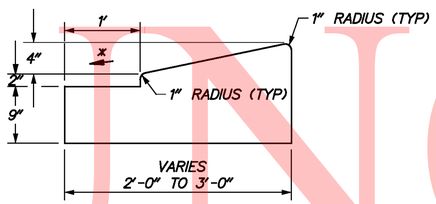

x MODIFY GUTTER SLOPE TO MATCH PAVEMENT. CURB MODIFICATION TO BE INCLUDED IN UNIT PRICE BID PER LINEAR FOOT.

ITEM 701500 – INTEGRAL PORTLAND CEMENT CONCRETE CURB AND GUTTER, SPECIAL

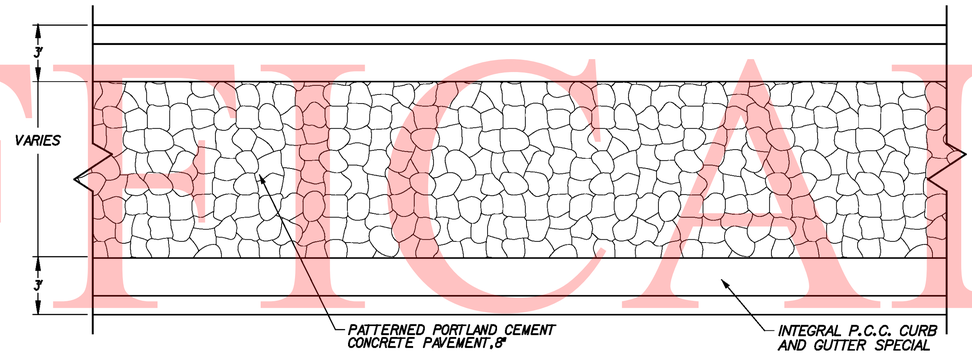

ITEM 501526 – PATTERNED PORTLAND CEMENT CONCRETE PAVEMENT, 8"

COLOR: GRANITE
PATTERN: RANDOM STONE

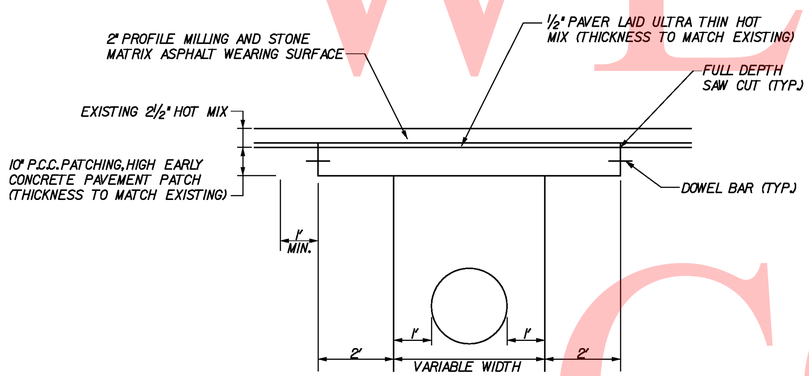

BITUMINOUS OVER CONCRETE PAVEMENT RESTORATION

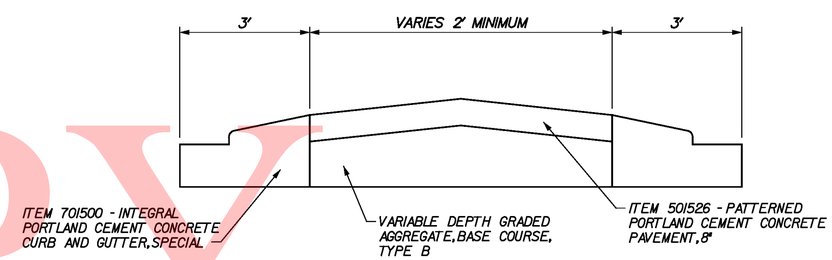

TYPICAL MEDIAN SECTION (MEDIANS > 8')

UNOFFICIAL WEBSITE COPY

Y:\Projects\Del41-202\Del95 Cont 5\DETAILS\I95d10c5.dgn

1/11/2010

DELAWARE DEPARTMENT OF TRANSPORTATION	ADDENDUMS / REVISIONS	NOT TO SCALE	I-95 & US 202 INTERCHANGE	CONTRACT T200510602	BRIDGE NO. NA	CONSTRUCTION DETAILS CD 1 OF 14	SHEET NO. 155
				COUNTY NEW CASTLE	DESIGNED BY: DAG		TOTAL SHTS. 482
					CHECKED BY: MAA		

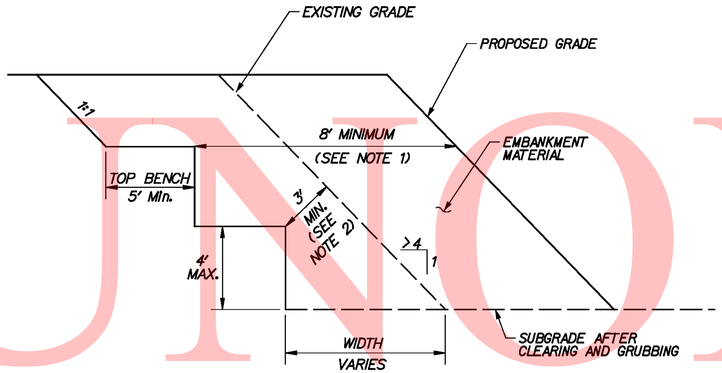

BENCHING DETAIL

NOTE:

1. MINIMUM CONSTRUCTION EMBANKMENT WIDTH IS 8 FEET ON ALLOW FOR PROPER COMPACTION.
2. 3' MINIMUM OR TO ROCK, WHICHEVER COMES FIRST.

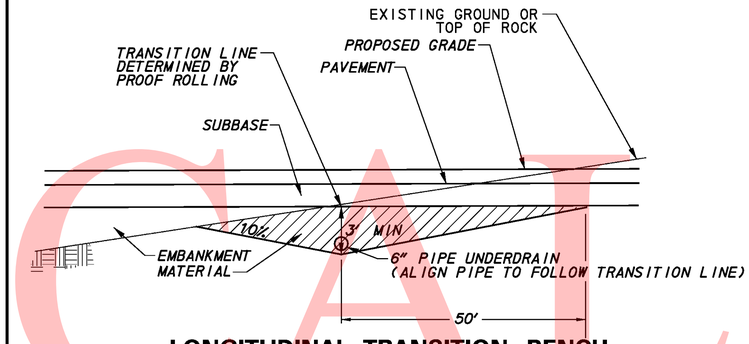

LONGITUDINAL TRANSITION BENCH

NOT TO SCALE

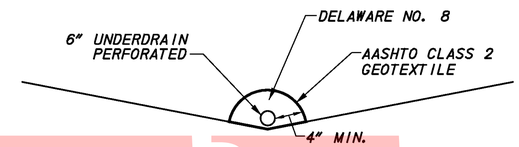

UNDERDRAIN DETAIL

NOT TO SCALE

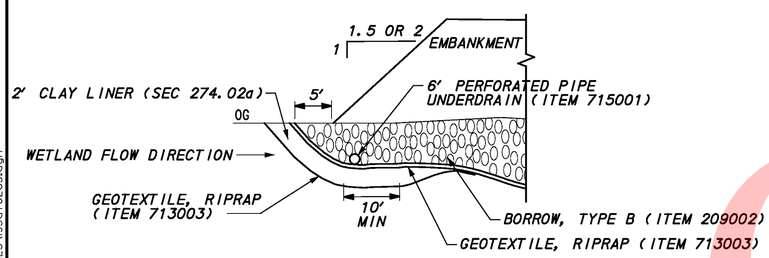

CLAY LINER FOR WETLAND TREATMENT AT TOE

NOT TO SCALE

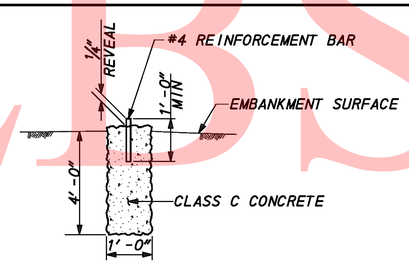

ITEM 202518– SETTLEMENT MONUMENT

NOT TO SCALE

LOCATION SCHEDULE	
RELOCATED RAMP 5	
STA. TO STA.	NO. OF MONUMENTS
30+25 TO 39+12	20
40+34 TO 46+76	14
49+05 TO 52+41	8
53+18 TO 54+00	2
RELOCATED RAMP 7	
STA. TO STA.	NO. OF MONUMENTS
149+27 TO 155+00	8

PLACE MONUMENTS WITHIN THE ABOVE LIMITS AT LOCATIONS DIRECTED BY THE ENGINEER

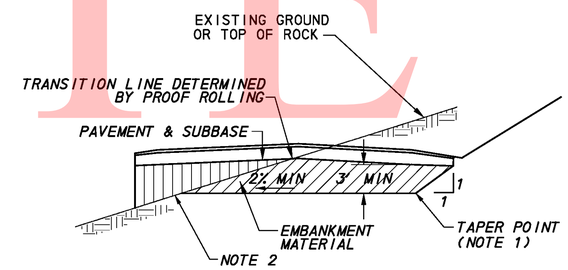

LATERAL TRANSITION BENCH

NOT TO SCALE

NOTE:

1. EXTEND TRANSITION TO EDGE OF TRAVEL LANE AND TAPER TO EDGE OF SHOULDER
2. FOR SLOPES STEEPER THAN 4H:1V PROVIDE BENCHING (IN ACCORDANCE WITH SIDEHILL BENCH CONSTRUCTION DETAIL)
3. AFTER EXCAVATION AND AND/OR EMBANKMENT HAVE REACHED SUBGRADE ELEVATION, TEST ROLL TRANSITION ZONE IN ACCORDANCE WITH SECTION 202.02 "ROLLING".
4. LOCATE TRANSITION LINE ACROSS THE ROADWAY, GENERALLY PARALLEL TO THE ORIGINAL GROUND CONTOURS, ON THE BASIS OF SUBGRADE REACTION TO TEST ROLLING. TEST ROLL THE TRANSITION ZONE IN THE PRESENCE OF THE ENGINEER.
5. EXCAVATE TO A 3-FOOT MINIMUM DEPTH ALONG THE TRANSITION LINE. EXCAVATE AND GRADE THE TRANSITION BENCH FROM A TYPICAL DISTANCE OF 50 FEET FROM BOTH SIDES OF THE TRANSITION LINE, MEASURED ALONG ROADWAY CENTERLINE OR AS DIRECTED BY ENGINEER. EXTEND EXCAVATION FOR THE FULL WIDTH OF ROADWAY INCLUDING SHOULDER.
6. PLACE UNDERDRAIN AS SHOWN IN DETAIL. SLOPE UNDERDRAIN AT 2% MINIMUM. LOCATE UNDERDRAIN OUTLET BASED ON FIELD CONDITIONS.
7. BACKFILL TO SUBGRADE WITH EMBANKMENT MATERIAL (TYPE F).

UNOFFICIAL WEBSITE COPY

Y:\Projects\Del41-202\Del95 Cont 5\DETAILS\95d102c5.dgn

1/1/2010

DELAWARE DEPARTMENT OF TRANSPORTATION	ADDENDUMS / REVISIONS	SCALE 0 30 60 90 FEET	I-95 & US 202 INTERCHANGE	CONTRACT T200510602	BRIDGE NO. NA	CONSTRUCTION DETAILS CD 2 OF 14	SHEET NO. 156
				COUNTY NEW CASTLE	DESIGNED BY: RL		TOTAL SHTS. 482
					CHECKED BY: BMD		

UNOFFICAL VERSION
WEB COPY

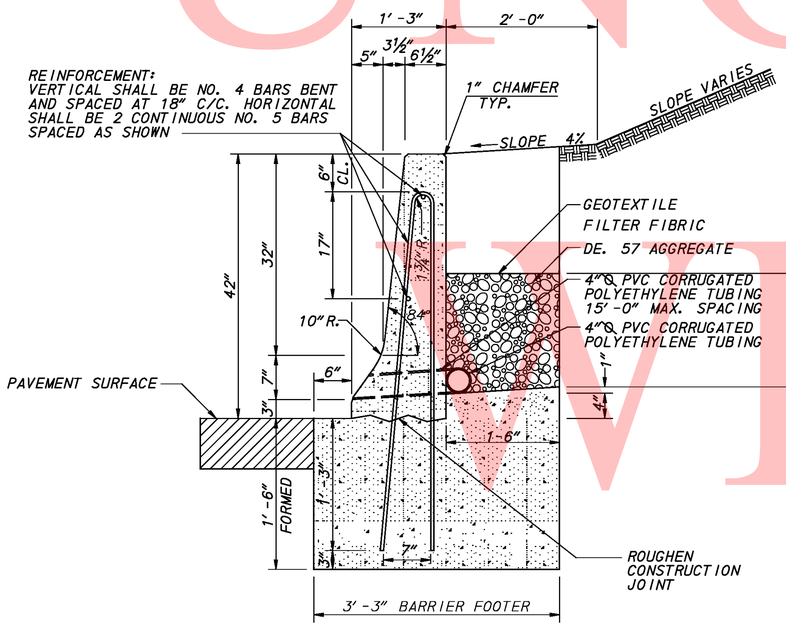

TYPICAL OUTSIDE SHOULDER INSTALLATION

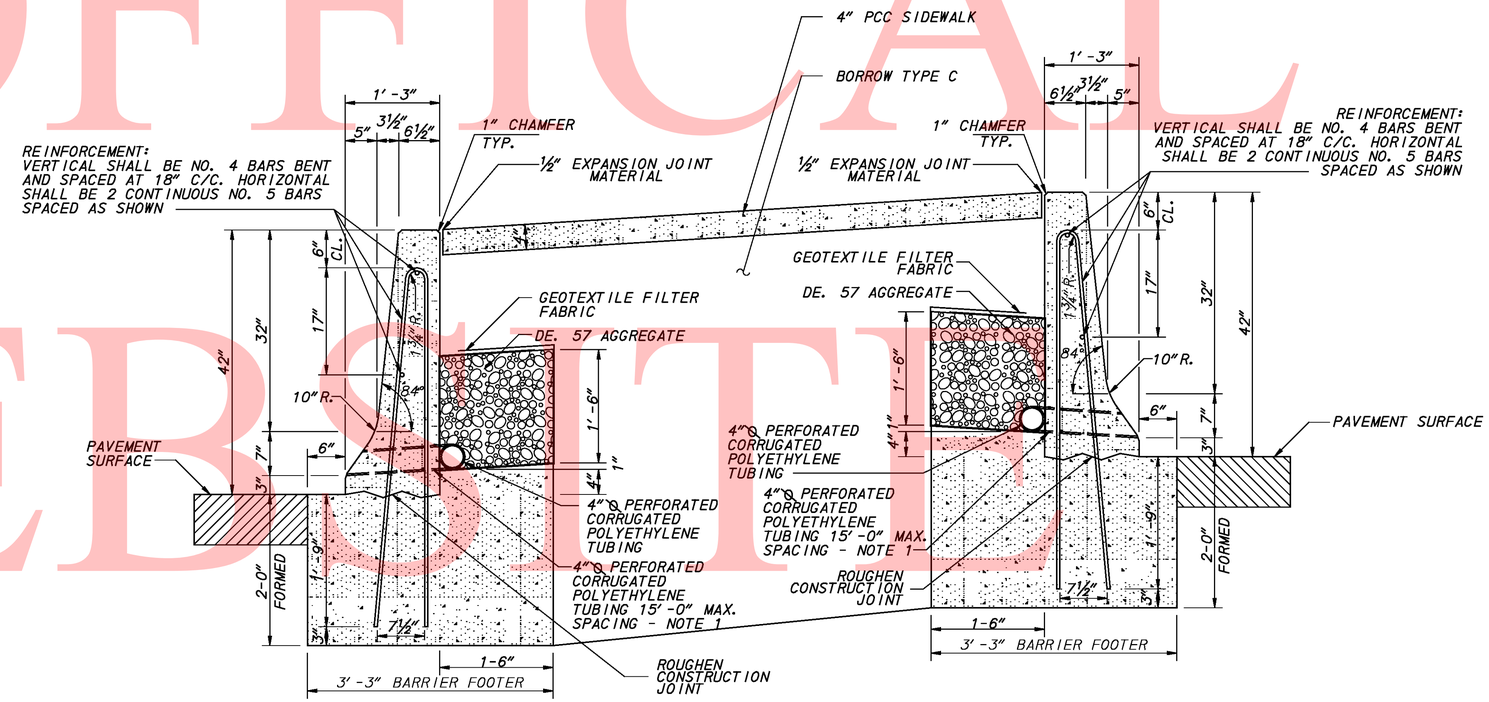

TYPICAL MEDIAN INSTALLATION

PCC BARRIER, MODIFIED (720550)

NOTES:

1. OUTLET 4" PVC DRAIN INTO INLET WHERE POSSIBLE AS DIRECTED BY THE ENGINEER
2. 4" PERFORATED CORRUGATED POLYETHYLENE TUBING, 4" CORRUGATED POLYETHLENE TUBING, DE. 57 AGGREGATE, AND GEOTEXTILE FILTER FABRIC TO BE PAID FOR UNDER PERFORATED PIPE UNDERDRAINS, 4" (ITEM 715000)
3. GEOTEXTILE FILTER FABRIC SHALL BE PLACE ENTIRELY AROUND DE. 57 AGGREGATE WITH A MINIMUM 12" OVERLAP
4. TRANSITION PROPOSED BARRIER TO MATCH EXISTING OVER THE LENGTH OF ONE JOINT SPACING (10' TO 20") AS DIRECTED BY THE ENGINEER.

UNOFFICAL WEBSITE COPY

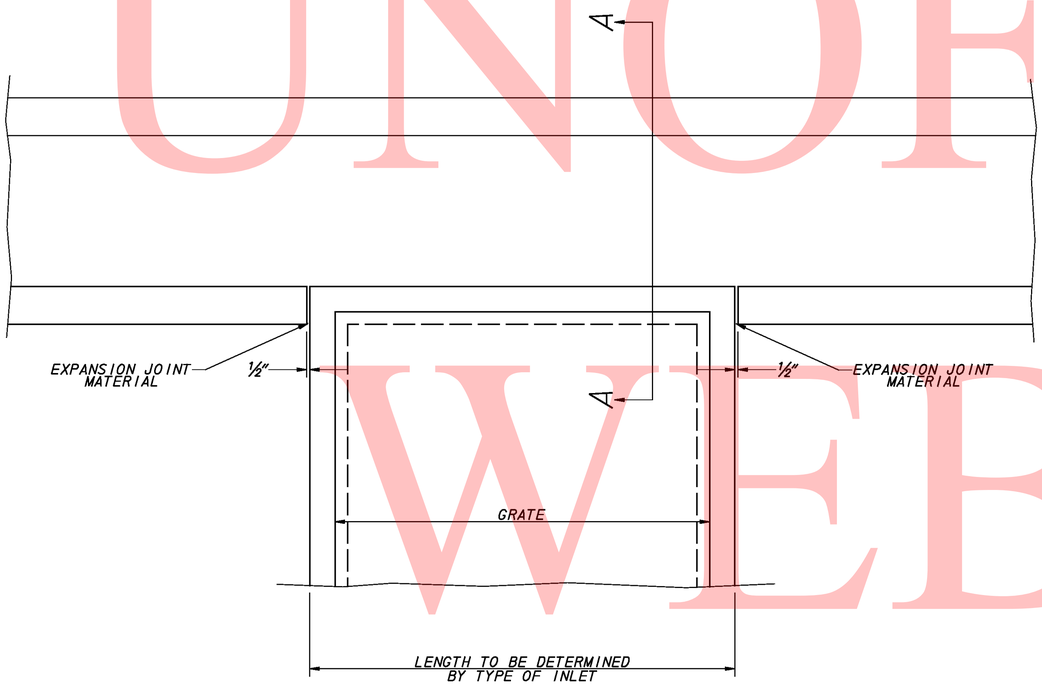

DRAINAGE INLET DETAIL AT BARRIER

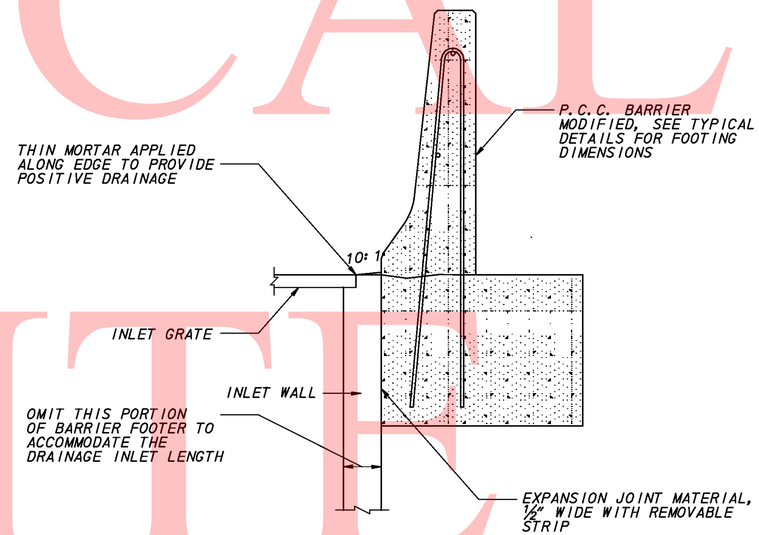

SECTION A–A

PCC BARRIER, MODIFIED (720550)

NOTES: SEE NOTES AND DETAILS PREVIOUS SHEET.

Y:\Projects\Del41-202\Del95 Cont 5\DETAILS\95d1025.dgn

11/11/2010

DELAWARE DEPARTMENT OF TRANSPORTATION	ADDENDUMS / REVISIONS	SCALE 0 30 60 90 FEET	I-95 & US 202 INTERCHANGE	CONTRACT T200510602	BRIDGE NO. NA	CONSTRUCTION DETAILS CD 4 OF 14	SHEET NO. 158
				COUNTY NEW CASTLE	DESIGNED BY: TM		TOTAL SHTS. 482
					CHECKED BY: MAA		

CASE 1 FOR OVERLYING SOIL DEPTH (A) RANGING FROM 0 TO 18" THE DEPTH OF REQUIRED DRILING (B) IS EQUAL TO 24".

CASE 1

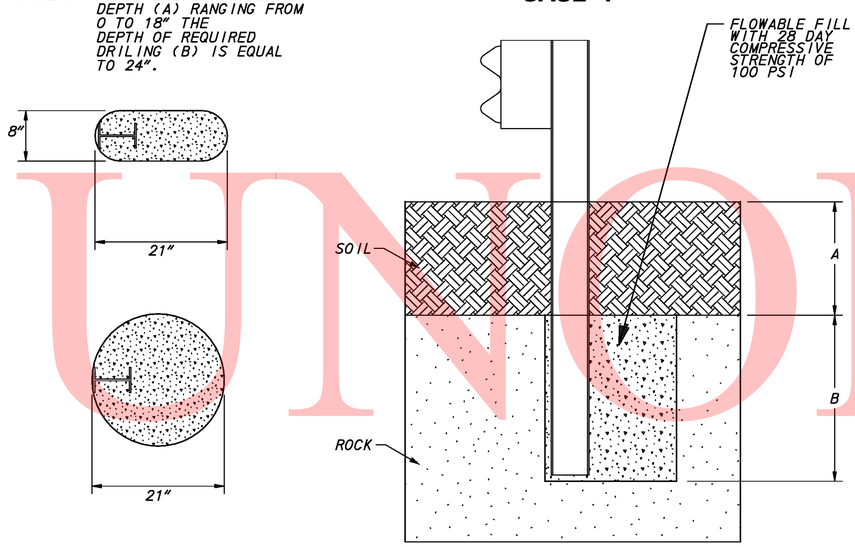

CASE 2

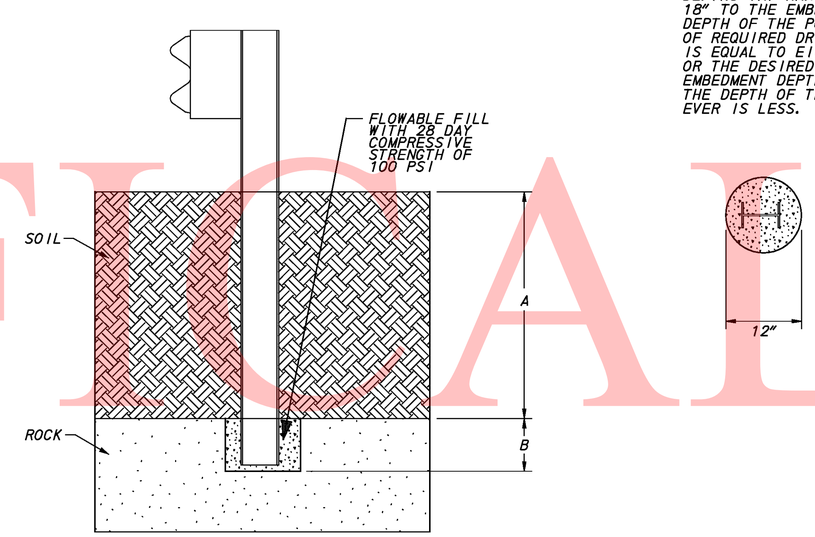

CASE 2 FOR OVERLYING SOIL DEPTHS (A) RANGING FROM 18" TO THE EMBEDMENT DEPTH OF THE POST, DEPTH OF REQUIRED DRILLING (B) IS EQUAL TO EITHER 12" OR THE DESIRED EMBEDMENT DEPTH MINUS THE DEPTH OF THE SOIL WHICH EVER IS LESS.

GUARDRAIL EMBEDDED IN ROCK DETAIL

NOTES: FLOWABLE FILL AND DRILLING COST ARE INCIDENTAL TO THE APPLICABLE GUIDERAIL ITEM

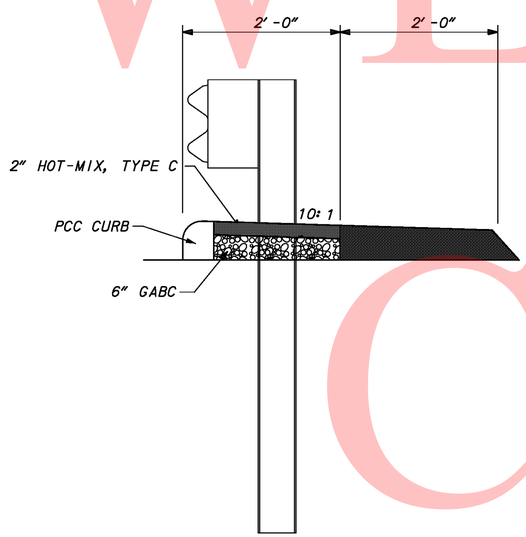

GUARDRAIL MAINTENANCE STRIP (WITH CURB)

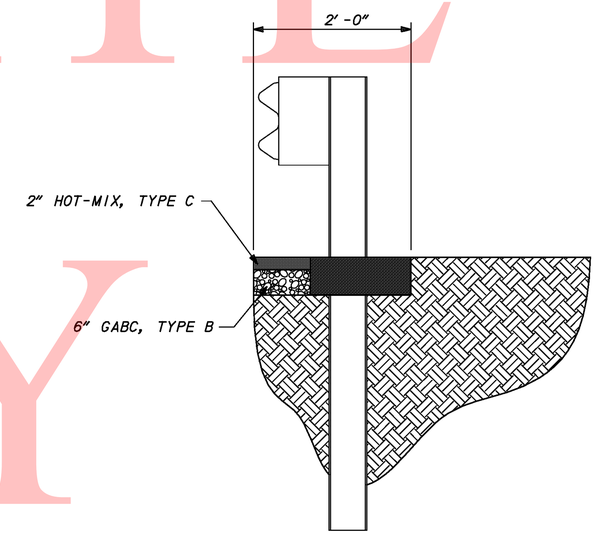

GUARDRAIL MAINTENANCE STRIP (WITHOUT CURB)

UNOFFICIAL WEBSITE COPY

Y:\Projects\Del41-202\Del95 Cont 5\DETAILS\I95d102c5.dgn

1/11/2010

DELAWARE DEPARTMENT OF TRANSPORTATION	ADDENDUMS / REVISIONS	SCALE 0 30 60 90 FEET	I-95 & US 202 INTERCHANGE	CONTRACT T200510602	BRIDGE NO. NA	CONSTRUCTION DETAILS CD 5 OF 14	SHEET NO. 159
				COUNTY NEW CASTLE	DESIGNED BY: TM		TOTAL SHTS. 482
					CHECKED BY: MAA		

NOTES:
1. UNDERDRAIN OUTLET MARKER (UOM) WILL BE MANUFACTURED BY BERNSTEN INTERNATIONAL OR WILLIAM FRICK & COMPANY OR APPROVED EQUAL.
2. UOM WILL BE 4" DIAMETER, WITH WHITE LETTERING ON A BLUE BACKROUND.
3. USE MANUFACTOR'S RECOMMENDED ADHESIVE AND INSTRUCTIONS TO ATTACH UOM TO PAVEMENT OR CURBING.
4. UOM IS INCIDENTAL TO ITEM 715500-UNDERDRAIN OUTLET PIPE, 6".

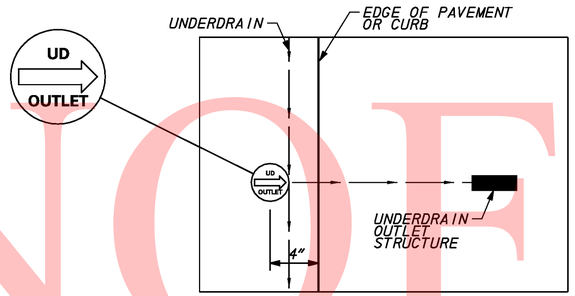

UNDERDRAIN OUTLET MARKER DETAIL

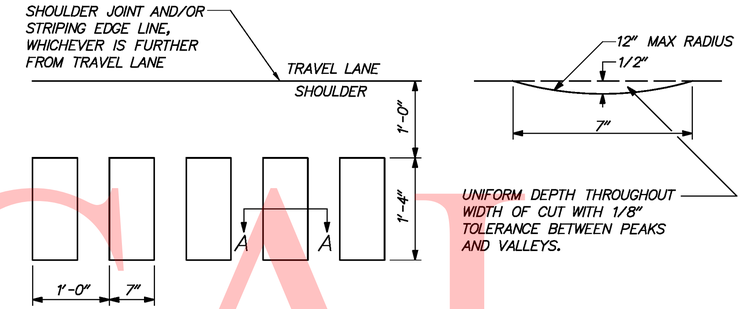

PLAN **SECTION A-A**

EDGELINE RUMBLE STRIPS DETAIL

NOTES:
- ALL WORK REQUIRED TO COMPLETE THE INSTALLATION OF EDGELINE RUMBLE STRIPS SHALL BE INCIDENTAL TO ITEM 760504 - RUMBLE STRIPS, HOT MIX AND/OR ITEM 760506 - RUMBLE STRIPS,CONCRETE.
- RUMBLE STRIPS ARE NOT TO BE INSTALLED ON BRIDGE 1-762, BRIDGE 1-763, BRIDGE 1-764 OR BRIDGE 1-570.
- EDGELINE RUMBLE STRIPS SHALL BE INSTALLED ALONG ALL INSIDE AND OUTSIDE SHOULDERS OF THE I-95 MAINLINE, AS PER THIS DETAIL, THROUGHOUT THE PROJECT UNLESS OTHERWISE NOTED BELOW:

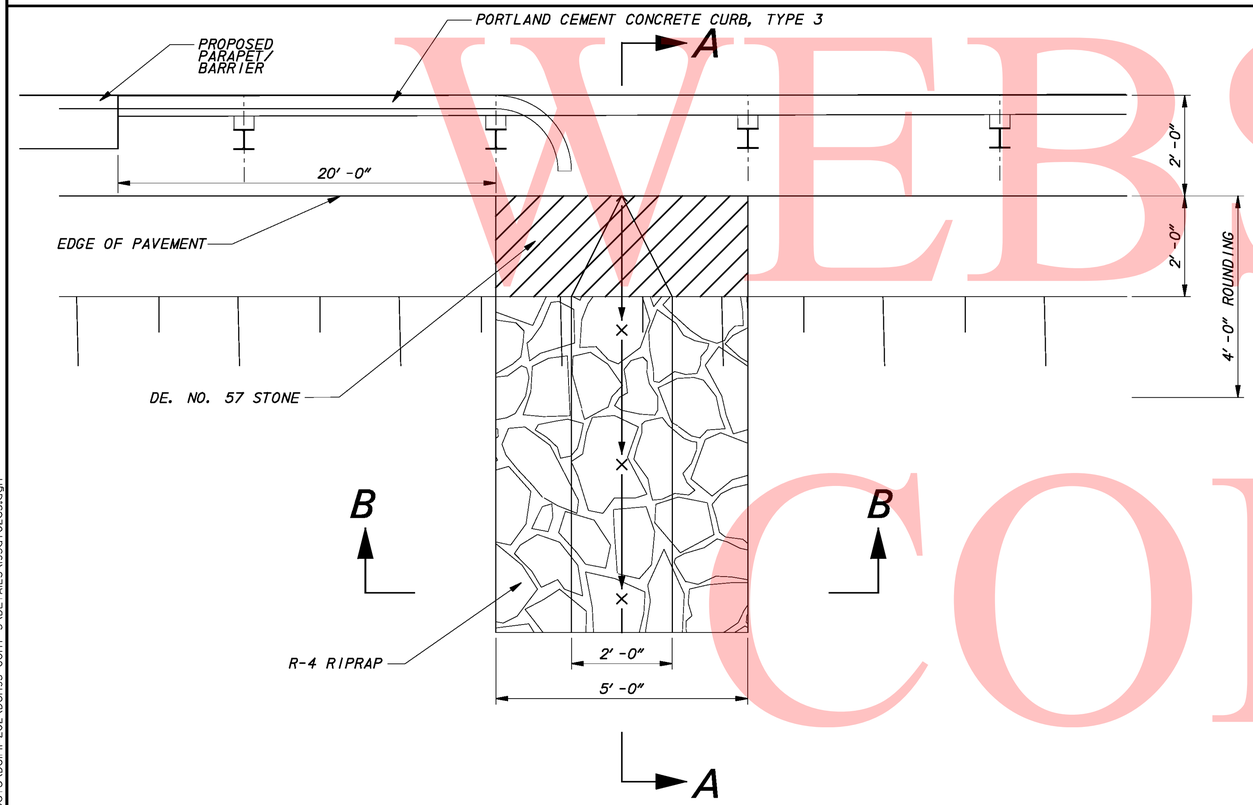

PLAN

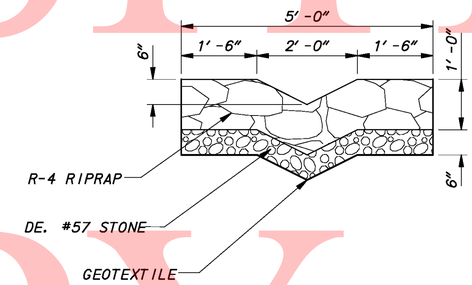

SECTION B-B

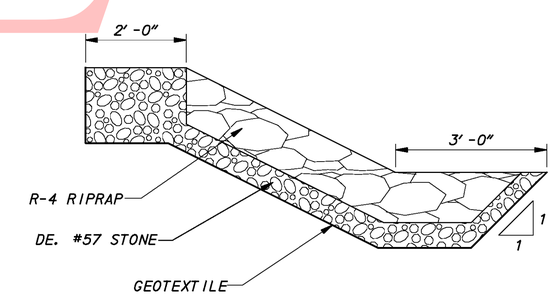

SECTION A-A

NOTE:
PAYMENT SHALL BE MADE UNDER THE RESPECTIVE PAY ITEMS.

STONE OUTLET DETAILS

N.T.S.
RAMP 5 STA. 38+71 LT

UNOFFICIAL WEBSITE COPY

Y:\Projects\Del41-202\Del195 Cont 5\DETAILS\195d102c5.dgn

11/18/2010

DELAWARE DEPARTMENT OF TRANSPORTATION	ADDENDUMS / REVISIONS	SCALE 0 30 60 90 FEET	I-95 & US 202 INTERCHANGE	CONTRACT T200510602	BRIDGE NO. NA	CONSTRUCTION DETAILS CD 6 OF 14	SHEET NO. 160
				COUNTY NEW CASTLE	DESIGNED BY: TM		TOTAL SHTS. 482
					CHECKED BY: MAA		

SPECIAL INLET BOX SCHEDULE

INLET ID	ITEM NUMBER	INSIDE DIMENSIONS		BOX	COVER SLAB (W/ TYPE A DRAINAGE INLET TOP UNIT)
		LENGTH	WIDTH		
DI-139	708512	114"	36"	SEE DETAIL, THIS SHEET	SEE DETAIL, THIS SHEET
DI-140	708512	114"	36"		

SPECIAL MANHOLE BOX SCHEDULE

MANHOLE ID	ITEM NUMBER	INSIDE DIMENSIONS		BOX	COVER SLAB (W/ MANHOLE TOP UNIT)
		LENGTH	WIDTH		
MH-11	708582	84"	36"	SEE DETAIL, THIS SHEET	SEE DETAIL, THIS SHEET
MH-12	708582	84"	36"		
MH-15	708113	66"	30"	PER DELDOT STANDARD NO. D-4, SHT. 1 OF 1	SEE DETAIL, THIS SHEET
MH-16					
MH-18					
MH-110					

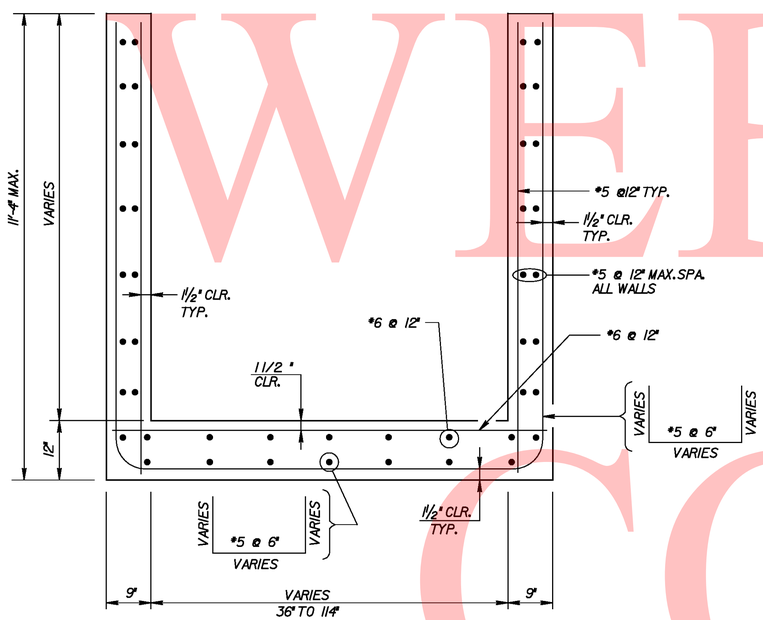

TYPICAL BOX SECTION

ITEM 708512, DRAINAGE INLET, SPECIAL 1
ITEM 708582, MANHOLE, SPECIAL 1

NOTES:
1. VERTICAL AND HORIZONTAL BARS SHOWN SHALL BE PLACED IN ALL WALLS.
2. REFER TO SPECIAL PROVISIONS FOR ADDITIONAL INFORMATION.
3. FOR ADDITIONAL NOTES, REFER TO DELDOT INLET BOX DETAILS, STANDARD NO. D-4 (2007)

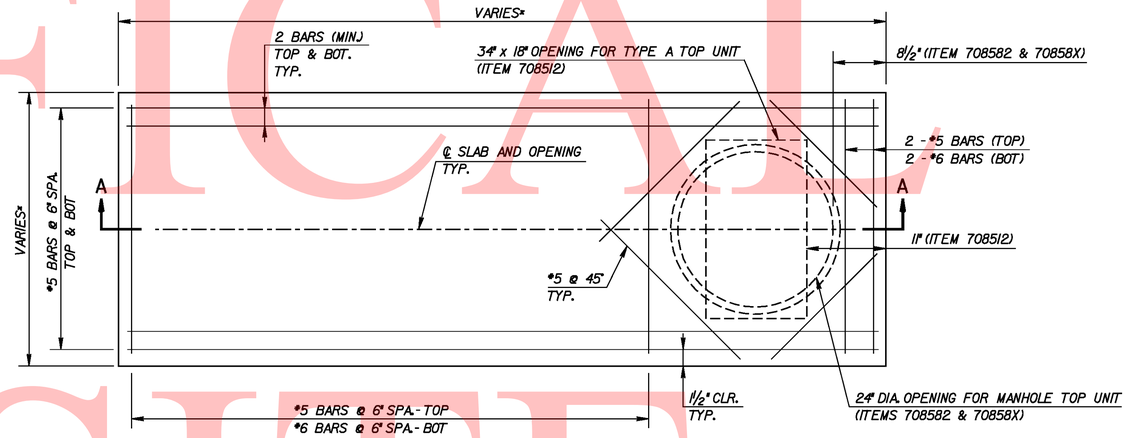

PLAN

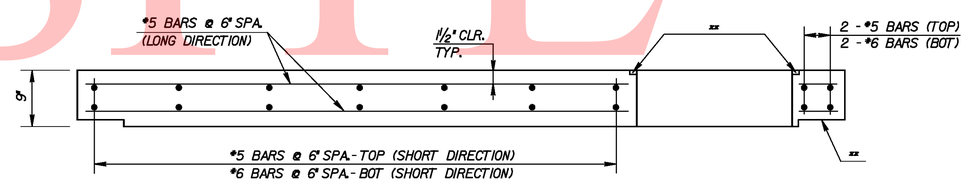

SECTION A-A

TYPICAL COVER SLAB DETAIL

ITEM 708512, DRAINAGE INLET, SPECIAL 1
ITEM 708582, MANHOLE, SPECIAL 1
ITEM 708113, MANHOLE, 66"x30" (MH 15, 16, 18 AND 110 ONLY)

NOTES:
1. REFER TO SPECIAL PROVISIONS FOR ADDITIONAL INFORMATION.
* DIMENSIONS TO MATCH OUTSIDE DIMENSIONS OF BOX TYP.
xx JOINTS AS REQUIRED PER DELDOT STANDARD NOS. D-5 (2008) AND D-6 (2007) TYP.

UNOFFICIAL WEBSITE COPY

Y:\Projects\Del41-202\Del95 Cont 5\DETAILS\95d103c5.dgn
1/11/2010

DELAWARE DEPARTMENT OF TRANSPORTATION	ADDENDUMS / REVISIONS	NOT TO SCALE	I-95 & US 202 INTERCHANGE	CONTRACT T200510602	BRIDGE NO. NA	CONSTRUCTION DETAILS CD 7 OF 14	SHEET NO. 161
				COUNTY NEW CASTLE	DESIGNED BY: BRM		TOTAL SHTS. 482
					CHECKED BY: JAC		

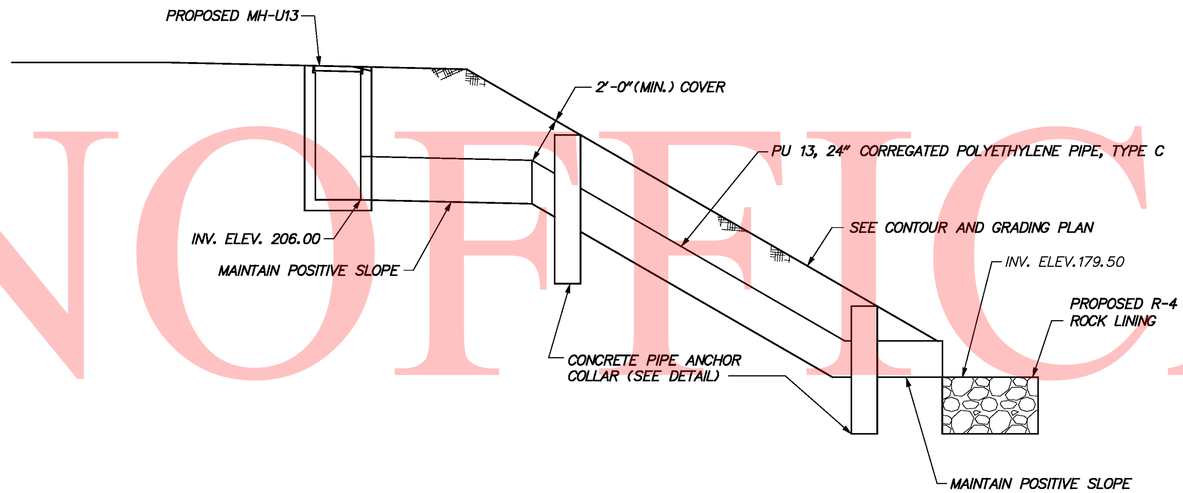

PIPE P-U13 DETAIL *

STA. 1013+51.3, 99.0' LT. TO STA. 1014+55.5, 60.8' LT.
(NOT TO SCALE)

* NOTE: PAYMENT FOR PIPE ANCHOR/COLLAR INCIDENTAL TO ITEM 612528.

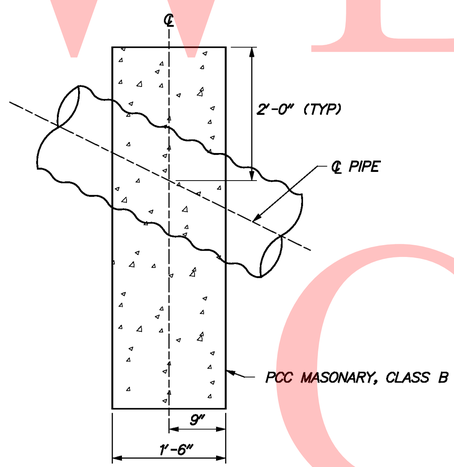

*PIPE ANCHOR /COLLAR DETAIL

NOT TO SCALE

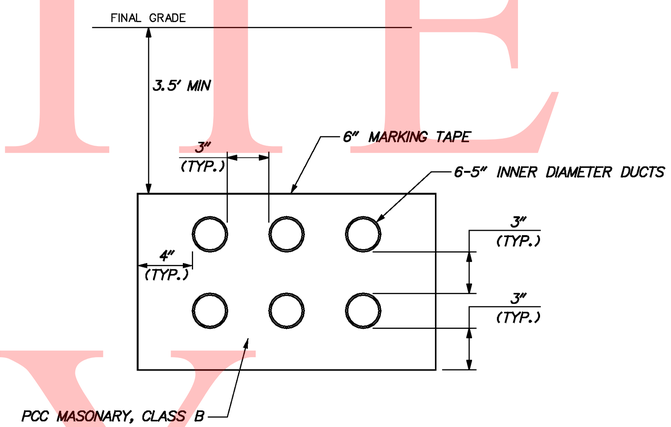

RELOCATED DELMARVA CONDUIT ENCASEMENT

NOT TO SCALE

NOTES:

1. TRANSITION FROM THE STRUCTURE TO CONDUIT CONFIGURATION AS SHOWN TO A POINT TEN FEET AWAY FROM DELMARVA MH 578 AND MH 579.
2. CONDUITS AND SPACERS WILL BE PROVIDED BY DELMARVA POWER.
3. ALL WORK WILL BE CONSIDERED INCIDENTAL UNDER ITEM 602002 PORTLAND CEMENT CONCRETE MASONARY, CLASS B.

UNOFFICAL WEBSITE COPY

ALL RIPRAP ON THE STREAM BANK, OUTSIDE THE CHANNEL BED, SHALL BE FILLED WITH TOPSOIL, SEEDED AND MULCHED WITH SOIL RETENTION BLANKET MULCH TYPE 3 (ITEM #735533). PRIOR TO TOPSOIL FILLING, AN INITIAL "CHOKE" OF THE VOIDS SHALL BE DONE USING A SMALLER AGGREGATE. JUST ENOUGH "CHOKE" MATERIAL SHALL BE PLACED TO PREVENT THE LOSS OF TOPSOIL THROUGH THE RIPRAP, THEN FINISH FILLING THE VOIDS WITH TOPSOIL SO THAT THE PEAKS ARE BARELY VISIBLE. AN ADDITIONAL 4-INCH TOPSOIL LAYER SHALL BE PLACED ON TOP OF THE RIPRAP. PAYMENT UNDER ITEM #732500 - TOPSOIL. SEEDING SHALL BE PERMANENT GRASS SEEDING WET GROUND (ITEM #7340151) FROM STREAM BASE FLOW ELEVATION TO 2-FEET UP THE SLOPE AND PERMANENT GRASS SEEDING DRY GROUND (ITEM #734013) ON THE REMAINING SLOPE.

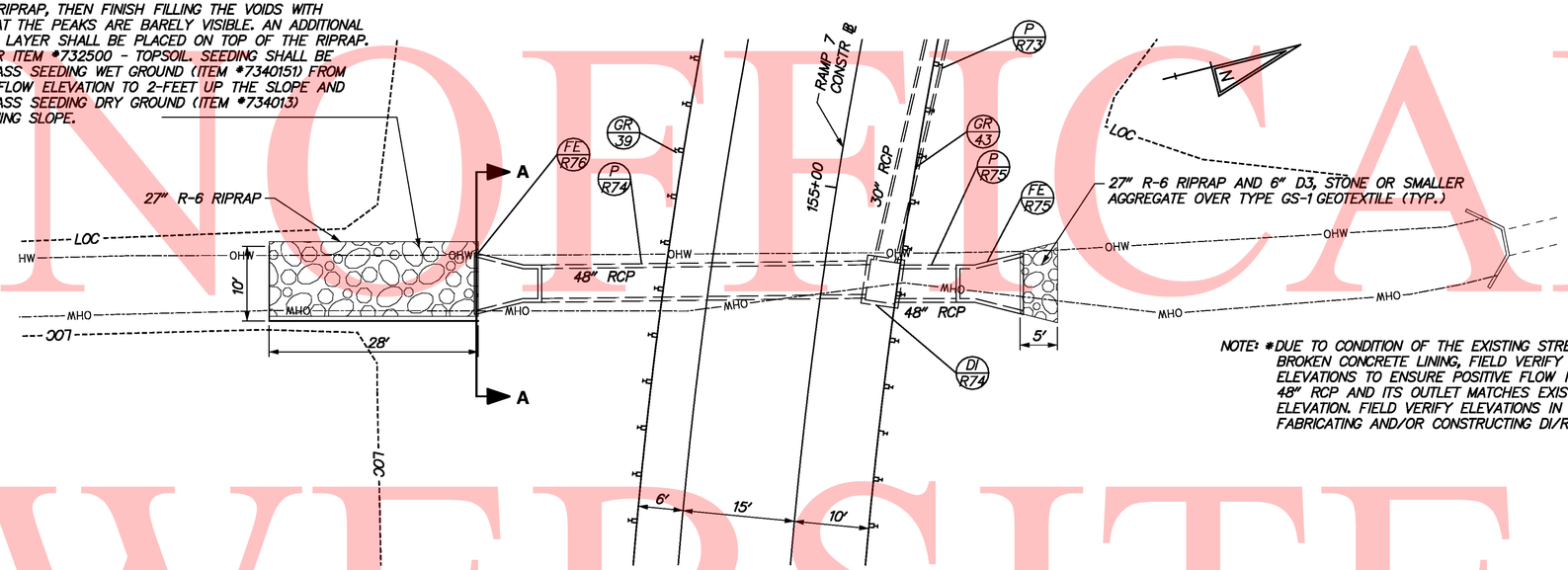

NOTE: *DUE TO CONDITION OF THE EXISTING STREAMBED UNDER THE BROKEN CONCRETE LINING, FIELD VERIFY EXISTING STREAMBED ELEVATIONS TO ENSURE POSITIVE FLOW INTO THE PROPOSED 48" RCP AND ITS OUTLET MATCHES EXISTING STREAMBED ELEVATION. FIELD VERIFY ELEVATIONS IN ADVANCE OF FABRICATING AND/OR CONSTRUCTING DI/R74.

PLAN

SCALE: 1" = 20'

(A) 2" - ITEM 401711 - SUPERPAVE, TYPE C HOT-MIX, 160 GYRATIONS, PG 76-22, (NON-CARBONATE STONE)

(B) 4.5" - ITEM 401660 - SUPERPAVE, TYPE B HOT-MIX, 160 GYRATIONS, PG 76-22

(F) 5.5" - ITEM 401663 - SUPERPAVE, BITUMINOUS CONCRETE BASE COURSE, 160 GYRATIONS, PG 64-22

(G) 8" - ITEM 302005 - GRADED AGGREGATE BASE COURSE, TYPE B

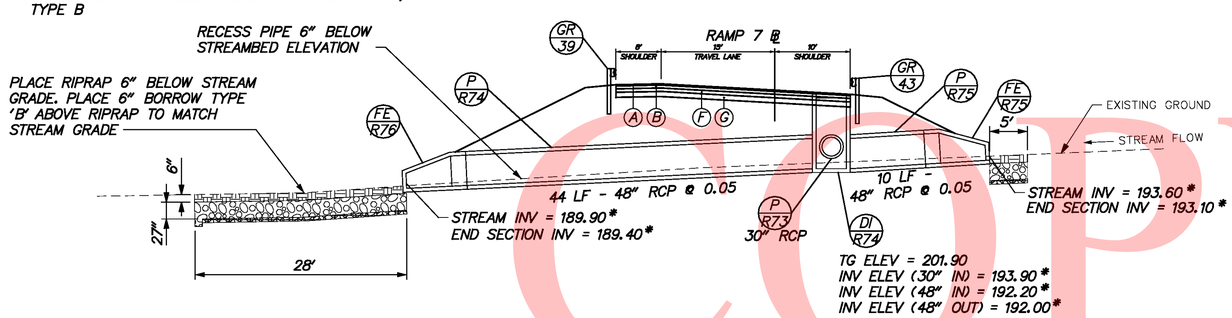

ELEVATION

SCALE: 1" = 20'

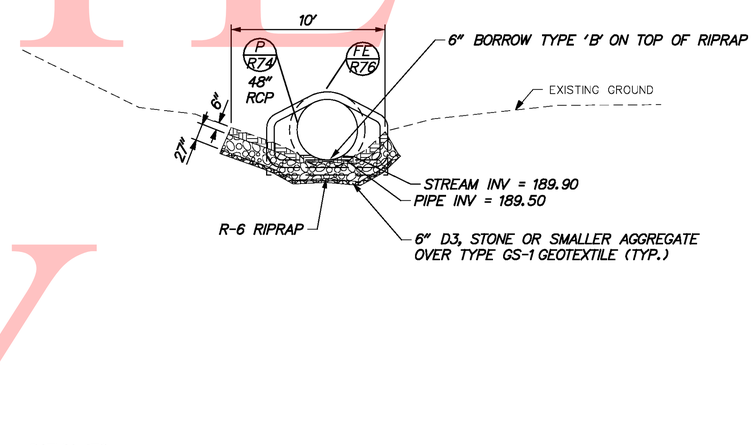

SECTION A-A

SCALE: 1" = 10'

CULVERTS R74 & R75 PLAN, ELEVATION & SECTION

UNOFFICAL WEBSITE COPY

Y:\Projects\Del41-202\Del95 Cont 5\DETAILS\195d105ce5.dgn

1/11/2010

DELAWARE DEPARTMENT OF TRANSPORTATION	ADDENDUMS / REVISIONS	SCALE 0 30 60 90 FEET	I-95 & US 202 INTERCHANGE	CONTRACT T200510602	BRIDGE NO. NA	CONSTRUCTION DETAILS CD 9 OF 14	SHEET NO. 163
				COUNTY NEW CASTLE	DESIGNED BY: EJS		TOTAL SHTS. 482
					CHECKED BY: REL		

UNOFFICAL WEBSITE COPY

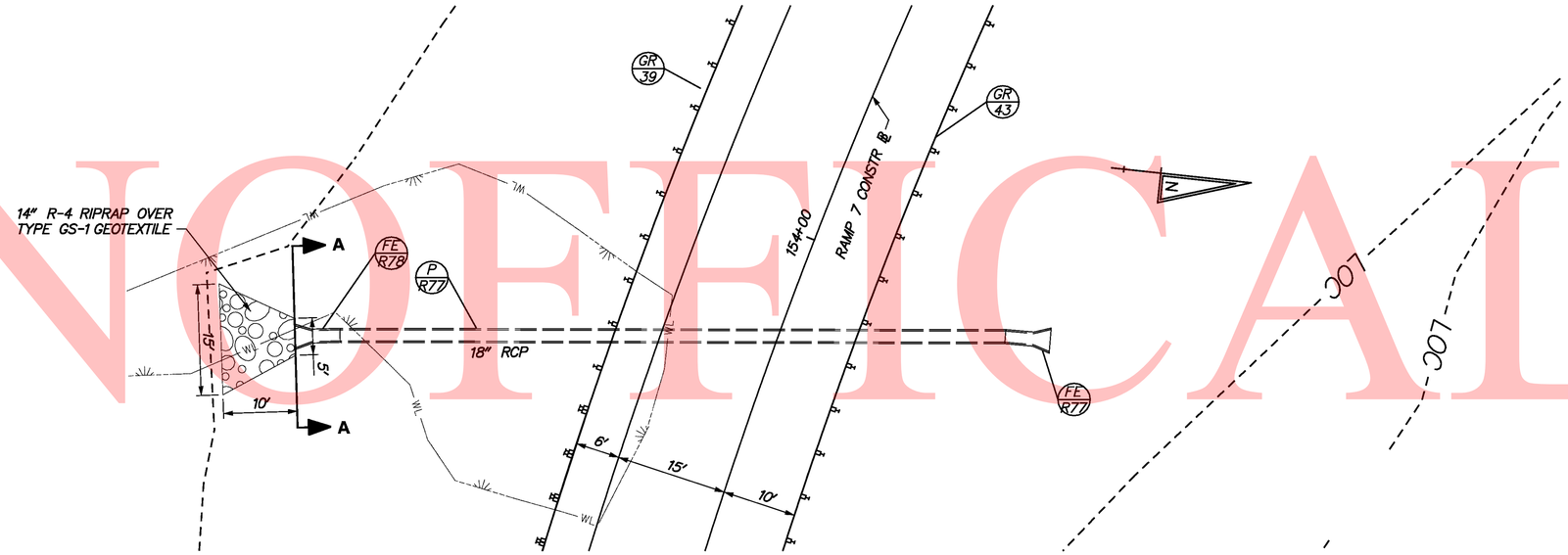

PLAN

SCALE: 1" = 20'

Ⓐ 2" - ITEM 401711 - SUPERPAVE, TYPE C HOT-MIX, 160 GYRATIONS, PG 76-22, (NON-CARBONATE STONE)

Ⓑ 4.5" - ITEM 401660 - SUPERPAVE, TYPE B HOT-MIX, 160 GYRATIONS, PG 76-22

Ⓕ 5.5" - ITEM 401663 - SUPERPAVE, BITUMINOUS CONCRETE BASE COURSE, 160 GYRATIONS, PG 64-22

Ⓖ 8" - ITEM 302005 - GRADED AGGREGATE BASE COURSE, TYPE B

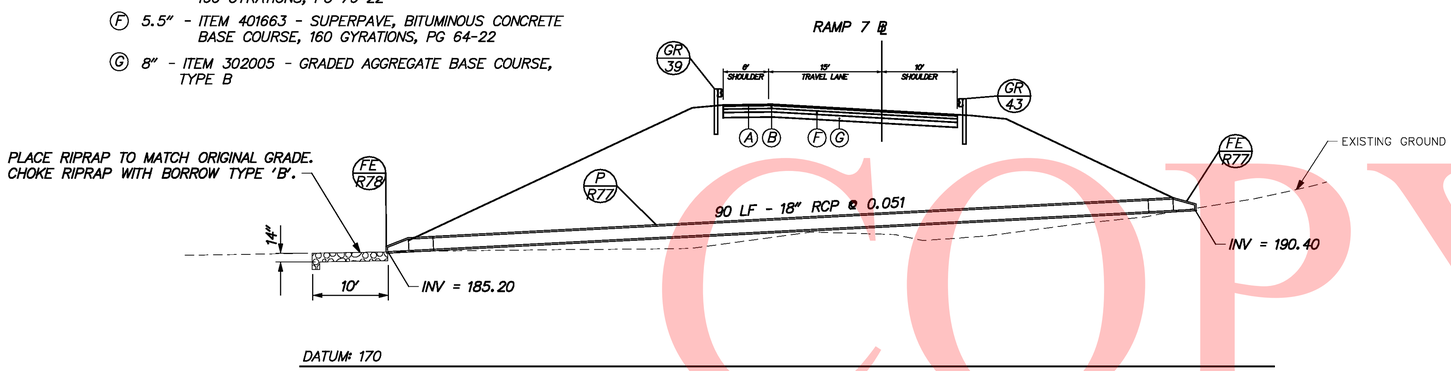

ELEVATION

SCALE: 1" = 20'

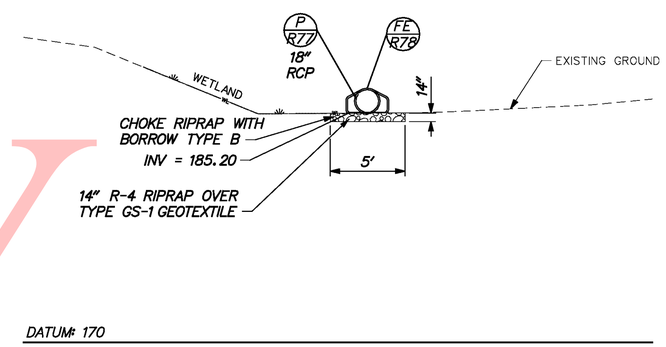

SECTION A-A

SCALE: 1" = 10'

CULVERT R77 PLAN, ELEVATION & SECTION

Y:\Projects\Del41-202\Del95 Cont 5\DETAILS\95d105c5.dgn

1/11/2010

DELAWARE DEPARTMENT OF TRANSPORTATION	ADDENDUMS / REVISIONS	SCALE 0 30 60 90 FEET	I-95 & US 202 INTERCHANGE	CONTRACT T200510602	BRIDGE NO. NA	CONSTRUCTION DETAILS CD 10 OF 14	SHEET NO. 164
				COUNTY NEW CASTLE	DESIGNED BY: EJS		TOTAL SHTS. 482
					CHECKED BY: REL		

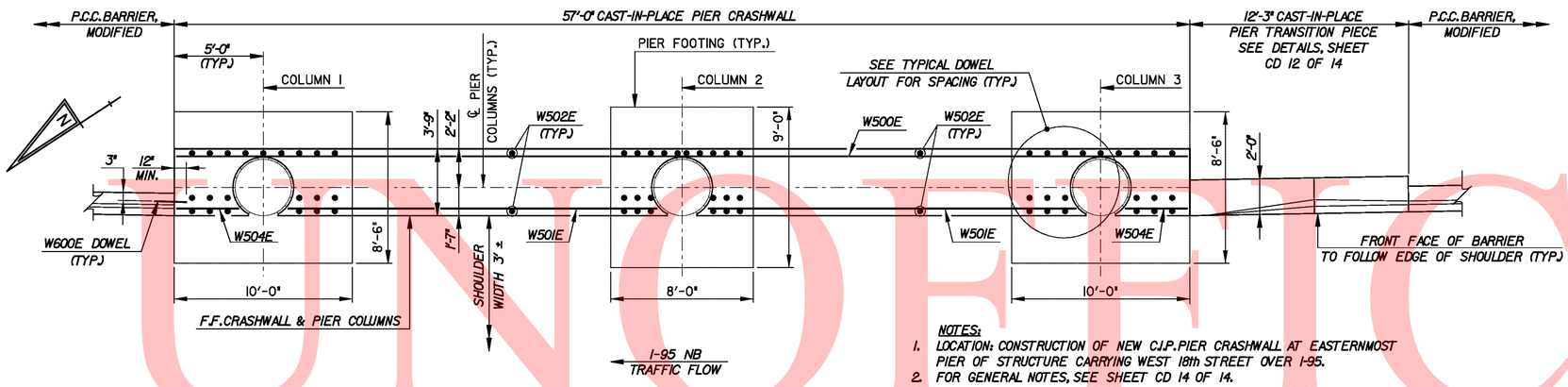

PLAN

(PIER CAP NOT SHOWN FOR CLARITY)
SCALE: 1/4" = 1'-0"

NOTES:

1. LOCATION: CONSTRUCTION OF NEW C.J.P. PIER CRASHWALL AT EASTERNMOST PIER OF STRUCTURE CARRYING WEST 18th STREET OVER I-95.
2. FOR GENERAL NOTES, SEE SHEET CD 14 OF 14.
3. FOR C.J.P. PIER CRASHWALL QUANTITIES, SEE SHEET CD 14 OF 14.
4. FOR C.J.P. PIER CRASHWALL REINFORCEMENT BAR SCHEDULE, SEE SHEET CD 14 OF 14.
5. VERIFY ALL DIMENSIONS AND GEOMETRY OF THE EXISTING STRUCTURE IN THE FIELD AS NECESSARY FOR PROPER FIT OF THE PROPOSED CONSTRUCTION.
6. ALL EXISTING DIMENSIONS AND ELEVATIONS SHOWN ARE BASED ON BEST AVAILABLE INFORMATION. THERE IS NO EXPRESSED OR IMPLIED AGREEMENT THAT INFORMATION IS CORRECTLY SHOWN. THE BIDDER IS TO ASSUME THE POSSIBILITY THAT CONDITIONS AFFECTING QUANTITIES OF WORK TO BE PERFORMED MAY DIFFER FROM THOSE INDICATED.
7. EXISTING STRUCTURE DIMENSIONS AND ELEVATIONS TAKEN FROM AS-BUILT STRUCTURE PLANS FOR WEST 18th STREET BRIDGE OVER ROUTE I-95, CONTRACT NO. 64-04-021 (1964).
8. BACKFILL BEHIND ENTIRE LENGTH OF COMPLETED CRASHWALL WITH NO. 57 STONE.
9. COORDINATE CONSTRUCTION OF PIER CRASHWALL WITH ITEM NO. 720550, P.C.C. BARRIER, MODIFIED.

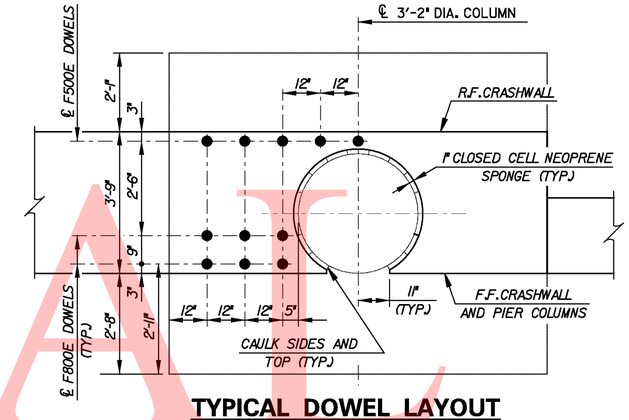

TYPICAL DOWEL LAYOUT COLUMN 1 & 3 FOOTINGS

(DOWEL LAYOUT SIMILAR ON BOTH SIDES OF EACH PIER COLUMN)
SCALE: 1/2" = 1'-0"

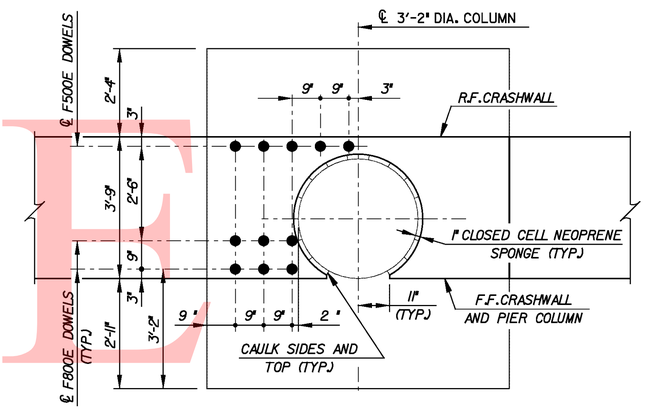

TYPICAL DOWEL LAYOUT COLUMN 2 FOOTING

(DOWEL LAYOUT SIMILAR ON BOTH SIDES OF PIER COLUMN)
SCALE: 1/2" = 1'-0"

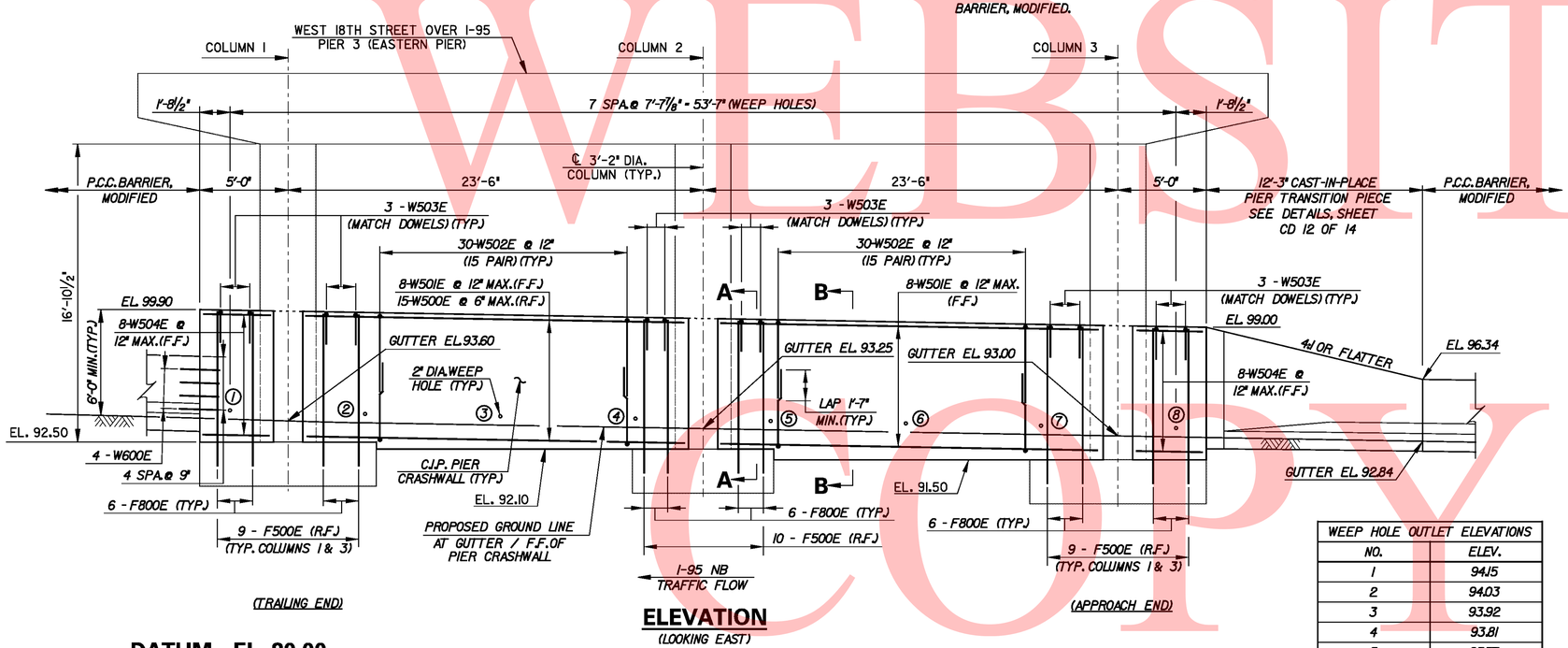

ELEVATION

(LOOKING EAST)

DATUM EL. 80.00

WEEP HOLE OUTLET ELEVATIONS	
NO.	ELEV.
1	94.15
2	94.03
3	93.92
4	93.81
5	93.77
6	93.62
7	93.55
8	93.46

(1) DENOTES WEEP HOLE NUMBER (TYP)

CAST-IN-PLACE PIER CRASHWALL

SCALE: 1/4" = 1'-0"

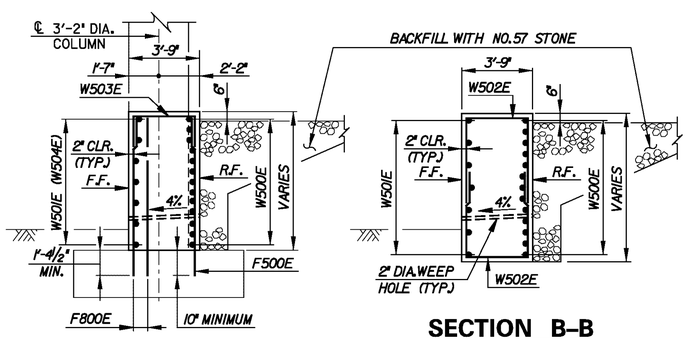

SECTION A–A

SCALE: 1/4" = 1'-0"

SECTION B–B

SCALE: 1/4" = 1'-0"

UNOFFICIAL WEBSITE COPY

Y:\Projects\Del4I-202\Del195 Cont 5\DETAILS\195dt06c5.dgn

11/11/2010

DELAWARE DEPARTMENT OF TRANSPORTATION	ADDENDUMS / REVISIONS	SCALE: AS NOTED	I-95 & US 202 INTERCHANGE	CONTRACT T200510602	BRIDGE NO. BR 1-760	CONSTRUCTION DETAILS CD 11 OF 14	SHEET NO. 165
				COUNTY NEW CASTLE	DESIGNED BY: BRM		TOTAL SHTS. 482
					CHECKED BY: JAC		

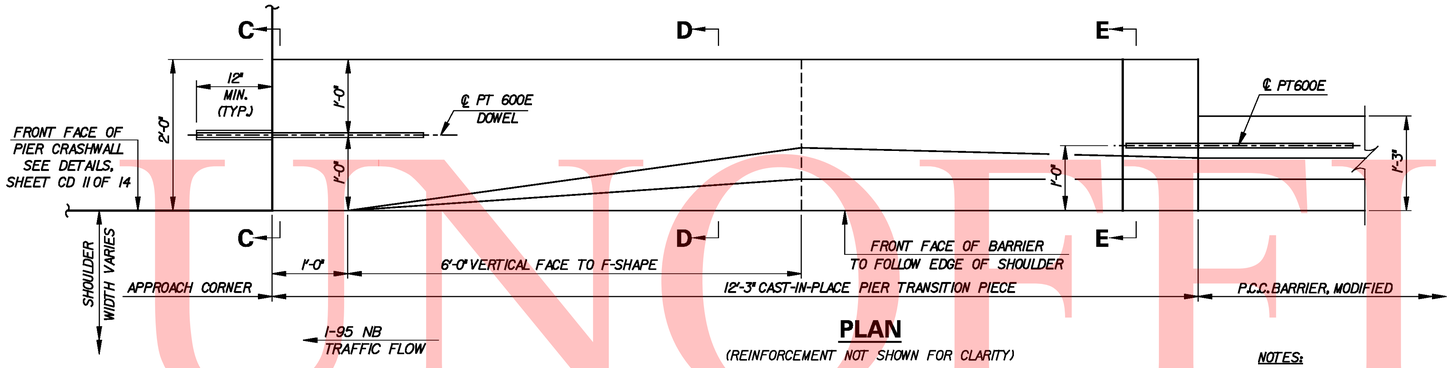

PLAN

(REINFORCEMENT NOT SHOWN FOR CLARITY)

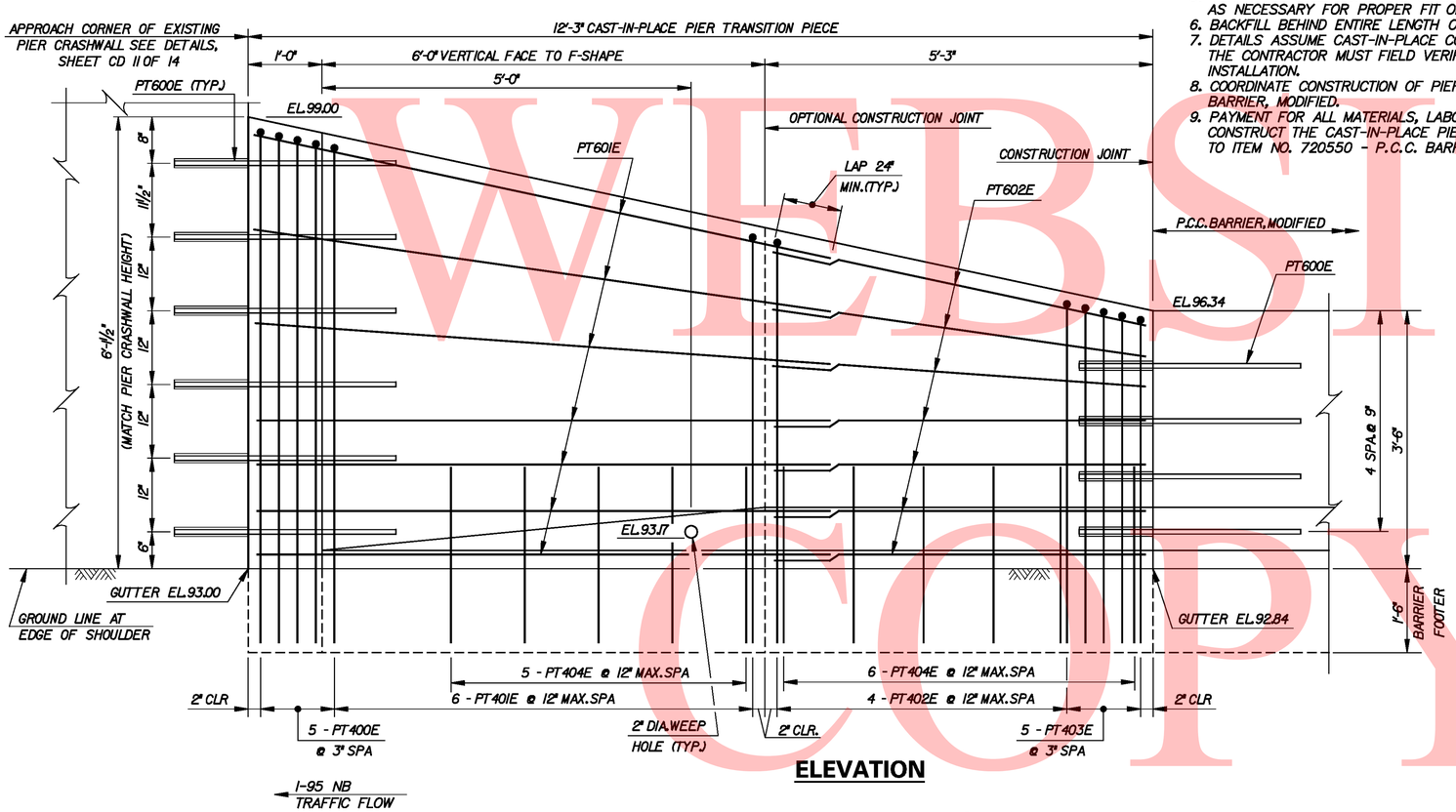

ELEVATION

CAST-IN-PLACE PIER TRANSITION PIECE

1 REQUIRED - PAYMENT INCLUDED IN ITEM 720550

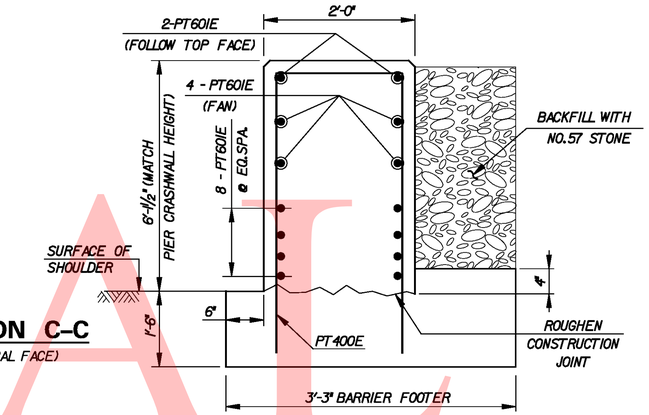

SECTION C–C

(VERTICAL FACE)

NOTES:

1. LOCATION: CONSTRUCTION OF NEW C.I.P. TRANSITION FROM NEW WEST 18th STREET PIER 3 CRASHWALL TO SINGLE FACED ROADWAY BARRIER.
2. FOR GENERAL NOTES, SEE SHEET CD 14 OF 14.
3. FOR C.I.P. PIER TRANSITION PIECE REINFORCEMENT BAR SCHEDULE, SEE SHEET CD 14 OF 14.
4. SEE P.C.C. BARRIER, MODIFIED DETAILS (SHEET CD 2 OF 7) FOR SINGLE FACED BARRIER DETAILS.
5. VERIFY ALL DIMENSIONS AND GEOMETRY OF PIER CRASHWALL IN THE FIELD AS NECESSARY FOR PROPER FIT OF THE PROPOSED CONSTRUCTION.
6. BACKFILL BEHIND ENTIRE LENGTH OF PIER TRANSITION PIECE WITH NO. 57 STONE.
7. DETAILS ASSUME CAST-IN-PLACE CONSTRUCTION. IF PRECAST UNITS ARE USED, THE CONTRACTOR MUST FIELD VERIFY NECESSARY DIMENSIONS TO ENSURE PROPER INSTALLATION.
8. COORDINATE CONSTRUCTION OF PIER TRANSITION PIECE WITH CONSTRUCTION OF P.C.C. BARRIER, MODIFIED.
9. PAYMENT FOR ALL MATERIALS, LABOR, EQUIPMENT, AND INCIDENTALS NECESSARY TO CONSTRUCT THE CAST-IN-PLACE PIER TRANSITION PIECE AS SHOWN IS INCIDENTAL TO ITEM NO. 720550 - P.C.C. BARRIER, MODIFIED.

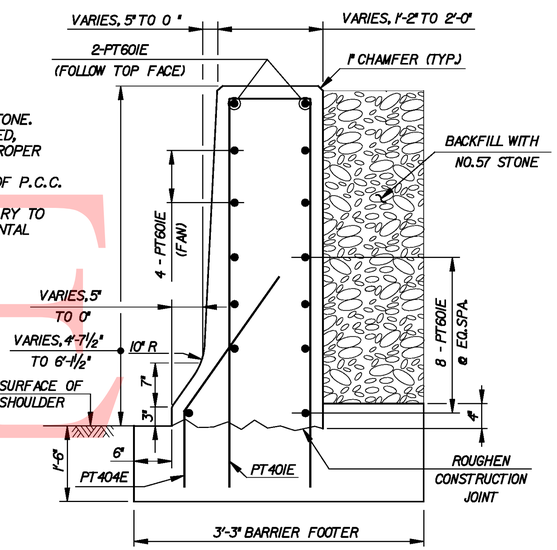

SECTION D–D

(F-SHAPE)

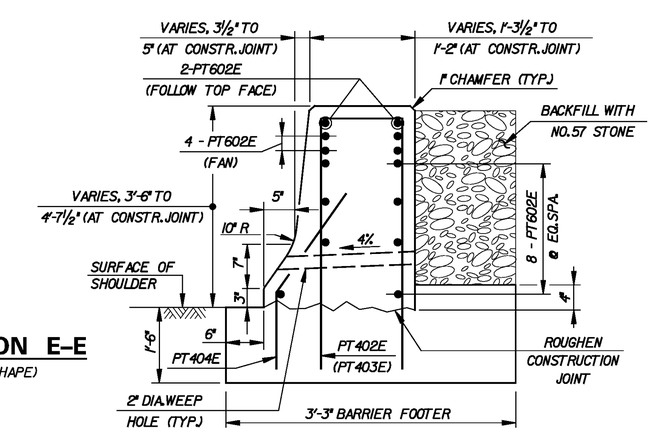

SECTION E–E

(F-SHAPE)

UNOFFICIAL WEBSITE COPY

Y:\Projects\Del4I-202\Del195 Cont 5\DETAILS\195dH07c5.dgn

11/11/2010

DELAWARE DEPARTMENT OF TRANSPORTATION	ADDENDUMS / REVISIONS	NOT TO SCALE	I-95 & US 202 INTERCHANGE	CONTRACT T200510602	BRIDGE NO. BR 1-760	CONSTRUCTION DETAILS CD 12 OF 14	SHEET NO. 166
				COUNTY NEW CASTLE	DESIGNED BY: BRM		TOTAL SHTS. 482
					CHECKED BY: JAC		

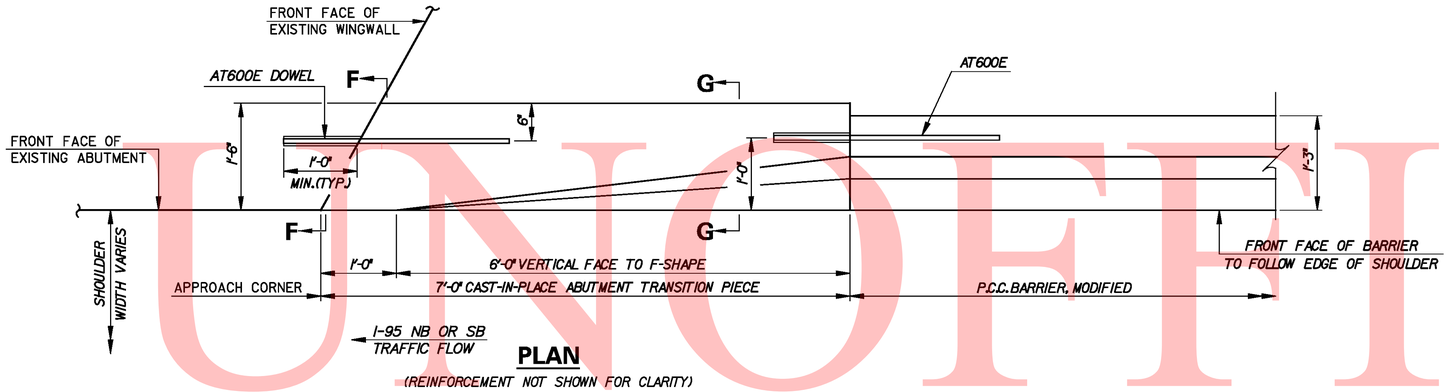

PLAN

(REINFORCEMENT NOT SHOWN FOR CLARITY)

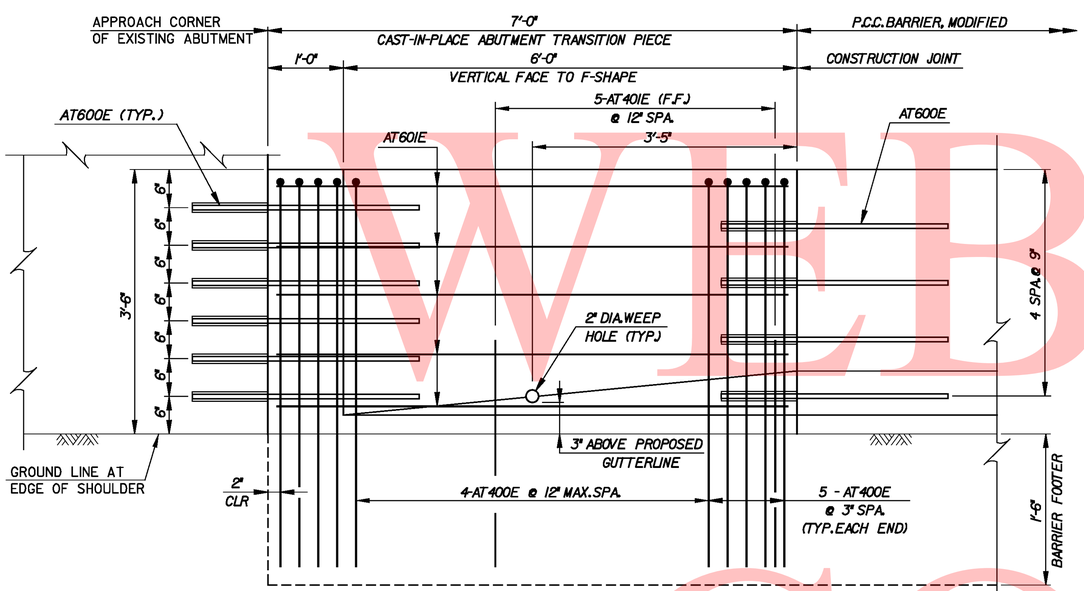

ELEVATION

CAST-IN-PLACE ABUTMENT TRANSITION PIECE

2 REQUIRED - PAYMENT INCLUDED IN ITEM 720550

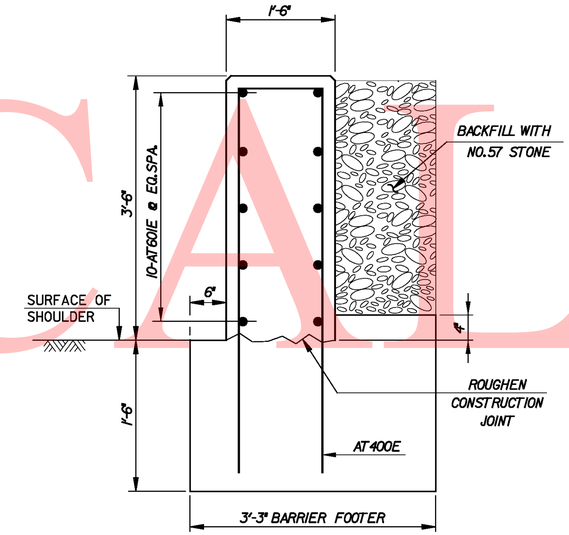

SECTION F–F

(VERTICAL FACE)

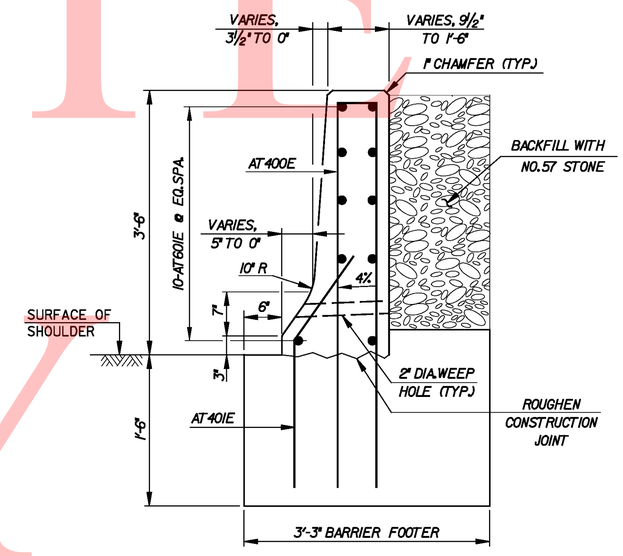

SECTION G–G

(F-SHAPE)

NOTES:

1. LOCATION: CONSTRUCTION OF NEW C.I.P. TRANSITIONS AT APPROACH CORNERS OF ABUTMENTS AT CSX RAILROAD BRIDGE OVER I-95.
2. FOR GENERAL NOTES, SEE SHEET CD 14 OF 14.
3. FOR C.I.P. ABUTMENT TRANSITION PIECE REINFORCEMENT BAR SCHEDULE, SEE SHEET CD 14 OF 14.
4. SEE P.C.C. BARRIER, MODIFIED DETAILS (SHEET CD 2 OF 7) FOR SINGLE FACED BARRIER DETAILS.
5. VERIFY ALL DIMENSIONS AND GEOMETRY OF EXISTING STRUCTURE IN THE FIELD AS NECESSARY FOR PROPER FIT OF THE PROPOSED CONSTRUCTION.
6. BACKFILL BEHIND ENTIRE LENGTH OF ABUTMENT TRANSITION PIECE WITH NO. 57 STONE.
7. DETAILS ASSUME CAST-IN-PLACE CONSTRUCTION. IF PRECAST UNITS ARE USED, THE CONTRACTOR MUST FIELD VERIFY NECESSARY DIMENSIONS TO ENSURE PROPER INSTALLATION.
8. COORDINATE CONSTRUCTION OF ABUTMENT TRANSITION PIECES WITH CONSTRUCTION OF P.C.C. BARRIER, MODIFIED.
9. PAYMENT FOR ALL MATERIALS, LABOR, EQUIPMENT, AND INCIDENTALS NECESSARY TO CONSTRUCT THE CAST-IN-PLACE ABUTMENT TRANSITION PIECES AS SHOWN IS INCIDENTAL TO ITEM NO. 720550 - P.C.C. BARRIER, MODIFIED.

UNOFFICIAL WEBSITE COPY

CAST-IN-PLACE PIER CRASHWALL REINFORCEMENT BAR SCHEDULE

SPECIFICATIONS					BAR DIMENSIONS					
QTY.	SIZE	LENGTH	MARK	TYPE	A	B	C	D	E	F
15	5	56-08 -	W500E	STR						
16	5	20-09 -	W501E	STR						
60	5	12-05 -	W502E	12	4-06 -	3-05 -	4-06 -			
18	5	6-11 -	W503E	12	1-09 -	3-05 -	1-09 -			
16	5	3-07 -	W504E	STR						
4	6	3-00 -	W600E	STR	DOWEL INTO CRASHWALL WITH ADHESIVE ANCHOR					
28	5	7-11 -	F500E	STR	DOWEL INTO EXISTING FOOTING WITH ADHESIVE ANCHOR					
36	8	8-06 -	F800E	STR						

C.I.P. PIER CRASHWALL QUANTITIES

ITEM NO.	ITEM TITLE	UNIT	QUANTITY
207000	EXCAVATION AND BACKFILL FOR STRUCTURES	C.Y.	43
302012	DELAWARE NO. 57 STONE	TON	42
602001	P.C.C. MASONRY, CLASS A	C.Y.	53
604000	BAR REINFORCEMENT, EPOXY COATED	L.B.	3266

CAST-IN-PLACE PIER TRANSITION PIECE REINFORCEMENT BAR SCHEDULE

(FOR INFORMATION ONLY - INCLUDED IN ITEM 720550)

SPECIFICATIONS					BAR DIMENSIONS						
QTY.	SIZE	LENGTH	MARK	TYPE	A	B	C	D	E	F	F
5	4	⊛16-07 7	PT400E	12		1-07 4					
					VARY A&C: 6'-10 7/8" TO 6'-1 3/8", VARY EA. BY 5/8"						
6	4	⊛14-07 4	PT401E	12	VARY A&C: 5'-8 1/2" TO 6'-9", VARY EA. BY 2 1/2"						
					VARY B: 10 1/2" TO 1'-6", VARY EA. BY 1 1/2"						
4	4	⊛12-05 6	PT402E	12		0-10 4					
					VARY A&C: 5'-0" TO 5'-7 1/2", VARY EA. BY 2 1/2"						
5	4	⊛11-03 6	PT403E	12		0-11 2					
					VARY A&C: 4'-7" TO 4'-9 1/4", VARY EA. BY 3/4"						
11	4	3-08 -	PT404E	6	1-05 -	1-09 -	1-00 -				
					FIELD CUT AS NECESSARY TO CLEAR SLOTTED PLATE						
10	6	3-00 -	PT600E	STR	DOWEL INTO PIER CRASHWALL & TRANSITION PIECE WITH ADHESIVE ANCHOR						
14	6	9-02 -	PT601E	STR							
14	6	5-00 -	PT602E	STR							

CAST-IN-PLACE ABUTMENT TRANSITION PIECE REINFORCEMENT BAR SCHEDULE

(FOR INFORMATION ONLY - INCLUDED IN ITEM 720550)

SPECIFICATIONS					BAR DIMENSIONS						
QTY.	SIZE	LENGTH	MARK	TYPE	A	B	C	D	E	F	G
14	4	⊛10-10 -	AT400E	12	4-06 -		4-06 -				
					VARY B: 5 7/8" TO 1'-2", VARY EA. BY 5/8"						
5	4	3-08 -	AT401E	6	1-05 -	1-09 -	1-00 -				
10	6	3-00 -	AT600E	STR	DOWEL INTO EXISTING ABUTMENT & TRANSITION PIECE WITH ADHESIVE ANCHOR						
10	6	6-08 -	AT601E	STR							

GENERAL NOTES:

(FOR CONSTRUCTION OF C.I.P. PIER CRASHWALL, C.I.P. PIER TRANSITION PIECE, AND C.I.P. ABUTMENT TRANSITION PIECES)

1. FOR C.I.P. PIER CRASHWALL DETAILS, SEE SHEET CD 11 OF 14.
2. FOR C.I.P. PIER TRANSITION PIECE DETAILS, SEE SHEET CD 12 OF 14.
3. FOR C.I.P. ABUTMENT TRANSITION PIECE DETAILS, SEE SHEET CD 13 OF 14.
4. VERTICAL DATUM AS PER ROADWAY PLANS.
5. ALL DIMENSIONS ARE HORIZONTAL EXCEPT AS NOTED.
6. DESIGN IS IN ACCORDANCE WITH 2007 AASHTO LRFD BRIDGE DESIGN SPECIFICATIONS, 4th EDITION, AND AS SUPPLEMENTED BY THE STATE OF DELAWARE DEPARTMENT OF TRANSPORTATION BRIDGE DESIGN MANUAL, 2005. ALL COMPONENTS DESIGNED FOR AASHTO LRFD TEST LEVEL 5.
7. PROVIDE MATERIALS AND PERFORM WORK IN ACCORDANCE WITH DELAWARE DEPARTMENT OF TRANSPORTATION STANDARD SPECIFICATIONS FOR ROAD AND BRIDGE CONSTRUCTION, AUGUST 2001 (INCLUDING SUPPLEMENTAL SPECIFICATIONS), ANSI/AASHTO/AWS D1.5-2002 BRIDGE WELDING CODE, AND CONTRACT SPECIAL PROVISIONS.
8. USE CLASS A PORTLAND CEMENT CONCRETE PER SECTION 812 OF THE SPECIFICATIONS. ALL EXPOSED EDGES SHALL BE CHAMFERED 3/4" UNLESS OTHERWISE NOTED. ALL EXPOSED CONSTRUCTION JOINT EDGES SHALL HAVE A 3/4" V-NOTCH.
9. USE GRADE 60 BAR REINFORCEMENT PER SECTION 824 OF THE SPECIFICATIONS. PROVIDE 2" CONCRETE COVER ON ALL REINFORCING STEEL UNLESS OTHERWISE NOTED. EPOXY COATED REINFORCING STEEL SHALL CONFORM TO AASHTO M284 (ASTM D3963), AND IS DENOTED WITH A SUFFIX "E" IN THE BAR MARKS.
10. USE ADHESIVE ANCHORS TO SECURE DOWELS INTO EXISTING CONCRETE AS INDICATED. DRILL HOLES TO THE MINIMUM DEPTH SHOWN ON THE PLANS OR AS PER THE MANUFACTURER'S RECOMMENDATION TO DEVELOP ULTIMATE TENSILE CAPACITY OF THE DOWEL BAR. DRILL HOLES TO THE DIAMETER AS PER THE MANUFACTURER'S RECOMMENDATION FOR THE SPECIFIED DOWEL BAR DIAMETER. ADHESIVE ANCHORS ARE INCIDENTAL TO BAR REINFORCEMENT.
11. CLOSED CELL NEOPRENE SPONGE SHALL CONFORM TO ASTM D1056 TYPE 2, CLASS C, GRADE 2. CAULKING COMPOUND SHALL CONFORM TO ASTM C834 OR C920. CLOSED CELL NEOPRENE SPONGE AND CAULKING COMPOUND ARE INCIDENTAL TO P.C.C. MASONRY.
12. USE EPOXY BONDING COMPOUND BETWEEN EXISTING CONCRETE AND NEW CONCRETE. THE EPOXY BONDING COMPOUND IS TO BE TYPE 2, GRADE 2 PER ASTM C881.
13. THE CONTRACTOR IS RESPONSIBLE FOR THE STABILITY OF ALL EXCAVATED SLOPES AND THE DESIGN OF ANY TEMPORARY SHORING AND BRACING THAT MAY BE USED. ALL SURFACE RUNOFF SHALL BE DIRECTED AWAY FROM EXCAVATION. PERFORM ALL EXCAVATIONS IN ACCORDANCE WITH OSHA REQUIREMENTS.
14. THE PRESENCE, SIZE, AND LOCATION OF ALL UTILITIES SHALL BE VERIFIED IN THE FIELD.

LEGEND

C.I.P.	- CAST-IN-PLACE
℄	- CENTERLINE
CLR.	- CLEAR
CONSTR.	- CONSTRUCTION
CY.	- CUBIC YARD
EA.	- EACH
EL.	- ELEVATION
EQ.	- EQUAL
F.F.	- FRONT FACE
LB.	- POUND
MAX.	- MAXIMUM
MIN.	- MINIMUM
P.C.C.	- PORTLAND CEMENT CONCRETE
R.F.	- REAR FACE
SPA.	- SPACE
STR	- STRAIGHT
TYP.	- TYPICAL

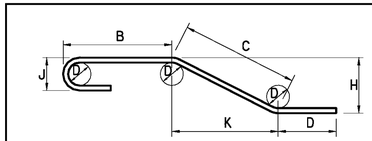

NOTES:

1. MARK NUMBER WITH SUFFIX 'E' DENOTES EPOXY COVERED STEEL.
2. MARK 'LOCATION PREFIXES' ARE AS FOLLOWS:
   F = FOOTING
   W = CRASHWALL
   PT = PIER TRANSITION PIECE
   AT = ABUTMENT TRANSITION PIECE
3. ALL DIMENSIONS ARE OUT-TO-OUT OF BAR EXCEPT 'A' AND 'G' ON STANDARD 180° AND 135° HOOKS.
4. 'J' DIMENSIONS ON 180° HOOKS TO BE SHOWN ONLY WHERE NECESSARY TO RESTRICT HOOK SIZE, OTHERWISE STANDARD HOOKS ARE TO BE USED.
5. FIGURES IN CIRCLES SHOW TYPES.
6. FOR RECOMMENDED DIAMETER 'D' OF BENDS, HOOKS, ETC., SEE 'CRSI' OR 'ACI' TABLES.
7. BARS ARE TO 1/8" ACCURACY.

⊛ DENOTES AVERAGE LENGTH OF BARS.

BAR BENDS

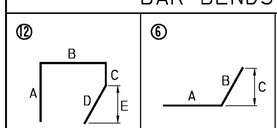

UNOFFICIAL WEBSITE COPY

Y:\Projects\Del41-202\Del195 Cont 5\DETAILS\195d106c5.dgn

11/1/2010

DELAWARE DEPARTMENT OF TRANSPORTATION	ADDENDUMS / REVISIONS	NOT TO SCALE	I-95 & US 202 INTERCHANGE	CONTRACT T200510602	BRIDGE NO. BR 1-760 BR 1-761	CONSTRUCTION DETAILS CD 14 OF 14	SHEET NO. 168
				COUNTY NEW CASTLE	DESIGNED BY: BRM		TOTAL SHTS. 482
					CHECKED BY: JAC		

BRIDGE I-762 NOTES

1. LOCATION:
   BRIDGE I-762 (I-95 RAMP 5 OVER U.S. 202), NEW CASTLE COUNTY, DELAWARE.

2. DESIGN CRITERIA:
   2007 AASHTO LRFD BRIDGE DESIGN SPECIFICATIONS, 4TH EDITION, WITH 2008 INTERIM, CUSTOMARY U.S. UNITS.

3. LOADING:
   LIVE LOAD: AASHTO HL-93 AND DELAWARE LEGAL LOADS
   FUTURE WEARING SURFACE: 25 PSF
   S.I.P. DECK FORMS: 15 PSF
   SEISMIC PERFORMANCE ZONE: ZONE 2

4. PORTLAND CEMENT CONCRETE:
   STRUCTURAL ELEMENTS OF PORTLAND CEMENT CONCRETE SHALL BE AS NOTED:
   (F'c = 28 DAY COMPRESSIVE STRENGTH)
   CLASS A - PARAPETS, ABUTMENTS, WINGWALLS, AND FOOTINGS (F'c = 4.5 KSI)
   CLASS D = CONCRETE DECK, AND APPROACH SLABS (F'c = 4.5 KSI)
   MIX REQUIREMENTS SHALL CONFORM TO SECTION 812 OF THE SPECIFICATIONS. ALL EXPOSED EDGES SHALL BE CHAMFERED ¾" UNLESS OTHERWISE NOTED. IT SHALL BE THE CONTRACTOR'S RESPONSIBILITY TO UTILIZE ANY APPROVED CONCRETE ADDITIVES OR HEATING TECHNIQUES TO MAINTAIN THE PROPER TEMPERATURE FOR ANY CONCRETE POURED DURING COLD WEATHER. PAYMENT SHALL BE INCIDENTAL TO THE RESPECTIVE CONCRETE BID ITEMS.

5. STRUCTURAL STEEL:
   STEEL PLATE GIRDER TOP AND BOTTOM FLANGES SHALL BE ASTM A709 GRADE 70W. STEEL PLATE GIRDER WEB, STIFFENERS, SOLE PLATES, AND CROSS-FRAMES SHALL BE ASTM A709 GRADE 50W. THE ADDITIONAL REQUIREMENTS FOR CHARPY V-NOTCH TESTING OF AASHTO M270 FOR PRIMARY LOAD CARRYING MEMBERS SHALL BE INCLUDED.

6. BEARINGS:
   ALL ELASTOMERIC BEARING PADS SHALL BE REINFORCED ELASTOMERIC AND SHALL CONFORM TO SUBSECTION 623.06 OF THE STANDARD SPECIFICATIONS.

7. BAR REINFORCEMENT:
   ALL REINFORCING STEEL SHALL CONFORM TO AASHTO M31 (ASTM A615), GRADE 60. ALL REINFORCING STEEL SHALL HAVE A CLEAR COVER OF 2" UNLESS OTHERWISE SPECIFIED ON THE PLANS. ALL REINFORCING STEEL SHALL BE PROTECTED WITH FUSION BONDED EPOXY. EPOXY COATED REINFORCING STEEL SHALL CONFORM TO AASHTO M284 (ASTM D3963).

8. CONSTRUCTION JOINTS:
   KEYED CONSTRUCTION JOINTS SHALL BE 2" x 4" OR AS NOTED. ALL EXPOSED CONSTRUCTION JOINT EDGES SHALL HAVE A ¾" V-NOTCH.

9. CONCRETE SEALER:
   SILICONE ACRYLIC CONCRETE SEALER SHALL BE APPLIED TO THE EXPOSED FACE OF BACKWALL, WINGWALLS, ABUTMENT SEATS, AND BARRIERS. PAYMENT UNDER ITEM #602646 - SILICONE ACRYLIC CONCRETE SEALER.

10. STABILIZING STRUCTURAL EXCAVATIONS:
    THE CONTRACTOR IS RESPONSIBLE FOR THE STABILITY OF ALL EXCAVATED SLOPES AND THE DESIGN OF ANY TEMPORARY SHORING AND BRACING THAT MAY BE USED. ALL SURFACE RUNOFF SHALL BE DIVERTED AWAY FROM EXCAVATIONS. THE CONTRACTOR SHALL PERFORM ALL EXCAVATIONS IN ACCORDANCE WITH OSHA REQUIREMENTS.

    IN LIEU OF A 2:1 SLOPE, THE CONTRACTOR SHALL USE SHORING FOR ANY EXCAVATIONS EXCEEDING 5 FEET IN HEIGHT. THE COST OF SHORING SHALL BE INCIDENTAL TO ITEM #207000 - EXCAVATION AND BACKFILL FOR STRUCTRUES.

11. PERFORATED PIPE UNDERDRAINS:
    MINIMUM INSTALLATION SLOPE SHALL BE 0.02 FT/FT. CAP FREE ENDS.

12. LOAD RATINGS:
    IN ACCORDANCE WITH AASHTO MANUAL FOR EVALUATION OF BRIDGES, 2008. NOTE THAT THE DECK ACTS COMPOSITELY WITH THE GIRDERS.

13. DECK SLAB:
    DECK SLAB INCLUDES ½" INTEGRAL WEARING SURFACE.

14. S.I.P. FORM SUBMITTALS:
    IN ADDITION TO THE REQUIREMENTS OF THE STANDARD SPECIFICATIONS, CALCULATIONS AND DRAWINGS FOR THE S.I.P. FORMS MUST BE SEALED B A PROFESSIONAL ENGINEER REGISTERED IN THE STATE OF DELAWARE AND SUBMITTED FOR APPROVAL. PAYMENT SHALL BE INCIDENTAL TO ITEM #602013 - PORTLAND CEMENT CONCRETE MASONRY, SUPERSTRUCTURE, CLASS D.

15. HAZARDOUS MATERIAL:
    THE CONTRACTOR IS ADVISED THAT THE EXISTING STRUCTURE OVER US-202 DOES CONTAIN LEAD BASED PAINT. AS A RESULT, THE CONTRACTOR'S PROPOSED DEMOLITION PLAN MUST ADDRESS, AS A MINIMUM, METHODS OF CUTTING THE BEAMS AND/OR DIAPHRAGMS, IF REQUIRED, AND HOW THOSE PERSONS PERFORMING SUCH WORK WILL BE PROTECTED IN ACCORDANCE WITH APPLICABLE OSHA REGULATIONS. ADDITIONALLY, THE CONTRACTOR MUST ADDRESS WHEN AND HOW THE LEAD BASED PAINT WILL BE REMOVED FROM THE STRUCTURAL STEEL AND ALL RELATED BRIDGE COMPONENTS. IF THE WORK IS PERFORMED ON SITE, THEN PROPER PROTECTION, CONTAINMENT, AND FINAL LEAD PAINT DISPOSAL MUST BE ADDRESSED IN THE PROPOSED PLAN. IF THE BEAMS WILL BE TRANSPORTED WITH THE PAINT STILL INTACT, THEN THE PLAN SHALL DETAIL HOW THE STRUCTURAL COMPONENTS WILL BE PROTECTED DURING TRANSPORT, WHERE AND HOW THE PAINT WILL BE REMOVED, AND THE LOCATION OF FINAL PAINT DISPOSAL, AGAIN IN ACCORDANCE WITH OSHA REGULATIONS. WRITTEN DOCUMENTATION MUST BE PROVIDED TO THE ENGINEER, PRIOR TO FINAL CONTRACT. ACCEPTANCE, NOTING WHEN AND WHERE THE LEAD BASED PAINT WAS REMOVED, AND THE LOCATION OF FINAL PAINT DISPOSAL. ALL COSTS INVOLVED WITH THE ABOVE LISTED WORK SHALL BE INCIDENTAL TO ITEM #211000 - REMOVAL OF STRUCTURES AND OBSTRUCTIONS.

16. ROCK PROFILE VARIATION:
    ANTICIPATING THAT THE ACTUAL PROFILE OF THE ROCK VARIES OVER WHAT HAS BEEN MEASURED, THE ESTIMATED QUANTITIES FOR THE ITEMS LISTED BELOW HAVE BEEN INCREASED BY 25% FROM THE QUANTITIES CALCULATED:
    ITEM #206500 - ROCK EXCAVATION FOR STRUCTURES AND TRENCHES
    ITEM #609000 - SUBFOUNDATION CONCRETE

17. REMOVAL OF STRUCTURES AND OBSTRUCTIONS
    ITEMS TO BE REMOVED UNDER ITEM #211000 - REMOVAL OF STRUCTURES AND OBSTRUCTIONS ASSOCIATED WITH BRIDGE I-762 SHALL INCLUDE, BUT NOT BE LIMITED TO, THE FOLLOWING:
    -EXISTING BRIDGE SUPERSTRUCTURE INCLUDING CONCRETE DECK, APPROACH SLAB, PARAPET, STRUCTURAL STEEL BEAMS, DIAPHRAGMS, AND CROSS BRACING.
    -EXISTING BRIDGE SUBSTRUCTURE INCLUDING ABUTMENTS, PIERS, AND FOOTINGS.

18. BLAST MONITORING
    BOTH THE EXISTING STRUCTURE AND THE PROPOSED STRUCTURE SHALL BE MONITORED DURING ANY ROCK BLASTING TO ENSURE STRUCTURAL STABILITY THROUGHOUT ALL PHASES OF THE PROJECT. MONITORING SHALL BE INCIDENTAL TO ITEM #206000 - ROCK EXCAVATION AND BACKFILLING FOR STRUCTURES AND TRENCHES.

19. REBAR LAP SPLICES / MECHANICAL COUPLERS
    THE CONTRACTOR IS PERMITTED TO USE MECHANICAL COUPLERS IN LIEU OF LAP SPLICES FOR BAR REINFORCEMENT. IF USED, MECHANICAL COUPLERS SHALL BE EPOXY COATED. PAYMENT FOR MECHANICAL COUPLERS SHALL BE INCIDENTAL TO ITEM #604000 - BAR REINFORCEMENT, EPOXY COATED.

INDEX OF SHEETS

SHEET NO.	TITLE
1	PROJECT NOTES
2	BRIDGE PLAN, SECTION & ELEVATION
3	CONSTRUCTION PHASING TYPICAL SECTIONS
4	WEST ABUTMENT DETAILS
5	WEST ABUTMENT FOOTING DETAILS
6	EAST ABUTMENT DETAILS
7	EAST ABUTMENT FOOTING DETAILS
8	WINGWALL DETAILS
9	FRAMING PLAN
10	GIRDER DETAILS (1 OF 2)
11	GIRDER DETAILS (2 OF 2)
12	FINISHED DECK ELEVATIONS
13	DECK PLAN
14	APPROACH SLAB DETAILS
15	BARRIER DETAILS
16	EXPANSION JOINT DETAILS
17	REINFORCEMENT BAR SCHEDULE (1 OF 2)
18	REINFORCEMENT BAR SCHEDULE (2 OF 2)

QUANTITIES

ITEM NO.	ITEM TITLE	UNIT	QUANTITY
206500	ROCK EXCAVATION AND BACKFILLING FOR STRUCTURES AND TRENCHES	C.Y.	1700
207000	EXCAVATION AND BACKFILL FOR STRUCTURES	C.Y.	2500
207501	SHEETING AND SHORING	L.S.	-
209003	BORROW, TYPE C	C.Y.	1000
211000	REMOVAL OF STRUCTURES AND OBSTRUCTIONS	L.S.	-
601502	TEMPORARY PROTECTIVE SHEILD	L.S.	-
602003	PCC MASONRY, ABUTMENT FOOTING, CLASS A	C.Y.	520
602013	PCC MASONRY, SUPERSTRUCTURE, CLASS D	C.Y.	155
602014	PCC MASONRY, APPROACH SLAB, CLASS D	C.Y.	220
602015	PCC MASONRY, ABUTMENT ABOVE FOOTING, CLASS A	C.Y.	755
602017	PCC MASONRY, PARAPET, CLASS A	C.Y.	47
602646	SILICONE ACRYLIC CONCRETE SEALER	S.F.	9000
602579	DRILLING HOLES AND INSTALLING DOWELS	EACH	650
604000	BAR REINFORCEMENT, EPOXY COATED	LB	285,000
605002	STEEL STRUCTURES	L.S.	-
605657	STRIP SEAL EXPANSION JOINT	L.F.	115
609000	SUBFOUNDATION CONCRETE	C.Y.	1600
712020	RIPRAP, R-4	TON	490
713003	GEOTEXTILES, RIPRAP	S.Y.	745
715000	PERFORATED PIPE UNDERDRAINS, 4"	L.F.	400
720526	PORTABLE P.C.C. STRUCTURE-MOUNTED SAFETY BARRIER	L.F.	190

LRFR LOAD RATINGS

TYPE OF TRUCK	INVENTORY RATING		OPERATING RATING	
	RATING FACTOR	LOAD RATING (TONS)	RATING FACTOR	LOAD RATING (TONS)
AASHTO HL-93 (TRUCK + LANE)	1.370	N/A	1.780	N/A
AASHTO HL-93 (TANDEM + LANE)	1.680	N/A	2.170	N/A

UNOFFICAL WEBSITE COPY

UNOFFICAL WEBSITE COPY

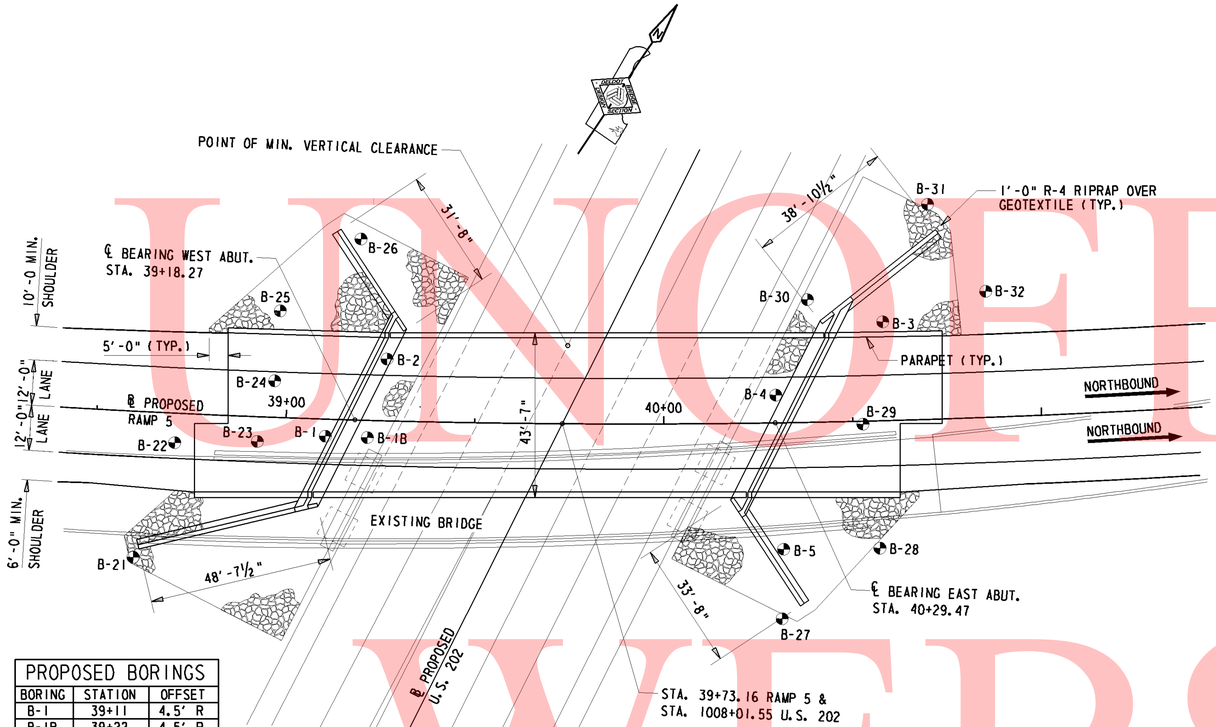

PLAN

1" = 20'-0"

PROPOSED BORINGS		
BORING	STATION	OFFSET
B-1	39+11	4.5' R
B-1B	39+22	4.5' R
B-2	39+26	16.5' L
B-3	40+59	7.0' L
B-4	40+30	33.5' R
B-5	40+31	26.0' L
B-21	38+61	38.5' R
B-22	38+71	8.0' R
B-23	38+93	6.5' R
B-24	38+97	9.5' L
B-25	38+98	28.5' L
B-26	39+19	48.0' L
B-27	40+30	52.0' R
B-28	40+56	34.0' R
B-29	40+53	1.0' R
B-30	40+39	32.0' L
B-31	40+72	57.0' L
B-32	40+86	33.0' L

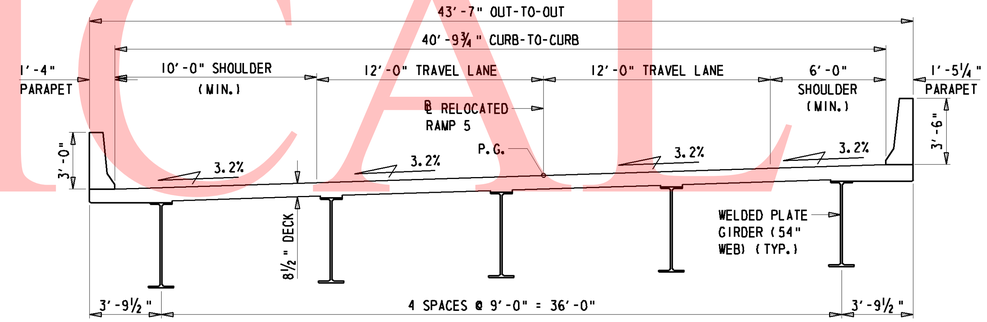

TYPICAL SECTION

¼" = 1'-0"

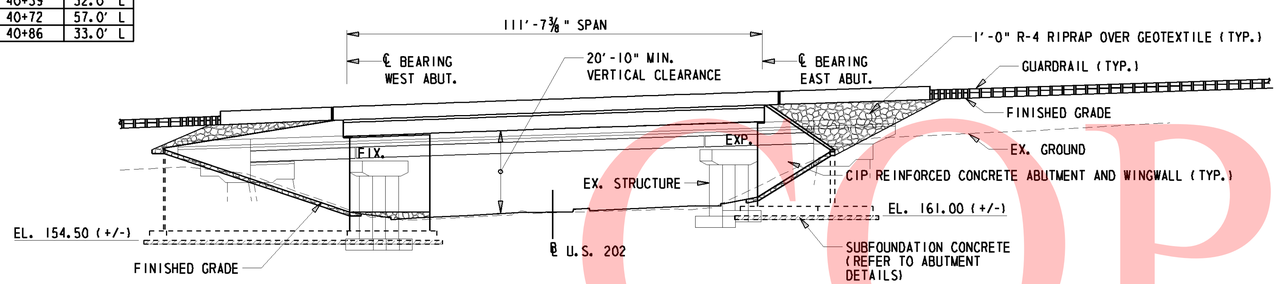

ELEVATION

1" = 20'-0"

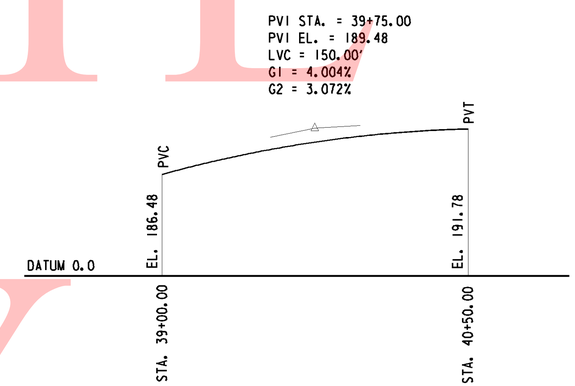

I-95 RAMP 5 PROFILE

N.T.S.

W:\MSV8\CELLS\PROJDEV\SB.CEL

DELAWARE DEPARTMENT OF TRANSPORTATION	ADDENDUMS / REVISIONS	I-95 & US 202 INTERCHANGE I-95 RAMP 5 OVER US 202	CONTRACT T200510602	BRIDGE NO. 1-762	BRIDGE PLAN S2 – 2 OF 18	SHEET NO. 170
			COUNTY NEW CASTLE	DESIGNED BY: JKM CHECKED BY: BAB		TOTAL SHTS. 482

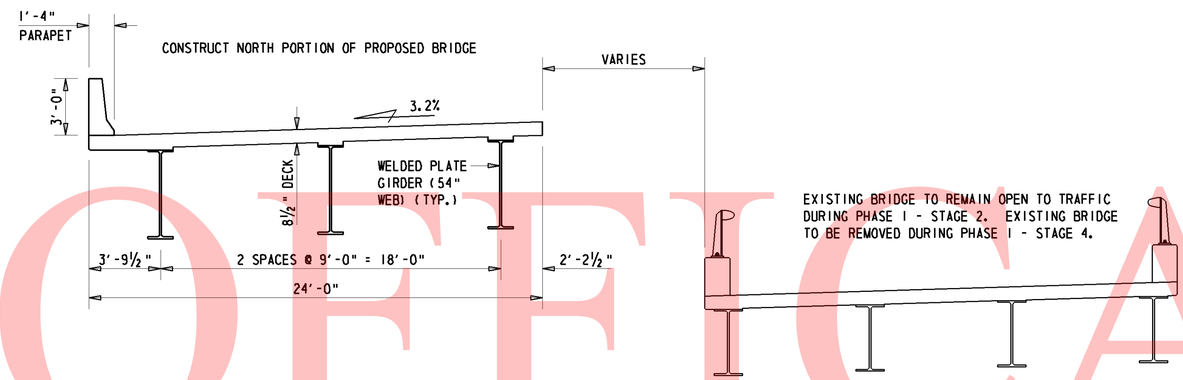

PHASE I - STAGE 2

¼" = 1'-0"

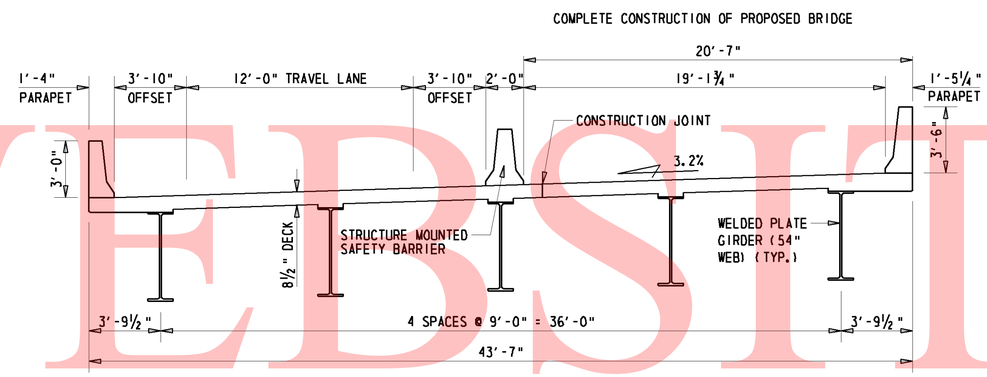

PHASE I - STAGE 4

¼" = 1'-0"

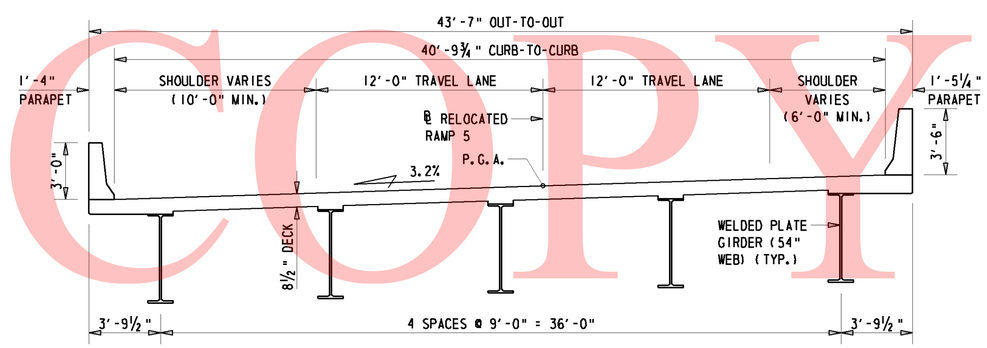

TYPICAL SECTION AT COMPLETION (PHASE 2)

¼" = 1'-0"

UNOFFICAL WEBSITE COPY

DELAWARE DEPARTMENT OF TRANSPORTATION	ADDENDUMS / REVISIONS		I-95 & US 202 INTERCHANGE I-95 RAMP 5 OVER US 202	CONTRACT T200510602	BRIDGE NO. 1-762	CONSTRUCTION PHASING TYPICAL SECTIONS S2 - 3 OF 18	SHEET NO. 171
				COUNTY NEW CASTLE	DESIGNED BY: JKM CHECKED BY: BAB		TOTAL SHTS. 482

*NOTE #1:
EXISTING STUB ABUTMENT BOTTOM ELEVATION IS 169.9.
PROPOSED FOOTING BOTTOM ELEVATION IS 154.5.
SHORING SHALL BE PROVIDED DURING PHASE 1, STAGE 2 TO ENSURE STRUCTURAL INTEGRITY OF EXISTING ABUTMENT AND FILL DURING PROPOSED CONSTRUCTION. SHORING SHALL BE REMOVED UPON DEMOLITION OF EXISTING STRUCTURE DURING PHASE 1, STAGE 4. SHORING TO BE PAID UNDER ITEM #207501 - SHEETING AND SHORING.

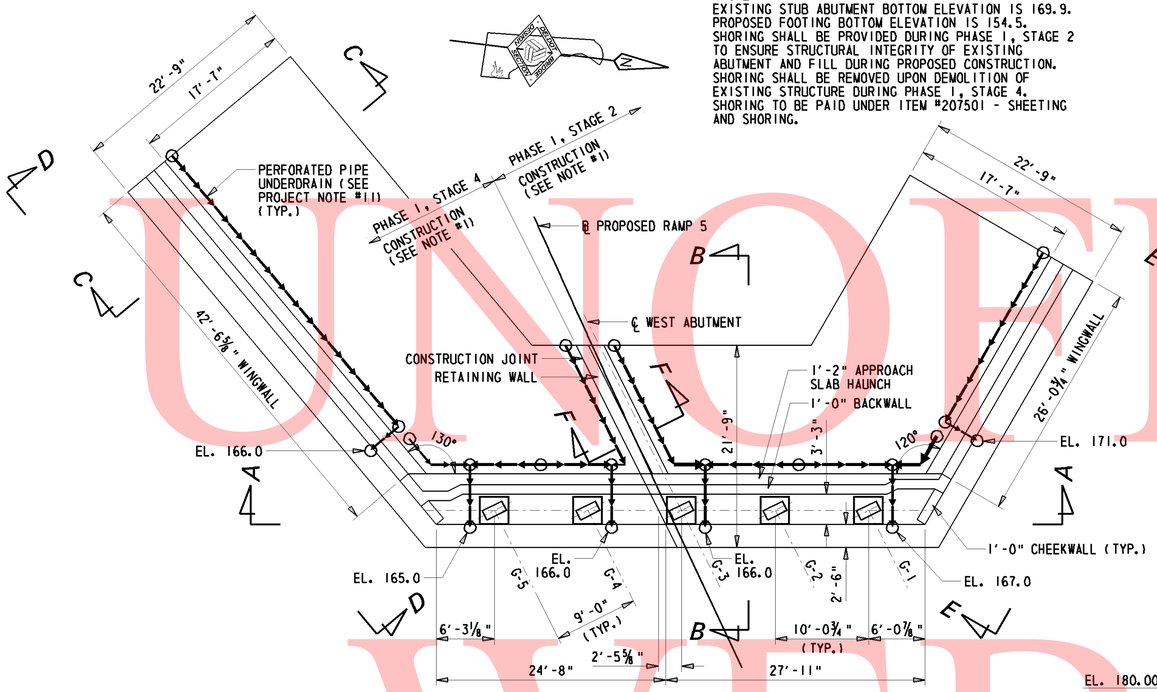

WEST ABUTMENT PLAN
⅛" = 1'-0"

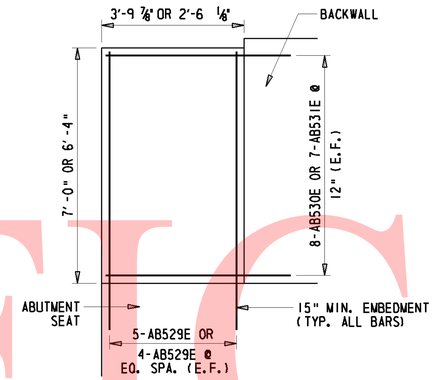

CHEEK WALL - ELEVATION
½" = 1'-0"

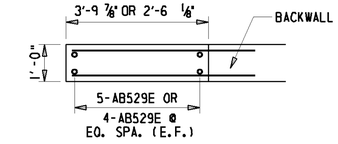

CHEEK WALL - PLAN
½" = 1'-0"

ABBREVIATIONS
E.F. - EACH FACE

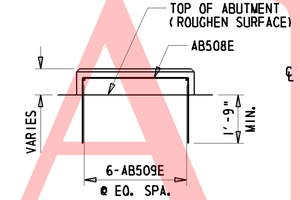

MASONRY PAD - ELEVATION
½" = 1'-0"

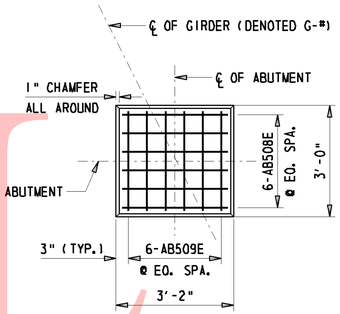

MASONRY PAD - PLAN
½" = 1'-0"

*NOTE #3:
ROADWAY SURFACE GRADE AT PHASING CONSTRUCTION JOINT IS APPROXIMATELY 2'-6" ABOVE TOP OF RETAINING WALL. HOTMIX SHALL BE SLOPED FROM THE TOP OF RETAINING WALL TO MATCH ROADWAY SURFACE GRADE FOR TRAFFIC DURING PHASE 1, STAGE 4. THIS 2'-6" OF HOTMIX SHALL BE REMOVED WHEN PHASE 1, STAGE 4 PORTION OF APPROACH SLAB IS POURED. PAYMENT UNDER ITEM #202000 - EXCAVATION AND EMBANKMENT.

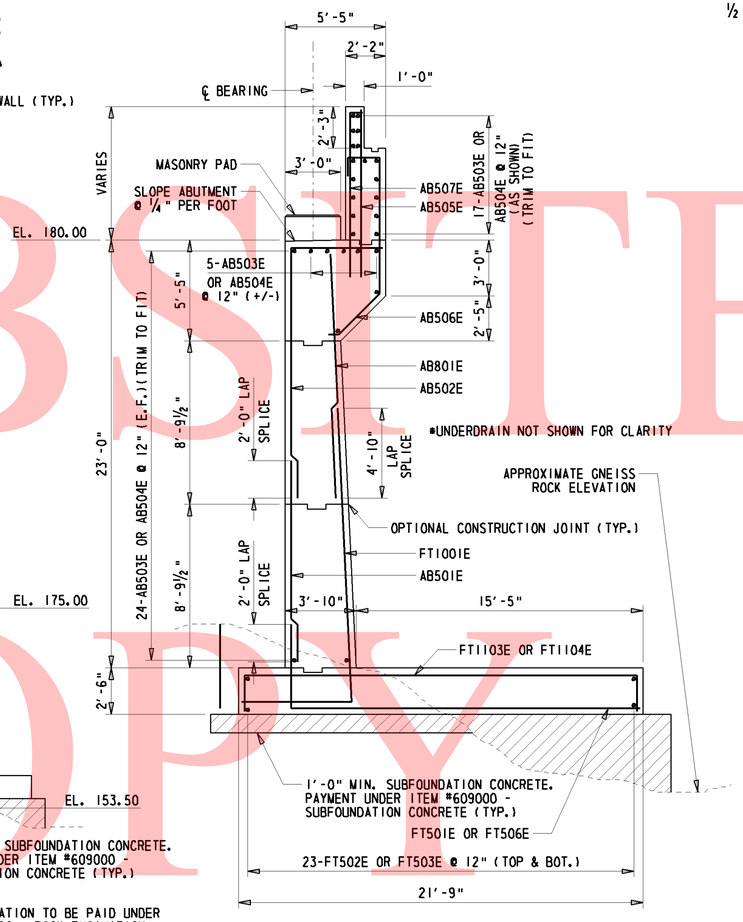

WEST ABUTMENT (SECTION B-B)
¼" = 1'-0"

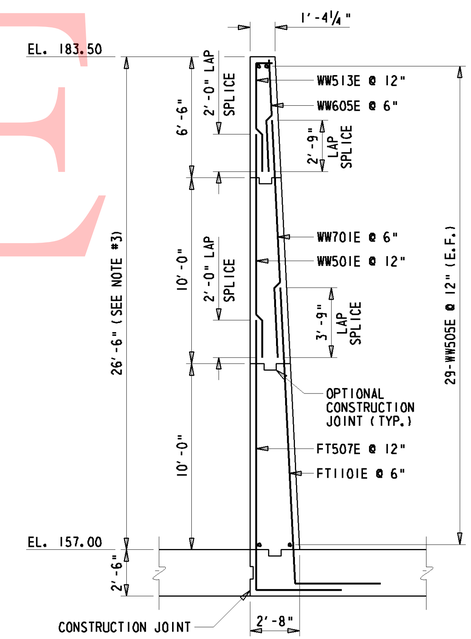

RETAINING WALL (SECTION F-F)
¼" = 1'-0"

MASONRY PAD ELEVATIONS

PAD	ELEVATION
G-1	180.74
G-2	180.87
G-3	181.00
G-4	181.12
G-5	181.24

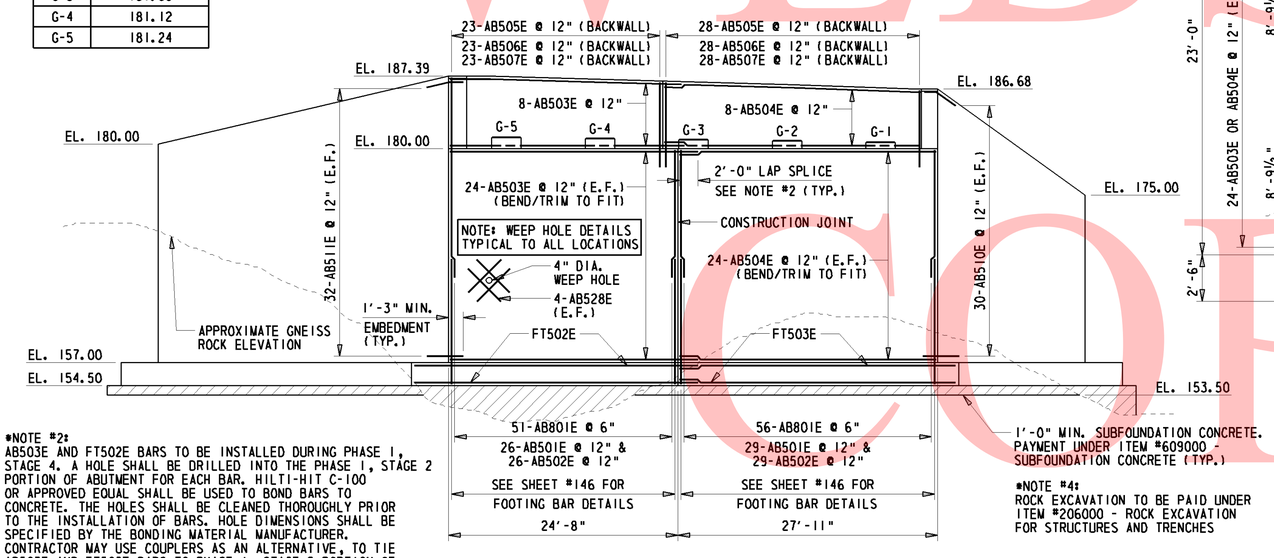

*NOTE #2:
AB503E AND FT502E BARS TO BE INSTALLED DURING PHASE 1, STAGE 4. A HOLE SHALL BE DRILLED INTO THE PHASE 1, STAGE 2 PORTION OF ABUTMENT FOR EACH BAR. HILTI-HIT C-100 OR APPROVED EQUAL SHALL BE USED TO BOND BARS TO CONCRETE. THE HOLES SHALL BE CLEANED THOROUGHLY PRIOR TO THE INSTALLATION OF BARS. HOLE DIMENSIONS SHALL BE SPECIFIED BY THE BONDING MATERIAL MANUFACTURER. CONTRACTOR MAY USE COUPLERS AS AN ALTERNATIVE, TO TIE AB503E AND FT502E BARS TO PHASE 1, STAGE 2 PORTION OF ABUTMENT (SEE PROJECT NOTE #19). PAYMENT SHALL BE MADE UNDER ITEM #602579 - DRILLING HOLES AND INSTALLING DOWELS.

*NOTE #4:
ROCK EXCAVATION TO BE PAID UNDER ITEM #206000 - ROCK EXCAVATION FOR STRUCTURES AND TRENCHES

WEST ABUTMENT ELEVATION (SECTION A-A)
⅛" = 1'-0"

UNOFFICIAL WEBSITE COPY

W:\MSV8\CELLS\PROJDEV\SB.CEL

DELAWARE DEPARTMENT OF TRANSPORTATION	ADDENDUMS / REVISIONS	I-95 & US 202 INTERCHANGE I-95 RAMP 5 OVER US 202	CONTRACT T200510602	BRIDGE NO. 1-762	WEST ABUTMENT DETAILS S2 - 4 OF 18	SHEET NO. 172
			COUNTY NEW CASTLE	DESIGNED BY: JKM		TOTAL SHTS. 482
				CHECKED BY: BAB		

ABBREVIATIONS

F.F. - FILL FACE
R.F. - ROADWAY FACE
E.F. - EACH FACE

WEST ABUTMENT WORKING POINTS					
PT.	STATION	OFFSET	ELEV.	NORTHING	EASTING
2-01	39+34.29	L 24.61	154.50	643088.10	620654.77
2-02	39+15.09	L 51.76	154.50	643101.26	620624.40
2-03	38+96.19	L 38.61	154.50	643080.38	620615.36
2-04	39+08.56	L 21.38	154.50	643071.98	620634.75
2-05	38.98.01	R 1.61	154.50	643046.87	620637.67
2-06	38+96.04	R 5.93	154.50	643042.15	620638.22
2-07	38+57.30	R 17.06	154.50	643012.75	620610.39
2-08	38+63.62	R 38.89	154.50	642997.11	620626.92
2-09	39+10.96	R 25.41	154.50	643033.28	620661.15
2-10	39+22.30	R 0.83	154.50	643060.18	620658.02

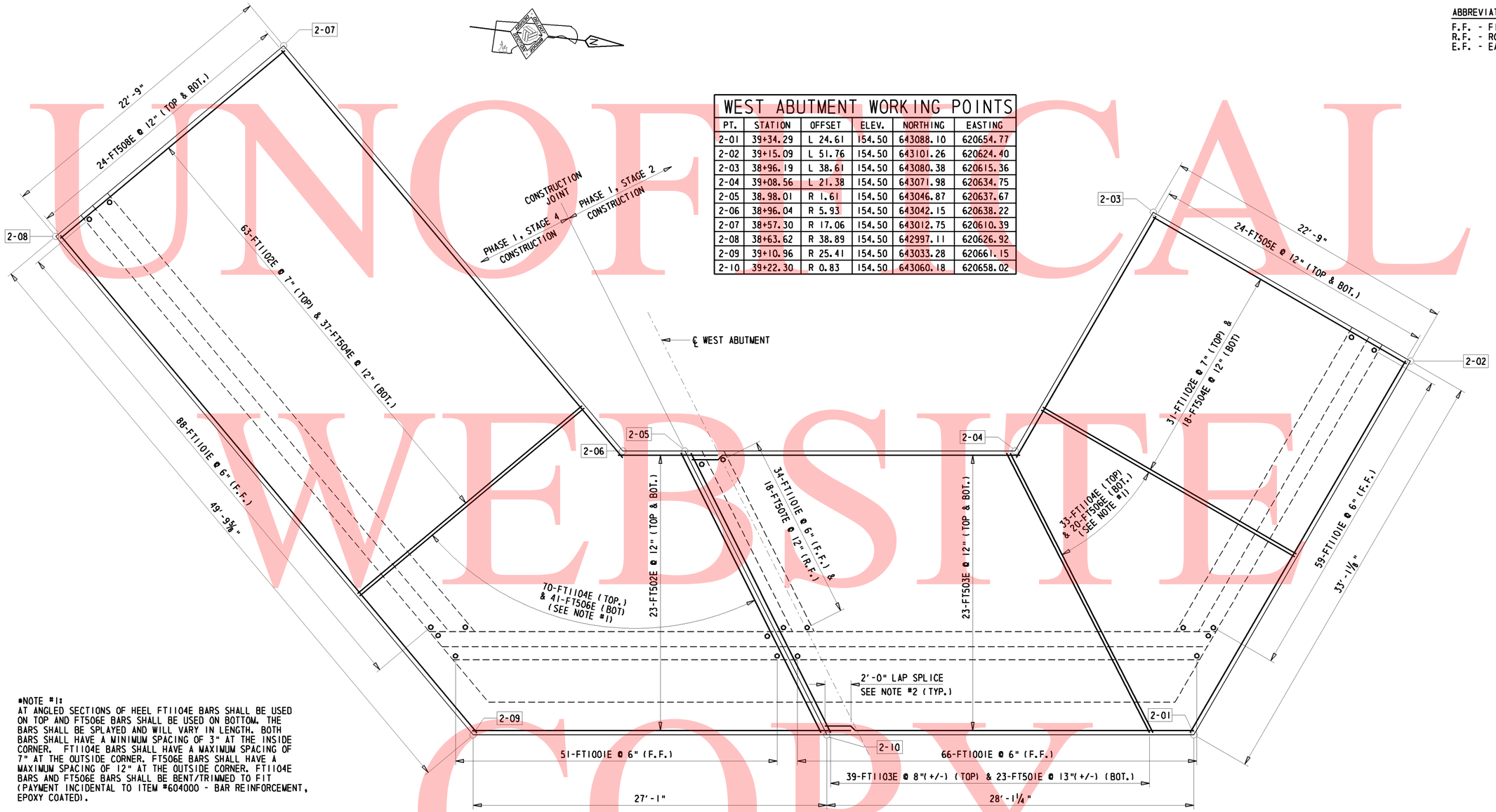

WEST ABUTMENT FOOTING PLAN

¼" = 1'-0"

*NOTE #1:
AT ANGLED SECTIONS OF HEEL FT1104E BARS SHALL BE USED ON TOP AND FT506E BARS SHALL BE USED ON BOTTOM. THE BARS SHALL BE SPLAYED AND WILL VARY IN LENGTH. BOTH BARS SHALL HAVE A MINIMUM SPACING OF 3" AT THE INSIDE CORNER. FT1104E BARS SHALL HAVE A MAXIMUM SPACING OF 7" AT THE OUTSIDE CORNER. FT506E BARS SHALL HAVE A MAXIMUM SPACING OF 12" AT THE OUTSIDE CORNER. FT1104E BARS AND FT506E BARS SHALL BE BENT/TRIMMED TO FIT (PAYMENT INCIDENTAL TO ITEM #604000 - BAR REINFORCEMENT, EPOXY COATED).

*NOTE #2:
FT502E BARS TO BE INSTALLED DURING PHASE 1, STAGE 4. A HOLE SHALL BE DRILLED INTO THE PHASE 1, STAGE 2 PORTION OF ABUTMENT FOR EACH BAR. HILTI-HIT C-100 OR APPROVED EQUAL SHALL BE USED TO BOND BARS TO CONCRETE. THE HOLES SHALL BE CLEANED THOROUGHLY PRIOR TO THE INSTALLATION OF BARS. HOLE DIMENSIONS SHALL BE SPECIFIED BY THE BONDING MATERIAL MANUFACTURER. CONTRACTOR MAY USE COUPLERS AS AN ALTERNATIVE, TO TIE FT502E BARS TO PHASE 1, STAGE 2 PORTION OF ABUTMENT (SEE PROJECT NOTE #19). PAYMENT SHALL BE MADE UNDER ITEM #602579 - DRILLING HOLES AND INSTALLING DOWELS. IF COUPLERS ARE USED, PAYMENT SHALL BE INCIDENTAL TO ITEM #604000 - BAR REINFORCEMENT, EPOXY COATED.

UNOFFICIAL WEBSITE COPY

W:\MSV8\CELLS\PROJDEV\SB.CEL

DELAWARE DEPARTMENT OF TRANSPORTATION

ADDENDUMS / REVISIONS

I-95 & US 202 INTERCHANGE
I-95 RAMP 5 OVER US 202

CONTRACT	BRIDGE NO.	1-762
T200510602	DESIGNED BY: JKM	
COUNTY		
NEW CASTLE	CHECKED BY: BAB	

WEST ABUTMENT FOOTING DETAILS
S2 - 5 OF 18

SHEET NO. 173
TOTAL SHTS. 482

*NOTE #1:
EXISTING STUB ABUTMENT BOTTOM ELEVATION IS 169.9.
PROPOSED FOOTING BOTTOM ELEVATION IS 161.0.
SHORING SHALL BE PROVIDED DURING PHASE 1, STAGE 2 TO ENSURE STRUCTURAL INTEGRITY OF EXISTING ABUTMENT AND FILL DURING PROPOSED CONSTRUCTION. SHORING SHALL BE REMOVED UPON DEMOLITION OF EXISTING STRUCTURE DURING PHASE 1, STAGE 4. SHORING TO BE PAID UNDER ITEM #207501 - SHEETING AND SHORING.

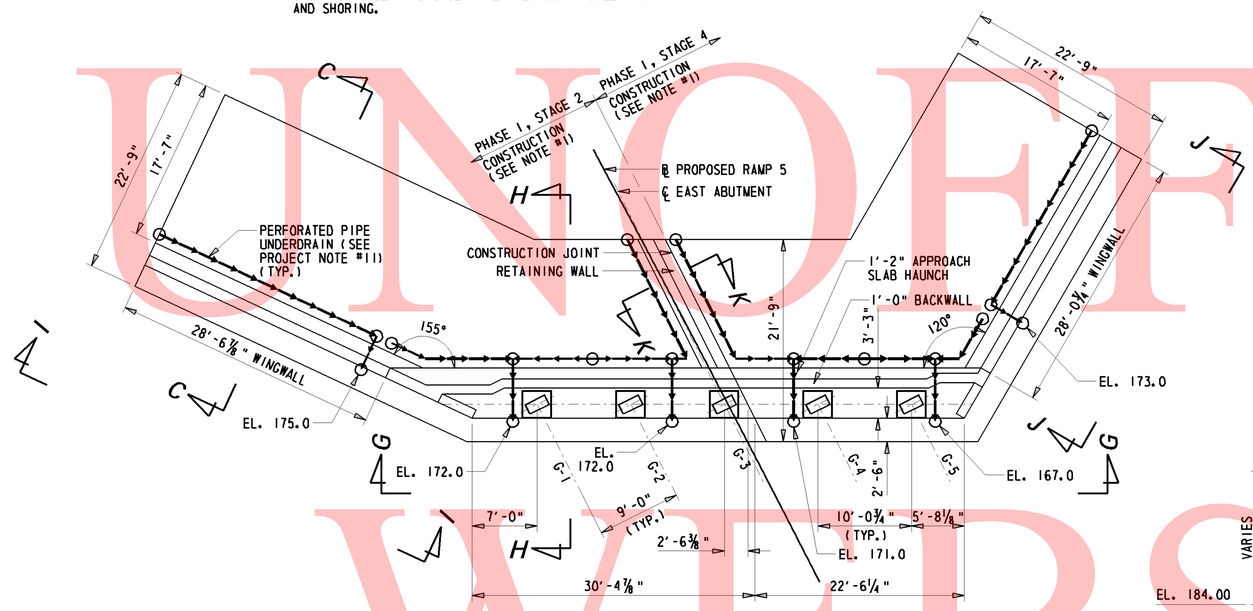

EAST ABUTMENT PLAN
⅛" = 1'-0"

MASONRY PAD ELEVATIONS	
PAD	ELEVATION
G-1	184.64
G-2	184.78
G-3	184.92
G-4	185.06
G-5	185.20

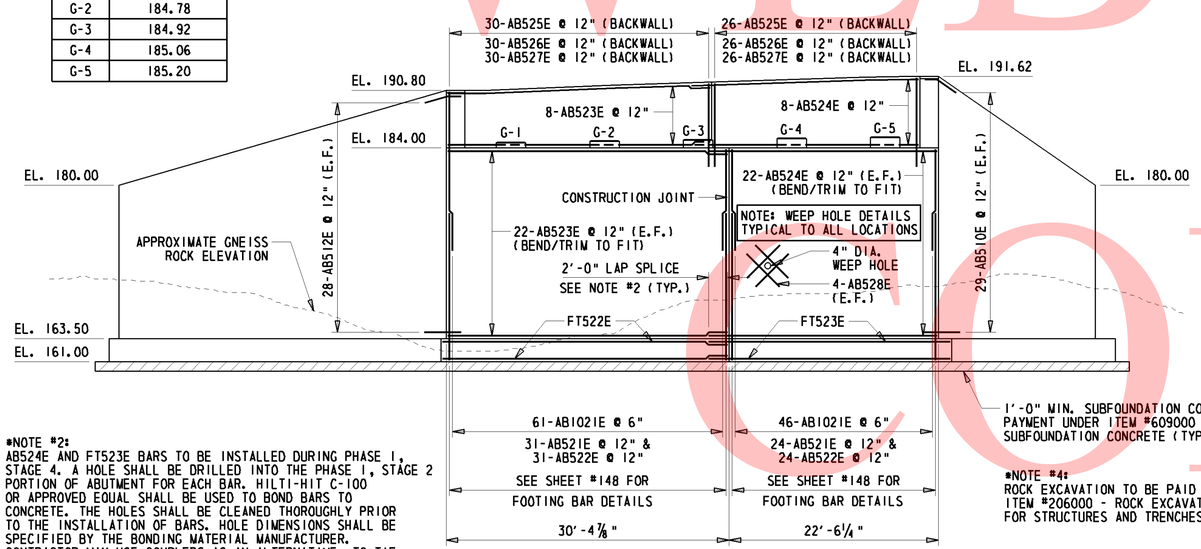

*NOTE #2:
AB524E AND FT523E BARS TO BE INSTALLED DURING PHASE 1, STAGE 4. A HOLE SHALL BE DRILLED INTO THE PHASE 1, STAGE 2 PORTION OF ABUTMENT FOR EACH BAR. HILTI-HIT C-100 OR APPROVED EQUAL SHALL BE USED TO BOND BARS TO CONCRETE. THE HOLES SHALL BE CLEANED THOROUGHLY PRIOR TO THE INSTALLATION OF BARS. HOLE DIMENSIONS SHALL BE SPECIFIED BY THE BONDING MATERIAL MANUFACTURER. CONTRACTOR MAY USE COUPLERS AS AN ALTERNATIVE, TO TIE AB524E AND FT523E BARS TO PHASE 1, STAGE 2 PORTION OF ABUTMENT (SEE PROJECT NOTE #19). PAYMENT SHALL BE MADE UNDER ITEM #602579 - DRILLING HOLES AND INSTALLING DOWELS.

EAST ABUTMENT ELEVATION (SECTION G-G)
⅛" = 1'-0"

1'-0" MIN. SUBFOUNDATION CONCRETE. PAYMENT UNDER ITEM #609000 - SUBFOUNDATION CONCRETE (TYP.)

*NOTE #4:
ROCK EXCAVATION TO BE PAID UNDER ITEM #206000 - ROCK EXCAVATION FOR STRUCTURES AND TRENCHES

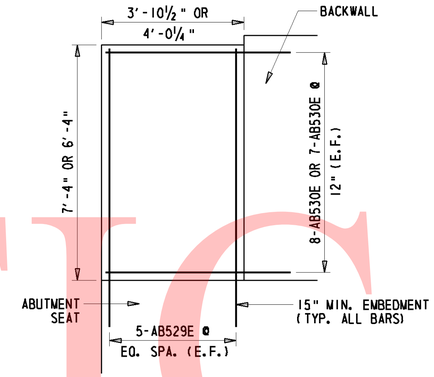

CHEEK WALL - ELEVATION
½" = 1'-0"

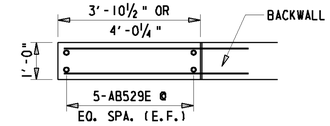

CHEEK WALL - PLAN
½" = 1'-0"

ABBREVIATIONS
E.F. - EACH FACE

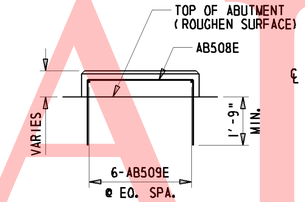

MASONRY PAD - ELEVATION
½" = 1'-0"

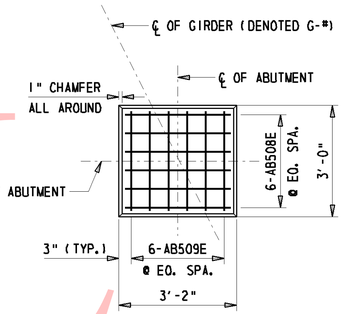

MASONRY PAD - PLAN
½" = 1'-0"

*NOTE #3:
ROADWAY SURFACE GRADE AT PHASING CONSTRUCTION JOINT IS APPROXIMATELY 2'-6" ABOVE TOP OF RETAINING WALL. HOTMIX SHALL BE SLOPED FROM THE TOP OF RETAINING WALL TO MATCH ROADWAY SURFACE GRADE FOR TRAFFIC DURING PHASE 1, STAGE 4. THIS 2'-0" OF HOTMIX SHALL BE REMOVED WHEN PHASE 1, STAGE 4 PORTION OF APPROACH SLAB IS POURED. PAYMENT UNDER ITEM #202000 - EXCAVATION AND EMBANKMENT.

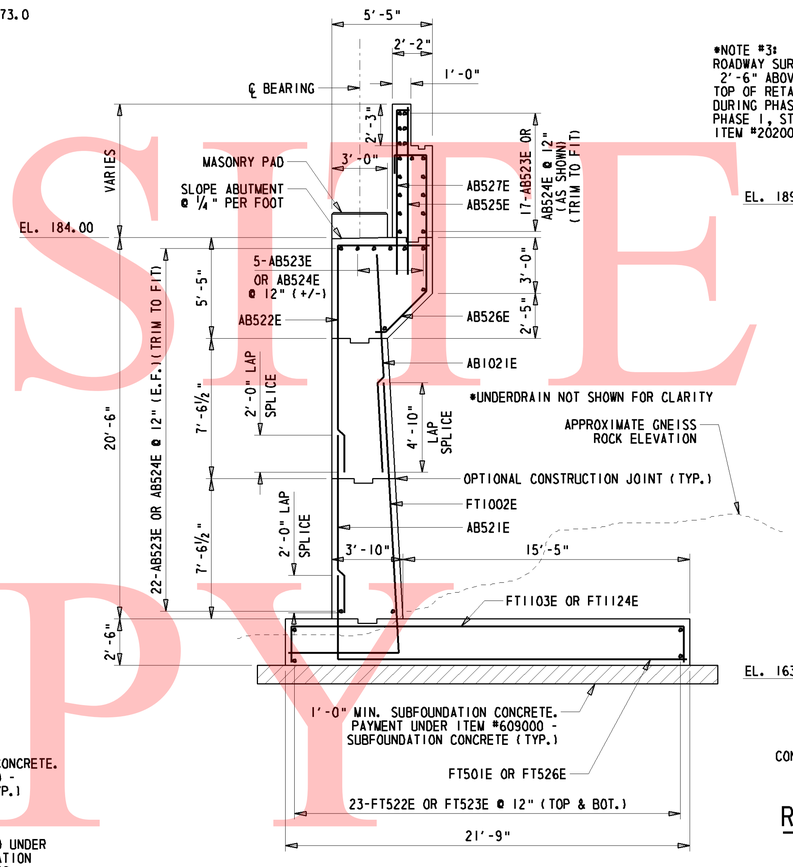

EAST ABUTMENT (SECTION H-H)
¼" = 1'-0"

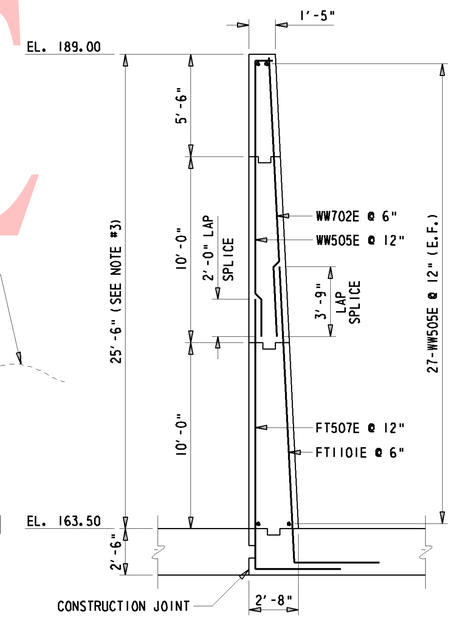

RETAINING WALL (SECTION K-K)
¼" = 1'-0"

UNOFFICIAL WEBSITE COPY

DELAWARE DEPARTMENT OF TRANSPORTATION	ADDENDUMS / REVISIONS	I-95 & US 202 INTERCHANGE I-95 RAMP 5 OVER US 202	CONTRACT T200510602	BRIDGE NO. 1-762	EAST ABUTMENT DETAILS S2 - 6 OF 18	SHEET NO. 174
			COUNTY NEW CASTLE	DESIGNED BY: JKM CHECKED BY: BAB		TOTAL SHTS. 482

W:\MSV8\CELLS\PROJDEV\SB.CEL

*NOTE #1:
AT ANGLED SECTIONS OF HEEL FT1124E BARS SHALL BE USED ON TOP AND FT526E BARS SHALL BE USED ON BOTTOM. THE BARS SHALL BE SPLAYED AND WILL VARY IN LENGTH. BOTH BARS SHALL HAVE A MINIMUM SPACING OF 3" AT THE INSIDE CORNER. FT1124E BARS SHALL HAVE A MAXIMUM SPACING OF 7" AT THE OUTSIDE CORNER. FT526E BARS SHALL HAVE A MAXIMUM SPACING OF 12" AT THE OUTSIDE CORNER. FT1124E BARS AND FT526E BARS SHALL BE BENT/TRIMMED TO FIT (PAYMENT INCIDENTAL TO ITEM #604000 - BAR REINFORCEMENT, EPOXY COATED).

*NOTE #2:
FT523E BARS TO BE INSTALLED DURING PHASE 1, STAGE 4. A HOLE SHALL BE DRILLED INTO THE PHASE 1, STAGE 2 PORTION OF ABUTMENT FOR EACH BAR. HILTI-HIT C-100 OR APPROVED EQUAL SHALL BE USED TO BOND BARS TO CONCRETE. THE HOLES SHALL BE CLEANED THOROUGHLY PRIOR TO THE INSTALLATION OF BARS. HOLE DIMENSIONS SHALL BE SPECIFIED BY THE BONDING MATERIAL MANUFACTURER. CONTRACTOR MAY USE COUPLERS AS AN ALTERNATIVE, TO TIE FT523E BARS TO PHASE 1, STAGE 2 PORTION OF ABUTMENT (SEE PROJECT NOTE #19). PAYMENT SHALL BE MADE UNDER ITEM #602579 - DRILLING HOLES AND INSTALLING DOWELS. IF COUPLERS ARE USED, PAYMENT SHALL BE INCIDENTAL TO ITEM #604000 - BAR REINFORCEMENT, EPOXY COATED.

ABBREVIATIONS

F.F. - FILL FACE
R.F. - ROADWAY FACE
E.F. - EACH FACE

EAST ABUTMENT WORKING POINTS					
PT.	STATION	OFFSET	ELEV.	NORTHING	EASTING
2-21	40+55.86	L 11.94	154.50	643143.75	620762.60
2-22	40+85.62	L 33.81	154.50	643178.58	620774.22
2-23	40+71.90	L 52.13	154.50	643185.78	620752.64
2-24	40+39.86	L 28.46	154.50	643148.38	620740.16
2-25	40+24.91	R 0.12	154.50	643116.39	620743.89
2-26	40+14.58	R 20.32	154.50	643093.83	620746.52
2-27	40+33.23	R 49.87	154.50	643079.87	620778.71
2-28	40+52.16	R 37.75	154.50	643100.74	620787.76
2-29	40+39.99	R 18.16	154.50	643109.94	620766.54
2-30	40+49.22	R 0.55	154.50	643129.70	620764.24

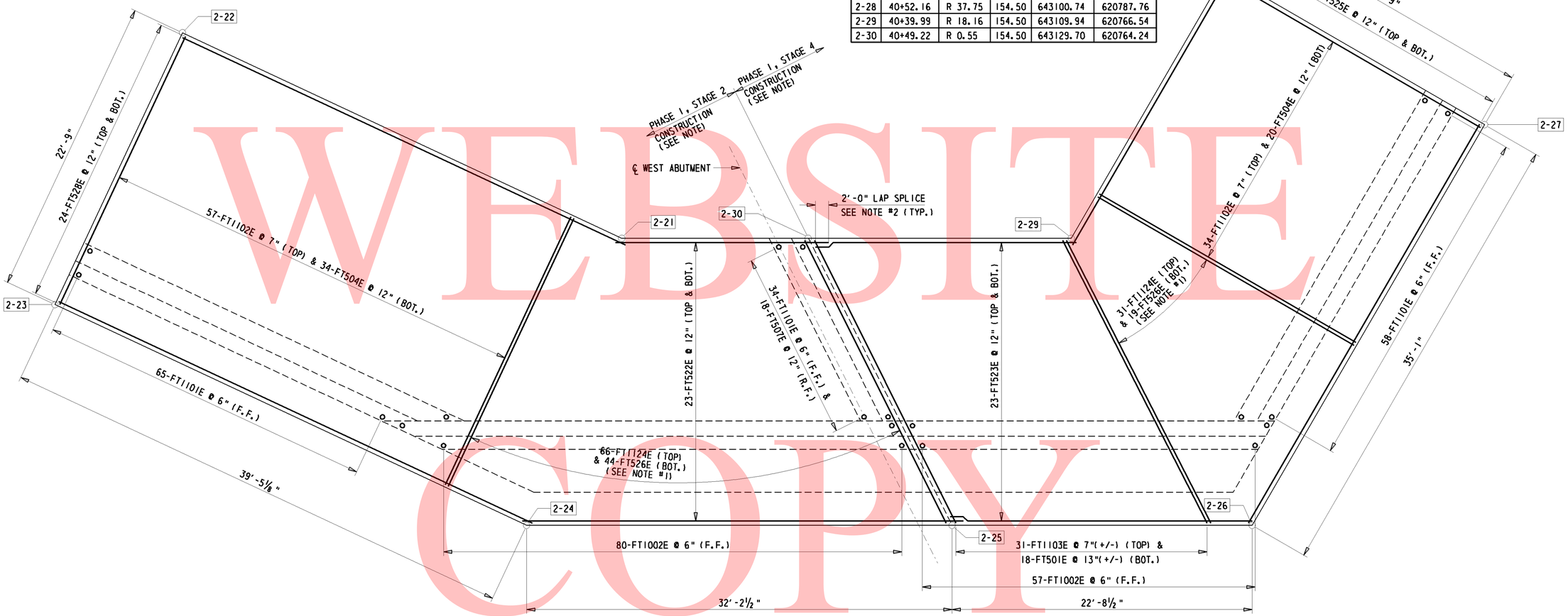

EAST ABUTMENT FOOTING PLAN
¼" = 1'-0"

UNOFFICAL WEBSITE COPY

W:\MSV8\CELLS\PROJDEV\SB.CEL

DELAWARE DEPARTMENT OF TRANSPORTATION	ADDENDUMS / REVISIONS	I-95 & US 202 INTERCHANGE I-95 RAMP 5 OVER US 202	CONTRACT T200510602	BRIDGE NO. 1-762	EAST ABUTMENT FOOTING DETAILS S2 – 7 OF 18	SHEET NO. 175
			COUNTY NEW CASTLE	DESIGNED BY: JKM		TOTAL SHTS. 482
				CHECKED BY: BAB		

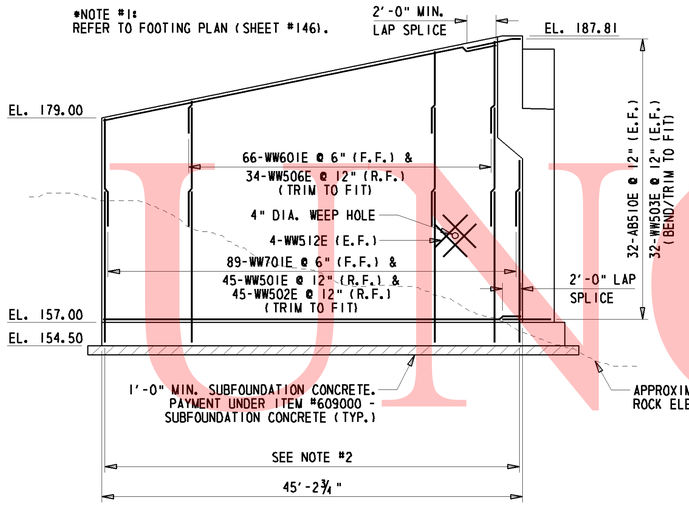

WINGWALL ELEVATION (SECTION D-D)

⅛" = 1'-0"

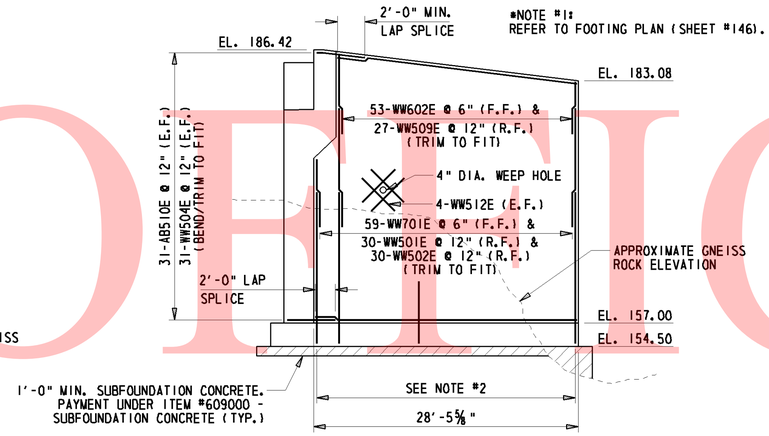

WINGWALL ELEVATION (SECTION E-E)

⅛" = 1'-0"

ABBREVIATIONS

F.F. - FILL FACE
R.F. - ROADWAY FACE
E.F. - EACH FACE

*NOTE #1:
ROCK EXCAVATION TO BE PAID UNDER
ITEM #206000 - ROCK EXCAVATION
FOR STRUCTURES AND TRENCHES

*NOTE #2:
REFER TO FOOTING PLAN

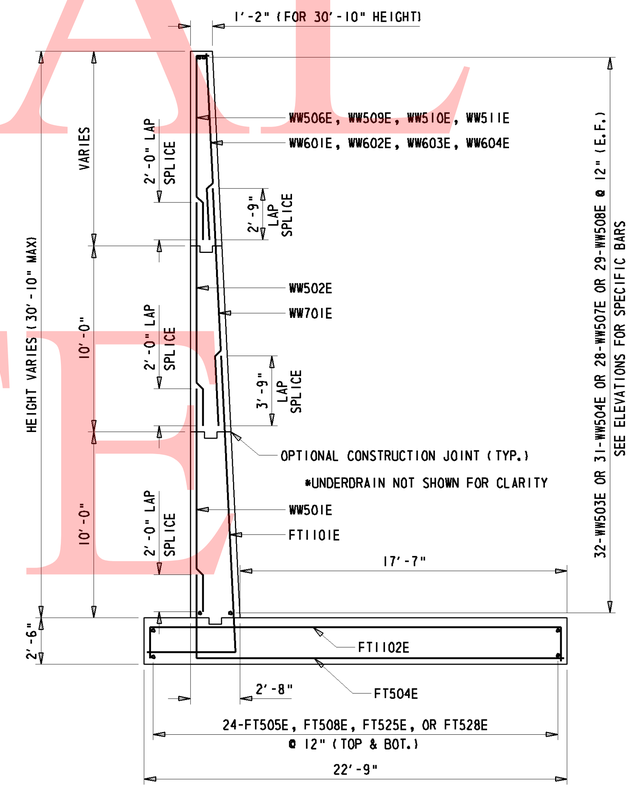

TYPICAL WINGWALL (SECTION C-C)

¼" = 1'-0"

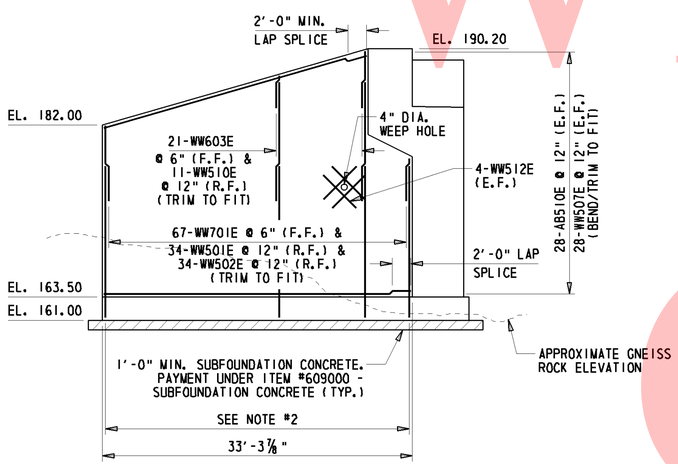

WINGWALL ELEVATION (SECTION I-I)

⅛" = 1'-0"

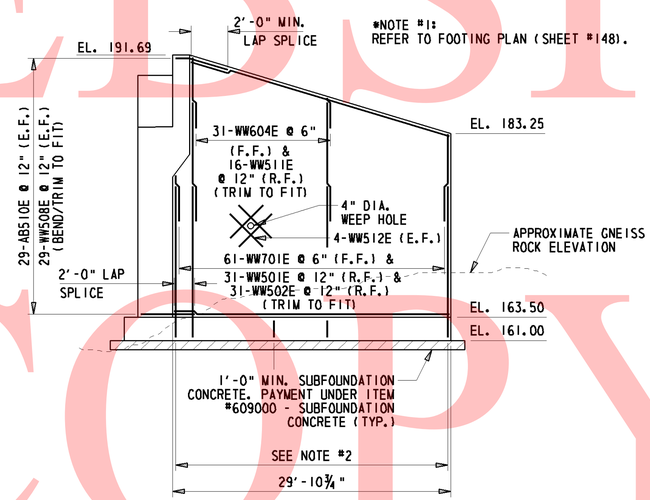

WINGWALL ELEVATION (SECTION J-J)

⅛" = 1'-0"

UNOFFICIAL WEBSITE COPY

W:\MSV8\CELLS\PROJDEV\SB.CEL

DELAWARE DEPARTMENT OF TRANSPORTATION	ADDENDUMS / REVISIONS	I-95 & US 202 INTERCHANGE I-95 RAMP 5 OVER US 202	CONTRACT T200510602	BRIDGE NO. 1-762	WINGWALL DETAILS S2 – 8 OF 18	SHEET NO. 176
			COUNTY NEW CASTLE	DESIGNED BY: JKM CHECKED BY: BAB		TOTAL SHTS. 482

UNOFFICAL WEBSITE COPY

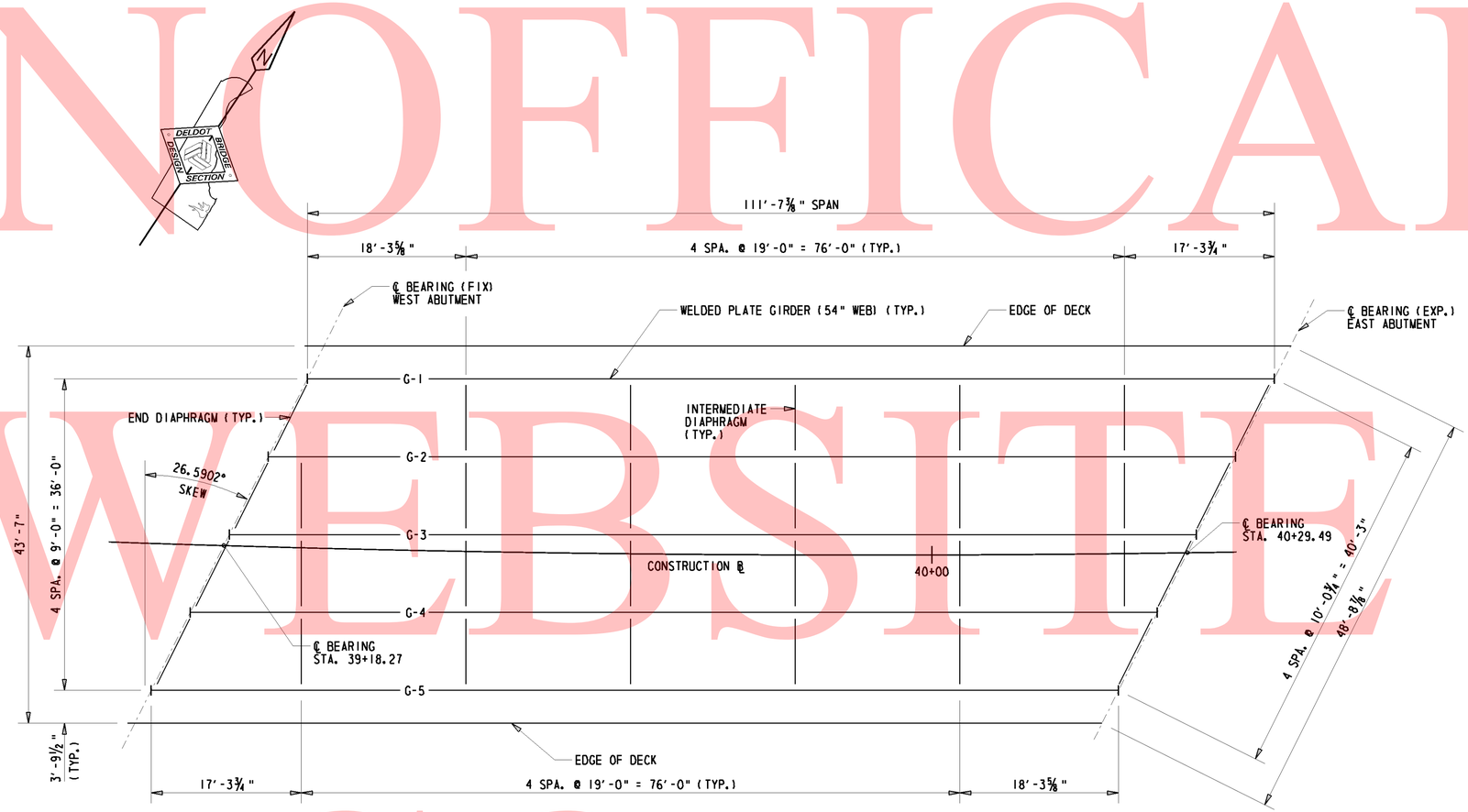

FRAMING PLAN

⅛" = 1'-0"

DELAWARE DEPARTMENT OF TRANSPORTATION	ADDENDUMS / REVISIONS		I-95 & US 202 INTERCHANGE I-95 RAMP 5 OVER US 202	CONTRACT T200510602	BRIDGE NO. 1-762	FRAMING PLAN S2 – 9 OF 18	SHEET NO. 177
				COUNTY NEW CASTLE	DESIGNED BY: JKM CHECKED BY: BAB		TOTAL SHTS. 482

UNOFFICIAL WEBSITE COPY

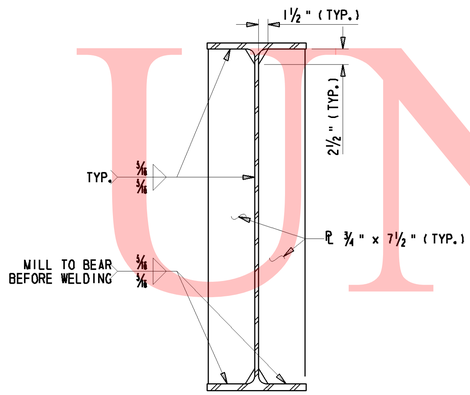

BEARING STIFFENERS

¼" = 1'-0"

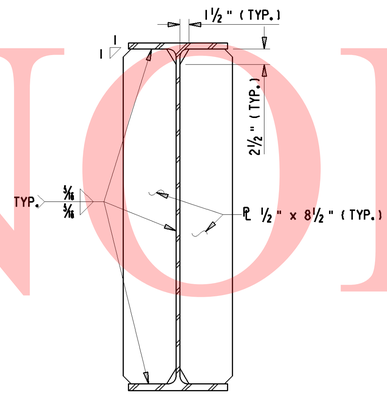

CONNECTION PLATE

¼" = 1'-0"

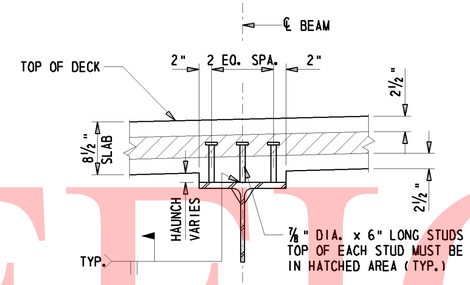

SHEAR CONNECTORS

¼" = 1'-0"

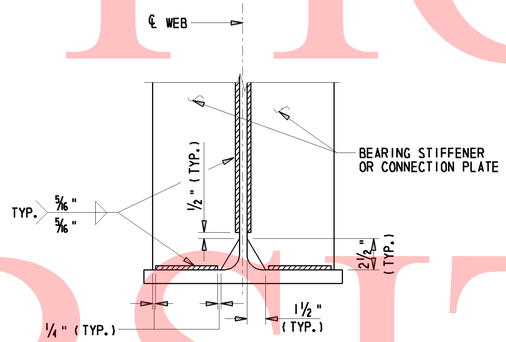

BEARING STIFFENER & CONNECTION PLATE WELD TERMINATION

N.T.S.

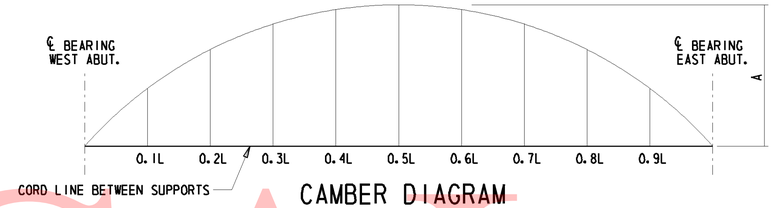

CAMBER DIAGRAM

DLS - DENOTES DEFLECTION DUE TO STRUCTURAL STEEL GIRDER

DLC - DENOTES DEFLECTION DUE TO DECK SLAB, HAUNCH, AND SIP FORMS

SDL - DENOTES DEFLECTION DUE TO PARAPET AND FUTURE WEARING SURFACE

TD - DENOTES TOTAL DEAD LOAD DEFLECTION

VCO - DENOTES CAMBER FOR VERTICAL CURVE ORDINATE DUE TO ROADWAY PROFILE

TOTAL CAMBER - DENOTES DESIRED CAMBER BEFORE INSTALLATION OF BEAMS

DEFLECTION AND TOTAL CAMBER (INCH)

GIRDER		0.1L	0.2L	0.3L	0.4L	0.5L	0.6L	0.7L	0.8L	0.9L
GIRDER 1	DLS	-1/8	-3/16	-1/4	-5/16	-5/16	-5/16	-1/4	-3/16	-1/8
	DLC	-7/16	-7/8	-1 3/16	-1 3/8	-1 7/16	-1 3/16	-1 3/16	-7/8	-7/16
	SDL	-1/16	-3/16	-1/4	-1/4	-5/16	-1/4	-1/4	-3/16	-1/16
	TD	-5/8	-1 3/16	-1 11/16	-1 5/16	-2 1/16	-1 5/16	-1 11/16	-1 3/16	-5/8
	VCO	5/16	5/8	11/16	7/8	5/16	7/8	11/16	5/8	5/16
	TOTAL CAMBER	5/16	1 11/16	2 1/2	2 11/16	3	2 11/16	2 1/2	1 11/16	5/16
GIRDER 2	DLS	-1/8	-3/16	-1/4	-5/16	-5/16	-5/16	-1/4	-3/16	-1/8
	DLC	-1/2	-5/16	-1 1/4	-1 7/16	-1 1/2	-1 7/16	-1 1/4	-5/16	-1/2
	SDL	-1/16	-3/16	-1/4	-1/4	-5/16	-1/4	-1/4	-3/16	-1/16
	TD	-5/8	-1 3/16	-1 11/16	-1 5/16	-2 1/16	-1 5/16	-1 11/16	-1 3/16	-5/8
	VCO	5/16	5/8	11/16	7/8	5/16	7/8	11/16	5/8	5/16
	TOTAL CAMBER	1	1 7/8	2 9/16	2 5/16	3 1/16	2 5/16	2 9/16	1 7/8	1
GIRDER 3	DLS	-1/8	-3/16	-1/4	-5/16	-5/16	-5/16	-1/4	-3/16	-1/8
	DLC	-1/2	-5/16	-1 1/4	-1 7/16	-1 1/2	-1 7/16	-1 1/4	-5/16	-1/2
	SDL	-1/16	-3/16	-1/4	-1/4	-5/16	-1/4	-1/4	-3/16	-1/16
	TD	-5/8	-1 3/16	-1 11/16	-1 5/16	-2 1/16	-1 5/16	-1 11/16	-1 3/16	-5/8
	VCO	5/16	5/8	11/16	7/8	5/16	7/8	11/16	5/8	5/16
	TOTAL CAMBER	1	1 7/8	2 9/16	2 5/16	3 1/16	2 5/16	2 9/16	1 7/8	1
GIRDER 4	DLS	-1/8	-3/16	-1/4	-5/16	-5/16	-5/16	-1/4	-3/16	-1/8
	DLC	-1/2	-5/16	-1 1/4	-1 7/16	-1 1/2	-1 7/16	-1 1/4	-5/16	-1/2
	SDL	-1/16	-3/16	-1/4	-1/4	-5/16	-1/4	-1/4	-3/16	-1/16
	TD	-5/8	-1 3/16	-1 11/16	-1 5/16	-2 1/16	-1 5/16	-1 11/16	-1 3/16	-5/8
	VCO	5/16	5/8	11/16	7/8	5/16	7/8	11/16	5/8	5/16
	TOTAL CAMBER	1	1 7/8	2 9/16	2 5/16	3 1/16	2 5/16	2 9/16	1 7/8	1
GIRDER 5	DLS	-1/8	-3/16	-1/4	-5/16	-5/16	-5/16	-1/4	-3/16	-1/8
	DLC	-7/16	-7/8	-1 3/16	-1 3/8	-1 7/16	-1 3/8	-1 3/16	-7/8	-7/16
	SDL	-1/16	-3/16	-1/4	-1/4	-5/16	-1/4	-1/4	-3/16	-1/16
	TD	-5/8	-1 3/16	-1 11/16	-1 5/16	-2 1/16	-1 5/16	-1 11/16	-1 3/16	-5/8
	VCO	5/16	5/8	11/16	7/8	5/16	7/8	11/16	5/8	5/16
	TOTAL CAMBER	5/16	1 11/16	2 1/2	2 11/16	3	2 11/16	2 1/2	1 11/16	5/16

NOTES:

1. POSITIVE CAMBERS/DEFLECTIONS ARE UPWARD AND NEGATIVE CAMBERS/DEFLECTIONS ARE DOWNWARD.
2. BEAMS SHALL BE CAMBERED BY TOTAL CAMBER AMOUNTS SHOWN IN THE TABLE. TOLERANCE SHALL BE 0" UNDER 1/16" OVER.
3. AFTER THE ERECTION OF STEEL AND THE CONNECTIONS OF THE STEEL CROSS FRAMES ARE COMPLETE, THE CONTRACTOR SHALL OBTAIN ELEVATIONS AT TEN FOOT INTERVALS ON THE TOP FLANGES OF ALL BEAMS TO DETERMINE THE REQUIRED HAUNCH THICKNESS. ALL OF THE DATA SHALL BE SUBMITTED WITH DETAILS OF STAY-IN-PLACE FORMS FOR REVIEW AND APPROVAL BY THE ENGINEER IN THE FIELD.

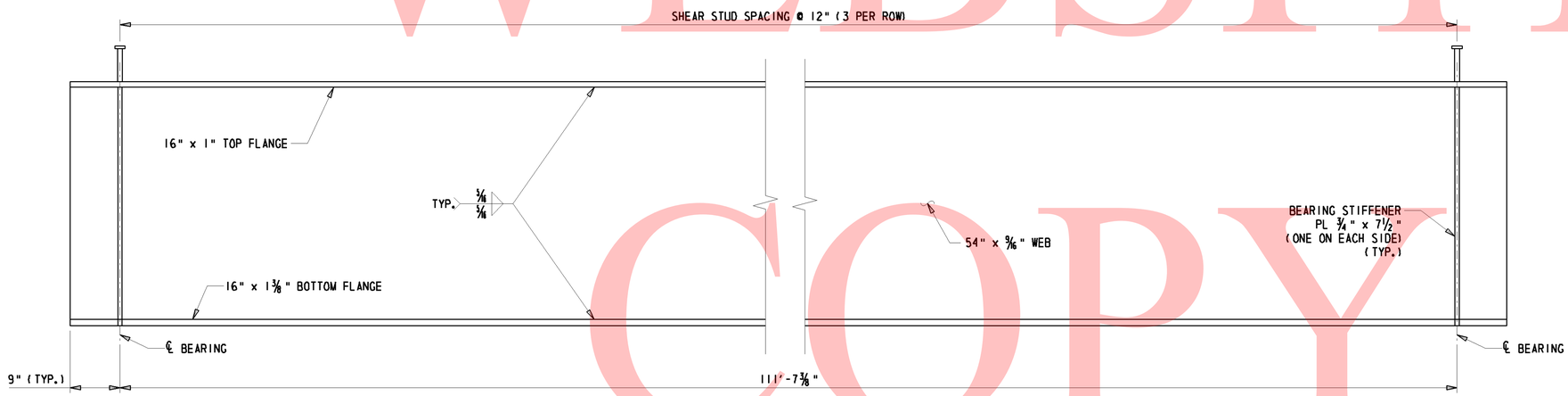

BEAM ELEVATION

¼" = 1'-0"

W:\MSV8\CELLS\PROJDEV\SB.CEL

DELAWARE DEPARTMENT OF TRANSPORTATION	ADDENDUMS / REVISIONS	I-95 & US 202 INTERCHANGE I-95 RAMP 5 OVER US 202	CONTRACT T200510602 COUNTY NEW CASTLE	BRIDGE NO. 1-762 DESIGNED BY: JKM CHECKED BY: BAB	GIRDER DETAILS (1 OF 2) S2 – 10 OF 18	SHEET NO. 178 TOTAL SHTS. 482

STEEL NOTES:

1. STEEL PLATE GIRDER TOP AND BOTTOM FLANGES SHALL BE ASTM A709 GRADE 70W. STEEL PLATE GIRDER WEB, STIFFENERS, SOLE PLATES, AND CROSS-FRAMES SHALL BE ASTM A709 GRADE 50W. THE ADDITIONAL REQUIREMENTS FOR CHARPY V-NOTCH TESTING OF AASHTO M270 FOR PRIMARY LOAD CARRYING MEMBERS SHALL BE INCLUDED. SUPPLEMENT REQUIREMENTS FOR TOUGHNESS ON ALL MEMBER COMPONENTS MARKED (T).

2. WELDING SHALL CONFORM TO THE CURRENT ANSI/AASHTO/AWS BRIDGE WELDING CODE D1.5-08. WELDING AND NONDESTRUCTIVE TESTING SYMBOLS SHALL CONFORM TO SYMBOLS FOR WELDING, BRAZING, AND NONDESTRUCTIVE EXAMINATION AWS A2.4-93.

3. JOINT WELDING PROCEDURES, OVERALL FABRICATION METHODS, AND QUALITY CONTROL INSPECTION PROCEDURE SHALL BE INCLUDED AS WRITTEN PROCEDURE SPECIFICATIONS WITH THE SHOP PLAN SUBMISSION.

4. GIRDER WEBS SHALL BE GROUND SMOOTH AND SHALL BE PLUMB AT THE ENDS UNDER FULL DEAD LOAD.

5. ALL BOLTED CONNECTIONS SHALL BE MADE WITH 7/8" DIAMETER ASTM A325 HIGH STRENGTH BOLTS, TYPE 1, UNLESS OTHERWISE NOTED.

6. THE GIRDERS SHALL BE PAINTED WITH A URETHANE PAINT SYSTEM IN ACCORDANCE WITH SECTION 605 FROM EACH END TO A DISTANCE OF 5' FROM FACE OF ABUTMENT OR MSE WALL AND THE DISTANCE BETWEEN 5' FROM EACH FACE OF PIER CAP. IN ADDITION, EACH FASCIA GIRDER SHALL BE PAINTED AS PER PAINTING DETAIL ABOVE IN AREAS BETWEEN THE PIER AND ABUTMENTS. THE COLOR OF THE FINISHED PAINT SHALL BE BROWN (NO. 10076) FROM FEDERAL STANDARD 595C. THE COLOR SHALL BE SUBMITTED FOR APPROVAL. AT ALL LOCATIONS WHERE THE CONTRACTOR'S WORK DAMAGES THE EXISTING PAINT SYSTEM, THE CONTRACTOR SHALL CLEAN THE DAMAGED LOCATION AND REPAINT THE AREA. ALL CLEANING AND PAINTING IS INCIDENTAL TO ITEM #605002 - STEEL STRUCTURES.

7. OVERSIZED HOLES SHALL BE USED ON DIAPHRAGM CONNECTORS.

8. ALL BOLTS ON DIAPHRAGMS SHALL BE FINGER TIGHT AT ERECTION. BOLTS ARE TO BE TORQUED BEFORE THE DECK CONCRETE IS POURED.

9. DIRECTION OF WELDS IS NOT APPLICABLE IF STIFFENERS ARE FITTED WITH TACK WELDS.

10. TIGHT FIT AT TENSION FLANGES AT INTERIOR SUPPORTS. FILLET WELDS OVER END SUPPORTS.

11. BEARING AREAS: PROVIDE BOTTOM FLANGE IN A TRUE HORIZONTAL PLANE IN TRANSVERSE DIRECTION AND IN A TRUE PLANE LONGITUDINALLY OVER DIMENSION "L", WHERE L = WIDTH OF SOLE PLATE + 6" AHEAD AND BACK. WHERE APPLICABLE. IF THE SOLE PLATE IS WELDED TO THE BOTTOM FLANGE, PROVIDE THE SOLE PLATE MEETING THE SAME FLATNESS REQUIREMENTS. EACH BEARING MUST BE STRESSED UNIFORMLY AFTER ALL DEAD LOAD IS PLACED. MAKE NECESSARY SHOP AND/OR FIELD ADJUSTMENTS TO PROVIDE UNIFORM BEARING STRESS UNDER ALL DEAD LOADS.

12. GIRDERS ARE TO BE SHOP ERECTED BEFORE SHIPPING.

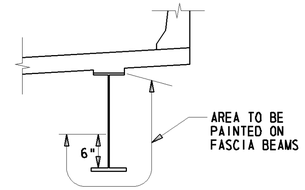

PAINTING DETAIL (NOTE #6)
N.T.S.

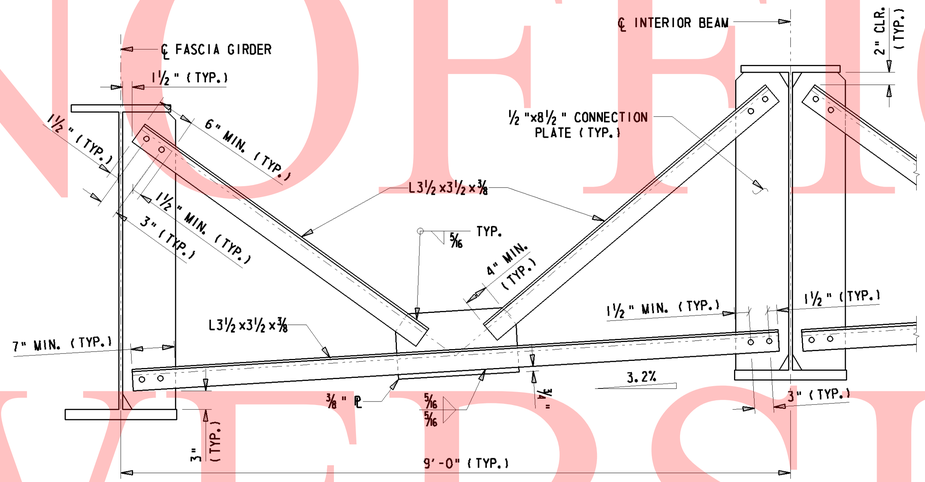

INTERMEDIATE DIAPHRAGM
N.T.S.

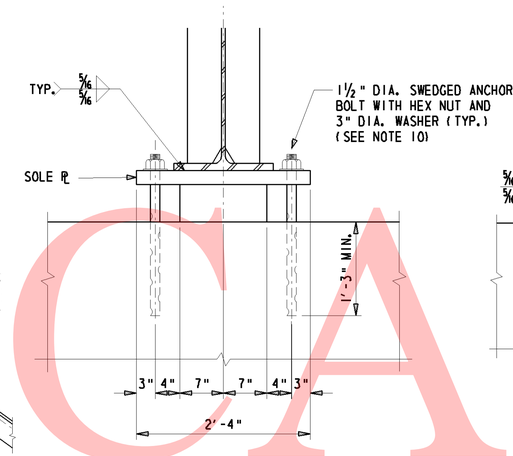

BEARING ELEVATION
1" = 1'-0"

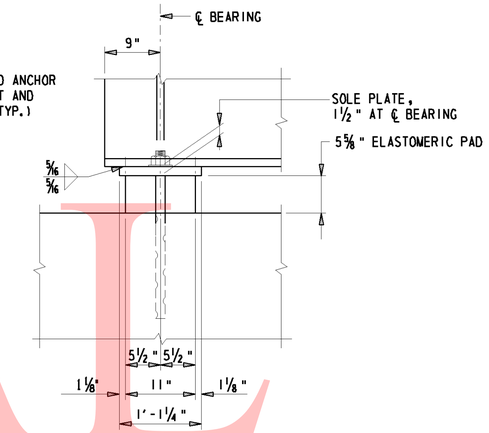

SIDE ELEVATION
1" = 1'-0"

BEARING PAD DIMENSIONS (TYP. ALL BEARINGS)

BEARING PAD LENGTH = 11"
BEARING PAD WIDTH = 14"
COVER LAYER THICKNESS = ¼"
INTERNAL LAYER THICKNESS = ½"
NUMBER OF STEEL LAYERS = 9
STEEL LAYER GAGE = 16
EDGE DISTANCE = ¼"
SOLE PLATE THICKNESS = 1½" (@ ℄ BEARING)

LAMINATED ELASTOMERIC PAD
N.T.S.

GENERAL NOTES:

1. FOR FRAMING PLAN, SEE BRIDGE SHEET S2-9.

2. ALL BOLTS FOR DIAPHRAGM CONNECTIONS SHALL BE HOT DIPPED GALVANIZED 1" DIA. HIGH STRENGTH BOLTS AASHTO M164 (ASTM A325) IN 1⅛" DIA. OPEN HOLES.

3. PAYMENT FOR ELASTOMETRIC PADS, SOLE PLATES & ANCHOR BOLTS SHALL BE INCIDENTAL TO ITEM #605002 - STEEL STRUCTURES.

4. CONTRACTOR SHALL BE RESPONSIBLE FOR SECURING THE GIRDER SYSTEM UNTIL THE DECK HAS CURED.

BEARING NOTES:

1. STEEL FOR BEARING LAMINATES SHALL CONFORM TO ASTM A709 GRADE 36.

2. NEOPRENE IN BEARING PAD SHALL HAVE A SHORE 'A' DUROMETER HARDNESS OF 60 POINTS.

3. ANCHOR BOLTS AND WASHERS SHALL BE UNPAINTED A709 GRADE 50 GALVANIZED STEEL. ALL NUTS SHALL BE UNPAINTED A307 GALVANIZED STEEL. SET NUTS ¼" CLEAR OF SOLE PLATES AND BURR THREADS ABOVE AND BELOW NUTS.

4. USE SWEDGED ANCHOR BOLTS. BOLTS MAY BE CAST-IN-PLACE OR GROUTED WITH NON-SHRINK GROUT IN PREFORMED (SLEEVED OR DRILLED) HOLES. THE PREFORMED & DRILLED HOLES SHALL HAVE A DIAMETER OF AT LEAST 1" LARGER THAN THE DIAMETER OF THE BOLTS.

5. SOLE PLATES ARE TO BE BEVELED TO MATCH GRADE WHEN GRADE EXCEEDS 1 PERCENT.

6. STEEL SURFACES OF SOLE PLATE TO BE MACHINE FINISHED, MEASURED IN ACCORDANCE WITH ANSI B46.1.

7. STEEL PLATES SHALL MEET A FLATNESS REQUIREMENT OF 0.5 PERCENT IN THE DIRECTION BEING MEASURED (WIDTH, LENGTH, AND DIAGONALS) MAXIMUM, BUT NOT TO EXCEED ⅛ INCH.

8. BEARING PADS SHALL BE PLACED NORMAL TO CENTERLINE OF BEAM.

9. FILL SLOTS AND HOLES IN STEEL AROUND ANCHOR BOLTS WITH AN APPROVED NON-HARDENING CAULKING COMPOUND OR ELASTIC JOINT SEALER.

10. FOR EXPANSION BEARINGS:
USE 2⅛" x 3" SLOTS IN SOLE PLATE AND ⅜"x3"x 5½" WASHERS WITH 1⅝" DIA. HOLE IN WASHERS.

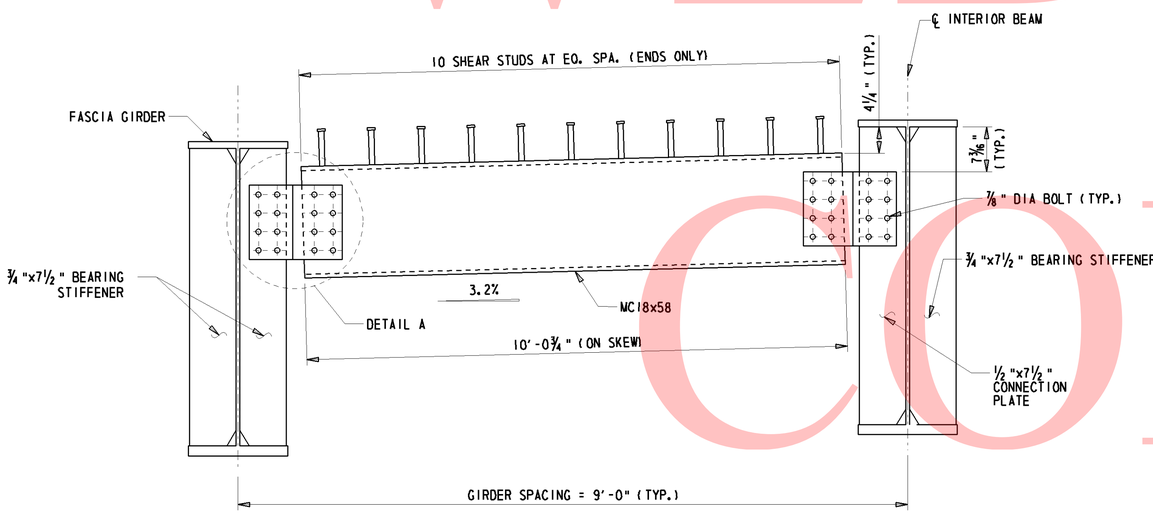

END & PIER DIAPHRAGMS
N.T.S.

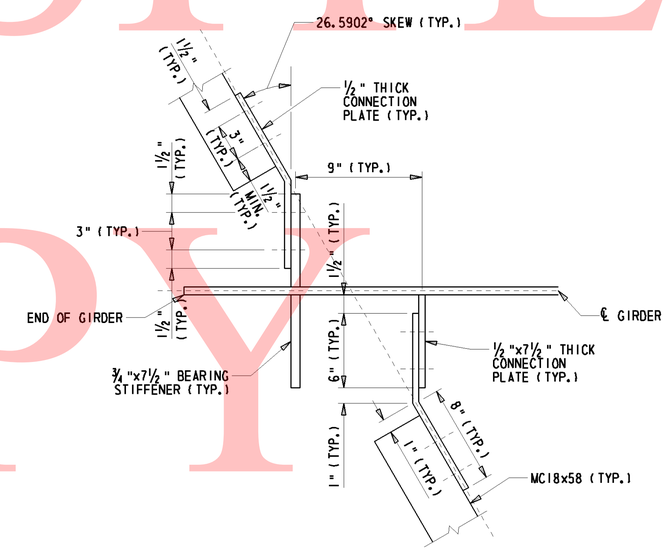

DETAIL A
N.T.S.

UNOFFICIAL WEBSITE COPY

W:\MSV8\CELLS\PROJDEV\SB.CEL

DELAWARE DEPARTMENT OF TRANSPORTATION	ADDENDUMS / REVISIONS	I-95 & US 202 INTERCHANGE	CONTRACT T200510602	BRIDGE NO. 1-762	GIRDER DETAILS (2 OF 2) S2 – 11 OF 18	SHEET NO. 179
			COUNTY NEW CASTLE	DESIGNED BY: JKM		TOTAL SHTS. 482
				CHECKED BY: BAB		

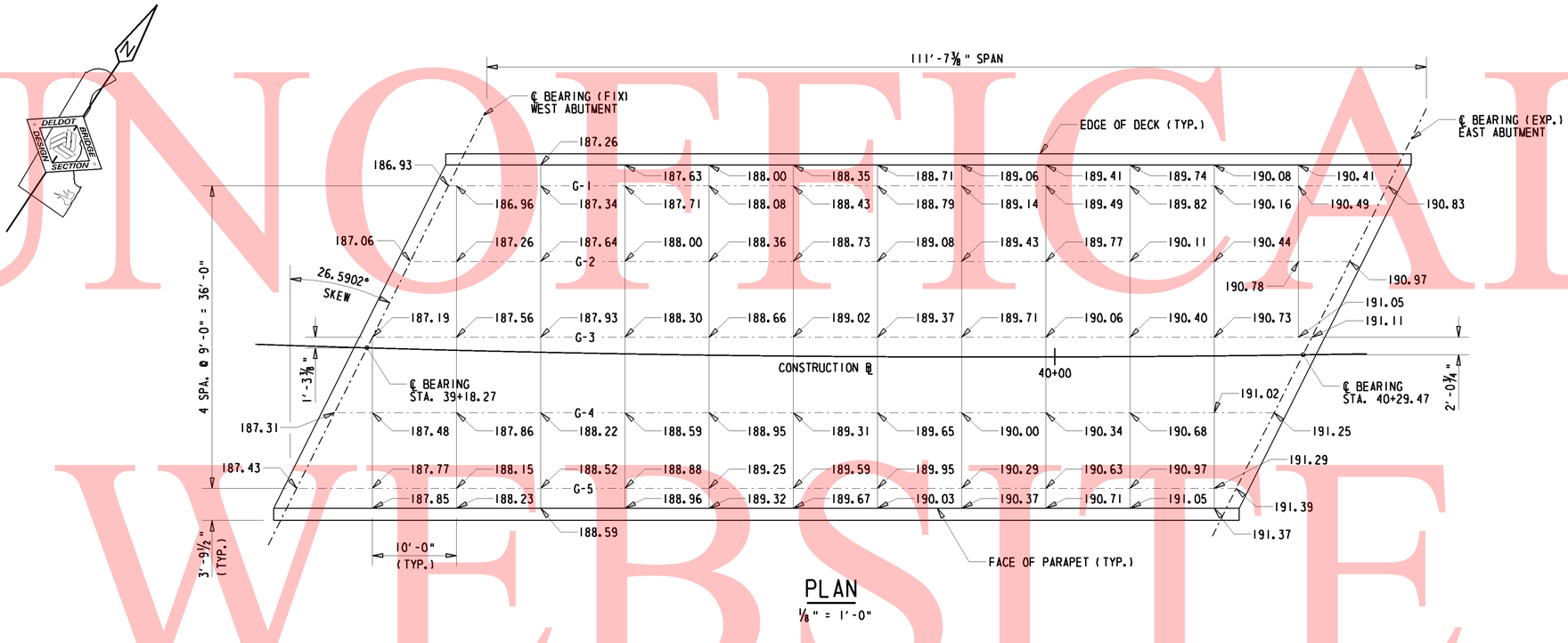

PLAN

1/8" = 1'-0"

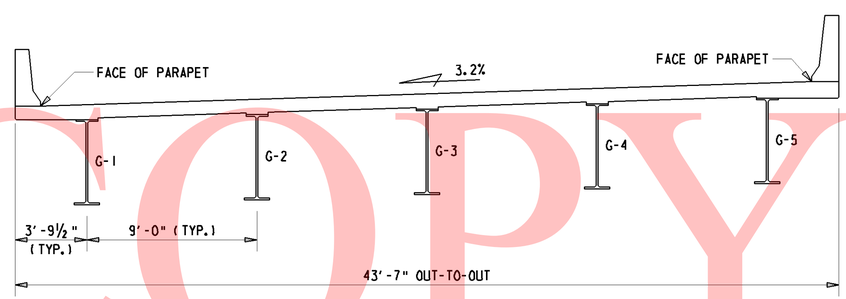

TYPICAL DECK SECTION

1/4" = 1'-0"

UNOFFICAL WEBSITE COPY

DELAWARE DEPARTMENT OF TRANSPORTATION	ADDENDUMS / REVISIONS	I-95 & US 202 INTERCHANGE I-95 RAMP 5 OVER US 202	CONTRACT T200510602	BRIDGE NO. 1-762	FINISHED DECK ELEVATIONS S2 – 12 OF 18	SHEET NO. 180
			COUNTY NEW CASTLE	DESIGNED BY: JKM CHECKED BY: BAB		TOTAL SHTS. 482

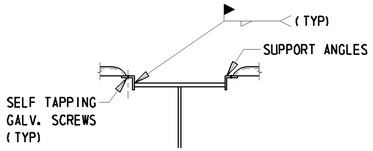

NOTE: ALL ANGLES, WELDS, AND INSERTS MUST BE DESIGNED BY THE CONTRACTOR AND SUBMITTED FOR APPROVAL

COMPRESSION FLANGE CONNECTION

N.T.S.

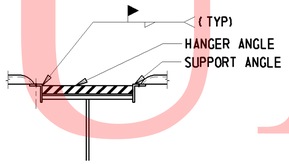

NOTE: ALL ANGLES, WELDS, AND INSERTS MUST BE DESIGNED BY THE CONTRACTOR AND SUBMITTED FOR APPROVAL

TENSION FLANGE CONNECTION

N.T.S.

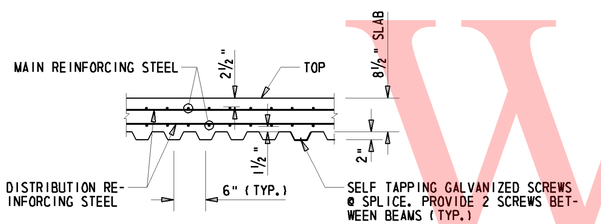

STAY-IN PLACE STEEL FORM DETAIL

N.T.S.

STEEL S.I.P. FORM NOTES:

1. THESE FORMS SHALL BE VERTICALLY ADJUSTED TO ATTAIN LINE AND GRADE REQUIRED ON THE PLANS.
2. SHOP DRAWINGS SHALL BE SUBMITTED BY THE ENGINEER. METAL FORMS MUST BE GALVANIZED AND MORTAR TIGHT. STEEL METAL SCREWS MUST BE NON-CORROSIVE. SELF TAPPING SCREWS SHALL BE INSTALLED AT THE SIDE LAP OF THE SHEETS AT MID-SPAN SUPPORTS.
3. ALL MATERIALS AND LABOR NEEDED FOR FORMS SHALL BE INCIDENTAL TO ITEM 603013-P.C.C. MASONRY, SUPERSTRUCTURE, CLASS D.
4. TENSION FLANGE DETAIL IS IN THE AREA ALONG THE BEAM BETWEEN SPLICES.

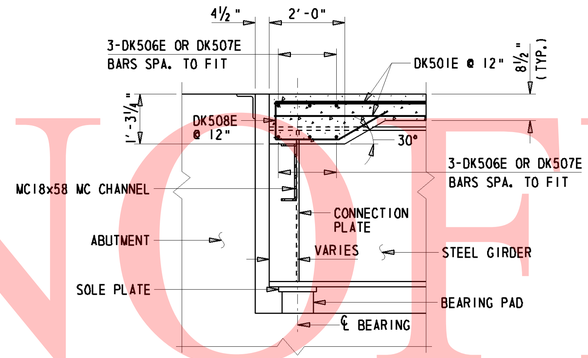

SECTION A-A AT ABUTMENTS

½" = 1'-0"

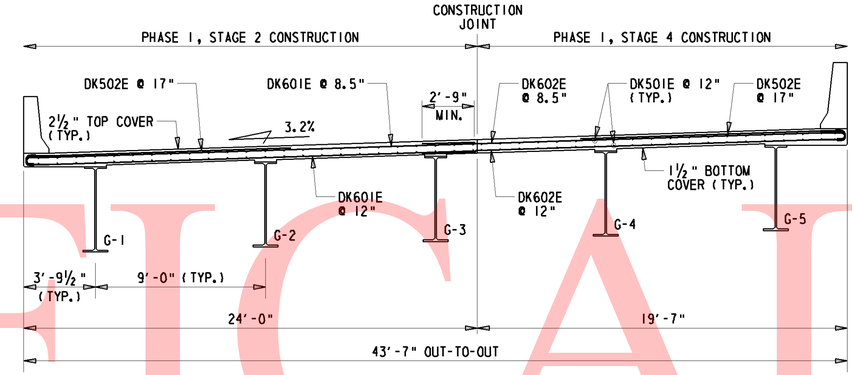

TYPICAL DECK SECTION

¼" = 1'-0"

*NOTE:
DK507E, DK602E, DK604E, & DK606E BARS TO BE INSTALLED DURING PHASE 1, STAGE 4. A HOLE SHALL BE DRILLED INTO THE PHASE 1, STAGE 2 PORTION OF DECK FOR EACH BAR. HILTI-HIT C-100 OR APPROVED EQUAL SHALL BE USED TO BOND BARS TO CONCRETE. THE HOLES SHALL BE CLEANED THOROUGHLY PRIOR TO THE INSTALLATION OF BARS. HOLE DIMENSIONS SHALL BE SPECIFIED BY THE BONDING MATERIAL MANUFACTURER. CONTRACTOR MAY USE COUPLERS AS AN ALTERNATIVE, TO TIE BARS TO PHASE 1, STAGE 2 PORTION OF DECK. MINIMUM LAP SPLICE LENGTH FOR DK507E BARS IS 2'-0". MINIMUM LAP SPLICE LENGTH FOR DK602E, DK604E, & DK606E BARS IS 2'-9". PAYMENT SHALL BE MADE UNDER ITEM #602579 - DRILLING HOLES AND INSTALLING DOWELS. MECHANICAL COUPLERS MAY BE USED IN LIEU OF LAP SPLICES (SEE PROJECT NOTE #19.)

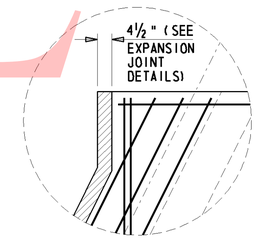

DETAIL 'A'

½" = 1'-0"

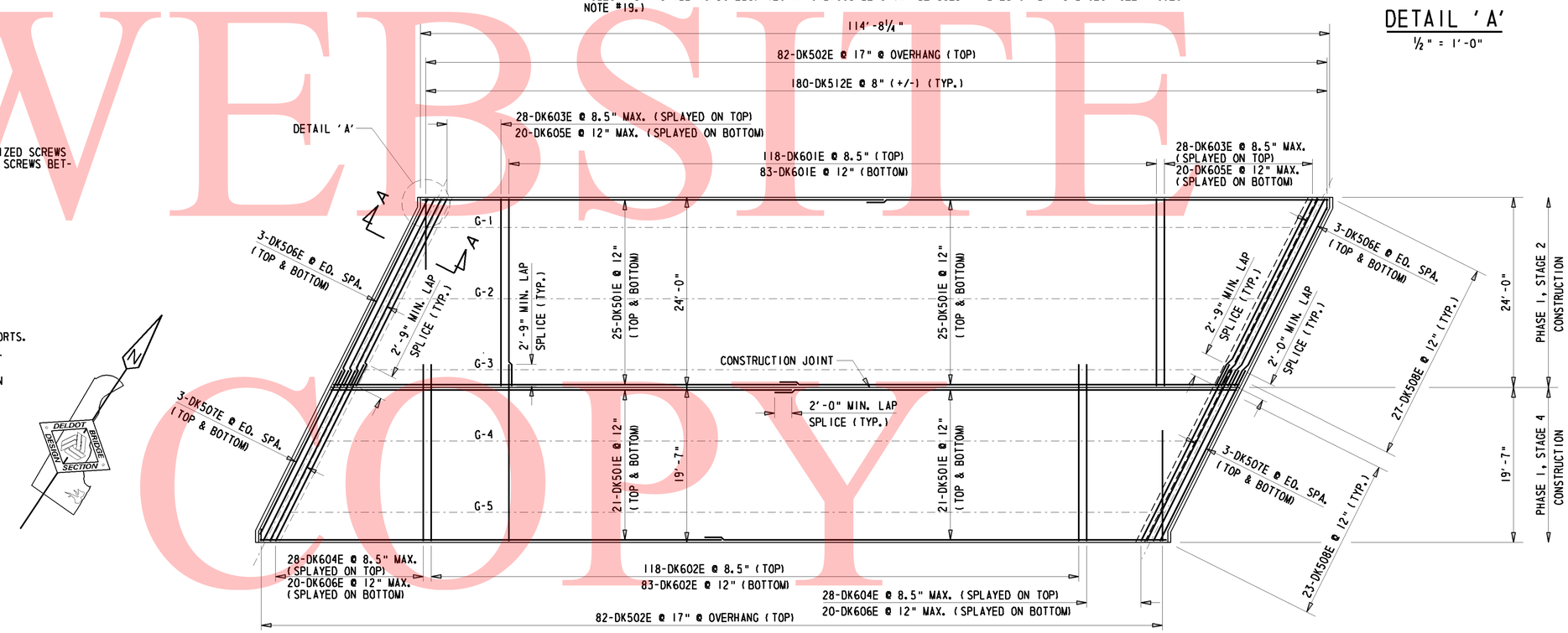

NOTE: DK603E, DK604E, DK605E, & DK606E BARS SHALL BE SPLAYED. TOP BARS SHALL HAVE A MAX. SPA. OF 8.5" & A MIN. SPA. OF 3". BOTTOM BARS SHALL HAVE A MAX. SPA. OF 12" & A MIN. SPA. OF 3".

DECK PLAN

⅛" = 1'-0"

UNOFFICIAL WEBSITE COPY

DELAWARE DEPARTMENT OF TRANSPORTATION	ADDENDUMS / REVISIONS	I-95 & US 202 INTERCHANGE I-95 RAMP 5 OVER US 202	CONTRACT T200510602	BRIDGE NO. 1-762	DECK PLAN S2 – 13 OF 18	SHEET NO. 181
			COUNTY NEW CASTLE	DESIGNED BY: JKM CHECKED BY: BAB		TOTAL SHTS. 482

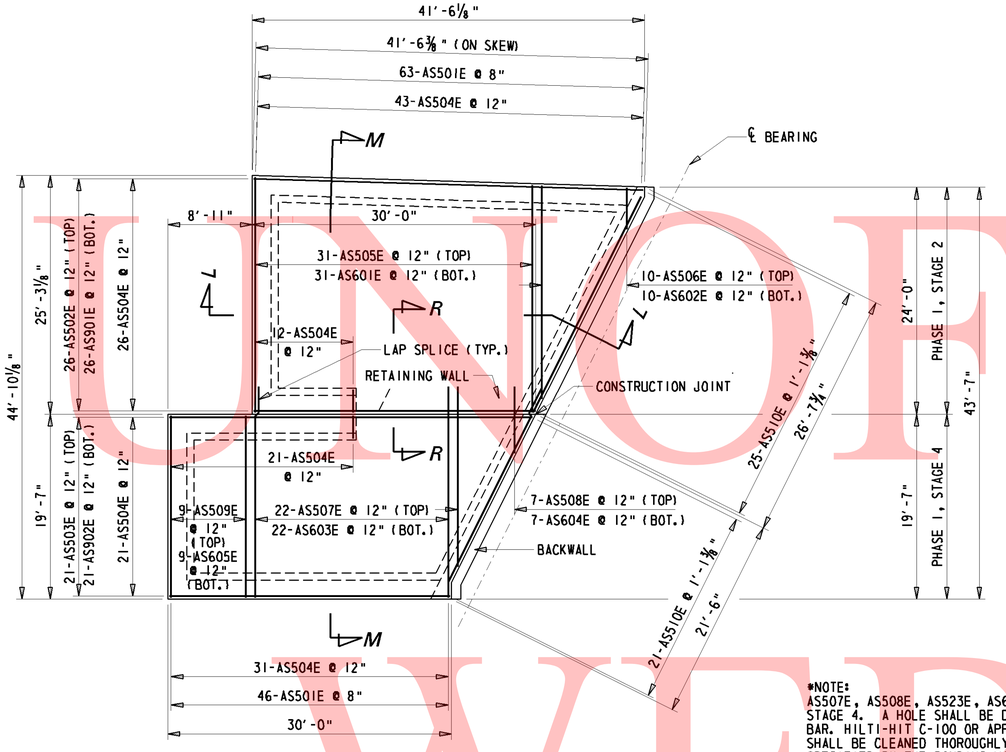

WEST APPROACH SLAB PLAN

⅛" = 1'-0"

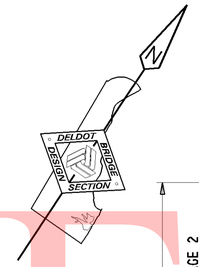

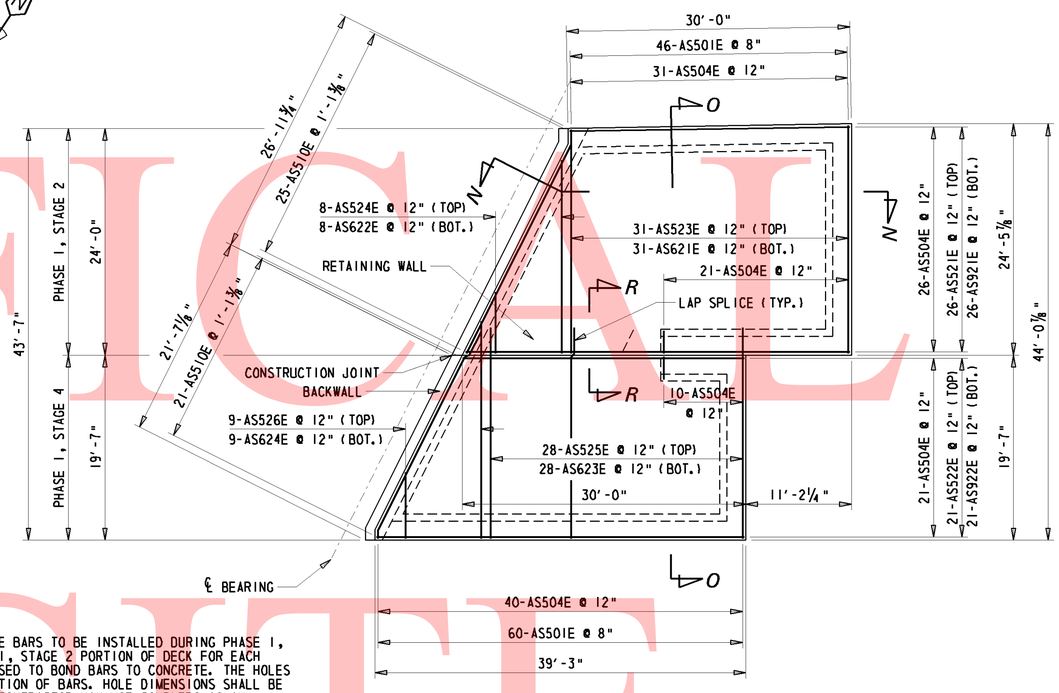

EAST APPROACH SLAB PLAN

⅛" = 1'-0"

*NOTE:
AS507E, AS508E, AS523E, AS603E, AS604E, AND AS623E BARS TO BE INSTALLED DURING PHASE I, STAGE 4. A HOLE SHALL BE DRILLED INTO THE PHASE I, STAGE 2 PORTION OF DECK FOR EACH BAR. HILTI-HIT C-100 OR APPROVED EQUAL SHALL BE USED TO BOND BARS TO CONCRETE. THE HOLES SHALL BE CLEANED THOROUGHLY PRIOR TO THE INSTALLATION OF BARS. HOLE DIMENSIONS SHALL BE SPECIFIED BY THE BONDING MATERIAL MANUFACTURER. CONTRACTOR MAY USE COUPLERS AS AN ALTERNATIVE, TO TIE BARS TO PHASE I, STAGE 2 PORTION OF DECK. MINIMUM LAP SPLICE LENGTH FOR AS507E, AS508E, AND AS525E BARS IS 2'-0". MINIMUM LAP SPLICE LENGTH FOR AS603E, AS604E, AND AS623E BARS IS 2'-9". PAYMENT SHALL BE MADE UNDER ITEM #602579 - DRILLING HOLES AND INSTALLING DOWELS. MECHANICAL COUPLERS MAY BE USED IN LIEU OF LAP SPLICES (SEE PROJECT NOTE #19).

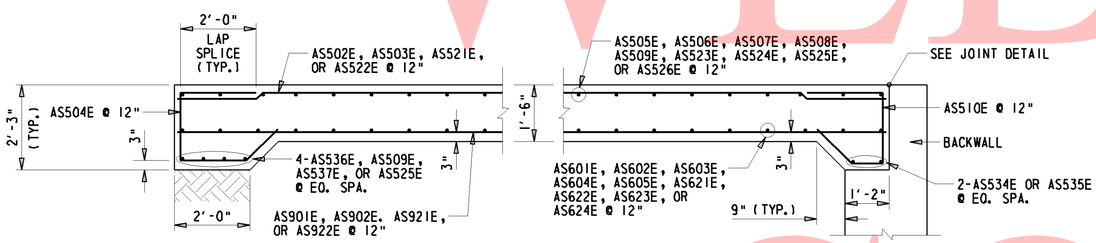

SECTIONS L-L & N-N

¼" = 1'-0"

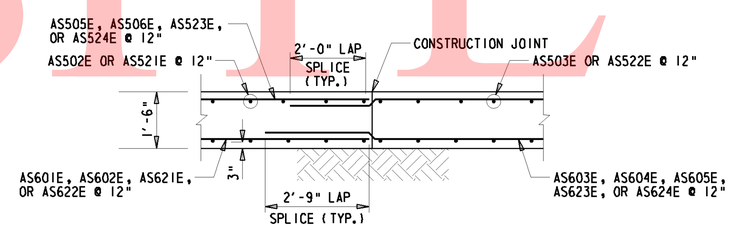

SECTION R-R

¼" = 1'-0"

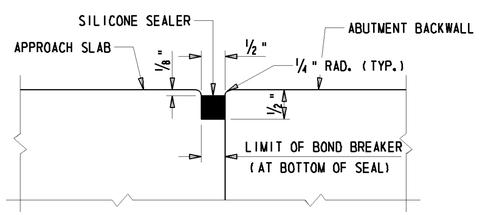

JOINT BETWEEN APPROACH SLAB AND ABUTMENT BACKWALL

N. T. S.

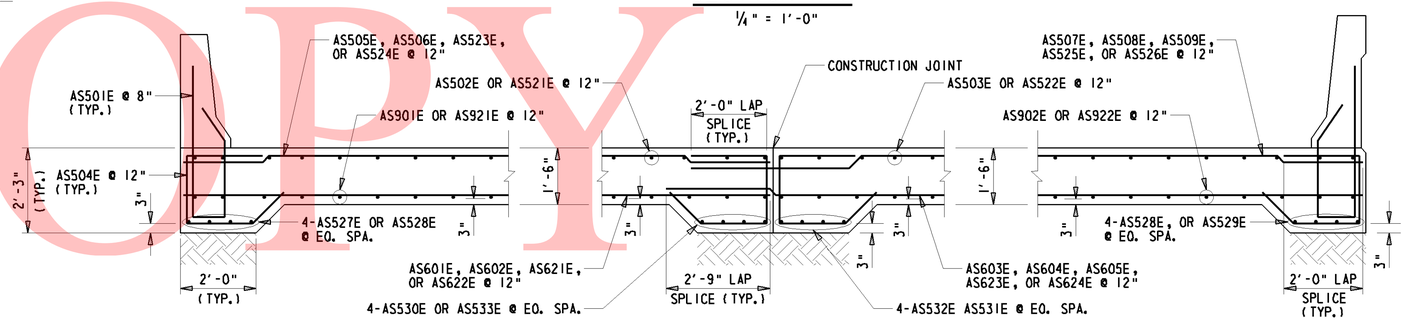

SECTIONS M-M & O-O

¼" = 1'-0"

UNOFFICIAL WEBSITE COPY

DELAWARE DEPARTMENT OF TRANSPORTATION	ADDENDUMS / REVISIONS	I-95 & US 202 INTERCHANGE I-95 RAMP 5 OVER US 202	CONTRACT T200510602 COUNTY NEW CASTLE	BRIDGE NO. 1-762 DESIGNED BY: JKM CHECKED BY: BAB	APPROACH SLAB DETAILS S2 – 14 OF 18	SHEET NO. 182 TOTAL SHTS. 482

36" F-SHAPE BARRIER
GRADE 60 REINFORCING STEEL
4500 PSI CONCRETE

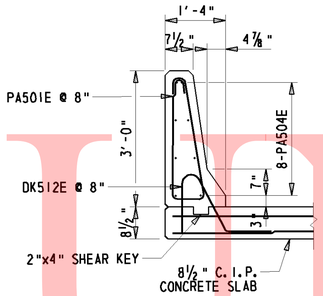

AT DECK

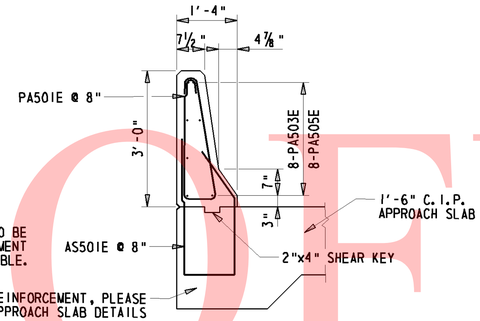

NOTE: ONE AS501E IS TO BE CAST WITH EACH ABUTMENT BACKWALL WHERE APPLICABLE.

FOR APPROACH SLAB REINFORCEMENT, PLEASE REFER TO APPROACH SLAB DETAILS

AT APPROACH SLAB

TYPICAL SECTION @ SOUTH ELEVATION

⅜" = 1'-0"

42" F-SHAPE BARRIER
GRADE 60 REINFORCING STEEL
4500 PSI CONCRETE

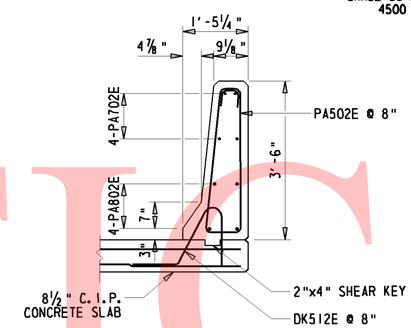

AT DECK

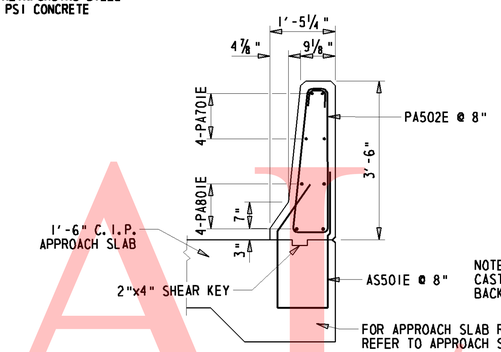

NOTE: ONE AS501E IS TO BE CAST WITH EACH ABUTMENT BACKWALL WHERE APPLIABLE.

FOR APPROACH SLAB REINFORCEMENT, PLEASE REFER TO APPROACH SLAB DETAILS

AT APPROACH SLAB

TYPICAL SECTION @ NORTH ELEVATION

⅜" = 1'=0"

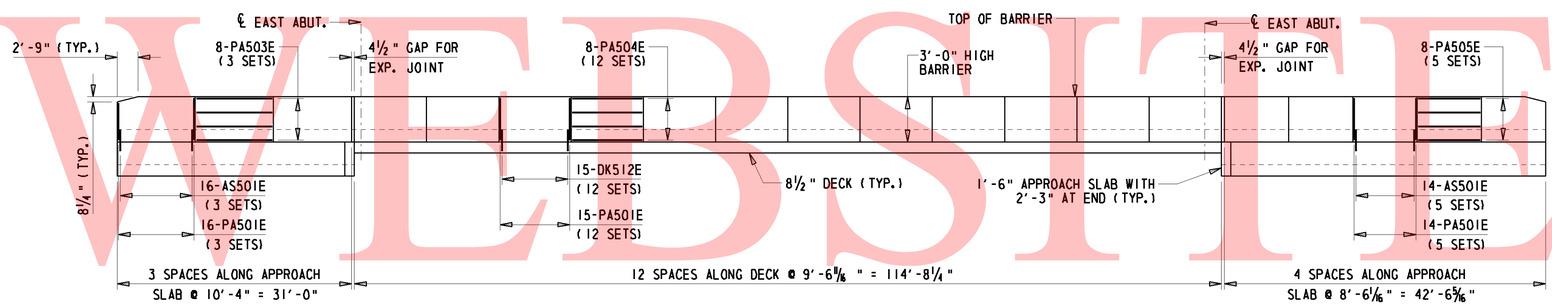

NOTE:
1. ALL BARRIER ENDS ARE TO BE TAPERED AT 4:1 SLOPE.
2. FIELD BEND/CUT BARS AS NEEDED AT TAPERED ENDS. PAYMENT INCIDENTAL TO 604000 - BAR REINFORCEMENT, EPOXY COATED.

F-SHAPE BARRIER SOUTH ELEVATION

HORIZ. 1" = 10'-0"
VERT. 1" - 5'-0"

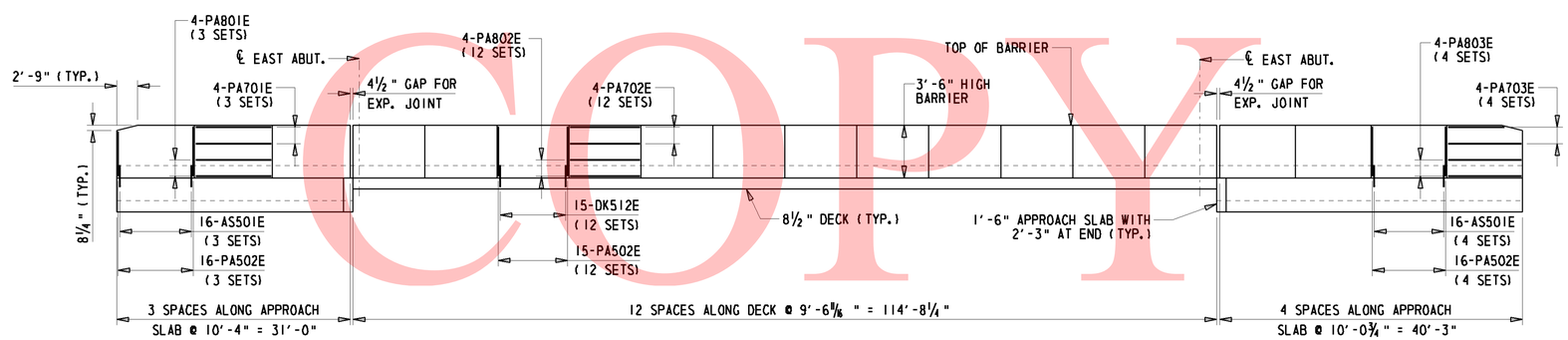

F-SHAPE BARRIER NORTH ELEVATION

HORIZ. 1" = 10'-0"
VERT. 1" - 5'-0"

UNOFFICIAL WEBSITE COPY

DELAWARE DEPARTMENT OF TRANSPORTATION	ADDENDUMS / REVISIONS	I-95 & US 202 INTERCHANGE I-95 RAMP 5 OVER US 202	CONTRACT T200510602	BRIDGE NO. 1-762	BARRIER DETAILS S2 – 15 OF 18	SHEET NO. 183
			COUNTY NEW CASTLE	DESIGNED BY: JKM CHECKED BY: BAB		TOTAL SHTS. 482

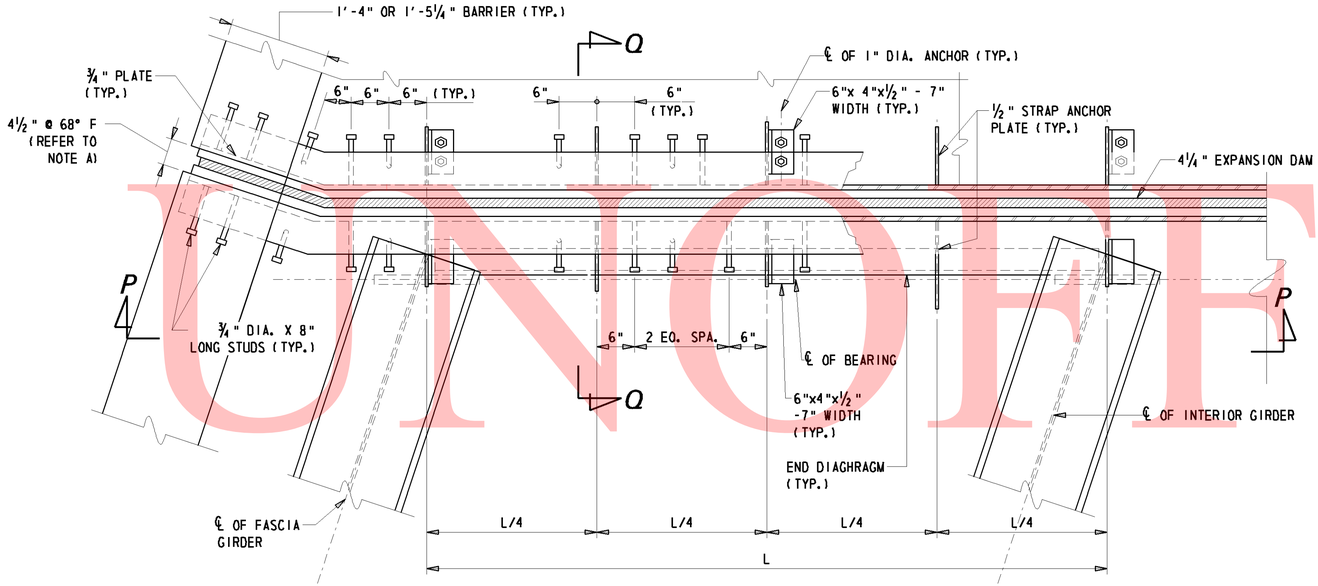

TYPICAL JOINT PLAN

1" = 1'-0"

EXPANSION JOINT NOTES:

1. STEEL FOR DECK JOINTS AND STEEL EXTRUSIONS SHALL BE AASHTO M270, GR. 36 (ASTM A36)
2. NEOPRENE EXTRUSION TO MEET D-2628-81 MODIFIED, (RECOVERY TESTS EXCLUDED).
3. THE EXPANSION JOINT SHALL BE CAPABLE OF SEALING THE DECK TO PREVENT MOISTURE AND OTHER CONTAIMINANTS FROM DESCENDING THROUGHT THE JOINT.
4. ENTIRE EXPANSION DAM SHALL BE PAINTED AFTER FABRICATION USING URETHANE SYSTEM, EXCEPT AS NOTED.
5. LUBRICANT-ADHESIVE FOR USE IN INSTALLING AND BONDING NEPORENE SEAL ELEMENTS TO STEEL JOINT COMPONENTS SHALL BE A ONE QUART MOISTURE-CURING POLYURETHAN AND HYDROCARBON SOLVENT MIXTURE HAVING THE FOLLOWING PHYSICAL PROPERTIES:

AVERAGE WEIGHT, POUNDS PER GALLON	8 +/- 10%
SOLIDS CONTENT	65%
ADHESIVE SHALL REMAIN LIQUID FROM	5°F TO 120°F
FILM STRENGTH, AS PER ASTM D-412	2,000 PSI
ELONGATION	250%

6. HOLES SHALL BE PLACED IN THE RIB PLATES AND STRAP ANCHOR PLATES FOR BAR REINFORCEMENT. IF THIS IS DONE IN THE FIELD AN APPROVED PAINT SHALL BE USED TO TOUCH-UP THE HOLES. PAYMENT INCIDENTAL TO #605657 - STRIP SEAL EXPANSION JOINT.
7. AT CONSTRUCTION JOINTS, ANCHOR PLATE AND STEEL EXTRUSION SHALL BE WELDED TO BE WATERTIGHT. PAYMENT INCIDENTAL TO #605657 - STRIP SEAL EXPANSION JOINT.
8. CONTRACTOR SHALL SUBMIT A PLAN FOR PLACEMENT OF STRIP SEAL DUE TO PHASING.

NOTE A:
THE CONTRACTOR SHALL ADJUST THE OPEN DECK JOINT AS REQUIRED BY THE WIDTH OF THE STEEL EXTRUSION USED SO AS TO PROVIDE A 1½" JOINT OPENING AT 68°F.

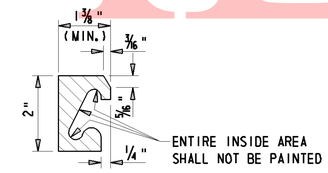

STEEL EXTRUSION DETAIL

6" = 1'-0"

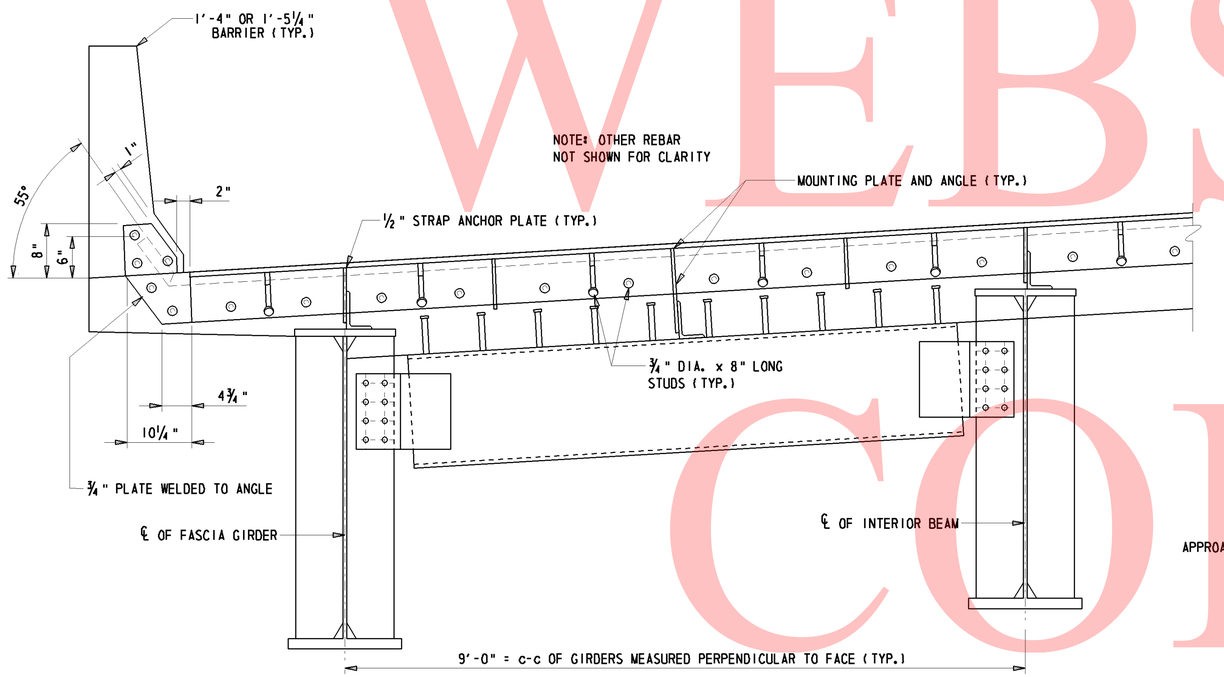

SECTION P-P

1" = 1'-0"

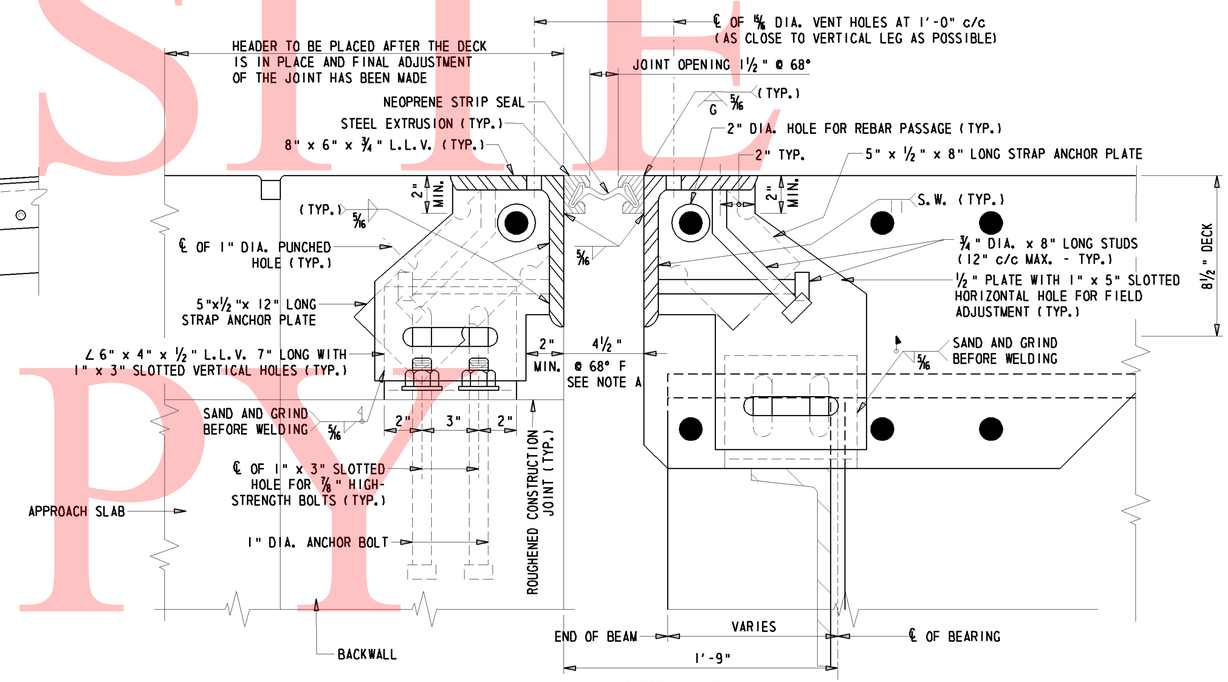

SECTION Q-Q

NTS

UNOFFICIAL WEBSITE COPY

W:\MSV8\CELLS\PROJDEV\SB.CEL

DELAWARE DEPARTMENT OF TRANSPORTATION	ADDENDUMS / REVISIONS	I-95 & US 202 INTERCHANGE	CONTRACT T200510602	BRIDGE NO. 1-762	EXPANSION JOINT DETAILS S2 – 16 OF 18	SHEET NO. 184
			COUNTY NEW CASTLE	DESIGNED BY: JKM		TOTAL SHTS. 482
				CHECKED BY: BAB		

① ANY MARK NUMBER WITH SUFFIX 'E' DENOTES EPOXY COATED REINFORCING STEEL.

② ALL MARK 'LOCATION PREFIXES' SHALL CONSIST OF TWO LETTERS AND ARE AS FOLLOWS: AB = ABUTMENT, AS = APPROACH SLAB, BC = BOX CULVERT, BW = BACKWALL, CL = COLUMN, DK = DECK, DL = DOWEL, FT = FOOTING, HW = HEADWALL, MS = MISC. BARS, PA = PARAPET, PR = PIER, SC = SHEETPILE CAP, SL = SLAB, TW = TOEWALL, WL = WALL (UNIQUE LOCATION), WW = WINGWALL

SPECIFICATIONS					BENDING DIMENSIONS (FEET-INCHES /QUARTER INCH)										
QTY.	SIZE	LENGTH	MARK	TYPE	A	B	C	D	E	F/R	G	H	J	K	O
55	5	10-100	AB501E	STR		10-100									
55	5	18-102	AB502E	17		5-10	13-92								
70	5	27-100	AB503E	STR		27-100									
70	5	32-40	AB504E	STR		32-40									
51	5	8-100	AB505E	STR		8-100									
1X51	5	13-110	AB506E	16	0-100	1-100	7-100	3-50				2-50		2-50	10-30
		T0			T0	T0	T0	T0				T0		T0	T0
		13-10			0-100	1-100	7-00	3-50				2-50		2-50	9-50
51	5	9-60	AB507E	17		0-80	8-100								
60	5	8-60	AB508E	17		2-100	2-100	2-100							
60	5	8-40	AB509E	17		2-100	2-80	2-100							
118	5	4-40	AB510E	12			2-20	2-20				1-102		1-10	3-30
64	5	4-40	AB511E	12			2-20	2-20				1-80		1-50	3-70
56	5	4-40	AB512E	12			2-20	2-20				0-110		1-112	4-12
55	5	9-70	AB521E	STR		9-70									
55	5	17-90	AB522E	17		5-10	12-80								
66	5	32-70	AB523E	STR		32-70									
66	5	26-100	AB524E	STR		26-100									
56	5	8-110	AB525E	STR		8-110									
1X56	5	14-10	AB526E	16	0-100	1-100	8-00	3-50				2-50		2-50	10-50
		T0			T0	T0	T0	T0				T0		T0	T0
		13-30			0-100	1-100	7-20	3-50				2-50		2-50	9-70
56	5	9-70	AB527E	17		0-80	8-110								
48	5	4-80	AB528E	STR		4-80									
38	5	8-50	AB529E	STR		8-50									
46	5	5-11	AB530E	STR		5-11									
14	5	3-71	AB531E	STR		3-71									
107	8	13-102	AB801E	STR		13-102									
107	10	12-80	AB1021	STR		12-80									
215	5	7-90	AS501E	T11			1-30	2-10	1-00	3-50		1-01		0-90	
1X26	5	29-80	AS502E	STR		29-80									
		T0				T0									
		41-20				41-20									
1X21	5	29-80	AS503E	STR		29-80									
		T0				T0									
		38-62				38-62									
306	5	6-92	AS504E	T11			1-32	1-80	1-100	2-00		0-110		0-110	
1x31	5	24-02	AS505E	STR		24-02									
		T0				T0									
		24-110				24-110									

SPECIFICATIONS					BENDING DIMENSIONS (FEET-INCHES /QUARTER INCH)										
QTY.	SIZE	LENGTH	MARK	TYPE	A	B	C	D	E	F/R	G	H	J	K	O
1X10	5	4-62	AS506E	STR		4-62									
		T0				T0									
		22-90				22-90									
22	5	21-70	AS507E	STR		21-70									
1X7	5	6-60	AS508E	STR		6-60									
		T0				T0									
		18-60				18-60									
13	5	19-30	AS509E	STR		19-30									
92	5	5-102	AS510E	T11			1-32	0-100	1-90	2-00		0-110		0-110	
1X26	5	29-80	AS521E	STR		29-80									
		T0				T0									
		40-100				40-100									
1X21	5	29-80	AS522E	STR		29-80									
		T0				T0									
		38-110				38-110									
1x31	5	23-80	AS523E	STR		23-80									
		T0				T0									
		24-13				24-13									
1X8	5	6-72	AS524E	STR		6-72									
		T0				T0									
		20-71				20-71									
32	5	21-70	AS525E	STR		21-70									
1X9	5	7-43	AS526E	STR		7-43									
		T0				T0									
		22-12				22-12									
4	5	40-41	AS527E	STR		40-41									
8	5	30-10	AS528E	STR		30-10									
4	5	38-10	AS529E	STR		38-10									
4	5	10-80	AS530E	STR		10-80									
4	5	8-80	AS531E	STR		8-80									
4	5	19-70	AS532E	STR		19-70									
4	5	19-10	AS533E	STR		19-10									
4	5	26-50	AS534E	STR		26-50									
4	5	23-91	AS535E	STR		23-91									
4	5	24-101	AS536E	STR		24-101									
4	5	24-11	AS537E	STR		24-11									
1x31	6	24-00	AS601E	STR		24-00									
		T0				T0									
		24-110				24-110									
1X10	6	4-62	AS602E	STR		4-62									

SPECIFICATIONS					BENDING DIMENSIONS (FEET-INCHES /QUARTER INCH)										
QTY.	SIZE	LENGTH	MARK	TYPE	A	B	C	D	E	F/R	G	H	J	K	O
		T0				T0									
		22-90				22-90									
22	6	22-40	AS603E	STR		22-40									
1X7	6	7-30	AS604E	STR		7-30									
		T0				T0									
		19-30				19-30									
9	6	19-30	AS605E	STR		19-30									
1x31	6	23-80	AS621E	STR		23-80									
		T0				T0									
		24-10				24-10									
1X8	6	6-71	AS622E	STR		6-71									
		T0				T0									
		20-71				20-71									
28	6	22-40	AS623E	STR		22-40									
1X9	6	7-20	AS624E	STR		7-20									
		T0				T0									
		22-10				22-10									
1X26	9	29-80	AS901E	STR		29-80									
		T0				T0									
		41-20				41-20									
1X21	9	29-80	AS902E	STR		29-80									
		T0				T0									
		38-60				38-60									
1X26	9	29-80	AS921E	STR		29-80									
		T0				T0									
		40-100				40-100									
1X21	9	29-80	AS922E	STR		29-80									
		T0				T0									
		38-110				38-110									
184	5	58-30	DK501E	STR		58-30									
164	5	15-20	DK502E	1	0-70	14-20							0-50		
12	5	26-62	DK506E	STR		26-62									
12	5	24-70	DK507E	STR		24-70									
100	5	6-102	DK508E	T11			1-31	1-80	0-111	3-00		1-10		0-80	
360	5	3-81	DK512E	T15		1-00	1-50	1-31							
201	6	24-90	DK601E	1	0-80	23-80							0-50		
201	6	23-50	DK602E	1	0-80	22-40							0-50		
2X28	6	24-90	DK603E	1	0-80	23-80							0-50		
		T0				T0									
		27-70			0-80	26-60							0-50		

ASTM STANDARD ENGLISH REINFORCING BARS				RECOMMENDED END HOOKS, APPLICABLE TO ALL GRADES				STIRRUP AND TIE HOOKS, APPLICABLE TO ALL GRADES			
	NOMINAL DIMENSIONS				180° HOOKS		90° HOOKS		90° HOOK	135° HOOK	
BAR SIZE	DIAMETER (INCHES)	AREA (INCHES²)	WEIGHT (LBS./FT.)	D	A OR G	J	A OR G	D	A OR G	A OR G	A OR G
3	0.375	0.110	0.376	2¼"	5"	3"	6"	1½"	4"	4"	2½"
4	0.500	0.200	0.668	3"	6"	4"	8"	2"	4½"	4½"	3"
5	0.625	0.310	1.043	3¾"	7"	5"	10"	2½"	6"	5½"	3¾"
6	0.750	0.440	1.502	4½"	8"	6"	1-0"	4½"	1-0"	8"	4½"
7	0.875	0.600	2.044	5¼"	10"	7"	1-2"	5¼"	1-2"	9"	5¼"
8	1.000	0.790	2.670	6"	11"	8"	1-4"	6"	1-4"	10½"	6"
9	1.128	1.000	3.400	9½"	1-3"	11¾"	1-7"				
10	1.270	1.270	4.303	10¾"	1-5"	1-1¼"	1-10"				
11	1.410	1.560	5.313	1-0"	1-7"	1-2¾"	2-0"				
14	1.693	2.250	7.650	1-6¼"	2-3"	1-9¾"	2-7"				
18	2.257	4.000	13.600	2-0"	3-0"	2-4½"	3-5"				

NOTES:

1. FIGURES SHOWN IN CIRCLES REPRESENT BAR BEND TYPES.
2. STANDARD BAR BENDS INCLUDE ONLY THOSE TYPES BELOW, INDICATED AS SUCH.
3. ALL DIMENSIONS OUT-TO-OUT, EXCEPT "A" AND "G" ON STD. 180° AND 135° HOOKS.
4. "J" DIMENSIONS ON 180° HOOKS TO BE SHOWN ONLY WHERE NECESSARY TO RESTRICT HOOK SIZE, OTHERWISE STANDARD 'ACI' HOOKS ARE TO BE USED.
5. WHERE "J" IS NOT SHOWN, "J" WILL BE KEPT EQUAL TO OR LESS THAN "H" ON TYPES 3, 5 AND 22. WHERE "J" CAN EXCEED "H", IT SHALL BE SHOWN.
6. "H" DIMENSIONS OF STIRRUPS TO BE SHOWN AS NEEDED TO FIT WITHIN THE CONCRETE.
7. UNLESS OTHERWISE NOTED, DIAMETER "D" IS THE SAME FOR ALL BENDS AND HOOKS ON A BAR (EXCEPT FOR BEND TYPES 11 AND 13).
8. WHERE SLOPE DIFFERS FROM 45° OFFSET, "H" AND "K" MUST BE SHOWN.
9. WHERE BARS ARE TO BE BENT MORE ACCURATELY THAN STANDARD BENDING TOLERANCES, BENDING DIMENSIONS REQUIRING CLOSER FABRICATION SHOULD HAVE LIMITS INDICATED.
10. FOR RECOMMENDED DIAMETER "D", OF BENDS, HOOKS, ETC., REFER TO TABLE ABOVE, 'CRSI' OR 'ACI' TABLES WHERE APPLICABLE AND REQUIRED.
11. TYPE S1-S6, S11, T1-T3 AND T6-T9 APPLICABLE TO BAR SIZES #3 THROUGH #8.

STANDARD BAR BENDS

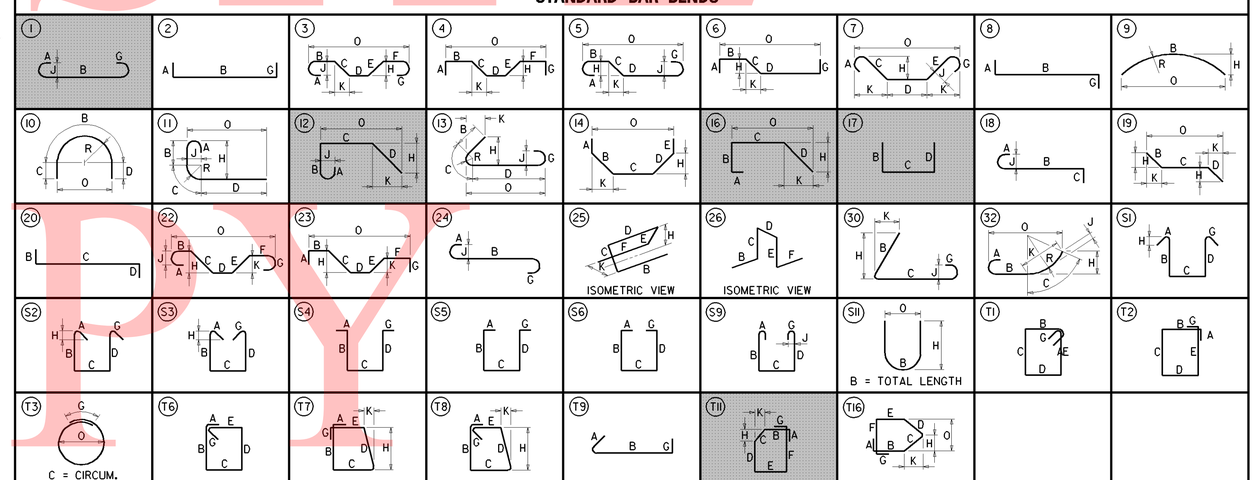

SPECIAL BAR BENDS

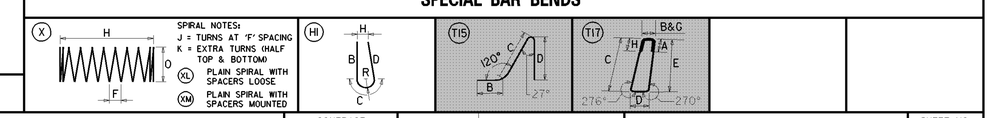

STIRRUP AND TIE HOOKS

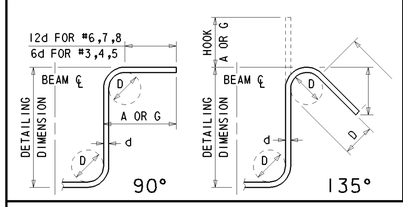

180° AND 90° END HOOKS

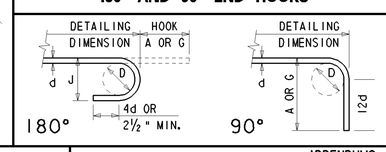

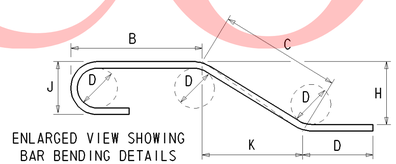

ENLARGED VIEW SHOWING BAR BENDING DETAILS

DELAWARE DEPARTMENT OF TRANSPORTATION

ADDENDUMS / REVISIONS

I-95 & US 202 INTERCHANGE
I-95 RAMP 5 OVER US 202

CONTRACT	BRIDGE NO.	1-762
T200510602	DESIGNED BY: JKM	
COUNTY		
NEW CASTLE	CHECKED BY: BAB	

REINFORCEMENT BAR LIST (1 OF 2) S2 - 17 OF 18

SHEET NO. 185

TOTAL SHTS. 482

UNOFFICIAL WEBSITE COPY

① ANY MARK NUMBER WITH SUFFIX 'E' DENOTES EPOXY COATED REINFORCING STEEL.

② ALL MARK 'LOCATION PREFIXES' SHALL CONSIST OF TWO LETTERS AND ARE AS FOLLOWS: AB = ABUTMENT, AS = APPROACH SLAB, BC = BOX CULVERT, BW = BACKWALL, CL = COLUMN, DK = DECK, DL = DOWEL, FT = FOOTING, HW = HEADWALL, MS = MISC. BARS, PA = PARAPET, PR = PIER, SC = SHEETPILE CAP, SL = SLAB, TW = TOEWALL, WL = WALL (UNIQUE LOCATION), WW = WINGWALL

SPECIFICATIONS					BENDING DIMENSIONS (FEET-INCHES /QUARTER INCH)										
QTY.	SIZE	LENGTH	MARK	TYPE	A	B	C	D	E	F/R	G	H	J	K	O
2X28	6	22-11⅔	DK604E	1	0-80	21-10⅔							0-50		
		TO				TO									
		23-50			0-80	22-40							0-50		
2x20	6	24-90	DK605E	1	0-80	23-80							0-50		
		TO				TO									
		27-11⅔			0-80	26-100							0-50		
2x20	6	22-11⅔	DK606E	1	0-80	21-10⅔							0-50		
		TO				TO									
		23-50			0-80	22-40							0-50		
41	5	25-70	FT501E	17		4-50	21-20								
2X23	5	7-80	FT502E	STR		7-80									
		TO				TO									
		29-40				29-40									
46	5	28-00	FT503E	STR		28-00									
109	5	24-40	FT504E	17		4-50	19-11								
2X24	5	20-10	FT505E	STR		20-10									
		TO				TO									
		32-90				32-90									
61	5	26-80	FT506E	17		4-50	22-30								
36	5	19-10	FT507E	17		4-80	14-50								
2X24	5	42-00	FT508E	STR		42-00									
		TO				TO									
		49-60				49-60									
2X23	5	16-60	FT522E	STR		16-60									
		TO				TO									
		34-20				34-20									
46	5	22-60	FT523E	STR		22-60									
2X24	5	23-60	FT525E	STR		23-60									
		TO				TO									
		34-90				34-90									
63	5	27-30	FT526E	17		4-50	22-100								
48	5	39-30	FT528E	STR		39-30									
117	10	22-30	FT1001	16		6-11		16-13				0-90		16-12	
137	10	20-11⅔	FT1002	16		6-12		14-100				0-100		14-92	
338	11	21-22	FT1101	16		4-11⅓		16-31				0-92		16-30	
185	11	26-70	FT1102	17		2-10	22-50	2-10							
80	11	28-10	FT1103	17		2-10	23-11⅔	2-10							
103	11	29-90	FT1104	17		2-10	27-80								
97	11	29-70	FT1124	17		2-10	27-60								
298	5	7-61	PA501E	T17	0-60	0-32	2-82	0-81	2-80		0-20	0-60			

SPECIFICATIONS					BENDING DIMENSIONS (FEET-INCHES /QUARTER INCH)										
QTY.	SIZE	LENGTH	MARK	TYPE	A	B	C	D	E	F/R	G	H	J	K	O
292	5	9-03	PA502E	T17	0-60	0-51	3-22	0-100	3-20		0-50	0-60			
24	5	10-00	PA503E	STR		10-00									
96	5	9-22	PA504E	STR		9-22									
40	5	8-20	PA505E	STR		8-20									
12	7	10-00	PA701E	STR		10-00									
48	7	9-22	PA702E	STR		9-22									
16	7	9-83	PA703E	STR		9-83									
12	8	10-00	PA801E	STR		10-00									
48	8	9-22	PA802E	STR		9-22									
16	8	9-83	PA803E	STR		9-83									
174	5	12-00	WW501E	STR		12-00									
140	5	12-00	WW502E	STR		12-00									
64	5	44-10⅓	WW503E	STR		44-10⅓									
62	5	28-11	WW504E	STR		28-11									
17	5	16-30	WW505E	17		1-10	15-20								
1x34	5	4-40	WW506E	17		0-100	3-60								
		TO				TO									
		11-22				0-100	10-42								
56	5	33-00	WW507E	STR		33-00									
58	5	29-62	WW508E	STR		29-62									
1x27	5	6-71	WW509E	17		0-100	5-91								
		TO				TO									
		9-81				0-100	8-101								
1x11	5	4-50	WW510E	17		0-100	3-70								
		TO				TO									
		7-10				0-100	6-30								
1x16	5	4-23	WW511E	17		0-100	3-43								
		TO				TO									
		8-70				0-100	7-90								
32	5	4-80	WW512E	STR		4-80									
17	5	7-20	WW513E	17		1-00	6-20								
1x66	6	4-40	WW601E	STR		4-40									
		TO				TO									
		11-22				11-22									
1x53	6	6-71	WW602E	STR		6-71									
		TO				TO									
		9-81				9-81									
1x21	6	4-50	WW603E	STR		4-50									
		TO				TO									
		7-10				7-10									

SPECIFICATIONS					BENDING DIMENSIONS (FEET-INCHES /QUARTER INCH)										
QTY.	SIZE	LENGTH	MARK	TYPE	A	B	C	D	E	F/R	G	H	J	K	O
1x31	6	4-23	WW604E	STR		4-23									
		TO				TO									
		8-70				8-70									
33	6	6-30	WW605E	STR		6-30									
309	7	12-100	WW701E	STR		12-100									
33	7	15-30	WW702E	STR		15-30									

ASTM STANDARD ENGLISH REINFORCING BARS				RECOMMENDED END HOOKS, APPLICABLE TO ALL GRADES				STIRRUP AND TIE HOOKS, APPLICABLE TO ALL GRADES			
	NOMINAL DIMENSIONS				180° HOOKS		90° HOOKS		90° HOOK	135° HOOK	
BAR SIZE	DIAMETER (INCHES)	AREA (INCHES²)	WEIGHT (LBS./FT.)	D	A OR G	J	A OR G	D	A OR G	A OR G	A OR G
3	0.375	0.110	0.376	2¼"	5"	3"	6"	1½"	4"	4"	2½"
4	0.500	0.200	0.668	3"	6"	4"	8"	2"	4½"	4½"	3"
5	0.625	0.310	1.043	3¾"	7"	5"	10"	2½"	6"	5½"	3¾"
6	0.750	0.440	1.502	4½"	8"	6"	1-0"	4½"	1-0"	8"	4½"
7	0.875	0.600	2.044	5¼"	10"	7"	1-2"	5¼"	1-2"	9"	5¼"
8	1.000	0.790	2.670	6"	11"	8"	1-4"	6"	1-4"	10½"	6"
9	1.128	1.000	3.400	9½"	1-3"	11¾"	1-7"				
10	1.270	1.270	4.303	10¾"	1-5"	1-1¼"	1-10"				
11	1.410	1.560	5.313	1-0"	1-7"	1-2¾"	2-0"				
14	1.693	2.250	7.650	1-6¼"	2-3"	1-9¾"	2-7"				
18	2.257	4.000	13.600	2-0"	3-0"	2-4½"	3-5"				

NOTES:

1. FIGURES SHOWN IN CIRCLES REPRESENT BAR BEND TYPES.
2. STANDARD BAR BENDS INCLUDE ONLY THOSE TYPES BELOW, INDICATED AS SUCH.
3. ALL DIMENSIONS OUT-TO-OUT, EXCEPT "A" AND "G" ON STD. 180° AND 135° HOOKS.
4. "J" DIMENSIONS ON 180° HOOKS TO BE SHOWN ONLY WHERE NECESSARY TO RESTRICT HOOK SIZE, OTHERWISE STANDARD 'ACI' HOOKS ARE TO BE USED.
5. WHERE "J" IS NOT SHOWN, "J" WILL BE KEPT EQUAL TO OR LESS THAN "H" ON TYPES 3, 5 AND 22. WHERE "J" CAN EXCEED "H", IT SHALL BE SHOWN.
6. "H" DIMENSIONS OF STIRRUPS TO BE SHOWN AS NEEDED TO FIT WITHIN THE CONCRETE.
7. UNLESS OTHERWISE NOTED, DIAMETER "D" IS THE SAME FOR ALL BENDS AND HOOKS ON A BAR (EXCEPT FOR BEND TYPES 11 AND 13).
8. WHERE SLOPE DIFFERS FROM 45° OFFSET, "H" AND "K" MUST BE SHOWN.
9. WHERE BARS ARE TO BE BENT MORE ACCURATELY THAN STANDARD BENDING TOLERANCES, BENDING DIMENSIONS REQUIRING CLOSER FABRICATION SHOULD HAVE LIMITS INDICATED.
10. FOR RECOMMENDED DIAMETER "D", OF BENDS, HOOKS, ETC., REFER TO TABLE ABOVE, 'CRSI' OR 'ACI' TABLES WHERE APPLICABLE AND REQUIRED.
11. TYPE S1-S6, S11, T1-T3 AND T6-T9 APPLICABLE TO BAR SIZES #3 THROUGH #8.

STANDARD BAR BENDS

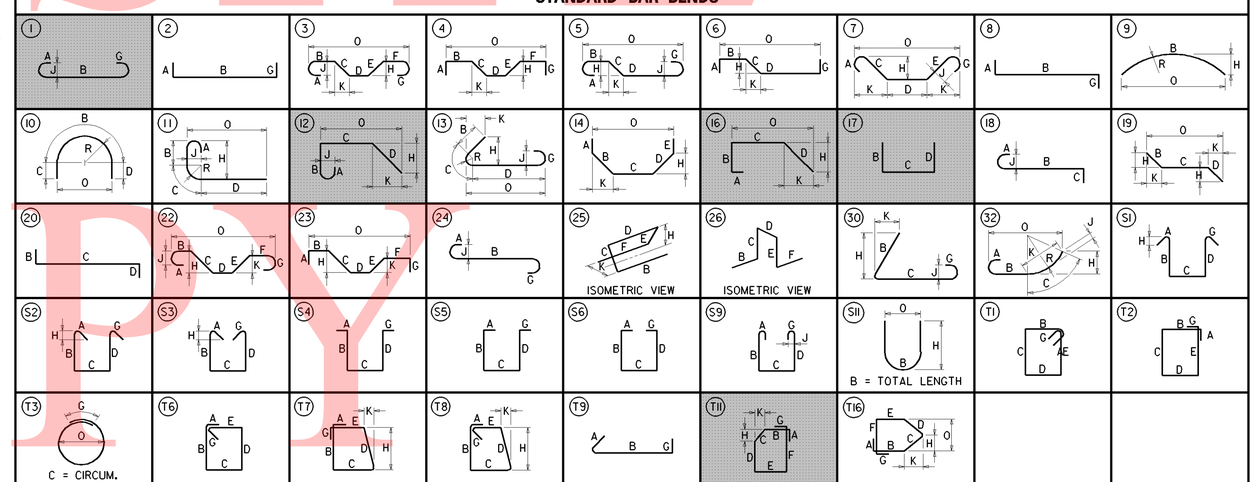

SPECIAL BAR BENDS

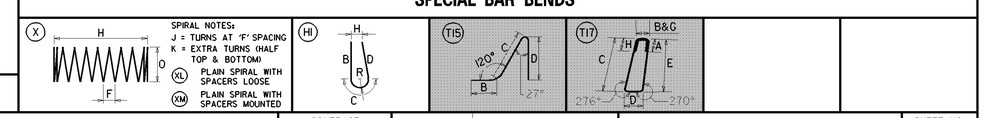

STIRRUP AND TIE HOOKS

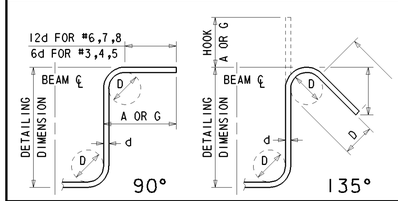

180° AND 90° END HOOKS

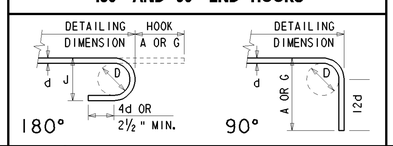

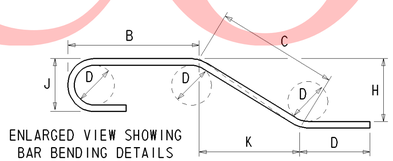

ENLARGED VIEW SHOWING BAR BENDING DETAILS

DELAWARE DEPARTMENT OF TRANSPORTATION

ADDENDUMS / REVISIONS

I-95 & US 202 INTERCHANGE
I-95 RAMP 5 OVER US 202

CONTRACT	BRIDGE NO.	1-762	REINFORCEMENT BAR LIST (2 OF 2) S2 18 OF 18	SHEET NO.
T200510602	DESIGNED BY: JKM			186
COUNTY				TOTAL SHTS.
NEW CASTLE	CHECKED BY: BAB			482

UNOFFICIAL WEBSITE COPY

BRIDGE PROJECT NOTES

1. LOCATION
PROPOSED NEW BRIDGE 1-764 (I-95 RAMP 5 OVER I-95), NEW CASTLE COUNTY, DELAWARE

2. GENERAL
PROVIDE MATERIALS AND PERFORM WORK IN ACCORDANCE WITH DELAWARE DEPARTMENT OF TRANSPORTATION STANDARD SPECIFICATIONS FOR ROAD AND BRIDGE CONSTRUCTION, ANSI/AASHTO/AWS D1.5-08 BRIDGE WELDING CODE AND PROJECT SPECIAL PROVISIONS. ALL DIMENSIONS ARE HORIZONTAL, EXCEPT AS NOTED. SUPERSTRUCTURE DIMENSIONS SHOWN ARE FOR A NORMAL TEMPERATURE OF 68 DEGREES FAHRENHEIT.

3. DESIGN SPECIFICATIONS
AASHTO LRFD BRIDGE DESIGN SPECIFICATIONS, 4TH EDITION WITH INTERIMS THROUGH 2009, AS SUPPLEMENTED BY THE DELAWARE DEPARTMENT OF TRANSPORTATION BRIDGE DESIGN MANUAL.

LIVE LOAD DISTRIBUTION TO THE GIRDERS IS BASED ON THE GRILLAGE METHOD

DESIGN IS IN ACCORDANCE WITH THE LRFD METHOD

4. DESIGN LIVE LOADS
HL-93 LOADING, WHICH CONSISTS OF A DESIGN TRUCK OR TANDEM WITH DYNAMIC LOAD ALLOWANCE AND LANE LOAD. FATIGUE DESIGN IS BASED ON THE FOLLOWING ONE DIRECTIONAL TRAFFIC VOLUMES:
ADTT= 1096 (YEAR 2027)

5. DEAD LOADS
INCLUDES 25 PSF FOR FUTURE WEARING SURFACE ON DECK SLAB AND 15 PSF FOR STAY-IN-PLACE FORMS (INCLUDES CONCRETE IN FORM CORRUGATIONS)

6. PORTLAND CEMENT CONCRETE
PORTLAND CEMENT CONCRETE FOR CAST-IN-PLACE ELEMENTS SHALL BE AS FOLLOWS:
(f'c= 28 DAY COMPRESSIVE STRENGTH)
CLASS A - PARAPETS, ABUTMENTS, PIER ABOVE FOOTING, MOMENT SLABS, AND WINGWALLS (f'c= 4.5 KSI)
CLASS B - PIER FOOTING (f'c= 3.0 KSI)
CLASS D - CONCRETE DECK AND APPROACH SLAB (f'c= 4.5 KSI)
MIX REQUIREMENTS SHALL CONFORM TO SECTION 812 OF THE STANDARD SPECIFICATIONS
ALL EXPOSED EDGES SHALL BE CHAMFERED 3/4" X 3/4" UNLESS OTHERWISE NOTED
IT SHALL BE THE CONTRACTOR'S RESPONSIBILITY TO UTILIZE ANY APPROVED CONCRETE ADDITIVES OR HEATING TECHNIQUES TO MAINTAIN THE PROPER TEMPERATURE FOR ANY CONCRETE POURED DURING COLD WEATHER.
PAYMENT SHALL BE INCIDENTAL TO THE RESPECTIVE CONCRETE BID ITEM
NO SLIP-FORMING OF BARRIERS IS PERMITTED, UNLESS OTHERWISE APPROVED BY THE DEPARTMENT

7. STRUCTURAL STEEL
PROVIDE STRUCTURAL STEEL CONFORMING TO AASHTO M270, GRADE 50W (ASTM A709, GRADE 50W) DESIGNATION, EXCEPT WHEN NOTED OTHERWISE. THE ADDITIONAL REQUIREMENTS FOR CHARPY V-NOTCH TESTING OF AASHTO M270 FOR PRIMARY LOAD CARRYING MEMBERS SHALL BE INCLUDED. SUPPLEMENTAL NOTCH TOUGHNESS REQUIREMENTS ARE MANDATORY FOR:
-TOP AND BOTTOM GIRDER FLANGES AS SHOWN ON PLANS
-GIRDER WEB PLATES
-GIRDER FIELD SPLICE PLATES
-ALL DIAPHRAGM MEMBERS AND DIAPHRAGM CONNECTION PLATES
ALL FASTENERS ARE 7/8" DIAMETER ASTM A325 HIGH STRENGTH BOLTS, TYPE 1, UNLESS OTHERWISE NOTED

IF GIRDERS CAN BE FABRICATED IN LENGTHS LONGER THAN THE SECTIONS SHOWN ON THE PLANS BY ELIMINATING FIELD SPLICES, FIELD SPLICES MAY BE OMITTED AT THE REQUEST OF THE CONTRACTOR. THE CONTRACTOR ASSUMES FULL RESPONSIBILITY FOR SECURING A HAULING PERMIT. APPROVAL FOR ELIMINATION OF A FIELD SPLICE AT THE SHOP DRAWING STAGE DOES NOT OBLIGATE THE DEPARTMENT TO ISSUE A HAULING PERMIT.

DO NOT MAKE WELDS BY MANUAL SHIELDED METAL ARC PROCESS FOR PRIMARY GIRDER WELDS SUCH AS FLANGE TO WEB WELDS OR FOR SHOP SPLICES OF WEB AND FLANGES. DO NOT USE FORM SUPPORT SYSTEMS THAT WILL CAUSE UNACCEPTABLE OVERSTRESS OR DEFORMATION TO PERMANENT BRIDGE MEMBERS.

THE FASCIA GIRDERS ARE DESIGNED FOR A TEMPORARY CONSTRUCTION LOAD APPLIED TO THE WEB WITHIN 6" OF THE BOTTOM FLANGE AT APPROXIMATELY 4'-0" INTERVALS. THIS LOAD APPROXIMATES THE HORIZONTAL COMPONENT OF A DECK SLAB OVERHANG FORM SUPPORT BRACKET AND CONSISTS OF A 1.05 KIP/FT ALLOWANCE FOR THE WEIGHT OF THE CONCRETE, FORMS, AND DECK FINISHING MACHINE.

GIRDER WEBS SHALL BE PLUMB UNDER THE FULL DEAD LOAD EXISTING AT THE END OF CONSTRUCTION. THE OUT-OF-PLANE ROTATIONS ANTICIPATED FOR THE CURVED GIRDERS ARE WITHIN THE TOLERANCE LEVEL FOR FABRICATION OF PLUMB WEBS.

SHOP ASSEMBLE THE ENTIRE STEEL SUPERSTRUCTURE FOLLOWING THE SAME ERECTION PROCEDURES AND SUPPORT CONDITIONS TO ENSURE THE PROPER FIT FOR ALL STRUCTURAL STEEL COMPONENTS PRIOR TO REAMING OF BOLT HOLES FOR SPLICES AND DIAPHRAGM CONNECTION PLATES

DO NOT WELD PERMANENT METAL DECK FORMS OR OTHER ATTACHMENTS TO GIRDER TOP FLANGES IN TENSION ZONES (TENSION ZONES OF TOP FLANGE ARE DESIGNATED ON THE PLANS)

PROVIDE WELDED STUD SHEAR CONNECTORS MANUFACTURED FROM STEEL CONFORMING TO ASTM A 108

SET ANCHOR BOLTS TO TEMPLATE OR IN PERFORMED HOLES. DO NOT DRILL UNLESS SPECIFICALLY INDICATED ON PLANS. FILL THE PERFORMED HOLES WITH NON-SHRINK GROUT. FILL THE CLEARANCE BETWEEN ANCHOR BOLTS AND HOLES IN MASONRY PLATES WITH APPROVED NON-HARDENING CAULKING COMPOUND.

STABILITY OF PARTIAL GIRDERS AND COMPLETED GIRDERS IS TO BE MAINTAINED BY THE CONTRACTOR DURING ERECTION UNTIL ALL GIRDERS AND DIAPHRAGMS ARE IN-PLACE AND ALL BOLTS ARE PROPERLY INSTALLED. ERECTION LOADS INCLUDING SELF-WEIGHT OF THE STEEL MEMBERS, WIND LOADING AND CONSTRUCTION LIVE LOAD EFFECTS ARE TO BE EVALUATED BY THE CONTRACTOR FOR STABILITY, STRESSES AND DEFLECTIONS ON THE STEEL MEMBERS DURING ANY STAGE OF ERECTION

AN ALTERNATE SLAB PLACEMENT SEQUENCE MAY BE PERMITTED AT THE REQUEST OF THE CONTRACTOR. SUBMIT FOR REVIEW AND APPROVAL TO THE DEPARTMENT A REVISED SLAB PLACEMENT SEQUENCE WITH SUPPORT CALCULATIONS AND COMPUTER STRESS ANALYSIS. SATISFY THE REQUIREMENTS OF THE ORIGINAL SLAB PLACEMENT SUQUENCE. OBTAIN WRITTEN APPROVAL PRIOR TO THE USE OF THE REVISED SLAB PLACEMENT SEQUENCE AND/OR CAMBER VALUES. NO COMPENSATION WILL BE ALLOWED FOR THE DEVELOPMENT AND APPROVAL OF THE REVISED SLAB PLACEMENT SEQUENCE AND CAMBER VALUES. THE DEPARTMENT WILL BE THE SOLE JUDGE OF THE ACCEPTABILITY OF THE REVISED SLAB PLACEMENT SEQUENCE AND CAMBER VALUES.

8. BAR REINFORCEMENT
REINFORCING STEEL SHALL CONFORM TO AASHTO M31 (ASTM A615), GRADE 60. REINFORCING STEEL SHALL HAVE A 2" CLEAR COVER UNLESS OTHERWISE SPECIFIED ON THE PLANS. ALL REINFORCING STEEL SHALL BE PROTECTED WITH FUSION BONDED EPOXY. EPOXY COATED REINFORCING STEEL SHALL CONFORM TO AASHTO M284 (ASTM D3963).

9. CONSTRUCTION JOINTS
KEYED CONSTRUCTION JOINTS SHALL BE 2 INCHES X 4 INCHES OR AS NOTED. ALL EXPOSED CONSTRUCTION JOINTS SHALL HAVE A 3/4" V-NOTCH. ANY WATERSTOPS SHALL BE INCIDENTAL TO THE APPROPRIATE CONCRETE ITEM.

10. CONCRETE SEALER
SILICONE ACRYLIC CONCRETE SEALER SHALL BE APPLIED TO THE EXPOSED FACE AND TOP OF BACKWALL, ABUTMENT SEAT, EXPOSED ABUTMENT AND WINGWALL FACE, DECK OVERHANG SOFFIT, PIER CAP, EXPOSED PIER COLUMNS, AND PARAPET. PAYMENT UNDER ITEM #602646 - SILICONE ACRYLIC CONCRETE SEALER.

11 STABILIZING STRUCTURAL EXCAVATIONS
SHORING SHALL BE REQUIRED FOR ANY EXCAVATION EXCEEDING 5'-0" IN DEPTH. UNLESS SPECIFIED ON THE PLANS AS NEEDING SHEETING AND SHORING, THE COST OF SHORING SHALL BE INCIDENTAL TO ITEM #207000 - EXCAVATION AND BACKFILL FOR STRUCTURES. IN LIEU OF SHORING, THE CONTRACTOR MAY USE A 2:1 (H:V) CUT SLOPE. NO PAYMENT FOR ADDITIONAL CUT OR FILL WILL BE GIVEN, AS DESCRIBED IN SECTION 207 OF THE STANDARD SPECIFICATIONS. FOR AREAS DESIGNATED IN THE PLANS AS NEEDING SHEETING OR SHORING, THE CONTRACTOR SHALL SUBMIT A PROPOSED PLAN FOR SHEETING OR SHORING OF THE EXCAVATION. THE SUBMITTAL SHALL INCLUDE ANY DRAWINGS AND CALCULATIONS ASSOCIATED WITH THE WORK AND SHALL BE STAMPED BY A DELAWARE REGISTERED PROFESSIONAL ENGINEER. PAYMENT FOR SHEETING AND SHORING, AS WELL AS THE MATERIALS AND WORK ASSOCIATED WITH THE SUBMITTAL, SHALL BE MADE UNDER ITEM #207501 - SHEETING AND SHORING.

12. PERFORATED PIPE UNDERDRAINS
MINIMUM INSTALLATION SLOPE SHALL BE 0.02 FT./FT. CAP FREE ENDS.

13. DECK SLAB
THE DECK SLAB THICKNESS INCLUDES 1/2" INTEGRAL WEARING SURFACE.

14. LOAD RATINGS
IN ACCORDANCE WITH AASHTO MANUAL FOR BRIDGE EVALUATION OF BRIDGES, 2008. NOTE THAT THE DECK ACTS COMPOSITELY WITH THE GIRDERS.

15. S.I.P FORM SUBMITTALS
IN ADDITION TO THE REQUIREMENTS OF THE STANDARD SPECIFICATIONS, CALCULATIONS AND DRAWINGS FOR THE S.I.P. FORMS MUST BE SEALED BY A PROFESSIONAL ENGINEER REGISTERED IN THE STATE OF DELAWARE AND SUBMITTED FOR APPROVAL. PAYMENT SHALL BE INCIDENTAL TO ITEM #602013 - PORTLAND CEMENT CONCRETE MASONRY, SUPERSTRUCTURE, CLASS D.

16. HAZARDOUS MATERIAL
THE CONTRACTOR IS ADVISED THAT THE EXISTING STRUCTURE OVER I-95 DOES CONTAIN LEAD BASED PAINT. AS A RESULT, THE CONTRACTOR'S PROPOSED DEMOLITION PLAN MUST ADDRESS, AS A MINIMUM, METHODS OF CUTTING THE BEAMS AND/OR DIAPHRAGMS, IF REQUIRED, AND HOW THOSE PERSONS PERFORMING SUCH WORK WILL BE PROTECTED IN ACCORDANCE WITH APPLICABLE OSHA REGULATIONS. ADDITIONALLY, THE CONTRACTOR MUST ADDRESS WHEN AND HOW THE LEAD BASED PAINT WILL BE REMOVED FROM THE STRUCTURAL STEEL AND ALL RELATED BRIDGE COMPONENTS. IF THE WORK IS PERFORMED ON SITE, THEN PROPER PROTECTION, CONTAINMENT, AND FINAL LEAD PAINT DISPOSAL MUST BE ADDRESSED IN THE PROPOSED PLAN. IF THE BEAMS WILL BE TRANSPORTED WITH THE PAINT STILL INTACT, THEN THE PLAN SHALL DETAIL HOW THE STRUCTURAL COMPONENTS WILL BE PROTECTED DURING TRANSPORT, WHERE AND HOW THE PAINT WILL BE REMOVED, AND THE LOCATION OF FINAL PAINT DISPOSAL, AGAIN IN ACCORDANCE WITH OSHA REGULATIONS. WRITTEN DOCUMENTATION MUST BE PROVIDED TO THE ENGINEER, PRIOR TO FINAL CONTRACT ACCEPTANCE, NOTING WHEN AND WHERE THE LEAD BASED PAINT WAS REMOVED, AND THE LOCATION OF FINAL PAINT DISPOSAL. ALL COSTS INVOLVED WITH THE ABOVE LISTED WORK SHALL BE INCIDENTAL TO ITEM #211000 - REMOVAL OF STRUCTURES AND OBSTRUCTIONS.

17. ROCK PROFILE VARIATION
ANTICIPATING THAT THE ACTUAL PROFILE OF THE ROCK VARIES OVER WHAT HAS BEEN MEASURED, THE ESTIMATED QUANTITIES FOR THE ITEMS LISTED BELOW HAVE BEEN INCREASED 25% OVER THE QUANTITIES CALCULATED:
ITEM #206000 - ROCK EXCAVATION FOR STRUCTURES AND TRENCHES
ITEM #609000 - SUBFOUNDATION CONCRETE
ITEM #618071 - STEEL H PILES, HP 10 X 57
ITEM #618072 - STEEL H TEST PILES, HP 10 X 57
ITEM #619051 - INSTALL STEEL H PILES, HP 10 X 57
ITEM #619052 - INSTALL STEEL H TEST PILES, HP 10 X 57
ITEM #619512 - PREDRILLING FOR END BEARING PILES

18. REMOVAL OF STRUCTURES AND OBSTRUCTIONS
ITEMS TO BE REMOVED UNDER ITEM #211000 - REMOVAL OF STRUCTURES AND OBSTRUCTIONS ASSOCIATING WITH BRIDGE 1-764 SHALL INCLUDE, BUT NOT BE LIMITED TO, THE FOLLOWING:
-EXISTING BRIDGE SUPERSTRUCTURE INCLUDING CONCRETE DECK, APPROACH SLAB, PARAPET, STRUCTURAL STEEL BEAMS, DIAPHRAGMS, AND CROSS BRACING.
-EXISTING BRIDGE ABUTMENTS DOWN TO 1' BELOW GRADE.
-EXISTING BRIDGE PIER DOWN TO 1' BELOW GRADE.

19. BLAST MONITORING
BOTH THE EXISTING STRUCTURE AND THE PROPOSED STRUCTURE SHALL BE MONITORED DURING ANY BLASTING TO ENSURE STRUCTURAL STABILITY THROUGHOUT THE DURATION OF THE PROJECT. PAYMENT SHALL BE UNDER ITEM #206000 - ROCK EXCAVATION FOR STRUCTURES AND TRENCHES.

20. SPREAD FOOTINGS
ABUTMENT A AND THE PIER WILL BE CONSTRUCTED ON SPREAD FOOTINGS. CONTRACTOR SHALL PERFORM AIR TRACK DRILLING ON A 10-FOOT GRID TO DETERMINE THE TOP OF ROCK WITHIN THE LIMITS OF THE FOOTING IN THE AREA INDICATED ON THE PLANS AND IN THE SPECIAL PROVISIONS FOR ITEM 619511 - EXPLORATORY DRILLING. BASED ON THE RESULTS, THE ENGINEER WILL DETERMINE THE LIMITS OF THE SOIL/ROCK EXCAVATION AND SUBFOUNDATION CONCRETE NECESSARY TO CONSTRUCT THE PROPOSED FOUNDATION. ANY ADDITIONAL SOIL/ROCK EXCAVATION AND SUBFOUNDATION CONCRETE WILL BE PAID FOR AT CONTRACT BID PRICE.

THE CONTRACTOR SHALL EXCAVATE ANY SOIL ZONES BELOW THE PROPOSED BEARING ELEVATION TO COMPETENT ROCK. THE ENGINEER WILL EXAMINE THE ROCK AND APPROVE PRIOR TO CONTRACTOR BACKFILLING WITH CONCRETE TO THE BOTTOM OF FOOTING ELEVATION.

21. PILE FOUNDATIONS
ABUTMENT B WILL UTILIZE MECHANICALLY STABILIZED EARTH (MSE) WALLS AND A STUB ABUTMENT ON STEEL H-PILES. CONTRACTOR SHALL PERFORM AIR TRACK DRILLING ON A 10-FOOT GRID TO DETERMINE THE TOP OF ROCK WITHIN THE LIMITS OF THE FOOTING IN THE AREA INDICATED ON THE PLANS AND IN THE SPECIAL PROVISIONS FOR ITEM 619511 - EXPLORATORY DRILLING.

CONTRACTOR SHALL CONTROL THE PILE DRIVING BY THE WAVE EQUATION ANALYSIS. THE ENGINEER WILL VERIFY, FROM THE TEST PILE DRIVING RESULTS, THE CAPABILITY OF THE PILE DRIVING HAMMER SELECTED BY THE CONTRACTOR. PILES SHALL BE DRIVEN TO ABSOLUTE REFUSAL INTO THE STRATUM DEFINED BY THE PILE TIP ELEVATION WHICH IS PREDETERMINED BY THE ENGINEER FROM THE TEST PILES AND AIR TRACK DRILLING. THE ENGINEER WILL DETERMINE THE ACCEPTABILITY OF THE BEARING PILES THAT ATTAIN ABSOLUTE REFUSAL ABOVE THE PREDETERMINED PILE TIP ELEVATIONS.

CONTRACTOR SHALL PERFORM DYNAMIC PILE MONITORING ON THE TEST PILES AND IF DIRECTED ON SELECTED BEARING PILES AT LOCATIONS AS DETERMINED BY THE ENGINEER.

ALL PILES SHALL BE HP10X57 AND SHALL CONFORM TO ASTM A709, GRADE 50 AND SHALL HAVE A HEAVY-DUTY TIP REINFORCEMENT, SUCH AS HP77600B BY ASSOCIATED PILE AND FITTING CORPORATION, H-777 BY DOUGHERTY FOUNDATION PRODUCTS INC, OR APPROVED EQUAL. PAYMENT SHALL BE INCIDENTAL TO ITEM 618071 AND 618072.

INDEX OF SHEETS

SHEET NO.	TITLE
1	BRIDGE NOTES
1A	BRIDGE QUANTITIES & LOAD RATINGS
2	BRIDGE PLAN, TYPICAL SECTION, & ELEVATION
3	ABUTMENT A FOOTING DETAILS
4	ABUTMENT A PLAN & ELEVATION
5	WINGWALL DETAILS
6	PIER DETAILS
7	MSE WALL PLAN & ELEVATION
8	ABUTMENT B PLAN & ELEVATION
8A	ABUTMENT B REINFORCING STRAP DETAILS
9	ABUTMENT B FOOTING & PILE LAYOUT DETAILS
10	FRAMING PLAN
11	GIRDER DETAILS-1
12	GIRDER DETAILS-2
13	CAMBER DETAILS
14A-E	BEARING DETAILS (SHEETS 200A TO 200E)
15	DECK PLAN-1
16	DECK PLAN-2
17	APPROACH SLAB DETAILS
18	MOMENT SLAB DETAILS
19	BARRIER DETAILS
20	EXPANSION JOINT DETAILS
21	REINFORCEMENT BAR SCHEDULE-1
22	REINFORCEMENT BAR SCHEDULE-2
23	REINFORCEMENT BAR SCHEDULE-3

UNOFFICIAL WEBSITE COPY

QUANTITIES

ITEM NO.	ITEM TITLE	UNIT	QUANTITY
206500	ROCK EXCAVATION FOR STRUCTURES AND TRENCHES	C.Y.	1625
207000	EXCAVATION AND BACKFILL FOR STRUCTURES	C.Y.	4150
207501	SHEETING AND SHORING	L.S.	L.S.
209003	BORROW, TYPE C	C.Y.	1000
210000	FURNISHING BORROW TYPE 'C' FOR ...	C.Y.	5395
211000	REMOVAL OF STRUCTURES AND OBSTRUCTIONS	L.S.	L.S.
302500	DELAWARE NO. 3 STONE	TON	24
601502	TEMPORARY PROTECTIVE SHEILD	L.S.	L.S.
602001	PCC MASONRY, CLASS A	C.Y.	36
602003	PCC MASONRY, ABUTMENT FOOTING, CLASS A	C.Y.	310
602006	PCC MASONRY, PIER FOOTING, CLASS B	C.Y.	130
602007	PCC MASONRY, PIER ABOVE FOOTING, CLASS A	C.Y.	73
602011	PCC MASONRY, SUBSTRUCTURE, CLASS A	C.Y.	66
602013	PCC MASONRY, SUPERSTRUCTURE, CLASS D	C.Y.	265
602014	PCC MASONRY, APPROACH SLAB, CLASS D	C.Y.	186
602015	PCC MASONRY, ABUTMENT ABOVE FOOTING, CLASS A	C.Y.	380
602017	PCC MASONRY, PARAPET, CLASS A	C.Y.	75
602553	MECHANICALLY STABILIZED EARTH WALLS, TYPE I	S.F.	3200
602646	SILICONE ACRYLIC CONCRETE SEALER	S.F.	12750
604000	BAR REINFORCEMENT, EPOXY COATED	LB	288000
605002	STEEL STRUCTURES	L.S.	L.S.
605659	STRIP SEAL EXPANSION JOINT, 3"	L.F.	100
605697	POT BEARINGS	EA	15
609000	SUBFOUNDATION CONCRETE	C.Y.	530
618071	STEEL H PILES, HP 10 X 57	L.F.	1540
618072	STEEL H TEST PILES, HP 10 X 57	L.F.	220
619051	INSTALL STEEL H PILES, HP 10 X 57	L.F.	1540
619052	INSTALL STEEL H TEST PILES, HP 10 X 57	L.F.	220
619511	EXPLORATORY DRILLING	EA	2
619512	PREDRILLING FOR END BEARING PILES	L.F.	1540
619519	DYNAMIC PILE TESTING BY CONTRACTOR	EA	2
712020	RIPRAP, R-4	TON	460
713003	GEOTEXTILES, RIPRAP	S.Y.	700
715000	PERFORATED PIPE UNDERDRAINS, 4"	L.F.	165

LRFD LOAD RATINGS

TYPE OF TRUCK	RATING TYPE	CONTROLLING UNIT/SPAN/MEMBER	CONTROLLING POINT	LOAD EFFECT	LIMIT STATE	LOAD RATING FACTOR	LOAD RATING (TONS)
AASHTO HL-93 (TRUCK + LANE)	INVENTORY	G1	110.00	FLEXURE (STRESS) MIN. EFFECTS	STRENGTH I	1.19	N/A
AASHTO HL-93 (TANDEM + LANE)	INVENTORY	G1	110.00	FLEXURE (STRESS) MIN. EFFECTS	STRENGTH I	1.39	N/A
AASHTO HL-93 (TRUCK + LANE)	OPERATING	G1	206.00	FLANGE STRESS MAX. EFFECTS BOT. FLANGE	SERVICE II-0	1.72	N/A
AASHTO HL-93 (TANDEM + LANE)	OPERATING	G1	206.00	FLANGE STRESS MAX. EFFECTS BOT. FLANGE	SERVICE II-0	2.02	N/A
S220	LEGAL	G1	206.00	FLEXURE (STRESS) MAX. EFFECTS	STRENGTH I	3.08	61.58
S335	LEGAL	G1	206.00	FLEXURE (STRESS) MAX. EFFECTS	STRENGTH I	1.73	60.64
S437	LEGAL	G1	206.00	FLEXURE (STRESS) MAX. EFFECTS	STRENGTH I	1.65	60.44
T330	LEGAL	G1	206.00	FLEXURE (STRESS) MAX. EFFECTS	STRENGTH I	2.33	69.99
T435	LEGAL	G1	206.00	FLEXURE (STRESS) MAX. EFFECTS	STRENGTH I	2.01	70.48
T540	LEGAL	G1	206.00	FLEXURE (STRESS) MAX. EFFECTS	STRENGTH I	1.79	71.74

DISTRIBUTION FACTORS

	I-LANE	MULTI-LANE
(-) MOMENT	1.182	1.189
(+) MOMENT	1.291	1.297
V (ABUTMENT 1)	0.941	0.933
V (PIER)	0.907	0.925

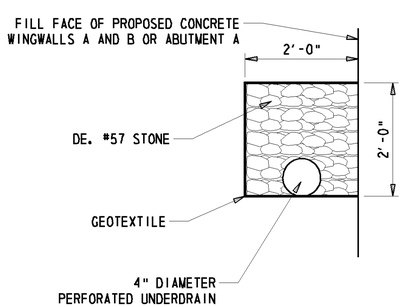

UNDERDRAIN DETAILS
N.T.S.

UNOFFICIAL WEBSITE COPY

UNOFFICAL WEBSITE COPY

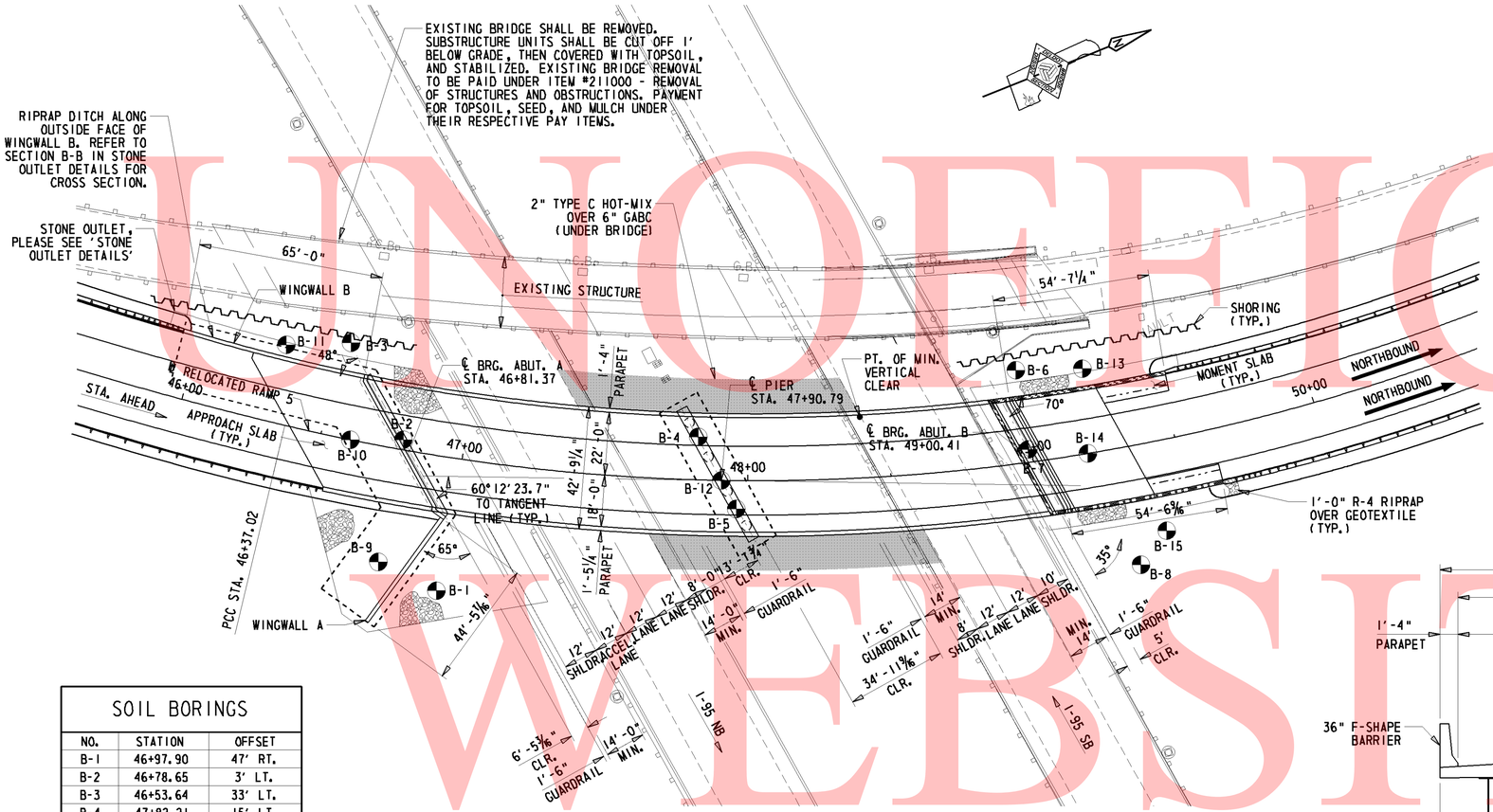

PLAN

1" = 25'-0"

I-95 RAMP 5 HORIZONTAL CURVE DATA

PI STA. = 53+20.48
Δ = 87°54'49.11" LT.
D = 8°04'59.99"
T = 683.46'
L = 1087.59'
R = 708.81'
E = 275.84'
MO = 198.56'

PVT STA. = 40+50.00
PVT EL. = 191.78
PVC STA. = 50+50.00
PVC EL. = 222.51
TANGENT LENGTH = 1000.00'
TANGENT GRADE = 3.0722%

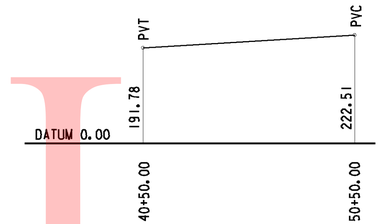

I-95 RAMP 5 PROFILE

N.T.S.

SOIL BORINGS		
NO.	STATION	OFFSET
B-1	46+97.90	47' RT.
B-2	46+78.65	3' LT.
B-3	46+53.64	33' LT.
B-4	47+82.21	15' LT.
B-5	47+96.12	10' RT.
B-6	48+98.25	32' LT.
B-7	48+98.68	4' LT.
B-8	49+30.50	42' RT.
B-9	46+77.75	45' RT.
B-10	46+60.00	0'
B-11	46+30.85	27' LT.
B-12	47+90.82	0'
B-13	49+22.43	30' LT.
B-14	49+19.22	0'
B-15	49+40.52	30' RT.

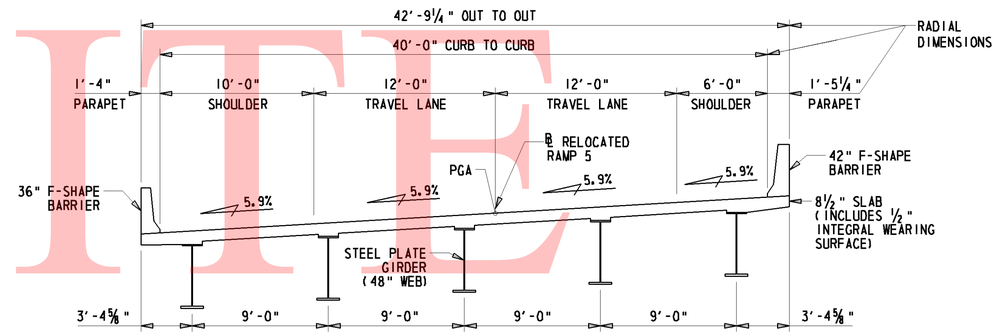

TYPICAL SECTIONS

1" = 5'-0"

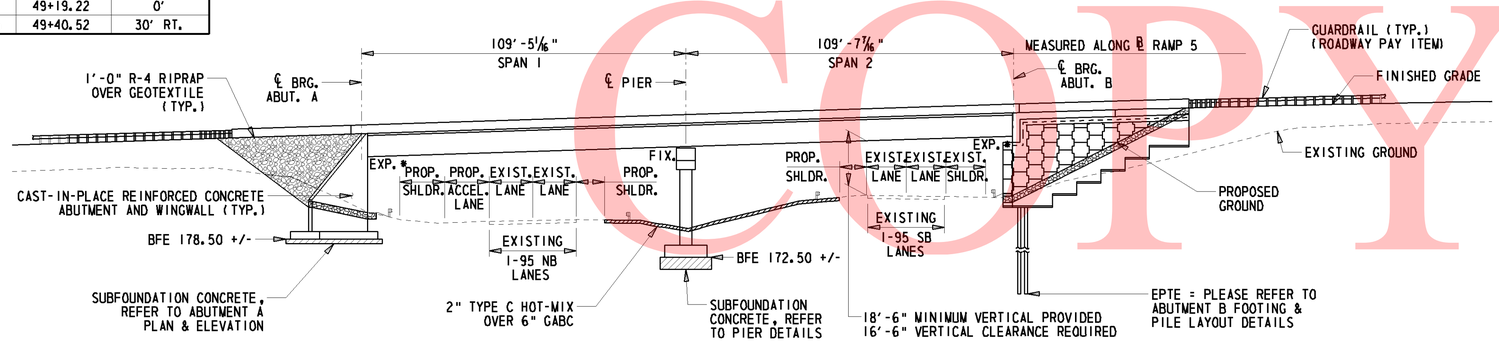

ELEVATION

1" = 25'-0"

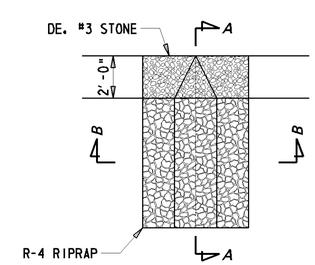

PLAN

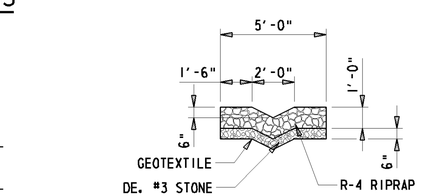

SECTION B-B

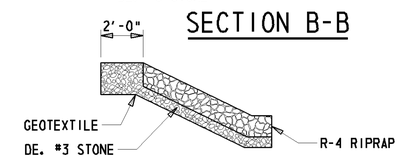

SECTION A-A

STONE OUTLET DETAILS

N.T.S.

NOTE: STONE OUTLET DETAILS APPLIES ONLY TO WINGWALL B.

Y:\NEWCASTL\059\BRIDGE\2510602\BRIDGE 1-763\PLANS\ALTERNATIVE CURVED\CP01.DGN

DELAWARE DEPARTMENT OF TRANSPORTATION

ADDENDUMS / REVISIONS

I-95 & US 202 INTERCHANGE

CONTRACT	BRIDGE NO.	1-764
T200510602	DESIGNED BY: MJG	
COUNTY		
NEW CASTLE	CHECKED BY: JNH	

BRIDGE PLAN, TYPICAL SECTION, & ELEVATION
S4-2 OF 23

SHEET NO. 188
TOTAL SHTS. 482

UNOFFICAL WEBSITE COPY

NOTE:
AT ANGLED SECTIONS OF HEEL, FT1001E, FT1003E, FT1102E, AND FT1003E SHALL BE SPLAYED AND WILL VARY IN LENGTH. EACH BAR SHALL HAVE A MINIMUM SPACING OF 3" AT THE INSIDE CORNER AND MAXIMUM SPACING OF 6" AT THE BACK OF STEM. FIELD BEND BARS AS NEEDED. PAYMENT INCIDENTAL TO 604000 - BAR REINFORCEMENT, EPOXY COATED.

NOTE:
TO VIEW TYPICAL WINGWALL SECTIONS (C-C AND D-D), PLEASE REFER TO S4-5 OF 23 - WINGWALL DETAILS.

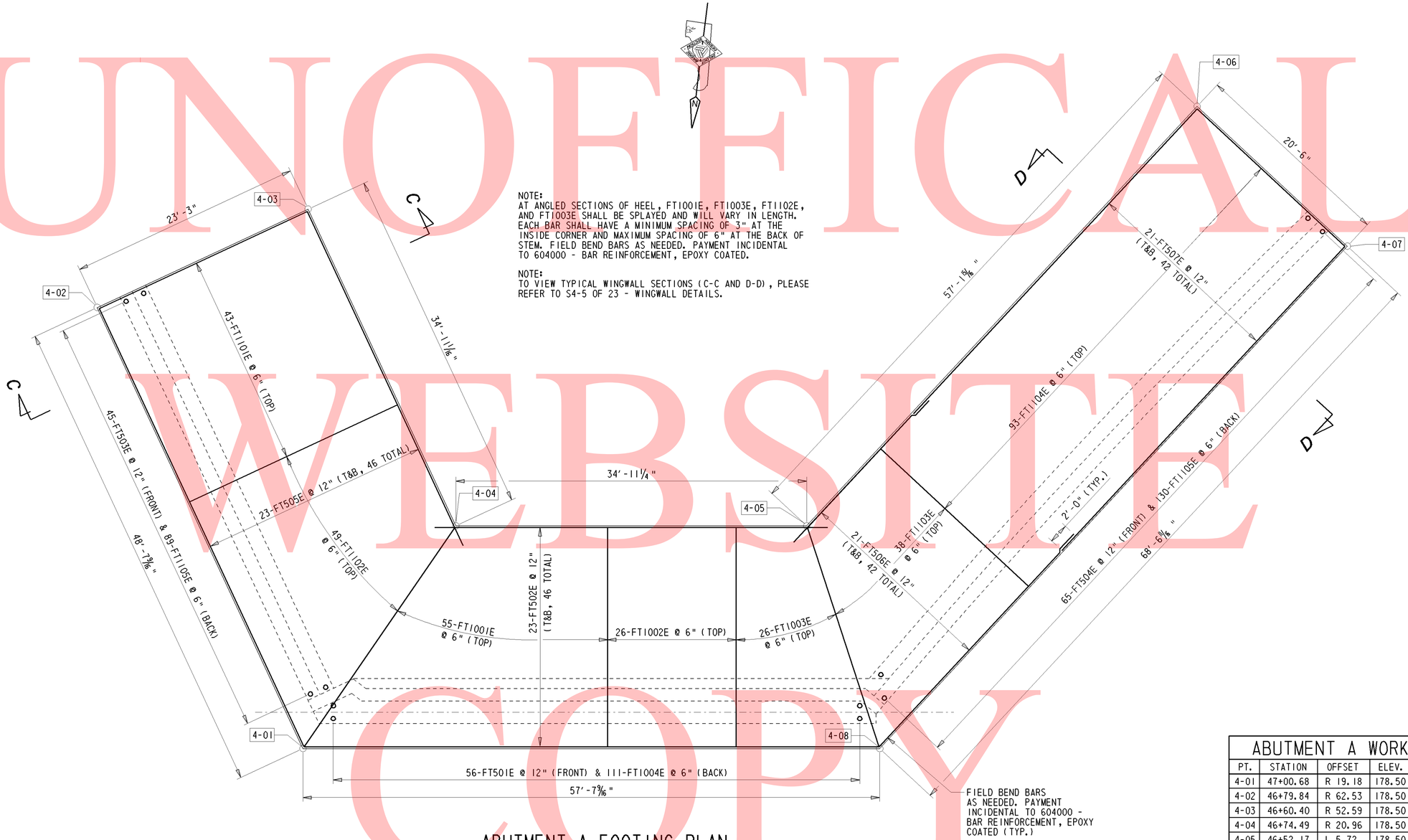

ABUTMENT A FOOTING PLAN

3/16" = 1'-0"

ABUTMENT A WORKING POINTS					
PT.	STATION	OFFSET	ELEV.	NORTHING	EASTING
4-01	47+00.68	R 19.18	178.50	643573.99	621241.16
4-02	46+79.84	R 62.53	178.50	643532.92	621267.21
4-03	46+60.40	R 52.59	178.50	643520.47	621247.58
4-04	46+74.49	R 20.96	178.50	643549.96	621228.87
4-05	46+52.17	L 5.72	178.50	643545.47	621194.23
4-06	45+94.70	L 5.34	178.50	643498.71	621161.34
4-07	45+94.07	L 25.83	178.50	643510.50	621144.58
4-08	46+64.51	L 25.83	178.50	643566.58	621184.01

Y:\NEWCASTL\059\BRIDGE\2510602\BRIDGE 1-763\PLANS\ALTERNATIVE CURVED\AB01.DGN

DELAWARE DEPARTMENT OF TRANSPORTATION	ADDENDUMS / REVISIONS	I-95 & US 202 INTERCHANGE	CONTRACT T200510602	BRIDGE NO. 1-764	ABUTMENT A FOOTING DETAILS S4-3 OF 23	SHEET NO. 189
			COUNTY NEW CASTLE	DESIGNED BY: MJG		TOTAL SHTS. 482
				CHECKED BY: JNH		

NOTE: FIELD CUT AND BEND BARS AS NEEDED. PAYMENT INCIDENTAL TO 604000 - BAR REINFORCEMENT, EPOXY COATED.

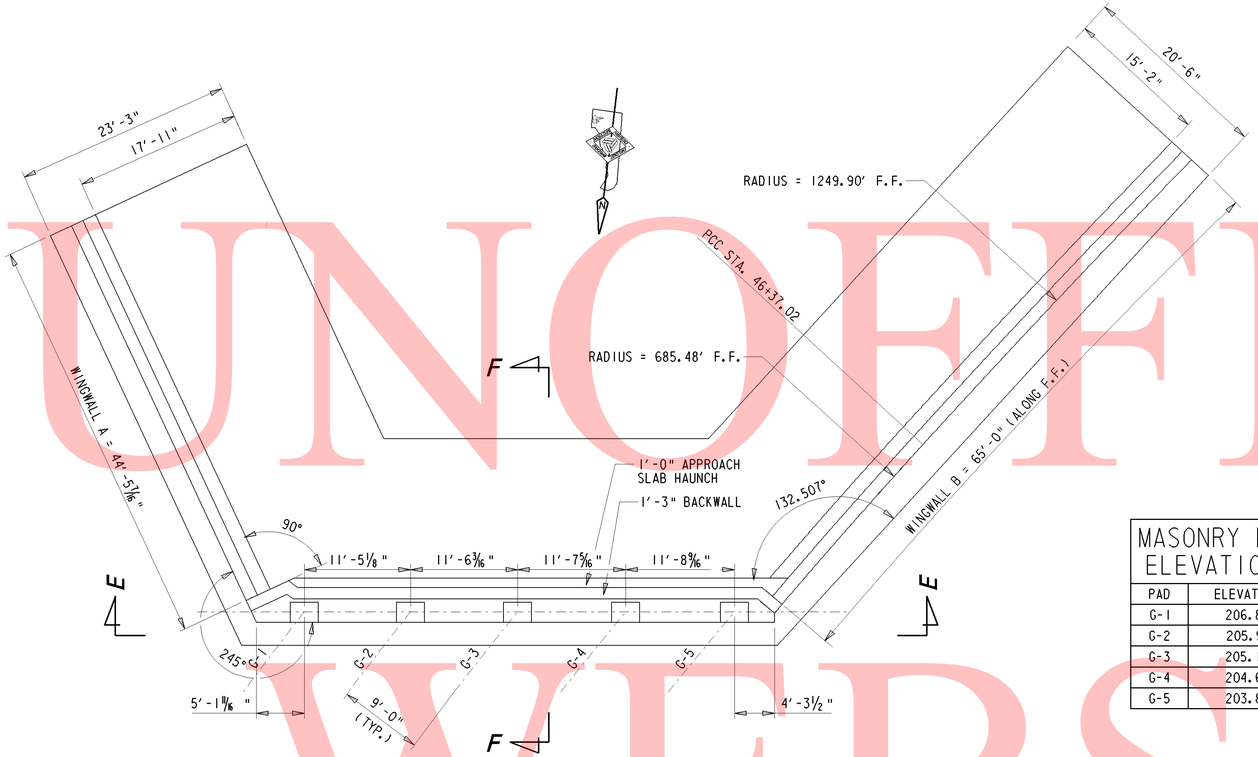

ABUTMENT A PLAN

1/8" = 1'-0"

MASONRY PAD ELEVATIONS	
PAD	ELEVATION
G-1	206.89
G-2	205.91
G-3	205.16
G-4	204.64
G-5	203.88

NOTE: CONCRETE FOR ABUTMENT A AND WINGWALL STEMS SHALL BE PAID FOR UNDER ITEM #602015 - P.C.C. MASONRY, ABUTMENT ABOVE FOOTING, CLASS A. CONCRETE FOR ABUTMENT A AND WINGWALL FOOTINGS SHALL BE PAID FOR UNDER ITEM #602003 - P.C.C. MASONRY, ABUTMENT FOOTING, CLASS A.

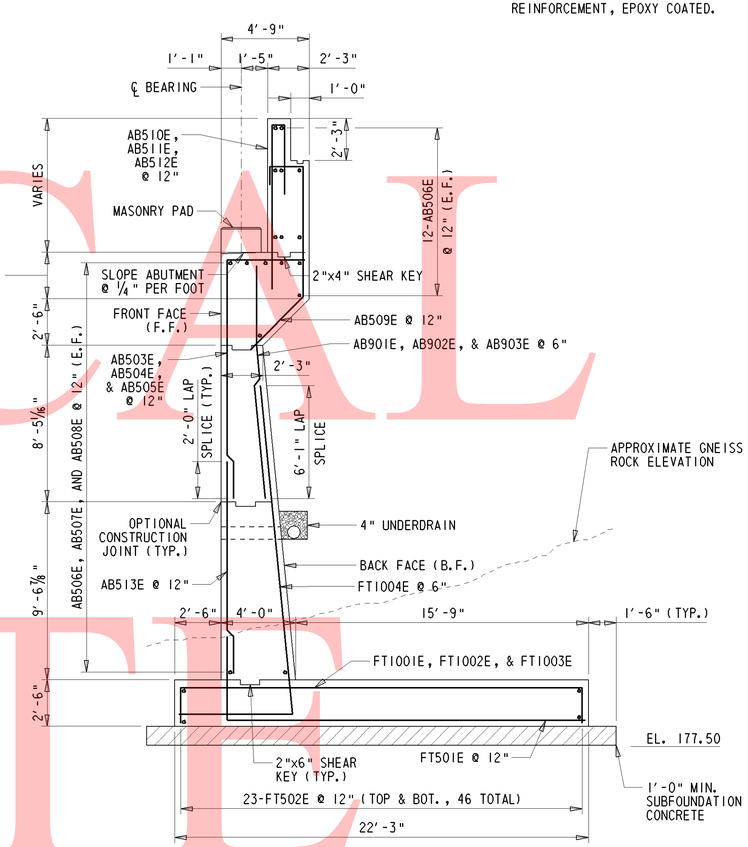

ABUTMENT A (SECTION F-F)

1/4" = 1'-0"

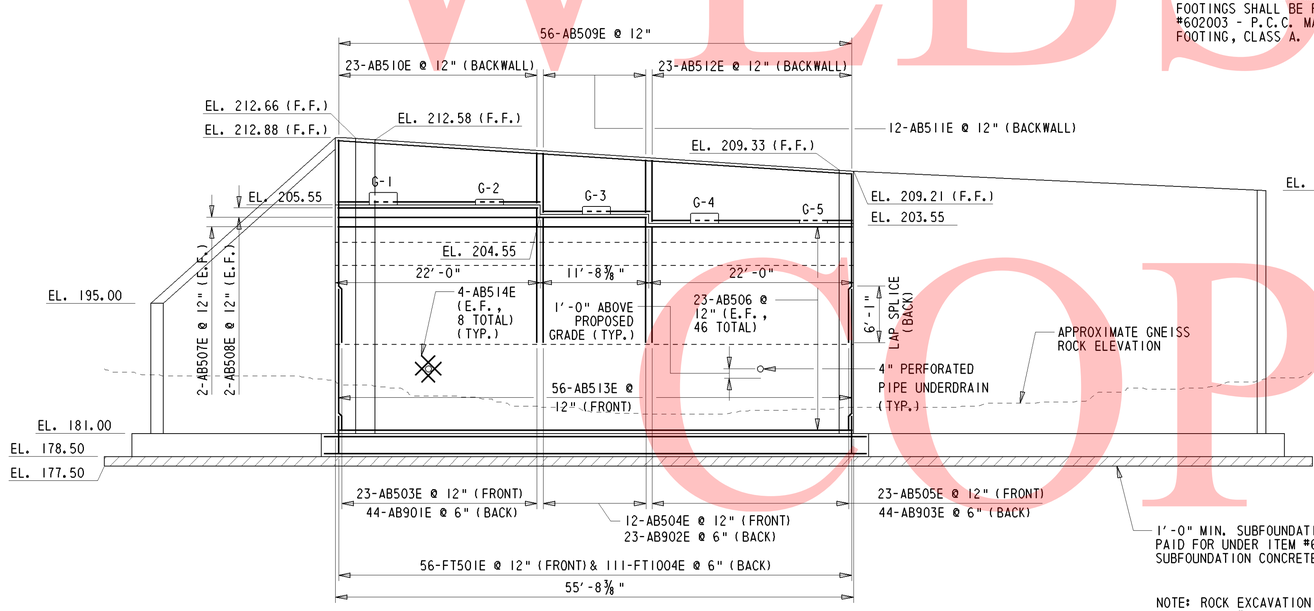

ABUTMENT A ELEVATION (SECTION E-E)

1/8" = 1'-0"

NOTE: ROCK EXCAVATION TO BE PAID UNDER ITEM #206000 - ROCK EXCAVATION FOR STRUCTURES AND TRENCHES

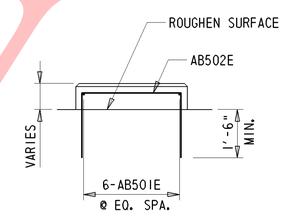

MASONRY PAD - ELEVATION

1/2" = 1'-0"

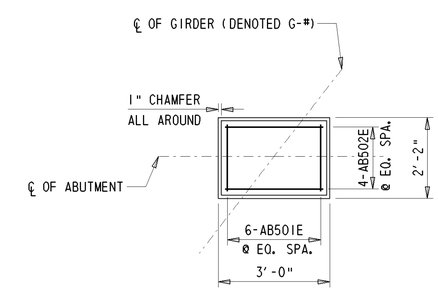

MASONRY PAD - PLAN

1/2" = 1'-0"

UNOFFICIAL WEBSITE COPY

Y:\NEWCASTL\059\BRIDGE\2510602\BRIDGE 1-763\PLANS\ALTERNATIVE CURVED\AB01.DGN

DELAWARE DEPARTMENT OF TRANSPORTATION	ADDENDUMS / REVISIONS	I-95 & US 202 INTERCHANGE	CONTRACT T200510602	BRIDGE NO. 1-764	ABUTMENT A PLAN & ELEVATION S4-4 OF 23	SHEET NO. 190
			COUNTY NEW CASTLE	DESIGNED BY: MJG		TOTAL SHTS. 482
				CHECKED BY: JNH		

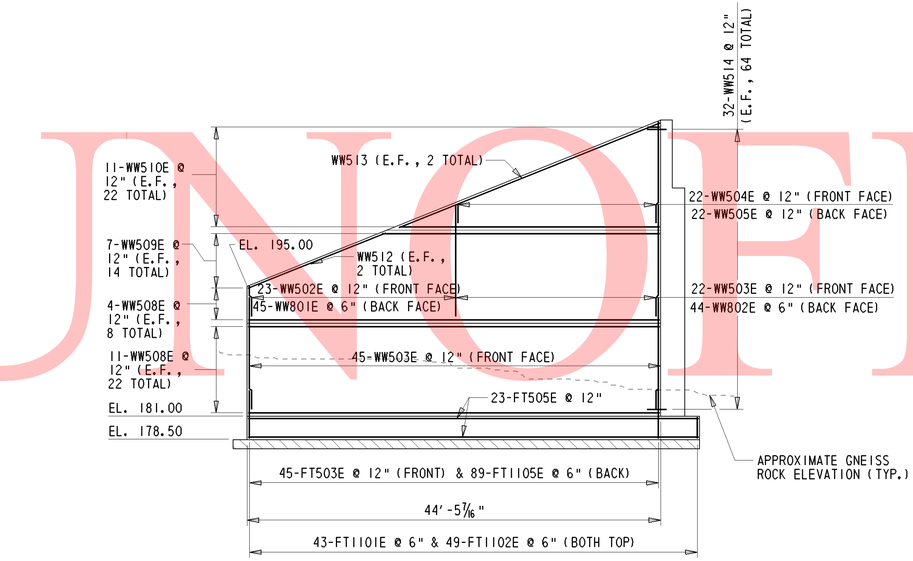

WINGWALL A ELEVATION

1/8" = 1'-0"

NOTE: FOR MORE INFORMATION ON ROCK EXCAVATION AND SUBFOUNDATION CONCRETE, PLEASE REFER TO ABUTMENT A PLAN & ELEVATION

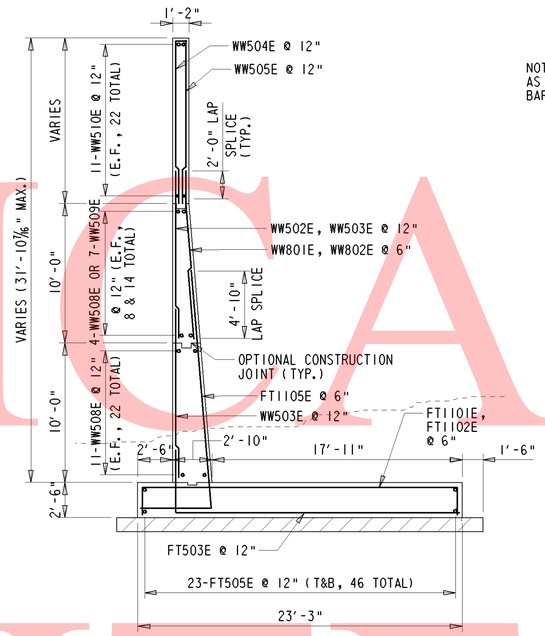

TYPICAL WINGWALL SECTION (C-C)

3/16" = 1'-0"

NOTE: FIELD BEND WW801E AND WW802E AS NEEDED. PAYMENT INCIDENTAL TO 604000 - BAR REINFORCEMENT, EPOXY COATED.

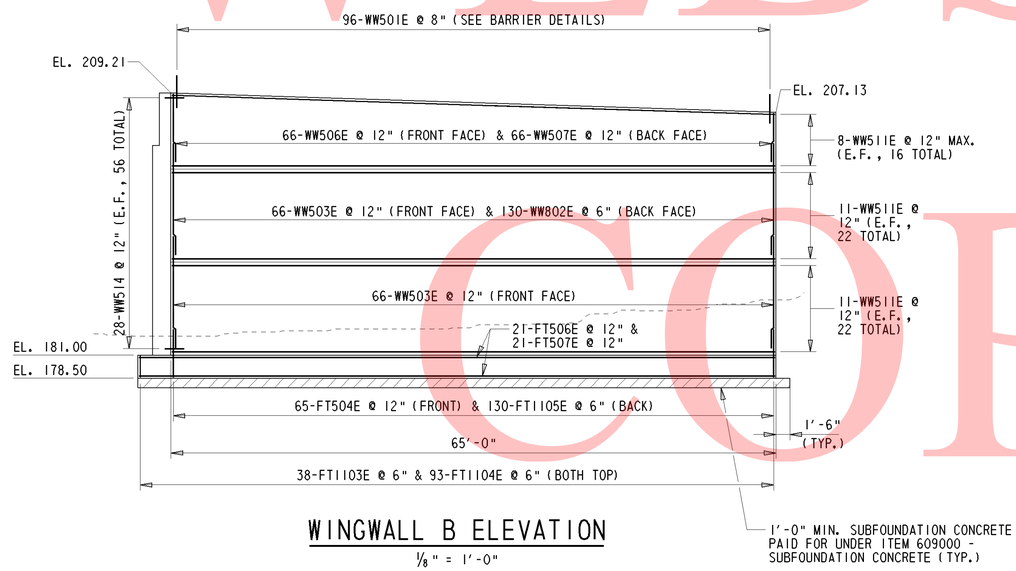

WINGWALL B ELEVATION

1/8" = 1'-0"

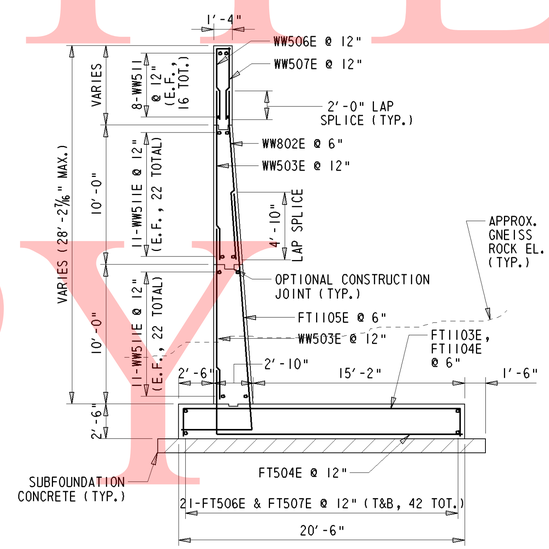

TYPICAL WINGWALL SECTION (D-D)

3/16" = 1'-0"

UNOFFICIAL WEBSITE COPY

Y:\NEWCASTL\059\BRIDGE\2510602\BRIDGE 1-763\PLANS\ALTERNATIVE CURVED\WW01.DGN

DELAWARE DEPARTMENT OF TRANSPORTATION	ADDENDUMS / REVISIONS	I-95 & US 202 INTERCHANGE	CONTRACT T200510602	BRIDGE NO. 1-764	WINGWALL DETAILS S4-5 OF 23	SHEET NO. 191
			COUNTY NEW CASTLE	DESIGNED BY: MJG		TOTAL SHTS. 482
				CHECKED BY: JNH		

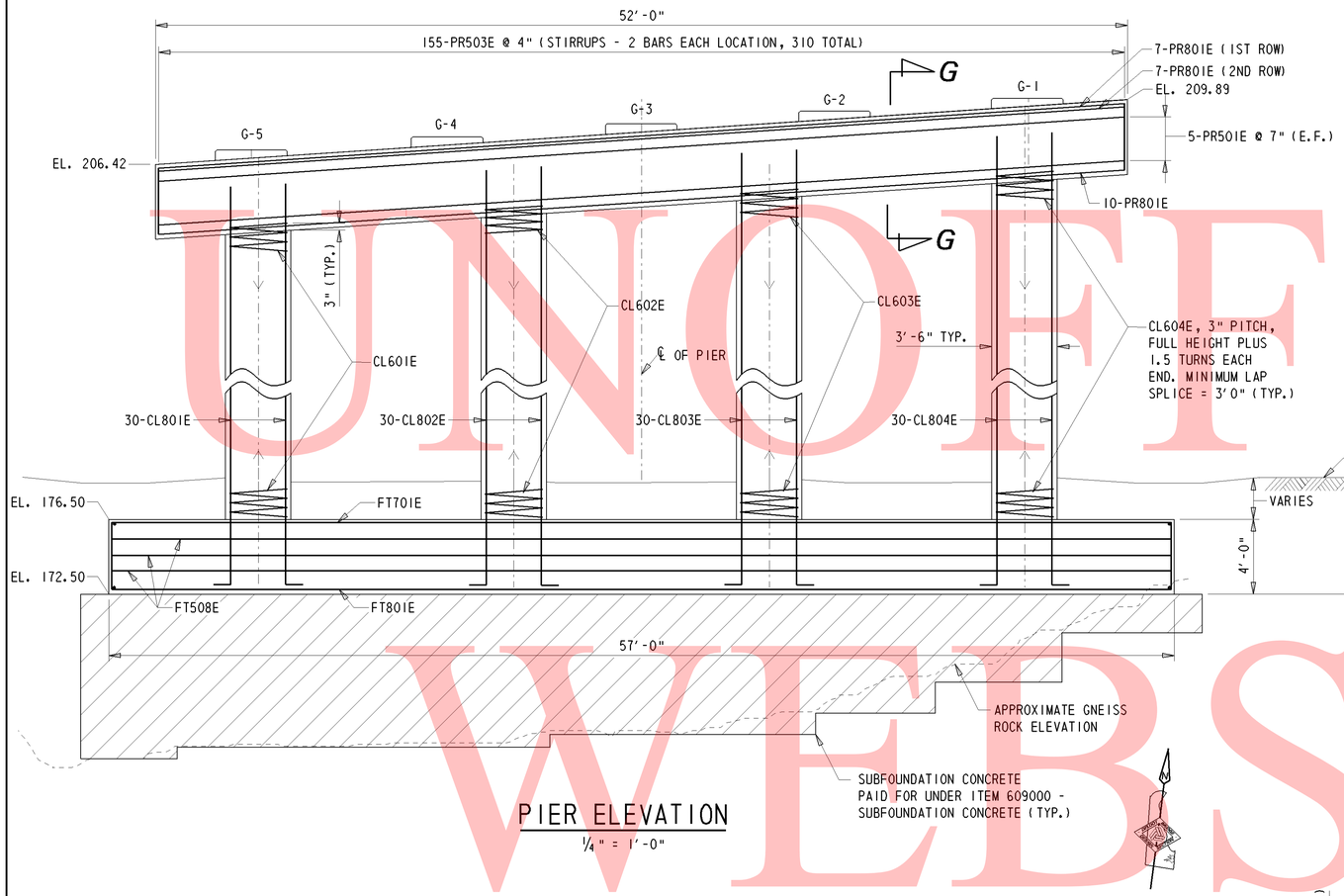

PIER ELEVATION

1/4" = 1'-0"

MASONRY PAD ELEVATIONS	
PAD	ELEVATION
G-1	209.98
G-2	209.28
G-3	208.59
G-4	207.90
G-5	207.22

PIER COLUMN COORDINATES				
POINT	STATION	OFFSET	NORTHING	EASTING
CL-1	47+79.11	L 19.59	643661.39	621241.70
CL-2	47+86.20	L 07.86	643663.17	621255.22
CL-3	47+93.06	R 03.98	643664.93	621268.77
CL-4	47+99.69	R 15.87	643666.69	621282.33

PIER WORKING POINTS				
POINT	STATION	OFFSET	NORTHING	EASTING
4-09	47+68.23	L 22.57	643652.95	621234.70
4-10	47+81.56	L 30.34	643667.82	621232.77
4-11	48+09.86	R 19.28	643675.15	621289.30
4-12	47+97.14	R 26.52	643660.28	621291.23

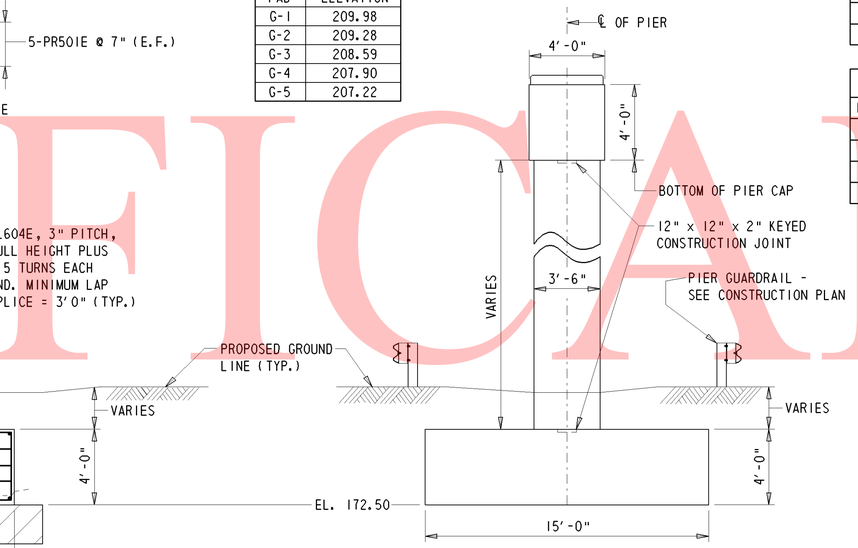

PIER END ELEVATION

1/4" = 1'-0"

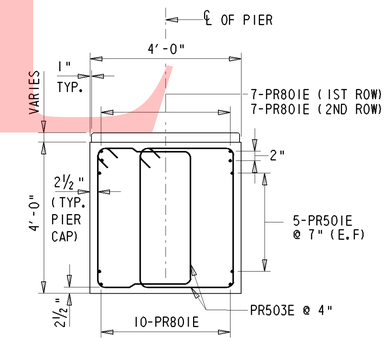

SECTION G-G

1/2" = 1'-0"

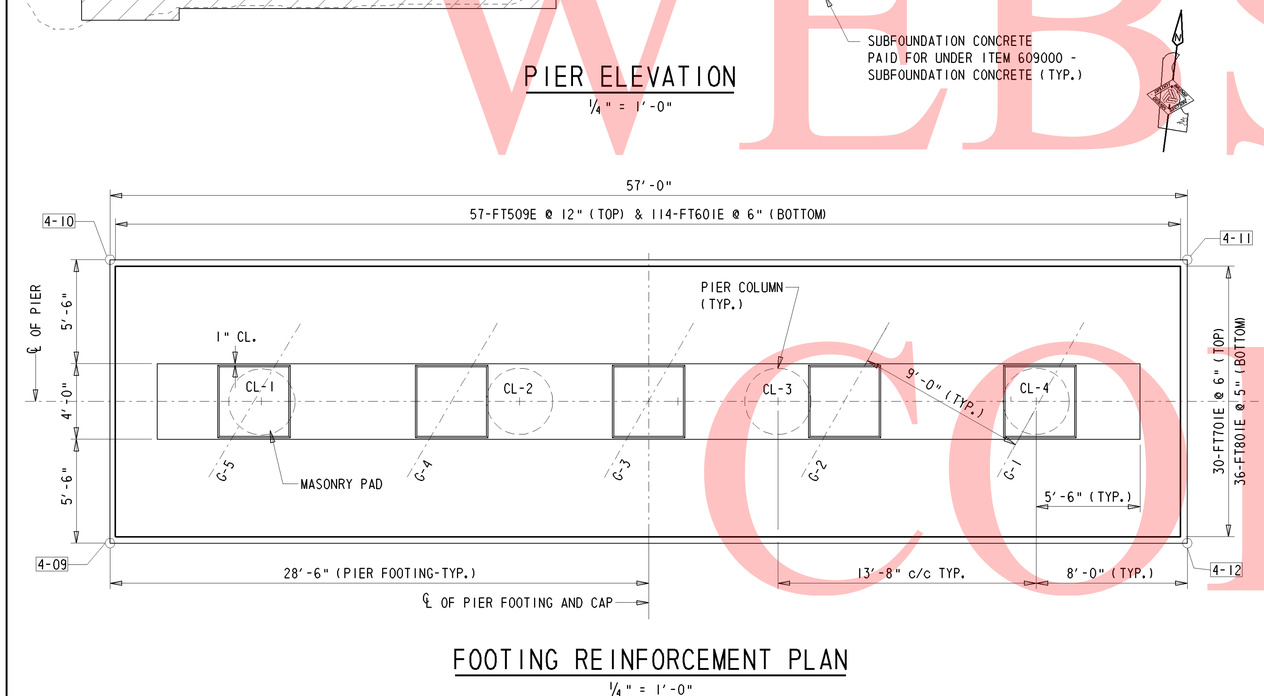

FOOTING REINFORCEMENT PLAN

1/4" = 1'-0"

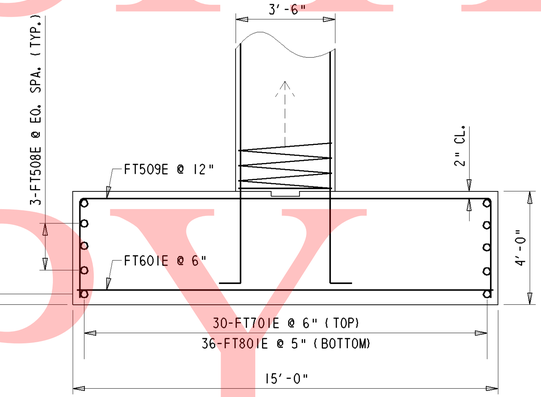

PIER FOOTING REINFORCEMENT

3/8" = 1'-0"

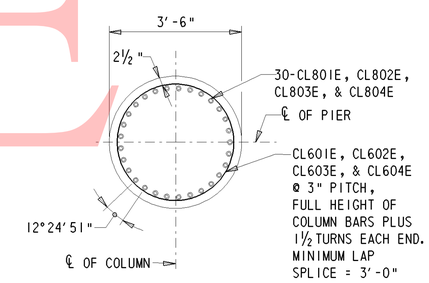

TYPICAL COLUMN SECTION

1/2" = 1'-0"

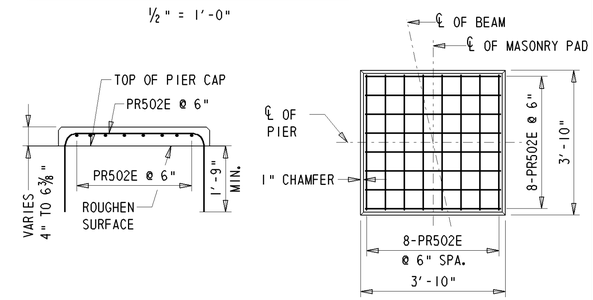

ELEVATION

PLAN

MASONRY PAD

1/2" = 1'-0"

UNOFFICIAL WEBSITE COPY

Y:\NEWCASTL\059\BRIDGE\2510602\BRIDGE 1-763\PLANS\ALTERNATIVE CURVED\PR01.DGN

DELAWARE DEPARTMENT OF TRANSPORTATION	ADDENDUMS / REVISIONS	I-95 & US 202 INTERCHANGE	CONTRACT T200510602	BRIDGE NO. 1-764	PIER DETAILS S4-6 OF 23	SHEET NO. 192
			COUNTY NEW CASTLE	DESIGNED BY: MJG		TOTAL SHTS. 482
				CHECKED BY: JNH		

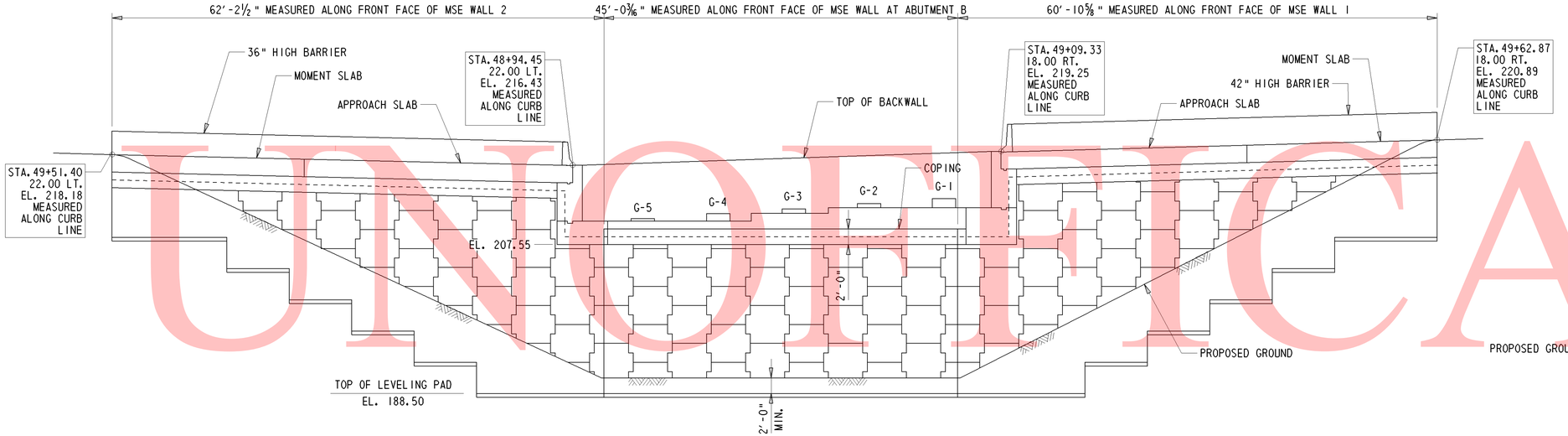

DEVELOPED ELEVATION

⅛" = 1'-0"

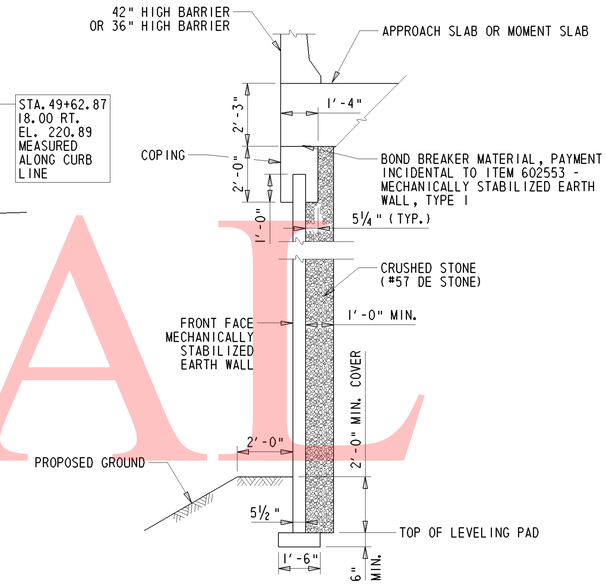

TYPICAL MSE WINGWALL SECTION

⅜" = 1'-0"

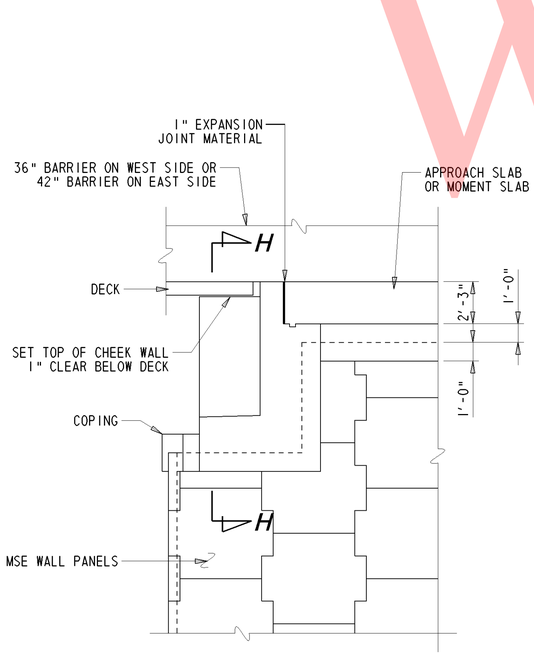

TYPICAL ELEVATION

¼" = 1'-0"

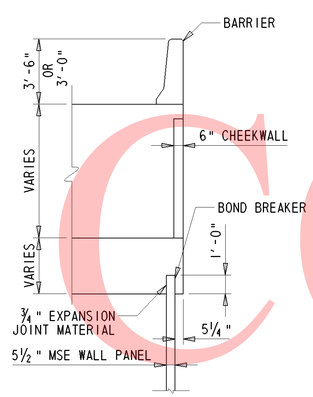

SECTION H-H

¼" = 1'-0"

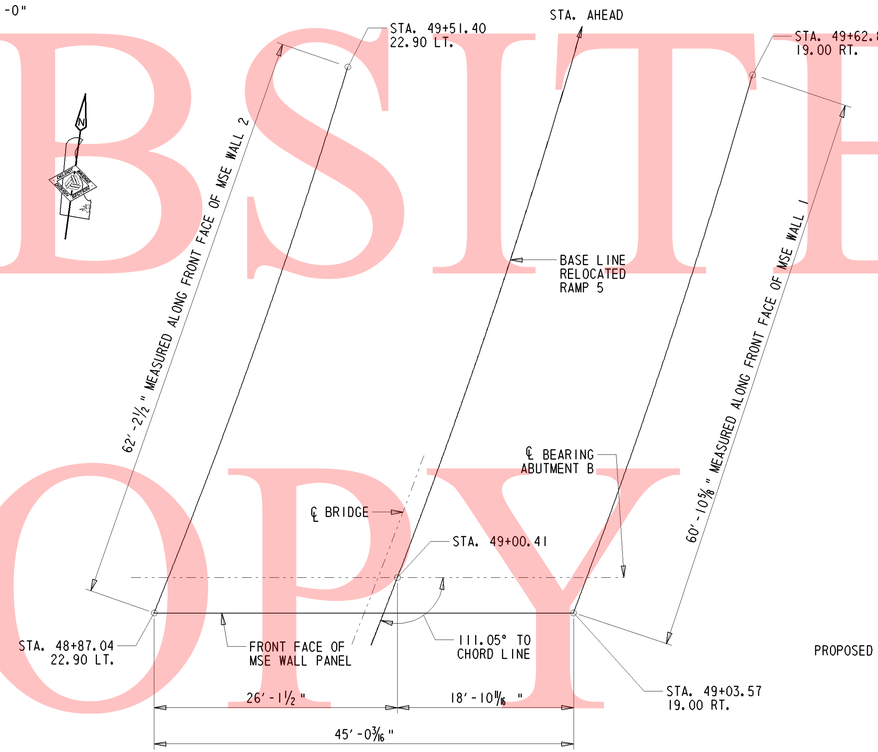

PLAN

⅛" = 1'-0"

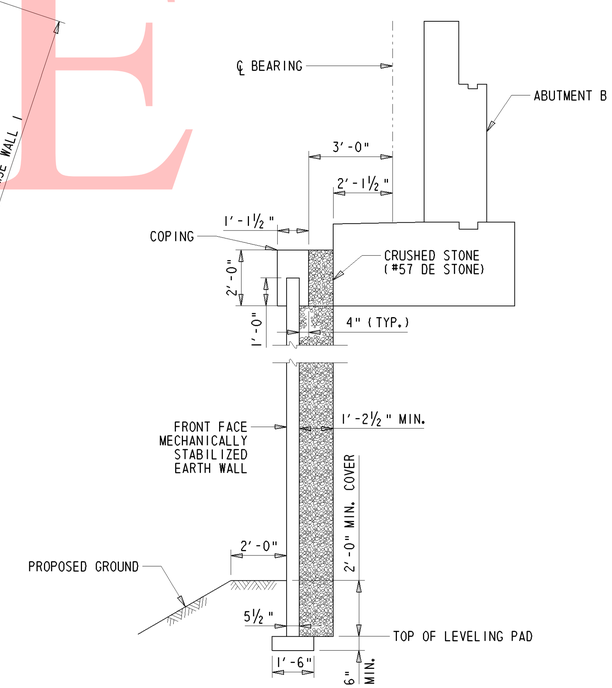

TYPICAL SECTION AT ABUTMENT B

⅜" = 1'-0"

UNOFFICIAL WEBSITE COPY

Y:\NEWCASTL\059\BRIDGE\2510602\BRIDGE 1-763\PLANS\ALTERNATIVE CURVED\AB02.DGN

DELAWARE DEPARTMENT OF TRANSPORTATION	ADDENDUMS / REVISIONS	**I-95 & US 202 INTERCHANGE**	CONTRACT T200510602	BRIDGE NO. **1-764**	**MSE WALL PLAN & ELEVATION S4-7 OF 23**	SHEET NO. 193
			COUNTY NEW CASTLE	DESIGNED BY: MJG		TOTAL SHTS. 482
				CHECKED BY: JNH		

MASONRY PAD ELEVATIONS	
PAD	ELEVATION
G-1	213.43
G-2	212.55
G-3	211.92
G-4	211.52
G-5	210.88

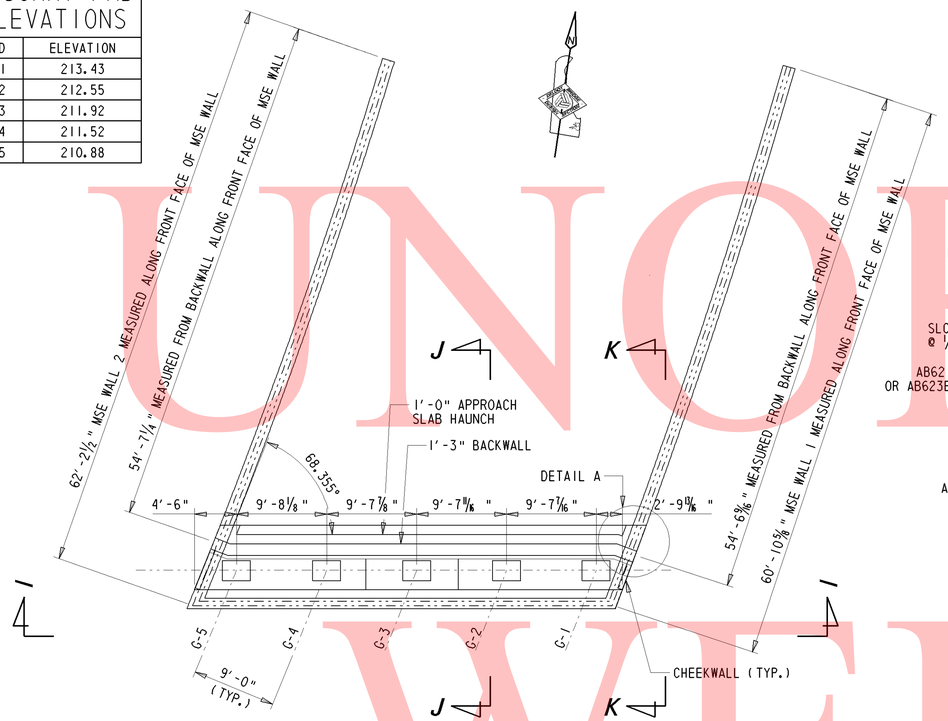

ABUTMENT B PLAN

⅛" = 1'-0"

NOTE: CONCRETE FOR ABUTMENT B SHALL BE PAID FOR UNDER ITEM #602011 - P.C.C. MASONRY, SUBSTRUCTURE, CLASS A.

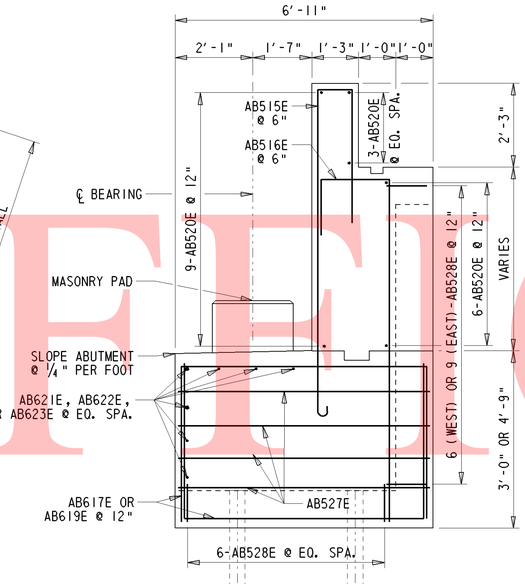

ABUTMENT B (SECTION K-K)

½" = 1'-0"

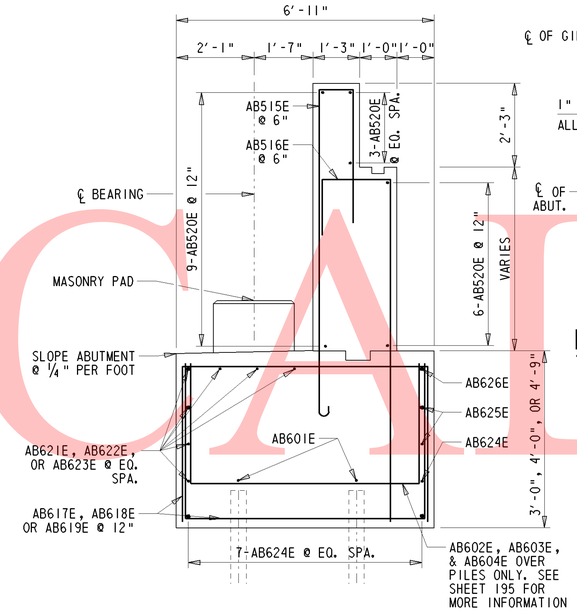

ABUTMENT B (SECTION J-J)

½" = 1'-0"

NOTE: TOTAL OF TWO AB527E WILL BE NEEDED IN THE OUTSIDE FACE ON THE WEST SIDE OF ABUTMENT B WHILE FOUR AB527E WILL BE NEEDED ON THE OUTSIDE FACE ON THE EAST SIDE.

NOTE: FIELD CUT OR BEND BARS AS NEEDED FOR AB520E TO AB626E BARS. PAYMENT INCIDENTAL TO 604000 - BAR REINFORCEMENT, EPOXY COATED.

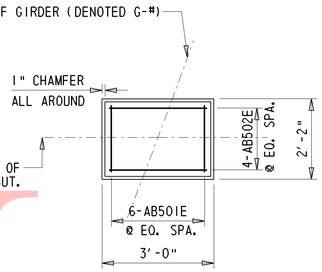

MASONRY PAD - PLAN

½" = 1'-0"

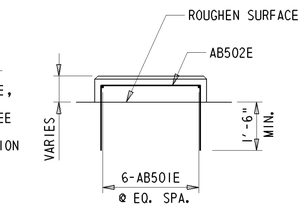

MASONRY PAD - ELEVATION

½" = 1'-0"

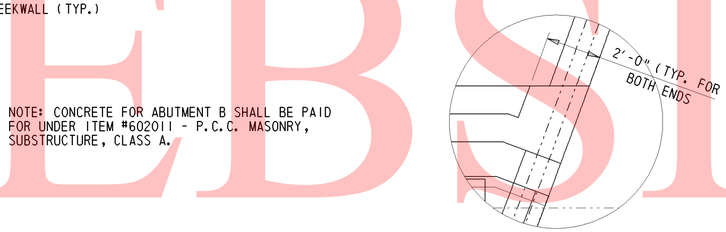

DETAIL A

⅜" = 1'-0"

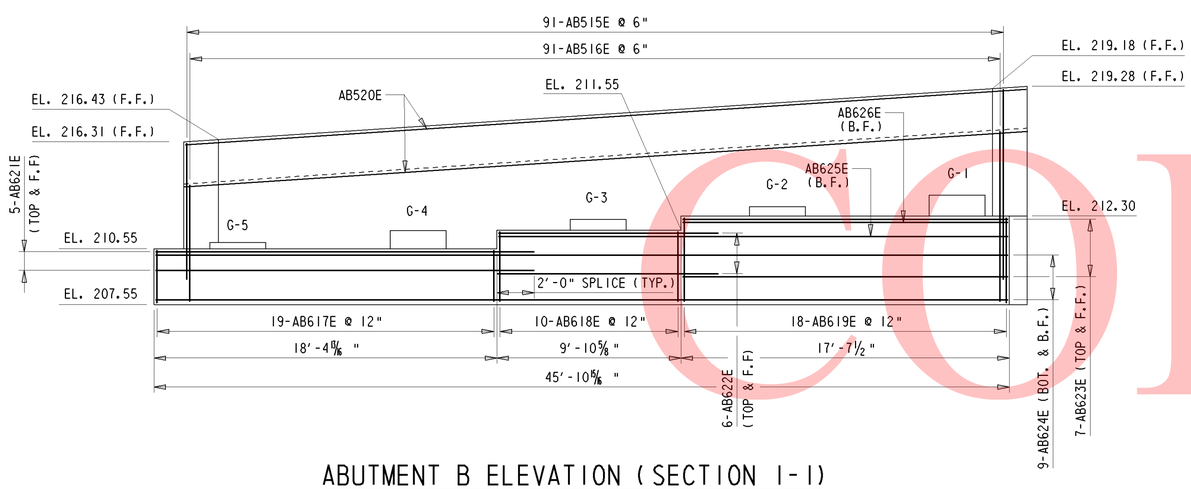

ABUTMENT B ELEVATION (SECTION I-I)

¼" = 1'-0"

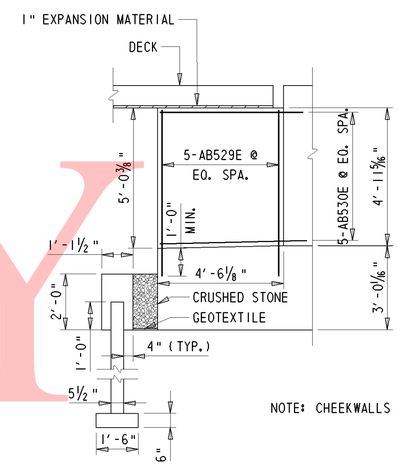

NOTE: CHEEKWALLS ARE 6" WIDE.

WEST CHEEKWALL DETAILS

⅜" = 1'-0"

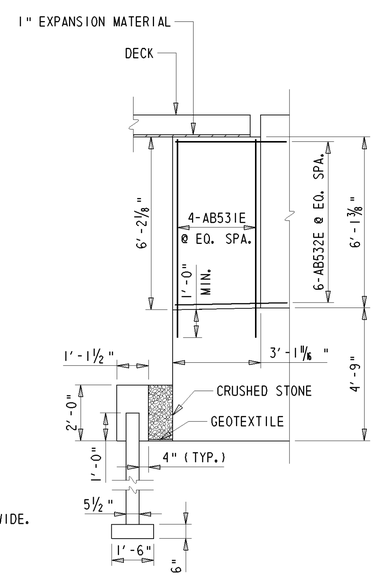

EAST CHEEKWALL DETAILS

⅜" = 1'-0"

UNOFFICIAL WEBSITE COPY

Y:\NEWCASTL\059\BRIDGE\2510602\BRIDGE 1-763\PLANS\ALTERNATIVE CURVED\AB02.DGN

DELAWARE DEPARTMENT OF TRANSPORTATION	ADDENDUMS / REVISIONS	I-95 & US 202 INTERCHANGE	CONTRACT T200510602	BRIDGE NO. 1-764	ABUTMENT B PLAN & ELEVATION S4-8 OF 23	SHEET NO. 194
			COUNTY NEW CASTLE	DESIGNED BY: MJG		TOTAL SHTS. 482
				CHECKED BY: JNH		

ABUTMENT LATERAL NOTES:

1. CONTRACTOR SHALL DESIGN THE REINFORCING STRAPS IN THE ABUTMENT STEM AND BACKWALL TO RESIST LATERAL LOADS 'EH', 'CE', 'FR', 'WL', 'LS', AND 'WS'.
2. LOAD 'EH' IS THE HORIZONTAL EARTH PRESSURE EXERTED ON THE ABUTMENT.
3. LOAD 'CE' IS THE HORIZONTAL LOAD DUE TO CENTRIFUGAL FORCE ON THE SUPERSTRUCTURE.
4. LOAD 'FR' IS THE HORIZONTAL LOAD DUE TO THE FRICTION IN THE POT BEARINGS AS A RESULT OF BRIDGE EXPANSION AND CONTRACTION.
5. LOAD 'WL' IS THE HORIZONTAL LOAD DUE TO THE WIND ON LIVE LOAD ON THE SUPERSTRUCTURE.
6. LOAD 'LS' IS THE ADDITIONAL HORIZONTAL SOIL PRESSURE DUE TO LIVE LOAD SURCHARGE.
7. LOAD 'WS' IS THE HORIZONTAL LOAD DUE TO THE WIND ON STRUCTURE.
8. PAYMENT FOR STRAPS ATTACHED TO ABUTMENT B SHALL BE INCIDENTAL TO ITEM #602553 - MECHANICALLY STABILIZED EARTH WALLS, TYPE I.

ABUTMENT B LATERAL LOADS

TYPE	SERVICE LOAD (KIPS/FT)
EH	3.73 KIP/FT
CE	0.39 KIP/FT
FR	1.27 KIP/FT
WL	0.06 KIP/FT
LS	1.92 KIP/FT
WS	0.34 KIP/FT

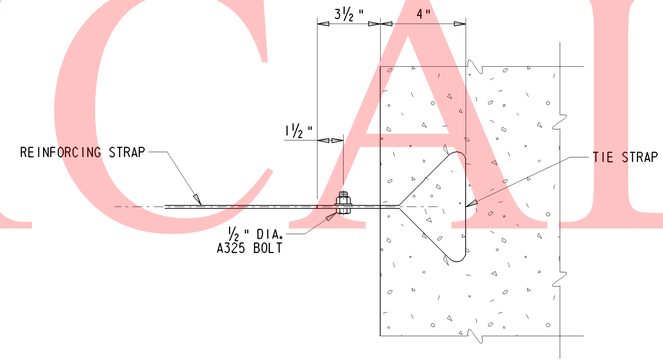

ABUTMENT STRAP ANCHOR DETAIL

N.T.S.

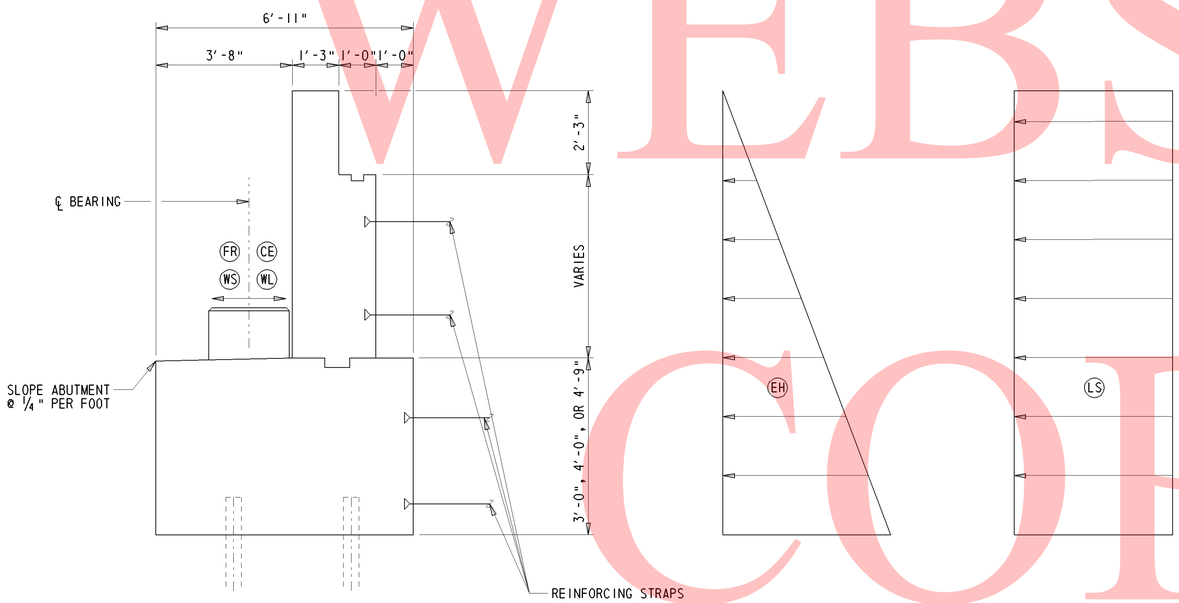

ABUTMENT B SECTION

½" = 1'-0"

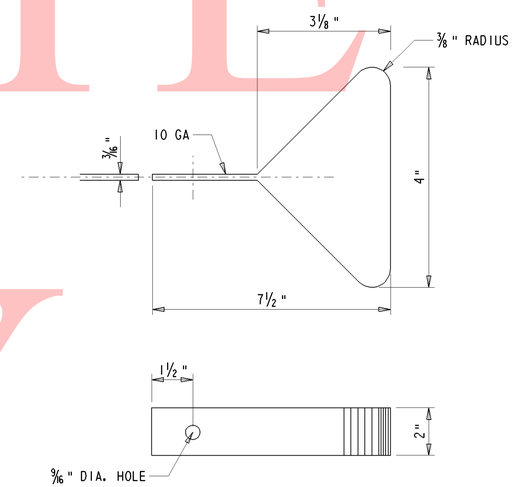

TIE STRAP DETAIL

N.T.S.

UNOFFICAL WEBSITE COPY

Y:\NEWCASTL\059\BRIDGE\2510602\BRIDGE 1-763\PLANS\ALTERNATIVE CURVED\AB02.DGN

DELAWARE DEPARTMENT OF TRANSPORTATION	ADDENDUMS / REVISIONS	I-95 & US 202 INTERCHANGE	CONTRACT T200510602	BRIDGE NO. 1-764	ABUTMENT B REINFORCING STRAP DETAILS S4-8A OF 23	SHEET NO. 194A
			COUNTY NEW CASTLE	DESIGNED BY: MJG		TOTAL SHTS. 482
				CHECKED BY: JNH		

UNOFFICIAL WEBSITE COPY

NOTES:
1. PIPES FOR SEPARATING THE PILES FROM THE MSE WALL BACKFILL SHALL BE INSTALLED AT LOCATIONS OF PILES PRIOR TO CONSTRUCTING MSE WALL. PILES SHALL BE INSTALLED AFTER QUARANTINE PERIOD AT THE CENTER OF THE PIPES.
2. PIPE SHALL BE 18" DIAMETER HIGH DENSITY POLYETHYLENE. CONTRACTOR SHALL FILL THE VOIDS WITH LOOSE AND UNCOMPACTED SAND PRIOR TO FOOTING POUR. PAYMENT FOR PIPES AND SAND SHALL BE INCIDENTAL TO ITEM #602553 - MECHANICALLY STABILIZED EARTH WALLS.
3. SEE BRIDGE NOTES FOR MORE INFORMATION REGARDING THE PILE FOUNDATION.

EPTE TABLE

PILE #	EPTE
P-1	128.00
P-2	123.00
P-3	118.00
P-4	117.00
P-5	115.00
P-6	114.00
P-7	113.00
P-8	128.00
P-9	123.00
P-10	118.00
P-11	117.00
P-12	115.00
P-13	114.00
P-14	113.00

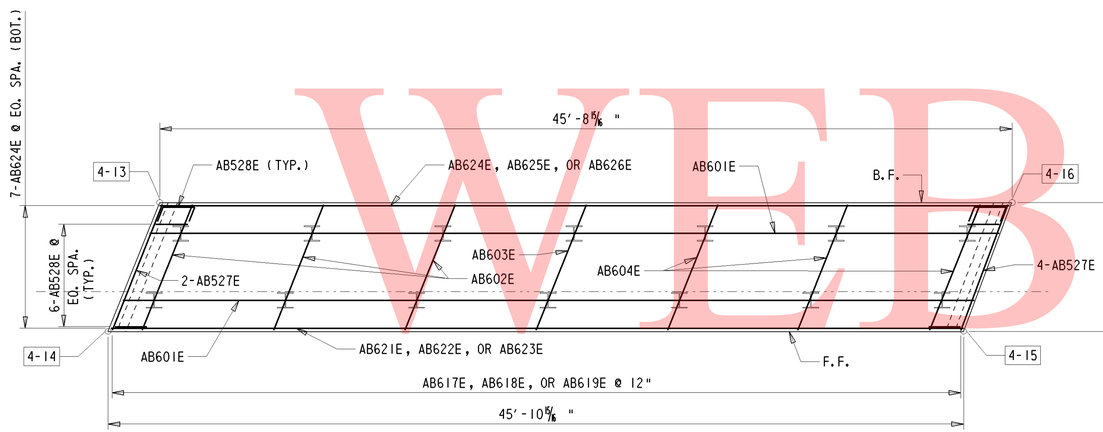

ABUTMENT B FOOTING PLAN

1/4" = 1'-0"

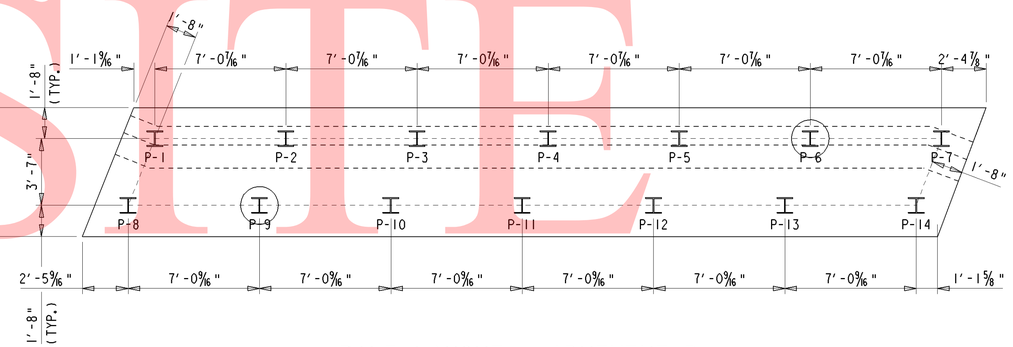

PILE LAYOUT - ABUTMENT B

1/4" = 1'-0"

ABUTMENT B WORKING POINTS

PT.	STATION	OFFSET	ELEV.	NORTHING	EASTING
4-13	48+96.47	L 23.33	207.55	643770.25	621274.67
4-14	48+88.77	L 23.33	207.55	643763.04	621272.81
4-15	49+05.05	R 19.44	207.55	643768.94	621318.34
4-16	49+12.69	R 19.44	207.55	643776.13	621320.02

PILE FOOTING DESIGN LOADS

SUBSTRUCTURE UNIT(S)	ABUTMENT B
B.F.E.	207.55
FACTORED AXIAL LOAD (KIP)	120
FACTORED AXIAL RESISTANCE (KIP)	420
GOVERNING LIMIT STATE	STR-1 (MAX)

LEGEND

I = DENOTES HP10x57 PILE

(I) = DENOTES TEST PILE

Y:\NEWCASTL\059\BRIDGE\2510602\BRIDGE 1-763\PLANS\ALTERNATIVE CURVED\AB02.DGN

DELAWARE DEPARTMENT OF TRANSPORTATION

ADDENDUMS / REVISIONS

I-95 & US 202 INTERCHANGE

CONTRACT	BRIDGE NO.	1-764
T200510602	DESIGNED BY: MJG	
COUNTY		
NEW CASTLE	CHECKED BY: JNH	

ABUTMENT B FOOTING & PILE LAYOUT DETAILS S4-9 OF 23

SHEET NO. 195

TOTAL SHTS. 482

UNOFFICAL WEBSITE COPY

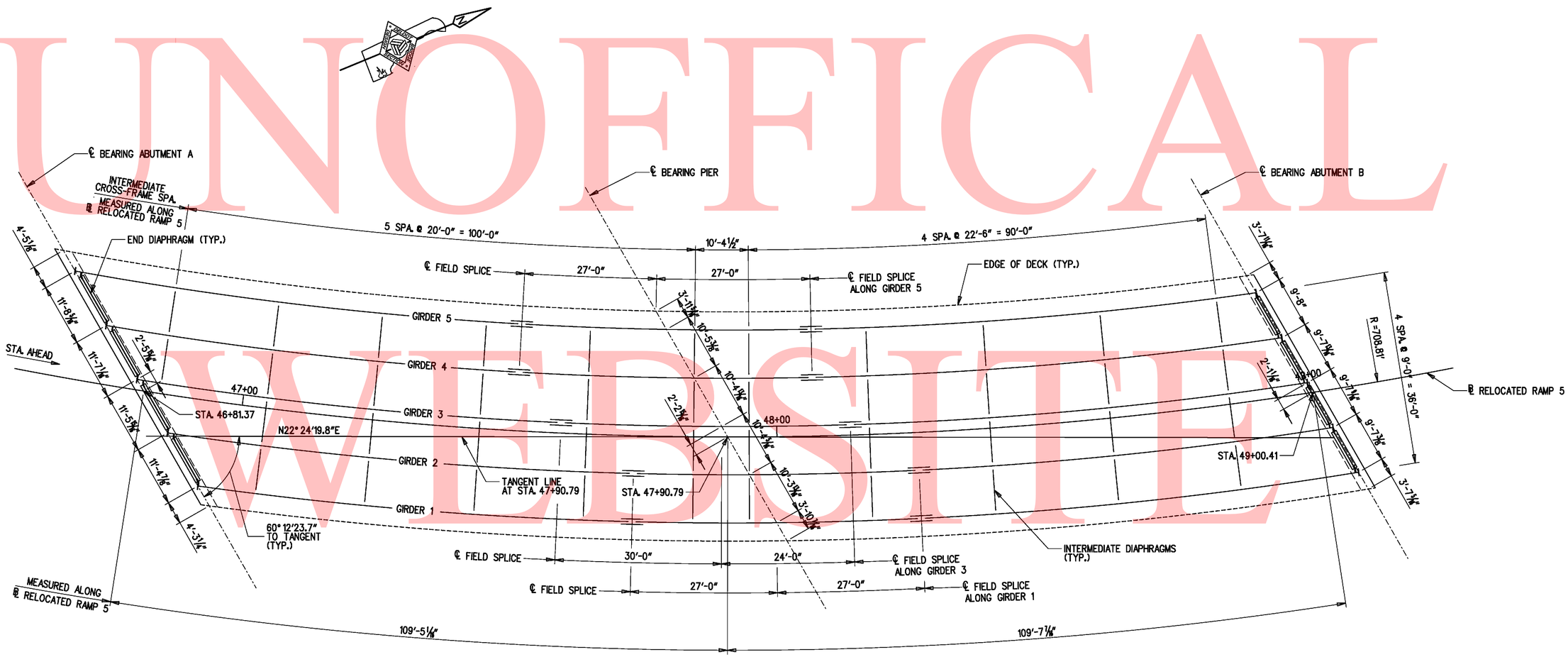

FRAMING PLAN

1" = 10'-0"

NOTES:

1. ALIGN INTERMEDIATE DIAPHRAGMS RADIAL TO BASELINE.
2. GIRDER RADII ARE CONCENTRIC TO BASELINE GEOMETRY.
3. FOR DIAPHRAGM AND STIFFENER DETAILS, SEE SHEET 198.
4. FOR FIELD SPLICE DETAILS, SEE SHEET 197.
5. FOR BEARING FIXITIES AND LAYOUT, SEE SHEET 200A.

Y:\NEWCASTL\059\BRIDGE\2510602\BRIDGE 1-763\PLANS\ALTERNATIVE CURVED\FR01.DG

DELAWARE DEPARTMENT OF TRANSPORTATION	ADDENDUMS / REVISIONS	I-95 & US 202 INTERCHANGE	CONTRACT T200510602	BRIDGE NO. 1-764	FRAMING PLAN S4-10 OF 23	SHEET NO. 196
			COUNTY NEW CASTLE	DESIGNED BY: DHG		TOTAL SHTS. 482
				CHECKED BY: JAM		

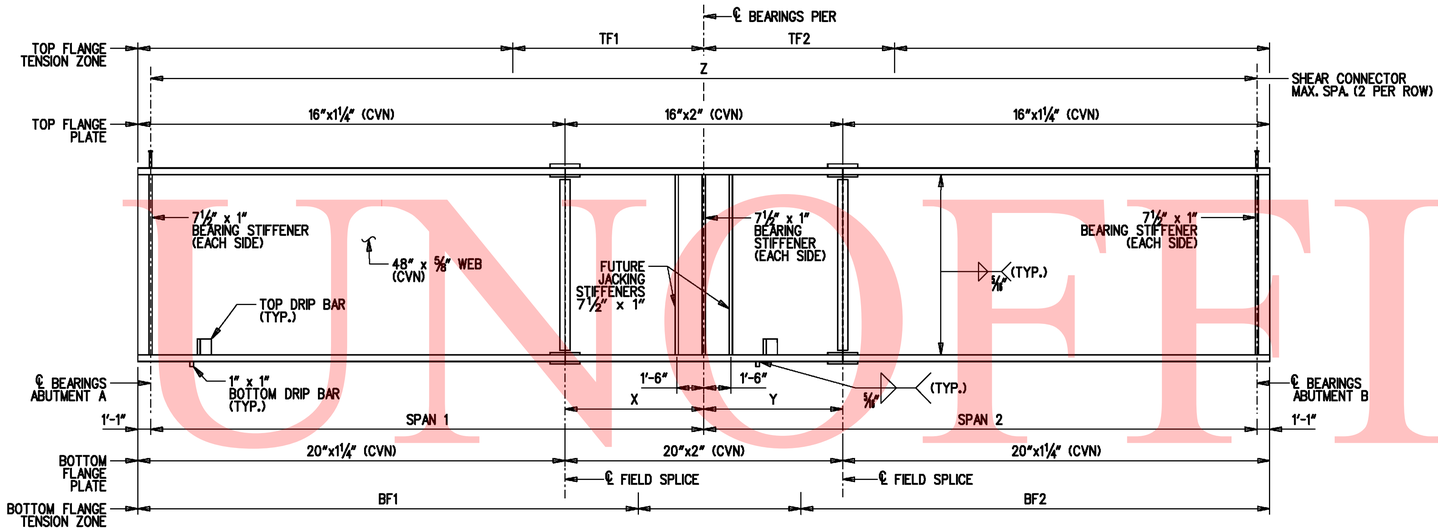

GIRDER ELEVATION

N.T.S.

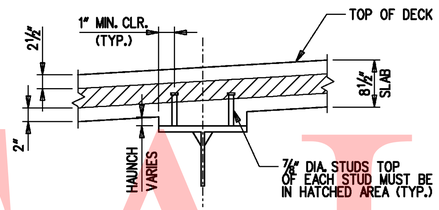

SHEAR CONNECTOR DETAIL

N.T.S.

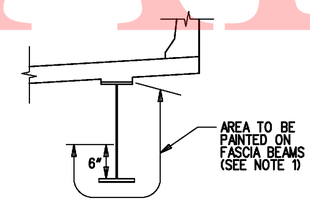

PAINTING DETAIL

N.T.S.

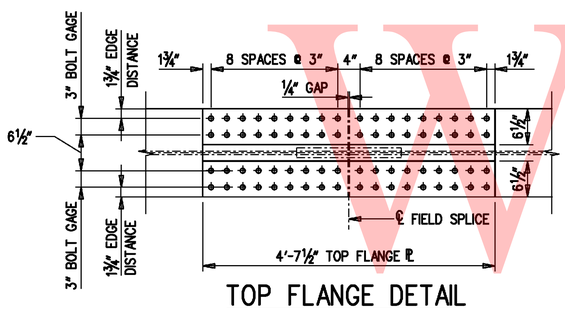

TOP FLANGE DETAIL

N.T.S.

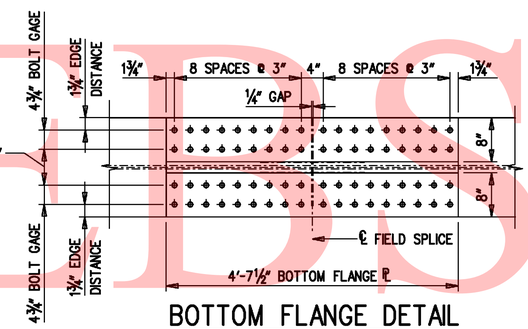

BOTTOM FLANGE DETAIL

N.T.S.

FIELD SECTION LENGTHS									
GIRDER	SPAN 1	SPAN 2	X	Y	Z	BF1	BF2	TF1	TF2
1	108'-3¾"	109'-0⅞"	27'-0"	27'-0"	436 @ 6"	88'-1"	90'-6"	50'-4"	47'-4"
2	108'-11"	109'-4½"	21'-7⅞"	31'-8⅛"	293 @ 9"	88'-9"	90'-1"	44'-9"	42'-4"
3	109'-6¾"	109'-8¼"	30'-0"	24'-0"	330 @ 8"	87'-10"	89'-9"	42'-11"	41'-10"
4	110'-2⅞"	110'-0¼"	32'-8⅜"	22'-0⅛"	332 @ 8"	90'-2"	90'-2"	42'-10"	42'-9"
5	110'-11½"	110'-4⅜"	27'-0"	27'-0"	381 @ 7"	91'-4"	90'-5"	43'-7"	44'-7"

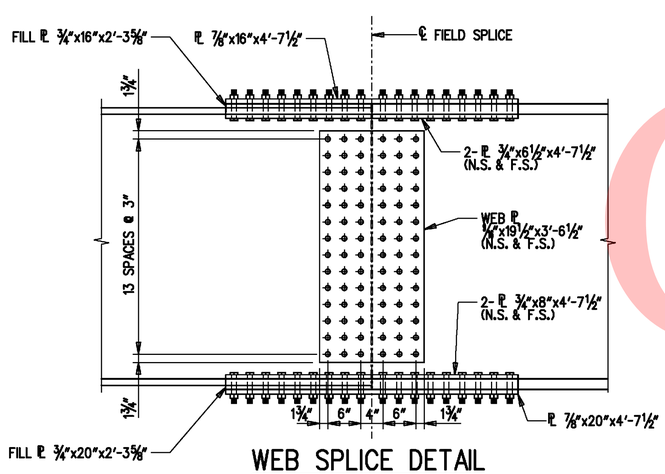

WEB SPLICE DETAIL

N.T.S.

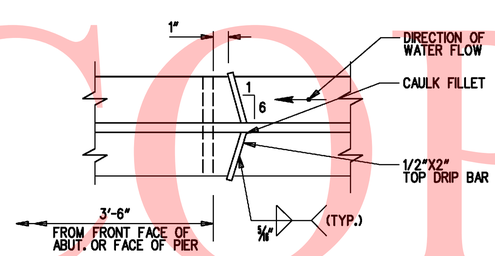

DRIP BAR DETAIL

N.T.S.

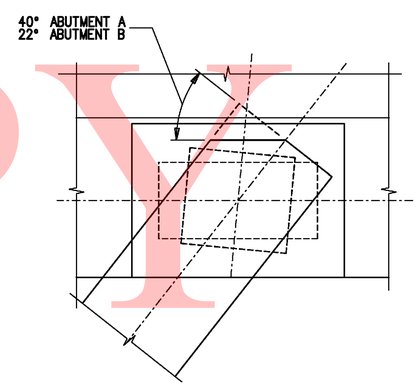

GIRDER FLANGE CLIP DETAIL

N.T.S.

NOTES:

1. THE GIRDERS SHALL BE PAINTED WITH A URETHANE PAINT SYSTEM IN ACCORDANCE WITH SECTION 605 FROM EACH END TO A DISTANCE OF 5' FROM FACE OF ABUTMENT OR MSE WALL AND THE DISTANCE BETWEEN 5' FROM EACH FACE OF PIER CAP. IN ADDITION, EACH FASCIA GIRDER SHALL BE PAINTED AS PER PAINTING DETAIL ABOVE IN AREAS BETWEEN THE PIER AND ABUTMENTS. THE COLOR OF THE FINISHED PAINT SHALL BE BROWN (NO. 10076) FROM FEDERAL STANDARD 595C. THE COLOR SHALL BE SUBMITTED FOR APPROVAL. AT ALL LOCATIONS WHERE THE CONTRACTOR'S WORK DAMAGES THE EXISTING PAINT SYSTEM, THE CONTRACTOR SHALL CLEAN THE DAMAGED LOCATION AND REPAINT THE AREA. ALL CLEANING AND PAINTING IS INCIDENTAL TO ITEM #605002 - STEEL STRUCTURES.
2. ALL FIELD SPLICE MATERIAL TO BE AASHTO M270, GRADE 50W (ASTM A709, GRADE 50M).
3. FIELD SPLICE DESIGNS ARE BASED ON CLASS A SURFACE (UNPAINTED CLEAN MILL SCALE, AND BLASTED-CLEANED SURFACES WITH CLASS A COATINGS).
4. OVERSIZED AND SLOTTED HOLES ARE NOT PERMITTED.
5. PROVIDE CHARPY V-NOTCH (CVN) TESTING OF ALL MAIN LOAD CARRYING MEMBERS (GIRDER & DIAPHRAGMS). PROVIDE CVN TESTING OF ALL FIELD SPLICE MATERIAL.
6. SEE FRAMING PLAN, SHEET 196, FOR DIAPHRAGM SPACING.
7. (TF) = TOP FLANGE TENSION ZONE.
8. (BF) = BOTTOM FLANGE TENSION ZONE.
9. PROPOSED FIELD SPLICES DESIGNED WITH BOLT THREADS IN THE SHEAR PLANE.
10. USE BOLTS, NUTS AND WASHERS CONFORMING TO ATMOSPHERIC CORROSION RESISTANCE REQUIREMENTS OF AASHTO M270/M270M (ASTM A709/A709M), GRADE 50W IN SPLICE CONNECTIONS.

UNOFFICAL WEBSITE COPY

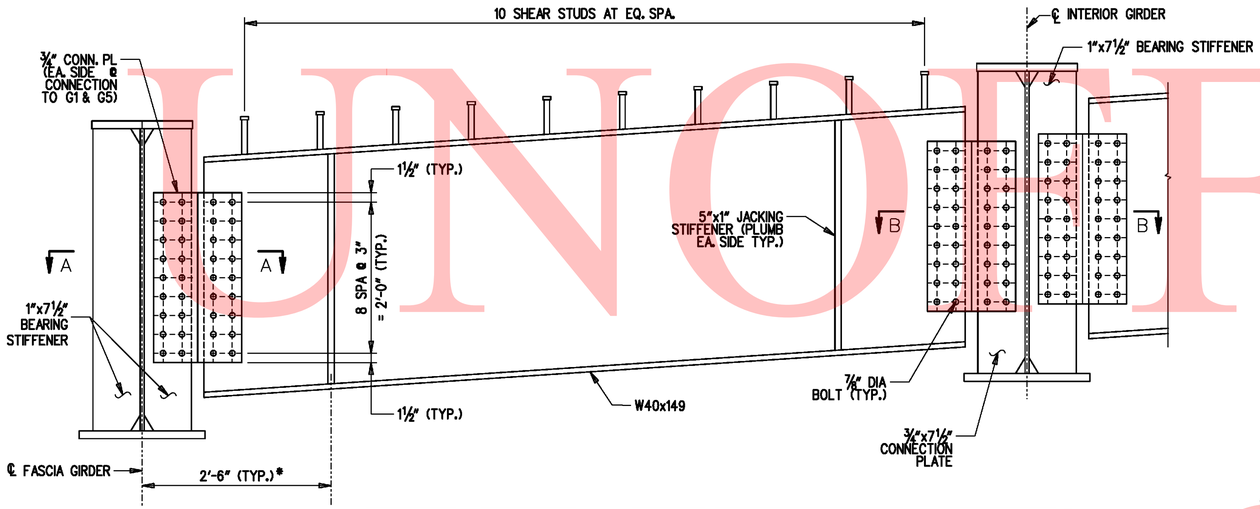

* DIMENSION MEASURED ALONG CENTERLINE OF END DIAPHRAGM

END DIAPHRAGMS

N.T.S.

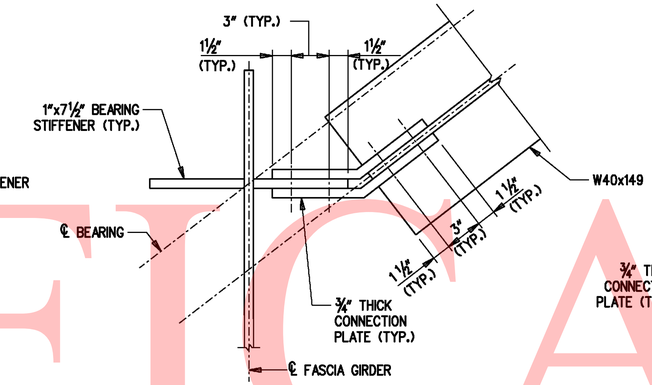

SECTION A-A

DETAIL @ END DIAPHRAGM
ABUTMENT A CONNECTION TO G1
ABUTMENT B CONNECTION TO G5
N.T.S.

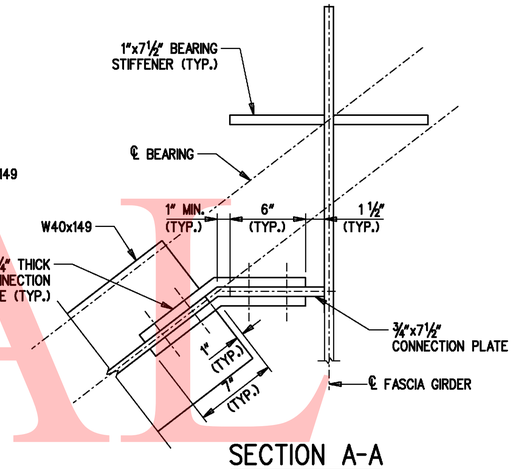

SECTION A-A

DETAIL @ END DIAPHRAGM
ABUTMENT A CONNECTION TO G5
ABUTMENT B CONNECTION TO G1
N.T.S.

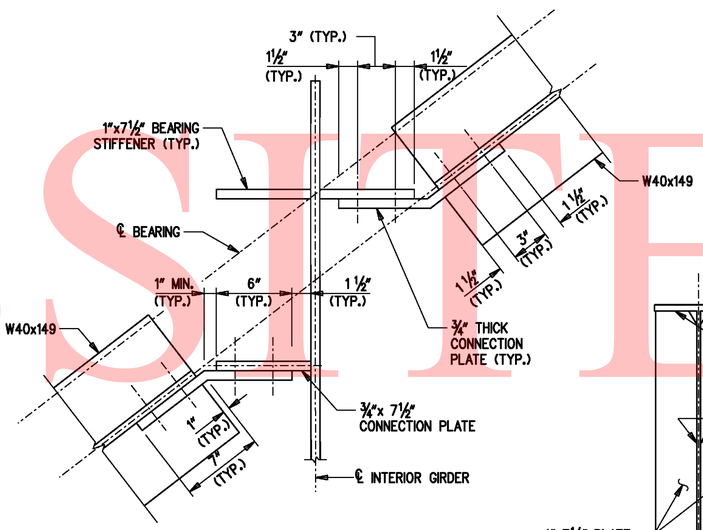

SECTION B-B

DETAIL @ END DIAPHRAGM
DETAIL @ CONNECTIONS TO G2-G4
N.T.S.

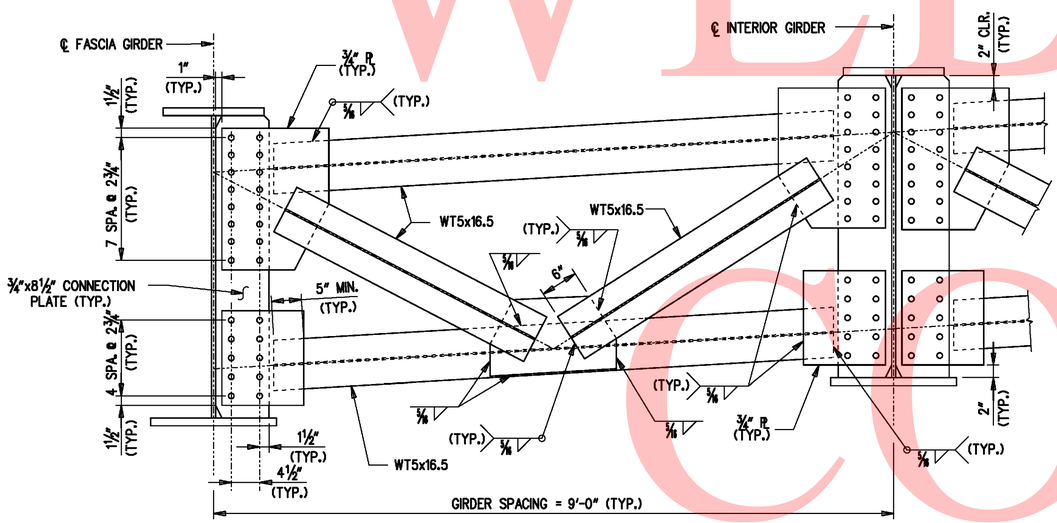

INTERMEDIATE DIAPHRAGM

N.T.S.

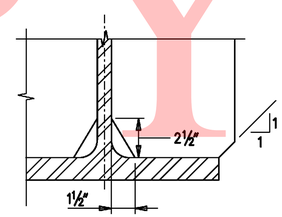

CHAMFER DETAIL

N.T.S.

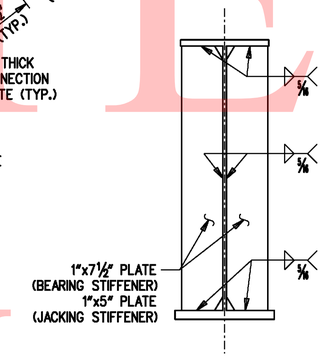

BEARING AND JACKING STIFFENERS

N.T.S.

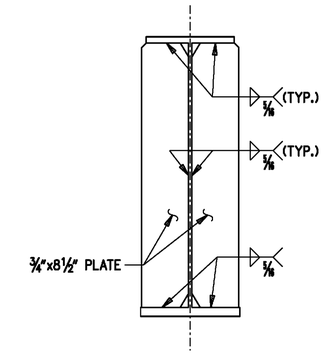

CONNECTION PLATE FOR INTERMEDIATE DIAPHRAGMS

N.T.S.

NOTES:

1. FOR FRAMING PLAN, SEE BRIDGE SHEET 196.
2. USE MECHANICALLY GALVANIZED BOLTS, NUTS AND WASHERS ON PAINTED PORTIONS OF WEATHERING STEEL. FOR PORTIONS OF STEEL THAT ARE TO REMAIN UNPAINTED, USE BOLTS, NUTS AND WASHERS CONFORMING TO ATMOSPHERIC CORROSION RESISTANCE REQUIREMENTS OF AASHTO M270/M270M (ASTM A709/A709M), GRADE 50W IN SPLICE CONNECTIONS.

UNOFFICIAL WEBSITE COPY

NOTES:

1. AFTER THE ERECTION OF STEEL AND THE CONNECTIONS OF THE STEEL CROSS FRAMES ARE COMPLETE, THE CONTRACTOR SHALL OBTAIN ELEVATIONS AT TEN FOOT INTERVALS ON THE TOP FLANGES OF ALL GIRDERS TO DETERMINE THE REQUIRED HAUNCH THICKNESS. ALL OF THE DATA SHALL BE SUBMITTED WITH DETAILS OF STAY-IN-PLACE FORMS FOR REVIEW AND APPROVAL BY THE ENGINEER IN THE FIELD.

2. VARY THICKNESS OF HAUNCH TO ACCOUNT FOR ANY INACCURACIES IN CAMBER.

LEGEND:

DLS = DEFLECTION DUE TO STRUCTURAL STEEL

DLC = DEFLECTION DUE TO CONCRETE SLAB

SDL = DEFLECTION DUE TO BARRIER

TD&C = TOTAL DEAD LOAD DEFLECTION & CAMBER

VCO = CAMBER FOR VERTICAL CURVE ORDINATE DUE TO ROADWAY PROFILE

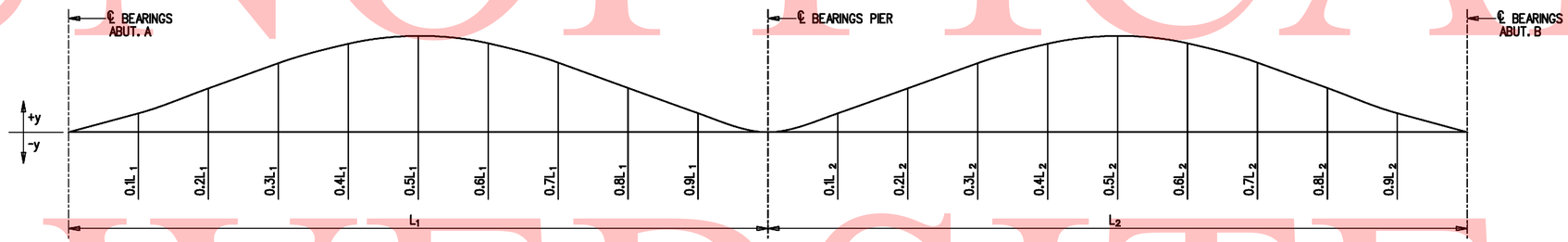

DEFLECTION AND TOTAL CAMBERS (INCHES)

PROPOSED GIRDERS		℄ BRG. ABUT. A	0.1L 1	0.2L 1	0.3L 1	0.4L 1	0.5L 1	0.6L 1	0.7L 1	0.8L 1	0.9L 1	℄ BRG. PIER	0.1L 2	0.2L 2	0.3L 2	0.4L 2	0.5L 2	0.6L 2	0.7L 2	0.8L 2	0.9L 2	℄ BRG. ABUT. B
GIRDER 1	DLS	0	3/16	3/8	1/2	9/16	1/2	7/16	5/16	3/16	1/16	0	1/16	3/16	5/16	1/2	9/16	5/8	9/16	7/16	1/4	0
	DLC	0	5/8	1 1/8	1 1/2	1 5/8	1 7/16	1 3/8	1	7/16	3/16	0	0	1/4	1/2	7/8	1 1/16	1 3/16	1 1/16	7/8	1/2	0
	SDL	0	1/16	1/16	1/8	1/8	1/8	1/16	1/16	1/16	0	0	0	1/16	1/16	1/8	1/8	1/8	1/8	1/8	1/16	0
	TD & C	0	7/8	1 9/16	2 1/8	2 3/16	2 3/16	1 7/8	1 3/8	15/16	1/4	0	1/16	1/2	7/8	1 1/2	1 3/4	1 15/16	1 3/4	1 7/16	15/16	0
	VCO	0	0	0	0	0	0	0	0	0	0	0	0	0	0	0	0	0	0	0	0	0
	TD & C + VCO	0	7/8	1 9/16	2 1/8	2 3/16	2 3/16	1 7/8	1 3/8	15/16	1/4	0	1/16	1/2	7/8	1 1/2	1 3/4	1 15/16	1 3/4	1 7/16	15/16	0
GIRDER 2	DLS	0	1/4	3/8	1/2	9/16	1/2	7/16	5/16	3/16	1/16	0	1/16	3/16	3/16	1/2	9/16	5/8	9/16	7/16	1/4	0
	DLC	0	9/16	1	1 3/8	1 1/2	1 1/2	1 5/16	9/16	9/16	3/16	0	0	1/4	1/2	15/16	1	1 1/8	1 1/16	9/16	7/16	0
	SDL	0	1/16	1/16	1/8	1/8	1/8	1/16	1/16	1/16	0	0	0	1/16	1/16	1/8	1/8	1/8	1/8	1/8	1/16	0
	TD & C	0	7/8	1 7/16	2	2 3/16	2 1/8	1 15/16	1 5/16	15/16	1/4	0	1/16	1/2	7/8	1 7/16	1 11/16	1 7/8	1 3/4	1 5/16	3/4	0
	VCO	0	0	0	0	0	0	0	0	0	0	0	0	0	0	0	0	0	0	0	0	0
	TD & C + VCO	0	7/8	1 7/16	2	2 3/16	2 1/8	1 15/16	1 5/16	15/16	1/4	0	1/16	1/2	7/8	1 7/16	1 11/16	1 7/8	1 3/4	1 5/16	3/4	0
GIRDER 3	DLS	0	3/16	3/8	1/2	9/16	9/16	7/16	5/16	3/16	1/16	0	1/16	3/16	5/16	1/2	9/16	5/8	9/16	7/16	1/4	0
	DLC	0	1/2	1	1 5/16	1 7/16	1 7/16	1 1/4	9/16	9/16	1/4	0	1/16	1/4	1/2	9/16	1	1 1/8	1 1/16	9/16	7/16	0
	SDL	0	1/16	1/16	1/8	1/8	1/8	1/16	1/16	1/16	0	0	0	1/16	1/16	1/8	1/8	1/8	1/8	1/8	1/16	0
	TD & C	0	3/4	1 7/16	1 15/16	2 1/8	2 1/8	1 3/4	1 5/16	9/16	5/16	0	1/8	1/2	7/8	1 7/16	1 11/16	1 7/8	1 3/4	1 5/16	3/4	0
	VCO	0	0	0	0	0	0	0	0	0	0	0	0	0	0	0	0	0	0	0	0	0
	TD & C + VCO	0	3/4	1 7/16	1 15/16	2 1/8	2 1/8	1 3/4	1 5/16	9/16	5/16	0	1/8	1/2	7/8	1 7/16	1 11/16	1 7/8	1 3/4	1 5/16	3/4	0
GIRDER 4	DLS	0	3/16	3/8	1/2	9/16	9/16	7/16	5/16	3/16	1/16	0	1/16	3/16	3/16	7/16	9/16	9/16	9/16	7/16	1/4	0
	DLC	0	1/2	9/16	1 5/16	1 7/16	1 3/8	1 5/16	7/8	1/2	3/16	0	1/16	1/4	9/16	9/16	1	1 1/16	1	9/16	7/16	0
	SDL	0	1/16	1/16	1/8	1/8	1/8	1/16	1/16	1/16	0	0	0	1/16	1/16	1/8	1/8	1/8	1/8	1/8	1/16	0
	TD & C	0	3/4	1 3/8	1 15/16	2 1/8	2 1/8	1 3/4	1 1/4	3/4	1/4	0	1/8	1/2	5/8	1 3/8	1 11/16	1 3/4	1 11/16	1 3/8	3/4	0
	VCO	0	0	0	0	0	0	0	0	0	0	0	0	0	0	0	0	0	0	0	0	0
	TD & C + VCO	0	3/4	1 3/8	1 15/16	2 1/8	2 1/8	1 3/4	1 1/4	3/4	1/4	0	1/8	1/2	5/8	1 3/8	1 11/16	1 3/4	1 11/16	1 3/8	3/4	0
GIRDER 5	DLS	0	3/16	3/8	1/2	9/16	1/2	7/16	5/16	3/16	1/16	0	1/16	1/8	1/4	3/8	1/2	1/2	1/2	3/8	3/16	0
	DLC	0	9/16	9/16	1 1/4	1 3/8	1 3/8	1 3/16	7/8	1/2	3/16	0	1/16	1/4	1/2	9/16	1	1 1/16	1	9/16	7/16	0
	SDL	0	1/16	1/16	1/16	1/16	1/16	1/16	1/16	1/16	0	0	0	1/16	1/16	1/16	1/16	1/16	1/16	1/16	1/16	0
	TD & C	0	9/16	1 1/16	1 7/8	2 1/16	2	1 3/4	1 1/4	3/4	1/4	0	1/8	7/16	9/16	1 5/16	1 5/8	1 11/16	1 5/8	1 5/16	11/16	0
	VCO	0	0	0	0	0	0	0	0	0	0	0	0	0	0	0	0	0	0	0	0	0
	TD & C + VCO	0	9/16	1 1/16	1 7/8	2 1/16	2	1 3/4	1 1/4	3/4	1/4	0	1/8	7/16	9/16	1 5/16	1 5/8	1 11/16	1 5/8	1 5/16	11/16	0

UNOFFICAL WEBSITE COPY

Y:\NEWCASTL\059\BRIDGE\2510602\BRIDGE 1-763\PLANS\ALTERNATIVE CURVED\CA01.DGN

DELAWARE DEPARTMENT OF TRANSPORTATION

ADDENDUMS / REVISIONS

I-95 & US 202 INTERCHANGE

CONTRACT	BRIDGE NO.	1-764
T200510602	DESIGNED BY: DHG	
COUNTY		
NEW CASTLE	CHECKED BY: JAM	

CAMBER DETAILS S4-13 OF 23

SHEET NO.
199
TOTAL SHTS.
482

POT BEARING GENERAL NOTES:

1. PROVIDE MATERIALS AND WORKMANSHIP IN ACCORDANCE WITH SPECIFICATIONS, ANSI/AASHTO/AWS/D1.5 BRIDGE WELDING CODE AND CONTRACT SPECIAL PROVISIONS.
2. SANDBLAST IN ACCORDANCE WITH SSPC-SP10 TO REMOVE MILL SCALE FROM BEARINGS.
3. GRIND SMOOTH ALL STEEL SURFACES AND EDGES AND REMOVE ANY SHARP PROTRUSIONS. FABRICATION TOLERANCES AND THE LIMITATIONS ON SURFACE FINISH WILL BE IN ACCORDANCE WITH THE STANDARD SPECIFICATIONS AND SPECIAL PROVISIONS.
4. PAINT ALL STEEL SURFACES IN ACCORDANCE WITH THE STANDARD SPECIFICATIONS AND SPECIAL PROVISIONS. APPLY ALL COATS IN THE FABRICATION SHOP ONLY. DO NOT PAINT PTFE, STAINLESS STEEL OR THE INSIDE OF THE POT. APPLY ONLY PRIME COAT TO THE CONTACT AREA BETWEEN BEAM BOTTOM FLANGE AND SOLE PLATE AND TO THE BOTTOM SIDE OF THE MASONRY PLATE.
5. ROUND ALL PTFE CORNERS TO ACCOMMODATE THE MACHINED RECESS IN STEEL GUIDE PLATE / PISTON.
6. ETCH PTFE ON ONE SIDE FOR BONDING INTO THE MACHINED RECESS.
7. PTFE ON THE SIDE OF GUIDE PLATE MUST BE PIGMENTED.
8. PRIOR TO THE APPLICATION OF ADHESIVE, CLEAN ALL MATING STEEL AND PTFE SURFACES BY GRIT BLASTING AND DEGREASING. APPLY ADHESIVE AS PER THE MANUFACTURER'S RECOMMENDATION.
9. LUBRICATE ALL SURFACES OF NEOPRENE DISC WITH SILICONE GREASE IN ACCORDANCE WITH MILITARY SPECIFICATION MIL-S-8660.
10. CUT FLAT BRASS SEALING RING ENDS AT 45° ANGLE WITH A MAXIMUM GAP OF 0.05". STAGGER THE OPENINGS IN THE BRASS RINGS 120° APART.
11. MARK THE THICKER EDGE OF THE SOLE PLATE AS SUCH FOR THE PURPOSE OF FIELD IDENTIFICATION. PLACE MARK ON THE EDGE OF SOLE PLATE SO THAT IT WILL BE VISIBLE AFTER BEARING INSTALLATION. IN THE CASE OF A SOLE PLATE WITH A COMPOUND BEVEL PLACE THE MARK ON EITHER EDGE OF THE THICKEST SOLE PLATE CORNER.
12. MARK CENTERLINE OF GUIDED AND NON-GUIDED POT BEARINGS ON THE SIDES OF MASONRY PLATE AND SOLE PLATE. THE CENTERLINE IDENTIFICATION MARKS WILL BE USEFUL TO LOCATE OFFSET DISTANCES IN THE FIELD. USE INDELIBLE INK TO PLACE ALL MARKS.
13. MARK EACH BEARING WITH THE NAME OF THE MANUFACTURER AND TYPE OR MODEL NUMBER. PLACE THE IDENTIFICATION MARK IN A PERMANENT MANNER AND LOCATION SO THAT IT IS VISIBLE AFTER ERECTION.
14. WHEN THE POT IS RECESSED INTO THE MASONRY PLATE SEAL AROUND THE POT PERIMETER WITH AN APPROVED CAULKING COMPOUND IN THE SHOP AFTER PAINT COATING HAS DRIED.
15. THE CONTRACTOR IS RESPONSIBILE TO NOTIFY THE ENGINEER OF ANY PROPOSED VARIATION FROM BEARING DIMENSIONS PROVIDED HEREIN DURING FABRICATION.
16. ENSURE ALL BEARING SURFACES INCLUDING THE BEARING SEAT ARE LEVEL PRIOR TO INSTALLATION OF POT BEARINGS UNLESS NOTED OTHERWISE.
17. TEST ONE BEARING PER TYPE OR PER LOT SIZE OF 25 FOR A HORIZONTAL FORCE CAPACITY PRIOR TO SHIPMENT.

MATERIALS:

1. STRUCTURAL STEEL:
   - MATERIAL 4" THICK OR LESS - AASHTO M270/ M 270M (ASTM A709/ A A709M), GRADE 50
   - MATERIAL GREATER THAN 4" THICK - ASTM A572/A572M, GRADE 50
2. ANCHOR BOLTS: ASTM F1554, GRADE 55
3. NUTS: ASTM A563/ A 563M, GRADE DH
4. WASHERS: ASTM F436/ F436M, TYPE 1
5. MECHANICAL GALVANIZATION OF ANCHOR BOLTS, NUTS AND WASHERS: ASTM B695.
6. STAINLESS STEEL: ASTM A240, GRADE 30, TYPE 304 WITH AN ANSI 0.02 mil SURFACE FINISH OR LESS.
7. FLAT BRASS SEALING RINGS: ASTM B36 (HALF HARD) SPECIFICATION.
8. ELASTOMERIC DISC: VIRGIN PLAIN NEOPRENE OR NATURAL RUBBER WITH HARDNESS OF 50 DUROMETER (+/- 10) PER AASHTO M251.
9. PTFE SHEET: MADE FROM VIRGIN TFE RESIN PER ASTM D4894.
   - MAIN SLIDING SURFACE PTFE - UNFILLED, DIMPLED AND LUBRICATED. DIMPLES MUST HAVE A MINIMUM EDGE DISTANCE OF 1/2" AND CONFORM TO AASHTO LRFD, SECTION 14.7.2.
   - GUIDE BAR SURFACE PTFE - PIGMENTED, FILLED OR UNFILLED.
10. CAULK FOR SEALING AROUND THE POT PERIMETER: SIKAFLEX IA OR APPROVED EQUAL.
11. BEDDING MATERIAL: ASTM D378.

MATERIAL DESIGN PARAMETERS:

1. ALLOWABLE PRESSURE IN ELASTOMER AND PTFE:

   MAXIMUM = 3500 psi ELASTOMER & PTFE
   MINIMUM = 700 psi ELASTOMER

2. COEFFICIENT OF FRICTION BETWEEN PTFE AND STAINLESS STEEL: 0.18
3. CONCRETE BEARING STRENGTH: f'c = 4500 psi

ANCHOR BOLT INSTALLATION:

1. IF BLOCKOUTS ARE USED, REMOVE BLOCKOUT FORM AND DEBRIS FROM HOLE PRIOR TO GROUTING. INSTALL USING APPROVED NON-SHRINK GROUTIN ACCORDANCE WITH STANDARD SPECIFICATIONS AND PER MANUFACTURER'S RECOMMENDATIONS. DO NOT GROUT UNTIL ALL GIRDER UNITS ARE PROPERLY ALIGNED.
2. PREVENT WATER FROM ACCUMULATING IN THE PREFORMED ANCHOR BOLT HOLES OR STANDARD PIPE AND ENSURE THE HOLES ARE COMPLETELY FILLED WITH GROUT.

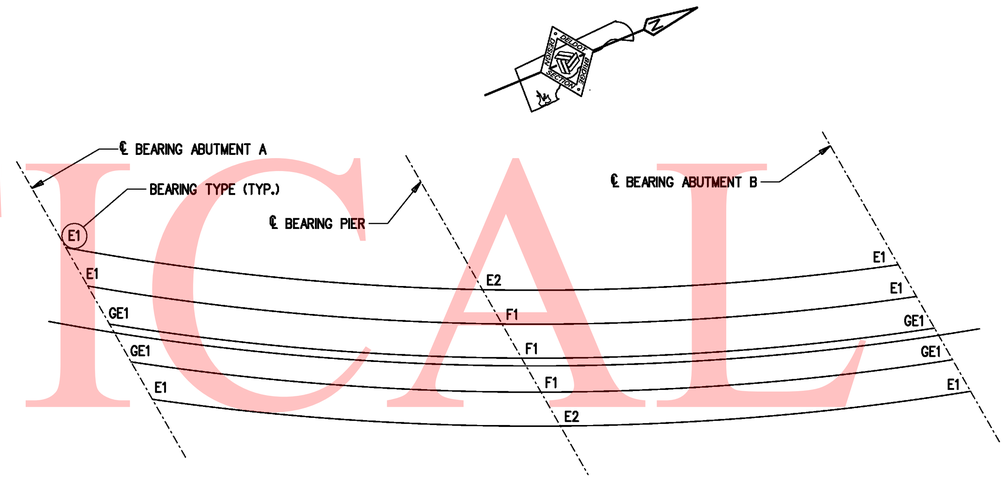

BEARING LAYOUT PLAN
N.T.S.

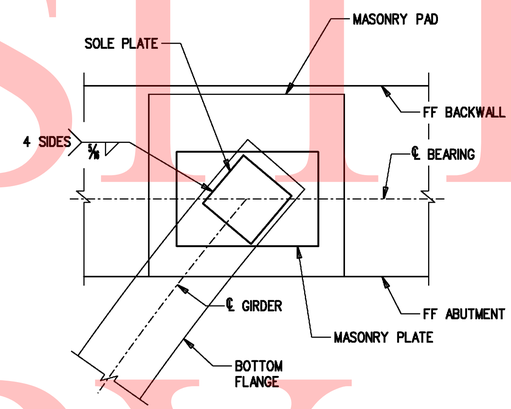

SOLE AND MASONRY PLATE ORIENTATION AT ABUTMENTS
N.T.S.

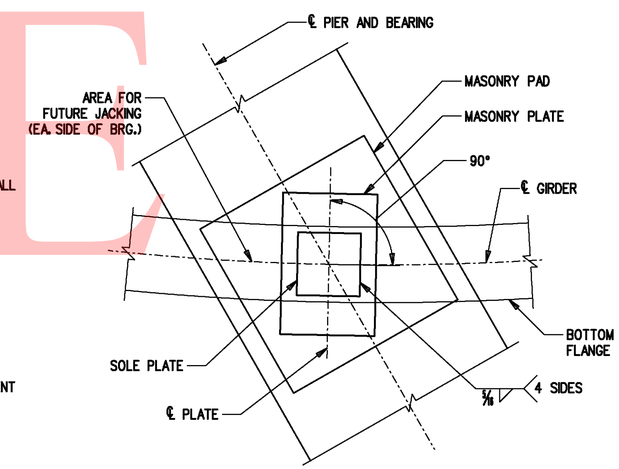

SOLE AND MASONRY PLATE ORIENTATION AT PIER
N.T.S.

POT BEARING DESIGN LRFD SPECIFICATIONS

BEARING TYPE	AASHTO LRFD LIMIT STATES	DESIGN LOADS (KIPS)										
		VERTICAL								HORIZONTAL *		
		DL		LL + I		WIND		TOTAL		TRANSVERSE	LONGITUDINAL	RESOLUTION
		MIN.	MAX.	MIN.	MAX.	MIN.	MAX.	MIN.	MAX.			
GE1	SERVICE I	68	79	-10	105	-3	3	52	184	52	0	52
E1	SERVICE I	61	78	-20	109	-5	5	36	189	0	0	0
E2	SERVICE I	204	259	-13	177	-10	10	170	458	0	0	0
F1	SERVICE I	230	292	-4	190	-6	6	226	489	138	64	152

* TRANSVERSE FORCE REFLECTS THE TOTAL TRANSVERSE FORCE PER BEARING LINE. BEARINGS DESIGNED SUCH THAT ALL TRANSVERSE FORCES CAN BE RESISTED BY ONE GUIDED OR FIXED BEARING. THE LONGITUDINAL LOADS AT THE FIXED BEARING LINE AT THE PIER ARE SHARED AMONG THE THREE FIXED BEARINGS. THE LONGITUDINAL FORCE PROVIDED REFLECTS THE FORCE PER BEARING.

UNOFFICAL WEBSITE COPY

TYPE	QTY.	MASONRY PLATE					ANCHOR BOLT		SOLE PLATE				POT						NEOPRENE DISC			PISTON				BEARING HEIGHT*
		A	B	C	D	E	F	QTY.	G	H	I	J	K	L	M	N	O	P	Q	R	S	T	U	V	W	X	PP
F1	3	1⅞"	19¼"	29¾"	11⅞"	6⅝"	-	4	1¾"	⅞"	1 1/16"	17¾"	17¾"	2⅝"	17¾"	2¼"	11/16"	¼"	2"	1⅜"	13¾"	⅜"	1½"	13.710	9/16"	5/16"	6⅝"

* BEARING HEIGHT INCLUDES ⅛" FABRIC REINFORCED ELASTOMERIC PAD

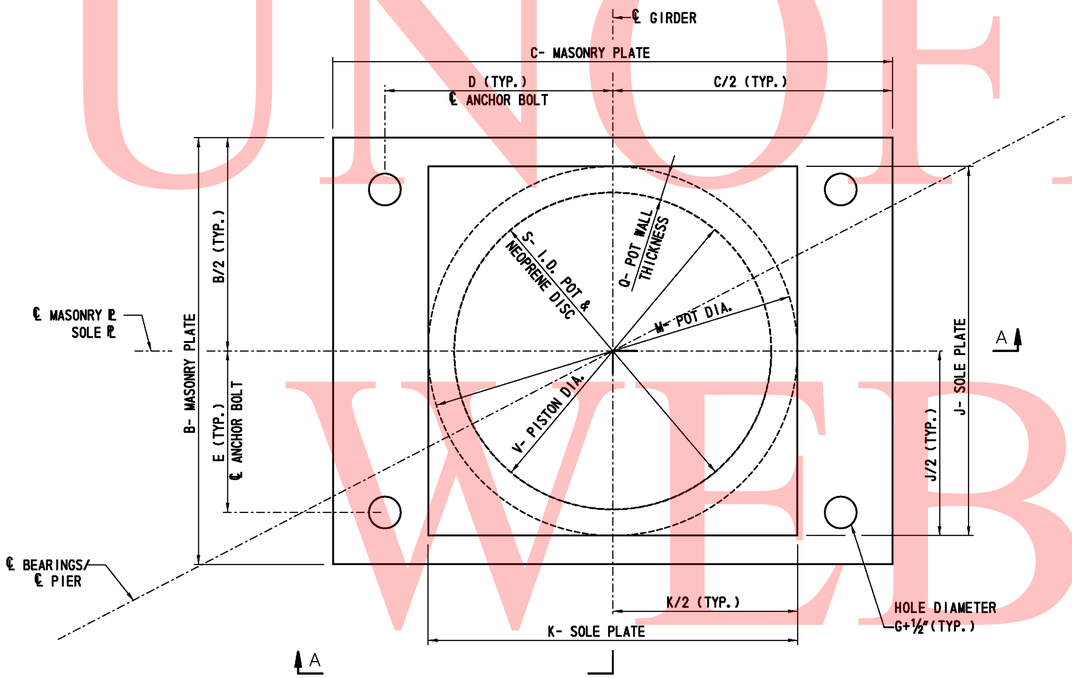

FIXED POT BEARING PLAN
N.T.S.

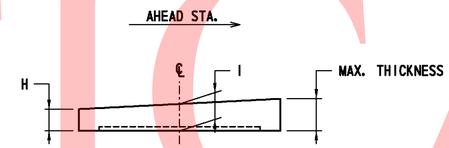

BEVELED SOLE PLATE DETAIL
N.T.S.

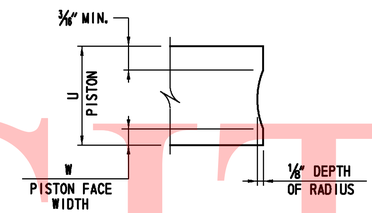

PISTON DETAIL
N.T.S.

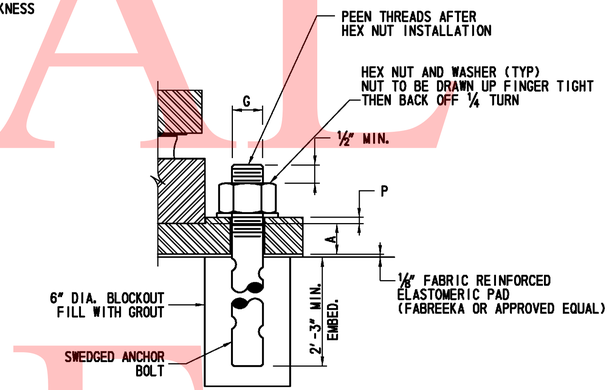

ANCHOR BOLT DETAIL
N.T.S.

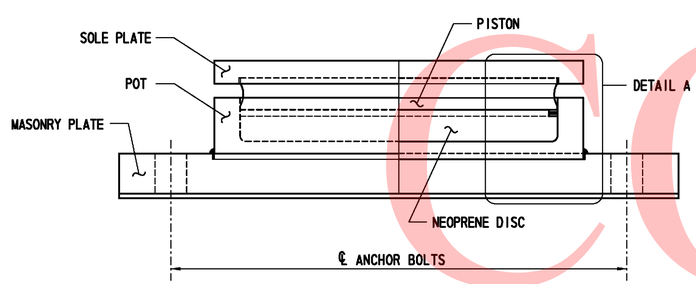

SECTION A-A
N.T.S.

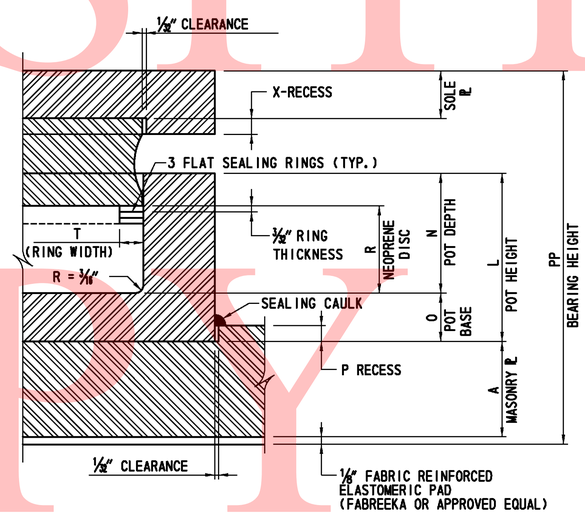

DETAIL A
N.T.S.

BEARING TYPE F1
N.T.S.

NOTE:

1. FOR BEARING LOCATIONS, SEE SHEET 200A.

UNOFFICAL WEBSITE COPY

Y:\NEWCASTL\059\BRIDGE\2510602\BRIDGE 1-763\PLANS\ALTERNATIVE CURVED\PN01.DGN

DELAWARE DEPARTMENT OF TRANSPORTATION	ADDENDUMS / REVISIONS	I-95 & US 202 INTERCHANGE	CONTRACT T200510602	BRIDGE NO. 1-764	BEARING DETAILS POT BEARINGS – 2	SHEET NO. 200B
			COUNTY NEW CASTLE	DESIGNED BY: JAM		TOTAL SHTS. 482
				CHECKED BY: DHG		

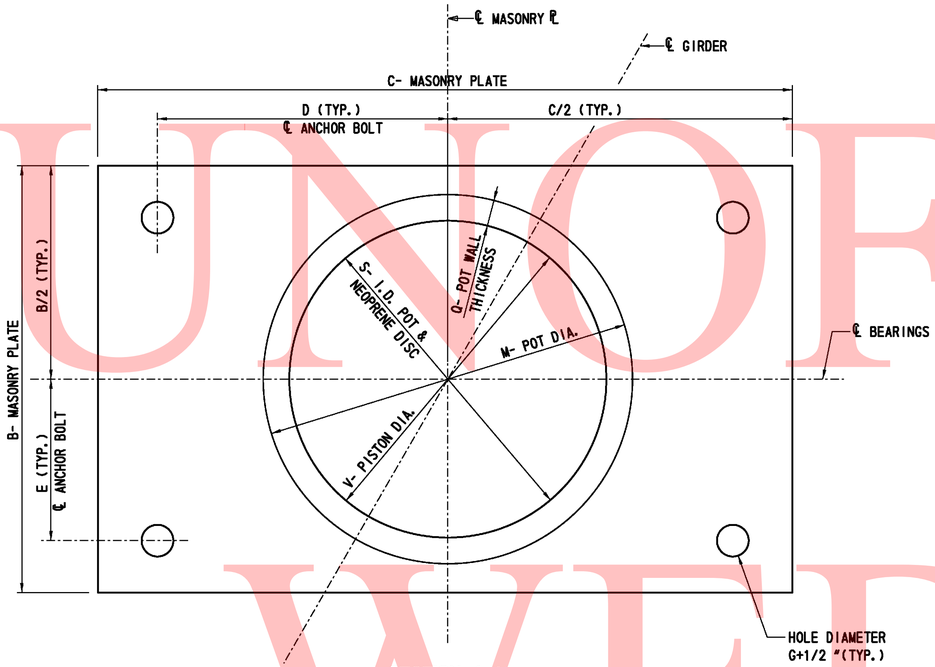

SECTION A-A
N.T.S.

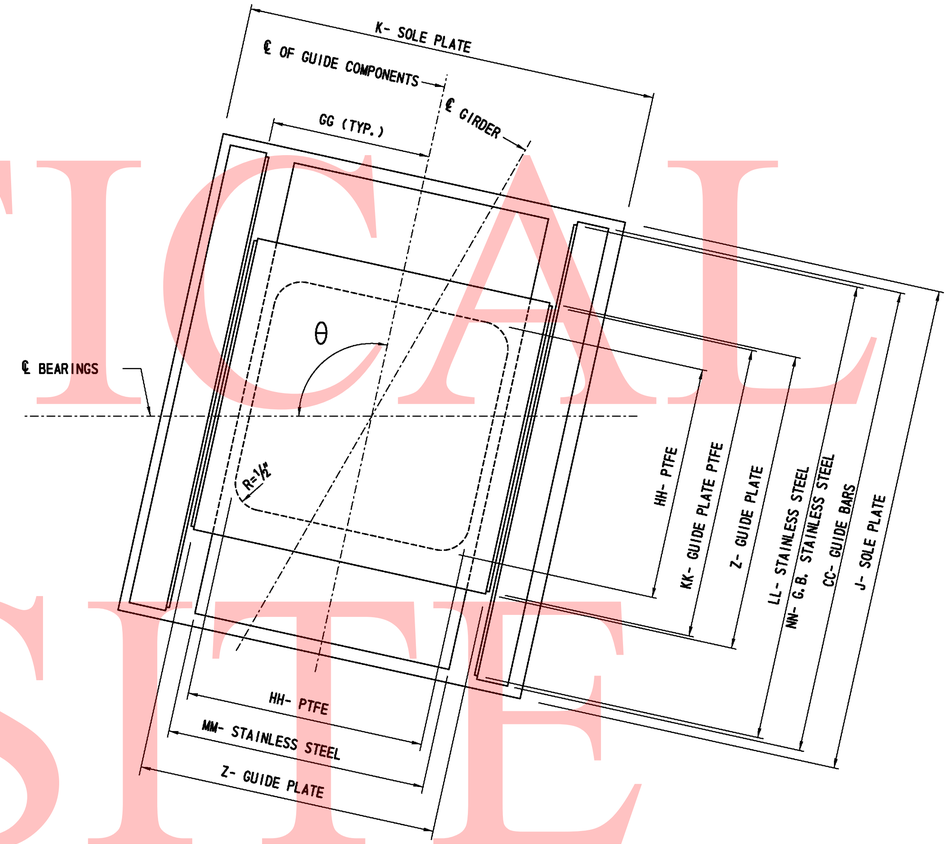

SECTION B-B
N.T.S.

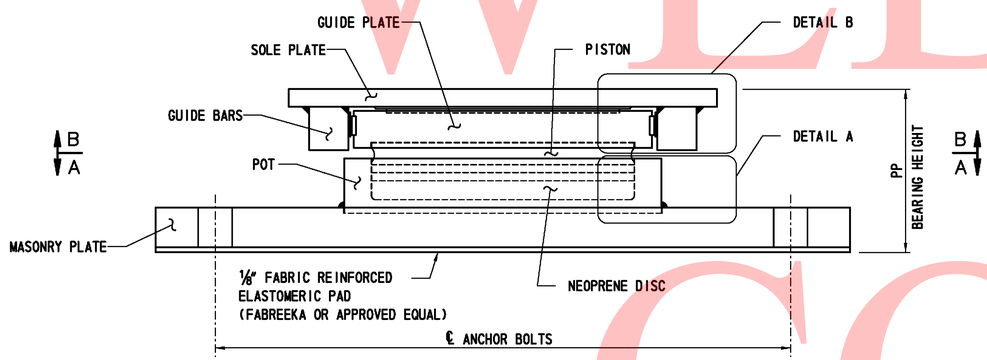

GUIDED EXPANSION BEARING ELEVATION
N.T.S.

BEARING TYPE GE1
N.T.S.

TYPE	ABUT	GIRDER	θ
GE1	A	2	95°24′
		3	98°03′
	B	2	89°50′
		3	87°27′

NOTES:

1. FOR BEARING LOCATIONS AND NOTES, SEE SHEET 200A.
2. WORK THIS SHEET WITH SHEET 200D.

UNOFFICAL WEBSITE COPY

Y:\NEWCASTL\059\BRIDGE\2510602\BRIDGE 1-763\PLANS\ALTERNATIVE CURVED\PN01.DGN

DELAWARE DEPARTMENT OF TRANSPORTATION

ADDENDUMS / REVISIONS

I-95 & US 202 INTERCHANGE

CONTRACT	BRIDGE NO.	1-764
T200510602	DESIGNED BY: JAM	
COUNTY		
NEW CASTLE	CHECKED BY: DHG	

BEARING DETAILS
POT BEARINGS – 3

SHEET NO.
200C
TOTAL SHTS.
482

TYPE	QTY.	MASONRY PLATE						ANCHOR BOLT		POT						NEOPRENE DISC			PISTON				GUIDE PLATE	
		A	B	C	D	E	F	QTY.	G	L	M	N	O	P	Q	R	S	T	U	V	W	X	Y	Z
GE1	4	2"	12 7/8"	26 7/8"	11 3/16"	4 13/16"	-	4	1 1/4"	2 3/16"	11 3/8"	1 5/8"	9/16"	1/4"	1 1/4"	1"	8 7/8"	3/8"	1 1/4"	8.835	3/8"	1/4"	2 1/8"	11 3/8"

TYPE	GUIDE BARS							PTFE				STAINLESS STEEL			
	AA	BB	CC	DD	EE	FF	GG	HH	II	JJ	KK	LL	MM	NN	OO
GE1	2 3/8"	2 3/8"	16 1/4"	3/16"	1/2"	3/16"	5.934	7 5/8"	3/16"	1 5/8"	11 1/8"	16 1/8"	8 5/8"	16 1/8"	1 7/8"

TYPE	SOLE PLATE				BEARING HEIGHT*
	H	I	J	K	PP
GE1	13/16"	1 1/16"	16 1/4"	17 7/8"	8 1/16"

* BEARING HEIGHT INCLUDES 1/8" FABRIC REINFORCED ELASTOMERIC PAD

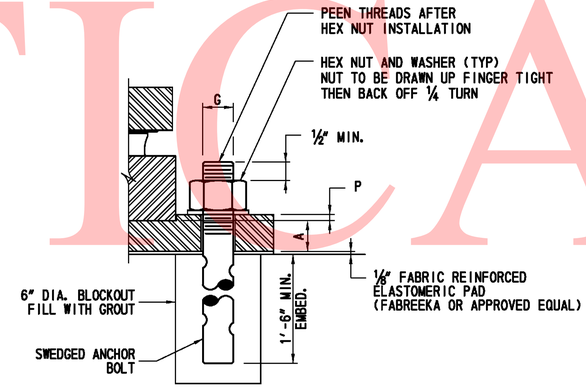

ANCHOR BOLT DETAIL
N.T.S.

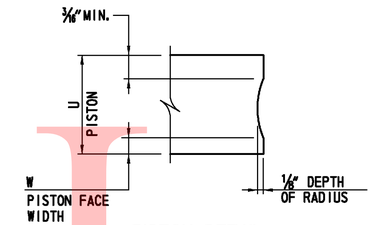

PISTON DETAIL
N.T.S.

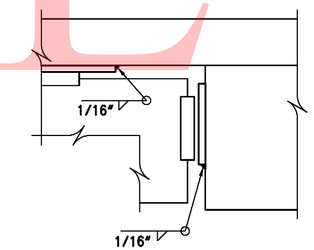

STAINLESS STEEL WELD DETAIL
N.T.S.

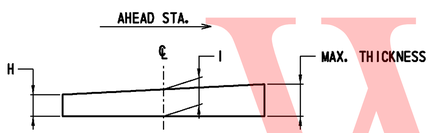

BEVELED SOLE PLATE DETAIL
N.T.S.

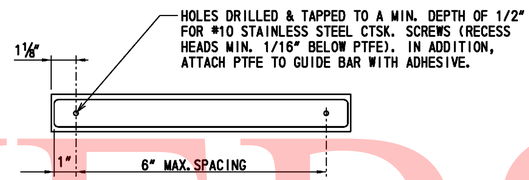

GUIDE PLATE PTFE DETAIL
N.T.S.

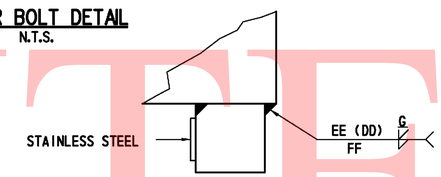

GUIDE BAR WELD DETAIL
N.T.S.

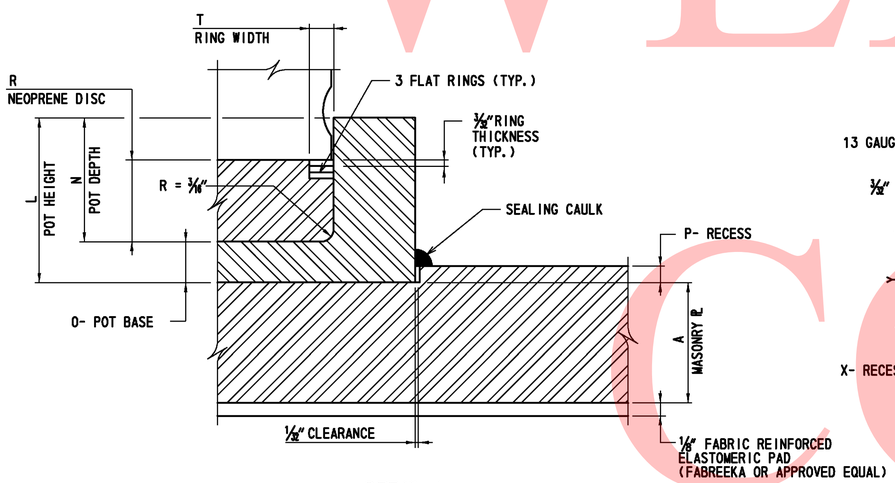

DETAIL A
N.T.S.

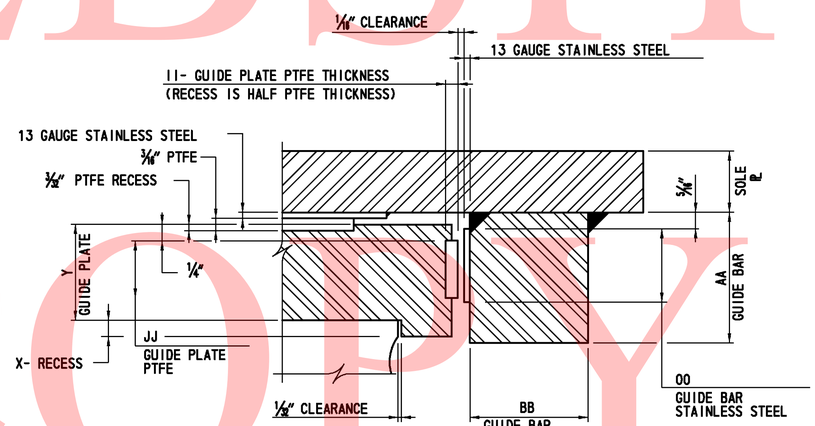

DETAIL B
N.T.S.

BEARING TYPE GE1
N.T.S.

NOTES:

1. FOR BEARING LOCATIONS AND NOTES, SEE SHEET 200A.
2. WORK THIS SHEET WITH SHEET 200C.

UNOFFICIAL WEBSITE COPY

Y:\NEWCASTL\059\BRIDGE\25100602\BRIDGE 1-763\PLANS\ALTERNATIVE CURVED\PN01.DGN

DELAWARE DEPARTMENT OF TRANSPORTATION

ADDENDUMS / REVISIONS

I-95 & US 202 INTERCHANGE

CONTRACT	BRIDGE NO.	1-764
T200510602	DESIGNED BY: JAM	
COUNTY		
NEW CASTLE	CHECKED BY: DHG	

BEARING DETAILS POT BEARINGS - 4

SHEET NO.
200D
TOTAL SHTS.
482

TYPE	QTY.	MASONRY PLATE					ANCHOR BOLT		POT						NEOPRENE DISC			PISTON			PTFE	STAINLESS STEEL	
		A	B	C	D	E	QTY.	G	L	M	N	O	P	Q	R	S	T	U	V	W	HH	LL	MM
E1	6	1½"	11⅞"	19⅞"	7 11/16"	3 11/16"	4	1¼"	2 1/16"	10⅜"	1½"	9/16"	¼"	¾"	1"	8⅞"	⅜"	13/16"	8.835	5/16"	8⅝"	13⅝"	10⅝"
E2	2	1¾"	17⅜"	24¾"	10⅛"	6 7/16"	4	1¼"	2⅞"	15¼"	2 3/16"	11/16"	¼"	¾"	1⅜"	13¾"	⅜"	1 3/16"	13.710	7/16"	13½"	18½"	15½"

TYPE	SOLE PLATE				BEARING HEIGHT*
	H	I	J	K	PP
E1	13/16"	1"	13⅞"	10⅞"	5 3/16"
E2	13/16"	1⅛"	18¾"	15¾"	6 7/16"

* BEARING HEIGHT INCLUDES ⅛" FABRIC REINFORCED ELASTOMERIC PAD

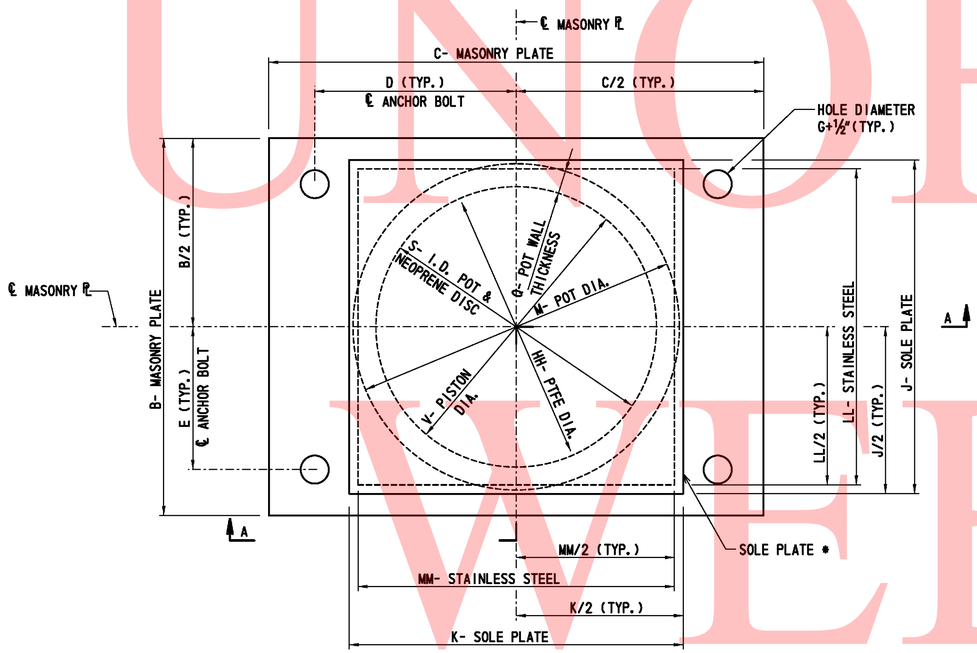

* ORIENTATION OF SOLE PLATE FOR BEARING TYPE E2 SHOWN, ORIENTATION OF SOLE PLATE FOR BEARING TYPE E1 SHALL BE AS SHOWN ON SHEET 200A.

NON-GUIDED POT BEARING PLAN
N.T.S.

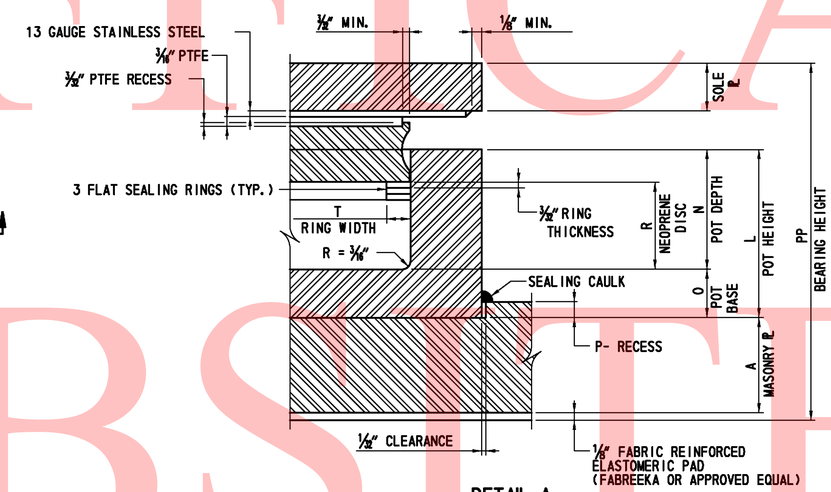

DETAIL A
N.T.S.

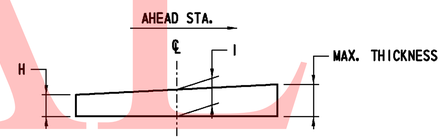

BEVELED SOLE PLATE DETAIL
N.T.S.

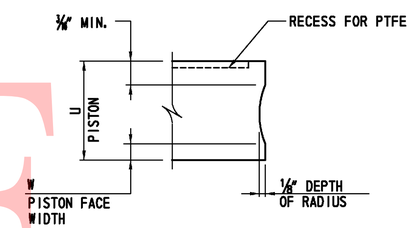

PISTON DETAIL
N.T.S.

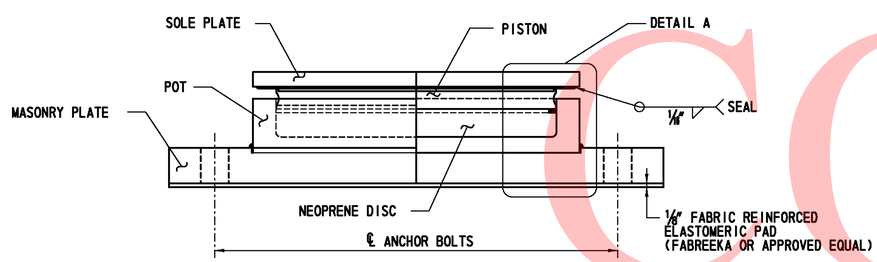

SECTION A-A
N.T.S.

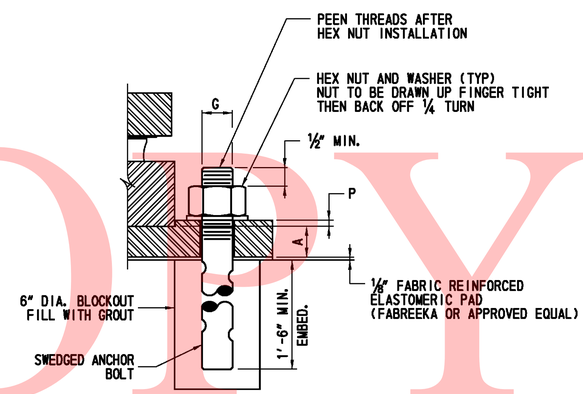

ANCHOR BOLT DETAIL
N.T.S.

BEARING TYPES E1 & E2
N.T.S.

NOTE:

1. FOR BEARING LOCATIONS AND NOTES, SEE SHEET 200A.

UNOFFICAL WEBSITE COPY

Y:\NEWCASTL\059\BRIDGE\2510602\BRIDGE 1-763\PLANS\ALTERNATIVE CURVED\PN01.DGN

DELAWARE DEPARTMENT OF TRANSPORTATION	ADDENDUMS / REVISIONS	I-95 & US 202 INTERCHANGE	CONTRACT T200510602	BRIDGE NO. 1-764	BEARING DETAILS POT BEARINGS – 5	SHEET NO. 200E
			COUNTY NEW CASTLE	DESIGNED BY: JAM		TOTAL SHTS. 482
				CHECKED BY: DHG		

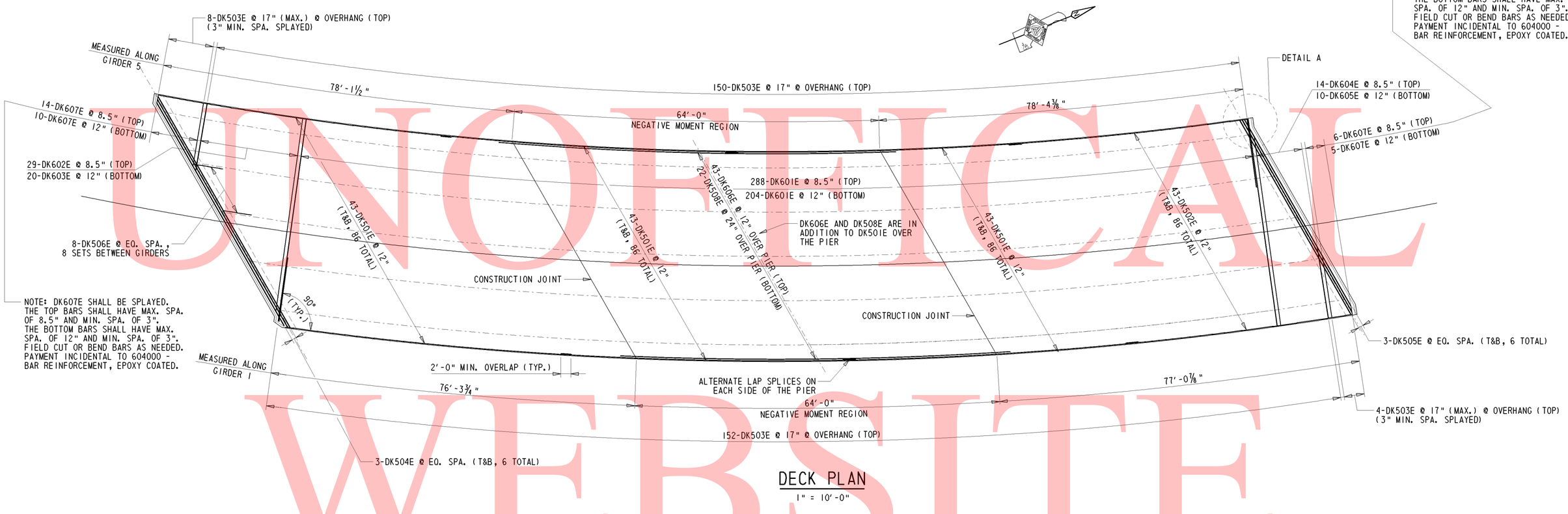

DECK PLAN

1" = 10'-0"

FINISHED DECK ELEVATION OF GIRDER ALONG CENTERLINE

POINT	EAST EDGE OF DECK		GIRDER 1		GIRDER 2		P.G.A.		GIRDER 3		GIRDER 4		GIRDER 5		WEST EDGE OF DECK	
	STATION	ELEV.	STATION	ELEV.	STATION	ELEV.	STATION	ELEV.	STATION	ELEV.	STATION	ELEV.	STATION	ELEV.	STATION	ELEV.
℄ BRG. ABUT. A	46+96.43	212.79	46+93.88	212.51	46+86.95	211.77	46+81.37	211.18	46+79.80	211.02	46+72.39	210.26	46+64.73	209.49	46+61.77	209.20
0.1	47+06.95	213.11	47+04.47	212.84	46+97.74	212.10	46+92.31	211.52	46+90.79	211.36	46+83.59	210.60	46+76.15	209.84	46+73.28	209.56
0.2	47+17.47	213.44	47+15.06	213.16	47+08.52	212.43	47+03.25	211.85	47+01.77	211.69	46+94.79	210.95	46+87.57	210.19	46+84.78	209.91
0.3	47+27.99	213.76	47+25.65	213.49	47+19.31	212.76	47+14.20	212.19	47+12.76	212.03	47+05.98	211.29	46+98.99	210.55	46+96.29	210.26
0.4	47+38.51	214.08	47+36.24	213.81	47+30.09	213.09	47+25.14	212.53	47+23.74	212.37	47+17.18	211.64	47+10.41	210.90	47+07.79	210.62
0.5	47+49.03	214.41	47+46.83	214.14	47+40.88	213.43	47+36.08	212.86	47+34.73	212.71	47+28.38	211.98	47+21.83	211.25	47+19.30	210.97
0.6	47+59.54	214.73	47+57.42	214.46	47+51.66	213.76	47+47.02	213.20	47+45.72	213.04	47+39.58	212.32	47+33.24	211.60	47+30.80	211.32
0.7	47+70.06	215.05	47+68.01	214.79	47+62.45	214.09	47+57.96	213.53	47+56.70	213.38	47+50.78	212.67	47+44.66	211.95	47+42.31	211.68
0.8	47+80.58	215.38	47+78.60	215.12	47+73.23	214.42	47+68.91	213.87	47+67.69	213.72	47+61.97	213.01	47+56.08	212.30	47+53.81	212.03
0.9	47+91.10	215.70	47+89.19	215.44	47+84.01	214.75	47+79.85	214.21	47+78.67	214.06	47+73.17	213.36	47+67.50	212.65	47+65.32	212.38
℄ BRG. PIER	48+01.62	216.02	47+99.78	215.77	47+94.80	215.08	47+90.79	214.54	47+89.66	214.39	47+84.37	213.70	47+78.92	213.00	47+76.82	212.74
0.1	48+12.23	216.35	48+10.45	216.09	48+05.63	215.41	48+01.75	214.88	48+00.66	214.73	47+95.55	214.04	47+90.28	213.35	47+88.25	213.09
0.2	48+22.83	216.67	48+21.11	216.42	48+16.46	215.75	48+12.71	215.22	48+11.66	215.07	48+06.72	214.39	48+01.63	213.70	47+99.68	213.45
0.3	48+33.44	217.00	48+31.78	216.75	48+27.29	216.08	48+23.68	215.55	48+22.66	215.41	48+17.90	214.73	48+12.99	214.05	48+11.10	213.79
0.4	48+44.04	217.33	48+42.44	217.08	48+38.12	216.41	48+34.64	215.89	48+33.66	215.74	48+29.07	215.07	48+24.35	214.40	48+22.53	214.14
0.5	48+54.65	217.65	48+53.11	217.40	48+48.95	216.75	48+45.60	216.23	48+44.66	216.08	48+40.25	215.42	48+35.71	214.75	48+33.96	214.49
0.6	48+65.26	217.98	48+63.78	217.73	48+59.77	217.08	48+56.56	216.56	48+55.66	216.42	48+51.42	215.76	48+47.06	215.09	48+45.39	214.84
0.7	48+75.86	218.30	48+74.44	218.06	48+70.60	217.41	48+67.52	216.90	48+66.66	216.76	48+62.60	216.10	48+58.42	215.44	48+56.82	215.19
0.8	48+86.47	218.63	48+85.11	218.39	48+81.43	217.74	48+78.49	217.24	48+77.66	217.10	48+73.77	216.45	48+69.78	215.79	48+68.24	215.55
0.9	48+97.07	218.96	48+95.77	218.72	48+92.26	218.08	48+89.45	217.57	48+88.66	217.43	48+84.95	216.79	48+88.13	216.14	48+79.67	215.90
℄ BRG. ABUT B	49+07.68	219.28	49+06.44	219.04	49+03.09	218.41	49+00.41	217.91	48+99.66	217.77	48+96.12	217.13	48+92.49	216.49	48+91.10	216.25

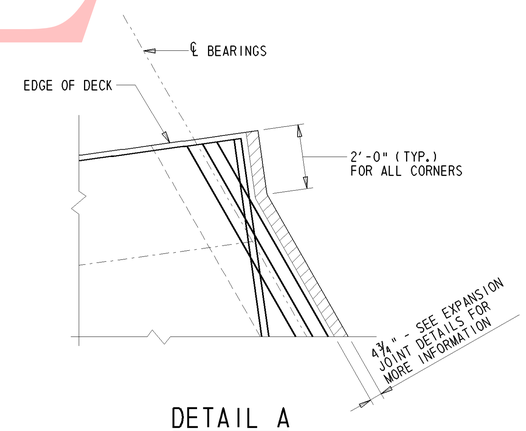

DETAIL A

⅜" = 1'-0"

UNOFFICIAL WEBSITE COPY

DELAWARE DEPARTMENT OF TRANSPORTATION	ADDENDUMS / REVISIONS	I-95 & US 202 INTERCHANGE	CONTRACT T200510602	BRIDGE NO. 1-764	DECK PLAN-1 S4-15 OF 23	SHEET NO. 201
			COUNTY NEW CASTLE	DESIGNED BY: MJG		TOTAL SHTS. 482
				CHECKED BY: JNH		

Y:\NEWCASTL\059\BRIDGE\250602\BRIDGE 1-763\PLANS\ALTERNATIVE CURVED\DK01.DGN

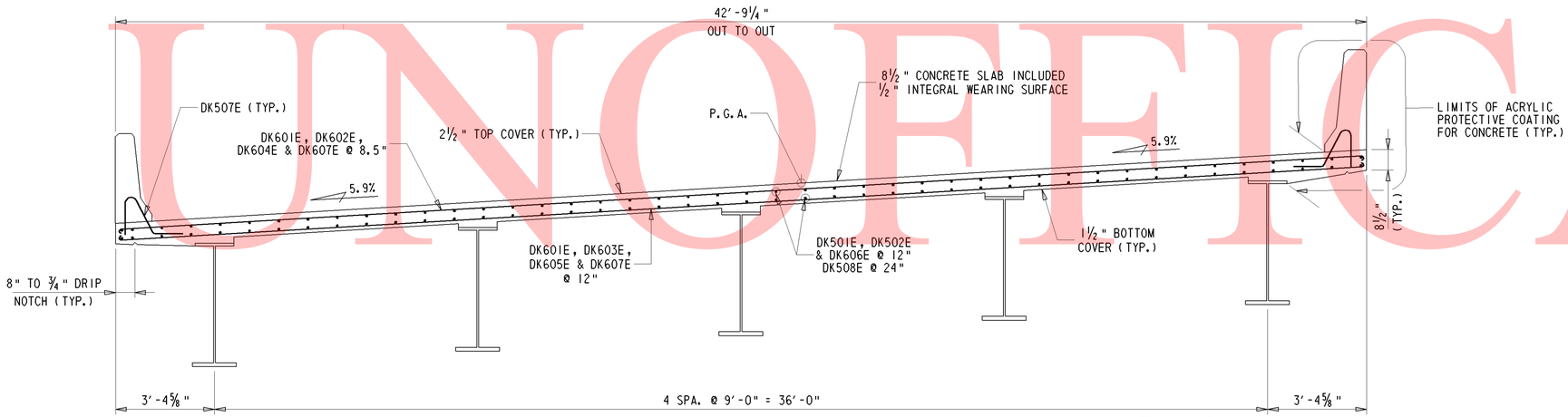

TYPICAL DECK SECTION

⅜" = 1'-0"

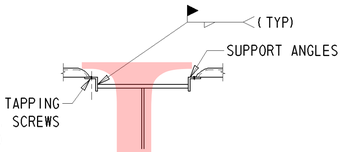

NOTE: ALL ANGLES, WELDS, AND INSERTS MUST BE DESIGNED BY THE CONTRACTOR AND SUBMITTED FOR APPROVAL

COMPRESSION FLANGE CONNECTION

N.T.S.

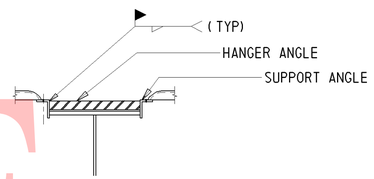

NOTE: ALL ANGLES, WELDS, AND INSERTS MUST BE DESIGNED BY THE CONTRACTOR AND SUBMITTED FOR APPROVAL

TENSION FLANGE CONNECTION

N.T.S.

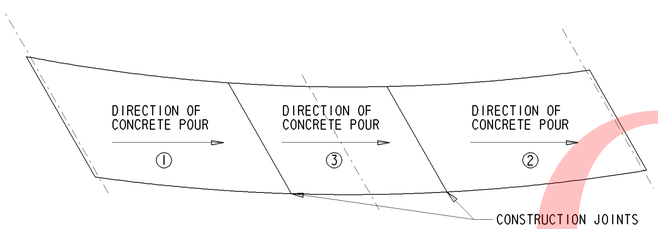

DECK CONCRETE POUR SEQUENCE

N.T.S

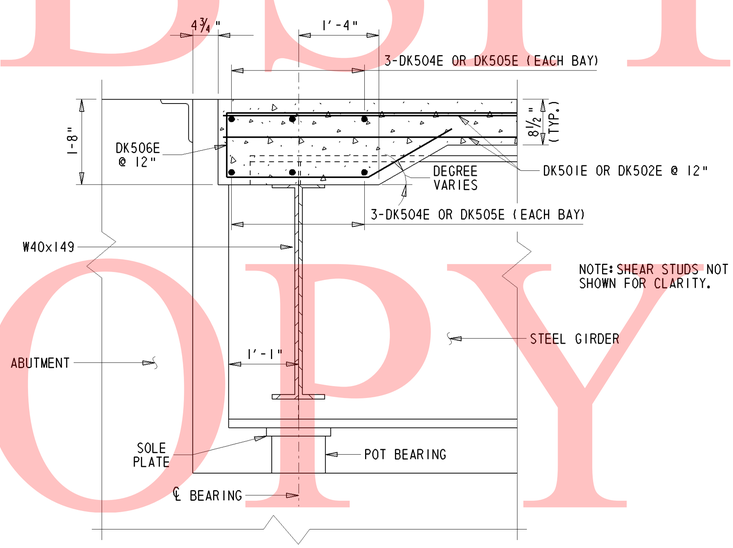

TYPICAL SECTION AT ABUTMENTS

¾" = 1'-0"

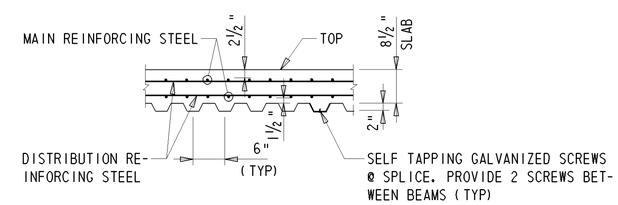

STAY-IN PLACE STEEL FORM DETAIL

N.T.S.

STEEL S.I.P. FORM NOTES:

1. THESE FORMS SHALL BE VERTICALLY ADJUSTED TO ATTAIN LINE AND GRADE REQUIRED ON THE PLANS.
2. SHOP DRAWINGS SHALL BE SUBMITTED BY THE ENGINEER. METAL FORMS MUST BE GALVANIZED AND MORTAR TIGHT. STEEL METAL SCREWS MUST BE NON-CORROSIVE. SELF TAPPING SCREWS SHALL BE INSTALLED AT THE SIDE LAP OF THE SHEETS AT MID-SPAN SUPPORTS.
3. ALL MATERIALS AND LABOR NEEDED FOR FORMS SHALL BE INCIDENTAL TO ITEM #602013 - P.C.C. MASONRY, SUPERSTRUCTURE, CLASS D.
4. TENSION FLANGE DETAIL IS IN THE AREA ALONG THE BEAM BETWEEN SPLICES.

UNOFFICAL WEBSITE COPY

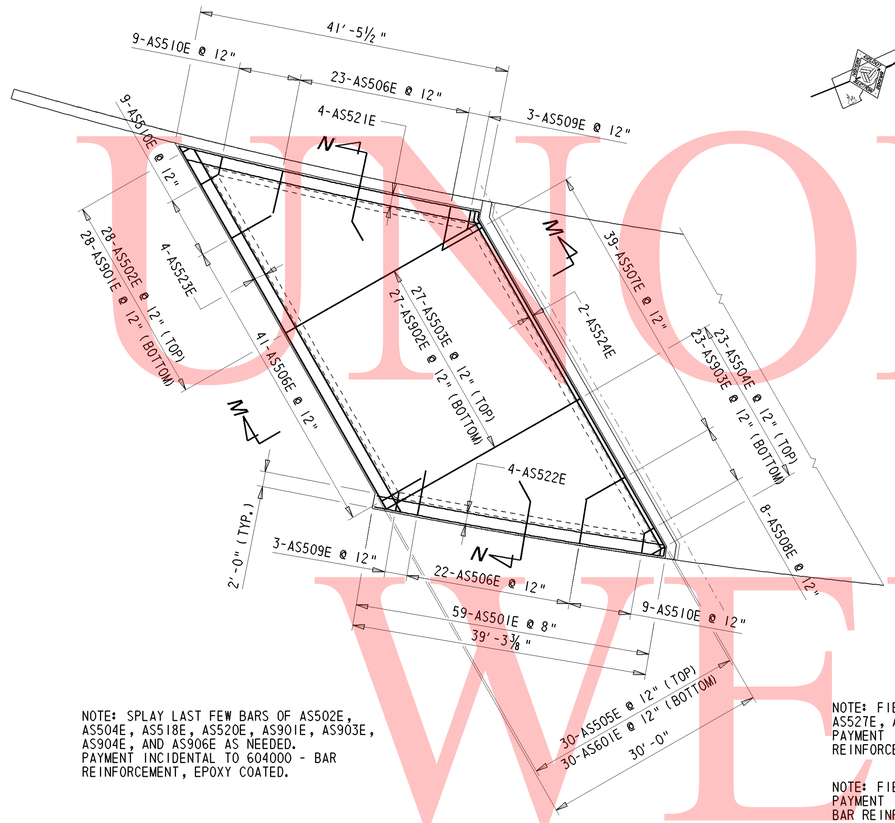

NOTE: SPLAY LAST FEW BARS OF AS502E, AS504E, AS518E, AS520E, AS901E, AS903E, AS904E, AND AS906E AS NEEDED. PAYMENT INCIDENTAL TO 604000 - BAR REINFORCEMENT, EPOXY COATED.

SOUTH APPROACH SLAB

1" = 10'=0"

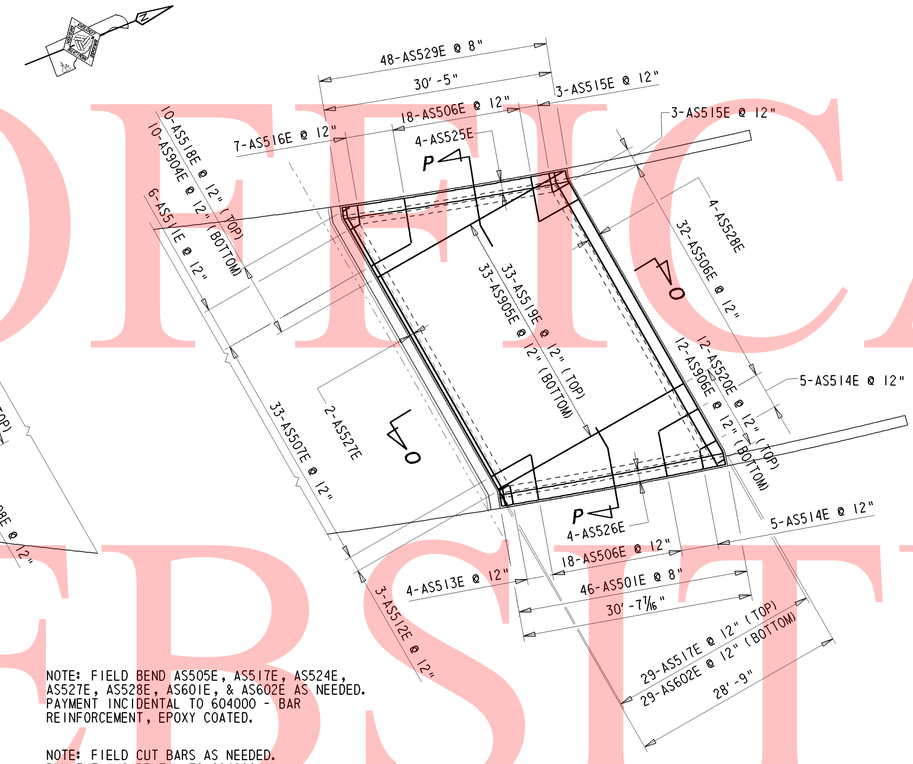

NOTE: FIELD BEND AS505E, AS517E, AS524E, AS527E, AS528E, AS601E, & AS602E AS NEEDED. PAYMENT INCIDENTAL TO 604000 - BAR REINFORCEMENT, EPOXY COATED.

NOTE: FIELD CUT BARS AS NEEDED. PAYMENT INCIDENTAL TO 604000 - BAR REINFORCEMENT, EPOXY COATED.

NORTH APPROACH SLAB

1" = 10'=0"

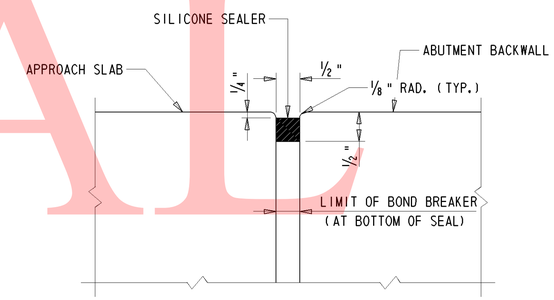

JOINT BETWEEN APPROACH SLAB AND ABUTMENT BACKWALL

N.T.S.

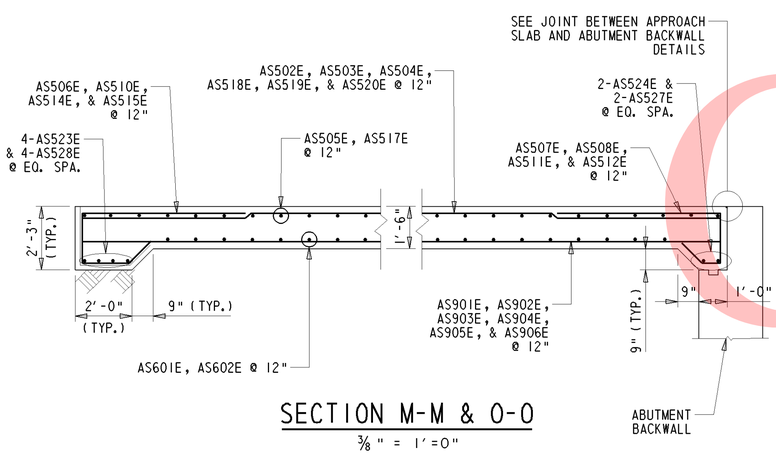

SECTION M-M & O-O

⅜" = 1'=0"

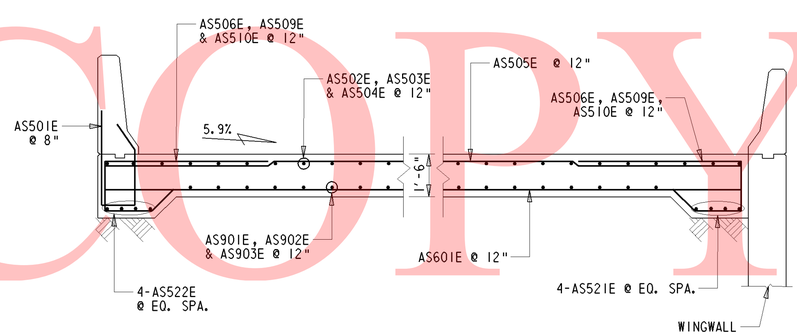

SECTION N-N

⅜" = 1'=0"

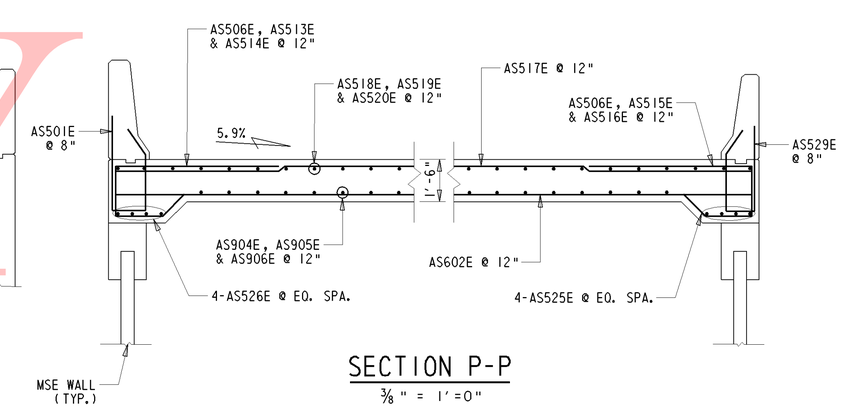

SECTION P-P

⅜" = 1'=0"

UNOFFICAL WEBSITE COPY

Y:\NEWCASTL\059\BRIDGE\2510602\BRIDGE 1-763\PLANS\ALTERNATIVE CURVED\AS01.DGN

DELAWARE DEPARTMENT OF TRANSPORTATION	ADDENDUMS / REVISIONS	I-95 & US 202 INTERCHANGE	CONTRACT T200510602	BRIDGE NO. 1-764	APPROACH SLAB DETAILS S4-17 OF 23	SHEET NO. 203
			COUNTY NEW CASTLE	DESIGNED BY: MJG		TOTAL SHTS. 482
				CHECKED BY: JNH		

UNOFFICAL WEBSITE COPY

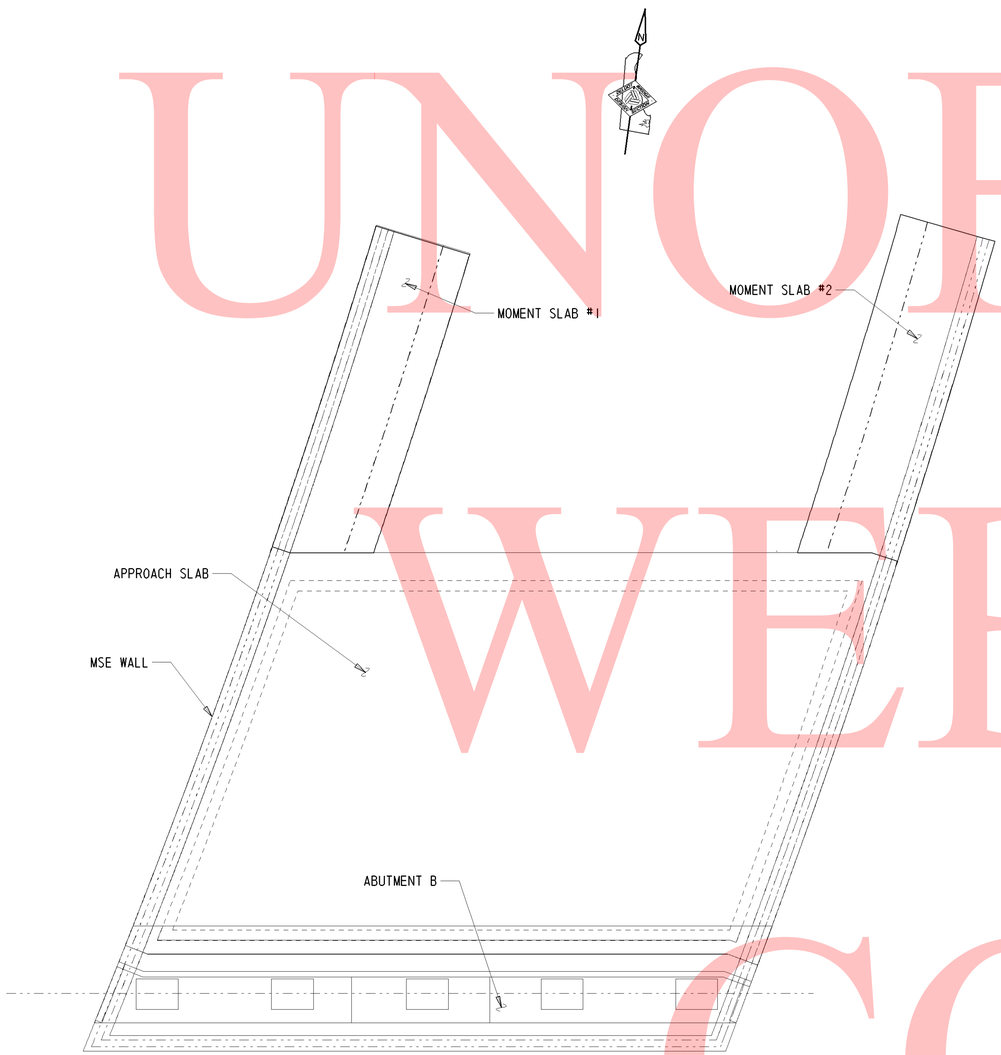

ABUTMENT B FOOTING PLAN

3/16" = 1'-0"

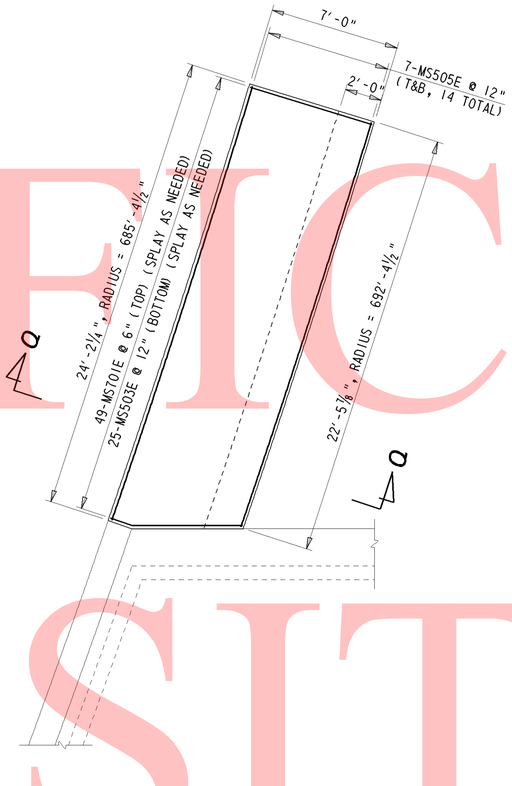

MOMENT SLAB 1 PLAN

¼" = 1'-0"

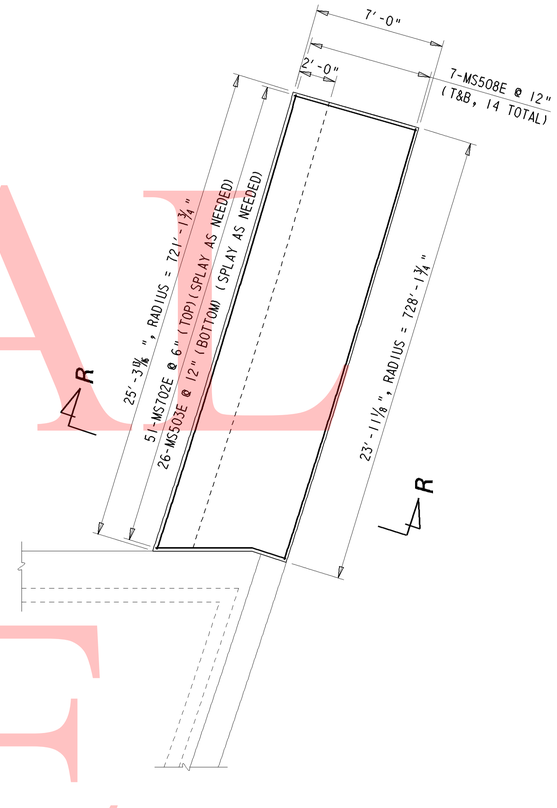

MOMENT SLAB 2 PLAN

¼" = 1'-0"

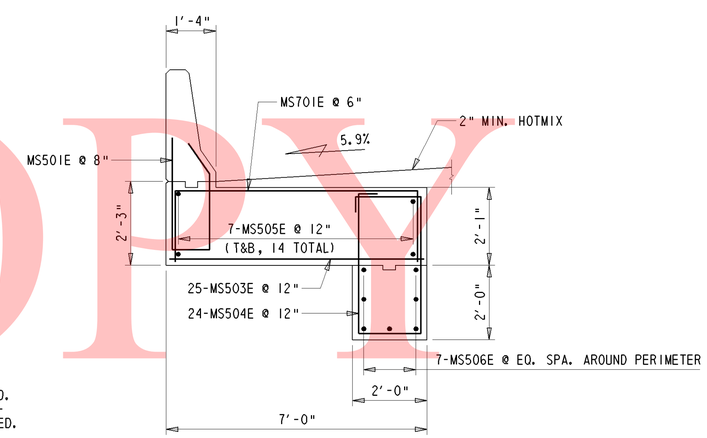

SECTON Q-Q

½" = 1'-0"

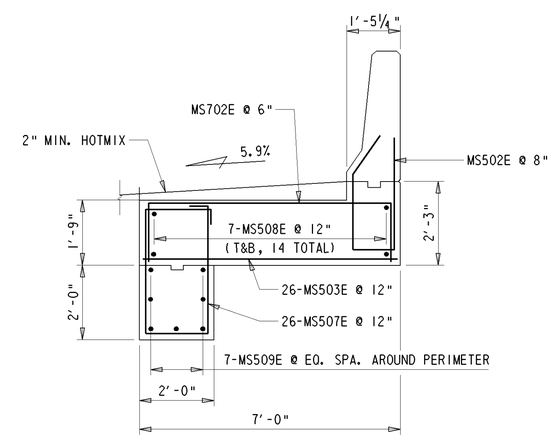

SECTION R-R

½" = 1'-0"

NOTE: FIELD CUT BARS AS NEEDED.
PAYMENT INCIDENTAL TO 604000 -
BAR REINFORCEMENT, EPOXY COATED.

DELAWARE DEPARTMENT OF TRANSPORTATION	ADDENDUMS / REVISIONS	I-95 & US 202 INTERCHANGE	CONTRACT T200510602	BRIDGE NO. 1-764	MOMENT SLAB DETAILS S4-18 OF 23	SHEET NO. 204
			COUNTY NEW CASTLE	DESIGNED BY: MJG		TOTAL SHTS. 482
				CHECKED BY: JNH		

Y:\NEWCASTL\059\BRIDGE\2510602\BRIDGE 1-763\PLANS\ALTERNATIVE CURVED\AB02.DGN

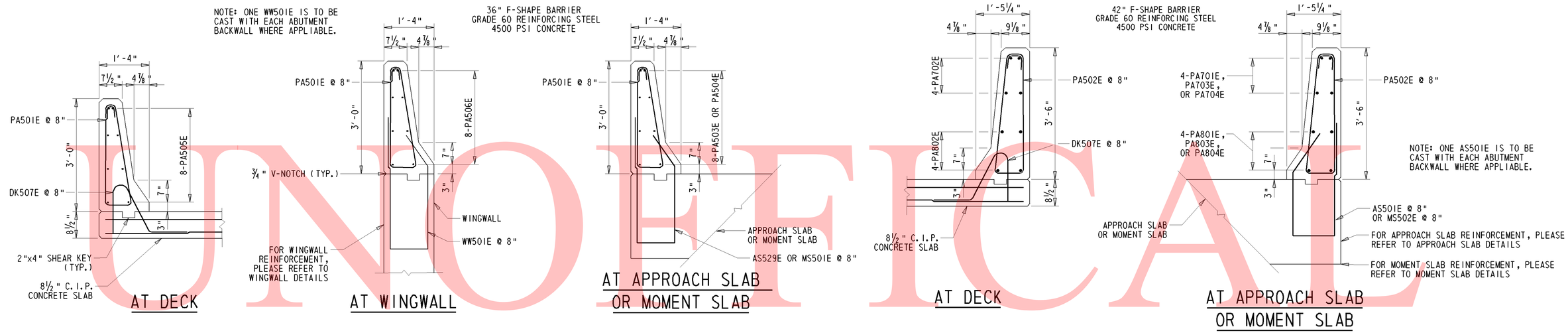

TYPICAL SECTION @ WEST ELEVATION

¾" = 1'-0"

TYPICAL SECTION @ EAST ELEVATION

¾" = 1'=0"

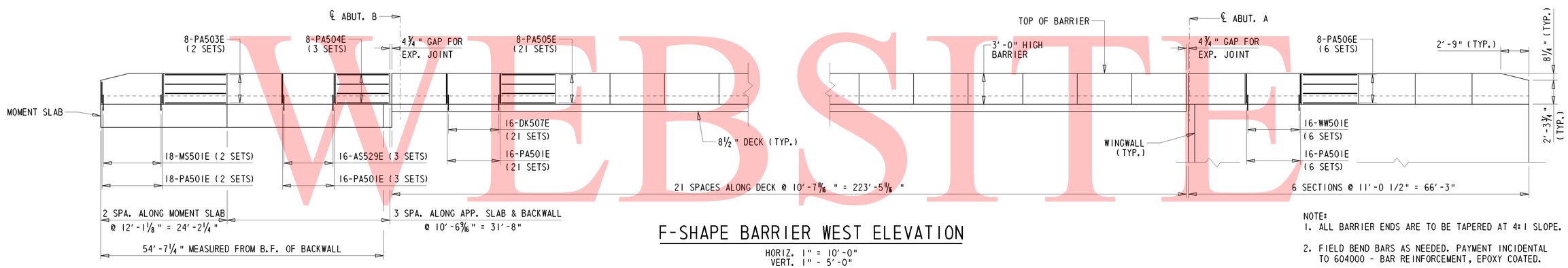

F-SHAPE BARRIER WEST ELEVATION

HORIZ. 1" = 10'-0"
VERT. 1" - 5'-0"

NOTE:
1. ALL BARRIER ENDS ARE TO BE TAPERED AT 4:1 SLOPE.
2. FIELD BEND BARS AS NEEDED. PAYMENT INCIDENTAL TO 604000 - BAR REINFORCEMENT, EPOXY COATED.
3. PA501E & PA502E SHALL BE SET LOWER AT THE ENDS. THIS MAY RESULT IN THESE BARS BEING CAST WITH WINGWALL B AND THE MOMENT SLABS.

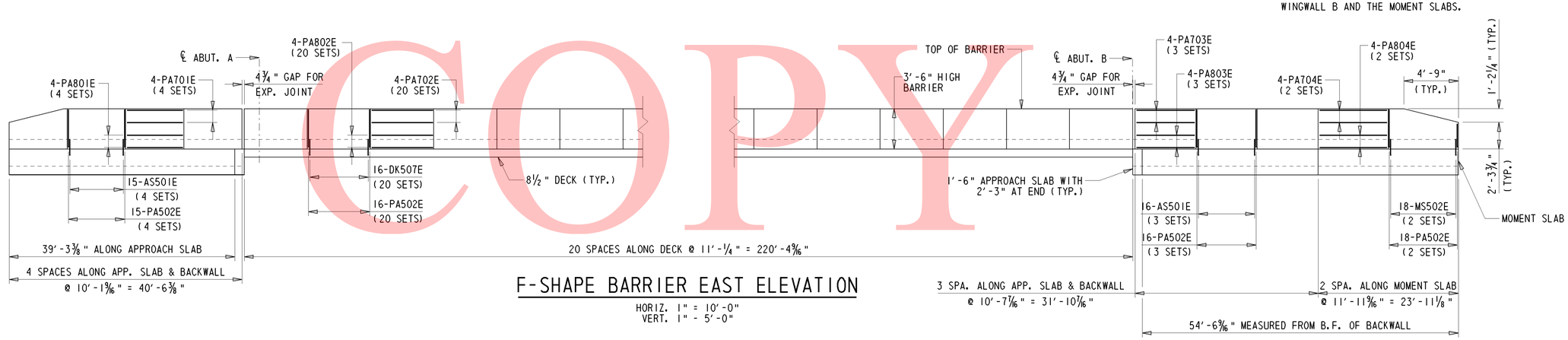

F-SHAPE BARRIER EAST ELEVATION

HORIZ. 1" = 10'-0"
VERT. 1" - 5'-0"

UNOFFICIAL WEBSITE COPY

Y:\NEWCASTL\059\BRIDGE\2510602\BRIDGE 1-763\PLANS\ALTERNATIVE CURVED\PA01.DGN

DELAWARE DEPARTMENT OF TRANSPORTATION	ADDENDUMS / REVISIONS	I-95 & US 202 INTERCHANGE	CONTRACT T200510602	BRIDGE NO. 1-764	BARRIER DETAILS S4-19 OF 23	SHEET NO. 205
			COUNTY NEW CASTLE	DESIGNED BY: MJG		TOTAL SHTS. 482
				CHECKED BY: JNH		

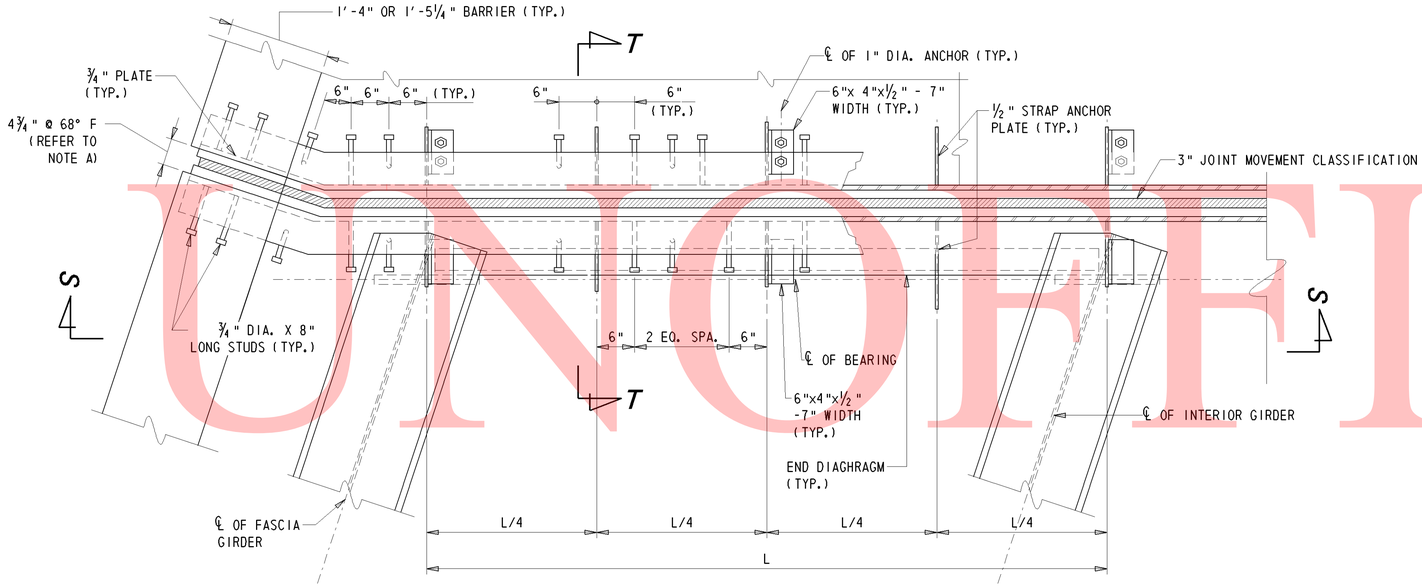

TYPICAL JOINT PLAN

1" = 1'-0"

EXPANSION JOINT NOTES:

1. STEEL FOR DECK JOINTS AND STEEL EXTRUSIONS SHALL BE AASHTO M270, GR. 36 (ASTM A36)
2. NEOPRENE EXTRUSION TO MEET D-2628-81 MODIFIED, (RECOVERY TESTS EXCLUDED).
3. THE EXPANSION JOINT SHALL BE CAPABLE OF SEALING THE DECK TO PREVENT MOISTURE AND OTHER CONTAIMINANTS FROM DESCENDING THROUGHT THE JOINT.
4. ENTIRE EXPANSION DAM SHALL BE PAINTED AFTER FABRICATION USING URETHANE SYSTEM, EXCEPT AS NOTED.
5. LUBRICANT-ADHESIVE FOR USE IN INSTALLING AND BONDING NEPORENE SEAL ELEMENTS TO STEEL JOINT COMPONENTS SHALL BE A ONE QUART MOISTURE-CURING POLYURETHAN AND HYDROCARBON SOLVENT MIXTURE HAVING THE FOLLOWING PHYSICAL PROPERTIES:

AVERAGE WEIGHT, POUNDS PER GALLON	8 +/- 10%
SOLIDS CONTENT	65%
ADHESIVE SHALL REMAIN LIQUID FROM	5°F TO 120°F
FILM STRENGTH, AS PER ASTM D-412	2,000 PSI
ELONGATION	250%

6. HOLES SHALL BE PLACED IN THE RIB PLATES AND STRAP ANCHOR PLATES FOR BAR REINFORCEMENT. IF THIS IS DONE IN THE FIELD AN APPROVED PAINT SHALL BE USED TO TOUCH-UP THE HOLES.

NOTE A:
THE CONTRACTOR SHALL ADJUST THE OPEN DECK JOINT AS REQUIRED BY THE WIDTH OF THE STEEL EXTRUSION USED SO AS TO PROVIDE A 2" JOINT OPENING AT 68°F.

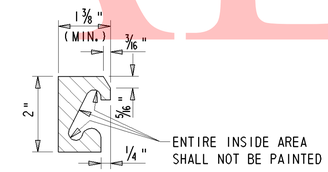

STEEL EXTRUSION DETAIL

6" = 1'-0"

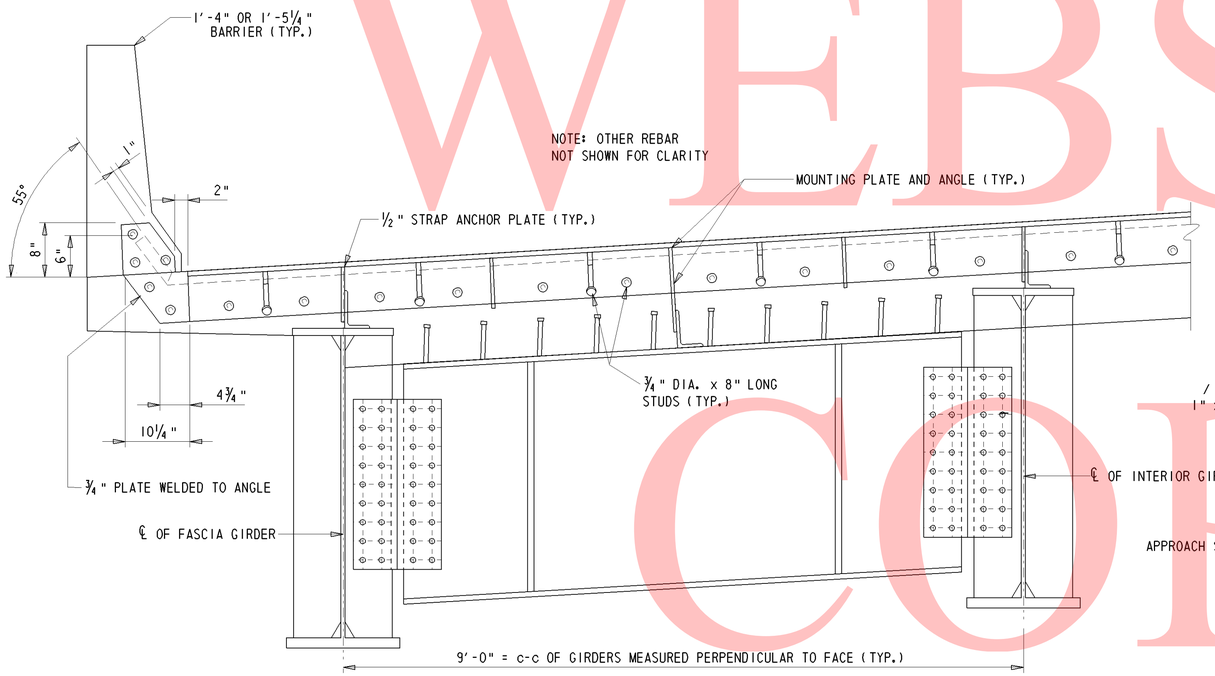

SECTION S-S

1" = 1'-0"

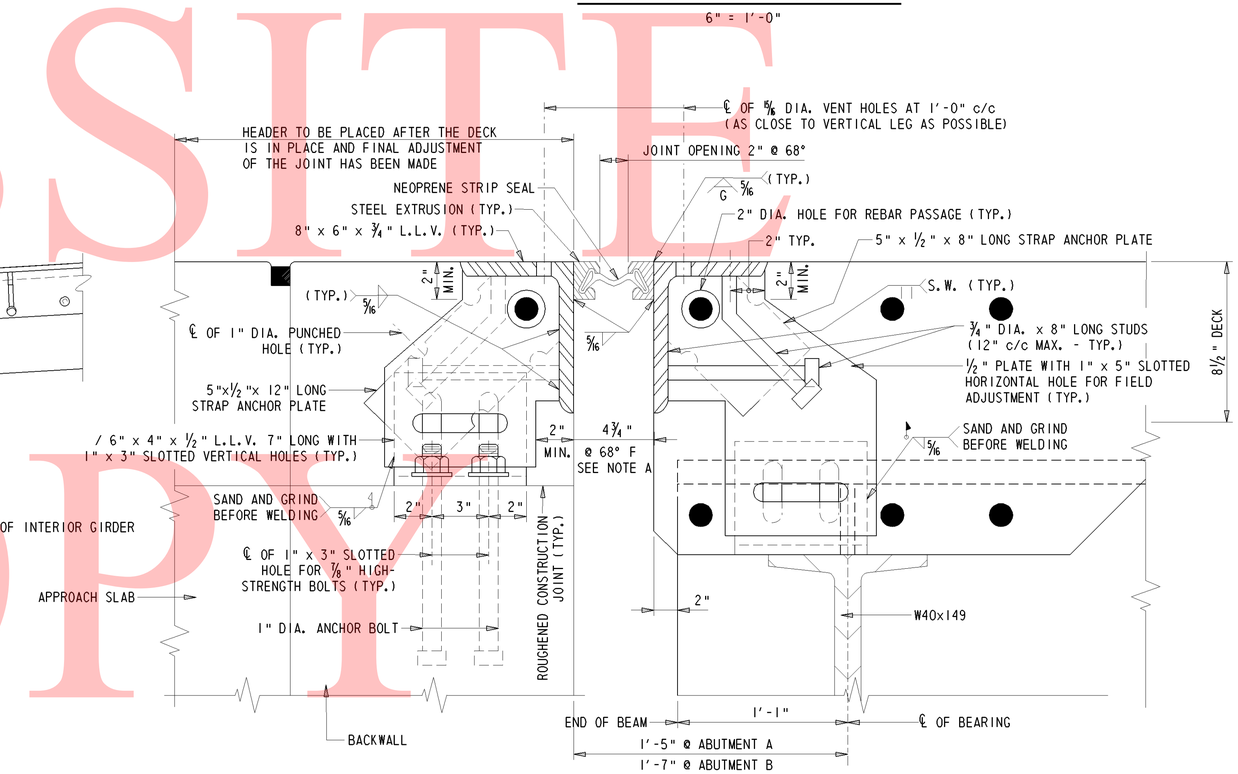

SECTION T-T

3" = 1'-0"

UNOFFICAL WEBSITE COPY

Y:\NEWCASTL\059\BRIDGE\2510602\BRIDGE 1-763\PLANS\ALTERNATIVE CURVED\EX01.DGN

DELAWARE DEPARTMENT OF TRANSPORTATION	ADDENDUMS / REVISIONS	I-95 & US 202 INTERCHANGE	CONTRACT T200510602	BRIDGE NO. 1-764	EXPANSION JOINT DETAILS S4-20 OF 23
			COUNTY NEW CASTLE	DESIGNED BY: MJG	SHEET NO. 206
				CHECKED BY: JNH	TOTAL SHTS. 482

① ANY MARK NUMBER WITH SUFFIX 'E' DENOTES EPOXY COATED REINFORCING STEEL.

② ALL MARK 'LOCATION PREFIXES' SHALL CONSIST OF TWO LETTERS AND ARE AS FOLLOWS: AB = ABUTMENT, AS = APPROACH SLAB, BC = BOX CULVERT, BW = BACKWALL, CL = COLUMN, DK = DECK, DL = DOWEL, FT = FOOTING, HW = HEADWALL, MS = MISC. BARS, PA = PARAPET, PR = PIER, SC = SHEETPILE CAP, SL = SLAB, TW = TOEWALL, WL = WALL (UNIQUE LOCATION), WW = WINGWALL

SPECIFICATIONS					BENDING DIMENSIONS (FEET-INCHES /QUARTER INCH)										
QTY.	SIZE	LENGTH	MARK	TYPE	A	B	C	D	E	F/R	G	H	J	K	O
60	5	7-20	AB501E	17		2-80	1-100	2-80							
40	5	8-00	AB502E	17		2-80	2-80	2-80							
23	5	19-10	AB503E	17		14-80	4-50								
12	5	18-10	AB504E	17		13-80	4-50								
23	5	17-10	AB505E	17		12-80	4-50								
70	5	55-41	AB506E	STR		55-41									
4	5	33-41	AB507E	STR		33-41									
4	5	21-80	AB508E	STR		21-80									
1X56	5	11-12	AB509E	16	0-60	1-110	5-22	3-60				2-52		2-52	7-80
		T0					T0								T0
		14-80			0-60	1-110	8-90	3-60				2-52		2-52	11-22
1X23	5	12-41	AB510E	17		7-81	0-110	3-90							
		T0				T0									
		15-83				9-03	0-110	3-90							
1X12	5	12-70	AB511E	17		7-110	0-110	3-90							
		T0				T0									
		13-40				8-80	0-110	3-90							
1X23	5	12-20	AB512E	17		7-60	0-110	3-90							
		T0				T0									
		13-63				8-103	0-110	3-90							
56	5	11-70	AB513E	STR		11-70									
16	5	3-00	AB514E	STR		3-00									
1X91	5	12-60	AB515E	S9	0-70	7-50	0-110	3-70			0-00		0-50		
		T0				T0									
		15-40			0-70	10-30	0-110	3-70			0-00		0-50		
1X91	5	9-30	AB516E	17	1-30	1-110	6-10								
		T0					T0								
		12-12			1-30	1-110	8-112								
19	6	12-20	AB617E	17		2-70	7-00	2-70							
10	6	14-20	AB618E	17		3-70	7-00	3-70							
18	6	15-80	AB619E	17		4-40	7-00	4-40							
18	5	45-20	AB520E	STR		45-20									
5	6	20-30	AB621E	STR		20-30									
6	6	11-82	AB622E	STR		11-82									
7	6	17-32	AB623E	STR		17-32									

SPECIFICATIONS					BENDING DIMENSIONS (FEET-INCHES /QUARTER INCH)										
					A	B	C	D	E	F/R	G	H	J	K	O
9	6	44-00	AB624E	STR		44-00									
1	6	28-62	AB625E	STR		28-62									
1	6	18-80	AB626E	STR		18-80									
6	5	7-00	AB527E	STR		7-00									
27	5	3-80	AB528E	17		1-00	1-80	1-00							
5	5	6-10	AB529E	STR		6-10									
5	5	5-50	AB530E	STR		5-50									
4	5	7-40	AB531E	STR		7-40									
6	5	3-113	AB532E	STR		3-113									
2	6	45-63	AB601E	STR		45-63									
3	6	10-20	AB602E	17		1-70	7-00	1-70							
1	6	12-20	AB603E	17		2-70	7-00	2-70							
3	6	13-80	AB604E	17		3-40	7-00	3-40							
44	9	14-80	AB901E	STR		14-80									
23	9	13-80	AB902E	STR		13-80									
44	9	12-80	AB903E	STR		12-80									
108	5	7-93	AS501E	T11	0-00	0-00	1-00	2-22	1-11	3-60	0-00	0-93		0-63	
1X28	5	2-40	AS502E	STR		2-40									
		T0				T0									
		29-80				29-80									
27	5	29-80	AS503E	STR		29-80									
1X23	5	2-40	AS504E	STR		2-40									
		T0				T0									
		29-80				29-80									
1X30	5	52-33	AS505E	STR		52-33									
		T0				T0									
		55-70				55-70									
154	5	10-80	AS506E	16	6-00	1-100	1-90	1-10				0-90			0-90
72	5	9-80	AS507E	16	6-00	1-100	0-90	1-00				0-90			0-90
1X8	5	5-20	AS508E	16	1-70	1-100	0-90	1-00				0-90			0-90
		T0			T0										
		9-80			6-00	1-100	0-90	1-00				0-90			0-90
2X3	5	7-30	AS509E	16	2-70	1-100	1-90	1-10				0-90			0-90
		T0			T0										
		10-80			6-00	1-100	1-90	1-10				0-90			0-90
3X9	5	7-30	AS510E	16	2-70	1-100	1-90	1-10				0-90			0-90
		T0			T0										
		10-80			6-00	1-100	1-90	1-10				0-90			0-90

SPECIFICATIONS					BENDING DIMENSIONS (FEET-INCHES /QUARTER INCH)										
QTY.	SIZE	LENGTH	MARK	TYPE	A	B	C	D	E	F/R	G	H	J	K	O
1X6	5	5-20	AS511E	16	1-70	1-100	0-90	1-00				0-90			0-90
		T0			T0										
		9-80			6-00	1-100	0-90	1-00				0-90			0-90
1X3	5	5-20	AS512E	16	1-70	1-100	0-90	1-00				0-90			0-90
		T0			T0										
		9-80			6-00	1-100	0-90	1-00				0-90			0-90
1X4	5	7-30	AS513E	16	2-70	1-100	1-90	1-10				0-90			0-90
		T0			T0										
		10-80			6-00	1-100	1-90	1-10				0-90			0-90
2X5	5	7-30	AS514E	16	2-70	1-100	1-90	1-10				0-90			0-90
		T0			T0										
		10-80			6-00	1-100	1-90	1-10				0-90			0-90
2X3	5	7-30	AS515E	16	2-70	1-100	1-90	1-10				0-90			0-90
		T0			T0										
		10-80			6-00	1-100	1-90	1-10				0-90			0-90
1X7	5	7-30	AS516E	16	2-70	1-100	1-90	1-10				0-90			0-90
		T0			T0										
		10-80			6-00	1-100	1-90	1-10				0-90			0-90
1X29	5	44-70	AS517E	STR		44-70									
		T0				T0									
		45-20				45-20									
1X10	5	2-40	AS518E	STR		2-40									
		T0				T0									
		28-50				28-50									
33	5	28-50	AS519E	STR		28-50									
1X12	5	2-40	AS520E	STR		2-40									
		T0				T0									
		28-50				28-50									
4	5	40-100	AS521E	STR		40-100									
4	5	39-00	AS522E	STR		39-00									
1X4	5	55-40	AS523E	STR		55-40									
		T0				T0									
		55-70				55-70									
2	5	52-33	AS524E	STR		52-33									
4	5	30-10	AS525E	STR		30-10									
4	5	30-31	AS526E	STR		30-31									
2	5	45-20	AS527E	STR		45-20									
4	5	44-70	AS528E	STR		44-70									
48	5	7-50	AS529E	T11	0-00	0-00	1-00	2-20	1-00	3-30		0-93		0-63	

ASTM STANDARD ENGLISH REINFORCING BARS				RECOMMENDED END HOOKS, APPLICABLE TO ALL GRADES				STIRRUP AND TIE HOOKS, APPLICABLE TO ALL GRADES			
NOMINAL DIMENSIONS					180° HOOKS		90° HOOKS		90° HOOK	135° HOOK	
BAR SIZE	DIAMETER (INCHES)	AREA (INCHES²)	WEIGHT (LBS./FT.)	D	A OR G	J	A OR G	D	A OR G	A OR G	A OR G
3	0.375	0.110	0.376	2¼"	5"	3"	6"	1½"	4"	4"	2½"
4	0.500	0.200	0.668	3"	6"	4"	8"	2"	4½"	4½"	3"
5	0.625	0.310	1.043	3¾"	7"	5"	10"	2½"	6"	5½"	3¾"
6	0.750	0.440	1.502	4½"	8"	6"	1-0"	4½"	1-0"	8"	4½"
7	0.875	0.600	2.044	5¼"	10"	7"	1-2"	5¼"	1-2"	9"	5¼"
8	1.000	0.790	2.670	6"	11"	8"	1-4"	6"	1-4"	10½"	6"
9	1.128	1.000	3.400	9½"	1-3"	11¾"	1-7"				
10	1.270	1.270	4.303	10¾"	1-5"	1-1¼"	1-10"				
11	1.410	1.560	5.313	1-0"	1-7"	1-2¾"	2-0"				
14	1.693	2.250	7.650	1-6¼"	2-3"	1-9¾"	2-7"				
18	2.257	4.000	13.600	2-0"	3-0"	2-4½"	3-5"				

NOTES:

1. FIGURES SHOWN IN CIRCLES REPRESENT BAR BEND TYPES.
2. STANDARD BAR BENDS INCLUDE ONLY THOSE TYPES BELOW, INDICATED AS SUCH.
3. ALL DIMENSIONS OUT-TO-OUT, EXCEPT "A" AND "G" ON STD. 180° AND 135° HOOKS.
4. "J" DIMENSIONS ON 180° HOOKS TO BE SHOWN ONLY WHERE NECESSARY TO RESTRICT HOOK SIZE, OTHERWISE STANDARD 'ACI' HOOKS ARE TO BE USED.
5. WHERE "J" IS NOT SHOWN, "J" WILL BE KEPT EQUAL TO OR LESS THAN "H" ON TYPES 3, 5 AND 22. WHERE "J" CAN EXCEED "H", IT SHALL BE SHOWN.
6. "H" DIMENSIONS OF STIRRUPS TO BE SHOWN AS NEEDED TO FIT WITHIN THE CONCRETE.
7. UNLESS OTHERWISE NOTED, DIAMETER "D" IS THE SAME FOR ALL BENDS AND HOOKS ON A BAR (EXCEPT FOR BEND TYPES 11 AND 13).
8. WHERE SLOPE DIFFERS FROM 45° OFFSET, "H" AND "K" MUST BE SHOWN.
9. WHERE BARS ARE TO BE BENT MORE ACCURATELY THAN STANDARD BENDING TOLERANCES, BENDING DIMENSIONS REQUIRING CLOSER FABRICATION SHOULD HAVE LIMITS INDICATED.
10. FOR RECOMMENDED DIAMETER "D", OF BENDS, HOOKS, ETC., REFER TO TABLE ABOVE, 'CRSI' OR 'ACI' TABLES WHERE APPLICABLE AND REQUIRED.
11. TYPE S1-S6, S11, T1-T3 AND T6-T9 APPLICABLE TO BAR SIZES #3 THROUGH #8.

STANDARD BAR BENDS

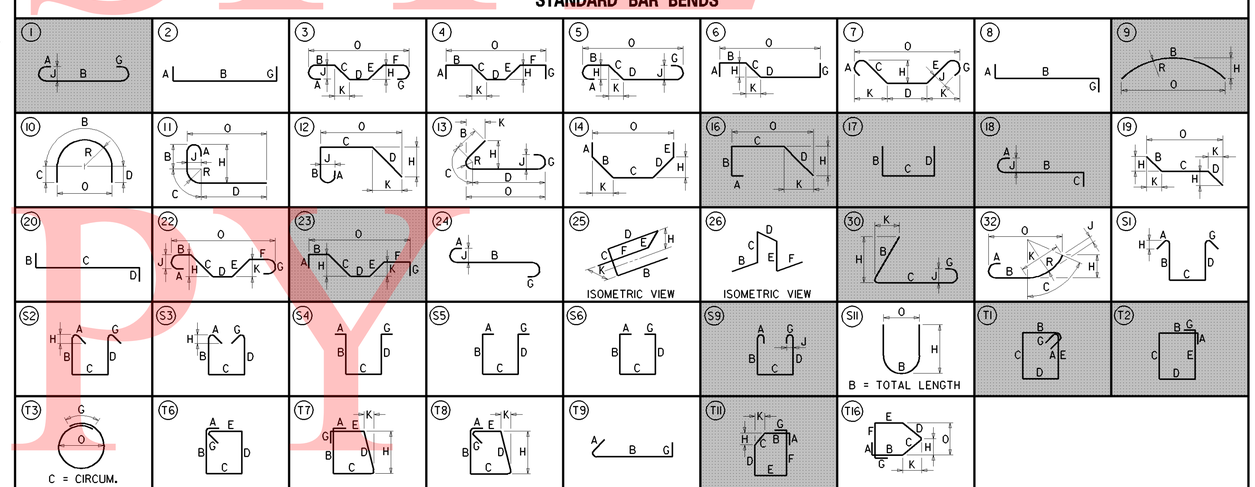

SPECIAL BAR BENDS

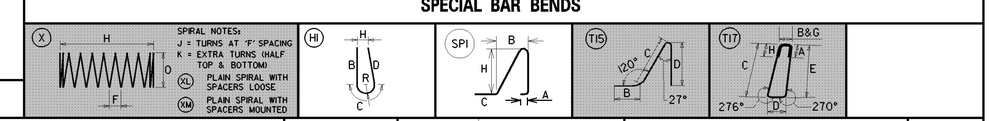

STIRRUP AND TIE HOOKS

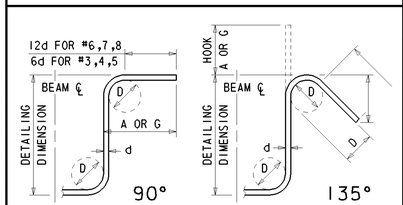

180° AND 90° END HOOKS

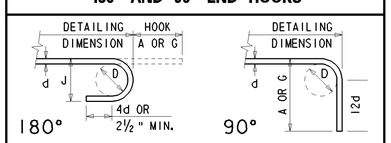

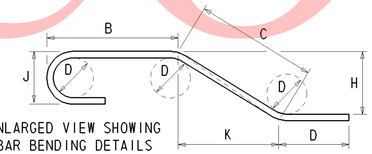

ADDENDUMS / REVISIONS

DELAWARE DEPARTMENT OF TRANSPORTATION

I-95 & US 202 INTERCHANGE

CONTRACT	BRIDGE NO.	1-764
T200510602	DESIGNED BY: MJG	
COUNTY: NEW CASTLE	CHECKED BY: JNH	

REINFORCEMENT BAR SCHEDULE-1
S4-21 OF 23

SHEET NO. 207
TOTAL SHTS. 482

Y:\NEWCASTL\059\BRIDGE\2510602\BRIDGE 1-763\PLANS\ALTERNATIVE CURVED\BRO1.DGN

UNOFFICIAL WEBSITE COPY

① ANY MARK NUMBER WITH SUFFIX 'E' DENOTES EPOXY COATED REINFORCING STEEL.

② ALL MARK 'LOCATION PREFIXES' SHALL CONSIST OF TWO LETTERS AND ARE AS FOLLOWS: AB = ABUTMENT, AS = APPROACH SLAB, BC = BOX CULVERT, BW = BACKWALL, CL = COLUMN, DK = DECK, DL = DOWEL, FT = FOOTING, HW = HEADWALL, MS = MISC. BARS, PA = PARAPET, PR = PIER, SC = SHEETPILE CAP, SL = SLAB, TW = TOEWALL, WL = WALL (UNIQUE LOCATION), WW = WINGWALL

SPECIFICATIONS					BENDING DIMENSIONS (FEET-INCHES /QUARTER INCH)										
QTY.	SIZE	LENGTH	MARK	TYPE	A	B	C	D	E	F/R	G	H	J	K	O
1X30	6	52-33	AS601E	STR		52-33									
		T0				T0									
		55-82				55-82									
1X29	6	44-70	AS602E	STR		44-70									
		T0				T0									
		45-20				45-20									
1X28	9	2-40	AS901E	STR		2-40									
		T0				T0									
		29-80				29-80									
27	9	29-80	AS902E	STR		29-80									
1X23	9	2-40	AS903E	STR		2-40									
		T0				T0									
		29-80				29-80									
1X10	9	2-40	AS904E	STR		2-40									
		T0				T0									
		28-50				28-50									
33	9	28-50	AS905E	STR		28-50									
1X12	9	2-40	AS906E	STR		2-40									
		T0				T0									
		28-50				28-50									
1	6	1172-52	CL601E	X						0-30		30-12	118	1.5	3-10
1	6	1201-61	CL602E	X						0-30		31-02	121	1.5	3-10
1	6	1240-32	CL603E	X						0-30		31-112	125	1.5	3-10
1	6	1279-02	CL604E	X						0-30		32-101	129	1.5	3-10
30	8	33-60	CL801E	17		1-00	32-60								
30	8	34-50	CL802E	17		1-00	33-50								
30	8	35-32	CL803E	17		1-00	34-32								
30	8	36-22	CL804E	17		1-00	35-22								

SPECIFICATIONS					BENDING DIMENSIONS (FEET-INCHES /QUARTER INCH)										
QTY.	SIZE	LENGTH	MARK	TYPE	A	B	C	D	E	F/R	G	H	J	K	O
6X43	5	60-00	DK501E	9		60-00				728-00		0-72			59-113
		T0				T0				T0		T0			
		60-00				60-00				685-60		0-73			59-113
2X43	5	46-80	DK502E	9		46-80				728-00		0-41			46-80
		T0				T0				T0		T0			T0
		49-20				49-20				685-60		0-51			49-20
314	5	14-70	DK503E	18	0-70	14-00	0-00						0-50		
2X3	5	52-52	DK504E	STR		52-52									
		T0				T0									
		54-13				54-13									
2X3	5	43-71	DK505E	STR		43-71									
		T0				T0									
		45-60				45-60									
64	5	10-13	DK506E	16	5-110	0-113	1-90	1-60				0-90		1-32	3-02
656	5	4-00	DK507E	T15		1-00	1-70	1-50							
1X22	5	70-00	DK508E	9		70-00				728-00		0-72			69-113
		T0				T0				T0		T0			
		70-00				70-00				685-60		0-73			69-113
492	6	43-91	DK601E	1	0-80	42-51					0-80		0-60		
1X29	6	14-80	DK602E	18	0-80	14-00	0-00						0-60		
		T0				T0									
		40-30			0-80	39-70	0-00						0-60		
1X20	6	14-80	DK603E	18	0-80	14-00	0-00						0-60		
		T0				T0									
		40-30			0-80	39-70	0-00						0-60		
1X14	6	14-80	DK604E	18	0-80	14-00	0-00						0-60		
		T0				T0									
		39-50			0-80	38-90	0-00						0-60		
1X10	6	14-80	DK605E	18	0-80	14-00	0-00						0-60		
		T0				T0									
		39-50			0-80	38-90	0-00						0-60		
1X43	6	70-00	DK606E	9		70-00				728-00		0-72			69-113
		T0				T0				T0		T0			
		70-00				70-00				685-60		0-73			69-113
35	6	14-80	DK607E	18	0-80	14-00	0-00						0-60		

SPECIFICATIONS					BENDING DIMENSIONS (FEET-INCHES /QUARTER INCH)										
QTY.	SIZE	LENGTH	MARK	TYPE	A	B	C	D	E	F/R	G	H	J	K	O
56	5	23-100	FT501E	17		4-50	19-50								
2X23	5	39-30	FT502E	STR		39-30									
		T0				T0									
		61-52				61-52									
45	5	24-100	FT503E	17		4-50	20-50								
65	5	22-10	FT504E	17		4-50	17-80								
2X23	5	36-102	FT505E	STR		36-102									
		T0				T0									
		50-40				50-40									
2X21	5	19-40	FT506E	STR		19-40									
		T0				T0									
		30-62				30-62									
42	5	41-62	FT507E	STR		41-62									
6	5	56-80	FT508E	STR		56-80									
57	5	21-100	FT509E	17		3-70	14-80	3-70							
114	6	14-80	FT601E	STR		14-80									
30	7	56-80	FT701E	STR		56-80									
36	8	56-80	FT801E	STR		56-80									
1X55	10	26-10	FT1001E	17		2-10	21-110	2-10							
		T0					T0								
		30-90				2-10	26-70	2-10							
26	10	26-10	FT1002E	17		2-10	21-110	2-10							
1X26	10	26-10	FT1003E	17		2-10	21-110	2-10							
		T0					T0								
		27-22				2-10	23-02	2-10							
111	10	25-40	FT1004E	23	6-50	0-00	18-110	0-00	0-00	0-00	0-00	1-100		0-00	18-93
43	11	27-10	FT1101E	17		2-10	22-110	2-10							
1X49	11	27-10	FT1102E	17		2-10	22-110	2-10							
		T0					T0								
		30-90				2-10	26-70	2-10							
1X38	11	24-40	FT1103E	17		2-10	20-20	2-10							
		T0					T0								
		27-22				2-10	23-02	2-10							
93	11	24-40	FT1104E	17		2-10	20-20	2-10							
219	11	22-50	FT1105E	30		17-40	5-10				0-00	17-30	0-00	1-60	

ASTM STANDARD ENGLISH REINFORCING BARS

BAR SIZE	NOMINAL DIMENSIONS: DIAMETER (INCHES)	AREA (INCHES²)	WEIGHT (LBS./FT.)	RECOMMENDED END HOOKS, APPLICABLE TO ALL GRADES: 180° HOOKS D	180° HOOKS A OR G	180° HOOKS J	90° HOOKS A OR G	STIRRUP AND TIE HOOKS, APPLICABLE TO ALL GRADES: 90° HOOK D	90° HOOK A OR G	135° HOOK A OR G	135° HOOK A OR G
3	0.375	0.110	0.376	2¼"	5"	3"	6"	1½"	4"	4"	2½"
4	0.500	0.200	0.668	3"	6"	4"	8"	2"	4½"	4½"	3"
5	0.625	0.310	1.043	3¾"	7"	5"	10"	2½"	6"	5½"	3¾"
6	0.750	0.440	1.502	4½"	8"	6"	1-0"	4½"	1-0"	8"	4½"
7	0.875	0.600	2.044	5¼"	10"	7"	1-2"	5¼"	1-2"	9"	5¼"
8	1.000	0.790	2.670	6"	11"	8"	1-4"	6"	1-4"	10½"	6"
9	1.128	1.000	3.400	9½"	1-3"	11¾"	1-7"				
10	1.270	1.270	4.303	10¾"	1-5"	1-1¼"	1-10"				
11	1.410	1.560	5.313	1-0"	1-7"	1-2¾"	2-0"				
14	1.693	2.250	7.650	1-6¼"	2-3"	1-9¾"	2-7"				
18	2.257	4.000	13.600	2-0"	3-0"	2-4½"	3-5"				

NOTES:

1. FIGURES SHOWN IN CIRCLES REPRESENT BAR BEND TYPES.
2. STANDARD BAR BENDS INCLUDE ONLY THOSE TYPES BELOW, INDICATED AS SUCH.
3. ALL DIMENSIONS OUT-TO-OUT, EXCEPT "A" AND "G" ON STD. 180° AND 135° HOOKS.
4. "J" DIMENSIONS ON 180° HOOKS TO BE SHOWN ONLY WHERE NECESSARY TO RESTRICT HOOK SIZE, OTHERWISE STANDARD 'ACI' HOOKS ARE TO BE USED.
5. WHERE "J" IS NOT SHOWN, "J" WILL BE KEPT EQUAL TO OR LESS THAN "H" ON TYPES 3, 5 AND 22. WHERE "J" CAN EXCEED "H", IT SHALL BE SHOWN.
6. "H" DIMENSIONS OF STIRRUPS TO BE SHOWN AS NEEDED TO FIT WITHIN THE CONCRETE.
7. UNLESS OTHERWISE NOTED, DIAMETER "D" IS THE SAME FOR ALL BENDS AND HOOKS ON A BAR (EXCEPT FOR BEND TYPES 11 AND 13).
8. WHERE SLOPE DIFFERS FROM 45° OFFSET, "H" AND "K" MUST BE SHOWN.
9. WHERE BARS ARE TO BE BENT MORE ACCURATELY THAN STANDARD BENDING TOLERANCES, BENDING DIMENSIONS REQUIRING CLOSER FABRICATION SHOULD HAVE LIMITS INDICATED.
10. FOR RECOMMENDED DIAMETER "D", OF BENDS, HOOKS, ETC., REFER TO TABLE ABOVE, 'CRSI' OR 'ACI' TABLES WHERE APPLICABLE AND REQUIRED.
11. TYPE S1-S6, S11, T1-T3 AND T6-T9 APPLICABLE TO BAR SIZES #3 THROUGH #8.

STANDARD BAR BENDS

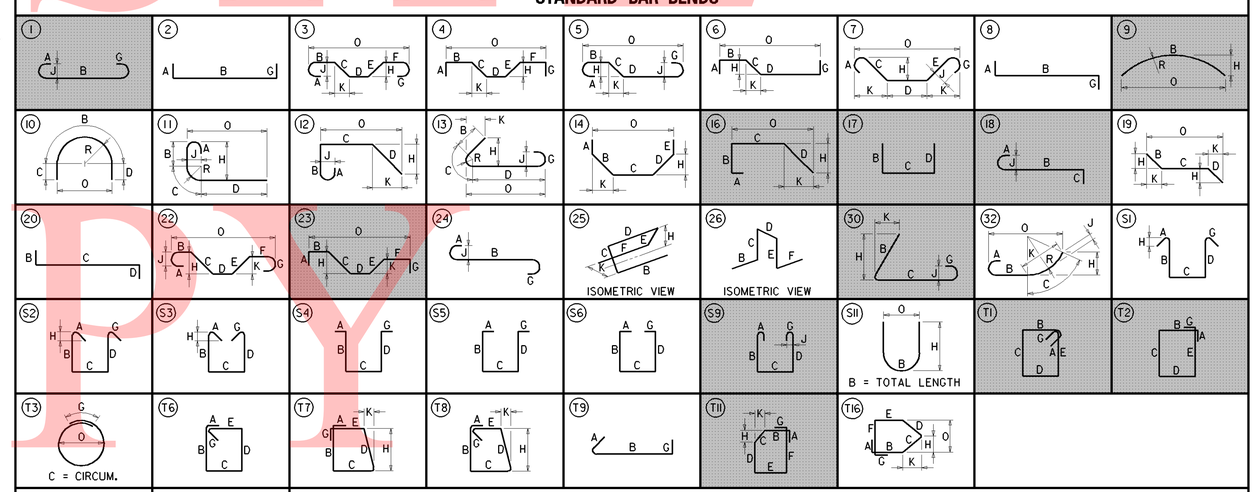

SPECIAL BAR BENDS

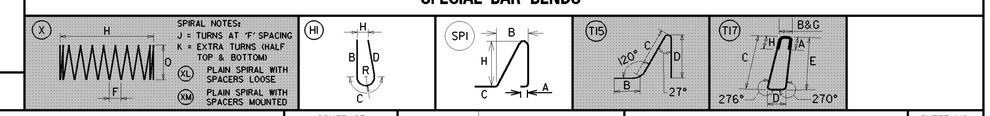

STIRRUP AND TIE HOOKS

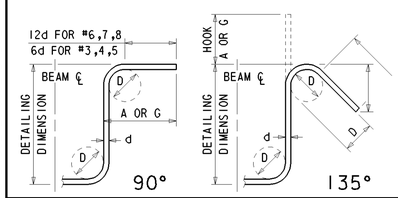

180° AND 90° END HOOKS

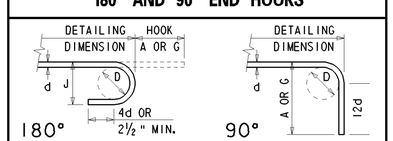

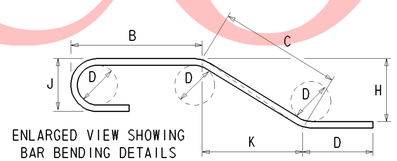

ENLARGED VIEW SHOWING BAR BENDING DETAILS

DELAWARE DEPARTMENT OF TRANSPORTATION

ADDENDUMS / REVISIONS

I-95 & US 202 INTERCHANGE

CONTRACT	BRIDGE NO.	1-764
T200510602	DESIGNED BY: MJG	
COUNTY		
NEW CASTLE	CHECKED BY: JNH	

REINFORCEMENT BAR SCHEDULE-2 S4-22 OF 23

SHEET NO. 208 / TOTAL SHTS. 482

Y:\NEWCASTL\059\BRIDGE\2510602\BRIDGE 1-763\PLANS\ALTERNATIVE CURVED\BR01.DGN

UNOFFICIAL WEBSITE COPY

① ANY MARK NUMBER WITH SUFFIX 'E' DENOTES EPOXY COATED REINFORCING STEEL.

② ALL MARK 'LOCATION PREFIXES' SHALL CONSIST OF TWO LETTERS AND ARE AS FOLLOWS: AB = ABUTMENT, AS = APPROACH SLAB, BC = BOX CULVERT, BW = BACKWALL, CL = COLUMN, DK = DECK, DL = DOWEL, FT = FOOTING, HW = HEADWALL, MS = MISC. BARS, PA = PARAPET, PR = PIER, SC = SHEETPILE CAP, SL = SLAB, TW = TOEWALL, WL = WALL (UNIQUE LOCATION), WW = WINGWALL

SPECIFICATIONS					BENDING DIMENSIONS (FEET-INCHES /QUARTER INCH)										
QTY.	SIZE	LENGTH	MARK	TYPE	A	B	C	D	E	F/R	G	H	J	K	O
36	5	7-50	MS501E	T11	0-00	0-00	1-00	2-20	1-00	3-30	0-00	0-93		0-63	
36	5	7-93	MS502E	T11	0-00	0-00	1-00	2-22	1-11	3-60	0-00	0-93		0-63	
51	5	6-80	MS503E	STR		6-80									
24	5	11-80	MS504E	T2	0-60	1-80	3-80	1-80	3-80		0-60				
2X7	5	22-22	MS505E	STR		22-22									
		T0				T0									
		23-100				23-100									
7	5	22-82	MS506E	STR		22-82									
26	5	11-00	MS507E	T2	0-60	1-80	3-40	1-80	3-40		0-60				
2X7	5	23-72	MS508E	STR		23-72									
		T0				T0									
		25-00				25-00									
7	5	25-00	MS509E	STR		25-00									
49	7	10-00	MS701E	17		1-80	6-80	1-80							
51	7	9-40	MS702E	17		1-40	6-80	1-40							
516	5	7-03	PA501E	T17	0-30	0-30	2-82	0-81	2-80		0-30	0-30			
464	5	8-83	PA502E	T17	0-42	0-51	3-21	0-90	3-20		0-51	0-42			
16	5	11-90	PA503E	STR		11-90									
24	5	10-22	PA504E	STR		10-22									
168	5	10-32	PA505E	STR		10-32									
48	5	10-82	PA506E	STR		10-82									
16	7	9-92	PA701E	STR		9-92									
80	7	10-81	PA702E	STR		10-81									
12	7	10-31	PA703E	STR		10-31									
8	7	11-72	PA704E	STR		11-72									
16	8	9-92	PA801E	STR		9-92									
80	8	10-81	PA802E	STR		10-81									
12	8	10-31	PA803E	STR		10-31									
8	8	11-72	PA804E	STR		11-72									
10	5	51-92	PR501E	STR		51-92									
80	5	8-60	PR502E	17		2-60	3-60	2-60							
310	5	13-70	PR503E	T1	0-52	2-90	3-70	2-90	3-70		0-52				
24	8	51-92	PR801E	STR		51-92									

SPECIFICATIONS					BENDING DIMENSIONS (FEET-INCHES /QUARTER INCH)										
QTY.	SIZE	LENGTH	MARK	TYPE	A	B	C	D	E	F/R	G	H	J	K	O
96	5	7-90	WW501E	T11			1-00	2-30	1-00	3-60		0-93		0-62	
1X23	5	3-80	WW502E	STR		3-80									
		T0				T0									
		12-00				12-00									
199	5	12-00	WW503E	STR		12-00									
1X22	5	3-60	WW504E	17		0-100	2-80								
		T0					T0								
		12-32				0-100	11-52								
1X22	5	2-80	WW505E	STR		2-80									
		T0				T0									
		11-52				11-52									
1X66	5	6-92	WW506E	17		1-00	5-92								
		T0					T0								
		8-101				1-00	7-101								
1X66	5	5-92	WW507E	STR		5-92									
		T0				T0									
		7-101				7-101									
30	5	44-11	WW508E	STR		44-11									
2X7	5	29-40	WW509E	STR		29-40									
		T0				T0									
		44-11				44-11									
2X11	5	1-40	WW510E	STR		1-40									
		T0				T0									
		28-60				28-60									
60	5	64-80	WW511E	STR		64-80									
2	5	15-110	WW512E	STR		15-110									
2	5	30-80	WW513E	STR		30-80									
120	5	5-00	WW514E	17		2-60	2-60								
1X45	8	3-80	WW801E	STR		3-80									
		T0				T0									
		12-00				12-00									
174	8	12-00	WW802E	STR		12-00									

SPECIFICATIONS					BENDING DIMENSIONS (FEET-INCHES /QUARTER INCH)										
QTY.	SIZE	LENGTH	MARK	TYPE	A	B	C	D	E	F/R	G	H	J	K	O

ASTM STANDARD ENGLISH REINFORCING BARS

	NOMINAL DIMENSIONS			RECOMMENDED END HOOKS, APPLICABLE TO ALL GRADES				STIRRUP AND TIE HOOKS, APPLICABLE TO ALL GRADES			
					180° HOOKS		90° HOOKS		90° HOOK	135° HOOK	
BAR SIZE	DIAMETER (INCHES)	AREA (INCHES²)	WEIGHT (LBS./FT.)	D	A OR G	J	A OR G	D	A OR G	A OR G	A OR G
3	0.375	0.110	0.376	2¼″	5″	3″	6″	1½″	4″	4″	2½″
4	0.500	0.200	0.668	3″	6″	4″	8″	2″	4½″	4½″	3″
5	0.625	0.310	1.043	3¾″	7″	5″	10″	2½″	6″	5½″	3¾″
6	0.750	0.440	1.502	4½″	8″	6″	1-0″	4½″	1-0″	8″	4½″
7	0.875	0.600	2.044	5¼″	10″	7″	1-2″	5¼″	1-2″	9″	5¼″
8	1.000	0.790	2.670	6″	11″	8″	1-4″	6″	1-4″	10½″	6″
9	1.128	1.000	3.400	9½″	1-3″	11¾″	1-7″				
10	1.270	1.270	4.303	10¾″	1-5″	1-1¼″	1-10″				
11	1.410	1.560	5.313	1-0″	1-7″	1-2¾″	2-0″				
14	1.693	2.250	7.650	1-6¼″	2-3″	1-9¾″	2-7″				
18	2.257	4.000	13.600	2-0″	3-0″	2-4½″	3-5″				

NOTES:

1. FIGURES SHOWN IN CIRCLES REPRESENT BAR BEND TYPES.
2. STANDARD BAR BENDS INCLUDE ONLY THOSE TYPES BELOW, INDICATED AS SUCH.
3. ALL DIMENSIONS OUT-TO-OUT, EXCEPT "A" AND "G" ON STD. 180° AND 135° HOOKS.
4. "J" DIMENSIONS ON 180° HOOKS TO BE SHOWN ONLY WHERE NECESSARY TO RESTRICT HOOK SIZE, OTHERWISE STANDARD 'ACI' HOOKS ARE TO BE USED.
5. WHERE "J" IS NOT SHOWN, "J" WILL BE KEPT EQUAL TO OR LESS THAN "H" ON TYPES 3, 5 AND 22. WHERE "J" CAN EXCEED "H", IT SHALL BE SHOWN.
6. "H" DIMENSIONS OF STIRRUPS TO BE SHOWN AS NEEDED TO FIT WITHIN THE CONCRETE.
7. UNLESS OTHERWISE NOTED, DIAMETER "D" IS THE SAME FOR ALL BENDS AND HOOKS ON A BAR (EXCEPT FOR BEND TYPES 11 AND 13).
8. WHERE SLOPE DIFFERS FROM 45° OFFSET, "H" AND "K" MUST BE SHOWN.
9. WHERE BARS ARE TO BE BENT MORE ACCURATELY THAN STANDARD BENDING TOLERANCES, BENDING DIMENSIONS REQUIRING CLOSER FABRICATION SHOULD HAVE LIMITS INDICATED.
10. FOR RECOMMENDED DIAMETER "D", OF BENDS, HOOKS, ETC., REFER TO TABLE ABOVE, 'CRSI' OR 'ACI' TABLES WHERE APPLICABLE AND REQUIRED.
11. TYPE S1-S6, S11, T1-T3 AND T6-T9 APPLICABLE TO BAR SIZES #3 THROUGH #8.

STANDARD BAR BENDS

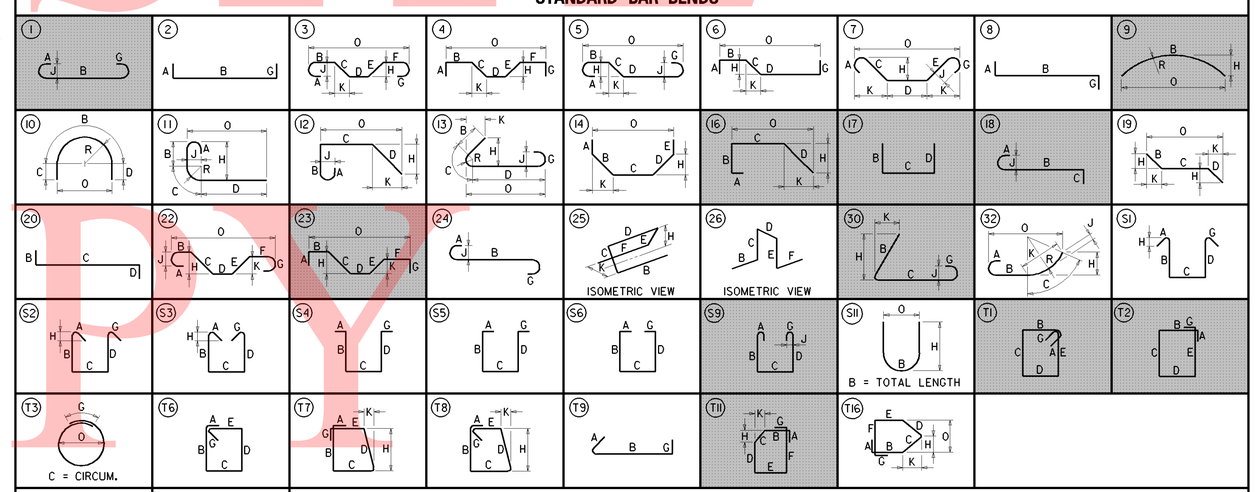

SPECIAL BAR BENDS

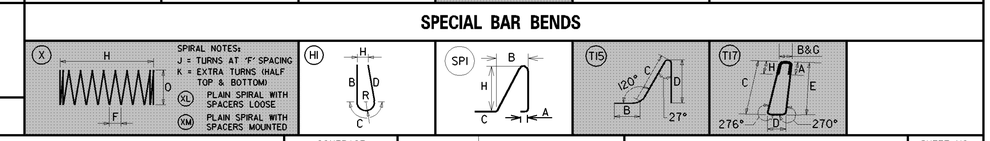

STIRRUP AND TIE HOOKS

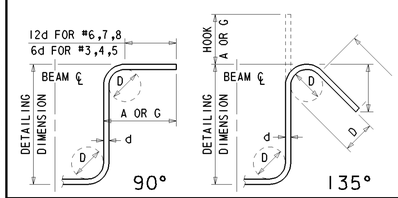

180° AND 90° END HOOKS

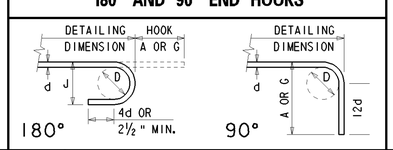

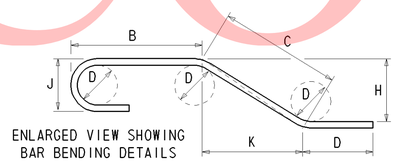

ENLARGED VIEW SHOWING BAR BENDING DETAILS

UNOFFICIAL WEBSITE COPY

DELAWARE DEPARTMENT OF TRANSPORTATION

ADDENDUMS / REVISIONS

I-95 & US 202 INTERCHANGE

CONTRACT	BRIDGE NO.	1-764
T200510602	DESIGNED BY: MJG	
COUNTY		
NEW CASTLE	CHECKED BY: JNH	

REINFORCEMENT BAR SCHEDULE-3 S4-23 OF 23

SHEET NO. 209 TOTAL SHTS. 482

Y:\NEWCASTL\059\BRIDGE\2510602\BRIDGE 1-763\PLANS\ALTERNATIVE CURVED\BR01.DGN

BRIDGE PROJECT NOTES

1. LOCATION
   PROPOSED NEW BRIDGE I-763 (I-95 RAMP 5 OVER I-95 RAMP 7), NEW CASTLE COUNTY, DELAWARE.

2. DESIGN CRITERIA
   2007 AASHTO LRFD BRIDGE DESIGN SPECIFICATIONS, 4TH EDITION, WITH INTERIMS THROUGH 2009.
   U.S. CUSTOMARY UNITS.

3. LOADING
   DEAD LOAD INCLUDES 25 PSF FOR FUTURE WEARING SURFACE AND 15 PSF FOR S.I.P FORMS.
   VEHICULAR LIVE LOAD IS HL-93.

4. PORTLAND CEMENT CONCRETE
   STRUCTURAL ELEMENTS OF PORTLAND CEMENT CONCRETE SHALL BE AS NOTED:
   (F'c = 28 DAY COMPRESSIVE STRENGTH)
   CLASS A - PARAPETS, ABUTMENTS, PIER ABOVE FOOTING, MOMENT SLABS, AND WINGWALLS (F'c = 4.5 KSI)
   CLASS B - PIER FOOTING (F'c = 3.0 KSI)
   CLASS D - CONCRETE DECK AND APPROACH SLAB (F'c = 4.5 KSI)
   MIX REQUIREMENTS SHALL CONFORM TO SECTION 812 OF THE STANDARD SPECIFICATIONS. ALL EXPOSED EDGES SHALL BE CHAMFERED 3*4" UNLESS OTHERWISE NOTED. IT SHALL BE THE CONTRACTOR'S RESPONSIBILITY TO UTILIZE ANY APPROVED CONCRETE ADDITIVES OR HEATING TECHNIQUES TO MAINTAIN THE PROPER TEMPERATURE FOR ANY CONCRETE POURED DURING COLD WEATHER. PAYMENT SHALL BE INCIDENTAL TO THE RESPECTIVE CONCRETE BID ITEMS.

5. STRUCTURAL STEEL
   STEEL BEAMS, WEB STIFFENERS, SOLE PLATES, AND CROSS FRAMES SHALL BE ASTM A709 GRADE 50W. THE ADDITIONAL REQUIREMENTS FOR CHARPY V-NOTCH TESTING OF AASHTO M270 FOR PRIMARY LOAD CARRYING MEMBERS SHALL BE INCLUDED.

6. BEARINGS
   ALL ELASTOMERIC BEARING PADS SHALL BE REINFORCED ELASTOMERIC AND SHALL CONFORM TO SUBSECTION 623.06 OF THE STANDARD SPECIFICATIONS.

7. BAR REINFORCEMENT
   REINFORCING STEEL SHALL CONFORM TO AASHTO M31 (ASTM A615), GRADE 60. REINFORCING STEEL SHALL HAVE A 3" COVER IF CAST AGAINST EARTH AND A 2" CLEAR COVER ELSEWHERE, UNLESS OTHERWISE SPECIFIED ON THE PLANS. ALL REINFORCING STEEL SHALL BE PROTECTED WITH FUSION BONDED EPOXY. EPOXY COATED REINFORCING STEEL SHALL CONFORM TO AASHTO M284 (ASTM D3963).

8. CONSTRUCTION JOINTS
   KEYED CONSTRUCTION JOINTS SHALL BE 2 INCHES X 4 INCHES OR AS NOTED. ALL EXPOSED CONSTRUCTION JOINTS SHALL HAVE A 3/4" V-NOTCH. ANY WATERSTOPS SHALL BE INCIDENTAL TO THE APPROPIATE CONCRETE ITEM.

9. CONCRETE SEALER
   SILICONE ACRYLIC CONCRETE SEALER SHALL BE APPLIED TO THE EXPOSED FACES OF BACKWALLS, ABUTMENTS, ABUTMENT SEATS, WINGWALLS, BARRIERS, AND OUTSIDE FACE AND UNDERSIDE OF DECK TO FASCIA BEAM. PAYMENT UNDER ITEM #602646 - SILICONE ACRYLIC CONCRETE SEALER.

10. STABILIZING STRUCTURAL EXCAVATIONS
    SHORING SHALL BE REQUIRED FOR ANY EXCAVATION EXCEEDING 5'-0" IN DEPTH. UNLESS SPECIFIED ON THE PLANS AS NEEDING SHEETING AND SHORING, THE COST OF SHORING SHALL BE INCIDENTAL TO ITEM #207000 - EXCAVATION AND BACKFILL FOR STRUCTURES. IN LIEU OF SHORING, THE CONTRACTOR MAY USE A 2:1 (H:V) CUT SLOPE. NO PAYMENT FOR ADDITIONAL CUT OR FILL WILL BE GIVEN, AS DESCRIBED IN SECTION 207 OF THE STANDARD SPECIFICATIONS. FOR AREAS DESIGNATED IN THE PLANS AS NEEDING SHEETING AND SHORING, THE CONTRACTOR SHALL SUBMIT A PROPOSED PLAN FOR SHEETING OR SHORING OF THE EXCAVATION. THE SUBMITTAL SHALL INCLUDE ANY DRAWINGS AND CALCULATIONS ASSOCIATED WITH THE WORK AND SHALL BE STAMPED BY A DELAWARE REGISTERED PROFESSIONAL ENGINEER. PAYMENT FOR SHEETING AND SHORING, AS WELL AS THE MATERIALS AND WORK ASSOCIATED WITH THE SUBMITTAL, SHALL BE MADE UNDER ITEM #207501 - SHEETING AND SHORING.

11. DECK SLAB
    THE DECK SLAB THICKNESS INCLUDES 1/2" INTEGRAL WEARING SURFACE.

12. LOAD RATINGS
    LRFR LOAD RATINGS IN ACCORDANCE WITH AASHTO MANUAL FOR BRIDGE EVALUATION, 2008
    NOTE THAT THE DECK ACTS COMPOSITELY WITH THE BEAMS.

13. S.I.P FORM SUBMITTALS
    IN ADDITION TO THE REQUIREMENTS OF THE STANDARD SPECIFICATIONS, CALCULATIONS AND DRAWINGS FOR THE S.I.P. FORMS MUST BE SEALED BY A PROFESSIONAL ENGINEER REGISTERED IN THE STATE OF DELAWARE AND SUBMITTED FOR APPROVAL. PAYMENT SHALL BE INCIDENTAL TO ITEM 602013 - PORTLAND CEMENT CONCRETE MASONRY, SUPERSTRUCTURE, CLASS D.

14. ROCK PROFILE VARIATION
    ANTICIPATING THAT THE ACTUAL PROFILE OF THE ROCK VARIES OVER WHAT HAS BEEN MEASURED, THE ESTIMATED QUANTITIES FOR THE ITEMS LISTED BELOW HAVE BEEN INCREASED 25% OVER THE QUANTITIES CALCULATED:
    ITEM #618071 - STEEL H PILES, HP 10 X 57
    ITEM #618072 - STEEL H TEST PILES, HP 10 X 57
    ITEM #619051 - INSTALL STEEL H PILES, HP 10 X 57
    ITEM #619052 - INSTALL STEEL H PILES, HP 10 X 57
    ITEM #619512 - PREDRILLING FOR END BEARING PILES

15. PILE FOUNDATIONS
    ABUTMENTS A & B WILL UTILIZE MECHANICALLY STABILIZED EARTH (MSE) WALLS AND STUB ABUTMENTS ON STEEL H-PILES. CONTRACTOR SHALL PERFORM AIR TRACK DRILLING ON A 10-FOOT GRID TO DETERMINE THE TOP OF ROCK WITHIN THE LIMITS OF THE ABUTMENT IN THE AREA INDICATED ON THE PLANS AND IN THE SPECIAL PROVISIONS FOR ITEM 619511 - EXPLORATORY DRILLING.

    CONTRACTOR SHALL CONTROL THE PILE DRIVING BY THE WAVE EQUATION ANALYSIS. THE ENGINEER WILL VERIFY, FROM THE TEST PILE DRIVING RESULTS, THE CAPABILITY OF THE PILE DRIVING HAMMER SELECTED BY THE CONTRACTOR. PILES SHALL BE DRIVEN TO ABSOLUTE REFUSAL INTO THE STRATUM DEFINED BY THE PILE TIP ELEVATION WHICH IS PREDETERMINED BY THE ENGINEER FROM THE TEST PILES AND AIR TRACK DRILLING. THE ENGINEER WILL DETERMINE THE ACCEPTABILITY OF THE BEARING PILES THAT ATTAIN ABSOLUTE REFUSAL ABOVE THE PREDETERMINED PILE TIP ELEVATIONS.

    CONTRACTOR SHALL PERFORM DYNAMIC PILE MONITORING ON THE TEST PILES AND IF DIRECTED ON SELECTED BEARING PILES AT LOCATIONS AS DETERMINED BY THE ENGINEER.

    ALL PILES SHALL BE ASTM A709, GRADE 50 AND SHALL HAVE A HEAVY-DUTY TIP REINFORCEMENT, SUCH AS HP77600B BY ASSOCIATED PILE AND FITTING CORPORATION, H-777 BY DOUGHERTY FOUNDATION PRODUCTS INC, OR APPROVED EQUAL. PAYMENT SHALL BE INCIDENTAL TO ITEM 618071 AND 618072.

INDEX OF SHEETS

SHEET NO.	TITLE
1	PROJECT NOTES
2	BRIDGE PLAN, TYPICAL SECTION, & ELEVATION
3	PILE LAYOUT DETAILS
4	MSE WALL A DETAILS
5	MSE WALL B DETAILS
6	ABUTMENT A-B FOOTING DETAILS
7	ABUTMENT A DETAILS
8	ABUTMENT B DETAILS
9	FRAMING PLAN
10	BEAM DETAILS - 1
11	BEAM DETAILS - 2
12	DECK PLAN - 1
13	DECK PLAN - 2
14	APPROACH SLAB DETAILS
15	MOMENT SLAB DETAILS
16	BARRIER DETAILS
17	EXPANSION JOINT DETAILS
18	REINFORCEMENT BAR SCHEDULE - 1
19	REINFORCEMENT BAR SCHEDULE - 2

QUANTITIES

ITEM NO.	ITEM TITLE	UNIT	QUANTITY
207000	EXCAVATION AND BACKFILL FOR STRUCTURES	C.Y.	450
207501	SHEETING AND SHORING	L.S.	L.S.
210000	FURNISHING BORROW TYPE "C" FOR PIPE, UTILITY TRENCH, AND STRUCTURE BACKFILL	C.Y.	360
602001	PCC MASONRY, MOMENT SLAB, CLASS A	C.Y.	220
602011	PCC MASONRY, SUBSTRUCTURE, CLASS A	C.Y.	140
602013	PCC MASONRY, SUPERSTRUCTURE, CLASS D	C.Y.	85
602014	PCC MASONRY, APPROACH SLAB, CLASS D	C.Y.	112
602017	PCC MASONRY, PARAPET, CLASS A	C.Y.	45
602557	MECHANICALLY STABILIZED EARTH WALLS, TYPE 2	S.F.	2870
602646	SILICONE ACRYLIC CONCRETE SEALER	S.F.	5000
602670	MECHANICALLY STABILIZED EARTH WALLS, TYPE 3	S.F.	3250
604000	BAR REINFORCEMENT, EPOXY COATED	LB	65000
605002	STEEL STRUCTURES	L.S.	L.S.
605657	STRIP SEAL EXPANSION JOINT, 1 1/2"	L.F.	118
618071	STEEL H PILES, HP 10 X 57	L.F.	1920
618072	STEEL H TEST PILES, HP 10 X 57	L.F.	240
619051	INSTALL STEEL H PILES, HP 10 X 57	L.F.	1920
619052	INSTALL STEEL H TEST PILES, HP 10 X 57	L.F.	240
619511	EXPLORATORY DRILLING	EA	4
619512	PREDRILLING FOR END BEARING PILES	L.F.	1920
619519	DYNAMIC PILE TESTING BY CONTRACTOR	EA	4
712020	RIPRAP, R-4	TON	125
713003	GEOTEXTILES, RIPRAP	S.Y.	180

LRFR LOAD RATINGS

TYPE OF TRUCK	INVENTORY RATING		OPERATING RATING	
	RATING FACTOR	LOAD RATING (TONS)	RATING FACTOR	LOAD RATING (TONS)
AASHTO HL-93 (TRUCK + LANE)	2.580	N/A	3.350	N/A
AASHTO HL-93 (TANDEM + LANE)	2.900	N/A	3.770	N/A

UNOFFICIAL WEBSITE COPY

UNOFFICIAL WEBSITE COPY

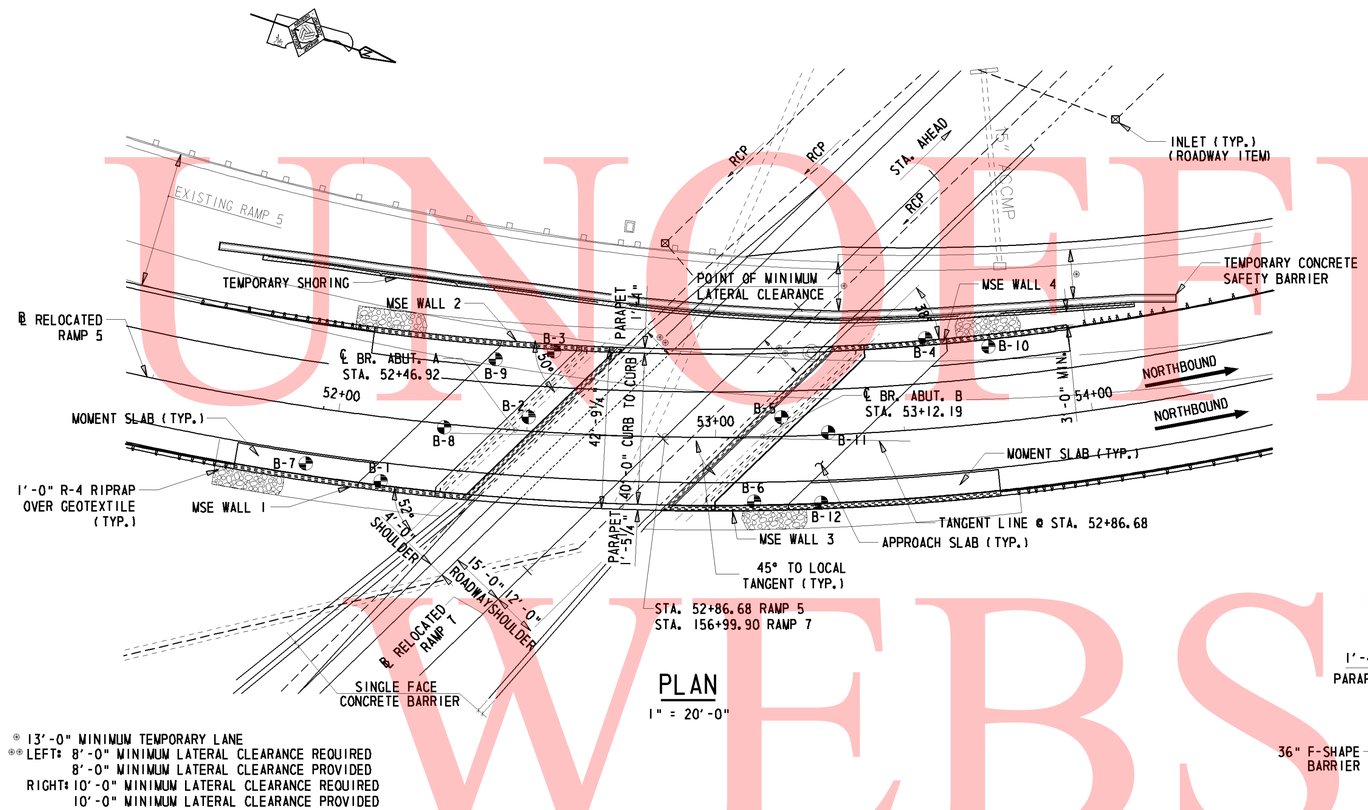

PLAN

1" = 20'-0"

⊛ 13'-0" MINIMUM TEMPORARY LANE
⊛⊛ LEFT: 8'-0" MINIMUM LATERAL CLEARANCE REQUIRED
8'-0" MINIMUM LATERAL CLEARANCE PROVIDED
RIGHT: 10'-0" MINIMUM LATERAL CLEARANCE REQUIRED
10'-0" MINIMUM LATERAL CLEARANCE PROVIDED

PVI STA. = 156+98.36
PVI EL. = 197.54
LVC = 500.00
G1 = -0.55%
G2 = 6.90%

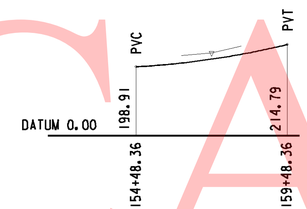

I-95 RAMP 7 PROFILE

N.T.S.

PVT STA. = 52+00.00
PVT EL. = 226.37
PVC STA. = 54+33.34
PVC EL. = 231.24
TANGENT LENGTH = 233.34
TANGENT GRADE = 2.08%

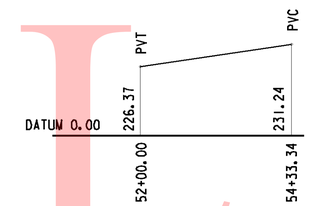

I-95 RAMP 5 PROFILE

N.T.S.

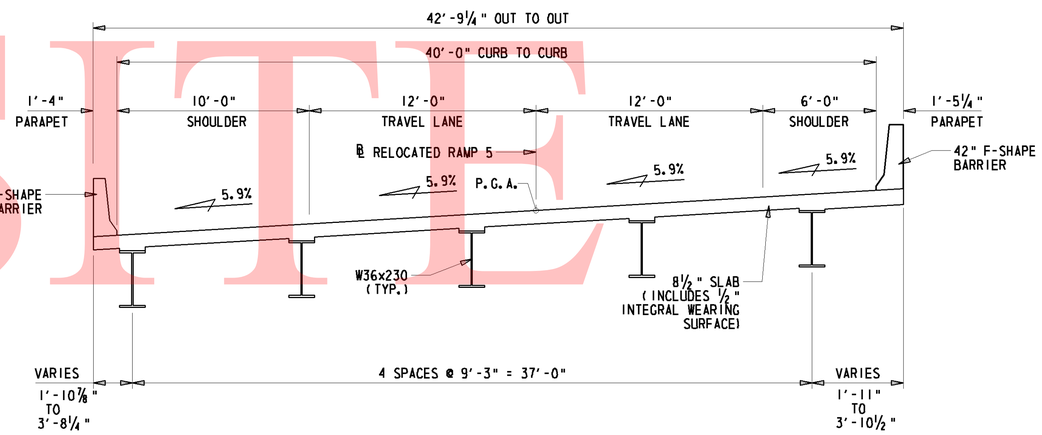

TYPICAL BRIDGE SECTION

1/4" = 1'-0"

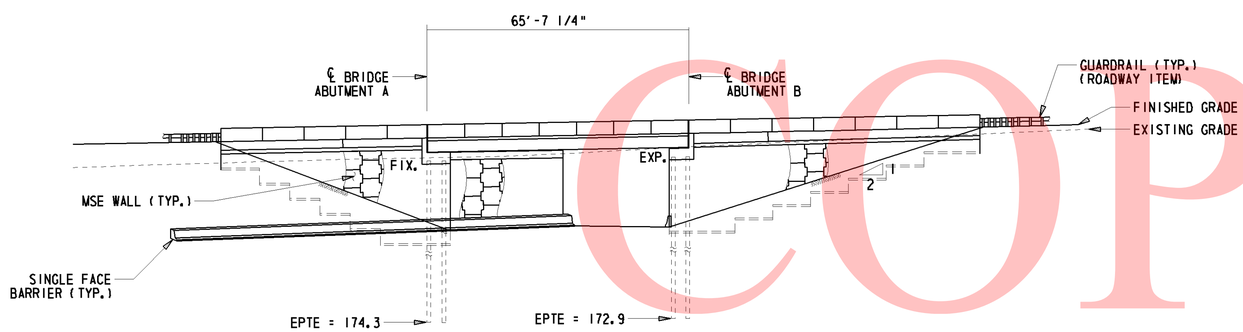

ELEVATION

1" = 20'-0"

SOIL BORINGS

NO.	STATION	OFFSET
B-1	52+13.23	16.00' RT.
B-2	52+50.22	5.00' LT.
B-3	52+55.95	23.00' LT.
B-4	53+57.48	22.00' LT.
B-5	53+17.55	5.00' LT.
B-6	53+09.94	17.00' RT.
B-7	51+93.39	15.00' RT.
B-8	52+28.15	0'
B-9	52+40.19	20.00' LT.
B-10	53+74.45	18.00' LT.
B-11	53+29.81	0'
B-12	53+27.25	19.00' RT.

I-95 RAMP 5 HORIZONTAL CURVE DATA

PI STA. = 53+20.48
Δ = 87°54'49.11" LT.
D = 8°04'59.99"
T = 683.46'
L = 1087.59'
R = 708.81'
E = 275.84'
MO = 198.556'

W:\MSV8\CELLS\PROJDEV\SB.CEL

DELAWARE DEPARTMENT OF TRANSPORTATION	ADDENDUMS / REVISIONS	I-95 & US 202 INTERCHANGE	CONTRACT T200510602	BRIDGE NO. BR. 1-763	BRIDGE PLAN, SECTION, & ELEVATION S3-2 OF 19	SHEET NO. 211
			COUNTY NEW CASTLE	DESIGNED BY: TRS		TOTAL SHTS. 482
				CHECKED BY: JNH		

PILE FOOTING DESIGN LOADS	
SUBSTRUCTURE UNIT(S)	ABUTMENT A
B.F.E.	219.45
FACTORED AXIAL LOAD (KIP)	118
FACTORED AXIAL RESISTANCE (KIP)	420
GOVERNING LIMIT STATE	STR-1 (MAX)

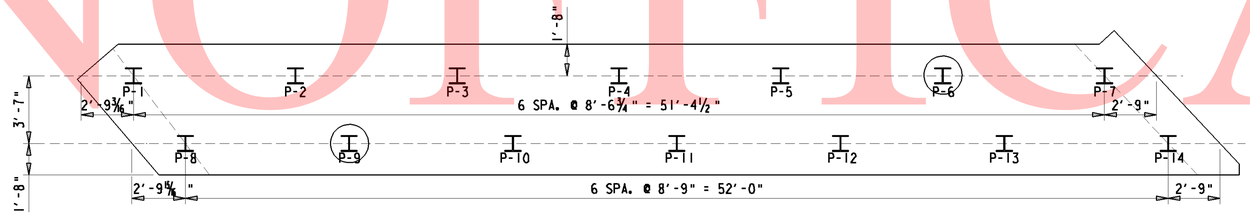

ABUTMENT A PILE LAYOUT PLAN

1/4" = 1'-0"

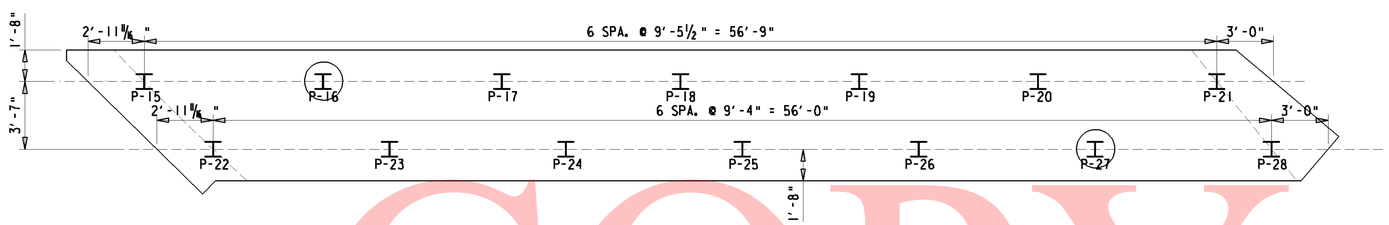

ABUTMENT B PILE LAYOUT PLAN

1/4" = 1'-0"

LEGEND

I = DENOTES HP10x57 PILE

(I) = DENOTES TEST PILE

PILE FOOTING DESIGN LOADS	
SUBSTRUCTURE UNIT(S)	ABUTMENT B
B.F.E.	220.92
FACTORED AXIAL LOAD (KIP)	118
FACTORED AXIAL RESISTANCE (KIP)	420
GOVERNING LIMIT STATE	STR-1 (MAX)

NOTES:

1. PIPES FOR SEPARATING THE PILES FROM THE MSE WALL BACKFILL SHALL BE INSTALLED AT LOCATIONS OF PILES PRIOR TO CONSTRUCTING MSE WALL. PILES SHALL BE INSTALLED AFTER QUARANTINE PERIOD AT THE CENTER OF THE PIPES.
2. PIPE SHALL BE 18" DIAMETER HIGH DENSITY POLYETHYLENE. CONTRACTOR SHALL FILL THE VOIDS WITH LOOSE AND UNCOMPACTED SAND PRIOR TO FOOTING POUR. PAYMENT FOR PIPES AND SAND SHALL BE INCIDENTAL TO ITEM #602553 - MECHANICALLY STABILIZED EARTH WALLS.
3. SEE BRIDGE NOTES FOR MORE INFORMATION REGARDING THE PILE FOUNDATION.

UNOFFICAL WEBSITE COPY

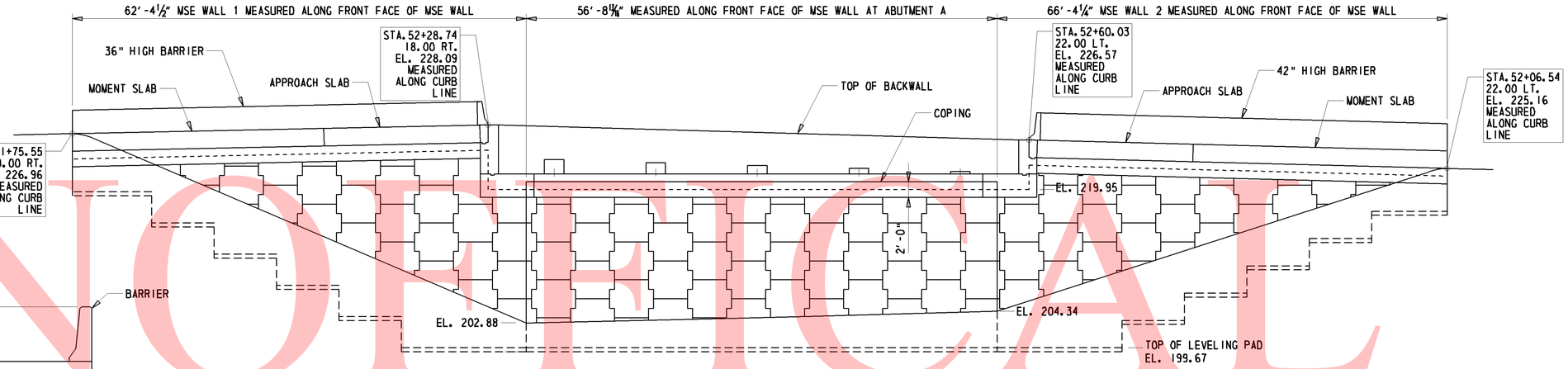

DEVELOPED ELEVATION
SOUTH MSE WALL
⅛" = 1'-0"

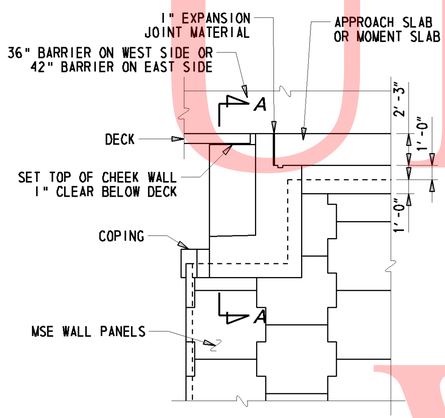

TYPICAL ELEVATION
⅜" = 1'-0"

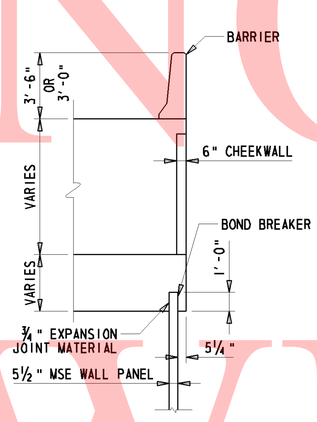

SECTION A-A
¼" = 1'-0"

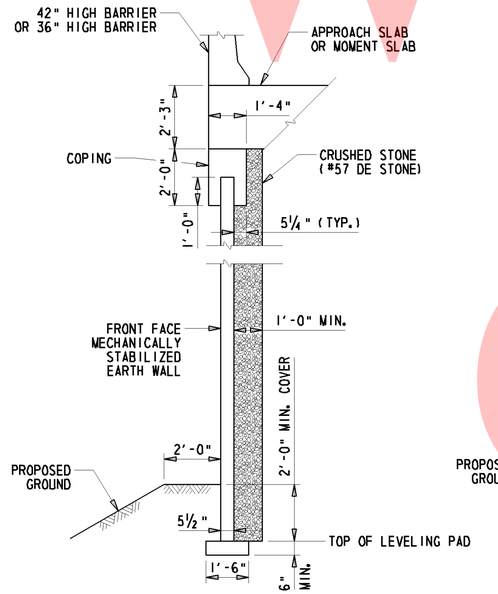

TYPICAL MSE WINGWALL SECTION
⅜" = 1'-0"

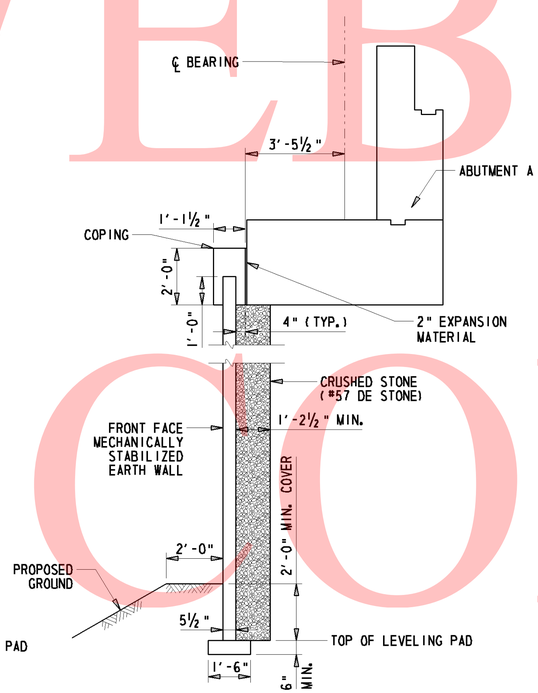

TYPICAL SECTION AT ABUTMENT B
⅜" = 1'-0"

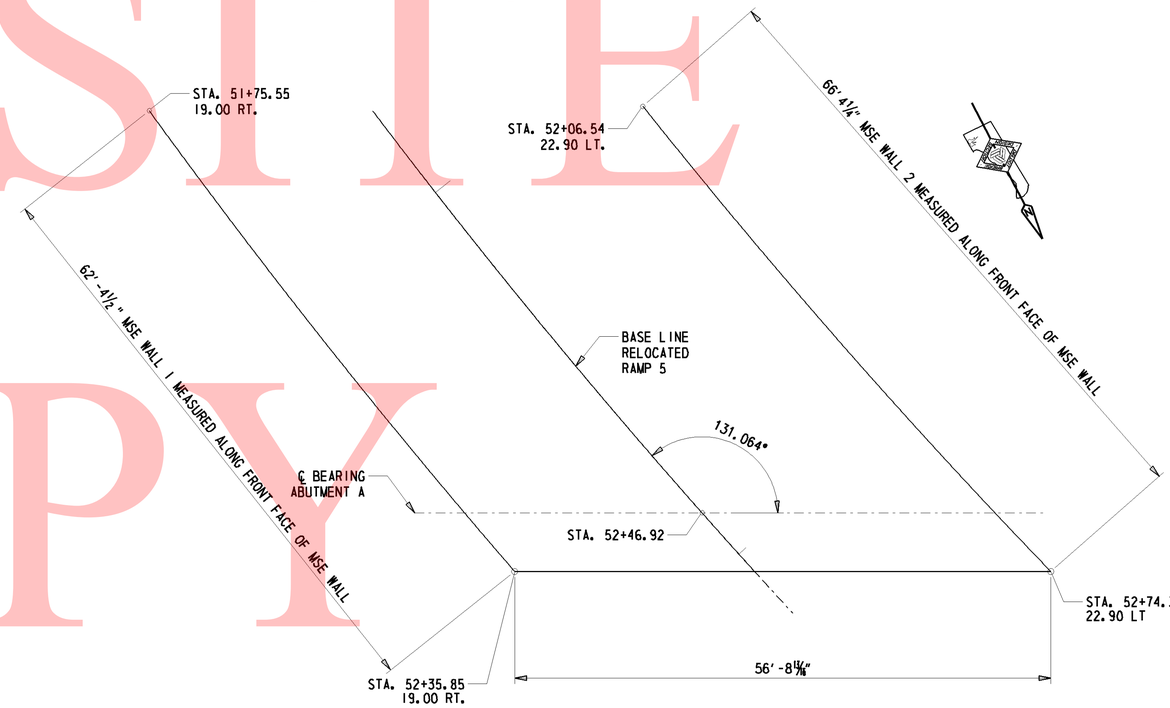

SOUTH MSE WALL PLAN
⅛" = 1'-0"

NOTE: REINFORCEMENT FOR MSE WALL SHALL BE SKEWED TO AVOID PILES.

UNOFFICIAL WEBSITE COPY

DELAWARE DEPARTMENT OF TRANSPORTATION	ADDENDUMS / REVISIONS	I-95 & US 202 INTERCHANGE	CONTRACT T200510602	BRIDGE NO. 1-763	MSE WALL 1 & 2 DETAILS S3 – 4 OF 19	SHEET NO. 213
			COUNTY NEW CASTLE	DESIGNED BY: TRS		TOTAL SHTS. 482
				CHECKED BY: JNH		

W:\MSV8\CELLS\PROJDEV\SB.CEL

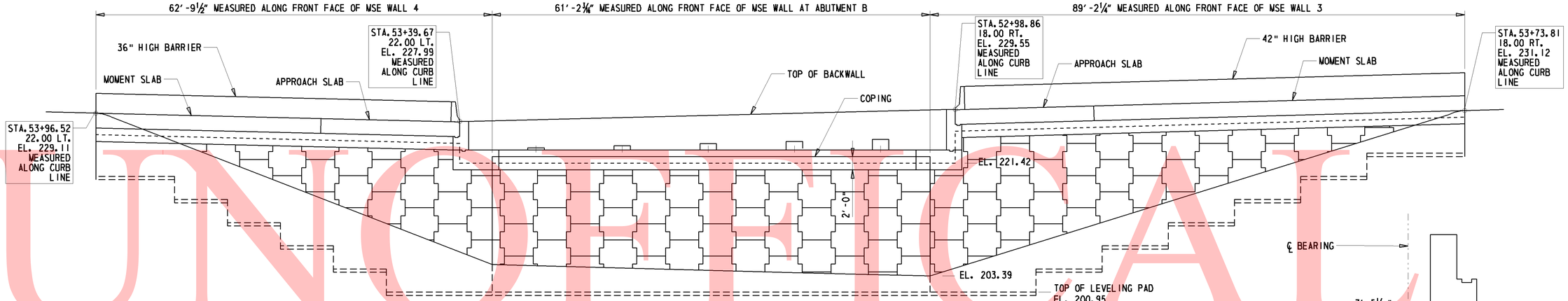

DEVELOPED ELEVATION
NORTH MSE WALL
⅛" = 1'-0"

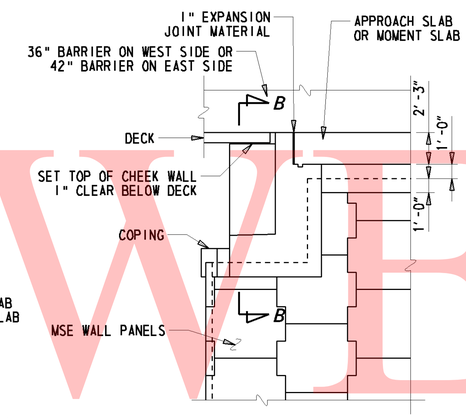

TYPICAL ELEVATION
3/16" = 1'-0"

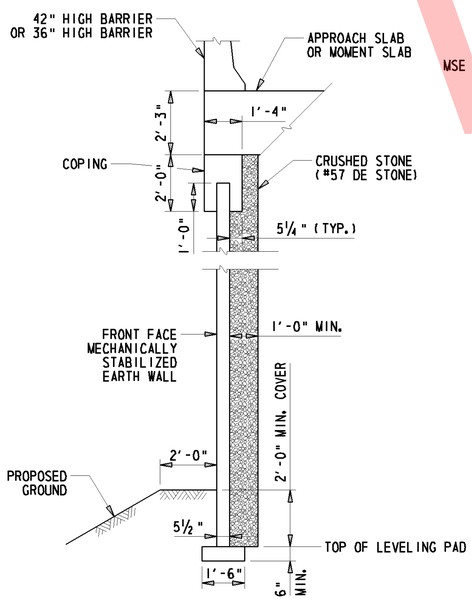

TYPICAL MSE WINGWALL SECTION
⅜" = 1'-0"

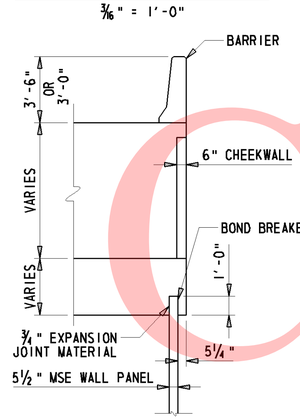

SECTION B-B
¼" = 1'-0"

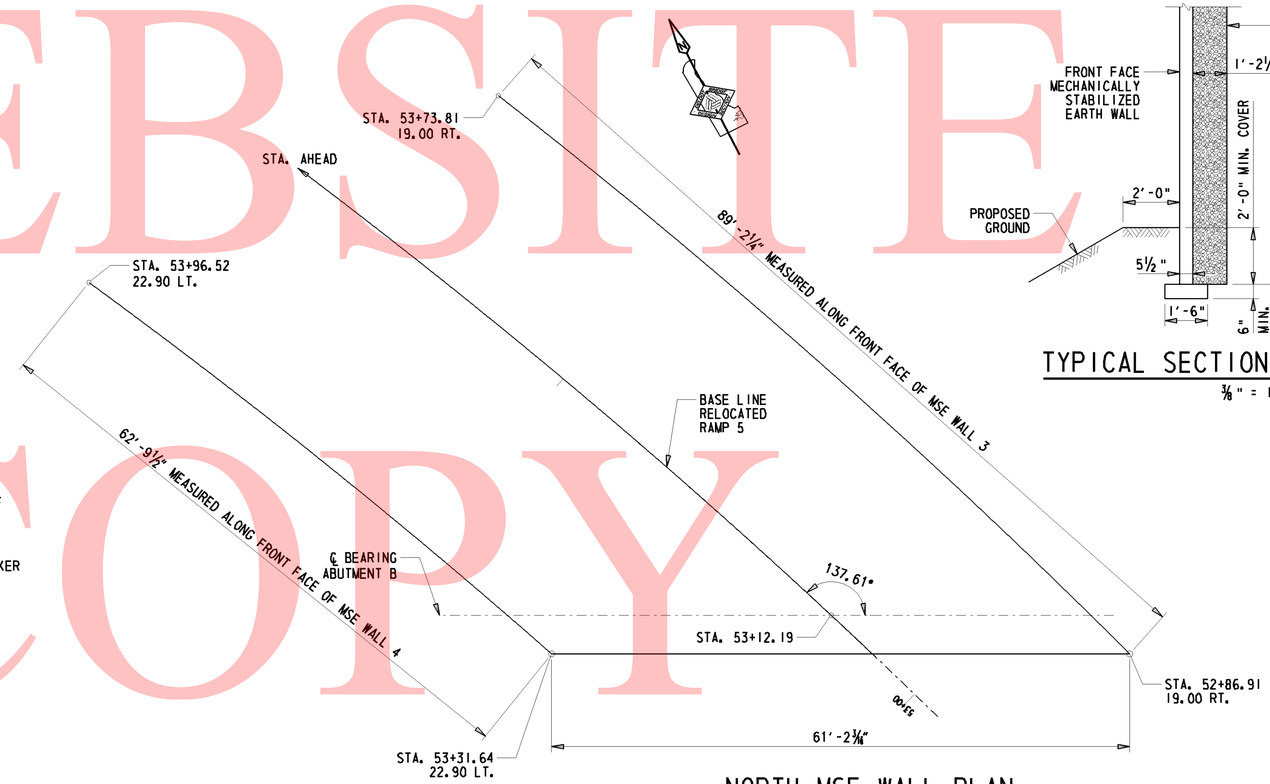

NORTH MSE WALL PLAN
⅛" = 1'-0"

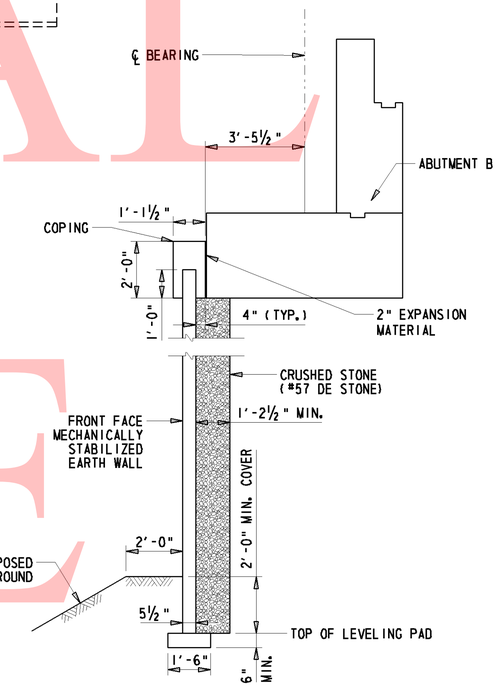

TYPICAL SECTION AT ABUTMENT B
⅜" = 1'-0"

NOTE: REINFORCEMENT FOR MSE WALL SHALL BE SKEWED TO AVOID PILES.

UNOFFICIAL WEBSITE COPY

DELAWARE DEPARTMENT OF TRANSPORTATION	ADDENDUMS / REVISIONS	I-95 & US 202 INTERCHANGE	CONTRACT T200510602	BRIDGE NO. 1-763	MSE WALL 3 & 4 DETAILS S3 – 5 OF 19	SHEET NO. 214
			COUNTY NEW CASTLE	DESIGNED BY: TRS		TOTAL SHTS. 482
				CHECKED BY: JNH		

W:\MSV8\CELLS\PROJDEV\SB.CEL

ABUTMENT A WORKING POINTS				
WP	STATION	OFFSET	NORTHING	EASTING
3-01	52+34.25	19.44 RT.	644103.68	621318.17
3-02	52+27.77	19.44 RT.	644092.19	621319.67
3-03	52+27.76	16.58 RT.	644096.55	621316.88
3-04	52+62.39	22.25 LT.	644120.46	621270.79
3-05	52+62.38	23.34 LT.	644120.16	621269.74
3-06	52+72.83	22.86 LT.	644130.01	621267.42

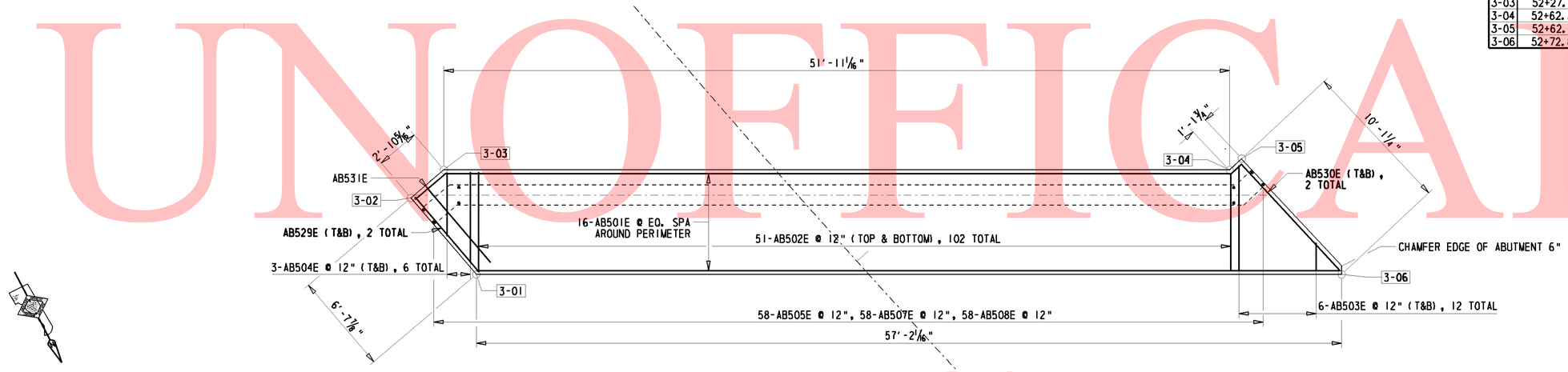

ABUTMENT A REINFORCEMENT PLAN

1/4" = 1'-0"

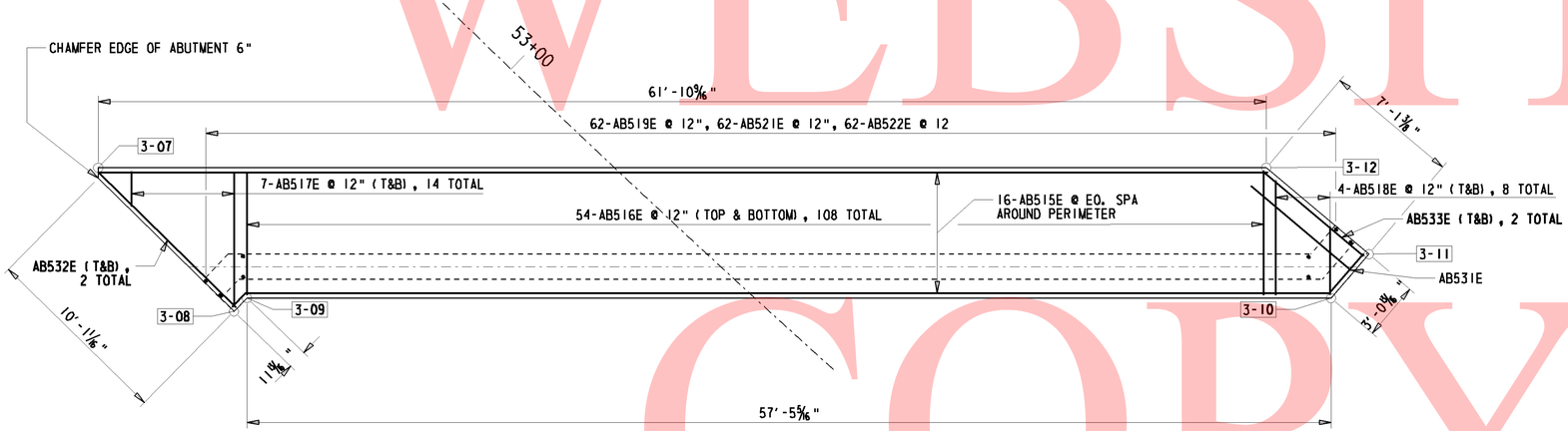

ABUTMENT B REINFORCEMENT PLAN

1/4" = 1'-0"

ABUTMENT B WORKING POINTS				
WP	STATION	OFFSET	NORTHING	EASTING
3-07	52+88.19	19.04 RT.	644156.95	621302.97
3-08	52+98.39	19.44 RT.	644167.03	621300.10
3-09	52+98.39	18.45 RT.	644166.72	621299.16
3-10	53+40.90	20.26 LT.	644193.17	621248.18
3-11	53+40.90	23.33 LT.	644192.02	621245.33
3-12	53+33.54	23.33 LT.	644185.45	621248.05

* FIELD CUT OR BEND BARS AS NEEDED, PAYMENT INCIDENTAL TO 604000 - BAR REINFORCEMENT, EPOXY COATED (TYP.)

UNOFFICAL WEBSITE COPY

UNOFFICIAL WEBSITE COPY

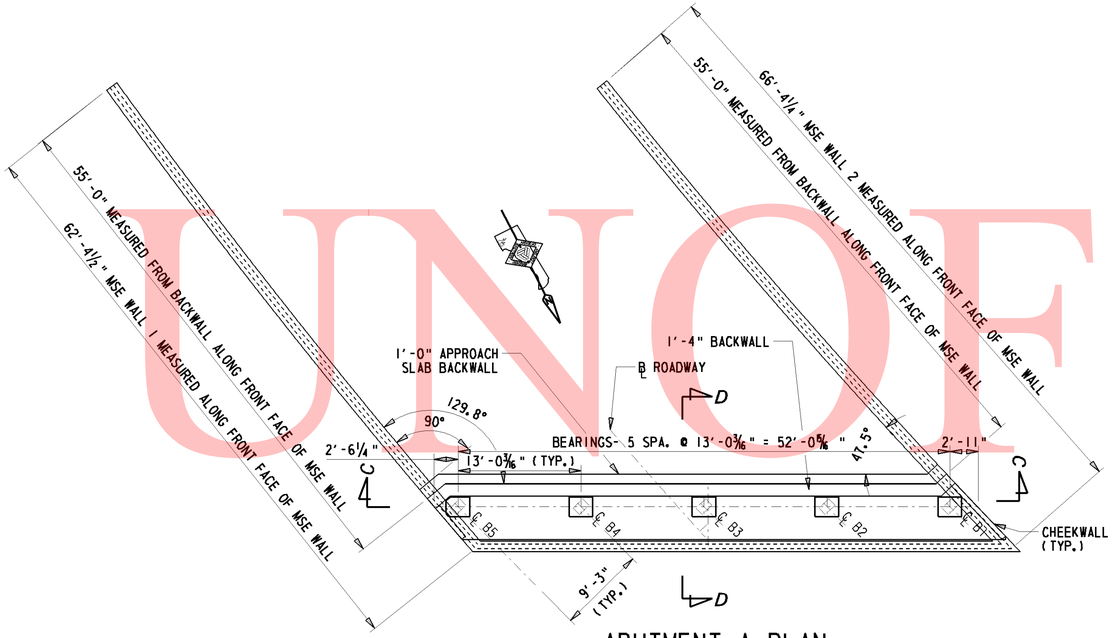

ABUTMENT A PLAN

⅛" = 1'-0"

NOTES:
1. ONE AB515E SHALL BE RAISED ABOVE EACH LONGITUDINAL LINE OF PILES (TWO TOTAL).
2. ONE AB516E, AB517E, OR AB518E SHALL BE RAISED ABOVE EACH PAIR OF PILES. CONTRACTOR SHALL FIELD CUT THE ENDS OF THESE BARS TO AVOID STICKING UP ABOVE THE ABUTMENT SEAT. PAYMENT SHALL BE INCIDENTAL TO ITEM 604000 - PAR REINFORCEMENT, EPOXY COATED.

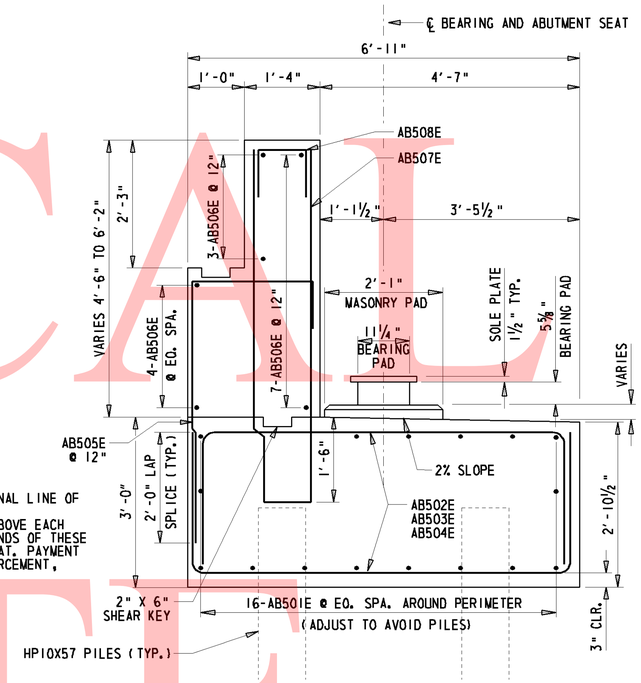

ABUTMENT A (SECTION D-D)

¾" = 1'-0"

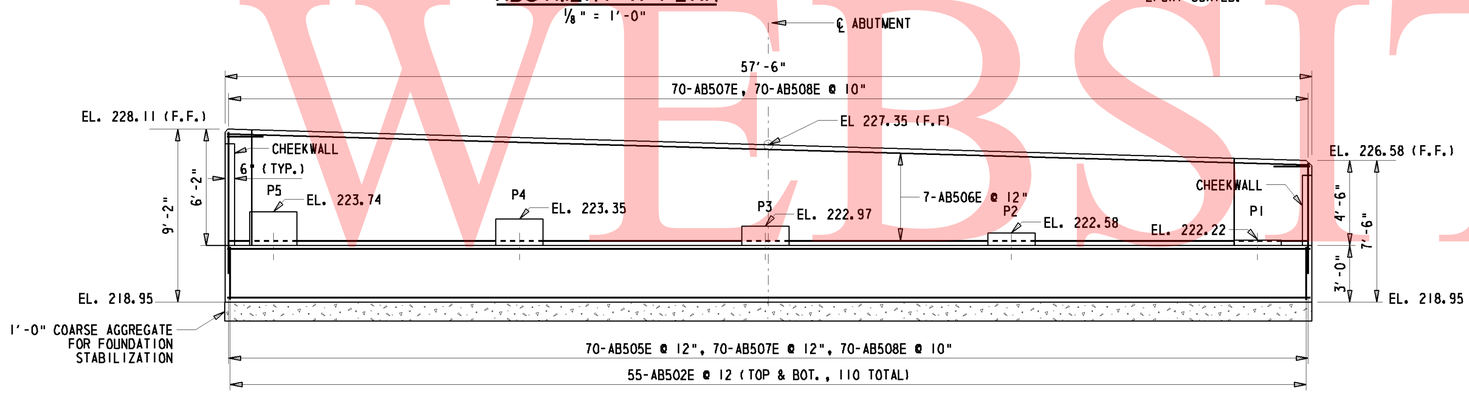

ABUTMENT A ELEVATION (SECTION C-C)

¼" = 1'-0"

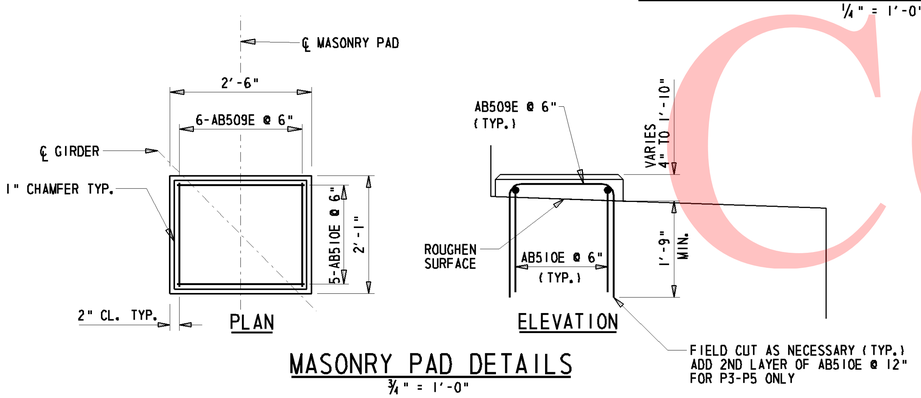

MASONRY PAD DETAILS

¾" = 1'-0"

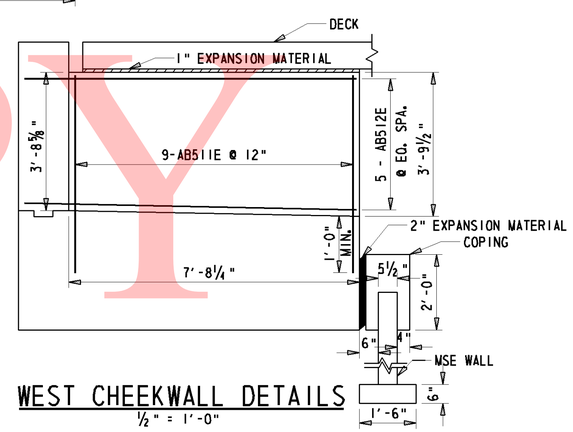

WEST CHEEKWALL DETAILS

½" = 1'-0"

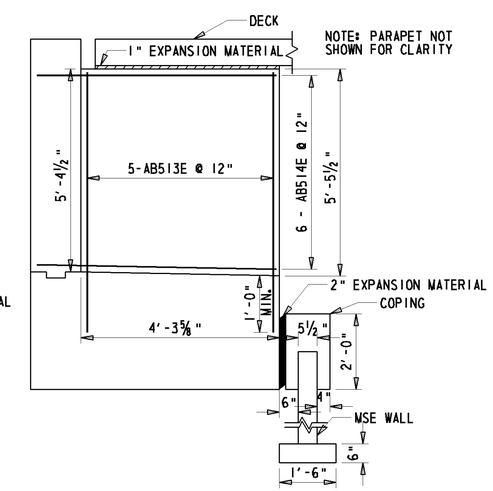

EAST CHEEKWALL DETAILS

½" = 1'-0"

DELAWARE DEPARTMENT OF TRANSPORTATION	ADDENDUMS / REVISIONS	I-95 & US 202 INTERCHANGE	CONTRACT T200510602	BRIDGE NO. 1-763	ABUTMENT A DETAILS S3-7 OF 19
			COUNTY NEW CASTLE	DESIGNED BY: TRS	SHEET NO. 216
				CHECKED BY: JNH	TOTAL SHTS. 482

Y:\NEWCASTL\BRIDGE\0602\BRIDGE 1-764\PLANS\REVISED\AB01.DGN

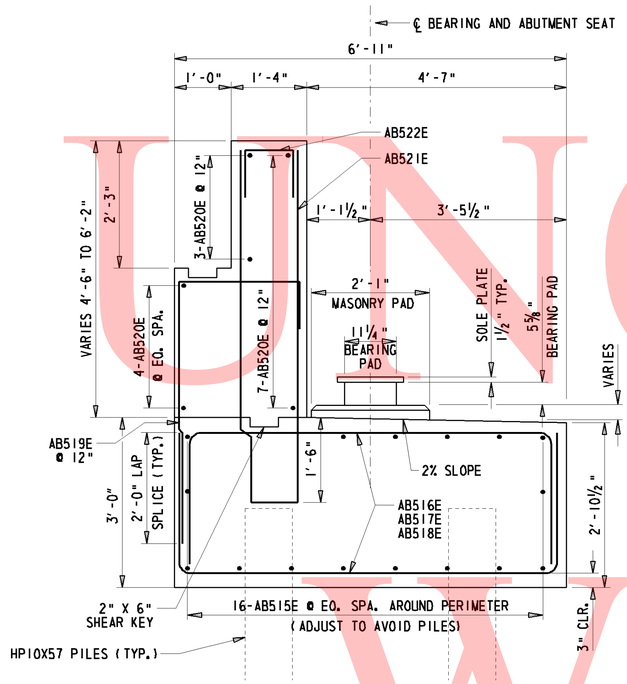

ABUTMENT B (SECTION F-F)
¾" = 1'-0"

NOTES:
1. ONE AB515E SHALL BE RAISED ABOVE EACH LONGITUDINAL LINE OF PILES (TWO TOTAL).
2. ONE AB516E, AB517E, OR AB518E SHALL BE RAISED ABOVE EACH PAIR OF PILES. CONTRACTOR SHALL FIELD CUT THE ENDS OF THESE BARS TO AVOID STICKING UP ABOVE THE ABUTMENT SEAT. PAYMENT SHALL BE INCIDENTAL TO ITEM 604000 - PAR REINFORCEMENT, EPOXY COATED.

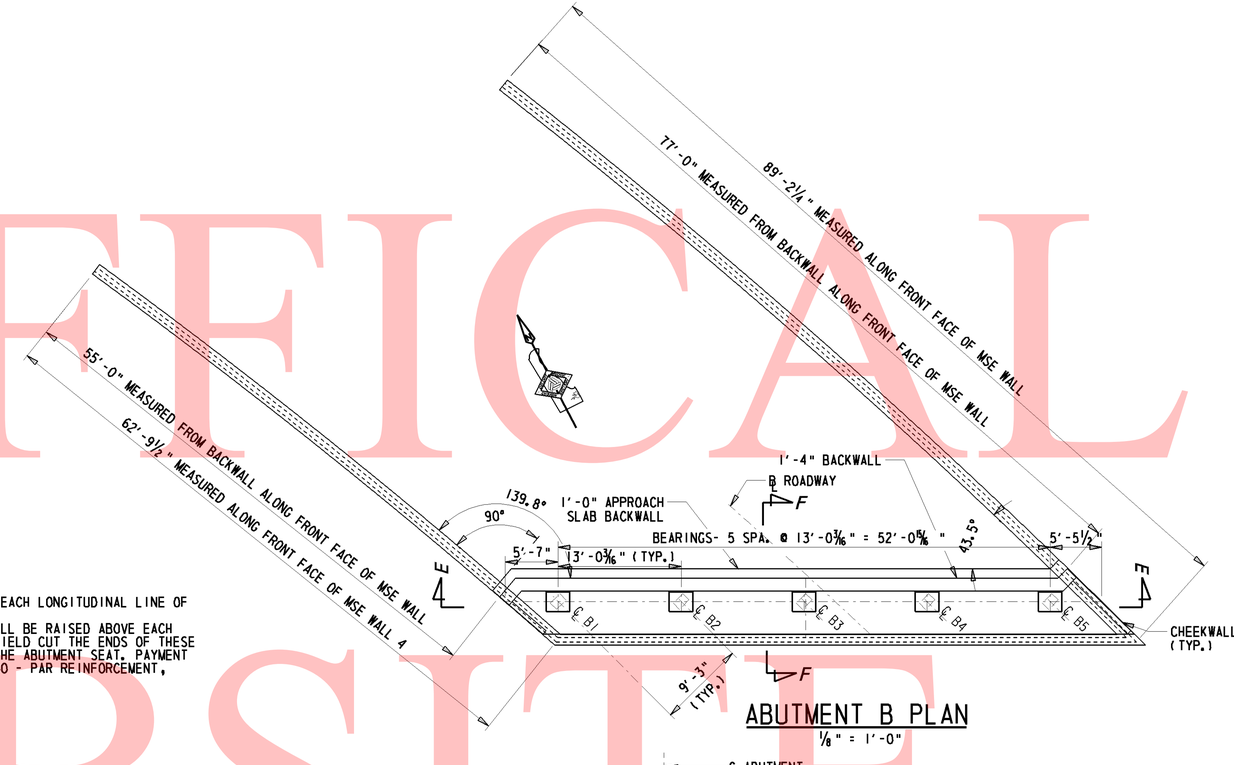

ABUTMENT B PLAN
⅛" = 1'-0"

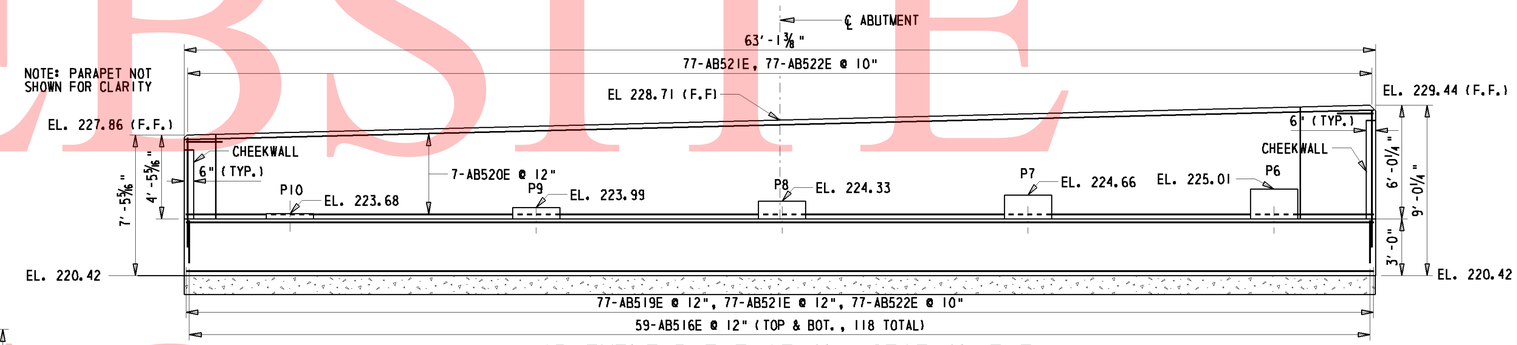

ABUTMENT B ELEVATION (SECTION E-E)
¼" = 1'-0"

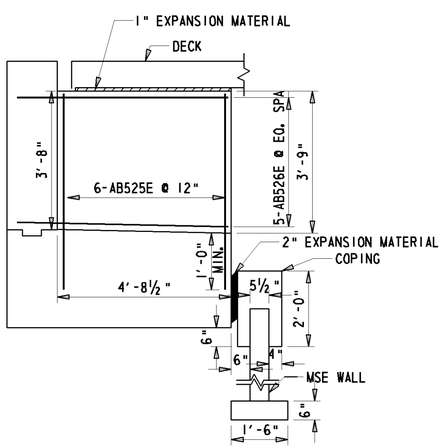

WEST CHEEKWALL DETAILS
½" = 1'-0"

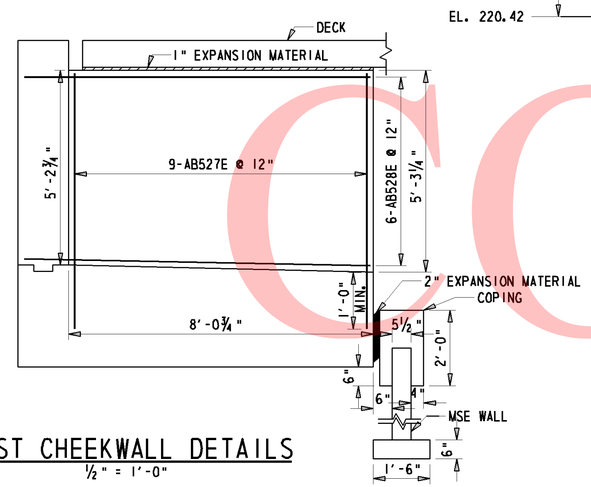

EAST CHEEKWALL DETAILS
½" = 1'-0"

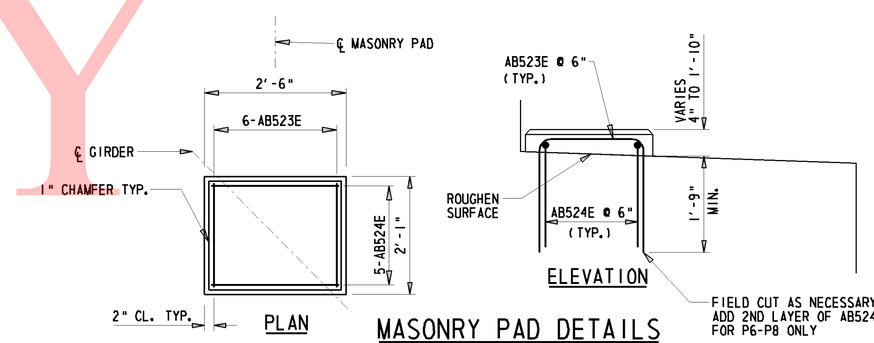

MASONRY PAD DETAILS
¾" = 1'-0"

UNOFFICAL WEBSITE COPY

Y:\NEWCASTL\BRIDGE*0602\BRIDGE 1-764\PLANS\REVISED\AB01.DGN

DELAWARE DEPARTMENT OF TRANSPORTATION	ADDENDUMS / REVISIONS	I-95 & US 202 INTERCHANGE	CONTRACT T200510602	BRIDGE NO. 1-763	ABUTMENT B DETAILS S3-8 OF 19
			COUNTY NEW CASTLE	DESIGNED BY: TRS	SHEET NO. 217
				CHECKED BY: JNH	TOTAL SHTS. 482

ABUTMENT LATERAL NOTES:

1. CONTRACTOR SHALL DESIGN THE REINFORCING STRAPS IN THE ABUTMENT STEM AND BACKWALL TO RESIST LATERAL LOADS 'EH', 'CE', 'FR', 'WL', 'LS', AND 'WS'.
2. LOAD 'EH' IS THE HORIZONTAL EARTH PRESSURE EXERTED ON THE ABUTMENT.
3. LOAD 'CE' IS THE HORIZONTAL LOAD DUE TO CENTRIFUGAL FORCE ON THE SUPERSTRUCTURE.
4. LOAD 'WL' IS THE HORIZONTAL LOAD DUE TO THE WIND ON LIVE LOAD ON THE SUPERSTRUCTURE.
5. LOAD 'LS' IS THE ADDITIONAL HORIZONTAL SOIL PRESSURE DUE TO LIVE LOAD SURCHARGE.
6. LOAD 'WS' IS THE HORIZONTAL LOAD DUE TO THE WIND ON STRUCTURE.
7. PAYMENT FOR STRAPS ATTACHED TO ABUTMENT A SHALL BE INCIDENTAL TO ITEM #602557 - MECHANICALLY STABILIZED EARTH WALLS, TYPE 2.
8. PAYMENT FOR STRAPS ATTACHED TO ABUTMENT B SHALL BE INCIDENTAL TO ITEM #602670 - MECHANICALLY STABILIZED EARTH WALLS, TYPE 3.

ABUTMENT A LATERAL LOADS

TYPE	SERVICE LOAD (KIPS/FT)
EH	3.36 KIP/FT
CE	0.15 KIP/FT
WL	0.06 KIP/FT
LS	1.98 KIP/FT
WS	0.07 KIP/FT
BR	0.19 KIP/FT

ABUTMENT B LATERAL LOADS

TYPE	SERVICE LOAD (KIPS/FT)
EH	3.36 KIP/FT
CE	0.14 KIP/FT
WL	0.06 KIP/FT
LS	1.98 KIP/FT
WS	0.07 KIP/FT

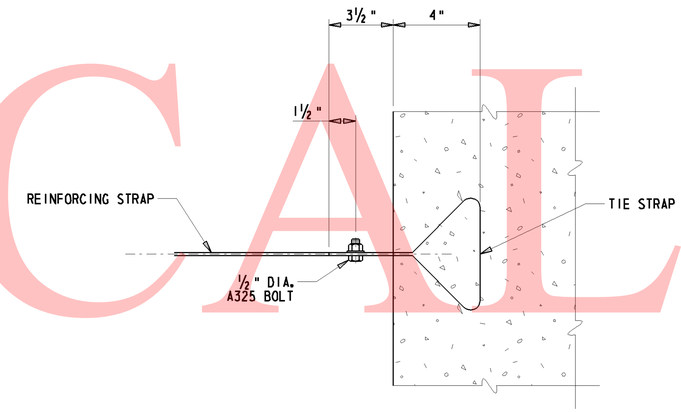

ABUTMENT STRAP ANCHOR DETAIL

N.T.S.

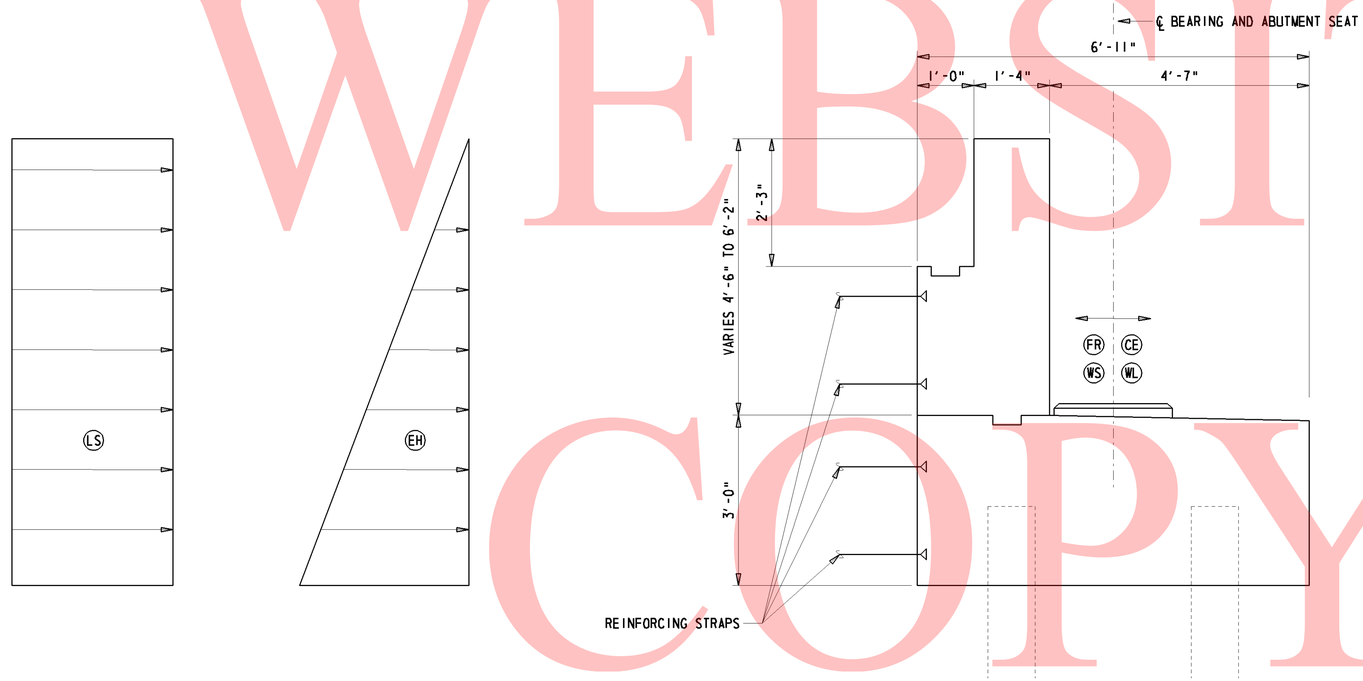

TYP. ABUTMENT SECTION (A & B)

¾" = 1'-0"

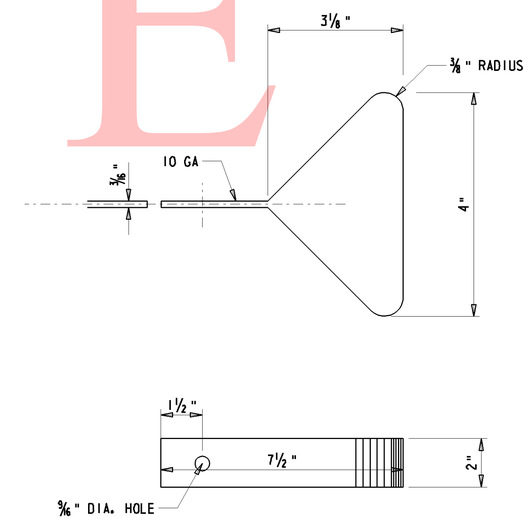

TIE STRAP DETAIL

N.T.S.

UNOFFICIAL WEBSITE COPY

Y:\NEWCASTL\BRIDGE#0602\BRIDGE 1-764\PLANS\REVISED\AB01.DGN

DELAWARE DEPARTMENT OF TRANSPORTATION	ADDENDUMS / REVISIONS	I-95 & US 202 INTERCHANGE	CONTRACT T200510602	BRIDGE NO. 1-763	ABUTMENT REINFORCING STRAP DETAILS S3-8A OF 19	SHEET NO. 217A
			COUNTY NEW CASTLE	DESIGNED BY: TRS		TOTAL SHTS. 482
				CHECKED BY: JNH		

UNOFFICAL WEBSITE COPY

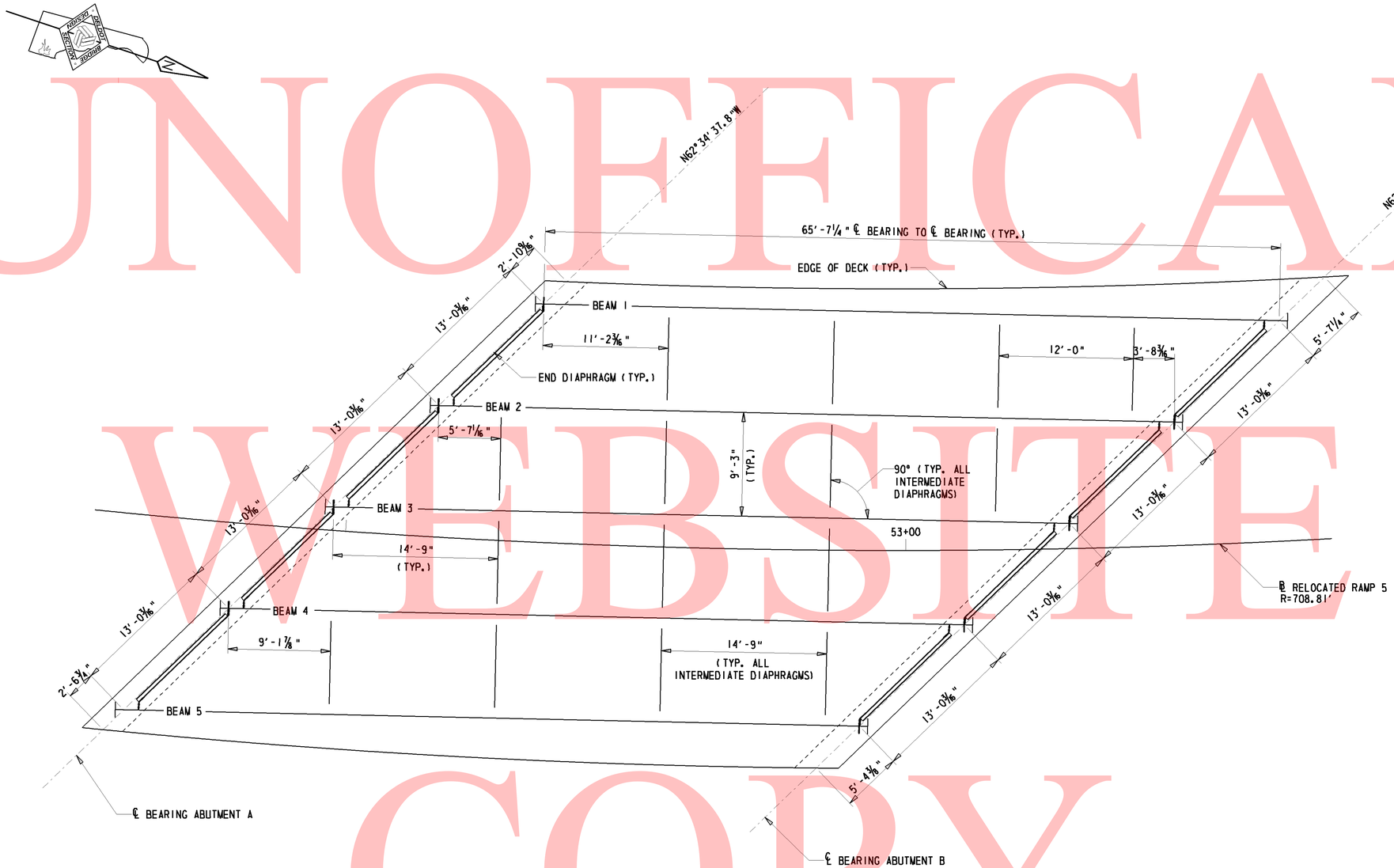

FRAMING PLAN

⅜" = 1'-0"

DELAWARE DEPARTMENT OF TRANSPORTATION	ADDENDUMS / REVISIONS	I-95 & US 202 INTERCHANGE	CONTRACT T200510602	BRIDGE NO. 1-763	FRAMING PLAN S3-9 OF 19	SHEET NO. 218
			COUNTY NEW CASTLE	DESIGNED BY: TRS		TOTAL SHTS. 482
				CHECKED BY: JNH		

STEEL NOTES:

1. ALL STRUCTURAL STEEL SHALL BE ASTM A709 GRADE 50W. THE ADDITIONAL REQUIREMENTS FOR CHARPY V-NOTCH TESTING OF AASHTO M270 SHALL BE INCLUDED FOR THE PRIMARY LOAD CARRYING MEMBERS (W36x230 SECTIONS).

2. WELDING SHALL CONFORM TO THE CURRENT ANSI/AASHTO/AWS BRIDGE WELDING CODE D1.5-08. WELDING AND NONDESTRUCTIVE TESTING SYMBOLS SHALL CONFORM TO SYMBOLS FOR WELDING, BRAZING, AND NONDESTRUCTIVE EXAMINATION AWS A2-4:2007.

3. JOINT WELDING PROCEDURES, OVERALL FABRICATION METHODS, AND QUALITY CONTROL INSPECTION PROCEDURE SHALL BE INCLUDED AS WRITTEN PROCEDURE SPECIFICATIONS WITH THE SHOP PLAN SUBMISSION.

4. BEAM WEBS SHALL BE GROUND SMOOTH AND SHALL BE PLUMB AT THE ENDS UNDER FULL DEAD LOAD.

5. ALL BOLTED CONNECTIONS SHALL BE MADE WITH 7/8" DIAMETER ASTM A325 HIGH STRENGTH BOLTS, TYPE 1, UNLESS OTHERWISE NOTED.

6. THE GIRDERS SHALL BE PAINTED WITH A URETHANE PAINT SYSTEM IN ACCORDANCE WITH SECTION 605 FROM EACH END TO A DISTANCE OF 5' FROM FACE OF ABUTMENT OR MSE WALL AND THE DISTANCE BETWEEN 5' FROM EACH FACE OF PIER CAP. IN ADDITION, EACH FASCIA GIRDER SHALL BE PAINTED AS PER PAINTING DETAIL ON BEAM DETAILS - 2 (S3-11) IN AREAS BETWEEN THE PIER AND ABUTMENTS. THE COLOR OF THE FINISHED PAINT SHALL BE BROWN (NO. 10076) FROM FEDERAL STANDARD 595C. THE COLOR SHALL BE SUBMITTED FOR APPROVAL. AT ALL LOCATIONS WHERE THE CONTRACTOR'S WORK DAMAGES THE EXISTING PAINT SYSTEM, THE CONTRACTOR SHALL CLEAN THE DAMAGED LOCATION AND REPAINT THE AREA. ALL CLEANING AND PAINTING IS INCIDENTAL TO ITEM #605002 - STEEL STRUCTURES.

7. OVERSIZED HOLES SHALL BE USED ON DIAPHRAGM CONNECTORS.

8. ALL BOLTS ON DIAPHRAGMS SHALL BE FINGER TIGHT AT ERECTION. BOLTS ARE NOT TO BE TORQUED UNTIL AFTER THE DECK CONCRETE IS POURED.

9. DIRECTION OF WELDS IS NOT APPLICABLE IF STIFFENERS ARE FITTED WITH TACK WELDS.

10. TIGHT FIT AT TENSION FLANGES AT INTERIOR SUPPORTS. FILLET WELDS OVER END SUPPORTS.

11. BEARING AREAS: PROVIDE BOTTOM FLANGE IN A TRUE HORIZONTAL PLANE IN TRANSVERSE DIRECTION AND IN A TRUE PLANE LONGITUDINALLY OVER DIMENSION "L", WHERE L = WIDTH OF SOLE PLATE + 8" AHEAD AND BACK. WHERE APPLICABLE. IF THE SOLE PLATE IS WELDED TO THE BOTTOM FLANGE, PROVIDE THE SOLE PLATE MEETING THE SAME FLATNESS REQUIREMENTS. EACH BEARING MUST BE STRESSED UNIFORMLY AFTER ALL DEAD LOAD IS PLACED. MAKE NECESSARY SHOP AND/OR FIELD ADJUSTMENTS TO PROVIDE UNIFORM BEARING STRESS UNDER ALL DEAD LOADS.

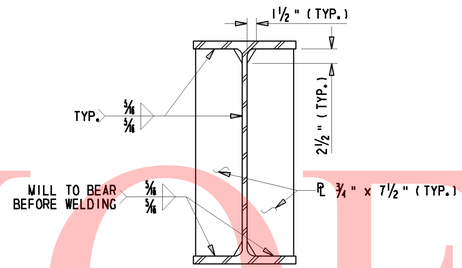

BEARING STIFFENERS

¼" = 1'-0"

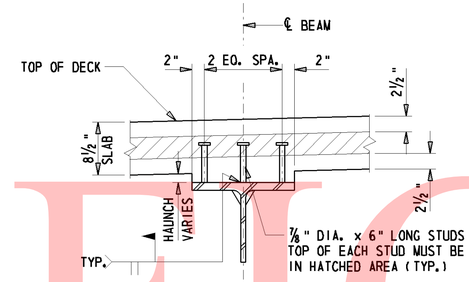

SHEAR CONNECTORS

¼" = 1'-0"

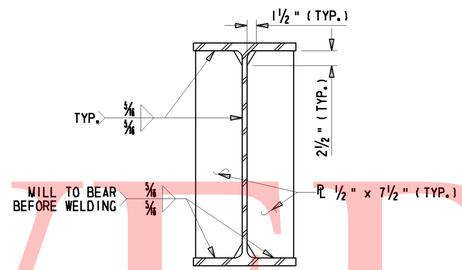

CONNECTION PLATE

¼" = 1'-0"

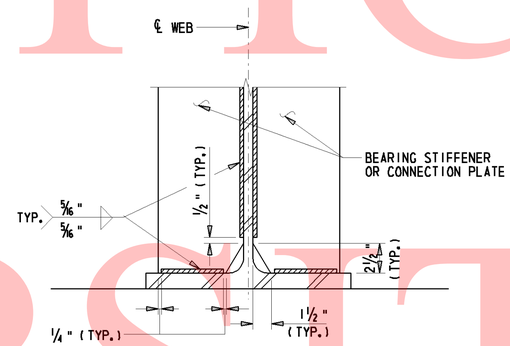

BEARING STIFFENER & CONNECTION PLATE WELD TERMINATION

½" = 1'-0"

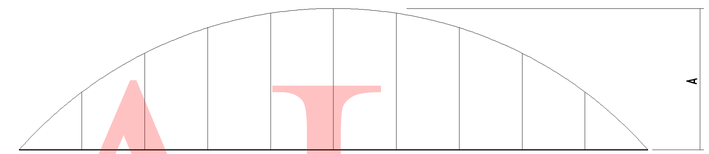

CAMBER DIAGRAM

DLS - DENOTES DEFLECTION DUE TO STRUCTURAL STEEL GIRDER

DLC - DENOTES DEFLECTION DUE TO DECK SLAB, HAUNCH, AND SIP FORMS

SDL - DENOTES DEFLECTION DUE TO PARAPET AND FUTURE WEARING SURFACE

TD - DENOTES TOTAL DEAD LOAD DEFLECTION

VCO - DENOTES CAMBER FOR VERTICAL CURVE ORDINATE DUE TO ROADWAY PROFILE

ALL BEAMS SHALL BE CAMBERED FOR DEAD LOAD DEFLECTION ORDINATES TO THE DIMENSIONS SHOWN ON THESE PLANS. THE CAMBER TOLERANCE IS ZERO UNDER TO 1/16" OVER.

DEFLECTION AND TOTAL CAMBER (INCH)

GIRDER		0.1L	0.2L	0.3L	0.4L	0.5L	0.6L	0.7L	0.8L	0.9L
GIRDER 1	DLS	1/16	1/8	3/16	3/16	1/4	3/16	3/16	1/8	1/16
	DLC	5/16	5/8	7/8	1	1 1/16	1	7/8	5/8	5/16
	SDL	0	1/16	1/16	1/16	1/16	1/16	1/16	1/16	0
	TD	7/16	11/16	1 1/8	1 5/16	1 3/8	1 5/16	1 1/8	11/16	7/16
	VCO	0	0	0	0	0	0	0	0	0
	TD+VCO	7/16	11/16	1 1/8	1 5/16	1 3/8	1 5/16	1 1/8	11/16	7/16
GIRDER 2	DLS	1/16	1/8	3/16	3/16	1/4	3/16	3/16	1/8	1/16
	DLC	5/16	5/8	7/8	1	1 1/16	1	7/8	5/8	5/16
	SDL	0	1/16	1/16	1/16	1/16	1/16	1/16	1/16	0
	TD	7/16	11/16	1 1/8	1 5/16	1 3/8	1 5/16	1 1/8	11/16	7/16
	VCO	0	0	0	0	0	0	0	0	0
	TD+VCO	7/16	11/16	1 1/8	1 5/16	1 3/8	1 5/16	1 1/8	11/16	7/16
GIRDER 3	DLS	1/16	1/8	3/16	3/16	1/4	3/16	3/16	1/8	1/16
	DLC	5/16	5/8	7/8	1	1 1/16	1	7/8	5/8	5/16
	SDL	0	1/16	1/16	1/16	1/16	1/16	1/16	1/16	0
	TD	7/16	11/16	1 1/8	1 5/16	1 3/8	1 5/16	1 1/8	11/16	7/16
	VCO	0	0	0	0	0	0	0	0	0
	TD+VCO	7/16	11/16	1 1/8	1 5/16	1 3/8	1 5/16	1 1/8	11/16	7/16
GIRDER 4	DLS	1/16	1/8	3/16	3/16	1/4	3/16	3/16	1/8	1/16
	DLC	5/16	5/8	7/8	1	1 1/16	1	7/8	5/8	5/16
	SDL	0	1/16	1/16	1/16	1/16	1/16	1/16	1/16	0
	TD	7/16	11/16	1 1/8	1 5/16	1 3/8	1 5/16	1 1/8	11/16	7/16
	VCO	0	0	0	0	0	0	0	0	0
	TD+VCO	7/16	11/16	1 1/8	1 5/16	1 3/8	1 5/16	1 1/8	11/16	7/16
GIRDER 5	DLS	1/16	1/8	3/16	3/16	1/4	3/16	3/16	1/8	1/16
	DLC	5/16	5/8	7/8	1	1 1/16	1	7/8	5/8	5/16
	SDL	0	1/16	1/16	1/16	1/16	1/16	1/16	1/16	0
	TD	7/16	11/16	1 1/8	1 5/16	1 3/8	1 5/16	1 1/8	11/16	7/16
	VCO	0	0	0	0	0	0	0	0	0
	TD+VCO	7/16	11/16	1 1/8	1 5/16	1 3/8	1 5/16	1 1/8	11/16	7/16

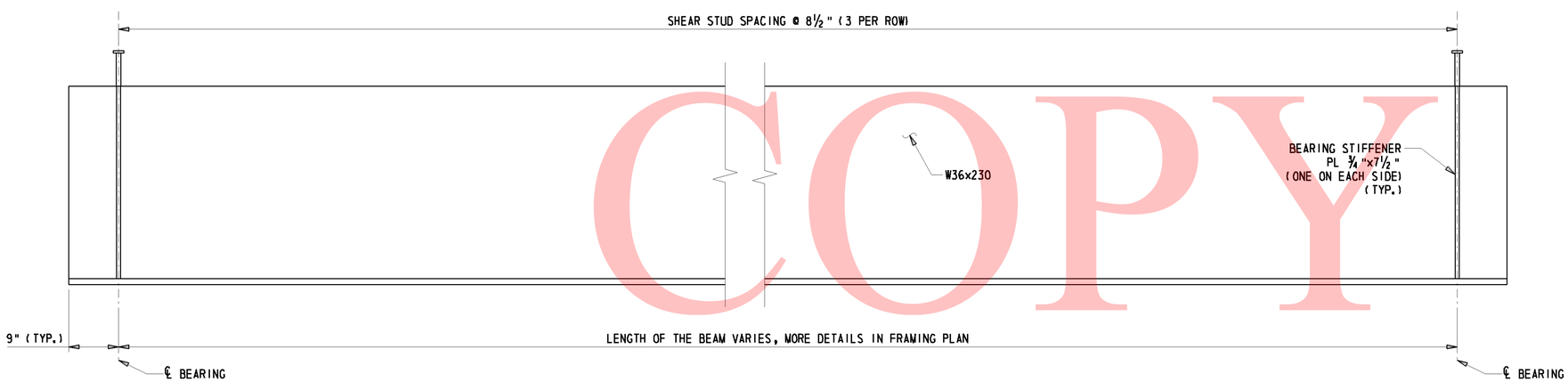

BEAM ELEVATION

¼" = 1'-0"

UNOFFICIAL WEBSITE COPY

W:\MSV8\CELLS\PROJDEV\SB.CEL

DELAWARE DEPARTMENT OF TRANSPORTATION

ADDENDUMS / REVISIONS

I-95 & US 202 INTERCHANGE

CONTRACT	BRIDGE NO. 1-763	BEAM DETAILS - 1 S3-10 OF 19	SHEET NO.
T200510602	DESIGNED BY: TRS		219
COUNTY			TOTAL SHTS.
NEW CASTLE	CHECKED BY: JNH		482

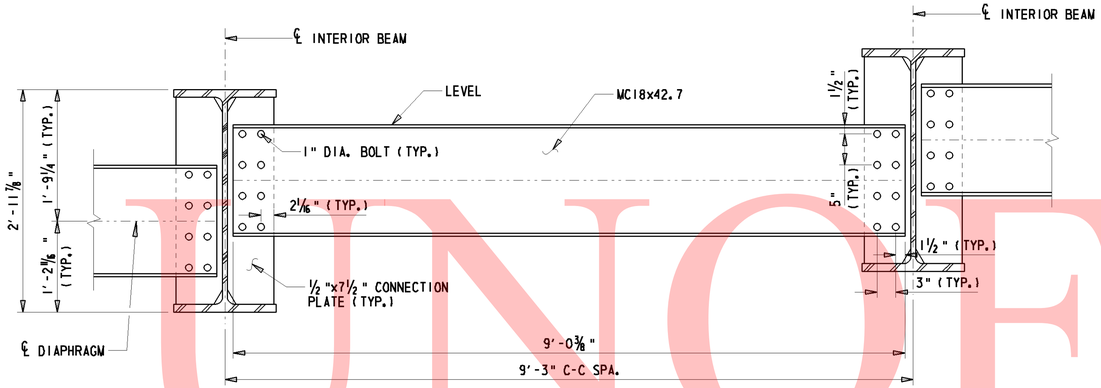

INTERMEDIATE DIAPHRAGM

1" = 1'-0"

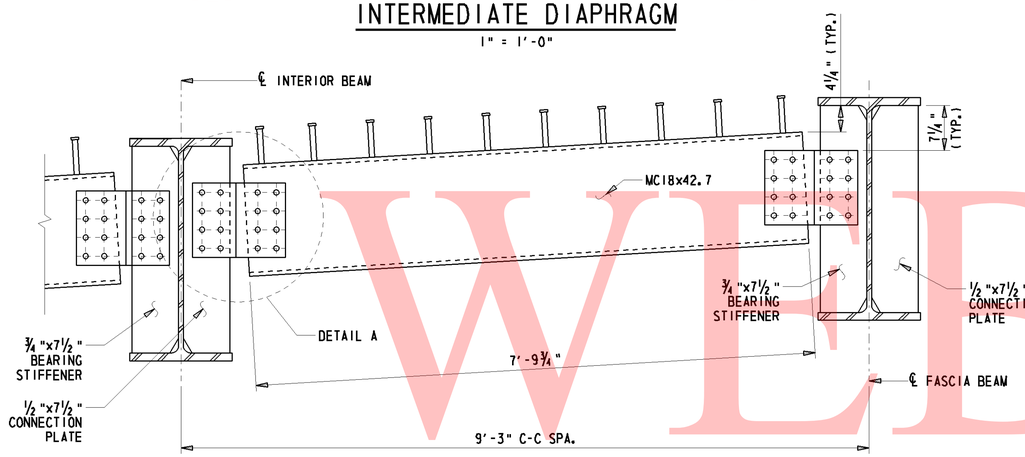

END DIAPHRAGM

1" = 1'-0"

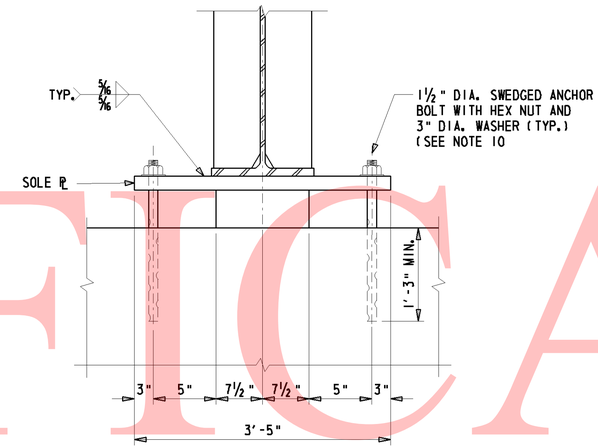

BEARING ELEVATION

1" = 1'-0"

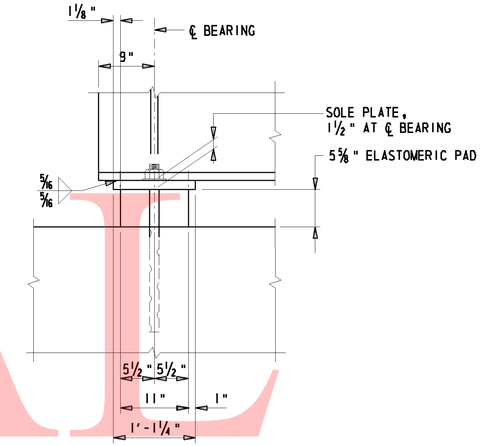

SIDE ELEVATION

1" = 1'-0"

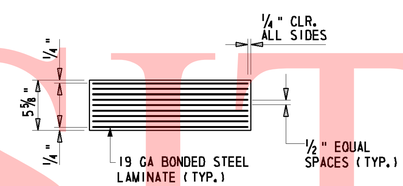

LAMINATED ELASTOMERIC PAD

N.T.S.

BEARING PAD DIMENSIONS (TYP.) ALL BEARINGS

BEARING PAD LENGTH = 11"
BEARING PAD WIDTH = 15"
COVER LAYER THICKNESS = 1/4"
INTERNAL LAYER THICKNESS = 1/2"
NUMBER OF STEEL LAYERS = 9
STEEL LAYER GAGE = 19
EDGE DISTANCE = 1/4"
SOLE PLATE THICKNESS = 1 1/2" (@ ℄ BEARING)

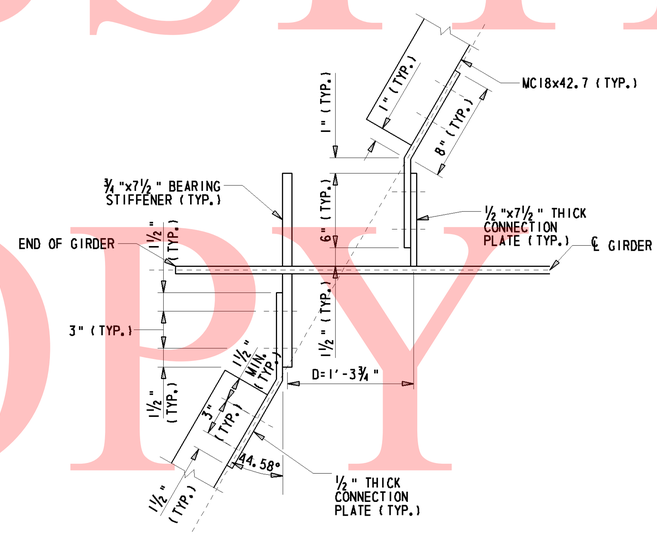

DETAIL A

N.T.S.

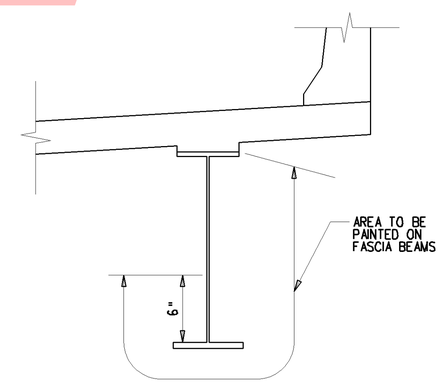

PAINTING DETAIL

N.T.S.

GENERAL NOTES:

1. FOR FRAMING PLAN, SEE BRIDGE SHEET S3-9.
2. ALL BOLTS FOR DIAPHRAGM CONNECTIONS SHALL BE HOT DIPPED GALVANIZED 1" DIA. HIGH STRENGTH BOLTS AASHTO M164 (ASTM A325) IN 1 1/8" DIA. OPEN HOLES.
3. PAYMENT FOR ELASTOMETRIC PADS, SOLE PLATES & ANCHOR BOLTS SHALL BE INCIDENTAL TO ITEM "605002 - STRUCTURAL STEEL".
4. CONTRACTOR SHALL BE RESPONSIBLE FOR SECURING THE GIRDER SYSTEM UNTIL THE DECK HAS CURED.

BEARING NOTES:

1. STEEL FOR BEARING LAMINATES SHALL CONFORM TO ASTM A709 GRADE 36.
2. NEOPRENE IN BEARING PAD SHALL HAVE A SHORE 'A' DUROMETER HARDNESS OF 60 POINTS.
3. ANCHOR BOLTS AND WASHERS SHALL BE UNPAINTED A709 GRADE 50 GALVANIZED STEEL. ALL NUTS SHALL BE UNPAINTED A307 GALVANIZED STEEL. SET NUTS 1/4" CLEAR OF SOLE PLATES AND BURR THREADS ABOVE AND BELOW NUTS.

BEARING NOTES (CONTINUED):

4. USE SWEDGED ANCHOR BOLTS. BOLTS MAY BE CAST-IN-PLACE OR GROUTED WITH NON-SHRINK GROUT IN PREFORMED (SLEEVED OR DRILLED) HOLES. THE PREFORMED & DRILLED HOLES SHALL HAVE A DIAMETER OF AT LEAST 1" LARGER THAN THE DIAMETER OF THE BOLTS.
5. SOLE PLATES ARE TO BE BEVELED TO MATCH GRADE WHEN GRADE EXCEEDS 1 PERCENT.
6. STEEL SURFACES OF SOLE PLATE TO BE MACHINE FINISHED, MEASURED IN ACCORDANCE WITH ANSI B46.1.
7. STEEL PLATES SHALL MEET A FLATNESS REQUIREMENT OF 0.5 PERCENT IN THE DIRECTION BEING MEASURED (WIDTH, LENGTH, AND DIAGONALS) MAXIMUM, BUT NOT TO EXCEED 1/8 INCH.
8. BEARING PADS SHALL BE PLACED NORMAL TO CENTERLINE OF BEAM.
9. FILL SLOTS AND HOLES IN STEEL AROUND ANCHOR BOLTS WITH AN APPROVED NON-HARDENING CAULKING COMPOUND OR ELASTIC JOINT SEALER.
10. FOR EXPANSION BEARINGS: USE 2 1/8" x 3" SLOTS IN SOLE PLATE AND 3/8"x3"x 5 1/2" WASHERS WITH 1 5/8" DIA. HOLE IN WASHERS.

UNOFFICIAL WEBSITE COPY

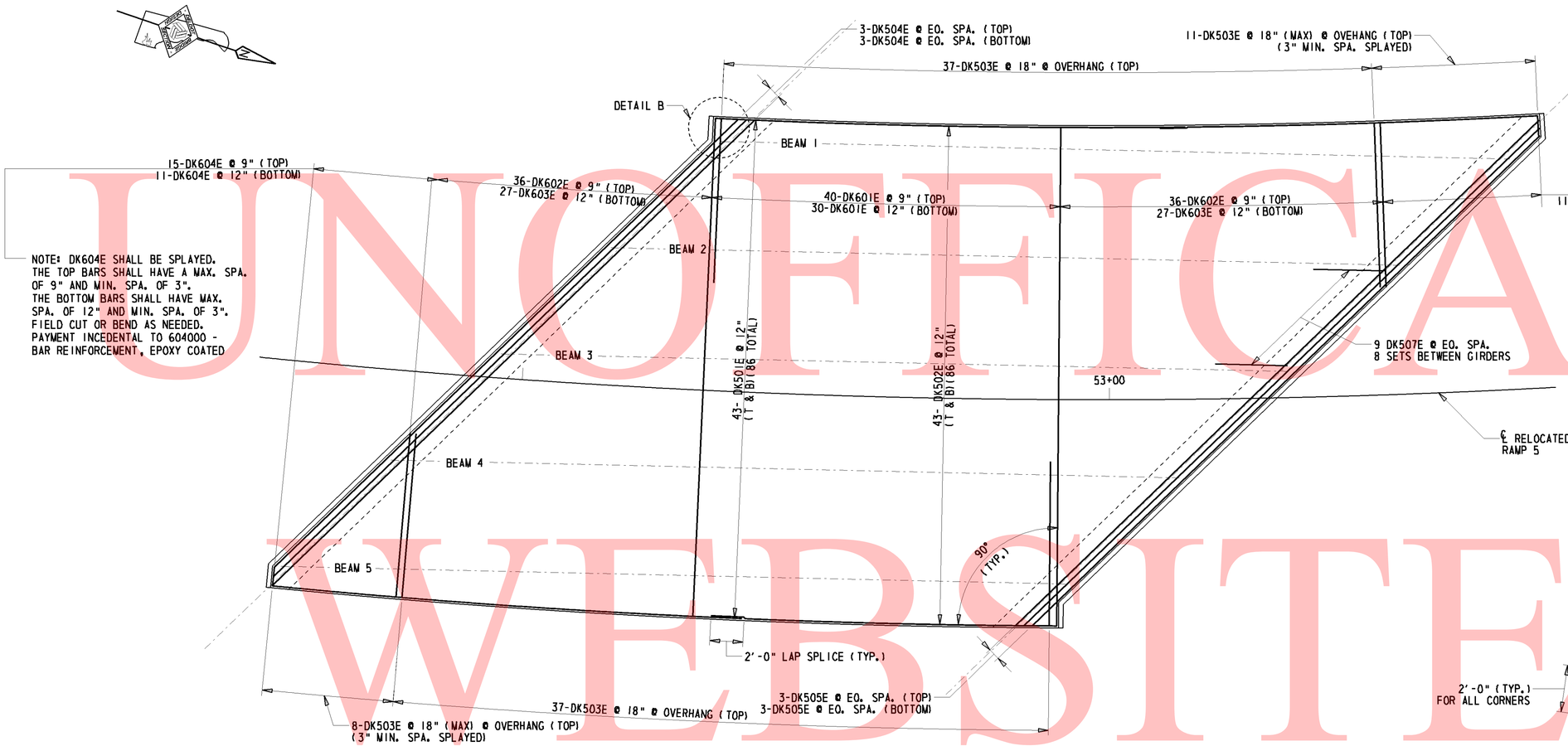

DECK PLAN

3/16" = 1'-0"

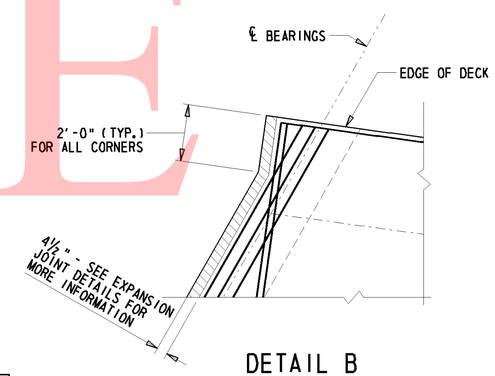

DETAIL B

¼" = 1'-0""

FINISHED DECK ELEVATION OF BEAM ALONG CENTERLINE

POINT	WEST EDGE OF DECK		GIRDER 1		GIRDER 2		GIRDER 3		P.G.A.		GIRDER 4		GIRDER 5		EAST EDGE OF DECK	
	STATION	ELEVATION	STATION	ELEVATION	STATION	ELEVATION	STATION	ELEVATION	STATION	ELEVATION	STATION	ELEVATION	STATION	ELEVATION	STATION	ELEVATION
℄ BRIDGE ABUTMENT A	52+69.77	226.45	52+67.22	226.52	52+58.06	226.88	52+48.89	227.27	52+46.92	227.35	52+39.72	227.65	52+30.54	228.04	52+30.33	228.11
0.1	52+76.53	226.59	52+73.78	226.65	52+64.62	227.02	52+55.48	227.39	52+53.45	227.49	52+46.28	227.77	52+37.10	228.16	52+36.70	228.17
0.2	52+83.29	226.73	52+80.34	226.79	52+71.18	227.15	52+62.04	227.52	52+59.98	227.62	52+52.84	227.88	52+43.66	228.26	52+43.07	228.38
0.3	52+90.05	226.87	52+86.90	226.92	52+77.74	227.27	52+68.59	227.64	52+66.50	227.76	52+59.40	228.01	52+50.22	228.38	52+49.44	228.51
0.4	52+96.80	228.01	52+93.46	227.06	52+84.30	227.41	52+75.16	227.77	52+73.03	227.89	52+65.96	228.14	52+56.78	228.51	52+55.81	228.64
0.5	53+03.56	227.15	53+00.02	227.21	52+90.86	227.55	52+81.72	227.90	52+79.56	228.03	52+72.52	228.23	52+63.35	228.63	52+62.18	228.77
0.6	53+10.32	227.29	53+06.58	227.35	52+97.42	227.69	52+88.28	228.04	52+86.09	228.17	52+79.08	228.39	52+69.91	228.76	52+68.55	228.91
0.7	53+17.08	227.44	53+13.14	227.50	53+03.98	227.84	52+94.84	228.18	52+92.61	228.30	52+85.65	228.53	52+76.47	228.89	52+74.92	229.04
0.8	53+23.83	227.57	53+19.70	227.66	53+10.54	227.99	53+01.40	228.33	52+99.14	228.44	52+92.21	228.67	52+83.03	229.03	52+81.29	229.17
0.9	53+30.59	227.71	53+26.27	227.81	53+17.10	228.14	53+07.96	228.47	53+05.67	228.58	52+98.77	228.81	52+89.57	229.16	52+87.66	229.31
℄ BRIDGE ABUTMENT B	53+37.34	227.86	53+32.83	227.98	53+23.69	228.29	53+14.52	228.63	53+12.19	228.71	53+05.33	228.96	52+96.15	229.31	52+94.02	229.44

UNOFFICAL WEBSITE COPY

UNOFFICAL WEBSITE COPY

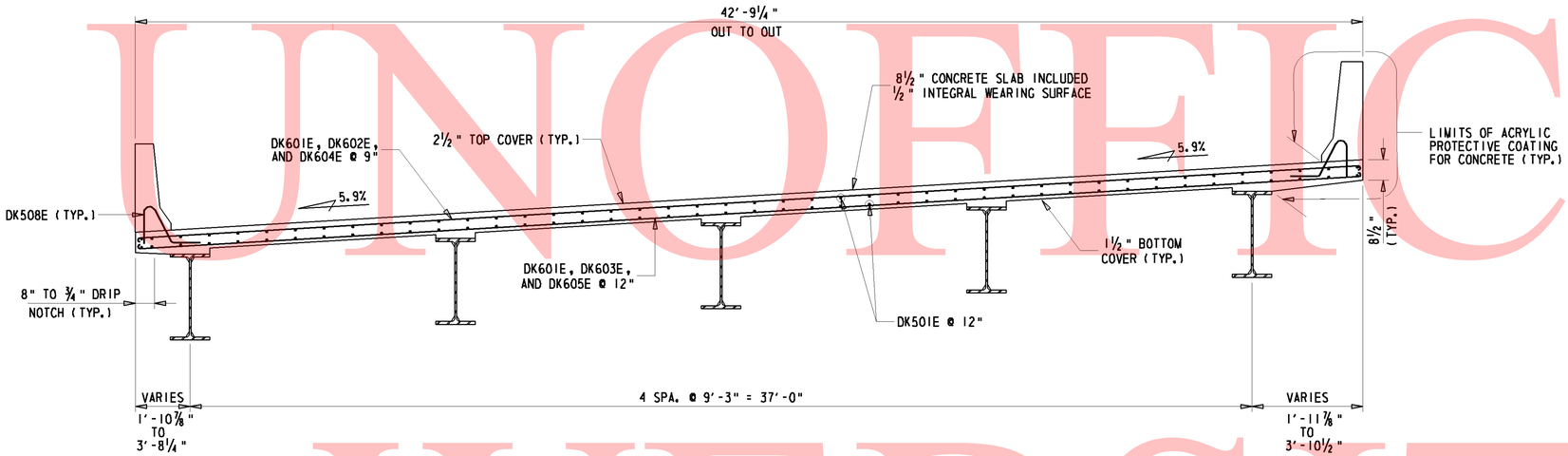

TYPICAL DECK SECTION

¼" = 1'-0"

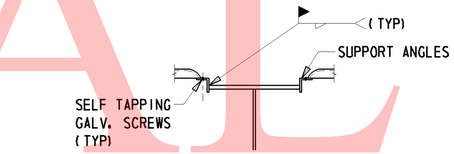

NOTE: ALL ANGLES, WELDS, AND INSERTS MUST BE DESIGNED BY THE CONTRACTOR AND SUBMITTED FOR APPROVAL

COMPRESSION FLANGE CONNECTION

N.T.S.

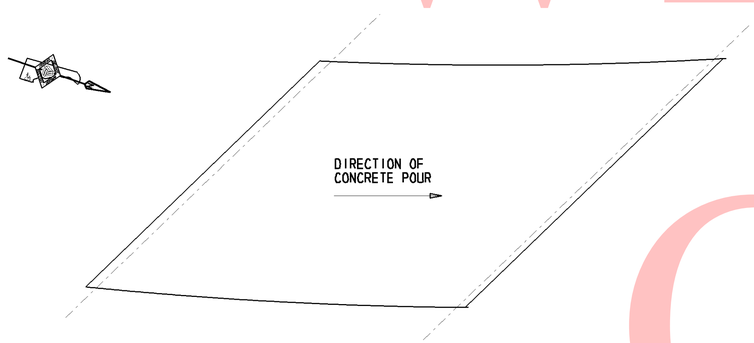

DECK CONCRETE POUR SEQUENCE

N.T.S

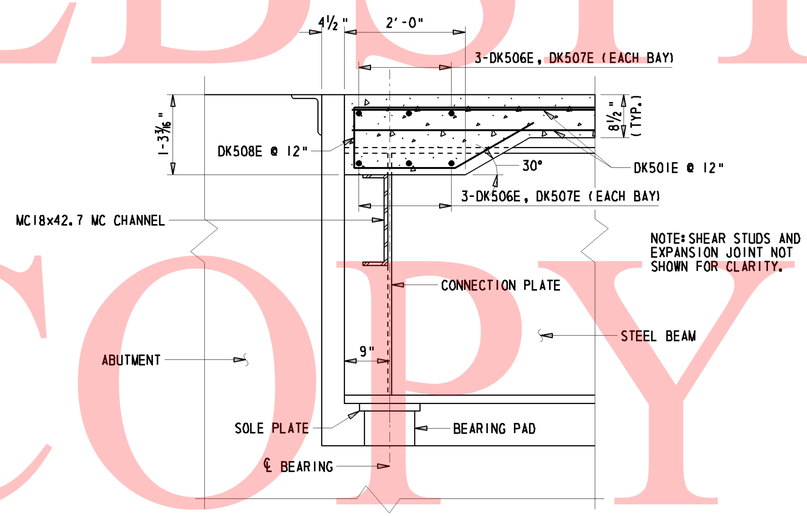

TYPICAL SECTION AT ABUTMENTS

½" = 1'-0"

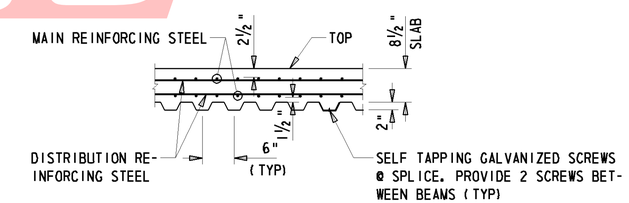

STAY-IN PLACE STEEL FORM DETAIL

N.T.S.

STEEL S.I.P. FORM NOTES:

1. THESE FORMS SHALL BE VERTICALLY ADJUSTED TO ATTAIN LINE AND GRADE REQUIRED ON THE PLANS.
2. SHOP DRAWINGS SHALL BE SUBMITTED BY THE ENGINEER. METAL FORMS MUST BE GALVANIZED AND MORTAR TIGHT. STEEL METAL SCREWS MUST BE NON-CORROSIVE. SELF TAPPING SCREWS SHALL BE INSTALLED AT THE SIDE LAP OF THE SHEETS AT MID-SPAN SUPPORTS.
3. ALL MATERIALS AND LABOR NEEDED FOR FORMS SHALL BE INCIDENTAL TO ITEM 603013-P.C.C. MASONRY, SUPERSTRUCTURE, CLASS D.

UNOFFICAL WEBSITE COPY

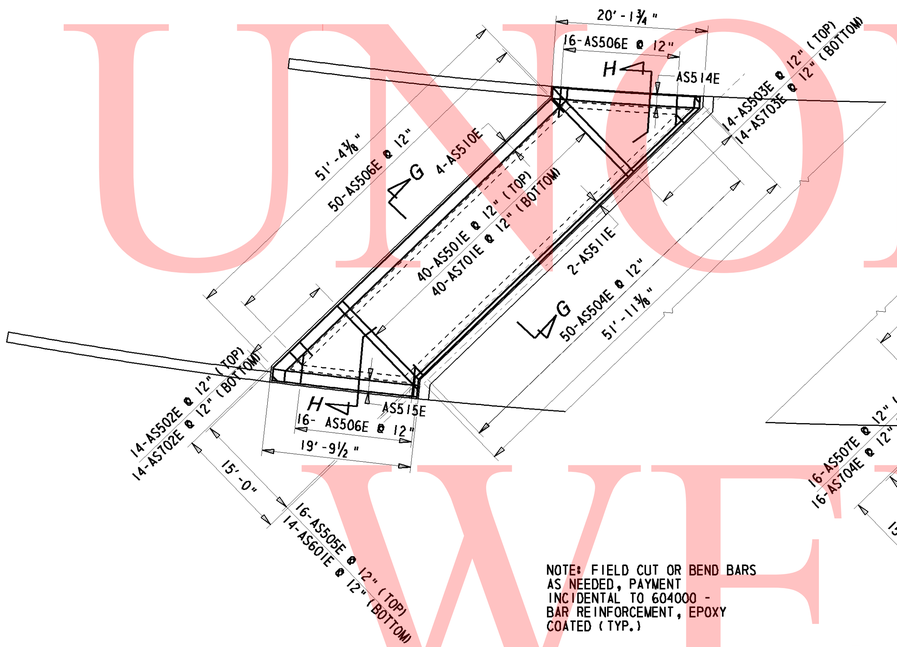

NOTE: FIELD CUT OR BEND BARS AS NEEDED, PAYMENT INCIDENTAL TO 604000 - BAR REINFORCEMENT, EPOXY COATED (TYP.)

SOUTH APPROACH SLAB

1" = 10'=0"

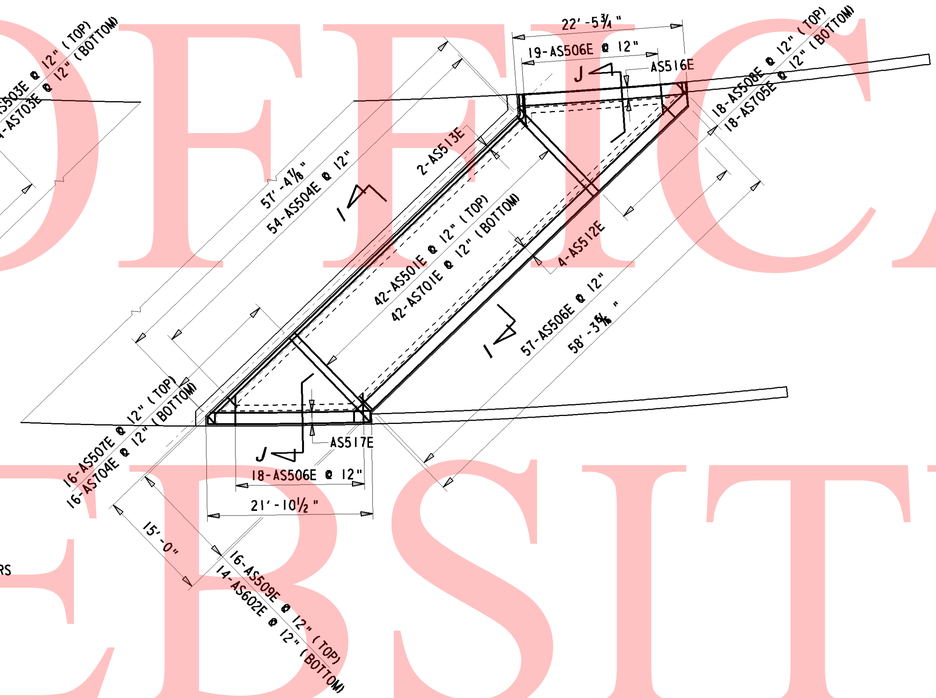

NORTH APPROACH SLAB

1" = 10'=0"

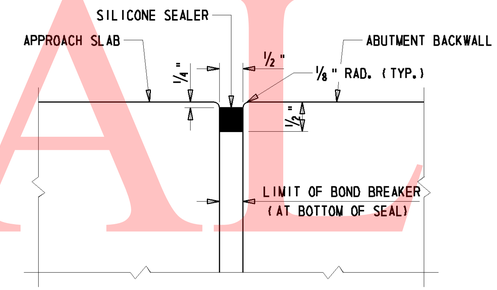

JOINT BETWEEN APPROACH SLAB AND ABUTMENT BACKWALL

N.T.S.

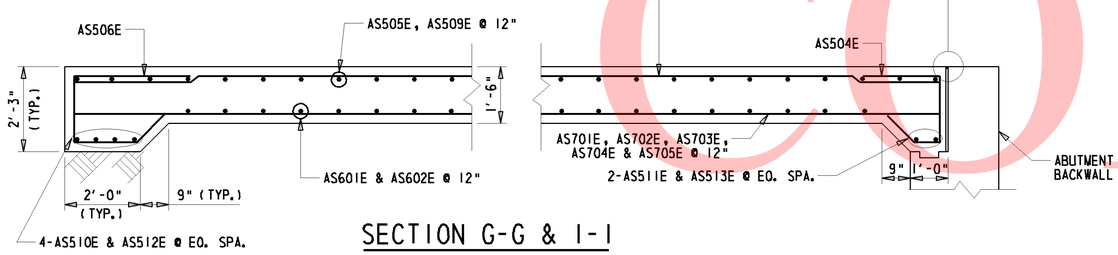

SECTION G-G & I-I

½" = 1'=0"

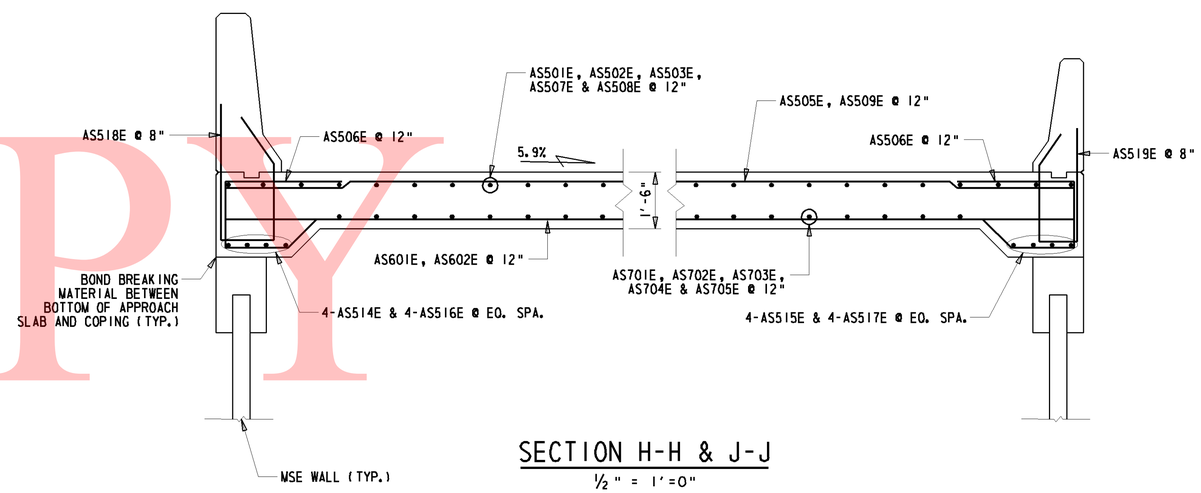

SECTION H-H & J-J

½" = 1'=0"

DELAWARE DEPARTMENT OF TRANSPORTATION	ADDENDUMS / REVISIONS	I-95 & US 202 INTERCHANGE	CONTRACT T200510602	BRIDGE NO. 1-763	APPROACH SLAB DETAILS S3-14 OF 19	SHEET NO. 223
			COUNTY NEW CASTLE	DESIGNED BY: TRS		TOTAL SHTS. 482
				CHECKED BY: JNH		

W:\MSV8\CELLS\PROJDEV\SB.CEL

UNOFFICAL WEBSITE COPY

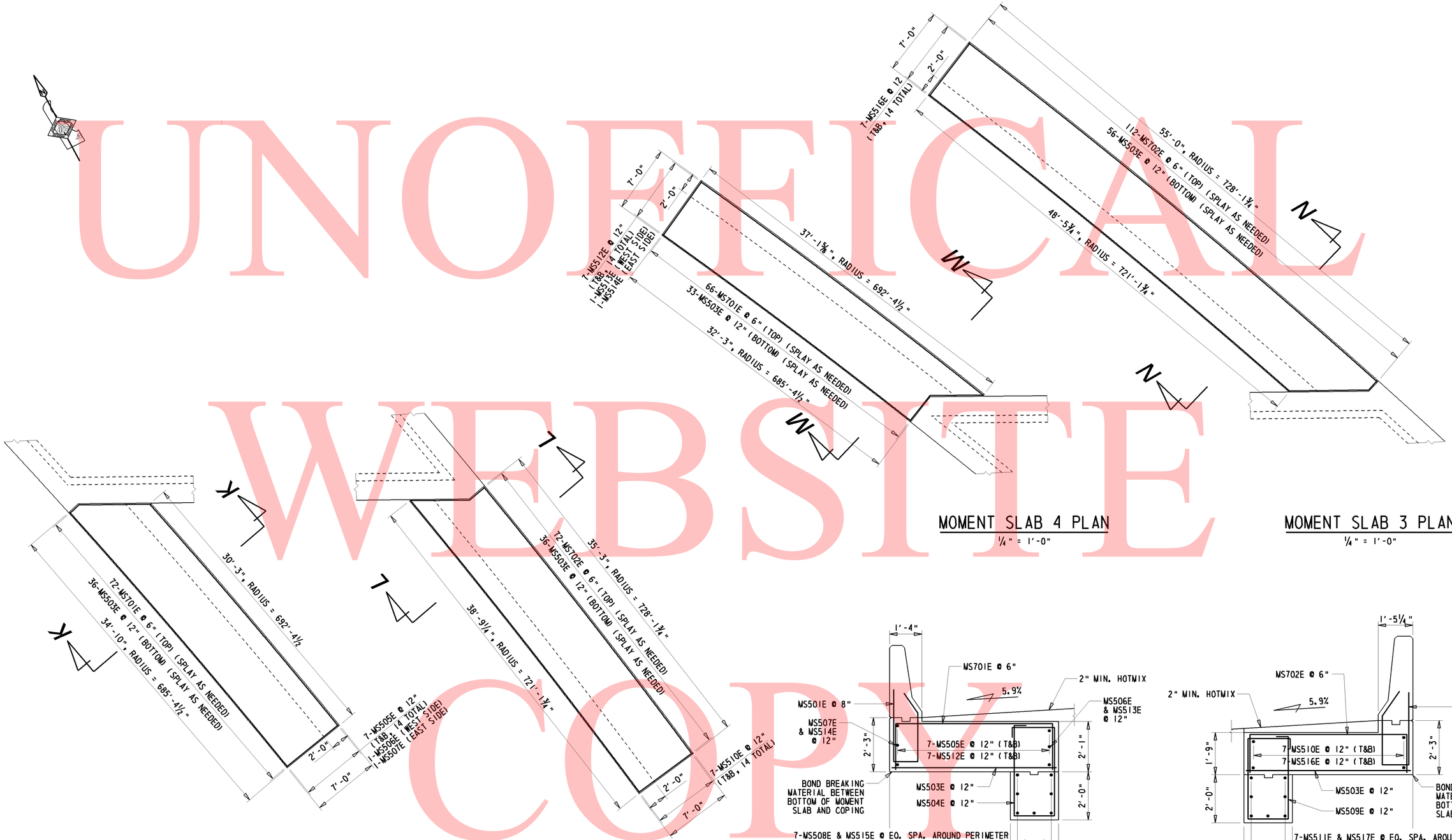

MOMENT SLAB 4 PLAN
¼" = 1'-0"

MOMENT SLAB 3 PLAN
¼" = 1'-0"

MOMENT SLAB 2 PLAN
¼" = 1'-0"

MOMENT SLAB 1 PLAN
¼" = 1'-0"

SECTIONS K-K & M-M
½" = 1'-0"

SECTIONS L-L & N-N
½" = 1'-0"

DELAWARE DEPARTMENT OF TRANSPORTATION	ADDENDUMS / REVISIONS	I-95 & US 202 INTERCHANGE	CONTRACT T200510602	BRIDGE NO. 1-763	MOMENT SLAB DETAILS S3-15 OF 19	SHEET NO. 224
			COUNTY NEW CASTLE	DESIGNED BY: TRS		TOTAL SHTS. 477
				CHECKED BY: JNH		

UNOFFICIAL WEBSITE COPY

36" F-SHAPE BARRIER
GRADE 60 REINFORCING STEEL
4500 PSI CONCRETE

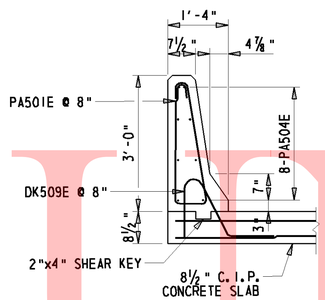

AT DECK

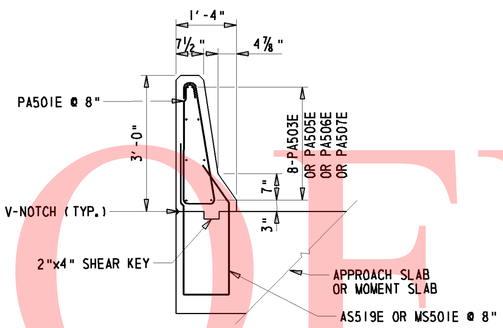

AT APPROACH SLAB OR MOMENT SLAB

TYPICAL SECTION @ WEST ELEVATION

⅜" = 1'-0"

42" F-SHAPE BARRIER
GRADE 60 REINFORCING STEEL
4500 PSI CONCRETE

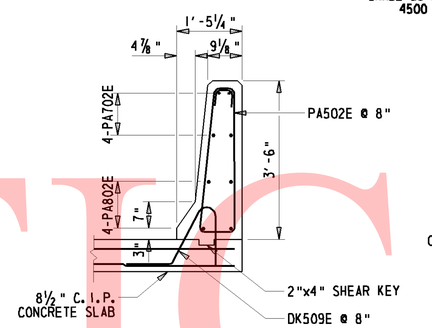

AT DECK

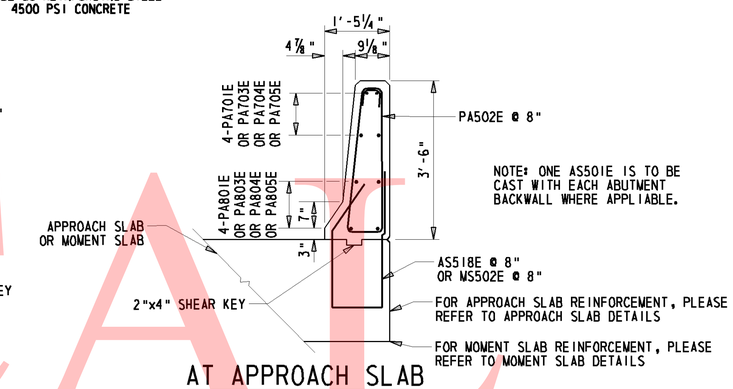

NOTE: ONE AS501E IS TO BE CAST WITH EACH ABUTMENT BACKWALL WHERE APPLIABLE.

AT APPROACH SLAB OR MOMENT SLAB

TYPICAL SECTION @ EAST ELEVATION

⅜" = 1'=0"

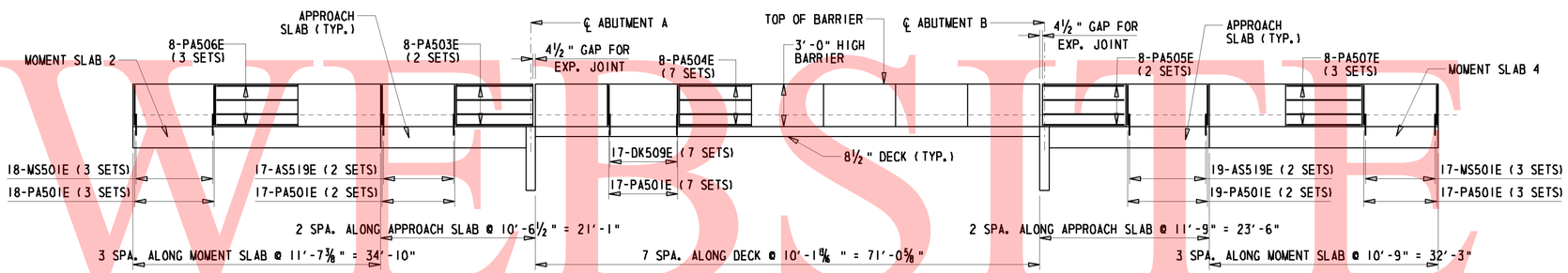

F-SHAPE BARRIER WEST ELEVATION

VERT. 1" - 5'-0"
HORIZ. 1" - 10'-0"

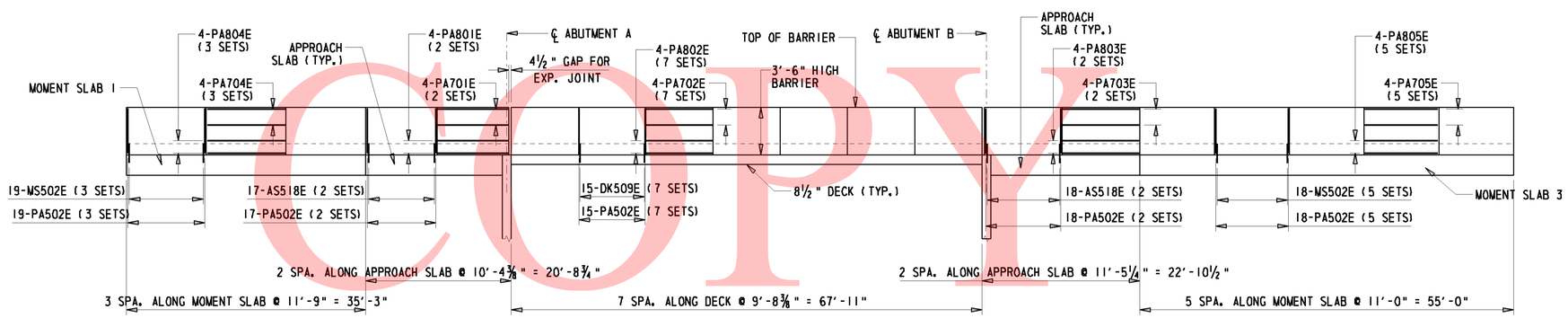

F-SHAPE BARRIER EAST ELEVATION

VERT. 1" - 5'-0"
HORIZ. 1" - 10'-0"

DELAWARE DEPARTMENT OF TRANSPORTATION	ADDENDUMS / REVISIONS	I-95 & US 202 INTERCHANGE	CONTRACT T200510602	BRIDGE NO. 1-763	BARRIER DETAILS S3-16 OF 19	SHEET NO. 225
			COUNTY NEW CASTLE	DESIGNED BY: TRS		TOTAL SHTS. 482
				CHECKED BY: JNH		

W:\MSV8\CELLS\PROJDEV\SB.CEL

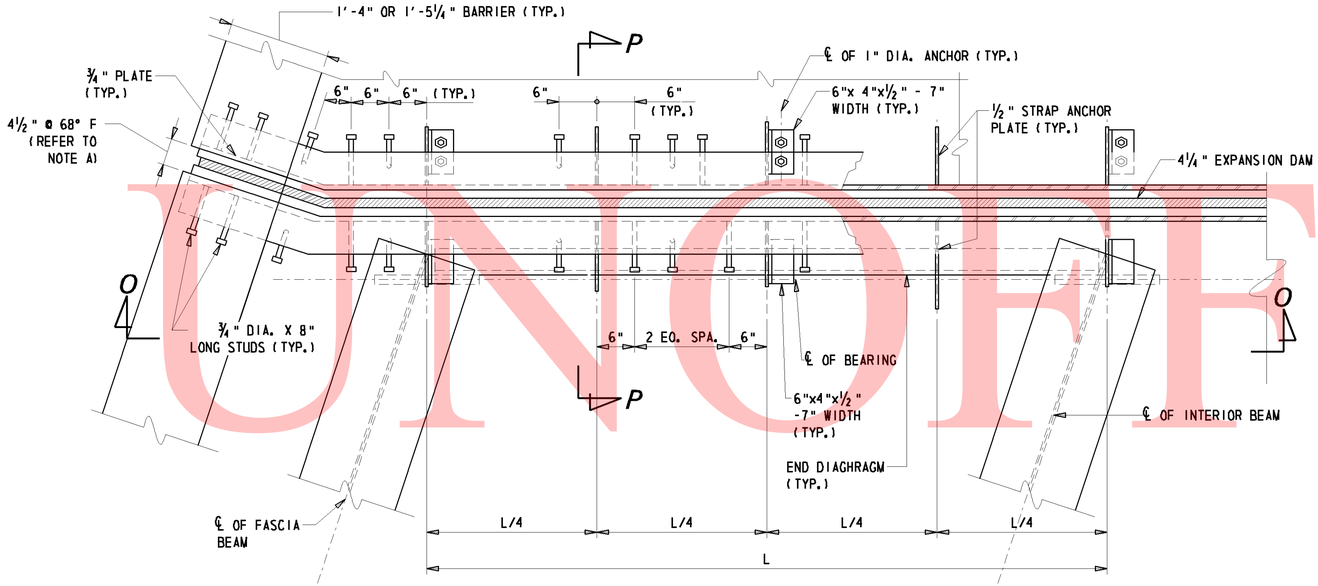

TYPICAL JOINT PLAN

1" = 1'-0"

EXPANSION JOINT NOTES:

1. STEEL FOR DECK JOINTS AND STEEL EXTRUSIONS SHALL BE AASHTO M270, GR. 36 (ASTM A36)
2. NEOPRENE EXTRUSION TO MEET D-2628-81 MODIFIED, (RECOVERY TESTS EXCLUDED).
3. THE EXPANSION JOINT SHALL BE CAPABLE OF SEALING THE DECK TO PREVENT MOISTURE AND OTHER CONTAIMINANTS FROM DESCENDING THROUGHT THE JOINT.
4. ENTIRE EXPANSION DAM SHALL BE PAINTED AFTER FABRICATION USING URETHANE SYSTEM, EXCEPT AS NOTED.
5. LUBRICANT-ADHESIVE FOR USE IN INSTALLING AND BONDING NEPORENE SEAL ELEMENTS TO STEEL JOINT COMPONENTS SHALL BE A ONE QUART MOISTURE-CURING POLYURETHAN AND HYDROCARBON SOLVENT MIXTURE HAVING THE FOLLOWING PHYSICAL PROPERTIES:

AVERAGE WEIGHT, POUNDS PER GALLON	8 +/- 10%
SOLIDS CONTENT	65%
ADHESIVE SHALL REMAIN LIQUID FROM	5°F TO 120°F
FILM STRENGTH, AS PER ASTM D-412	2,000 PSI
ELONGATION	250%

6. HOLES SHALL BE PLACED IN THE RIB PLATES AND STRAP ANCHOR PLATES FOR BAR REINFORCEMENT. IF THIS IS DONE IN THE FIELD AN APPROVED PAINT SHALL BE USED TO TOUCH-UP THE HOLES.

NOTE A:
THE CONTRACTOR SHALL ADJUST THE OPEN DECK JOINT AS REQUIRED BY THE WIDTH OF THE STEEL EXTRUSION USED SO AS TO PROVIDE A 1½" JOINT OPENING AT 68°F.

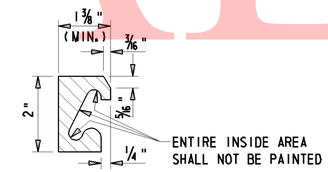

STEEL EXTRUSION DETAIL

6" = 1'-0"

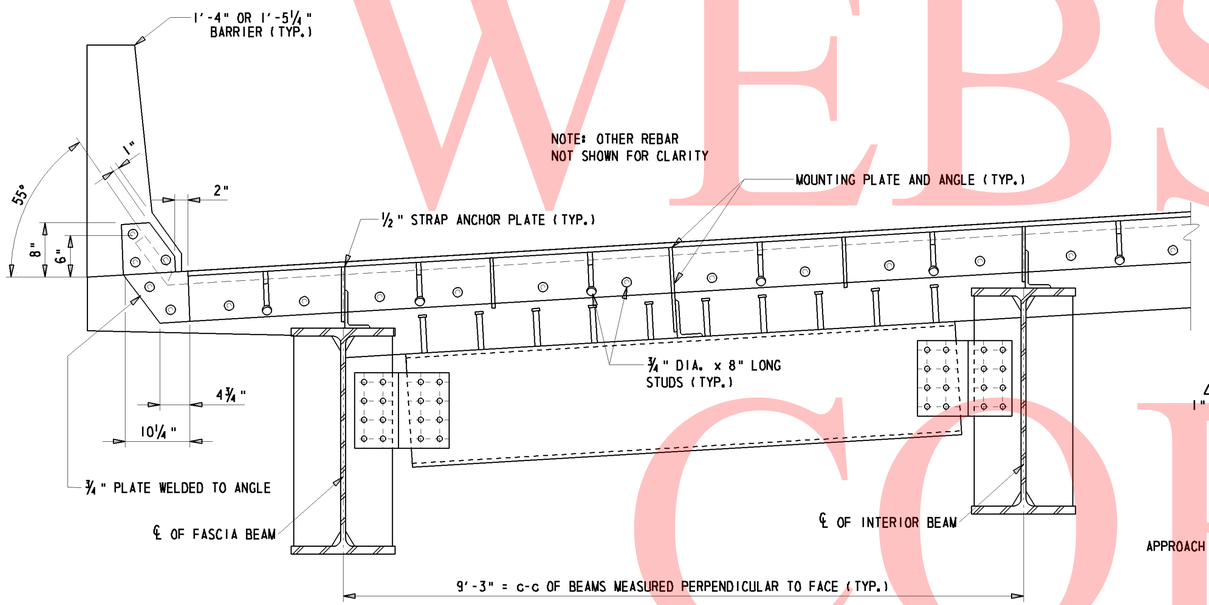

SECTION O-O

1" = 1'-0"

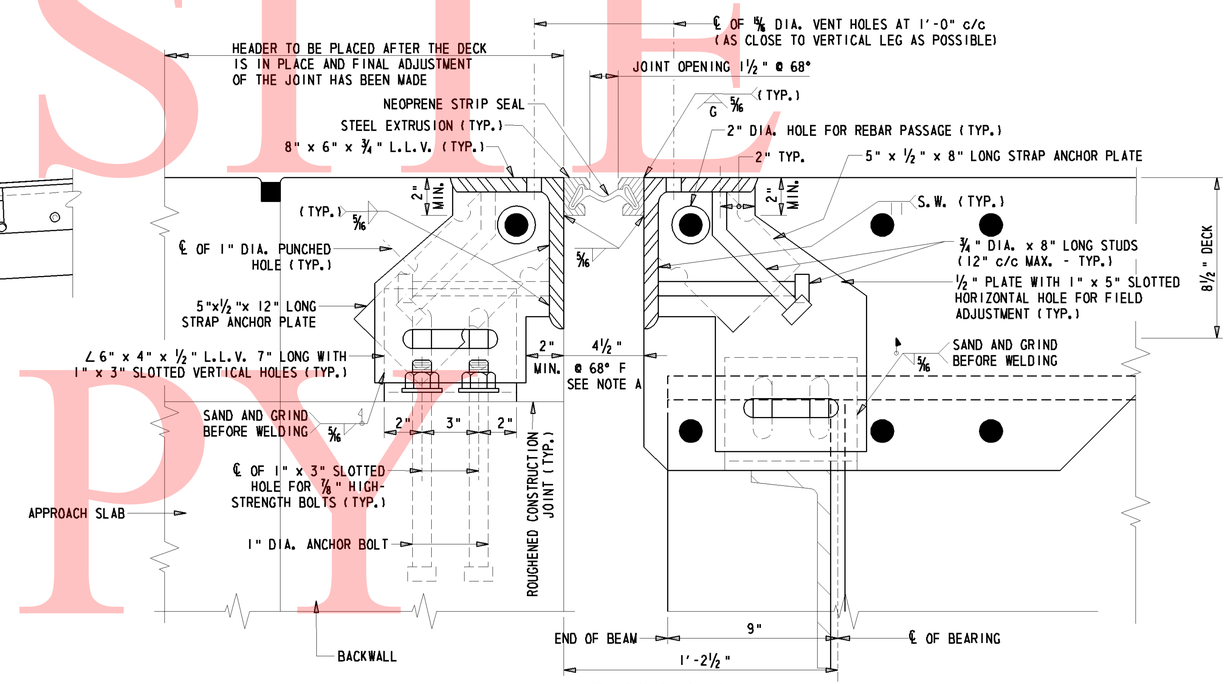

SECTION P-P

3" = 1'-0"

UNOFFICIAL WEBSITE COPY

DELAWARE DEPARTMENT OF TRANSPORTATION	ADDENDUMS / REVISIONS	I-95 & US 202 INTERCHANGE	CONTRACT T200510602	BRIDGE NO. 1-763	EXPANSION JOINT DETAILS S3-17 OF 19	SHEET NO. 226
			COUNTY NEW CASTLE	DESIGNED BY: TRS		TOTAL SHTS. 482
				CHECKED BY: JNH		

W:\MSV8\CELLS\PROJDEV\SB.CEL

① ANY MARK NUMBER WITH SUFFIX 'E' DENOTES EPOXY COATED REINFORCING STEEL.

② ALL MARK 'LOCATION PREFIXES' SHALL CONSIST OF TWO LETTERS AND ARE AS FOLLOWS: AB = ABUTMENT, AS = APPROACH SLAB, BC = BOX CULVERT, BW = BACKWALL, CL = COLUMN, DK = DECK, DL = DOWEL, FT = FOOTING, HW = HEADWALL, MS = MISC. BARS, PA = PARAPET, PR = PIER, SC = SHEETPILE CAP, SL = SLAB, TW = TOEWALL, WL = WALL (UNIQUE LOCATION), WW = WINGWALL

SPECIFICATIONS					BENDING DIMENSIONS (FEET-INCHES /QUARTER INCH)											
QTY.	SIZE	LENGTH	MARK	TYPE	A	B	C	D	E	F/R	G	H	J	K	O
16	5	57-02	AB501E	STR		57-02									
110	5	11-110	AB502E	17		2-80	6-70	2-80							
2X6	5	7-40	AB503E	17		2-80	2-00	2-80							
		T0				T0	T0	T0							
		12-53				2-80	5-71	2-80							
2X3	5	9-53	AB504E	17		2-80	4-13	2-80							
		T0				T0	T0	T0							
		11-52				2-80	6-12	2-80							
1X70	5	7-30	AB505E	17		4-50	2-00	0-100							
		T0				T0	T0	T0							
		8-110				6-10	2-00	0-100							
14	5	55-80	AB506E	STR		55-80									
1X70	5	12-80	AB507E	17		5-100	1-00	5-100							
		T0				T0	T0	T0							
		16-00				7-60	1-00	7-60							
70	5	4-00	AB508E	17		1-60	1-00	1-60							
30	5	8-70	AB509E	17		3-50	1-90	3-50							
50	5	9-00	AB510E	17		3-50	2-20	3-50							
9	5	4-62	AB511E	STR		4-62									
5	5	8-90	AB512E	STR		8-90									
5	5	6-42	AB513E	STR		6-42									
6	5	5-32	AB514E	STR		5-32									
16	5	63-20	AB515E	STR		63-20									
108	5	11-110	AB516E	17		2-80	6-70	2-80							
2X7	5	9-03	AB517E	17		2-80	2-00	2-80							
		T0				T0	T0	T0							
		12-72				2-80	7-32	2-80							
2X4	5	9-03	AB518E	17		2-80	3-83	2-80							
		T0				T0	T0	T0							
		11-50				2-80	6-10	2-80							
1X77	5	7-20	AB519E	17		4-40	2-00	0-100							
		T0				T0	T0	T0							
		8-90				5-110	2-00	0-100							
14	5	61-13	AB520E	STR		61-13									
1X77	5	12-62	AB521E	17		5-91	1-00	5-91							
		T0				T0	T0	T0							
		15-80				7-40	1-00	7-40							
77	5	4-00	AB522E	17		1-60	1-00	1-60							
30	5	8-70	AB523E	17		3-50	1-90	3-50							
50	5	9-00	AB524E	17		3-50	2-20	3-50							

SPECIFICATIONS					BENDING DIMENSIONS (FEET-INCHES /QUARTER INCH)											
QTY.	SIZE	LENGTH	MARK	TYPE	A	B	C	D	E	F/R	G	H	J	K	O
6	5	4-50	AB525E	STR		4-50									
5	5	5-61	AB526E	STR		5-61									
9	5	6-00	AB527E	STR		6-00									
6	5	10-63	AB528E	STR		10-63									
2	5	11-102	AB529E	17		2-80	6-62	2-80							
2	5	14-113	AB530E	17		2-80	9-73	2-80							
4	5	10-10	AB531E	17		2-80	7-50	0-00							
1	5	11-91	AB532E	17		2-80	9-11	0-00							
2	5	15-40	AB533E	17		2-80	10-00	0-00							
2	5	12-50	AB534E	17		2-80	7-10	0-00							
1	5	11-91	AB535E	17		2-80	9-11	0-00							
82	5	14-80	AS501E	STR		14-80									
1X14	5	1-00	AS502E	STR		1-00									
		T0				T0									
		15-71				15-71									
1X14	5	1-00	AS503E	STR		1-00									
		T0				T0									
		15-63				15-63									
94	5	5-51	AS504E	16	2-00	1-92	0-80	1-00				0-90		0-90	
1X16	5	55-60	AS505E	STR		55-60									
		T0				T0									
		56-00				56-00									
176	5	8-62	AS506E	16	4-00	1-92	1-80	1-10				0-90		0-90	
1X15	5	1-00	AS507E	STR		1-00									
		T0				T0									
		13-100				13-100									
1X18	5	1-00	AS508E	STR		1-00									
		T0				T0									
		15-50				15-50									
1X16	5	61-11	AS509E	STR		61-11									
		T0				T0									
		62-92				62-92									
1X4	5	52-10	AS510E	STR		52-10									
		T0				T0									
		54-80				54-80									
2	5	55-22	AS511E	STR		55-22									
1X4	5	62-83	AS512E	STR		62-83									
		T0				T0									
		63-50				63-50									

SPECIFICATIONS					BENDING DIMENSIONS (FEET-INCHES /QUARTER INCH)											
QTY.	SIZE	LENGTH	MARK	TYPE	A	B	C	D	E	F/R	G	H	J	K	O
2	5	61-12	AS513E	STR		61-12									
4	5	19-103	AS514E	STR		19-103									
4	5	19-52	AS515E	STR		19-52									
4	5	22-71	AS516E	STR		22-71									
4	5	21-71	AS517E	STR		21-71									
70	5	7-42	AS518E	T11			1-30	2-02	1-11	3-00		1-01		0-82	
72	5	7-02	AS519E	T11			1-00	2-02	1-00	3-00		0-93		0-63	
1X14	6	55-50	AS601E	STR		55-50									
		T0				T0									
		56-00				56-00									
1X14	6	61-11	AS602E	STR		61-11									
		T0				T0									
		62-91				62-91									
82	7	14-80	AS701E	STR		14-80									
1X12	7	1-00	AS702E	STR		1-00									
		T0				T0									
		15-71				51-71									
1X12	7	1-00	AS703E	STR		1-00									
		T0				T0									
		15-63				15-63									
1X16	7	1-00	AS704E	STR		1-00									
		T0				T0									
		15-80				15-80									
1X18	7	1-00	AS705E	STR		1-00									
		T0				T0									
		15-50				15-50									
2X43	5	40-00	DK501E	9		40-00				685-73		0-32			39-113
		T0				T0				T0		T0			T0
		40-00				40-00				728-10		0-31			39-113
2X43	5	29-51	DK502E	9		29-51				685-73		0-20			30-101
		T0				T0				T0		T0			T0
		32-13				32-13				728-10		0-21			32-12
93	5	14-80	DK503E	18	0-80	14-00									
1X3	5	54-92	DK504E	STR		57-92									
		T0				T0									
		56-111				56-111									
1X3	5	60-02	DK505E	STR		60-02									
		T0				T0									
		61-111				61-111									

ASTM STANDARD ENGLISH REINFORCING BARS

	NOMINAL DIMENSIONS			RECOMMENDED END HOOKS, APPLICABLE TO ALL GRADES				STIRRUP AND TIE HOOKS, APPLICABLE TO ALL GRADES			
					180° HOOKS		90° HOOKS		90° HOOK	135° HOOK	
BAR SIZE	DIAMETER (INCHES)	AREA (INCHES²)	WEIGHT (LBS./FT.)	D	A OR G	J	A OR G	D	A OR G	A OR G	A OR G
3	0.375	0.110	0.376	2¼"	5"	3"	6"	1½"	4"	4"	2½"
4	0.500	0.200	0.668	3"	6"	4"	8"	2"	4½"	4½"	3"
5	0.625	0.310	1.043	3¾"	7"	5"	10"	2½"	6"	5½"	3¾"
6	0.750	0.440	1.502	4½"	8"	6"	1-0"	4½"	1-0"	8"	4½"
7	0.875	0.600	2.044	5¼"	10"	7"	1-2"	5¼"	1-2"	9"	5¼"
8	1.000	0.790	2.670	6"	11"	8"	1-4"	6"	1-4"	10½"	6"
9	1.128	1.000	3.400	9½"	1-3"	11¾"	1-7"				
10	1.270	1.270	4.303	10¾"	1-5"	1-1¼"	1-10"				
11	1.410	1.560	5.313	1-0"	1-7"	1-2¾"	2-0"				
14	1.693	2.250	7.650	1-6¼"	2-3"	1-9¾"	2-7"				
18	2.257	4.000	13.600	2-0"	3-0"	2-4½"	3-5"				

NOTES:

1. FIGURES SHOWN IN CIRCLES REPRESENT BAR BEND TYPES.
2. STANDARD BAR BENDS INCLUDE ONLY THOSE TYPES BELOW, INDICATED AS SUCH.
3. ALL DIMENSIONS OUT-TO-OUT, EXCEPT "A" AND "G" ON STD. 180° AND 135° HOOKS.
4. "J" DIMENSIONS ON 180° HOOKS TO BE SHOWN ONLY WHERE NECESSARY TO RESTRICT HOOK SIZE, OTHERWISE STANDARD 'ACI' HOOKS ARE TO BE USED.
5. WHERE "J" IS NOT SHOWN, "J" WILL BE KEPT EQUAL TO OR LESS THAN "H" ON TYPES 3, 5 AND 22. WHERE "J" CAN EXCEED "H", IT SHALL BE SHOWN.
6. "H" DIMENSIONS OF STIRRUPS TO BE SHOWN AS NEEDED TO FIT WITHIN THE CONCRETE.
7. UNLESS OTHERWISE NOTED, DIAMETER "D" IS THE SAME FOR ALL BENDS AND HOOKS ON A BAR (EXCEPT FOR BEND TYPES 11 AND 13).
8. WHERE SLOPE DIFFERS FROM 45° OFFSET, "H" AND "K" MUST BE SHOWN.
9. WHERE BARS ARE TO BE BENT MORE ACCURATELY THAN STANDARD BENDING TOLERANCES, BENDING DIMENSIONS REQUIRING CLOSER FABRICATION SHOULD HAVE LIMITS INDICATED.
10. FOR RECOMMENDED DIAMETER "D", OF BENDS, HOOKS, ETC., REFER TO TABLE ABOVE, 'CRSI' OR 'ACI' TABLES WHERE APPLICABLE AND REQUIRED.
11. TYPE S1-S6, S11, T1-T3 AND T6-T9 APPLICABLE TO BAR SIZES #3 THROUGH #8.

STANDARD BAR BENDS

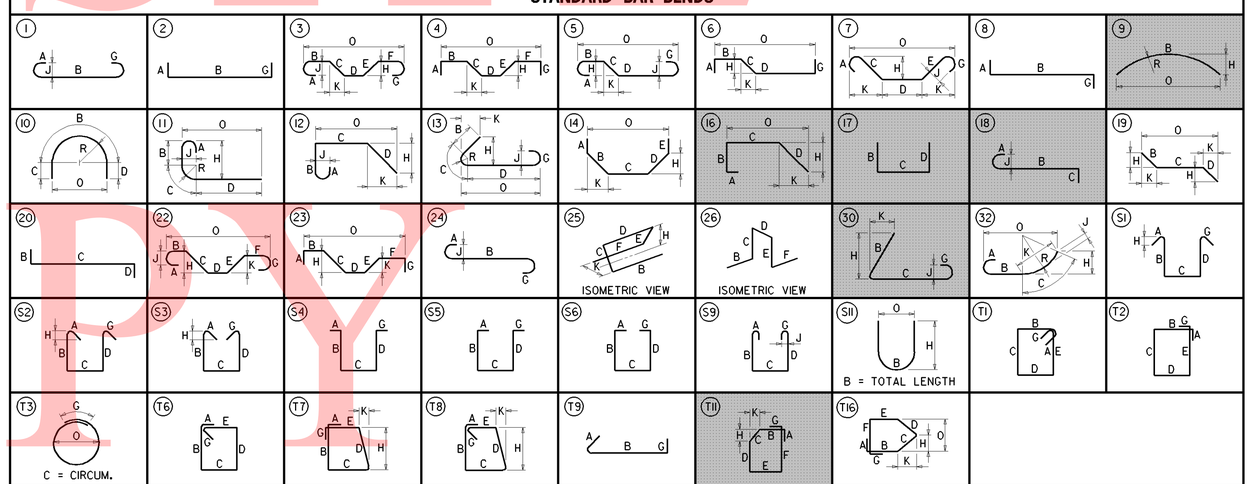

SPECIAL BAR BENDS

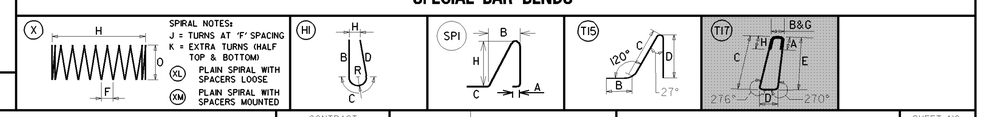

STIRRUP AND TIE HOOKS

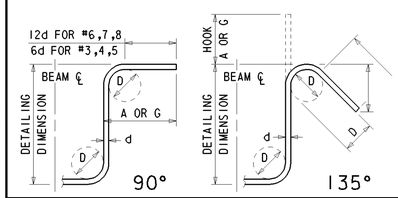

180° AND 90° END HOOKS

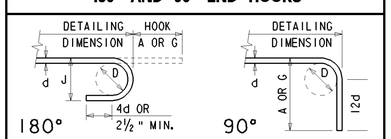

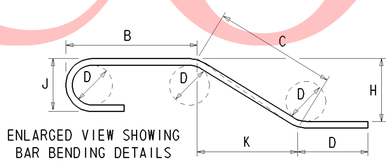

ENLARGED VIEW SHOWING BAR BENDING DETAILS

UNOFFICIAL WEBSITE COPY

DELAWARE DEPARTMENT OF TRANSPORTATION

ADDENDUMS / REVISIONS

I-95 & US 202 INTERCHANGE

CONTRACT	BRIDGE NO.	1-763	REINFORCEMENT BAR SCHEDULE-1 S3-18 OF 19	SHEET NO.
T200510602	DESIGNED BY: TRS			227
COUNTY				TOTAL SHTS.
NEW CASTLE	CHECKED BY: JNH			482

W:\MSV8\CELLS\PROJDEV\SB.CEL

① ANY MARK NUMBER WITH SUFFIX 'E' DENOTES EPOXY COATED REINFORCING STEEL.

② ALL MARK 'LOCATION PREFIXES' SHALL CONSIST OF TWO LETTERS AND ARE AS FOLLOWS: AB = ABUTMENT, AS = APPROACH SLAB, BC = BOX CULVERT, BW = BACKWALL, CL = COLUMN, DK = DECK, DL = DOWEL, FT = FOOTING, HW = HEADWALL, MS = MISC. BARS, PA = PARAPET, PR = PIER, SC = SHEETPILE CAP, SL = SLAB, TW = TOEWALL, WL = WALL (UNIQUE LOCATION), WW = WINGWALL

SPECIFICATIONS					BENDING DIMENSIONS (FEET-INCHES /QUARTER INCH)										
QTY.	SIZE	LENGTH	MARK	TYPE	A	B	C	D	E	F/R	G	H	J	K	O
72	5	10-01	DK506E	16	5-110	0-111	1-80	1-60				1-03		1-03	1-83
210	5	3-81	DK507E	T15		1-00	1-50	1-31							
70	6	43-91	DK601E	1	0-80	42-51					0-80				
2X36	6	14-80	DK602E	18	0-80	14-00									
		T0				T0									
		43-11			0-80	42-51									
2X27	6	14-80	DK603E	18	0-80	14-00									
		T0				T0									
		43-11			0-80	42-51									
52	6	14-80	DK604E	18	0-80	14-00									
105	5	7-02	MS501E	T11			1-00	2-02	1-00	3-00		0-93		0-63	
147	5	7-42	MS502E	T11			1-30	2-02	1-11	3-00		1-01		0-82	
161	5	6-80	MS503E	STR		6-80									
72	5	11-80	MS504E	T11	0-60	1-80	3-80	1-80	3-80		0-60				
2X7	5	29-110	MS505E	STR		29-110									
		T0				T0									
		34-60				34-60									
1	5	34-60	MS506E	STR		34-60									
1	5	29-110	MS507E	STR		29-110									
7	5	31-70	MS508E	STR		31-70									
90	5	11-00	MS509E	T11	0-60	1-80	3-40	1-80	3-40		0-60				
2X7	5	34-110	MS510E	STR		34-110									
		T0				T0									
		38-30				38-30									
7	5	38-30	MS511E	STR		38-30									
2X7	5	31-110	MS512E	STR		31-110									
		T0				T0									
		36-60				36-60									
1	5	36-60	MS513E	STR		36-60									
1	5	31-110	MS514E	STR		31-110									
7	5	36-60	MS515E	STR		36-60									
2X7	5	48-13	MS516E	STR		48-13									
		T0				T0									
		54-80				54-80									
7	5	50-60	MS517E	STR		50-60									
138	7	10-00	MS701E	17		1-80	6-80	1-80							
184	7	9-40	MS702E	17		1-40	6-80	1-40							

SPECIFICATIONS					BENDING DIMENSIONS (FEET-INCHES /QUARTER INCH)										
QTY.	SIZE	LENGTH	MARK	TYPE	A	B	C	D	E	F/R	G	H	J	K	O
296	5	7-03	PA501E	T17	0-30	0-30	2-82	0-81	2-80		0-30	0-30			
448	5	8-83	PA502E	T17	0-42	0-51	3-21	0-90	3-20		0-51	0-42			
16	5	10-21	PA503E	STR		10-21									
56	5	9-93	PA504E	STR		9-93									
16	5	11-50	PA505E	STR		11-50									
24	5	11-31	PA506E	STR		11-31									
24	5	10-50	PA507E	STR		10-50									
8	7	10-22	PA701E	STR		10-22									
28	7	9-63	PA702E	STR		9-63									
8	7	11-11	PA703E	STR		11-11									
12	7	11-50	PA704E	STR		11-50									
20	7	10-80	PA705E	STR		10-80									
8	8	10-22	PA801E	STR		10-22									
28	8	9-63	PA802E	STR		9-63									
8	8	11-11	PA803E	STR		11-11									
12	8	11-50	PA804E	STR		11-50									
20	8	10-80	PA805E	STR		10-80									

SPECIFICATIONS					BENDING DIMENSIONS (FEET-INCHES /QUARTER INCH)										
QTY.	SIZE	LENGTH	MARK	TYPE	A	B	C	D	E	F/R	G	H	J	K	O
											0-30	0-30			
											0-51	0-42			

UNOFFICIAL WEBSITE COPY

ASTM STANDARD ENGLISH REINFORCING BARS				RECOMMENDED END HOOKS, APPLICABLE TO ALL GRADES				STIRRUP AND TIE HOOKS, APPLICABLE TO ALL GRADES			
NOMINAL DIMENSIONS					180° HOOKS		90° HOOKS		90° HOOK	135° HOOK	
BAR SIZE	DIAMETER (INCHES)	AREA (INCHES²)	WEIGHT (LBS./FT.)	D	A OR G	J	A OR G	D	A OR G	A OR G	A OR G
3	0.375	0.110	0.376	2¼"	5"	3"	6"	1½"	4"	4"	2½"
4	0.500	0.200	0.668	3"	6"	4"	8"	2"	4½"	4½"	3"
5	0.625	0.310	1.043	3¾"	7"	5"	10"	2½"	6"	5½"	3¾"
6	0.750	0.440	1.502	4½"	8"	6"	1-0"	4½"	1-0"	8"	4½"
7	0.875	0.600	2.044	5¼"	10"	7"	1-2"	5¼"	1-2"	9"	5¼"
8	1.000	0.790	2.670	6"	11"	8"	1-4"	6"	1-4"	10½"	6"
9	1.128	1.000	3.400	9½"	1-3"	11¾"	1-7"				
10	1.270	1.270	4.303	10¾"	1-5"	1-1¼"	1-10"				
11	1.410	1.560	5.313	1-0"	1-7"	1-2¾"	2-0"				
14	1.693	2.250	7.650	1-6¼"	2-3"	1-9¾"	2-7"				
18	2.257	4.000	13.600	2-0"	3-0"	2-4½"	3-5"				

NOTES:

1. FIGURES SHOWN IN CIRCLES REPRESENT BAR BEND TYPES.
2. STANDARD BAR BENDS INCLUDE ONLY THOSE TYPES BELOW, INDICATED AS SUCH.
3. ALL DIMENSIONS OUT-TO-OUT, EXCEPT "A" AND "G" ON STD. 180° AND 135° HOOKS.
4. "J" DIMENSIONS ON 180° HOOKS TO BE SHOWN ONLY WHERE NECESSARY TO RESTRICT HOOK SIZE, OTHERWISE STANDARD 'ACI' HOOKS ARE TO BE USED.
5. WHERE "J" IS NOT SHOWN, "J" WILL BE KEPT EQUAL TO OR LESS THAN "H" ON TYPES 3, 5 AND 22. WHERE "J" CAN EXCEED "H", IT SHALL BE SHOWN.
6. "H" DIMENSIONS OF STIRRUPS TO BE SHOWN AS NEEDED TO FIT WITHIN THE CONCRETE.
7. UNLESS OTHERWISE NOTED, DIAMETER "D" IS THE SAME FOR ALL BENDS AND HOOKS ON A BAR (EXCEPT FOR BEND TYPES 11 AND 13).
8. WHERE SLOPE DIFFERS FROM 45° OFFSET, "H" AND "K" MUST BE SHOWN.
9. WHERE BARS ARE TO BE BENT MORE ACCURATELY THAN STANDARD BENDING TOLERANCES, BENDING DIMENSIONS REQUIRING CLOSER FABRICATION SHOULD HAVE LIMITS INDICATED.
10. FOR RECOMMENDED DIAMETER "D", OF BENDS, HOOKS, ETC., REFER TO TABLE ABOVE, 'CRSI' OR 'ACI' TABLES WHERE APPLICABLE AND REQUIRED.
11. TYPE S1-S6, S11, T1-T3 AND T6-T9 APPLICABLE TO BAR SIZES #3 THROUGH #8.

STANDARD BAR BENDS

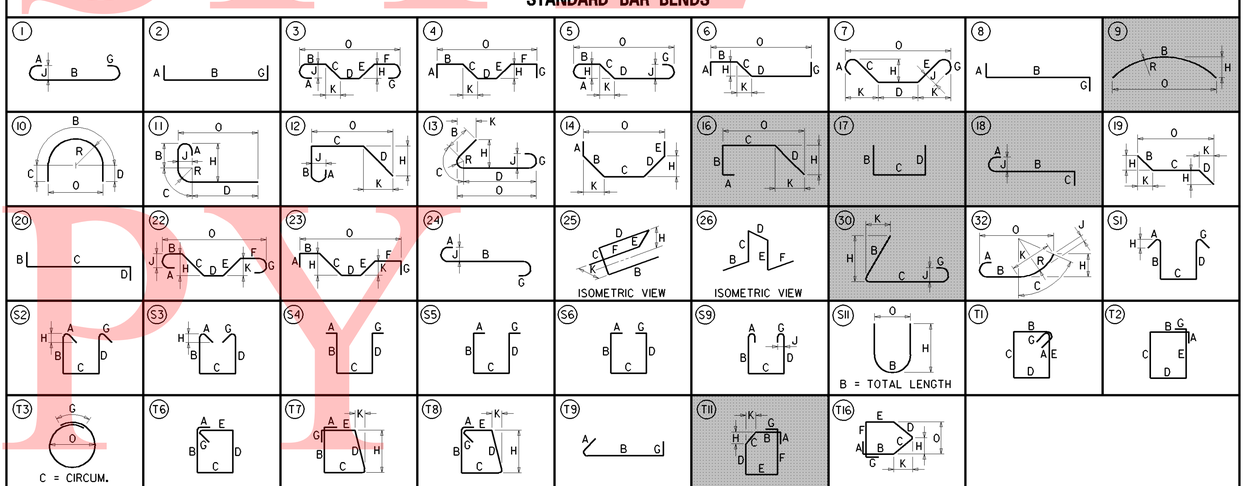

SPECIAL BAR BENDS

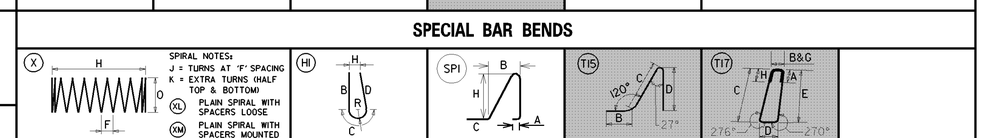

STIRRUP AND TIE HOOKS

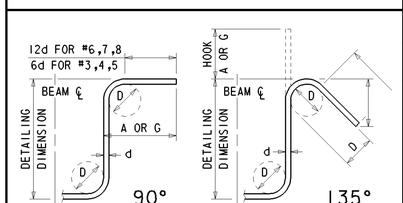

180° AND 90° END HOOKS

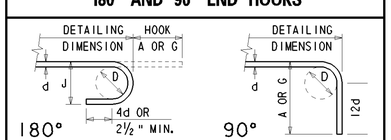

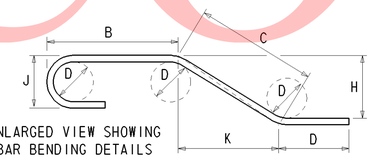

DELAWARE DEPARTMENT OF TRANSPORTATION

ADDENDUMS / REVISIONS

I-95 & US 202 INTERCHANGE

CONTRACT	BRIDGE NO.	1-763
T200510602	DESIGNED BY: TRS	
COUNTY: NEW CASTLE	CHECKED BY: JNH	

REINFORCEMENT BAR SCHEDULE-2 S3-19 OF 19

SHEET NO. 228 / TOTAL SHTS. 482

W:\MSV8\CELLS\PROJDEV\SB.CEL

BRIDGE PROJECT NOTES

1. LOCATION
   BRIDGE 1-570 (US 202, CONCORD PIKE OVER I-95), NEW CASTLE COUNTY, DELAWARE.

2. DESIGN CRITERIA
   2007 AASHTO LRFD BRIDGE DESIGN SPECIFICATIONS, 4TH EDITION, WITH 2008 INTERIM, CUSTOMARY U.S. UNITS.

3. LOADING
   DEAD LOAD INCLUDES 25 PSF FOR FUTURE WEARING SURFACE AND 15 PSF FOR S.I.P FORMS.
   VEHICULAR LIVE LOAD IS HL-93. SEISMIC PERFORMANCE ZONE 2.

4. PORTLAND CEMENT CONCRETE
   STRUCTURAL ELEMENTS OF PORTLAND CEMENT CONCRETE SHALL BE AS NOTED:
   (F'c = 28 DAY COMPRESSIVE STRENGTH)
   CLASS A - BARRIERS, MASONRY PADS, ABUTMENTS, BACKWALLS, AND APPROACH SLABS (F'c = 4.5 KSI)
   CLASS B - MEDIAN (F'c = 3.0 KSI)
   CLASS D - DECK (F'c = 4.5 KSI)
   MIX REQUIREMENTS SHALL CONFORM TO SECTION 812 OF THE STANDARD SPECIFICATIONS. ALL EXPOSED EDGES SHALL BE CHAMFERED ¾" UNLESS OTHERWISE NOTED. IT SHALL BE THE CONTRACTOR'S RESPONSIBILITY TO UTILIZE ANY APPROVED CONCRETE ADDITIVES OR HEATING TECHNIQUES TO MAINTAIN THE PROPER TEMPERATURE FOR ANY CONCRETE POURED DURING COLD WEATHER. PAYMENT SHALL BE INCIDENTAL TO THE RESPECTIVE CONCRETE BID ITEMS.

5. STRUCTURAL STEEL
   ASTM A709 GRADE 50 (AASHTO M270) WITH SUPPLEMENTARY REQUIREMENTS FOR CHARPY V-NOTCH TOUGHNESS FOR ALL MEMBERS AND COMPONENTS MARKED (T).

6. BEARINGS
   ALL ELASTOMERIC BEARINGS SHALL BE STEEL LAMINATED ELASTOMERIC DESIGNED AS PER AASHTO 14.7.6, METHOD A, AND SHALL CONFORM TO SUBSECTION 623.06 OF THE DELDOT STANDARD SPECIFICATIONS. PAYMENT UNDER ITEM #605581 - ELASTOMETRIC BEARING PADS.

7. BAR REINFORCEMENT
   REINFORCING STEEL SHALL CONFORM TO AASHTO M31 (ASTM A615), GRADE 60. ALL REINFORCING STEEL SHALL HAVE A CLEAR COVER OF 2", UNLESS OTHERWISE SPECIFIED ON THE PLANS. ALL REINFORCING STEEL SHALL BE PROTECTED WITH FUSION BONDED EPOXY. EPOXY COATED REINFORCING STEEL SHALL CONFORM TO AASHTO M284 (ASTM D3963).

8. CONSTRUCTION JOINTS
   KEYED CONSTRUCTION JOINTS SHALL BE 2 INCHES X 4 INCHES OR AS NOTED. ALL EXPOSED CONSTRUCTION JOINTS SHALL HAVE A ¾" V-NOTCH.

9. CONCRETE SEALER
   SILICONE ACRYLIC CONCRETE SEALER SHALL BE APPLIED TO THE EXPOSED FACES OF BACKWALLS, ABUTMENTS, ABUTMENT SEATS, WINGWALLS, BARRIERS, AND OUTSIDE FACE AND UNDERSIDE OF DECK TO FASCIA BEAM. PAYMENT UNDER ITEM #602646 - SILICONE ACRYLIC CONCRETE SEALER. PRECAST CAPSTONES SHALL NOT BE COATED.

10. DECK SLAB
    THE DECK SLAB THICKNESS INCLUDES ½" INTEGRAL WEARING SURFACE.

11. DIMENSIONS
    ALL EXISTING DIMENSIONS AND ELEVATIONS SHOWN ARE BASED ON THE BEST AVAILABLE INFORMATION AND ARE APPROXIMATE ONLY. CONTRACTOR SHALL VERIFY ALL EXISTING DIMENSIONS AND ELEVATIONS IN THE FIELD, PRIOR TO COMMENCING CONSTRUCTION. PAYMENT SHALL BE INCIDENTAL TO THE CONTRACT.

12. LOAD RATINGS
    IN ACCORDANCE WITH AASHTO MANUAL FOR BRIDGE EVALUATION 2008.

13. EXISTING CONDITIONS
    CONTRACTOR MUST FIELD VERIFY EXISTING DIMENSIONS AND ELEVATIONS PRIOR TO ORDERING ANY MATERIALS. PAYMENT SHALL BE INCIDENTAL TO ITEM #763501 - CONSTRUCTION ENGINEERING.

14. REMOVAL OF STRUCTURES
    REMOVAL OF STRUCTURES AND OBSTRUCTIONS SHALL INCLUDE REMOVAL OF FASCIA BEAMS, EXISTING DIAPHRAGMS, EXISTING DECK SLAB, EXISTING APPROACH SLABS WHERE SHOWN AND DIRECTED BY ENGINEER, EXISTING BARRIERS, EXISTING CONCRETE SUBSTRUCTURE WHERE SHOWN AND DIRECTED BY ENGINEER, AND ANY INCIDENTALS AS NOTED. PAYMENT UNDER ITEM #211000 - REMOVAL OF STRUCTURES AND OBSTRUCTIONS.

15. S.I.P. FORM SUBMITTALS
    IN ADDITION TO THE REQUIREMENTS OF THE STANDARD SPECIFICATIONS, CALCULATIONS AND DRAWINGS FOR THE S.I.P. FORMS MUST BE SEALED BY A PROFESSIONAL ENGINEER REGISTERED IN THE STATE OF DELAWARE AND SUBMITTED FOR APPROVAL. PAYMENT SHALL BE INCIDENTAL TO ITEM #602013 - PORTLAND CEMENT CONCRETE MASONRY, SUPERSTRUCTURE, CLASS D.

16. CONTINGENT QUANTITIES
    THESE CONTRACT DRAWINGS HAVE BEEN PREPARED BASED ON ORIGINAL CONTRACT PLANS AND FIELD INSPECTION NOTES. ACTUAL CONDITIONS MAY REQUIRE MODIFICATION IN CONSTRUCTION DETAILS AND WORK QUANTITIES. ALL DIMENSIONS AND DETAILS SHOWN ON THE PLANS SHALL BE VERIFIED BY THE CONTRACTOR PRIOR TO ORDERING ANY MATERIALS. THE ESTIMATED QUANTITIES FOR THE FOLLOWING PAY ITEMS INCLUDE CONTINGENCY FACTORS TO ACCOUNT FOR THE ANTICIPATED VARIATIONS IN THE ACTUAL QUANTITY.

ITEM	DESCRIPTION	CONTINGENCY FACTOR
602572	REPAIRING EXISTING PCC STRUCTURES	50%
602586	REHABILITATION OF CONCRETE STRUCTURE	50%
602611	REPAIR OF CONCRETE STRUCTURES BY EPOXY INJECTION	50%

17. HAZARDOUS MATERIAL
    THE CONTRACTOR IS ADVISED THAT THE EXISTING STRUCTURE OVER I-95 DOES CONTAIN LEAD BASED PAINT. AS A RESULT, THE CONTRACTOR'S PROPOSED DEMOLITION PLAN MUST ADDRESS, AS A MINIMUM, METHODS OF CUTTING THE BEAMS AND/OR DIAPHRAGMS, IF REQUIRED, AND HOW THOSE PERSONS PERFORMING SUCH WORK WILL BE PROTECTED IN ACCORDANCE WITH APPLICABLE OSHA REGULATIONS. ADDITIONALLY, THE CONTRACTOR MUST ADDRESS WHEN AND HOW THE LEAD BASED PAINT WILL BE REMOVED FROM THE STRUCTURAL STEEL AND ALL RELATED BRIDGE COMPONENTS. IF THE WORK IS PERFORMED ON SITE, THEN PROPER PROTECTION, CONTAINMENT, AND FINAL LEAD PAINT DISPOSAL MUST BE ADDRESSED IN THE PROPOSED PLAN. IF THE BEAMS WILL BE TRANSPORTED WITH THE PAINT STILL INTACT, THEN THE PLAN SHALL DETAIL HOW THE STRUCTURAL COMPONENTS WILL BE PROTECTED DURING TRANSPORT, WHERE AND HOW THE PAINT WILL BE REMOVED, AND THE LOCATION OF FINAL PAINT DISPOSAL, AGAIN IN ACCORDANCE WITH OSHA REGULATIONS. WRITTEN DOCUMENTATION MUST BE PROVIDED TO THE ENGINEER, PRIOR TO FINAL CONTRACT ACCEPTANCE, NOTING WHEN AND WHERE THE LEAD BASED PAINT WAS REMOVED, AND THE LOCATION OF FINAL PAINT DISPOSAL. PROPOSED DEMOLITION COVERS ONLY THE FASCIA BEAMS IN SPANS 2 & 3 AND IS PAID FOR UNDER ITEM 211000 - REMOVAL OF STRUCTURES AND OBSTRUCTIONS. ALL CLEANING OF EXISTING STEEL STRUCTURES THAT ARE TO REMAIN IN PLACE SHALL BE PAID FOR UNDER ITEM 605533 - CLEANING EXISTING STEEL STRUCTURES, HAZARDOUS BASE.

18. SLOPE PROTECTION REPAIR
    SLOPE PROTECTION REPAIR TO ABUTMENT A SHALL BE PAID FOR UNDER ITEM #712524 - CONCRETE SLOPE PAVING REPAIR, 4". PLEASE REFER TO 'ABUTMENT A PLAN AND ELEVATION' AND 'REPAIR DETAILS' FOR MORE INFORMATION.

INDEX OF SHEETS

SHEET NO.	TITLE
1	PROJECT NOTES
2	BRIDGE PLAN AND ELEVATION
3	PROFILE, STAKE-OUT PLAN AND QUANTITIES
4	EXISTING AND PROPOSED DECK SECTION
5	STAGING PLAN
6	ABUTMENT A PLAN AND ELEVATION
7	PIER 1 PLAN AND ELEVATION
8	PIER 2 PLAN AND ELEVATION
9	PIER 3 PLAN AND ELEVATION
10	ABUTMENT B PLAN AND ELEVATION
11	REPAIR DETAILS
12	FRAMING PLAN
13	BEAM DETAILS
14	DIAPHRAGM DETAILS
15	CAMBER DETAILS
16	BEARING DETAILS
17	DECK PLAN
18	TYPICAL DECK SECTION & MISCELLANEOUS DETAILS
19	FINISHED DECK ELEVATIONS-1
20	FINISHED DECK ELEVATIONS-2
21	DECK JOINT DETAILS
22	BARRIER & APPROACH SLAB DETAILS
23	BARRIER DETAILS
24	GUARDRAIL ATTACHMENT DETAILS
25	LIGHTING POLE ANCHORAGE
26	ELECTRICAL DETAILS
27	SCUPPER DETAILS
28	REINFORCEMENT BAR SCHEDULE-1
29	REINFORCEMENT BAR SCHEDULE-2

LRFR LOAD RATINGS

TYPE OF TRUCK	INVENTORY RATING		OPERATING RATING	
	RATING FACTOR	LOAD RATING (TONS)	RATING FACTOR	LOAD RATING (TONS)
AASHTO HL-93 (TRUCK + LANE)	1.06	N/A	1.37	N/A
AASHTO HL-93 (TANDEM + LANE)	1.07	N/A	1.38	N/A

UNOFFICIAL WEBSITE COPY

NOTE:

1. EXISTING APPROACH SLABS TO BE REMOVED UNDER PHASE I. HOT-MIX TO BE PUT BACK AFTER PHASE I COMPLETE AND THEN REMOVED WHEN BRIDGE WORK TAKE PLACE. SEE CONSTRUCTION PHASING SHEETS.

2. EXISTING APPROACH SLABS SHALL BE SAW CUT WHERE NEEDED FOR REMOVAL. SAW CUTTING SHALL BE FULL DEPTH. PAYMENT SHALL BE UNDER ITEM 762002 - SAW CUTTING, CONCRETE, FULL DEPTH.

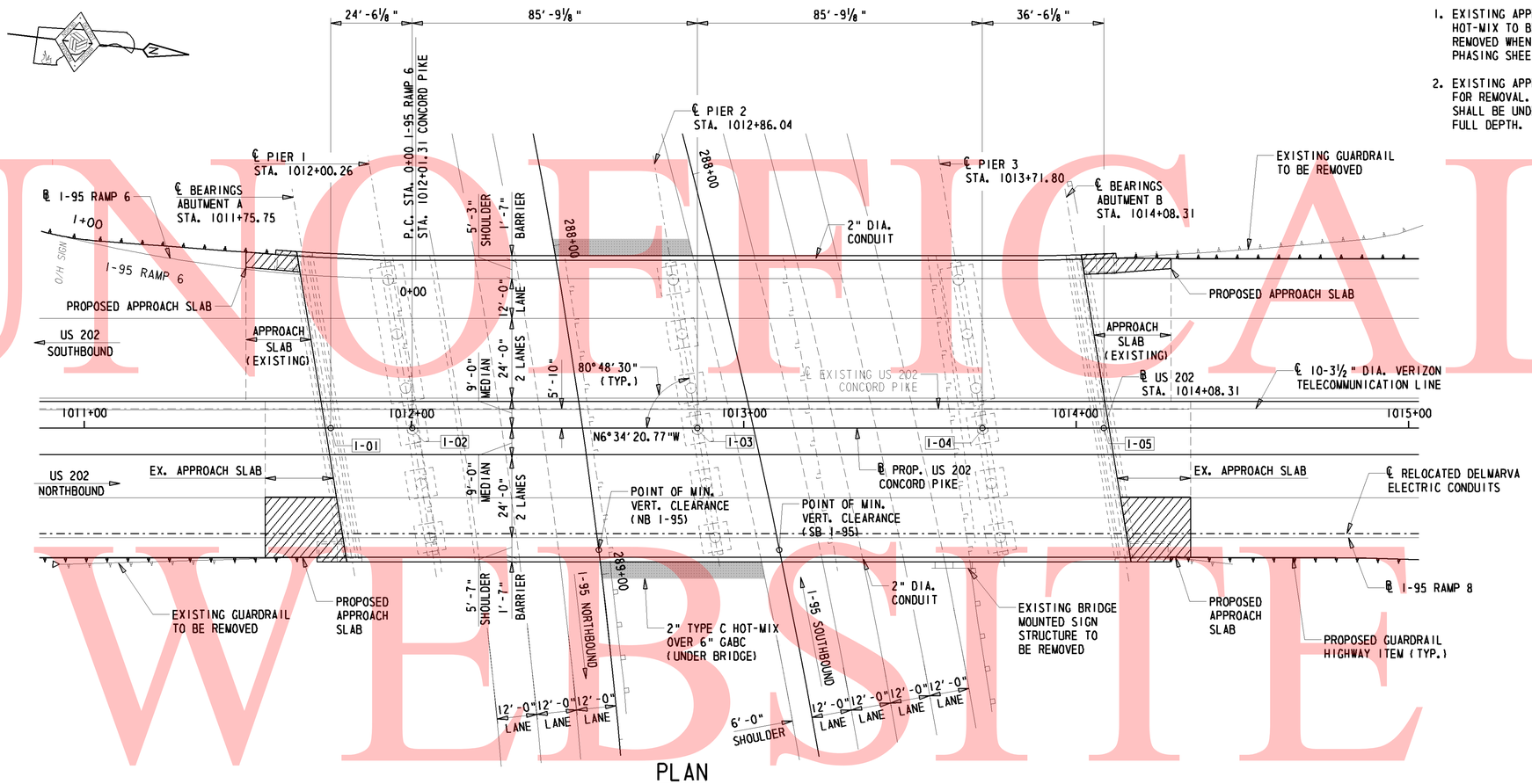

PLAN

1" = 20'-0"

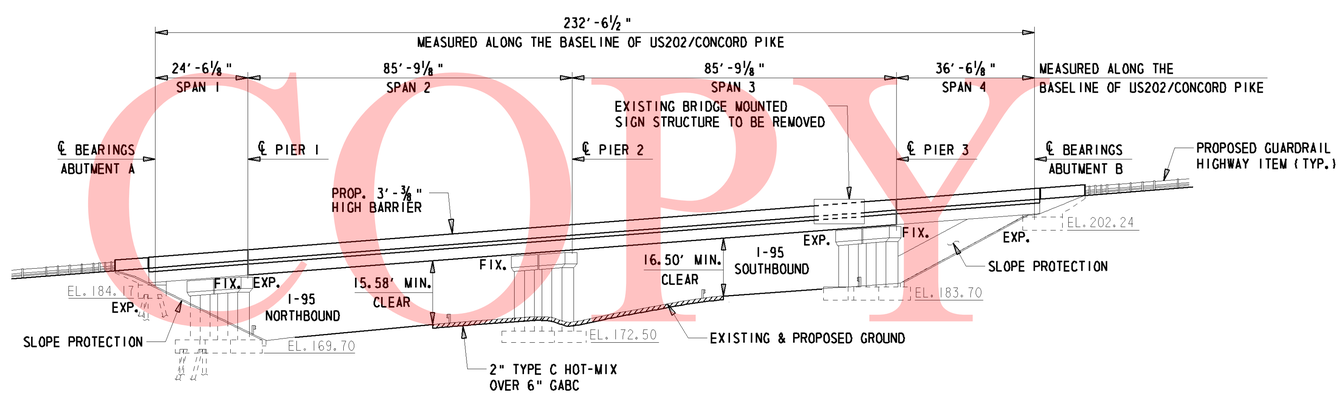

ELEVATION

1" = 20'-0"

UNOFFICIAL WEBSITE COPY

Y:\NEWCASTL\059\BRIDGE\2510602\BRIDGE 1-570\PLANS\ALTERNATIVE 1(FASCIA BEAMS ONLY)\PE01.DGN

DELAWARE DEPARTMENT OF TRANSPORTATION	ADDENDUMS / REVISIONS	I-95 & US 202 INTERCHANGE	CONTRACT T200510602	BRIDGE NO. 1-570	BRIDGE PLAN AND ELEVATION S1-2 OF 29	SHEET NO. 230
			COUNTY NEW CASTLE	DESIGNED BY: MJG		TOTAL SHTS. 482
				CHECKED BY: JNH		

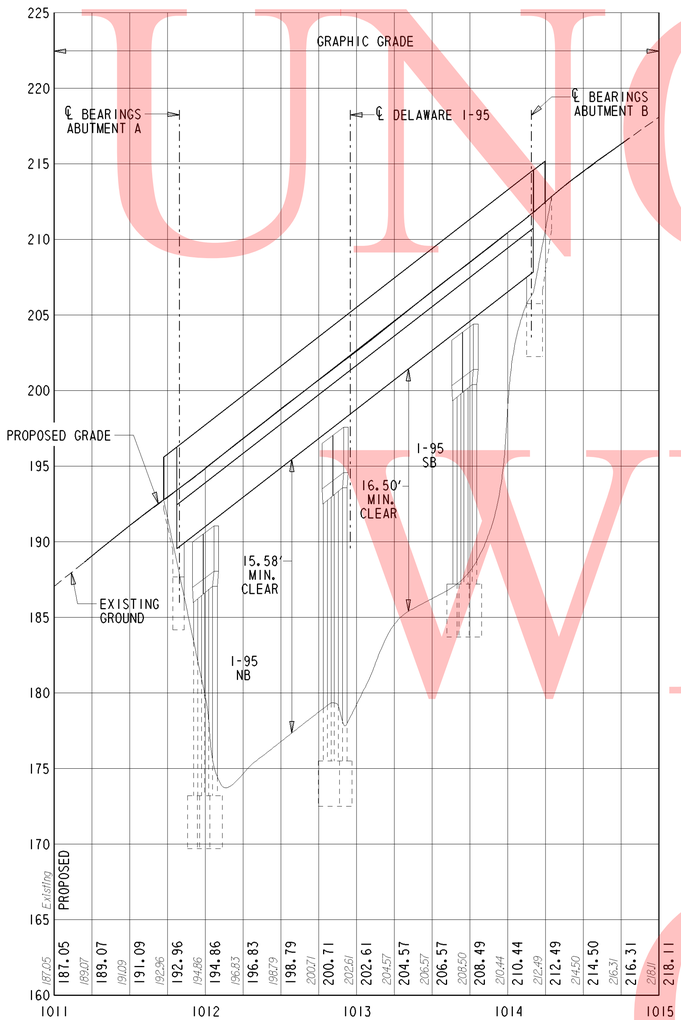

US 202/CONCORD PIKE PROFILE

HORIZONTAL: 1' = 50'-0"
VERTICAL: 1' = 5'-0"

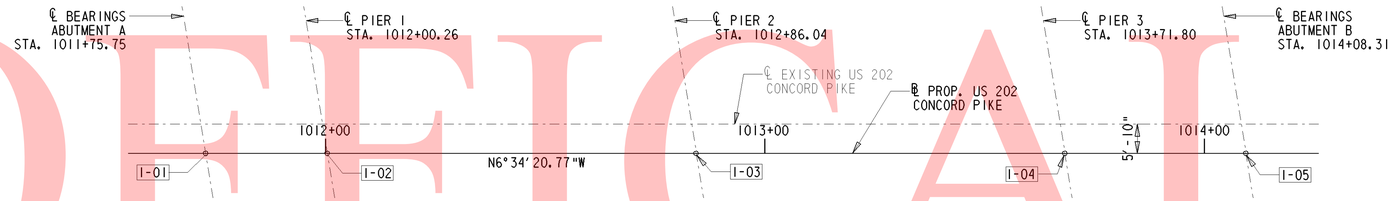

STAKE-OUT PLAN

N.T.S.

TABLE OF WORK POINT DATA

WORK POINT NUMBER	COORDINATES		STATION	OFFSET
	NORTHING	EASTING		
I-01	643459.761	620657.776	1011+75.75	0'-0"
I-02	643484.109	620654.971	1012+00.26	0'-0"
I-03	643569.319	620645.153	1012+86.04	0'-0"
I-04	643654.515	620635.338	1013+71.80	0'-0"
I-05	643690.785	620631.159	1014+08.31	0'-0"

QUANTITIES

ITEM NO.	ITEM TITLE	UNIT	QUANTITY
207000	EXCAVATION AND BACKFILL FOR STRUCTURES	C.Y.	10
210000	FURNISHING BORROW 'C' FOR PIPE, UTILITY TRENCH, AND SUBSTRUCTURE BACKFILL	C.Y.	13
211000	REMOVAL OF STRUCTURES AND OBSTRUCTIONS	L.S.	L.S.
601502	TEMPORARY PROTECTIVE SHIELD	L.S.	L.S.
602002	PCC MASONRY, CLASS B	C.Y.	62
602009	PCC MASONRY, APPROACH SLAB, CLASS A	C.Y.	58
602011	PCC MASONRY, SUBSTRUCTURE, CLASS A	C.Y.	2
602013	PCC MASONRY, SUPERSTRUCTURE, CLASS D	C.Y.	630
602017	PCC MASONRY, PARAPET, CLASS A	C.Y.	50
602572	REPAIRING EXISTING PCC STRUCTURES	LB	450
602579	DRILLING HOLES AND INSTALLING DOWELS	EA	824
602586	REHABILITATION OF CONCRETE STRUCTURE	C.F.	100
602611	REPAIR OF CONCRETE STRUCTURES BY EPOXY INJECTION	L.F.	100
602646	SILICONE ACRYLIC CONCRETE SEALER	S.F.	13,000
602648	PRECAST CAPSTONE	L.F.	525
604000	BAR REINFORCEMENT, EPOXY COATED	LB	181,000
605002	STEEL STRUCTURES	L.S.	L.S.
605522	URETHANE PAINT SYSTEM, EXISTING STEEL	L.S.	L.S.
605524	BRIDGE DRAINAGE SYSTEM	L.S.	L.S.
605528	UTILITY SUPPORT	L.S.	L.S.
605533	CLEANING EXISTING STEEL STRUCTURES, HAZARDOUS BASE	L.S.	L.S.
605581	ELASTOMETRIC BEARING PADS	EA	36
605607	JACKING BRIDGE	L.S.	L.S.
605641	JOINT REPAIR (COMPRESSION SEAL), 1"	L.F.	190
605657	STRIP SEAL EXPANSION JOINT	L.F.	190
611500	STONE MASONRY	S.F.	1300
712524	CONCRETE SLOPE PAVING REPAIR, 4"	S.Y.	8
745506	GALVANIZED CONDUIT IN/ON STRUCTURE, 2"	L.F.	520
762002	SAW CUTTING, CONCRETE, FULL DEPTH	L.F.	525

UNOFFICAL WEBSITE COPY

UNOFFICAL WEBSITE COPY

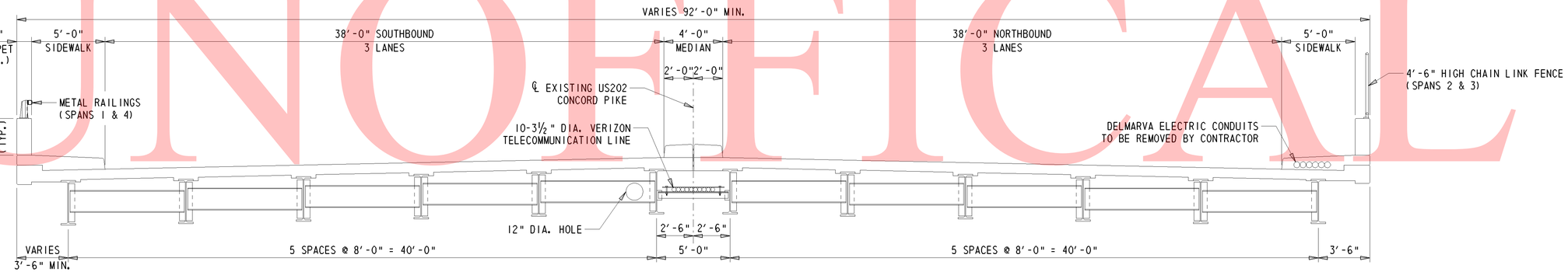

EXISTING DECK SECTION

(LOOKING UP STATION)
¼" = 1'-0"

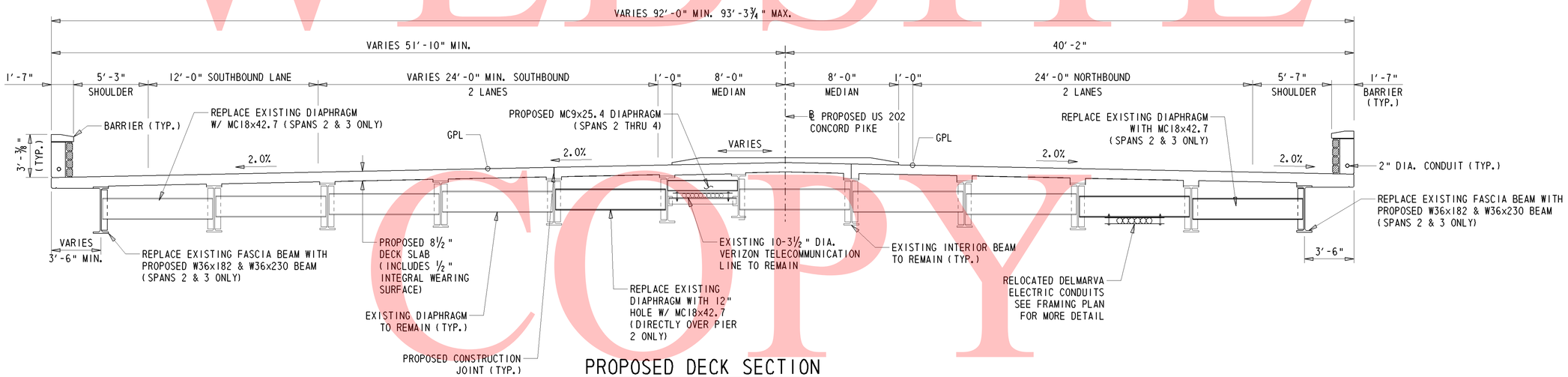

PROPOSED DECK SECTION

(LOOKING UP STATION)
¼" = 1'-0"

DELAWARE DEPARTMENT OF TRANSPORTATION	ADDENDUMS / REVISIONS		I-95 & US 202 INTERCHANGE	CONTRACT T200510602	BRIDGE NO. 1-570	EXISTING AND PROPOSED DECK SECTION S1-4 OF 29	SHEET NO. 232
				COUNTY NEW CASTLE	DESIGNED BY: MJG		TOTAL SHTS. 482
					CHECKED BY: JNH		

Y:\NEWCASTL\059\BRIDGE\2510602\BRIDGE I-570\PLANS\ALTERNATIVE 1(FASCIA BEAMS ONLY)\DT01.DGN

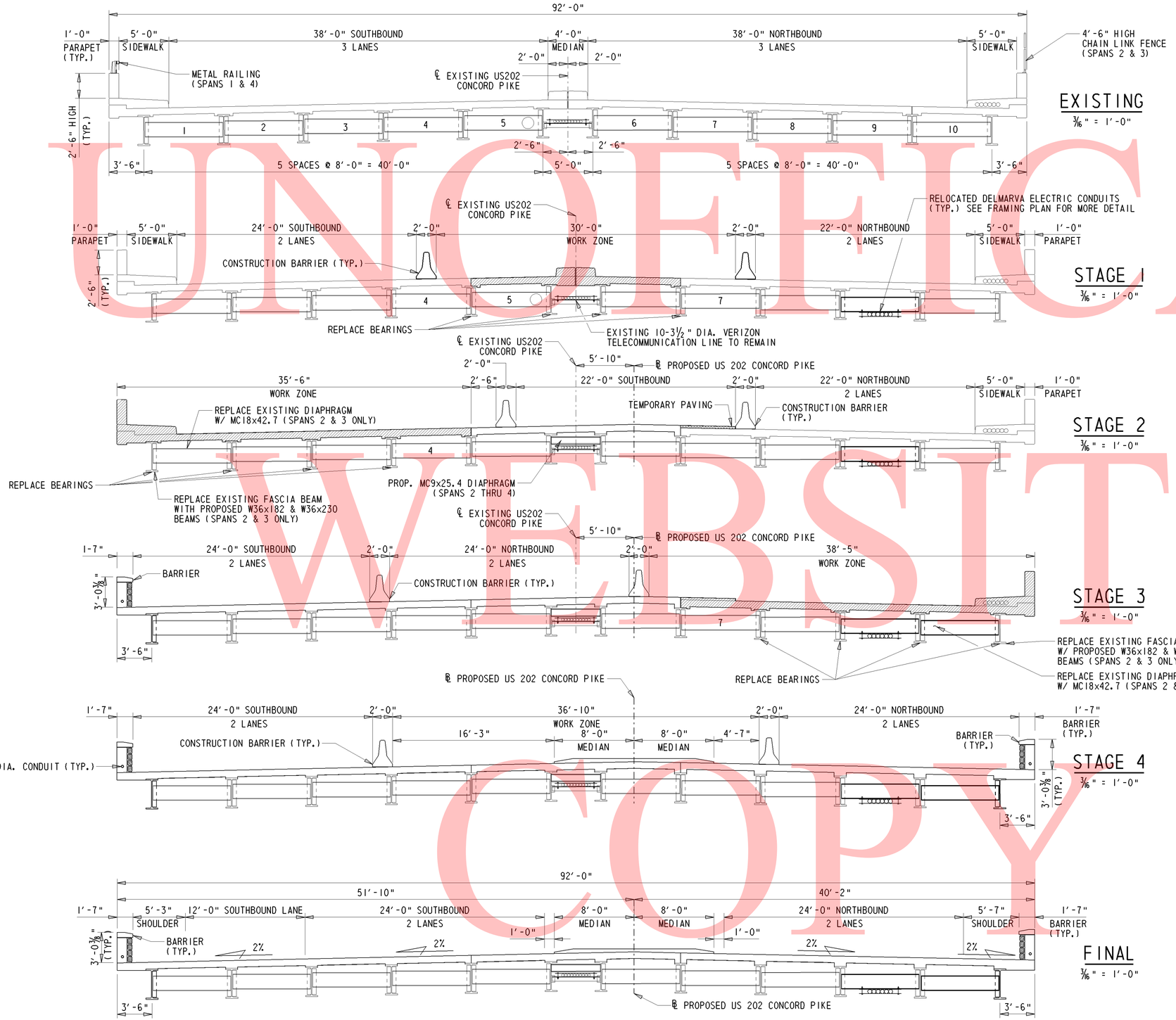

SEQUENCE OF REHABILITATION WORK

STAGE 1
1. PERFORM CONCRETE REPAIRS OF ABUTMENT B AND PIERS 2 & 3. REPAIR SLOPE PROTECTION AT ABUTMENT A.
2. CONSTRUCT TEMPORARY PROTECTIVE SHEILD UNDER SPAN 2 & 3.
3. SET UP MAINTENANCE OF TRAFFIC PATTERN FOR STAGE 1 CONSTRUCTION IN ACCORDANCE WITH TRAFFIC CONTROL PLAN. DEMOLISH PORTION OF EXISTING DECK SLAB AND APPROACH SLAB AS SHOWN.
4. REMOVE DIAPHRAGMS 4 & 7. REPLACE DIAPHRAGM 5 PRIOR TO JACKING AT PIER 2.
5. JACK UP BRIDGE AND REPLACE BEARINGS UNDER 4 BEAMS AS SHOWN.
6. REATTACH DIAPHRAGM 7.
7. INSTALL NEW MC9x25.4 DIAPHRAGMS IN THE MIDDLE BAY ABOVE THE EXISTING VERIZON TELECOMMUNICATION LINE.
8. INSTALL DIAPHRAGMS AND UTILITY SUPPORTS IN BAY 9 IN ALL SPANS FOR DELMARVA CONDUITS. REFER TO FRAMING PLAN FOR MORE INFORMATION.
9. RELOCATE DELMARVA CONDUITS TO BAY 9 (SEE FRAMING PLAN).
10. CONSTRUCT NEW DECK, APPROACH SLABS, AND TEMPORARY PAVING AS SHOWN.
11. RECONSTRUCT ABUTMENT BACKWALLS AND JOINTS.

STAGE 2
1. SET UP MAINTENANCE OF TRAFFIC PATTERN FOR STAGE 2 CONSTRUCTION IN ACCORDANCE WITH TRAFFIC CONTROL PLAN. REMOVE EXISTING DECK SLAB, SIDEWALK, AND APPROACH SLAB AS SHOWN.
2. REMOVE TEMPORARY PROTECTIVE SHEILD IN BAY 1.
3. REPLACE WEST FASCIA BEAM AND REATTACH DIAPHRAGMS IN WEST EXTERIOR BAY IN SPANS 2 & 3.
4. JACK UP BRIDGE AND REPLACE BEARINGS AS SHOWN.
5. REATTACH DIAPHRAGM 4.
6. REATTACH TEMPORARY PROTECTIVE SHEILD IN BAY 1.
7. CONSTRUCT NEW DECK, BARRIER, AND APPROACH SLABS AND MODIFY WINGWALLS.
8. RECONSTRUCT ABUTMENT BACKWALLS AND JOINTS.

STAGE 3
1. REMOVE EXISTING LUMINARE.
2. SET UP MAINTENANCE OF TRAFFIC PATTERN FOR STAGE 3 CONSTRUCTION IN ACCORDANCE WITH TRAFFIC CONTROL PLAN. REMOVE EXISTING DECK SLAB.
3. REMOVE TEMPORARY PROTECTIVE SHEILD IN BAY 10.
4. REPLACE EAST FASCIA BEAM AND DIAPHRAGMS IN EXTERIOR BAY IN SPANS 2 & 3.
5. REMOVE DIAPHRAGM 7.
6. JACK UP BRIDGE AND REPLACE BEARINGS AS SHOWN.
7. REATTACH DIAPHRAGM 7.
8. REATTACH TEMPORARY PROTECTIVE SHEILD IN BAY 10.
9. CONSTRUCT NEW DECK, PARAPET, AND APPROACH SLABS AND MODIFY WINGWALLS.
10. RECONSTRUCT ABUTMENT BACKWALLS AND JOINTS.

STAGE 4
1. SET UP MAINTENANCE OF TRAFFIC PATTERN FOR STAGE 4 CONSTRUCTION IN ACCORDANCE WITH TRAFFIC CONTROL PLAN.
2. CONSTRUCT MEDIAN.

NOTE:
SAW CUTTING SHALL BE USED AT BEAMS 5 AND 8 FOR REMOVAL OF EXISTING DECK. CONTRACTOR SHALL TAKE CARE SO THAT BEAMS ARE NOT DAMAGED. ANY DAMAGE DONE SHALL BE REPAIRED AT CONTRACTOR'S EXPENSE. PAYMENT SHALL BE UNDER ITEM 762002 - SAW CUTTING, CONCRETE, FULL DEPTH.

LEGEND

DENOTES LIMITS OF DECK STRUCTURES TO BE REMOVED

TEMPORARY PAVEMENT

NOTE:
EXISTING METAL RAILING AND CHAIN LINK FENCE ON STAGE 1, 2, AND 3, NOT SHOWN FOR CLARITY.

UNOFFICIAL WEBSITE COPY

Y:\NEWCASTL\059\BRIDGE\2510602\BRIDGE 1-570\PLANS\ALTERNATIVE 1(FASCIA BEAMS ONLY)\STAGING.DGN

DELAWARE DEPARTMENT OF TRANSPORTATION	ADDENDUMS / REVISIONS	I-95 & US 202 INTERCHANGE	CONTRACT T200510602	BRIDGE NO. 1-570	STAGING PLAN S1-5 OF 29	SHEET NO. 233
			COUNTY NEW CASTLE	DESIGNED BY: MJG		TOTAL SHTS. 482
				CHECKED BY: JNH		

NOTE:
BACKWALL REMOVAL AND RECONSTRUCTION TO TAKE PLACE IN PHASE 1. ALL OTHER WORK TO TAKE PLACE WITH BRIDGE WORK. SEE CONSTRUCTION PHASING SHEETS FOR MORE DETAIL.

LEGEND:

- SHALLOW SPALL REPAIR
- EXISTING STRUCTURE TO BE REMOVED
- EXISTING STRUCTURE TO BE REMOVED AND RECONSTRUCTED

NOTES:
1. SHALLOW SPALL REPAIR PAID FOR UNDER ITEM #602572.
2. CONTRACTOR SHALL CLEAN UP DIRT AND DEBRIS ON BRIDGE SEAT. COST TO BE PAID FOR UNDER ITEM #211000.
3. QUANTITIES SHOWN FOR SUBSTRUCTURE REPAIR INCLUDES REMOVAL OF UNSOUND & DETERIORATED CONCRETE AROUND THE SPALL AS PER DETAIL SHOWN IN REPAIR DETAILS.
4. REPAIR QUANTITIES SHOWN ARE BASED ON BEST AVAILABLE INFORMATION. ANY ADDITIONAL REPAIR QUANTITY FOUND DURING CONSTRUCTION WILL BE REPAIRED BY THE CONTRACTOR AT THE BID PRICE AND AS DIRECTED BY THE ENGINEER.
5. REFER TO NOTE #16 'CONTINGENT QUANTITIES' ON PROJECT NOTES SHEET.

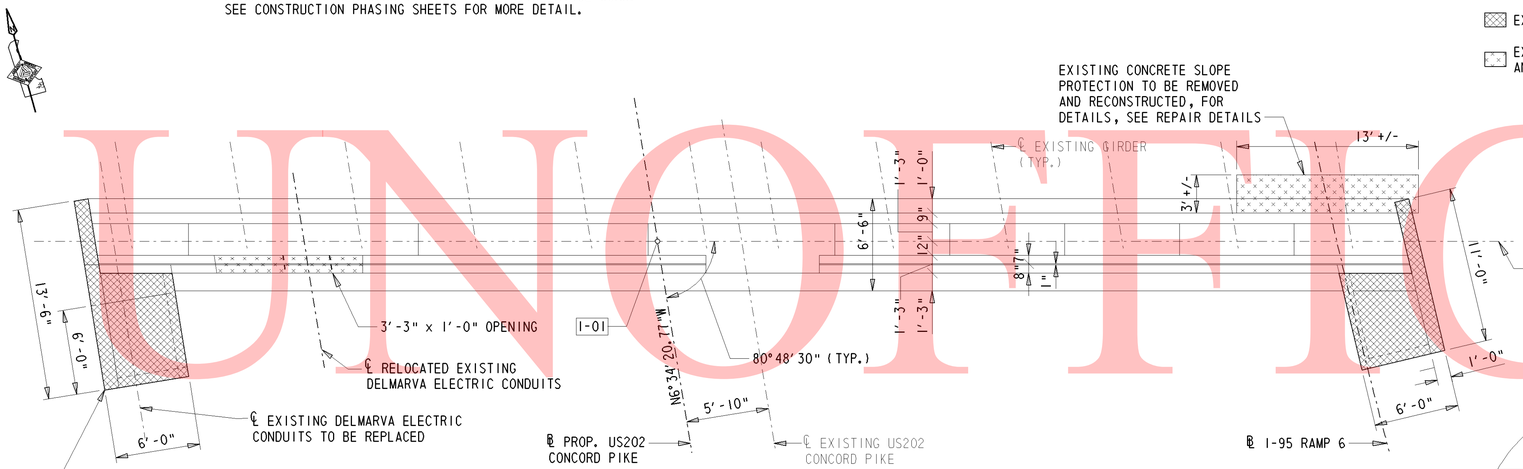

PLAN ABUTMENT A

3/16" = 1'-0"

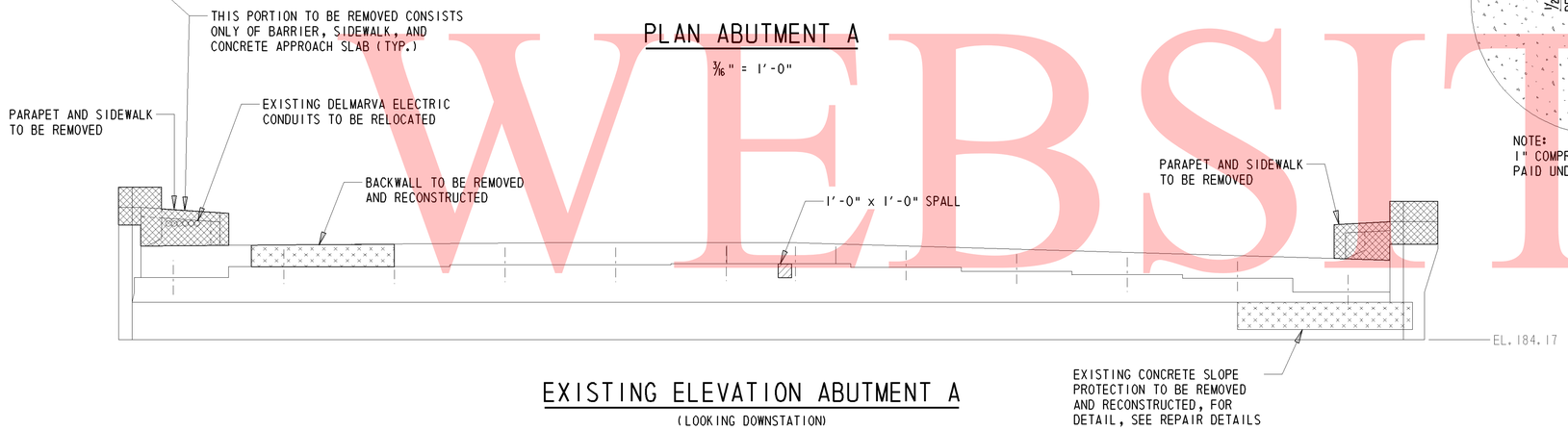

EXISTING ELEVATION ABUTMENT A

(LOOKING DOWNSTATION)

3/16" = 1'-0"

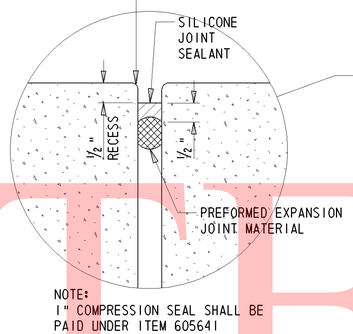

NOTE:
1" COMPRESSION SEAL SHALL BE PAID UNDER ITEM 605641

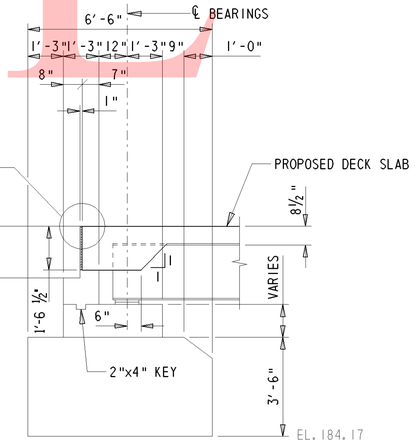

TYPICAL SECTIONS

3/8" = 1'-0"

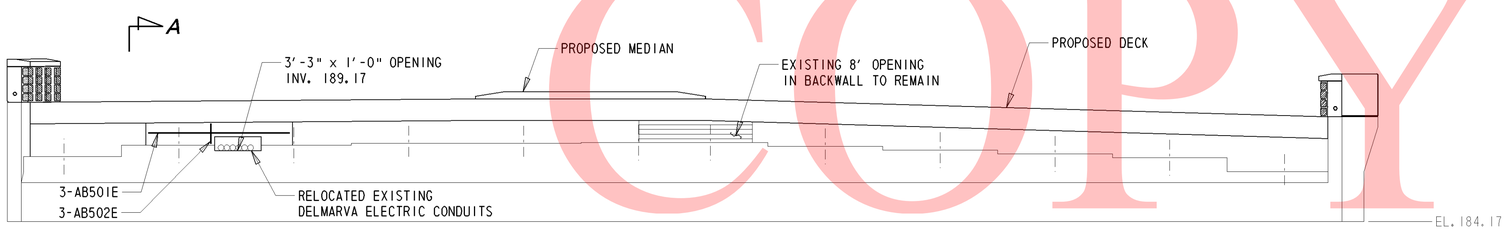

PROPOSED ELEVATION ABUTMENT A

(LOOKING DOWNSTATION)

3/16" = 1'-0"

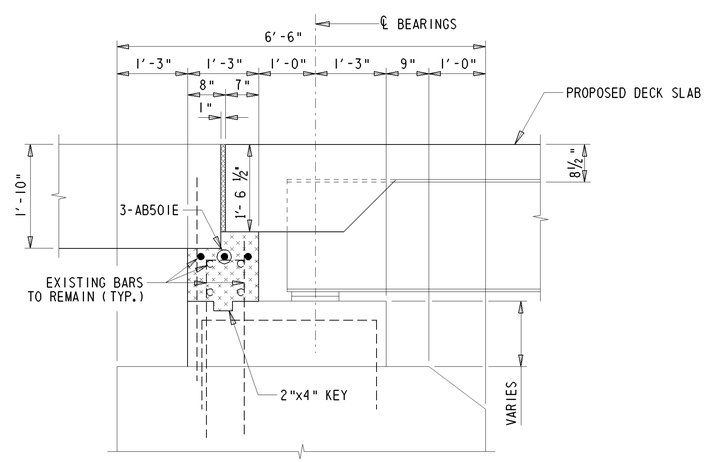

SECTION A-A

3/4" = 1'-0"

UNOFFICIAL WEBSITE COPY

Y:\NEWCASTL\059\BRIDGE\2510602\BRIDGE 1-570\PLANS\ALTERNATIVE 1(FASCIA BEAMS ONLY)\AB01.DGN

DELAWARE DEPARTMENT OF TRANSPORTATION	ADDENDUMS / REVISIONS	I-95 & US 202 INTERCHANGE	CONTRACT T200510602	BRIDGE NO. 1-570	ABUTMENT A PLAN AND ELEVATION S1-6 OF 29	SHEET NO. 234
			COUNTY NEW CASTLE	DESIGNED BY: MJG		TOTAL SHTS. 482
				CHECKED BY: JNH		

PEDESTAL ELEVATIONS	
GIRDER	ELEVATION
1	189.34'
2	189.54'
3	189.80'
4	190.06'
5	190.32'
6	190.58'
7	190.75'
8	190.32'
9	190.26'
10	190.20'
11	190.14'
12	190.25'

NOTE:
1. CONTRACTOR SHALL CLEAN UP DIRT AND DEBRIS ON BRIDGE SEAT. COST TO BE PAID FOR UNDER ITEM #211000.
2. COST OF MASONRY PADS ON ALL PIERS IS INCIDENTAL TO THE BID PRICE ITEM #602011 - PCC MASONRY, SUBSTRUCTURE, CLASS A.
3. COST TO DRILL AND GROUT BARS FOR MASONRY PADS SHALL BE PAID UNDER ITEM #602579 - DRILLING HOLES AND INSTALLING DOWELS. BARS FOR MASONRY PADS SHALL BE PAID UNDER ITEM #604000.

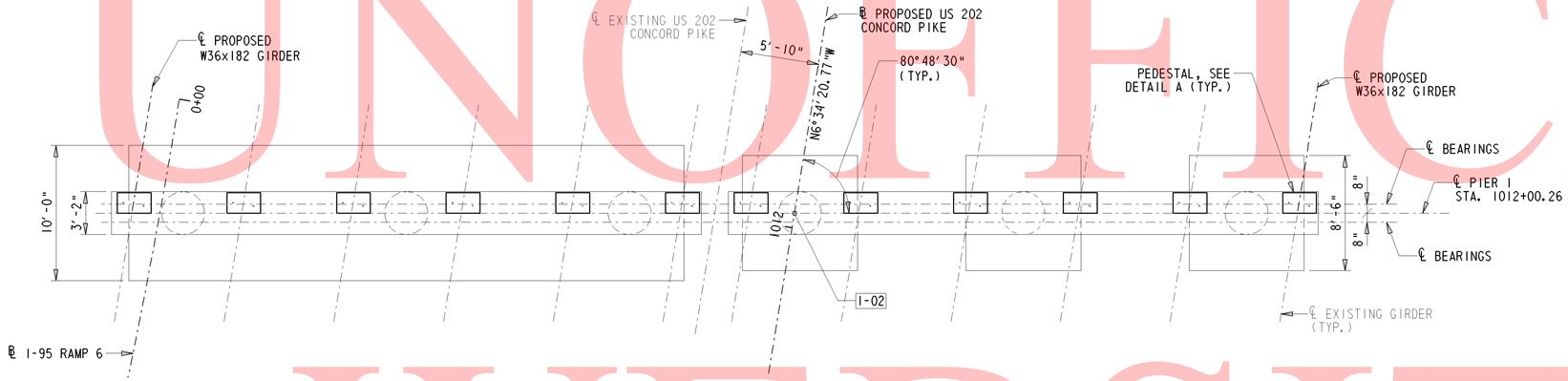

PLAN PIER 1

3/16" = 1'-0"

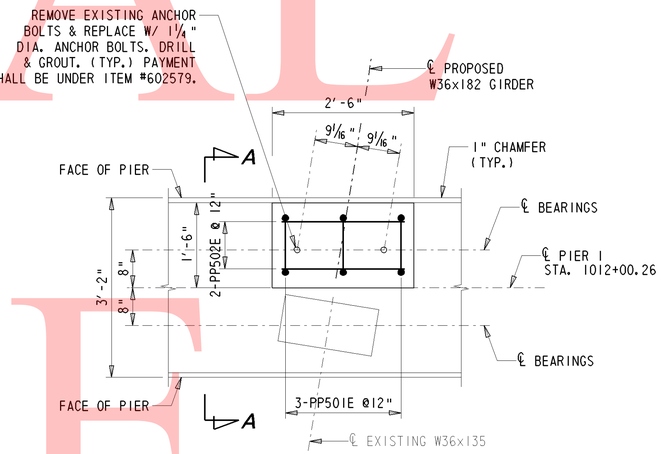

DETAIL A

N.T.S.

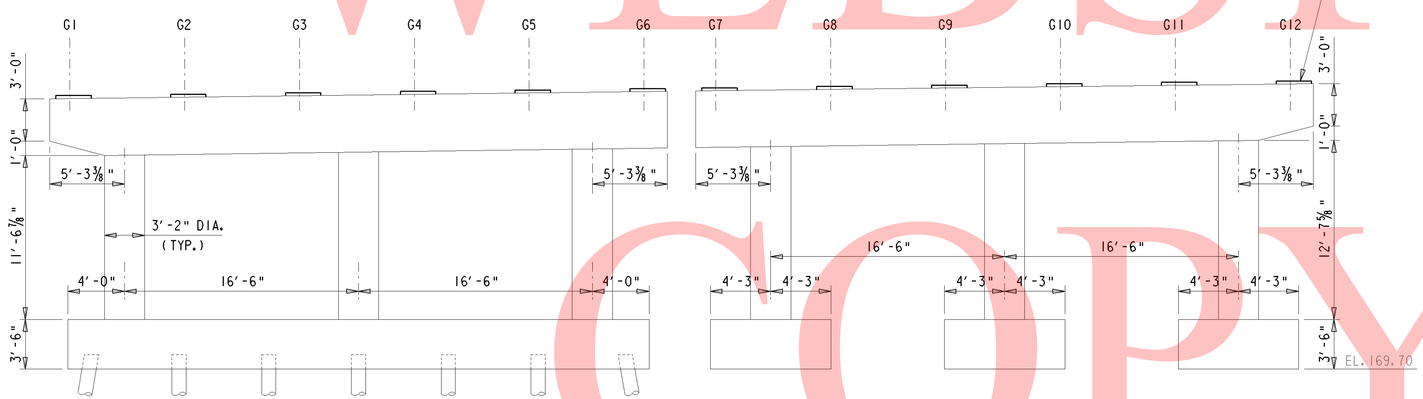

SOUTH ELEVATION

(LOOKING UPSTATION)

3/16" = 1'-0"

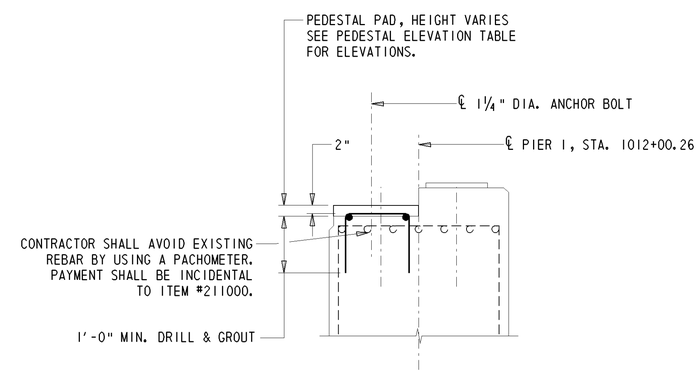

NOTE:
MINIMUM EMBEDMENT OF ANCHOR BOLT IS 1'-3"

SECTION A-A

N.T.S.

UNOFFICAL WEBSITE COPY

Y:\NEWCASTL\059\BRIDGE\2510602\BRIDGE 1-570\PLANS\ALTERNATIVE 1(FASCIA BEAMS ONLY)\PRO1.DGN

DELAWARE DEPARTMENT OF TRANSPORTATION	ADDENDUMS / REVISIONS	I-95 & US 202 INTERCHANGE	CONTRACT T200510602	BRIDGE NO. 1-570	PIER 1 PLAN AND ELEVATION S1-7 OF 29	SHEET NO. 235
			COUNTY NEW CASTLE	DESIGNED BY: MJG		TOTAL SHTS. 482
				CHECKED BY: JNH		

UNOFFICIAL WEBSITE COPY

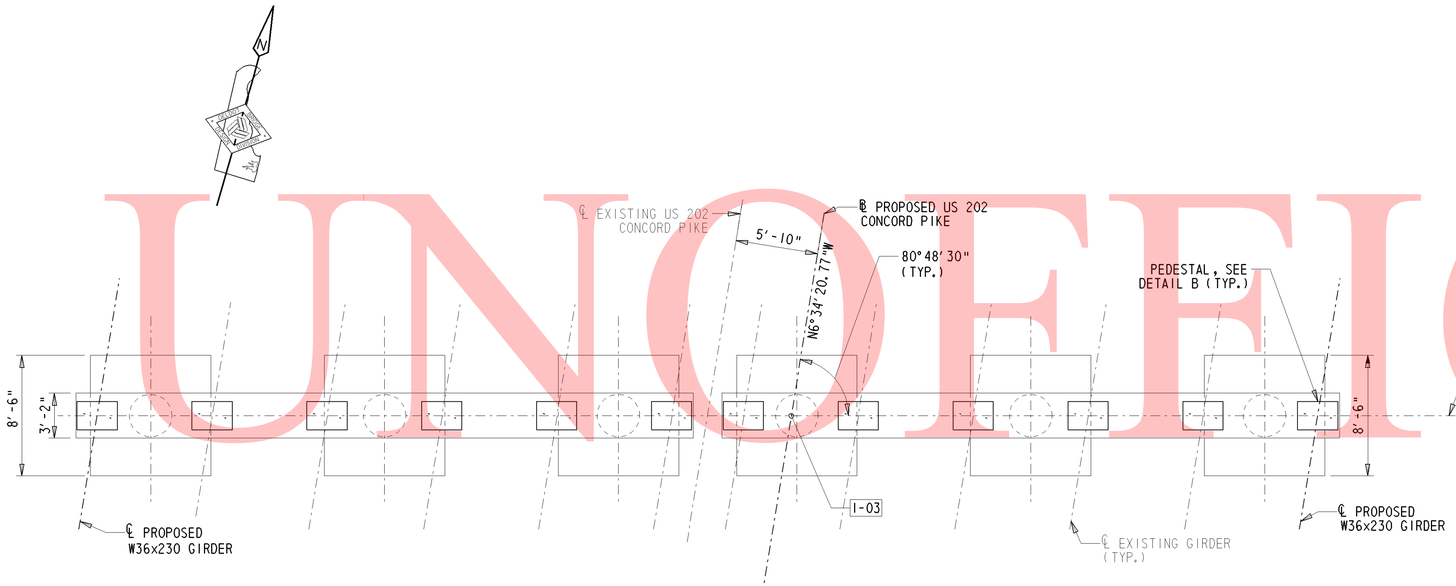

PLAN PIER 2

3/16" = 1'-0"

PEDESTAL ELEVATIONS	
GIRDER	ELEVATION
1	195.96'
2	196.13'
3	196.39'
4	196.65'
5	196.91'
6	197.17'
7	197.34'
8	196.97'
9	196.91'
10	196.85'
11	196.79'
12	196.91'

LEGEND:

SHALLOW SPALL REPAIR

CRACK REPAIR

NOTE:

1. SHALLOW SPALL REPAIR PAID FOR UNDER ITEM #602572
2. CRACK REPAIR PAID FOR UNDER ITEM #602611
3. SOFFIT SPALL REPAIR PAID FOR UNDER ITEM #602572
4. CONTRACTOR SHALL CLEAN UP DIRT AND DEBRIS ON BRIDGE SEAT, COST TO BE INCIDENTAL TO ITEM #211000
5. QUANTITIES SHOWN FOR SUBSTRUCTURE REPAIR INCLUDES REMOVAL OF UNSOUND & DETERIORATED CONCRETE AROUND THE SPALL AS PER DETAIL SHOWN IN REPAIR DETAILS.
6. REPAIR QUANTITIES SHOWN ARE BASED ON BEST AVAILABLE INFORMATION. ANY ADDITIONAL REPAIR QUANTITY FOUND DURING CONSTRUCTION WILL BE REPAIRED BY THE CONTRACTOR AT THE BID PRICE AND AS DIRECTED BY THE ENGINEER.
7. COST TO DRILL AND GROUT BARS FOR MASONRY PADS SHALL BE PAID UNDER ITEM #602579 - DRILLING HOLES AND INSTALLING DOWELS. BARS FOR MASONRY PADS SHALL BE PAID UNDER ITEM #604000.

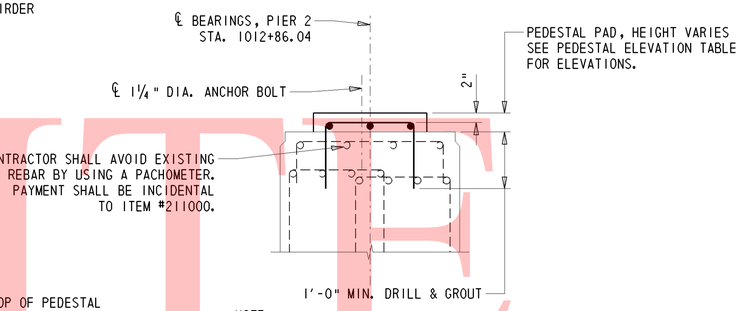

NOTE:
MINIMUM EMBEDMENT OF ANCHOR BOLT IS 1'-3"

SECTION B-B

N.T.S.

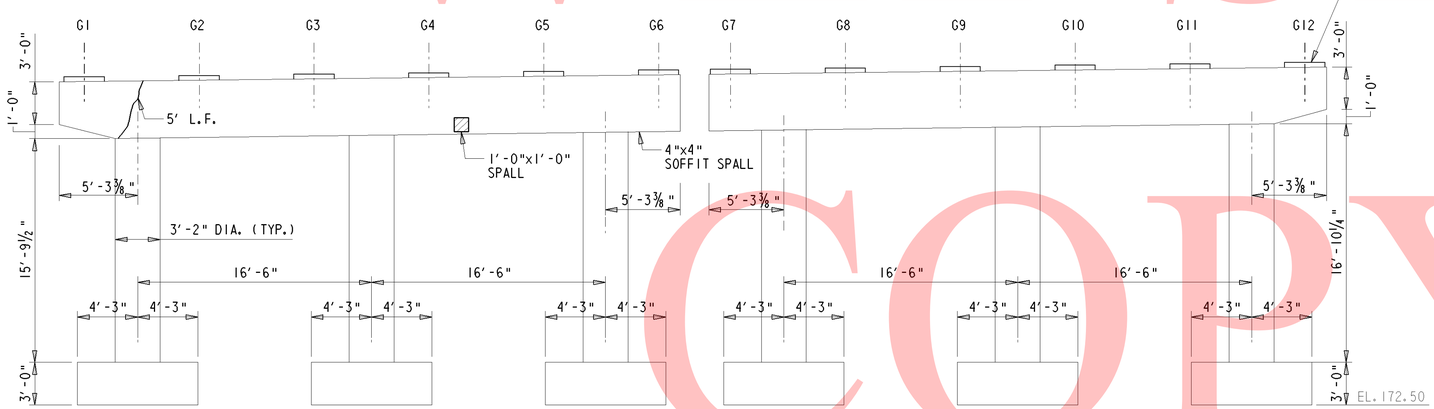

SOUTH ELEVATION

(LOOKING UPSTATION)

3/16" = 1'-0"

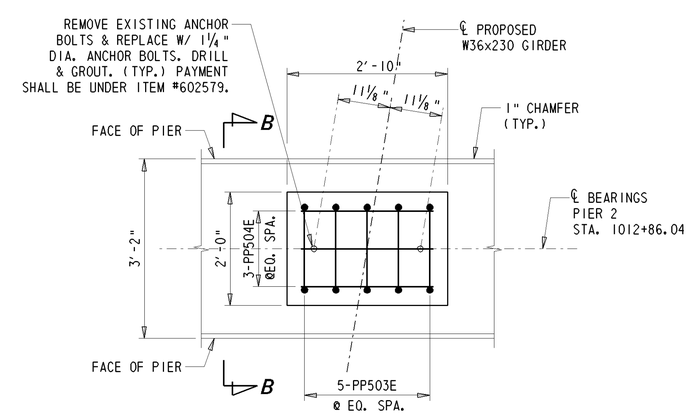

DETAIL B

N.T.S.

DELAWARE DEPARTMENT OF TRANSPORTATION	ADDENDUMS / REVISIONS	I-95 & US 202 INTERCHANGE	CONTRACT T200510602	BRIDGE NO. 1-570	PIER 2 PLAN AND ELEVATION S1-8 OF 29	SHEET NO. 236
			COUNTY NEW CASTLE	DESIGNED BY: MJG		TOTAL SHTS. 482
				CHECKED BY: JNH		

Y:\NEWCASTL\059\BRIDGE\2510602\BRIDGE 1-570\PLANS\ALTERNATIVE 1(FASCIA BEAMS ONLY)\PRO2.DGN

PEDESTAL ELEVATIONS	
GIRDER	ELEVATION
1	202.55'
2	202.72'
3	202.99'
4	203.25'
5	203.51'
6	203.77'
7	203.93'
8	203.54'
9	203.48'
10	203.42'
11	203.36'
12	203.48'

LEGEND:

SHALLOW SPALL REPAIR

CRACK REPAIR

NOTE:

1. INCIPIENT SHALLOW SPALL REPAIR PAID FOR UNDER ITEM #602572
2. CRACK REPAIR PAID FOR UNDER ITEM #602611
3. CONTRACTOR SHALL CLEAN UP DIRT AND DEBRIS ON BRIDGE SEAT, COST TO BE PAID FOR UNDER ITEM #211000
4. QUANTITIES SHOWN FOR SUBSTRUCTURE REPAIR INCLUDES REMOVAL OF UNSOUND & DETERIORATED CONCRETE AROUND THE SPALL AS PER DETAIL SHOWN IN REPAIR DETAILS.
5. REPAIR QUANTITIES SHOWN ARE BASED ON BEST AVAILABLE INFORMATION. ANY ADDITIONAL REPAIR QUANTITY FOUND DURING CONSTRUCTION WILL BE REPAIRED BY THE CONTRACTOR AT THE BID PRICE AND AS DIRECTED BY THE ENGINEER.
6. COST TO DRILL AND GROUT BARS FOR MASONRY PADS SHALL BE PAID UNDER ITEM #602579 - DRILLING HOLES AND INSTALLING DOWELS. BARS FOR MASONRY PADS SHALL BE PAID UNDER ITEM #604000.

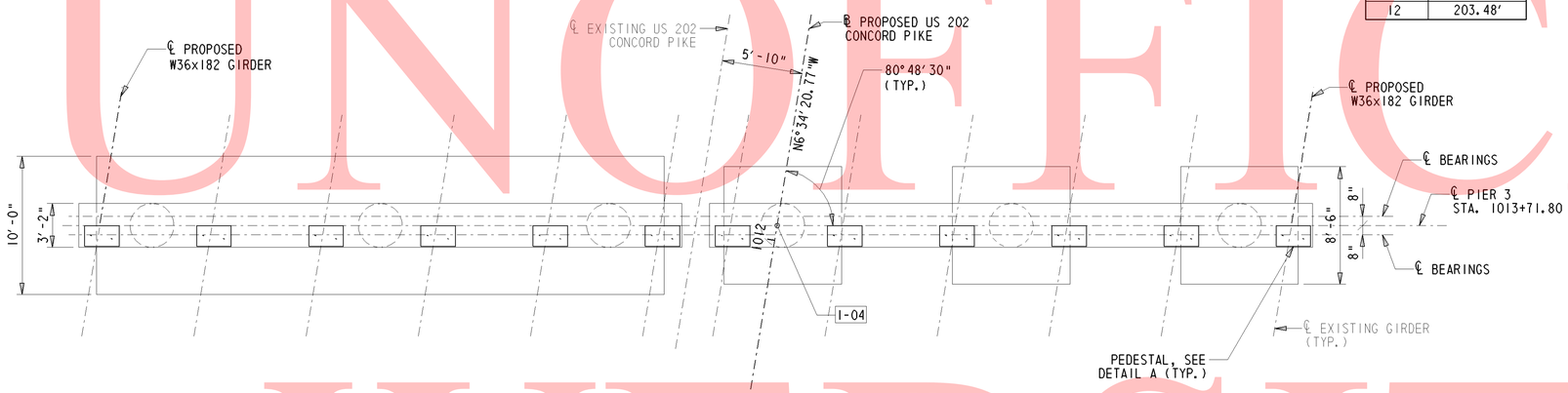

PLAN PIER 3

3/16" = 1'-0"

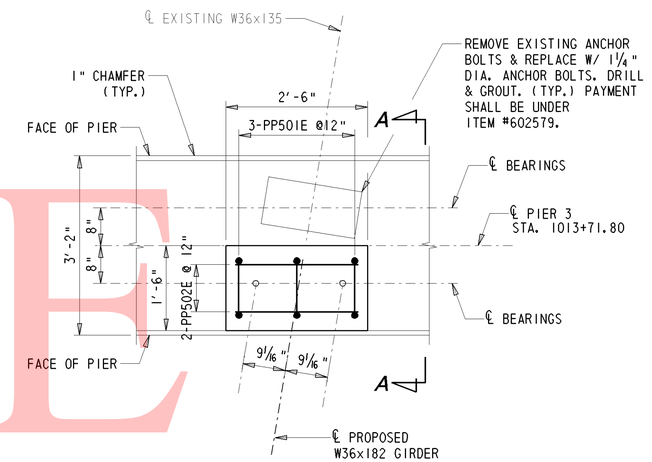

DETAIL A

N.T.S.

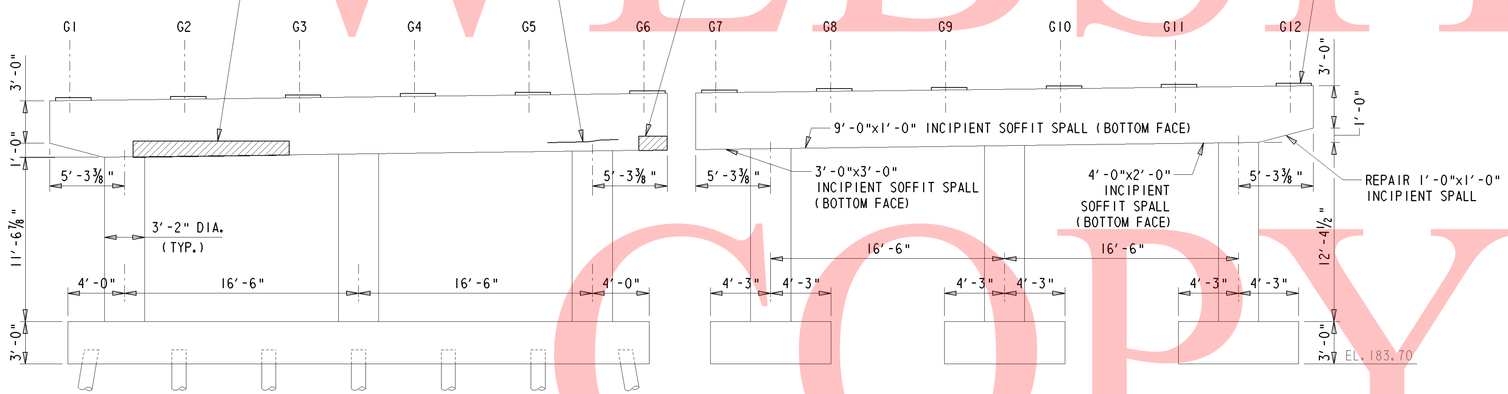

SOUTH ELEVATION

(LOOKING UPSTATION)

3/16" = 1'-0"

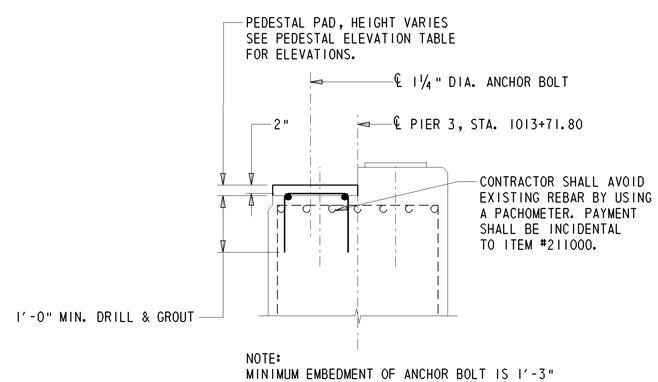

NOTE:
MINIMUM EMBEDMENT OF ANCHOR BOLT IS 1'-3"

SECTION A-A

N.T.S.

UNOFFICAL WEBSITE COPY

DELAWARE DEPARTMENT OF TRANSPORTATION	ADDENDUMS / REVISIONS	I-95 & US 202 INTERCHANGE	CONTRACT T200510602	BRIDGE NO. 1-570	PIER 3 PLAN AND ELEVATION S1-9 OF 29	SHEET NO. 237
			COUNTY NEW CASTLE	DESIGNED BY: MJG		TOTAL SHTS. 482
				CHECKED BY: JNH		

Y:\NEWCASTL\059\BRIDGE\2510602\BRIDGE 1-570\PLANS\ALTERNATIVE 1(FASCIA BEAMS ONLY)\PR03.DGN

NOTE:
BACKWALL REMOVAL AND RECONSTRUCTION TO TAKE PLACE IN PHASE 1. ALL OTHER WORK TO TAKE PLACE WITH BRIDGE WORK. SEE CONSTRUCTION PHASING SHEETS FOR MORE DETAIL.

LEGEND:

- SHALLOW SPALL REPAIR
- EXISTING STRUCTURE TO BE REMOVED
- EXISTING STRUCTURE TO BE REMOVED AND RECONSTRUCTED
- CRACK REPAIR

NOTES:
1. SHALLOW SPALL REPAIR PAID FOR UNDER ITEM #602572.
2. CRACK REPAIR PAID FOR UNDER ITEM #602611.
3. QUANTITIES SHOWN FOR SUBSTRUCTURE REPAIR INCLUDE REMOVAL OF UNSOUND & DETERIORATED CONCRETE AROUND THE SPALL AS PER DETAIL SHOWN ON REPAIR DETAILS SHEET.
4. REPAIR QUANTITIES SHOWN ARE BASED ON BEST AVAILABLE INFORMATION. ANY ADDITIONAL REPAIR QUANTITY FOUND DURING CONSTRUCTION WILL BE REPAIRED BY THE CONTRACTOR AT THE BID PRICE AND AS DIRECTED BY THE ENGINEER.

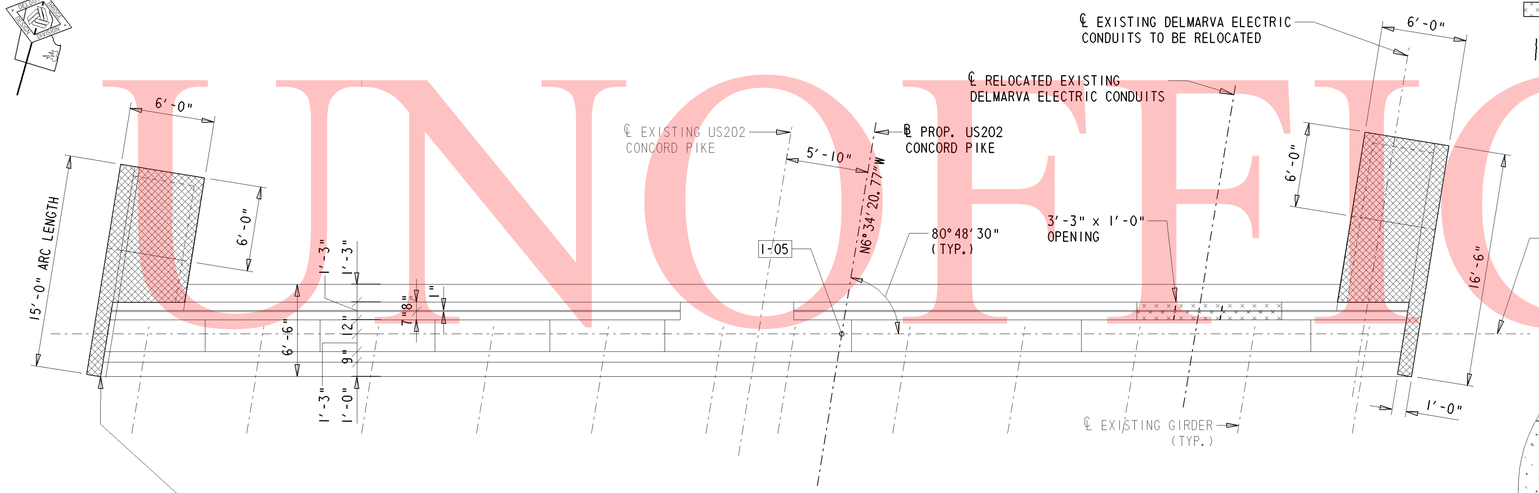

PLAN ABUTMENT B

(LOOKING UPSTATION)

3/16" = 1'-0"

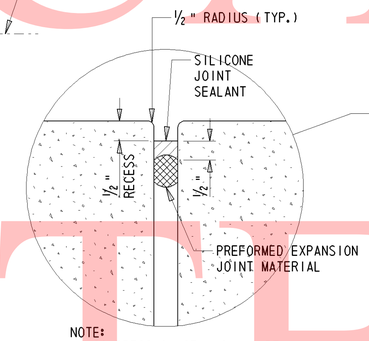

NOTE:
1" COMPRESSION SEAL SHALL BE PAID UNDER ITEM 605641

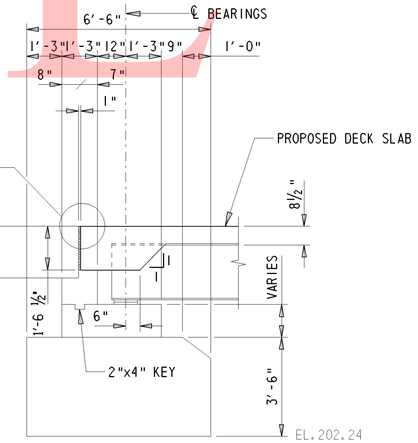

TYPICAL SECTIONS

3/8" = 1'-0"

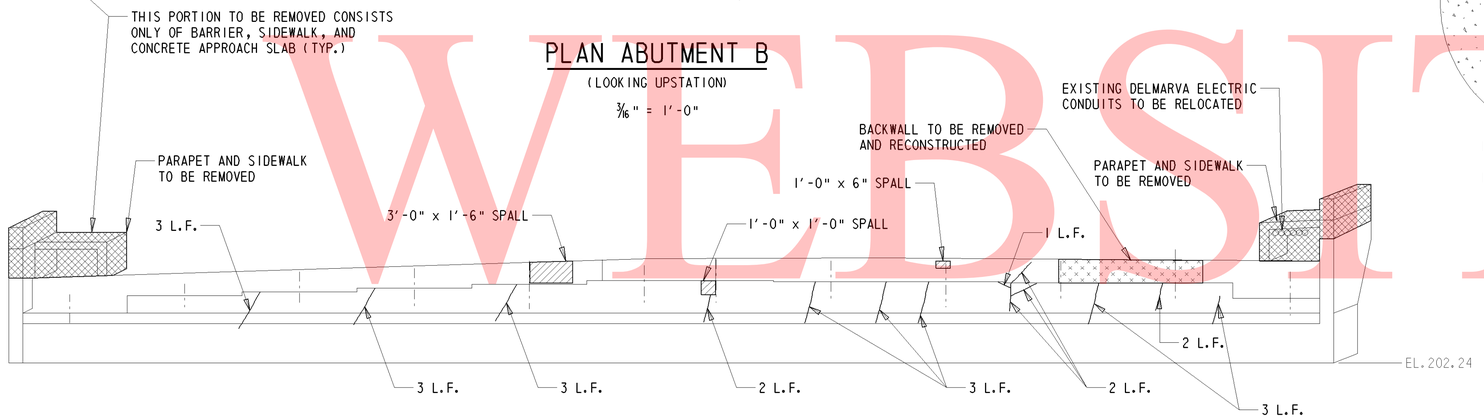

EXISTING ABUTMENT B ELEVATION

(LOOKING UPSTATION)

3/16" = 1'-0"

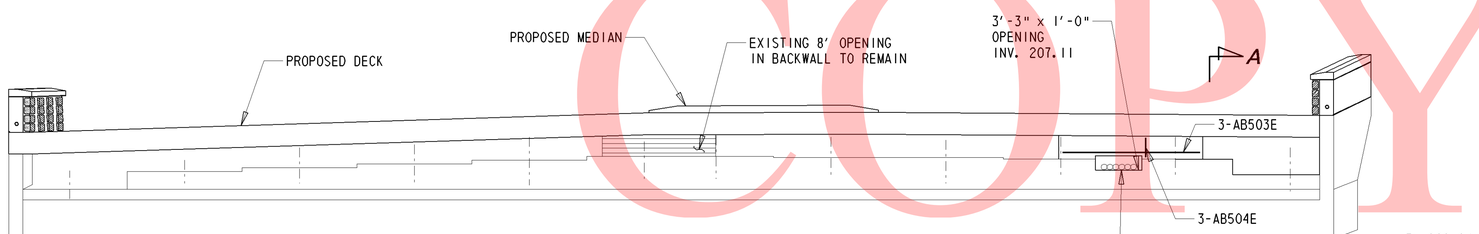

PROPOSED ABUTMENT B ELEVATION

(LOOKING UPSTATION)

3/16" = 1'-0"

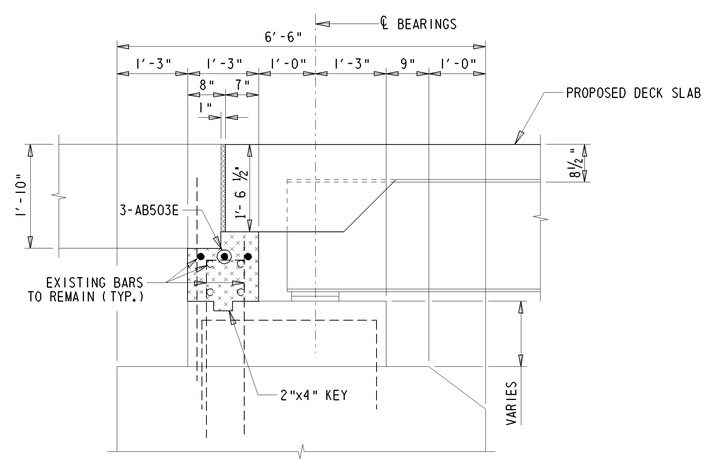

SECTION A-A

3/4" = 1'-0"

UNOFFICAL WEBSITE COPY

Y:\NEWCASTL\059\BRIDGE\2510602\BRIDGE 1-570\PLANS\ALTERNATIVE 1(FASCIA BEAMS ONLY)\AB02.DGN

DELAWARE DEPARTMENT OF TRANSPORTATION	ADDENDUMS / REVISIONS	I-95 & US 202 INTERCHANGE	CONTRACT T200510602	BRIDGE NO. 1-570	ABUTMENT B PLAN AND ELEVATION S1-10 OF 29	SHEET NO. 238
			COUNTY NEW CASTLE	DESIGNED BY: MJG		TOTAL SHTS. 482
				CHECKED BY: JNH		

PRESSURE INJECTION, CRACKS ONLY:

1. MINIMUM CRACK WIDTH TO BE PRESSURE INJECTED WITH EPOXY SHALL BE 1/8".
2. ALL LOOSE MATERIALS SHALL BE REMOVED, SURFACES SHALL BE CLEANED AND PREPARED AS PER SPECIAL PROVISIONS.
3. PRIOR TO INJECTION OF EPOXY IN THE CRACK, A SURFACE SEAL MATERIAL SHALL BE APPLIED TO THE FACE OF THE CRACK AS PER SPECIAL PROVISIONS.
4. PRESSURE INJECT EPOXY MATERIAL AS PER SPECIAL PROVISIONS.

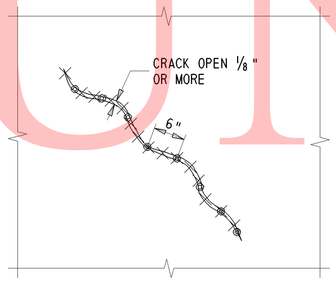

PRESSURE INJECTION

N.T.S.

LEGEND:

- OPEN CRACK (1/8" OR MORE)
- ◎ PRESSURE INJECTION PORTS
- ×××× CRACK SURFACE SEALANT TO BE REMOVED AFTER SEALING IS COMPLETED

SUBSTRUCTURE CONCRETE REPAIR:

1. REMOVE ALL UNSOUND AND DETERIORATED CONCRETE AND EXISTING PATCH MATERIAL AS PER SUPPLEMENTARY SPECIFICATIONS. THE EDGES OF THE AREA TO BE REPAIRED SHOULD BE SAW-CUT BACK SHARP, PERPENDICULAR TO THE FACE OF THE CONCRETE TO AT LEAST 1" DEEP.
2. DETERIORATED CONCRETE SHALL BE REMOVED TO A SOUND CONCRETE SURFACE TO A MINIMUM OF 1" BEHIND THE REINFORCEMENT.
3. CLEAN TO BRIGHT METAL BY REMOVING RUST, COATINGS OR ANY FOREIGN MATERIAL USING WIRE BRUSHING OR OTHER APPROVED MEANS AND EPOXY COAT ALL EXPOSED REINFORCING STEEL. A NEW EPOXY COATED REINFORCEMENT BAR SHALL BE PLACED TO SUPPLEMENT AN EXISTING REINFORCEMENT BAR WHEN AN EXISTING BAR HAS A SECTION LOSS OF 25% OR MORE OF THE ORIGINAL CROSS SECTION, AS DETERMINED BY THE ENGINEER, OR WHEN THE EXISTING REINFORCEMENT BAR IS BROKEN. THE NEW BAR SHALL BE OF THE SAME CROSS SECTIONAL AREA AS THE EXISTING BAR AND EXTEND 30 BAR DIAMETERS IN EACH DIRECTION FROM WHERE THE SECTION LOSS OR BREAK ENDS. MODIFY THE LIMITS OF THE REPAIR AREA TO MEET THE REINFORCEMENT SPLICE LAP REQUIREMENTS.
4. PRESSURE CLEAN CONCRETE SURFACES TO BE REPAIRED AND APPLY AN EPOXY BONDING COAT AS PER SUPPLEMENTARY SPECIFICATIONS.
5. APPLY CONCRETE AS PER SPECIAL PROVISIONS AND FINISH TO MATCH EXISTING CONCRETE SURFACES AND ARCHITECTURAL DETAILS. PATCH MATERIAL SHALL BE FORMED.
6. PNEUMATICALLY APPLIED MORTAR AND QUICK SETTING MATERIAL MAY BE SUBSTITUTED FOR CLASS A MIX DESIGN UPON APPROVAL OF THE ENGINEER.
7. PNEUMATICALLY APPLIED MORTAR SHALL NOT BE USED ON BRIDGE SEAT AREAS.
8. IF REINFORCING STEEL IS MISSING IN THE SPALL AREA, ONE LAYER OF NON-GALVANIZED WIRE MESH SHALL BE PLACED FOR EVERY 3" OF PATCH DEPTH.
9. WELDED WIRE MESH SHALL BE 4X4 W4.0/4.0 WITH A MINIMUM COVER OF 2".
10. EXPANSION OR CONTRACTION JOINTS SHALL BE FORMED IN THE CONCRETE REPAIR MATERIAL AT THE LOCATION OF EXISTING JOINTS.
11. IF THE DEPTH OF SPALL IS MORE THAN 6", THEN ONLY CLASS A CONCRETE SHALL BE USED.
12. ALL OPERATIONS SHALL CONFORM TO THE MANUFACTURER'S RECOMMENDATIONS.
13. SHALLOW SPALL REPAIR TO BE PAID FOR UNDER ITEM 602572 - REPAIRING EXISTING PCC STRUCTURES. DEEP SPALL REPAIRS TO BE PAID FOR UNDER ITEM 602586 - REHABILITATION OF CONCRETE STRUCTURES.

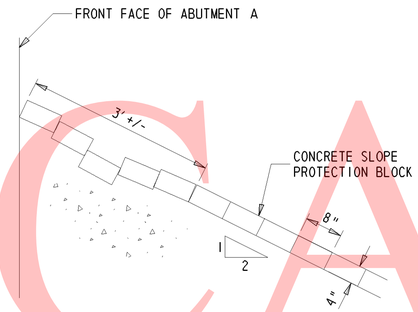

EXISTING REPAIR

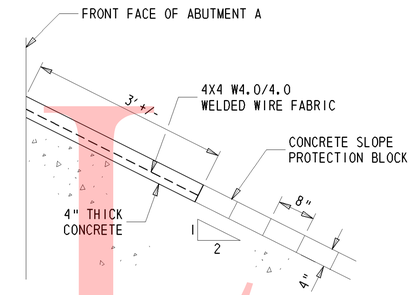

PROPOSED REPAIR

SLOPE PROTECTION REPAIR

N.T.S.

NOTES:

1. SLOPE PROTECTION REPAIR PAID FOR UNDER ITEM #712524 - CONCRETE SLOPE PAVING REPAIR, 4".
2. COST OF BORROW 'TYPE C' (SECTION 210) AND WELDED WIRE FABRIC TO BE INCLUDED IN THE BID PRICE ITEM #712524 - CONCRETE SLOPE PAVING REPAIR, 4".

SLOPE PROTECTION REPAIR PROCEDURE:

1. REMOVE THE EXISTING CONCRETE BLOCK. FILL WITH BORROW 'TYPE C'.
2. COMPACT THE SOIL.
3. RECONSTRUCT THE CONCRETE SLOPE PROTECTION AS SHOWN IN THE PROPOSED REPAIR DETAIL.

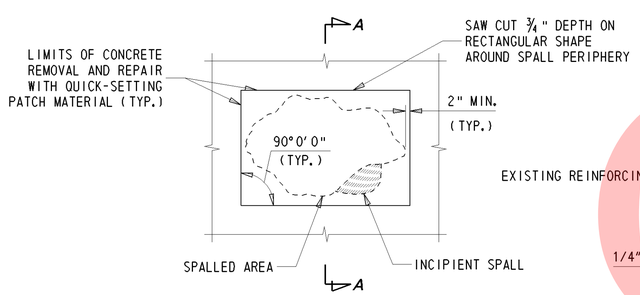

PLAN

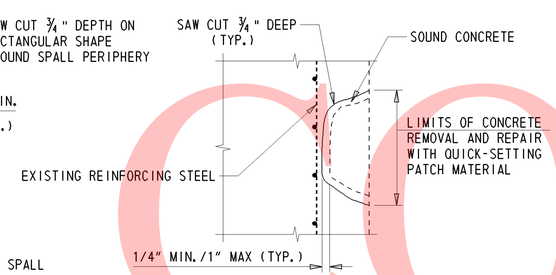

SECTION A-A

SHALLOW SPALL REPAIR

N.T.S.

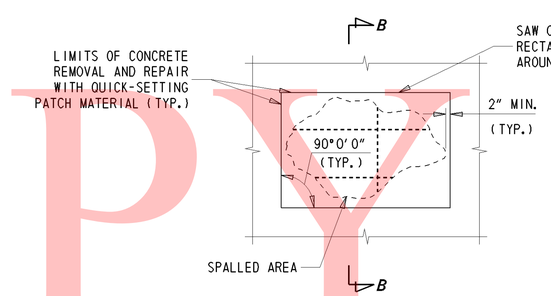

PLAN

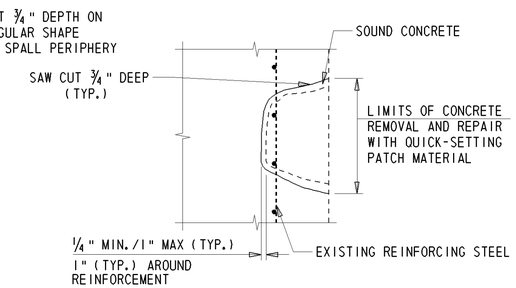

SECTION B-B

DEEP SPALL REPAIR

N.T.S.

UNOFFICIAL WEBSITE COPY

DELAWARE DEPARTMENT OF TRANSPORTATION	ADDENDUMS / REVISIONS	I-95 & US 202 INTERCHANGE	CONTRACT T200510602	BRIDGE NO. 1-570	REPAIR DETAILS S1-11 OF 29	SHEET NO. 239
			COUNTY NEW CASTLE	DESIGNED BY: MJG		TOTAL SHTS. 482
				CHECKED BY: JNH		

Y:\NEWCASTL\059\BRIDGE\250602\BRIDGE I-570\PLANS\ALTERNATIVE 1(FASCIA BEAMS ONLY)\RH01.DGN

UNOFFICAL WEBSITE COPY

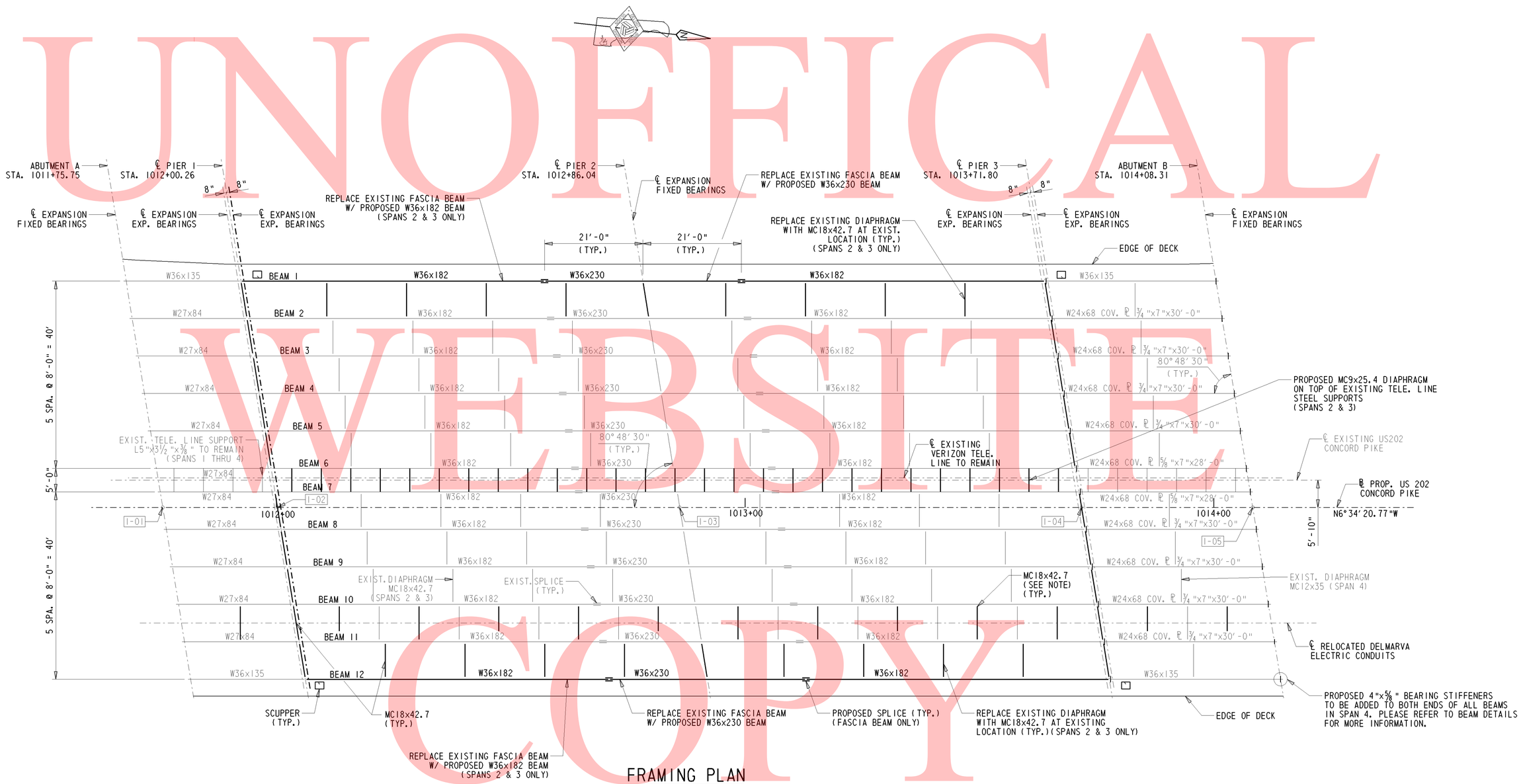

FRAMING PLAN

1/12" = 1'-0"

NOTE: ADD ONE MC18x42.7 DIAPHRAGM BETWEEN EXISTING DIAPHRAGMS AT EQUAL SPACING BETWEEN BEAMS 10 AND 11 ONLY.

Y:\NEWCASTL\059\BRIDGE\2510602\BRIDGE I-570\PLANS\ALTERNATIVE 1(FASCIA BEAMS ONLY)\FR01.DGN

DELAWARE DEPARTMENT OF TRANSPORTATION	ADDENDUMS / REVISIONS		I-95 & US 202 INTERCHANGE	CONTRACT T200510602	BRIDGE NO. 1-570	FRAMING PLAN S1-12 OF 29	SHEET NO. 240
				COUNTY NEW CASTLE	DESIGNED BY: MJG		TOTAL SHTS. 482
					CHECKED BY: JNH		

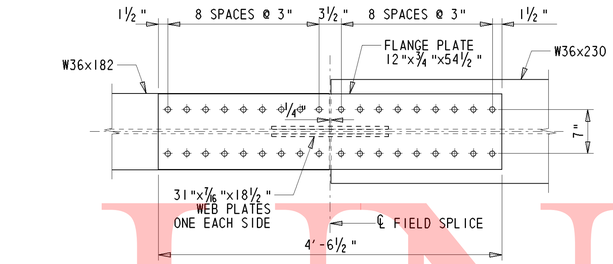

TOP & BOTTOM FLANGE

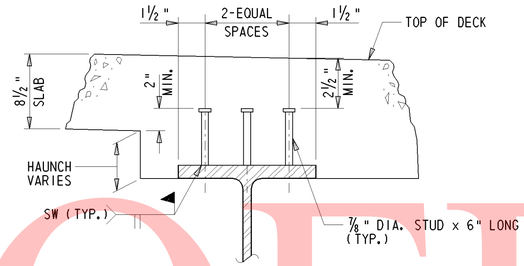

SHEAR CONNECTOR DETAIL

N.T.S.

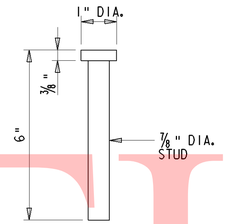

STUD DETAIL

N.T.S.

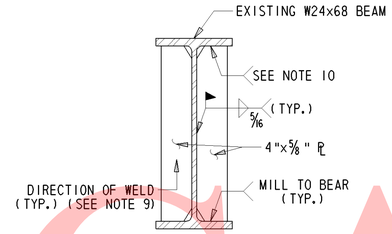

BEARING STIFFENER

(SPAN 4 ONLY)

N.T.S.

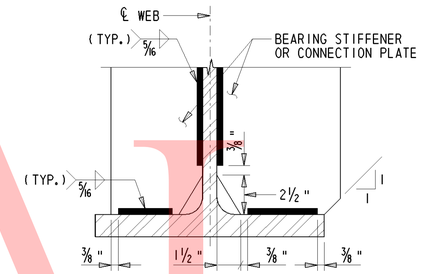

CORNER CHAMFER DETAIL

N.T.S.

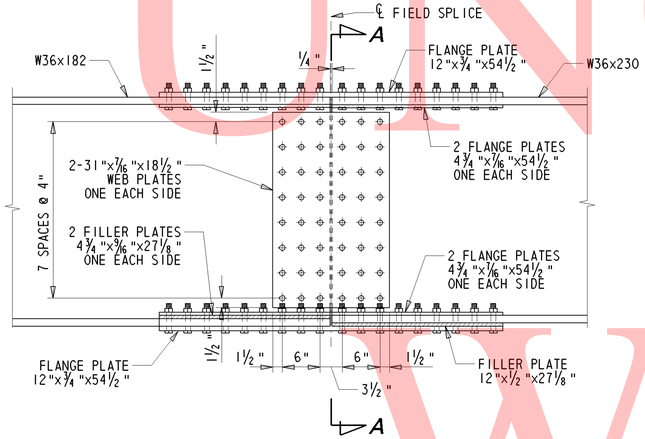

ELEVATION

SPLICE DETAIL

N.T.S.

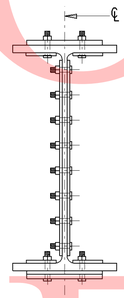

SECTION A-A

N.T.S.

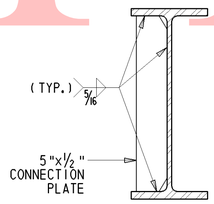

DIAPHRAGM CONNECTION PLATE

N.T.S.

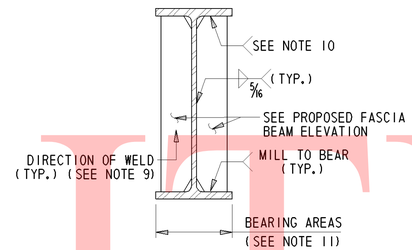

BEARING STIFFENER

(FASCIA BEAMS, SPANS 2 & 3 ONLY)

N.T.S.

STEEL NOTES:

1. ALL STRUCTURAL STEEL SHALL BE ASTM A709 GRADE 50 (AASHTO M270) WITH SUPPLEMENT REQUIREMENTS FOR TOUGHNESS ON ALL MEMBER COMPONENTS MARKED (T).
2. WELDING SHALL CONFORM TO THE CURRENT ANSI/AASHTO/AWS BRIDGE WELDING CODE D1.5-08. WELDING AND NONDESTRUCTIVE TESTING SYMBOLS SHALL CONFORM TO SYMBOLS FOR WELDING, BRAZING, AND NONDESTRUCTIVE EXAMINATION AWS A2-4:2007.
3. JOINT WELDING PROCEDURES, OVERALL FABRICATION METHODS, AND QUALITY CONTROL INSPECTION PROCEDURE SHALL BE INCLUDED AS WRITTEN PROCEDURE SPECIFICATIONS WITH THE SHOP PLAN SUBMISSION.
4. BEAM WEBS SHALL BE GROUND SMOOTH AND SHALL BE PLUMB AT THE ENDS UNDER FULL DEAD LOAD.
5. ALL BOLTED CONNECTIONS SHALL BE MADE WITH ⅞" DIAMETER ASTM A325 HIGH STRENGTH BOLTS, TYPE 1, UNLESS OTHERWISE NOTED.
6. ALL NEW AND EXISTING STRUCTURAL STEEL SHALL BE PAINTED WITH A URETHANE PAINT SYSTEM IN ACCORDANCE WITH SECTION 605. THE COLOR OF THE FINISHED PAINT SHALL BE BROWN (NO. 10076) FROM FEDERAL STANDARD 595C. THE COLOR SHALL BE SUBMITTED FOR APPROVAL. AT ALL LOCATIONS WHERE THE CONTRACTOR'S WORK DAMAGES THE EXISTING PAINT SYSTEM, THE CONTRACTOR SHALL CLEAN THE DAMAGED LOCATION AND REPAINT THE AREA. PAINTING FOR PROPOSED STEEL STRUCTURES IS INCIDENTAL TO THE ITEM #605002 - STEEL STRUCTURES. ALL CLEANING AND PAINTING ON EXISTING STEEL STRUCTURES SHALL BE PAID FOR UNDER ITEM #605522 - URETHANE PAINT SYSTEM, EXISTING STEEL AND ITEM #605533 - CLEANING EXISTING STEEL STRUCTURES, HAZARDOUS BASE. THE ESTIMATED AREA OF STEEL TO BE CLEANED AND PAINTED IS 24,000.00 S.F.
7. OVERSIZED HOLES SHALL BE USED ON DIAPHRAGM CONNECTORS.
8. ALL BOLTS ON DIAPHRAGMS SHALL BE FINGER TIGHT AT ERECTION. BOLTS ARE NOT TO BE TORQUED UNTIL AFTER THE DECK CONCRETE IS POURED.
9. DIRECTION OF WELDS IS NOT APPLICABLE IF STIFFENERS ARE FITTED WITH TACK WELDS.
10. TIGHT FIT AT TENSION FLANGES AT INTERIOR SUPPORTS. FILLET WELDS OVER END SUPPORTS.
11. BEARING AREAS: PROVIDE BOTTOM FLANGE IN A TRUE HORIZONTAL PLANE IN TRANSVERSE DIRECTION AND IN A TRUE PLANE LONGITUDINALLY OVER DIMENSION "L", WHERE L = WIDTH OF SOLE PLATE + 8" AHEAD AND BACK. WHERE APPLICABLE. IF THE SOLE PLATE IS WELDED TO THE BOTTOM FLANGE, PROVIDE THE SOLE PLATE MEETING THE SAME FLATNESS REQUIREMENTS. EACH BEARING MUST BE STRESSED UNIFORMLY AFTER ALL DEAD LOAD IS PLACED. MAKE NECESSARY SHOP AND/OR FIELD ADJUSTMENTS TO PROVIDE UNIFORM BEARING STRESS UNDER ALL DEAD LOADS.
12. BEARING STIFFENERS FOR SPANS 2 & 3 ARE FOR PROPOSED FASCIA BEAMS ONLY. BEARING STIFFENERS FOR SPAN 4 ARE TO BE ADDED TO BOTH ENDS OF ALL EXISTING BEAMS WITHIN THE SPAN.
13. IN ADDITION TO PROPOSED FASCIA BEAMS IN SPANS 2 & 3, SHEAR CONNECTORS SHALL BE FIELD WELDED ONTO ALL EXISTING BEAMS FOR ALL 4 SPANS. SPACING FOR SHEAR STUDS ON EXISTING BEAMS IN SPANS 2 & 3 SHALL BE AS LISTED IN PROPOSED FASCIA BEAM ELEVATION. SHEAR STUD SPACING ON EXISTING BEAMS IN SPANS 1 & 4 SHALL BE 8½".
14. PAYMENT FOR ALL STRUCTURAL STEEL, INCLUDING STIFFENERS, DIAPHRAGMS, BEAMS, BOLTS, PLATES, AND ETC., SHALL BE PAID UNDER ITEM #605002 - STEEL STRUCTURES.

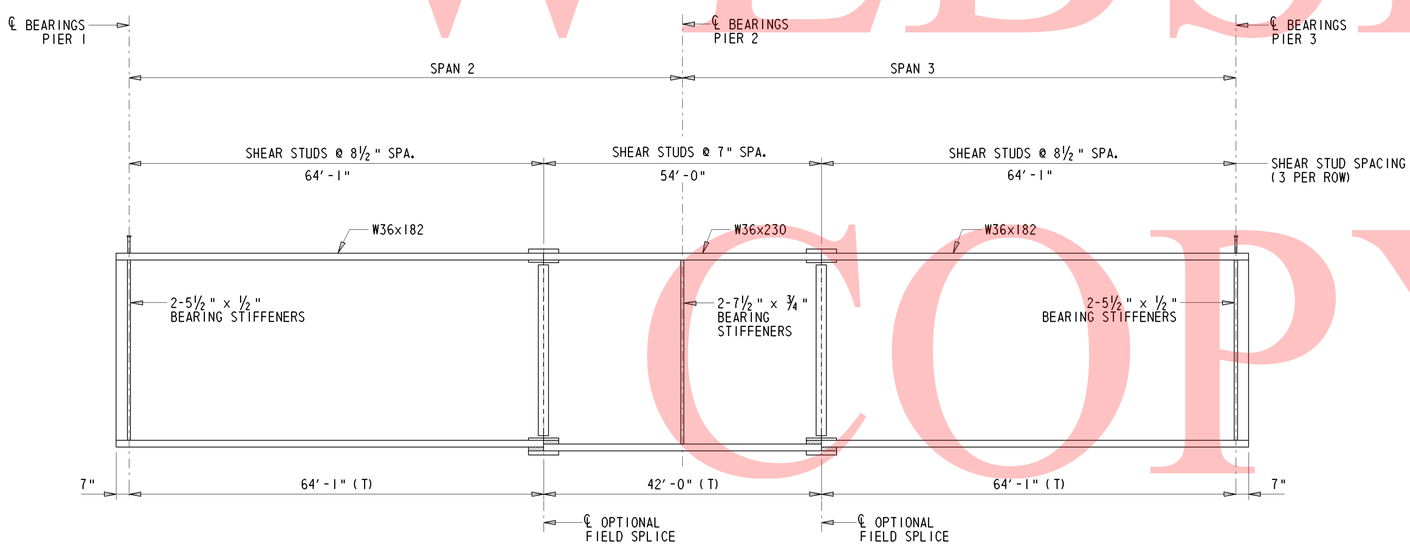

PROPOSED FASCIA BEAM ELEVATION

(SPANS 2 & 3 ONLY)
N.T.S.

UNOFFICAL WEBSITE COPY

UNOFFICAL WEBSITE COPY

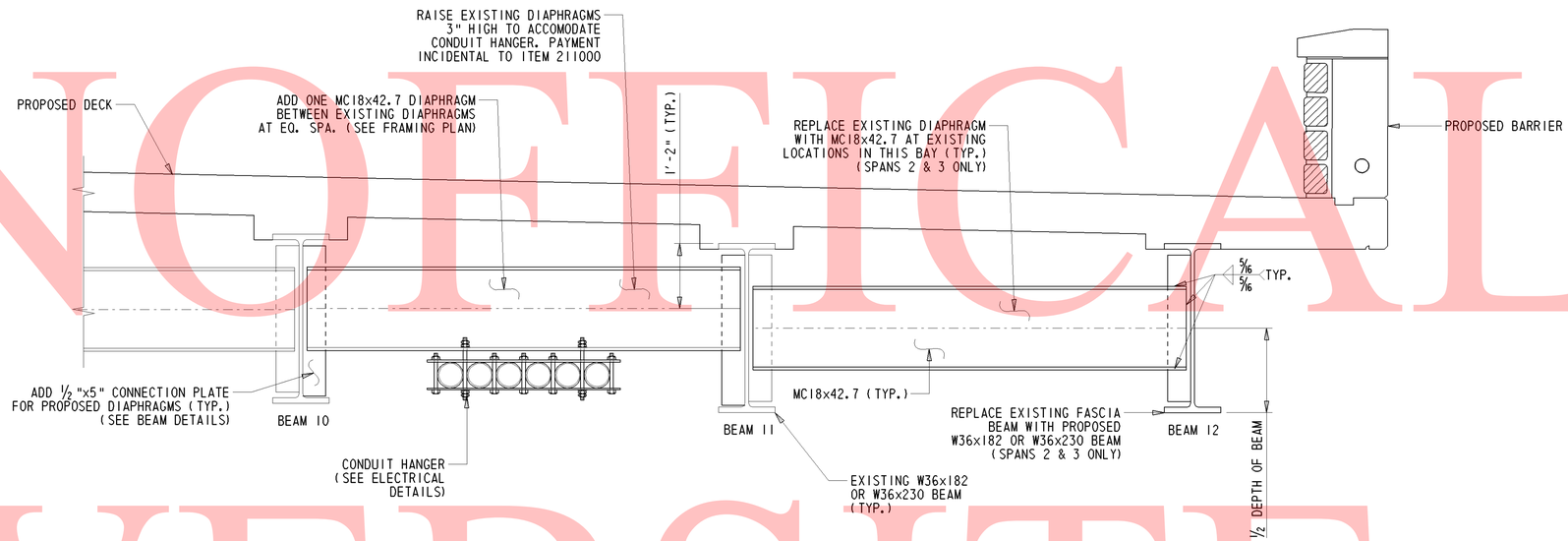

MC18x42.7 DIAPHRAGM DETAILS

(LOOKING UPSTATION)

3/4" = 1'-0"

NOTE:

1. THE CONTRACTOR MUST ENSURE THAT THE EXISTING VERIZON TELECOMMUNICATION LINES WILL NOT BE DAMAGED DURING REMOVAL OF EXISTING DECK. PAYMENT INCIDENTAL TO ITEM #601502 - TEMPORARY PROTECTIVE SHEILD.
2. ANY DAMAGE TO THE EXISTING TELECOMMUNICATION LINES WILL BE REPAIRED BY THE CONTRACTOR AT HIS EXPENSE.

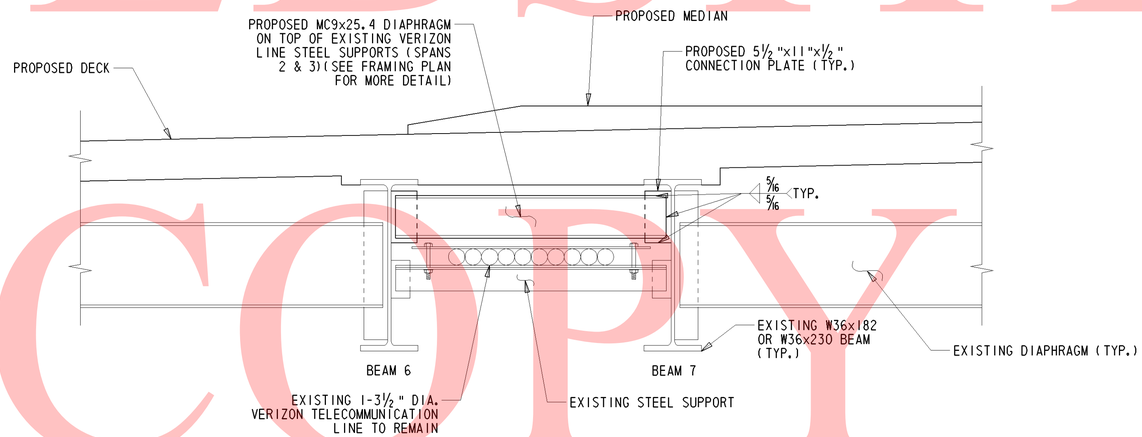

MC9x25.4 DIAPHRAGM DETAILS

(LOOKING UPSTATION)

3/4" = 1'-0"

Y:\NEWCASTL\059\BRIDGE\2510602\BRIDGE 1-570\PLANS\ALTERNATIVE 1(FASCIA BEAMS ONLY)\DIAPHRAGM.DGN

DELAWARE DEPARTMENT OF TRANSPORTATION	ADDENDUMS / REVISIONS	I-95 & US 202 INTERCHANGE	CONTRACT T200510602	BRIDGE NO. 1-570	DIAPHRAGM DETAILS S1-14 OF 29	SHEET NO. 242
			COUNTY NEW CASTLE	DESIGNED BY: MJG		TOTAL SHTS. 482
				CHECKED BY: JNH		

NOTES:

1. POSITIVE CAMBERS ARE UPWARD CAMBERS AND NEGATIVE CAMBERS ARE DOWNWARD CAMBERS.

2. BEAMS SHALL BE CAMBERED BY TOTAL AMOUNTS SHOWN IN TABLE. TOLERANCE SHALL BE 0" UNDER 1/16" OVER.

3. AFTER THE ERECTION OF STEEL AND THE CONNECTIONS OF THE STEEL CROSS FRAMES ARE COMPLETE, THE CONTRACTOR SHALL OBTAIN ELEVATIONS AT TEN FOOT INTERVALS ON THE TOP FLANGES OF ALL BEAMS TO DETERMINE THE REQUIRED HAUNCH THICKNESS. ALL OF THE DATA SHALL BE SUBMITTED WITH DETAILS OF STAY-IN-PLACE FORMS FOR REVIEW AND APPROVAL BY THE ENGINEER IN THE FIELD.

LEGEND:

DLS = DEFLECTION DUE TO STRUCTURAL STEEL

DLC = DEFLECTION DUE TO CONCRETE SLAB & SIP FORM FOR FASCIA BEAM

SDL = DEFLECTION DUE TO BARRIER, MEDIAN & FWS

TD&C = TOTAL DEAD LOAD DEFLECTION & CAMBER

VCO = CAMBER FOR VERTICAL CURVE ORDINATE DUE TO ROADWAY PROFILE

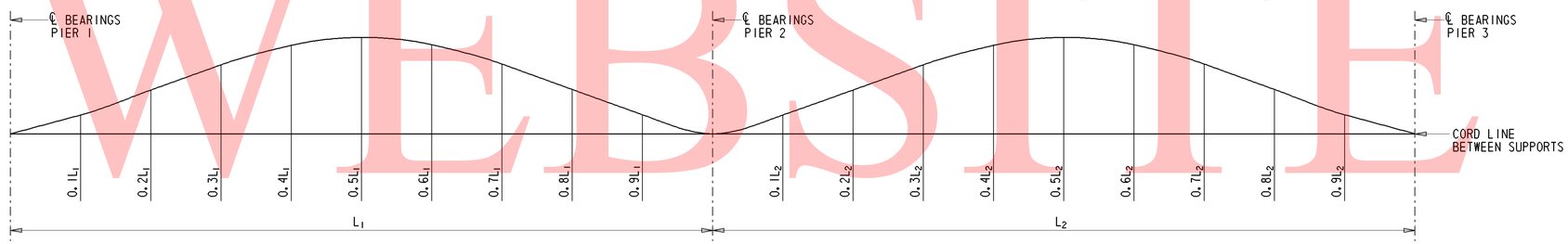

DEFLECTION AND TOTAL CAMBER (INCHES) FOR FASCIA BEAM

PROPOSED BEAMS	CL BRG. PIER 1	$0.1L_1$	$0.2L_1$	$0.3L_1$	$0.4L_1$	$0.5L_1$	$0.6L_1$	$0.7L_1$	$0.8L_1$	$0.9L_1$	CL BRG. PIER 2	$0.1L_2$	$0.2L_2$	$0.3L_2$	$0.4L_2$	$0.5L_2$	$0.6L_2$	$0.7L_2$	$0.8L_2$	$0.9L_2$	CL BRG. PIER 3
DLS	0	1/8	3/16	1/4	1/4	1/4	1/4	3/16	1/16	0	0	1/8	3/16	1/4	1/4	1/4	1/4	3/16	1/16	0	0
DLC	0	3/16	3/8	1/2	1/2	1/2	7/16	5/16	1/8	1/16	0	3/16	3/8	1/2	1/2	1/2	7/16	5/16	1/8	1/16	0
SDL	0	1/8	1/4	3/8	3/8	3/8	5/16	1/4	1/8	0	0	1/8	1/4	3/8	3/8	3/8	5/16	1/4	1/8	0	0
TD & C	0	7/16	13/16	1 1/16	1 3/16	1 1/8	15/16	11/16	5/16	1/8	0	7/16	13/16	1 1/16	1 3/16	1 1/8	15/16	11/16	5/16	1/8	0
VCO	0	0	0	0	0	0	0	0	0	0	0	0	0	0	0	0	0	0	0	0	0
TD & C + VCO	0	7/16	13/16	1 1/16	1 3/16	1 1/8	15/16	11/16	5/16	1/8	0	7/16	13/16	1 1/16	1 3/16	1 1/8	15/16	11/16	5/16	1/8	0

UNOFFICAL WEBSITE COPY

BEARING NOTES:

1. BEARINGS FOR SPANS 2 & 3 AT PIERS 1, 2, & 3 SHALL BE REPLACED. BEARINGS FOR SPANS 1 & 4 AT ABUTMENT A, PIER 1, PIER 3, & ABUTMENT B SHALL BE CLEANED AND GREASED. PAYMENT FOR CLEANING AND GREASING EXISTING ABUTMENTS SHALL BE INCIDENTAL TO ITEM 211000.
2. STEEL FOR BEARING LAMINATES SHALL CONFORM TO ASTM A709 GRADE 36. SOLE PLATE SHALL BE ASTM A709 GRADE 50 TO MATCH FLANGES OF BEAMS.
3. NEOPRENE IN BEARING PAD SHALL HAVE A SHORE 'A' DUROMETER HARDNESS OF 60 POINTS.
4. ANCHOR BOLTS AND WASHERS SHALL BE UNPAINTED A709 GRADE 50 GALVANIZED STEEL. ALL NUTS SHALL BE UNPAINTED A307 GALVANIZED STEEL. SET NUTS 1/4" CLEAR OF SOLE PLATES AND BURR THREADS ABOVE AND BELOW NUTS.
5. USE SWEDGED ANCHOR BOLTS. BOLTS SHALL BE GROUTED WITH NON-SHRINK GROUT IN PREFORMED (SLEEVED OR DRILLED) HOLES. THE PREFORMED & DRILLED HOLES SHALL HAVE A DIAMETER OF AT LEAST 1" LARGER THAN THE DIAMETER OF THE BOLTS.
6. SOLE PLATES ARE TO BE BEVELED TO MATCH GRADE WHEN GRADE EXCEEDS 1 PERCENT.
7. STEEL SURFACES OF SOLE PLATE TO BE MACHINE FINISHED, MEASURED IN ACCORDANCE WITH ANSI B46.1.
8. DRILLING FOR ANCHOR BOLTS SHALL BE PAID FOR UNDER ITEM #605581. GROUT AND ANCHOR BOLTS SHALL BE INCLUDED UNDER ITEM #605581.
9. STEEL PLATES SHALL MEET A FLATNESS REQUIREMENT OF 0.5 PERCENT IN THE DIRECTION BEING MEASURED (WIDTH, LENGTH, AND DIAGONALS) MAXIMUM, BUT NOT TO EXCEED 1/8 INCH.
10. BEARING PADS SHALL BE PLACED NORMAL TO CENTERLINE OF BEAM.
11. FILL SLOTS AND HOLES IN STEEL AROUND ANCHOR BOLTS WITH AN APPROVED NON-HARDENING CAULKING COMPOUND OR ELASTIC JOINT SEALER.
12. FOR EXPANSION BEARINGS:
    USE 2 1/8" x 4" SLOTS IN SOLE PLATE AND 3/8"x3"x 5 1/2" WASHERS WITH 1 5/8" DIA. HOLE IN WASHERS. FOR PIERS 1 AND 3 ONLY.

    FOR FIXED BEARINGS
    USE 2 1/8" DIA. HOLES IN SOLE PLATE AND 3/8"x 3" DIA. WASHERS WITH 1 5/8" DIA. HOLE IN WASHER. FOR PIER 2 ONLY.

JACKING NOTES:

1. PERFORM JACKING OPERATIONS AND BEARING REPLACEMENT AS PER STAGING PLAN. PLEASE REFER TO STAGING PLAN SHEET FOR INFORMATION.
2. IMMEDIATELY AFTER THE JACKING LOADS HAVE BEEN APPLIED, THE JACKS SHALL BE CRIBBED AND THE LOAD TOTALLY RELIEVED FROM JACKS.
3. THE BEAM SHALL BE JACKED AND BLOCKED NO MORE THAN 3/16" OFF THE BEARING.
4. THE METHOD OF JACKING SHOWN IS THE RECOMMENDED SCHEME. THE CONTRACTOR MAY PROVIDE AN ALTERNATE SCHEME AFTER FIRST SUBMITTING SUCH SCHEME TO THE ENGINEER FOR APPROVAL. ALL CHANGES TO DETAILS AND/OR MOT DUE TO ALTERNATIVE SCHEME SHALL BE INCLUDED IN THE BID PRICE FOR #605607 - JACKING BRIDGE.

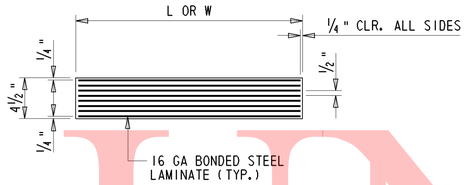

LAMINATED ELASTOMERIC PAD

N.T.S.

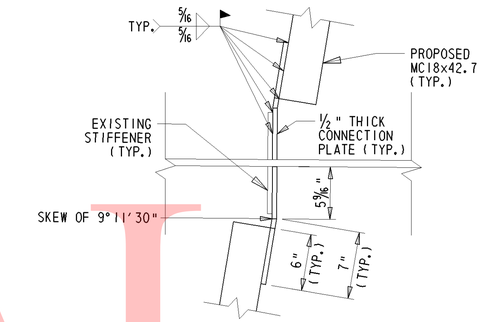

DETAIL A

N.T.S.

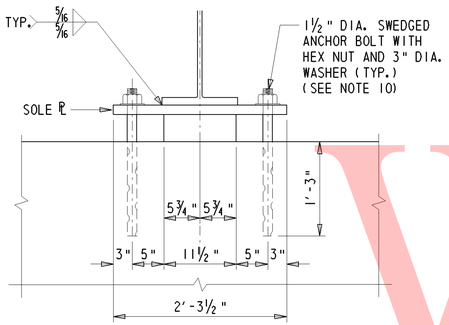

BEARING ELEVATION
SPANS 2 & 3 AT PIERS 1 & 3

1" = 1'-0"

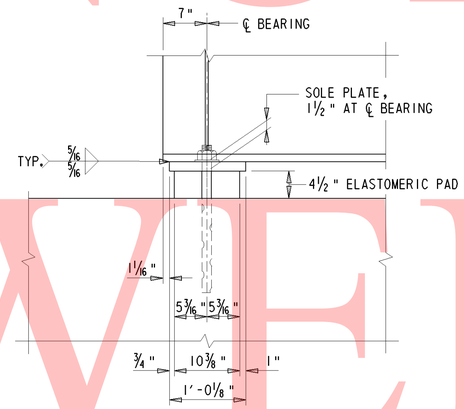

SIDE ELEVATION
PIERS 1 & 3

1" = 1'-0"

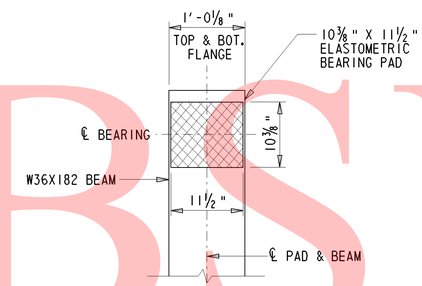

BEARING PAD PLAN
PIERS 1 & 3

1" = 1'-0"

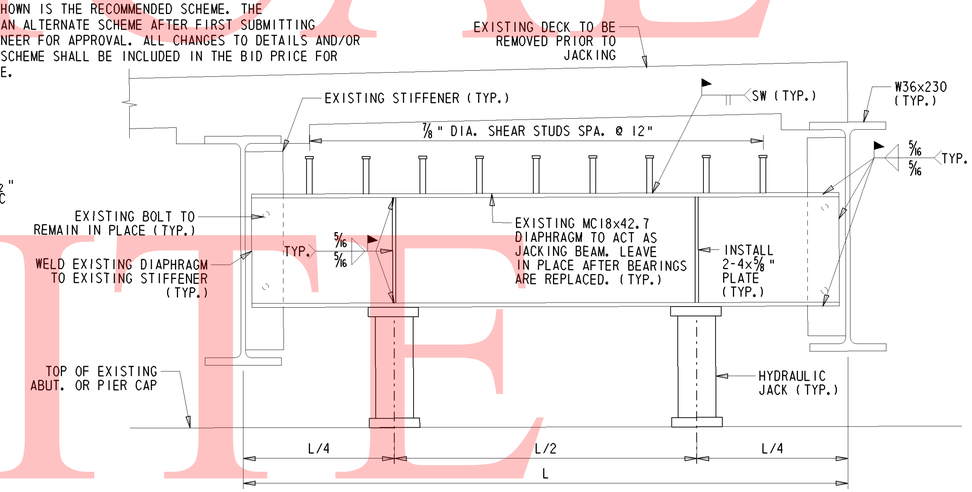

PROPOSED JACKING ELEVATION FOR PIER 2

(LOOKING DOWN STATION)
N.T.S.

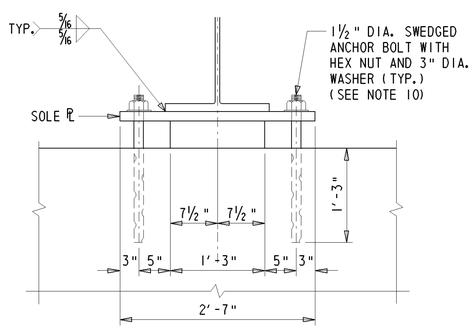

BEARING ELEVATION
SPANS 2 & 3 AT PIER 2

1" = 1'-0"

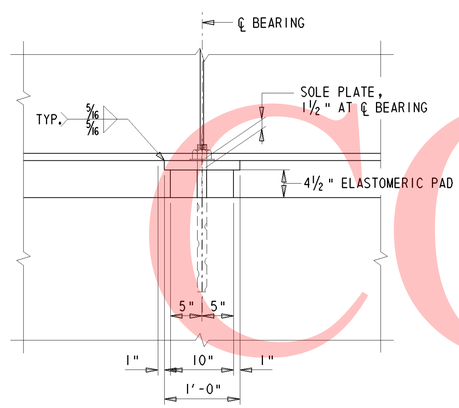

SIDE ELEVATION
PIER 2

1" = 1'-0"

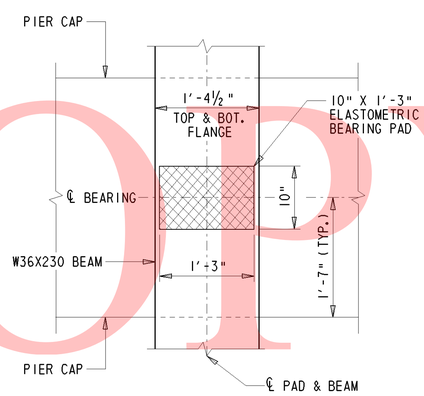

BEARING PAD PLAN
PIER 2

1" = 1'-0"

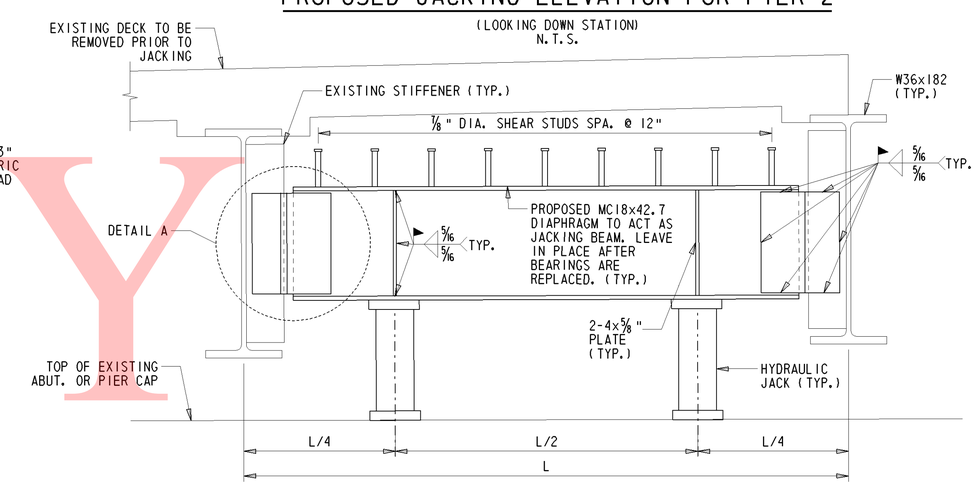

PROPOSED JACKING ELEVATION FOR PIERS 1 & 3

(LOOKING DOWN STATION)
N.T.S.

UNOFFICIAL WEBSITE COPY

DELAWARE DEPARTMENT OF TRANSPORTATION	ADDENDUMS / REVISIONS	I-95 & US 202 INTERCHANGE	CONTRACT T200510602	BRIDGE NO. 1-570	BEARING DETAILS S1-16 OF 29	SHEET NO. 244
			COUNTY NEW CASTLE	DESIGNED BY: MJG		TOTAL SHTS. 482
				CHECKED BY: JNH		

Y:\NEWCASTL\059\BRIDGE\2510602\BRIDGE 1-570\PLANS\ALTERNATIVE 1(FASCIA BEAMS ONLY)\BEARING DETAILS.DGN

NOTE:
REINFORCEMENT IN MEDIAN NOT SHOWN FOR CLARITY.
SEE TYPICAL MEDIAN SECTION FOR DETAILS.

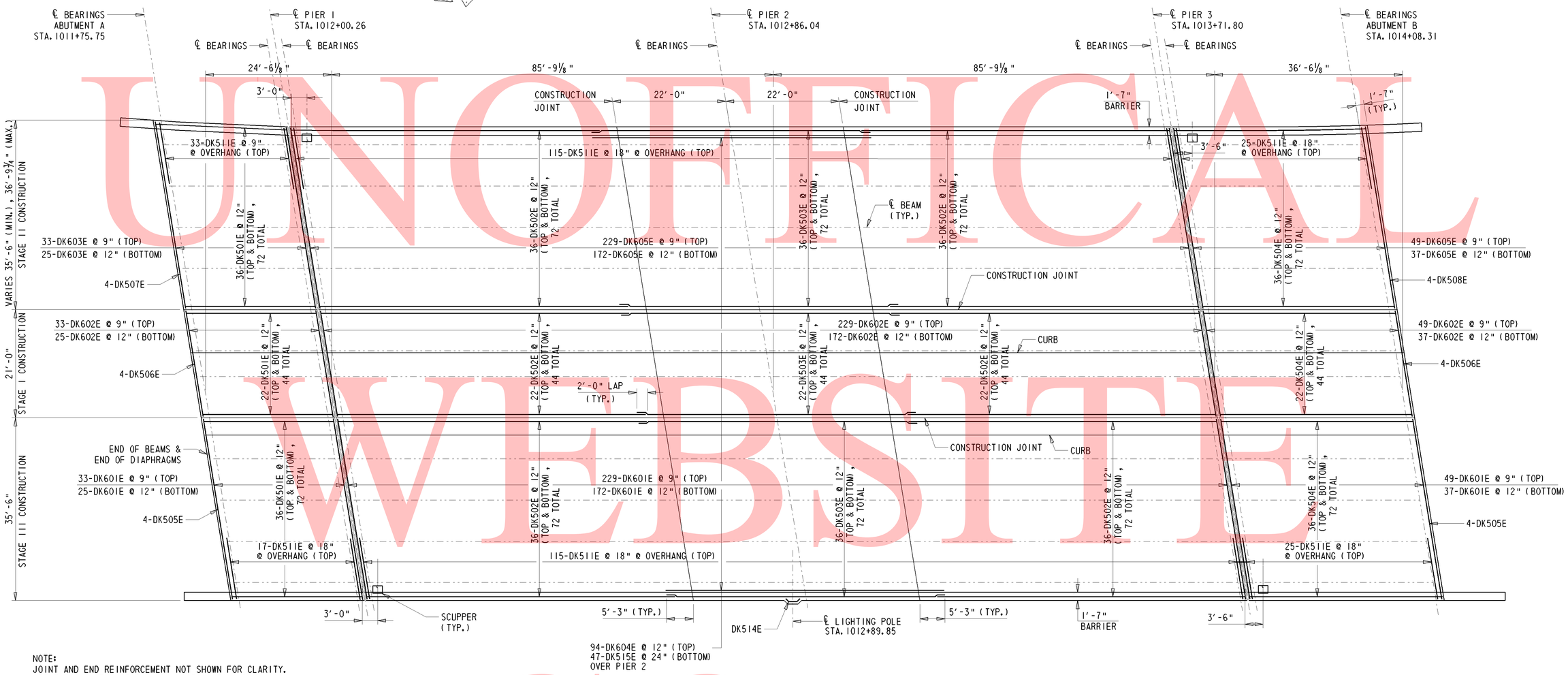

NOTE:
JOINT AND END REINFORCEMENT NOT SHOWN FOR CLARITY.
SEE TYPICAL DECK SECTION & MISCELLANEOUS DETAILS
IN SHEET S-18 FOR DETAILS.

DECK PLAN

1" = 10'-0"

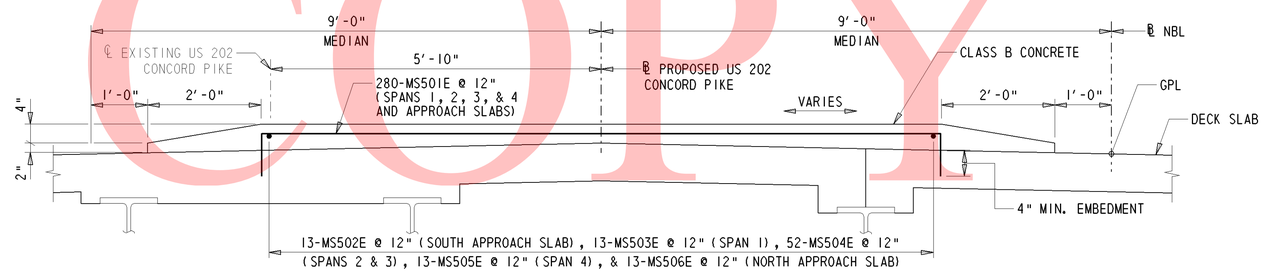

TYPICAL MEDIAN SECTION

3/4" = 1'-0"

NOTE:
FIELD CUT OR BEND BARS AS NEEDED FOR MS502E AND MS506E. PAYMENT INCIDENTAL TO #604000 - BAR REINFORCEMENT, EPOXY COATED.

NOTE:
MS501E SHALL BE EMBEDDED MINIMUM OF 4" INTO THE DECK AND SHALL BE ANCHORED USING KELIGROUT, PAYMENT SHALL BE PAID FOR UNDER ITEM #602579. SURFACE SHALL BE ROUGHENED TO 1/4" AMPLITUDE AND SHALL BE TREATED WITH BONDING AGENT BEFORE CASTING. PAYMENT INCIDENTAL TO #602002 - PCC MASONRY, CLASS B.

UNOFFICAL WEBSITE COPY

Y:\NEWCASTL\059\BRIDGE\2510602\BRIDGE I-570\PLANS\ALTERNATIVE 1(FASCIA BEAMS ONLY)\DK01.DGN

DELAWARE DEPARTMENT OF TRANSPORTATION	ADDENDUMS / REVISIONS	I-95 & US 202 INTERCHANGE	CONTRACT T200510602	BRIDGE NO. 1-570	DECK PLAN S1-17 OF 29	SHEET NO. 245
			COUNTY NEW CASTLE	DESIGNED BY: MJG		TOTAL SHTS. 482
				CHECKED BY: JNH		

NOTE:
1. ADDITIONAL LONGITUDINAL REINFORCEMENT (DK515E & DK604E) OVER PIER 2 CAN BE FOUND ON DECK PLAN 1.
2. NOTE: MECHANICAL COUPLERS SHALL BE EPOXY COATED. PAYMENT FOR COUPLERS SHALL BE INCIDENTAL TO ITEM #604000 - BAR REINFORCEMENT, EPOXY COATED.
3. NOTE: BARS THAT ARE CONNECTED VIA COUPLER MAY NEED TO BE FIELD CUT TO ALLOW FOR PROPER ROOM FOR THE COUPLER. PAYMENT SHALL BE INCIDENTAL TO ITEM #604000 - BAR REINFORCEMENT, EPOXY COATED.
4. THE CONTRACTOR HAS THE OPTION TO DRILL IN LIEU OF MECHANICAL COUPLERS. #6 BARS SHALL BE USED. THE BARS MUST BE EMBEDDED INTO THE DECK A MINIMUM OF 2'-2" EACH WAY (TOTAL LENGTH OF 4'-4").

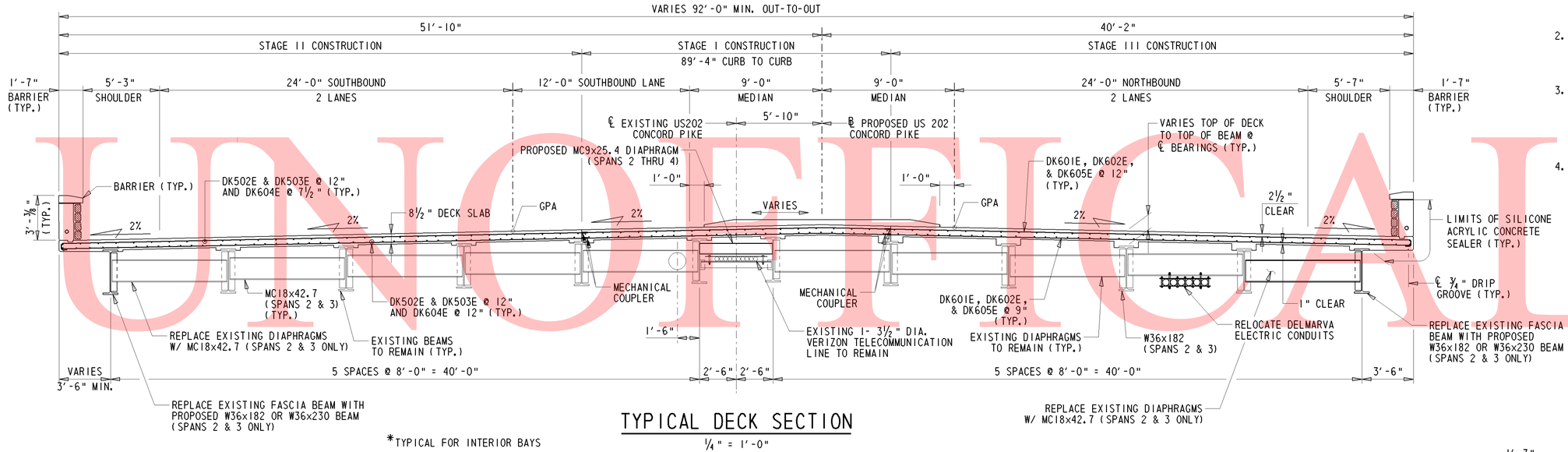

*TYPICAL FOR INTERIOR BAYS

TYPICAL DECK SECTION

¼" = 1'-0"

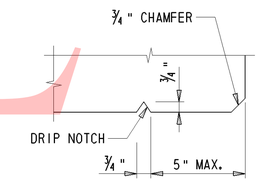

DETAIL A

3" = 1'-0"

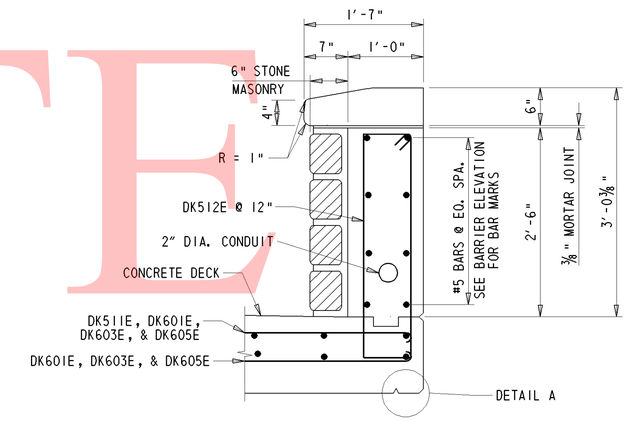

BARRIER REINFORCEMENT DETAIL

1" = 1'-0"

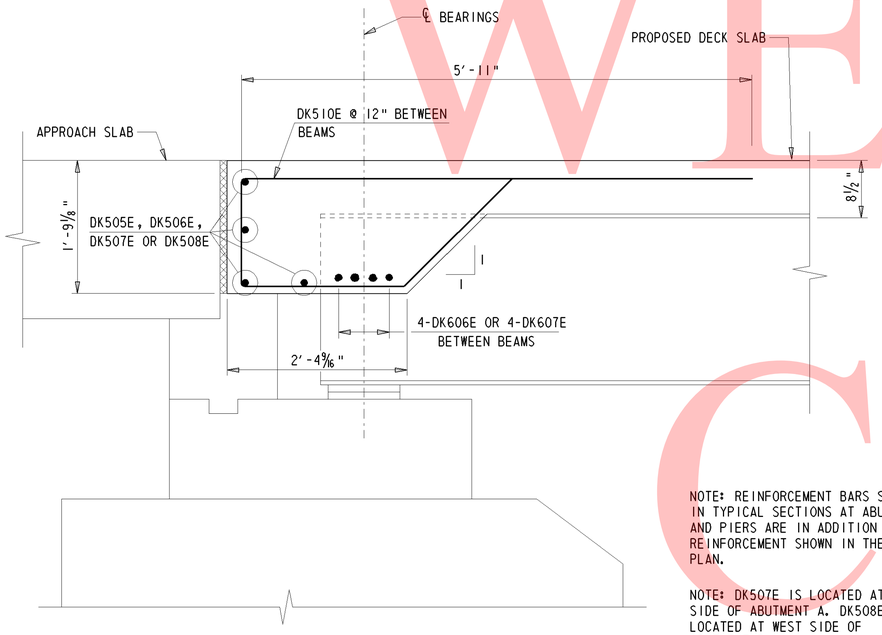

TYPICAL SECTION AT ABUTMENTS

1" = 1'-0"

NOTE: REINFORCEMENT BARS SHOWN IN TYPICAL SECTIONS AT ABUTMENT AND PIERS ARE IN ADDITION TO REINFORCEMENT SHOWN IN THE DECK PLAN.

NOTE: DK507E IS LOCATED AT WEST SIDE OF ABUTMENT A. DK508E IS LOCATED AT WEST SIDE OF ABUTMENT B.

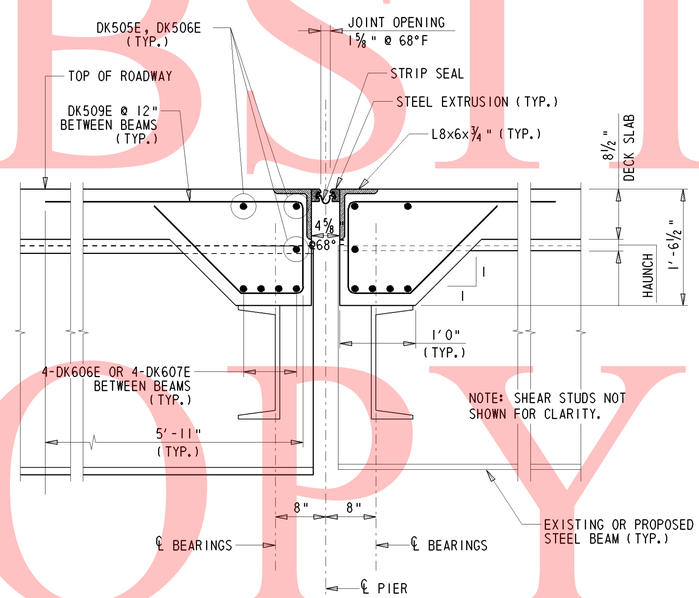

TYPICAL SECTION AT PIERS 1 & 3

1" = 1'-0"

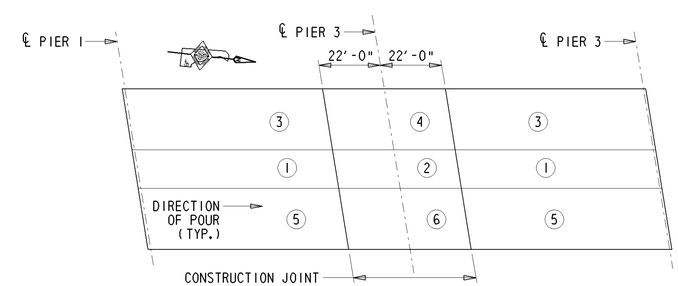

DECK SLAB POURING SEQUENCE

N.T.S.

UNOFFICIAL WEBSITE COPY

Y:\NEWCASTL\059\BRIDGE\2510602\BRIDGE 1-570\PLANS\ALTERNATIVE 1(FASCIA BEAMS ONLY)\DK03.DGN

DELAWARE DEPARTMENT OF TRANSPORTATION	ADDENDUMS / REVISIONS	I-95 & US 202 INTERCHANGE	CONTRACT T200510602	BRIDGE NO. 1-570	TYPICAL DECK SECTION & MISCELLANEOUS DETAILS S1-18 OF 29	SHEET NO. 246
			COUNTY NEW CASTLE	DESIGNED BY: MJG		TOTAL SHTS. 482
				CHECKED BY: JNH		

NOTES:
1. ALL DIMENSIONS ARE MEASURED NORMAL TO BASELINE US 202 CONCORD PIKE UNLESS OTHERWISE NOTED.
2. STATIONS AND ELEVATIONS ARE GIVEN AT THE BREAK POINTS IN THE CROSS SLOPE OF THE DECK AT EVERY 10 POINTS.

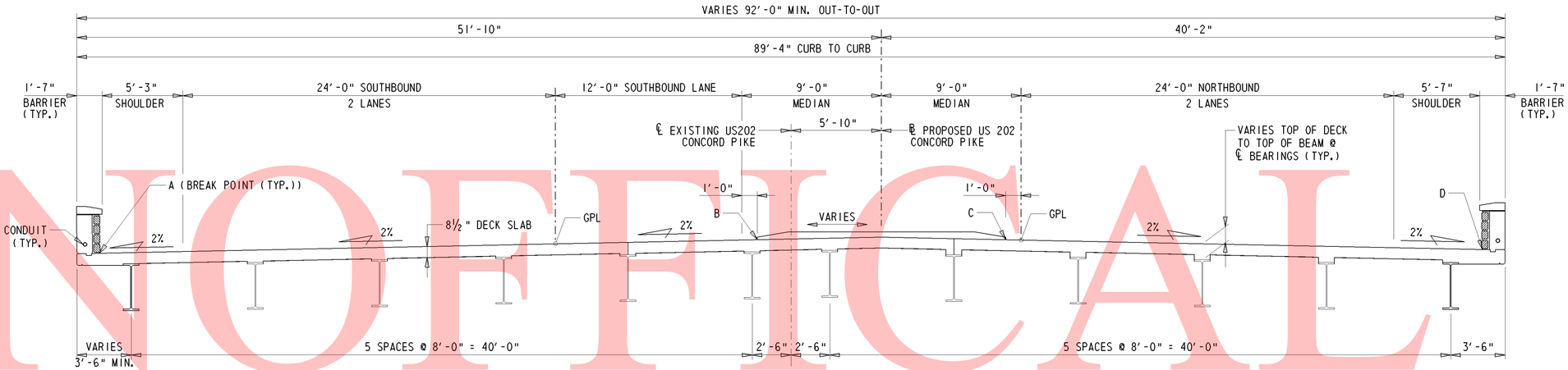

NOTE: DIAPHRAGMS AND REINFORCEMENTS NOT SHOWN FOR CLARITY.

TYPICAL DECK SECTION

(LOOKING UPSTATION)

¼" = 1'-0"

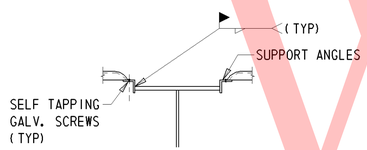

NOTE: ALL ANGLES, WELDS, AND INSERTS MUST BE DESIGNED BY THE CONTRACTOR AND SUBMITTED FOR APPROVAL

COMPRESSION FLANGE CONNECTION

N.T.S.

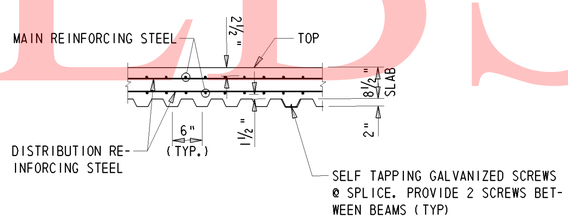

STAY-IN PLACE STEEL FORM DETAIL

N.T.S.

STEEL S.I.P. FORM NOTES:
1. THESE FORMS SHALL BE VERTICALLY ADJUSTED TO ATTAIN LINE AND GRADE REQUIRED ON THE PLANS.
2. SHOP DRAWINGS SHALL BE SUBMITTED BY THE ENGINEER. METAL FORMS MUST BE GALVANIZED AND MORTAR TIGHT. STEEL METAL SCREWS MUST BE NON-CORROSIVE. SELF TAPPING SCREWS SHALL BE INSTALLED AT THE SIDE LAP OF THE SHEETS AT MID-SPAN SUPPORTS.
3. ALL MATERIALS AND LABOR NEEDED FOR FORMS SHALL BE INCIDENTAL TO ITEM 603013-P.C.C. MASONRY, SUPERSTRUCTURE, CLASS D.
4. TENSION FLANGE DETAIL IS IN THE AREA ALONG THE BEAM BETWEEN SPLICES.

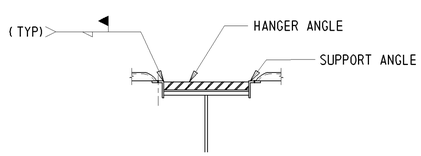

NOTE: ALL ANGLES, WELDS, AND INSERTS MUST BE DESIGNED BY THE CONTRACTOR AND SUBMITTED FOR APPROVAL

TENSION FLANGE CONNECTION

N.T.S.

FINISHED DECK ELEVATION AT BREAK POINTS

POINT	BREAK POINT A		BREAK POINT B		BREAK POINT C		BREAK POINT D	
	STATION	ELEV.	STATION	ELEV.	STATION	ELEV.	STATION	ELEV.
℄ BRG. ABUT. A	1011+67.39	191.52	1011+74.46	192.92	1011+77.04	192.96	1011+82.03	192.72
0.1	1011+69.79	191.70	1011+76.84	193.10	1011+79.43	193.14	1011+84.42	192.90
0.2	1011+72.19	191.88	1011+79.22	193.29	1011+81.81	193.32	1011+86.80	193.08
0.3	1011+74.62	192.06	1011+81.61	193.48	1011+84.20	193.50	1011+89.19	193.25
0.4	1011+76.99	192.25	1011+83.99	193.67	1011+86.58	193.67	1011+91.57	193.43
0.5	1011+79.39	192.44	1011+86.38	193.85	1011+88.96	193.85	1011+93.95	193.61
0.6	1011+81.79	192.63	1011+88.76	194.04	1011+91.35	194.03	1011+96.34	193.78
0.7	1011+84.19	192.82	1011+91.14	194.23	1011+93.73	194.20	1011+98.72	193.96
0.8	1011+86.60	193.02	1011+93.53	194.41	1011+96.12	194.38	1012+01.11	194.14
0.9	1011+89.00	193.21	1011+95.91	194.60	1011+98.50	194.56	1012+03.49	194.33
℄ BRG. PIER 1	1011+91.40	193.40	1011+98.30	194.79	1012+00.88	194.74	1012+05.87	194.51
℄ BRG. PIER 1	1011+92.76	193.51	1011+99.65	194.89	1012+02.23	194.84	1012+07.22	194.62
0.1	1012+01.28	194.17	1012+08.16	195.54	1012+10.74	195.51	1012+15.73	195.28
0.2	1012+09.79	194.82	1012+16.67	196.19	1012+19.25	196.17	1012+24.24	195.94
0.3	1012+18.30	195.47	1012+25.18	196.84	1012+27.76	196.83	1012+32.75	196.60
0.4	1012+26.81	196.12	1012+33.69	197.50	1012+36.27	197.49	1012+41.26	197.26
0.5	1012+35.32	196.78	1012+42.20	198.16	1012+44.78	198.15	1012+49.77	197.92
0.6	1012+43.83	197.44	1012+50.71	198.82	1012+53.29	198.81	1012+58.28	198.58
0.7	1012+52.34	198.09	1012+59.22	199.47	1012+61.80	199.47	1012+66.79	199.24
0.8	1012+60.85	198.75	1012+67.73	200.13	1012+70.31	200.13	1012+75.30	199.90
0.9	1012+69.36	199.41	1012+76.24	200.79	1012+78.82	200.79	1012+83.81	200.57
℄ BRG. PIER 2	1012+77.87	200.07	1012+84.75	201.46	1012+87.33	201.46	1012+92.32	201.23
0.1	1012+86.38	200.74	1012+93.25	202.12	1012+95.84	202.12	1013+00.83	201.90
0.2	1012+94.89	201.40	1013+01.76	202.78	1013+04.35	202.78	1013+09.34	202.56
0.3	1013+03.40	202.06	1013+10.27	203.44	1013+12.86	203.45	1013+17.85	203.22
0.4	1013+11.90	202.72	1013+18.78	204.10	1013+21.37	204.11	1013+26.36	203.89
0.5	1013+20.41	203.38	1013+27.29	204.77	1013+29.88	204.77	1013+34.87	204.54
0.6	1013+28.92	204.05	1013+35.80	205.43	1013+38.39	205.43	1013+43.38	205.20
0.7	1013+37.43	204.71	1013+44.31	206.10	1013+46.90	206.09	1013+51.89	205.86
0.8	1013+45.94	205.38	1013+52.82	206.76	1013+55.41	206.75	1013+60.40	206.52
0.9	1013+54.45	206.04	1013+61.33	207.42	1013+63.92	207.41	1013+68.90	207.18
℄ BRG. PIER 3	1013+62.96	206.70	1013+69.84	208.08	1013+72.42	208.07	1013+77.41	207.83
℄ BRG. PIER 3	1013+64.31	206.80	1013+71.19	208.18	1013+73.77	208.17	1013+78.76	207.95
0.1	1013+67.89	207.08	1013+74.77	208.46	1013+77.36	208.45	1013+82.35	208.24
0.2	1013+71.47	207.36	1013+78.35	208.74	1013+80.94	208.74	1013+85.93	208.52
0.3	1013+75.06	207.63	1013+81.93	209.03	1013+84.52	209.02	1013+89.51	208.81
0.4	1013+78.64	207.92	1013+85.52	209.31	1013+88.11	209.31	1013+93.10	209.09
0.5	1013+82.20	208.20	1013+89.10	209.59	1013+91.69	209.59	1013+96.68	209.38
0.6	1013+85.78	208.48	1013+92.68	209.88	1013+95.27	209.88	1014+00.26	209.66
0.7	1013+89.36	208.76	1013+96.27	210.16	1013+98.86	210.16	1014+03.84	209.95
0.8	1013+92.93	209.05	1013+99.85	210.45	1014+02.44	210.45	1014+07.43	210.23
0.9	1013+96.52	209.33	1014+03.43	210.73	1014+06.02	210.74	1014+11.01	210.52
℄ BRG. ABUT. B	1014+00.08	209.61	1014+07.02	211.02	1014+09.60	211.02	1014+14.59	210.81

UNOFFICAL WEBSITE COPY

Y:\NEWCASTL\059\BRIDGE\2510602\BRIDGE 1-570\PLANS\ALTERNATIVE 1 (FASCIA BEAMS ONLY)\DK04.DGN

NOTES:
1. ALL DIMENSIONS ARE MEASURED NORMAL TO BASELINE US 202 CONCORD PIKE UNLESS OTHERWISE NOTED.
2. STATIONS AND ELEVATIONS ARE GIVEN AT 10TH POINT ALONG CENTERLINES AND BREAKLINE OF GIRDERS.

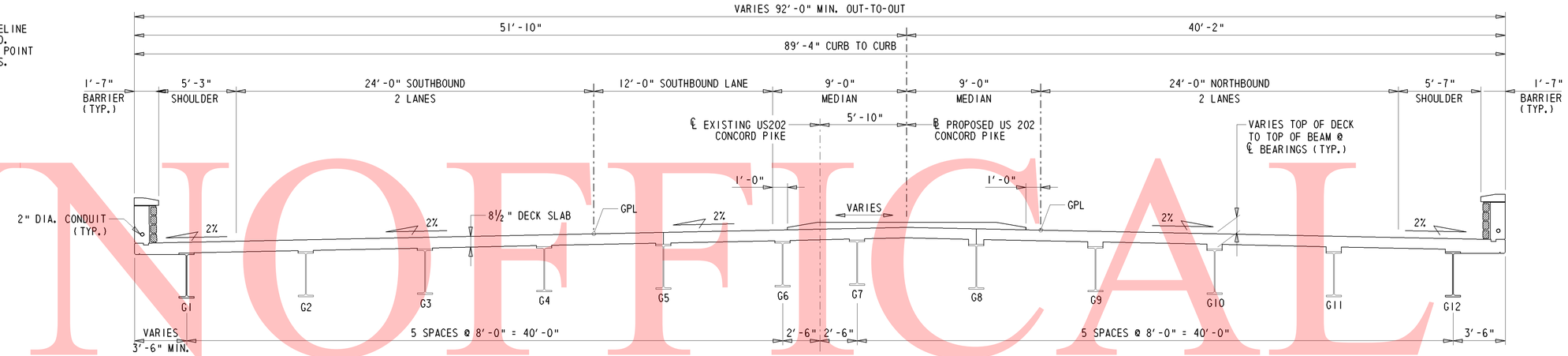

TYPICAL DECK SECTION

(LOOKING UPSTATION)

¼" = 1'-0"

NOTE: DIAPHRAGMS AND UTILITY SUPPORTS NOT SHOWN FOR CLARITY.

FINISHED DECK ELEVATION OF BEAM ALONG CENTERLINE

POINT	GIRDER 1		GIRDER 2		GIRDER 3		GIRDER 4		GIRDER 5		GIRDER 6		GIRDER 7		GIRDER 8		GIRDER 9		GIRDER 10		GIRDER 11		GIRDER 12	
	STATION	ELEV.	STATION	ELEV.	STATION	ELEV.	STATION	ELEV.	STATION	ELEV.	STATION	ELEV.	STATION	ELEV.	STATION	ELEV.	STATION	ELEV.	STATION	ELEV.	STATION	ELEV.	STATION	ELEV.
℄ BRG. ABUT. A	1011+67.93	191.62	1011+69.22	191.88	1011+70.52	192.14	1011+71.81	192.39	1011+73.11	192.65	1011+74.40	192.90	1011+75.21	193.07	1011+76.51	192.99	1011+77.80	192.93	1011+79.09	192.86	1011+80.39	192.80	1011+81.68	192.74
0.1	1011+70.31	191.80	1011+71.61	192.06	1011+72.90	192.31	1011+74.20	192.57	1011+75.49	192.83	1011+76.79	193.19	1011+77.59	193.25	1011+78.89	193.17	1011+80.18	193.10	1011+81.48	193.04	1011+82.77	192.98	1011+84.07	192.91
0.2	1011+72.70	191.98	1011+73.99	192.23	1011+75.29	192.49	1011+76.58	192.75	1011+77.88	193.02	1011+79.17	193.28	1011+79.98	193.44	1011+81.27	193.35	1011+82.57	193.28	1011+83.86	193.22	1011+85.16	193.15	1011+86.45	193.09
0.3	1011+75.08	192.16	1011+76.38	192.42	1011+77.67	192.68	1011+78.96	192.94	1011+80.26	193.20	1011+81.55	193.46	1011+82.36	193.63	1011+83.66	193.52	1011+84.95	193.46	1011+86.25	193.40	1011+87.54	193.33	1011+88.84	193.27
0.4	1011+77.46	192.34	1011+78.76	192.61	1011+80.05	192.87	1011+81.35	193.13	1011+82.64	193.39	1011+83.94	193.65	1011+84.75	193.82	1011+86.04	193.70	1011+87.34	193.64	1011+88.63	193.57	1011+89.92	193.51	1011+91.22	193.45
0.5	1011+79.85	192.53	1011+81.14	192.79	1011+82.44	193.05	1011+83.73	193.32	1011+85.03	193.58	1011+86.32	193.84	1011+87.13	194.00	1011+88.43	193.88	1011+89.72	193.81	1011+91.01	193.75	1011+92.31	193.69	1011+93.60	193.62
0.6	1011+82.23	192.72	1011+83.53	192.98	1011+84.82	193.24	1011+86.12	193.50	1011+87.41	193.77	1011+88.71	194.03	1011+89.51	194.19	1011+90.81	194.05	1011+92.10	193.99	1011+93.40	193.93	1011+94.69	193.86	1011+95.99	193.80
0.7	1011+84.62	192.91	1011+85.91	193.17	1011+87.21	193.43	1011+88.50	193.69	1011+89.80	193.95	1011+91.09	194.21	1011+91.90	194.38	1011+93.19	194.23	1011+94.49	194.17	1011+95.78	194.10	1011+97.08	194.04	1011+98.37	193.98
0.8	1011+87.00	193.09	1011+88.30	193.36	1011+89.59	193.62	1011+90.88	193.88	1011+92.18	194.14	1011+93.47	194.40	1011+94.28	194.57	1011+95.58	194.41	1011+96.87	194.35	1011+98.17	194.28	1011+99.46	194.22	1012+00.76	194.16
0.9	1011+89.38	193.28	1011+90.68	193.54	1011+91.97	193.80	1011+93.27	194.07	1011+94.56	194.33	1011+95.86	194.59	1011+96.67	194.75	1011+97.96	194.59	1011+99.26	194.52	1012+00.55	194.46	1012+01.84	194.40	1012+03.14	194.34
℄ BRG. PIER 1	1011+91.77	193.47	1011+93.06	193.73	1011+94.36	193.99	1011+95.65	194.25	1011+96.95	194.52	1011+98.24	194.78	1011+99.05	194.94	1012+00.35	194.76	1012+01.64	194.71	1012+02.93	194.65	1012+04.23	194.59	1012+05.52	194.53
℄ BRG. PIER 1	1011+93.12	193.58	1011+94.41	193.84	1011+95.71	194.10	1011+97.00	194.36	1011+98.30	194.62	1011+99.59	194.88	1012+00.40	195.05	1012+01.70	194.87	1012+02.99	194.81	1012+04.28	194.75	1012+05.58	194.69	1012+06.87	194.63
0.1	1012+01.63	194.24	1012+02.92	194.50	1012+04.22	194.76	1012+05.51	195.02	1012+06.81	195.28	1012+08.10	195.53	1012+08.91	195.70	1012+10.21	195.53	1012+11.50	195.47	1012+12.79	195.41	1012+14.09	195.35	1012+15.38	195.29
0.2	1012+10.14	194.90	1012+11.43	195.15	1012+12.73	195.41	1012+14.02	195.67	1012+15.32	195.92	1012+16.61	196.18	1012+17.42	196.34	1012+18.72	196.19	1012+20.01	196.13	1012+21.30	196.07	1012+22.60	196.01	1012+23.89	195.95
0.3	1012+18.65	195.54	1012+19.94	195.80	1012+21.24	196.06	1012+22.53	196.32	1012+23.83	196.58	1012+25.12	196.83	1012+25.93	197.00	1012+27.23	196.85	1012+28.52	196.79	1012+29.81	196.73	1012+31.11	196.68	1012+32.40	196.62
0.4	1012+27.16	196.19	1012+28.45	196.45	1012+29.75	196.71	1012+31.04	196.97	1012+32.34	197.23	1012+33.63	197.49	1012+34.44	197.65	1012+35.74	197.51	1012+37.03	197.46	1012+38.32	197.40	1012+39.62	197.34	1012+40.91	197.28
0.5	1012+35.67	196.85	1012+36.96	197.11	1012+38.26	197.37	1012+39.55	197.63	1012+40.85	197.89	1012+42.14	198.15	1012+42.95	198.31	1012+44.25	198.18	1012+45.54	198.12	1012+46.83	198.06	1012+48.13	198.00	1012+49.42	197.94
0.6	1012+44.18	197.51	1012+45.47	197.76	1012+46.77	198.03	1012+48.06	198.28	1012+49.36	198.54	1012+50.65	198.80	1012+51.46	198.97	1012+52.76	198.84	1012+54.05	198.78	1012+55.34	198.72	1012+56.64	198.66	1012+57.93	198.60
0.7	1012+52.69	198.16	1012+53.98	198.42	1012+55.28	198.68	1012+56.57	198.94	1012+57.87	199.20	1012+59.16	199.46	1012+59.97	199.63	1012+61.27	199.50	1012+62.56	199.44	1012+63.85	199.38	1012+65.15	199.32	1012+66.44	199.26
0.8	1012+61.20	198.82	1012+62.49	199.08	1012+63.79	199.34	1012+65.08	199.60	1012+66.38	199.86	1012+67.67	200.12	1012+68.48	200.28	1012+69.78	200.16	1012+71.07	200.10	1012+72.36	200.04	1012+73.66	199.98	1012+74.95	199.92
0.9	1012+69.71	199.48	1012+71.00	199.74	1012+72.30	200.00	1012+73.59	200.26	1012+74.89	200.52	1012+76.18	200.78	1012+76.99	200.94	1012+78.29	200.82	1012+79.58	200.76	1012+80.87	200.70	1012+82.17	200.64	1012+83.46	200.58
℄ BRG. PIER 2	1012+78.22	200.14	1012+79.51	200.40	1012+80.81	200.66	1012+82.10	200.92	1012+83.40	201.18	1012+84.69	201.44	1012+85.50	201.61	1012+86.80	201.48	1012+88.09	201.42	1012+89.38	201.36	1012+90.68	201.30	1012+91.97	201.25
0.1	1012+86.73	200.80	1012+88.02	201.07	1012+89.32	201.33	1012+90.61	201.59	1012+91.91	201.85	1012+93.20	202.11	1012+94.01	202.27	1012+95.30	202.15	1012+96.60	202.09	1012+97.89	202.03	1012+99.19	201.97	1013+00.48	201.91
0.2	1012+95.24	201.47	1012+96.53	201.73	1012+97.83	201.99	1012+99.12	202.25	1013+00.42	202.51	1013+01.71	202.77	1013+02.52	202.94	1013+03.81	202.81	1013+05.11	202.75	1013+06.40	202.69	1013+07.70	202.63	1013+08.99	202.57
0.3	1013+03.75	202.13	1013+05.04	202.39	1013+06.33	202.65	1013+07.63	202.91	1013+08.92	203.17	1013+10.22	203.43	1013+11.03	203.60	1013+12.32	203.47	1013+13.62	203.41	1013+14.91	203.35	1013+16.21	203.30	1013+17.50	203.24
0.4	1013+12.25	202.79	1013+13.55	203.05	1013+14.84	203.31	1013+16.14	203.57	1013+17.43	203.83	1013+18.73	204.09	1013+19.54	204.26	1013+20.83	204.14	1013+22.13	204.08	1013+23.42	204.02	1013+24.71	203.96	1013+26.01	203.90
0.5	1013+20.76	203.45	1013+22.06	203.71	1013+23.35	203.97	1013+24.65	204.23	1013+25.94	204.49	1013+27.24	204.75	1013+28.05	204.92	1013+29.34	204.80	1013+30.63	204.74	1013+31.93	204.68	1013+33.22	204.62	1013+34.52	204.56
0.6	1013+29.27	204.11	1013+30.57	204.38	1013+31.86	204.64	1013+33.16	204.90	1013+34.45	205.16	1013+35.75	205.42	1013+36.55	205.58	1013+37.85	205.45	1013+39.14	205.40	1013+40.44	205.33	1013+41.73	205.27	1013+43.03	205.21
0.7	1013+37.78	204.78	1013+39.08	205.04	1013+40.37	205.30	1013+41.67	205.56	1013+42.96	205.82	1013+44.25	206.09	1013+45.06	206.25	1013+46.36	206.11	1013+47.65	206.05	1013+48.95	205.99	1013+50.24	206.93	1013+51.54	205.87
0.8	1013+46.29	205.45	1013+47.59	205.71	1013+48.88	205.97	1013+50.17	206.23	1013+51.47	206.49	1013+52.76	206.75	1013+53.57	206.91	1013+54.87	206.77	1013+56.16	206.71	1013+57.46	206.65	1013+58.75	206.59	1013+60.05	206.53
0.9	1013+54.80	206.11	1013+56.09	206.37	1013+57.39	206.63	1013+58.68	206.89	1013+59.98	207.15	1013+61.27	207.41	1013+62.08	207.57	1013+63.38	207.43	1013+64.67	207.37	1013+65.97	207.31	1013+67.26	207.25	1013+68.55	207.19
℄ BRG. PIER 3	1013+63.31	206.77	1013+64.60	207.02	1013+65.90	207.29	1013+67.19	207.55	1013+68.49	207.81	1013+69.78	208.07	1013+70.59	208.23	1013+71.89	208.09	1013+73.18	208.03	1013+74.47	207.97	1013+75.77	207.91	1013+77.06	207.86
℄ BRG. PIER 3	1013+64.66	206.87	1013+65.95	207.13	1013+67.25	207.39	1013+68.54	207.65	1013+69.84	207.91	1013+71.13	208.17	1013+71.94	208.33	1013+73.24	208.20	1013+74.53	208.14	1013+75.82	208.08	1013+77.12	208.02	1013+78.41	207.96
0.1	1013+68.24	207.15	1013+69.54	207.41	1013+70.83	207.67	1013+72.13	207.93	1013+73.42	208.19	1013+74.71	208.45	1013+75.52	208.61	1013+76.82	208.48	1013+78.11	208.42	1013+79.41	208.36	1013+80.70	208.31	1013+82.00	208.25
0.2	1013+71.82	207.42	1013+73.12	207.68	1013+74.41	207.94	1013+75.71	208.21	1013+77.00	208.47	1013+78.30	208.73	1013+79.11	208.89	1013+80.40	208.76	1013+81.70	208.71	1013+82.99	208.65	1013+84.28	208.59	1013+85.58	208.53
0.3	1013+75.41	207.70	1013+76.70	208.96	1013+78.00	208.23	1013+79.29	208.49	1013+80.59	208.75	1013+81.88	209.01	1013+82.69	209.18	1013+83.98	209.05	1013+85.28	208.99	1013+86.57	208.93	1013+87.87	208.88	1013+89.16	208.82
0.4	1013+78.99	207.99	1013+80.29	208.25	1013+81.58	208.51	1013+82.87	208.77	1013+84.17	209.04	1013+85.46	209.30	1013+86.27	209.46	1013+87.57	209.33	1013+88.86	209.28	1013+90.16	209.22	1013+91.45	209.16	1013+92.75	209.10
0.5	1013+82.57	208.27	1013+83.87	208.53	1013+85.16	208.79	1013+86.46	209.06	1013+87.75	209.32	1013+89.05	209.58	1013+89.86	209.75	1013+91.15	209.62	1013+92.44	209.56	1013+93.74	209.50	1013+95.03	209.43	1013+96.33	209.39
0.6	1013+86.16	208.55	1013+87.45	208.82	1013+88.75	209.08	1013+90.04	209.34	1013+91.34	209.60	1013+92.63	209.87	1013+93.44	210.03	1013+94.73	209.90	1013+96.03	209.85	1013+97.32	209.79	1013+98.62	209.73	1013+99.91	209.67
0.7	1013+89.74	208.84	1013+91.03	209.10	1013+92.33	209.36	1013+93.62	209.63	1013+94.92	209.89	1013+96.21	210.15	1013+97.02	210.31	1013+98.32	210.19	1013+99.61	210.13	1014+00.91	210.07	1014+02.20	210.02	1014+03.49	209.96
0.8	1013+93.32	209.12	1013+94.62	209.38	1013+95.91	209.65	1013+97.21	209.91	1013+98.50	210.17	1013+99.80	210.44	1014+00.60	210.60	1014+01.90	210.47	1014+03.19	210.42	1014+04.49	210.36	1014+05.78	210.30	1014+07.08	210.25
0.9	1013+96.91	209.41	1013+98.20	209.67	1013+99.49	209.93	1014+00.79	210.19	1014+02.08	210.45	1014+03.38	210.72	1014+04.19	210.88	1014+05.48	210.72	1014+06.78	210.70	1014+08.07	210.65	1014+09.37	210.59	1014+10.66	210.53
℄ BRG. ABUT. B	1014+00.49	209.69	1014+01.78	209.95	1014+03.08	210.22	1014+04.37	210.48	1014+05.67	210.74	1014+06.96	211.00	1014+07.77	211.17	1014+09.07	211.05	1014+10.36	210.99	1014+11.65	210.93	1014+12.95	210.88	1014+14.24	210.82

UNOFFICIAL VERSION

DELAWARE DEPARTMENT OF TRANSPORTATION

ADDENDUMS / REVISIONS

I-95 & US 202 INTERCHANGE

CONTRACT	BRIDGE NO.	1-570
T200510602	DESIGNED BY: MJG	
COUNTY		
NEW CASTLE	CHECKED BY: JNH	

FINISHED DECK ELEVATIONS - 2
S1-20 OF 29

SHEET NO. 248
TOTAL SHTS. 482

Y:\NEWCASTL\059\BRIDGE\2510602\BRIDGE 1-570\PLANS\ALTERNATIVE 1(FASCIA BEAMS ONLY)\DK05.DGN

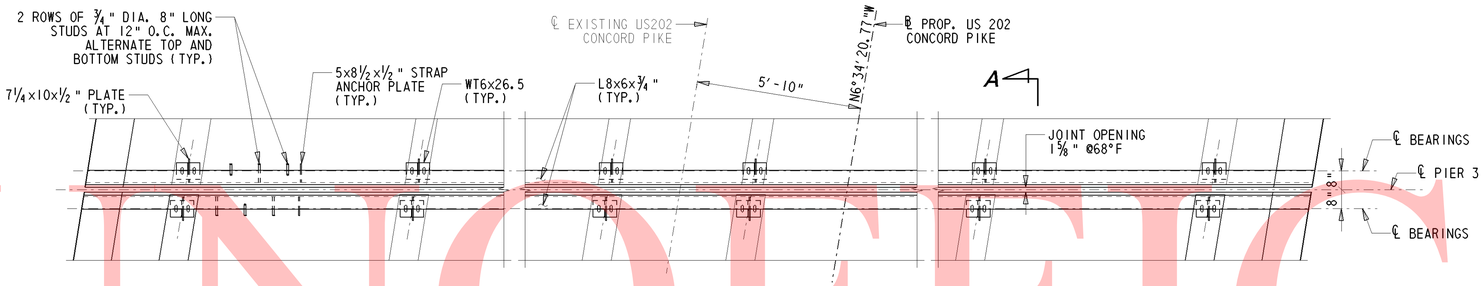

PLAN

½" = 1'-0"

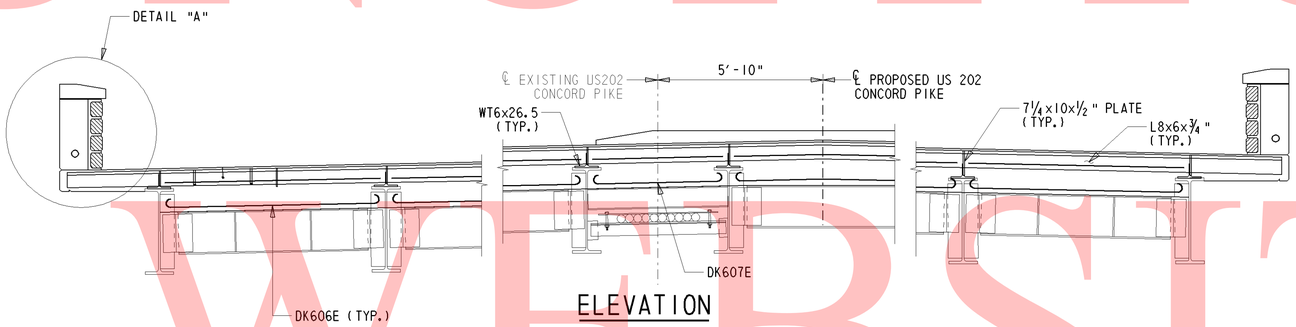

ELEVATION

½" = 1'-0"

EXPANSION JOINT NOTES:

1. STEEL FOR DECK JOINTS AND EXTRUSIONS SHALL BE AASHTO M270, GR. 36 (ASTM A36), (ASTM 709, GR. 36).
2. THE EXPANSION JOINT SHALL BE CAPABLE OF SEALING THE DECK TO PREVENT MOISTURE AND OTHER CONTAMINANTS FROM DESCENDING THROUGH THE JOINT.
3. THE ENTIRE EXPANSION DAM SHALL BE PAINTED AFTER FABRICATION, WITH URETHANE PAINT SYSTEM IN ACCORDANCE WITH THE SPECIAL PROVISIONS.
4. HOLES SHALL BE PLACED IN THE RIB PLATES AND STRAP-ANCHOR PLATES FOR BAR REINFORCEMENT. IF THIS IS DONE IN THE FIELD AN APPROVED EPOXY BONDED PAINT SHALL BE USED TO TOUCH UP THE HOLES. PAYMENT INCIDENTAL TO #605657 - STRIP SEAL EXPANSION JOINT.
5. THE PLAN AND ELEVATION SHOWN ARE FOR PIER 3. PIER 1 IS SIMILIAR.
6. ANCHOR PLATE AND STEEL EXTRUSION SHALL BE WELDED TO BE WATERTIGHT AT CONSTRUCTION JOINTS. PAYMENT INCIDENTAL TO #605657 - STRIP SEAL EXPANSION JOINT.
7. THE CONTRACTOR SHALL SUBMIT A PLAN FOR PLACEMENT OF STRIP SEAL DUE TO PHASING.

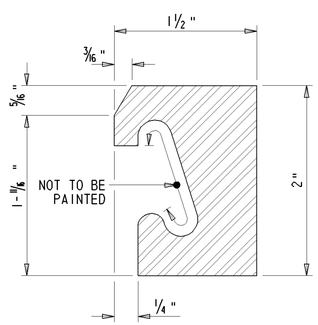

STEEL EXTRUSION

N.T.S.

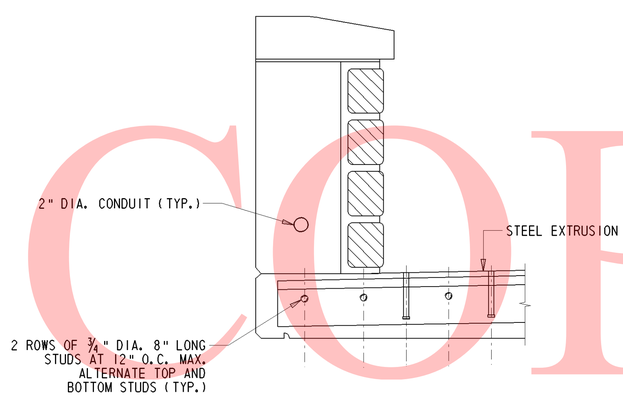

DETAIL A

1½" = 1'-0"

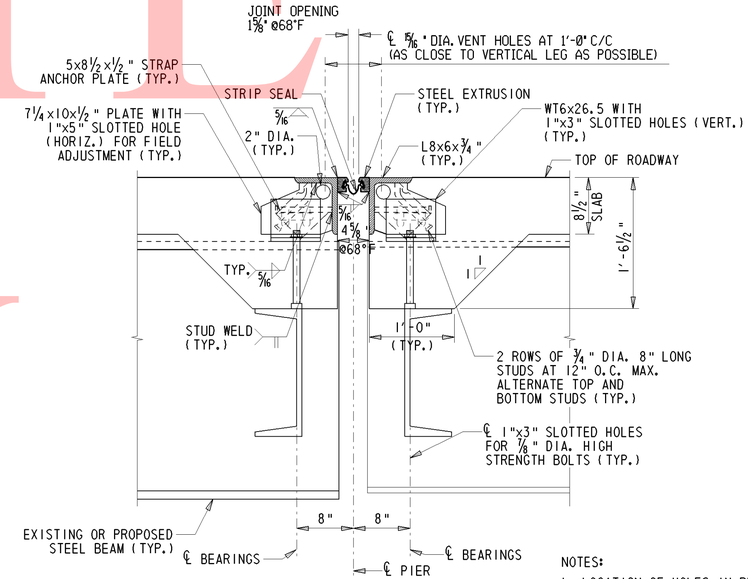

SECTION A-A

N.T.S.

NOTES:

1. LOCATION OF HOLES IN PLATES MUST COINCIDE WITH REBAR LOCATIONS.

UNOFFICIAL WEBSITE COPY

Y:\NEWCASTL\059\BRIDGE\2510602\BRIDGE 1-570\PLANS\ALTERNATIVE 1(FASCIA BEAMS ONLY)\DECK JOINT01.DGN

DELAWARE DEPARTMENT OF TRANSPORTATION	ADDENDUMS / REVISIONS	I-95 & US 202 INTERCHANGE	CONTRACT T200510602	BRIDGE NO. 1-570	DECK JOINT DETAILS S1-21 OF 29	SHEET NO. 249
			COUNTY NEW CASTLE	DESIGNED BY: MJG		TOTAL SHTS. 482
				CHECKED BY: JNH		

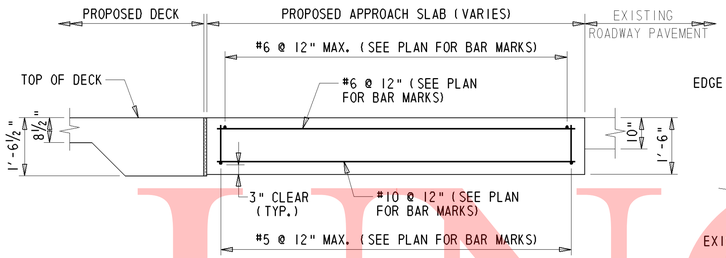

SECTION A-A

½" = 1'-0"

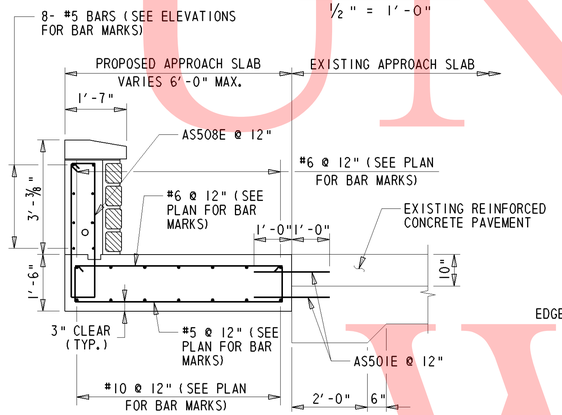

SECTION B-B

½" = 1'-0"

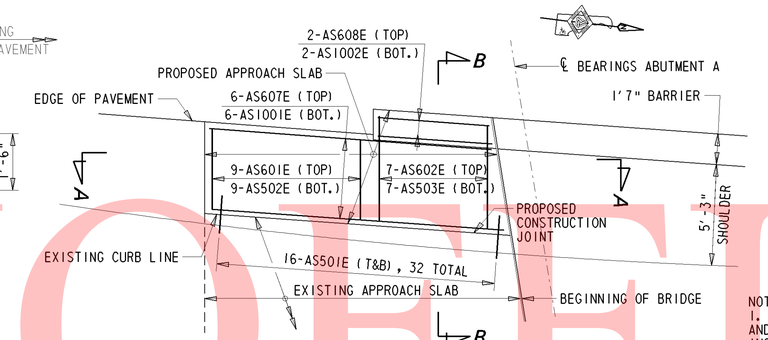

APPROACH SLAB-SOUTH WEST CORNER

¼" = 1'-0"

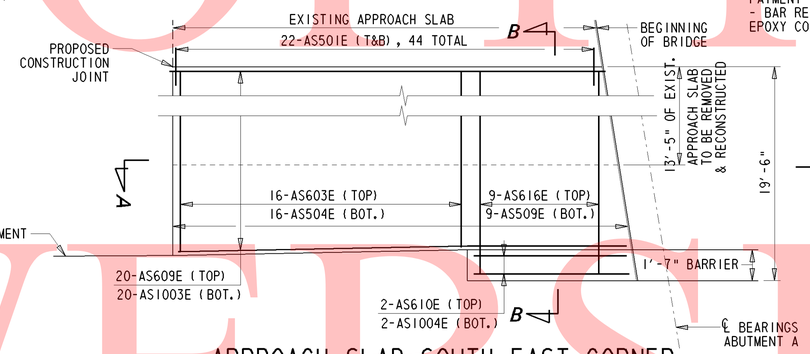

APPROACH SLAB-SOUTH EAST CORNER

¼" = 1'-0"

NOTES:
1. SPLAY LAST FEW BARS OF AS505E AND AS604E AS NEEDED. PAYMENT INCIDENTAL TO 604000 - BAR REINFORCEMENT, EPOXY COATED.

2. FIELD CUT BARS AS NEEDED. PAYMENT INCIDENTAL TO 604000 - BAR REINFORCEMENT, EPOXY COATED.

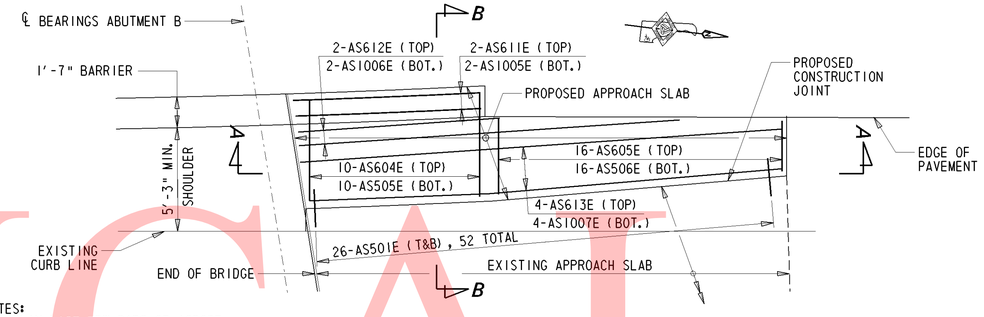

APPROACH SLAB-NORTH WEST CORNER

¼" = 1'-0"

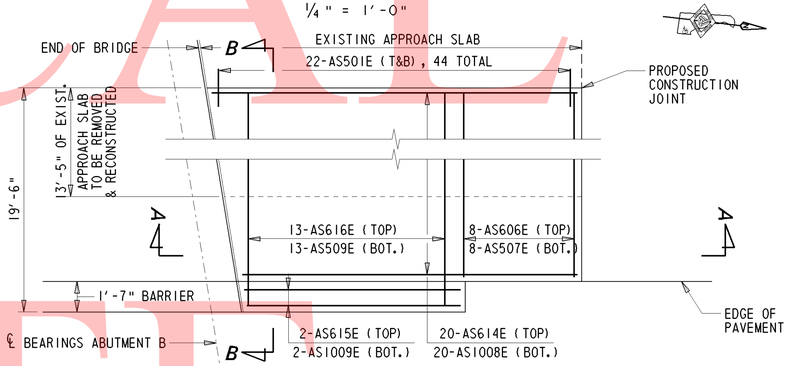

APPROACH SLAB-NORTH EAST CORNER

¼" = 1'-0"

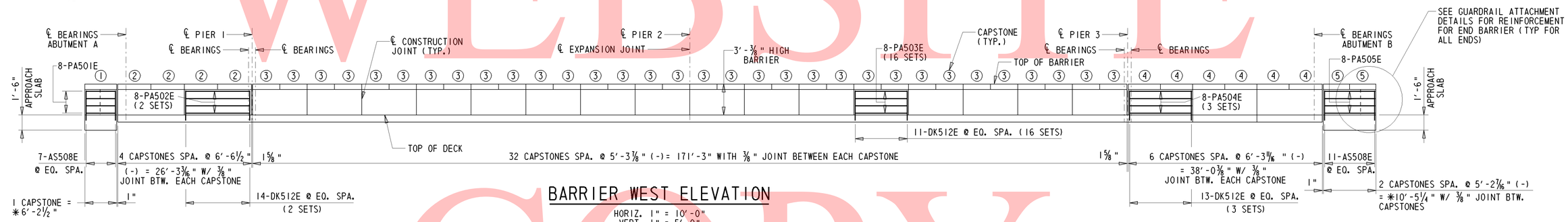

BARRIER WEST ELEVATION

HORIZ. 1" = 10'-0"
VERT. 1" = 5'-0"

* NOTE:
THESE DIMENSIONS ARE MEASURED ALONG FASCIA.

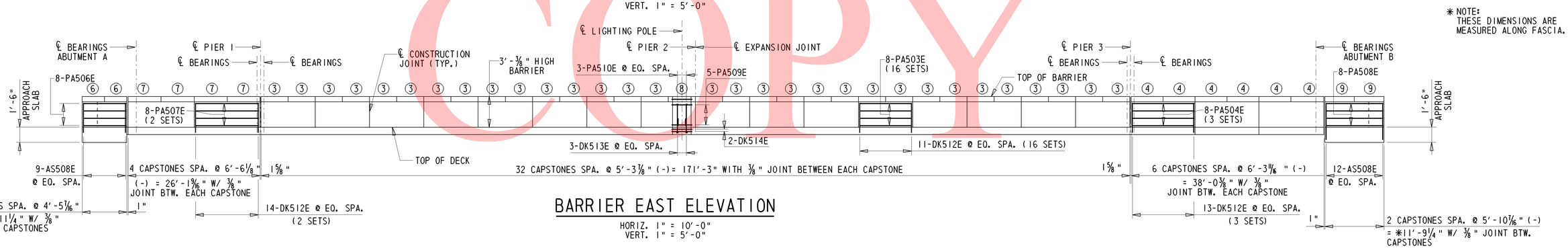

BARRIER EAST ELEVATION

HORIZ. 1" = 10'-0"
VERT. 1" = 5'-0"

UNOFFICIAL WEBSITE COPY

Y:\NEWCASTL\059\BRIDGE\2510602\BRIDGE 1-570\PLANS\ALTERNATIVE 1(FASCIA BEAMS ONLY)\DK02.DGN

DELAWARE DEPARTMENT OF TRANSPORTATION	ADDENDUMS / REVISIONS	I-95 & US 202 INTERCHANGE	CONTRACT T200510602	BRIDGE NO. 1-570	BARRIER & APPROACH SLAB DETAILS S1-22 OF 29	SHEET NO. 250
			COUNTY NEW CASTLE	DESIGNED BY: MJG		TOTAL SHTS. 482
				CHECKED BY: JNH		

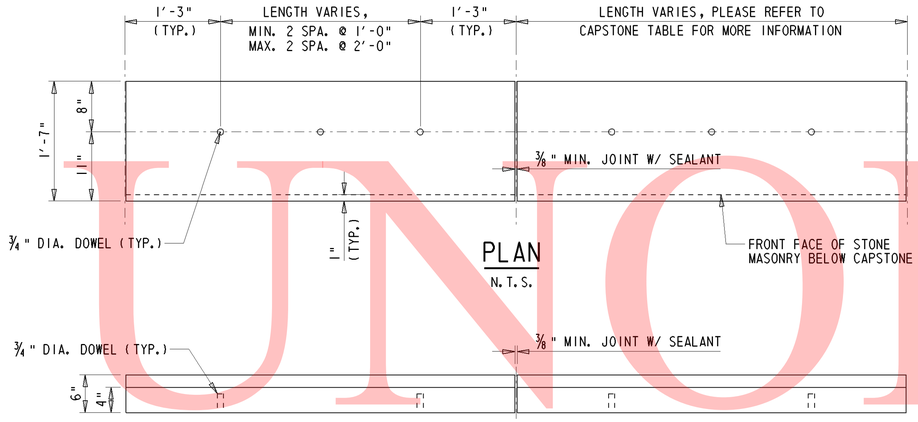

PLAN
N.T.S.

ELEVATION
N.T.S.

CAPSTONE TABLE		
TYPE	QUANTITY	LENGTH
1	1	6'-2 1/2"
2	4	6'-6 1/2"
3	64	5'-3 7/8"
4	12	6'-3 11/16"
5	2	5'-2 7/16"
6	2	4'-5 7/16"
7	4	6'-6 1/8"
9	2	5'-10 7/16"

JOINT NOTES:

1. PROVIDE CONSTRUCTION JOINTS IN BARRIER AT 10'-0" INTERVALS OR AS REQUIRED. PROVIDE EXPANSION JOINTS IN BARRIER ONLY AT INTERVALS NOT EXCEEDING 90'-0".
2. REINFORCEMENT SHALL NOT PASS THROUGH EXPANSION JOINTS.
3. REINFORCEMENT SHALL NOT PASS THROUGH CONSTRUCTION JOINTS.

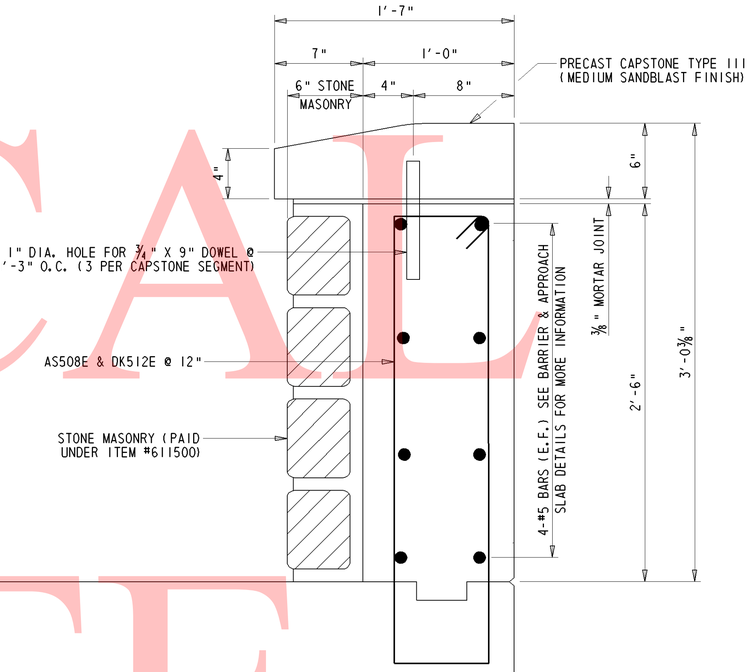

BARRIER DETAIL
1/2" = 1'-0"

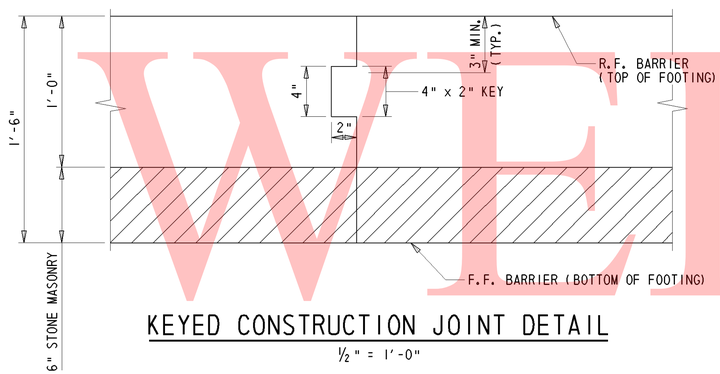

KEYED CONSTRUCTION JOINT DETAIL
1/2" = 1'-0"

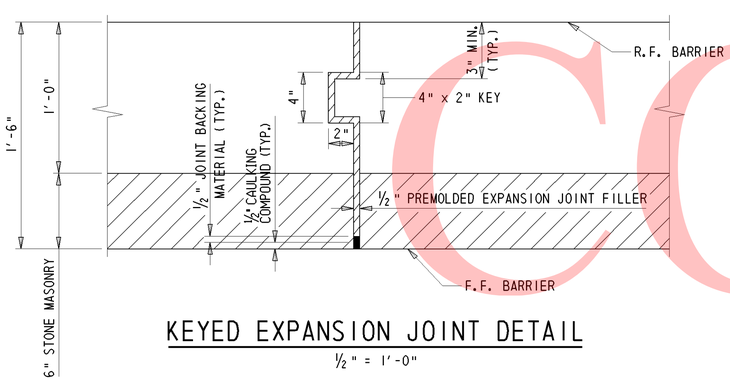

KEYED EXPANSION JOINT DETAIL
1/2" = 1'-0"

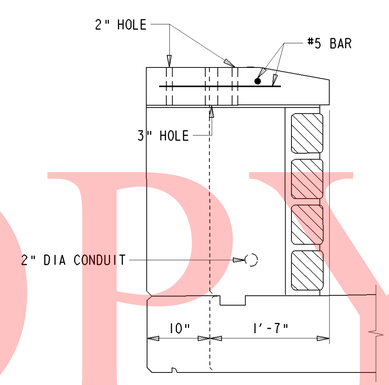

SECTION A-A

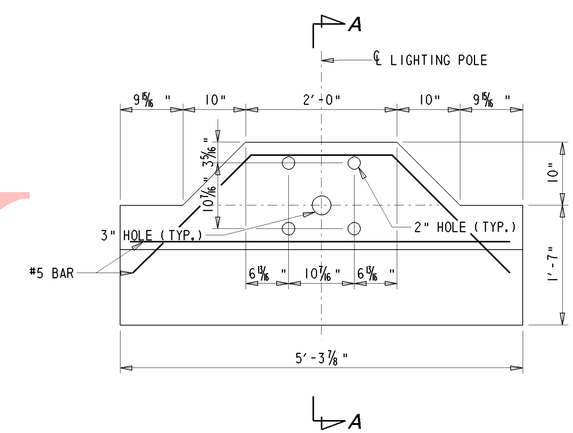

PLAN

TYPE 8 BARRIER DETAIL FOR LIGHT POLE ANCHORAGE AT EAST ELEVATION
1" = 1'-0"

UNOFFICIAL WEBSITE COPY

Y:\NEWCASTL\059\BRIDGE\2510602\BRIDGE 1-570\PLANS\ALTERNATIVE 1(FASCIA BEAMS ONLY)\PA01.DGN

DELAWARE DEPARTMENT OF TRANSPORTATION	ADDENDUMS / REVISIONS	I-95 & US 202 INTERCHANGE	CONTRACT T200510602	BRIDGE NO. 1-570	BARRIER DETAILS S1-23 OF 29	SHEET NO. 251
			COUNTY NEW CASTLE	DESIGNED BY: MJG		TOTAL SHTS. 482
				CHECKED BY: JNH		

NOTES

1. SEE STANDARD NO. B-8 (2002) FOR DETAILS NOT SHOWN. (GUARDRAIL TO BARRIER CONNECTION, APPROACH TYPE 2)
2. ELIMINATE BOTTOM RAIL FOR EXIT TYPE CONNECTION.
3. PAYMENT FOR REINFORCED CONCRETE PARAPET/BARRIER INCLUDES EMBEDDED INSERTS. ALL OTHER ITEMS SHOWN ARE ROADWAY ITEMS.

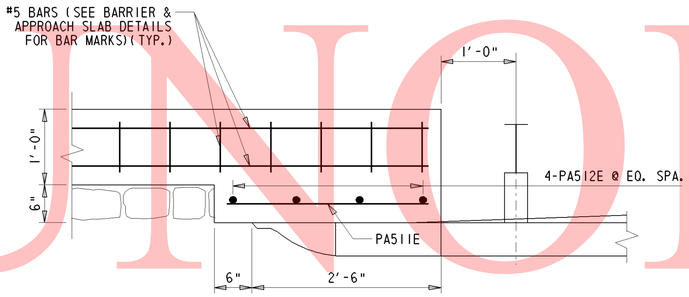

REINFORCEMENT PLAN

3/16" = 1'-0"

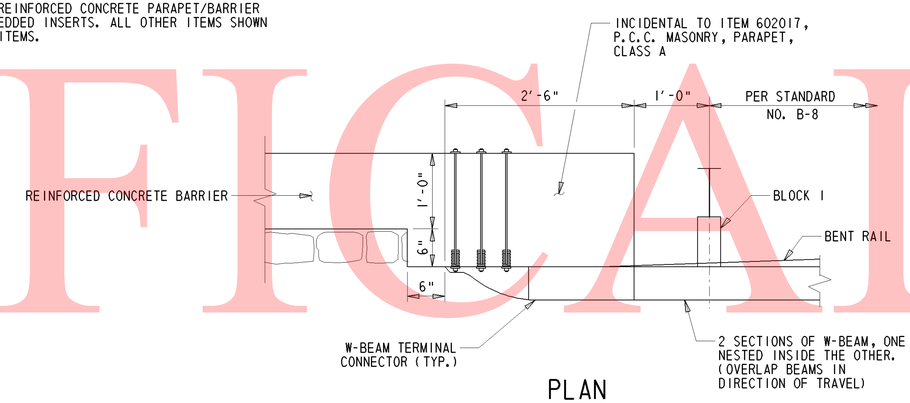

PLAN

3/16" = 1'-0"

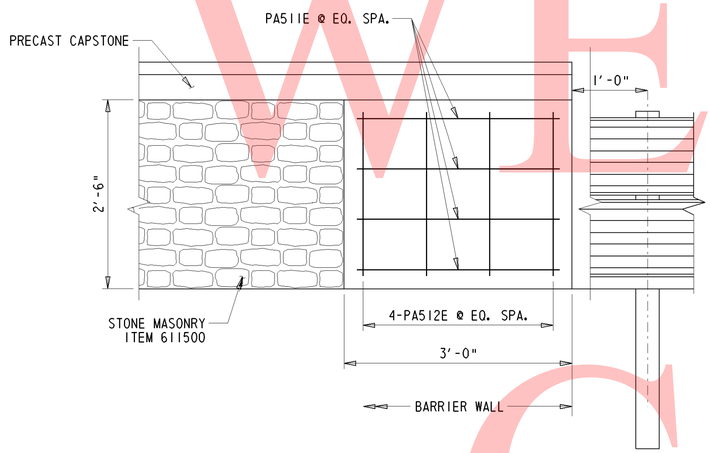

REINFORCEMENT ELEVATION

3/16" = 1'-0"

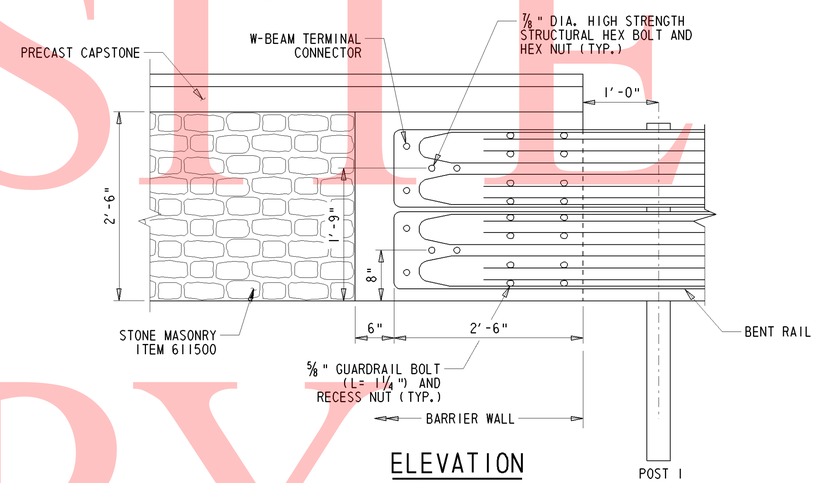

ELEVATION

3/16" = 1'-0"

GUARDRAIL TO BARRIER CONNECTION

3/16" = 1'-0"

UNOFFICIAL WEBSITE COPY

Y:\NEWCASTL\059\BRIDGE\2510602\BRIDGE 1-570\PLANS\ALTERNATIVE 1(FASCIA BEAMS ONLY)\GUARDRAIL CONNECTION.DGN

DELAWARE DEPARTMENT OF TRANSPORTATION	ADDENDUMS / REVISIONS		I-95 & US 202 INTERCHANGE	CONTRACT T200510602	BRIDGE NO. 1-570	GUARDRAIL ATTACHMENT DETAILS S1-24 OF 29	SHEET NO. 252
				COUNTY NEW CASTLE	DESIGNED BY: MJG		TOTAL SHTS. 482
					CHECKED BY: JNH		

NOTES:
1. SET ANCHOR BOLTS ACCURATELY BY THE TEMPLATE FURNISHED BY THE MANUFACTURER, TO THE CORRECT ELEVATION AND ALIGNMENT AND SECURELY BRACE AGAINST DISPLACEMENT BEFORE THE SURROUNDING CONCRETE IS PLACED. ANCHOR BOLT DIAMETER AS REQUIRED BY LIGHTING POLE MANUFACTURER.
2. ORIENT HAND HOLES FOR BARRIER MOUNTED POLES TOWARD THE ROADWAY.
3. SEAL CONDUIT AND PROTECT THREADS FOR FUTURE LIGHTING INSTALLATIONS.
4. DO NOT GALVANIZE ANCHOR ANGLES.
5. SET LIGHTING POLES TRULY VERTICAL WITH BASES LEVEL USING LEVELING NUTS.
6. PROVIDE A MINIMUM OF 2½" CONCRETE COVER FOR CONDUIT.

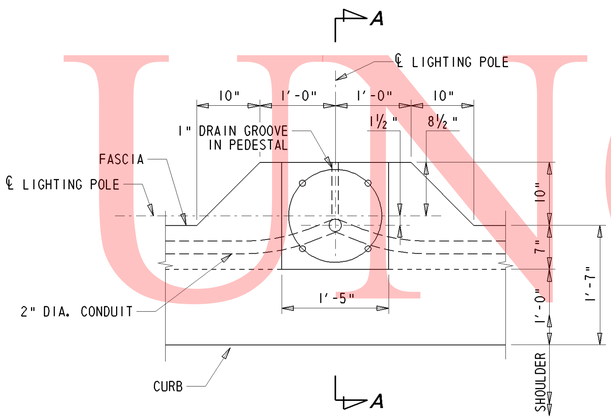

PLAN
N.T.S.

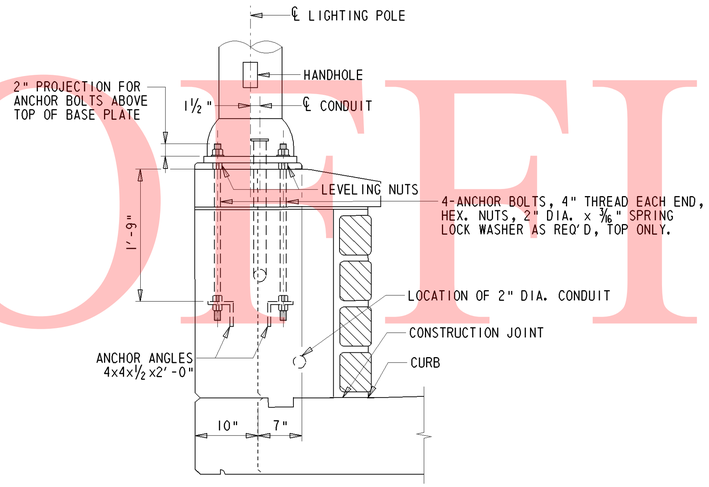

SECTION A-A

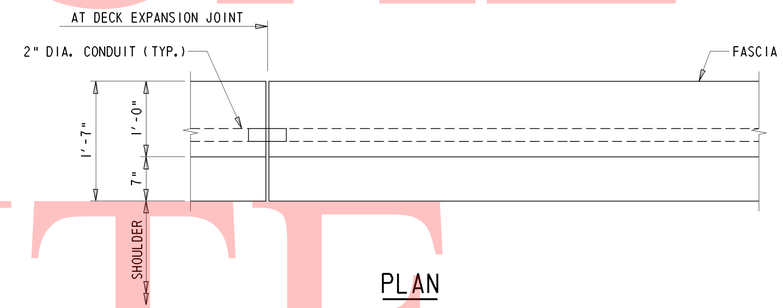

PLAN

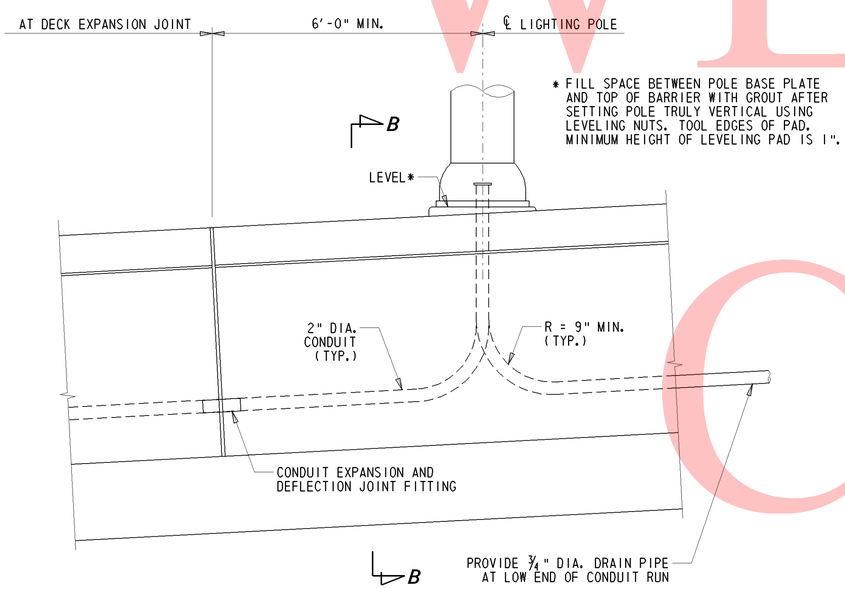

PLAN
N.T.S.

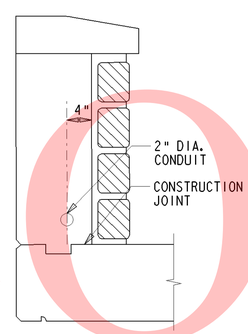

SECTION B-B

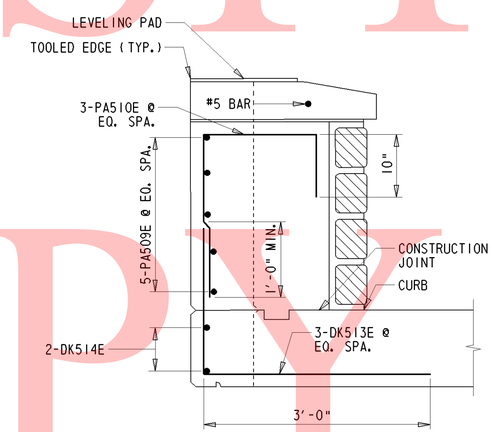

SECTION C-C
(BEAM, LIGHTING POLE AND BARRIER REINFORCEMENT NOT SHOWN)

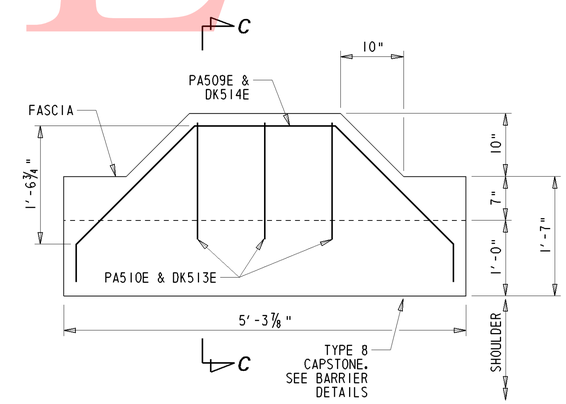

SUGGESTED REINFORCEMENT
(CONTINUE NORMAL BARRIER REINFORCEMENT THROUGH THICKENED PORTION OF BARRIER.)

LIGHTING POLE ANCHORAGE REINFORCEMENT

UNOFFICAL WEBSITE COPY

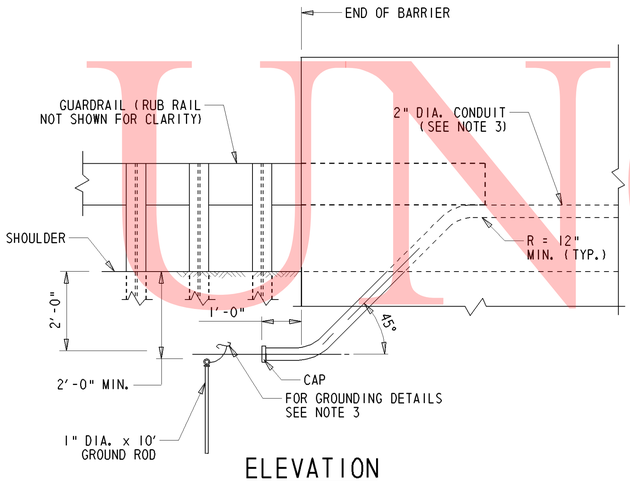

ELEVATION

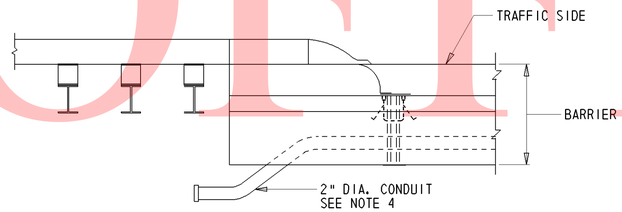

PLAN

CONDUIT DETAILS AT ENDS OF BRIDGE

N.T.S.

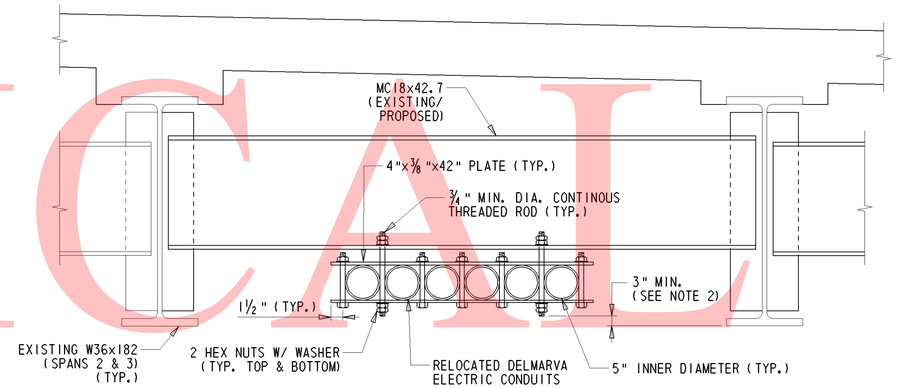

CONDUIT HANGER

1" = 1'-0"

NOTES:

1. MOUNTING DETAIL FOR CONDUIT HANGER AS SHOWN IS A SUGGESTED METHOD FOR STEEL STRUCTURES. ALTERNATIVE DETAILS WILL BE CONSIDERED ON A CASE BY CASE BASIS. ALL DETAILS MUST BE DESIGNED FOR SPECIFIC LOADS AND DETAILED ON SHOP DRAWINGS. DO NOT MAKE ANY ATTACHMENT TO THE UNDERSIDE OF THE DECK.
2. RAISE NEW DIAPHRAGM LOCATION BY 3" FROM EXISTING TO ALLOW FOR CLEARANCE. FIELD DRILL EXISTING CONNECTION PLATE AS REQUIRED.
3. THE CONDUIT HANGER IS TO BE ATTACHED TO ALL DIAPHRAGMS (BOTH EXISTING AND PROPOSED) BETWEEN BEAMS 10 AND 11.
4. THE CONTRACTOR SHALL INSTALL RUBBER EXPANSION MATERIAL BETWEEN THE CONDUIT AND THE SLEEVE WALL TO PROTECT THE CONDUIT FROM EXPANSION AND CONTRACTION. PAYMENT SHALL BE INCLUDED UNDER ITEM 605528 - UTILITY SUPPORT.

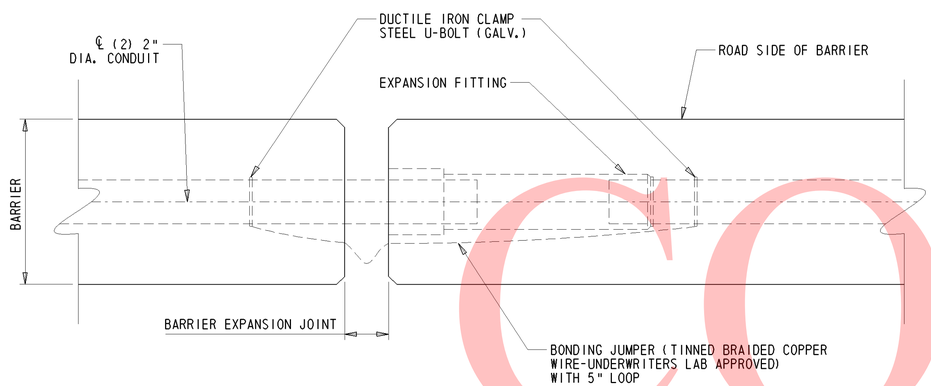

CONDUIT EXPANSION JOINT

N.T.S.

NOTES:

1. FOR PROPER GROUNDING OF GALV. STEEL CONDUIT OR NON-METALLIC CONDUIT, SEE SPECIFICATION. GROUNDING CONDUCTOR AND GROUND ROD CONSIDERED INCIDENTAL TO CIRCUIT CONDUCTOR.
2. CONDUIT TO EXIT BARRIER ON OUTSIDE OF GUARDRAIL POST LINE TO AVOID DAMAGE TO CONDUIT, GROUND ROD, GROUND CONNECTOR OR UNDERGROUND CABLE.

UNOFFICIAL WEBSITE COPY

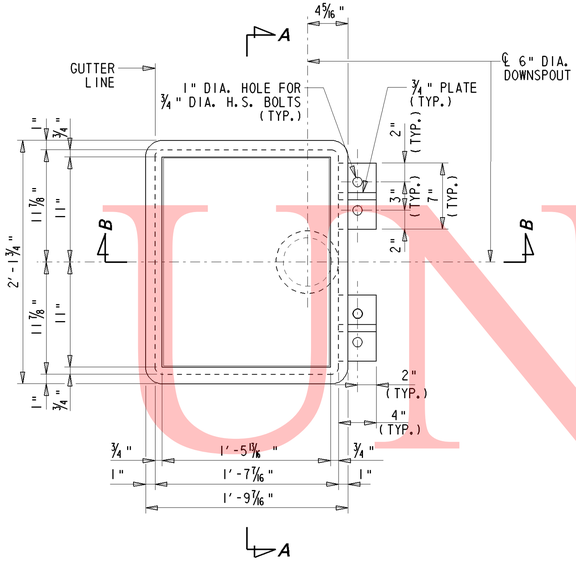

PLAN OF DRAINAGE SCUPPER

1 1/2" = 1'-0"

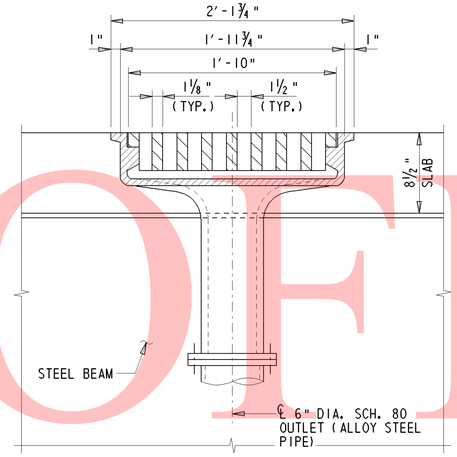

SECTION A-A

1 1/2" = 1'-0"

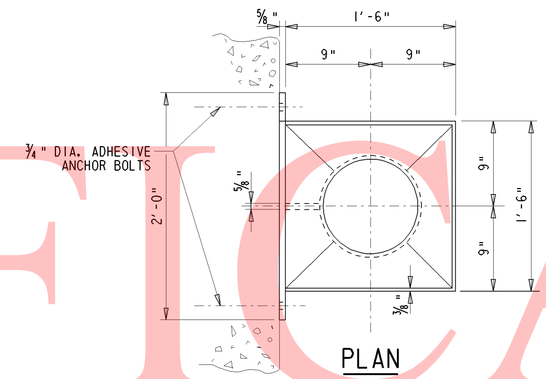

PLAN

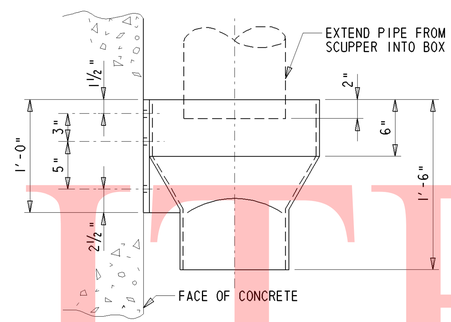

ELEVATION

DRAIN BOX DETAIL

1 1/2" = 1'-0"

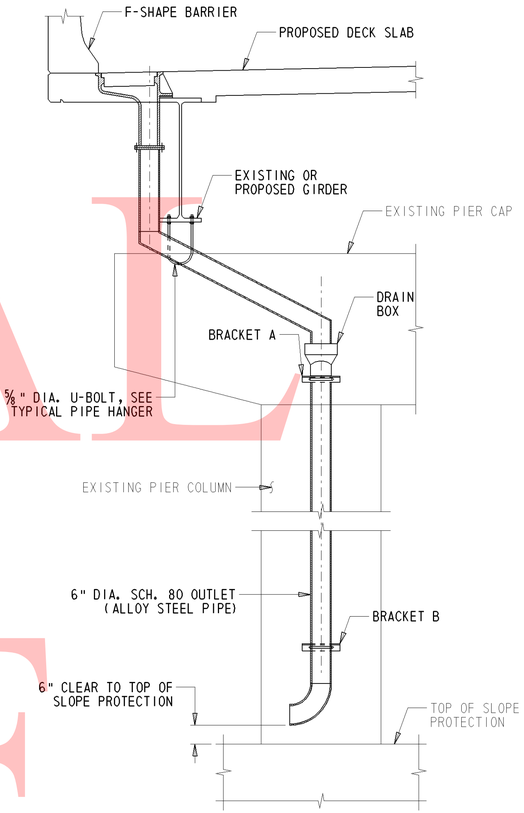

6" DIA. DOWNSPOUT LAYOUT

1 1/2" = 1'-0"

NOTES:

1. SCUPPERS, DRAINAGE PIPES AND FITTINGS ARE PAID BY ITEM NO. 605524 - BRIDGE DRAINAGE SYSTEM.

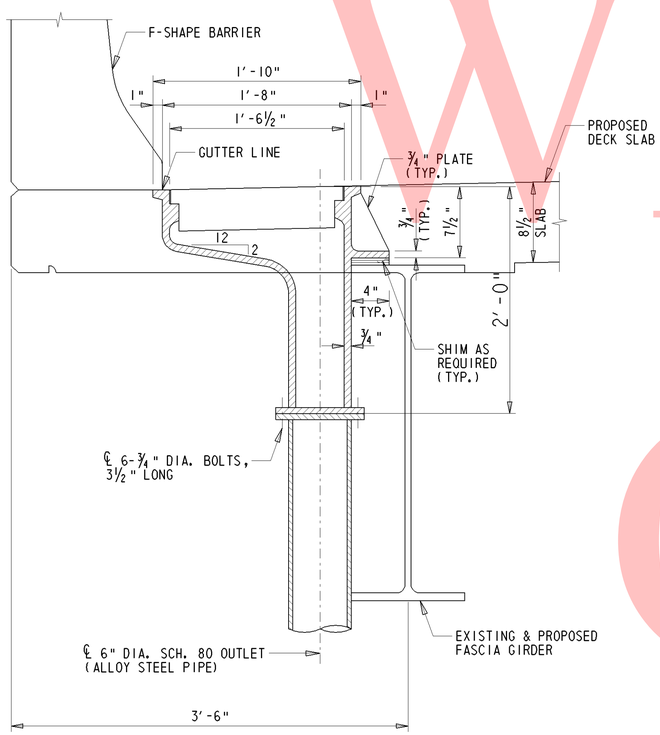

VIEW B-B

1 1/2" = 1'-0"

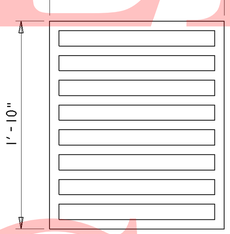

PLAN OF GRATE

1 1/2" = 1'-0"

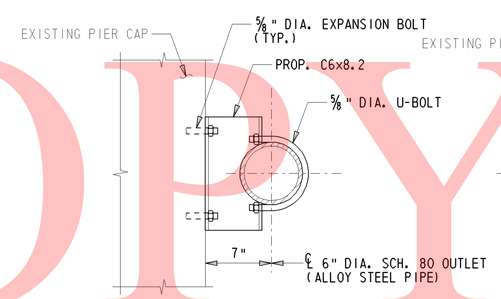

BRACKET A

1 1/2" = 1'-0"

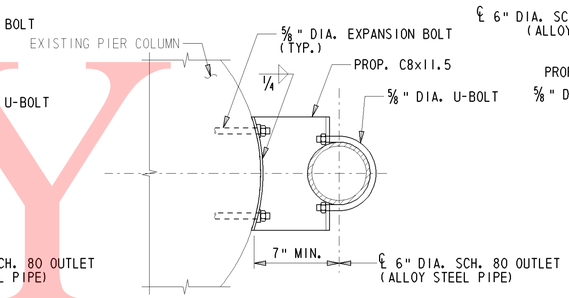

BRACKET B

1 1/2" = 1'-0"

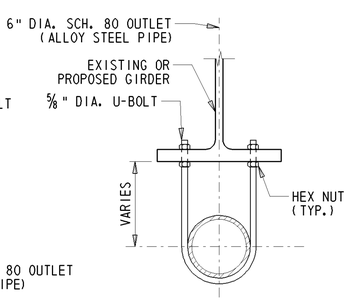

TYPICAL PIPE HANGER

1 1/2" = 1'-0"

UNOFFICAL WEBSITE COPY

Y:\NEWCASTL\059\BRIDGE\2510602\BRIDGE 1-570\PLANS\ALTERNATIVE 1(FASCIA BEAMS ONLY)\SC01.DGN

DELAWARE DEPARTMENT OF TRANSPORTATION	ADDENDUMS / REVISIONS	I-95 & US 202 INTERCHANGE	CONTRACT T200510602	BRIDGE NO. 1-570	SCUPPER DETAILS S1-27 OF 29	SHEET NO. 255
			COUNTY NEW CASTLE	DESIGNED BY: MJG		TOTAL SHTS. 482
				CHECKED BY: JNH		

① ANY MARK NUMBER WITH SUFFIX 'E' DENOTES EPOXY COATED REINFORCING STEEL.

② ALL MARK 'LOCATION PREFIXES' SHALL CONSIST OF TWO LETTERS AND ARE AS FOLLOWS: AB = ABUTMENT, AS = APPROACH SLAB, BC = BOX CULVERT, BW = BACKWALL, CL = COLUMN, DK = DECK, DL = DOWEL, FT = FOOTING, HW = HEADWALL, MS = MISC. BARS, PA = PARAPET, PP = PEDESTAL PAD, PR = PIER, SC = SHEETPILE CAP, SL = SLAB, TW = TOEWALL, WL = WALL (UNIQUE LOCATION), WW = WINGWALL

SPECIFICATIONS					BENDING DIMENSIONS (FEET-INCHES /QUARTER INCH)											
QTY.	SIZE	LENGTH	MARK	TYPE	A	B	C	D	E	F/R	G	H	J	K	O
3	5	10-00	AB501E	STR		10-00									
3	5	1-30	AB502E	STR		1-30									
3	5	9-80	AB503E	STR		9-80									
3	5	1-40	AB504E	STR		1-40									
172	5	2-00	AS501E	STR		2-00									
9	5	6-70	AS502E	17		1-02	4-60	1-02							
7	5	7-110	AS503E	17		1-02	5-100	1-02							
1X16	5	19-80	AS504E	17		1-02	17-70	1-02							
		T0				T0	T0	T0							
		19-110				1-02	17-100	1-02							
10	5	7-100	AS505E	17		1-02	5-90	1-02							
1x16	5	4-100	AS506E	17		1-02	2-90	1-02							
		T0				T0	T0	T0							
		6-20				1-02	4-10	1-02							
8	5	19-80	AS507E	17		1-02	17-70	1-02							
39	5	9-32	AS508E	T1	0-33	0-80	3-80	0-80	3-80		0-33				
22	5	21-30	AS509E	17		1-02	19-20	1-02							
9	6	4-60	AS601E	STR		4-60									
7	6	5-100	AS602E	STR		5-100									
1X16	6	17-70	AS603E	STR		17-70									
		T0				T0									
		17-100				17-100									
10	6	5-90	AS604E	STR		5-90									
1X16	6	2-90	AS605E	STR		2-90									
		T0				T0									
		4-10				4-10									
8	6	17-70	AS606E	STR		17-70									
1X6	6	15-20	AS607E	STR		15-20									
		T0				T0									
		15-100				15-100									
1X2	6	5-110	AS608E	STR		5-110									
		T0				T0									
		6-20				6-20									
1X20	6	21-00	AS609E	STR		21-00									
		T0				T0									
		23-100				23-100									
1X2	6	8-50	AS610E	STR		8-50									
		T0				T0									
		8-72				8-72									

SPECIFICATIONS					BENDING DIMENSIONS (FEET-INCHES /QUARTER INCH)											
QTY.	SIZE	LENGTH	MARK	TYPE	A	B	C	D	E	F/R	G	H	J	K	O
1X2	6	9-102	AS611E	STR		9-102									
		T0				T0									
		10-11				10-11									
1X2	6	10-40	AS612E	STR		10-40									
		T0				T0									
		19-100				19-100									
1X4	6	25-00	AS613E	STR		25-00									
		T0				T0									
		25-60				25-60									
1X20	6	17-100	AS614E	STR		17-100									
		T0				T0									
		20-90				20-90									
1X2	6	11-33	AS615E	STR		11-33									
		T0				T0									
		11-51				11-51									
22	6	19-20	AS616E	STR		19-20									
1X6	10	15-20	AS1001E	STR		15-20									
		T0				T0									
		15-100				15-100									
1X2	10	5-110	AS1002E	STR		5-110									
		T0				T0									
		6-20				6-20									
1X20	10	21-00	AS1003E	STR		21-00									
		T0				T0									
		23-100				23-100									
1X2	10	8-50	AS1004E	STR		8-50									
		T0				T0									
		8-72				8-72									
1X2	10	9-102	AS1005E	STR		9-102									
		T0				T0									
		10-11				10-11									
1X2	10	10-40	AS1006E	STR		10-40									
		T0				T0									
		19-100				19-100									
1X4	10	25-00	AS1007E	STR		25-00									
		T0				T0									
		25-60				25-60									

SPECIFICATIONS					BENDING DIMENSIONS (FEET-INCHES /QUARTER INCH)											
QTY.	SIZE	LENGTH	MARK	TYPE	A	B	C	D	E	F/R	G	H	J	K	O
1X20	10	17-100	AS1008E	STR		17-100									
		T0				T0									
		20-90				20-90									
1X2	10	11-33	AS1009E	STR		11-33									
		T0				T0									
		11-51				11-51									
188	5	25-71	DK501E	STR		25-71									
376	5	59-103	DK502E	STR		59-103									
188	5	54-00	DK503E	STR		54-00									
188	5	37-71	DK504E	STR		37-71									
32	5	35-92	DK505E	STR		35-92									
20	5	21-30	DK506E	STR		21-30									
4	5	37-10	DK507E	STR		37-10									
4	5	36-11	DK508E	STR		36-11									
340	5	9-30	DK509E	16	5-110	1-20	0-80	1-60				1-03		1-03	1-83
170	5	10-102	DK510E	16	5-110	1-50	2-02	1-60				1-03		1-03	3-03
330	5	12-70	DK511E	18	0-70	12-00									
486	5	7-102	DK512E	T1	0-33	0-80	2-112	0-80	2-112		0-33				
3	5	4-110	DK513E	17		1-110	3-00								
2	5	7-31	DK514E	14	0-60	2-22	1-101	2-22	0-60			1-63		1-63	5-00
47	5	54-00	DK515E	STR		54-00									
545	6	36-52	DK601E	18	0-80	35-92									
545	6	21-30	DK602E	STR		21-30									
2X29	6	36-52	DK603E	18	0-80	35-92									
		T0				T0									
		37-90			0-80	37-10									
94	6	54-00	DK604E	STR		54-00									
487	6	36-40	DK605E	18	0-80	35-80									
240	6	9-00	DK606E	1	0-80	7-80					0-80		0-60		
24	6	6-00	DK607E	1	0-80	4-80					0-80		0-60		

ASTM STANDARD ENGLISH REINFORCING BARS

BAR SIZE	NOMINAL DIMENSIONS: DIAMETER (INCHES)	AREA (INCHES²)	WEIGHT (LBS./FT.)	RECOMMENDED END HOOKS, APPLICABLE TO ALL GRADES: D	180° HOOKS: A OR G	180° HOOKS: J	90° HOOKS: A OR G	STIRRUP AND TIE HOOKS, APPLICABLE TO ALL GRADES: D	90° HOOK: A OR G	135° HOOK: A OR G	135° HOOK: A OR G
3	0.375	0.110	0.376	2¼"	5"	3"	6"	1½"	4"	4"	2½"
4	0.500	0.200	0.668	3"	6"	4"	8"	2"	4½"	4½"	3"
5	0.625	0.310	1.043	3¾"	7"	5"	10"	2½"	6"	5½"	3¾"
6	0.750	0.440	1.502	4½"	8"	6"	1-0"	4½"	1-0"	8"	4½"
7	0.875	0.600	2.044	5¼"	10"	7"	1-2"	5¼"	1-2"	9"	5¼"
8	1.000	0.790	2.670	6"	11"	8"	1-4"	6"	1-4"	10½"	6"
9	1.128	1.000	3.400	9½"	1-3"	11¾"	1-7"				
10	1.270	1.270	4.303	10¾"	1-5"	1-1¼"	1-10"				
11	1.410	1.560	5.313	1-0"	1-7"	1-2¾"	2-0"				
14	1.693	2.250	7.650	1-6¼"	2-3"	1-9¾"	2-7"				
18	2.257	4.000	13.600	2-0"	3-0"	2-4½"	3-5"				

NOTES:

1. FIGURES SHOWN IN CIRCLES REPRESENT BAR BEND TYPES.
2. STANDARD BAR BENDS INCLUDE ONLY THOSE TYPES BELOW, INDICATED AS SUCH.
3. ALL DIMENSIONS OUT-TO-OUT, EXCEPT "A" AND "G" ON STD. 180° AND 135° HOOKS.
4. "J" DIMENSIONS ON 180° HOOKS TO BE SHOWN ONLY WHERE NECESSARY TO RESTRICT HOOK SIZE, OTHERWISE STANDARD 'ACI' HOOKS ARE TO BE USED.
5. WHERE "J" IS NOT SHOWN, "J" WILL BE KEPT EQUAL TO OR LESS THAN "H" ON TYPES 3, 5 AND 22. WHERE "J" CAN EXCEED "H", IT SHALL BE SHOWN.
6. "H" DIMENSIONS OF STIRRUPS TO BE SHOWN AS NEEDED TO FIT WITHIN THE CONCRETE.
7. UNLESS OTHERWISE NOTED, DIAMETER "D" IS THE SAME FOR ALL BENDS AND HOOKS ON A BAR (EXCEPT FOR BEND TYPES 11 AND 13).
8. WHERE SLOPE DIFFERS FROM 45° OFFSET, "H" AND "K" MUST BE SHOWN.
9. WHERE BARS ARE TO BE BENT MORE ACCURATELY THAN STANDARD BENDING TOLERANCES, BENDING DIMENSIONS REQUIRING CLOSER FABRICATION SHOULD HAVE LIMITS INDICATED.
10. FOR RECOMMENDED DIAMETER "D", OF BENDS, HOOKS, ETC., REFER TO TABLE ABOVE, 'CRSI' OR 'ACI' TABLES WHERE APPLICABLE AND REQUIRED.
11. TYPE S1-S6, S11, T1-T3 AND T6-T9 APPLICABLE TO BAR SIZES #3 THROUGH #8.

STANDARD BAR BENDS

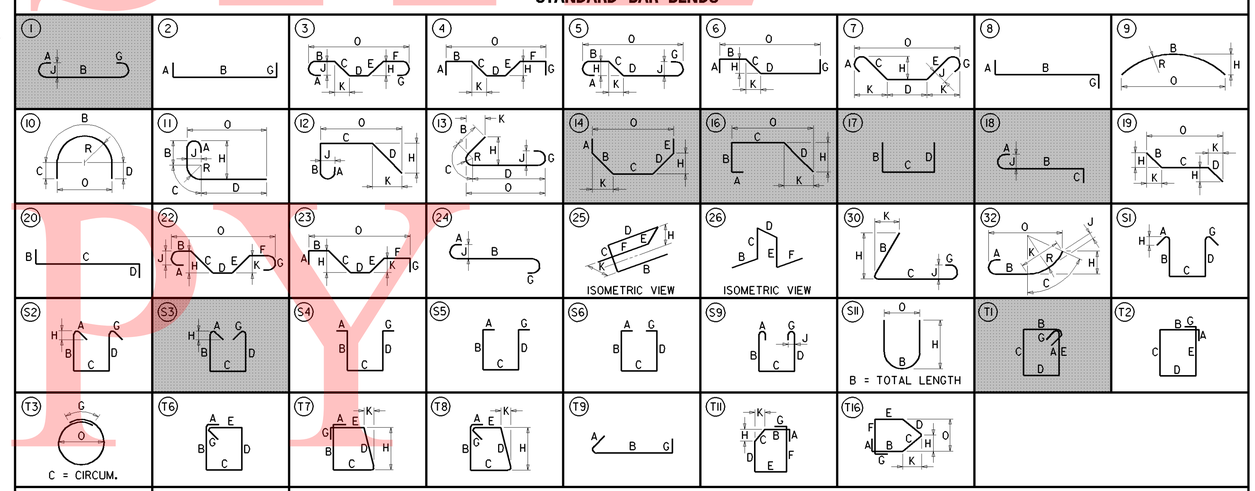

SPECIAL BAR BENDS

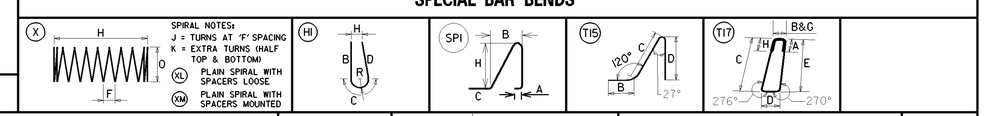

STIRRUP AND TIE HOOKS

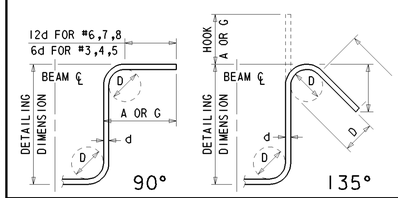

180° AND 90° END HOOKS

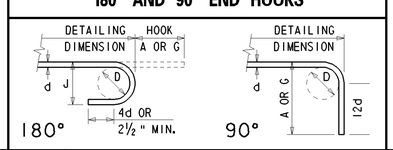

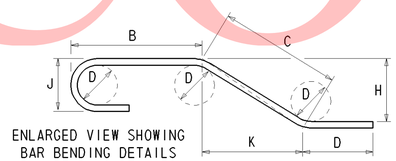

ENLARGED VIEW SHOWING BAR BENDING DETAILS

DELAWARE DEPARTMENT OF TRANSPORTATION

ADDENDUMS / REVISIONS

I-95 & US 202 INTERCHANGE

CONTRACT	BRIDGE NO.	1-570
T200510602	DESIGNED BY: MJG	
COUNTY		
NEW CASTLE	CHECKED BY: JNH	

REINFORCEMENT BAR SCHEDULE-1 S1-28 OF 29

SHEET NO. 256 TOTAL SHTS. 482

Y:\NEWCASTL\059\BRIDGE\2510602\BRIDGE 1-570\PLANS\ALTERNATIVE 1(FASCIA BEAMS ONLY)\BR01.DGN

UNOFFICIAL WEBSITE COPY

① ANY MARK NUMBER WITH SUFFIX 'E' DENOTES EPOXY COATED REINFORCING STEEL.

② ALL MARK 'LOCATION PREFIXES' SHALL CONSIST OF TWO LETTERS AND ARE AS FOLLOWS: AB = ABUTMENT, AS = APPROACH SLAB, BC = BOX CULVERT, BW = BACKWALL, CL = COLUMN, DK = DECK, DL = DOWEL, FT = FOOTING, HW = HEADWALL, MS = MISC. BARS, PA = PARAPET, PP = PEDESTAL PAD, PR = PIER, SC = SHEETPILE CAP, SL = SLAB, TW = TOEWALL, WL = WALL (UNIQUE LOCATION), WW = WINGWALL

SPECIFICATIONS					BENDING DIMENSIONS (FEET-INCHES /QUARTER INCH)										
QTY.	SIZE	LENGTH	MARK	TYPE	A	B	C	D	E	F/R	G	H	J	K	O
8	5	5-102	PA501E	STR		5-102									
16	5	12-82	PA502E	STR		12-82									
256	5	10-33	PA503E	STR		10-33									
48	5	12-31	PA504E	STR		12-31									
8	5	10-11	PA505E	STR		10-11									
8	5	8-71	PA506E	STR		8-71									
16	5	12-82	PA507E	STR		12-82									
8	5	11-51	PA508E	STR		11-51									
5	5	7-31	PA509E	14	0-60	2-22	1-101	2-22	0-60			1-63		1-63	5-00
3	5	4-60	PA510E	16	0-100	1-60	2-20								2-20
16	5	2-80	PA511E	STR		2-80									
16	5	2-20	PA512E	STR		2-20									
72	5	4-20	PP501E	17	1-60	1-20	1-60								
48	5	2-20	PP502E	STR		2-20									
60	5	4-100	PP503E	17	1-70	1-80	1-70								
36	5	2-60	PP504E	STR		2-60									
280	5	13-40	MS501E	17		0-80	12-00	0-80							
13	5	20-70	MS502E	STR		20-70									
13	5	25-60	MS503E	STR		25-60									
52	5	44-32	MS504E	STR		44-32									
13	5	37-60	MS505E	STR		37-60									
13	5	27-00	MS506E	STR		27-00									

SPECIFICATIONS					BENDING DIMENSIONS (FEET-INCHES /QUARTER INCH)										
QTY.	SIZE	LENGTH	MARK	TYPE	A	B	C	D	E	F/R	G	H	J	K	O

SPECIFICATIONS					BENDING DIMENSIONS (FEET-INCHES /QUARTER INCH)										
QTY.	SIZE	LENGTH	MARK	TYPE	A	B	C	D	E	F/R	G	H	J	K	O

UNOFFICAL WEBSITE COPY

ASTM STANDARD ENGLISH REINFORCING BARS

	NOMINAL DIMENSIONS			RECOMMENDED END HOOKS, APPLICABLE TO ALL GRADES				STIRRUP AND TIE HOOKS, APPLICABLE TO ALL GRADES			
					180° HOOKS		90° HOOKS		90° HOOK	135° HOOK	
BAR SIZE	DIAMETER (INCHES)	AREA (INCHES²)	WEIGHT (LBS./FT.)	D	A OR G	J	A OR G	D	A OR G	A OR G	A OR G
3	0.375	0.110	0.376	2¼″	5″	3″	6″	1½″	4″	4″	2½″
4	0.500	0.200	0.668	3″	6″	4″	8″	2″	4½″	4½″	3″
5	0.625	0.310	1.043	3¾″	7″	5″	10″	2½″	6″	5½″	3¾″
6	0.750	0.440	1.502	4½″	8″	6″	1-0″	4½″	1-0″	8″	4½″
7	0.875	0.600	2.044	5¼″	10″	7″	1-2″	5¼″	1-2″	9″	5¼″
8	1.000	0.790	2.670	6″	11″	8″	1-4″	6″	1-4″	10½″	6″
9	1.128	1.000	3.400	9½″	1-3″	11¾″	1-7″				
10	1.270	1.270	4.303	10¾″	1-5″	1-1¼″	1-10″				
11	1.410	1.560	5.313	1-0″	1-7″	1-2¾″	2-0″				
14	1.693	2.250	7.650	1-6¼″	2-3″	1-9¾″	2-7″				
18	2.257	4.000	13.600	2-0″	3-0″	2-4½″	3-5″				

NOTES:

1. FIGURES SHOWN IN CIRCLES REPRESENT BAR BEND TYPES.
2. STANDARD BAR BENDS INCLUDE ONLY THOSE TYPES BELOW, INDICATED AS SUCH.
3. ALL DIMENSIONS OUT-TO-OUT, EXCEPT "A" AND "G" ON STD. 180° AND 135° HOOKS.
4. "J" DIMENSIONS ON 180° HOOKS TO BE SHOWN ONLY WHERE NECESSARY TO RESTRICT HOOK SIZE, OTHERWISE STANDARD 'ACI' HOOKS ARE TO BE USED.
5. WHERE "J" IS NOT SHOWN, "J" WILL BE KEPT EQUAL TO OR LESS THAN "H" ON TYPES 3, 5 AND 22. WHERE "J" CAN EXCEED "H", IT SHALL BE SHOWN.
6. "H" DIMENSIONS OF STIRRUPS TO BE SHOWN AS NEEDED TO FIT WITHIN THE CONCRETE.
7. UNLESS OTHERWISE NOTED, DIAMETER "D" IS THE SAME FOR ALL BENDS AND HOOKS ON A BAR (EXCEPT FOR BEND TYPES 11 AND 13).
8. WHERE SLOPE DIFFERS FROM 45° OFFSET, "H" AND "K" MUST BE SHOWN.
9. WHERE BARS ARE TO BE BENT MORE ACCURATELY THAN STANDARD BENDING TOLERANCES, BENDING DIMENSIONS REQUIRING CLOSER FABRICATION SHOULD HAVE LIMITS INDICATED.
10. FOR RECOMMENDED DIAMETER "D", OF BENDS, HOOKS, ETC., REFER TO TABLE ABOVE, 'CRSI' OR 'ACI' TABLES WHERE APPLICABLE AND REQUIRED.
11. TYPE S1-S6, S11, T1-T3 AND T6-T9 APPLICABLE TO BAR SIZES #3 THROUGH #8.

STANDARD BAR BENDS

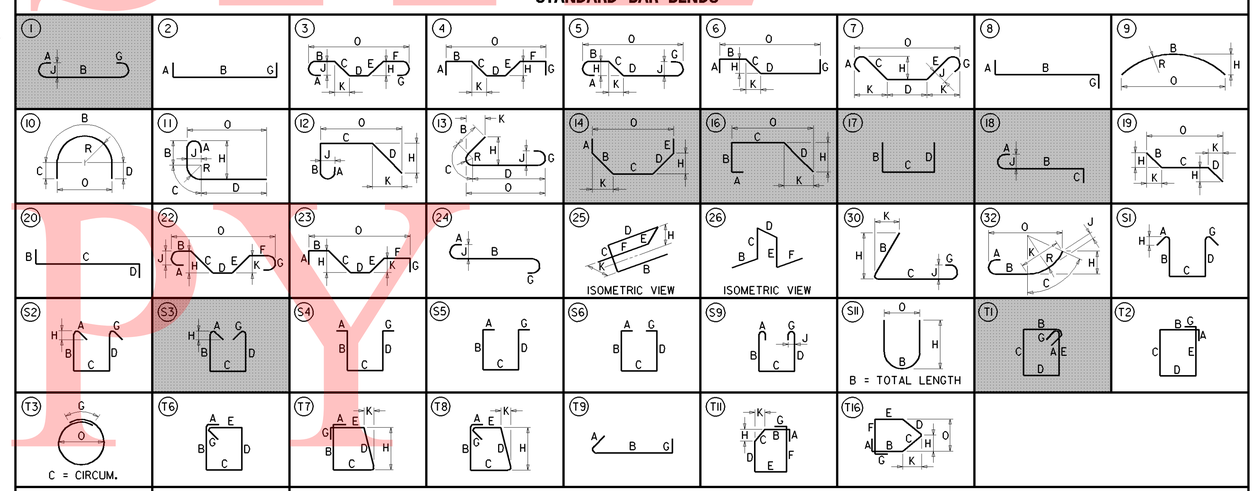

SPECIAL BAR BENDS

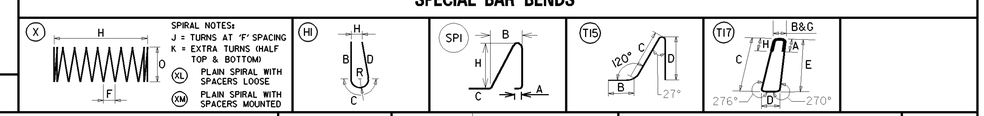

STIRRUP AND TIE HOOKS

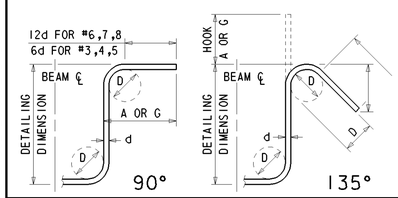

180° AND 90° END HOOKS

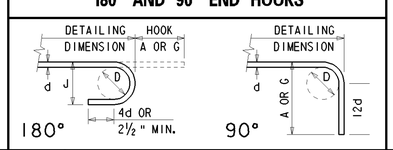

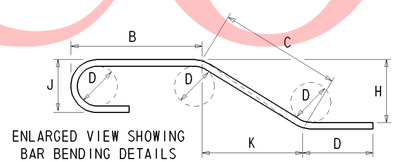

ENLARGED VIEW SHOWING BAR BENDING DETAILS

DELAWARE DEPARTMENT OF TRANSPORTATION

ADDENDUMS / REVISIONS

I-95 & US 202 INTERCHANGE

CONTRACT	BRIDGE NO.	1-570
T200510602	DESIGNED BY: MJG	
COUNTY		
NEW CASTLE	CHECKED BY: JNH	

REINFORCEMENT BAR SCHEDULE-2 S1-29 OF 29

SHEET NO.
257
TOTAL SHTS.
482

Y:\NEWCASTL\059\BRIDGE\2510602\BRIDGE 1-570\PLANS\ALTERNATIVE 1(FASCIA BEAMS ONLY)\BR01.DGN

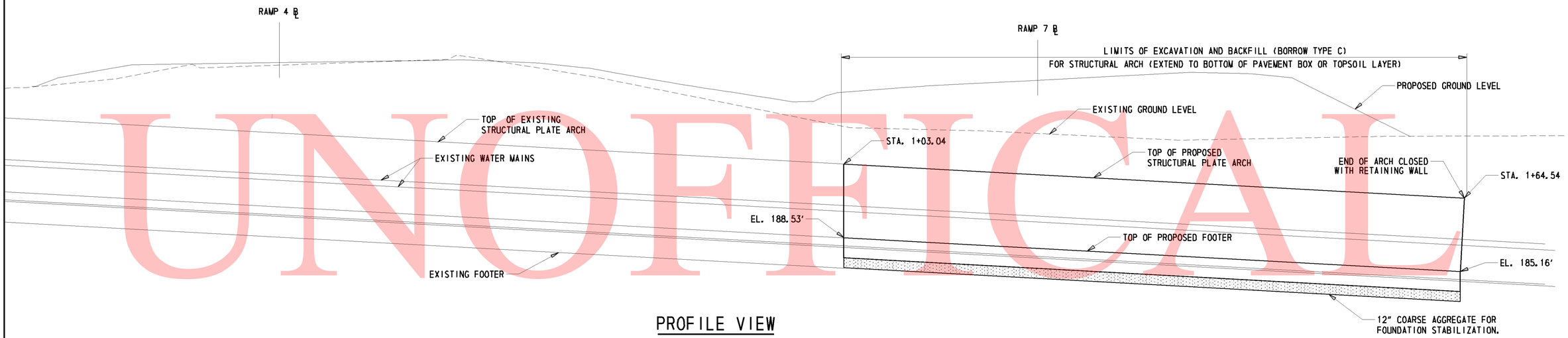

PROFILE VIEW

1" = 5'-0"

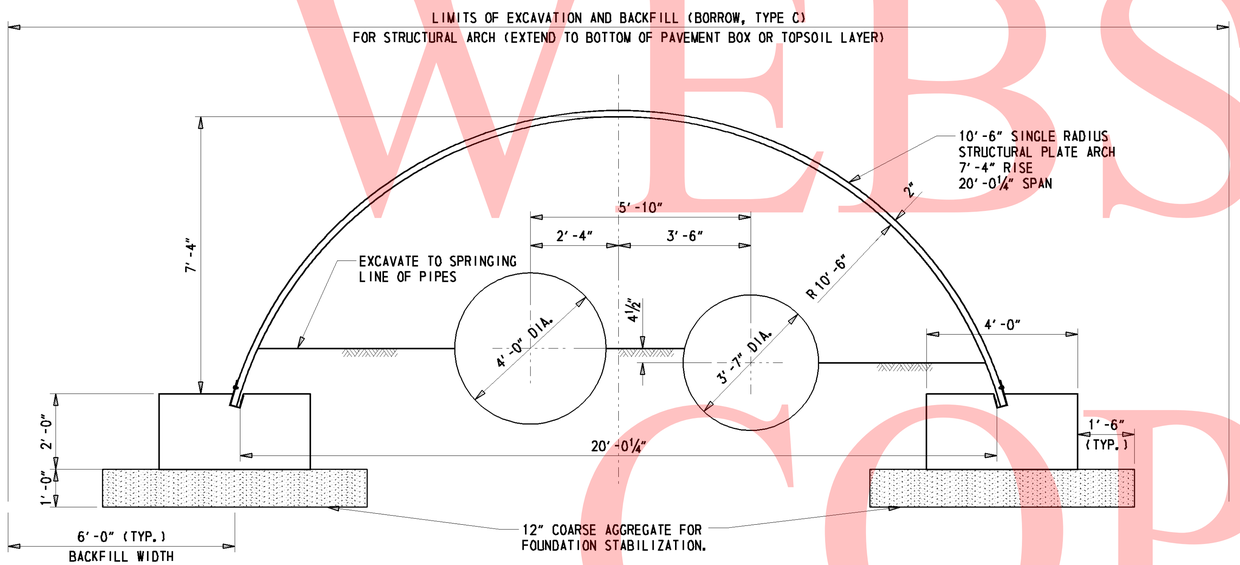

TYPICAL SECTION

½" = 1'-0"

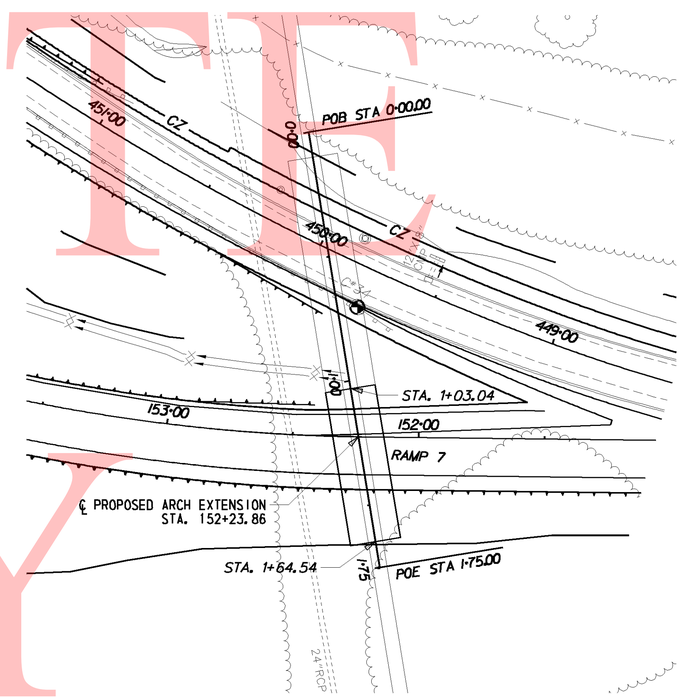

PLAN VIEW

1" = 30'-0"

UNOFFICIAL WEBSITE COPY

DELAWARE DEPARTMENT OF TRANSPORTATION	ADDENDUMS / REVISIONS	I-95 & US 202 INTERCHANGE	CONTRACT T200510602	BRIDGE NO. 1-779A	STRUCTURAL ARCH PLAN, SECTION & ELEVATION SHEET 1 OF 2	SHEET NO. 258
			COUNTY NEW CASTLE	DESIGNED BY: JAT		TOTAL SHTS. 482
				CHECKED BY: JNH		

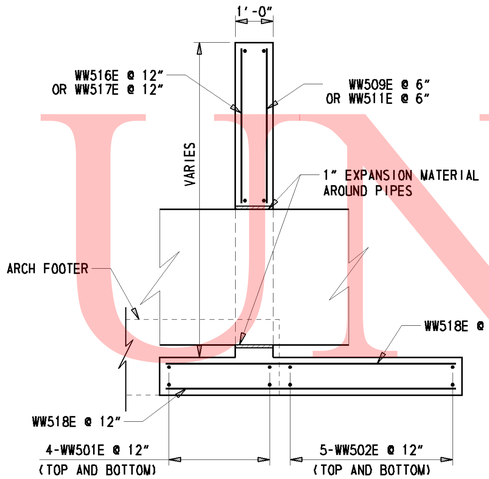

SECTION B-B

½" = 1'-0"

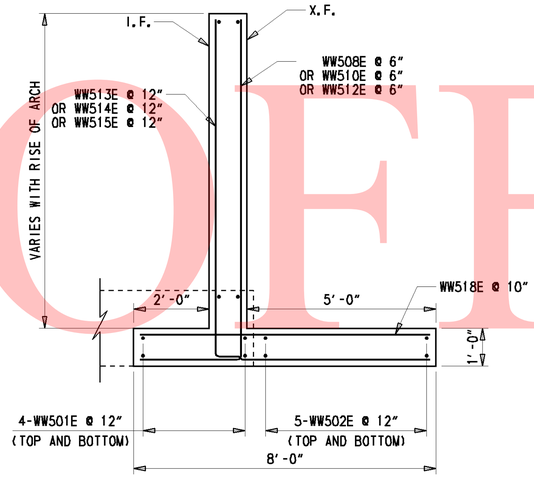

SECTION A-A

½" = 1'-0"

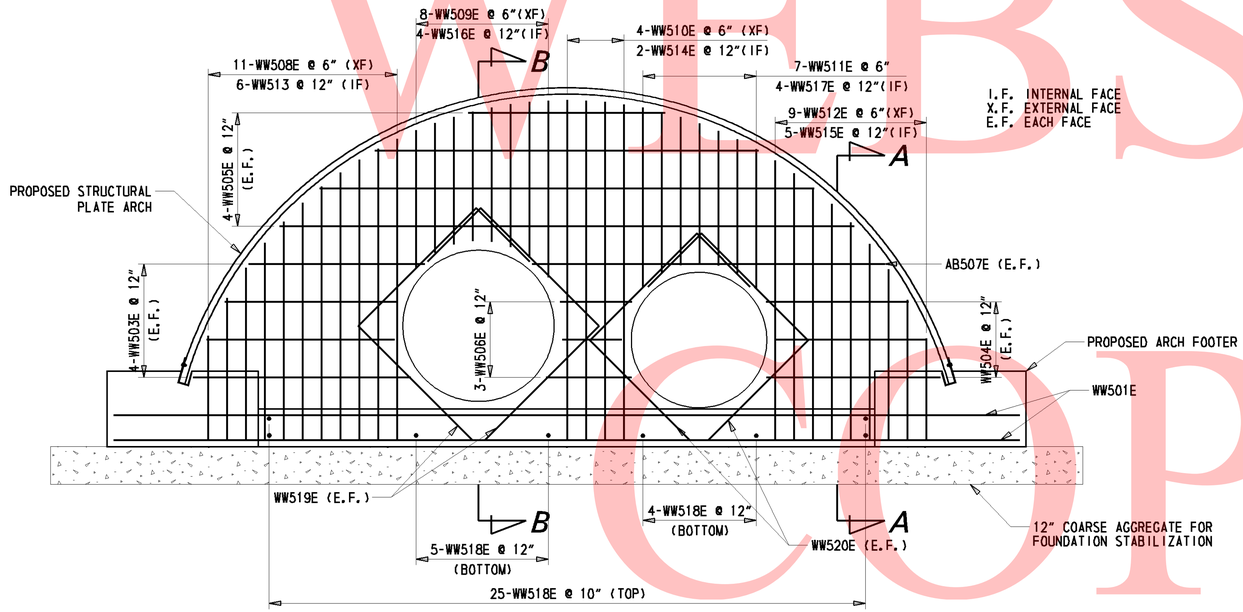

ARCH END ELEVATION

½" = 1'-0"

STRUCTURAL ARCH NOTES

1. CONCRETE
   SPECIFIED COMPRESSIVE STRENGTH @ 28 days:
   RETAINING WALL FOOTINGS----------4.5 KSI(CLASS A)
   CONCRETE IN FOOTING----------3.0 KSI(CLASS B)
   MIX REQUIREMENTS SHALL CONFORM TO SECTION 812 OF THE STANDARD SPECIFICATIONS.
   ALL EXPOSED EDGES SHALL BE CHAMFERED ¾" UNLESS OTHERWISE NOTED.
   IT IS THE CONTRACTOR'S RESPONSIBILITY TO UTILIZE ANY APPROVED CONCRETE ADDITIVES TO ACCELERATE CONCRETE CURING TIME DURING COLD WEATHER. PAYMENT SHALL BE INCIDENTAL TO THE RESPECTIVE CONCRETE ITEM.

2. REINFORCING STEEL
   ALL REINFORCING STEEL SHALL BE AASHTO M31, GRADE 60, AND SHALL BE EPOXY COATED IN ACCORDANCE WITH AASHTO M284. EACH SHIPMENT OF EPOXY-COATED REINFORCING STEEL SHALL BE ACCOMPANIED BY A CERTIFICATE OF COMPLIANCE SIGNED BY THE COATING APPLICATOR CERTIFYING THAT THE EPOXY COATED REINFORCING BARS CONFORM TO THE REQUIREMENTS OF AASHTO M317 AND AASHTO M284.

3. REMOVAL OF EXISTING WALL
   EXISTING BRICK WALL AT END OF EXISTING STRUCTURAL PLATE ARCH SHALL BE REMOVED.

4. SUPPORT AND PROTECTION OF WATER MAINS
   ANY WORK REQUIRING EXCAVATION UNDER THE EXISTING WATER MAINS SHALL INCLUDE ADDEQUATELY SUPPORTING THE WATER MAINS TO PREVENT DAMAGE. CONTRACTOR SHALL SUBMIT A PLAN DETAILING THE SUPPORT. PAYMENT SHALL BE INCIDENTAL TO ITEM #211000 - REMOVAL OF STRUCTURES.

5. STABILIZING STRUCTURAL EXCAVATIONS
   SHORING SHALL BE REQUIRED FOR ANY EXCAVATION EXCEEDING 5'-0" IN DEPTH. UNLESS SPECIFIED ON THE PLANS AS NEEDING SHEETING AND SHORING, THE COST OF SHORING SHALL BE INCIDENTAL TO ITEM #207000 - EXCAVATION AND BACKFILL FOR STRUCTURES. IN LIEU OF SHORING, THE CONTRACTOR MAY USE A 2:1(H:V) CUT SLOPE. NO PAYMENT FOR ADDITIONAL CUT OR FILL WILL BE GIVEN, AS DESCRIBED IN SECTION 207 OF THE STANDARD SPECIFICATIONS. FOR AREAS DESIGNATED IN THE PLANS AS NEEDING SHEETING OR SHORING, THE CONTRACTOR SHALL SUBMIT A PROPOSED PLAN FOR SHEETING OR SHORING OF THE EXCAVATION. THE SUBMITTAL SHALL INCLUDE ANY DRAWINGS AND CALCULATIONS ASSOCIATED WITH THE WORK AND SHALL BE STAMPED BY A DELAWARE REGISTERED PROFESSIONAL ENGINEER.

6. CONNECTION TO EXISTING STEEL PLATE ARCH
   CONTRACTOR MUST DESIGN A FIELD CONNECTION AND SUBMIT FOR APPROVAL. THE CONNECTION MUST BE SOIL TIGHT.

PLATE ARCH QUANTITIES

NO.	ITEM	UNIT	QUANT.
207000	EXCAVATION AND BACKFILL FOR STRUCTURES	CY	1135
210000	FURNISHING BORROW TYPE "C" FOR STRUCTURAL BACKFILL	CY	1030
211000	REMOVAL OF STRUCTURES AND OBSTRUCTIONS	LS	LS
602001	P.C.C. MASONRY, CLASS A	CY	10
602012	P.C.C. MASONRY, CLASS B	CY	40
604000	BAR REINFORCEMENT, EPOXY COATED	LB	4100
608000	COARSE AGGREGATE FOR FOUNDATION STABILIZATION	TON	65
614861	STRUCTURAL PLATE ARCH (STEEL)	LF	62

REINFORCING BAR LIST

QTY.	SIZE	LENGTH	MARK	TYPE	A	B	C	D
8	5	24-00	WW501E	STR		24-00		
10	5	16-00	WW502E	STR		16-00		
2X4	5	4-62	WW503E	STR		4-62		
		TO				TO		
		5-91				5-91		
2X3	5	3-91	WW504E	STR		3-91		
		TO				TO		
		4-71				4-71		
2X4	5	5-22	WW505E	STR		5-22		
		TO				TO		
		15-22				15-22		
6	5	2-30	WW506E	STR		2-30		
2	5	9-40	WW507E	STR		9-40		
1X11	5	5-51	WW508E	17		2-91	2-80	
		TO				TO		
		10-73				7-113	2-80	
1X8	5	3-42	WW509E	STR		3-42		
		TO				TO		
		4-80				4-80		
4	5	11-72	WW510E	17		8-112	2-80	
1X7	5	3-62	WW511E	STR		3-62		
		TO				TO		
		4-90				4-90		
1X9	5	5-42	WW512E	17		2-82	2-80	
		TO				TO		
		10-03				7-43	2-80	
1X6	5	8-51	WW513E	17		2-91	5-80	
		TO				TO		
		13-73				7-113	5-80	
2	5	14-72	WW514E	17		8-112	5-80	
1X5	5	8-42	WW515E	17		2-82	5-80	
		TO				TO		
		13-03				7-43	5-80	
1X4	5	3-42	WW516E	STR		3-42		
		TO				TO		
		4-80				4-80		
1X4	5	3-62	WW517E	STR		3-62		
		TO				TO		
		4-90				4-90		
34	5	7-80	WW518E	STR		7-80		
4	5	10-92	WW519E	17		4-32	4-60	2-00
4	5	9-100	WW520E	17		3-90	4-10	2-00
40	5	32-100	FT501E	STR		32-100		
126	5	9-100	FT502E	S6	1-60	1-70	3-80	1-60

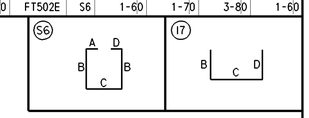

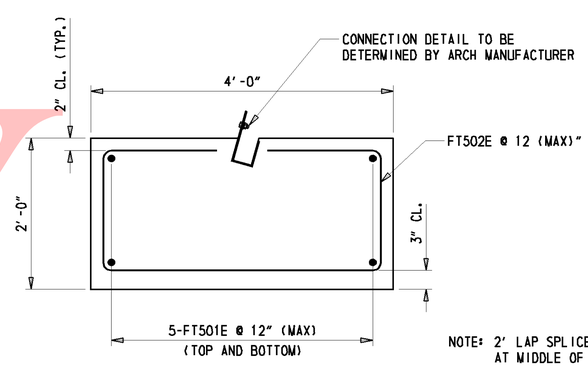

NOTE: 2' LAP SPLICE FOR FT501E AT MIDDLE OF EACH FOOTER

FOOTER TYPICAL SECTION

1" = 1'-0"

UNOFFICIAL WEBSITE COPY

ENVIRONMENTAL COMPLIANCE NOTES

1. GENERAL NOTES:

A. THE PURPOSE OF THESE SHEETS IS TO IDENTIFY THOSE ITEMS ASSOCIATED WITH ENVIRONMENTAL COMPLIANCE.

B. IF A DEPARTURE FROM THE APPROVED PLANS (WHICH WOULD AFFECT ANY OF THE NATURAL AND/OR CULTURAL RESOURCE ISSUES) IS NECESSARY, THE ENVIRONMENTAL STUDIES SECTION SHALL BE CONTACTED AT (302) 760-2264 TO ALLOW THE DEPARTMENT TO COORDINATE WITH THE APPROPRIATE RESOURCE AGENCIES FOR APPROVAL.

C. USE OF THESE SHEETS DOES NOT ALLEVIATE THE CONTRACTOR'S RESPONSIBILITY TO COMPLY WITH ALL CONDITIONS SET FORTH IN THE ENVIRONMENTAL STATEMENT AND PERMITS.

2. NATURAL RESOURCE ISSUES:

A. PERMIT REQUIREMENTS / APPROVALS*:
CORPS OF ENGINEERS (USACE) - NATIONWIDE PERMIT *23**
DNREC WETLANDS & SUBAQUEOUS LANDS (WLSL) - SUBAQUEOUS LANDS PERMIT**
DNREC - WATER QUALITY (WQC) AND COASTAL ZONE CONSISTENCY (CZM) - WAIVED
(PROJECT NOT LOCATED IN CRW)
NCC DEPARTMENT OF LAND USE - NONE (ZONE X AND NO USGS BLUE LINES)

*THE PERMITS/APPROVAL(S) LISTED ARE THOSE REQUIRED FOR THIS PROJECT. THE ENVIRONMENTAL STUDIES SECTION IS RESPONSIBLE FOR COORDINATING/OBTAINING THESE PERMITS/APPROVALS.

**THE CONTRACTOR MUST ENSURE THAT THESE PERMITS/APPROVALS (USACE, DNREC WLSL) ARE IN THEIR POSSESSION PRIOR TO THE BEGINNING OF CONSTRUCTION IN THE PERMITTED AREA(S) AND ENSURE THEY ARE DISPLAYED ON-SITE DURING THE ENTIRE CONSTRUCTION PERIOD.

B. CONSTRUCTION RESTRICTIONS:
FISHERIES - NONE
ENDANGERED SPECIES - NONE
MIGRATORY BIRDS - NONE

C. STREAM RESTORATION:
I. ALL RIPRAP IN THE CHANNEL BOTTOM (I.E. BELOW THE WATER LINE) SHALL BE CHOKED WITH BORROW TYPE 'B' SO THAT ALL OF THE VOIDS IN THE RIPRAP ARE FILLED WITH MATERIAL. PAYMENT UNDER ITEM *2009002 - BORROW TYPE 'B'. THE RIPRAP SHALL THEN BE COVERED WITH BORROW TYPE 'B' AS SHOWN ON THE CULVERT PLAN, SECTION AND ELEVATION SHEETS. PAYMENT UNDER ITEM *712531 - CHANNEL BED FILL.

II. OTHER AREAS OF THE CHANNEL BOTTOM AFFECTED BY CONSTRUCTION (INCLUDING, BUT NOT LIMITED TO, THE LOCATION OF SUMP PITS, STABILIZED OUTFALLS, TEMPORARY PIPES AND/OR SANDBAG DIKES AND DIVERSIONS) SHALL BE RESTORED TO EXISTING CONDITIONS. ANY CAVITIES OR SCOUR HOLES RESULTING FROM CONSTRUCTION ACTIVITIES SHALL BE FILLED WITH BORROW TYPE 'B'. PAYMENT UNDER ITEM *712531 - CHANNEL BED FILL.

III. WHEN ALL EROSION AND SEDIMENT CONTROL MEASURES ARE REMOVED AND THE STREAM RETURNS TO ITS NATURAL FLOW CONDITIONS, THE FLOW MUST REMAIN ABOVE GROUND AND ABOVE THE RIPRAP (I.E. THE FLOW CANNOT BE 'LOST' IN THE RIPRAP OR BENEATH THE STRUCTURE). IF THIS IS NOT ACHIEVED, THE CONTRACTOR WILL BE REQUIRED TO TAKE CORRECTIVE ACTION AT THE CONTRACTOR'S EXPENSE.

IV. RIPRAP TO BE PLACED ON THE SIDESLOPES (ABOVE THE WATER LINE) SHALL BE BACKFILLED WITH TOPSOIL, SEEDED AND MULCHED IN ACCORDANCE WITH THE PLAN, SECTION AND ELEVATION SHEET.

D. MINIMIZE TREE REMOVAL:
CONSTRUCTION FENCE IS TO BE INSTALLED AT THE INITIATION OF THE PROJECT TO PROTECT TREES NOT TO BE REMOVED AND DEMARCATE LIMITS OF CLEARANCE. PRIOR TO REMOVAL OF MATURE TREES WITHIN THE LOOP OF EXISTING RAMP 7, DETERMINE IF CONSTRUCTION ACTIVITIES WILL REQUIRE TREE REMOVAL FULLY TO THE LIMIT OF CONSTRUCTION. ADJUST LIMITS OF CLEARANCE IN, ACCORDINGLY, TO SAVE AS MANY MATURE TREES AS POSSIBLE.

E. PROTECTION OF RESOURCES:
SILT FENCE OR CONSTRUCTION SAFETY FENCE SHALL BE USED ALONG THE LIMITS OF CONSTRUCTION IN ALL AREAS WHERE WATER/WETLANDS EXIST AND ALSO IN ALL LOCATIONS WHERE WATER/WETLANDS ARE BEING IMPACTED WITHIN THE LOC (AS SHOWN ON THE EC SHEETS). CONTRACTOR MUST TAKE SPECIAL CARE TO NOT IMPACT MORE WATER/WETLANDS THAN WHAT APPEAR ON THE EC SHEETS. CONTRACTOR ACCESS BEYOND THE LOC IS STRICTLY PROHIBITED.

F. PLANTINGS:
TREE PLANTINGS: IN ACCORDANCE WITH SENATE BILL 324, COMPENSATION FOR TREE REMOVAL WILL BE CARRIED OUT BY PLANTING THE DESIGNATED REFORESTATION AREAS ON THE PROJECT LANDSCAPE PLANS AND BY PLANTING A 1,000 TO 1,200 FOOT REACH ALONG THE BRANDYWINE CREEK WITHIN BRANDYWINE CREEK STATE PARK. THE PLANTINGS WILL REPLACE REMOVED MATURE TREES AT AN ACRE FOR ACRE RATIO.

RIPARIAN PLANTINGS: THE BRANDYWINE CREEK PLANTING WILL BE PERFORMED IN CONCERT WITH DNREC PARK MANAGEMENT ACCORDING TO THE MEMORANDUM OF AGREEMENT (MOA) ENTERED INTO BY DELDOT AND DNREC. IT WILL REFOREST UP TO 1.3 ACRES OF RIPARIAN ZONE ALONG THE STREAM BELOW THOMPSONS BRIDGE, WHICH IS TO BE REMOVED FROM ACTIVE MOWING UNDER REVISIONS TO THE PARKS MANAGEMENT PLAN PER THE MOA. THE BRANDYWINE CREEK PLANTS WILL BE INSTALLED SEPARATELY FROM THIS CONTRACT.

3. CULTURAL RESOURCE ISSUES:

A. FEDERAL HIGHWAY ADMINISTRATION (FHWA) IS THE LEAD AGENCY ENSURING THAT ENVIRONMENTAL COMPLIANCE ISSUES INVOLVING ARCHAEOLOGY AND/OR ARCHITECTURE PROPERTIES LISTED ON OR ELIGIBLE FOR INCLUSION FOR THE NATIONAL REGISTER OF HISTORIC PLACES IS OBLIGATED. COORDINATION IS ONGOING.

B. THE CONTRACTOR SHALL BE AWARE THAT A MEMORANDUM OF AGREEMENT (MOA) HAS BEEN EXECUTED BY THE FHWA, THE STATE HISTORIC PRESERVATION OFFICER, AND THE DEPARTMENT OF TRANSPORTATION REGARDING CULTURAL RESOURCE ISSUES AND COMMITMENTS. REGARDING THIS MOA, THE CONTRACTOR SHALL PAY SPECIAL ATTENTION TO VIBRATION AND MONITORING REQUIREMENTS SPECIFICALLY DESIGNATING HISTORIC PROPERTIES AND BUILDING AREAS SURROUNDING THE BRANDYWINE PARK, ONE ROCK MANOR, AND THE PORTER RESERVOIR. THE CONTRACTOR SHALL NOTE THE SPECIFICATIONS, RECORD KEEPING, AND/OR COORDINATION REGARDING VIBRATION AND/OR CONSTRUCTION MONITORING FOR THESE PROPERTIES OR OTHERS.

WETLANDS DELINEATED BY:
MCCORMICK TAYLOR, INC. IN AUGUST 2009 IN ACCORDANCE WITH THE 1987 CORPS OF ENGINEERS WETLAND DELINEATION MANUAL.
CENAP-OP-R-200000815-23 (JD) (JD LINES LOCATED OUTSIDE OF LOC)

A FORMAL DEPARTMENT OF ARMY JD FOR AREAS WITHIN THE LOC HAS BEEN SUBMITTED ON DECEMBER 7, 2009. APPROVAL IS PENDING.

SHEET PREPARED BY: MCCORMICK TAYLOR, INC.
CREATED: SEPTEMBER 29, 2009
REVISED: AUGUST 17, 2010

WATERWAY WITHIN LOC IS DNREC JURISDICTIONAL

IMPACT AREA TABLE

SHEET	ID	IMPACT DESCRIPTION	AREA-SF	AREA-AC	VOL-CY
6	W1	ROADWAY FILL	1627.55	0.0374	N/A
6	W2	RIPRAP	58.90	0.0014	N/A
TOTAL PERMANENT WETLAND IMPACTS			1686.45	0.0388	N/A
3	OT1	RIPRAP	206.29	0.0047	7.64
3	OT2	FILL/PIPE	458.77	0.0105	16.99
3	OT3	RIPRAP	32.61	0.0007	1.21
3	OT4	SANDBAGS	25.05	0.0006	0.93
TOTAL TEMPORARY OPEN WATER IMPACTS*			722.72	0.0165	26.77

*IMPACTS HAVE BEEN IDENTIFIED AS TEMPORARY BECAUSE THE EXISTING CHANNEL IS CONCRETE-LINED.

UNOFFICIAL WEBSITE COPY

SHEET PREPARED BY: MCCORMICK TAYLOR, INC.
CREATED: SEPTEMBER 29, 2009
REVISED: AUGUST 17, 2010

ENVIRONMENTAL COMPLIANCE PLAN - 02

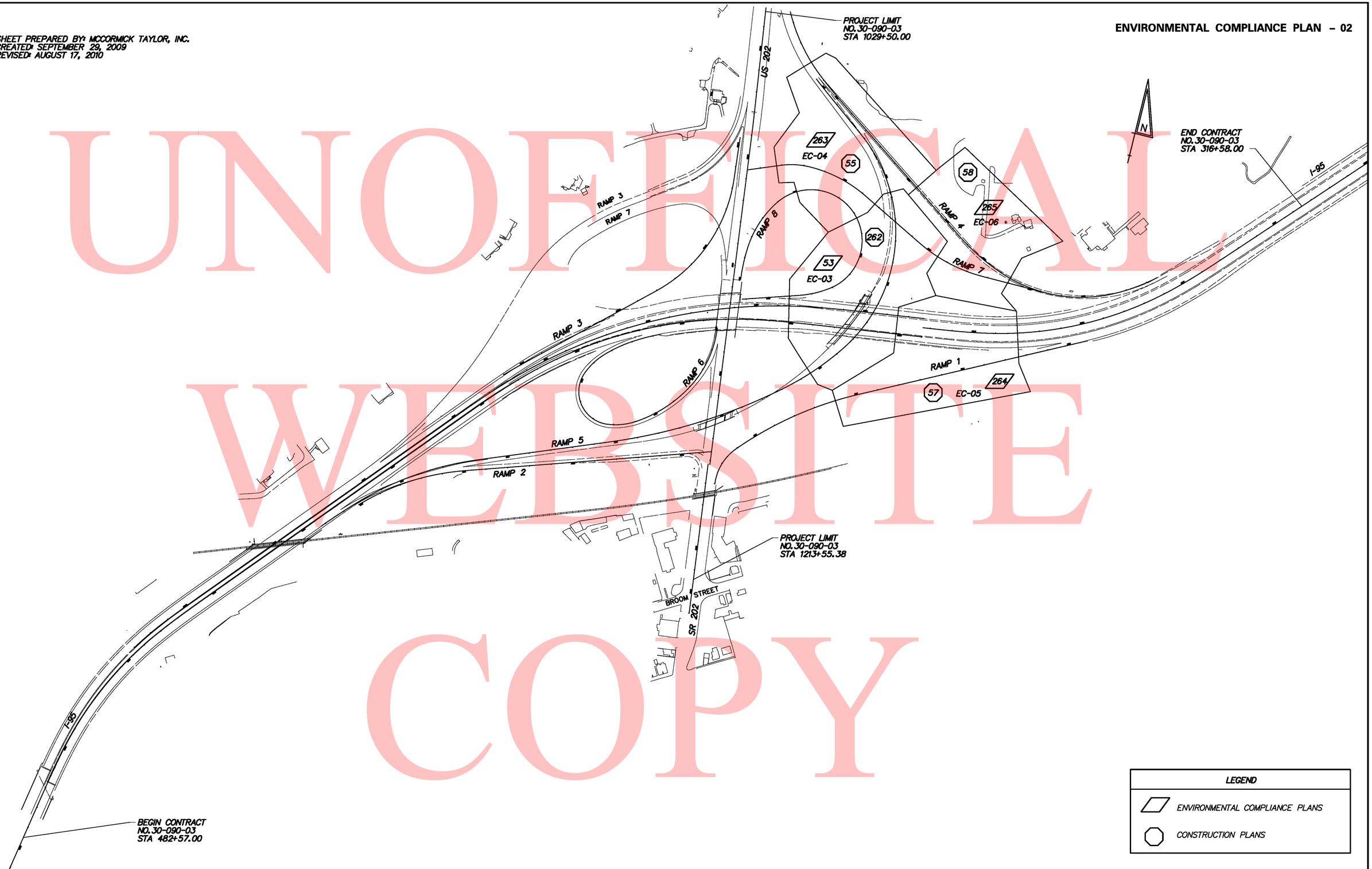

UNOFFICIAL WEBSITE COPY

LEGEND
ENVIRONMENTAL COMPLIANCE PLANS
CONSTRUCTION PLANS

$FILE$

8/19/2010

DELAWARE DEPARTMENT OF TRANSPORTATION	ADDENDUMS / REVISIONS	SCALE 0 200 400 600 FEET	I-95 & US 202 INTERCHANGE	CONTRACT T200510602	BRIDGE NO. NA	ENVIRONMENTAL COMPLIANCE PLAN SHEET INDEX EC 2 OF 6	SHEET NO. 261
				COUNTY NEW CASTLE	DESIGNED BY: REL		TOTAL SHTS. 482
					CHECKED BY: LMM		

SHEET PREPARED BY: MCCORMICK TAYLOR, INC.
CREATED: SEPTEMBER 29, 2009
REVISED: AUGUST 17, 2010

ENVIRONMENTAL COMPLIANCE PLAN – 03

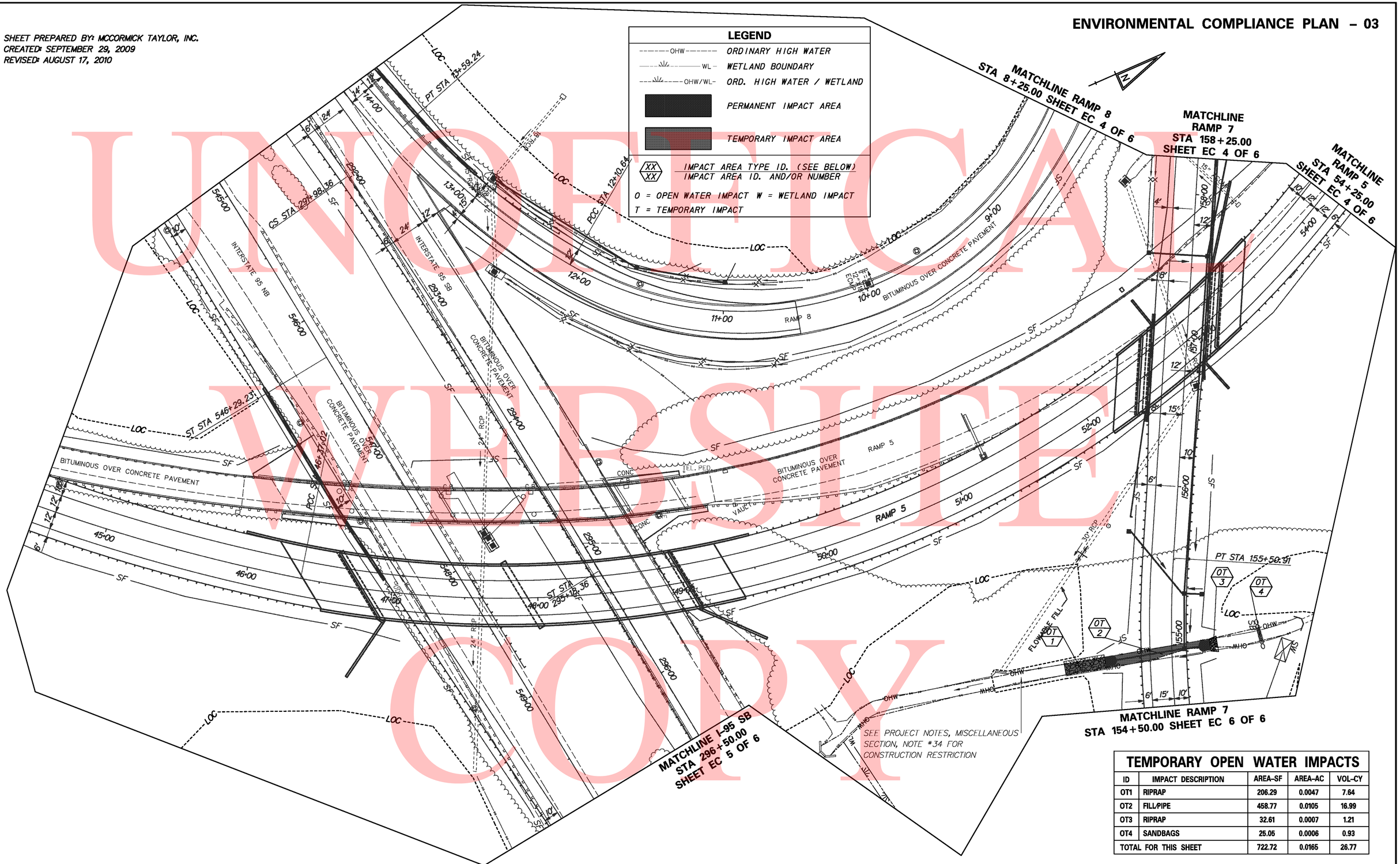

TEMPORARY OPEN WATER IMPACTS

ID	IMPACT DESCRIPTION	AREA-SF	AREA-AC	VOL-CY
OT1	RIPRAP	206.29	0.0047	7.64
OT2	FILL/PIPE	458.77	0.0105	16.99
OT3	RIPRAP	32.61	0.0007	1.21
OT4	SANDBAGS	25.05	0.0006	0.93
TOTAL FOR THIS SHEET		722.72	0.0165	26.77

UNOFFICIAL WEBSITE COPY

$FILE$
8/19/2010

DELAWARE DEPARTMENT OF TRANSPORTATION

ADDENDUMS / REVISIONS

SCALE 0 30 60 90 FEET

I-95 & US 202 INTERCHANGE

CONTRACT	BRIDGE NO.	BR 1-763,1-764
T200510602	DESIGNED BY:	REL
COUNTY	CHECKED BY:	LMM
NEW CASTLE		

ENVIRONMENTAL COMPLIANCE SHEET EC 3 OF 6

SHEET NO. 262
TOTAL SHTS. 482

SHEET PREPARED BY: MCCORMICK TAYLOR, INC.
CREATED: SEPTEMBER 29, 2009
REVISED: AUGUST 17, 2010

ENVIRONMENTAL COMPLIANCE PLAN – 04

NOTE: THERE ARE NO IMPACTS TO ANY WETLANDS/ WATER RESOURCES ON THIS SHEET.

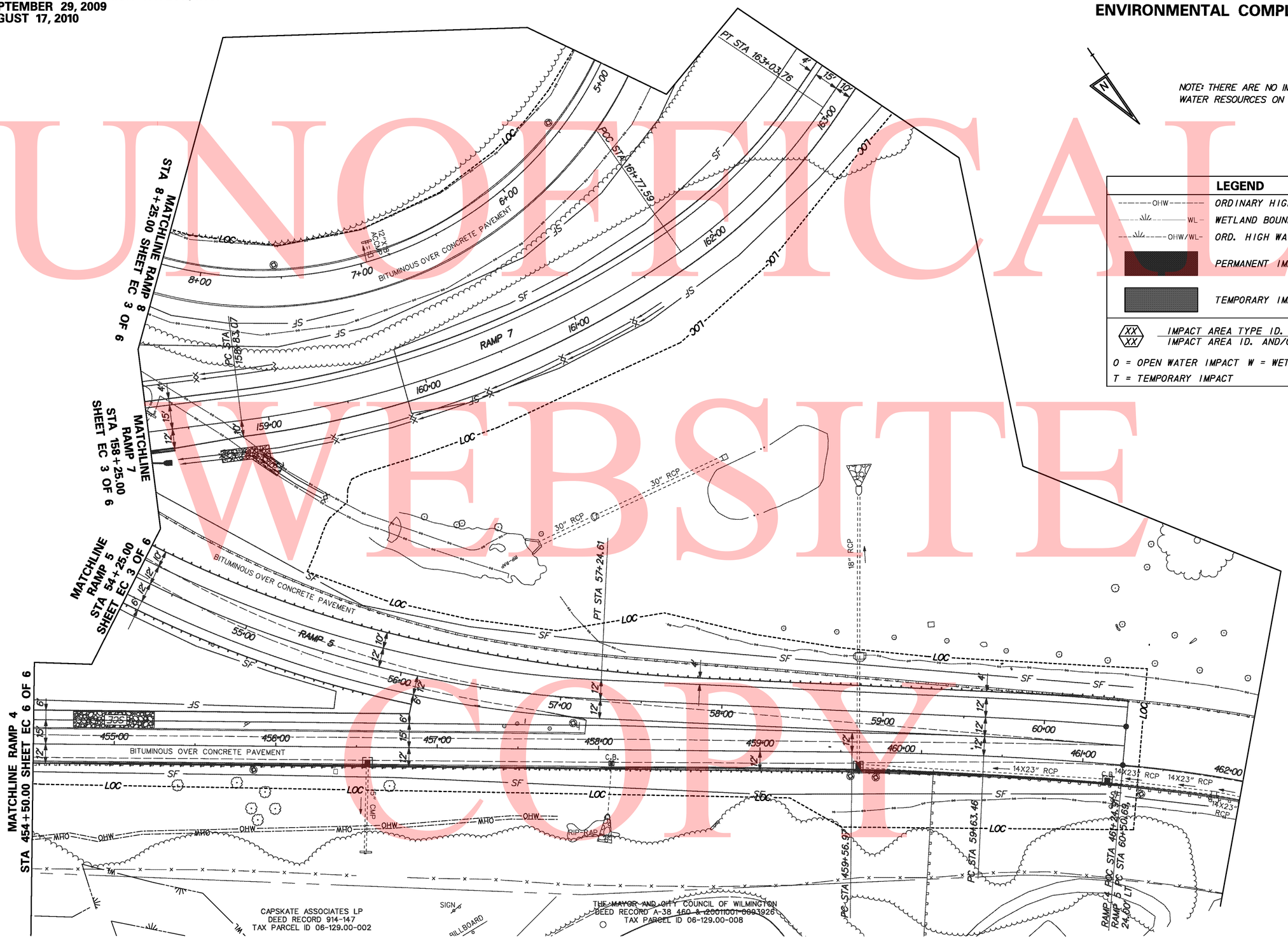

LEGEND

OHW	ORDINARY HIGH WATER
WL	WETLAND BOUNDARY
OHW/WL	ORD. HIGH WATER / WETLAND
	PERMANENT IMPACT AREA
	TEMPORARY IMPACT AREA
XX / XX	IMPACT AREA TYPE ID. (SEE BELOW) / IMPACT AREA ID. AND/OR NUMBER

O = OPEN WATER IMPACT W = WETLAND IMPACT
T = TEMPORARY IMPACT

UNOFFICIAL WEBSITE COPY

DELAWARE DEPARTMENT OF TRANSPORTATION	ADDENDUMS / REVISIONS	SCALE 0 30 60 90 FEET	I-95 & US 202 INTERCHANGE	CONTRACT T200510602 / COUNTY NEW CASTLE	BRIDGE NO. NA / DESIGNED BY: REL / CHECKED BY: LMM	ENVIRONMENTAL COMPLIANCE SHEET EC 4 OF 6	SHEET NO. 263 / TOTAL SHTS. 482

$FILE$
8/19/2010

SHEET PREPARED BY: MCCORMICK TAYLOR, INC.
CREATED: SEPTEMBER 29, 2009
REVISED: AUGUST 17, 2010

ENVIRONMENTAL COMPLIANCE PLAN – 05

NOTE: THERE ARE NO IMPACTS TO ANY WETLANDS/ WATER RESOURCES ON THIS SHEET.

LEGEND

OHW	ORDINARY HIGH WATER
WL	WETLAND BOUNDARY
OHW/WL	ORD. HIGH WATER / WETLAND
	PERMANENT IMPACT AREA
	TEMPORARY IMPACT AREA
XX / XX	IMPACT AREA TYPE ID. (SEE BELOW) / IMPACT AREA ID. AND/OR NUMBER

O = OPEN WATER IMPACT W = WETLAND IMPACT
T = TEMPORARY IMPACT

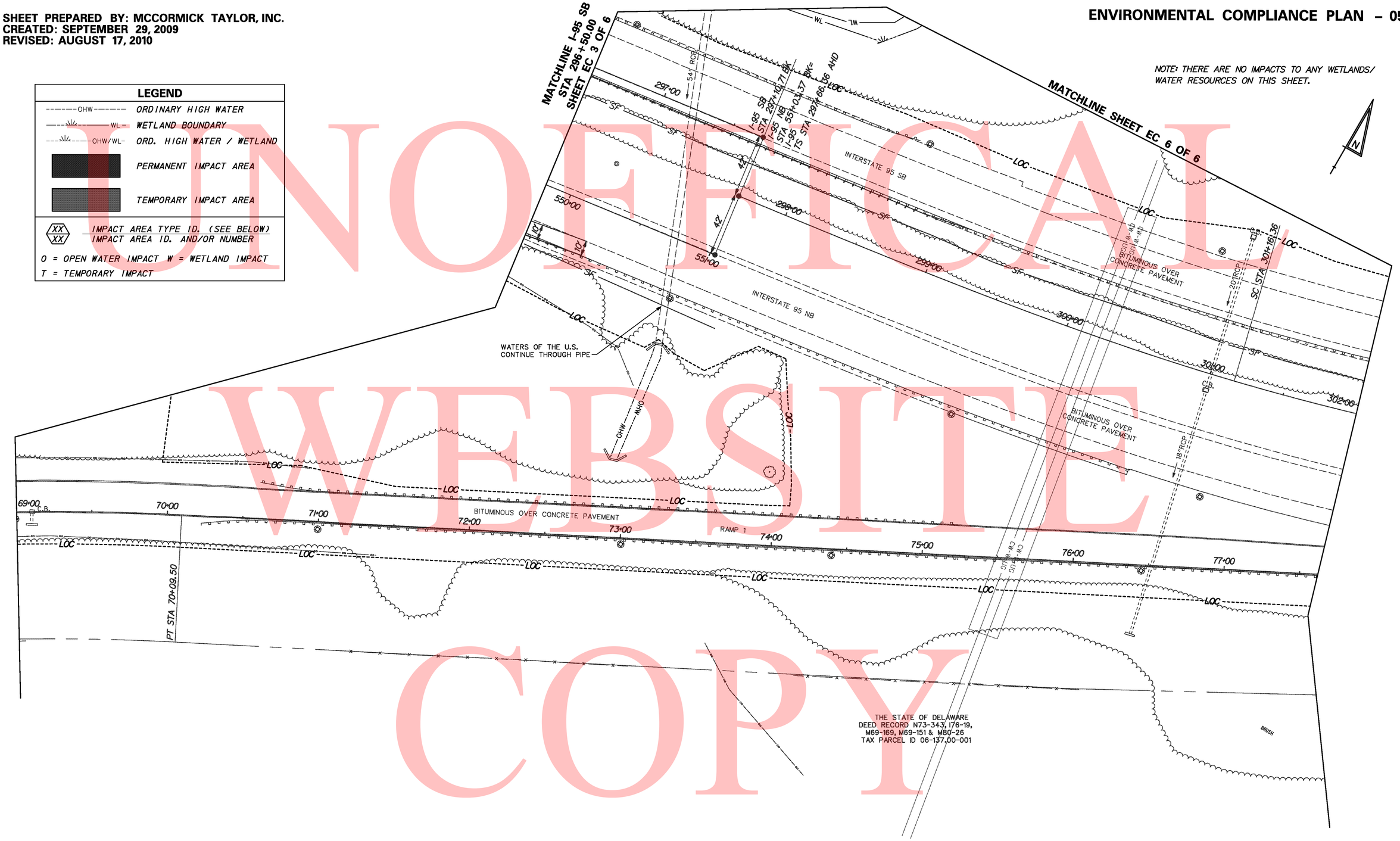

UNOFFICIAL WEBSITE COPY

DELAWARE DEPARTMENT OF TRANSPORTATION	ADDENDUMS / REVISIONS	SCALE 0 30 60 90 FEET	I-95 & US 202 INTERCHANGE	CONTRACT T200510602	BRIDGE NO. NA	ENVIRONMENTAL COMPLIANCE SHEET EC 5 OF 6	SHEET NO. 264
				COUNTY NEW CASTLE	DESIGNED BY: REL		TOTAL SHTS. 482
					CHECKED BY: LMM		

$FILE$
8/19/2010

ENVIRONMENTAL COMPLIANCE PLAN – 06

SHEET PREPARED BY: MCCORMICK TAYLOR, INC.
CREATED: SEPTEMBER 29, 2009
REVISED: AUGUST 17, 2010

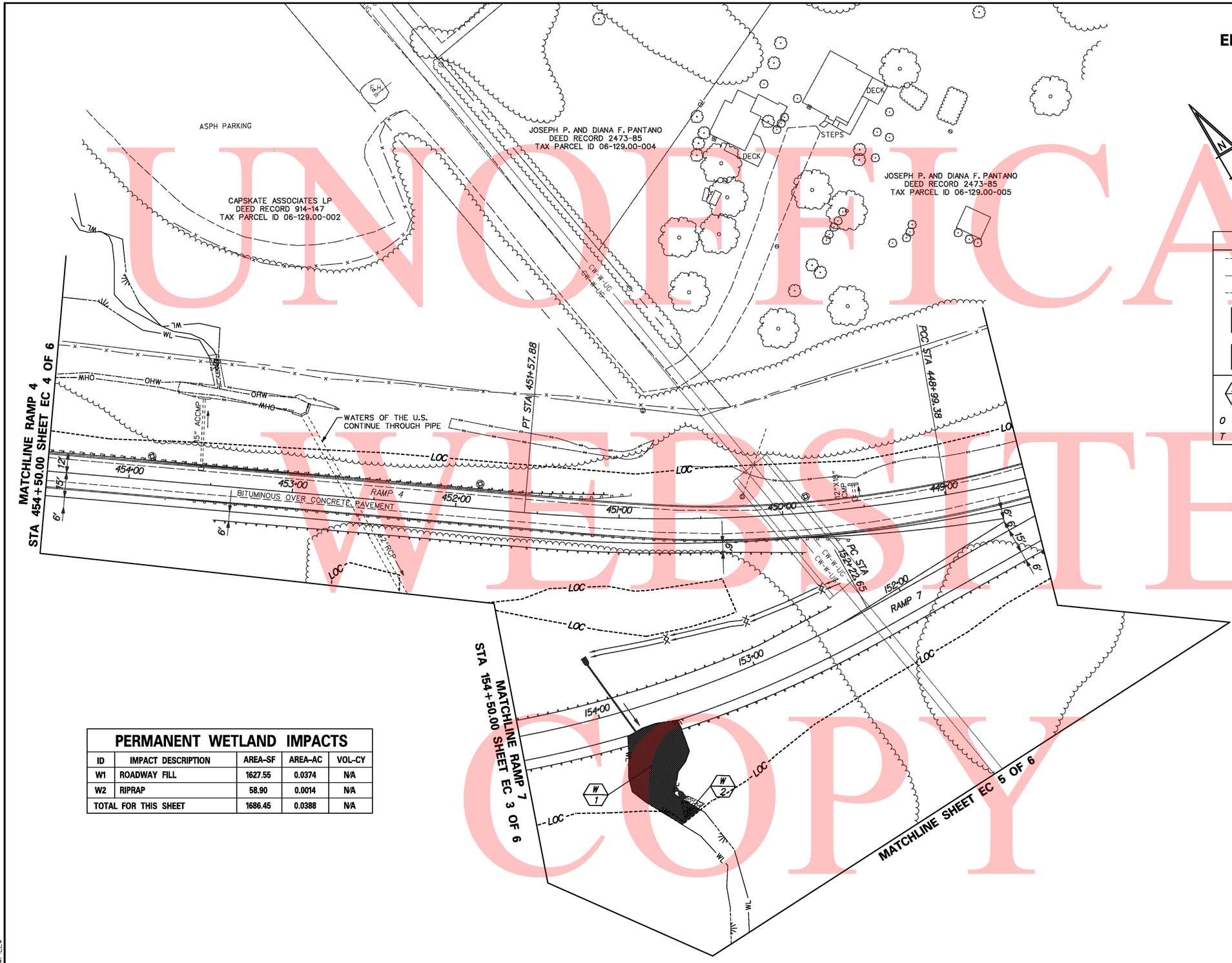

LEGEND

OHW	ORDINARY HIGH WATER
WL	WETLAND BOUNDARY
OHW/WL	ORD. HIGH WATER / WETLAND
	PERMANENT IMPACT AREA
	TEMPORARY IMPACT AREA
XX / XX	IMPACT AREA TYPE ID. (SEE BELOW) / IMPACT AREA ID. AND/OR NUMBER

O = OPEN WATER IMPACT W = WETLAND IMPACT
T = TEMPORARY IMPACT

PERMANENT WETLAND IMPACTS

ID	IMPACT DESCRIPTION	AREA-SF	AREA-AC	VOL-CY
W1	ROADWAY FILL	1627.55	0.0374	N/A
W2	RIPRAP	58.90	0.0014	N/A
TOTAL FOR THIS SHEET		1686.45	0.0388	N/A

UNOFFICAL WEBSITE COPY

$FILE$

8/19/2010

DELAWARE DEPARTMENT OF TRANSPORTATION

ADDENDUMS / REVISIONS

SCALE 0 30 60 90 FEET

I-95 & US 202 INTERCHANGE

CONTRACT	BRIDGE NO.	NA
T200510602	DESIGNED BY:	REL
COUNTY		
NEW CASTLE	CHECKED BY:	LMM

ENVIRONMENTAL COMPLIANCE SHEET EC 6 OF 6

SHEET NO. 265
TOTAL SHTS. 482

UNOFFICIAL WEBSITE COPY

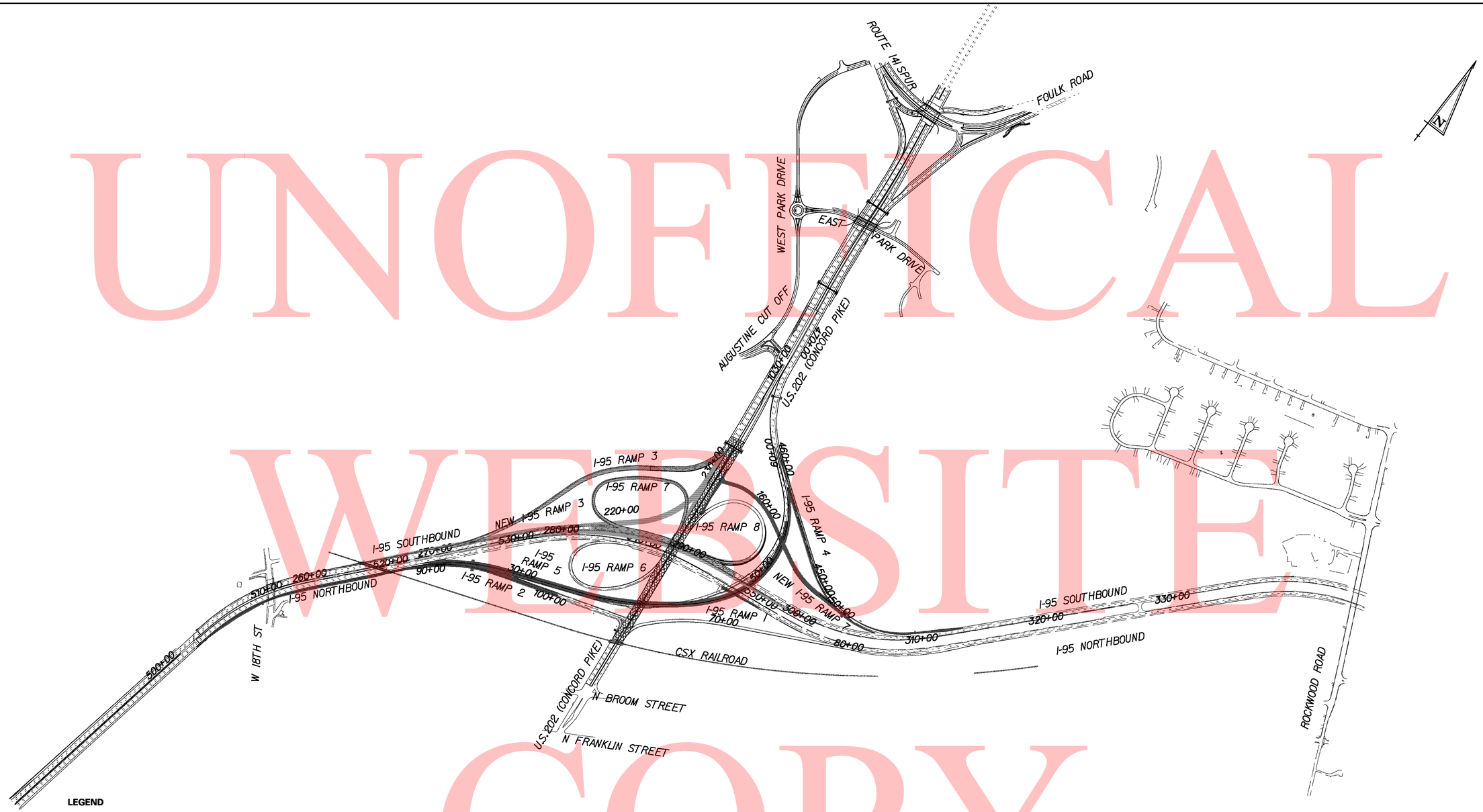

LEGEND

PHASE 1: CONSTRUCT NEW RAMP 5 AND RAMP 2, WIDEN I-95 NORTHBOUND, LENGTHEN RAMP 6 ACCELERATION LANE, REMOVE EXISTING RAMP 5, CONSTRUCT NEW RAMP 7, RECONSTRUCT RAMP 4

PHASE 2: REMOVE EXISTING RAMP 7, CONSTRUCT NEW RAMP 3, REMOVE EXISTING RAMP 3, CONSTRUCT I-95 SOUTHBOUND, RAMP 8 AND I-95 NORTHBOUND INSIDE SHOULDER

PHASE 3: US 202 BRIDGE OVER I-95, MILL AND OVERLAY OF ALL ROADS AND RAMPS, AND PLACE FINAL PAVEMENT MARKINGS.

\\nighdot\eng\deldot\1625 (az)\07 (contract 5)\submissions\00-in-progress\mot\sheet files\I95cphsh100.dgn

8/18/2010

DELAWARE DEPARTMENT OF TRANSPORTATION	ADDENDUMS / REVISIONS	SCALE 0 200 400 600 800	I-95 & US 202 INTERCHANGE	CONTRACT T200510602	BRIDGE NO. NA	CONSTRUCTION PHASING, MOT & EROSION CONTROL MOT 1 OF 139	SHEET NO. 266
				COUNTY NEW CASTLE	DESIGNED BY: DJD / REM		TOTAL SHTS. 482
					CHECKED BY: KMC		

LEGEND

- [X] PHASE 1 SHEET NO.
- (X) PHASE 2 SHEET NO.
- △X PHASE 3 SHEET NO.

INDEX OF SHEETS

SHEET INDEX – SHEET 267
GENERAL NOTES – SHEET 268
PERMANENT WARNING SIGNS – SHEET 269
MOT FIGURES – SHEET 270
TEMPORARY GUIDE SIGN DETAIL SHEET – SHEET 271
PHASE 1 STAGE 1 – SHEETS 272–279
PHASE 1 STAGE 2 – SHEETS 280–298
PHASE 1 STAGE 3 – SHEETS 299–310
PHASE 1 STAGE 4 – SHEETS 311–322
PHASE 2 STAGE 1 – SHEETS 323–335
PHASE 2 STAGE 2 – SHEETS 336–353
PHASE 2 STAGE 3 – SHEETS 354–365
PHASE 2 STAGE 4 – SHEETS 366–374
PHASE 2 STAGE 5 – SHEETS 375–383
PHASE 3 STAGE 1 – SHEETS 384–388
PHASE 3 STAGE 2 – SHEETS 389–393
PHASE 3 STAGE 3 – SHEETS 394–398
PHASE 3 STAGE 4 – SHEETS 399–404

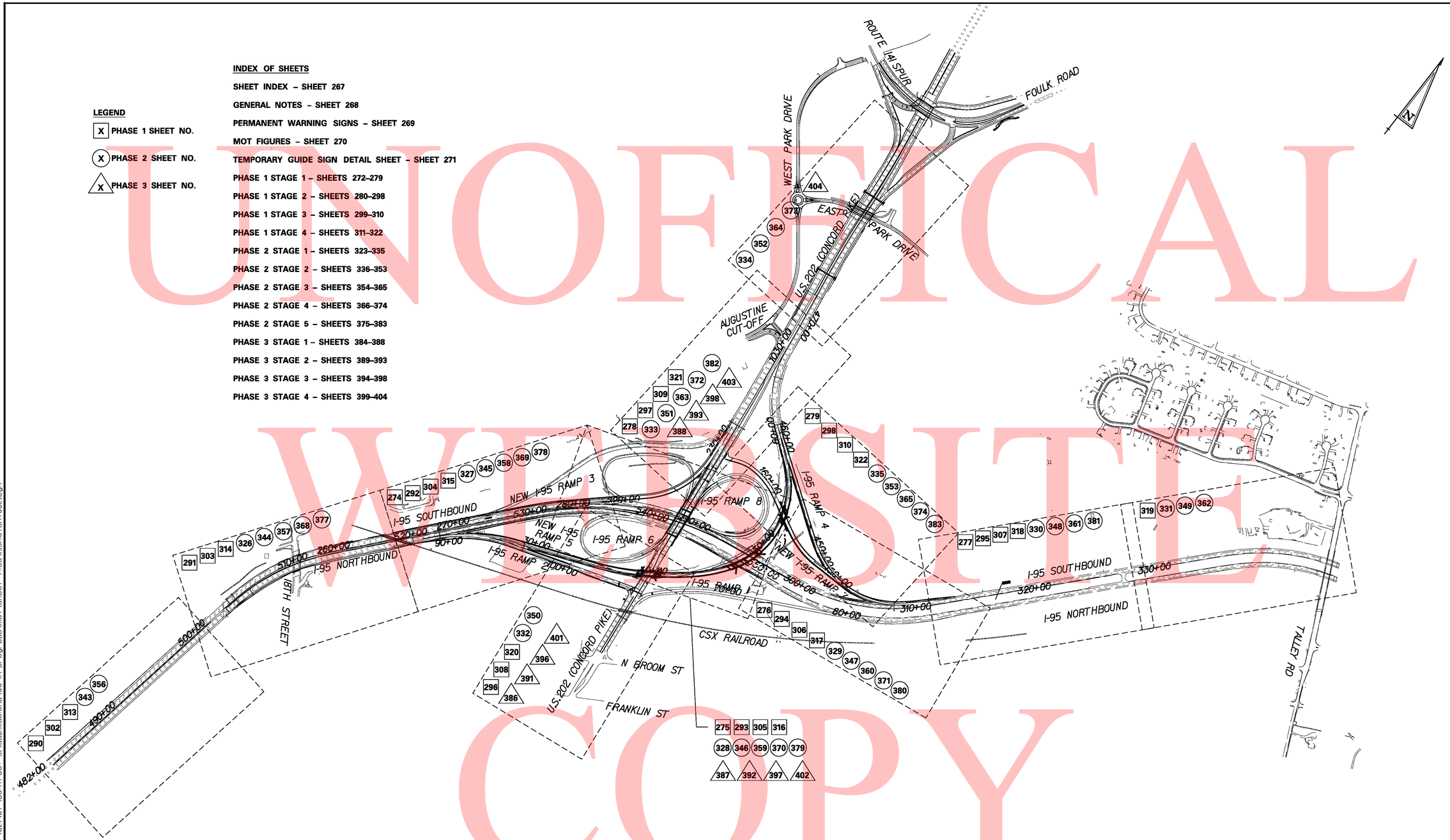

UNOFFICAL WEBSITE COPY

\\highdat\eng\deldot\4625 (az)\07 (contract 5)\submissions\00-in-progress\mot\sheet files\195motsht002.dgn

8/18/2010

DELAWARE DEPARTMENT OF TRANSPORTATION	ADDENDUMS / REVISIONS	SCALE 0 200 400 600 800	I-95 & US 202 INTERCHANGE	CONTRACT T200510602	BRIDGE NO. NA	CONSTRUCTION PHASING, MOT & EROSION CONTROL SHEET INDEX MOT 2 OF 139	SHEET NO. 267
				COUNTY NEW CASTLE	DESIGNED BY: DJD / REM		TOTAL SHTS. 482
					CHECKED BY: KMC		

GENERAL MOT NOTES:

1. MAINTENANCE OF TRAFFIC DURING LANE CLOSURES AND LANE SHIFTS SHALL CONFORM TO CASES 7,9,13 AND 14 OF THE TRAFFIC CONTROL MANUAL. SHOULDER CLOSURES ON US 202 SHALL USE CASE 3. SHOULDER CLOSURES ON I-95 SHALL USE CASE 4 AND CASE 5.

2. ON ALL INTERSECTING STREETS APPROACHING THE WORK AREA, "ROAD WORK 1,500 FT." "ROAD WORK 1,000 FT." AND "ROAD WORK 500 FT." PERMANENT SIGNS SHALL BE PLACED AS SHOWN ON THESE PLANS OR AS DIRECTED BY THE ENGINEER. AN "END ROAD WORK" SIGN SHALL BE PLACED ACROSS THE STREET FROM THE "ROAD WORK 500 FT" SIGN, VISIBLE TO TRAFFIC OPERATING IN THE WORK ZONE.

3. GRADING AND MAINTAINING TEMPORARY ROADWAY MATERIAL THAT IS BEING USED AS A TRAVELWAY, DRIVEWAY, ACCESS RAMP, ETC. SHALL BE INCIDENTAL TO ITEM 763500 - MAINTENANCE OF TRAFFIC. EXCESS BASE COURSE MATERIAL SHALL BE PUSHED AHEAD AND USED IN THE NEXT SEGMENT AND SHALL BE INCIDENTAL TO THE PARTICULAR BASE COURSE PAY ITEM. NO SEPARATE PAYMENT SHALL BE MADE FOR TEMPORARY ROADWAY MATERIAL (TRM) USED TO PROTECT EDGE DROP-OFFS, UNLESS THE MATERIAL IS EVENTUALLY UTILIZED AS PART OF A PERMANENT ROADWAY AT WHICH TIME THE MATERIAL WOULD BE PAID FOR UNDER THE RESPECTIVE CONTRACT MATERIAL ITEM. CONSTRUCTION OF A PLANNED RUNAROUND OR DETOUR WOULD BE ELIGIBLE FOR PAYMENT AS SPECIFIED IN THE CONTRACT.

4. THIS PROJECT IS CONSIDERED A SIGNIFICANT PROJECT AS DEFINED BY DELDOT'S WORK ZONE MOBILITY PROCEDURES AND GUIDELINES. A TYPE B TRANSPORTATION MANAGEMENT PLAN (TMP) HAS BEEN PREPARED AND IS AVAILABLE FOR VIEWING BY CONTACTING THE DEPARTMENT'S SAFETY PROGRAMS MANAGER AT (302)659-4060. ALL MONITORING REQUIREMENTS OF THE TMP SHALL BE CONDUCTED BY DELDOT FORCES UNLESS OTHERWISE DIRECTED BY THE ENGINEER. MODIFICATIONS TO THE TMP SHALL BE COMPLETED BY THE CONTRACTOR IF CHANGES TO THE TIME RESTRICTIONS OR THE TRAFFIC CONTROL PLAN ARE DESIRED. THE MODIFIED TMP SHALL BE PREPARED BY A PROFESSIONAL ENGINEER, REGISTERED IN THE STATE OF DELAWARE.

5. A TYPE II TRUCK MOUNTED ATTENUATOR (TMA) SHALL BE REQUIRED ON THIS PROJECT DURING THE FOLLOWING PAVEMENT OPERATIONS: TEMPORARY PERMANENT PAVEMENT MARKINGS, ROADSIDE SPRAYING, PATCHING, MILLING, SWEEPING, TEMPORARY TRAFFIC BARRIER PLACEMENT OR AS DIRECTED BY THE ENGINEER. THE ROLL AHEAD DISTANCE SHALL BE AS PER THE MANUFACTURER'S RECOMMENDATIONS. THE TMA SHALL CONFORM TO THE REQUIREMENTS OF SECTION 6F.82 OF THE DELAWARE MUTCD.

6. MOUNT ALL ROAD CLOSED SIGNS ON TYPE III BARRICADES. TYPE III BARRICADES SHALL EXTEND THE FULL WIDTH OF ROADWAY. PLACE TWO RED TYPE "B" LIGHTS ON EACH TYPE III BARRICADE USED AT POINTS OF ROAD CLOSURE.

7. CONSTRUCTION ENTRANCES SHALL BE COMPLETELY CLOSED WITH TYPE III BARRICADES WHEN NOT IN USE.

8. TEMPORARY COVERING OF ALL SIGNS SHOWN ON THE TRAFFIC CONTROL PLANS WILL NOT BE MEASURED AND PAID FOR, BUT WILL BE INCIDENTAL TO ITEM 763500-MAINTENANCE ON TRAFFIC.

9. ALL WORK AND MATERIALS NECESSARY TO FURNISH, INSTALL, RELOCATE AND REMOVE TEMPORARY SIGN SUPPORTS USED FOR THE TEMPORARY GUIDE SIGNS SHOWN ON THE TRAFFIC CONTROL PLANS WILL NOT BE MEASURED AND PAID FOR BUT WILL BE INCIDENTAL TO ITEM 763500 - MAINTENANCE OF TRAFFIC. TEMPORARY SIGN SUPPORTS SHALL MEET THE REQUIREMENTS OF THE TRAFFIC CONTROL MANUAL.

GENERAL MOT NOTES (CONT.):

10. THE CONTRACTOR SHALL SUPPLY MESSAGE BOARDS UNDER ITEM 743004 - FURNISH AND MAINTAIN MESSAGE BOARD. THE CONTRACTOR MUST DESIGNATE WHO SHALL BE RESPONSIBLE FOR THESE MESSAGE BOARDS. MOVING THE MESSAGE BOARDS TO DIFFERENT LOCATIONS DURING CONSTRUCTION WILL BE INCIDENTAL TO ITEM 743004.

11. ANY FLOODLIGHTING NECESSARY DUE TO WORK OCCURING DURING NIGHT HOURS WILL BE PAID FOR UNDER ITEM 743005 - FURNISH AND MAINTAIN PORTABLE LIGHT ASSEMBLY.

12. SIGN STRUCTURE WORK OVER THE ROADWAY AND DRAINAGE WORK CROSSING THE ROADWAY SHALL BE COORDINATED WITH ROAD CLOSURES FOR BRIDGE STEEL BEAM ERECTION AS NOTED IN THE SEQUENCE OF CONSTRUCTION.

13. LANE CLOSURES FOR DRAINAGE WORK CROSSING THE ROADWAY SHALL BE PERFORMED DURING THE HOURS INDICATED UNDER THE WORK HOUR REQUIREMENTS FOR LANE CLOSURES.

14. FOR BLASTING OPERATIONS INSTALL TRAFFIC CONTROL DEVICES AS SHOWN ON CASE 18 OF THE TRAFFIC CONTROL MANUAL.

15. QUANTITY OF 12" TEMPORARY STRIPING IS TO BE DOUBLED AND PAID FOR UNDER ITEM 748020 - TEMPORARY MARKINGS, PAINT 6".

16. PAVEMENT MARKING REMOVAL: GRINDING OF CONCRETE PAVEMENT IS NOT ALLOWED, AS INDICATED IN THE SPECIAL PROVISION FOR ITEM 748530 - PAVEMENT MARKING REMOVAL.

17. REMOVAL OF EXISTING RAISED PAVEMENT MARKERS SHALL BE PAID FOR UNDER ITEM 763632 - REMOVAL OF RAISED PAVEMENT MARKER.

18. REMOVAL OF EXISTING RUMBLE STRIPS SHALL BE PAID FOR UNDER ITEM 760002 - PAVEMENT-MILLING, HOT-MIX, STRIP-CUT. PAVEMENT TO FILL IN THE MILLED RUMBLE STRIP AREA SHALL BE PAID FOR UNDER ITEM 401665 - SUPERPAVE, TYPE C HOT-MIX, 160 GYRATIONS, PG 64-22, PATCHING. THIS WORK SHALL BE DONE IN ACCORDANCE WITH THE DETAIL BELOW "REMOVAL OF EXISTING RUMBLE STRIP."

19. INSTALLATIONS OF TEMPORARY CONCRETE BARRIER THAT DO NOT PROVIDE A 2' DISTANCE BETWEEN THE BACK OF BARRIER AND THE SLOPE HINGE POINT, FOR SLOPES OF 2:1 OR STEEPER, SHALL BE PINNED TO THE PAVEMENT. THE WORK ASSOCIATED WITH PINNING THE TEMPORARY CONCRETE BARRIER SHALL BE PAID FOR UNDER ITEM 720636 - FURNISH AND MAINTAIN PINNED PORTABLE P.C.C. SAFETY BARRIER, DOUBLE FACE, AND ITEM 720621 - RELOCATING PINNED PORTABLE P.C.C. SAFETY BARRIER.

20. THE CONTRACT DRAWINGS AND NOTES ON PLAN SHEETS 266 THROUGH 419 PROVIDE A SEQUENCE OF CONSTRUCTION FOR THIS CONTRACT. THERE ARE ROAD CLOSURES AND DETOURS WITH LIMITED TIME FRAMES. SHOULD THE CONTRACTOR FAIL TO SUBSTANTIALLY COMPLETE ALL WORK AND RESTORE TRAFFIC TO REGULAR OPERATION BY THE TIMES SPECIFIED IN THE SPECIAL PROVISIONS FOR THE SPECIFIED ACTIVITIES, THE DEPARTMENT WILL ASSESS THE CONTRACTOR ROAD USERS COSTS AS SPECIFIED IN THE SPECIAL PROVISIONS.

WORK HOUR RESTRICTIONS:

1. WORK IS NOT PERMITTED ON THE HOLIDAYS OR THE WORK DAYS PRECEDING AND FOLLOWING THE HOLIDAYS AS INDICATED IN THE SPECIAL PROVISION FOR ITEM 763500 - MAINTENANCE OF TRAFFIC.

2. NIGHT WORK HOURS FOR GENERAL WORK ACTIVTIES ARE DEFINED AS 9:00 PM TO 5:00 AM ON I-95, U.S. 202 AND ALL INTERCHANGE RAMPS, EXCEPT FOR A 10:00 PM START TO WORK INVOLVING MULTIPLE LANE CLOSURES ON I-95 (AS NOTED IN TABLE 2 BELOW), AND EXCEPT FOR THE HOLIDAYS OR THE WORK DAYS PRECEDING AND FOLLOWING THE HOLIDAYS AS INDICATED IN THE SPECIAL PROVISION FOR ITEM 763500 - MAINTENANCE OF TRAFFIC.

3. LANE CLOSURES ON I-95 ARE PERMITTED DURING THE HOURS SPECIFIED IN TABLES 1 AND 2 BELOW.

4. LANE CLOSURES ON U.S. 202: DURING THE OFF-PEAK HOURS OF 9:00 AM TO 3:00 PM, NO MORE THAN ONE LANE IN EACH DIRECTION SHALL BE CLOSED. DURING THE NIGHT WORK HOURS OF 9:00 PM TO 5:00 AM, TWO LANES IN EACH DIRECTION MAY BE CLOSED.

5. 15-MINUTE STOPPAGES OF TRAFFIC FOR OVERHEAD SIGNING WORK ON I-95 AND U.S. 202 ARE PERMITTED DURING THE HOURS OF 12:00 AM TO 5:00 AM ONLY.

6. THE SIMULTANEOUS ROAD AND RAMP CLOSURES AS SHOWN ON THE STRUCTURE NO. 762 DETOUR PLAN (SHEET 414) FOR THE STRUCTURE NO. 762 BEAM ERECTION ARE PERMITTED DURING THE WEEKEND HOURS OF SATURDAY 8:00 PM TO MONDAY 5:00AM ONLY.

7. THE SIMULTANEOUS ROAD AND RAMP CLOSURES AS SHOWN ON THE STRUCTURE NO. 763 DETOUR PLAN (SHEET 415) AND THE I-95 TO I-495 DETOUR PLAN (SHEET 416) FOR THE STRUCTURE NO. 763 BEAM ERECTION ARE PERMITTED DURING THE WEEKEND HOURS OF FRIDAY 9:00 PM TO MONDAY 5:00 AM ONLY.

8. THE CLOSURE OF RAMP 5 FOR THE STRUCTURE NO. 1-764 BEAM ERECTION SHOULD OCCUR ON A WEEKEND IMMEDIATELY BEFORE OR AFTER THE CLOSURE OF RAMP 5 FOR STRUCTURE NO. 1-763 BEAM ERECTION. A DETOUR SHOULD BE IMPLEMENTED, CORRESPONDING WITH THE STRUCTURE NO. 764 (OPTION 1 DETOUR) DETOUR PLAN (SHEET 418). THIS IS ALSO KNOWN AS THE OPTION 1 DETOUR AS DESCRIBED IN THE TRANSPORTATION MANAGEMENT PLAN (TMP). HOWEVER, IF A SIGNIFICANT AMOUNT OF TIME (TO BE DETERMINED BY DELDOT) PASSES BETWEEN THE CLOSURE OF RAMP 5 FOR THE STRUCTURE NO. 1-763 BEAM ERECTION AND THE CLOSURE OF RAMP 5 FOR THE STRUCTURE NO. 1-764 BEAM ERECTION, A DIFFERENT DETOUR SHOULD BE IMPLEMENTED, CORRESPONDING WITH THE RAMP *6172 DETOUR PLAN (SHEET 410). THIS IS ALSO KNOWN AS THE OPTION 2 DETOUR AS DESCRIBED IN THE TRANSPORTATION MANAGEMENT PLAN.

9. THE CLOSURE OF RAMP 5 FOR THE STRUCTURE NO. 764 BEAM ERECTION IS PERMITTED DURING THE WEEKEND HOURS OF SATURDAY 8:00 PM TO MONDAY 5:00AM ONLY. THIS CLOSURE WILL BE IN ACCORDANCE WITH EITHER THE STRUCTURE NO. 764 (OPTION 1 DETOUR) DETOUR PLAN (SHEET 418) OR THE RAMP *6172 DETOUR PLAN (SHEET 410), AS DESCRIBED ABOVE.

10. THE SIMULTANEOUS ROAD AND RAMP CLOSURES AS SHOWN ON THE STRUCTURE NO. 570 DETOUR PLAN (SHEET 419) AND THE I-95 TO I-495 DETOUR PLAN (SHEET 416) FOR THE STRUCTURE NO. 570 BEAM ERECTION ARE PERMITTED DURING THE WEEKNIGHT HOURS OF 10:00 PM TO 5:00 AM ONLY.

11. THE SIMULTANEOUS CLOSURES OF I-95 SOUTH AND RAMP 4 AS SHOWN ON THE EXISTING SIGN STRUCTURE SO 1044 DETOUR PLAN (SHEET 413) ARE PERMITTED DURING THE HOURS OF 12:00 AM TO 5:00 AM ONLY.

12. THE SIMULTANEOUS CLOSURES OF I-95 NORTH AND SOUTH AS SHOWN ON THE I-95 SIGN STRUCTURES DETOUR PLAN (SHEET 417) ARE PERMITTED DURING THE HOURS OF 12:00 AM TO 5:00 AM ONLY DURING THE WEEKEND WORK FOR STRUCTURE NO. 763.

13. ADDITIONAL CLOSURES OF THE INTERCHANGE RAMPS IN ACCORDANCE WITH THE FOLLOWING DETOUR PLANS ARE PERMITTED DURING THE HOURS OF 12:00 AM TO 5:00 AM ONLY, WITH TWO EXCEPTIONS AS NOTED BELOW.
   - DETOUR PLAN RAMP *6171
   - DETOUR PLAN RAMP *6172
   - DETOUR PLAN RAMP *6174
   - DETOUR PLAN RAMP *6176
   - DETOUR PLAN RAMP *6177
   - DETOUR PLAN RAMP *6178

   EXCEPTIONS:
   1. THE RAMP 8 DETOUR FOR PHASE 2 STAGE 3 WHICH IS A CONTINUOUS MONTH-LONG DETOUR.
   2. THE RAMP 5 DETOUR USING DETOUR PLAN RAMP *6172 FOR STRUCTURE NO. 764 WORK (OPTION 2 DETOUR) WHICH IS PERMITTED DURING THE WEEKEND HOURS OF SATURDAY 8:00 PM TO MONDAY 5:00 AM.

TABLE 1 - ALLOWABLE LANE CLOSURES ON I-95, NORTHERN SECTION

SECTION OF I-95	NO. OF LANES	1 LANE OPEN, 1 LANE CLOSED	
NORTHBOUND I-95 (NORTH OF RAMP 5 DIVERGE)	2 LANES	BEGIN SET-UP	9:00 PM
		END	5:00 AM
SOUTHBOUND I-95 (NORTH OF RAMP 3 MERGE)	2 LANES	BEGIN SET-UP	9:00 PM
		END	5:00 AM

TABLE 2 - ALLOWABLE LANE CLOSURES ON I-95, SOUTHERN SECTION

SECTION OF I-95	NO. OF LANES	2 LANES OPEN, 1 LANE CLOSED		1 LANE OPEN, 2 LANES CLOSED	
NORTHBOUND I-95 (SOUTH OF RAMP 5 DIVERGE)	3 LANES	BEGIN SET-UP	9:00 PM	BEGIN SET-UP	10:00 PM
		END	5:00 AM	END	5:00 AM
SOUTHBOUND I-95 (SOUTH OF RAMP 3 MERGE)	3 LANES	BEGIN SET-UP	9:00 PM	BEGIN SET-UP	10:00 PM
		END	5:00 AM	END	5:00 AM

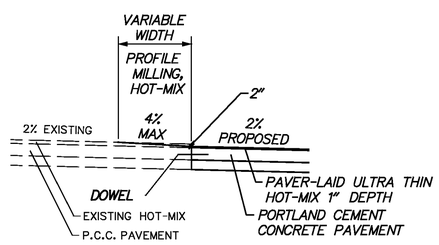

NOTES:
1. COMPLETE PAVEMENT MILLING, HOT-MIX, VARIABLE DEPTH TO PROVIDE A 4% SLOPE (MAX.) FROM THE EXISTING PAVEMENT SURFACE TO THE PROPOSED PAVER-LAID ULTRA THIN HOT-MIX UNTIL FINAL WEARING COURSE IS APPLIED.

WIDENING/PROFILE MILLING TIE-IN DETAIL

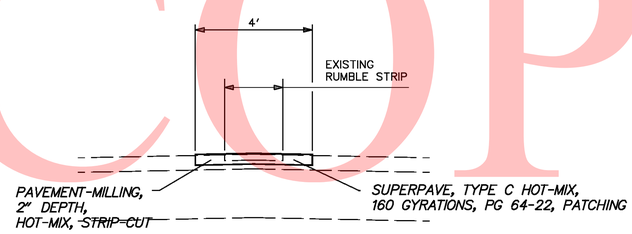

REMOVAL OF EXISTING RUMBLE STRIP

OFFICIAL WEBSITE COPY

WARNING SIGN LEGEND

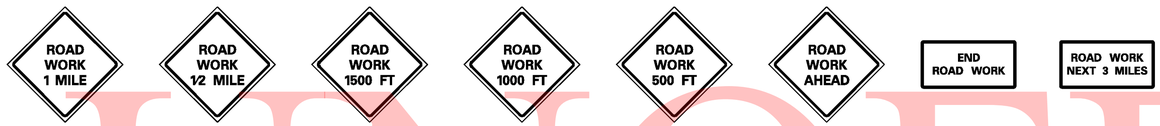

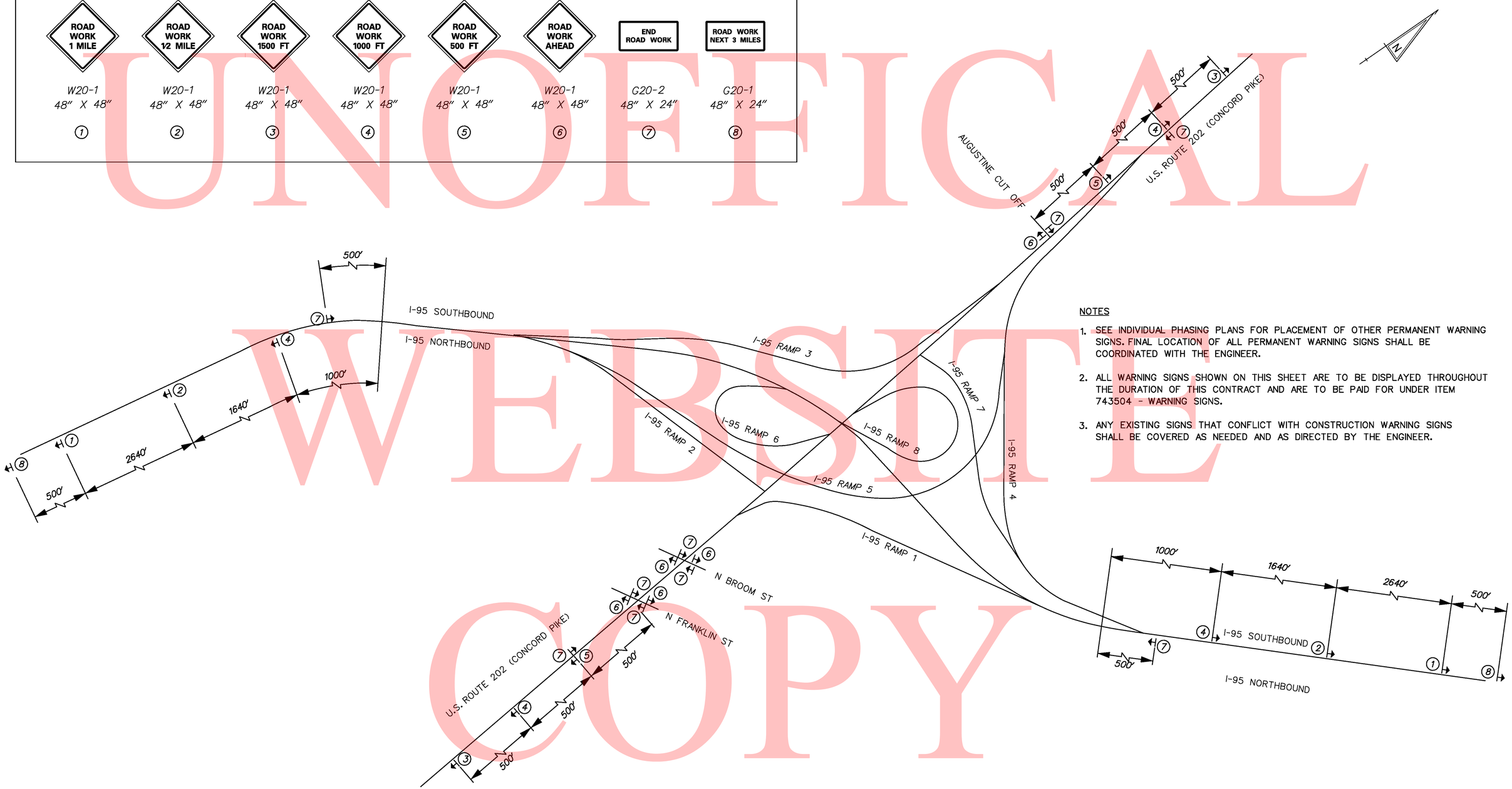

NOTES

1. SEE INDIVIDUAL PHASING PLANS FOR PLACEMENT OF OTHER PERMANENT WARNING SIGNS. FINAL LOCATION OF ALL PERMANENT WARNING SIGNS SHALL BE COORDINATED WITH THE ENGINEER.
2. ALL WARNING SIGNS SHOWN ON THIS SHEET ARE TO BE DISPLAYED THROUGHOUT THE DURATION OF THIS CONTRACT AND ARE TO BE PAID FOR UNDER ITEM 743504 - WARNING SIGNS.
3. ANY EXISTING SIGNS THAT CONFLICT WITH CONSTRUCTION WARNING SIGNS SHALL BE COVERED AS NEEDED AND AS DIRECTED BY THE ENGINEER.

UNOFFICIAL WEBSITE COPY

\\nighdat\eng\deldot\4625 (az)\07 (contract 5)\submissions\00-in-progress\mot\sheet files\I95motsht004_SIGN.dgn
11/9/2010

DELAWARE DEPARTMENT OF TRANSPORTATION	ADDENDUMS / REVISIONS	NOT TO SCALE	I-95 & US 202 INTERCHANGE	CONTRACT T200510602	BRIDGE NO. NA	CONSTRUCTION PHASING, MOT & EROSION CONTROL PERMANENT WARNING SIGN LAYOUT MOT 4 OF 139	SHEET NO. 269
				COUNTY NEW CASTLE	DESIGNED BY: DJD / REM		TOTAL SHTS. 482
					CHECKED BY: KMC		

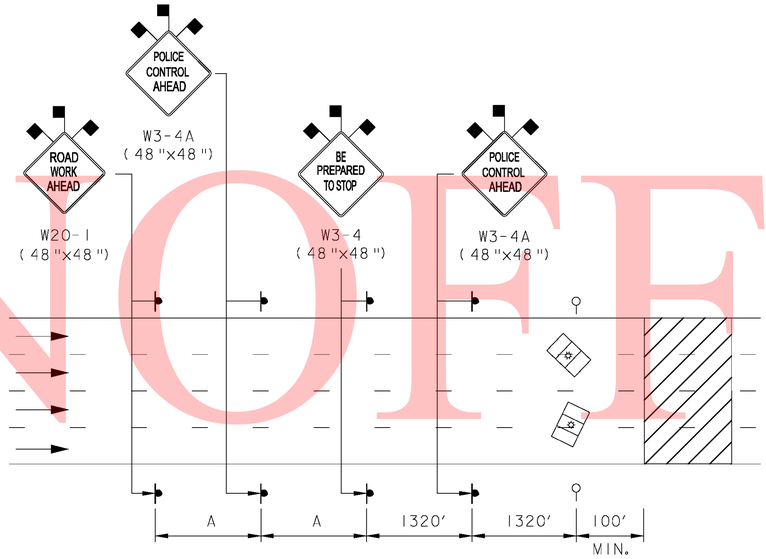

S (MPH)	A (FT)
25	250
30	300
35	350
40	400
45	450
50	500
55	550

SYMBOLS

- WORK AREA
- SIGN
- S NORMAL SPEED LIMIT
- UNIFORMED POLICE OFFICER
- POLICE VEHICLE WITH ACTIVATED FLASHING LIGHTS

FIGURE A - 15-MINUTE STOPPAGES OF TRAFFIC

SHORT-TERM OPERATION
N.T.S.

NOTES

1. USE FIGURE A ONLY DURING THE HOURS AND DAYS ALLOWABLE AS DIRECTED IN THE PLANS AND SPECIAL PROVISIONS.

2. ALL DISTANCES MAY BE ADJUSTED SLIGHTLY TO FIT ACTUAL FIELD CONDITIONS.

3. DURING HOURS OF DARKNESS, ALL SIGNS SHALL BE REFLECTORIZED OR ILLUMINATED, AND EACH ADVANCE WARNING SIGN SHALL HAVE A TYPE A OR TYPE B LIGHT.

4. ALL SIGNS - BLACK LEGEND AND BORDER, ORANGE RETROREFLECTIVE BACKGROUND.

5. TRAFFIC MAY BE STOPPED FOR A MAXIMUM OF 15 MINUTES PER CLOSURE.

6. FOR REMOVAL OF EXISTING OVERHEAD SIGNS, ALL PARTS OF SIGN AND ATTACHMENT HARDWARE MUST BE COMPLETELY REMOVED WITHIN ONE 15-MINUTE TIME FRAME.

7. FOR INSTALLATION OF NEW OVERHEAD SIGNS, ALL SECTIONS OF SIGN AND SIGN ATTACHMENTS MUST BE PERMANENTLY MOUNTED WITHIN ONE 15-MINUTE TIME FRAME.

8. ADDITIONAL 15-MINUTE TIME FRAMES MAY BE USED FOR EACH INDIVIDUAL SIGN ON THE STRUCTURE, OR FOR INSPECTION OF THE EXISTING SIGNS.

9. AFTER EACH 15-MINUTE STOPPAGE, WAIT UNTIL TRAFFIC QUEUES HAVE DISSIPATED AND TRAFFIC HAS RETURNED TO NORMAL TRAFFIC FLOW BEFORE IMPLEMENTING THE NEXT CLOSURE.

UNOFFICAL WEBSITE COPY

TEMPORARY GUIDE SIGNS DETAIL SHEET

NOTES:
1. COLORS: B = BLACK, G = GREEN, O = ORANGE, W = WHITE, Y = YELLOW
2. FOR ARROW DETAILS, SEE FHWA PUBLICATION "STANDARD HIGHWAY SIGNS BOOK".
3. SIGNS SHALL BE FABRICATED OF FLAT SHEET ALUMINUM PANELS.
4. ALL UPPER/LOWER CASE COPY SHALL BE CLEARVIEW FONT 5-W, UNLESS NOTED OTHERWISE, AND ALL UPPERCASE COPY SHALL BE SERIES E.
5. THE DESIGN OF SIGNS SHALL FOLLOW THE REQUIREMENTS SET FORTH IN THE DELDOT MUTCD, THE 2009 MANUAL ON UNIFORM TRAFFIC CONTROL DEVICES (MUTCD) AND THE FHWA PUBLICATION "STANDARD HIGHWAY SIGNS BOOK".

PANEL DESIGNATION	MOT SHEET NO.	QUANTITY	LEGEND	SIZE WIDTH	SIZE HEIGHT	COLOR LEGEND	COLOR BACKGROUND	BORDER WIDTH	BORDER RADIUS	SHIELD	ARROW	REMARKS
G-1	2	1		9'-6"	2'-6"	B	O	2"	12"	36" X 45"	N/A	123.50 S.F. SIGN TO BE PAID FOR UNDER ITEM 749500 "SIGN PANEL"
				9'-6"	10'-0"	B	O					
G-2	2	1		11'-6"	10'-6"	B	O	2"	12"	36" X 45"	N/A	126.0 S.F. SIGN TO BE PAID FOR UNDER ITEM 749500 "SIGN PANEL"
S3	12 25 30 37 65 84 97 106	4		4'-0"	4'-0"	B	O	.75"	1.25"	-	-	16 S.F. 6" CAPITALS, SERIES C SIGN TO BE PAID FOR UNDER ITEM 743504 "WARNING SIGNS"
S4	12 25 30 37 64 83 96 105	4		4'-0"	4'-0"	B	O	.75"	1.25"	-	-	16 S.F. 6" CAPITALS, SERIES C SIGN TO BE PAID FOR UNDER ITEM 743504 "WARNING SIGNS"
S5	31 32 43 44 55 56 69 121 123 126 128 131 133	2		4'-0"	4'-0"	B	O	.75"	1.25"	-	-	16 S.F. 6" CAPITALS, SERIES C SIGN TO BE PAID FOR UNDER ITEM 743504 "WARNING SIGNS"

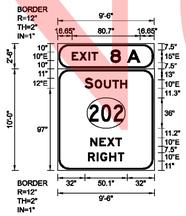

			TOTAL
10" UC/15" NUM	SERIES E	E X I T 8 A 16.7 9.4 10.7 3.8 7.3 15.0 12.0 7.5 15.0 16.6	114
12" UC/10" UC	SERIES E	S O U T H 32.0 11.8 10.9 10.0 9.4 8.0 31.9	114
SHIELD	SHIELD	S202 34.5 45.0 34.5	114
10" UC	SERIES E	N E X T 38.4 10.6 9.4 10.0 7.3 38.3	114
10" UC	SERIES E	R I G H T 35.6 10.6 4.3 10.6 10.0 7.3 35.6	114

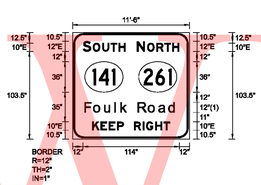

			TOTAL
12" UC/10" UC	SERIES E	S O U T H N O R T H 12.0 11.8 10.9 10.0 9.4 8.0 13.2 12.4 10.9 10.0 9.4 8.0 12.0	138
SHIELDS	SHIELDS	S141 S261 14.6 45.0 18.5 45.0 14.9	138
12" UC/10" LC	CLEARVIEW 5-W	F o u I K R o a d 15.1 10.7 13.3 12.7 7.4 8.5 9.0 12.6 12.6 12.2 8.8 15.1	138
10" UC	SERIES E	K E E P R I G H T 23.1 10.2 9.4 9.4 8.0 12.0 10.6 4.3 10.6 10.0 7.3 23.1	138

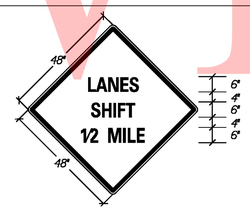

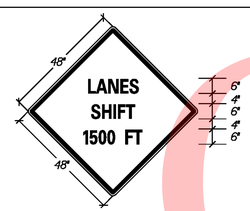

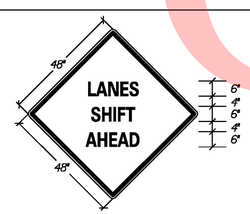

UNOFFICIAL WEBSITE COPY

\\hlghdat1\eng\deldot\1625 (az)\07 (contract 5)\submissions\00-in-progress\mot\sheet files\195motsht006_SignDetail.dgn
11/9/2010

DELAWARE DEPARTMENT OF TRANSPORTATION

ADDENDUMS / REVISIONS

I-95 & US 202 INTERCHANGE

CONTRACT	BRIDGE NO.	NA
T200510602	DESIGNED BY:	KOC
COUNTY	CHECKED BY:	MDL
NEW CASTLE		

CONSTRUCTION PHASING, M.O.T., AND EROSION CONTROL PLAN
MOT 6 OF 139

SHEET NO. 271
TOTAL SHTS. 482

SEQUENCE OF CONSTRUCTION

PHASE 1, STAGE 1

(1) PLACE ALL PERMANENT WARNING SIGNS AS SHOWN ON THE FIRST CONSTRUCTION PHASING, MOT AND EROSION AND CONTROL SHEET.

(2) INSTALL ALL EROSION AND SEDIMENT CONTROL MEASURES AS SHOWN ON THE PLANS.

(3) STABILIZE ALL DISTURBED AREAS WITH TOP SOIL SEED AND MULCH PRIOR TO THE REMOVAL OF THE SEDIMENT CONTROL DEVICES AS DIRECTED BY THE ENGINEER.

(4) WHEN INSTALLING 48" RCP, USE SANDBAGE DIKE, STILLING WELL, AND RIPRAP. PUMP STREAM FLOW INTO 18" RCP WHICH SHOULD BE INSTALLED BEFORE THIS WORK. PUMPING COST INCIDENTAL TO STILLING WELL.

(5) DURING NIGHT WORK HOURS: REMOVE EXISTING STRIPING ON I-95 SOUTHBOUND AND RAMP 4 ,AS NECESSARY, USING LANE AND SHOULDER CLOSURES IN ACCORDANCE WITH THE CASES LISTED IN THE MOT GENERAL NOTES. PLACE TEMPORARY PAVEMENT STRIPING ON I-95 SOUTHBOUND AND RAMP 4 AS SHOWN UNDER PHASE1, STAGE1 TRAFFIC CONTROL USING CASE 23-C OF THE TRAFFIC CONTROL MANUAL.

(6) USING LANE AND SHOULDER CLOSURES IN ACCORDANCE WITH THE CASES LISTED IN THE MOT GENERAL NOTES, INSTALL TRAFFIC CONTROL SIGNS AND DEVICES AND INSTALL TEMPORARY CONCRETE BARRIER AND ATTENUATORS AT THE FOLLOWING LOCATIONS:
1. I-95 SOUTHBOUND / RAMP 4 FROM I-95 STATION 314+19 TO I-95 STATION 309+06 (RAMP 4 STA 441+47.67) TO RAMP 4 STATION 461+75.
2. INSTALL PORTABLE IMPACT ATTENUATOR AT I-95 SOUTHBOUND STATION 314+19.

(7) SHIFT TRAFFIC TO NEW LANES DESIGNATED FOR PHASE 1, STAGE 1.

I-95 SOUTHBOUND AND RAMP 4 SIGNING WORK

(8) CONSTRUCT FOUNDATION AND SIDE SUPPORT FOR NEW CANTILEVER SIGN STRUCTURE AT I-95 SOUTHBOUND STATION 309+50 AS SHOWN ON THE SIGN STRUCTURE PLANS PRIOR TO REMOVAL OF EXISTING OVERHEAD TRUSS AT I-95 SOUTHBOUND STATION 308+10.

(9) DURING NIGHT WORK HOURS, CLOSE AND DETOUR RAMP 4 AND I-95 SOUTHBOUND IN ACCORDANCE WITH THE EXISTING SIGN STRUCTURE SO 1044 DETOUR PLAN TO PERFORM THE FOLLOWING SIGNING WORK AS SHOWN ON THE SIGNING, STRIPING AND CONDUIT PLANS:

1. REMOVE EXISTING OVERHEAD TRUSS ON THE EXISTING SIGN STRUCTURE AT I-95 SOUTHBOUND STATION 308+15.

2. REMOVE THE "EXIT 8A, 202 SOUTH" SIGN PANEL FROM THE EXISTING TRUSS. THIS SIGN IS TO BE INSTALLED ON THE NEW SIGN STRUCTURE AT RAMP 4 STATION 447+00 IN PHASE 1, STAGE 2.

3. REMOVE THE "EXIT 8B, 202 NORTH" SIGN PANEL FROM THE EXISTING OVERHEAD TRUSS AND INSTALL SIGN PANEL ON THE NEW CANTILEVER ARM AT I-95 SOUTHBOUND STATION 309+50.

4. INSTALL NEW CANTILEVER ARM WITH SIGN PANEL AT I-95 SOUTHBOUND STATION 309+50.

(10) CONSTRUCT RIGHT FOUNDATION AND SIDE SUPPORT FOR NEW OVERHEAD SIGN STRUCTURE AT RAMP 4 STATION 447+00 AS SHOWN ON THE SIGN STRUCTURE PLANS.

I-95 SOUTHBOUND AND RAMP 4 WORK

(11) CONSTRUCT RIGHT SHOULDER OF I-95 SOUTHBOUND FROM STATION 309+05.41 (RAMP 4 STATION 441+47.67) TO STATION 313+30 AND RIGHT SHOULDER OF RAMP 4 FROM STATION 441+47.67 TO STATION 461+24.91.

UNOFFICAL WEBSITE COPY

\\nighdar1\eng\deldot\1625 (az)\07 (contract 5)\submissions\00-in-progress\mot\sheet files\195mot sht007_PHIS+gi_Notes.dgn
11/3/2010

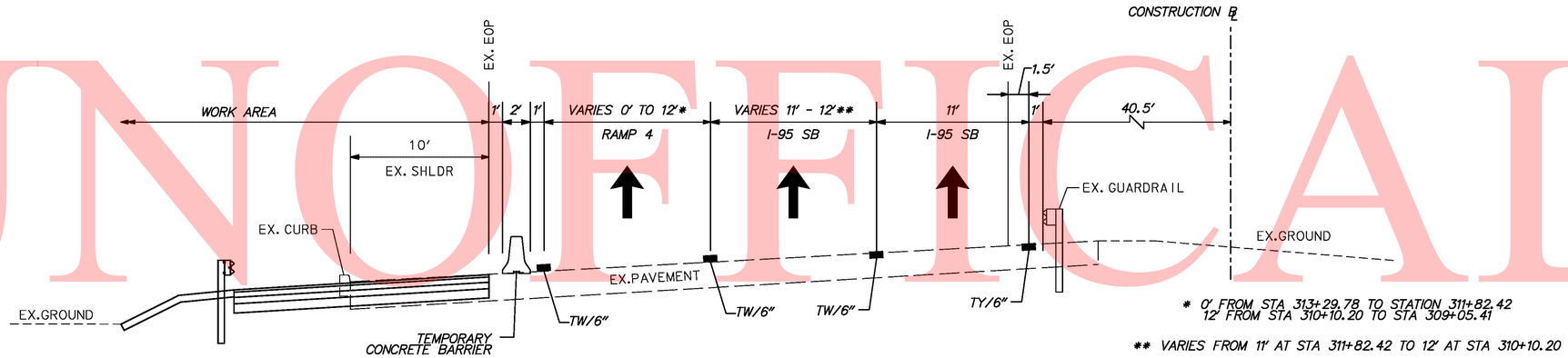

* 0' FROM STA 313+29.78 TO STATION 311+82.42
12' FROM STA 310+10.20 TO STA 309+05.41

** VARIES FROM 11' AT STA 311+82.42 TO 12' AT STA 310+10.20

I-95 SOUTHBOUND

STA 309+05.41 (RAMP 4 STA 441+47.67) TO STA 313+29.78

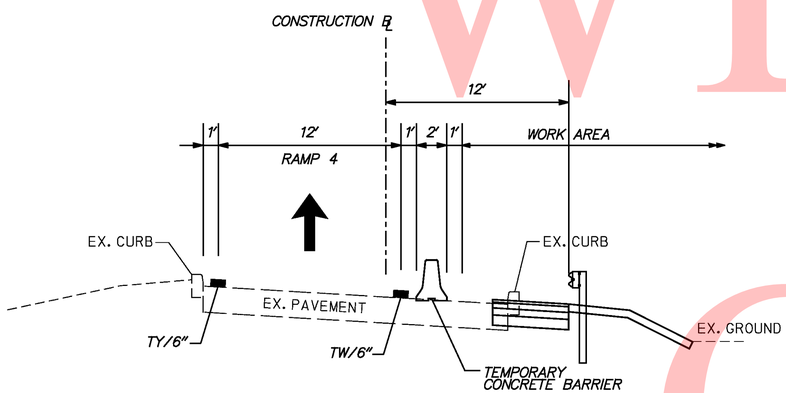

RAMP 4

STA 444+06.63 TO STA 461+24.91

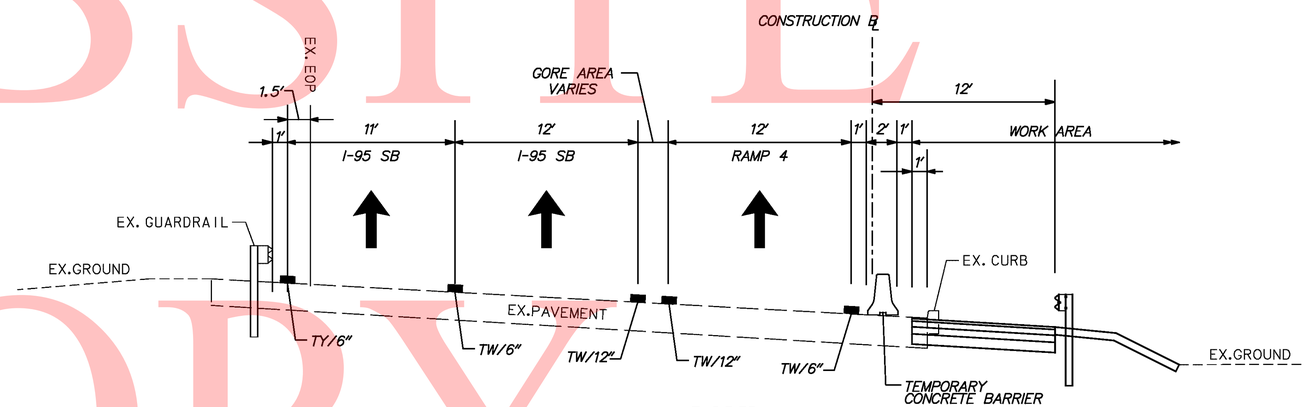

RAMP 4

STA 441+47.67 (I-95 STA 309+05.41) TO STA 444+06.63

UNOFFICAL WEBSITE COPY

\\nighdar1\eng\deldot\1625 (az)\07 (contract 5)\submissions\00-in-progress\mot\sheet files\95mot sht008_PHIS+gi_Typicals.cgn
8/18/2010

DELAWARE DEPARTMENT OF TRANSPORTATION	ADDENDUMS / REVISIONS	SCALE 0 30 60 90 FEET	I-95 & US 202 INTERCHANGE	CONTRACT T200510602	BRIDGE NO. NA	CONSTRUCTION PHASING, MOT & EROSION CONTROL PHASE 1 STAGE 1 MOT 8 OF 139	SHEET NO. 273
				COUNTY NEW CASTLE	DESIGNED BY: DJD / REM		TOTAL SHTS. 482
					CHECKED BY: KMC		

CONSTRUCTION PHASING LEGEND	
	WORK AREA THIS PHASE
	TEMPORARY CONSTRUCTION
	TEMPORARY PAVEMENT MARKING ARROW
	TEMPORARY WARNING SIGN
	PORTABLE IMPACT ATTENUATOR
	CHANNELIZING DEVICE
	TYPE III BARRICADE

SEDIMENT TRAP SCHEDULE

STA.	D. AREA	LENGTH	WIDTH	DEPTH	OUT. TYPE	OUT. EL.	CLEAN EL.
220+75	0.37	20	10	3.00	SCD	215.00	214.00
277+50	0.85	20	10	3.00	SCD	161.00	160.00
276+75	1.03	20	10	3.00	SCD	160.00	159.00
504+25	2.64	20	10	3.00	SCD	95.00	94.00

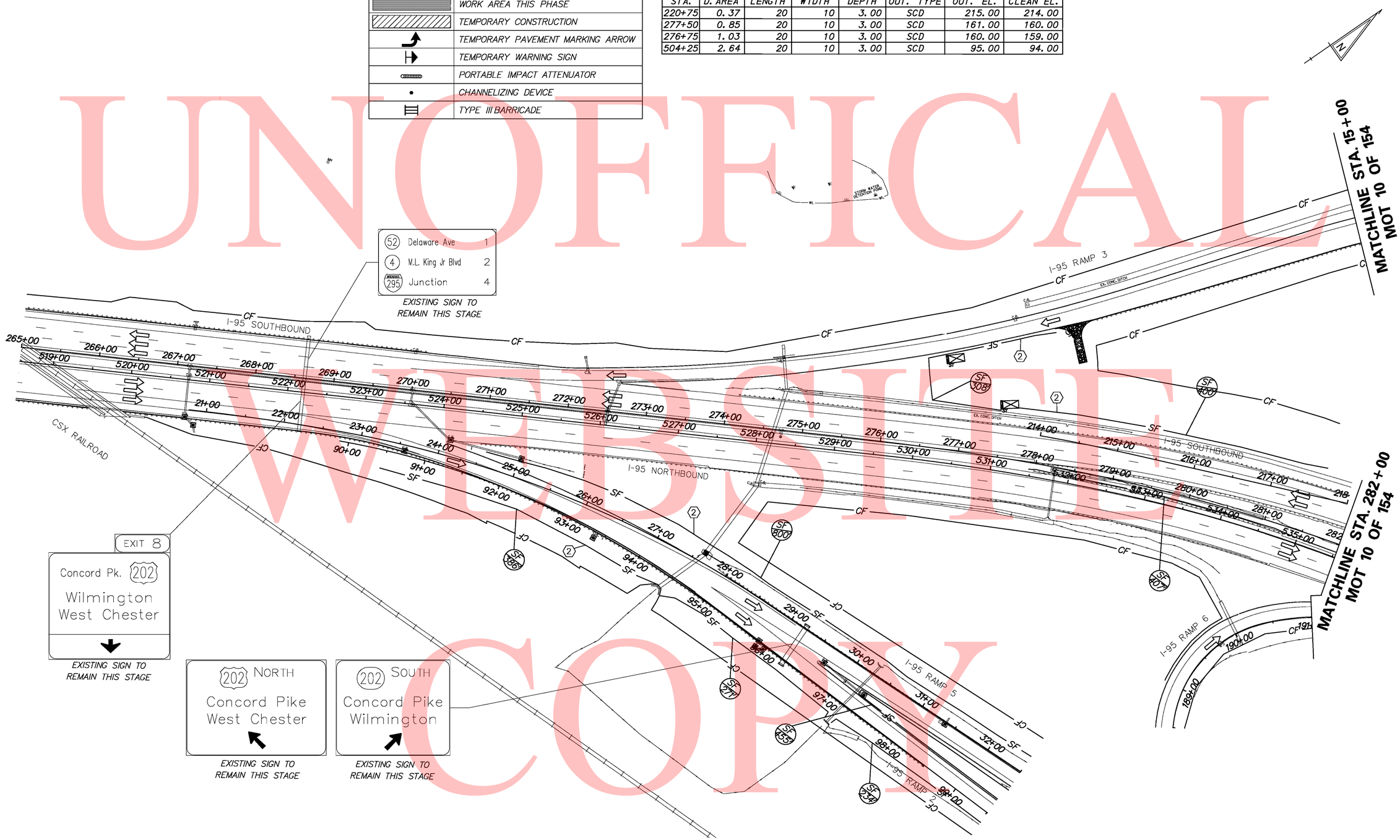

UNOFFICAL WEBSITE COPY

\\highdat\eng\deldot\4625 (az)\07 (contract 5)\submissions\00-in-progress\mot\sheet files\195motsht009_PHIS?gi.dgn

8/18/2010

DELAWARE DEPARTMENT OF TRANSPORTATION

ADDENDUMS / REVISIONS

SCALE 0 30 60 90 FEET

I-95 & US 202 INTERCHANGE

CONTRACT	BRIDGE NO.	NA
T200510602	DESIGNED BY: DJD / REM	
COUNTY		
NEW CASTLE	CHECKED BY: KMC	

CONSTRUCTION PHASING, MOT & EROSION CONTROL PHASE 1, STAGE 1 MOT 9 OF 139

SHEET NO. 274

TOTAL SHTS. 482

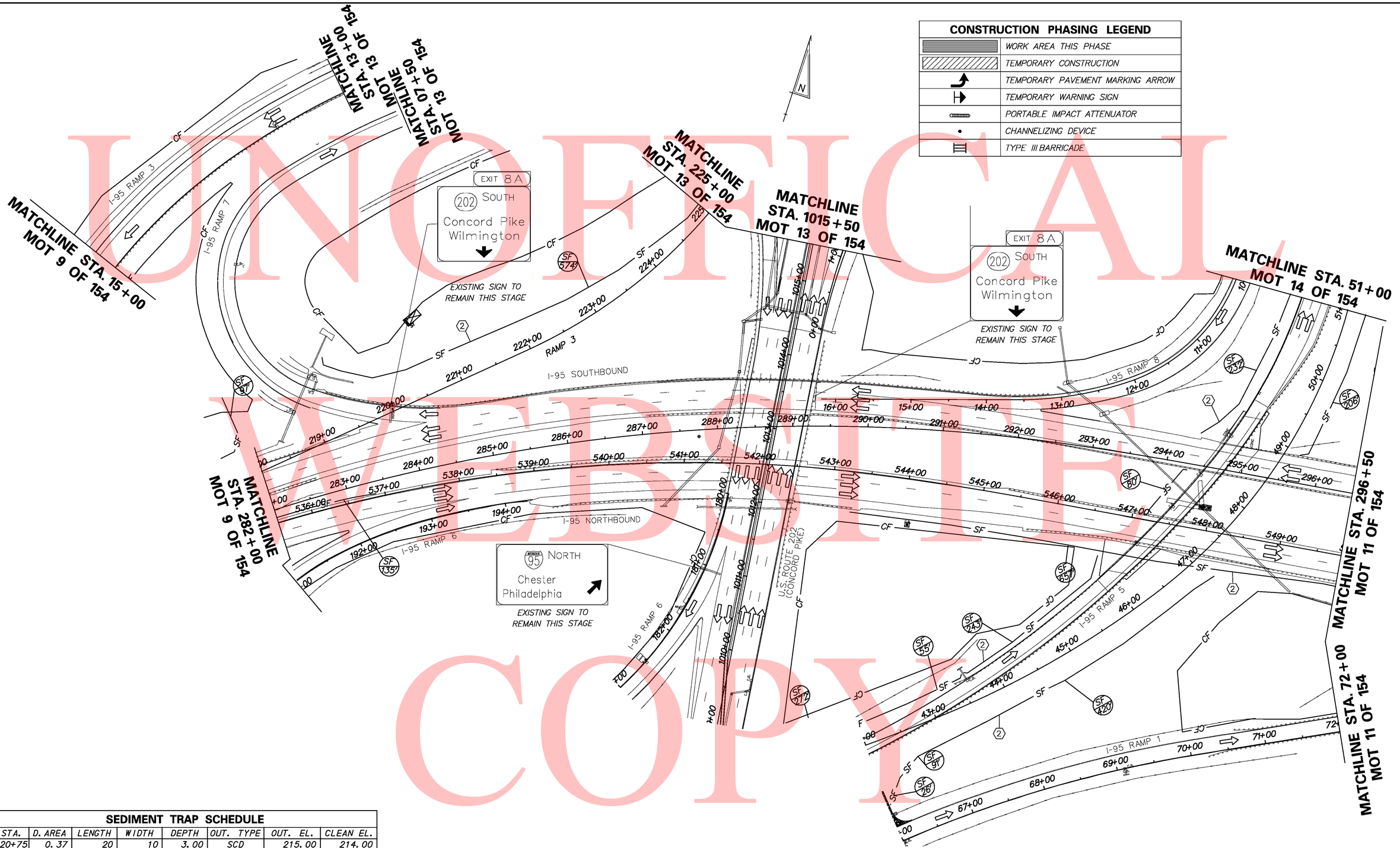

CONSTRUCTION PHASING LEGEND	
	WORK AREA THIS PHASE
	TEMPORARY CONSTRUCTION
	TEMPORARY PAVEMENT MARKING ARROW
	TEMPORARY WARNING SIGN
	PORTABLE IMPACT ATTENUATOR
	CHANNELIZING DEVICE
	TYPE III BARRICADE

SEDIMENT TRAP SCHEDULE

STA.	D. AREA	LENGTH	WIDTH	DEPTH	OUT. TYPE	OUT. EL.	CLEAN EL.
220+75	0.37	20	10	3.00	SCD	215.00	214.00
277+50	0.85	20	10	3.00	SCD	161.00	160.00
276+75	1.03	20	10	3.00	SCD	160.00	159.00
504+25	2.64	20	10	3.00	SCD	95.00	94.00

UNOFFICIAL WEBSITE COPY

\\highdar1\eng\deldot\1625 (az)\07 (contract 5)\submissions\00-in-progress\mot\sheet files\95mot sht010_PhiStgl.dgn

8/18/2010

DELAWARE DEPARTMENT OF TRANSPORTATION

ADDENDUMS / REVISIONS

SCALE 0 30 60 90 FEET

I-95 & US 202 INTERCHANGE

CONTRACT	BRIDGE NO.	NA
T200510602	DESIGNED BY: DJD / REM	
COUNTY	CHECKED BY: KMC	
NEW CASTLE		

CONSTRUCTION PHASING, MOT & EROSION CONTROL PHASE 1, STAGE 1 MOT 10 OF 139

SHEET NO. 275
TOTAL SHTS. 482

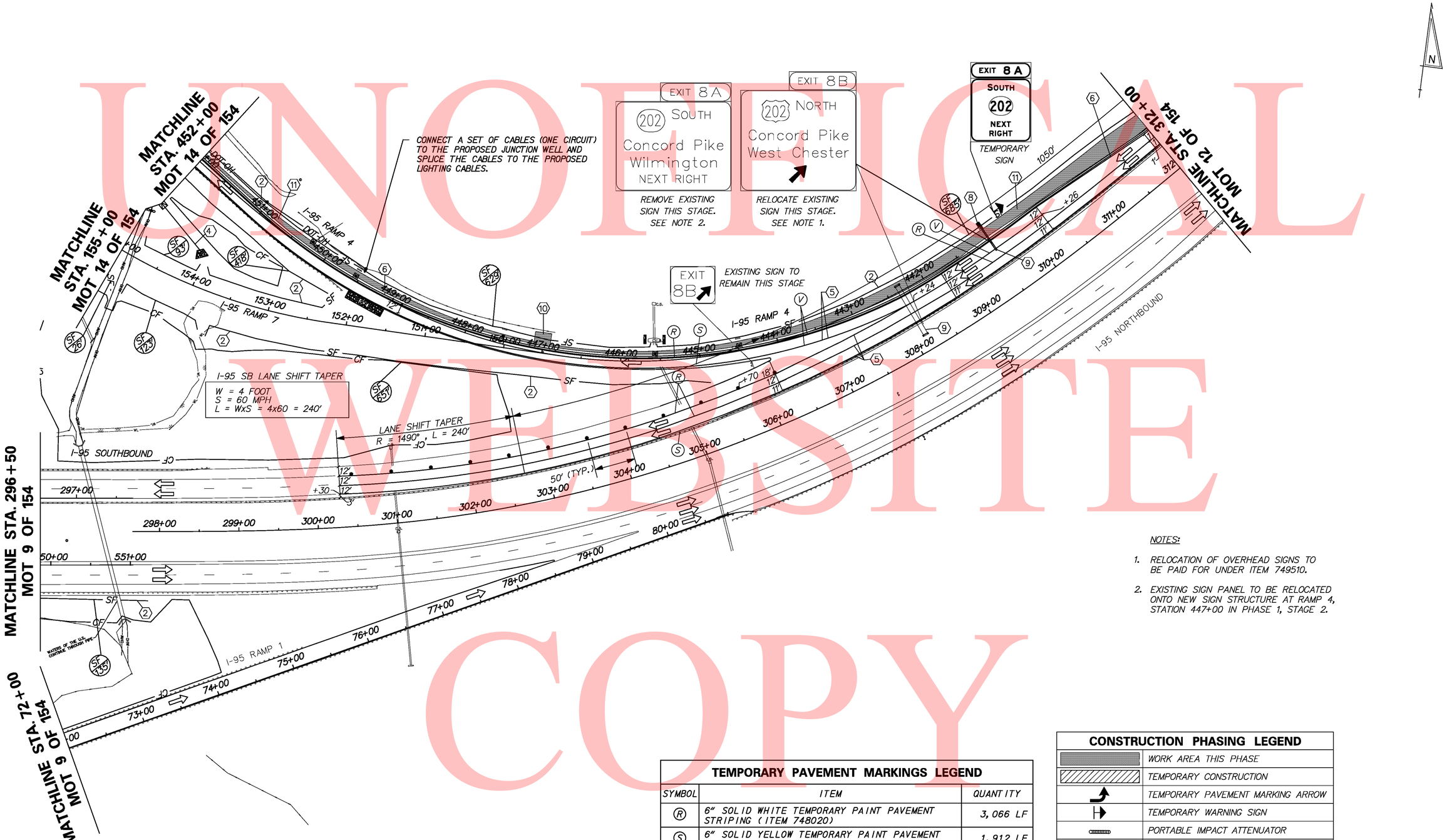

NOTES:

1. RELOCATION OF OVERHEAD SIGNS TO BE PAID FOR UNDER ITEM 749510.
2. EXISTING SIGN PANEL TO BE RELOCATED ONTO NEW SIGN STRUCTURE AT RAMP 4, STATION 447+00 IN PHASE 1, STAGE 2.

TEMPORARY PAVEMENT MARKINGS LEGEND		
SYMBOL	ITEM	QUANTITY
R	6" SOLID WHITE TEMPORARY PAINT PAVEMENT STRIPING (ITEM 748020)	3,066 LF
S	6" SOLID YELLOW TEMPORARY PAINT PAVEMENT STRIPING (ITEM 748020)	1,912 LF
V	12" SOLID WHITE TEMPORARY PAINT PAVEMENT STRIPING (ITEM 748020)	742 LF

CONSTRUCTION PHASING LEGEND	
	WORK AREA THIS PHASE
	TEMPORARY CONSTRUCTION
	TEMPORARY PAVEMENT MARKING ARROW
	TEMPORARY WARNING SIGN
	PORTABLE IMPACT ATTENUATOR
	CHANNELIZING DEVICE
	TYPE III BARRICADE

UNOFFICIAL WEBSITE COPY

\\Highdat1\Eng\DelDOT\4625 (AZ)\07 (Contract 5)\SUBMISSIONS\00-IN-PROGRESS\MOT\Sheet Files\I95motsht01_PHIS+gl.dgn

12/9/2010

DELAWARE DEPARTMENT OF TRANSPORTATION

ADDENDUMS / REVISIONS

SCALE 0 30 60 90 FEET

I-95 & US 202 INTERCHANGE

CONTRACT	BRIDGE NO.	NA
T200510602	DESIGNED BY: DJD / REM	
COUNTY	CHECKED BY: KMC	
NEW CASTLE		

CONSTRUCTION PHASING, MOT & EROSION CONTROL PHASE 1, STAGE 1 MOT 11 OF 139

SHEET NO. 276

TOTAL SHTS. 482

TEMPORARY PAVEMENT MARKINGS LEGEND		
SYMBOL	ITEM	QUANTITY
(R)	6" SOLID WHITE TEMPORARY PAINT PAVEMENT STRIPING (ITEM 748020)	858 LF
(S)	6" SOLID YELLOW TEMPORARY PAINT PAVEMENT STRIPING (ITEM 748020)	429 LF

CONSTRUCTION PHASING LEGEND	
	WORK AREA THIS PHASE
	TEMPORARY CONSTRUCTION
	TEMPORARY PAVEMENT MARKING ARROW
	TEMPORARY WARNING SIGN
	PORTABLE IMPACT ATTENUATOR
	CHANNELIZING DEVICE
	TYPE III BARRICADE

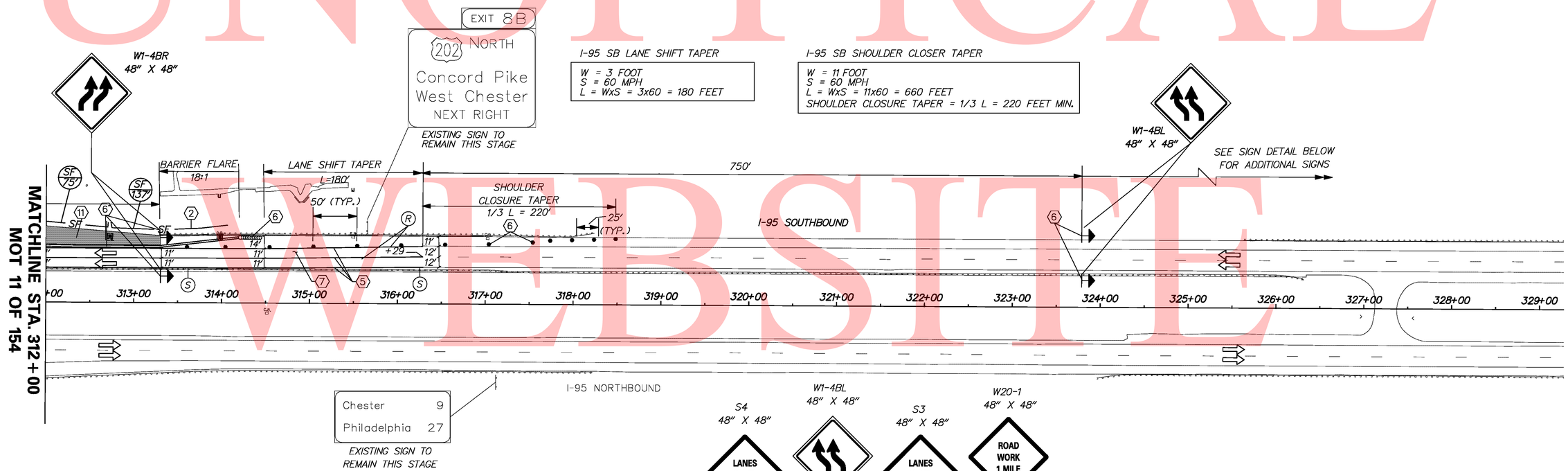

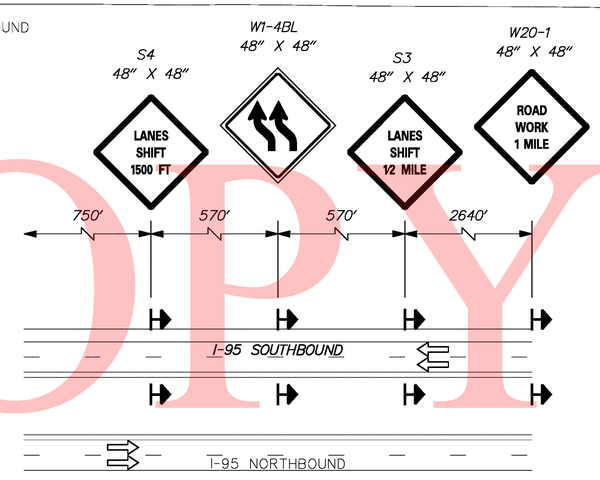

ADVANCE WARNING SIGN DETAIL

UNOFFICAL WEBSITE COPY

\\highdot\eng\deldot\462S (az)\07 (contract 5)\submissions\00-in-progress\mot\sheet files\I95motsht02_PHIS^gi.dgn

8/18/2010

DELAWARE DEPARTMENT OF TRANSPORTATION

ADDENDUMS / REVISIONS

SCALE 0 30 60 90 FEET

I-95 & US 202 INTERCHANGE

CONTRACT	BRIDGE NO.	NA
T200510602	DESIGNED BY: DJD / REM	
COUNTY		
NEW CASTLE	CHECKED BY: KMC	

CONSTRUCTION PHASING, MOT & EROSION CONTROL PHASE 1, STAGE 1 MOT 12 OF 139

SHEET NO. 277

TOTAL SHTS. 482

CONSTRUCTION PHASING LEGEND	
	WORK AREA THIS PHASE
	TEMPORARY CONSTRUCTION
	TEMPORARY PAVEMENT MARKING ARROW
	TEMPORARY WARNING SIGN
	PORTABLE IMPACT ATTENUATOR
	CHANNELIZING DEVICE
	TYPE III BARRICADE

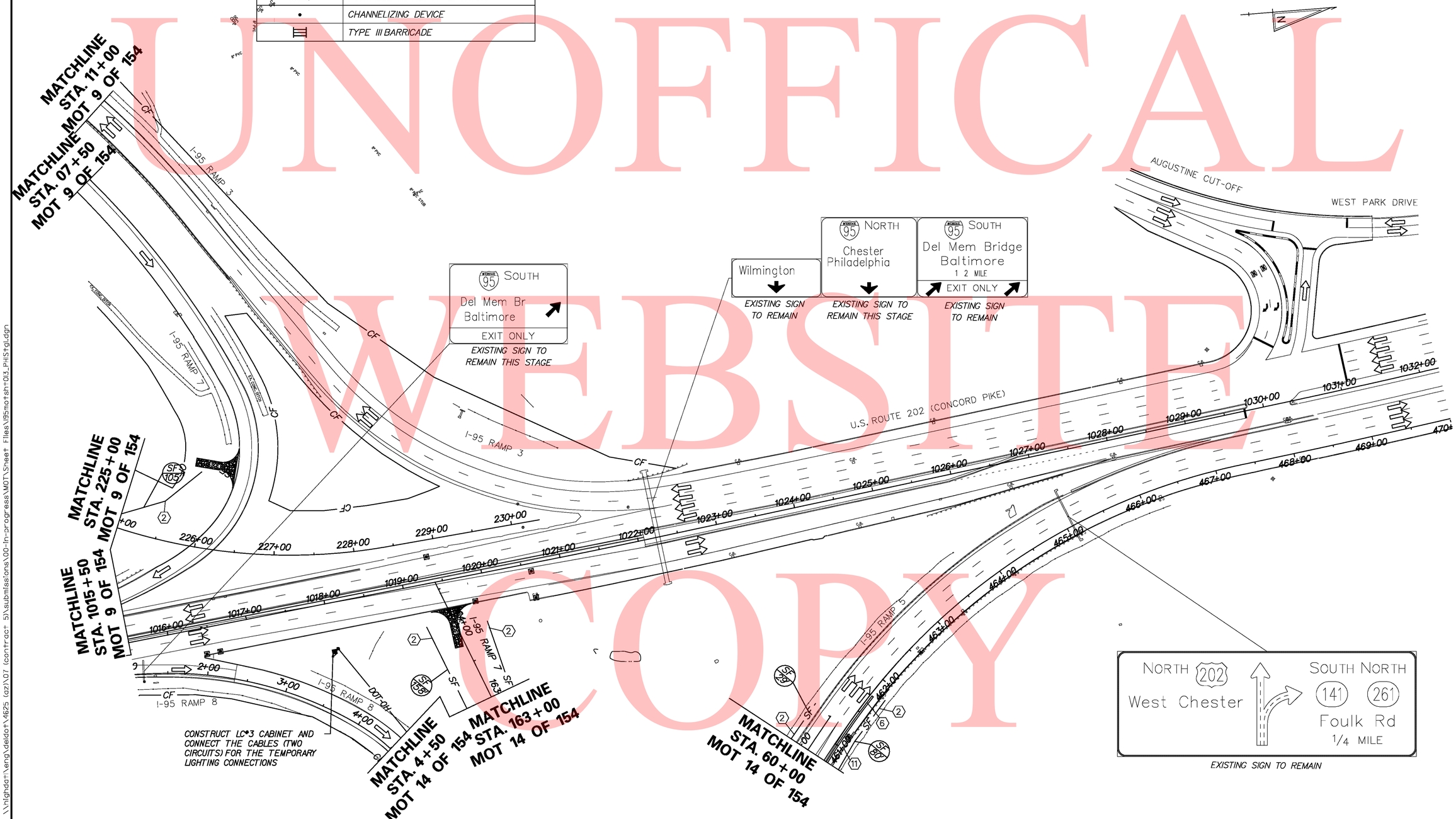

UNOFFICIAL WEBSITE COPY

\\nighdat\eng\deldot\4625 (az)\07 (contract 5)\submissions\00-in-progress\MOT\Sheet Files\I95motsht013_PHIStgl.dgn

12/9/2010

DELAWARE DEPARTMENT OF TRANSPORTATION	ADDENDUMS / REVISIONS	SCALE 0 30 60 90 FEET	I-95 & US 202 INTERCHANGE	CONTRACT T200510602	BRIDGE NO. NA	CONSTRUCTION PHASING, MOT & EROSION CONTROL PHASE 1, STAGE 1 MOT 13 OF 139	SHEET NO. 278
				COUNTY NEW CASTLE	DESIGNED BY: DJD / REM		TOTAL SHTS. 482
					CHECKED BY: KMC		

TEMPORARY PAVEMENT MARKINGS LEGEND		
SYMBOL	ITEM	QUANTITY
R	6" SOLID WHITE TEMPORARY PAINT PAVEMENT STRIPING (ITEM 748020)	542 LF
S	6" SOLID YELLOW TEMPORARY PAINT PAVEMENT STRIPING (ITEM 748020)	819 LF
V	12" SOLID WHITE TEMPORARY PAINT PAVEMENT STRIPING (ITEM XXXXXX)	277 LF

CONSTRUCTION PHASING LEGEND	
	WORK AREA THIS PHASE
	TEMPORARY CONSTRUCTION
	TEMPORARY PAVEMENT MARKING ARROW
	TEMPORARY WARNING SIGN
	PORTABLE IMPACT ATTENUATOR
	CHANNELIZING DEVICE
	TYPE III BARRICADE

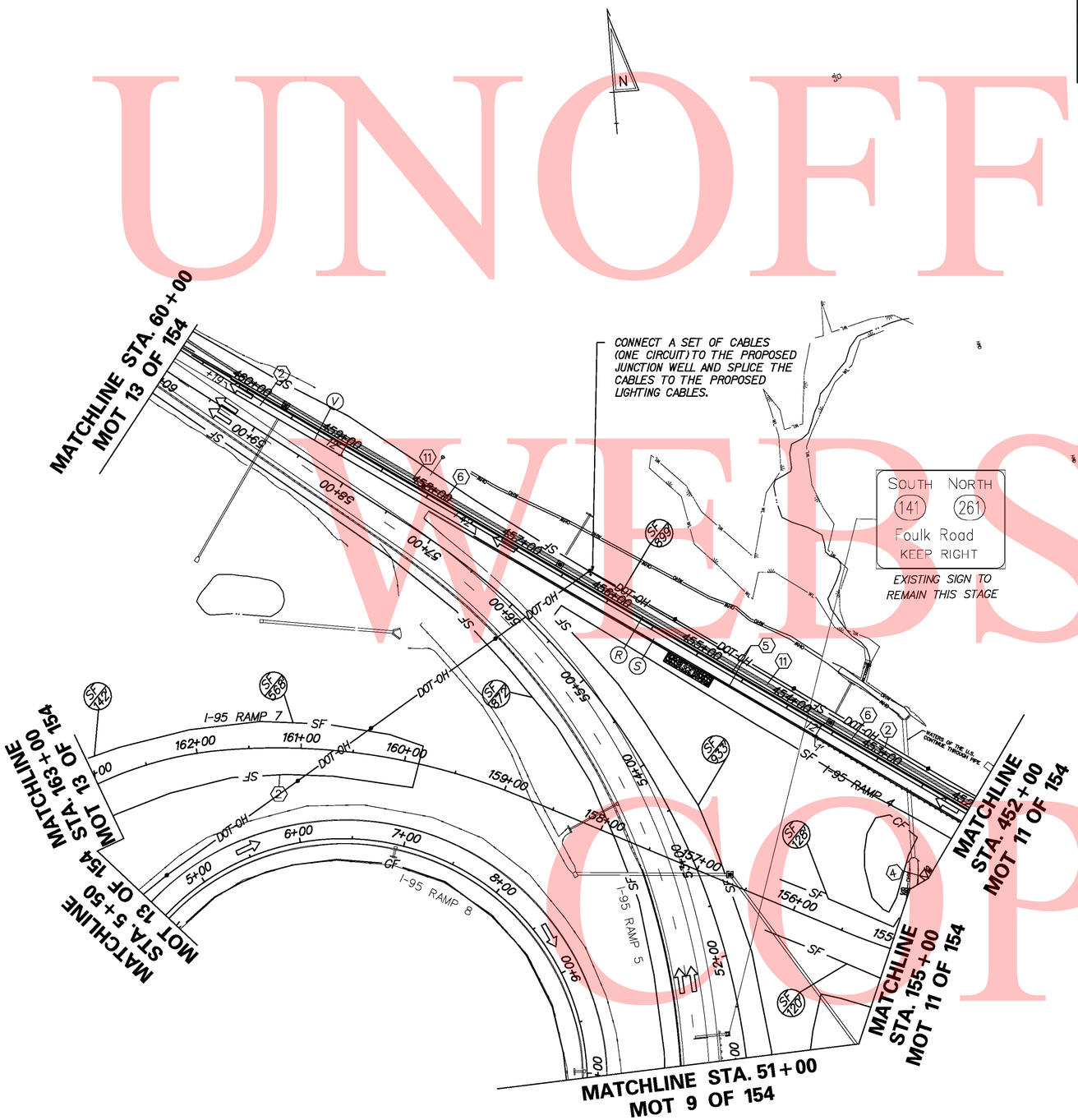

UNOFFICIAL WEBSITE COPY

\\nighdat\eng\deldot\4625 (az)\07 (contract 5)\submissions\00-in-progress\MOT\Sheet Files\I95motsht014_PHIStgl.dgn

12/9/2010

DELAWARE DEPARTMENT OF TRANSPORTATION	ADDENDUMS / REVISIONS	SCALE 0 30 60 90 FEET	I-95 & US 202 INTERCHANGE	CONTRACT T200510602	BRIDGE NO. NA	CONSTRUCTION PHASING, MOT & EROSION CONTROL PHASE 1, STAGE 1 MOT 14 OF 139	SHEET NO. 279
				COUNTY NEW CASTLE	DESIGNED BY: DJD / REM		TOTAL SHTS. 482
					CHECKED BY: KMC		

SEQUENCE OF CONSTRUCTION

PHASE 1, STAGE 2

(1) INSTALL ALL EROSION AND SEDIMENT CONTROL MEASURES AS SHOWN ON THE PLANS.

(2) STABILIZE ALL DISTURBED AREAS WITH TOP SOIL SEED AND MULCH PRIOR TO THE REMOVAL OF THE SEDIMENT CONTROL DEVICES AS DIRECTED BY THE ENGINEER.

(3) COORDINATE SIGN STRUCTURE WORK OVER THE ROADWAY AND DRAINAGE WORK CROSSING THE ROADWAY WITH ROAD CLOSURES FOR BRIDGE STEEL BEAM ERECTION.

(4) DURING NIGHT WORK HOURS: USING LANE AND SHOULDER CLOSURES IN ACCORDANCE WITH THE CASES LISTED IN THE MOT GENERAL NOTES, REMOVE EXISTING STRIPING ON I-95 NORTHBOUND AND SOUTHBOUND, US 202 NORTHBOUND AND SOUTHBOUND, RAMP 2, RAMP 4 AND RAMP 5, AS NECESSARY, AND REMOVE EXISTING RAISED PAVEMENT MARKERS ON I-95 NORTHBOUND FROM STATION 498+30 TO STATION 503+00 AND ON RAMP 5 FROM STATION 50+50 TO STATION 60+25. PLACE TEMPORARY PAVEMENT STRIPING AS SHOWN UNDER PHASE 1, STAGE 2 TRAFFIC CONTROL USING CASE 23-C FOR I-95 AND RAMPS 2, 4, AND 5 AND CASE 23-B FOR US 202.

(5) USING LANE AND SHOULDER CLOSURES IN ACCORDANCE WITH THE CASES LISTED IN THE MOT GENERAL NOTES, RELOCATE AND INSTALL NEW TEMPORARY CONCRETE BARRIER AND ATTENUATORS AT THE FOLLOWING LOCATIONS:

1. RAMP 4 STATION 444+43 TO STATION 449+00, STATION 450+00 TO STATION 455+50, AND STATION 456+50 TO STATION 458+40
2. I-95 SOUTHBOUND STATION 302+18 TO STATION 306+80
3. I-95 SOUTHBOUND STATION 503+25 TO STATION 505+90
4. I-95 SOUTHBOUND STATION 481+54 TO STATION 483+00
5. I-95 NORTHBOUND STATION AT DELAWARE AVENUE ON-RAMP
6. I-95 NORTHBOUND STATION 501+04 TO RAMP 2 STATION 100+34
7. US 202 SOUTHBOUND STATION 1006+49 TO STATION 1010+61
8. US 202 NORTHBOUND STATION 1006+23 TO STATION 1012+33
9. RAMP 5 STATION 25+11 TO STATION 41+00, STATION 40+30 TO STATION 45+50 AND STATION 51+16 TO STATION 57+65
10. RELOCATE PORTABLE IMPACT ATTENUATOR FROM I-95 SOUTHBOUND STATION 314+19 TO I-95 SOUTHBOUND STATION 306+80
11. INSTALL PORTABLE IMPACT ATTENUATORS AT:
    - A. I-95 NORTHBOUND AT DELAWARE AVENUE ON-RAMP
    - B. I-95 NORTHBOUND STATION 501+04
    - C. I-95 SOUTHBOUND STATION 483+00
    - D. I-95 SOUTHBOUND STATION 505+88
    - E. RAMP 5 STATION 25+11
    - F. RAMP 5 STATION 40+30
    - G. RAMP 5 STATION 51+16
    - H. RAMP 4 STATION 444+43
    - I. RAMP 4 STATION 450+00
    - J. RAMP 4 STATION 456+50
    - K. US 202 NORTHBOUND STATION 1006+23
    - L. US 202 SOUTHBOUND STATION 1006+49

(6) SHIFT TRAFFIC TO NEW LANES DESIGNATED FOR PHASE 1, STAGE 2.

RAMP 7 EXCAVATION

(7) EXCAVATE RAMP 7 FROM STATION 151+50 TO STATION 164+00.

RAMP 4, RAMPS 4/7 GORE AREA AND RAMP 4/I-95 SOUTHBOUND GORE AREA

(8) CONSTRUCT THE LEFT FOUNDATION AND SIGN SUPPORTS FOR PROPOSED SIGN STRUCTURE AT RAMP 4 STATION 447+00 AS SHOWN ON THE SIGN STRUCTURE PLANS.

(9) CONSTRUCT THE LEFT SIDE OF RAMP 4 FROM STATION 444+07 TO STATION 457+92.

(10) CONSTRUCT THE RIGHT SHOULDER OF I-95 SOUTHBOUND FROM STATION 302+58 TO STATION 306+28.

(11) CLOSE AND DETOUR RAMP 4 IN ACCORDANCE WITH THE RAMP #6174 DETOUR PLAN AND PERFORM THE FOLLOWING WORK: INSTALL EXISTING "202 SOUTH, CONCORD PIKE, WILMINGTON" SIGN PANEL REMOVED IN STAGE 1 AND NEW OVERLAY PANEL ONTO NEW OVERHEAD TRUSS IN ACCORDANCE WITH THE SIGNING, STRIPING AND CONDUIT PLANS. INSTALL NEW OVERHEAD TRUSS ON PROPOSED SIGN STRUCTURE AT RAMP 4 STATION 447+00. COVER SIGN PANEL UNTIL NEW RAMP 7 IS OPEN TO TRAFFIC IN PHASE 1 STAGE 4.

RAMP 6 ACCELERATION LANE

(12) DURING WEEKEND CLOSURES FOR BEAM ERECTION FOR STRUCTURE NO. 763, CONSTRUCT RAMP 6 ACCELERATION LANE FROM I-95 NORTHBOUND STATION 543+42 TO STATION 546+90.

RAMP 1 DRAINAGE WORK

(13) CLOSE AND DETOUR RAMP 1 IN ACCORDANCE WITH THE RAMP #6171 DETOUR PLAN TO PERFORM DRAINAGE WORK CROSSING THE ROADWAY ON RAMP 1.

I-95 SIGNING WORK

(15) CONSTRUCT THE RIGHT AND LEFT FOUNDATION AND SIGN SUPPORTS FOR PROPOSED SIGN STRUCTURE AT I-95 STATION 503+81 AS SHOWN ON THE SIGN STRUCTURE PLANS PRIOR TO REMOVING THE EXISTING SIGN STRUCTURE AT I-95 STATION 504+40.

(16) CONSTRUCT THE GROUND-MOUNTED I-BEAM SIGN AT I-95 NORTHBOUND STATION 503+50 AS SHOWN ON THE SIGNING, STRIPING AND CONDUIT PLANS.

(17) REMOVE EXISTING GROUND-MOUNTED SIGN "CHESTER, PHILADELPHIA" AT I-95 NORTHBOUND STATION 317+10 AS SHOWN ON THE SIGNING, STRIPING AND CONDUIT PLANS.

(18) DURING THE WEEKEND CLOSURES FOR BEAM ERECTION FOR STRUCTURE NO. 763, PERFORM THE FOLLOWING SIGNING WORK ON I-95 AS SHOWN ON THE SIGNING STRIPING AND CONDUIT PLANS:

1. USING 15-MINUTE STOPPAGES OF TRAFFIC IN ACCORDANCE WITH FIGURE A OF THE TRAFFIC CONTROL PLANS, INSTALL NEW OVERLAY PANEL ON "US 202 CONCORD PIKE" SIGN PANEL ON THE I-95 NORTHBOUND SIDE OF THE 8TH STREET OVERPASS.

2. REMOVE EXISTING OVERHEAD I-BEAM SIGN PANEL "DE 3 MARSH RD, HARVEY RD, DE 92 NAMMANS RD" ON THE I-95 NORTHBOUND SIDE OF THE 18TH STREET OVERPASS AND INSTALL NEW SIGN PANEL "I-95 NORTH PHILADELPHIA" ON THE EXISTING OVERHEAD I-BEAM SUPPORTS. INSTALL THE "DE 3 MARSH RD, HARVEY RD, DE 92 NAMMANS RD" SIGN PANEL ON NEW GROUND-MOUNTED I-BEAM SUPPORTS AT I-95 NORTHBOUND STATION 322+20 DURING THIS STAGE.

(14) 3. CONSTRUCT THE RIGHT AND LEFT FOUNDATIONS AND SIGN SUPPORTS FOR PROPOSED SIGN STRUCTURE AT I-95 SOUTHBOUND STATION 482+80 AS SHOWN ON THE SIGN STRUCTURE PLANS PRIOR TO REMOVING THE EXISTING SIGN STRUCTURE AT I-95 STATION 482+55.

USING THE I-95 OVERHEAD SIGN STRUCTURE WORK DETOUR PLAN IN CONJUNCTION WITH THE STRUCTURE NO. 763 DETOUR PLAN, TEMPORARILY DETOUR ALL I-95 TRAFFIC TO PERFORM THE FOLLOWING SIGNING WORK AS SHOWN ON THE SIGNING STRIPING AND CONDUIT PLANS:

A. REMOVE THE EXISTING OVERHEAD TRUSS FROM EXISTING SIGN STRUCTURE AT I-95 STATION 482+55. REMOVE THE EXISTING SIGN PANELS ON THE I-95 SOUTHBOUND SIDE OF THE EXISTING TRUSS AND INSTALL THE SIGN PANELS ON THE I-95 SOUTHBOUND SIDE OF THE NEW OVERHEAD TRUSS. INSTALL THE NEW OVERHEAD TRUSS ON NEW SIGN STRUCTURE AT I-95 STATION 482+80.

B. REMOVE THE EXISTING OVERHEAD TRUSS FROM EXISTING SIGN STRUCTURE AT I-95 STATION 504+40. REMOVE THE EXISTING SIGN PANELS ON THE I-95 SOUTHBOUND SIDE OF THE EXISTING TRUSS AND INSTALL THE SIGN PANELS ON THE I-95 SOUTHBOUND SIDE OF THE NEW OVERHEAD TRUSS. INSTALL THE NEW OVERHEAD TRUSS ON NEW SIGN STRUCTURE AT I-95 STATION 503+81.

C. REMOVE THE EXISTING CANTILEVER AT I-95 NORTHBOUND STATION 518+36.

D. REMOVE EXISTING OVERHEAD SIGN STRUCTURE AT I-95 NORTHBOUND STATION 522+20.

RAMP 5 SIGNING WORK

(19) CONSTRUCT THE RIGHT AND LEFT FOUNDATIONS AND SIGN SUPPORTS FOR PROPOSED SIGN STRUCTURE AT RAMP 5 STATION 26+20 AS SHOWN ON THE SIGN STRUCTURE PLANS PRIOR TO REMOVING THE EXISTING SIGN STRUCTURE AT RAMP 5 STATION 29+20.

(20) CONSTRUCT THE FOUNDATION AND SIDE SUPPORT FOR NEW CANTILEVER STRUCTURE AT RAMP 5 STATION 51+05 AS SHOWN ON THE SIGN STRUCTURE PLANS.

(21) DURING NIGHT CLOSURES FOR BEAM ERECTION FOR STRUCTURE NO. 762, USING 15-MINUTE STOPPAGES OF TRAFFIC IN ACCORDANCE WITH FIGURE A OF THE TRAFFIC CONTOL PLANS, INSTALL NEW OVERLAY PANEL ON THE "I-95 SOUTH, DEL MEM BRIDGE, BALTIMORE" SIGN PANEL AT US 202 NORTHBOUND STATION 1216+88.

(22) DURING WEEKEND CLOSURES FOR BEAM ERECTION FOR STRUCTURE NO.763 PERFORM THE FOLLOWING SIGNING WORK ON RAMP 5 AS SHOWN ON THE SIGNING, STRIPING AND CONDUIT PLANS:

1. REMOVE THE EXISTING CANTILEVER AT RAMP 5 STATION 51+25 AND RELOCATE EXISTING SIGN TO PROPOSED CANTILEVER AT STATION 51+05 AS SHOWN ON THE SIGN STRUCTURE PLANS.

2. USING THE RAMP #6172 DETOUR PLAN IN CONJUNCTION WITH THE STRUCTURE NO. 763 DETOUR PLAN, TEMPORARILY DETOUR RAMP 2 AND RAMP 5 TO PERFORM THE FOLLOWING SIGNING WORK AS SHOWN ON THE SIGNING STRIPING AND CONDUIT PLANS:
   A. REMOVE THE EXISTING OVERHEAD TRUSS FROM THE EXISTING SIGN STRUCTURE AT RAMP 5 STATION 29+20. REMOVE THE EXISTING SIGN PANELS FROM THE EXISTING TRUSS AND INSTALL THE SIGN PANELS ON THE NEW OVERHEAD TRUSS.

   B. INSTALL THE NEW OVERHEAD TRUSS ON THE NEW SIGN STRUCTURE AT RAMP 5 STATION 26+20.

I-95 NORTHBOUND, RAMP 2 AND RAMP 5

(23) CONSTRUCT THE RIGHT SIDE OF I-95 NORTHBOUND / RAMP 2 FROM I-95 NORTHBOUND STATION 502+96 TO RAMP 2 STATION 100+34. COORDINATE DRAINAGE WORK CROSSING RAMP 2 WITH THE RAMP 2 AND RAMP 5 CLOSURES FOR THE SIGNING WORK AT RAMP 5 STATION 26+20 AND STATION 29+20.

(24) CONSTRUCT THE PROPOSED STORMWATER MANAGEMENT BASIN ALONG RAMP 2 AND US 202 SOUTHBOUND.

(25) CONSTRUCT THE LEFT SIDE OF RAMP 5 FROM STATION 28+00 TO STATION 40+44, THE FULL-WIDTH OF RAMP 5 FROM STATION 45+00 TO STATION 54+50, AND THE LEFT SIDE OF RAMP 5 FROM STATION 54+50 TO STATION 57+17.

(26) CONSTRUCT TEMPORARY PAVEMENT ON RAMP 5 FROM STATION 40+50 TO 46+54 AS SHOWN ON THE RAMP 5 TEMPORARY PAVEMENT PLANS IN THE PHASE 1 STAGE 2 TRAFFIC CONTROL PLANS.

RAMP 5 STRUCTURE WORK

(27) CONSTRUCT THE LEFT SIDE OF STRUCTURE NO. 762 (RAMP 5 OVER US 202) AS SHOWN ON THE STRUCTURE PLANS. ERECT BEAMS FOR LEFT SIDE OF STRUCTURE NO. 762 IN ACCORDANCE WITH THE FOLLOWING REQUIREMENTS:

1. PERFORM WORK DURING THE HOURS INDICATED IN THE MOT GENERAL NOTES FOR THIS ACTIVITY.

2. CLOSE AND DETOUR US 202 NORTHBOUND, U.S. 202 SOUTHBOUND AND RAMP 5 IN ACCORDANCE WITH THE STRUCTURE NO. 762 DETOUR PLAN.

3. ERECT BEAMS

(28) CONSTRUCT STRUCTURE NO. 763 (RAMP 5 OVER I-95) AS SHOWN ON THE STRUCTURE PLANS. ERECT BEAMS FOR STRUCTURE NO. 763 IN ACCORDANCE WITH THE FOLLOWING REQUIREMENTS:

1. PERFORM WORK DURING THE HOURS INDICATED IN THE MOT GENERAL NOTES FOR THIS ACTIVITY.

2. IMMEDIATELY PRIOR TO INSTALLING THE STRUCTURE NO. 763 DETOUR, DURING NIGHT WORK HOURS, USING CASE 7 OF THE TRAFFIC CONTROL MANUAL, CLOSE THE LANE ADJACENT TO THE EXISTING MEDIAN ON BOTH DIRECTIONS OF U.S. 202 TO REMOVE THE EXISTING MEDIAN FROM STATION 1006+07 TO STATION 1006+87.

3. INSTALL SIGNS AND DEVICES IN ACCORDANCE WITH MOT DETAIL B IN THE PHASE 1, STAGE 2 TRAFFIC CONTROL PLANS.

4. INSTALL SIGNAL EQUIPMENT AT US 202 AND RAMP 2 INTERSECTION AS SHOWN ON CONCORD PIKE (US 202) & I-95 NB OFF RAMP 2 MOT PHASE 1, STAGE 2 INTERIM SIGNAL PLAN SIGNAL 1 OF 4.

5. CLOSE AND DETOUR I-95 NORTHBOUND, I-95 SOUTHBOUND, RAMP 6, RAMP 8, RAMP 7 AND RAMP 5 IN ACCORDANCE WITH THE STRUCTURE NO. 763 DETOUR PLAN AND THE I-95 TO I-495 DETOUR PLAN. CONVERT THE US 202 AND RAMP 2 SIGNAL TO TEMPORARY OPERATION IN ACCORDANCE WITH THE CONCORD PIKE (US 202) & I-95 NB OFF RAMP 2 MOT PHASE 1, STAGE 2 INTERIM SIGNAL PLAN SIGNAL 1 OF 4.

6. ERECT BEAMS.

7. AT THE END OF THE BEAM ERECTION WEEKEND, OPEN ALL ROADS BACK TO TRAFFIC. CONVERT THE US 202 AND RAMP 2 SIGNAL BACK TO NORMAL OPERATION AS SHOWN ON THE CONCORD PIKE (US 202) & I-95 NB OFF RAMP 2 MOT ULTIMATE SIGNAL PLAN SIGNAL 2 OF 4. INSTALL TUBULAR MARKERS IN THE US 202 MEDIAN FROM STATION 1006+07 TO STATION 1006+87 AND COVER SIGNS AS SHOWN ON MOT DETAIL C IN THE PHASE 1, STAGE 2 TRAFFIC CONTROL PLANS.

(29) CONSTRUCT STRUCTURE NO. 764 (RAMP 5 OVER NEW RAMP 7) AS SHOWN ON THE STRUCTURE PLANS. ERECT BEAMS FOR STRUCTURE NO. 764 IN ACCORDANCE WITH THE FOLLOWING REQUIREMENTS:

1. PERFORM WORK DURING THE HOURS INDICATED IN THE MOT GENERAL NOTES FOR THIS ACTIVITY.

2. UTILIZE THE OPTION 1 DETOUR OR OPTION 2 DETOUR AS DESCRIBED IN THE MOT GENERAL NOTES, THE RULD SPECIAL PROVISION AND THE TRANSPORTATION MANAGMENT PLAN, AS DIRECTED BY THE ENGINEER.

3. ERECT BEAMS

UNOFFICIAL WEBSITE COPY

\\Highdatl\Eng\DelDOT\4625 (AZ)\07 (Contract 5)\SUBMISSIONS\00-IN-PROGRESS\MOT\Sheet Files\I95motsht015_PHIStg2_Notes.dgn
11/4/2010

TYPICAL SECTIONS

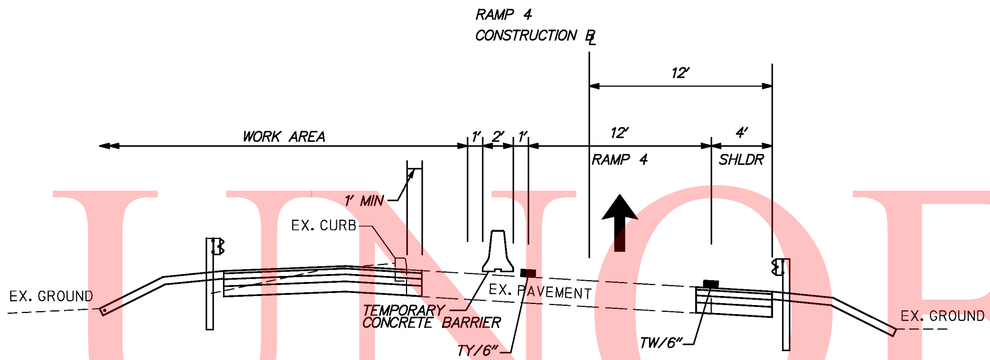

RAMP 4

STA 444+06.63 TO STA 458+41.50

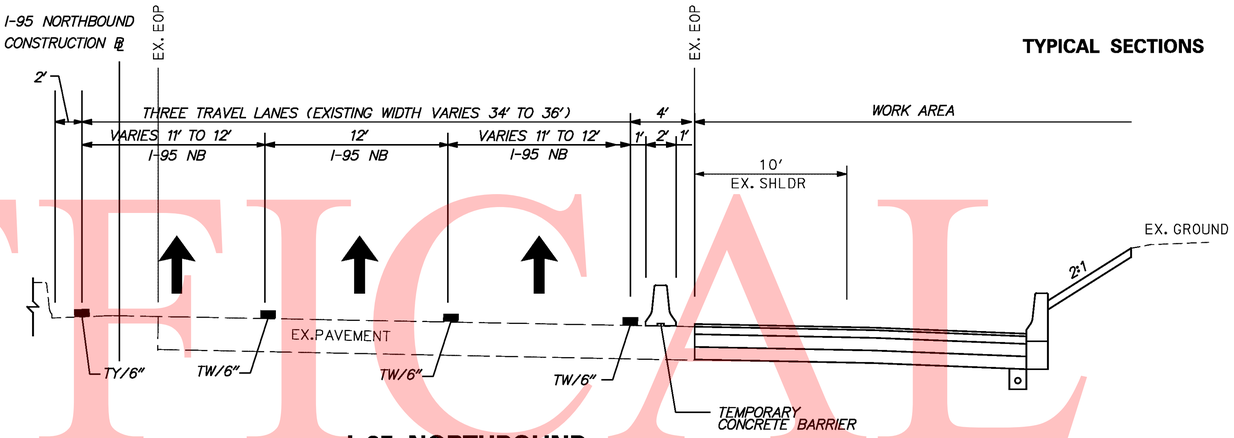

I-95 NORTHBOUND

STA 502+96 TO STA 520+77.72 (RAMP 5 STA 20+77.78)

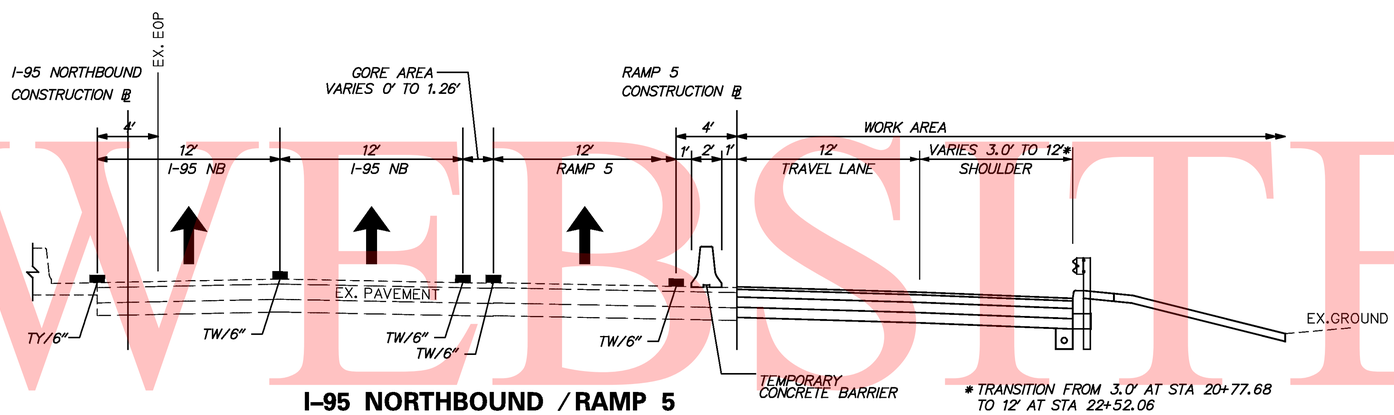

I-95 NORTHBOUND / RAMP 5

RAMP 5 STA 20+77.78 (I-95 NB STA 520+77.72) TO RAMP 5 STA 22+73.87 (RAMP 2 STA 89+88.73)

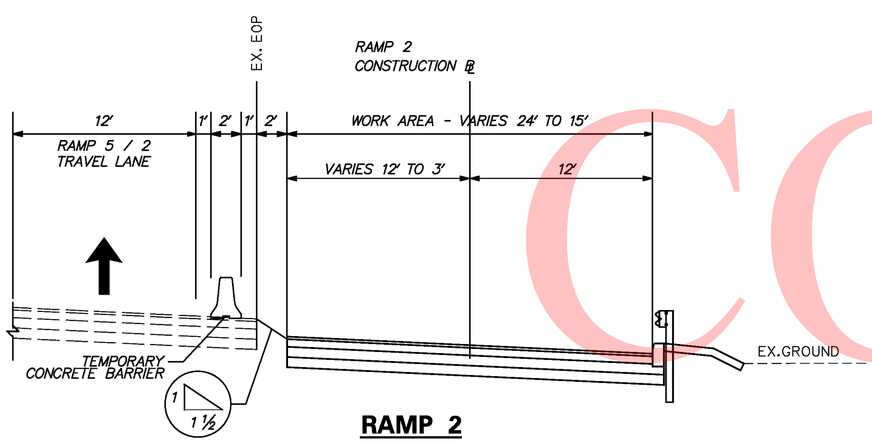

RAMP 2

STA 89+88.73 (RAMP 5 STA 22+73.87) TO STA 95+01.72

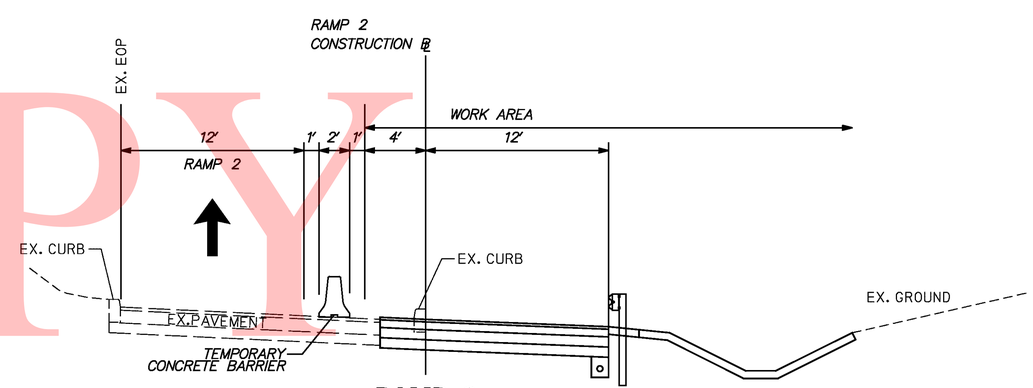

RAMP 2

STA 95+01.72 TO 100+33.73

UNOFFICIAL WEBSITE COPY

\\highdat\eng\deldot\4625 (az)\07 (contract 5)\submissions\00-in-progress\mot\sheet files\I95motsht06_PHIStg2_Typical.dgn

8/18/2010

DELAWARE DEPARTMENT OF TRANSPORTATION	ADDENDUMS / REVISIONS	SCALE 0 30 60 90 FEET	I-95 & US 202 INTERCHANGE	CONTRACT T200510602	BRIDGE NO. NA	CONSTRUCTION PHASING, MOT & EROSION CONTROL PHASE 1 STAGE 2 MOT 16 OF 139	SHEET NO. 281
				COUNTY NEW CASTLE	DESIGNED BY: DJD / REM		TOTAL SHTS. 482
					CHECKED BY: KMC		

TYPICAL SECTIONS

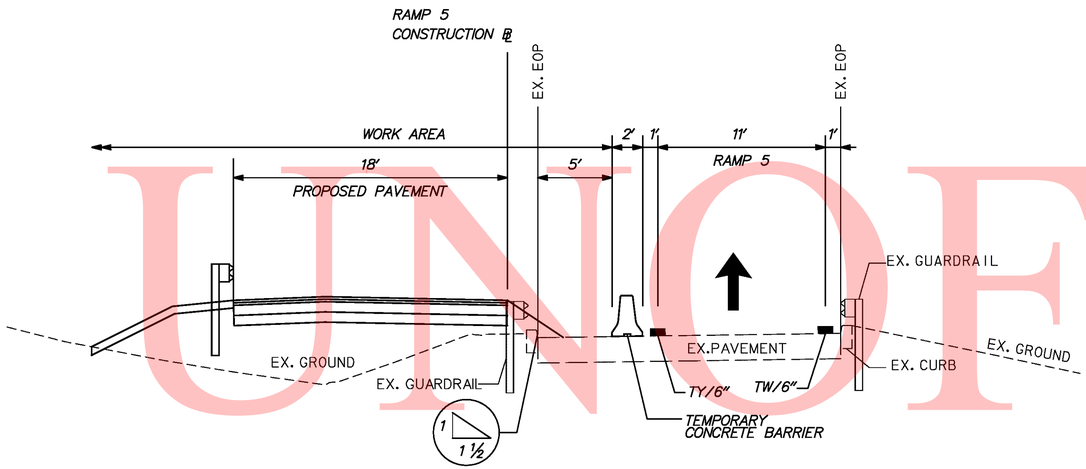

RAMP 5

STA. 28+00 TO STA. 35+97

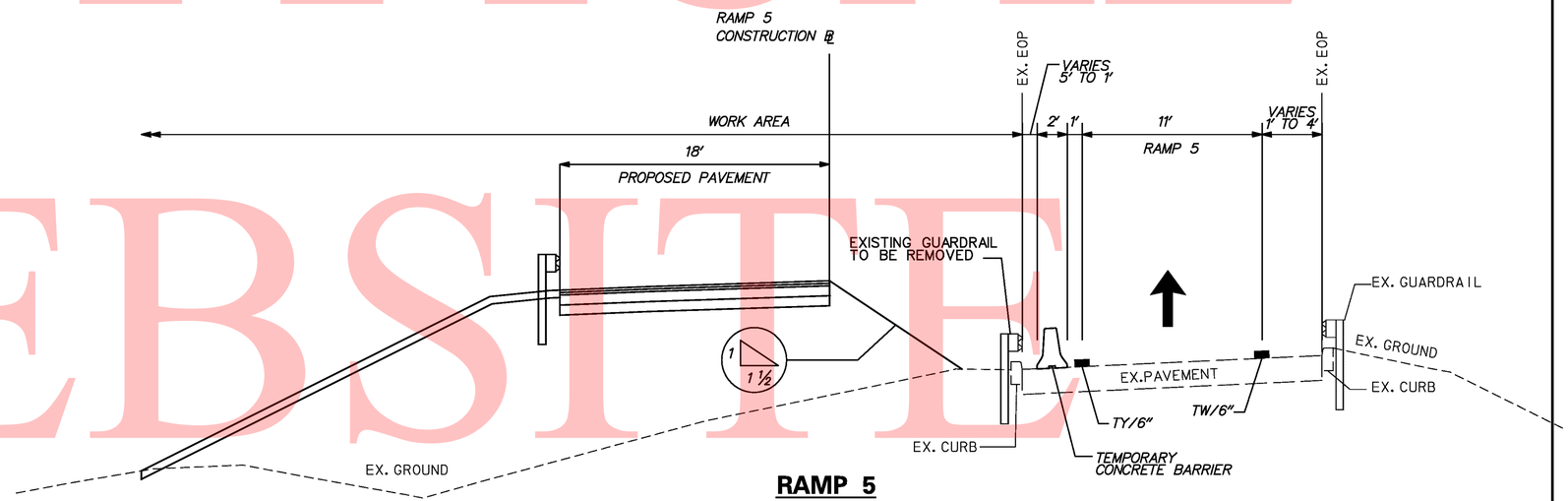

RAMP 5

STA. 35+97 TO STA. 39+24

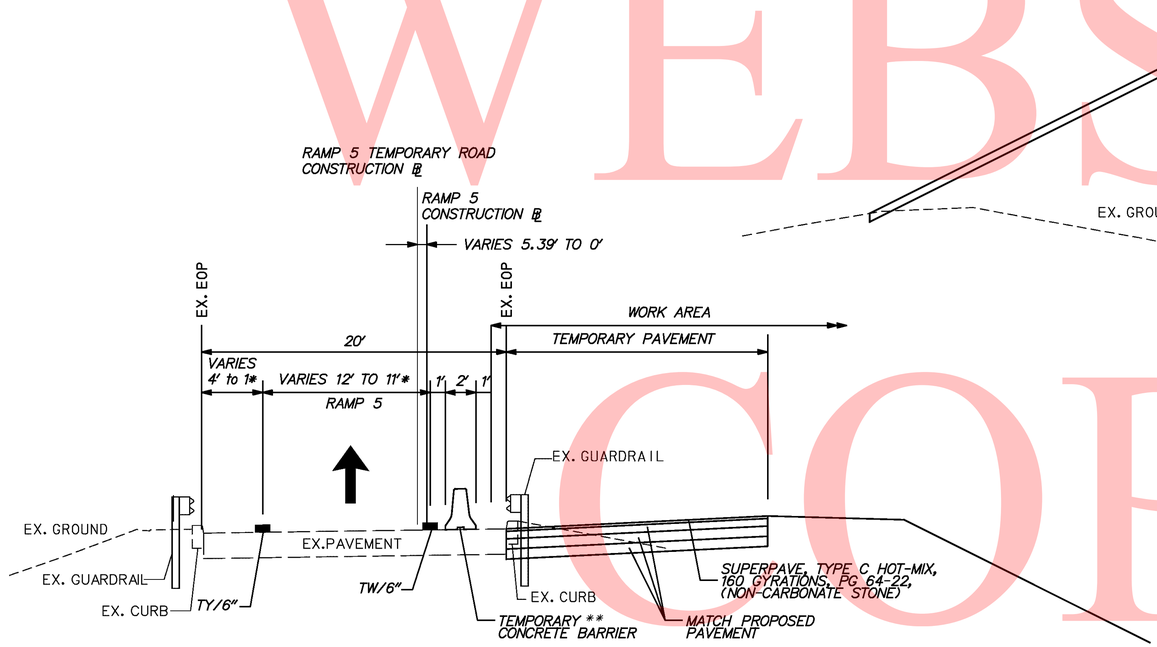

RAMP 5

STA. 39+24 TO STA. 45+00

* FROM STATION 40+30.51 TO STATION 42+00

** TEMPORARY CONCRETE BARRIER ENDS AT STA 45+60

UNOFFICAL WEBSITE COPY

\\Highcart\Eng\Dell0T\4625 (AZ)\07 (Contract 5)\SUBMISSIONS\00-IN-PROGRESS\MOT\Sheet Files\95motsht017_PHIStg2_Typical2.dgn
12/9/2010

DELAWARE DEPARTMENT OF TRANSPORTATION	ADDENDUMS / REVISIONS	SCALE 0 30 60 90 FEET	I-95 & US 202 INTERCHANGE	CONTRACT T200510602	BRIDGE NO. NA	CONSTRUCTION PHASING, MOT & EROSION CONTROL PHASE 1 STAGE 2 MOT 17 OF 139	SHEET NO. 282
				COUNTY NEW CASTLE	DESIGNED BY: DJD / REM		TOTAL SHTS. 482
					CHECKED BY: KMC		

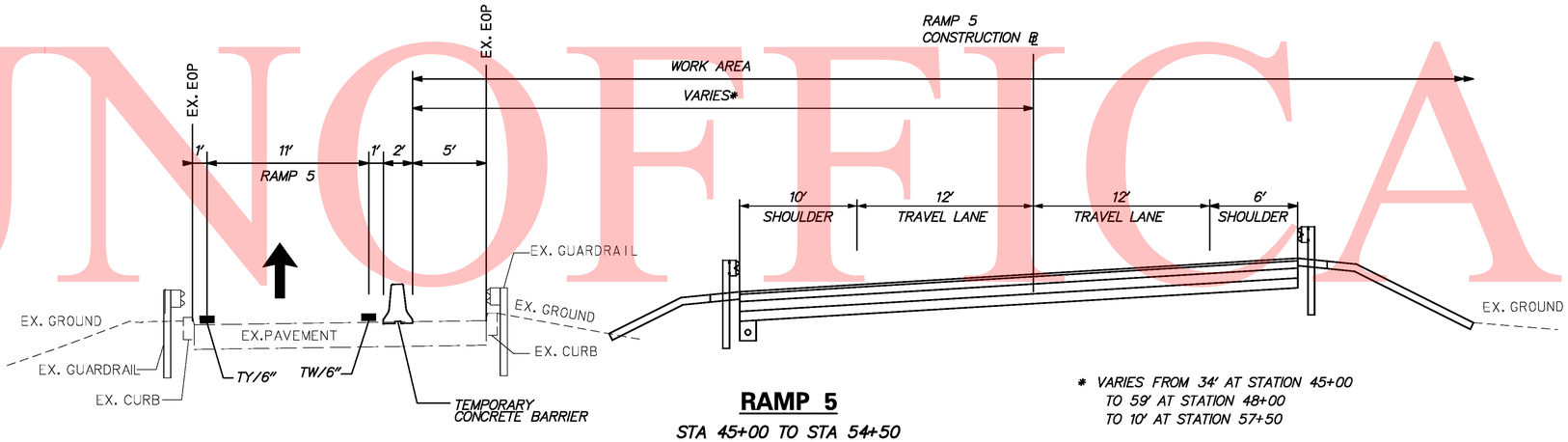

RAMP 5

STA 45+00 TO STA 54+50

* VARIES FROM 34' AT STATION 45+00
TO 59' AT STATION 48+00
TO 10' AT STATION 57+50

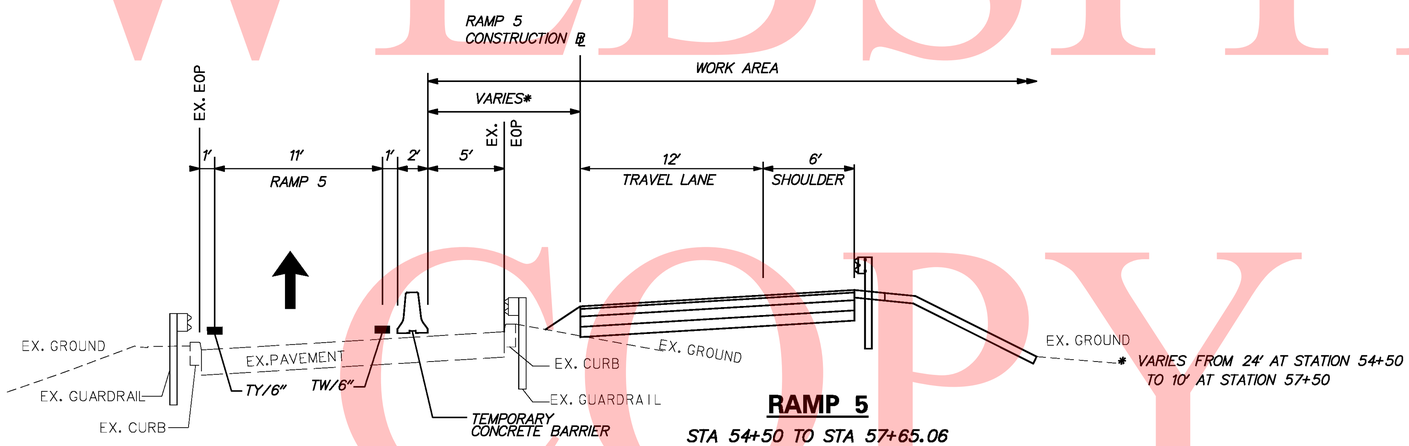

RAMP 5

STA 54+50 TO STA 57+65.06

* VARIES FROM 24' AT STATION 54+50
TO 10' AT STATION 57+50

UNOFFICAL WEBSITE COPY

\\Highcart\Eng\Dell0T\4625 (A2)\07 (Contract 5)\SUBMISSIONS\00-IN-PROGRESS\MOT\Sheet Files\95mot+sh+018_PHIS+g2_Typical3.dgn
12/9/2010

DELAWARE DEPARTMENT OF TRANSPORTATION	ADDENDUMS / REVISIONS	SCALE 0 30 60 90 FEET	I-95 & US 202 INTERCHANGE	CONTRACT T200510602	BRIDGE NO. NA	CONSTRUCTION PHASING, MOT & EROSION CONTROL PHASE 1 STAGE 2 MOT 18 OF 139	SHEET NO. 283
				COUNTY NEW CASTLE	DESIGNED BY: DJD / REM		TOTAL SHTS. 482
					CHECKED BY: KMC		

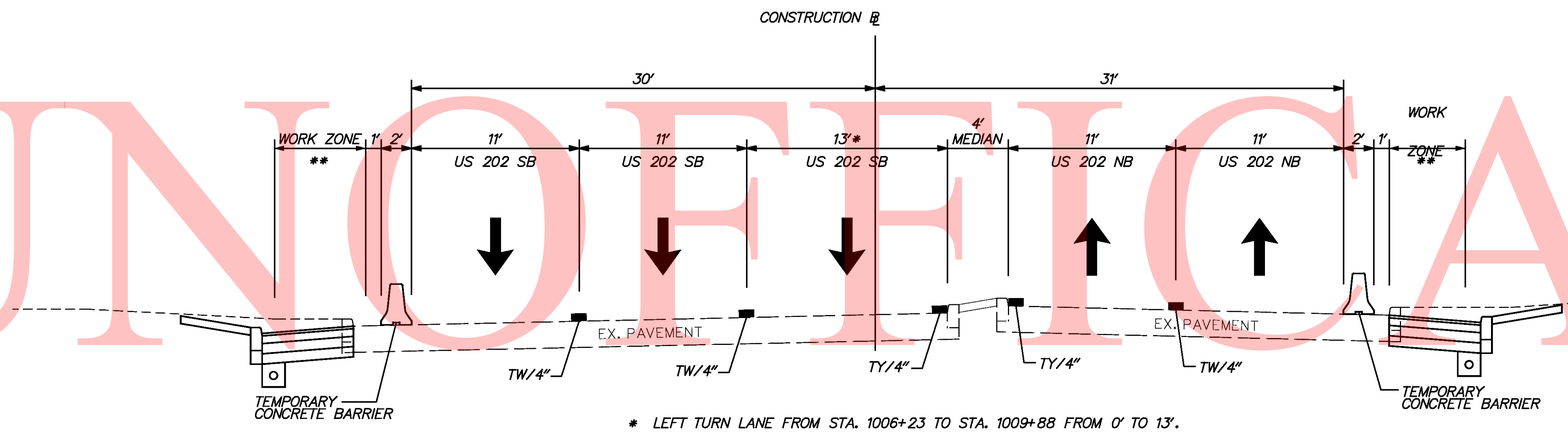

* LEFT TURN LANE FROM STA. 1006+23 TO STA. 1009+88 FROM 0' TO 13'.
** WORK PERFORMED DURING PHASE 1, STAGE 4.

US 202 – PHASE 1, STAGES 2, 3 & 4

STA 1006+23 TO STA 1010+75

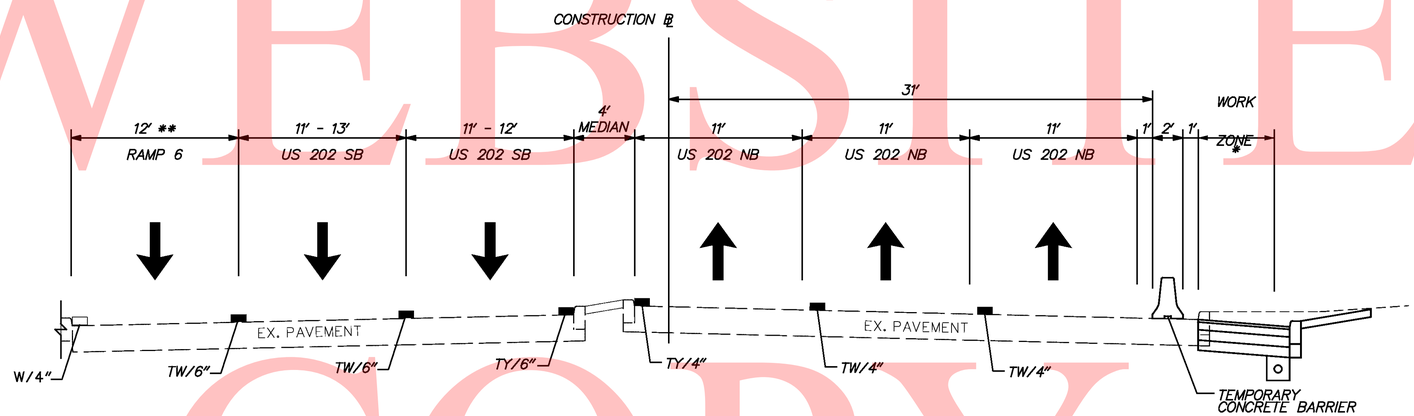

* WORK PERFORMED DURING PHASE 1, STAGE 4.
** RAMP 6 FROM STA. 1011+45 TO STA. 1012+33

US 202 – PHASE 1, STAGES 2, 3 & 4

STA 1010+75 TO STA 1012+33

UNOFFICIAL WEBSITE COPY

\\highdar1\eng\deldot\4625 (az)\07 (contract 5)\submissions\00-in-progress\mot\sheet files\195motsht09_PHIS+g2_Typical4.dgn
8/18/2010

DELAWARE DEPARTMENT OF TRANSPORTATION	ADDENDUMS / REVISIONS	SCALE 0 30 60 90 FEET	I-95 & US 202 INTERCHANGE	CONTRACT T200510602	BRIDGE NO. NA	CONSTRUCTION PHASING, MOT & EROSION CONTROL PHASE 1 STAGE 2 MOT 19 OF 139	SHEET NO. 284
				COUNTY NEW CASTLE	DESIGNED BY: DJD / REM		TOTAL SHTS. 482
					CHECKED BY: KMC		

CONSTRUCTION PHASING LEGEND	
	WORK AREA THIS PHASE
	TEMPORARY CONSTRUCTION
	TEMPORARY PAVEMENT MARKING ARROW
	TEMPORARY WARNING SIGN
	PORTABLE IMPACT ATTENUATOR
	CHANNELIZING DEVICE
	TYPE III BARRICADE

MOT DETAIL A

NOTES:

1. THIS SHEET TO BE USED IF EXISTING GUIDERAIL IS REMOVED FOR SIGN STRUCTURE WORK
2. SIGNS ON THIS SHEET TO BE PAID FOR UNDER ITEM 743525 "TEMPORARY WARNING SIGNS."

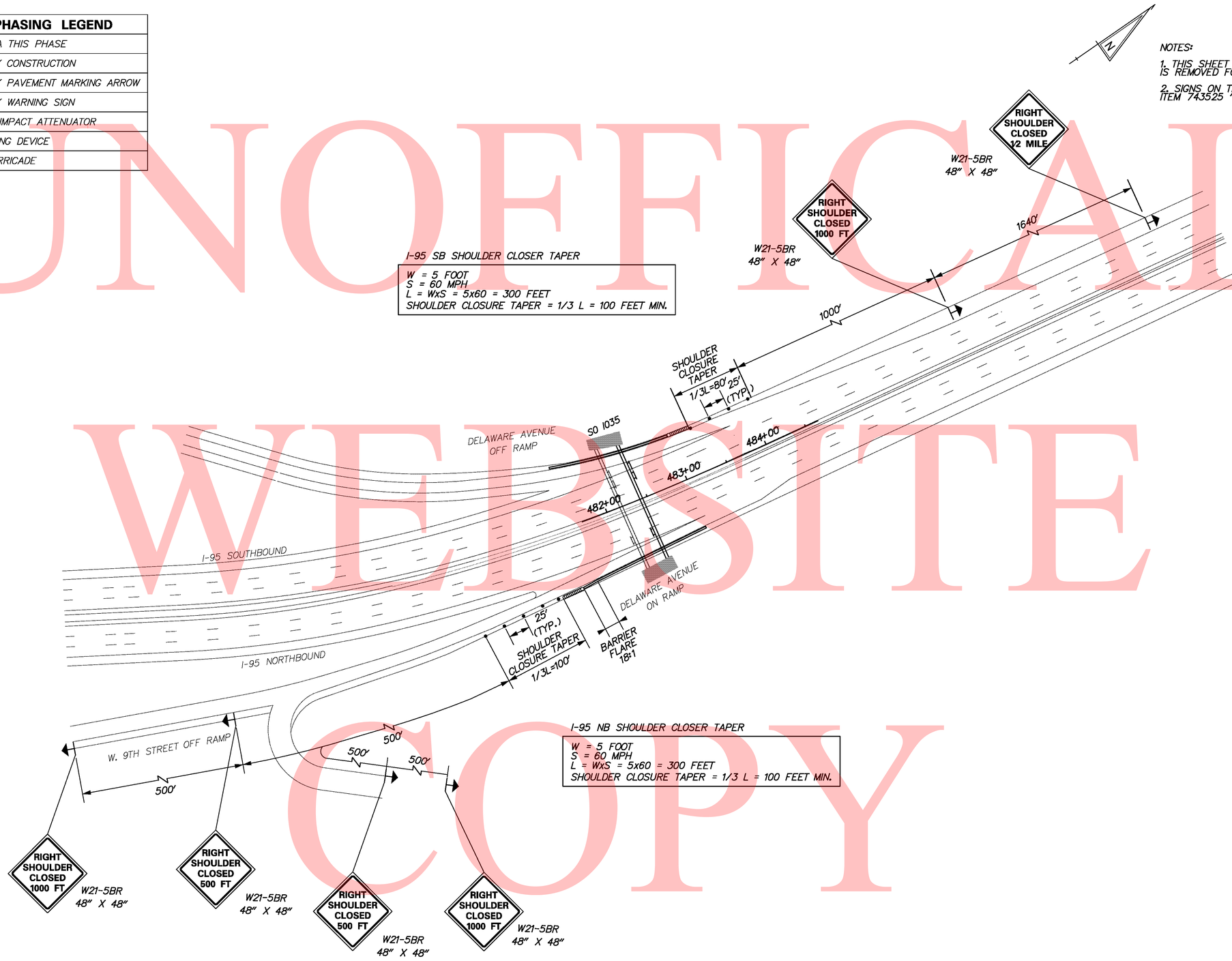

I-95 SB SHOULDER CLOSER TAPER

W = 5 FOOT
S = 60 MPH
L = WxS = 5x60 = 300 FEET
SHOULDER CLOSURE TAPER = 1/3 L = 100 FEET MIN.

I-95 NB SHOULDER CLOSER TAPER

W = 5 FOOT
S = 60 MPH
L = WxS = 5x60 = 300 FEET
SHOULDER CLOSURE TAPER = 1/3 L = 100 FEET MIN.

UNOFFICIAL WEBSITE COPY

\\highdat\eng\deldot\4625 (az)\07 (contract 5)\submissions\00-in-progress\mot\sheet files\I95motsht020_PHIStg2_Detail_A.dgn

11/9/2010

DELAWARE DEPARTMENT OF TRANSPORTATION	ADDENDUMS / REVISIONS	SCALE 0 30 60 90 FEET	I-95 & US 202 INTERCHANGE	CONTRACT T200510602	BRIDGE NO. NA	CONSTRUCTION PHASING, MOT & EROSION CONTROL PHASE 1, STAGE 2 MOT 20 OF 139	SHEET NO. 285
				COUNTY NEW CASTLE	DESIGNED BY: DJD / REM		TOTAL SHTS. 482
					CHECKED BY: KMC		

TEMPORARY PAVEMENT MARKINGS LEGEND

SYMBOL		
G	WHITE TEMPORARY PAINT PAVEMENT SYMBOL (ITEM 748026)	165 SF
S	6" SOLID YELLOW TEMPORARY PAINT PAVEMENT STRIPING (ITEM 748020)	30 LF

CONSTRUCTION PHASING LEGEND

	WORK AREA THIS PHASE
	TEMPORARY CONSTRUCTION
	TEMPORARY PAVEMENT MARKING ARROW
	TEMPORARY WARNING SIGN
	PORTABLE IMPACT ATTENUATOR
	CHANNELIZING DEVICE
	TYPE III BARRICADE

NOTES:

1. SIGNS AND DEVICES SHOWN ON THIS PLAN ARE TO BE IN PLACE DURING WEEKEND DETOURS OF I-95 RAMP 5 IN ACCORDANCE WITH DETOUR PLAN STRUCTURE NO. 763 AND DETOUR PLAN STRUCTURE NO. 764 AS INDICATED IN THE SEQUENCE OF CONSTRUCTION. SEE CONCORD PIKE (US 202) AND I-95 NB OFF RAMP 2 MOT PHASE 1, STAGE 2 INTERIM SIGNAL PLAN PHASE 1, STAGE 2 TEMPORARY SIGNAL PLAN FOR SIGNAL OPERATION.

2. SEE DETOUR PLAN STRUCTURE NO. 763 AND DETOUR PLAN NO. 764 FOR ADDITIONAL SIGNS AND DEVICES.

3. ADDITIONAL SIGNS SHOWN ON THIS PLAN ARE TO BE PAID FOR UNDER ITEM 743525 "TEMPORARY WARNING SIGNS."

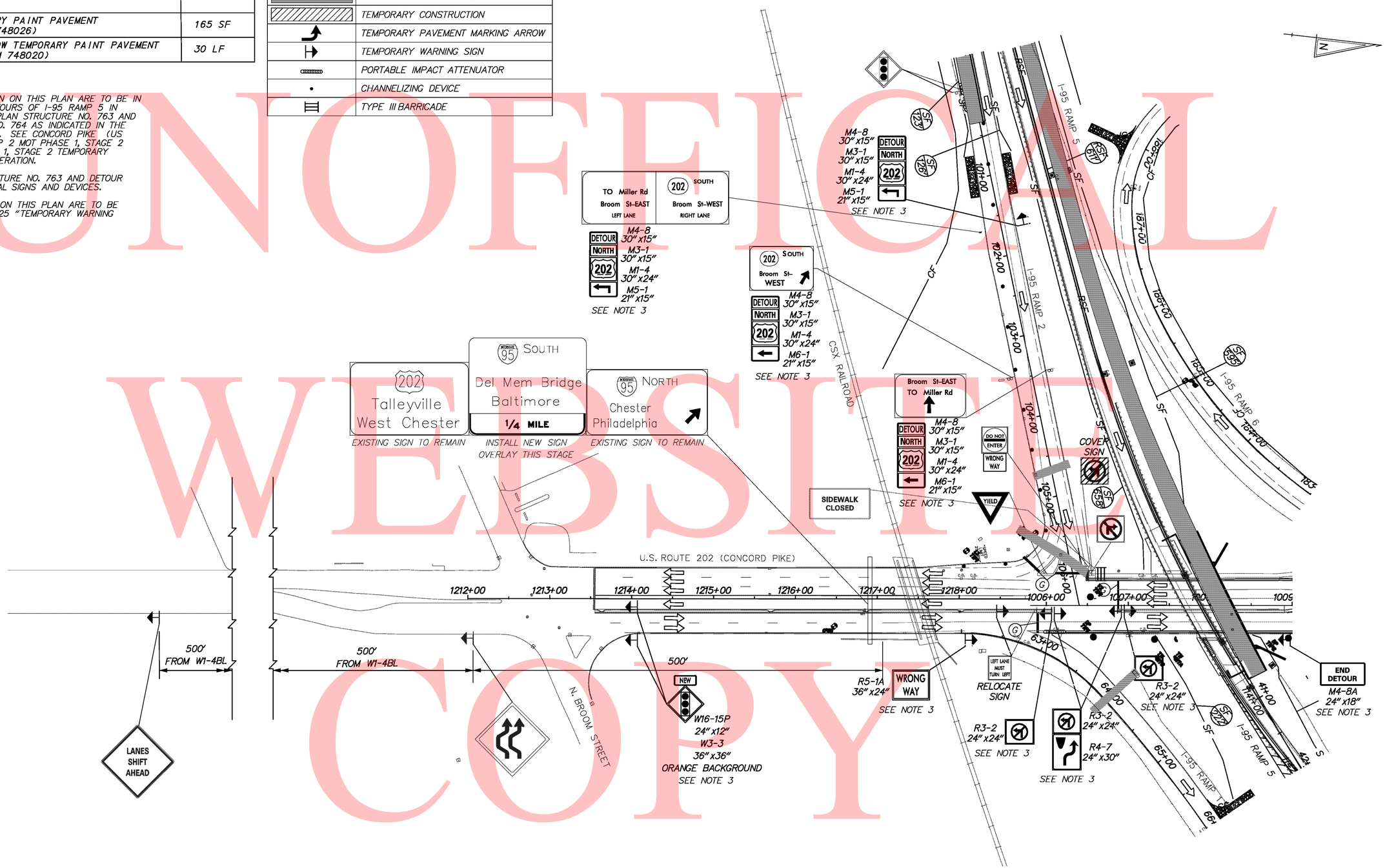

UNOFFICIAL WEBSITE COPY

\\highdar1\eng\deldot\4625 (az)\07 (contract 5)\submissions\00-in-progress\mot\sheet files\I95mot sht02_PHIS+g2_Detail_B.dgn

11/9/2010

DELAWARE DEPARTMENT OF TRANSPORTATION	ADDENDUMS / REVISIONS	SCALE 0 30 60 90 FEET	I-95 & US 202 INTERCHANGE	CONTRACT T200510602	BRIDGE NO. NA	CONSTRUCTION PHASING, MOT & EROSION CONTROL PHASE 1, STAGE 2 MOT 21 OF 139	SHEET NO. 286
				COUNTY NEW CASTLE	DESIGNED BY: DJD / REM		TOTAL SHTS. 482
					CHECKED BY: KMC		

MOT DETAIL C

CONSTRUCTION PHASING LEGEND	
	WORK AREA THIS PHASE
	TEMPORARY CONSTRUCTION
	TEMPORARY PAVEMENT MARKING ARROW
	TEMPORARY WARNING SIGN
	PORTABLE IMPACT ATTENUATOR
	CHANNELIZING DEVICE
	TYPE III BARRICADE

NOTES:

1. SIGNS AND DEVICES SHOWN ON THIS PLAN ARE TO BE IN PLACE DURING THE WEEKDAYS BETWEEN THE WEEKEND DETOURS OF I-95 RAMP 5 IN ACCORDANCE WTIH DETOUR PLAN STRUCTURE NO. 763 AND DETOUR PLAN STRUCTURE NO. 764 AS INDICATED IN THE SEQUENCE OF CONSTRUCTION. SEE CONCORD PIKE (US 202) AND I-95 NB OFF RAMP 2 MOT PHASE 1, STAGE 2 INTERIM SIGNAL PLAN PHASE 1, STAGE 2 FOR SIGNAL OPERATION.

2. SEE DETOUR PLAN STRUCTURE NO. 763 AND DETOUR PLAN STRUCTURE NO. 764 FOR ADDITIONAL SIGNS AND DEVICES.

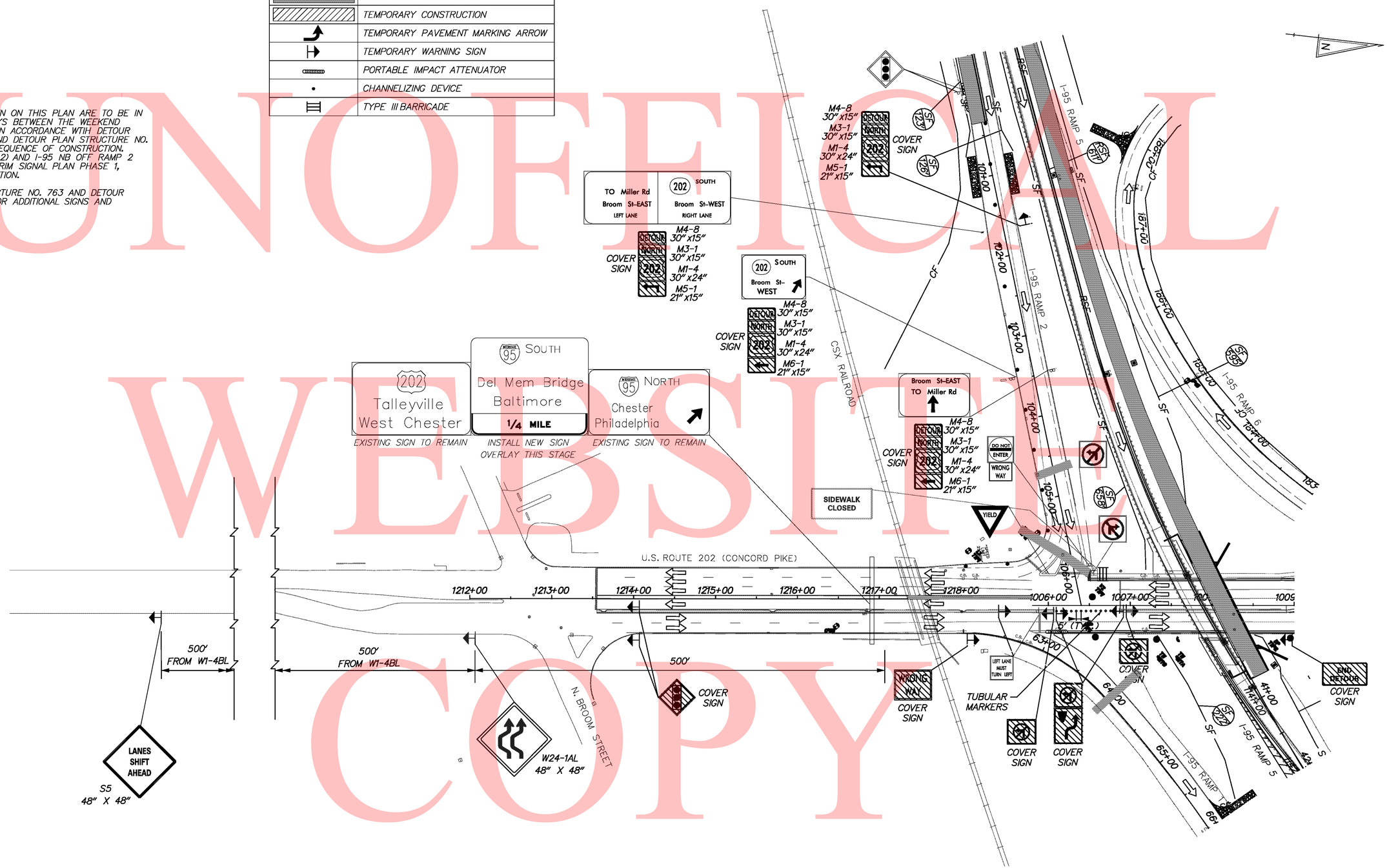

UNOFFICIAL WEBSITE COPY

\\nighdat\eng\deldot\4625 (az)\07 (contract 5)\submissions\00-in-progress\mot\sheet files\I95motsht022_PHIStg2_Detail_C.dgn

11/3/2010

DELAWARE DEPARTMENT OF TRANSPORTATION	ADDENDUMS / REVISIONS	SCALE 0 30 60 90 FEET	I-95 & US 202 INTERCHANGE	CONTRACT T200510602	BRIDGE NO. NA	CONSTRUCTION PHASING, MOT & EROSION CONTROL PHASE 1, STAGE 2 MOT 22 OF 139	SHEET NO. 287
				COUNTY NEW CASTLE	DESIGNED BY: DJD / REM		TOTAL SHTS. 482
					CHECKED BY: KMC		

UNOFICAL WEBSITE COPY

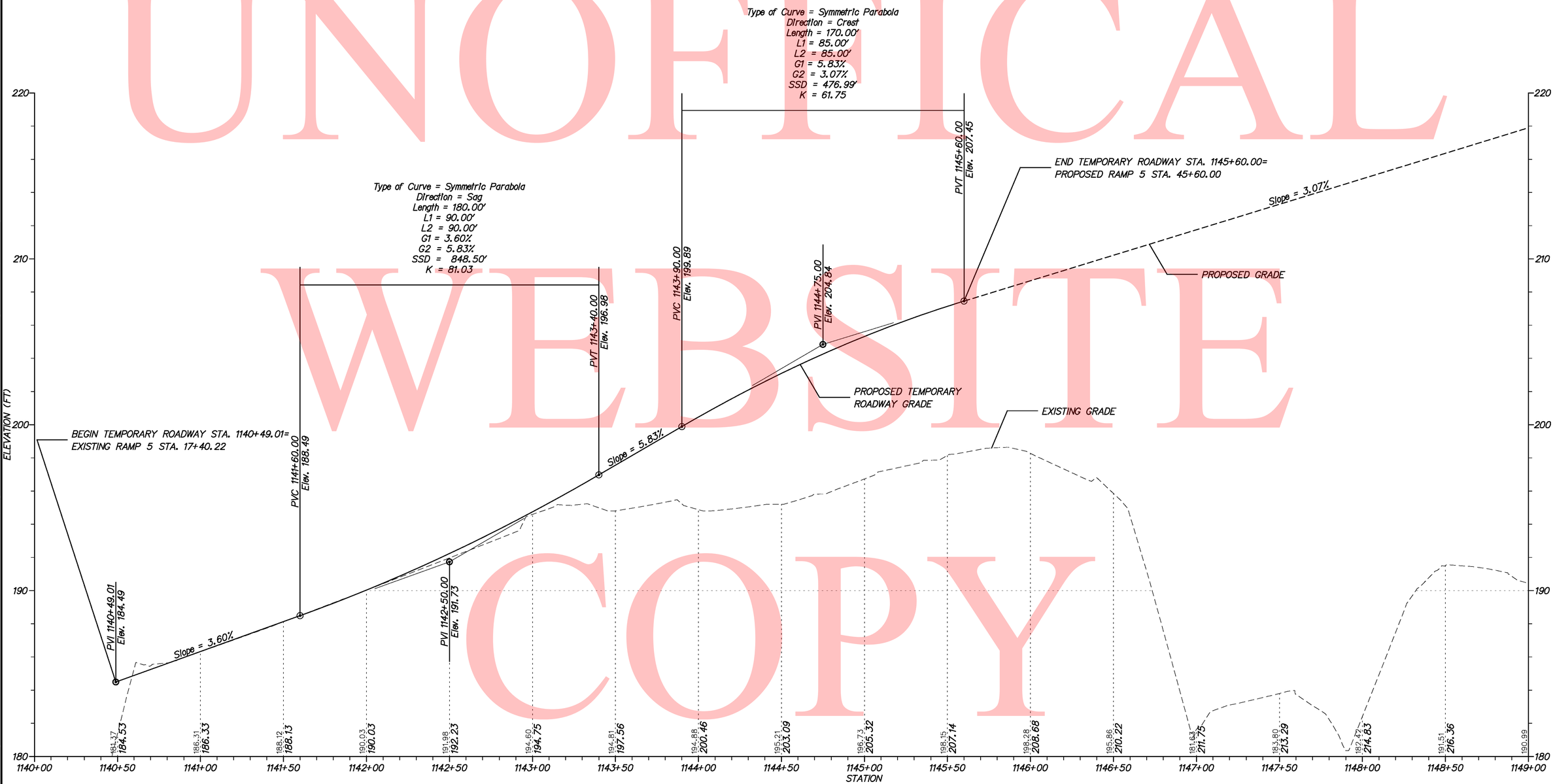

RAMP 5

\\highdot\eng\deldot\4625 (az)\07 (contract 5)\submissions\00-in-progress\mot\sheet files\195motsht023_PHIS+g2_Ramp5tempProfile.dgn

8/18/2010

DELAWARE DEPARTMENT OF TRANSPORTATION	ADDENDUMS / REVISIONS	SCALE 0 30 60 90 FEET	I-95 & US 202 INTERCHANGE	CONTRACT T200510602	BRIDGE NO. NA	CONSTRUCTION PHASING, MOT & EROSION CONTROL PHASE 1, STAGE 2 MOT 23 OF 139	SHEET NO. 288
				COUNTY NEW CASTLE	DESIGNED BY: DJD / REM		TOTAL SHTS. 482
					CHECKED BY: KMC		

RAMP 5 TEMPORARY PAVEMENT HORIZONTAL ALIGNMENT

EXISTING ROAD CIRCULAR CURVE			
	STATION	NORTHING	EASTING
ELEMENT:	CIRCULAR		
PC ()	13+13.6380	642913.6099	620398.6874
PI ()	19+28.6704	643138.1102	620971.2818
CC ()		644247.1633	619875.8335
PCC ()	24+75.5080	643707.8902	621202.8322
RADIUS:		1432.3900	
DELTA:		46°28'29.8042" LEFT	
DEGREE OF CURVATURE (ARC):		4°00'00.0451"	
LENGTH:		1161.8700	
TANGENT:		615.0324	
CHORD:		1130.2788	
MIDDLE ORDINATE:		116.1991	
EXTERNAL:		126.4576	
TANGENT DIRECTION:		N 68°35'27.8158" E	
RADIAL DIRECTION:		S 21°24'32.1842" E	
CHORD DIRECTION:		N 45°21'12.9137" E	
RADIAL DIRECTION:		S 67°53'01.9884" E	
TANGENT DIRECTION:		N 22°06'58.0116" E	

TEMPORARY ROAD CIRCULAR CURVE			
	STATION	NORTHING	EASTING
ELEMENT:	CIRCULAR		
PC (50901)	1142+68.7694	643262.4576	620939.0324
PI ()	1144+54.1880	643377.8135	621084.1980
CC ()		644259.2868	620146.9019
PCC (50005)	1146+37.0179	643529.7804	621190.4341
RADIUS:		1273.2396	
DELTA:		16°34'16.2467" LEFT	
DEGREE OF CURVATURE (ARC):		4°29'59.9993"	
LENGTH:		368.2485	
TANGENT:		185.4185	
CHORD:		366.9663	
MIDDLE ORDINATE:		13.2900	
EXTERNAL:		13.4302	
TANGENT DIRECTION:		N 51°31'39.2909" E	
RADIAL DIRECTION:		S 38°28'20.7091" E	
CHORD DIRECTION:		N 43°14'31.1676" E	
RADIAL DIRECTION:		S 55°02'36.9558" E	
TANGENT DIRECTION:		N 34°57'23.0442" E	

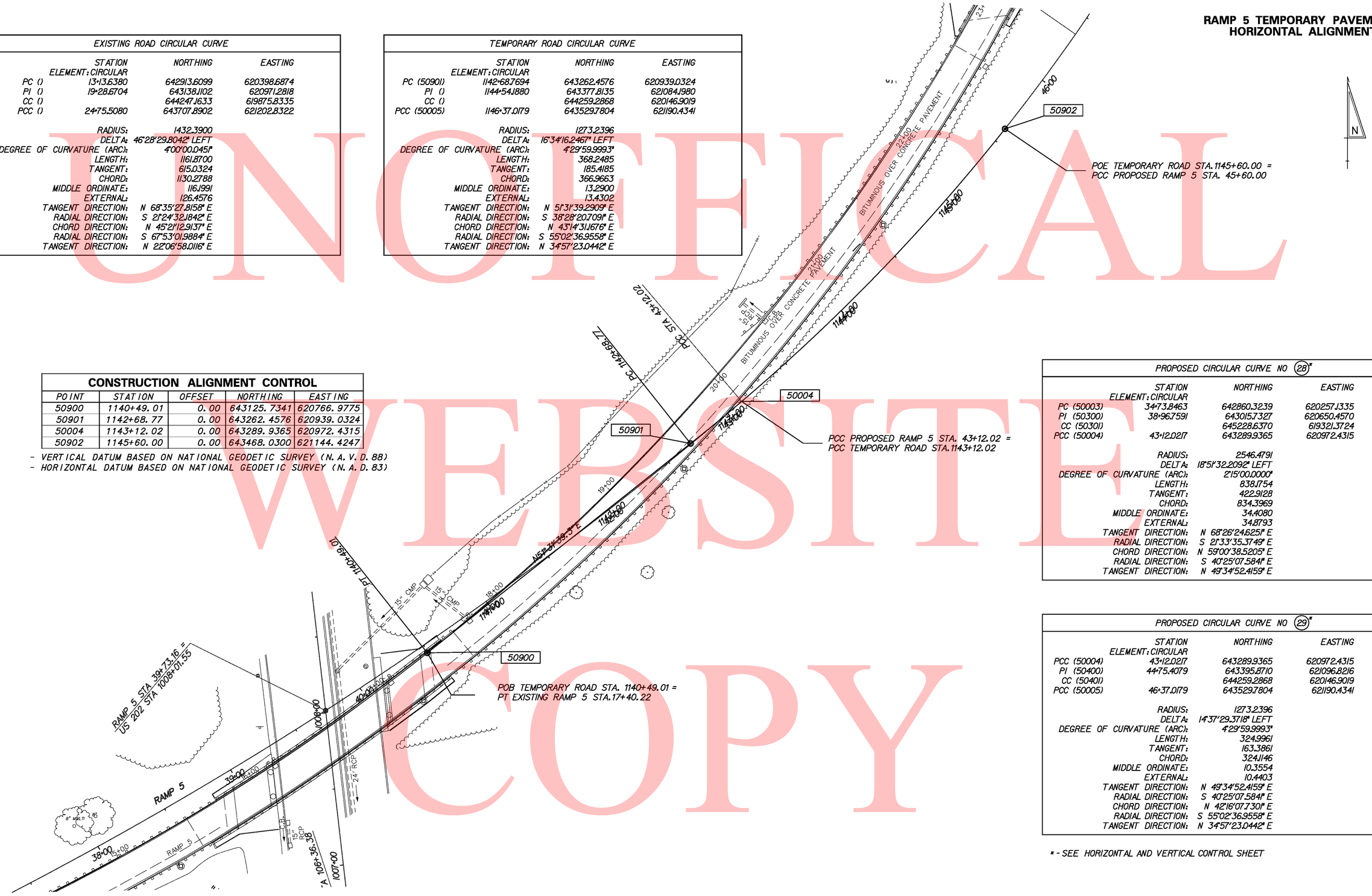

CONSTRUCTION ALIGNMENT CONTROL				
POINT	STATION	OFFSET	NORTHING	EASTING
50900	1140+49.01	0.00	643125.7341	620766.9775
50901	1142+68.77	0.00	643262.4576	620939.0324
50004	1143+12.02	0.00	643289.9365	620972.4315
50902	1145+60.00	0.00	643468.0300	621144.4247

- VERTICAL DATUM BASED ON NATIONAL GEODETIC SURVEY (N.A.V.D.88)
- HORIZONTAL DATUM BASED ON NATIONAL GEODETIC SURVEY (N.A.D.83)

PROPOSED CIRCULAR CURVE NO (28)*			
	STATION	NORTHING	EASTING
ELEMENT:	CIRCULAR		
PC (50003)	34+73.8463	642860.3239	620257.1335
PI (50300)	38+96.7591	643015.7327	620650.4570
CC (50301)		645228.6370	619321.3724
PCC (50004)	43+12.0217	643289.9365	620972.4315
RADIUS:		2546.4791	
DELTA:		18°51'32.2092" LEFT	
DEGREE OF CURVATURE (ARC):		2°15'00.0000"	
LENGTH:		838.1754	
TANGENT:		422.9128	
CHORD:		834.3969	
MIDDLE ORDINATE:		34.4080	
EXTERNAL:		34.8793	
TANGENT DIRECTION:		N 68°26'24.6251" E	
RADIAL DIRECTION:		S 21°33'35.3749" E	
CHORD DIRECTION:		N 59°00'38.5205" E	
RADIAL DIRECTION:		S 40°25'07.5841" E	
TANGENT DIRECTION:		N 49°34'52.4159" E	

PROPOSED CIRCULAR CURVE NO (29)*			
	STATION	NORTHING	EASTING
ELEMENT:	CIRCULAR		
PCC (50004)	43+12.0217	643289.9365	620972.4315
PI (50400)	44+75.4079	643395.8710	621096.8216
CC (50401)		644259.2868	620146.9019
PCC (50005)	46+37.0179	643529.7804	621190.4341
RADIUS:		1273.2396	
DELTA:		14°37'29.3718" LEFT	
DEGREE OF CURVATURE (ARC):		4°29'59.9993"	
LENGTH:		324.9961	
TANGENT:		163.3861	
CHORD:		324.1146	
MIDDLE ORDINATE:		10.3554	
EXTERNAL:		10.4403	
TANGENT DIRECTION:		N 49°34'52.4159" E	
RADIAL DIRECTION:		S 40°25'07.5841" E	
CHORD DIRECTION:		N 42°16'07.7301" E	
RADIAL DIRECTION:		S 55°02'36.9558" E	
TANGENT DIRECTION:		N 34°57'23.0442" E	

* - SEE HORIZONTAL AND VERTICAL CONTROL SHEET

UNOFFICIAL WEBSITE COPY

\\highdat1\eng\deldot\4625 (az)\07 (contract 5)\submissions\00-In-progress\mot\sheet files\195mot sht024_PHIStg2_Ramp5tempAlign.dgn

8/18/2010

DELAWARE DEPARTMENT OF TRANSPORTATION

ADDENDUMS / REVISIONS

SCALE 0 30 60 90 FEET

I-95 & US 202 INTERCHANGE

CONTRACT	BRIDGE NO.	NA
T200510602	DESIGNED BY: DJD / REM	
COUNTY		
NEW CASTLE	CHECKED BY: KMC	

CONSTRUCTION PHASING, MOT & EROSION CONTROL PHASE 1, STAGE 2 MOT 24 OF 139

SHEET NO. 289

TOTAL SHTS. 482

TEMPORARY PAVEMENT MARKINGS LEGEND		
SYMBOL	ITEM	QUANTITY
R	6" SOLID WHITE TEMPORARY PAINT PAVEMENT STRIPING (ITEM 748020)	804 LF
S	6" SOLID YELLOW TEMPORARY PAINT PAVEMENT STRIPING (ITEM 748020)	268 LF

CONSTRUCTION PHASING LEGEND	
	WORK AREA THIS PHASE
	TEMPORARY CONSTRUCTION
	TEMPORARY PAVEMENT MARKING ARROW
	TEMPORARY WARNING SIGN
	PORTABLE IMPACT ATTENUATOR
	CHANNELIZING DEVICE
	TYPE III BARRICADE

NOTES:

1. RELOCATION OF OVERHEAD SIGNS TO BE PAID FOR UNDER ITEM 749510.

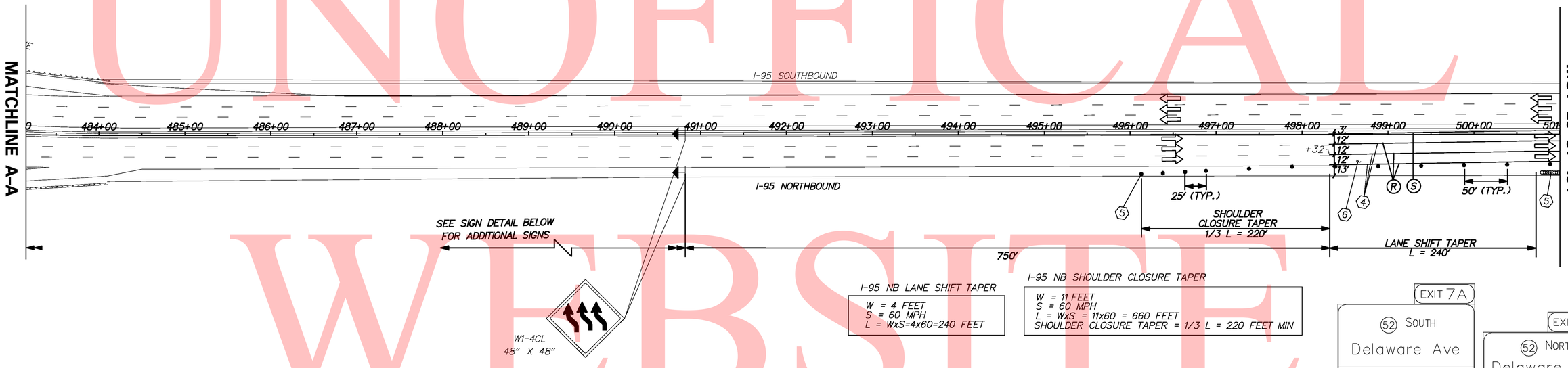

I-95 NB LANE SHIFT TAPER

W = 4 FEET
S = 60 MPH
L = WxS=4x60=240 FEET

I-95 NB SHOULDER CLOSURE TAPER

W = 11 FEET
S = 60 MPH
L = WxS = 11x60 = 660 FEET
SHOULDER CLOSURE TAPER = 1/3 L = 220 FEET MIN

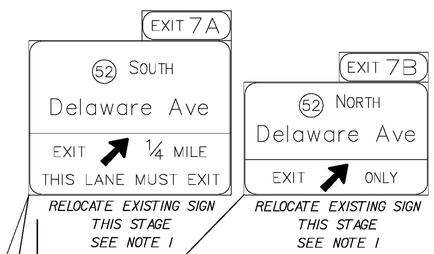

ADVANCE WARNING SIGN DETAIL

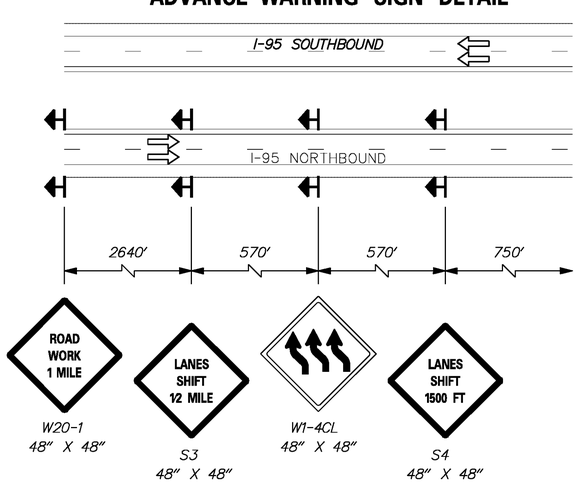

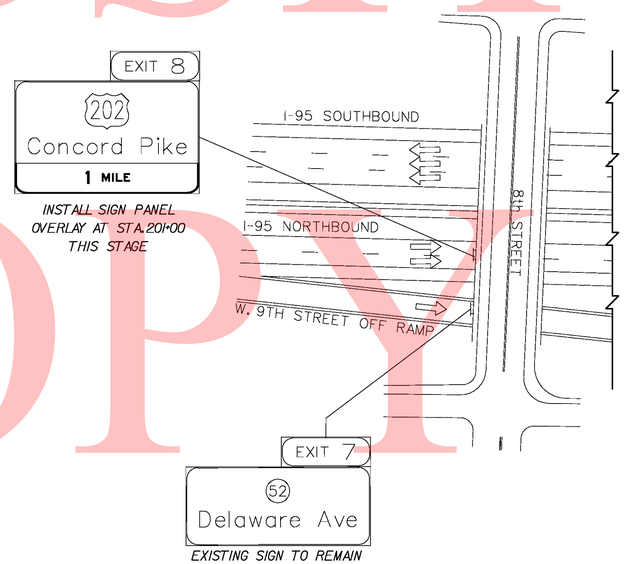

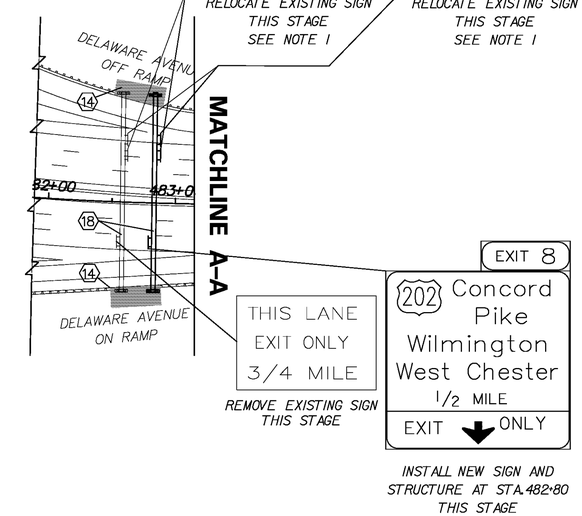

UNOFFICAL WEBSITE COPY

\\nighdat\eng\deldot\4625 (az)\07 (contract 5)\submissions\00-in-progress\mot\sheet files\I95motsht025_PHIStg2.dgn

8/18/2010

DELAWARE DEPARTMENT OF TRANSPORTATION	ADDENDUMS / REVISIONS	SCALE 0 60 120 180 FEET	I-95 & US 202 INTERCHANGE	CONTRACT T200510602	BRIDGE NO. NA	CONSTRUCTION PHASING, MOT & EROSION CONTROL PHASE 1, STAGE 2 MOT 25 OF 139	SHEET NO. 290
				COUNTY NEW CASTLE	DESIGNED BY: MT		TOTAL SHTS. 482
					CHECKED BY: KMC		

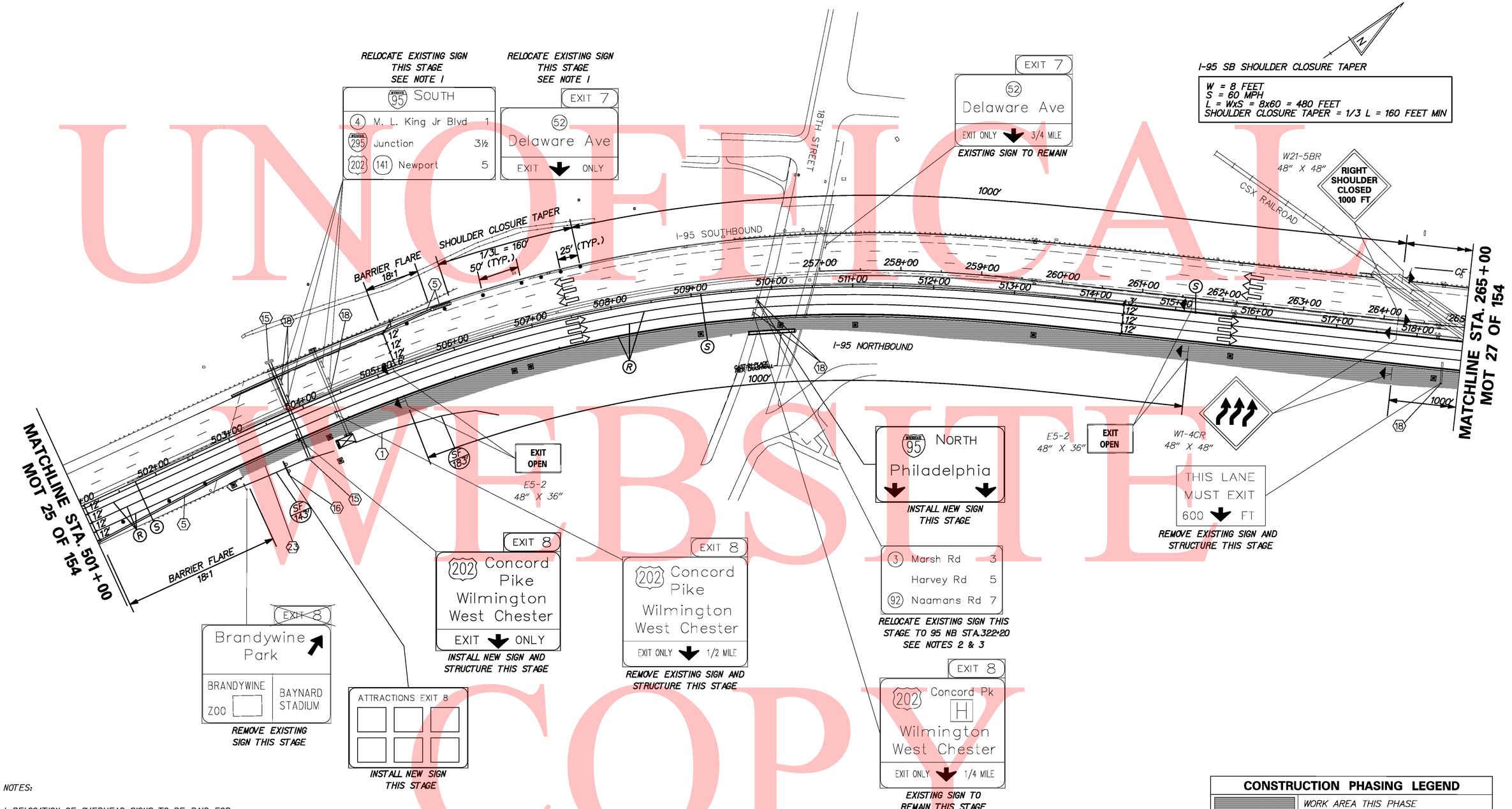

UNOFFICIAL WEBSITE COPY

NOTES:

1. RELOCATION OF OVERHEAD SIGNS TO BE PAID FOR UNDER ITEM 749510.

2. REMOVAL OF OVERHEAD I-BEAMS AND SIGN PANEL TO BE PAID FOR UNDER ITEM 749540.

3. SIGN PANEL TO BE INSTALLED ON NEW GROUND-MOUNTED I-BEAM SUPPORTS AT I-95 STA.322+20. INSTALLATION OF SIGN PANEL IS INCIDENTAL TO ITEM 605501.

SEDIMENT TRAP SCHEDULE

STA.	D. AREA	LENGTH	WIDTH	DEPTH	OUT. TYPE	OUT. EL.	CLEAN EL.
220+75	0.37	20	10	3.00	SCD	215.00	214.00
277+50	0.85	20	10	3.00	SCD	161.00	160.00
276+75	1.03	20	10	3.00	SCD	160.00	159.00
504+25	2.64	20	10	3.00	SCD	95.00	94.00

TEMPORARY PAVEMENT MARKINGS LEGEND

SYMBOL	ITEM	QUANTITY
R	6" SOLID WHITE TEMPORARY PAINT PAVEMENT STRIPING (ITEM 748020)	5,271 LF
S	6" SOLID YELLOW TEMPORARY PAINT PAVEMENT STRIPING (ITEM 748020)	1,757 LF

CONSTRUCTION PHASING LEGEND

	WORK AREA THIS PHASE
	TEMPORARY CONSTRUCTION
	TEMPORARY PAVEMENT MARKING ARROW
	TEMPORARY WARNING SIGN
	PORTABLE IMPACT ATTENUATOR
	CHANNELIZING DEVICE
	TYPE III BARRICADE

\\nighdat\eng\deldot\4625 (az)\07 (contract 5)\submissions\00-in-progress\mot\sheet files\I95motsht026_PHIStg2.dgn

8/18/2010

DELAWARE DEPARTMENT OF TRANSPORTATION

ADDENDUMS / REVISIONS

SCALE 0 60 120 180 FEET

I-95 & US 202 INTERCHANGE

CONTRACT T200510602
COUNTY NEW CASTLE
BRIDGE NO. NA
DESIGNED BY: DJD / REM
CHECKED BY: KMC

CONSTRUCTION PHASING, MOT & EROSION CONTROL PHASE 1, STAGE 2 MOT 26 OF 139

SHEET NO. 291
TOTAL SHTS. 482

TEMPORARY PAVEMENT MARKINGS LEGEND		
SYMBOL	ITEM	QUANTITY
R	6" SOLID WHITE TEMPORARY PAINT PAVEMENT STRIPING (ITEM 748020)	3,418 LF
S	6" SOLID YELLOW TEMPORARY PAINT PAVEMENT STRIPING (ITEM 748020)	2,196 LF
V	12" SOLID WHITE TEMPORARY PAINT PAVEMENT STRIPING (ITEM 748020)	960 LF

CONSTRUCTION PHASING LEGEND	
	WORK AREA THIS PHASE
	TEMPORARY CONSTRUCTION
	TEMPORARY PAVEMENT MARKING ARROW
	TEMPORARY WARNING SIGN
	PORTABLE IMPACT ATTENUATOR
	CHANNELIZING DEVICE
	TYPE III BARRICADE

NOTES:

1. RELOCATION OF OVERHEAD SIGNS TO BE PAID FOR UNDER ITEM 749510.

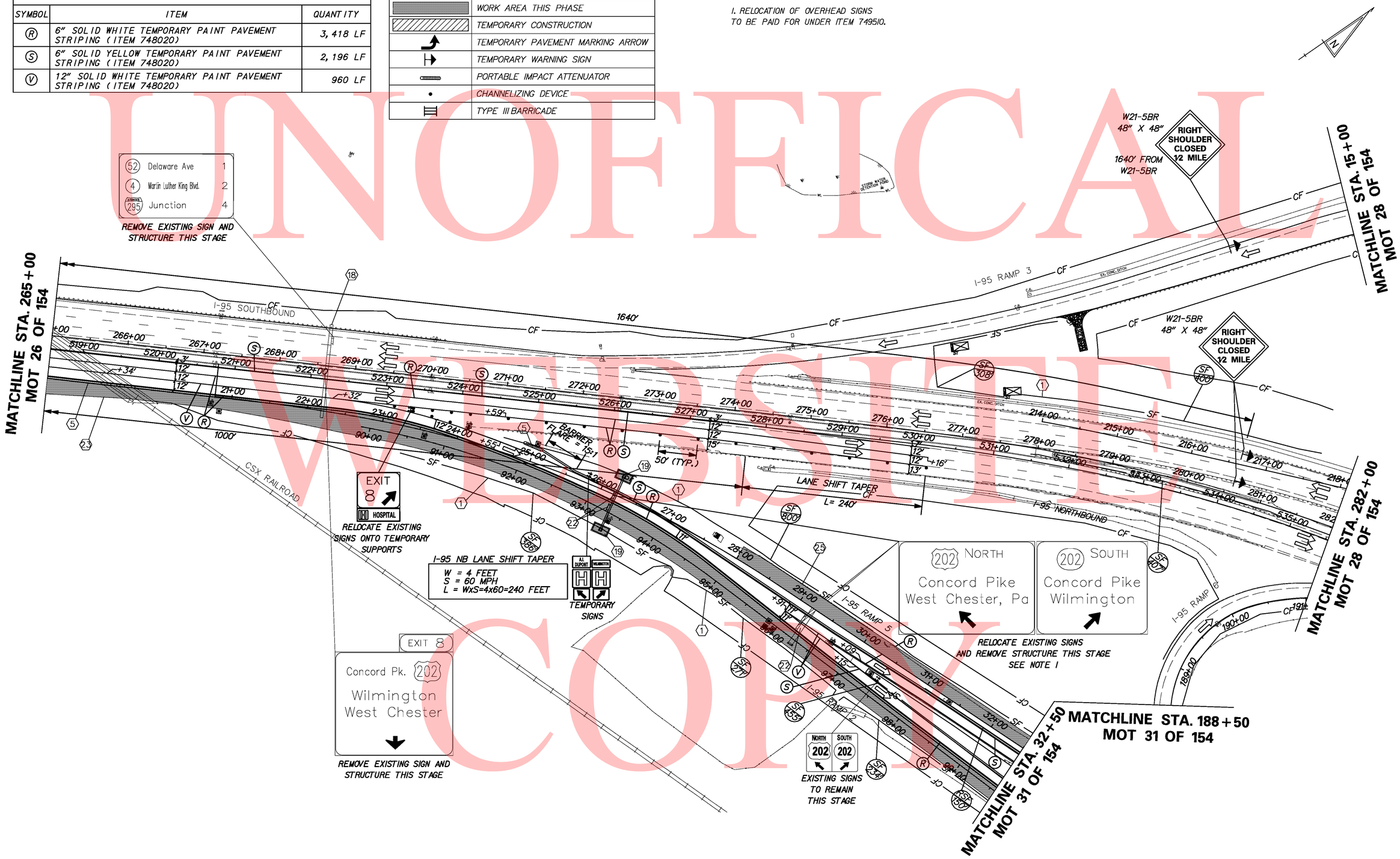

UNOFFICIAL WEBSITE COPY

\\nighdat\eng\deldot\4625 (az)\07 (contract 5)\submissions\00-in-progress\mot\sheet files\I95motsht027_PHIStg2.dgn

8/18/2010

DELAWARE DEPARTMENT OF TRANSPORTATION	ADDENDUMS / REVISIONS	SCALE 0 30 60 90 FEET	I-95 & US 202 INTERCHANGE	CONTRACT T200510602	BRIDGE NO. NA	CONSTRUCTION PHASING, MOT & EROSION CONTROL PHASE 1, STAGE 2 MOT 27 OF 139	SHEET NO. 292
				COUNTY NEW CASTLE	DESIGNED BY: DJD / REM		TOTAL SHTS. 482
					CHECKED BY: KMC		

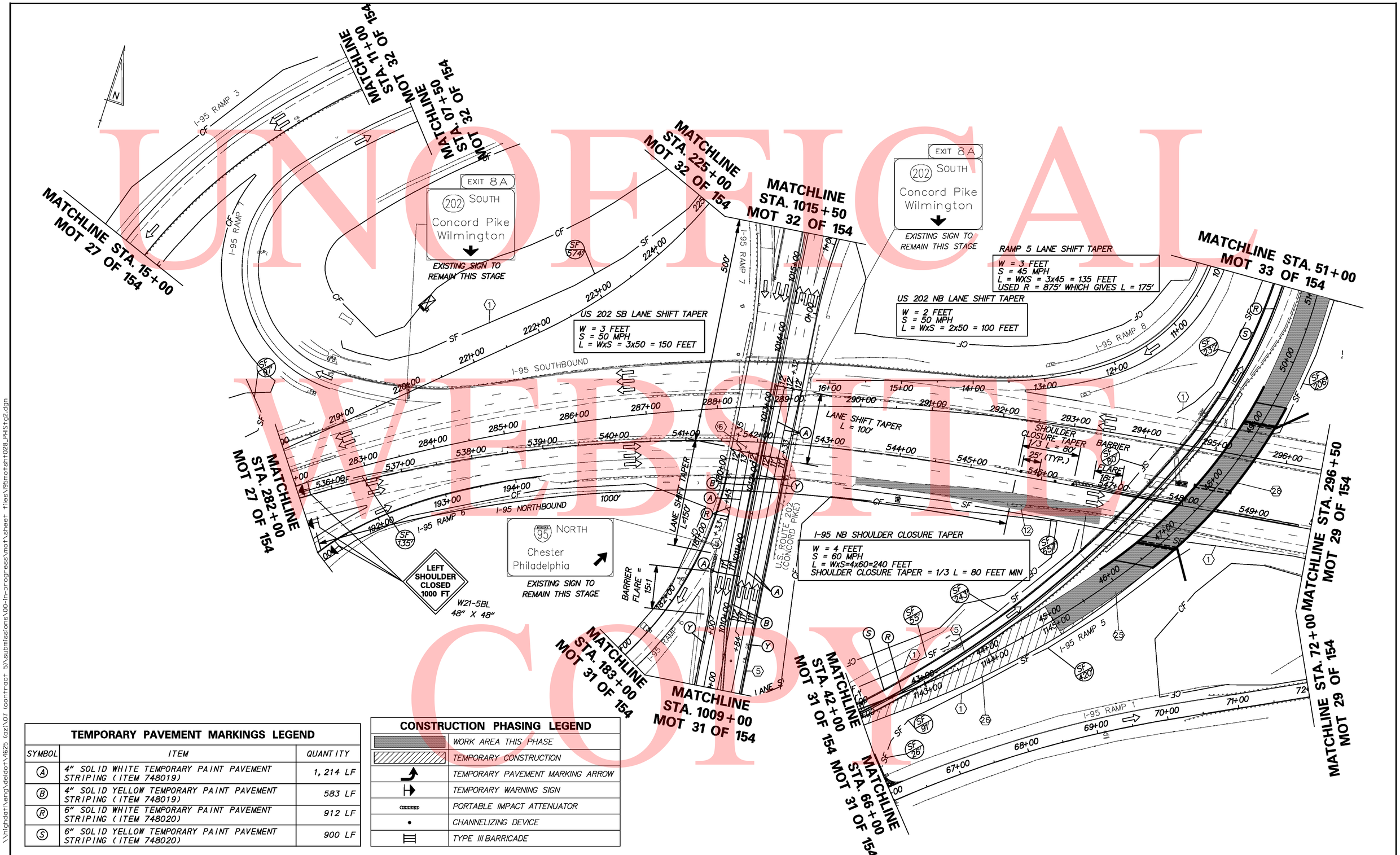

UNOFFICIAL WEBSITE COPY

TEMPORARY PAVEMENT MARKINGS LEGEND		
SYMBOL	ITEM	QUANTITY
Ⓐ	4" SOLID WHITE TEMPORARY PAINT PAVEMENT STRIPING (ITEM 748019)	1,214 LF
Ⓑ	4" SOLID YELLOW TEMPORARY PAINT PAVEMENT STRIPING (ITEM 748019)	583 LF
Ⓡ	6" SOLID WHITE TEMPORARY PAINT PAVEMENT STRIPING (ITEM 748020)	912 LF
Ⓢ	6" SOLID YELLOW TEMPORARY PAINT PAVEMENT STRIPING (ITEM 748020)	900 LF

CONSTRUCTION PHASING LEGEND	
	WORK AREA THIS PHASE
	TEMPORARY CONSTRUCTION
	TEMPORARY PAVEMENT MARKING ARROW
	TEMPORARY WARNING SIGN
	PORTABLE IMPACT ATTENUATOR
	CHANNELIZING DEVICE
	TYPE III BARRICADE

\\nghdat\eng\deldot\4625 (az)\07 (contract 5)\submissions\00-in-progress\mot\sheet files\I95motsht028_PHIStg2.dgn

8/18/2010

DELAWARE DEPARTMENT OF TRANSPORTATION

ADDENDUMS / REVISIONS

SCALE 0 30 60 90 FEET

I-95 & US 202 INTERCHANGE

CONTRACT	BRIDGE NO.	NA
T200510602	DESIGNED BY: DJD / REM	
COUNTY	CHECKED BY: KMC	
NEW CASTLE		

CONSTRUCTION PHASING, MOT & EROSION CONTROL PHASE 1, STAGE 2 MOT 28 OF 139

SHEET NO. 293

TOTAL SHTS. 482

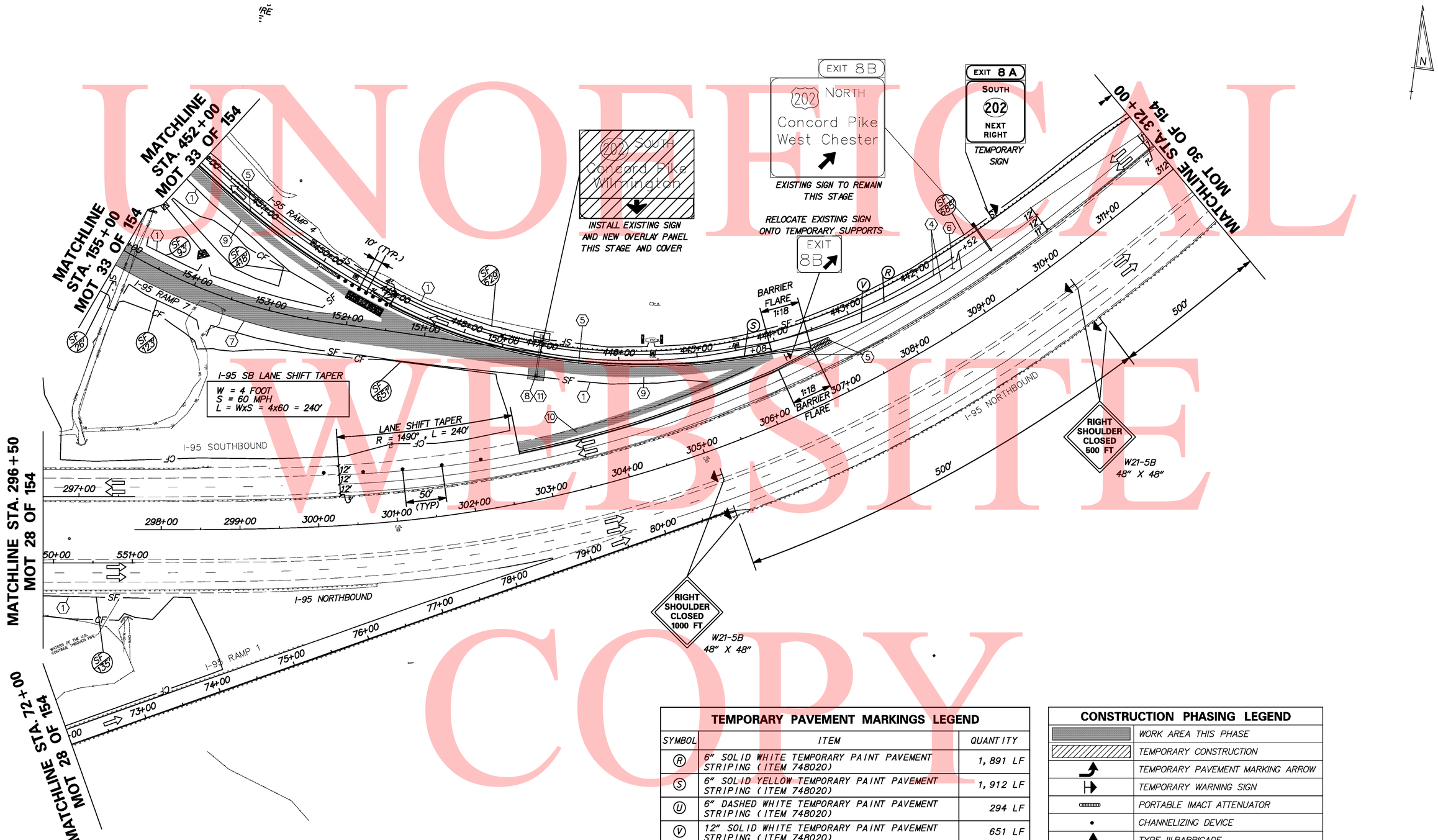

TEMPORARY PAVEMENT MARKINGS LEGEND

SYMBOL	ITEM	QUANTITY
(R)	6" SOLID WHITE TEMPORARY PAINT PAVEMENT STRIPING (ITEM 748020)	1,891 LF
(S)	6" SOLID YELLOW TEMPORARY PAINT PAVEMENT STRIPING (ITEM 748020)	1,912 LF
(U)	6" DASHED WHITE TEMPORARY PAINT PAVEMENT STRIPING (ITEM 748020)	294 LF
(V)	12" SOLID WHITE TEMPORARY PAINT PAVEMENT STRIPING (ITEM 748020)	651 LF
(W)	12" DASHED WHITE TEMPORARY PAINT PAVEMENT STRIPING (ITEM 748020)	74 LF

CONSTRUCTION PHASING LEGEND

	WORK AREA THIS PHASE
	TEMPORARY CONSTRUCTION
	TEMPORARY PAVEMENT MARKING ARROW
	TEMPORARY WARNING SIGN
	PORTABLE IMACT ATTENUATOR
	CHANNELIZING DEVICE
	TYPE III BARRICADE

UNOFFICIAL WEBSITE COPY

\\hlghdar1\eng\deldot\4625 (az)\07 (contract 5)\submissions\00-in-progress\mot\sheet files\195motsht029_PHIS1g2.dgn

8/18/2010

DELAWARE DEPARTMENT OF TRANSPORTATION

ADDENDUMS / REVISIONS

SCALE 0 30 60 90 FEET

I-95 & US 202 INTERCHANGE

CONTRACT	BRIDGE NO.	NA
T200510602	DESIGNED BY: DJD / REM	
COUNTY		
NEW CASTLE	CHECKED BY: KMC	

CONSTRUCTION PHASING, MOT & EROSION CONTROL PHASE 1, STAGE 2 MOT 29 OF 139

SHEET NO. 294

TOTAL SHTS. 482

TEMPORARY PAVEMENT MARKINGS LEGEND		
SYMBOL	ITEM	QUANTITY
R	6" SOLID WHITE TEMPORARY PAINT PAVEMENT STRIPING (ITEM 748020)	409 LF
S	6" SOLID YELLOW TEMPORARY PAINT PAVEMENT STRIPING (ITEM 748020)	409 LF
U	6" DASHED WHITE TEMPORARY PAINT PAVEMENT STRIPING (ITEM 748020)	103 LF
W	12" DASHED WHITE TEMPORARY PAINT PAVEMENT STRIPING (ITEM 748020)	33 LF

CONSTRUCTION PHASING LEGEND	
	WORK AREA THIS PHASE
	TEMPORARY CONSTRUCTION
	TEMPORARY PAVEMENT MARKING ARROW
	TEMPORARY WARNING SIGN
	PORTABLE IMPACT ATTENUATOR
	CHANNELIZING DEVICE
	TYPE III BARRICADE

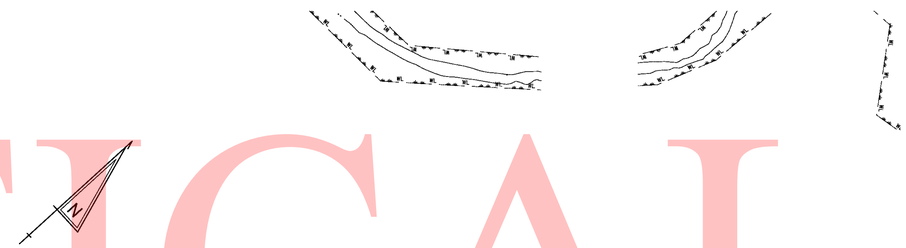

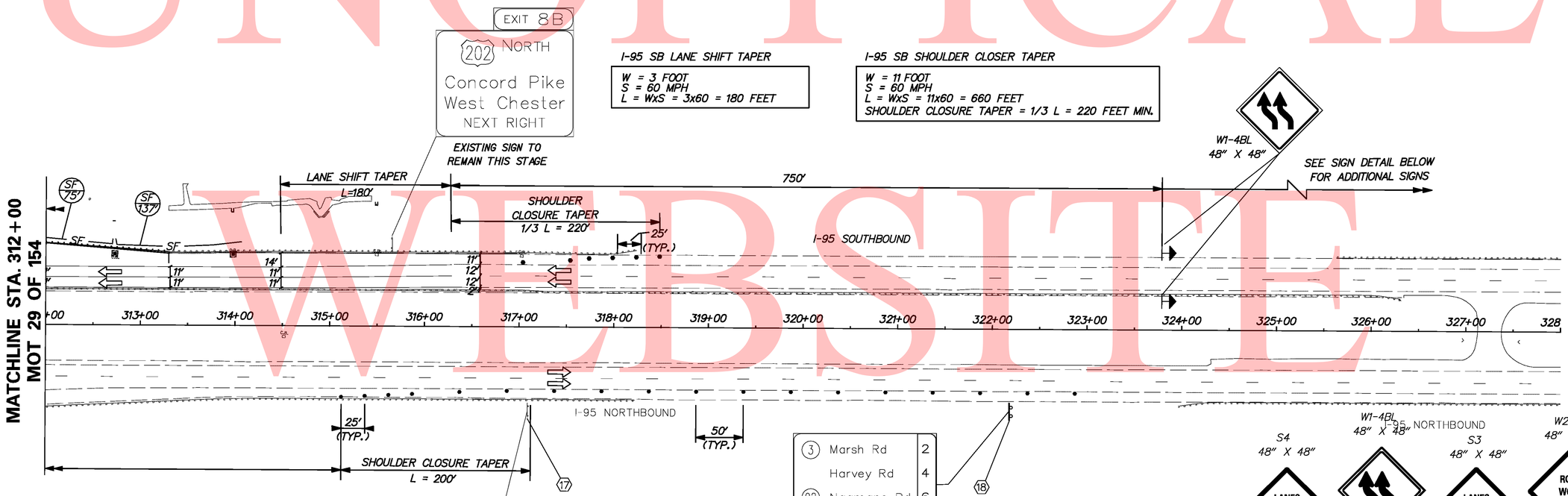

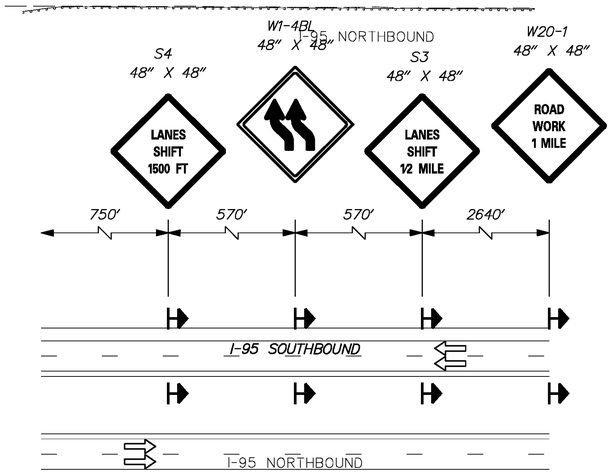

ADVANCE WARNING SIGN DETAIL

UNOFFICAL WEBSITE COPY

\\Highdat1\Eng\DelDOT\4625 (AZ)\07 (Contract 5)\SUBMISSIONS\00-IN-PROGRESS\MOT\Sheet Files\I95motsht030_PHIStg2.dgn

11/3/2010

DELAWARE DEPARTMENT OF TRANSPORTATION	ADDENDUMS / REVISIONS	SCALE 0 30 60 90 FEET	I-95 & US 202 INTERCHANGE	CONTRACT T200510602	BRIDGE NO. NA	CONSTRUCTION PHASING, MOT & EROSION CONTROL PHASE 1 STAGE 2 MOT 30 OF 139	SHEET NO. 295
				COUNTY NEW CASTLE	DESIGNED BY: DJD / REM		TOTAL SHTS. 482
					CHECKED BY: KMC		

TEMPORARY PAVEMENT MARKINGS LEGEND

SYMBOL		
A	4" SOLID WHITE TEMPORARY PAINT PAVEMENT STRIPING (ITEM 748019)	1533 LF
B	4" SOLID YELLOW TEMPORARY PAINT PAVEMENT STRIPING (ITEM 748019)	732 LF
R	6" SOLID WHITE TEMPORARY PAINT PAVEMENT STRIPING (ITEM 748020)	1537 LF
S	6" SOLID YELLOW TEMPORARY PAINT PAVEMENT STRIPING (ITEM 748020)	1282 LF

CONSTRUCTION PHASING LEGEND

	WORK AREA THIS PHASE
	TEMPORARY CONSTRUCTION
	TEMPORARY PAVEMENT MARKING ARROW
	TEMPORARY WARNING SIGN
	PORTABLE IMPACT ATTENUATOR
	CHANNELIZING DEVICE
	TYPE III BARRICADE

NOTES:

1. SEE MOT DETAIL A FOR TRAFFIC CONTROL ON U.S. 202 DURING STRUCTURE NO. 763 DETOURS.

2. SEE MOT DETAIL B FOR TRAFFIC CONTROL ON U.S. 202 IN BETWEEN THE STRUCTURE NO. 763 DETOURS.

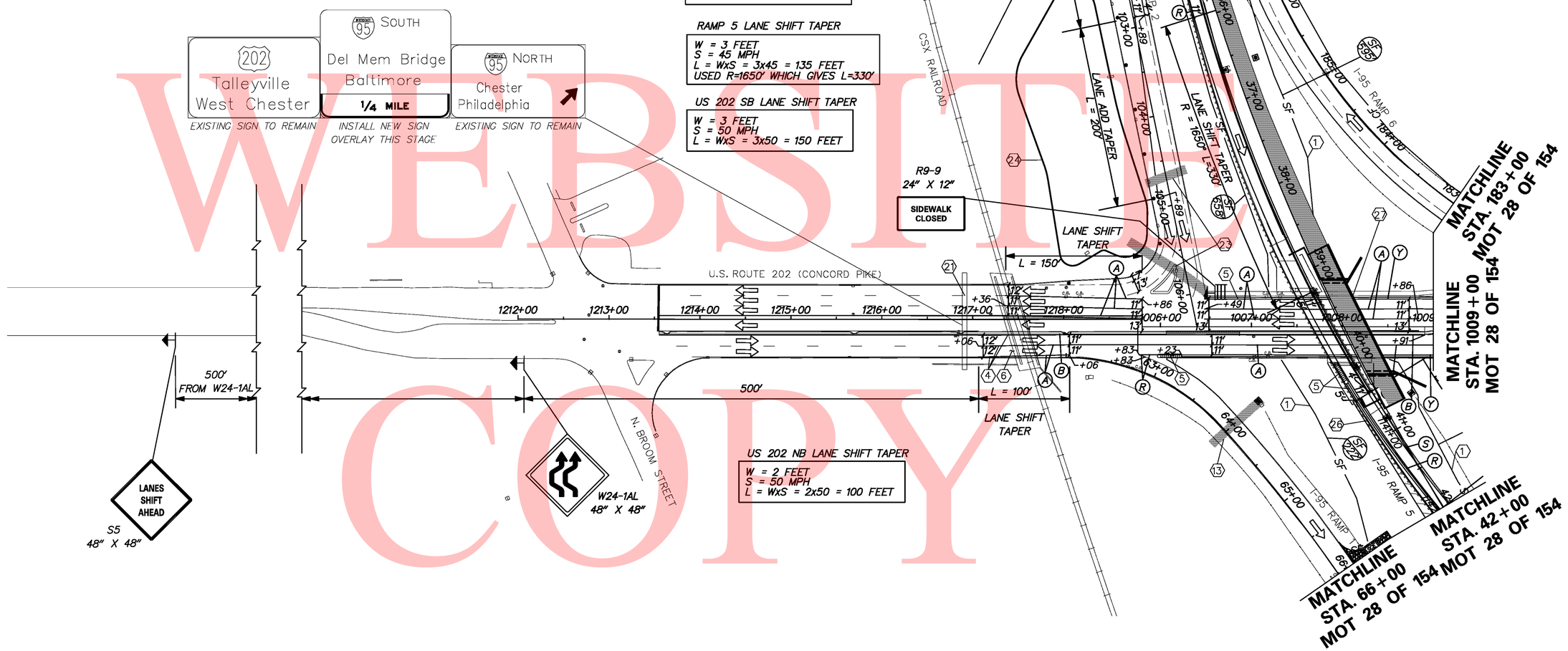

UNOFFICIAL WEBSITE COPY

DELAWARE DEPARTMENT OF TRANSPORTATION

ADDENDUMS / REVISIONS

SCALE 0 30 60 90 FEET

I-95 & US 202 INTERCHANGE

CONTRACT	BRIDGE NO.	NA
T200510602	DESIGNED BY: DJD / REM	
COUNTY		
NEW CASTLE	CHECKED BY: KMC	

CONSTRUCTION PHASING, MOT & EROSION CONTROL PHASE 1, STAGE 2 MOT 31 OF 139

SHEET NO.
296
TOTAL SHTS.
482

8/18/2010

\\nighdar1\eng\deldot\1625 (az)\07 (contract 5)\submissions\00-in-progress\mot\sheet files\195mot+sht03_PHIS+g2.dgn

CONSTRUCTION PHASING LEGEND	
	WORK AREA THIS PHASE
	TEMPORARY CONSTRUCTION
	TEMPORARY PAVEMENT MARKING ARROW
	TEMPORARY WARNING SIGN
	PORTABLE IMPACT ATTENUATOR
	CHANNELIZING DEVICE
	TYPE III BARRICADE

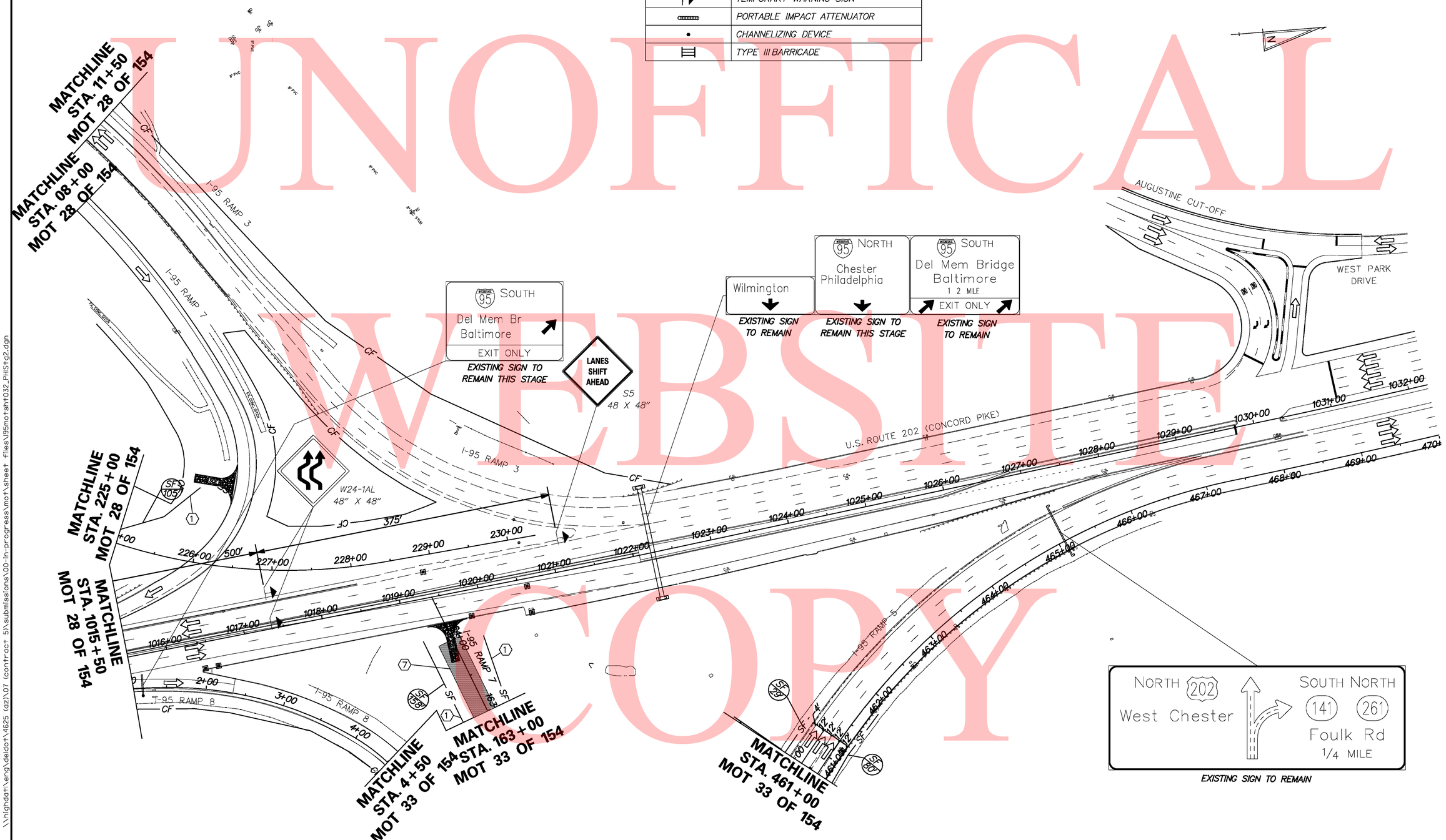

UNOFFICIAL WEBSITE COPY

\\nighdat\eng\deldot\4625 (az)\07 (contract 5)\submissions\00-in-progress\mot\sheet files\I95motsht032_PHIStg2.dgn

8/18/2010

DELAWARE DEPARTMENT OF TRANSPORTATION	ADDENDUMS / REVISIONS	SCALE 0 30 60 90 FEET	I-95 & US 202 INTERCHANGE	CONTRACT T200510602	BRIDGE NO. NA	CONSTRUCTION PHASING, MOT & EROSION CONTROL PHASE 1, STAGE 2 MOT 32 OF 139	SHEET NO. 297
				COUNTY NEW CASTLE	DESIGNED BY: DJD / REM		TOTAL SHTS. 482
					CHECKED BY: KMC		

TEMPORARY PAVEMENT MARKINGS LEGEND		
SYMBOL	ITEM	QUANTITY
Ⓡ	6" SOLID WHITE TEMPORARY PAINT PAVEMENT STRIPING (ITEM 748020)	1337 LF
Ⓢ	6" SOLID YELLOW TEMPORARY PAINT PAVEMENT STRIPING (ITEM 748020)	1392 LF
Ⓥ	12" SOLID WHITE TEMPORARY PAINT PAVEMENT STRIPING (ITEM 748020)	315 LF

CONSTRUCTION PHASING LEGEND	
	WORK AREA THIS PHASE
	TEMPORARY CONSTRUCTION
	TEMPORARY PAVEMENT MARKING ARROW
	TEMPORARY WARNING SIGN
	PORTABLE IMPACT ATTENUATOR
	CHANNELIZING DEVICE
	TYPE III BARRICADE

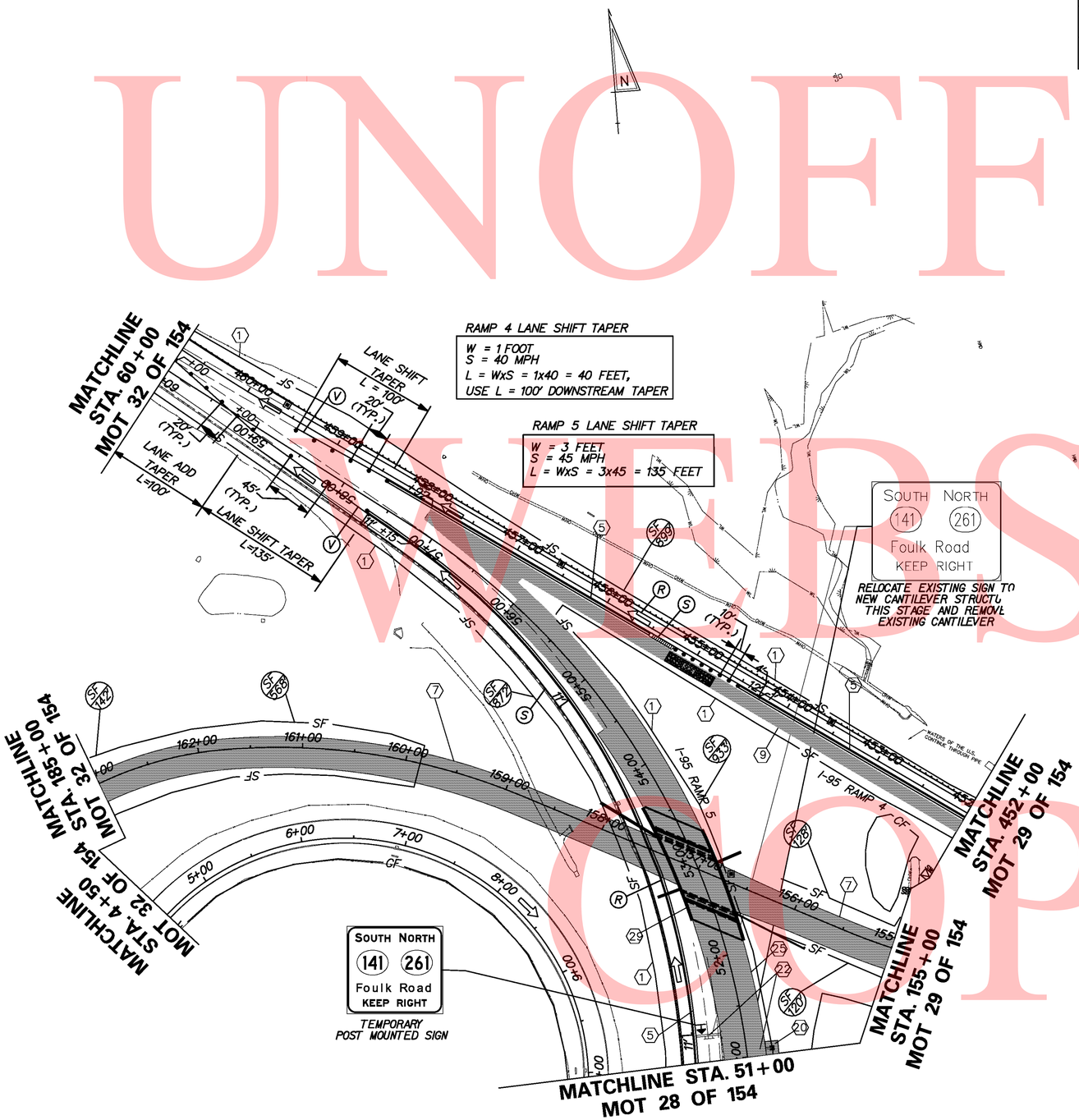

UNOFFICAL WEBSITE COPY

\\highdot\eng\deldot\4625 (az)\07 (contract 5)\submissions\00-in-progress\mot\sheet files\95motsht033_PHIS1pg2.dgn

8/18/2010

DELAWARE DEPARTMENT OF TRANSPORTATION

ADDENDUMS / REVISIONS

SCALE 0 30 60 90 FEET

I-95 & US 202 INTERCHANGE

CONTRACT	BRIDGE NO.	NA
T200510602	DESIGNED BY: DJD / REM	
COUNTY		
NEW CASTLE	CHECKED BY: KMC	

CONSTRUCTION PHASING, MOT & EROSION CONTROL PHASE 1, STAGE 2 MOT 33 OF 139

SHEET NO.
298
TOTAL SHTS.
482

SEQUENCE OF CONSTRUCTION

PHASE 1, STAGE 3

1. INSTALL ALL EROSION AND SEDIMENT CONTROL MEASURES AS SHOWN ON THE PLANS.

2. STABILIZE ALL DISTURBED AREAS WITH TOP SOIL SEED AND MULCH PRIOR TO THE REMOVAL OF THE SEDIMENT CONTROL DEVICES AS DIRECTED BY THE ENGINEER.

3. DURING NIGHT WORK HOURS: USING LANE AND SHOULDER CLOSURES IN ACCORDANCE WITH THE CASES LISTED IN THE MOT GENERAL NOTES, REMOVE EXISTING STRIPING ON I-95 NORTHBOUND, RAMP 2, RAMP 4 AND RAMP 5, AS NECESSARY. PLACE TEMPORARY PAVEMENT STRIPING ON I-95 NORTHBOUND AND RAMPS 2, 4 AND 5 USING CASE 23-C AS SHOWN UNDER PHASE 1, STAGE 3 TRAFFIC CONTROL.

4. USING LANE AND SHOULDER CLOSURES IN ACCORDANCE WITH THE CASES LISTED IN THE MOT GENERAL NOTES, RELOCATE TEMPORARY CONCRETE BARRIER ALONG:
   - THE RIGHT SIDE OF I-95 NORTHBOUND FROM STATION 521+22 TO STATION 527+75
   - THE LEFT SIDE OF RAMP 5 FROM STATION 21+50 TO STATION 28+62
   - THE LEFT SIDE OF RAMP 5 FROM STATION 36+00 TO STATION 45+50
   - THE RIGHT SIDE OF RAMP 5 FROM STATION 40+50 TO STATION 46+50
   - THE LEFT SIDE OF RAMP 5 FROM STATION 53+27 TO STATION 60+50
   - THE RIGHT SIDE OF US 202 NORTHBOUND FROM STATION 1016+20 TO STATION 1021+00
   - THE LEFT SIDE OF RAMP 8 FROM STATION 2+00 TO STATION 3+50.

5. TEMPORARY CONCRETE BARRIER WILL REMAIN IN PLACE FROM PHASE 1, STAGE 2 ON:
   - THE LEFT SIDE OF RAMP 5 FROM STATION 28+62 TO STATION 36+00
   - THE RIGHT SIDE OF US 202 NORTHBOUND FROM STATION 1006+23 TO STATION 1012+33
   - THE RIGHT SIDE OF US 202 SOUTHBOUND FROM STATION 1006+49 TO STATION 1010+61.

6. RELOCATE ANY ADDITIONAL TEMPORARY CONCRETE BARRIER FROM PHASE 1, STAGE 2 OFF SITE.

7. USING LANE AND SHOULDER CLOSURES IN ACCORDANCE WITH THE CASES LISTED IN THE MOT GENERAL NOTES, RELOCATE PORTABLE IMPACT ATTENUATORS:
   - FROM I-95 NORTHBOUND STATION 501+04 TO I-95 NORTHBOUND STATION 521+22
   - FROM RAMP 5 STATION 40+30 TO RAMP 5 STATION 40+50
   - FROM RAMP 5 STATION 51+16 TO RAMP 5 STATION 53+27
   - FROM RAMP 4 STATION 450+02 TO US 202 NORTHBOUND STATION 1016+20.

8. PORTABLE IMPACT ATTENUATORS REMAIN IN PLACE FROM PHASE 1, STAGE 2 AT US 202 NORTHBOUND STATION 1006+23 AND US 202 SOUTHBOUND STATION 1006+49.

9. SHIFT RAMP 4 AND RAMPS 2 AND 5 TRAFFIC TO NEW LANES DESIGNATED FOR PHASE 1, STAGE 3. I-95 NORTHBOUND MAINLINE LANES AND US 202 NORTHBOUND AND SOUTHBOUND LANES REMAIN IN SAME LOCATION AS PHASE 1, STAGE 2.

10. CONSTRUCT THE RIGHT SIDE OF I-95 NORTHBOUND FROM STATION 521+92 TO STATION 527+25 AND THE LEFT SIDE OF RAMP 5 FROM STATION 21+93 TO STATION 30+00.

11. CONSTRUCT THE LEFT SIDE OF RAMP 5 FROM STATION 40+50 TO STATION 45+00 AND FROM STATION 54+50 TO STATION 56+00. REMOVE EXISTING RAMP 5 FROM STATION 49+22 TO 60+07. EXISTING RAMP 5 STRUCTURE NO. 763 SHALL REMAIN IN PLACE TO MAINTAIN ACCESS TO THE RAMP 5 CONSTRUCTION FROM STATION 40+50 TO STATION 45+00.

12. CONSTRUCT RAMP 7 FROM STATION 152+00 TO STATION 164+24, THE RIGHT SIDE OF US 202 FROM STATION 1016+37 TO STATION 1020+50 AND THE LEFT SIDE OF RAMP 8 FROM STATION 1+92 TO STATION 3+03.

13. DURING NIGHT WORK HOURS, CLOSE THE LANE ADJACENT TO THE EXISTING MEDIAN ON BOTH DIRECTIONS OF U.S. 202 IN ACCORDANCE WITH CASE 7 OF THE TRAFFIC CONTROL MANUAL TO REMOVE THE EXISTING MEDIAN FROM STATION 1018+80 TO STATION 1019+63.

14. INSTALL TEMPORARY SIGNAL AT THE INTERSECTION OF US 202 AND RAMP 7 ACCORDING TO CONCORD PIKE (US 202) & I-95 SB OFF RAMP 7 INTERIM SIGNAL PLAN SIGNAL 3 OF 4.

UNOFFICAL WEBSITE COPY

\\Highcrt\Eng\Dell0T\4625 (A2)\07 (Contract 5)\SUBMISSIONS\00-IN-PROGRESS\MOT\Sheet Files\95mot+sh+034_PHIS+g3_Notes.cgn
11/3/2010

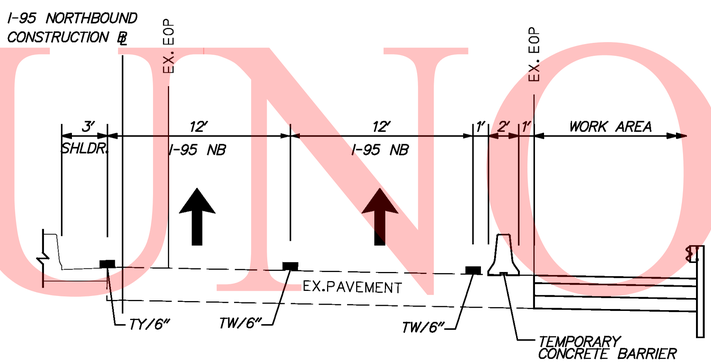

I-95 NORTHBOUND

STA 520+77.72 (RAMP 5 STA. 20+77.78) TO STA 527+74.98

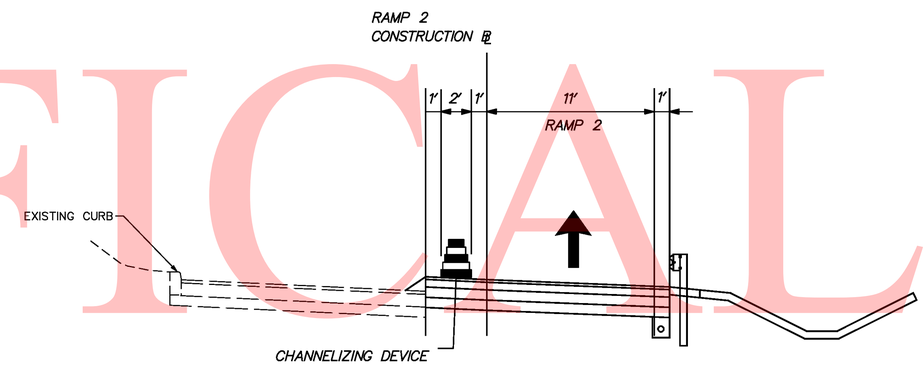

RAMP 2

STA 93+27 TO 100+33.73

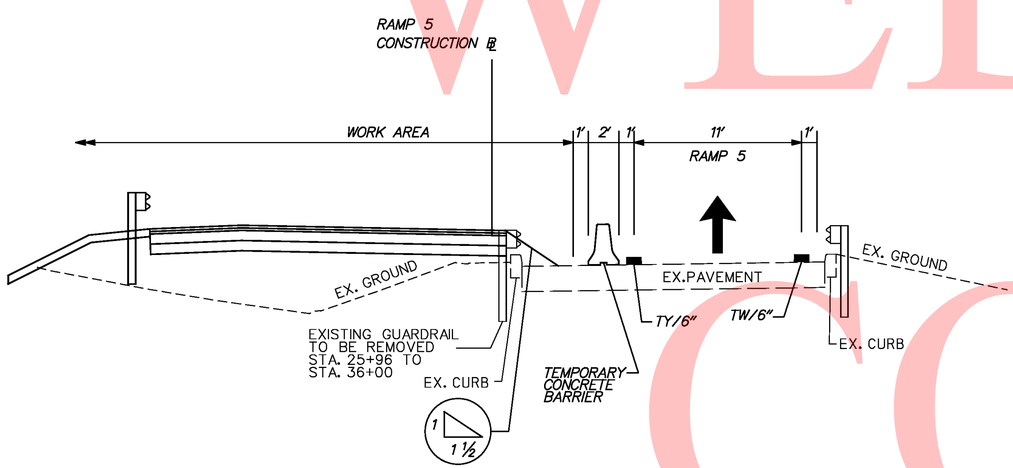

RAMP 5

STA. 29+04 TO STA. 40+50

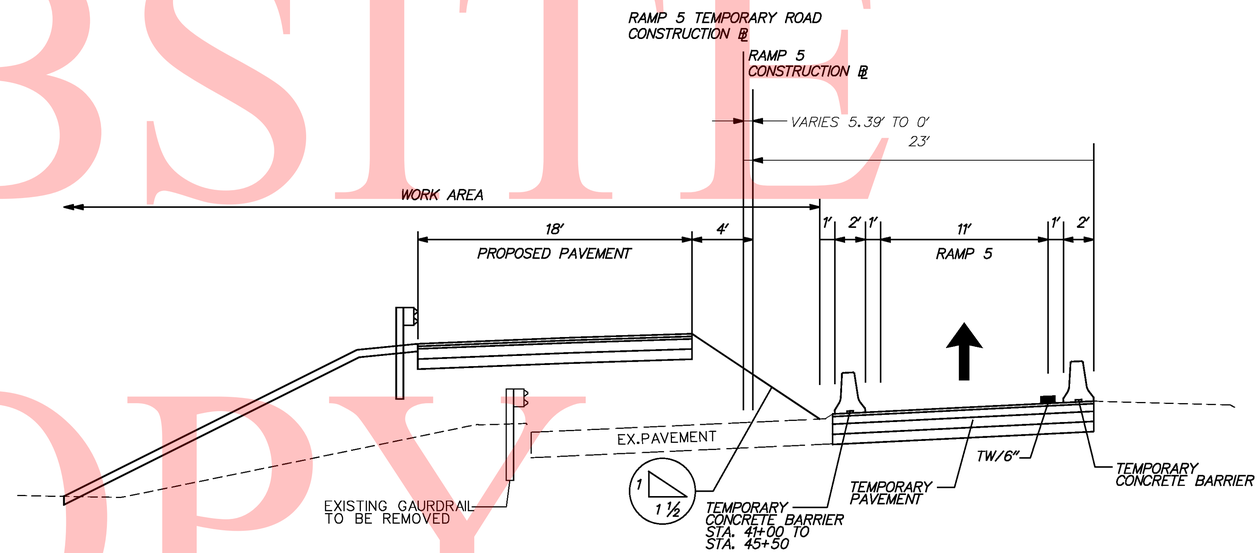

RAMP 5

STA. 40+50 TO STA. 45+00

UNOFFICIAL WEBSITE COPY

\\Highcat1\Eng\Dell0T\4625 (AZ)\07 (Contract 5)\SUBMISSIONS\00-IN-PROGRESS\MOT\Sheet Files\I95motsht035_PHIS+g3_TypIcal.dgn
12/9/2010

DELAWARE DEPARTMENT OF TRANSPORTATION	ADDENDUMS / REVISIONS	SCALE 0 30 60 90 FEET	I-95 & US 202 INTERCHANGE	CONTRACT T200510602	BRIDGE NO. NA	CONSTRUCTION PHASING, MOT & EROSION CONTROL PHASE 1, STAGE 3 MOT 35 OF 139	SHEET NO. 300
				COUNTY NEW CASTLE	DESIGNED BY: DJD / REM		TOTAL SHTS. 482
					CHECKED BY: KMC		

TYPICAL SECTIONS

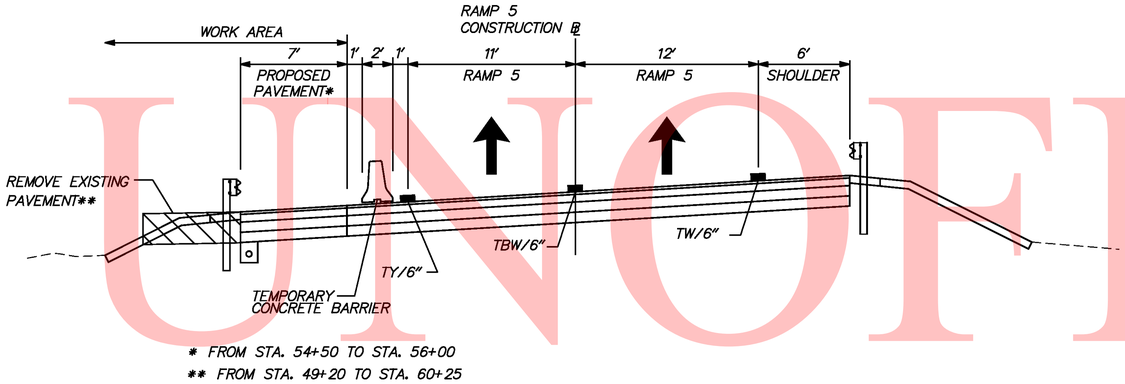

* FROM STA. 54+50 TO STA. 56+00
** FROM STA. 49+20 TO STA. 60+25

RAMP 5

STA. 45+00 TO STA. 57+24.61

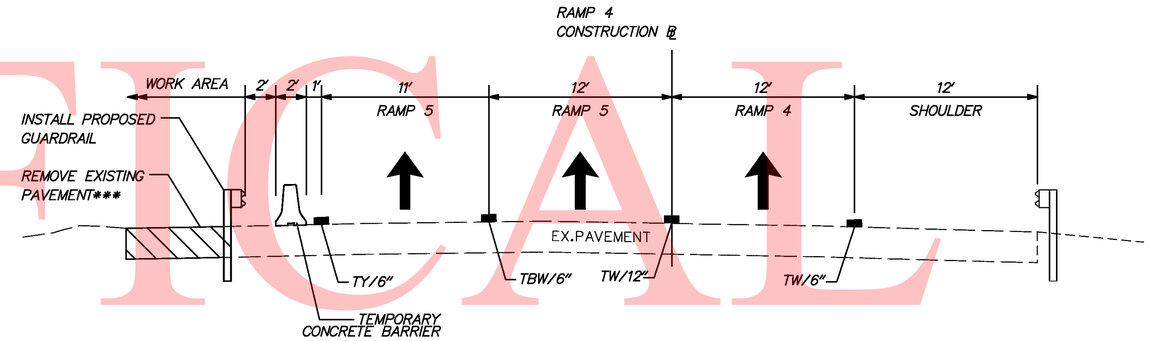

RAMP 4

STA. 458+00 (RAMP 5 STA 57+24.61) TO STA 461+24.91 (RAMP 5 STA. 60+50.69)

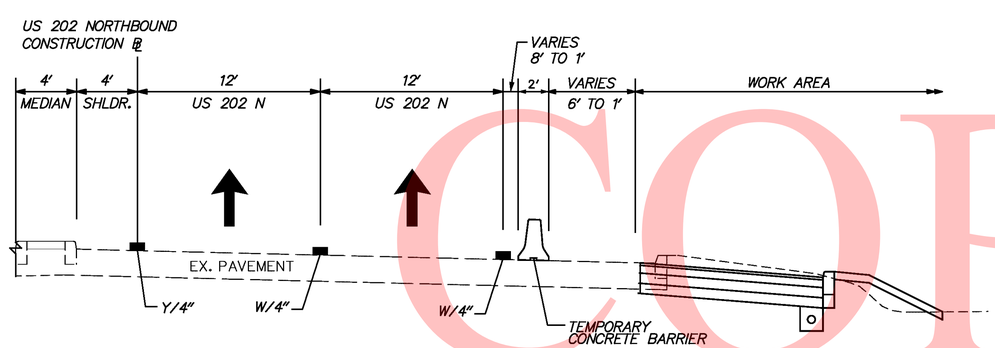

US 202 NORTHBOUND

STA 1016+20.73 TO STA 1021+00

UNOFFICIAL WEBSITE COPY

\\nighdat\eng\deldot\4625 (az)\07 (contract 5)\submissions\00-in-progress\mot\sheet files\I95motsht036_PHIStg3_Typical2.dgn

8/18/2010

DELAWARE DEPARTMENT OF TRANSPORTATION	ADDENDUMS / REVISIONS	SCALE 0 30 60 90 FEET	I-95 & US 202 INTERCHANGE	CONTRACT T200510602	BRIDGE NO. NA	CONSTRUCTION PHASING, MOT & EROSION CONTROL PHASE 1, STAGE 3 MOT 36 OF 139	SHEET NO. 301
				COUNTY NEW CASTLE	DESIGNED BY: DJD / REM		TOTAL SHTS. 482
					CHECKED BY: KMC		

CONSTRUCTION PHASING LEGEND	
	WORK AREA THIS PHASE
	TEMPORARY CONSTRUCTION
	TEMPORARY PAVEMENT MARKING ARROW
	TEMPORARY WARNING SIGN
	PORTABLE IMPACT ATTENUATOR
	CHANNELIZING DEVICE
	TYPE III BARRICADE

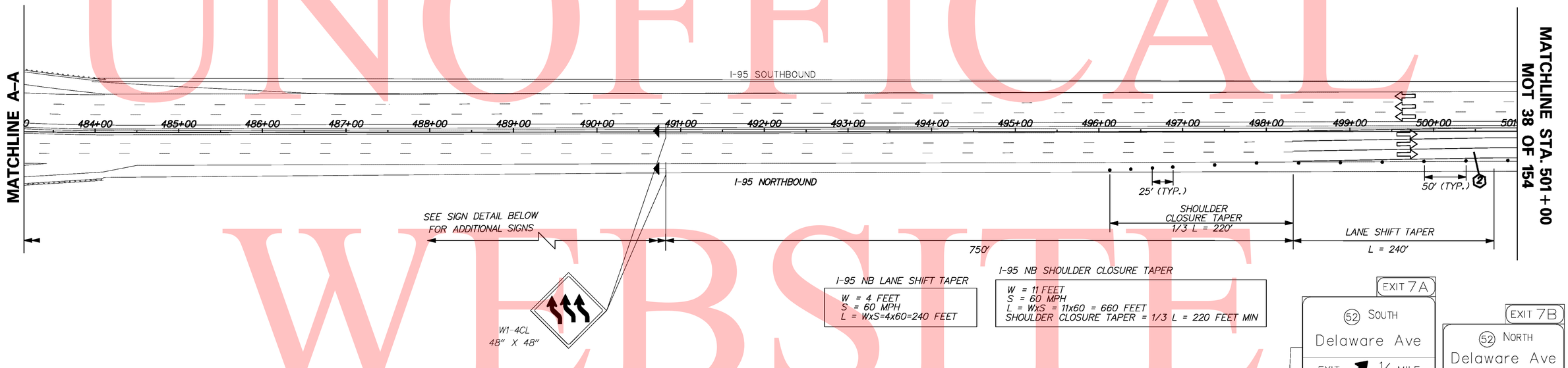

I-95 NB LANE SHIFT TAPER

W = 4 FEET
S = 60 MPH
L = WxS=4x60=240 FEET

I-95 NB SHOULDER CLOSURE TAPER

W = 11 FEET
S = 60 MPH
L = WxS = 11x60 = 660 FEET
SHOULDER CLOSURE TAPER = 1/3 L = 220 FEET MIN

ADVANCE WARNING SIGN DETAIL

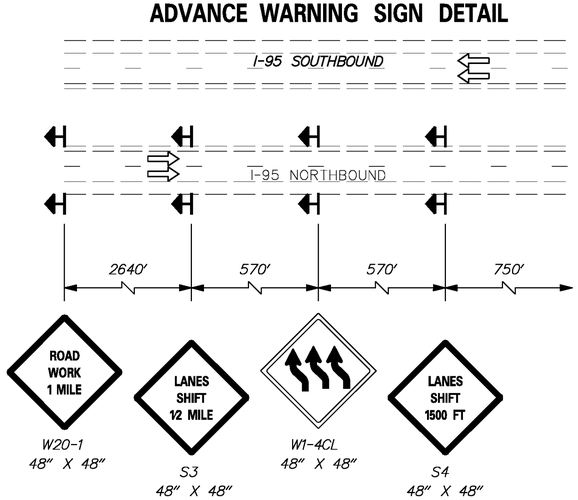

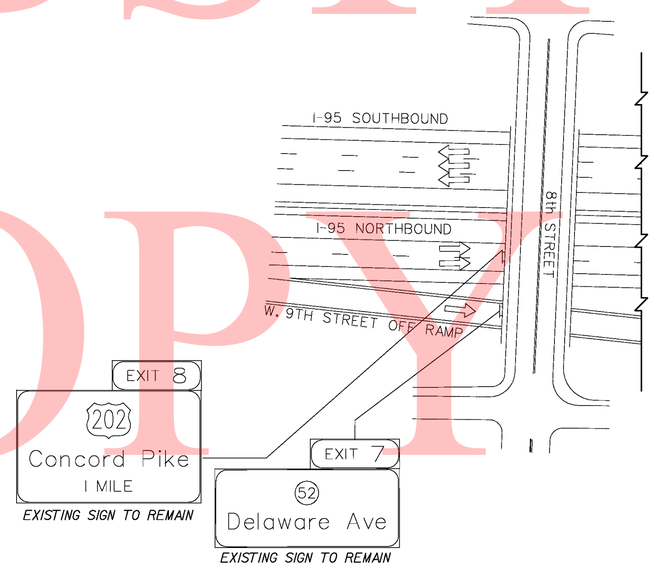

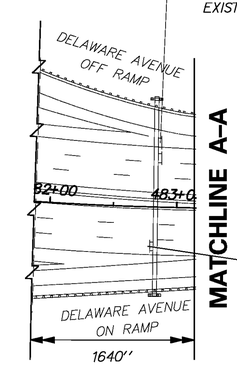

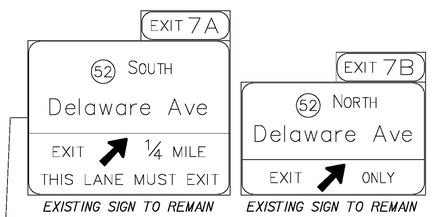

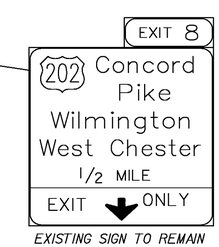

UNOFFICAL WEBSITE COPY

\\Highcat1\Eng\Dell0T\4625 (AZ)\07 (Contract 5)\SUBMISSIONS\00-IN-PROGRESS\MOT\Sheet Files\95mot+sh+037_PHIS+g3.dgn

11/3/2010

DELAWARE DEPARTMENT OF TRANSPORTATION	ADDENDUMS / REVISIONS	SCALE 0 60 120 180 FEET	I-95 & US 202 INTERCHANGE	CONTRACT T200510602	BRIDGE NO. NA	CONSTRUCTION PHASING, MOT & EROSION CONTROL PHASE 1, STAGE 3 MOT 37 OF 139	SHEET NO. 302
				COUNTY NEW CASTLE	DESIGNED BY: MT		TOTAL SHTS. 482
					CHECKED BY: KMC		

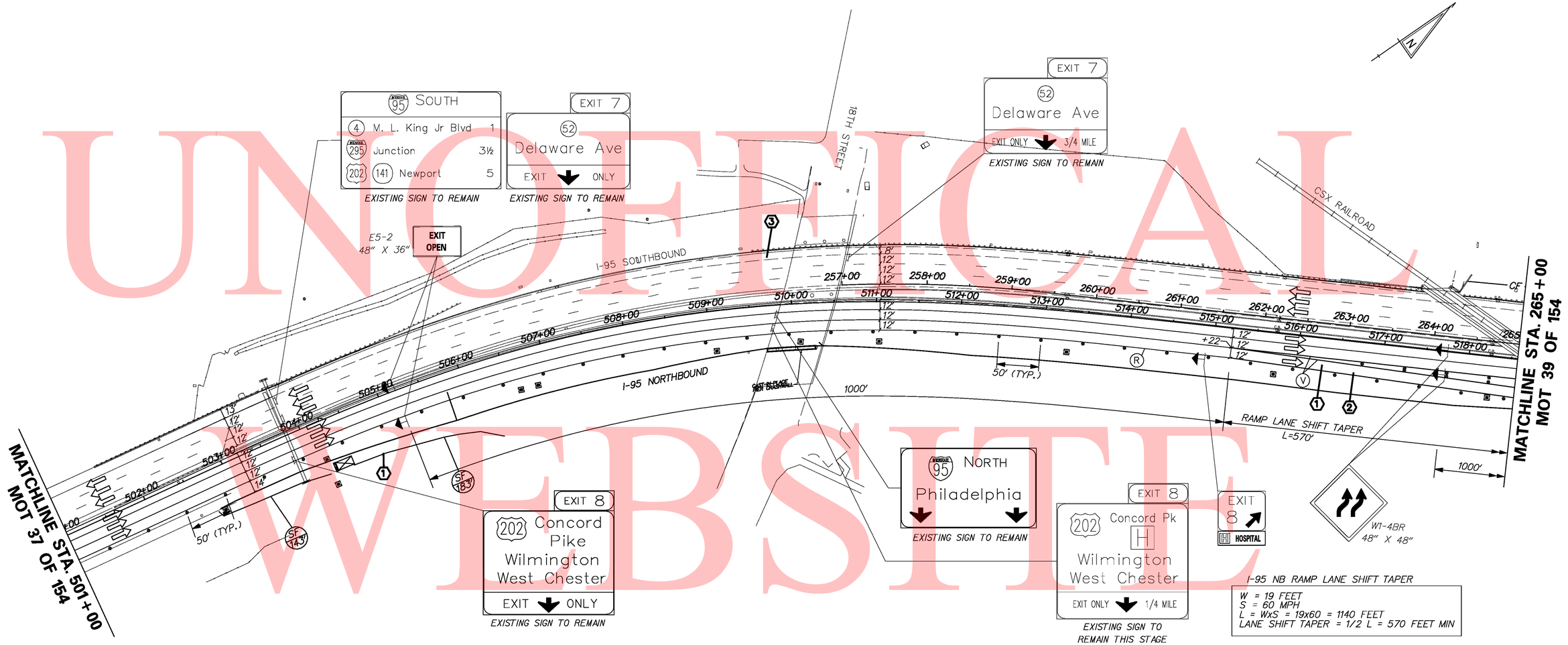

UNOFFICIAL WEBSITE COPY

TEMPORARY PAVEMENT MARKINGS LEGEND		
SYMBOL	ITEM	QUANTITY
R	6" SOLID WHITE TEMPORARY PAINT PAVEMENT STRIPING (ITEM 748020)	335 LF
V	12" SOLID WHITE TEMPORARY PAINT PAVEMENT STRIPING (ITEM 748020)	670 LF

CONSTRUCTION PHASING LEGEND	
	WORK AREA THIS PHASE
	TEMPORARY CONSTRUCTION
	TEMPORARY PAVEMENT MARKING ARROW
	TEMPORARY WARNING SIGN
	PORTABLE IMPACT ATTENUATOR
	CHANNELIZING DEVICE
	TYPE III BARRICADE

\\nighdat\eng\deldot\4625 (az)\07 (contract 5)\submissions\00-in-progress\mot\sheet files\I95motsht038_PHIStg3.dgn

8/18/2010

DELAWARE DEPARTMENT OF TRANSPORTATION

ADDENDUMS / REVISIONS

SCALE 0 60 120 180 FEET

I-95 & US 202 INTERCHANGE

CONTRACT	BRIDGE NO.	NA
T200510602	DESIGNED BY: DJD / REM	
COUNTY	CHECKED BY: KMC	
NEW CASTLE		

CONSTRUCTION PHASING, MOT & EROSION CONTROL PHASE 1, STAGE 3 MOT 38 OF 139

SHEET NO. 303

TOTAL SHTS. 482

TEMPORARY PAVEMENT MARKINGS LEGEND		
SYMBOL	ITEM	QUANTITY
R	6" SOLID WHITE TEMPORARY PAINT PAVEMENT STRIPING (ITEM 748020)	957 LF
S	6" SOLID YELLOW TEMPORARY PAINT PAVEMENT STRIPING (ITEM 748020)	1,500 LF
V	12" SOLID WHITE TEMPORARY PAINT PAVEMENT STRIPING (ITEM 748020)	1,402 LF

CONSTRUCTION PHASING LEGEND	
	WORK AREA THIS PHASE
	TEMPORARY CONSTRUCTION
	TEMPORARY PAVEMENT MARKING ARROW
	TEMPORARY WARNING SIGN
	PORTABLE IMPACT ATTENUATOR
	CHANNELIZING DEVICE
	TYPE III BARRICADE

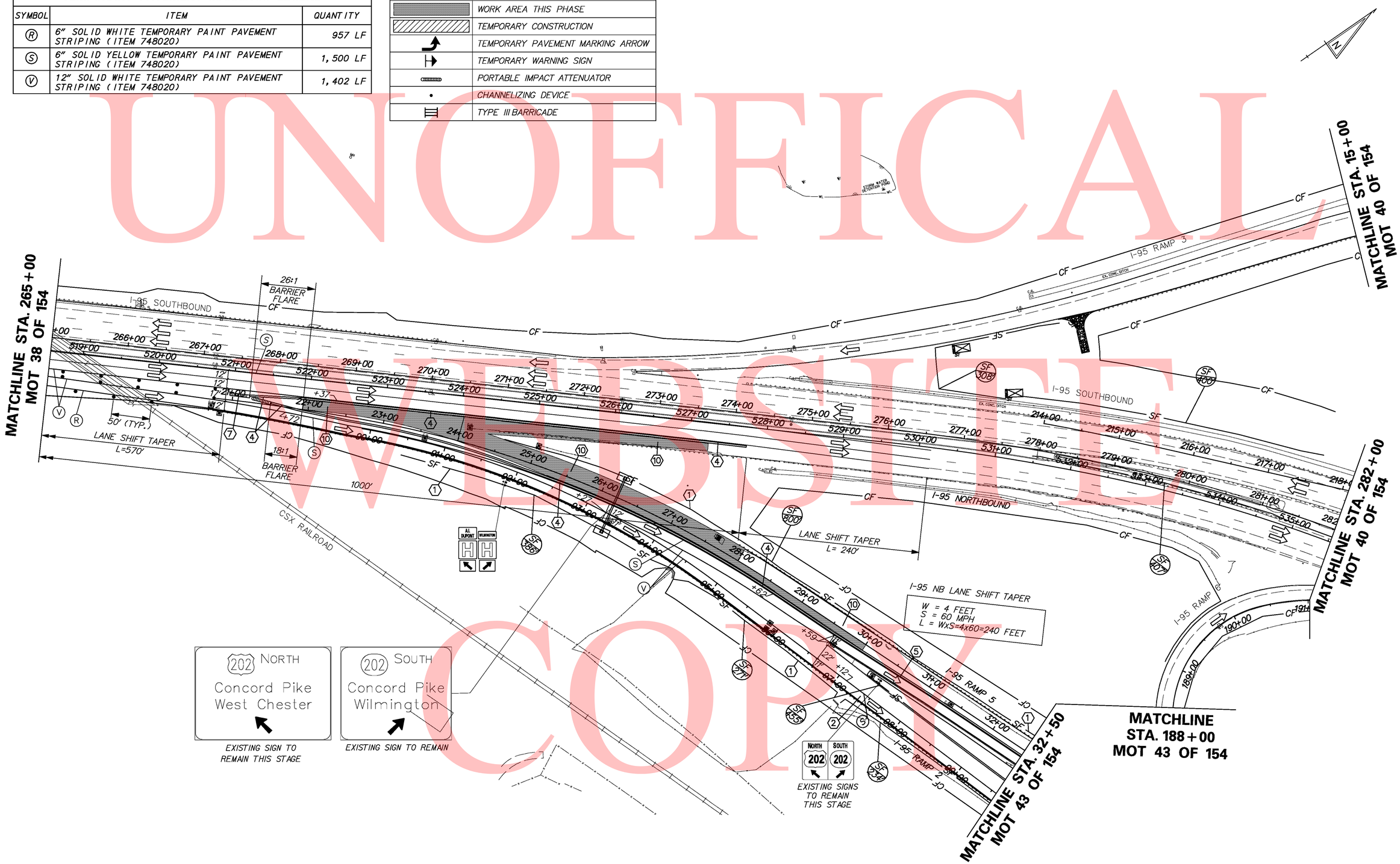

UNOFFICIAL WEBSITE COPY

\\nighdat\eng\deldot\4625 (az)\07 (contract 5)\submissions\00-in-progress\mot\sheet files\I95motsht039_PHIStg3.dgn

8/18/2010

DELAWARE DEPARTMENT OF TRANSPORTATION	ADDENDUMS / REVISIONS	SCALE 0 30 60 90 FEET	I-95 & US 202 INTERCHANGE	CONTRACT T200510602	BRIDGE NO. NA	CONSTRUCTION PHASING, MOT & EROSION CONTROL PHASE 1, STAGE 3 MOT 39 OF 139	SHEET NO. 304
				COUNTY NEW CASTLE	DESIGNED BY: DJD / REM		TOTAL SHTS. 482
					CHECKED BY: KMC		

TEMPORARY PAVEMENT MARKINGS LEGEND		
SYMBOL	ITEM	QUANTITY
Ⓡ	6" SOLID WHITE TEMPORARY PAINT PAVEMENT STRIPING (ITEM 748020)	900 LF
Ⓢ	6" SOLID YELLOW TEMPORARY PAINT PAVEMENT STRIPING (ITEM 748020)	900 LF
Ⓤ	6" DASHED WHITE TEMPORARY PAINT PAVEMENT STRIPING (ITEM 748020)	15 LF

CONSTRUCTION PHASING LEGEND	
	WORK AREA THIS PHASE
	TEMPORARY CONSTRUCTION
	TEMPORARY PAVEMENT MARKING ARROW
	TEMPORARY WARNING SIGN
	PORTABLE IMPACT ATTENUATOR
•	CHANNELIZING DEVICE
	TYPE III BARRICADE

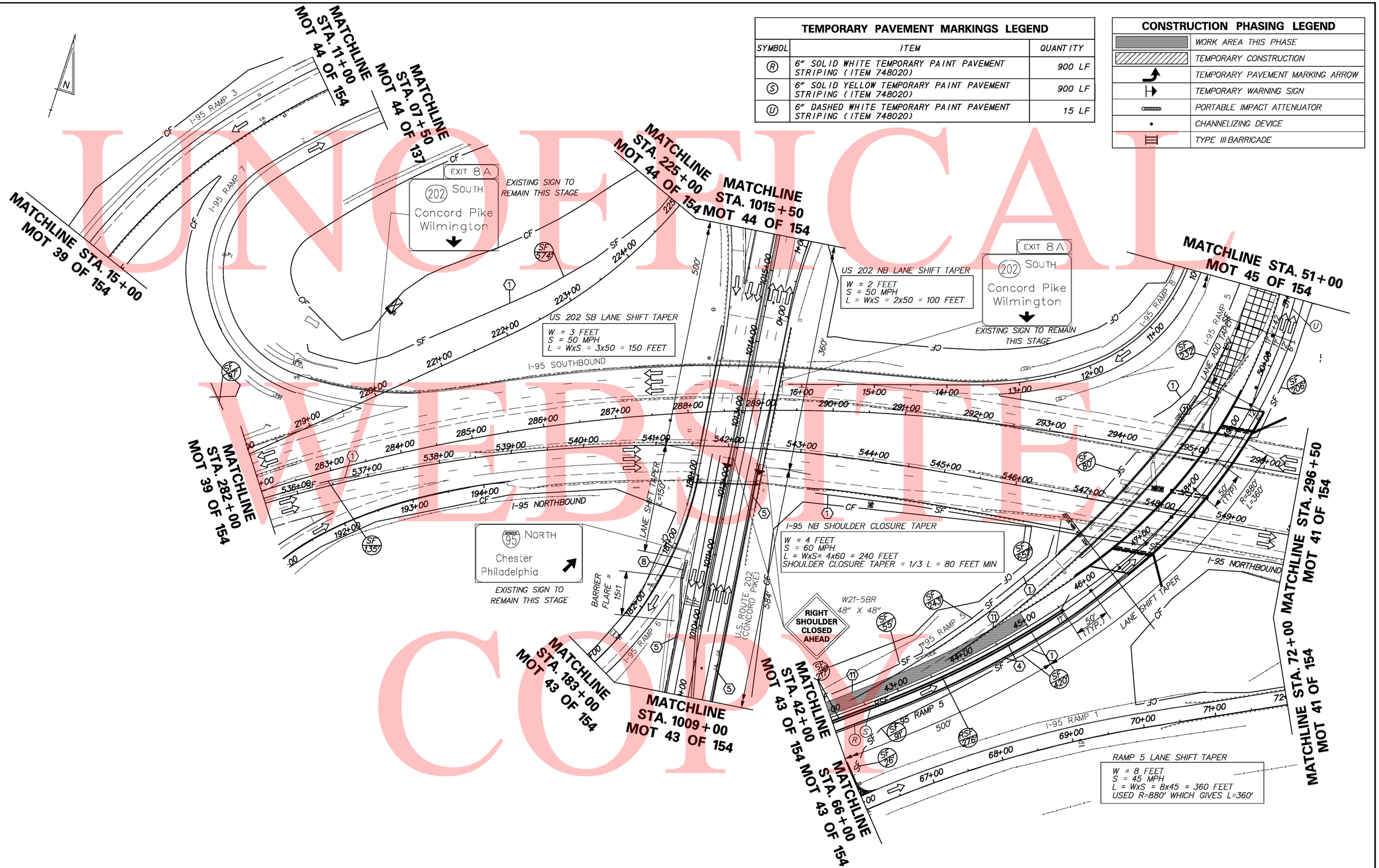

UNOFFICIAL WEBSITE COPY

\\highdat\eng\deldot\4625 (az)\07 (contract 5)\submissions\00-in-progress\mot\sheet files\19smotsht040_PHIS+g3.dgn

8/18/2010

DELAWARE DEPARTMENT OF TRANSPORTATION	ADDENDUMS / REVISIONS	SCALE 0 30 60 90 FEET	I-95 & US 202 INTERCHANGE	CONTRACT T200510602	BRIDGE NO. NA	CONSTRUCTION PHASING, MOT & EROSION CONTROL PHASE 1, STAGE 3 MOT 40 OF 139	SHEET NO. 305
				COUNTY NEW CASTLE	DESIGNED BY: DJD / REM		TOTAL SHTS. 482
					CHECKED BY: KMC		

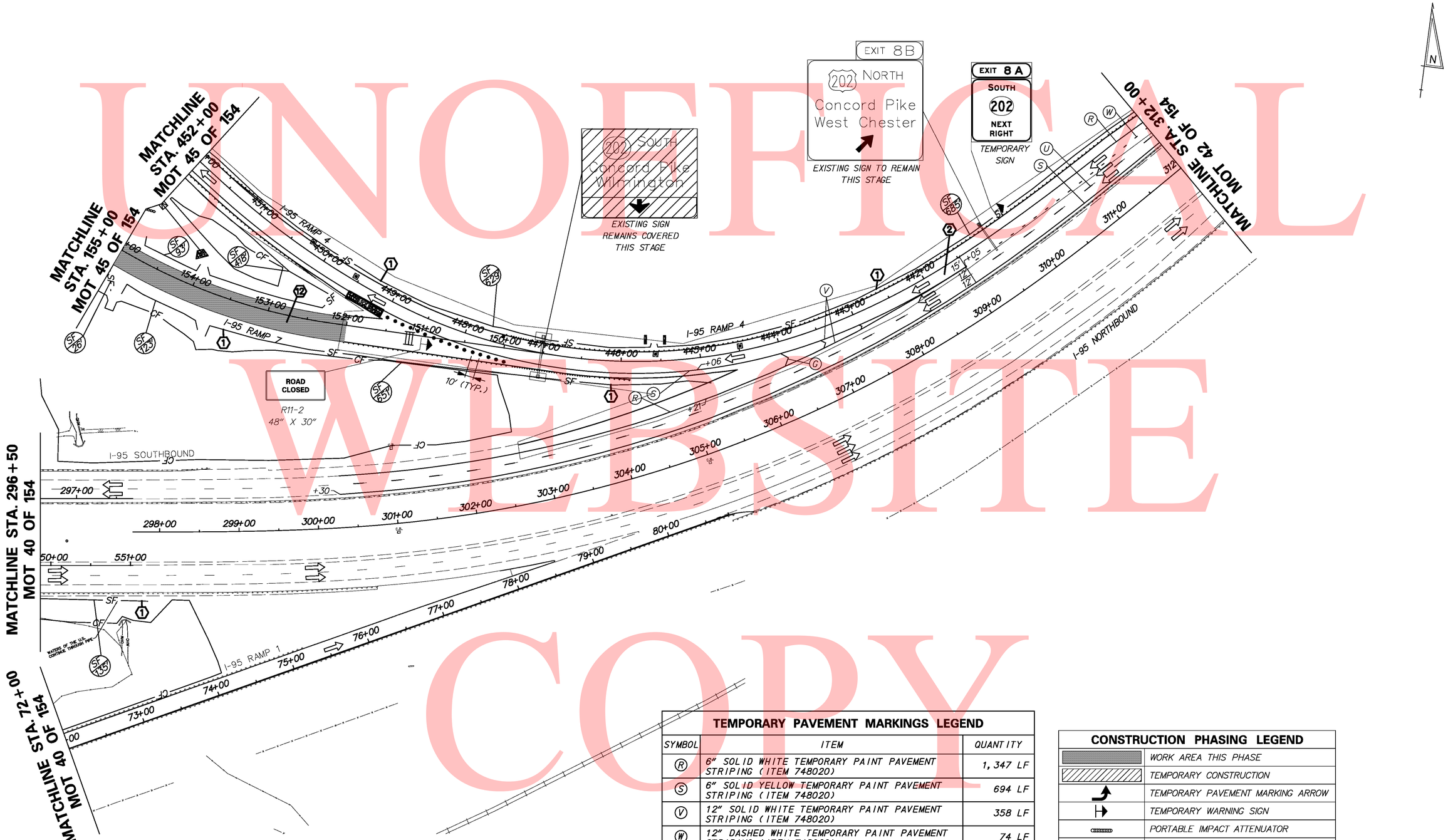

UNOFFICIAL WEBSITE COPY

TEMPORARY PAVEMENT MARKINGS LEGEND

SYMBOL	ITEM	QUANTITY
R	6" SOLID WHITE TEMPORARY PAINT PAVEMENT STRIPING (ITEM 748020)	1,347 LF
S	6" SOLID YELLOW TEMPORARY PAINT PAVEMENT STRIPING (ITEM 748020)	694 LF
V	12" SOLID WHITE TEMPORARY PAINT PAVEMENT STRIPING (ITEM 748020)	358 LF
W	12" DASHED WHITE TEMPORARY PAINT PAVEMENT STRIPING (ITEM 748020)	74 LF
G	WHITE TEMPORARY PAINT PAVEMENT SYMBOL (ITEM 748026)	55 SF

CONSTRUCTION PHASING LEGEND

	WORK AREA THIS PHASE
	TEMPORARY CONSTRUCTION
	TEMPORARY PAVEMENT MARKING ARROW
	TEMPORARY WARNING SIGN
	PORTABLE IMPACT ATTENUATOR
	CHANNELIZING DEVICE
	TYPE III BARRICADE

\\nighdat\eng\deldot\4625 (az)\07 (contract 5)\submissions\00-in-progress\mot\sheet files\I95motsht04I_PHIStg3.dgn

8/18/2010

DELAWARE DEPARTMENT OF TRANSPORTATION

ADDENDUMS / REVISIONS

SCALE 0 30 60 90 FEET

I-95 & US 202 INTERCHANGE

CONTRACT	BRIDGE NO.	NA
T200510602	DESIGNED BY: DJD / REM	
COUNTY	CHECKED BY: KMC	
NEW CASTLE		

CONSTRUCTION PHASING, MOT & EROSION CONTROL PHASE 1, STAGE 3 MOT 41 OF 139

SHEET NO. 306

TOTAL SHTS. 482

TEMPORARY PAVEMENT MARKINGS LEGEND		
SYMBOL	ITEM	QUANTITY
(R)	6" SOLID WHITE TEMPORARY PAINT PAVEMENT STRIPING (ITEM 748020)	130 LF
(W)	12" DASHED WHITE TEMPORARY PAINT PAVEMENT STRIPING (ITEM 748020)	130 LF

CONSTRUCTION PHASING LEGEND	
	WORK AREA THIS PHASE
	TEMPORARY CONSTRUCTION
	TEMPORARY PAVEMENT MARKING ARROW
	TEMPORARY WARNING SIGN
	PORTABLE IMPACT ATTENUATOR
	CHANNELIZING DEVICE
	TYPE III BARRICADE

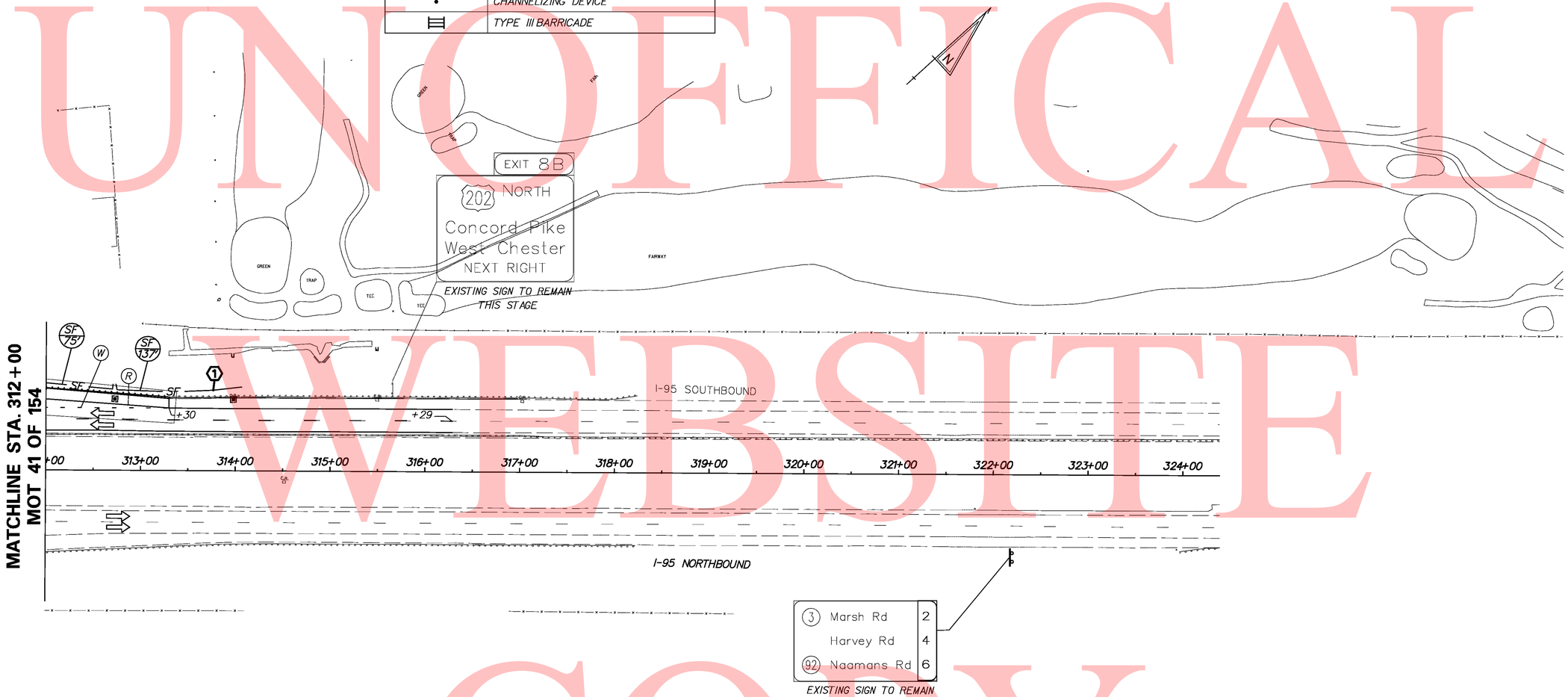

UNOFFICAL WEBSITE COPY

\\nighdot\eng\deldot\1625 (az)\07 (contract 5)\submissions\00-in-progress\mot\sheet files\195mot sht042_PHIS tg3.dgn

8/18/2010

DELAWARE DEPARTMENT OF TRANSPORTATION	ADDENDUMS / REVISIONS	SCALE 0 30 60 90 FEET	I-95 & US 202 INTERCHANGE	CONTRACT T200510602	BRIDGE NO. NA	CONSTRUCTION PHASING, MOT & EROSION CONTROL PHASE 1, STAGE 3 MOT 42 OF 139	SHEET NO. 307
				COUNTY NEW CASTLE	DESIGNED BY: DJD / REM		TOTAL SHTS. 482
					CHECKED BY: KMC		

TEMPORARY PAVEMENT MARKINGS LEGEND		
SYMBOL	ITEM	QUANTITY
R	6" SOLID WHITE TEMPORARY PAINT PAVEMENT STRIPING (ITEM 748020)	970 LF
S	6" SOLID YELLOW TEMPORARY PAINT PAVEMENT STRIPING (ITEM 748020)	1,170 LF
G	WHITE TEMPORARY PAINT PAVEMENT SYMBOL (ITEM 748026)	48 SF

CONSTRUCTION PHASING LEGEND	
	WORK AREA THIS PHASE
	TEMPORARY CONSTRUCTION
	TEMPORARY PAVEMENT MARKING ARROW
	TEMPORARY WARNING SIGN
	PORTABLE IMPACT ATTENUATOR
	CHANNELIZING DEVICE
	TYPE III BARRICADE

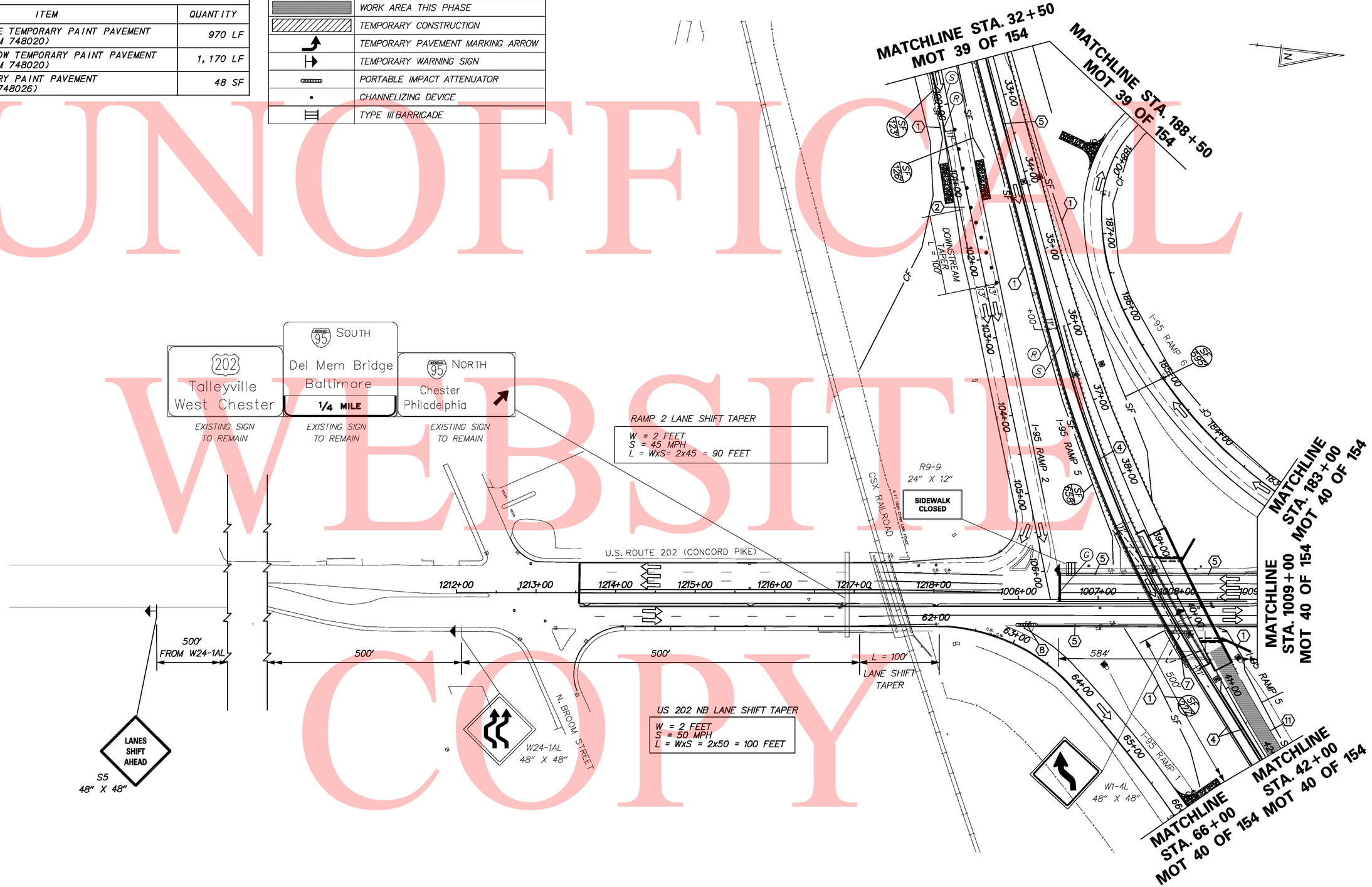

UNOFFICIAL WEBSITE COPY

\\nighdat\eng\deldot\4625 (az)\07 (contract 5)\submissions\00-in-progress\mot\sheet files\95motsht043_PHIStg3.dgn

8/18/2010

DELAWARE DEPARTMENT OF TRANSPORTATION	ADDENDUMS / REVISIONS	SCALE 0 30 60 90 FEET	I-95 & US 202 INTERCHANGE	CONTRACT T200510602	BRIDGE NO. NA	CONSTRUCTION PHASING, MOT & EROSION CONTROL PHASE 1, STAGE 3 MOT 43 OF 139	SHEET NO. 308
				COUNTY NEW CASTLE	DESIGNED BY: DJD / REM		TOTAL SHTS. 482
					CHECKED BY: KMC		

TEMPORARY PAVEMENT MARKINGS LEGEND

SYMBOL	ITEM	QUANTITY
Ⓡ	6" SOLID WHITE TEMPORARY PAINT PAVEMENT STRIPING (ITEM 748020)	25 LF
Ⓢ	6" SOLID YELLOW TEMPORARY PAINT PAVEMENT STRIPING (ITEM 748020)	25 LF
Ⓤ	6" DASHED WHITE TEMPORARY PAINT PAVEMENT STRIPING (ITEM 748020)	6 LF
Ⓥ	12" SOLID WHITE TEMPORARY PAINT PAVEMENT STRIPING (ITEM 748020)	25 LF

CONSTRUCTION PHASING LEGEND

	WORK AREA THIS PHASE
	TEMPORARY CONSTRUCTION
	TEMPORARY PAVEMENT MARKING ARROW
	TEMPORARY WARNING SIGN
	PORTABLE IMPACT ATTENUATOR
	CHANNELIZING DEVICE
	TYPE III BARRICADE

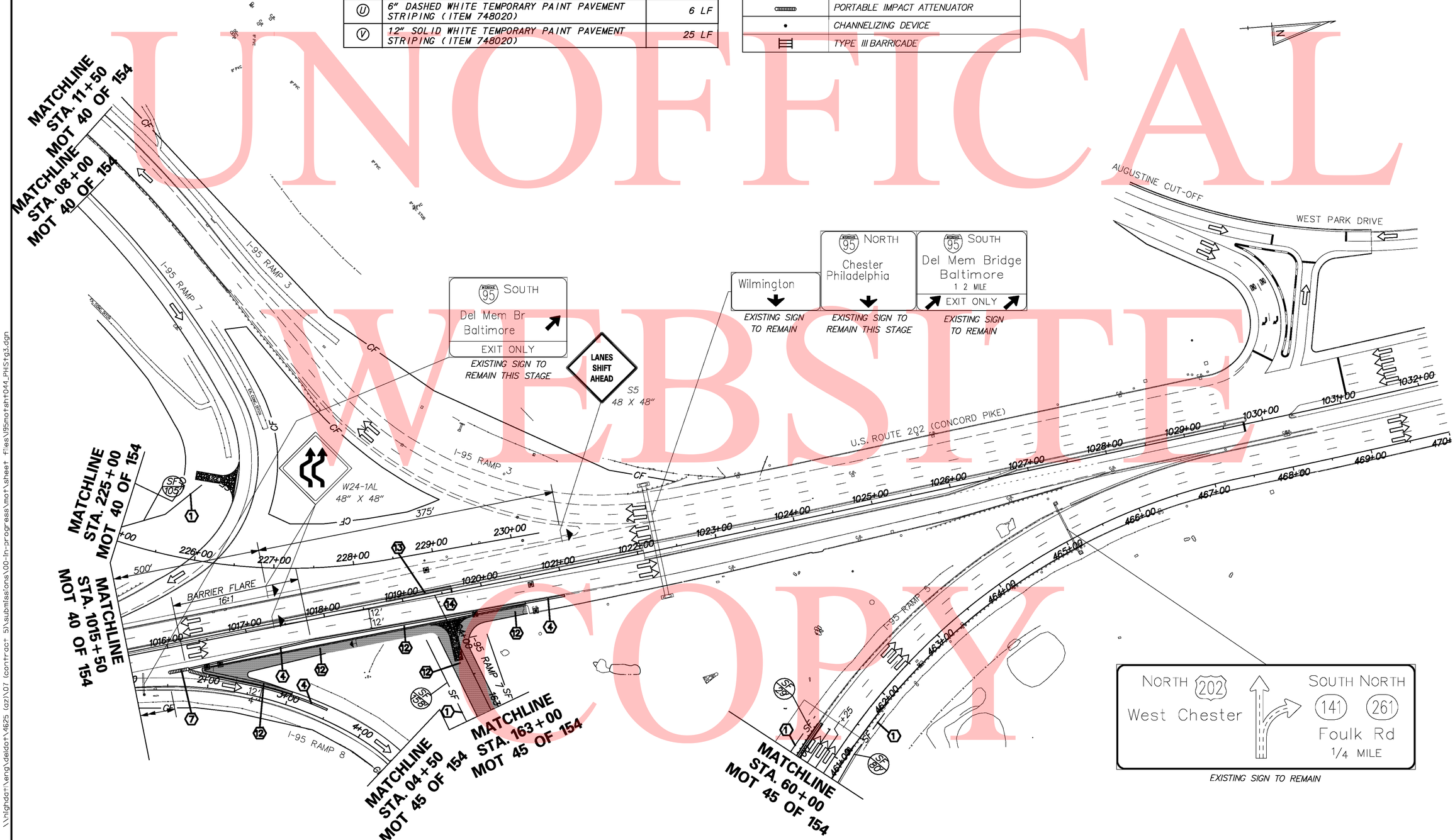

UNOFFICAL WEBSITE COPY

DELAWARE DEPARTMENT OF TRANSPORTATION

ADDENDUMS / REVISIONS

SCALE 0 30 60 90 FEET

I-95 & US 202 INTERCHANGE

CONTRACT	BRIDGE NO.	NA
T200510602	DESIGNED BY: DJD / REM	
COUNTY		
NEW CASTLE	CHECKED BY: KMC	

CONSTRUCTION PHASING, MOT & EROSION CONTROL PHASE 1, STAGE 3 MOT 44 OF 139

SHEET NO. 309

TOTAL SHTS. 482

8/18/2010

\\highdar\eng\deldot\4625 (az)\07 (contract 5)\submissions\00-in-progress\mot\sheet files\i95motsht044_PHIStg3.dgn

CONSTRUCTION PHASING LEGEND	
	WORK AREA THIS PHASE
	TEMPORARY CONSTRUCTION
	TEMPORARY PAVEMENT MARKING ARROW
	TEMPORARY WARNING SIGN
	PORTABLE IMPACT ATTENUATOR
	CHANNELIZING DEVICE
	TYPE III BARRICADE

TEMPORARY PAVEMENT MARKINGS LEGEND		
SYMBOL	ITEM	QUANTITY
R	6" SOLID WHITE TEMPORARY PAINT PAVEMENT STRIPING (ITEM 748020)	1,336 LF
S	6" SOLID YELLOW TEMPORARY PAINT PAVEMENT STRIPING (ITEM 748020)	1,369 LF
U	6" DASHED WHITE TEMPORARY PAINT PAVEMENT STRIPING (ITEM 748020)	225 LF
V	12" SOLID WHITE TEMPORARY PAINT PAVEMENT STRIPING (ITEM 748020)	808 LF

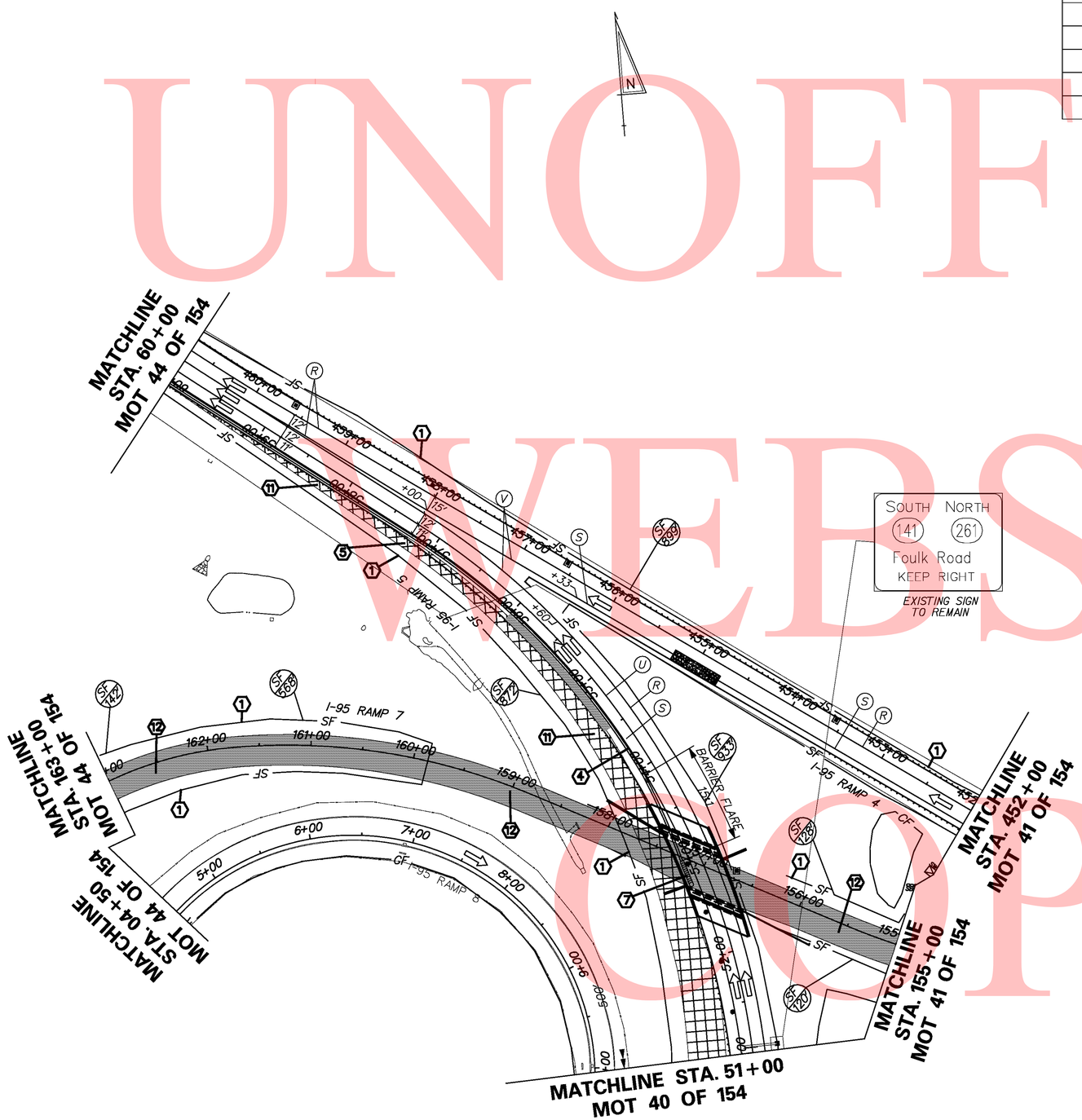

UNOFFICIAL WEBSITE COPY

\\nighdat\eng\deldot\4625 (az)\07 (contract 5)\submissions\00-in-progress\mot\sheet files\I95motsht045_PHIStg3.dgn

8/18/2010

DELAWARE DEPARTMENT OF TRANSPORTATION	ADDENDUMS / REVISIONS	SCALE 0 30 60 90 FEET	I-95 & US 202 INTERCHANGE	CONTRACT T200510602	BRIDGE NO. NA	CONSTRUCTION PHASING, MOT & EROSION CONTROL PHASE 1, STAGE 3 MOT 45 OF 139	SHEET NO. 310
				COUNTY NEW CASTLE	DESIGNED BY: DJD / REM		TOTAL SHTS. 482
					CHECKED BY: KMC		

SEQUENCE OF CONSTRUCTION

PHASE 1, STAGE 4

(1) INSTALL ALL EROSION AND SEDIMENT CONTROL MEASURES AS SHOWN ON THE PLANS.

(2) STABILIZE ALL DISTURBED AREAS WITH TOP SOIL SEED AND MULCH PRIOR TO THE REMOVAL OF THE SEDIMENT CONTROL DEVICES AS DIRECTED BY THE ENGINEER.

PERFORM THE FOLLOWING WORK PRIOR TO OPENING RAMP 5 / RAMP 2 TWO-LANE RAMP AND NEW RAMP 7 TO TRAFFIC:

(3) 1. INSTALL PERMANENT SIGNING ON NEW RAMP 7 AS SHOWN ON THE SIGNING, STRIPING AND CONDUIT PLANS.

(4) 2. CONSTRUCT THE NEW GROUND-MOUNTED I-BEAM SIGN AT I-95 SOUTHBOUND STATION 325+25.

(5) 3. REMOVE THE EXISTING GROUND-MOUNTED I-BEAM SIGNS AT I-95 SOUTHBOUND STATION 315+70 AND I-95 SOUTHBOUND STATION 325+80.

(6) 4. REMOVE THE EXISTING CANTILEVER AT EXISTING RAMP 7 STATION 1+30.

5. USE 15-MINUTE STOPPAGES OF TRAFFIC IN ACCORDANCE WITH FIGURE A OF THE TRAFFIC CONTROL PLANS TO PERFORM THE FOLLOWING SIGNING WORK IN ACCORDANCE WITH THE SIGNING, STRIPING AND CONDUIT PLANS:

(7) A. REMOVE THE EXISTING OVERHEAD I-BEAM SIGN FROM THE US 202 OVERPASS AT I-95 SOUTHBOUND STATION 289+30.

(8) B. INSTALL NEW SIGN OVERLAY PANEL ON THE EXISTING "202 CONCORD PIKE" EXIT SIGN ON THE I-95 NORTHBOUND SIDE OF THE 18TH STREET OVERPASS AT I-95 STATION 509+73.

6. CLOSE AND DETOUR RAMP 4 IN ACCORDANCE WITH THE RAMP #6174 DETOUR PLAN TO PERFORM THE FOLLOWING SIGNING WORK AS SHOWN ON THE SIGNING, STRIPING AND CONDUIT PLANS:

(9) A. RELOCATE THE EXISTING SIGN PANEL ON THE CANTILEVER AT I-95 SOUTHBOUND STATION 309+50 TO THE NEW OVERHEAD TRUSS AT RAMP 4 STATION 447+00. REMOVE COVER FROM THE "202 SOUTH, CONCORD PIKE, WILMINGTON" EXISTING SIGN PANEL ON THE OVERHEAD TRUSS.

(10) B. INSTALL NEW SIGN PANEL ON THE CANTILEVER AT I-95 SOUTHBOUND STATION 309+50.

(11) DURING NIGHT WORK HOURS: USING LANE AND SHOULDER CLOSURES IN ACCORDANCE WITH THE CASES LISTED IN THE MOT GENERAL NOTES, REMOVE EXISTING STRIPING ON I-95 NORTHBOUND, RAMP 5 AND RAMP 2, AS NECESSARY, AND REMOVE THE EXISTING RAISED PAVEMENT MARKERS AND THE EXISTING RUMBLE STRIPS ON I-95 NORTHBOUND FROM STATION 536+00 TO STATION 299+14. PLACE TEMPORARY STRIPING ON I-95 NORTHBOUND, RAMP 2, RAMP 5 AND RAMP 7 USING CASE 23-C AS SHOWN UNDER PHASE 1, STAGE 4.

(12) USING LANE AND SHOULDER CLOSURES IN ACCORDANCE WITH THE CASES LISTED IN THE MOT GENERAL NOTES, RELOCATE TEMPORARY CONCRETE BARRIER:
1. TO THE RIGHT SIDE OF I-95 NORTHBOUND FROM STATION 545+72 TO STATION 550+72
2. THE RIGHT SIDE OF I-95 SOUTHBOUND / RAMP 3 FROM I-95 SOUTHBOUND STATION 267+65 TO 275+40
3. THE LEFT SIDE OF RAMP 2 FROM STATION 91+40 TO STATION 100+34
4. THE RIGHT SIDE OF RAMP 5 FROM STATION 24+02 TO STATION 45+50
5. THE RIGHT SIDE OF US 202 SOUTHBOUND FROM STATION 1017+32 TO STATION 1021+07
6. THE LEFT SIDE OF RAMP 6 FROM STATION 181+44 TO STATION 183+50.

TEMPORARY CONCRETE BARRIER REMAINS IN PLACE ON THE US 202 NORTHBOUND FROM STATION 1006+23 TO STATION 1012+33 AND ON US 202 SOUTHBOUND FROM STATION 1006+49 TO STATION 1010+61.

(13) USING LANE AND SHOULDER CLOSURES IN ACCORDANCE WITH THE CASES LISTED IN THE MOT GENERAL NOTES, RELOCATE PORTABLE IMPACT ATTENUATORS:
1. FROM I-95 NORTHBOUND STATION 521+22 TO I-95 NORTHBOUND STATION 545+72
2. FROM RAMP 5 STATION 40+51 TO RAMP 5 STATION 24+02
3. FROM RAMP 5 STATION 52+99 TO RAMP 3 (I-95 SOUTHBOUDN STATION 275+40)
4. FROM US 202 NORTHBOUND STATION 1016+20 TO US 202 SOUTHBOUND STATION 1017+32

PORTABLE IMPACT ATTENUATORS REMAIN IN PLACE FROM PHASE 1, STAGE 2 AT US 202 NORTHBOUND STATION 1006+23 AND US 202 SOUTHBOUND STATION 1006+49.

(14) SHIFT TRAFFIC TO NEW LANES DESIGNATED FOR PHASE 1, STAGE 4. US 202 NORTHBOUND AND SOUTHBOUND LANES STAY IN SAME LOCATION AS IN PHASE 1 STAGE 3.

(15) OPEN NEW RAMP 7 TO TRAFFIC. ACTIVATE TEMPORARY SIGNAL AT THE US 202 AND NEW RAMP 7 INTERSECTION IN ACCORDANCE WITH THE CONCORD PIKE (US 202) & I-95 SB OFF RAMP 7 INTERIM SIGNAL PLAN SIGNAL 3 OF 4.

EXISTING RAMP 7

(16) REMOVE EXISTING RAMP 7.

NEW RAMP 5 AND RAMP 2

(17) CONSTRUCT THE RIGHT SIDE OF RAMP 5 FROM STATION 25+25 TO STATION 45+00 AND THE LEFT SIDE OF RAMP 2 FROM STATION 92+37 TO STATION 100+34.

(18) CONSTRUCT THE RIGHT SIDE OF STRUCTURE NO. 762 AS SHOWN ON THE STRUCTURE PLANS. ERECT BEAMS FOR RIGHT SIDE OF STRUCTURE NO. 762 IN ACCORDANCE WITH THE FOLLOWING REQUIREMENTS:

1. PERFORM WORK DURING THE HOURS INDICATED IN THE MOT GENERAL NOTES FOR THIS ACTIVITY.

2. CLOSE AND DETOUR US 202 NORTHBOUND AND SOUTHBOUND AND RAMP 5 IN ACCORDANCE WITH THE STRUCTURE NO. 762 DETOUR PLAN.

3. ERECT BEAMS.

EXISTING RAMP 5

(19) REMOVE EXISTING RAMP 5 FROM STATION 35+53 TO STATION 41+67 AND FROM STATION 43+03 TO STATION 49+34.

(20) REMOVE EXISTING STRUCTURE NO. 763 IN ACCORDANCE WITH THE FOLLOWING REQUIREMENTS:

1. PERFORM WORK DURING THE HOURS INDICATED IN THE MOT GENERAL NOTES FOR THIS ACTIVITY.

2. CLOSE AND DETOUR I-95 NORTHBOUND AND SOUTHBOUND, RAMP 5, RAMP 6 AND RAMP 7 IN ACCORDANCE WITH THE STRUCTURE NO. 763 DETOUR PLAN AND THE I-95 TO I-495 DETOUR PLAN.

RAMP 6 AND US 202

(21) CONSTRUCT RAMP 6 ACCELERATION LANE FROM I-95 NORTHBOUND STATION 546+90 TO STATION 550+25.

(22) CONSTRUCT THE RIGHT SIDE OF US 202 NORTHBOUND FROM STATION 1006+23 TO STATION 1011+83, THE RIGHT SIDE OF US 202 SOUTHBOUND FROM STATION 1006+49 TO STATION 1010+35 AND THE LEFT SIDE OF RAMP 6 FROM STATION 181+62 TO STATION 183+00.

I-95 SOUTHBOUND / RAMP 3 TEMPORARY PAVEMENT

(23) REMOVE EXISTING GUARDRAIL FROM I-95 STATION 268+00 TO 270+15 TO CONSTRUCT TEMPORARY PAVEMENT.

USING LANE AND SHOULDER CLOSURES IN ACCORDANCE WITH THE CASES LISTED IN THE MOT GENERAL NOTES, CONSTRUCT TEMPORARY PAVEMENT ALONG EXISTING RAMP 3 / I-95 SOUTHBOUND FROM I-95 SOUTHBOUND STATION 268+17 TO STATION 275+00.

INSTALL NEW GUARDRAIL FROM I-95 STATION 268+00 TO 270+15 AND INSTALL TEMPORARY IMPACT ATTENUATOR AT I-95 STATION 270+15.

UNOFFICAL WEBSITE COPY

\\highdot\eng\deldot\4625 (az)\07 (contract 5)\submissions\00-in-progress\mot\sheet files\95motsht046_PHIStg4_Notes.dgn
12/10/2010

DELAWARE DEPARTMENT OF TRANSPORTATION	ADDENDUMS / REVISIONS	SCALE 0 30 60 90 FEET	I-95 & US 202 INTERCHANGE	CONTRACT T200510602	BRIDGE NO. NA	CONSTRUCTION PHASING, MOT & EROSION CONTROL PHASE 1, STAGE 4 MOT 46 OF 139	SHEET NO. 311
				COUNTY NEW CASTLE	DESIGNED BY: DJD / REM		TOTAL SHTS. 482
					CHECKED BY: KMC		

TYPICAL SECTIONS

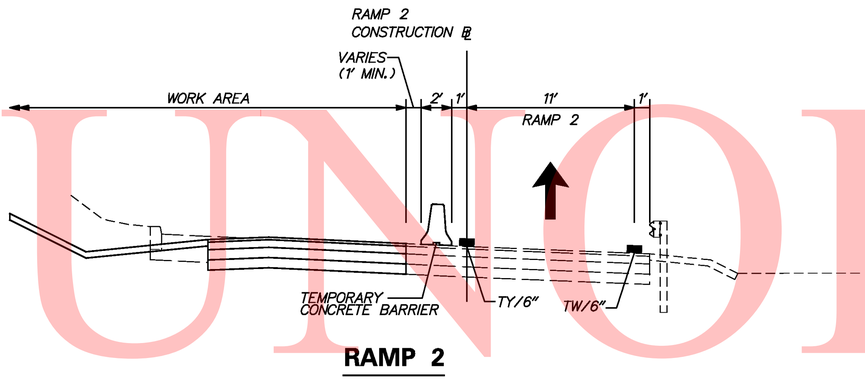

RAMP 2

STA 92+37 TO STA 100+33.75

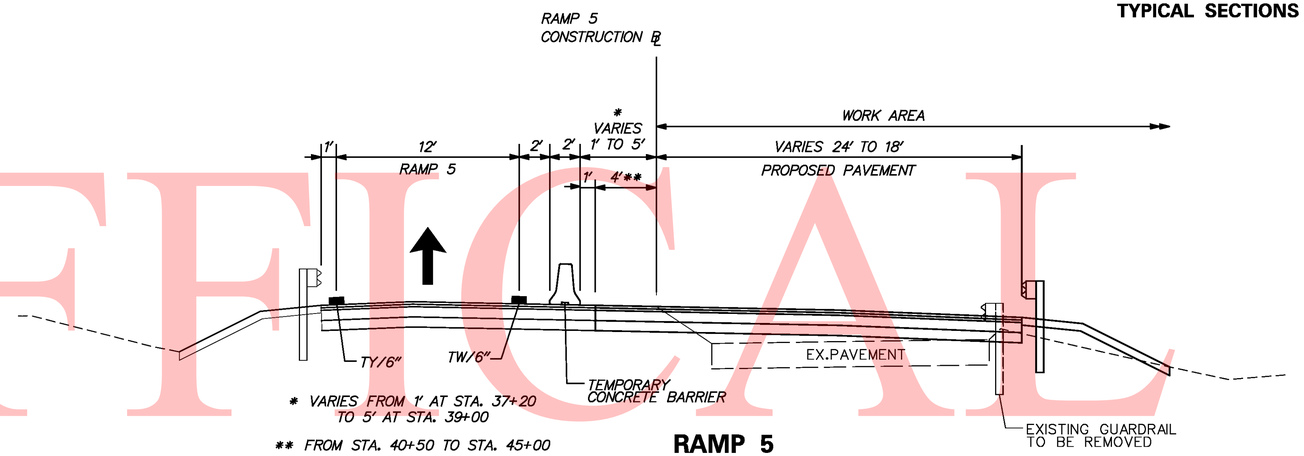

* VARIES FROM 1' AT STA. 37+20 TO 5' AT STA. 39+00

** FROM STA. 40+50 TO STA. 45+00

RAMP 5

STA. 25+25 TO STA. 45+00

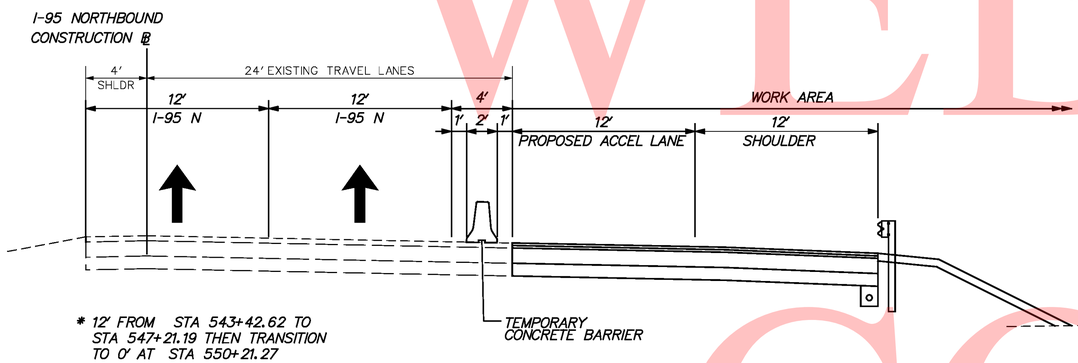

* 12' FROM STA 543+42.62 TO STA 547+21.19 THEN TRANSITION TO 0' AT STA 550+21.27

I-95 NORTHBOUND /RAMP 6 ACCELERATION LANE

STA 546+90 TO STA 550+21.27

NOTE' SEE PHASE 1 - STAGE 2 TYPICAL SECTIONS FOR US 202.

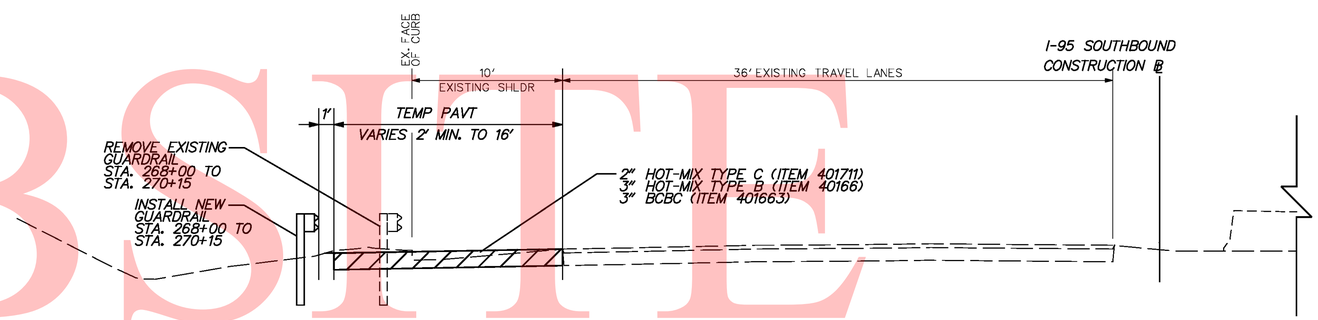

I-95 SOUTHBOUND /RAMP 3 TEMPORARY PAVEMENT

STA 268+10 TO STA 272+00

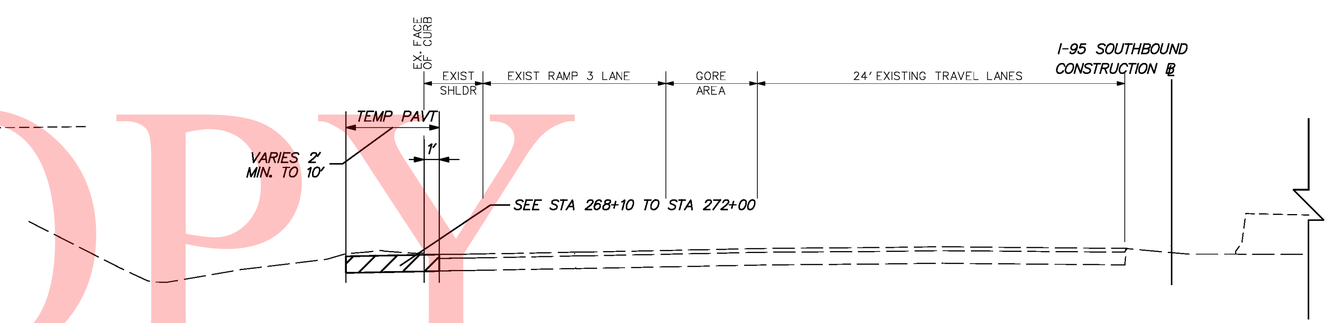

I-95 SOUTHBOUND /RAMP 3 TEMPORARY PAVEMENT

STA 272+00 TO STA. 275+00

UNOFFICIAL WEBSITE COPY

\\highdat\eng\deldot\462S (az)\07 (contract 5)\submissions\00-in-progress\mot\sheet files\I95motsht047_PHIStg4_Typ1cai.dgn

12/10/2010

DELAWARE DEPARTMENT OF TRANSPORTATION	ADDENDUMS / REVISIONS	SCALE 0 30 60 90 FEET	I-95 & US 202 INTERCHANGE	CONTRACT T200510602 / COUNTY NEW CASTLE	BRIDGE NO. NA / DESIGNED BY: DJD / REM / CHECKED BY: KMC	CONSTRUCTION PHASING, MOT & EROSION CONTROL PHASE 1 STAGE 4 MOT 47 OF 139	SHEET NO. 312 / TOTAL SHTS. 482

UNOFFICAL WEBSITE COPY

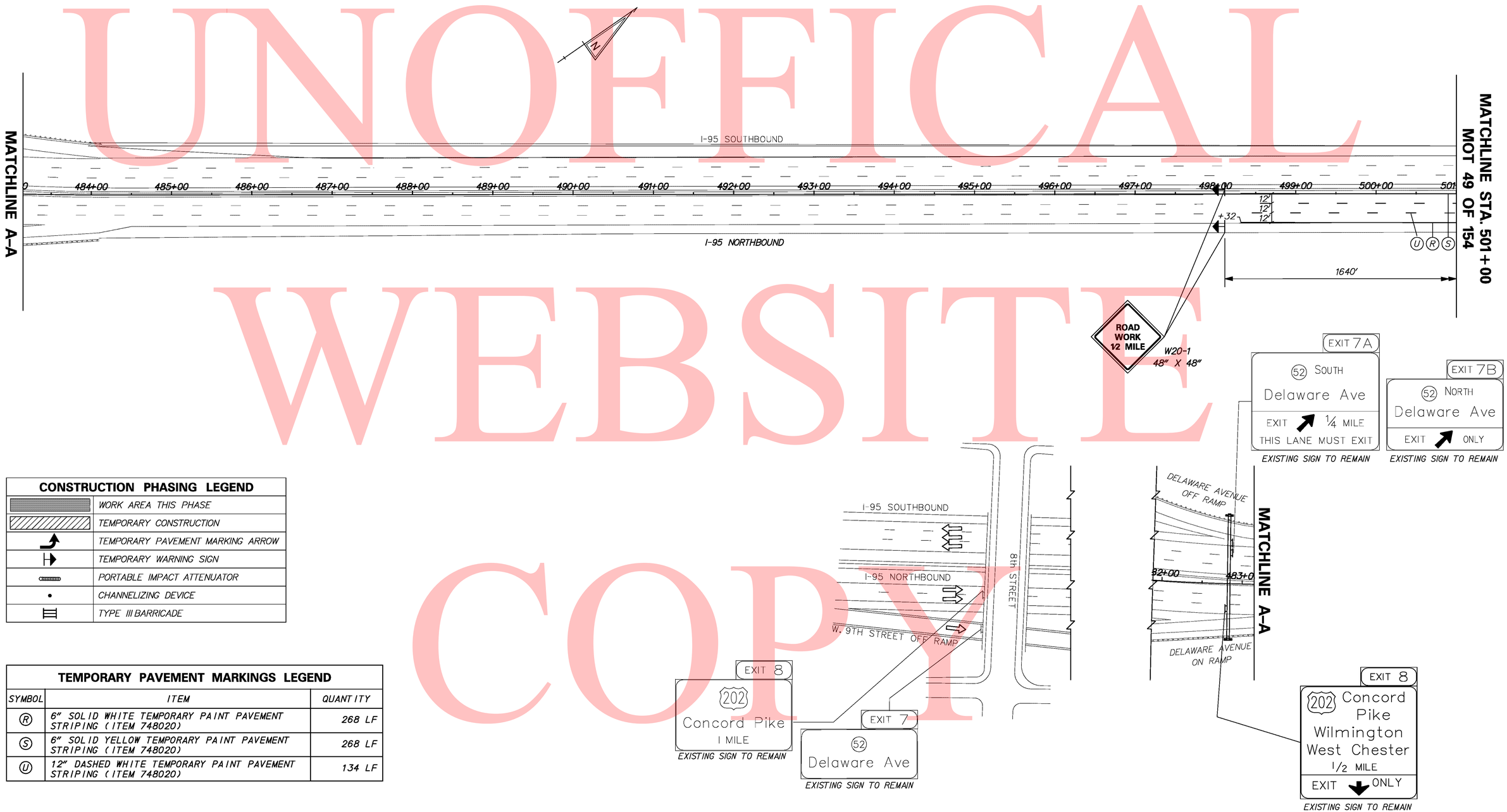

CONSTRUCTION PHASING LEGEND	
	WORK AREA THIS PHASE
	TEMPORARY CONSTRUCTION
	TEMPORARY PAVEMENT MARKING ARROW
	TEMPORARY WARNING SIGN
	PORTABLE IMPACT ATTENUATOR
	CHANNELIZING DEVICE
	TYPE III BARRICADE

TEMPORARY PAVEMENT MARKINGS LEGEND		
SYMBOL	ITEM	QUANTITY
R	6" SOLID WHITE TEMPORARY PAINT PAVEMENT STRIPING (ITEM 748020)	268 LF
S	6" SOLID YELLOW TEMPORARY PAINT PAVEMENT STRIPING (ITEM 748020)	268 LF
U	12" DASHED WHITE TEMPORARY PAINT PAVEMENT STRIPING (ITEM 748020)	134 LF

\\highdat1\eng\deldot\1625 (az)\07 (contract 5)\submissions\00-in-progress\mot\sheet files\95mot sht048_PHIS+g4.dgn

11/3/2010

DELAWARE DEPARTMENT OF TRANSPORTATION

ADDENDUMS / REVISIONS

SCALE 0 60 120 180 FEET

I-95 & US 202 INTERCHANGE

CONTRACT	BRIDGE NO.	NA
T200510602	DESIGNED BY:	MT
COUNTY		
NEW CASTLE	CHECKED BY:	KMC

CONSTRUCTION PHASING, MOT & EROSION CONTROL PHASE 1, STAGE 4 MOT 48 OF 139

SHEET NO. 313
TOTAL SHTS. 482

TEMPORARY PAVEMENT MARKINGS LEGEND		
SYMBOL	ITEM	QUANTITY
R	6" SOLID WHITE TEMPORARY PAINT PAVEMENT STRIPING (ITEM 748020)	1757 LF
S	6" SOLID YELLOW TEMPORARY PAINT PAVEMENT STRIPING (ITEM 748020)	1757 LF
U	6" DASHED WHITE TEMPORARY PAINT PAVEMENT STRIPING (ITEM 748020)	759 LF
V	12" SOLID WHITE TEMPORARY PAINT PAVEMENT STRIPING (ITEM 748020)	1,236 LF
W	12" DASHED WHITE TEMPORARY PAINT PAVEMENT STRIPING (ITEM 748020)	225 LF

CONSTRUCTION PHASING LEGEND	
	WORK AREA THIS PHASE
	TEMPORARY CONSTRUCTION
	TEMPORARY PAVEMENT MARKING ARROW
	TEMPORARY WARNING SIGN
	PORTABLE IMPACT ATTENUATOR
	CHANNELIZING DEVICE
	TYPE III BARRICADE

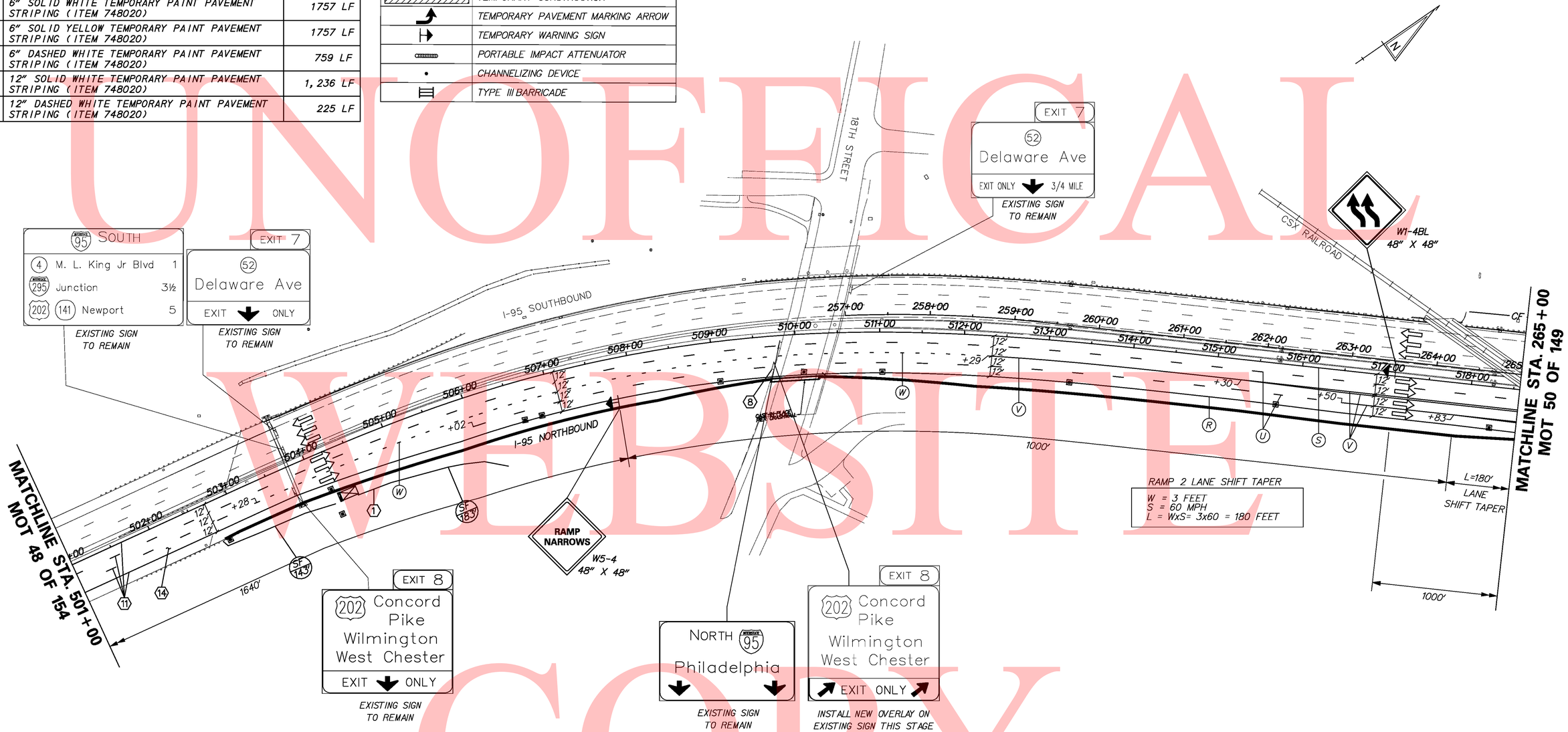

UNOFFICIAL WEBSITE COPY

\\nighdat\eng\deldot\4625 (az)\07 (contract 5)\submissions\00-in-progress\mot\sheet files\I95motsht049_PHIStg4.dgn

8/18/2010

DELAWARE DEPARTMENT OF TRANSPORTATION	ADDENDUMS / REVISIONS	SCALE 0 60 120 180 FEET	I-95 & US 202 INTERCHANGE	CONTRACT T200510602	BRIDGE NO. NA	CONSTRUCTION PHASING, MOT & EROSION CONTROL PHASE 1, STAGE 4 MOT 49 OF 139	SHEET NO. 314
				COUNTY NEW CASTLE	DESIGNED BY: DJD / REM		TOTAL SHTS. 482
					CHECKED BY: KMC		

TEMPORARY PAVEMENT MARKINGS LEGEND		
SYMBOL	ITEM	QUANTITY
R	6" SOLID WHITE TEMPORARY PAINT PAVEMENT STRIPING (ITEM 748020)	3,308 LF
S	6" SOLID YELLOW TEMPORARY PAINT PAVEMENT STRIPING (ITEM 748020)	2,898 LF
U	6" DASHED WHITE TEMPORARY PAINT PAVEMENT STRIPING (ITEM 748020)	214 LF
V	12" SOLID WHITE TEMPORARY PAINT PAVEMENT STRIPING (ITEM 748020)	2,257 LF

CONSTRUCTION PHASING LEGEND	
	WORK AREA THIS PHASE
	TEMPORARY CONSTRUCTION
	TEMPORARY PAVEMENT MARKING ARROW
	TEMPORARY WARNING SIGN
	PORTABLE IMPACT ATTENUATOR
	CHANNELIZING DEVICE
	TYPE III BARRICADE

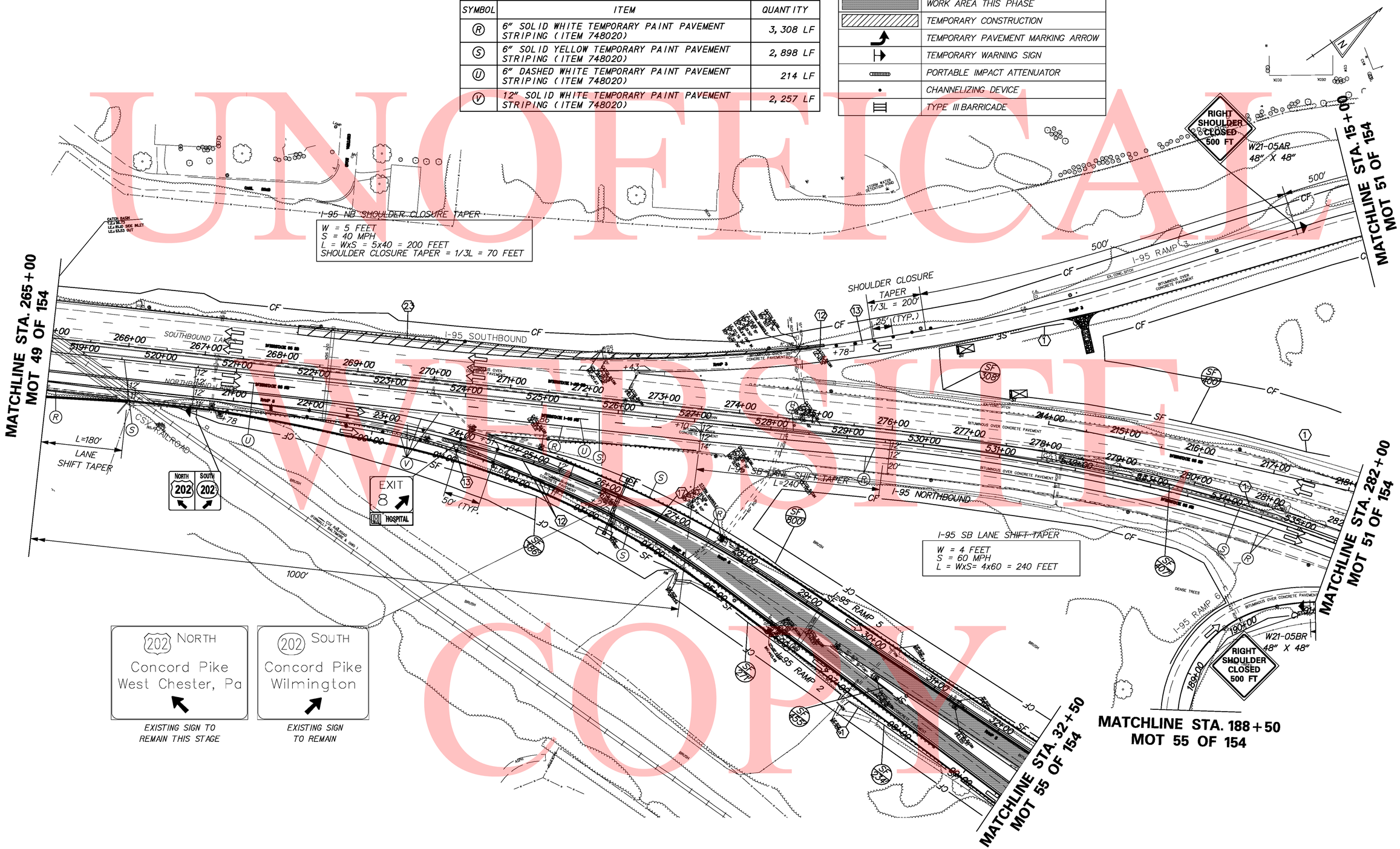

UNOFFICIAL WEBSITE COPY

\\nighdat\eng\deldot\4625 (az)\07 (contract 5)\submissions\00-in-progress\mot\sheet files\I95motsht050_PHIS+g4.dgn

12/9/2010

DELAWARE DEPARTMENT OF TRANSPORTATION	ADDENDUMS / REVISIONS	SCALE 0 30 60 90 FEET	I-95 & US 202 INTERCHANGE	CONTRACT T200510602	BRIDGE NO. NA	CONSTRUCTION PHASING, MOT & EROSION CONTROL PHASE 1, STAGE 4 MOT 50 OF 139	SHEET NO. 315
				COUNTY NEW CASTLE	DESIGNED BY: DJD / REM		TOTAL SHTS. 482
					CHECKED BY: KMC		

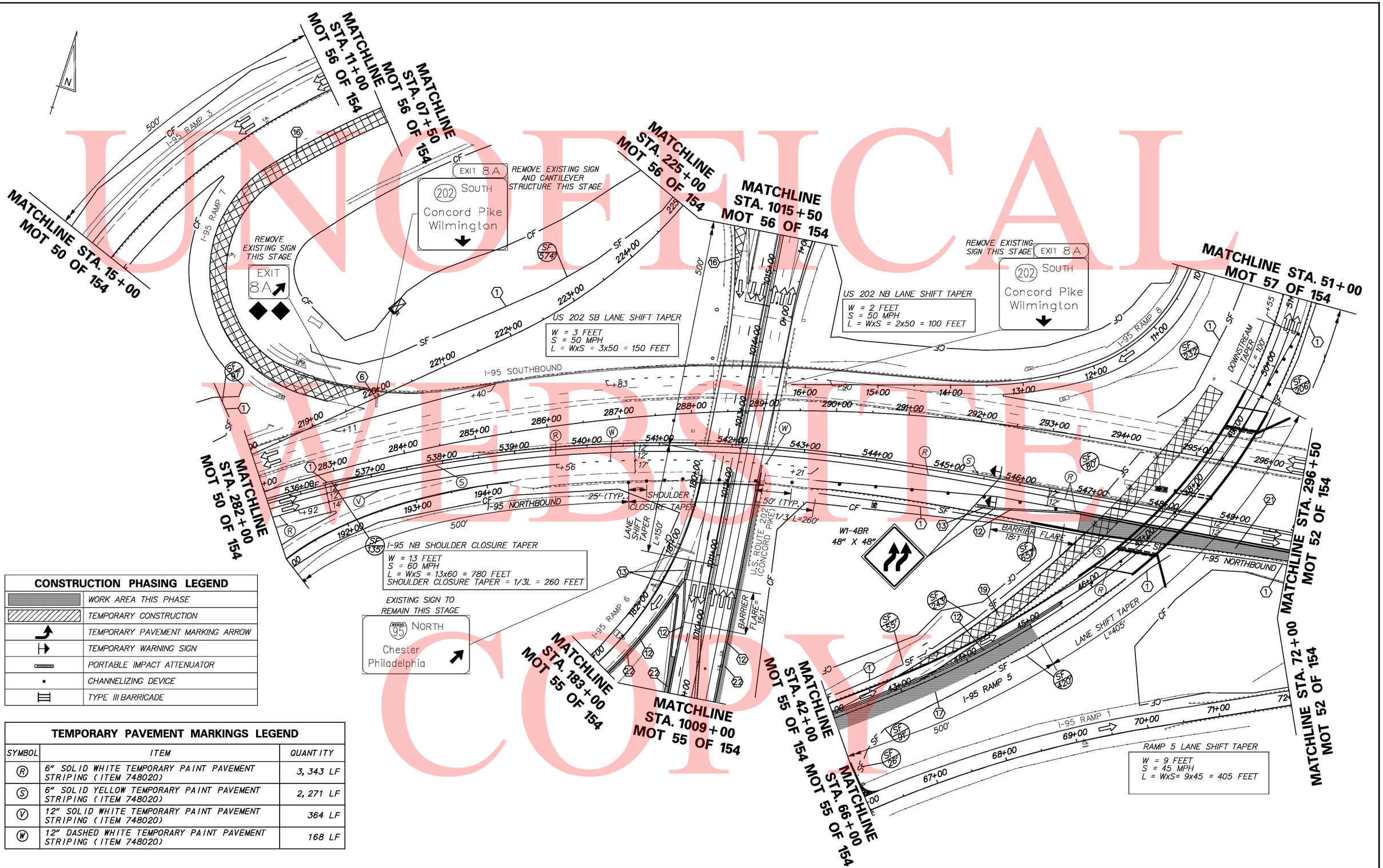

UNOFFICAL WEBSITE COPY

CONSTRUCTION PHASING LEGEND

	WORK AREA THIS PHASE
	TEMPORARY CONSTRUCTION
	TEMPORARY PAVEMENT MARKING ARROW
	TEMPORARY WARNING SIGN
	PORTABLE IMPACT ATTENUATOR
	CHANNELIZING DEVICE
	TYPE III BARRICADE

TEMPORARY PAVEMENT MARKINGS LEGEND

SYMBOL	ITEM	QUANTITY
R	6" SOLID WHITE TEMPORARY PAINT PAVEMENT STRIPING (ITEM 748020)	3,343 LF
S	6" SOLID YELLOW TEMPORARY PAINT PAVEMENT STRIPING (ITEM 748020)	2,271 LF
V	12" SOLID WHITE TEMPORARY PAINT PAVEMENT STRIPING (ITEM 748020)	364 LF
W	12" DASHED WHITE TEMPORARY PAINT PAVEMENT STRIPING (ITEM 748020)	168 LF

\\nighdot\eng\deldot\1625 (az)\07 (contract 5)\submissions\00-in-progress\mot\sheet files\195mot+sht05_PHIS+g4.dgn

8/18/2010

DELAWARE DEPARTMENT OF TRANSPORTATION

ADDENDUMS / REVISIONS

SCALE 0 30 60 90 FEET

I-95 & US 202 INTERCHANGE

CONTRACT	BRIDGE NO.	NA
T200510602	DESIGNED BY: DJD / REM	
COUNTY		
NEW CASTLE	CHECKED BY: KMC	

CONSTRUCTION PHASING, MOT & EROSION CONTROL PHASE 1, STAGE 4 MOT 51 OF 139

SHEET NO. 316
TOTAL SHTS. 482

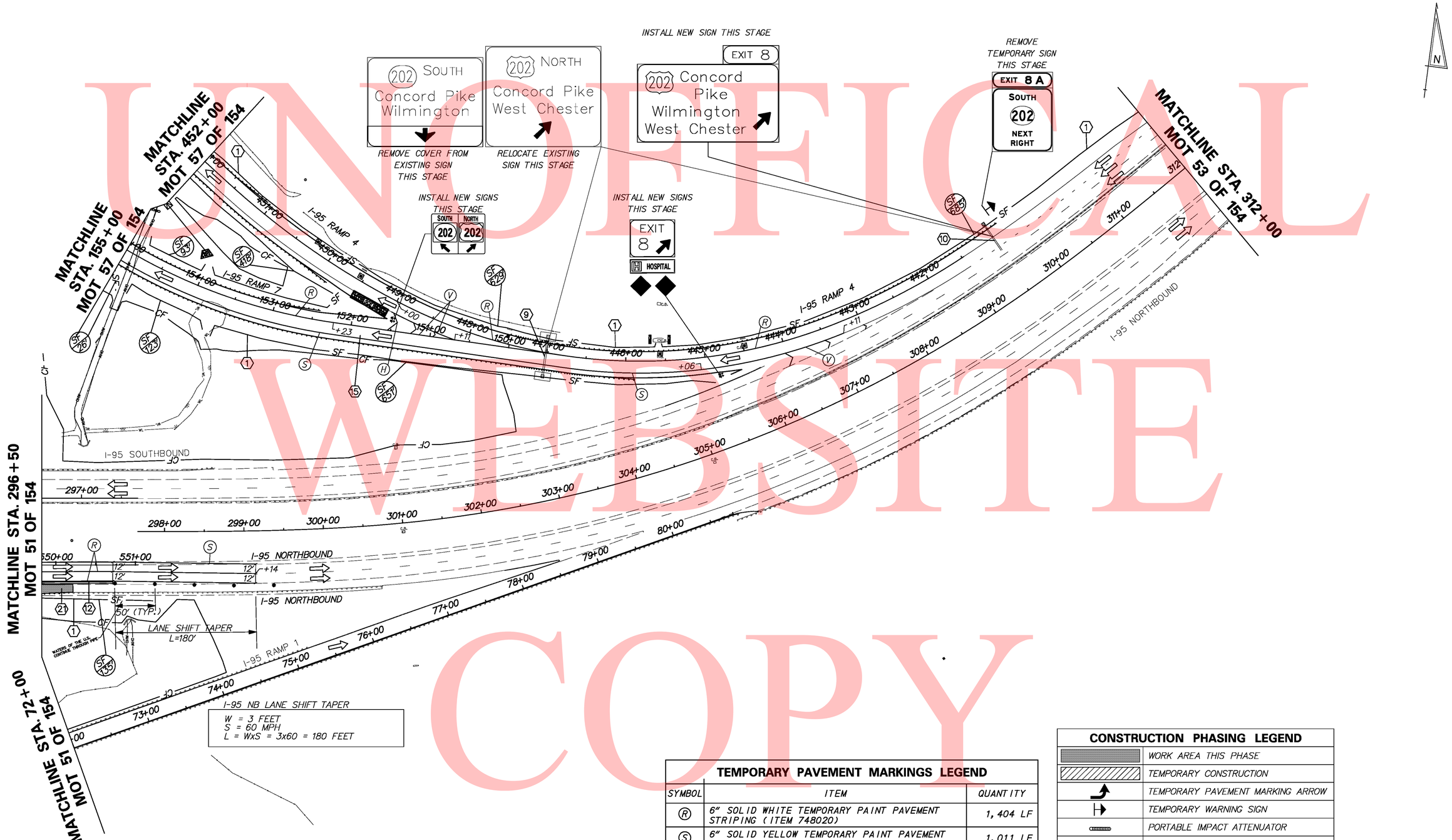

TEMPORARY PAVEMENT MARKINGS LEGEND

SYMBOL	ITEM	QUANTITY
R	6" SOLID WHITE TEMPORARY PAINT PAVEMENT STRIPING (ITEM 748020)	1,404 LF
S	6" SOLID YELLOW TEMPORARY PAINT PAVEMENT STRIPING (ITEM 748020)	1,011 LF
V	12" SOLID WHITE TEMPORARY PAINT PAVEMENT STRIPING (ITEM 748020)	438 LF

CONSTRUCTION PHASING LEGEND

	WORK AREA THIS PHASE
	TEMPORARY CONSTRUCTION
	TEMPORARY PAVEMENT MARKING ARROW
	TEMPORARY WARNING SIGN
	PORTABLE IMPACT ATTENUATOR
	CHANNELIZING DEVICE
	TYPE III BARRICADE

UNOFFICIAL WEBSITE COPY

\\nlghdat\eng\deldot\1625 (az)\07 (contract 5)\submissions\00-in-progress\mot\sheet files\I95mot sht052_PHIStg4.dgn

8/18/2010

DELAWARE DEPARTMENT OF TRANSPORTATION

ADDENDUMS / REVISIONS

SCALE 0 30 60 90 FEET

I-95 & US 202 INTERCHANGE

CONTRACT	BRIDGE NO.	NA
T200510602	DESIGNED BY: DJD / REM	
COUNTY		
NEW CASTLE	CHECKED BY: KMC	

CONSTRUCTION PHASING, MOT & EROSION CONTROL PHASE 1, STAGE 4 MOT 52 OF 139

SHEET NO. 317

TOTAL SHTS. 482

CONSTRUCTION PHASING LEGEND	
	WORK AREA THIS PHASE
	TEMPORARY CONSTRUCTION
	TEMPORARY PAVEMENT MARKING ARROW
	TEMPORARY WARNING SIGN
	PORTABLE IMPACT ATTENUATOR
•	CHANNELIZING DEVICE
	TYPE III BARRICADE

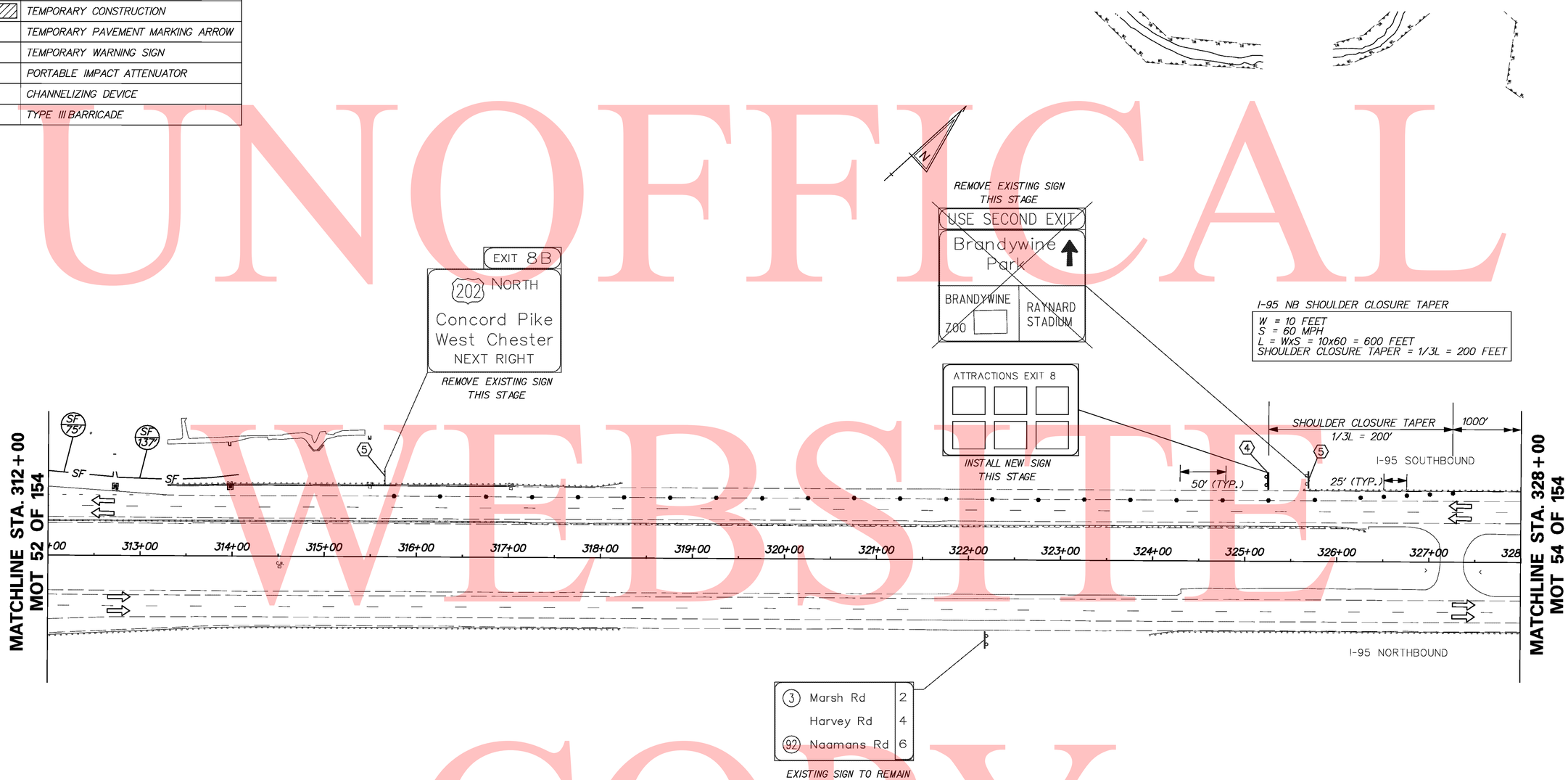

UNOFFICAL WEBSITE COPY

\\highdot\eng\deldot\462S (az)\07 (contract 5)\submissions\00-in-progress\mot\sheet files\I95motsht053_PHIStg4.dgn

8/18/2010

DELAWARE DEPARTMENT OF TRANSPORTATION	ADDENDUMS / REVISIONS	SCALE 0 30 60 90 FEET	I-95 & US 202 INTERCHANGE	CONTRACT T200510602	BRIDGE NO. NA	CONSTRUCTION PHASING, MOT & EROSION CONTROL PHASE 1, STAGE 4 MOT 53 OF 139	SHEET NO. 318
				COUNTY NEW CASTLE	DESIGNED BY: DJD / REM		TOTAL SHTS. 482
					CHECKED BY: KMC		

CONSTRUCTION PHASING LEGEND	
	WORK AREA THIS PHASE
	TEMPORARY CONSTRUCTION
	TEMPORARY PAVEMENT MARKING ARROW
	TEMPORARY WARNING SIGN
	PORTABLE IMPACT ATTENUATOR
	CHANNELIZING DEVICE
	TYPE III BARRICADE

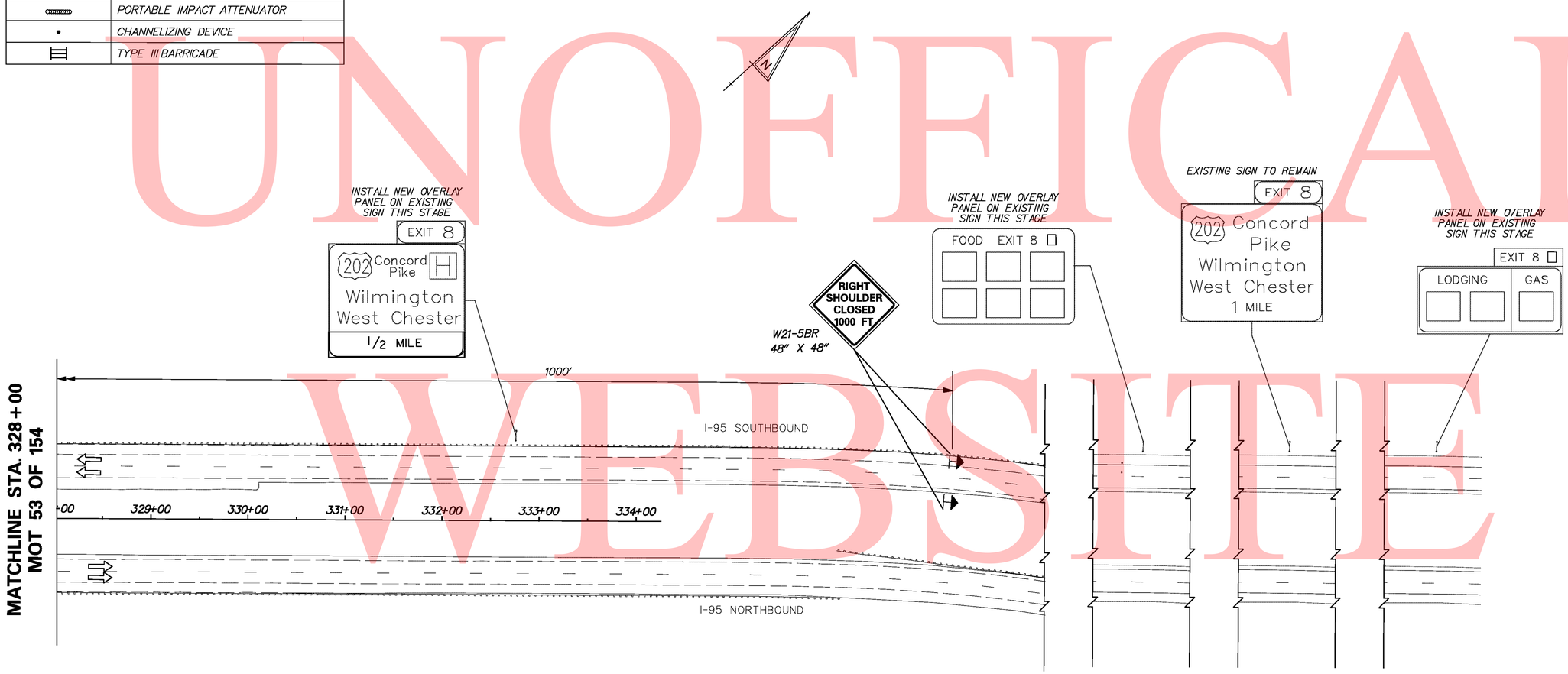

UNOFFICAL WEBSITE COPY

\\highdat\eng\deldot\4625 (az)\07 (contract 5)\submissions\00-in-progress\mot\sheet files\I95motsht054_PHIStg4.dgn

8/18/2010

DELAWARE DEPARTMENT OF TRANSPORTATION	ADDENDUMS / REVISIONS	SCALE 0 30 60 90 FEET	I-95 & US 202 INTERCHANGE	CONTRACT T200510602	BRIDGE NO. NA	CONSTRUCTION PHASING, MOT & EROSION CONTROL PHASE 1, STAGE 4 MOT 54 OF 139	SHEET NO. 319
				COUNTY NEW CASTLE	DESIGNED BY: DJD / REM		TOTAL SHTS. 482
					CHECKED BY: KMC		

TEMPORARY PAVEMENT MARKINGS LEGEND		
SYMBOL	ITEM	QUANTITY
Ⓡ	6" SOLID WHITE TEMPORARY PAINT PAVEMENT STRIPING (ITEM 748020)	950 LF
Ⓢ	6" SOLID YELLOW TEMPORARY PAINT PAVEMENT STRIPING (ITEM 748020)	950 LF

CONSTRUCTION PHASING LEGEND	
	WORK AREA THIS PHASE
	TEMPORARY CONSTRUCTION
	TEMPORARY PAVEMENT MARKING ARROW
	TEMPORARY WARNING SIGN
	PORTABLE IMPACT ATTENUATOR
	CHANNELIZING DEVICE
	TYPE III BARRICADE

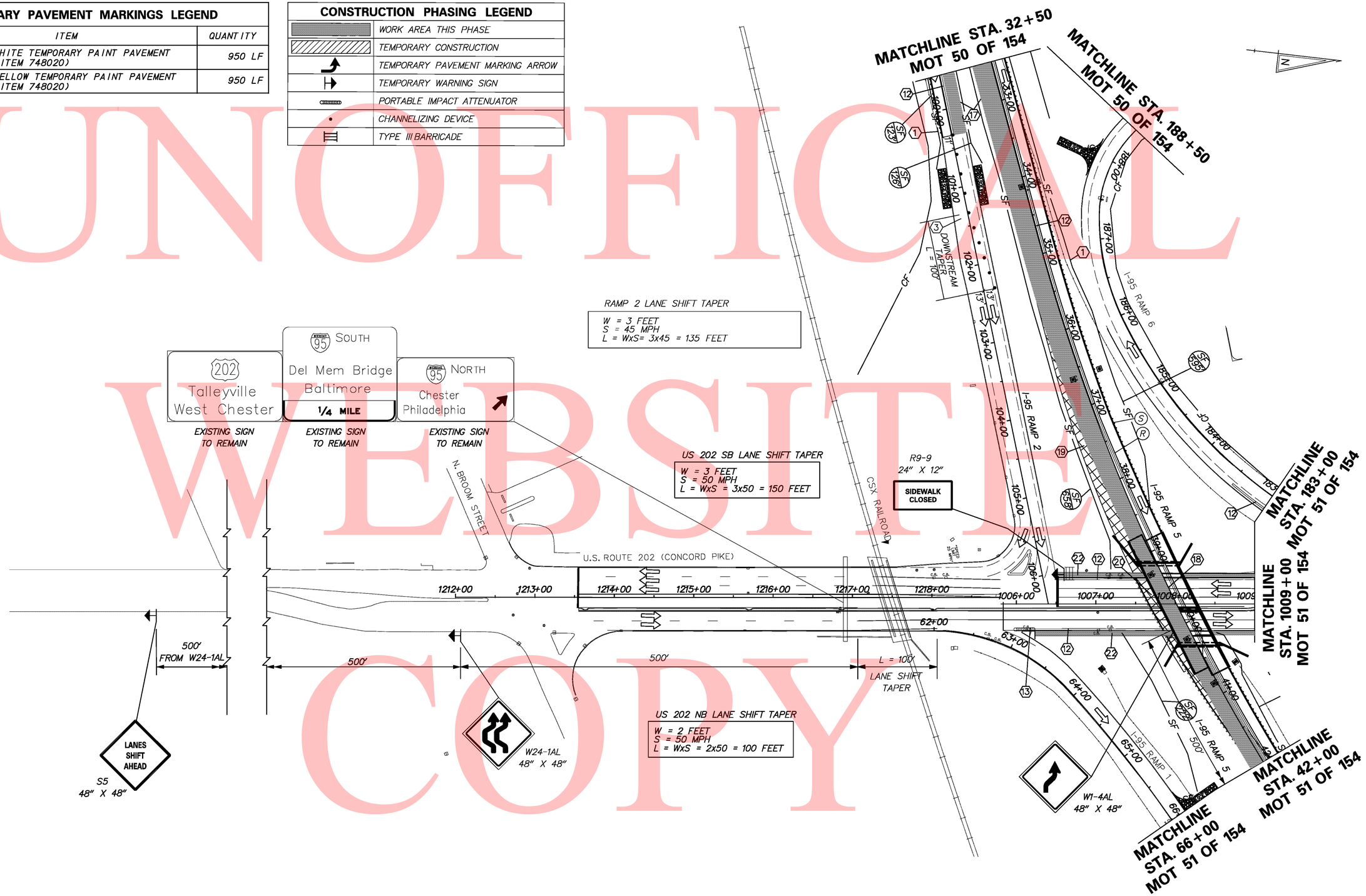

UNOFFICIAL WEBSITE COPY

\\nighdot\eng\deldot\1625 (az)\07 (contract 5)\submissions\00-in-progress\mot\sheet files\195mot sht055_PhiStg4.dgn

8/18/2010

DELAWARE DEPARTMENT OF TRANSPORTATION	ADDENDUMS / REVISIONS	SCALE 0 30 60 90 FEET	I-95 & US 202 INTERCHANGE	CONTRACT T200510602	BRIDGE NO. NA	CONSTRUCTION PHASING, MOT & EROSION CONTROL PHASE 1, STAGE 4 MOT 55 OF 139	SHEET NO. 320
				COUNTY NEW CASTLE	DESIGNED BY: DJD / REM		TOTAL SHTS. 482
					CHECKED BY: KMC		

TEMPORARY PAVEMENT MARKINGS LEGEND		
SYMBOL	ITEM	QUANTITY
G	WHITE TEMPORARY PAINT PAVEMENT SYMBOL (ITEM 748026)	105 SF
R	6" SOLID WHITE TEMPORARY PAINT PAVEMENT STRIPING (ITEM 748020)	240 LF
S	24" SOLID WHITE TEMPORARY PAINT PAVEMENT STRIPING (ITEM 748020)	131 LF

CONSTRUCTION PHASING LEGEND	
	WORK AREA THIS PHASE
	TEMPORARY CONSTRUCTION
	TEMPORARY PAVEMENT MARKING ARROW
	TEMPORARY WARNING SIGN
	PORTABLE IMPACT ATTENUATOR
	CHANNELIZING DEVICE
	TYPE III BARRICADE

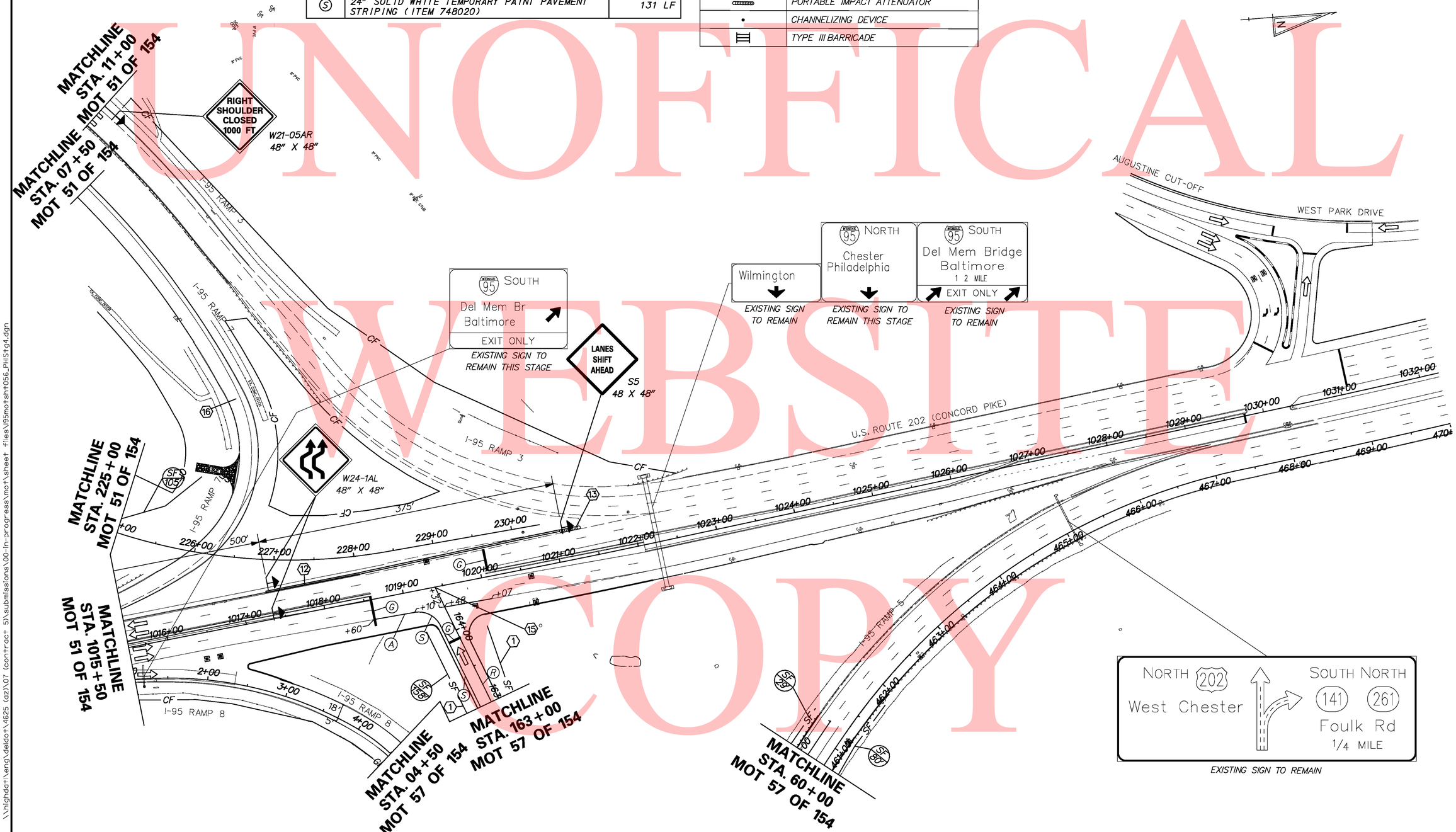

UNOFFICIAL WEBSITE COPY

\\nighdat\eng\deldot\4625 (az)\07 (contract 5)\submissions\00-in-progress\mot\sheet files\I95motsht056_PHIStg4.dgn

8/18/2010

DELAWARE DEPARTMENT OF TRANSPORTATION	ADDENDUMS / REVISIONS	SCALE 0 30 60 90 FEET	I-95 & US 202 INTERCHANGE	CONTRACT T200510602	BRIDGE NO. NA	CONSTRUCTION PHASING, MOT & EROSION CONTROL PHASE 1, STAGE 4 MOT 56 OF 139	SHEET NO. 321
				COUNTY NEW CASTLE	DESIGNED BY: DJD / REM		TOTAL SHTS. 482
					CHECKED BY: KMC		

TEMPORARY PAVEMENT MARKINGS LEGEND		
SYMBOL	ITEM	QUANTITY
R	6" SOLID WHITE TEMPORARY PAINT PAVEMENT STRIPING (ITEM 748020)	800 LF
S	6" SOLID YELLOW TEMPORARY PAINT PAVEMENT STRIPING (ITEM 748020)	800 LF

CONSTRUCTION PHASING LEGEND	
	WORK AREA THIS PHASE
	TEMPORARY CONSTRUCTION
	TEMPORARY PAVEMENT MARKING ARROW
	TEMPORARY WARNING SIGN
	PORTABLE IMPACT ATTENUATOR
	CHANNELIZING DEVICE
	TYPE III BARRICADE

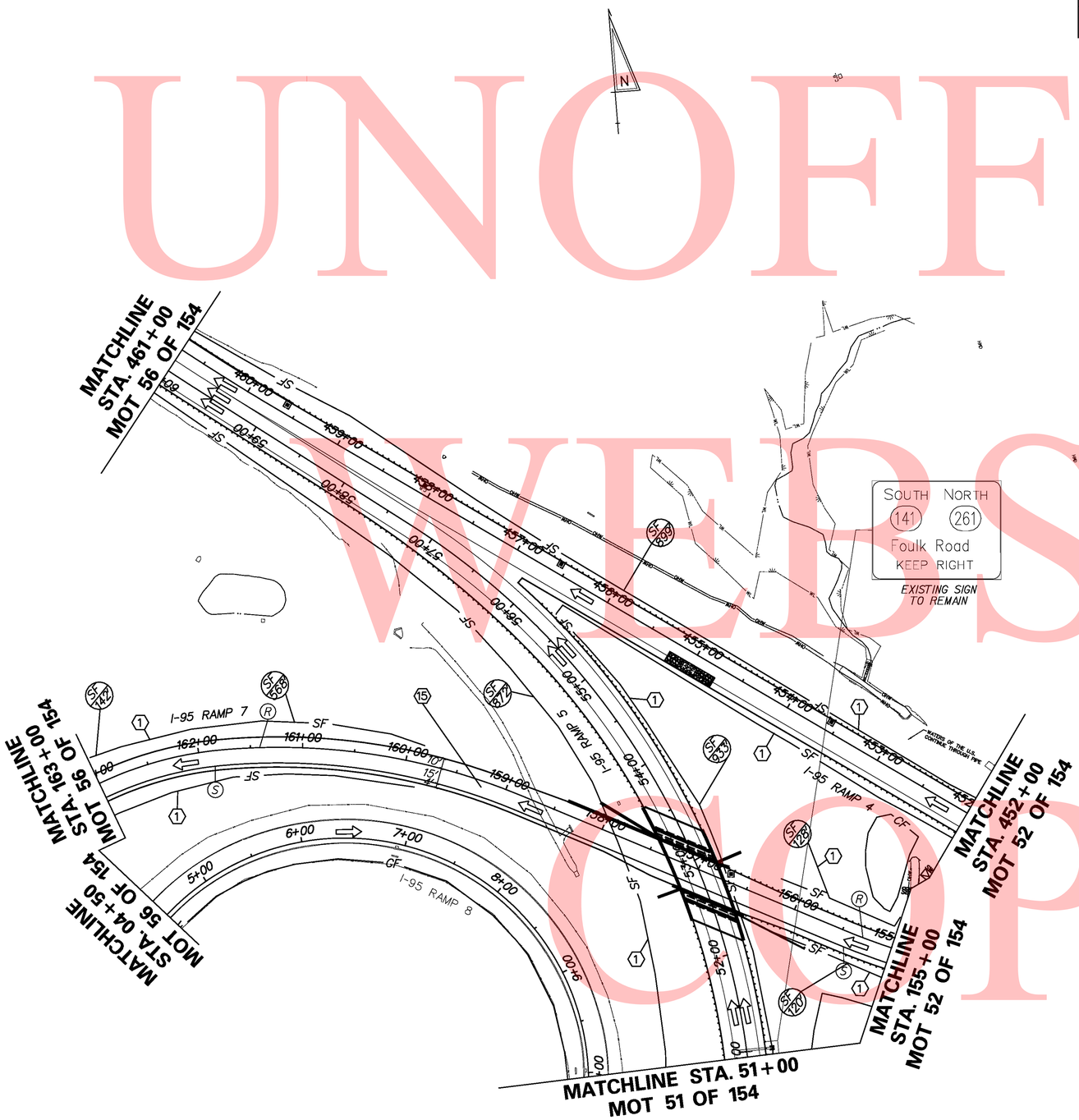

UNOFFICIAL WEBSITE COPY

\\nighdat\eng\deldot\4625 (az)\07 (contract 5)\submissions\00-in-progress\mot\sheet files\I95motsht057_PHIStg4.dgn

8/18/2010

DELAWARE DEPARTMENT OF TRANSPORTATION	ADDENDUMS / REVISIONS	SCALE 0 30 60 90 FEET	I-95 & US 202 INTERCHANGE	CONTRACT T200510602	BRIDGE NO. NA	CONSTRUCTION PHASING, MOT & EROSION CONTROL PHASE 1, STAGE 4 MOT 57 OF 139	SHEET NO. 322
				COUNTY NEW CASTLE	DESIGNED BY: DJD / REM		TOTAL SHTS. 482
					CHECKED BY: KMC		