THE STATE OF DELAWARE
DEPARTMENT OF TRANSPORTATION

U.S. CUSTOMARY UNITS

DESIGN DESIGNATION – SHADY ROAD			
FUNCTIONAL CLASS: LOCAL		D.H.V. PROJECTED: -	YEAR: -
TYPE OF CONSTRUCTION: -		DESIGN SPEED: 40 M.P.H.	
A.A.D.T. CURRENT: 3,779	YEAR: 2012	TRUCKS: -	
A.A.D.T. PROJECTED: 4,762	YEAR: 2020	DIRECTION OF DISTRIBUTION: -	

CONSTRUCTION PLANS FOR:

DELAWARE TRANSIT CORPORATION
LEWES PARK AND RIDE
AND MAINTENANCE FACILITY

CONTRACT NUMBER: T200612502
FEDERAL AID PROJECT NUMBER: DE-04-0003

COUNTY: SUSSEX

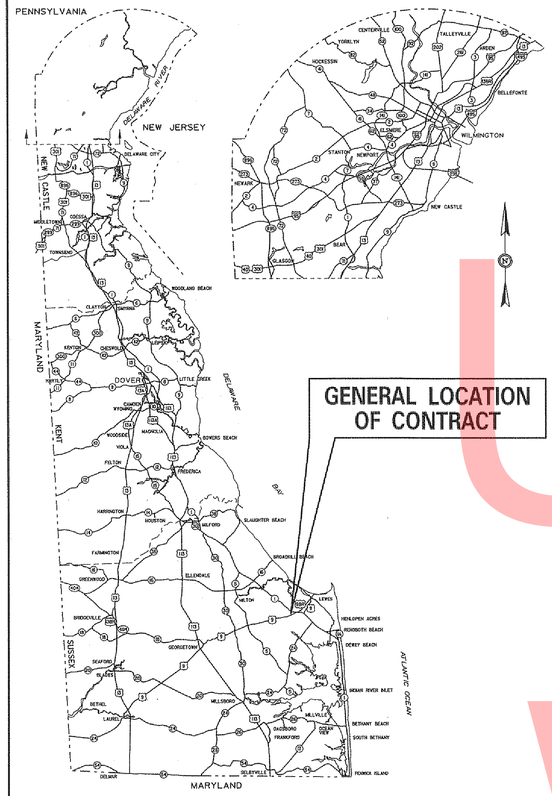

PREPARED BY
THE CONSULTING FIRM OF
WR&A
WHITMAN, REQUARDT & ASSOCIATES, LLP
ENGINEERS · ARCHITECTS · PLANNERS
EST. 1915

SEAL

SEAL

RECOMMENDED DATE

RECOMMENDED DATE

RECOMMENDED

SQUAD MANAGER, CONSTRUCTION DATE

GROUP ENGINEER, CONSTRUCTION DATE

ASSISTANT DIRECTOR, TRANSPORTATION SOLUTIONS (CONSTRUCTION) DATE

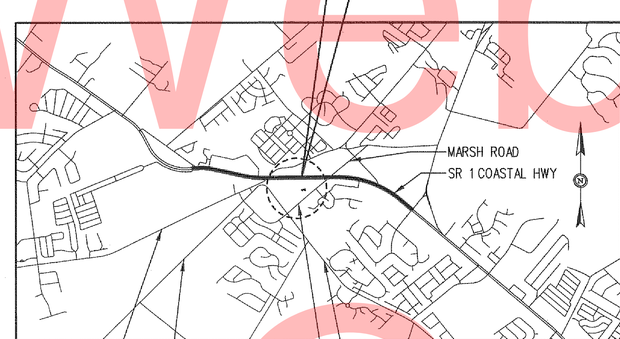

VICINITY MAP
NOT TO SCALE

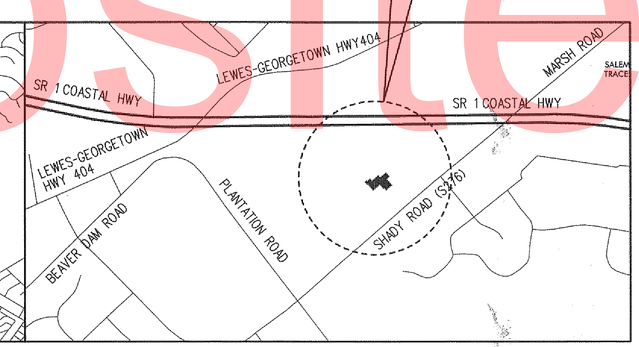

LOCATION MAP
NOT TO SCALE

APPROVED DESIGN EXCEPTIONS

DESIGN PARAMETER	REQUIRED	PROVIDED	DATE
-	-	-	
-	-	-	

ADDENDA & REVISIONS

DESCRIPTION	NAME & DATE

ASSOCIATED CONTRACTS

CONTRACT NO.	CONTRACT NAME
-	-
-	-
-	-

RECOMMENDED
Vincent W. Davis
STORMWATER ENGINEER
DATE 22 APR 2015
SEAL

RECOMMENDED
SQUAD MANAGER, TRANSPORTATION SOLUTIONS (PROJECT DEVELOPMENT OR BRIDGE DESIGN)
DATE
SEAL

RECOMMENDED
BRIDGE DESIGN ENGINEER
DATE
SEAL

RECOMMENDED
GROUP ENGINEER, PROJECT DEVELOPMENT
DATE
SEAL

RECOMMENDED
ASSISTANT DIRECTOR, TRANSPORTATION SOLUTIONS
DATE
SEAL

RECOMMENDED AS TO PROCESS
Robert B. McCleary
CHIEF ENGINEER
DATE 4/27/2015
SEAL

Unofficial Website Copy

LAST REVISED: 8/7/2008
N:\90181-004\CADD\CP01-90181004G-001.DGN

DRAWING INDEX

No	CADD FILES	DRAWING No	DRAWING NAMES
		GENERAL	
1	CP01-90181004G-001	G-001	COVER SHEET
2	CP01-90181004G-002	G-002	DRAWING INDEX
3	CP01-90181004G-003	G-003	CODE ANALYSIS
		CIVIL	
4	CP01-90181004C-101	C-101	EXISTING CONDITION / DEMOLITION PLAN
5	CP01-90181004C-102	C-102	SITE PLAN
6	CP01-90181004C-103	C-103	GRADING PLAN
7	CP01-90181004C-104	C-104	STORM DRAIN PLAN
8	CP01-90181004C-105	C-105	WATER & SEWER PLAN
9	CP01-90181004C-106	C-106	STAKEOUT & LAYOUT PLAN
10	CP01-90181004C-107	C-107	STORM DRAIN PROFILES
11	CP01-90181004C-108	C-108	WATER & SEWER PROFILES
12	CP01-90181004C-301	C-301	ENLARGED GRADING PLAN
13	CP01-90181004C-401	C-401	SITE DETAILS
14	CP01-90181004C-402	C-402	WATER & SEWER DETAILS
15	CP01-90181004C-403	C-403	DRAINAGE DETAILS
16	CP01-90181004C-404	C-404	PAVEMENT DETAILS
17	CP01-90181004C-405	C-405	STAKEOUT DATA
18	CP01-90181004C-406	C-406	EROSION AND SEDIMENT CONTROL DETAILS
19	CS01_LEWES	CS-01	EROSION AND SEDIMENT CONTROL PLAN - STAGE 1
20	CS02_LEWES	CS-02	EROSION AND SEDIMENT CONTROL PLAN - STAGE 2
21	CS03_LEWES	CS-03	EROSION AND SEDIMENT CONTROL SPECIAL DETAILS
		LANDSCAPE	
22	LD-01_LEWES	LD-01	LANDSCAPE PLAN
23	LD-02_LEWES	LD-02	LANSDCAPE SCHEDULE & DETAILS
24	LD-03_LEWES	LD-03	LANDSCAPE DETAILS
		STORMWATER MANAGEMENT	
25	SW01_LEWES	SW-01	STORMWATER MANAGEMENT PLAN
26	SW02_LEWES	SW-02	STORMWATER MANAGEMENT PLAN
27	SW02_LEWES	SW-03	STORMWATER MANAGEMENT STAKEOUT PLAN
28	SW04_LEWES	SW-04	STORMWATER MANAGEMENT STAKEOUT PLAN
29	SW05_LEWES	SW-05	STORMWATER MANAGEMENT PROFILES
		HIGHWAY	
30	CP01-90181004H0-01	H0-01	LEGEND
31	CP01-90181004H0-02	H0-02	NOTES
32	CP01-90181004H1-01	H1-01	TYPICAL SECTIONS
33	CP01-90181004H3-01	H3-01	HORIZONTAL AND VERTICAL CONTROL
34	CP01-90181004H5-01	H5-01	CONSTRUCTION PLAN
35	CP01-90181004H5-02	H5-02	CONSTRUCTION PLAN
36	CP01-90181004H6-01	H6-01	PROFILES
37	CP01-90181004H6-02	H6-02	PROFILES
38	CP01-90181004H7-01	H7-01	GRADES AND GEOMETRICS
39	CP01-90181004H7-02	H7-02	GRADES AND GEOMETRICS
40	CP01-90181004H8-01	H8-01	CONSTRUCTION DETAILS
41	CP01-90181004H12-01	H12-01	CONSTRUCTION PHASING, M.O.T. AND EROSION CONTROL PLAN
42	CP01-90181004H12-02	H12-02	CONSTRUCTION PHASING, M.O.T. AND EROSION CONTROL PLAN
43	CP01-90181004H12-03	H12-03	CONSTRUCTION PHASING AND M.O.T. PLAN - PHASE 1
44	CP01-90181004H12-04	H12-04	CONSTRUCTION PHASING AND M.O.T. PLAN - PHASE 1
45	CP01-90181004H12-05	H12-05	CONSTRUCTION PHASING, M.O.T. AND EROSION CONTROL PLAN - PHASE 2
46	CP01-90181004H12-06	H12-06	CONSTRUCTION PHASING, M.O.T. AND EROSION CONTROL PLAN - PHASE 2
47	CP01-90181004H12-07	H12-07	CONSTRUCTION PHASING, M.O.T. AND EROSION CONTROL PLAN - PHASE 3
48	CP01-90181004H12-08	H12-08	CONSTRUCTION PHASING, M.O.T. AND EROSION CONTROL PLAN - PHASE 3
49	CP01-90181004H12-09	H12-09	DETOUR PLAN
50	CP01-90181004H13-01	H13-01	SIGNING AND STRIPING PLAN
51	CP01-90181004H13-02	H13-02	SIGNING AND STRIPING PLAN
52	CP01-90181004H13-03	H13-03	SIGNING AND STRIPING PLAN
53	CP01-90181004H13-04	H13-04	SIGNING AND STRIPING PLAN
54	CP01-90181004H13-05	H13-05	SIGNING AND STRIPING PLAN
55	CP01-90181004H13-06	H13-06	SIGNING AND STRIPING PLAN
56	CP01-90181004H13-07	H13-07	SIGNING SCHEDULE
57	CP01-90181004H13-08	H13-08	SIGNING SCHEDULE

DRAWING INDEX CONT.

		STRUCTURAL	
58	CP01-90181004-S001	S-001	GENERAL STRUCTURAL NOTES, LOADS AND CODES
59	CP01-90181004-S002	S-002	STRUCTURAL TYPICAL DETAILS
60	CP01-90181004-S003	S-003	STRUCTURAL TYPICAL DETAILS
61	CP01-90181004-S004	S-004	STRUCTURAL TYPICAL DETAILS
62	CP01-90181004-S005	S-005	STRUCTURAL TYPICAL DETAILS
63	CP01-90181004-S006	S-006	STRUCTURAL TYPICAL DETAILS
64	CP01-90181004-S101	S-101	FOUNDATION PLAN - NORTH BUILDING
65	CP01-90181004-S102	S-102	FOUNDATION PLAN - SOUTH BUILDING
66	CP01-90181004-S103	S-103	COMPOSITE FRAMING PLAN
67	CP01-90181004-S104	S-104	FRAMING PLAN - ELEVATIONS 38' AND 42'
68	CP01-90181004-S105	S-105	FRAMING PLAN - ELEVATION 48'
69	CP01-90181004-S106	S-106	FRAMING PLAN - ELEVATIONS 49' AND 58'
70	CP01-90181004-S201	S-201	FRAMING ELEVATIONS
71	CP01-90181004-S202	S-202	FRAMING ELEVATIONS
72	CP01-90181004-S203	S-203	FRAMING ELEVATIONS
73	CP01-90181004-S204	S-204	FRAMING ELEVATIONS
74	CP01-90181004-S205	S-205	FRAMING ELEVATIONS
75	CP01-90181004-S206	S-206	FRAMING ELEVATIONS
76	CP01-90181004-S207	S-207	FRAMING ELEVATIONS
77	CP01-90181004-S501	S-501	STRUCTURAL SECTIONS AND DETAILS
78	CP01-90181004-S502	S-502	STRUCTURAL SECTIONS AND DETAILS
79	CP01-90181004-S503	S-503	STRUCTURAL SECTIONS AND DETAILS
80	CP01-90181004-S601	S-601	COLUMN SCHEDULE
81	CP01-90181004-S602	S-602	COLUMN SCHEDULE
82	CP01-90181004-S603	S-603	PEDESTAL DETAILS
		ARCHITECTURAL	
83	CP01-90181004A-001	A-001	ARCHITECTURAL ABBREVIATIONS AND LEGEND
84	CP01-90181004A-101	A-101	FLOOR PLAN - NORTH BUILDING
85	CP01-90181004A-102	A-102	FLOOR PLAN - SOUTH BUILDING
86	CP01-90181004A-103	A-103	ROOF PLAN - NORTH BUILDING
87	CP01-90181004A-104	A-104	ROOF PLAN - SOUTH BUILDING
88	CP01-90181004A-201	A-201	REFLECTED CEILING PLAN - NORTH BUILDING
89	CP01-90181004A-202	A-202	REFLECTED CEILING PLAN - SOUTH BUILDING
90	CP01-90181004A-301	A-301	BUILDING ELEVATIONS
91	CP01-90181004A-302	A-302	BUILDING ELEVATIONS
92	CP01-90181004A-401	A-401	BUILDING SECTIONS
93	CP01-90181004A-402	A-402	BUILDING SECTIONS
94	CP01-90181004A-403	A-403	BUILDING SECTIONS
95	CP01-90181004A-404	A-404	WALL SECTIONS
96	CP01-90181004A-405	A-405	WALL SECTIONS
97	CP01-90181004A-406	A-406	WALL SECTIONS
98	CP01-90181004A-501	A-501	ENLARGED TOILET ROOM PLANS AND ELEVATIONS
99	CP01-90181004A-502	A-502	INTERIOR ELEVATIONS AND DETAILS
100	CP01-90181004A-503	A-503	ENLARGED PLANS AND DETAILS
101	CP01-90181004A-504	A-504	MEZZANINE ENLARGED PLAN AND DETAILS
102	CP01-90181004A-601	A-601	PLAN DETAILS
103	CP01-90181004A-602	A-602	PLAN DETAILS
104	CP01-90181004A-603	A-603	SECTION DETAILS
105	CP01-90181004A-604	A-604	SECTION DETAILS
106	CP01-90181004A-504	A-605	ENTRANCE CANOPY SECTION DETAILS
107	CP01-90181004A-801	A-801	FINISH SCHEDULE AND FINISHES LIST
108	CP01-90181004A-802	A-802	DOOR AND HARDWARE SCHEDULE
109	CP01-90181004A-803	A-803	DOOR AND FRAME TYPES AND HARDWARE LIST
110	CP01-90181004A-804	A-804	DOOR DETAILS
111	CP01-90181004A-805	A-805	STOREFRONT TYPES AND DETAILS
112	CP01-90181004A-806	A-806	INTERIOR HOLLOW METAL FRAME & STOREFRONT DETAILS
113	CP01-90181004A-807	A-807	LOUVER TYPES & DETAILS
114	CP01-90181004A-901	A-901	PARTITION TYPES
115	CP01-90181004A-902	A-902	PARTITION TYPES
116	CP01-90181004A-903	A-903	PARTITION DETAILS
		EQUIPMENT	
117	CP01-90181004EI-001	EI-001	EQUIPMENT ABBREVIATIONS AND NOTES
118	CP01-90181004EI-101	EI-101	EQUIPMENT PLAN SOUTH BUILDING
119	CP01-90181004EI-102	EI-102	EQUIPMENT DETAILS

DRAWING INDEX CONT.

		MECHANICAL	
120	CP01-90181004M-001	M-001	MECHANICAL LEGEND AND ABBREVIATIONS
121	CP01-90181004M-101	M-101	FLOOR AND ROOF PLANS - NORTH BUILDING - HVAC
122	CP01-90181004M-102	M-102	FLOOR PLAN - SOUTH BUILDING - DUCTWORK
123	CP01-90181004M-103	M-103	ROOF PLAN - SOUTH BUILDING - HVAC
124	CP01-90181004M-201	M-201	FLOOR PLAN - NORTH BUILDING - PIPING
125	CP01-90181004M-202	M-202	FLOOR PLAN - SOUTH BUILDING - PIPING
126	CP01-90181004M-301	M-301	MECHANICAL ROOM PART PLANS - HVAC
127	CP01-90181004M-501	M-501	AUTOMATIC TEMPERATURE CONTROLS
128	CP01-90181004M-502	M-502	AUTOMATIC TEMPERATURE CONTROLS
129	CP01-90181004M-503	M-503	AUTOMATIC TEMPERATURE CONTROLS
130	CP01-90181004M-504	M-504	AUTOMATIC TEMPERATURE CONTROLS
131	CP01-90181004M-601	M-601	MECHANICAL DETAILS
132	CP01-90181004M-602	M-602	MECHANICAL DETAILS
133	CP01-90181004M-603	M-603	MECHANICAL DETAILS
134	CP01-90181004M-701	M-701	MECHANICAL SCHEDULES
135	CP01-90181004M-702	M-702	MECHANICAL SCHEDULES
		PLUMBING	
136	CP01-90181004P-100	P-100	FOUNDATION PLAN - PLUMBING
137	CP01-90181004P-101	P-101	LOWER LEVEL FLOOR PLAN - PLUMBING
138	CP01-90181004P-102	P-102	UPPER LEVEL FLOOR PLAN - PLUMBING
139	CP01-90181004P-103	P-103	PART FLOOR PLANS - PLUMBING
140	CP01-90181004P-104	P-104	PART PLANS
141	CP01-90181004P-501	P-501	PLUMBING RISER DIAGRAMS
142	CP01-90181004P-502	P-502	PLUMBING RISER DIAGRAMS
143	CP01-90181004P-601	P-601	PLUMBING DETAILS
144	CP01-90181004P-602	P-602	PLUMBING DETAILS
145	CP01-90181004P-603	P-603	PLUMBING DETAILS
146	CP01-90181004P-604	P-604	PLUMBING DETAILS
147	CP01-90181004P-605	P-605	PLUMBING DETAILS
148	CP01-90181004P-701	P-701	PLUMBING SCHEDULES
		FIRE PROTECTION	
149	CP01-90181004F-001	F-001	FIRE PROTECTION LEGEND, NOTES AND ABBREVIATIONS
150	CP01-90181004F-101	F-101	FLOOR PLAN NORTH BUILDING FIRE PROTECTION
151	CP01-90181004F-102	F-102	FLOOR PLAN SOUTH BUILDING FIRE PROTECTION
152	CP01-90181004F-501	F-501	FIRE PROTECTION DETAILS
153	CP01-90181004FA-001	FA-001	FIRE ALARM LEGEND, NOTES AND ABBREVIATIONS
154	CP01-90181004FA-101	FA-101	FLOOR PLAN NORTH BUILDING ALARM
155	CP01-90181004FA-102	FA-102	FLOOR PLAN SOUTH BUILDING FIRE ALARM
156	CP01-90181004FA-501	FA-501	FIRE ALARM RISER AND SEQUENCE OF OPERATION
		ELECTRICAL	
157	CP01-90181004E-001	E-001	ELECTRICAL LEGEND
158	CP01-90181004E-002	E-002	ELECTRICAL ABBREVIATIONS & DIAGEM LEGEND
159	CP01-90181004E-003	E-003	ELECTRICAL GENERAL NOTES
160	CP01-90181004ED-100	ED-100	ELECTRICAL EXISTING SITE PLAN DEMOLITION
161	CP01-90181004E-100	E-100	ELECTRICAL SITE PLAN
162	CP01-90181004E-201	E-201	ELECTRICAL FLOOR PLAN SOUTH BUILDING - LIGHTING
163	CP01-90181004E-202	E-202	ELECTRICAL FLOOR PLAN NORTH BUILDING - LIGHTING
164	CP01-90181004E-301	E-301	ELECTRICAL FLOOR PLAN SOUTH BUILDING - POWER
165	CP01-90181004E-302	E-302	ELECTRICAL FLOOR PLAN NORTH BUILDING - POWER
166	CP01-90181004E-303	E-303	ELECTRICAL ROOF PLANS - POWER
167	CP01-90181004E-304	E-304	ELECTRICAL ENLARGEMENT PLANS - POWER
168	CP01-90181004E-305	E-305	ELECTRICAL FLOOR PLAN SOUTH BUILDING - SPECIAL SYSTEMS
169	CP01-90181004E-306	E-306	ELECTRICAL FLOOR PLAN NORTH BUILDING - SPECIAL SYSTEMS
170	CP01-90181004E-401	E-401	ELECTRICAL PLAN - GROUNDING
171	CP01-90181004E-501	E-501	ELECTRICAL SINGLE LINE DIAGRAM
172	CP01-90181004E-601	E-601	ELECTRICAL DETAILS
173	CP01-90181004E-602	E-602	ELECTRICAL DETAILS
174	CP01-90181004E-603	E-603	ELECTRICAL DETAILS
175	CP01-90181004E-604	E-604	ELECTRICAL DETAILS
176	CP01-90181004E-605	E-605	ELECTRICAL DETAILS
177	CP01-90181004E-606	E-606	ELECTRICAL DETAILS
178	CP01-90181004E-607	E-607	ELECTRICAL DETAILS
179	CP01-90181004E-608	E-608	ELECTRICAL DETAILS
180	CP01-90181004E-609	E-609	ELECTRICAL DETAILS
181	CP01-90181004E-701	E-701	LIGHTING FIXTURE SCHEDULE
182	CP01-90181004E-702	E-702	ELECTRICAL PANEL SCHEDULES
183	CP01-90181004E-703	E-703	ELECTRICAL PANEL SCHEDULES
184	CP01-90181004E-704	E-704	ELECTRICAL PANEL SCHEDULES
185	CP01-90181004E-705	E-705	ELECTRICAL PANEL SCHEDULES

G-002

DELAWARE
DEPARTMENT OF TRANSPORTATION

ADDENDUMS / REVISIONS

DELAWARE TRANSIT CORPORATION
LEWES PARK AND RIDE
AND MAINTENANCE FACILITY

CONTRACT	BRIDGE NO.	
T200612502	DESIGNED BY: RJH	
COUNTY		
SUSSEX	CHECKED BY: EJ	

DRAWING INDEX

SHEET NO. 2
TOTAL SHTS. 185

N:\90181\004\CADD\CP01-90181004G-002.dgn
1/17/2014 8:03:00 AM

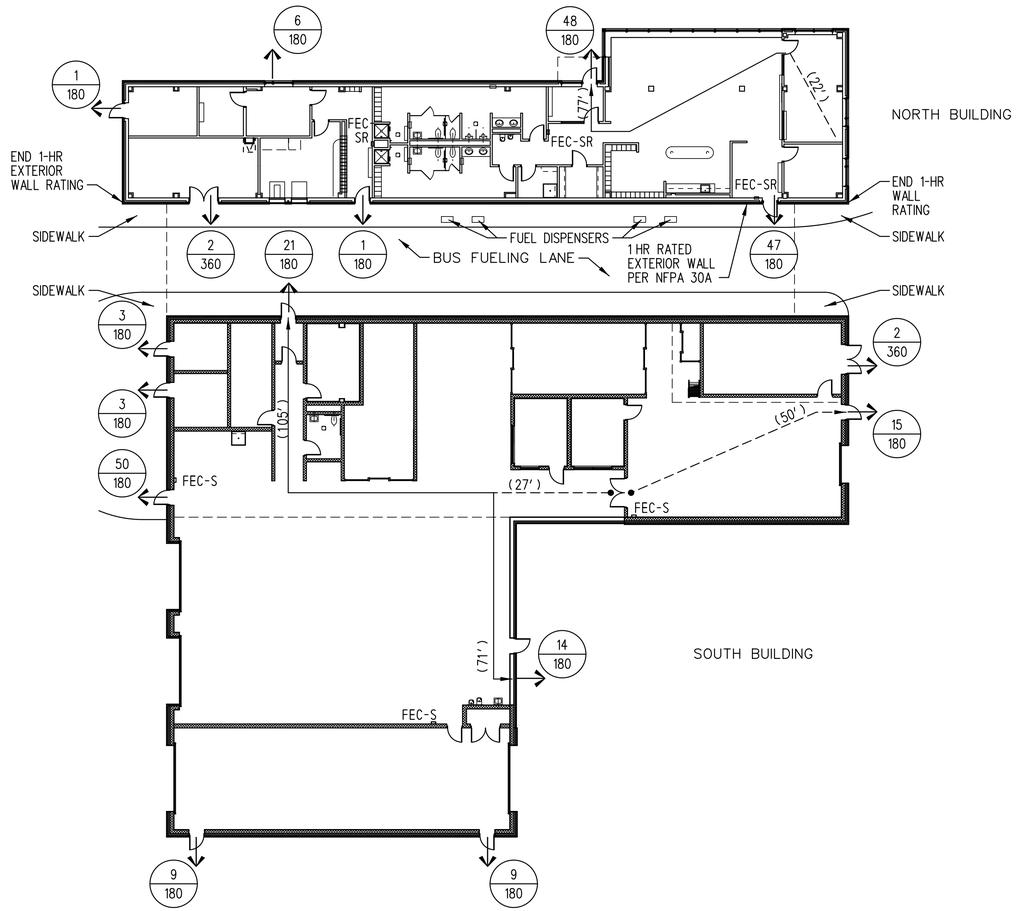

1 / G-003 GROUND FLOOR CODE ANALYSIS PLAN
SCALE: 1/16" = 1'-0"

BUILDING CODE DATA

APPLICABLE CODES/YEAR:	INTERNATIONAL BUILDING CODE (IBC) 2012 NFPA 101: SPECIAL PURPOSE INDUSTRIAL NFPA 30A: MINOR REPAIR GARAGE
OCCUPANCY TYPE:	NORTH BUILDING: A-3 / SOUTH BUILDING: S-1
OCCUPANCY SEPARATIONS:	N/A
CONSTRUCTION TYPE:	TYPE II-B
SPRINKLERS:	NORTH BUILDING: NOT REQUIRED PROVIDED FOR ENTIRE BUILDING SOUTH BUILDING: REQUIRED PROVIDED FOR ENTIRE BUILDING
HEIGHT LIMITATION:	NORTH BUILDING: PERMITTED: 55 FT / 2 STORIES ACTUAL: 21'-4" FT / 1 STORIES SOUTH BUILDING: PERMITTED: 55 FT / 3 STORIES ACTUAL: 32'-0" FT / 1 STORIES
AREA LIMITATIONS: NORTH BUILDING: SOUTH BUILDING:	 40,945 SF ALLOWED / 4,474 SF ACTUAL 78,225 SF ALLOWED / 11,220 SF ACTUAL
OCCUPANT LOADS:	NORTH BUILDING: 105 SOUTH BUILDING: 120
EXITS:	NORTH: 2 REQUIRED / 6 PROVIDED SOUTH: 2 REQUIRED / 8 PROVIDED
TRAVEL DISTANCES:	NORTH BUILDING: COMMON PATH: 100 FEET (SPRINKLERED) TOTAL TRAVEL DISTANCE: 250 FEET SOUTH BUILDING: COMMON PATH: 100 FEET (SPRINKLERED) TOTAL TRAVEL DISTANCE: 250 FEET
STAIRWAY WIDTH:	44" MINIMUM
EGRESS WIDTH:	32" MINIMUM
CORRIDOR WIDTH:	44" MINIMUM

SEISMIC DESIGN CLASSIFICATION:

OCCUPANCY CATEGORY:	III	SS = 0.100
IMPORTANCE FACTOR:	1.25	S1 = 0.045
SITE CLASSIFICATION:	D	SDS = 0.107
DESIGN CATEGORY:	B	SD1 = 0.072

CODE ANALYSIS LEGEND

(150') TOTAL EGRESS DISTANCE

(30') COMMON PATH OF TRAVEL

1 HOUR RATED WALL CONSTRUCTION

REQUIRED EXIT

50 / 100 — OCCUPANT LOAD AT EXIT / EXIT CAPACITY

FEC-S — PORTABLE FIRE EXTINGUISHER IN CABINET - SURFACE MOUNTED

FEC-R — PORTABLE FIRE EXTINGUISHER IN CABINET - RECESSED

FEC-SR — PORTABLE FIRE EXTINGUISHER IN CABINET - SEMI-RECESSED

OCCUPANT LOAD CALCULATIONS

NORTH BUILDING:

BREAK/READY ROOM:	1,030 SF	/	15 SF/PERSON	=	69
SUPERVISOR:	174 SF	/	100 SF/PERSON	=	2
DISPATCH OPS.:	334 SF	/	100 SF/PERSON	=	4
SCRTY/POOL OFFICE:	171 SF	/	100 SF/PERSON	=	2
COUNTING ROOM:	224 SF	/	100 SF/PERSON	=	3
VESTIBULE:	96 SF	/	100 SF/PERSON	=	1
LOCKER ROOM:	155 SF	/	50 SF/PERSON	=	4
RESTROOMS:	781 SF	/	N/A	=	12
KITCHENETTE:	178 SF	/	100 SF/PERSON	=	2
MECHANICAL/STORAGE:	900 SF	/	300 SF/PERSON	=	6
			OCCUPANT LOAD:	=	105

SOUTH BUILDING:

MAINT./WASH BAYS:	4,884 SF	/	100 SF/PERSON	=	49
OFFICES:	361 SF	/	100 SF/PERSON	=	4
CONFERENCE ROOM:	916 SF	/	7 SF/PERSON	=	32
RESTROOM:	100 SF	/	N/A	=	1
GFISHOP:	110 SF	/	100 SF/PERSON	=	2
STORE ROOM:	1,488 SF	/	100 SF/PERSON	=	15
STORAGE:	1,012 SF	/	300 SF/PERSON	=	5
MECHANICAL:	868 SF	/	300 SF/PERSON	=	5
MACHINE/TIRE SHOP:	657 SF	/	100 SF/PERSON	=	7
			OCCUPANT LOAD:	=	120

ALLOWABLE AREA CALCULATIONS

NORTH BUILDING:
A-3 ACTUAL = 4,474 SF BASE ALLOWED = 9,500 SF

INCREASES ALLOWED:
SPRINKLERS: +300% (28,500 SF)
OPEN PERIMETER: +31% (2,945 SF)

TOTAL NORTH BUILDING ALLOWED: 40,945 SF

SOUTH BUILDING:
S-1 ACTUAL = 11,220 SF BASE ALLOWED = 17,500

INCREASES ALLOWED:
SPRINKLERS: +300% (52,500 SF)
OPEN PERIMETER: +47% (8,225 SF)

TOTAL SOUTH BUILDING ALLOWED: 78,225 SF

N:\90181-004\GOD\GP01-90181004G-003.dgn
1/17/2014 8:03:26 AM

G-003

DELAWARE DEPARTMENT OF TRANSPORTATION

ADDENDUMS / REVISIONS

0 8' 16' 32'
SCALE: 1/16" = 1'-0"

DELAWARE TRANSIT CORPORATION
LEWES PARK AND RIDE
AND MAINTENANCE FACILITY

CONTRACT T200612502	BRIDGE NO.	CODE ANALYSIS
COUNTY SUSSEX	DESIGNED BY: RJH CHECKED BY: EL	

SHEET NO. 3
TOTAL SHTS. 185

NOTES:

1. CLEAR AND GRUB ALL TREES AND SHRUBS WITHIN LOD
2. REMOVE ALL UTILITIES ASSOCIATED WITH THE EX BUILDING
3. REMOVE ALL MACADAM, CONCRETE, AND GRAVEL WITHIN THE LOD
4. CONTRACTOR MUST OBTAIN ALL DNREC PERMITS ASSOCIATED WITH THE REMOVAL OF THE EX UNDERGROUND STORAGE TANK
5. TEST PIT AREAS OF STORM DRAIN CONNECTIONS ALONG ROUTE 1 TO DETERMINE ANY POTENTIAL CONFLICT WITH DELDOT FIBER OPTIC CABLES. TEST PIT CHESAPEAKE GAS AND VERIZON UTILITIES ALONG SHADY ROAD TO DETERMINE ANY POTENTIAL CONFLICTS WITH PROPOSED STORM DRAINAGE SYSTEM. NOTIFY THE ENGINEER IMMEDIATELY UPON DISCOVERY OF ANY POTENTIAL CONFLICTS.
6. CONTRACTOR TO HAVE EXISTING BUILDING SANITARY SEWER DISCONNECTED BY A SUSSEX COUNTY LICENSED PLUMBER.
7. CONTRACTOR TO HAVE EXISTING WELLS REMOVED BY A DELAWARE STATE LICENSED DRILLER.
8. FOR EROSION & SEDIMENT CONTROL, REFER TO SHEETS CS01 & CS02.

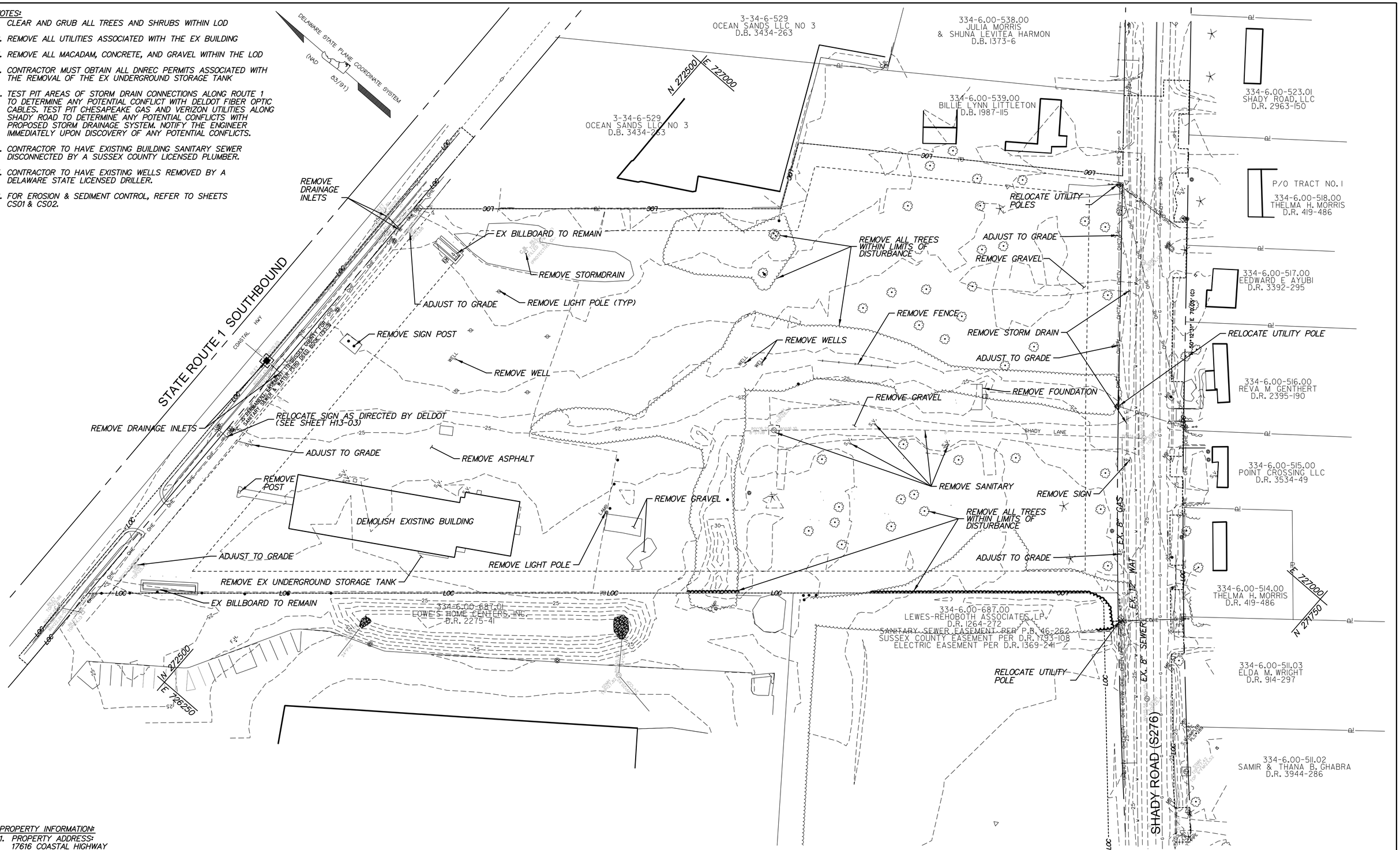

PROPERTY INFORMATION:

1. PROPERTY ADDRESS:
   17616 COASTAL HIGHWAY
   LEWES, DE 19958
2. ZONING: C-1 COMMERCIAL

N:\90181-004\CADD\CP01-90181004C-101.dgn
4/16/2015 4:26:22 PM

DELAWARE DEPARTMENT OF TRANSPORTATION	ADDENDUMS / REVISIONS	SCALE 0 40 80 120 FEET	DELAWARE TRANSIT CORPORATION LEWES PARK AND RIDE AND MAINTENANCE FACILITY	CONTRACT T200612502 / BRIDGE NO. / COUNTY SUSSEX / DESIGNED BY: PMG / CHECKED BY: PMG	EXISTING CONDITIONS / DEMOLITION PLAN

C-101

SHEET NO. 4 / TOTAL SHTS. 185

LEGEND:

- SOUND WALL
- DECORATIVE METAL FENCE
- CURB & GUTTER
- 15"SD — STORM DRAIN
- 8"W — WATER
- 8"S — SANITARY SEWER
- 25 — CONTOUR
- PROPERTY LINE
- YARD SETBACK LINE
- 25 — EXISTING CONTOUR
- EXISTING TREE LINE
- W — EXISTING WATER
- G — EXISTING GAS
- EX 8" S — EXISTING SEWER
- PORTLAND CEMENT CONCRETE PAVEMENT
- PERVIOUS PORTLAND CEMENT CONCRETE PAVEMENT
- ASPHALT PAVEMENT

NOTES:

1. REFER TO ELECTRICAL DRAWINGS FOR INSTALLATION OF DIRECT BURY ENTRANCE AND EXIT GROUND LOOPS TO CONTROL CANTILEVER GATES AND CONTROL ARMS
2. REFER TO ELECTRICAL DRAWINGS FOR COORDINATION OF LIGHTING AND UNDERGROUND ELECTRICAL LINES
3. REFER TO HIGHWAY DRAWINGS FOR CONTINUATION OF WORK ALONG SHADY ROAD (S276)

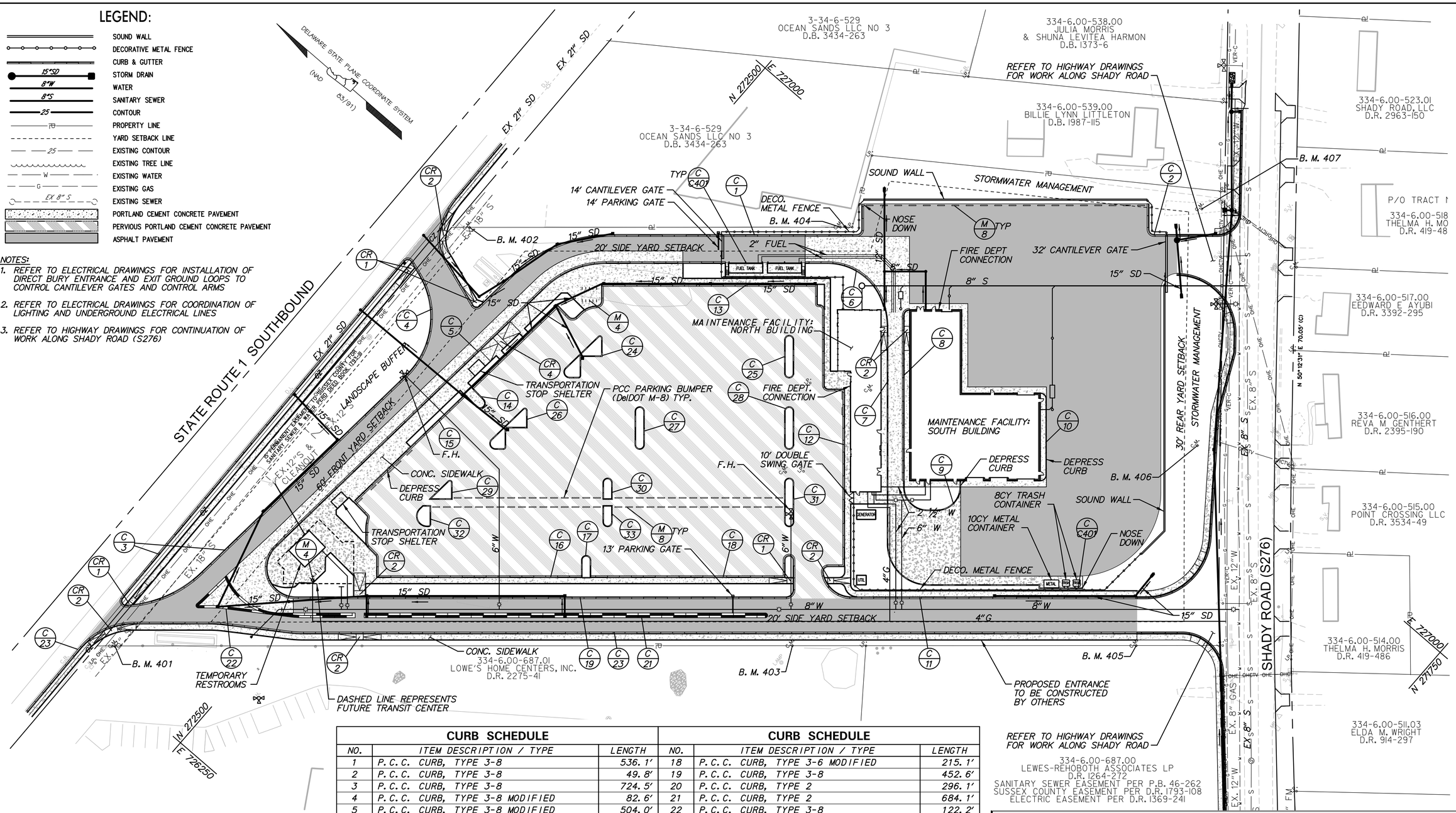

CURB SCHEDULE

NO.	ITEM DESCRIPTION / TYPE	LENGTH
1	P.C.C. CURB, TYPE 3-8	536.1'
2	P.C.C. CURB, TYPE 3-8	49.8'
3	P.C.C. CURB, TYPE 3-8	724.5'
4	P.C.C. CURB, TYPE 3-8 MODIFIED	82.6'
5	P.C.C. CURB, TYPE 3-8 MODIFIED	504.0'
6	P.C.C. CURB, TYPE 3-8 MODIFIED	84.6'
7	P.C.C. CURB, TYPE 1-6	385.7'
8	P.C.C. CURB, TYPE 3-6	148.4'
9	P.C.C. CURB, TYPE 1-6	80.8'
10	P.C.C. CURB, TYPE 1-6	79.7'
11	P.C.C. CURB, TYPE 3-8	262.0'
12	P.C.C. CURB, TYPE 3-6 MODIFIED	290.5'
13	P.C.C. CURB, TYPE 3-6	240.8'
14	P.C.C. CURB, TYPE 1-6	42.6'
15	P.C.C. CURB, TYPE 3-6	128.1'
16	P.C.C. CURB, TYPE 3-6 MODIFIED	242.1'
17	P.C.C. CURB, TYPE 1-6	42.1'

CURB SCHEDULE

NO.	ITEM DESCRIPTION / TYPE	LENGTH
18	P.C.C. CURB, TYPE 3-6 MODIFIED	215.1'
19	P.C.C. CURB, TYPE 3-8	452.6'
20	P.C.C. CURB, TYPE 2	296.1'
21	P.C.C. CURB, TYPE 2	684.1'
22	P.C.C. CURB, TYPE 3-8	122.2'
23	P.C.C. CURB, TYPE 3-8 MODIFIED	842.8'
24	P.C.C. CURB, TYPE 1-6	114.8'
25	P.C.C. CURB, TYPE 1-6	81.0'
26	P.C.C. CURB, TYPE 1-6	112.3'
27	P.C.C. CURB, TYPE 1-6	81.0'
28	P.C.C. CURB, TYPE 1-6	81.0'
29	P.C.C. CURB, TYPE 1-6	60.9'
30	P.C.C. CURB, TYPE 1-6	48.6'
31	P.C.C. CURB, TYPE 1-6	91.0'
32	P.C.C. CURB, TYPE 1-6	52.1'
33	P.C.C. CURB, TYPE 1-6	48.6'

*SEE SITE DETAILS (SHEET C-401) FOR MODIFIED CURB DETAILS

BENCH MARK INFORMATION:

POINT#	NORTHING	EASTING	ELEV.	DESCRIPTION
401	272594.8598	726275.4614	24.49	CONCRETE MONUMENT
402	272600.0252	726736.2719	22.16	CONCRETE MONUMENT
403	272164.8638	726648.1142	29.40	CONCRETE MONUMENT
404	272364.6158	726940.3069	22.41	CONCRETE MONUMENT
405	271946.6363	726837.2111	26.77	CONCRETE MONUMENT
406	272017.8375	726997.9937	25.07	CONCRETE MONUMENT
407	272145.2257	727150.6042	23.38	CONCRETE MONUMENT

BUILDING NAME	BUILDING DESCRIPTION	AREA	STORIES / HEIGHT	SPRINKLERS	CONSTRUCTION TYPE	OCCUPANCY / USE
MAINTENANCE FACILITY: NORTH BUILDING	DRIVER'S LOUNGE AND DISPATCH	4,474 SF	1 / 15'-0"	YES	II (000)	ASSEMBLY (<300)
MAINTENANCE FACILITY: SOUTH BUILDING	BUS MAINTENANCE SHOPS	11,220 SF	1 / 32'-0"	YES	II (000)	INDUSTRIAL (MINOR REPAIR GARAGE)
TEMPORARY RESTROOMS	PRECAST CONCRETE MODULAR TOILET ROOMS	190 SF	1 / 12'-0"	NO	II (000)	BUSINESS
FUTURE TRANSIT CENTER	FUTURE PERMANENT TOILET ROOMS AND VISITOR CENTER	+/- 2,500 SF	1 / 21'-0"	PROPOSED	II (000)	ASSEMBLY (<300)

1. THESE STRUCTURES WILL BE PROTECTED BY AUTOMATIC SPRINKLERS IN ACCORDANCE WITH NFPA 13.
2. ALL FIRE LANES, FIRE HYDRANTS, AND FIRE DEPARTMENT CONNECTIONS SHALL BE MARKED IN ACCORDANCE WITH THE DELAWARE STATE FIRE PREVENTION REGULATIONS.
3. LOCK BOXES REQUIRED, CONTACT LOCAL FIRE CHIEF FOR ORDERING INFORMATION AND LOCATION OF BOXES ON THE BUILDINGS.

C-102

N:\90181-00A\CAD\CP01-90181004C-102.dgn
4/16/2015 4:16:11 PM

DELAWARE DEPARTMENT OF TRANSPORTATION

ADDENDUMS / REVISIONS

SCALE 0 40 80 120 FEET

DELAWARE TRANSIT CORPORATION LEWES PARK AND RIDE AND MAINTENANCE FACILITY

CONTRACT	BRIDGE NO.
T200612502	
COUNTY	DESIGNED BY: PMG
SUSSEX	CHECKED BY: PMG

SITE PLAN

SHEET NO. 5
TOTAL SHTS. 185

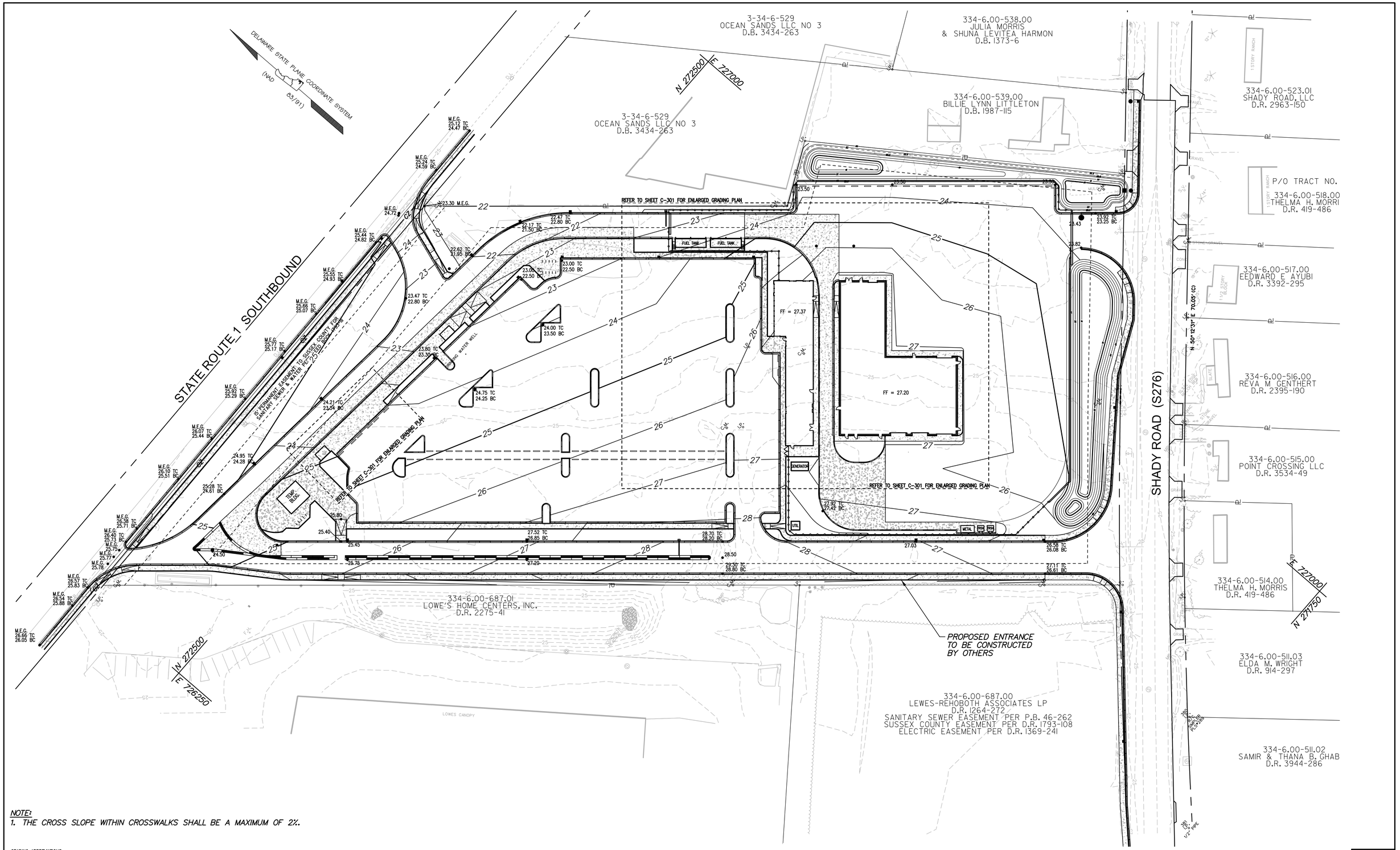

NOTE:
1. THE CROSS SLOPE WITHIN CROSSWALKS SHALL BE A MAXIMUM OF 2%.

GRADING ABBREVIATIONS

M.E.G.	MATCH EXISTING GRADE, REPORT ANY DISCREPENCY TO THE ENGINEER
TC	TOP OF CURB
BC	BOTTOM OF CURB

N:\90181-004\GRD\GP01-90181004C-103.dgn
4/16/2015 4:26:17 PM

DELAWARE DEPARTMENT OF TRANSPORTATION

ADDENDUMS / REVISIONS

SCALE 0 40 80 120 FEET

DELAWARE TRANSIT CORPORATION
LEWES PARK AND RIDE AND MAINTENANCE FACILITY

CONTRACT	BRIDGE NO.	
T200612502	DESIGNED BY:	PMG
COUNTY		
SUSSEX	CHECKED BY:	PMG

GRADING PLAN

C-103

SHEET NO. 6

TOTAL SHTS. 185

DRAINAGE PIPE SCHEDULE

NO.	SIZE / TYPE	CLASS	LENGTH	SLOPE	INT. EL.	DIS. EL.
1	18" RCP	IV	17 LF	0.0030	20.66	20.59
2	15" RCP	IV	2 LF	0.0030	20.77	20.76
3	18" RCP	IV	79 LF	0.0030	20.90	20.66
4	18" RCP	IV	3 LF	0.0342	21.00	20.90
*5	15" RCP	V	199 LF	0.0030	21.49	20.90
*6	15" RCP	V	180 LF	0.0030	22.04	21.49
7	15" RCP	V	115 LF	0.0030	22.38	22.04
8	15" CPP-S	N.A.	24 LF	0.0062	24.15	24.00
9	15" CPP-S	N.A.	110 LF	0.0030	24.48	24.15
10	15" RCP	IV	27 LF	0.0050	20.13	20.00
11	15" RCP	IV	47 LF	0.0030	20.21	20.05
12	15" RCP	IV	12 LF	0.0030	20.04	20.00
13	8" CPP-S	N.A.	30 LF	0.0105	23.33	23.01
14	8" CPP-S	N.A.	31 LF	0.0114	22.91	22.56
15	12" CPP-S	N.A.	69 LF	0.0650	22.46	18.00
16	15" CPP-S	N.A.	79 LF	0.0178	22.19	20.78
17	15" CPP-S	N.A.	85 LF	0.0094	20.78	19.99
18	23"X14" RECP	IV	44 LF	0.0030	19.99	19.86
19	15" CPP-S	N.A.	45 LF	0.0050	19.30	19.08
20	15" CPP-S	N.A.	19 LF	0.0030	18.87	18.82
21	15" CPP-S	N.A.	52 LF	0.0040	19.08	18.87
22	15" CPP-S	N.A.	48 LF	0.0066	20.63	20.31
23	30"X19" RECP	IV	103 LF	0.0030	19.86	19.55
24	15" CPP-S	N.A.	46 LF	0.0100	20.25	19.79
25	30"X19" RECP	IV	107 LF	0.0064	19.55	18.87
26	30"X19" RECP	IV	46 LF	0.0040	19.24	19.05
27	15" CPP-S	N.A.	85 LF	0.0050	19.71	19.28
28	15" RCP	IV	54 LF	0.0044	20.31	20.07
29	15" RCP	IV	64 LF	0.0045	20.58	20.30
30	15" RCP	IV	13 LF	0.0100	20.71	20.58
31	15" RCP	IV	161 LF	0.0100	22.19	20.58
32	15" RCP	IV	13 LF	0.0100	22.42	22.29
33	8" CPP-S	N.A.	30 LF	0.0109	23.50	23.17
34	15" RCP	IV	81 LF	0.0044	20.07	19.71
35	15" RCP	IV	65 LF	0.0032	18.82	18.61
**36	15" RCP	V	332 LF	0.0047	23.93	22.38

*SEE STORM DRAIN ENCASEMENT DETAIL, SHEET C-404
**FOR PLAN VIEW OF ITEMS, SEE SHEET H5-01

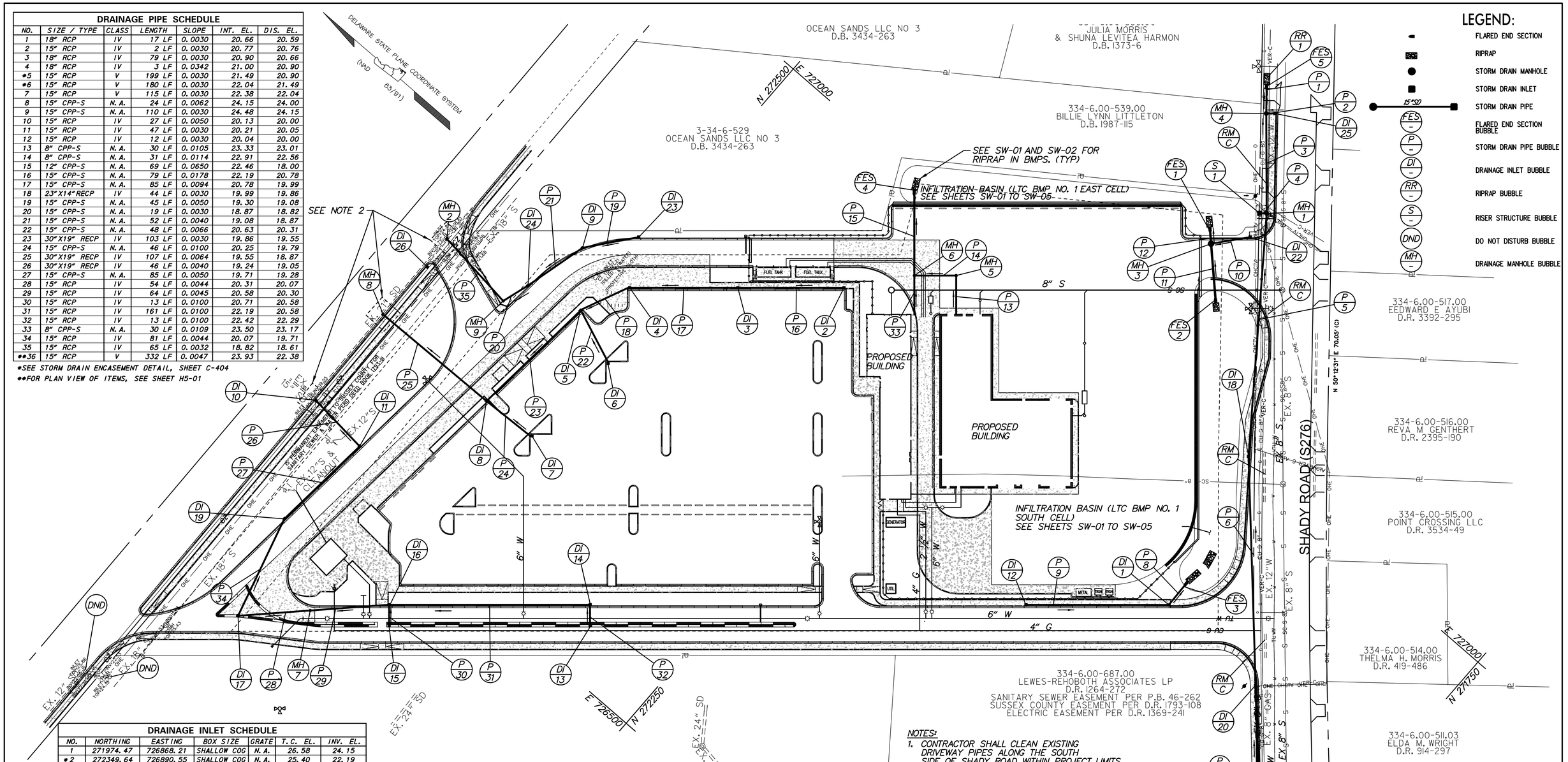

LEGEND:

- FLARED END SECTION
- RIPRAP
- STORM DRAIN MANHOLE
- STORM DRAIN INLET
- 15"SD — STORM DRAIN PIPE
- FES — FLARED END SECTION BUBBLE
- P — STORM DRAIN PIPE BUBBLE
- DI — DRAINAGE INLET BUBBLE
- RR — RIPRAP BUBBLE
- S — RISER STRUCTURE BUBBLE
- DND — DO NOT DISTURB BUBBLE
- MH — DRAINAGE MANHOLE BUBBLE

DRAINAGE INLET SCHEDULE

NO.	NORTHING	EASTING	BOX SIZE	GRATE	T.C. EL.	INV. EL.
1	271974.47	726868.21	SHALLOW COG	N.A.	26.58	24.15
*2	272349.64	726890.55	SHALLOW COG	N.A.	25.40	22.19
*3	272416.05	726833.03	SHALLOW COG	N.A.	24.04	20.78
*4	272483.75	726774.40	SHALLOW COG	N.A.	23.00	19.99
*5	272502.23	726733.48	SHALLOW COG	N.A.	23.00	19.86
**6	272456.33	726715.24	34" X 24"	1	23.50	20.63
**7	272464.67	726628.64	34" X 24"	1	24.25	20.25
8	272512.03	726625.93	SHALLOW COG	N.A.	23.80	19.55
*9	272534.95	726773.89	SHALLOW COG	N.A.	22.17	19.08
*10	272619.27	726533.83	SHALLOW COG	N.A.	25.77	MATCH EX.
*11	272566.90	726528.82	SHALLOW COG	N.A.	24.21	19.24
*12	272063.99	726790.78	SHALLOW COG	N.A.	27.03	24.48
*13	272325.66	726541.67	SHALLOW COG	N.A.	27.20	22.42
*14	272336.79	726554.52	SHALLOW COG	N.A.	27.52	22.19
*15	272451.42	726432.75	SHALLOW COG	N.A.	25.75	20.71
*16	272462.55	726445.61	SHALLOW COG	N.A.	25.95	20.58
*17	272551.15	726357.05	SHALLOW COG	N.A.	24.50	20.07
*19	272574.68	726442.58	SHALLOW COG	N.A.	24.95	19.71
*22	272122.87	727142.51	SHALLOW COG	N.A.	24.06	20.13
*23	272505.57	726811.06	SHALLOW COG	N.A.	22.47	19.30
*24	272548.64	726720.79	SHALLOW COG	N.A.	22.62	18.87
*26	272621.75	726677.76	SHALLOW COG	N.A.	25.25	19.05

*SEE SHALLOW COG DETAIL, SHEET C-403
**T.C. EL REFERS TO THE TOP OF GRATE

RIPRAP SCHEDULE

NO.	TYPE	AREA
1	R-4	5 SY

FLARED END SECTION SCHEDULE

NO.	SIZE / TYPE	SLOPE	SAFETY GRATE
1	15" RCP	0.0000	NO
2	15" RCP	0.0000	NO
3	15" CPP-S	0.0062	NO
4	12" CPP-S	0.0100	NO
5	18" CPP-S	0.0030	NO
*6	15" RCP	0.0046	YES

*FOR PLAN VIEW OF ITEMS, SEE SHEET H5-01

DRAINAGE INLET SCHEDULE

NO.	STATION	OFFSET	BOX SIZE	GRATE	T.C. EL.	INV. EL.
*18	107+90	35 LT	SHALLOW COG	N.A.	24.46	21.49
*20	106+01	29 LT	SHALLOW COG	N.A.	25.71	22.04
*21	104+81	29 LT	SHALLOW COG	N.A.	26.00	22.38
*25	110+74	18 LT	SHALLOW COG	N.A.	23.84	20.77

*SEE SHALLOW COG DETAIL, SHEET C-403

MANHOLE SCHEDULE

NO.	STATION	OFFSET	NORTHING	NORTHING	TYPE/SIZE	T.G. EL.	INV. EL.
1	109+91	24 LT			48" X 48"	24.33	20.90
*2			272625.16	726733.43	48" X 48"	24.69	MATCH EX.
3			272143.78	747117.16	48" X 48"	23.43	20.04
4	110+74	26 LT			48" X 48"	23.82	20.66
5			272286.07	726959.08	48" X 48"	25.92	22.91
6			272312.28	726936.39	48" X 48"	25.84	22.46
7			272508.81	726399.30	48" X 48"	24.99	20.31
*8			272623.39	726624.04	48" X 48"	25.00	18.87
9			272555.82	726697.63	48" X 48"	22.93	18.82

* SHALL BE A DOGHOUSE STYLE MANHOLE TO CONNECT TO EXISTING STORM DRAIN

NOTES:

1. CONTRACTOR SHALL CLEAN EXISTING DRIVEWAY PIPES ALONG THE SOUTH SIDE OF SHADY ROAD WITHIN PROJECT LIMITS
2. CONTRACTOR SHALL USE EXTREME CARE IN EXECUTING ALL WORK AROUND EXISTING FIBER OPTIC LINES AND SHALL USE HAND-DIGGING OR OTHER MEANS TO AVOID IMPACTS TO THE LINES. REPAIR OF ANY DAMAGE TO THE LINES SHALL BE THE RESPONSIBILITY OF THE CONTRACTOR.

N:\90181-004\CADD\CP01-90181004C-104.dgn
4/16/2015 4:27:32 PM

DELAWARE DEPARTMENT OF TRANSPORTATION

ADDENDUMS / REVISIONS

SCALE 0 40 80 120 FEET

DELAWARE TRANSIT CORPORATION LEWES PARK AND RIDE AND MAINTENANCE FACILITY

CONTRACT	BRIDGE NO.
T200612502	DESIGNED BY: PMG
COUNTY	CHECKED BY: PMG
SUSSEX	

STORM DRAIN PLAN

C-104

SHEET NO. 7

TOTAL SHTS. 185

WATER MATERIAL LIST	
ITEM DESCRIPTION	QUANITY
8" PVC (CL. 150)	804 LF
6" PVC (CL. 150)	500 LF
6" DIP (CL. 52)	19 LF
2-1/2" PVC (CL. 150)	139 LF
2" PVC (CL. 150)	35 LF
6" FIRE HYDRANTS	3
8" VALVES	3
6" VALVES	7
2-1/2" VALVES	2
2" VALVE	1
8"X6" TEE	4
6"X6" TEE	1
6" 90° HORZ. BENDS	2
6" 45° HORZ. BENDS	1
6" 45° VERT. BENDS	4
8" 45° VERT. BENDS	4
2 1/2" 90° HORZ. BEND	2
2 1/2" 45° HORZ. BEND	1
1-1/2" 90° HORZ. BENDS	3
8" CAP & 2"	1
6" CAP & 2" BLOW-OFF ASSEMBLY	1
12"x8" TAPPING SLEEVE	1
12"x6" TAPPING SLEEVE	1
2" BLOW OFF W/ VAULT	1

DIESEL FUEL SUPPLY LINE MATERIAL LIST	
ITEM DESCRIPTION	QUANITY
2" DOUBLE WALL FIBERGLASS	164 LF
2" 45° HORZ. BENDS	3

GASOLINE SUPPLY LINE MATERIAL LIST	
ITEM DESCRIPTION	QUANITY
2"	122 LF
2" 45° HORZ. BENDS	3

SANITARY SEWER MATERIAL LIST	
ITEM DESCRIPTION	QUANITY
8" PVC (SDR-35)	323 LF
6" PVC (SDR-35)	104 LF
4" PVC (SDR-35)	102 LF
STD. 48" DIA. SEWER MANHOLE	1
SEWER CLEANOUTS	4
6" 45° HORZ. BENDS	2
WATER AND OIL SEPARATOR (350 GAL.)	1
WATER AND OIL SEPARATOR (1000 GAL.)	1

NOTES:

1. REFER TO SHEETS C-104 FOR ADDITIONAL STORM DRAIN PIPING INFORMATION.
2. INSTALLATION OF WATER AND SEWER SHALL BE IN ACCORDANCE WITH SUSSEX COUNTY STANDARDS AND SPECIFICATIONS.

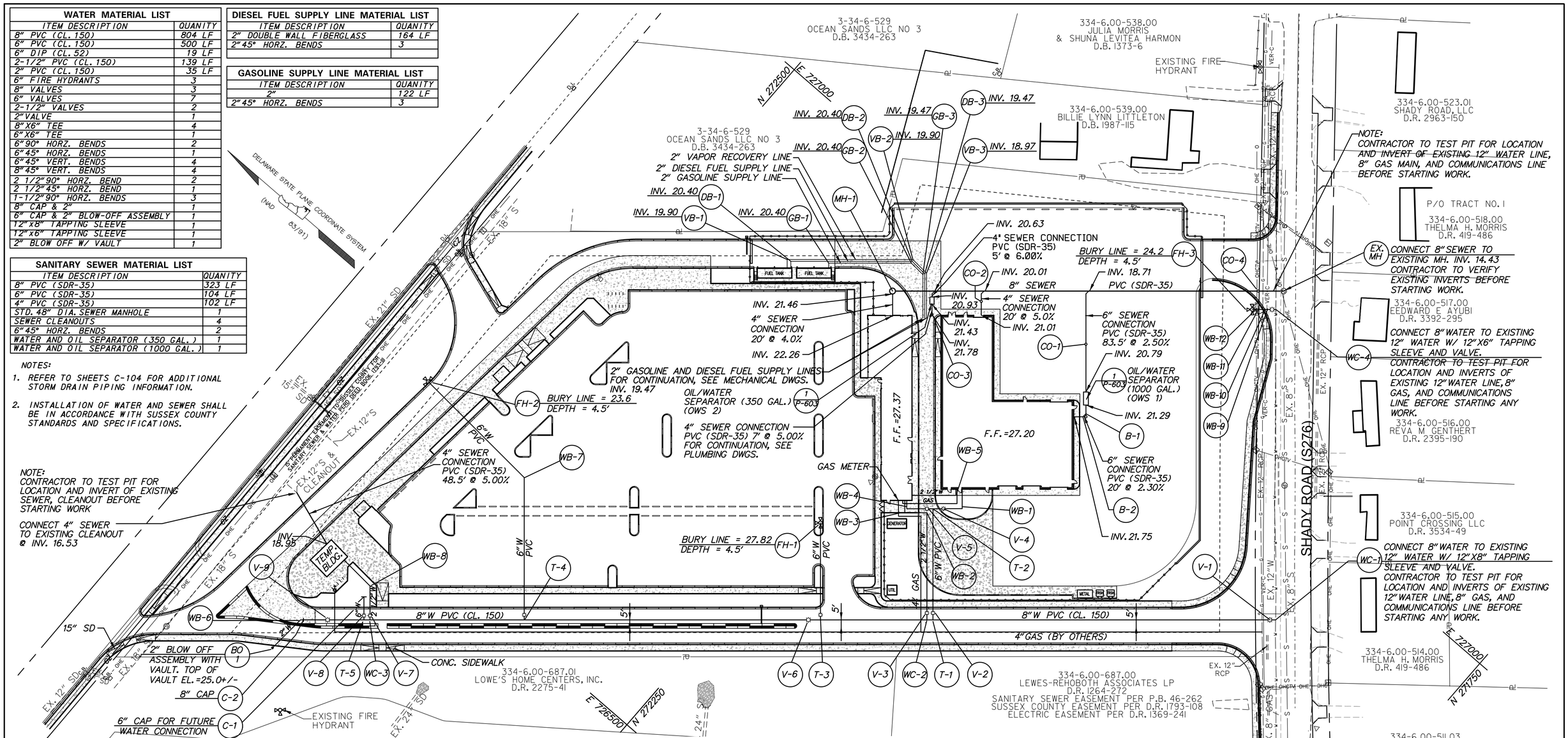

WATER STAKEOUT SCHEDULE			
No.	TYPE	NORTHING	EASTING
WC-1	WATER CONNECTION	N 271901.2267	E 726916.7616
WC-2	WATER CONNECTION	N 272119.2054	E 726727.9732
WC-3	WATER CONNECTION	N 272467.3850	E 726426.4198
WC-4	WATER CONNECTION	N 272069.0252	E 727110.8894
V-1	8" VALVE	N 271904.8506	E 726913.6691
V-2	6" VALVE	N 272119.1284	E 726735.5165
V-3	2-1/2" VALVE	N 272122.9010	E 726732.2491
V-4	6" VALVE	N 272169.0329	E 726806.4572
V-5	6" VALVE	N 272171.7786	E 726803.9245
V-6	8" VALVE	N 272193.3159	E 726663.7872
V-7	2-1/2" VALVE	N 272469.6835	E 726429.1169
V-8	6" VALVE	N 272473.4758	E 726425.8324
V-9	8" VALVE	N 272493.8698	E 726403.4817
T-1	8"x6" TEE	N 272115.4259	E 726731.2466
T-2	6"x6" TEE	N 272175.5952	E 726800.7193
T-3	8"x6" TEE	N 272185.7637	E 726670.3419
T-4	8"x6" TEE	N 272370.8969	E 726510.1183
T-5	8"x6" TEE	N 272471.1645	E 726423.1464
WB-1	6" 90° BEND	N 272157.3920	E 726816.6002
WB-2	2-1/2" 90° BEND	N 272177.2109	E 726794.9475
WB-3	2-1/2" 90° BEND	N 272191.0541	E 726782.9581
WB-4	6" 90° BEND	N 272191.9917	E 726786.5186
WB-5	2-1/2" 90° BEND	N 272168.5162	E 726821.4295

WATER STAKEOUT SCHEDULE			
No.	TYPE	NORTHING	EASTING
WB-6	2" 45° BEND	N 272510.8040	E 726388.7792
WB-7	6" 45° BEND	N 272448.0413	E 726598.8606
WB-8	2 1/2" 45° BEND	N 272485.5095	E 726447.4386
WB-9	6" 45° VERT. BEND	N 272074.3427	E 727106.3441
WB-10	6" 45° VERT. BEND	N 272075.8563	E 727105.0489
WB-11	6" 45° VERT. BEND	N 272079.9943	E 727101.4572
WB-12	6" 45° VERT. BEND	N 272081.4674	E 727100.1814
BO-1	2" BLOW OFF & VAULT	N 272513.1532	E 726356.1058
FH-1	6" FIRE HYDRANT	N 272238.3272	E 726731.0328
FH-2	6" FIRE HYDRANT	N 272560.1753	E 726606.9075
FH-3	6" FIRE HYDRANT	N 272083.8077	E 727098.1710

DIESEL SUPPLY LINE - STRUCTURE STAKEOUT SCHEDULE			
No.	TYPE	NORTHING	EASTING
DB-1	2" 90° HORZ. BEND	N 272398.4289	E 726878.4218
DB-2	2" 45° HORZ. BEND	N 272322.5782	E 726944.1150
DB-3	2" 45° HORZ. BEND	N 272307.9381	E 726943.0644

GAS SUPPLY LINE - STRUCTURE STAKEOUT SCHEDULE			
No.	TYPE	NORTHING	EASTING
GB-1	2" 90° HORZ. BEND	N 272401.6786	E 726877.5916
GB-2	2" 45° HORZ. BEND	N 272323.0905	E 726945.6557
GB-3	2" 45° HORZ. BEND	N 272307.2110	E 726944.5161

WATER STAKEOUT SCHEDULE			
No.	TYPE	NORTHING	EASTING
C-1	6" CAP & 2" BLOWOFF	N 272483.6365	E 726437.5541
C-2	8" CAP & 2" BLOWOFF	N 272508.9598	E 726390.4124

STAGE 2 VAPOR RECOVERY LINE - STRUCTURE STAKEOUT SCHEDULE			
No.	TYPE	NORTHING	EASTING
VB-1	2" 90° HORZ. BEND	N 272373.7531	E 726897.8088
VB-2	2" 45° HORZ. BEND	N 272322.0658	E 726942.5744
VB-3	2" 45° HORZ. BEND	N 272308.6652	E 726941.6128

SEWER STRUCTURE STAKEOUT SCHEDULE			
No.	TYPE	NORTHING	EASTING
EX. MH		N 272074.2326	E 727126.6465
EX. CO	SEWER CLEANOUT	N 272581.8734	E 726466.3055
MH-1	48" STD. MANHOLE	N 272318.7342	E 726914.8871
B-1	6" 45° HORZ. BEND	N 272131.3736	E 726942.8844
B-2	6" 45° HORZ. BEND	N 272131.6369	E 726939.3698
CO-1	SEWER CLEANOUT	N 272169.0279	E 726986.3608
CO-2	SEWER CLEANOUT	N 272257.6892	E 726956.5235
CO-3	SEWER CLEANOUT	N 272281.4595	E 726921.7084
CO-4	SEWER CLEANOUT	N 272090.1604	E 727112.8577
OWS-1	OIL/WATER SEPERATOR	N 272139.6491	E 726952.4395
OWS-2	OIL/WATER SEPERATOR	N 272288.8932	E 726930.2997

NOTE:
FOR LOCATION OF FIRE DEPARTMENT CONNECTIONS, SEE DWGS. F-101 AND F-102

NOTE:
REFER TO DRAWING P-604 FOR FUEL LINE DETAILS

DELAWARE DEPARTMENT OF TRANSPORTATION

ADDENDUMS / REVISIONS

SCALE 0 40 80 120 FEET

DELAWARE TRANSIT CORPORATION
LEWES PARK AND RIDE AND MAINTENANCE FACILITY

CONTRACT	BRIDGE NO.
T200612502	DESIGNED BY: D.J.L.
COUNTY	
SUSSEX	CHECKED BY: PMG

WATER AND SEWER PLAN

C-105

SHEET NO. 8

TOTAL SHTS. 185

N:\90181-0041\CADD\CP01-90181004C-105.dgn
2/12/2014 11:59:20 AM

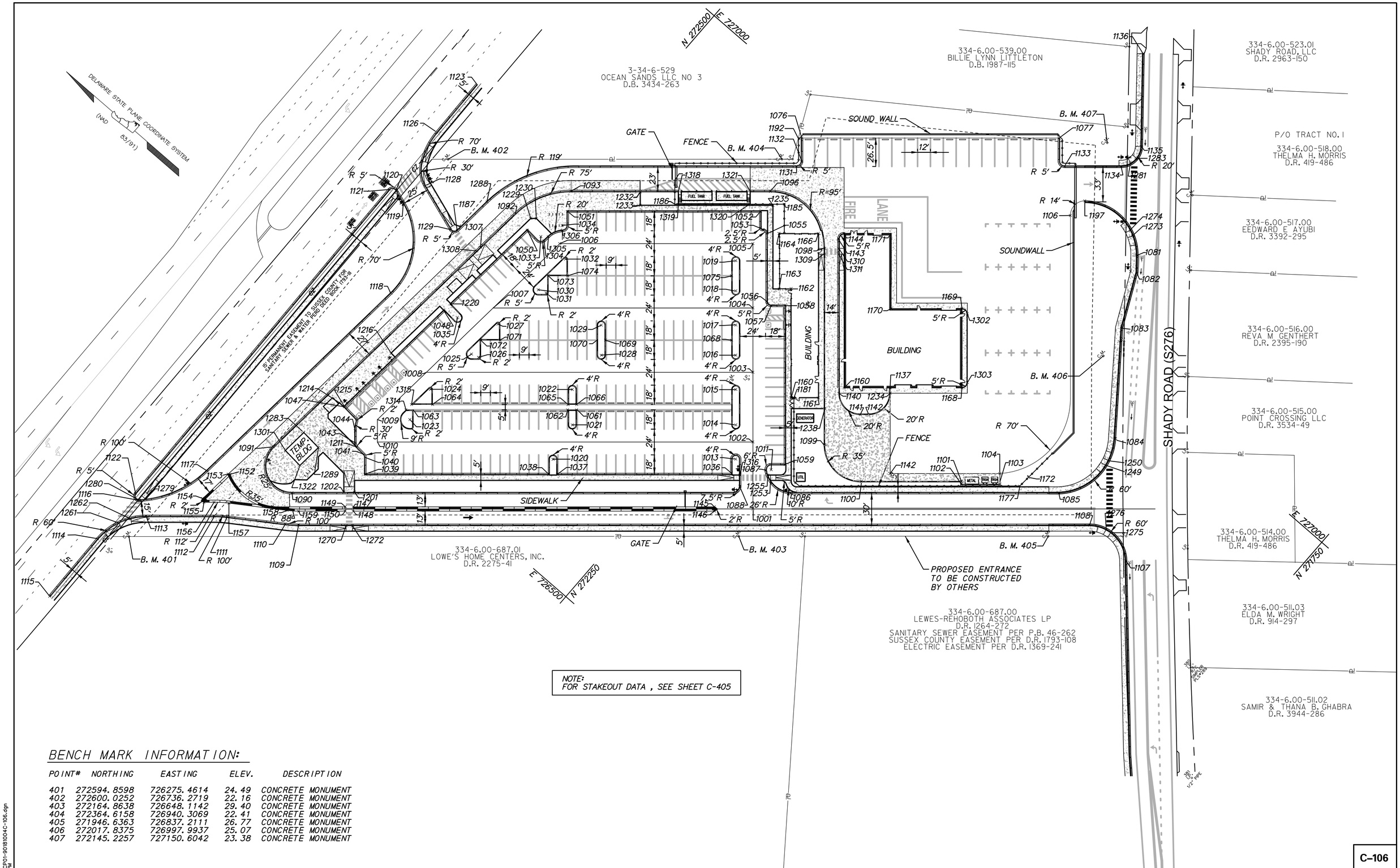

NOTE:
FOR STAKEOUT DATA , SEE SHEET C-405

BENCH MARK INFORMATION:

POINT#	NORTHING	EASTING	ELEV.	DESCRIPTION
401	272594.8598	726275.4614	24.49	CONCRETE MONUMENT
402	272600.0252	726736.2719	22.16	CONCRETE MONUMENT
403	272164.8638	726648.1142	29.40	CONCRETE MONUMENT
404	272364.6158	726940.3069	22.41	CONCRETE MONUMENT
405	271946.6363	726837.2111	26.77	CONCRETE MONUMENT
406	272017.8375	726997.9937	25.07	CONCRETE MONUMENT
407	272145.2257	727150.6042	23.38	CONCRETE MONUMENT

N:\99181-004\CADD\CP01-99181004C-106.dgn
4/16/2015 4:15:18 PM

DELAWARE DEPARTMENT OF TRANSPORTATION

ADDENDUMS / REVISIONS

SCALE 0 40 80 120 FEET

DELAWARE TRANSIT CORPORATION
LEWES PARK AND RIDE AND MAINTENANCE FACILITY

CONTRACT	BRIDGE NO.
T200612502	DESIGNED BY: DJL
COUNTY	CHECKED BY: PMG
SUSSEX	

STAKEOUT & LAYOUT PLAN

C-106

SHEET NO. 9

TOTAL SHTS. 185

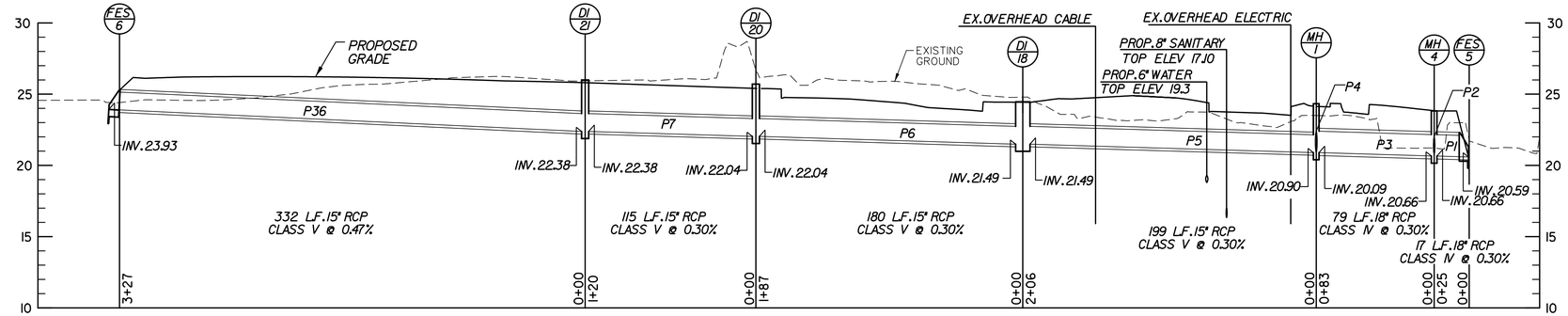

FES-6 TO FES-5

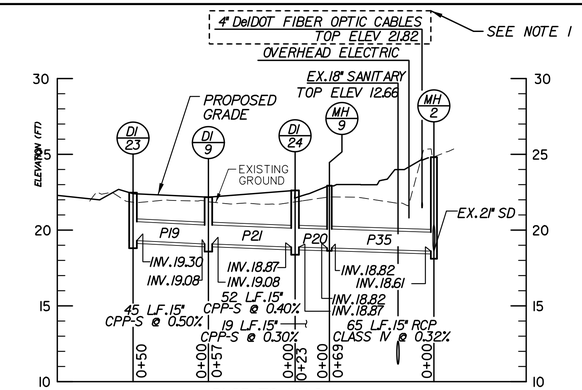

DI-23 TO MH-2

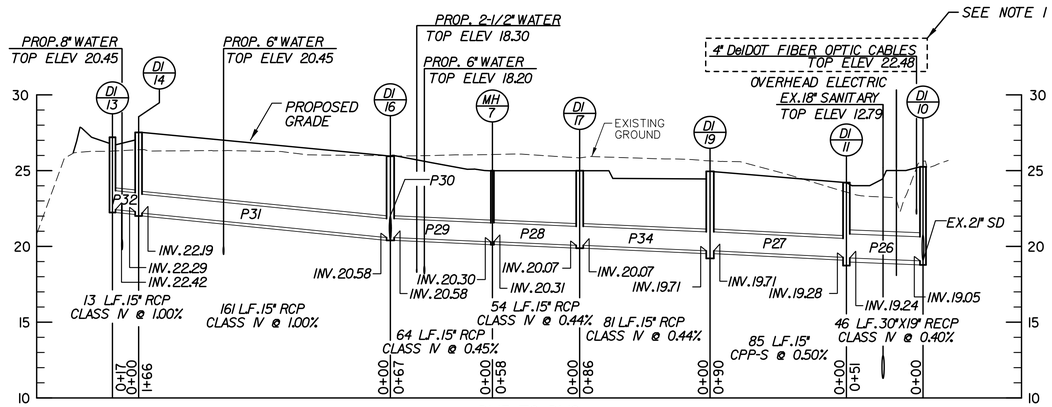

DI-13 TO DI-10

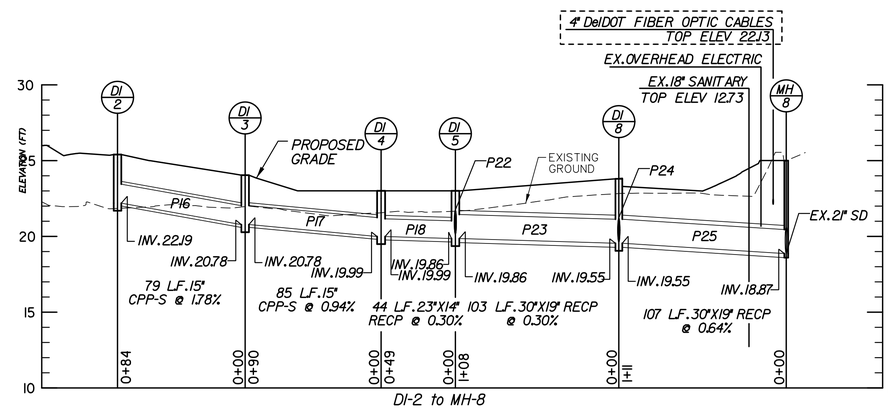

DI-2 to MH-8

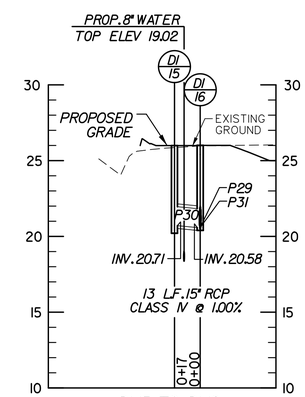

DI-15 TO DI-16

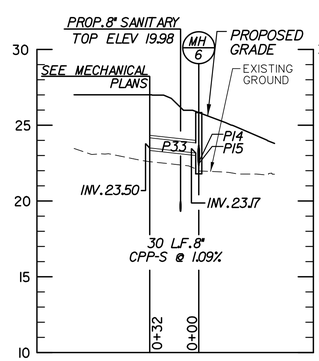

BUILDING CONNECTION TO MH-6

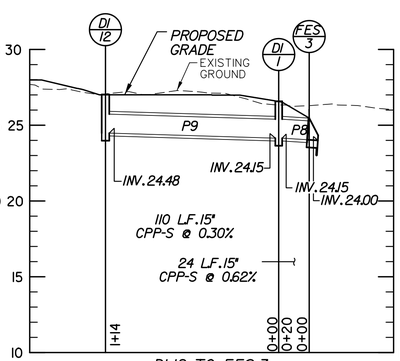

DI-12 TO FES-3

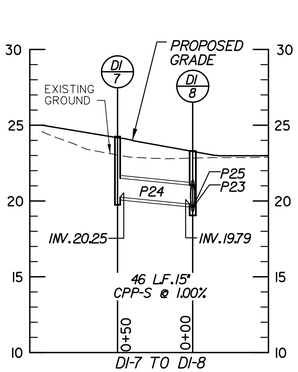

DI-7 TO DI-8

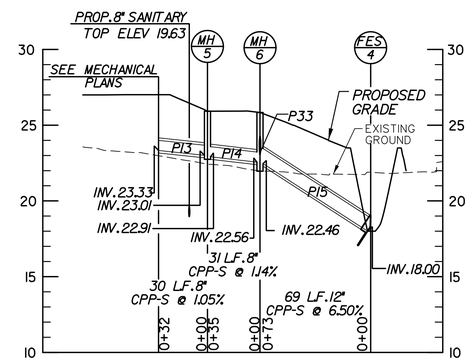

BUILDING CONNECTION TO FES-4

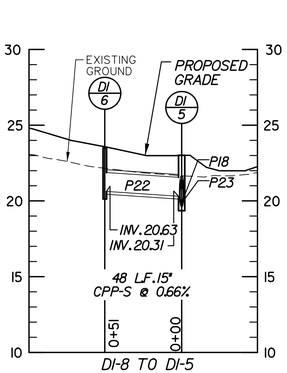

DI-8 TO DI-5

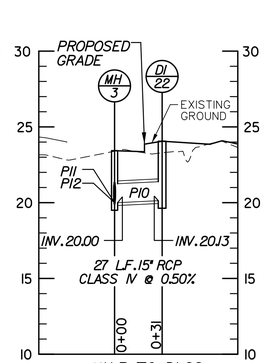

MH-3 TO DI-22

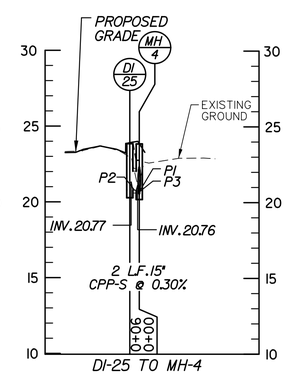

DI-25 TO MH-4

NOTES:

1. CONTRACTOR SHALL USE EXTREME CARE IN EXECUTING ALL WORK AROUND EXISTING FIBER OPTIC LINES AND SHALL USE HAND-DRILLING OR OTHER MEANS TO AVOID IMPACTS TO THE LINES. REPAIR OF ANY DAMAGE TO THE LINES SHALL BE THE RESPONSIBILITY OF THE CONTRACTOR

SCALE: HORIZ. 1"=50' VERT. 1"=5'

C-107

DELAWARE DEPARTMENT OF TRANSPORTATION

ADDENDUMS / REVISIONS

DELAWARE TRANSIT CORPORATION
LEWES PARK AND RIDE
AND MAINTENANCE FACILITY

CONTRACT	BRIDGE NO.	
T200612502	DESIGNED BY:	B.P.G.
COUNTY	CHECKED BY:	J.D.C.
SUSSEX		

STORM DRAIN PROFILES

SHEET NO. 10
TOTAL SHTS. 185

N:\0180181-00\CADD\C-01-90180104C-107.dgn
4/26/2018 1:14 PM

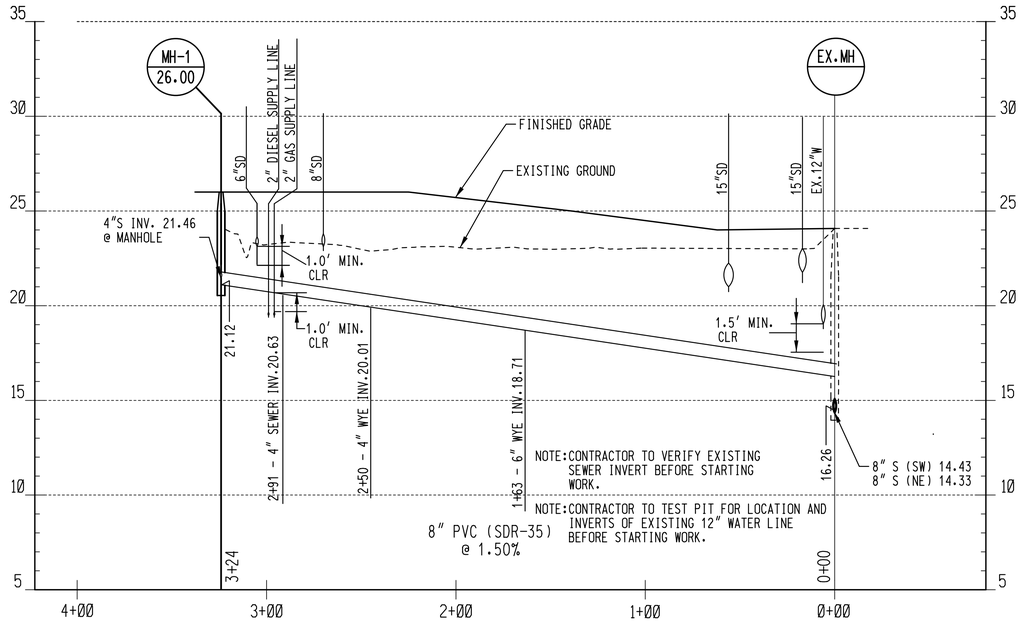

SEWER PROFILE

SCALE: HORZ: 1"=40'
VERT. 1"=4'

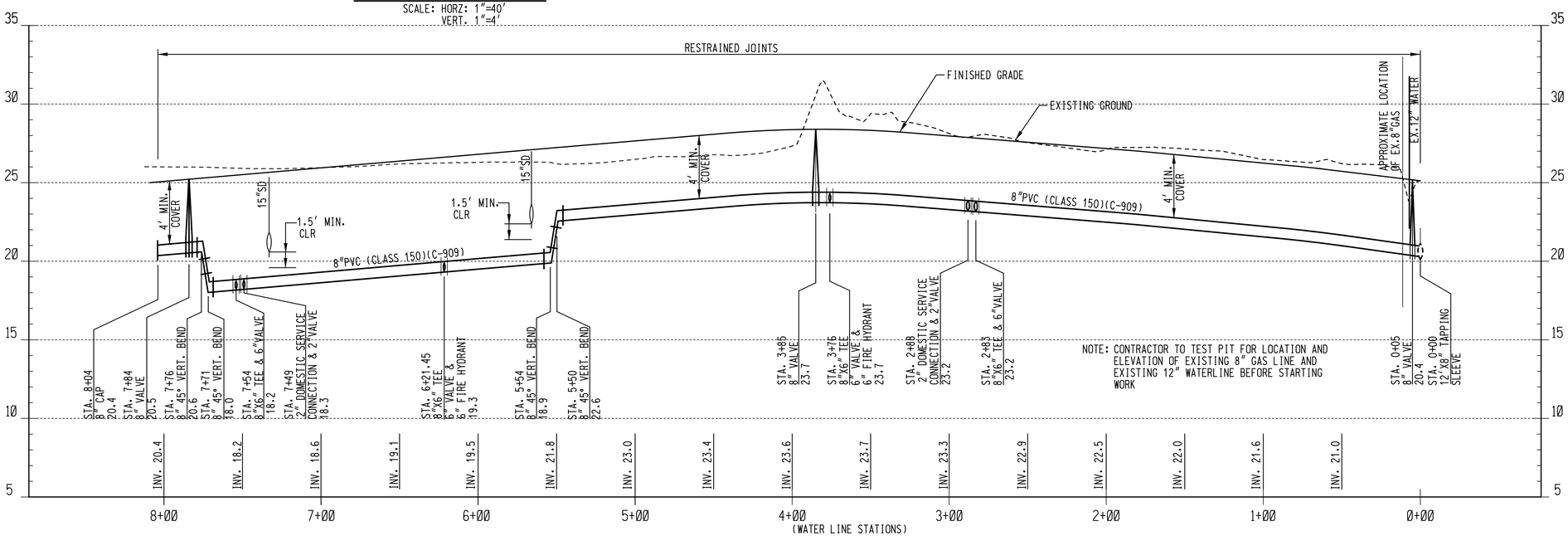

WATER PROFILE

SCALE: HORZ: 1"=40'
VERT. 1"=4'

N:\90181-004\CADD\CP01-90181004C-108.dgn
4/16/2015 4:28:48 PM

DELAWARE DEPARTMENT OF TRANSPORTATION	ADDENDUMS / REVISIONS	SCALE 0 40 80 120 FEET SCALE: HORZ: 1"=40' VERT. 1"=4'	DELAWARE TRANSIT CORPORATION LEWES PARK AND RIDE AND MAINTENANCE FACILITY	CONTRACT T200612502	BRIDGE NO.	WATER AND SEWER PROFILES	C-108
				COUNTY SUSSEX	DESIGNED BY: D.J.L.		SHEET NO. 11
					CHECKED BY: P.M.G.		TOTAL SHTS. 185

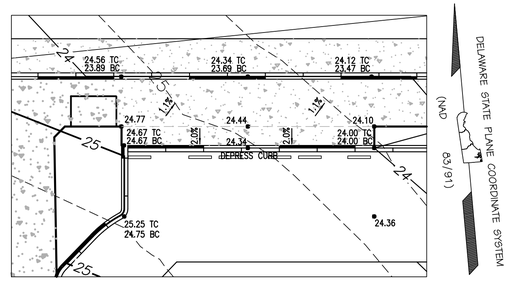

HANDICAPPED PARKING ENLARGED GRADING PLAN

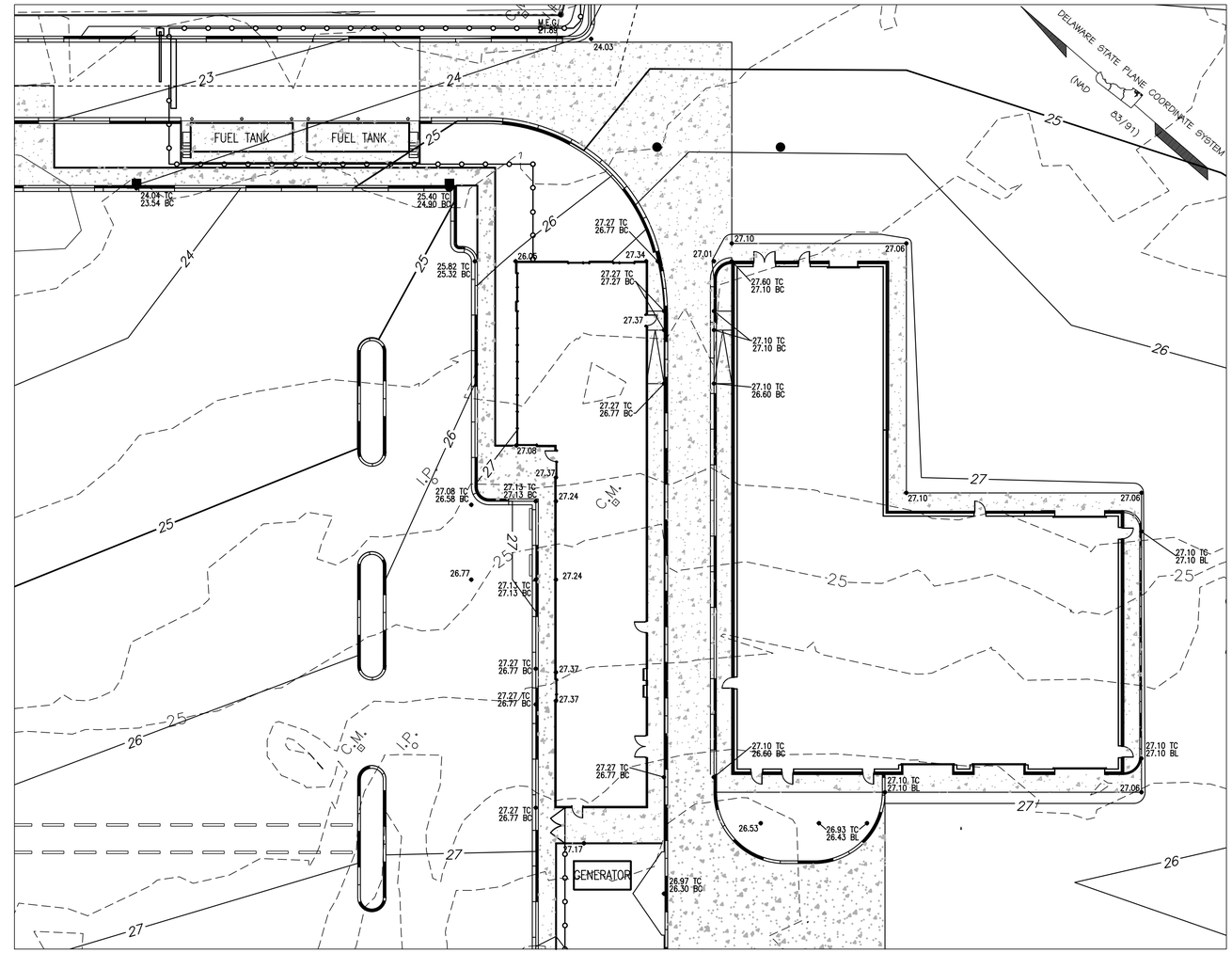

BUILDING ENLARGED GRADING PLAN

NOTES:

1. REFER TO SIGNAGE AND STRIPING PLAN FOR HANDICAP SIGN LOCATIONS.
2. CONTRACTOR IS TO ENSURE THAT ALL SIDEWALK, RAMPS, AND HANDI-CAP PARKING SPACE MEET THE GRADING REQUIREMENTS OF THE LATEST ADA GUIDELINES.

N:\90181-004\CADD\CP01-90181004C-301.dgn
2/12/2014 12:04:44 PM

DELAWARE DEPARTMENT OF TRANSPORTATION	ADDENDUMS / REVISIONS	SCALE 0 20 40 60 FEET	DELAWARE TRANSIT CORPORATION LEWES PARK AND RIDE AND MAINTENANCE FACILITY	CONTRACT T200612502	BRIDGE NO.	ENLARGED GRADING PLAN	C–301
				COUNTY SUSSEX	DESIGNED BY: PMG		SHEET NO. 12
					CHECKED BY: PMG		TOTAL SHTS. 185

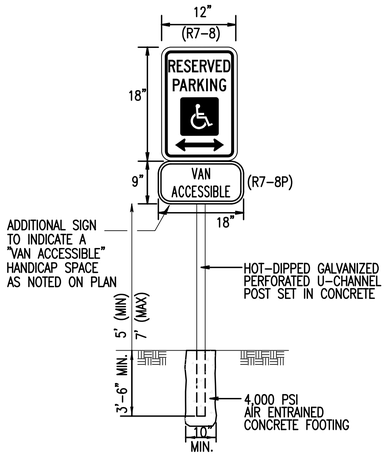

A / C401 HANDICAP PARKING SIGNS DETAIL
NOT TO SCALE

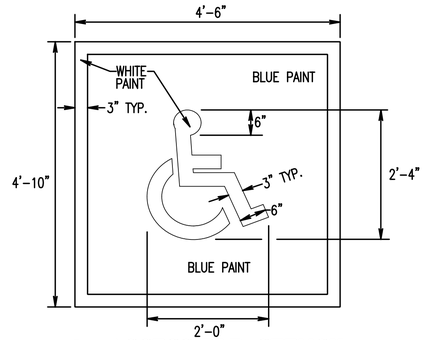

B / C401 ACCESSIBLE STENCIL
NOT TO SCALE

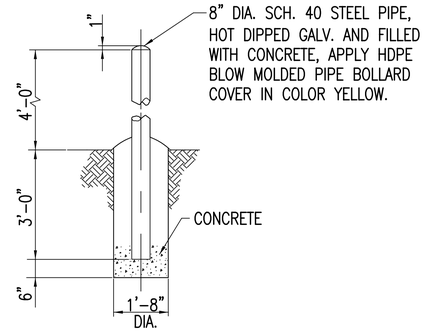

C / C401 TYPICAL PIPE BOLLARD DETAIL
NOT TO SCALE

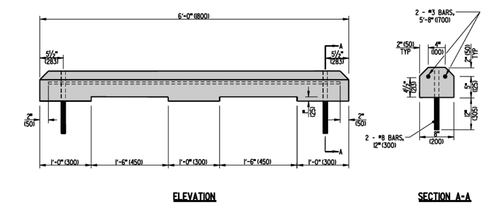

M / 8 P.C.C. PARKING BUMPER

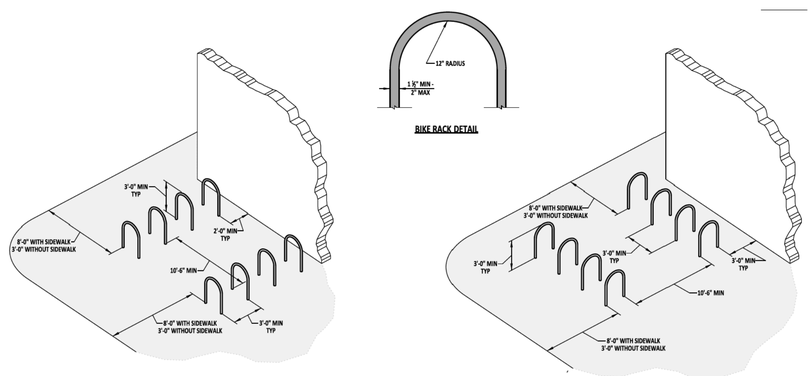

NOTES:
1). BIKE RACK SHALL BE ANCHORED AS PER MANUFACTURER'S RECOMMENDATIONS AFTER APPROVAL FROM ENGINEER IN THE FIELD.
2). DETAIL SHOWN WITH P.C.C. CURB TYPE 3-8, HOWEVER ACTUAL CURB VARIES AND SHOULD BE PLACED AS SHOWN ON PLANS.
3). SPECIAL CONSIDERATIONS SHOULD BE TAKEN WHEN PLACING BIKE RACKS NEAR CURB RAMPS AND MAY REQUIRE A DETAIL ON THE PLANS.

M / 4 BIKE RACK LAYOUT DETAILS
NOT TO SCALE

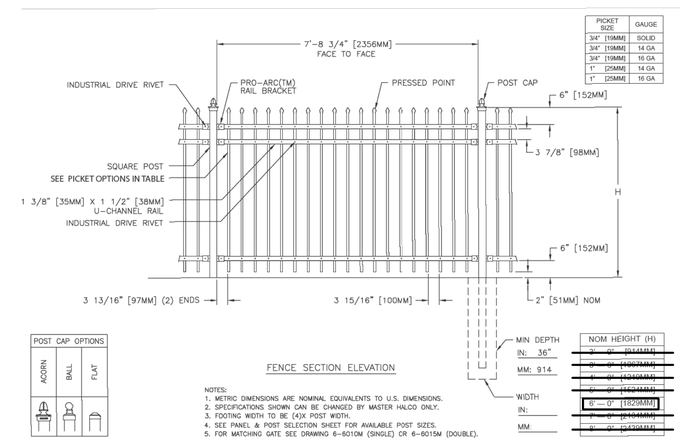

DECORATIVE METAL FENCE

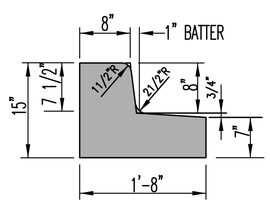

D / C401 INTERGAL P.C.C. CURB AND GUTTER
TYPE 3-8 MODIFIED
NOT TO SCALE

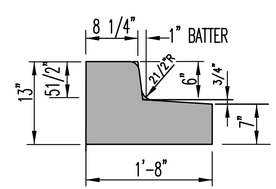

E / C401 INTERGAL P.C.C. CURB AND GUTTER
TYPE 3-6 MODIFIED
NOT TO SCALE

N:\90181-004\CADD\CR01-90181004C-401.dgn
2/12/2014 12:05:36 PM

DELAWARE DEPARTMENT OF TRANSPORTATION	ADDENDUMS / REVISIONS		DELAWARE TRANSIT CORPORATION LEWES PARK AND RIDE AND MAINTENANCE FACILITY	CONTRACT T200612502	BRIDGE NO.	SITE DETAILS	C-401
				COUNTY SUSSEX	DESIGNED BY: D.J.L.		SHEET NO. 13
					CHECKED BY: P.M.G.		TOTAL SHTS. 185

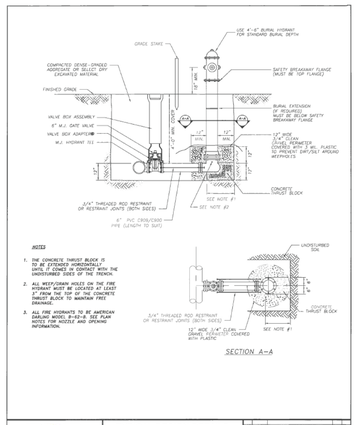

TIDEWATER UTILITIES INC. A Middlesex Water Company Affiliate 1089 South Little Creek Road Dover, Delaware 19901

TYPICAL DESIGN DETAILS
FIRE HYDRANT ASSEMBLY DETAIL
A-7

REV.	DATE	DESCRIPTION	APP.
1	3/31/08	ADDED TRACE BOX ADAPTER	DAF/PG
2	3/31/08	INITIAL RELEASE	DAF/PG

DATE: 10.04.02 DRAWN BY: AC
SCALE: N.T.S. A-7 17

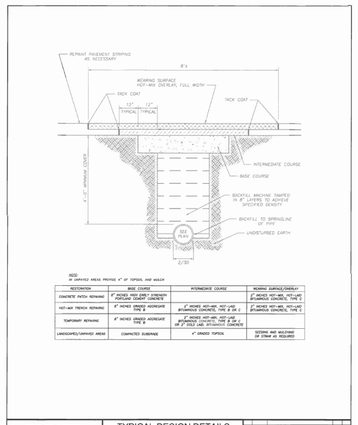

TIDEWATER UTILITIES INC. A Middlesex Water Company Affiliate 1089 South Little Creek Road Dover, Delaware 19901

TYPICAL DESIGN DETAILS
REPAVING AND TRENCH DETAIL
A-8

REV.	DATE	DESCRIPTION	APP.
1	3/31/08	INITIAL RELEASE	DAF/PG

DATE: 10.04.02 DRAWN BY: AC
SCALE: N.T.S. A-8 17

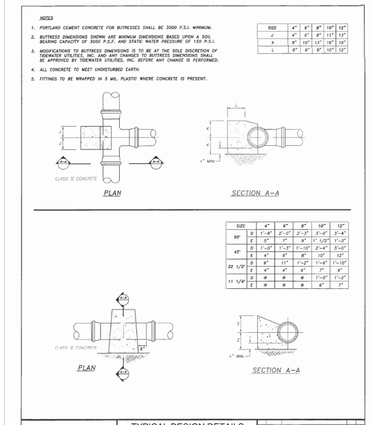

SIZE		4"	6"	8"	10"	12"
90°	Z	4'-0"	4'-0"	5'-0"	5'-0"	6'-0"
	X	3'-0"	3'-0"	3'-0"	3'-1 1/2"	3'-3"
	B	1'-0"	1'-0"	1'-0"	2'-0"	2'-0"
45°	Z	4'-0"	4'-0"	4'-0"	4'-0"	5'-0"
	X	3'-0"	3'-0"	3'-0"	3'-0"	3'-0"
22 1/2°	Z	4'-0"	4'-0"	4'-0"	4'-0"	4'-0"
	X	3'-0"	3'-0"	3'-0"	3'-0"	3'-0"
11 1/4°	Z	4'-0"	4'-0"	4'-0"	4'-0"	4'-0"
	X	#	#	#	3'-0"	3'-0"

TIDEWATER UTILITIES INC. A Middlesex Water Company Affiliate 1089 South Little Creek Road Dover, Delaware 19901

TYPICAL DESIGN DETAILS
THRUST BLOCK DETAIL
A-11

REV.	DATE	DESCRIPTION	APP.
1	3/31/08	INITIAL RELEASE	DAF/PG

DATE: 10.04.02 DRAWN BY: AC
SCALE: N.T.S. A-11 17

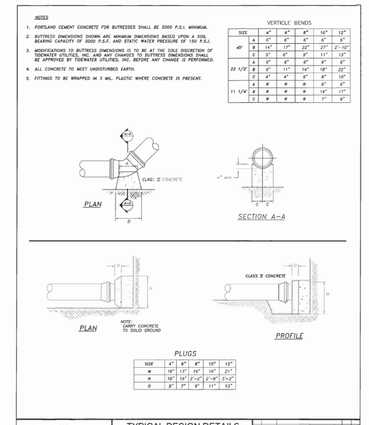

VERTICLE BENDS

SIZE		4"	6"	8"	10"	12"
45°	Z	4'-0"	4'-0"	4'-0"	4'-0"	4'-0"
	X	1'-6"	1'-7"	2'-2"	2'-7"	2'-10"
	C	3'-0"	3'-0"	3'-0"	1'-1"	1'-2"
22 1/2°	Z	4'-0"	4'-0"	4'-0"	4'-0"	4'-0"
	X	0'-6"	1'-1"	1'-4"	1'-8"	2'-2"
	C	3'-0"	3'-0"	3'-0"	3'-0"	3'-0"
11 1/4°	Z	4'-0"	4'-0"	4'-0"	4'-0"	4'-0"
	X	#	#	#	1'-4"	1'-7"
	C	#	#	#	1'-1"	3'-0"

PLUGS

SIZE	4"	6"	8"	10"	12"
W	10"	12"	2'-0"	2'-0"	2'-0"
D	8"	9"	9"	11"	12"

TIDEWATER UTILITIES INC. A Middlesex Water Company Affiliate 1089 South Little Creek Road Dover, Delaware 19901

TYPICAL DESIGN DETAILS
THRUST BLOCK DETAIL
A-12

REV.	DATE	DESCRIPTION	APP.
1	3/31/08	INITIAL RELEASE	DAF/PG

DATE: 10.04.02 DRAWN BY: AC
SCALE: N.T.S. A-12 17

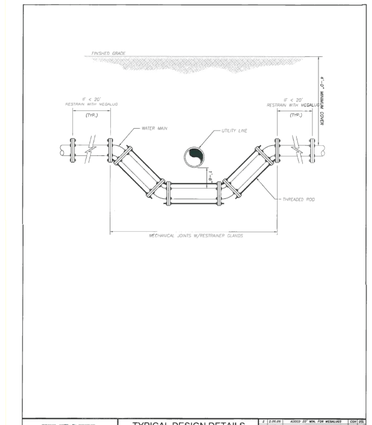

TIDEWATER UTILITIES INC. A Middlesex Water Company Affiliate 1089 South Little Creek Road Dover, Delaware 19901

TYPICAL DESIGN DETAILS
WATER MAIN CROSSING
UTILITY DETAIL
A-9

REV.	DATE	DESCRIPTION	APP.
1	3/31/08	ADDED 18" MIN. FOR REDRAWING	DAF/PG
2	7/31/08	ADDED DIMENSIONS NOTE	DAF/PG
3	7/31/08	INITIAL RELEASE	DAF/PG

DATE: 10.04.02 DRAWN BY: AC
SCALE: N.T.S. A-9 17

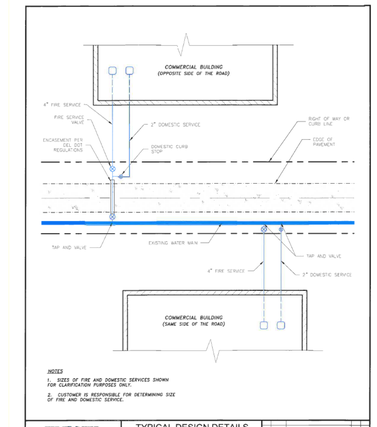

TIDEWATER UTILITIES INC. A Middlesex Water Company Affiliate 1089 South Little Creek Road Dover, Delaware 19901

TYPICAL DESIGN DETAILS
LARGE COMMERCIAL SERVICE
FIRE & DOMESTIC
A-17

REV.	DATE	DESCRIPTION	APP.
1	8/14/12	INITIAL RELEASE	DAF/MD

DATE: 8/14/12 DRAWN BY: SAM
SCALE: N.T.S. A-17 17

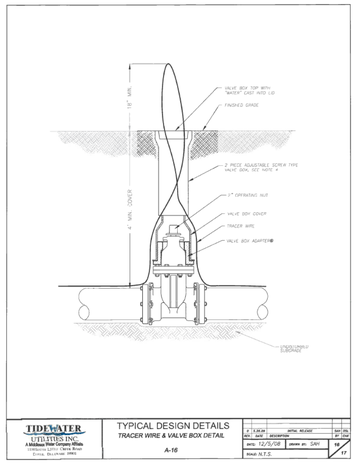

TIDEWATER UTILITIES INC. A Middlesex Water Company Affiliate 1089 South Little Creek Road Dover, Delaware 19901

TYPICAL DESIGN DETAILS
TRACER WIRE & VALVE BOX DETAIL
A-16

REV.	DATE	DESCRIPTION	APP.
1	3/31/08	INITIAL RELEASE	DAF/PG

DATE: 12/9/08 DRAWN BY: SAM
SCALE: N.T.S. A-16 17

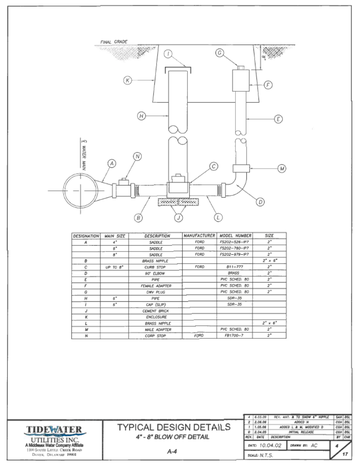

DESIGNATION	MAIN SIZE	DESCRIPTION	MANUFACTURER	MODEL NUMBER	SIZE
A	3"	SADDLE	FORD	FS202-166-W-77	3"
B	6"	SADDLE	FORD	FS202-166-W-77	6"
C	3"	BRASS NIPPLE		B11-L777	3" x 6"
D	6"	BRASS NIPPLE		B11-L777	6" x 6"
E	3"	CURB STOP	FORD	B11-777	3"
F	3"	BRASS		BRASS	3"
G	3"	BEND		PVC SCHED. 80	3"
H	3"	FEMALE ADAPTER		PVC SCHED. 80	3"
I	3"	CAP		PVC SCHED. 80	3"
J	3"	DRY PLUG		SDR-35	3"
K	3"	PIPE		SDR-35	3"
L	6"	CAP CLIPS		SDR-35	6"
M	6"	CURB BOX			6"
N	6"	ENCLOSURE			
O	6"	BRASS NIPPLE			6" x 6"
P	6"	MALE ADAPTER		PVC SCHED. 80	6"
Q	6"	CURB STOP	FORD	FB1700-7	6"

TIDEWATER UTILITIES INC. A Middlesex Water Company Affiliate 1089 South Little Creek Road Dover, Delaware 19901

TYPICAL DESIGN DETAILS
4"- 8" BLOW OFF DETAIL
A-4

REV.	DATE	DESCRIPTION	APP.
1	3/31/08	ADDED 3" & 6" SADDLE & 3" CURB STOP	DAF/PG
2	7/31/08	ADDED 3" & 6" SADDLE	DAF/PG
3	7/31/08	ADDED 3" & 6" ADAPTED 3"	DAF/PG
4	7/31/08	INITIAL RELEASE	DAF/PG

DATE: 10.04.02 DRAWN BY: AC
SCALE: N.T.S. A-4 17

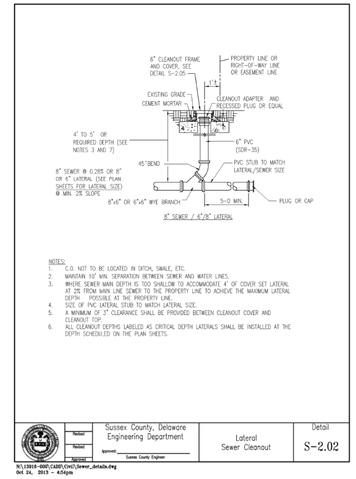

NOTES:
1. C.O. NOT TO BE LOCATED IN DITCH, SWALE, ETC.
2. MAINTAIN 10' MIN. SEPARATION BETWEEN SEWER AND WATER LINES.
3. WHERE SEWER MAIN DEPTH IS TOO SHALLOW TO ACCOMMODATE 4' OF COVER SET LATERAL AT 2% FROM MAIN LINE SEWER TO THE PROPERTY LINE TO ACHIEVE THE MAXIMUM LATERAL DEPTH POSSIBLE AT THE PROPERTY LINE.
4. SIZE OF PVC LATERAL STUB TO MATCH LATERAL SIZE.
5. A MINIMUM OF 3" CLEARANCE SHALL BE PROVIDED BETWEEN CLEANOUT COVER AND CLEANOUT TOP.
6. ALL CLEANOUT DEPTHS LABELED AS CRITICAL DEPTH LATERALS SHALL BE INSTALLED AT THE DEPTH SCHEDULED ON THE PLAN SHEETS.

Revised Revised Revised Approved: Sussex County Engineer

Sussex County, Delaware Engineering Department | Lateral Sewer Cleanout | Detail S-2.02

N:\13016-0007,CADD\Civil\Sewer_details.dwg Oct 24, 2013 - 4:51pm

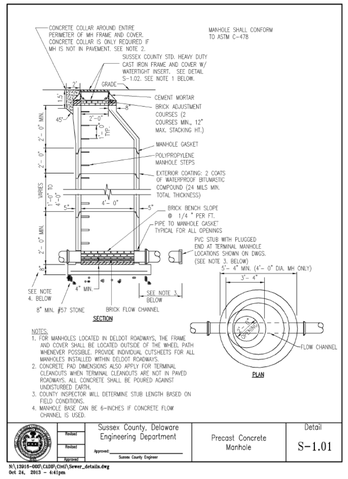

NOTES:
1. FOR MANHOLES LOCATED IN DELDOT ROADWAYS, THE FRAME AND COVER SHALL BE LOCATED OUTSIDE OF THE WHEEL PATH WHENEVER POSSIBLE. PROVIDE INDIVIDUAL CUTSHEETS FOR ALL MANHOLES INSTALLED WITHIN DELDOT ROADWAYS.
2. CONCRETE PAD DIMENSIONS ALSO APPLY FOR TERMINAL CLEANOUTS WHEN TERMINAL CLEANOUTS ARE NOT IN PAVED ROADWAYS. ALL CONCRETE SHALL BE POURED AGAINST UNDISTURBED EARTH.
3. COUNTY INSPECTOR WILL DETERMINE STUB LENGTH BASED ON FIELD CONDITIONS.
4. MANHOLE BASE CAN BE 6-INCHES IF CONCRETE FLOW CHANNEL IS USED.

Revised Revised Revised Approved: Sussex County Engineer

Sussex County, Delaware Engineering Department | Precast Concrete Manhole | Detail S-1.01

N:\13016-0007,CADD\Civil\Sewer_details.dwg Oct 24, 2013 - 4:41pm

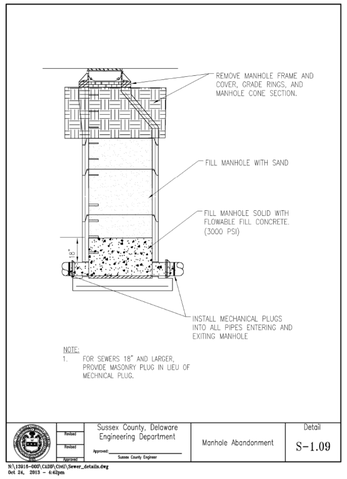

Revised Revised Revised Approved: Sussex County Engineer

Sussex County, Delaware Engineering Department | Manhole Abandonment | Detail S-1.09

N:\13016-0007,CADD\Civil\Sewer_details.dwg Oct 24, 2013 - 4:42pm

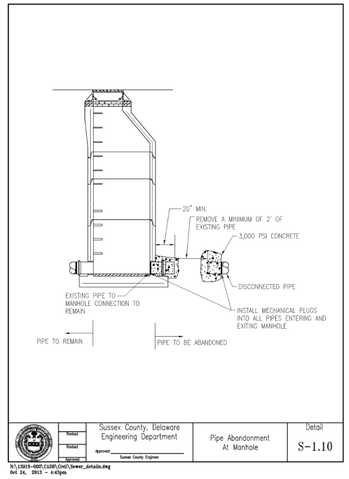

Revised Revised Revised Approved: Sussex County Engineer

Sussex County, Delaware Engineering Department | Pipe Abandonment At Manhole | Detail S-1.10

N:\13016-0007,CADD\Civil\Sewer_details.dwg Oct 24, 2013 - 4:43pm

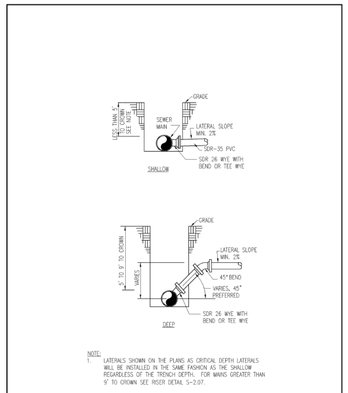

NOTE:
1. LATERALS SHOWN ON THE PLANS AS CRITICAL DEPTH LATERALS WILL BE INSTALLED IN THE SAME FASHION AS THE SHALLOW REGARDLESS OF THE TRENCH DEPTH. FOR MAINS GREATER THAN 9' TO CROWN SEE RISER DETAIL S-2.07.

Revised Revised Revised Approved: Sussex County Engineer

Sussex County, Delaware Engineering Department | Standard House Connections | Detail S-2.03

N:\13016-0007,CADD\Civil\Sewer_details.dwg Oct 24, 2013 - 4:44pm

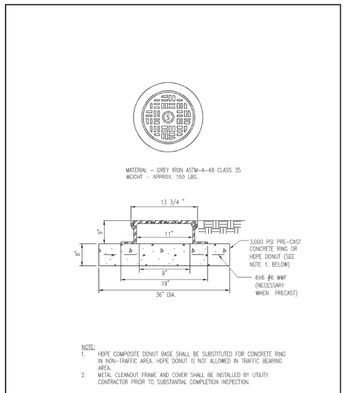

NOTE:
1. HDPE COMPOSITE DONUT BASE SHALL BE SUBSTITUTED FOR CONCRETE RING IN NON-TRAFFIC AREA. HDPE DONUT IS NOT ALLOWED IN TRAFFIC BEARING AREA.
2. METAL CLEANOUT FRAME AND COVER SHALL BE INSTALLED BY UTILITY CONTRACTOR PRIOR TO SUBSTANTIAL COMPLETION INSPECTION.

Revised Revised Revised Approved: Sussex County Engineer

Sussex County, Delaware Engineering Department | 8" Cleanout and Cover | Detail S-2.06

N:\13016-0007,CADD\Civil\Sewer_details.dwg Oct 24, 2013 - 4:45pm

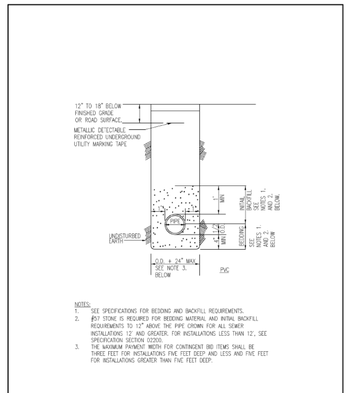

NOTES:
1. SEE SPECIFICATIONS FOR BEDDING AND BACKFILL REQUIREMENTS.
2. #57 STONE IS REQUIRED FOR BEDDING MATERIAL AND INITIAL BACKFILL REQUIREMENTS TO 12" ABOVE THE PIPE CROWN FOR ALL SEWER INSTALLATIONS 12' AND GREATER. FOR INSTALLATIONS LESS THAN 12', SEE SPECIFICATION SECTION 02200.
3. THE MAXIMUM PAYMENT WIDTH FOR CONTINGENT BID ITEMS SHALL BE THREE FEET FOR INSTALLATIONS FIVE FEET DEEP AND LESS AND FIVE FEET FOR INSTALLATIONS GREATER THAN FIVE FEET DEEP.

Revised Revised Revised Approved: Sussex County Engineer

Sussex County, Delaware Engineering Department | Gravity Sewer Trench | Detail S-3.01

N:\13016-0007,CADD\Civil\Sewer_details.dwg Oct 24, 2013 - 4:47pm

N:\90181\004\CADD\CP01-90181004C-402.dgn
2/12/2014 12:07:10 PM

DELAWARE DEPARTMENT OF TRANSPORTATION

ADDENDUMS / REVISIONS

DELAWARE TRANSIT CORPORATION
LEWES PARK AND RIDE
AND MAINTENANCE FACILITY

CONTRACT	BRIDGE NO.	
T200612502	DESIGNED BY: D.J.L.	
COUNTY		
SUSSEX	CHECKED BY: P.M.G.	

WATER AND SEWER DETAILS

C-402

SHEET NO.
14
TOTAL SHTS.
185

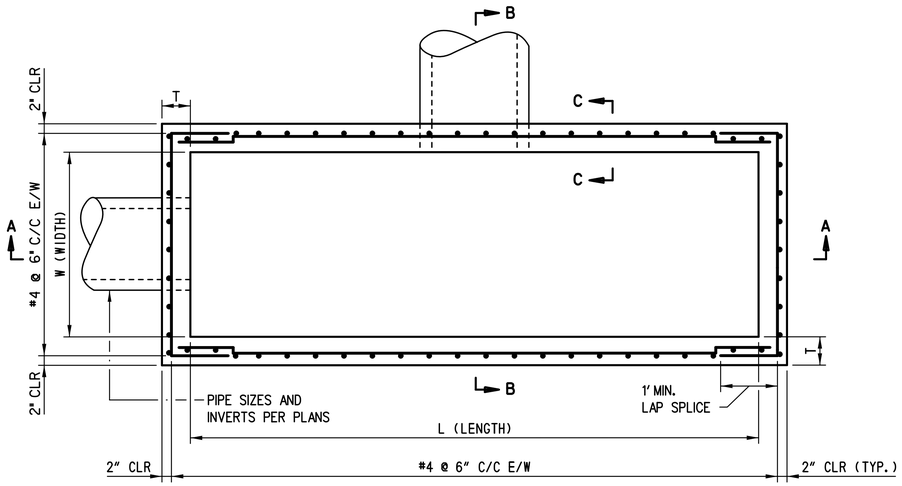

PLAN - SHALLOW COG INLET

SCALE: 3/4" = 1'-0"

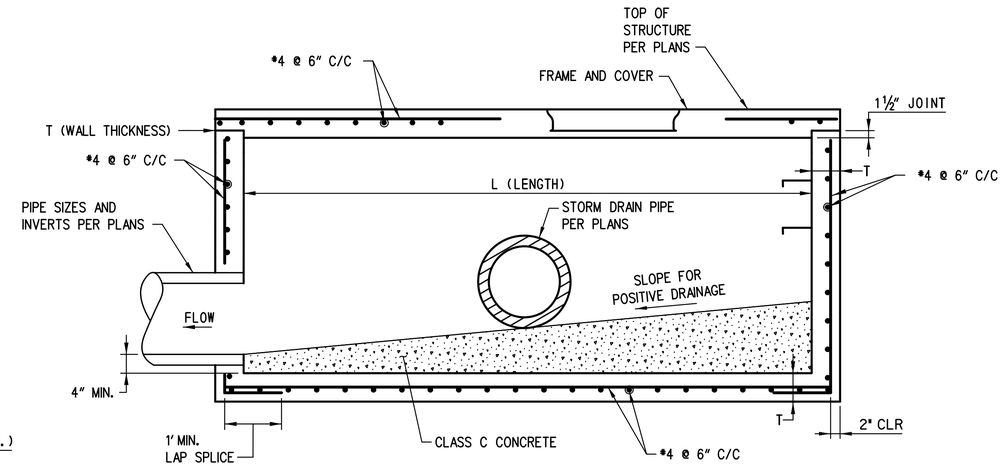

SECTION A-A

SCALE: 3/4"=1'-0"

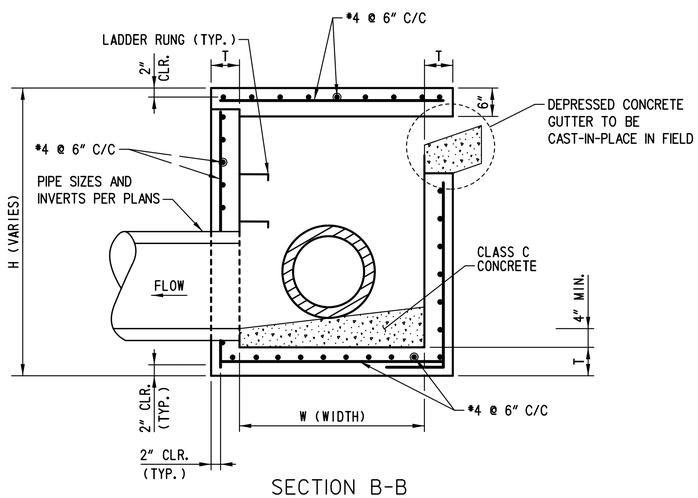

SECTION B-B

SCALE: 3/4"=1'-0"

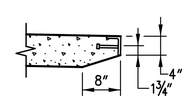

SECTION C-C

SCALE: 3/4"=1'-0"

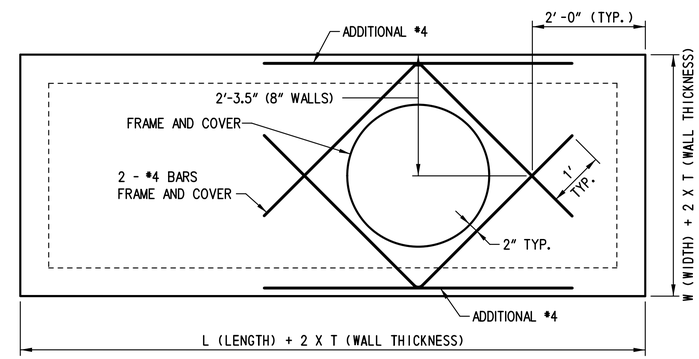

PLAN - TOP SLAB - SHALLOW COG INLET

SCALE: 3/4" = 1'-0"

INLET TYPE	T (WALL THICKNESS)	W (WIDTH)	L (LENGTH)	REINFORCEMENT
MODIFIED 5' COG/COS	8"	2'-0"	5'-0"	#4 @ 6" E.W.

NOTES:

1. MATERIAL PROPERTIES: f'c = 4500 PSI
   WWF: fy = 65 ksi
   REBAR: fy = 60 ksi
   ALL STRUCTURE CONCRETE SHALL BE CLASS A, 4500 PSI.
2. GRADE AND SLOPE ADJUSTMENTS TO BE COMPLETED IN FIELD.
3. MIN. PIPE OPENINGS = PIPE O.D. + 4". REFER TO PLANS FOR LOCATION AND ELEVATIONS.
4. THREADED INSERTS TO BE PROVIDED FOR HANDLING.
5. ANGLE IRON AND SHEAR STUD CONNECTORS SHALL BE GALVANIZED AFTER WELDING IN ACCORDANCE WITH ASTM A123.
6. CLASS C CONCRETE CHANNEL SHALL BE PROVIDED IN THE FIELD AND SHALL SLOPE TOWARD OUTLET TO PROVIDE POSITIVE DRAINAGE.
7. SHALLOW COG INLETS SHALL BE PAID UNDER ITEM 708512, DRAINAGE INLET SPECIAL, 1.

C-403

DELAWARE
DEPARTMENT OF TRANSPORTATION

ADDENDUMS / REVISIONS

DELAWARE TRANSIT CORPORATION
LEWES PARK AND RIDE
AND MAINTENANCE FACILITY

CONTRACT	BRIDGE NO.		DRAINAGE DETAILS	SHEET NO.
T200612502	DESIGNED BY:	C.S.C.		15
COUNTY				TOTAL SHTS.
SUSSEX	CHECKED BY:	J.D.C.		185

N:\90181-004\CAD\CP01-90181004C-403.dgn
2/12/2014 1:12:22 PM

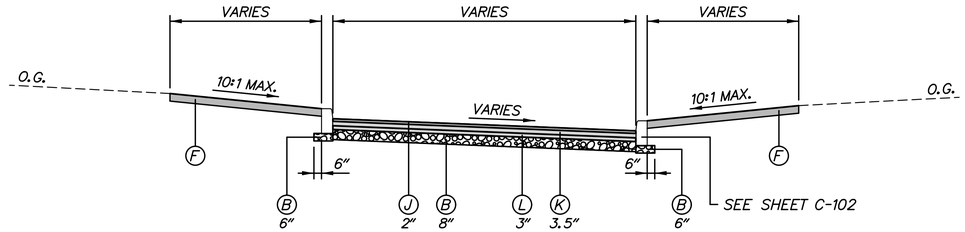

ASPHALT PAVEMENT TYPICAL SECTION

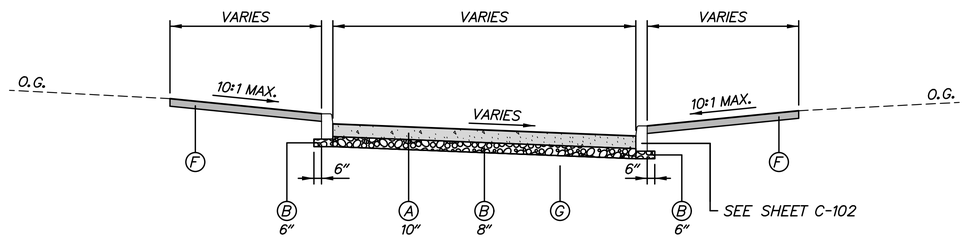

PORTLAND CEMENT CONCRETE PAVEMENT TYPICAL SECTION

NOTES:
1. PRIOR TO FORMING CONCRETE PAVEMENT SECTION, CONTRACTOR SHALL SUBMIT A JOINT PLAN FOR APPROVAL BY THE ENGINEER.

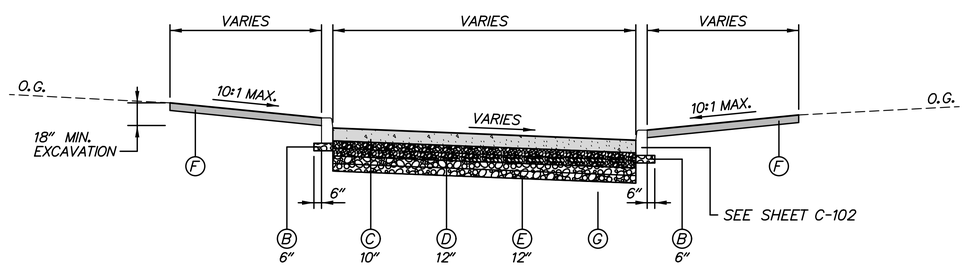

PERVIOUS PORTLAND CEMENT CONCRETE PAVEMENT TYPICAL SECTION

NOTES:
1. PRIOR TO FORMING CONCRETE PAVEMENT SECTION, CONTRACTOR SHALL SUBMIT A JOINT PLAN FOR APPROVAL BY THE ENGINEER.
2. SUBGRADE FOR PERVIOUS CONCRETE SHALL NOT BE COMPACTED AND SHALL BE CLEAR OF SEDIMENT ABOVE THE EXISTING SAND SUBGRADE.
3. SEE CONTRACT SPECIFICATIONS FOR PERVIOUS CONCRETE INSTALLATION REQUIREMENTS.
4. DELAWARE NO. 57 STONE AND DELAWARE NO. 3 STONE SUBBASE SHALL BE CONSTRUCTED IN MAXIMUM 6" LIFTS.

LEGEND

- (A) ITEM 501004 - PORTLAND CEMENT CONCRETE PAVEMENT, 10"
- (B) ITEM 302007 - GRADED AGGREGATE BASE COURSE, TYPE B
- (C) ITEM 501532 - PERVIOUS PORTLAND CEMENT CONCRETE
- (D) ITEM 302012 - DELAWARE NO. 57 STONE
- (E) ITEM 302011 - DELAWARE NO. 3 STONE
- (F) ITEM 732002 - TOPSOIL, 6" DEPTH
  ITEM 734013 - PERMANENT GRASS SEEDING, DRY GROUND
- (G) ITEM 209001 - BORROW, TYPE A (IF REQUIRED TO FILL VOIDS)
- (H) ITEM 701023 - INTEGRAL PORTLAND CEMENT CONCRETE CURB, TYPE 3-6
- (I) ITEM 701014 - PORTLAND CEMENT CONCRETE CURB, TYPE 1-6
- (J) ITEM 401833 - WMA, SUPERPAVE, TYPE C, 160 GYRATIONS, PG 76-22 (NON-CARBONATE STONE)
- (K) ITEM 401816 - WMA, SUPERPAVE, TYPE B, 160 GYRATIONS, PG 76-22
- (L) ITEM 401819 - WMA, SUPERPAVE, BITUMINOUS CONCRETE BASE COURSE, 160 GYRATIONS, PG 64-22
- (M) ITEM 705001 - P.C.C. SIDEWALK, 4"

PR - POINT OF ROTATION
PDGA - PROFILE DITCH GRADE APPLICATION
PGA - PROFILE GRADE APPLICATION

MAXIMUM SINGLE LIFTS FOR THE FOLLOWING:
MATERIALS AFTER COMPACTION ARE:
2" = WARM-MIX, TYPE C
4" = WARM-MIX, TYPE B
6" = WARM-MIX, BCBC
8" = GABC

NOTES:
1. CONTRACTOR SHALL PROOF ROLL ALL SUBGRADE FOR THE ASPHALT PAVEMENT AND PORTLAND CEMENT CONCRETE PAVEMENT SECTIONS, BUT NOT FOR THE PERVIOUS PORTLAND CEMENT CONCRETE PAVEMENT SECTION. ALL UNSUITABLE MATERIAL FOUND SHALL BE EXCAVATED TO THE DEPTH OF STABLE SOIL AND BACKFILLED WITH APPROVED MATERIAL. THE CONTRACTOR SHALL COMPACT ALL MATERIALS TO MEET THE DELDOT STANDARD SPECIFICATIONS.
2. IF REQUIRED, BORROW, TYPE A SHALL BE PLACED IN SUCCESSIVE LAYERS NOT TO EXCEED 8" IN DEPTH, LOOSE MEASUREMENT, UNLESS OTHERWISE APPROVED BY THE ENGINEER.
3. SEE GRADING PLAN AND GRADES AND GEOMETRICS SHEETS FOR FURTHER DETAILS.
4. THE PERVIOUS CONCRETE (ITEM 501532) SHALL MEET A MINIMUM STRENGTH OF 3500 PSI WITHIN TEN (10) DAYS.
5. THE COURSE AGGREGATE GRADATION FOR PERVIOUS CONCRETE (ITEM 501532) SHALL BE NO. 8 STONE.

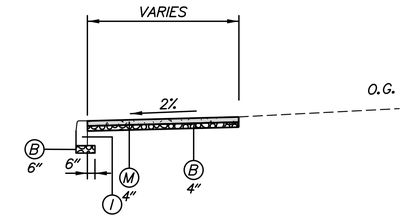

PORTLAND CEMENT CONCRETE SIDEWALK TYPICAL SECTION

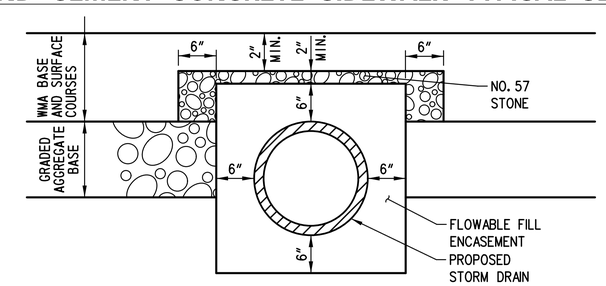

STORM DRAIN ENCASEMENT DETAIL

NOTES:
1. DETAIL SHALL BE USED WHERE OUTSIDE TOP OF STORM DRAIN TO BOTTOM OF WMA CLEARANCE IS LESS THAN 2 INCHES. WHERE TOP OF FLOWABLE FILL ENCASEMENT DOES NOT ENCROACH INTO THE GABC THE NO. 57 STONE LAYER SHALL BE PLACED ON TOP OF THE GABC.
2. FLOWABLE FILL ENCASEMENT AND NO. 57 STONE SHALL BE MEASURED AND PAID AS ITEMS 208001 AND 302012, RESPECTIVELY.

C-404

N:\90181-004\CADD\CP01-90181004C-404.dgn
2/12/2014 1:15:15 PM

DELAWARE DEPARTMENT OF TRANSPORTATION

ADDENDUMS / REVISIONS

DELAWARE TRANSIT CORPORATION
LEWES PARK AND RIDE
AND MAINTENANCE FACILITY

CONTRACT	BRIDGE NO.	
T200612502	DESIGNED BY: CSC	
COUNTY		
SUSSEX	CHECKED BY: JDC	

PAVEMENT DETAILS

SHEET NO. 16
TOTAL SHTS. 185

SITE STAKEOUT DATA

POINT	NORTHING	EASTING	DESCRIPTION
1001	272171.5873	726676.0583	BASELINE PI
1002	272212.4172	726723.2014	BASELINE PI
1003	272254.9715	726772.3353	BASELINE PI
1004	272294.2523	726817.6898	BASELINE PI
1005	272333.5331	726863.0442	BASELINE PI
1006	272469.7185	726745.0961	BASELINE PI
1007	272477.4943	726659.0135	BASELINE PI
1008	272485.2753	726572.8726	BASELINE PI
1009	272490.9807	726509.7109	BASELINE PI
1010	272477.2383	726493.8437	BASELINE PI
1011	272182.6658	726714.8167	RADIUS POINT
1013	272214.1153	726700.6739	RADIUS POINT
1014	272234.9278	726724.8168	RADIUS POINT
1015	272256.5869	726749.8247	RADIUS POINT
1016	272277.4820	726773.9503	RADIUS POINT
1017	272295.8677	726795.1792	RADIUS POINT
1018	272316.7629	726819.3052	RADIUS POINT
1019	272335.1485	726840.5336	RADIUS POINT
1020	272342.9016	726589.0242	RADIUS POINT
1021	272350.2453	726624.9972	RADIUS POINT
1022	272371.8498	726649.9421	RADIUS POINT
1023	272468.1044	726529.5357	RADIUS POINT
1024	272472.0767	726563.3695	RADIUS POINT
1025	272464.5535	726613.3090	RADIUS POINT
1026	272457.5863	726615.3744	RADIUS POINT
1027	272464.2053	726650.5112	RADIUS POINT
1028	272372.3900	726691.8075	RADIUS POINT
1029	272390.7211	726712.9730	RADIUS POINT
1030	272456.7751	726699.4207	RADIUS POINT
1031	272449.2450	726701.9737	RADIUS POINT
1032	272456.3338	726737.6531	RADIUS POINT
1033	272487.3835	726738.4999	RADIUS POINT
1034	272479.1385	726759.4016	RADIUS POINT
1035	272496.6465	726630.3949	RADIUS POINT
1036	272207.8469	726687.4537	CURB LINE
1037	272330.6579	726580.9972	CURB LINE
1038	272336.7051	726575.7598	CURB LINE
1039	272466.2974	726463.5218	CURB LINE
1040	272476.7845	726475.6303	CURB PC
1041	272479.5132	726477.0007	CURB PT
1043	272492.3265	726479.7010	CURB PT
1044	272499.7213	726488.2393	CURB PC
1047	272522.1014	726498.6507	EDGE OF SIDEWALK
1048	272510.5796	726627.1351	CURB PI
1050	272500.8561	726734.7802	CURB PI
1051	272483.9999	726772.5248	CURB PI
1052	272347.8107	726890.4763	CURB PI
1053	272337.5849	726878.6701	CURB PC
1055	272329.9257	726878.7362	CURB PT
1056	272288.4194	726830.8135	CURB PC
1057	272282.8240	726830.4773	CURB PT
1058	272272.9539	726839.0107	CURB PI
1059	272175.9949	726727.0987	CURB PI
1061	272356.3872	726638.1986	CURB ISLAND

POINT	NORTHING	EASTING	DESCRIPTION
1062	272362.7667	726632.6734	CURB LINE @ ISLAND
1063	272471.6173	726538.3995	CURB LINE @ ISLAND
1064	272461.2843	726553.9633	CURB LINE @ ISLAND
1065	272365.7078	726636.7407	CURB LINE @ ISLAND
1066	272359.6606	726641.9781	CURB LINE @ ISLAND
1068	272289.6670	726781.9736	CURB LINE @ ISLAND
1069	272378.5319	726705.0090	CURB LINE @ ISLAND
1070	272384.5792	726699.7715	CURB LINE @ ISLAND
1071	272452.9430	726640.5626	CURB LINE @ ISLAND
1072	272466.5494	726628.7783	CURB LINE @ ISLAND
1076	272363.4315	726967.3551	END OF CURB
1077	272181.9776	727124.4975	END OF CURB
1085	271965.5244	726874.1113	CURB PT
1086	272153.2391	726710.4069	CURB PT
1087	272186.0530	726711.2529	CURB PCC
1088	272194.6217	726684.1910	CURB PC
1090	272506.4493	726405.8162	CURB PC
1091	272547.6604	726426.8999	CURB PT
1092	272519.3925	726738.9169	CURB PC
1093	272493.8258	726788.8091	CURB PT
1096	272353.1921	726910.5997	CURB PC
1098	272280.6457	726902.9194	CORNER OF HC RAMP
1099	272160.1016	726765.2642	CURB PC
1100	272112.0060	726761.8297	CURB PT
1101	272041.4144	726822.8781	CURB PI
1102	272039.6832	726820.8793	CURB PI
1103	272012.4842	726844.4360	END OF CURB
1109	272482.1202	726387.1998	CURB PC
1110	272492.0620	726379.6136	CURB PT
1111	272537.4654	726349.2226	CURB PC
1112	272547.2111	726341.7861	CURB PT
1114	272615.5168	726254.6074	CURB PC
1115	272614.2898	726184.9122	CURB END
1116	272609.7149	726307.1498	CORNER OF HC RAMP
1117	272579.9658	726369.3832	CURB PT
1118	272558.4955	726607.0721	CURB PC
1119	272605.2077	726678.7016	CURB PT
1120	272617.7787	726682.9181	CURB PC
1121	272623.1785	726679.0708	CURB PT
1122	272616.5187	726309.9358	CURB PC
1123	272625.4256	726806.7452	END OF CURB
1126	272624.4161	726748.6561	CURB PT
1128	272599.9743	726703.2949	CURB PT
1129	272555.2047	726688.2569	CURB PC
1131	272349.9432	726944.0779	CURB PC
1132	272349.4487	726951.0171	CURB PT
1133	272160.9604	727107.7481	CURB PC
1134	272120.9877	727142.3756	CURB PT
1135	272118.8438	727168.9112	CURB PC
1137	272148.6748	726845.2385	END OF CURB
1136	272174.2199	727235.2470	END OF CURB
1140	272181.0767	726809.3666	CURB PC
1141	272153.8250	726807.7080	CURB PT
1142	272096.4677	726784.9665	CURB PC
1143	272275.9551	726918.8881	CURB PC
1144	272275.4490	726925.9410	BUILDING CORNER
1145	272200.0762	726653.9635	CURB PT
1146	272197.4575	726650.9399	CURB PC
1147	272454.7365	726433.4060	END OF CURB
1148	272452.1178	726430.3823	END OF CURB

POINT	NORTHING	EASTING	DESCRIPTION
1149	272460.4058	726428.4959	END OF CURB
1150	272457.7871	726425.4722	END OF CURB
1152	272561.4803	726381.0646	CURB PC
1153	272562.9184	726380.2576	CURB PT
1154	272566.1120	726347.2733	CURB PC
1155	272562.8254	726345.4606	CURB PRC
1156	272555.7219	726351.6129	CURB PT
1157	272544.6973	726360.0253	CURB PC
1158	272499.2932	726390.4168	CURB PC
1159	272490.6310	726397.0266	CURB PT
1160	272212.3562	726777.7378	BUILDING CORNER
1161	272193.2065	726794.3230	BUILDING CORNER
1162	272279.1050	726854.8074	BUILDING CORNER
1163	272287.2375	726847.2679	BUILDING CORNER
1164	272321.3153	726886.2330	BUILDING CORNER
1166	272293.5907	726910.2287	BUILDING CORNER
1168	272098.0254	726889.1052	BUILDING CORNER
1169	272146.4717	726945.0423	BUILDING CORNER
1170	272196.3615	726901.8335	BUILDING CORNER
1171	272242.1891	726954.7469	BUILDING CORNER
1172	271995.9801	726867.2522	END OF FENCE
1177	271997.2758	726855.2416	FENCE CORNER
1181	272210.4676	726779.3693	END OF FENCE
1185	272335.4691	726909.9810	FENCE CORNER
1186	272412.6981	726843.1243	FENCE CORNER
1187	272549.9321	726691.6886	CURB PT
1192	272365.0745	726964.6002	FENCE CORNER
1201	272462.7561	726444.5402	CORNER OF HC RAMP
1202	272470.3152	726437.9934	CORNER OF HC RAMP
1211	272488.6396	726477.6893	CURB PC
1214	272527.8978	726498.4018	EDGE OF SIDEWALK
1215	272523.0071	726497.9794	CURB PI
1216	272521.8479	726564.8965	EDGE OF SIDEWALK
1220	272510.4484	726636.2065	CURB PI
1229	272505.6244	726745.1001	FENCE CORNER
1230	272501.6495	726748.4763	FENCE CORNER
1232	272444.5222	726830.6283	EDGE OF CONCRETE SIDEWALK
1233	272436.3984	726821.2484	EDGE OF CONCRETE SIDEWALK
1234	272145.4261	726841.4938	CURB PT
1235	272342.8352	726902.2821	EDGE OF SIDEWALK
1238	272182.1243	726790.6920	EDGE OF SIDEWALK
1249	271949.7216	726922.2014	CORNER OF HC RAMP
1250	271950.7568	726927.1678	CORNER OF HC RAMP
1253	272176.6056	726706.9231	CORNER OF HC RAMP
1255	272181.7027	726709.0362	CORNER OF HC RAMP
1261	272610.0538	726278.8552	CORNER OF HC RAMP
1262	272604.4529	726288.9202	CORNER OF HC RAMP
1270	272448.2729	726415.6325	CORNER OF HC RAMP
1272	272443.7374	726419.5606	CORNER OF HC RAMP
1275	271904.7367	726877.6906	CORNER OF HC RAMP
1276	271909.6792	726876.9350	CORNER OF HC RAMP
1279	272605.8888	726312.0497	CURB PC
1280	272610.8002	726307.1472	CURB PCC
1281	272116.2254	727150.4008	CORNER OF HC RAMP
1283	272115.1105	727157.4577	BUILDING CORNER
1286	272588.2397	726726.2898	CURB PC
1289	272515.5262	726453.8063	BUILDING CORNER
1301	272537.1063	726431.6579	BUILDING CORNER
1302	272139.4188	726944.5362	CURB PC
1303	272097.4272	726896.0518	CURB PT
1304	272482.5673	726737.5121	CURB PC
1305	272482.0567	726742.9677	CURB PT
1306	272475.8677	726755.7211	CURB PRC
1307	272523.3882	726694.0634	CORNER OF HC RAMP
1308	272523.8619	726689.0858	CORNER OF HC RAMP

POINT	NORTHING	EASTING	DESCRIPTION
1309	272276.3982	726899.5426	CORNER OF HC RAMP
1310	272270.0630	726912.0849	CORNER OF HC RAMP
1311	272266.5174	726908.0534	CORNER OF HC RAMP
1314	272476.7412	726533.9617	CURB PI
1315	272476.0930	726541.1377	CURB PI
1316	272201.4064	726692.0390	CORNER OF HC RAMP
1318	272418.0717	726854.4195	END OF CURB
1319	272410.3788	726845.5379	EDGE OF WALL
1320	272359.7331	726889.4015	EDGE OF WALL
1321	272367.4260	726898.2831	END CURB
1322	272517.6733	726430.0369	BUILDING CORNER

N:\90181-004\CADD\CP01-90181004C-405.dgn
1/17/2014 8:16:31 AM

DELAWARE
DEPARTMENT OF TRANSPORTATION

ADDENDUMS / REVISIONS

DELAWARE TRANSIT CORPORATION
LEWES PARK AND RIDE
AND MAINTENANCE FACILITY

CONTRACT	BRIDGE NO.
T200612502	DESIGNED BY: PMG
COUNTY	
SUSSEX	CHECKED BY: PMG

STAKEOUT DATA

C–405

SHEET NO. 17

TOTAL SHTS. 185

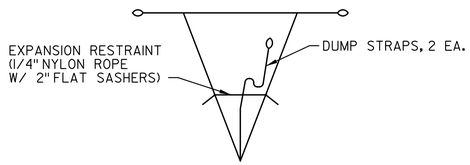

BAG DETAIL

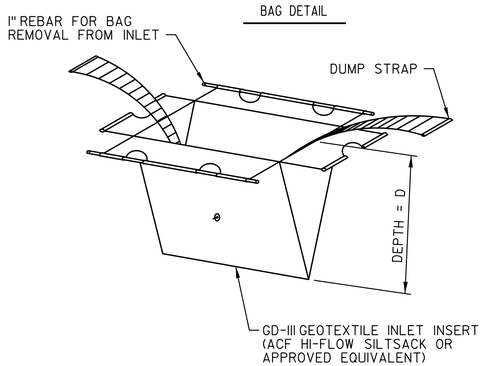

PERSPECTIVE VIEW

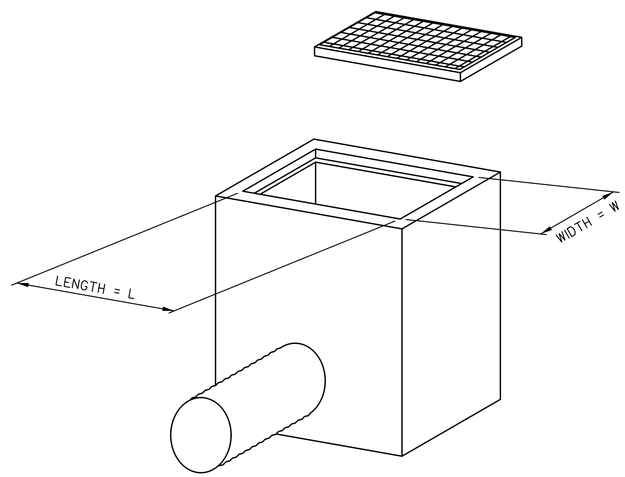

PLAN SYMBOL

INLET SEDIMENT CONTROL
ITEM 252000
SCALE: NONE

NOTES:
1. *XXX XXX.*
2. *XXX.*

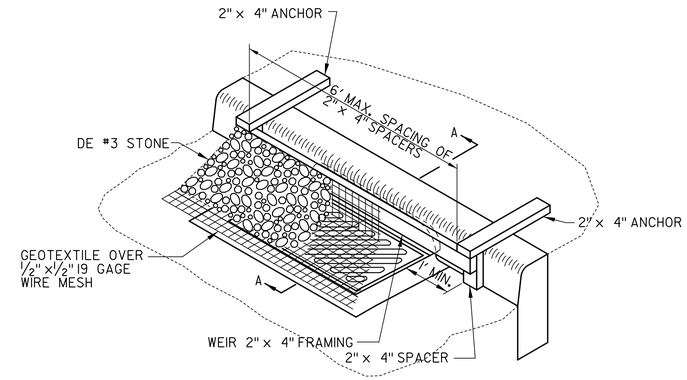

ISOMETRIC VIEW

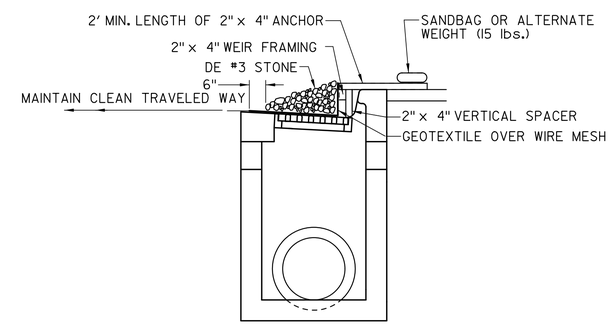

SECTION A-A

PLAN SYMBOL

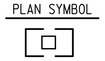

INLET SEDIMENT CONTROL
ITEM 252000
SCALE: NONE

NOTES:
1. *TO BE USED FOR CURB OPENING INLETS IN AREAS OF IMPERVIOUS PAVING. SEE SHEET CS-03 FOR CURB INLET PROTECTION IN AREAS OF PERVIOUS CONCRETE.*

N:\30181-004\CADD\CP01-90180004C-406.dgn
1/17/2014 8:18:50 AM

DELAWARE DEPARTMENT OF TRANSPORTATION	ADDENDUMS / REVISIONS	DELAWARE TRANSIT CORPORATION LEWES PARK AND RIDE AND MAINTENANCE FACILITY	CONTRACT T200612502	BRIDGE NO.	EROSION AND SEDIMENT CONTROL DETAILS	C-406
			COUNTY SUSSEX	DESIGNED BY: C.S.C.		SHEET NO. 18
				CHECKED BY: J.D.C.		TOTAL SHTS. 185

SEQUENCE OF CONSTRUCTION - STAGE I

1. INSTALL STABILIZED CONSTRUCTION ENTRANCES, ASSOCIATED TEMPORARY PIPES, REINFORCED SILT FENCE AND INLET PROTECTION ALONG ROUTE 1 AS SHOWN ON PLAN.
2. START DEMOLITION WORK AS SHOWN ON DEMOLITION PLAN "C-101".

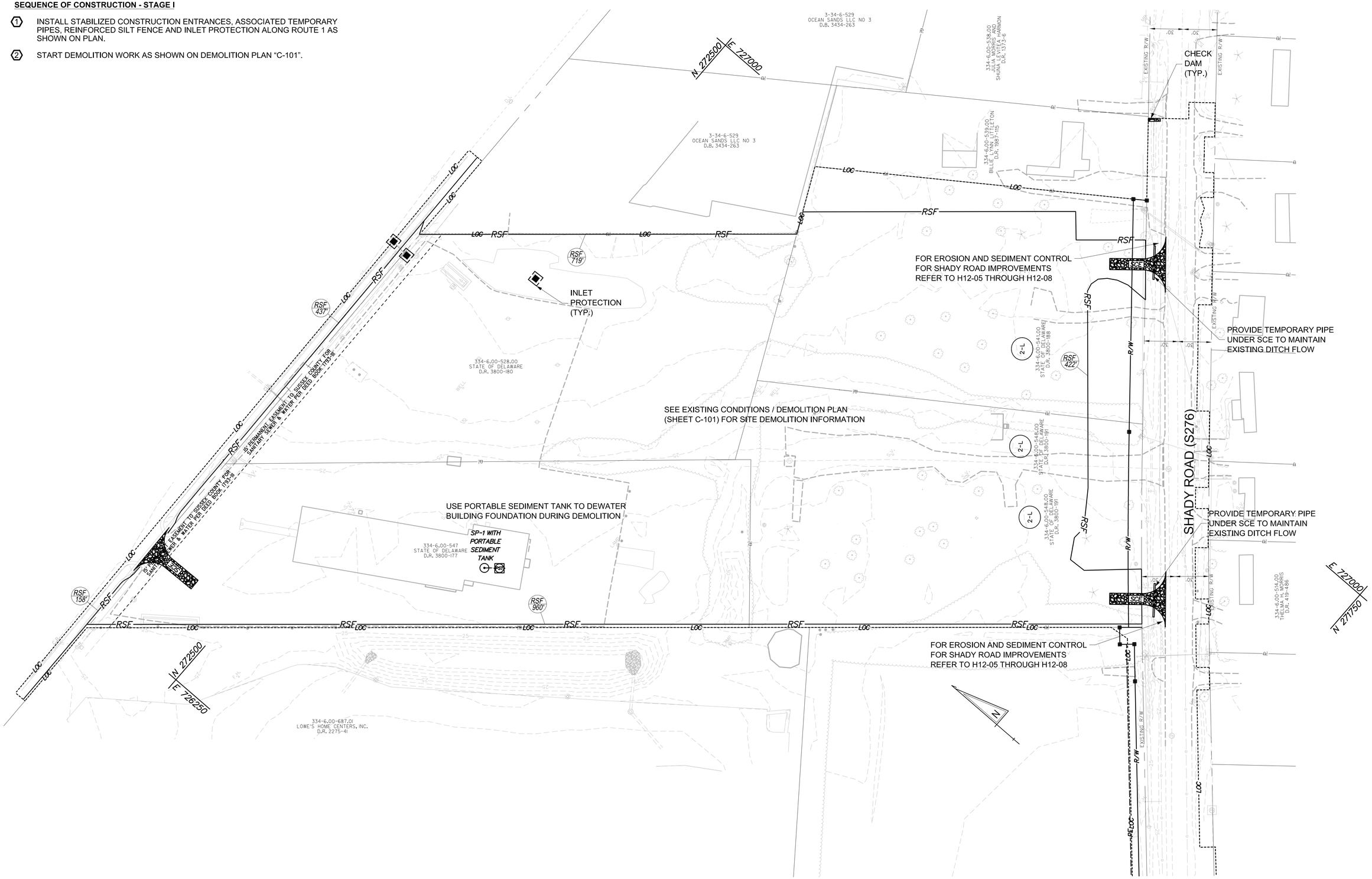

G:\Project\Jobs\2012\2012336.04 Lewes Transit Center\Work\C500_LEWES_AB.dgn
12/22/2015 4:12:15 PM

DELAWARE DEPARTMENT OF TRANSPORTATION	ADDENDUMS / REVISIONS	SCALE 0 40 80 120 FEET	DELAWARE TRANSIT CORPORATION LEWES PARK AND RIDE AND MAINTENANCE FACILITY	CONTRACT T200612502	BRIDGE NO.	EROSION AND SEDIMENT CONTROL PLAN – STAGE 1
				COUNTY SUSSEX	DESIGNED BY: H.P., C.R.	
					CHECKED BY: S.P.	

CS–01

SHEET NO.	TOTAL SHTS.
19	185

SEQUENCE OF CONSTRUCTION - STAGE II

1. INSTALL ADDITIONAL STABILIZED CONSTRUCTION ENTRANCES AND RESTORE REINFORCED SILT FENCE INSTALLED UNDER PHASE I.

2. START ROUGH GRADING OF SITE OUTSIDE OF PERVIOUS CONCRETE AND INFILTRATION AREAS.

3. START CONSTRUCTION OF STORM DRAIN SYSTEM, INSTALL INLET PROTECTION, WATER AND SEWER LINE AND ANY OTHER MISCELLANEOUS UTILITIES.

4. START CONSTRUCTION OF CURB AND GUTTER, SIDEWALK, BUILDING PAD AND PARKING LOT (EXCEPT PERVIOUS CONCRETE PAVEMENT) UP TO BASE COURSE.

   NOTE: CONTRACTOR SHALL USE PORTABLE SEDIMENT TANK FOR DEWATERING IF NEEDED DURING THE CONSTRUCTION OF PARKING LOT.

5. BEGIN ROUGH GRADING AND OVER-EXCAVATION OF AREA FOR PERVIOUS CONCRETE INSTALLATION IN ACCORDANCE WITH NOTE, THIS SHEET AND OTHER CONTRACT DOCUMENTS. INSTALL SUMP PITS TO DEWATER SUBGRADE AS NECESSARY DURING EXCAVATION AND PLACEMENT OF STONE LAYERS. INSTALL PERVIOUS CONCRETE WEARING SURFACE PER CONTRACT DOCUMENTS USING CARE TO PREVENT SEDIMENT FROM DISTURBED AREAS FROM CLOGGING SURFACE.

6. DURING A NOAA 3 DAY CONTINUOUS DRY WEATHER FORECAST, START CONSTRUCTION FOR SWM INFILTRATION FACILITIES.

   NOTE: CONTRACTOR SHALL USE PORTABLE SEDIMENT TANK FOR DEWATERING IF NEEDED DURING THE CONSTRUCTION OF STORMWATER MANAGEMENT FACILITY.

7. AFTER ALL AREAS HAVE BEEN STABILIZED WITH 95% GROUND COVER, REMOVE BRICK BULKHEADS ON ALL INLET THROAT OPENING AND START FINAL NON-PERVIOUS SURFACE COURSE AND STABILIZE THE DISTURBED AREA.

8. ONCE THE SITE IS STABILIZED WITH 95% GROUND COVER, WITH THE APPROVAL OF THE DNREC SEDIMENT CONTROL INSPECTOR, REMOVE ALL THE SEDIMENT CONTROL MEASURES AND STABILIZE REMAINING DISTURBED AREA IMMEDIATELY.

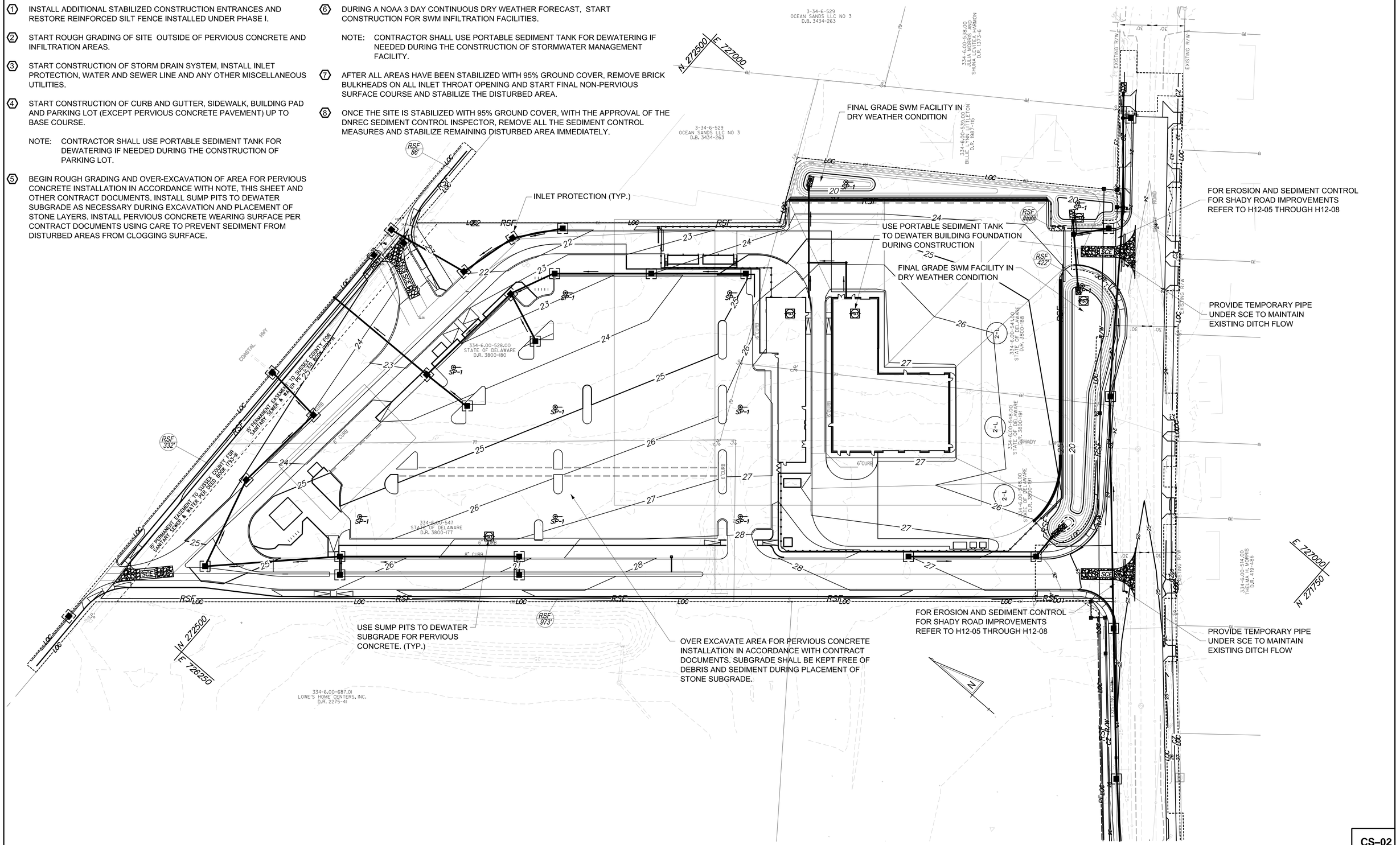

DELAWARE DEPARTMENT OF TRANSPORTATION	ADDENDUMS / REVISIONS	SCALE 0 40 80 120 FEET	**DELAWARE TRANSIT CORPORATION LEWES PARK AND RIDE AND MAINTENANCE FACILITY**	CONTRACT T200612502 / BRIDGE NO. / COUNTY SUSSEX / DESIGNED BY: H.P., C.R. / CHECKED BY: S.P.	**EROSION AND SEDIMENT CONTROL PLAN – STAGE 2**

CS–02

SHEET NO. 20

TOTAL SHTS. 185

G:\Product\Jobs\2012\2012336.04 Lewes Transit Center\Work\CS00_LEWES_AB.dgn
12/22/2013 4:12:17 PM

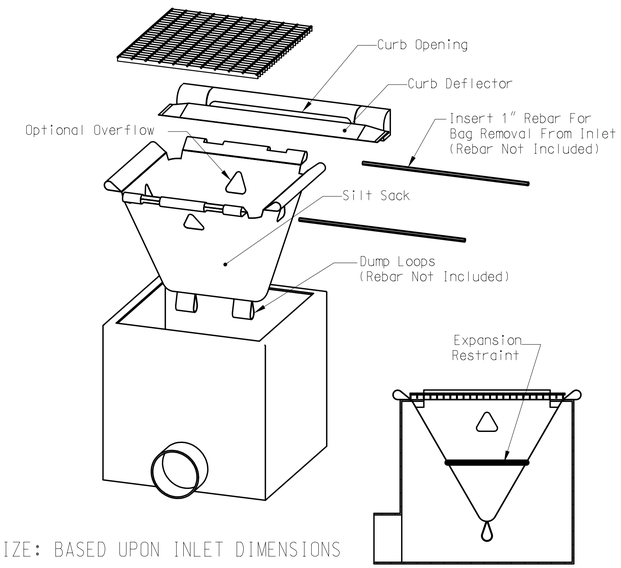

SIZE: BASED UPON INLET DIMENSIONS

CURB OPENING
INLET PROTECTION

N.T.S.

CS-03

$DGNNAME$
$$DATE$$ $TIME$

DELAWARE
DEPARTMENT OF TRANSPORTATION

ADDENDUMS / REVISIONS

DELAWARE TRANSIT CORPORATION
LEWES PARK AND RIDE
AND MAINTENANCE FACILITY

CONTRACT	BRIDGE NO.	
T200612502	DESIGNED BY:H.P. , C.R.	
COUNTY		
SUSSEX	CHECKED BY: S.P.	

EROSION AND SEDIMENT
CONTROL
SPECIAL DETAILS

SHEET NO.
21
TOTAL SHTS.
185

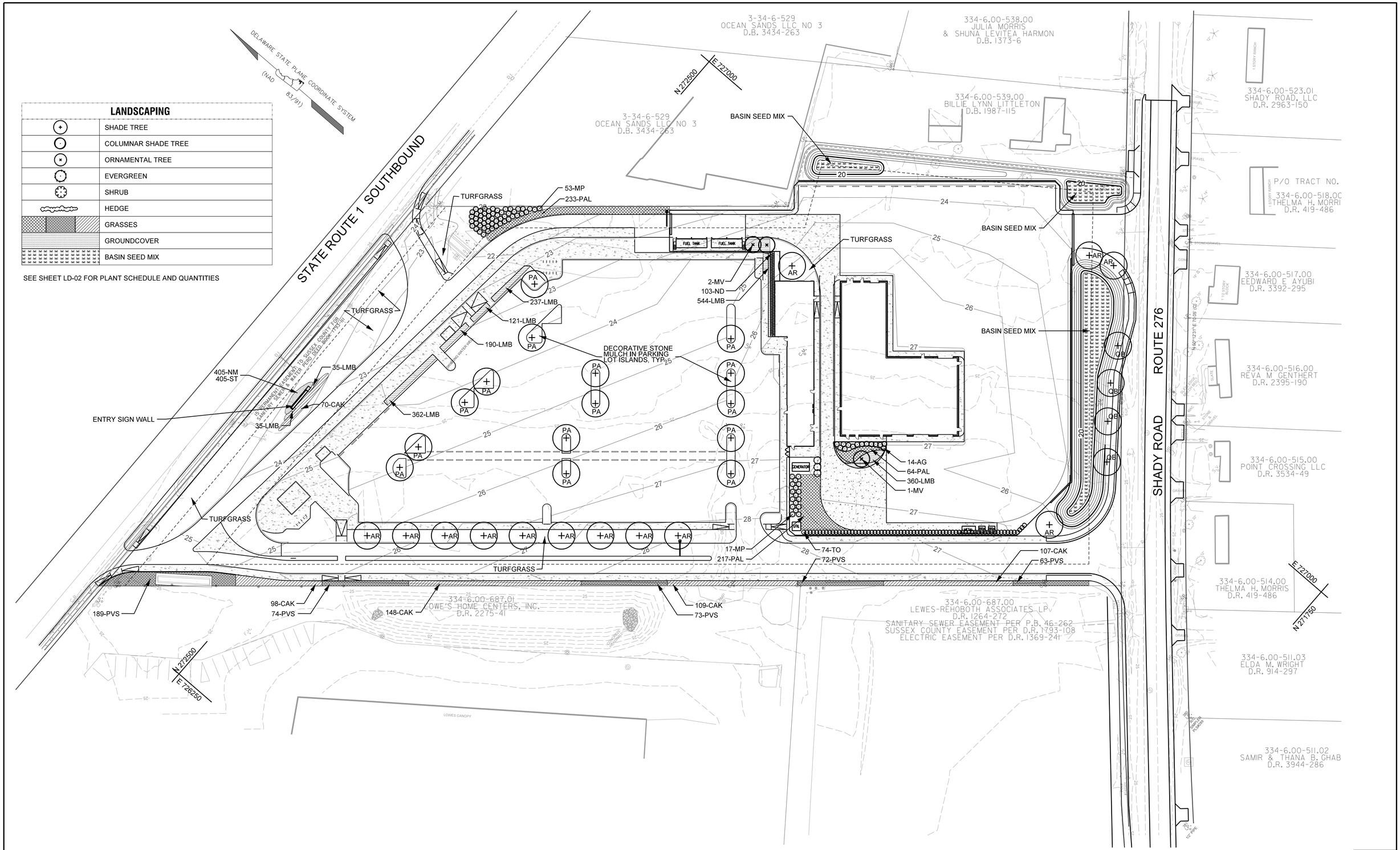

LANDSCAPING

	SHADE TREE
	COLUMNAR SHADE TREE
	ORNAMENTAL TREE
	EVERGREEN
	SHRUB
	HEDGE
	GRASSES
	GROUNDCOVER
	BASIN SEED MIX

SEE SHEET LD-02 FOR PLANT SCHEDULE AND QUANTITIES

LD-01

DELAWARE DEPARTMENT OF TRANSPORTATION

ADDENDUMS / REVISIONS

SCALE 0 40 80 120 FEET

DELAWARE TRANSIT CORPORATION LEWES PARK AND RIDE AND MAINTENANCE FACILITY

CONTRACT	BRIDGE NO.		
T200612502	DESIGNED BY:	TB	
COUNTY			
SUSSEX	CHECKED BY:	JKS	

LANDSCAPE PLAN

SHEET NO.
22
TOTAL SHTS.
185

$TIMES
$DGNNAME$
$SDATE$

PLANT SCHEDULE

KEY	QTY	BOTANICAL NAME	COMMON NAME	SIZE	ROOT	COMMENTS
SHADE TREE						
AR	13	ACER RUBRUM 'RED SUNSET'	SUNSET RED MAPLE	3" CAL.	B&B	MATCHED, BRANCHED AT 7'
PA	15	PLANTANUS X ACERIFOLIA 'COLUMBIA'	COLUMBIA LONDON PLANETREE	3" CAL.	B&B	MATCHED
QB	4	QUERCUS BICOLOR	SWAMP WHITE OAK	3" CAL.	B&B	MATCHED, BRANCHED AT 7'
ORNAMENTAL TREE						
MV	3	MAGNOLIA VIRGINIANA	SWEETBAY MAGNOLIA	10' HT.	B&B	MULTI-STEM
SHRUB						
AG	14	ABELIA X GRANDIFISRA 'LITTLE RICHMOND'	GLOSSY ABELIA	#5	CONT.	30" O.C.
MP	70	MYRICA PENSYLVANICA	NORTHER BAYBERRY	#7	CONT.	4' HT.
ND	103	NANDINA DOMESTICA 'FIRE POWER'	FIRE POWER HEAVENLY BAMBOO	#3	CONT.	12" HT.
TO	74	THUJA OCCIDENTALIS 'EMERALD'	EMERALD AMERICAN ARBORVITAE	7' HT.	B&B	
GRASSES/GROUNDCOVER						
CAK	532	CALAMAGROSTIS X ACUTIFLORA 'KARL FOERSTER'	KARL FOERSTER FEATHER REED GRASS	#2	CONT.	
LMB	1,884	LIRIOPE MUSCARI 'BIG BLUE'	BIG BLUE LILYTURF	#1	CONT.	
PAL	514	PENNISETUM ALOPECUROIDES	FOUNTAINGRASS	#2	CONT.	
PVS	471	PANICUM VIRGATUM 'SHENANDOAH'	SHENANDOAH SWITCHGRASS	#2	CONT.	
NM	405	NARCISSUS 'MINNOW'	MINNOW TAZETTA DAFFODIL	BULB	DN1	INTERPLANTING TO BE RANDOMLY SPACED
ST	405	SEDUM TERNATUM	WHORLED STONECROP	#1	CONT.	INTERPLANTING TO BE RANDOMLY SPACED

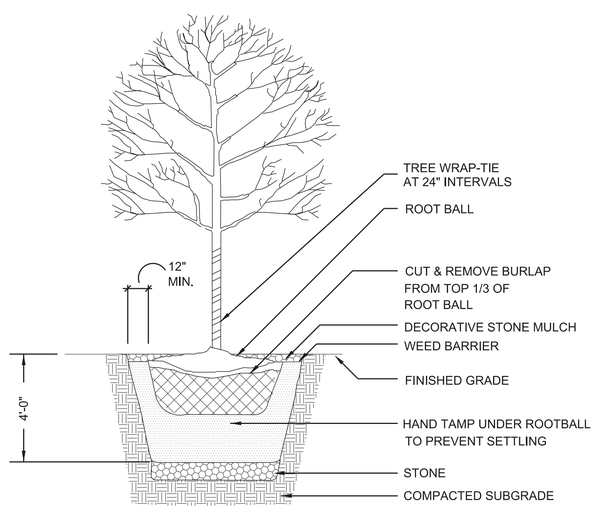

1 / LD-02 TREE PLANTING
NTS

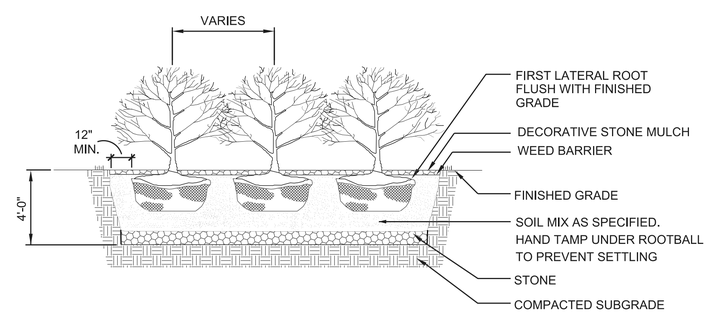

NOTE:
1. CUT AND REMOVE BURLAP FROM TOP 1/3 OF ROOT BALL AS SHOWN.

2 / LD-02 SHRUB PLANTING
NTS

LD-02

DELAWARE
DEPARTMENT OF TRANSPORTATION

ADDENDUMS / REVISIONS

DELAWARE TRANSIT CORPORATION
LEWES PARK AND RIDE
AND MAINTENANCE FACILITY

CONTRACT	BRIDGE NO.	
T200612502	DESIGNED BY:	TB
COUNTY		
SUSSEX	CHECKED BY:	JKS

LANDSCAPE SCHEDULE & DETAILS

SHEET NO. 23
TOTAL SHTS. 185

$SIGNNAME$
$$DATE$$ $TIME$

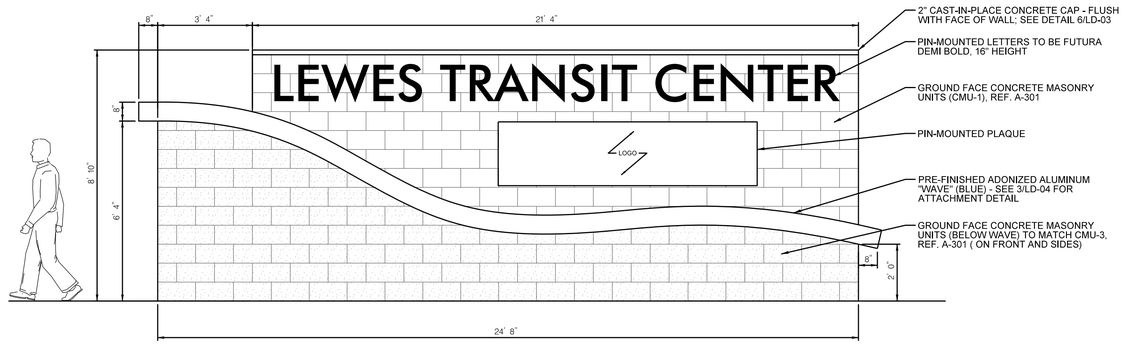

1 LD-03 SIGN WALL - FRONT ELEVATION
3/8" = 1'

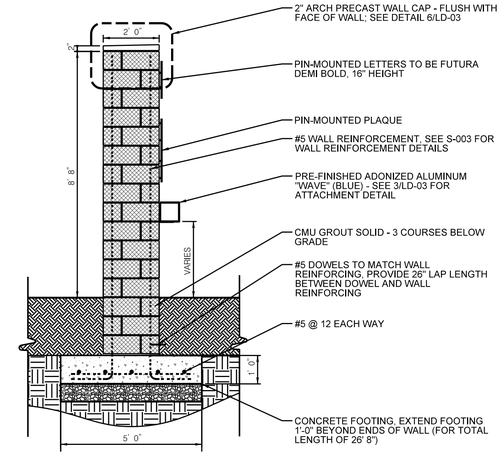

2 LD-03 WALL SECTION
3/8"=1'

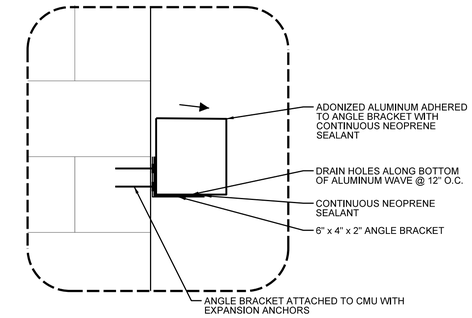

3 LD-03 WAVE ALONG LENGTH OF WALL
1-1/2"=1'

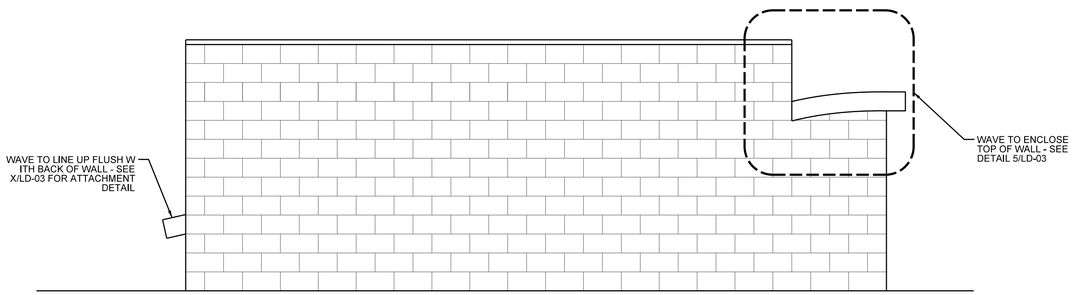

4 LD-03 SIGN WALL - BACK ELEVATION
3/8" = 1'

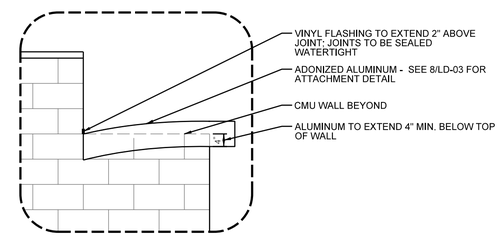

5 LD-03 WAVE / WALL COPING
1/2" = 1'

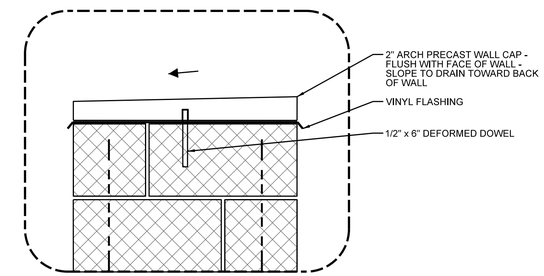

6 LD-03 ARCH PRECAST CAP
1-1/2"=1'

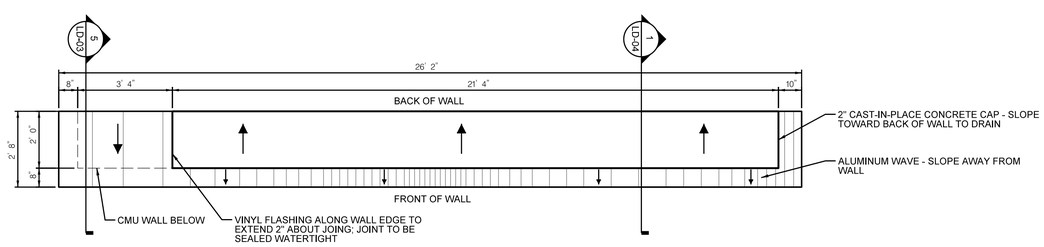

7 LD-03 SIGN WALL - PLAN
3/8" = 1'

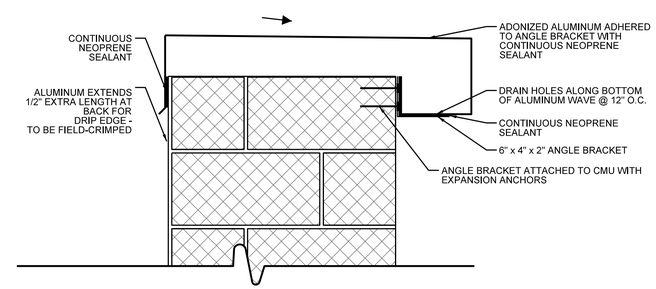

8 LD-03 WAVE / WALL COPING AT TOP OF WALL
1-1/2"=1'

$TIME$
$FORNAME$ $SDATE$

DELAWARE DEPARTMENT OF TRANSPORTATION

ADDENDUMS / REVISIONS

DELAWARE TRANSIT CORPORATION LEWES PARK AND RIDE AND MAINTENANCE FACILITY

CONTRACT	BRIDGE NO.	
T200612502	DESIGNED BY:	TB/MIF
COUNTY		
SUSSEX	CHECKED BY:	JKS

LANDSCAPE DETAILS

LD-03
SHEET NO.
24
TOTAL SHTS.
185

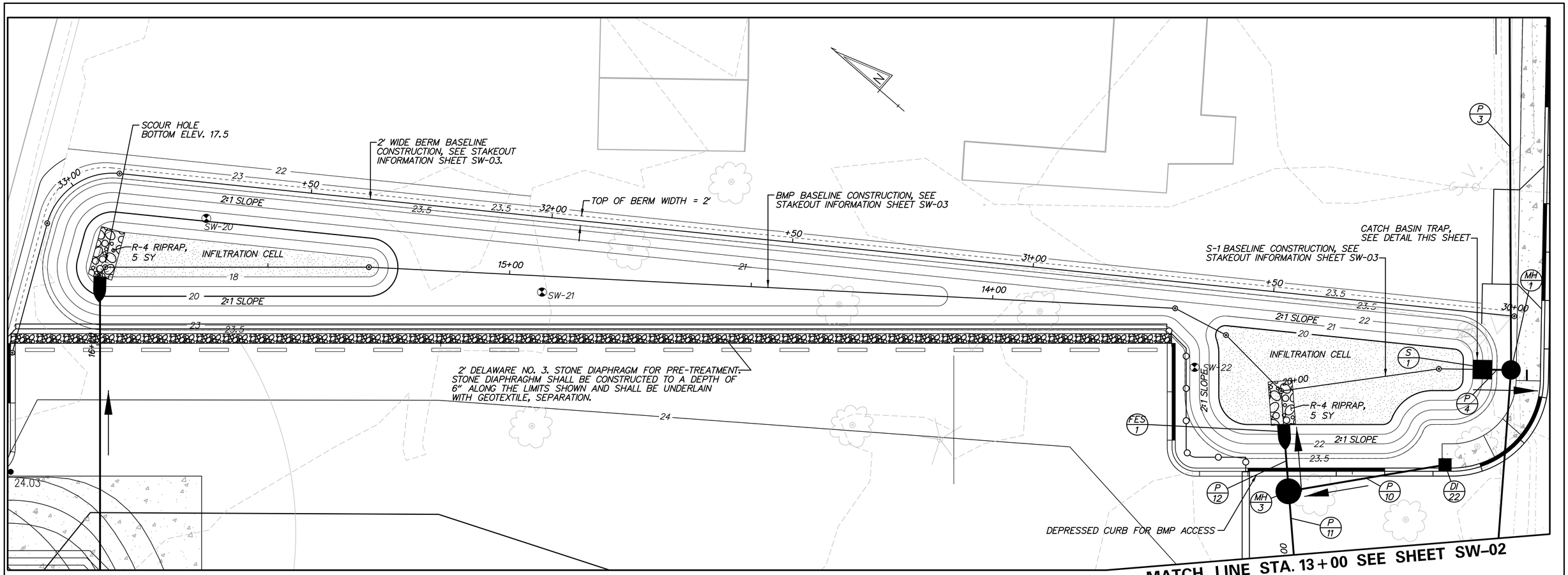

PLAN – LTC BMP NO.1 EAST CELL

SCALE: 1" = 10'

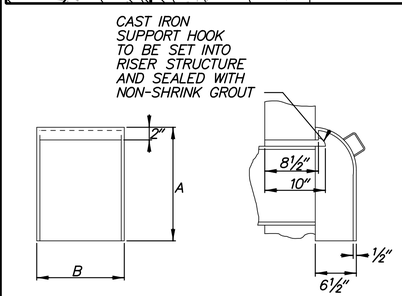

DIMENSIONS IN INCHES			
A	B	PIPE SIZE	SETTING METHOD
16	12	TO 6	ON 2 HOOKS

CATCH BASIN TRAP

SCALE: NONE

CATCH BASIN TRAP NOTES:

1. CATCH BASIN TRAP AND SUPPORT HOOKS SHALL BE FABRICATED FROM CAST IRON
2. BOTTOM OF TRAP SHALL EXTEND A MINIMUM OF 6-INCHES BELOW THE BOTTOM OF THE COVERED ORIFICE.
3. THE COST OF ALL CATCH BASIN TRAPS SHALL BE INCIDENTAL TO THE CONTRACT UNIT COST FOR THE POND OUTLET STRUCTURE.

DRAINAGE INLET SCHEDULE

NO.	STATION	OFFSET	BOX SIZE	GRATE	T.G. EL.	INV. EL.
*S-1	20+42	0 RT	48"X48"	1	23.00	21.00

* A FOUR INCH DIAMETER CIRCULAR ORIFICE SHALL BE CAST AT THE UPSTREAM FACE OF S-1 AT ELEVATION 21.00. A CATCH BASIN TRAP SHALL BE INSTALLED OVER THE ORIFICE PER DETAIL, THIS SHEET.

BMP NO. 1 – DESIGN SUMMARY

DESIGN STORM	FACILITY INFLOW (CFS)	FACILITY DISCHARGE (CFS)	WATER SURFACE ELEVATION	STORAGE VOLUME (CF)
INFILTRATION	3.56	N.A.	21.00	11925
2-YEAR	7.00	0.40	22.21	12078
10-YEAR	9.40	0.50	22.97	21156

HAZARD CLASSIFICATION "A" AS PER POND CODE 378

DRAINAGE AREA TO FACILITY: 2.61 ACRES

MANAGEMENT PROVIDED BY FACILITY: WATER QUALITY CONTROL VIA INFILTRATION FOR 2-INCH STORM (1 INCH RUNOFF) AND QUANTITY CONTROL FOR THE 2, AND 10-YEAR EVENTS.

POND CONSTRUCTION SEQUENCE AND NOTES:

THE STORMWATER MANAGEMENT FACILITY SHALL NOT FUNCTION AS A SEDIMENT BASIN DURING ROADWAY CONSTRUCTION AND SHALL BE CONSTRUCTED IN ACCORDANCE WITH THE FOLLOWING SECTIONS OF THE STANDARD SPECIFICATIONS:
SECTION 271 - STORMWATER MANAGEMENT POND
SECTION 272 - POND OUTLET STRUCTURE, CONCRETE

1. SEE EROSION AND SEDIMENT CONTROL PLANS FOR SEQUENCE OF CONSTRUCTION.
2. STABILIZE ALL BARE AREAS BELOW ELEVATION 21.00 WITH PERMANENT SEEDING, WET GROUND. STABILIZE ALL BARE AREAS ABOVE ELEVATION 21.00 WITH PERMANENT SEEDING, DRY GROUND. SEE LANDSCAPE PLANS FOR POND PLANTINGS.

GENERAL NOTES:

1. THE CONTRACTOR SHALL PROVIDE "AS-BUILT" DRAWINGS OF ALL STORMWATER MANAGEMENT FACILITIES, SUCH AS PONDS, BIOFILTRATION SWALES, BIO-RETENTION AREAS, ETC. THE "AS-BUILT" DRAWINGS SHALL SHOW THE ACTUAL FINISHED GROUND CONTOURS, OUTLET STRUCTURE DIMENSIONS AND ELEVATIONS, ETC., AS THEY EXIST AT THE COMPLETION OF THE PROJECT. THESE DRAWINGS SHALL BE SIGNED AND SEALED BY A PROFESSIONAL ENGINEER OR LAND SURVEYOR REGISTERED IN THE STATE OF DELAWARE. ALL "AS-BUILT" DRAWINGS SHALL BE SENT TO THE DELDOT STORMWATER ENGINEER. ALL COSTS FOR THIS WORK SHALL BE INCLUDED UNDER ITEM 763501 - CONSTRUCTION ENGINEERING.
2. NO SET-ASIDE AREA FOR DEPOSIT OF CLEAN-OUT MATERIAL IS PROVIDED. ALL CLEAN-OUT MATERIAL SHALL BE DISPOSED OF AT AN APPROVED, OFFSITE LOCATION.

N:\90181-00A\CADD\SW01_LEWES.dgn
12/16/2013 8:03:36 AM

DELAWARE DEPARTMENT OF TRANSPORTATION

ADDENDUMS / REVISIONS

DELAWARE TRANSIT CORPORATION
LEWES TRANSIT CENTER – PHASE I

CONTRACT	BRIDGE NO.	
T200612502	DESIGNED BY:	CSC
COUNTY		
SUSSEX	CHECKED BY:	JDC

STORMWATER MANAGEMENT PLAN

SW-01

SHEET NO.
25
TOTAL SHTS.
183

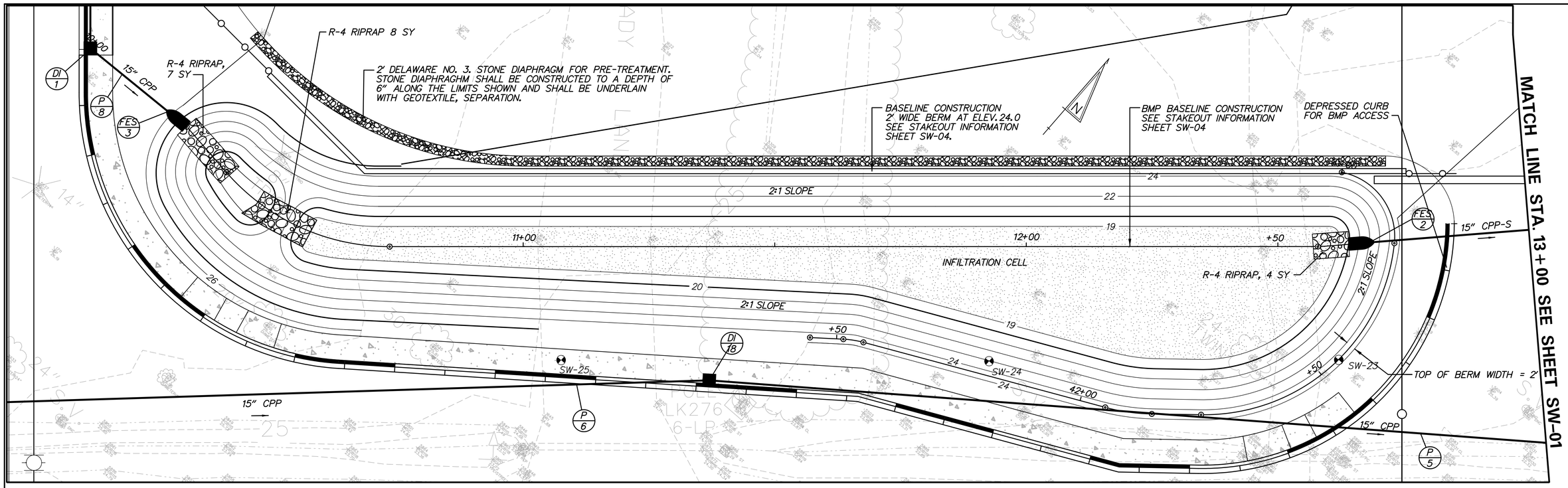

PLAN – LTC BMP NO. 1 SOUTH CELL

SCALE: 1" = 10'

BMP NO. 1 – DESIGN SUMMARY				
DESIGN STORM	FACILITY INFLOW (CFS)	FACILITY DISCHARGE (CFS)	WATER SURFACE ELEVATION	STORAGE VOLUME (CF)
INFILTRATION	3.56	N.A.	21.00	11925
2-YEAR	7.00	0.40	22.21	12078
10-YEAR	9.40	0.50	22.97	21156

HAZARD CLASSIFICATION "A" AS PER POND CODE 378

DRAINAGE AREA TO FACILITY: 2.61 ACRES

MANAGEMENT PROVIDED BY FACILITY: WATER QUALITY CONTROL VIA INFILTRATION FOR 2-INCH STORM (1 INCH RUNOFF) AND QUANTITY CONTROL FOR THE 2, AND 10-YEAR EVENTS.

POND CONSTRUCTION SEQUENCE AND NOTES:

THE STORMWATER MANAGEMENT FACILITY SHALL NOT FUNCTION AS A SEDIMENT BASIN DURING ROADWAY CONSTRUCTION AND SHALL BE CONSTRUCTED IN ACCORDANCE WITH THE FOLLOWING SECTIONS OF THE STANDARD SPECIFICATIONS:
SECTION 271 - STORMWATER MANAGEMENT POND
SECTION 272 - POND OUTLET STRUCTURE, CONCRETE

1. SEE EROSION AND SEDIMENT CONTROL PLANS FOR SEQUENCE OF CONSTRUCTION.
2. STABILIZE ALL BARE AREAS BELOW ELEVATION 21.00 WITH PERMANENT SEEDING, WET GROUND. STABILIZE ALL BARE AREAS ABOVE ELEVATION 21.00 WITH PERMANENT SEEDING, DRY GROUND. SEE LANDSCAPE PLANS FOR POND PLANTINGS.

GENERAL NOTES:

1. THE CONTRACTOR SHALL PROVIDE "AS-BUILT" DRAWINGS OF ALL STORMWATER MANAGEMENT FACILITIES, SUCH AS PONDS, BIOFILTRATION SWALES, BIO-RETENTION AREAS, ETC. THE "AS-BUILT" DRAWINGS SHALL SHOW THE ACTUAL FINISHED GROUND CONTOURS, OUTLET STRUCTURE DIMENSIONS AND ELEVATIONS, ETC., AS THEY EXIST AT THE COMPLETION OF THE PROJECT. THESE DRAWINGS SHALL BE SIGNED AND SEALED BY A PROFESSIONAL ENGINEER OR LAND SURVEYOR REGISTERED IN THE STATE OF DELAWARE. ALL "AS-BUILT" DRAWINGS SHALL BE SENT TO THE DELDOT TRANSIT CORPORATION. ALL COSTS FOR THIS WORK SHALL BE INCLUDED UNDER ITEM 763501 - CONSTRUCTION ENGINEERING.
2. NO SET-ASIDE AREA FOR DEPOSIT OF CLEAN-OUT MATERIAL IS PROVIDED. ALL CLEAN-OUT MATERIAL SHALL BE DISPOSED OF AT AN APPROVED, OFFSITE LOCATION.

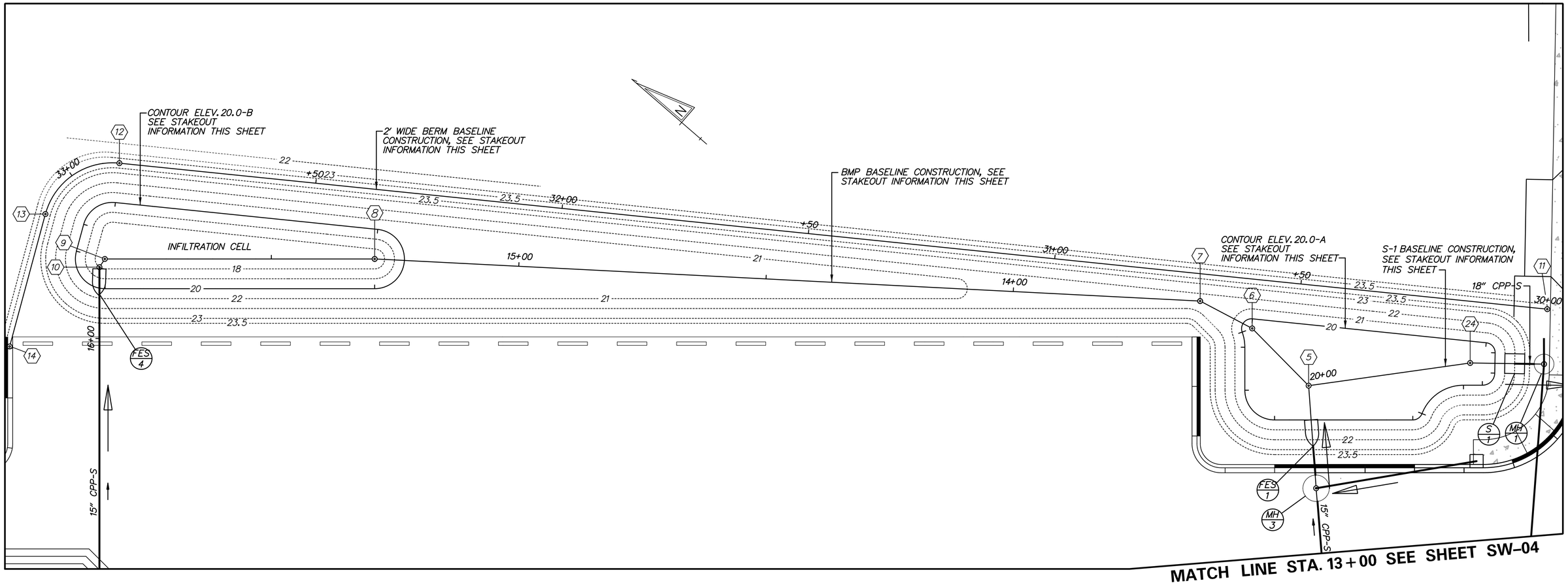

PLAN – LTC BMP NO. 1 EAST CELL

SCALE: 1" = 10'

BMP BASELINE CONSTRUCTION TABLE			
POINT NO.	STATION	NORTH	EAST
MH 3	PI STA. 13+13.19	272143.78	727117.16
5	PI STA. 12+33.96	272158.49	727131.83
6	PI STA. 13+50.19	272174.67	727133.10
7	PI STA. 13+62.07	272186.24	727130.40
8	PI STA. 15+29.00	272317.82	727027.68
9	PI STA. 15+83.50	272359.02	726992.00
10	PI STA. 15+85.48	272358.75	726990.04
MH 6	POE STA. 16+56.46	272312.28	726936.39

2' WIDE BERM BASELINE CONSTRUCTION TABLE			
POINT NO.	STATION	NORTH	EAST
11	POB STA. 30+00.00	272132.17	727175.06
12	PC STA. 32+89.87	272369.45	727008.55
13	PT STA. 33+09.60	272374.02	726991.01
14	POE STA. 33+37.29	272361.98	726966.06

S-1 BASELINE CONSTRUCTION TABLE			
POINT NO.	STATION	NORTH	EAST
5	POB STA. 20+00.00	272158.49	727131.83
24	PI STA. 20+32.94	272136.83	727156.65
MH 6	POE STA. 20+47.86	272125.40	727166.24

STAKEOUT INFORMATION CONTOUR 20.0-A		
POINT	NORTH	EAST
PC 9'R	272173.31	727129.25
PRC 2'R	272175.72	727131.22
PT 2'R	272175.90	727134.60
PC 2'R	272137.05	727161.86
PT 2'R	272134.37	727161.50
PC 2.5'R	272131.74	727158.36
PT 2.5'R	272132.03	727154.86
PC 9'R	272134.90	727152.37
PRC 2'R	272137.49	727142.55
PT 2'R	272138.06	727140.37
PC 6'R	272159.17	727122.09
PT 6'R	272167.63	727122.70

STAKEOUT INFORMATION CONTOUR 20.0-B		
POINT	NORTH	EAST
PC 6'R	272366.82	726994.48
PT 6'R	272364.86	727002.00
PC 6'R	272321.26	727032.60
PT 6'R	272313.89	727023.15
PC 6'R	272355.04	726987.51
PT 6'R	272364.38	726989.43

N:\90181-004\CADD\SW03_LEWES.dgn
12/16/2013 8:04:13 AM

DELAWARE DEPARTMENT OF TRANSPORTATION

ADDENDUMS / REVISIONS

DELAWARE TRANSIT CORPORATION
LEWES TRANSIT CENTER – PHASE I

CONTRACT	BRIDGE NO.	
T200612502	DESIGNED BY:	CSC
COUNTY		
SUSSEX	CHECKED BY:	JDC

STORMWATER MANAGEMENT STAKEOUT PLAN

SW-03

SHEET NO. 27

TOTAL SHTS. 183

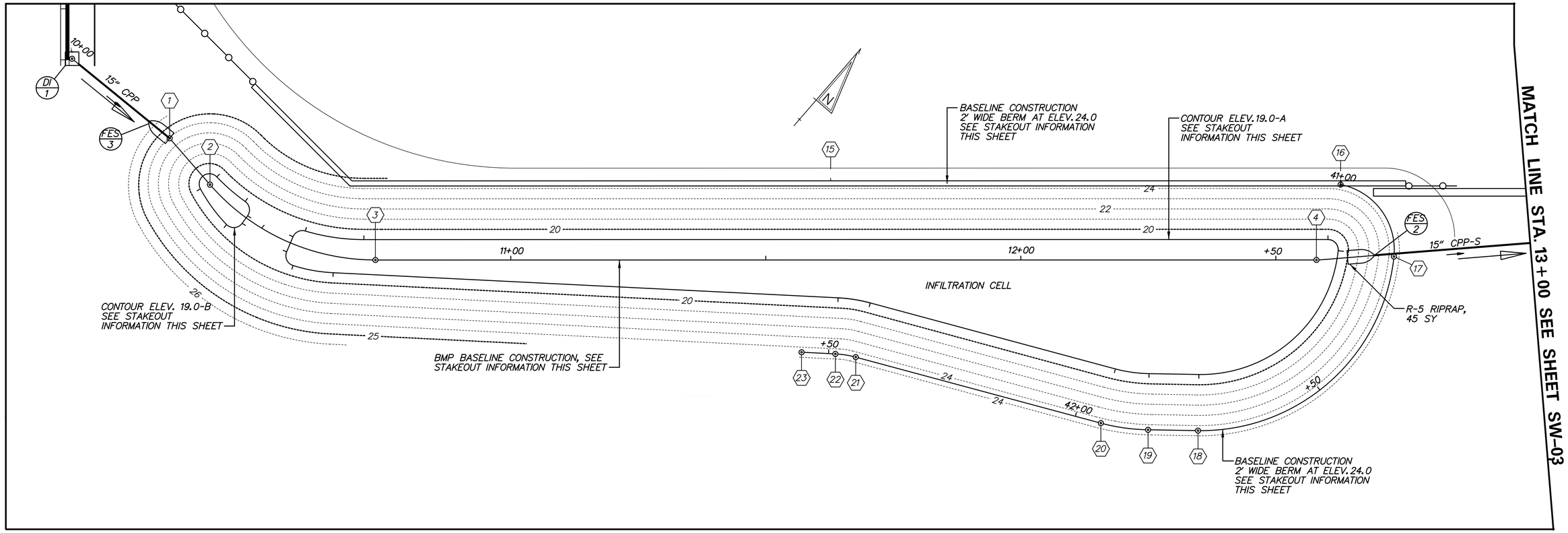

PLAN – LTC BMP NO. 1 SOUTH CELL

SCALE: 1" = 10'

BMP BASELINE CONSTRUCTION TABLE

POINT NO.	STATION	NORTH	EAST
DI-1	POB STA. 10+00.00	271974.47	726868.21
1	PI STA. 10+24.68	271975.21	726892.88
2	PC STA. 10+36.72	271973.53	726904.80
3	PT STA. 10+73.46	271983.60	726938.98
4	PI STA. 12+57.96	272104.40	727078.43

2' WIDE BERM BASELINE CONSTRUCTION TABLE

POINT NO.	STATION	NORTH	EAST
16	POB STA. 41+00.00	272118.66	727072.35
17	PCC STA. 41+19.27	272114.85	727089.49
18	PT STA. 41+75.67	272063.93	727082.77
19	PC STA. 41+85.46	272057.64	727075.26
20	PT STA. 41+94.83	272052.56	727067.41
21	PC STA. 42+44.60	272030.87	727022.62
22	PT STA. 42+48.65	272028.73	727019.19
23	POE STA. 42+55.29	272024.64	727013.96

STAKEOUT INFORMATION CONTOUR 19.0–A

POINT	NORTH	EAST
PC 2'R	272108.91	727077.53
PCC 27'R	272108.54	727080.48
PT 27'R	272072.36	727075.70
PC 27'R	272066.07	727068.20
PT 27'R	272062.46	727062.62
PC 30'R	272040.77	727017.82
PT 30'R	272037.40	727012.41
PC 31'R	271976.30	726934.36
PCC 2'R	271972.21	726927.47
PT 2'R	271973.42	726924.78
PC 2'R	271976.45	726923.79
PRC 40'R	271978.90	726924.87
PT 40'R	271985.14	726934.65

STAKEOUT INFORMATION CONTOUR 19.0–B

POINT	NORTH	EAST
PC 2'R	271969.75	726912.36
PT 2'R	271971.91	726914.52
PC 2'R	271973.73	726914.37
PT 2'R	271975.55	726912.19
PC 2'R	271975.55	726904.80
PT 2'R	271971.67	726903.93

SW-04

DELAWARE DEPARTMENT OF TRANSPORTATION

ADDENDUMS / REVISIONS

DELAWARE TRANSIT CORPORATION
LEWES TRANSIT CENTER – PHASE I

CONTRACT	BRIDGE NO.	
T200612502	DESIGNED BY:	BPG
COUNTY		
SUSSEX	CHECKED BY:	JDC

STORMWATER MANAGEMENT STAKEOUT PLAN

SHEET NO. 28
TOTAL SHTS. 183

N:\90181-004\CADD\SW04_LEWES.dgn
12/16/2013 8:04:34 AM

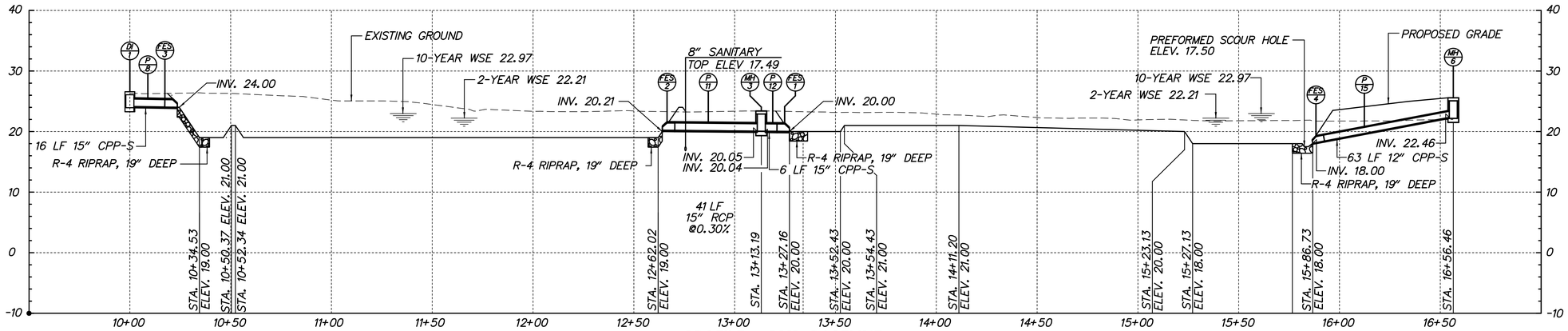

PROFILE – BMP BASELINE

SCALE: HORIZONTAL: 1" = 30'
VERTICAL: 1" = 10'

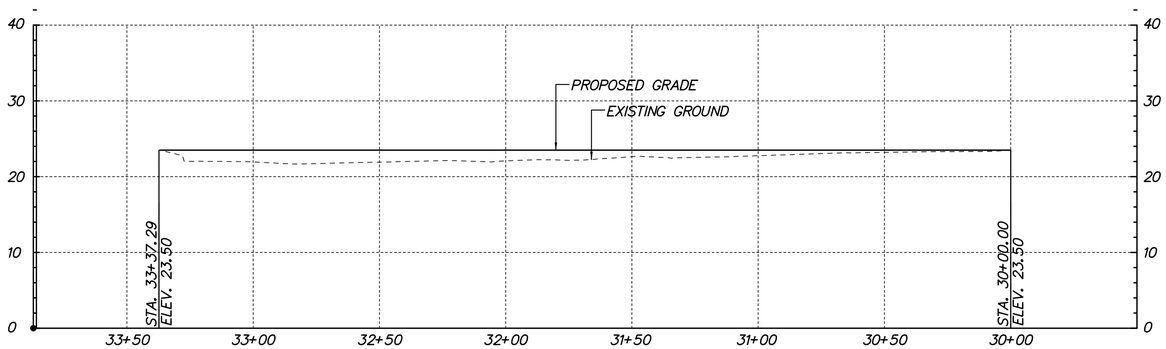

PROFILE – 2' WIDE BERM (EAST CELL)

SCALE: HORIZONTAL: 1" = 30'
VERTICAL: 1" = 10'

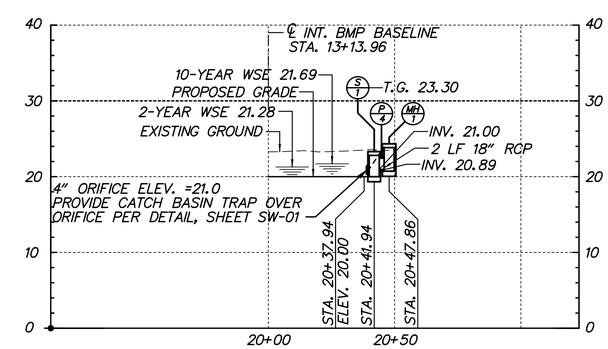

PROFILE – S-1 BASELINE (EAST CELL)

SCALE: HORIZONTAL: 1" = 30'
VERTICAL: 1" = 10'

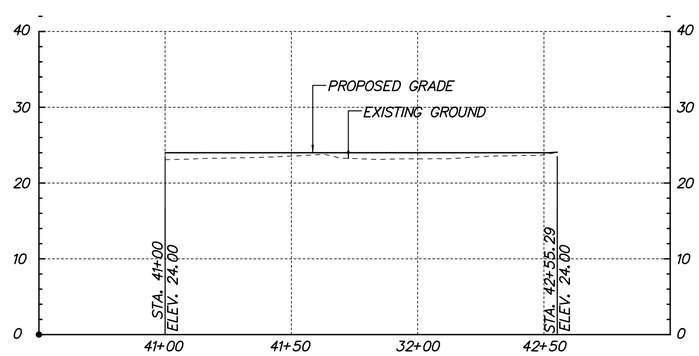

PROFILE – 2' WIDE BERM (SOUTH CELL)

SCALE: HORIZONTAL: 1" = 30'
VERTICAL: 1" = 10'

N:\9018I-004\CADD\SW05_LEWES.dgn
12/6/2013 8:04:55 AM

SW-05

DELAWARE DEPARTMENT OF TRANSPORTATION

ADDENDUMS / REVISIONS

DELAWARE TRANSIT CORPORATION
LEWES TRANSIT CENTER – PHASE I

CONTRACT	BRIDGE NO.	
T200612502	DESIGNED BY: CSC	
COUNTY		
SUSSEX	CHECKED BY: JDC	

STORMWATER MANAGEMENT PROFILES

SHEET NO. 29
TOTAL SHTS. 183

EXISTING SYMBOLS

DRAINAGE

	DITCH OR STREAM CENTERLINE
	DIRECTIONAL STREAM FLOW ARROW
C.B.	DRAINAGE CATCH BASIN
J.B.	DRAINAGE JUNCTION BOX
D	DRAINAGE MANHOLE
SIZE/TYPE LABEL	DRAINAGE PIPE AND FLOW ARROW
	DRAINAGE PIPE HEADWALL
	RIPRAP - AREA FEATURE
	RIPRAP - LINEAR FEATURE

MANMADE ROADSIDE FEATURES

(TYPE LABEL)	CURB
(TYPE LABEL)	CURB AND GUTTER
	FENCE - CHAINLINK OR STRANDED
	FENCE - STOCKADE OR SPLIT RAIL
FP	FLAG POLE
	GUARDRAIL - STEEL BEAM
	GUARDRAIL - WIRE ROPE
LAMP	LAMP AND POST - RESIDENTIAL
MB	MAILBOX
PM	PARKING METER AND POST
	PAVEMENT - FLEXIBLE
	PAVEMENT - RIGID
	PILE - BRIDGE
	PILLAR OR MISCELLANEOUS POST
	TRAFFIC SIGN AND POST
	WALL - BRICK OR BLOCK
	WALL - STONE

NATURAL ROADSIDE FEATURES

	GRASS LAWN
	HEDGEROW OR THICKET
	MARSH BOUNDARY LINE
	TREE - CONIFEROUS
	TREE - DECIDUOUS
	TREE STUMP
	SHRUBBERY
WL	DELINEATED WETLAND BOUNDARY LINE
	WOODS LINE BOUNDARY

RIGHT-OF-WAY SYMBOLS

C.M.	PROPERTY MARKER - CONCRETE MON.
I.P.	PROPERTY MARKER - IRON PIPE
100+00	HISTORIC RIGHT-OF-WAY BASELINE
	EXISTING RIGHT-OF-WAY
PL	EXISTING PROPERTY LINE
EASEMENT TYPE	EXISTING EASEMENT
DA	EXISTING DENIAL OF ACCESS
R/W-DA	EXISTING R/W & DENIAL OF ACCESS

SURVEY CONTROL & MONUMENTATION

B.M.	SURVEY BENCHMARK LOCATION
T.P.	SURVEY TIE POINT LOCATION
	SURVEY TRAVERSE POINT
	POINT OF CURVATURE OR TANGENCY
	POINT OF INTERSECTING TANGENTS

UTILITY

	SOIL BORING LOCATION
	UTILITY TEST HOLE LOCATION
TV	CABLE TV DISTRIBUTION BOX
E	ELECTRIC MANHOLE
E	ELECTRIC TRANSFORMER
	POLE MOUNTED LUMINAIRE
G	GAS MANHOLE
G.M.	GAS METER
G.V.	GAS VALVE
G.P.	GAS PUMP - SERVICE STATION
	RAILROAD TRACKS
S	SANITARY SEWER MANHOLE
S.V.	SANITARY SEWER VALVE
VENT	SANITARY SEWER VENT OR CLEANOUT
S.D.F.	SEPTIC DRAIN FIELD
B	TELEPHONE BOOTH
T	TELEPHONE MANHOLE
T	TELEPHONE TEST POINT
J.W.	TRAFFIC - CONDUIT JUNCTION WELL
	TRAFFIC - LIGHT POLE AND BASE
	TRAFFIC - PEDESTRIAN POLE & BASE
	TRAFFIC - SIGNAL CABINET & BASE
	TRAFFIC - SIGNAL POLE AND BASE
U	UTILITY BOX
	UTILITY POLE GUY WIRE ANCHOR
	UTILITY POLE
F.H.	WATER - FIRE HYDRANT
W.M.	WATER METER
W.V.	WATER VALVE
WELL	WELL HEAD

UTILITY COMPANY FACILITIES

CU-G	CHESAPEAKE UTILITY - GAS
SC-S	SUSSEX COUNTY - SEWER
TU-W	TIDEWATER UTILITIES - WATER
VER-C	VERIZON

PROPOSED SYMBOLS

CONSTRUCTION

	CONCRETE SAFETY BARRIER - PERMANENT
BFS	BIOFILTRATION SWALE
	BRICK PATTERNED SURFACE
	BUTT JOINT
100+00	CONSTRUCTION BASELINE
CSF	CONSTRUCTION SAFETY FENCE
	CURB, TYPE 1 & TYPE 3
	CURB, TYPE 2
	CURB & GUTTER, TYPE 1
	CURB & GUTTER, TYPE 2
	CURB & GUTTER, TYPE 3
	CURB & GUTTER, TYPE 4
	CURB OPENING
CZ	CLEAR ZONE
	DRAINAGE INLET
	DITCH
	FENCE - METAL
	FENCE - WOOD
	FLARED END SECTION
	GUARDRAIL, TYPE 1
	GUARDRAIL, TYPE 2
	GUARDRAIL, TYPE 3
	GUARDRAIL END ANCHORAGE
	GUARDRAIL END TREATMENT, TYPE 1
	GUARDRAIL END TREATMENT, TYPE 2
	GUARDRAIL END TREATMENT, TYPE 3
HC	HORIZONTAL CLEARANCE
	IMPACT ATTENUATOR
	JUNCTION BOX - DRAINAGE
LOC	LIMIT OF CONSTRUCTION
MB	MAILBOX
	MANHOLE
	PAVEMENT PATCH
	PAVEMENT REMOVAL - TOPSOIL, SEED AND MULCH
	PIPE & DIRECTIONAL FLOW ARROW
	RIPRAP
	P.C.C. SIDEWALK @ 4"
	P.C.C. SIDEWALK @ 6"
	UNDERDRAIN
	UNDERDRAIN OUTLET

RIGHT-OF-WAY SYMBOLS

	PROPOSED RIGHT-OF-WAY MONUMENT
DA	PROPOSED DENIAL OF ACCESS
PE	PROPOSED PERMANENT EASEMENT
R/W	PROPOSED RIGHT-OF-WAY
R/W-DA	PROPOSED R/W & DENIAL OF ACCESS
TCE	TEMPORARY CONSTRUCTION EASEMENT
100+00	PROPOSED RIGHT-OF-WAY BASELINE

IDENTIFIERS

A C	ADJUST BY CONTRACTOR
A O	ADJUST BY OTHERS
B	CONCRETE SAFETY BARRIER
C	CURB OR CURB & GUTTER
CJB	CONVERT TO JUNCTION BOX
CMH	CONVERT TO DRAINAGE MANHOLE
C O	CURB OPENING
CR	CURB RAMP / TYPE
CR-N	CURB RAMP / TYPE - WITHOUT SIDEWALK SURFACE DETECTABLE WARNING SYSTEM
CSF	CONSTRUCTION SAFETY FENCE
DI	DRAINAGE INLET
DND	DO NOT DISTURB
ED	ENERGY DISSIPATOR
F	FENCE
FES	FLARED END SECTION
FF C	FILL WITH FLOWABLE FILL
FS	FILTRATION STRUCTURE
GR	GUARDRAIL
JB	JUNCTION BOX
MH	MANHOLE
M	MONUMENT - RIGHT-OF-WAY
P	PIPE
RL C	RELOCATE BY CONTRACTOR
RL O	RELOCATE BY OTHERS
RM C	REMOVE BY CONTRACTOR
RM O	REMOVE BY OTHERS
UD	UNDERDRAIN / LENGTH
UDO	UNDERDRAIN OUTLET PIPE

LANDSCAPING

L.S.	LANDSCAPE PLANTINGS
	SHRUBBERY
	CONIFEROUS TREE
	DECIDUOUS TREE

TRAFFIC

ITMS-CON	ITMS CONDUIT
SIG-CON	SIGNAL CONDUIT
	CONDUIT JUNCTION WELL
	LUMINAIRE
	PAVEMENT MARKINGS
	PAVEMENT STRIPING
	TRAFFIC SIGN

PAVEMENT SECTIONS

	FULL DEPTH/RECONSTRUCTION - SEE TYPICAL SECTIONS FOR MATERIALS AND DEPTHS
	DRIVEWAY 2" WMA, SUPERPAVE, TYPE C 8" GABC, TYPE B

MISCELLANEOUS

	UTILITY POLE GUY WIRE ANCHOR
	UTILITY POLE

N:\99181-004\CADD\Highway\CP01-99181004H0-01.dgn
1/22/2014 3:15:11 PM

DELAWARE DEPARTMENT OF TRANSPORTATION

ADDENDUMS / REVISIONS

NOT TO SCALE

DELAWARE TRANSIT CORPORATION
LEWES PARK AND RIDE AND MAINTENANCE FACILITY

CONTRACT	BRIDGE NO.
T200612502	DESIGNED BY: D.A.D.
COUNTY	CHECKED BY: T.A.O.
SUSSEX	

LEGEND

H0-01

SHEET NO. 30

TOTAL SHTS. 185

GENERAL NOTES

1. THIS PROJECT IS TO BE CONSTRUCTED IN ACCORDANCE WITH THE DELAWARE DEPARTMENT OF TRANSPORTATION "STANDARD SPECIFICATIONS", DATED AUGUST 2001 AND THE DELAWARE DEPARTMENT OF TRANSPORTATION "STANDARD CONSTRUCTION DETAILS", DATED 2001, INCLUDING ALL REVISIONS UP TO THE DATE OF ADVERTISEMENT.

2. SITE REVIEWER - AN EROSION CONTROL SITE REVIEWER SHALL BE A PERSON FROM THE CONTRACTOR'S STAFF ASSIGNED TO EROSION AND SEDIMENT CONTROL IMPLEMENTATION AND MAINTENANCE AND SHALL BE REQUIRED ON SPECIFIC PROJECTS. THE NAME AND DNREC CERTIFICATION NUMBER OF EACH SITE REVIEWER SO REQUIRED SHALL BE SUBMITTED TO THE DEPARTMENT PRIOR TO THE EXECUTION OF THE CONTRACT. THE NAME OF THE DELAWARE REGISTERED PROFESSIONAL ENGINEER PROVIDING DIRECTION AND SUPERVISION OF THE SITE REVIEWER, AS REQUIRED IN SECTION 12.3 OF THE DELAWARE SEDIMENT AND STORMWATER REGULATIONS, SHALL ALSO BE SUBMITTED TO THE DEPARTMENT PRIOR TO THE EXECUTION OF THE CONTRACT. THE SITE REVIEWER REQUIREMENTS IN EFFECT ON THIS PROJECT SHALL BE MARKED WITH AN "X" BELOW:

EROSION POTENTIAL FOR THIS PROJECT	SITE REVIEWER REQUIREMENT
( ) INSIGNIFICANT	NONE
( ) MINOR	CONTRACTOR CERTIFICATION COURSE TRAINING ONLY, AS DEFINED IN SECTION 13 OF THE DELAWARE SEDIMENT AND STORMWATER REGULATIONS.
(X) MEDIUM	THE SUPERINTENDENT OR A SEPARATE INDIVIDUAL FROM THE CONTRACTOR'S STAFF SHALL BE A CERTIFIED CONSTRUCTION REVIEWER (CCR), AS DEFINED IN SECTION 12 OF THE DELAWARE SEDIMENT AND STORMWATER REGULATIONS.
( ) MAJOR	SUPERINTENDENT AND AN INDIVIDUAL FROM CONTRACTOR'S STAFF SHALL BE CCR. ONE INDIVIDUAL FROM THE CONTRACTOR'S STAFF MUST BE A CCR PRIOR TO THE EXECUTION OF THE CONTRACT. THE SUPERINTENDENT MUST BECOME A CCR WITHIN ONE YEAR AFTER THE AWARD OF CONTRACT.

3. ELECTRONIC PROJECT FILES THAT WILL BE MADE AVAILABLE TO THE AWARDED CONTRACTOR, INCLUDE:

( )	NONE
(X)	ASCII DATA FILES WITH COORDINATES AND ELEVATIONS FOR PROPOSED POINTS AS SELECTED BY THE ENGINEER.
(X)	RASTER FILES, IN .CAL FILE FORMAT, FOR ALL PLAN SHEETS.
( )	EXISTING DIGITAL TERRAIN MODEL, IN .DTM FILE FORMAT, COMPATIBLE WITH SOFTWARE CURRENTLY USED BY DELDOT.
( )	PROPOSED DIGITAL TERRAIN MODEL, IN .DTM FILE FORMAT, COMPATIBLE WITH SOFTWARE CURRENTLY USED BY DELDOT.
( )	DESIGN FILE, IN .DGN FILE FORMAT, CONTAINING ONLY THE PROPOSED 3D TRIANGLES OF THE PROPOSED DIGITAL TERRAIN MODEL (DTM).

NOTE: THE DOCUMENT ENTITLED "RELEASE FOR DELIVERY OF DOCUMENTS IN ELECTRONIC FORM TO A CONTRACTOR" MUST BE SIGNED BY ALL PARTIES PRIOR TO THE DELIVERY OF ANY ELECTRONIC PROJECT FILES.

4. PROJECT FILES THAT WILL BE MADE AVAILABLE TO THE CONTRACTOR, INCLUDE:

( )	CROSS SECTIONS
(X)	RIGHT-OF-WAY PLANS (WILL BE MADE AVAILABLE TO THE AWARDED CONTRACTOR)

5. AMERICAN TRAFFIC SAFETY SERVICES ASSOCIATION (ATSSA) CERTIFIED TRAFFIC CONTROL SUPERVISOR REQUIREMENT FOR THIS PROJECT.

( )	THE CONTRACTOR SHALL NOT BE REQUIRED TO HAVE AN ATSSA SUPERVISOR ASSIGNED TO THIS PROJECT.
(X)	THE CONTRACTOR SHALL HAVE AN ATSSA SUPERVISOR ASSIGNED TO THIS PROJECT. THE CONTRACTOR'S GENERAL SUPERINTENDENT FOR THIS PROJECT OR ANOTHER ATSSA CERTIFIED MEMBER OF THE CONTRACTOR'S PROJECT STAFF MAY BE THE ATSSA SUPERVISOR. PAYMENT FOR ATSSA SUPERVISOR IS INCIDENTAL TO ITEM 743000.
( )	THE CONTRACTOR SHALL HAVE AN ATSSA SUPERVISOR ASSIGNED TO THIS PROJECT. THE ATSSA SUPERVISOR'S SOLE JOB SHALL BE SUPERVISION OF THE INSTALLATION, OPERATION AND MAINTENANCE OF TRAFFIC CONTROL DEVICES FOR THIS PROJECT. THE CONTRACTOR'S GENERAL SUPERINTENDENT FOR THIS PROJECT SHALL NOT BE THE ATSSA SUPERVISOR. PAYMENT FOR ATSSA SUPERVISOR SHALL BE PAID FOR UNDER ITEM 743031.

6. THE DISTURBED AREA FOR THIS PROJECT IS 8.23 ACRES.

7. THE CONTRACTOR SHALL BE RESPONSIBLE FOR ADHERING TO THE CONSTRUCTION SITE POLLUTION PREVENTION SPECIFICATIONS AS DETAILED IN SECTION 3.6 OF THE "DELAWARE EROSION AND SEDIMENT CONTROL HANDBOOK". ALL COSTS ASSOCIATED WITH ADHERING TO THE STANDARDS SHALL BE INCIDENTAL TO THE OVERALL CONTRACT COSTS.

8. THE EROSION AND SEDIMENT CONTROL PLANS HAVE BEEN APPROVED BY DELDOT'S STORMWATER ENGINEER UNDER DELDOT'S DELEGATED AUTHORITY. THE EROSION AND SEDIMENT CONTROL PLANS ARE VALID FOR A THREE YEAR PERIOD, BEGINNING ON THE DATE THE STORMWATER ENGINEER SIGNED THE CONSTRUCTION TITLE SHEET. IF THE FINAL ACCEPTANCE OF THE PROJECT IS ANTICIPATED TO EXTEND BEYOND THE THREE YEARS, THE CONTRACTOR SHALL INFORM THE ENGINEER THREE MONTHS PRIOR TO THE EXPIRATION OF THE EROSION AND SEDIMENT CONTROL PLAN APPROVAL. DELDOT WILL REVIEW THE CURRENT EROSION AND SEDIMENT CONTROL PLAN AND ISSUE AN EXTENSION WITH ANY APPROPRIATE MODIFICATIONS.

PROJECT NOTES

SECTION 100

1. ANY DAMAGE TO ITEMS NOTED TO BE RELOCATED OR RESET BY THE CONTRACTOR, AT THE DISCRETION OF THE ENGINEER, SHALL BE REPAIRED AND/OR REPLACED IN KIND AT THE CONTRACTOR'S EXPENSE.

SECTION 200

2. THE CONTRACTOR SHALL REMOVE AND RESET ALL MAILBOXES TO MAINTAIN MAIL SERVICE AS DIRECTED BY THE ENGINEER. THE CONTRACTOR SHALL RELOCATE MAILBOXES AS REQUIRED BY THE PROPOSED GEOMETRICS AND AS DIRECTED BY THE ENGINEER. WHEN RELOCATING MAILBOXES IN CURBED SECTIONS, THE FACE OF THE MAILBOX SHALL BE FLUSH WITH THE BACK EDGE OF CURB. WHEN RELOCATING MAILBOXES IN OPEN SECTIONS, THE FACE OF THE MAILBOX SHALL BE SET BACK 8 INCHES FROM THE EDGE OF THE PAVED SHOULDER. THE BOTTOM OF THE MAILBOX SHALL BE SET 46 INCHES ABOVE THE ROADWAY SURFACE. MAILBOXES LOCATED AT DRIVEWAY ENTRANCES SHALL BE PLACED ON THE FAR SIDE OF THE DRIVEWAY IN THE DIRECTION OF TRAVEL. POSTS BEING RESET IN CONCRETE SIDEWALK SHALL BE PLACE IN AN APPROPRIATE SIZE PVC SLEEVE. COST FOR ALL WORK AND MATERIALS SHALL BE PAID FOR UNDER ITEM 201000 - CLEARING AND GRUBBING.

3. IN AREAS WHERE TREES OR SHRUBS WILL BE OVERHANGING THE PROPOSED SIDEWALK, PRUNING MAY BE NECESSARY TO ACHIEVE A VERTICAL CLEAR SPACE OF 10 FEET ABOVE THE PROPOSED SIDEWALK ELEVATION. THE CONTRACTOR SHALL PRUNE EXISTING TREE AND SHRUB BRANCHES, WHICH OVERHANG THE SIDEWALK, IN ACCORDANCE WITH I.S.A. STANDARDS. THE CONTRACTOR SHALL NOTIFY DELDOT'S ROADSIDE ENVIRONMENTALIST ADMINISTRATOR, EUGENE 'CHIP' ROSAN, JR. AT (302) 760-2185 AND/OR HIS DESIGNEE, AT LEAST TWO (2) DAYS PRIOR TO THE PRUNING OPERATION. ALL COSTS ASSOCIATED WITH THE ABOVE WORK TO BE PAID UNDER ITEM 201000 - CLEARING AND GRUBBING.

4. THE ENGINEER MAY REQUIRE THE CONTRACTOR TO EXCAVATE TEST PITS ALONG PROPOSED DRAINAGE RUNS AT POINTS OF POSSIBLE UTILITY CONFLICTS, TO DETERMINE IF A CONFLICT EXISTS. ANY CONFLICTS SHALL BE COORDINATED BY THE CONTRACTOR, WITH THE ENGINEER AND THE UTILITY COMPANY INVOLVED. THE ENGINEER SHALL ULTIMATELY DETERMINE THE SOLUTION TO THE UTILITY CONFLICT. TEST HOLES SHALL BE MEASURED AND PAID FOR IN ACCORDANCE WITH ITEM 202000 - EXCAVATION AND EMBANKMENT, BUT ONLY TO THE ACTUAL DEPTH EXCAVATED.

5. ITEMS TO BE REMOVED UNDER ITEM 211000 - REMOVAL OF STRUCTURES AND OBSTRUCTIONS SHALL INCLUDE, BUT NOT BE LIMITED TO THE FOLLOWING:
   - CONCRETE SUPPORT FOUNDATIONS FOR MISCELLANEOUS SMALL STRUCTURES NOT COVERED UNDER OTHER PAY ITEMS.
   - DRAINAGE STRUCTURES.

6. THIS PROJECT IS COVERED UNDER AN NPDES GENERAL PERMIT FOR CONSTRUCTION. UNDER THE GENERAL PERMIT, COMPLIANCE WITH DELDOT'S APPROVED SEDIMENT AND STORMWATER MANAGEMENT PLANS WILL CONSTITUTE COMPLIANCE WITH THE NPDES INDUSTRIAL PERMITTING REQUIREMENTS FOR THIS CONSTRUCTION PROJECT. A COPY OF THE NPDES GENERAL PERMIT AND NOI IS KEPT ON FILE IN EACH OF THE CONSTRUCTION OFFICES AND THE DEPARTMENT'S TEAM SUPPORT SECTION. A COPY OF THE GENERAL PERMIT OR THE NOI CAN BE OBTAINED UPON REQUEST FROM EITHER THE DEPARTMENT'S STORMWATER ENGINEER OR THE APPROPRIATE CONSTRUCTION ENGINEER.

SECTION 300

7. A. THE CONTRACTOR MAY ELECT TO USE ANY OF THE FOLLOWING MATERIALS TO MEET THE REQUIREMENTS OF ITEM 302007 - GRADED AGGREGATE BASE COURSE, TYPE 'B':
   a. CRUSHED STONE (PER STANDARD SPECIFICATION 821)
   b. CRUSHED CONCRETE (PER STANDARD SPECIFICATION 821)
   c. HOT-MIX MILLINGS (PER SPECIAL PROVISION 302514 MILLED HOT-MIX BASE COURSE)

   THE CONTRACTOR WILL NOT BE ALLOWED TO MIX DIFFERENT MATERIALS (OR SIMILAR MATERIALS FROM DIFFERENT SOURCES) TO MEET THE REQUIREMENTS OF ITEM 302007 - GRADED AGGREGATE BASE COURSE, TYPE 'B'.

   ALL OF THE ABOVE LISTED MATERIALS ARE PERMITTED FOR USE ON THE JOB, PROVIDED THEY ARE SEPARATED INTO APPROVED AREAS. EACH AREA OF BASE COURSE MUST BE CONSTRUCTED USING MATERIALS FROM A SINGULAR SOURCE, FULL DEPTH, IN ORDER THAT PROPER TESTING MAY BE ACCOMPLISHED. THE CONTRACTOR AND DELDOT'S PROJECT ENGINEER SHALL AGREE ON THE LIMITS OF EACH SOURCE OF MATERIAL PRIOR TO PLACEMENT.

   B. THE QUANTITY USED FOR BASE OF EACH OF THE ABOVE LISTED MATERIALS WILL BE THE CONTRACTOR'S CHOICE, WITH THE TOTAL MEETING THE ADVERTISED QUANTITY OF ITEM 302007 - GRADED AGGREGATE BASE COURSE, TYPE 'B'.

   C. THE CONTRACTOR MAY ALSO ELECT TO RECYCLE MILLINGS FOR USE IN HOT-MIX AS PERMITTED BY THE STANDARD SPECIFICATIONS. THE CHOICE OF THE QUANTITY OF MILLINGS USED FOR THIS PURPOSE, OR FOR BASE COURSE, LIES WITH THE CONTRACTOR. ALL MILLING MATERIAL SHALL BECOME PROPERTY OF THE CONTRACTOR.

   D. HOT-MIX MILLINGS MAY BE GENERATED FROM THE FOLLOWING SOURCES:
   a. MATERIAL MADE AVAILABLE WHEN MILLED ON THIS CONTRACT UNDER ITEM 760502.
   b. MATERIAL MILLED ON THIS CONTRACT AT THE CONTRACTOR'S CHOICE UNDER ITEM 202000.
   c. MILLED MATERIAL FURNISHED ON THE JOB FROM THE CONTRACTOR'S YARD OR OTHER OUTSIDE SOURCE.
   ALL MILLED MATERIALS SHALL MEET THE MATERIAL REQUIREMENTS OF ITEM 302514 MILLED HOT-MIX BASE COURSE.

   E. PAYMENT CLARIFICATION:
   a. SHOULD THE CONTRACTOR ELECT TO MILL PORTIONS OF HOT-MIX SHOWN ON THE PLANS TO BE REMOVED UNDER ITEM 202000 - EXCAVATION AND EMBANKMENT THE COST OF MILLING THIS HOT-MIX WILL BE PAID AS ITEM 202000 - EXCAVATION AND EMBANKMENT. THE MILLINGS GENERATED MAY BE RECYCLED INTO HOT-MIX, UTILIZED FOR BASE COURSE, OR DISPOSED OF TO AN APPROVED SITE. HAULING COSTS FOR DISPOSAL AND/OR RECYCLING ARE INCIDENTAL TO ITEM 202000 - EXCAVATION AND EMBANKMENT.

   b. MILLINGS GENERATED UNDER ITEM 760502 - PAVEMENT MILLINGS, TAPERCUT MAY BE RECYCLED INTO HOT-MIX, UTILIZED FOR BASE COURSE OR DISPOSED OF BY THE CONTRACTOR TO AN APPROVED SITE. NO SEPARATE PAYMENT WILL BE MADE FOR TRANSPORTING MILLINGS ON SITE OR TO AN APPROVED DISPOSAL SITE.

   c. SHOULD THE CONTRACTOR ELECT TO TEMPORARILY STOCKPILE MILLINGS ON THE JOB SITE FOR LATER USE, ALL COSTS FOR STOCKPILING AND SUBSEQUENT REHANDLING SHALL BE INCIDENTAL TO ITEM 202000 - EXCAVATION AND EMBANKMENT.

   d. MILLINGS USED FOR BASE COURSE SHALL BE PLACED IN ACCORDANCE WITH THE REQUIREMENTS OF SPECIAL PROVISION 302514 - MILLED HOT-MIX BASE COURSE. NO SEPARATE PAYMENT WILL BE MADE TO FURNISH MILLINGS FROM AN OUTSIDE SOURCE OR TRANSPORT MILLINGS WITHIN THE PROJECT LIMITS. MILLINGS USED FOR BASE COURSE WILL BE PAID IN PLACE AT THE UNIT BID PRICE FOR ITEM 302007 - GRADED AGGREGATE BASE COURSE, TYPE 'B'.

   e. ALL COSTS TO UTILIZE MILLINGS IN RECYCLED HOT-MIX WILL BE INCIDENTAL TO THE UNIT PRICE BID FOR THE HOT-MIX ITEM USING THE RECYCLED MATERIAL.

   f. SPECIAL PROVISION 302514 MILLED HOT-MIX BASE COURSE IS PROVIDED TO SPECIFY THE MEANS OF LAY DOWN AND COMPACTION AS WELL AS THE MATERIAL REQUIREMENTS FOR MILLINGS USED AS BASE COURSE. ALL COSTS TO BRING THE MILLINGS INTO COMPLIANCE WITH THE REQUIREMENTS OF 302514 MILLED HOT-MIX BASE COURSE ARE INCIDENTAL TO ITEM 302007 - GRADED AGGREGATE BASE COURSE, TYPE 'B'. NO PAYMENT WILL BE MADE FOR ITEM 302514 - MILLED HOT-MIX BASE COURSE. THE QUANTITY OF MILLINGS USED FOR BASE COURSE WILL BE PAID FOR UNDER ITEM 302007 - GRADED AGGREGATE BASE COURSE.

SECTION 400

8. THE PAVEMENT SECTION FOR WMA RESIDENTIAL DRIVEWAYS SHALL BE 2' WMA, TYPE 'C' OVER 8" GRADED AGGREGATE BASE COURSE, TYPE 'B', UNLESS OTHERWISE NOTED ON THE PLANS.

SECTION 600

9. THE DEPARTMENT AND THE CONTRACTOR SHALL INSPECT ALL EXISTING PIPES AND DRAINAGE STRUCTURES TO BE USED IN THE FINAL DRAINAGE SYSTEM AND AGREE ON THE CONDITION PRIOR TO THE START OF CONSTRUCTION. EXISTING PIPES AND DRAINAGE STRUCTURES DAMAGED DUE TO CONTRACTOR OPERATIONS SHALL BE REPAIRED OR REPLACED IN-KIND AT THE CONTRACTOR'S EXPENSE. THE DEPARTMENT WILL VIDEO INSPECT NEW PIPE RUNS TO CONFIRM CONDITION PRIOR TO ACCEPTANCE. PIPE CLEANING PRIOR TO VIDEO INSPECTION AND MAINTENANCE OF TRAFFIC DURING THE VIDEO INSPECTION ARE THE RESPONSIBILITY OF THE CONTRACTOR AND INCIDENTAL TO THE PIPE ITEM THAT IS BEING VIDEO INSPECTED.

SECTION 700

10. IN AREAS WHERE PROPOSED CURB MEETS EXISTING CURB AND THE TWO CURB TYPES ARE NOT SIMILAR, THE PROPOSED CURB SHALL BE TRANSITIONED IN 10 LINEAR FEET, UNLESS OTHERWISE DIRECTED BY THE ENGINEER. PAYMENT FOR THIS WORK, INCLUDING SAW CUTTING EXISTING CURB SHALL BE INCIDENTAL TO THE PROPOSED CURB ITEM.

11. WHERE PROPOSED CONCRETE SIDEWALK IS CONSTRUCTED TO MEET EXISTING SIDEWALK, THE EXISTING SIDEWALK SHALL BE SAWCUT AT THE TIE-IN POINT OR MEET THE NEAREST EXISTING SIDEWALK JOINT. ALL SAW CUTTING SHALL BE FULL DEPTH, UNLESS OTHERWISE NOTED ON THE PLANS OR DIRECTED BY THE ENGINEER AND SHALL BE PAID FOR UNDER ITEM 762002 - SAWCUTTING, CONCRETE, FULL DEPTH.

12. ALL PAVED AREAS TO BE RECONSTRUCTED OR WIDENED SHALL BE SAWCUT AT THE POINT WHERE THE NEW PAVEMENT IS TO TIE INTO THE EXISTING PAVEMENT.

MISCELLANEOUS

13. THE CONTRACTOR SHALL CONTACT MICHAEL ELLER, THE CHIEF OF SCHEDULING FOR DART FIRST STATE, 14 DAYS PRIOR TO THE START OF CONSTRUCTION AT 302-576-6061.

14. REFER TO THE CONSTRUCTION PLAN SHEETS FOR THE LOCATION OF THE CLEAR ZONE AREA LIMITS.

15. THE CONTRACTOR SHALL REMOVE AND INSTALL ALL REGULATORY, WARNING, AND SPECIAL SIGNS AND POSTS WITHIN CONTRACT LIMITS UNLESS OTHERWISE NOTED. DELDOT TO FURNISH ALL REGULATORY, WARNING, AND SPECIAL SIGNS AND POSTS TO CONTRACTOR FOR INSTALLATION. FOR COORDINATION AND PICK UP OF SIGNS AND POSTS THE CONTRACTOR SHALL CONTACT DELDOT'S TRANSPORTATION SYSTEM SPECIALIST AT 302-760-2581. THE CONTRACTOR SHALL ALLOW FOUR (4) WEEKS FOR THE DELIVERY OF SIGNS.

16. THERE ARE NO ENVIRONMENTAL PERMITS ASSOCIATED WITH THIS PROJECT. AS SUCH, AN ENVIRONMENTAL COMPLIANCE SHEET WAS NOT PREPARED.

17. AT THE SIDEWALK TERMINATION LIMITS (STA. 101+65 LT. AND STA. 110+80 LT.), THE CONTRACTOR SHALL TAPER THE SIDEWALK TO THE PROPOSED ROADWAY. THE SIDEWALK CONNECTIONS SHALL BE CONSTRUCTED IN ACCORDANCE WITH DELDOT'S SHARED-USE PATH AND/OR SIDEWALK TERMINATION POLICY (REVISED 9/16/2013).

18. THE CROSS SLOPE WITHIN CROSSWALKS SHALL BE A MAXIMUM OF 2%.

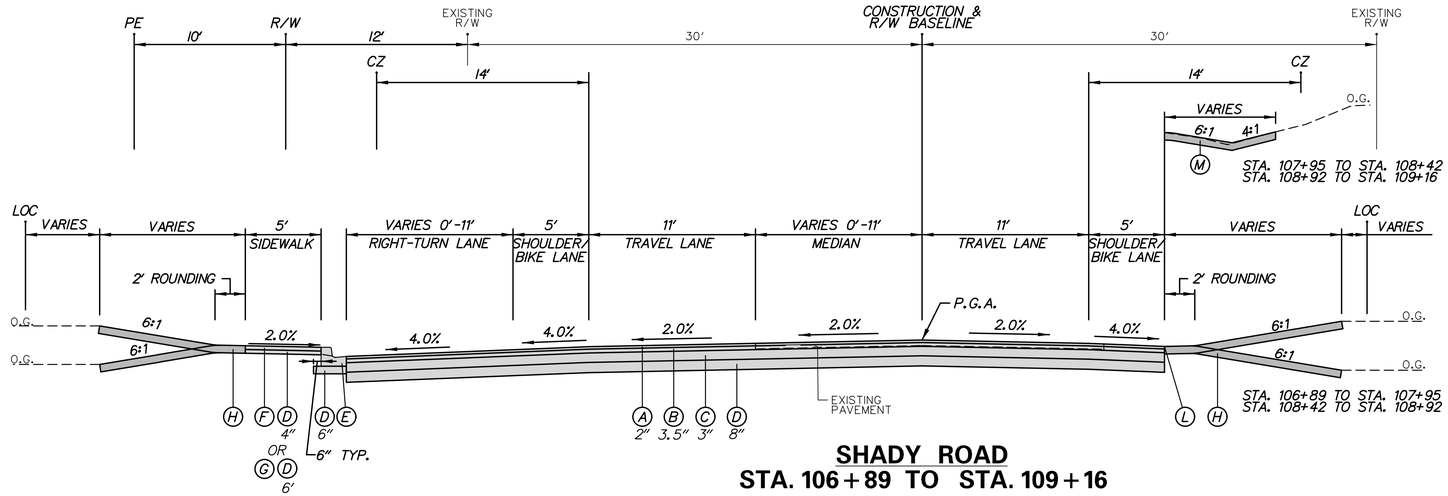

SHADY ROAD
STA. 106+89 TO STA. 109+16

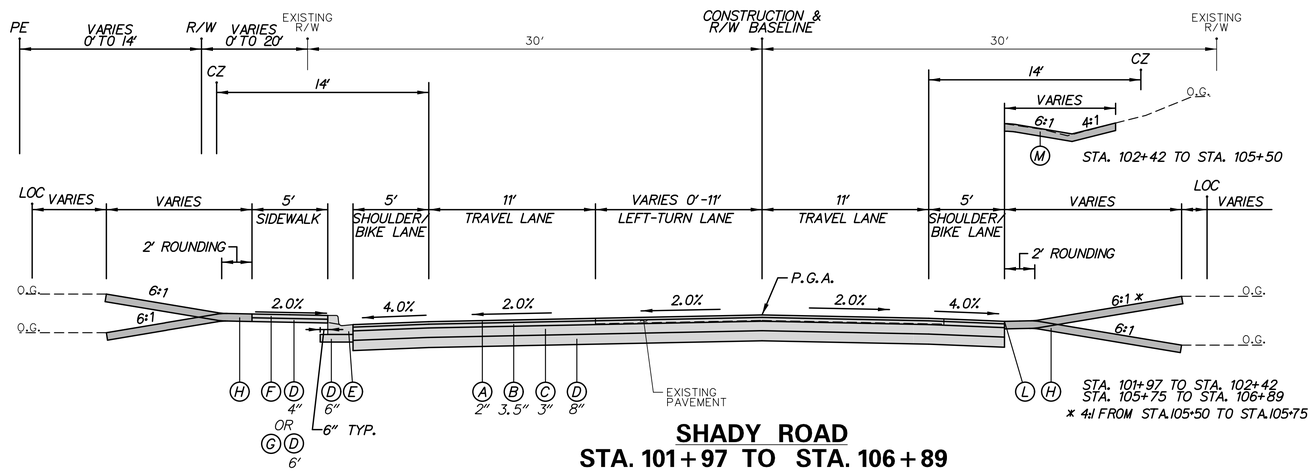

SHADY ROAD
STA. 101+97 TO STA. 106+89
STA. 108+71 TO STA. 109+89

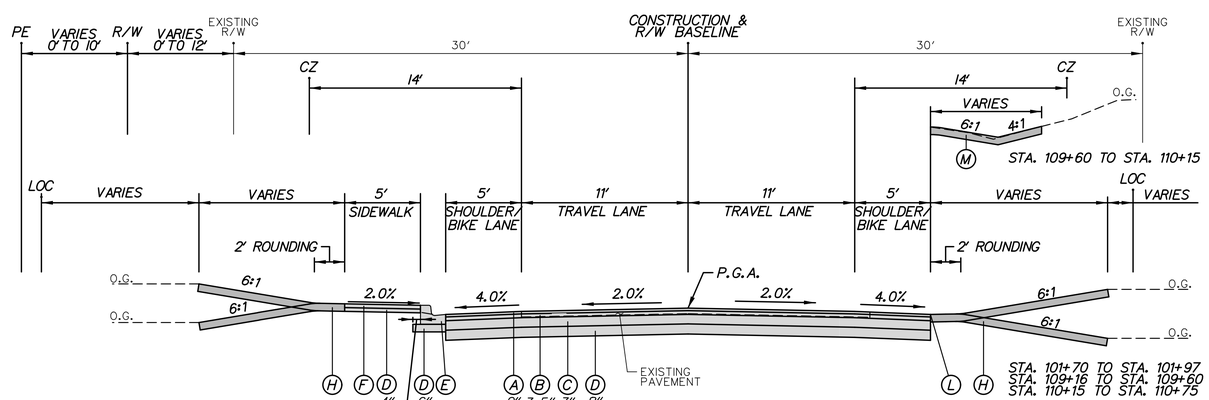

SHADY ROAD
STA. 101+70 TO STA. 101+97
STA. 109+16 TO STA. 110+75

LEGEND

- (A) ITEM 401833 - WMA,SUPERPAVE,TYPE C 160 GYRATIONS,PG 76-22 (NON-CARBONATE STONE)
- (B) ITEM 401816 - WMA,SUPERPAVE,TYPE B,160 GYRATIONS,PG 76-22
- (C) ITEM 401819 - WMA,SUPERPAVE,BITUMINOUS CONCRETE BASE COURSE, 160 GYRATIONS,PG 64-22
- (D) ITEM 302007 - GRADED AGGREGATE BASE COURSE,TYPE B
- (E) ITEM 701019 - INTEGRAL PORTLAND CEMENT CONCRETE CURB AND GUTTER,TYPE 3-8
- (F) ITEM 705001 - P.C.C.SIDEWALK,4"
- (G) ITEM 705002 - P.C.C.SIDEWALK,6"
- (H) ITEM 732002 - TOPSOIL,6" DEPTH
  ITEM 734013 - PERMANENT GRASS SEEDING,DRY GROUND
- (L) ITEM 401752 - SAFETY EDGE FOR ROADWAY PAVEMENT
- (M) ITEM 732002 - TOPSOIL,6" DEPTH
  ITEM 734013 - PERMANENT GRASS SEEDING,DRY GROUND
  ITEM 735535 - SOIL RETENTION BLANKET MULCH,TYPE 5

N:\90181-004\CADD\Highway\CP01-90181004H1-01.dgn
1/22/2014 3:13:13 PM

DELAWARE DEPARTMENT OF TRANSPORTATION	ADDENDUMS / REVISIONS	NOT TO SCALE	DELAWARE TRANSIT CORPORATION LEWES PARK AND RIDE AND MAINTENANCE FACILITY	CONTRACT T200612502 / COUNTY SUSSEX	BRIDGE NO. / DESIGNED BY: D.A.D. / CHECKED BY: T.A.O.	TYPICAL SECTIONS

H1-01

SHEET NO. 32

TOTAL SHTS. 185

CONSTRUCTION ALIGNMENT CONTROL
SHADY ROAD

POINT NO.	STATION	OFFSET	NORTHING	EASTING
1000	100+00.00	0.00'	271452.1578	726438.3177
1004	116+00.00	0.00'	272497.6143	727649.1736
1005	105+00.00	0.00'	271787.1664	726809.4904
1006	113+00.00	0.00'	272305.3619	727418.8716

DATUM REFERENCE:
HORIZONTAL - PROJECT IS BASED ON THE DELAWARE STATE PLANE COORDINATE SYSTEM (NAD 83).
VERTICAL - PLAN ELEVATIONS ARE BASED ON N.G.S. SURVEY DATUM (NAVD 88), DELAWARE BENCHMARK

POINT	NORTH	EAST	ELEV.
HU2678	281814.0508	737237.2327	39.3211 FT.
HU2675	240018.8301	668394.8301	46.7075 FT.
HU2670	199819.7389	732912.3541	25.6348 FT.

HORIZONTAL / VERTICAL CONTROL DATA

POINT	STATION	OFFSET	NORTHING	EASTING	ELEVATION
3	107+78.39	22.46' RT.	271953.8712	727032.9226	24.17
52	110+30.45	13.27' RT.	272122.4387	727220.4495	23.37
56	104+17.53	145.73' LT.	271840.0900	726650.6228	25.73
251	109+47.17	17.48' LT.	272092.6684	727136.8129	23.73
252	105+65.78	19.20' RT.	271816.9893	726871.1872	26.51

CIRCULAR CURVE NO. 1 - SHADY ROAD

	STATION	NORTHING	EASTING
PC (1001)	105+77.97	271839.4063	726867.3696
PI (1002)	106+88.67	271913.5803	726949.5506
CC		267586.0787	730706.2876
PT (1003)	107+99.35	271984.5244	727034.5356

Radius:	5729.5800
Delta:	2° 12' 49.7355" Right
Degree of Curvature(Arc):	0° 59' 59.9987"
Length:	221.38
Tangent:	110.70
Chord:	221.37
Middle Ordinate:	1.07
External:	1.07
Tangent Direction:	N 47° 55' 53.7474" E
Radial Direction:	S 42° 04' 06.2526" E
Chord Direction:	N 49° 02' 18.6152" E
Radial Direction:	S 39° 51' 16.5171" E
Tangent Direction:	N 50° 08' 43.4829" E

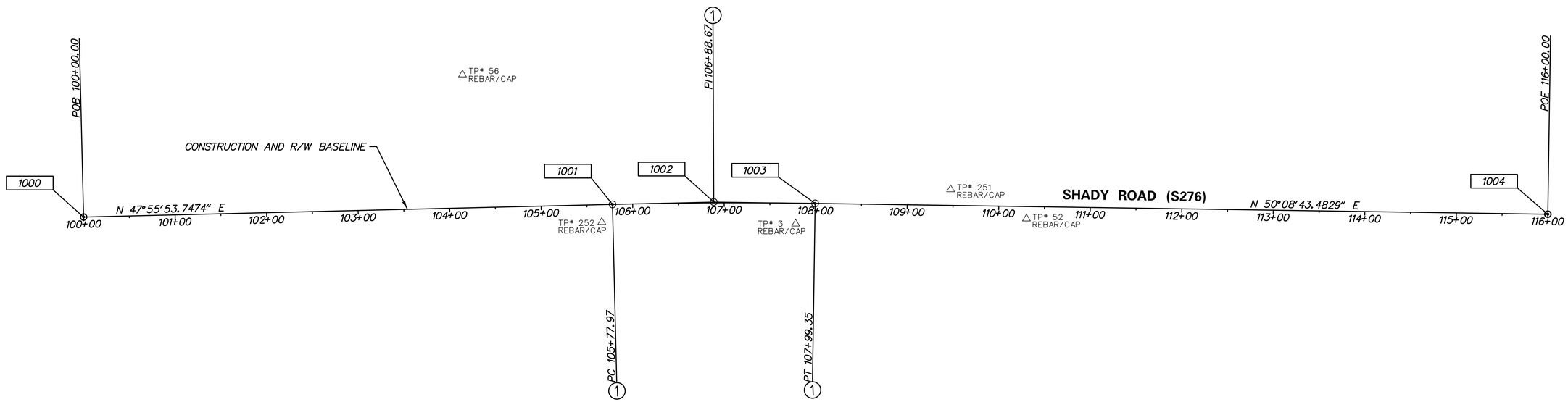

H3-01

DELAWARE DEPARTMENT OF TRANSPORTATION

ADDENDUMS / REVISIONS

SCALE 0 60 120 180 FEET

DELAWARE TRANSIT CORPORATION LEWES PARK AND RIDE AND MAINTENANCE FACILITY

CONTRACT	BRIDGE NO.
T200612502	DESIGNED BY: D.A.D.
COUNTY	
SUSSEX	CHECKED BY: T.A.O.

HORIZONTAL AND VERTICAL CONTROL

SHEET NO. 33
TOTAL SHTS. 185

N:\99181-004\CADD\Highway\CP01-9018100H3-01.dgn
1/22/2014 3:15:14 PM

CURB SCHEDULE		
NO.	ITEM DESCRIPTION / TYPE	LENGTH
41	P.C.C. CURB AND GUTTER, TYPE 3-8	526'
42	P.C.C. CURB AND GUTTER, TYPE 3-8	342'

ROADWAY CORE SCHEDULE			
NO.	STATION	OFFSET	DESCRIPTION
P-4	106+74.66	8.97' LT.	4" HOT-MIX ASPHALT ON 3" AGGREGATE BASE

NOTES:
1. SEE STORM DRAIN PLANS (SHEET C-104) FOR DRAINAGE PIPE AND STRUCTURE SCHEDULES.
2. SEE SITE PLAN (SHEET C-102) FOR SITE WORK.

RIGHT-OF-WAY MONUMENT SCHEDULE					
NO.	TYPE	STATION	OFFSET	NORTHING	EASTING
1	CAPPED REBAR	102+86.00	30.00' LT.	271666.0500	726630.5245
2	CAPPED REBAR	102+86.00	37.00' LT.	271671.2464	726625.8344
3	CONCRETE	105+77.97	37.00' LT.	271866.8731	726842.5789
4	CONCRETE	106+11.00	37.00' LT.	271889.0739	726867.3193
5	CONCRETE	106+10.98	50.00' LT.	271898.7665	726858.6559
6	CONCRETE	106+26.02	50.00' LT.	271908.8519	726869.9903

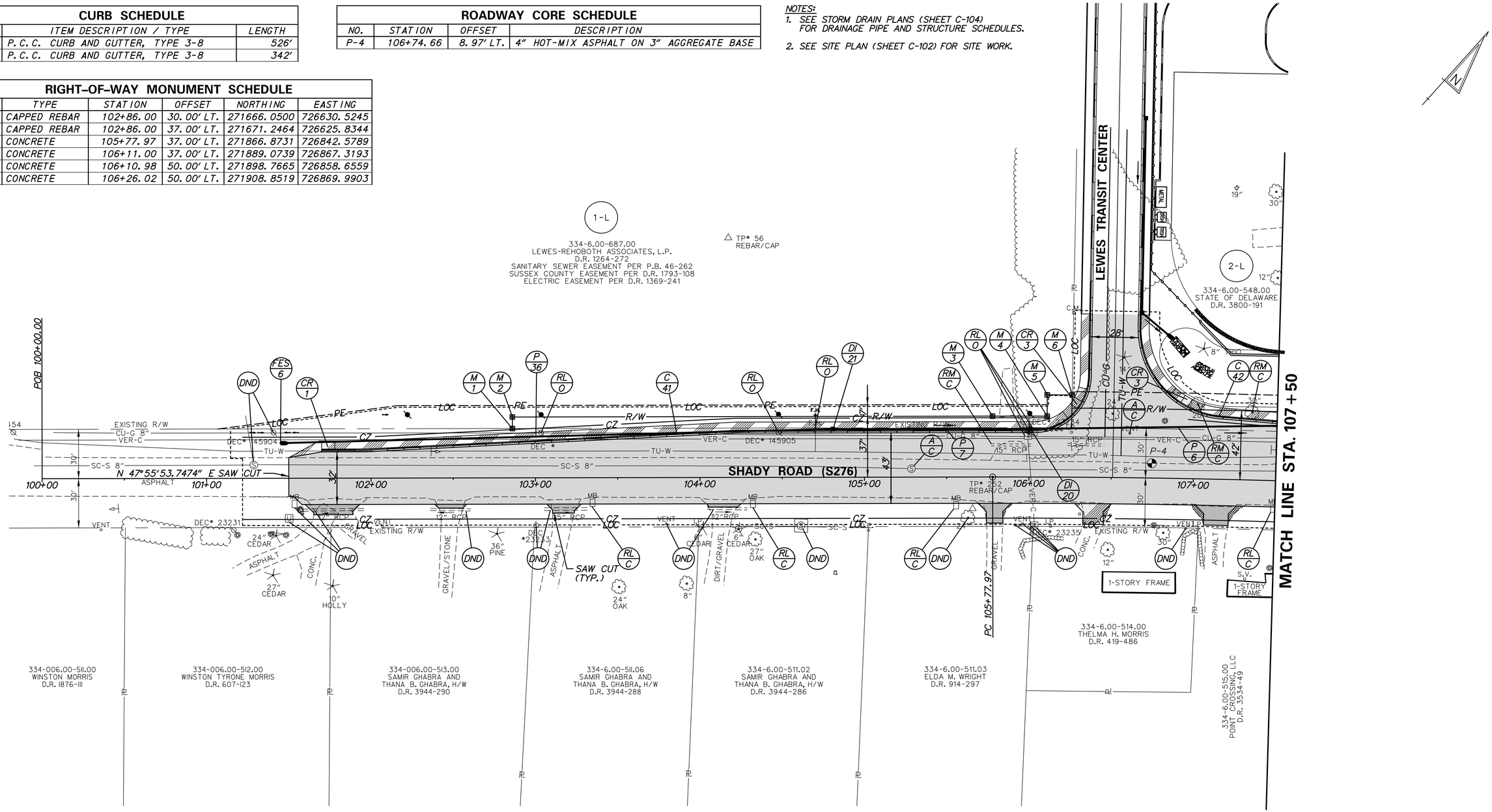

N:\90181-00\CADD\Highway\CP01-90181004H5-01.dgn
4/16/2015 4:30:01 PM

DELAWARE DEPARTMENT OF TRANSPORTATION	ADDENDUMS / REVISIONS	SCALE 0 30 60 90 FEET	DELAWARE TRANSIT CORPORATION LEWES PARK AND RIDE AND MAINTENANCE FACILITY	CONTRACT T200612502	BRIDGE NO.	CONSTRUCTION PLAN	H5-01 SHEET NO. 34 TOTAL SHTS. 185
				COUNTY SUSSEX	DESIGNED BY: D.A.D. CHECKED BY: T.A.O.		

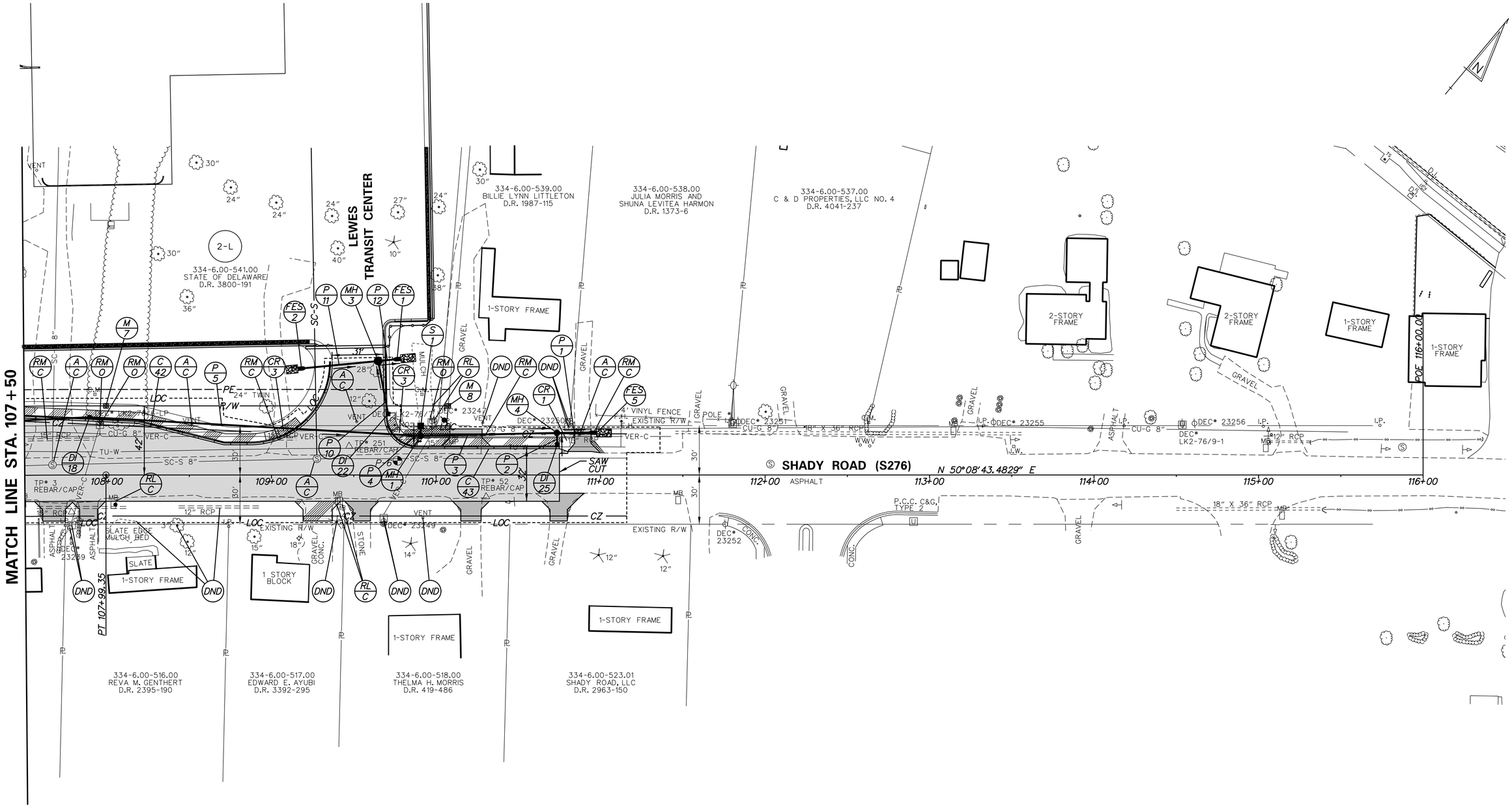

CURB SCHEDULE		
NO.	ITEM DESCRIPTION / TYPE	LENGTH
43	P.C.C. CURB AND GUTTER, TYPE 3-8	152'

ROADWAY CORE SCHEDULE			
NO.	STATION	OFFSET	DESCRIPTION
P-6	109+76.56	8.68' LT.	4" HOT-MIX ASPHALT ON 2" AGGREGATE BASE

RIGHT-OF-WAY MONUMENT SCHEDULE					
NO.	TYPE	STATION	OFFSET	NORTHING	EASTING
7	CONCRETE	107+99.35	42.00' LT.	272016.7667	727007.6203
8	CAPPED REBAR	110+07.43	42.00' LT.	272150.1106	727167.3549

NOTES:
1. SEE STORM DRAIN PLANS (SHEET C-104) FOR DRAINAGE PIPE AND STRUCTURE SCHEDULES.
2. SEE SITE PLAN (SHEET C-102) FOR SITE WORK.

H5-02

DELAWARE DEPARTMENT OF TRANSPORTATION

ADDENDUMS / REVISIONS

SCALE 0 30 60 90 FEET

DELAWARE TRANSIT CORPORATION
LEWES PARK AND RIDE
AND MAINTENANCE FACILITY

CONTRACT	BRIDGE NO.	
T200612502	DESIGNED BY: D.A.D.	
COUNTY		
SUSSEX	CHECKED BY: T.A.O.	

CONSTRUCTION PLAN

SHEET NO.
35
TOTAL SHTS.
185

N:\90181-004\CADD\Highway\CP01-90181004H5-02.dgn
1/27/2014 3:13:20 PM

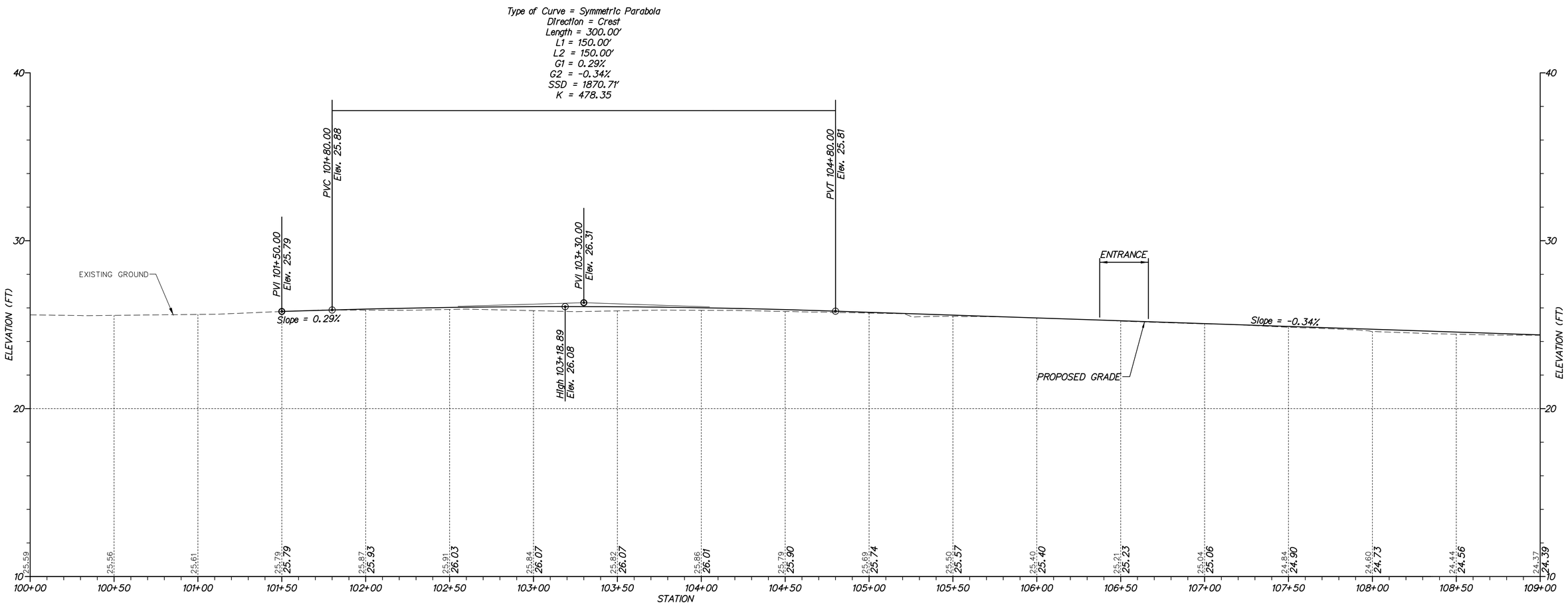

SHADY ROAD

VERTICAL SCALE FEET 9 6 3 0

H6-01

N:\90181-004\CADD\Highway\CP01-90181004H6-01.dgn
1/22/2014 3:13:22 PM

DELAWARE DEPARTMENT OF TRANSPORTATION	ADDENDUMS / REVISIONS	SCALE 0 30 60 90 FEET	**DELAWARE TRANSIT CORPORATION LEWES PARK AND RIDE AND MAINTENANCE FACILITY**	CONTRACT T200612502 / COUNTY SUSSEX	BRIDGE NO. / DESIGNED BY: D.A.D. / CHECKED BY: T.A.O.	**PROFILES**	SHEET NO. 36 / TOTAL SHTS. 185

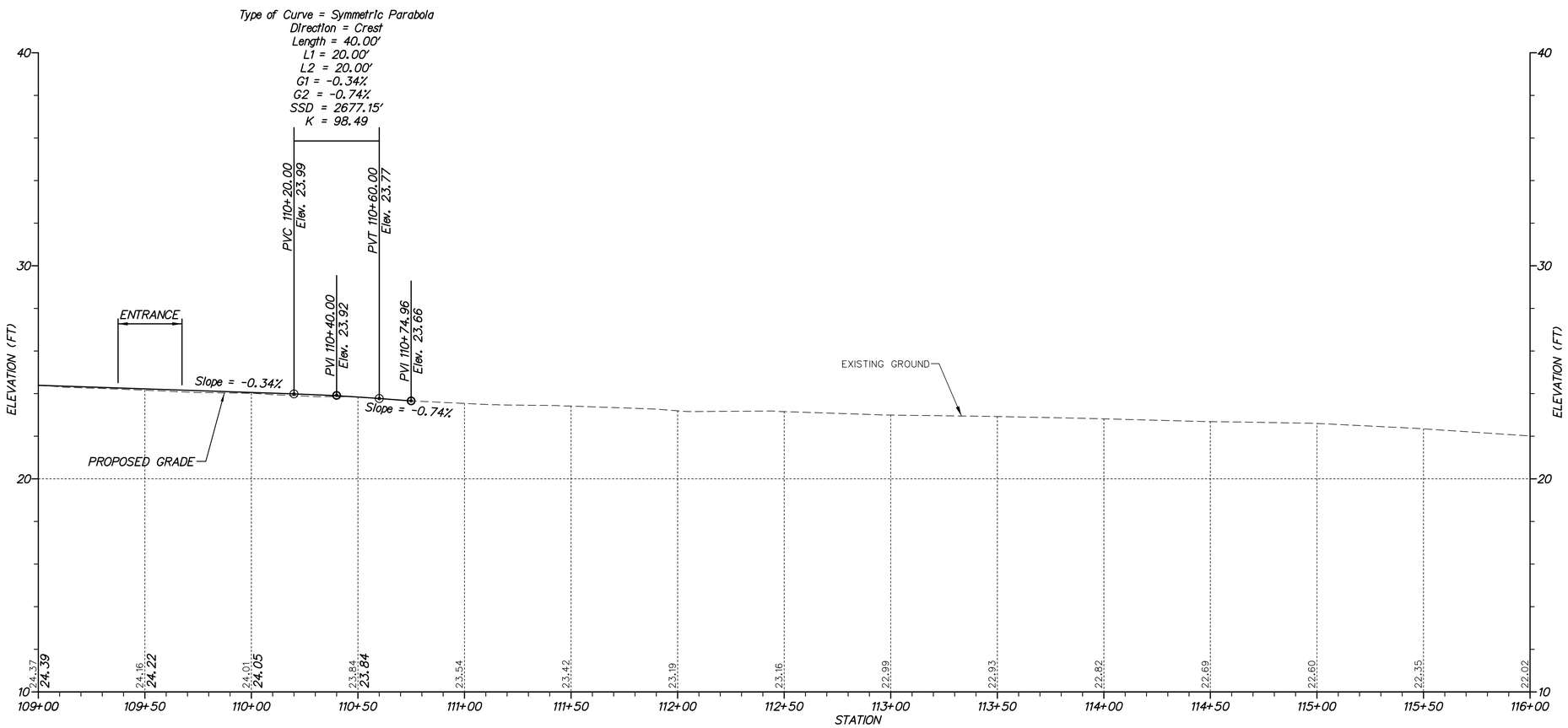

SHADY ROAD

VERTICAL SCALE FEET 9 6 3 0

H6–02

N:\90181-004\CADD\Highway\CP01-90181004H6-02.dgn
1/22/2014 3:13:23 PM

DELAWARE DEPARTMENT OF TRANSPORTATION

ADDENDUMS / REVISIONS

SCALE 0 30 60 90 FEET

DELAWARE TRANSIT CORPORATION LEWES PARK AND RIDE AND MAINTENANCE FACILITY

CONTRACT	BRIDGE NO.	
T200612502	DESIGNED BY: D.A.D.	
COUNTY		
SUSSEX	CHECKED BY: T.A.O.	

PROFILES

SHEET NO. 37

TOTAL SHTS. 185

COORDINATE LIST

POINT NO.	STATION	OFFSET	NORTHING	EASTING
61001	101+50.00	-12.51	271561.9479	726541.2869
61002	101+70.00	-16.00	271577.9382	726553.7962
61003	101+97.40	-16.00	271596.2985	726574.1383
61004	104+22.40	-27.00	271755.2182	726733.7959
61005	106+02.79	-27.00	271876.1214	726867.8312
61006	106+37.42	-61.55	271925.1274	726870.9425
61007	106+37.78	-99.29	271953.6429	726846.2292
61008	106+65.30	-99.07	271971.9739	726867.3946
61009	106+65.27	-91.66	271966.3702	726872.2511
61010	107+16.16	-36.74	271958.6147	726947.1098
61011	106+24.44	-34.64	271896.3118	726878.9937
61012	106+30.46	-40.88	271904.9945	726879.3820
61013	106+33.15	-45.08	271909.9374	726878.6285
61014	106+36.32	-53.16	271918.1107	726875.6704
61015	106+84.15	-49.79	271947.3925	726914.1793
61016	106+90.87	-44.83	271948.0880	726922.5407
61017	106+95.20	-42.40	271949.1049	726927.4362
61018	107+02.92	-39.23	271951.7970	726935.3829

COORDINATE LIST

POINT NO.	STATION	OFFSET	NORTHING	EASTING
61500	101+50.00	11.00	271544.4946	726557.0397
61501	101+52.92	11.00	271546.4517	726559.2082
61502	101+57.90	16.00	271546.0780	726566.2566
61503	101+59.84	16.00	271547.3776	726567.6965
61504	101+65.18	21.00	271547.2427	726575.0095
61505	101+65.18	22.20	271546.3532	726575.8123
61510	101+88.92	22.20	271562.2557	726593.4315
61511	101+88.92	20.18	271563.7573	726592.0763
61512	101+93.09	16.00	271569.6546	726592.3783
61513	102+37.53	16.00	271599.4275	726625.3651
61514	102+41.03	18.33	271600.0436	726629.5228
61516	102+58.14	16.00	271613.2384	726640.6669
61517	102+55.81	18.33	271609.9499	726640.4985
61519	103+06.85	16.00	271645.8742	726676.8257
61520	103+10.34	19.49	271645.6216	726681.7591
61521	103+10.34	21.50	271644.1314	726683.1040
61522	103+27.81	16.00	271659.9179	726692.3855
61523	103+23.72	20.09	271654.1390	726692.0895
61524	103+23.41	21.50	271652.8883	726692.8062
61525	104+04.16	16.00	271711.0751	726749.0650
61526	104+05.46	18.00	271710.4612	726751.3688
61528	104+24.90	16.00	271724.9720	726764.4621
61529	104+22.90	18.00	271722.1483	726764.3175
61531	105+69.15	16.00	271821.6237	726871.5473

COORDINATE LIST

POINT NO.	STATION	OFFSET	NORTHING	EASTING
61532	105+74.11	20.97	271821.2566	726878.5548
61533	105+74.11	27.98	271816.0452	726883.2533
61534	105+89.18	16.00	271835.0091	726886.3939
61535	105+84.18	20.98	271827.9748	726886.0253
61536	105+84.18	27.98	271822.7749	726890.7135
61537	106+28.02	16.00	271860.8075	726915.2864
61538	106+33.01	20.99	271860.3754	726922.3202
61539	106+33.00	28.59	271854.6750	726927.3513
61540	106+50.44	16.00	271875.6122	726932.0461
61541	106+45.44	20.99	271868.5739	726931.6029
61542	106+45.45	28.59	271862.8733	726936.6342
61543	107+01.71	16.00	271909.2134	726970.5810
61544	107+06.70	20.99	271908.6852	726977.6066
61545	107+06.69	27.99	271903.3783	726982.1714
61546	107+26.73	16.00	271925.4843	726989.4938
61547	107+21.74	20.99	271918.4562	726988.9655
61548	107+21.75	27.99	271913.1493	726993.5302

NOTE:
1. THE CROSS SLOPE WITHIN CROSSWALKS SHALL BE A MAXIMUM OF 2%.

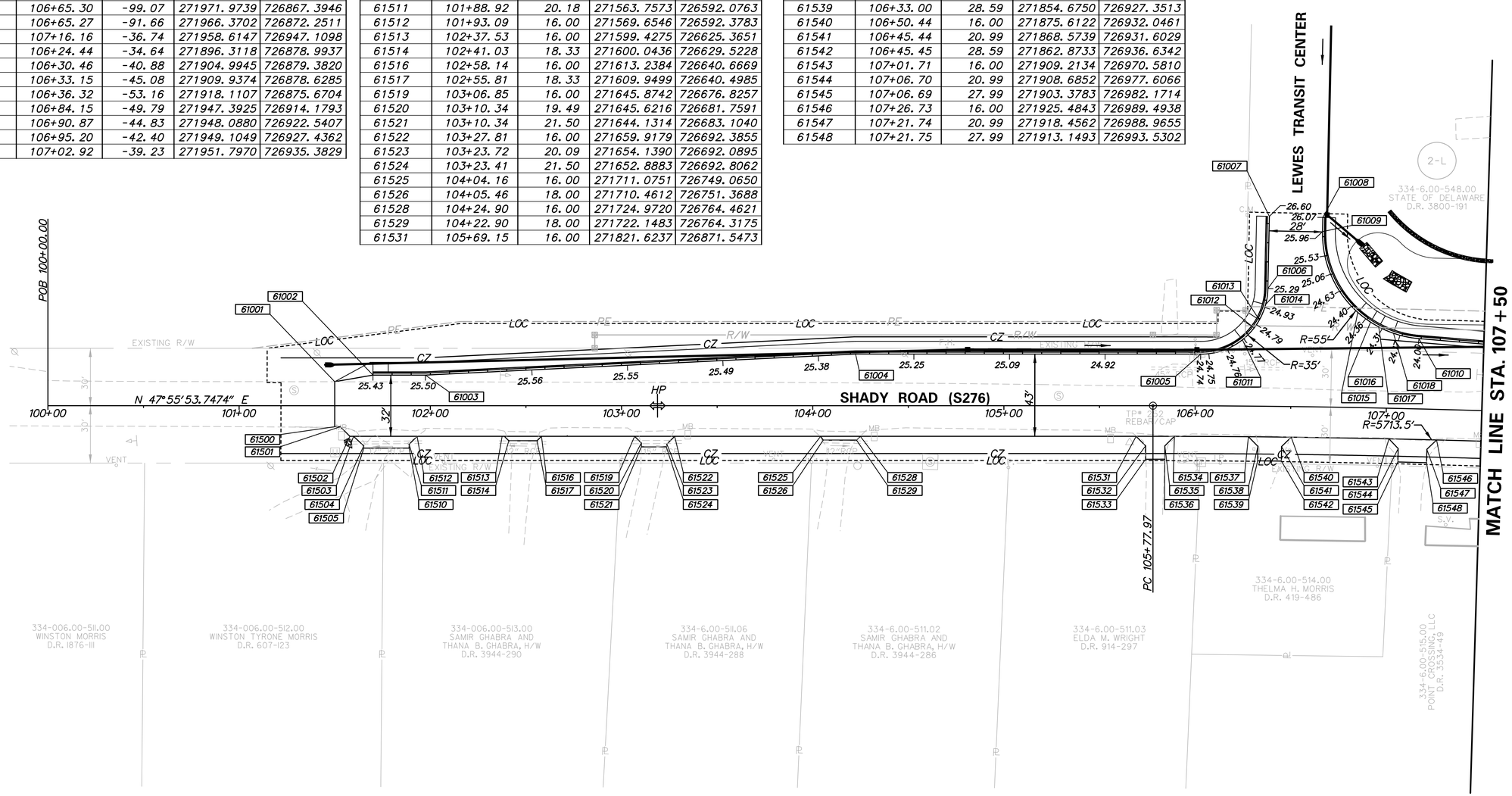

N:\90181-004\CADD\Highway\CP01-90181004H7-01.dgn
4/16/2015 4:31:43 PM

DELAWARE DEPARTMENT OF TRANSPORTATION	ADDENDUMS / REVISIONS	SCALE 0 30 60 90 FEET	DELAWARE TRANSIT CORPORATION LEWES PARK AND RIDE AND MAINTENANCE FACILITY	CONTRACT T200612502	BRIDGE NO.	GRADES AND GEOMETRICS	H7-01 SHEET NO. 38
				COUNTY SUSSEX	DESIGNED BY: D.A.D. CHECKED BY: T.A.O.		TOTAL SHTS. 185

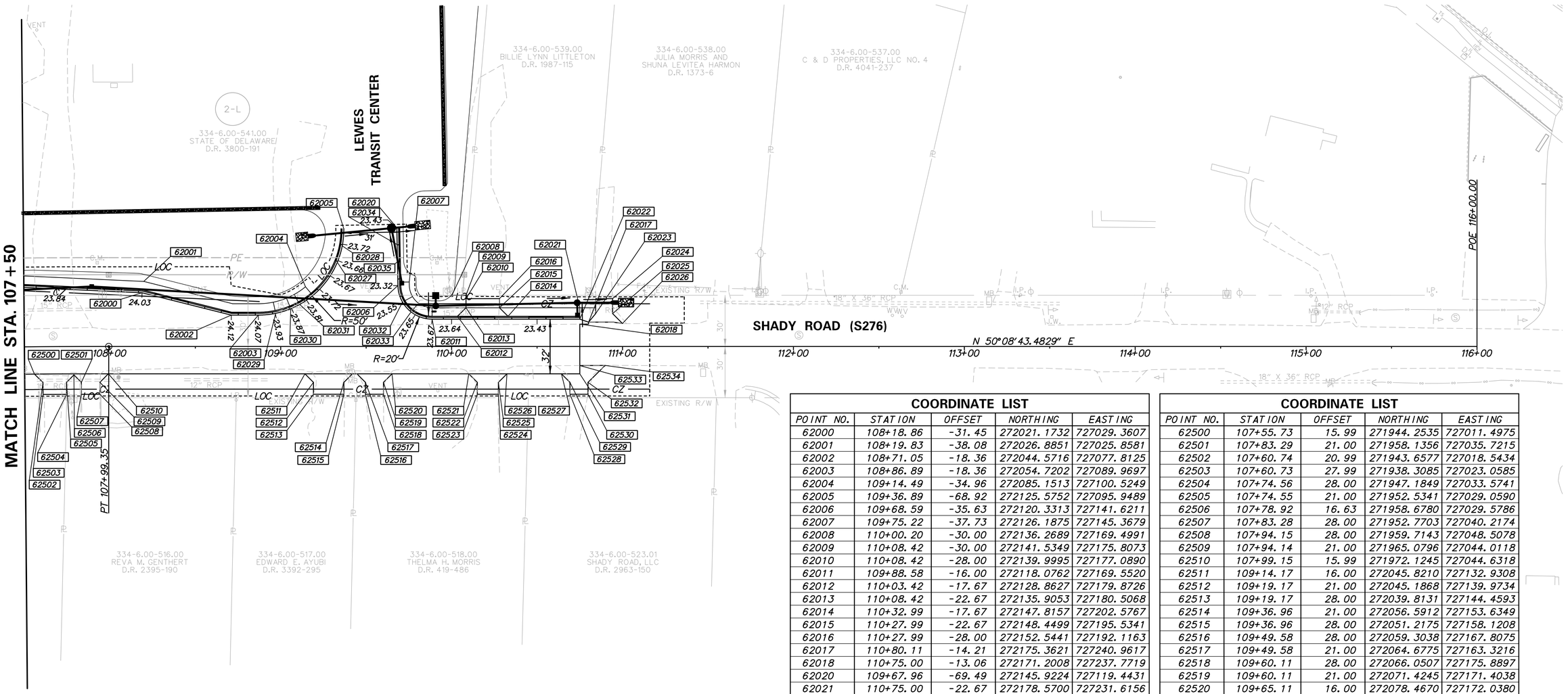

NOTE:

1. POINTS NO. 62027 & 62028 AND 62034 & 62035 ARE LOCATED ON THE EDGE OF PAVEMENT AND DENOTE THE EXTENTS OF DEPRESSED CURB FOR MAINTENANCE ACCESS TO SWM FACILITIES.
2. THE CROSS SLOPE WITHIN CROSSWALKS SHALL BE A MAXIMUM OF 2%.

COORDINATE LIST

POINT NO.	STATION	OFFSET	NORTHING	EASTING
62000	108+18.86	-31.45	272021.1732	727029.3607
62001	108+19.83	-38.08	272026.8851	727025.8581
62002	108+71.05	-18.36	272044.5716	727077.8125
62003	108+86.89	-18.36	272054.7202	727089.9697
62004	109+14.49	-34.96	272085.1513	727100.5249
62005	109+36.89	-68.92	272125.5752	727095.9489
62006	109+68.59	-35.63	272120.3313	727141.6211
62007	109+75.22	-37.73	272126.1875	727145.3679
62008	110+00.20	-30.00	272136.2689	727169.4991
62009	110+08.42	-30.00	272141.5349	727175.8073
62010	110+08.42	-28.00	272139.9995	727177.0890
62011	109+88.58	-16.00	272118.0762	727169.5520
62012	110+03.42	-17.67	272128.8627	727179.8726
62013	110+08.42	-22.67	272135.9053	727180.5068
62014	110+32.99	-17.67	272147.8157	727202.5767
62015	110+27.99	-22.67	272148.4499	727195.5341
62016	110+27.99	-28.00	272152.5441	727192.1163
62017	110+80.11	-14.21	272175.3621	727240.9617
62018	110+75.00	-13.06	272171.2008	727237.7719
62020	109+67.96	-69.49	272145.9224	727119.4431
62021	110+75.00	-22.67	272178.5700	727231.6156
62022	110+75.00	-16.00	272173.4522	727235.8878
62023	110+84.29	-19.21	272181.8741	727240.9604
62024	110+94.19	-28.00	272194.9655	727242.9335
62025	110+94.19	-19.21	272188.2211	727248.5636
62026	110+99.96	-13.45	272187.4895	727256.6888
62027	109+33.11	-49.28	272108.0746	727105.6338
62028	109+35.98	-58.85	272117.2576	727101.7066
62029	108+97.01	-19.40	272062.0006	727097.0759
62030	109+05.88	-22.11	272069.7626	727102.1451
62031	109+11.08	-24.60	272075.0115	727104.5395
62032	109+71.24	-26.03	272114.6668	727149.8101
62033	109+76.28	-20.24	272113.4403	727157.3898
62034	109+68.14	-59.61	272138.4574	727125.9125
62035	109+68.33	-49.61	272130.9004	727132.4616

COORDINATE LIST

POINT NO.	STATION	OFFSET	NORTHING	EASTING
62500	107+55.73	15.99	271944.2535	727011.4975
62501	107+83.29	21.00	271958.1356	727035.7215
62502	107+60.74	20.99	271943.6577	727018.5434
62503	107+60.73	27.99	271938.3085	727023.0585
62504	107+74.56	28.00	271947.1849	727033.5741
62505	107+74.55	21.00	271952.5341	727029.0590
62506	107+78.92	16.63	271958.6780	727029.5786
62507	107+83.28	28.00	271952.7703	727040.2174
62508	107+94.15	28.00	271959.7143	727048.5078
62509	107+94.14	21.00	271965.0796	727044.0118
62510	107+99.15	15.99	271972.1245	727044.6318
62511	109+14.17	16.00	272045.8210	727132.9308
62512	109+19.17	21.00	272045.1868	727139.9734
62513	109+19.17	28.00	272039.8131	727144.4593
62514	109+36.96	21.00	272056.5912	727153.6349
62515	109+36.96	28.00	272051.2175	727158.1208
62516	109+49.58	28.00	272059.3038	727167.8075
62517	109+49.58	21.00	272064.6775	727163.3216
62518	109+60.11	28.00	272066.0507	727175.8897
62519	109+60.11	21.00	272071.4245	727171.4038
62520	109+65.11	16.00	272078.4670	727172.0380
62521	110+10.05	16.00	272107.2674	727206.5384
62522	110+15.05	21.00	272106.6332	727213.5810
62523	110+15.05	28.00	272101.2595	727218.0669
62524	110+27.36	28.00	272109.1508	727227.5199
62525	110+27.36	21.00	272114.5245	727223.0340
62526	110+32.36	16.00	272121.5671	727223.6682
62527	110+64.24	16.00	272141.9947	727248.1388
62528	110+69.24	28.00	272135.9868	727259.6672
62529	110+69.24	21.00	272141.3605	727255.1813
62530	110+79.78	28.00	272142.7433	727267.7609
62531	110+75.00	16.00	272148.8890	727256.3975
62532	110+79.78	21.00	272148.1170	727263.2750
62533	110+75.00	11.18	272152.5886	727253.3091
62534	110+89.85	11.09	272162.1749	727264.6488

N:\99181-004\CADD\Highway\CP01-9018100HH7-02.dgn
2/14/2014 1:46:37 PM

DELAWARE DEPARTMENT OF TRANSPORTATION

ADDENDUMS / REVISIONS

SCALE 0 30 60 90 FEET

DELAWARE TRANSIT CORPORATION
LEWES PARK AND RIDE AND MAINTENANCE FACILITY

CONTRACT	BRIDGE NO.	
T200612502	DESIGNED BY: D.A.D.	
COUNTY		
SUSSEX	CHECKED BY: T.A.O.	

GRADES AND GEOMETRICS

H7-02

SHEET NO. 39

TOTAL SHTS. 185

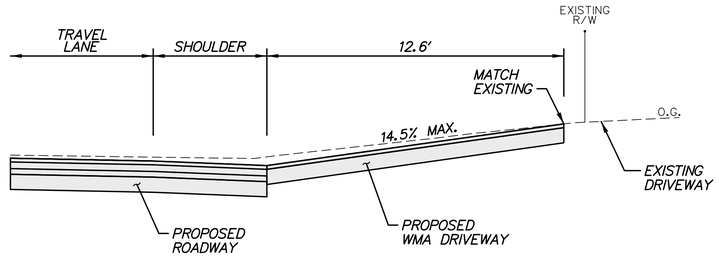

DRIVEWAY DETAIL - STATION 106+40 RT.

SCALE: NONE

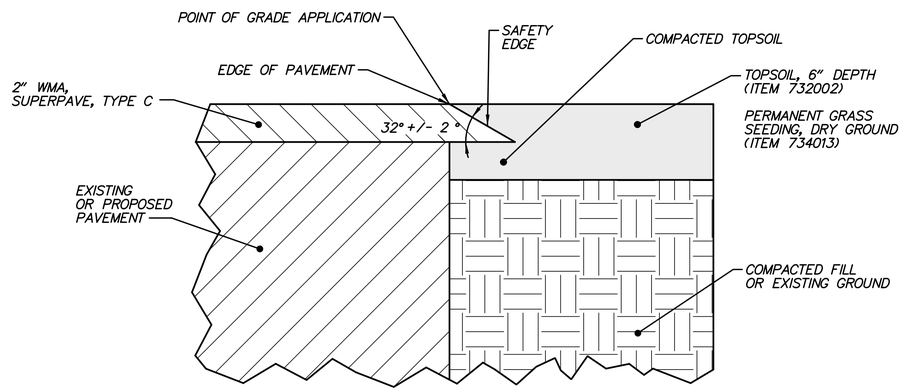

NOTES:

1. FOR ADDITIONAL INFORMATION, SEE ITEM 401752 SAFETY EDGE FOR ROADWAY PAVEMENT.
2. THE SAFETY EDGE SHALL NOT BE CONSTRUCTED ADJACENT TO OTHER PAVEMENTS, CURB, CURB & GUTTER, CONCRETE SAFETY BARRIER OR MAINTENANCE PAVEMENT UNDER GUARDRAIL. THE CONTRACTOR SHALL STAKE OUT THE LIMITS OF THE AREAS NOT TO RECIEVE THE SAFETY EDGE FOR APPROVAL BY THE ENGINEER PRIOR TO BEGINNING PAVEMENT OPERATIONS.
3. IN BITUMINOUS CONCRETE PAVEMENT SECTIONS, PRIOR TO THE CONSTRUCTION OF THE SAFETY EDGE IN OVERLAY SECTIONS AND MILL/OVERLAY SECTIONS, THE EXISTING TOPSOIL OR IN-SITU MATERIAL AT THE EDGE OF PAVEMENT SHALL BE COMPACTED SO THAT IT IS LEVEL WITH THE BOTTOM OF THE FINAL SURFACE LAYER PRIOR TO PLACING THE FINAL SURFACE OVERLAY. AFTER THE FINAL SURFACE OVERLAY IS PACED, TOPSOIL SHALL BE PLACED TO THE TOP OF THE FINAL SURFACE OVERLAY.
4. IN BITUMINOUS CONCRETE PAVEMENT SECTIONS WHERE FULL DEPTH TOPSOIL IS PROPOSED TO BE PLACED ADJACENT TO THE EDGE OF PAVEMENT, THE TOPSOIL SHALL BE PLACED AND COMPACTED ALONG THE PAVEMENT EDGE TO THAT IS IT LEVEL WITH THE BOTTOM OF THE FINAL SURFACE LAYER PRIOR TO PACING THE FINAL SURFACE OVERAY. AFTER THE FINAL SURFACE OVERLAY IS PLACED, THE TOPSOIL SHALL BE PLACED TO THE TOP OF THE FINAL SURFACE OVERLAY. ALL COSTS FOR PLACING AND COMPACTING THE TOPSOIL SHALL BE INCLUDED IN THE PRICE OF THE TOPSOIL ITEM,

SAFETY EDGE - BITUMINOUS PAVEMENT AND OVERLAYS

SCALE: NONE

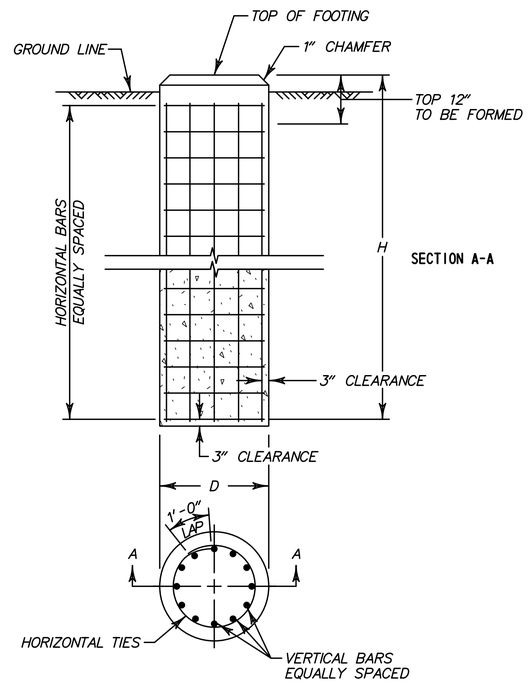

GALVANIZED STEEL BEAM SIGN POST FOUNDATION DETAIL (ITEM 749516 - REINFORCED CONCRETE SIGN FOUNDATION, W-6)

FOR RELOCATED SIGN NO. 51 ON SHEET H13-03

FOUNDATION DATA TABLE

POST SIZE	D	H	VERTICAL REINFORCEMENT	HORIZONTAL REINFORCEMENT	CONCRETE REQUIRED (CY)
W6x16	30"	6'-6"	EIGHT (8)-NO. 7	SEVEN (7)-NO. 4	1.2

SCALE: NONE

N:\90181-004\CADD\Highway\CP01-90181004H8-01.dgn
1/22/2014 3:15:29 PM

DELAWARE DEPARTMENT OF TRANSPORTATION	ADDENDUMS / REVISIONS	NOT TO SCALE	DELAWARE TRANSIT CORPORATION LEWES PARK AND RIDE AND MAINTENANCE FACILITY	CONTRACT T200612502 / COUNTY SUSSEX	BRIDGE NO. / DESIGNED BY: D.A.D. / CHECKED BY: T.A.O.	CONSTRUCTION DETAILS

H8-01

SHEET NO. 40

TOTAL SHTS. 185

GENERAL TRAFFIC CONTROL NOTES

1. MAINTENANCE OF TRAFFIC DURING LANE CLOSURES SHALL CONFORM TO THE FOLLOWING TYPICAL APPLICATIONS OF THE DELAWARE MUTCD:
   TYPICAL APPLICATION 10 - LANE CLOSURE ON A TWO-LANE ROAD USING FLAGGERS
   TYPICAL APPLICATION 33 - STATIONARY LANE CLOSURE ON A MULTI-LANE, DIVIDED HIGHWAY

   THE CONTRACTOR WILL BE RESPONSIBLE FOR COORDINATING WORK WITH UTILITY CONTRACTORS FOR UTILITY WORK ON SR 1 AND SHADY ROAD.

2. THE CONTRACTOR SHALL SUPPLY MESSAGE BOARDS UNDER ITEM 743004 - FURNISH AND MAINTAIN PORTABLE CHANGEABLE MESSAGE SIGN. THE CONTRACTOR MUST DESIGNATE WHO SHALL BE RESPONSIBLE FOR THESE MESSAGE BOARDS. MOVING MESSAGE BOARDS TO DIFFERENT LOCATIONS DURING CONSTRUCTION WILL BE INCIDENTAL TO ITEM 734004. MESSAGE BOARDS SHALL BE PLACED A MINIMUM OF SEVEN DAYS (ONE WEEK) PRIOR TO THE START OF CONSTRUCTION AND ANY CHANGES IN TRAFFIC PATTERNS. MESSAGE AND LOCATION SHALL BE APPROVED BY DISTRICT TRAFFIC SAFETY OFFICER.

3. THE CONTRACTOR SHALL INSTALL WOOD BARRICADES AT BOTH ACCESS POINTS TO THE TRANSIT CENTER ON SHADY ROAD DURING PHASE 2. BARRICADES SHALL BE INSTALLED PER DELDOT STANDARD CONSTRUCTION DETAIL NO. T-16. BARRIERS SHALL REMAIN UNTIL THE TRANSIT CENTER IS OPEN.

4. THE CONTRACTOR SHALL COORDINATE THE INSTALLATION OF THE RIGHT-TURN AND LEFT-TURN LANE STRIPING ON SHADY ROAD INTO THE SITE TO COINCIDE WITH THE REMOVAL OF THE WOOD BARRICADES AND OPENING OF THE TRANSIT CENTER ENTRANCES.

5. THE CONTRACTOR SHALL CONTACT DELDOT TRAFFIC AT LEAST THREE WEEKS PRIOR TO THE SHADY ROAD CLOSURE TO COORDINATE CONSTRUCTION ACTIVITIES WITH DELDOT CONTRACT T200911201 (HEP, SC, PLANTATION ROAD AT CEDAR GROVE ROAD/POSTAL LANE INTERSECTION IMPROVEMENTS). SHADY ROAD SHALL NOT BE CLOSED DURING ROAD CLOSURES OF POSTAL LANE AND/OR PLANTATION ROAD AS PART OF CONTRACT T200911201.

6. DELDOT TRAFFIC RESERVES THE RIGHT TO MODIFY THE TRAFFIC CONTROL AS FIELD CONDITIONS DICTATE.

7. THE CONTRACTOR SHALL PROVIDE A TEMPORARY CURB RAMPS FOR THE PHASE 1 PEDESTRIAN DETOUR AS SHOWN ON THE PLANS AND IN ACCORDANCE WITH ITEM 705528 - TEMPORARY CURB RAMP. INSTALLING THE CURB RAMP AT THE BEGINNING OF EACH WORK DAY AND REMOVING THE CURB RAMP AT THE END OF EACH WORK DAY WILL BE INCIDENTAL TO ITEM 705528.

8. THE CONTRACTOR SHALL CONTACT LOCAL EMERGENCY SERVICES AT LEAST THREE WEEKS PRIOR TO THE IMPLEMENTATION OF THE SHADY ROAD CLOSURE.

9. LANE CLOSURES ON SR 1 SHALL CONFORM TO THE FOLLOWING TIME RESTRICTIONS:,
   MAY 1 TO SEPTEMBER 30: SUNDAY THROUGH FRIDAY, BETWEEN 8:00 PM TO 6:00 AM
   OCTOBER 1 TO APRIL 30: MONDAY THROUGH FRIDAY, BETWEEN 9:00 AM AND 3:00 PM

10. RECONSTRUCTION OF SHADY ROAD UNDER DETOUR, UP TO THE TYPE B COURSE, SHALL CONFORM TO THE FOLLOWING TIME RESTRICTIONS:
    MAY 1 TO SEPTEMBER 30: NO WORK ALLOWED
    OCTOBER 1 TO APRIL 30: FOLLOW 24-HOUR DETOUR *

    *NIGHTTIME WORK HOURS ARE ALLOWABLE WITH THE APPROVAL OF THE RESIDENTIAL COMMUNITY ADJACENT TO THE PROJECT LIMITS.

CONSTRUCTION PHASING & M.O.T	
	BARRICADE, TYPE 3
	CONCRETE SAFETY BARRIER - PORTABLE
CSF XXX	CONSTRUCTION SAFETY FENCE / LENGTH
—CSF—	CONSTRUCTION SAFETY FENCE
	CONSTRUCTION WARNING SIGN LOCATION
END ROAD WORK	CONSTRUCTION WARNING SIGN
	CRASH CUSHION ARRAY
	DRUM - TRAFFIC CONTROL
	FLAGGER LOCATION
PHASE	PHASING TRAFFIC FLOW ARROW
	TEMPORARY CONSTRUCTION
	TEMPORARY PAVEMENT MARKING ARROW
	TRUCK WITH MOUNTED ATTENUATOR
	WORK AREA - ACTIVE PHASE

EROSION AND SEDIMENT CONTROL	
	INLET SEDIMENT CONTROL
— SF —	SILT FENCE
—CSF—	CONSTRUCTION SAFETY FENCE
—RSF—	SILT FENCE - REINFORCED
	STONE CHECK DAM
SCE	STABILIZED CONSTRUCTION ENTRANCE

H12-01

DELAWARE DEPARTMENT OF TRANSPORTATION

ADDENDUMS / REVISIONS

NOT TO SCALE

DELAWARE TRANSIT CORPORATION
LEWES PARK AND RIDE
AND MAINTENANCE FACILITY

CONTRACT	BRIDGE NO.
T200612502	DESIGNED BY: D.A.D.
COUNTY	
SUSSEX	CHECKED BY: T.A.O.

CONSTRUCTION PHASING, M.O.T. AND EROSION CONTROL PLAN

SHEET NO. 41
TOTAL SHTS. 185

N:\90181-004\CADD\Highway\CP01-90181004H12-01.dgn
1/22/2014 3:15:30 PM

NOTES:

1. PLACE ALL WARNING SIGNS PRIOR TO THE BEGINNING OF CONSTRUCTION. ALL WARNING SIGNS SHALL BE PAID FOR UNDER ITEM 743024 - TEMPORARY WARNING SIGNS AND PLAQUES.
2. WHERE POSSIBLE, WARNING SIGNS SHALL BE PLACED A MINIMUM OF 500' FROM THE INTERSECTION. ANY LOCATIONS WHERE THEY ARE SPACED LESS THAN 500' SHALL BE APPROVED BY THE ENGINEER.
3. WARNING SIGNS SHALL BE COORDINATED WITH DELDOT CONTRACT T200911201 (HEP, SC, PLANTATION ROAD AT CEDAR GROVE ROAD/POSTAL LANE INTERSECTION IMPROVEMENTS).

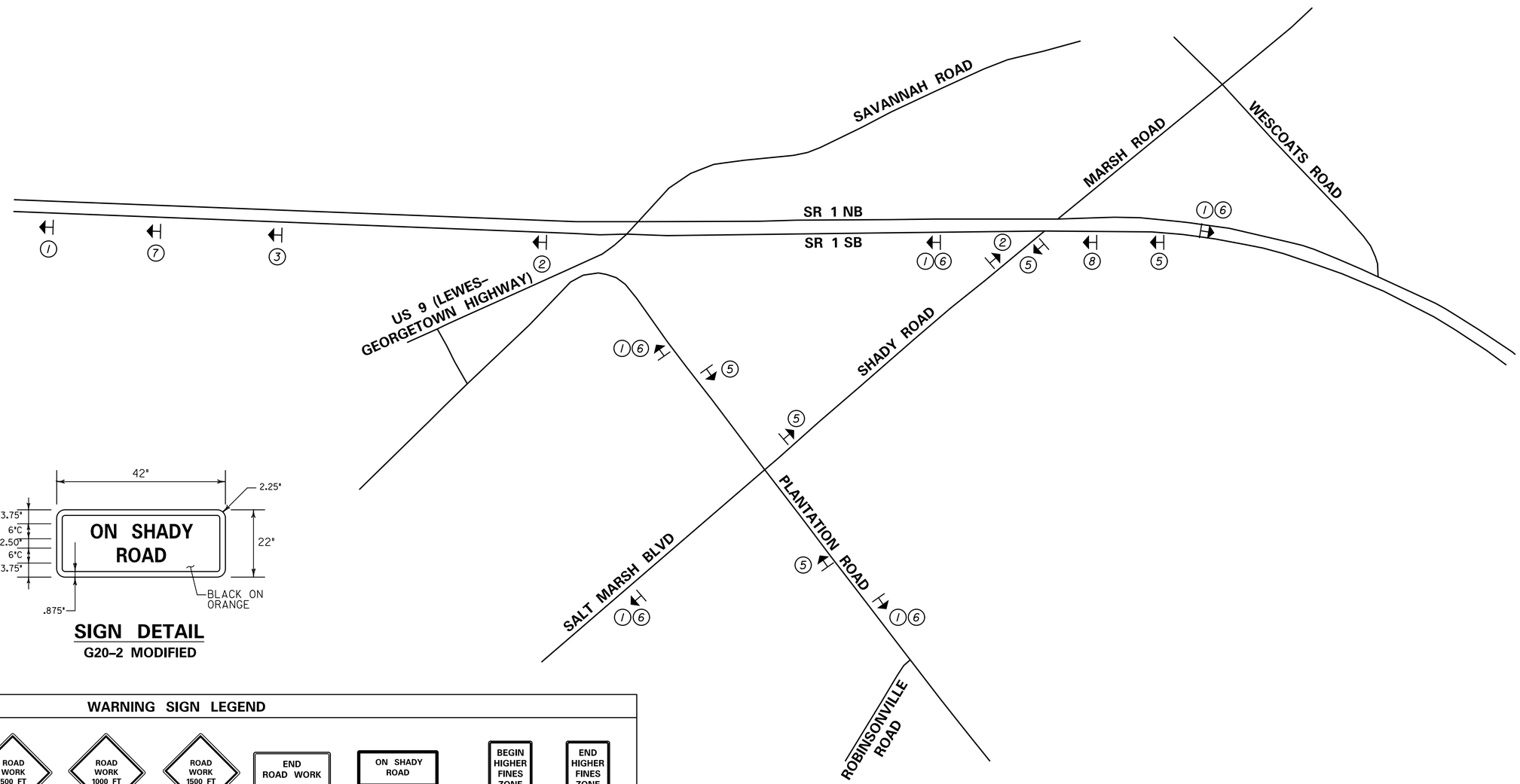

SIGN DETAIL
G20–2 MODIFIED

WARNING SIGN LEGEND

ROAD WORK AHEAD	ROAD WORK 500 FT	ROAD WORK 1000 FT	ROAD WORK 1500 FT	END ROAD WORK	ON SHADY ROAD	BEGIN HIGHER FINES ZONE	END HIGHER FINES ZONE
W20-1 48" x 48"	W20-1 48" x 48"	W20-1 48" x 48"	W20-1 48" x 48"	G20-2A 48"x24"	G20-2 MODIFIED 42" X 22" (SEE SIGN DETAIL) BLACK/ORANGE	R2-10 36"x48"	R2-11 36"x48"
1	2	3	4	5	6	7	8

N:\9018\-004\CADD\Highway\CP01-9018I004H12-02.dgn
1/22/2014 3:13:32 PM

DELAWARE DEPARTMENT OF TRANSPORTATION	ADDENDUMS / REVISIONS	NOT TO SCALE	DELAWARE TRANSIT CORPORATION LEWES PARK AND RIDE AND MAINTENANCE FACILITY	CONTRACT T200612502	BRIDGE NO.	CONSTRUCTION PHASING, M.O.T. AND EROSION CONTROL PLAN	H12–02
				COUNTY SUSSEX	DESIGNED BY: D.A.D.		SHEET NO. 42
					CHECKED BY: T.A.O.		TOTAL SHTS. 185

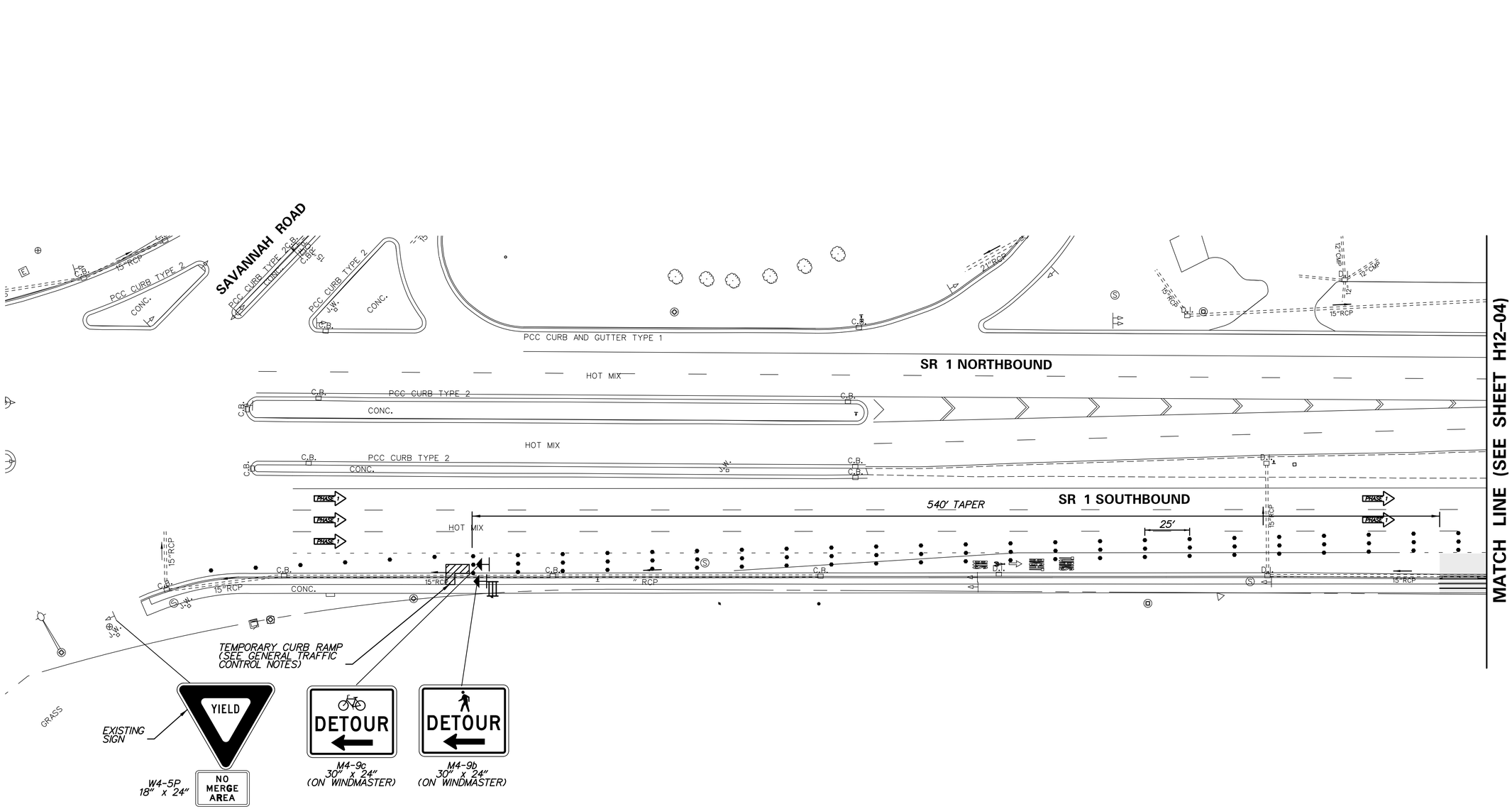

SEQUENCE OF CONSTRUCTION - PHASE I

1. PLACE ALL PERTINENT TRAFFIC CONTROL DEVICES FOR PHASE I AS SHOWN ON THIS PLAN AND THE WARNING SIGN LOCATION PLAN (SEE SHEET H12-02).
2. INSTALL EROSION AND SEDIMENT CONTROL WORK ON SR I AS SHOWN ON SHEETS CS-01 AND CS-02.
3. TRAFFIC ON SR I SHALL OPERATE UNDER TA-33, STATIONARY LANE CLOSURE ON A MULTI-LANE, DIVIDED HIGHWAY. PROVIDE A BICYCLE AND PEDESTRIAN DETOUR (INCLUDING A TEMPORARY CURB RAMP) WITHIN SR I AS SHOWN ON THIS SHEET. NO WORK OR EQUIPMENT SHALL ENCROACH INTO THE BICYCLE AND PEDESTRIAN DETOUR FACILITY. SITE ACCESS SHALL BE FROM SHADY ROAD WHEN THE DETOUR IS OPERATIONAL. M.O.T. DEVICES SHALL BE REMOVED AND TRAFFIC SHALL BE RESTORED AT THE END OF EACH WORK DAY.
4. CONSTRUCT PROPOSED ENTRANCES, INCLUDING SIDEWALK, CURB AND DRAINAGE, ON SR I.
5. STABILIZE ALL DISTURBED AREAS WITH TOPSOIL, SEED AND MULCH PRIOR TO REMOVAL OF SEDIMENT CONTROL DEVICES.

N:\90181-004\CADD\Highway\CP01-90181004H12-03.dgn
1/22/2014 3:13:35 PM

DELAWARE DEPARTMENT OF TRANSPORTATION	ADDENDUMS / REVISIONS	SCALE 0 30 60 90 FEET	DELAWARE TRANSIT CORPORATION LEWES PARK AND RIDE AND MAINTENANCE FACILITY	CONTRACT T200612502	BRIDGE NO.	CONSTRUCTION PHASING AND M.O.T. – PHASE 1	H12–03
				COUNTY SUSSEX	DESIGNED BY: B.S.S.		SHEET NO. 43
					CHECKED BY: T.A.O.		TOTAL SHTS. 185

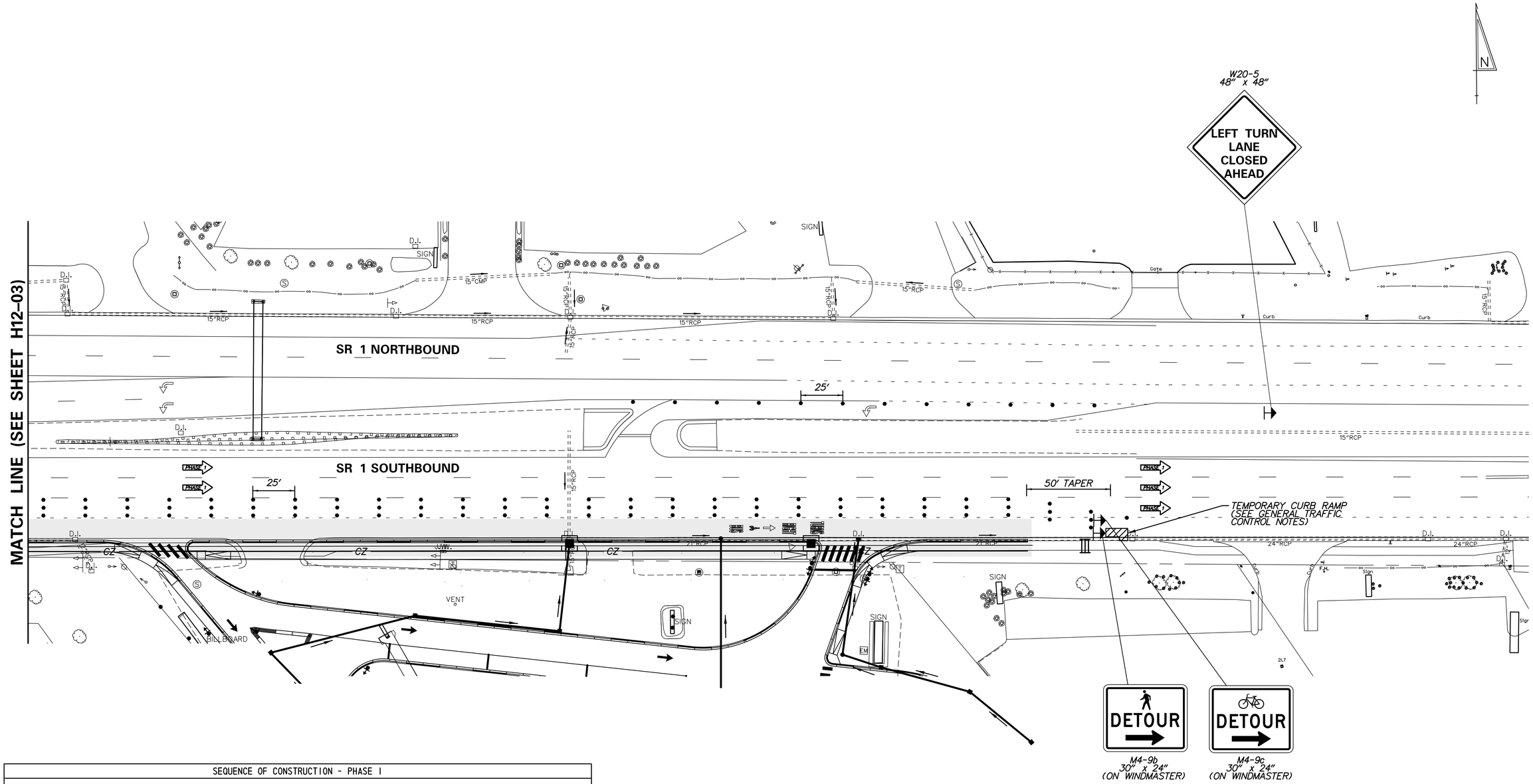

SEQUENCE OF CONSTRUCTION - PHASE I
(1) PLACE ALL PERTINENT TRAFFIC CONTROL DEVICES FOR PHASE I AS SHOWN ON THIS PLAN AND THE WARNING SIGN LOCATION PLAN (SEE SHEET H12-02).
(2) INSTALL EROSION AND SEDIMENT CONTROL WORK ON SR I AS SHOWN ON SHEETS CS-01 AND CS-02.
(3) TRAFFIC ON SR I SHALL OPERATE UNDER TA-33, STATIONARY LANE CLOSURE ON A MULTI-LANE, DIVIDED HIGHWAY. PROVIDE A BICYCLE AND PEDESTRIAN DETOUR (INCLUDING A TEMPORARY CURB RAMP) WITHIN SR I AS SHOWN ON THIS SHEET. NO WORK OR EQUIPMENT SHALL ENCROACH INTO THE BICYCLE AND PEDESTRIAN DETOUR FACILITY. SITE ACCESS SHALL BE FROM SHADY ROAD WHEN THE DETOUR IS OPERATIONAL. M.O.T. DEVICES SHALL BE REMOVED AND TRAFFIC SHALL BE RESTORED AT THE END OF EACH WORK DAY.
(4) CONSTRUCT PROPOSED ENTRANCES, INCLUDING SIDEWALK, CURB AND DRAINAGE, ON SR I.
(5) STABILIZE ALL DISTURBED AREAS WITH TOPSOIL, SEED AND MULCH PRIOR TO REMOVAL OF SEDIMENT CONTROL DEVICES.

N:\90181-004\CADD\Highway\CP01-90181004H12-04.dgn
1/22/2014 3:13:37 PM

DELAWARE DEPARTMENT OF TRANSPORTATION

ADDENDUMS / REVISIONS

SCALE 0 30 60 90 FEET

DELAWARE TRANSIT CORPORATION LEWES PARK AND RIDE AND MAINTENANCE FACILITY

CONTRACT	BRIDGE NO.
T200612502	DESIGNED BY: B.S.S.
COUNTY	CHECKED BY: T.A.O.
SUSSEX	

CONSTRUCTION PHASING AND M.O.T. – PHASE 1

H12-04
SHEET NO. 44
TOTAL SHTS. 185

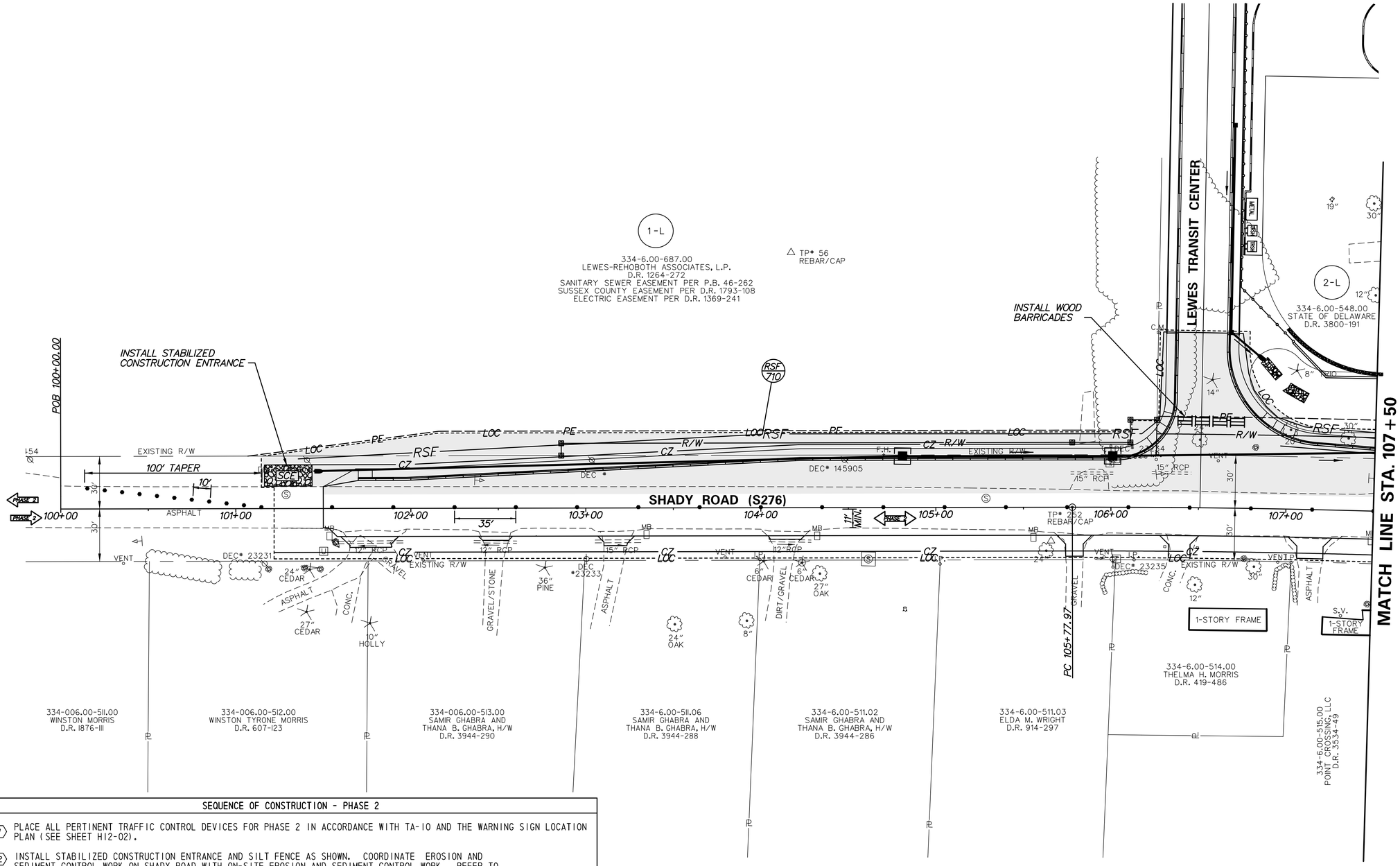

SEQUENCE OF CONSTRUCTION - PHASE 2

1. PLACE ALL PERTINENT TRAFFIC CONTROL DEVICES FOR PHASE 2 IN ACCORDANCE WITH TA-10 AND THE WARNING SIGN LOCATION PLAN (SEE SHEET H12-02).
2. INSTALL STABILIZED CONSTRUCTION ENTRANCE AND SILT FENCE AS SHOWN. COORDINATE EROSION AND SEDIMENT CONTROL WORK ON SHADY ROAD WITH ON-SITE EROSION AND SEDIMENT CONTROL WORK. REFER TO SHEETS CS-01 AND CS-02 FOR ON-SITE WORK.
3. DURING PHASE 2 WORKING HOURS, TRAFFIC ON SHADY ROAD SHALL OPERATE UNDER TA-10, LANE CLOSURE ON A TWO-LANE ROAD USING FLAGGERS. M.O.T. DEVICES SHALL BE REMOVED AND TRAFFIC SHALL BE RESTORED AT THE END OF EACH WORK DAY.
4. DURING A THREE DAY CONTINUOUS DRY WEATHER PERIOD (PER NOAA.GOV FORECAST), CLEAR AND GRUB WORK AREA AND BEGIN STORM DRAIN CONSTRUCTION. CONSTRUCT STORM DRAIN SYSTEM BEGINNING FROM THE DOWNSTREAM END AND WORK TOWARDS THE UPSTREAM END. DIVERT FLOW INTO THE PROPOSED SYSTEM PRIOR TO ROADWAY WIDENING. INSTALL INLET PROTECTION IMMEDIATELY ON NEWLY CONSTRUCTED INLETS.
5. INSTALL PROPOSED SIDEWALK, CURB, AND CURB RAMPS, AS SHOWN, BETWEEN STATION 101+45 TO STATION 110+80 LT.
6. INSTALL WOOD BARRICADES AT BOTH ACCESS POINTS TO TRANSIT CENTER FROM SHADY ROAD. BARRIERS SHALL REMAIN UNTIL THE TRANSIT CENTER IS OPEN.
7. STABILIZE ALL DISTURBED AREAS WITH TOPSOIL, SEED AND MULCH PRIOR TO REMOVAL OF SEDIMENT CONTROL DEVICES AND SWITCH TO PHASE 3.

N:\90181-004\CADD\Highway\CP01-90181004H12-05.dgn
4/16/2015 4:40:48 PM

DELAWARE DEPARTMENT OF TRANSPORTATION

ADDENDUMS / REVISIONS

SCALE 0 30 60 90 FEET

DELAWARE TRANSIT CORPORATION LEWES PARK AND RIDE AND MAINTENANCE FACILITY

CONTRACT	BRIDGE NO.
T200612502	DESIGNED BY: D.A.D.
COUNTY	
SUSSEX	CHECKED BY: T.A.O.

CONSTRUCTION PHASING, M.O.T. AND EROSION CONTROL PLAN – PHASE 2

H12-05
SHEET NO.
45
TOTAL SHTS.
185

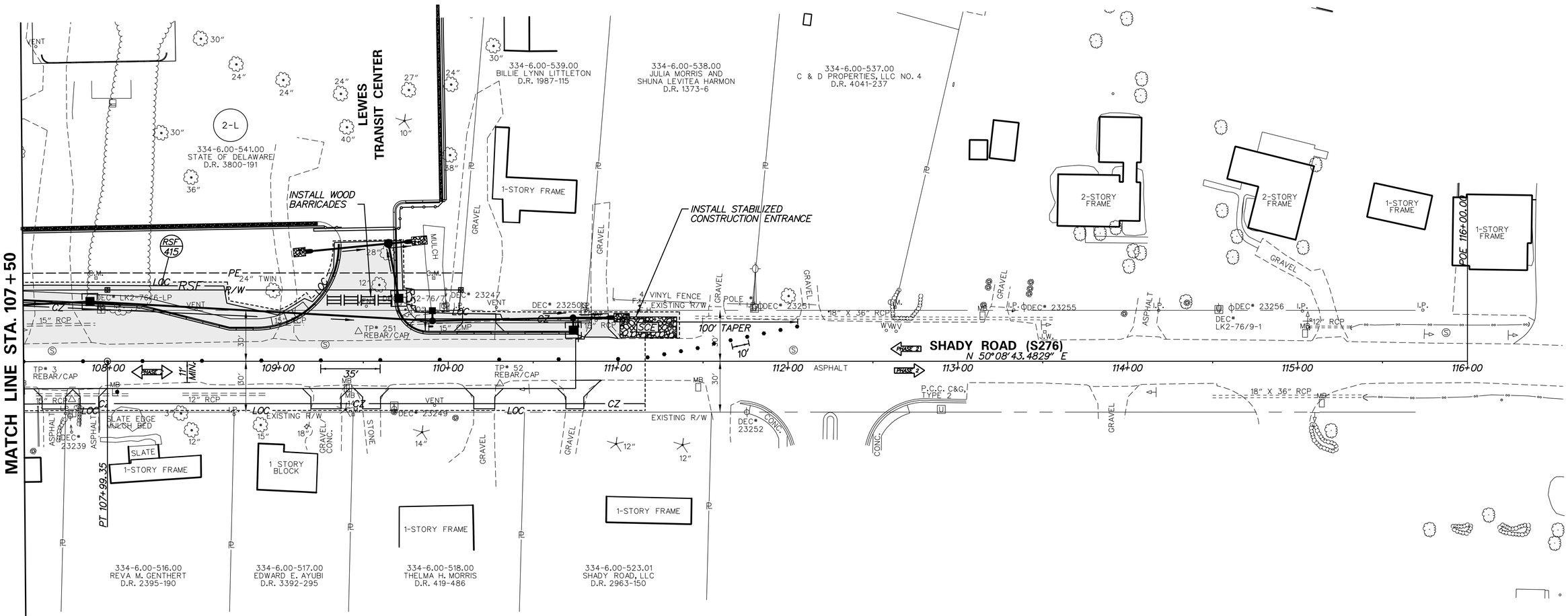

SEQUENCE OF CONSTRUCTION - PHASE 2

1. PLACE ALL PERTINENT TRAFFIC CONTROL DEVICES FOR PHASE 2 IN ACCORDANCE WITH TA-10 AND THE WARNING SIGN LOCATION PLAN (SEE SHEET H12-02).
2. INSTALL STABILIZED CONSTRUCTION ENTRANCE AND SILT FENCE AS SHOWN. COORDINATE EROSION AND SEDIMENT CONTROL WORK ON SHADY ROAD WITH ON-SITE EROSION AND SEDIMENT CONTROL WORK. REFER TO SHEETS CS-01 AND CS-02 FOR ON-SITE WORK.
3. DURING PHASE 2 WORKING HOURS, TRAFFIC ON SHADY ROAD SHALL OPERATE UNDER TA-10, LANE CLOSURE ON A TWO-LANE ROAD USING FLAGGERS. M.O.T. DEVICES SHALL BE REMOVED AND TRAFFIC SHALL BE RESTORED AT THE END OF EACH WORK DAY.
4. DURING A THREE DAY CONTINUOUS DRY WEATHER PERIOD (PER NOAA.GOV FORECAST), CLEAR AND GRUB WORK AREA AND BEGIN STORM DRAIN CONSTRUCTION. CONSTRUCT STORM DRAIN SYSTEM BEGINNING FROM THE DOWNSTREAM END AND WORK TOWARDS THE UPSTREAM END. DIVERT FLOW INTO THE PROPOSED SYSTEM PRIOR TO ROADWAY WIDENING. INSTALL INLET PROTECTION IMMEDIATELY ON NEWLY CONSTRUCTED INLETS.
5. INSTALL PROPOSED SIDEWALK, CURB, AND CURB RAMPS, AS SHOWN, BETWEEN STATION 101+45 TO STATION 110+80 LT.
6. INSTALL WOOD BARRICADES AT BOTH ACCESS POINTS TO TRANSIT CENTER FROM SHADY ROAD. BARRIERS SHALL REMAIN UNTIL THE TRANSIT CENTER IS OPEN.
7. STABILIZE ALL DISTURBED AREAS WITH TOPSOIL, SEED AND MULCH PRIOR TO REMOVAL OF SEDIMENT CONTROL DEVICES AND SWITCH TO PHASE 3.

N:\90181-004\CADD\Highway\CP01-90181004H12-06.dgn
1/22/2014 3:13:40 PM

DELAWARE DEPARTMENT OF TRANSPORTATION

ADDENDUMS / REVISIONS

SCALE 0 30 60 90 FEET

DELAWARE TRANSIT CORPORATION LEWES PARK AND RIDE AND MAINTENANCE FACILITY

CONTRACT	BRIDGE NO.
T200612502	DESIGNED BY: D.A.D.
COUNTY	CHECKED BY: T.A.O.
SUSSEX	

CONSTRUCTION PHASING, M.O.T. AND EROSION CONTROL PLAN – PHASE 2

H12–06
SHEET NO. 46
TOTAL SHTS. 185

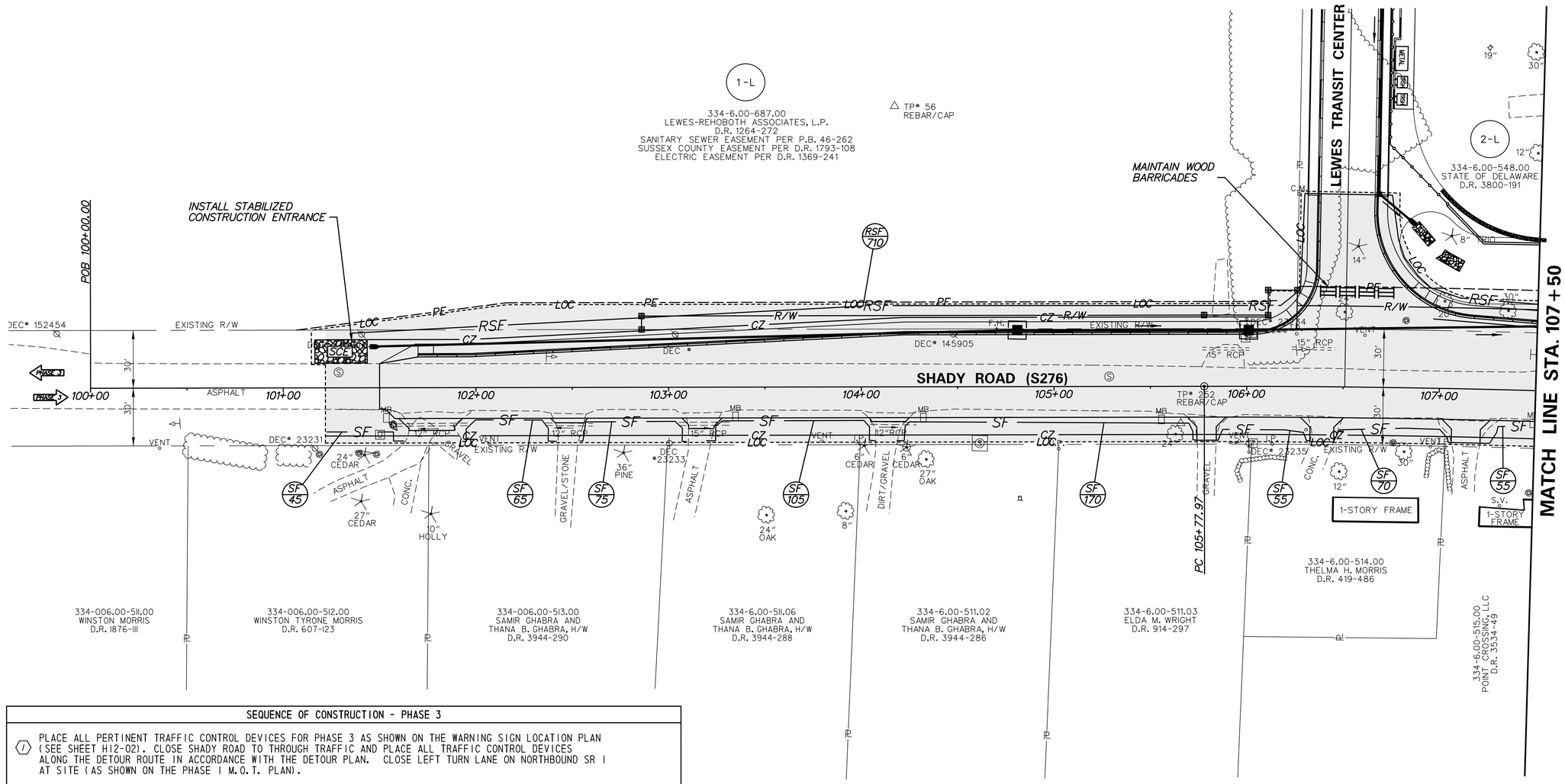

SEQUENCE OF CONSTRUCTION - PHASE 3

1. PLACE ALL PERTINENT TRAFFIC CONTROL DEVICES FOR PHASE 3 AS SHOWN ON THE WARNING SIGN LOCATION PLAN (SEE SHEET H12-02). CLOSE SHADY ROAD TO THROUGH TRAFFIC AND PLACE ALL TRAFFIC CONTROL DEVICES ALONG THE DETOUR ROUTE IN ACCORDANCE WITH THE DETOUR PLAN. CLOSE LEFT TURN LANE ON NORTHBOUND SR 1 AT SITE (AS SHOWN ON THE PHASE 1 M.O.T. PLAN).
2. MAINTAIN ACCESS TO ALL RESIDENTIAL DRIVEWAYS ON SHADY ROAD. MAINTAIN ACCESS USING TEMPORARY HOT-MIX MATERIAL (TRM). TRM SHALL BE INCIDENTAL TO ITEM 743000 - MAINTENANCE OF TRAFFIC.
3. INSTALL STABILIZED CONSTRUCTION ENTRANCES AND SILT FENCE AS SHOWN. COORDINATE EROSION AND SEDIMENT CONTROL WORK ON SHADY ROAD WITH ON-SITE EROSION AND SEDIMENT CONTROL WORK. REFER TO SHEETS CS-01 AND CS-02 FOR ON-SITE WORK.
4. EXCAVATE FOR AND INSTALL PROPOSED ROADWAY AND DRIVEWAYS, UP TO AND INCLUDING SUPERPAVE TYPE B, ON SHADY ROAD.
5. MAINTAIN WOOD BARRICADES AT BOTH SHADY ROAD ACCESS POINTS TO THE TRANSIT CENTER. BARRIERS SHALL REMAIN UNTIL THE TRANSIT CENTER IS OPEN.
6. STABILIZE ALL DISTURBED AREAS WITH TOPSOIL, SEED AND MULCH PRIOR TO REMOVAL OF SEDIMENT CONTROL DEVICES.

N:\90181-00\CADD\Highway\CP01-90181004H12-07.dgn
4/16/2015 4:40:05 PM

DELAWARE DEPARTMENT OF TRANSPORTATION

ADDENDUMS / REVISIONS

SCALE 0 30 60 90 FEET

DELAWARE TRANSIT CORPORATION LEWES PARK AND RIDE AND MAINTENANCE FACILITY

CONTRACT	BRIDGE NO.
T200612502	DESIGNED BY: D.A.D.
COUNTY	
SUSSEX	CHECKED BY: T.A.O.

CONSTRUCTION PHASING, M.O.T. AND EROSION CONTROL PLAN – PHASE 3

H12-07

SHEET NO.	TOTAL SHTS.
47	185

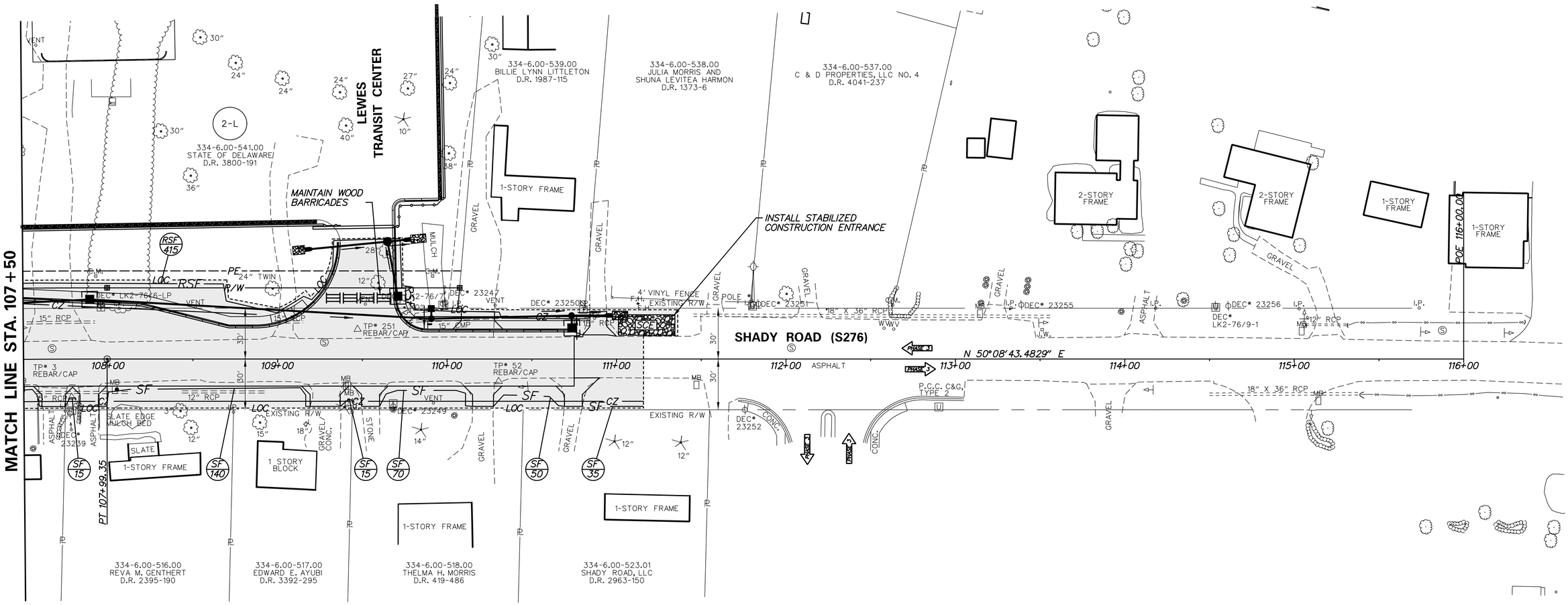

SEQUENCE OF CONSTRUCTION - PHASE 3

1. PLACE ALL PERTINENT TRAFFIC CONTROL DEVICES FOR PHASE 3 AS SHOWN ON THE WARNING SIGN LOCATION PLAN (SEE SHEET H12-02). CLOSE SHADY ROAD TO THROUGH TRAFFIC AND PLACE ALL TRAFFIC CONTROL DEVICES ALONG THE DETOUR ROUTE IN ACCORDANCE WITH THE DETOUR PLAN. CLOSE LEFT TURN LANE ON NORTHBOUND SR 1 AT SITE (AS SHOWN ON THE PHASE 1 M.O.T. PLAN).
2. MAINTAIN ACCESS TO ALL RESIDENTIAL DRIVEWAYS ON SHADY ROAD. MAINTAIN ACCESS USING TEMPORARY HOT-MIX MATERIAL (TRM). TRM SHALL BE INCIDENTAL TO ITEM 743000 - MAINTENANCE OF TRAFFIC.
3. INSTALL STABILIZED CONSTRUCTION ENTRANCES AND SILT FENCE AS SHOWN. COORDINATE EROSION AND SEDIMENT CONTROL WORK ON SHADY ROAD WITH ON-SITE EROSION AND SEDIMENT CONTROL WORK. REFER TO SHEETS CS-01 AND CS-02 FOR ON-SITE WORK.
4. EXCAVATE FOR AND INSTALL PROPOSED ROADWAY AND DRIVEWAYS, UP TO AND INCLUDING SUPERPAVE TYPE B, ON SHADY ROAD.
5. MAINTAIN WOOD BARRICADES AT BOTH SHADY ROAD ACCESS POINTS TO THE TRANSIT CENTER. BARRIERS SHALL REMAIN UNTIL THE TRANSIT CENTER IS OPEN.
6. STABILIZE ALL DISTURBED AREAS WITH TOPSOIL, SEED AND MULCH PRIOR TO REMOVAL OF SEDIMENT CONTROL DEVICES.

N:\90181-004\CADD\Highway\CP01-90181004H12-08.dgn
1/22/2014 3:13:43 PM

DELAWARE DEPARTMENT OF TRANSPORTATION

ADDENDUMS / REVISIONS

SCALE 0 30 60 90 FEET

DELAWARE TRANSIT CORPORATION LEWES PARK AND RIDE AND MAINTENANCE FACILITY

CONTRACT	BRIDGE NO.
T200612502	DESIGNED BY: D.A.D.
COUNTY	CHECKED BY: T.A.O.
SUSSEX	

CONSTRUCTION PHASING, M.O.T. AND EROSION CONTROL PLAN – PHASE 3

H12–08
SHEET NO.
48
TOTAL SHTS.
185

PORTABLE CHANGEABLE MESSAGE SIGNS

PRIOR TO DETOUR
(10 DAYS PRIOR TO BEGINNING OF DETOUR)

PCMS-1

SHADY RD TO CLOSE	STARTING MM/DD/YY

SPECIAL SIGNS

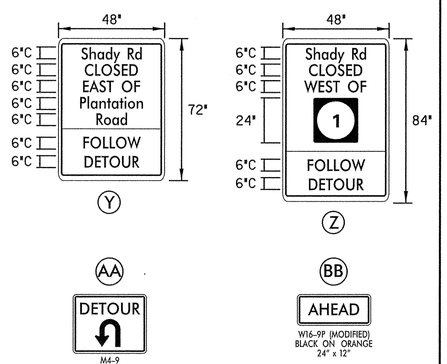

ADDITIONAL NOTES

1. CONTRACTOR SHALL AT ALL TIMES MAINTAIN LOCAL ACCESS FOR RESIDENTS WHOM RESIDE WITHIN THE CLOSURE
2. PERMANENT WARNING SIGNS SHALL BE COVERED DURING DETOUR.

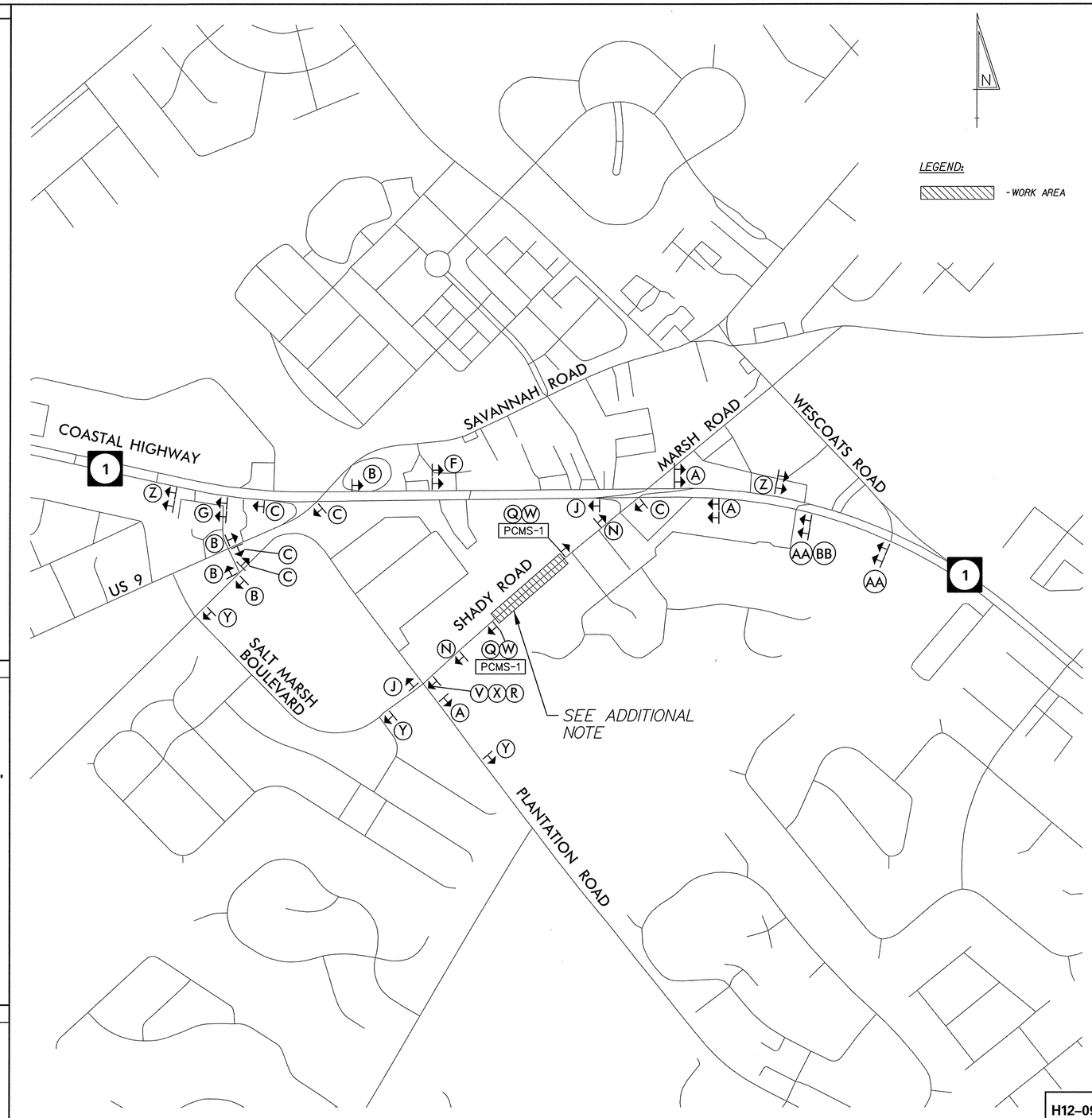

H12-09

LEGEND

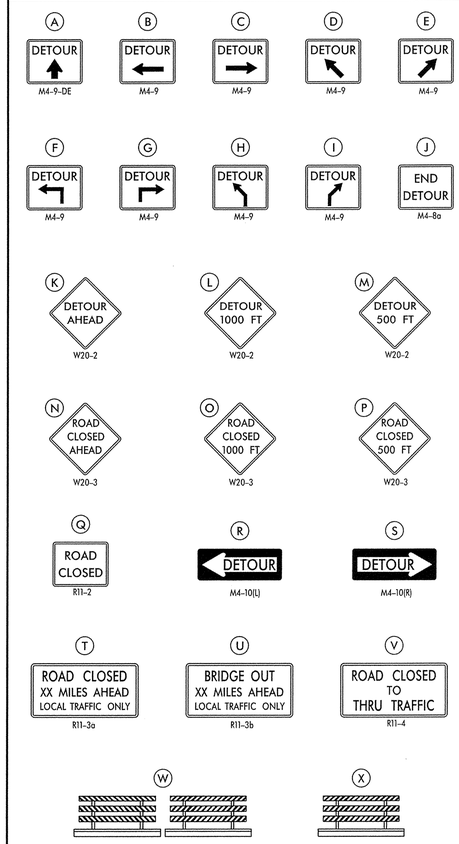

GENERAL NOTES

1. ALL DETOUR SIGNING, INCLUDING TRAILBLAZERS, ARE TO BE SUPPLIED AND MAINTAINED BY THE GENERAL CONTRACTOR IN COMPLIANCE WITH "THE DELAWARE MANUAL ON UNIFORM TRAFFIC CONTROL DEVICES" (DE MUTCD.)
2. THE CONTRACTOR SHALL COMPLY WITH GUIDELINES IN "THE DELAWARE MANUAL ON UNIFORM TRAFFIC CONTROL DEVICES" (DE MUTCD PART 6) FOR BARRICADES AND SIGNS (AS PER LATEST REVISION.)
3. DESIGN OF ALL SIGNS SHALL BE IN ACCORDANCE WITH THE FHWA STANDARD HIGHWAY SIGNS BOOK.
4. SIZES OF ALL SIGNS SHALL BE IN ACCORDANCE WITH "THE DELAWARE MANUAL ON UNIFORM TRAFFIC CONTROL DEVICES" (DE MUTCD.) SIZE OF SIGN SHALL BE BASED ON TYPE OF ROADWAY ON WHICH THE SIGN IS INSTALLED.
5. SIGNS NO LONGER IN USE SHALL BE COMPLETELY COVERED WITH NO RETROREFLECTIVE MATERIAL SHOWING, OR SHALL BE REMOVED, AS DIRECTED BY THE ENGINEER.
6. FIELD CONDITIONS MAY DICTATE CHANGES AT SOME TIME DURING THE LIFE OF THE CONTRACT. IN THE EVENT OF OMISSIONS OR CORRECTIONS, THE SIGNING PROVISIONS OF "THE DELAWARE MANUAL ON UNIFORM TRAFFIC CONTROL DEVICES" (DE MUTCD) WILL PREVAIL.
7. SIGNS "N" THROUGH "Q" AND "T" AND "V", THE WORD "ROAD" SHOULD BE CHANGED TO "RAMP", "RR XING", OR "BRIDGE" WHERE APPLICABLE.
8. WARNING SIGNS AND DETOUR TRAILBLAZERS SHALL BE MOUNTED ON BREAKAWAY POSTS AND HAVE RETROREFLECTIVE FLUORESCENT ORANGE SHEETING.
9. "W" BARRICADES SHALL COMPLETELY RUN THE FULL WIDTH OF THE ROADWAY.
10. BARRICADES SHALL BE A MINIMUM OF 6 FEET WIDE UNLESS DIRECTED BY THE ENGINEER.

RECOMMENDED [signature] DATE: 12/20/13	RECOMMENDED _____ DATE: _____	RECOMMENDED [signature] DATE: 12-20-13	APPROVED CHIEF SAFETY OFFICER [signature] DATE: 12-20-13	APPROVED TRAFFIC ENGINEER [signature] DATE: 12/20/13

DELAWARE DEPARTMENT OF TRANSPORTATION	ADDENDUM / REVISIONS	NOT TO SCALE	DELAWARE TRANSIT CORPORATION LEWES PARK AND RIDE AND MAINTENANCE FACILITY	CONTRACT T200612502	PERMIT NO. N/A	VEHICULAR DETOUR PLAN SHADY ROAD	SHEET NO. 49
				COUNTY SUSSEX	DESIGNED BY: B.S.S.		TOTAL SHTS. 185
					CHECKED BY: D.A.D.		

PAVEMENT MARKINGS LEGEND		
SYMBOL	ITEM	QUANTITY
(A)	PERMANENT PAVEMENT STRIPING, SYMBOL/LEGEND, ALKYD-THERMOPLASTIC (ITEM 748015)	44 SF
(B)	5" SOLID DOUBLE YELLOW EPOXY RESIN PAVEMENT STRIPING (ITEM 748548)	810 LF
(D)	5" DASHED WHITE EPOXY RESIN PAVEMENT STRIPING, 2' LINE & 6' GAP (ITEM 748548)	191 LF
(E)	5" SOLID WHITE EPOXY RESIN PAVEMENT STRIPING (ITEM 748548)	1281 LF
(L)	PREFORMED RETROREFLECTIVE THERMOPLASTIC PAVEMENT MARKINGS, BIKE SYMBOL (ITEM 748553)	3 EA
(K)	16" PERMANENT PAVEMENT STRIPING, SYMBOL/ LEGEND, ALKYD-THERMOPLASTIC (ITEM 748015)	19 SF
(M)	6'x2' SOLID WHITE ALKYD THERMOPLASTIC PERMANENT PAVEMENT STRIPING (ITEM 748015)	168 SF
(U)	4" SOLID DOUBLE YELLOW EPOXY RESIN PAVEMENT STRIPING (ITEM 748548)	145 LF

NOTES:
1. STOP LINES SHALL BE PLACED A MINIMUM OF 4 FEET IN ADVANCE OF THE NEAREST CROSSWALK LINE.
2. ALL CROSSWALKS SHALL HAVE 2' SPACING.

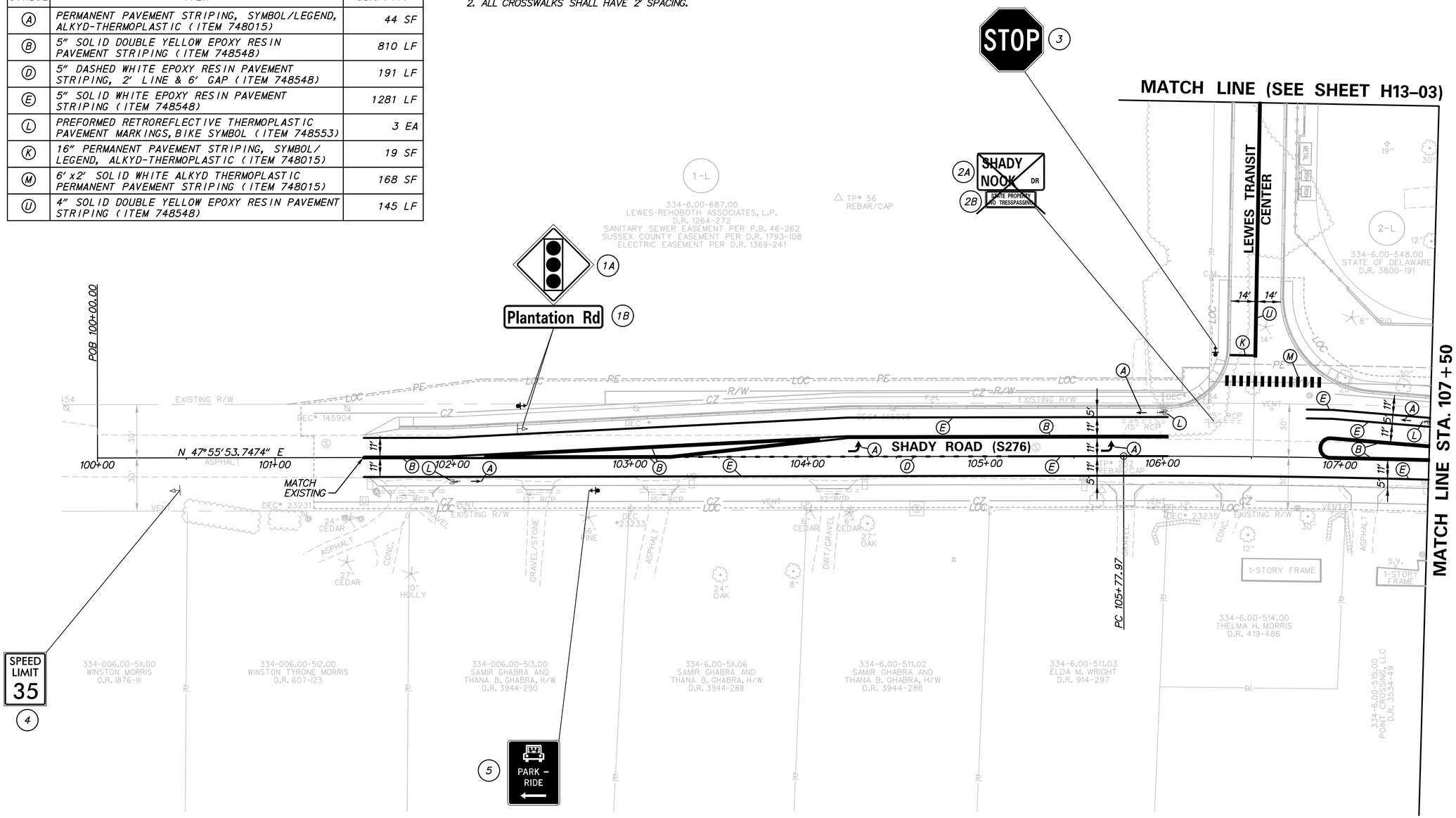

N:\9018I-00A\CAD\Highway\CP01-90181004H13-01.dgn
1/22/2014 3:13:45 PM

DELAWARE DEPARTMENT OF TRANSPORTATION	ADDENDUMS / REVISIONS	SCALE 0 30 60 90 FEET	DELAWARE TRANSIT CORPORATION LEWES PARK AND RIDE AND MAINTENANCE FACILITY	CONTRACT T200612502	BRIDGE NO.	SIGNING AND STRIPING PLAN	H13-01 SHEET NO. 50
				COUNTY SUSSEX	DESIGNED BY: B.S.S.		TOTAL SHTS. 185
					CHECKED BY: T.A.O.		

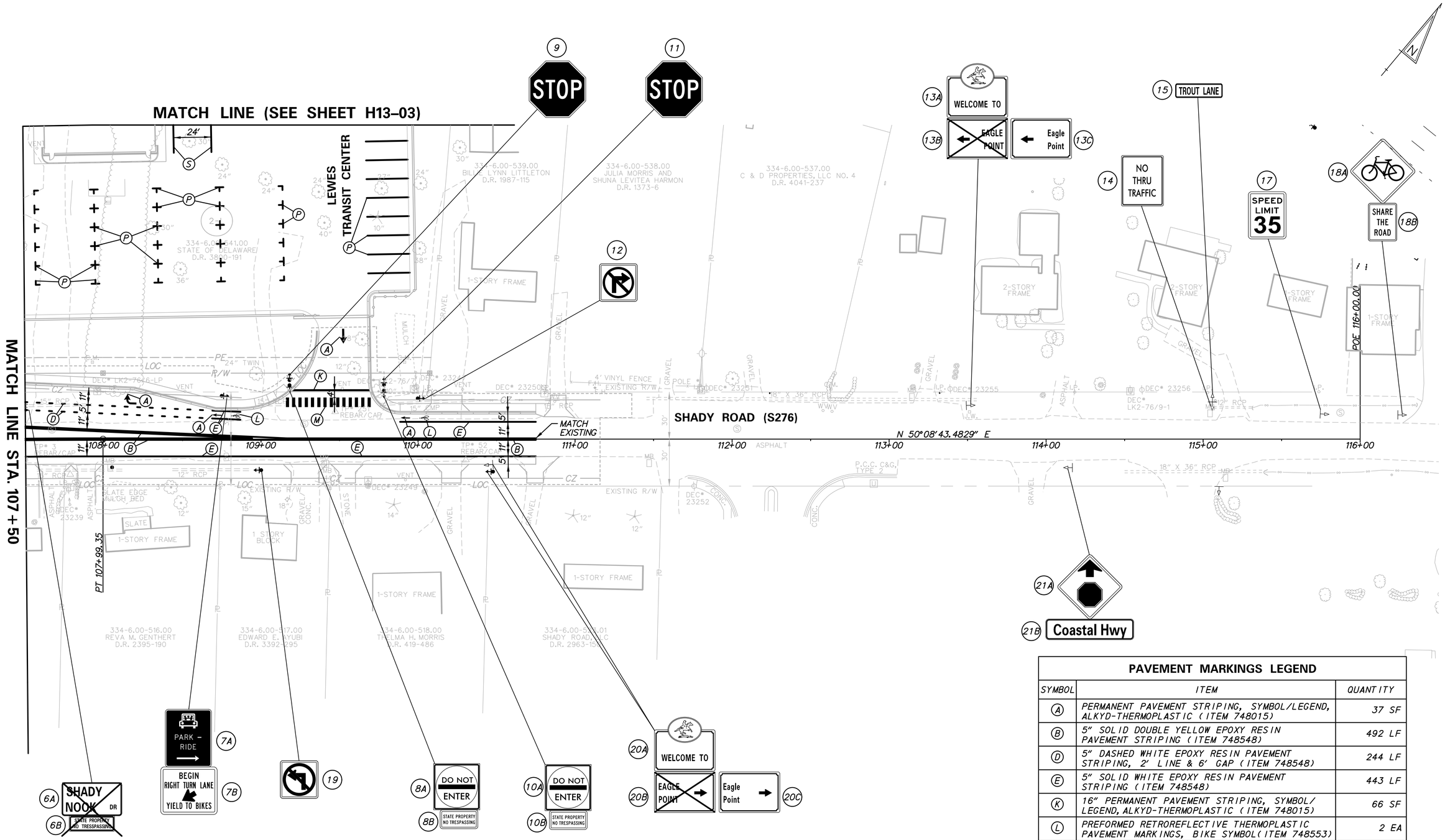

PAVEMENT MARKINGS LEGEND

SYMBOL	ITEM	QUANTITY
A	PERMANENT PAVEMENT STRIPING, SYMBOL/LEGEND, ALKYD-THERMOPLASTIC (ITEM 748015)	37 SF
B	5" SOLID DOUBLE YELLOW EPOXY RESIN PAVEMENT STRIPING (ITEM 748548)	492 LF
D	5" DASHED WHITE EPOXY RESIN PAVEMENT STRIPING, 2' LINE & 6' GAP (ITEM 748548)	244 LF
E	5" SOLID WHITE EPOXY RESIN PAVEMENT STRIPING (ITEM 748548)	443 LF
K	16" PERMANENT PAVEMENT STRIPING, SYMBOL/LEGEND, ALKYD-THERMOPLASTIC (ITEM 748015)	66 SF
L	PREFORMED RETROREFLECTIVE THERMOPLASTIC PAVEMENT MARKINGS, BIKE SYMBOL (ITEM 748553)	2 EA
M	6'x2' SOLID WHITE ALKYD THERMOPLASTIC PERMANENT PAVEMENT STRIPING (ITEM 748015)	168 SF
P	4" SOLID WHITE EPOXY RESIN PAVEMENT STRIPING (ITEM 748548)	457 LF
S	4" SOLID YELLOW EPOXY RESIN PAVEMENT STRIPING (ITEM 748548)	35 LF

NOTES:
1. STOP LINES SHALL BE PLACED A MINIMUM OF 4 FEET IN ADVANCE OF THE NEAREST CROSSWALK LINE.
2. ALL CROSSWALKS SHALL HAVE 2' SPACING.

H13–02

DELAWARE DEPARTMENT OF TRANSPORTATION

ADDENDUMS / REVISIONS

SCALE 0 30 60 90 FEET

DELAWARE TRANSIT CORPORATION
LEWES PARK AND RIDE
AND MAINTENANCE FACILITY

CONTRACT	BRIDGE NO.	SIGNING AND STRIPING PLAN	SHEET NO.
T200612502	DESIGNED BY: B.S.S.		51
COUNTY			TOTAL SHTS.
SUSSEX	CHECKED BY: T.A.O.		185

N:\90181-004\CADD\Highway\CP01-90181004H13-02.dgn
2/18/2014 11:36:03 AM

PAVEMENT MARKINGS LEGEND

SYMBOL	ITEM	QUANTITY
(A)	PERMANENT PAVEMENT STRIPING, SYMBOL/LEGEND, ALKYD-THERMOPLASTIC (ITEM 748015)	315 SF
(K)	16" PERMANENT PAVEMENT STRIPING, SYMBOL/ LEGEND, ALKYD-THERMOPLASTIC (ITEM 748015)	34 SF
(M)	6' x 2' SOLID WHITE ALKYD THERMOPLASTIC PERMANENT PAVEMENT STRIPING (ITEM 748015)	132 SF
(N)	10' x 2' SOLID WHITE ALKYD THERMOPLASTIC PERMANENT PAVEMENT STRIPING (ITEM 748015)	200 SF
(P)	4" SOLID WHITE EPOXY RESIN PAVEMENT STRIPING (ITEM 748548)	5637 LF
(S)	4" SOLID YELLOW EPOXY RESIN PAVEMENT STRIPING (ITEM 748548)	410 LF
(T)	6' X 2' RETROREFLECTIVE PREFORMED PATTERNED MARKINGS, SYMBOL/LEGEND (TAPE)(ITEM 748529)	132 SF
(U)	4" SOLID DOUBLE YELLOW EPOXY RESIN PAVEMENT STRIPING (ITEM 748548)	140 LF
(X)	4" SOLID BLUE EPOXY RESIN PAVEMENT STRIPING (ITEM 748548)	345 LF
* (Y)	RETROREFLECTIVE PREFORMED PATTERNED MARKINGS, SYMBOL/LEGEND (TAPE)(ITEM 748529)	174 SF
(Z)	16" RETROREFLECTIVE PREFORMED PATTERNED MARKINGS, SYMBOL/LEGEND (TAPE)(ITEM 748529)	115 SF

* SEE SHEET C-401 FOR WHEELCHAIR SYMBOL DETAILS

NOTES:

1. ALL EXISTING SIGNING ALONG SR 1 SHALL REMAIN IN PLACE UNLESS OTHERWISE NOTED.
2. STOP LINES SHALL BE PLACED A MINIMUM OF 4 FEET IN ADVANCE OF THE NEAREST CROSSWALK LINE.
3. ALL CROSSWALKS SHALL HAVE 2' SPACING.
4. REMOVE EXISTING BREAKAWAY I-BEAM SIGN POSTS AND FOUNDATIONS.
5. EACH WORD IN THE "FIRE LANE" STRIPING TEXT SHALL BE AT LEAST 10 FEET IN HEIGHT. THE DISTANCE BETWEEN THE WORD "FIRE" AND "LANE" SHALL BE NO GREATER THAN 30 FEET.
6. FIRE LANE SIGNS (R107-DE) SHALL BE MOUNTED BETWEEN 6 FEET AND 8 FEET ABOVE THE PAVEMENT.
7. INSTALL RELOCATED SIGN ON (2) W6x16 BREAKAWAY GALVANIZED STEEL BEAM SIGN SUPPORTS (L=14.5' EACH) SPACED AT 1.92'-7.5'-1.92' FROM THE RIGHT EDGE OF SIGN. INSTALL STEEL BEAM SIGN SUPPORTS ON TWO W6x16 GALVANIZED STEEL BEAM SIGN FOUNDATIONS (SEE CONSTRUCTION DETAILS). SET SIGN 7.5' ABOVE THE ROADWAY SURFACE WITH A MINIMUM 15'-0" HORIZONTAL CLEARANCE FROM THE EDGE OF ROADWAY. BREAKAWAY BASES FOR SIGN SUPPORTS SHALL BE INSTALLED IN ACCORDANCE WITH MANUFACTURER'S RECOMMENDATIONS. THE CONTRACTOR SHALL STAKEOUT SIGN LOCATION TO DETERMINE THE EXACT DIMENSIONS OF THE GALVANIZED STEEL BEAM SIGN SUPPORTS. THE CONTRACTOR SHALL SUBMIT STAKEOUT MEASUREMENTS TO THE ENGINEER FOR APPROVAL PRIOR TO FABRICATION AND INSTALLATION OF SIGN SUPPORTS.

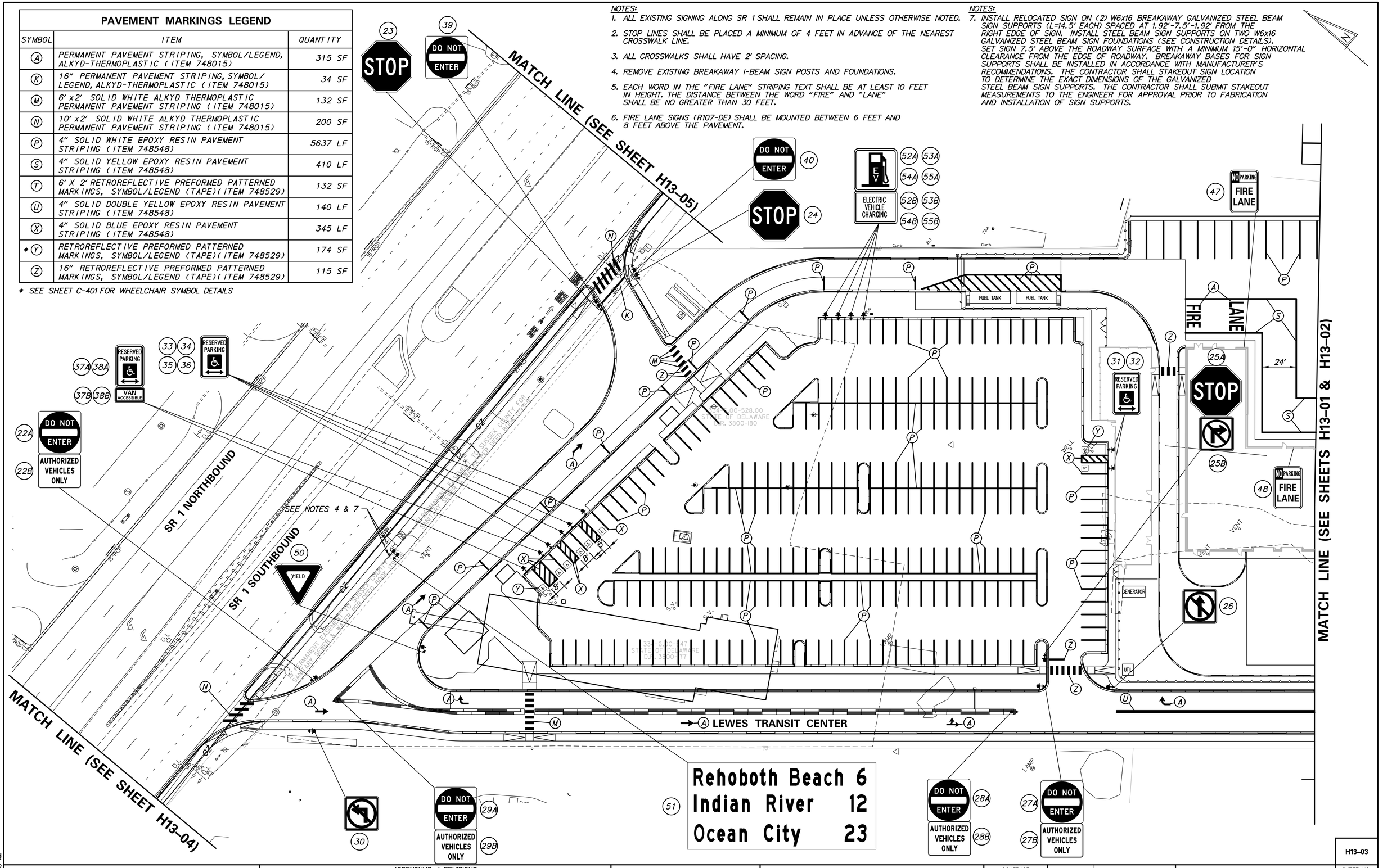

DELAWARE DEPARTMENT OF TRANSPORTATION	ADDENDUMS / REVISIONS	SCALE 0 30 60 90 FEET	DELAWARE TRANSIT CORPORATION LEWES PARK AND RIDE AND MAINTENANCE FACILITY	CONTRACT T200612502	BRIDGE NO.	SIGNING AND STRIPING PLAN	H13-03
				COUNTY SUSSEX	DESIGNED BY: B.S.S.		SHEET NO. 52
					CHECKED BY: T.A.O.		TOTAL SHTS. 185

N:\90181-004\CADD\Highway\CP01-90181004H13-03.dgn
2/11/2014 11:35:05 AM

NOTES:
1. ALL EXISTING SIGNING ALONG SR 1 SHALL REMAIN IN PLACE UNLESS OTHERWISE NOTED.

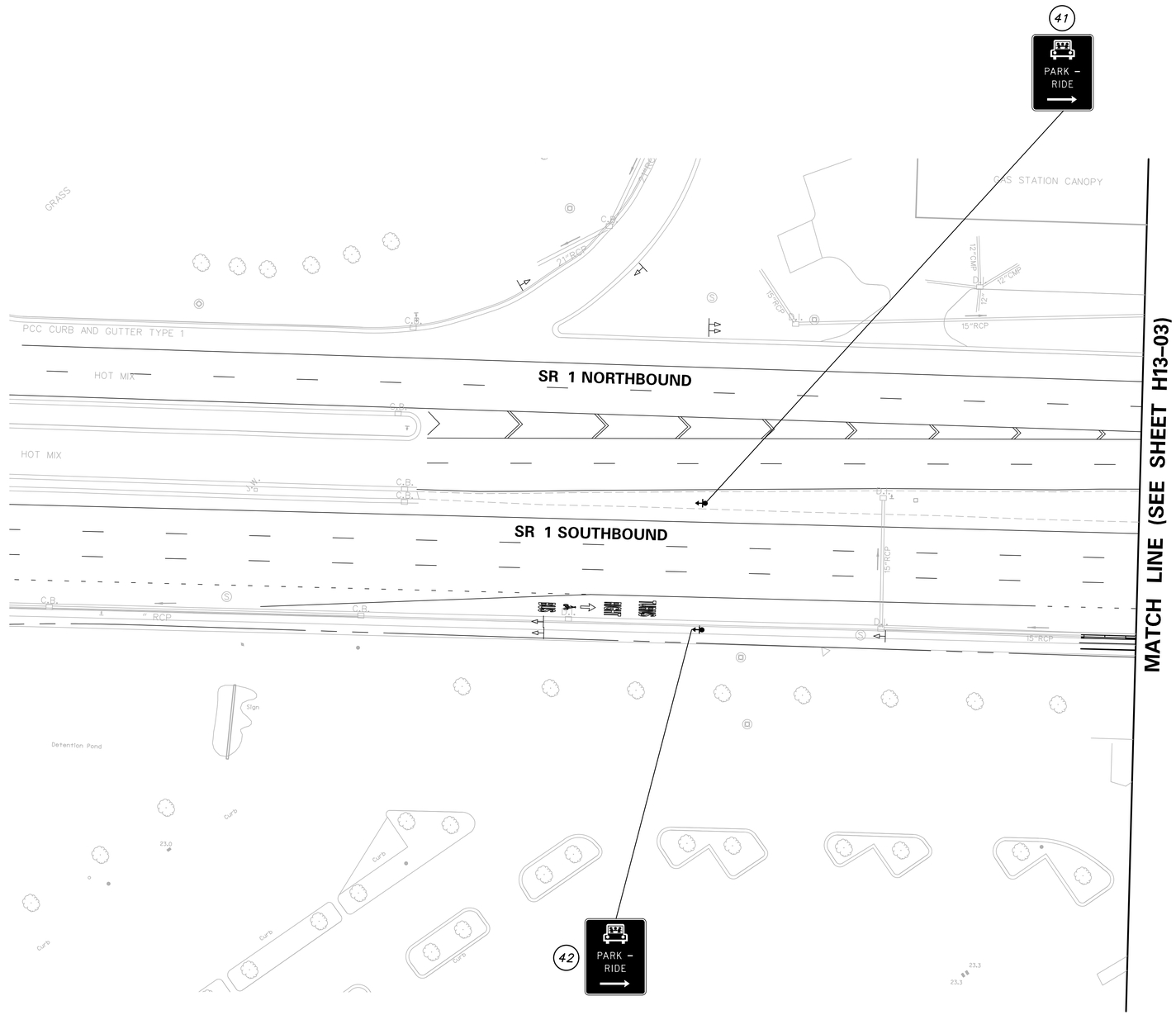

DELAWARE DEPARTMENT OF TRANSPORTATION	ADDENDUMS / REVISIONS	SCALE 0 30 60 90 FEET	DELAWARE TRANSIT CORPORATION LEWES PARK AND RIDE AND MAINTENANCE FACILITY	CONTRACT T200612502	BRIDGE NO.	SIGNING AND STRIPING PLAN	H13-04
				COUNTY SUSSEX	DESIGNED BY: B.S.S.		SHEET NO. 53
					CHECKED BY: T.A.O.		TOTAL SHTS. 185

N:\90181-004\CADD\Highway\CP01-90181004H13-04.dgn
1/22/2014 3:13:50 PM

NOTES:
1. ALL EXISTING SIGNING ALONG SR 1 SHALL REMAIN IN PLACE UNLESS OTHERWISE NOTED.

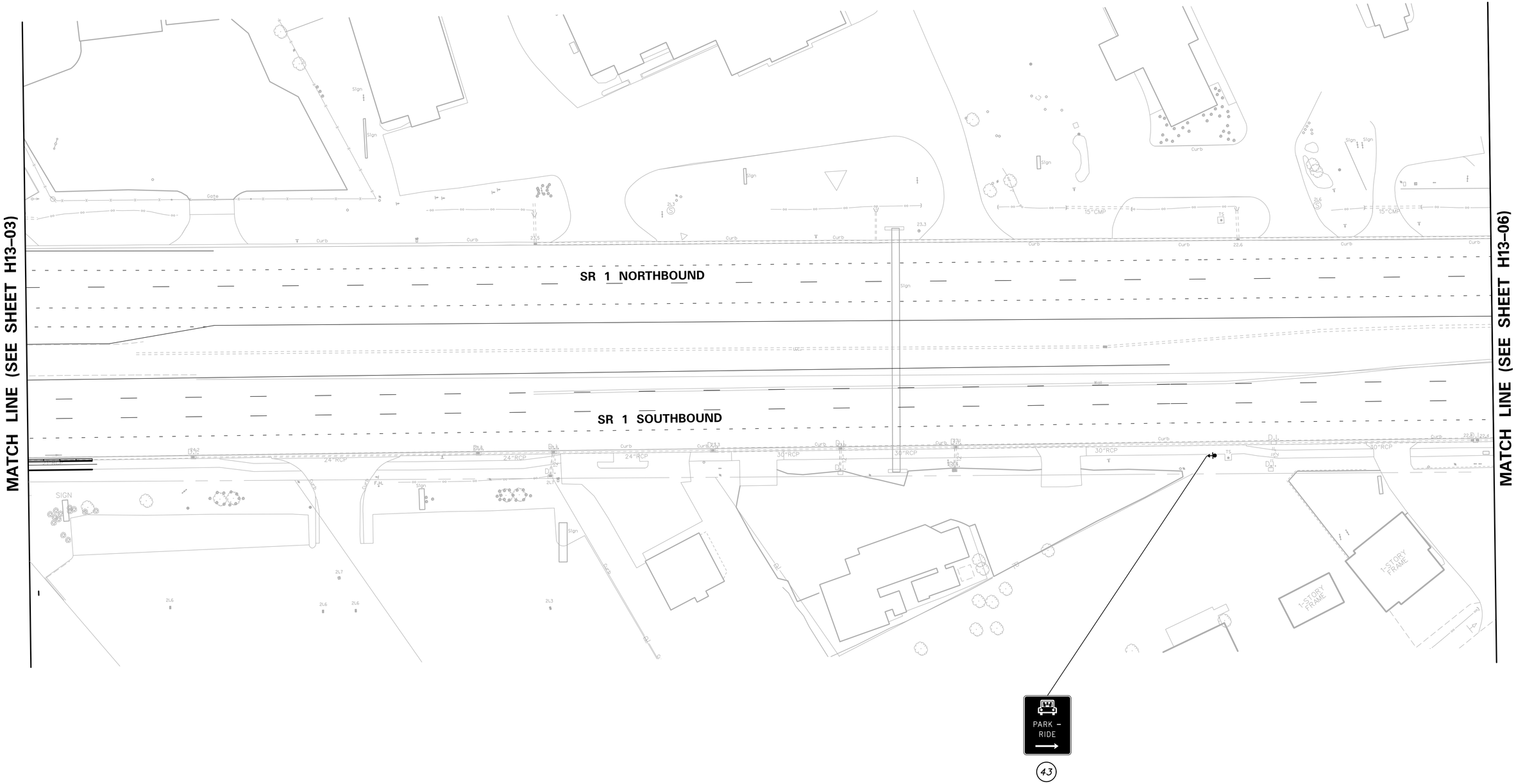

DELAWARE DEPARTMENT OF TRANSPORTATION	ADDENDUMS / REVISIONS	SCALE 0 30 60 90 FEET	DELAWARE TRANSIT CORPORATION LEWES PARK AND RIDE AND MAINTENANCE FACILITY	CONTRACT T200612502	BRIDGE NO.	SIGNING AND STRIPING PLAN	H13-05 SHEET NO. 54
				COUNTY SUSSEX	DESIGNED BY: B.S.S.		TOTAL SHTS. 185
					CHECKED BY: T.A.O.		

N:\90181-004\CADD\Highway\CP01-90181004H13-05.dgn
1/22/2014 3:13:51 PM

NOTES:
1. ALL EXISTING SIGNING ALONG SR 1 SHALL REMAIN IN PLACE UNLESS OTHERWISE NOTED.

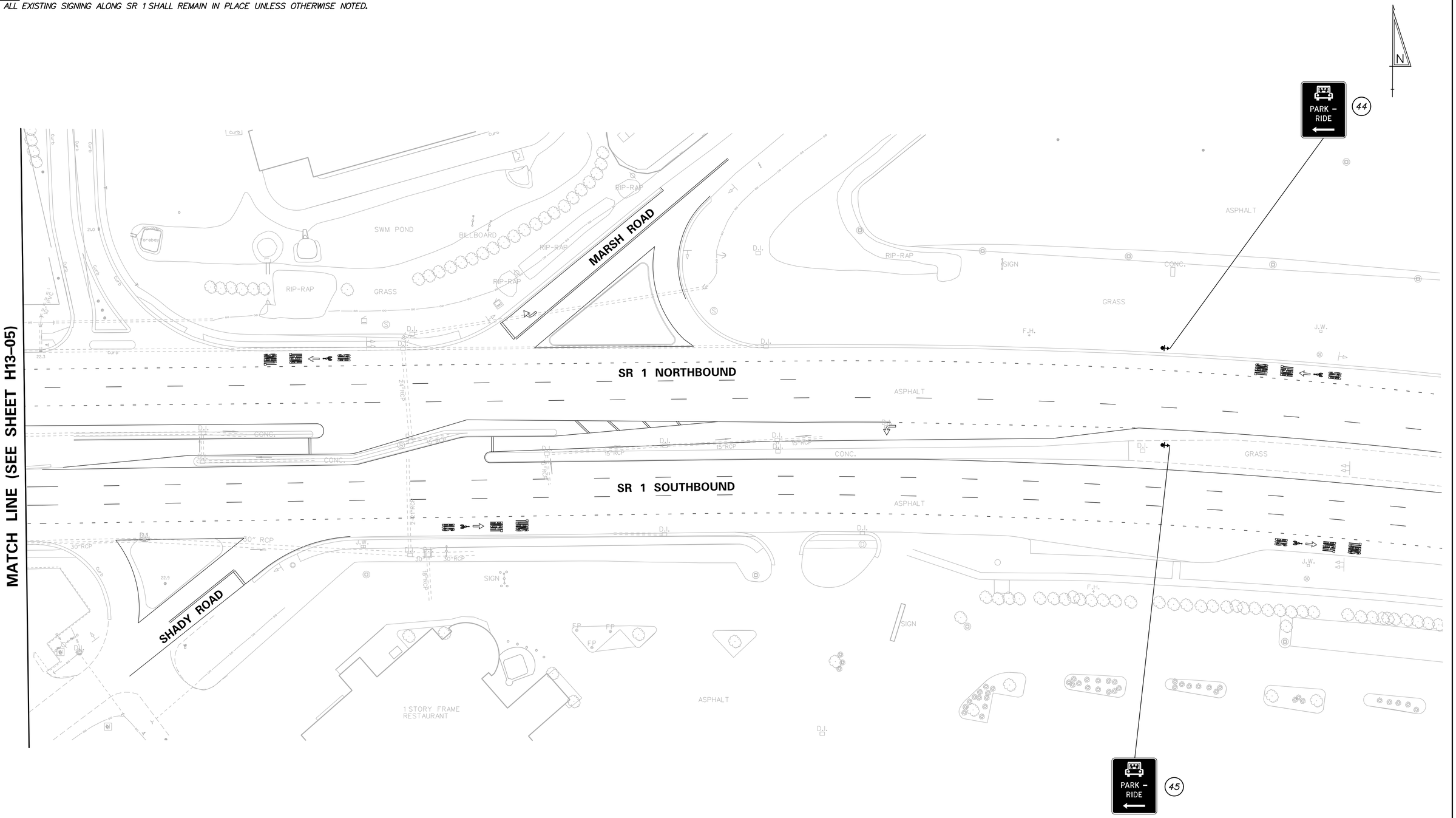

H13-06

DELAWARE DEPARTMENT OF TRANSPORTATION	ADDENDUMS / REVISIONS	SCALE 0 30 60 90 FEET	DELAWARE TRANSIT CORPORATION LEWES PARK AND RIDE AND MAINTENANCE FACILITY	CONTRACT T200612502 / COUNTY SUSSEX	BRIDGE NO. / DESIGNED BY: B.S.S. / CHECKED BY: T.A.O.	SIGNING AND STRIPING PLAN	SHEET NO. 55 / TOTAL SHTS. 185

N:\99181-004\CADD\Highway\CP01-9018100H13-06.dgn
1/22/2014 3:15:53 PM

SIGN SCHEDULE

NO.	SHEET NO.	PLAN INDICATOR	CODE	QTY.	DESCRIPTION	ASSEMBLY NO.	SIGN WIDTH (IN)	SIGN HEIGHT (IN)	SIGN AREA (SF)	ITEM 749687 SINGLE POST (EACH)			ITEM 749690 MULTI POST (SF)			POST INSTALLATION TYPE	Code X11 12' Post (W/ Basepost)	ITEM 749688 4" HOLE, 0-6" (EACH)	ITEM 749689 4" HOLE, >6" (EACH)	REMARKS
										SIGN DISPOSTION	REMOVE	INSTALL	SIGN DISPOSTION	REMOVE	INSTALL					
	H13-01	1A			Signal Ahead (Symbol)	1				REPOSITION	1	1				SOIL	0	0	0	
	H13-01	1B			"Plantation Rd"	1				REPOSITION	1	1				SOIL	0	0	0	
	H13-01	2A			"SHADY NOOK DR"	2				REMOVE	1						0	0	0	
	H13-01	2B			STATE PROPERTY NO TRESSPASSING	2				REMOVE	1						0	0	0	
4	H13-01	3	R1-1(36)		STOP	3	36"	36"	9	NEW		1				SOIL	1	0	0	
	H13-01	4			Speed Limit (35 MPH)	4				REMAIN							0	0	0	
1691	H13-01	5	D4-2(30)		PARK & RIDE - 30x36	5	30"	36"	7.5	NEW		1				SOIL	1	0	0	
	H13-02	6A			"SHADY NOOK DR"	6				REMOVE	1						0	0	0	
	H13-02	6B			STATE PROPERTY NO TRESSPASSING	6				REMOVE	1						0	0	0	
1691	H13-02	7A	D4-2(30)		PARK & RIDE - 30x36	7	30"	36"	7.5	NEW		1				SOIL	1	0	0	
305	H13-02	7B	R4-4-DE		RIGHT TURNS YIELD TO BIKE	7	36"	30"	7.5	NEW		1				SOIL		0	0	
358	H13-02	8A	R5-1(30)		DO NOT ENTER - 30x30	8	30"	30"	6.25	NEW		1				SOIL	1	0	0	
693	H13-02	8B	SR1-15-DE		STATE PROPERTY NO TRESPASSING	8	24"	12"	2	NEW		1				SOIL		0	0	
4	H13-02	9	R1-1(36)		STOP	9	36"	36"	9	NEW		1				SOIL	1	0	0	
358	H13-02	10A	R5-1(30)		DO NOT ENTER - 30x30	10	30"	30"	6.25	NEW		1				SOIL	1	0	0	
693	H13-02	10B	SR1-15-DE		STATE PROPERTY NO TRESPASSING	10	24"	12"	2	NEW		1				SOIL		0	0	
4	H13-02	11	R1-1(36)		STOP	11	36"	36"	9	NEW		1				SOIL	1	0	0	
105	H13-02	12	R3-1(24)		RIGHT TURN PROHIBITION (Symbol) - 24x24	12	24"	24"	4	NEW		1				SOIL	1	0	0	
	H13-02	13A			Welcome To (Development Sign)	13				REMAIN							0	0	0	
	H13-02	13B			Development Name	13				REMOVE	1						0	0	0	
1686	H13-02	13C	D3-2-DE2		DEVELOPMENT NAME	13	36"	24"	6	NEW		1				SOIL	0	0	0	
	H13-02	14			NO THRU TRAFFIC	14				REMAIN							0	0	0	
	H13-02	15			"TROUT LANE"	15				REMAIN							0	0	0	
	H13-02	17			Speed Limit (35 MPH)	17				REMAIN							0	0	0	
	H13-02	18A			Bicycle (Symbol)	18				REMAIN							0	0	0	
	H13-02	18B			Share the Road (Plaque)	18				REMOVE	1						0	0	0	
110	H13-02	19	R3-2(24)		LEFT TURN PROHIBITION (Symbol) - 24x24	19	24"	24"	4	NEW		1				SOIL	1	0	0	
	H13-02	20A			Weclome To (Development Sign)	20				REPOSITION	1	1				SOIL	0	0	0	
	H13-02	20B			Development Name	20				REMOVE	1						0	0	0	
1686	H13-02	20C	D3-2-DE2		DEVELOPMENT NAME	20	36"	24"	6	NEW		1				SOIL	0	0	0	
	H13-02	21A			Stop Ahead (Symbol)	21				REMAIN							0	0	0	
	H13-02	21B			"Coastal Hwy"	21				REMAIN							0	0	0	
358	H13-03	22A	R5-1(30)		DO NOT ENTER - 30x30	22	30"	30"	6.25	NEW		1				SOIL	1	0	0	
391	H13-03	22B	R5-11		AUTHORIZED VEHICLES ONLY	22	30"	24"	5	NEW		1				SOIL		0	0	
4	H13-03	23	R1-1(36)		STOP	23	36"	36"	9	NEW		1				SOIL	1	0	0	
4	H13-03	24	R1-1(36)		STOP	24	36"	36"	9	NEW		1				CONCRETE	1	0	0	
4	H13-03	25A	R1-1(36)		STOP	25	36"	36"	9	NEW		1				SOIL	1	0	0	
105	H13-03	25B	R3-1(24)		RIGHT TURN PROHIBITION (Symbol) - 24x24	25	24"	24"	4	NEW		1				SOIL		0	0	
263	H13-03	26	R3-27(24)		THRU MOVEMENT PROHIBITION (Symbol) - 24x24	26	24"	24"	4	NEW		1				SOIL	1	0	0	
358	H13-03	27A	R5-1(30)		DO NOT ENTER - 30x30	27	30"	30"	6.25	NEW		1				SOIL	1	0	0	
391	H13-03	27B	R5-11		AUTHORIZED VEHICLES ONLY	27	30"	24"	5	NEW		1				SOIL		0	0	
358	H13-03	28A	R5-1(30)		DO NOT ENTER - 30x30	28	30"	30"	6.25	NEW		1				CONCRETE	1	0	0	
391	H13-03	28B	R5-11		AUTHORIZED VEHICLES ONLY	28	30"	24"	5	NEW		1				CONCRETE			0	
					PAGE TOTALS				154.75		10	28		0	0		16	0	0	

H13-07

DELAWARE DEPARTMENT OF TRANSPORTATION

ADDENDUMS / REVISIONS

NOT TO SCALE

DELAWARE TRANSIT CORPORATION
LEWES PARK AND RIDE
AND MAINTENANCE FACILITY

CONTRACT	BRIDGE NO.	
T200612502	DESIGNED BY: B.S.S.	
COUNTY		
SUSSEX	CHECKED BY: T.A.O.	

SIGNING SCHEDULE

SHEET NO. 56

TOTAL SHTS. 185

N:\90181-004\CADD\Highway\CP01-90181004H13-07.dgn
1/22/2014 3:13:54 PM

SIGN SCHEDULE

NO.	SHEET NO.	PLAN INDICATOR	CODE	QTY.	DESCRIPTION	ASSEMBLY NO.	SIGN WIDTH (IN)	SIGN HEIGHT (IN)	SIGN AREA (SF)	ITEM 749687 SINGLE POST (EACH)			ITEM 749690 MULTI POST (SF)			POST INSTALLATION TYPE	Code X11 12' Post (W/ Basepost)	ITEM 749688 4" HOLE, 0-6" (EACH)	ITEM 749689 4" HOLE, >6" (EACH)	REMARKS
										SIGN DISPOSTION	REMOVE	INSTALL	SIGN DISPOSTION	REMOVE	INSTALL					
358	H13-03	29A	R5-1(30)		DO NOT ENTER - 30x30	29	30"	30"	6.25	NEW		1				CONCRETE	1	0	0	
391	H13-03	29B	R5-11		AUTHORIZED VEHICLES ONLY	29	30"	24"	5	NEW		1				CONCRETE			0	
110	H13-03	30	R3-2(24)		LEFT TURN PROHIBITION (Symbol) - 24x24	30	24"	24"	4	NEW		1				CONCRETE	1	0	0	
428	H13-03	31	R7-8		RESERVED PARKING (Disabilities - symbols)	31	12"	18"	1.5	NEW		1				CONCRETE	1	0	0	
428	H13-03	32	R7-8		RESERVED PARKING (Disabilities - symbols)	32	12"	18"	1.5	NEW		1				CONCRETE	1	0	0	
428	H13-03	33	R7-8		RESERVED PARKING (Disabilities - symbols)	33	12"	18"	1.5	NEW		1				CONCRETE	1	0	0	
428	H13-03	34	R7-8		RESERVED PARKING (Disabilities - symbols)	34	12"	18"	1.5	NEW		1				CONCRETE	1	0	0	
428	H13-03	35	R7-8		RESERVED PARKING (Disabilities - symbols)	35	12"	18"	1.5	NEW		1				CONCRETE	1	0	0	
428	H13-03	36	R7-8		RESERVED PARKING (Disabilities - symbols)	36	12"	18"	1.5	NEW		1				CONCRETE	1	0	0	
428	H13-03	37A	R7-8		RESERVED PARKING (Disabilities - symbols)	37	12"	18"	1.5	NEW		1				CONCRETE	1	0	0	
429	H13-03	37B	R7-8P		VAN ACCESSIBLE (plaque)	37	18"	9"	1.125	NEW		1				CONCRETE			0	
428	H13-03	38A	R7-8		RESERVED PARKING (Disabilities - symbols)	38	12"	18"	1.5	NEW		1				CONCRETE	1	0	0	
429	H13-03	38B	R7-8P		VAN ACCESSIBLE (plaque)	38	18"	9"	1.125	NEW		1				CONCRETE			0	
358	H13-03	39	R5-1(30)		DO NOT ENTER - 30x30	39	30"	30"	6.25	NEW		1				SOIL	1	0	0	
358	H13-03	40	R5-1(30)		DO NOT ENTER - 30x30	40	30"	30"	6.25	NEW		1				CONCRETE	1	0	0	
8	H13-03	50	R1-2(36)		YIELD	50	36"	36"	4.5	NEW		1				CONCRETE	1	0	0	
	H13-03	51			Distance (3 Lines)	51	84"	42"	24.5'				REPOSITION	24.5	24.5	SOIL	0	0	0	See sheets H8-01 and H13-03 for details.
1776	H13-03	52A	D9-11b(24)		ELECTRIC VEHICLE CHARGING (Symbol) - 24x24	52	24"	24"	4	NEW		1				CONCRETE	1	0	0	
1778	H13-03	52B	D9-11bP(24)		ELECTRIC VEHICLE CHARGING (plaque) - 24x18	52	24"	18"	3	NEW		1				CONCRETE			0	
1776	H13-03	53A	D9-11b(24)		ELECTRIC VEHICLE CHARGING (Symbol) - 24x24	53	24"	24"	4	NEW		1				CONCRETE	1	0	0	
1778	H13-03	53B	D9-11bP(24)		ELECTRIC VEHICLE CHARGING (plaque) - 24x18	53	24"	18"	3	NEW		1				CONCRETE			0	
1776	H13-03	54A	D9-11b(24)		ELECTRIC VEHICLE CHARGING (Symbol) - 24x24	54	24"	24"	4	NEW		1				CONCRETE	1	0	0	
1778	H13-03	54B	D9-11bP(24)		ELECTRIC VEHICLE CHARGING (plaque) - 24x18	54	24"	18"	3	NEW		1				CONCRETE			0	
1776	H13-03	55A	D9-11b(24)		ELECTRIC VEHICLE CHARGING (Symbol) - 24x24	55	24"	24"	4	NEW		1				CONCRETE	1	0	0	
1778	H13-03	55B	D9-11bP(24)		ELECTRIC VEHICLE CHARGING (plaque) - 24x18	55	24"	18"	3	NEW		1				CONCRETE			0	
1691	H13-04	41	D4-2(30)		PARK & RIDE - 30x36	41	30"	36"	7.5	NEW		1				SOIL	1	0	0	
1691	H13-04	42	D4-2(30)		PARK & RIDE - 30x36	42	30"	36"	7.5	NEW		1				SOIL	1	0	0	
1691	H13-05	43	D4-2(30)		PARK & RIDE - 30x36	43	30"	36"	7.5	NEW		1				SOIL	1	0	0	
1691	H13-06	44	D4-2(30)		PARK & RIDE - 30x36	44	30"	36"	7.5	NEW		1				SOIL	1	0	0	
1691	H13-06	45	D4-2(30)		PARK & RIDE - 30x36	45	30"	36"	7.5	NEW		1				SOIL	1	0	0	
440	H13-03	47	R7-107-DE(12)		NO PARKING (Blank) - 12"x18"	46	12"	18"	1.5"	NEW		1				CONCRETE	1	0	0	"FIRE LANE" (MOUNT ON BULDING)
440	H13-03	48	R7-107-DE(12)		NO PARKING (Blank) - 12"x18"	46	12"	18"	1.5"	NEW		1				CONCRETE	1	0	0	"FIRE LANE" (MOUNT ON BULDING)
PAGE TOTALS									112		0	31		24.5	24.5		24	0	0	
JOB TOTALS									266.75		10	59		24.5	24.5		40	0	0	

N:\90181-004\CADD\Highway\CP01-90181004H13-08.dgn
2/11/2014 11:36:32 AM

DELAWARE
DEPARTMENT OF TRANSPORTATION

ADDENDUMS / REVISIONS

NOT TO SCALE

DELAWARE TRANSIT CORPORATION
LEWES PARK AND RIDE
AND MAINTENANCE FACILITY

CONTRACT T200612502
COUNTY SUSSEX
BRIDGE NO.
DESIGNED BY: B.S.S.
CHECKED BY: T.A.O.

SIGNING SCHEDULE

H13-08
SHEET NO. 57
TOTAL SHTS. 185

GENERAL STRUCTURAL NOTES

GENERAL:

1. FIELD VERIFY ALL DIMENSIONS, LOCATIONS AND ELEVATIONS SHOWN ON CONTRACT DRAWINGS FOR EXISTING STRUCTURES. ALL DISCREPANCIES SHALL BE BROUGHT TO THE ATTENTION OF THE ENGINEER BEFORE PROCEEDING WITH THE WORK.

2. THE SIZES AND LOCATIONS OF EQUIPMENT PADS AND PEDESTALS, AS WELL AS EQUIPMENT-RELATED FLOOR AND WALL OPENINGS, ARE DEPENDENT ON THE ACTUAL EQUIPMENT FURNISHED. VERIFY AND COORDINATE ALL SUCH ITEMS. DIMENSIONS INDICATED ON THESE DRAWINGS SHALL NOT BE ALTERED WITHOUT APPROVAL OF THE ENGINEER. STRUCTURAL DRAWINGS MAY NOT SHOW ALL EQUIPMENT PADS AND OTHER EQUIPMENT SUPPORTS REQUIRED. REFER TO CIVIL, ARCHITECTURAL, MECHANICAL AND ELECTRICAL DRAWINGS.

3. FOR NOTES PERTAINING DIRECTLY TO INDIVIDUAL STRUCTURES, SEE DRAWINGS FOR THOSE STRUCTURES.

4. COORDINATE ALL ACTIVITIES, INCLUDING THOSE OF SUBCONTRACTORS, WITH DELDOT AND DART.

5. TEMPORARILY BRACE STEEL FRAMING UNTIL ALL PERMANENT BRACING AND ROOF DECKING HAVE BEEN INSTALLED, AND ALL CONNECTIONS BETWEEN THESE ELEMENTS HAVE BEEN MADE.

FOUNDATION:

1. DESIGN BEARING PRESSURE SHALL IS ASSUMED 2,000 PSF.

2. PERFORM CLEARING, GRUBBING, AND ROUGH GRADING.

3. EXCAVATE TO A DEPTH OF FOUR (4) FEET BELOW FOOTING SUBGRADE. UNDERCUT EXCAVATION WIDTH SHOULD EQUAL FOOTING WIDTH PLUS THE DEPTH OF UNDERCUT BELOW FOOTING SUBGRADE.

4. PROOF ROLL AS SPECIFIED.

5. REFILL TO FOOTING SUBGRADE WITH SUITABLE MATERIAL FROM THE EXCAVATIONS COMPACTED TO AT LEAST 95% OF AASHTO T-180 MAXIMUM DENSITY. BORROW TYPE C SHOULD BE USED IF SUFFICIENT QUANTITIES OF SUITABLE MATERIAL FROM THE EXCAVATIONS ARE NOT AVAILABLE.

6. THE CONTRACTOR MAY USE RAPID IMPACT COMPACTION AS AN ALTERNATE TO THE UNDERCUTTING OPERATION. IF THIS METHOD OF FOUNDATION PREPARATION IS CHOSEN, A PLAN FOR PERFORMING THIS WORK, ALONG WITH EVIDENCE OF COMPLETING AT LEAST FIVE PROJECTS SIMILAR IN SCOPE, SHALL BE SUBMITTED TO THE ENGINEER TWO (2) WEEKS PRIOR TO PERFORMING THE WORK.

7. KEEP ALL EXCAVATIONS DRY. STANDING WATER WILL NOT BE ALLOWED IN EXCAVATIONS. PLACE A LAYER OF 15 MIL VAPOR BARRIER AND A 6" LAYER OF CRUSHED STONE UNDER ALL SLABS ON GRADE. ALL EXCAVATIONS SHALL BE INSPECTED AND APPROVED BY THE ENGINEER BEFORE PLACING ANY CONCRETE OR CRUSHED STONE.

8. FOR MECHANICAL AND ELECTRICAL WORK TO BE INCORPORATED IN FOUNDATION WORK, SEE MECHANICAL AND ELECTRICAL DRAWINGS.

9. FILL ALL EXCESS EXCAVATION BELOW THE ELEVATION OF THE CONCRETE AS SPECIFIED.

CONCRETE:

1. PROVIDE CONCRETE WITH A MINIMUM COMPRESSIVE STRENGTH OF 4500 PSI AT 28 DAYS.

2. DETAIL AND CONSTRUCT REINFORCED CONCRETE IN ACCORDANCE WITH AMERICAN CONCRETE INSTITUTE ACI 301, "SPECIFICATION FOR STRUCTURAL CONCRETE."

3. DETAIL REINFORCING STEEL IN ACCORDANCE WITH AMERICAN CONCRETE INSTITUTE SP-66, "ACI DETAILING MANUAL," WHICH INCLUDES ACI 315, "DETAILS AND DETAILING OF CONCRETE REINFORCEMENT."

4. PROVIDE REINFORCEMENT CONFORMING TO ASTM A 615, GRADE 60, DEFORMED BARS.

5. PROVIDE WELDED WIRE FABRIC CONFORMING TO ASTM A 185.

6. UNLESS NOTED OTHERWISE ON THE DRAWINGS, THE CONCRETE COVER FOR REINFORCEMENT SHALL BE AS FOLLOWS:

   A. BOTTOM BARS IN FOOTINGS AND IN SLABS ON EARTH OR GRAVEL: 3".
   B. SLABS AND WALLS EXPOSED TO GROUND, WEATHER AFTER REMOVAL OF FORMS: 2".
   C. COLUMNS, WALLS AND PIERS NOT EXPOSED TO WEATHER: 1-1/2".
   D. STRUCTURAL SLABS NOT EXPOSED TO GROUND, WEATHER OR TRUCK TRAFFIC: 1".

7. SUBMIT REINFORCING STEEL DETAILS (SHOP DRAWINGS) AND RECEIVE APPROVAL BEFORE PROCEEDING WITH FABRICATION.

8. CHAMFER ALL EXPOSED CONCRETE EDGES 3/4" UNLESS OTHERWISE NOTED.

9. DETAIL ALL SPLICES FOR REINFORCING BARS NOT DIMENSIONED ON THE DRAWINGS AS TABULATED ON SHEET S-002.

10. POUR CONCRETE SLABS AND WALLS BETWEEN INDICATED JOINTS, ALLOWING A MINIMUM ELAPSED PERIOD OF 3 DAYS BETWEEN ADJACENT POURS.

11. PROVIDE JOINTS AS DETAILED ON THE DRAWINGS. NO ADDITIONAL JOINTS SHALL BE USED NOR ANY OMITTED EXCEPT BY WRITTEN AUTHORIZATION FROM THE ENGINEER. APPROVED ADDITIONAL JOINTS SHALL NOT RESULT IN ADDITIONAL EXPENSE TO THE OWNER.

CONCRETE (CONTINUED):

12. WHERE A SLAB IS SLOPED (TOP AND/OR BOTTOM), PROVIDE SLOPED REINFORCING PARALLEL TO THE CONCRETE SURFACE.

13. SIZE AND LOCATE ANCHOR BOLTS AND EQUIPMENT PADS OR PEDESTALS TO SUIT EQUIPMENT FURNISHED.

14. REVIEW ALL DRAWINGS FROM OTHER DISCIPLINES AND COORDINATE ALL OPENINGS AND EMBEDDED ITEMS SUCH AS SLEEVES, ANCHORS, CONDUIT, ETC. THAT WILL BE INCORPORATED INTO CONCRETE WORK.

15. PROVIDE BONDING COMPOUND AT ALL LOCATIONS IN WHICH FRESH CONCRETE COMES IN CONTACT WITH CURED CONCRETE.

CONCRETE MASONRY:

1. CONSTRUCT MASONRY IN ACCORDANCE WITH AMERICAN CONCRETE INSTITUTE ACI-530/ ASCE 5/ TMS 402, 2011 "BUILDING CODE REQUIREMENTS FOR MASONRY STRUCTURES."

2. PROVIDE HOLLOW LIGHTWEIGHT LOAD-BEARING CONCRETE MASONRY UNITS MEETING THE REQUIREMENTS OF ASTM C 90, WITH A MINIMUM NET AREA COMPRESSIVE STRENGTH OF 2,150 PSI.

3. PROVIDE MORTAR CONFORMING TO THE REQUIREMENTS OF ASTM C-270, TYPE N. CEMENT USED FOR MORTAR SHALL BE PORTLAND CEMENT.

4. PROVIDE GROUT CONFORMING TO THE REQUIREMENTS OF ASTM C 476 COARSE GROUT, WITH A MINIMUM COMPRESSIVE STRENGTH OF 2,000 PSI AT 28 DAYS.

5. PROVIDE CONCRETE MASONRY VENEER WITH A MINIMUM NET AREA COMPRESSIVE STRENGTH (F'm) OF 1,500 PSI.

6. PROVIDE REINFORCING BARS CONFORMING TO ASTM A 615, GRADE 60.

7. IN ADDITION TO THE MASONRY WALL REINFORCEMENT SHOWN ON THE DRAWINGS, FURNISH THE FOLLOWING:

   #5 VERTICAL REINFORCEMENT SHALL BE PROVIDED AT CORNERS, WITHIN 16 INCHES OF EACH SIDE OF OPENINGS, WITHIN 8 INCHES OF EACH SIDE OF MOVEMENT JOINTS AND WITHIN 8 INCHES OF THE ENDS OF THE WALLS.

POST-INSTALLED ANCHORS:

EXCEPT WHERE INDICATED ON THE DRAWINGS, POST-INSTALLED ANCHORS SHALL CONSIST OF THE FOLLOWING ANCHORAGE TYPES:

1. ANCHORAGE TO SOLID GROUTED MASONRY AND CONCRETE, ADHESIVE ANCHORS FOR CRACKED AND UNCRACKED USE:

   A. HILTI HIT HY-200 ADHESIVE ANCHORING SYSTEM, PER ICC ESR-3187.

2. ANCHORAGE TO HOLLOW / MULTI-WHYTHE MASONRY, ADHESIVE ANCHORS FOR USE:

   A. HILTI HIT HY-70 MASONRY ADHESIVE ANCHORING SYSTEM, PER ICC ESR 3342.

3. INSTALL ANCHORS PER THE MANUFACTURER'S INSTRUCTIONS.

4. SUBSTITUTION REQUESTS FOR ALTERNATE PRODUCTS MUST BE APPROVED IN WRITING BY THE STRUCTURAL ENGINEER OF RECORD, PRIOR TO USE. CONTRACTOR SHALL PROVIDE CALCULATIONS DEMONSTRATING THAT THE SUBSTITUTED PRODUCT IS CAPABLE OF ACHIEVING THE PERFORMANCE VALUES OF THE SPECIFIED PRODUCT. SUBSTITUTIONS WILL BE EVALUATED BY THEIR HAVING AN ICC ESR SHOWING COMPLIANCE WITH RELEVANT BUILDING CODE FOR SEISMIC USES, LOAD RESISTANCE, INSTALLATION CATEGORY AND AVAILABILITY OF COMPREHENSIVE INSTALLATION INSTRUCTIONS. ADHESIVE ANCHOR EVALUATION WILL ALSO CONSIDER CREEP, IN-SERVICE TEMPERATURE AND INSTALLATION TEMPERATURE.

5. ARRANGE AN ANCHOR MANUFACTURER'S REPRESENTATIVE TO PROVIDE ONSITE INSTALLATION TRAINING FOR ALL OF THEIR ANCHORING PRODUCTS SPECIFIED. THE STRUCTURAL ENGINEER OF RECORD MUST RECEIVE DOCUMENTED CONFIRMATION THAT ALL OF THE CONTRACTOR'S PERSONNEL WHO INSTALL ANCHORS ARE TRAINED PRIOR TO THE COMMENCEMENT OF INSTALLING OF ANCHORS.

6. INSTALL ANCHORS IN ACCORDANCE WITH SPACING AND EDGE CLEARANCES WHERE INDICATED ON THE DRAWINGS AND MANUFACTURER'S REQUIREMENTS.

STRUCTURAL STEEL:

1. FABRICATE AND ERECT STRUCTURAL STEEL CONFORMING TO THE REQUIREMENTS OF AMERICAN INSTITUTE OF STEEL CONSTRUCTION (AISC), "STEEL CONSTRUCTION MANUAL", 14TH EDITION, AISC 360-10.

2. SUBMIT ERECTION PLANS AND SHOP DETAILS AND RECEIVE APPROVAL BEFORE PROCEEDING WITH FABRICATION.

3. PROVIDE STRUCTURAL STEEL WIDE-FLANGE SHAPES CONFORMING TO ASTM A992 (Fy=50 KSI), HSS MEMBERS CONFORMING TO ASTM A500, GRADE B (RECTANGULAR/SQUARE HSS, Fy=46 KSI; ROUND HSS, Fy=42 KSI) AND ALL OTHER MEMBERS CONFORMING TO ASTM A36 (Fy=36KSI).

4. PROVIDE HEAVY HEX HEAD ANCHORS CONFORMING TO ASTM F1554, GRADE 105 FOR COLUMN BASE PLATE ANCHORAGE. HEAVY HEX AND NUTS CONFORMING TO ASTM A563, GRADE DH (HEAVY HEX). REFER TO SECTIONS AND DETAILS ON THE SHEETS FOR SIZE AND EMBEDMENT DEPTHS.

5. ALL BOLTED SHEAR CONNECTIONS ARE HIGH-STRENGTH BOLTS, 3/4" DIAMETER MINIMUM, CONFORMING TO ASTM A-325N, UNLESS OTHERWISE NOTED.

6. PROVIDE ALL SPLICED CONNECTIONS WITH COMPRESSIBLE-WASHER-TYPE DIRECT-TENSION INDICATORS CONFORMING TO ASTM F959.

7. WELD IN COMPLIANCE WITH AMERICAN WELDING SOCIETY AWS D1.1, "STRUCTURAL WELDING CODE." WELD ALL SHOP CONNECTIONS WITH CLASS E-70 SERIES ELECTRODES. PROVIDE FIELD CONNECTIONS WITH HIGH STRENGTH BOLTED CONNECTIONS EXCEPT WHERE NOTED.

STRUCTURAL STEEL (CONTINUED):

8. CONNECTIONS TO BE DESIGNED BY THE CONTRACTOR ARE AS INDICATED IN THE DRAWINGS. INDICATED CONNECTIONS SHALL BE DESIGNED AND DETAILED BY THE CONTRACTOR FOR THE MEMBER FORCES (INDICATED AND NOT INDICATED) ON THESE DRAWINGS. IF DESIGN MEMBER FORCE VALUE IS NOT SHOWN, THE CONNECTIONS SHALL BE DESIGNED FOR HALF THE MAXIMUM LOADING CAPACITY OF THE MEMBER. CALCULATIONS FOR ALL CONNECTIONS SHALL BE SIGNED AND SEALED BY A PROFESSIONAL ENGINEER CURRENTLY REREGISTERED IN THE STATE OF DELAWARE AND SUBMITTED FOR REVIEW AND APPROVAL.

9. MOMENT CONNECTIONS INDICATED ON THESE DRAWINGS THAT ARE NOT SPECIFICALLY DETAILED, SHALL BE DESIGNED BY THE CONTRACTOR FOR THE SERVICE LEVEL MOMENT PROVIDED ON THE DRAWINGS. IF THE DESIGN MOMENT VALUE IS NOT PROVIDED, THE CONNECTION SHALL DEVELOP THE FULL MOMENT CAPACITY.

10. MILL BOTTOM OF ALL COLUMNS AND FINISH TOP OF ALL BASE PLATES IN ACCORDANCE WITH AISC SPECIFICATIONS. WELD BASE PLATES TO BOTTOM OF COLUMNS.

11. DO NOT SHOP-PRIME STEEL SURFACES TO BE EMBEDDED IN CONCRETE, OR AT DESIGNATED FIELD-WELD LOCATIONS.

12. GALVANIZE AND FIELD PAINT ALL STEEL EXPOSED TO THE ELEMENTS.

STEEL DECK:

1. FABRICATE AND ERECT ALL STEEL DECK CONFORMING TO THE REQUIREMENTS OF "STEEL DECK INSTITUTE" (SDI) DESIGN MANUAL FOR COMPOSITE DECKS, FORM DECKS AND ROOF DECKS - NO. 31.

2. STEEL DECK SHALL BE FABRICATED OF G-90, GALVANIZED SHEETS CONFORMING TO ASTM A653-11, STRUCTURAL QUALITY, FEDERAL SPECIFICATION QQS-775, AND MEET OR EXCEED THE PROPERTIES GIVEN ON THE "MINIMUM REQUIRED STEEL DECK PROPERTIES" TABLE ON SHEET S-002.

3. SUBMIT ERECTION PLANS AND SHOP DETAILS AND RECEIVE APPROVAL BEFORE PROCEEDING WITH FABRICATION AND ERECTION. FAILURE TO COMPLY MAY RESULT IN CORRECTIVE WORK AT THE CONTRACTOR'S EXPENSE.

4. STAGGERING OF STEEL DECK END LAPS SHALL NOT BE PERMITTED.

5. DECK ENDS MAY BE EITHER BUTTED OR LAPPED OVER SUPPORTS.

6. STEEL DECK UNITS SHALL BE ANCHORED TO SUPPORTING MEMBERS BY MECHANICAL FASTENERS AS SHOWN ON THE DRAWINGS.

7. ALL FIELD WELDING OF DECK SHALL BE IN STRICT ACCORDANCE WITH AWS D1.3 STRUCTURAL WELDING CODE - SHEET METAL.

8. STEEL DECK UNITS SHALL BE ANCHORED BY SUPPORTING MEMBERS INCLUDING PERIMETER SUPPORT STEEL AND/OR BEARING WALLS BY EITHER WELDING OR MECHANICAL FASTENERS, TO PROVIDE LATERAL STABILITY TO THE TOP FLANGE OF STEEL MEMBERS AND TO RESIST THE FOLLOWING MINIMUM GROSS UPLIFTS:

   A. AT CANOPY AND OVERHANGS: 18 PSF

STEEL JOIST:

1. DESIGN DRAWINGS SHOW FINAL STEEL JOIST CONDITIONS AND SIZES SCHEMATICALLY ONLY. COORDINATE ACTUAL JOIST MEMBER SIZES AND CONFIGURATIONS WITH THE STEEL JOIST FABRICATOR/MANUFACTURER. THE CONTRACTOR/ERECTOR IS SOLELY RESPONSIBLE FOR INSURING THE STABILITY OF THE STRUCTURE DURING CONSTRUCTION.

2. HANGERS SUPPORTING MECHANICAL EQUIPMENT FROM JOIST CHORDS SHALL BE LOCATED WITHIN 3 INCHES OF JOIST PANEL POINTS OR JOIST SHALL BE REINFORCED PER JOIST REINFORCEMENT DETAIL. HANGER LOADS GREATER THAN 150 POUNDS SHALL NOT BE ATTACHED TO THE EDGE OF CHORD ANGLES AND SHALL BE CENTERED ON JOIST CHORD.

3. JOISTS SHALL BE DESIGNED TO RESIST THE DESIGN GRAVITY AND THE NET UPLIFT PRESSURE ON ROOF AS SHOWN IN THE DESIGN LOADS ON THIS SHEET.

4. DIAGONAL BRIDGING SHALL BE PROVIDED BETWEEN ADJACENT JOISTS WHENEVER BOTTOM CHORD HORIZONTAL BRIDGING IS DISCONTINUOUS.

5. THE LIVE LOAD DEFLECTION LIMIT FOR JOISTS SHALL BE LIMITED TO L/360.

6. SPECIAL JOISTS THAT REQUIRE SPECIFIC ORIENTATION SHALL BE TAGGED AT ONE END. DEFINE LOCATION OF TAGGED END ON ERECTION DRAWING.

7. JOIST SEATS AND CONNECTIONS SHALL BE DESIGNED FOR A SERVICE LEVEL LATERAL ROLL-OVER FORCE OF 2 KIPS IN ADDITION TO REQUIRED DESIGN LOADS.

COLD-FORMED STEEL:

1. FABRICATE AND ERECT COLD FORMED STEEL FRAMING CONFORMING TO THE REQUIREMENTS OF THE AMERICAN IRON AND STEEL INSTITUTE (AISI) "NORTH AMERICAN SPECIFICATION FOR THE DESIGN OF COLD-FORMED STEEL STRUCTURAL MEMBERS", LATEST EDITION.

2. COLD FORMED STEEL MEMBERS SHALL MEET OR EXCEED THE MINIMUM REQUIRED SECTION PROPERTIES AND GEOMETRIES AS PROPOSED BY THE STEEL STUD MANUFACTURERS ASSOCIATION FOR INDUSTRY STANDARDIZATION (SSMA).

3. ALL COLD FORMED STEEL MEMBERS ON THESE DRAWINGS ARE IDENTIFIED IN SSMA PRODUCT DESIGNATIONS.

4. COLD FORMED MATERIALS SHALL BE FORMED OF STEEL CONFORMING TO ASTM A446 "STEEL SHEET, ZINC COATED (GALVANIZED) BY THE HOT-DIP PROCESS, STRUCTURAL QUALITY." MANUFACTURE IS TO BE IN COMPLIANCE WITH ASTM C955 "LOAD BEARING STEEL STUDS" AND ASTM C1007 "INSTALLATION OF LOAD BEARING STEEL STUDS AND RELATED ACCESSORIES."

5. ALL COLD-FORMED MEMBERS 16 GAUGE (54 MIL) AND HEAVIER SHALL HAVE A MINIMUM YIELD STRENGTH OF 50 KSI, UNLESS SPECIFICALLY NOTED OTHERWISE.

6. ALL 18 GAUGE AND LIGHTER MEMBERS, INCLUDING TRACK, BRIDGING AND ACCESSORY ITEMS SHALL HAVE A MINIMUM YIELD STRENGTH OF 33 KSI, UNLESS NOTED OTHERWISE.

COLD-FORMED STEEL (CONTINUED):

7. ALL SUPPORT CLIPS, SLIDE CLIP AND CLIP ANGLES SHALL BE 50 KSI, UNLESS OTHERWISE NOTED.

8. WEB STIFFENERS AT REACTION POINTS AND AT POINTS OF CONCENTRATED LOADS SHALL BE 16 GAUGE MINIMUM.

9. WHENEVER POSSIBLE, WEBS OF ALL HORIZONTAL AND VERTICAL MEMBERS SHALL BE ALIGNED.

10. ALL FRAMING COMPONENTS WILL BE SQUARELY CUT FOR ATTACHMENT TO PERPENDICULAR MEMBERS OR AS REQUIRED ON ANGULAR FIT AGAINST ABUTTING MEMBERS. MEMBERS WILL BE HELD POSITIVELY IN PLACE UNTIL PROPERLY FASTENED.

11. ALL FIELD CUTTING OF MEMBERS MUST BE DONE BY SAWING OR SHEARING. TORCH CUTTING OF COLD FORMED MEMBERS IS UNACCEPTABLE AND NOT PERMITTED.

12. WHEN REQUIRED FOR BRIDGING PURPOSES, THE CONTRACTOR IS TO ENSURE PUNCH OUT ALIGNMENT WHEN ASSEMBLING FRAMING AND FIELD CUTTING MEMBERS TO LENGTH.

13. NO SPLICES IN ALL LOAD-CARRYING COLD FORMED MEMBERS MAY BE MADE WITHOUT PRIOR ENGINEERING REVIEW AND SPECIFIC DETAILS FOR ANY SUCH SPLICE(S).

14. NO NOTCHING OR COPING OF COLD FORMED MEMBERS IS ALLOWED, UNLESS SPECIFICALLY INDICATED ON THE DRAWINGS.

CODES AND STANDARDS:

1. INTERNATIONAL CODE COUNCIL (ICC) INTERNATIONAL BUILDING CODE (IBC) 2012, INCLUDING THE MODIFICATIONS MADE BY LOCAL JURISDICTION.

2. AMERICAN SOCIETY OF CIVIL ENGINEERS (ASCE), ASCE 7-10 (2010), MINIMUM DESIGN LOADS FOR BUILDING AND OTHER STRUCTURES.

3. AMERICAN INSTITUTE OF STEEL CONSTRUCTION (AISC), AISC 360-10 (2010), "SPECIFICATION FOR STRUCTURAL STEEL BUILDINGS."

4. AMERICAN CONCRETE INSTITUTE (ACI), ACI-318-11 (2011), BUILDING CODE REQUIREMENTS FOR REINFORCED CONCRETE.

5. AMERICAN CONCRETE INSTITUTE (ACI), ACI 530-11 (2011), "BUILDING CODE REQUIREMENTS FOR MASONRY STRUCTURES."

6. STEEL DECK INSTITUTE (SDI), "DESIGN MANUAL FOR COMPOSITE DECKS, FORM DECKS AND ROOF DECKS - NO. 31 (2007)."

7. STEEL JOIST INSTITUTE (SJI), "STANDARD SPECIFICATIONS, LOAD TABLES, AND WEIGHT TABLES FOR STEEL JOISTS AND JOIST GIRDERS" (2010) AND "CODE OF STANDARD PRACTICE FOR STEEL JOISTS AND JOIST GIRDERS" (2010).

8. AMERICAN IRON AND STEEL INSTITUTE (AISI), AISI S100-12, "NORTH AMERICAN SPECIFICATION FOR DESIGN OF COLD-FORMED STEEL STRUCTURAL MEMBERS," 2012 EDITION.

DESIGN LOADS:

ALL LOADS INDICATED BELOW ARE UNFACTORED LOADS.

1. DEAD LOADS:
   A. STRUCTURES: ACTUAL WEIGHT
   B. WEIGHT OF SOIL 100 PCF FOR RESISTING UPLIFT
   C. WEIGHT OF SOIL 120 PCF FOR DEAD LOAD
   D. HANGING (MEP) 15 PSF

2. LIVE LOADS:
   A. MAINTENANCE BAYS, SHOP AND STORAGE AREAS, AND SHOP OFFICES: 250 PSF OR AASHTO HS-20 TRUCK LOADING.
   B. ALL OTHER FIRST FLOOR AREAS: 150 PSF
   C. MEZZANINE: 250 PSF
   D. STAIRS AND LANDINGS: 100 PSF

3. ROOF LIVE LOADS:
   A. CANOPY AND UPPER LEVEL: 25 PSF + 5 PSF FOR PV PANELS
   B. ALL OTHER AREAS: 25 PSF

4. ROOF SNOW LOAD:
   A. GROUND SNOW LOAD (Pg): 20 PSF
   B. REQUIRED FLAT-ROOF SNOW LOAD (Pf): 20 PSF
   C. SNOW EXPOSURE FACTOR (Ce): 0.9
   D. SNOW LOAD IMPORTANCE FACTOR (I): 1.0
   E. THERMAL FACTOR (Ct): 1.0
   F. ADDITIONAL SNOW LOAD DUE TO SNOW DRIFT AND SLIDING SNOW PER ASCE 7-10 HAS BEEN CONSIDERED WHERE APPLICABLE.

5. WIND LOAD:
   A. BASIC WIND SPEED, V: 121 MPH
   B. RISK CATEGORY: II
   C. WIND EXPOSURE: B
   D. INTERNAL PRESSURE COEFFICIENT: +/- 0.18
   E. COMPONENTS AND CLADDING: per ASCE 7-10
   F. DESIGN NET UPLIFT PRESSURE ON ROOF: 10 PSF

6. SEISMIC LOAD:
   A. RISK CATEGORY : II
   B. SEISMIC IMPORTANCE FACTOR Ie: 1.0
   C. MAPPED SPECTRAL RESPONSE ACCELERATIONS: Ss= 0.100 g, AND S1= 0.045 g.
   D. SITE CLASS: D
   E. SPECTRAL RESPONSE COEFFICIENT: SDS = 0.108g; SD1 = 0.072g.
   F. SEISMIC DESIGN CATEGORY: B
   G. BASIC SEISMIC-FORCE-RESISTING SYSTEM(S): STEEL SYSTEM NOT SPECIFICALLY DESIGNED FOR SEISMIC RESISTANCE EXCLUDING CANTILEVER COLUMNS
   H. SEISMIC RESPONSE COEFFICIENT(S) (Cs): 0.041
   I. RESPONSE MODIFICATION FACTOR(S) (R): 3

S-001

STRUCTURAL ABBREVIATIONS

ALUM	ALUMINUM
ARCH	ARCHITECTURAL
CJ	CONSTRUCTION JOINT
CL	CENTERLINE
CLR	CLEAR
CMU	CONCRETE MASONRY UNIT
COL	COLUMN
CONC	CONCRETE
DWG	DRAWING
DIA	DIAMETER
EL	ELEVATION
ELEC	ELECTRICAL
EF	EACH FACE
EMBED	EMBEDMENT
EW	EACH WAY
EX	EXISTING
EXP	EXPANSION
GA	GAUGE
GALV	GALVANIZED
HP	HIGH POINT
JT	JOINT
LB	POUND
LLV	LONG LEG VERTICAL
LP	LOW POINT
LSV	LONG SIDE VERTICAL
MAX	MAXIMUM
MECH	MECHANICAL
MIN	MINIMUM
PL	PLATE
PSF	POUND PER SQUARE FOOT
PSI	POUND PER SQUARE INCH
OC	ON CENTER
OPP	OPPOSITE HAND
SCH	SCHEDULE
SHT	SHEET
SIM	SIMILAR
SJ	CONTROL JOINT
SS	STAINLESS STEEL
TOS	TOP OF STEEL
TYP	TYPICAL
TO	TOP OF
UON	UNLESS OTHERWISE NOTED
WP	WORKING POINT
WWF	WELDED WIRE FABRIC

LAP SPLICE LENGTH						MINIMUM TENSION EMBEDMENTS			
BAR SIZE		SLAB AND WALL		BEAM		STD 90° HOOK		STD 180° HOOK	
SOFT METRIC	ENGLISH	OTHER BARS	TOP BARS	OTHER BARS	TOP BARS	ldh	12db	ldh	4db
#10	#3	12"	14"	12"	14"	6"	5"	6"	3"
#13	#4	14"	19"	18"	23"	7"	6"	7"	3"
#16	#5	18"	23"	26"	34"	8"	8"	8"	3"
#19	#6	21"	28"	35"	46"	10"	9"	10"	3"
#22	#7	35"	45"	51"	67"	11"	11"	11"	4"
#25	#8	44"	57"	59"	76"	13"	12"	13"	4"
#29	#9	54"	70"	66"	86"	15"	14"	15"	5"
#32	#10	66"	86"	74"	96"	16"	16"	16"	6"
#36	#11	79"	103"	82"	107"	18"	17"	18"	6"

LAP SPLICE ASSUMPTIONS:

CONCRETE: 4500 PSI COMPRESSIVE STRENGTH (NORMALWEIGHT CONCRETE)

SLAB AND WALL: 6" MINIMUM REBAR SPACING WITH CONCRETE COVER = 1.5" CLEAR

BEAM: MINIMUM CLEAR SPACING BETWEEN BARS = 1.5 db (1.5" MIN). MINIMUM CONCRETE COVER = 1.5" CLEAR. MINIMUM STIRRUP #4@12" PROVIDED.

TOP BAR: TOP BAR FOR SLAB AND BEAM SHALL BE DEFINED AS REINFORCEMENT SO PLACED THAT MORE THAN 12" OF CONCRETE IS CAST BELOW THE SPLICE.

TENSION LAP SPLICE AND STANDARD HOOK LENGTH (ACI 318-11)

(NON-EPOXY COATED)

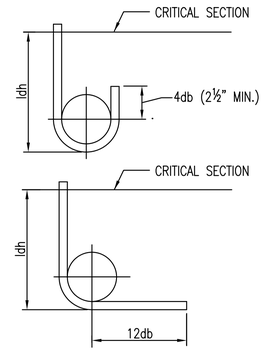

STANDARD HOOK ASSUMPTIONS:

SIDE COVER SHALL NOT BE LESS THAN 2.5"
END COVER ON 90° HOOK SHALL NOT BE LESS THAN 2"

STANDARD 180° AND 90° END HOOKS

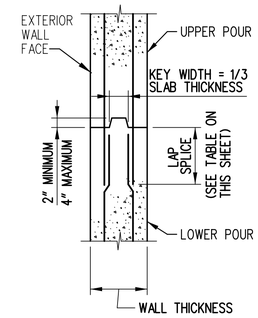

HORIZONTAL JOINT

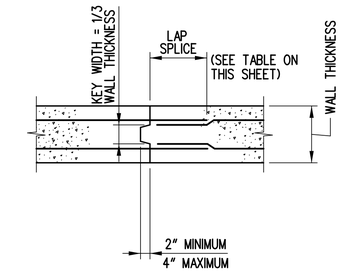

VERTICAL JOINT

CONSTRUCTION JOINTS IN WALLS

NO SCALE

MINIMUM REQUIRED STEEL DECK PROPERTIES

DECK LOCATION	DEPTH (IN)	DESIGN THICKNESS (IN)	I(Pos) (IN^4/FT)	I(Neg) (IN^4/FT)	S (Pos) (IN^3/FT)	S (Neg) (IN^3/FT)	Fy (ksi)
UPPER ROOF	3"	0.474	1.238	1.430	0.688	0.749	33
WASH BAY ROOF	3"	0.474	1.238	1.430	0.688	0.749	33
OTHER LOWER ROOFS AND BUS CANOPY	1 1/2"	0.474	0.289	0.295	0.318	0.327	33
MEZZANINE	2"	0.474	0.559	0.558	0.495	0.504	50

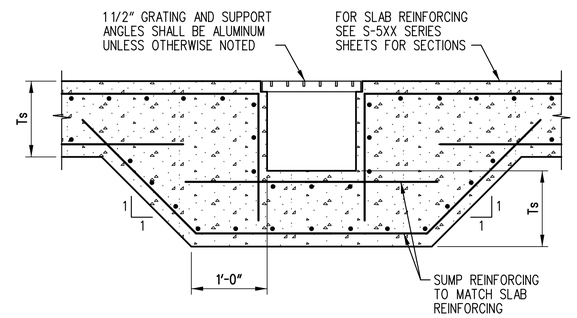

TYPICAL SUMP DETAIL

NO SCALE

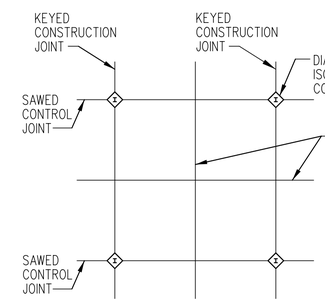

TYPICAL SLAB ON GRADE JOINTING DETAIL

NO SCALE

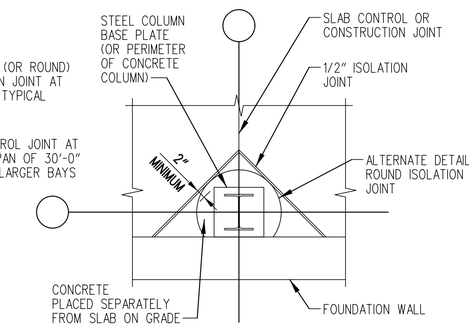

TYPICAL ISOLATION JOINT DETAIL AT EXTERIOR COLUMN

NO SCALE

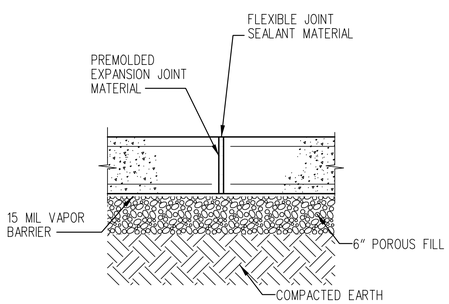

TYPICAL SLAB ISOLATION/EXPANSION JOINT

NO SCALE

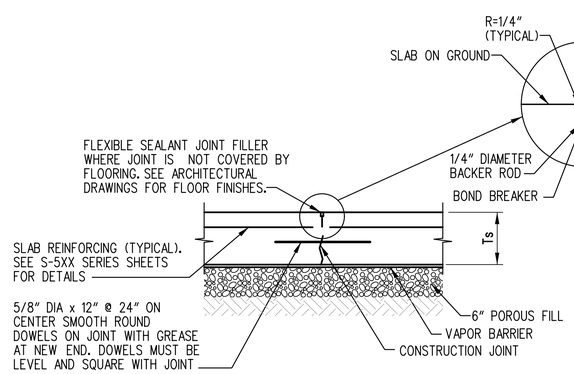

NOTE: Ts = SLAB THICKNESS

TYPICAL CONSTRUCTION JOINT IN SLAB-ON-GRADE

NO SCALE

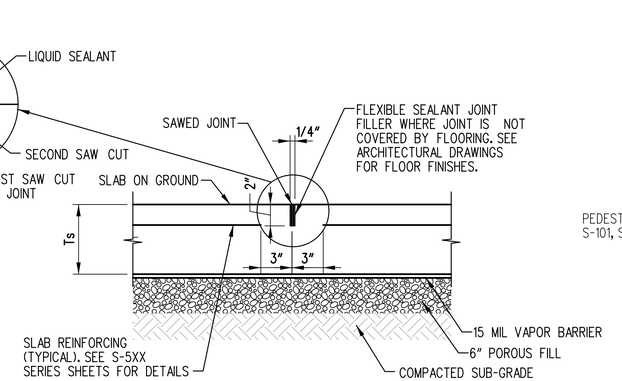

NOTE: Ts = SLAB THICKNESS

TYPICAL SLAB CONTROL JOINT DETAIL

NO SCALE

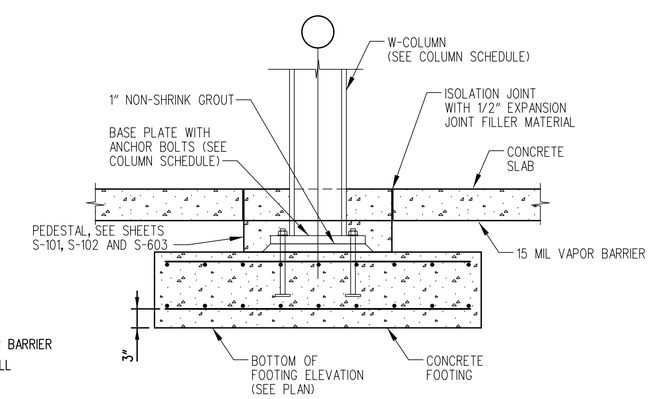

TYPICAL INTERIOR W-COLUMN BASE

NO SCALE

N:\90181-004\CADD\CP01-90181004S-002.dgn
1/16/2014 9:44:58 AM

DELAWARE DEPARTMENT OF TRANSPORTATION

ADDENDUMS / REVISIONS

DELAWARE TRANSIT CORPORATION
LEWES PARK AND RIDE AND MAINTENANCE FACILITY

CONTRACT	BRIDGE NO.	
T200612502	DESIGNED BY:	GAP
COUNTY		
SUSSEX	CHECKED BY:	RBG

STRUCTURAL TYPICAL DETAILS

S-002

SHEET NO. 59

TOTAL SHTS. 185

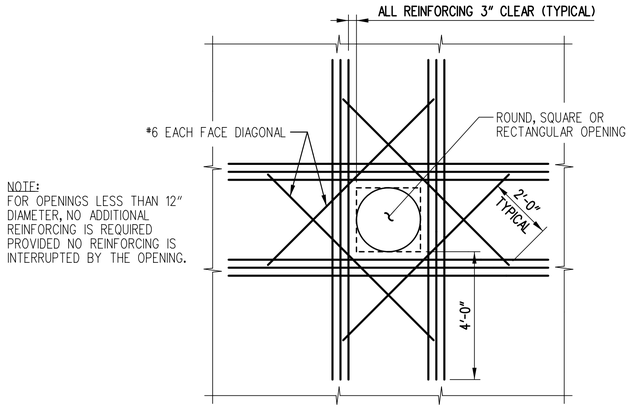

ADDITIONAL REINFORCING AROUND OPENINGS

NO SCALE

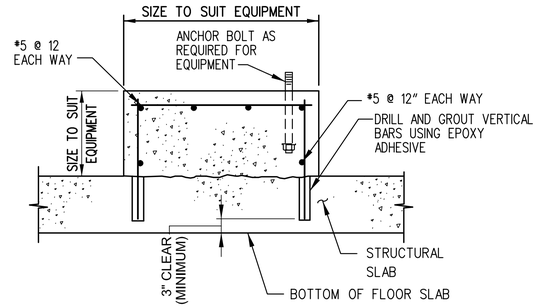

TYPICAL INTERIOR EQUIPMENT SUPPORT

NO SCALE

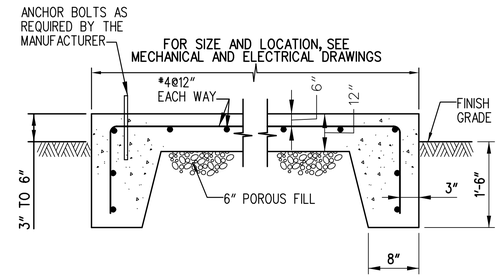

TYPICAL EXTERIOR EQUIPMENT PAD DETAIL

NO SCALE

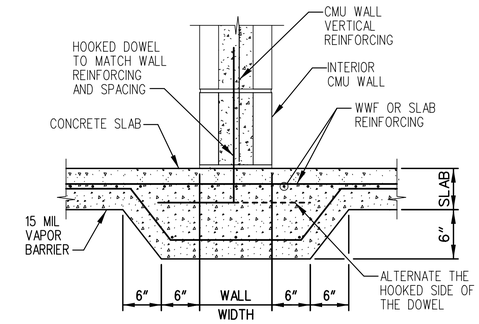

THICKENED SLAB AT PARTITION WALL

NO SCALE

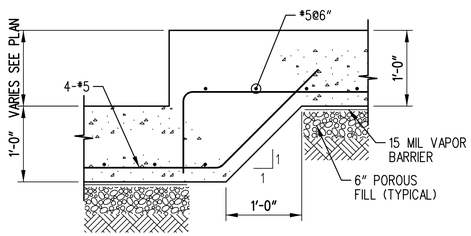

TYPICAL STEP FOOTING DETAIL

SCALE: NONE

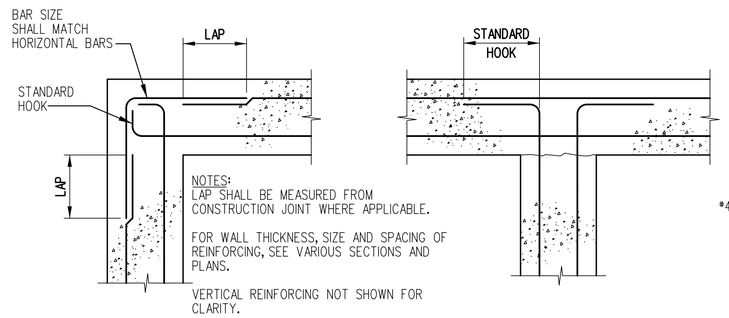

REINFORCING DETAILS AT WALL INTERSECTIONS

NO SCALE

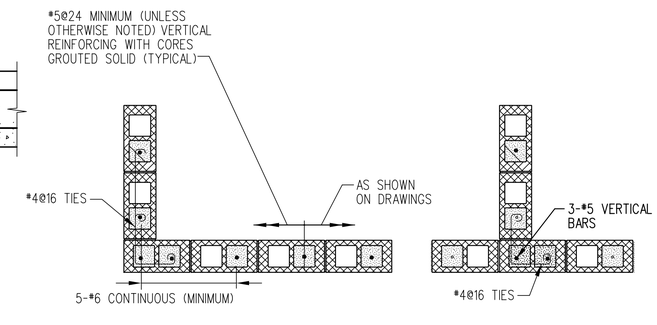

TYPICAL CMU WALL REINFORCING DETAILS

NO SCALE

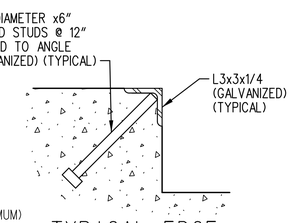

TYPICAL EDGE ANGLE DETAIL

SCALE: NONE

NOTES
1. GROUT CELLS WHERE LINTEL BARS ARE SOLID FOR 1' (MINIMUM) BEYOND OPENING
2. FOR (1) OPENINGS, CMU LINTEL IS 8" DEEP (UNLESS OTHERWISE NOTED)
   FOR (2) OPENINGS, CMU LINTEL IS 16" DEEP (UNLESS OTHERWISE NOTES)
   FOR (3) OPENINGS, CMU LINTEL IS 24" DEEP, (UNLESS OTHERWISE NOTED)
3. BOND BEAM REINFORCEMENT NOT SHOWN FOR CLARITY.

LEGEND:
(1) OPENING 2'-0" OR LESS
(2) OPENING GREATER THAN 2'-0" BUT LESS THAN 4'-0"
(3) OPENING EQUALS 4'-0"

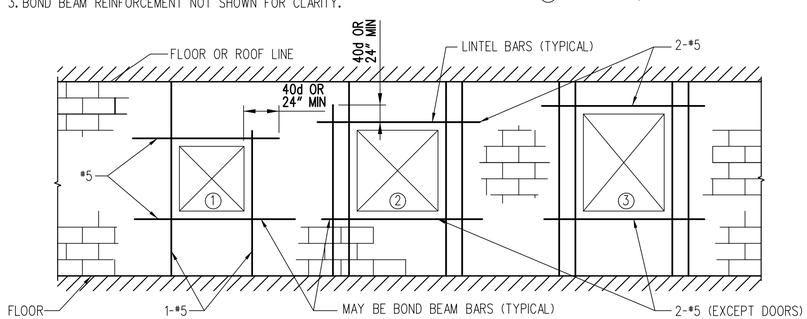

TYPICAL CMU WALL REINFORCING AT OPENINGS

NO SCALE

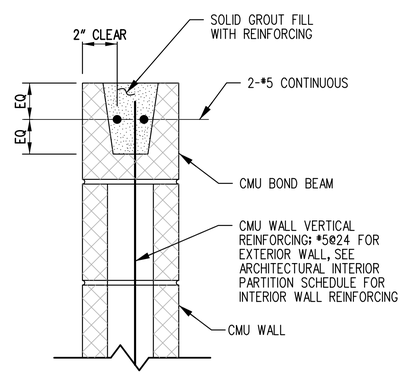

TYPICAL CMU BOND BEAM DETAIL

NO SCALE

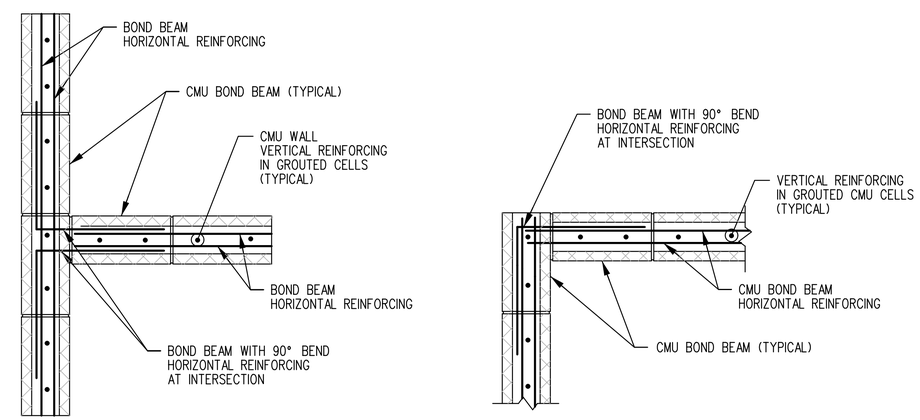

TYPICAL CMU BOND BEAM REINFORCING DETAIL

NO SCALE

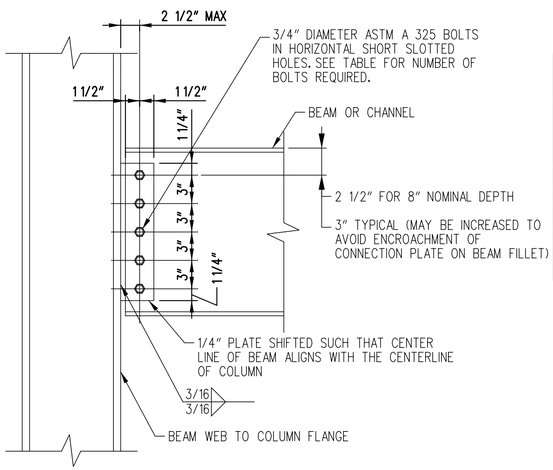

BEAM TO COLUMN FLANGE

TYPICAL BEAM CONNECTION BOLT TABLE	
NOMINAL BEAM DEPTH	NUMBER OF BOLTS
8-10	2
12-14	3
16	4
18-20	5
21	6
24-27	8

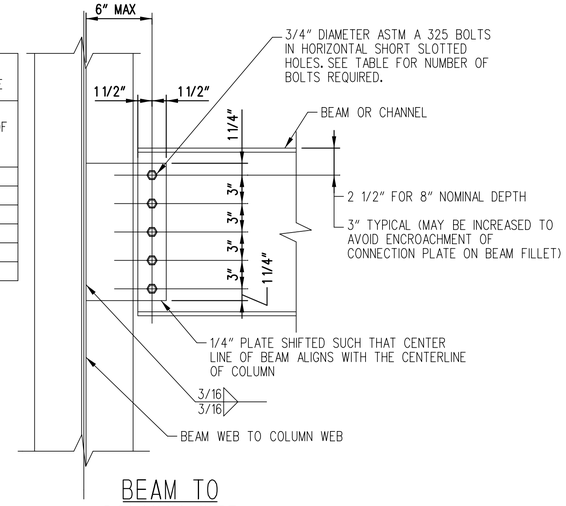

BEAM TO COLUMN WEB

TYPICAL BEAM TO COLUMN WEB SHEAR CONNECTION DETAIL

NO SCALE

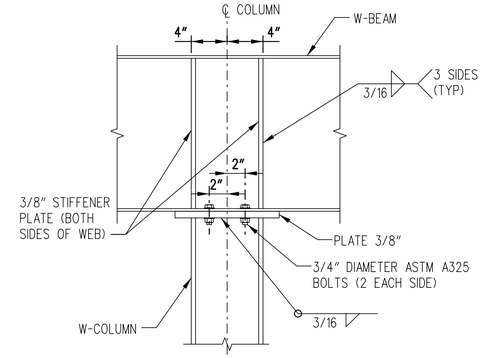

TYPICAL CANTILEVERED BEAM DETAIL (TYPE I)

NO SCALE

NOTE: OFFSET AS REQUIRED TO UTILIZE STIFFENER AS CONNECTION PLATE.

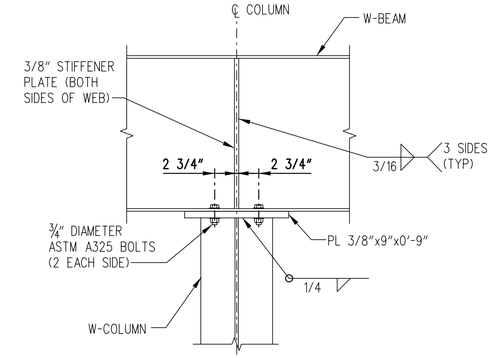

TYPICAL CANTILEVERED BEAM DETAIL (TYPE II)

NO SCALE

NOTE: OFFSET AS REQUIRED TO UTILIZE STIFFER AS CONNECTION PLATE.

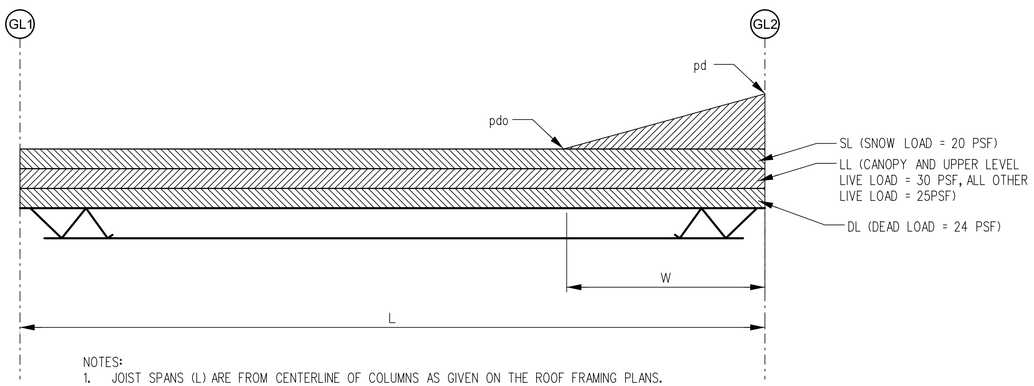

NOTES:
1. JOIST SPANS (L) ARE FROM CENTERLINE OF COLUMNS AS GIVEN ON THE ROOF FRAMING PLANS.
2. "GL" REPRESENTS THE GIRDER LINE OR CENTERLINE OF THE SUPPORTING STRUCTURAL ELEMENT.

TYPICAL JOIST LOADING DIAGRAM

NO SCALE

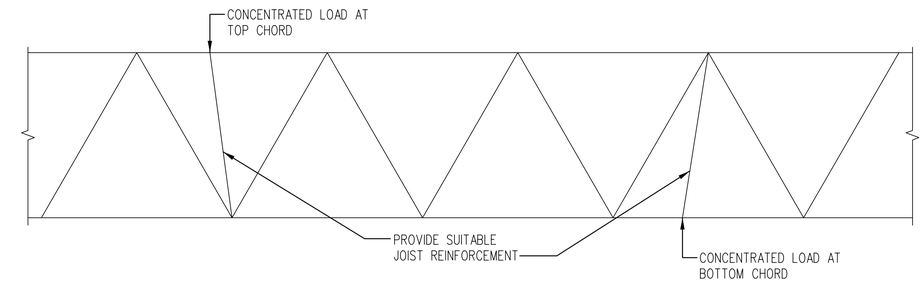

TYPICAL JOIST REINFORCEMENT FOR CONCENTRATED LOADS

NO SCALE

JOIST LOADING DIAGRAM											
BETWEEN GRID LINES	COLUMN LINE, GL1	COLUMN LINE, GL2	SPAN, L (FT)	JOIST SPACING, S (FT)	DEAD LOAD, DL (PLF)	LIVE LOAD, LL (PLF)	SNOW LOAD, S (PLF)	MAX SNOW DRIFT LOAD, pd (PLF)	MIN SNOW DRIFT LOAD, pdo (PLF)	WIDTH OF SNOW DRIFT, W (FT)	SNOW DRIFT LOAD, pd1 (PLF)
2.5-3	H	G	22.67	4.4	126	109.4	87.5	111.2	0	6.5	0
3-4	H	G	22.67	5.0	143	125.0	100.0	127.0	0	6.5	0
4-4.6	H	G	22.67	4.3	122	106.3	85.0	108.0	0	6.5	0
4.6-5	H	G	22.67	4.6	131	114.6	91.7	120.0	0	6.5	0
5-5.3	H	G	22.67	3.4	98	84.4	67.5	89.0	0	6.5	0
5.3-5.7	H	G	22.67	5.1	144	127.1	101.7	133.0	0	6.5	0
5.7-6	H	G	22.67	5.7	162	142.7	114.2	0	0	0	0
2-6	F	E	16.00	5.0	138	125.0	100.0	0	0	0	0
2-4	D	B	43.00	8.8	271	262.5	175.0	0	0	0	0

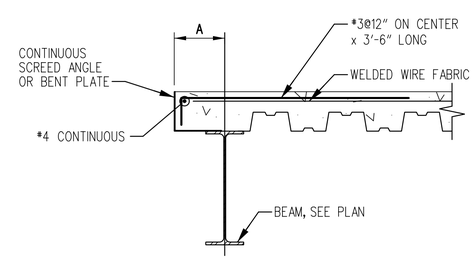

NOTE:
IF A < 8", THEN THE *3@12" AND 1 *4 CONTINUOUS ARE NOT REQUIRED. SEE ARCHITECTURAL DRAWINGS FOR EDGE OF DECK DIMENSIONS.

TYPICAL DETAIL AT EDGE OF DECK-MEZZANINE

NO SCALE

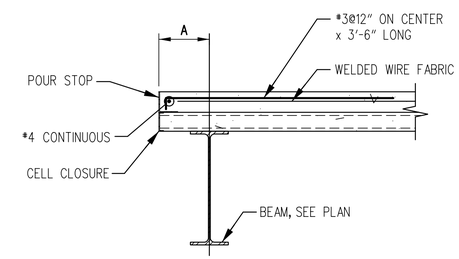

NOTE:
IF A < 8", THEN THE *3@12" AND 1 *4 CONTINUOUS ARE NOT REQUIRED. SEE ARCHITECTURAL DRAWINGS FOR EDGE OF DECK DIMENSIONS.

TYPICAL DETAIL AT EDGE OF DECK-MEZZANINE

NO SCALE

S-004

DELAWARE DEPARTMENT OF TRANSPORTATION

ADDENDUMS / REVISIONS

DELAWARE TRANSIT CORPORATION
LEWES PARK AND RIDE
AND MAINTENANCE FACILITY

CONTRACT	BRIDGE NO.	
T200612502	DESIGNED BY:	GAP
COUNTY		
SUSSEX	CHECKED BY:	RBG

STRUCTURAL TYPICAL DETAILS

SHEET NO. 61
TOTAL SHTS. 185

N:\90181-004\CADD\CP01-90181004S-004.dgn
11/8/2014 9:45:00 AM

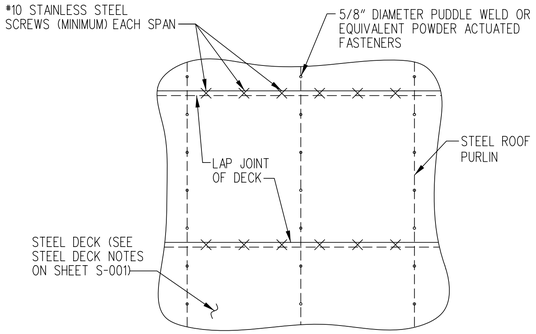

NOTE:
COORDINATE WITH GENERAL NOTES ON S-001 FOR FURTHER REQUIREMENTS. SEE ROOF DECK FASTENER PATTERN TABLE FOR SUPPORT FASTENER PATTERN AND SIDE-LAP FASTENER REQUIREMENTS.

ROOF DECK FASTENER PATTERN TABLE		
DECK LOCATION	FASTENER PATTERN (5/8" PUDDLE WELDS)	NUMBER OF SIDE-LAP FASTENERS BETWEEN SUPPORTING FRAMING (#10 SCREWS)
LOW CANOPY	36/4	3
CANOPY	36/7	4
UPPER ROOF AND WASH BAY ROOF	24/4	4

TYPICAL ROOF DECK FASTENER PATTERN

NO SCALE

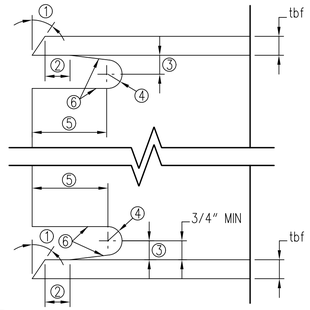

① BEVEL AS REQUIRED BY AWS D1.1 FOR SELECTED GROOVE WELD PROCEDURE

② LARGER OF tbf OR 1/2" (PLUS 1/2 tbf, OR MINUS 1/4 tbf)

③ 3/4 tbf TO tbf, 3/4" MIN (± 1/4")

④ 3/8" MIN RADIUS (PLUS NOT LIMITED, OR MINUS 0)

⑤ 3 tbf. (± 1/2")

TYPICAL BEAM PREPARATION FOR MOMENT CONNECTION DETAIL

NO SCALE

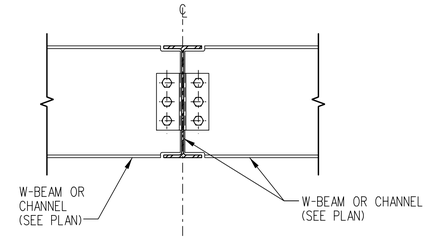

NOTE: REFER TO TYPICAL BEAM CONNECTION BOLT TABLE ON SHEET S-004.

TYPICAL BEAM TO BEAM SHEAR CONNECTION DETAIL

NO SCALE

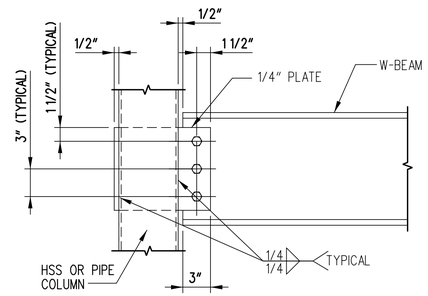

NOTE: REFER TO TYPICAL BEAM CONNECTION BOLT TABLE ON SHEET S-004.

TYPICAL W-BEAM TO HSS OR PIPE COLUMN DETAIL

NO SCALE

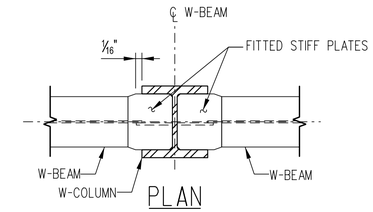

PLAN

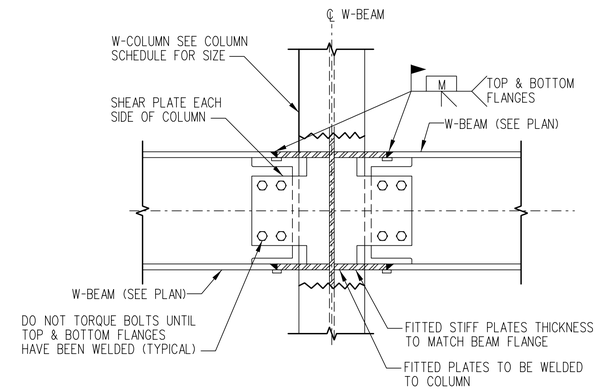

ELEVATION

NOTE: REFER TO BOLT SCHEDULE FOR TYPICAL BEAM CONNECTION BOLT TABLE ON SHEET S-004.

TYPICAL BEAM TO COLUMN WEB MOMENT CONNECTION DETAIL

NO SCALE

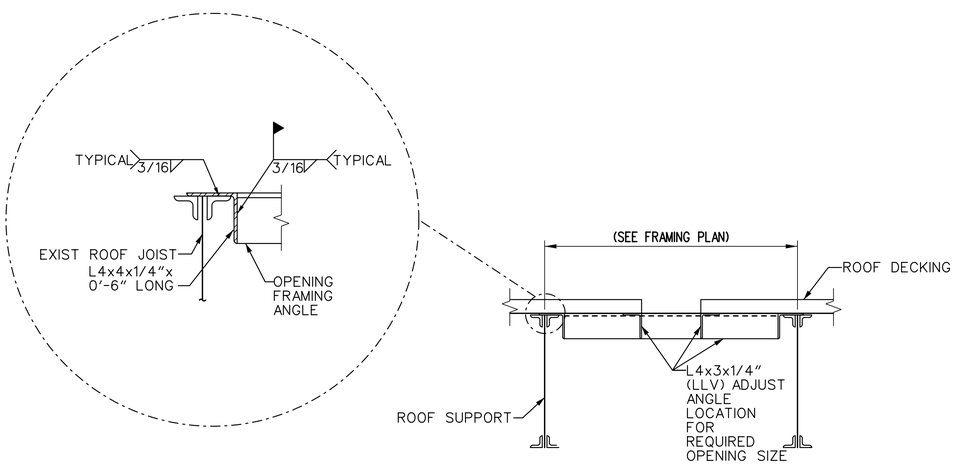

TYPICAL FRAME AT ROOF PENETRATION

NO SCALE

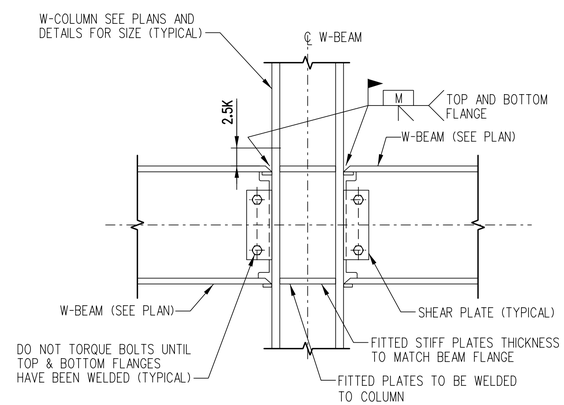

K = DISTANCE FROM OUTSIDE FACE OF COLUMN FLANGE TO INTERSECTION OF FILLET WITH WEB. SEE AISC MANUAL

NOTE: REFER TO TYPICAL BEAM CONNECTION BOLT TABLE ON SHEET S-004.

TYPICAL BEAM TO COLUMN FLANGE MOMENT CONNECTION DETAIL

NO SCALE

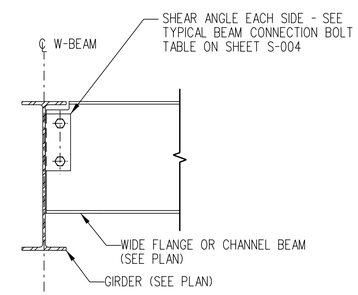

TYPICAL BEAM TO GIRDER SHEAR CONNECTION DETAIL

NO SCALE

N:\90181-004\CADD\CP01-90181004S-005.dgn
1/18/2014 9:45:01 AM

DELAWARE DEPARTMENT OF TRANSPORTATION	ADDENDUMS / REVISIONS	DELAWARE TRANSIT CORPORATION LEWES PARK AND RIDE AND MAINTENANCE FACILITY	CONTRACT T200612502	BRIDGE NO.	STRUCTURAL TYPICAL DETAILS	S-005 SHEET NO. 62
			COUNTY SUSSEX	DESIGNED BY: GAP		TOTAL SHTS. 185
				CHECKED BY: RBG		

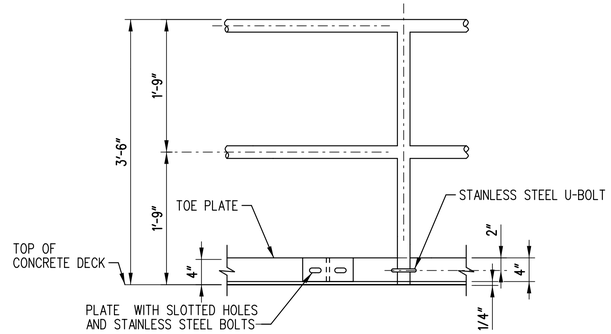

NOTE:
1. ALL HANDRAIL COMPONENTS SHALL BE ALUMINUM, UNLESS OTHERWISE NOTED.
2. SEE SPECIFICATIONS SECTION 055213, PIPE AND TUBE RAILING, FOR METAL RAILING REQUIREMENTS.
3. FOR CONNECTION DETAILING OF HANDRAIL, SEE "POST CONNECTION TO STEEL BEAMS" ON THIS SHEET.

AT FLOOR
OR DECK

TYPICAL HANDRAIL ELEVATION - ALUMINUM

SCALE: NONE

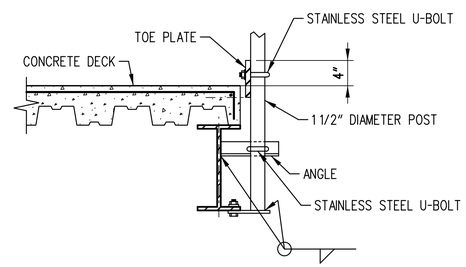

WIDE FLANGE
SIDE MOUNTED

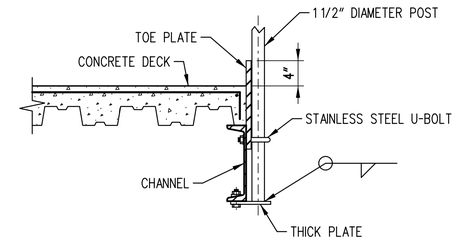

CHANNEL
SIDE MOUNTED

POST CONNECTION TO STEEL BEAMS

SCALE: NONE

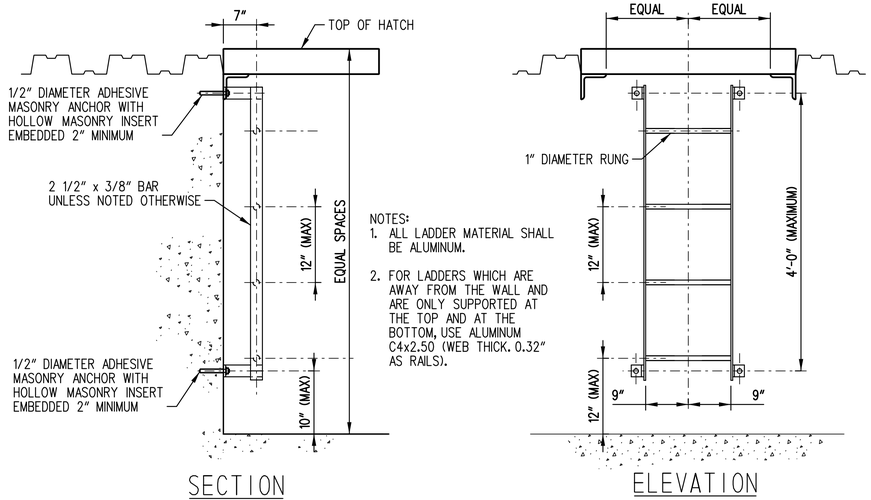

NOTES:
1. ALL LADDER MATERIAL SHALL BE ALUMINUM.
2. FOR LADDERS WHICH ARE AWAY FROM THE WALL AND ARE ONLY SUPPORTED AT THE TOP AND AT THE BOTTOM, USE ALUMINUM C4x2.50 (WEB THICK. 0.32" AS RAILS).

SECTION

ELEVATION

TYPICAL LADDER DETAILS

NO SCALE

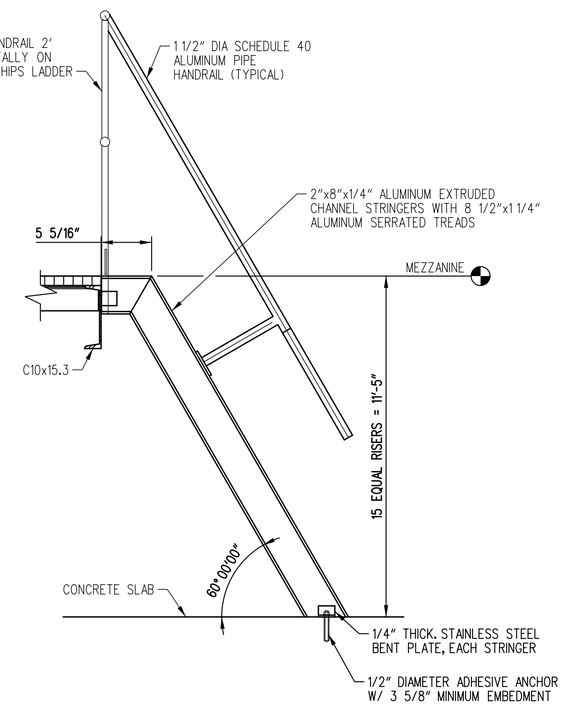

SHIPS LADDER DETAIL - ALUMINUM

NO SCALE

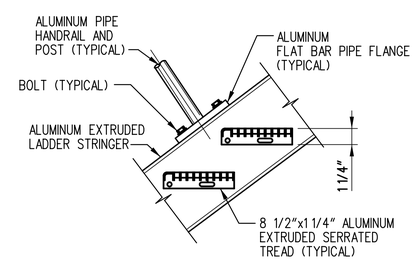

SHIPS LADDER CONNECTION DETAIL - ALUMINUM

NO SCALE

N:\90181-004\CADD\CR01-90181045-006.dgn
1/16/2014 9:45:02 AM

DELAWARE DEPARTMENT OF TRANSPORTATION	ADDENDUMS / REVISIONS	DELAWARE TRANSIT CORPORATION LEWES PARK AND RIDE AND MAINTENANCE FACILITY	CONTRACT T200612502	BRIDGE NO.	STRUCTURAL TYPICAL DETAILS	S-006 SHEET NO.
			COUNTY SUSSEX	DESIGNED BY: GAP		63 TOTAL SHTS.
				CHECKED BY: RBG		185

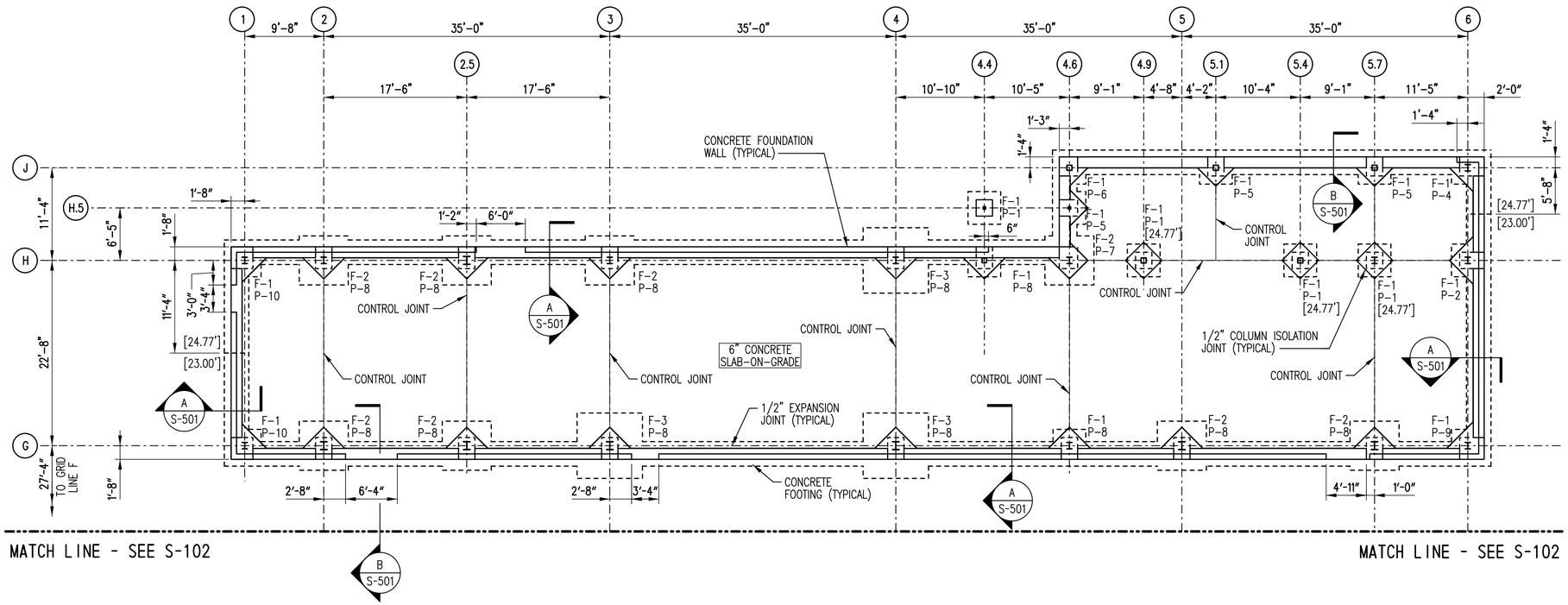

1 S-102 FOUNDATION PLAN - NORTH BUILDING
SCALE: 1/8" = 1'-0"

GENERAL SHEET NOTES

1. FLOOR CONSTRUCTION TO BE 6" AND 12" THICK REINFORCED CONCRETE SLAB-ON-GRADE. THESE AREAS ARE DESIGNATED ON THE PLAN. TOP OF CONCRETE ELEVATION 27.37' (NORTH BUILDING) AND 27.20' (SOUTH BUILDING).
2. [XX.XX'] INDICATES THE BOTTOM OF FOOTING ELEVATION.
3. REFER TO SHEET S-001 FOR GENERAL STRUCTURAL NOTES, CODES, AND LOADS.
4. REFER TO SHEETS S-002 TO S-006 FOR STRUCTURAL ABBREVIATIONS AND TYPICAL DETAILS.
5. REFER TO SHEETS S-501 TO S-502 FOR FOUNDATION DETAILS AND SECTIONS.
6. REFER TO SHEETS S-601 TO S-603 FOR COLUMN SCHEDULES, BASE PLATE AND CONCRETE PEDESTAL DETAILS.
7. COORDINATE ALL STRUCTURAL WORK WITH THE CIVIL, ELECTRICAL, AND PLUMBING DRAWINGS TO LOCATE ALL CONCRETE SLAB PENETRATIONS.
8. CONTRACTOR TO VERIFY MINIMUM ALLOWABLE BEARING CAPACITY OF 2,000 PSF PRIOR TO INSTALLATION OF FOUNDATION AND FOOTINGS.

FOOTING SCHEDULE

MARK	SIZE	REINFORCING	REMARKS
F-1	4'-0"x4'-0"x1'-0" THICK	8-#5 EACH WAY TOP & BOTTOM	-
F-2	6'-0"x6'-0"x1'-0" THICK	12-#5 EACH WAY TOP & BOTTOM	-
F-3	8'-0"x8'-0"x1'-0" THICK	16-#5 EACH WAY TOP & BOTTOM	-

PIER/PEDESTAL SCHEDULE

MARK	SIZE	REINFORCING	REMARKS
P-1	24"x24"	12-#6 VERT BARS WITH #4 TIES @6", 2 TIES WITHIN TOP 5" OF PEDESTAL	SEE PEDESTAL DETAIL ON S-603
P-2	24"x36"	16-#6 VERT BARS WITH #4 TIES @6", 2 TIES WITHIN TOP 5" OF PEDESTAL	SEE PEDESTAL DETAIL ON S-603
P-3	36"x36"	20-#6 VERT BARS WITH #4 TIES @6", 2 TIES WITHIN TOP 5" OF PEDESTAL	SEE PEDESTAL DETAIL ON S-603
P-4	28"x36"	18-#6 VERT BARS WITH #4 TIES @6", 2 TIES WITHIN TOP 5" OF PEDESTAL	SEE PEDESTAL DETAIL ON S-603
P-5	24"x28"	14-#6 VERT BARS WITH #4 TIES @6", 2 TIES WITHIN TOP 5" OF PEDESTAL	SEE PEDESTAL DETAIL ON S-603
P-6	27"x28"	16-#6 VERT BARS WITH #4 TIES @6", 2 TIES WITHIN TOP 5" OF PEDESTAL	SEE PEDESTAL DETAIL ON S-603
P-7	27"x32"	16-#6 VERT BARS WITH #4 TIES @6", 2 TIES WITHIN TOP 5" OF PEDESTAL	SEE PEDESTAL DETAIL ON S-603
P-8	24"x32"	14-#6 VERT BARS WITH #4 TIES @6", 2 TIES WITHIN TOP 5" OF PEDESTAL	SEE PEDESTAL DETAIL ON S-603
P-9	32"x36"	16-#6 VERT BARS WITH #4 TIES @6", 2 TIES WITHIN TOP 5" OF PEDESTAL	SEE PEDESTAL DETAIL ON S-603
P-10	32"x32"	16-#6 VERT BARS WITH #4 TIES @6", 2 TIES WITHIN TOP 5" OF PEDESTAL	SEE PEDESTAL DETAIL ON S-603

NOTE: NORTH BUILDING TOP OF PEDESTAL ELEVATION IS 26.70'

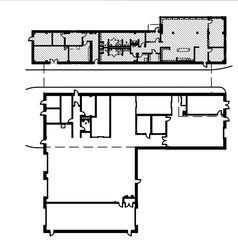

KEY PLAN
SCALE: NTS

S-101

N:\9018I-004\CADD\CPD1-90180045-101.dgn
1/16/2014 9:45:03 AM

DELAWARE DEPARTMENT OF TRANSPORTATION

ADDENDUMS / REVISIONS

0 4' 8' 16'
SCALE: 1/8" = 1'-0"

DELAWARE TRANSIT CORPORATION
LEWES PARK AND RIDE
AND MAINTENANCE FACILITY

CONTRACT	BRIDGE NO.
T200612502	DESIGNED BY: RJN/GAP
COUNTY	CHECKED BY: RBG
SUSSEX	

FOUNDATION PLAN - NORTH BUILDING

SHEET NO. 64
TOTAL SHTS. 185

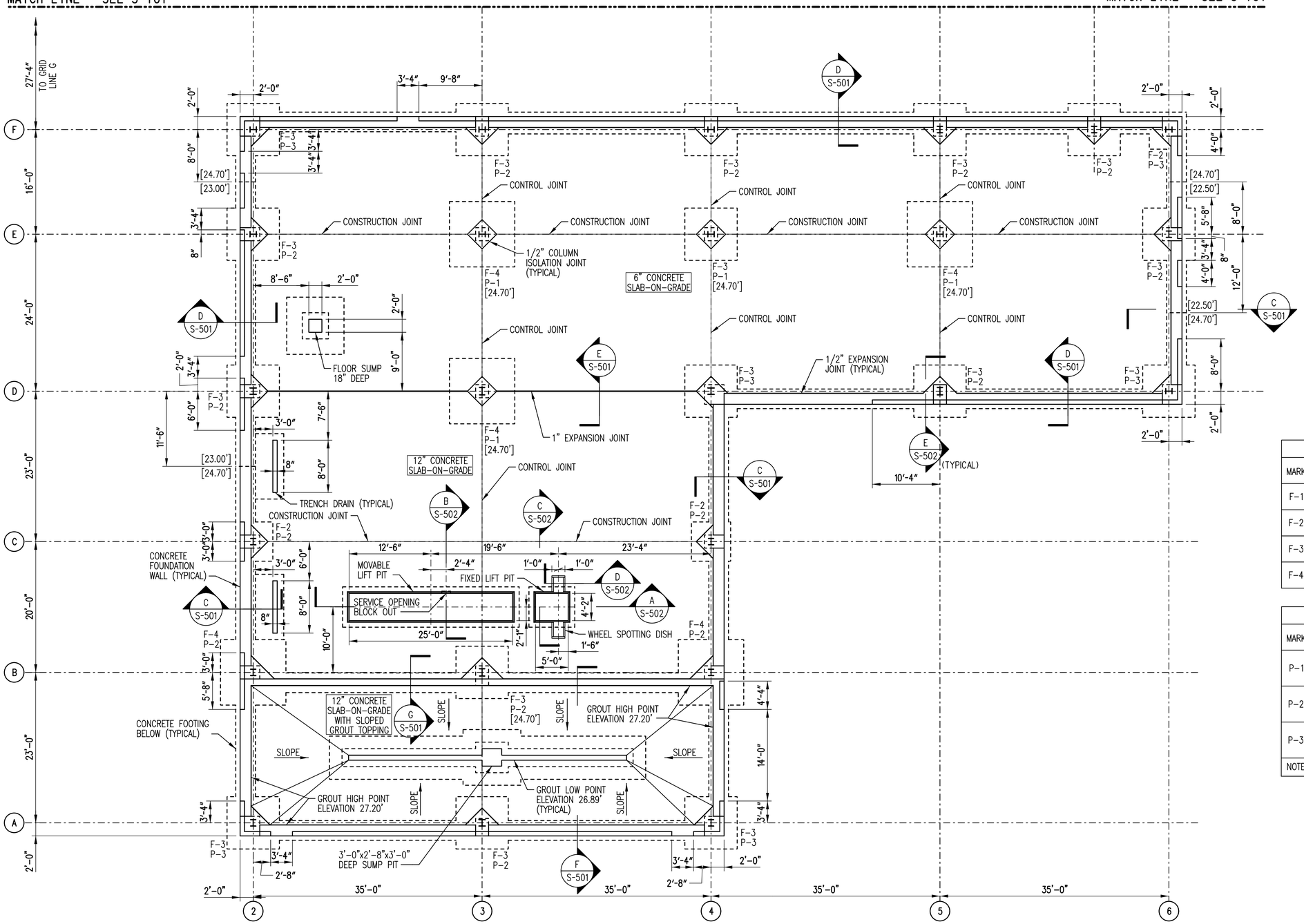

1 S-101 FOUNDATION PLAN SOUTH BUILDING
SCALE: 1/8"=1'-0"

GENERAL SHEET NOTES

1. FLOOR CONSTRUCTION TO BE 6" AND 12" THICK REINFORCED CONCRETE SLAB-ON-GRADE. THESE AREAS ARE DESIGNATED ON THE PLAN. TOP OF CONCRETE ELEVATION 27.37' (NORTH BUILDING) AND 27.20' (SOUTH BUILDING).
2. [XX.XX'] INDICATES THE BOTTOM OF FOOTING ELEVATION.
3. REFER TO SHEET S-001 FOR GENERAL STRUCTURAL NOTES, CODES, AND LOADS.
4. REFER TO SHEETS S-002 TO S-006 FOR ABBREVIATIONS AND STRUCTURAL TYPICAL DETAILS.
5. REFER TO SHEETS S-501 TO S-502 FOR FOUNDATION DETAILS AND SECTIONS.
6. REFER TO SHEETS S-601 TO S-603 FOR COLUMN SCHEDULES, BASE PLATE AND CONCRETE PEDESTAL DETAILS.
7. COORDINATE ALL STRUCTURAL WORK WITH THE CIVIL, ELECTRICAL, AND PLUMBING DRAWINGS TO LOCATE ALL CONCRETE SLAB PENETRATIONS.
8. CONTRACTOR TO VERIFY MINIMUM ALLOWABLE BEARING CAPACITY OF 2,000 PSF PRIOR TO INSTALLATION OF FOUNDATION AND FOOTINGS.
9. COORDINATE ALL DETAILS OF MOVABLE LIFT PIT AND FIXED LIFT PIT WITH LIFT MANUFACTURER'S REQUIREMENTS/RECOMMENDATIONS. NOTIFY ENGINEER OF ANY DISCREPANCY BETWEEN LIFT MANUFACTURER'S REQUIREMENTS AND INFORMATION SHOWN ON THESE DRAWINGS PRIOR TO BEGINNING CONCRETE WORK.
10. SLOPE GROUT TOPPING IN TRENCH DRAIN TO ACCOMMODATE POSITIVE FLOW TO DRAIN OR SUMP PIT. SEE PLUMBING DRAWINGS.

FOOTING SCHEDULE

MARK	SIZE	REINFORCING	REMARKS
F-1	4'-0"x4'-0"x1'-0" THICK	8-#5 EACH WAY TOP & BOTTOM	-
F-2	6'-0"x6'-0"x1'-0" THICK	12-#5 EACH WAY TOP & BOTTOM	-
F-3	8'-0"x8'-0"x1'-0" THICK	16-#5 EACH WAY TOP & BOTTOM	-
F-4	10'-0"x10'-0"x1'-0" THICK	20-#5 EACH WAY TOP & BOTTOM	-

PIER/PEDESTAL SCHEDULE

MARK	SIZE	REINFORCING	REMARKS
P-1	24"x24"	12-#6 VERT BARS WITH #4 TIES @6", 2 TIES WITHIN TOP 5" OF PEDESTAL	SEE PEDESTAL DETAIL ON S-603
P-2	24"x36"	16-#6 VERT BARS WITH #4 TIES @6", 2 TIES WITHIN TOP 5" OF PEDESTAL	SEE PEDESTAL DETAIL ON S-603
P-3	36"x36"	20-#6 VERT BARS WITH #4 TIES @6", 2 TIES WITHIN TOP 5" OF PEDESTAL	SEE PEDESTAL DETAIL ON S-603

NOTE: SOUTH BUILDING TOP OF PEDESTAL ELEVATION IS 26.53'.

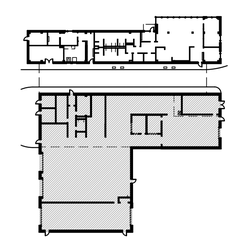

KEY PLAN
SCALE:NTS

S-102

N:\90181-004\CADD\CP01-90181004S-102.dgn
1/16/2024 9:45:04 AM

DELAWARE DEPARTMENT OF TRANSPORTATION

ADDENDUMS / REVISIONS

0 4' 8' 16'
SCALE: 1/8" = 1'-0"

DELAWARE TRANSIT CORPORATION
LEWES PARK AND RIDE AND MAINTENANCE FACILITY

CONTRACT	BRIDGE NO.	
T200612502	DESIGNED BY: RJN/GAP	
COUNTY	CHECKED BY: RBG	
SUSSEX		

FOUNDATION PLAN - SOUTH BUILDING

SHEET NO. 65
TOTAL SHTS. 185

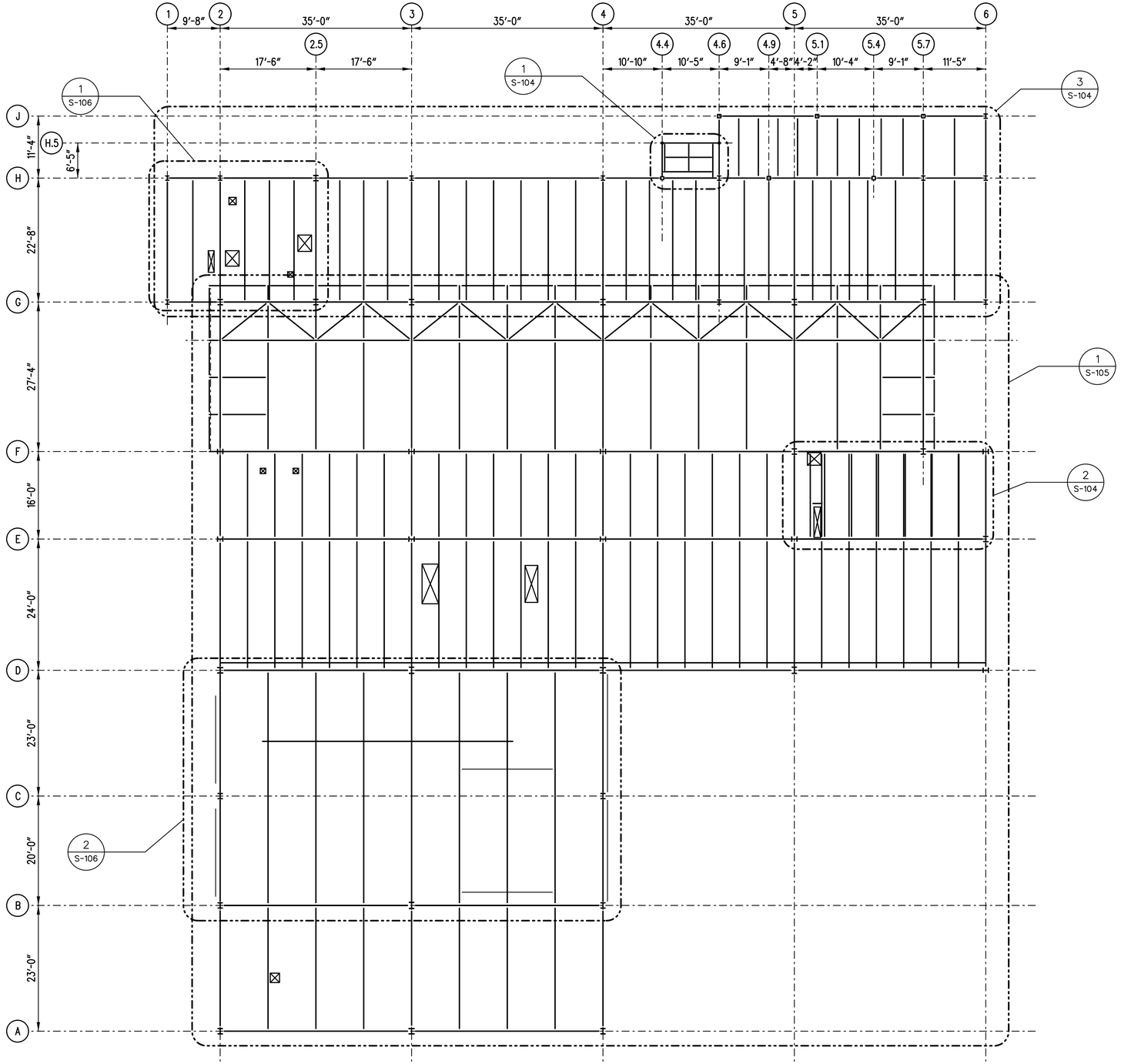

1 S-102 FRAMING PLAN
SCALE: 3/32" = 1'-0"

GENERAL SHEET NOTES

1. REFER TO SHEET S-001 FOR GENERAL STRUCTURAL NOTES, CODES, AND LOADS.
2. REFER TO SHEETS S-002 TO S-006 FOR STRUCTURAL ABBREVIATIONS AND TYPICAL DETAILS.
3. REFER TO SHEETS S-503 FRAMING DETAILS AND SECTIONS.
4. REFER TO SHEETS S-601 TO S-603 FOR COLUMN SCHEDULES, BASE PLATE AND CONCRETE PEDESTAL DETAILS.
5. COORDINATE ALL STRUCTURAL WORK WITH THE ARCHITECTURAL, ELECTRICAL, AND MECHANICAL DRAWINGS TO LOCATE ALL ROOF AND DECK PENETRATIONS.
6. CONTRACTOR TO COORDINATE REQUIRED TOP AND BOTTOM CHORD BRIDGING WITH JOIST MANUFACTURER. BRIDGING SHALL SUPPORT THE TOP AND BOTTOM CHORDS AGAINST LATERAL MOVEMENT DURING THE CONSTRUCTION PERIOD AND SHALL HOLD THE STEEL JOISTS IN THE APPROPRIATE POSITION AS SHOWN IN PLAN. THE ENDS OF THE BRIDGING LINES TERMINATING INTO BEAMS SHALL BE ANCHORED TO RESIST ALL NOMINAL FORCES FROM BRIDGING. JOIST MANUFACTURER SHALL CHECK THE ROOF SYSTEM PROVIDED FOR ADEQUACY OF SELECTED JOISTS AND PROVIDE BRIDGING AND ITS SPACING AS REQUIRED.

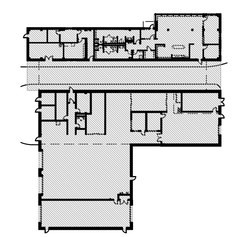

KEY PLAN
SCALE: NTS

N:\9018I-00A\CAD\CP01-90181004S-103.dgn
1/16/2014 9:45:05 AM

DELAWARE DEPARTMENT OF TRANSPORTATION	ADDENDUMS / REVISIONS	0 4' 8' 12' 20' SCALE: 3/32" = 1'-0"	DELAWARE TRANSIT CORPORATION LEWES PARK AND RIDE AND MAINTENANCE FACILITY	CONTRACT T200612502	BRIDGE NO.	COMPOSITE FRAMING PLAN	S-103
				COUNTY SUSSEX	DESIGNED BY: GAP		SHEET NO. 66
					CHECKED BY: RBG		TOTAL SHTS. 185

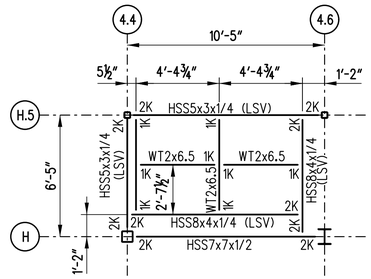

NOTE: ALL EXPOSED STEEL TO BE HOT-DIPPED GALVANIZED AND FIELD PAINTED PER SPECIFICATIONS.

1 / S-104 CANOPY FRAMING PLAN AT ELEVATION 38'
SCALE: 1/4"=1'-0"

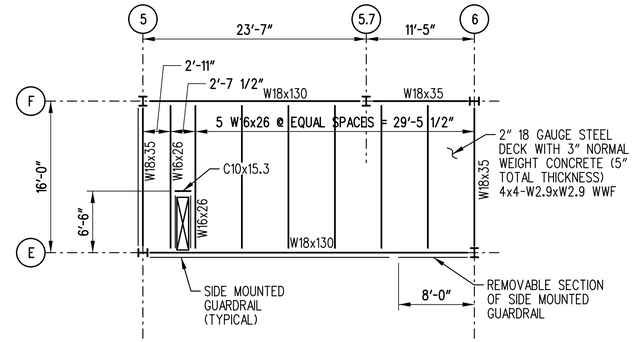

MEMBER LOAD SCHEDULE FOR FRAMING AT ELEVATION 38'		
MEMBER SIZE	SHEAR AT EITHER END OF MEMBER (KIPS)	MOMENT (KIP-FT)
C10x15.3	2	–
W16x26	20	–

2 / S-104 MEZZANINE FRAMING PLAN AT ELEVATION 38'
SCALE: 1/8"=1'-0"

GENERAL SHEET NOTES

1. REFER TO SHEET S-001 FOR GENERAL STRUCTURAL NOTES, CODES, AND LOADS.
2. REFER TO SHEETS S-002 TO S-006 FOR STRUCTURAL ABBREVIATIONS AND TYPICAL DETAILS.
3. REFER TO SHEETS S-503 FRAMING DETAILS AND SECTIONS.
4. REFER TO SHEETS S-601 TO S-603 FOR COLUMN SCHEDULES, BASE PLATE AND CONCRETE PEDESTAL DETAILS.
5. COORDINATE ALL STRUCTURAL WORK WITH THE ARCHITECTURAL, ELECTRICAL, AND MECHANICAL DRAWINGS TO LOCATE ALL ROOF AND DECK PENETRATIONS.
6. CONTRACTOR TO COORDINATE REQUIRED TOP AND BOTTOM CHORD BRIDGING WITH JOIST MANUFACTURER. BRIDGING SHALL SUPPORT THE TOP AND BOTTOM CHORDS AGAINST LATERAL MOVEMENT DURING THE CONSTRUCTION PERIOD AND SHALL HOLD THE STEEL JOISTS IN THE APPROPRIATE POSITION AS SHOWN IN PLAN. THE ENDS OF THE BRIDGING LINES TERMINATING INTO BEAMS SHALL BE ANCHORED TO RESIST ALL NOMINAL FORCES FROM BRIDGING. JOIST MANUFACTURER SHALL CHECK THE ROOF SYSTEM PROVIDED FOR ADEQUACY OF SELECTED JOISTS AND PROVIDE BRIDGING AND ITS SPACING AS REQUIRED.

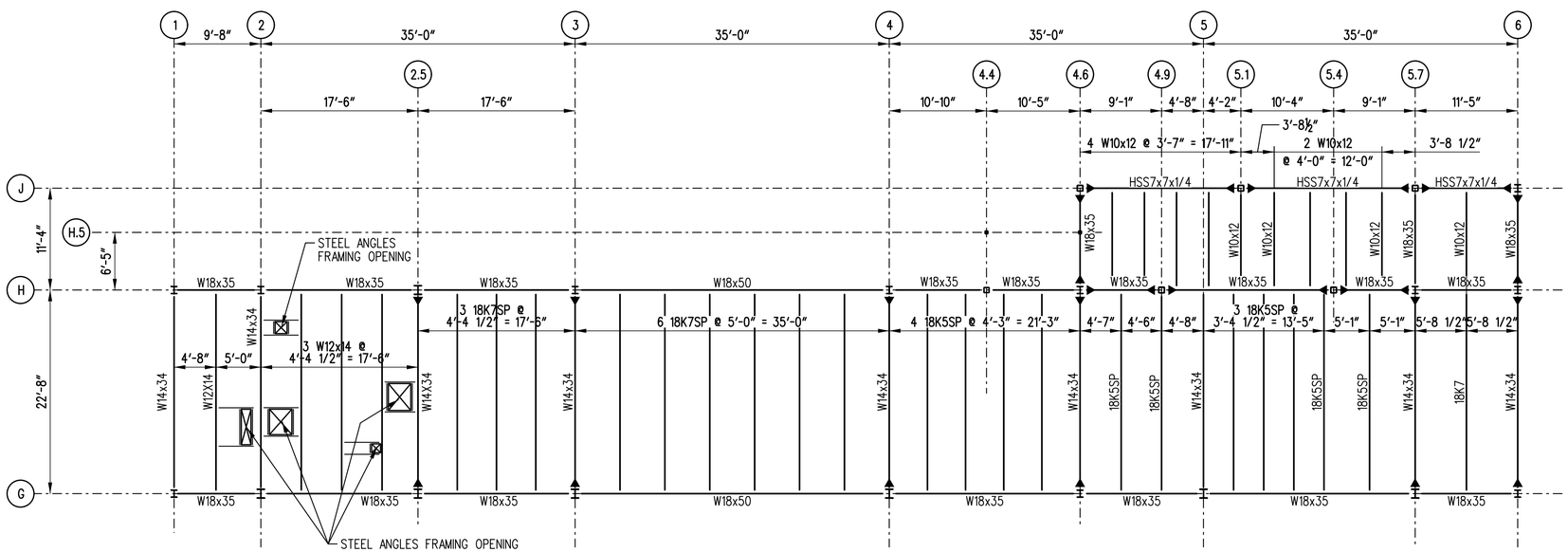

MEMBER LOAD SCHEDULE FOR FRAMING AT ELEVATION 42'		
MEMBER SIZE	SHEAR AT EITHER END OF MEMBER (KIPS)	MOMENT (KIP-FT)
W10x12	3	–
W12x14	6	–

3 / S-104 FRAMING PLAN AT ELEVATION 42'
SCALE: 1/8"=1'-0"

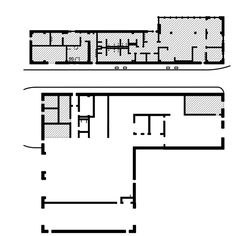

KEY PLAN
SCALE: NTS

S-104

N:\90181-004\CADD\GP01-90181004S-104.dgn
1/16/2014 9:45:06 AM

DELAWARE DEPARTMENT OF TRANSPORTATION

ADDENDUMS / REVISIONS

0 4' 8' 16'
SCALE: 1/8" = 1'-0"

DELAWARE TRANSIT CORPORATION
LEWES PARK AND RIDE
AND MAINTENANCE FACILITY

CONTRACT	BRIDGE NO.
T200612502	DESIGNED BY: GAP
COUNTY	CHECKED BY: RBG
SUSSEX	

FRAMING PLAN – ELEVATIONS 38' AND 42'

SHEET NO. 67
TOTAL SHTS. 185

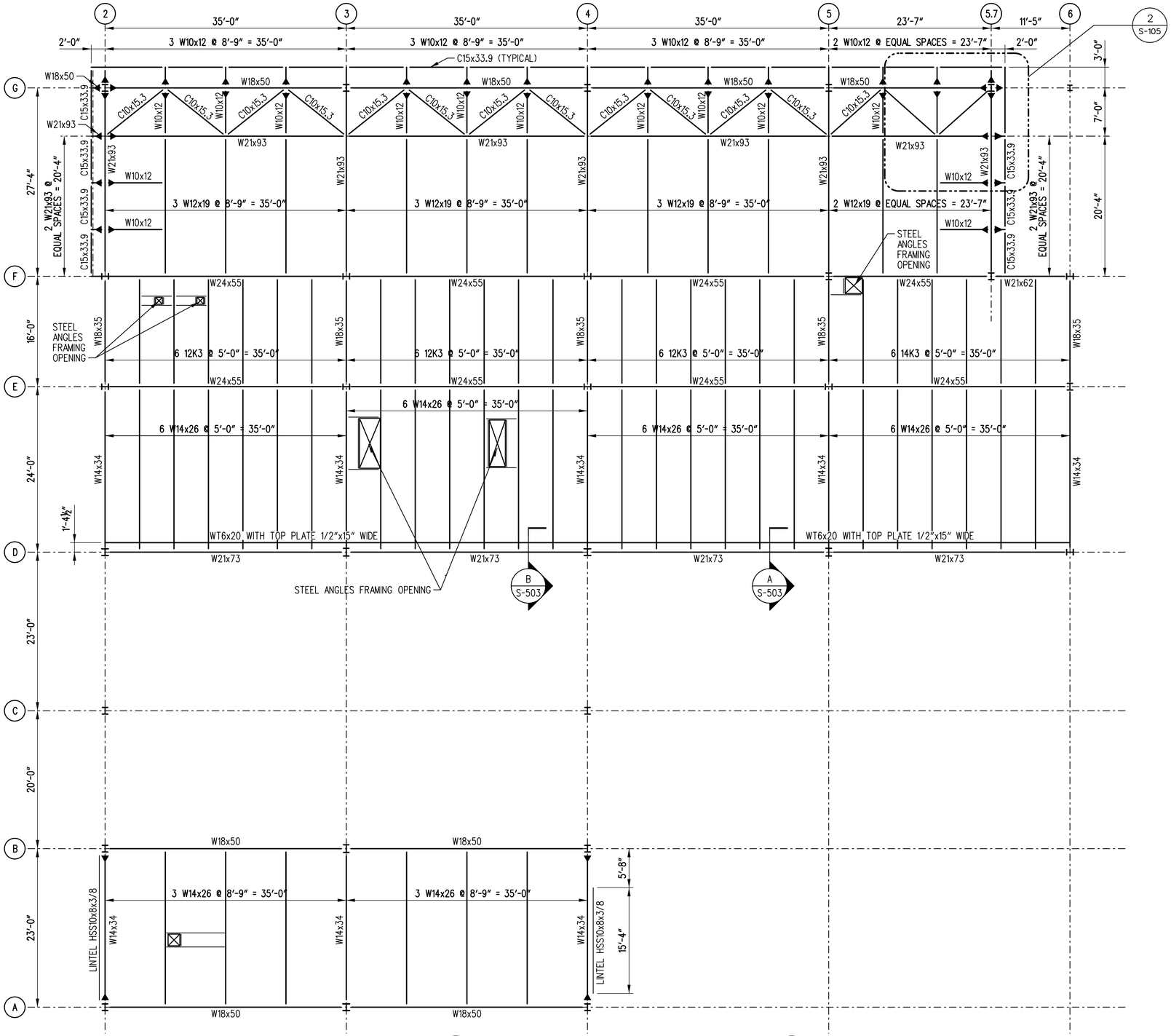

1 S-105 FRAMING PLAN AT ELEVATION 48'
SCALE: 1/8"=1'-0"

GENERAL SHEET NOTES

1. REFER TO SHEET S-001 FOR GENERAL STRUCTURAL NOTES, CODES, AND LOADS.
2. REFER TO SHEETS S-002 TO S-006 FOR STRUCTURAL ABBREVIATIONS AND TYPICAL DETAILS.
3. REFER TO SHEETS S-503 FOR FRAMING DETAILS AND SECTIONS.
4. REFER TO SHEETS S-601 TO S-603 FOR COLUMN SCHEDULES, BASE PLATE AND CONCRETE PEDESTAL DETAILS.
5. ALL EXPOSED CANOPY STEEL, STEEL NORTH-WEST OF COLUMN LINE F, TO BE HOT-DIPPED GALVANIZED AND FIELD PAINTED PER SPECIFICATIONS.
6. COORDINATE ALL STRUCTURAL WORK WITH THE ARCHITECTURAL, ELECTRICAL, AND MECHANICAL DRAWINGS TO LOCATE ALL ROOF AND DECK PENETRATIONS.
7. CONTRACTOR TO COORDINATE REQUIRED TOP AND BOTTOM CHORD BRIDGING WITH JOIST MANUFACTURER. BRIDGING SHALL SUPPORT THE TOP AND BOTTOM CHORDS AGAINST LATERAL MOVEMENT DURING THE CONSTRUCTION PERIOD AND SHALL HOLD THE STEEL JOISTS IN THE APPROPRIATE POSITION AS SHOWN IN PLAN. THE ENDS OF THE BRIDGING LINES TERMINATING INTO BEAMS SHALL BE ANCHORED TO RESIST ALL NOMINAL FORCES FROM BRIDGING. JOIST MANUFACTURER SHALL CHECK THE ROOF SYSTEM PROVIDED FOR ADEQUACY OF SELECTED JOISTS AND PROVIDE BRIDGING AND ITS SPACING AS REQUIRED.
8. SCREEN WALL NOT SHOWN FOR CLARITY. FOR SCREEN WALL PLAN SEE SHEET S-106.
9. LOADS ARE FACTORED AND GIVEN ON THE DRAWINGS AS FOLLOWS:

   T = TENSION
   C = COMPRESSION
   P = REACTIONS
   M = MOMENT
   ▲ = MOMENT CONNECTION

MEMBER LOAD SCHEDULE FOR FRAMING AT ELEVATION 48'		
MEMBER SIZE	SHEAR AT EITHER END OF MEMBER (KIPS)	MOMENT (KIP-FT)
W12x19	10	–
W14x26	12	–

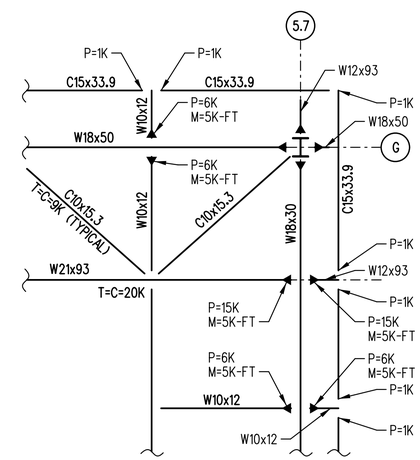

2 S-105 ENLARGED PLAN
SCALE: 1/4"=1'-0"
REF: S-105

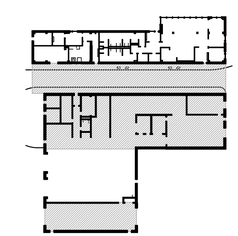

KEY PLAN
SCALE: NTS

S-105

N:\90181-004\CAD\CP01-90181004S-105.dgn
1/16/2014 9:45:06 AM

DELAWARE DEPARTMENT OF TRANSPORTATION	ADDENDUMS / REVISIONS	0 4' 8' 16' SCALE: 1/8" = 1'-0"	DELAWARE TRANSIT CORPORATION LEWES PARK AND RIDE AND MAINTENANCE FACILITY	CONTRACT T200612502	BRIDGE NO.	FRAMING PLAN – ELEVATION 48'	SHEET NO. 68
				COUNTY SUSSEX	DESIGNED BY: GAP		TOTAL SHTS. 185
					CHECKED BY: RBG		

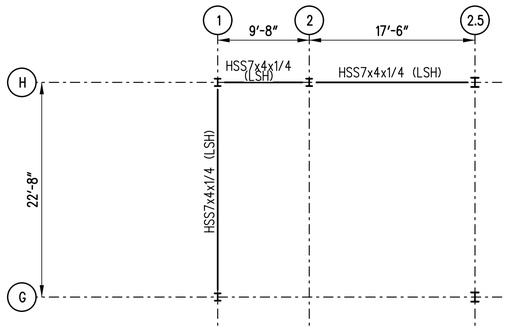

1 / S-106 FRAMING PLAN AT ELEVATION 49'
SCALE: 1/8"=1'-0"

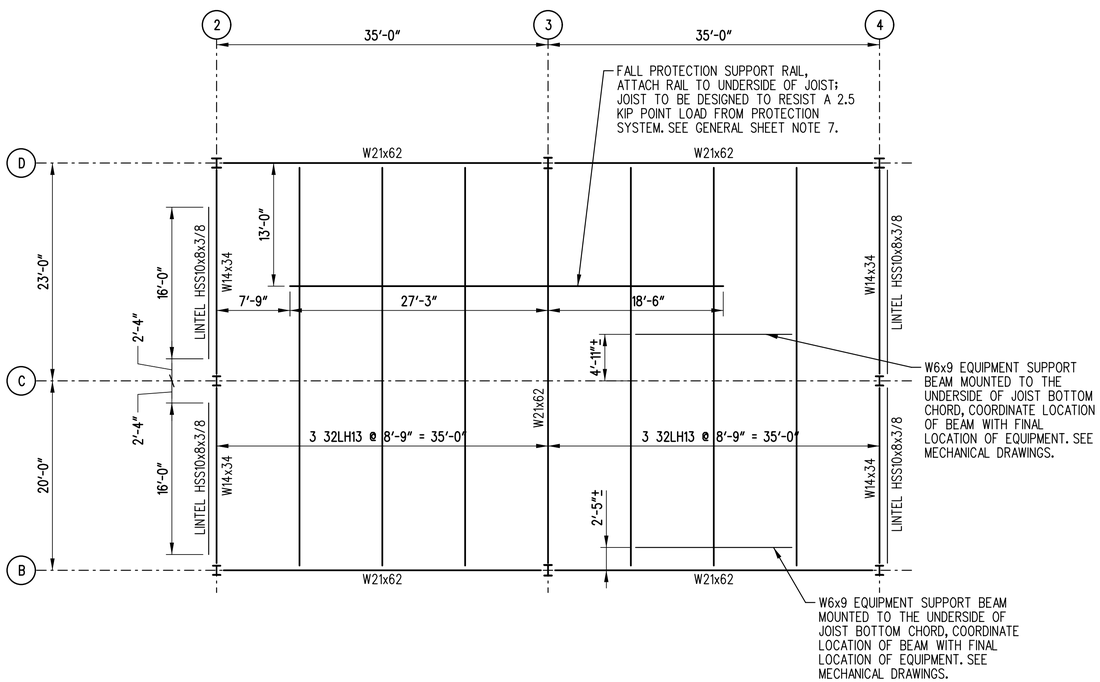

2 / S-106 FRAMING PLAN AT ELEVATION 58'
SCALE: 1/8"=1'-0"

GENERAL SHEET NOTES

1. REFER TO SHEET S-001 FOR GENERAL STRUCTURAL NOTES, CODES, AND LOADS.
2. REFER TO SHEETS S-002 TO S-006 FOR STRUCTURAL ABBREVIATIONS AND TYPICAL DETAILS.
3. REFER TO SHEETS S-503 FOR FRAMING DETAILS AND SECTIONS.
4. REFER TO SHEETS S-601 TO S-603 FOR COLUMN SCHEDULES, BASE PLATE AND CONCRETE PEDESTAL DETAILS.
5. COORDINATE ALL STRUCTURAL WORK WITH THE ARCHITECTURAL, ELECTRICAL, AND MECHANICAL DRAWINGS TO LOCATE ALL ROOF AND DECK PENETRATIONS.
6. CONTRACTOR TO COORDINATE REQUIRED TOP AND BOTTOM CHORD BRIDGING WITH JOIST MANUFACTURER. BRIDGING SHALL SUPPORT THE TOP AND BOTTOM CHORDS AGAINST LATERAL MOVEMENT DURING THE CONSTRUCTION PERIOD AND SHALL HOLD THE STEEL JOISTS IN THE APPROPRIATE POSITION AS SHOWN IN PLAN. THE ENDS OF THE BRIDGING LINES TERMINATING INTO BEAMS SHALL BE ANCHORED TO RESIST ALL NOMINAL FORCES FROM BRIDGING. JOIST MANUFACTURER SHALL CHECK THE ROOF SYSTEM PROVIDED FOR ADEQUACY OF SELECTED JOISTS AND PROVIDE BRIDGING AND ITS SPACING AS REQUIRED.
7. CONTRACTOR TO PROVIDE AND INSTALL FALL PROTECTION SYSTEM AS MANUFACTURED BY RIGID LIFE LINES. THE SYSTEM SHALL INCLUDE A 2-MAN, PLAIN FALL ARREST TRACK, PART NUMBER FAPT 6XX OR EQUAL. CONTRACTOR SHALL SUBMIT AND RECEIVE APPROVAL FOR FALL PROTECTION SYSTEM FROM ENGINEER PRIOR TO INSTALLATION. COORDINATION WITH JOIST MANUFACTURER IS ALSO REQUIRED PRIOR TO SUBMITTAL.

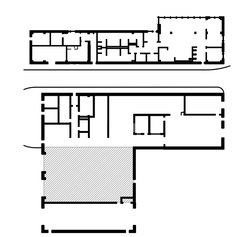

KEY PLAN
SCALE: NTS

S-106

DELAWARE DEPARTMENT OF TRANSPORTATION

ADDENDUMS / REVISIONS

0 4' 8' 16'
SCALE: 1/8" = 1'-0"

DELAWARE TRANSIT CORPORATION
LEWES PARK AND RIDE
AND MAINTENANCE FACILITY

CONTRACT	BRIDGE NO.	
T200612502	DESIGNED BY: GAP	
COUNTY	CHECKED BY: RBG	
SUSSEX		

FRAMING PLAN – ELEVATIONS 49' AND 58'

SHEET NO.
69
TOTAL SHTS.
185

N:\90181-00\CADD\CP01-90181004S-106.dgn
11/8/2024 9:45:09 AM

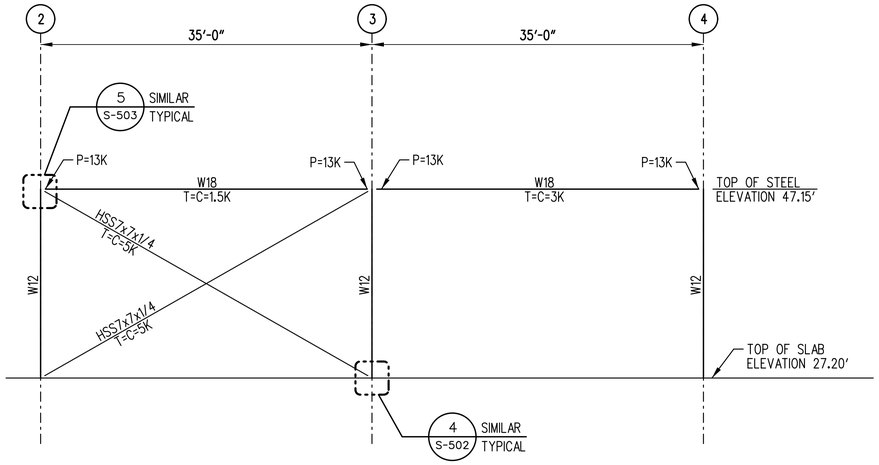

A S-201 ELEVATION ALONG COLUMN LINE A
SCALE: 1/8"=1'-0"

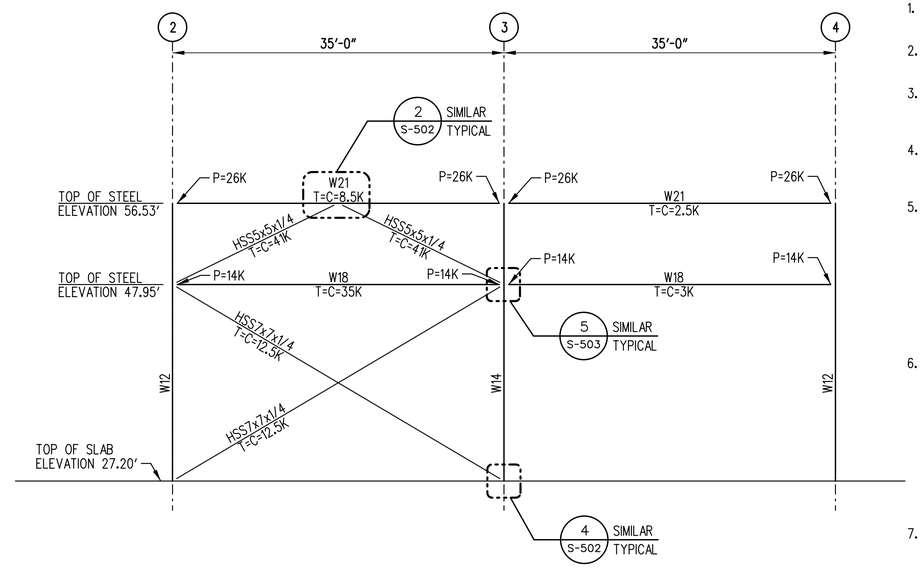

B S-201 ELEVATION ALONG COLUMN LINE B
SCALE: 1/8"=1'-0"

GENERAL SHEET NOTES

1. REFER TO SHEET S-001 FOR GENERAL STRUCTURAL NOTES, CODES, AND LOADS.
2. REFER TO SHEETS S-002 TO S-006 FOR STRUCTURAL ABBREVIATIONS AND TYPICAL DETAILS.
3. REFER TO SHEETS S-601 TO S-603 FOR COLUMN SCHEDULES, BASE PLATE AND CONCRETE PEDESTAL DETAILS, AND TOP OF COLUMN ELEVATIONS.
4. COORDINATE ALL STRUCTURAL WORK WITH THE ARCHITECTURAL, ELECTRICAL, AND MECHANICAL DRAWINGS TO LOCATE ALL ROOF AND DECK PENETRATIONS.
5. CONTRACTOR TO COORDINATE REQUIRED TOP AND BOTTOM CHORD BRIDGING WITH JOIST MANUFACTURER. BRIDGING SHALL SUPPORT THE TOP AND BOTTOM CHORDS AGAINST LATERAL MOVEMENT DURING THE CONSTRUCTION PERIOD AND SHALL HOLD THE STEEL JOISTS IN THE APPROPRIATE POSITION AS SHOWN IN PLAN. THE ENDS OF THE BRIDGING LINES TERMINATING INTO BEAMS SHALL BE ANCHORED TO RESIST ALL NOMINAL FORCES FROM BRIDGING. JOIST MANUFACTURER SHALL CHECK THE ROOF SYSTEM PROVIDED FOR ADEQUACY OF SELECTED JOISTS AND PROVIDE BRIDGING AND ITS SPACING AS REQUIRED.
6. LOADS ARE FACTORED AND GIVEN ON THE DRAWINGS BY THE FOLLOWING SYMBOLOGY:

   T = TENSION
   C = COMPRESSION
   P = REACTIONS (SHEAR)
   M = MOMENT

   CONNECTIONS AT END OF BEAMS OR GIRDERS SHALL BE DESIGNED AND DETAILED BY FABRICATOR. SEE SPECIFICATIONS FOR ADDITIONAL REQUIREMENTS.
7. LOADS FOR INFILL BEAMS ARE AS GIVEN IN THE MEMBER LOAD SCHEDULES ON S-1XX SERIES SHEETS FOR EACH PARTIAL FRAMING PLAN.
8. ◄— INDICATES A MOMENT CONNECTION.
9. —► INDICATES THE ROOF SLOPE.

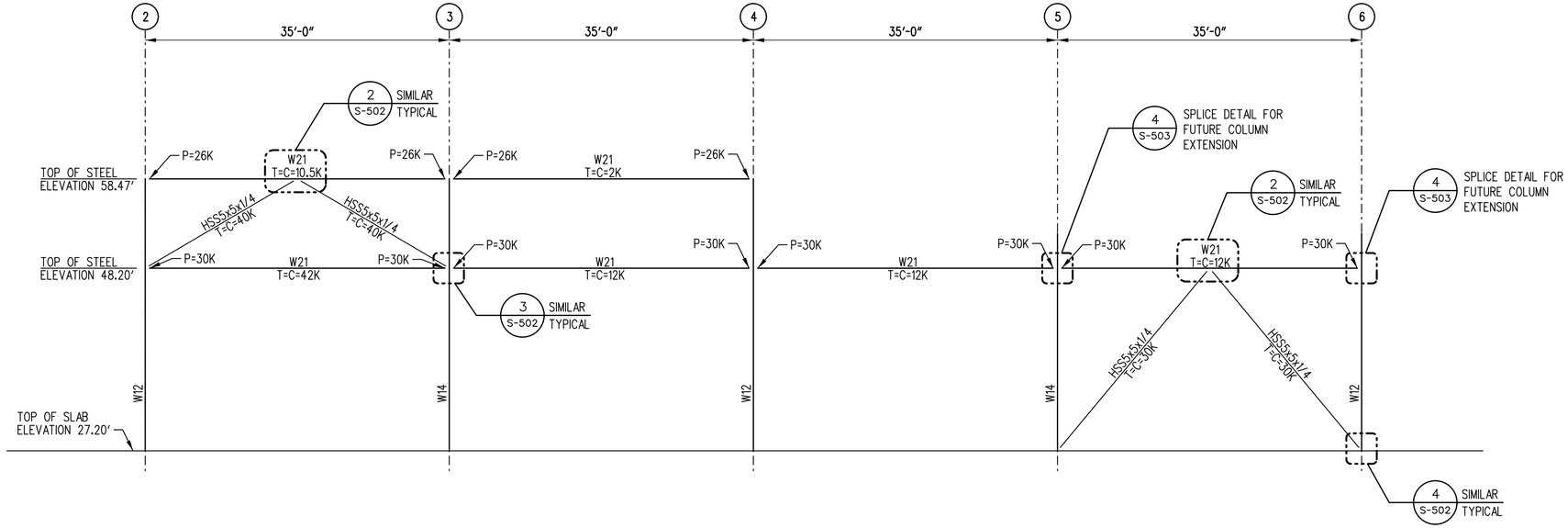

C S-201 ELEVATION ALONG COLUMN LINE D
SCALE: 1/8"=1'-0"

N:\90181-004\CADD\GP01-90181004S-201.dgn
1/16/2014 9:45:10 AM

DELAWARE DEPARTMENT OF TRANSPORTATION	ADDENDUMS / REVISIONS	0 4' 8' 16' SCALE: 1/8" = 1'-0"	DELAWARE TRANSIT CORPORATION LEWES PARK AND RIDE AND MAINTENANCE FACILITY	CONTRACT T200612502	BRIDGE NO.	FRAMING ELEVATIONS
				COUNTY SUSSEX	DESIGNED BY: GAP	
					CHECKED BY: RBG	

S-201
SHEET NO. 70
TOTAL SHTS. 185