THE STATE OF DELAWARE
DEPARTMENT OF TRANSPORTATION

U.S. CUSTOMARY UNITS

DESIGN DESIGNATION – SHADY ROAD			
FUNCTIONAL CLASS: LOCAL		D.H.V. PROJECTED: -	YEAR: -
TYPE OF CONSTRUCTION: -		DESIGN SPEED: 40 M.P.H.	
A.A.D.T. CURRENT: 3,779	YEAR: 2012	TRUCKS: -	
A.A.D.T. PROJECTED: 4,762	YEAR: 2020	DIRECTION OF DISTRIBUTION: -	

CONSTRUCTION PLANS FOR:

LEWES PARK & RIDE AND SITE WORK

CONTRACT NUMBER: T200612502.02
FEDERAL AID PROJECT NUMBER: DE-04-0003

COUNTY: SUSSEX

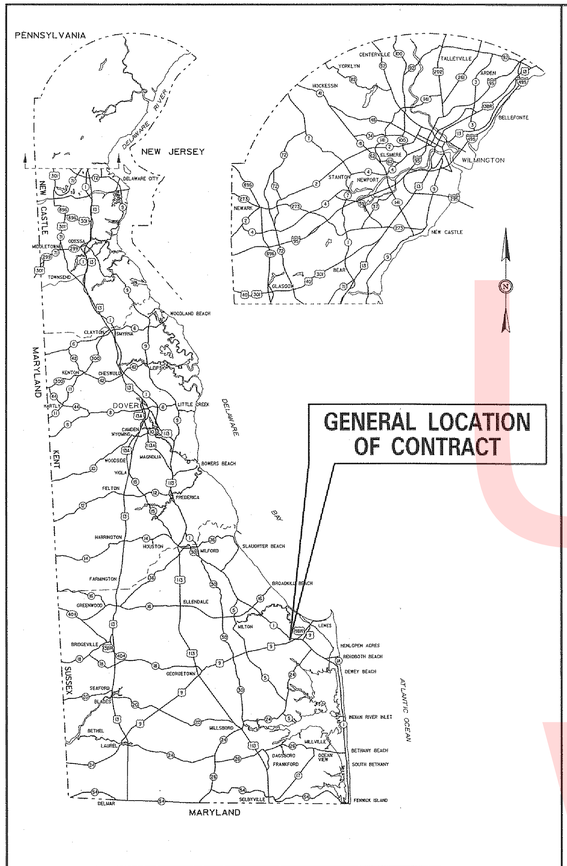

PREPARED BY
THE CONSULTING FIRM OF

WRA
Whitman, Requardt & Associates, LLP

JOSEPH STEPHEN MAKAR REGISTERED No. 7974 DELAWARE PROFESSIONAL ENGINEER
SEAL

RECOMMENDED — DATE 10/28/15

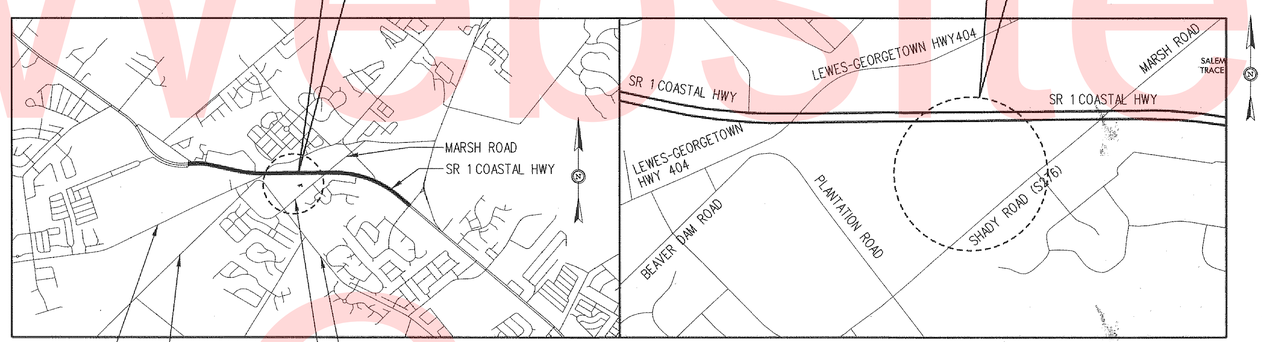

VICINITY MAP
NOT TO SCALE

LOCATION MAP
NOT TO SCALE

APPROVED DESIGN EXCEPTIONS

DESIGN PARAMETER	REQUIRED	PROVIDED	DATE
-	-	-	
-	-	-	

ADDENDA & REVISIONS

DESCRIPTION	NAME & DATE

ASSOCIATED CONTRACTS

CONTRACT NO.	CONTRACT NAME
-	-
-	-
-	-

RECOMMENDED

SQUAD MANAGER, CONSTRUCTION — DATE

GROUP ENGINEER, CONSTRUCTION — DATE

ASSISTANT DIRECTOR, TRANSPORTATION SOLUTIONS (CONSTRUCTION) — DATE

RECOMMENDED
Vincent W. Davis
STORMWATER ENGINEER
DATE 9 NOV 2015

VINCENT W. DAVIS REGISTERED No. 12996 DELAWARE PROFESSIONAL ENGINEER
SEAL

RECOMMENDED
SQUAD MANAGER, TRANSPORTATION SOLUTIONS (PROJECT DEVELOPMENT OR BRIDGE DESIGN)
DATE
SEAL

RECOMMENDED
BRIDGE DESIGN ENGINEER
DATE
SEAL

RECOMMENDED
GROUP ENGINEER, PROJECT DEVELOPMENT
DATE
SEAL

RECOMMENDED
ASSISTANT DIRECTOR, TRANSPORTATION SOLUTIONS
DATE
SEAL

RECOMMENDED AS TO PROCESS
Robert B. McCleary
CHIEF ENGINEER
DATE 11/09/2015
SEAL

Unofficial Website Copy

LAST REVISED: 8/7/2008
N:\90181-019\CADD\CP01-90181004G-001.DGN

DRAWING INDEX

No	CADD FILES	DRAWING No	DRAWING NAMES
		GENERAL	
1	CP01-90181004G-001	G-001	COVER SHEET
2	CP01-90181004G-002	G-002	DRAWING INDEX
		CIVIL	
3	CP01-90181004C-101	C-101	EXISTING CONDITION / DEMOLITION PLAN
4	CP01-90181004C-102	C-102	SITE PLAN
5	CP01-90181004C-103	C-103	GRADING PLAN
6	CP01-90181004C-104	C-104	STORM DRAIN PLAN
7	CP01-90181004C-105	C-105	WATER & SEWER PLAN
8	CP01-90181004C-106	C-106	STAKEOUT & LAYOUT PLAN
9	CP01-90181004C-107	C-107	STORM DRAIN PROFILES
10	CP01-90181004C-108	C-108	WATER & SEWER PROFILES
11	CP01-90181004C-301	C-301	ENLARGED GRADING PLAN
12	CP01-90181004C-401	C-401	SITE DETAILS
13	CP01-90181004C-402	C-402	WATER & SEWER DETAILS
14	CP01-90181004C-403	C-403	DRAINAGE DETAILS
15	CP01-90181004C-404	C-404	PAVEMENT DETAILS
16	CP01-90181004C-405	C-405	STAKEOUT DATA
17	CS01_LEWES	CS-01	EROSION AND SEDIMENT CONTROL PLAN - STAGE 1
18	CS02_LEWES	CS-02	EROSION AND SEDIMENT CONTROL PLAN - STAGE 2
19	CS03_LEWES	CS-03	EROSION AND SEDIMENT CONTROL SPECIAL DETAILS
		LANDSCAPING	
20	LD-01_LEWES	LD-01	LANDSCAPE PLAN
21	LD-02_LEWES	LD-02	LANSDCAPE SCHEDULE & DETAILS
22	LD-03_LEWES	LD-03	LANDSCAPE DETAILS
23	LD-03_LEWES	LD-04	LANDSCAPE DETAILS
		STORMWATER MANAGEMENT	
24	SW01_LEWES	SW-01	STORMWATER MANAGEMENT PLAN
25	SW02_LEWES	SW-02	STORMWATER MANAGEMENT PLAN
26	SW03_LEWES	SW-03	STORMWATER MANAGEMENT STAKEOUT PLAN
27	SW04_LEWES	SW-04	STORMWATER MANAGEMENT STAKEOUT PLAN
28	SW05_LEWES	SW-05	STORMWATER MANAGEMENT PROFILES
		HIGHWAY	
29	CP01-90181004H0-01	H0-01	LEGEND
30	CP01-90181004H0-02	H0-02	NOTES
31	CP01-90181004H1-01	H1-01	TYPICAL SECTIONS
32	CP01-90181004H3-01	H3-01	HORIZONTAL AND VERTICAL CONTROL
33	CP01-90181004H5-01	H5-01	CONSTRUCTION PLAN
34	CP01-90181004H5-02	H5-02	CONSTRUCTION PLAN
35	CP01-90181004H6-01	H6-01	PROFILES
36	CP01-90181004H6-02	H6-02	PROFILES
37	CP01-90181004H7-01	H7-01	GRADES AND GEOMETRICS
38	CP01-90181004H7-02	H7-02	GRADES AND GEOMETRICS
39	CP01-90181004H8-01	H8-01	CONSTRUCTION DETAILS
40	CP01-90181004H12-01	H12-01	CONSTRUCTION PHASING, M.O.T. AND EROSION CONTROL PLAN
41	CP01-90181004H12-02	H12-02	CONSTRUCTION PHASING, M.O.T. AND EROSION CONTROL PLAN
42	CP01-90181004H12-03	H12-03	CONSTRUCTION PHASING AND M.O.T. PLAN - PHASE 1
43	CP01-90181004H12-04	H12-04	CONSTRUCTION PHASING AND M.O.T. PLAN - PHASE 1
44	CP01-90181004H12-05	H12-05	CONSTRUCTION PHASING, M.O.T. AND EROSION CONTROL PLAN - PHASE 2
45	CP01-90181004H12-06	H12-06	CONSTRUCTION PHASING, M.O.T. AND EROSION CONTROL PLAN - PHASE 2
46	CP01-90181004H12-07	H12-07	CONSTRUCTION PHASING, M.O.T. AND EROSION CONTROL PLAN - PHASE 3
47	CP01-90181004H12-08	H12-08	CONSTRUCTION PHASING, M.O.T. AND EROSION CONTROL PLAN - PHASE 3
48	CP01-90181004H12-09	H12-09	DETOUR PLAN
49	CP01-90181004H13-01	H13-01	SIGNING AND STRIPING PLAN
50	CP01-90181004H13-02	H13-02	SIGNING AND STRIPING PLAN
51	CP01-90181004H13-03	H13-03	SIGNING AND STRIPING PLAN
52	CP01-90181004H13-04	H13-04	SIGNING AND STRIPING PLAN
53	CP01-90181004H13-05	H13-05	SIGNING AND STRIPING PLAN
54	CP01-90181004H13-06	H13-06	SIGNING AND STRIPING PLAN
55	CP01-90181004H13-07	H13-07	SIGNING SCHEDULE
56	CP01-90181004H13-08	H13-08	SIGNING SCHEDULE

DRAWING INDEX (CONTINUED)

No	CADD FILES	DRAWING No	DRAWING NAMES
		ELECTRICAL	
57	CP01-90181019E-001	E-001	ELECTRICAL LEGEND
58	CP01-901810194E-002	E-002	ELECTRICAL ABBREVIATIONS & DIAGRAM LEGEND
59	CP01-90181019E-003	E-003	ELECTRICAL GENERAL NOTES
60	CP01-90181019ED-100	ED-100	ELECTRICAL EXISTING SITE PLAN DEMOLITION
61	CP01-90181019E-100	E-100	ELECTRICAL SITE PLAN
62	CP01-90181019E-301	E-301	ELECTRICAL FLOOR PLANS - UTILITY BUILDING
63	CP01-90181019E-501	E-501	ELECTRICAL SINGLE LINE DIAGRAM
64	CP01-90181019E-601	E-601	ELECTRICAL DETAILS
65	CP01-90181019E-602	E-602	ELECTRICAL DETAILS
66	CP01-90181019E-603	E-603	ELECTRICAL DETAILS
67	CP01-90181019E-604	E-604	ELECTRICAL DETAILS
68	CP01-90181019E-605	E-605	ELECTRICAL DETAILS
69	CP01-90181019E-606	E-606	ELECTRICAL DETAILS
70	CP01-90181019E-607	E-607	ELECTRICAL DETAILS
71	CP01-90181019E-701	E-701	LIGHTING FIXTURE SCHEDULE
72	CP01-90181019E-702	E-702	ELECTRICAL PANEL SCHEDULES

Unofficial Website Copy

N:\90181-019\CADD\CP01-90181004G-002.dgn
10/30/2015 9:16:17 AM

DELAWARE
DEPARTMENT OF TRANSPORTATION

ADDENDUMS / REVISIONS

LEWES PARK & RIDE
AND SITE WORK

CONTRACT	BRIDGE NO.	
T200612502	DESIGNED BY: RJH	
COUNTY		
SUSSEX	CHECKED BY: EJ	

DRAWING INDEX

	G-002
SHEET NO.	2
TOTAL SHTS.	72

NOTES:

1. CLEAR AND GRUB ALL TREES AND SHRUBS WITHIN LOD
2. REMOVE ALL UTILITIES ASSOCIATED WITH THE EX BUILDING
3. REMOVE ALL MACADAM, CONCRETE, AND GRAVEL WITHIN THE LOD
4. CONTRACTOR MUST OBTAIN ALL DNREC PERMITS ASSOCIATED WITH THE REMOVAL OF THE EX UNDERGROUND STORAGE TANK
5. TEST PIT AREAS OF STORM DRAIN CONNECTIONS ALONG ROUTE 1 TO DETERMINE ANY POTENTIAL CONFLICT WITH DELDOT FIBER OPTIC CABLES. TEST PIT CHESAPEAKE GAS AND VERIZON UTILITIES ALONG SHADY ROAD TO DETERMINE ANY POTENTIAL CONFLICTS WITH PROPOSED STORM DRAINAGE SYSTEM. NOTIFY THE ENGINEER IMMEDIATELY UPON DISCOVERY OF ANY POTENTIAL CONFLICTS.
6. CONTRACTOR TO HAVE EXISTING BUILDING SANITARY SEWER DISCONNECTED BY A SUSSEX COUNTY LICENSED PLUMBER.
7. CONTRACTOR TO HAVE EXISTING WELLS REMOVED BY A DELAWARE STATE LICENSED DRILLER.
8. FOR EROSION & SEDIMENT CONTROL, REFER TO SHEETS CS01 & CS02.

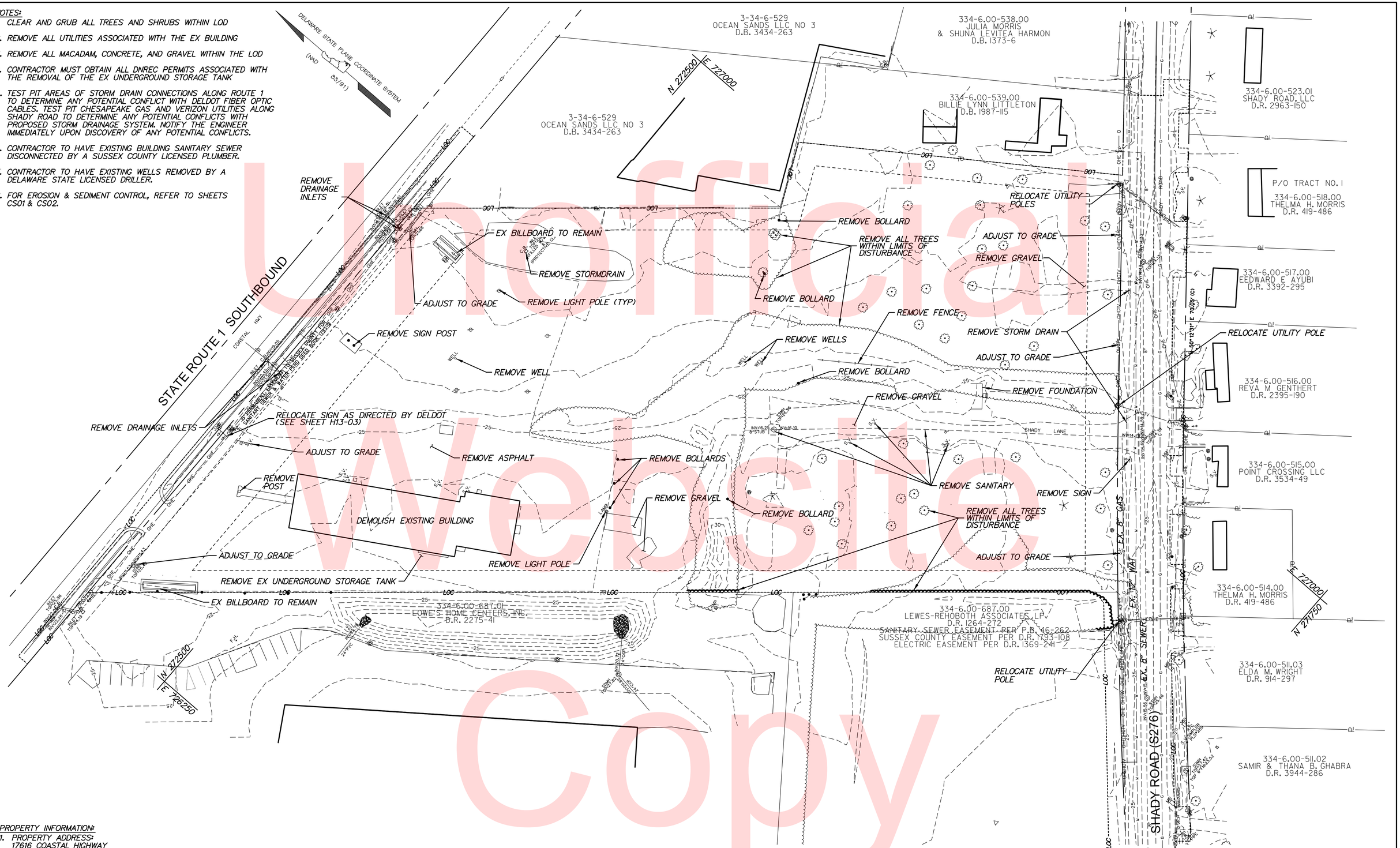

PROPERTY INFORMATION:

1. PROPERTY ADDRESS:
   17616 COASTAL HIGHWAY
   LEWES, DE 19958
2. ZONING: C-1 COMMERCIAL

Unofficial Website Copy

DELAWARE DEPARTMENT OF TRANSPORTATION	ADDENDUMS / REVISIONS	SCALE 0 40 80 120 FEET	LEWES PARK & RIDE AND SITE WORK	CONTRACT T200612502 / COUNTY SUSSEX	BRIDGE NO. / DESIGNED BY: PMG / CHECKED BY: PMG

EXISTING CONDITIONS / DEMOLITION PLAN

C-101

SHEET NO. 3 / TOTAL SHTS. 72

N:\90181\019\CADD\CR01-90181004C-101.dgn
10/30/2015 10:25:10 AM

LEGEND:

- CURB & GUTTER
- 15"SD — STORM DRAIN
- 8"W — WATER
- 8"S — SANITARY SEWER
- 25 — CONTOUR
- PROPERTY LINE
- YARD SETBACK LINE
- 25 — EXISTING CONTOUR
- EXISTING TREE LINE
- W — EXISTING WATER
- G — EXISTING GAS
- EX 8" S — EXISTING SEWER
- PORTLAND CEMENT CONCRETE SIDEWALK
- PORTLAND CEMENT CONCRETE PAVEMENT
- PERVIOUS PORTLAND CEMENT CONCRETE PAVEMENT
- ASPHALT PAVEMENT
- FUTURE BUILDING LINE

NOTES:

1. REFER TO ELECTRICAL DRAWINGS FOR INSTALLATION OF DIRECT BURY ENTRANCE AND EXIT GROUND LOOPS TO CONTROL CANTILEVER GATES AND CONTROL ARMS
2. REFER TO ELECTRICAL DRAWINGS FOR COORDINATION OF LIGHTING AND UNDERGROUND ELECTRICAL LINES
3. REFER TO HIGHWAY DRAWINGS FOR CONTINUATION OF WORK ALONG SHADY ROAD (S276)

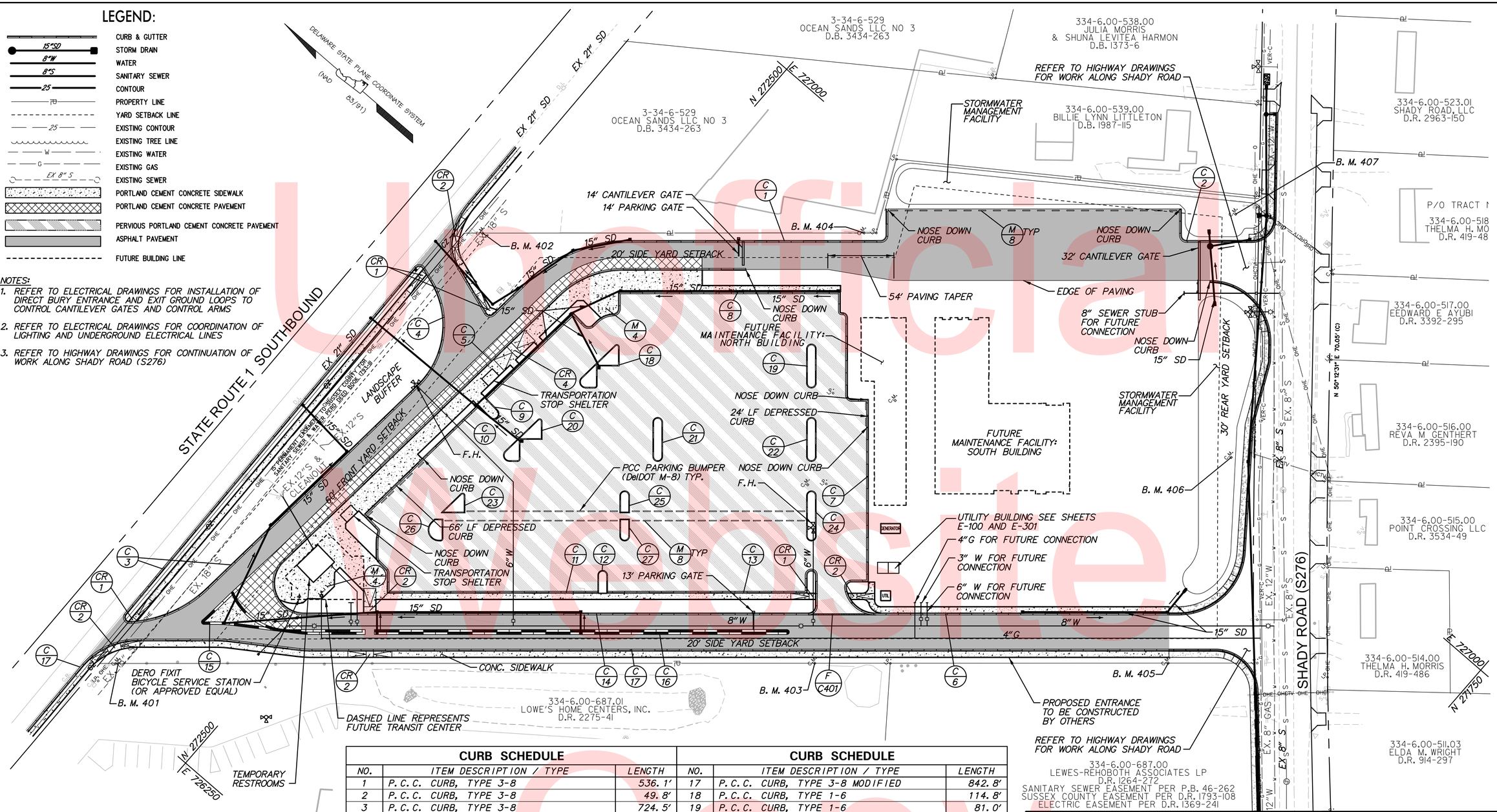

BENCH MARK INFORMATION:

POINT#	NORTHING	EASTING	ELEV.	DESCRIPTION
401	272594.8598	726275.4614	24.49	CONCRETE MONUMENT
402	272600.0252	726736.2719	22.16	CONCRETE MONUMENT
403	272164.8638	726648.1142	29.40	CONCRETE MONUMENT
404	272364.6158	726940.3069	22.41	CONCRETE MONUMENT
405	271946.6363	726837.2111	26.77	CONCRETE MONUMENT
406	272017.8375	726997.9937	25.07	CONCRETE MONUMENT
407	272145.2257	727150.6042	23.38	CONCRETE MONUMENT

CURB SCHEDULE

NO.	ITEM DESCRIPTION / TYPE	LENGTH
1	P.C.C. CURB, TYPE 3-8	536.1'
2	P.C.C. CURB, TYPE 3-8	49.8'
3	P.C.C. CURB, TYPE 3-8	724.5'
4	P.C.C. CURB, TYPE 3-8 MODIFIED	82.6'
5	P.C.C. CURB, TYPE 3-8 MODIFIED	504.0'
6	P.C.C. CURB, TYPE 3-8	262.0'
7	P.C.C. CURB, TYPE 3-6 MODIFIED	290.5'
8	P.C.C. CURB, TYPE 3-6	240.8'
9	P.C.C. CURB, TYPE 1-6	42.6'
10	P.C.C. CURB, TYPE 3-6	128.1'
11	P.C.C. CURB, TYPE 3-6 MODIFIED	242.1'
12	P.C.C. CURB, TYPE 1-6	42.1'
13	P.C.C. CURB, TYPE 3-6 MODIFIED	215.1'
14	P.C.C. CURB, TYPE 3-8	452.6'
15	P.C.C. CURB, TYPE 2	296.1'
16	P.C.C. CURB, TYPE 2	684.1'

CURB SCHEDULE

NO.	ITEM DESCRIPTION / TYPE	LENGTH
17	P.C.C. CURB, TYPE 3-8 MODIFIED	842.8'
18	P.C.C. CURB, TYPE 1-6	114.8'
19	P.C.C. CURB, TYPE 1-6	81.0'
20	P.C.C. CURB, TYPE 1-6	112.3'
21	P.C.C. CURB, TYPE 1-6	81.0'
22	P.C.C. CURB, TYPE 1-6	81.0'
23	P.C.C. CURB, TYPE 1-6	60.9'
24	P.C.C. CURB, TYPE 1-6	91.0'
25	P.C.C. CURB, TYPE 1-6	48.6'
26	P.C.C. CURB, TYPE 1-6	52.1'
27	P.C.C. CURB, TYPE 1-6	48.6'

*SEE SITE DETAILS (SHEET C-401) FOR MODIFIED CURB DETAILS

BUILDING NAME	BUILDING DESCRIPTION	AREA	STORIES / HEIGHT	SPRINKLERS	CONSTRUCTION TYPE	OCCUPANCY / USE
MAINTENANCE FACILITY: NORTH BUILDING (FUTURE)	DRIVER'S LOUNGE AND DISPATCH	4,474 SF	1 / 15'-0"	YES	II (000)	ASSEMBLY (<300)
MAINTENANCE FACILITY: SOUTH BUILDING (FUTURE)	BUS MAINTENANCE SHOPS	11,220 SF	1 / 32'-0"	YES	II (000)	INDUSTRIAL (MINOR REPAIR GARAGE)
TEMPORARY RESTROOMS	PRECAST CONCRETE MODULAR TOILET ROOMS	460 SF	1 / 12'-0"	NO	II (000)	BUSINESS
FUTURE TRANSIT CENTER	FUTURE PERMANENT TOILET ROOMS AND VISITOR CENTER	+/- 2,500 SF	1 / 21'-0"	PROPOSED	II (000)	ASSEMBLY (<300)
TEMPORARY ELECTRICAL BUILDING	PRECAST CONCRETE MODULAR BUILDING FOR ELECTRICAL SERVICE	500 SF	1 / 21'-0"	NO	II (000)	UTILITY

1. THESE STRUCTURES WILL BE PROTECTED BY AUTOMATIC SPRINKLERS IN ACCORDANCE WITH NFPA 13.
2. ALL FIRE LANES, FIRE HYDRANTS, AND FIRE DEPARTMENT CONNECTIONS SHALL BE MARKED IN ACCORDANCE WITH THE DELAWARE STATE FIRE PREVENTION REGULATIONS.
3. LOCK BOXES REQUIRED. CONTACT LOCAL FIRE CHIEF FOR ORDERING INFORMATION AND LOCATION OF BOXES ON THE BUILDINGS.

Unofficial Website Copy

N:\90181-019\CADD\CP01-90181004C-102.dgn
10/30/2015 10:28:52 AM

DELAWARE DEPARTMENT OF TRANSPORTATION

ADDENDUMS / REVISIONS

SCALE 0 40 80 120 FEET

LEWES PARK & RIDE AND SITE WORK

CONTRACT	BRIDGE NO.	
T200612502	DESIGNED BY:	
COUNTY		
SUSSEX	CHECKED BY:	

SITE PLAN

C-102

SHEET NO. 4

TOTAL SHTS. 72

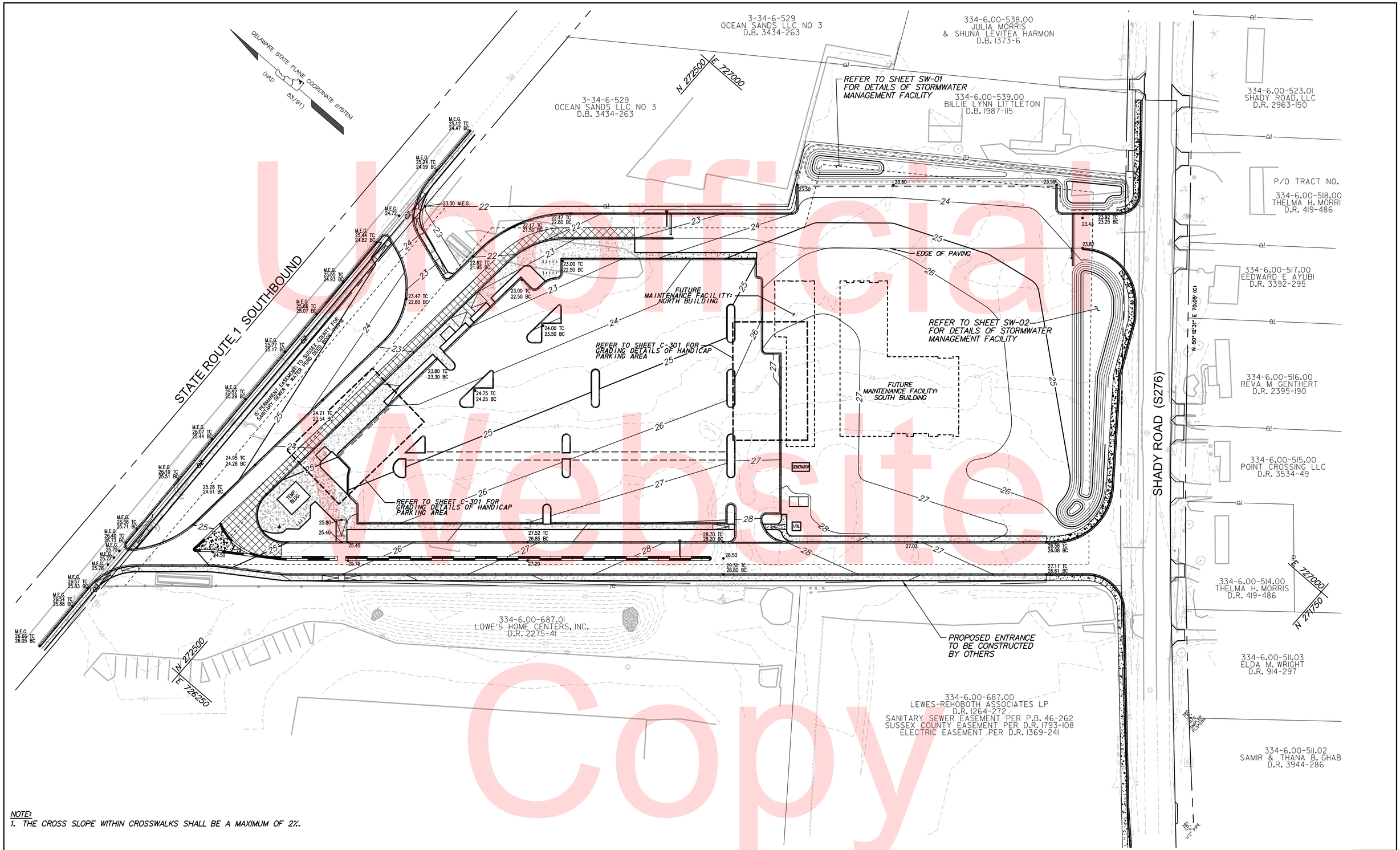

Unofficial Website Copy

NOTE:
1. THE CROSS SLOPE WITHIN CROSSWALKS SHALL BE A MAXIMUM OF 2%.

GRADING ABBREVIATIONS

M.E.G.	MATCH EXISTING GRADE, REPORT ANY DISCREPENCY TO THE ENGINEER
TC	TOP OF CURB
BC	BOTTOM OF CURB

N:\90181-019\CADD\CP01-90181004C-103.dgn
10/30/2015 10:28:14 AM

DELAWARE DEPARTMENT OF TRANSPORTATION

ADDENDUMS / REVISIONS

SCALE 0 40 80 120 FEET

LEWES PARK & RIDE AND SITE WORK

CONTRACT	BRIDGE NO.	
T200612502	DESIGNED BY:	PMG
COUNTY		
SUSSEX	CHECKED BY:	PMG

GRADING PLAN

C-103

SHEET NO.
5
TOTAL SHTS.
72

DRAINAGE PIPE SCHEDULE

NO.	SIZE / TYPE	CLASS	LENGTH	SLOPE	INT. EL.	DIS. EL.
1	18" RCP	IV	17 LF	0.0030	20.66	20.59
2	15" RCP	IV	2 LF	0.0030	20.77	20.76
3	18" RCP	IV	79 LF	0.0030	20.90	20.66
4	18" RCP	IV	2 LF	0.0342	21.00	20.90
*5	15" RCP	V	199 LF	0.0030	21.49	20.90
*6	15" RCP	V	180 LF	0.0030	22.04	21.49
7	15" RCP	V	115 LF	0.0030	22.38	22.04
8	15" CPP-S	N. A.	24 LF	0.0062	24.15	24.00
9	15" CPP-S	N. A.	110 LF	0.0030	24.48	24.15
10	15" RCP	IV	27 LF	0.0033	20.13	20.04
11	15" RCP	IV	41 LF	0.0030	20.21	20.05
12	15" RCP	IV	6 LF	0.0030	20.04	20.00
16	15" CPP-S	N. A.	79 LF	0.0178	22.19	20.78
17	15" CPP-S	N. A.	85 LF	0.0094	20.78	19.99
18	23"X14" RECP	IV	44 LF	0.0030	19.99	19.86
19	15" CPP-S	N. A.	45 LF	0.0050	19.30	19.08
20	15" CPP-S	N. A.	19 LF	0.0030	18.87	18.82
21	15" CPP-S	N. A.	52 LF	0.0040	19.08	18.87
22	15" CPP-S	N. A.	48 LF	0.0066	20.63	20.31
23	30"X19" RECP	IV	103 LF	0.0030	19.86	19.55
24	15" CPP-S	N. A.	46 LF	0.0100	20.25	19.79
25	30"X19" RECP	IV	107 LF	0.0064	19.55	18.87
26	30"X19" RECP	IV	46 LF	0.0040	19.24	19.05
27	15" CPP-S	N. A.	85 LF	0.0050	19.71	19.28
28	15" RCP	IV	54 LF	0.0044	20.31	20.07
29	15" RCP	IV	64 LF	0.0045	20.58	20.30
30	15" RCP	IV	13 LF	0.0100	20.71	20.58
31	15" RCP	IV	161 LF	0.0100	22.19	20.58
32	15" RCP	IV	13 LF	0.0100	22.42	22.29
34	15" RCP	IV	81 LF	0.0044	20.07	19.71
35	15" RCP	IV	65 LF	0.0032	18.82	18.61
**36	15" RCP	V	332 LF	0.0047	23.93	22.38

*SEE STORM DRAIN ENCASEMENT DETAIL, SHEET C-404
**FOR PLAN VIEW OF ITEMS, SEE SHEET H5-01

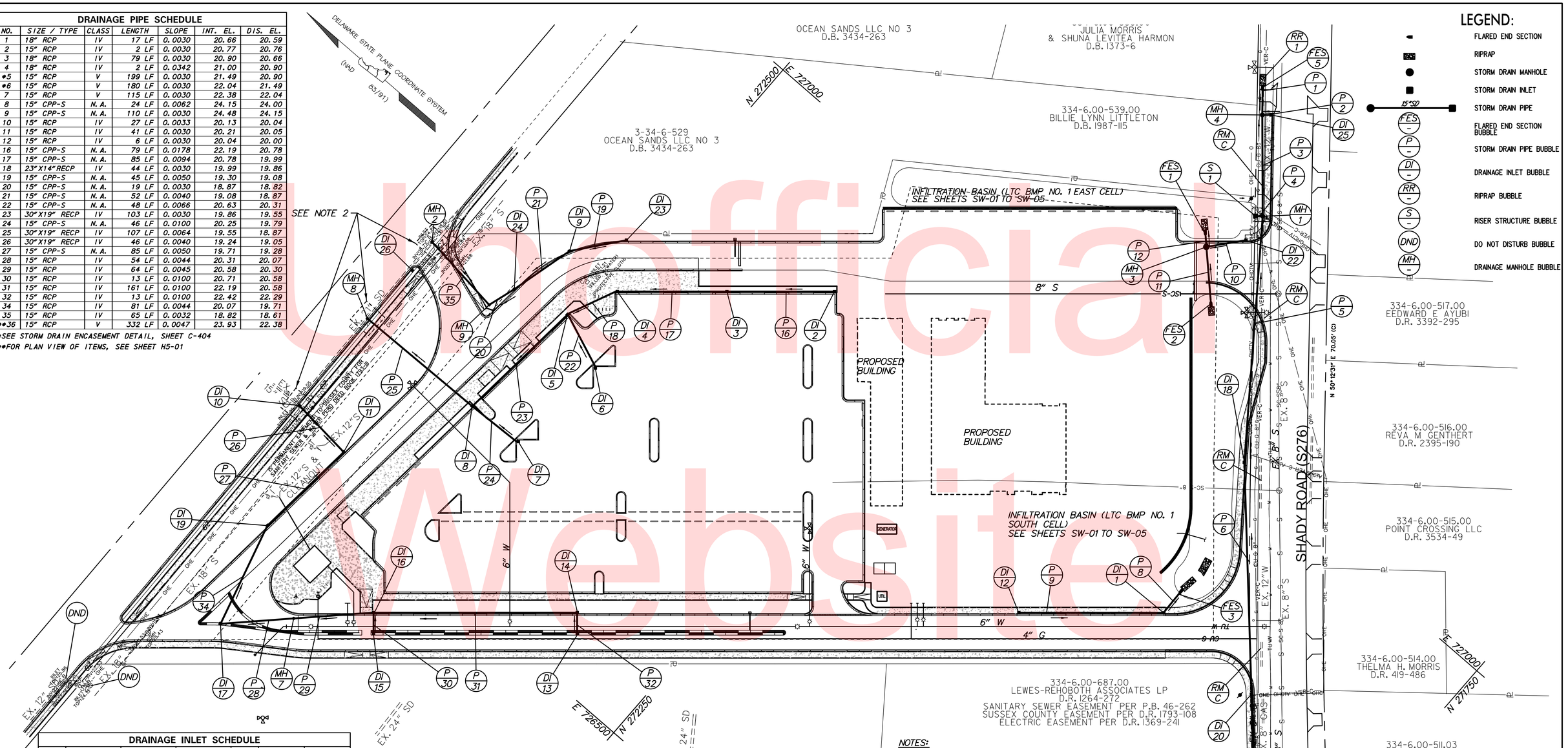

LEGEND:

- FLARED END SECTION
- RIPRAP
- STORM DRAIN MANHOLE
- STORM DRAIN INLET
- 15"SD — STORM DRAIN PIPE
- FES — FLARED END SECTION BUBBLE
- P — STORM DRAIN PIPE BUBBLE
- DI — DRAINAGE INLET BUBBLE
- RR — RIPRAP BUBBLE
- S — RISER STRUCTURE BUBBLE
- DND — DO NOT DISTURB BUBBLE
- MH — DRAINAGE MANHOLE BUBBLE

DRAINAGE INLET SCHEDULE

NO.	NORTHING	EASTING	BOX SIZE	GRATE	T. C. EL.	INV. EL.
1	271974.47	726868.21	SHALLOW COG	N. A.	26.58	24.15
*2	272349.64	726890.55	SHALLOW COG	N. A.	25.40	22.19
*3	272416.05	726833.03	SHALLOW COG	N. A.	24.04	20.78
*4	272483.75	726774.40	SHALLOW COG	N. A.	23.00	19.99
*5	272502.23	726733.48	SHALLOW COG	N. A.	23.00	19.86
**6	272456.33	726715.24	34" X 24"	1	23.50	20.63
**7	272464.67	726628.64	34" X 24"	1	24.25	20.25
8	272512.03	726625.93	SHALLOW COG	N. A.	23.80	19.55
*9	272534.95	726773.89	SHALLOW COG	N. A.	22.17	19.08
*10	272619.27	726533.83	SHALLOW COG	N. A.	25.77	MATCH EX.
*11	272566.90	726528.82	SHALLOW COG	N. A.	24.21	19.24
*12	272063.99	726790.78	SHALLOW COG	N. A.	27.03	24.48
*13	272325.66	726541.67	SHALLOW COG	N. A.	27.20	22.42
*14	272336.79	726554.52	SHALLOW COG	N. A.	27.52	22.19
*15	272451.42	726432.75	SHALLOW COG	N. A.	25.75	20.71
*16	272462.55	726445.61	SHALLOW COG	N. A.	25.95	20.58
*17	272551.15	726357.05	SHALLOW COG	N. A.	24.50	20.07
*19	272574.68	726442.58	SHALLOW COG	N. A.	24.95	19.71
*22	272122.87	727142.51	SHALLOW COG	N. A.	24.06	20.13
*23	272505.57	726811.06	SHALLOW COG	N. A.	22.47	19.30
*24	272548.64	726720.79	SHALLOW COG	N. A.	22.62	18.87
*26+	272621.75	726677.76	48" X 30"	1	25.25	MATCH EX.

*SEE SHALLOW COG DETAIL, SHEET C-403
**T.C. EL REFERS TO THE TOP OF GRATE
+SHALL BE A DOGHOUSE STYLE INLET TO CONNECT TO EX. STORM DRAIN.

RIPRAP SCHEDULE

NO.	TYPE	AREA
1	R-4	5 SY

FLARED END SECTION SCHEDULE

NO.	SIZE / TYPE	SLOPE	SAFETY GRATE
1	15" RCP	0.0000	NO
2	15" RCP	0.0000	NO
3	15" CPP-S	0.0062	NO
5	18" RCP	0.0030	NO
*6	15" RCP	0.0047	YES

*FOR PLAN VIEW OF ITEMS, SEE SHEET H5-01

DRAINAGE INLET SCHEDULE

NO.	STATION	OFFSET	BOX SIZE	GRATE	T. C. EL.	INV. EL.
*18	107+90	35 LT	SHALLOW COG	N. A.	24.46	21.49
*20	106+01	29 LT	SHALLOW COG	N. A.	25.71	22.04
*21	104+81	29 LT	SHALLOW COG	N. A.	26.00	22.38
*25	110+74	18 LT	SHALLOW COG	N. A.	23.84	20.77

*SEE SHALLOW COG DETAIL, SHEET C-403

MANHOLE SCHEDULE

NO.	STATION	OFFSET	NORTHING	NORTHING	TYPE/SIZE	T. G. EL.	INV. EL.
1	109+91	24 LT			48" X 48"	24.33	20.90
*2			272625.16	726733.43	48" X 48"	24.69	MATCH EX.
3			272143.78	747117.16	48" X 48"	23.43	20.04
4	110+74	26 LT			48" X 48"	23.82	20.66
7			272508.81	726399.30	48" X 48"	24.99	20.31
*8			272623.39	726624.04	48" X 48"	25.00	MATCH EX.
9			272555.82	726697.63	48" X 48"	22.93	18.82

* SHALL BE A DOGHOUSE STYLE MANHOLE TO CONNECT TO EXISTING STORM DRAIN

NOTES:

1. CONTRACTOR SHALL CLEAN EXISTING DRIVEWAY PIPES ALONG THE SOUTH SIDE OF SHADY ROAD WITHIN PROJECT LIMITS
2. CONTRACTOR SHALL USE EXTREME CARE IN EXECUTING ALL WORK AROUND EXISTING FIBER OPTIC LINES AND SHALL USE HAND-DIGGING OR OTHER MEANS TO AVOID IMPACTS TO THE LINES. REPAIR OF ANY DAMAGE TO THE LINES SHALL BE THE RESPONSIBILITY OF THE CONTRACTOR.

Unofficial Website Copy

N:\90181\019\CADD\CP01-90181004C-104.dgn
10/30/2015 10:29:38 AM

DELAWARE DEPARTMENT OF TRANSPORTATION

ADDENDUMS / REVISIONS

SCALE 0 40 80 120 FEET

LEWES PARK & RIDE AND SITE WORK

CONTRACT	BRIDGE NO.
T200612502	DESIGNED BY: PMG
COUNTY	
SUSSEX	CHECKED BY: PMG

STORM DRAIN PLAN

C-104

SHEET NO. 6

TOTAL SHTS. 72

WATER MATERIAL LIST	
ITEM DESCRIPTION	QUANITY
8" PVC (CL. 150)	804 LF
6" PVC (CL. 150)	267 LF
6" DIP (CL. 52)	19 LF
3" PVC (CL. 150)	76 LF
2" PVC (CL. 150)	35 LF
6" FIRE HYDRANTS	3
8" VALVES	3
6" VALVES	2
3" VALVES	2
8"X6" TEE	4
3" 45° HORZ. BENDS	1
2" 45° HORZ. BENDS	1
6" 45° HORZ. BENDS	1
6" 45° VERT. BENDS	4
8" 45° VERT. BENDS	4
8" CAP	1
6" CAP	2
3" CAP	1
12"x8" TAPPING SLEEVE	1
12"x6" TAPPING SLEEVE	1
2" BLOW OFF ASSEMBLY W/ VAULT	3
RESTRAINED JOINTS	823 LF

SANITARY SEWER MATERIAL LIST	
ITEM DESCRIPTION	QUANITY
8" PVC (SDR-35)	80 LF
4" PVC (SDR-35)	49 LF
SEWER CLEANOUT	1

NOTES:

1. REFER TO SHEETS C-104 FOR ADDITIONAL STORM DRAIN PIPING INFORMATION.
2. INSTALLATION OF WATER AND SEWER SHALL BE IN ACCORDANCE WITH SUSSEX COUNTY STANDARDS AND SPECIFICATIONS.
3. REFER TO SHEET C-108 FOR WATER AND SEWER PROFILES.

NOTE:
CONTRACTOR TO TEST PIT FOR LOCATION AND INVERT OF EXISTING SEWER, CLEANOUT BEFORE STARTING WORK

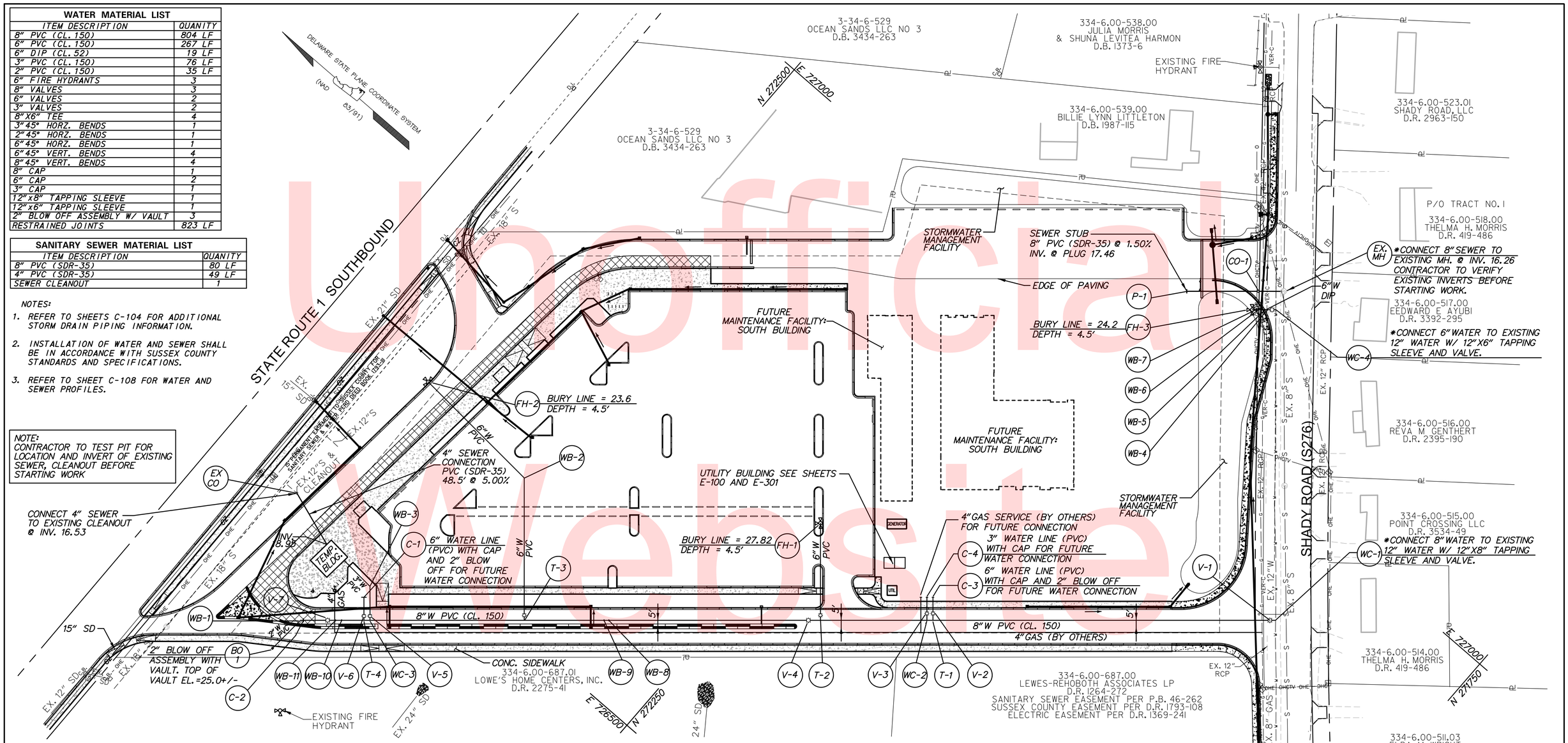

WATER STAKEOUT SCHEDULE			
No.	TYPE	NORTHING	EASTING
WC-1	WATER CONNECTION	N 271901.2267	E 726916.7616
WC-2	WATER CONNECTION	N 272119.2054	E 726727.9732
WC-3	WATER CONNECTION	N 272467.3850	E 726426.4198
WC-4	WATER CONNECTION	N 272069.0252	E 727110.8894
V-1	8" VALVE	N 271904.8506	E 726913.6691
V-2	6" VALVE	N 272119.1284	E 726735.5165
V-3	3" VALVE	N 272122.9010	E 726732.2491
V-4	8" VALVE	N 272193.3159	E 726663.7872
V-5	3" VALVE	N 272469.6835	E 726429.1169
V-6	6" VALVE	N 272473.4758	E 726425.8324
V-7	8" VALVE	N 272493.8698	E 726403.4817
T-1	8"x6" TEE	N 272115.4259	E 726731.2466
T-2	8"x6" TEE	N 272185.7637	E 726670.3419
T-3	8"x6" TEE	N 272370.8969	E 726510.1183
T-4	8"x6" TEE	N 272471.1645	E 726423.1464
WB-1	2" 45° BEND	N 272510.8040	E 726388.7792
WB-2	6" 45° BEND	N 272448.0413	E 726598.8606
WB-3	3" 45° BEND	N 272485.5095	E 726447.4386
WB-4	6" 45° VERT. BEND	N 272074.3427	E 727106.3441
WB-5	6" 45° VERT. BEND	N 272075.8563	E 727105.0489
WB-6	6" 45° VERT. BEND	N 272079.9943	E 727101.4572
WB-7	6" 45° VERT. BEND	N 272081.4674	E 727100.1814
WB-8	8" 45° VERT. BEND	N 272318.0405	E 726555.7650

WATER STAKEOUT SCHEDULE			
No.	TYPE	NORTHING	EASTING
WB-9	8" 45° VERT. BEND	N 272321.0641	E 726553.1463
WB-10	8" 45° VERT. BEND	N 272485.0958	E 726411.0808
WB-11	8" 45° VERT. BEND	N 272488.8753	E 726407.8074
BO-1	2" BLOW OFF & VAULT	N 272513.1532	E 726356.1058
FH-1	6" FIRE HYDRANT	N 272238.3272	E 726731.0328
FH-2	6" FIRE HYDRANT	N 272560.1753	E 726606.9075
FH-3	6" FIRE HYDRANT	N 272083.8077	E 727098.1710
C-1	6" CAP & 2" BLOWOFF	N 272483.6365	E 726437.5541
C-2	8" CAP & 2" BLOWOFF	N 272508.9598	E 726390.4124
C-3	6" CAP & 2" BLOWOFF	N 272127.8800	E 726745.6264
C-4	3" CAP & 2" BLOWOFF	N 272131.6229	E 726742.3830

SEWER STRUCTURE STAKEOUT SCHEDULE			
No.	TYPE	NORTHING	EASTING
EX. MH		N 272074.2326	E 727126.6465
EX. CO	SEWER CLEANOUT	N 272581.8734	E 726466.3055
CO-1	SEWER CLEANOUT	N 272090.1604	E 727112.8577
P-1	8" SEWER PLUG	N 272134.8008	E 727074.1866

Unofficial Website Copy

N:\90181-019\CADD\CP01-90181004C-105.dgn
10/30/2015 10:30:53 AM

DELAWARE DEPARTMENT OF TRANSPORTATION

ADDENDUMS / REVISIONS

SCALE 0 40 80 120 FEET

LEWES PARK & RIDE AND SITE WORK

CONTRACT	BRIDGE NO.	
T200612502	DESIGNED BY: D.J.L.	
COUNTY		
SUSSEX	CHECKED BY: PMG	

WATER AND SEWER PLAN

C-105

SHEET NO.
7
TOTAL SHTS.
72

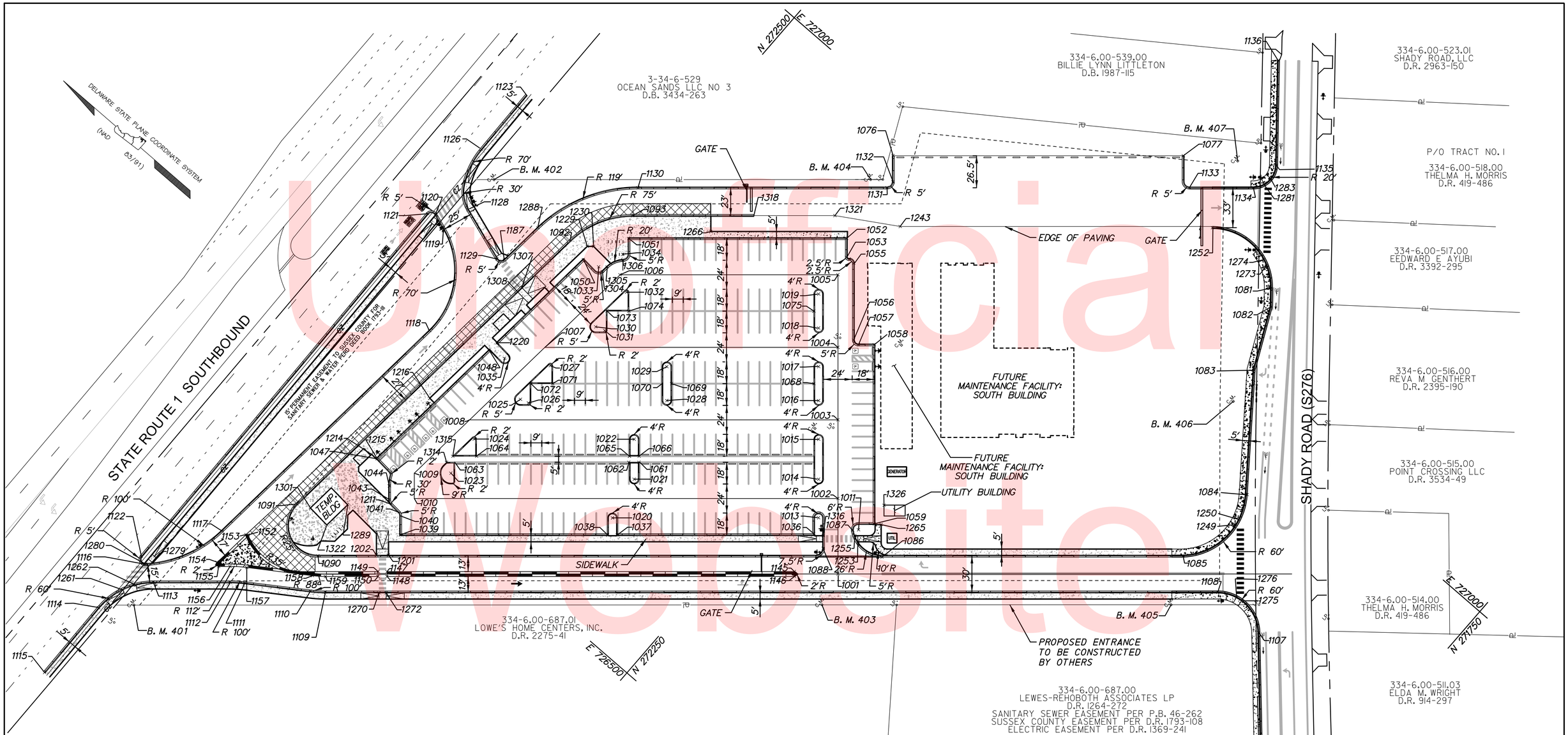

NOTE:
FOR STAKEOUT DATA , SEE SHEET C-405

BENCH MARK INFORMATION:

POINT#	NORTHING	EASTING	ELEV.	DESCRIPTION
401	272594.8598	726275.4614	24.49	CONCRETE MONUMENT
402	272600.0252	726736.2719	22.16	CONCRETE MONUMENT
403	272164.8638	726648.1142	29.40	CONCRETE MONUMENT
404	272364.6158	726940.3069	22.41	CONCRETE MONUMENT
405	271946.6363	726837.2111	26.77	CONCRETE MONUMENT
406	272017.8375	726997.9937	25.07	CONCRETE MONUMENT
407	272145.2257	727150.6042	23.38	CONCRETE MONUMENT

Unofficial Website Copy

N:\90181-019\CADD\CP01-90181604C-106.dgn
10/30/2015 10:32:10 AM

DELAWARE DEPARTMENT OF TRANSPORTATION

ADDENDUMS / REVISIONS

SCALE 0 40 80 120 FEET

LEWES PARK & RIDE AND SITE WORK

CONTRACT	BRIDGE NO.	
T200612502	DESIGNED BY: DJL	
COUNTY		
SUSSEX	CHECKED BY: PMG	

STAKEOUT & LAYOUT PLAN

C-106

SHEET NO. 8

TOTAL SHTS. 72

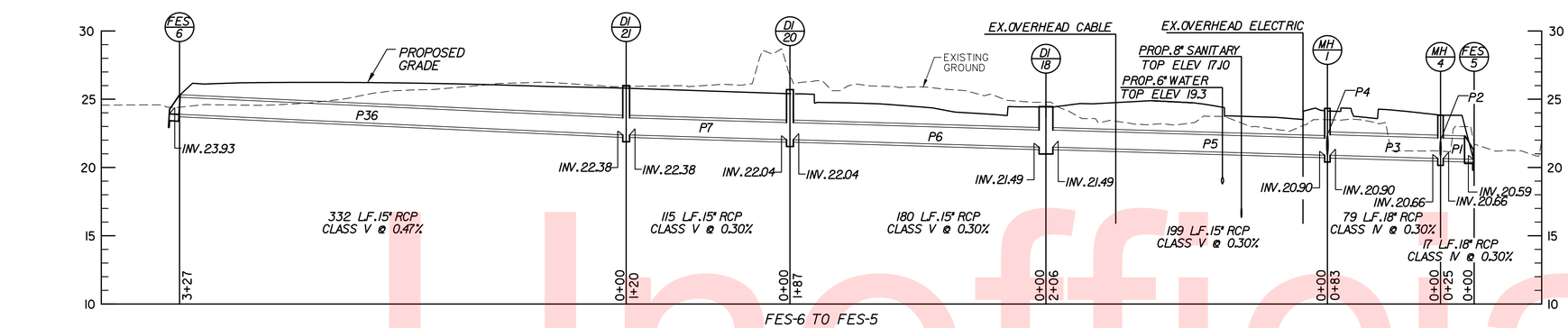

FES-6 TO FES-5

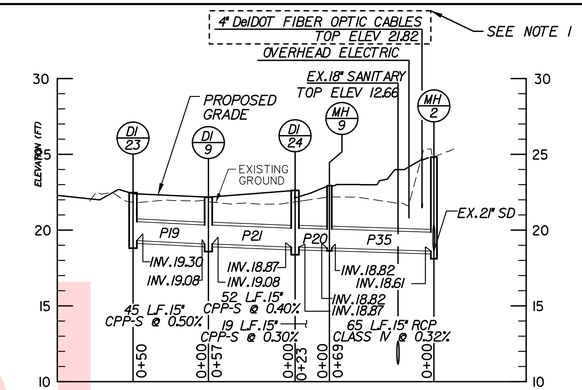

DI-23 TO MH-2

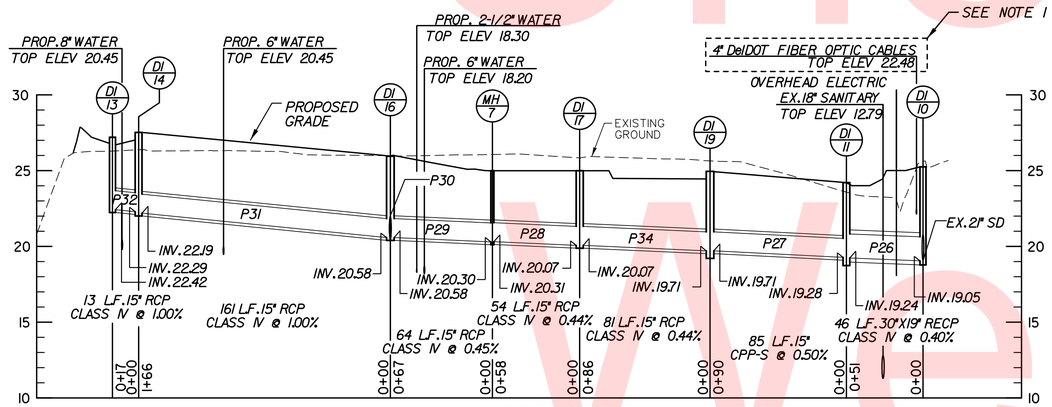

DI-13 TO DI-10

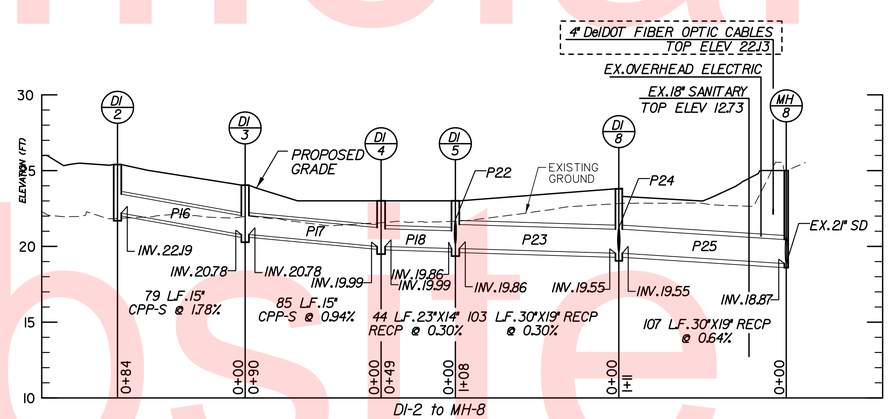

DI-2 to MH-8

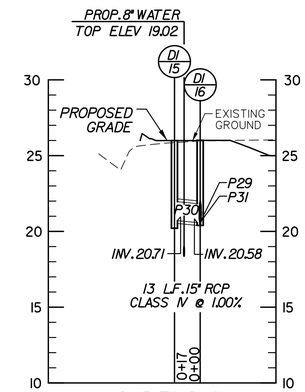

DI-15 TO DI-16

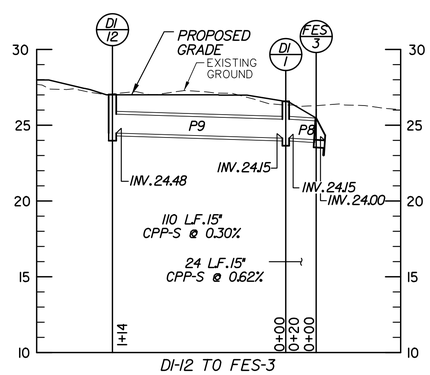

DI-12 TO FES-3

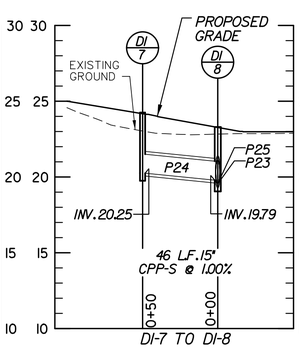

DI-7 TO DI-8

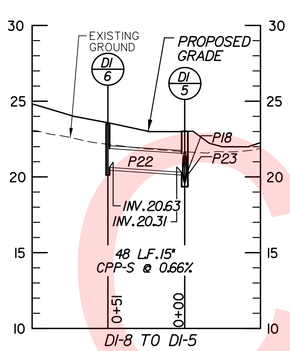

DI-8 TO DI-5

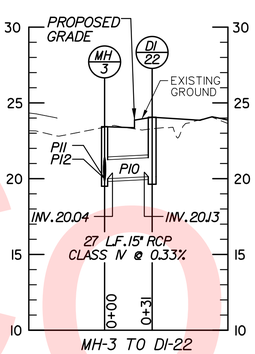

MH-3 TO DI-22

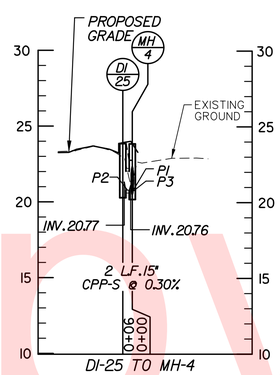

DI-25 TO MH-4

NOTES:

1. CONTRACTOR SHALL USE EXTREME CARE IN EXECUTING ALL WORK AROUND EXISTING FIBER OPTIC LINES AND SHALL USE HAND-DRILLING OR OTHER MEANS TO AVOID IMPACTS TO THE LINES. REPAIR OF ANY DAMAGE TO THE LINES SHALL BE THE RESPONSIBILITY OF THE CONTRACTOR

SCALE: HORIZ. 1"=50' VERT. 1"=5'

Unofficial Website Copy

N:\90181-019\CADD\CP01-90181004C-107.dgn
10/30/2015 10:33:44 AM

DELAWARE DEPARTMENT OF TRANSPORTATION	ADDENDUMS / REVISIONS	LEWES PARK & RIDE AND SITE WORK	CONTRACT T200612502	BRIDGE NO.	STORM DRAIN PROFILES	C-107
			COUNTY SUSSEX	DESIGNED BY: B.P.G.		SHEET NO. 9
				CHECKED BY: J.D.C.		TOTAL SHTS. 72

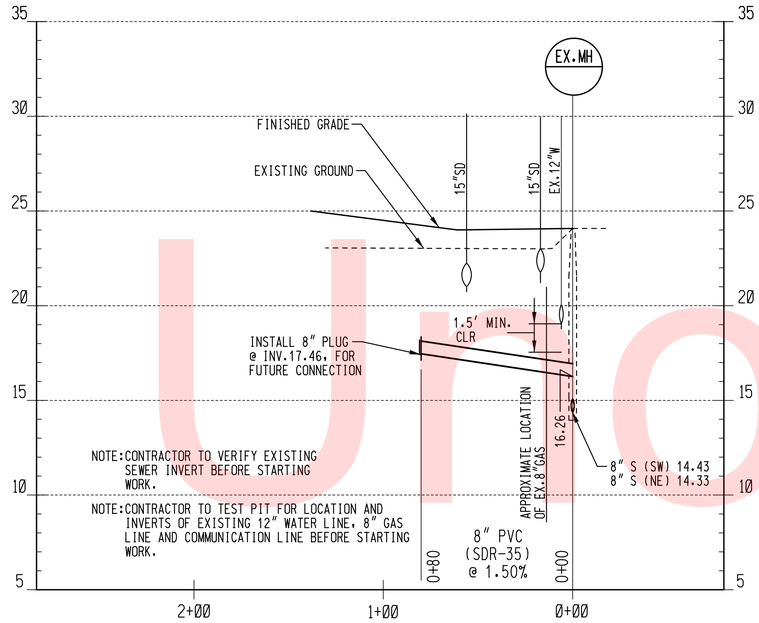

SEWER PROFILE

SCALE: HORZ: 1"=40'
VERT. 1"=4'

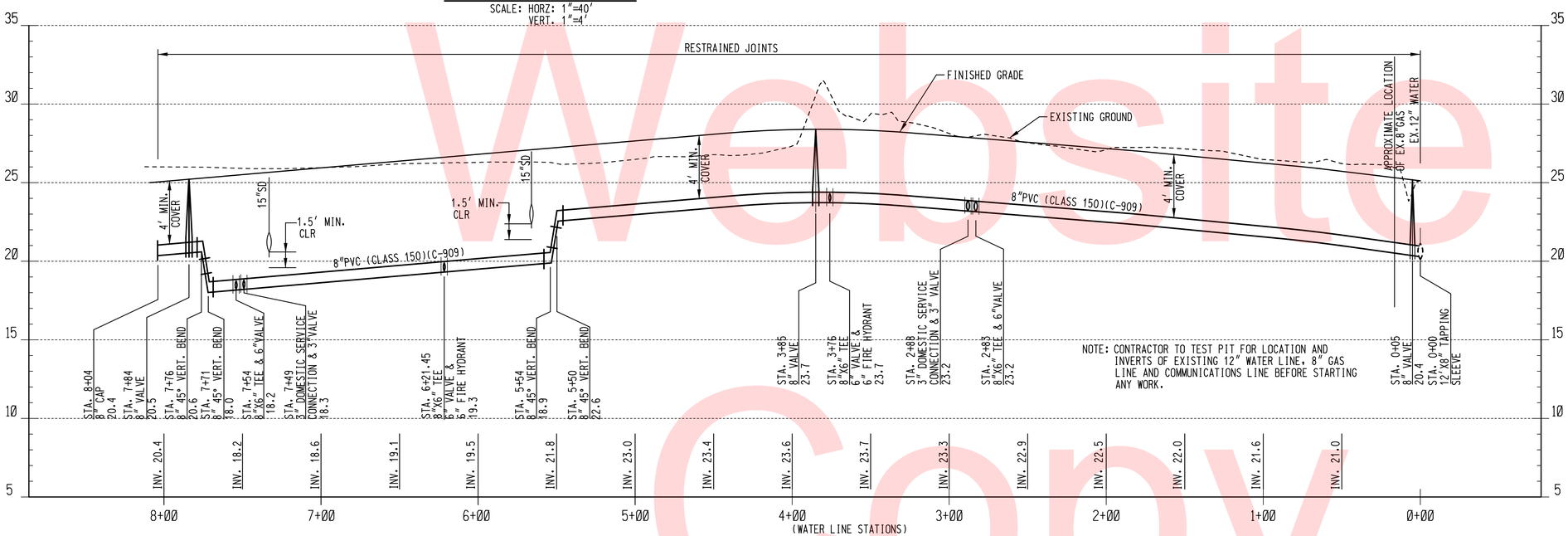

WATER PROFILE

SCALE: HORZ: 1"=40'
VERT. 1"=4'

Unofficial Website Copy

N:\90181-01\CADD\CP01-90181004C-108.dgn
10/30/2015 10:35:08 AM

DELAWARE DEPARTMENT OF TRANSPORTATION	ADDENDUMS / REVISIONS	SCALE 0 40 80 120 FEET SCALE: HORZ: 1"=40' VERT. 1"=4'	LEWES PARK & RIDE AND SITE WORK	CONTRACT T200612502	BRIDGE NO.	WATER AND SEWER PROFILES
				COUNTY SUSSEX	DESIGNED BY: D.J.L.	
					CHECKED BY: P.M.G.	

C-108

SHEET NO.	TOTAL SHTS.
10	72

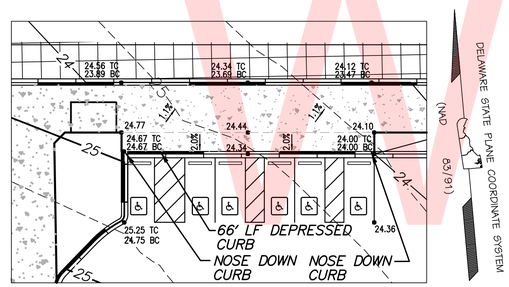

HANDICAPPED PARKING ENLARGED GRADING PLAN

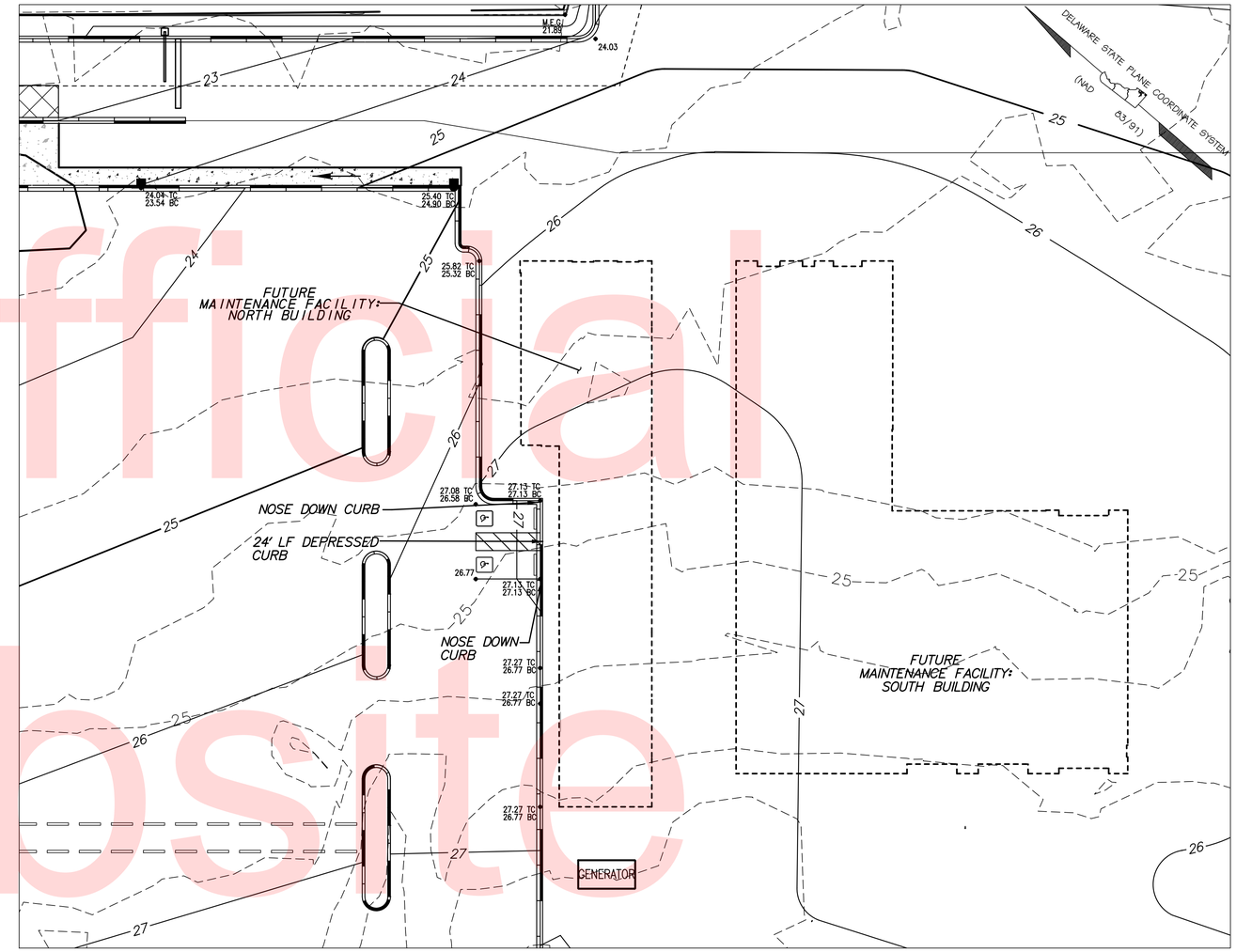

HANDICAPPED PARKING ENLARGED GRADING PLAN

Unofficial Website Copy

NOTES:

1. REFER TO SIGNAGE AND STRIPING PLAN FOR HANDICAP SIGN LOCATIONS.
2. CONTRACTOR IS TO ENSURE THAT ALL SIDEWALK, RAMPS, AND HANDI-CAP PARKING SPACE MEET THE GRADING REQUIREMENTS OF THE LATEST ADA GUIDELINES.

C-301

DELAWARE DEPARTMENT OF TRANSPORTATION	ADDENDUMS / REVISIONS	SCALE 0 20 40 60 FEET	LEWES PARK & RIDE AND SITE WORK	CONTRACT T200612502	BRIDGE NO.	ENLARGED GRADING PLAN	SHEET NO. 11
				COUNTY SUSSEX	DESIGNED BY: PMG		TOTAL SHTS. 72
					CHECKED BY: PMG		

N:\90181-019\CADD\CP01-90181004C-301.dgn
10/30/2015 10:58:36 AM

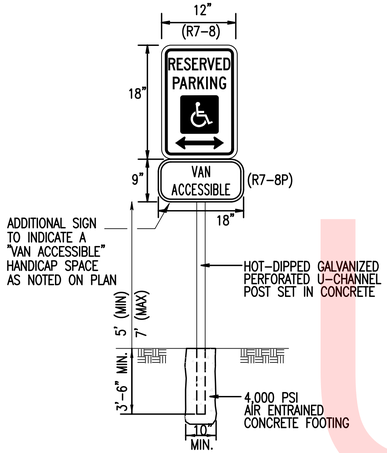

A C401 HANDICAP PARKING SIGNS DETAIL
NOT TO SCALE

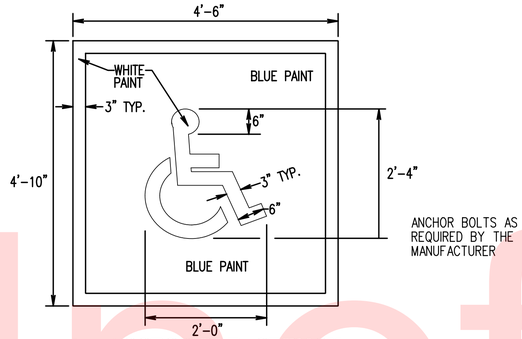

B C401 ACCESSIBLE STENCIL
NOT TO SCALE

LAP SPLICE LENGTH						MINIMUM TENSION EMBEDMENTS			
BAR SIZE		SLAB AND WALL		BEAM		STD 90° HOOK		STD 180° HOOK	
SOFT METRIC	ENGLISH	OTHER BARS	TOP BARS	OTHER BARS	TOP BARS	ldh	12db	ldh	4db
#10	#3	12"	14"	12"	14"	6"	5"	6"	3"
#13	#4	14"	19"	18"	23"	7"	6"	7"	3"
#16	#5	18"	23"	26"	34"	8"	8"	8"	3"
#19	#6	21"	28"	35"	46"	10"	9"	10"	3"
#22	#7	35"	45"	51"	67"	11"	11"	11"	4"
#25	#8	44"	57"	59"	76"	13"	12"	13"	4"
#29	#9	54"	70"	66"	86"	15"	14"	15"	5"
#32	#10	66"	86"	74"	96"	16"	16"	16"	6"
#36	#11	79"	103"	82"	107"	18"	17"	18"	6"

LAP SPLICE ASSUMPTIONS:

CONCRETE: 4500 PSI COMPRESSIVE STRENGTH (NORMALWEIGHT CONCRETE)

SLAB AND WALL: 6" MINIMUM REBAR SPACING WITH CONCRETE COVER = 1.5" CLEAR

BEAM: MINIMUM CLEAR SPACING BETWEEN BARS = 1.5 db (1.5" MIN). MINIMUM CONCRETE COVER = 1.5" CLEAR. MINIMUM STIRRUP #4@12" PROVIDED.

TOP BAR: TOP BAR FOR SLAB AND BEAM SHALL BE DEFINED AS REINFORCEMENT SO PLACED THAT MORE THAN 12" OF CONCRETE IS CAST BELOW THE SPLICE.

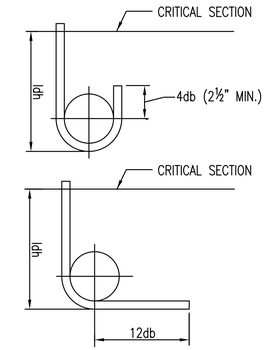

STANDARD HOOK ASSUMPTIONS:

SIDE COVER SHALL NOT BE LESS THAN 2.5"
END COVER ON 90° HOOK SHALL NOT BE LESS THAN 2"

STANDARD 180° AND 90° END HOOKS

TENSION LAP SPLICE AND STANDARD HOOK LENGTH (ACI 318-11)
(NON-EPOXY COATED)

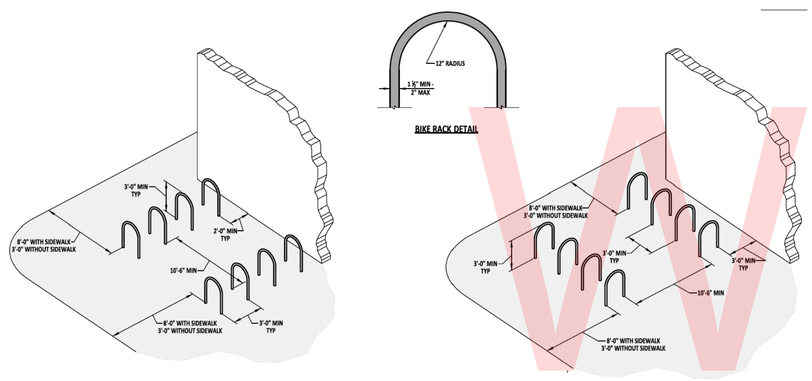

NOTES:
1). BIKE RACK SHALL BE ANCHORED AS PER MANUFACTURER'S RECOMMENDATIONS AFTER APPROVAL FROM ENGINEER IN THE FIELD.
2). DETAIL SHOWN WITH P.C.C. CURB TYPE 1-8, HOWEVER ACTUAL CURB VARIES AND SHOULD BE PLACED AS SHOWN ON PLANS.
3). SPECIAL CONSIDERATIONS SHOULD BE TAKEN WHEN PLACING BIKE RACKS NEAR CURB RAMPS AND MAY REQUIRE A DETAIL ON THE PLANS.

M 4 BIKE RACK LAYOUT DETAILS
NOT TO SCALE

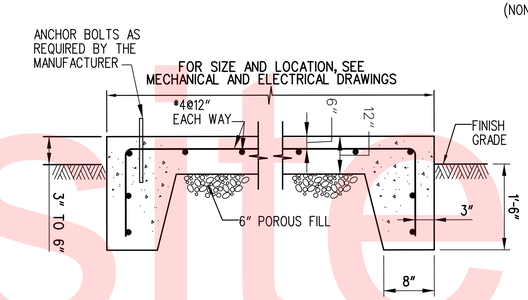

TYPICAL EXTERIOR EQUIPMENT PAD DETAIL
NO SCALE

STRUCTURAL CONCRETE NOTES:

1. PROVIDE CONCRETE WITH A MINIMUM COMPRESSIVE STRENGTH OF 4500 PSI AT 28 DAYS.
2. DETAIL AND CONSTRUCT REINFORCED CONCRETE IN ACCORDANCE WITH AMERICAN CONCRETE INSTITUTE ACI 301, "SPECIFICATION FOR STRUCTURAL CONCRETE."
3. DETAIL REINFORCING STEEL IN ACCORDANCE WITH AMERICAN CONCRETE INSTITUTE SP-66, "ACI DETAILING MANUAL," WHICH INCLUDES ACI 315, "DETAILS AND DETAILING OF CONCRETE REINFORCEMENT."
4. PROVIDE REINFORCEMENT CONFORMING TO ASTM A615, GRADE 60, DEFORMED BARS.
5. UNLESS NOTED OTHERWISE ON THE DRAWINGS, THE CONCRETE COVER FOR REINFORCEMENT SHALL BE AS FOLLOWS:
   A. BOTTOM BARS IN FOOTINGS AND IN SLABS ON EARTH OR GRAVEL: 3".
   B. SLABS AND WALLS EXPOSED TO GROUND, WEATHER AFTER REMOVAL OF FORMS: 2".
6. SUBMIT REINFORCING STEEL DETAILS (SHOP DRAWINGS) AND RECEIVE APPROVAL BEFORE PROCEEDING WITH FABRICATION.
7. CHAMFER ALL EXPOSED CONCRETE EDGES 3/4" UNLESS OTHERWISE NOTED.
8. DETAIL ALL SPLICES FOR REINFORCING BARS NOT DIMENSIONED ON THE DRAWINGS AS TABULATED ON SHEET S-002.
9. SIZE AND LOCATE ANCHOR BOLTS AND EQUIPMENT PADS OR PEDESTALS TO SUIT EQUIPMENT FURNISHED.
10. REVIEW ALL DRAWINGS FROM OTHER DISCIPLINES AND COORDINATE ALL OPENINGS AND EMBEDDED ITEMS SUCH AS SLEEVES, ANCHORS, CONDUIT, ETC. THAT WILL BE INCORPORATED INTO CONCRETE WORK.

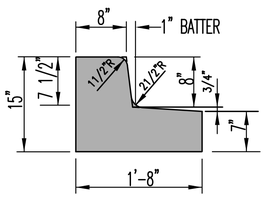

D C401 INTERGAL P.C.C. CURB AND GUTTER
TYPE 3-8 MODIFIED
NOT TO SCALE

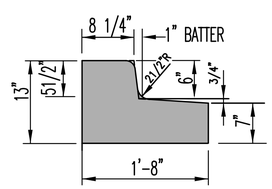

E C401 INTERGAL P.C.C. CURB AND GUTTER
TYPE 3-6 MODIFIED
NOT TO SCALE

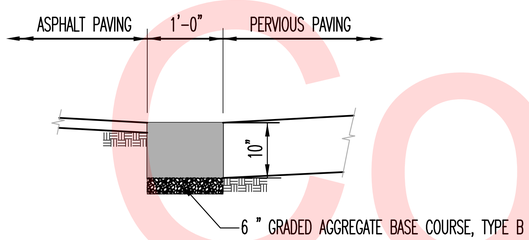

F C401 CONCRETE STRIP DETAIL
NOT TO SCALE

NOTES:
1. CONCRETE STRIP SHALL BE PAID UNDER ITEM 501004, PORTLAND CEMENT CONCRETE PAVEMENT, 10".

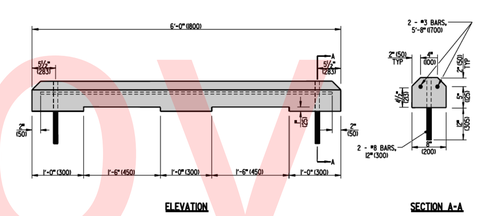

M 8 P.C.C. PARKING BUMPER

Unofficial Website Copy

N:\90181-019\CADD\CR01-90181004C-401.dgn
10/30/2015 10:38:17 AM

DELAWARE DEPARTMENT OF TRANSPORTATION	ADDENDUMS / REVISIONS	LEWES PARK & RIDE AND SITE WORK	CONTRACT T200612502	BRIDGE NO.	SITE DETAILS	C-401
			COUNTY SUSSEX	DESIGNED BY: D.J.L.		SHEET NO. 12
				CHECKED BY: P.M.C.		TOTAL SHTS. 72

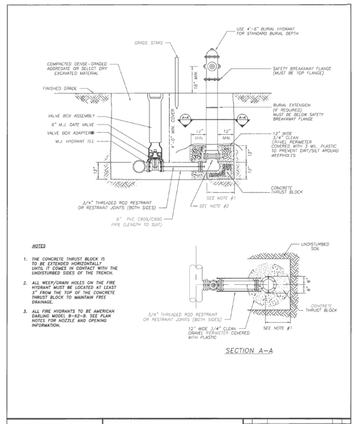

NOTES

1. THE CONCRETE THRUST BLOCK IS TO BE EXTENDED HORIZONTALLY ACROSS THE TRENCH WIDTH WITH THE UNDISTURBED SIDES OF THE TRENCH.
2. ALL WEEP/DRAIN HOLES ON THE FIRE HYDRANT MUST BE LOCATED AT LEAST 3" FROM THE TOP OF THE CONCRETE THRUST BLOCK TO MAINTAIN FREE DRAINAGE.
3. ALL FIRE HYDRANTS TO BE AMERICAN DARLING MODEL B-62-B. SEE PLAN NOTES FOR NOZZLE AND OPENING INFORMATION.

TIDEWATER UTILITIES INC.
A Middlesex Water Company Affiliate
1089 Bennett Lutter Creek Road
Bridgeville, Delaware 19933

TYPICAL DESIGN DETAILS
FIRE HYDRANT ASSEMBLY DETAIL
A-7

NO.	DATE	DESCRIPTION	BY
2	3/31/08	ADDED 12X12 BOX ADAPTER	SAM
1	3/31/08	INITIAL RELEASE	SAM

DATE: 12/04/02 DRAWN BY: SAM 19 / 17
SCALE: N.T.S.

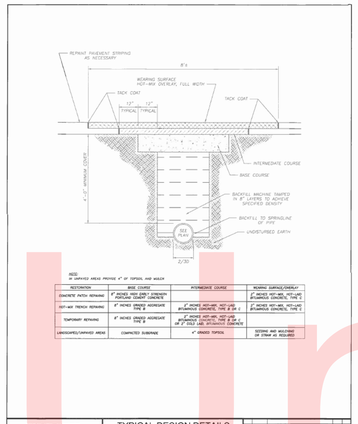

NOTE
IN UNPAVED AREAS PROVIDE 4" OF TOPSOIL AND MULCH

RESTORATION	BASE COURSE	INTERMEDIATE COURSE	WEARING SURFACE/OVERLAY
CONCRETE PATCH REPAIRING	8" MODIFIED MIXED (MIN) STRENGTH PORTLAND CEMENT CONCRETE		2" MIXED HOT-MIX, HOT-LAID BITUMINOUS CONCRETE, TYPE B SM 2
HOT-MIX TRENCH REPAIRING	8" MIXED WEARING AGGREGATE	2" MIXED HOT-MIX, HOT-LAID BITUMINOUS CONCRETE, TYPE B SM 2	2" MIXED HOT-MIX, HOT-LAID BITUMINOUS CONCRETE, TYPE B SM 2
TEMPORARY REPAIRING	8" MIXED WEARING AGGREGATE	2" MIXED HOT-MIX, HOT-LAID BITUMINOUS CONCRETE, TYPE B SM 2	
UNDISTURBED/UNPAVED AREAS	COMPACTED SUBGRADE	4" GRADED TOPSOIL	SEEDING AND MULCHING OR SOD AS REQUIRED

TIDEWATER UTILITIES INC.
A Middlesex Water Company Affiliate
1089 Bennett Lutter Creek Road
Bridgeville, Delaware 19933

TYPICAL DESIGN DETAILS
REPAVING AND TRENCH DETAIL
A-8

NO.	DATE	DESCRIPTION	BY
1	3/31/08	INITIAL RELEASE	SAM

DATE: 12/04/02 DRAWN BY: AC 17 / 17
SCALE: N.T.S.

NOTES

1. PORTLAND CEMENT CONCRETE FOR BUTRESSES SHALL BE 3000 P.S.I. MINIMUM.
2. BUTTRESS DIMENSIONS SHOWN ARE MINIMUM DIMENSIONS BASED UPON A SOIL BEARING CAPACITY OF 3000 P.S.F. AND STATIC WATER PRESSURE OF 150 P.S.I.
3. MODIFICATIONS TO BUTTRESS DIMENSIONS IS TO BE AT THE SOLE DISCRETION OF TIDEWATER UTILITIES, INC. AND ANY CHANGES TO BUTTRESS DIMENSIONS SHALL BE APPROVED BY TIDEWATER UTILITIES, INC. BEFORE ANY CHANGE IS PERFORMED.
4. ALL CONCRETE TO MEET UNDISTURBED EARTH.
5. FITTINGS TO BE WRAPPED IN 3 MIL. PLASTIC WHERE CONCRETE IS PRESENT.

SIZE		4"	6"	8"	10"	12"
45°	A	8"	10"	12"	14"	15"
	B	8"	10"	12"	14"	15"
	L	8"	8"	8"	10"	12"

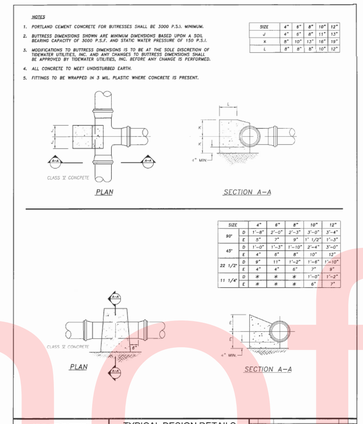

SIZE		4"	6"	8"	10"	12"
90°	A	4'-4"	4'-4"	3'-4"	3'-4"	3'-4"
	B	5'-	7'-	9'-	1'-1/2"	1'-3"
	E	1'-1/2"	1'-1/2"	1'-1/2"	2'-4"	2'-4"
45°	A	3'-	4'-	5'-	1'-1/2"	1'-3"
	B	3'-	1'-1"	1'-1/2"	2'-4"	2'-4"
22 1/2°	A	2'-	2'-	2'-	1'-	1'-
	B	2'-	1'-1"	1'-1/2"	1'-1/2"	1'-1/2"
11 1/4°	A	1'-	1'-	1'-	1'-	1'-
	B	1'-	1'-	1'-	1'-1/2"	1'-1/2"
	E	1'-	1'-	1'-	1'-	1'-

TIDEWATER UTILITIES INC.
A Middlesex Water Company Affiliate
1089 Bennett Lutter Creek Road
Bridgeville, Delaware 19933

TYPICAL DESIGN DETAILS
THRUST BLOCK DETAIL
A-11

NO.	DATE	DESCRIPTION	BY
1	3/31/08	INITIAL RELEASE	SAM

DATE: 12/04/02 DRAWN BY: AC 18 / 17
SCALE: N.T.S.

NOTES

1. PORTLAND CEMENT CONCRETE FOR BUTRESSES SHALL BE 3000 P.S.I. MINIMUM.
2. BUTTRESS DIMENSIONS SHOWN ARE MINIMUM DIMENSIONS BASED UPON A SOIL BEARING CAPACITY OF 3000 P.S.F. AND STATIC WATER PRESSURE OF 150 P.S.I.
3. MODIFICATIONS TO BUTTRESS DIMENSIONS IS TO BE AT THE SOLE DISCRETION OF TIDEWATER UTILITIES, INC. AND ANY CHANGES TO BUTTRESS DIMENSIONS SHALL BE APPROVED BY TIDEWATER UTILITIES, INC. BEFORE ANY CHANGE IS PERFORMED.
4. ALL CONCRETE TO MEET UNDISTURBED EARTH.
5. FITTINGS TO BE WRAPPED IN 3 MIL. PLASTIC WHERE CONCRETE IS PRESENT.

VERTICLE BENDS

SIZE		4"	6"	8"	10"	12"
45°	A	5'-	6'-	8'-	9'-	1'-
	B	14"	17"	22"	27"	2'-10"
	E	5'-	5'-	5'-	11"	13"
	J	2'-	4'-	6'-	8'-	9'-
22 1/2°	A	6'-	11"	14"	18"	22"
	B	4'-	5'-	6'-	8'-	10"
	J	#-	#-	#-	6'-	8'-
11 1/4°	B	#-	#-	#-	14"	17"
	J	#-	#-	#-	7'-	9'-

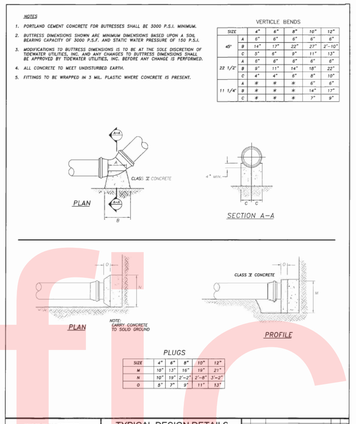

PLUGS

SIZE	4"	6"	8"	10"	12"
M	10"	12"	1'-	1'-	1'-
N	10"	10"	1'-4"	1'-4"	2'-2"
O	2'-	2'-	3'-	1'-	1'-

TIDEWATER UTILITIES INC.
A Middlesex Water Company Affiliate
1089 Bennett Lutter Creek Road
Bridgeville, Delaware 19933

TYPICAL DESIGN DETAILS
THRUST BLOCK DETAIL
A-12

NO.	DATE	DESCRIPTION	BY
1	3/31/08	INITIAL RELEASE	SAM

DATE: 12/04/02 DRAWN BY: AC 19 / 17
SCALE: N.T.S.

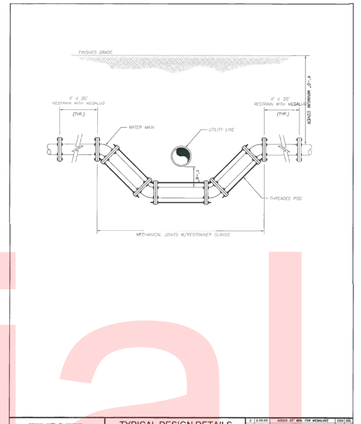

TIDEWATER UTILITIES INC.
A Middlesex Water Company Affiliate
1089 Bennett Lutter Creek Road
Bridgeville, Delaware 19933

TYPICAL DESIGN DETAILS
WATER MAIN CROSSING
UTILITY DETAIL
A-9

NO.	DATE	DESCRIPTION	BY
4	11/01/05	ADDED 12" MIN. FOR REBUILDING	CSM/JMS
3	11/01/05	ADDED 12" MIN.	CSM/JMS
2	3/31/08	ADDED 2' & 3' MODIFIED 12'	CSM/JMS
1	3/31/08	INITIAL RELEASE	SAM/JMS

DATE: 12/04/02 DRAWN BY: AC 20 / 17
SCALE: N.T.S.

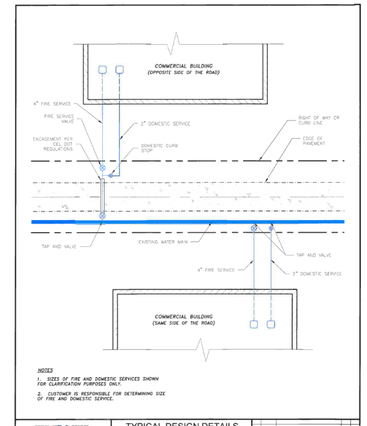

NOTES

1. SIZES OF FIRE AND DOMESTIC SERVICES SHOWN FOR CLARIFICATION PURPOSES ONLY.
2. CUSTOMER IS RESPONSIBLE FOR DETERMINING SIZE OF FIRE AND DOMESTIC SERVICE.

TIDEWATER UTILITIES INC.
A Middlesex Water Company Affiliate
1089 Bennett Lutter Creek Road
Bridgeville, Delaware 19933

TYPICAL DESIGN DETAILS
LARGE COMMERCIAL SERVICE
FIRE & DOMESTIC
A-17

NO.	DATE	DESCRIPTION	BY
1	6/14/12	INITIAL RELEASE	SAM

DATE: 6/14/12 DRAWN BY: SAM 17 / 17
SCALE: N.T.S.

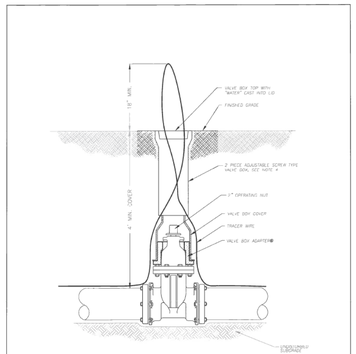

TIDEWATER UTILITIES INC.
A Middlesex Water Company Affiliate
1089 Bennett Lutter Creek Road
Bridgeville, Delaware 19933

TYPICAL DESIGN DETAILS
TRACER WIRE & VALVE BOX DETAIL
A-16

NO.	DATE	DESCRIPTION	BY
1	3/31/08	INITIAL RELEASE	SAM

DATE: 12/5/08 DRAWN BY: SAM 16 / 17
SCALE: N.T.S.

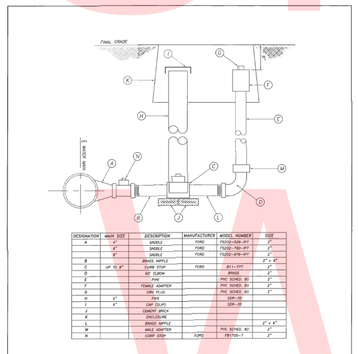

DESIGNATION	MAIN SIZE	DESCRIPTION	MANUFACTURER	MODEL NUMBER	SIZE
A	3"	SADDLE	FORD	FAU10-236-W-P	3"
B	3"	SADDLE	FORD	FAU10-236-W-P	3"
C	3"	BRASS NIPPLE			3" x 6"
D	1/4" TO 6"	CLAMP STOP	FORD	B11-777	3"
D		BP CLAMP		BR600	3"
E		PIPE		PVC SCH80, 80	3"
F		FEMALE ADAPTER		PVC SCH80, 80	3"
G		CAP/ PLUG		PVC SCH80, 80	3"
H	3"	PIPE		SDR-35	
I	3"	CAP (SLIP)		SDR-35	
J		BRASS PLUG			
K		ENCLOSURE			
L		BRASS NIPPLE			3" x 6"
M		MALE ADAPTER		PVC SCH80, 80	3"
N		CURB STOP	FORD	FB1700-7	3"

TIDEWATER UTILITIES INC.
A Middlesex Water Company Affiliate
1089 Bennett Lutter Creek Road
Bridgeville, Delaware 19933

TYPICAL DESIGN DETAILS
4"- 8" BLOW OFF DETAIL
A-4

NO.	DATE	DESCRIPTION	BY
4	3/31/08	REV. UNIT IN TO SHOW 4" SERVICE	SAM/JMS
3	3/31/08	ADDED 12"	SAM/JMS
2	3/31/08	ADDED 2' & 3' MODIFIED 12'	SAM/JMS
1	3/31/08	INITIAL RELEASE	SAM/JMS

DATE: 12/04/02 DRAWN BY: AC 4 / 17
SCALE: N.T.S.

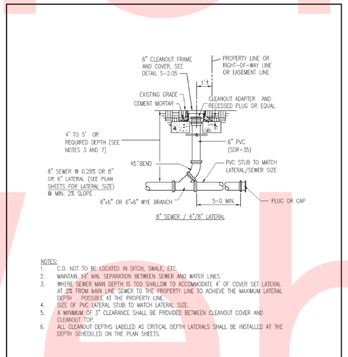

NOTES:

1. C.O. NOT TO BE LOCATED IN DITCH, SWALE, ETC.
2. MAINTAIN 18" WALL SEPARATION BETWEEN SEWER AND WATER LINES.
3. WHERE SEWER MAIN DEPTH IS TOO SHALLOW TO ACCOMMODATE 4' OF COVER SET LATERAL AT 2% FROM MAIN LINE SEWER TO THE PROPERTY LINE TO ACHIEVE THE MAXIMUM LATERAL DEPTH POSSIBLE AT THE PROPERTY LINE.
4. SIZE OF PVC LATERAL STUB TO MATCH LATERAL SIZE.
5. A MINIMUM OF 3" CLEARANCE SHALL BE PROVIDED BETWEEN CLEANOUT COVER AND CLEANOUT TOP.
6. ALL CLEANOUT DEPTHS LABELED AS CRITICAL DEPTH LATERALS SHALL BE INSTALLED AT THE DEPTH SCHEDULED ON THE PLAN SHEETS.

Revised
Revised
Approved
Sussex County Engineer

Sussex County, Delaware Engineering Department

Lateral Sewer Cleanout

Detail S-2.02

N:\13016-005\CADD\Civil\Sewer_details.dwg
Oct 24, 2013 - 4:06pm

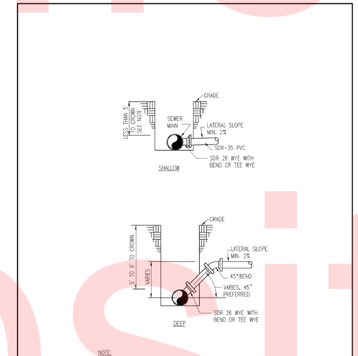

NOTE:

1. LATERALS SHOWN ON THE PLANS AS CRITICAL DEPTH LATERALS WILL BE INSTALLED IN THE SAME FASHION AS THE SHALLOW REGARDLESS OF THE TRENCH DEPTH. FOR MAINS GREATER THAN 9' TO CROWN SEE RISER DETAIL S-2.07.

Revised
Revised
Approved
Sussex County Engineer

Sussex County, Delaware Engineering Department

Standard House Connections

Detail S-2.03

N:\13016-005\CADD\Civil\Sewer_details.dwg
Oct 24, 2013 - 4:06pm

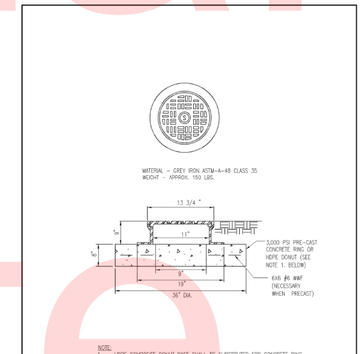

MATERIAL - GREY IRON ASTM-A-48 CLASS 35
WEIGHT - APPROX. 150 LBS.

NOTE:

1. HDPE COMPOSITE DONUT BASE SHALL BE SUBSTITUTED FOR CONCRETE RING IN NON-TRAFFIC AREA. HDPE DONUT IS NOT ALLOWED IN TRAFFIC BEARING AREA.
2. METAL CLEANOUT FRAME AND COVER SHALL BE INSTALLED BY UTILITY CONTRACTOR PRIOR TO SUBSTANTIAL COMPLETION INSPECTION.

Revised
Revised
Approved
Sussex County Engineer

Sussex County, Delaware Engineering Department

8" Cleanout and Cover

Detail S-2.06

N:\13016-005\CADD\Civil\Sewer_details.dwg
Oct 24, 2013 - 4:06pm

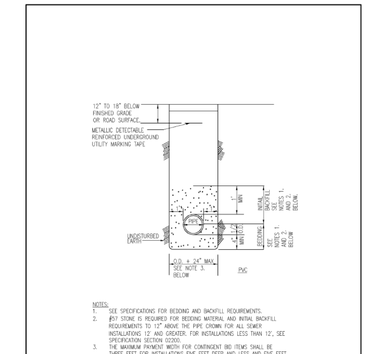

NOTES:

1. SEE SPECIFICATIONS FOR BEDDING AND BACKFILL REQUIREMENTS.
2. #57 STONE IS REQUIRED FOR BEDDING MATERIAL AND INITIAL BACKFILL REQUIREMENTS TO 12" ABOVE THE PIPE CROWN FOR ALL SEWER INSTALLATIONS 12' AND GREATER. FOR INSTALLATIONS LESS THAN 12', SEE SPECIFICATION SECTION 02200.
3. THE MAXIMUM PAYMENT WIDTH FOR CONTINGENT BID ITEMS SHALL BE THREE FEET FOR INSTALLATIONS FIVE FEET DEEP AND LESS AND FIVE FEET FOR INSTALLATIONS GREATER THAN FIVE FEET DEEP.

Revised
Revised
Approved
Sussex County Engineer

Sussex County, Delaware Engineering Department

Gravity Sewer Trench

Detail S-3.01

N:\13016-005\CADD\Civil\Sewer_details.dwg
Oct 24, 2013 - 4:07pm

Unofficial Website Copy

N:\90181-019\CADD\CP01-90181004C-402.dgn
10/30/2015 10:39:50 AM

DELAWARE DEPARTMENT OF TRANSPORTATION

ADDENDUMS / REVISIONS

LEWES PARK & RIDE AND SITE WORK

CONTRACT	BRIDGE NO.
T200612502	DESIGNED BY: D.J.L.
COUNTY	CHECKED BY: P.M.G.
SUSSEX	

WATER AND SEWER DETAILS

C-402

SHEET NO.
13
TOTAL SHTS.
72

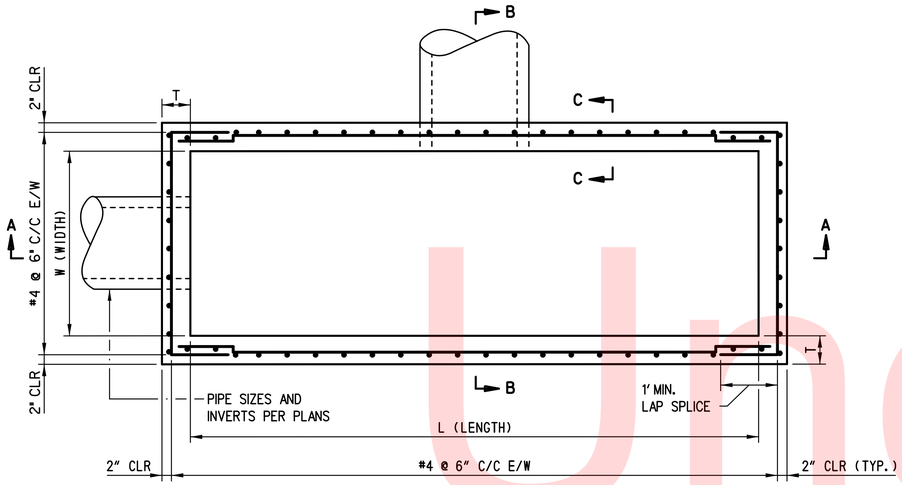

PLAN - SHALLOW COG INLET

SCALE: ¾" = 1'-0"

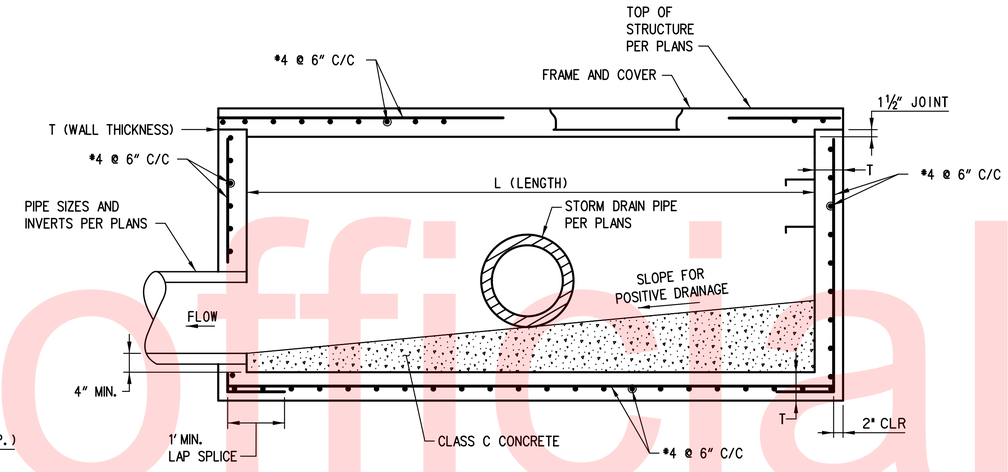

SECTION A-A

SCALE: ¾"=1'-0"

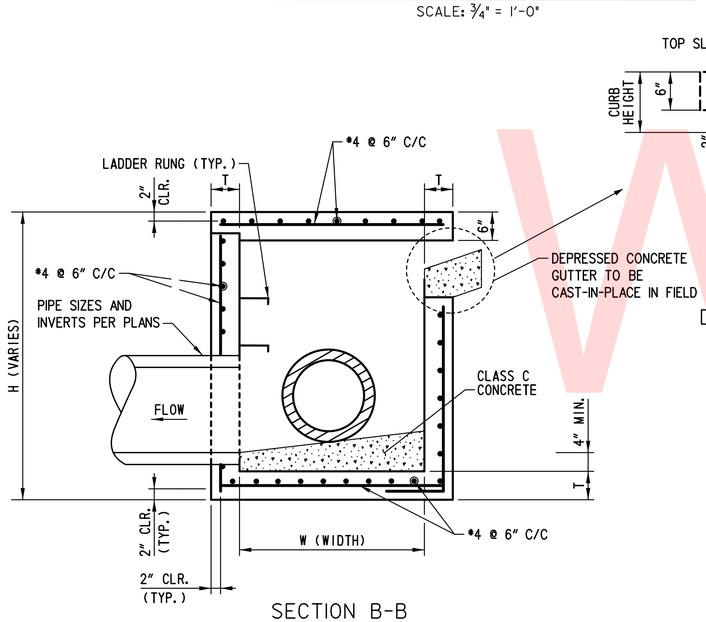

SECTION B-B

SCALE: ¾"=1'-0"

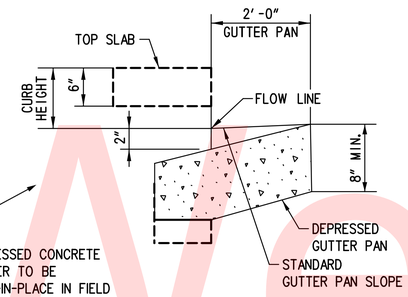

DEPRESSED GUTTER PAN

NOT TO SCALE

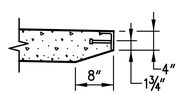

SECTION C-C

SCALE: ¾"=1'-0"

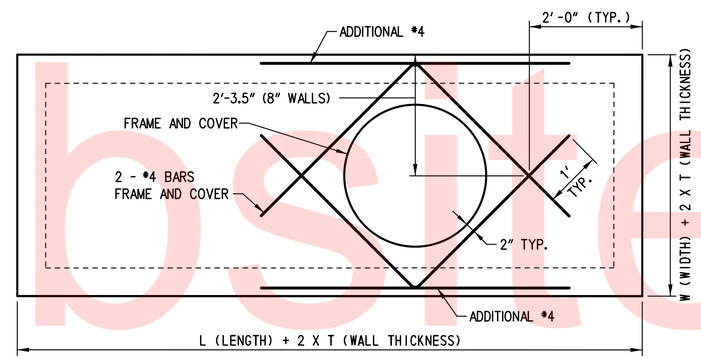

PLAN - TOP SLAB - SHALLOW COG INLET

SCALE: ¾" = 1'-0"

INLET TYPE	T (WALL THICKNESS)	W (WIDTH)	L (LENGTH)	REINFORCEMENT
MODIFIED 5' COG/COS	8"	2'-0"	5'-0"	#4 @ 6" E.W.

NOTES:

1. MATERIAL PROPERTIES: f'c = 4500 PSI
   WWF: fy = 65 ksi
   REBAR: fy = 60 ksi
   ALL STRUCTURE CONCRETE SHALL BE CLASS A, 4500 PSI.
2. GRADE AND SLOPE ADJUSTMENTS TO BE COMPLETED IN FIELD.
3. MIN. PIPE OPENINGS = PIPE O.D. + 4". REFER TO PLANS FOR LOCATION AND ELEVATIONS.
4. THREADED INSERTS TO BE PROVIDED FOR HANDLING.
5. ANGLE IRON AND SHEAR STUD CONNECTORS SHALL BE GALVANIZED AFTER WELDING IN ACCORDANCE WITH ASTM A123.
6. CLASS C CONCRETE CHANNEL SHALL BE PROVIDED IN THE FIELD AND SHALL SLOPE TOWARD OUTLET TO PROVIDE POSITIVE DRAINAGE.
7. SHALLOW COG INLETS SHALL BE PAID UNDER ITEM 708512, DRAINAGE INLET SPECIAL, 1.

Unofficial Website Copy

N:\90181-019\CADD\CRD1-90181004C-403.dgn
10/30/2015 10:41:28 AM

C-403

DELAWARE
DEPARTMENT OF TRANSPORTATION

ADDENDUMS / REVISIONS

LEWES PARK & RIDE
AND SITE WORK

CONTRACT	BRIDGE NO.	
T200612502	DESIGNED BY:	C.S.C.
COUNTY		
SUSSEX	CHECKED BY:	J.D.C.

DRAINAGE DETAILS

SHEET NO. 14
TOTAL SHTS. 72

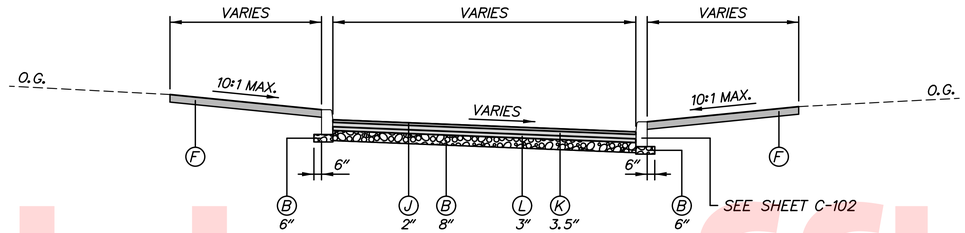

ASPHALT PAVEMENT TYPICAL SECTION

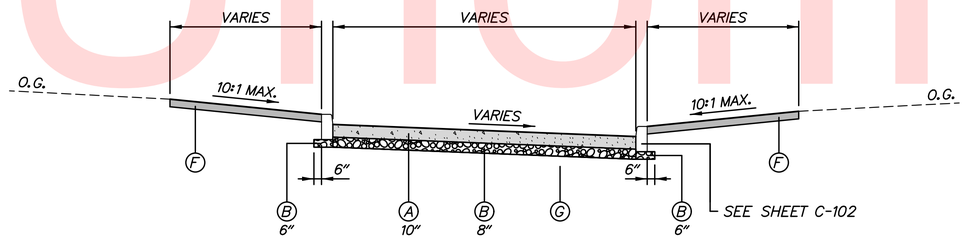

PORTLAND CEMENT CONCRETE PAVEMENT TYPICAL SECTION

NOTES:

1. PRIOR TO FORMING CONCRETE PAVEMENT SECTION, CONTRACTOR SHALL SUBMIT A JOINT PLAN FOR APPROVAL BY THE ENGINEER.
2. PORTLAND CEMENT CONCRETE PAVEMENT PER SECTION 501 OF DELDOT STANDARD SPECIFICATIONS
3. EMBEDDED REINFORCEMENT PER SECTION 824 OF DELDOT STANDARD SPECIFICATIONS

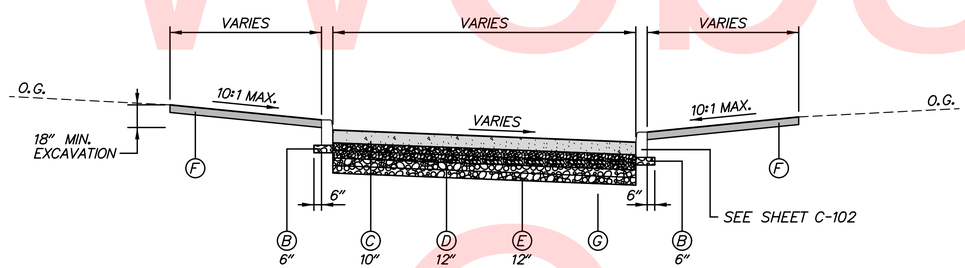

PERVIOUS PORTLAND CEMENT CONCRETE PAVEMENT TYPICAL SECTION

NOTES:

1. PRIOR TO FORMING CONCRETE PAVEMENT SECTION, CONTRACTOR SHALL SUBMIT A JOINT PLAN FOR APPROVAL BY THE ENGINEER.
2. SUBGRADE FOR PERVIOUS CONCRETE SHALL NOT BE COMPACTED AND SHALL BE CLEAR OF SEDIMENT ABOVE THE EXISTING SAND SUBGRADE.
3. SEE CONTRACT SPECIFICATIONS FOR PERVIOUS CONCRETE INSTALLATION REQUIREMENTS.
4. DELAWARE NO. 57 STONE AND DELAWARE NO. 3 STONE SUBBASE SHALL BE CONSTRUCTED IN MAXIMUM 6" LIFTS. SEE CONTRACT SPECIFICATIONS.

LEGEND

- (A) ITEM 501004 - PORTLAND CEMENT CONCRETE PAVEMENT, 10"
- (B) ITEM 302007 - GRADED AGGREGATE BASE COURSE, TYPE B
- (C) ITEM 501532 - PERVIOUS PORTLAND CEMENT CONCRETE
- (D) ITEM 302012 - DELAWARE NO. 57 STONE
- (E) ITEM 302011 - DELAWARE NO. 3 STONE
- (F) ITEM 732002 - TOPSOIL, 6" DEPTH
  ITEM 734013 - PERMANENT GRASS SEEDING, DRY GROUND
- (G) ITEM 209001 - BORROW, TYPE A (IF REQUIRED TO FILL VOIDS)
- (H) ITEM 701023 - INTEGRAL PORTLAND CEMENT CONCRETE CURB, TYPE 3-6
- (I) ITEM 701014 - PORTLAND CEMENT CONCRETE CURB, TYPE 1-6
- (J) ITEM 401833 - WMA, SUPERPAVE, TYPE C, 160 GYRATIONS, PG 76-22 (NON-CARBONATE STONE)
- (K) ITEM 401816 - WMA, SUPERPAVE, TYPE B, 160 GYRATIONS, PG 76-22
- (L) ITEM 401819 - WMA, SUPERPAVE, BITUMINOUS CONCRETE BASE COURSE, 160 GYRATIONS, PG 64-22
- (M) ITEM 705001 - P.C.C. SIDEWALK, 4"

PR - POINT OF ROTATION
PDGA - PROFILE DITCH GRADE APPLICATION
PGA - PROFILE GRADE APPLICATION

MAXIMUM SINGLE LIFTS FOR THE FOLLOWING:
MATERIALS AFTER COMPACTION ARE:
2" = WARM-MIX, TYPE C
4" = WARM-MIX, TYPE B
6" = WARM-MIX, BCBC
8" = GABC

NOTES:

1. CONTRACTOR SHALL PROOF ROLL ALL SUBGRADE FOR THE ASPHALT PAVEMENT AND PORTLAND CEMENT CONCRETE PAVEMENT SECTIONS, BUT NOT FOR THE PERVIOUS PORTLAND CEMENT CONCRETE PAVEMENT SECTION. ALL UNSUITABLE MATERIAL FOUND SHALL BE EXCAVATED TO THE DEPTH OF STABLE SOIL AND BACKFILLED WITH APPROVED MATERIAL. THE CONTRACTOR SHALL COMPACT ALL MATERIALS TO MEET THE DELDOT STANDARD SPECIFICATIONS.
2. IF REQUIRED, BORROW, TYPE A SHALL BE PLACED IN SUCCESSIVE LAYERS NOT TO EXCEED 8" IN DEPTH, LOOSE MEASUREMENT, UNLESS OTHERWISE APPROVED BY THE ENGINEER.
3. SEE GRADING PLAN AND GRADES AND GEOMETRICS SHEETS FOR FURTHER DETAILS.
4. THE PERVIOUS CONCRETE SHALL BE INSTALLED BY CERTIFIED INSTALLERS IN ACCORDANCE WITH THE CONTRACT SPECIFICATIONS.

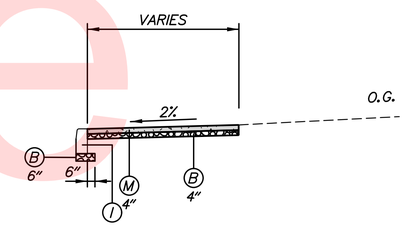

PORTLAND CEMENT CONCRETE SIDEWALK TYPICAL SECTION

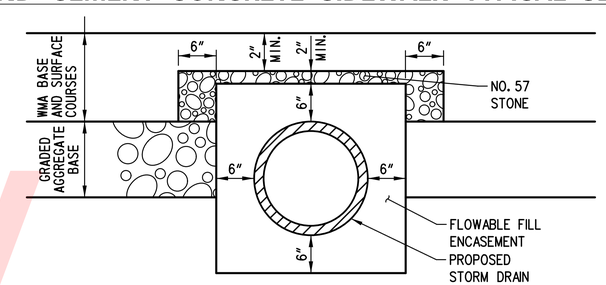

STORM DRAIN ENCASEMENT DETAIL

NOTES:

1. DETAIL SHALL BE USED WHERE OUTSIDE TOP OF STORM DRAIN TO BOTTOM OF WMA CLEARANCE IS LESS THAN 2 INCHES. WHERE TOP OF FLOWABLE FILL ENCASEMENT DOES NOT ENCROACH INTO THE GABC THE NO. 57 STONE LAYER SHALL BE PLACED ON TOP OF THE GABC.
2. FLOWABLE FILL ENCASEMENT AND NO. 57 STONE SHALL BE MEASURED AND PAID AS ITEMS 208001 AND 302012, RESPECTIVELY.

C-404

Unofficial Website Copy

SITE STAKEOUT DATA

POINT	NORTHING	EASTING	DESCRIPTION
1001	272171.5873	726676.0583	BASELINE PI
1002	272212.4172	726723.2014	BASELINE PI
1003	272254.9715	726772.3353	BASELINE PI
1004	272294.2523	726817.6898	BASELINE PI
1005	272333.5331	726863.0442	BASELINE PI
1006	272469.7185	726745.0961	BASELINE PI
1007	272477.4943	726659.0135	BASELINE PI
1008	272485.2753	726572.8726	BASELINE PI
1009	272490.9807	726509.7109	BASELINE PI
1010	272477.2383	726493.8437	BASELINE PI
1011	272182.6658	726714.8167	RADIUS POINT
1013	272214.1153	726700.6739	RADIUS POINT
1014	272234.9278	726724.8168	RADIUS POINT
1015	272256.5869	726749.8247	RADIUS POINT
1016	272277.4820	726773.9503	RADIUS POINT
1017	272295.8677	726795.1792	RADIUS POINT
1018	272316.7629	726819.3052	RADIUS POINT
1019	272335.1485	726840.5336	RADIUS POINT
1020	272342.9016	726589.0242	RADIUS POINT
1021	272350.2453	726624.9972	RADIUS POINT
1022	272371.8498	726649.9421	RADIUS POINT
1023	272468.1044	726529.5357	RADIUS POINT
1024	272472.0767	726563.3695	RADIUS POINT
1025	272464.5535	726613.3090	RADIUS POINT
1026	272457.5863	726615.3744	RADIUS POINT
1027	272464.2053	726650.5112	RADIUS POINT
1028	272372.3900	726691.8075	RADIUS POINT
1029	272390.7211	726712.9730	RADIUS POINT
1030	272456.7751	726699.4207	RADIUS POINT
1031	272449.2450	726701.9737	RADIUS POINT
1032	272456.3338	726737.6531	RADIUS POINT
1033	272487.3835	726738.4999	RADIUS POINT
1034	272479.1385	726759.4016	RADIUS POINT
1035	272496.6465	726630.3949	RADIUS POINT
1036	272207.8469	726687.4537	CURB LINE
1037	272330.6579	726580.9972	CURB LINE
1038	272336.7051	726575.7598	CURB LINE
1039	272466.2974	726463.5218	CURB LINE
1040	272476.7845	726475.6303	CURB PC
1041	272479.5132	726477.0007	CURB PT
1043	272492.3265	726479.7010	CURB PT
1044	272499.7213	726488.2393	CURB PC
1047	272522.1014	726498.6507	EDGE OF SIDEWALK
1048	272510.5796	726627.1351	CURB PI
1050	272500.8561	726734.7802	CURB PI
1051	272483.9999	726772.5248	CURB PI
1052	272347.8107	726890.4763	CURB PI
1053	272337.5849	726878.6701	CURB PC
1055	272329.9257	726878.7362	CURB PT
1056	272288.4194	726830.8135	CURB PC
1057	272282.8240	726830.4773	CURB PT
1058	272272.9539	726839.0107	CURB PI
1059	272175.9949	726727.0987	CURB PI
1061	272356.3872	726638.1986	CURB ISLAND
1062	272362.7667	726632.6734	CURB LINE @ ISLAND
1063	272471.6173	726538.3995	CURB LINE @ ISLAND
1064	272461.2843	726553.9633	CURB LINE @ ISLAND
1065	272365.7078	726636.7407	CURB LINE @ ISLAND
1066	272359.6606	726641.9781	CURB LINE @ ISLAND
1068	272289.6670	726781.9736	CURB LINE @ ISLAND
1069	272378.5319	726705.0090	CURB LINE @ ISLAND
1070	272384.5792	726699.7715	CURB LINE @ ISLAND
1071	272452.9430	726640.5626	CURB LINE @ ISLAND
1072	272466.5494	726628.7783	CURB LINE @ ISLAND
1073	272458.2081	726715.3776	CURB LINE
1074	272444.6017	726727.1619	CURB LINE
1075	272328.9478	726827.3280	CURB LINE
1076	272363.4315	726967.3551	END OF CURB
1077	272181.9776	727124.4975	END OF CURB
1081	272055.4150	727089.3850	CURB PC
1082	272045.5264	727077.3958	CURB LINE
1083	272021.9951	727028.8160	CURB LINE
1084	271958.6147	726947.1098	CURB LINE
1085	271965.5244	726874.1113	CURB PT
1086	272153.2391	726710.4069	CURB PT
1087	272186.0530	726711.2529	CURB PCC
1088	272194.6217	726684.1910	CURB PC
1090	272506.4493	726405.8162	CURB PC
1091	272547.6604	726426.8999	CURB PT
1092	272519.3925	726738.9169	CURB PC
1093	272493.8258	726788.8091	CURB PT
1107	271876.9501	726867.2057	CURBPT
1108	271924.2974	726870.3371	CURB PT
1109	272482.1202	726387.1998	CURB PC
1110	272492.0620	726379.6136	CURB PT
1111	272537.4654	726349.2226	CURB PC
1112	272547.2111	726341.7861	CURB PT
1114	272615.5168	726254.6074	CURB PC
1115	272614.2898	726184.9122	CURB END
1116	272609.7149	726307.1498	CORNER OF HC RAMP
1117	272579.9658	726369.3832	CURB PT
1118	272558.4955	726607.0721	CURB PC
1119	272605.2077	726678.7016	CURB PT
1120	272617.7787	726682.9181	CURB PC
1121	272623.1785	726679.0708	CURB PT
1122	272616.5187	726309.9358	CURB PC
1123	272625.4256	726806.7452	END OF CURB
1126	272624.4161	726748.6561	CURB PT
1128	272599.9743	726703.2949	CURB PT
1129	272555.2047	726688.2569	CURB PC
1130	272505.7040	726809.1768	CURB PT
1131	272349.9432	726944.0779	CURB PC
1132	272349.4487	726951.0171	CURB PT
1133	272160.9604	727107.7481	CURB PC
1134	272120.9877	727142.3756	CURB PT
1135	272118.8438	727168.9112	CURB PC
1136	272174.2199	727235.2470	END OF CURB
1145	272200.0762	726653.9635	CURB PT
1146	272197.4575	726650.9399	CURB PC
1147	272454.7365	726433.4060	END OF CURB
1148	272452.1178	726430.3823	END OF CURB
1149	272460.4058	726428.4959	END OF CURB
1150	272457.7871	726425.4722	END OF CURB
1152	272561.4803	726381.0646	CURB PC
1153	272562.9184	726380.2576	CURB PT
1154	272566.1120	726347.2733	CURB PC
1155	272562.8254	726345.4606	CURB PRC
1156	272555.7219	726351.6129	CURB PT
1157	272544.6973	726360.0253	CURB PC
1158	272499.2932	726390.4168	CURB PC
1159	272490.6310	726397.0266	CURB PT
1187	272549.9321	726691.6886	CURB PT
1201	272462.7561	726444.5402	CORNER OF
1202	272470.3152	726437.9934	CORNER OF
1211	272488.6396	726477.6893	CURB PC
1214	272527.8978	726498.4018	EDGE OF SIDEWALK
1215	272523.0071	726497.9794	CURB PI
1216	272521.8479	726564.8965	EDGE OF SIDEWALK
1220	272510.4484	726636.2065	CURB PI
1229	272505.6244	726745.1001	FENCE CORNER
1230	272501.6495	726748.4763	FENCE CORNER
1243	272320.7406	726926.9190	EDGE OF PAV
1249	271949.7216	726922.2014	CORNER OF HC RAMP
1250	271950.7568	726927.1678	CORNER OF HC RAMP
1252	272124.9288	727095.1859	END OF CURB
1253	272176.6056	726706.9231	CORNER OF HC RAMP
1255	272181.7027	726709.0362	CORNER OF HC RAMP
1261	272610.0538	726278.8552	CORNER OF HC RAMP
1262	272604.4529	726288.9202	CORNER OF HC RAMP
1265	272171.2683	726730.3104	EDGE OF SIDEWALK
1266	272436.4568	726821.3157	EDGE OF SIDEWALK
1270	272448.2729	726415.6325	CORNER OFHC RAMP
1272	272443.7374	726419.5606	CORNER OF HC RAMP
1273	272070.5746	727100.6069	CORNER OF HC RAMP
1274	272075.6247	727102.9599	CORNER OF HC RAMP
1275	271904.7367	726877.6906	CORNER OF HC RAMP
1276	271909.6792	726876.9350	CORNER OF HC RAMP
1279	272605.8888	726312.0497	CURB PC
1280	272610.8002	726307.1472	CURB PCC
1281	272116.2254	727150.4008	CORNER OF HC RAMP
1283	272115.1105	727157.4577	CORNER OF HC RAMP
1288	272547.0776	726730.6462	CURB PC
1289	272515.5262	726453.8063	BUILDING CORNER
1301	272537.1063	726431.6579	BUILDING CORNER
1304	272482.5673	726737.5121	CURB PC
1305	272482.0567	726742.9677	CURB PT
1306	272475.8677	726755.7211	CURB PRC
1307	272523.3882	726694.0634	CORNER OF HC RAMP
1308	272523.8619	726689.0858	CORNER OF HC RAMP
1314	272476.7412	726533.9617	CURB PI
1315	272476.0930	726541.1377	CURB PI
1316	272201.4064	726692.0390	CORNER OF HC RAMP
1318	272418.0717	726854.4195	END OF CURB
1321	272367.4260	726898.2831	BEGIN PAV. TAPER
1322	272517.6733	726430.0369	BUILDING CORNER
1326	272180.0835	726744.0392	BUILDING CORNER

Unofficial Website Copy

N:\90181\019\CADD\CRD1-90181004C-405.dgn
10/30/2015 10:51:05 AM

DELAWARE
DEPARTMENT OF TRANSPORTATION

ADDENDUMS / REVISIONS

LEWES PARK & RIDE
AND SITE WORK

CONTRACT	BRIDGE NO.
T200612502	DESIGNED BY: PMG
COUNTY	
SUSSEX	CHECKED BY: PMG

STAKEOUT DATA

C-405

SHEET NO.
16
TOTAL SHTS.
72

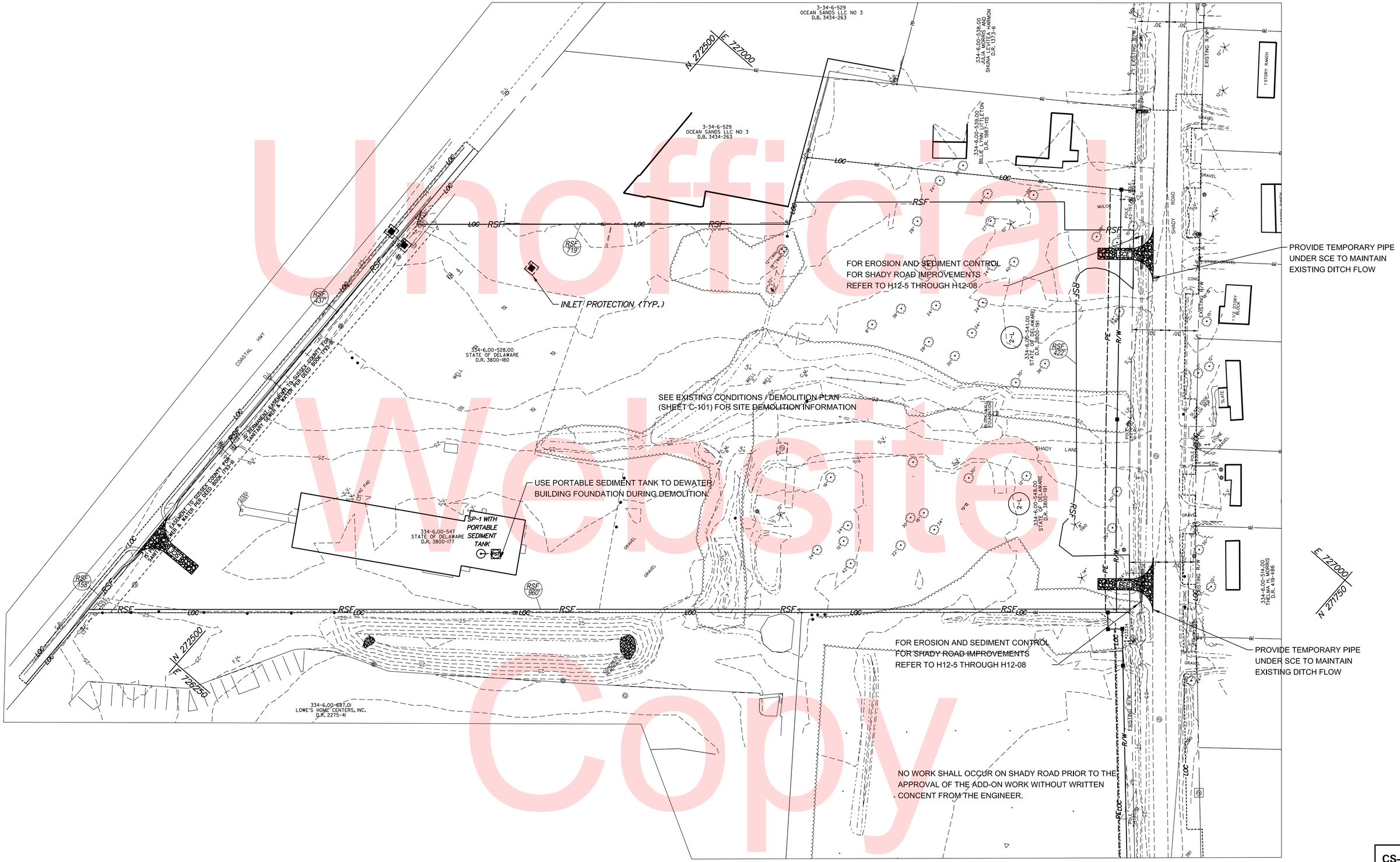

Unofficial Website Copy

N:\90181-019\CADD\CS01_LEWES_AB.dgn
10/28/2015 9:55:08 AM

DELAWARE DEPARTMENT OF TRANSPORTATION

ADDENDUMS / REVISIONS	

SCALE
0 40 80 120
FEET

LEWES PARK & RIDE AND SITE WORK

CONTRACT	BRIDGE NO.	
T200612502	DESIGNED BY: H.P., C.R.	
COUNTY		
SUSSEX	CHECKED BY: S.P.	

EROSION AND SEDIMENT CONTROL PLAN STAGE 1

CS-01

SHEET NO.
17
TOTAL SHTS.
72

SEQUENCE OF CONSTRUCTION - STAGE II

1. INSTALL ADDITIONAL STABILIZED CONSTRUCTION ENTRANCES AND RESTORE REINFORCED SILT FENCE INSTALLED UNDER PHASE I.

2. START ROUGH GRADING OF SITE OUTSIDE OF PERVIOUS CONCRETE AND INFILTRATION AREAS.

3. START CONSTRUCTION OF STORM DRAIN SYSTEM, INSTALL INLET PROTECTION, WATER AND SEWER LINE AND ANY OTHER MISCELLANEOUS UTILITIES.

4. START CONSTRUCTION OF CURB AND GUTTER, SIDEWALK, BUILDING PAD AND PARKING LOT (EXCEPT PERVIOUS CONCRETE PAVEMENT) UP TO BASE COURSE.

   NOTE: CONTRACTOR SHALL USE PORTABLE SEDIMENT TANK FOR DEWATERING IF NEEDED DURING THE CONSTRUCTION OF PARKING LOT.

5. BEGIN ROUGH GRADING AND OVER-EXCAVATION OF AREA FOR PERVIOUS CONCRETE INSTALLATION IN ACCORDANCE WITH NOTE, THIS SHEET AND OTHER CONTRACT DOCUMENTS. INSTALL SUMP PITS TO DEWATER SUBGRADE AS NECESSARY DURING EXCAVATION AND PLACEMENT OF STONE LAYERS. INSTALL PERVIOUS CONCRETE WEARING SURFACE PER CONTRACT DOCUMENTS USING CARE TO PREVENT SEDIMENT FROM DISTURBED AREAS FROM CLOGGING SURFACE.

6. DURING A NOAA 3 DAY CONTINUOUS DRY WEATHER FORECAST, START CONSTRUCTION FOR SWM INFILTRATION FACILITIES.

   NOTE: CONTRACTOR SHALL USE PORTABLE SEDIMENT TANK FOR DEWATERING IF NEEDED DURING THE CONSTRUCTION OF STORMWATER MANAGEMENT FACILITY.

7. AFTER ALL AREAS HAVE BEEN STABILIZED WITH 95% GROUND COVER, REMOVE BRICK BULKHEADS ON ALL INLET THROAT OPENING AND START FINAL NON-PERVIOUS SURFACE COURSE AND STABILIZE THE DISTURBED AREA.

8. ONCE THE SITE IS STABILIZED WITH 95% GROUND COVER, WITH THE APPROVAL OF THE DNREC SEDIMENT CONTROL INSPECTOR, REMOVE ALL THE SEDIMENT CONTROL MEASURES AND STABILIZE REMAINING DISTURBED AREA IMMEDIATELY.

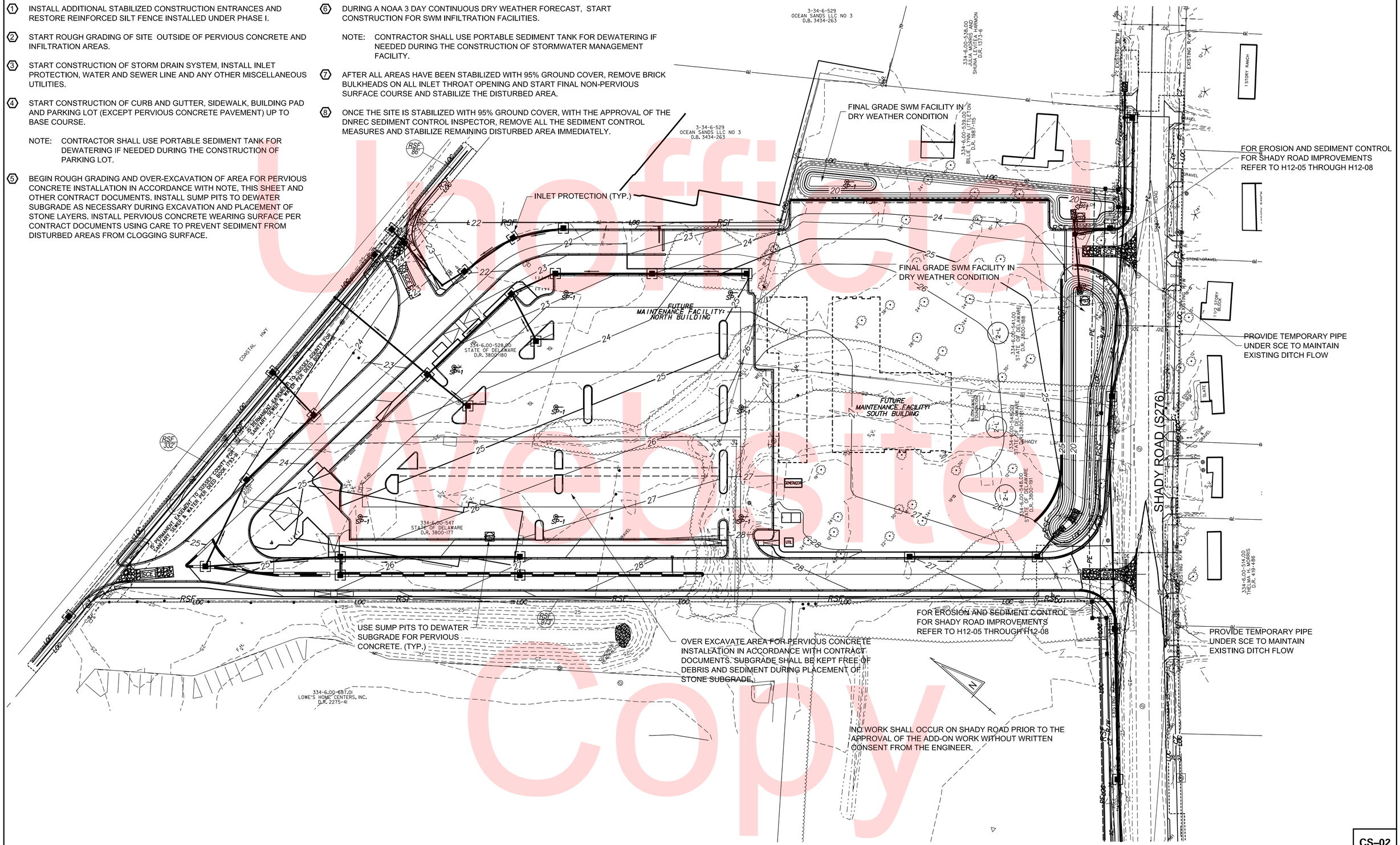

Unofficial Website Copy

N:\9018\019\CADD\CS01_LEWES_AB.dgn
10/28/2015 9:55:29 AM

DELAWARE DEPARTMENT OF TRANSPORTATION	ADDENDUMS / REVISIONS	LEWES PARK & RIDE AND SITE WORK	CONTRACT T200612502	BRIDGE NO.	EROSION AND SEDIMENT CONTROL PLAN STAGE 2	CS-02
			COUNTY SUSSEX	DESIGNED BY: H.P., C.R.		SHEET NO. 18
				CHECKED BY: S.P.		TOTAL SHTS. 72

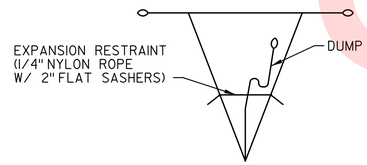

BAG DETAIL

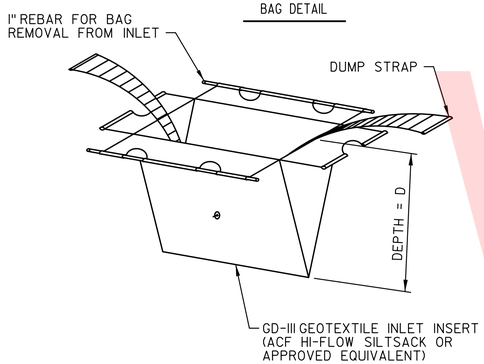

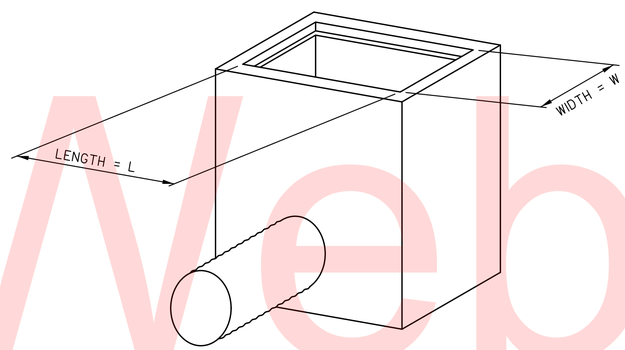

PERSPECTIVE VIEW

PLAN SYMBOL

INLET SEDIMENT CONTROL
ITEM 905004
SCALE: NONE

NOTES:
1. *TO BE USED FOR GRATE INLETS.*

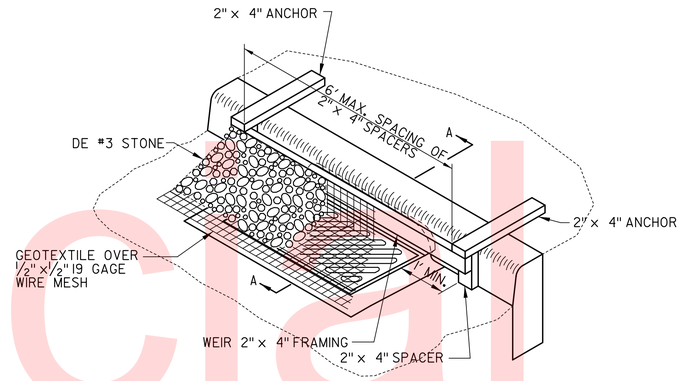

ISOMETRIC VIEW

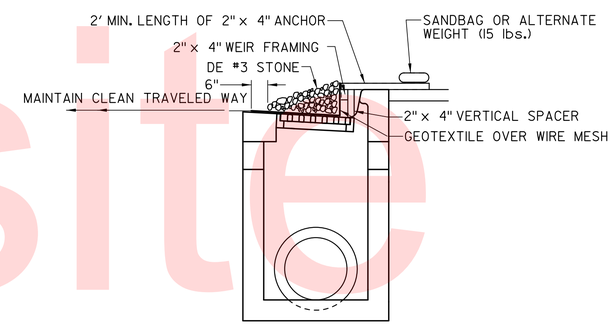

SECTION A-A

PLAN SYMBOL

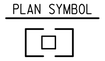

INLET SEDIMENT CONTROL
ITEM 905005
SCALE: NONE

NOTES:
1. *TO BE USED FOR CURB OPENING INLETS.*
2. *IN AREAS OF PERVIOUS PAVEMENT, STONE PLACEMENT SHALL NOT EXTEND BEYOND THE GUTTER PAN.*

Unofficial Website Copy

N:\90181-019\CADD\CS03_LEWES_AB.dgn
10/28/2015 9:55:47 AM

DELAWARE DEPARTMENT OF TRANSPORTATION	ADDENDUMS / REVISIONS	LEWES PARK & RIDE AND SITE WORK	CONTRACT T200612502	BRIDGE NO.	EROSION AND SEDIMENT CONTROL DETAILS
			COUNTY SUSSEX	DESIGNED BY: C.S.C.	SHEET NO. 19
				CHECKED BY: J.D.C.	TOTAL SHTS. 72

CS-03

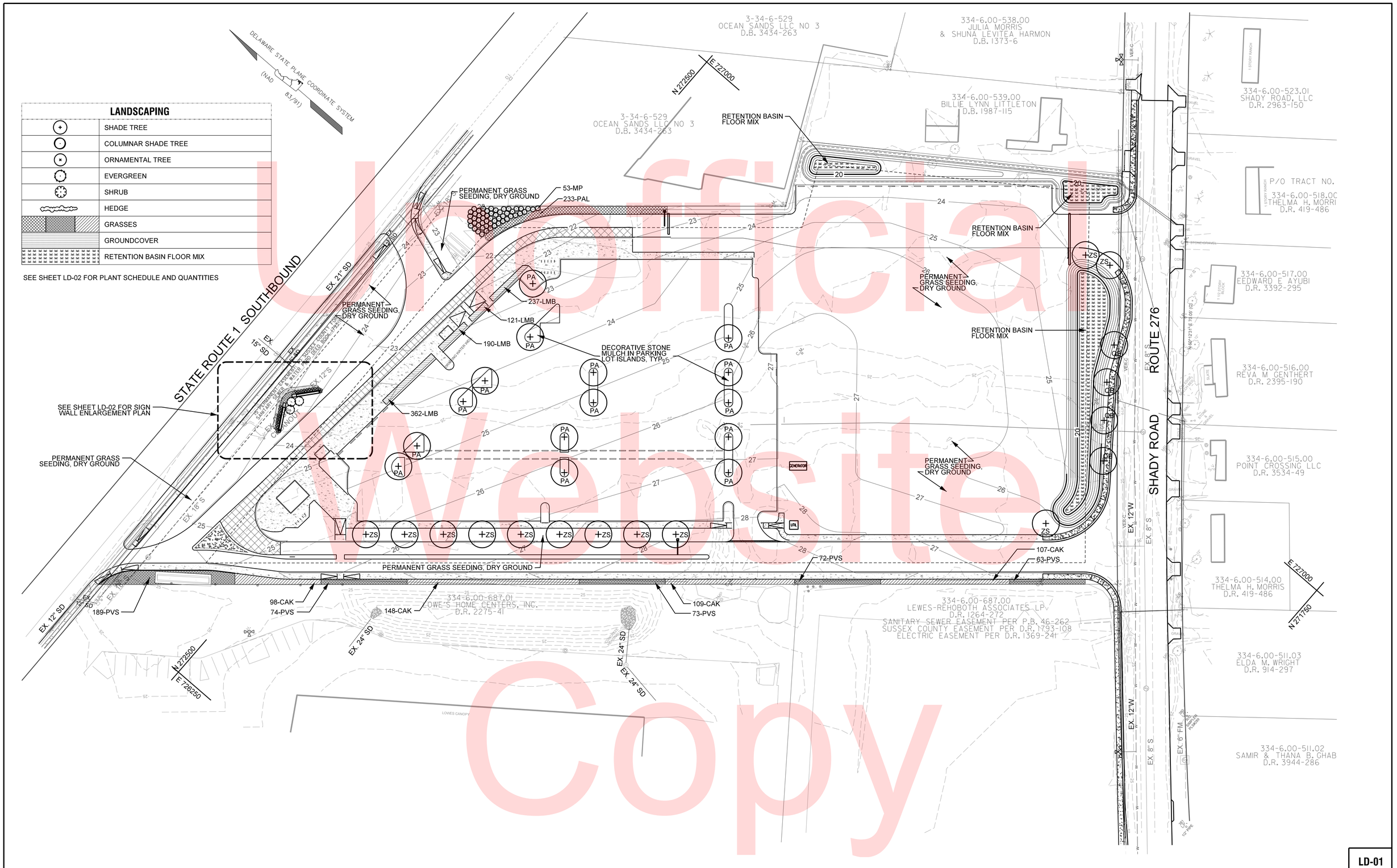

Unofficial Website Copy

DELAWARE DEPARTMENT OF TRANSPORTATION

ADDENDUMS / REVISIONS

SCALE 0 40 80 120 FEET

LEWES PARK & RIDE AND SITE WORK

CONTRACT	BRIDGE NO.	
T200612502	DESIGNED BY:	TB
COUNTY	CHECKED BY:	JKS
SUSSEX		

LANDSCAPE PLAN

LD-01
SHEET NO.
20
TOTAL SHTS.
72

$TIMES
$CONNAMES
$SDATES

PLANT SCHEDULE

KEY	QTY	BOTANICAL NAME	COMMON NAME	SIZE	ROOT	COMMENTS
SHADE TREE						
PA	15	PLANTANUS X ACERIFOLIA 'COLUMBIA'	COLUMBIA LONDON PLANETREE	3" CAL.	B&B	MATCHED
QB	4	QUERCUS BICOLOR	SWAMP WHITE OAK	3" CAL.	B&B	MATCHED, BRANCHED AT 7'
ZS	12	ZELKOVA SERRATA	JAPANESE ZELKOVA	3" CAL.	B&B	MATCHED, BRANCHED AT 7'
EVERGREEN						
IE	3	ILEX X 'EMILY BRUNER'	EMILY BRUNER HOLLY	5' HT.	B&B	MATCHED
SHRUB						
HC	40	HYPERICUM CALYCINUM	ST. JOHN'S WORT	#2	CONT.	
MP	53	MYRICA PENSYLVANICA	NORTHER BAYBERRY	#7	CONT.	4' HT.
GRASSES/GROUNDCOVERS/PERENNIALS						
CAK	532	CALAMAGROSTIS X ACUTIFLORA 'KARL FOERSTER'	KARL FOERSTER FEATHER REED GRASS	#2	CONT.	
HS	97	HEMEROCALLIS 'STELLA DE ORO'	STELLA DE ORO DAYLILY	#1	CONT.	
LMB	980	LIRIOPE MUSCARI 'BIG BLUE'	BIG BLUE LILYTURF	#1	CONT.	
PAL	233	PENNISETUM ALOPECUROIDES	FOUNTAINGRASS	#2	CONT.	
PVS	483	PANICUM VIRGATUM 'SHENANDOAH'	SHENANDOAH SWITCHGRASS	#2	CONT.	
NM	405	NARCISSUS 'MINNOW'	MINNOW TAZETTA DAFFODIL	BULB	DN1	INTERPLANTING TO BE RANDOMLY SPACED
ST	405	SEDUM TERNATUM	WHORLED STONECROP	#1	CONT.	INTERPLANTING TO BE RANDOMLY SPACED

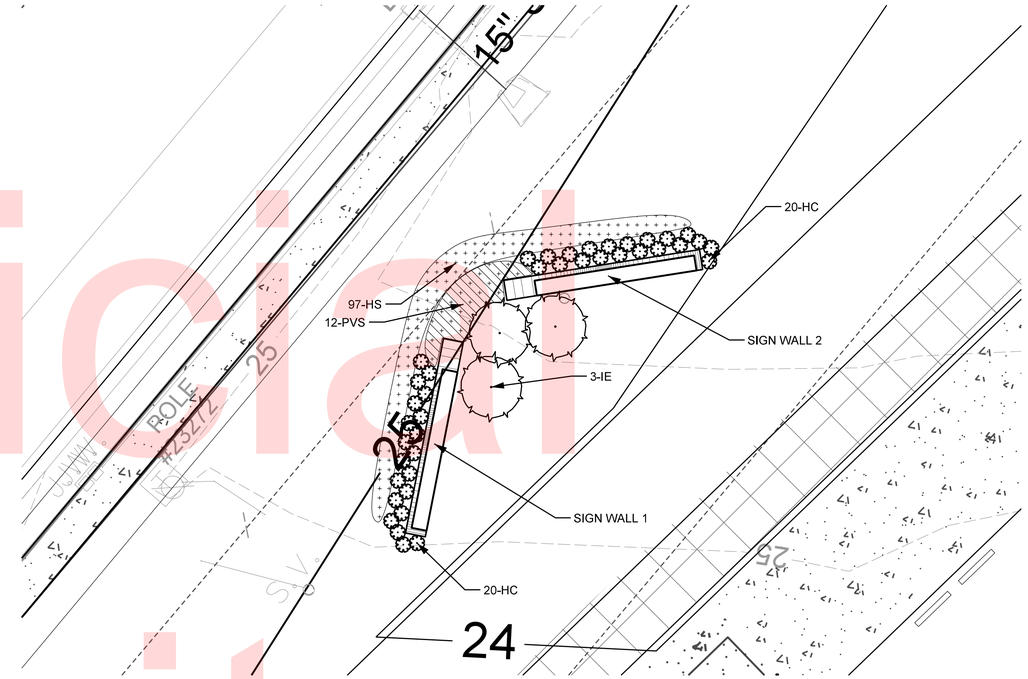

3 LD-02 SIGN WALL ENLARGEMENT PLAN
1"=10'

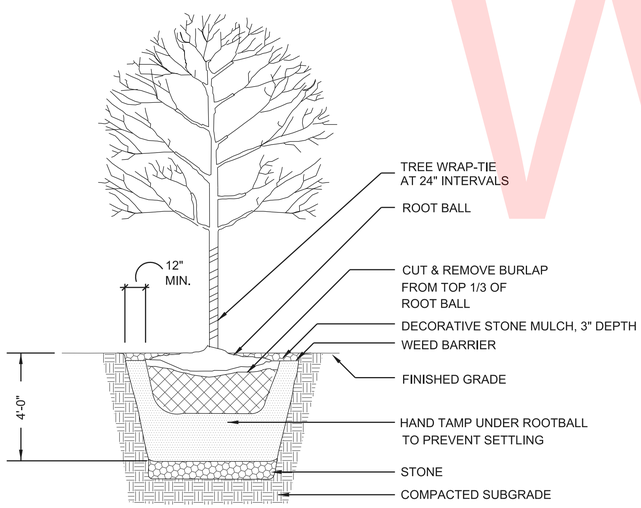

1 LD-02 TREE PLANTING
NTS

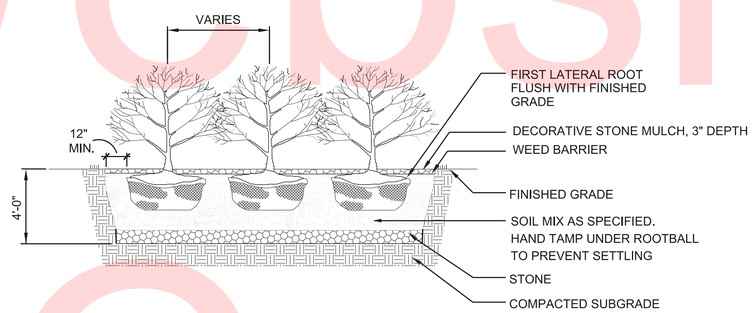

NOTE:
1. CUT AND REMOVE BURLAP FROM TOP 1/3 OF ROOT BALL AS SHOWN.

2 LD-02 SHRUB PLANTING
NTS

Unofficial Website Copy

LD-02

DELAWARE DEPARTMENT OF TRANSPORTATION

ADDENDUMS / REVISIONS

SCALE 0 10 20 30 FEET

LEWES PARK & RIDE AND SITE WORK

CONTRACT	BRIDGE NO.	
T200612502	DESIGNED BY:	TB
COUNTY	CHECKED BY:	JKS
SUSSEX		

LANDSCAPE SCHEDULE & DETAILS

SHEET NO. 21
TOTAL SHTS. 72

$DGNNAME$ $DATE$$ $TIME$

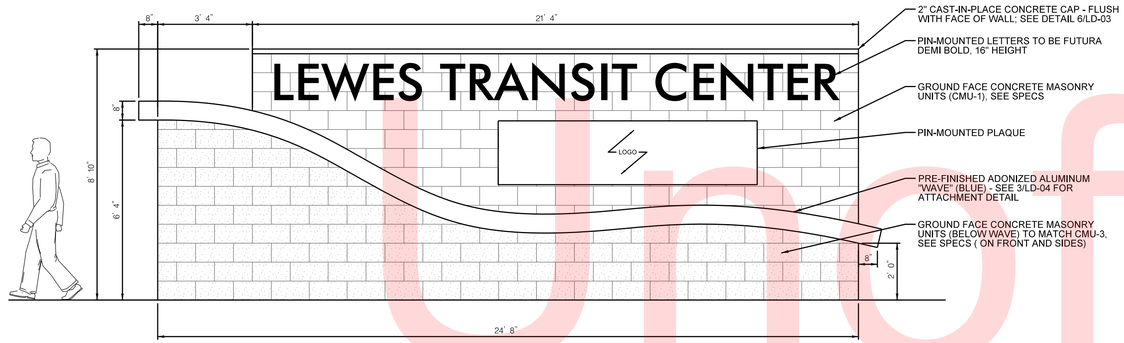

1 LD-03 SIGN WALL 1 - FRONT ELEVATION
3/8" = 1'

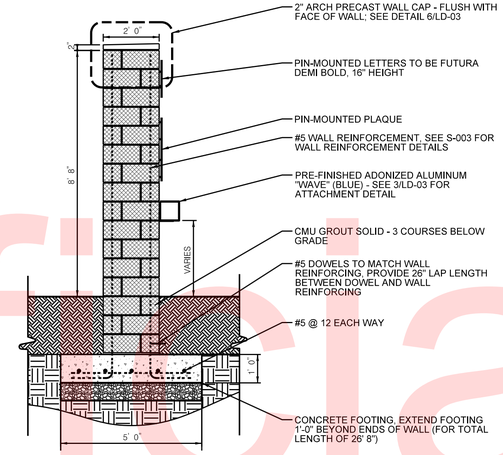

2 LD-03 WALL SECTION
3/8"=1'

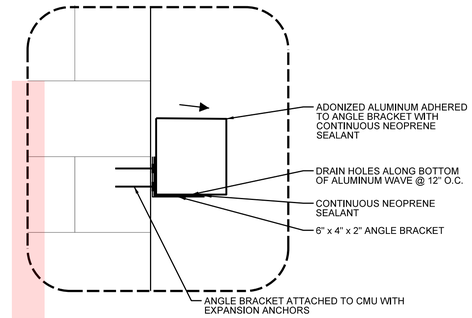

3 LD-03 WAVE ALONG LENGTH OF WALL
1-1/2"=1'

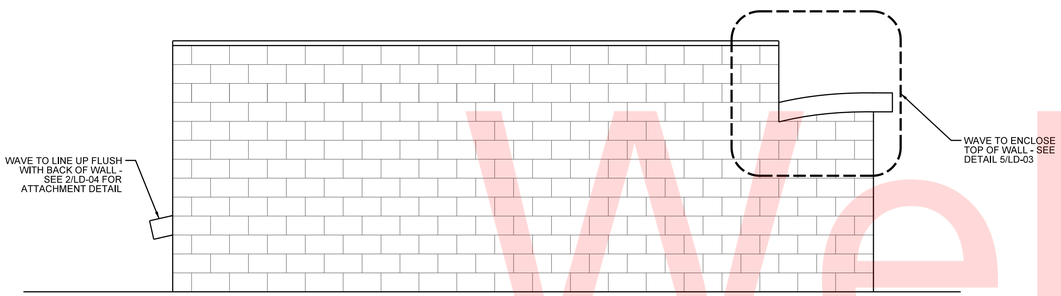

4 LD-03 SIGN WALL 1 - BACK ELEVATION
3/8" = 1'

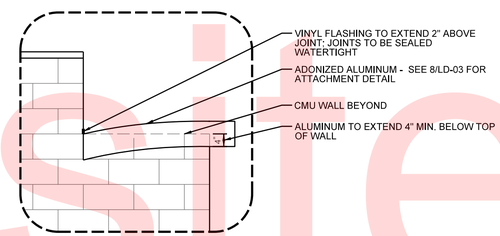

5 LD-03 WAVE / WALL COPING
1/2" = 1'

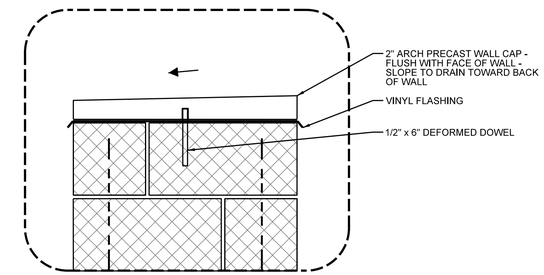

6 LD-03 ARCH PRECAST CAP
1-1/2"=1'

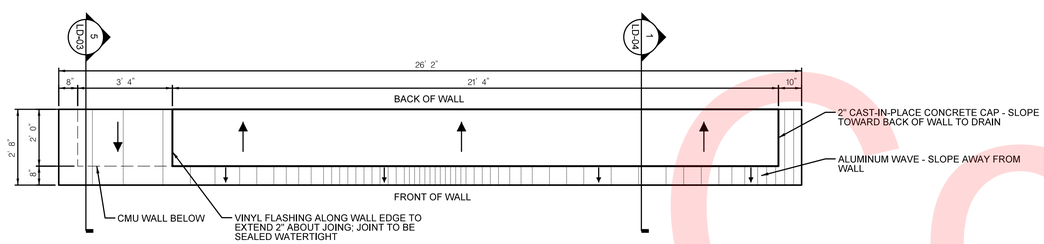

7 LD-03 SIGN WALL 1 - PLAN
3/8" = 1'

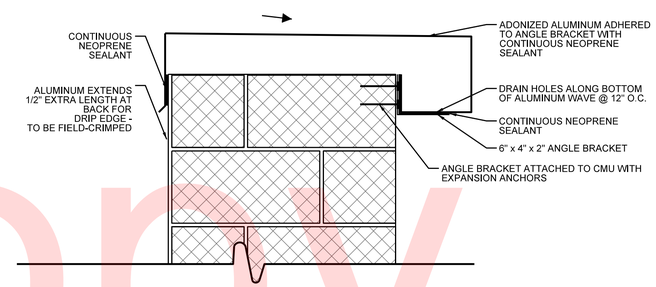

8 LD-03 WAVE / WALL COPING AT TOP OF WALL
1-1/2"=1'

NOTE: SIGN WALL 2 TO BE MIRRORED - SEE DETAIL 4/LD-04

Unofficial Website Copy

LD-03

DELAWARE DEPARTMENT OF TRANSPORTATION

ADDENDUMS / REVISIONS

LEWES PARK & RIDE AND SITE WORK

CONTRACT	BRIDGE NO.	
T200612502	DESIGNED BY:	TB/MIF
COUNTY	CHECKED BY:	JKS
SUSSEX		

LANDSCAPE DETAILS

SHEET NO.
22
TOTAL SHTS.
72

$DGNNAME$ $TIMES
$$DATE$$

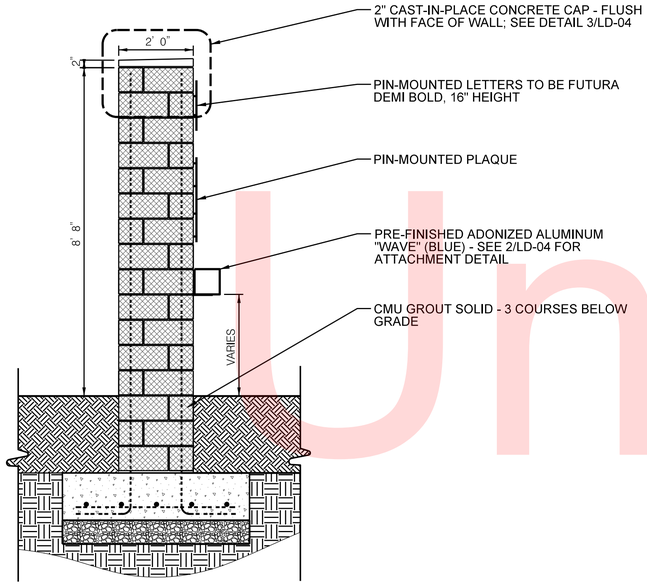

1 LD-04 WALL SECTION
1/2"=1'

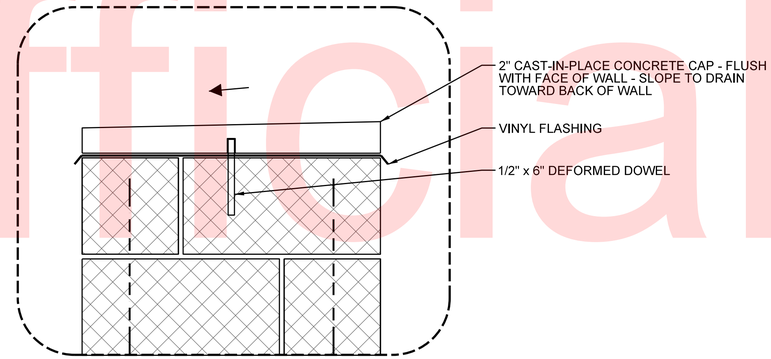

3 LD-04 ARCH PRECAST CAP
2"=1'

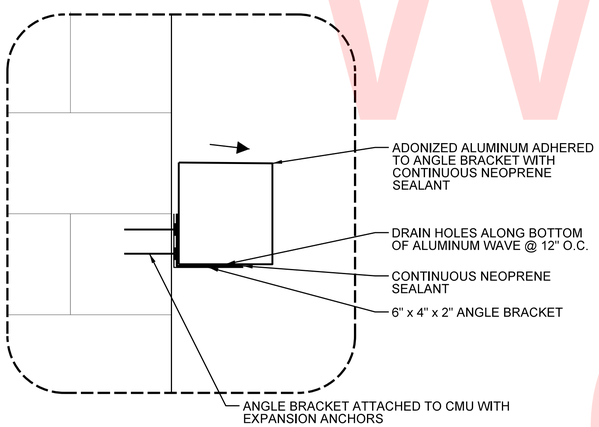

2 LD-04 WAVE ALONG LENGTH OF WALL
2"=1'

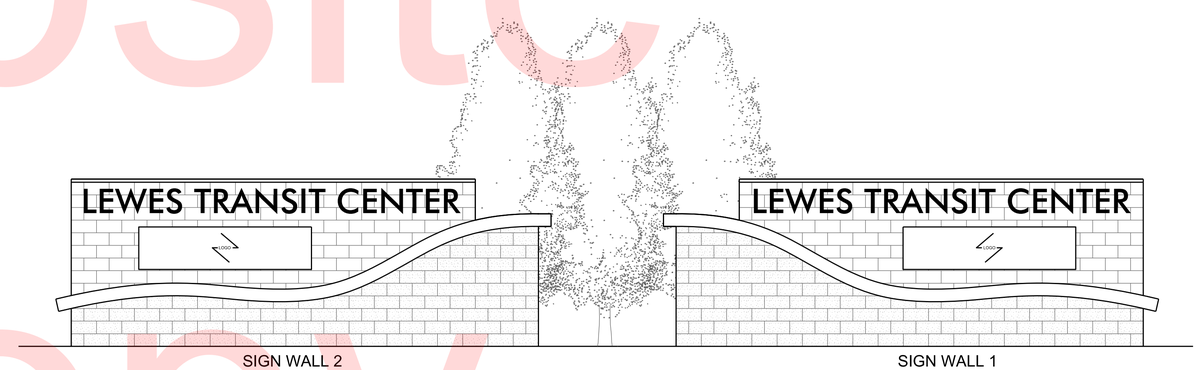

4 LD-04 ELEVATION - BOTH SIGN WALLS
NTS

Unofficial Website Copy

LD-04

DELAWARE DEPARTMENT OF TRANSPORTATION	ADDENDUMS / REVISIONS	LEWES PARK & RIDE AND SITE WORK	CONTRACT T200612502	BRIDGE NO.	LANDSCAPE DETAILS	SHEET NO. 23
			COUNTY SUSSEX	DESIGNED BY: TB/MIF		TOTAL SHTS. 72
				CHECKED BY: JKS		

$DGNNAME$ $DATE$$ $TIME$

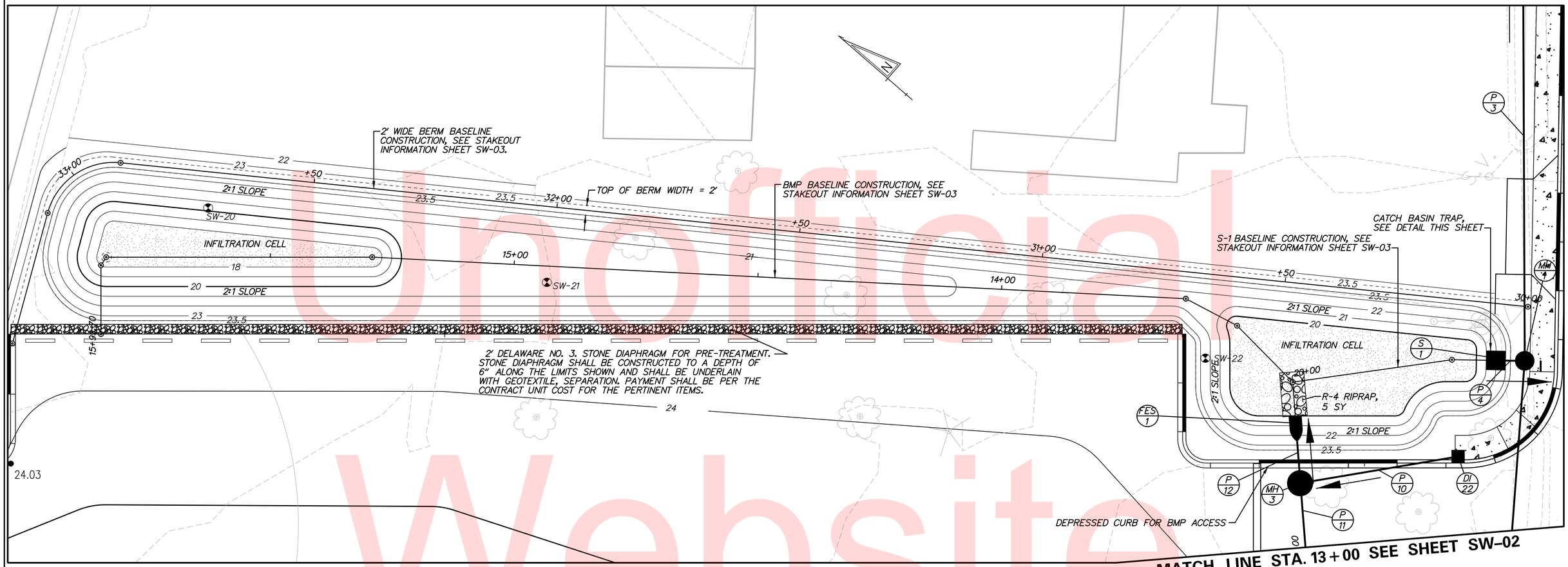

PLAN – LTC BMP NO.1 EAST CELL

SCALE: 1" = 10'

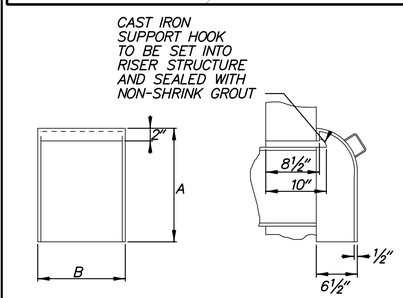

DIMENSIONS IN INCHES			
A	B	PIPE SIZE	SETTING METHOD
16	12	TO 6	ON 2 HOOKS

CATCH BASIN TRAP

SCALE: NONE

CATCH BASIN TRAP NOTES:

1. CATCH BASIN TRAP AND SUPPORT HOOKS SHALL BE FABRICATED FROM CAST IRON
2. BOTTOM OF TRAP SHALL EXTEND A MINIMUM OF 6-INCHES BELOW THE BOTTOM OF THE COVERED ORIFICE.
3. THE COST OF ALL CATCH BASIN TRAPS SHALL BE INCIDENTAL TO THE CONTRACT UNIT COST FOR THE POND OUTLET STRUCTURE.

DRAINAGE INLET SCHEDULE

NO.	STATION	OFFSET	BOX SIZE	GRATE	T. G. EL.	INV. EL.
*S-1	20+42	0 RT	48"X48"	1	23.00	21.00

* A FOUR INCH DIAMETER CIRCULAR ORIFICE SHALL BE CAST AT THE UPSTREAM FACE OF S-1 AT ELEVATION 21.00. A CATCH BASIN TRAP SHALL BE INSTALLED OVER THE ORIFICE PER DETAIL THIS SHEET. INLET SHALL BE PAID UNDER ITEM NO.910006, POND OUTLET STRUCTURE, CONCRETE, NO.1.

BMP NO. 1 – DESIGN SUMMARY

DESIGN STORM	FACILITY INFLOW (CFS)	FACILITY DISCHARGE (CFS)	WATER SURFACE ELEVATION	STORAGE VOLUME (CF)
INFILTRATION	3.56	N. A.	21.00	11925
2-YEAR	7.00	0.40	22.21	12078
10-YEAR	9.40	0.50	22.97	21156

HAZARD CLASSIFICATION "A" AS PER POND CODE 378

DRAINAGE AREA TO FACILITY: 2.61 ACRES

MANAGEMENT PROVIDED BY FACILITY: WATER QUALITY CONTROL VIA INFILTRATION FOR 2-INCH STORM (1 INCH RUNOFF) AND QUANTITY CONTROL FOR THE 2, AND 10-YEAR EVENTS.

POND CONSTRUCTION SEQUENCE AND NOTES:

THE STORMWATER MANAGEMENT FACILITY SHALL NOT FUNCTION AS A SEDIMENT BASIN DURING ROADWAY CONSTRUCTION AND SHALL BE CONSTRUCTED IN ACCORDANCE WITH THE FOLLOWING SECTIONS OF THE STANDARD SPECIFICATIONS:
SECTION 910 - STORMWATER MANAGEMENT FACILITIES

1. SEE EROSION AND SEDIMENT CONTROL PLANS FOR SEQUENCE OF CONSTRUCTION.
2. SEE LANDSCAPE PLANS FOR POND SEEDING AND PLANTINGS.

GENERAL NOTES:

1. THE CONTRACTOR SHALL PROVIDE "AS-BUILT" DRAWINGS OF ALL STORMWATER MANAGEMENT FACILITIES, SUCH AS PONDS, BIOFILTRATION SWALES, BIO-RETENTION AREAS, ETC. THE "AS-BUILT" DRAWINGS SHALL SHOW THE ACTUAL FINISHED GROUND CONTOURS, OUTLET STRUCTURE DIMENSIONS AND ELEVATIONS, ETC., AS THEY EXIST AT THE COMPLETION OF THE PROJECT. THESE DRAWINGS SHALL BE SIGNED AND SEALED BY A PROFESSIONAL ENGINEER OR LAND SURVEYOR REGISTERED IN THE STATE OF DELAWARE. ALL "AS-BUILT" DRAWINGS SHALL BE SENT TO THE DELDOT STORMWATER ENGINEER. ALL COSTS FOR THIS WORK SHALL BE INCLUDED UNDER ITEM 763501 - CONSTRUCTION ENGINEERING.
2. NO SET-ASIDE AREA FOR DEPOSIT OF CLEAN-OUT MATERIAL IS PROVIDED. ALL CLEAN-OUT MATERIAL SHALL BE DISPOSED OF AT AN APPROVED, OFFSITE LOCATION.

Unofficial Website Copy

N:\90181-019\CADD\SW01_LEWES.dgn
10/28/2019 9:56:12 AM

DELAWARE DEPARTMENT OF TRANSPORTATION

ADDENDUMS / REVISIONS

LEWES PARK & RIDE AND SITE WORK

CONTRACT	BRIDGE NO.	
T200612502	DESIGNED BY:	CSC
COUNTY	CHECKED BY:	JDC
SUSSEX		

STORMWATER MANAGEMENT PLAN

SW-01

SHEET NO. 24

TOTAL SHTS. 72

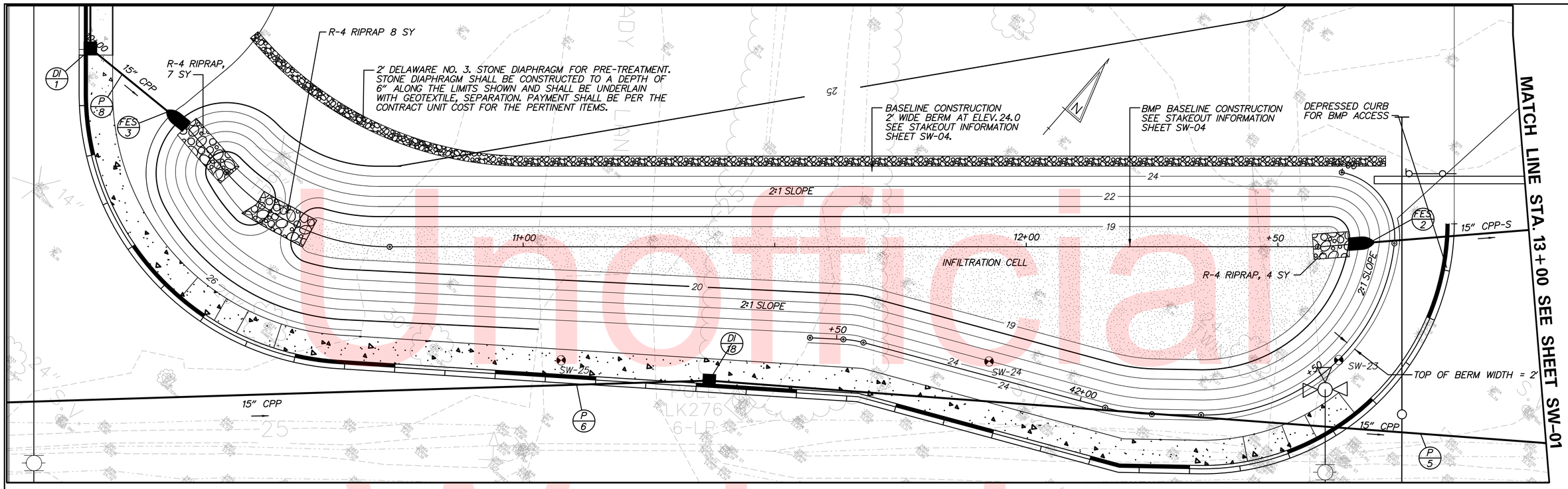

PLAN – LTC BMP NO. 1 SOUTH CELL

SCALE: 1" = 10'

BMP NO. 1 – DESIGN SUMMARY				
DESIGN STORM	FACILITY INFLOW (CFS)	FACILITY DISCHARGE (CFS)	WATER SURFACE ELEVATION	STORAGE VOLUME (CF)
INFILTRATION	3.56	N.A.	21.00	11925
2-YEAR	7.00	0.40	22.21	12078
10-YEAR	9.40	0.50	22.97	21156

HAZARD CLASSIFICATION "A" AS PER POND CODE 378

DRAINAGE AREA TO FACILITY: 2.61 ACRES

MANAGEMENT PROVIDED BY FACILITY: WATER QUALITY CONTROL VIA INFILTRATION FOR 2-INCH STORM (1 INCH RUNOFF) AND QUANTITY CONTROL FOR THE 2, AND 10-YEAR EVENTS.

POND CONSTRUCTION SEQUENCE AND NOTES:

THE STORMWATER MANAGEMENT FACILITY SHALL NOT FUNCTION AS A SEDIMENT BASIN DURING ROADWAY CONSTRUCTION AND SHALL BE CONSTRUCTED IN ACCORDANCE WITH THE FOLLOWING SECTIONS OF THE STANDARD SPECIFICATIONS:
SECTION 910 - STORMWATER MANAGEMENT FACILITIES

1. SEE EROSION AND SEDIMENT CONTROL PLANS FOR SEQUENCE OF CONSTRUCTION.
2. SEE LANDSCAPE PLANS FOR POND SEEDING AND PLANTINGS.

GENERAL NOTES:

1. THE CONTRACTOR SHALL PROVIDE "AS-BUILT" DRAWINGS OF ALL STORMWATER MANAGEMENT FACILITIES, SUCH AS PONDS, BIOFILTRATION SWALES, BIO-RETENTION AREAS, ETC. THE "AS-BUILT" DRAWINGS SHALL SHOW THE ACTUAL FINISHED GROUND CONTOURS, OUTLET STRUCTURE DIMENSIONS AND ELEVATIONS, ETC., AS THEY EXIST AT THE COMPLETION OF THE PROJECT. THESE DRAWINGS SHALL BE SIGNED AND SEALED BY A PROFESSIONAL ENGINEER OR LAND SURVEYOR REGISTERED IN THE STATE OF DELAWARE. ALL "AS-BUILT" DRAWINGS SHALL BE SENT TO THE DELDOT TRANSIT CORPORATION. ALL COSTS FOR THIS WORK SHALL BE INCLUDED UNDER ITEM 763501 - CONSTRUCTION ENGINEERING.
2. NO SET-ASIDE AREA FOR DEPOSIT OF CLEAN-OUT MATERIAL IS PROVIDED. ALL CLEAN-OUT MATERIAL SHALL BE DISPOSED OF AT AN APPROVED, OFFSITE LOCATION.

Unofficial Website Copy

N:\90181-019\CADD\SW02_LEWES.dgn
10/28/2019 9:58:50 AM

DELAWARE DEPARTMENT OF TRANSPORTATION

ADDENDUMS / REVISIONS

LEWES PARK & RIDE AND SITE WORK

CONTRACT	BRIDGE NO.	
T200612502	DESIGNED BY:	CSC
COUNTY	CHECKED BY:	JDC
SUSSEX		

STORMWATER MANAGEMENT PLAN

SW-02

SHEET NO. 25

TOTAL SHTS. 72

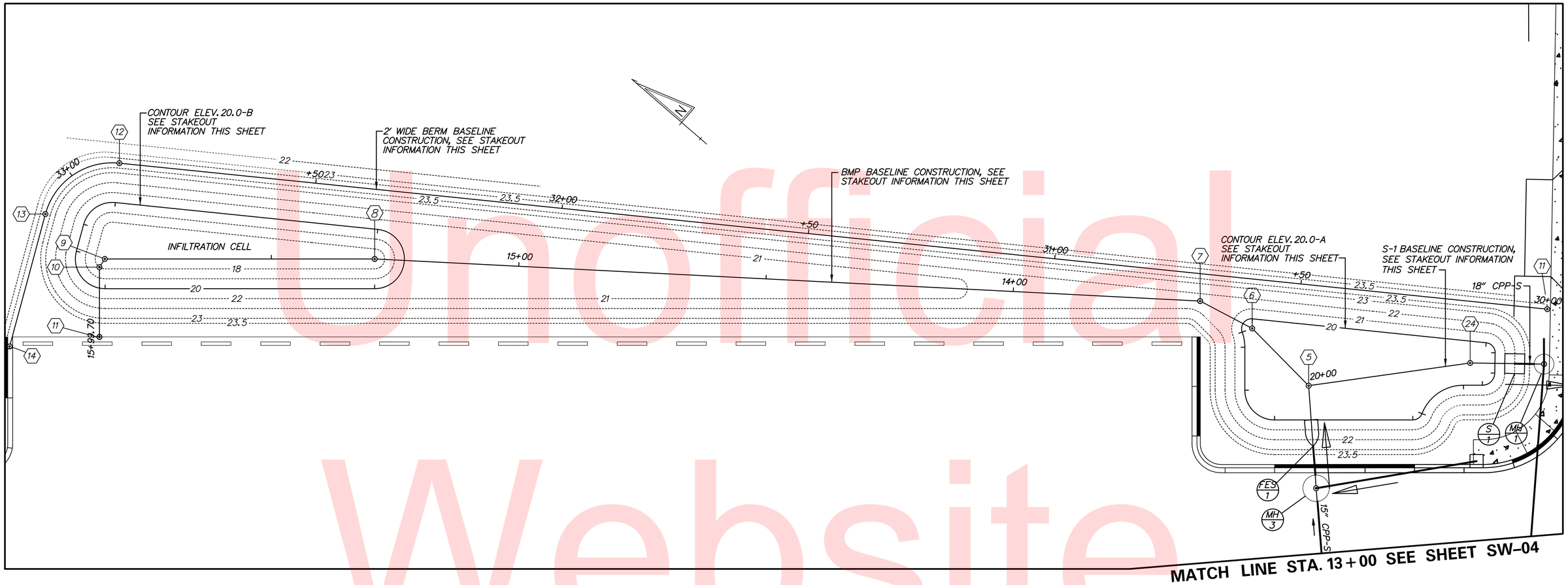

PLAN – LTC BMP NO. 1 EAST CELL

SCALE: 1" = 10'

BMP BASELINE CONSTRUCTION TABLE			
POINT NO.	STATION	NORTH	EAST
MH 3	PI STA. 13+13.19	272143.78	727117.16
5	PI STA. 12+33.96	272158.49	727131.83
6	PI STA. 13+50.19	272174.67	727133.10
7	PI STA. 13+62.07	272186.24	727130.40
8	PI STA. 15+29.00	272317.82	727027.68
9	PI STA. 15+83.50	272359.02	726992.00
10	PI STA. 15+85.48	272358.75	726990.04
11	POE STA. 15+99.70	272349.52	726979.39

2' WIDE BERM BASELINE CONSTRUCTION TABLE			
POINT NO.	STATION	NORTH	EAST
11	POB STA. 30+00.00	272132.17	727175.06
12	PC STA. 32+89.87	272369.45	727008.55
13	PT STA. 33+09.60	272374.02	726991.01
14	POE STA. 33+37.29	272361.98	726966.06

S-1 BASELINE CONSTRUCTION TABLE			
POINT NO.	STATION	NORTH	EAST
5	POB STA. 20+00.00	272158.49	727131.83
24	PI STA. 20+32.94	272136.83	727156.65
MH 6	POE STA. 20+47.86	272125.40	727166.24

STAKEOUT INFORMATION CONTOUR 20.0-A		
POINT	NORTH	EAST
PC 9'R	272173.31	727129.25
PRC 2'R	272175.72	727131.22
PT 2'R	272175.90	727134.60
PC 2'R	272137.05	727161.86
PT 2'R	272134.37	727161.50
PC 2.5'R	272131.74	727158.36
PT 2.5'R	272132.03	727154.86
PC 9'R	272134.90	727152.37
PRC 2'R	272137.49	727142.55
PT 2'R	272138.06	727140.37
PC 6'R	272159.17	727122.09
PT 6'R	272167.63	727122.70

STAKEOUT INFORMATION CONTOUR 20.0-B		
POINT	NORTH	EAST
PC 6'R	272366.82	726994.48
PT 6'R	272364.86	727002.00
PC 6'R	272321.26	727032.60
PT 6'R	272313.89	727023.15
PC 6'R	272355.04	726987.51
PT 6'R	272364.38	726989.43

Unofficial Website Copy

N:\90181-019\CADD\SW03_LEWES.dgn
10/28/2015 9:56:46 AM

DELAWARE
DEPARTMENT OF TRANSPORTATION

ADDENDUMS / REVISIONS

LEWES PARK & RIDE
AND SITE WORK

CONTRACT	BRIDGE NO.	
T200612502	DESIGNED BY:	CSC
COUNTY		
SUSSEX	CHECKED BY:	JDC

STORMWATER
MANAGEMENT
STAKEOUT PLAN

SW-03

SHEET NO. 26

TOTAL SHTS. 72

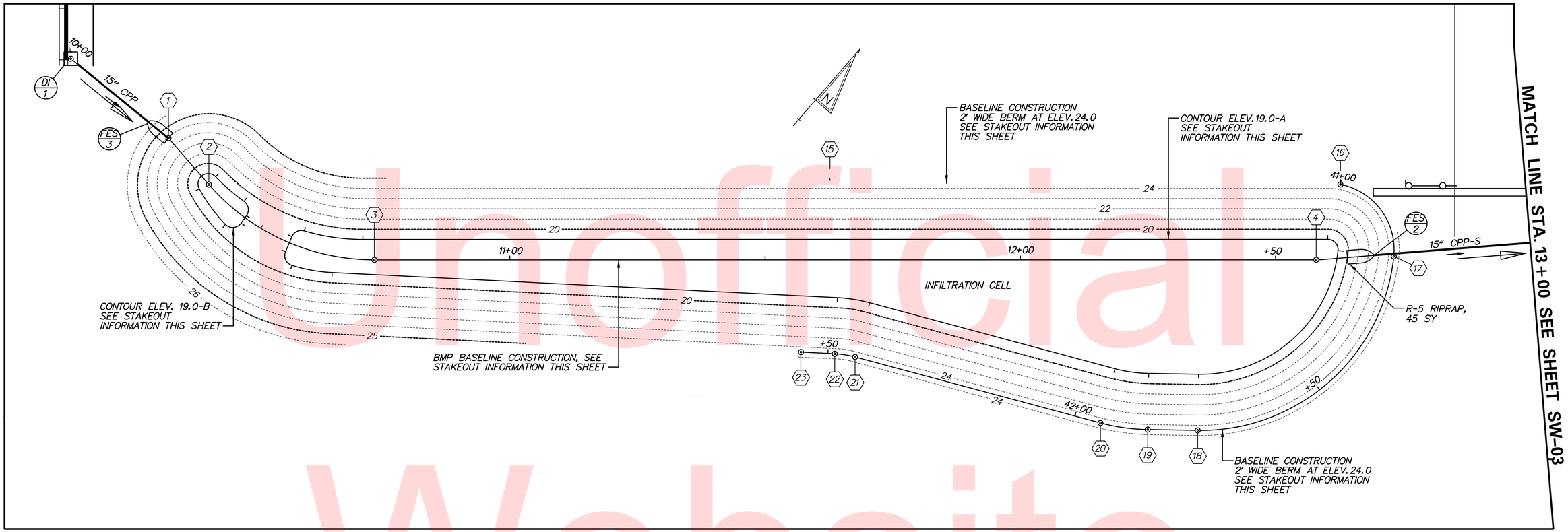

PLAN – LTC BMP NO. 1 SOUTH CELL

SCALE: 1" = 10'

BMP BASELINE CONSTRUCTION TABLE

POINT NO.	STATION	NORTH	EAST
DI-1	POB STA. 10+00.00	271974.47	726868.21
1	PI STA. 10+24.68	271975.21	726892.88
2	PC STA. 10+36.72	271973.53	726904.80
3	PT STA. 10+73.46	271983.60	726938.98
4	PI STA. 12+57.96	272104.40	727078.43

2' WIDE BERM BASELINE CONSTRUCTION TABLE

POINT NO.	STATION	NORTH	EAST
16	POB STA. 41+00.00	272118.66	727072.35
17	PCC STA. 41+19.27	272114.85	727089.49
18	PT STA. 41+75.67	272063.93	727082.77
19	PC STA. 41+85.46	272057.64	727075.26
20	PT STA. 41+94.83	272052.56	727067.41
21	PC STA. 42+44.60	272030.87	727022.62
22	PT STA. 42+48.65	272028.73	727019.19
23	POE STA. 42+55.29	272024.64	727013.96

STAKEOUT INFORMATION CONTOUR 19.0–A

POINT	NORTH	EAST
PC 2'R	272108.91	727077.53
PCC 27'R	272108.54	727080.48
PT 27'R	272072.36	727075.70
PC 27'R	272066.07	727068.20
PT 27'R	272062.46	727062.62
PC 30'R	272040.77	727017.82
PT 30'R	272037.40	727012.41
PC 31'R	271976.30	726934.36
PCC 2'R	271972.21	726927.47
PT 2'R	271973.42	726924.78
PC 2'R	271976.45	726923.79
PRC 40'R	271978.90	726924.87
PT 40'R	271985.14	726934.65

STAKEOUT INFORMATION CONTOUR 19.0–B

POINT	NORTH	EAST
PC 2'R	271969.75	726912.36
PT 2'R	271971.91	726914.52
PC 2'R	271973.73	726914.37
PT 2'R	271975.55	726912.19
PC 2'R	271975.55	726904.80
PT 2'R	271971.67	726903.93

Unofficial Website Copy

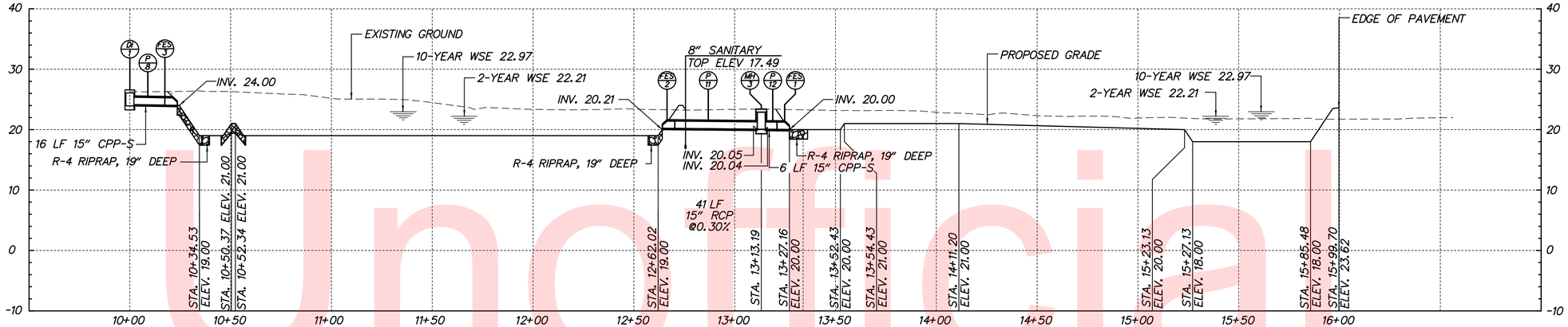

PROFILE – BMP BASELINE

SCALE: HORIZONTAL: 1" = 30'
VERTICAL: 1" = 10'

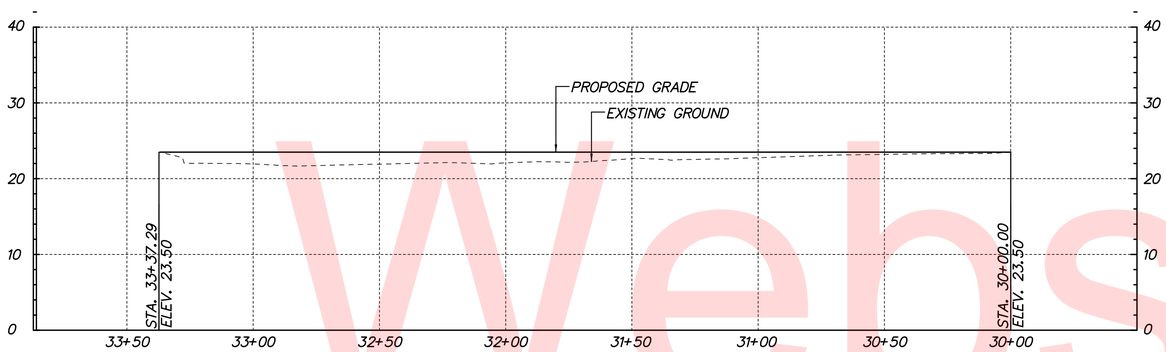

PROFILE – 2' WIDE BERM (EAST CELL)

SCALE: HORIZONTAL: 1" = 30'
VERTICAL: 1" = 10'

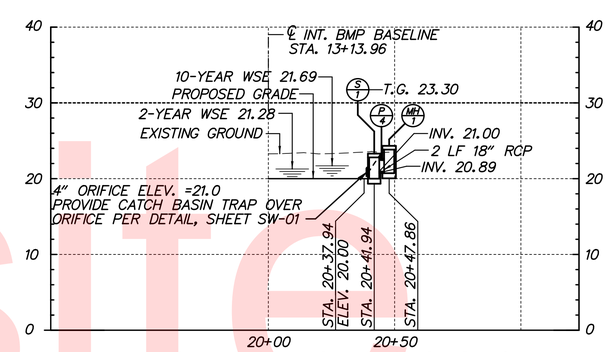

PROFILE – S-1 BASELINE (EAST CELL)

SCALE: HORIZONTAL: 1" = 30'
VERTICAL: 1" = 10'

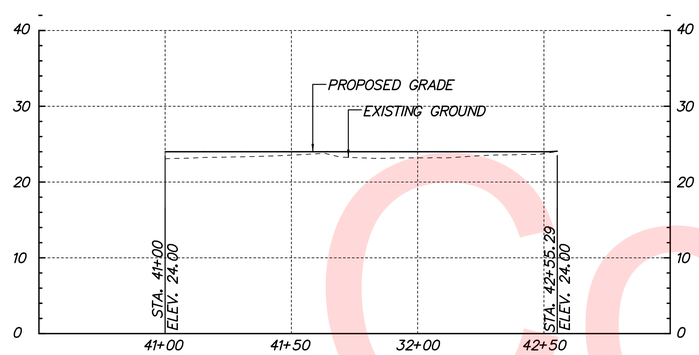

PROFILE – 2' WIDE BERM (SOUTH CELL)

SCALE: HORIZONTAL: 1" = 30'
VERTICAL: 1" = 10'

Unofficial Website Copy

N:\90181-019\CADD\SW05_LEWES.dgn
10/28/2015 9:57:24 AM

DELAWARE DEPARTMENT OF TRANSPORTATION	ADDENDUMS / REVISIONS		LEWES PARK & RIDE AND SITE WORK	CONTRACT T200612502	BRIDGE NO.	STORMWATER MANAGEMENT PROFILES	SHEET NO. 28
				COUNTY SUSSEX	DESIGNED BY: CSC		TOTAL SHTS. 72
					CHECKED BY: JDC		

SW-05

EXISTING SYMBOLS

DRAINAGE

	DITCH OR STREAM CENTERLINE
	DIRECTIONAL STREAM FLOW ARROW
C.B.	DRAINAGE CATCH BASIN
J.B.	DRAINAGE JUNCTION BOX
D	DRAINAGE MANHOLE
SIZE/TYPE LABEL	DRAINAGE PIPE AND FLOW ARROW
	DRAINAGE PIPE HEADWALL
	RIPRAP - AREA FEATURE
	RIPRAP - LINEAR FEATURE

MANMADE ROADSIDE FEATURES

(TYPE LABEL)	CURB
(TYPE LABEL)	CURB AND GUTTER
	FENCE - CHAINLINK OR STRANDED
	FENCE - STOCKADE OR SPLIT RAIL
FP	FLAG POLE
	GUARDRAIL - STEEL BEAM
	GUARDRAIL - WIRE ROPE
LAMP	LAMP AND POST - RESIDENTIAL
MB	MAILBOX
PM	PARKING METER AND POST
	PAVEMENT - FLEXIBLE
	PAVEMENT - RIGID
	PILE - BRIDGE
	PILLAR OR MISCELLANEOUS POST
	TRAFFIC SIGN AND POST
	WALL - BRICK OR BLOCK
	WALL - STONE

NATURAL ROADSIDE FEATURES

	GRASS LAWN
	HEDGEROW OR THICKET
	MARSH BOUNDARY LINE
	TREE - CONIFEROUS
	TREE - DECIDUOUS
	TREE STUMP
	SHRUBBERY
WL	DELINEATED WETLAND BOUNDARY LINE
	WOODS LINE BOUNDARY

RIGHT-OF-WAY SYMBOLS

C.M.	PROPERTY MARKER - CONCRETE MON.
I.P.	PROPERTY MARKER - IRON PIPE
100+00	HISTORIC RIGHT-OF-WAY BASELINE
	EXISTING RIGHT-OF-WAY
	EXISTING PROPERTY LINE
EASEMENT TYPE	EXISTING EASEMENT
DA	EXISTING DENIAL OF ACCESS
R/W-DA	EXISTING R/W & DENIAL OF ACCESS

SURVEY CONTROL & MONUMENTATION

B.M.	SURVEY BENCHMARK LOCATION
T.P.	SURVEY TIE POINT LOCATION
	SURVEY TRAVERSE POINT
	POINT OF CURVATURE OR TANGENCY
	POINT OF INTERSECTING TANGENTS

UTILITY

	SOIL BORING LOCATION
	UTILITY TEST HOLE LOCATION
TV	CABLE TV DISTRIBUTION BOX
E	ELECTRIC MANHOLE
E	ELECTRIC TRANSFORMER
	POLE MOUNTED LUMINAIRE
G	GAS MANHOLE
G.M.	GAS METER
G.V.	GAS VALVE
G.P.	GAS PUMP - SERVICE STATION
	RAILROAD TRACKS
S	SANITARY SEWER MANHOLE
S.V.	SANITARY SEWER VALVE
VENT	SANITARY SEWER VENT OR CLEANOUT
S.D.F.	SEPTIC DRAIN FIELD
B	TELEPHONE BOOTH
T	TELEPHONE MANHOLE
T	TELEPHONE TEST POINT
J.W.	TRAFFIC - CONDUIT JUNCTION WELL
	TRAFFIC - LIGHT POLE AND BASE
	TRAFFIC - PEDESTRIAN POLE & BASE
	TRAFFIC - SIGNAL CABINET & BASE
	TRAFFIC - SIGNAL POLE AND BASE
U	UTILITY BOX
	UTILITY POLE GUY WIRE ANCHOR
	UTILITY POLE
F.H.	WATER - FIRE HYDRANT
W.M.	WATER METER
W.V.	WATER VALVE
WELL	WELL HEAD

UTILITY COMPANY FACILITIES

CU-G	CHESAPEAKE UTILITY - GAS
SC-S	SUSSEX COUNTY - SEWER
TU-W	TIDEWATER UTILITIES - WATER
VER-C	VERIZON

PROPOSED SYMBOLS

CONSTRUCTION

	CONCRETE SAFETY BARRIER - PERMANENT
BFS	BIOFILTRATION SWALE
	BRICK PATTERNED SURFACE
	BUTT JOINT
100+00	CONSTRUCTION BASELINE
CSF	CONSTRUCTION SAFETY FENCE
	CURB, TYPE 1 & TYPE 3
	CURB, TYPE 2
	CURB & GUTTER, TYPE 1
	CURB & GUTTER, TYPE 2
	CURB & GUTTER, TYPE 3
	CURB & GUTTER, TYPE 4
	CURB OPENING
CZ	CLEAR ZONE
	DRAINAGE INLET
	DITCH
	FENCE - METAL
	FENCE - WOOD
	FLARED END SECTION
	GUARDRAIL, TYPE 1
	GUARDRAIL, TYPE 2
	GUARDRAIL, TYPE 3
	GUARDRAIL END ANCHORAGE
	GUARDRAIL END TREATMENT, TYPE 1
	GUARDRAIL END TREATMENT, TYPE 2
	GUARDRAIL END TREATMENT, TYPE 3
HC	HORIZONTAL CLEARANCE
	IMPACT ATTENUATOR
	JUNCTION BOX - DRAINAGE
LOC	LIMIT OF CONSTRUCTION
MB	MAILBOX
	MANHOLE
	PAVEMENT PATCH
	PAVEMENT REMOVAL - TOPSOIL, SEED AND MULCH
	PIPE & DIRECTIONAL FLOW ARROW
	RIPRAP
	P.C.C. SIDEWALK @ 4"
	P.C.C. SIDEWALK @ 6"
	UNDERDRAIN
	UNDERDRAIN OUTLET

RIGHT-OF-WAY SYMBOLS

	PROPOSED RIGHT-OF-WAY MONUMENT
DA	PROPOSED DENIAL OF ACCESS
PE	PROPOSED PERMANENT EASEMENT
R/W	PROPOSED RIGHT-OF-WAY
R/W-DA	PROPOSED R/W & DENIAL OF ACCESS
TCE	TEMPORARY CONSTRUCTION EASEMENT
100+00	PROPOSED RIGHT-OF-WAY BASELINE

IDENTIFIERS

A C	ADJUST BY CONTRACTOR
A O	ADJUST BY OTHERS
B	CONCRETE SAFETY BARRIER
C	CURB OR CURB & GUTTER
CJB	CONVERT TO JUNCTION BOX
CMH	CONVERT TO DRAINAGE MANHOLE
C O	CURB OPENING
CR	CURB RAMP / TYPE
CR-N	CURB RAMP / TYPE - WITHOUT SIDEWALK SURFACE DETECTABLE WARNING SYSTEM
CSF	CONSTRUCTION SAFETY FENCE
DI	DRAINAGE INLET
DND	DO NOT DISTURB
ED	ENERGY DISSIPATOR
F	FENCE
FES	FLARED END SECTION
FF C	FILL WITH FLOWABLE FILL
FS	FILTRATION STRUCTURE
GR	GUARDRAIL
JB	JUNCTION BOX
MH	MANHOLE
M	MONUMENT - RIGHT-OF-WAY
P	PIPE
RL C	RELOCATE BY CONTRACTOR
RL O	RELOCATE BY OTHERS
RM C	REMOVE BY CONTRACTOR
RM O	REMOVE BY OTHERS
UD	UNDERDRAIN / LENGTH
UDO	UNDERDRAIN OUTLET PIPE

LANDSCAPING

L.S.	LANDSCAPE PLANTINGS
	SHRUBBERY
	CONIFEROUS TREE
	DECIDUOUS TREE

TRAFFIC

ITMS-CON	ITMS CONDUIT
SIG-CON	SIGNAL CONDUIT
	CONDUIT JUNCTION WELL
	LUMINAIRE
	PAVEMENT MARKINGS
	PAVEMENT STRIPING
	TRAFFIC SIGN

PAVEMENT SECTIONS

	FULL DEPTH/RECONSTRUCTION - SEE TYPICAL SECTIONS FOR MATERIALS AND DEPTHS
	DRIVEWAY 2" WMA, SUPERPAVE, TYPE C 8" GABC, TYPE B

MISCELLANEOUS

	UTILITY POLE GUY WIRE ANCHOR
	UTILITY POLE

Unofficial Website Copy

GENERAL NOTES

1. THIS PROJECT IS TO BE CONSTRUCTED IN ACCORDANCE WITH THE DELAWARE DEPARTMENT OF TRANSPORTATION "STANDARD SPECIFICATIONS", DATED AUGUST 2001 AND THE DELAWARE DEPARTMENT OF TRANSPORTATION "STANDARD CONSTRUCTION DETAILS", DATED 2001, INCLUDING ALL REVISIONS UP TO THE DATE OF ADVERTISEMENT.

2.

EROSION POTENTIAL FOR THIS PROJECT	CONTRACTOR ESC SUPERVISOR REQUIREMENT
( ) INSIGNIFICANT	NONE
( ) MINOR	CONTRACTOR TRAINING PROGRAM, AS DEFINED IN SECTION 6.2 OF THE DELAWARE SEDIMENT AND STORMWATER REGULATIONS.
(X) MEDIUM	CONTRACTOR TRAINING PROGRAM, AS DEFINED IN SECTION 6.2 OF THE DELAWARE SEDIMENT AND STORMWATER REGULATIONS.
( ) MAJOR	CERTIFIED CONSTRUCTION REVIEWER (CCR), AS DEFINED IN SECTION 6.3 OF THE DELAWARE SEDIMENT AND STORMWATER REGULATIONS.

3. ELECTRONIC PROJECT FILES THAT WILL BE MADE AVAILABLE TO THE AWARDED CONTRACTOR, INCLUDE:

( )	NONE
(X)	ASCII DATA FILES WITH COORDINATES AND ELEVATIONS FOR PROPOSED POINTS AS SELECTED BY THE ENGINEER.
(X)	ALL PLAN SHEETS, IN PDF FORMAT.
( )	EXISTING DIGITAL TERRAIN MODEL, IN .DTM FILE FORMAT, COMPATIBLE WITH SOFTWARE CURRENTLY USED BY DELDOT.
( )	PROPOSED DIGITAL TERRAIN MODEL, IN .DTM FILE FORMAT, COMPATIBLE WITH SOFTWARE CURRENTLY USED BY DELDOT.
( )	DESIGN FILE, IN .DGN FILE FORMAT, CONTAINING ONLY THE PROPOSED 3D TRIANGLES OF THE PROPOSED DIGITAL TERRAIN MODEL (DTM).

NOTE: THE DOCUMENT ENTITLED "RELEASE FOR DELIVERY OF DOCUMENTS IN ELECTRONIC FORM TO A CONTRACTOR" MUST BE SIGNED BY ALL PARTIES PRIOR TO THE DELIVERY OF ANY ELECTRONIC PROJECT FILES.

4. PROJECT FILES THAT WILL BE MADE AVAILABLE TO THE CONTRACTOR, INCLUDE:

( )	CROSS SECTIONS
(X)	RIGHT-OF-WAY PLANS (WILL BE MADE AVAILABLE TO THE AWARDED CONTRACTOR)

5. AMERICAN TRAFFIC SAFETY SERVICES ASSOCIATION (ATSSA) CERTIFIED TRAFFIC CONTROL SUPERVISOR REQUIREMENT FOR THIS PROJECT.

( )	THE CONTRACTOR SHALL NOT BE REQUIRED TO HAVE AN ATSSA SUPERVISOR ASSIGNED TO THIS PROJECT.
(X)	THE CONTRACTOR SHALL HAVE AN ATSSA SUPERVISOR ASSIGNED TO THIS PROJECT. THE CONTRACTOR'S GENERAL SUPERINTENDENT FOR THIS PROJECT OR ANOTHER ATSSA CERTIFIED MEMBER OF THE CONTRACTOR'S PROJECT STAFF MAY BE THE ATSSA SUPERVISOR. PAYMENT FOR ATSSA SUPERVISOR IS INCIDENTAL TO ITEM 743000.
( )	THE CONTRACTOR SHALL HAVE AN ATSSA SUPERVISOR ASSIGNED TO THIS PROJECT. THE ATSSA SUPERVISOR'S SOLE JOB SHALL BE SUPERVISION OF THE INSTALLATION, OPERATION AND MAINTENANCE OF TRAFFIC CONTROL DEVICES FOR THIS PROJECT. THE CONTRACTOR'S GENERAL SUPERINTENDENT FOR THIS PROJECT SHALL NOT BE THE ATSSA SUPERVISOR. PAYMENT FOR ATSSA SUPERVISOR SHALL BE PAID FOR UNDER ITEM 743031.

6. THE DISTURBED AREA FOR THIS PROJECT IS 8.23 ACRES.

7. THE SEDIMENT AND STORMWATER MANAGEMENT PLANS HAVE BEEN APPROVED BY DELDOT'S STORMWATER ENGINEER UNDER DELDOT'S DELEGATED AUTHORITY. THE SEDIMENT AND STORMWATER MANAGEMENT PLANS ARE VALID FOR A THREE YEAR PERIOD, BEGINNING ON THE DATE THE STORMWATER ENGINEER SIGNED THE CONSTRUCTION TITLE SHEET. IF THE FINAL ACCEPTANCE OF THE PROJECT IS ANTICIPATED TO EXTEND BEYOND THE THREE YEARS, THE CONTRACTOR WILL INFORM THE ENGINEER THREE MONTHS PRIOR TO THE EXPIRATION OF THE APPROVED SEDIMENT AND STORMWATER MANAGEMENT PLANS. THE STORMWATER ENGINEER WILL REVIEW THE CURRENT SEDIMENT AND STORMWATER MANAGEMENT PLAN AND ISSUE AN EXTENSION WITH ANY APPROPRIATE MODIFICATIONS.

PROJECT NOTES

SECTION 100

1. ANY DAMAGE TO ITEMS NOTED TO BE RELOCATED OR RESET BY THE CONTRACTOR, AT THE DISCRETION OF THE ENGINEER, SHALL BE REPAIRED AND/OR REPLACED IN KIND AT THE CONTRACTOR'S EXPENSE.

SECTION 200

2. THE CONTRACTOR SHALL REMOVE AND RESET ALL MAILBOXES TO MAINTAIN MAIL SERVICE AS DIRECTED BY THE ENGINEER. THE CONTRACTOR SHALL RELOCATE MAILBOXES AS REQUIRED BY THE PROPOSED GEOMETRICS AND AS DIRECTED BY THE ENGINEER. WHEN RELOCATING MAILBOXES IN CURBED SECTIONS, THE FACE OF THE MAILBOX SHALL BE FLUSH WITH THE BACK EDGE OF CURB. WHEN RELOCATING MAILBOXES IN OPEN SECTIONS, THE FACE OF THE MAILBOX SHALL BE SET BACK 8 INCHES FROM THE EDGE OF THE PAVED SHOULDER. THE BOTTOM OF THE MAILBOX SHALL BE SET 46 INCHES ABOVE THE ROADWAY SURFACE. MAILBOXES LOCATED AT DRIVEWAY ENTRANCES SHALL BE PLACED ON THE FAR SIDE OF THE DRIVEWAY IN THE DIRECTION OF TRAVEL. POSTS BEING RESET IN CONCRETE SIDEWALK SHALL BE PLACE IN AN APPROPRIATE SIZE PVC SLEEVE. COST FOR ALL WORK AND MATERIALS SHALL BE PAID FOR UNDER ITEM 201000 - CLEARING AND GRUBBING.

3. IN AREAS WHERE TREES OR SHRUBS WILL BE OVERHANGING THE PROPOSED SIDEWALK, PRUNING MAY BE NECESSARY TO ACHIEVE A VERTICAL CLEAR SPACE OF 10 FEET ABOVE THE PROPOSED SIDEWALK ELEVATION. THE CONTRACTOR SHALL PRUNE EXISTING TREE AND SHRUB BRANCHES, WHICH OVERHANG THE SIDEWALK, IN ACCORDANCE WITH I.S.A. STANDARDS. THE CONTRACTOR SHALL NOTIFY DELDOT'S ROADSIDE ENVIRONMENTALIST ADMINISTRATOR, EUGENE 'CHIP' ROSAN, JR. AT (302) 760-2185 AND/OR HIS DESIGNEE, AT LEAST TWO (2) DAYS PRIOR TO THE PRUNING OPERATION. ALL COSTS ASSOCIATED WITH THE ABOVE WORK TO BE PAID UNDER ITEM 201000 - CLEARING AND GRUBBING.

4. THE ENGINEER MAY REQUIRE THE CONTRACTOR TO EXCAVATE TEST PITS ALONG PROPOSED DRAINAGE RUNS AT POINTS OF POSSIBLE UTILITY CONFLICTS, TO DETERMINE IF A CONFLICT EXISTS. ANY CONFLICTS SHALL BE COORDINATED BY THE CONTRACTOR, WITH THE ENGINEER AND THE UTILITY COMPANY INVOLVED. THE ENGINEER SHALL ULTIMATELY DETERMINE THE SOLUTION TO THE UTILITY CONFLICT. TEST HOLES SHALL BE MEASURED AND PAID FOR IN ACCORDANCE WITH ITEM 202000 - EXCAVATION AND EMBANKMENT, BUT ONLY TO THE ACTUAL DEPTH EXCAVATED.

5. ITEMS TO BE REMOVED UNDER ITEM 211000 - REMOVAL OF STRUCTURES AND OBSTRUCTIONS SHALL INCLUDE, BUT NOT BE LIMITED TO THE FOLLOWING:
   - CONCRETE SUPPORT FOUNDATIONS FOR MISCELLANEOUS SMALL STRUCTURES NOT COVERED UNDER OTHER PAY ITEMS.
   - DRAINAGE STRUCTURES.

6. THIS PROJECT IS COVERED UNDER AN NPDES GENERAL PERMIT FOR CONSTRUCTION. UNDER THE GENERAL PERMIT, COMPLIANCE WITH DELDOT'S APPROVED SEDIMENT AND STORMWATER MANAGEMENT PLANS WILL CONSTITUTE COMPLIANCE WITH THE NPDES INDUSTRIAL PERMITTING REQUIREMENTS FOR THIS CONSTRUCTION PROJECT. A COPY OF THE NPDES GENERAL PERMIT AND NOI IS KEPT ON FILE IN EACH OF THE CONSTRUCTION OFFICES AND THE DEPARTMENT'S TEAM SUPPORT SECTION. A COPY OF THE GENERAL PERMIT OR THE NOI CAN BE OBTAINED UPON REQUEST FROM EITHER THE DEPARTMENT'S STORMWATER ENGINEER OR THE APPROPRIATE CONSTRUCTION ENGINEER.

SECTION 300

7. A. THE CONTRACTOR MAY ELECT TO USE ANY OF THE FOLLOWING MATERIALS TO MEET THE REQUIREMENTS OF ITEM 302007 - GRADED AGGREGATE BASE COURSE, TYPE 'B':
   a. CRUSHED STONE (PER STANDARD SPECIFICATION 821)
   b. CRUSHED CONCRETE (PER STANDARD SPECIFICATION 821)
   c. HOT-MIX MILLINGS (PER SPECIAL PROVISION 302514 MILLED HOT-MIX BASE COURSE)

   THE CONTRACTOR WILL NOT BE ALLOWED TO MIX DIFFERENT MATERIALS (OR SIMILAR MATERIALS FROM DIFFERENT SOURCES) TO MEET THE REQUIREMENTS OF ITEM 302007 - GRADED AGGREGATE BASE COURSE, TYPE 'B'.

   ALL OF THE ABOVE LISTED MATERIALS ARE PERMITTED FOR USE ON THE JOB, PROVIDED THEY ARE SEPARATED INTO APPROVED AREAS. EACH AREA OF BASE COURSE MUST BE CONSTRUCTED USING MATERIALS FROM A SINGULAR SOURCE, FULL DEPTH, IN ORDER THAT PROPER TESTING MAY BE ACCOMPLISHED. THE CONTRACTOR AND DELDOT'S PROJECT ENGINEER SHALL AGREE ON THE LIMITS OF EACH SOURCE OF MATERIAL PRIOR TO PLACEMENT.

   B. THE QUANTITY USED FOR BASE OF EACH OF THE ABOVE LISTED MATERIALS WILL BE THE CONTRACTOR'S CHOICE, WITH THE TOTAL MEETING THE ADVERTISED QUANTITY OF ITEM 302007 - GRADED AGGREGATE BASE COURSE, TYPE 'B'.

   C. THE CONTRACTOR MAY ALSO ELECT TO RECYCLE MILLINGS FOR USE IN HOT-MIX AS PERMITTED BY THE STANDARD SPECIFICATIONS. THE CHOICE OF THE QUANTITY OF MILLINGS USED FOR THIS PURPOSE, OR FOR BASE COURSE, LIES WITH THE CONTRACTOR. ALL MILLING MATERIAL SHALL BECOME PROPERTY OF THE CONTRACTOR.

   D. HOT-MIX MILLINGS MAY BE GENERATED FROM THE FOLLOWING SOURCES:
   a. MATERIAL MADE AVAILABLE WHEN MILLED ON THIS CONTRACT UNDER ITEM 760502.
   b. MATERIAL MILLED ON THIS CONTRACT AT THE CONTRACTOR'S CHOICE UNDER ITEM 202000.
   c. MILLED MATERIAL FURNISHED ON THE JOB FROM THE CONTRACTOR'S YARD OR OTHER OUTSIDE SOURCE.
   ALL MILLED MATERIALS SHALL MEET THE MATERIAL REQUIREMENTS OF ITEM 302514 MILLED HOT-MIX BASE COURSE.

   E. PAYMENT CLARIFICATION:
   a. SHOULD THE CONTRACTOR ELECT TO MILL PORTIONS OF HOT-MIX SHOWN ON THE PLANS TO BE REMOVED UNDER ITEM 202000 - EXCAVATION AND EMBANKMENT THE COST OF MILLING THIS HOT-MIX WILL BE PAID AS ITEM 202000 - EXCAVATION AND EMBANKMENT. THE MILLINGS GENERATED MAY BE RECYCLED INTO HOT-MIX, UTILIZED FOR BASE COURSE, OR DISPOSED OF TO AN APPROVED SITE. HAULING COSTS FOR DISPOSAL AND/OR RECYCLING ARE INCIDENTAL TO ITEM 202000 - EXCAVATION AND EMBANKMENT.

   b. MILLINGS GENERATED UNDER ITEM 760502 - PAVEMENT MILLINGS, TAPERCUT MAY BE RECYCLED INTO HOT-MIX, UTILIZED FOR BASE COURSE OR DISPOSED OF BY THE CONTRACTOR TO AN APPROVED SITE. NO SEPARATE PAYMENT WILL BE MADE FOR TRANSPORTING MILLINGS ON SITE OR TO AN APPROVED DISPOSAL SITE.

   c. SHOULD THE CONTRACTOR ELECT TO TEMPORARILY STOCKPILE MILLINGS ON THE JOB SITE FOR LATER USE, ALL COSTS FOR STOCKPILING AND SUBSEQUENT REHANDLING SHALL BE INCIDENTAL TO ITEM 202000 - EXCAVATION AND EMBANKMENT.

   d. MILLINGS USED FOR BASE COURSE SHALL BE PLACED IN ACCORDANCE WITH THE REQUIREMENTS OF SPECIAL PROVISION 302514 - MILLED HOT-MIX BASE COURSE. NO SEPARATE PAYMENT WILL BE MADE TO FURNISH MILLINGS FROM AN OUTSIDE SOURCE OR TRANSPORT MILLINGS WITHIN THE PROJECT LIMITS. MILLINGS USED FOR BASE COURSE WILL BE PAID IN PLACE AT THE UNIT BID PRICE FOR ITEM 302007 - GRADED AGGREGATE BASE COURSE, TYPE 'B'.

   e. ALL COSTS TO UTILIZE MILLINGS IN RECYCLED HOT-MIX WILL BE INCIDENTAL TO THE UNIT PRICE BID FOR THE HOT-MIX ITEM USING THE RECYCLED MATERIAL.

   f. SPECIAL PROVISION 302514 MILLED HOT-MIX BASE COURSE IS PROVIDED TO SPECIFY THE MEANS OF LAY DOWN AND COMPACTION AS WELL AS THE MATERIAL REQUIREMENTS FOR MILLINGS USED AS BASE COURSE. ALL COSTS TO BRING THE MILLINGS INTO COMPLIANCE WITH THE REQUIREMENTS OF 302514 MILLED HOT-MIX BASE COURSE ARE INCIDENTAL TO ITEM 302007 - GRADED AGGREGATE BASE COURSE, TYPE 'B'. NO PAYMENT WILL BE MADE FOR ITEM 302514 - MILLED HOT-MIX BASE COURSE. THE QUANTITY OF MILLINGS USED FOR BASE COURSE WILL BE PAID FOR UNDER ITEM 302007 - GRADED AGGREGATE BASE COURSE.

SECTION 400

8. THE PAVEMENT SECTION FOR WMA RESIDENTIAL DRIVEWAYS SHALL BE 2' WMA, TYPE 'C' OVER 8" GRADED AGGREGATE BASE COURSE, TYPE 'B', UNLESS OTHERWISE NOTED ON THE PLANS.

SECTION 600

9. THE DEPARTMENT AND THE CONTRACTOR SHALL INSPECT ALL EXISTING PIPES AND DRAINAGE STRUCTURES TO BE USED IN THE FINAL DRAINAGE SYSTEM AND AGREE ON THE CONDITION PRIOR TO THE START OF CONSTRUCTION. EXISTING PIPES AND DRAINAGE STRUCTURES DAMAGED DUE TO CONTRACTOR OPERATIONS SHALL BE REPAIRED OR REPLACED IN-KIND AT THE CONTRACTOR'S EXPENSE. THE DEPARTMENT WILL VIDEO INSPECT NEW PIPE RUNS TO CONFIRM CONDITION PRIOR TO ACCEPTANCE. PIPE CLEANING PRIOR TO VIDEO INSPECTION AND MAINTENANCE OF TRAFFIC DURING THE VIDEO INSPECTION ARE THE RESPONSIBILITY OF THE CONTRACTOR AND INCIDENTAL TO THE PIPE ITEM THAT IS BEING VIDEO INSPECTED.

SECTION 700

10. IN AREAS WHERE PROPOSED CURB MEETS EXISTING CURB AND THE TWO CURB TYPES ARE NOT SIMILAR, THE PROPOSED CURB SHALL BE TRANSITIONED IN 10 LINEAR FEET, UNLESS OTHERWISE DIRECTED BY THE ENGINEER. PAYMENT FOR THIS WORK, INCLUDING SAW CUTTING EXISTING CURB SHALL BE INCIDENTAL TO THE PROPOSED CURB ITEM.

11. WHERE PROPOSED CONCRETE SIDEWALK IS CONSTRUCTED TO MEET EXISTING SIDEWALK, THE EXISTING SIDEWALK SHALL BE SAWCUT AT THE TIE-IN POINT OR MEET THE NEAREST EXISTING SIDEWALK JOINT. ALL SAW CUTTING SHALL BE FULL DEPTH, UNLESS OTHERWISE NOTED ON THE PLANS OR DIRECTED BY THE ENGINEER AND SHALL BE PAID FOR UNDER ITEM 762002 - SAWCUTTING, CONCRETE, FULL DEPTH.

12. ALL PAVED AREAS TO BE RECONSTRUCTED OR WIDENED SHALL BE SAWCUT AT THE POINT WHERE THE NEW PAVEMENT IS TO TIE INTO THE EXISTING PAVEMENT.

MISCELLANEOUS

13. THE CONTRACTOR SHALL CONTACT MICHAEL ELLER, THE CHIEF OF SCHEDULING FOR DART FIRST STATE, 14 DAYS PRIOR TO THE START OF CONSTRUCTION AT 302-576-6061.

14. REFER TO THE CONSTRUCTION PLAN SHEETS FOR THE LOCATION OF THE CLEAR ZONE AREA LIMITS.

15. THE CONTRACTOR SHALL REMOVE AND INSTALL ALL REGULATORY, WARNING, AND SPECIAL SIGNS AND POSTS WITHIN CONTRACT LIMITS UNLESS OTHERWISE NOTED. DELDOT TO FURNISH ALL REGULATORY, WARNING, AND SPECIAL SIGNS AND POSTS TO CONTRACTOR FOR INSTALLATION. FOR COORDINATION AND PICK UP OF SIGNS AND POSTS THE CONTRACTOR SHALL CONTACT DELDOT'S TRANSPORTATION SYSTEM SPECIALIST AT 302-760-2581. THE CONTRACTOR SHALL ALLOW FOUR (4) WEEKS FOR THE DELIVERY OF SIGNS.

16. THERE ARE NO ENVIRONMENTAL PERMITS ASSOCIATED WITH THIS PROJECT. AS SUCH, AN ENVIRONMENTAL COMPLIANCE SHEET WAS NOT PREPARED.

17. AT THE SIDEWALK TERMINATION LIMITS (STA. 110+80 LT.), THE CONTRACTOR SHALL TAPER THE SIDEWALK TO THE PROPOSED ROADWAY. THE SIDEWALK CONNECTIONS SHALL BE CONSTRUCTED IN ACCORDANCE WITH DELDOT'S SHARED-USE PATH AND/OR SIDEWALK TERMINATION POLICY (REVISED 9/16/2013).

18. THE CROSS SLOPE WITHIN CROSSWALKS SHALL BE A MAXIMUM OF 2%.

Unofficial Website Copy

LEGEND

- (A) ITEM 401833 - WMA,SUPERPAVE,TYPE C 160 GYRATIONS,PG 76-22 (NON-CARBONATE STONE)
- (B) ITEM 401816 - WMA,SUPERPAVE,TYPE B,160 GYRATIONS,PG 76-22
- (C) ITEM 401819 - WMA,SUPERPAVE,BITUMINOUS CONCRETE BASE COURSE, 160 GYRATIONS,PG 64-22
- (D) ITEM 302007 - GRADED AGGREGATE BASE COURSE,TYPE B
- (E) ITEM 701019 - INTEGRAL PORTLAND CEMENT CONCRETE CURB AND GUTTER,TYPE 3-8
- (F) ITEM 705001 - P.C.C.SIDEWALK,4"
- (G) ITEM 705002 - P.C.C.SIDEWALK,6"
- (H) ITEM 732002 - TOPSOIL,6" DEPTH
  ITEM 734013 - PERMANENT GRASS SEEDING,DRY GROUND
- (L) ITEM 401752 - SAFETY EDGE FOR ROADWAY PAVEMENT
- (M) ITEM 732002 - TOPSOIL,6" DEPTH
  ITEM 734013 - PERMANENT GRASS SEEDING,DRY GROUND
  ITEM 735535 - SOIL RETENTION BLANKET MULCH,TYPE 5

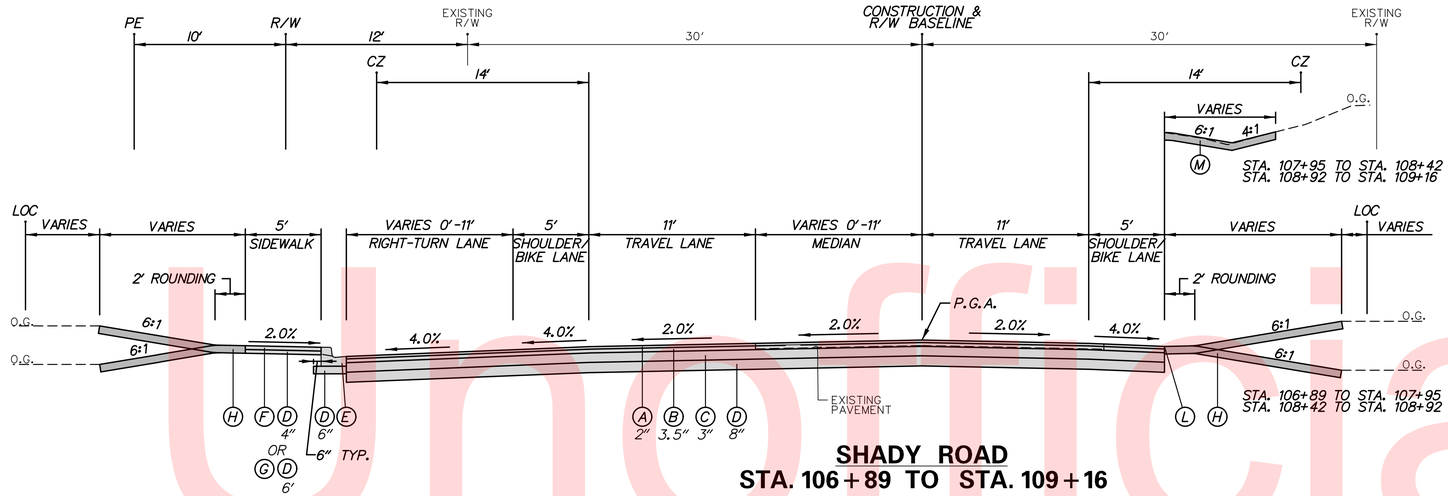

SHADY ROAD
STA. 106+89 TO STA. 109+16

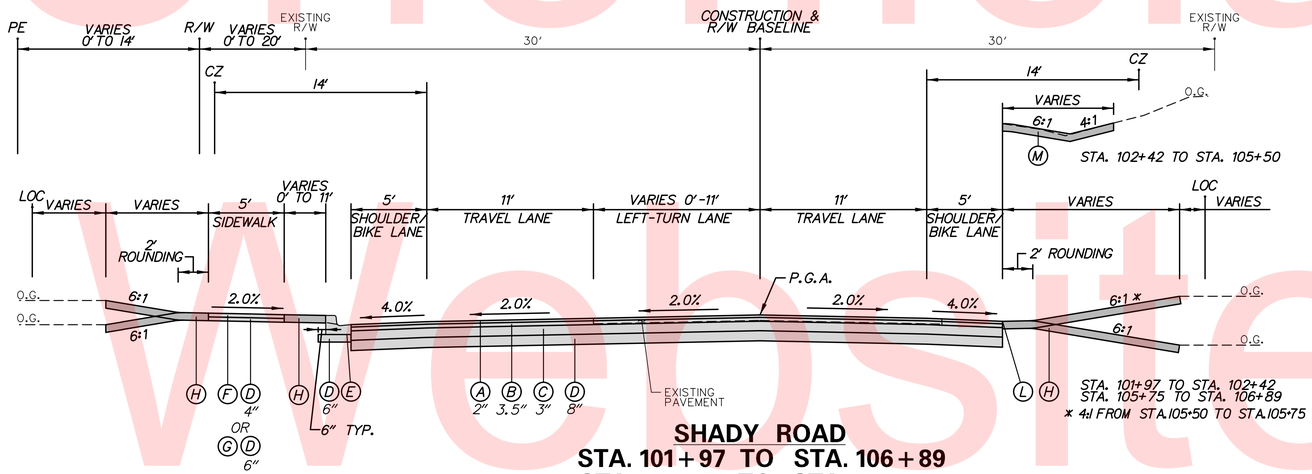

SHADY ROAD
STA. 101+97 TO STA. 106+89
STA. 108+71 TO STA. 109+89

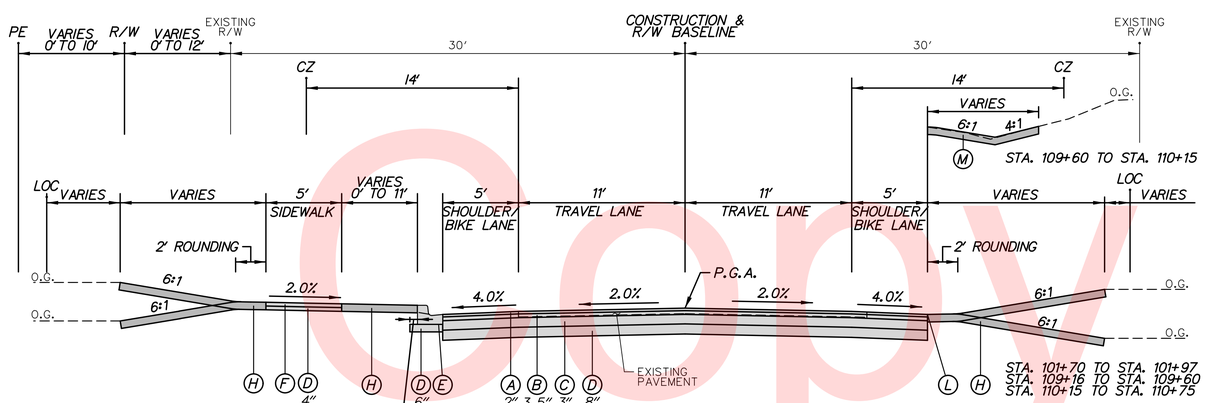

SHADY ROAD
STA. 101+70 TO STA. 101+97
STA. 109+16 TO STA. 110+75

Unofficial Website Copy

N:\90181-019\C&D\Highway\CP01-90181004H1-01.dgn
10/28/2015 9:52:06 AM

DELAWARE DEPARTMENT OF TRANSPORTATION	ADDENDUMS / REVISIONS	NOT TO SCALE	LEWES PARK & RIDE AND SITE WORK	CONTRACT T200612502	BRIDGE NO.	TYPICAL SECTIONS	H1-01
				COUNTY SUSSEX	DESIGNED BY: D.A.D.		SHEET NO. 31
					CHECKED BY: T.A.O.		TOTAL SHTS. 72

CONSTRUCTION ALIGNMENT CONTROL
SHADY ROAD

POINT NO.	STATION	OFFSET	NORTHING	EASTING
1000	100+00.00	0.00'	271452.1578	726438.3177
1004	116+00.00	0.00'	272497.6143	727649.1736
1005	105+00.00	0.00'	271787.1664	726809.4904
1006	113+00.00	0.00'	272305.3619	727418.8716

DATUM REFERENCE:
HORIZONTAL - PROJECT IS BASED ON THE DELAWARE STATE PLANE COORDINATE SYSTEM (NAD 83).
VERTICAL - PLAN ELEVATIONS ARE BASED ON N.G.S. SURVEY DATUM (NAVD 88), DELAWARE BENCHMARK

POINT	NORTH	EAST	ELEV.
HU2678	281814.0508	737237.2327	39.3211 FT.
HU2675	240018.8301	668394.8301	46.7075 FT.
HU2670	199819.7389	732912.3541	25.6348 FT.

HORIZONTAL / VERTICAL CONTROL DATA

POINT	STATION	OFFSET	NORTHING	EASTING	ELEVATION
3	107+78.39	22.46' RT.	271953.8712	727032.9226	24.17
52	110+30.45	13.27' RT.	272122.4387	727220.4495	23.37
56	104+17.53	145.73' LT.	271840.0900	726650.6228	25.73
251	109+47.17	17.48' LT.	272092.6684	727136.8129	23.73
252	105+65.78	19.20' RT.	271816.9893	726871.1872	26.51

CIRCULAR CURVE NO. 1 - SHADY ROAD

	STATION	NORTHING	EASTING
PC (1001)	105+77.97	271839.4063	726867.3696
PI (1002)	106+88.67	271913.5803	726949.5506
CC		267586.0787	730706.2876
PT (1003)	107+99.35	271984.5244	727034.5356

Radius:	5729.5800
Delta:	2° 12' 49.7355" Right
Degree of Curvature(Arc):	0° 59' 59.9987"
Length:	221.38
Tangent:	110.70
Chord:	221.37
Middle Ordinate:	1.07
External:	1.07
Tangent Direction:	N 47° 55' 53.7474" E
Radial Direction:	S 42° 04' 06.2526" E
Chord Direction:	N 49° 02' 18.6152" E
Radial Direction:	S 39° 51' 16.5171" E
Tangent Direction:	N 50° 08' 43.4829" E

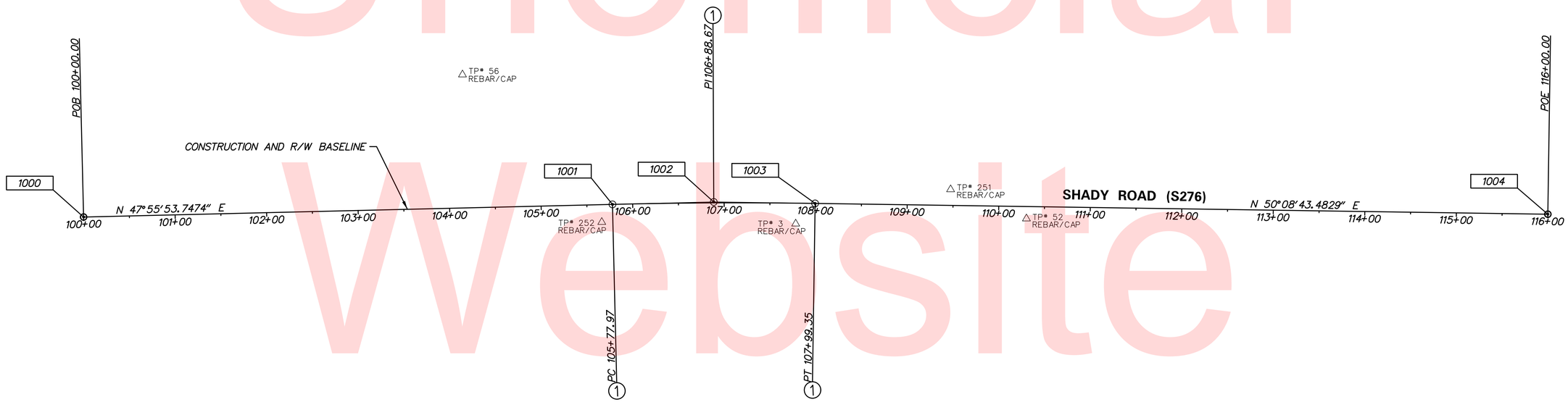

Unofficial Website Copy

H3-01

DELAWARE DEPARTMENT OF TRANSPORTATION

ADDENDUMS / REVISIONS

SCALE 0 60 120 180 FEET

LEWES PARK & RIDE AND SITE WORK

CONTRACT	BRIDGE NO.
T200612502	DESIGNED BY: D.A.D.
COUNTY	
SUSSEX	CHECKED BY: T.A.O.

HORIZONTAL AND VERTICAL CONTROL

SHEET NO. 32
TOTAL SHTS. 72

N:\90181-019\CADD\Highway\CP01-90181004H3-01.dgn
10/28/2015 9:52:07 AM

CURB SCHEDULE		
NO.	ITEM DESCRIPTION / TYPE	LENGTH
41	P.C.C. CURB AND GUTTER, TYPE 3-8	526'
42	P.C.C. CURB AND GUTTER, TYPE 3-8	342'

ROADWAY CORE SCHEDULE			
NO.	STATION	OFFSET	DESCRIPTION
P-4	106+74.66	8.97' LT.	4" HOT-MIX ASPHALT ON 3" AGGREGATE BASE

NOTES:
1. SEE STORM DRAIN PLANS (SHEET C-104) FOR DRAINAGE PIPE AND STRUCTURE SCHEDULES.
2. SEE SITE PLAN (SHEET C-102) FOR SITE WORK.

RIGHT-OF-WAY MONUMENT SCHEDULE					
NO.	TYPE	STATION	OFFSET	NORTHING	EASTING
1	CAPPED REBAR	102+86.00	30.00' LT.	271666.0500	726630.5245
2	CAPPED REBAR	102+86.00	37.00' LT.	271671.2464	726625.8344
3	CONCRETE	105+77.97	37.00' LT.	271866.8731	726842.5789
4	CONCRETE	106+11.00	37.00' LT.	271889.0739	726867.3193
5	CONCRETE	106+10.98	50.00' LT.	271898.7665	726858.6559
6	CONCRETE	106+26.02	50.00' LT.	271908.8519	726869.9903

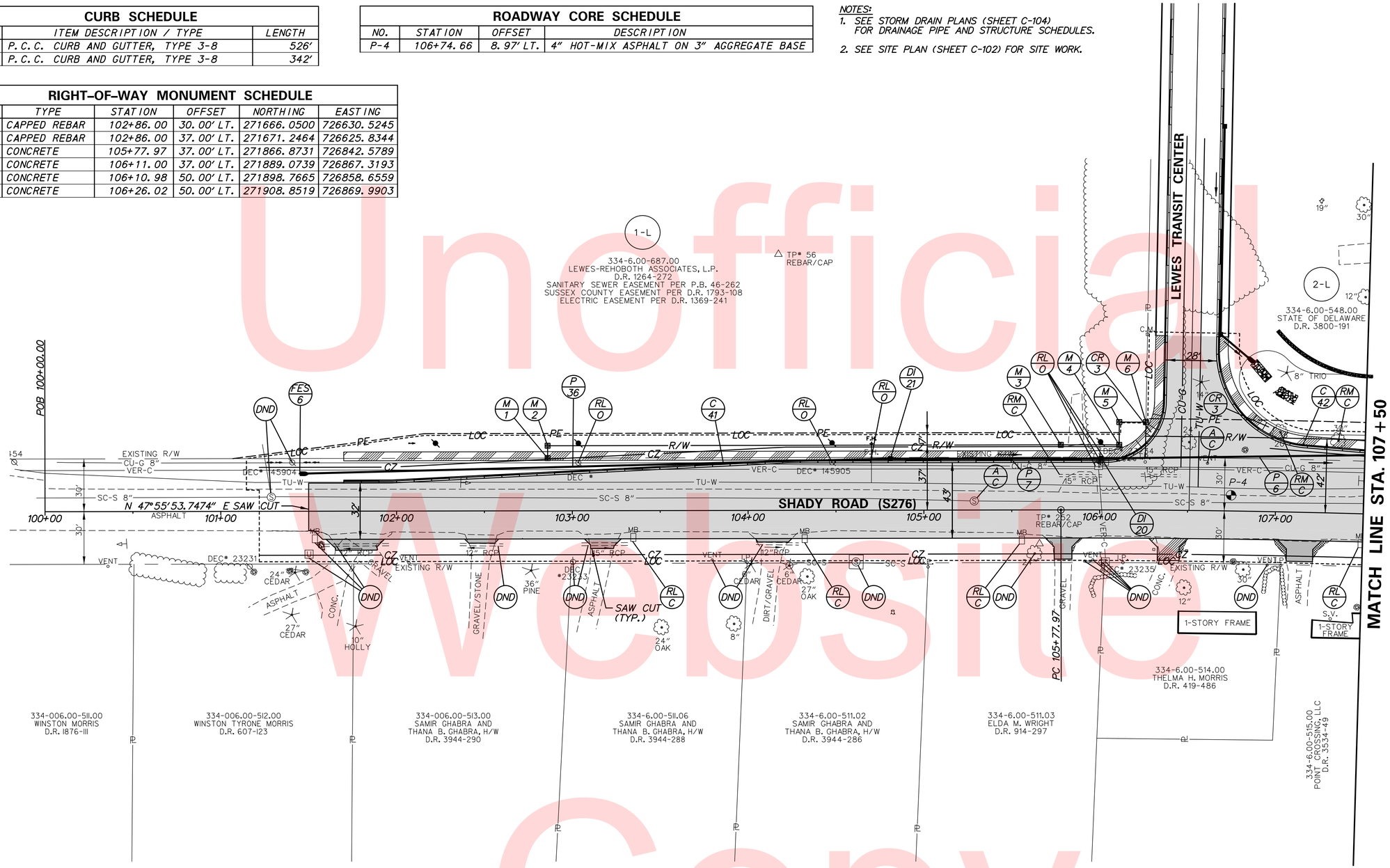

Unofficial Website Copy

N:\90181-019\CADD\Highway\CP01-90181004H5-01.dgn
10/28/2015 9:52:11 AM

DELAWARE DEPARTMENT OF TRANSPORTATION	ADDENDUMS / REVISIONS	SCALE 0 30 60 90 FEET	LEWES PARK & RIDE AND SITE WORK	CONTRACT T200612502	BRIDGE NO.	CONSTRUCTION PLAN	H5-01
				COUNTY SUSSEX	DESIGNED BY: D.A.D.		SHEET NO. 33
					CHECKED BY: T.A.O.		TOTAL SHTS. 72

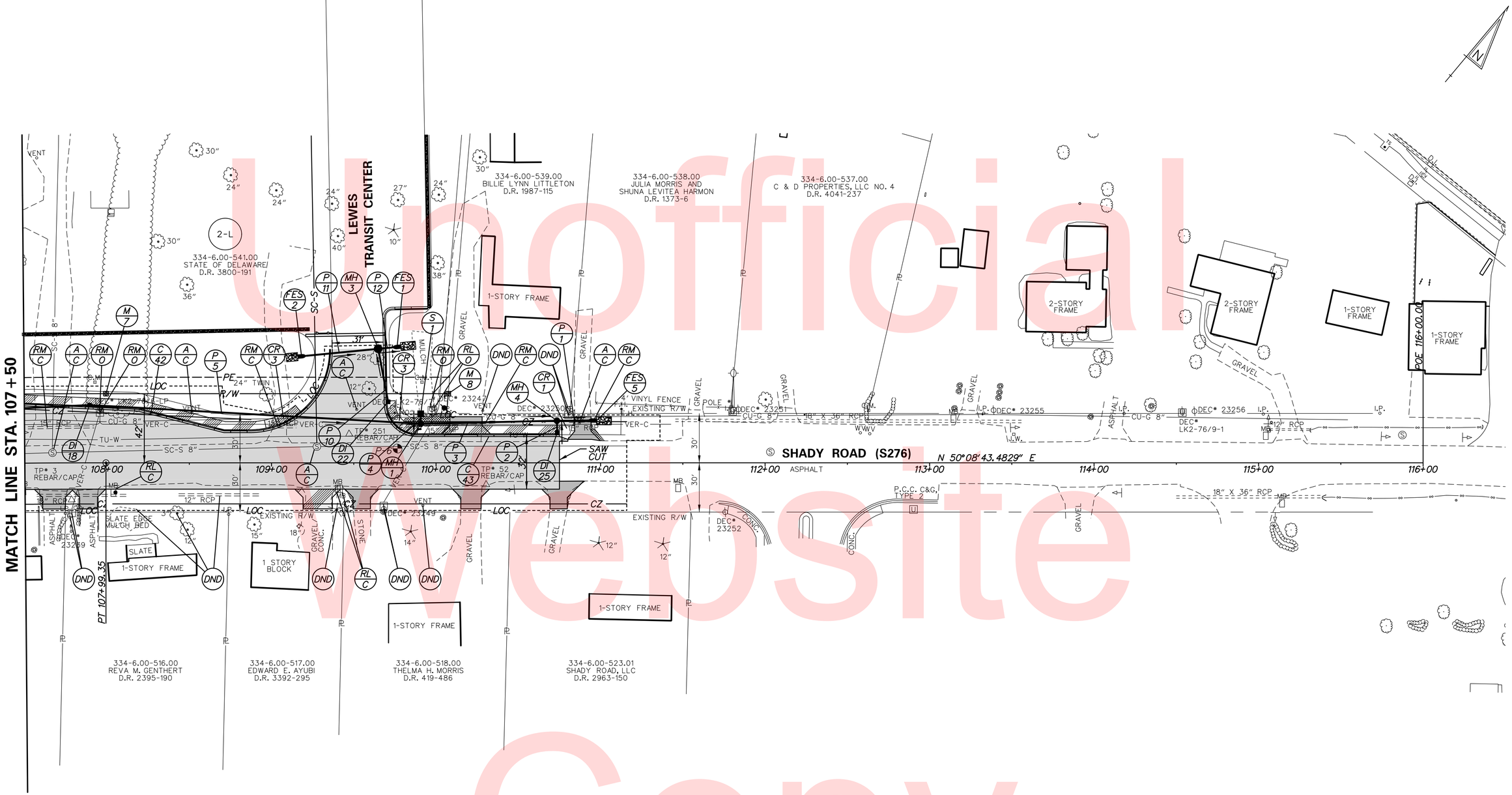

CURB SCHEDULE

NO.	ITEM DESCRIPTION / TYPE	LENGTH
43	P.C.C. CURB AND GUTTER, TYPE 3-8	152'

ROADWAY CORE SCHEDULE

NO.	STATION	OFFSET	DESCRIPTION
P-6	109+76.56	8.68' LT.	4" HOT-MIX ASPHALT ON 2" AGGREGATE BASE

RIGHT-OF-WAY MONUMENT SCHEDULE

NO.	TYPE	STATION	OFFSET	NORTHING	EASTING
7	CONCRETE	107+99.35	42.00' LT.	272016.7667	727007.6203
8	CAPPED REBAR	110+07.43	42.00' LT.	272150.1106	727167.3549

NOTES:
1. SEE STORM DRAIN PLANS (SHEET C-104) FOR DRAINAGE PIPE AND STRUCTURE SCHEDULES.
2. SEE SITE PLAN (SHEET C-102) FOR SITE WORK.

Unofficial Website Copy

N:\90181-019\CADD\Highway\CP01-90181004H5-02.dgn
10/28/2015 9:52:12 AM

H5-02

DELAWARE DEPARTMENT OF TRANSPORTATION

ADDENDUMS / REVISIONS

SCALE 0 30 60 90 FEET

LEWES PARK & RIDE AND SITE WORK

CONTRACT	BRIDGE NO.	
T200612502	DESIGNED BY: D.A.D.	
COUNTY		
SUSSEX	CHECKED BY: T.A.O.	

CONSTRUCTION PLAN

SHEET NO. 34
TOTAL SHTS. 72

SHADY ROAD

Unofficial Website Copy

VERTICAL SCALE FEET 0 3 6 9

H6-01

DELAWARE DEPARTMENT OF TRANSPORTATION	ADDENDUMS / REVISIONS	SCALE 0 30 60 90 FEET	LEWES PARK & RIDE AND SITE WORK	CONTRACT T200612502	BRIDGE NO.	PROFILES	SHEET NO. 35
				COUNTY SUSSEX	DESIGNED BY: D.A.D.		TOTAL SHTS. 72
					CHECKED BY: T.A.O.		

N:\90181-019\CADD\Highway\CP01-90181004H6-01.dgn
10/28/2015 9:52:14 AM

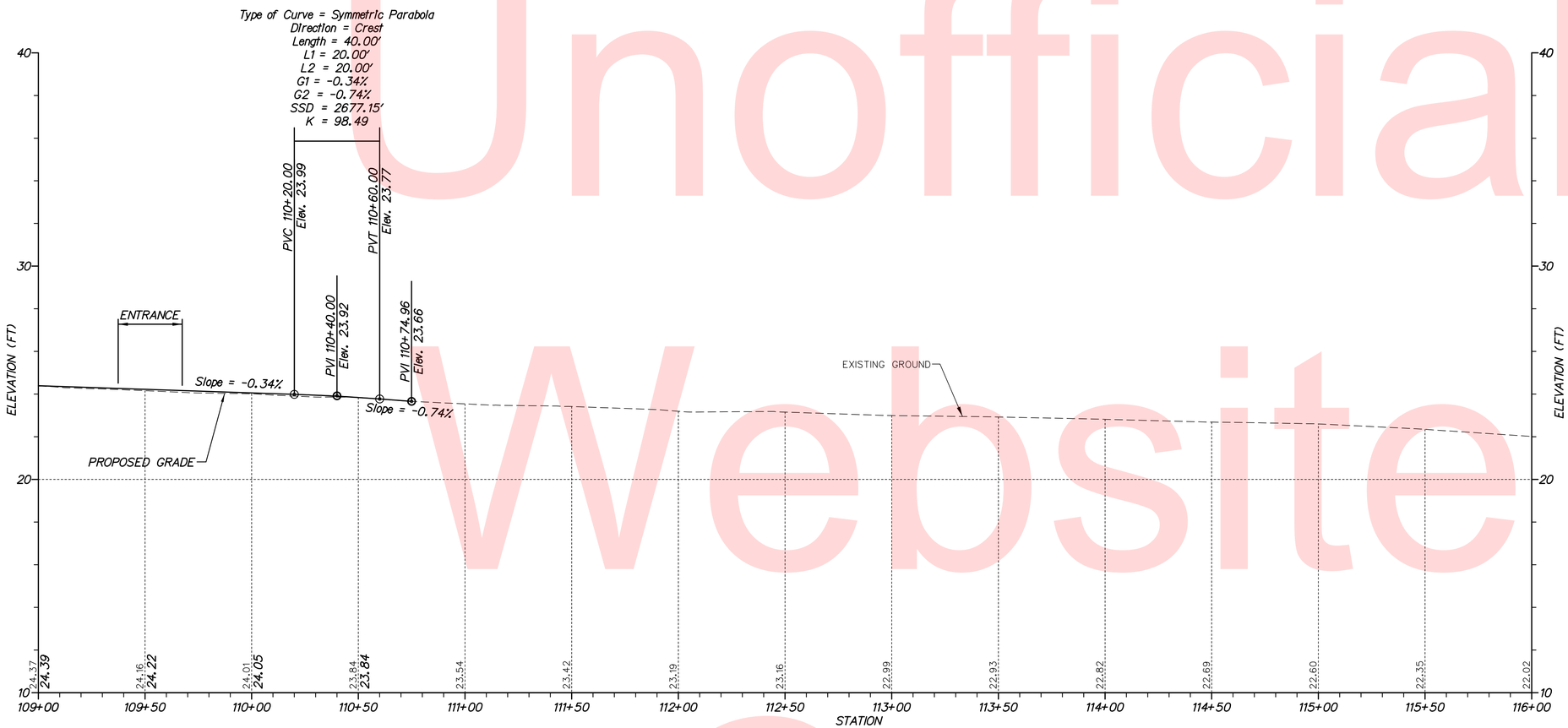

SHADY ROAD

Unofficial Website Copy

VERTICAL SCALE FEET 0 3 6 9

H6-02

DELAWARE DEPARTMENT OF TRANSPORTATION	ADDENDUMS / REVISIONS	SCALE 0 30 60 90 FEET	LEWES PARK & RIDE AND SITE WORK	CONTRACT T200612502	BRIDGE NO.	PROFILES	SHEET NO. 36
				COUNTY SUSSEX	DESIGNED BY: D.A.D.		TOTAL SHTS. 72
					CHECKED BY: T.A.O.		

N:\90181-019\CADD\Highway\CP01-90181004H6-02.dgn
10/28/2015 9:52:15 AM

COORDINATE LIST

POINT NO.	STATION	OFFSET	NORTHING	EASTING
61001	101+50.00	-16.00	271564.5379	726538.9493
61002	101+70.00	-16.00	271577.9382	726553.7962
61003	101+97.40	-16.00	271596.2985	726574.1383
61004	104+22.40	-27.00	271755.2182	726733.7959
61005	106+02.79	-27.00	271876.1214	726867.8312
61006	106+37.42	-61.55	271925.1274	726870.9425
61007	106+37.78	-99.29	271953.6429	726846.2292
61008	106+65.30	-99.07	271971.9739	726867.3946
61009	106+65.27	-91.66	271966.3702	726872.2511
61010	107+16.16	-36.74	271958.6147	726947.1098
61011	106+24.44	-34.64	271896.3118	726878.9937
61012	106+30.46	-40.88	271904.9945	726879.3820
61013	106+33.15	-45.08	271909.9374	726878.6285
61014	106+36.32	-53.16	271918.1107	726875.6704
61015	106+84.15	-49.79	271947.3925	726914.1793
61016	106+90.87	-44.83	271948.0880	726922.5407
61017	106+95.20	-42.40	271949.1049	726927.4362
61018	107+02.92	-39.23	271951.7970	726935.3829

COORDINATE LIST

POINT NO.	STATION	OFFSET	NORTHING	EASTING
61500	101+50.00	11.00	271544.4946	726557.0397
61501	101+52.92	11.00	271546.4517	726559.2082
61502	101+57.90	16.00	271546.0780	726566.2566
61503	101+59.84	16.00	271547.3776	726567.6965
61504	101+65.18	21.00	271547.2427	726575.0095
61505	101+65.18	22.20	271546.3532	726575.8123
61510	101+88.92	22.20	271562.2557	726593.4315
61511	101+88.92	20.18	271563.7573	726592.0763
61512	101+93.09	16.00	271569.6546	726592.3783
61513	102+37.53	16.00	271599.4275	726625.3651
61514	102+41.03	18.33	271600.0436	726629.5228
61516	102+58.14	16.00	271613.2384	726640.6669
61517	102+55.81	18.33	271609.9499	726640.4985
61519	103+06.85	16.00	271645.8742	726676.8257
61520	103+10.34	19.49	271645.6216	726681.7591
61521	103+10.34	21.50	271644.1314	726683.1040
61522	103+27.81	16.00	271659.9179	726692.3855
61523	103+23.72	20.09	271654.1390	726692.0895
61524	103+23.41	21.50	271652.8883	726692.8062
61525	104+04.16	16.00	271711.0751	726749.0650
61526	104+05.46	18.00	271710.4612	726751.3688
61528	104+24.90	16.00	271724.9720	726764.4621
61529	104+22.90	18.00	271722.1483	726764.3175
61531	105+69.15	16.00	271821.6237	726871.5473

COORDINATE LIST

POINT NO.	STATION	OFFSET	NORTHING	EASTING
61532	105+74.11	20.97	271821.2566	726878.5548
61533	105+74.11	27.98	271816.0452	726883.2533
61534	105+89.18	16.00	271835.0091	726886.3939
61535	105+84.18	20.98	271827.9748	726886.0253
61536	105+84.18	27.98	271822.7749	726890.7135
61537	106+28.02	16.00	271860.8075	726915.2864
61538	106+33.01	20.99	271860.3754	726922.3202
61539	106+33.00	28.59	271854.6750	726927.3513
61540	106+50.44	16.00	271875.6122	726932.0461
61541	106+45.44	20.99	271868.5739	726931.6029
61542	106+45.45	28.59	271862.8733	726936.6342
61543	107+01.71	16.00	271909.2134	726970.5810
61544	107+06.70	20.99	271908.6852	726977.6066
61545	107+06.69	27.99	271903.3783	726982.1714
61546	107+26.73	16.00	271925.4843	726989.4938
61547	107+21.74	20.99	271918.4562	726988.9655
61548	107+21.75	27.99	271913.1493	726993.5302
61549	101+70.00	-33.67	271591.0530	726541.9592

NOTE:
1. THE CROSS SLOPE WITHIN CROSSWALKS SHALL BE A MAXIMUM OF 2%.

Unofficial Website Copy

N:\90181-019\CADD\Highway\CP01-90181004H7-01.dgn
10/28/2015 9:52:17 AM

DELAWARE DEPARTMENT OF TRANSPORTATION	ADDENDUMS / REVISIONS	SCALE 0 30 60 90 FEET	LEWES PARK & RIDE AND SITE WORK	CONTRACT T200612502	BRIDGE NO.	GRADES AND GEOMETRICS	H7-01 SHEET NO. 37
				COUNTY SUSSEX	DESIGNED BY: D.A.D.		TOTAL SHTS. 72
					CHECKED BY: T.A.O.		

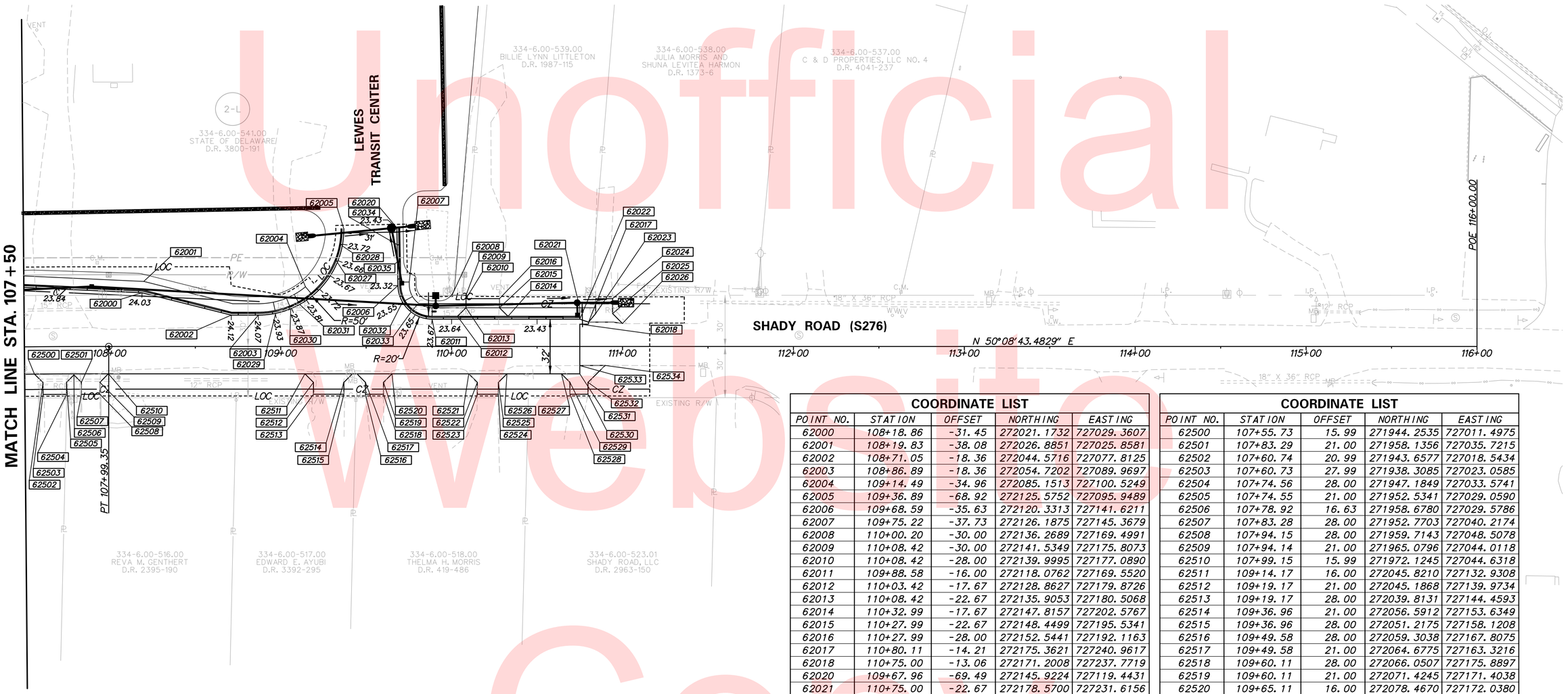

Unofficial Website Copy

NOTE:

1. POINTS NO. 62027 & 62028 AND 62034 & 62035 ARE LOCATED ON THE EDGE OF PAVEMENT AND DENOTE THE EXTENTS OF DEPRESSED CURB FOR MAINTENANCE ACCESS TO SWM FACILITIES.
2. THE CROSS SLOPE WITHIN CROSSWALKS SHALL BE A MAXIMUM OF 2%.

COORDINATE LIST

POINT NO.	STATION	OFFSET	NORTHING	EASTING
62000	108+18.86	-31.45	272021.1732	727029.3607
62001	108+19.83	-38.08	272026.8851	727025.8581
62002	108+71.05	-18.36	272044.5716	727077.8125
62003	108+86.89	-18.36	272054.7202	727089.9697
62004	109+14.49	-34.96	272085.1513	727100.5249
62005	109+36.89	-68.92	272125.5752	727095.9489
62006	109+68.59	-35.63	272120.3313	727141.6211
62007	109+75.22	-37.73	272126.1875	727145.3679
62008	110+00.20	-30.00	272136.2689	727169.4991
62009	110+08.42	-30.00	272141.5349	727175.8073
62010	110+08.42	-28.00	272139.9995	727177.0890
62011	109+88.58	-16.00	272118.0762	727169.5520
62012	110+03.42	-17.67	272128.8627	727179.8726
62013	110+08.42	-22.67	272135.9053	727180.5068
62014	110+32.99	-17.67	272147.8157	727202.5767
62015	110+27.99	-22.67	272148.4499	727195.5341
62016	110+27.99	-28.00	272152.5441	727192.1163
62017	110+80.11	-14.21	272175.3621	727240.9617
62018	110+75.00	-13.06	272171.2008	727237.7719
62020	109+67.96	-69.49	272145.9224	727119.4431
62021	110+75.00	-22.67	272178.5700	727231.6156
62022	110+75.00	-16.00	272173.4522	727235.8878
62023	110+84.29	-19.21	272181.8741	727240.9604
62024	110+94.19	-28.00	272194.9655	727242.9335
62025	110+94.19	-19.21	272188.2211	727248.5636
62026	110+99.96	-13.45	272187.4895	727256.6888
62027	109+33.11	-49.28	272108.0746	727105.6338
62028	109+35.98	-58.85	272117.2576	727101.7066
62029	108+97.01	-19.40	272062.0006	727097.0759
62030	109+05.88	-22.11	272069.7626	727102.1451
62031	109+11.08	-24.60	272075.0115	727104.5395
62032	109+71.24	-26.03	272114.6668	727149.8101
62033	109+76.28	-20.24	272113.4403	727157.3898
62034	109+68.14	-59.61	272138.4574	727125.9125
62035	109+68.33	-49.61	272130.9004	727132.4616

COORDINATE LIST

POINT NO.	STATION	OFFSET	NORTHING	EASTING
62500	107+55.73	15.99	271944.2535	727011.4975
62501	107+83.29	21.00	271958.1356	727035.7215
62502	107+60.74	20.99	271943.6577	727018.5434
62503	107+60.73	27.99	271938.3085	727023.0585
62504	107+74.56	28.00	271947.1849	727033.5741
62505	107+74.55	21.00	271952.5341	727029.0590
62506	107+78.92	16.63	271958.6780	727029.5786
62507	107+83.28	28.00	271952.7703	727040.2174
62508	107+94.15	28.00	271959.7143	727048.5078
62509	107+94.14	21.00	271965.0796	727044.0118
62510	107+99.15	15.99	271972.1245	727044.6318
62511	109+14.17	16.00	272045.8210	727132.9308
62512	109+19.17	21.00	272045.1868	727139.9734
62513	109+19.17	28.00	272039.8131	727144.4593
62514	109+36.96	21.00	272056.5912	727153.6349
62515	109+36.96	28.00	272051.2175	727158.1208
62516	109+49.58	28.00	272059.3038	727167.8075
62517	109+49.58	21.00	272064.6775	727163.3216
62518	109+60.11	28.00	272066.0507	727175.8897
62519	109+60.11	21.00	272071.4245	727171.4038
62520	109+65.11	16.00	272078.4670	727172.0380
62521	110+10.05	16.00	272107.2674	727206.5384
62522	110+15.05	21.00	272106.6332	727213.5810
62523	110+15.05	28.00	272101.2595	727218.0669
62524	110+27.36	28.00	272109.1508	727227.5199
62525	110+27.36	21.00	272114.5245	727223.0340
62526	110+32.36	16.00	272121.5671	727223.6682
62527	110+64.24	16.00	272141.9947	727248.1388
62528	110+69.24	28.00	272135.9868	727259.6672
62529	110+69.24	21.00	272141.3605	727255.1813
62530	110+79.78	28.00	272142.7433	727267.7609
62531	110+75.00	16.00	272148.8890	727256.3975
62532	110+79.78	21.00	272148.1170	727263.2750
62533	110+75.00	11.18	272152.5886	727253.3091
62534	110+89.85	11.09	272162.1749	727264.6488

N:\90181-019\CADD\Highway\CP01-90181004H7-02.dgn
10/28/2015 9:15:19 AM

DELAWARE
DEPARTMENT OF TRANSPORTATION

ADDENDUMS / REVISIONS

SCALE
0 30 60 90
FEET

LEWES PARK & RIDE
AND SITE WORK

CONTRACT	BRIDGE NO.	
T200612502	DESIGNED BY: D.A.D.	
COUNTY		
SUSSEX	CHECKED BY: T.A.O.	

GRADES AND GEOMETRICS

H7-02

SHEET NO. 38

TOTAL SHTS. 72

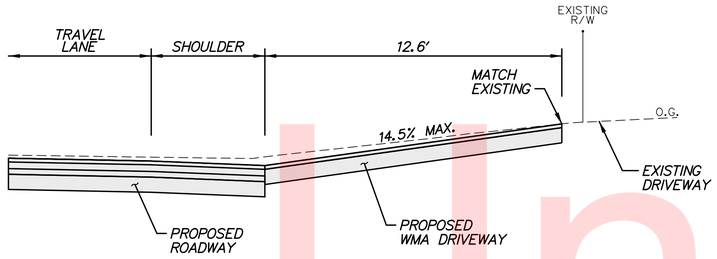

DRIVEWAY DETAIL - STATION 106+40 RT.

SCALE: NONE

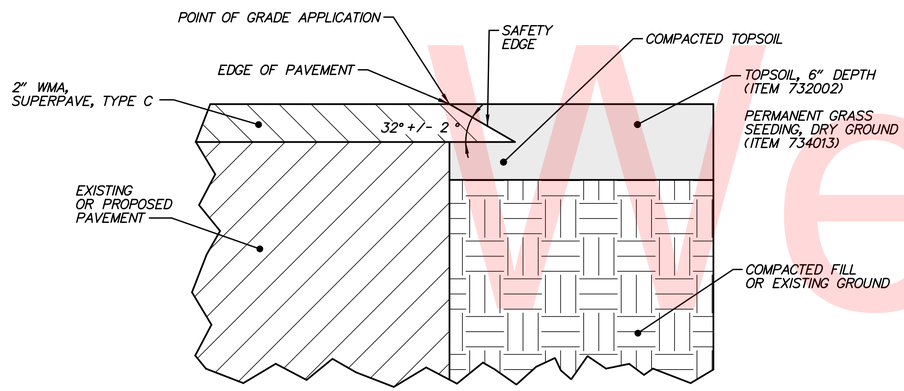

NOTES:

1. FOR ADDITIONAL INFORMATION, SEE ITEM 401752 SAFETY EDGE FOR ROADWAY PAVEMENT.
2. THE SAFETY EDGE SHALL NOT BE CONSTRUCTED ADJACENT TO OTHER PAVEMENTS, CURB, CURB & GUTTER, CONCRETE SAFETY BARRIER OR MAINTENANCE PAVEMENT UNDER GUARDRAIL. THE CONTRACTOR SHALL STAKE OUT THE LIMITS OF THE AREAS NOT TO RECIEVE THE SAFETY EDGE FOR APPROVAL BY THE ENGINEER PRIOR TO BEGINNING PAVEMENT OPERATIONS.
3. IN BITUMINOUS CONCRETE PAVEMENT SECTIONS, PRIOR TO THE CONSTRUCTION OF THE SAFETY EDGE IN OVERLAY SECTIONS AND MILL/OVERLAY SECTIONS, THE EXISTING TOPSOIL OR IN-SITU MATERIAL AT THE EDGE OF PAVEMENT SHALL BE COMPACTED SO THAT IT IS LEVEL WITH THE BOTTOM OF THE FINAL SURFACE LAYER PRIOR TO PLACING THE FINAL SURFACE OVERLAY. AFTER THE FINAL SURFACE OVERLAY IS PACED, TOPSOIL SHALL BE PLACED TO THE TOP OF THE FINAL SURFACE OVERLAY.
4. IN BITUMINOUS CONCRETE PAVEMENT SECTIONS WHERE FULL DEPTH TOPSOIL IS PROPOSED TO BE PLACED ADJACENT TO THE EDGE OF PAVEMENT, THE TOPSOIL SHALL BE PLACED AND COMPACTED ALONG THE PAVEMENT EDGE TO THAT IS IT LEVEL WITH THE BOTTOM OF THE FINAL SURFACE LAYER PRIOR TO PACING THE FINAL SURFACE OVERAY. AFTER THE FINAL SURFACE OVERLAY IS PLACED, THE TOPSOIL SHALL BE PLACED TO THE TOP OF THE FINAL SURFACE OVERLAY. ALL COSTS FOR PLACING AND COMPACTING THE TOPSOIL SHALL BE INCLUDED IN THE PRICE OF THE TOPSOIL ITEM,

SAFETY EDGE - BITUMINOUS PAVEMENT AND OVERLAYS

SCALE: NONE

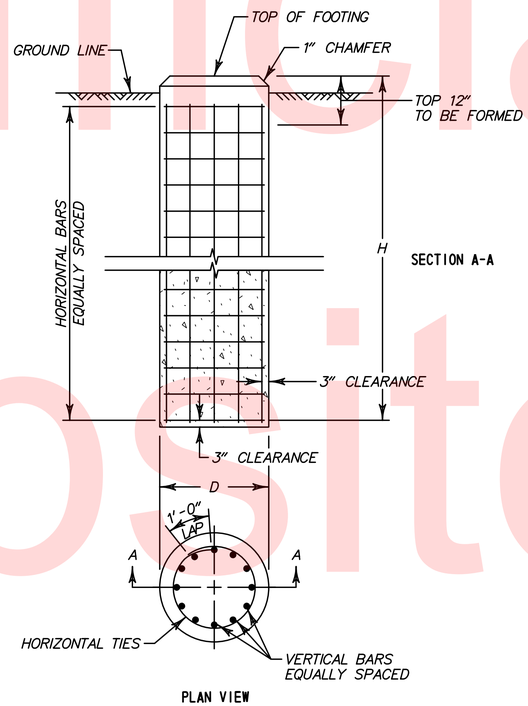

GALVANIZED STEEL BEAM SIGN POST FOUNDATION DETAIL (ITEM 749516 - REINFORCED CONCRETE SIGN FOUNDATION, W-6)

FOR RELOCATED SIGN NO. 51 ON SHEET H13-03

FOUNDATION DATA TABLE

POST SIZE	D	H	VERTICAL REINFORCEMENT	HORIZONTAL REINFORCEMENT	CONCRETE REQUIRED (CY)
W6x16	30"	6'-6"	EIGHT (8)-NO. 7	SEVEN (7)-NO. 4	1.2

SCALE: NONE

Unofficial Website Copy

N:\90181-019\CADD\Highway\CP01-90181004H8-01.dgn
10/28/2015 9:52:21 AM

DELAWARE DEPARTMENT OF TRANSPORTATION	ADDENDUMS / REVISIONS	NOT TO SCALE	LEWES PARK & RIDE AND SITE WORK	CONTRACT T200612502	BRIDGE NO.	CONSTRUCTION DETAILS	H8-01 SHEET NO. 39
				COUNTY SUSSEX	DESIGNED BY: D.A.D. CHECKED BY: T.A.O.		TOTAL SHTS. 72

GENERAL TRAFFIC CONTROL NOTES

1. MAINTENANCE OF TRAFFIC DURING LANE CLOSURES SHALL CONFORM TO THE FOLLOWING TYPICAL APPLICATIONS OF THE DELAWARE MUTCD:
   TYPICAL APPLICATION 10 - LANE CLOSURE ON A TWO-LANE ROAD USING FLAGGERS
   TYPICAL APPLICATION 33 - STATIONARY LANE CLOSURE ON A MULTI-LANE, DIVIDED HIGHWAY

   THE CONTRACTOR WILL BE RESPONSIBLE FOR COORDINATING WORK WITH UTILITY CONTRACTORS FOR UTILITY WORK ON SR 1 AND SHADY ROAD.

2. THE CONTRACTOR SHALL SUPPLY MESSAGE BOARDS UNDER ITEM 743004 - FURNISH AND MAINTAIN PORTABLE CHANGEABLE MESSAGE SIGN. THE CONTRACTOR MUST DESIGNATE WHO SHALL BE RESPONSIBLE FOR THESE MESSAGE BOARDS. MOVING MESSAGE BOARDS TO DIFFERENT LOCATIONS DURING CONSTRUCTION WILL BE INCIDENTAL TO ITEM 734004. MESSAGE BOARDS SHALL BE PLACED A MINIMUM OF SEVEN DAYS (ONE WEEK) PRIOR TO THE START OF CONSTRUCTION AND ANY CHANGES IN TRAFFIC PATTERNS. MESSAGE AND LOCATION SHALL BE APPROVED BY DISTRICT TRAFFIC SAFETY OFFICER.

3. THE CONTRACTOR SHALL INSTALL WOOD BARRICADES AT BOTH ACCESS POINTS TO THE TRANSIT CENTER ON SHADY ROAD DURING PHASE 2. BARRICADES SHALL BE INSTALLED PER DELDOT STANDARD CONSTRUCTION DETAIL NO. T-16. BARRIERS SHALL REMAIN UNTIL THE PARK AND RIDE IS OPEN.

4. THE CONTRACTOR SHALL COORDINATE THE INSTALLATION OF THE RIGHT-TURN AND LEFT-TURN LANE STRIPING ON SHADY ROAD INTO THE SITE TO COINCIDE WITH THE REMOVAL OF THE WOOD BARRICADES AND OPENING OF THE TRANSIT CENTER ENTRANCES.

5. THE CONTRACTOR SHALL CONTACT DELDOT TRAFFIC AT LEAST THREE WEEKS PRIOR TO THE SHADY ROAD CLOSURE TO COORDINATE CONSTRUCTION ACTIVITIES WITH DELDOT CONTRACT T200911201 (HEP, SC, PLANTATION ROAD AT CEDAR GROVE ROAD/POSTAL LANE INTERSECTION IMPROVEMENTS). SHADY ROAD SHALL NOT BE CLOSED DURING ROAD CLOSURES OF POSTAL LANE AND/OR PLANTATION ROAD AS PART OF CONTRACT T200911201.

6. DELDOT TRAFFIC RESERVES THE RIGHT TO MODIFY THE TRAFFIC CONTROL AS FIELD CONDITIONS DICTATE.

7. THE CONTRACTOR SHALL PROVIDE A TEMPORARY CURB RAMPS FOR THE PHASE 1 PEDESTRIAN DETOUR AS SHOWN ON THE PLANS AND IN ACCORDANCE WITH ITEM 705528 - TEMPORARY CURB RAMP. INSTALLING THE CURB RAMP AT THE BEGINNING OF EACH WORK DAY AND REMOVING THE CURB RAMP AT THE END OF EACH WORK DAY WILL BE INCIDENTAL TO ITEM 705528.

8. THE CONTRACTOR SHALL CONTACT LOCAL EMERGENCY SERVICES AT LEAST THREE WEEKS PRIOR TO THE IMPLEMENTATION OF THE SHADY ROAD CLOSURE.

9. LANE CLOSURES ON SR 1 SHALL CONFORM TO THE FOLLOWING TIME RESTRICTIONS:,
   MAY 1 TO SEPTEMBER 30: SUNDAY THROUGH FRIDAY, BETWEEN 8:00 PM TO 6:00 AM
   OCTOBER 1 TO APRIL 30: MONDAY THROUGH FRIDAY, BETWEEN 9:00 AM AND 3:00 PM

10. RECONSTRUCTION OF SHADY ROAD UNDER DETOUR, UP TO THE TYPE B COURSE, SHALL CONFORM TO THE FOLLOWING TIME RESTRICTIONS:
    MAY 1 TO SEPTEMBER 30: NO WORK ALLOWED
    OCTOBER 1 TO APRIL 30: FOLLOW 24-HOUR DETOUR *

    *NIGHTTIME WORK HOURS ARE ALLOWABLE WITH THE APPROVAL OF THE RESIDENTIAL COMMUNITY ADJACENT TO THE PROJECT LIMITS.

CONSTRUCTION PHASING & M.O.T	
	BARRICADE, TYPE 3
	CONCRETE SAFETY BARRIER - PORTABLE
CSF XXX	CONSTRUCTION SAFETY FENCE / LENGTH
—CSF—	CONSTRUCTION SAFETY FENCE
	CONSTRUCTION WARNING SIGN LOCATION
END ROAD WORK	CONSTRUCTION WARNING SIGN
	CRASH CUSHION ARRAY
	DRUM - TRAFFIC CONTROL
	FLAGGER LOCATION
PHASE	PHASING TRAFFIC FLOW ARROW
	TEMPORARY CONSTRUCTION
	TEMPORARY PAVEMENT MARKING ARROW
	TRUCK WITH MOUNTED ATTENUATOR
	WORK AREA - ACTIVE PHASE

EROSION AND SEDIMENT CONTROL	
	INLET SEDIMENT CONTROL
— SF —	SILT FENCE
—CSF—	CONSTRUCTION SAFETY FENCE
—RSF—	SILT FENCE - REINFORCED
	STONE CHECK DAM
SCE	STABILIZED CONSTRUCTION ENTRANCE

Unofficial Website Copy

N:\90181-019\CADD\Highway\CP01-90181004H12-01.dgn
10/28/2015 9:52:22 AM

DELAWARE DEPARTMENT OF TRANSPORTATION

ADDENDUMS / REVISIONS

NOT TO SCALE

LEWES PARK & RIDE AND SITE WORK

CONTRACT	BRIDGE NO.	
T200612502	DESIGNED BY: D.A.D.	
COUNTY		
SUSSEX	CHECKED BY: T.A.O.	

CONSTRUCTION PHASING, M.O.T. AND EROSION CONTROL PLAN

H12-01

SHEET NO. 40

TOTAL SHTS. 72

NOTES:

1. PLACE ALL WARNING SIGNS PRIOR TO THE BEGINNING OF CONSTRUCTION. ALL WARNING SIGNS SHALL BE PAID FOR UNDER ITEM 743024 - TEMPORARY WARNING SIGNS AND PLAQUES.
2. WHERE POSSIBLE, WARNING SIGNS SHALL BE PLACED A MINIMUM OF 500' FROM THE INTERSECTION. ANY LOCATIONS WHERE THEY ARE SPACED LESS THAN 500' SHALL BE APPROVED BY THE ENGINEER.
3. WARNING SIGNS SHALL BE COORDINATED WITH DELDOT CONTRACT T200911201 (HEP, SC, PLANTATION ROAD AT CEDAR GROVE ROAD/POSTAL LANE INTERSECTION IMPROVEMENTS).

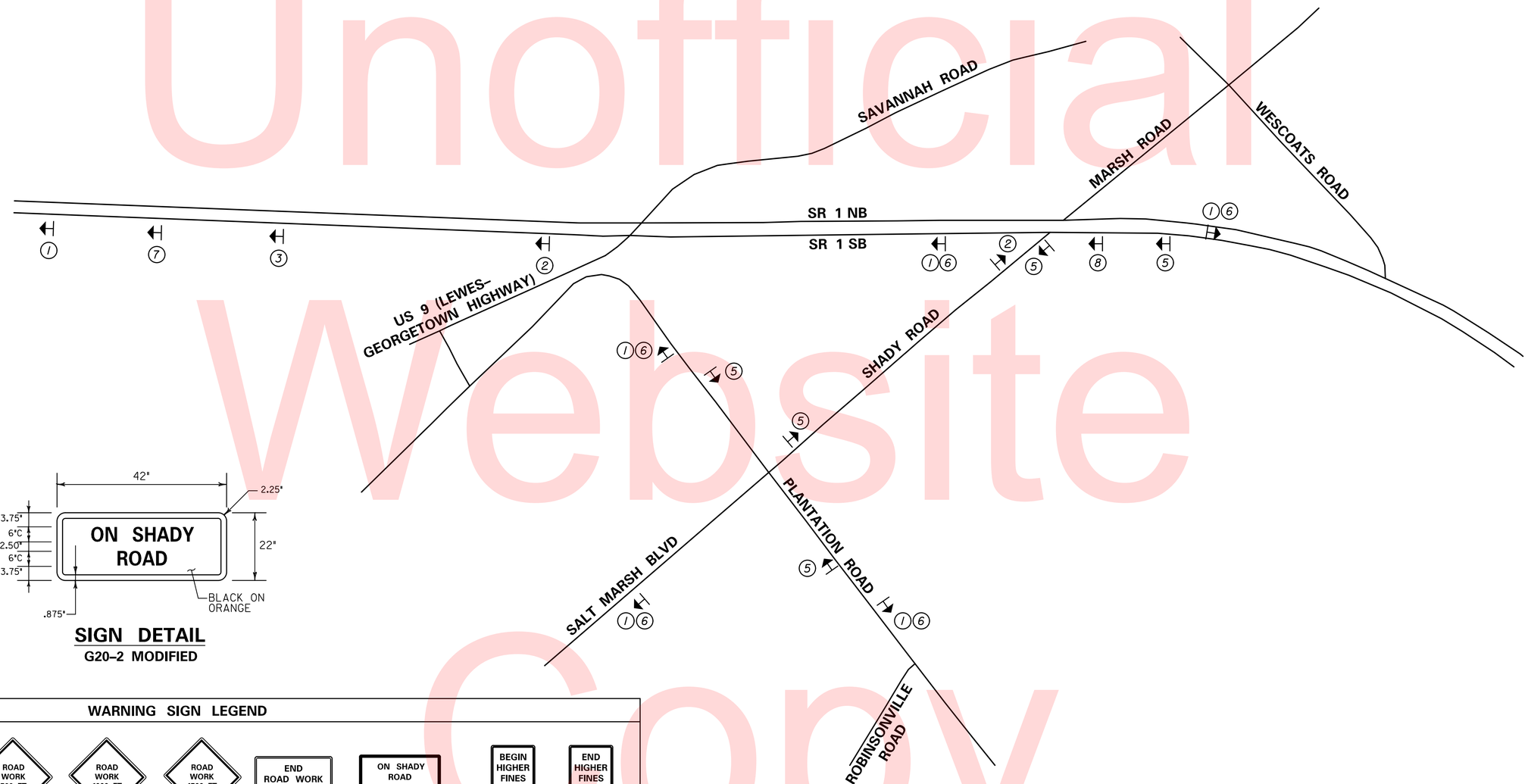

SIGN DETAIL
G20-2 MODIFIED

WARNING SIGN LEGEND

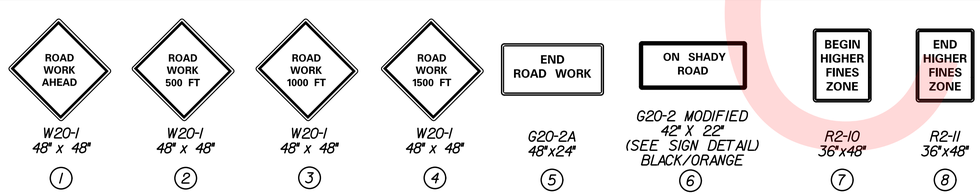

Unofficial Website Copy

DELAWARE DEPARTMENT OF TRANSPORTATION	ADDENDUMS / REVISIONS	NOT TO SCALE	LEWES PARK & RIDE AND SITE WORK	CONTRACT T200612502	BRIDGE NO.	CONSTRUCTION PHASING, M.O.T. AND EROSION CONTROL PLAN	H12-02
				COUNTY SUSSEX	DESIGNED BY: D.A.D.		SHEET NO. 41
					CHECKED BY: T.A.O.		TOTAL SHTS. 72

N:\90181-019\CADD\Highway\CP01-90181004H12-02.dgn
10/28/2015 9:52:25 AM

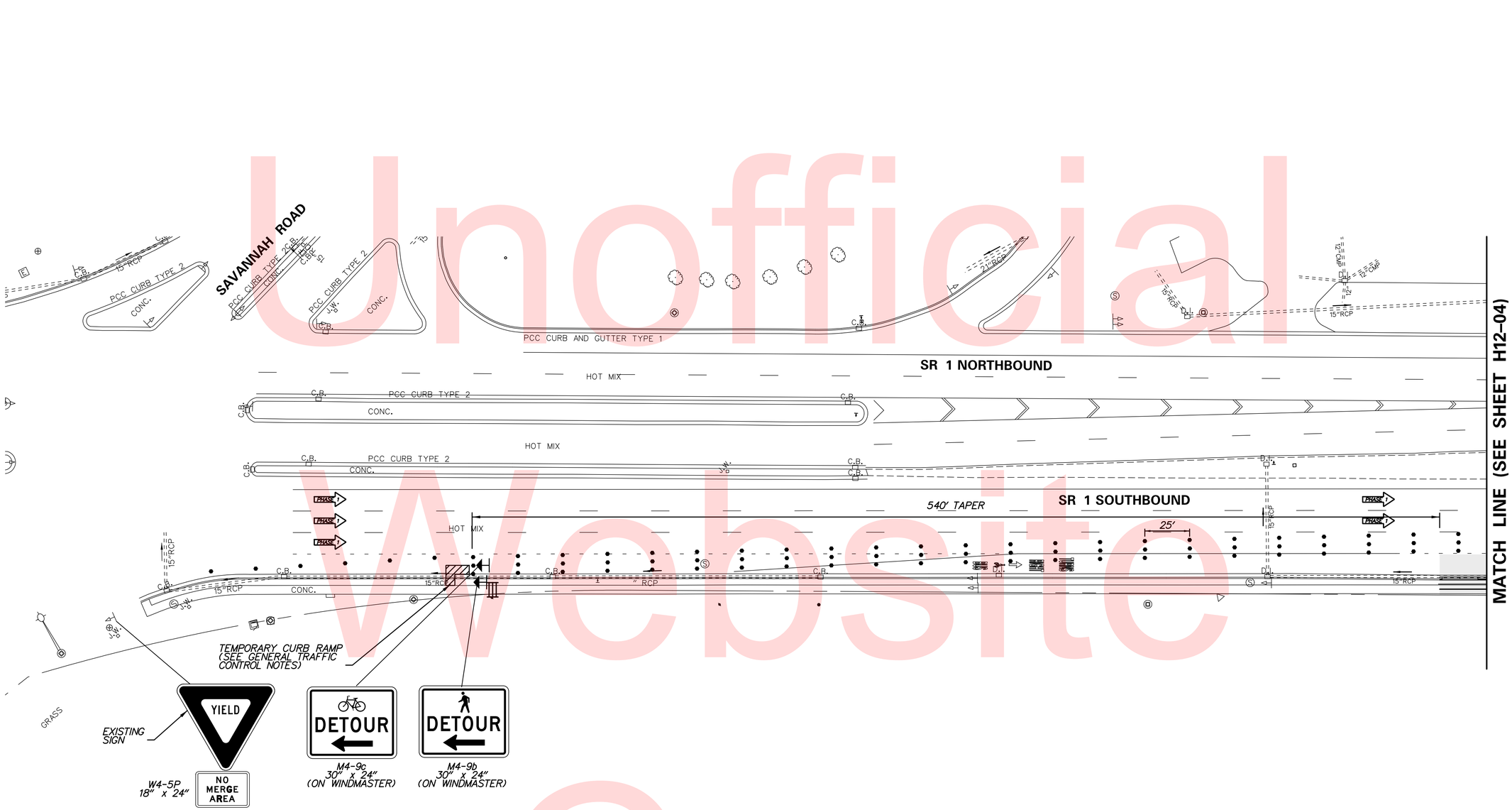

SEQUENCE OF CONSTRUCTION - PHASE I

1. PLACE ALL PERTINENT TRAFFIC CONTROL DEVICES FOR PHASE I AS SHOWN ON THIS PLAN AND THE WARNING SIGN LOCATION PLAN (SEE SHEET H12-02).
2. INSTALL EROSION AND SEDIMENT CONTROL WORK ON SR I AS SHOWN ON SHEETS CS-01 AND CS-02.
3. TRAFFIC ON SR I SHALL OPERATE UNDER TA-33, STATIONARY LANE CLOSURE ON A MULTI-LANE, DIVIDED HIGHWAY. PROVIDE A BICYCLE AND PEDESTRIAN DETOUR (INCLUDING A TEMPORARY CURB RAMP) WITHIN SR I AS SHOWN ON THIS SHEET. NO WORK OR EQUIPMENT SHALL ENCROACH INTO THE BICYCLE AND PEDESTRIAN DETOUR FACILITY. SITE ACCESS SHALL BE FROM SHADY ROAD WHEN THE DETOUR IS OPERATIONAL. M.O.T. DEVICES SHALL BE REMOVED AND TRAFFIC SHALL BE RESTORED AT THE END OF EACH WORK DAY.
4. CONSTRUCT PROPOSED ENTRANCES, INCLUDING SIDEWALK, CURB AND DRAINAGE, ON SR I.
5. STABILIZE ALL DISTURBED AREAS WITH TOPSOIL, SEED AND MULCH PRIOR TO REMOVAL OF SEDIMENT CONTROL DEVICES.

Unofficial Website Copy

N:\90181\019\CAD\Highway\CP01-90181004H12-03.dgn
10/28/2015 9:52:29 AM

DELAWARE DEPARTMENT OF TRANSPORTATION	ADDENDUMS / REVISIONS	SCALE 0 30 60 90 FEET	LEWES PARK & RIDE AND SITE WORK	CONTRACT T200612502 / COUNTY SUSSEX	BRIDGE NO. / DESIGNED BY: B.S.S. / CHECKED BY: T.A.O.
CONSTRUCTION PHASING AND M.O.T. – PHASE 1	H12–03	SHEET NO. 42	TOTAL SHTS. 72		

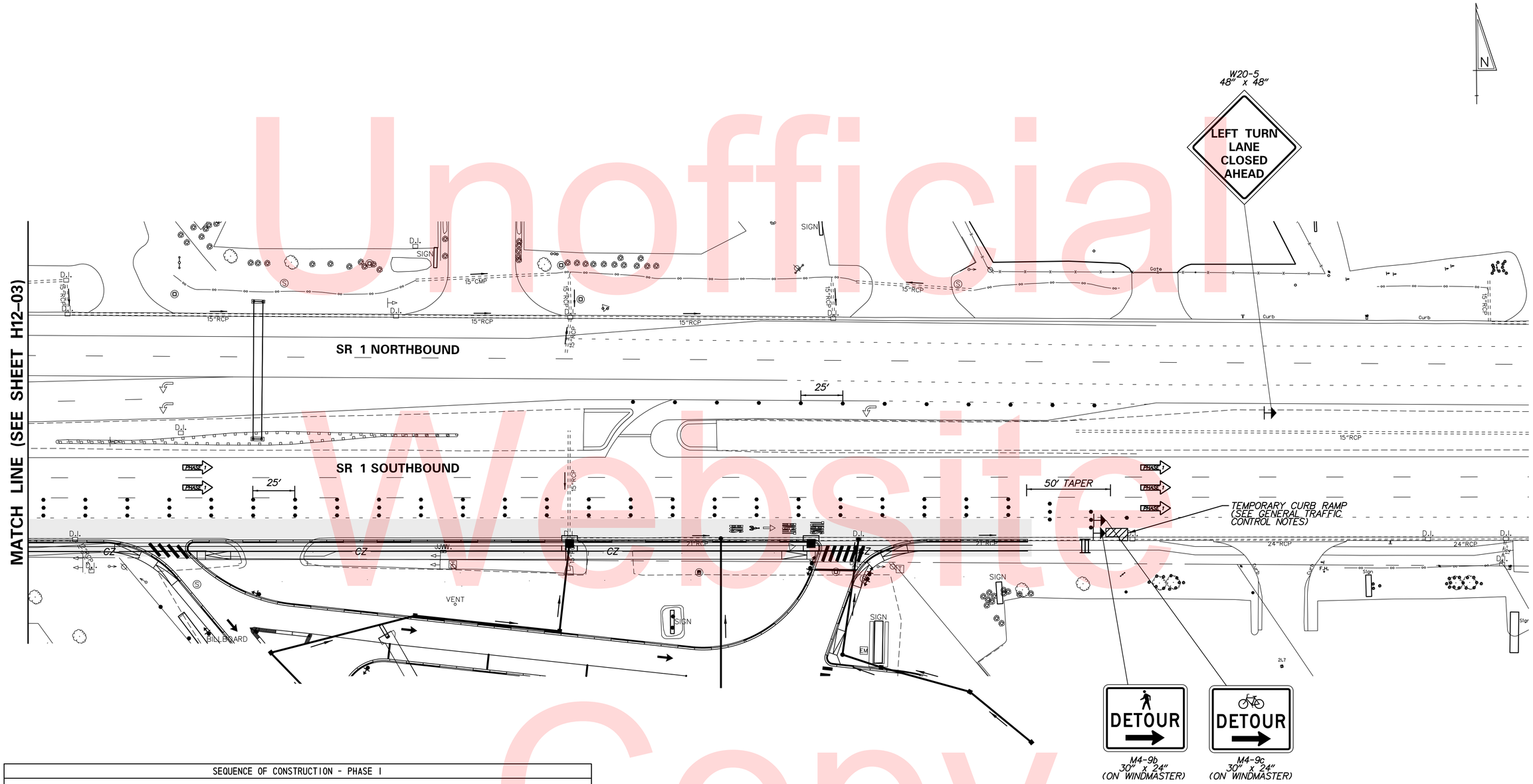

Unofficial Website Copy

SEQUENCE OF CONSTRUCTION - PHASE I
(1) PLACE ALL PERTINENT TRAFFIC CONTROL DEVICES FOR PHASE I AS SHOWN ON THIS PLAN AND THE WARNING SIGN LOCATION PLAN (SEE SHEET H12-02).
(2) INSTALL EROSION AND SEDIMENT CONTROL WORK ON SR I AS SHOWN ON SHEETS CS-01 AND CS-02.
(3) TRAFFIC ON SR I SHALL OPERATE UNDER TA-33, STATIONARY LANE CLOSURE ON A MULTI-LANE, DIVIDED HIGHWAY. PROVIDE A BICYCLE AND PEDESTRIAN DETOUR (INCLUDING A TEMPORARY CURB RAMP) WITHIN SR I AS SHOWN ON THIS SHEET. NO WORK OR EQUIPMENT SHALL ENCROACH INTO THE BICYCLE AND PEDESTRIAN DETOUR FACILITY. SITE ACCESS SHALL BE FROM SHADY ROAD WHEN THE DETOUR IS OPERATIONAL. M.O.T. DEVICES SHALL BE REMOVED AND TRAFFIC SHALL BE RESTORED AT THE END OF EACH WORK DAY.
(4) CONSTRUCT PROPOSED ENTRANCES, INCLUDING SIDEWALK, CURB AND DRAINAGE, ON SR I.
(5) STABILIZE ALL DISTURBED AREAS WITH TOPSOIL, SEED AND MULCH PRIOR TO REMOVAL OF SEDIMENT CONTROL DEVICES.

N:\90181-019\CADD\Highway\CP01-90180004H12-04.dgn
10/28/2015 9:52:52 AM

DELAWARE DEPARTMENT OF TRANSPORTATION

ADDENDUMS / REVISIONS

SCALE 0 30 60 90 FEET

LEWES PARK & RIDE AND SITE WORK

CONTRACT	BRIDGE NO.
T200612502	DESIGNED BY: B.S.S.
COUNTY	CHECKED BY: T.A.O.
SUSSEX	

CONSTRUCTION PHASING AND M.O.T. – PHASE 1

H12-04
SHEET NO. 43
TOTAL SHTS. 72

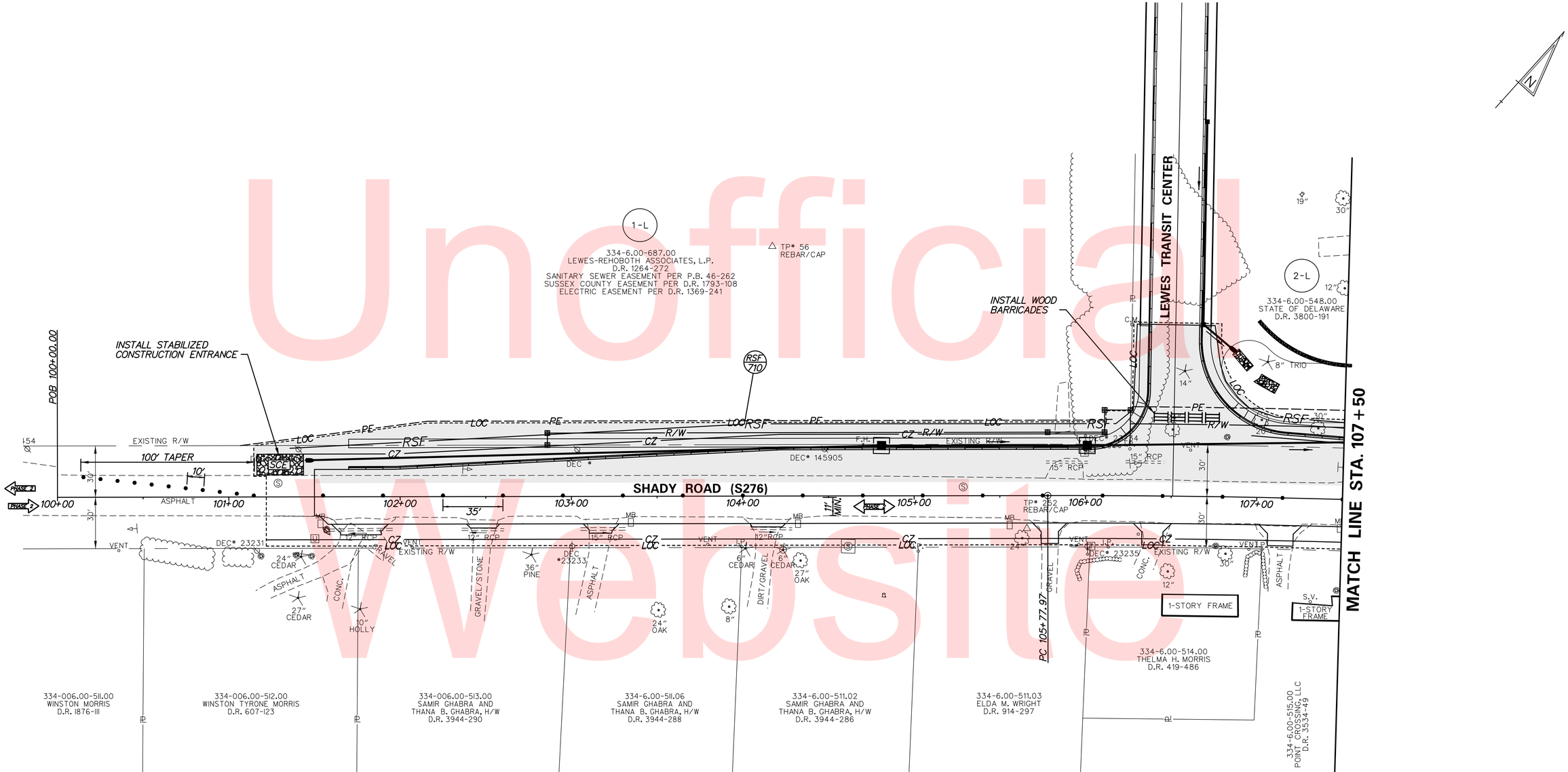

SEQUENCE OF CONSTRUCTION - PHASE 2

1. PLACE ALL PERTINENT TRAFFIC CONTROL DEVICES FOR PHASE 2 IN ACCORDANCE WITH TA-10 AND THE WARNING SIGN LOCATION PLAN (SEE SHEET H12-02).
2. INSTALL STABILIZED CONSTRUCTION ENTRANCE AND SILT FENCE AS SHOWN. COORDINATE EROSION AND SEDIMENT CONTROL WORK ON SHADY ROAD WITH ON-SITE EROSION AND SEDIMENT CONTROL WORK. REFER TO SHEETS CS-01 AND CS-02 FOR ON-SITE WORK.
3. DURING PHASE 2 WORKING HOURS, TRAFFIC ON SHADY ROAD SHALL OPERATE UNDER TA-10, LANE CLOSURE ON A TWO-LANE ROAD USING FLAGGERS. M.O.T. DEVICES SHALL BE REMOVED AND TRAFFIC SHALL BE RESTORED AT THE END OF EACH WORK DAY.
4. DURING A THREE DAY CONTINUOUS DRY WEATHER PERIOD (PER NOAA.GOV FORECAST), CLEAR AND GRUB WORK AREA AND BEGIN STORM DRAIN CONSTRUCTION. CONSTRUCT STORM DRAIN SYSTEM BEGINNING FROM THE DOWNSTREAM END AND WORK TOWARDS THE UPSTREAM END. DIVERT FLOW INTO THE PROPOSED SYSTEM PRIOR TO ROADWAY WIDENING. INSTALL INLET PROTECTION IMMEDIATELY ON NEWLY CONSTRUCTED INLETS.
5. INSTALL PROPOSED SIDEWALK, CURB, AND CURB RAMPS, AS SHOWN, BETWEEN STATION 101+45 TO STATION 110+80 LT.
6. INSTALL WOOD BARRICADES AT BOTH ACCESS POINTS TO THE PARK AND RIDE FROM SHADY ROAD. BARRIERS SHALL REMAIN UNTIL THE PARK AND RIDE IS OPEN.
7. STABILIZE ALL DISTURBED AREAS WITH TOPSOIL, SEED AND MULCH PRIOR TO REMOVAL OF SEDIMENT CONTROL DEVICES AND SWITCH TO PHASE 3.

Unofficial Website Copy

N:\90181-019\CADD\Highway\CP01-90181004H12-05.dgn
10/28/2015 9:52:34 AM

DELAWARE DEPARTMENT OF TRANSPORTATION	ADDENDUMS / REVISIONS	SCALE 0 30 60 90 FEET	LEWES PARK & RIDE AND SITE WORK	CONTRACT T200612502	BRIDGE NO.	CONSTRUCTION PHASING, M.O.T. AND EROSION CONTROL PLAN – PHASE 2	H12-05
				COUNTY SUSSEX	DESIGNED BY: D.A.D.		SHEET NO. 44
					CHECKED BY: T.A.O.		TOTAL SHTS. 72

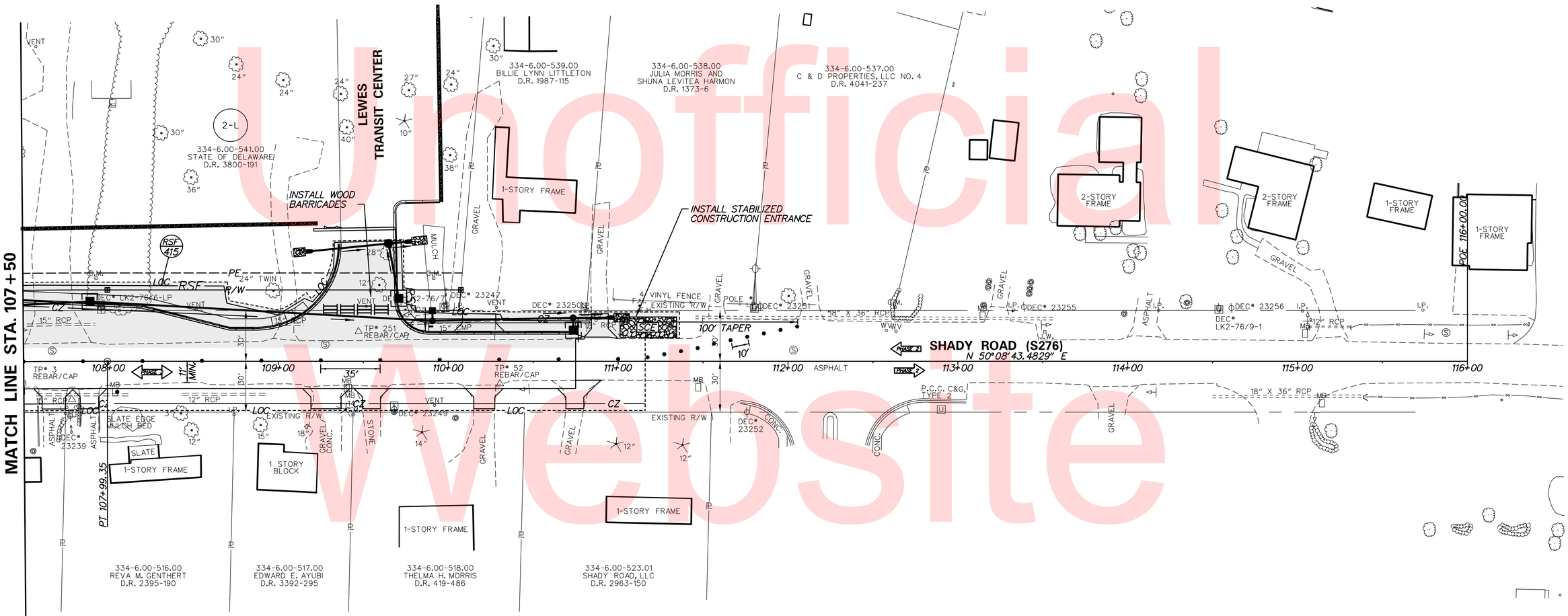

SEQUENCE OF CONSTRUCTION - PHASE 2

1. PLACE ALL PERTINENT TRAFFIC CONTROL DEVICES FOR PHASE 2 IN ACCORDANCE WITH TA-10 AND THE WARNING SIGN LOCATION PLAN (SEE SHEET H12-02).
2. INSTALL STABILIZED CONSTRUCTION ENTRANCE AND SILT FENCE AS SHOWN. COORDINATE EROSION AND SEDIMENT CONTROL WORK ON SHADY ROAD WITH ON-SITE EROSION AND SEDIMENT CONTROL WORK. REFER TO SHEETS CS-01 AND CS-02 FOR ON-SITE WORK.
3. DURING PHASE 2 WORKING HOURS, TRAFFIC ON SHADY ROAD SHALL OPERATE UNDER TA-10, LANE CLOSURE ON A TWO-LANE ROAD USING FLAGGERS. M.O.T. DEVICES SHALL BE REMOVED AND TRAFFIC SHALL BE RESTORED AT THE END OF EACH WORK DAY.
4. DURING A THREE DAY CONTINUOUS DRY WEATHER PERIOD (PER NOAA.GOV FORECAST), CLEAR AND GRUB WORK AREA AND BEGIN STORM DRAIN CONSTRUCTION. CONSTRUCT STORM DRAIN SYSTEM BEGINNING FROM THE DOWNSTREAM END AND WORK TOWARDS THE UPSTREAM END. DIVERT FLOW INTO THE PROPOSED SYSTEM PRIOR TO ROADWAY WIDENING. INSTALL INLET PROTECTION IMMEDIATELY ON NEWLY CONSTRUCTED INLETS.
5. INSTALL PROPOSED SIDEWALK, CURB, AND CURB RAMPS, AS SHOWN, BETWEEN STATION 101+45 TO STATION 110+80 LT.
6. INSTALL WOOD BARRICADES AT BOTH ACCESS POINTS TO THE PARK AND RIDE FROM SHADY ROAD. BARRIERS SHALL REMAIN UNTIL THE PARK AND RIDE IS OPEN.
7. STABILIZE ALL DISTURBED AREAS WITH TOPSOIL, SEED AND MULCH PRIOR TO REMOVAL OF SEDIMENT CONTROL DEVICES AND SWITCH TO PHASE 3.

Unofficial Website Copy

N:\90181-019\CADD\Highway\CP01-90181004H12-06.dgn
10/28/2015 9:52:36 AM

DELAWARE DEPARTMENT OF TRANSPORTATION	ADDENDUMS / REVISIONS	SCALE 0 30 60 90 FEET	LEWES PARK & RIDE AND SITE WORK	CONTRACT T200612502 / COUNTY SUSSEX	BRIDGE NO. / DESIGNED BY: D.A.D. / CHECKED BY: T.A.O.
CONSTRUCTION PHASING, M.O.T. AND EROSION CONTROL PLAN – PHASE 2	H12–06	SHEET NO. 45	TOTAL SHTS. 72		

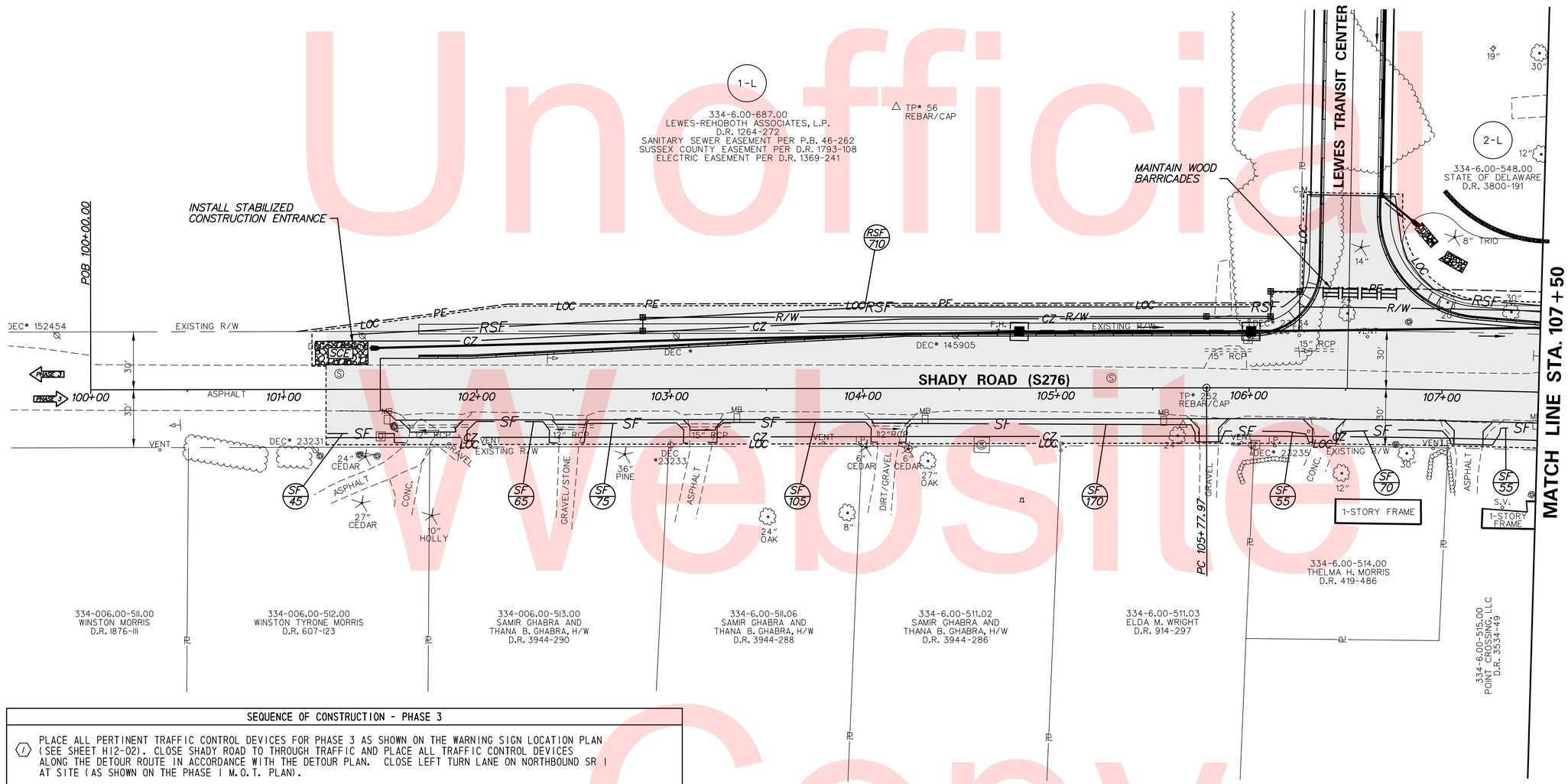

SEQUENCE OF CONSTRUCTION - PHASE 3

1. PLACE ALL PERTINENT TRAFFIC CONTROL DEVICES FOR PHASE 3 AS SHOWN ON THE WARNING SIGN LOCATION PLAN (SEE SHEET H12-02). CLOSE SHADY ROAD TO THROUGH TRAFFIC AND PLACE ALL TRAFFIC CONTROL DEVICES ALONG THE DETOUR ROUTE IN ACCORDANCE WITH THE DETOUR PLAN. CLOSE LEFT TURN LANE ON NORTHBOUND SR 1 AT SITE (AS SHOWN ON THE PHASE 1 M.O.T. PLAN).
2. MAINTAIN ACCESS TO ALL RESIDENTIAL DRIVEWAYS ON SHADY ROAD. MAINTAIN ACCESS USING TEMPORARY HOT-MIX MATERIAL (TRM). TRM SHALL BE INCIDENTAL TO ITEM 743000 - MAINTENANCE OF TRAFFIC.
3. INSTALL STABILIZED CONSTRUCTION ENTRANCES AND SILT FENCE AS SHOWN. COORDINATE EROSION AND SEDIMENT CONTROL WORK ON SHADY ROAD WITH ON-SITE EROSION AND SEDIMENT CONTROL WORK. REFER TO SHEETS CS-01 AND CS-02 FOR ON-SITE WORK.
4. EXCAVATE FOR AND INSTALL PROPOSED ROADWAY AND DRIVEWAYS, UP TO AND INCLUDING SUPERPAVE TYPE B, ON SHADY ROAD.
5. MAINTAIN WOOD BARRICADES AT BOTH SHADY ROAD ACCESS POINTS TO THE PARK AND RIDE. BARRIERS SHALL REMAIN UNTIL THE PARK AND RIDE IS OPEN.
6. STABILIZE ALL DISTURBED AREAS WITH TOPSOIL, SEED AND MULCH PRIOR TO REMOVAL OF SEDIMENT CONTROL DEVICES.

Unofficial Website Copy

N:\90181-019\CADD\Highway\CP01-90181004H12-07.dgn
10/28/2015 9:52:38 AM

DELAWARE DEPARTMENT OF TRANSPORTATION	ADDENDUMS / REVISIONS	SCALE 0 30 60 90 FEET	LEWES PARK & RIDE AND SITE WORK	CONTRACT T200612502	BRIDGE NO.	CONSTRUCTION PHASING, M.O.T. AND EROSION CONTROL PLAN – PHASE 3
				COUNTY SUSSEX	DESIGNED BY: D.A.D.	
					CHECKED BY: T.A.O.	

H12-07
SHEET NO. 46
TOTAL SHTS. 72

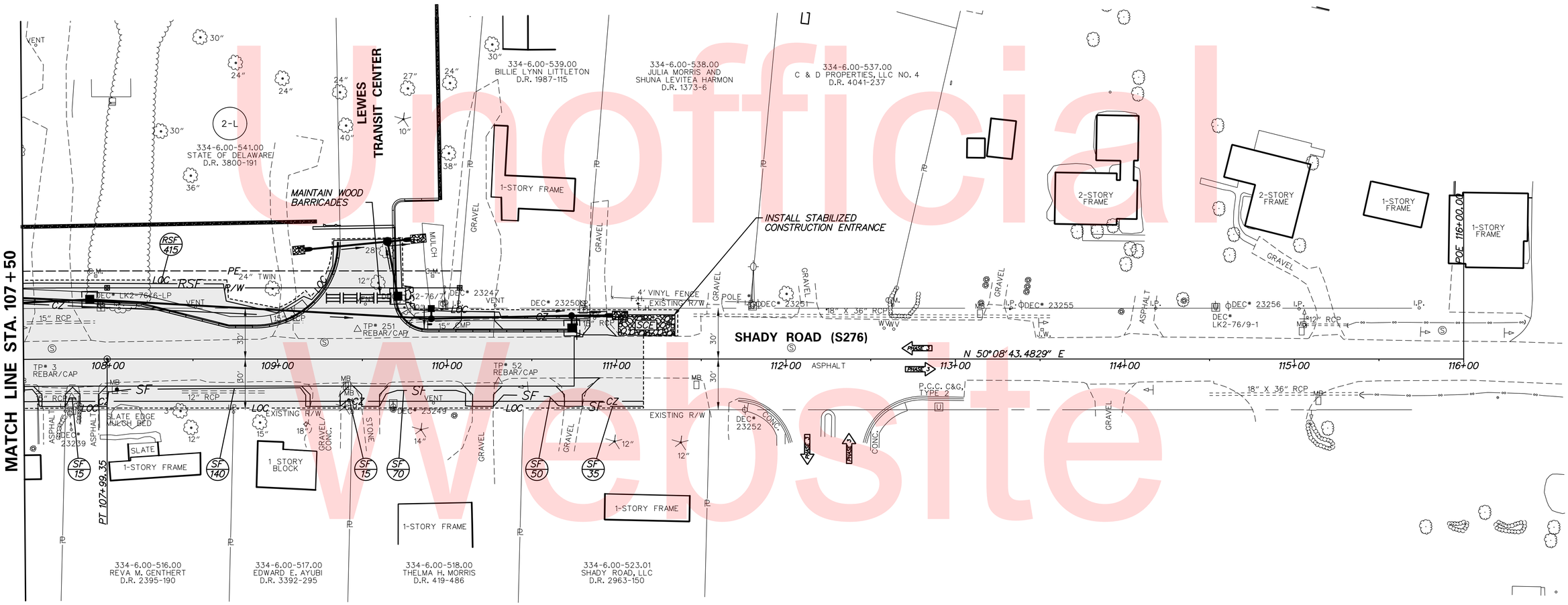

SEQUENCE OF CONSTRUCTION - PHASE 3

1. PLACE ALL PERTINENT TRAFFIC CONTROL DEVICES FOR PHASE 3 AS SHOWN ON THE WARNING SIGN LOCATION PLAN (SEE SHEET H12-02). CLOSE SHADY ROAD TO THROUGH TRAFFIC AND PLACE ALL TRAFFIC CONTROL DEVICES ALONG THE DETOUR ROUTE IN ACCORDANCE WITH THE DETOUR PLAN. CLOSE LEFT TURN LANE ON NORTHBOUND SR 1 AT SITE (AS SHOWN ON THE PHASE 1 M.O.T. PLAN).
2. MAINTAIN ACCESS TO ALL RESIDENTIAL DRIVEWAYS ON SHADY ROAD. MAINTAIN ACCESS USING TEMPORARY HOT-MIX MATERIAL (TRM). TRM SHALL BE INCIDENTAL TO ITEM 743000 - MAINTENANCE OF TRAFFIC.
3. INSTALL STABILIZED CONSTRUCTION ENTRANCES AND SILT FENCE AS SHOWN. COORDINATE EROSION AND SEDIMENT CONTROL WORK ON SHADY ROAD WITH ON-SITE EROSION AND SEDIMENT CONTROL WORK. REFER TO SHEETS CS-01 AND CS-02 FOR ON-SITE WORK.
4. EXCAVATE FOR AND INSTALL PROPOSED ROADWAY AND DRIVEWAYS, UP TO AND INCLUDING SUPERPAVE TYPE B, ON SHADY ROAD.
5. MAINTAIN WOOD BARRICADES AT BOTH SHADY ROAD ACCESS POINTS TO THE PARK AND RIDE. BARRIERS SHALL REMAIN UNTIL THE PARK AND RIDE IS OPEN.
6. STABILIZE ALL DISTURBED AREAS WITH TOPSOIL, SEED AND MULCH PRIOR TO REMOVAL OF SEDIMENT CONTROL DEVICES.

Unofficial Website Copy

N:\90181-019\CADD\Highway\CP01-90181004H12-08.dgn
10/28/2015 9:52:39 AM

DELAWARE DEPARTMENT OF TRANSPORTATION	ADDENDUMS / REVISIONS	SCALE 0 30 60 90 FEET	LEWES PARK & RIDE AND SITE WORK	CONTRACT T200612502	BRIDGE NO.	CONSTRUCTION PHASING, M.O.T. AND EROSION CONTROL PLAN – PHASE 3	H12–08
				COUNTY SUSSEX	DESIGNED BY: D.A.D.		SHEET NO. 47
					CHECKED BY: T.A.O.		TOTAL SHTS. 72

PORTABLE CHANGEABLE MESSAGE SIGNS

PRIOR TO DETOUR
(10 DAYS PRIOR TO BEGINNING OF DETOUR)

PCMS-1

SHADY RD	STARTING
TO CLOSE	MM/DD/YY

SPECIAL SIGNS

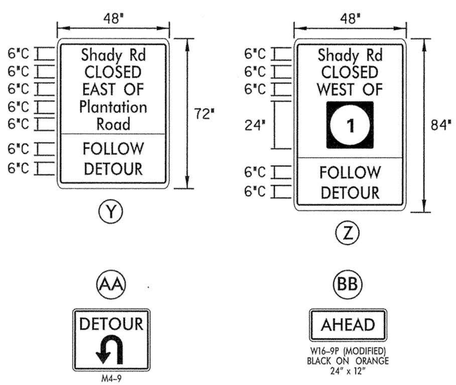

ADDITIONAL NOTES

1. CONTRACTOR SHALL AT ALL TIMES MAINTAIN LOCAL ACCESS FOR RESIDENTS WHOM RESIDE WITHIN THE CLOSURE
2. PERMANENT WARNING SIGNS SHALL BE COVERED DURING DETOUR.

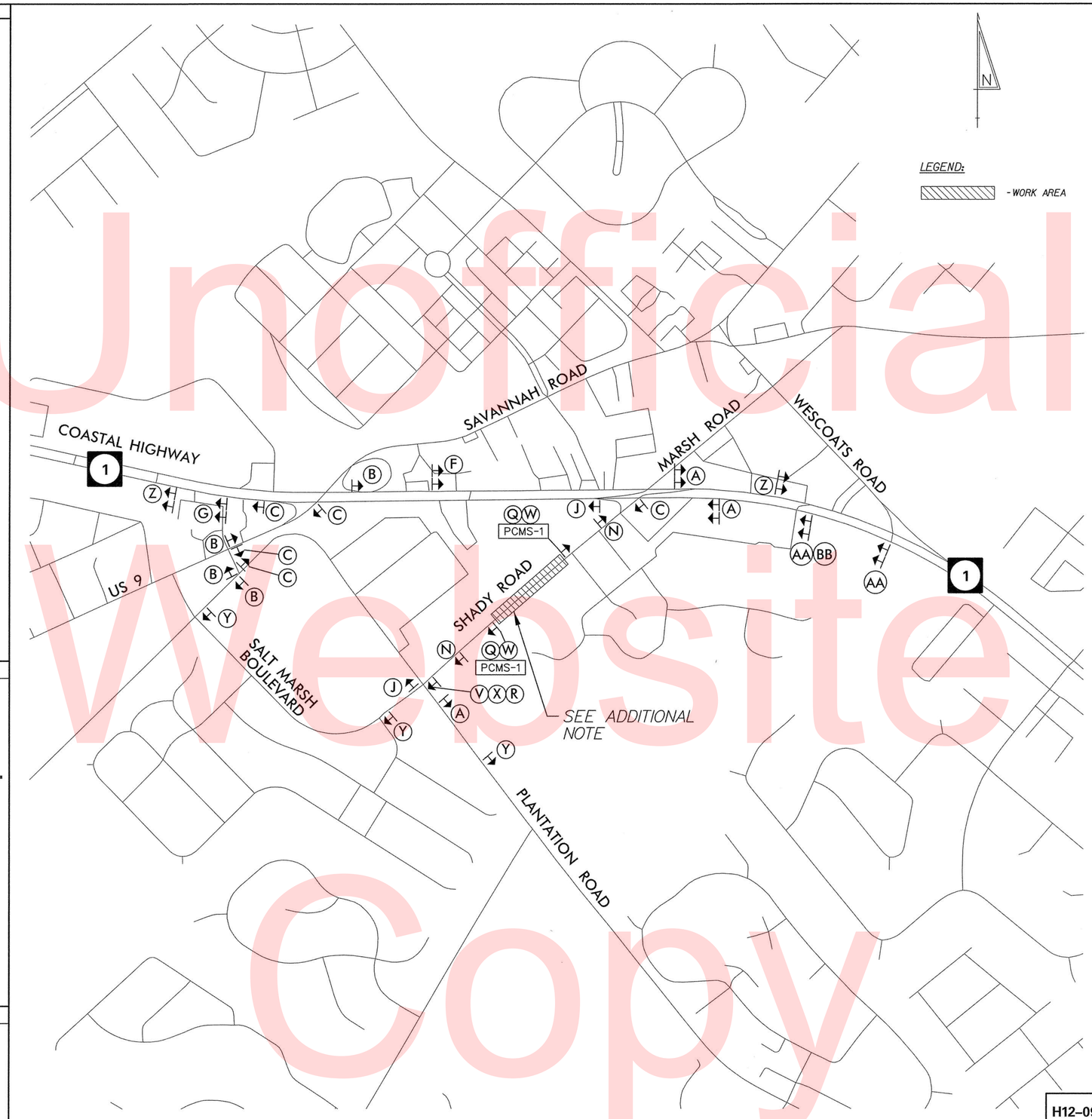

LEGEND

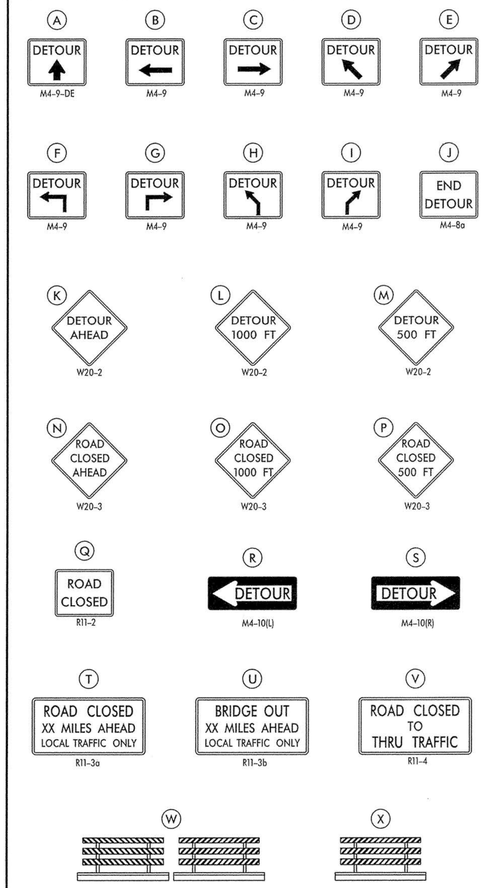

GENERAL NOTES

1. ALL DETOUR SIGNING, INCLUDING TRAILBLAZERS, ARE TO BE SUPPLIED AND MAINTAINED BY THE GENERAL CONTRACTOR IN COMPLIANCE WITH "THE DELAWARE MANUAL ON UNIFORM TRAFFIC CONTROL DEVICES" (DE MUTCD.)
2. THE CONTRACTOR SHALL COMPLY WITH GUIDELINES IN "THE DELAWARE MANUAL ON UNIFORM TRAFFIC CONTROL DEVICES" (DE MUTCD PART 6) FOR BARRICADES AND SIGNS (AS PER LATEST REVISION.)
3. DESIGN OF ALL SIGNS SHALL BE IN ACCORDANCE WITH THE FHWA STANDARD HIGHWAY SIGNS BOOK.
4. SIZES OF ALL SIGNS SHALL BE IN ACCORDANCE WITH "THE DELAWARE MANUAL ON UNIFORM TRAFFIC CONTROL DEVICES" (DE MUTCD.) SIZE OF SIGN SHALL BE BASED ON TYPE OF ROADWAY ON WHICH THE SIGN IS INSTALLED.
5. SIGNS NO LONGER IN USE SHALL BE COMPLETELY COVERED WITH NO RETROREFLECTIVE MATERIAL SHOWING, OR SHALL BE REMOVED, AS DIRECTED BY THE ENGINEER.
6. FIELD CONDITIONS MAY DICTATE CHANGES AT SOME TIME DURING THE LIFE OF THE CONTRACT. IN THE EVENT OF OMISSIONS OR CORRECTIONS, THE SIGNING PROVISIONS OF "THE DELAWARE MANUAL ON UNIFORM TRAFFIC CONTROL DEVICES" (DE MUTCD) WILL PREVAIL.
7. SIGNS "N" THROUGH "Q" AND "T" AND "V", THE WORD "ROAD" SHOULD BE CHANGED TO "RAMP", "RR XING", OR "BRIDGE" WHERE APPLICABLE.
8. WARNING SIGNS AND DETOUR TRAILBLAZERS SHALL BE MOUNTED ON BREAKAWAY POSTS AND HAVE RETROREFLECTIVE FLUORESCENT ORANGE SHEETING.
9. "W" BARRICADES SHALL COMPLETELY RUN THE FULL WIDTH OF THE ROADWAY.
10. BARRICADES SHALL BE A MINIMUM OF 6 FEET WIDE UNLESS DIRECTED BY THE ENGINEER.

Unofficial Website Copy

RECOMMENDED	DATE: 12/20/13	RECOMMENDED	DATE:	RECOMMENDED	DATE: 12-20-13	APPROVED CHIEF SAFETY OFFICER	DATE: 12-20-13	APPROVED TRAFFIC ENGINEER	DATE: 12/20/13

DELAWARE DEPARTMENT OF TRANSPORTATION	ADDENDUM / REVISIONS	NOT TO SCALE	LEWES PARK & RIDE AND SITE WORK	CONTRACT T200612502	PERMIT NO. N/A	VEHICULAR DETOUR PLAN SHADY ROAD	SHEET NO. 48
				COUNTY SUSSEX	DESIGNED BY: B.S.S.		TOTAL SHTS. 72
					CHECKED BY: D.A.D.		

PAVEMENT MARKINGS LEGEND		
SYMBOL	ITEM	QUANTITY
(A)	PERMANENT PAVEMENT STRIPING, SYMBOL/LEGEND, ALKYD-THERMOPLASTIC (ITEM 748015)	44 SF
(B)	5" SOLID DOUBLE YELLOW EPOXY RESIN PAVEMENT STRIPING (ITEM 748548)	810 LF
(D)	5" DASHED WHITE EPOXY RESIN PAVEMENT STRIPING, 2' LINE & 6' GAP (ITEM 748548)	191 LF
(E)	5" SOLID WHITE EPOXY RESIN PAVEMENT STRIPING (ITEM 748548)	1281 LF
(L)	PREFORMED RETROREFLECTIVE THERMOPLASTIC PAVEMENT MARKINGS, BIKE SYMBOL (ITEM 748553)	3 EA
(K)	16" PERMANENT PAVEMENT STRIPING, SYMBOL/LEGEND, ALKYD-THERMOPLASTIC (ITEM 748015)	19 SF
(M)	6'x2' SOLID WHITE ALKYD THERMOPLASTIC PERMANENT PAVEMENT STRIPING (ITEM 748015)	168 SF
(U)	4" SOLID DOUBLE YELLOW EPOXY RESIN PAVEMENT STRIPING (ITEM 748548)	145 LF

NOTES:
1. STOP LINES SHALL BE PLACED A MINIMUM OF 4 FEET IN ADVANCE OF THE NEAREST CROSSWALK LINE.
2. ALL CROSSWALKS SHALL HAVE 2' SPACING.

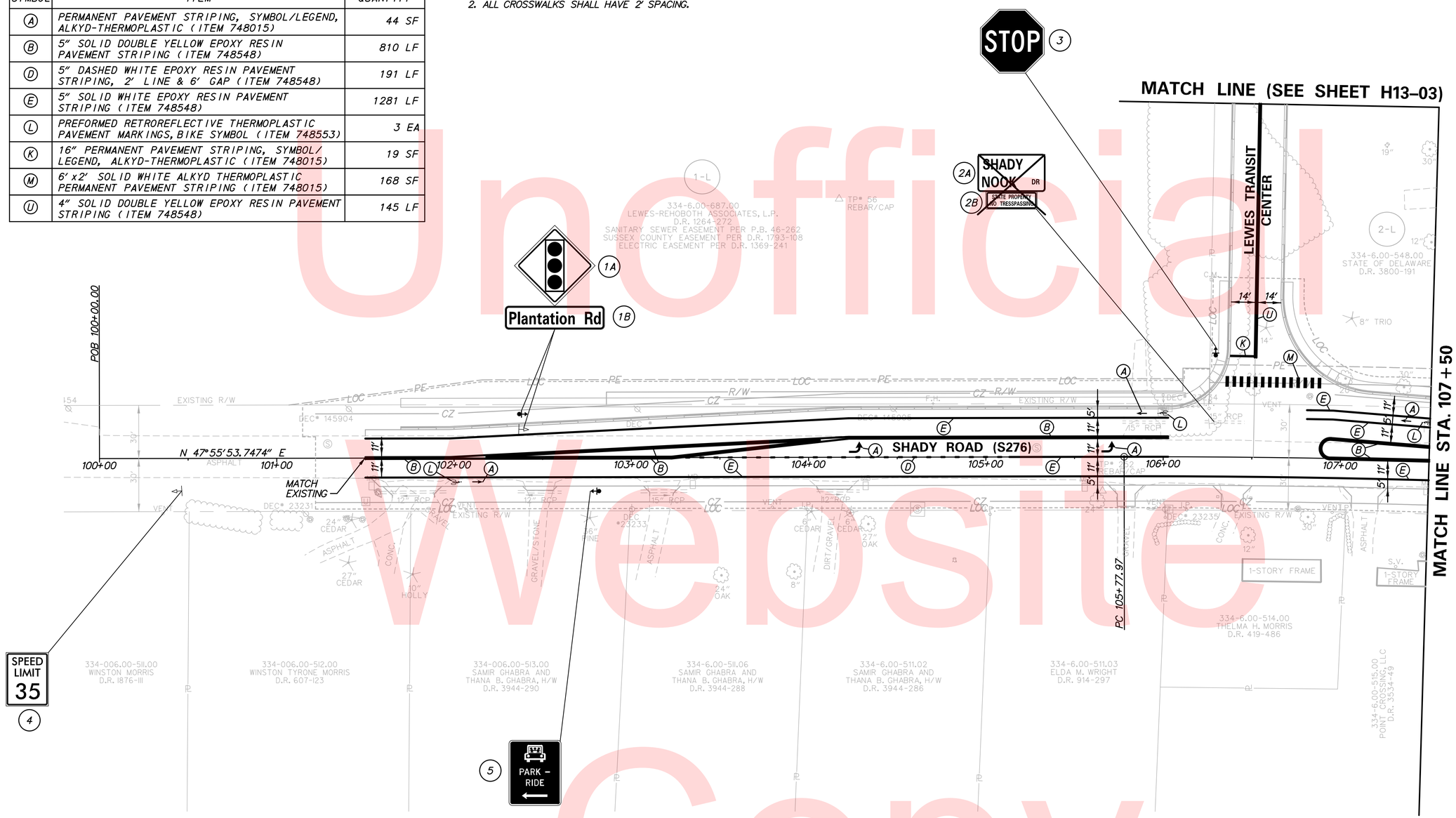

Unofficial Website Copy

N:\90181-019\CADD\Highway\CP01-90181004H13-01.dgn
10/28/2015 9:52:41 AM

DELAWARE DEPARTMENT OF TRANSPORTATION	ADDENDUMS / REVISIONS	SCALE 0 30 60 90 FEET	LEWES PARK & RIDE AND SITE WORK	CONTRACT T200612502	BRIDGE NO.	SIGNING AND STRIPING PLAN	H13-01
				COUNTY SUSSEX	DESIGNED BY: B.S.S.		SHEET NO. 49
					CHECKED BY: T.A.O.		TOTAL SHTS. 72

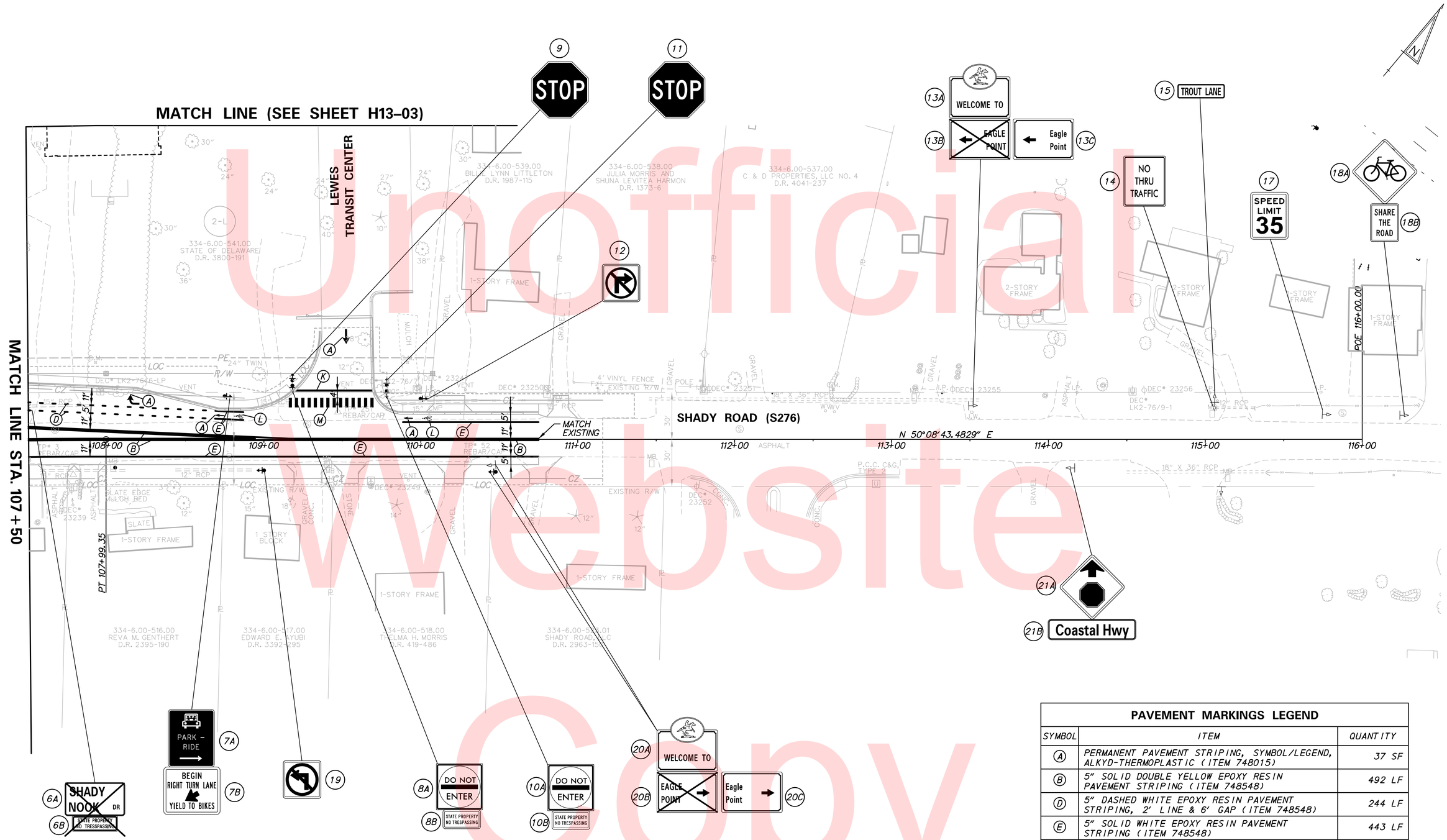

PAVEMENT MARKINGS LEGEND		
SYMBOL	ITEM	QUANTITY
A	PERMANENT PAVEMENT STRIPING, SYMBOL/LEGEND, ALKYD-THERMOPLASTIC (ITEM 748015)	37 SF
B	5" SOLID DOUBLE YELLOW EPOXY RESIN PAVEMENT STRIPING (ITEM 748548)	492 LF
D	5" DASHED WHITE EPOXY RESIN PAVEMENT STRIPING, 2' LINE & 6' GAP (ITEM 748548)	244 LF
E	5" SOLID WHITE EPOXY RESIN PAVEMENT STRIPING (ITEM 748548)	443 LF
K	16" PERMANENT PAVEMENT STRIPING, SYMBOL/LEGEND, ALKYD-THERMOPLASTIC (ITEM 748015)	66 SF
L	PREFORMED RETROREFLECTIVE THERMOPLASTIC PAVEMENT MARKINGS, BIKE SYMBOL (ITEM 748553)	2 EA
M	6'x2' SOLID WHITE ALKYD THERMOPLASTIC PERMANENT PAVEMENT STRIPING (ITEM 748015)	168 SF

NOTES:
1. STOP LINES SHALL BE PLACED A MINIMUM OF 4 FEET IN ADVANCE OF THE NEAREST CROSSWALK LINE.
2. ALL CROSSWALKS SHALL HAVE 2' SPACING.

Unofficial Website Copy

H13-02

DELAWARE DEPARTMENT OF TRANSPORTATION

ADDENDUMS / REVISIONS

SCALE 0 30 60 90 FEET

LEWES PARK & RIDE AND SITE WORK

CONTRACT	BRIDGE NO.	SIGNING AND STRIPING PLAN	SHEET NO.
T200612502	DESIGNED BY: B.S.S.		50
COUNTY	CHECKED BY: T.A.O.		TOTAL SHTS.
SUSSEX			72

N:\90181-019\CADD\Highway\CP01-90181004H13-02.dgn
10/28/2015 9:52:43 AM

PAVEMENT MARKINGS LEGEND

SYMBOL	ITEM	QUANTITY
A	PERMANENT PAVEMENT STRIPING, SYMBOL/LEGEND, ALKYD-THERMOPLASTIC (ITEM 748015)	68 SF
K	16" PERMANENT PAVEMENT STRIPING, SYMBOL/ LEGEND, ALKYD-THERMOPLASTIC (ITEM 748015)	34 SF
M	6' x 2' SOLID WHITE ALKYD THERMOPLASTIC PERMANENT PAVEMENT STRIPING (ITEM 748015)	132 SF
N	10' x 2' SOLID WHITE ALKYD THERMOPLASTIC PERMANENT PAVEMENT STRIPING (ITEM 748015)	200 SF
P	4" SOLID WHITE EPOXY RESIN PAVEMENT STRIPING (ITEM 748548)	5044 LF
S	4" SOLID YELLOW EPOXY RESIN PAVEMENT STRIPING (ITEM 748548)	86 LF
T	6' X 2' RETROREFLECTIVE PREFORMED PATTERNED MARKINGS, SYMBOL/LEGEND (TAPE)(ITEM 748529)	132 SF
U	4" SOLID DOUBLE YELLOW EPOXY RESIN PAVEMENT STRIPING (ITEM 748548)	140 LF
X	4" SOLID BLUE EPOXY RESIN PAVEMENT STRIPING (ITEM 748548)	345 LF
* Y	RETROREFLECTIVE PREFORMED PATTERNED MARKINGS, SYMBOL/LEGEND (TAPE)(ITEM 748529)	174 SF
Z	16" RETROREFLECTIVE PREFORMED PATTERNED MARKINGS, SYMBOL/LEGEND (TAPE)(ITEM 748529)	79 SF

* SEE SHEET C-401 FOR WHEELCHAIR SYMBOL DETAILS

NOTES:

1. ALL EXISTING SIGNING ALONG SR 1 SHALL REMAIN IN PLACE UNLESS OTHERWISE NOTED.
2. STOP LINES SHALL BE PLACED A MINIMUM OF 4 FEET IN ADVANCE OF THE NEAREST CROSSWALK LINE.
3. ALL CROSSWALKS SHALL HAVE 2' SPACING.
4. REMOVE EXISTING BREAKAWAY I-BEAM SIGN POSTS AND FOUNDATIONS.

NOTES:

5. INSTALL RELOCATED SIGN ON (2) W6x16 BREAKAWAY GALVANIZED STEEL BEAM SIGN SUPPORTS (L=14.5' EACH) SPACED AT 1.92'-7.5'-1.92' FROM THE RIGHT EDGE OF SIGN. INSTALL STEEL BEAM SIGN SUPPORTS ON TWO W6x16 GALVANIZED STEEL BEAM SIGN FOUNDATIONS (SEE CONSTRUCTION DETAILS). SET SIGN 7.5' ABOVE THE ROADWAY SURFACE WITH A MINIMUM 15'-0" HORIZONTAL CLEARANCE FROM THE EDGE OF ROADWAY. BREAKAWAY BASES FOR SIGN SUPPORTS SHALL BE INSTALLED IN ACCORDANCE WITH MANUFACTURER'S RECOMMENDATIONS. THE CONTRACTOR SHALL STAKEOUT SIGN LOCATION TO DETERMINE THE EXACT DIMENSIONS OF THE GALVANIZED STEEL BEAM SIGN SUPPORTS. THE CONTRACTOR SHALL SUBMIT STAKEOUT MEASUREMENTS TO THE ENGINEER FOR APPROVAL PRIOR TO FABRICATION AND INSTALLATION OF SIGN SUPPORTS.

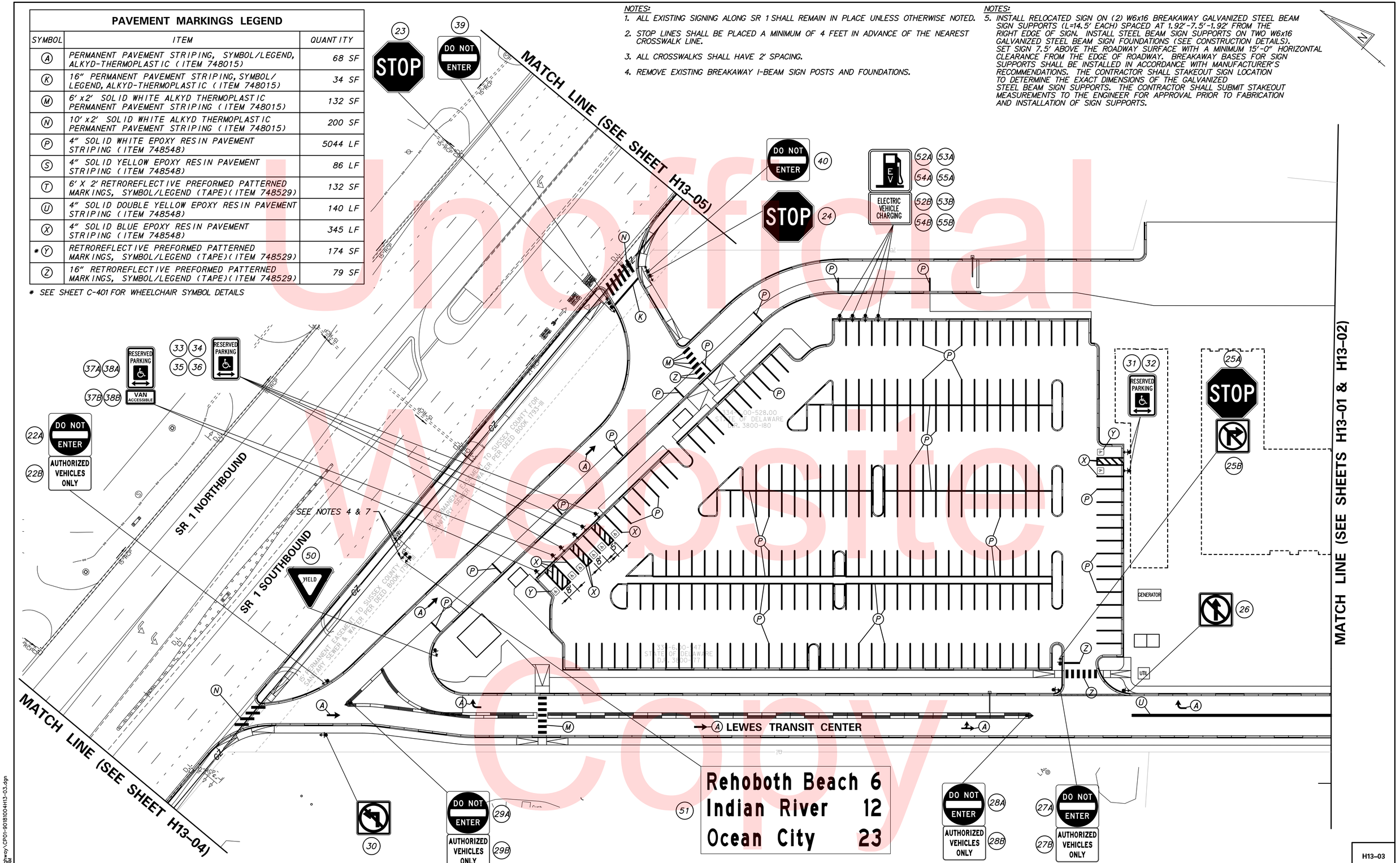

Unofficial Website Copy

N:\901B1-019\CADD\Highway\CR01-90181004H13-03.dgn
10/28/2015 9:52:44 AM

DELAWARE DEPARTMENT OF TRANSPORTATION	ADDENDUMS / REVISIONS	SCALE 0 30 60 90 FEET	LEWES PARK & RIDE AND SITE WORK	CONTRACT T200612502 / COUNTY SUSSEX	BRIDGE NO. / DESIGNED BY: B.S.S. / CHECKED BY: T.A.O.
SIGNING AND STRIPING PLAN	H13-03	SHEET NO. 51	TOTAL SHTS. 72		

NOTES:
1. ALL EXISTING SIGNING ALONG SR 1 SHALL REMAIN IN PLACE UNLESS OTHERWISE NOTED.

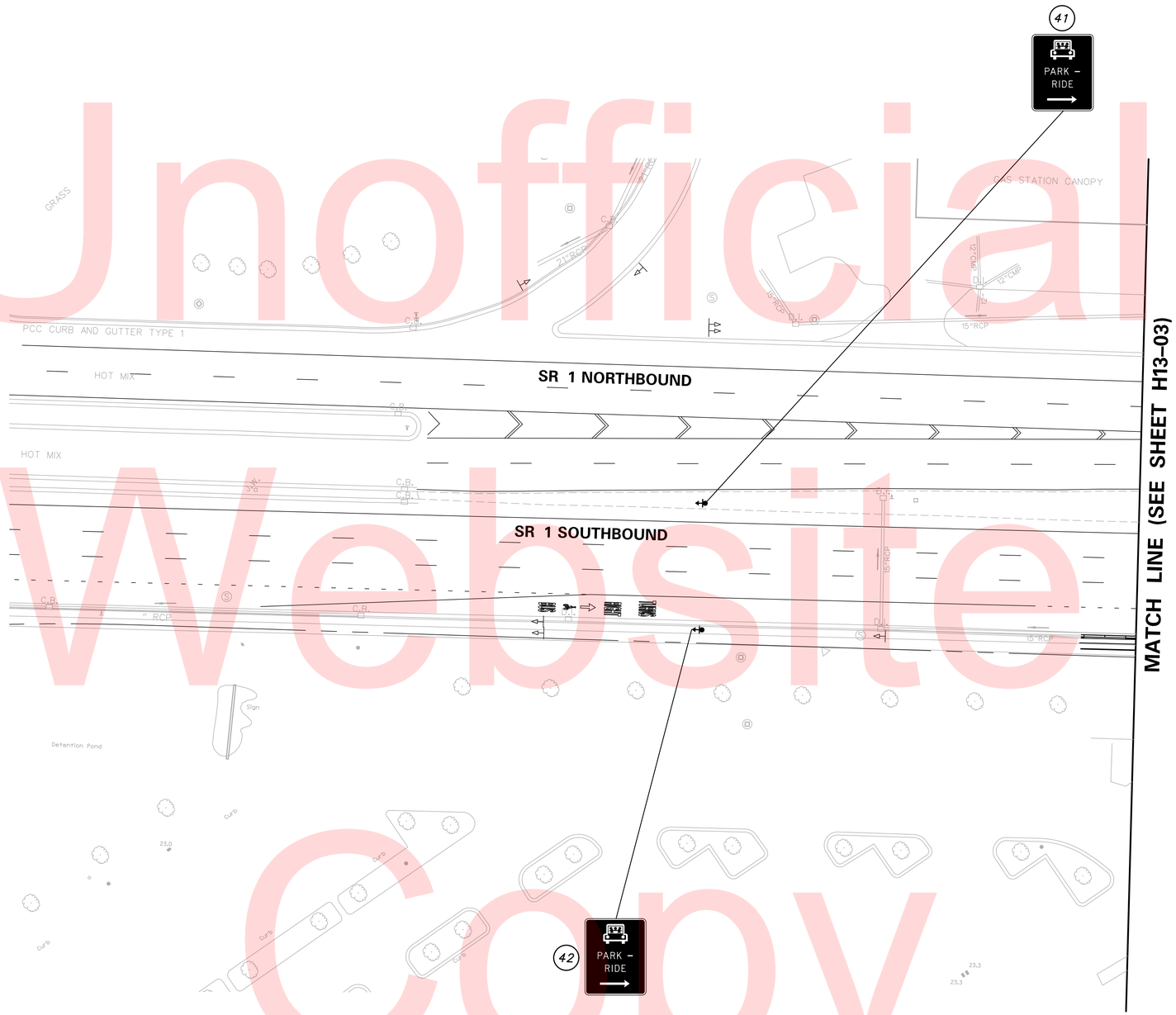

Unofficial Website Copy

N:\90181-019\CADD\Highway\CP01-90181004H13-04.dgn
10/28/2015 9:52:45 AM

DELAWARE DEPARTMENT OF TRANSPORTATION	ADDENDUMS / REVISIONS	SCALE 0 30 60 90 FEET	LEWES PARK & RIDE AND SITE WORK	CONTRACT T200612502	BRIDGE NO.	SIGNING AND STRIPING PLAN	H13-04
				COUNTY SUSSEX	DESIGNED BY: B.S.S.		SHEET NO. 52
					CHECKED BY: T.A.O.		TOTAL SHTS. 72

NOTES:
1. ALL EXISTING SIGNING ALONG SR 1 SHALL REMAIN IN PLACE UNLESS OTHERWISE NOTED.

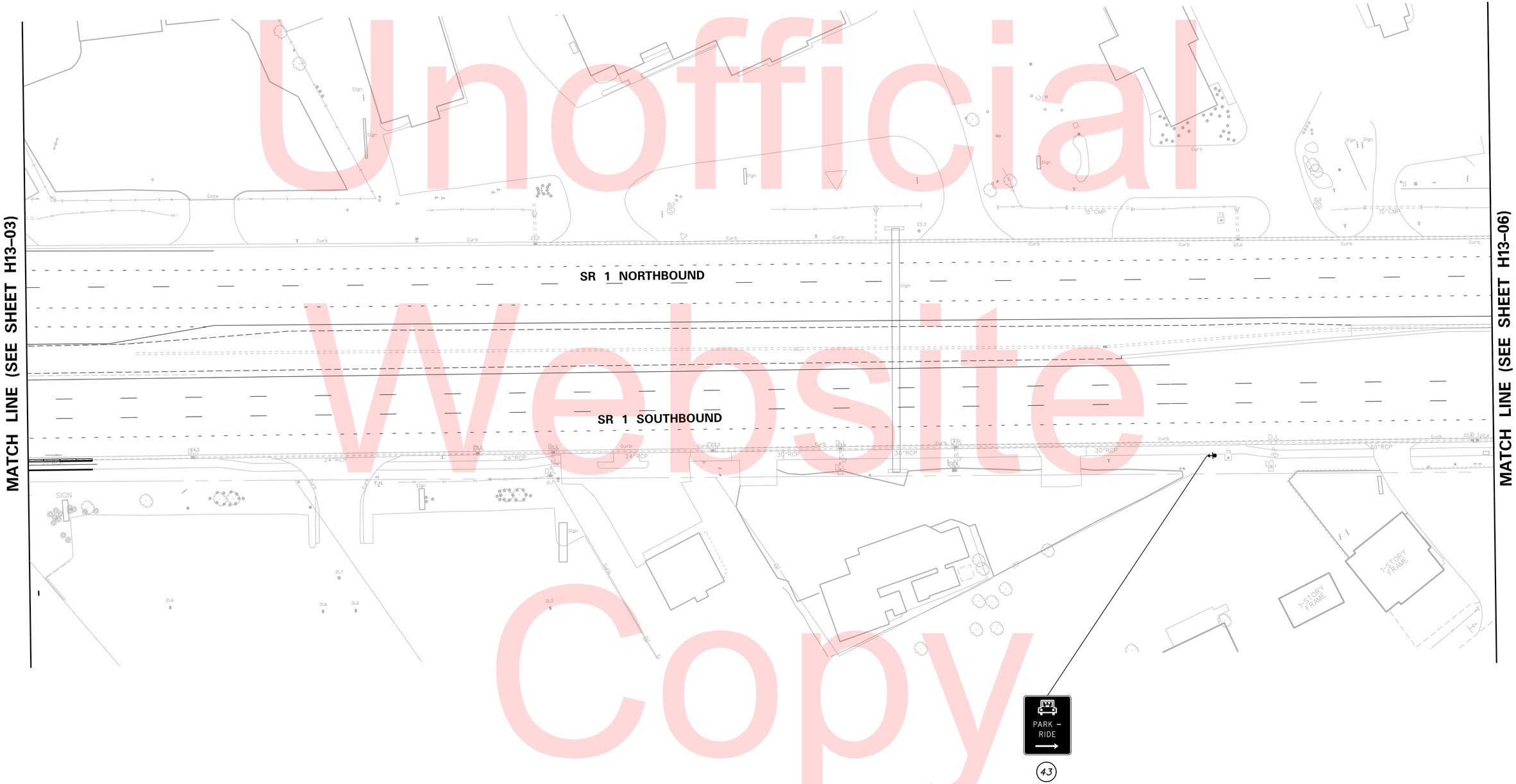

Unofficial Website Copy

N:\9018\019\CADD\Highway\CP01-9018I004H13-05.dgn
10/28/2015 9:52:47 AM

DELAWARE DEPARTMENT OF TRANSPORTATION	ADDENDUMS / REVISIONS	SCALE 0 30 60 90 FEET	LEWES PARK & RIDE AND SITE WORK	CONTRACT T200612502	BRIDGE NO.	SIGNING AND STRIPING PLAN
				COUNTY SUSSEX	DESIGNED BY: B.S.S.	
					CHECKED BY: T.A.O.	

H13-05
SHEET NO. 53
TOTAL SHTS. 72

NOTES:
1. ALL EXISTING SIGNING ALONG SR 1 SHALL REMAIN IN PLACE UNLESS OTHERWISE NOTED.

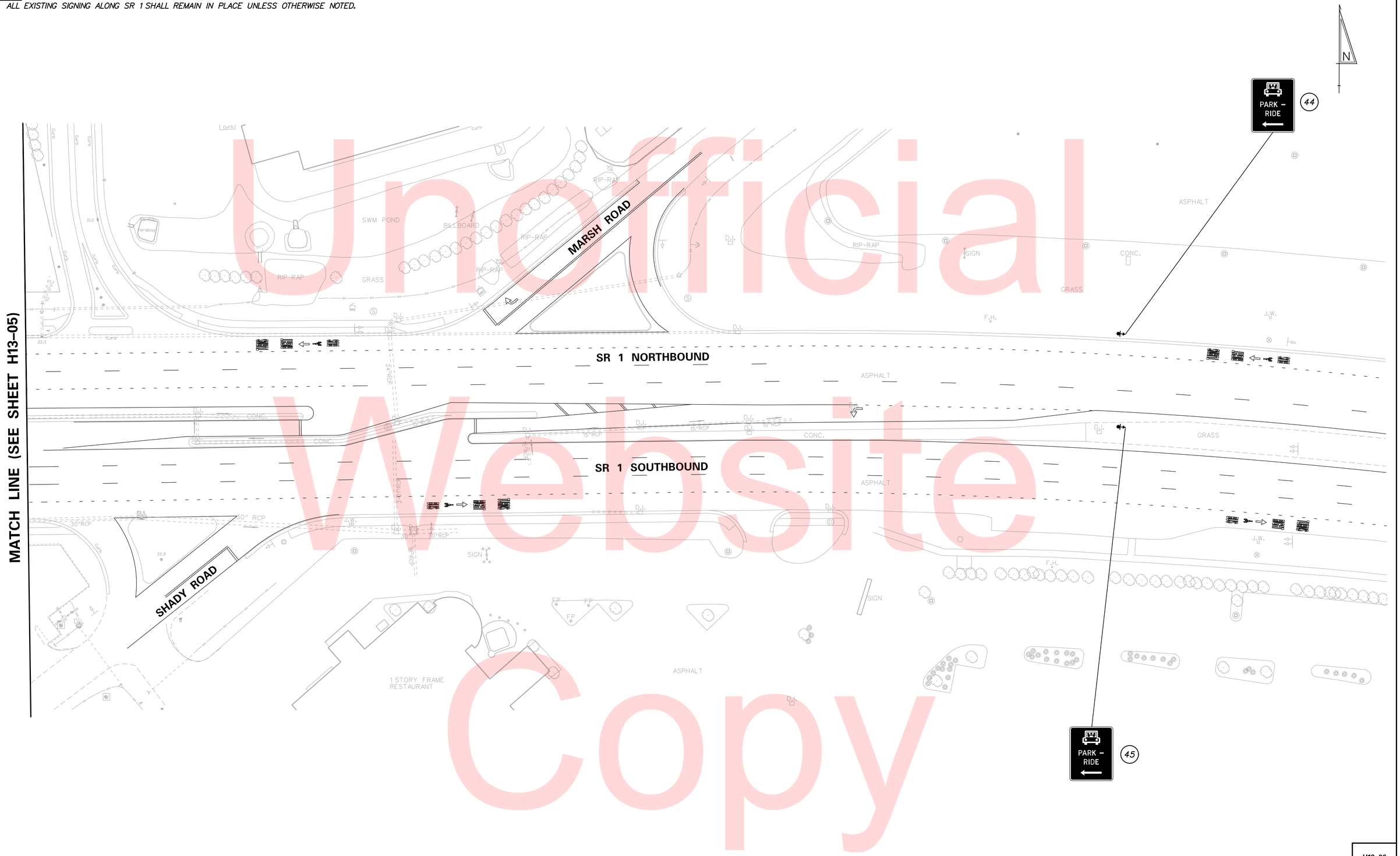

Unofficial Website Copy

N:\9018\-019\CADD\Highway\CP01-9018004H13-06.dgn
10/28/2015 9:52:48 AM

DELAWARE DEPARTMENT OF TRANSPORTATION	ADDENDUMS / REVISIONS	SCALE 0 30 60 90 FEET	LEWES PARK & RIDE AND SITE WORK	CONTRACT T200612502 / COUNTY SUSSEX	BRIDGE NO. / DESIGNED BY: B.S.S. / CHECKED BY: T.A.O.	SIGNING AND STRIPING PLAN

H13-06

SHEET NO. 54

TOTAL SHTS. 72

SIGN SCHEDULE

NO.	SHEET NO.	PLAN INDICATOR	CODE	QTY.	DESCRIPTION	ASSEMBLY NO.	SIGN WIDTH (IN)	SIGN HEIGHT (IN)	SIGN AREA (SF)	ITEM 749687 SINGLE POST (EACH)			ITEM 749690 MULTI POST (SF)			POST INSTALLATION TYPE	Code X11 12' Post (W/ Basepost)	ITEM 749688 4" HOLE, 0-6" (EACH)	ITEM 749689 4" HOLE, >6" (EACH)	REMARKS
										SIGN DISPOSTION	REMOVE	INSTALL	SIGN DISPOSTION	REMOVE	INSTALL					
	H13-01	1A			Signal Ahead (Symbol)	1				REPOSITION	1	1				SOIL	0	0	0	
	H13-01	1B			"Plantation Rd"	1				REPOSITION	1	1				SOIL	0	0	0	
	H13-01	2A			"SHADY NOOK DR"	2				REMOVE	1						0	0	0	
	H13-01	2B			STATE PROPERTY NO TRESSPASSING	2				REMOVE	1						0	0	0	
4	H13-01	3	R1-1(36)		STOP	3	36"	36"	9	NEW		1				SOIL	1	0	0	
	H13-01	4			Speed Limit (35 MPH)	4				REMAIN							0	0	0	
1691	H13-01	5	D4-2(30)		PARK & RIDE - 30x36	5	30"	36"	7.5	NEW		1				SOIL	1	0	0	
	H13-02	6A			"SHADY NOOK DR"	6				REMOVE	1						0	0	0	
	H13-02	6B			STATE PROPERTY NO TRESSPASSING	6				REMOVE	1						0	0	0	
1691	H13-02	7A	D4-2(30)		PARK & RIDE - 30x36	7	30"	36"	7.5	NEW		1				SOIL	1	0	0	
305	H13-02	7B	R4-4-DE		RIGHT TURNS YIELD TO BIKE	7	36"	30"	7.5	NEW		1				SOIL		0	0	
358	H13-02	8A	R5-1(30)		DO NOT ENTER - 30x30	8	30"	30"	6.25	NEW		1				SOIL	1	0	0	
693	H13-02	8B	SR1-15-DE		STATE PROPERTY NO TRESPASSING	8	24"	12"	2	NEW		1				SOIL		0	0	
4	H13-02	9	R1-1(36)		STOP	9	36"	36"	9	NEW		1				SOIL	1	0	0	
358	H13-02	10A	R5-1(30)		DO NOT ENTER - 30x30	10	30"	30"	6.25	NEW		1				SOIL	1	0	0	
693	H13-02	10B	SR1-15-DE		STATE PROPERTY NO TRESPASSING	10	24"	12"	2	NEW		1				SOIL		0	0	
4	H13-02	11	R1-1(36)		STOP	11	36"	36"	9	NEW		1				SOIL	1	0	0	
105	H13-02	12	R3-1(24)		RIGHT TURN PROHIBITION (Symbol) - 24x24	12	24"	24"	4	NEW		1				SOIL	1	0	0	
	H13-02	13A			Welcome To (Development Sign)	13				REMAIN							0	0	0	
	H13-02	13B			Development Name	13				REMOVE	1						0	0	0	
1686	H13-02	13C	D3-2-DE2		DEVELOPMENT NAME	13	36"	24"	6	NEW		1				SOIL	0	0	0	
	H13-02	14			NO THRU TRAFFIC	14				REMAIN							0	0	0	
	H13-02	15			"TROUT LANE"	15				REMAIN							0	0	0	
	H13-02	17			Speed Limit (35 MPH)	17				REMAIN							0	0	0	
	H13-02	18A			Bicycle (Symbol)	18				REMAIN							0	0	0	
	H13-02	18B			Share the Road (Plaque)	18				REMOVE	1						0	0	0	
110	H13-02	19	R3-2(24)		LEFT TURN PROHIBITION (Symbol) - 24x24	19	24"	24"	4	NEW		1				SOIL	1	0	0	
	H13-02	20A			Wedome To (Development Sign)	20				REPOSITION	1	1				SOIL	0	0	0	
	H13-02	20B			Development Name	20				REMOVE	1						0	0	0	
1686	H13-02	20C	D3-2-DE2		DEVELOPMENT NAME	20	36"	24"	6	NEW		1				SOIL	0	0	0	
	H13-02	21A			Stop Ahead (Symbol)	21				REMAIN							0	0	0	
	H13-02	21B			"Coastal Hwy"	21				REMAIN							0	0	0	
358	H13-03	22A	R5-1(30)		DO NOT ENTER - 30x30	22	30"	30"	6.25	NEW		1				SOIL	1	0	0	
391	H13-03	22B	R5-11		AUTHORIZED VEHICLES ONLY	22	30"	24"	5	NEW		1				SOIL		0	0	
4	H13-03	23	R1-1(36)		STOP	23	36"	36"	9	NEW		1				SOIL	1	0	0	
4	H13-03	24	R1-1(36)		STOP	24	36"	36"	9	NEW		1				CONCRETE	1	0	0	
4	H13-03	25A	R1-1(36)		STOP	25	36"	36"	9	NEW		1				SOIL	1	0	0	
105	H13-03	25B	R3-1(24)		RIGHT TURN PROHIBITION (Symbol) - 24x24	25	24"	24"	4	NEW		1				SOIL		0	0	
263	H13-03	26	R3-27(24)		THRU MOVEMENT PROHIBITION (Symbol) - 24x24	26	24"	24"	4	NEW		1				SOIL	1	0	0	
358	H13-03	27A	R5-1(30)		DO NOT ENTER - 30x30	27	30"	30"	6.25	NEW		1				SOIL	1	0	0	
391	H13-03	27B	R5-11		AUTHORIZED VEHICLES ONLY	27	30"	24"	5	NEW		1				SOIL		0	0	
358	H13-03	28A	R5-1(30)		DO NOT ENTER - 30x30	28	30"	30"	6.25	NEW		1				CONCRETE	1	0	0	
391	H13-03	28B	R5-11		AUTHORIZED VEHICLES ONLY	28	30"	24"	5	NEW		1				CONCRETE			0	
					PAGE TOTALS				154.75		10	28		0	0		16	0	0	

Unofficial Website Copy

N:\90181-019\CADD\Highway\CP01-90181004H13-07.dgn
10/28/2019 9:52:49 AM

SIGN SCHEDULE

NO.	SHEET NO.	PLAN INDICATOR	CODE	QTY.	DESCRIPTION	ASSEMBLY NO.	SIGN WIDTH (IN)	SIGN HEIGHT (IN)	SIGN AREA (SF)	ITEM 749687 SINGLE POST (EACH)			ITEM 749690 MULTI POST (SF)			POST INSTALLATION TYPE	Code X11 12' Post (W/ Basepost)	ITEM 749688 4" HOLE, 0-6" (EACH)	ITEM 749689 4" HOLE, >6" (EACH)	REMARKS
										SIGN DISPOSTION	REMOVE	INSTALL	SIGN DISPOSTION	REMOVE	INSTALL					
358	H13-03	29A	R5-1(30)		DO NOT ENTER - 30x30	29	30"	30"	6.25	NEW		1				CONCRETE	1	0	0	
391	H13-03	29B	R5-11		AUTHORIZED VEHICLES ONLY	29	30"	24"	5	NEW		1				CONCRETE			0	
110	H13-03	30	R3-2(24)		LEFT TURN PROHIBITION (Symbol) - 24x24	30	24"	24"	4	NEW		1				CONCRETE	1	0	0	
428	H13-03	31	R7-8		RESERVED PARKING (Disabilities - symbols)	31	12"	18"	1.5	NEW		1				CONCRETE	1	0	0	
428	H13-03	32	R7-8		RESERVED PARKING (Disabilities - symbols)	32	12"	18"	1.5	NEW		1				CONCRETE	1	0	0	
428	H13-03	33	R7-8		RESERVED PARKING (Disabilities - symbols)	33	12"	18"	1.5	NEW		1				CONCRETE	1	0	0	
428	H13-03	34	R7-8		RESERVED PARKING (Disabilities - symbols)	34	12"	18"	1.5	NEW		1				CONCRETE	1	0	0	
428	H13-03	35	R7-8		RESERVED PARKING (Disabilities - symbols)	35	12"	18"	1.5	NEW		1				CONCRETE	1	0	0	
428	H13-03	36	R7-8		RESERVED PARKING (Disabilities - symbols)	36	12"	18"	1.5	NEW		1				CONCRETE	1	0	0	
428	H13-03	37A	R7-8		RESERVED PARKING (Disabilities - symbols)	37	12"	18"	1.5	NEW		1				CONCRETE	1	0	0	
429	H13-03	37B	R7-8P		VAN ACCESSIBLE (plaque)	37	18"	9"	1.125	NEW		1				CONCRETE			0	
428	H13-03	38A	R7-8		RESERVED PARKING (Disabilities - symbols)	38	12"	18"	1.5	NEW		1				CONCRETE	1	0	0	
429	H13-03	38B	R7-8P		VAN ACCESSIBLE (plaque)	38	18"	9"	1.125	NEW		1				CONCRETE			0	
358	H13-03	39	R5-1(30)		DO NOT ENTER - 30x30	39	30"	30"	6.25	NEW		1				SOIL	1	0	0	
358	H13-03	40	R5-1(30)		DO NOT ENTER - 30x30	40	30"	30"	6.25	NEW		1				CONCRETE	1	0	0	
8	H13-03	50	R1-2(36)		YIELD	50	36"	36"	4.5	NEW		1				CONCRETE	1	0	0	
	H13-03	51			Distance (3 Lines)	51	84"	42"	24.5				REPOSITION	24.5	24.5	SOIL	0	0	0	See sheets H8-01 and H13-03 for details.
1776	H13-03	52A	D9-11b(24)		ELECTRIC VEHICLE CHARGING (Symbol) - 24x24	52	24"	24"	4	NEW		1				CONCRETE	1	0	0	
1778	H13-03	52B	D9-11bP(24)		ELECTRIC VEHICLE CHARGING (plaque) - 24x18	52	24"	18"	3	NEW		1				CONCRETE			0	
1776	H13-03	53A	D9-11b(24)		ELECTRIC VEHICLE CHARGING (Symbol) - 24x24	53	24"	24"	4	NEW		1				CONCRETE	1	0	0	
1778	H13-03	53B	D9-11bP(24)		ELECTRIC VEHICLE CHARGING (plaque) - 24x18	53	24"	18"	3	NEW		1				CONCRETE			0	
1776	H13-03	54A	D9-11b(24)		ELECTRIC VEHICLE CHARGING (Symbol) - 24x24	54	24"	24"	4	NEW		1				CONCRETE	1	0	0	
1778	H13-03	54B	D9-11bP(24)		ELECTRIC VEHICLE CHARGING (plaque) - 24x18	54	24"	18"	3	NEW		1				CONCRETE			0	
1776	H13-03	55A	D9-11b(24)		ELECTRIC VEHICLE CHARGING (Symbol) - 24x24	55	24"	24"	4	NEW		1				CONCRETE	1	0	0	
1778	H13-03	55B	D9-11bP(24)		ELECTRIC VEHICLE CHARGING (plaque) - 24x18	55	24"	18"	3	NEW		1				CONCRETE			0	
1691	H13-04	41	D4-2(30)		PARK & RIDE - 30x36	41	30"	36"	7.5	NEW		1				SOIL	1	0	0	
1691	H13-04	42	D4-2(30)		PARK & RIDE - 30x36	42	30"	36"	7.5	NEW		1				SOIL	1	0	0	
1691	H13-05	43	D4-2(30)		PARK & RIDE - 30x36	43	30"	36"	7.5	NEW		1				SOIL	1	0	0	
1691	H13-06	44	D4-2(30)		PARK & RIDE - 30x36	44	30"	36"	7.5	NEW		1				SOIL	1	0	0	
1691	H13-06	45	D4-2(30)		PARK & RIDE - 30x36	45	30"	36"	7.5	NEW		1				SOIL	1	0	0	
PAGE TOTALS									136.5		0	29		24.5	24.5		22	0	0	
JOB TOTALS									291.25		10	57		24.5	24.5		38	0	0	

Unofficial Website Copy

LEGEND

LIGHTING

- n2 3 / n2 3 — FLUORESCENT LIGHTING FIXTURE (LOWER CASE LETTER WITH NUMBER INDICATES SWITCH OR OCCUPANCY SENSOR USED TO CONTROL FIXTURE, NUMBER INDICATES CIRCUIT)
- n2 3 — FLUORESCENT INDUSTRIAL TYPE LIGHTING FIXTURE (LOWER CASE LETTER WITH NUMBER INDICATES SWITCH OR OCCUPANCY SENSOR USED TO CONTROL FIXTURE, NUMBER INDICATES CIRCUIT)
- 8 r3 — WALL MOUNTED LIGHTING FIXTURE (LOWER CASE LETTER WITH NUMBER INDICATES SWITCH OR OCCUPANCY SENSOR USED TO CONTROL FIXTURE, NUMBER INDICATES CIRCUIT)
- 8 r3 — DOWN-LIGHT LIGHTING FIXTURE (LOWER CASE LETTER WITH NUMBER INDICATES SWITCH OR OCCUPANCY SENSOR USED TO CONTROL FIXTURE, NUMBER INDICATES CIRCUIT)
- 7 7 — EXIT LIGHTING FIXTURE, ARROW, INDICATES DIRECTION (NUMBER INDICATES CIRCUIT)
- 3 — EMERGENCY BATTERY POWERED LIGHTING UNIT (NUMBER INDICATES CIRCUIT)
- A — LIGHTING FIXTURE TYPE SYMBOL (SEE LIGHTING FIXTURE SCHEDULE)

SWITCHES

- S — SINGLE POLE SWITCH, 20A, 120-277V
- S_3 — THREE WAY SWITCH, 20A, 120-277V
- S_4 — FOUR WAY SWITCH, 20A, 120-277V
- S_{a1} — SINGLE POLE SWITCH, 20A, 120-277V, (LOWER CASE LETTER WITH NUMBER WHEN USED INDICATES FIXTURES CONTROLLED)
- $S_{Lv-\bullet}$ — LOW VOLTAGE SWITCH, SUBSCRIPT WHEN USED INDICATES QUANTITY OF BUTTON/ZONES TO BE PROVIDED
- S_T — SINGLE POLE TIMERSWITCH, 20A, 120-277V
- S_{OC} — SWITCH WITH OCCUPANCY SENSOR, 20A, 120-277V
- C — LIGHTING CONTACTOR (X POLE) 277V
- PUSH BUTTON
- PC — PHOTO CELL
- MS — MOTION SENSOR
- OS 3 — OCCUPANCY SENSOR. PROVIDE POWER PACK AS REQUIRED (LOWER CASE LETTER WITH NUMBER WHEN USED INDICATES FIXTURES CONTROLLED.)
- OS 2 — HALLWAY OCCUPANCY SENSOR. PROVIDE POWER PACK AS REQUIRED (LOWER CASE LETTER WITH NUMBER WHEN USED INDICATES FIXTURES CONTROLLED.)

RECEPTACLES

- SINGLE RECEPTACLE, 20A, 125V AC. MOUNT 1'-6" AFF (UON)
- TRACK LIGHTING RECEPTACLE, 15A, 125V AC. MOUNT 8'-0" AFF (UON)
- DUPLEX CONVENIENCE RECEPT., 20A, 125V AC, MOUNT 1'-6" AFF (UON)
- G — DUPLEX CONVENIENCE RECEPTACLE 20A, 125V AC. SUBSCRIPT "G" INDICATES GFI TYPE, MOUNT 18" AFF (UON)
- $+$ — RECEPTACLE, SUBSCRIPT "+" INDICATES MOUNT 6" ABOVE COUNTER
- G — DUPLEX CONVENIENCE RECEPTACLE 20A, 125V AC. SUBSCRIPT "G" INDICATES GFI TYPE, MOUNT 12" ABOVE COUNTER (UON)
- DOUBLE DUPLEX CONVENIENCE RECEPTACLE 20A, 125V AC. MOUNT 18" AFF (UON)
- SPECIAL PURPOSE RECEPTACLE 20A OR 30A OR 50A, 3P, 4W, 480V AC. MOUNT 48" AFF (UON)
- SPECIAL PURPOSE RECEPTACLE 20A OR 30A OR 50A, 3P, 4W, 208V AC. MOUNT 48" AFF (UON)
- C — FLUSH CEILING MOUNTED DUPLEX RECEPTACLE. 20A, 125V
- C — FLUSH CEILING MOUNTED DOUBLE DUPLEX RECEPTACLE. 20A, 125V

SAFETY SWITCHES/BREAKERS/STARTERS

- 60/3 — NON-FUSED DISCONNECT SWITCH, SUBSCRIPT INDICATES AMPACITY AND NUMBER OF POLES. ALL NON-FUSED DISCONNECT SWITCHES SHALL BE 3 POLE, 30AMPS UON.
- F 15/3 — FUSED DISCONNECT SWITCH, SUBSCRIPT INDICATES FUSED SIZE AND NUMBER OF POLES. ALL FUSED DISCONNECT SWITCHES SHALL BE RATED EQUAL TO OR GREATER GREATER THAN THE FUSE INDICATED.
- 2 — MAGNETIC MOTOR STARTER, SUBSCRIPT INDICATES NEMA SIZE 2, NEMA SIZE 1 STARTER UON
- 2 60/3 — MAGNETIC MOTOR STARTER, SUBSCRIPT INDICATES NEMA SIZE 2, 60 = SWITCH SIZE AND 3 = NO. OF POLES. ALL COMBINATION STARTERS SHALL BE 30AMPS, 3 POLE WITH NEMA SIZE 1 STARTER UON
- S_M — MANUAL MOTOR STARTER SWITCH WITH OVERLOAD. PROVIDE HOA AS REQUIRED
- VFD — VARIABLE FREQUENCY DRIVE, INDIVIDUALLY MOUNTED
- SS — SOLID STATE STARTER, INDIVIDUALLY MOUNTED
- 225/200 — ENCLOSED CIRCUIT BREAKER, SIZE AS INDICATED

EQUIPMENT CONNECTIONS

- M 2 — MOTOR, NUMBER INDICATES HORSEPOWER
- H — ELECTRIC UNIT HEATER
- J J — JUNCTION BOX
- E E — EQUIPMENT CONNECTION AS NOTED
- VAV — VARIABLE AIR VOLUME BOX
- MOD — MOTOR OPERATED DAMPER
- CP — CONTROL PANEL
- FD — FUEL DISPENSER
- FMS — FUEL MANAGEMENT SYSTEM
- FTSP — FUEL TANK STATUS PANEL
- VRP — VAPOR RECOVERY PANEL

GROUNDING

- GROUND ROD, 3/4" DIAMETER x 10'-0" LONG UON
- AIR TERMINAL

FIRE ALARM SYSTEM

- FACP — FIRE ALARM CONTROL PANEL (FACP)
- FARP — FIRE ALARM RELEASING PANEL (FARP)
- NAC — FIRE ALARM NOTIFICATION APPLIANCE PANEL

ACCESS CONTROL/SECURITY SYSTEM (ROUGH-IN ONLY, PROVIDE BACKBOX AND RACEWAY)

- E — EMERGENCY DOOR RELEASE
- CA — CARD ACCESS TERMINAL
- DC — MAGNETIC DOOR CONTACT
- MD — MOTION DETECTOR
- ES — ELECTRIC STRIKE
- PC — PERSONAL COMPUTER
- PR — PRINTER
- VR — VIDEO RECORDER
- M — MONITOR
- CAMERA
- SSCP — SECURITY SYSTEM CONTROL PANEL
- RE — REQUEST TO EXIT

UNDERGROUND/SITE WORK

- EXISTING HANDHOLE/MANHOLE
- G — GROUND CONDUCTOR
- HANDHOLE/MANHOLE
- UNDERGROUND CONCRETE ENCASED DUCTBANK
- UNDERGROUND DIRECT BURIED DUCTBANK
- EXISTING DUCT BANK TO BE REMOVED
- MH — MANHOLE
- HH — HANDHOLE

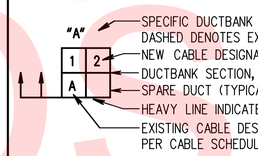

TELEPHONE/ DATA (ROUGH-IN ONLY, PROVIDE BACKBOX AND RACEWAY)

- TELEPHONE CABINET
- W — TELEPHONE OUTLET ROUGH-IN IN WALL, 4" BOX WITH DOUBLE GAUGE RING, MOUNT 48" AFF UON. PROVIDE 1"C TO RACK IN ROOM 117 (NORTH BLDG.) AND ROOM 213 (SOUTH BLDG.).
- TELEPHONE/DATA OUTLET ROUGH-IN IN WALL, 4" BOX WITH DOUBLE GANG RING, MOUNT 18" AFF UON. PROVIDE 1"C TO RACK IN ROOM 117 (NORTH BLDG.) AND ROOM 213 (SOUTH BLDG.).

EMERGENCY SYSTEM

- G — GENERATOR
- ATS — AUTOMATIC TRANSFER SWITCH

WIRING

- HPA-1,3,5 — BRANCH CIRCUIT HOMERUN TO PANELBOARD, HPA DENOTES TO PANEL HPA AND NUMERALS IDENTIFY CIRCUIT NUMBERS.
- CONDUIT WITH WIRES, #12 AWG IN 3/4"C. UNLESS OTHERWISE NOTED, NUMBER OF CONDUCTORS AS REQUIRED. PROVIDE SEPARATE NEUTRALS FOR ALL SINGLE PHASE CIRCUITS.
- OR — BRANCH CIRCUIT OR FEEDER WIRING IN CONDUIT. INDICATES 2#12 CONDUCTORS AND 1#12 GROUND IN A 3/4"C (UON) FOR SINGLE PHASE BRANCH CIRCUITS AND 3#12 CONDUCTORS AND 1#12 GROUND IN A 3/4"C (UON) FOR 3 PHASE BRANCH CIRCUITS.
- INDICATES A CONDUIT RUN CONCEALED IN CEILING, WALL, FLOOR, OR ABOVE SUSPENDED CEILING (UON)
- EXPOSED CONDUIT RUN AS INDICATED.
- CONDUIT TURNED UP
- CONDUIT TURNED DOWN
- G — GROUNDING CONDUCTOR (BCSD)
- RACEWAY WITH SEALING FITTING
- CABLE TRAY

PANELBOARDS

- ELECTRICAL PANELBOARD
- ELECTRICAL PANELBOARD (208Y/120V, 4W+G)
- ELECTRICAL PANELBOARD (480Y/277V, 4W+G)

MISCELLANEOUS

- 1 — SPECIFIC NOTE NUMBER
- 1 — FEEDER SIZE
- SECTION NUMBER / DRAWING NUMBER WHERE SHOWN
- DETAIL NUMBER / DRAWING NUMBER WHERE SHOWN

Unofficial Website Copy

ABBREVIATIONS

A	AMPERES
AC	ALTERNATING CURRENT
AFF	ABOVE FINISHED FLOOR
AFG	ABOVE FINISHED GRADE
AHU	AIR HANDLING UNIT
AIC	AMPERES INTERRUPTING CAPACITY, (SYM, RMS AMPS)
AL	ALUMINUM
ANNUN	ANNUNCIATOR
AS	AMMETER SWITCH
ATC	AUTOMATIC TEMPERATURE CONTROL
ATS	AUTOMATIC TRANSFER SWITCH
AUTO	AUTOMATIC
AUX	AUXILIARY
AWG	AMERICAN WIRE GAUGE
BCSD	BARE COPPER SOFT DRAWN
BFC	BELOW FINISHED CEILING
BFI	BLOWN FUSE INDICATOR
BFF	BELOW FINISHED FLOOR
BFG	BELOW FINISHED GRADE
BLDG	BUILDING
BKR	BREAKER
C	CONDUIT
CB	CIRCUIT BREAKER
CC1	POWER/CONTROL/INSTRUMENTATION CABLE RUN NUMBER AS INDICATED.
CKT	CIRCUIT
COMB	COMBINATION
CLG	CEILING
CP	CONTROL PANEL
CPT	CONTROL POWER TRANSFORMER
CT	CURRENT TRANSFORMER
CU	COPPER
CX	CONNECT TO EXISTING
CCTV	CLOSED CIRCUIT TELEVISION
DAS	DATA ACQUISITION SYSTEM
DC	DIRECT CURRENT
O/D	OUTDOOR
DISC	DISCONNECT
DN	DOWN
DP	DISTRIBUTION PANEL
DPC	DISTRIBUTED PROCESS CONTROLLER
DWG	DRAWING
EA	EACH
EC	EMPTY CONDUIT
ECD	ELEMENTARY CONTROL DIAGRAM
EF	EXHAUST FAN
EH	ELECTRIC HEATER
ELEV	ELEVATION
EMERG.	EMERGENCY
EMH	ELECTRIC MANHOLE
EMT	ELECTRIC METALLIC TUBING
ENCL	ENCLOSURE
E/O	ELECTRICALLY/OPERATED
EQUIP	EQUIPMENT
ETM	ELAPSED TIME METER
ETR	EXISTING TO REMAIN
EUH	ELECTRIC UNIT HEATER
EWC	ELECTRIC WATER COOLER
EWH	ELECTRIC WATER HEATER
EX,EXIST	EXISTING
EXP	EXPLOSION PROOF
F	FUSE
FA	FRAME AMPS
FA	FIRE ALARM
FAAP	FIRE ALARM ANNUNCIATOR PANEL
FACP	FIRE ALARM CONTROL PANEL
FBO	FURNISHED BY OTHERS UNDER SEPARATE CONTRACT
FC	FAN COIL UNIT
FDR	FEEDER
FL	FLOOR
FLEX	FLEXIBLE
FMC	FLEXIBLE METAL CONDUIT
FS	FLOW SWITCH
FSS	FUSED SAFETY SWITCH
FT	FOOT OR FEET
FVNR	FULL VOLTAGE NON-REVERSING
FVR	FULL VOLTAGE REVERSING
G	GROUND
GFI	GROUND FAULT INTERRUPTER
GFCI	GOVERNMENT FURNISHED CONTRACTOR INSTALLED
GFGI	GOVERNMENT FURNISHED GOVERNMENT INSTALLED
GFP	GROUND FAULT PROTECTION
HID	HIGH INTENSITY DISCHARGE
HH	HANDHOLE
HOA	HAND OFF AUTOMATIC
HP	HORSEPOWER
HPS	HIGH PRESSURE SODIUM
HTR	HEATER
HV	HIGH VOLTAGE
HZ	HERTZ
ICCB	INSULATED CASE CIRCUIT BREAKER
IDS	INTRUSION DETECTION SYSTEM
IMC	INTERMEDIATE METALLIC CONDUIT
JB	JUNCTION BOX
KAIC	THOUSAND AMPERES INTERRUPTING CAPACITY
KV	KILOVOLT
KVA	KILOVOLT AMPERE
LTG	LIGHTING
LO	LOCKOUT
LP	LIGHTING AND APPLIANCE PANEL
LT/FMC	LIQUID TIGHT/FLEXIBLE METAL CONDUIT
LS	LIMIT SWITCH
LSH	LEVEL SWITCH HIGH
MAFC	MAKE ALL FINAL CONNECTIONS
M/C	MULTI/CONDUCTOR
MCB	MAIN CIRCUIT BREAKER
MCCB	MOLDED CASE CIRCUIT BREAKER
MCC	MOTOR CONTROL CENTER
MCP	MOTOR CIRCUIT PROTECTOR
MH	MOUNTING HEIGHT
MHR	MOTORIZED HOSE REEL
MIN	MINIMUM
MLO	MAIN LUGS ONLY
MOD	MOTOR OPERATED DAMPER
MO	METAL OXIDE
MSP	MOTOR STARTER PANEL
MTD	MOUNTED
MTG	MOUNTING
N	NEUTRAL
NEC	NATIONAL ELECTRICAL CODE
NEMA	NATIONAL ELECTRICAL MANUFACTURER'S ASSOCIATION
NFSS	NON FUSED SAFETY SWITCH
NO	NORMALLY OPEN
NO	NUMBER
NC	NORMALLY CLOSED
NIC	NOT IN CONTRACT
NL	NIGHT LIGHT
NTS	NOT TO SCALE
OL	OVERLOAD
P	POLE OR POLES
PB	PUSH BUTTON
PH	PHASE
PL	PILOT LIGHT
PLC	PROGRAMMABLE LOGIC CONTROLLER
PNL	PANELBOARD
PS	PRESSURE SWITCH
PSH	PRESSURE SWITCH HIGH
PT	POTENTIAL TRANSFORMER
PVC	POLYVINYL CHLORIDE
RC	REMOTE CONTROL
RECEPT	RECEPTACLE
REQ'D	REQUIRED
RGS	RIGID GALVANIZED STEEL
RM	ROOM
RMS	ROOT MEAN SQUARE
RTD	RESISTANCE TEMPERATURE DETECTOR
RTU	REMOTE TERMINAL UNIT
RVAT	REDUCED VOLTAGE AUTOTRANSFORMER
RX	REMOVE EXISTING
SER.	SERVICE
SF	SUPPLY FAN
SG1-1A/P	SWGR POWER WIRE RUN NUMBER - SWGR NUMBER AND UNIT NUMBER AS INDICATED
SIC	SYMMETRICAL INTERRUPTING CURRENT
SOPN	SPACE OR POLE NUMBER
SPPS	SOUND POWERED PHONE SYSTEM
SS	STAINLESS STEEL
SS	SAFETY SWITCH
ST	SHUNT TRIP
STA	STATION
STP	SHIELDED TWISTED PAIR
STPS	SHIELDED TWISTED PAIR OVER ALL SHIELD
STR	STARTER
STT	SHIELDED TWISTED TRIPLE
S/N	SOLID NEUTRAL
SW	SWITCH
SWBD	SWITCHBOARD
SWGR	SWITCHGEAR
SYM	SYMMETRICAL
SYS	SYSTEM
TA	TRIP AMPS
TC	TIME CLOCK
TDD	TIME DELAY DE-ENERGIZED (OFF)
TDE	TIME DELAY ENERGIZED (ON)
TDC	TIME DELAY CLOSE
TDO	TIME DELAY OPEN
TMH	TELEPHONE MANHOLE
TP	TWISTED PAIR
TPS	TWISTED PAIR SHIELDED
TST	THERMOSTAT SWITCH IN AUTO-TRANSFORMER STARTER
TTB/TTC	TELEPHONE TERMINAL BOARD/CABINET
TYP	TYPICAL
UH	UNIT HEATER
UG	UNDERGROUND
UON	UNLESS OTHERWISE NOTED
UPS	UNINTERRUPTIBLE POWER SUPPLY
V	VOLTS OR VOLTAGE
VFD	VARIABLE FREQUENCY DRIVE
W	WATTS
W	WIRE
W/	WITH
WP	WEATHERPROOF
XFMR	TRANSFORMER
℄	CENTER LINE
Ø	PHASE
@	AT
#	NUMBER

DIAGRAM LEGEND

INCOMING LINE

METER

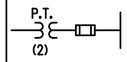

PT -POTENTIAL TRANSFORMER, NUMERAL DENOTES QUANTITY, STATIONARY TYPE WITH FUSE.
CPT -CONTROL POWER TRANSFORMER, NUMERAL DENOTES QUANTITY, STATIONARY FUSE.

CT -CURRENT TRANSFORMER, NUMERAL DENOTES QUANTITY.

MOLDED CASE CIRCUIT BREAKER AUTOMATIC. 3 POLE UNLESS NOTED. 800 = FRAME SIZE, 600 = TRIP SIZE.

TRANSFORMER, SIZE AS NOTED ON DWG

△ PRIMARY CONNECTED DELTA

Y SECONDARY CONNECTED WYE, NEUTRAL SOLIDLY GROUNDED.

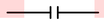
NORMALLY OPEN CONTACT

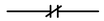
NORMALLY CLOSED CONTACT

PILOT OR INDICATING LIGHT
A=AMBER, B=BLUE, G=GREEN, R=RED

GROUND CONNECTION

TRANSIENT VOLTAGE SURGE SUPPRESSOR

AUTOMATIC TRANSFER SWITCH

Unofficial Website Copy

N:\9018\019\CADD\CP01-9018019E-002.dgn
10/28/2015 10:37:35 AM

DELAWARE DEPARTMENT OF TRANSPORTATION

ADDENDUMS / REVISIONS

LEWES PARK & RIDE AND SITE WORK

CONTRACT	BRIDGE NO.	
T200612502	DESIGNED BY: MSM/SMC	
COUNTY		
SUSSEX	CHECKED BY: AP	

ELECTRICAL ABBREVIATIONS & DIAGRAM LEGEND

E-002

SHEET NO. 58

TOTAL SHTS. 72

GENERAL NOTES

1. INSTALLATION OF ALL ELECTRICAL WORK SHALL CONFORM TO THE LATEST EDITION OF THE NATIONAL ELECTRICAL CODE (NFPA 70), AND ALL APPLICABLE LOCAL CODES.

2. CONDUIT RUNS ARE SHOWN DIAGRAMMATICALLY ONLY AND SHALL BE INSTALLED IN A MANNER TO PREVENT CONFLICTS WITH EQUIPMENT AND STRUCTURAL CONDITIONS. EXPOSED CONDUITS ABOVE SUSPENDED CEILING AND INFURRED WALLS SHALL BE INSTALLED PARALLEL TO THE BEAMS AND WALLS.

3. PROVIDE ALL REQUIRED PULL BOXES, JUNCTIONBOXES, AND HANDHOLES FOR INSTALLATION OF THE WIRING IN ACCORDANCE WITH THE CONTRACT SPECIFICATIONS THOUGH THE BOXES MAY NOT BE INDICATED ON THE DRAWINGS.

4. THE WIRING DIAGRAMS, QUANTITY AND SIZE OF WIRES AND CONDUITS ARE BASED UPON SELECTED STANDARD COMPONENTS OF ELECTRICAL EQUIPMENT. MODIFICATIONS, APPROVED BY THE ENGINEER, MAY BE MADE BY THE CONTRACTOR AT HIS EXPENSE TO ACCOMMODATE EQUIPMENT ACTUALLY PURCHASED.

5. PROVIDE ALL NECESSARY COMPONENTS REQUIRED FOR MAKING FINAL CONNECTION OF ALL EQUIPMENT INSTALLED AS PART OF THIS CONTRACT.

6. ALL INDICATION AND CONTROL WIRING IN JUNCTION BOXES SHALL BE WIRED TO NUMBERED TERMINAL STRIPS AND IDENTIFIED AS TO START AND END OF RUN.

7. ALL ELECTRICAL EQUIPMENT INSTALLED AGAINST CONCRETE OR MASONRY WALLS SHALL BE INSTALLED WITH IN A 1/4" SPACE BETWEEN THE EQUIPMENT AND THE MOUNTING SURFACE. SPACERS SHALL BE STAINLESS STEEL, PVC OR NYLON.

8. ALL JUNCTION AND PULL BOXES SHALL BE LABELED WITH THEIR VOLTAGE AND USAGE.

9. DRAWINGS ARE DIAGRAMMATIC, ACTUAL LOCATION OF EQUIPMENT TO BE DETERMINED IN THE FIELD. NEW EQUIPMENT SHALL FIT INTO AVAILABLE SPACE. IT IS THE RESPONSIBILITY OF THE CONTRACTOR TO PROVIDE EQUIPMENT WHICH MEETS THE SPACE REQUIREMENT.

10. UNLESS OTHERWISE NOTED ALL SINGLE PHASE BRANCH CIRCUITS SHAL BE #12, #126 IN 3" C. ALL THREE PHASE BRANCH CIRCUITS SHALL BE 3#12, #126, IN 3/4" C.

11. CONTRACTOR SHALL SUBMIT A LIST OF ALL MAJOR EQUIPMENT AND FIXTURES TO THE ENGINEER FOR REVIEW AND APPROVAL. NO SUBSTITUTIONS WILL BE ALLOWED WITHOUT THE PERMISSION OF THE ENGINEER IN WRITING. ALL EQUIPMENT SHALL BE NEW AND BEAR THE MANUFACTURER'S NAME AND TRADE NAME. ALL EQUIPMENT SHALL BE UL LISTED.

12. ALL CONDUITS IN FINISHED AREAS SHALL RUN CONCEALED UNLESS OTHERWISE NOTED.

13. THE CIRCUIT NUMBERS ARE FOR IDENTIFICATION PURPOSE ONLY. THE CONTRACTOR IS RESPONSIBLE FOR BALANCING LOADS AND CORRECTLY PHASING THE CIRCUITS IN PANELBOARDS.

14. ELECTRICAL REQUIREMENTS FOR MECHANICAL EQUIPMENT ARE BASED ON EQUIPMENT SPECIFIED. COORDINATE EXACT REQUIREMENTS WITH MECHANICAL SHOP DRAWINGS PRIOR TO ORDERING AND INSTALLING EQUIPMENT.

15. UNLESS OTHERWISE NOTED ALL 20 AMP SINGLE PHASE BRANCH CIRCUITS FOR RECEPTACLES AND LIGHTING FIXTURES SHALL BE INCREASED IN SIZE AS LISTED BELOW FROM THE PANEL TO THE LAST DEVICE OR FIXTURE FOR VOLTAGE DROP.
    a. 120V CIRCUIT UP TO 100FT, #12
    b. 120V CIRCUIT UP TO 180FT, #10
    c. 120V CIRCUIT UP TO 280FT, #8
    d. 277V CIRCUIT UP TO 170FT, #12
    e. 277V CIRCUIT UP TO 280FT, #10
    f. 277V CIRCUIT UP TO 450FT, #8

    ALL BRANCH CIRCUITS IN EXCESS OF DISTANCES LISTED CONSULT ENGINEER PRIOR TO INSTALLATION.

16. CONTRACTOR SHALL VERIFY ALL DOOR SWINGS BEFORE SETTING SWITCHES. INSTALL SWITCHES ON THE LOCK SIDE OF DOORS 4 FEET AFF, UNLESS OTHERWISE NOTED.

17. WHERE ELECTRICAL INSTALLATIONS DEPEND UPON WORK OF OTHER TRADES, THE ELECTRICAL CONTRACTOR SHALL ENSURE THAT NECESSARY INSTRUCTIONS, TEMPLATES, MATERIALS, ETC. ARE PROVIDED AND SUPERVISE THE WORK OF THE OTHER TRADES FOR QUALITY AND CODE COMPLIANCE.

18. CABLE TRAY INSTALLATION SHALL BE COORDINATED IN FIELD WITH OTHER TRADES.

19. CONTRACTOR SHALL VISIT THE JOB SITE AND EXAMINE THE EXISTING CONDITIONS THAT MAY AFFECT HIS WORK.

20. CONTRACTOR SHALL OBTAIN A WRITTEN PERMISSION FROM THE OWNER TO DE-ENERGIZE ANY ENERGIZED BUILDING EQUIPMENT OR DISRUPT ANY COMMUNICATION LINE 10 DAYS PRIOR TO THE SCHEDULED SHUTDOWN.

21. OPENINGS AND PASSAGE OF CONDUITS OR WIREWAYS THROUGH FLOOR SLABS AND FIRE RATED WALLS OR PARTITIONS SHALL BE PROVIDED WITH UL LISTED FIRE RATED SLEEVING SYSTEMS AS MANUFACTURED BY PROSET SYSTEMS INC.

22. DO NOT INSTALL MORE THAN THREE SINGLE PHASE CIRCUITS IN ONE HOMERUN UON.

23. NUMBER ADJACENT TO LIGHT, RECEPTACLE OR OTHER DEVICES INDICATE PANEL SERVING THE DEVICE OR EQUIPMENT AND CIRCUIT NUMBER. PROVIDE COMPLETE WIRING IN CONDUIT.

24. SERIES RATING OF CIRCUIT BREAKERS SHALL NOT BE ALLOWED UNLESS SPECIFICALLY INDICATED ON CONTRACT DRAWINGS.

25. ALL VFDS SHALL BE FURNISHED UNDER DIVISION 23 AND INSTALLED UNDER DIVISION 26 UNLESS OTHERWISE NOTED.

26. ALL WORK SHOWN ON THE DRAWINGS SHALL BE NEW UNLESS OTHERWISE NOTED.

27. SUBMIT DUCTBANKS AND MANHOLE PROFILE AND PLAN DRAWINGS FOR APPROVAL BY THE ENGINEER. DUCTBANK AND MANHOLE SHALL COORDINATE WITH OTHER NEW UTILITIES. DUCTBANK PROFILES ARE INDICATED ON CIVIL DRAWINGS. MODIFY PROFILES TO SUIT EXISTING CONDITIONS. INCREASE DEPTH OF THE MANHOLE IF REQUIRED TO SUIT DUCTBANK INSTALLATION.

28. CONTRACTOR SHALL COORDINATE ALL WORK RELATED TO ELECTRICAL SERVICE WITH UTILITY COMPANY AND OBTAIN APPROVAL BEFORE INSTALLATION.

29. CONTRACTOR SHALL COORDINATE ALL WORK RELATED TO TELEPHONE SERVICE WITH TELEPHONE COMPANY AND OBTAIN APPROVAL BEFORE INSTALLATION.

30. PROVIDE PULL STRINGS IN ALL EMPTY CONDUIT TO FACILITATE PULLING OF CABLES IN FUTURE.

31. ALL RECEPTACLES IN SHOP AREA SHALL BE 48" AFF. ALL RECEPTACLES AND SWITCHES INDICATED AS FREE STANDING SHALL BE INSTALLED ON CHANNELS. ALL RECEPTACLES LOCATED IN MECHANICAL RM, ELECTRICAL RM, JANITOR'S CLOSET, BATH ROOMS AND WITHIN 6' OF KITCHEN SINK SHALL BE GFITYPE UON.

32. ALL ELECTRICAL EQUIPMENT LOCATED OUTDOORS SHALL HAVE NEMA 4X ENCLOSURE UON.

33. ALL 120V CIRCUITS AND 277V CIRCUITS SHALL HAVE SEPARATE NEUTRALS.

34. ALL TRANSFORMERS WINDINGS AND PANEL BUSSES SHALL BE COPPER UON.

35. ALL OUTDOOR UNDERGROUND CONCRETE ENCASED CONDUITS SHALL BE PVC SCHEDULE 40 UON.

36. ALL OUTDOOR UNDERGROUND DIRECT BURIED CONDUITS SHALL BE SCHEDULE 80 UON.

37. MINIMUM CONDUIT SIZE SHALL BE 3 / 4".

38. MINIMUM WIRE SIZE SHALL BE #12 AWG.

39. PROVIDE SYSTEM GROUNDING CONDUCTORS AND EQUIPMENT GROUNDING CONDUCTORS IN ACCORDANCE WITH NEC-250, UON.

Unofficial Website Copy

GENERAL NOTES:

1. SEE DRAWING E-001 FOR ADDITIONAL NOTES AND LEGEND.
2. COORDINATE REMOVAL OF EXISTING FLOOD LIGHTS MOUNTED ON UTILITY POLES OWNED BY DEC.

SPECIFIC NOTES:

1. EXISTING ELECTRICAL SERVICE TO BILLBOARD SIGN TO REMAIN. CONTRACTOR TO INSURE THE SIGN REMAINS IN SERVICE DURING CONSTRUCTION.
2. EXISTING ELECTRICAL SERVICE TO EXISTING BUILDING TO BE REMOVED. COORDINATE REMOVAL OF EXISTING SERVICE WITH LOCAL UTILITY(DEC) PRIOR TO DEMOLITION OF THE BUILDING.
3. REMOVE AND DEMOLISH EXISTING ELECTRICAL SERVICE TO SIGN POST TO BE REMOVED.
4. REMOVE AND DEMOLISH EXISTING ELECTRICAL SERVICE TO EXISTING WELL TO BE REMOVED.
5. REMOVE AND DEMOLISH EXISTING ELECTRICAL SERVICE TO EXISTING SITE LIGHTING POLE TO BE REMOVED.

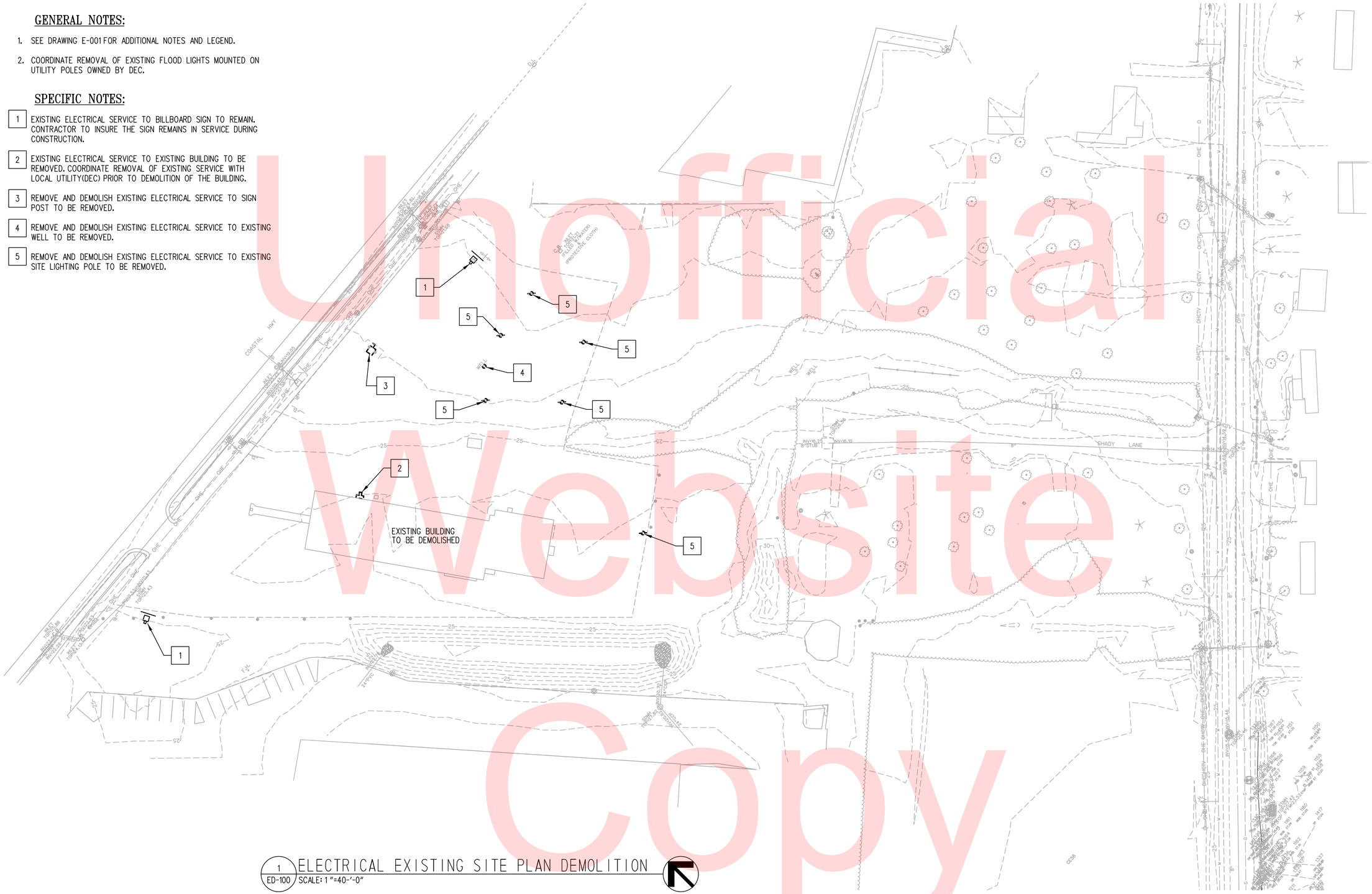

1 / ED-100 ELECTRICAL EXISTING SITE PLAN DEMOLITION
SCALE: 1"=40'-0"

Unofficial Website Copy

N:\9018\019\CADD\CP01-9018019ED-100.dgn
10/28/2015 10:38:35 AM

DELAWARE DEPARTMENT OF TRANSPORTATION	ADDENDUMS / REVISIONS	0 20' 40' 80' SCALE: 1" = 40'-0"	LEWES PARK & RIDE AND SITE WORK	CONTRACT T200612502 / COUNTY SUSSEX	BRIDGE NO. / DESIGNED BY: MSM/SMC / CHECKED BY: AP	ELECTRICAL EXISTING SITE PLAN DEMOLITION	ED-100 / SHEET NO. 60 / TOTAL SHTS. 72

GENERAL NOTES:

1. SEE DRAWING E-001 THRU E-003 FOR LEGEND, ABBREVIATIONS AND GENERAL NOTES.
2. SEE DRAWING E-501 FOR SINGLE LINE DIAGRAM.
3. SEE DRAWING E-701 FOR LIGHTING FIXTURE SCHEDULE.
4. SEE LIGHTING PLANS FOR CANOPY AND EXTERIOR BUILDING FIXTURES MOUNTED.
5. PRIMARY AND SECONDARY SERVICE LATERALS INCLUDING THE PAD MOUNTED SERVICE TRANSFORMER AND PAD ARE PROVIDED AND INSTALLED BY DEC. CONTRACTOR SHALL COORDINATE THIS INSTALLATION WITH DEC ONCE THE SITE IS GRADED TO WITHIN 6" OF FINAL GRADE.
6. DUCT BANK ROUTING SHOWN IS SUGGESTED, CONTRACTOR SHALL COORDINATE ROUTE WITH OTHER UTILITIES AND CABLE BENDING RADIUS REQUIREMENTS.
7. ALL HAND HOLES SHALL BE AS SHOWN ON DETAIL 7 ON SHEET E-601, UON.
8. ALL HAND HOLES SHALL BE INSTALLED IN AREAS NOT SUBJECT TO VEHICULAR TRAFFIC.
9. ALL GROUND ENTRY AND EXIT LOOPS SHALL HAVE A 3/4" STUB UP TO EACH LOCAL GATE OPERATOR FOR CABLE CONNECTIONS.
10. CONCRETE PEDESTAL MOUNTED DUAL PORT LEVEL 2 CHARGING STATION: ADA COMPLIANT, BRUSHED STAINLESS STEEL CONSTRUCTION, COIL CORD CABLE MANAGEMENT WITH WEATHERPROOF DISPLAY. PROVIDE SYSTEM WITH THE FOLLOWING ETHERNET BASED CONNECTIVITY FEATURES:
    a. REPORTING: MAINTAIN USAGE STATISTICS PER STATION.
    b. RATE MANAGEMENT: STATION OWNERS MAY SET THE HOURLY FEE FOR CREDIT CARD BILLING.
    c. ACCESS MANAGEMENT: STATIONS CAN BE CONFIGURED TO ACCESS CARDS, CREDIT CARDS OR FREE CHARGING.
    d. HOURS OF OPERATION: STATION CAN BE CONFIGURED FOR TIME OF DAY OPERATION.

    PV CHARGING STATION BASIS OF DESIGN SHALL BE A MODEL #PS2000 AS MANUFACTURED BY PEP STATIONS/HUBBELL OR EQUAL.
11. SEE LIGHTING PLANS FOR ADDITIONAL BUILDING AND CANOPY MOUNTED FIXTURES.
12. COORDINATE EXACT STUB-UP LOCATIONS AND REQUIRED CONNECTIONS FOR EACH FUEL TANK WITH MANUFACTURERS APPROVED SHOP DRAWINGS PRIOR TO INSTALLATION OF CONDUITS.
13. SEE DRAWING E-608 FOR CCTV CAMERA MOUNTING AND INSTALLATION DETAILS.
14. ALL SITE LIGHTING CIRCUITS SHALL BE CONNECTED TO AND CONTROLLED WITH TIMECLOCK OVER RIDE TO INTERNAL PHOTOCELL.
15. PROVIDE PULL STRING IN ALL EMPTY POWER CONDUITS AND CONDUITS FOR CONTROL, DATA AND FIBER.
16. KEEP A MINIMUM OF 6" OF SEPARATION BETWEEN POWER AND COMMUNICATIONS CONDUIT.
17. HANDHOLE CONDUIT ENTRY POINTS SHOWN ARE DIAGRAMMATIC. CONTRACTOR SHALL COORDINATE ALL CONDUIT ENTRY POINTS WITH DIVIDERS IN HANDHOLES. PROVIDE ADDITIONAL CONDUIT BENDS NOT SHOWN AS REQUIRED FOR PROPER ENTRY AND EXIT LOCATIONS TO MAINTAIN PROPER SEPARATION.

SPECIFIC NOTES:

1. EMERGENCY GENERATOR.
2. PV CHARGING STATIONS. SEE GENERAL NOTE 10.
3. PROPOSED LOCATION UTILITY TRANSFORMER EXACT LOCATION BY DEC.
4. 3"C SECONDARY SERVICE TO ATS.
5. TRANSFORMER AND DISCONNECT SWITCHES FOR TEMPORARY BUILDING. PROVIDE APPROPRIATE SUPPORT STRUCTURES.
6. UTILITY BUILDING. SEE DRAWING E-301.
7. (1) 1" CONDUIT(POWER)
8. (1) 1" CONDUIT(POWER),(1) 1"CONDUIT(FIBER)
9. (2) 1" CONDUIT(POWER),(1) 1" CONDUIT(FIBER), 1" CONDUIT(CONTROL)
10. (1) 1" CONDUIT(POWER), (1) 1" CONDUIT(CONTROL)
11. (2) 1 1/4" CONDUIT(POWER),(2) 1" CONDUIT(POWER), (2) 1" CONDUIT(CONTROL), (1) 1" CONDUIT(DATA)
12. (2) 1 1/4" CONDUIT(POWER), (5) 1" CONDUIT(POWER), (2) 1" CONDUIT(CONTROL), (1) 1" CONDUIT(FIBER), (1) 1" CONDUIT(DATA)
13. (1) 2" CONDUIT(POWER), (1) 1" CONDUIT(POWER), (1) 2" CONDUIT(DATA),(1) 1" CONDUIT(FIBER)
14. (1) 2" CONDUIT(POWER), (1) 2" CONDUIT(DATA)
15. (1) 2" CONDUIT(POWER), (1) 2" CONDUIT(DATA), (2) 1" CONDUIT(POWER), (1) 1" CONDUIT(FIBER), (1) 1" CONDUIT(CONTROL)
16. MAIN ELECTRICAL RM.

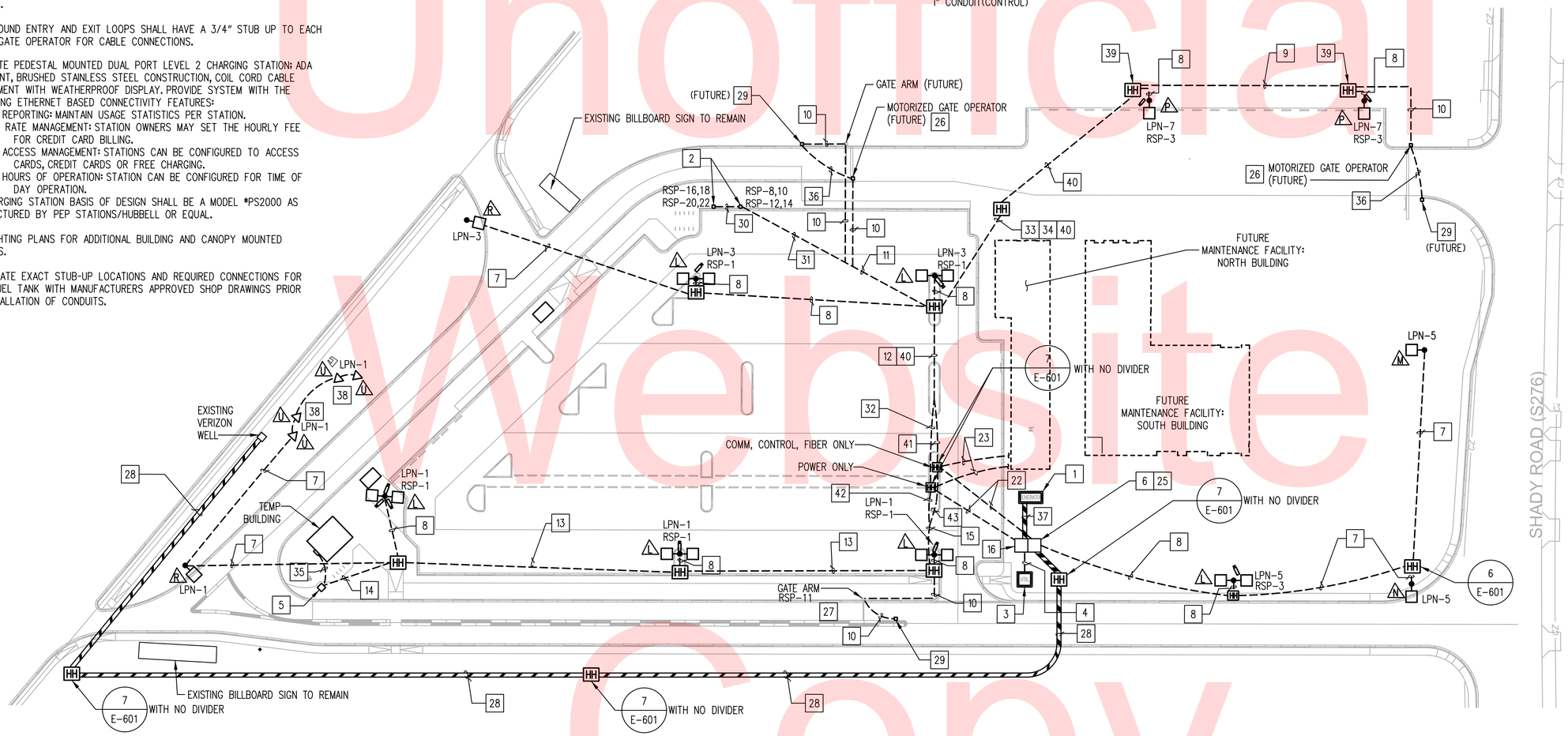

1 E-100 ELECTRICAL SITE PLAN
SCALE: 1"=40'-0"

SPECIFIC NOTES:

17. (2) 1" CONDUIT(CONTROL), (1) 1" CONDUIT(FIBER), (1) 1" CONDUIT(DATA)
18. (1) 2" CONDUIT(DATA), (1) 1" CONDUIT(FIBER), (1) 1" CONDUIT(CONTROL)
19. (1) 2" CONDUIT(POWER), (2) 1 1/4" CONDUIT(POWER), (7) 1" CONDUIT(POWER)
20. (3) 1" CONDUIT(POWER)
21. (1) 1" CONDUIT(FIBER),(1) 1" CONDUIT (CONTROL)
22. ROUTE 17 18 21 TO COMMUNICATIONS RM. ROUTE 19 20 TO ELECTRICAL RM.
23. (1) 2", (2) 1 1/4" AND (10) 1" SPARE CONDUITS FROM POWER ONLY HANDHOLE. (1) 2" AND (8) 1" SPARE CONDUITS FROM COMMUNICATIONS ONLY HANDHOLE. EXTEND ALL CONDUITS UNDERGROUND AS SHOW TO 12" PAST CURB LINE AND CAP FOR FUTURE EXTENSION TO FUTURE MAINTENANCE BUILDING.
24. (1) 4" CONDUIT-FEED TO PANEL "MDPS", (1) 1" CONDUIT FIRE ALARM CONCRETE ENCASED. SEE DETAIL 8/E-601.
25. COMMUNICATIONS ROOM.
26. 1" CONDUIT STUB UP TO GATE AND OR ARM OPERATOR.
27. PROVIDE EXIT LOOP CONNECTED TO GATE OPERATOR. COORDINATED REQUIREMENTS WITH GATE MANUFACTURER WITH 1" CONDUIT STUB UP TO GATE AND OR ARM OPERATOR.
28. (2) 4"C WITH PULL STRING FOR VOICE/DATA UTILITY SERVICE. COORDINATE SERVICE REQUIREMENTS WITH DELDOT AND VERIZON. SEE DETAIL 4/E-601.
29. GATE, READER ACCESS CONTROL. PROVIDE CONDUIT TURN UP. SEE DRAWING E-609 FOR INSTALLATION DETAILS.
30. (1) 1 1/4" CONDUIT(POWER), (1) 1" CONDUIT(DATA).
31. (2) 1 1/4" CONDUIT (POWER), (2) 1" CONDUIT (DATA).
32. (2) 1 1/4" AND (8) 1" CONDUITS (POWER).
33. (1) 1" CONDUIT (POWER) FUTURE GAS TANK PUMPS.
34. (1) 1" CONDUIT (POWER) FUTURE DIESEL TANK PUMPS.
35. 1 1/4" CONDUIT(POWER) COORDINATE STUB UP LOCATION WITH TRAILER MANUFACTURER.
36. 1" CONDUIT (CONTROL).
37. GENERATOR DUCTBANK. SEE DETAIL 5/E-601.
38. NEW SIGN ILLUMINATED WITH (2) TYPE "U" FLOOD LIGHTS MOUNTED ON THREADED RGS PIPE 1'-0" ABOVE GRADE. LOCATE FIXTURES 10'-0" FROM SIGN AND 1'-0" FROM EDGE ON EACH SIDE. FEILD AJUST PITCH ANGLE FOR OPTIMAL UNIFORM SURFACE LIGHT LEVEL.
39. HANDHOLE INSTALLED IN 2' WIDE STONE AREA. REDUCE BOX DIMENSIONS SHOWN ON DETAIL 7/E-601 TO 16"x22". TOP OF BOX TO BE 1" ABOVE STONE GRADE.
40. (2) 1" CONDUIT (POWER) (1) 1" CONDUIT (POWER) FROM PANEL RSP FOR FUTURE PROPANE DISP., (1) 1" CONDUIT FIBER, 1" CONDUIT (CONTROL).
41. (1) 1" CONDUIT (CONTROL), (2) 1" CONDUITS (FIBER), (1) 1" CONDUIT (DATA).
42. (1) 2" AND (2) 1" CONDUITS (POWER).
43. (1) 2" CONDUIT (DATA), (1) 1" CONDUIT (CONTROL), (1) 1" CONDUIT (FIBER).

Unofficial Website Copy

N:\801B1-016\CADD\PP01-801B1019E-100.dgn
10/28/2015 10:57:41 AM

DELAWARE DEPARTMENT OF TRANSPORTATION	ADDENDUMS / REVISIONS	0 20' 40' 80' SCALE: 1" = 40'-0"	LEWES PARK & RIDE AND SITE WORK	CONTRACT T200612502 / COUNTY SUSSEX	BRIDGE NO. / DESIGNED BY: MSM/SMC / CHECKED BY: AP	ELECTRICAL SITE PLAN

E-100
SHEET NO. 61
TOTAL SHTS. 72

GENERAL NOTES:

1. SEE DRAWING E-001 THRU E-003 FOR LEGEND, ABBREVIATIONS AND GENERAL NOTES.
2. SEE DRAWING E-603 FOR ADDITIONAL GROUNDING DETAILS.

SPECIFIC NOTES:

1. ALL GROUNDING MATERIAL SHALL BE UL RATED.
2. ALL CONNECTIONS TO GROUND BUS SHALL BE DONE BY IRREVERSIBLE COMPRESSION TYPE, UL RATED CONNECTORS ON CONDUCTORS AND BOLTED CONNECTION GROUND BUS.
3. GROUND BUS.
4. GAP AND FAAP PANELS. SEE DETAIL 2 / E-604.

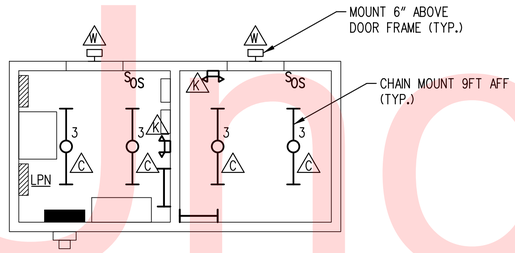

1 E-301 UTILITY BUILDING PLAN - LIGHTING
SCALE: 1/4"=1'-0"

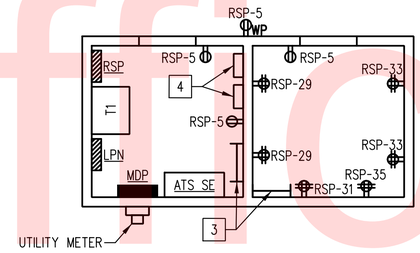

2 E-301 UTILITY BUILDING PLAN - POWER
SCALE: 1/4"=1'-0"

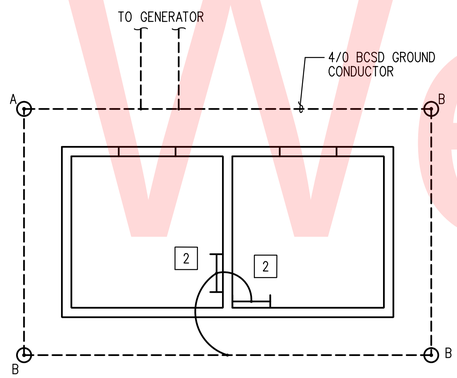

3 E-301 UTILITY BUILDING PLAN - GROUNDING 1
SCALE: 1/4"=1'-0"

Unofficial Website Copy

N:\90181-019\CADD\GP01-90181019E-301.dgn
10/28/2015 10:37:46 AM

DELAWARE DEPARTMENT OF TRANSPORTATION	ADDENDUMS / REVISIONS	0 2' 4' 8' SCALE: 1/4" = 1'-0"	LEWES PARK & RIDE AND SITE WORK	CONTRACT T200612502 / COUNTY SUSSEX	BRIDGE NO. / DESIGNED BY: MSM/SMC / CHECKED BY: AP	ELECTRICAL FLOOR PLAN NORTH BUILDING POWER	E-301 / SHEET NO. 62 / TOTAL SHTS. 72

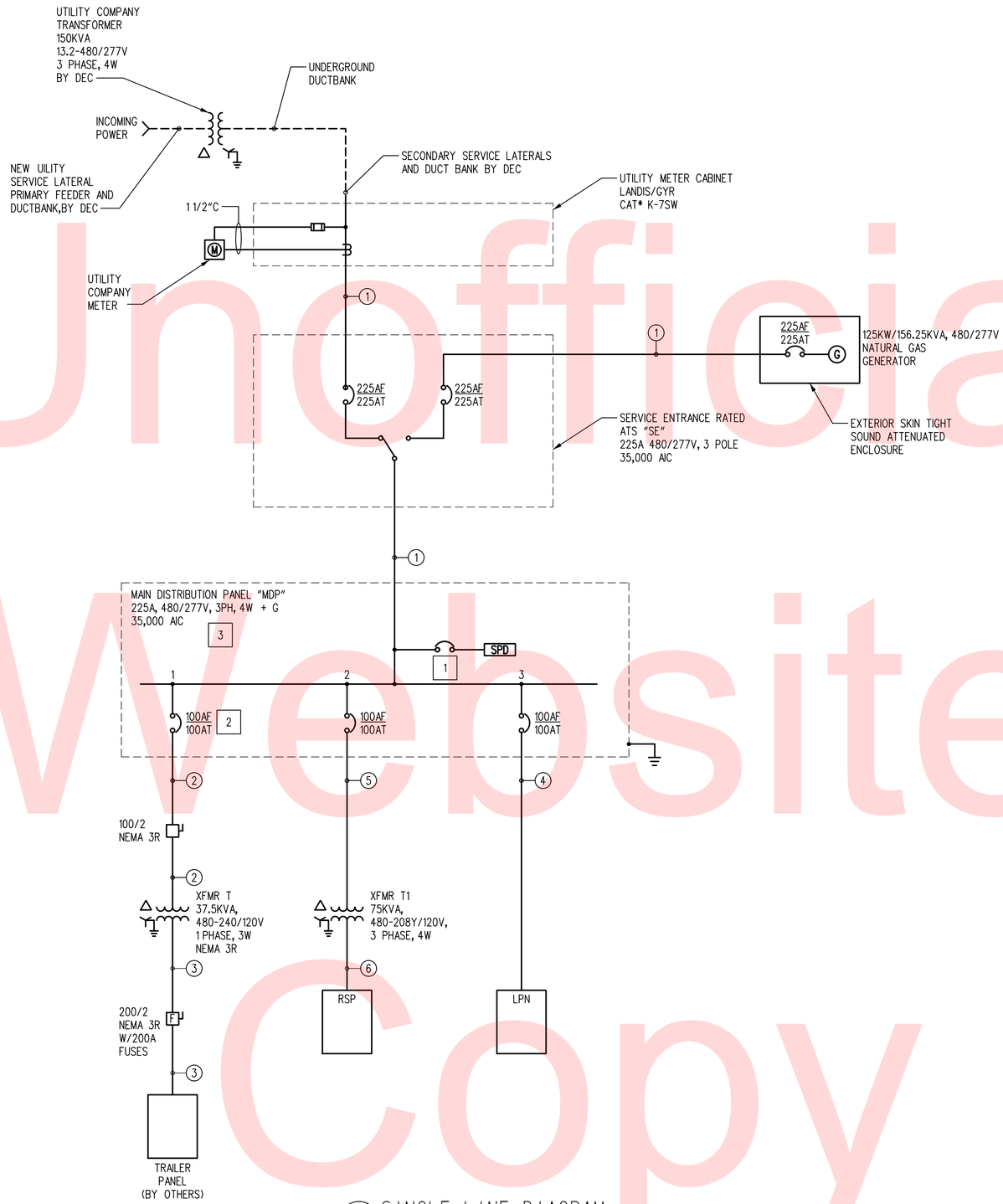

1 E-501 SINGLE LINE DIAGRAM
SCALE: NTS

GENERAL NOTES:

1. SEE DRAWING E-001 THRU E-003 FOR LEGEND, ABBREVIATIONS AND GENERAL NOTES.
2. SEE DRAWING E-702 FOR PANELBOARD SCHEDULES.
3. THE LOCAL UTILITY IS THE DELAWARE ELECTRIC CO-OP(DEC).

SPECIFIC NOTES:

1. BREAKER SIZE AS REQUIRED BY SPD MANUFACTURER.
2. 2 POLE BREAKER.
3. PROVIDE (2) 100AF, 3 POLE SPARES IN PANEL.

FEEDER SCHEDULE

1. 4*4/0, 1*2G IN 2 1/2"C
2. 2*2/0, 1*6G IN 2"C
3. 3*4/0, 1*2G IN 2 1/2"C
4. 4*2, 1*8G IN 1 1/2"C
5. 3*2, 1*8G IN 1 1/2"C
6. 4*4/0, *2G IN 2 1/2"C

Unofficial Website Copy

N:\90181-019\CADD\CP01-90181019E-501.dgn
10/28/2015 10:37:48 AM

DELAWARE DEPARTMENT OF TRANSPORTATION	ADDENDUMS / REVISIONS	LEWES PARK & RIDE AND SITE WORK	CONTRACT T200612502	BRIDGE NO.	ELECTRICAL SINGLE LINE DIAGRAM
			COUNTY SUSSEX	DESIGNED BY: MSM/SMC	SHEET NO. 63
				CHECKED BY: AP	TOTAL SHTS. 72

E-501

GENERAL NOTES:

1. SEE DRAWING E001 THRU E003 FOR LEGEND, ABBREVIATIONS AND GENERAL NOTES.

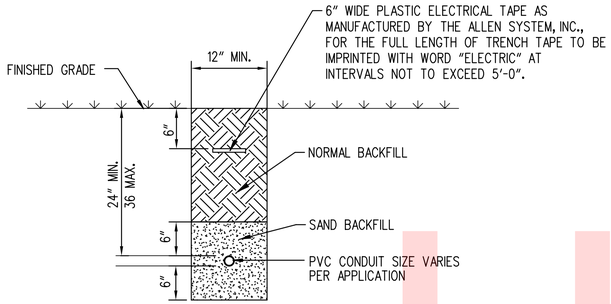

SINGLE DIRECT BURIED CONDUIT INSTALLATION DETAIL

1 / E-601 SCALE: NTS

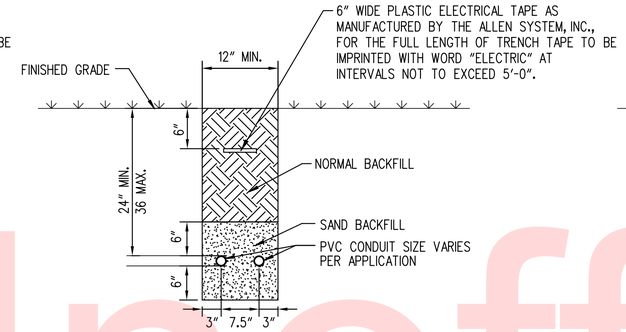

2 WAY DIRECT BURIED CONDUIT INSTALLATION DETAIL

2 / E-601 SCALE: NTS

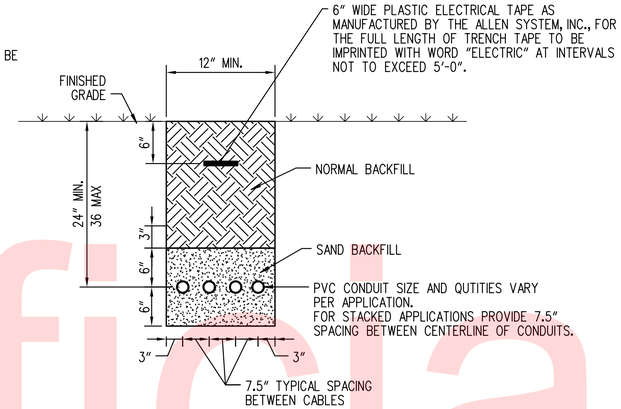

MULTIPLE DIRECT BURIED CONDUIT INSTALLATION TYPICAL DETAIL

3 / E-601 SCALE: NTS

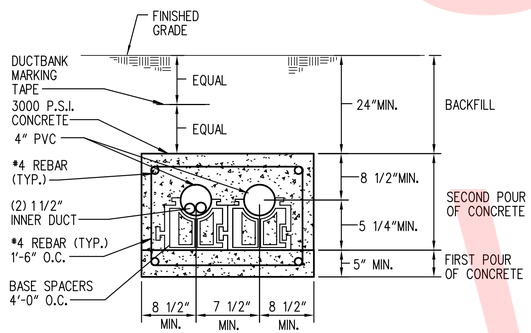

DUCTBANK DETAIL TELE/DATA W/ INNERDUCT

4 / E-601 SCALE: NTS

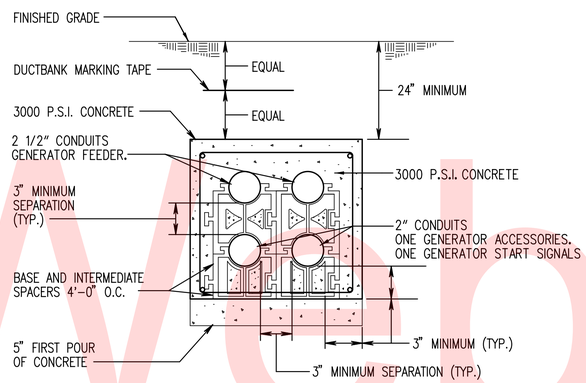

GENERATOR POWER/CONTROLS

5 / E-601 SCALE: NTS

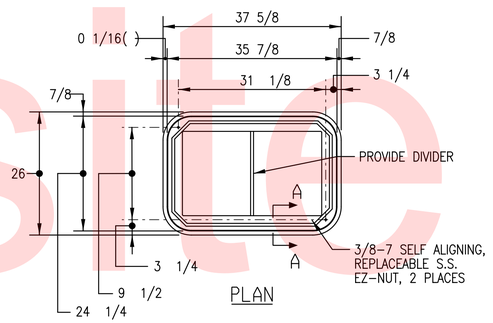

PLAN

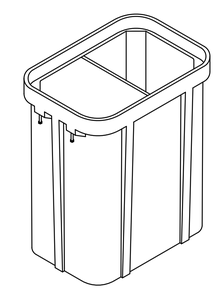

ISOMETRIC

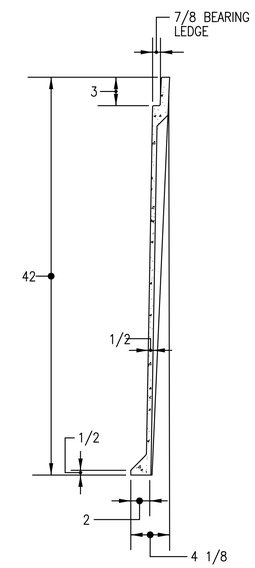

SECTION A-A

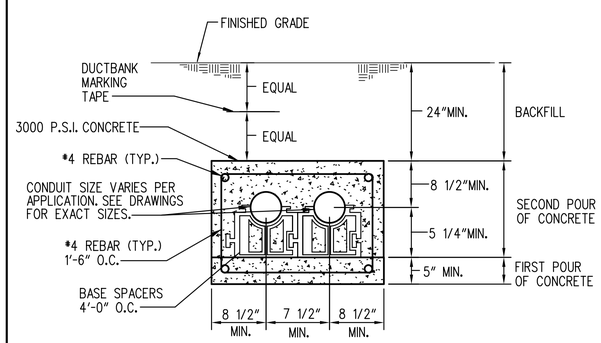

TYPICAL TWO WAY DUCTBANK DETAIL

8 / E-601 SCALE: NTS

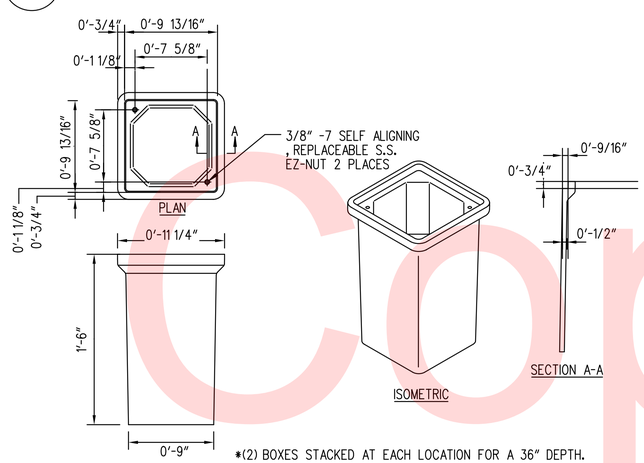

*(2) BOXES STACKED AT EACH LOCATION FOR A 36" DEPTH.

HANDHOLE DETAIL

6 / E-601 SCALE: NTS

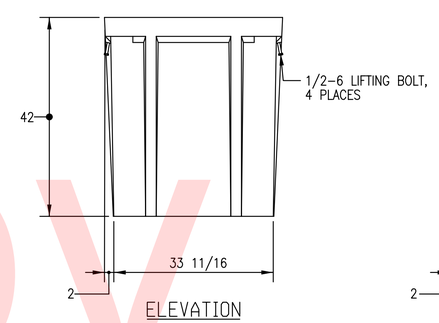

NOTE:

1. PROVIDE 2 PIECE COVER;
   LOGO 1 : ELECTRIC
   LOGO 2 : COMMUNICATIONS

DIVIDED HANDHOLE DETAIL

7 / E-601 SCALE: NTS

Unofficial Website Copy

N:\90181-019\C4D\C901-90181019E-601.dgn
10/28/2015 10:37:49 AM

DELAWARE DEPARTMENT OF TRANSPORTATION	ADDENDUMS / REVISIONS	LEWES PARK & RIDE AND SITE WORK	CONTRACT T200612502	BRIDGE NO.	ELECTRICAL DETAILS
			COUNTY SUSSEX	DESIGNED BY: MSM	
				CHECKED BY: AP	

	E-601
SHEET NO.	64
TOTAL SHTS.	72

GENERAL NOTES:

1. SEE DRAWING E-001 THRU E-003 FOR LEGEND, ABBREVIATIONS AND GENERAL NOTES.

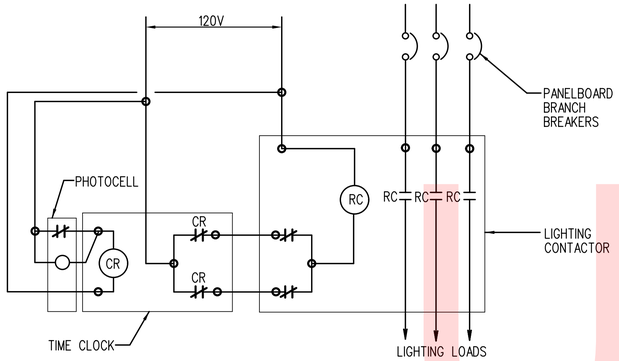

1 E-602 EXTERIOR LIGHTING CONTROL SCHEMATIC
SCALE: NTS

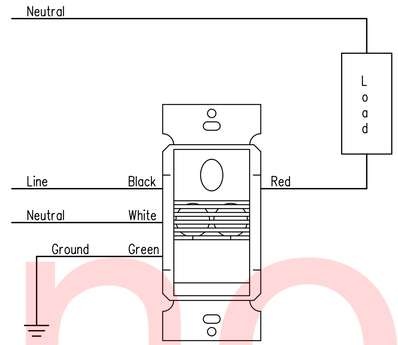

2 E-602 WALL MOUNTED SENSOR AND SWITCH DIAGRAM
SCALE: NTS

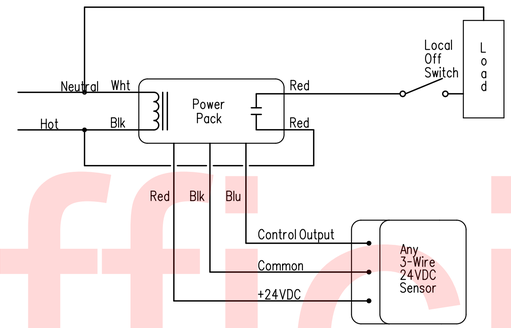

3 E-602 CEILING SENSOR SCHEMATIC DIAGRAM
SCALE: NTS

Unofficial Website Copy

N:\90181-019\CADD\CP01-90181019E-602.dgn
10/28/2015 10:37:52 AM

DELAWARE DEPARTMENT OF TRANSPORTATION	ADDENDUMS / REVISIONS		LEWES PARK & RIDE AND SITE WORK	CONTRACT T200612502	BRIDGE NO.	ELECTRICAL DETAILS	E-602
				COUNTY SUSSEX	DESIGNED BY: MSM		SHEET NO. 65
					CHECKED BY: AP		TOTAL SHTS. 72

GENERAL NOTES:

1. SEE DRAWING E-001 THRU E-003 FOR LEGEND, ABBREVIATIONS AND GENERAL NOTES.

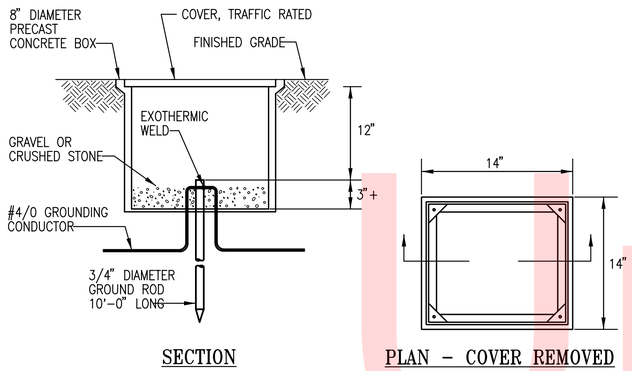

1 E-603 GROUND ROD TYPE "A" DETAIL
SCALE: NTS

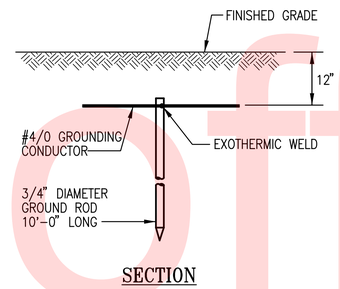

2 E-603 GROUND ROD TYPE "B" DETAIL
SCALE: NTS

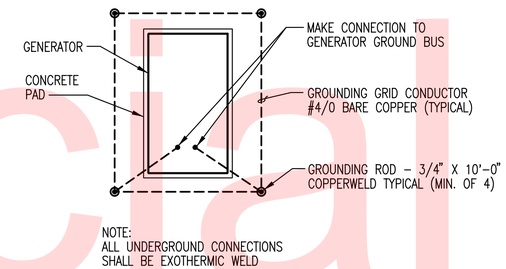

3 E-603 EMERGENCY GENERATOR GROUNDING GRID DETAIL
SCALE: NTS

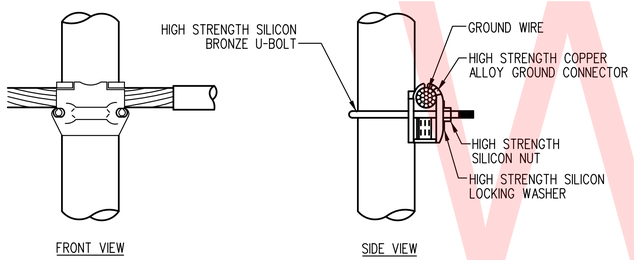

4 E-603 GROUNDING WIRE TO PIPE DETAIL
SCALE: NTS

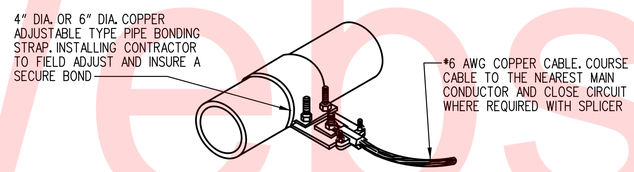

5 E-603 TYPICAL PIPE GROUNDING DETAIL
SCALE: NTS

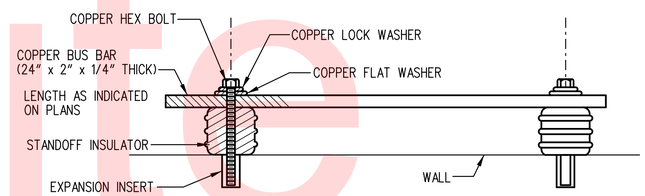

6 E-603 GROUND BUS DETAIL
SCALE: NTS

Unofficial Website Copy

N:\90181-019\CADD\CP01-90181019E-603.dgn
10/28/2015 10:37:54 AM

DELAWARE DEPARTMENT OF TRANSPORTATION	ADDENDUMS / REVISIONS		LEWES PARK & RIDE AND SITE WORK	CONTRACT T200612502	BRIDGE NO.	ELECTRICAL DETAILS	E-603
				COUNTY SUSSEX	DESIGNED BY: MSM		SHEET NO. 66
					CHECKED BY: AP		TOTAL SHTS. 72

GENERAL NOTES:

1. SEE DRAWING E001 THRU E003 FOR LEGEND, ABBREVIATIONS AND GENERAL NOTES.

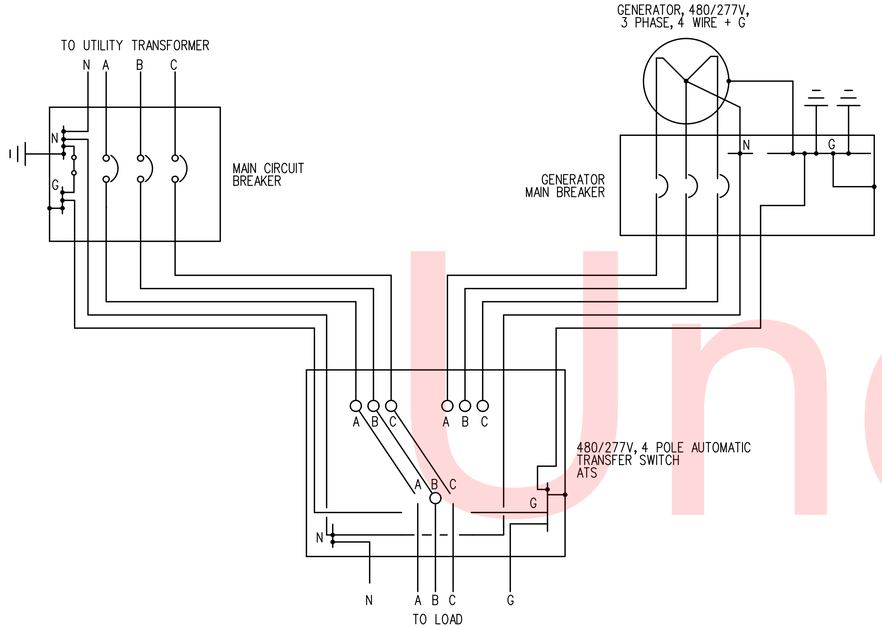

EMERGENCY GENERATOR, ATS, AND MAIN CIRCUIT BREAKER CONNECTION DETAIL - 3 PHASE, 4 WIRE SYSTEM

1 / E-604 SCALE: NTS

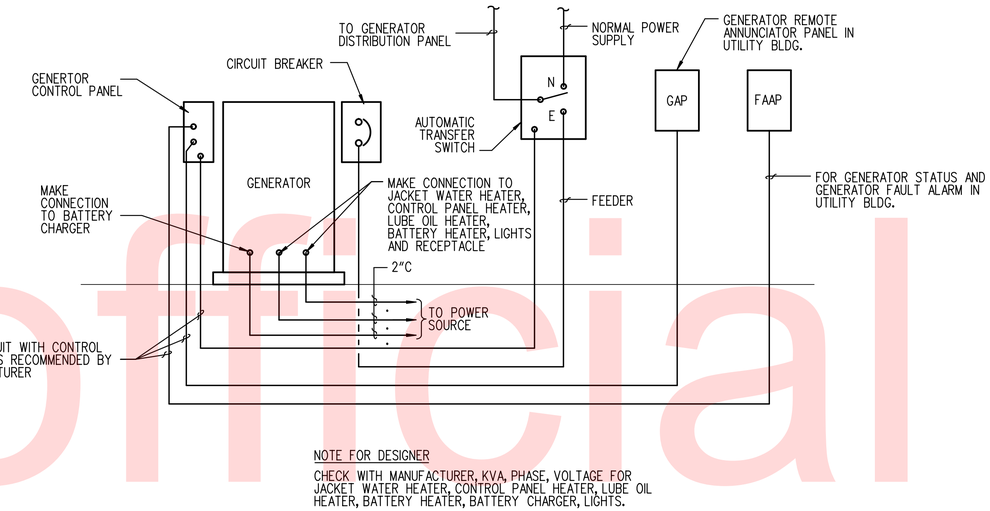

NOTE FOR DESIGNER

CHECK WITH MANUFACTURER, KVA, PHASE, VOLTAGE FOR JACKET WATER HEATER, CONTROL PANEL HEATER, LUBE OIL HEATER, BATTERY HEATER, BATTERY CHARGER, LIGHTS.

2 / E-604 GENERATOR CONNECTION WIRING DIAGRAM

SCALE: NTS

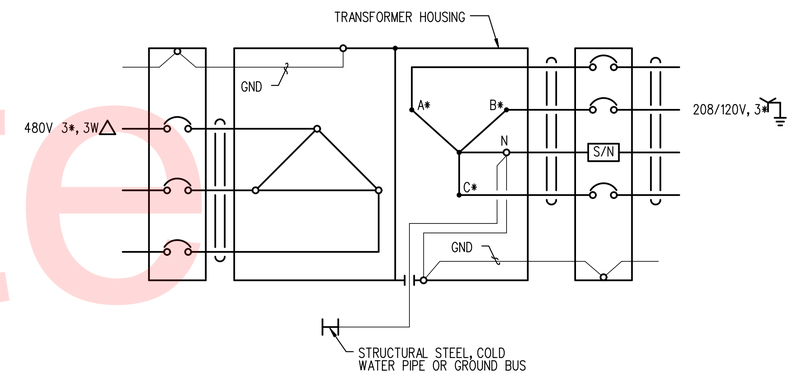

5 / E-604 DRY TYPE TRANSFORMER WIRING

SCALE: NTS

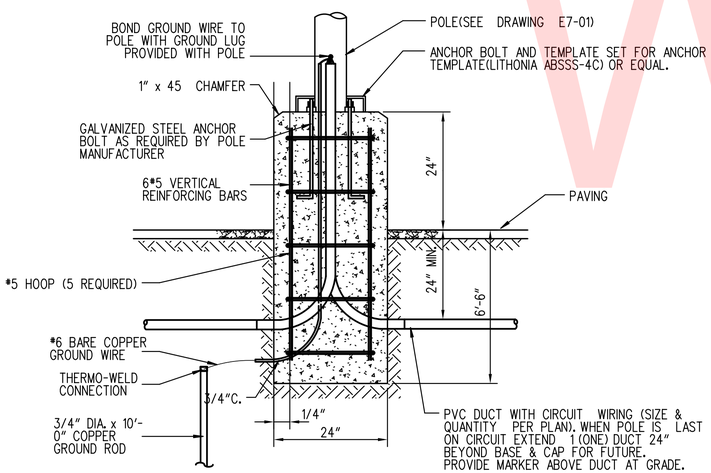

NOTE:
FOUNDATION SHALL BE POURED ON UNDISTURBED SOIL. CONCRETE SHALL NOT BE POURED BELOW 40°F ON A FALLING TEMPERATURE.

ELEVATION/SECTION

3 / E-604 POLE BASE DETAIL - FIXTURE TYPE H1 & H2

SCALE: NTS

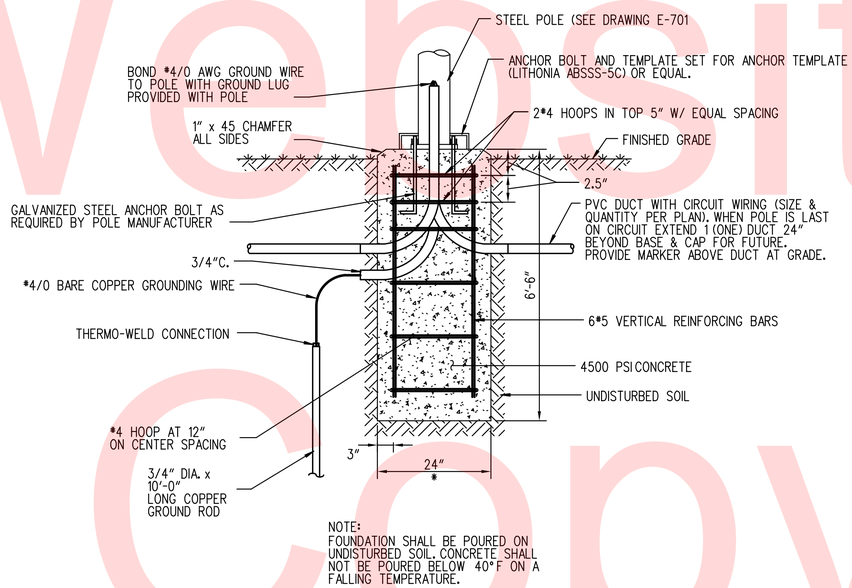

NOTE:
FOUNDATION SHALL BE POURED ON UNDISTURBED SOIL. CONCRETE SHALL NOT BE POURED BELOW 40°F ON A FALLING TEMPERATURE.

ELEVATION/SECTION

4 / E-604 POLE BASE DETAIL - FIXTURE TYPE H3 & H4

SCALE: NTS

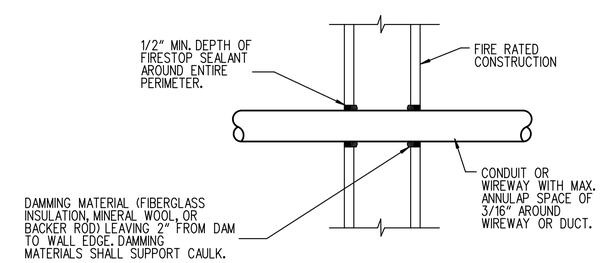

6 / E-604 DETAIL - FIRE STOP THROUGH WALL

SCALE: NTS

Unofficial Website Copy

N:\90181\019\CAD\CP01-90181019E-604.dgn
10/28/2015 10:37:57 AM

DELAWARE DEPARTMENT OF TRANSPORTATION	ADDENDUMS / REVISIONS	LEWES PARK & RIDE AND SITE WORK	CONTRACT T200612502	BRIDGE NO.	ELECTRICAL DETAILS
			COUNTY SUSSEX	DESIGNED BY: MSM	
				CHECKED BY: AP	

E-604

SHEET NO. 67

TOTAL SHTS. 72

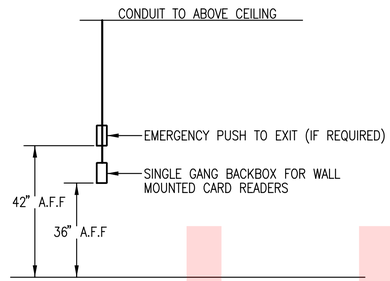

1 E-605 CARD READER BACKBOX DETAIL (TYPICAL)
SCALE: NTS

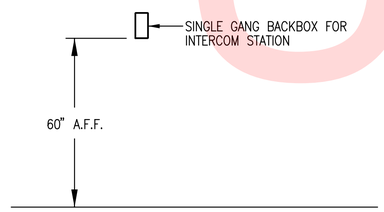

2 E-605 INTERCOM VIDEO STATION BACKBOX DETAIL
SCALE: NTS

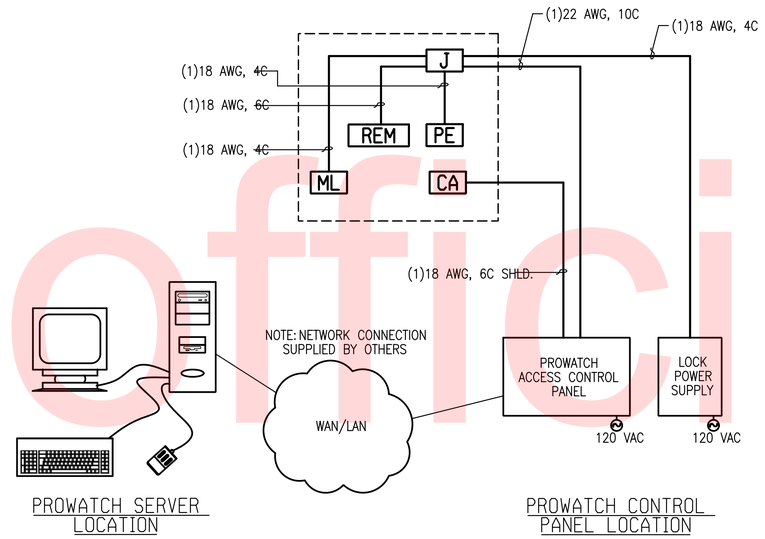

4 E-605 TYPICAL ACCESS CONTROL RISER (MAGNETIC LOCK)
SCALE: NTS

ACCESS CONTROL WIRING

CARD READER	CA	18AWG, 6C SHLD
REQUEST TO EXIT MOTION	REM	18AWG, 4C
ELECTRONIC STRIKES	ES	18AWG, 4C
PUSH TO EXIT BUTTON	PE	18AWG, 4C
MAGNETIC LOCK	ML	18AWG, 4C
DOOR CONTACT	DC	22AWG, 4C
DOOR RELEASE	DR	18AWG, 4C

CARD READER (SHIELDED, 6 CONDUCTOR / 18 GAUGE)

THIS CABLE IS RUN FROM THE CARD READER INTO THE ACCESS CONTROL PANEL.

RED.....RED
BLACK.....BLACK
BROWN & ORANGE.....BROWN
WHITE.....WHITE
GREEN.....GREEN

TAPE OFF AT READER.....SHIELD
BLUE.....BLUE

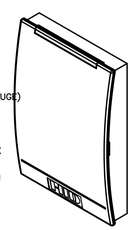

WIRE COLOR	FUNCTION
RED	+DC (10-16 VDC)
BLACK	GROUND
GREEN	DATA0 (DATA)
WHITE	DATA1 (CLOCK)
DRAIN*	SHIELD GROUND
ORANGE	GREEN LED
BROWN	RED LED
YELLOW	SPEAKER
BLUE	HOLD

* DRAIN WIRE CAN BE "DATA RETURN" WHEN A SEPARATE POWER SOURCE IS USED

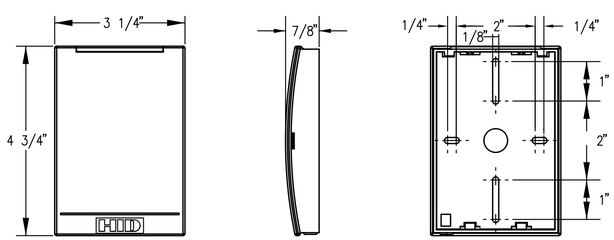

FRONT VIEW SIDE VIEW BACK VIEW

3 E-605 RP-40 I-CLASS CARD READER DETAIL
SCALE: NTS

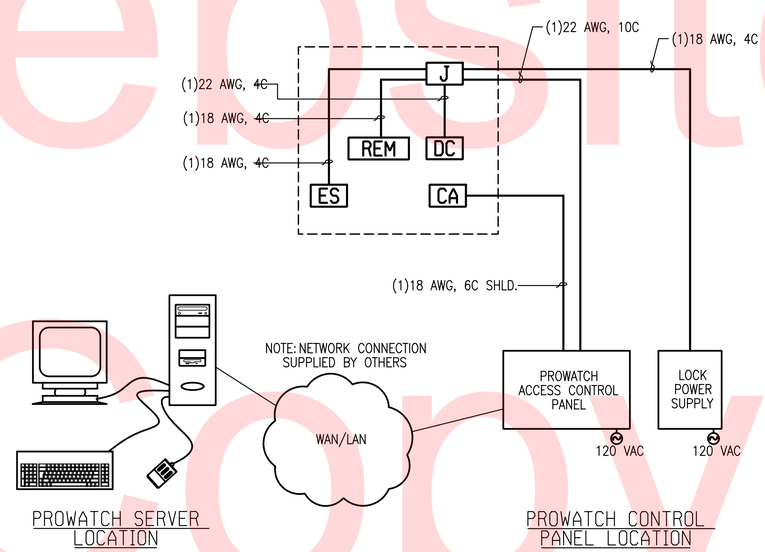

5 E-605 TYPICAL ACCESS CONTROL RISER (ELECTRONIC STRIKE)
SCALE: NTS

Unofficial Website Copy

N:\90181-019\CADD\CP01-90181019E-605.dgn
10/28/2015 10:38:00 AM

DELAWARE DEPARTMENT OF TRANSPORTATION	ADDENDUMS / REVISIONS	LEWES PARK & RIDE AND SITE WORK	CONTRACT T200612502	BRIDGE NO.	ELECTRICAL DETAILS
			COUNTY SUSSEX	DESIGNED BY: MSM	
				CHECKED BY: AP	

E-605
SHEET NO. 68
TOTAL SHTS. 72

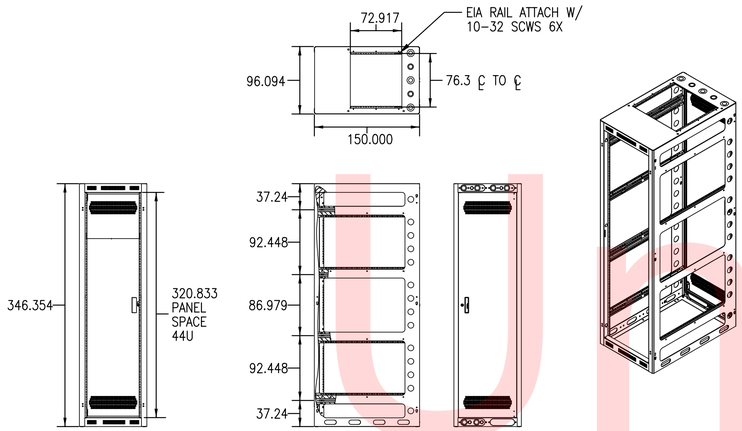

1 E-606 LOWELL (LGR-4432) RACK DETAIL
SCALE: NTS

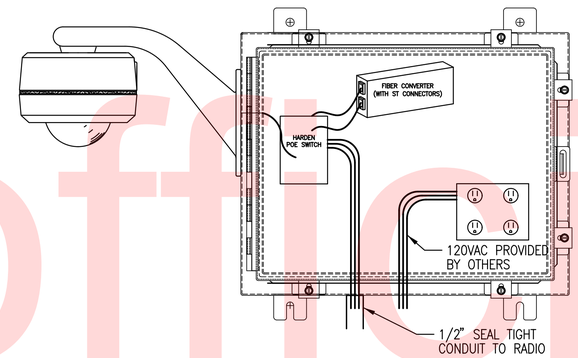

2 E-606 TYPICAL NEMA ENCLOSURE DETAIL
SCALE: NTS

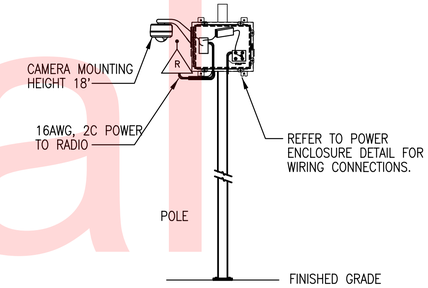

3 E-606 TYPICAL POLE-MOUNT CAMERA
SCALE: NTS

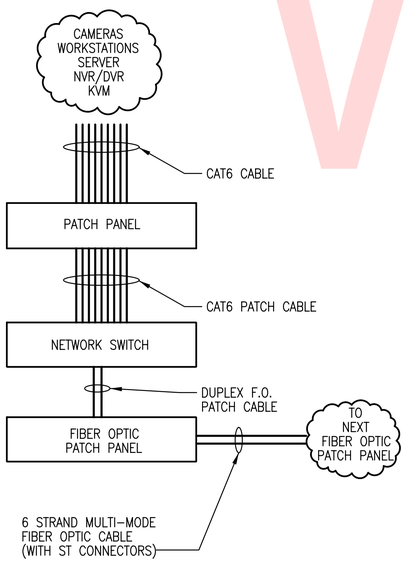

4 E-606 TYPICAL VIDEO MGMT. WIRING DIAGRAM
SCALE: NTS

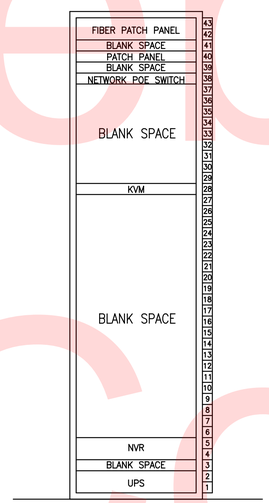

5 E-606 VIDEO MANAGEMENT LARGE RACK DETAIL
SCALE: NTS

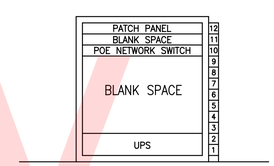

6 E-606 VIDEO MANAGEMENT RACK DETAIL
SCALE: NTS

CAMERA/VIDEO MGMT.	
NETWORK VIDEO RECORDER	NVR
NETWORK SWITCH	NS
PATCH PANEL	PP
KEYBOARD / VIDEO / MOUSE	KVM
BUILDING CAMERA	
POLE MOUNTED CAMERA	
WORKSTATION	WKST

Unofficial Website Copy

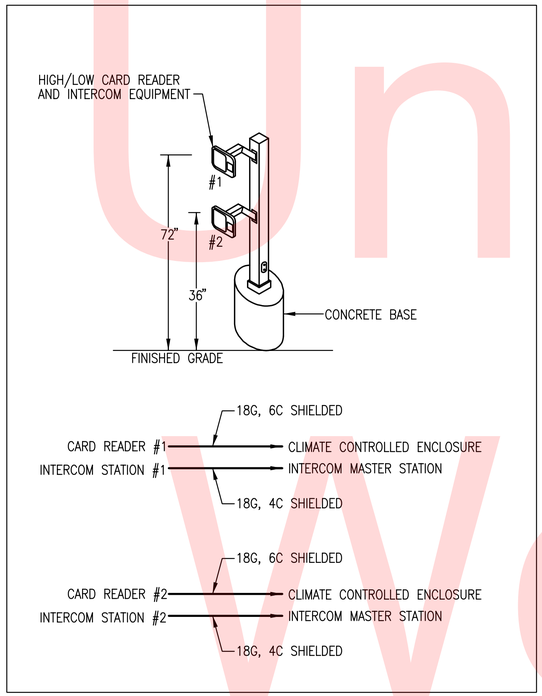

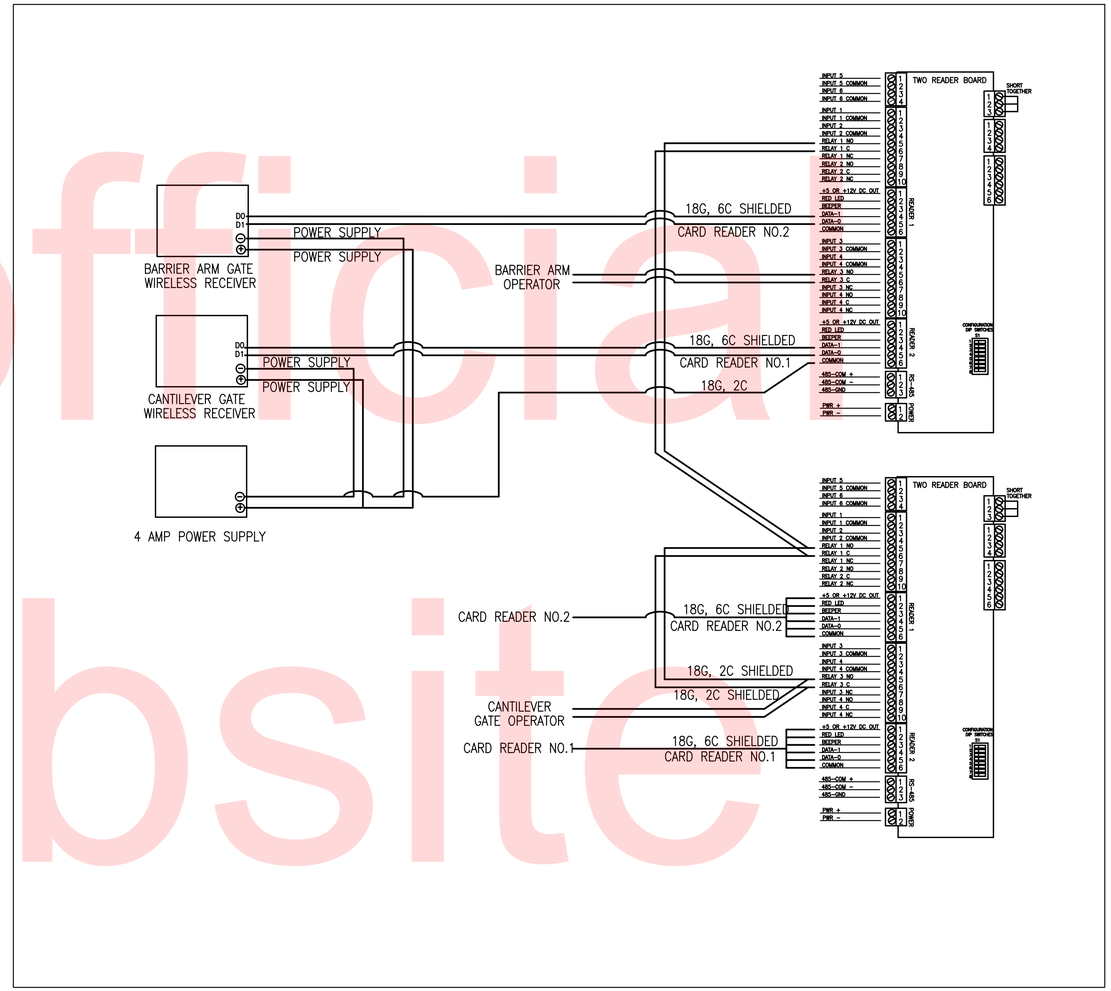

1 / E-607 GATE OPERATOR WIRING DIAGRAM
SCALE: NTS

Unofficial Website Copy

N:\9018\019\CADD\CP90-9018019E-607.dgn
10/28/2019 10:38:06 AM

DELAWARE DEPARTMENT OF TRANSPORTATION	ADDENDUMS / REVISIONS	LEWES PARK & RIDE AND SITE WORK	CONTRACT T200612502	BRIDGE NO.	ELECTRICAL DETAILS	E-607
			COUNTY SUSSEX	DESIGNED BY: MSM		SHEET NO. 70
				CHECKED BY: AP		TOTAL SHTS. 72

LIGHTING FIXTURE SCHEDULE

FIX. TYPE	DESCIRPTION	MOUNTING	LAMPS NO.	LAMPS WATTS	LAMPS TYPE	VOLTS	MAUNFACTURER AND CATALOG NUMBER	REMARKS	
A	2' X 4' ENERGYMAX INTERSECT FULL DISTRIBUTION RECESSED ARCHITECTURAL LUMINAIRE WITH 2 X 6 CELL MATTE WHITE LOUVER	RECESSED	2	32	T8	277	COLUMBIA LIGHTING EMI24-232G-E104U		
B	4' LINEAR FLUORESCENT, FROSTED ARCYLIC LENS, CORROSION RESISTANCE STEEL HOUSING, DIMMABLE	SURFACE	2	32	T8	277	BARTCO IPR8MS2UISFSMWH		
C	4' PREMIUM TURRET INDUSTRIAL FLUORESCENT FIXTURE	SUSPENDED	2	32	T8	277	COLUMBIA LIGHTING IC4-232-ST-EUICFC		
D	4' PREMIUM INDUSTRIAL FLUORESCENT FIXTURE	SUSPENDED	2	32	T8	277	COLUMBIA LIGHTING KL4-232-ST-E-U		
E	6" COMPACT FLUORESCENT DOWN LIGHT, PRISMATIC GLASS LENSE, WHITE PAINTED RELECTOR	RECESSED	1	26	26TRT	277	GOTHAM LGF1/26TRT6RWT73MVOLT		
F	HIGH BAY LED, SPECULAR REFLECTOR AND CLEAR CURVED ACRYLIC LENS	PENDANT	-	146	LED	277	DIALIGHT HB1C4N-LM79	MOUNT AT 25' AFF	
G	2' X 4' SPECIFICATION GRADE STATIC TROFFER WITH ACRYLIC PRISMATIC PATTERN 12 LENS	RECESSED	2	32	T8	277	COLUMBIA LIGHTING 4PS24-232G-FSA12-EU		
H	4'LONG X 4"X5" SLIM WALL MOUNT LIGHT WITH OPAL ACRYLIC LENS	WALL	2	32	T8	277	COLUMBIA LIGHTING W4-232-EU		
J	4' FLOURESCENT, ENCLOSED AND GASKETED FIBERGLASS INDUSTRIAL FIXTURE WITH CLEAR ACRYLIC CREPE LENS, UL LISTED FOR WET LOCATIONS.	WALL	3	32	T8	277	COLUMBIA LIGHTING FNPH4-332-EU2H3S	MOUNT AT 12' AFF	
K	DESIGNER EMERGENCY LIGHT	SURFACE	2	12	LED	277	Dual Light CV2NI		
K2	HIGH CAPACITY EMERGENCY LIGHTING UNIT, UL LISTED FOR DAMP LOCATIONS	SURFACE	2	56	LED	277	Dual Light LM56NDI		
L	(2) HEAD LED AREA LUMINAIRE, WIDE THROW DISTRIBUTION, ENERGY EFFICIENT, BLACK FINISH.	POLE	100C	436	LED	277	LITHONIA DSX2 LED 100C 700 40K T5W MVOLT SPA DBLXD	PROVIDE WITH INTERNAL PHOTOCELL	1
M	LED AREA LUMINAIRE, FORWARD THROW MEDIUM DISTRIBUTION, ENERGY EFFICIENT, BLACK FINISH.	POLE	100C	218	LED	277	LITHONIA DSX2 LED 100C 700 40K T4M MVOLT SPA DBLXD	PROVIDE WITH INTERNAL PHOTOCELL	2
N	LED AREA LUMINAIRE, FORWARD THROW MEDIUM DISTRIBUTION, ENERGY EFFICIENT, BLACK FINISH.	POLE	80C	37	LED	277	LITHONIA DSX2 LED 80C 530 40K T4M MVOLT SPA DBLXD	PROVIDE WITH INTERNAL PHOTOCELL	2
P	LED AREA LUMINAIRE, MEDIUM THROW DISTRIBUTION, HOUSE-SIDE SHIELD, ENERGY EFFICIENT, BLACK FINISH.	POLE	100C	218	LED	277	LITHONIA DSX2 LED 100C 700 40K T3M MVOLT SPA HS DBLXD	PROVIDE WITH INTERNAL PHOTOCELL	2
R	LED AREA LUMINAIRE, SHORT THROW DISTRIBUTION, HOUSE-SIDE SHIELD, ENERGY EFFICIENT, BLACK FINISH.	POLE	80C	142	LED	277	LITHONIA DSX2 LED 80C 530 40K T1S MVOLT SPA HS DBLXD	PROVIDE WITH INTERNAL PHOTOCELL	2
S	LED AREA LUMINAIRE, MEDIUM THROW DISTRIBUTION, ENERGY EFFICIENT, BLACK FINISH.	WALL	30C	54	LED	277	LITHONIA DSXW2 LED 30C 530 40K T4M MVOLT DBLXD	PROVIDE WITH INTERNAL PHOTOCELL	
T	LED AREA LUMINAIRE, REGULAR THROW DISTRIBUTION, ENERGY EFFICIENT, WHITE FINISH.	SURFACE	30C	67	LED	277	LITHONIA DSXSC LED 30C 700 40K T5R MVOLT DWHXD	CONNECT TO FIELD LOCATED EXTERNAL PHOTOCELL	
U	LED FLOOD LIGHT LUMINAIRE, HORIZONTAL FLOOD DISTRIBUTION, SINGLE "COB" ENGINE, ENERGY EFFICIENT, BLACK FINISH.	POLE	COB	21	LED	277	LITHONIA DSXF1-LED-1-A530/40K-HMF-MVOLT-THK-PE-DBLXD	PROVIDE WITH INTERNAL PHOTOCELL	3
W	LED WALL LUMINAIERE, MEDIUM DISTRIBUTION, SINGLE ENGINE, ENERGY EFFICIENT, BLACK FINISH.	WALL	10C	39	LED	277	LITHONIA LIGHTING TWH LED 10C T3M MVOLT PE DBLXD	PROVIDE WITH INTERNAL PHOTOCELL	
W2	LED WALL LUMINAIERE, MEDIUM DISTRIBUTION, DOUBLE ENGINE, ENERGY EFFICIENT, BLACK FINISH.	WALL	20C	72	LED	277	LITHONIA LIGHTING TWH LED 20C T3M MVOLT PE DBLXD	PROVIDE WITH INTERNAL PHOTOCELL	
W3	LED WALL LUMINAIERE, MEDIUM DISTRIBUTION, TRIPLE ENGINE, ENERGY EFFICIENT, BLACK FINISH.	WALL	30C	104	LED	277	LITHONIA LIGHTING TWH LED 30C T3M MVOLT PE DBLXD	PROVIDE WITH INTERNAL PHOTOCELL	
X	CAST ALUMINUM LED EXIT SIGN WITH RED LETTERING	SURFACE	1	3.8	LED	277	DUAL LITE SESRWEI		
X1	CAST ALUMINUM LED EXIT SIGN WITH RED LETTERING, UL LISTED FOR DAMP LOCATIONS	SURFACE	1	7.22	LED	277	DUAL LITE LED2EMRWW		
X2	CAST ALUMINUM LED EXIT SIGN WITH RED LETTERING, UL LISTED FOR WET LOCATIONS	SURFACE	1	3.8	LED	277	DUAL LITE LN4XRWE		

SPECIFIC NOTES:

1. MOUNT FIXTURE TO 40FT, DUAL LUMINAIRE, SITE POLE RATED FOR 140MPH. LITHONIA CAT# (6)RTS 40 9-0B DM28 FBC VD-SNAKE DDB/GALV L/AB.
2. MOUNT FIXTURE TO 40FT, SINGLE LUMINAIRE, SITE POLE RATED FOR 140MPH. LITHONIA CAT# (5)RTS 40 9-0B DM19 FBC VD-SNAKE DDB/GALV L/AB.
3. STEM MOUNTED TO RGS PIPE 12 INCHES ABOVE FINISHED GRADE.

BASIS OF DESIGN NOTE:

PRODUCTS LISTED ARE THE BASIS OF DESIGN, CONTRACTOR MAY SUBMIT EQUALS FOR REVIEW AND APPROVAL.

CONTRACTOR MUST VERIFY, ANY EQUAL FIXTURE SUBMITTED WILL MEET THE MINIMUM REQUIRED FOOT-CANDLE LEVEL LISTED IN THE IES STANDARDS FOR EACH ROOM OR AREA. AT THE REQUEST OF THE ENGINEER THE CONTRACTOR SHALL PROVIDE FOOT-CANDLE CALCULATIONS TO SUPPORT COMPLIANCE. THIS APPLIES TO BOTH INTERIOR AND EXTERIOR APPLICATIONS.

Unofficial Website Copy

PANELBOARD RSP

10, 000 RMS
NEMA ENCLOSURE: TYPE 1

225 AMPS BUS
208Y/120 VOLTS
SURFACE MOUNTED

225 AMP MCB
3 PHASE, 4 WIRE + GROUND
PANEL LOCATION - UTILITY BUILDING

LOAD SERVED	LOAD (AMPS) A	LOAD (AMPS) B	LOAD (AMPS) C	CB TRIP	WIRE SIZE	CKT	PHASE A	PHASE B	PHASE C	CKT	WIRE SIZE	CB TRIP	LOAD (AMPS) A	LOAD (AMPS) B	LOAD (AMPS) C	LOAD SERVED
FORNT PARKING LOT CCTV CAMERAS	1			20	10	1				2	10	20	16			GENERATOR BLOCK HEATER
REAR PARKING LOT CCTV CAMERAS		0.5		20	10	3				4	12	20		5		GENERATOR BATTERY CHARGER
REC UTILITY BLDG			8	20	12	5				6	12	20			4	GENERATOR LIGHTS AND REC
SPARE				20		7				8	4	40	32			PV STATION #1
SPARE				20		9				10				32		
GATE ARM SOUTH			5.4	20	10	11				12	4	40			32	PV STATION #1
SPARE				20		13				14			32			
SPARE				20		15				16	4	40		32		PV STATION #2
SPARE				20		17				18					32	
SPARE				20		19				20	4	40	32			PV STATION #2
SPARE				20		21				22				32		
SPARE				20		23				24		20				SPARE
SPARE				20		25				26		20				SPARE
SPARE				20		27				28		20				SPARE
REC COM RM			5	20	12	29				30		20				SPARE
REC COM RM	5			20	12	31				32		20				SPARE
REC COM RM		5		20	12	33				34		20				SPARE
REC COM RM			5	20	12	35				36		20				SPARE
SPARE				20		37				38		20				SPARE
SPARE				20		39				40		20				SPARE
SPARE				20		41				42		20				SPARE
TOTAL	6	5.5	23.4										112	101	68	TOTAL

TOTAL CONNECTED AMPS: A= 118 B= 107 C= 91.4

PANELBOARD LPN

22, 000 RMS
NEMA ENCLOSURE: TYPE 1

100 AMPS BUS
480Y/277 VOLTS
SURFACE MOUNTED

100 AMP MCB
3 PHASE, 4 WIRE + GROUND
PANEL LOCATION - 116 ELEC

LOAD SERVED	LOAD (AMPS) A	LOAD (AMPS) B	LOAD (AMPS) C	CB TRIP	WIRE SIZE	CKT	PHASE A	PHASE B	PHASE C	CKT	WIRE SIZE	CB TRIP	LOAD (AMPS) A	LOAD (AMPS) B	LOAD (AMPS) C	LOAD SERVED
FRONT PARKIN LOT SOUTH LIGHTING	5.2			20	8	1				2	8	20				SPARE
FRONT PARKIN LOT NORTH LIGHTING		3.7		20	10	3				4	10	20				SPARE
REAR PARKIN LOT SOUTH LIGHTING			2.9	20	10	5				6	12	20				SPARE
REAR PARKIN LOT NORTH LIGHTING	1.6			20	12	7				8	12	20				SPARE
EXIT SIGNS/EMERGENCY LIGHTING		1.0		20	12	9				10	12	20				SPARE
SPARE				20		11				12	12	20				SPARE
SPARE				20		13				14		20				SPARE
SPARE				20		15				16		20				SPARE
SPARE				20		17				18		20				SPARE
SPARE				20		19				20		20				SPARE
SPARE				20		21				22		20				SPARE
SPARE				20		23				24		20				SPARE
SPARE				20		25				26		20				SPARE
SPARE				20		27				28		20				SPARE
SPARE				20		29				30		20				SPARE
TOTAL	6.81	4.67	2.87										0	0	0	TOTAL

Unofficial Website Copy

N:\90181-019\CADD\CP01-90181019E-702.dgn
10/28/2015 10:38:23 AM

DELAWARE
DEPARTMENT OF TRANSPORTATION

ADDENDUMS / REVISIONS

LEWES PARK & RIDE
AND SITE WORK

CONTRACT T200612502
COUNTY SUSSEX
BRIDGE NO.
DESIGNED BY: MSM
CHECKED BY: AP

ELECTRICAL
PANEL SCHEDULES

E-702
SHEET NO. 72
TOTAL SHTS. 72