UNOFFICIAL WEBSITE COPY

THE STATE OF DELAWARE
DEPARTMENT OF TRANSPORTATION

U.S. CUSTOMARY UNITS

SPECIFICATION AND CONSTRUCTION PLANS FOR:

NORTHEAST CORRIDOR IMPROVEMENTS
YARD TO RAGAN – CIVIL, STRUCTURAL

CONTRACT NUMBER T200751201
FEDERAL AID PROJECT NUMBER HPP-2005 (028)

COUNTY: NEW CASTLE **M.R. #:** N/A (AMTRAK CORRIDOR)

FROM AMTRAK MILE POST 28.15 TO MILE POST 29.85

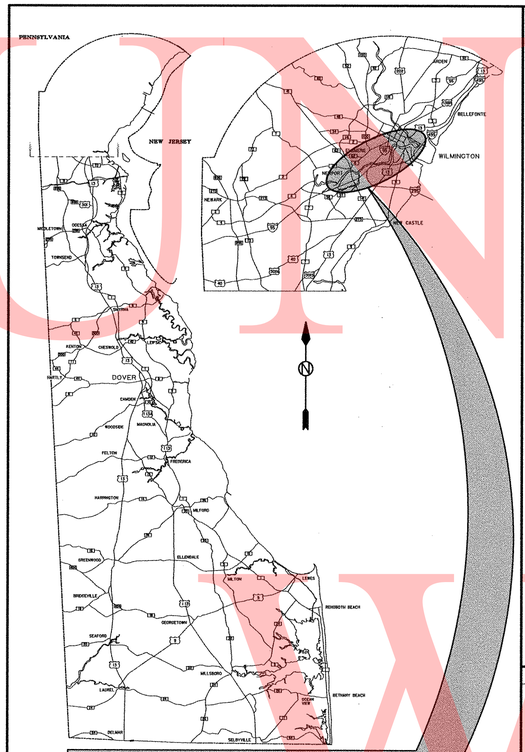

GENERAL LOCATION OF CONTRACT

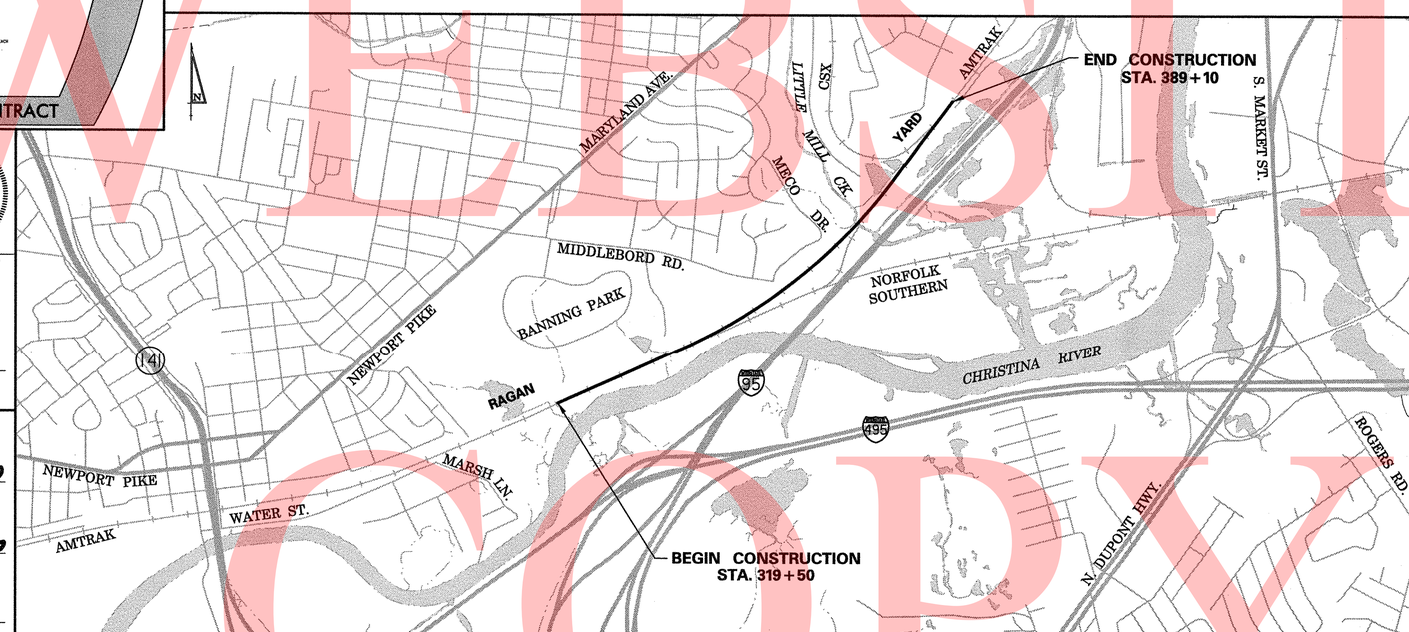

DESIGN DESIGNATION

FUNCTIONAL CLASS:	N/A		D.H.V. PROJECTED:	N/A	YEAR: N/A
TYPE OF CONSTRUCTION:	N/A		DESIGN SPEED: M.P.H.	N/A	
A.A.D.T. CURRENT:	N/A	YEAR:	TRUCKS: %	N/A	
A.A.D.T. PROJECTED:	N/A	YEAR:	DIRECTION OF DISTRIBUTION:	N/A %	

INDEX OF SHEETS

SHEET Nº	TABLE OF CONTENTS
	VOLUME NO. 1
1	TITLE
2	PLAN SHEET LAYOUT
3-4	GENERAL NOTES AND LEGEND
5	EROSION AND SEDIMENT CONTROL NOTES
6-15	EROSION AND SEDIMENT CONTROL PLANS
16-25	PLAN AND PROFILE
26	TYPICAL SECTIONS
27-28	DRAINAGE DETAILS
29-36	MILL CREEK SCOUR PROTECTION PLANS, DETAILS, AND PHASING
37-49	MILL CREEK BRIDGE - STRUCTURAL PLANS AND DETAILS
49A	DOWNGUY ANCHOR PLATE
50-53	MILL CREEK RETAINING WALL - STRUCTURAL PLANS AND DETAILS
54-71	SOLDIER PILE WALL PLANS AND DETAILS
72-74	SUPPORT OF EXCAVATION PLANS AND DETAILS
75-83	SOIL BORING LAYOUT PLANS
84-85	SOIL BORING LAB DATA AND INFORMATION
86-93	BORING AND DRIVE TESTS
94-103	EXISTING CONDITIONS PLANS
104-105	SURVEY CONTROL
106	BASELINE OF CONSTRUCTION DATA
107-108	CONTRACTOR ACCESS PLAN
109-118	ENVIRONMENTAL COMPLIANCE PLANS
119-134	CROSS SECTIONS
135-140	CATENARY STRUCTURE REFERENCE DRAWINGS

TOTAL SHEETS: 142

APPROVED DESIGN EXCEPTIONS

DESIGN PARAMETER	REQUIRED	PROVIDED	DATE

ADDENDA & REVISIONS

DESCRIPTION	NAME & DATE

ASSOCIATED CONTRACTS

CONTRACT NO.	CONTRACT NAME

PREPARED BY
THE CONSULTING FIRM OF

RK&K

RUMMEL, KLEPPER & KAHL, LLP
CONSULTING ENGINEERS
81 MOSHER STREET
BALTIMORE, MD 21217

RECOMMENDED — DATE 11/17/11

THOMAS E. MOHLER REGISTERED No. 14234 DELAWARE PROFESSIONAL ENGINEER — SEAL

RECOMMENDED

SQUAD MANAGER, CONSTRUCTION — DATE 11/19/10

GROUP ENGINEER, CONSTRUCTION — DATE 11/19/10

ASSISTANT DIRECTOR, TRANSPORTATION SOLUTIONS (CONSTRUCTION) — DATE 11-19-10

DEPARTMENT OF TRANSPORTATION

AMTRAK

OFFICE OF THE
CHIEF ENGINEER - ENGINEERING
National Railroad Passenger Corporation
30TH Street Station, Philadelphia, PA 19104

RECOMMENDED
DEVELOPMENT DIRECTOR
DELAWARE TRANSIT CORPORATION
DATE 11-18-10

RECOMMENDED
DIRECTOR
DELAWARE TRANSIT CORPORATION
DATE 11-18-10

RECOMMENDED
STORMWATER ENGINEER
DATE 23 NOV 2010

VINCENT W. DAVIS REGISTERED No. 12298 DELAWARE PROFESSIONAL ENGINEER — SEAL

APPROVED
CHIEF ENGINEER
DATE 11/23/10

NATALIE M. BARNHART REGISTERED No. 8880 DELAWARE PROFESSIONAL ENGINEER — SEAL

11/15/2010
\\RKK\DATA\20071\20071.07052.07C\Third-Trk\CADD\Plans\T01-MYLAR.dgn
PLOTTER = RAIL-PS-BW.PLT; PEN TABLE = BALTIMORE.TBL

CONTRACT	COUNTY	F.A.P. NO.	SHEET NO.	TOTAL SHTS
27-512-01	NEW CASTLE	HPP-2005 (028)	2	140

DRAWING NO. PI-1

PLAN SHEET INDEX

THIRD TRACK

SCALE
500 250 0 500
1"= 500'

NEC COMMUTER RAIL IMPROVE.– DELAWARE YARD to RAGAN – Civil, Structural

DATE: APRIL 20, 2009

REVISIONS

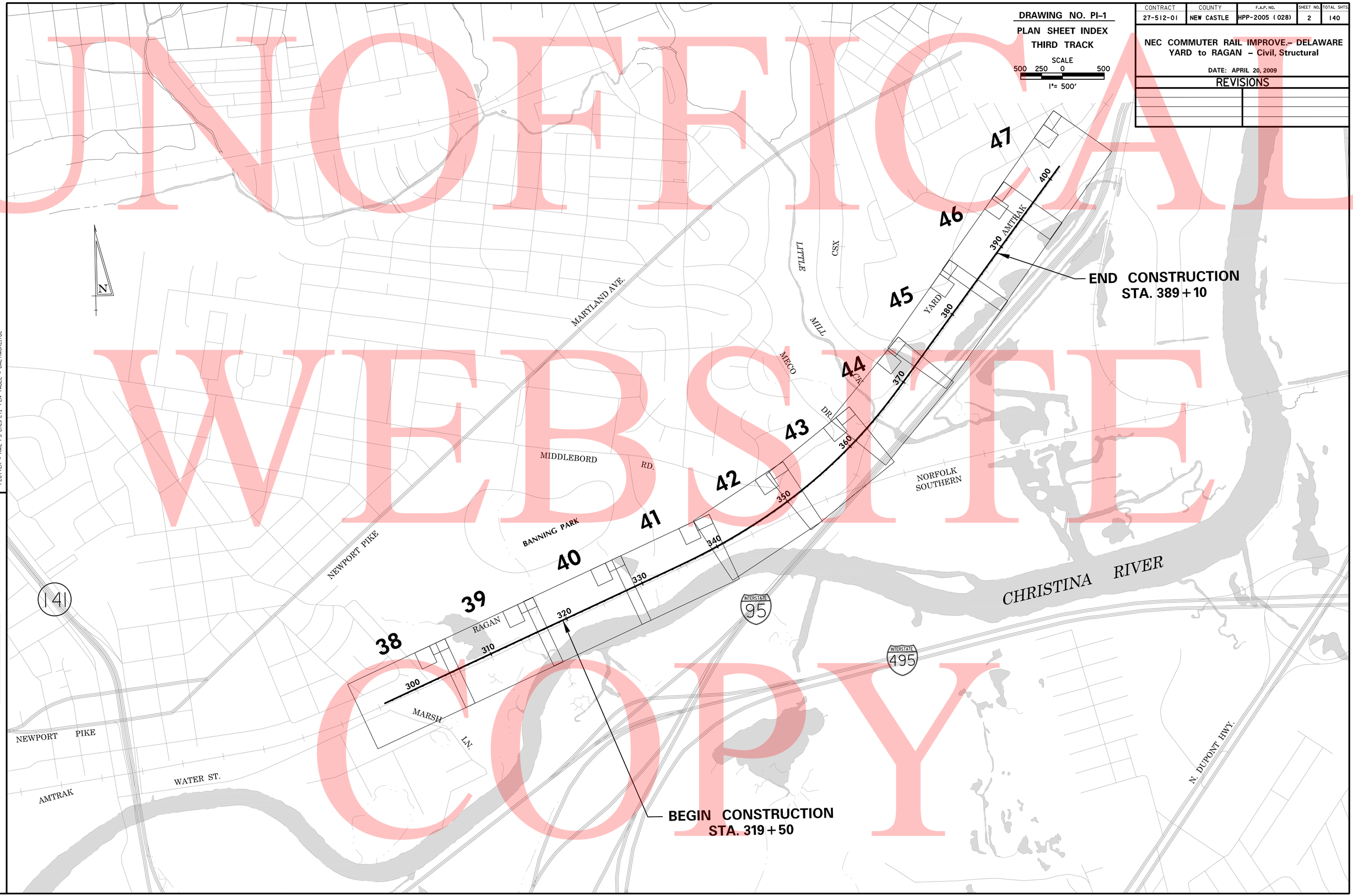

4/16/2009
M:\Projects\2007\07052.DTC\Third-Trk\CADD\Plans\PI01DTC.dgn
PLOTTER = RAIL-PS-EHL.PLT, PEN TABLE = BALTIMORE.TBL

PREL. TRACING _____ DESIGN _____ CHKD. _____

UNOFFICIAL WEBSITE COPY

CONTRACT	COUNTY	F.A.P. NO.	SHEET NO.	TOTAL SHTS
27-512-01	NEW CASTLE	HPP-2005 (028)	3	140

DRAWING NO. G-1

PROJECT NOTES

THIRD TRACK

NEC COMMUTER RAIL IMPROVE.- DELAWARE YARD to RAGAN - Civil, Structural

DATE: APRIL 20, 2009

REVISIONS

1. THE LOCATIONS OF THE EXISTING UTILITIES SHOWN ARE APPROXIMATE, AND SHOULD BE CONSIDERED LOCATED TO QUALITY LEVEL 'D'. THE CONTRACTOR SHALL COORDINATE WITH AMTRAK FOR MARKINGS AND SHALL NOTIFY 'MISS UTILITY' AT TELEPHONE NUMBER 1-800-282-8555 PRIOR TO ANY EXCAVATION OR BELOW GRADE INSTALLATION/RELOCATION. ALL EXISTING UTILITIES SHALL BE PROTECTED, TEMPORARILY SUPPORTED AND/OR RELOCATED AS NECESSARY TO COMPLETE THE WORK IN ACCORDANCE WITH THE RESPECTIVE UTILITY COMPANY. COSTS SHALL BE INCIDENTAL TO THE ITEM OF WORK BEING COMPLETED.

2. THE ENGINEER MAY REQUIRE THE CONTRACTOR TO EXCAVATE TEST PITS AT POINTS OF POSSIBLE UTILITY CONFLICTS, TO DETERMINE IF A CONFLICT EXISTS. ANY CONFLICTS SHALL BE COORDINATED BY THE CONTRACTOR, WITH THE ENGINEER AND THE UTILITY COMPANY INVOLVED. THE ENGINEER SHALL ULTIMATELY DETERMINE THE SOLUTION TO THE UTILITY CONFLICT. TEST HOLES SHALL BE MEASURED AND PAID FOR IN ACCORDANCE WITH ITEM 208000, BUT ONLY TO THE ACTUAL DEPTH EXCAVATED.

3. EXISTING PROPERTY MONUMENTS THAT ARE DISTURBED OR DESTROYED DURING CONSTRUCTION SHALL BE REPLACED WITH NEW MONUMENTS OF COMPARABLE MATERIAL AND SIZE TO THE ORIGINAL AND MEETING THE CURRENT STANDARDS FOR MONUMENTATION. ALL MONUMENTS THAT ARE PLACED SHALL BE LOCATED AND SET BY, OR UNDER THE SUPERVISION OF, A REGISTERED PROFESSIONAL ENGINEER OR LAND SURVEYOR LICENSED TO PRACTICE IN THE STATE OF DELAWARE.

4. ALL PLAN DIMENSIONS ARE MEASURED TO THE CENTERLINE OF TRACK WHERE APPLICABLE, UNLESS OTHERWISE NOTED.

5. ALL LOADED TRUCKS HAULING TO OR FROM THE PROJECT SITE SHALL HAVE AN APPROVED COVER. THE COVER SHALL BE TIED ON THE REAR AND BOTH SIDES AND ENCLOSE THE TOP TO PREVENT MATERIAL FROM LEAVING THE TRUCK WHILE IN TRANSIT. THE COST TO COVER THE TRUCKS SHALL BE INCIDENTAL TO THE TRANSPORTED ITEM.

6. POOR SUBGRADE SOILS THAT ARE ENCOUNTERED AND DETERMINED BY THE ENGINEER TO REQUIRE UNDERCUT EXCAVATION SHALL BE EXCAVATED TO THE DEPTH DETERMINED BY THE ENGINEER AND SHALL BE PAID UNDER ITEM 212000, UNDERCUT EXCAVATION. BORROW TYPE B (209002) SHALL BE USED FOR UNDERCUT BACKFILL IN WET AREAS, ALL OTHER UNDERCUT BACKFILL AREAS SHALL BE BACKFILLED WITH BORROW TYPE F (209006) UNLESS OTHERWISE DIRECTED BY THE ENGINEER. GEOTEXTILE SEPARATION (713002) SHALL BE INSTALLED PRIOR TO BACKFILLING, AS DIRECTED BY THE ENGINEER.

7. THE CONTRACTOR IS RESPONSIBLE FOR PROVIDING AN AREA SUITABLE FOR STOCKPILING BORROW, TOPSOIL AND OTHER FILL MATERIAL REQUIRED FOR THE PROJECT IN ACCORDANCE WITH SECTIONS 110.07 AND 110.10 OF THE STANDARD SPECIFICATIONS. SUBJECT TO THE APPROVAL OF THE ENGINEER. STOCKPILE AREA MAY BE LOCATED OUTSIDE THE PROJECT LIMITS, IF NECESSARY. NO ADDITIONAL PAYMENT WILL OCCUR FOR OFFSITE STOCKPILING.

8. DURING CUT AND FILL OPERATIONS, SUFFICIENT SLOPE CONTROL STAKES MUST BE PROVIDED BY THE CONTRACTOR AS DIRECTED BY THE ENGINEER IN ORDER TO ASSURE THAT THE DESIGNED RATES OF SLOPE ARE BEING MAINTAINED. ADDITIONALLY, A LINE OF STAKES WILL BE REQUIRED AT ALL 'HINGE POINTS', BREAKS IN SUBGRADE, BREAKS IN FINAL GRADE, AND AT OTHER LOCATIONS DEEMED NECESSARY BY THE ENGINEER. THIS WORK SHALL BE INCLUDED IN ITEM 763501-CONSTRUCTION ENGINEERING.

9. ANY DAMAGE TO ITEMS NOTED TO BE RELOCATED OR RESET BY THE CONTRACTOR, AT THE DISCRETION OF THE ENGINEER, SHALL BE REPAIRED AND/OR REPLACED IN KIND AT THE CONTRACTOR'S EXPENSE.

10. ALL TREES, STUMPS AND ROOTMAT REMOVED UNDER 201000 SHALL BE ENTIRELY REMOVED REGARDLESS OF DEPTH. BURIAL OF ORGANIC MATTER WITHIN THE PROJECT LIMITS IS NOT PERMITTED. OPEN BURNING OF TREES, STUMPS, BRUSH, ETC. IS NOT PERMITTED. CHIPPED MATERIAL MUST BE REMOVED PRIOR TO PLACING EMBANKMENT OR TOPSOIL.

11. CONSTRUCTION OF ANY PROPOSED DRAINAGE, TEMPORARY DRAINAGE, OR INSTALLATION OF EROSION CONTROL MEASURES SHALL START AT THE OUTFALL AND PROGRESS UPSTREAM FOR ALL CONSTRUCTION PHASES.

12. ALL PROPOSED DRAINAGE STRUCTURES TO CONNECT TO EXISTING PIPES, OR CONSTRUCTED ON EXISTING PIPES, MUST BE CAST-IN-PLACE CONCRETE. ALL OTHER DRAINAGE INLETS AND MANHOLES SHALL BE PRECAST OR CAST-IN-PLACE CONCRETE. THE CONTRACTOR IS ADVISED THAT INVERT OR ALIGNMENT ADJUSTMENTS, OR DRAINAGE INLET ELIMINATION, MAY BE REQUIRED IN THE FIELD TO AVOID EXISTING, UNANTICIPATED, UNDERGROUND CONFLICTS. SHOULD THE CONTRACTOR ELECT TO PRECAST THE DRAINAGE STRUCTURES, ANY DRAINAGE INLET ELIMINATIONS OR FIELD ADJUSTMENTS THAT WOULD REQUIRE MODIFICATION OR RE-CASTING OF PRECAST UNITS SHALL BE THE COMPLETE RESPONSIBILITY OF THE CONTRACTOR. THE DEPARTMENT WILL NOT CONSIDER ANY RENEGOTIATIONS OF DRAINAGE INLET BID PRICES. THE CONTRACTOR MUST WEIGH THIS WHEN CONSIDERING HIS OPTION TO PRECAST OR CAST-IN-PLACE. IN ALL CASES WHEN USING PRECAST UNITS, IT IS UNDERSTOOD THAT THE UNIT BID PRICE INCLUDES A MINIMUM CLEARANCE OF 2" ON ALL SIDES FROM THE OUTSIDE WALL OF ANY PIPE ENTERING OR EXITING THE UNIT TO THE INSIDE WALL OF THE PRECAST INLET OR MANHOLE WHICH WILL REQUIRE MODIFICATIONS TO THE CURRENT INLET AND MANHOLE DESIGN. THESE DESIGN MODIFICATIONS SHALL BE CLEARLY IDENTIFIED ON ALL PRECAST SHOP DRAWINGS.

13. ALL EXISTING DRAINAGE SYSTEMS SHOWN WITHIN THE RIGHT-OF-WAY ARE TO REMAIN OPERATIONAL.

14. ALL COSTS ASSOCIATED WITH CONNECTING PROPOSED STORM DRAINAGE PIPES TO EXISTING DRAINAGE INLETS OR EXISTING PIPES SHALL BE CONSIDERED INCIDENTAL TO THE COST OF THE PIPE BEING INSTALLED.

15. THE STATION AND OFFSET OF ALL DRAINAGE STRUCTURES ARE MEASURED TO THE CENTER OF THE STRUCTURE.

16. WHERE ADJUSTMENTS ARE REQUIRED TO NEW DRAINAGE STRUCTURES I.E. DRAINAGE INLETS, MANHOLES, JUNCTION BOXES, ETC., FOR STAGED CONSTRUCTION, THE ADJUSTED TOPS SHALL BE CAST-IN-PLACE CONCRETE. ELEVATION ADJUSTMENTS SHALL NOT EXCEED 1'. THIS NOTE SHALL SUPERSEDE ANY REFERENCE TO STANDARD CONSTRUCTION METHODS AS REFERRED TO ON THE STANDARD CONSTRUCTION DETAIL SHEETS. CONTRACTOR SHALL SUBMIT DETAILED PLANS SHOWING SECTIONS, JOINTS, REINFORCEMENT AND OTHER PERTINENT INFORMATION FOR APPROVAL. COST SHALL BE INCIDENTAL TO THE RESPECTIVE DRAINAGE STRUCTURE.

17. DELDOT WILL BE RESPONSIBLE FOR OBTAINING THE FOLLOWING PERMITS:
    - ACOE INDIVIDUAL PERMIT
    - DNREC SUBAQUEOUS LANDS PERMIT
    - DNREC WETLANDS PERMIT
    - DNREC WATER QUALITY CERTIFICATION
    - NEW CASTLE COUNTY FLOODPLAIN DEVELOPMENT APPROVAL
    - NEW CASTLE COUNTY NOISE ORDINANCE

    THE CONTRACTOR SHALL BE RESPONSIBLE FOR OBTAINING ALL OTHER PERMITS REQUIRED, FOR PURPOSES OF CONSTRUCTION FOR THE PROJECT. ANY CHANGES TO THE PERMITS REQUIRED BY THE CONTRACTOR SHALL BE OBTAINED BY THE CONTRACTOR. DIFFICULTIES IN OBTAINING THE PERMITS OR CHANGES TO PERMITS WILL NOT JUSTIFY A DELAY IN THE CONSTRUCTION SCHEDULE OR INCREASE IN COST.

18. THE LUMP SUM BID FOR ITEM 763000, INITIAL EXPENSE, SHALL INCLUDE ALL COSTS ASSOCIATED WITH ANY CONSTRUCTION ENTRANCES INCLUDING CLEARING AND GRUBBING, OBTAINING RAILROAD RIGHT - OF ENTRY AGREEMENTS, CONSTRUCTING THE ENTRANCE SECURING THE ENTRANCE, MAINTAINING THE ENTRANCE, REMOVING THE ENTRANCE AND RESTORING THE AREA ONCE THE ENTRANCE IS REMOVED.

19. CLEARANCES:
    A. THE CONTRACTOR SHALL NOTE VERTICAL AND HORIZONTAL CLEARANCE RESTRICTIONS AS SHOWN ON THE PLANS OR DESCRIBED IN THE SPECIAL PROVISIONS.

    B. THE CONTRACTOR SHALL COORDINATE WITH AMTRAK AND RECEIVE WRITTEN APPROVAL FOR ALL ACTIVITIES WITHIN 25 FEET OF TRACKS OR ELECTRICAL WIRES.

    C. ALL WIRES SHALL BE CONSIDERED ENERGIZED UNLESS SPECIFICALLY NOTIFIED OTHERWISE BY AMTRAK AND APPROPRIATE GROUNDING APPARATUS IS IN-PLACE.

    D. THE CONTRACTOR SHALL COORDINATE WITH NORFOLK SOUTHERN AND/OR CSXT FOR ACTIVITIES WITHIN 25 FEET OF FREIGHT TRACKS.

20. THE CONTRACTOR SHALL COORDINATE WITH AMTRAK ET REGARDING REQUIRED PROTECTION MEASURES WHEN WORKING NEAR DOWN GUYS AND CATENARY POLES.

ENVIRONMENTAL RESTRICTIONS

1. NO WORK SHALL OCCUR IN THE LITTLE MILL CREEK FROM APRIL 1 THROUGH MAY 30.

2. ALL CONSTRUCTION ACTIVITIES SHALL OCCUR WITHIN THE L.O.C. AS DESIGNATED ON THE PLAN SHEETS. ANY DEVIATION FROM THIS L.O.C. BY THE CONTRACTOR SHALL REQUIRE APPROVAL OBTAINED BY THE CONTRACTOR FROM A.C.O.E, DNREC, AND SHPO.

EARTHWORK SUMMARY

EXCAVATION	
EXCAVATION FROM CROSS SECTIONS	6078 C.Y.
ROCK EXCAVATION FOR ROADWAY AND TRENCHES	0 C.Y.
TOPSOIL STRIPPING	420 C.Y.
EXCAVATION AVAILABLE FOR EMBANKMENT	
EXCAVATION MEETING BORROW TYPE 'A'	0 C.Y.
EXCAVATION MEETING BORROW TYPE 'F'	5658 C.Y.
EXCAVATION MEETING TOPSOIL	0 C.Y.
EMBANKMENT REQUIREMENTS	
BORROW TYPE 'A' REQUIRED	0 C.Y.
BORROW TYPE 'F' REQUIRED (INCLUDING UNDERCUT)	25 C.Y.
TOPSOIL REQUIRED	643 C.Y.
MATERIAL BALANCE (+ =EXCESS, - =NEED)	
BORROW TYPE 'A'	0 C.Y.
BORROW TYPE 'F'	+5633 C.Y.
TOPSOIL	-643 C.Y.
UNSUITABLE MATERIAL	+520 C.Y.

THIS CHART IS FOR INFORMATIONAL PURPOSES ONLY. EARTHWORK SUMMARY IS BASED ON ESTIMATED QUANTITIES FOR EXCAVATION, BORROW, AND TOPSOIL.

TRACK MONITORING

A. SCOPE: IF ANY WORK THAT COULD POTENTIALLY AFFECT THE STABILITY OF THE TRACK IS OCCURRING WITHIN 50 FEET OF A TRACK, OR WITHIN THE INFLUENCE LINE OF A TRACK, THEN MONITORING POINTS SHALL BE ESTABLISHED ALONG THE TRACK. THE INFLUENCE LINE DESCENDS FROM A POINT ONE FOOT HORIZONTALLY AWAY FROM THE OUTSIDE END OF THE TIE BOTTOM ONE UNIT VERTICALLY FOR EVERY UNIT AND A HALF HORIZONTALLY.

B. SAFETY: ALL WORK CLOSE ENOUGH TO FOUL A TRACK MUST ONLY BE PERFORMED UNDER THE DIRECTION OF QUALIFIED RAILROAD PERSONNEL. PEOPLE PERFORMING TRACK MONITORING ARE CLASSIFIED AS ROADWAY WORKERS AND MUST BE TRAINED IN ROADWAY WORKER PROTECTION.

C. FOULING DEFINITION: ANY EQUIPMENT OR MATERIAL SHALL BE CONSIDERED TO BE FOULING A TRACK OR OVERHEAD WIRE WHEN LOCATED WITHIN 15 FEET FROM THE CENTERLINE OF THE TRACK OR WITHIN 15 FEET FROM THE WIRE OR IN SUCH A POSITION THAT FAILURE OF SAME, WITH OR WITHOUT LOAD, WOULD BRING IT WITHIN 15 FEET FROM THE CENTERLINE OF TRACK OR WITHIN 15 FEET FROM THE WIRE.

D. POINTS: EACH LOCATION SHALL INCLUDE A POINT ON THE TOP OF RAIL MARKED WITH PAINT OR CRAYON ON THE FIELD SIDE OF THE RAIL AND USED FOR VERTICAL MEASUREMENTS, AND A POINT ON THE TIE FOR HORIZONTAL MEASUREMENTS. IN WOOD TIES, THE POINT SHALL BE MARKED WITH A PK NAIL OR SIMILAR SURVEYOR 3/32 S MARKER; ON CONCRETE OR STEEL TIES THE POINT SHALL BE MARKED WITH PAINT.

E. POINT LOCATIONS: REFERENCE POINTS SHALL BE ESTABLISHED ALONG THE TRACK BEGINNING AT THE POINT WHERE THE WORK IS CLOSEST TO THE TRACK. POINTS SHALL CONTINUE TO BE PLACED AT INTERVALS OF 50 FEET ALONG THE TRACK TO THE POINT WHERE THE WORK ENDS OR DOES NOT MEET THE CONDITIONS OUTLINED ABOVE, AND THEN AT 50 FEET, 100 FEET, AND 200 FEET AWAY FROM THE END POINT(S). WHERE MORE THAN ONE TRACK MAY BE AFFECTED, POINTS SHALL BE ESTABLISHED ON EACH TRACK THAT COULD BE AFFECTED.

F. MEASUREMENT ACCURACY: MONITORING POINTS SHALL BE ESTABLISHED TO WITHIN 0.001 FEET, AND MONITORING SHALL BE DONE TO 0.01 FEET.

G. MONITORING: MONITORING SHALL BE PERFORMED AT THE BEGINNING AND END OF EVERY SHIFT OF WORK. POINTS SHALL BE MEASURED, THE MEASUREMENTS RECORDED, AND THE NUMBERS COMPARED WITH PREVIOUS MEASUREMENTS. ALL POINTS SHALL BE MEASURED EACH TIME MONITORING OCCURS, EXCEPT FOR THE POINTS 200 FEET AWAY FROM THE END OF WORK; THESE POINTS SHALL ONLY BE MEASURED IF ANY OF THE OTHER MEASUREMENTS EXCEEDS AN ALLOWABLE DEVIATION.

H. ALLOWABLE DEVIATIONS: IF TRACK IS FOUND TO HAVE MOVED EITHER VERTICALLY OR HORIZONTALLY BY MORE THAN ONE HALF OF THE AMTRAK MAINTENANCE LIMITS AS SPECIFIED IN AMTRAK 3/32 S MW-1000 FOR THE PARTICULAR CLASS OF TRACK INVOLVED, THEN ALL WORK SHALL CEASE IMMEDIATELY AND THE CONTRACTOR SHALL IMMEDIATELY NOTIFY THE DESIGNATED AMTRAK PROJECT ENGINEER. WORK MAY NOT RESUME UNTIL THE DESIGNATED AMTRAK PROJECT ENGINEER HAS INSPECTED THE SITE AND APPROVED.

I. TRACK MAINTENANCE: DEFICIENCIES IN TRACK SURFACE AND ALIGNMENT CAUSED BY CONSTRUCTION ACTIVITIES SHALL BE CORRECTED SOLELY BY AMTRAK FORCES AT THE CONTRACTOR'S EXPENSE WITH NO ADDITIONAL COMPENSATION FROM THE DEPARTMENT.

J. BID ITEM: THIS WORK IS INCLUDED IN BID ITEM 763502 'MAINTENANCE OF RAILROAD TRAFFIC (AMTRAK)'.

TRACK CLASS	MAX. PASSENGER SPEED (MPH)	CROSS LEVEL (INCHES) The Difference in Cross Level Between Any Two Points Less Than		DEVIATION FROM PROFILE 31' CHORD INCHES		DEVIATION FROM HORIZONTAL ALIGNMENT INCHES	DEVIATION FROM HORIZONTAL ALIGNMENT INCHES
		10'	62'	31' CHORD	62' CHORD	31' CHORD	62' CHORD
MAINTENANCE LIMITS							
1	15	1	2 1/4	2 5/8	2 1/4	N/A	3 3/4
2	30	1	1 5/8	2 1/4	2	N/A	2 1/4
3	60	1	1	1 1/2	1 5/8	N/A	1 1/4
4	80	1	1	1 1/8	1 1/2	N/A	1
5	90	1	1	3/4	1	N/A	1/2
6	110	3/4	1	3/4	3/4	3/8	1/2
7	125	3/4	1	3/4	3/4	3/8	3/8
8	160	3/4	1	1/2	3/4	3/8	3/8
9	200	3/4	1	3/8	1/2	3/8	3/8
1/2 MAINTENANCE LIMITS							
1	15	1/2	1 1/8	1 5/16	1 1/8	N/A	1 7/8
2	30	1/2	13/16	1 1/8	1	N/A	1 1/8
3	60	1/2	1/2	3/4	13/16	N/A	5/8
4	80	1/2	1/2	9/16	3/4	N/A	1/2
5	90	1/2	1/2	3/8	1/2	N/A	1/4
6	110	3/8	1/2	3/8	3/8	3/16	1/4
7	125	3/8	1/2	3/8	3/8	3/16	3/16
8	160	3/8	1/2	1/4	3/8	3/16	3/16
9	200	3/8	1/2	3/16	1/4	3/16	3/16

$$DATE$$
$$FILE$$
PLOTTER = RAIL-PS-EHL.PLT, PEN TABLE = BALTIMORE.TBL

PREL. TRACING _____ DESIGN _____ CHKD. _____

UNOFFICIAL WEBSITE COPY

CONTRACT	COUNTY	F.A.P. NO.	SHEET NO.	TOTAL SHTS
27-512-01	NEW CASTLE	HPP-2005 (028)	4	140

NEC COMMUTER RAIL IMPROVE.– DELAWARE YARD to RAGAN – Civil, Structural

DATE: APRIL 20, 2009

REVISIONS

DRAWING NO. G-2

GENERAL NOTES AND LEGEND THIRD TRACK

GENERAL NOTES

1. THIS PROJECT IS TO BE CONSTRUCTED IN ACCORDANCE WITH DELAWARE DEPARTMENT OF TRANSPORTATION STANDARD SPECIFICATIONS FOR ROAD AND BRIDGE CONSTRUCTION, DATED AUGUST 2001 AND THE DELAWARE DEPARTMENT OF TRANSPORTATION "STANDARD CONSTRUCTION DETAILS", DATED 2001, INCLUDING ALL REVISIONS UP TO THE DATE OF ADVERTISEMENT.

2. ALL WORK RELATED TO CLEARANCES, RAILROAD LOADING, TRACK MONITORING, PROTECTION, AND SUPPORT OF EXCAVATION SHALL BE IN ACCORDANCE WITH AMTRAK AND AREMA STANDARDS AND SPECIFICATIONS

3. SITE REVIEWER. AN EROSION CONTROL SITE REVIEWER SHALL BE A PERSON FROM THE CONTRACTOR'S STAFF ASSIGNED TO EROSION AND SEDIMENT CONTROL IMPLEMENTATION AND MAINTENANCE AND SHALL BE REQUIRED ON SPECIFIC PROJECTS. THE NAME AND DNREC CERTIFICATION NUMBER OF EACH SITE REVIEWER SO REQUIRED SHALL BE SUBMITTED TO THE DEPARTMENT AT THE TIME OF BID. THE SITE REVIEWER REQUIREMENTS IN EFFECT ON THIS PROJECT SHALL BE AS MARKED WITH AN (X) BELOW:

EROSION POTENTIAL FOR THIS PROJECT	SITE REVIEWER REQUIREMENT
( ) INSIGNIFICANT	NONE
( ) MINOR	CONTRACTOR CERTIFICATION COURSE TRAINING ONLY. SEE A BELOW.
( ) MEDIUM	AT THE TIME OF AWARD OF THE CONTRACT, EITHER THE SUPERINTENDENT OR A SEPARATE INDIVIDUAL FROM THE CONTRACTOR'S STAFF SHALL BE A CERTIFIED CONSTRUCTION REVIEWER (CCR). SEE B BELOW.
(X) MAJOR	SUPERINTENDENT AND INDIVIDUAL FROM CONTRACTOR'S STAFF SHALL BE CCR. SEE C BELOW.

A. AS DEFINED IN SECTION 13 OF THE DELAWARE SEDIMENT AND STORMWATER REGULATIONS.

B. AS DEFINED IN SECTION 12 OF THE DELAWARE SEDIMENT AND STORMWATER REGULATIONS.

C. ONE INDIVIDUAL FROM THE CONTRACTOR'S STAFF MUST BE A CCR AT THE TIME OF AWARD OF THE CONTRACT. THE SUPERINTENDENT MUST BECOME A CCR WITHIN ONE YEAR AFTER THE AWARD OF CONTRACT.

4. FOR ADDITIONAL EROSION CONTROL REQUIREMENTS, SEE DWG. ES-1

5. STAGING AREAS:
PROPER EROSION AND SEDIMENT CONTROL MEASURES AS DETERMINED BY THE ENGINEER SHALL BE INSTALLED IN ALL STAGING AREAS. ALL AREAS USED BY THE CONTRACTOR FOR STAGING OPERATIONS SHALL BE FULLY RESTORED BY THE CONTRACTOR UPON COMPLETION OF THE PROJECT. THE STAGING AREA SHALL BE RE-GRADED, TOPSOILED, SEEDED AND MULCHED IN ACCORDANCE WITH DELAWARE STANDARD SPECIFICATIONS 732, 734 AND 735, FOR TOPSOIL, SEED AND MULCH RESPECTIVELY, TO THE SATISFACTION OF THE ENGINEER. THE SEED SHALL ADHERE TO THE SPECIFICATIONS OF SECTION 734 FOR PERMANENT GRASS SEEDING-DRY GROUND. ALL COSTS ASSOCIATED WITH RESTORATION OF THE STAGING AREA SHALL BE AT THE CONTRACTOR'S EXPENSE. IF THE ENGINEER DETERMINES THAT A SATISFACTORY STAND OF GRASS DOES NOT EXIST AT THE TIME OF FINAL INSPECTION, ALL COST ASSOCIATED WITH RE-ESTABLISHING A SATISFACTORY STAND OF GRASS SHALL BE AT THE CONTRACTOR'S EXPENSE.

6. DISTURBED AREA: 8.1 ± AC.

UTILITIES

- SANITARY SEWER LINE
- AMTRAK COMMUNICATION/SIGNAL DUCT
- WATER LINE
- ELECTRIC LINE
- GAS LINE

CONSTRUCTION

- FULL DEPTH PAVEMENT
- MILL & OVERLAY EXISTING BITUMINOUS PAVEMENT
- PAVEMENT PATCH
- MAINTENANCE PAVEMENT
- 4" P.C.C. SIDEWALK
- 6" P.C.C. SIDEWALK
- BUTT JOINT
- PIPE TRENCH PAVEMENT PATCH
- RIPRAP
- DRAINAGE INLET
- DI — DRAINAGE INLET IDENTIFIER
- MANHOLE
- MH — MANHOLE IDENTIFIER
- DRAINAGE PIPE & FLOW ARROW
- P — PIPE IDENTIFIER
- FLARED END SECTION
- FE — FLARED END SECTION IDENTIFIER
- JUNCTION BOX
- JB — JUNCTION BOX IDENTIFIER
- CJB — CONVERT TO JB IDENTIFIER
- HW — HEADWALL IDENTIFIER
- UNDERDRAIN
- UD — UNDERDRAIN IDENTIFIER
- UNDERDRAIN OUTLET STRUCTURE
- DITCH
- BFS — BIOFILTRATION SWALE
- INTEGRAL P.C.C. CURB AND GUTTER TYPE 1
- P.C.C. CURB TYPE 1 &/OR 3
- P.C.C. CURB TYPE 2
- INTEGRAL P.C.C. CURB AND GUTTER TYPE 2
- INTEGRAL P.C.C. CURB AND GUTTER TYPE 3
- P.C.C. MONOLITHIC MEDIAN CURB
- CURB (BY OTHERS)
- C — CURB IDENTIFIER
- C/O — CURB OPENING
- CR — CURB ACCESS RAMP IDENTIFIER WITH TYPE NUMBER
- CONCRETE SAFETY BARRIER
- B — BARRIER IDENTIFIER
- STEEL BEAM GUARDRAIL
- GUARDRAIL END SECTION
- GR — GUARDRAIL IDENTIFIER
- METAL FENCE
- WOOD FENCE
- DND — DO NOT DISTURB IDENTIFIER
- M — R/W MONUMENT IDENTIFIER
- RL/C — RELOCATE BY CONTRACTOR
- A/C — ADJUST BY CONTRACTOR
- RM/C — REMOVE BY CONTRACTOR
- RL/O — RELOCATE BY OTHERS
- A/O — ADJUST BY OTHERS
- RM/O — REMOVE BY OTHERS
- C/MH — CONVERT TO MANHOLE

CONSTRUCTION PHASING

- SCD — STONE CHECK DAM
- INLET SEDIMENT CONTROL
- PERIMETER DIKE SWALE
- TEMPORARY SWALE
- ED — EARTH DIKE
- S-B — SAND BAG DIVERSION
- SM-C — STABILIZATION MATTING WITH IDENTIFIER
- ST — SEDIMENT TRAP
- 5 — EXISTING CONTOURS
- 5 — PROPOSED CONTOURS
- TC — TURBIDITY CURTAIN
- GB — GEOTEXTILE DEWATERING BAG
- OWS — OIL WATER SEPARATOR
- POLYPROPYLENE OIL ABSORBANT BOOMS
- PST — PORTABLE SEDIMENT TANK
- SF — SILT FENCE
- RSF — REINFORCED SILT FENCE
- SF — SILT FENCE IDENTIFIER
- SW — STILLING WELL
- SP — SUMP PIT
- DWB — DEWATERING BASIN
- ST — SEDIMENT TRAP PIPE OUTLET
- TSD — TEMPORARY SLOPE DRAIN
- SBD — SAND BAG DIKE
- SCE — STABILIZED CONSTRUCTION ENTRANCE

RIGHT OF WAY

- R/W — PROPOSED RIGHT OF WAY
- RW&DA — PROPOSED RIGHT OF WAY AND DENIAL OF ACCESS
- DA — PROPOSED DENIAL OF ACCESS
- PE — PROPOSED PERMANENT EASEMENT
- TCE — PROPOSED TEMPORARY CONSTRUCTION EASEMENT
- 100 — HISTORIC R/W CENTERLINE OR BASELINE
- 100 — PROPOSED RIGHT OF WAY BASELINE
- EX RW — EXISTING RIGHT-OF-WAY LINE
- ℞ — EXISTING PROPERTY LINE
- ERW&DA — EXISTING RIGHT-OF-WAY LINE AND EXISTING DENIAL OF ACCESS
- EXISTING EASEMENT
- R/W MONUMENT

MISCELLANEOUS SYMBOLS

- LOC — LIMIT OF CONSTRUCTION/DISTURBANCE
- NORTH ARROW
- CZ — CLEAR ZONE
- 100 — CONSTRUCTION BASELINE
- PROPOSED LUMINAIRE
- PREVIOUSLY DRILLED BORINGS
- PAVEMENT CORE LOCATION
- XXX — CONSTRUCTION SAFETY FENCE
- RL/U — RELOCATE BY UTILITY
- RM/U — REMOVE BY UTILITY COMPANY
- HW — HEADWALL IDENTIFIER
- C — TOP OF CUT
- F — TOE OF FILL
- TEMPORARY PIPE
- BITUMINOUS RESIDENTIAL DRIVEWAY/ BIKEPATH PAVEMENT
- BITUMINOUS COMMERCIAL DRIVEWAY PAVEMENT
- EXISTING PAVEMENT TO BE REMOVED
- EDA — EXISTING DENIAL OF ACCESS
- ABANDONED FACILITY
- EXISTING FACILITY TO BE ABANDONED
- EXISTING FACILITY TO BE REMOVED BY CONTRACTOR UNLESS OTHERWISE NOTED
- EXISTING FACILITY TO BE REMOVED AND REPLACED IN PLACE

EXISTING DETAIL

- SURVEY TRAVERSE POINT
- POINT OF INTERSECTION - TANGENTS
- POINT OF TANGENCY & CURVATURE
- T.P. — SURVEY TIE POINT LOCATION
- B.M. — BENCH MARK LOCATION
- A-4(4) A-2(4) — SOIL BORING LOG - PROFILE VIEW
- SOIL BORING LOCATION - PLAN VIEW
- GnB2 GnB3 — SOIL TYPE AND BOUNDARY LINE
- WETLAND
- SMALL BUSH OR ORNAMENTAL SHRUB
- CONIFEROUS TREE 6" AND LARGER
- DECIDUOUS TREE 6" AND LARGER
- HEDGEROW OR THICKET
- WOODS LINE
- TREE STUMP
- UTILITY TEST HOLE LOCATION
- GAS MANHOLE
- SANITARY SEWER MANHOLE
- TELEPHONE MANHOLE
- ELECTRIC MANHOLE
- F.H. — FIRE HYDRANT
- TELEPHONE BOOTH
- UTILITY POLE GUY WIRE ANCHOR
- G.V. — GAS VALVE
- W.V. — WATER VALVE
- WOOD POLE
- W.M. — WATER METER
- VENT — SANITARY SEWER VENT
- S.V. — SANITARY SEWER SURFACE FIXTURE
- T — TELEPHONE TEST POINT
- G.M. — GAS METER
- POLE MOUNTED LUMINAIRE
- LAMP — RESIDENTIAL STREET LAMP AND POST
- F.P. — FLAG POLE
- M.B. — MAIL BOX
- (TYPE LABEL) — CURB
- (TYPE LABEL) — INTEGRAL CURB & GUTTER
- FLEXIBLE PAVEMENT EDGE
- RIGID PAVEMENT EDGE
- STEEL BEAM GUARD RAIL
- WOOD POST AND CABLE GUARD RAIL
- C.B. — STORM DRAINAGE SURFACE INLET
- STORM DRAINAGE MANHOLE
- J.B. — STORM DRAINAGE JUNCTION BOX
- (SIZE/TYPE LABEL) — EXISTING DRAINAGE PIPE AND FLOW ARROW
- DRAINAGE PIPE HEADWALL
- EROSION CONTROL STONE
- STREAM, DITCH OR POND BOUNDARY
- STREAM FLOW DIRECTION ARROW
- TRAFFIC CONTROL SIGN POST
- TRAFFIC SIGNAL SUPPORT BASE
- TRAFFIC SIGNAL CONTROL BOX AND/OR BASE
- J.W. — TRAFFIC SIGNAL CONDUIT JUNCTION WELL
- E — ELECTRIC TRANSFORMER
- TV — CABLE TELEVISION DISTRIBUTION BOX
- C.M. — CONCRETE MONUMENT OR PROPERTY MARKER
- I.P. — PROPERTY LINE MARKER
- STONE PILLAR - CONC. BLOCK OR POURED
- STRAND OR WOVEN WIRE FENCE
- WOODEN FENCE
- LUMINAIRE SUPPORT POLE AND/OR BASE
- G.P. — SERVICE STATION FUEL PUMP
- WELL — WELL HEAD
- S.D.F. — SEPTIC DRAIN FIELD
- RAILROAD TRACKS
- WL — DELINEATED WETLANDS
- NTW — DELINEATED NON-TIDAL WATERS
- HTL — HIGH TIDE LINE
- MHW — MEAN HIGH WATER

4/16/2009
M:\projects\2007\07052.DT\Third-Track\CADD\Plans\G020TC.dgn
PLOTTER = RAIL-PS ENLRL1, PEN TABLE = BALTIMORE.TBL

PREL. TRACING ____ DESIGN ____ CHKD. ____

UNOFFICIAL WEBSITE COPY

ENVIRONMENTAL COMPLIANCE NOTES

1. GENERAL NOTES

A. THE PURPOSE OF THESE ENVIRONMENTAL COMPLIANCE SHEETS IS TO IDENTIFY THOSE ITEMS ASSOCIATED WITH ENVIRONMENTAL COMPLIANCE. IMPACT CALCULATIONS ARE FOR AGENCY REPORTING PURPOSES ONLY AND ARE NOT TO BE USED FOR BIDDING PURPOSES.

B. IF A DEPARTURE FROM THE APPROVED PLANS (WHICH WOULD AFFECT ANY OF THE NATURAL AND/OR CULTURAL RESOURCE ISSUES) IS NECESSARY, THE DELDOT ENVIRONMENTAL STUDIES SECTION SHALL BE CONTACTED AT (302) 760-2264 TO ALLOW THE DEPARTMENT TO COORDINATE WITH THE APPROPRIATE RESOURCE AGENCIES FOR APPROVAL.

C. USE OF THESE SHEETS DOES NOT ALLEVIATE THE CONTRACTOR'S RESPONSIBILITY TO COMPLY WITH ALL CONDITIONS SET FORTH IN THE ENVIRONMENTAL STATEMENT AND PERMITS.

D. ALL CONSTRUCTION ACTIVITIES SHALL OCCUR WITHIN THE L.O.C. AS DESIGNATED ON THE PLAN SHEETS. ANY DEVIATION FROM THIS L.O.C. BY THE CONTRACTOR SHALL REQUIRE APPROVAL OBTAINED BY THE CONTRACTOR FROM A.C.O.E, DNREC, AND SHPO.

E. THE IDENTIFIED PERMANENT AND TEMPORARY IMPACTS TO WETLANDS SHOWN ON THE ENVIRONMENTAL COMPLIANCE SHEETS ARE THE ONLY AUTHORIZED IMPACTS. ANY CHANGE IN THE CONTRACT PLANS AFFECTING THESE AREAS WILL REQUIRE REVIEW AND APPROVAL FROM ACOE AND DNREC.

F. CONTACT INFORMATION:
DELDOT, ENVIRONMENTAL STUDIES, TERRY FULMER, 1-302-760-2095
CORPS OF ENGINEERS, REGULATORY, LARRY SLAVITTAR, 1-215-656-5583
DNREC, WETLANDS, JOANNE LEE, 1-302-739-4691
DNREC, NATURAL HERITAGE, EDNA STETZAR, 1-302-653-2880
SHPO, HISTORIC PRESERVATION, GWEN DAVIS, 1-302-739-5865
USCG, 5TH DISTRICT, BRIDGE ADMINISTRATION BRANCH,
TERRY KNOWLES, 1-757-398-6587

G. JURISDICTIONAL RESOURCES ARE SHOWN ON THESE SHEETS ONLY WITHIN THE WETLAND INVESTIGATION AREA. JURISDICTIONAL RESOURCES DO EXIST OUTSIDE THE WETLAND INVESTIGATION AREA WHICH ARE NOT SHOWN ON THESE SHEETS. IF A DEPARTURE FROM THE APPROVED PLANS (WHICH WOULD REQUIRE WORK OUTSIDE OF THE WETLAND INVESTIGATION AREA) IS NECESSARY, THE DELDOT ENVIRONMENTAL STUDIES SECTION SHALL BE CONTACTED AT (302) 760-2264 TO ALLOW THE DEPARTMENT TO DELINEATE ANY RESOURCES AND COORDINATE WITH THE APPROPRIATE RESOURCE AGENCIES FOR APPROVAL.

2. NATURAL RESOURCE ISSUES:

A. TEMPORARY WETLAND IMPACTS SHALL BE RESTORED TO ORIGINAL GRADES, AND SEEDED USING THE FOLLOWING SEED MIX (TEMPORARY GRASS SEEDING - WET GROUND 734018).

B. PERMIT REQUIREMENTS / APPROVALS *
ARMY CORPS OF ENGINEERS (ACOE) - INDIVIDUAL PERMIT **

INDIVIDUAL PERMIT APPROVED

DELAWARE DEPARTMENT OF NATURAL RESOURCES AND ENVIRONMENTAL CONTROL (DNREC) **

SUBAQUEOUS LAND PERMIT PENDING
WETLANDS PERMIT PENDING
WATER QUALITY CERTIFICATION PENDING
DELAWARE COASTAL ZONE MANAGEMENT FEDERAL CONSISTENCY CERTIFICATION - DECEMBER 12, 2005 AND AUGUST 24, 2006

UNITED STATES COAST GUARD BRIDGE PERMIT NOT REQUIRED PER LETTER DATED MAY 25, 2004

* - THE PERMITS / APPROVALS LISTED ARE THOSE REQUIRED FOR THIS PROJECT. THE ENVIRONMENTAL STUDIES SECTION IS RESPONSIBLE FOR COORDINATING/ OBTAINING THESE PERMIT APPROVALS.

** - THE CONTRACTOR MUST ENSURE THAT THESE PERMITS (A.C.O.E., DNREC, APPROVALS ARE IN THEIR POSSESSION PRIOR TO THE BEGINNING OF CONSTRUCTION IN THE PERMITTED AREA(S). THESE PERMITS / APPROVALS SHALL BE DISPLAYED ON-SITE DURING THE ENTIRE CONSTRUCTION PERIOD.

C. CONSTRUCTION RESTRICTIONS (TIME FRAMES, ETC.) FOR FISHERIES, ENDANGERED SPECIES, MIGRATORY SPECIES WILL BE IN ACCORDANCE WITH PROJECT PERMITS.

ENDANGERED SPECIES: NONE

FISHERIES:

NO WORK SHALL OCCUR ON TRIBUTARIES OF THE CHRISTINA RIVER FROM MARCH 15 THROUGH MAY 31.

MIGRATORY BIRDS:

DURING THE MIGRATORY BIRD NESTING SEASON (APRIL 15 THROUGH AUGUST 1), MIGRATORY BIRDS (SWALLOWS) TYPICALLY NEST ON THE BRIDGES OVER RIVERS AND STREAMS. IN ANY YEAR THAT BRIDGE STRUCTURE CONSTRUCTION BEGINS DURING THE MIGRATORY BIRD NESTING SEASON, THE CONTRACTOR SHALL INSTALL MIGRATORY BIRD EXCLUSION NETTING, ITEM NUMBER 763623, PRIOR TO APRIL 15. THE NETTING SHALL BE MAINTAINED IN GOOD CONDITION UNTIL CONSTRUCTION BEGINS OR UNTIL THE CONCLUSION OF THE MIGRATORY BIRD NESTING SEASON. INSTALLATION OF MIGRATORY BIRD NETTING SHALL NOT BE NECESSARY IF BRIDGE STRUCTURE CONSTRUCTION BEGINS PRIOR TO THE MIGRATORY BIRD NESTING SEASON AND CONTINUES INTO THE MIGRATORY BIRD NESTING SEASON.

3. CULTURAL RESOURCE ISSUES:

A. THERE ARE NO KNOWN SITES WITHIN THE PROJECT LIMITS OF CONSTRUCTION. ANY WORK OUTSIDE THE L.O.C. LIMITS, INCLUDING OFF-SITE DISPOSAL SITES AND STOCKPILE AREAS WILL NEED TO BE CLEARED BY THE STATE HISTORICAL PRESERVATION OFFICE (SHPO).

4. U.S. COAST GUARD 30-DAY ADVANCED NOTIFICATION

THE CHRISTINA RIVER IS A NAVIGABLE WATERWAY. ALL WORK PERFORMED WITHIN THE WATERWAY SHALL BE COORDINATED WITH THE U.S. COAST GUARD PRIOR TO BEGINNING WORK AND SHALL BE IN CONFORMANCE WITH ITEM NO. 763522 - "COAST GUARD SPECIFIC CONDITIONS". VERTICAL CLEARANCE MUST BE MAINTAINED IN ACCORDANCE WITH COAST GUARD REQUIREMENTS. FURTHERMORE, ADVANCED NOTIFICATION SHALL BE GIVEN, WHICH REQUIRES THE CONTRACTOR TO FORMALLY NOTIFY THE COAST GUARD 30 DAYS IN ADVANCE OF ANY PLANNED TEMPORARY OBSTRUCTION OR CLOSURE OF WATERWAY NAVIGATION. CONTACT TERRY KNOWLES AT 1-757-398-6587.

EROSION AND SEDIMENT CONTROL NOTES

1. THE DELDOT SEDIMENT AND STORMWATER MANAGEMENT PROGRAM SHALL BE NOTIFIED IN WRITING FIVE (5) DAYS PRIOR TO COMMENCING WITH CONSTRUCTION. FAILURE TO DO SO CONSTITUTES A VIOLATION OF THE APPROVED SEDIMENT AND STORMWATER MANAGEMENT PLAN.

2. REVIEW AND/OR APPROVAL OF THE SEDIMENT AND STORMWATER MANAGEMENT PLAN SHALL NOT RELIEVE THE CONTRACTOR FROM HIS OR HER RESPONSIBILITIES FOR COMPLIANCE WITH THE REQUIREMENTS OF THE SEDIMENT AND STORMWATER REGULATIONS. NOR SHALL IT RELIEVE THE CONTRACTOR FROM ERRORS OR OMISSIONS IN THE APPROVED PLAN.

3. IF THE APPROVED PLAN NEEDS TO BE MODIFIED, ADDITIONAL SEDIMENT AND STORMWATER CONTROL MEASURES MAY BE REQUIRED AS DEEMED NECESSARY BY DELDOT.

4. FOLLOWING SOIL DISTURBANCE OR REDISTURBANCE, PERMANENT OR TEMPORARY STABILIZATION IN THE FORM OF SEED AND MULCH SHALL BE APPLIED TO THE SURFACE OF ALL PERIMETER SEDIMENT CONTROLS AND ALL OTHER DISTURBED OR GRADED AREAS ON THE PROJECT SITE WITHIN 14 DAYS.

5. THE CONTRACTOR SHALL MAINTAIN AND REPAIR ALL EROSION AND SEDIMENT CONTROL AND STORMWATER MANAGEMENT DEVICES THROUGHOUT CONSTRUCTION ACTIVITIES.

6. ALL SEDIMENT SHALL BE REMOVED FROM VEHICLES PRIOR TO THEIR LEAVING THE SITE. IN THE EVENT THAT IT IS DETERMINED THAT VEHICLES ARE TRANSPORTING SEDIMENT FROM THE SITE, A WHEEL WASH SHALL BE INSTALLED TO CLEAN VEHICLES PRIOR TO THEIR EGRESS FROM THE SITE. THIS DETERMINATION SHALL BE MADE BY THE PROJECT'S CERTIFIED EROSION CONTROL SITE REVIEWER AND/OR BY THE ENGINEER. ALL PAVED SURFACES ADJOINING THE PROJECT LIMITS SHALL BE LEFT IN A BROOM CLEAN CONDITION AT THE END OF EACH WORKDAY. STABILIZED CONSTRUCTION ENTRANCES SHALL BE TOP DRESSED WITH TWO (2) INCHES OF CLEAN DE. NO. 3 STONE WHEN THE VOIDS BECOME CLOGGED OR AS DIRECTED BY THE ENGINEER. COST TO INSTALL AND MAINTAIN THE ENTRANCE SHALL BE INCLUDED IN THE BASE BID.

7. DUST SHALL BE CONTROLLED EXCLUSIVELY THROUGH THE USE OF WATER.

SEQUENCE OF CONSTRUCTION

COMPLETION OF THE FOLLOWING PHASES MAY PROCEED IN ANY ORDER AS APPROVED BY THE EROSION CONTROL INSPECTOR

AREA I : SOUTH OF LITTLE MILL CREEK

1. CLEAR AND GRUB AS REQUIRED TO INSTALL EROSION AND SEDIMENT PERIMETER CONTROLS. INSTALL STABILIZED CONSTRUCTION ENTRANCE AT STA. 359+75

2. GRADE PROPOSED SWALE FROM STA. 341+00 TO STA. 353+00 WORKING FROM DOWNSTREAM TO UPSTREAM. THE SWALE, AND ALL OTHER DISTURBANCE CAUSED BY THIS OPERATION, SHALL BE STABILIZED BY THE END OF EACH WORK DAY.

3. UPON COMPLETION OF THE SWALE CONSTRUCTION, INSTALL SILT FENCE AND SEDIMENT TRAP ST-1 AS SHOWN. ONCE PERIMETER CONTROLS ARE PROPERLY INSTALLED, PERIMETER APPROVAL MUST BE OBTAINED.

4. COMPLETE IMPROVEMENTS. UPON COMPLETION OF IMPROVEMENTS AND STABILIZATION BETWEEN STA. 319+80 AND STA. 327+50, AND WITH THE APPROVAL OF THE SEDIMENT CONTROL INSPECTOR, REMOVE SEDIMENT TRAP ST-1. COMPLETE THE WORK BETWEEN STA. 327+50 TO 329+50. THIS AREA SHALL BE STABILIZED AT THE END OF EACH WORK DAY.

5. FOLLOWING SEDIMENT CONTROL INSPECTOR AUTHORIZATION, REMOVE EROSION AND SEDIMENT CONTROL MEASURES.

AREA II : BRIDGE IMPROVEMENTS AND SCOUR COUNTERMEASURES

1. SEE DWGS. S-1 AND RW-1 AND DETAILED SEQUENCE OF CONSTRUCTION ON DWGS. MT-20 THROUGH MT-27

AREA III : NORTH OF LITTLE MILL CREEK

1. CLEAR AND GRUB AS REQUIRED TO INSTALL EROSION AND SEDIMENT PERIMETER CONTROLS. INSTALL STABILIZED CONSTRUCTION ENTRANCES AND SILT FENCE AS SHOWN.

2. COMPLETE IMPROVEMENTS.

3. FOLLOWING SEDIMENT CONTROL INSPECTOR AUTHORIZATION, REMOVE EROSION AND SEDIMENT CONTROL MEASURES.

$$DATE$$
$$FILE$$
PLOTTER = RAIL-PS-EHL.PLT. PEN TABLE = BALTIMORE.TBL

PREL. TRACING ____ DESIGN ____ CHKD. ____

UNOFFICIAL WEBSITE COPY

UNOFFICIAL WEB SITE COPY

CONTRACT	COUNTY	F.A.P. NO.	SHEET NO.	TOTAL SHTS.
27-512-01	NEW CASTLE	HPP-2005 (028)	6	140

NEC COMMUTER RAIL IMPROVE.– DELAWARE YARD to RAGAN – Civil, Structural

DATE: APRIL 20, 2009

REVISIONS

DRAWING NO. ES-38

EROSION & SEDIMENT CONTROL PLAN

THIRD TRACK

SCALE

40 20 0 40

1"= 40'

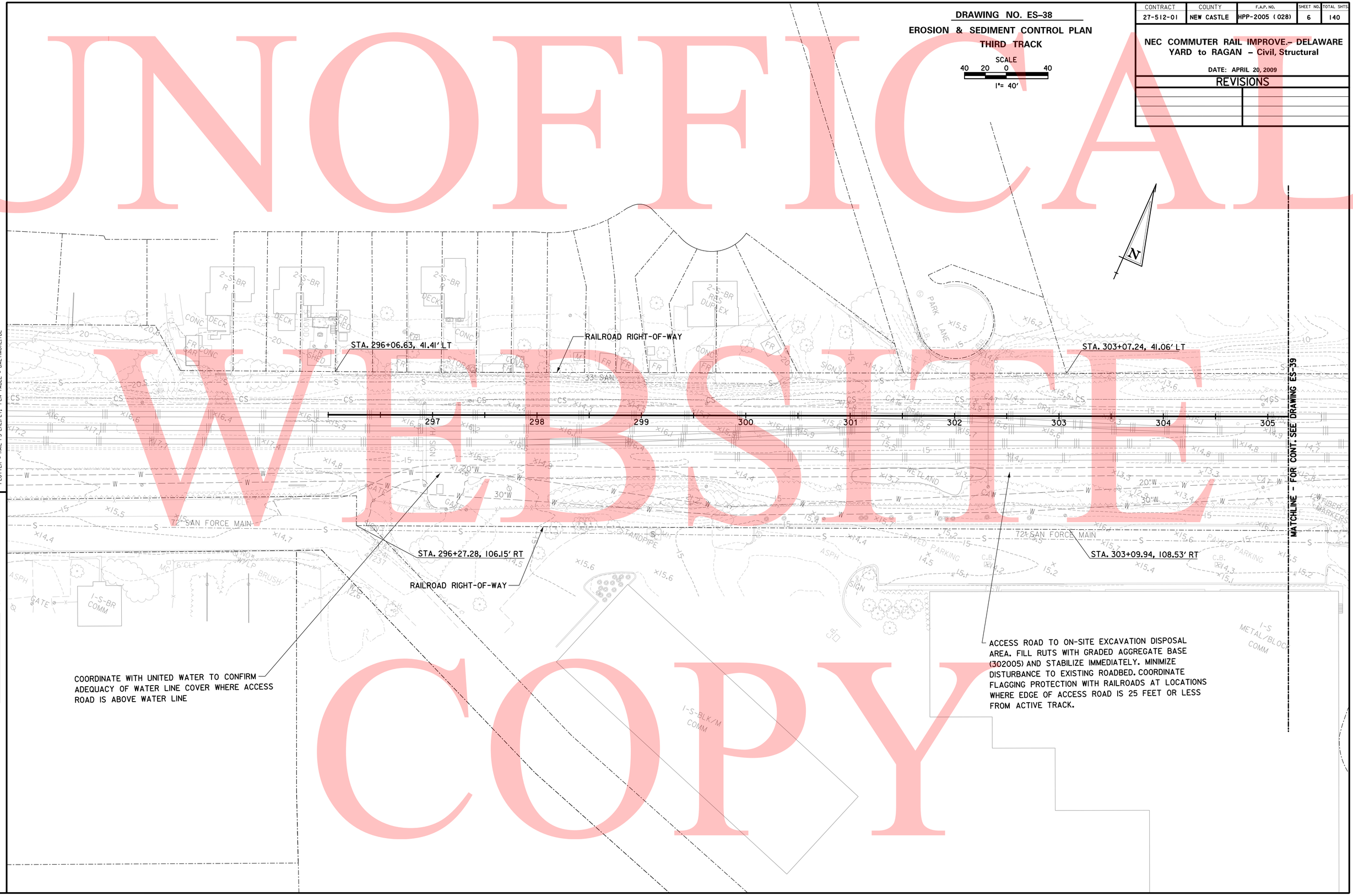

4/16/2009
MA:sr0ejes\2007\07052_DT0\Third-Trk\CADD\Plans\ES380TC.dgn
PLOTTER = RAIL-PS-ENLRL1, PEN TABLE = BALTIMORE.TBL

PREL. TRACING ____ DESIGN ____ CHKD. ____

UNOFFICIAL WEBSITE COPY

CONTRACT	COUNTY	F.A.P. NO.	SHEET NO.	TOTAL SHTS.
27-512-01	NEW CASTLE	HPP-2005 (028)	7	140

DRAWING NO. ES-39

EROSION & SEDIMENT CONTROL PLAN

THIRD TRACK

SCALE

40 20 0 40

1"= 40'

NEC COMMUTER RAIL IMPROVE.- DELAWARE YARD to RAGAN - Civil, Structural

DATE: APRIL 20, 2009

REVISIONS

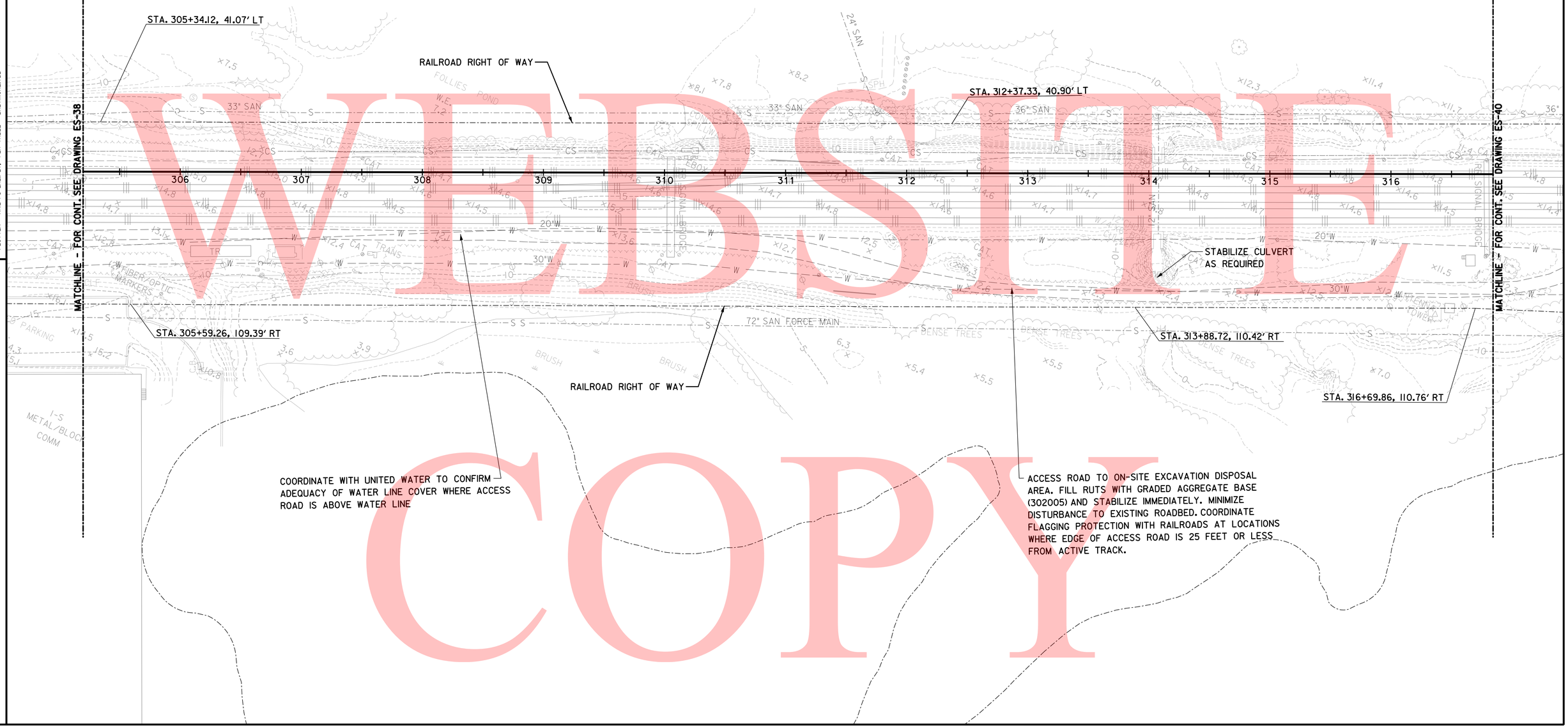

4/23/2009
\\VRKMAV2007\2007\07052.DTC\Third-Trk\G4D01\Plans\ES3901C.dgn
PLOTTER = RAIL-PS-ENL-TL1, PEN TABLE = BALTIMORE.TBL

PREL. TRACING _____ DESIGN _____ CHKD. _____

UNOFFICIAL WEBSITE COPY

CONTRACT	COUNTY	F.A.P. NO.	SHEET NO.	TOTAL SHTS
27-512-01	NEW CASTLE	HPP-2005 (028)	8	140

NEC COMMUTER RAIL IMPROVE.– DELAWARE YARD to RAGAN – Civil, Structural

DATE: APRIL 20, 2009

REVISIONS

DRAWING NO. ES-40

EROSION & SEDIMENT CONTROL PLAN
THIRD TRACK

SCALE
40 20 0 40
1"= 40'

NOTES:

1. SEE TYPICAL SECTIONS DWG. TS-1 FOR LIMITS OF SOIL RETENTION BLANKET MULCH (SRBM).
2. FOR STORM DRAIN PROFILES, SEE DWG. DR-2

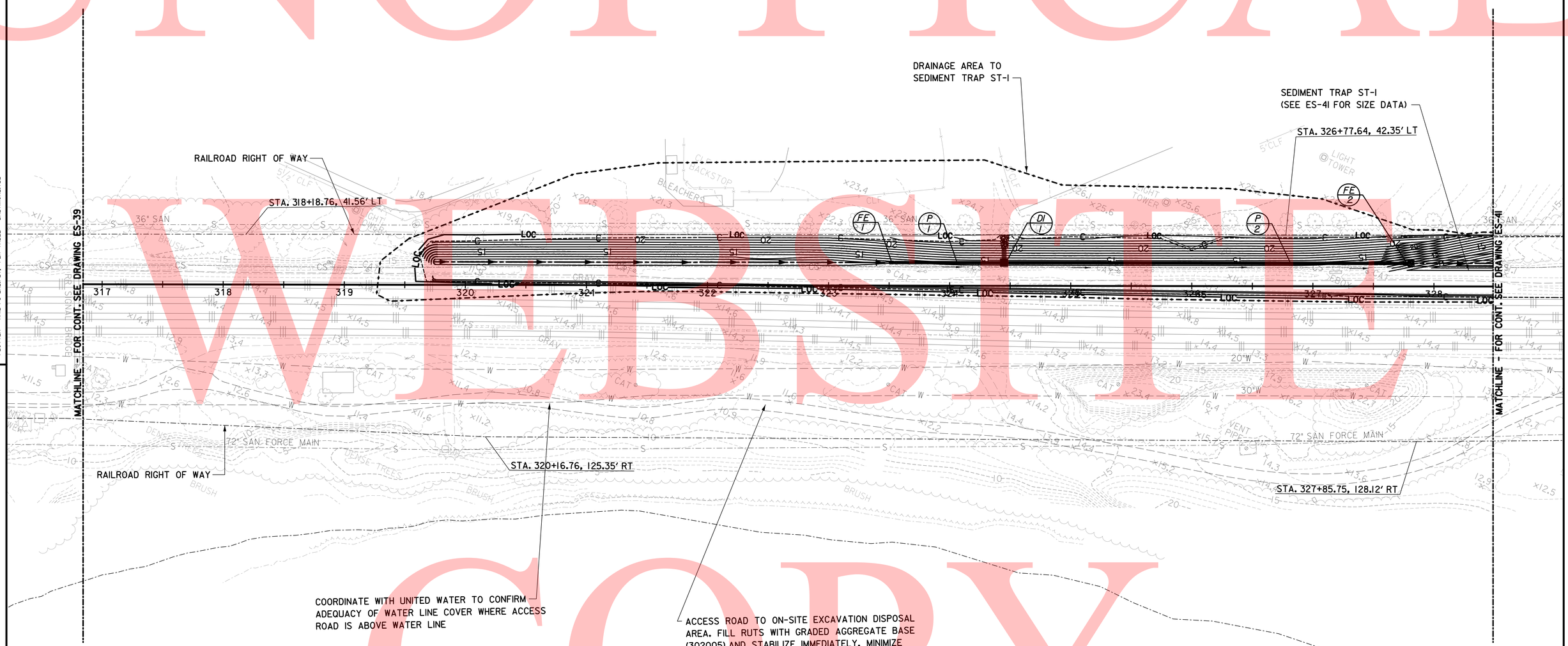

4/16/2009
M:\proj\ec-s\2007\07052.DT\Third-Trk\CADD\Plans\ES400TC.dgn
PLOTTER = RAIL-PS-BW.PLT, PEN TABLE = BALTIMORE.TBL

DESIGN _____ CHKD. _____

PREL. TRACING _____

UNOFFICIAL WEBSITE COPY

CONTRACT	COUNTY	F.A.P. NO.	SHEET NO.	TOTAL SHTS
27-512-01	NEW CASTLE	HPP-2005 (028)	9	140

NEC COMMUTER RAIL IMPROVE.– DELAWARE YARD to RAGAN – Civil, Structural

DATE: APRIL 20, 2009

REVISIONS

DRAWING NO. ES-41

EROSION & SEDIMENT CONTROL PLAN THIRD TRACK

SCALE

40 20 0 40

1"= 40'

NOTES:

1. SEE TYPICAL SECTIONS DWG. TS-1 FOR LIMITS OF SRBM.

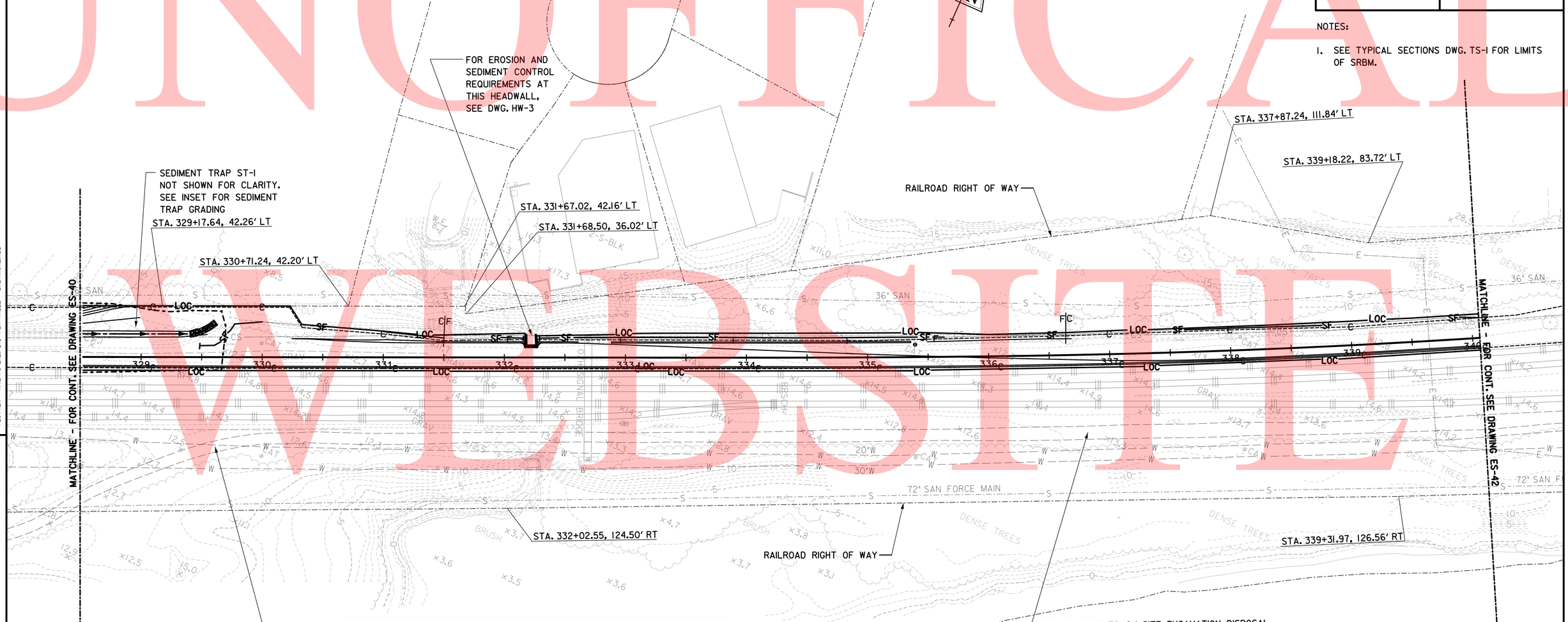

SEDIMENT TRAP GRADING

SEDIMENT TRAP SCHEDULE

NO.	D.A.	LENGTH	WIDTH	OUTLET TYPE	OUTLET EL.	CLEANOUT EL.
DI-1	1.98	190	16	SCD	10.50	8.76

4/16/2009
M:\projects\2007\07052.DT\Third-Trk\CADD\Plans\ES41DT.dgn
PLOTTER = RAIL-PS-ENL-FL1, PEN TABLE = BALTIMORE.TBL

PREL. TRACING ____ DESIGN ____ CHKD. ____

UNOFFICIAL WEBSITE COPY

CONTRACT	COUNTY	F.A.P. NO.	SHEET NO.	TOTAL SHTS.
27-512-01	NEW CASTLE	HPP-2005 (028)	10	140

DRAWING NO. ES-42

EROSION & SEDIMENT CONTROL PLAN

THIRD TRACK

SCALE

40 20 0 40

1"= 40'

NEC COMMUTER RAIL IMPROVE.– DELAWARE YARD to RAGAN – Civil, Structural

DATE: APRIL 20, 2009

REVISIONS

NOTES:

1. SEE TYPICAL SECTIONS DWG. TS-1 FOR LIMITS OF SRBM.

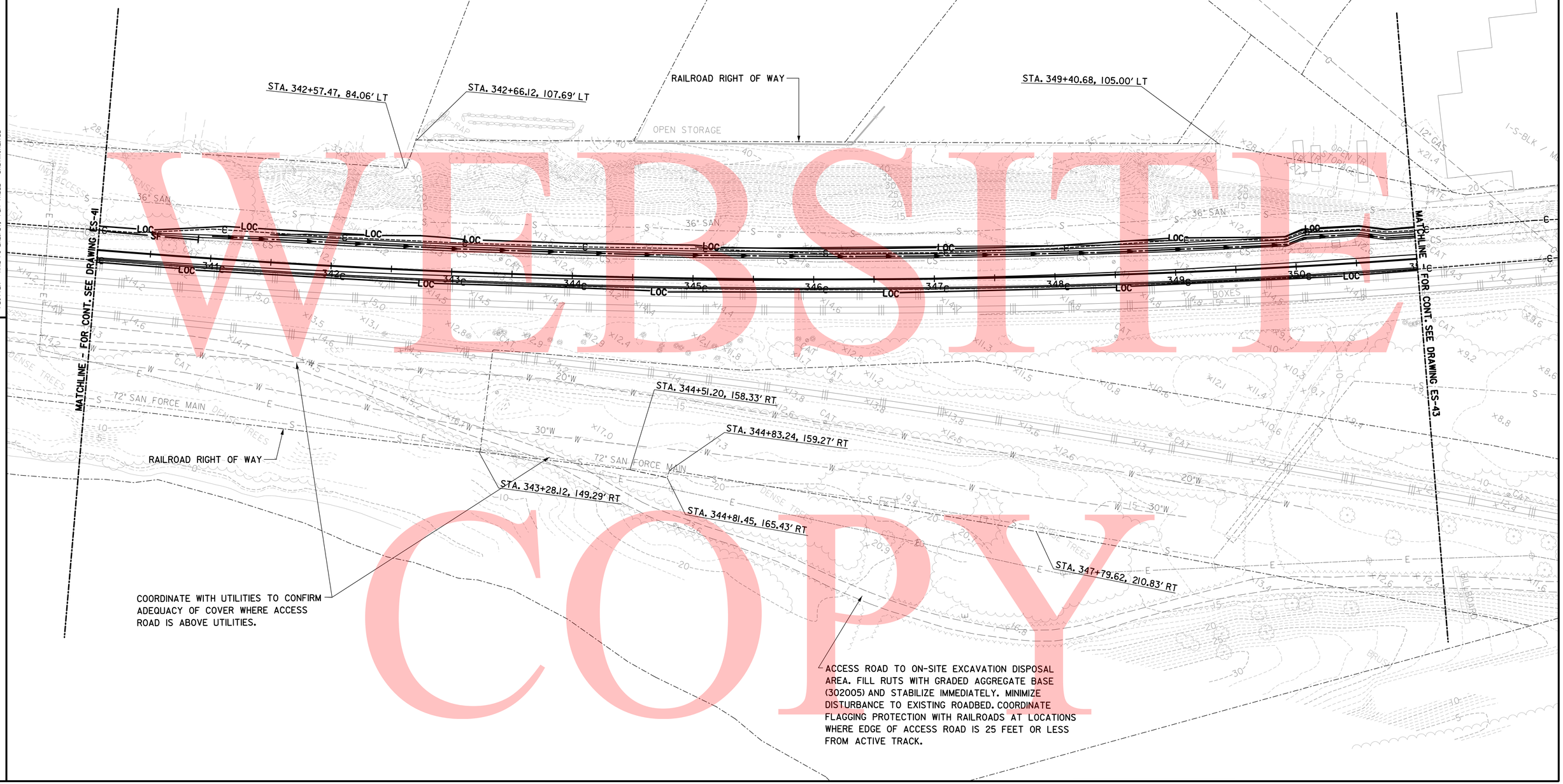

4/16/2009
M:\projects\2007\07052_DTC\Third-Track\CADD\Plans\ES420TC.dgn
PLOTTER = RAIL-PS-EHL,PL1, PEN TABLE = BALTIMORE.TBL

CHKD. _____ DESIGN _____ PREL. TRACING _____

UNOFFICIAL WEBSITE COPY

CONTRACT	COUNTY	F.A.P. NO.	SHEET NO.	TOTAL SHTS
27-512-01	NEW CASTLE	HPP-2005 (028)	11	140

NEC COMMUTER RAIL IMPROVE.– DELAWARE YARD to RAGAN – Civil, Structural

DATE: APRIL 20, 2009

REVISIONS

DRAWING NO. ES-43

EROSION & SEDIMENT CONTROL PLAN
THIRD TRACK

SCALE
40 20 0 40
1"= 40'

NOTES:

1. SEE TYPICAL SECTIONS DWG. TS-1 FOR LIMITS OF SOIL RETENTION BLANKET MULCH (SRBM).

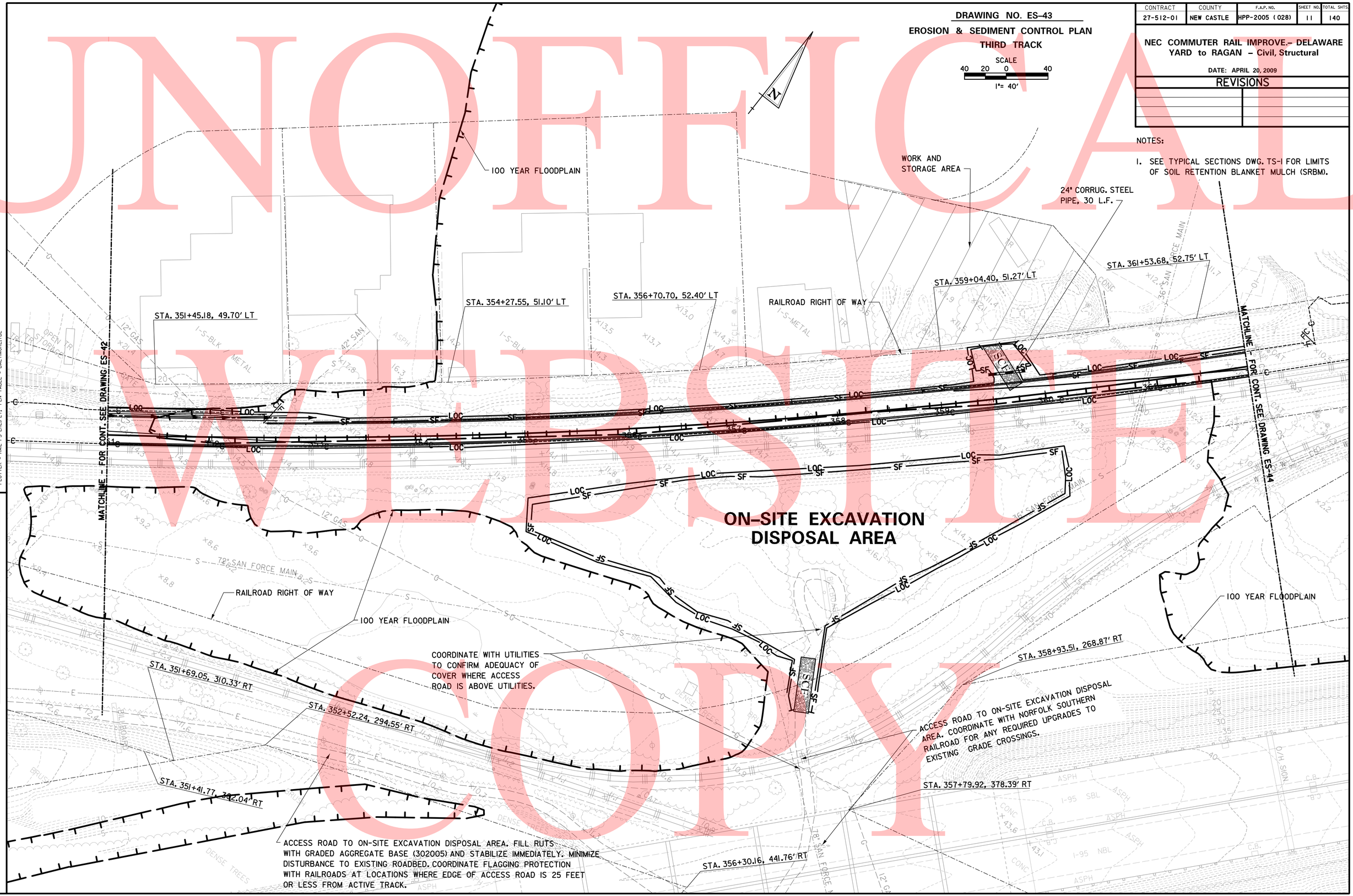

4/16/2009
M:\proj\ec-s\2007\07052_DT0\Third-Trk\CADD\Plans\ES43DTc.dgn
PLOTTER = RAIL-PS-EHL,PL1, PEN TABLE = BALTIMORE.TBL

PREL. TRACING ____ DESIGN ____ CHKD. ____

CONTRACT	COUNTY	F.A.P. NO.	SHEET NO.	TOTAL SHTS
27-512-01	NEW CASTLE	HPP-2005 (028)	12	140

DRAWING NO. ES-44

EROSION & SEDIMENT CONTROL PLAN

THIRD TRACK

SCALE

40 20 0 40

1"= 40'

NEC COMMUTER RAIL IMPROVE.- DELAWARE YARD to RAGAN - Civil, Structural

DATE: APRIL 20, 2009

REVISIONS

NOTES:

1. SEE TYPICAL SECTIONS DWG. TS-1 FOR LIMITS OF SOIL STABILIZATION MATTING.

REFER TO DWGS. MT-20 THRU MT-27 FOR EROSION AND SEDIMENT CONTROL DURING SCOUR PROTECTION INSTALLATION

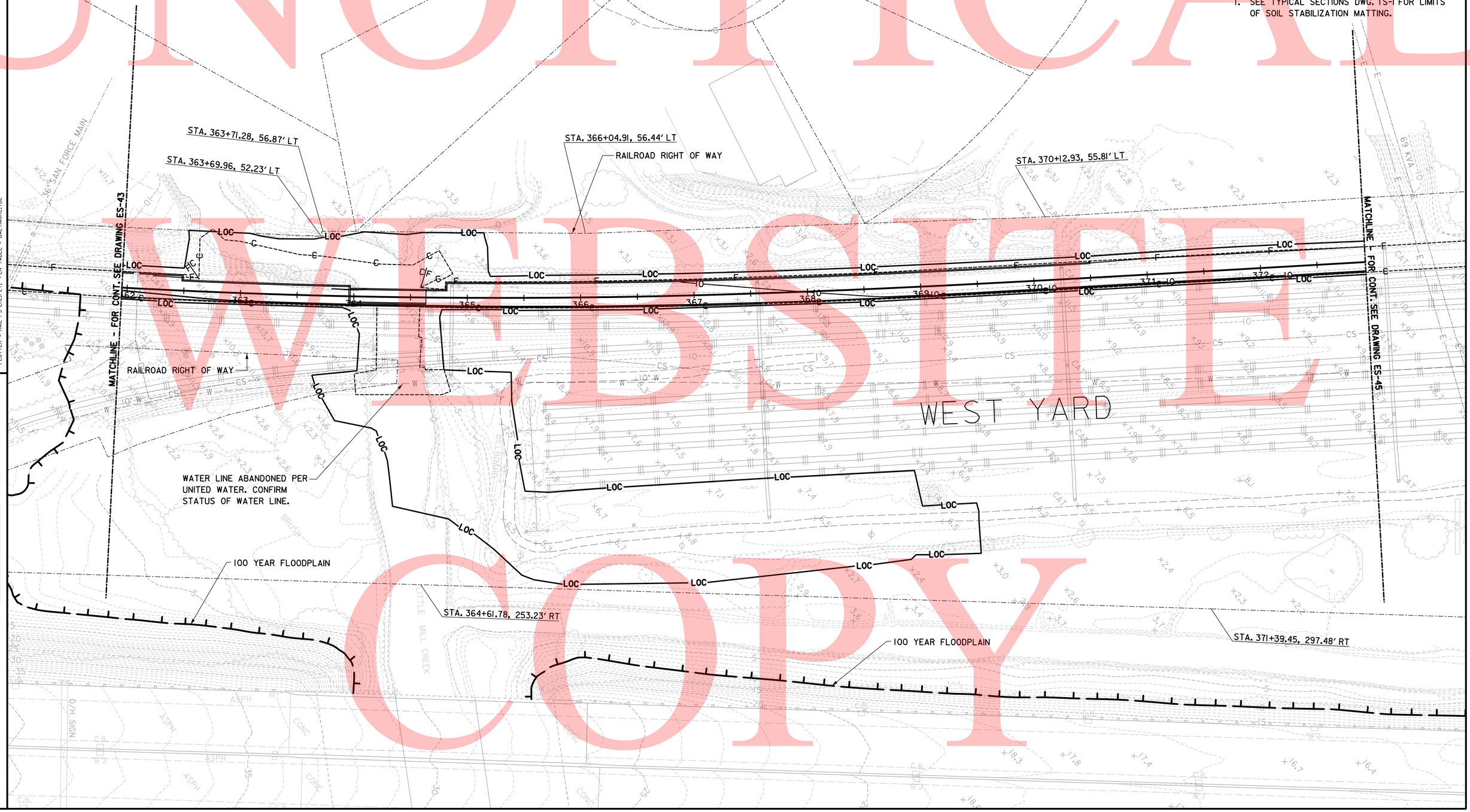

UNOFFICIAL WORKING COPY

4/16/2009
MaSprojects\2007\07052.DT\Third-Track\D400\Plans\ES440TC.dgn
PLOTTER = RAIL-PS-ENL,2L1, PEN TABLE = BALTIMORE.TBL

PREL. TRACING DESIGN CHKD.

CONTRACT	COUNTY	F.A.P. NO.	SHEET NO.	TOTAL SHTS
27-512-01	NEW CASTLE	HPP-2005 (028)	13	140

NEC COMMUTER RAIL IMPROVE.– DELAWARE YARD to RAGAN – Civil, Structural

DATE: APRIL 20, 2009

REVISIONS

DRAWING NO. ES-45

EROSION & SEDIMENT CONTROL PLAN

THIRD TRACK

SCALE

40 20 0 40

1"= 40'

NOTES:

1. SEE TYPICAL SECTIONS DWG. TS-1 FOR LIMITS OF SRBM.

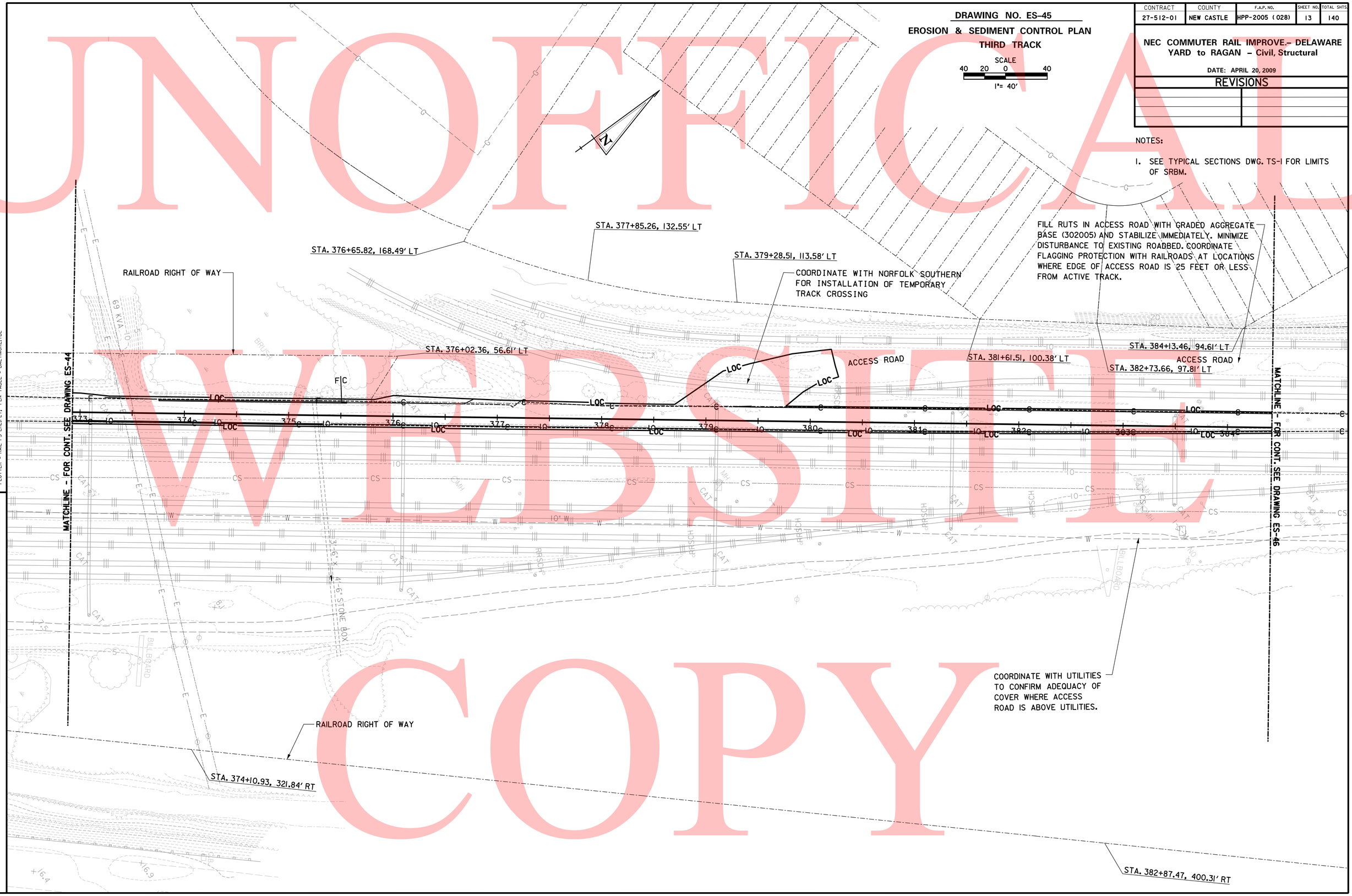

4/16/2009
M:\proj\ec-rs\2007\07052_DTC\Third-Trk\CADD\Plans\ES450TC.dgn
PLOTTER = RAIL-PS ENLRL1, PEN TABLE = BALTIMORE.TBL

PREL. TRACING ____ DESIGN ____ CHKD. ____

UNOFFICIAL WEBSITE COPY

CONTRACT	COUNTY	F.A.P. NO.	SHEET NO.	TOTAL SHTS
27-512-01	NEW CASTLE	HPP-2005 (028)	14	140

NEC COMMUTER RAIL IMPROVE.– DELAWARE YARD to RAGAN – Civil, Structural

DATE: APRIL 20, 2009

REVISIONS

DRAWING NO. ES-46

EROSION & SEDIMENT CONTROL PLAN

THIRD TRACK

SCALE

40 20 0 40

1"= 40'

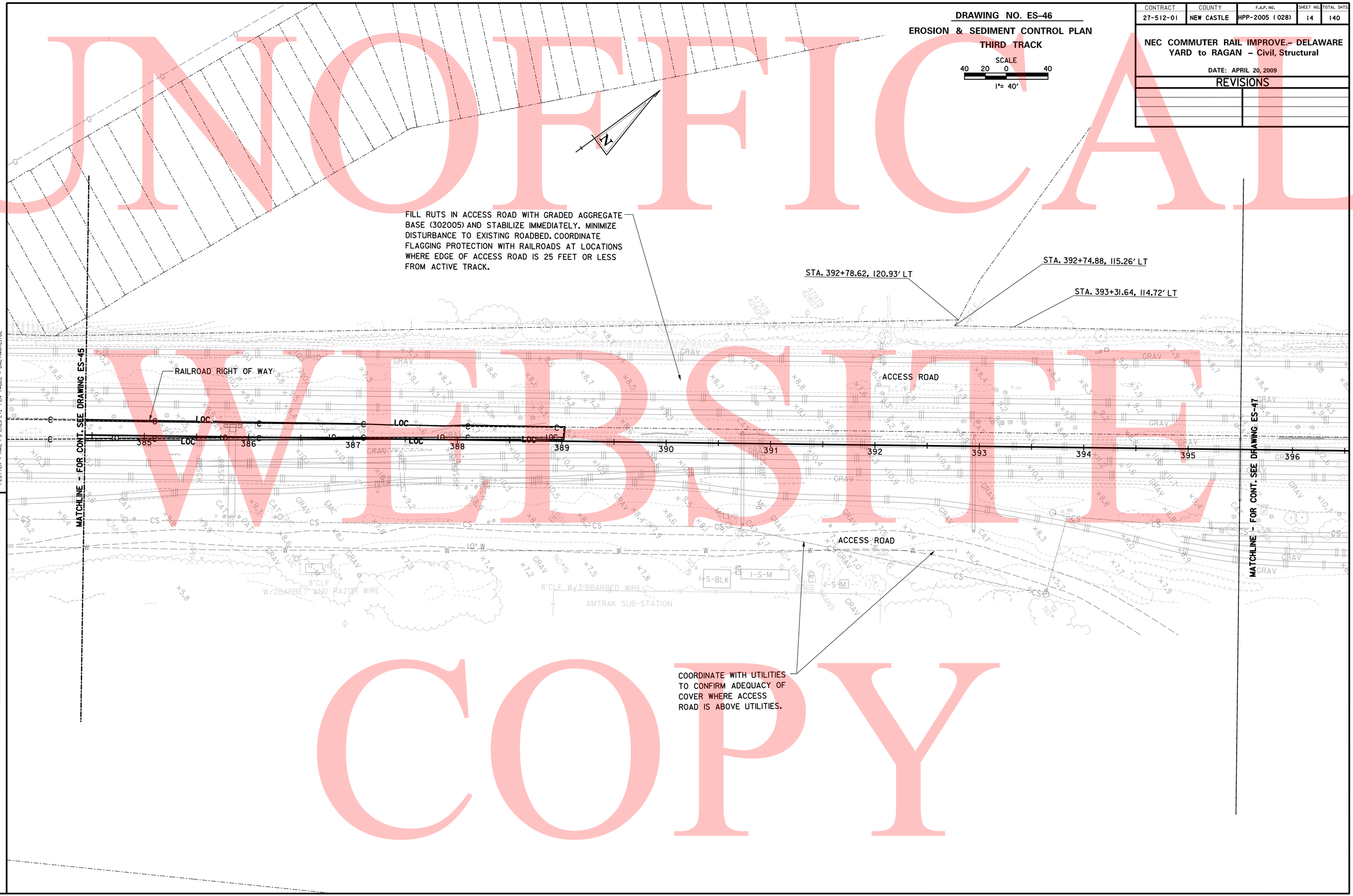

4/16/2009
MA:\proj\ec-ra\2007\07052_DT0\Third-Trk\CADD\Plans\ES46DTC.dgn
PLOTTER = RAIL-PS-ENL-FL1, PEN TABLE = BALTIMORE.TBL

PREL. TRACING _____ DESIGN _____ CHKD. _____

UNOFFICIAL WEBSITE COPY

CONTRACT	COUNTY	F.A.P. NO.	SHEET NO.	TOTAL SHTS
27-512-01	NEW CASTLE	HPP-2005 (028)	15	140

NEC COMMUTER RAIL IMPROVE.– DELAWARE YARD to RAGAN – Civil, Structural

DATE: APRIL 20, 2009

REVISIONS

DRAWING NO. ES–47

EROSION & SEDIMENT CONTROL PLAN
THIRD TRACK

SCALE
40 20 0 40
1"= 40'

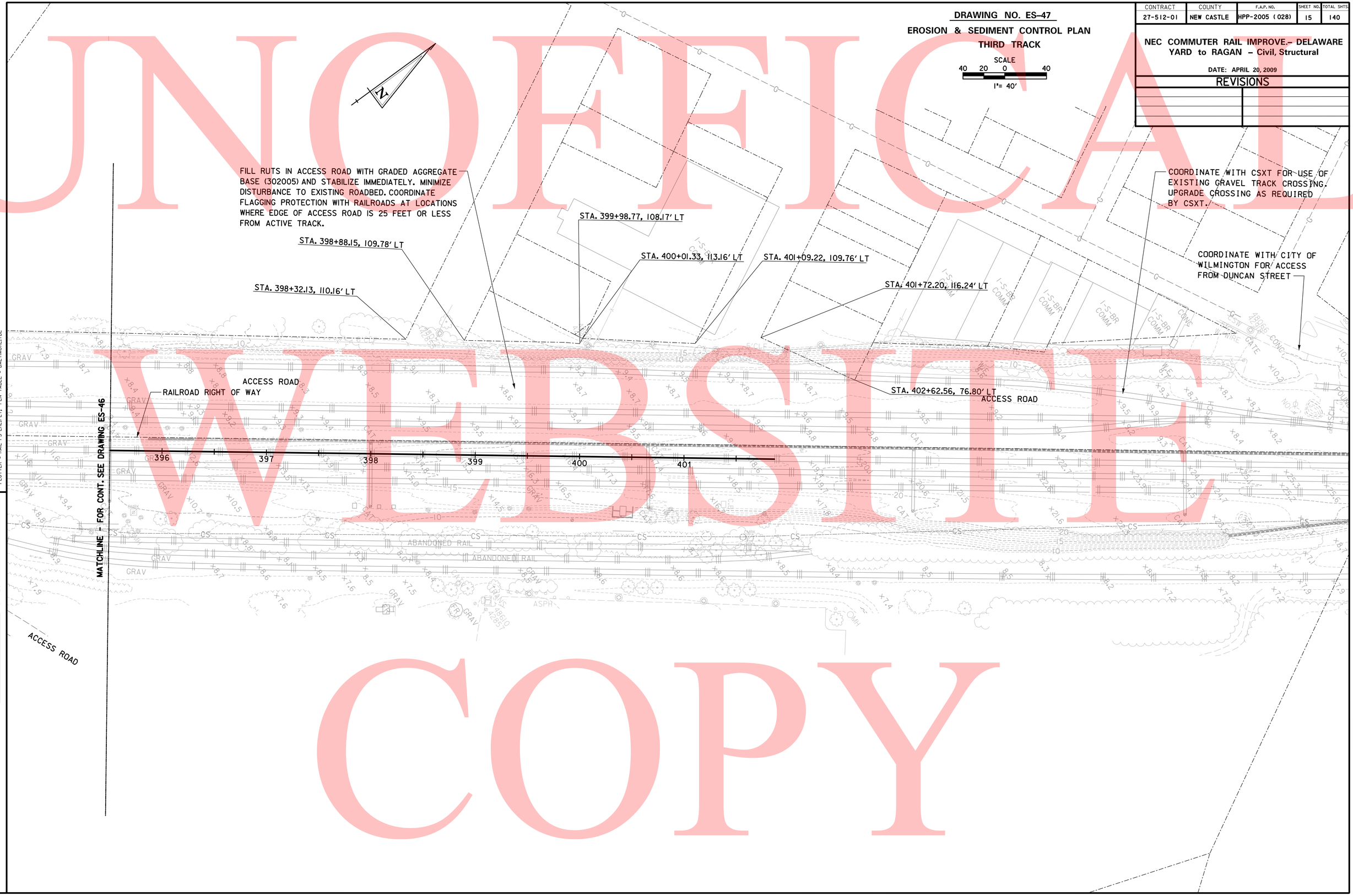

4/16/2009
M:\projects\2007\07052_DT(C)\Third-Trk\CADD\Plans\ES47DTC.dgn
PLOTTER = RAIL-PS ENLPL1, PEN TABLE = BALTIMORE.TBL

PREL. TRACING _____ DESIGN _____ CHKD. _____

UNOFFICIAL WEBSITE COPY

CONTRACT	COUNTY	F.A.P. NO.	SHEET NO.	TOTAL SHTS
27-512-01	NEW CASTLE	HPP-2005 (028)	16	140

DRAWING NO. PP-38

PLAN /PROFILE – STA. 296+00 to 305+00

THIRD TRACK

SCALE 40 20 0 40
1"= 40'

NEC COMMUTER RAIL IMPROVE.– DELAWARE YARD to RAGAN – Civil, Structural

DATE: APRIL 20, 2009

REVISIONS

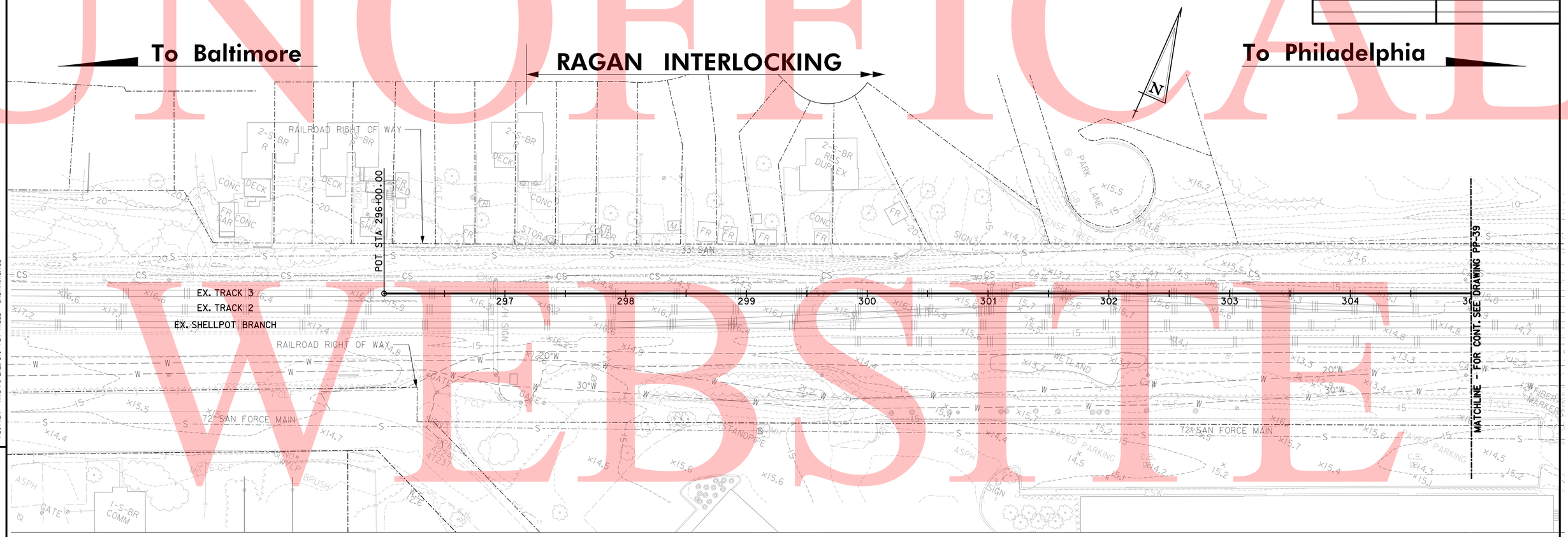

PLAN SCALE 40 20 0 40
1"= 40'

NO PROFILE THIS PAGE

4/16/2009
M:\projects\X2007\07052.DTC\Third-Trk\CADD\Plans\pp38-DTC.dgn
PLOTTER = RAIL-PS-ENLRLT, PEN TABLE = BALTIMORE.TBL

PREL. TRACING _____ DESIGN _____ CHKD. _____

UNOFFICIAL WEBSITE COPY

CONTRACT	COUNTY	F.A.P. NO.	SHEET NO.	TOTAL SHTS
27-512-01	NEW CASTLE	HPP-2005 (028)	17	140

DRAWING NO. PP-39

PLAN /PROFILE – STA. 305+000 to 317+00

THIRD TRACK

SCALE 40 20 0 40
1"= 40'

NEC COMMUTER RAIL IMPROVE.– DELAWARE YARD to RAGAN – Civil, Structural

DATE: APRIL 20, 2009

REVISIONS

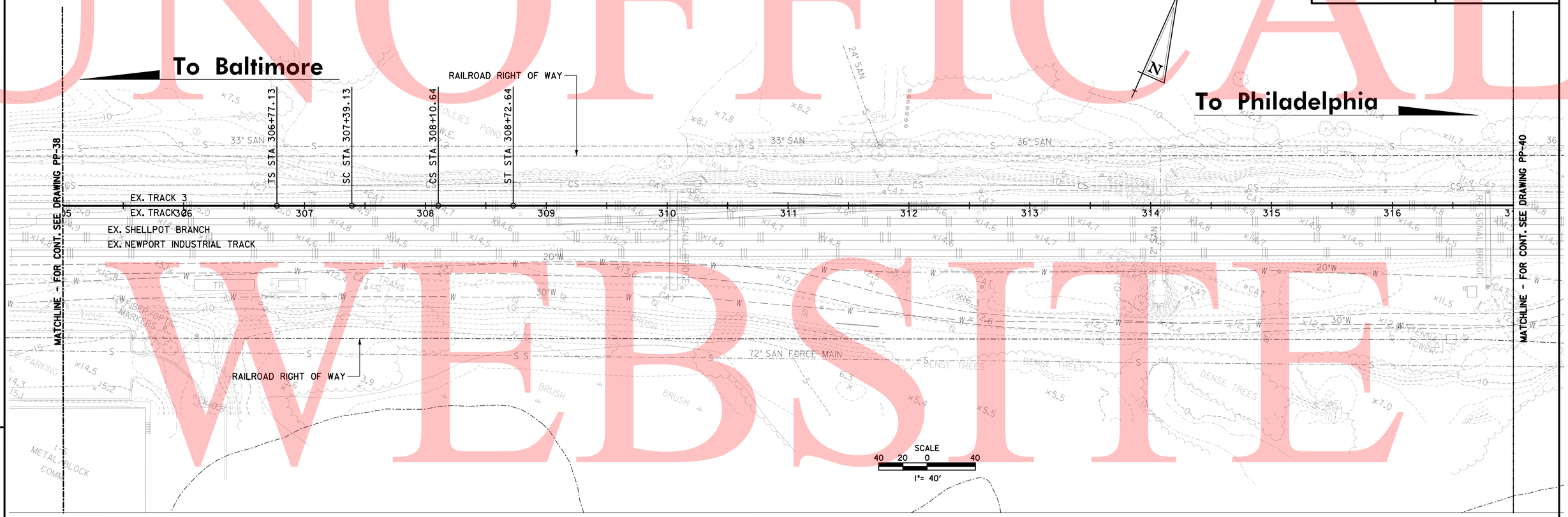

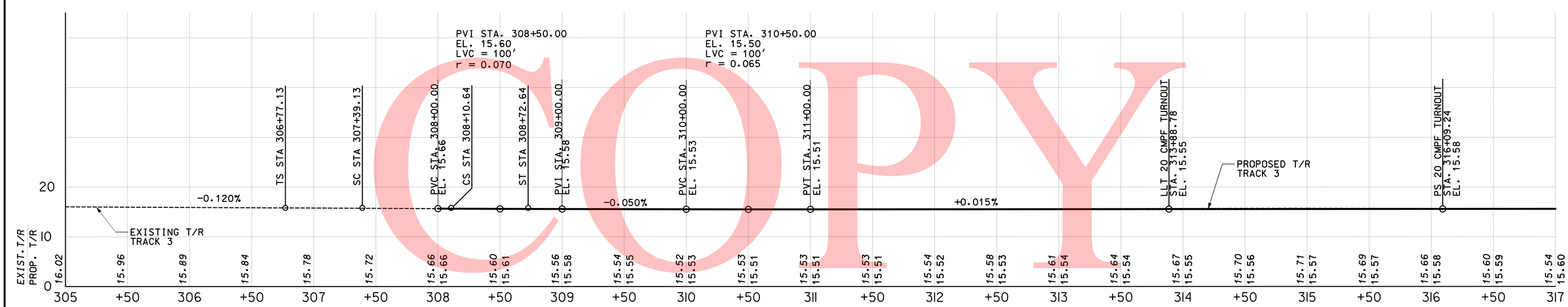

PROFILE SCALE: HORIZ: 1"=40'
VERT: 1"=10'

4/16/2009
MAJOR/Projects\2007\07052_DTC\Third-Track\CADD\Plans\pp39-DTC.dgn
PLOTTER = RAIL-PS-ENLRLT, PEN TABLE = BALTIMORE.TBL

PRELIM. TRACING ____ DESIGN ____ CHKD. ____

UNOFFICIAL WEBSITE COPY

UNOFFICIAL WEBSITE COPY

CONTRACT	COUNTY	F.A.P. NO.	SHEET NO.	TOTAL SHTS
27-512-01	NEW CASTLE	HPP-2005 (028)	18	140

NEC COMMUTER RAIL IMPROVE.– DELAWARE YARD to RAGAN – Civil, Structural

DATE: APRIL 20, 2009

REVISIONS

DRAWING NO. PP-40

PLAN /PROFILE – STA. 317+00 to 328+50

THIRD TRACK

SCALE 40 20 0 40 — 1"= 40'

DRAINAGE INLET SCHEDULE

NO.	BOX	GRATE	T.G. EL.	INV. EL.	STATION	OFFSET
DI-1	SPECIAL DRAINAGE INLET	I	14.80	11.30	324+45	19.0' LT

PIPE SCHEDULE

NO.	SIZE/TYPE	LENGTH	SLOPE	INT. INV.	DIS. INV.
P-1	24" RCP, CLASS IV	87'	0.00%	11.30	11.30
P-2	24" RCP, CLASS IV	325'	0.00%	11.30	11.30

FLARED END SCHEDULE

NO.	SIZE	TYPE	INV.
FE-1	24"	SEE DETAIL, DWG. DR-1	11.30
FE-2	24"	SEE DETAIL, DWG. DR-1	11.30

FOR STORM DRAIN AND RIP RAP DITCH PROFILES, SEE DWG. DR-2

R-5 RIPRAP DITCH LINING

LOCATION	RIPRAP LIMITS (FT) W	RIPRAP LIMITS (FT) L	AREA (SY)	REMARKS
324+46, 42' LT	6	12	8	DITCH
327+78, 19' LT	5	11	7	OUTFALL

SOIL RETENTION BLANKET MULCH NOTES:

1. DRAINAGE DITCH STA. 319+74 TO STA. 323+50 AND STA. 328+00 TO STA. 328+50: INSTALL SOIL RETENTION BLANKET MULCH, TYPE 5 (735535). QUANTITY = 189 S.Y. REFER TO DRAWING NO. DR-1 FOR THE DITCH LINING DETAIL.

2. CUT/FILL SLOPE STA. 319+69 TO STA. 328+50: INSTALL SOIL RETENTION BLANKET MULCH, TYPE 3 (735533). QUANTITY = 1920 S.Y.

To Baltimore — **To Philadelphia**

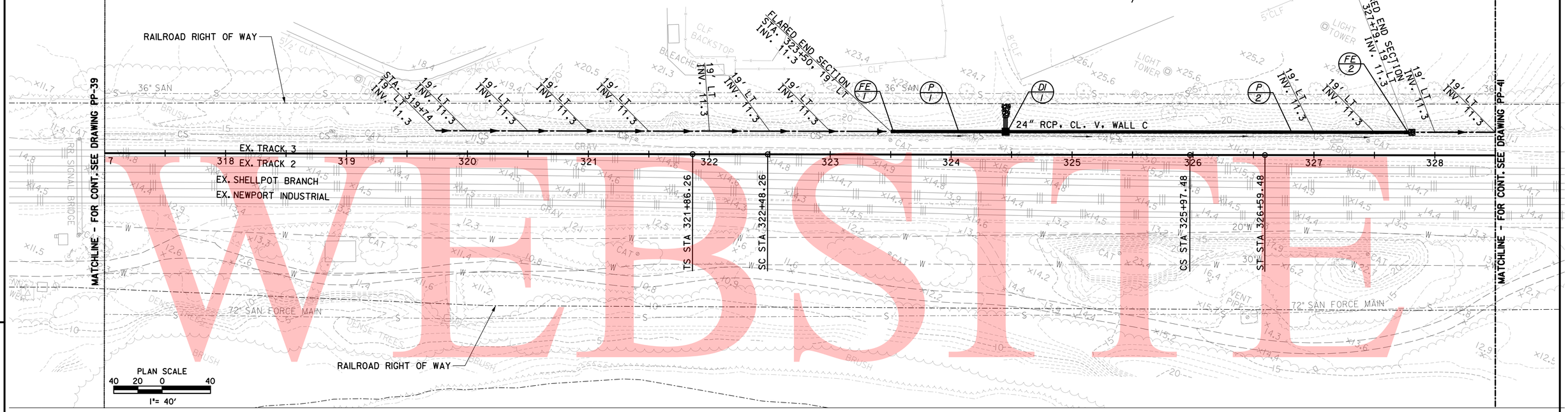

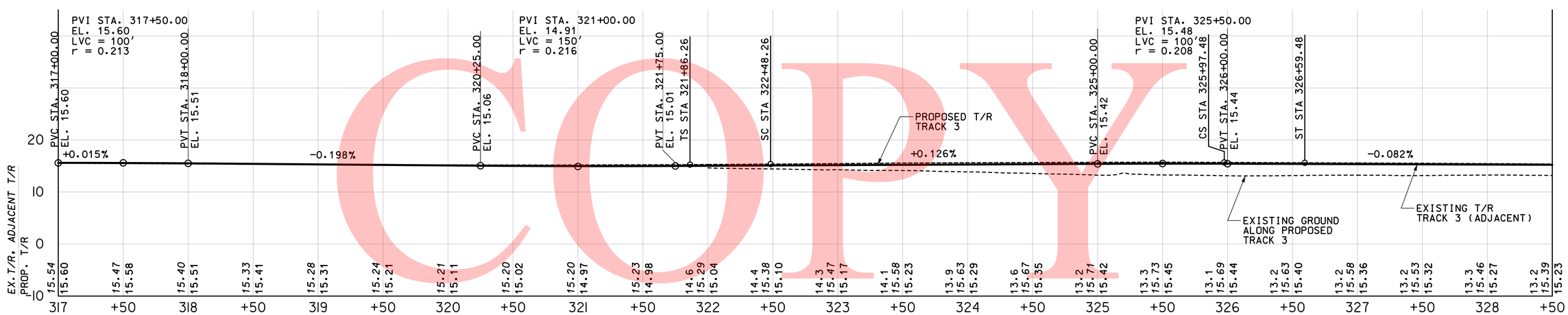

4/16/2009
M:\proj\ec-ra\2007\07052_DTC\Third-Trk\G40\Plans\pp40-DTC.dgn
PLOTTER = RAIL_PS-ENL_FL1, PEN TABLE = BALTIMORE.TBL

PRELIM. TRACING ____ DESIGN ____ CHKD. ____

CONTRACT	COUNTY	F.A.P. NO.	SHEET NO.	TOTAL SHTS
27-512-01	NEW CASTLE	HPP-2005 (028)	19	140

NEC COMMUTER RAIL IMPROVE.– DELAWARE YARD to RAGAN – Civil, Structural

DATE: APRIL 20, 2009

REVISIONS

DRAWING NO. PP-41

PLAN /PROFILE – STA. 328+50 to 340+00

THIRD TRACK

SCALE 40 20 0 40

1"= 40'

R-5 RIPRAP ENERGY DISSIPATOR

LOCATION	RIPRAP LIMITS (FT) W	RIPRAP LIMITS (FT) L	AREA (SY)	REMARKS
329+40, 19' LT	5	24	14	DITCH

SOIL RETENTION BLANKET MULCH NOTES:

1. DRAINAGE DITCH STA. 328+50 TO STA. 329+40: INSTALL SOIL RETENTION BLANKET MULCH, TYPE 5 (735535). QUANTITY = 48 S.Y. REFER TO DRAWING NO. DR-1 (SHEET 33) FOR THE DITCH LINING DETAIL.

2. CUT/FILL SLOPE STA. 328+50 TO STA. 329+58: INSTALL SOIL RETENTION BLANKET MULCH, TYPE 3 (735533). QUANTITY = 103 S.Y.

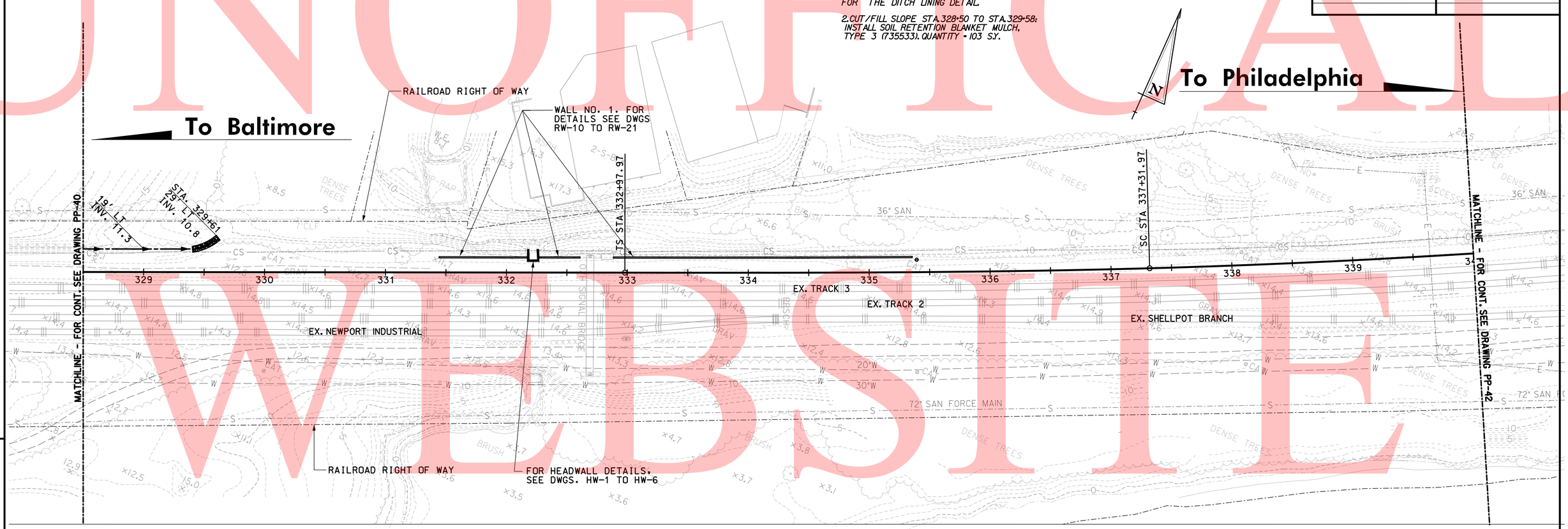

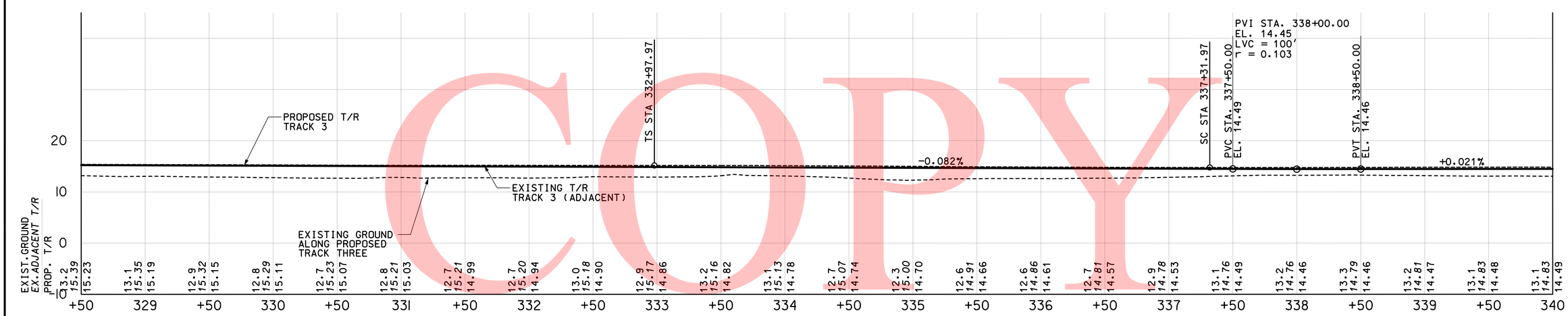

PROFILE SCALE: HORIZ: 1"=40'
VERT: 1"=10'

4/16/2009
MLspro1jec:s\2007\07052_DTC\Third-Trk\G4DP\Plans\pp41-DTC.dgn
PLOTTER = RAIL-PS-BW.PLT, PEN TABLE = BALTIMORE.TBL

DESIGN ____ CHKD. ____

PREL. TRACING ____

UNOFFICIAL WEBSITE COPY

CONTRACT	COUNTY	F.A.P. NO.	SHEET NO.	TOTAL SHTS
27-512-01	NEW CASTLE	HPP-2005 (028)	20	140

NEC COMMUTER RAIL IMPROVE.– DELAWARE YARD to RAGAN – Civil, Structural

DATE: APRIL 20, 2009

REVISIONS

DRAWING NO. PP-42

PLAN /PROFILE – STA. 340+00 to 351+00

THIRD TRACK

SCALE 40 20 0 40
1"= 40'

SOIL RETENTION BLANKET MULCH NOTES:

1. DRAINAGE DITCH STA. 341+00 TO STA. 351+00: INSTALL SOIL RETENTION BLANKET MULCH, TYPE 5 (735535). QUANTITY = 445 S.Y. REFER TO DRAWING NO. DR-1 (SHEET 33) FOR THE DITCH LINING DETAIL.

2. CUT/FILL SLOPE STA. 341+00 TO STA. 351+00: INSTALL SOIL RETENTION BLANKET MULCH, TYPE 3 (735533). QUANTITY = 300 S.Y.

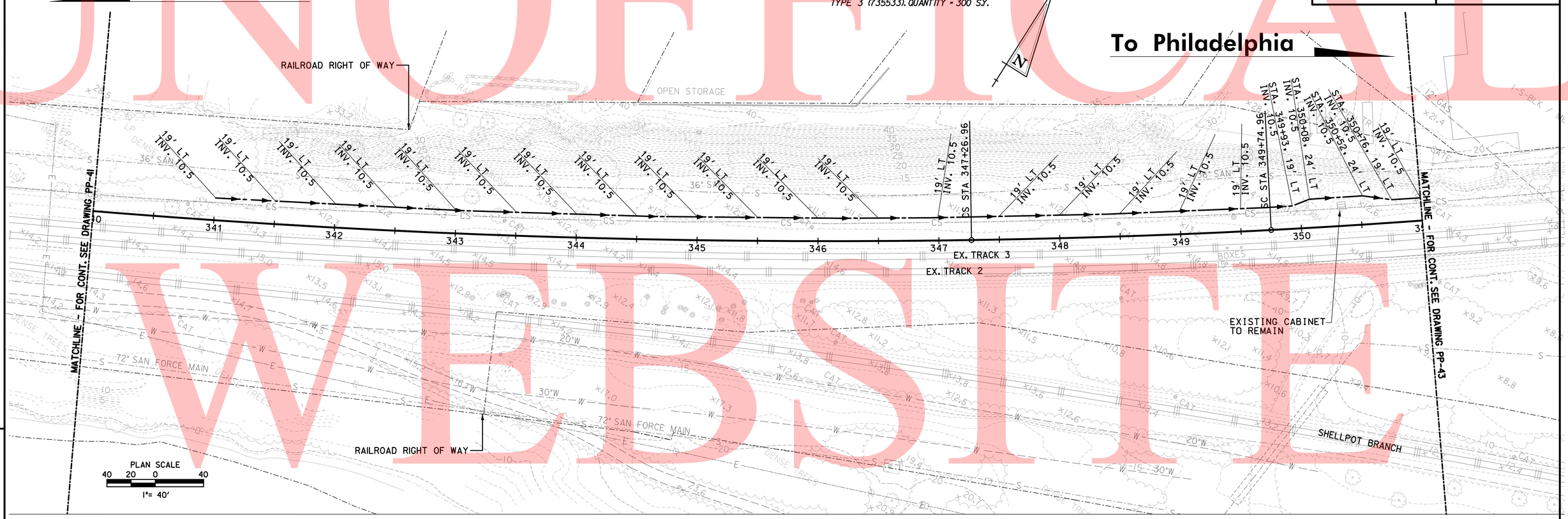

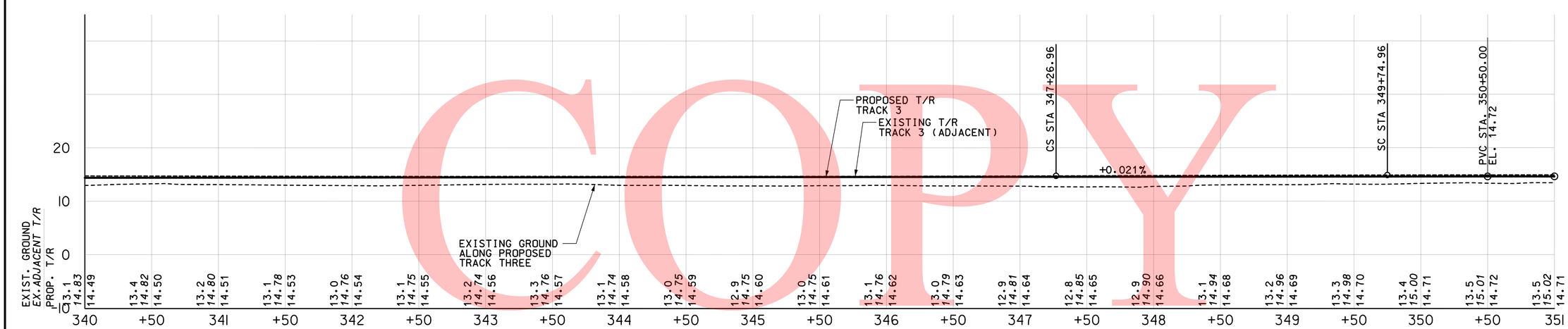

PROFILE SCALE: HORIZ: 1"=40'
VERT: 1"=10'

4/16/2009
MKprojects\2007\07052_DTC\Third-Trk\G4DP\Plans\pp42-DTC.dgn
PLOTTER = RAIL-PS-ENL-PL1, PEN TABLE = BALTIMORE.TBL

PREL. TRACING ____ DESIGN ____ CHKD. ____

UNOFFICIAL WEBSITE COPY

CONTRACT	COUNTY	F.A.P. NO.	SHEET NO.	TOTAL SHTS
27-512-01	NEW CASTLE	HPP-2005 (028)	21	140

NEC COMMUTER RAIL IMPROVE.– DELAWARE YARD to RAGAN – Civil, Structural

DATE: APRIL 20, 2009

REVISIONS

DRAWING NO. PP-43

PLAN /PROFILE – STA. 351+00 to 362+00

THIRD TRACK

SCALE 40 20 0 40
1"= 40'

SOIL RETENTION BLANKET MULCH NOTES:

1.DRAINAGE DITCH STA.351+00 TO STA.353+00: INSTALL SOIL RETENTION BLANKET MULCH, TYPE 5 (735535). QUANTITY = 90 S.Y. REFER TO DRAWING NO. DR-1 (SHEET 33) FOR THE DITCH LINING DETAIL.

2.CUT/FILL SLOPE STA.351+00 TO STA.353+00: INSTALL SOIL RETENTION BLANKET MULCH, TYPE 3 (735533). QUANTITY = 68 S.Y.

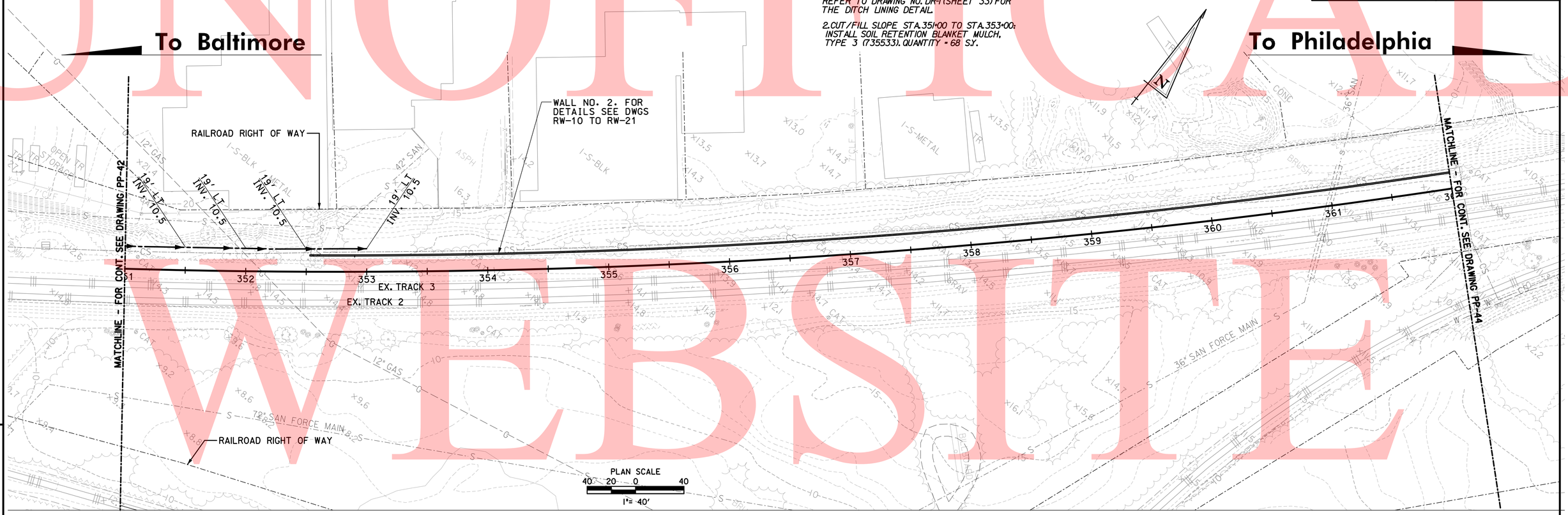

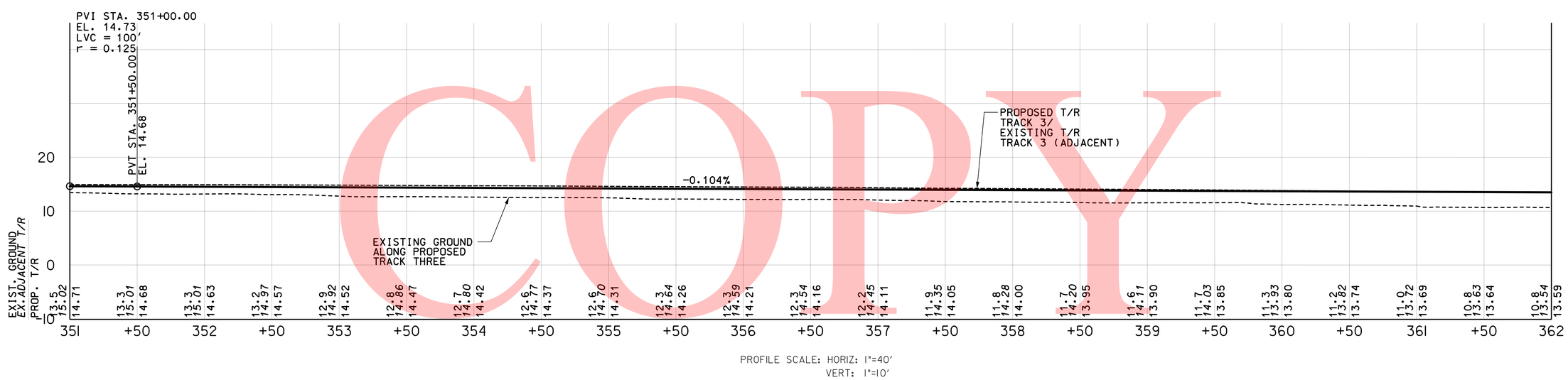

PROFILE SCALE: HORIZ: 1"=40'
VERT: 1"=10'

4/16/2009
M:\projects\2007\07052.DTC\Third-Trk\C400\Plans\pp43-DTC.dgn
PLOTTER = RAIL-PS-EHL,PL1, PEN TABLE = BALTIMORE.TBL

PREL. TRACING ____ DESIGN ____ CHKD. ____

UNOFFICIAL WEBSITE COPY

CONTRACT	COUNTY	F.A.P. NO.	SHEET NO.	TOTAL SHTS
27-512-01	NEW CASTLE	HPP-2005 (028)	22	140

DRAWING NO. PP-44

PLAN /PROFILE – STA. 362+00 to 373+00

THIRD TRACK

SCALE 40 20 0 40
1"= 40'

NEC COMMUTER RAIL IMPROVE.– DELAWARE YARD to RAGAN – Civil, Structural

DATE: APRIL 20, 2009

REVISIONS

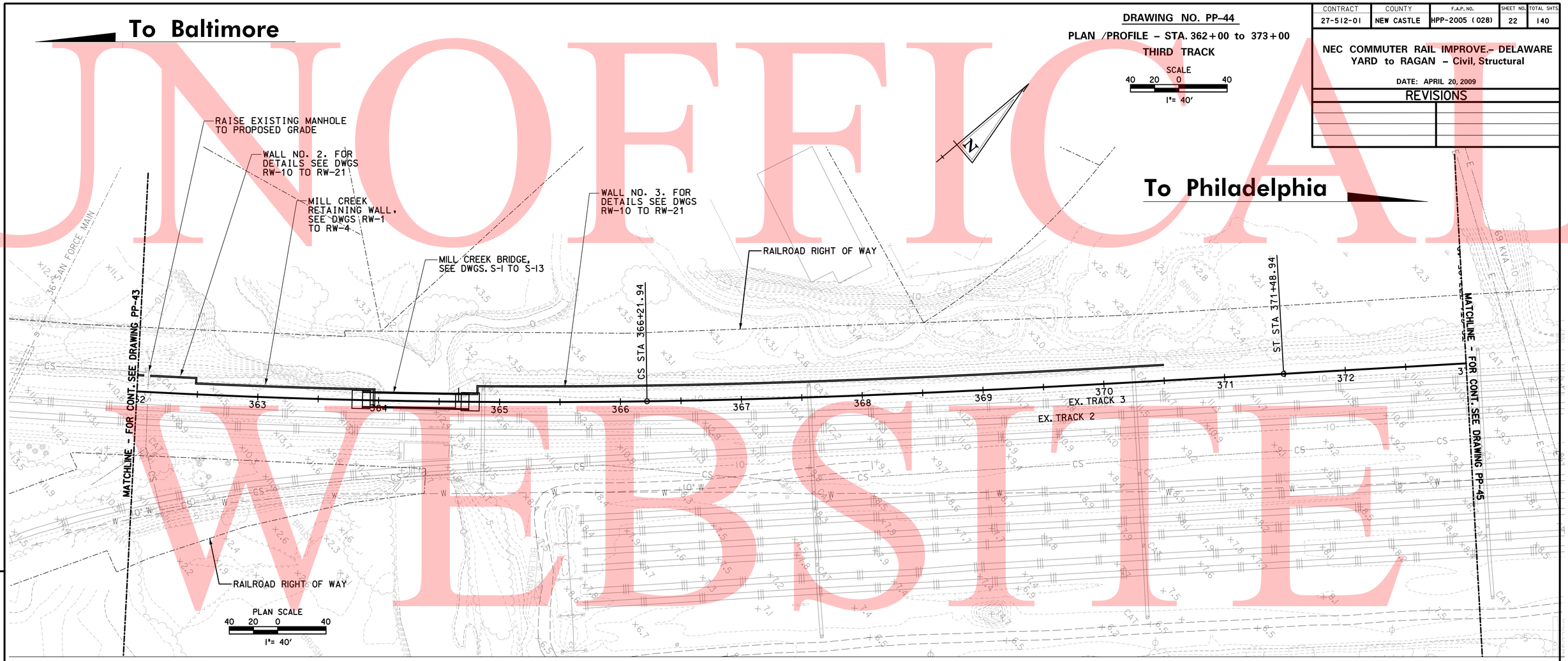

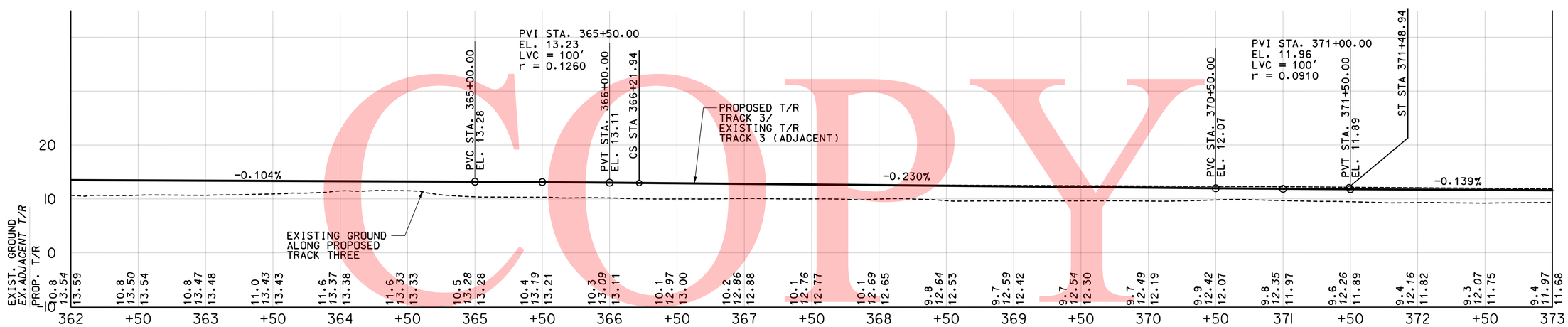

PROFILE SCALE: HORIZ: 1"=40'
VERT: 1"=10'

4/16/2009
MA:proj\ec-rs\2007\07052_DTC\Third-Trk\G400\Plans\pp44-DTC.dgn
PLOTTER = RAIL-PS-ENL-PL1, PEN TABLE = BALTIMORE.TBL

PREL. TRACING _____ DESIGN _____ CHKD. _____

UNOFFICIAL WEBSITE COPY

UNOFFICIAL WEBSITE COPY

CONTRACT	COUNTY	F.A.P. NO.	SHEET NO.	TOTAL SHTS
27-512-01	NEW CASTLE	HPP-2005 (028)	23	140

DRAWING NO. PP-45

PLAN /PROFILE – STA. 373+00 to 384+50

THIRD TRACK

SCALE 40 20 0 40
1"= 40'

NEC COMMUTER RAIL IMPROVE.– DELAWARE YARD to RAGAN – Civil, Structural

DATE: APRIL 20, 2009

REVISIONS

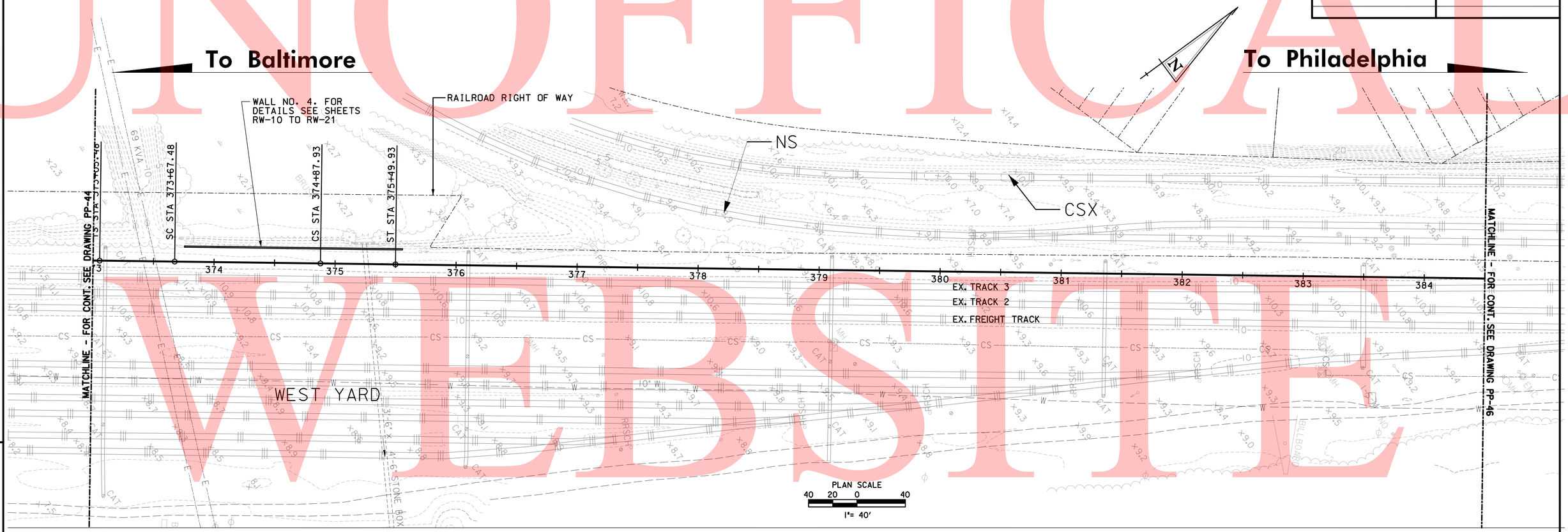

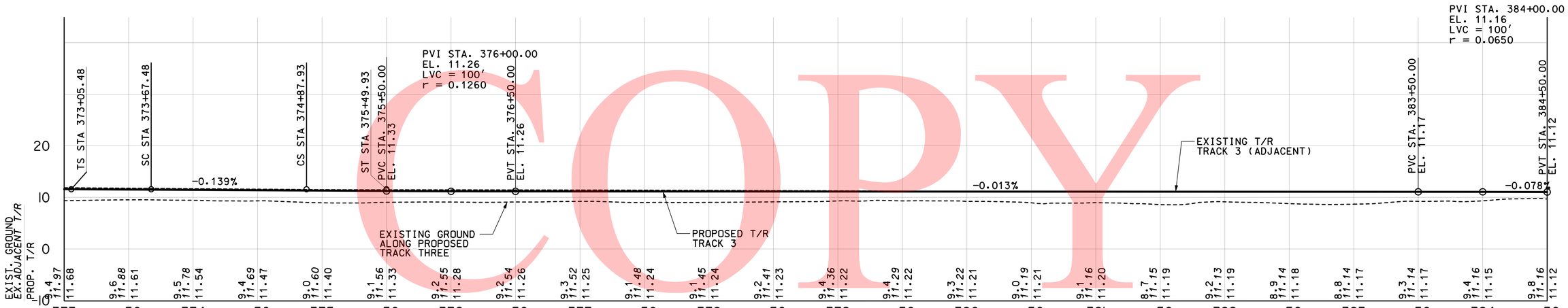

PROFILE SCALE: HORIZ: 1"=40'
VERT: 1"=10'

4/16/2009
MAJorajec:s:\2007\07052.DTC\Third-Trk\CADD\Plans\pp45-DTC.dgn
PLOTTER = RAIL-PS-ENLRLT, PEN TABLE = BALTIMORE.TBL

PREL. TRACING ____ DESIGN ____ CHKD. ____

UNOFFICIAL WEBSITE COPY

CONTRACT	COUNTY	F.A.P. NO.	SHEET NO.	TOTAL SHTS.
27-512-01	NEW CASTLE	HPP-2005 (028)	24	140

DRAWING NO. PP-46

PLAN /PROFILE – STA. 384+50 to 395+50

THIRD TRACK

SCALE
40 20 0 40
1"= 40'

NEC COMMUTER RAIL IMPROVE.– DELAWARE YARD to RAGAN – Civil, Structural

DATE: APRIL 20, 2009

REVISIONS

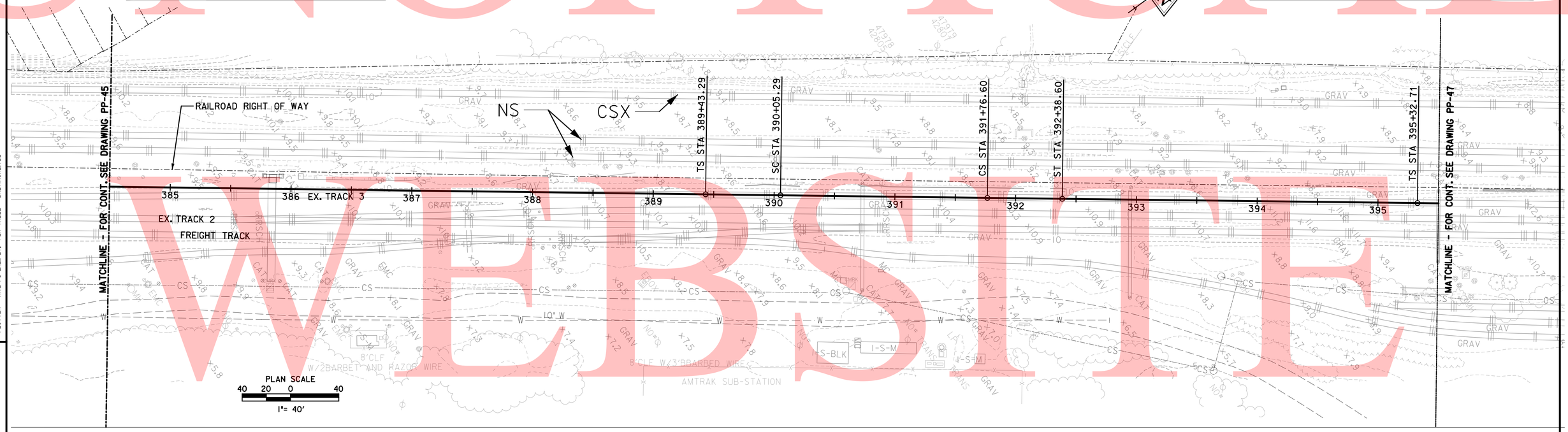

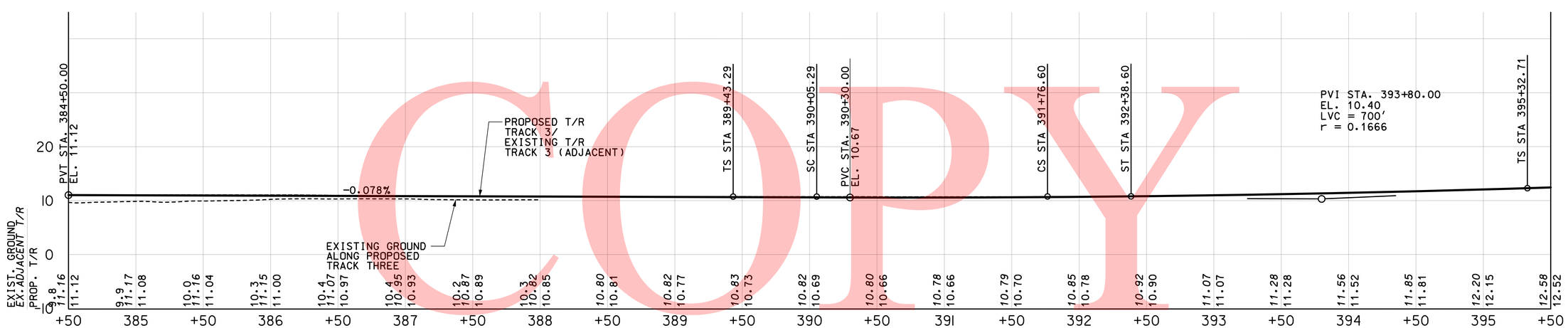

PROFILE SCALE: HORIZ: 1"=40'
VERT: 1"=10'

4/16/2009
M:\projects\2007\07052_DTC\Third-Trk\CADD\Plans\pp46-DTC.dgn
PLOTTER = RAIL-PS-ENLPL1, PEN TABLE = BALTIMORE.TBL

PREL. TRACING ____ DESIGN ____ CHKD. ____

UNOFFICIAL WEBSITE COPY

CONTRACT	COUNTY	F.A.P. NO.	SHEET NO.	TOTAL SHTS.
27-512-01	NEW CASTLE	HPP-2005 (028)	25	140

DRAWING NO. PP-47

PLAN /PROFILE – STA. 395+50 to 401+86

THIRD TRACK

SCALE 40 20 0 40

1"= 40'

NEC COMMUTER RAIL IMPROVE.– DELAWARE YARD to RAGAN – Civil, Structural

DATE: APRIL 20, 2009

REVISIONS

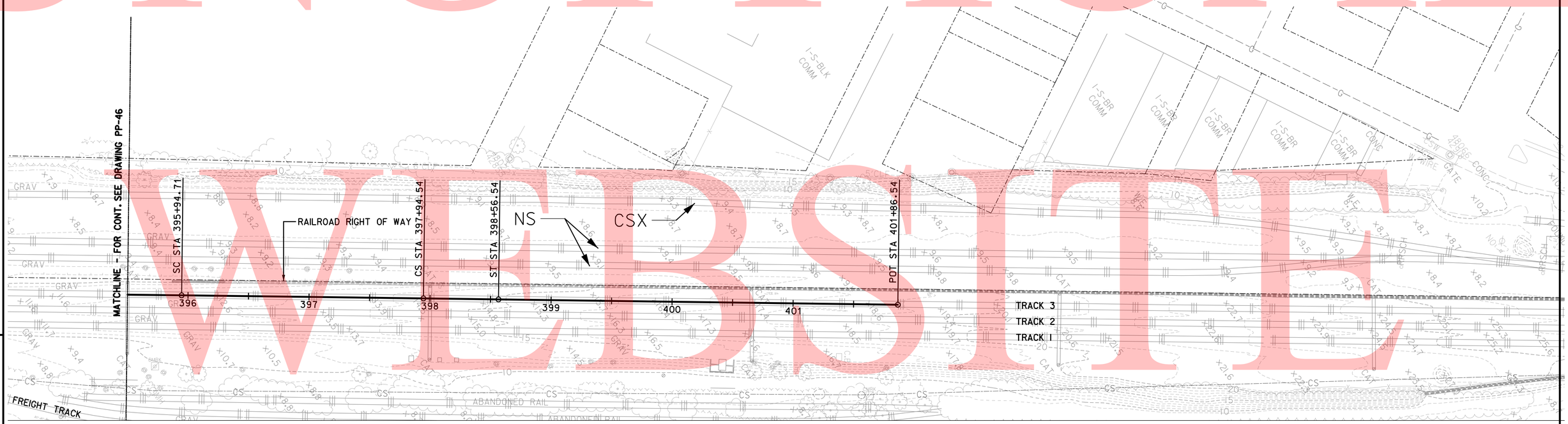

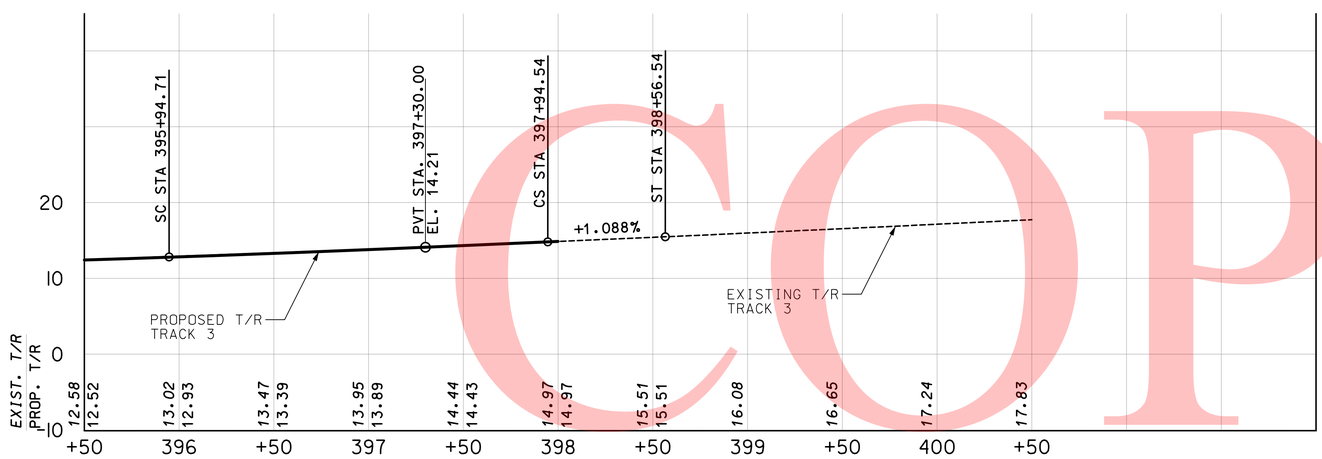

4/16/2009
M:\projects\2007\07052.DT\Third-Track\CADD\Plans\pp47-DTC.dgn
PLOTTER = RAIL-PS-ENL-PL1, PEN TABLE = BALTIMORE.TBL

PRELIM. TRACING _____ DESIGN _____ CHKD. _____

CONTRACT	COUNTY	F.A.P. NO.	SHEET NO.	TOTAL SHTS
27-512-01	NEW CASTLE	HPP-2005 (028)	26	140

DRAWING NO. TS-1

TYPICAL SECTIONS - 1

THIRD TRACK

SCALE 5 2.5 0 5
1" = 5'

NEC COMMUTER RAIL IMPROVE.- DELAWARE YARD to RAGAN - Civil, Structural

DATE: AUGUST 24, 2009

REVISIONS

LEGEND

1. BALLAST (AREMA SIZE NO. 3) (302512)
2. SUBBALLAST (GRADED AGGREGATE BASE COURSE, TYPE B) - DEPTH VARIES (302005)
3. BID ITEM 2025XX - "GRADING AND RESHAPING EXISTING SUBGRADE". QUANTITY EXCLUDED FROM BID ITEM 202000 - "EXCAVATION AND EMBANKMENT"
4. TOPSOILING (6" DEPTH), SEED AND SOIL RETENTION BLANKET MULCH TYPE 3 (ALL DISTURBED AREAS EXCEPT SWALES, BALLAST, & SUBBALLAST) (732002, 735533)
5. TOPSOILING (6" DEPTH), SEED AND SOIL RETENTION BLANKET MULCH TYPE 5 (ALL SWALE LOCATIONS) (732002, 735535)

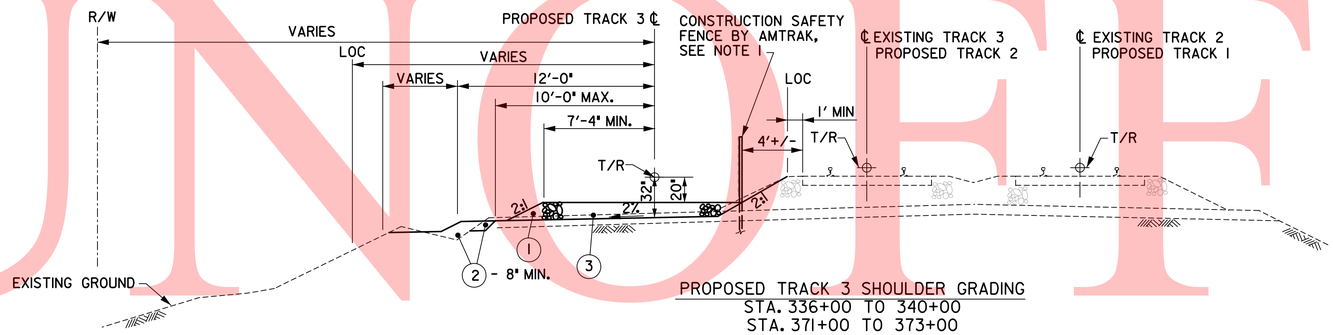

PROPOSED TRACK 3 SHOULDER GRADING
STA. 336+00 TO 340+00
STA. 371+00 TO 373+00
STA. 375+50 TO 376+50

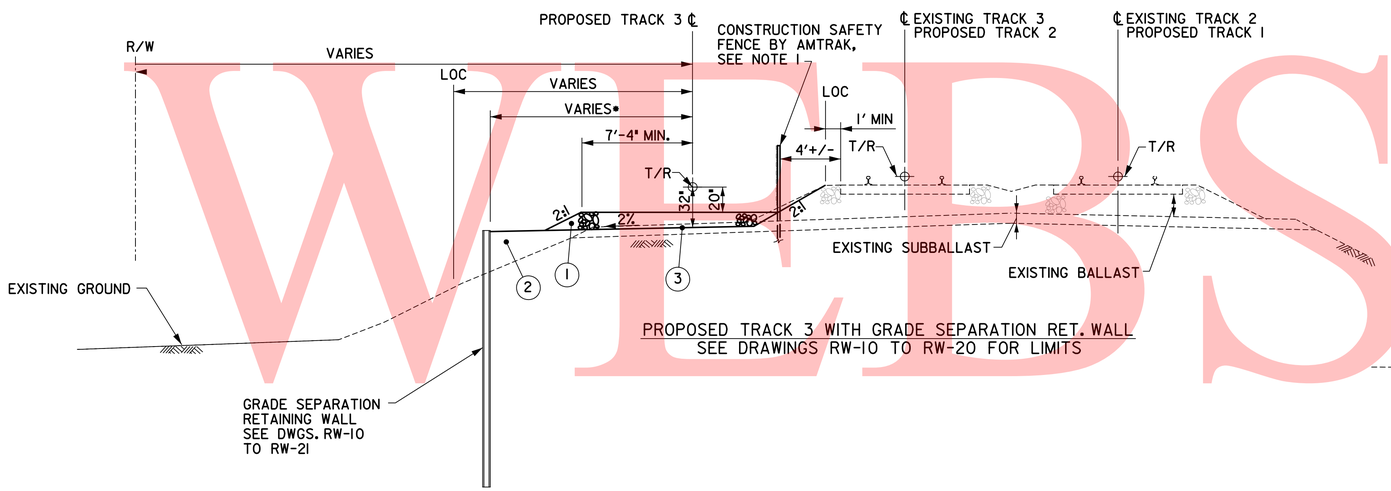

PROPOSED TRACK 3 WITH GRADE SEPARATION RET. WALL
SEE DRAWINGS RW-10 TO RW-20 FOR LIMITS

* SEE DRAWINGS RW-10 TO RW-21

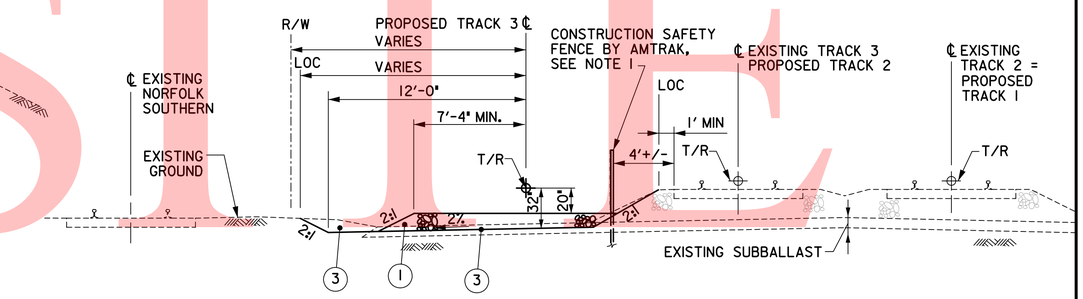

PROPOSED TRACK 3 ADJACENT TO NORFOLK SOUTHERN
STA. 377+50 TO 389+00

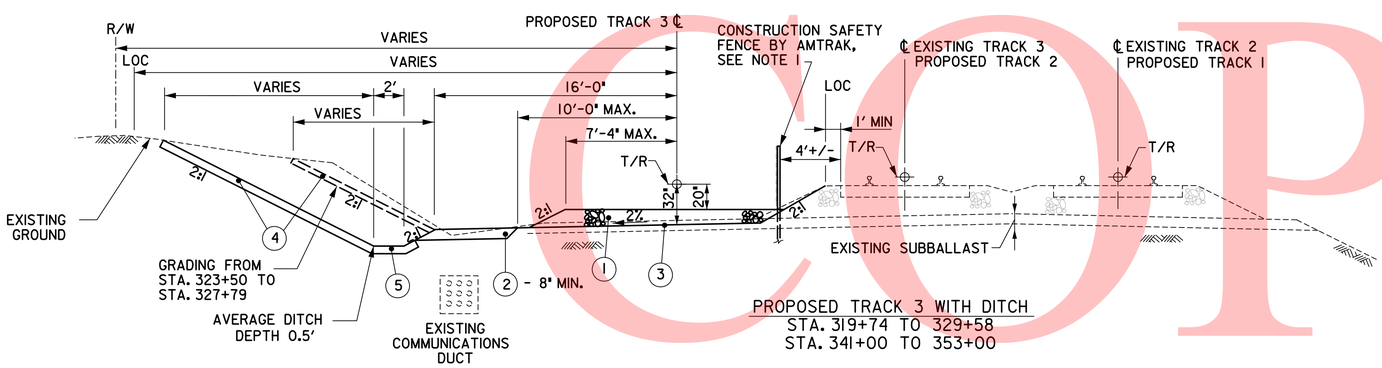

PROPOSED TRACK 3 WITH DITCH
STA. 319+74 TO 329+58
STA. 341+00 TO 353+00

NOTES:

1. COORDINATE WITH AMTRAK REGARDING TIMING OF GRADING OF AREA OCCUPIED BY AMTRAK'S CONSTRUCTION SAFETY FENCE

8/26/2009
\\RKAN\v2007\2007\07052.DTC\Third-Trk\GADD\Plans\TS01DTC.dgn
PLOTTER = RAIL-PS-BW.PLT, PEN TABLE = BALTIMORE.TBL

DESIGN ____ CHKD. ____ PREL. TRACING ____

UNOFFICIAL WEBSITE COPY

CONTRACT	COUNTY	F.A.P. NO.	SHEET NO.	TOTAL SHTS
27-512-01	NEW CASTLE	HPP-2005 (028)	27	140

DRAWING NO. DR-1

DRAINAGE DETAILS

THIRD TRACK

NEC COMMUTER RAIL IMPROVE.– DELAWARE YARD to RAGAN – Civil, Structural

DATE: APRIL 20, 2009

REVISIONS

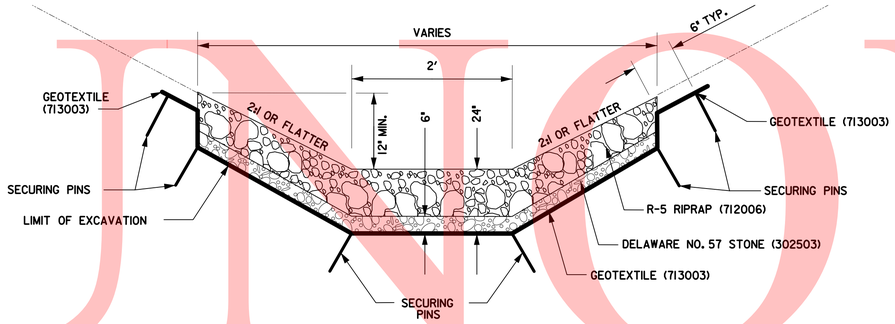

R-5 RIPRAP DITCH LINING

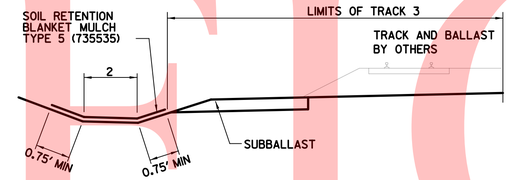

DITCH LINING DETAIL

FOR LONGITUDINAL DITCHES

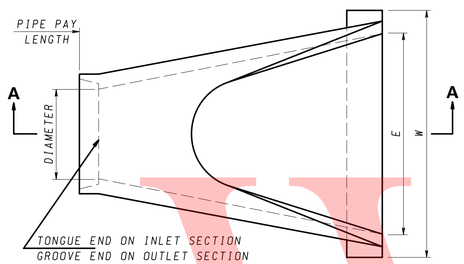

PLAN

NOTES

1. END SECTIONS MUST BE REINFORCED TO CONFORM TO CLASS V PIPE.
2. CONCRETE FOOTER SHALL BE USED WHEN SPECIFIED ON THE PLANS. COST OF CONCRETE FOOTER TO BE INCLUDED IN PRICE OF END SECTION. CONCRETE TO BE 3500 PSI. REINFORCEMENT TO BE NO.3 BARS.
3. SAFETY GRATES ARE NOT REQUIRED.

* INVERT ELEVATION TO BE AT THE PIPE END OF THE STANDARD END SECTION. ELEVATIONS TO BE NOTED ON THE CONSTRUCTION PLANS.

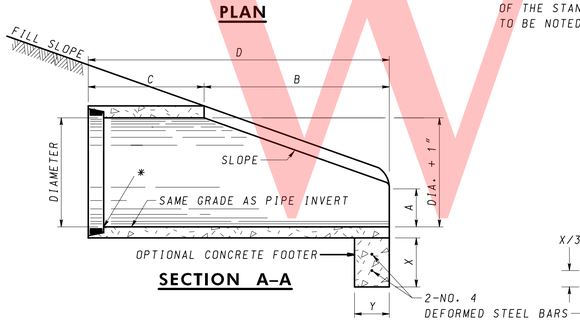

SECTION A–A

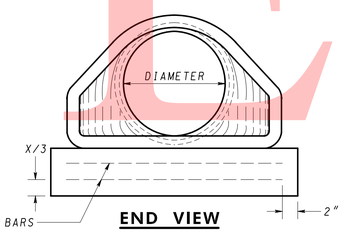

END VIEW

QUANTITIES FOR ESTIMATING PURPOSES ONLY

DIMENSIONS										QUANTITIES	
CONCRETE END SECTION							CONCRETE FOOTER				
DIA.	SLOPE	A	B	C	D	E	W	X	Y	CONC. C.Y.	STEEL LBS.
12"	3:1	4"	2'-0"	4'-0 7/8"	6'-0 7/8"	2'-0"	3'-0"	12"	9"	0.08	24.00
15"	3:1	6 1/2"	2'-4"	3'-10"	6'-2"	2'-6"	3'-6"	12"	9"	0.10	28.50
18"	3:1	10 1/4"	2'-2"	4'-0"	6'-2"	3'-0"	4'-0"	12"	9"	0.11	33.00
21"	3:1	9"	3'-0"	3'-1 1/2"	6'-1 1/2"	3'-6"	4'-6"	12"	9"	0.13	37.50
24"	3:1	11"	3'-7"	2'-8"	6'-3"	4'-0"	5'-0"	15"	9"	0.17	42.00
27"	3:1	10 1/2"	4'-1 1/2"	2'-0"	6'-1 1/2"	4'-6"	5'-6"	15"	9"	0.19	46.50
30"	3:1	1'-1"	4'-5"	1'-10"	6'-3"	5'-0"	6'-0"	15"	9"	0.21	51.00
33"	3:1	1'-2"	4'-7"	2'-2"	6'-9"	5'-6"	6'-6"	15"	9"	0.23	55.50
36"	3:1	1'-3 1/2"	5'-3"	3'-1"	8'-1 1/2"	6'-0"	7'-3"	15"	9"	0.25	62.25
42"	3:1	1'-9 1/4"	5'-5"	2'-10"	8'-3"	6'-6"	7'-9"	15"	9"	0.27	66.75
48"	3:1	2'-1"	6'-0"	2'-2"	8'-2"	7'-0"	8'-6"	18"	12"	0.47	73.50
54"	2.4:1	2'-5"	5'-2"	2'-10"	8'-0"	7'-6"	9'-0"	18"	12"	0.50	78.00
60"	2:1	2'-7"	4'-11"	3'-8 1/2"	8'-7 1/2"	8'-0"	9'-6"	18"	12"	0.53	82.50
66"	2:1	2'-4"	6'-6"	1'-9"	8'-3"	8'-6"	10'-0"	18"	12"	0.56	87.00
72"	2:1	2'-10"	6'-6"	1'-9"	8'-3"	9'-0"	10'-9"	18"	12"	0.60	93.75

SEE NOTE 3 ABOVE FOR CONCRETE FOOTER

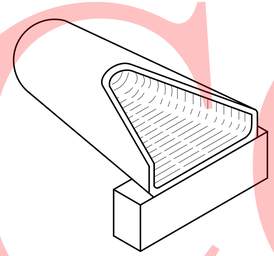

ISOMETRIC VIEW

REINFORCED CONCRETE FLARED END SECTION

BID ITEM 617005

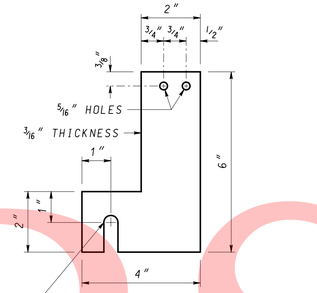

END STRAP DETAIL

9/16" SLOTTED HOLE TO RECEIVE 1/2"x4" MACHINE BOLT (GALV.) IMBEDDED 3" IN CONC. WALL. NUT TO BE PLACED ON END OF BOLT AFTER GRATE IS INSTALLED.

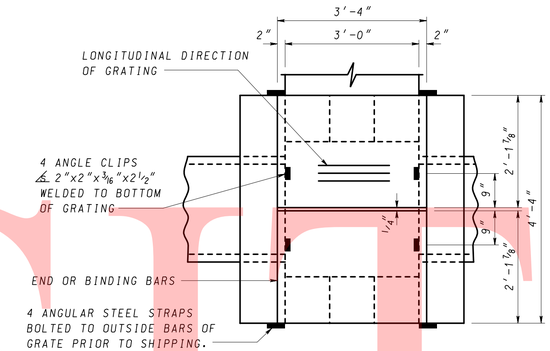

PLAN

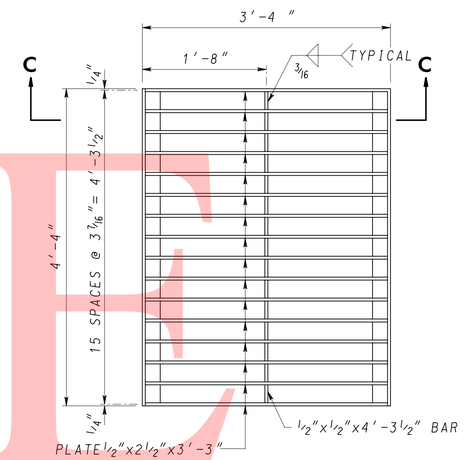

PLAN – GRATE

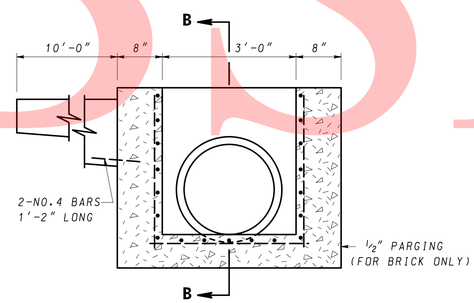

ELEVATION

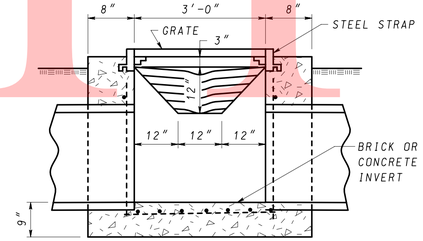

SECTION B–B

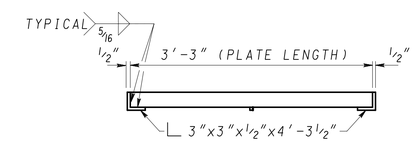

SECTION C–C

NOTES

1. THE CONCRETE VALLEY GUTTER TO BE USED IN CONNECTION WITH THIS INLET, WILL BE WARPED FROM THE STANDARD SECTION TO MEET THE SECTION AT THE END OF THE INLET. THIS TRANSITION WILL TAKE PLACE WITH A DISTANCE OF TEN (10) FEET FROM THE INLET. GUTTER TO BE PAID FOR SEPARATELY.
2. PIPE OUTLETS AND GUTTER APPROACHES CAN BE REVISED TO MEET EXISTING CONDITIONS.
3. INLET MAY BE CONSTRUCTED OF REINFORCED CONCRETE (3500 PSI) OR BRICK. CHAMFER INSIDE CORNER 3/4"x3/4". REINFORCEMENT NO.4 BARS @ 6" C/C, 2" COVER.
4. GRATINGS ARE SUBJECT TO APPROVAL FOR EACH JOB. ANY TYPE OF SUBSTANTIAL TRANSVERSE BARS MAY BE USED WHICH WILL SUPPORT A MINIMUM UNIFORM LOAD OF 50 LBS./SQ.FT. THE TRANSVERSE BARS SHALL BE HELD RIGID BY SPACER BARS.
5. AREA TO BE MADE UP OF TWO EQUAL PANELED WIDTHS, ARRANGED FOR BOLTING TOGETHER IN THE FIELD.
6. ALL EXPOSED METAL TO BE HOT DIPPED GALVANIZED AFTER FABRICATION.

NOTE THIS TYPE OF INLET MAY BE USED IN CONJUNCTION WITH BERM DITCHES, BENCHES, AND SUMP AREAS OF INNER LOOPS OF INTERCHANGES. IT IS NOT TO BE USED IN MEDIANS OR OTHER AREAS TRAVERSED BY OUT-OF-CONTROL VEHICLES.

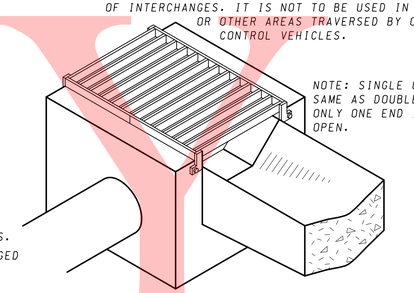

NOTE: SINGLE OPENING SAME AS DOUBLE EXCEPT ONLY ONE END IS OPEN.

ISOMETRIC VIEW

(DOUBLE OPENING SHOWN)

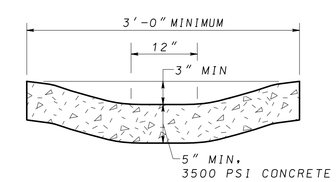

VALLEY GUTTER

DRAINAGE INLET – SPECIAL 1

BID ITEM 708512

4/16/2009
M:\Projects\2007\07052.DTC\Third-Trk\CADD\Plans\DR01DTC.dgn
PLOTTER = RAIL-PS-ENLRL1, PEN TABLE = BALTIMORE.TBL

PREL. TRACING ____ DESIGN ____ CHKD. ____

UNOFFICIAL WEBSITE COPY

CONTRACT	COUNTY	F.A.P. NO.	SHEET NO.	TOTAL SHTS.
27-512-01	NEW CASTLE	HPP-2005 (028)	28	140

DRAWING NO. DR-2

DRAINAGE PROFILES

THIRD TRACK

SCALE: AS SHOWN

NEC COMMUTER RAIL IMPROVE.- DELAWARE YARD to RAGAN - Civil, Structural

DATE: APRIL 20, 2009

REVISIONS

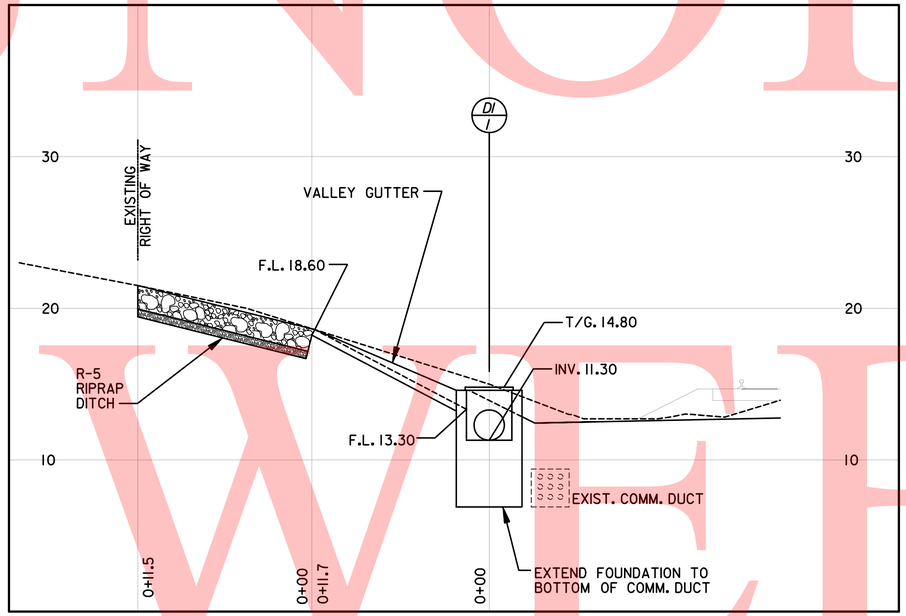

SCALE: (H) 1" = 5'
(V) 1" = 5'

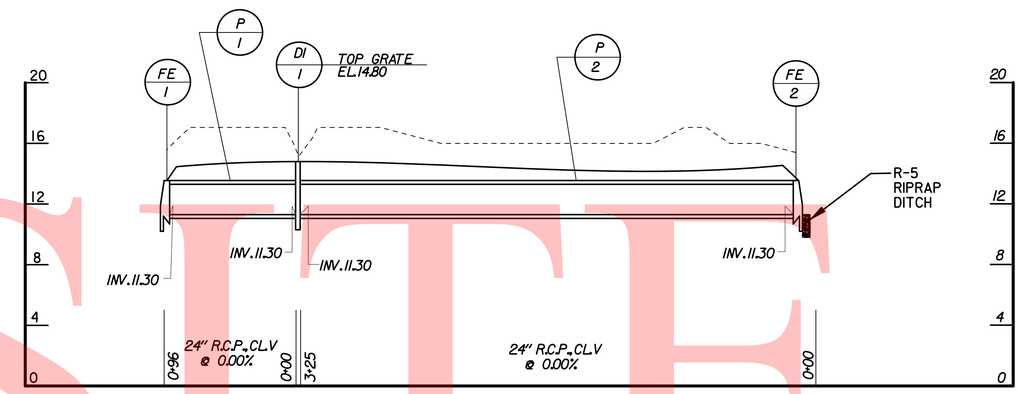

SCALE: (H) 1" = 50'
(V) 1" = 5'

4/16/2009
M:\pr\jec-rs\2007\07052_DTC\Third-Trk\CADD\Plans\DR02DTC.dgn
PLOTTER = RAIL-PS ENL.PL1, PEN TABLE = BALTIMORE.TBL

PREL. TRACING _____ DESIGN _____ CHKD. _____

UNOFFICIAL WEBSITE COPY

CONTRACT	COUNTY	F.A.P. NO.	SHEET NO.	TOTAL SHTS.
27-512-01	NEW CASTLE	HPP-2005 (028)	29	140

NEC COMMUTER RAIL IMPROVE.– DELAWARE YARD to RAGAN – Civil, Structural

DATE: MARCH 10, 2011

REVISIONS

DRAWING NO. DR-5

SCOUR PROTECTION LAYOUT & DETAILS

THIRD TRACK – LITTLE MILL CREEK

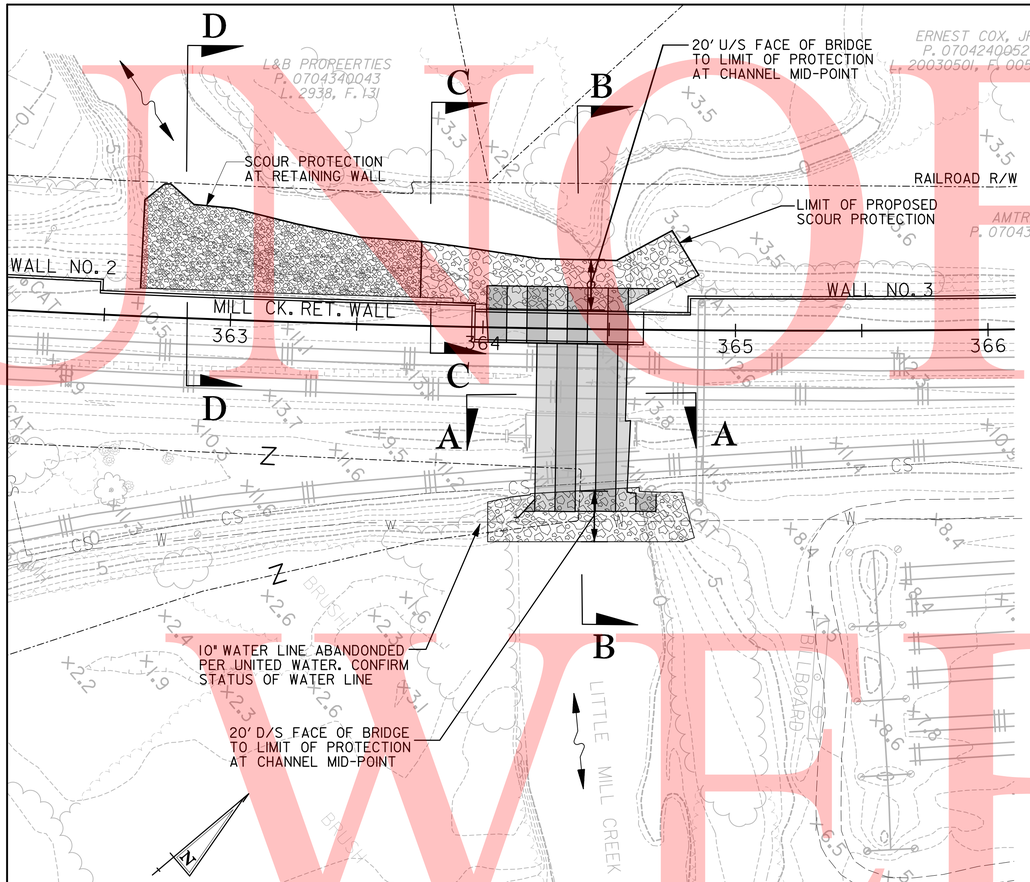

PLAN

30 15 0 30

1"= 30'

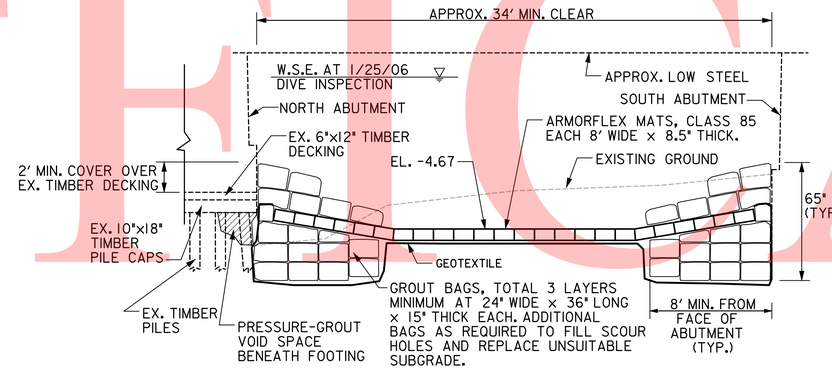

SECTION A-A

SCALE: 1" = 5'

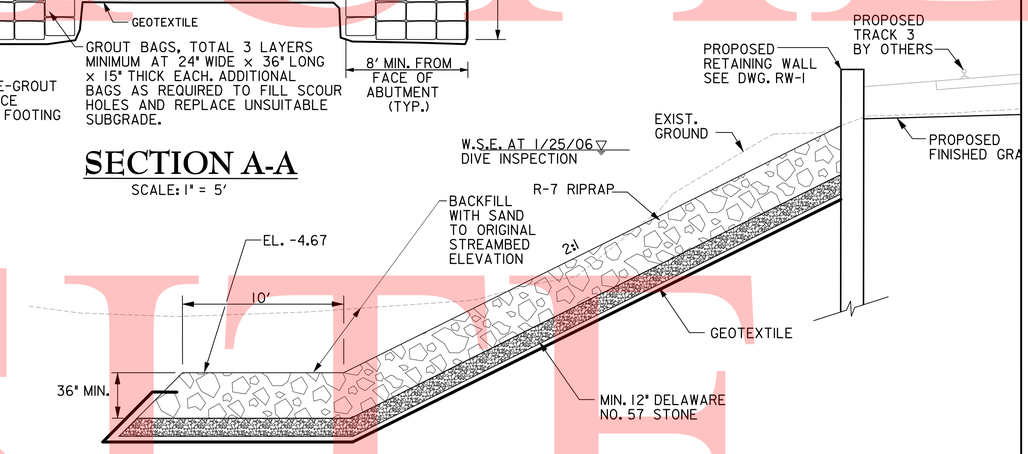

SECTION C-C

SCALE: 1" = 5'

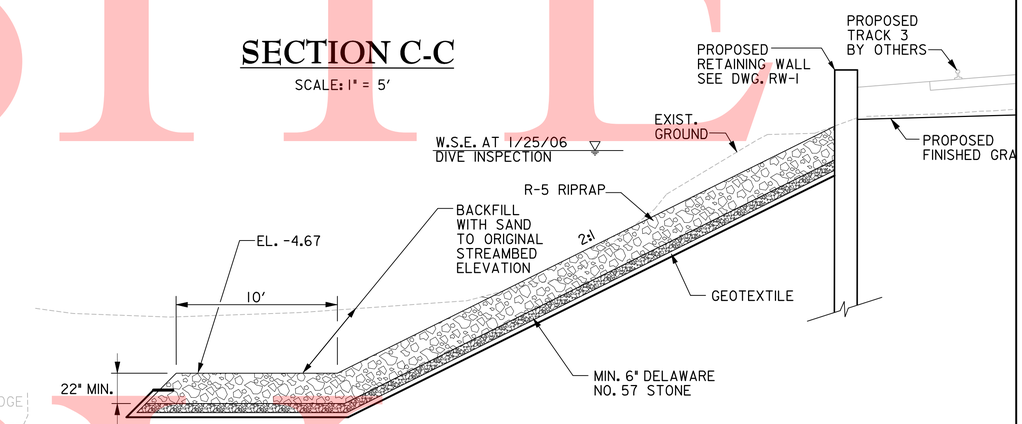

SECTION D-D

SCALE: 1" = 5'

LEGEND

- R-5 RIPRAP FOR SCOUR PROTECTION
- R-7 RIPRAP FOR SCOUR PROTECTION
- ARMORFLEX MATS

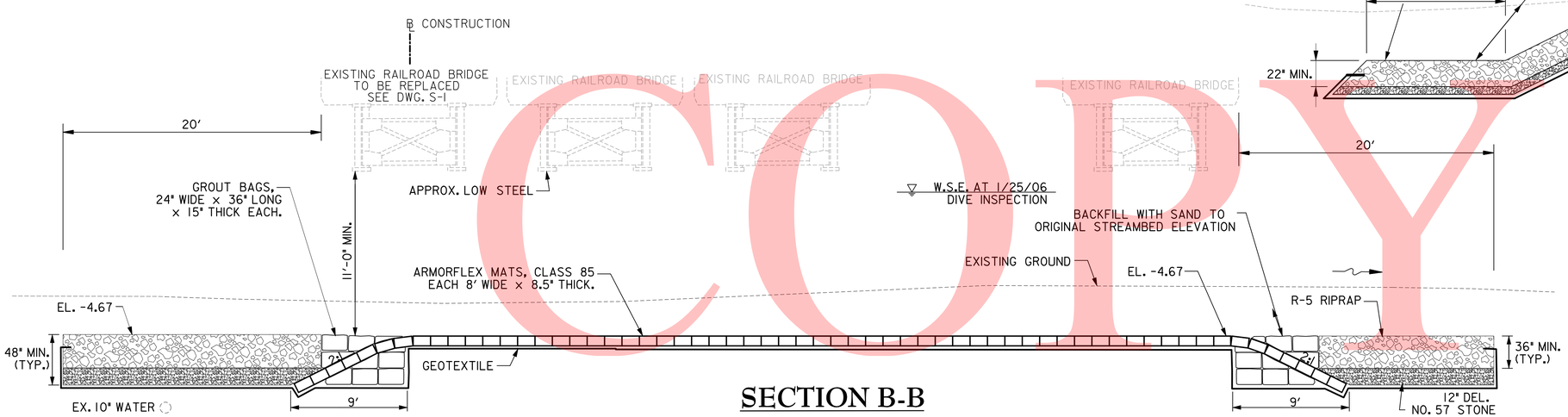

SECTION B-B

SCALE: 1" = 5'

3/10/2011
\\NKAKV\2007\2007\07052.DT01\Third-Track\CADD\Plans\DR05DTC.dgn
PLOTTER = RAIL-F5-ENL.PLT, PEN TABLE = BALTIMORE.TBL

CHKD. _____ DESIGN _____ PREL. TRACING _____

UNOFFICIAL WEBSITE COPY

CONTRACT	COUNTY	F.A.P. NO.	SHEET NO.	TOTAL SHTS.
27-512-01	NEW CASTLE	HPP-2005 (028)	30	140

NEC COMMUTER RAIL IMPROVE.– DELAWARE YARD to RAGAN – Civil, Structural

DATE: MARCH 10, 2011

REVISIONS

DRAWING NO. MT–20

STAGE 1
SCOUR PROTECTION INSTALLATION
THIRD TRACK

SCALE
30 15 0 30
1"= 30'

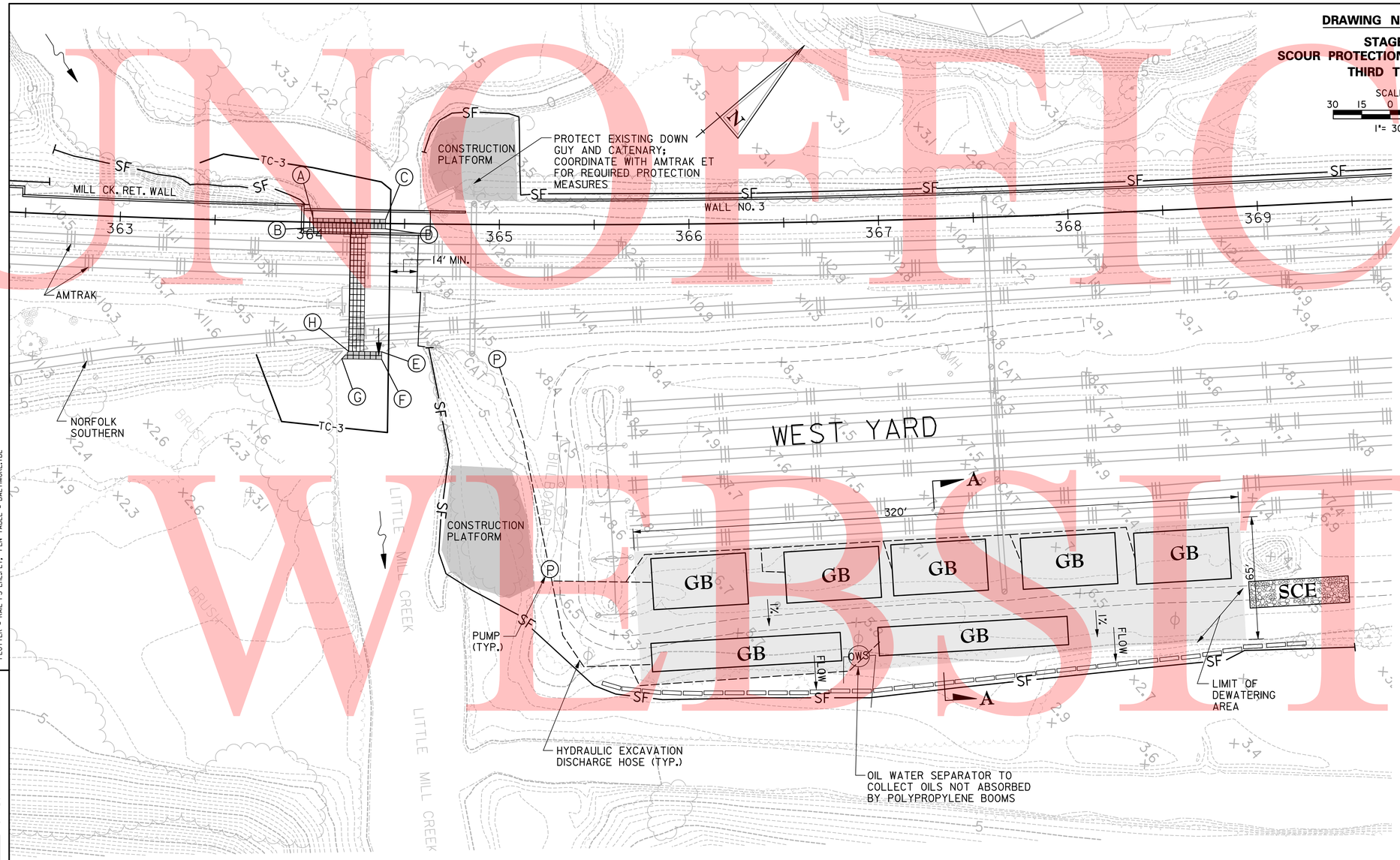

STAGE 1: SEQUENCE OF CONSTRUCTION

1. COORDINATE WITH AMTRAK FOR RELOCATION OF STORED MATERIALS WITHIN CONSTRUCTION AREA.
2. SUBMIT SURVEY OF EXISTING STREAMBED ELEVATIONS.
3. INSTALL TURBIDITY CURTAIN AS SHOWN AND ANCHOR TO RETAIN CONFIGURATION THROUGHOUT TIDAL FLUCTUATIONS.
4. PREPARE DEWATERING AREA PER SECTION A-A AND ASSEMBLE GEOTUBES. AVOID EXCAVATION OF EXISTING SOILS.
5. INSTALL PUMP AND DISCHARGE HOSE SYSTEM. COORDINATE LOCATION OF HOSES WITH AMTRAK AND NORFOLK SOUTHERN. PROTECT HOSES AT ROAD CROSSING BY ADDING GRADED AGGREGATE BASE OVER THE HOSE. AVOID EXCAVATING IN THE WEST YARD.
6. INSTALL EROSION AND SEDIMENT CONTROL DEVICES AND POLYPROPYLENE OIL ABSORBENT BOOMS.
7. HYDRAULICALLY EXCAVATE CHANNEL TO ELEVATIONS SHOWN. LAYBACK SLOPES 2:1.
8. INSTALL GEOTEXTILE AND GROUT BAGS AS EXCAVATION PROGRESSES. SECURE GEOTEXTILE NOT COVERED BY GROUT BAGS.
9. WHEN A GEOTUBE REACHES CAPACITY, ALLOW SOLIDS CONTAINED TO DEWATER, AND PROPERLY DISPOSE OF SOLIDS AND GEOTUBE. ASSEMBLE NEW GEOTUBE AT THIS LOCATION, IF REQUIRED.
10. REMOVE TURBIDITY CURTAIN WHEN GROUT BAG AND GEOTEXTILE INSTALLATION IS COMPLETE.
11. INSTALL AND OPERATE OIL WATER SEPARATOR AS DIRECTED BY ENGINEER OR DNREC.

POINT	STATION	OFFSET	FINISHED GRADE ELEVATION
A	364+02	2' LT.	-9.75
B	364+02	3' RT.	-5.42
C	364+40	2' LT.	-9.75
D	364+40	3' RT.	-5.42
E	364+40	68' RT.	-5.42
F	364+40	72' RT.	-9.75
G	364+18	72' RT.	-9.75
H	364+22	68' RT.	-5.42

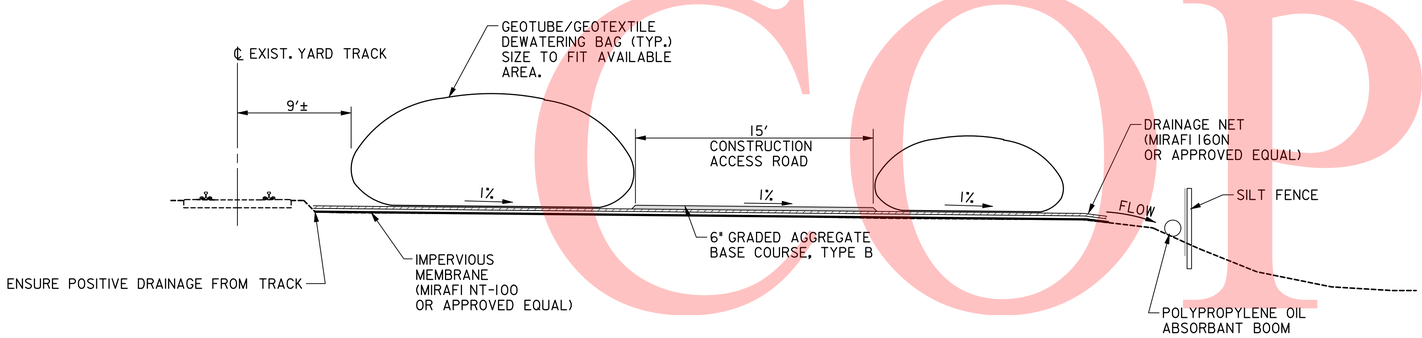

SECTION A-A
NTS

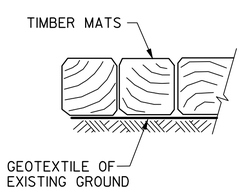

CONSTRUCTION PLATFORM DETAIL
NTS

DATUM CONVERSION
NTS

NAVD 1988 0.00	0.85	
-0.85	0.00	NGVD 1929
-3.85	-3.00	
-4.85	-4.00	

3/10/2011
\\RKMA\v2007\2007\07052.DT0\Third-Track\CADD\Plans\MT200TC.dgn
PLOTTER = RAIL-PS-EHL.PLT, PEN TABLE = BALTIMORE.TBL

DESIGN ____ CHKD. ____
PRELIM. TRACING ____

UNOFFICIAL WEBSITE COPY

CONTRACT	COUNTY	F.A.P. NO.	SHEET NO.	TOTAL SHTS.
27-512-01	NEW CASTLE	HPP-2005 (028)	31	140

NEC COMMUTER RAIL IMPROVE.– DELAWARE YARD to RAGAN – Civil, Structural

DATE: MARCH 10, 2011

REVISIONS

DRAWING NO. MT-21

STAGE 2
SCOUR PROTECTION INSTALLATION
THIRD TRACK

SCALE
30 15 0 30
1"= 30'

STAGE 2: SEQUENCE OF CONSTRUCTION

1. INSTALL PILES TO ASSIST IN GUIDING ARMORFLEX PANELS INTO POSITION.
2. USING PONTOONS OR OTHER FLOATING DEVICES, LAUNCH ARMORFLEX PANELS AND PLACE INTO POSITION.

POINT	STATION	OFFSET	FINISHED GRADE ELEVATION
A	364+18	73' RT.	-10.35
B	364+38	73' RT.	-10.35
C	364+38	67' RT.	-6.45
D	364+22	67' RT.	-6.45
E	364+37	2' LT.	-10.35
F	364+02	2' LT.	-10.35
G	364+22	6' RT.	-6.45
H	364+38	6' RT.	-6.45

DATUM CONVERSION
NTS

NAVD 1988 0.00	0.85
-0.85	0.00 NGVD 1929
-3.85	-3.00
-4.85	-4.00

3/10/2011
\\WRAWA\v2007\2007\07052.DTC\Third-Track\CADD\Plans\MT21DTC.dgn
PLOTTER = RAIL-PS-EWL.PLT, PEN TABLE = BALTIMORE.TBL

PREL. TRACING _____ DESIGN _____ CHKD. _____

UNOFFICIAL WEBSITE COPY

CONTRACT	COUNTY	F.A.P. NO.	SHEET NO.	TOTAL SHTS.
27-512-01	NEW CASTLE	HPP-2005 (028)	32	140

NEC COMMUTER RAIL IMPROVE.– DELAWARE YARD to RAGAN – Civil, Structural

DATE: MARCH 10, 2011

REVISIONS

DRAWING NO. MT-22

STAGE 3
SCOUR PROTECTION INSTALLATION
THIRD TRACK

SCALE
30 15 0 30
1"= 30'

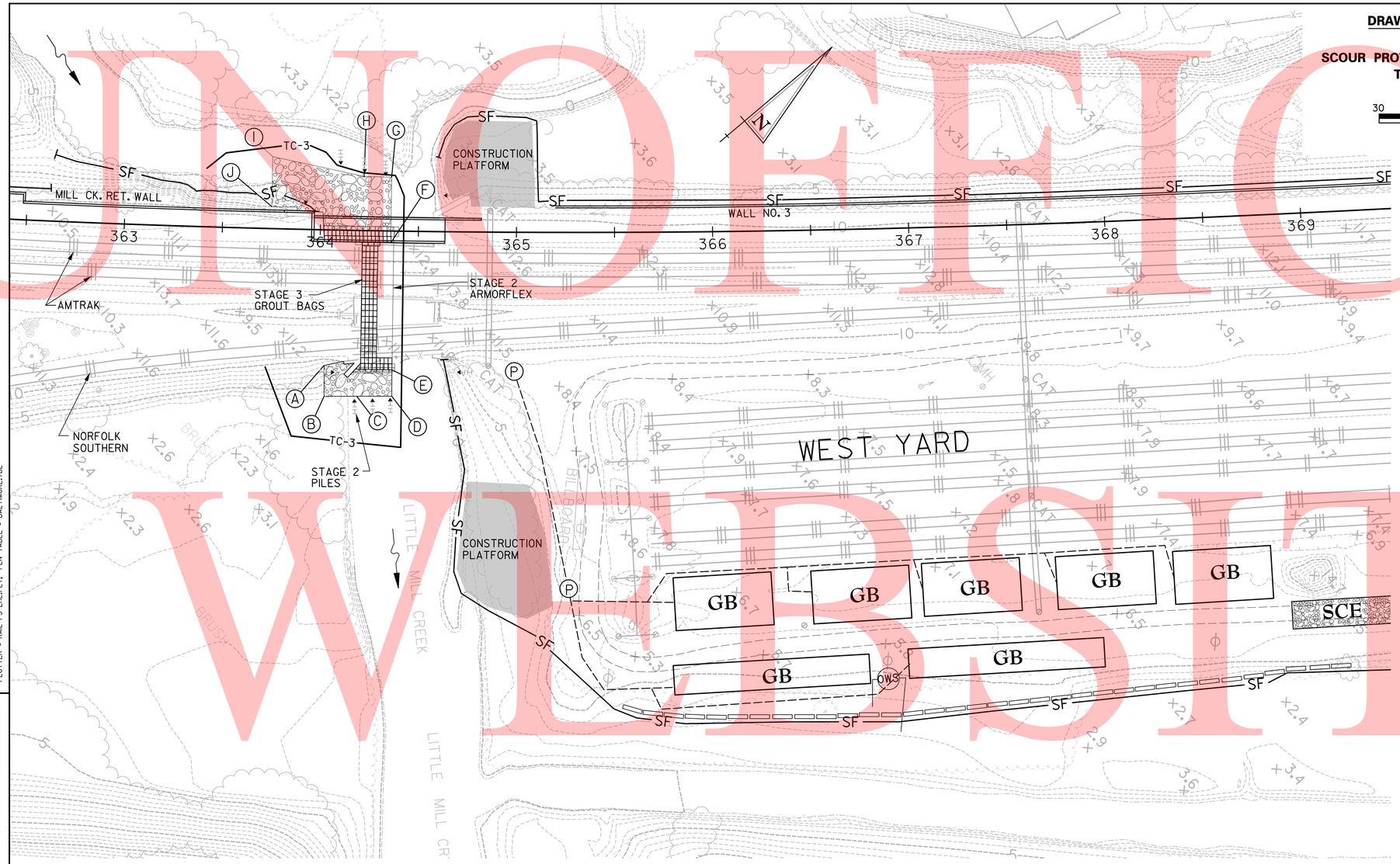

STAGE 3: SEQUENCE OF CONSTRUCTION

1. COMPLETE MILL CREEK RETAINING WALL AND SOUTH ABUTMENT.
2. RE-ESTABLISH TURBIDITY CURTAIN.
3. HYDRAULICALLY EXCAVATE FOR RIPRAP BEYOND ARMORFLEX.
4. INSTALL GEOTEXTILE, GROUT BAGS AND RIPRAP AS EXCAVATION PROGRESSES.
5. WHEN A GEOTUBE REACHES CAPACITY, ALLOW SOLIDS CONTAINED TO DEWATER, AND PROPERLY DISPOSE OF SOLIDS AND GEOTUBE. ASSEMBLE NEW GEOTUBE AT THIS LOCATION IF REQUIRED.
6. REMOVE TURBIDITY CURTAIN WHEN GEOTEXTILE, GROUT BAG, AND RIPRAP INSTALLATION IS COMPLETE.

POINT	STATION	OFFSET	FINISHED GRADE ELEVATION
A	364+05	70' RT.	MATCH EXISTING
B	364+05	85' RT.	MATCH EXISTING
C	364+20	85' RT.	-4.67
D	364+38	85' RT.	-4.67
E	364+38	70' RT.	-4.67
F	364+36	6' RT.	-4.67
G	364+36	27' LT.	-4.67
H	364+20	27' LT.	-4.67
I	363+75	36' LT.	-4.67
J	363+75	11' LT.	5.30

LEGEND

R-7 RIPRAP FOR SCOUR PROTECTION

DATUM CONVERSION
NTS

NAVD 1988 0.00 — 0.85
-0.85 — 0.00 NGVD 1929
-3.85 — -3.00
-4.85 — -4.00

3/10/2011
\\WRAWA\v2007\2007\07052.DT\Third-Track\CADD\Plans\MT220TC.dgn
PLOTTER = RAIL-PS-EWL.PLT, PEN TABLE = BALTIMORE.TBL

PREL. TRACING ____ DESIGN ____ CHKD. ____

UNOFFICIAL WEBSITE COPY

CONTRACT	COUNTY	F.A.P. NO.	SHEET NO.	TOTAL SHTS.
27-512-01	NEW CASTLE	HPP-2005 (028)	33	140

NEC COMMUTER RAIL IMPROVE.– DELAWARE YARD to RAGAN – Civil, Structural

DATE: MARCH 10, 2011

REVISIONS

DRAWING NO. MT–23

STAGE 4
SCOUR PROTECTION INSTALLATION
THIRD TRACK

SCALE
30 15 0 30
1"= 30'

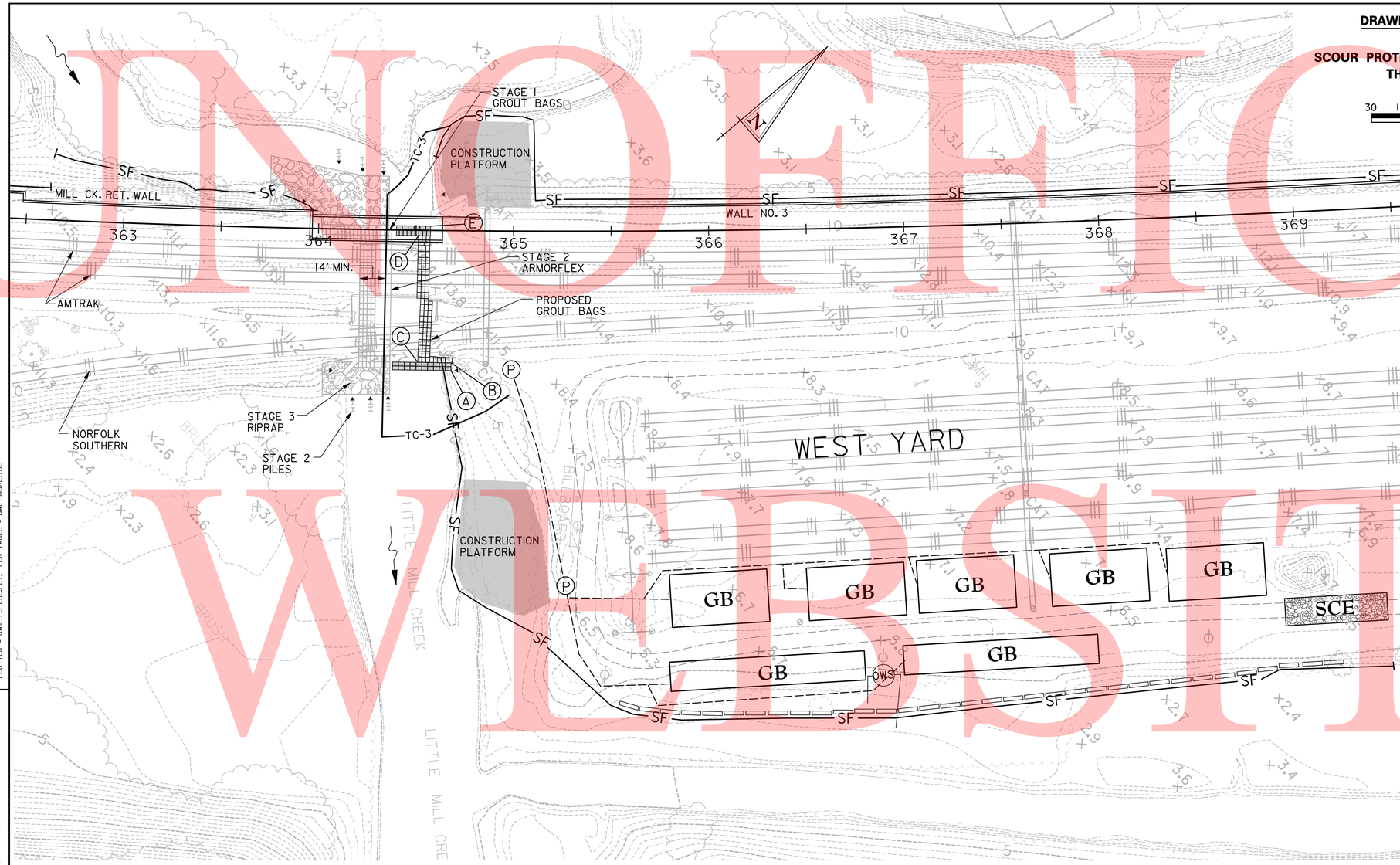

STAGE 4: SEQUENCE OF CONSTRUCTION

1. INSTALL TURBIDITY CURTAIN AS SHOWN. ALLOW TIDAL FLUCTUATIONS TO EQUALIZE AT UPSTREAM CONSTRUCTION. PLATFORM.
2. HYDRAULICALLY EXCAVATE FOR INSTALLATION OF PROPOSED GROUT BAGS. LAYBACK SLOPES AT 2:1.
3. INSTALL GEOTEXTILE AND GROUT BAGS AS EXCAVATION PROGRESSES. SECURE GEOTEXTILE NOT COVERED BY GROUT BAGS.
4. WHEN A GEOTUBE REACHES CAPACITY, ALLOW SOLIDS CONTAINED TO DEWATER, AND PROPERLY DISPOSE OF SOLIDS AND GEOTUBE. ASSEMBLE NEW GEOTUBE AT THIS LOCATION, IF REQUIRED.
5. REMOVE TURBIDITY CURTAIN WHEN GROUT BAG AND GEOTEXTILE INSTALLATION IS COMPLETE.

POINT	STATION	OFFSET	FINISHED GRADE ELEVATION
A	364+70	72' RT.	-9.75
B	364+70	68' RT.	-5.42
C	364+50	68' RT.	-5.42
D	364+50	3' RT.	-5.42
E	364+60	2' LT.	-9.75

DATUM CONVERSION
NTS

NAVD 1988 0.00	0.85
-0.85	0.00 NGVD 1929
-3.85	-3.00
-4.85	-4.00

3/10/2011
\\WRAWA\v2007\2007\07052.DT\Third-Track\CADD\Plans\MT230TC.dgn
PLOTTER = RAIL-PS-ENL.PLT, PEN TABLE = BALTIMORE.TBL

PREL. TRACING _____ DESIGN _____ CHKD. _____

UNOFFICIAL WEBSITE COPY

CONTRACT	COUNTY	F.A.P. NO.	SHEET NO.	TOTAL SHTS.
27-512-01	NEW CASTLE	HPP-2005 (028)	34	140

NEC COMMUTER RAIL IMPROVE.– DELAWARE YARD to RAGAN – Civil, Structural

DATE: MARCH 10, 2011

REVISIONS

DRAWING NO. MT-24

STAGE 5
SCOUR PROTECTION INSTALLATION
THIRD TRACK

SCALE
30 15 0 30
1"= 30'

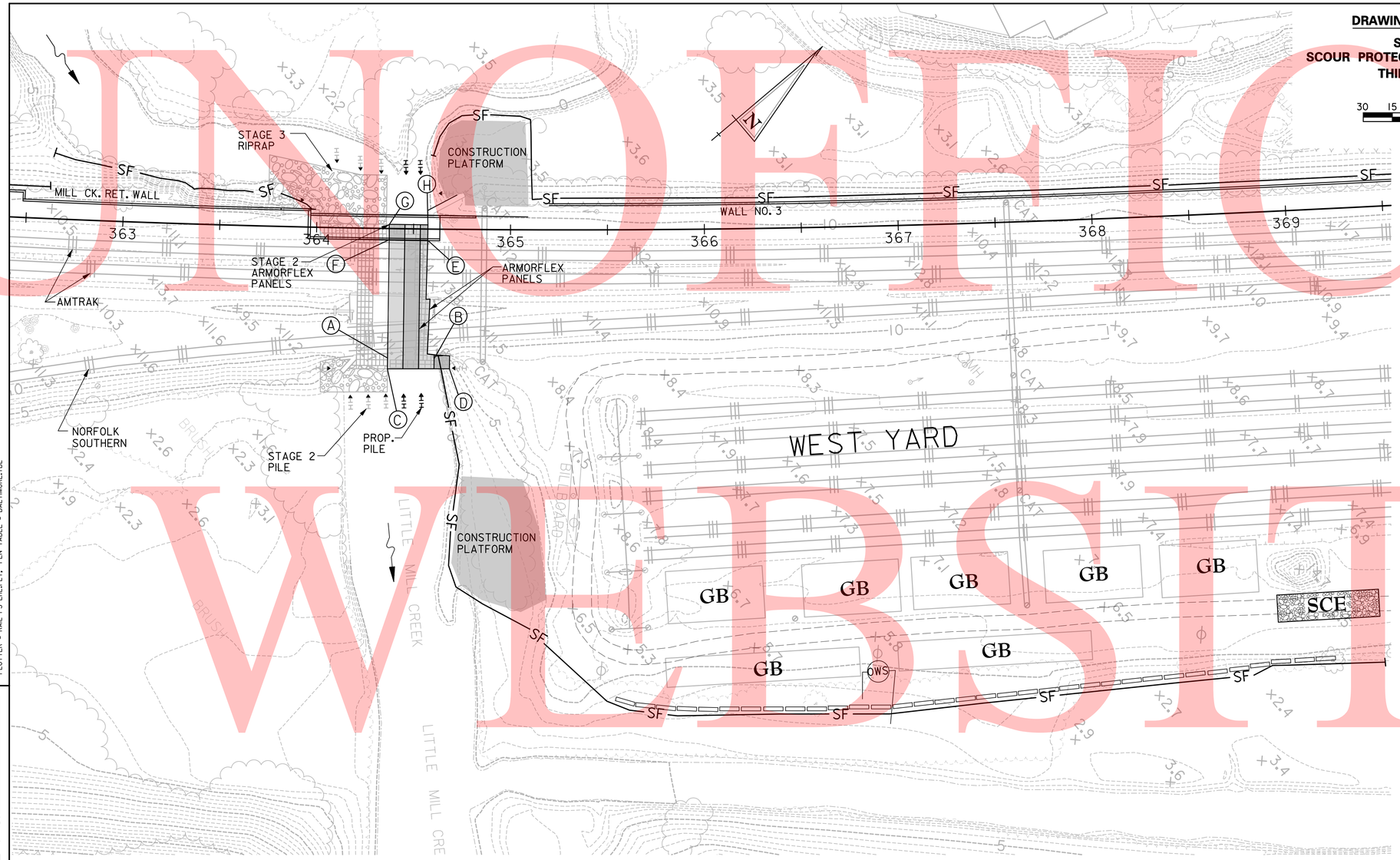

STAGE 5: SEQUENCE OF CONSTRUCTION

1. INSTALL ADDITIONAL PILES TO ASSIST IN GUIDING ARMORFLEX PANELS INTO POSITION.
2. USING PONTOONS OR OTHER FLOATING DEVICES, LAUNCH ARMORFLEX PANELS AND PLACE INTO POSITION.
3. ENSURE THAT GEOTEXTILE IS PROVIDED BENEATH ALL ARMORFLEX PANELS.
4. REMOVE ALL PILES.

POINT	STATION	OFFSET	FINISHED GRADE ELEVATION
A	364+38	67' RT.	-4.67
B	364+67	67' RT.	-4.67
C	364+38	72' RT.	-9.73
D	364+70	72' RT.	-9.73
E	364+57	6' RT.	-4.67
F	364+37	6' RT.	-4.67
G	364+37	2' LT.	-9.73
H	364+57	2' LT.	-9.73

DATUM CONVERSION
NTS

NAVD 1988 0.00	0.85	
-0.85	0.00	NGVD 1929
-3.85	-3.00	
-4.85	-4.00	

3/10/2011
\\WRAWA\v2007\2007\07052.DT0\Third-Track\CADD\Plans\MT24DTC.dgn
PLOTTER = RAIL-PS-EHL.PL1, PEN TABLE = BALTIMORE.TBL

PREL. TRACING _____ DESIGN _____ CHKD. _____

UNOFFICIAL WEBSITE COPY

CONTRACT	COUNTY	F.A.P. NO.	SHEET NO.	TOTAL SHTS.
27-512-01	NEW CASTLE	HPP-2005 (028)	35	140

NEC COMMUTER RAIL IMPROVE.– DELAWARE YARD to RAGAN – Civil, Structural

DATE: MARCH 10, 2011

REVISIONS

DRAWING NO. MT–25

STAGE 6
SCOUR PROTECTION INSTALLATION
THIRD TRACK

SCALE
30 15 0 30
1"= 30'

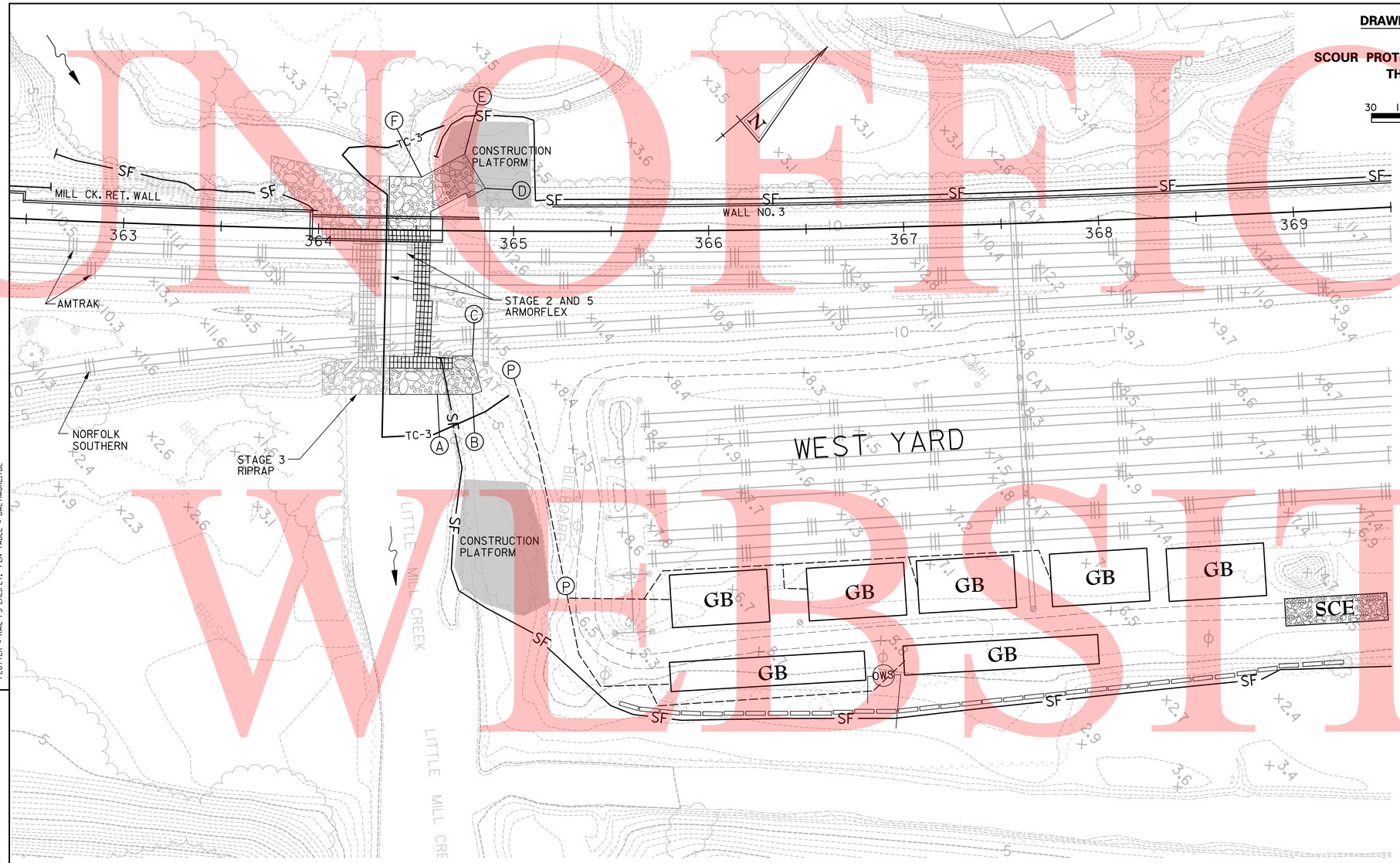

STAGE 6: SEQUENCE OF CONSTRUCTION

1. COMPLETE NORTH ABUTMENT.
2. RE-ESTABLISH TURBIDITY CURTAIN.
3. HYDRAULICALLY EXCAVATE FOR RIPRAP BEYOND ARMORFLEX.
4. INSTALL GEOTEXTILE, GROUT BAGS, AND RIPRAP AS EXCAVATION PROGRESSES.
5. WHEN A GEOTUBE REACHES CAPACITY, ALLOW SOLIDS CONTAINED TO DEWATER, AND PROPERLY DISPOSE OF SOLIDS AND GEOTUBE. ASSEMBLE NEW GEOTUBE AT THIS LOCATION IF REQUIRED.
6. REMOVE TURBIDITY CURTAIN WHEN GEOTEXTILE, GROUT BAG AND RIPRAP INSTALLATION IS COMPLETE.
7. REMOVE CONSTRUCTION PLATFORMS AND GEOTEXTILE. STABILIZE DISTURBED AREA IMMEDIATELY.

POINT	STATION	OFFSET	FINISHED GRADE ELEVATION
A	364+62	84' RT.	-4.67
B	364+80	84' RT.	MATCH EXISTING
C	364+80	64' RT.	MATCH EXISTING
D	364+85	22' LT.	MATCH EXISTING
E	364+75	39' LT.	MATCH EXISTING
F	364+53	27' LT.	-4.67

DATUM CONVERSION
NTS

NAVD 1988 0.00	0.85	
-0.85	0.00	NGVD 1929
-3.85	-3.00	
-4.85	-4.00	

3/10/2011
\\WRAWA\v2007\2007\07052_DTC\Third-Track\CADD\Plans\MT25DTC.dgn
PLOTTER = RAIL-PS-ENL.PLT, PEN TABLE = BALTIMORE.TBL

PREL. TRACING _____ DESIGN _____ CHKD. _____

UNOFFICIAL WEBSITE COPY

CONTRACT	COUNTY	F.A.P. NO.	SHEET NO.	TOTAL SHTS.
27-512-01	NEW CASTLE	HPP-2005 (028)	36	140

NEC COMMUTER RAIL IMPROVE.– DELAWARE YARD to RAGAN – Civil, Structural

DATE: MARCH 10, 2011

REVISIONS

DRAWING NO. MT-26

STAGE 7
SCOUR PROTECTION INSTALLATION
THIRD TRACK

SCALE
30 15 0 30
1" = 30'

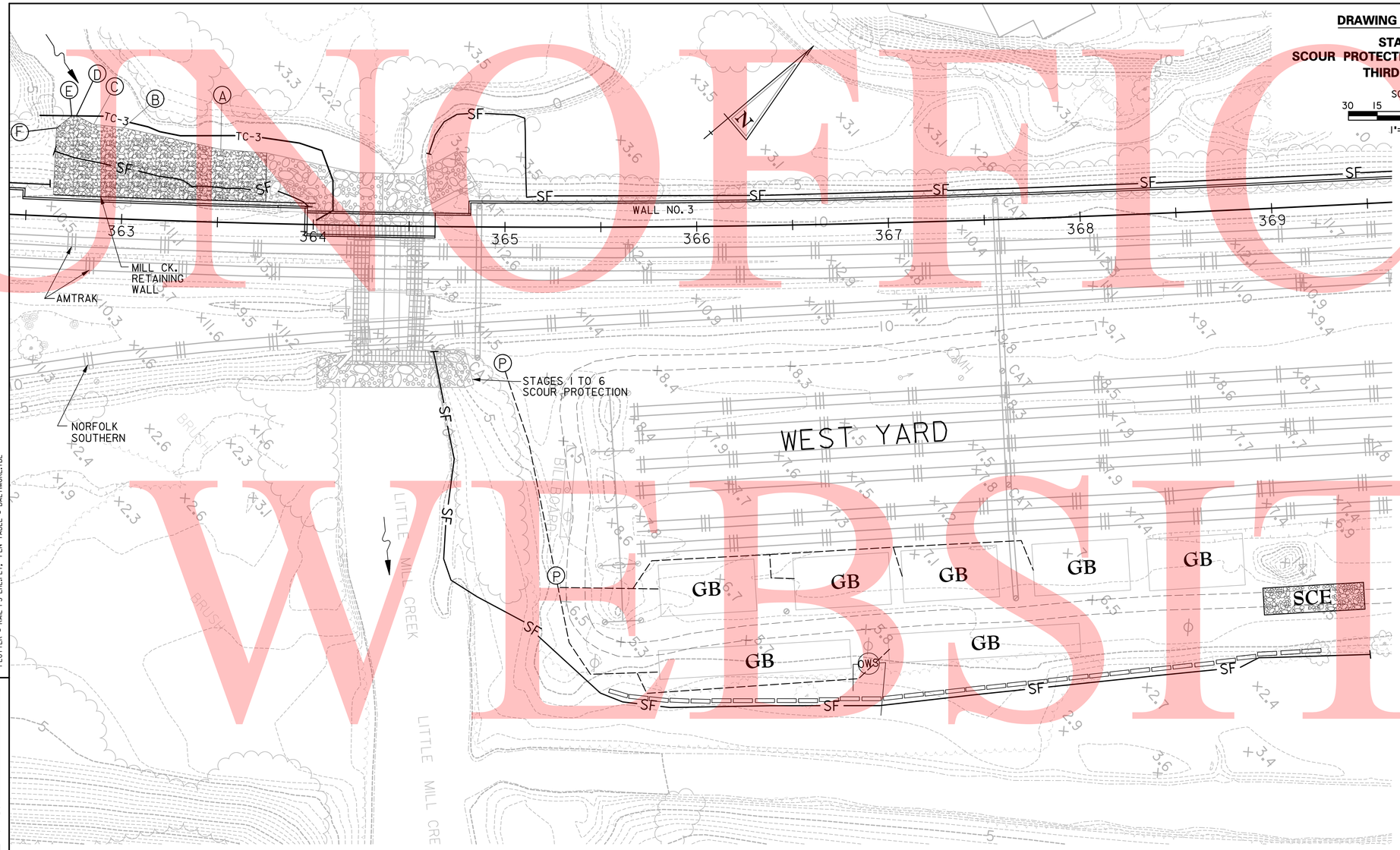

STAGE 7: SEQUENCE OF CONSTRUCTION

1. INSTALL TURBIDITY CURTAIN AS SHOWN. ALLOW TIDAL FLUCTUATIONS TO EQUALIZE AT UPSTREAM END OF CONSTRUCTION.
2. EXCAVATE AND INSTALL GEOTEXTILE AND R-5 RIPRAP. SEE DWG. DR-5 FOR DETAILS.
3. STABILIZE DISTURBED SOILS AND REMOVE TURBIDITY CURTAIN.
4. BACKFILL STREAMBED TO ORIGINAL ELEVATIONS WITH SAND. SUBMIT AS-BUILT SURVEY OF STREAMBED.
5. REMOVE PUMPING SYSTEM, GEOTUBES, DRAINAGE NET, AND IMPERVIOUS MEMBRANE FROM DEWATERING AREA. GRADED AGGREGATE BASE SHALL REMAIN.
6. COMPLETE WALL NO. 3

POINT	STATION	OFFSET	FINISHED GRADE ELEVATION
A	363+50	34' LT.	-4.67
B	363+00	44' LT.	-4.67
C	362+84	45' LT.	-4.67
D	362+74	53' LT.	-4.67
E	362+71	53' LT.	-4.67
F	362+64	46' LT.	MATCH EXISTING

DATUM CONVERSION
NTS

NAVD 1988 0.00	0.85
-0.85	0.00 NGVD 1929
-3.85	-3.00
-4.85	-4.00

3/10/2011
\\KKMV2007\2007\07052.DTC\Thrd-Trk\CADD\Plans\MT26DTC.dgn
PLOTTER = RAIL-PS-ENL.PLT, PEN TABLE = BALTIMORE.TBL

PREL. TRACING _____ DESIGN _____ CHKD. _____

UNOFFICIAL WEBSITE COPY

CONTRACT	COUNTY	F.A.P. NO.	SHEET NO.	TOTAL SHTS.
	NEW CASTLE	N/A	37	140

DRAWING NO. S-1

GENERAL PLAN AND ELEVATION THIRD TRACK – MILL CREEK BRIDGE

NEC COMMUTER RAIL IMPROVEMENTS WILMINGTON TO NEWARK, DE

DATE: APRIL 20, 2009

REVISIONS

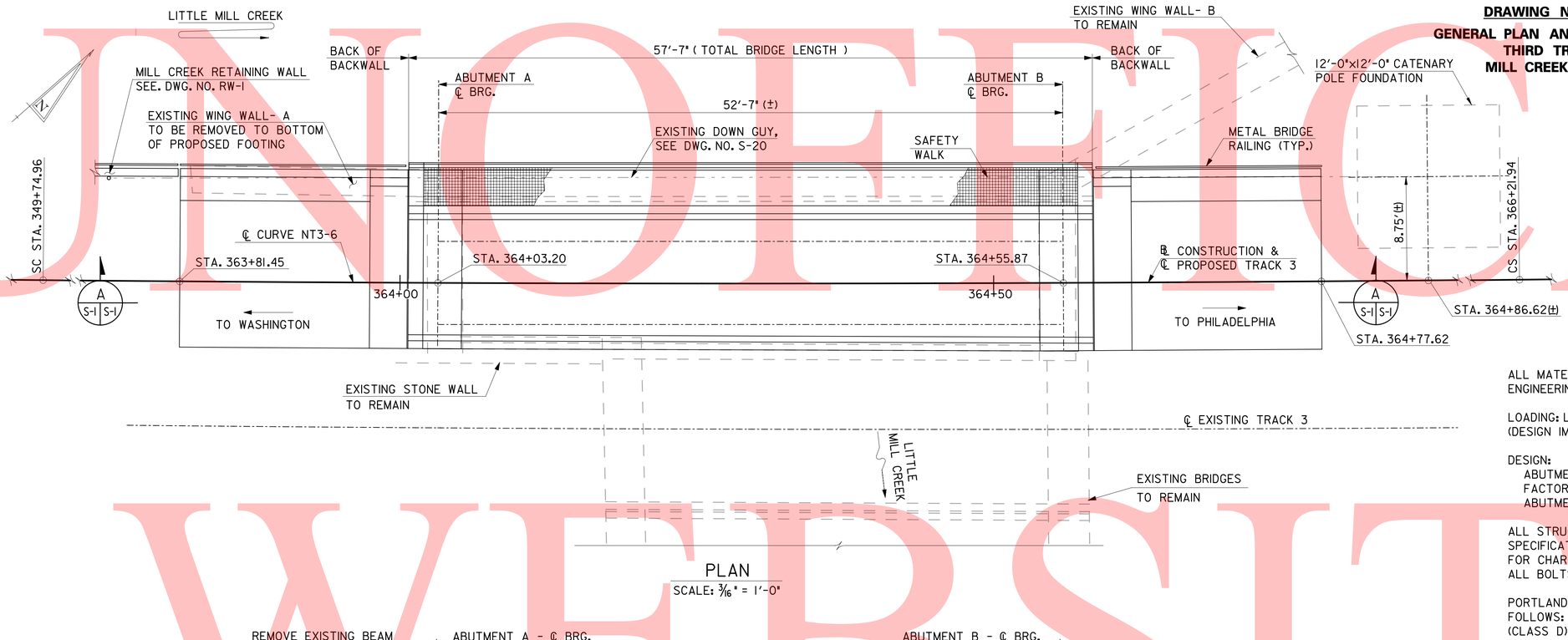

PLAN

SCALE: 3/16" = 1'-0"

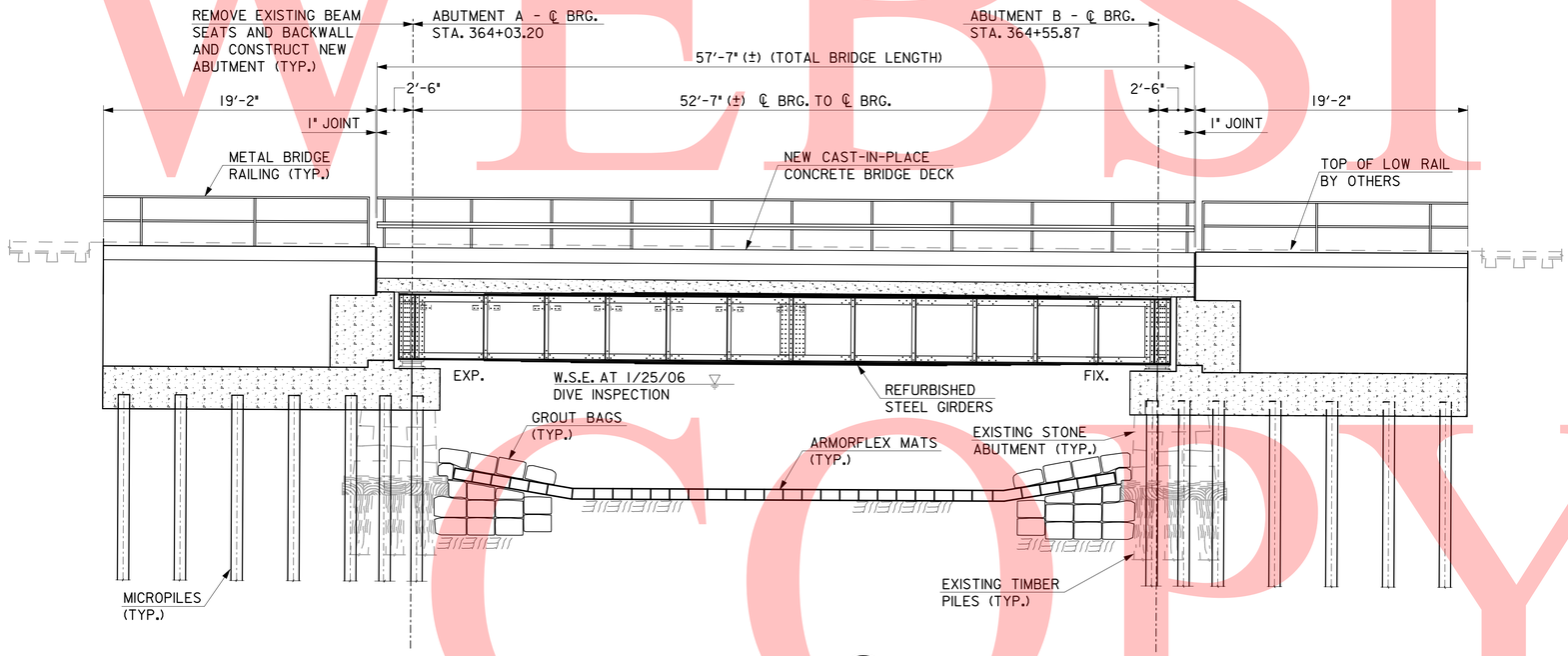

SECTION A (A S-1 S-1)

SCALE: 3/16" = 1'-0"

STRUCTURE GENERAL NOTES

ALL MATERIALS AND WORKMANSHIP SHALL COMFORM TO AMERICAN RAILWAY ENGINEERING AND MAINTENANCE-OF-WAY ASSOCIATION (AREMA), DATED 2005.

LOADING: LIVE LOAD-COOPER E80 FOR ABUTMENT AND RETAINING WALL DESIGNS. (DESIGN IMPACT AS SPECIFIED IN AN AREMA MANUAL USING DIESEL LOCOMOTIVE).

DESIGN:
ABUTMENT AND RETAINING WALL ELEMENTS WERE DESIGNED BY THE LOAD FACTOR METHOD.
ABUTMENT AND RETAINING WALL STABILITY ANALYSIS WITH SERVICE LOADS.

ALL STRUCTURAL STEEL SHALL COMFORM TO THE REQUIREMENTS OF ASTM SPECIFICATION A709, GRADE 50 INCLUDING THE ADDITIONAL REQUIREMENTS FOR CHARPY V-NOTCH TESTING OF PRIMARY LOAD CARRYING MEMBERS. ALL BOLTS TO BE 7/8" DIAMETER HIGH STRENGTH ASTM DESIGNATION A325.

PORTLAND CEMENT CONCRETE FOR CAST-IN-PLACE ELEMENTS SHALL BE AS FOLLOWS: (28 DAY COMPRESSIVE STRENGTH) BRIDGE DECK - f'c = 4500 PSI (CLASS D). ALL OTHER CONCRETE - f'c = 4500 PSI (CLASS A). MIX REQUIREMENTS SHALL CONFORM TO SECTION 812 OF THE DELAWARE DEPARTMENT OF TRANSPORTATION STANDARD SPECIFICATIONS. ALL EXPOSED CORNERS OF CONCRETE SHALL BE CHAMFERED WITH 3/4"x3/4" MILLED CHAMFERED STRIPS.

ALL REINFORCING BARS SHALL CONFORM TO ASTM SPECIFICATION A615, GRADE 60. EPOXY COATED REINFORCING STEEL SHALL CONFORM TO ASTM D3963, AND IS DENOTED WITH A PREFIX "E" IN THE BARMARKS. MINIMUM COVER FOR ANY BAR SHALL BE 2" UNLESS NOTED OTHERWISE. ALL REINFORCING BAR BENDS AND STANDARD HOOKS SHALL COMFORM TO ACI STANDARDS. FOR TIES AND STIRRUPS: STANDARD ACI BENDING TOLERANCES ARE MODIFIED TO PLUS (+) ZERO INCHES, MINUS (-) NORMAL ACI BENDING TOLERANCES.

ALL WELDING SHALL CONFORM TO STRUCTURAL WELDING CODE AWS D1.5, LATEST EDITION. ALL WELDS SHALL BE CONTINOUS UNLESS OTHERWISE NOTED. ALL WELDERS SHALL BE QUALIFIED IN ACCORDANCE WITH AWS STRUCTRAL WELDING CODE.

EXISTING STRUCTURE: ALL DIMENSIONS AFFECTED BY THE GEOMETRICS, AND/OR LOCATION OF THE EXISTING STRUCTURES AND UTILITIES SHALL BE FIELD VERIFIED BY THE CONTRACTOR BEFORE ANY WORK IS DONE, AND BEFORE ANY MATERIAL IS ORDERED OR FABRICATED. IT SHALL BE THE RESPONSIBILITY OF THE CONTRACTOR TO SUPPLY THE ENGINEER WITH ALL FIELD DIMENSIONS TO CHECK DETAIL DRAWINGS. THE (+/-) MARKS SHOWN WITH DIMENSIONS DO NOT INDICATE ANY DEGREE OF PERCISION. THESE MARKS (+/-) INDICATE AN EXISTING DIMENSION THAT MAY VARY AND REQUIRE FIELD VERIFICATION BY THE CONTRACTOR. IF DRAWINGS AND SPECIFICATIONS CONFLICT, THE DRAWINGS SHALL GOVERN.

THE EXISTING TIMBER PILES AND TIMBER DECKING ARE TO REMAIN IN PLACE. IN THE EVENT THE EXISTING TIMBER IS IN CONFLICT WITH THE PROPOSED CONSTRUCTION, THE CONTRACTOR SHALL BE PERMITTED TO REMOVED THE EXISTING TIMBER TO AN ELEVATION ONE FOOT BELOW THE PROPOSED BOTTOM OF FOOTING ELEVATION.

NOTES:
1. FOR ABUTMENT SECTIONS AND DETAILS, SEE DWG. NOS. S-2 THRU S-6.
2. FOR CURVE DATA, SEE DWG. NO. C-3
3. FOR STREAM MODIFICATIONS, SEE DWG. NO. DR-5
4. FOR RAILING DETAILS, SEE DWG. NOS. S-8 AND RW-3.

4/13/2009
M:\projects\2007\07052_DTC\Third-Track\CADD\structure\S01-GPE.dgn
PLOTTER = RAIL-PS-ENLRLL, PEN TABLE = BALTIMORE.TBL

PREL. TRACING ____ EMT ____ DESIGN ____ BJH ____ CHKD. ____ DCK ____

UNOFFICIAL WEBSITE COPY

CONTRACT	COUNTY	F.A.P. NO.	SHEET NO.	TOTAL SHTS.
27-512-01	NEW CASTLE	HPP-2005 (028)	38	140

NEC COMMUTER RAIL IMPROVE.– DELAWARE YARD to RAGAN – Civil, Structural

DATE: NOVEMBER 10, 2010

REVISIONS

DRAWING NO. S-2

ABUTMENT A AND PILE PLAN THIRD TRACK – MILL CREEK BRIDGE

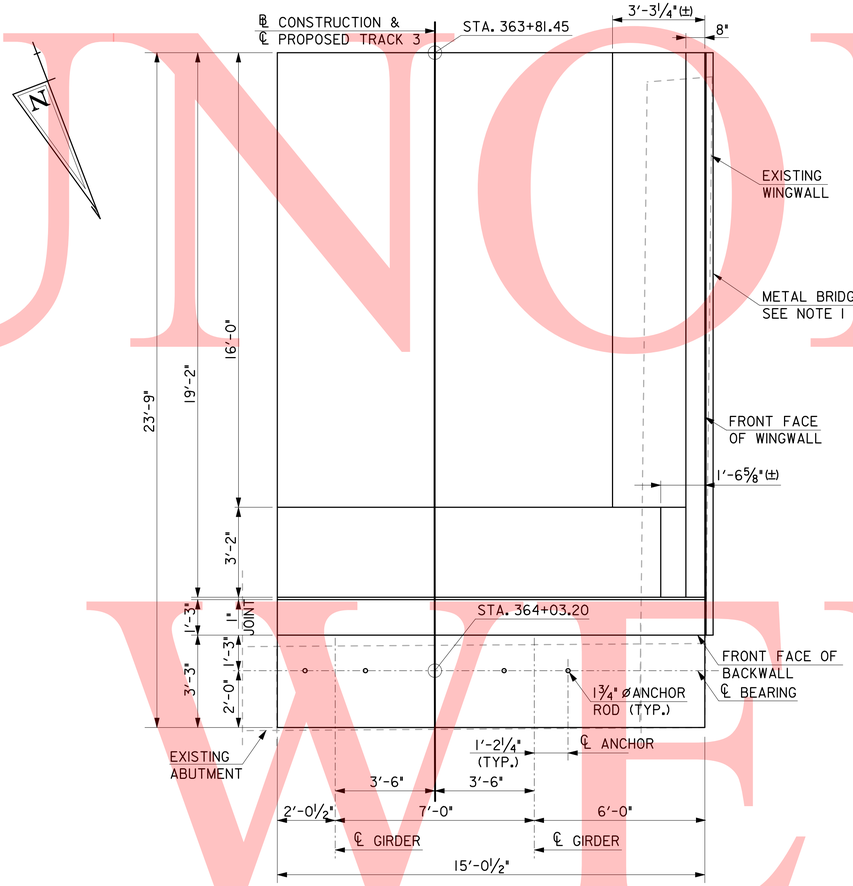

PLAN

SCALE: ⅜" = 1'-0"

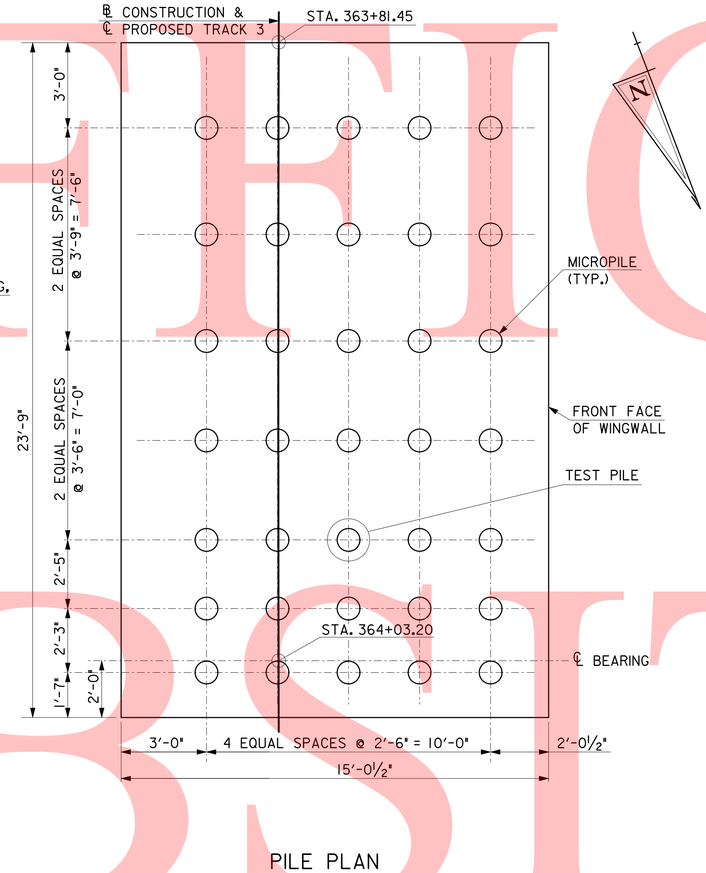

PILE PLAN

SCALE: ⅜" = 1'-0"

MICROPILE ALLOWABLE LOADS * (SERVICE LOADS) [KIPS]			
SUBSTRUCTURE UNIT	COMPRESSION	TENSION	LATERAL
ABUTMENT A & B	73.0	14.0	10.5

* THE MICROPILES SHALL EXTEND AT LEAST 10 FEET INTO CONTINUOUS ROCK WITH NO VOIDS GREATER THAN SIX INCHES.

THE CONTRACTOR SHALL DESIGN THE MICROPILE TO FOOTING CONNECTION DETAIL TO MEET THE REQUIRED CAPACITY AS SHOWN ABOVE. THE COST OF MICROPILE TO FOOTING CONNECTION SHALL BE INCIDENTAL TO THE INSTALLATION OF THE MICROPILE.

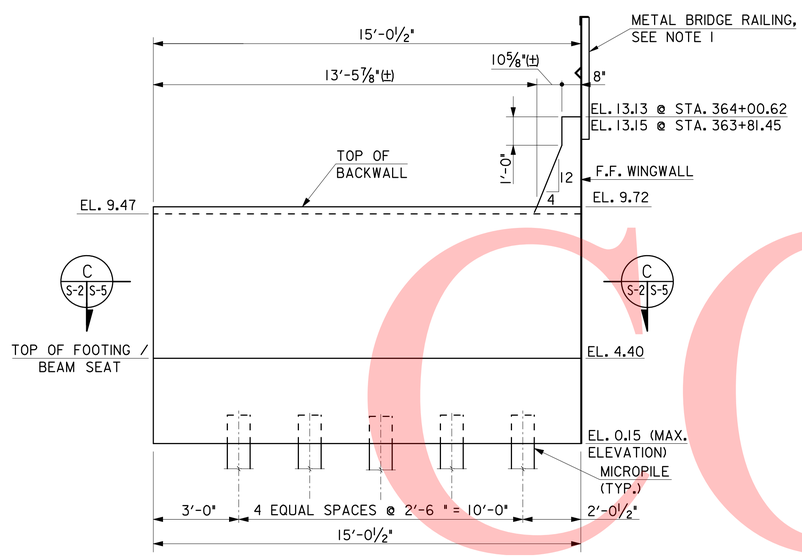

NOTE:
EXISTING TIMBER PILES AND MASONRY NOT SHOWN FOR CLARITY

ELEVATION

SCALE: ⅜" = 1'-0"

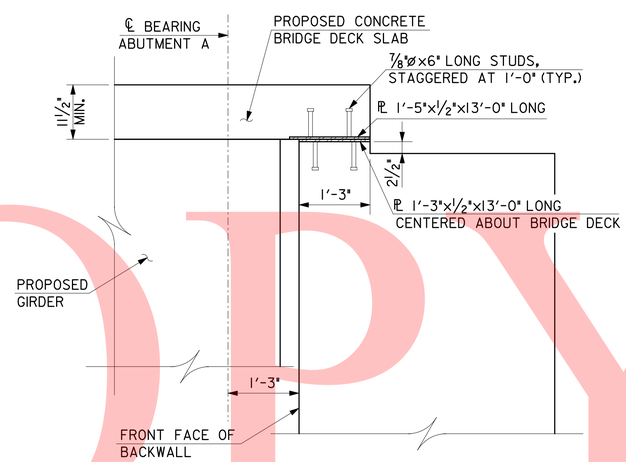

DETAIL A S-4 S-2

SCALE: ¾" = 1'-0"

NOTE:
1. FOR WINGWALL METAL BRIDGE RAILING, SEE DWG. NO. RW-3.

11/9/2010
\\RKMV2-2007\2007\07052.DTC\Third-Trk\CADD\structr\S02-PilePlan.dgn
PLOTTER = RAIL-PS-EHL-PL1, PEN TABLE = BALTIMORE.TBL

DCK ____ CHKD. ____ BJH ____ DESIGN ____ EMT ____ PREL. TRACING ____

UNOFFICIAL WEBSITE COPY

CONTRACT	COUNTY	F.A.P. NO.	SHEET NO.	TOTAL SHTS.
	NEW CASTLE	N/A	39	140

NEC COMMUTER RAIL IMPROVEMENTS
WILMINGTON TO NEWARK, DE

DATE: APRIL 20, 2009

REVISIONS

DRAWING NO. S-3
ABUTMENT B AND PILE PLAN
THIRD TRACK –
MILL CREEK BRIDGE

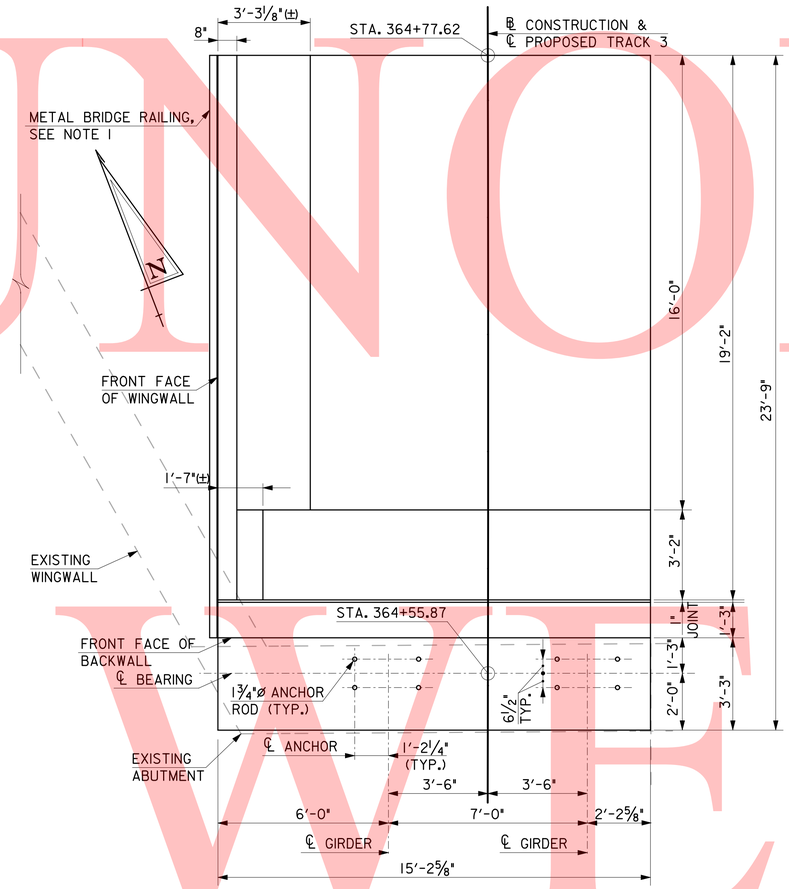

PLAN
SCALE: 3/8" = 1'-0"

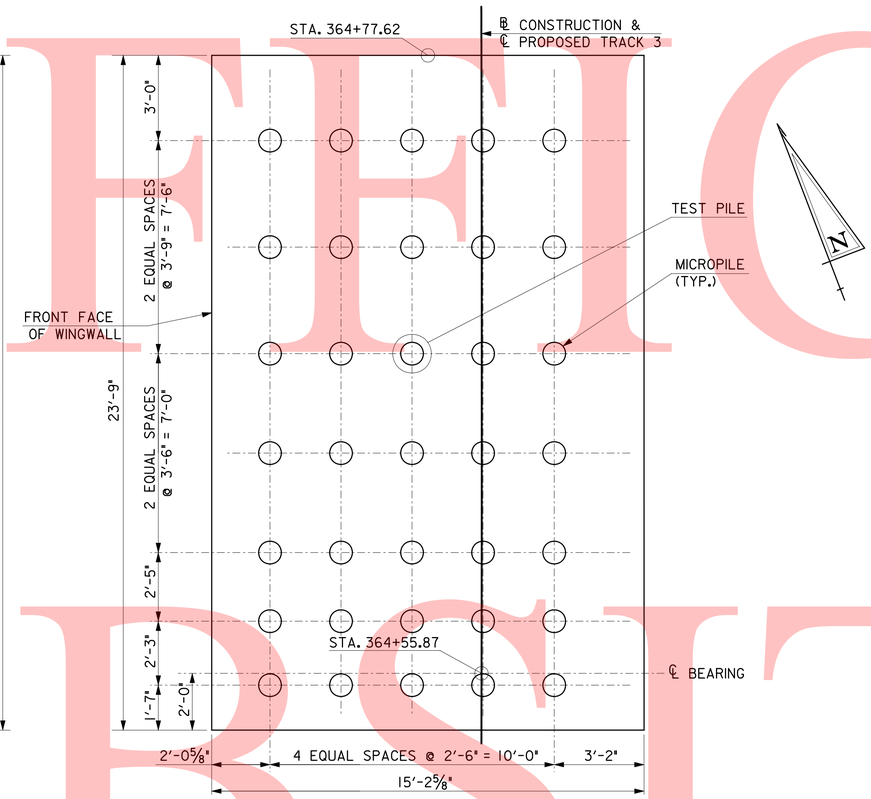

PILE PLAN
SCALE: 3/8" = 1'-0"

MICROPILE ALLOWABLE LOADS ✱ (SERVICE LOADS) [KIPS]			
SUBSTRUCTURE UNIT	COMPRESSION	TENSION	LATERAL
ABUTMENT A & B	73.0	14.0	10.5

✱ THE MICROPILES SHALL EXTEND AT LEAST 10 PILE DIAMETERS INTO CONTINUOUS ROCK WITH NO VOIDS GREATER THAN SIX INCHES.

THE CONTRACTOR SHALL DESIGN THE MICROPILE TO FOOTING CONNECTION DETAIL TO MEET THE REQUIRED CAPACITY AS SHOWN ABOVE. THE COST OF MICROPILE TO FOOTING CONNECTION SHALL BE INCIDENTAL TO THE INSTALLATION OF THE MICROPILE.

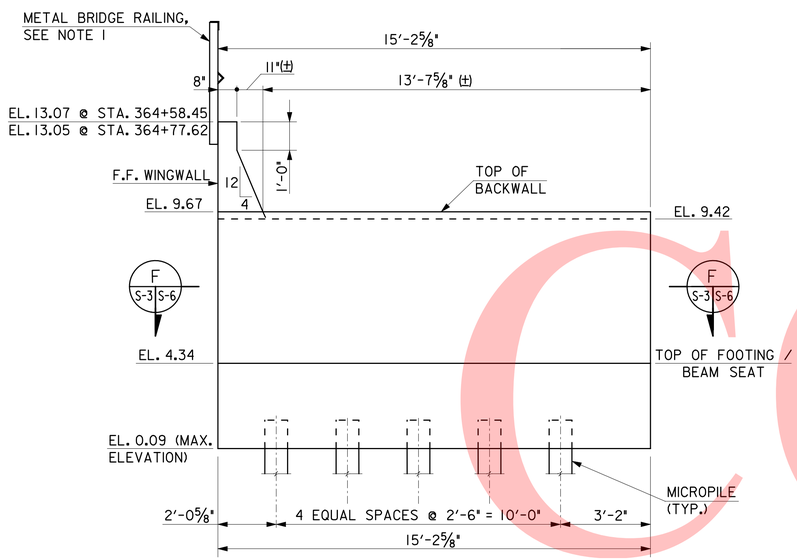

ELEVATION
SCALE: 3/8" = 1'-0"

NOTE:
EXISTING TIMBER PILES AND MASONRY NOT SHOWN FOR CLARITY

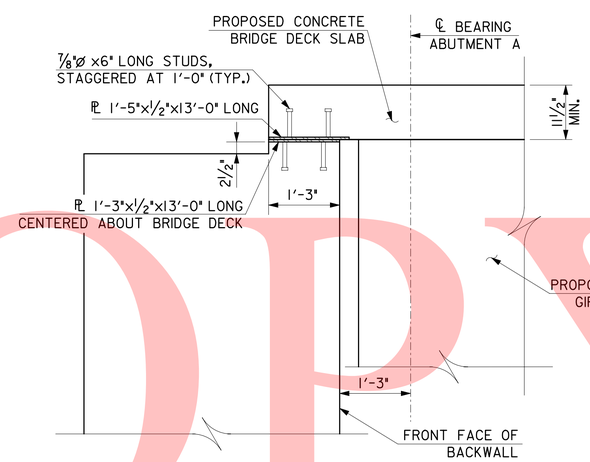

DETAIL
SCALE: 3/4" = 1'-0" A S-4 S-3

NOTE:
1. FOR WINGWALL METAL BRIDGE RAILING, SEE DWG. NO. RW-3.

4/13/2009
MN:\projects\2007\07052_DTC\Third-Track\CADD\structure\S03-PilePlan.dgn
PLOTTER = RAIL-F5-EMLFL1, PEN TABLE = BALTIMORE.TBL

PREL. TRACING EMT DESIGN BJH CHKD. DCK

UNOFFICIAL WEBSITE COPY

CONTRACT	COUNTY	F.A.P. NO.	SHEET NO.	TOTAL SHTS.
27-512-01	NEW CASTLE	HPP-2005 (028)	39	140

NEC COMMUTER RAIL IMPROVE.– DELAWARE YARD to RAGAN – Civil, Structural

DATE: NOVEMBER 10, 2010

REVISIONS

DRAWING NO. S-3

ABUTMENT B AND PILE PLAN THIRD TRACK – MILL CREEK BRIDGE

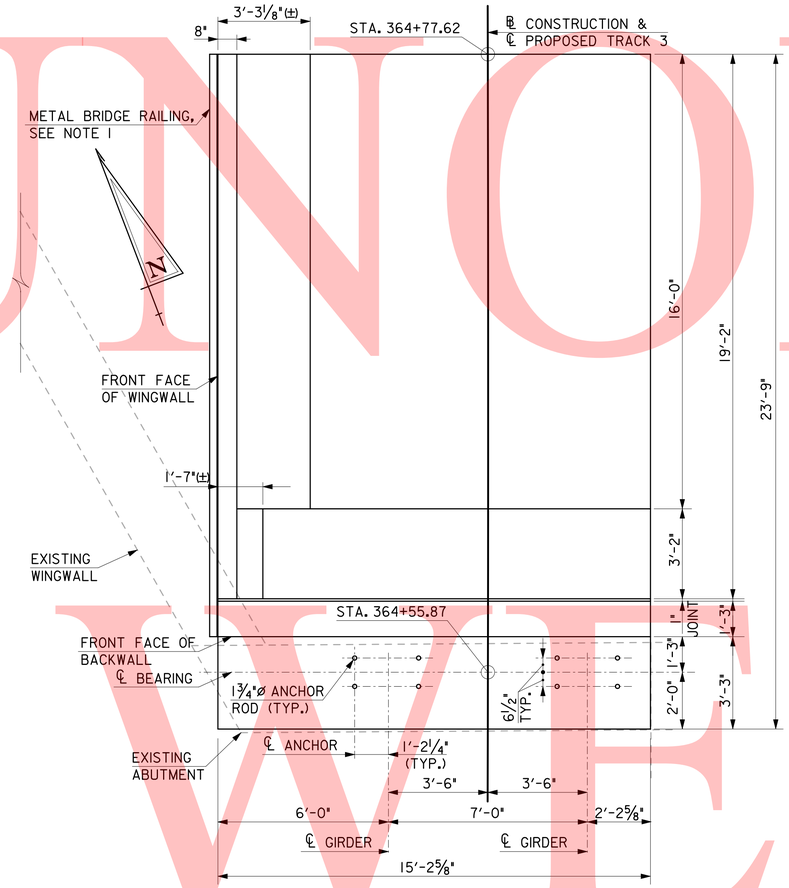

PLAN
SCALE: 3/8" = 1'-0"

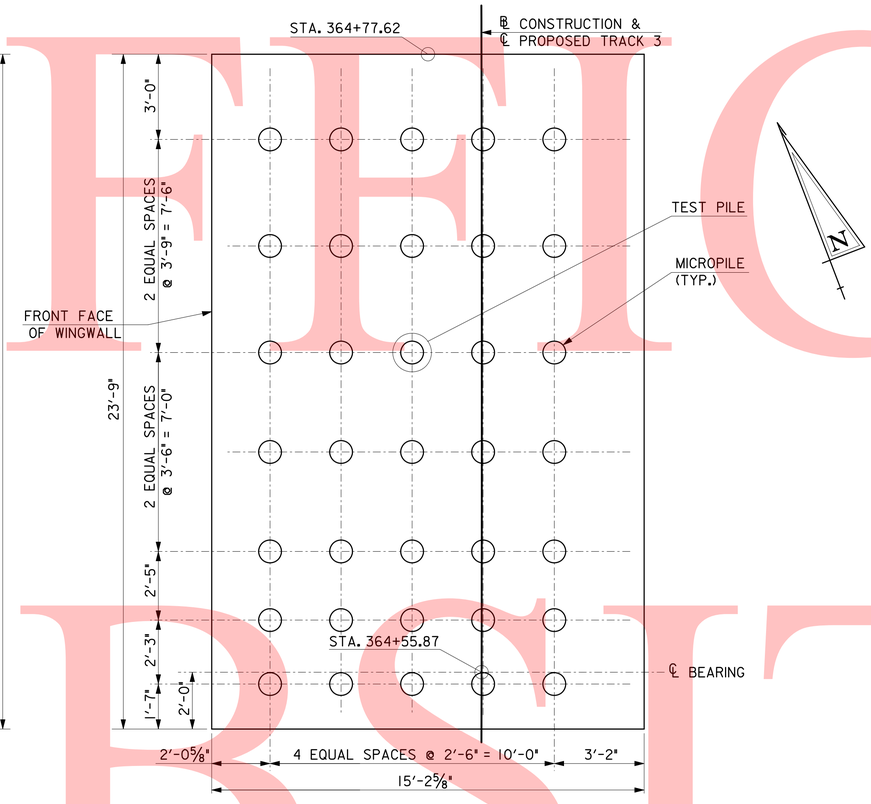

PILE PLAN
SCALE: 3/8" = 1'-0"

MICROPILE ALLOWABLE LOADS ✱ (SERVICE LOADS) [KIPS]			
SUBSTRUCTURE UNIT	COMPRESSION	TENSION	LATERAL
ABUTMENT A & B	73.0	14.0	10.5

✱ THE MICROPILES SHALL EXTEND AT LEAST 10 FEET INTO CONTINUOUS ROCK WITH NO VOIDS GREATER THAN SIX INCHES.

THE CONTRACTOR SHALL DESIGN THE MICROPILE TO FOOTING CONNECTION DETAIL TO MEET THE REQUIRED CAPACITY AS SHOWN ABOVE. THE COST OF MICROPILE TO FOOTING CONNECTION SHALL BE INCIDENTAL TO THE INSTALLATION OF THE MICROPILE.

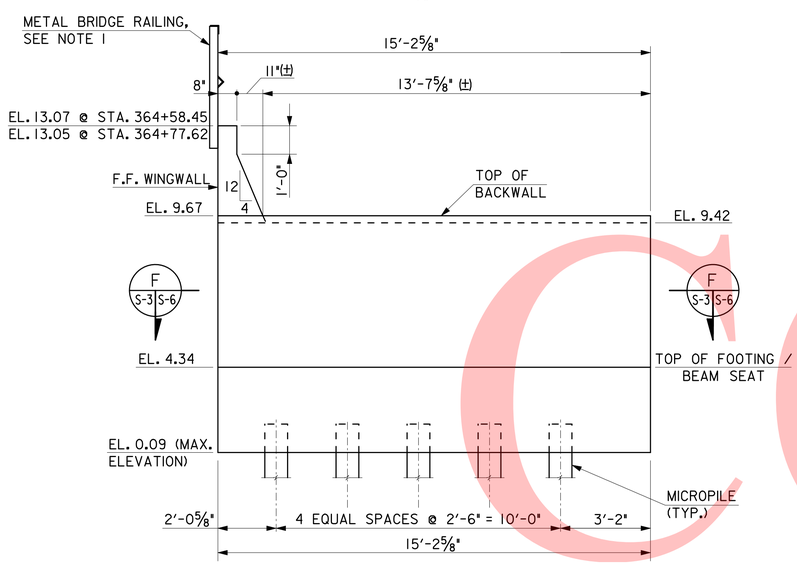

ELEVATION
SCALE: 3/8" = 1'-0"

NOTE:
EXISTING TIMBER PILES AND MASONRY NOT SHOWN FOR CLARITY

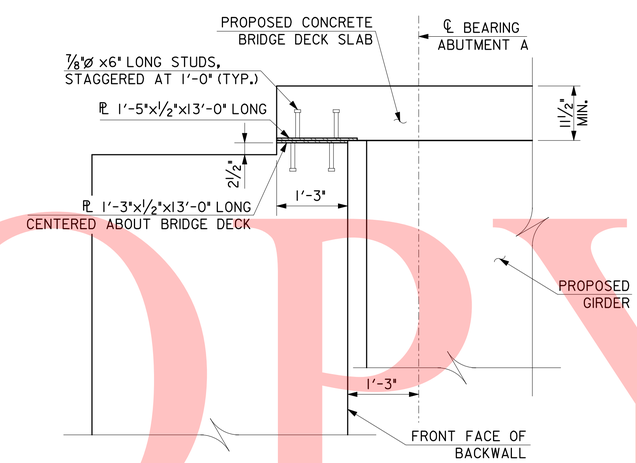

DETAIL
SCALE: 3/4" = 1'-0" A S-4 S-3

NOTE:
1. FOR WINGWALL METAL BRIDGE RAILING, SEE DWG. NO. RW-3.

11/9/2010
\\KRAMV2007\2007\07052_DTC\Third-Track\CADD\structure\S03-PilePlan.dgn
PLOTTER = RAIL-PS-EWL-PL1, PEN TABLE = BALTIMORE.TBL

PREL. TRACING EMT DESIGN BJH CHKD. DCK

UNOFFICIAL WEBSITE COPY

CONTRACT	COUNTY	F.A.P. NO.	SHEET NO.	TOTAL SHTS.
	NEW CASTLE	N/A	40	140

DRAWING NO. S-4

WINGWALL ELEVATIONS
THIRD TRACK –
MILL CREEK BRIDGE

NEC COMMUTER RAIL IMPROVEMENTS
WILMINGTON TO NEWARK, DE

DATE: APRIL 20, 2009

REVISIONS

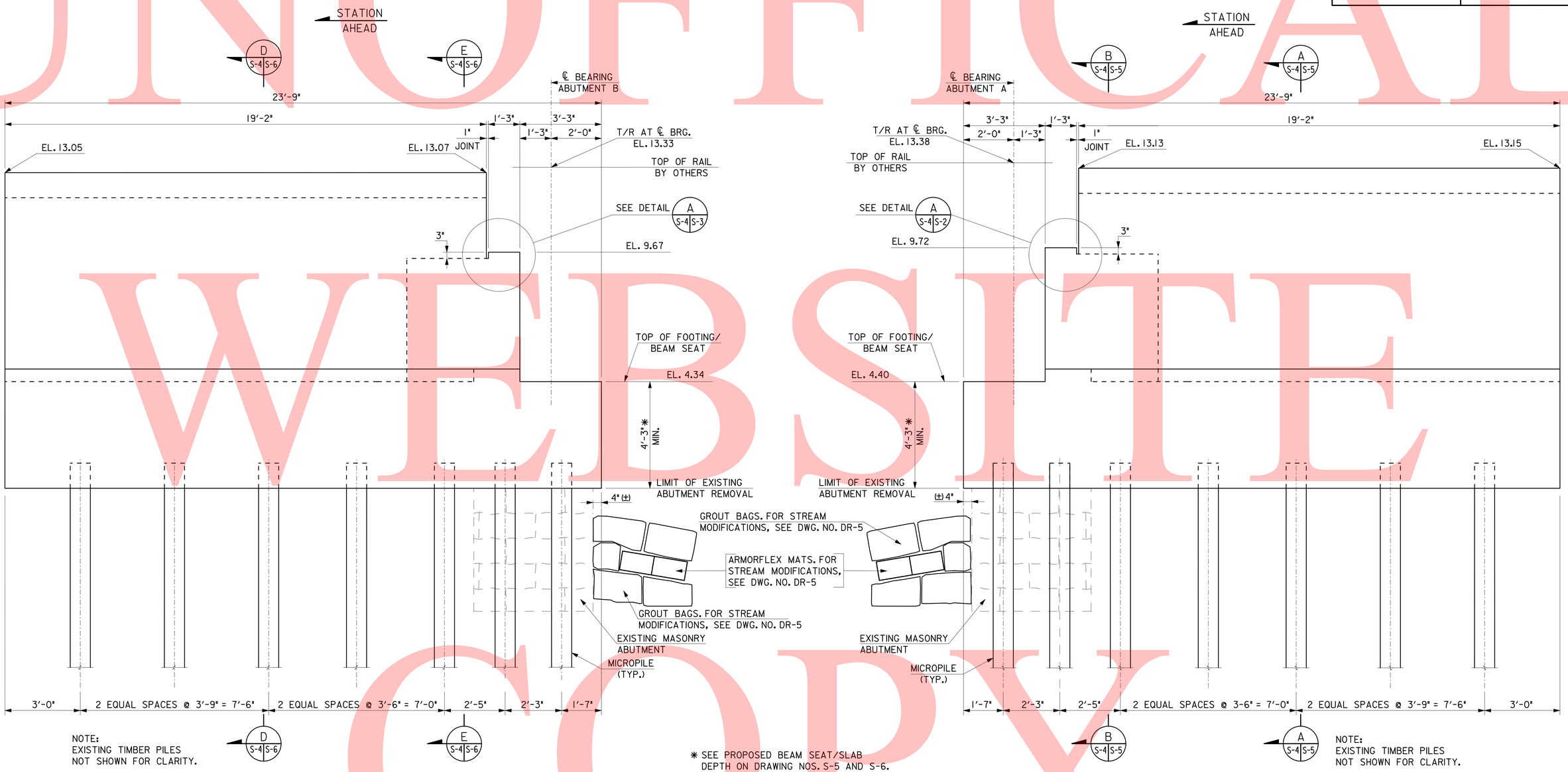

NOTE:
EXISTING TIMBER PILES
NOT SHOWN FOR CLARITY.

D S-4 S-6 E S-4 S-6

* SEE PROPOSED BEAM SEAT/SLAB DEPTH ON DRAWING NOS. S-5 AND S-6.

NOTE:
METAL BRIDGE RAILING
NOT SHOWN FOR CLARITY.

B S-4 S-5 A S-4 S-5

NOTE:
EXISTING TIMBER PILES
NOT SHOWN FOR CLARITY.

ABUTMENT B - WINGWALL

SCALE: ½" = 1'-0"

ABUTMENT A - WINGWALL

SCALE: ½" = 1'-0"

4/13/2009
M:\pr\j\ec-rs\2007\07052_DTC\Third-Trk\CADD\structure\S04-WINGWALL.dgn
PLOTTER = RAIL-F5-ENLPLT, PEN TABLE = BALTIMORE.TBL

PREL. TRACING JCE DESIGN BJH CHKD. DCK

UNOFFICIAL WEBSITE COPY

UNOFFICIAL WEBSITE COPY

CONTRACT	COUNTY	F.A.P. NO.	SHEET NO.	TOTAL SHTS.
	NEW CASTLE	N/A	41	140

DRAWING NO. S-5
ABUTMENT A
SECTIONS AND DETAILS
THIRD TRACK –
MILL CREEK BRIDGE

NEC COMMUTER RAIL IMPROVEMENTS
WILMINGTON TO NEWARK, DE

DATE: APRIL 20, 2009

REVISIONS

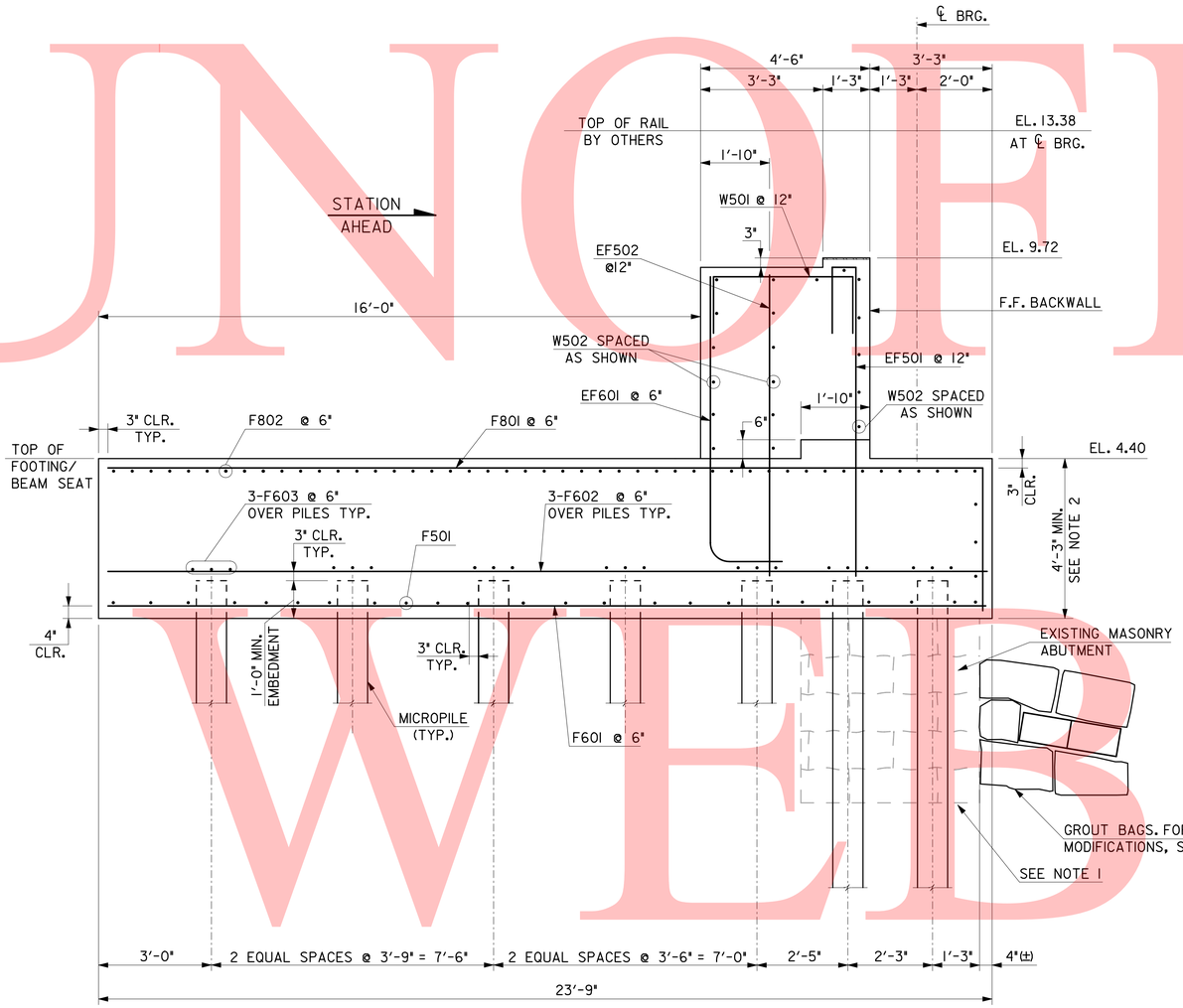

ABUTMENT A - TYPICAL SECTION
SCALE: 1/2" = 1'-0"

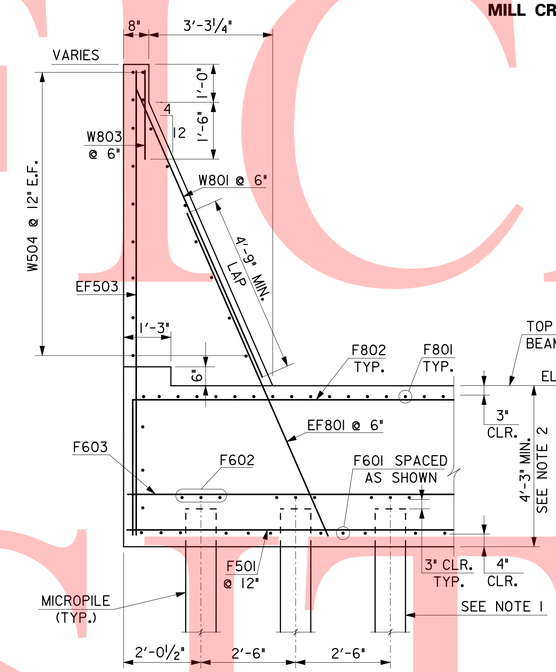

SECTION A (S-4 / S-5)
SCALE: 1/2" = 1'-0"

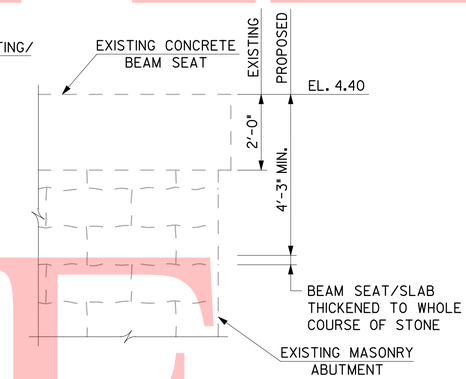

NOTE: THE PROPOSED BEAM SEAT AND SLAB DEPTH IS CONTINGENT UPON AN ENTIRE COURSE OF STONE BEING REMOVED. IF THE PROPOSED DEPTH FALLS WITHIN A COURSE AS SHOWN, THE ENTIRE COURSE SHALL BE REMOVED AND THE PROPOSED BEAM SEAT/SLAB THICKENED ACCORDINGLY.

PROPOSED BEAM SEAT/SLAB DEPTH
SCALE: 1/2" = 1'-0"

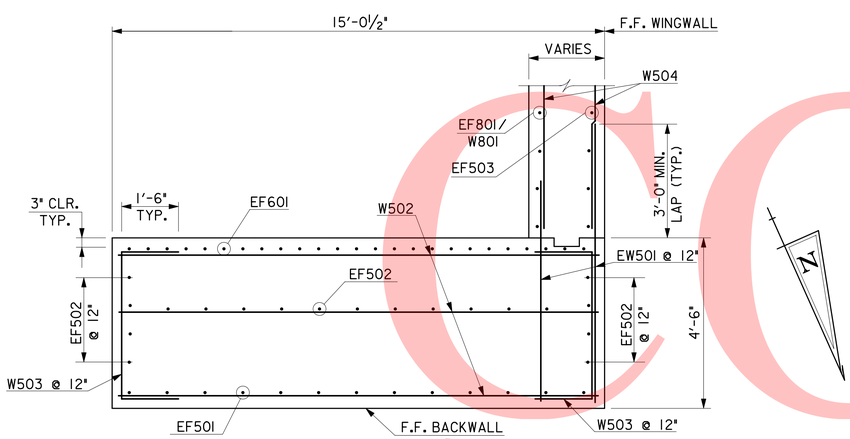

SECTION C (S-2 / S-5)
SCALE: 1/2" = 1'-0"

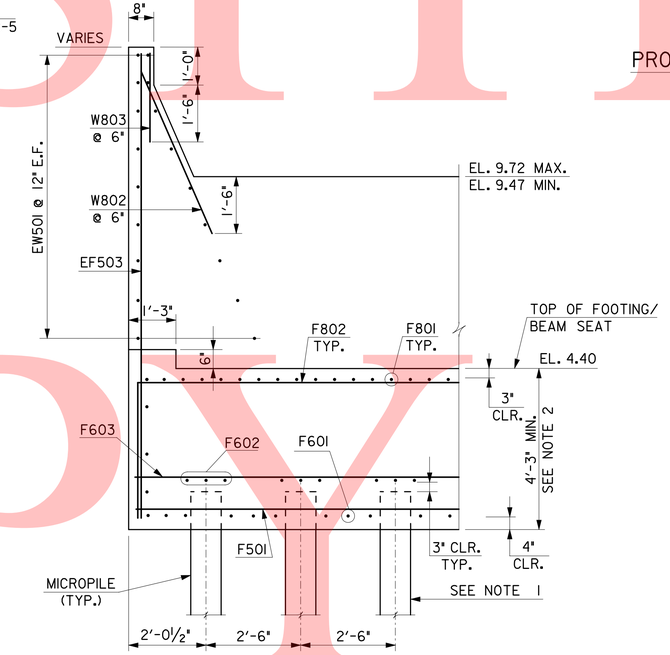

SECTION B (S-4 / S-5)
SCALE: 1/2" = 1'-0"

NOTES:

1. EXISTING TIMBER PILES AND MASONRY ABUTMENT NOT SHOWN FOR CLARITY.
2. SEE PROPOSED BEAM SEAT/SLAB DEPTH THIS SHEET.
3. REINFORCING STEEL BAR MARKS THAT START WITH "E" ARE TO BE EPOXY COATED.
4. METAL BRIDGE RAILING NOT SHOWN FOR CLARITY.

4/13/2009
MKproJects:\2007\07052_DTC\Third-Track\CADD\struct\S05-ABUTA.dgn
PLOTTER = RAIL-F5-EHL.PLT, PEN TABLE = BALTIMORE.TBL

PREL. TRACING | JCE | DESIGN | BJH | CHKD. | DCK

UNOFFICIAL WEBSITE COPY

CONTRACT	COUNTY	F.A.P. NO.	SHEET NO.	TOTAL SHTS.
	NEW CASTLE	N/A	42	140

DRAWING NO. S-6
ABUTMENT B
SECTIONS AND DETAILS
THIRD TRACK –
MILL CREEK BRIDGE

NEC COMMUTER RAIL IMPROVEMENTS
WILMINGTON TO NEWARK, DE

DATE: APRIL 20, 2009

REVISIONS

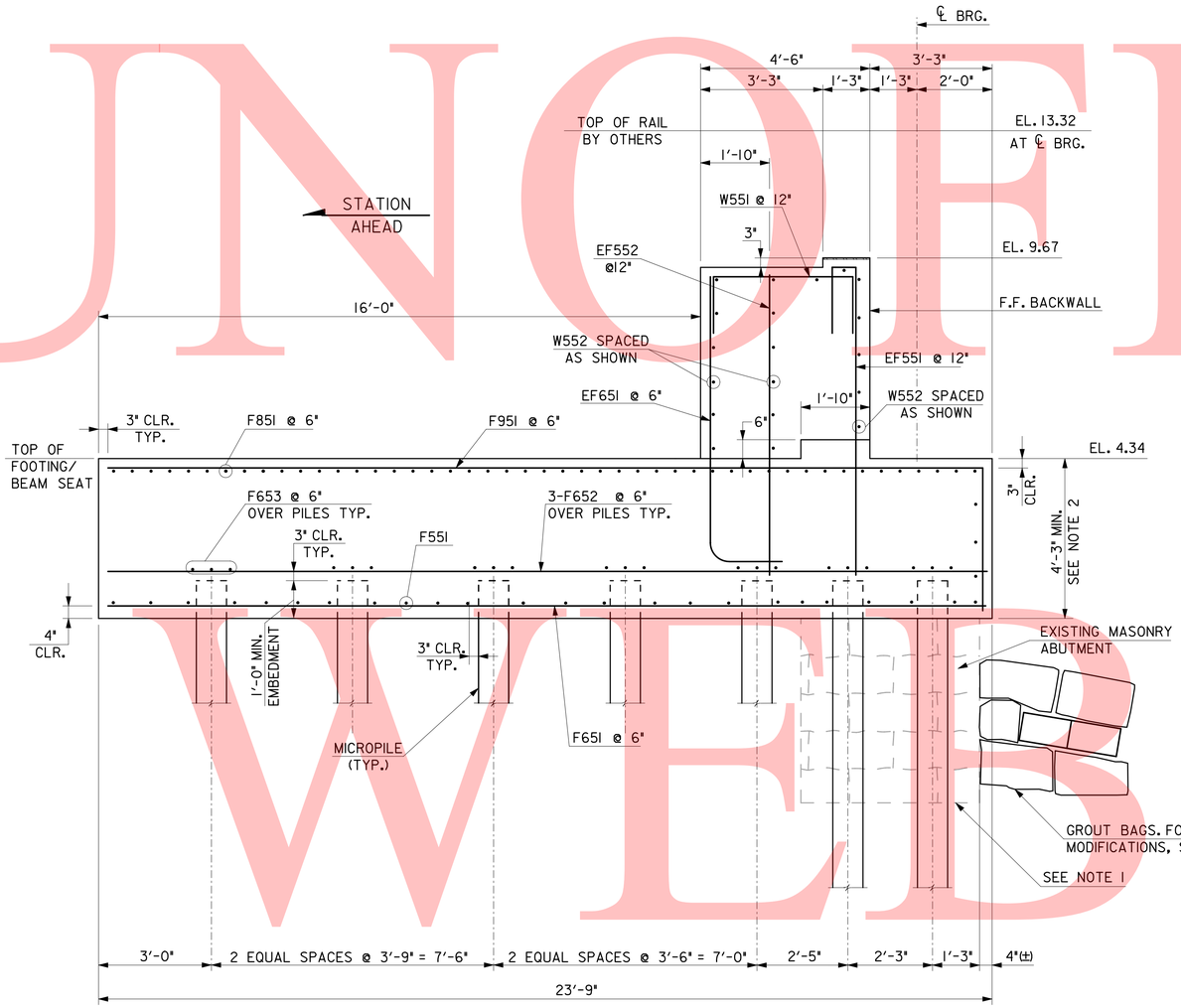

ABUTMENT B - TYPICAL SECTION
SCALE: 1/2" = 1'-0"

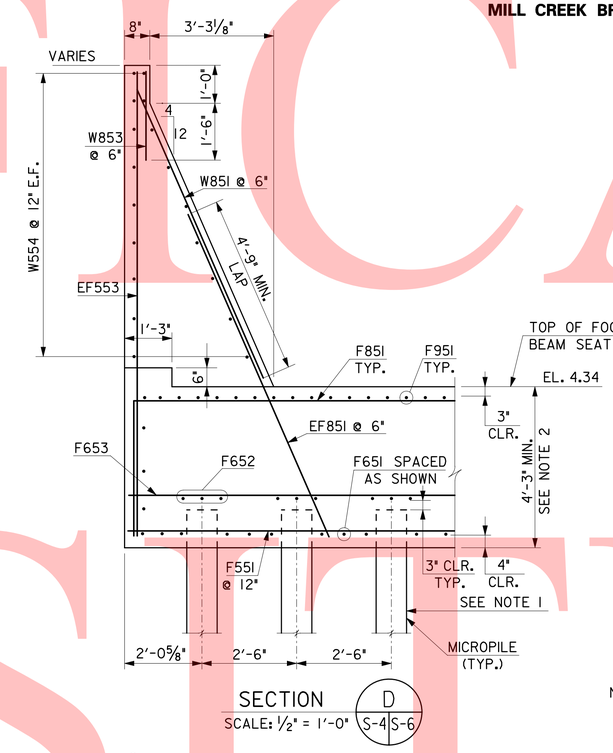

SECTION D
SCALE: 1/2" = 1'-0"
S-4 | S-6

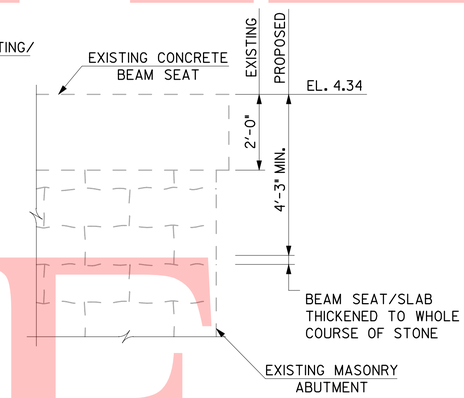

NOTE: THE PROPOSED BEAM SEAT AND SLAB DEPTH IS CONTINGENT UPON AN ENTIRE COURSE OF STONE BEING REMOVED. IF THE PROPOSED DEPTH FALLS WITHIN A COURSE AS SHOWN, THE ENTIRE COURSE SHALL BE REMOVED AND THE PROPOSED BEAM SEAT/SLAB THICKENED ACCORDINGLY.

PROPOSED BEAM SEAT/SLAB DEPTH
SCALE: 1/2" = 1'-0"

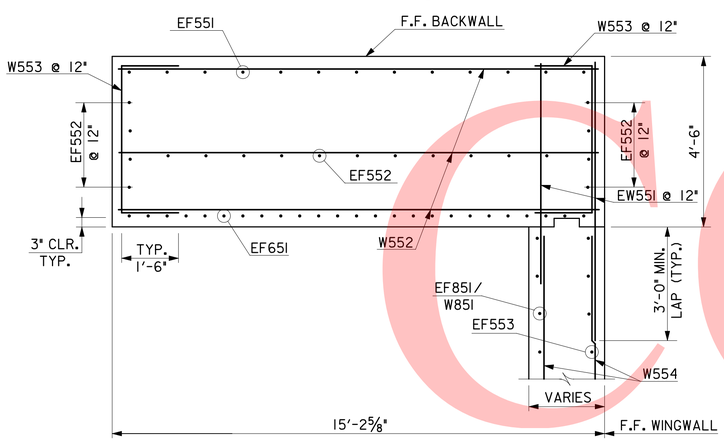

SECTION F
SCALE: 1/2" = 1'-0"
S-3 | S-6

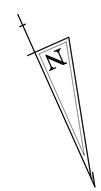

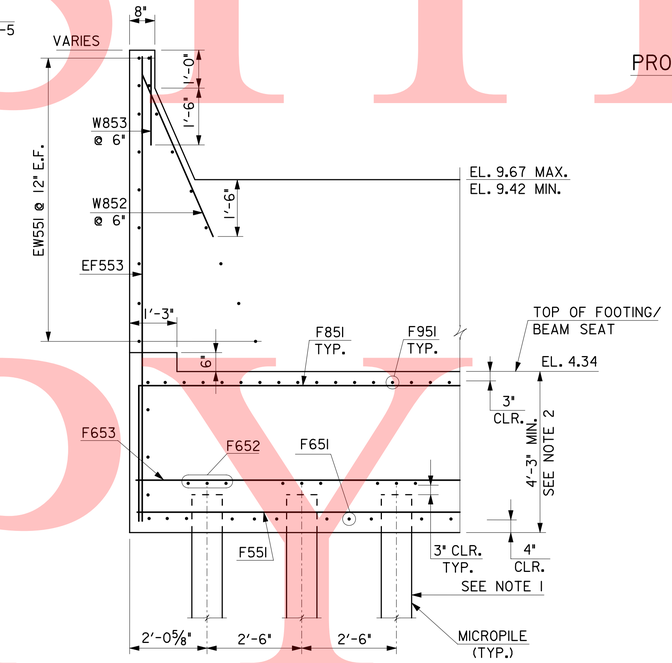

SECTION E
SCALE: 1/2" = 1'-0"
S-4 | S-6

NOTES:

1. EXISTING TIMBER PILES AND MASONRY ABUTMENT NOT SHOWN FOR CLARITY.
2. SEE PROPOSED BEAM SEAT/SLAB DEPTH THIS SHEET.
3. REINFORCING STEEL BAR MARKS THAT START WITH "E" ARE TO BE EPOXY COATED.
4. METAL BRIDGE RAILING NOT SHOWN FOR CLARITY.

4/13/2009
M:\projects\2007\07052_DTC\Third-Track\CADD\structure\S06-ABUTB.dgn
PLOTTER = RAIL-F5-EHL,FL1, PEN TABLE = BALTIMORE.TBL

PREL. TRACING ____ JCE ____ DESIGN ____ BJH ____ CHKD. ____ DCK ____