CONTRACT	COUNTY	F.A.P. NO.	SHEET NO.	TOTAL SHTS.
	NEW CASTLE	N/A	43	140

NEC COMMUTER RAIL IMPROVEMENTS
WILMINGTON TO NEWARK, DE

DATE: APRIL 20, 2009

REVISIONS

DRAWING NO. S-7

EXISTING TYPICAL SECTION
THIRD TRACK -
MILL CREEK BRIDGE

LEGEND

REMOVE FOR DISPOSAL

EXISTING TYPICAL SECTION
SCALE: 1" = 1'-0"

NOTES:
1. INSTALL DEMOLITION SHIELDS. ALL DEBRIS MUST BE CONTAINED AND IS NOT ALLOWED TO FALL INTO LITTLE MILL CREEK.
2. ALL MATERIALS DESIGNATED TO BE REMOVED FOR DISPOSAL BECOME THE PROPERTY OF THE CONTRACTOR AND SHALL BE REMOVED FROM THE SITE.
3. REMOVE THE EXISTING CONCRETE BRIDGE DECK. CARE SHALL BE USED TO NOT DAMAGE THE EXISTING STEEL GIRDERS.
4. LATERAL BRACING AND CROSS-FRAMES TO BE REMOVED FOR DISPOSAL.
5. REMOVE EACH GIRDER IN ONE COMPLETE PIECE AND SHIP TO FABRICATION FACILITY FOR REHABILITATION.
6. EXISTING BRIDGE BEARINGS AND SOLE PLATES TO BE REMOVED FOR DISPOSAL.

4/13/2009
M:\pr\26rs\2007\07052_DTC\Third-Trk\CADD\struct\S07-EXISTING TYPSECT.dgn
PLOTTER = RAIL-F5-EHL.PL1, PEN TABLE = BALTIMORE.TBL

PREL. TRACING ____ JCE ____ DESIGN ____ BJH ____ CHKD. ____ DCK

UNOFFICAL WEBSITE COPY

CONTRACT	COUNTY	F.A.P. NO.	SHEET NO.	TOTAL SHTS.
	NEW CASTLE	N/A	44	140

NEC COMMUTER RAIL IMPROVEMENTS
WILMINGTON TO NEWARK, DE

DATE: APRIL 20, 2009

REVISIONS

DRAWING NO. S-8

PROPOSED TYPICAL SECTION
THIRD TRACK –
MILL CREEK BRIDGE

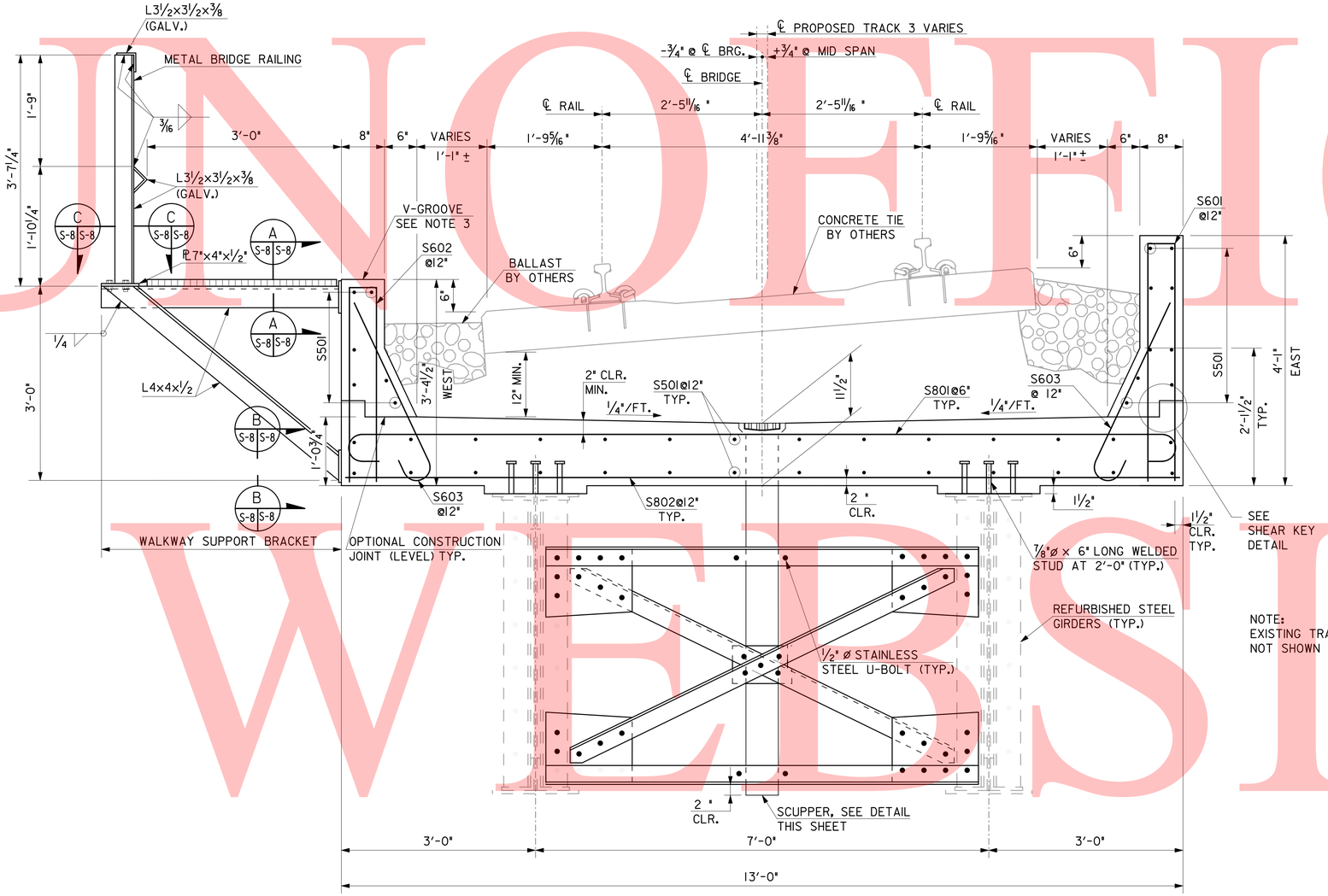

PROPOSED TYPICAL SECTION
SCALE: 1" = 1'-0"

NOTE:
EXISTING TRACK 3 BRIDGE NOT SHOWN FOR CLARITY.

NOTES:

1. FOR PROPOSED STRUCTURAL STEEL CROSS-FRAMES AND LATERAL BRACING, SEE DWG. NO. S-10.
2. FOR SCUPPER LOCATION, SEE DWG. NO. S-10.
3. THE CONTRACTOR SHALL PLACE A ¾"x¾" V-GROOVE ON THE TOP OF THE CONCRETE CURB AT THE LOCATION OF THE SCUPPER. THE V-GROOVE SHALL BE VISIBLE FROM THE WALKWAY.

GRATING NOTES:

GRATING SHALL BE A36 STEEL, WITH CARRYING BARS A MINIMUM OF 1¼"x3/16" @ 1 3/16" O.C. AND 5/16" SQUARE CROSS BARS @ 4" O.C., WELDED CONSTRUCTION, ALL ENDS BANDED. ATTACH GRATING TO ANGLE SUPPORTS WITH 3/16"x1" LONG FILLET WELDS, EVERY THIRD BAR ALL SUPPORTS.

METAL BRIDGE RAILING AND WALKWAY SUPPORT BRACKET NOTES:

1. ALL ANGLES SHALL BE ASTM A36.
2. ANGLES TO BE GALVANIZED, SHALL BE GALVANIZED IN ACCORDANCE WITH ASTM A123.
3. HIGH STRENGTH BOLTS, NUTS AND WASHERS: ASTM A325, TYPE 1, HEAVY HEX STEEL STRUCTURAL BOLTS; ASTM A563 HEAVY HEX CARBON STEEL NUTS; AND ASTM F436 HARDENED CARBON STEEL WASHERS. ALL BOLTS, NUTS AND WASHERS TO BE GALVANIZED IN ACCORDANCE WITH ASTM A153.
4. WALKWAY SUPPORT BRACKETS SHALL BE SPACED AT 8'-0" MAX.

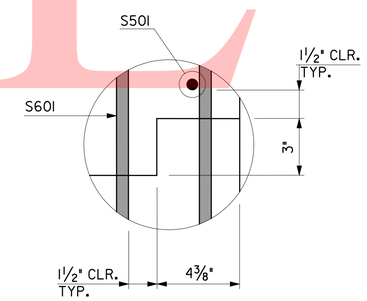

SHEAR KEY DETAIL
SCALE: 3" = 1'-0"

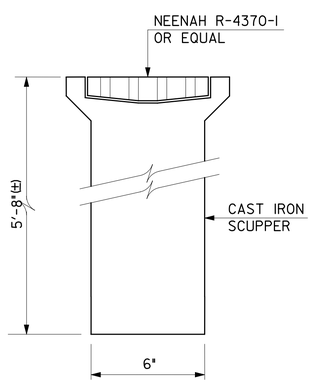

SCUPPER DETAIL
SCALE: 3" = 1'-0"

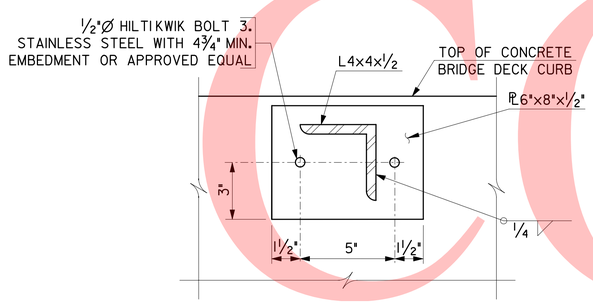

SECTION A
SCALE: 3" = 1'-0"

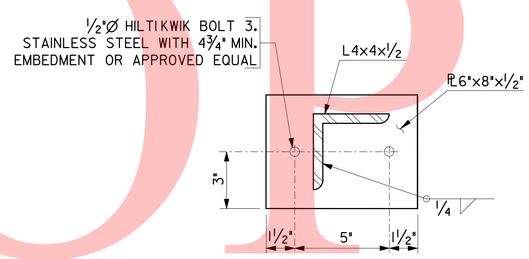

SECTION B
SCALE: 3" = 1'-0"

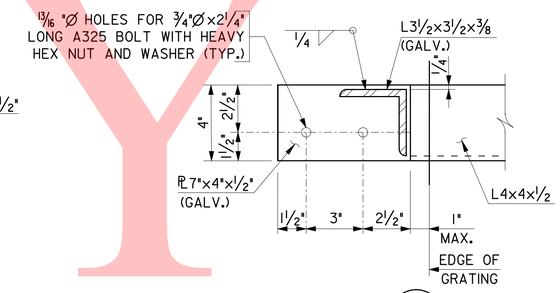

SECTION C
SCALE: 3" = 1'-0"

4/13/2009
MN:pr26ec1$\2007\07052_DTC\Third-Track\CADD\struct\S08-TYPSECT.dgn
PLOTTER = RAIL-F5-ENLRLL, PEN TABLE = BALTIMORE.TBL

PRELIM. TRACING JCE DESIGN BJH CHKD. DCK

UNOFFICIAL WEBSITE COPY

CONTRACT	COUNTY	F.A.P. NO.	SHEET NO.	TOTAL SHTS.
	NEW CASTLE	N/A	45	140

NEC COMMUTER RAIL IMPROVEMENTS
WILMINGTON TO NEWARK, DE

DATE: APRIL 20, 2009

REVISIONS

DRAWING NO. S-9

EXISTING FRAMING PLAN AND SECTION
THIRD TRACK –
MILL CREEK BRIDGE

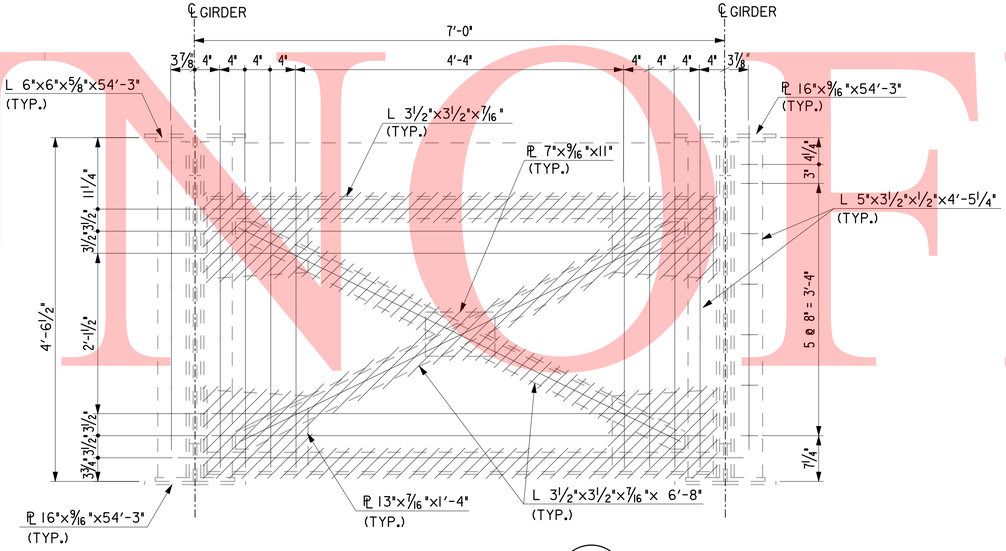

SECTION A S-9 S-9
SCALE 1" = 1'-0"

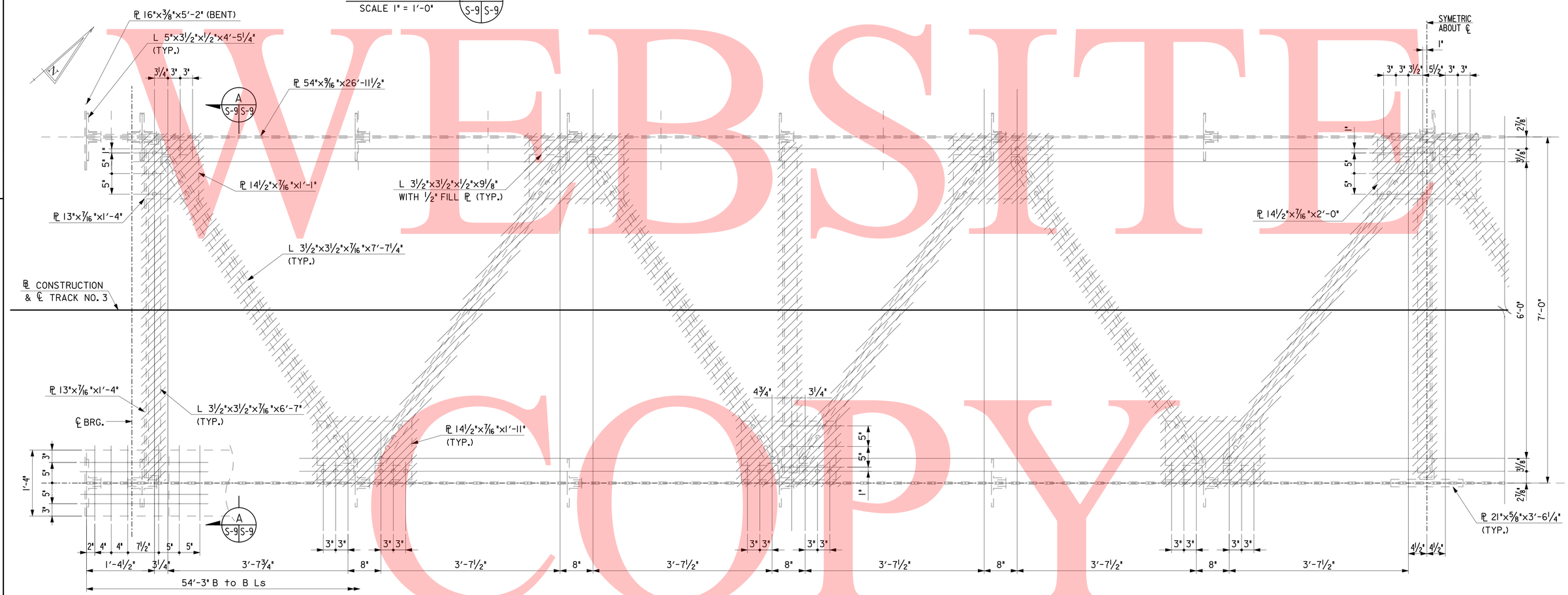

NOTE:
RIVET SPACING NOT SHOWN FOR BOTTOM FLANGE SAME AS FOR TOP FLANGE.

NOTE:
ALL DIMENSIONS AND SIZES ARE (±) AND SHALL BE VERIFIED BY THE CONTRACTOR.

EXISTING FRAMING PLAN
SCALE 1" = 1'-0"

NOTE:
ALL DIMENSIONS AND SIZES ARE (±) AND SHALL BE VERIFIED BY THE CONTRACTOR.

LEGEND

REMOVE FOR DISPOSAL

NOTES:
1. THE EXISTING STEEL BRIDGE GIRDERS ARE TO BE SHOP CLEANED, REHABILITATED AND PAINTED FOR USE IN THE PROPOSED BRIDGE.
2. INSTALL DEMOLITION SHIELDS. ALL DEBRIS MUST BE CONTAINED AND IS NOT ALLOWED TO FALL INTO LITTLE MILL CREEK.
3. ALL MATERIALS DESIGNATED TO BE REMOVED FOR DISPOSAL BECOME THE PROPERTY OF THE CONTRACTOR AND SHALL BE REMOVED FROM THE SITE.
4. REMOVE THE EXISTING CONCRETE BRIDGE DECK. CARE SHALL BE USED TO NOT DAMAGE THE EXISTING STEEL GIRDERS.
5. LATERAL BRACING AND CROSS-FRAMES TO BE REMOVED FOR DISPOSAL.
6. REMOVE EACH GIRDER IN ONE COMPLETE PIECE AND SHIP TO FABRICATION FACILITY FOR REHABILITATION.
7. EXISTING BRIDGE BEARINGS AND SOLE PLATES TO BE REMOVED FOR DISPOSAL.

4/13/2009
M:\projects\2007\07052_DTC\Third-Trk\CADD\struct\S09-FR-1.dgn
pcf: DTC FD Third-Trk

PREL. TRACING JCE DESIGN BJH CHKD. DCK

UNOFFICIAL WEBSITE COPY

CONTRACT	COUNTY	F.A.P. NO.	SHEET NO.	TOTAL SHTS.
	NEW CASTLE	N/A	46	140

NEC COMMUTER RAIL IMPROVEMENTS
WILMINGTON TO NEWARK, DE

DATE: APRIL 20, 2009

REVISIONS

DRAWING NO. S-10

PROPOSED FRAMING PLAN AND SECTION
THIRD TRACK –
MILL CREEK BRIDGE

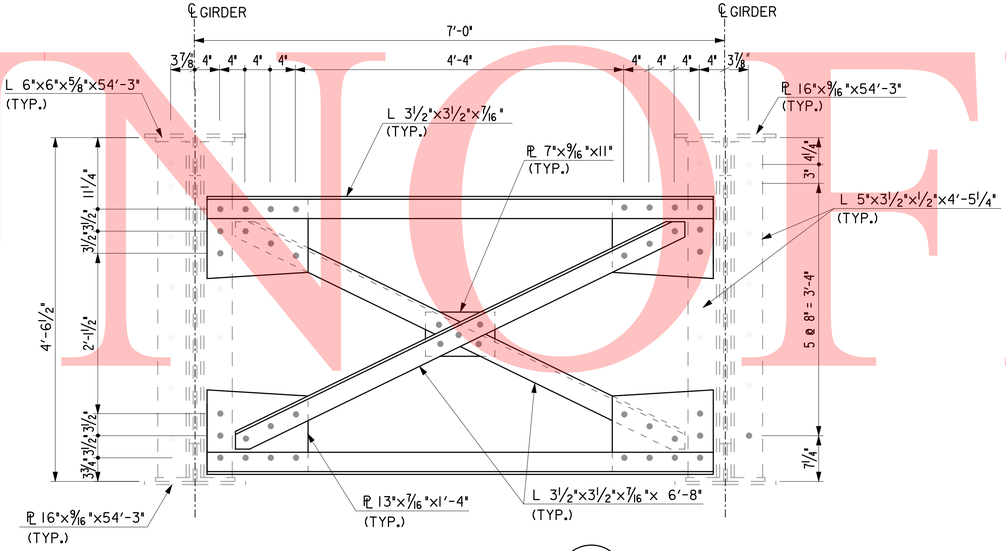

SECTION A S-10 S-10
SCALE 1" = 1'-0"

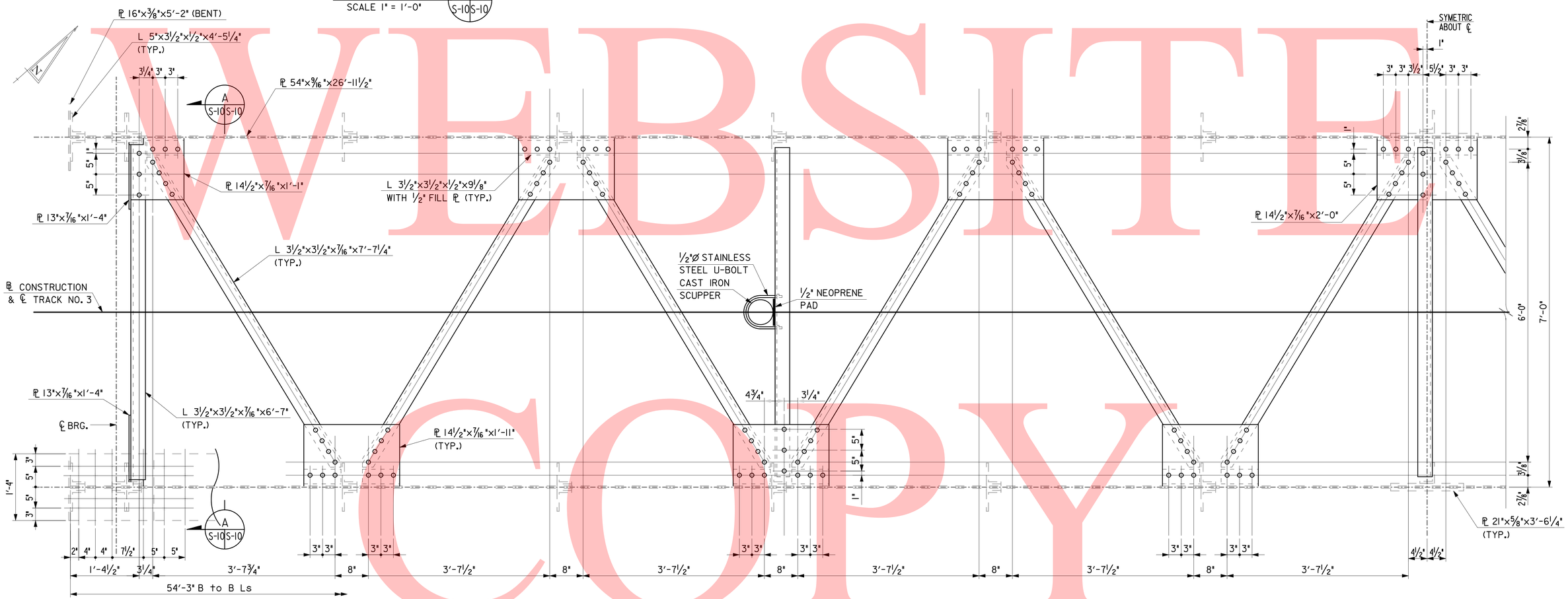

NOTE:
RIVET SPACING NOT SHOWN FOR BOTTOM FLANGE SAME AS FOR TOP FLANGE.

PROPOSED FRAMING PLAN
SCALE 1" = 1'-0"

NOTES:
1. CLEAN STEEL GIRDERS PER SPECIFICATION.
2. FOLLOWING REMOVAL OF THE EXISTING PAINT SYSTEM, THE CONTRACTOR SHALL SCHEDULE WITH THE ENGINEER AND AMTRAK AN INSPECTION OF THE GIRDERS, AT THE FABRICATION FACILITY. THE INSPECTION IS TO QUANTIFY ANY DETERIORATION AND/OR DEFECTS IN THE STRUCTURAL STEEL. FOLLOWING THE INSPECTION, THE ENGINEER WILL PROVIDE REPAIR DETAILS AND DIRECTION TO THE CONTRACTOR, AS REQUIRED.
3. ASTM A325 HIGH STRENGTH BOLTS ARE TO BE USED TO REPLACE RIVETS THAT REQUIRE REMOVAL AND REPLACEMENT.
4. IF A RIVET HOLE HAS BEEN SCORED OR OTHERWISE DAMAGED, THE HOLE SHALL BE REAMED AND THE REPLACEMENT HIGH STRENGTH BOLT SHALL BE ONE SIZE LARGER IN NOMINAL DIAMETER THAN THE REPLACED RIVET.
5. PRIME ALL STRUCTURAL STEEL IN THE FABRICATION FACILITY SHOP PER SPECIFICATIONS.
6. TRANSPORT AND ERECT ALL STRUCTURAL STEEL AT THE PROJECT SITE INCLUDING, GIRDER, NEW CROSS FRAMES AND NEW BEARINGS.

4/13/2009
M:\projects\2007\07052_DTC\Third-Trk\CADD\struct\S10-FR-1.dgn
pcf:DTC FD Third-Trk

PREL. TRACING JCE DESIGN BJH CHKD. DCK

UNOFFICIAL WEBSITE COPY

CONTRACT	COUNTY	F.A.P. NO.	SHEET NO.	TOTAL SHTS.
	NEW CASTLE	N/A	47	140

DRAWING NO. S-11

EXISTING AND PROPOSED GIRDER PLAN AND ELEVATION THIRD TRACK – MILL CREEK BRIDGE

NEC COMMUTER RAIL IMPROVEMENTS WILMINGTON TO NEWARK, DE

DATE: APRIL 20, 2009

REVISIONS

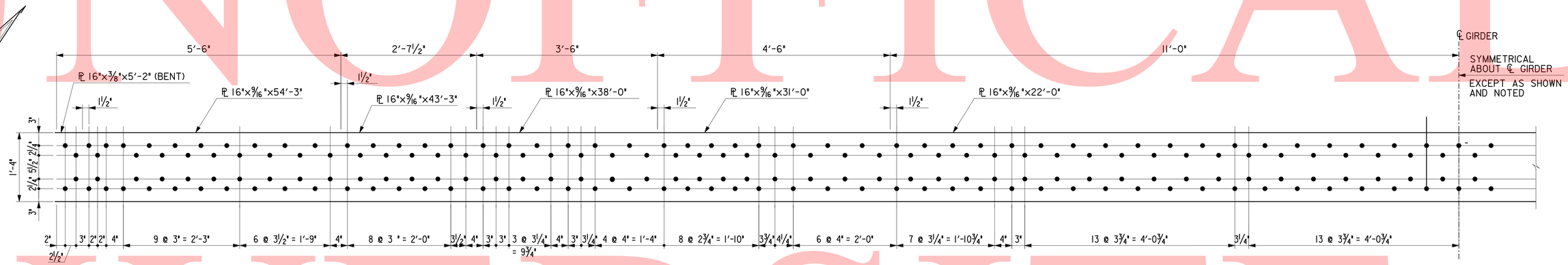

EXISTING AND PROPOSED PLAN

(TOP OF GIRDER)
SCALE 1" = 1'-0"

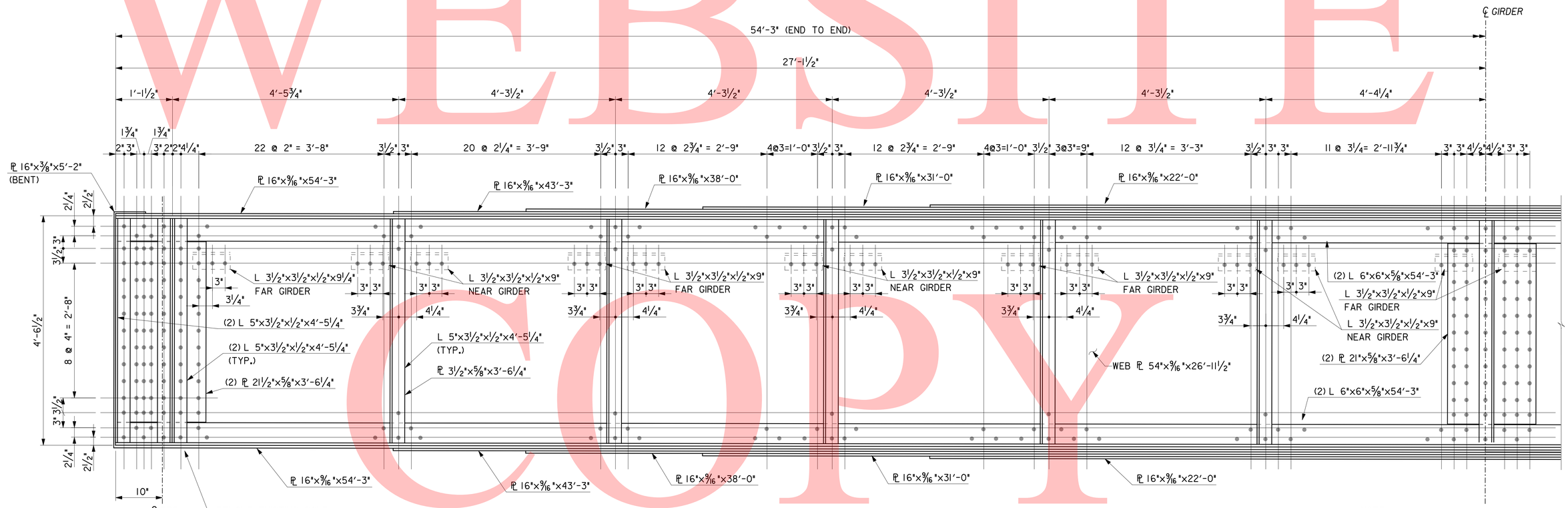

EXISTING AND PROPOSED ELEVATION

SCALE 1" = 1'-0"

NOTE:
ALL DIMENSIONS AND SIZES ARE (±) AND SHALL BE VERIFIED BY THE CONTRACTOR.

4/13/2009
W:\projects\2007\07052_DTC\Third-Trk\CADD\struct\S11-GD-1.dgn
pcf:DTC_TD_Third-Trk

PREL. TRACING JCE DESIGN BJH CHKD. DCK

UNOFFICIAL WEBSITE COPY

CONTRACT	COUNTY	F.A.P. NO.	SHEET NO.	TOTAL SHTS.
	NEW CASTLE	N/A	48	140

DRAWING NO. S-12

ELASTOMERIC BEARINGS
THIRD TRACK –
MILL CREEK BRIDGE

NEC COMMUTER RAIL IMPROVEMENTS
WILMINGTON TO NEWARK, DE

DATE: APRIL 20, 2009

REVISIONS

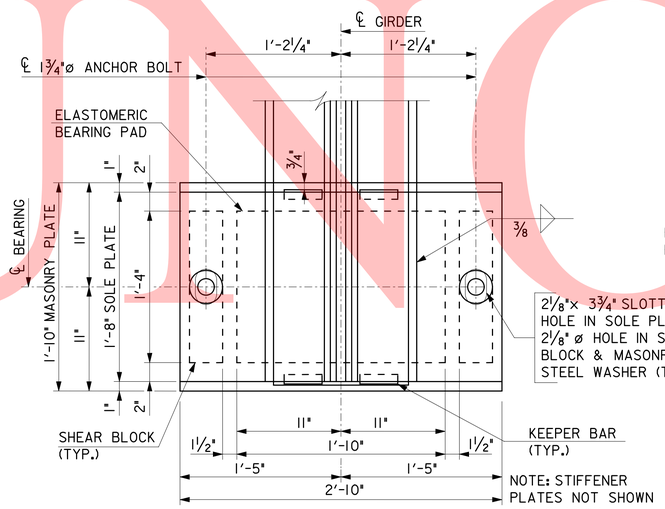

NOTE: STIFFENER PLATES NOT SHOWN FOR CLARITY

EXPANSION PLAN
SCALE: 1½" = 1'-0"

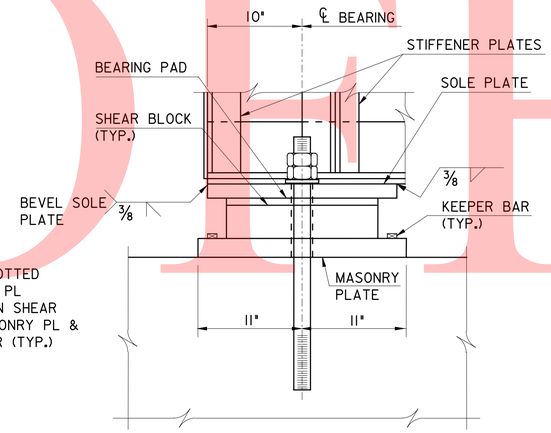

EXPANSION SIDE VIEW
SCALE: 1½" = 1'-0"

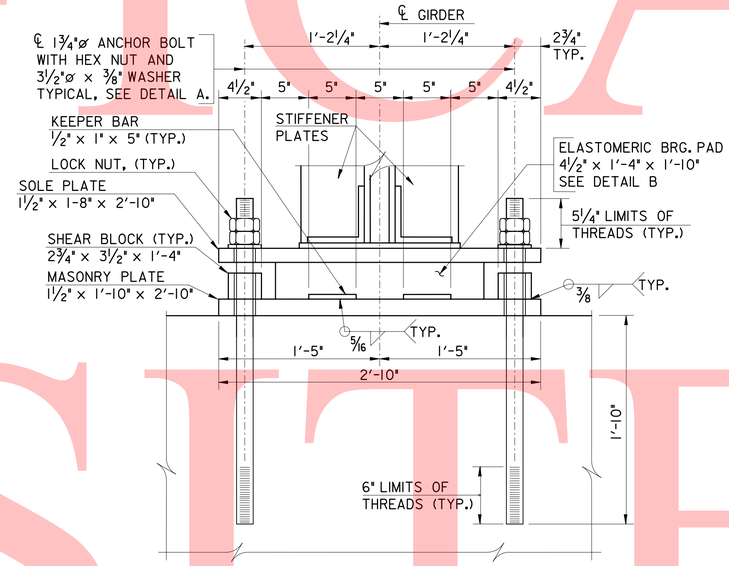

TYPICAL ELEVATION
SCALE: 1½" = 1'-0"

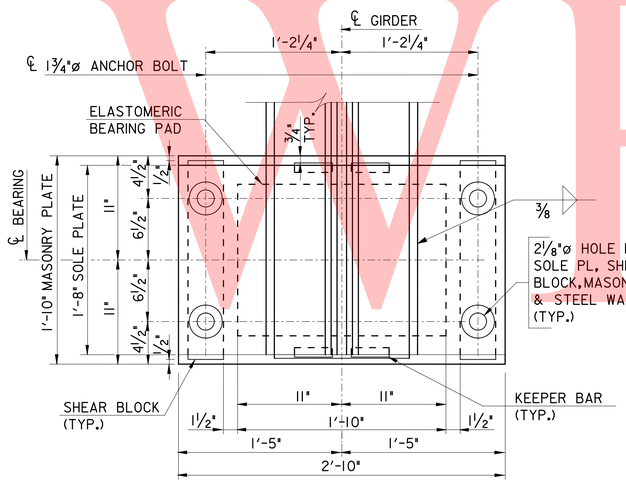

NOTE: STIFFENER PLATES NOT SHOWN FOR CLARITY

FIXED PLAN
SCALE: 1½" = 1'-0"

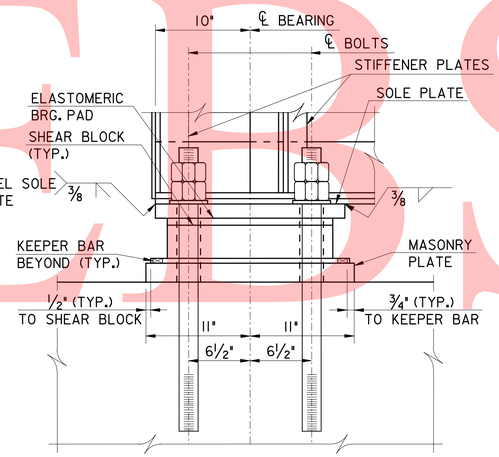

FIXED SIDE VIEW
SCALE: 1½" = 1'-0"

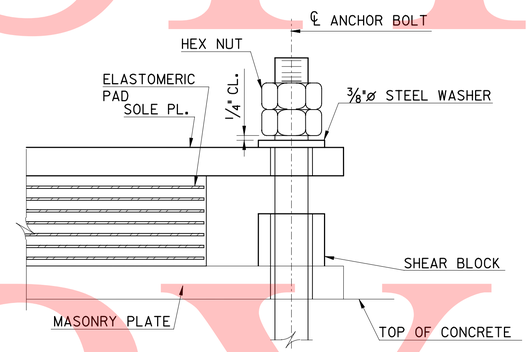

DETAIL A
SCALE: 3" = 1'-0"

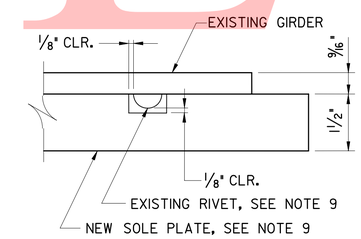

SOLE PLATE / RIVET DETAIL
NOT TO SCALE

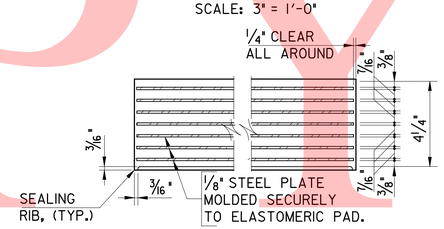

DETAIL B
SCALE: 3" = 1'-0"

NOTES:

1. ELASTOMERIC BEARING PADS SHALL BE 60 DUROMETER HARDNESS AND CONFORM TO AASHTO M251.
2. STRUCTURAL STEEL PLATES, SHEAR BLOCKS AND KEEPER BARS SHALL BE ASTM GRADE 50 UNLESS OTHERWISE NOTED.
3. ANCHOR BOLTS SHALL BE ASTM F1554, GRADE 55, UNLESS OTHERWISE NOTED.
4. WASHER SHALL BE ASTM F436, UNLESS OTHERWISE NOTED.
5. NUTS SHALL BE ASTM A194, GRADE 24, UNLESS OTHERWISE NOTED.
6. THE POSITION OF THE EXPANSION BEARING ANCHOR BOLTS RELATIVE TO THE CENTER OF SLOTTED HOLES SHALL BE SET SUCH THAT THE ANCHOR BLOTS WILL BE LONGITUDINALLY CENTERED IN THEIR RESPECTIVE SLOTTED HOLES AT 70°F.
7. IN ORDER TO PREVENT EXCESSIVE DEFORMATION OF ELASTOMERIC BEARING PADS, GIRDERS AND BEARING PADS SHALL BE ERECTED BETWEEN 40°F. AND 80°F.
8. ELASTOMERIC BEARING PADS SHALL BE GLUED WITH EPOXY ADHESIVE TO TOP AND BOTTOM CONTACT SURFACES FOR THE FIXED BEARING AND ONLY TO THE BOTTOM SURFACE FOR THE EXPANSION BEARING.
9. SOLE PLATE SHALL BE DRILLED AN ⅛" LARGER IN DIAMETER AND DEEPER TO ACCEPT EXISTING RIVETS FOR EACH RIVET THAT COMES IN CONTACT WITH THE PROPOSED SOLE PLATE - SEE SOLE PLATE / RIVET DETAIL. CONTRACTOR IS RESPONSIBLE FOR LOCATING EXISTING RIVETS.

4/13/2009
M:\projects\2007\07052_DTC\Third-Track\CADD\structure\S12-BEARINGS.dgn
PLOTTER = RAIL-PS-EHL.PLT, PEN TABLE = BALTIMORE.TBL
PREL. TRACING JCE DESIGN BJH CHKD. DCK
UNOFFICIAL WEBSITE COPY

DRAWING NO. S-13
REINFORCING BAR LIST
THIRD TRACK – MILL CREEK BRIDGE

CONTRACT	COUNTY	FEDERAL AID PROJECT NO.	SHEET NO.	TOTAL SHTS.
	NEW CASTLE	N/A	49	140

NEC COMMUTER RAIL IMPROVEMENTS
WILMINGTON TO NEWARK, DE

DATE: APRIL 20, 2009

REVISIONS

	SPECIFICATIONS					BENDING DIMENSIONS (FEET-INCHES / QUARTER INCH)										
	QTY.	SIZE	LENGTH	MARK	TYPE	A	B	C	D	E	F/R	G	H	J	K	O
ABUTMENT A	27	5	14-6½	F501	STR											
	26	6	23-3	F601	STR											
	15	6	23-3	F602	STR											
	21	6	14-6½	F603	STR											
	32	8	26-11	F801	2		23-3	3-8								
	49	8	21-10½	F802	2	3-8	14-6½	3-8								
	16	5	9-9½	EF501	17		1-0	0-9	8-1							
	22	5	7-10	EF502	STR											
	17	5	12-4¾	EF503	STR											
	16	6	8-6	EF601	2	0-8	7-10					0-0				
	32	8	8-10½	EF801	STR											
	16	5	8-4	W501	17		2-2	4-0	2-2							
	19	5	14-6½	W502	STR											
	12	5	7-0	W503	17		1-6	4-0	1-6							
	20	5	15-6	W504	STR											
	32	8	8-1¾	W801	STR											
	9	8	4-1½	W802	STR											
	41	8	2-3	W803	STR											
	28	5	7-3	EW501	STR											
ABUTMENT B	27	5	14-8¾	F551	STR											
	26	6	23-3	F651	STR											
	15	6	23-3	F652	STR											
	21	6	14-8¾	F653	STR											
	49	8	22-0¾	F851	2	3-8	14-8¾	3-8								
	32	9	26-11	F951	2		23-3	3-8								
	16	5	9-9½	EF551	17		1-0	0-9	8-1							
	22	5	7-10	EF552	STR											
	17	5	12-5½	EF553	STR											
	16	6	8-6	EF651	2	0-8	7-10					0-0				
	32	8	8-10½	EF852	STR											
	16	5	8-4	W551	17		2-2	4-0	2-2							
	20	5	14-8¾	W552	STR											
	12	5	7-0	W553	17		1-6	4-0	1-6							
	20	5	15-9	W554	STR											
	32	8	8-2½	W851	STR											
	9	8	4-2¼	W852	STR											
	41	8	2-3	W853	STR											
	28	5	7-3	EW551	STR											
SLAB	44	5	52-4	S501	STR											
	54	6	8-0¾	S601	S10		3-9¾	0-5	3-9¾							
	54	6	6-7½	S602	S10		3-1¼	0-5	3-1¼							
	54	6	4-1¾	S603	1	0-8	3-5¾					0-0		0-6		
	107	8	14-7	S801	1	0-11	12-9					0-11		0-8		
	54	8	12-9	S802	STR											

SPECIFICATIONS					BENDING DIMENSIONS (FEET-INCHES / QUARTER INCH)										
QTY.	SIZE	LENGTH	MARK	TYPE	A	B	C	D	E	F/R	G	H	J	K	O

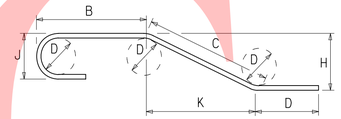

NOTES:
1. FIGURES SHOWN IN CIRCLES REPRESENT BAR BEND TYPES.
2. STANDARD BAR BENDS INCLUDE ONLY TYPES 1-32, S1-S12, AND T1-T16.
3. ALL DIMENSIONS ARE OUT-TO-OUT OF BAR EXCEPT "A" AND "G" ON STANDARD 180° AND 135° HOOKS.
4. "J" DIMENSIONS ON 180° HOOKS TO BE SHOWN ONLY WHERE NECESSARY TO RESTRICT HOOK SIZE, OTHERWISE STANDARD HOOKS ARE TO BE USED.
5. WHERE "J" IS NOT SHOWN, "J" WILL BE KEPT EQUAL TO OR LESS THAN "H" ON TRUSS BARS. WHERE "J" CAN EXCEED "H", IT SHALL BE SHOWN.
6. "H" DIMENSIONS OF STIRRUPS TO BE SHOWN WHERE NECESSARY TO FIT WITHIN THE CONCRETE.
7. UNLESS OTHERWISE NOTED, DIAMETER "D" IS THE SAME FOR ALL BENDS AND HOOKS ON A BAR.
8. WHERE SLOPE DIFFERS FROM 45° OFFSET, "H" AND "K" MUST BE SHOWN.
9. WHERE BARS ARE TO BE BENT MORE ACCURATELY THAN STANDARD BENDING TOLERANCES, BENDING DIMENSIONS WHICH REQUIRE CLOSER FABRICATION SHOULD HAVE LIMITS INDICATED.
10. FOR RECOMMENDED DIAMETER "D", OF BENDS, HOOKS, ETC., REFER TO TABLE AT RIGHT, 'CRS1' OR 'ACI' TABLES.
11. TYPE S1-S12, T1-T16 APPLY TO BAR SIZES 3 THROUGH 6.

ASTM STANDARD ENGLISH REINFORCING BARS				RECOMMENDED END HOOKS, APPLICABLE TO ALL GRADES			
NOMINAL DIMENSIONS				180° HOOKS			90° HOOKS
BAR SIZE	DIAMETER (inches)	AREA (inches²)	WEIGHT (lbs./ft.)	D	A OR G	J	A OR G
3	0.375	0.110	0.376	2¼"	5"	3"	6"
4	0.500	0.200	0.668	3"	6"	4"	8"
5	0.625	0.310	1.043	3¾"	7"	5"	10"
6	0.750	0.440	1.502	4½"	8"	6"	1'-0"
7	0.875	0.600	2.044	5¼"	10"	7"	1'-2"
8	1.000	0.790	2.670	6"	11"	8"	1'-4"
9	1.128	1.000	3.400	9½"	1'-3"	11¾"	1'-7"
10	1.270	1.270	4.303	10¾"	1'-5"	1'-1¼"	1'-10"
11	1.410	1.560	5.313	1'-0"	1'-7"	1'-2¾"	2'-0"
14	1.693	2.250	7.650	1'-6¼"	2'-3"	1'-9¾"	2'-7"
18	2.257	4.000	13.600	2'-0"	3'-0"	2'-4½"	3'-5"

STANDARD BAR BENDS

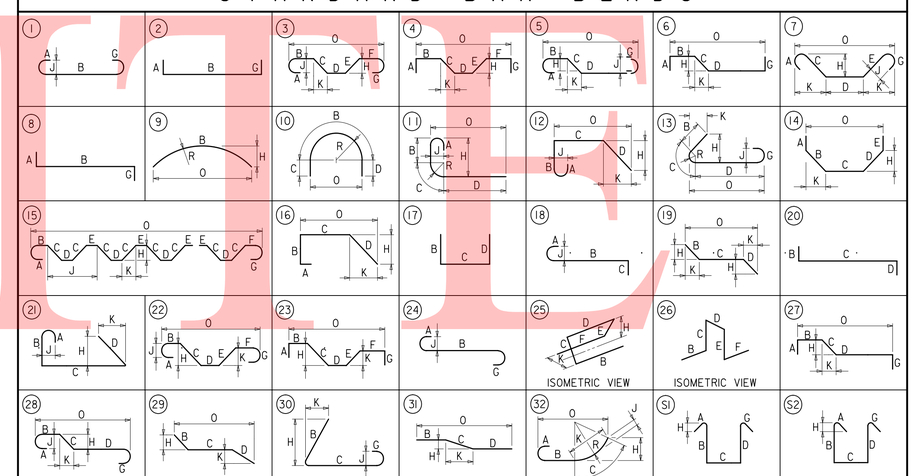

SPECIAL BAR BENDS

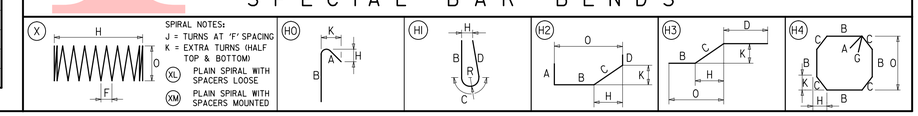

CADD DESIGN JCE DESIGN BJH CHKD. DCK

4/13/2009
M:\projects\2007\07052_DTC\Third-Trk\CADD\struct\S13-BARLIST.dgn
pcf:DTC FD Third-Trk

UNOFFICIAL WEBSITE COPY

UNOFFICAL WEBSITE COPY

CONTRACT	COUNTY	F.A.P. NO.	SHEET NO.	TOTAL SHTS.
27-512-01	NEW CASTLE	HPP-2005 (028)	49A	140

DRAWING NO. S-20

CONSTRUCTION PLAN
THIRD TRACK

SCALE
40 20 0 40
1"= 40'

NEC COMMUTER RAIL IMPROVE.- DELAWARE YARD to RAGAN - Civil, Structural

DATE: APRIL 20, 2009

REVISIONS

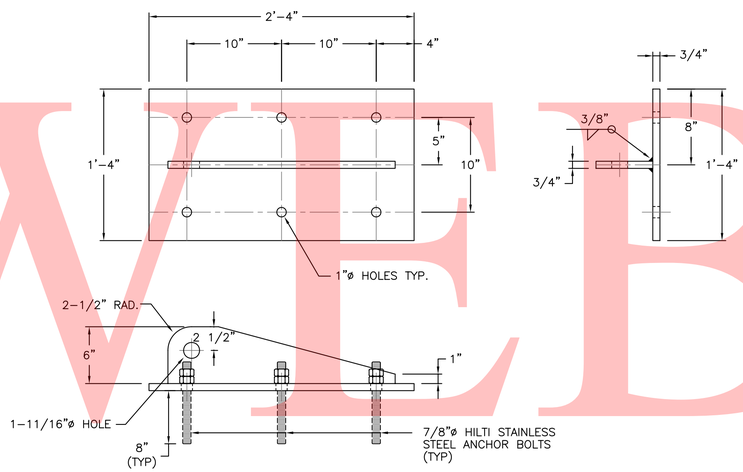

WALL ANCHOR PLATE (WAP)
SCALE: 1/8" = 1"

STRUCTURAL STEEL CONSTRUCTION

1. PROVIDE STEEL IN ACCORDANCE WITH THE AMERICAN INSTITUTE OF STEEL CONSTRUCTION (AISC) SPECIFICATIONS FOR STRUCTURAL STEEL BUILDING-ALLOWABLE STRESS DESIGN (LATEST VERSION) (INCLUDING FABRICATION AND ERECTION) AND THE AMERICAN RAILWAY ENGINEERING AND MAINTENANCE OF WAY ASSOCIATION'S MANUAL FOR RAILWAY ENGINEERING (LATEST EDITION).
2. ALL STRUCTURAL STEEL PARTS SHALL CONFORM TO ASTM A36 FOR PLATES.
3. ALL STRUCTURAL STEEL SHALL BE HOT DIP GALVANIZED AFTER FABRICATION IN ACCORDANCE WITH ASTM A123 UNLESS NOTED OTHERWISE.
4. ANCHOR RODS SHALL BE HILTI (OR EQUAL) 7/8" DIAMETER, STAINLESS STEEL. HEX NUTS, FLAT WASHERS AND LOCKWASHERS SHALL BE STAINLESS STEEL.
5. ALL WELDING IS TO BE IN ACCORDANCE WITH THE SPECIFICATIONS OF THE AMERICAN WELDING SOCIETY (INCLUDING THE STRUCTURAL STEEL WELDING CODE D1.1, LATEST EDITION). WELD METAL SHALL MATCH BASE METAL USING PROPER SERIES E70XX ELECTRODES PER AWS A5.1 AND IN ACCORDANCE WITH ASTM A233.
6. FIELD WELDS SHALL NOT BE PERMITTED UNLESS AUTHORIZED BY THE ENGINEER.
7. SUBMIT ELECTRONIC VERSIONS (PDF) OF SHOP DRAWINGS FOR REVIEW TO THE ENGINEER PRIOR TO FABRICATION. REVIEW OF SHOP DRAWINGS IS FOR THE PURPOSE OF REVIEWING THE GENERAL CONFORMANCE TO THE OVERALL STRUCTURAL DESIGN.

SEQUENCE OF CONSTRUCTION:

1. CONTRACTOR SHALL COORDINATE WITH AMTRAK ET FOR INSTALLATION OF A TEMPORARY DOWN GUY TO THE BASE OF STRUCTURE D-2 (SOUTH OF EXISTING STRUCTURE) PRIOR TO EXCAVATING NEAR THE EXISTING DOWN GUY ANCHOR.
2. CONTRACTOR SHALL INSTALL WALL PLATE AND HILTI ANCHOR RODS ON OUTSIDE SURFACE OF RETAINING WALL. CONTRACTOR SHALL ALIGN THE WALL PLATE WITH THE PROPOSED DOWN GUY ANGLE.
3. AMTRAK ET WILL INSTALL THE PERMANENT DOWN GUY TO THE WALL PLATE AND REMOVE THE TEMPORARY DOWN GUY AFTER THE INSTALLATION OF THE WALL PLATE IS COMPLETE.
4. PERMANENT LOCATION AND ORIENTATION OF WALL ANCHOR PLATE SHALL BE COORDINATED WITH AMTRAK ET.
5. REFER TO DRAWING RW-1 FOR MILL CREEK RETAINING WALL AND APPROXIMATE LOCATION OF WALL ANCHOR PLATE.

PERTINENT AMTRAK ET DRAWINGS:
ET-003
ET-020.7
ET-021.7
ET-022.7
ET-080
ET-081

SYSTRA USA
SYSTRA Consulting, Inc.
1600 MARKET STREET
SUITE 1310
PHILADELPHIA, PA 19103-2340

DATE: 01/23/2009
FILENAME: K:\5674 DELDOT WILMINGTON-NEWARK\10.0 DELIVERABLES\10.2 DRAWINGS\10.2.0 WORKING OCS\DRAWINGS-WALLPLATE\5674S-20.DWG

PREL. TRACING _____ DESIGN _____ CHKD. _____

CONTRACT	COUNTY	F.A.P. NO.	SHEET NO.	TOTAL SHTS.
	NEW CASTLE	N/A	50	140

DRAWING NO. RW-1

PLAN AND ELEVATION
THIRD TRACK –
MILL CREEK RETAINING WALL

NEC COMMUTER RAIL IMPROVEMENTS
WILMINGTON TO NEWARK, DE

DATE: APRIL 20, 2009

REVISIONS

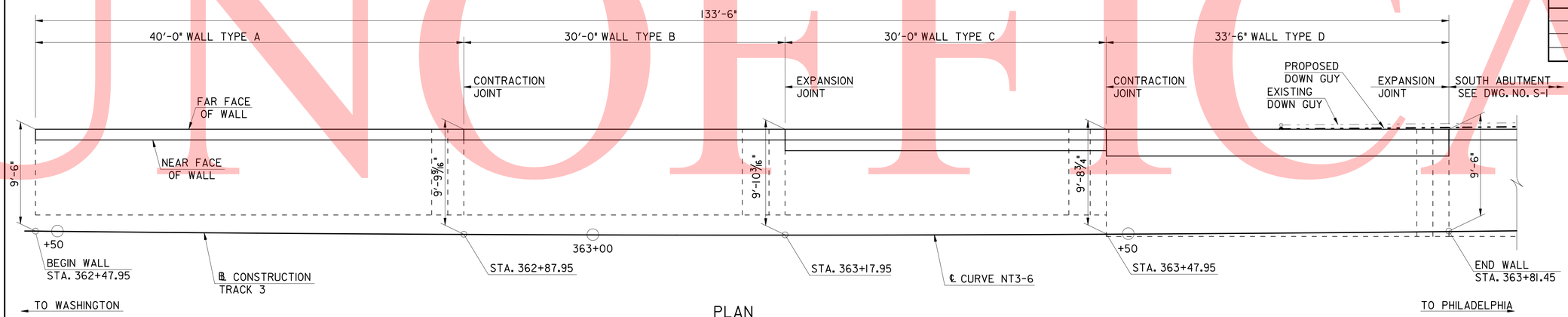

PLAN
SCALE: 3/16"=1'-0"

NOTES:
1. FOR STRUCTURAL GENERAL NOTES, SEE DWG. NO. S-1.
2. FOR TEMPORARY RELOCATION AND PERMANENT ATTACHMENT OF DOWN GUY TO RETAINING WALL, SEE DWG. NO. S-20.
3. METAL BRIDGE RAILING NOT SHOWN FOR CLARITY.

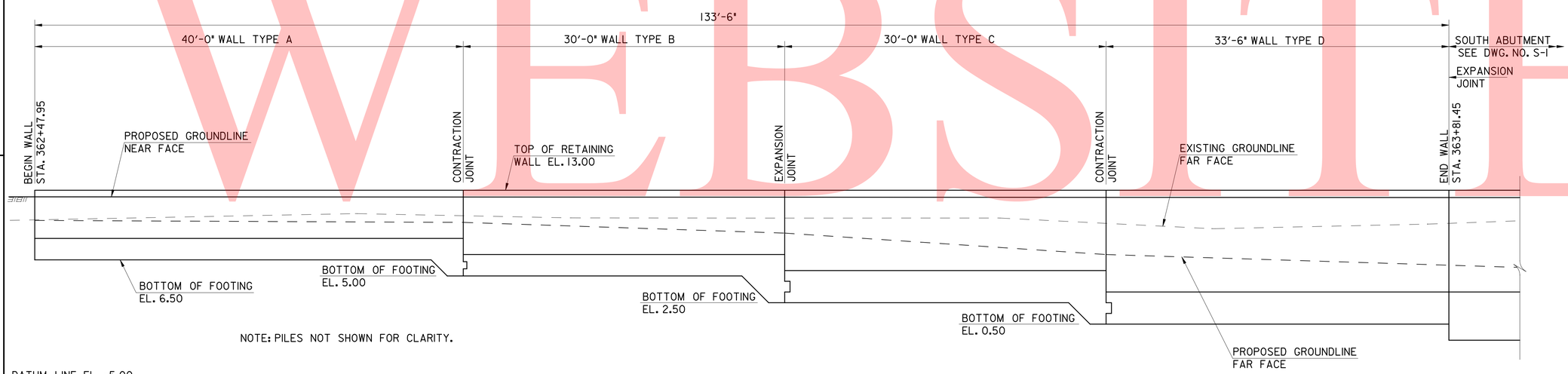

NOTE: PILES NOT SHOWN FOR CLARITY.

ELEVATION
SCALE: 3/16"=1'-0"

MICROPILE ALLOWABLE LOADS * (SERVICE LOADS) [KIPS]			
SUBSTRUCTURE UNIT	COMPRESSION	TENSION	LATERAL
RETAINING WALL	56.0	15.0	7.0

* THE MICROPILES SHALL EXTEND AT LEAST 10 PILE DIAMETERS INTO CONTINUOUS ROCK WITH NO VOIDS GREATER THAN SIX INCHES.

THE CONTRACTOR SHALL DESIGN THE MICROPILE TO FOOTING CONNECTION DETAIL TO MEET THE REQUIRED CAPACITY AS SHOWN ABOVE. THE COST OF MICROPILE TO FOOTING CONNECTION SHALL BE INCIDENTAL TO THE INSTALLATION OF THE MICROPILE.

4/13/2009
M:\projects\2007\07052_DTC\Third-Track\CADD\structure\RW1-RETWALL.dgn
PLOTTER = RAIL-PS-ENLRL1, PEN TABLE = BALTIMORE.TBL

DST ____ CHKD. ____ BST ____ DESIGN ____ DLS ____ PREL. TRACING ____

UNOFFICIAL WEBSITE COPY

UNOFFICIAL WEBSITE COPY

CONTRACT	COUNTY	F.A.P. NO.	SHEET NO.	TOTAL SHTS.
	NEW CASTLE	N/A	51	140

DRAWING NO. RW-2

FOUNDATION PLAN
THIRD TRACK –
MILL CREEK RETAINING WALL

NEC COMMUTER RAIL IMPROVEMENTS
WILMINGTON TO NEWARK, DE

DATE: APRIL 20, 2009

REVISIONS

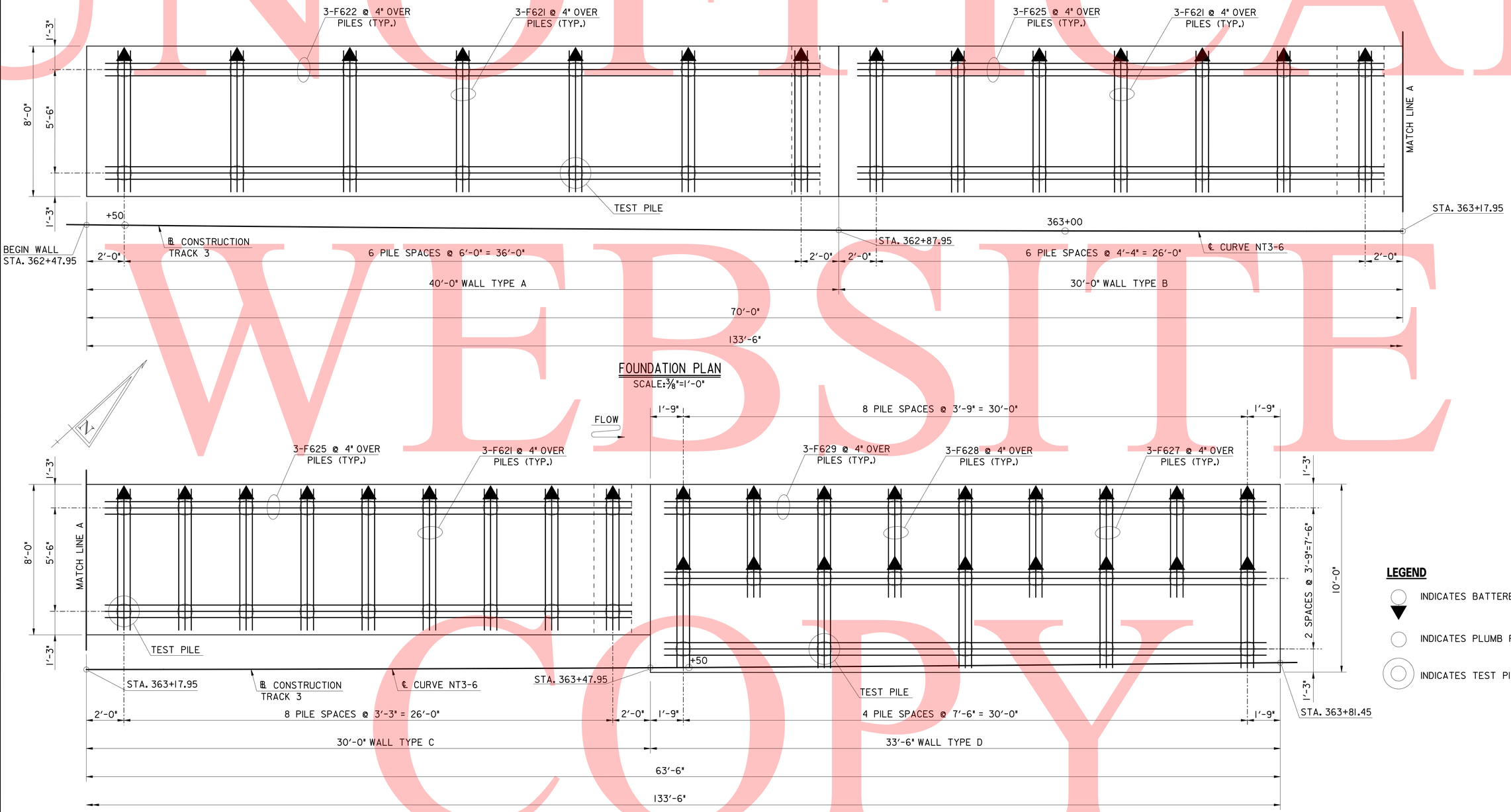

4/13/2009
M:\projects\2007\07052_DTC\Third-Track\CADD\structure\RW2-FDN.dgn
PLOTTER = RAIL-F5-EHL-PL1, PEN TABLE = BALTIMORE.TBL

DST ____ CHKD. ____ BST ____ DESIGN ____ DLS ____ PREL. TRACING ____

CONTRACT	COUNTY	F.A.P. NO.	SHEET NO.	TOTAL SHTS.
	NEW CASTLE	N/A	52	140

NEC COMMUTER RAIL IMPROVEMENTS
WILMINGTON TO NEWARK, DE

DATE: APRIL 20, 2009

REVISIONS

DRAWING NO. RW-3

WALL SECTIONS
THIRD TRACK –
MILL CREEK RETAINING WALL

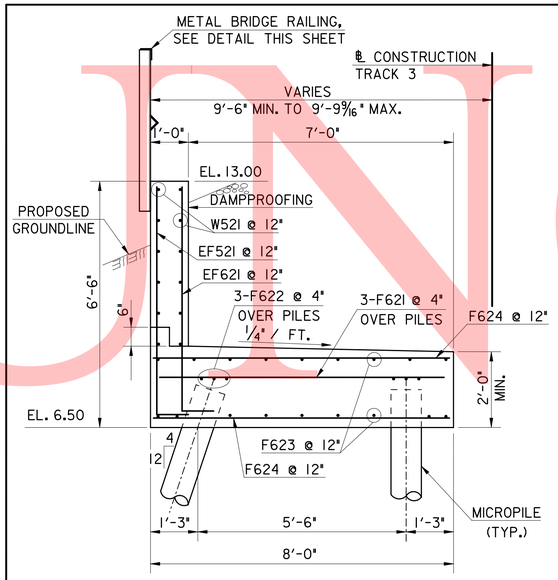

TYPICAL SECTION-WALL TYPE A
SCALE: 1/2"=1'-0"

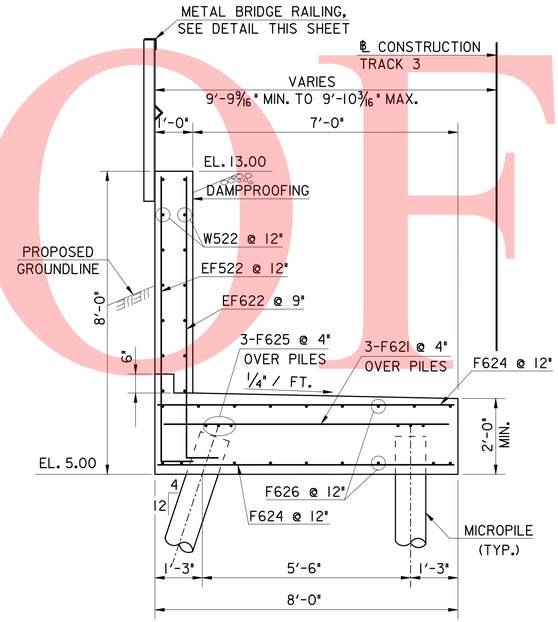

TYPICAL SECTION-WALL TYPE B
SCALE: 1/2"=1'-0"

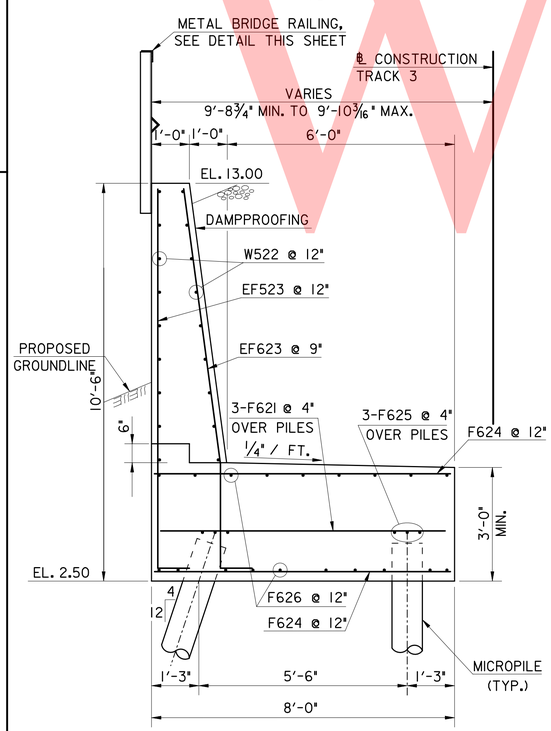

TYPICAL SECTION-WALL TYPE C
SCALE: 1/2"=1'-0"

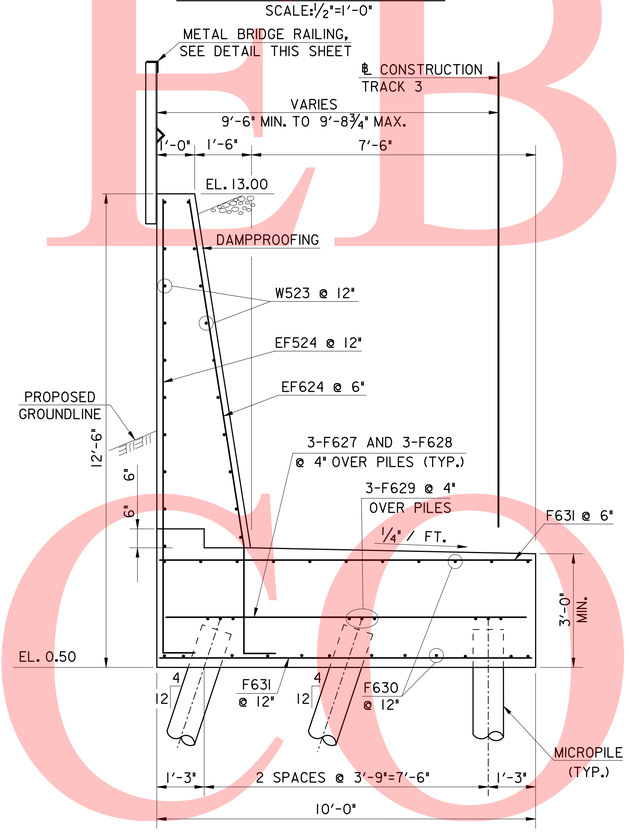

TYPICAL SECTION-WALL TYPE D
SCALE: 1/2"=1'-0"

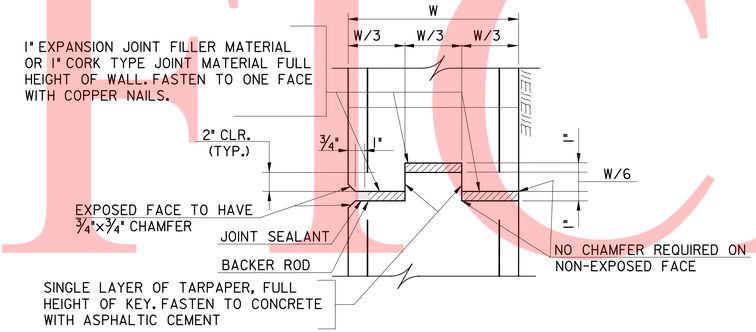

EXPANSION JOINT DETAIL
SCALE: 1 1/2"=1'-0"

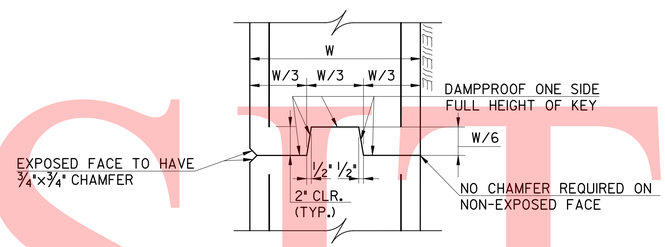

CONTRACTION JOINT DETAIL
SCALE: 1 1/2" = 1'-0"

METAL BRIDGE RAILING NOTES:

1. ALL ANGLES SHALL BE ASTM A36.
2. ANGLES SHALL BE GALVANIZED IN ACCORDANCE WITH ASTM A123.
3. RAILING SUPPORT POSTS SHALL BE SPACED AT 8'-0" MAX. RAILING SUPPORT POSTS SHALL MAINTAIN 6" MINIMUM CLEARANCE OF ALL JOINTS.

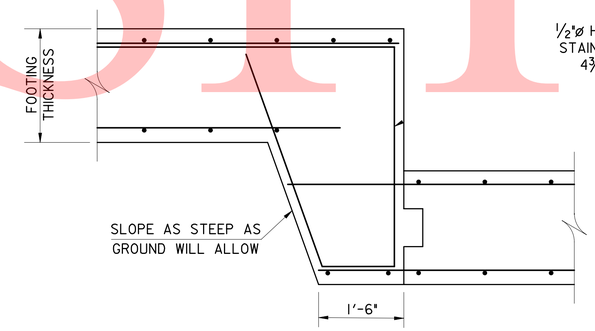

FOOTING STEP DETAIL
SCALE: 3/4" = 1'-0"

KEY SIZE	
FOOTING THICKNESS	KEY
2'-0" TO 2'-5"	4"x8"
2'-6" TO 3'-0"	5"x10"

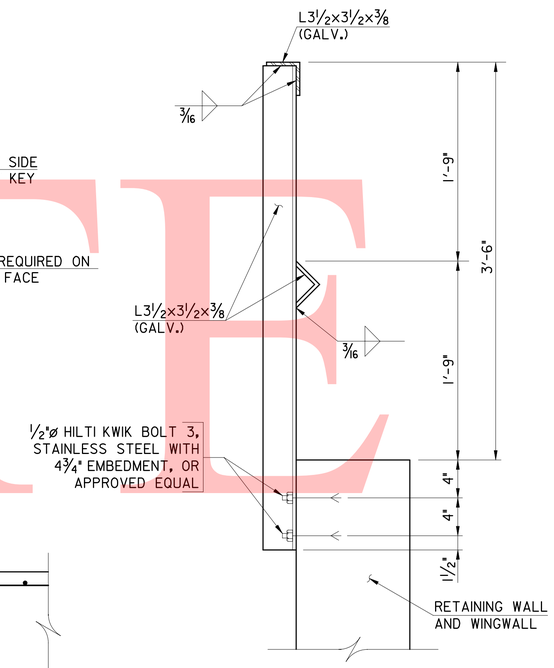

METAL BRIDGE RAILING DETAIL
SCALE: 3" = 1'-0"

4/13/2009
MicroStation: S:\2007\07052_DTC\Third-Track\CADD\structure\RW3-SECT.dgn
PLOTTER = RAIL-F5-EHL.PLT, PEN TABLE = BALTIMORE.TBL

BST ____ CHKD. ____ RST ____ DESIGN ____ DLS ____ PREL. TRACING ____

UNOFFICIAL WEBSITE COPY

DRAWING NO. RW-4

REINFORCING BAR LIST
THIRD TRACK –
MILL CREEK RETAINING WALL

CONTRACT	COUNTY	FEDERAL AID PROJECT NO.	SHEET NO.	TOTAL SHTS.
	NEW CASTLE	N/A	53	140

NEC COMMUTER RAIL IMPROVEMENTS
WILMINGTON TO NEWARK, DE

DATE: APRIL 20, 2009

REVISIONS

SPECIFICATIONS					BENDING DIMENSIONS (FEET-INCHES / QUARTER INCH)										
QTY.	SIZE	LENGTH	MARK	TYPE	A	B	C	D	E	F/R	G	H	J	K	O
41	5	6-9	EF521	17		9½	5-11½								
31	5	8-3	EF522	17		9½	7-5½								
31	5	10-9	EF523	17		9½	9-11½								
35	5	12-9	EF524	17		9½	11-11½								
41	6	6-11	EF621	17		11½	5-11½								
41	6	8-5	EF622	17		11½	7-5½								
41	6	10-11	EF623	T17	7-4½	2-7	11-2					7-6		1-0	10-1
67	6	12-11½	EF624	T17	9-5	2-7	11-2					9-6		1-6	12-1
63	6	7-6	F621	STR											
6	6	39-0	F622	STR											
18	6	39-8	F623	STR											
199	6	7-8	F624	STR											
12	6	29-0	F625	STR											
36	6	29-8	F626	STR											
15	6	9-6	F627	STR											
12	6	5-9	F628	STR											
9	6	32-6	F629	STR											
23	6	33-2	F630	STR											
63	6	9-8	F631	STR											
10	5	39-8	W521	STR											
32	5	29-8	W522	STR											
20	5	33-2	W523	STR											
9	5	8-6½	F521	T15	2-0	2-10½	1-2	2-6					1-0	2-3½	
9	5	10-6½	F522	T15	2-0	3-10½	1-2	3-6					1-3	3-3	
9	5	11-0½	F523	T15	2-0	4-4½	1-2	3-6					1-3	3-3	

SPECIFICATIONS					BENDING DIMENSIONS (FEET-INCHES / QUARTER INCH)										
QTY.	SIZE	LENGTH	MARK	TYPE	A	B	C	D	E	F/R	G	H	J	K	O

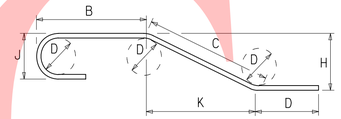

NOTES:
1. FIGURES SHOWN IN CIRCLES REPRESENT BAR BEND TYPES.
2. STANDARD BAR BENDS INCLUDE ONLY TYPES 1-32, S1-S12, AND T1-T16.
3. ALL DIMENSIONS ARE OUT-TO-OUT OF BAR EXCEPT "A" AND "G" ON STANDARD 180° AND 135° HOOKS.
4. "J" DIMENSIONS ON 180° HOOKS TO BE SHOWN ONLY WHERE NECESSARY TO RESTRICT HOOK SIZE, OTHERWISE STANDARD HOOKS ARE TO BE USED.
5. WHERE "J" IS NOT SHOWN, "J" WILL BE KEPT EQUAL TO OR LESS THAN "H" ON TRUSS BARS. WHERE "J" CAN EXCEED "H", IT SHALL BE SHOWN.
6. "H" DIMENSIONS OF STIRRUPS TO BE SHOWN WHERE NECESSARY TO FIT WITHIN THE CONCRETE.
7. UNLESS OTHERWISE NOTED, DIAMETER "D" IS THE SAME FOR ALL BENDS AND HOOKS ON A BAR.
8. WHERE SLOPE DIFFERS FROM 45° OFFSET, "H" AND "K" MUST BE SHOWN.
9. WHERE BARS ARE TO BE BENT MORE ACCURATELY THAN STANDARD BENDING TOLERANCES, BENDING DIMENSIONS WHICH REQUIRE CLOSER FABRICATION SHOULD HAVE LIMITS INDICATED.
10. FOR RECOMMENDED DIAMETER "D", OF BENDS, HOOKS, ETC., REFER TO TABLE AT RIGHT, 'CRSI' OR 'ACI' TABLES.
11. TYPE S1-S12, T1-T16 APPLY TO BAR SIZES 3 THROUGH 6.

ASTM STANDARD ENGLISH REINFORCING BARS				RECOMMENDED END HOOKS, APPLICABLE TO ALL GRADES			
NOMINAL DIMENSIONS					180° HOOKS		90° HOOKS
BAR SIZE	DIAMETER (inches)	AREA (inches²)	WEIGHT (lbs./ft.)	D	A OR G	J	A OR G
3	0.375	0.110	0.376	2¼"	5"	3"	6"
4	0.500	0.200	0.668	3"	6"	4"	8"
5	0.625	0.310	1.043	3¾"	7"	5"	10"
6	0.750	0.440	1.502	4½"	8"	6"	1'-0"
7	0.875	0.600	2.044	5¼"	10"	7"	1'-2"
8	1.000	0.790	2.670	6"	11"	8"	1'-4"
9	1.128	1.000	3.400	9½"	1'-3"	11¾"	1'-7"
10	1.270	1.270	4.303	10¾"	1'-5"	1'-1¼"	1'-10"
11	1.410	1.560	5.313	1'-0"	1'-7"	1'-2¾"	2'-0"
14	1.693	2.250	7.650	1'-6¼"	2'-3"	1'-9¾"	2'-7"
18	2.257	4.000	13.600	2'-0"	3'-0"	2'-4½"	3'-5"

STANDARD BAR BENDS

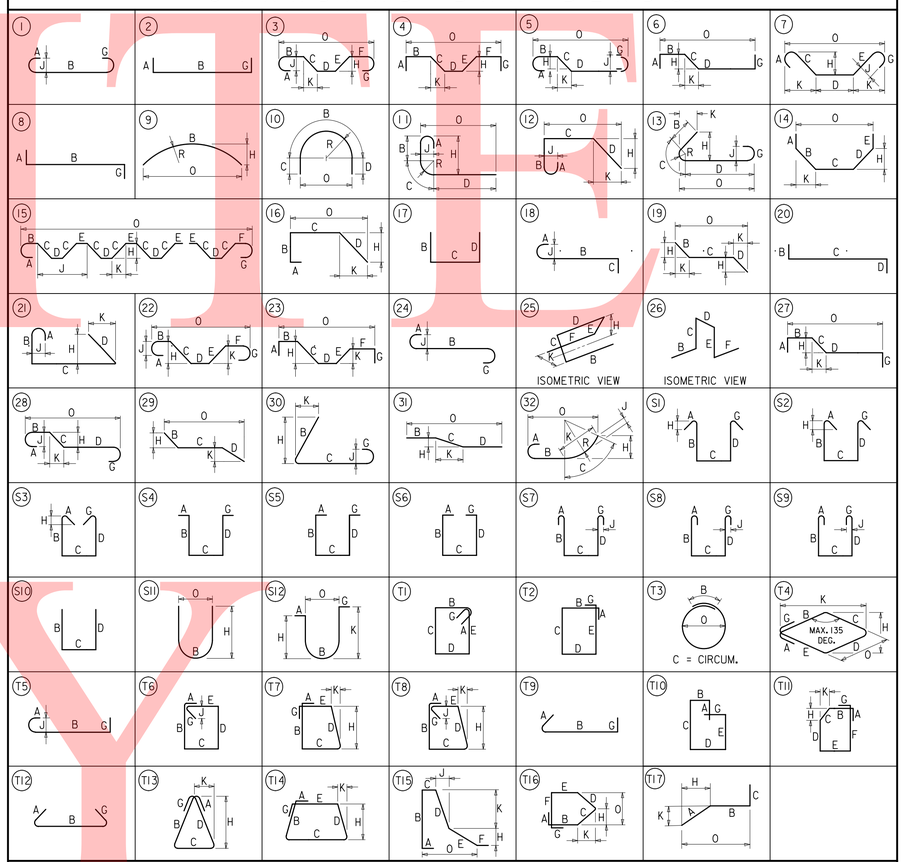

SPECIAL BAR BENDS

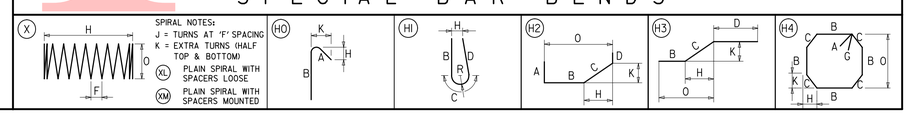

CADD DESIGN JCE DESIGN BJH CHKD. DCK

4/13/2009
M:\projects\2007\07052_DTC\Third-Trk\CADD\struct\RW4-BARLIST.dgn
pcf:DTC FD Third-Trk

UNOFFICIAL WEBSITE COPY

CONTRACT	COUNTY	F.A.P. NO.	SHEET NO.	TOTAL SHTS.
27-512-01	NEW CASTLE	N/A	54	140

NEC COMMUTER RAIL IMPROVEMENTS- DELAWARE YARD TO RAGAN - CIVIL, STRUCTURAL

DATE: NOVEMBER 10, 2010

REVISIONS

DRAWING NO. RW-10

PLAN/SECTION - GRADE SEPARATION WALLS

THIRD TRACK

SCALE

3 0 3

1" = 3'

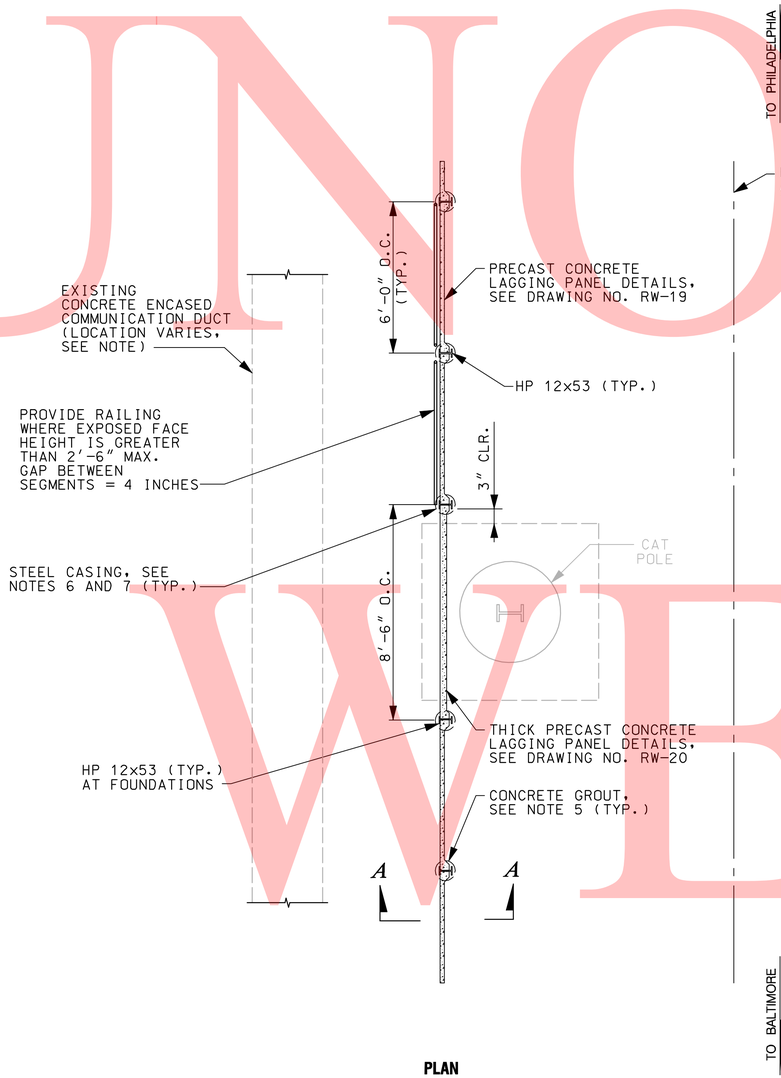

PLAN

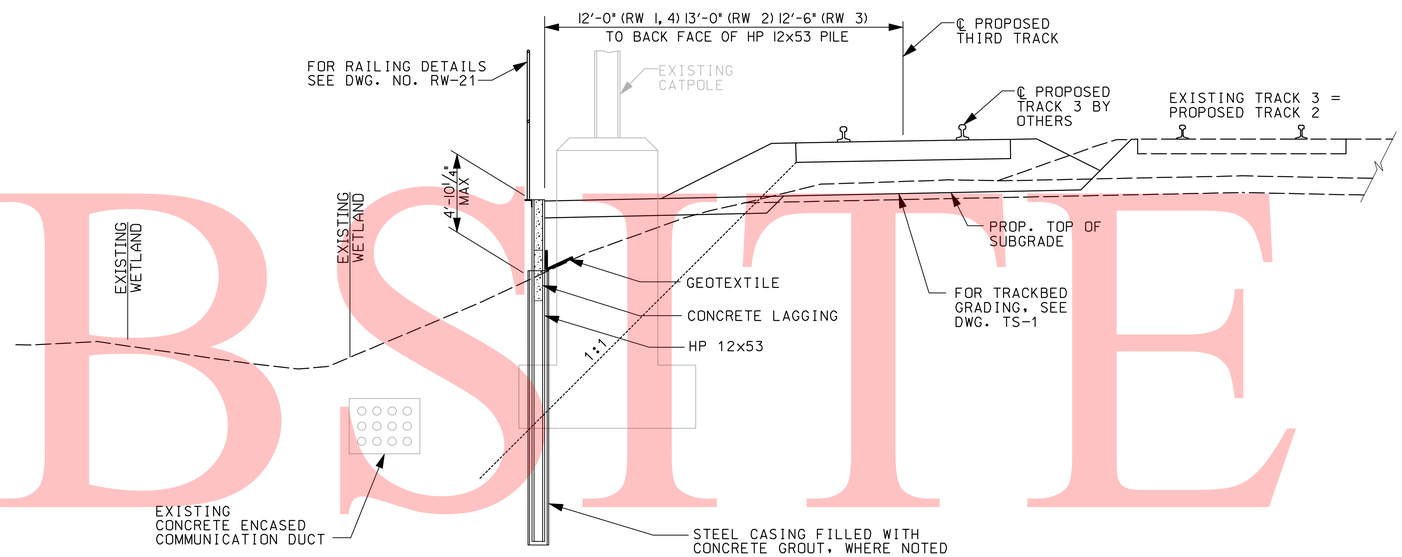

SECTION A-A

NOTE TO CONTRACTOR:

1. CONTRACTOR SHALL FIELD VERIFY ACTUAL LOCATION OF COMMUNICATION DUCT PRIOR TO DRIVING PILES AND NOTIFY ENGINEER WHEN LOCATION CONFLICTS WITH PILE LOCATION. ADEQUATE MEASURES SHOULD BE TAKEN TO AVOID DAMAGE TO DUCT. TEST PIT COMMUNICATION DUCT PRIOR TO PILE INSTALLATION (MAX. SPACING 50' ON CENTER).

NOTES:

1. FOR LOCATION OF THE GRADE SEPARATION WALL, SEE PLAN AND PROFILE SHEETS.
2. FOR PILE INFORMATION, SEE DRAWING NOS. RW-11 THRU RW-18.
3. NO WATER SHALL BE USED FOR INSTALLATION OF PILES.
4. UTILIZE MINIMUM AUGER BIT SIZE FOR PILE INSTALLATION.
5. AUGURED SOLDIER PILES FOR RETAINING WALL 1 THRU 4 MUST BE BACKFILLED WITH CONCRETE GROUT.
6. ALL PILES WITHIN 5 FEET OF EXISTING CATENARY POLES SHALL BE PRE-DRILLED TO THE FULL LENGTH OF THE PILES. PRE-DRILLED HOLES SHALL BE CONCRETE GROUTED TO THE FULL DEPTH OF THE PRE-DRILLING PRIOR TO PLACING THE PILE, SEE SPECIAL PROVISION 602625 "POST AND PLANK RETAINING WALL "FOR GROUTING REQUIREMENTS.
7. PILES LOCATED WITHIN 5' OF CATENARY POLE FOUNDATION SHALL BE CASED WITH A PERMANENT STEEL CASING FOR THE FULL DEPTH.

$$DATE$$
$$FILE$$
PLOTTER = RAIL-PS-EHL.PLT, PEN TABLE = BALTIMORE.TBL

PREL. TRACING _____ DESIGN _____ CHKD. _____

UNOFFICAL WEBSITE COPY

CONTRACT	COUNTY	F.A.P. NO.	SHEET NO.	TOTAL SHTS.
27-512-01	NEW CASTLE	N/A	55	140

DRAWING NO. RW-11

PILE LAYOUT RW 1

THIRD TRACK

NEC COMMUTER RAIL IMPROVEMENTS- DELAWARE YARD TO RAGAN - CIVIL, STRUCTURAL

DATE: NOVEMBER 10, 2010

REVISIONS

Station	Offset (ft)	Top of Railroad Elevation	Ground Elevation Track Side	Ground Elevation Field Side	Exposed Face Height (ft)	Minimum Pile Embedment Depth (ft)	Total Pile Length (ft) *	Railing
331+44.26	12.00	14.99	12.16	11.52	0.75	14.50	16.00	NO
331+50.26	12.00	14.99	12.15	11.41	0.79	14.50	16.00	NO
331+56.26	12.00	14.98	12.15	11.37	0.82	14.50	16.00	NO
331+62.26	12.00	14.98	12.14	11.33	0.90	14.50	16.00	NO
331+68.26	12.00	14.97	12.14	11.25	1.06	14.50	16.00	NO
331+74.26	12.00	14.97	12.13	11.08	1.12	14.50	16.00	NO
331+80.26	12.00	14.96	12.13	11.02	1.18	14.50	16.00	NO
331+86.26	12.00	14.96	12.12	10.95	1.25	14.50	16.00	NO
331+92.26	12.00	14.95	12.12	10.87	1.43	14.50	16.00	NO
331+98.26	12.00	14.95	12.11	10.69	1.71	28.00	33.00	NO
332+04.26	12.00	14.94	12.11	10.41	2.05	28.00	33.00	NO
332+10.26	12.00	14.94	12.10	10.06	3.92	28.00	33.00	YES
THICKENED PANEL BETWEEN POSTS								
332+16.26	12.00	14.93	12.10	8.18	3.92	28.00	33.00	YES
NO LAGGING BETWEEN POSTS DUE TO EXISTING FEATURE								
332+27.93	12.00	14.92	12.09	7.23	4.86	28.00	33.00	YES
THICKENED PANEL BETWEEN POSTS								
332+33.93	12.00	14.92	12.08	10.03	4.86	28.00	33.00	YES
332+39.93	12.00	14.91	12.08	10.22	2.05	25.50	28.00	NO
332+45.93	12.00	14.91	12.07	10.35	1.85	25.50	28.00	NO
332+51.93	12.00	14.90	12.07	10.59	1.72	25.50	28.00	NO
THICKENED PANEL BETWEEN POSTS								
332+60.13	12.00	14.89	12.06	10.89	1.48	25.50	28.00	NO
NO LAGGING BETWEEN POSTS DUE TO EXISTING FEATURE								
332+89.26	12.00	14.87	12.04	10.70	1.35	14.50	16.00	NO
332+95.26	12.00	14.87	12.03	10.69	1.35	14.50	16.00	NO
333+01.26	12.00	14.86	12.03	10.71	1.43	14.50	16.00	NO
333+07.26	12.00	14.86	12.02	10.61	1.42	14.50	16.00	NO
333+13.26	12.00	14.85	12.02	10.63	1.42	14.50	16.00	NO
333+19.26	12.00	14.85	12.01	10.73	1.39	14.50	16.00	NO
333+25.26	12.00	14.84	12.01	10.79	1.28	14.50	16.00	NO
333+31.26	12.00	14.84	12.00	10.86	1.22	14.50	16.00	NO
333+37.26	12.00	14.83	12.00	10.93	1.14	14.50	16.00	NO
333+43.26	12.00	14.83	11.99	10.97	1.06	14.50	16.00	NO
333+49.26	12.00	14.82	11.99	11.01	1.06	14.50	16.00	NO
333+55.26	12.00	14.82	11.98	10.93	1.23	14.50	16.00	NO
333+61.26	12.00	14.81	11.98	10.76	1.30	14.50	16.00	NO
333+67.26	12.00	14.81	11.97	10.69	1.29	14.50	16.00	NO
333+73.26	12.00	14.80	11.97	10.71	1.29	14.50	16.00	NO
333+79.26	12.00	14.80	11.96	10.81	1.26	14.50	16.00	NO
333+85.26	12.00	14.79	11.96	10.88	1.15	14.50	16.00	NO
333+91.26	12.00	14.79	11.95	10.88	1.08	14.50	16.00	NO
333+97.26	12.00	14.78	11.95	10.99	1.07	14.50	16.00	NO
334+03.26	12.00	14.78	11.94	11.03	1.00	14.50	16.00	NO
334+09.26	12.00	14.77	11.94	10.95	1.10	14.50	16.00	NO
334+15.26	12.00	14.77	11.93	10.84	1.24	14.50	16.00	NO
334+21.26	12.00	14.76	11.93	10.69	1.39	14.50	16.00	NO
334+27.26	12.00	14.76	11.92	10.55	1.51	20.50	23.00	NO
334+33.26	12.00	14.75	11.92	10.41	1.59	20.50	23.00	NO
334+39.26	12.00	14.75	11.91	10.33	1.63	20.50	23.00	NO
334+45.26	12.00	14.74	11.91	10.29	1.62	20.50	23.00	NO
334+51.26	12.00	14.74	11.90	10.43	1.62	20.50	23.00	NO
334+57.26	12.00	14.73	11.90	10.55	1.47	20.50	23.00	NO
334+63.26	12.00	14.73	11.89	10.51	1.58	20.50	23.00	NO
334+69.26	12.00	14.72	11.89	10.32	1.68	20.50	23.00	NO
334+75.26	12.00	14.72	11.88	10.21	1.73	20.50	23.00	NO
334+81.26	12.00	14.71	11.88	10.16	1.72	20.50	23.00	NO
334+87.26	12.00	14.71	11.87	10.19	1.72	20.50	23.00	NO
334+93.26	12.00	14.70	11.87	10.17	1.70	20.50	23.00	NO
334+99.26	12.00	14.70	11.86	10.18	1.70	20.50	23.00	NO
335+05.26	12.00	14.69	11.86	10.21	1.68	20.50	23.00	NO
335+11.26	12.00	14.69	11.85	10.25	1.65	20.50	23.00	NO
335+17.26	12.00	14.68	11.85	10.31	1.60	20.50	23.00	NO
335+23.26	12.00	14.68	11.84	10.33	1.54	20.50	23.00	NO
335+29.26	12.00	14.67	11.84	10.37	1.51	20.50	23.00	NO
335+35.72	12.00	14.67	11.83	10.38	1.47	20.50	23.00	NO

* PILE LENGTH ROUNDED UP TO NEXT FT. THE CONTRACTOR SHALL PROVIDE THE LENGTH OF THE PILES AS NOTED "TOTAL PILE LENGTH".

CAT. POLE CLEARANCES	
STATION	OFFSET (FT)
332+61.71	12.48
335+39.97	10.25

NOTES:

1. FOR LOCATION OF THE GRADE SEPARATION WALL, SEE PLAN AND PROFILE SHEETS.
2. FOR PLAN AND SECTION, SEE DRAWING NO. RW-10.
3. FOR PANEL DETAILS, SEE DRAWING NOS. RW-19 AND RW-20.
4. ALL OFFSETS MEASURED FROM ℄ OF PROPOSED TRACK 3 TO BACK FLANGE OF HP 12x53 POST.
5. ALL OFFSETS ARE MEASURED LEFT OF THE ℄.

$$DATE$$
$$FILE$$
PLOTTER = RAIL-PS-EHL.PLT, PEN TABLE = BALTIMORE.TBL

PREL. TRACING _____ DESIGN _____ CHKD. _____

UNOFFICIAL WEBSITE COPY

CONTRACT	COUNTY	F.A.P. NO.	SHEET NO.	TOTAL SHTS.
27-512-01	NEW CASTLE	N/A	56	140

NEC COMMUTER RAIL IMPROVEMENTS- DELAWARE YARD TO RAGAN - CIVIL, STRUCTURAL

DATE: NOVEMBER 10, 2010

REVISIONS

DRAWING NO. RW-12

PILE LAYOUT RW 2

THIRD TRACK

Station	Offset (ft)	Top of Railroad Elevation	Ground Elevation Track Side	Ground Elevation Field Side	Exposed Face Height (ft)	Minimum Pile Embedment Depth (ft)	Total Pile Length (ft) *
352+52.97	13.00	14.57	11.74	11.10	0.80	14.50	16.00
352+58.97	13.00	14.56	11.73	10.94	0.96	14.50	16.00
352+64.97	13.00	14.56	11.72	10.78	1.06	14.50	16.00
352+70.97	13.00	14.55	11.72	10.67	1.11	14.50	16.00
352+76.97	13.00	14.55	11.71	10.62	1.16	14.50	16.00
352+82.97	13.00	14.54	11.71	10.56	1.21	14.50	16.00
352+88.97	13.00	14.53	11.70	10.50	1.27	14.50	16.00
352+94.97	13.00	14.53	11.69	10.44	1.33	14.50	16.00
353+00.97	13.00	14.52	11.69	10.37	1.40	14.50	16.00
353+06.97	13.00	14.51	11.68	10.30	1.46	14.50	16.00
353+12.97	13.00	14.51	11.67	10.22	1.53	20.50	23.00
353+18.97	13.00	14.50	11.67	10.15	1.59	20.50	23.00
353+24.97	13.00	14.50	11.66	10.08	1.59	20.50	23.00
353+30.97	13.00	14.49	11.66	10.10	1.58	20.50	23.00
353+36.97	13.00	14.48	11.65	10.12	1.56	20.50	23.00
353+42.97	13.00	14.48	11.64	10.12	1.54	20.50	23.00
353+48.97	13.00	14.47	11.64	10.11	1.54	20.50	23.00
353+54.97	13.00	14.46	11.63	10.11	1.54	20.50	23.00
353+60.97	13.00	14.46	11.62	10.10	1.54	20.50	23.00
353+66.97	13.00	14.45	11.62	10.09	1.54	20.50	23.00
353+72.97	13.00	14.45	11.61	10.09	1.53	20.50	23.00
353+78.97	13.00	14.44	11.61	10.11	1.52	20.50	23.00
353+84.97	13.00	14.43	11.60	10.12	1.50	17.50	19.00
353+90.97	13.00	14.43	11.59	10.12	1.49	17.50	19.00
THICKENED PANEL BETWEEN POSTS							
353+99.47	13.00	14.42	11.59	10.11	1.50	17.50	19.00
354+05.47	13.00	14.41	11.58	10.10	1.50	17.50	19.00
354+11.47	13.00	14.41	11.57	10.09	1.51	20.50	23.00
354+17.47	13.00	14.40	11.57	10.07	1.51	20.50	23.00
354+23.47	13.00	14.39	11.56	10.06	1.52	20.50	23.00
354+29.47	13.00	14.39	11.55	10.05	1.54	20.50	23.00
354+35.47	13.00	14.38	11.55	10.02	1.56	20.50	23.00
354+41.47	13.00	14.37	11.54	9.99	1.59	20.50	23.00
354+47.47	13.00	14.37	11.54	9.95	1.63	20.50	23.00
354+53.47	13.00	14.36	11.53	9.91	1.66	20.50	23.00
354+59.47	13.00	14.36	11.52	9.87	1.70	20.50	23.00
354+65.47	13.00	14.35	11.52	9.83	1.74	20.50	23.00
354+71.47	13.00	14.34	11.51	9.78	1.78	20.50	23.00
354+77.47	13.00	14.34	11.50	9.73	1.83	20.50	23.00
354+83.47	13.00	14.33	11.50	9.68	1.86	20.50	23.00
354+89.47	13.00	14.33	11.49	9.64	1.86	20.50	23.00
354+95.47	13.00	14.32	11.49	9.66	1.85	20.50	23.00
355+01.47	13.00	14.31	11.48	9.67	1.83	20.50	23.00
355+07.47	13.00	14.31	11.47	9.69	1.81	20.50	23.00
355+13.47	13.00	14.30	11.47	9.71	1.78	20.50	23.00
355+19.47	13.00	14.29	11.46	9.72	1.76	20.50	23.00
355+25.47	13.00	14.29	11.45	9.73	1.74	20.50	23.00
355+31.47	13.00	14.28	11.45	9.74	1.72	20.50	23.00
355+37.47	13.00	14.28	11.44	9.75	1.71	20.50	23.00
355+43.47	13.00	14.27	11.44	9.75	1.70	20.50	23.00
355+49.47	13.00	14.26	11.43	9.74	1.70	20.50	23.00

* PILE LENGTH ROUNDED UP TO NEXT FT. THE CONTRACTOR SHALL PROVIDE THE LENGTH OF THE PILES AS NOTED "TOTAL PILE LENGTH".

CAT. POLE CLEARANCES	
STATION	OFFSET (FT)
353+95.22	9.74
356+78.07	10.35
359+47.49	10.83
362+18.18	10.73

NOTES:

1. FOR LOCATION OF THE GRADE SEPARATION WALL, SEE PLAN AND PROFILE SHEETS.
2. FOR PLAN AND SECTION, SEE DRAWING NO. RW-10.
3. FOR PANEL DETAILS, SEE DRAWING NOS. RW-19 AND RW-20.
4. ALL OFFSETS MEASURED FROM ℄ OF PROPOSED TRACK 3 TO BACK FLANGE OF HP 12x53 POST.
5. ALL OFFSETS ARE MEASURED LEFT OF THE ℄.

$$DATE$$
$$FILE$$
PLOTTER = RAIL-PS-EHL.PLT, PEN TABLE = BALTIMORE.TBL

PREL. TRACING _____ DESIGN _____ CHKD. _____

UNOFFICIAL WEBSITE COPY

CONTRACT	COUNTY	F.A.P. NO.	SHEET NO.	TOTAL SHTS.
27-512-01	NEW CASTLE	N/A	57	140

DRAWING NO. RW-13

PILE LAYOUT RW 2

THIRD TRACK

NEC COMMUTER RAIL IMPROVEMENTS- DELAWARE YARD TO RAGAN - CIVIL, STRUCTURAL

DATE: NOVEMBER 10, 2010

REVISIONS

Station	Offset (ft)	Top of Railroad Elevation	Ground Elevation Track Side	Ground Elevation Field Side	Exposed Face Height (ft)	Minimum Pile Embedment Depth (ft)	Total Pile Length (ft) *
355+55.47	13.00	14.26	11.42	9.73	1.71	20.50	23.00
355+61.47	13.00	14.25	11.42	9.72	1.72	20.50	23.00
355+67.47	13.00	14.24	11.41	9.71	1.71	20.50	23.00
355+73.47	13.00	14.24	11.40	9.70	1.71	20.50	23.00
355+79.47	13.00	14.23	11.40	9.70	1.71	20.50	23.00
355+85.47	13.00	14.23	11.39	9.70	1.70	20.50	23.00
355+91.47	13.00	14.22	11.39	9.70	1.70	20.50	23.00
355+97.47	13.00	14.21	11.38	9.69	1.70	20.50	23.00
356+03.47	13.00	14.21	11.37	9.69	1.70	20.50	23.00
356+09.47	13.00	14.20	11.37	9.68	1.70	20.50	23.00
356+15.47	13.00	14.19	11.36	9.68	1.69	20.50	23.00
356+21.47	13.00	14.19	11.35	9.68	1.69	20.50	23.00
356+27.47	13.00	14.18	11.35	9.74	1.67	20.50	23.00
356+33.47	13.00	14.18	11.34	9.79	1.61	20.50	23.00
356+39.47	13.00	14.17	11.34	9.84	1.55	20.50	23.00
356+45.47	13.00	14.16	11.33	9.89	1.49	14.50	16.00
356+51.47	13.00	14.16	11.32	9.90	1.44	14.50	16.00
356+57.47	13.00	14.15	11.32	9.90	1.43	14.50	16.00
356+63.47	13.00	14.14	11.31	9.90	1.43	14.50	16.00
356+69.47	13.00	14.14	11.30	9.89	1.43	14.50	16.00
356+73.82	13.00	14.13	11.30	9.88	1.44	17.50	19.00
THICKENED PANEL BETWEEN POSTS							
356+82.32	13.00	14.13	11.29	9.87	1.44	17.50	19.00
356+88.32	13.00	14.12	11.29	9.86	1.45	14.50	16.00
356+94.32	13.00	14.11	11.28	9.84	1.45	14.50	16.00
357+00.32	13.00	14.11	11.27	9.84	1.45	14.50	16.00
357+06.32	13.00	14.10	11.27	9.83	1.46	14.50	16.00
357+12.32	13.00	14.09	11.26	9.81	1.47	14.50	16.00
357+18.32	13.00	14.09	11.25	9.80	1.48	14.50	16.00
357+24.32	13.00	14.08	11.25	9.78	1.50	20.50	23.00
357+30.32	13.00	14.08	11.24	9.75	1.52	20.50	23.00
357+36.32	13.00	14.07	11.24	9.73	1.55	20.50	23.00
357+42.32	13.00	14.06	11.23	9.69	1.57	20.50	23.00
357+48.32	13.00	14.06	11.22	9.66	1.60	20.50	23.00
357+54.32	13.00	14.05	11.22	9.63	1.62	14.50	16.00
357+60.32	13.00	14.04	11.21	9.61	1.64	14.50	16.00
357+66.32	13.00	14.04	11.20	9.58	1.63	14.50	16.00
357+72.32	13.00	14.03	11.20	9.58	1.63	14.50	16.00
357+78.32	13.00	14.03	11.19	9.62	1.62	14.50	16.00
357+84.32	13.00	14.02	11.19	9.67	1.57	20.50	23.00
357+90.32	13.00	14.01	11.18	9.71	1.52	20.50	23.00
357+96.32	13.00	14.01	11.17	9.76	1.47	14.50	16.00
358+02.32	13.00	14.00	11.17	9.80	1.42	14.50	16.00
358+08.32	13.00	13.99	11.16	9.84	1.37	14.50	16.00
358+14.32	13.00	13.99	11.15	9.89	1.32	14.50	16.00
358+20.32	13.00	13.98	11.15	9.93	1.27	14.50	16.00
358+26.32	13.00	13.98	11.14	9.96	1.23	14.50	16.00
358+32.32	13.00	13.97	11.14	9.92	1.28	14.50	16.00
358+38.32	13.00	13.96	11.13	9.86	1.33	14.50	16.00
358+44.32	13.00	13.96	11.12	9.81	1.38	14.50	16.00
358+50.32	13.00	13.95	11.12	9.75	1.44	14.50	16.00

* PILE LENGTH ROUNDED UP TO NEXT FT. THE CONTRACTOR SHALL PROVIDE THE LENGTH OF THE PILES AS NOTED "TOTAL PILE LENGTH".

NOTES:

1. FOR LOCATION OF THE GRADE SEPARATION WALL, SEE PLAN AND PROFILE SHEETS.
2. FOR PLAN AND SECTION, SEE DRAWING NO. RW-10.
3. FOR PANEL DETAILS, SEE DRAWING NOS. RW-19 AND RW-20.
4. ALL OFFSETS MEASURED FROM ℄ OF PROPOSED TRACK 3 TO BACK FLANGE OF HP 12x53 POST.
5. ALL OFFSETS ARE MEASURED LEFT OF THE ℄.

$$DATE$$
$$FILE$$
PLOTTER = RAIL-PS-EHL.PLT, PEN TABLE = BALTIMORE.TBL

PREL. TRACING _____ DESIGN _____ CHKD. _____

UNOFFICIAL WEBSITE COPY

CONTRACT	COUNTY	F.A.P. NO.	SHEET NO.	TOTAL SHTS.
27-512-01	NEW CASTLE	N/A	58	140

NEC COMMUTER RAIL IMPROVEMENTS- DELAWARE YARD TO RAGAN - CIVIL, STRUCTURAL

DATE: NOVEMBER 10, 2010

REVISIONS

DRAWING NO. RW-14

PILE LAYOUT RW 2

THIRD TRACK

Station	Offset (ft)	Top of Railroad Elevation	Ground Elevation Track Side	Ground Elevation Field Side	Exposed Face Height (ft)	Minimum Pile Embedment Depth (ft)	Total Pile Length (ft) *	Railing
358+56.32	13.00	13.94	11.11	9.69	1.49	14.50	16.00	NO
358+62.32	13.00	13.94	11.10	9.63	1.54	20.50	23.00	NO
358+68.32	13.00	13.93	11.10	9.57	1.56	20.50	23.00	NO
358+74.32	13.00	13.93	11.09	9.54	1.56	20.50	23.00	NO
358+80.32	13.00	13.92	11.09	9.57	1.55	20.50	23.00	NO
358+86.32	13.00	13.91	11.08	9.60	1.52	20.50	23.00	NO
358+92.32	13.00	13.91	11.07	9.63	1.48	14.50	16.00	NO
358+98.32	13.00	13.90	11.07	9.66	1.44	14.50	16.00	NO
359+04.32	13.00	13.89	11.06	9.68	1.41	14.50	16.00	NO
359+10.32	13.00	13.89	11.06	9.70	1.38	14.50	16.00	NO
359+16.32	13.00	13.88	11.05	9.70	1.37	14.50	16.00	NO
359+22.32	13.00	13.88	11.04	9.69	1.37	14.50	16.00	NO
359+28.32	13.00	13.87	11.04	9.68	1.38	14.50	16.00	NO
359+34.32	13.00	13.86	11.03	9.66	1.40	14.50	16.00	NO
359+40.32	13.00	13.86	11.02	9.64	1.40	14.50	16.00	NO
359+43.24	13.00	13.85	11.02	9.63	1.40	17.50	19.00	NO
THICKENED PANEL BETWEEN POSTS								
359+51.74	13.00	13.85	11.01	9.62	1.40	17.50	19.00	NO
359+57.74	13.00	13.84	11.01	9.76	1.39	14.50	16.00	NO
359+63.74	13.00	13.83	11.00	10.26	1.25	14.50	16.00	NO
359+69.74	13.00	13.83	10.99	10.68	0.74	14.50	16.00	NO
359+75.74	13.00	13.82	10.99	10.73	0.76	14.50	16.00	NO
359+81.74	13.00	13.81	10.98	10.23	1.11	14.50	16.00	NO
359+87.74	13.00	13.81	10.97	9.88	1.20	14.50	16.00	NO
359+93.74	13.00	13.80	10.97	9.78	1.20	14.50	16.00	NO
359+99.74	13.00	13.80	10.96	9.92	1.19	14.50	16.00	NO
360+05.74	13.00	13.79	10.96	10.03	1.09	14.50	16.00	NO
360+11.74	13.00	13.78	10.95	9.87	1.28	14.50	16.00	NO
360+17.74	13.00	13.78	10.94	9.68	1.42	14.50	16.00	NO
360+23.74	13.00	13.77	10.94	9.53	1.54	20.50	23.00	NO
360+29.74	13.00	13.76	10.93	9.40	1.62	21.00	24.00	NO
360+35.74	13.00	13.76	10.93	9.32	1.80	21.00	24.00	NO
360+41.74	13.00	13.75	10.92	9.13	1.98	21.00	24.00	NO
360+47.74	13.00	13.75	10.91	8.95	2.10	21.00	24.00	NO
360+53.74	13.00	13.74	10.91	8.82	2.12	21.00	24.00	NO
360+59.74	13.00	13.73	10.90	8.79	2.12	21.00	24.00	NO
360+65.74	13.00	13.73	10.89	8.79	2.13	21.00	24.00	NO
360+71.74	13.00	13.72	10.89	8.77	2.16	21.00	24.00	NO
360+77.74	13.00	13.71	10.88	8.74	2.19	21.00	24.00	NO
360+83.74	13.00	13.71	10.88	8.70	2.22	21.00	24.00	NO
360+89.74	13.00	13.70	10.87	8.66	2.35	21.00	24.00	NO
360+95.74	13.00	13.70	10.86	8.52	2.48	21.00	24.00	NO
361+01.74	13.00	13.69	10.86	8.39	2.53	21.00	24.00	YES
361+07.74	13.00	13.68	10.85	8.34	2.57	21.00	24.00	YES
361+13.74	13.00	13.68	10.84	8.28	2.69	21.00	24.00	YES
361+19.74	13.00	13.67	10.84	8.16	2.77	21.00	24.00	YES
361+25.74	13.00	13.67	10.83	8.07	2.77	21.00	24.00	YES
361+31.74	13.00	13.66	10.83	8.07	2.76	21.00	24.00	YES
361+37.74	13.00	13.65	10.82	8.14	2.75	21.00	24.00	YES
361+43.74	13.00	13.65	10.81	8.29	2.68	21.00	24.00	YES
361+49.74	13.00	13.64	10.81	8.32	2.53	21.00	24.00	YES

* PILE LENGTH ROUNDED UP TO NEXT FT. THE CONTRACTOR SHALL PROVIDE THE LENGTH OF THE PILES AS NOTED "TOTAL PILE LENGTH".

NOTES:

1. FOR LOCATION OF THE GRADE SEPARATION WALL, SEE PLAN AND PROFILE SHEETS.
2. FOR PLAN AND SECTION, SEE DRAWING NO. RW-10.
3. FOR PANEL DETAILS, SEE DRAWING NOS. RW-19 AND RW-20.
4. ALL OFFSETS MEASURED FROM ℄ OF PROPOSED TRACK 3 TO BACK FLANGE OF HP 12x53 POST.
5. ALL OFFSETS ARE MEASURED LEFT OF THE ℞.

$$DATE$$
$$FILE$$
PLOTTER = RAIL-PS-EHL.PLT, PEN TABLE = BALTIMORE.TBL

PREL. TRACING ____ DESIGN ____ CHKD. ____

UNOFFICIAL WEBSITE COPY

CONTRACT	COUNTY	F.A.P. NO.	SHEET NO.	TOTAL SHTS.
27-512-01	NEW CASTLE	N/A	59	140

NEC COMMUTER RAIL IMPROVEMENTS- DELAWARE YARD TO RAGAN - CIVIL, STRUCTURAL

DATE: NOVEMBER 10, 2010

REVISIONS

DRAWING NO. RW-15

PILE LAYOUT RW 2

THIRD TRACK

Station	Offset (ft)	Top of Railroad Elevation	Ground Elevation Track Side	Ground Elevation Field Side	Exposed Face Height (ft)	Minimum Pile Embedment Depth (ft)	Total Pile Length (ft) *	Railing
361+55.74	13.00	13.63	10.80	8.28	2.55	21.00	24.00	YES
361+61.74	13.00	13.63	10.79	8.26	2.55	21.00	24.00	YES
361+67.74	13.00	13.62	10.79	8.34	2.54	21.00	24.00	YES
361+73.74	13.00	13.62	10.78	8.41	2.45	21.00	24.00	NO
361+79.74	13.00	13.61	10.78	8.48	2.37	21.00	24.00	NO
361+85.74	13.00	13.60	10.77	8.58	2.29	21.00	24.00	NO
361+91.74	13.00	13.60	10.76	8.70	2.18	21.00	24.00	NO
361+97.74	13.00	13.59	10.76	8.68	2.08	21.00	24.00	NO
362+04.55	13.00	13.58	10.75	8.71	2.07	21.00	24.00	NO
NO LAGGING BETWEEN POSTS DUE TO EXISTING FEATURE								
362+11.05	13.00	13.58	10.74	8.79	2.04	21.00	24.00	NO
362+13.93	13.00	13.57	10.74	8.81	1.95	25.50	28.00	NO
THICKENED PANEL BETWEEN POSTS								
362+22.43	13.00	13.56	10.73	8.84	1.93	25.50	28.00	NO
362+28.43	13.00	13.56	10.73	8.86	1.89	21.00	24.00	NO
362+34.43	13.00	13.55	10.72	8.95	1.87	21.00	24.00	NO
362+40.43	13.00	13.55	10.71	9.07	1.77	21.00	24.00	NO
362+46.43	13.00	13.54	10.71	9.17	1.65	21.00	24.00	NO

* PILE LENGTH ROUNDED UP TO NEXT FT. THE CONTRACTOR SHALL PROVIDE THE LENGTH OF THE PILES AS NOTED "TOTAL PILE LENGTH".

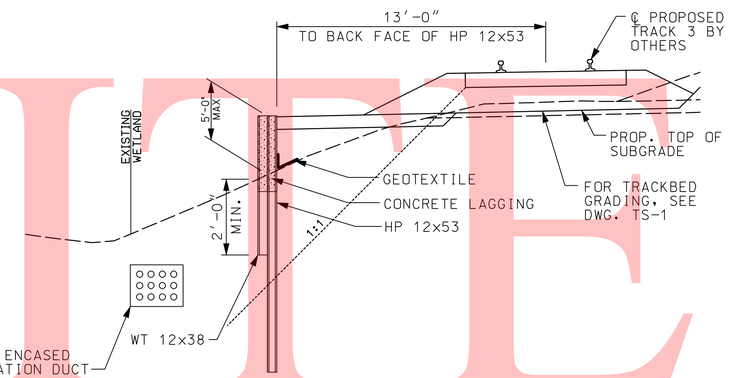

SECTION A-A
NTS

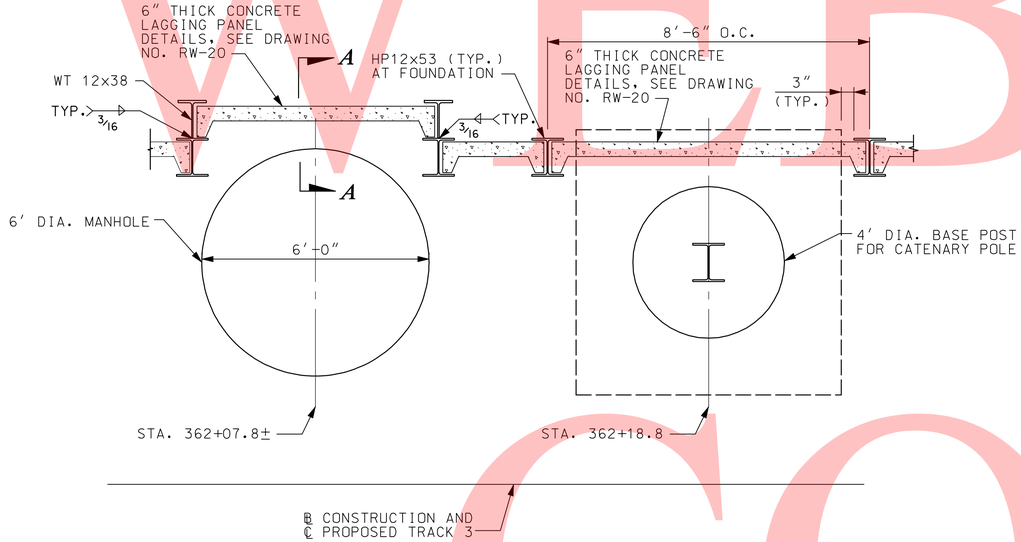

PLAN @ MANHOLE
SCALE: 1/2" = 1'-0"

MANHOLE CLEARANCE TO CENTER	
STATION	OFFSET
362+07.8	10.75±

NOTES:

1. FOR LOCATION OF THE GRADE SEPARATION WALL, SEE PLAN AND PROFILE SHEETS.
2. FOR PLAN AND SECTION, SEE DRAWING NO. RW-10.
3. FOR PANEL DETAILS, SEE DRAWING NOS. RW-19 AND RW-20.
4. ALL OFFSETS MEASURED FROM ℄ OF PROPOSED TRACK 3 TO BACK FLANGE OF HP 12x53 POST.
5. ALL OFFSETS ARE MEASURED LEFT OF THE ℄.

$$DATE$$
$$FILE$$
PLOTTER = RAIL-PS-EHL.PLT, PEN TABLE = BALTIMORE.TBL

PREL. TRACING _____ DESIGN _____ CHKD. _____

UNOFFICIAL WEBSITE COPY

CONTRACT	COUNTY	F.A.P. NO.	SHEET NO.	TOTAL SHTS.
27-512-01	NEW CASTLE	N/A	60	140

DRAWING NO. RW-16

PILE LAYOUT RW 3

THIRD TRACK

NEC COMMUTER RAIL IMPROVEMENTS- DELAWARE YARD TO RAGAN - CIVIL, STRUCTURAL

DATE: NOVEMBER 10, 2010

REVISIONS

Station	Offset (ft)	Top of Railroad Elevation	Ground Elevation Track Side	Ground Elevation Field Side	Exposed Face Height (ft)	Minimum Pile Embedment Depth (ft)	Total Pile Length (ft) *	Railing
364+83.00	12.50	13.29	10.46	7.82	2.97	27.00	30.00	YES
THICKENED PANEL BETWEEN POSTS								
364+91.50	12.50	13.29	10.45	7.50	2.97	27.00	30.00	YES
364+97.50	12.50	13.28	10.45	7.75	2.96	21.00	24.00	YES
365+03.50	12.50	13.27	10.44	7.84	2.69	21.00	24.00	YES
365+09.50	12.50	13.27	10.43	7.84	2.61	21.00	24.00	YES
365+15.50	12.50	13.26	10.43	7.83	2.61	21.00	24.00	YES
365+21.50	12.50	13.25	10.42	7.83	2.62	21.00	24.00	YES
365+27.50	12.50	13.24	10.41	7.81	2.63	21.00	24.00	YES
365+33.50	12.50	13.24	10.40	7.79	2.62	21.00	24.00	YES
365+39.50	12.50	13.23	10.39	7.79	2.66	21.00	24.00	YES
365+45.50	12.50	13.22	10.38	7.75	2.71	21.00	24.00	YES
365+51.50	12.50	13.21	10.37	7.69	2.77	21.00	24.00	YES
365+57.50	12.50	13.20	10.36	7.61	2.84	21.00	24.00	YES
365+63.50	12.50	13.19	10.35	7.53	2.86	21.00	24.00	YES
365+69.50	12.50	13.17	10.34	7.50	2.85	21.00	24.00	YES
365+75.50	12.50	13.16	10.33	7.50	2.84	21.00	24.00	YES
365+81.50	12.50	13.15	10.32	7.53	2.82	21.00	24.00	YES
365+87.50	12.50	13.14	10.30	7.57	2.79	21.00	24.00	YES
365+93.50	12.50	13.12	10.29	7.61	2.73	21.00	24.00	YES
365+99.50	12.50	13.11	10.28	7.65	2.68	21.00	24.00	YES
366+05.50	12.50	13.10	10.26	7.73	2.63	21.00	24.00	YES
366+11.50	12.50	13.08	10.25	7.82	2.53	21.00	24.00	YES
366+17.50	12.50	13.07	10.24	7.88	2.43	21.00	24.00	NO
366+23.50	12.50	13.06	10.22	7.90	2.36	21.00	24.00	NO
366+29.50	12.50	13.04	10.21	7.92	2.37	21.00	24.00	NO
366+35.50	12.50	13.03	10.20	7.86	2.45	21.00	24.00	NO
366+41.50	12.50	13.01	10.18	7.76	2.54	21.00	24.00	YES
366+47.50	12.50	13.00	10.17	7.66	2.63	21.00	24.00	YES
366+53.50	12.50	12.99	10.15	7.55	2.71	21.00	24.00	YES
366+59.50	12.50	12.97	10.14	7.46	2.73	21.00	24.00	YES
366+65.50	12.50	12.96	10.13	7.43	2.73	21.00	24.00	YES
366+71.50	12.50	12.95	10.11	7.41	2.75	21.00	24.00	YES
366+77.50	12.50	12.93	10.10	7.38	2.77	21.00	24.00	YES
366+83.50	12.50	12.92	10.08	7.34	2.82	21.00	24.00	YES
366+89.50	12.50	12.90	10.07	7.28	2.90	21.00	24.00	YES
366+95.50	12.50	12.89	10.06	7.19	2.98	21.00	24.00	YES
367+01.50	12.50	12.88	10.04	7.09	3.06	21.00	24.00	YES
367+07.50	12.50	12.86	10.03	6.99	3.11	21.00	24.00	YES
367+13.50	12.50	12.85	10.02	6.93	3.10	21.00	24.00	YES
367+19.50	12.50	12.84	10.00	6.92	3.09	21.00	24.00	YES
367+25.50	12.50	12.82	9.99	7.03	3.08	21.00	24.00	YES
367+31.50	12.50	12.81	9.97	7.25	2.96	21.00	24.00	YES
367+37.50	12.50	12.79	9.96	7.47	2.73	21.00	24.00	YES
367+43.50	12.50	12.78	9.95	7.65	2.49	25.50	28.00	YES
THICKENED PANEL BETWEEN POSTS								
367+51.05	12.50	12.76	9.93	7.63	2.35	25.50	28.00	NO
THICKENED PANEL BETWEEN POSTS								
367+59.55	12.50	12.74	9.91	7.60	2.33	25.50	28.00	NO
367+65.55	12.50	12.73	9.90	7.61	2.32	20.50	23.00	NO
367+71.55	12.50	12.72	9.88	7.59	2.32	20.50	23.00	NO

* PILE LENGTH ROUNDED UP TO NEXT FT. THE CONTRACTOR SHALL PROVIDE THE LENGTH OF THE PILES AS NOTED "TOTAL PILE LENGTH".

CAT. POLE CLEARANCES	
STATION	OFFSET (FT)
364+87.25	10.18
367+55.30	9.41
370+24.25	10.26

NOTES:

1. FOR LOCATION OF THE GRADE SEPARATION WALL, SEE PLAN AND PROFILE SHEETS.
2. FOR PLAN AND SECTION, SEE DRAWING NO. RW-10.
3. FOR PANEL DETAILS, SEE DRAWING NOS. RW-19 AND RW-20.
4. ALL OFFSETS MEASURED FROM ℄ OF PROPOSED TRACK 3 TO BACK FLANGE OF HP 12x53 POST.
5. ALL OFFSETS ARE MEASURED LEFT OF THE ℄.

$$DATE$$
$$FILE$$
PLOTTER = RAIL-PS-EHL.PLT, PEN TABLE = BALTIMORE.TBL

PREL. TRACING _____ DESIGN _____ CHKD. _____

UNOFFICIAL WEBSITE COPY

CONTRACT	COUNTY	F.A.P. NO.	SHEET NO.	TOTAL SHTS.
27-512-01	NEW CASTLE	N/A	61	140

NEC COMMUTER RAIL IMPROVEMENTS- DELAWARE YARD TO RAGAN - CIVIL, STRUCTURAL

DATE: NOVEMBER 10, 2010

REVISIONS

DRAWING NO. RW-17

PILE LAYOUT RW 3

THIRD TRACK

Station	Offset (ft)	Top of Railroad Elevation	Ground Elevation Track Side	Ground Elevation Field Side	Exposed Face Height (ft)	Minimum Pile Embedment Depth (ft)	Total Pile Length (ft) *
367+77.55	12.50	12.70	9.87	7.57	2.33	20.50	23.00
367+83.55	12.50	12.69	9.85	7.55	2.32	20.50	23.00
367+89.55	12.50	12.67	9.84	7.55	2.31	20.50	23.00
367+95.55	12.50	12.66	9.83	7.55	2.29	20.50	23.00
368+01.55	12.50	12.65	9.81	7.57	2.27	20.50	23.00
368+07.55	12.50	12.63	9.80	7.59	2.24	20.50	23.00
368+13.55	12.50	12.62	9.79	7.61	2.21	20.50	23.00
368+19.55	12.50	12.61	9.77	7.65	2.18	20.50	23.00
368+25.55	12.50	12.59	9.76	7.68	2.13	20.50	23.00
368+31.55	12.50	12.58	9.74	7.69	2.08	20.50	23.00
368+37.55	12.50	12.56	9.73	7.68	2.09	20.50	23.00
368+43.55	12.50	12.55	9.72	7.66	2.13	20.50	23.00
368+49.55	12.50	12.54	9.70	7.60	2.20	20.50	23.00
368+55.55	12.50	12.52	9.69	7.51	2.22	20.50	23.00
368+61.55	12.50	12.51	9.68	7.48	2.21	20.50	23.00
368+67.55	12.50	12.49	9.66	7.50	2.20	20.50	23.00
368+73.55	12.50	12.48	9.65	7.57	2.16	20.50	23.00
368+79.55	12.50	12.47	9.63	7.61	2.08	20.50	23.00
368+85.55	12.50	12.45	9.62	7.57	2.08	20.50	23.00
368+91.55	12.50	12.44	9.61	7.55	2.07	20.50	23.00
368+97.55	12.50	12.43	9.59	7.56	2.06	20.50	23.00
369+03.55	12.50	12.41	9.58	7.56	2.08	20.50	23.00
369+09.55	12.50	12.40	9.56	7.51	2.13	20.50	23.00
369+15.55	12.50	12.38	9.55	7.45	2.18	20.50	23.00
369+21.55	12.50	12.37	9.54	7.39	2.23	20.50	23.00
369+27.55	12.50	12.36	9.52	7.32	2.28	20.50	23.00
369+33.55	12.50	12.34	9.51	7.25	2.33	20.50	23.00
369+39.55	12.50	12.33	9.50	7.19	2.34	20.50	23.00
369+45.55	12.50	12.32	9.48	7.17	2.33	20.50	23.00
369+51.55	12.50	12.30	9.47	7.20	2.31	20.50	23.00
369+57.55	12.50	12.29	9.45	7.24	2.27	20.50	23.00
369+63.55	12.50	12.27	9.44	7.29	2.21	20.50	23.00
369+69.55	12.50	12.26	9.43	7.32	2.15	20.50	23.00
369+75.55	12.50	12.25	9.41	7.32	2.11	20.50	23.00
369+81.55	12.50	12.23	9.40	7.33	2.09	20.50	23.00
369+87.55	12.50	12.22	9.39	7.34	2.07	20.50	23.00
369+93.55	12.50	12.20	9.37	7.34	2.05	20.50	23.00
369+99.55	12.50	12.19	9.36	7.35	2.03	20.50	23.00
370+05.55	12.50	12.18	9.34	7.36	2.01	20.50	23.00
370+11.55	12.50	12.16	9.33	7.44	1.99	25.50	28.00
THICKENED PANEL BETWEEN POSTS							
370+20.00	12.50	12.14	9.31	7.61	1.89	25.50	28.00
THICKENED PANEL BETWEEN POSTS							
370+28.50	12.50	12.12	9.29	7.56	1.80	25.50	28.00
370+34.50	12.50	12.11	9.28	7.51	1.83	20.50	23.00
370+40.50	12.50	12.10	9.26	7.46	1.81	20.50	23.00
370+46.50	12.50	12.08	9.25	7.52	1.80	20.50	23.00
370+52.50	12.50	12.07	9.24	7.60	1.73	20.50	23.00

* PILE LENGTH ROUNDED UP TO NEXT FT. THE CONTRACTOR SHALL PROVIDE THE LENGTH OF THE PILES AS NOTED "TOTAL PILE LENGTH".

NOTES:

1. FOR LOCATION OF THE GRADE SEPARATION WALL, SEE PLAN AND PROFILE SHEETS.
2. FOR PLAN AND SECTION, SEE DRAWING NO. RW-10.
3. FOR PANEL DETAILS, SEE DRAWING NOS. RW-19 AND RW-20.
4. ALL OFFSETS MEASURED FROM ℄ OF PROPOSED TRACK 3 TO BACK FLANGE OF HP 12x53 POST.
5. ALL OFFSETS ARE MEASURED LEFT OF THE ℞.

UNOFFICIAL WEB SITE COPY

$$DATE$$
$$FILE$$
PLOTTER = RAIL-PS-EHL.PLT, PEN TABLE = BALTIMORE.TBL

PREL. TRACING _____ DESIGN _____ CHKD. _____

CONTRACT	COUNTY	F.A.P. NO.	SHEET NO.	TOTAL SHTS.
27-512-01	NEW CASTLE	N/A	62	140

DRAWING NO. RW-18

PILE LAYOUT RW 4

THIRD TRACK

NEC COMMUTER RAIL IMPROVEMENTS- DELAWARE YARD TO RAGAN - CIVIL, STRUCTURAL

DATE: NOVEMBER 10, 2010

REVISIONS

Station	Offset (ft)	Top of Railroad Elevation	Ground Elevation Track Side	Ground Elevation Field Side	Exposed Face Height (ft)	Minimum Pile Embedment Depth (ft)	Total Pile Length (ft) *
373+75.00	12.00	11.58	8.74	8.01	0.73	14.50	16.00
373+81.00	12.00	11.57	8.74	8.02	0.74	14.50	16.00
373+87.00	12.00	11.56	8.73	8.01	0.78	14.50	16.00
373+93.00	12.00	11.55	8.72	7.96	0.82	14.50	16.00
373+99.00	12.00	11.54	8.71	7.90	0.90	14.50	16.00
374+05.00	12.00	11.54	8.70	7.82	0.97	14.50	16.00
374+11.00	12.00	11.53	8.69	7.74	1.08	14.50	16.00
374+17.00	12.00	11.52	8.69	7.62	1.20	14.50	16.00
374+23.00	12.00	11.51	8.68	7.50	1.21	14.50	16.00
374+29.00	12.00	11.50	8.67	7.47	1.21	14.50	16.00
374+35.00	12.00	11.49	8.66	7.48	1.20	14.50	16.00
374+41.00	12.00	11.48	8.65	7.49	1.18	14.50	16.00
374+47.00	12.00	11.48	8.64	7.50	1.16	14.50	16.00
374+53.00	12.00	11.47	8.63	7.49	1.16	14.50	16.00
374+59.00	12.00	11.46	8.63	7.48	1.16	14.50	16.00
374+65.00	12.00	11.45	8.62	7.48	1.16	14.50	16.00
374+71.00	12.00	11.44	8.61	7.47	1.15	14.50	16.00
374+77.00	12.00	11.43	8.60	7.47	1.14	14.50	16.00
374+83.00	12.00	11.43	8.59	7.49	1.13	14.50	16.00
374+89.00	12.00	11.42	8.58	7.53	1.11	14.50	16.00
374+95.00	12.00	11.41	8.58	7.53	1.07	14.50	16.00
375+01.00	12.00	11.40	8.57	7.51	1.08	14.50	16.00
375+07.00	12.00	11.39	8.56	7.50	1.08	14.50	16.00
375+13.00	12.00	11.38	8.55	7.49	1.07	14.50	16.00
375+19.00	12.00	11.38	8.54	7.49	1.09	14.50	16.00
375+25.00	12.00	11.37	8.53	7.46	1.08	14.50	16.00
375+31.00	12.00	11.36	8.53	7.46	1.10	14.50	16.00
375+37.00	12.00	11.35	8.52	7.43	1.20	14.50	16.00
375+43.00	12.00	11.34	8.51	7.33	1.30	14.50	16.00
375+49.00	12.00	11.33	8.50	7.22	1.40	14.50	16.00
375+55.00	12.00	11.33	8.49	7.11	1.39	14.50	16.00

* PILE LENGTH ROUNDED UP TO NEXT FT. THE CONTRACTOR SHALL PROVIDE THE LENGTH OF THE PILES AS NOTED "TOTAL PILE LENGTH".

NOTES:

1. FOR LOCATION OF THE GRADE SEPARATION WALL, SEE PLAN AND PROFILE SHEETS.
2. FOR PLAN AND SECTION, SEE DRAWING NO. RW-10.
3. FOR PANEL DETAILS, SEE DRAWING NOS. RW-19 AND RW-20.
4. ALL OFFSETS MEASURED FROM ℄ OF PROPOSED TRACK 3 TO BACK FLANGE OF HP 12x53 POST.
5. ALL OFFSETS ARE MEASURED LEFT OF THE ℄.

UNOFFICIAL WEBSITE COPY

PREL. TRACING _____ DESIGN _____ CHKD. _____

$$DATE$$
$$FILE$$
PLOTTER = RAIL-PS-EHL.PLT, PEN TABLE = BALTIMORE.TBL

CONTRACT	COUNTY	F.A.P. NO.	SHEET NO.	TOTAL SHTS.
27-512-01	NEW CASTLE	N/A	63	140

DRAWING NO. RW-19

PANEL DETAILS- GRADE SEPARATION WALLS

THIRD TRACK

SCALE 0 1/2" = 1'

NEC COMMUTER RAIL IMPROVEMENTS- DELAWARE YARD TO RAGAN - CIVIL, STRUCTURAL

DATE: APRIL 20, 2009

REVISIONS

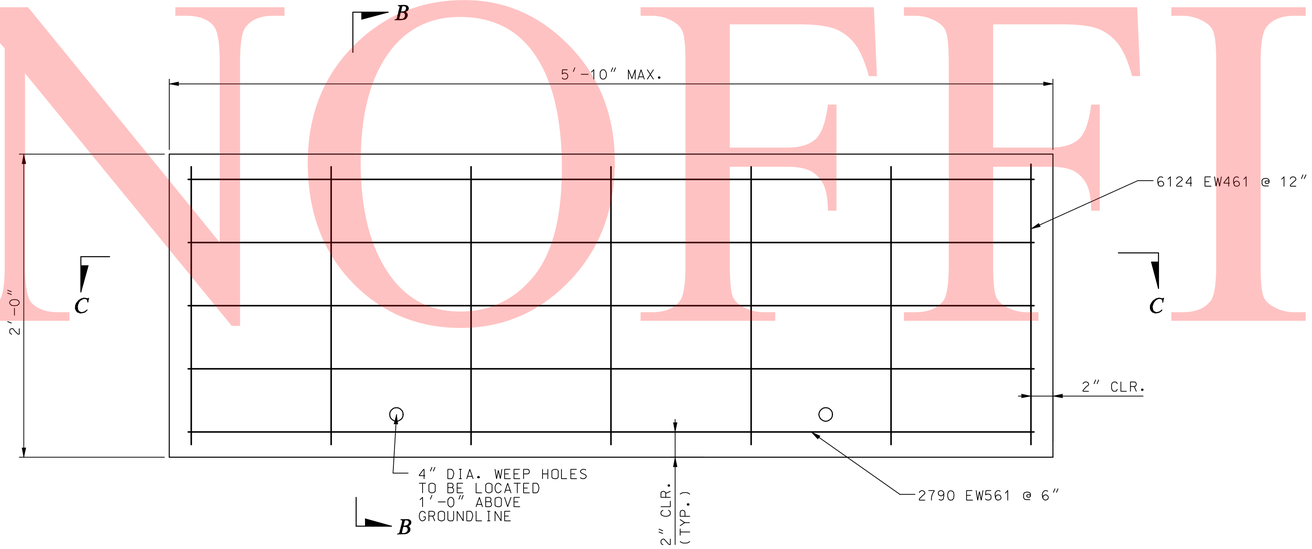

PANEL REINFORCING DETAIL

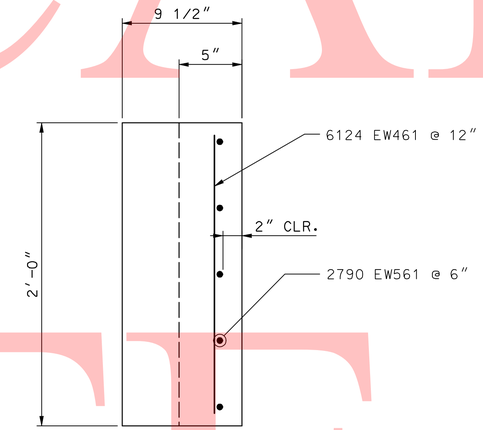

SECTION B-B

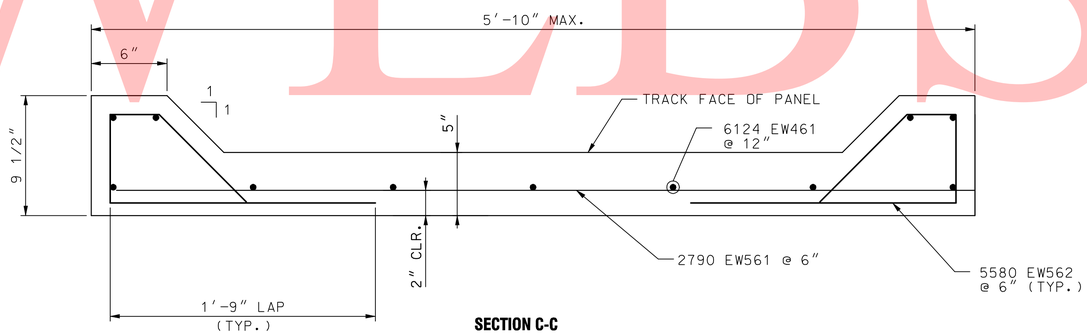

SECTION C-C

NOTE:

1. ALL REINFORCING SHALL BE EPOXY COATED.
2. LIFTING HOOK SHALL BE PROVIDED BY CONTRACTOR.
3. FOR PILE INFORMATION, SEE DRAWING NOS. RW-11 THRU RW-18.
4. FOR REINFORCING STEEL, SEE DWG. NO. HW-6A.

$$DATE$$
$$FILE$$
PLOTTER = RAIL-PS-EHL.PLT, PEN TABLE = BALTIMORE.TBL

PREL. TRACING _____ DESIGN _____ CHKD. _____

UNOFFICIAL WEBSITE COPY

CONTRACT	COUNTY	F.A.P. NO.	SHEET NO.	TOTAL SHTS.
27-512-01	NEW CASTLE	N/A	64	140

DRAWING NO. RW-20

PANEL DETAILS- GRADE SEPARATION WALLS

THIRD TRACK

SCALE 0 1/2" = 1'

NEC COMMUTER RAIL IMPROVEMENTS- DELAWARE YARD TO RAGAN - CIVIL, STRUCTURAL

DATE: APRIL 20, 2009

REVISIONS

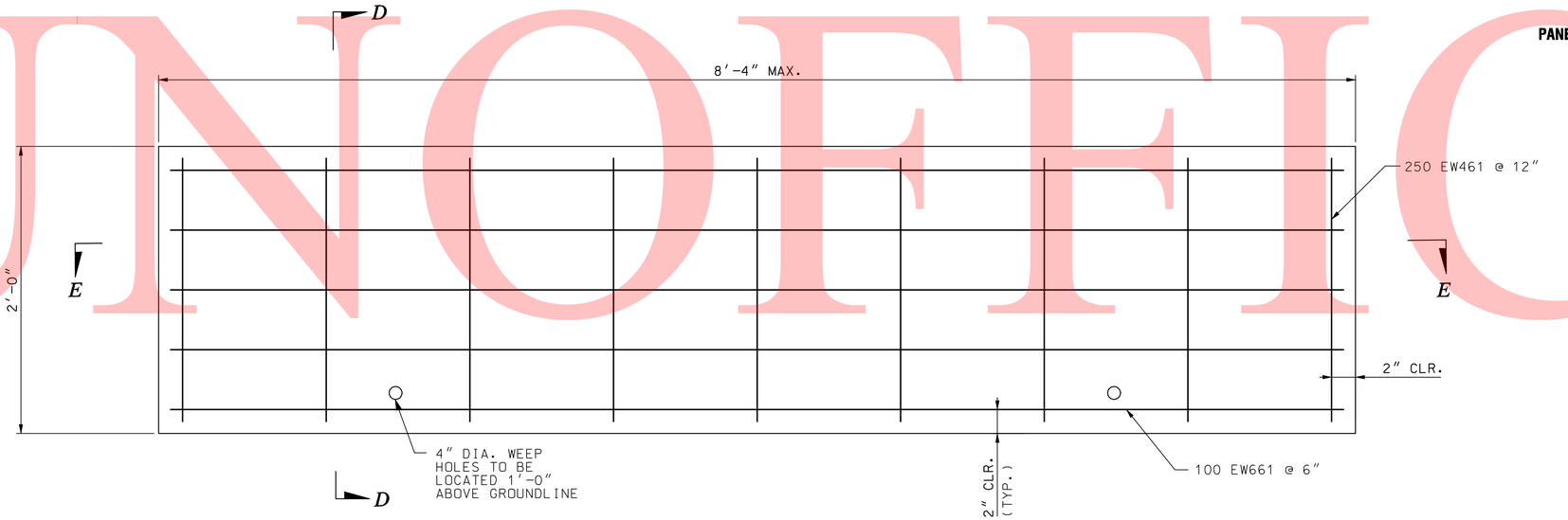

THICK PANEL REINFORCING DETAIL

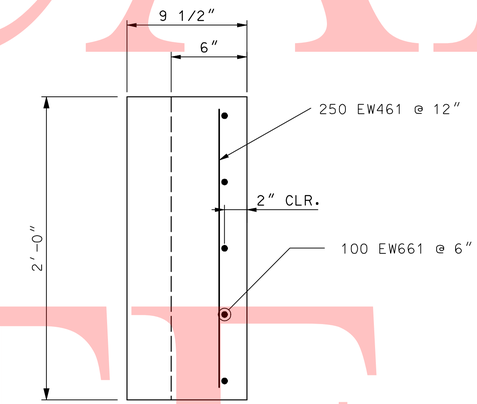

SECTION D-D

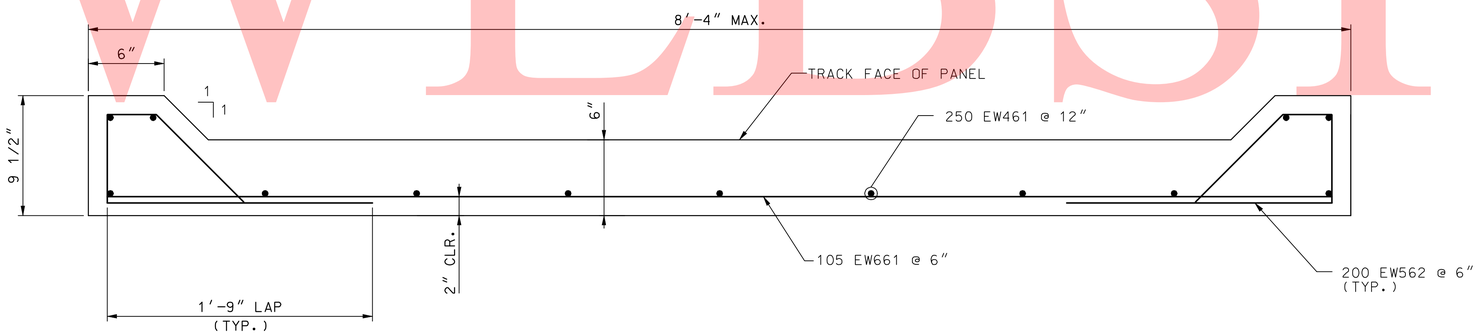

SECTION E-E

NOTE:

1. ALL REINFORCING SHALL BE EPOXY COATED.
2. LIFTING HOOK SHALL BE PROVIDED BY CONTRACTOR.
3. FOR PILE INFORMATION, SEE DRAWING NOS. RW1-11 THRU RW-18.
4. FOR REINFORCING STEEL, SEE DWG. NO. HW-6A.

$$DATE$$
$$FILE$$
PLOTTER = RAIL-PS-EHL.PLT, PEN TABLE = BALTIMORE.TBL

PREL. TRACING _____ DESIGN _____ CHKD. _____

UNOFFICAL WEBSITE COPY

CONTRACT	COUNTY	F.A.P. NO.	SHEET NO.	TOTAL SHTS.
27-512-01	NEW CASTLE	N/A	65	140

NEC COMMUTER RAIL IMPROVEMENTS- DELAWARE YARD TO RAGAN - CIVIL, STRUCTURAL

DATE: APRIL 20, 2009

REVISIONS

DRAWING NO. RW-21

PANEL SUPPORT DETAILS

THIRD TRACK

SCALE

1/2" = 1'

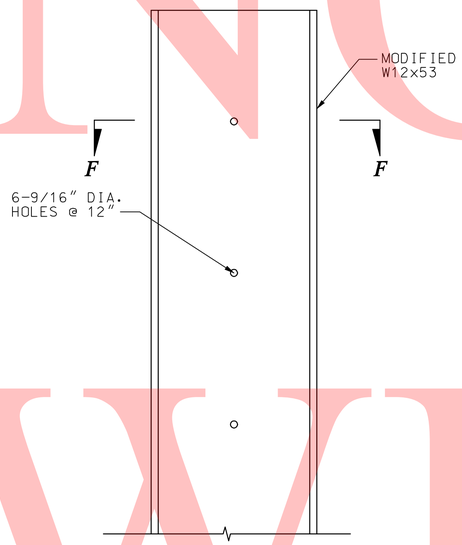

ELEVATION DETAIL AT RETAINING WALL TYPE A STA. 362+47.95
SCALE: 1/8" = 1'-0"

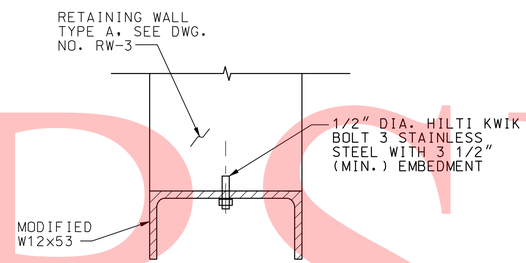

SECTION F-F
SCALE: 1/8" = 1'-0"

$$DATE$$
$$FILE$$
PLOTTER = RAIL-PS-EHL.PLT, PEN TABLE = BALTIMORE.TBL

PREL. TRACING _____ DESIGN _____ CHKD. _____

UNOFFICAL WEBSITE COPY

CONTRACT	COUNTY	F.A.P. NO.	SHEET NO.	TOTAL SHTS.
27-512-01	NEW CASTLE	N/A	66	140

NEC COMMUTER RAIL IMPROVEMENTS- DELAWARE YARD TO RAGAN - CIVIL, STRUCTURAL

DATE: APRIL 20, 2009

REVISIONS

DRAWING NO. HW-1

EXISTING PLAN, ELEVATION, SECTION

THIRD TRACK

SCALE

1/2" = 1'

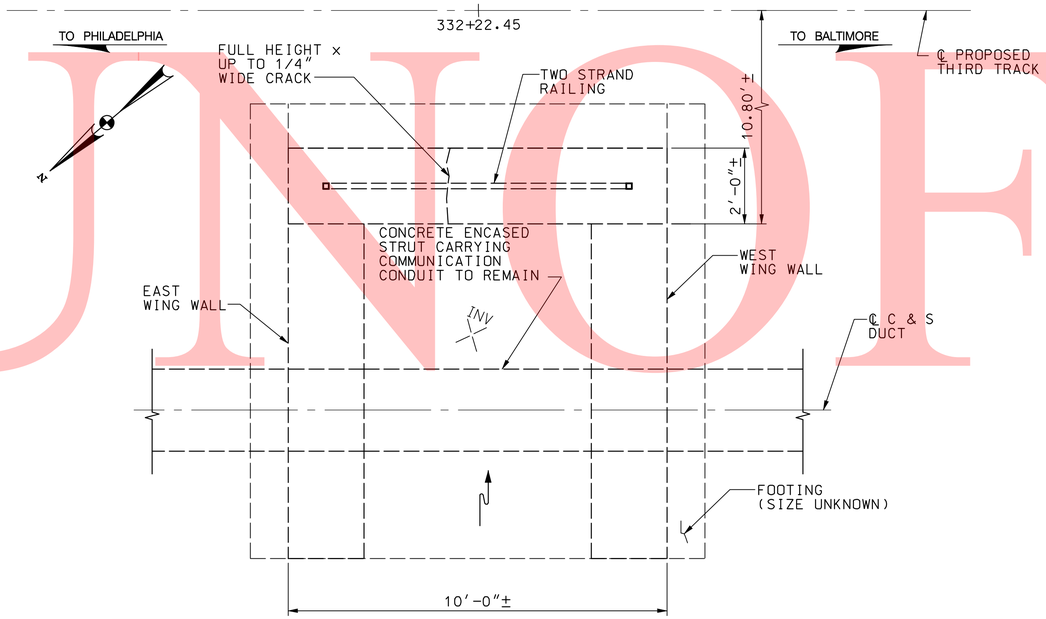

PLAN
SCALE: 1/2" = 1'-0"

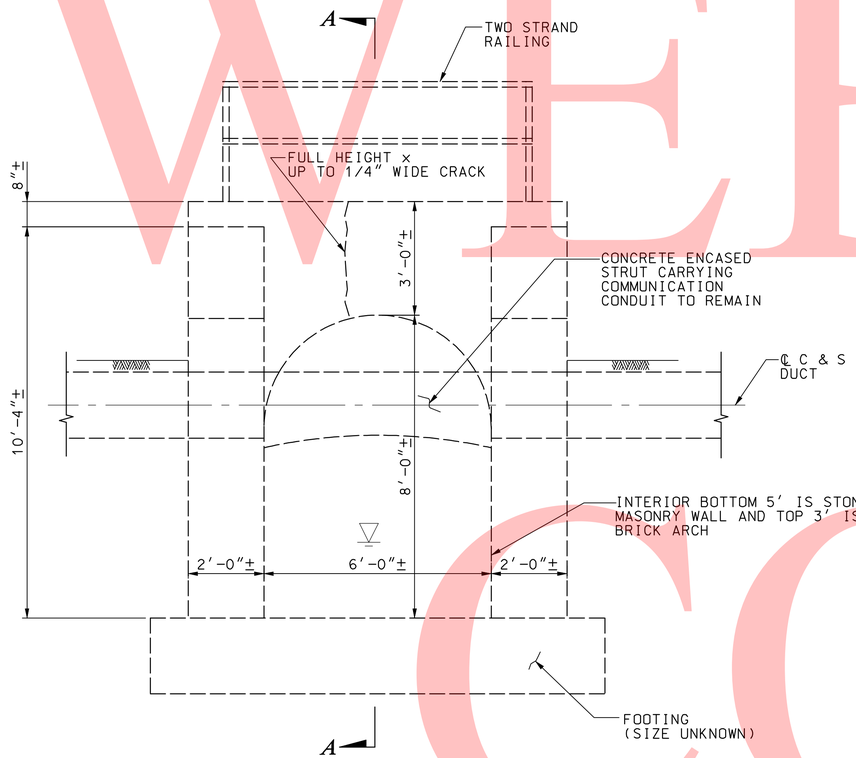

ELEVATION
SCALE: 1/2" = 1'-0"

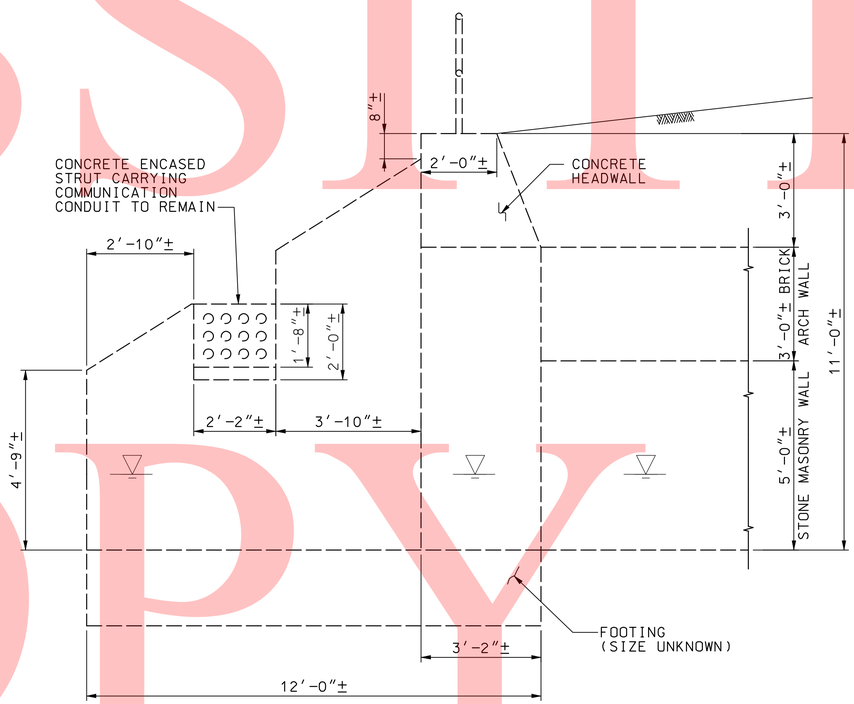

SECTION A-A
SCALE: 1/2" = 1'-0"

EXISTING CULVERT HEADWALL @ STA. 322+22 (TO BE REMOVED)

$$DATE$$
$$FILE$$
PLOTTER = RAIL-PS-EHL.PLT, PEN TABLE = BALTIMORE.TBL

DESIGN _____ CHKD. _____

PREL. TRACING _____

UNOFFICIAL WEBSITE COPY

CONTRACT	COUNTY	F.A.P. NO.	SHEET NO.	TOTAL SHTS.
27-512-01	NEW CASTLE	N/A	67	140

NEC COMMUTER RAIL IMPROVEMENTS- DELAWARE YARD TO RAGAN - CIVIL, STRUCTURAL

DATE: APRIL 20, 2009

REVISIONS

DRAWING NO. HW-2

EXISTING CULVERT REMOVAL DETAIL

THIRD TRACK

SCALE 0

3/8" = 1'

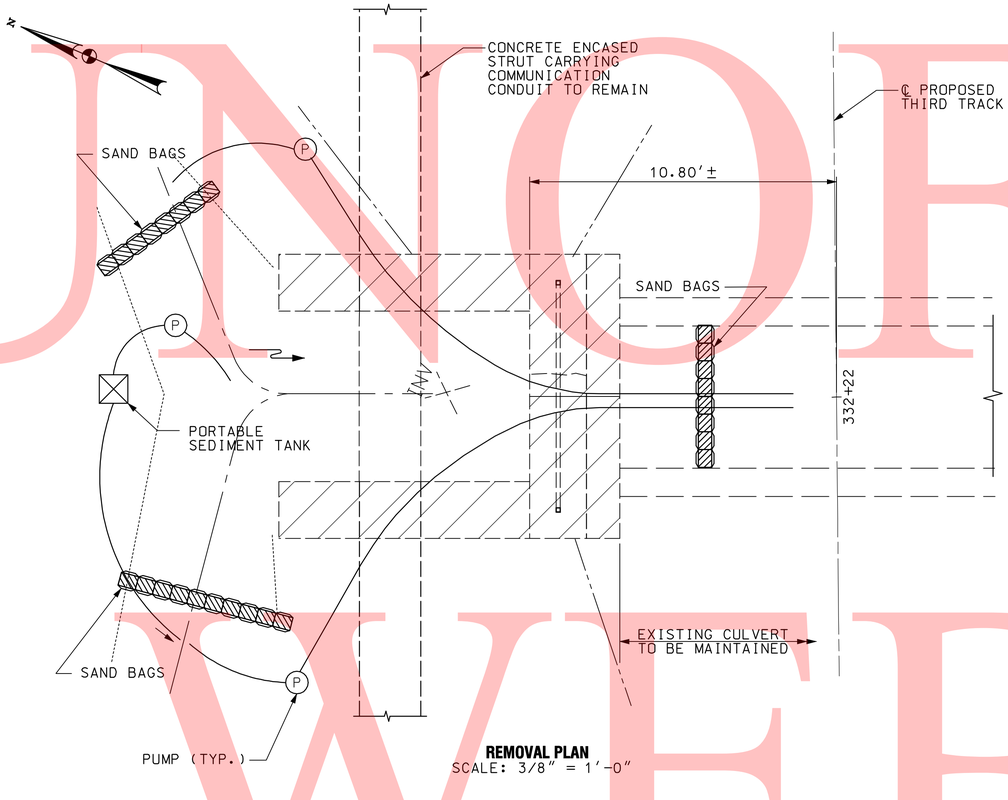

REMOVAL PLAN
SCALE: 3/8" = 1'-0"

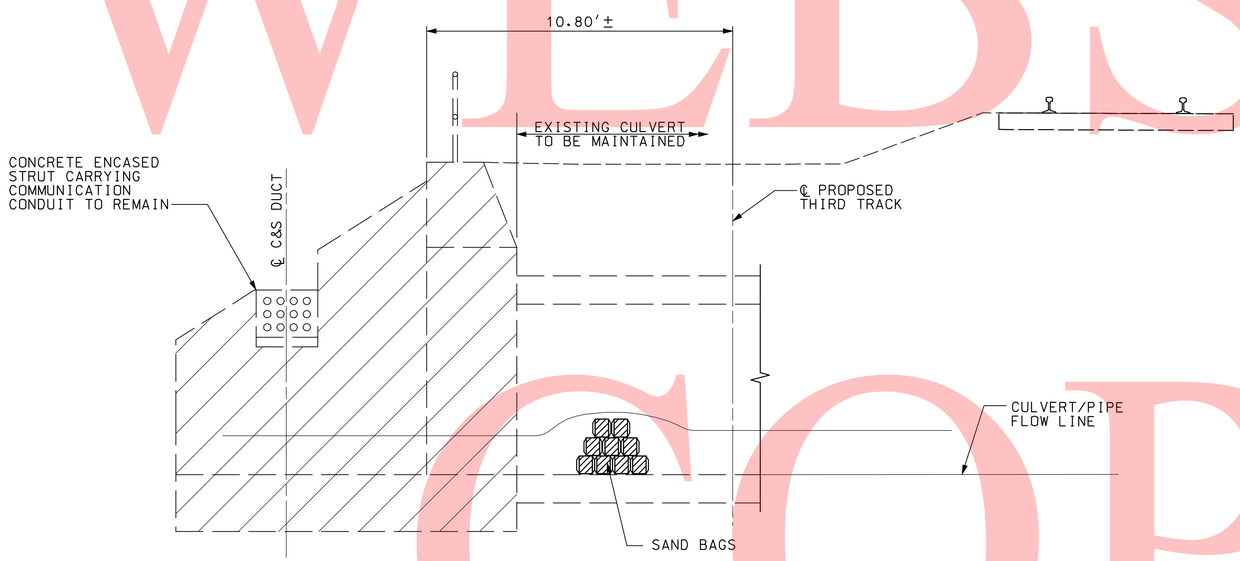

REMOVAL ELEVATION
SCALE: 3/8" = 1'-0"

SEQUENCE OF CONSTRUCTION

1. PLACE SAND BAGS UPSTREAM AND DOWNSTREAM OF WORK SITE AND PUMP FLOW THROUGH WORK AREA. DOWNSTREAM SAND BAGS SHALL ACCOMMODATE HIGH TIDE.
2. UTILIZE PORTABLE SEDIMENT TANK FOR WATER COLLECTED IN WORK AREA.
3. DIVERT STREAM USING SANDBAGS AND A DIVERSION PIPE.
4. REMOVE EXISTING STRUCTURE AND SUBSTRUCTURE ELEMENTS IN THEIR ENTIRETY, I.E. HEADWALL, WINGWALLS, FOUNDATION AND SUB-FOUNDATION ELEMENTS UP TO CONSTRUCTION JOINT WITHIN CULVERT BARREL; DO NOT DISTURB CULVERT.
5. PUMP OUT STANDING WATER AT THE UPSTREAM (NORTHEAST) END OF THE CULVERT.
6. DRIVE TEMPORARY SUPPORT OF EXACTION SHEETING PARALLEL TO RAILROAD TRACKS.

NOTES:

1. FOR LOCATION OF THE GRADE SEPARATION WALL, SEE PLAN AND PROFILE SHEETS.
2. FOR PLAN AND SECTION, SEE DRAWING NO. RW-10.
3. FOR PANEL DETAILS, SEE DRAWING NOS. RW-19 AND RW-20.

CONDUIT MAINTENANCE NOTES:

1. TERRA COTTA DUCT SHALL BE MONITORED FOR VIBRATIONS AND MOVEMENT PER AMTRAK REQUIREMENTS.
2. CONTRACTOR SHALL PROVIDE SHOP DRAWINGS OF HOW DUCT WILL BE SUPPORTED DURING CONSTRUCTION.
3. PRIOR TO ANY DEMOLITION THE CONTRACTOR SHALL EXPOSE AND SUPPORT IN PLACE THE C & S DUCT.
4. CONTRACTOR SHOULD SAW CUT DUCT FREE, SUPPORT IN PLACE AND CONSTRUCT HEADWALL AROUND EXISTING DUCT BANK.
5. CONTRACTOR SHALL FIELD VERIFY ACTUAL LOCATION OF COMMUNICATION DUCT PRIOR TO DRIVING PILES AND NOTIFY ENGINEER WHEN LOCATION CONFLICTS WITH PILE LOCATION. TEST PIT COMMUNICATION DUCT PRIOR TO PILE INSTALLATION (MINIMUM 50'-0" ON CENTER) ADEQUATE MEASURES SHOULD BE TAKEN TO AVOID DAMAGE TO DUCT.

LEGEND:

EXISTING STRUCTURE TO BE REMOVED

$$DATE$$
$$FILE$$
PLOTTER = RAIL-PS-EHL.PLT, PEN TABLE = BALTIMORE.TBL

PREL. TRACING ____ DESIGN ____ CHKD. ____

UNOFFICIAL WEBSITE COPY

CONTRACT	COUNTY	F.A.P. NO.	SHEET NO.	TOTAL SHTS.
27-512-01	NEW CASTLE	N/A	68	140

NEC COMMUTER RAIL IMPROVEMENTS- DELAWARE YARD TO RAGAN - CIVIL, STRUCTURAL

DATE: APRIL 20, 2009

REVISIONS

DRAWING NO. HW-3

PROPOSED GENERAL PLAN AND SECTION THIRD TRACK

SCALE 0 3/8" = 1'

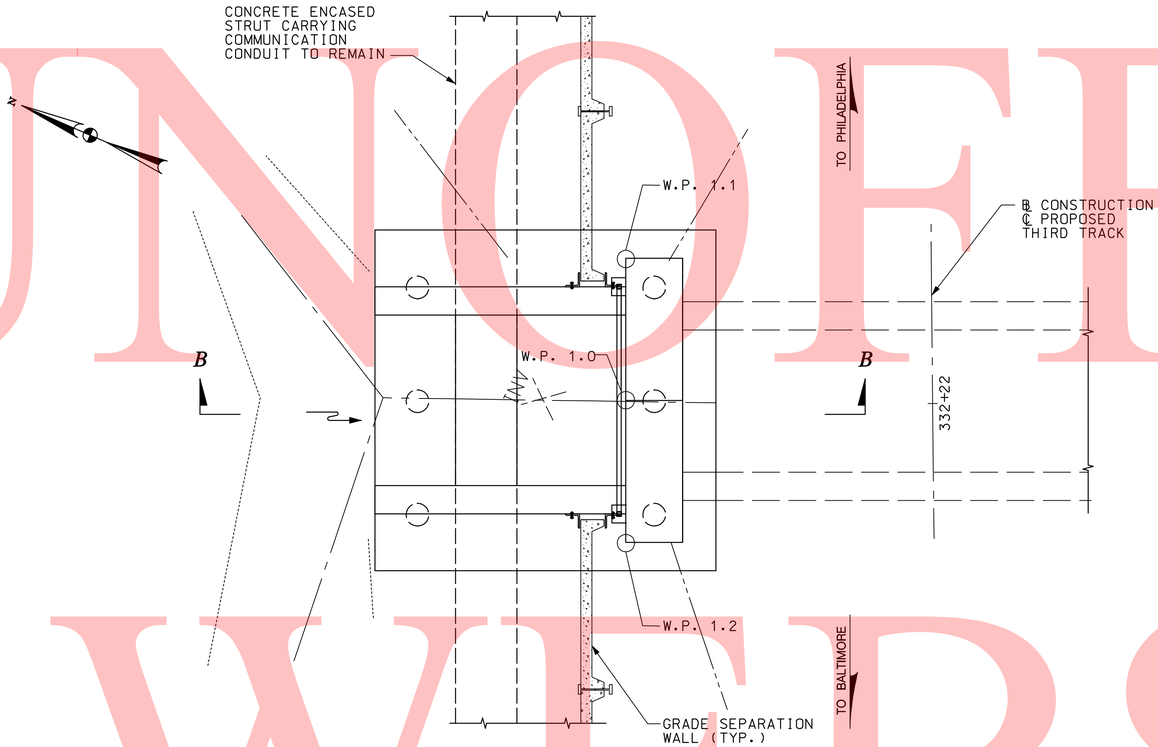

PLAN
SCALE: 3/8" = 1'-0"

℄ CONSTRUCTION PROPOSED TRACK 3		
WORKING POINT	STATION	OFFSET (FT.)
W.P. 1.0	332+22.26	10.80±
W.P. 1.1	332+27.27	10.75±
W.P. 1.2	332+17.26	10.85±

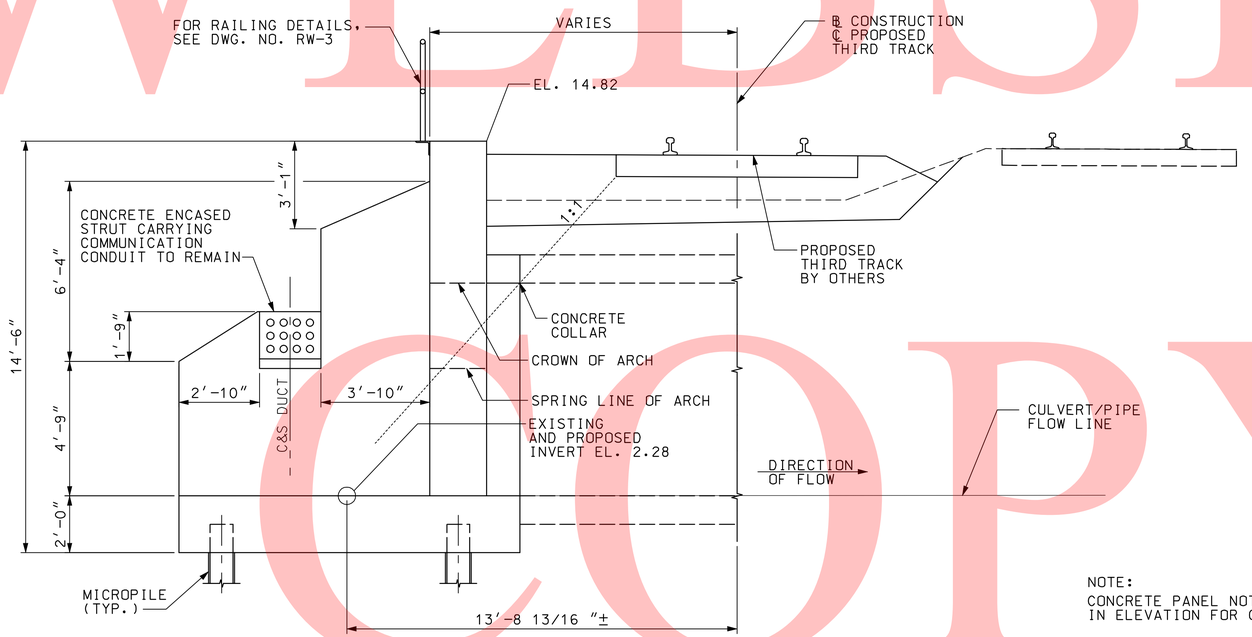

SECTION B-B
SCALE: 3/8" = 1'-0"

NOTE:
CONCRETE PANEL NOT SHOWN IN ELEVATION FOR CLARITY.

NOTES:

1. FOR PILE PLAN, SEE DWG. NO. HW-6.
2. ALL OFFSETS ARE MEASURED TO THE LEFT OF THE ℄.
3. FOR LOCATION OF THE GRADE SEPARATION WALL, SEE PLAN AND PROFILE SHEETS.
4. FOR PLAN AND SECTION, SEE DRAWING NO. RW-10.
5. FOR PANEL DETAILS, SEE DRAWING NOS. RW-19 AND RW-20.

$$DATE$$
$$FILE$$
PLOTTER = RAIL-PS-EHL.PLT, PEN TABLE = BALTIMORE.TBL

PREL. TRACING ____ DESIGN ____ CHKD. ____

UNOFFICIAL WEBSITE COPY

CONTRACT	COUNTY	F.A.P. NO.	SHEET NO.	TOTAL SHTS.
27-512-01	NEW CASTLE	N/A	69	140

NEC COMMUTER RAIL IMPROVEMENTS- DELAWARE YARD TO RAGAN - CIVIL, STRUCTURAL

DATE: APRIL 20, 2009

REVISIONS

DRAWING NO. HW-4

PROPOSED PLAN, ELEVATION, SECTION

THIRD TRACK

SCALE

0

1/2" = 1'

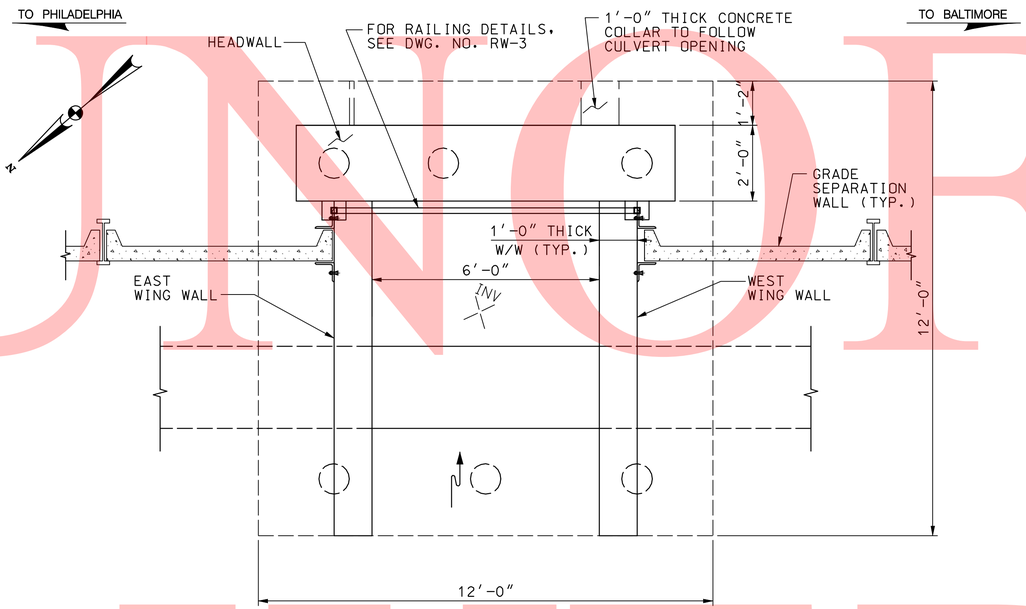

PLAN

SCALE: 1/2" = 1'-0"

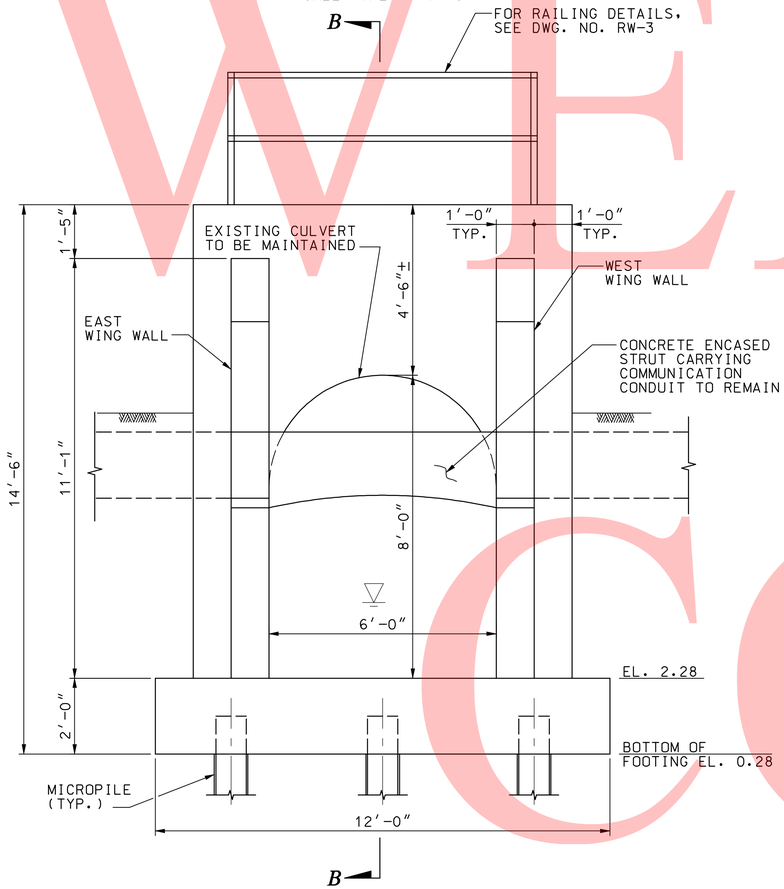

ELEVATION

SCALE: 1/2" = 1'-0"

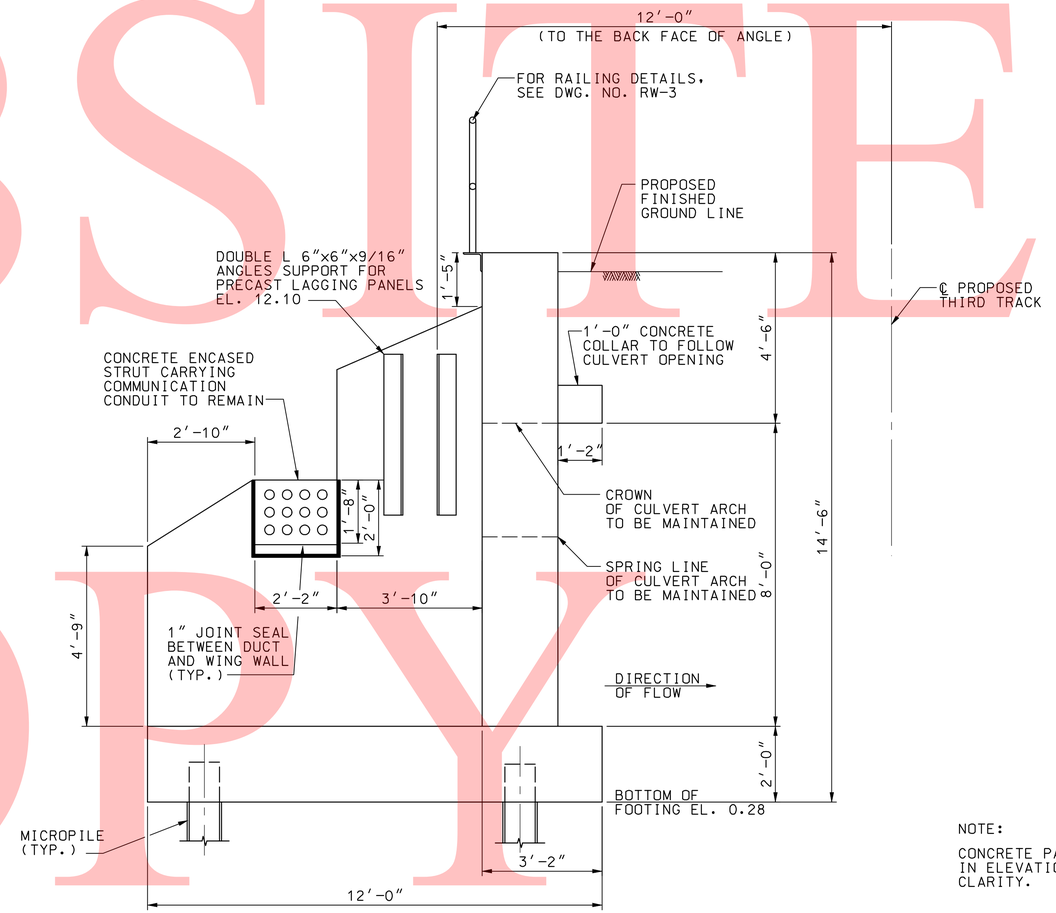

SECTION B-B

SCALE: 1/2" = 1'-0"

NOTES:

1. FOR PILE PLAN, SEE DWG. NO. HW-6.
2. FOR LOCATION OF THE GRADE SEPARATION WALL, SEE PLAN AND PROFILE SHEETS.
3. FOR PLAN AND SECTION, SEE DRAWING NO. RW-10.
4. FOR PANEL DETAILS, SEE DRAWING NOS. RW-19 AND RW-20.

NOTE:

CONCRETE PANEL NOT SHOWN IN ELEVATION & SECTION FOR CLARITY.

$$DATE$$
$$FILE$$
PLOTTER = RAIL-PS-ENL.PLT, PEN TABLE = BALTIMORE.TBL

PREL. TRACING ____ DESIGN ____ CHKD. ____

UNOFFICIAL WEBSITE COPY

CONTRACT	COUNTY	F.A.P. NO.	SHEET NO.	TOTAL SHTS.
27-512-01	NEW CASTLE	N/A	70	140

NEC COMMUTER RAIL IMPROVEMENTS- DELAWARE YARD TO RAGAN - CIVIL, STRUCTURAL

DATE: APRIL 20, 2009

REVISIONS

DRAWING NO. HW-5

REINF. DETAILS

THIRD TRACK

SCALE 0 1/2" = 1'

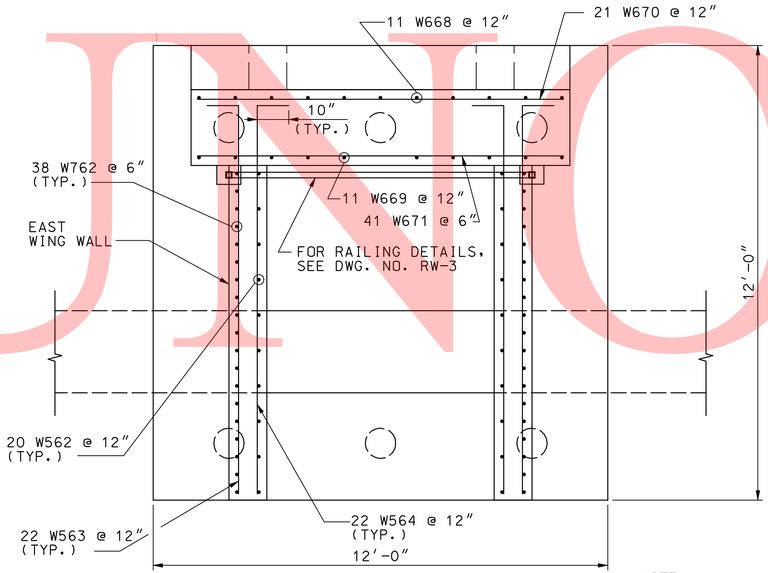

PLAN
SCALE: 1/2" = 1'-0"

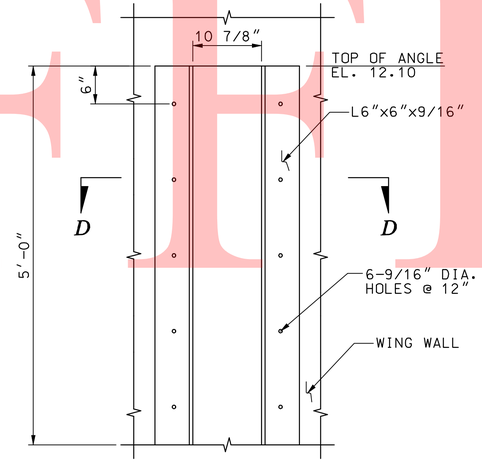

DOUBLE ANGLE ELEVATION DETAIL
SCALE: 1/4" = 1'-0"

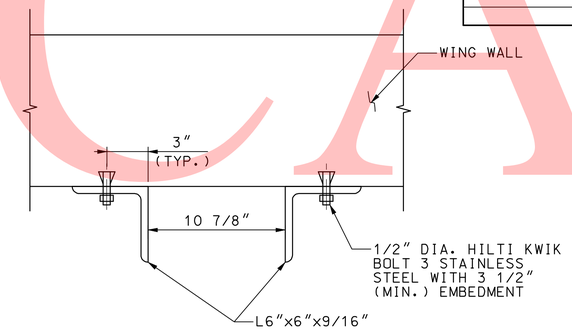

SECTION D-D
SCALE: 1/4" = 1'-0"

NOTE:
CONCRETE PANEL & ANGLES NOT SHOWN IN ELEVATION & SECTION FOR CLARITY

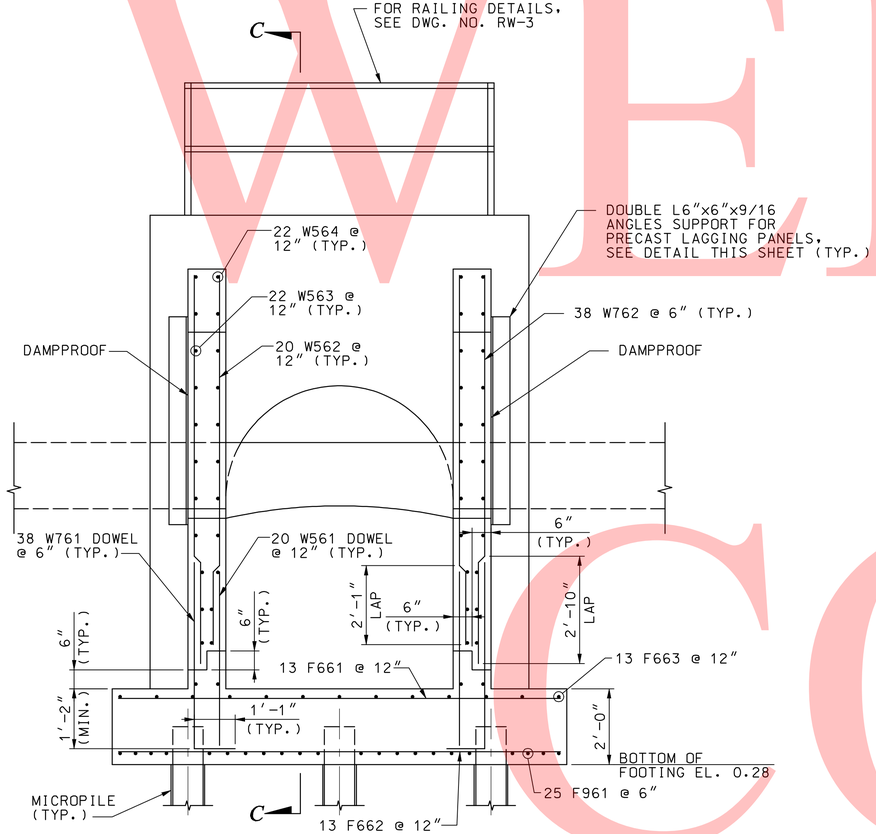

ELEVATION
SCALE: 1/2" = 1'-0"

NOTE:
REINFORCING OVER PILES NOT SHOWN FOR CLARITY.

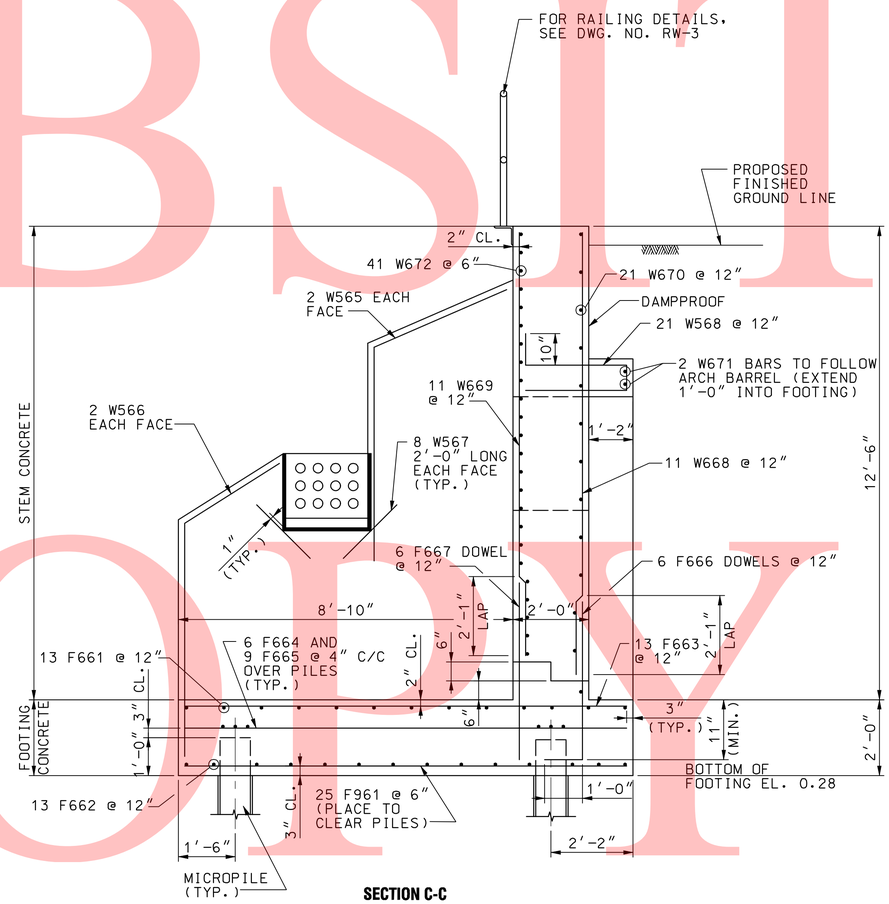

SECTION C-C
SCALE: 1/2" = 1'-0"

NOTES:

1. CONTRACTOR HAS OPTION OF LAPPING STEM REINFORCING WITH DOWEL REINFORCING HOWEVER NO ADDITIONAL COMPENSATION TO CONTRACTOR WILL BE ALLOWED FOR WHICHEVER ALTERNATE IS SELECTED.
2. ALL REINFORCING SHALL BE RESPACED TO MISS PILES AS NECESSARY.
3. FOR PILE PLAN, SEE DWG. NO. HW-6.
4. FOR REINFORCING BAR LIST, SEE DWG. NO. HW-6A.

$$DATE$$
$$FILE$$
PLOTTER = RAIL-PS-EHL.PLT, PEN TABLE = BALTIMORE.TBL

PREL. TRACING ____ DESIGN ____ CHKD. ____

UNOFFICIAL WEBSITE COPY

CONTRACT	COUNTY	F.A.P. NO.	SHEET NO.	TOTAL SHTS.
27-512-01	NEW CASTLE	N/A	71	140

NEC COMMUTER RAIL IMPROVEMENTS- DELAWARE YARD TO RAGAN - CIVIL, STRUCTURAL

DATE: NOVEMBER 10, 2010

REVISIONS

DRAWING NO. HW-6

PILE PLAN

THIRD TRACK

SCALE

0

1/2" = 1'

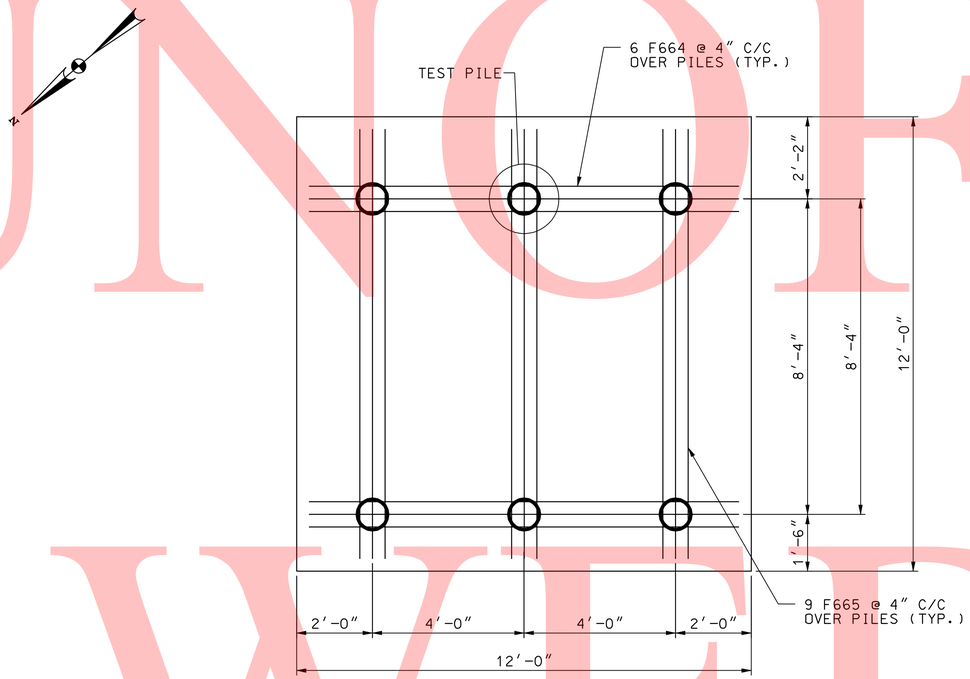

PLAN
SCALE: 1/2" = 1'-0"

MICROPILE ALLOWABLE LOADS ✱ (SERVICE LOAD) [KIPS]			
SUBSTRUCTURE UNIT	COMPRESSION	TENSION	LATERAL
CULVERT HEADWALL	40	–	–

✱ THE CONTRACTOR SHALL DESIGN THE MICROPILE TO FOOTING CONNECTION DETAIL TO MEET THE REQUIRED CAPACITY AS SHOWN ABOVE. THE COST OF MICROPILE TO FOOTING CONNECTION SHALL BE INCIDENTAL TO THE INSTALLATION OF THE MICROPILE.

PILE NOTES:

1. ALL PILES SHALL BE MICROPILES WITH AN ALLOWABLE DESIGN BEARING VALUE OF 20 TONS.
2. SHOP PLANS SHALL SHOW HOW REBARS ARE TO BE TIED AS WELL AS HOW THEY WILL BE HELD IN PLACE ABOVE PILING AS CONCRETE POUR IS MADE.
3. THE MINIMUM SAFE BEARING VALUE AND MINIMUM PENETRATION SHOWN ON THESE PLANS MUST BE ACHIEVED FOR EACH PILE.
4. AT LEAST ONE STATIC QUICK LOAD TEST SHOULD BE PERFORMED ON A PLUMB PILE. MICROPILES SHALL EXTEND AT LEAST 10 FOOT INTO CONTINUOUS ROCK WITH NO VOIDS GREATER THAN SIX INCHES.
5. MINIMUM CLEARANCE OF DRILLING FROM COMMUNICATION DUCT IS 15".
6. MICROPILLES SHALL BE CASED FOR THE ENTIRE LENGTH.
7. FOR ANY OTHER DETAILS CONCERNING MICROPILES, SEE MICROPILE SPECIFICATION FOR PROJECT.

UNOFFICIAL WEBSITE COPY

$$DATE$$
$$FILE$$
PLOTTER = RAIL-PS-EHL.PLT, PEN TABLE = BALTIMORE.TBL

PREL. TRACING _____ DESIGN _____ CHKD. _____

UNOFFICIAL WEBSITE COPY

CONTRACT	COUNTY	F.A.P. NO.	SHEET NO.	TOTAL SHTS.
	NEW CASTLE	N/A	72	140

NEC COMMUTER RAIL IMPROVEMENTS
WILMINGTON TO NEWARK, DE

DATE: APRIL 20, 2009

REVISIONS

DRAWING NO. SOE-1

LIMITS OF EXCAVATION PLAN
THIRD TRACK –
MILL CREEK BRIDGE
AND RETAINING WALL

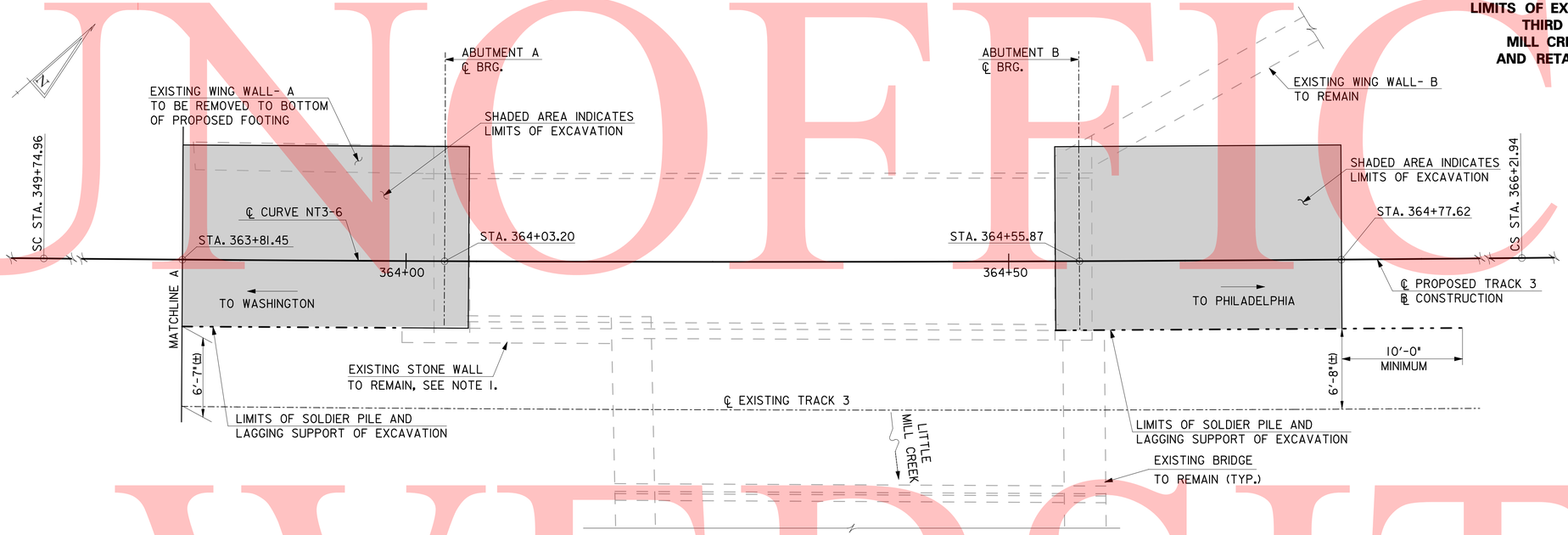

PLAN
SCALE: 3/16"=1'-0"

- - - - - INDICATES SOLDIER PILES AND LAGGING

NOTES:
1. AMTRAK WILL INSPECT THE EXISTING STONE WALL AND PERFORM REPAIRS AS NECESSARY. THE CONTRACTOR SHALL COORDINATE WITH AMTRAK TO PERFORM THIS WORK AFTER THE EXISTING BRIDGE IS REMOVED AND PRIOR TO THE GIRDERS BEING RE-INSTALLED.

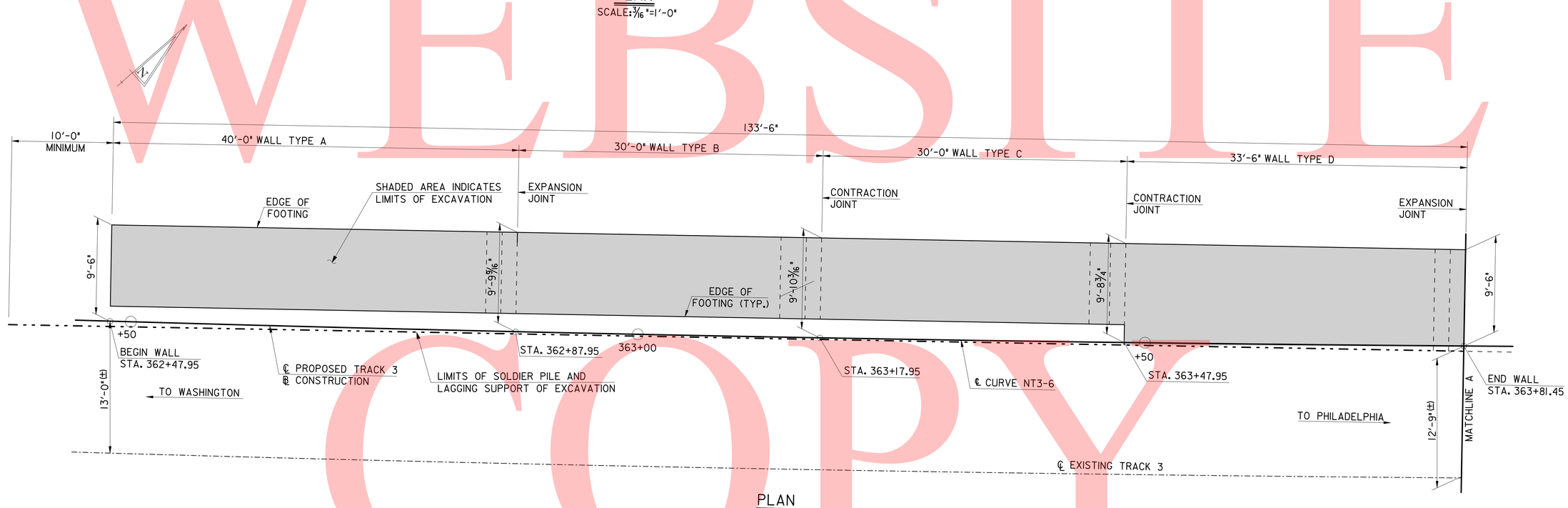

PLAN
SCALE: 3/16"=1'-0"

4/13/2009
M:\projects\2007\07052_DTC\Third-Trk\CADD\structr\SOE-1.dgn
PLOTTER = RAIL-F5-EHL.PL1, PEN TABLE = BALTIMORE.TBL

PREL. TRACING	JCE	DESIGN	BST	CHKD.	CME

CONTRACT	COUNTY	F.A.P. NO.	SHEET NO.	TOTAL SHTS.
27-512-01	NEW CASTLE	HPP-2005 (028)	73	140

NEC COMMUTER RAIL IMPROVE.– DELAWARE YARD to RAGAN – Civil, Structural

DATE: NOVEMBER 10, 2010

REVISIONS

DRAWING NO. SOE-2

TEMPORARY SUPPORT OF EXCAVATION

THIRD TRACK

NOT TO SCALE

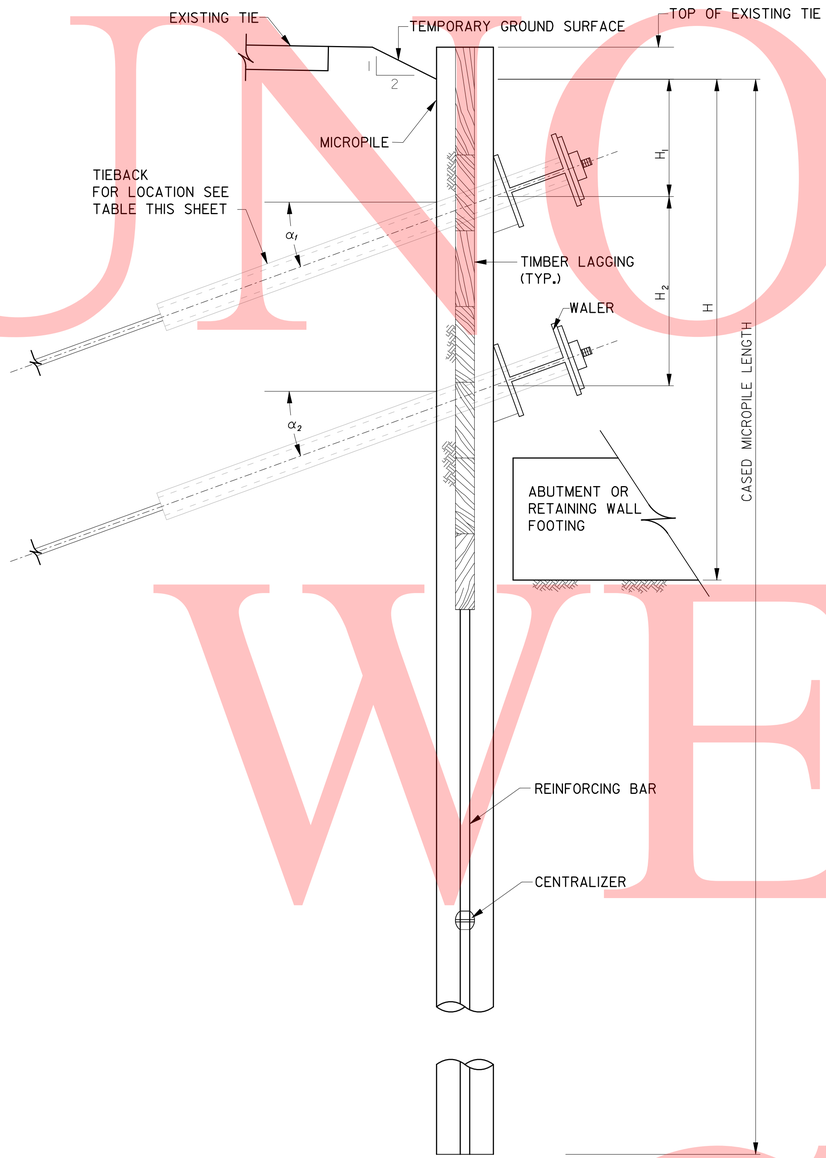

SUPPORT OF EXCAVATION DETAIL

NOT TO SCALE

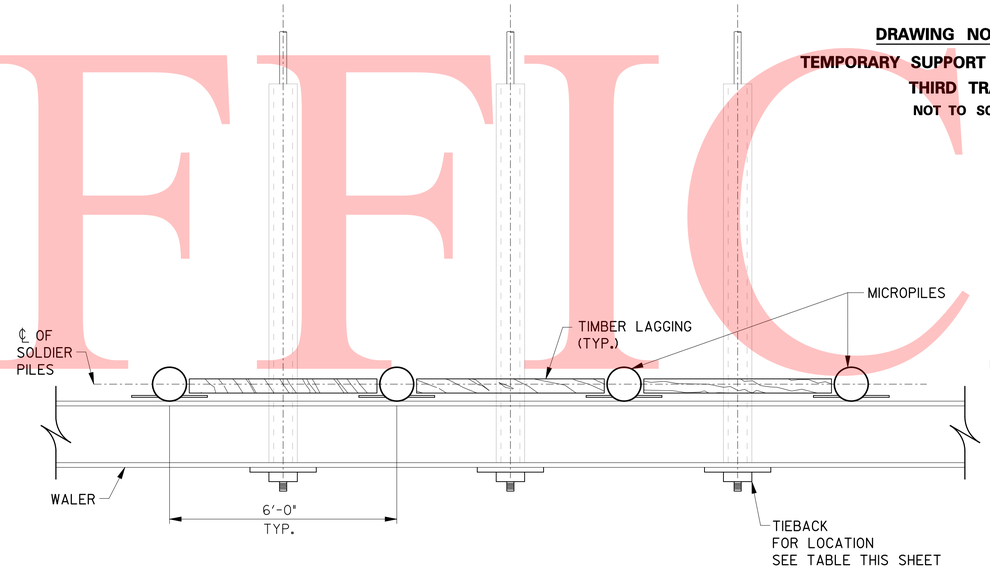

TYPICAL PLAN SECTION

NOT TO SCALE

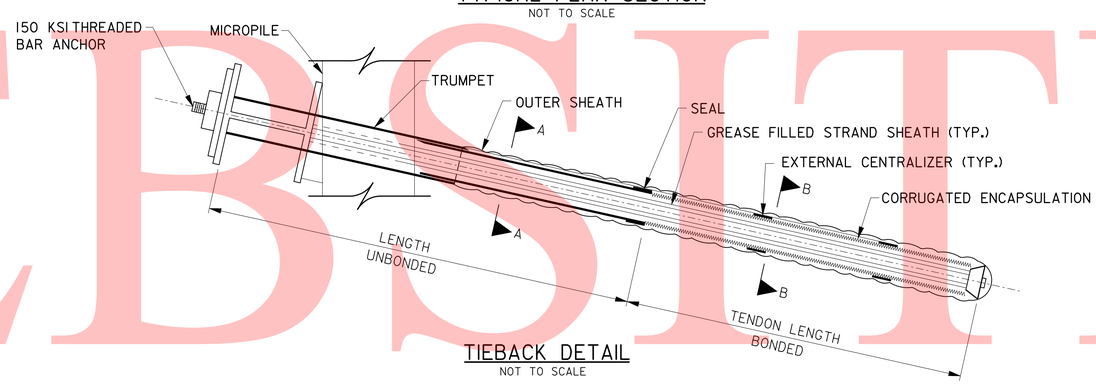

TIEBACK DETAIL

NOT TO SCALE

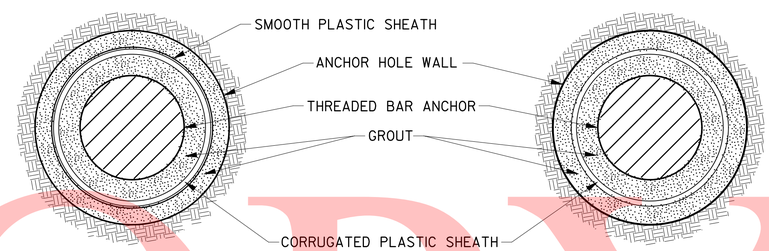

SECTION A-A

NOT TO SCALE

SECTION B-B

NOT TO SCALE

NOTES:

1. FOR BORING AND DRIVE TEST, SEE DWG. NO SB-67 THROUGH DWG. NO SB-75.
2. WATER SHALL NOT BE USED FOR INSTALLATION OF MICROPILES AND TIE BACKS.
3. MICROPILES SHALL BE CASED FOR THE ENTIRE LENGTH.
4. THE MICROPILES SHALL EXTEND A MINIMUM OF 10 FEET INTO CONTINUOUS ROCK WITH NO VOIDS GREATER THAN 6-INCHES.
5. TIEBACKS SHALL BE DRILLED IN PLACE WITH CASING. CASING SHALL BE EXTRACTED ONLY AS GROUT IS PLACED IN THE TIEBACK.
6. THE LENGTH OF TIEBACKS SHALL BE DESIGNED TO BE WITHIN THE RIGHT-OF-WAY OF THE PROJECT. THE TIEBACKS SHALL EXTEND A MAXIMUM HORIZONTAL DISTANCE OF 39 FEET FROM THE ℄ OF EXISTING TRACK 3.

11/9/2010
\\RKKAV2007\2007\07052_DTC\Third-Track\CADD\structr\ST01_TSOE.dgn
PLOTTER = RAIL-PS-ENL.PLT, PEN TABLE = BALTIMORE.TBL

PREL. TRACING EMT DESIGN BJH CHKD. DCK

UNOFFICIAL WEBSITE COPY

CONTRACT	COUNTY	F.A.P. NO.	SHEET NO.	TOTAL SHTS.
	NEW CASTLE	N/A	74	140

DRAWING NO. SOE-3

LATERAL EARTH LOADINGS

THIRD TRACK

NOT TO SCALE

NEC COMMUTER RAIL IMPROVEMENTS
WILMINGTON TO NEWARK, DE

DATE: APRIL 20, 2009

REVISIONS

LATERAL PRESSURE DUE TO WEIGHT OF SOIL AND SURCHARGE (DRAINED CONDITIONS)

SOE 1 (TWO ROWS OF TIEBACKS)

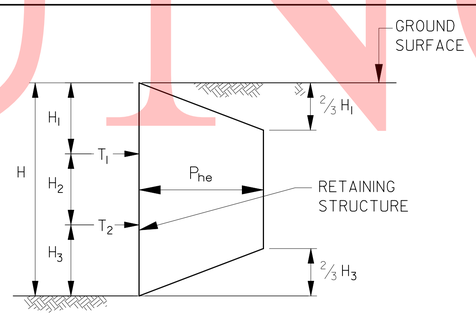

$$P_{he} = \frac{27.06\ H^2}{H - \frac{1}{3} H_1 - \frac{1}{3} H_3}$$

H_1 = DEPTH FROM GROUND SURFACE TO FIRST ROW OF TIEBACK

H_2 = DISTANCE BETWEEN FIRST ROW AND SECOND ROW OF TIEBACK

H_3 = DISTANCE FROM SECOND ROW OF TIEBACK TO BOTTOM OF EXCAVATION

T_1 = TIEBACK 1

T_2 = TIEBACK 2

SOE 2 (ONE ROW OF TIEBACK)

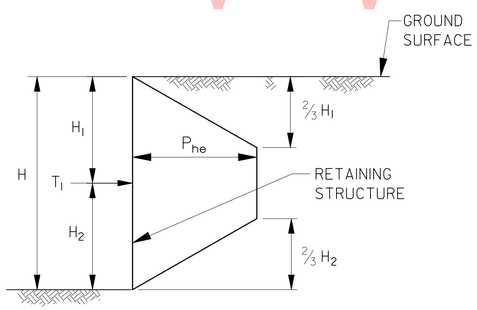

P_{he} = 41.2 H

H_1 = DEPTH FROM GROUND SURFACE TO TIEBACK

H_2 = DISTANCE FROM TIEBACK TO BOTTOM OF EXCAVATION

T_1 = TIEBACK 1

CONSTRUCTION EQUIPMENT SURCHARGE

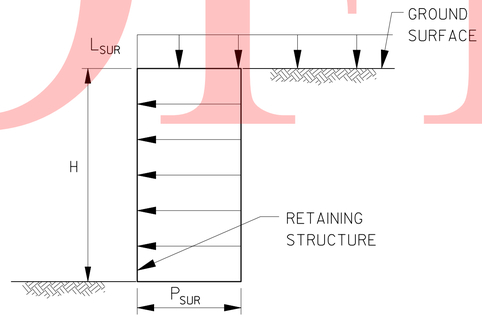

LATERAL PRESSURE IS BASED ON CONSTRUCTION EQUIPMENT SURCHARGE (L_{SUR}).

P_{SUR} = 0.33 L_{SUR} psf.

FOR SURCHARGE FROM RAILROAD COOPER E-80 LOADING, BOUSSINESQ ANALYSIS MUST BE PERFORMED- SEE FIGURE THIS SHEET

ADDITIONAL LATERAL PRESSURE DUE TO SURCHARGE FROM RAILROAD COOPER E-80 LOADING

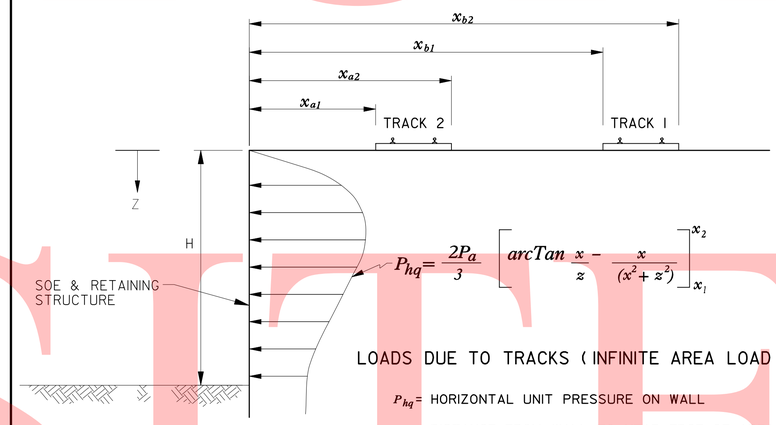

$$P_{hq} = \frac{2P_a}{3}\left[arcTan\ \frac{x}{z} - \frac{x}{(x^2+z^2)}\right]_{x_1}^{x_2}$$

LOADS DUE TO TRACKS (INFINITE AREA LOAD PARALLEL TO WALL)

P_{hq} = HORIZONTAL UNIT PRESSURE ON WALL

$x_{(i)1}$ = DISTANCE FROM WALL TO NEAR EDGE OF AREA LOAD (i)

$x_{(i)2}$ = DISTANCE FROM WALL TO FAR EDGE OF AREA LOAD (i)

Z = DEPTH FROM TOP OF WALL

P_a = SURCHARGE LOAD/ UNIT AREA

P_a FOR SUPPORT OF EXCAVATION = 150% OF COOPER E80 LOADING: 2812 PSF

GENERAL NOTES:

H = MAXIMUM EXPOSED HEIGHT OF WALL

P_{he} = CALCULATED LATERAL EARTH PRESSURE TO BE USED IN DESIGNING RETAINING STRUCTURE (PSF)

NOTES:

1. CALCULATIONS SHALL BE BASED ON THE ASSUMPTION THAT THE EXCAVATION IS DEWATERED WHEN CONSTRUCTED WITH SOLDIER BEAMS AND LAGGING, OR WHEN OTHER POSITIVE METHODS OF DRAINING THE SOILS ARE USED.
2. FOR EVALUATION OF THE LATERAL PRESSURE UNDER A GIVEN SET OF CONDITIONS, LATERAL PRESSURE FROM SURCHARGE LOADS SHALL BE SUPERPOSED ON LATERAL PRESSURE FROM SOIL WEIGHT (TRAPEZOIDAL DIAGRAM).
3. IF ANY LOADINGS OCCUR, WHICH ARE NOT DESCRIBED HEREON, ADEQUATE MEASURES MUST BE TAKEN FOR THESE CONDITIONS, SUBJECT TO REVIEW BY THE ENGINEER.
4. THE TRAPEZOIDAL SHAPED PRESSURE DIAGRAM SHOWN ARE APPLICABLE TO THE MULTILEVEL TIEBACK OR BRACE SUPPORT SYSTEM AND SINGLE-LEVEL TIEBACK OR BRACE SUPPORT SYSTEM AS INDICATED.
5. LAGGING TO BE DESIGNED BY THE CONTRACTOR BASED ON SOLDIER PILE SPACING.
6. THE INFORMATION PROVIDED ON THIS DRAWING IS FOR THE CONTRACTOR'S USE IF THE CONTRACTOR INTENDS TO RE-DESIGN THE SUPPORT OF EXCAVATION SYSTEM.
7. THE CONTRACTOR SHALL COORDINATE AND RECEIVE WRITTEN APPROVAL FROM AMTRAK FOR ALL ACTIVITIES WITHIN 25 FEET OF ACTIVE TRACKS OR ENERGIZED WIRES.
8. THE CONTRACTOR SHALL NOTE HORIZONTAL AND VERTICAL CLEARANCE RESTRICTIONS SHOWN ON THE PLANS OR DESCRIBED IN THE SPECIFICATIONS.
9. ALL WIRES SHALL BE CONSIDERED ENERGIZED UNLESS SPECIFICALLY NOTIFIED OTHERWISE BY AMTRAK AND APPROPRIATE GROUNDING APPARATUS IS IN PLACE.
10. NO EXCAVATION FOR INSTALLATION OF SOE SHALL OCCUR UNLESS AMTRAK HAS APPROVED A SERVICE OUTAGE ON THE ADJACENT TRACK (ALL TRAIN TRAFFIC ON FAR TRACK).

UNOFFICIAL WEBSITE COPY

4/13/2009
MKbrojbec-1$\2007\07052_DTC\Third-Trk\CADD\struct\ST02_EARTH LOADINGS.dgn
PLOTTER = RAIL-F5-EHL,FL1, PEN TABLE = BALTIMORE.TBL

PREL. TRACING | EMT | DESIGN | BJH | CHKD. | DCK

CONTRACT	COUNTY	F.A.P. NO.	SHEET NO.	TOTAL SHTS
27-512-01	NEW CASTLE	HPP-2005 (028)	75	140

DRAWING NO. SB-39

SOIL BORING LAYOUT PLAN

THIRD TRACK

SCALE

40 20 0 40

1"= 40'

NEC COMMUTER RAIL IMPROVE.– DELAWARE YARD to RAGAN – Civil, Structural

DATE: APRIL 20, 2009

REVISIONS

UNOFFICIAL WEBSITE COPY

NO SOIL BORINGS THIS SHEET

To Baltimore

To Philadelphia

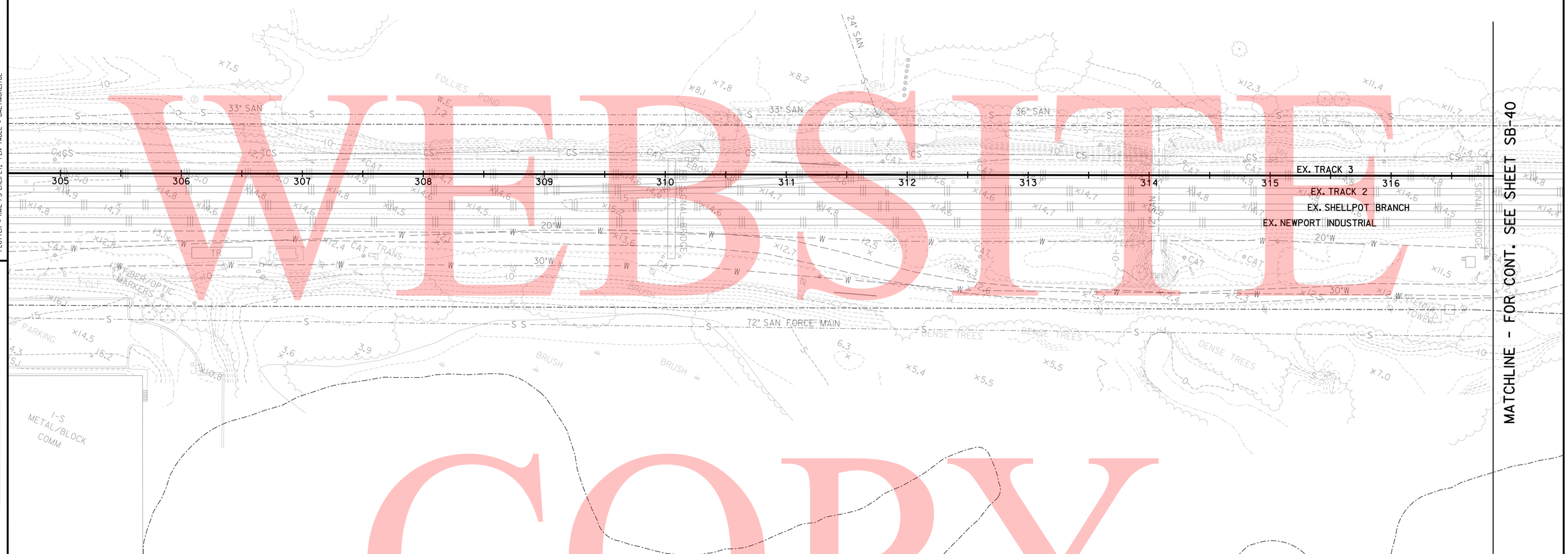

LEGEND

SOIL BORING

4/20/2009
M:\pr\jec-s\2007\07052_DT\Third-Trk\CADD\Plans\SB390TC.dgn
PLOTTER = RAIL-PS-ENLRLT, PEN TABLE = BALTIMORE.TBL

PRELIM. TRACING _____ DESIGN _____ CHKD. _____

CONTRACT	COUNTY	F.A.P. NO.	SHEET NO.	TOTAL SHTS.
27-512-01	NEW CASTLE	HPP-2005 (028)	76	140

DRAWING NO. SB-40

SOIL BORING LAYOUT PLAN

THIRD TRACK

SCALE

40 20 0 40

1"= 40'

NEC COMMUTER RAIL IMPROVE.– DELAWARE YARD to RAGAN – Civil, Structural

DATE: APRIL 20, 2009

REVISIONS

UNOFFICIAL WEBSITE COPY

To Baltimore **To Philadelphia**

LEGEND

SOIL BORING

4/20/2009
M:\projects\2007\07052_DT0\Third-T+A\CADD\Plans\SB400TC.dgn
PLOTTER = RAIL-PS SHLPLT, PEN TABLE = BALTIMORE.TBL

PREL. TRACING _____ DESIGN _____ CHKD. _____

CONTRACT	COUNTY	F.A.P. NO.	SHEET NO.	TOTAL SHTS.
27-512-01	NEW CASTLE	HPP-2005 (028)	77	140

NEC COMMUTER RAIL IMPROVE.– DELAWARE YARD to RAGAN – Civil, Structural

DATE: APRIL 20, 2009

REVISIONS

DRAWING NO. SB-41

SOIL BORING LAYOUT PLAN
THIRD TRACK

SCALE
40 20 0 40
1"= 40'

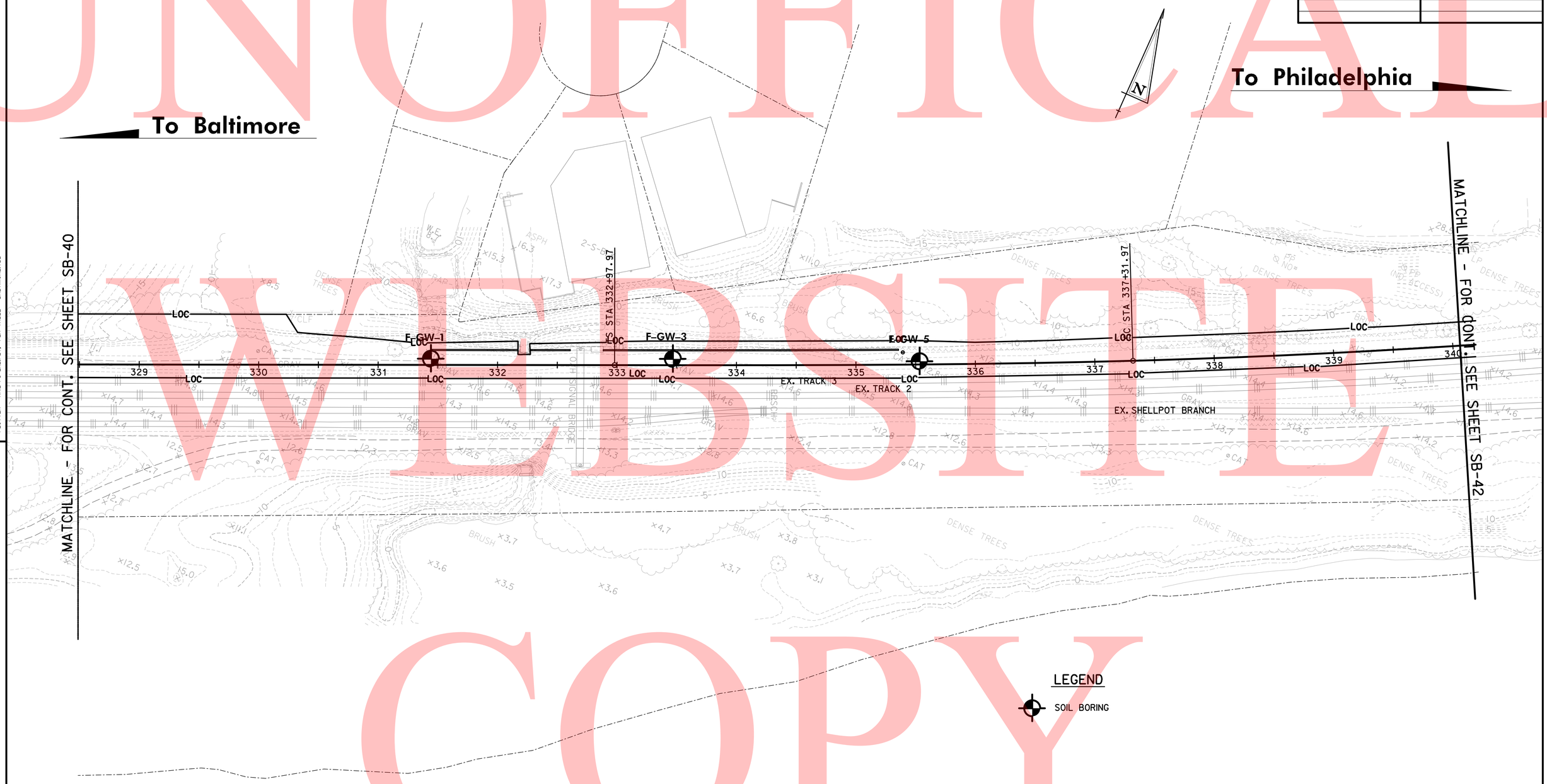

4/20/2009
MAJor Objects\2007\07052_DTC\Third-Trk\CADD\Plans\SB41DTC.dgn
PLOTTER = RAIL-PS-EHL,PL1, PEN TABLE = BALTIMORE.TBL

DESIGN
CHKD.
PREL. TRACING

UNOFFICIAL WEBSITE COPY

CONTRACT	COUNTY	F.A.P. NO.	SHEET NO.	TOTAL SHTS.
27-512-01	NEW CASTLE	HPP-2005 (028)	78	140

NEC COMMUTER RAIL IMPROVE.– DELAWARE
YARD to RAGAN – Civil, Structural

DATE: APRIL 20, 2009

REVISIONS

DRAWING NO. SB-42

SOIL BORING LAYOUT PLAN
THIRD TRACK

SCALE
40 20 0 40
1"= 40'

4/20/2009
M:\projects\2007\07052.DT0\Third-Trk\CADD\Plans\SB420Tc.dgn
PLOTTER = RAIL-PS-ENL-PL1, PEN TABLE = BALTIMORE.TBL

PREL. TRACING ____ DESIGN ____ CHKD. ____

UNOFFICIAL WEBSITE COPY

CONTRACT	COUNTY	F.A.P. NO.	SHEET NO.	TOTAL SHTS.
27-512-01	NEW CASTLE	HPP-2005 (028)	79	140

NEC COMMUTER RAIL IMPROVE.– DELAWARE YARD to RAGAN – Civil, Structural

DATE: APRIL 20, 2009

REVISIONS

DRAWING NO. SB-43

SOIL BORING LAYOUT PLAN
THIRD TRACK

SCALE
40 20 0 40
1"= 40'

To Baltimore | **To Philadelphia**

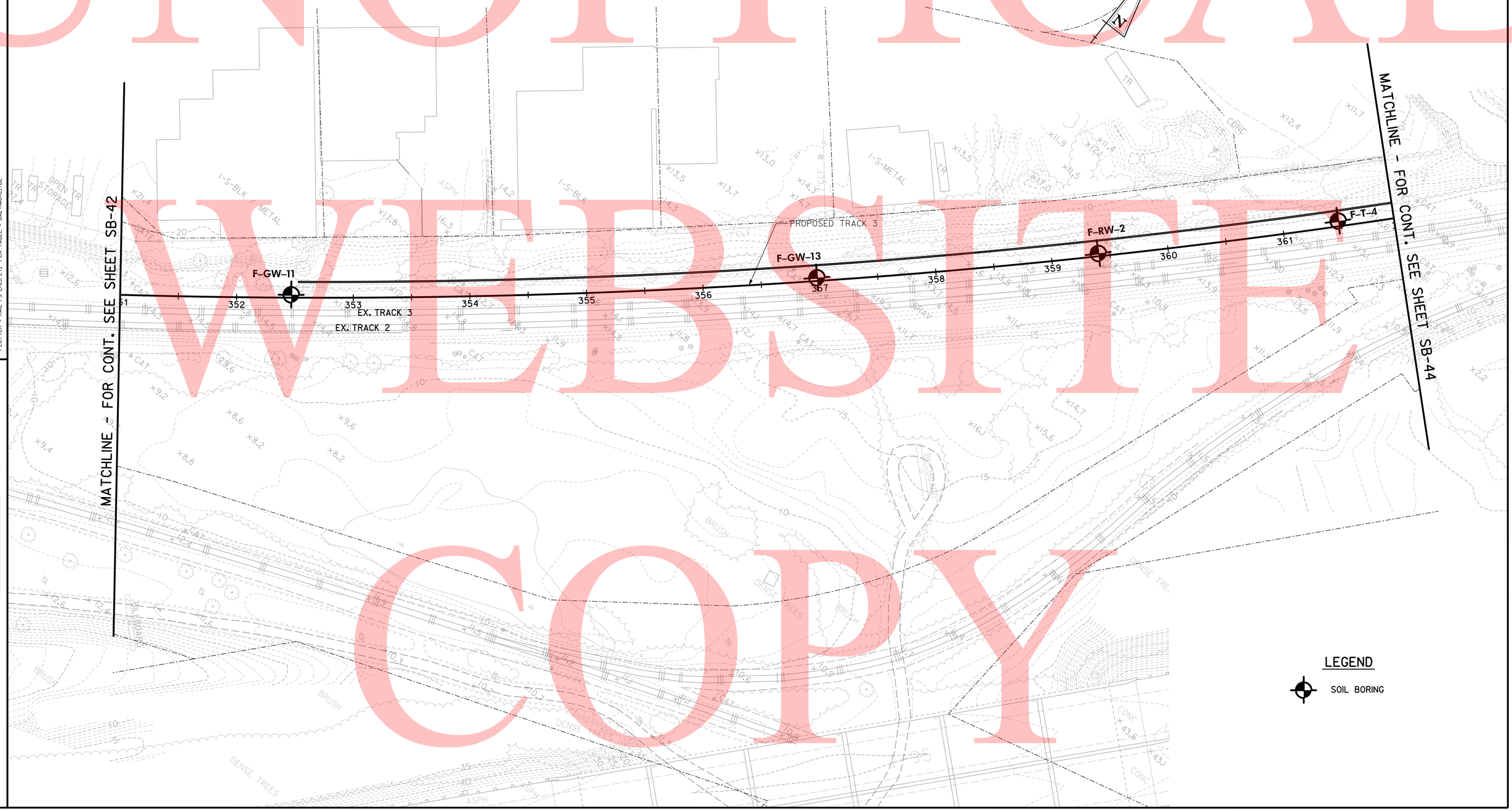

LEGEND

SOIL BORING

4/20/2009
M:\projects\2007\07052.DT\Third-Trk\CADD\Plans\SB430Tc.dgn
PLOTTER = RAIL-PS-ENL.PLT, PEN TABLE = BALTIMORE.TBL

PREL. TRACING ____ DESIGN ____ CHKD. ____

UNOFFICIAL WEBSITE COPY

CONTRACT	COUNTY	F.A.P. NO.	SHEET NO.	TOTAL SHTS.
27-512-01	NEW CASTLE	HPP-2005 (028)	80	140

DRAWING NO. SB-44

SOIL BORING LAYOUT PLAN

THIRD TRACK

SCALE

40 20 0 40

1"= 40'

NEC COMMUTER RAIL IMPROVE.– DELAWARE YARD to RAGAN – Civil, Structural

DATE: APRIL 20, 2009

REVISIONS

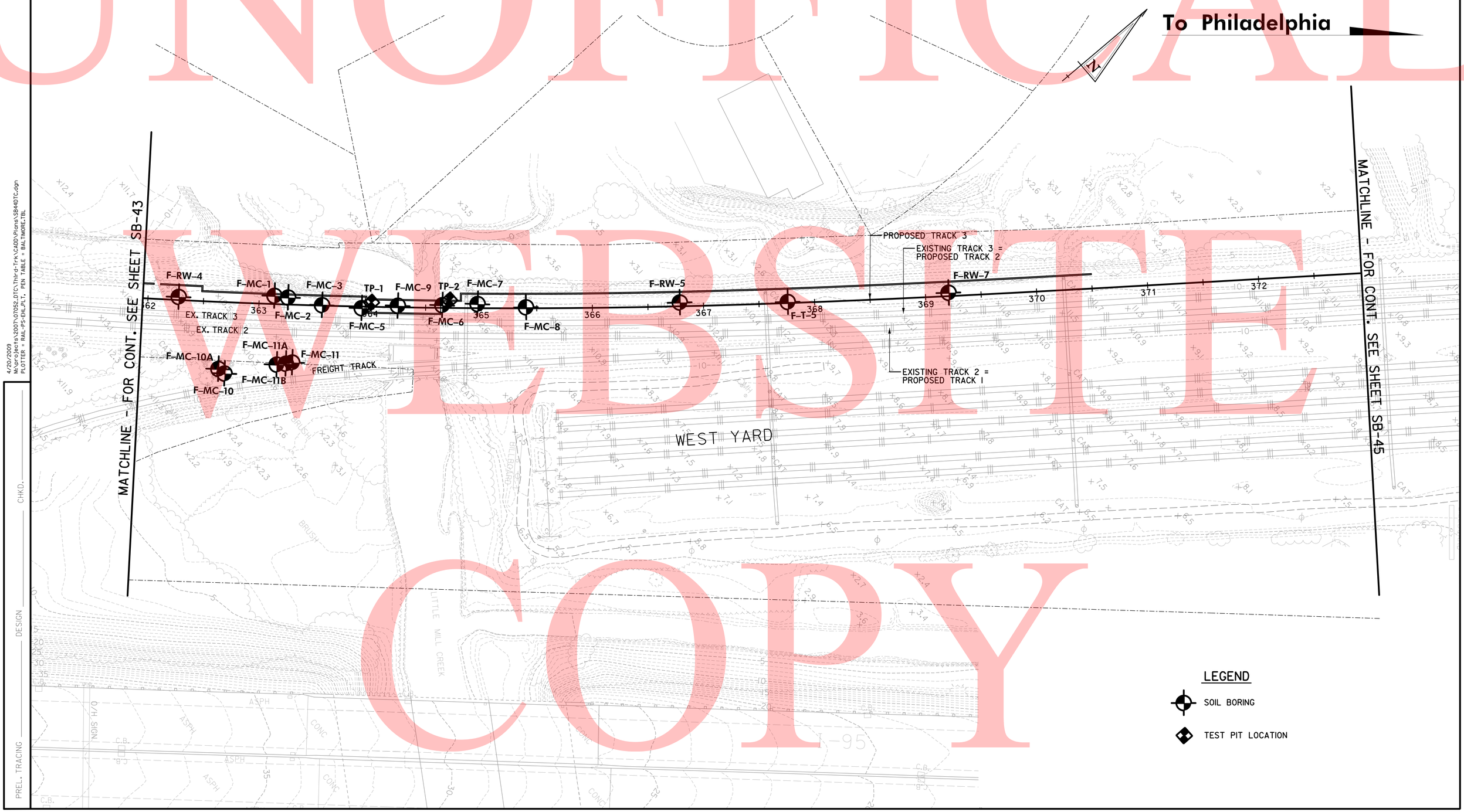

4/20/2009
M:\pr\jec-18\2007\07052_DTC\Third-Trk\CADD\Plans\SB440TC.dgn
PLOTTER = RAIL-PS-ENL,PL1, PEN TABLE = BALTIMORE.TBL

PREL. TRACING ____ DESIGN ____ CHKD. ____

UNOFFICIAL WEBSITE COPY

CONTRACT	COUNTY	F.A.P. NO.	SHEET NO.	TOTAL SHTS.
27-512-01	NEW CASTLE	HPP-2005 (028)	81	140

NEC COMMUTER RAIL IMPROVE.– DELAWARE YARD to RAGAN – Civil, Structural

DATE: APRIL 20, 2009

REVISIONS

DRAWING NO. SB-45

SOIL BORING LAYOUT PLAN
THIRD TRACK

SCALE
40 20 0 40
1"= 40'

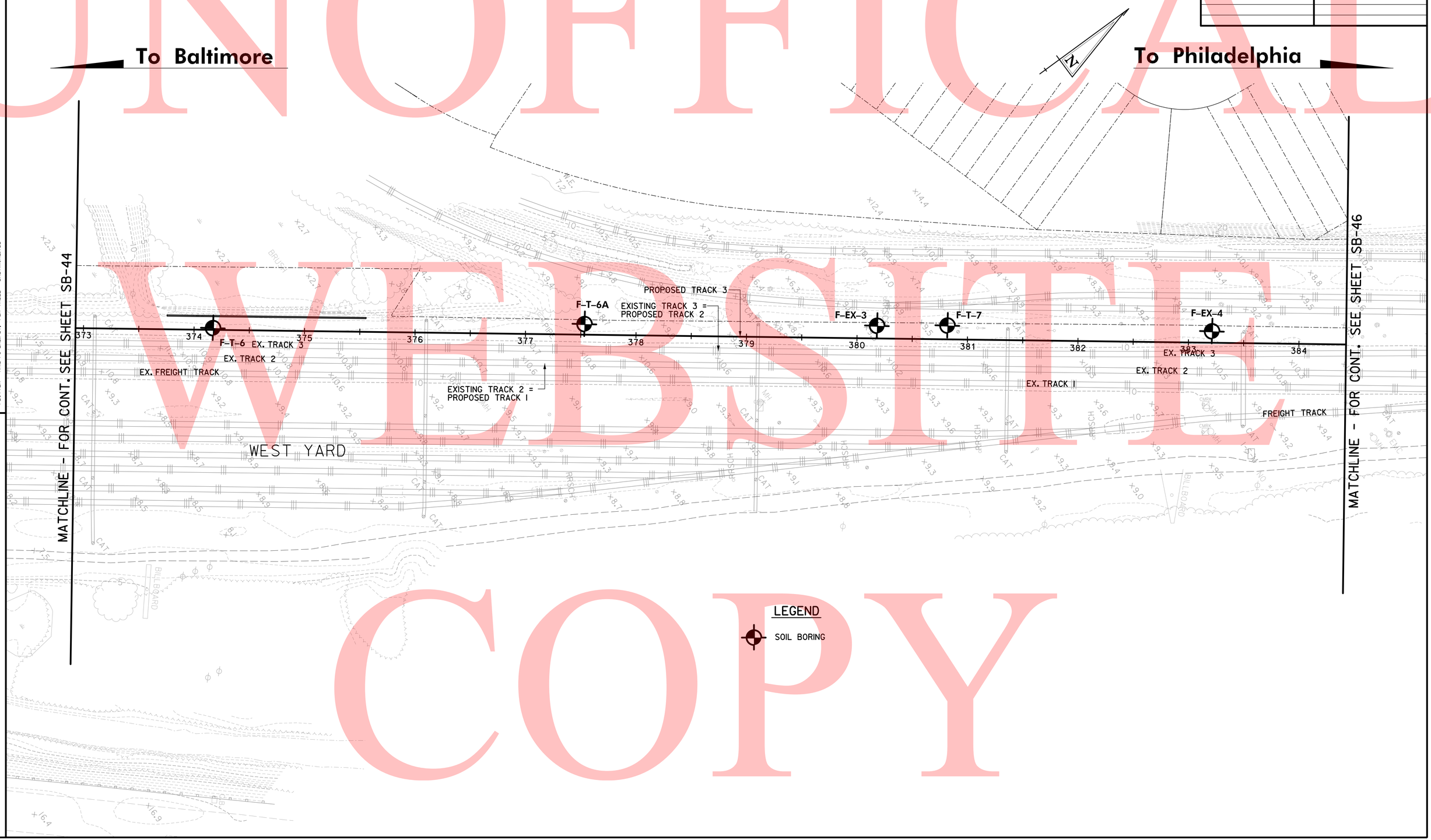

4/20/2009
MajorProjects\2007\07052_DTC\Third-Trk\CADD\Plans\SB450TC.dgn
PLOTTER = RAIL-PS-ENL.PL1, PEN TABLE = BALTIMORE.TBL

DESIGN
CHKD.
PREL. TRACING

UNOFFICIAL WEBSITE COPY

CONTRACT	COUNTY	F.A.P. NO.	SHEET NO.	TOTAL SHTS
27-512-01	NEW CASTLE	HPP-2005 (028)	82	140

NEC COMMUTER RAIL IMPROVE.– DELAWARE YARD to RAGAN – Civil, Structural

DATE: APRIL 20, 2009

REVISIONS

DRAWING NO. SB-46

SOIL BORING LAYOUT PLAN

THIRD TRACK

SCALE

40 20 0 40

1"= 40'

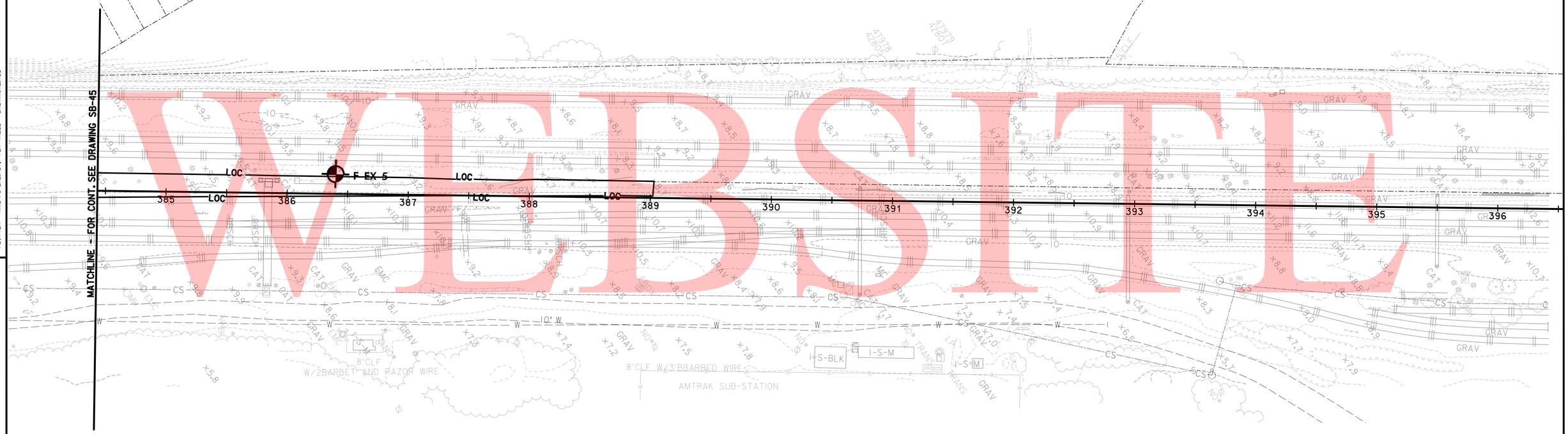

LEGEND

SOIL BORING

4/20/2009
MA:\projects\2007\07052.DT0\Third-Trk\CADD\Plans\SB460TC.dgn
PLOTTER = RAIL-PS-ENLRL1, PEN TABLE = BALTIMORE.TBL

PREL. TRACING _____ DESIGN _____ CHKD. _____

UNOFFICIAL WEBSITE COPY

CONTRACT	COUNTY	F.A.P. NO.	SHEET NO.	TOTAL SHTS
27-512-01	NEW CASTLE	HPP-2005 (028)	83	140

DRAWING NO. SB-47

SUMMARY OF LABORATORY DATA

THIRD TRACK

NOT TO SCALE

NEC COMMUTER RAIL IMPROVE.- DELAWARE YARD to RAGAN - Civil, Structural

DATE: APRIL 20, 2009

REVISIONS

UNOFFICIAL WEBSITE COPY

Summary of Laboratory Classification Testing

Boring/ Sample No.	Depth (ft)	Description	NMC	LL	PI	% Fines	USCS	AASHTO
F-EX-1 / S-4	8.0 - 10.0	Sandy Lean CLAY	20.1	31	15	67	CL	A-6
F-EX-2 / S-4	8.0 - 10.0	Silty SAND	16.4	NP	NP	21	SM	A-2-4
F-EX-3 / S-3	6.0 - 8.0	Lean CLAY	31	33	12	85	CL	A-6
F-EX-4 / S-2	4.0 - 6.0	Silty Clayey SAND with Gravel	19.3	21	5	31	SC-SM	A-2-4
F-EX-5 / S-3	6.0 - 8.0	Clayey SAND with Gravel	25.6	28	11	37	SC	A-6
F-GW-01 / S-3	8.0 - 10.0	Sandy Lean CLAY	21	25	8	52	CL	A-4
F-GW-01 / S-4	14.0 - 16.0	Silty Clayey SAND	22.8	25	5	32	SC-SM	A-2-4
F-GW-03 / S-3	8.0 - 10.0	Lean CLAY with Sand	30.2	38	21	77	CL	A-6
F-GW-03 / S-6	24.0 - 26.0	Silty Clayey SAND	16.1	25	5	29	SC-SM	A-2-4
F-GW-05 / S-2	5.0 - 7.0	Silty SAND	18.7	15	1	23	SM	A-2-4
F-GW-05 / S-6	24.0 - 26.0	Lean CLAY with Sand	24.1	48	30	74	CL	A-7-6
F-GW-07 / S-3	8.0 - 10.0	Silty SAND	14.5	NP	NP	37	SM	A-4
F-GW-07 / S-6	24.0 - 26.0	Sandy Lean CLAY	16.3	34	19	59	CL	A-6
F-GW-08 / S-3	8.0 - 10.0	Lean CLAY with Sand	28.7	49	24	76	CL	A-7-6
F-GW-08 / S-6	24.0 - 26.0	Sandy Lean CLAY	16	22	11	51	CL	A-6
F-GW-11 / S-3	8.0 - 10.0	Lean CLAY with Sand	27.6	28	9	78	CL	A-4
F-GW-11 / S-6	24.0 - 26.0	Silty SAND	26.1	NP	NP	21	SM	A-2-4
F-GW-13 / S-5	19.0 - 21.0	Clayey SAND	26.7	33	10	30	SC	A-2-4
F-GW-13 / S-7	28.0 - 30.0	Elastic SILT	44.8	57	27	97	MH	A-7-5
F-MC-1 / S-4	11.5-13.5	Elastic SILT	52.1	54	22	98	MH	A-7-5
F-MC-1 / S-8	24.5-26.0	SILT	21.8	23	2	87	ML	A-4
F-MC-1A / U-2	21.0 - 23.0	Organic SILT	74	69	31	98	OH	A-7-5
F-MC-2 / S-3	7.0 - 8.5	Silty SAND	21.5	25	3	36	SM	A-4
F-MC-2 / U-1	14.0 - 16.0	Organic SILT	54.9	63	28	98	OH	A-7-5
F-MC-2 / U-2	23.0 - 25.0	Organic SILT	60.4	41	13	98	OL	A-7-6
F-MC-2 / S-10	29.0 - 30.5	Poorly Graded SAND	16.2	NP	NP	3	SP	A-1-b
F-MC-3 / S-3	3.0 - 4.5	Silty CLAY with Sand	23.9	27	6	79	CL-ML	A-4
F-MC-3 / S-6	24.0 - 25.5	Sandy SILT	50.6	22	1	53	ML	A-4
F-MC-3A / U-1	16.0 - 18.0	Organic SILT	49.8	53	21	97	OH	A-7-5
F-MC-3A / U-2	24.0 - 26.0	Organic CLAY with Sand	60.3	41	16	85	OL	A-7-6
F-MC-5 / S-3	11.0 - 12.5	Silty SAND	27.3	26	4	40	SM	A-4
F-MC-5 / S-6	24.0 - 25.5	SILT with Sand	65.3	44	14	83	ML	A-7-5
F-MC-5 / S-7	29.0 - 30.5	Silty SAND	45.1	NP	NP	21	SM	A-2-4
F-MC-5A / U-1	14.0 - 16.0	Organic SILT	61.8	83	32	97	OH	A-7-5
F-MC-6 / S-5	15.0 - 16.5	Elastic SILT	39.4	56	22	100	MH	A-7-5
F-MC-6 / S-8	29.0 - 30.5	Poorly Graded GRAVEL with Silt and Sand	16.3	NP	NP	6	GP-GM	A-1-a
F-MC-6A / U-6	24.0 - 26.0	Silty CLAY	34.2	25	4	94	CL-ML	A-4
F-MC-6B / U-3	18.0 - 20.0	Elastic SILT	83.5	84	43	100	MH	A-7-5
F-MC-7 / S-4	9.0 - 10.5	Silty CLAY	17.8	22	6	95	CL-ML	A-4
F-MC-7 / S-9	24.0 - 25.5	SILT	34.7	29	6	97	ML	A-4
F-MC-7 / S-11	34.0 - 35.5	Well Graded SAND with Silt	14.2	NP	NP	7	SW-SM	A-1-a
F-MC-7A / U-1	10.0 - 12.0	SILT with Sand	19.5	27	4	75	ML	A-4
F-MC-7A / U-2	20.0 - 22.0	Elastic SILT	126.4	131	65	99	MH	A-7-5
F-MC-8 / S-3	9.0 - 11.0	SILT with Sand	19.8	28	5	71	ML	A-4
F-MC-8 / S-11	34.0-35.5	Poorly Graded GRAVEL with Silt and Sand	14.7	NP	NP	7	GP-GM	A-1-a
F-MC-8A / U-2	21.0-23.0	Elastic SILT	55.9	67	28	99	MH	A-7-5
F-MC-9 / S-4	9.0 - 10.5	Poorly Graded SAND with Silt	29.3	NP	NP	6	SP-SM	A-1-b
F-MC-9 / S-7	18.0 - 19.5	Silty SAND with Gravel	33.8	29	3	44	SM	A-4
F-MC-9 / U-1	15.0 - 17.0	Organic SILT	71.4	52	12	91	OH	A-7-5
F-MC-9 / U-1	15.0 - 17.0	Organic SILT		37	NP	(Oven Dried Sample)		
F-MC-10 / S-8	34.0 - 36.0	Well Graded SAND with Silt and Gravel	14.9	NP	NP	5	SW-SM	A-1-b
F-MC-10 / S-11	49.0 - 50.5	Clayey SAND	19.7	37	16	46	SC	A-6
F-MC-10A / U-1	13.0 - 15.0	Organic SILT with Sand	64.9	64	28	79	OH	A-7-5
F-MC-10A / U-1	13.0 -15.0	Organic SILT with Sand		49	NP	(Oven Dried Sample)		
F-MC-10A / U-2	20.0 - 22.0	Organic SILT	110.9	83	30	97	OH	A-7-5
F-MC-10A / U-2	20.0 - 22.0	Organic SILT		55	NP	(Oven Dried Sample)		
F-MC-11 / S-3	10.5 - 12.0	SILT with Sand	26.7	28	5	74	ML	A-4
F-MC-11 / S-5	18.5 - 20.0	Elastic SILT	83.1	88	35	97	MH	A-7-5
F-MC-11A / U-1	14.0 - 16.0	Organic SILT	44.2	71	30	99	OH	A-7-5
F-MC-11A / U-1	14.0 - 16.0	Organic SILT		46	NP	(Oven Dried Sample)		
F-MC-11A / U-2	24.0 - 26.0	Elastic SILT	55.9	51	17	97	MH	A-7-5
F-MC-11B / U-1	13.0 - 15.0	CLAY	24.6	32	11	92	CL	A-6
F-MC-11B / U-2	23.0 - 25.0	Elastic SILT	67.5	55	23	97	MH	A-7-5

Summary of Laboratory Classification Testing

Boring/ Sample No.	Depth (ft)	Description	NMC	LL	PI	% Fines	USCS	AASHTO
F-RW-2 / S-4	14.0 - 16.0	Sandy SILT	29.8	23	2	56	ML	A-4
F-RW-2 / S-5	19.0 - 21.0	Elastic SILT	71.9	78	33	99	MH	A-7-5
F-RW-4 / S-3	8.0 - 10.0	Silty CLAY	26	26	5	93	CL-ML	A-4
F-RW-4 / S-5	19.0 - 21.0	Elastic SILT	89.2	85	40	95	MH	A-7-5
F-RW-5 / S-5	19.0 - 21.0	Elastic SILT	59.8	58	27	99	MH	A-7-5
F-RW-5 / S-6	24.0 - 26.0	SILT with Sand	25	29	6	72	ML	A-4
F-RW-7 / S-2	5.0 - 7.0	Silty SAND	10.8	NP	NP	19	SM	A-1-b
F-RW-7 / S-5	19.0 - 21.0	Organic SILT with Sand	112.2	81	27	75	MH	A-7-5
F-RW-7 / S-5	19.0 - 21.0	Organic SILT with Sand		53	NP	(Oven Dried Sample)		
F-T-1 / S-2	5.0 - 7.0	Lean CLAY with Sand	29.4	43	23	84	CL	A-7-6
F-T-1 / S-4	14.0 - 16.0	Silty SAND	20	NP	NP	22	SM	A-2-4
F-T-4 / BS-1	3.0 - 8.0	Silty Clayey SAND	5.2	25	6	39	SC-SM	A-4
F-T-4 / S-3	8.0 - 10.0	Lean CLAY with Sand	38.8	37	14	83	CL	A-6
F-T-4 / S-4	14.0 - 16.0	Silty SAND	26.1	NP	NP	43	SM	A-4
F-T-5 / S-3	8.0 - 10.0	Silty Clayey SAND	14.6	21	5	36	SC-SM	A-4
F-T-5 / S-5	19.0 - 21.0	Elastic SILT	57.1	62	28	98	MH	A-7-5
F-T-5 / S-6	24.0 - 26.0	Silty CLAY with Sand	23.4	29	7	81	CL-ML	A-4
F-T-6 / S-2	5.0 - 7.0	Silty SAND	14.7	19	2	25	SM	A-1-b
F-T-6 / S-4	14.0 - 16.0	Lean CLAY	29.8	32	11	88	CL	A-6
F-T-6 / S-5	19.0 - 21.0	Poorly Graded SAND with Silt and Gravel	12	NP	NP	5	SP-SM	A-1-a
F-T-6A / S-2	5.0 - 7.0	Silty SAND	18.5	21	3	34	SM	A-2-4
F-T-6A / S-5	19.0 - 21.0	SILT with Sand	29.2	28	4	81	ML	A-4
F-T-6A / BS-1	3.0 - 8.0	Silty Clayey SAND	1.1	20	4	29	SC-SM	A-2-4
F-T-7 / S-3	8.0 - 10.0	Sandy SILT	23.7	23	2	56	ML	A-4
F-T-7 / S-5	19.0 - 21.0	Clayey SAND	15.7	23	8	47	SC	A-4
Test Pit / B-1	3.0 - 8.0	Poorly Graded SAND with Silt and Gravel	6.3	NP	NP	10	SP-SM	A-1-b

NOTES:

NMC = NATURAL MOISTURE CONTENT
LL = LIQUID LIMIT
PI= PLASTICITY INDEX
% FINES = % FINER THAN #200 SEIVE BY WEIGHT
USCS = UNITED SOIL CLASSIFICATION SYSTEM
AASHTO = AMERICAN ASSN. OF STATE HIGHWAY AND TRANSPORTATION OFFICIALS
S = SPLIT SPOON SAMPLE
B = BULK BAG SAMPLE
U = UNDISTURBED 3 INCH SHELBY TUBE SAMPLE

EXAMPLE:

F-RW-2/ S-4
(BORING NUMBER F-RW-2, SPLIT SPOON SAMPLE NUMBER 4)

4/20/2009
M:\projects\2007\07052_DTC\Third-Trk\CADD\Plans\SB47DTC.dgn
PLOTTER = RAIL-PS-ENLPL.T, PEN TABLE = BALTIMORE.TBL

PREL. TRACING ____ DESIGN ____ CHKD. ____