THE STATE OF DELAWARE
DEPARTMENT OF TRANSPORTATION

U.S. CUSTOMARY UNITS

CONSTRUCTION PLANS FOR:

HSIP NCC, SR 273 AND I-95 INTERCHANGE IMPROVEMENTS

CONTRACT NUMBER: T200800713

FEDERAL AID PROJECT NUMBER: ESTP-N018(13)

COUNTY: NEW CASTLE M.R. #: N 6041

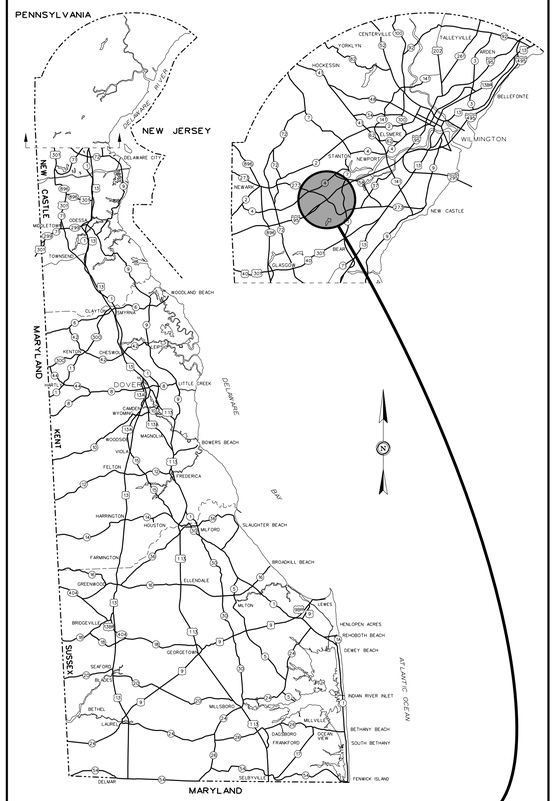

GENERAL LOCATION OF CONTRACT

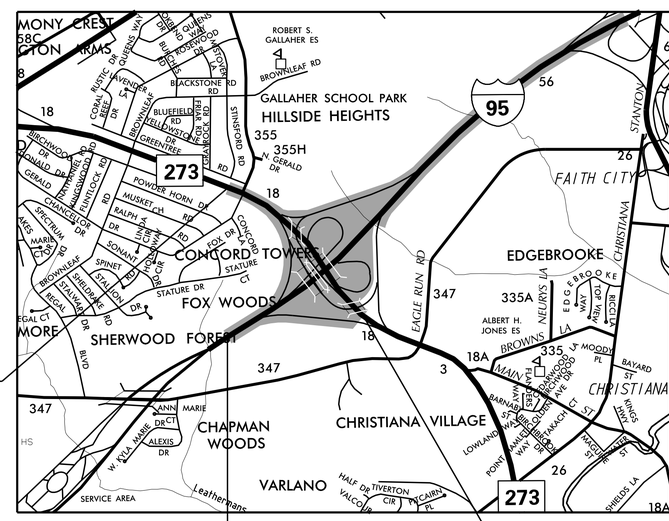

LIMIT OF CONTRACT STATION 431+00.00

BEGIN CONTRACT STATION 81+25.00

END CONTRACT STATION 49+25.00

LIMIT OF CONTRACT STATION 347+75.00

PREPARED BY
RK&K

Carey D. Webb

THIS SEAL APPLIES TO ALL SHEETS BEARING THE "RK&K" SECTION DESIGNATION.

JULY 24, 2020
DATE

CAREY DANIEL WEBB
LICENSED
No. 18515
DELAWARE
PROFESSIONAL ENGINEER

SEAL

DESIGN DESIGNATION

MRD #: 00018	ROAD NAME: STATE ROUTE 273		
FUNCTIONAL CLASS: PRINCIPAL ARTERIAL		D.H.V. PROJECTED: 1,340	YEAR: 2040
TYPE OF CONSTRUCTION: RECONSTRUCTION		DESIGN SPEED: 50 M.P.H.	
A.A.D.T. CURRENT: 16,800	YEAR: 2019	TRUCKS: 3%	
A.A.D.T. PROJECTED: 17,810	YEAR: 2040	DIRECTION OF DISTRIBUTION: 100%	

DESIGN DESIGNATION

MRD #: 006041	ROAD NAME: RAMP E		
FUNCTIONAL CLASS: INTERSTATE		D.H.V. PROJECTED: 1,160	YEAR: 2040
TYPE OF CONSTRUCTION: RECONSTRUCTION		DESIGN SPEED: 35 MPH	
A.A.D.T. CURRENT: 15,300	YEAR: 2019	TRUCKS: 3.1%	
A.A.D.T. PROJECTED: 16,250	YEAR: 2040	DIRECTION OF DISTRIBUTION: 100%	

DESIGN DESIGNATION

MRD #: 006046	ROAD NAME: RAMP A		
FUNCTIONAL CLASS: INTERSTATE		D.H.V. PROJECTED: 280	YEAR: 2040
TYPE OF CONSTRUCTION: RECONSTRUCTION		DESIGN SPEED: 30 MPH	
A.A.D.T. CURRENT: 2,190	YEAR: 2019	TRUCKS: 3.3%	
A.A.D.T. PROJECTED: 2,325	YEAR: 2040	DIRECTION OF DISTRIBUTION: 100%	

APPROVED DESIGN EXCEPTIONS

DESIGN PARAMETER	REQUIRED	PROVIDED	DATE
–	–	–	–

ADDENDA / REVISIONS

ASSOCIATED CONTRACTS

CONTRACT NO.	CONTRACT NAME
7001	DELAWARE TURNPIKE CONTRACT No. 7001
7060	ROUTE 273 INTERCHANGE IMPROVEMENT
7229	TOLL BOOTH AND PLAZA REMOVAL
7486	SLOPE PAVEMENT REPAIRS DELAWARE TURNPIKE & ROUTE 273
T201604110	SR 273 AND CHAPMAN ROAD INTERSECTION IMPROVEMENTS

APPROVED FOR ADVERTISEMENT

DIRECTOR OF TRANSPORTATION SOLUTIONS

08/10/2020
DATE

24-JUL-2020
09:53
\\balsrv01\v20\14\20\14\14144_DelDOT\70\Task 4A - Harmony FD\Cadd\Contract\Plans\tc01_1tar.dgn

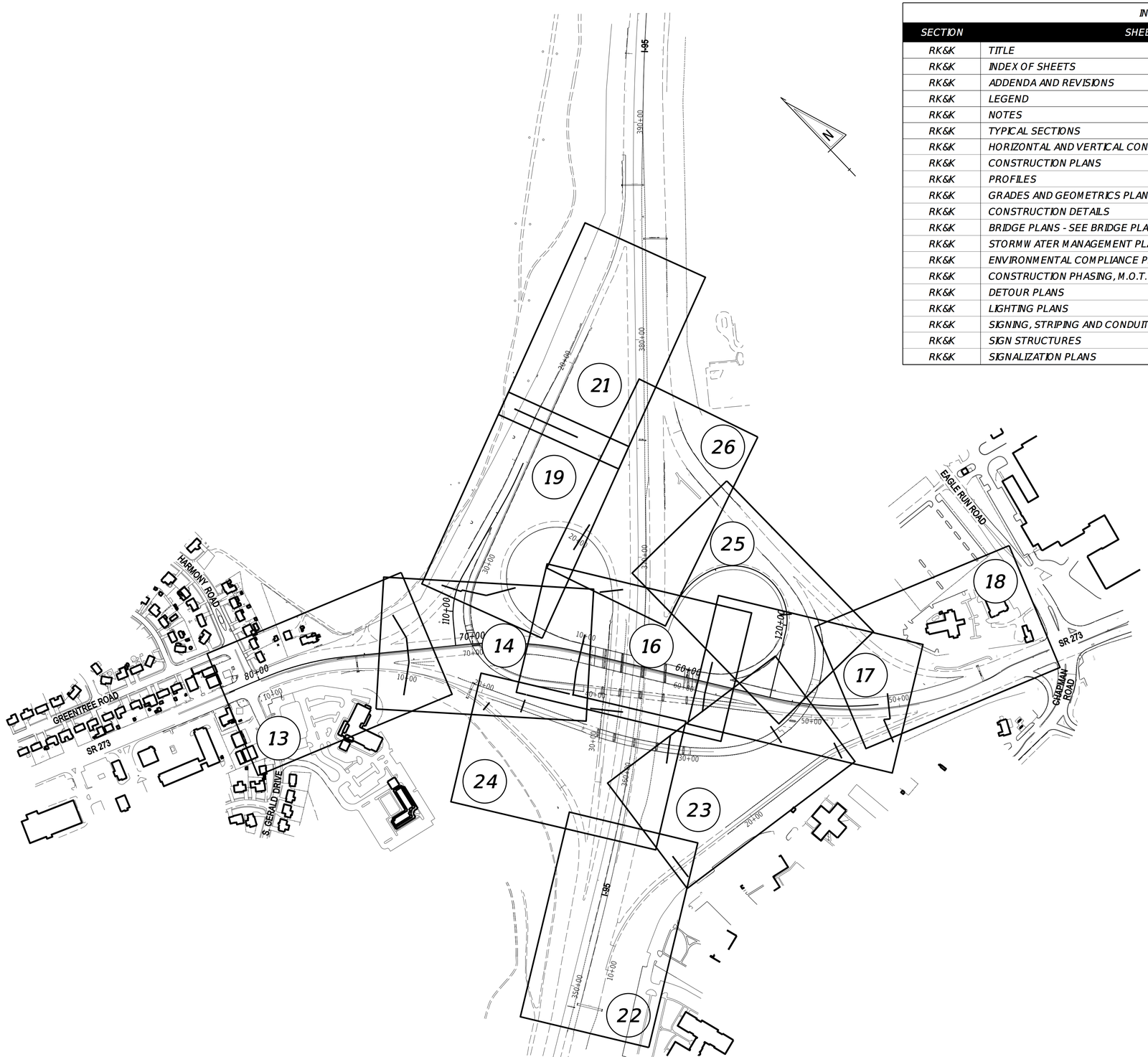

INDEX OF SHEETS		
SECTION	SHEET DESCRIPTION	SHEET NO(S)
RK&K	TITLE	1
RK&K	INDEX OF SHEETS	2
RK&K	ADDENDA AND REVISIONS	3
RK&K	LEGEND	4
RK&K	NOTES	5
RK&K	TYPICAL SECTIONS	6 - 10
RK&K	HORIZONTAL AND VERTICAL CONTROL	11 - 12
RK&K	CONSTRUCTION PLANS	13 - 26
RK&K	PROFILES	27 - 28
RK&K	GRADES AND GEOMETRICS PLANS	29 - 33
RK&K	CONSTRUCTION DETAILS	34 - 35
RK&K	BRIDGE PLANS - SEE BRIDGE PLANS FOR TABLE OF CONTENTS	36 - 44
RK&K	STORMWATER MANAGEMENT PLANS	45 - 50
RK&K	ENVIRONMENTAL COMPLIANCE PLANS	51 - 59
RK&K	CONSTRUCTION PHASING, M.O.T. AND EROSION CONTROL PLANS	60 - 76
RK&K	DETOUR PLANS	77 - 82
RK&K	LIGHTING PLANS	83 - 94
RK&K	SIGNING, STRIPING AND CONDUIT PLANS	95 - 114
RK&K	SIGN STRUCTURES	115 - 123
RK&K	SIGNALIZATION PLANS	124 - 125

ADDENDA / REVISIONS

SCALE
0 250 500 750
FEET

HSIP NCC, SR 273 AND I-95 INTERCHANGE IMPROVEMENTS

CONTRACT	BRIDGE NO.	715, 715A, 715B, 715C & 715D
T200800713	DESIGNED BY:	B. BURRIS
COUNTY		
NEW CASTLE	CHECKED BY:	Z. SCHOLL

INDEX OF SHEETS

SECTION: RK&K
SHEET NO.: 2

11-AUG-2020
17:39
\\balsv01\v2014\2014\14144_DelDOT\707\Task 4A - Harmony FD\Cadd\Contract\Plans\is01_Har.dgn

ADDENDA / REVISIONS	

NOT TO SCALE

HSIP NCC, SR 273 AND I-95 INTERCHANGE IMPROVEMENTS

CONTRACT	BRIDGE NO.	715, 715A, 715B, 715C & 715D
T200800713	DESIGNED BY:	S. SMITH
COUNTY		
NEW CASTLE	CHECKED BY:	Z. SCHOLL

ADDENDA AND REVISIONS

SECTION
RK&K
SHEET NO.
3

13-DEC-2019
10:29
\\balsrv01\v2014\20141414\4_DelDOT\700\Task 4A - Harmony FD\Cadd\Contract\Plans\sht01_Hsr.dgn

EXISTING SYMBOLS

DRAINAGE

	DITCH OR STREAM CENTERLINE
	DIRECTIONAL STREAM FLOW ARROW
C.B. / D.I.	DRAINAGE INLET
J.B.	DRAINAGE JUNCTION BOX
D	DRAINAGE MANHOLE
SIZE/TYPE LABEL	DRAINAGE PIPE AND FLOW ARROW
	DRAINAGE PIPE HEADWALL
	RIPRAP - AREA FEATURE
	RIPRAP - LINEAR FEATURE

MANMADE ROADSIDE FEATURES

	BOLLARD - STEEL POLE
	BOLLARD - WOOD POST
(TYPE LABEL)	CURB
(TYPE LABEL)	CURB AND GUTTER
	FENCE - CHAINLINK OR STRANDED
	FENCE - STOCKADE OR SPLIT RAIL
F.P.	FLAG POLE
	GUARDRAIL - STEEL BEAM
	GUARDRAIL - WIRE ROPE
LAMP	LAMP AND POST - RESIDENTIAL
MB	MAILBOX
P.M.	PARKING METER AND POST
	PAVEMENT - FLEXIBLE
	PAVEMENT - RIGID
	PILE - BRIDGE
	PILLAR OR MISCELLANEOUS POST
	TRAFFIC SIGN AND POST
	WALL - BRICK OR BLOCK
	WALL - STONE

NATURAL ROADSIDE FEATURES

	HEDGEROW OR THICKET
	MARSH BOUNDARY LINE
	TREE - CONIFEROUS
	TREE - DECIDUOUS
	TREE STUMP
	SHRUBBERY
WL	DELINEATED WETLAND BOUNDARY LINE
	WOODS LINE BOUNDARY

RIGHT-OF-WAY SYMBOLS

C.M.	PROPERTY MARKER - CONCRETE MON.
I.P.	PROPERTY MARKER - IRON PIPE
100+00	HISTORIC RIGHT-OF-WAY BASELINE
	EXISTING RIGHT-OF-WAY
	EXISTING PROPERTY LINE
EASEMENT TYPE	EXISTING EASEMENT
DA	EXISTING DENIAL OF ACCESS
R/W-DA	EXISTING R/W & DENIAL OF ACCESS

SURVEY CONTROL & MONUMENTATION

B.M.	SURVEY BENCHMARK LOCATION
	SURVEY NGS POINT LOCATION
T.P.	SURVEY TIE POINT LOCATION
	SURVEY TRAVERSE POINT
	POINT OF CURVATURE OR TANGENCY
	POINT OF INTERSECTING TANGENTS

UTILITY

	SOIL BORING LOCATION
	UTILITY TEST HOLE LOCATION
TV	CABLE TV DISTRIBUTION BOX
E	ELECTRIC MANHOLE
EM	ELECTRIC METER
E	ELECTRIC TRANSFORMER
	POLE MOUNTED LUMINAIRE
G	GAS MANHOLE
G.M.	GAS METER
G.V.	GAS VALVE
G.P.	GAS PUMP - SERVICE STATION
	RAILROAD TRACKS
S	SANITARY SEWER MANHOLE
S.V.	SANITARY SEWER VALVE
S.C.O.	SANITARY SEWER CLEANOUT OR VENT
S.D.F.	SEPTIC DRAIN FIELD
B	TELEPHONE BOOTH
T	TELEPHONE MANHOLE
T	TELEPHONE TEST POINT
J.W.	TRAFFIC - CONDUIT JUNCTION WELL
	TRAFFIC - LIGHT POLE AND BASE
	TRAFFIC - PEDESTRIAN POLE & BASE
	TRAFFIC - SIGNAL CABINET & BASE
	TRAFFIC - SIGNAL POLE AND BASE
U	UTILITY BOX
	UTILITY POLE GUY WIRE ANCHOR
	UTILITY POLE
F.H.	WATER - FIRE HYDRANT
W.M.	WATER METER
WV	WATER VALVE
WELL	WELL HEAD
?	MANHOLE - UNDETERMINED OWNER

UTILITY COMPANY FACILITIES

CAV-C (X)	CAVALIER CABLE
COM-C (X)	COMCAST CABLE
EX-CON (X)	DELDOT MULTIDUCT CONDUIT
DP-E (X)	DELMARVA POWER - ELECTRIC
DP-G (X)	DELMARVA POWER - GAS
NCC-S (X)	NEW CASTLE COUNTY - SEWER
SZ-W (X)	SUEZ WATER
VER-C (X)	VERIZON

(X) REPRESENTS ASCE DEFINED SUE QUALITY LEVEL

PROPOSED SYMBOLS

CONSTRUCTION

	BARRIER, DOUBLE-FACED, PERMANENT
	BARRIER, SINGLE-FACED, PERMANENT, TL-4 / TL-5
BFS	BIOFILTRATION SWALE
	BRICK PATTERNED SURFACE
	BUTT JOINT
CZ	CLEAR ZONE
100+00	CONSTRUCTION BASELINE
	CURB, TYPE 1 & TYPE 3
	CURB, TYPE 2
	CURB & GUTTER, TYPE 1
	CURB & GUTTER, TYPE 2
	CURB & GUTTER, TYPE 3
	CURB OPENING - SUMP / ON GRADE
	CURB OPENING WITH SIDEWALK
	DRAINAGE INLET
	DITCH
	FENCE - METAL / FENCE - WOOD
	FLARED END / SAFETY END SECTION
	GUARDRAIL, TYPE 1
	GUARDRAIL, TYPE 2
	GUARDRAIL, TYPE 3
	GUARDRAIL END ANCHORAGE
	GUARDRAIL END TREATMENT, TYPE 1
	GUARDRAIL END TREATMENT, TYPE 2
	GUARDRAIL END TREATMENT, TYPE 3
	IMPACT ATTENUATOR
	JUNCTION BOX - DRAINAGE
LO	LATERAL OFFSET
LOC	LIMIT OF CONSTRUCTION
MB	MAILBOX
	MANHOLE
	PAVEMENT PATCH
	PAVEMENT REMOVAL - TOPSOIL, SEED AND MULCH
	PIPE & DIRECTIONAL FLOW ARROW
	RIPRAP
	P.C.C. SIDEWALK - 4"
	P.C.C. SIDEWALK - 6" (USE 8" DEPTH FOR CHANNELIZATION ISLANDS.)
	UNDERDRAIN
	UNDERDRAIN OUTLET

RIGHT-OF-WAY SYMBOLS

	PROPOSED RIGHT-OF-WAY MONUMENT
DA	PROPOSED DENIAL OF ACCESS
PE	PROPOSED PERMANENT EASEMENT
R/W	PROPOSED RIGHT-OF-WAY
R/W-DA	PROPOSED R/W & DENIAL OF ACCESS
RTE	RIGHT-TO-ENTER
TCE	TEMPORARY CONSTRUCTION EASEMENT
100+00	PROPOSED RIGHT-OF-WAY BASELINE

IDENTIFIERS

AB / C	ABANDON BY CONTRACTOR
AB / O	ABANDON BY OTHERS
A / C	ADJUST BY CONTRACTOR
A / O	ADJUST BY OTHERS
BMP / XXX	BEST MANAGEMENT PRACTICE
BSP / X	BUS STOP PAD / TYPE
BSSP / X	BUS STOP WITH SHELTER PAD / TYPE
B / XXX	CONCRETE SAFETY BARRIER
C / XXX	CURB OR CURB & GUTTER
CJB / XXX	CONVERT TO JUNCTION BOX
CMH / XXX	CONVERT TO DRAINAGE MANHOLE
C / O	CURB OPENING - SUMP / ON GRADE
CO / SW	CURB OPENING WITH SIDEWALK
DI / XXX	DRAINAGE INLET
DND	DO NOT DISTURB
ED / XXX	ENERGY DISSIPATOR
F / XXX	FENCE
FES / XXX	FLARED END SECTION
FF / C	FILL WITH FLOWABLE FILL
GR / XXX	GUARDRAIL
JB / XXX	JUNCTION BOX
MH / XXX	MANHOLE
M / XXX	MONUMENT - RIGHT-OF-WAY
PC / XX	PEDESTRIAN CONNECTION / TYPE
PC-N / XXX	PEDESTRIAN CONNECTION / TYPE WITHOUT SIDEWALK SURFACE DETECTABLE WARNING SYSTEM
P / XXX	PIPE
RL / C	RELOCATE BY CONTRACTOR
RL / O	RELOCATE BY OTHERS
RL / PO	RELOCATE BY PROPERTY OWNER
RM / C	REMOVE BY CONTRACTOR
RM / TC	REMOVE BY TRAFFIC CONTRACTOR
RM / O	REMOVE BY OTHERS
SES / XXX	SAFETY END SECTION
UD / XXX	UNDERDRAIN / LENGTH
UDO / XXX	UNDERDRAIN OUTLET PIPE

LANDSCAPING

LS / XXX	LANDSCAPE PLANTINGS
	SHRUBBERY
	CONIFEROUS TREE
	DECIDUOUS TREE

TRAFFIC

ITMS-CON	ITMS CONDUIT
SIG-CON	SIGNAL CONDUIT
	CONDUIT JUNCTION WELL
	LUMINAIRE
	PAVEMENT MARKINGS
	PAVEMENT STRIPING
	TRAFFIC SIGN

PAVEMENT SECTION(S)

	OVERLAY PAVEMENT - SEE TYPICAL SECTIONS FOR MATERIALS AND DEPTHS
	RECONSTRUCTED PAVEMENT - SEE TYPICAL SECTIONS FOR MATERIALS AND DEPTHS
	DRIVEWAY AND ENTRANCE PAVEMENT - SEE NOTES FOR MATERIALS AND DEPTHS

UTILITIES

F.H.	PROPOSED FIRE HYDRANT
	PROPOSED GUY WIRE ANCHOR
	PROPOSED UTILITY POLE
W.V.	PROPOSED WATER VALVE

ADDENDA / REVISIONS

NOT TO SCALE

HSIP NCC, SR 273 AND I-95 INTERCHANGE IMPROVEMENTS

CONTRACT	BRIDGE NO.	715, 715A, 715B, 715C & 715D
T200800713	DESIGNED BY:	S. SMITH
COUNTY		
NEW CASTLE	CHECKED BY:	Z. SCHOLL

LEGEND

SECTION: RK&K

SHEET NO. 4

31-JAN-2020
09:25
\\balserv01\v2014\20141414144_DelDOT1700TTask 4A - Harmony FD\Cadd\Contract\Plans\lg01_Hsr.dgn

GENERAL NOTES

1. THIS PROJECT IS TO BE CONSTRUCTED IN ACCORDANCE WITH THE DELAWARE DEPARTMENT OF TRANSPORTATION "STANDARD SPECIFICATIONS", DATED AUGUST 2016 AND THE DELAWARE DEPARTMENT OF TRANSPORTATION "STANDARD CONSTRUCTION DETAILS", DATED 2018, INCLUDING ALL REVISIONS UP TO THE DATE OF ADVERTISEMENT.

2. ELECTRONIC DESIGN DATA FILES THAT WILL BE MADE AVAILABLE TO THE AWARDED CONTRACTOR, INCLUDE:

( )	NONE
( )	ASCII DATA FILES WITH COORDINATES AND ELEVATIONS FOR PROPOSED POINTS AS SELECTED BY THE ENGINEER.
(X)	EXISTING DIGITAL TERRAIN MODEL, IN .DTM FILE FORMAT, COMPATIBLE WITH SOFTWARE CURRENTLY USED BY DELDOT.
( )	PROPOSED DIGITAL TERRAIN MODEL, IN .DTM FILE FORMAT, COMPATIBLE WITH SOFTWARE CURRENTLY USED BY DELDOT.
( )	DESIGN FILE, IN .DGN FILE FORMAT, THAT CONTAINS 3D FEATURE LINES FOR THE PROPOSED DESIGN. 3D FEATURE LINES ARE FOR THE PROPOSED TOP SURFACE ELEVATION ONLY.

NOTE: THE DOCUMENT ENTITLED "RELEASE FOR DELIVERY OF DOCUMENTS IN ELECTRONIC FORM TO A CONTRACTOR" MUST BE SIGNED BY ALL PARTIES PRIOR TO THE DELIVERY OF ANY ELECTRONIC PROJECT FILES.

NOTE: THERE MAY BE SOME AREAS OF THE PROJECT NOT INCLUDED IN THE ELECTRONIC DESIGN DATA FILE(S). IT IS THE CONTRACTOR'S RESPONSIBILITY TO REVIEW THE DESIGN DATA FILE AND DETERMINE THE LIMITS OF THE PROJECT INCLUDED.

3. PROJECT FILES THAT WILL BE MADE AVAILABLE TO THE CONTRACTOR, INCLUDE:

(X)	CROSS SECTIONS
( )	RIGHT-OF-WAY PLANS (WILL BE MADE AVAILABLE TO THE AWARDED CONTRACTOR)

PROJECT NOTES

SECTION 100

1. ANY DAMAGE TO ITEMS NOTED TO BE RELOCATED OR RESET BY THE CONTRACTOR, AT THE DISCRETION OF THE ENGINEER, SHALL BE REPAIRED AND/OR REPLACED IN KIND AT THE CONTRACTOR'S EXPENSE.

2. THE CONTRACTOR WILL CONTACT THE DELAWARE TMC AT 302-659-4600 PRIOR TO ANY UNMANNED AIRCRAFT VEHICLE (UAV) FLIGHTS. THE CONTRACTOR WILL BE REQUIRED TO PROVIDE THE FOLLOWING INFORMATION: THE REGISTRATION NUMBER OF THE UAV, THE FLIGHT TIME, LOCATION OF THE FLIGHT, THE PILOT'S NAME AND THE PILOT'S CONTACT NUMBER DURING THE FLIGHT.

SECTION 200

3. ITEMS TO BE REMOVED UNDER ITEM 211000 - REMOVAL OF STRUCTURES AND OBSTRUCTIONS SHALL INCLUDE, BUT NOT BE LIMITED TO THE FOLLOWING:
   a. CANTILEVER SIGN STRUCTURES AND FOUNDATIONS
   b. OVERHEAD SIGN STRUCTURES AND FOUNDATIONS
   c. DRAINAGE INLETS AND FLARED END SECTIONS
   d. PIPES NOT COVERED UNDER ITEM 202000

SECTION 600

4. DRAINAGE INLET GRATES ADJACENT TO THE CURB OR EDGE PAVING, WITHIN THE PROJECT LIMITS, WHICH ARE NOT TYPE 1 OR TYPE 4, SHALL BE REPLACED WITH TYPE 1. INLET GRATES WITHIN THE PAVING, NOT ADJACENT TO THE CURB OR EDGE OF PAVING SHALL BE REPLACED WITH TYPE 3. THE ACTUAL LOCATIONS, THE NEED FOR ANY GRATE MODIFICATIONS OR FOR NEW FRAMES SHALL BE DETERMINED BY THE ENGINEER. ALL REPLACED GRATES/FRAMES SHALL BE DELIVERED TO THE NEAREST DISTRICT MAINTENANCE YARD WITH THE COST OF DELIVERY INCIDENTAL TO ITEM 602100 - REPLACING DRAINAGE INLET GRATE(S) & ITEM 602101 - REPLACING DRAINAGE INLET FRAME(S). FINAL PAYMENT FOR REPLACED GRATES/FRAMES SHALL NOT BE MADE UNTIL RECEIPT OF DELIVERED MATERIALS IS PRODUCED, SIGNED BY A DELDOT MAINTENANCE YARD SUPERVISOR.

5. STATION AND ELEVATION DATA GIVEN FOR DRAINAGE STRUCTURES ARE TO BE APPLIED TO THE CENTER OF THE GRATE FOR INLETS AND TO THE CENTER OF THE STRUCTURE FOR JUNCTION BOXES AND MANHOLES.

SECTION 700

6. IN AREAS WHERE PROPOSED CURB MEETS EXISTING CURB AND THE TWO CURB TYPES ARE NOT SIMILAR, THE PROPOSED CURB SHALL BE TRANSITIONED IN 10 LINEAR FEET, UNLESS OTHERWISE DIRECTED BY THE ENGINEER. PAYMENT FOR THIS WORK, INCLUDING SAW CUTTING EXISTING CURB SHALL BE INCIDENTAL TO THE PROPOSED CURB ITEM.

7. THE NEW CASTLE COUNTY DEPARTMENT OF PUBLIC WORKS SHALL SUPPLY AND THE STATE'S CONTRACTOR SHALL INSTALL NEW SELF SEALING MANHOLE FRAMES AND COVERS ON ALL COUNTY SEWER MANHOLES THAT ARE NOT BEING RELOCATED, WITHIN THE PROJECT LIMITS IN ACCORDANCE WITH THE COUNTY'S STANDARD SPECIFICATIONS. THE EXISTING MANHOLE FRAMES AND COVERS THAT ARE REMOVED SHALL BECOME THE PROPERTY OF THE STATE'S CONTRACTOR. PAYMENT SHALL BE INCIDENTAL TO ITEM 711500 - ADJUST AND REPAIR EXISTING SANITARY SEWER MANHOLE.

8. THE CONTRACTOR SHALL DELIVER ALL EXCESS MILLED MATERIAL TO THE DELAWARE DEPARTMENT OF TRANSPORTATION'S BEAR, DE MAINTENANCE YARD. THE MATERIAL SHALL BE NEATLY STOCKPILED AT THE YARD. COSTS FOR THIS WORK SHALL BE INCIDENTAL TO THE MILLING ITEM UTILIZED FOR PAYMENT ON THE CONTRACT.

9. ALL PAVED AREAS TO BE RECONSTRUCTED OR WIDENED SHALL BE SAWCUT AT THE POINT WHERE THE NEW PAVEMENT IS TO TIE INTO THE EXISTING PAVEMENT.

SECTION 900

10. THIS PROJECT IS COVERED UNDER AN NPDES GENERAL PERMIT FOR CONSTRUCTION. UNDER THE GENERAL PERMIT, COMPLIANCE WITH DELDOT'S APPROVED SEDIMENT AND STORMWATER MANAGEMENT PLANS WILL CONSTITUTE COMPLIANCE WITH THE NPDES INDUSTRIAL PERMITTING REQUIREMENTS FOR THIS CONSTRUCTION PROJECT. A COPY OF THE NPDES GENERAL PERMIT AND NOI IS KEPT ON FILE IN EACH OF THE CONSTRUCTION OFFICES AND THE DEPARTMENT'S STORMWATER SECTION. A COPY OF THE GENERAL PERMIT OR THE NOI CAN BE OBTAINED UPON REQUEST FROM EITHER THE DEPARTMENT'S STORMWATER ENGINEER OR THE APPROPRIATE CONSTRUCTION ENGINEER.

MISCELLANEOUS

11. THE CONTRACTOR SHALL NOTIFY DART FIRST STATE AT DOT_DETOURS@DELAWARE.GOV AT LEAST 14 DAYS PRIOR TO THE START OF ANY DETOURS OR CONSTRUCTION, AND DOT_DTC_PROJECTDEVELOPMENT@DELAWARE.GOV AT SUCH TIME THE FACILITY IS COMPLETED AND OPERABLE FOR TRANSIT OPERATIONS. FOR EMERGENCY DETOUR INFORMATION ONLY, PLEASE CONTACT DTC'S CHIEF SCHEDULER AT 302-576-6019.

12. ALL DART SIGNS HAVE BEEN UPDATED TO A NEW DESIGN. THE DELDOT SIGN SHOP DOES NOT FABRICATE THE UPDATED SIGN OR ANY SUPPLEMENTAL PLAQUES TO ALLOW FOR ADDITIONAL ROUTE NUMBERS. ALL REQUESTS FOR FABRICATION OF THESE SIGNS MUST BE MADE THROUGH DART TRANSIT AT (302) 576-6132.

13. IT IS ANTICIPATED THAT ALL WORK WILL OCCUR WITHIN DELDOT'S RIGHT OF WAY AREAS. SHOULD THE NEED OCCUR TO TRESPASS ONTO PRIVATE PROPERTY, IT WILL BE THE RESPONSIBILITY OF THE DELDOT PROJECT MANAGER TO SECURE SUCH TRESPASS NEEDS.

14. CONCRETE PAVEMENT PATCHING FOR FAILING SECTIONS OF THE EXISTING ROADWAY ON EASTBOUND AND WESTBOUND SR 273, WITHIN THE CONTRACT LIMITS, SHALL BE PERFORMED AS DIRECTED BY THE ENGINEER IN PHASE 4 OF CONSTRUCTION.

15. ADJUSTING GAS VALVES AND/OR GAS METERS SHALL BE PAID FOR UNDER ITEM 710503 - ADJUST GAS VALVE BOXES

16. ADJUSTING VERIZON MANHOLES SHALL BE PAID FOR UNDER ITEM 602132 - ADJUST AND REPAIRING EXISTING MANHOLE

EARTHWORK SUMMARY

EXCAVATION	
EXCAVATION FROM CROSS SECTIONS	923 C.Y.
EXCAVATION FOR ROOTMAT REMOVAL	0 C.Y.
EXCAVATION FOR PAVEMENT REMOVAL	5,045 C.Y.
EXCAVATION FOR STRUCTURES	462 C.Y.
MISC. EXCAVATION (DRAINAGE, SWM POND, UNDERCUT)	6,689 C.Y.
TOPSOIL STRIPPING	3,038 C.Y.
TOTAL EXCAVATION	16,157 C.Y.
EXCAVATION AVAILABLE FOR EMBANKMENT	
EXCAVATION MEETING BORROW TYPE 'A'	0 C.Y.
EXCAVATION MEETING BORROW TYPE 'F'	3,150 C.Y.
EXCAVATION MEETING TOPSOIL	760 C.Y.
EMBANKMENT REQUIREMENTS	
BORROW TYPE 'A' REQUIRED (INCLUDING UNDERCUT)	1,630 C.Y.
BORROW TYPE 'F' REQUIRED	3,256 C.Y.
TOPSOIL REQUIRED	2,877 C.Y.
MATERIAL BALANCE ("+"= EXCESS, "-"= NEED)	
BORROW TYPE 'A'	-1,630 C.Y.
BORROW TYPE 'F'	-106 C.Y.
TOPSOIL	-2,117 C.Y.
UNSUITABLE MATERIAL	+12,247 C.Y.

NOTES:
1) THE VALUES LISTED IN THE EARTHWORK SUMMARY ARE APPROXIMATE AND ARE NOT TO BE USED AS A BASIS OF PAYMENT. THE EARTHWORK SUMMARY IS CONSIDERED FOR INFORMATIONAL PURPOSES ONLY.

2) OTHER SOURCES OF EXCAVATION MAY INCLUDE PIPE TRENCH EXCAVATION, STRUCTURE EXCAVATION, UNDERCUT EXCAVATION, STORMWATER MANAGEMENT POND EXCAVATION, ENVIRONMENTAL SITE EXCAVATION, MAINTENANCE OF TRAFFIC EXCAVATION, ETC.

3) UNSUITABLE MATERIALS INCLUDE UNDERCUT SOILS, BITUMINOUS PAVEMENT, ETC.

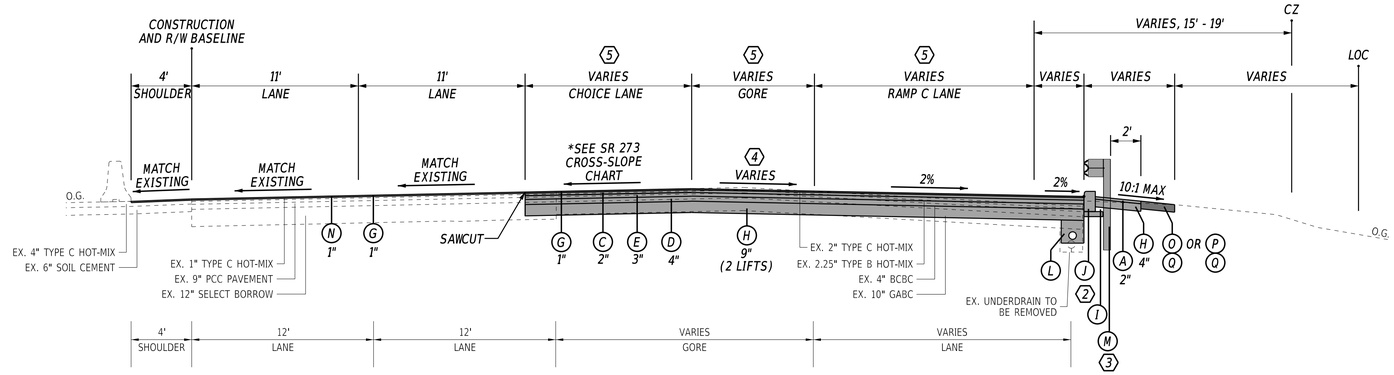

SR 273 WB

STA. 64+56 TO STA. 66+88

4 SEE GRADES AND GEOMETRICS PLANS FOR FURTHER DETAIL.

5 SEE SIGNING AND STRIPING PLANS FOR LANE CONFIGURATION.
CHOICE LANE WIDTH:
STA. 64+59 TO STA. 65+36
LANE WIDTH IS 11'
STA. 65+36 TO STA. 66+25
LANE WIDTH VARIES FROM 11' TO 25.5'
STA. 66+25 TO STA. 66+88
LANE WIDTH IS 11'
GORE WIDTH:
STA. 66+25 TO STA. 66+88
GORE WIDTH VARIES FROM 0' TO 20'
RAMP C LANE WIDTH:
STA. 66+25 TO STA. 66+88
RAMP C LANE WIDTH VARIES FROM 14' TO 15'

LEGEND

- (A) ITEM 401044 - SUPERPAVE TYPE C, 64-22 (NON-CARBONATE STONE)
- (C) ITEM 401046 - SUPERPAVE TYPE C, PG 76-22 (NON-CARBONATE STONE)
- (D) ITEM 401014 - SUPERPAVE TYPE B, PG 64-22
- (E) ITEM 401015 - SUPERPAVE TYPE B, PG 70-22
- (F) ITEM 401016 - SUPERPAVE TYPE B, PG 76-22
- (G) ITEM 401577 - PAVER-LAID ULTRATHIN BITUMINOUS CONCRETE
- (H) ITEM 301001 - GRADED AGGREGATE BASE COURSE, TYPE B
- (I) ITEM 209001 - BORROW, TYPE A (SEE NOTE 1) OR ITEM 209006 - BORROW, TYPE F OR APPROVED PROJECT EXCAVATION
- (J) ITEM 701011 - PORTLAND CEMENT CONCRETE CURB, TYPE 1-4 OVER 4" GABC, TYPE B
- (K) ITEM 701012 - PORTLAND CEMENT CONCRETE CURB, TYPE 1-6 OVER 4" GABC, TYPE B
- (L) ITEM 709001 - PERFORATED PIPE UNDERDRAINS, 6"
- (M) ITEM 720021 - GALVANIZED STEEL BEAM GUARDRAIL, TYPE 1-31
- (N) ITEM 760010 - PAVEMENT MILLING, BITUMINOUS CONCRETE PAVEMENT
- (O) ITEM 908004 - TOPSOIL, 6" DEPTH
- (P) ITEM 908010 - TOPSOILING, 6" DEPTH
- (Q) ITEM 908014 - PERMANENT GRASS SEEDING, DRY GROUND
- (R) ITEM 908020 - EROSION CONTROL BLANKET MULCH
- (S) ITEM 760502 - HIGH FRICTION SURFACE TREATMENT
- (T) ITEM 401029 - SUPERPAVE TYPE C, PG 64-22, PATCHING
- (U) ITEM 401030 - SUPERPAVE TYPE B, PG 64-22, PATCHING
- (V) ITEM 401031 - SUPERPAVE TYPE BCBC, PG 64-22, PATCHING
- (W) ITEM 301002 - GRADED AGGREGATE BASE COURSE, TYPE B, PATCHING
- (X) ITEM 760012 - PAVEMENT MILLING, BITUMINOUS CONCRETE PAVEMENT, VARIABLE DEPTH
- (Y) ITEM 401036 - SUPERPAVE TYPE C, PG 64-22, WEDGE
- (Z) ITEM 401037 - SUPERPAVE TYPE B, PG 64-22, WEDGE
- (AA) ITEM 760006 - RUMBLE STRIPS, BITUMINOUS PAVEMENT

MATERIAL	LIFT THICKNESS	
	MINIMUM	MAXIMUM
BITUMINOUS CONCRETE, TYPE 'C'	1.25"	2"
BITUMINOUS CONCRETE, TYPE 'B'	2.25"	4"
BITUMINOUS CONCRETE BASE COURSE	3"	6"
GRADED AGGREGATE BASE COURSE	4"	8"

* SEE BRIDGE PLANS FOR LIMITS AND DETAILS OF WORK

SR 273 - I-95 BRIDGE

STA. 59+52 TO STA. 64+56 WB

STA. 59+50 TO STA. 64+50 EB

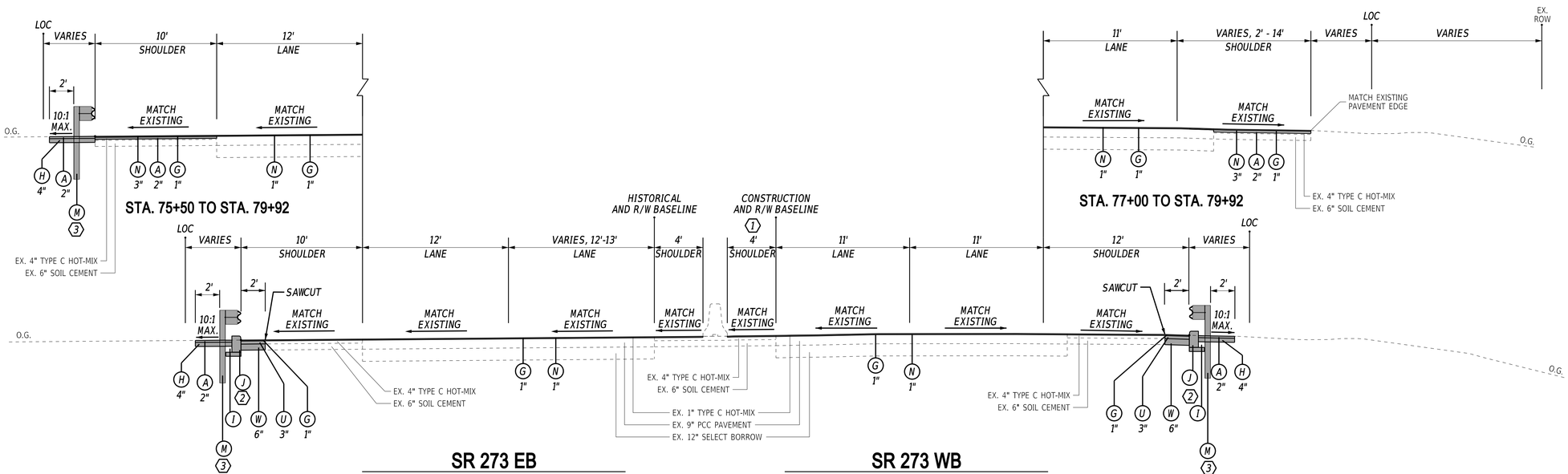

*SR 273 CROSS-SLOPES			
STA.	EX. LANES	NEW LANE	OUTSIDE SHLD
64+56	-1.50%	-2.00%	-
64+75	-1.50%	-2.00%	-
66+18	1.13%		-2.00%
67+75	5.00%		-2.00%
69+50	5.00%		-2.00%
72+50	-1.50%		-2.00%
74+00	-1.50%		-2.00%
77+00	5.00%		-2.00%

MATCH EX. LANES CROSS SLOPE

NOTES:

1. BORROW, TYPE A SHALL BE USED UNDER ROADWAY FOOTPRINT (BACK OF MAINTENANCE PAVEMENT TO BACK OF MAINTENANCE PAVEMENT). BORROW, TYPE F OR PROJECT EXCAVATION MEETING REQUIREMENTS OF BORROW, TYPE F SHALL BE USED OUTSIDE OF ROADWAY FOOTPRINT.
2. CONCRETE PAVEMENT PATCHING FOR FAILING FULL DEPTH PAVEMENT SECTIONS OF THE EXISTING ROADWAY ON EASTBOUND AND WESTBOUND SR 273, WITHIN THE PROJECT LIMITS, SHALL BE PERFORMED AS DIRECTED BY THE ENGINEER.

1 STA. 49+25 TO STA. 54+50:
SHOULDER WIDTH VARIES FROM 23' TO 4'
STA. 49+25 TO STA. 54+50:
MILL 2" AND OVERLAY WITH 2" OF ITEM 401044

2 SEE CONSTRUCTION PLANS FOR CURB LOCATIONS.

3 SEE CONSTRUCTION PLANS FOR GUARDRAIL LOCATIONS.

ADDENDA / REVISIONS

NOT TO SCALE

HSIP NCC, SR 273 AND I-95 INTERCHANGE IMPROVEMENTS

CONTRACT	BRIDGE NO.	715, 715A, 715B, 715C & 715D
T200800713	DESIGNED BY:	B. BARAL
COUNTY		
NEW CASTLE	CHECKED BY:	Z. SCHOLL

TYPICAL SECTIONS

SECTION: RK&K

SHEET NO. 6

14-JUL-2020
15:19
\\balsrv01\v20\14\20141414\4_DelDOT\T70\Task 4A - Harmony FD\Cadd\ContractPlans\ts01_Har.dgn

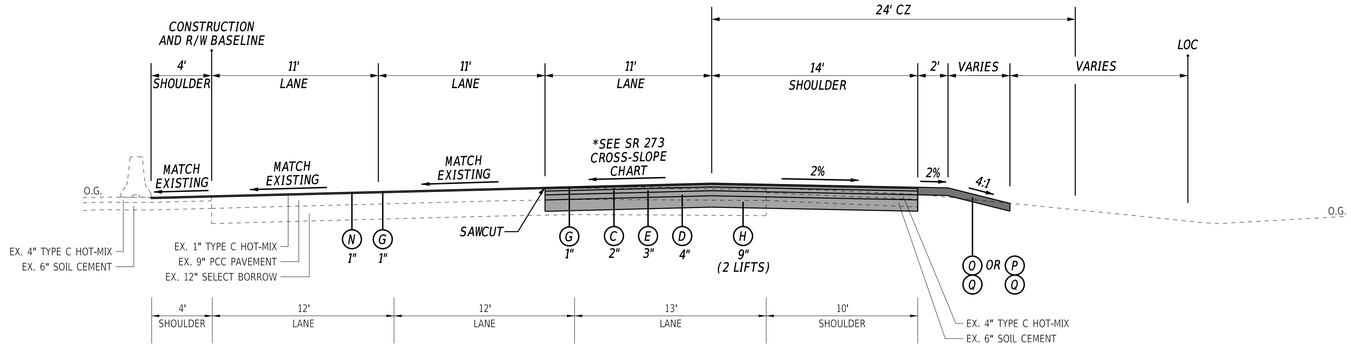

SR 273 WB

STA. 75+29 TO STA. 77+00

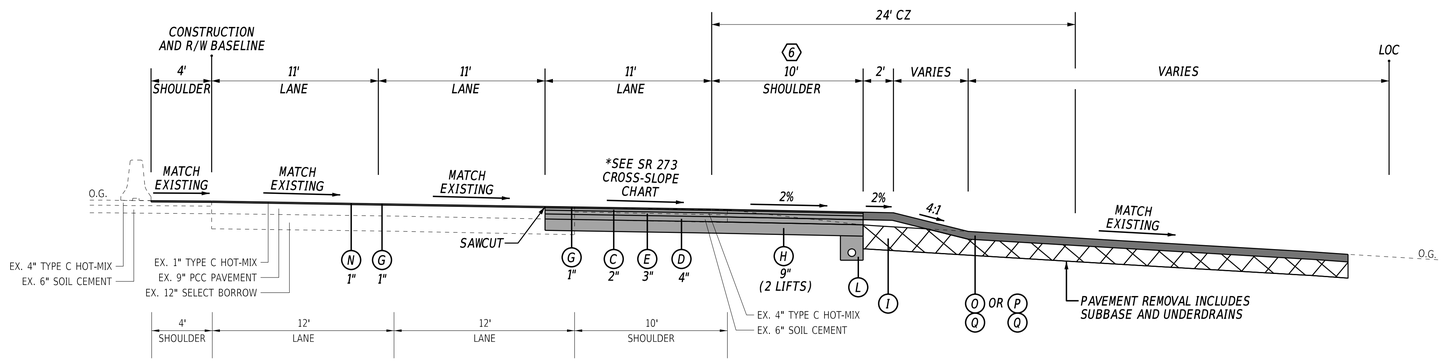

SR 273 WB

STA. 73+00 TO STA. 75+29

6 STA. 74+50 TO STA. 75+29:
SHOULDER WIDTH VARIES FROM 10' TO 14'

*SR 273 CROSS-SLOPES			
STA.	EX. LANES	NEW LANE	OUTSIDE SHLD
64+56	-1.50%	-2.00%	-
64+75	-1.50%	-2.00%	-
66+18	1.13%		-2.00%
67+75	5.00%		-2.00%
69+50	5.00%		-2.00%
72+50	-1.50%		-2.00%
74+00	-1.50%		-2.00%
77+00	5.00%		-2.00%

MATCH EX. LANES CROSS SLOPE

LEGEND

- A ITEM 401044 - SUPERPAVE TYPE C, 64-22 (NON-CARBONATE STONE)
- C ITEM 401046 - SUPERPAVE TYPE C, PG 76-22 (NON-CARBONATE STONE)
- D ITEM 401014 - SUPERPAVE TYPE B, PG 64-22
- E ITEM 401015 - SUPERPAVE TYPE B, PG 70-22
- F ITEM 401016 - SUPERPAVE TYPE B, PG 76-22
- G ITEM 401577 - PAVER-LAID ULTRATHIN BITUMINOUS CONCRETE
- H ITEM 301001 - GRADED AGGREGATE BASE COURSE, TYPE B
- I ITEM 209001 - BORROW, TYPE A (SEE NOTE 1) OR ITEM 209006 - BORROW, TYPE F OR APPROVED PROJECT EXCAVATION
- J ITEM 701011 - PORTLAND CEMENT CONCRETE CURB, TYPE 1-4 OVER 4" GABC, TYPE B
- K ITEM 701012 - PORTLAND CEMENT CONCRETE CURB, TYPE 1-6 OVER 4" GABC, TYPE B
- L ITEM 709001 - PERFORATED PIPE UNDERDRAINS, 6"
- M ITEM 720021 - GALVANIZED STEEL BEAM GUARDRAIL, TYPE 1-31
- N ITEM 760010 - PAVEMENT MILLING, BITUMINOUS CONCRETE PAVEMENT
- O ITEM 908004 - TOPSOIL, 6" DEPTH
- P ITEM 908010 - TOPSOILING, 6" DEPTH
- Q ITEM 908014 - PERMANENT GRASS SEEDING, DRY GROUND
- R ITEM 908020 - EROSION CONTROL BLANKET MULCH
- S ITEM 760502 - HIGH FRICTION SURFACE TREATMENT
- T ITEM 401029 - SUPERPAVE TYPE C, PG 64-22, PATCHING
- U ITEM 401030 - SUPERPAVE TYPE B, PG 64-22, PATCHING
- V ITEM 401031 - SUPERPAVE TYPE BCBC, PG 64-22, PATCHING
- W ITEM 301002 - GRADED AGGREGATE BASE COURSE, TYPE B, PATCHING
- X ITEM 760012 - PAVEMENT MILLING, BITUMINOUS CONCRETE PAVEMENT, VARIABLE DEPTH
- Y ITEM 401036 - SUPERPAVE TYPE C, PG 64-22, WEDGE
- Z ITEM 401037 - SUPERPAVE TYPE B, PG 64-22, WEDGE
- AA ITEM 760006 - RUMBLE STRIPS, BITUMINOUS PAVEMENT

MATERIAL	LIFT THICKNESS	
	MINIMUM	MAXIMUM
BITUMINOUS CONCRETE, TYPE 'C'	1.25"	2"
BITUMINOUS CONCRETE, TYPE 'B'	2.25"	4"
BITUMINOUS CONCRETE BASE COURSE	3"	6"
GRADED AGGREGATE BASE COURSE	4"	8"

NOTES:

1. BORROW, TYPE A SHALL BE USED UNDER ROADWAY FOOTPRINT (BACK OF MAINTENANCE PAVEMENT TO BACK OF MAINTENANCE PAVEMENT). BORROW, TYPE F OR PROJECT EXCAVATION MEETING REQUIREMENTS OF BORROW, TYPE F SHALL BE USED OUTSIDE OF ROADWAY FOOTPRINT.
2. CONCRETE PAVEMENT PATCHING FOR FAILING SECTIONS OF THE EXISTING ROADWAY ON EASTBOUND AND WESTBOUND SR 273, WITHIN THE PROJECT LIMITS, SHALL BE PREFORMED AS DIRECTED BY THE ENGINEER.

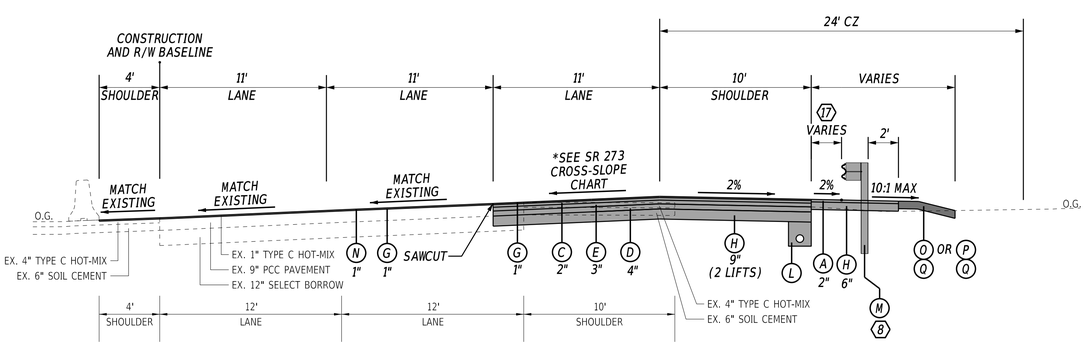

SR 273 WB

STA. 66+88 TO STA. 69+75
STA. 70+69 TO STA. 73+00

8 SEE CONSTRUCTION PLANS FOR GUARDRAIL LOCATIONS

17 STA. 71+87 TO STA. 72+37:
GUARDRAIL OFFSET TRANSITIONS FROM 6.5' TO 2'
STA. 72+37 TO STA. 72+64:
GUARDRAIL OFFSET = 2'

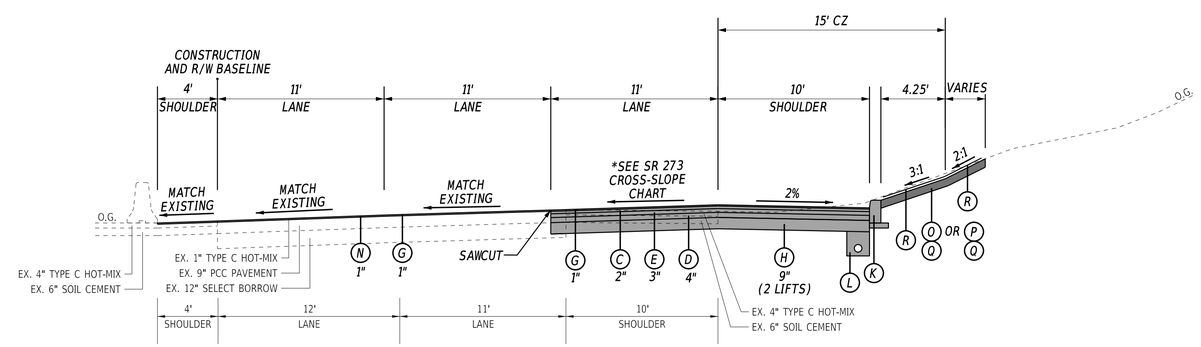

SR 273 WB

STA. 69+75 TO STA. 70+69

ADDENDA / REVISIONS		NOT TO SCALE	HSIP NCC, SR 273 AND I-95 INTERCHANGE IMPROVEMENTS	CONTRACT T200800713	BRIDGE NO. 715, 715A, 715B, 715C & 715D	TYPICAL SECTIONS	SECTION RK&K
				COUNTY NEW CASTLE	DESIGNED BY: B. BARAL		SHEET NO. 7
					CHECKED BY: Z. SCHOLL		

14-JUL-2020
15:21
\\balts01\v20\14\20141414144_DelDOT\70\Task 4A - Harmony FD\Cadd\Contract\Plans\ts\2_Har.dgn

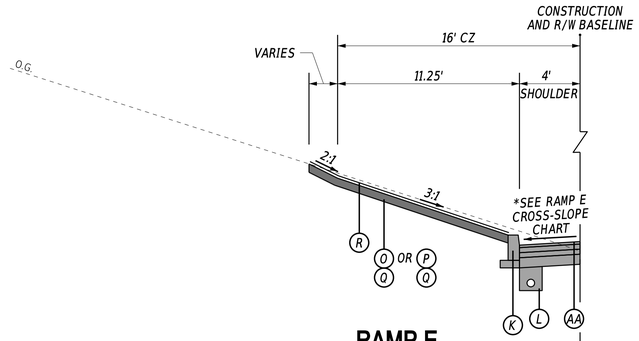

RAMP E
STA. 109+30 TO STA. 111+15

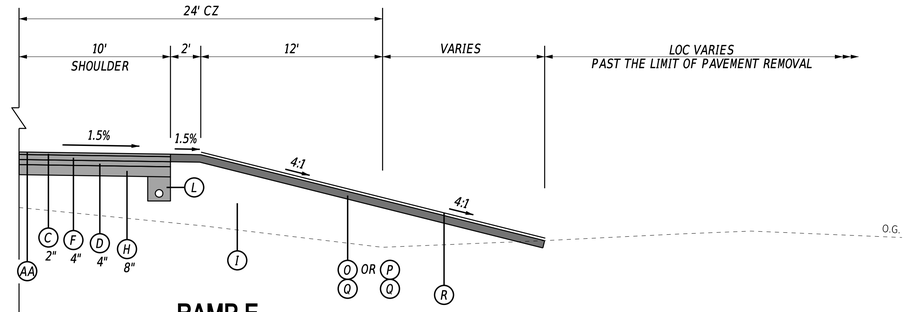

RAMP E
STA. 110+00 TO STA. 111+15

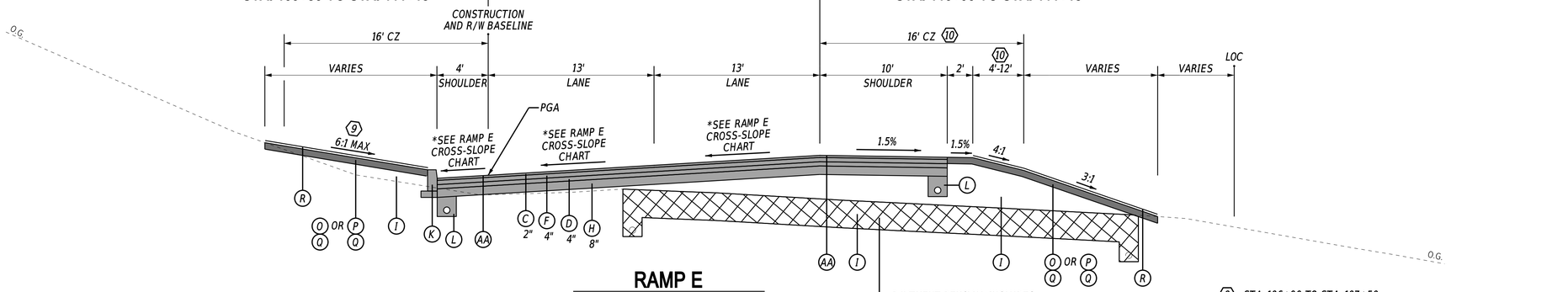

RAMP E
STA. 108+00 TO STA. 111+15

9 STA. 106+00 TO STA. 107+50:
TIE IN VARIES FROM 2% TO 6:1
STA. 107+50 TO STA. 108+00:
TIE IN AT 4:1
STA. 108+00 TO STA. 109+30:
TIE IN AT 6:1

10 STA. 108+00 TO STA. 108+25:
CLEAR ZONE IS 16' OFF THE EDGE OF THE TRAVEL LANE
STA. 108+25 TO STA. 111+15:
CLEAR ZONE IS 24' OFF THE EDGE OF THE TRAVEL LANE
4:1 SLOPES VARY FROM 4' TO 12' TO MEET THE CLEAR ZONE

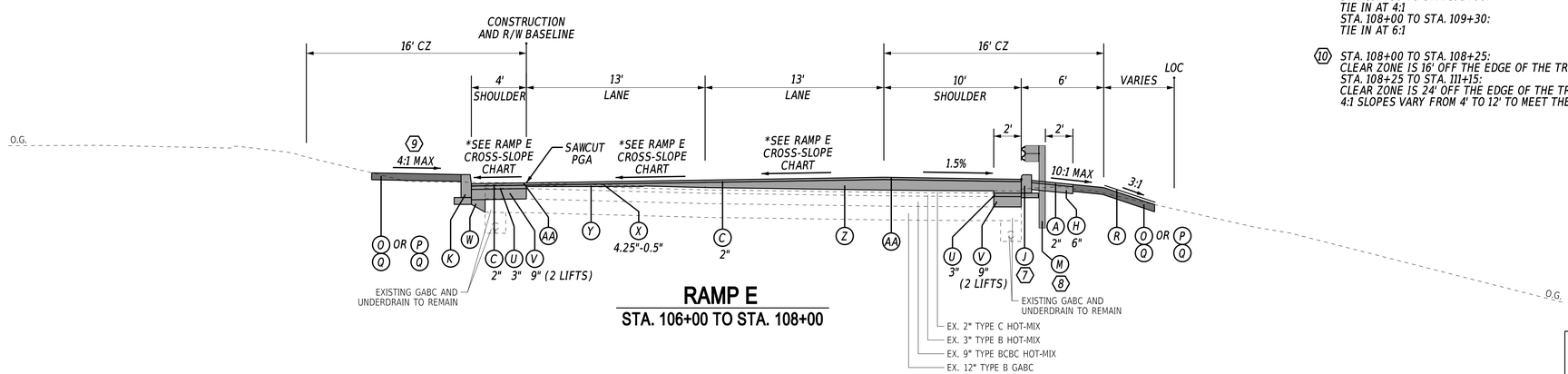

RAMP E
STA. 106+00 TO STA. 108+00

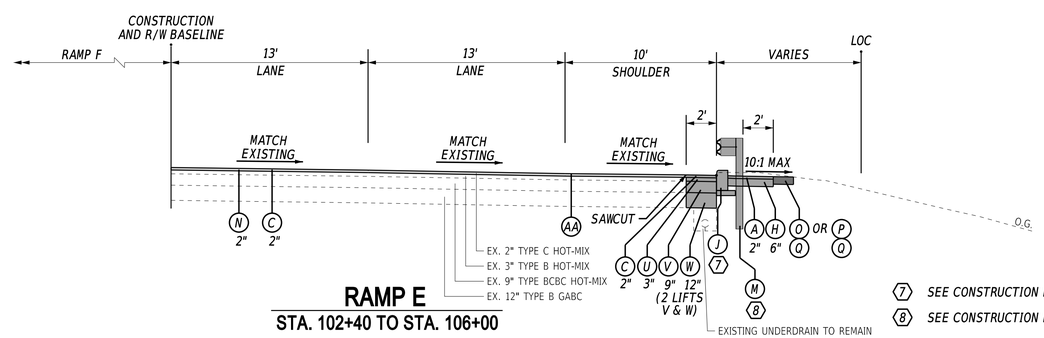

RAMP E
STA. 102+40 TO STA. 106+00

7 SEE CONSTRUCTION PLANS FOR CURB LOCATIONS

8 SEE CONSTRUCTION PLANS FOR GUARDRAIL LOCATIONS

LEGEND

- A ITEM 401044 - SUPERPAVE TYPE C, 64-22 (NON-CARBONATE STONE)
- C ITEM 401046 - SUPERPAVE TYPE C, PG 76-22 (NON-CARBONATE STONE)
- D ITEM 401014 - SUPERPAVE TYPE B, PG 64-22
- E ITEM 401015 - SUPERPAVE TYPE B, PG 70-22
- F ITEM 401016 - SUPERPAVE TYPE B, PG 76-22
- G ITEM 401577 - PAVER-LAID ULTRATHIN BITUMINOUS CONCRETE
- H ITEM 301001 - GRADED AGGREGATE BASE COURSE, TYPE B
- I ITEM 209001 - BORROW, TYPE A (SEE NOTE 1) OR ITEM 209006 - BORROW, TYPE F OR APPROVED PROJECT EXCAVATION
- J ITEM 701011 - PORTLAND CEMENT CONCRETE CURB, TYPE 1-4 OVER 4" GABC, TYPE B
- K ITEM 701012 - PORTLAND CEMENT CONCRETE CURB, TYPE 1-6 OVER 4" GABC, TYPE B
- L ITEM 709001 - PERFORATED PIPE UNDERDRAINS, 6"
- M ITEM 720021 - GALVANIZED STEEL BEAM GUARDRAIL, TYPE 1-31
- N ITEM 760010 - PAVEMENT MILLING, BITUMINOUS CONCRETE PAVEMENT
- O ITEM 908004 - TOPSOIL, 6" DEPTH
- P ITEM 908010 - TOPSOILING, 6" DEPTH
- Q ITEM 908014 - PERMANENT GRASS SEEDING, DRY GROUND
- R ITEM 908020 - EROSION CONTROL BLANKET MULCH
- S ITEM 760502 - HIGH FRICTION SURFACE TREATMENT
- T ITEM 401029 - SUPERPAVE TYPE C, PG 64-22, PATCHING
- U ITEM 401030 - SUPERPAVE TYPE B, PG 64-22, PATCHING
- V ITEM 401031 - SUPERPAVE TYPE BCBC, PG 64-22, PATCHING
- W ITEM 301002 - GRADED AGGREGATE BASE COURSE, TYPE B, PATCHING
- X ITEM 760012 - PAVEMENT MILLING, BITUMINOUS CONCRETE PAVEMENT, VARIABLE DEPTH
- Y ITEM 401036 - SUPERPAVE TYPE C, PG 64-22, WEDGE
- Z ITEM 401037 - SUPERPAVE TYPE B, PG 64-22, WEDGE
- AA ITEM 760006 - RUMBLE STRIPS, BITUMINOUS PAVEMENT

MATERIAL	LIFT THICKNESS	
	MINIMUM	MAXIMUM
BITUMINOUS CONCRETE, TYPE 'C'	1.25"	2"
BITUMINOUS CONCRETE, TYPE 'B'	2.25"	4"
BITUMINOUS CONCRETE BASE COURSE	3"	6"
GRADED AGGREGATE BASE COURSE	4"	8"

NOTE:

1. BORROW, TYPE A SHALL BE USED UNDER ROADWAY FOOTPRINT (BACK OF MAINTENANCE PAVEMENT TO BACK OF MAINTENANCE PAVEMENT). BORROW, TYPE F OR PROJECT EXCAVATION MEETING REQUIREMENTS OF BORROW, TYPE F SHALL BE USED OUTSIDE OF ROADWAY FOOTPRINT.

*RAMP E CROSS-SLOPES			
STA.	LT SHLD.	LANES	RT SHLD.
106+00	MATCH EX.	MATCH EX.	MATCH EX.
106+50	0.00%	0.00%	-1.50%
108+40	-6.00%	6.00%	-1.50%
109+40	-6.00%	6.00%	-1.50%
111+00	-1.00%	1.00%	-1.50%

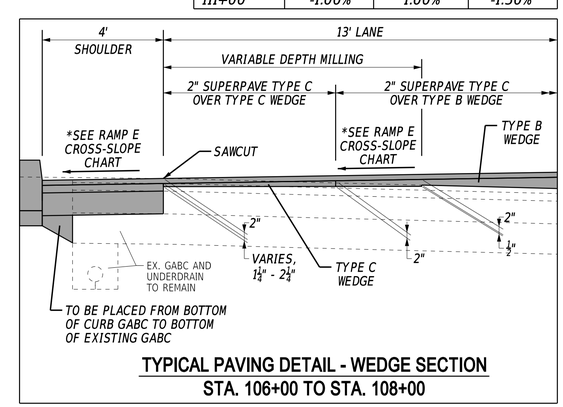

TYPICAL PAVING DETAIL - WEDGE SECTION
STA. 106+00 TO STA. 108+00

ADDENDA / REVISIONS

NOT TO SCALE

HSIP NCC, SR 273 AND I-95 INTERCHANGE IMPROVEMENTS

CONTRACT	BRIDGE NO.	715, 715A, 715B, 715C & 715D
T200800713	DESIGNED BY:	B. BURRIS
COUNTY	CHECKED BY:	Z. SCHOLL
NEW CASTLE		

TYPICAL SECTIONS

SECTION: RK&K

SHEET NO. 8

13-JUL-2020
15:02
\\balsnx01\v20\14\20141414144_DelDOT\70\Task 4A - Harmony FD\Cadd\Contract\Plans\ts\0_Har.dgn

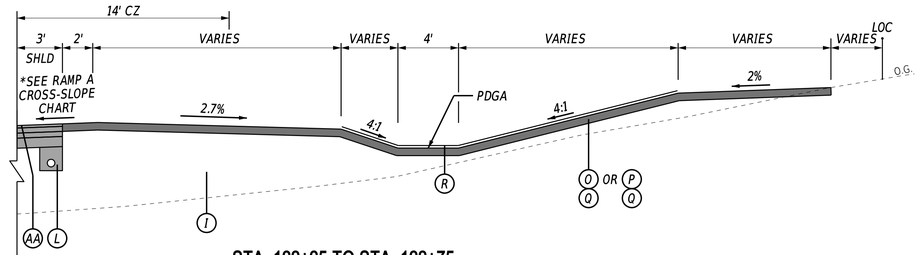

STA. 122+25 TO STA. 122+75

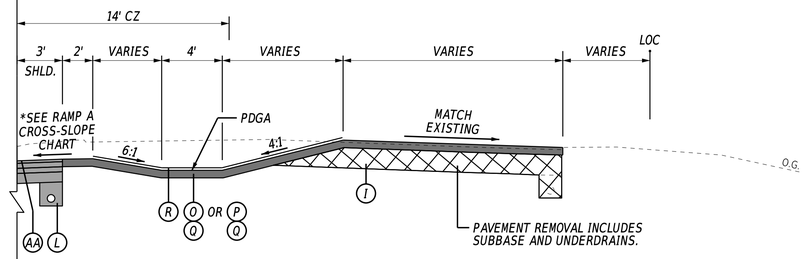

STA. 121+50 TO STA. 122+25

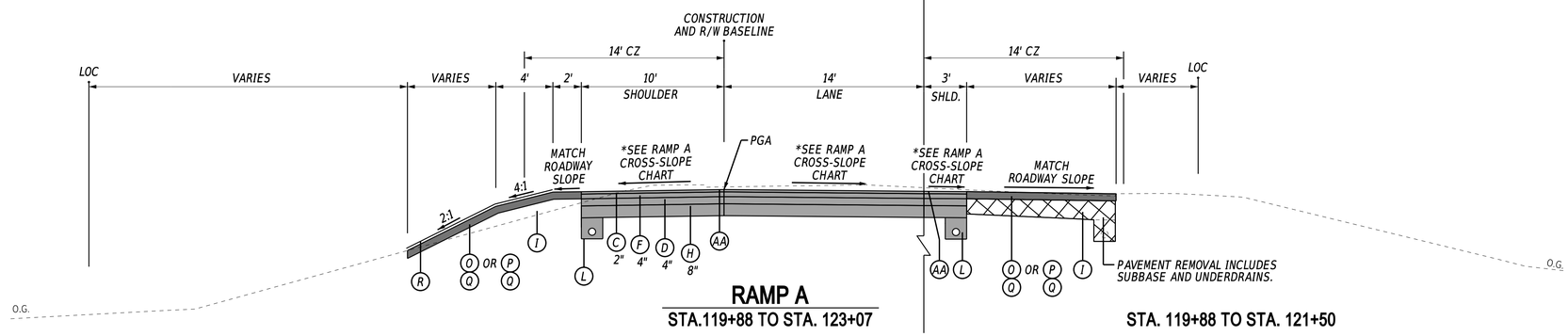

RAMP A

STA.119+88 TO STA. 123+07

STA. 119+88 TO STA. 121+50

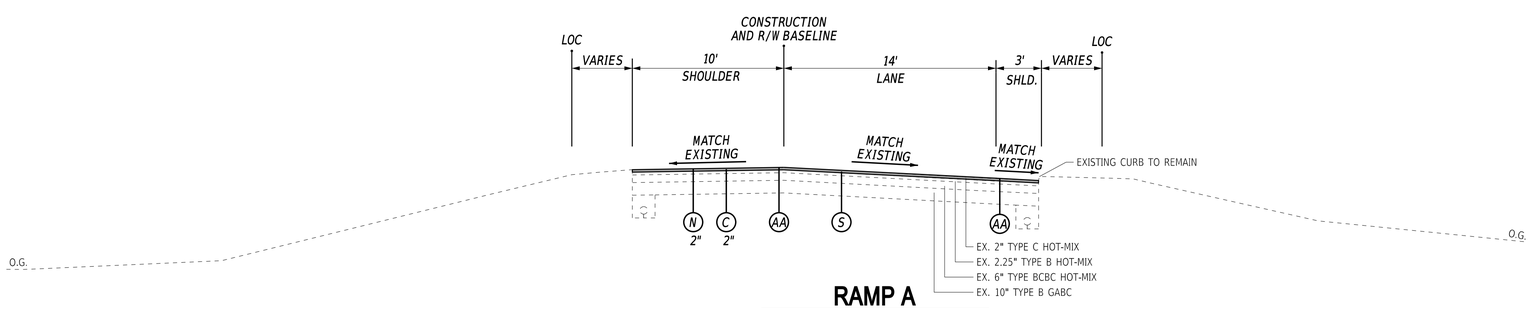

RAMP A

STA.112+27 TO STA. 119+88

LEGEND

- (A) ITEM 401044 - SUPERPAVE TYPE C, 64-22 (NON-CARBONATE STONE)
- (C) ITEM 401046 - SUPERPAVE TYPE C, PG 76-22 (NON-CARBONATE STONE)
- (D) ITEM 401014 - SUPERPAVE TYPE B, PG 64-22
- (E) ITEM 401015 - SUPERPAVE TYPE B, PG 70-22
- (F) ITEM 401016 - SUPERPAVE TYPE B, PG 76-22
- (G) ITEM 401577 - PAVER-LAID ULTRATHIN BITUMINOUS CONCRETE
- (H) ITEM 301001 - GRADED AGGREGATE BASE COURSE, TYPE B
- (I) ITEM 209001 - BORROW, TYPE A (SEE NOTE 1) OR ITEM 209006 - BORROW, TYPE F OR APPROVED PROJECT EXCAVATION
- (J) ITEM 701011 - PORTLAND CEMENT CONCRETE CURB, TYPE 1-4 OVER 4" GABC, TYPE B
- (K) ITEM 701012 - PORTLAND CEMENT CONCRETE CURB, TYPE 1-6 OVER 4" GABC, TYPE B
- (L) ITEM 709001 - PERFORATED PIPE UNDERDRAINS, 6"
- (M) ITEM 720021 - GALVANIZED STEEL BEAM GUARDRAIL, TYPE 1-31
- (N) ITEM 760010 - PAVEMENT MILLING, BITUMINOUS CONCRETE PAVEMENT
- (O) ITEM 908004 - TOPSOIL, 6" DEPTH
- (P) ITEM 908010 - TOPSOILING, 6" DEPTH
- (Q) ITEM 908014 - PERMANENT GRASS SEEDING, DRY GROUND
- (R) ITEM 908020 - EROSION CONTROL BLANKET MULCH
- (S) ITEM 760502 - HIGH FRICTION SURFACE TREATMENT
- (T) ITEM 401029 - SUPERPAVE TYPE C, PG 64-22, PATCHING
- (U) ITEM 401030 - SUPERPAVE TYPE B, PG 64-22, PATCHING
- (V) ITEM 401031 - SUPERPAVE TYPE BCBC, PG 64-22, PATCHING
- (W) ITEM 301002 - GRADED AGGREGATE BASE COURSE, TYPE B, PATCHING
- (X) ITEM 760012 - PAVEMENT MILLING, BITUMINOUS CONCRETE PAVEMENT, VARIABLE DEPTH
- (Y) ITEM 401036 - SUPERPAVE TYPE C, PG 64-22, WEDGE
- (Z) ITEM 401037 - SUPERPAVE TYPE B, PG 64-22, WEDGE
- (AA) ITEM 760006 - RUMBLE STRIPS, BITUMINOUS PAVEMENT

MATERIAL	LIFT THICKNESS	
	MINIMUM	MAXIMUM
BITUMINOUS CONCRETE, TYPE 'C'	1.25"	2"
BITUMINOUS CONCRETE, TYPE 'B'	2.25"	4"
BITUMINOUS CONCRETE BASE COURSE	3"	6"
GRADED AGGREGATE BASE COURSE	4"	8"

NOTE:

1. BORROW, TYPE A SHALL BE USED UNDER ROADWAY FOOTPRINT (BACK OF MAINTENANCE PAVEMENT TO BACK OF MAINTENANCE PAVEMENT). BORROW, TYPE F OR PROJECT EXCAVATION MEETING REQUIREMENTS OF BORROW, TYPE F SHALL BE USED OUTSIDE OF ROADWAY FOOTPRINT.

*RAMP A CROSS-SLOPES			
STA.	LT SHLD.	LANES	RT SHLD.
119+88	MATCH EX.	MATCH EX.	MATCH EX.
120+30	-1.50%	-4.00%	-4.00%
121+14	-1.50%	0.00%	0.00%
121+52	-1.50%	1.66%	1.66%
122+23	-4.75%	4.75%	4.75%
123+07	-4.75%	4.75%	4.75%

ADDENDA / REVISIONS

NOT TO SCALE

HSIP NCC, SR 273 AND I-95 INTERCHANGE IMPROVEMENTS

CONTRACT	BRIDGE NO.	715, 715A, 715B, 715C & 715D
T200800713	DESIGNED BY:	B. BURRIS
COUNTY		
NEW CASTLE	CHECKED BY:	Z. SCHOLL

TYPICAL SECTIONS

SECTION: RK&K

SHEET NO. 9

30-JUN-2020
11:52
\\balsnx01\v20142014\14144_DelDOT\700TTask 4A - Harmony FD\Cadd\Contract\Plans\ts04_Har.dgn

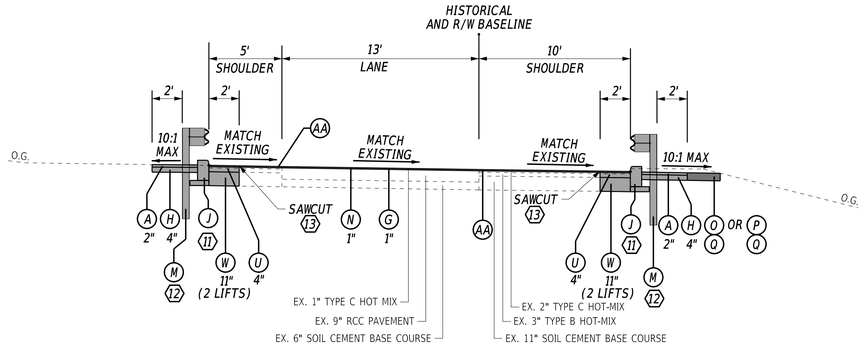

RAMP M
STA. 11+16 TO STA. 29+05

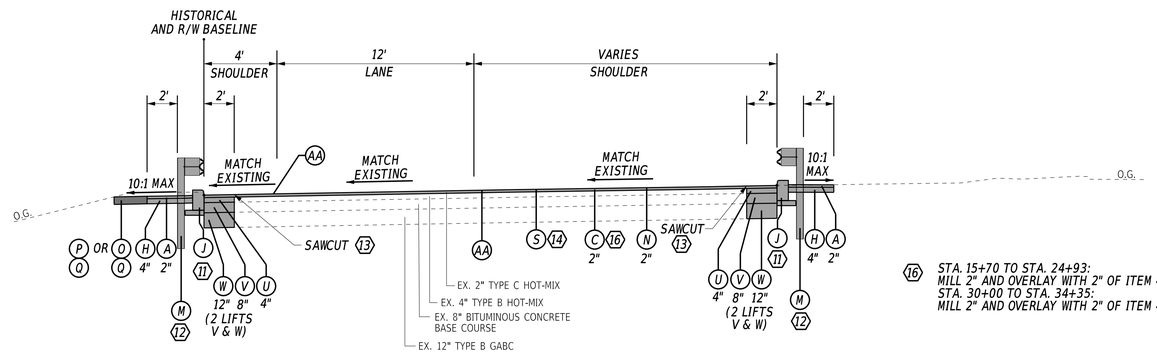

RAMP B
STA. 15+70 TO STA. 24+93
STA. 30+00 TO STA. 34+35

16 STA. 15+70 TO STA. 24+93:
MILL 2" AND OVERLAY WITH 2" OF ITEM 401046
STA. 30+00 TO STA. 34+35:
MILL 2" AND OVERLAY WITH 2" OF ITEM 401044

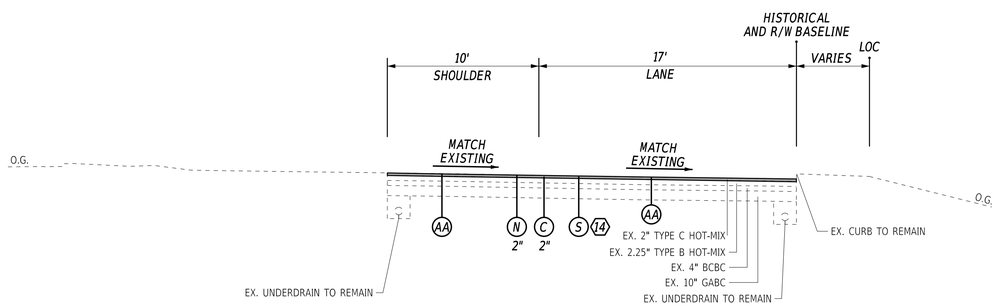

RAMP C
STA. 11+92 TO STA. 31+82

11 SEE CONSTRUCTION PLANS FOR CURB LOCATIONS

12 SEE CONSTRUCTION PLANS FOR GUARDRAIL LOCATIONS

13 SEE CONSTRUCTION PLANS FOR SAWCUT LOCATIONS

14 APPLY HIGH FRICTION SURFACE TREATMENT IN THE FOLLOWING AREAS, FULL WIDTH OF RAMP:
RAMP F - STA. 30+00 TO STA. 37+50
RAMP C - STA. 11+80 TO STA. 24+00
RAMP B - STA. 30+00 TO STA. 34+35

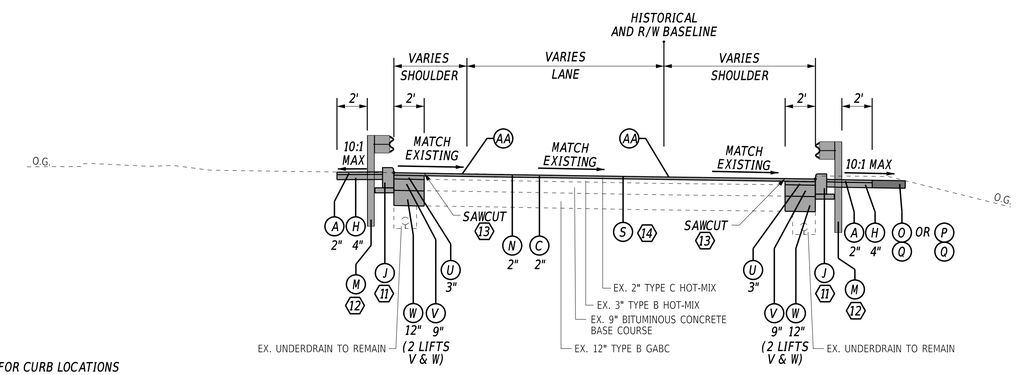

RAMP F
STA. 15+90 TO STA. 33+01
STA. 35+06 TO STA. 39+43
STA. 44+52 TO STA. 51+36

LEGEND

- A ITEM 401044 - SUPERPAVE TYPE C, 64-22 (NON-CARBONATE STONE)
- C ITEM 401046 - SUPERPAVE TYPE C, PG 76-22 (NON-CARBONATE STONE)
- D ITEM 401014 - SUPERPAVE TYPE B, PG 64-22
- E ITEM 401015 - SUPERPAVE TYPE B, PG 70-22
- F ITEM 401016 - SUPERPAVE TYPE B, PG 76-22
- G ITEM 401577 - PAVER-LAID ULTRATHIN BITUMINOUS CONCRETE
- H ITEM 301001 - GRADED AGGREGATE BASE COURSE, TYPE B
- I ITEM 209001 - BORROW, TYPE A (SEE NOTE 1) OR ITEM 209006 - BORROW, TYPE F OR APPROVED PROJECT EXCAVATION
- J ITEM 701011 - PORTLAND CEMENT CONCRETE CURB, TYPE 1-4 OVER 4" GABC, TYPE B
- K ITEM 701012 - PORTLAND CEMENT CONCRETE CURB, TYPE 1-6 OVER 4" GABC, TYPE B
- L ITEM 709001 - PERFORATED PIPE UNDERDRAINS, 6"
- M ITEM 720021 - GALVANIZED STEEL BEAM GUARDRAIL, TYPE 1-31
- N ITEM 760010 - PAVEMENT MILLING, BITUMINOUS CONCRETE PAVEMENT
- O ITEM 908004 - TOPSOIL, 6" DEPTH
- P ITEM 908010 - TOPSOILING, 6" DEPTH
- Q ITEM 908014 - PERMANENT GRASS SEEDING, DRY GROUND
- R ITEM 908020 - EROSION CONTROL BLANKET MULCH
- S ITEM 760502 - HIGH FRICTION SURFACE TREATMENT
- T ITEM 401029 - SUPERPAVE TYPE C, PG 64-22, PATCHING
- U ITEM 401030 - SUPERPAVE TYPE B, PG 64-22, PATCHING
- V ITEM 401031 - SUPERPAVE TYPE BCBC, PG 64-22, PATCHING
- W ITEM 301002 - GRADED AGGREGATE BASE COURSE, TYPE B, PATCHING
- X ITEM 760012 - PAVEMENT MILLING, BITUMINOUS CONCRETE PAVEMENT, VARIABLE DEPTH
- Y ITEM 401036 - SUPERPAVE TYPE C, PG 64-22, WEDGE
- Z ITEM 401037 - SUPERPAVE TYPE B, PG 64-22, WEDGE
- AA ITEM 760006 - RUMBLE STRIPS, BITUMINOUS PAVEMENT

MATERIAL	LIFT THICKNESS	
	MINIMUM	MAXIMUM
BITUMINOUS CONCRETE, TYPE 'C'	1.25"	2"
BITUMINOUS CONCRETE, TYPE 'B'	2.25"	4"
BITUMINOUS CONCRETE BASE COURSE	3"	6"
GRADED AGGREGATE BASE COURSE	4"	8"

NOTE:

1. BORROW, TYPE A SHALL BE USED UNDER ROADWAY FOOTPRINT (BACK OF MAINTENANCE PAVEMENT TO BACK OF MAINTENANCE PAVEMENT). BORROW, TYPE F OR PROJECT EXCAVATION MEETING REQUIREMENTS OF BORROW, TYPE F SHALL BE USED OUTSIDE OF ROADWAY FOOTPRINT.

ADDENDA / REVISIONS

NOT TO SCALE

HSIP NCC, SR 273 AND I-95 INTERCHANGE IMPROVEMENTS

CONTRACT	BRIDGE NO.	715, 715A, 715B, 715C & 715D
T200800713	DESIGNED BY:	B. BURRIS
COUNTY		
NEW CASTLE	CHECKED BY:	Z. SCHOLL

TYPICAL SECTIONS

SECTION RK&K

SHEET NO. 10

30-JUN-2020
19:35
\\balsrv01\v20\14\20\14\14144_DelDOT170\Task 4A - Harmony FD\Cadd\Contract\Plansheets\05_Ttar.dgn

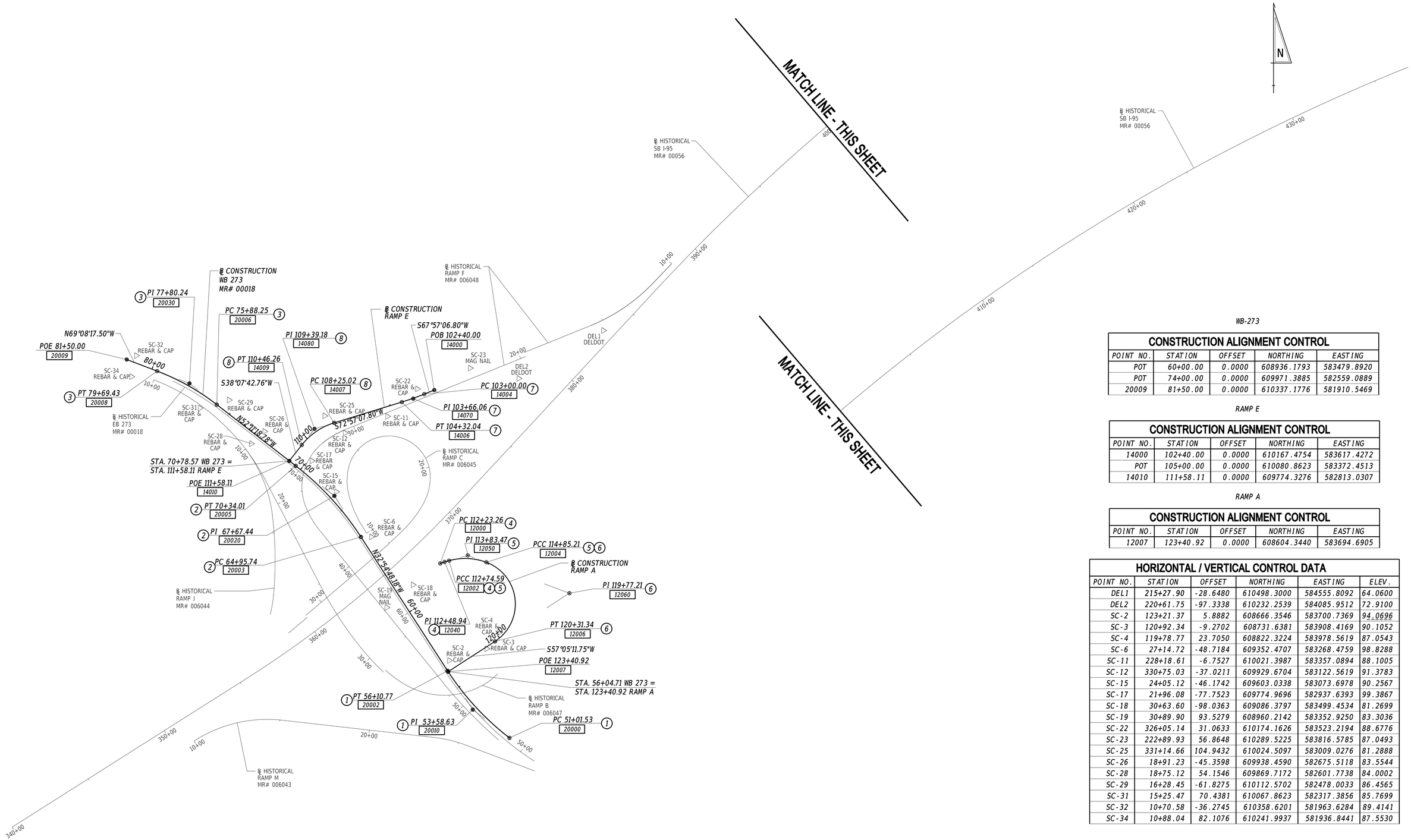

WB-273

CONSTRUCTION ALIGNMENT CONTROL				
POINT NO.	STATION	OFFSET	NORTHING	EASTING
POT	60+00.00	0.0000	608936.1793	583479.8920
POT	74+00.00	0.0000	609971.3885	582559.0889
20009	81+50.00	0.0000	610337.1776	581910.5469

RAMP E

CONSTRUCTION ALIGNMENT CONTROL				
POINT NO.	STATION	OFFSET	NORTHING	EASTING
14000	102+40.00	0.0000	610167.4754	583617.4272
POT	105+00.00	0.0000	610080.8623	583372.4513
14010	111+58.11	0.0000	609774.3276	582813.0307

RAMP A

CONSTRUCTION ALIGNMENT CONTROL				
POINT NO.	STATION	OFFSET	NORTHING	EASTING
12007	123+40.92	0.0000	608604.3440	583694.6905

HORIZONTAL / VERTICAL CONTROL DATA					
POINT NO.	STATION	OFFSET	NORTHING	EASTING	ELEV.
DEL1	215+27.90	-28.6480	610498.3000	584555.8092	64.0600
DEL2	220+61.75	-97.3338	610232.2539	584085.9512	72.9100
SC-2	123+21.37	5.8882	608666.3546	583700.7369	94.0696
SC-3	120+92.34	-9.2702	608731.6381	583908.4169	90.1052
SC-4	119+78.77	23.7050	608822.3224	583978.5619	87.0543
SC-6	27+14.72	-48.7184	609352.4707	583268.4759	98.8288
SC-11	228+18.61	-6.7527	610021.3987	583357.0894	88.1005
SC-12	330+75.03	-37.0211	609929.6704	583122.5619	91.3783
SC-15	24+05.12	-46.1742	609603.0338	583073.6978	90.2567
SC-17	21+96.08	-77.7523	609774.9696	582937.6393	99.3867
SC-18	30+63.60	-98.0363	609086.3797	583499.4534	81.2699
SC-19	30+89.90	93.5279	608960.2142	583352.9250	83.3036
SC-22	326+05.14	31.0633	610174.1626	583523.2194	88.6776
SC-23	222+89.93	56.8648	610289.5225	583816.5785	87.0493
SC-25	331+14.66	104.9432	610024.5097	583009.0276	81.2888
SC-26	18+91.23	-45.3598	609938.4590	582675.5118	83.5544
SC-28	18+75.12	54.1546	609869.7172	582601.7738	84.0002
SC-29	16+28.45	-61.8275	610112.5702	582478.0033	86.4565
SC-31	15+25.47	70.4381	610067.8623	582317.3856	85.7699
SC-32	10+70.58	-36.2745	610358.6201	581963.6284	89.4141
SC-34	10+88.04	82.1076	610241.9937	581936.8441	87.5530

NOTE:
CONSTRUCTION ALIGNMENT CONTROL AND CURVE CHART DATA ONLY PROVIDED FOR BASELINES ASSOCIATED WITH PROPOSED CONSTRUCTION.
EXISTING BASELINES SHOWN FOR HISTORICAL REFERENCE.

DATUM REFERENCE:
HORIZONTAL - THIS PROJECT IS REFERENCED TO THE DELAWARE STATE PLANE COORDINATE SYSTEM, NORTH AMERICAN DATUM OF 1983 (NAD 83/91).

VERTICAL - THIS PROJECT IS REFERENCED TO THE NORTH AMERICAN VERTICAL DATUM OF 1988 (NAVD 88).

ADDENDA / REVISIONS

SCALE
0 250 500 750
FEET

HSIP NCC, SR 273 AND I-95 INTERCHANGE IMPROVEMENTS

CONTRACT	BRIDGE NO.	715, 715A, 715B, 715C & 715D
T200800713	DESIGNED BY:	B. BARAL
COUNTY		
NEW CASTLE	CHECKED BY:	Z. SCHOLL

HORIZONTAL AND VERTICAL CONTROL PLAN

SECTION: RK&K
SHEET NO.: 11

09-APR-2020
15:40
\\balsrv01\v2014\2014\141144_DelDOT\770\Task 4A - Harmony FD\Cadd\Contract\Plans\hv01_Har.dgn

WB-273

CIRCULAR CURVE NO. 1

	STATION	NORTHING	EASTING
ELEMENT: CIRCULAR			
PC (20000)	51+01.53	608236.6062	5840340.6832
PI (20010)	53+58.63	608393.5962	583831.0846
CC (20001)		609424.4821	584950.6258
PT (20002)	56+10.77	608609.4263	583691.3863
RADIUS:	1500.0000		
DELTA:	19°27'05.9960" RIGHT		
DEGREE OF CURVATURE(ARC):	3°49'10.9871"		
LENGTH:	509.2434		
TANGENT:	257.0958		
CHORD:	506.8014		
MIDDLE ORDINATE:	21.5589		
EXTERNAL:	21.8733		
TANGENT DIRECTION:	N 52°21'54.1723" W		
RADIAL DIRECTION:	N 37°38'05.8277" E		
CHORD DIRECTION:	N 42°38'21.1744" W		
RADIAL DIRECTION:	N 57°05'11.8236" E		
TANGENT DIRECTION:	N 32°54'48.1764" W		

CIRCULAR CURVE NO. 2

	STATION	NORTHING	EASTING
ELEMENT: CIRCULAR			
PC (20003)	64+95.74	609352.3520	583210.5199
PI (20020)	67+67.44	609580.4418	583062.8865
CC (20004)		608482.9592	581867.3312
PT (20005)	70+34.01	609747.0112	582848.2351
RADIUS:	1600.0000		
DELTA:	19°16'30.6000" LEFT		
DEGREE OF CURVATURE(ARC):	3°34'51.5504"		
LENGTH:	538.2642		
TANGENT:	271.6994		
CHORD:	535.7295		
MIDDLE ORDINATE:	22.5817		
EXTERNAL:	22.9050		
TANGENT DIRECTION:	N 32°54'48.1764" W		
RADIAL DIRECTION:	N 57°05'11.8236" E		
CHORD DIRECTION:	N 42°33'03.4764" W		
RADIAL DIRECTION:	N 37°48'41.2236" E		
TANGENT DIRECTION:	N 52°11'18.7764" W		

CIRCULAR CURVE NO. 3

	STATION	NORTHING	EASTING
ELEMENT: CIRCULAR			
PC (20006)	75+88.25	610086.8003	582410.3623
PI (20030)	77+80.24	610204.5033	582258.6831
CC (20007)		609068.8332	581620.4201
PT (20008)	79+69.43	610272.8741	582079.2786
RADIUS:	1288.5130		
DELTA:	16°56'58.8151" LEFT		
DEGREE OF CURVATURE(ARC):	4°26'47.9725"		
LENGTH:	381.1777		
TANGENT:	191.9910		
CHORD:	379.7892		
MIDDLE ORDINATE:	14.0697		
EXTERNAL:	14.2250		
TANGENT DIRECTION:	N 52°11'18.7764" W		
RADIAL DIRECTION:	N 37°48'41.2236" E		
CHORD DIRECTION:	N 60°39'48.1839" W		
RADIAL DIRECTION:	N 20°51'42.4085" E		
TANGENT DIRECTION:	N 69°08'17.5000" W		

RAMP A

CIRCULAR CURVE NO. 4

	STATION	NORTHING	EASTING
ELEMENT: CIRCULAR			
PC (12000)	112+23.26	609204.8997	583650.5644
PI (12040)	112+48.94	609213.6324	583674.7112
CC (12001)		608587.0619	583874.0045
PCC (12002)	112+74.59	609220.4538	583699.4660
RADIUS:	657.0000		
DELTA:	4°28'34.6102" RIGHT		
DEGREE OF CURVATURE(ARC):	8°43'14.9477"		
LENGTH:	51.3287		
TANGENT:	25.6774		
CHORD:	51.3156		
MIDDLE ORDINATE:	0.5012		
EXTERNAL:	0.5016		
TANGENT DIRECTION:	N 70°07'03.1914" E		
RADIAL DIRECTION:	S 19°52'56.8086" E		
CHORD DIRECTION:	N 72°21'20.4965" E		
RADIAL DIRECTION:	S 15°24'22.1984" E		
TANGENT DIRECTION:	N 74°35'37.8016" E		

RAMP A

CIRCULAR CURVE NO. 5

	STATION	NORTHING	EASTING
ELEMENT: CIRCULAR			
PCC (12002)	112+74.59	609220.4538	583699.4660
PI (12050)	113+83.47	609249.3788	583804.4332
CC (12003)		608895.5633	583788.9934
PCC (12004)	114+85.21	609211.4200	583906.4818
RADIUS:	337.0000		
DELTA:	35°48'35.0615" RIGHT		
DEGREE OF CURVATURE(ARC):	17°00'06.1740"		
LENGTH:	210.6243		
TANGENT:	108.8797		
CHORD:	207.2129		
MIDDLE ORDINATE:	16.3215		
EXTERNAL:	17.1522		
TANGENT DIRECTION:	N 74°35'37.8016" E		
RADIAL DIRECTION:	S 15°24'22.1984" E		
CHORD DIRECTION:	S 87°30'04.6676" E		
RADIAL DIRECTION:	S 20°24'12.8631" W		
TANGENT DIRECTION:	S 69°35'47.1369" E		

CIRCULAR CURVE NO. 6

	STATION	NORTHING	EASTING
ELEMENT: CIRCULAR			
PCC (12004)	114+85.21	609211.4200	583906.4818
PI (12060)	119+77.21	609039.8964	584367.6069
CC (12005)		608979.9167	583820.3701
PT (12006)	120+31.34	608772.5620	583954.5827
RADIUS:	247.0000		
DELTA:	126°40'58.8867"LEFT		
DEGREE OF CURVATURE(ARC):	23°11'48.0187"		
LENGTH:	546.1259		
TANGENT:	491.9925		
CHORD:	441.4862		
MIDDLE ORDINATE:	136.1781		
EXTERNAL:	303.5140		
TANGENT DIRECTION:	S 69°35'47.1369" E		
RADIAL DIRECTION:	S 20°24'12.8631" W		
CHORD DIRECTION:	S 6°15'17.6935" E		
RADIAL DIRECTION:	N 32°54'48.2501" W		
TANGENT DIRECTION:	S 57°05'11.7499" W		

RAMP E

CIRCULAR CURVE NO. 7

	STATION	NORTHING	EASTING
ELEMENT: CIRCULAR			
PC (14004)	103+00.00	610144.9523	583561.8151
PI (14070)	103+66.06	610120.1533	583500.5836
CC (14005)		611547.3050	582993.8575
PT (14006)	104+32.04	610100.7857	583437.4237
RADIUS:	1513.0000		
DELTA:	5°00'01.0007" RIGHT		
DEGREE OF CURVATURE(ARC):	3°47'12.8358"		
LENGTH:	132.0415		
TANGENT:	66.0627		
CHORD:	131.9996		
MIDDLE ORDINATE:	1.4402		
EXTERNAL:	1.4416		
TANGENT DIRECTION:	S 67°57'06.7961" W		
RADIAL DIRECTION:	N 22°02'53.2039" W		
CHORD DIRECTION:	S 70°27'07.2965" W		
RADIAL DIRECTION:	N 17°02'52.2032" W		
TANGENT DIRECTION:	S 72°57'07.7968" W		

CIRCULAR CURVE NO. 8

	STATION	NORTHING	EASTING
ELEMENT: CIRCULAR			
PC (14007)	108+25.02	609985.5753	583061.7095
PI (14080)	109+39.18	609952.1090	582952.5723
CC (14008)		609637.5693	583168.4234
PT (14009)	110+46.26	609862.3131	582882.0910
RADIUS:	364.0000		
DELTA:	34°49'25.0331" LEFT		
DEGREE OF CURVATURE(ARC):	15°44'26.1556"		
LENGTH:	221.2344		
TANGENT:	114.1531		
CHORD:	217.8449		
MIDDLE ORDINATE:	16.6790		
EXTERNAL:	17.4799		
TANGENT DIRECTION:	S 72°57'07.7968" W		
RADIAL DIRECTION:	N 17°02'52.2032" W		
CHORD DIRECTION:	S 55°32'25.2803" W		
RADIAL DIRECTION:	N 51°52'17.2363" W		
TANGENT DIRECTION:	S 38°07'42.7637" W		

ADDENDA / REVISIONS

NOT TO SCALE

HSIP NCC, SR 273 AND I-95 INTERCHANGE IMPROVEMENTS

CONTRACT	BRIDGE NO.	715, 715A, 715B, 715C & 715D
T200800713	DESIGNED BY:	B. BARAL
COUNTY		
NEW CASTLE	CHECKED BY:	Z. SCHOLL

HORIZONTAL AND VERTICAL CONTROL PLAN

SECTION: RK&K

SHEET NO. 12

27-JAN-2020
12:29
\\balts01\v20\14\20141414144_DelDOT\70\Task 4A - Harmony FD\Cadd\ContractPlans\hv02_Har.dgn

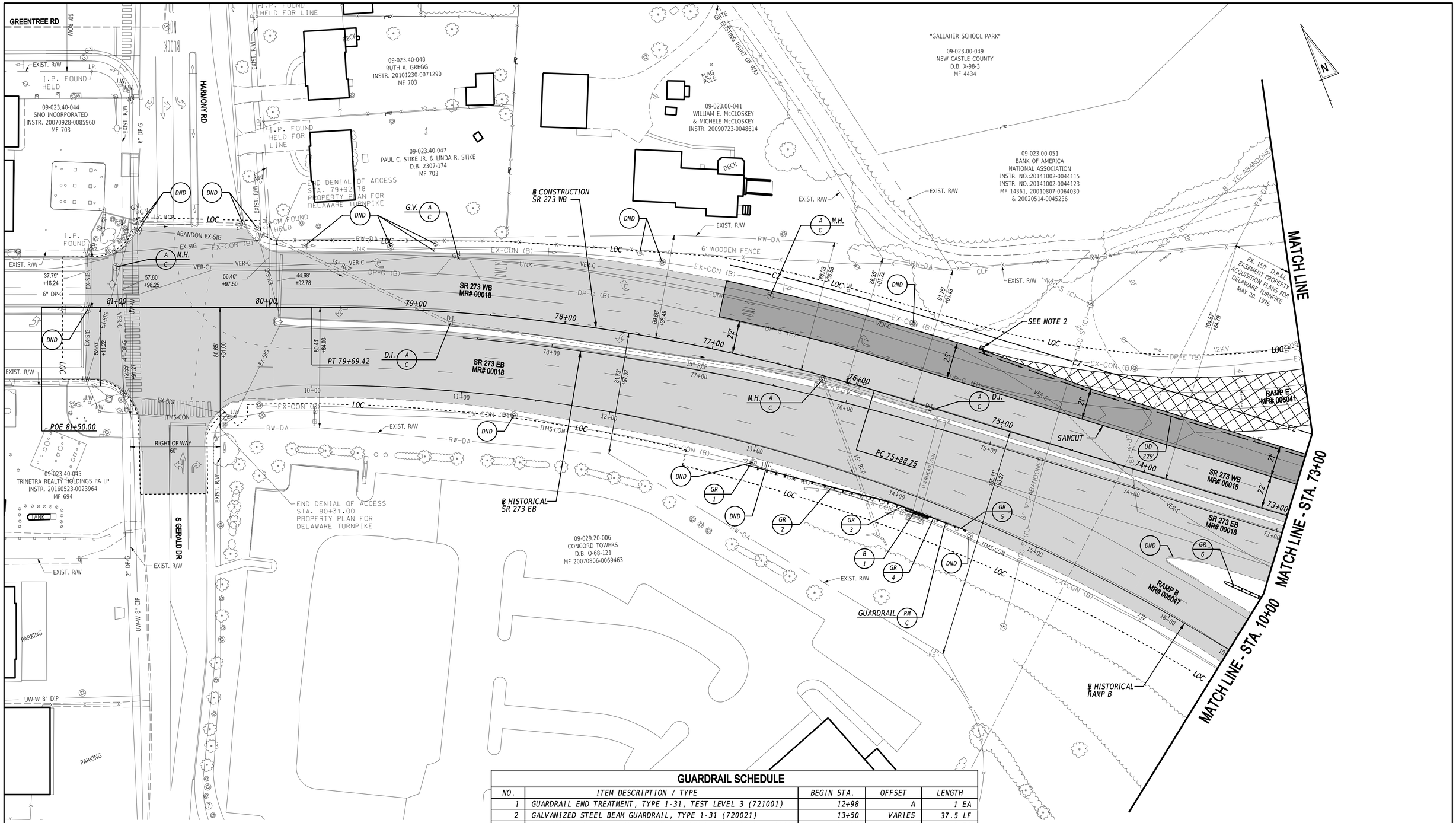

BARRIER SCHEDULE

NO.	ITEM DESCRIPTION / TYPE	LENGTH
1	P.C.C. SAFETY BARRIER, PERM., SINGLE FACE, 42"	16'

GUARDRAIL SCHEDULE

NO.	ITEM DESCRIPTION / TYPE	BEGIN STA.	OFFSET	LENGTH
1	GUARDRAIL END TREATMENT, TYPE 1-31, TEST LEVEL 3 (721001)	12+98	A	1 EA
2	GALVANIZED STEEL BEAM GUARDRAIL, TYPE 1-31 (720021)	13+50	VARIES	37.5 LF
3	GUARDRAIL TO BARRIER CONNECTION, APPROACH TYPE 1-31 (721010)	13+88	B	1 EA
4	GUARDRAIL TO BARRIER CONNECTION, EXIT TYPE 31 (721009)	14+25	B	1 EA
5	END ANCHORAGE 31 (721006)	14+37	9'	1 EA
6	GUARDRAIL END TREATMENT TYPE 3-31 (721004)	73+27	A	1 EA

NOTES: ALL BEGINNING STATIONS ARE APPROXIMATE. EXACT LOCATIONS ARE TO BE DETERMINED BY THE ENGINEER IN THE FIELD.
A = OFFSET ATTENUATORS AS PER STANDARD DETAILS.
B = ATTACH TO P.C.C. BARRIER

NOTE:

1. CONCRETE PAVEMENT PATCHING FOR FAILING SECTIONS OF THE EXISTING ROADWAY ON EASTBOUND AND WESTBOUND SR 273, WITHIN THE CONTRACT LIMITS, SHALL BE PERFORMED AS DIRECTED BY THE ENGINEER.
2. SEE DETAIL SHEET 35 FOR UNDERDRAIN CLEANOUT.

ADDENDA / REVISIONS

SCALE 0 30 60 90 FEET

HSIP NCC, SR 273 AND I-95 INTERCHANGE IMPROVEMENTS

CONTRACT	BRIDGE NO.	715, 715A, 715B, 715C & 715D	
T200800713	DESIGNED BY:	B. BURRIS	
COUNTY			
NEW CASTLE	CHECKED BY:	Z. SCHOLL	

CONSTRUCTION PLAN

CP-01
SECTION
RK&K
SHEET NO.
13

14-JUL-2020
15:26
\\balsvr01\v2014\2014\14144_DelDOT\70\Task 4A - Harmony FD\Cadd\Contract\Plans\cp01_Har.dgn

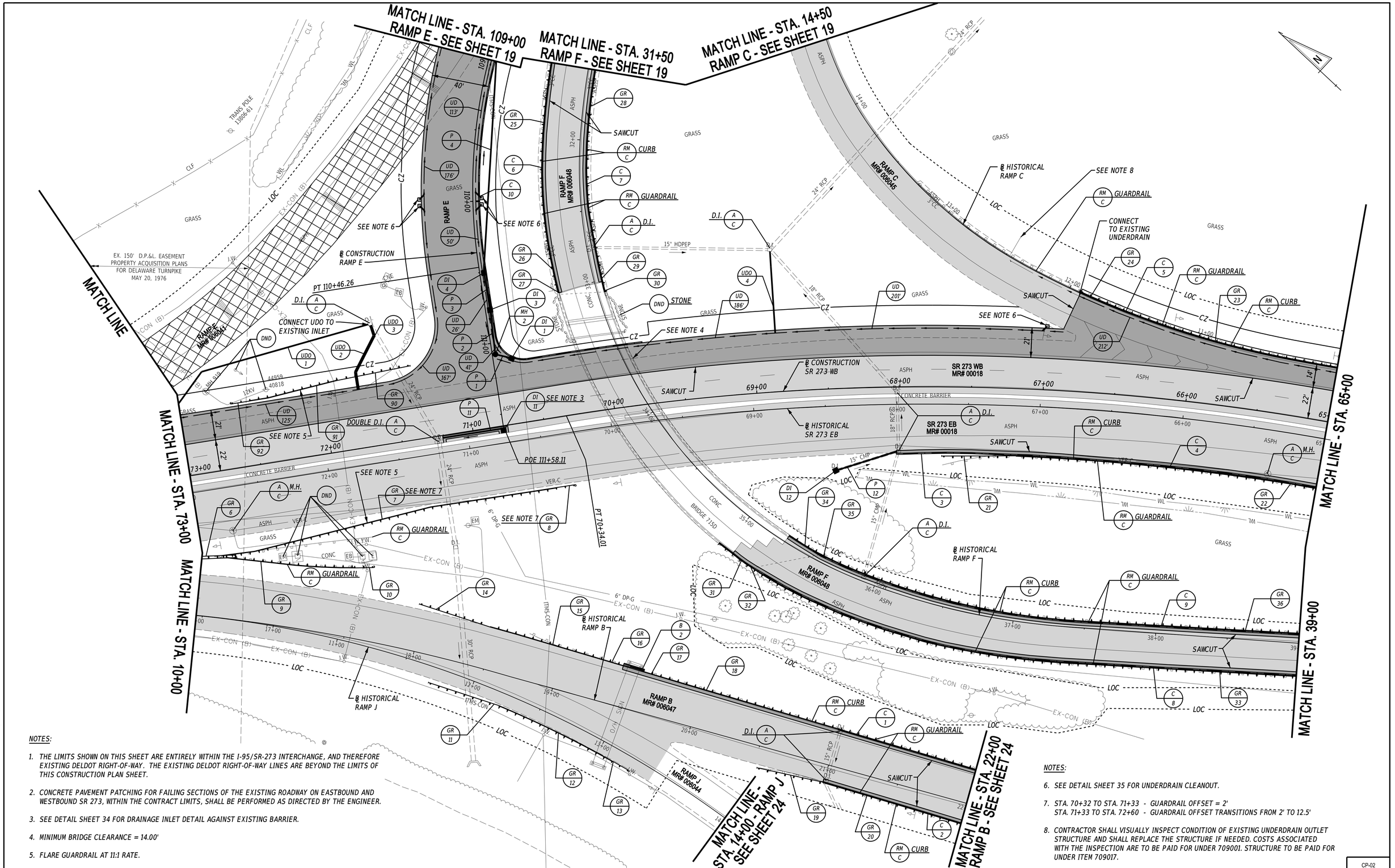

NOTES:

1. THE LIMITS SHOWN ON THIS SHEET ARE ENTIRELY WITHIN THE I-95/SR-273 INTERCHANGE, AND THEREFORE EXISTING DELDOT RIGHT-OF-WAY. THE EXISTING DELDOT RIGHT-OF-WAY LINES ARE BEYOND THE LIMITS OF THIS CONSTRUCTION PLAN SHEET.
2. CONCRETE PAVEMENT PATCHING FOR FAILING SECTIONS OF THE EXISTING ROADWAY ON EASTBOUND AND WESTBOUND SR 273, WITHIN THE CONTRACT LIMITS, SHALL BE PERFORMED AS DIRECTED BY THE ENGINEER.
3. SEE DETAIL SHEET 34 FOR DRAINAGE INLET DETAIL AGAINST EXISTING BARRIER.
4. MINIMUM BRIDGE CLEARANCE = 14.00'
5. FLARE GUARDRAIL AT 11:1 RATE.

NOTES:

6. SEE DETAIL SHEET 35 FOR UNDERDRAIN CLEANOUT.
7. STA. 70+32 TO STA. 71+33 - GUARDRAIL OFFSET = 2'
   STA. 71+33 TO STA. 72+60 - GUARDRAIL OFFSET TRANSITIONS FROM 2' TO 12.5'
8. CONTRACTOR SHALL VISUALLY INSPECT CONDITION OF EXISTING UNDERDRAIN OUTLET STRUCTURE AND SHALL REPLACE THE STRUCTURE IF NEEDED. COSTS ASSOCIATED WITH THE INSPECTION ARE TO BE PAID FOR UNDER 709001. STRUCTURE TO BE PAID FOR UNDER ITEM 709017.

ADDENDA / REVISIONS

SCALE
0 30 60 90
FEET

HSIP NCC, SR 273 AND I-95 INTERCHANGE IMPROVEMENTS

CONTRACT	BRIDGE NO.	715, 715A, 715B, 715C & 715D
T200800713	DESIGNED BY:	B. BURRIS
COUNTY	CHECKED BY:	Z. SCHOLL
NEW CASTLE		

CONSTRUCTION PLAN

CP-02
SECTION
RK&K
SHEET NO.
14

24-JUL-2020
13:14
\\bdfsrv01\v20\14\20\14141144_DetDOT1707\Task 4A - Harmony FD\Cadd\Contract\Plans\cp02_Har.dgn

CURB SCHEDULE

NO.	ITEM DESCRIPTION / TYPE	LENGTH
1	PCC CURB, TYPE 1-4	394 LF
2	PCC CURB, TYPE 1-4	400 LF
3	PCC CURB, TYPE 1-2	85 LF
4	PCC CURB, TYPE 1-4	270 LF
5	PCC CURB, TYPE 1-4	235 LF
6	PCC CURB, TYPE 1-4	265 LF
7	PCC CURB, TYPE 1-4	1,437 LF
8	PCC CURB, TYPE 1-4	456 LF
9	PCC CURB, TYPE 1-4	415 LF
10	PCC CURB, TYPE 1-6	608 LF

GUARDRAIL SCHEDULE

NO.	ITEM DESCRIPTION / TYPE	BEGIN STA.	OFFSET	LENGTH
7	GALVANIZED STEEL BEAM GUARDRAIL, TYPE 1-31 (720021)	72+73	VARIES	237.5 LF
8	END ANCHORAGE 31 (721006)	70+45	VARIES	1 EA
9	GALVANIZED STEEL BEAM GUARDRAIL, TYPE 1-31 (720021)	16+63	VARIES	87.5 LF
10	END ANCHORAGE 31 (721006)	17+48	VARIES	1 EA
11	GUARDRAIL END TREATMENT, TYPE 1-31, TEST LEVEL 3 (721001)	11+70	A	1 EA
12	GALVANIZED STEEL BEAM GUARDRAIL, TYPE 2-31 (720022)	12+22	9.3'	87.5 LF
13	END ANCHORAGE 31 (721006)	13+10	9.3'	1 EA
14	GUARDRAIL END TREATMENT, TYPE 1-31, TEST LEVEL 3 (721001)	17+97	A	1 EA
15	GALVANIZED STEEL BEAM GUARDRAIL, TYPE 1-31 (720021)	18+47	VARIES	75 LF
16	GUARDRAIL TO BARRIER CONNECTION, APPROACH TYPE 1-31 (721010)	19+24	B	1 EA
17	GUARDRAIL TO BARRIER CONNECTION, EXIT TYPE 31 (721009)	19+58	B	1 EA
18	GALVANIZED STEEL BEAM GUARDRAIL, TYPE 1-31 (720021)	19+70	VARIES	487.5 LF
19	GUARDRAIL END TREATMENT, TYPE 1-31, TEST LEVEL 3 (721001)	20+52	A	1 EA
20	GALVANIZED STEEL BEAM GUARDRAIL, TYPE 1-31 (720021)	21+04	VARIES	350 LF
21	GUARDRAIL END TREATMENT, TYPE 1-31, TEST LEVEL 3 (721001)	67+69	A	1 EA
22	GALVANIZED STEEL BEAM GUARDRAIL, TYPE 1-31 (720021)	67+16	VARIES	237.5 LF
23	GALVANIZED STEEL BEAM GUARDRAIL, TYPE 1-31 (720021)	64+93	VARIES	187.5 LF
24	END ANCHORAGE 31 (721006)	11+78	VARIES	1 EA
25	GALVANIZED STEEL BEAM GUARDRAIL, TYPE 1-31 (720021)	30+53	VARIES	212.5 LF
26	TYPE 1-31 TO TYPE 1-27 TRANSITION SECTION (720021)	32+57	VARIES	28 LF
27	GUARDRAIL TO BARRIER CONNECTION, APPROACH TYPE 1-27 (721014)	32+83	B	1 EA
28	GALVANIZED STEEL BEAM GUARDRAIL, TYPE 1-31 (720021)	18+69	VARIES	1,400 LF
29	TYPE 1-31 TO TYPE 1-27 TRANSITION SECTION (720021)	32+60	VARIES	28 LF
30	GUARDRAIL TO BARRIER CONNECTION, APPROACH TYPE 1-27 (721014)	32+89	B	1 EA
31	GUARDRAIL TO BARRIER CONNECTION, EXIT TYPE 27 (721013)	34+95	B	1 EA
32	TYPE 1-31 TO TYPE 1-27 TRANSITION SECTION (720021)	35+07	VARIES	28 LF
33	GALVANIZED STEEL BEAM GUARDRAIL, TYPE 1-31 (720021)	35+35	VARIES	375 LF
34	GUARDRAIL TO BARRIER CONNECTION, EXIT TYPE 27 (721013)	35+30	B	1 EA
35	TYPE 1-31 TO TYPE 1-27 TRANSITION SECTION (720021)	35+42	VARIES	28 LF
36	GALVANIZED STEEL BEAM GUARDRAIL, TYPE 1-31 (720021)	35+70	VARIES	375 LF
90	GUARDRAIL END TREATMENT, TYPE 1-31, TEST LEVEL 3 (721001)	71+37	A	1 EA
91	GALVANIZED STEEL BEAM GUARDRAIL, TYPE 2-31 (720022)	71+87	VARIES	62.5 LF
92	END ANCHORAGE 31 (721006)	72+50	2'	1 EA

NOTES: ALL BEGINNING STATIONS ARE APPROXIMATE. EXACT LOCATIONS ARE TO BE DETERMINED BY THE ENGINEER IN THE FIELD.
A = OFFSET ATTENUATORS AS PER STANDARD DETAILS.
B = ATTACH TO P.C.C. BARRIER

BARRIER SCHEDULE

NO.	ITEM DESCRIPTION / TYPE	LENGTH
2	P.C.C. SAFETY BARRIER, PERM., SINGLE FACE 42"	15 LF

MANHOLE SCHEDULE

NO.	STATION	OFFSET	TYPE/SIZE	T.G. EL.	INVERT EL.
2	111+07.63	3' LT	48" X 30"	84.91	80.26

DRAINAGE PIPE SCHEDULE

NO.	SIZE / TYPE	CLASS	LENGTH	SLOPE	INVERT EL.	DIS. EL.
1	15" RCP	III	8'	0.005	80.50	80.46
2	15" RCP	III	28'	0.005	80.26	80.12
3	15" RCP	III	24'	0.005	79.92	79.80
4	15" RCP	III	160'	0.005	79.60	78.80
11*	15" RCP	III	50'	0.005	80.55	80.30
12	15" RCP	III	45'	0.02	81.38	80.48

*TRENCH WIDTH SHALL BE OUTSIDE DIAMETER OF THE PIPE PLUS 6 INCHES ON EITHER SIDE FOR INSTALLATION ALONG BARRIER. SEE DETAIL SHEET 34 FOR PIPE OFFSET FROM BARRIER.

DRAINAGE INLET SCHEDULE

NO.	STATION	OFFSET	BOX SIZE	GRATE	T.G. EL.	INV. EL.
1	70+65.00	++ RT.	72" X 24"	1	+	80.50
3	110+75.00	++ LT.	34" X 24"	1	+	79.92
4	110+50.00	++ LT.	48" X 30"	1	+	79.60
11	70+75.00	++ LT.	72" X 48"	1	+	80.55
12	68+45.00	45' LT.	34" X 24"	3	85.0	81.38

+ MATCH FLOWLINE OF PROPOSED CURB OR EXISTING BARRIER
++ MATCH PROPOSED CURB LINE OR EXISTING BARRIER

UNDERDRAIN OUTLETS

NO.	LENGTH	DIS. EL.
1	159'	*
2	49'	*
3	49'	*
4	58'	*

* TO BE VERIFIED IN FIELD BY THE ENGINEER

CURB SCHEDULE

NO.	ITEM DESCRIPTION / TYPE	LENGTH
11	PCC CURB, TYPE 1-4	112 LF
13	PCC CURB, TYPE 1-4	377 LF
14	PCC CURB, TYPE 1-4	585 LF

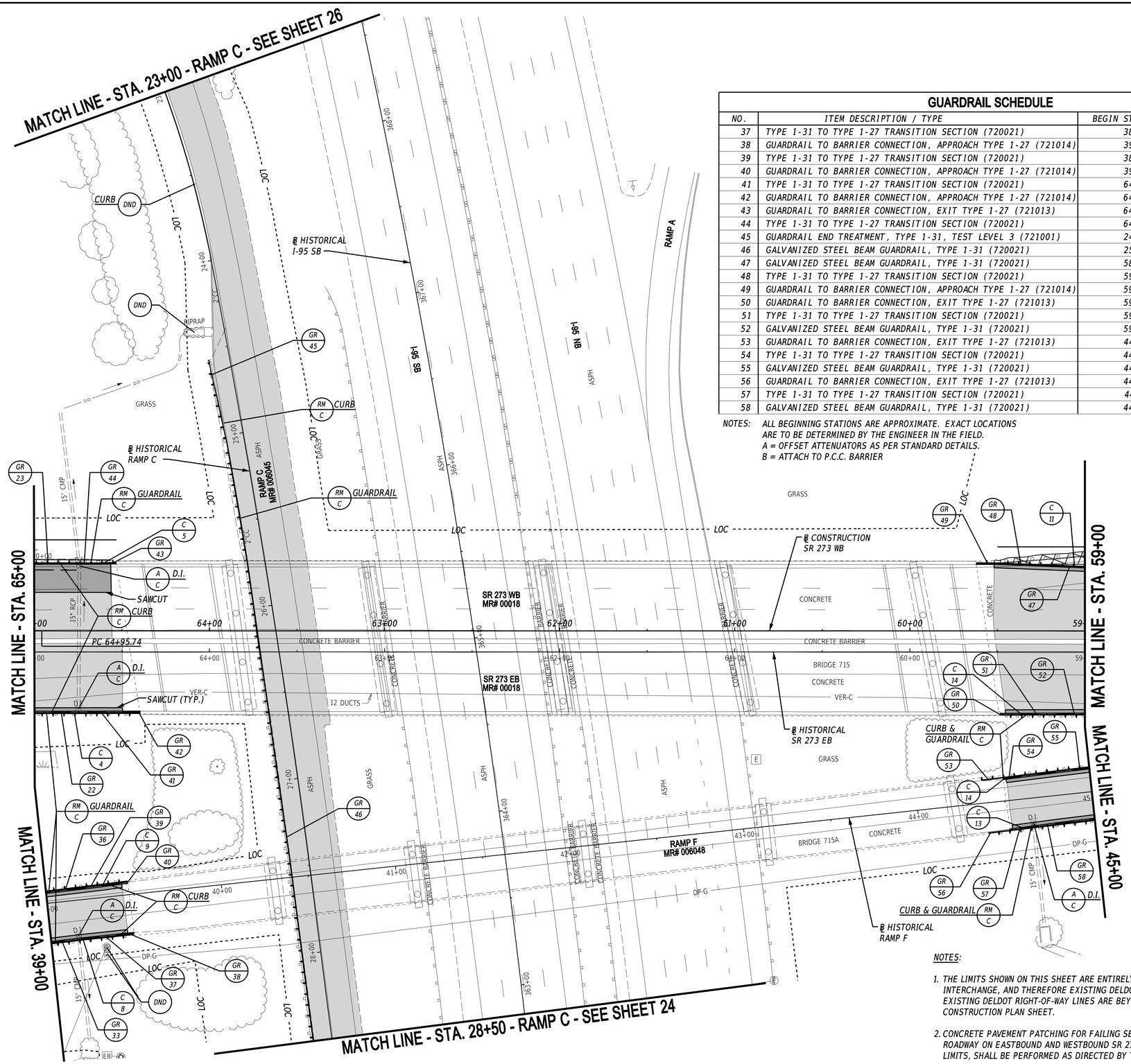

GUARDRAIL SCHEDULE

NO.	ITEM DESCRIPTION / TYPE	BEGIN STA.	OFFSET	LENGTH
37	TYPE 1-31 TO TYPE 1-27 TRANSITION SECTION (720021)	38+99	VARIES	28 LF
38	GUARDRAIL TO BARRIER CONNECTION, APPROACH TYPE 1-27 (721014)	39+27	B	1 EA
39	TYPE 1-31 TO TYPE 1-27 TRANSITION SECTION (720021)	38+99	VARIES	28 LF
40	GUARDRAIL TO BARRIER CONNECTION, APPROACH TYPE 1-27 (721014)	39+27	B	1 EA
41	TYPE 1-31 TO TYPE 1-27 TRANSITION SECTION (720021)	64+87	VARIES	28 LF
42	GUARDRAIL TO BARRIER CONNECTION, APPROACH TYPE 1-27 (721014)	64+59	B	1 EA
43	GUARDRAIL TO BARRIER CONNECTION, EXIT TYPE 1-27 (721013)	64+53	B	1 EA
44	TYPE 1-31 TO TYPE 1-27 TRANSITION SECTION (720021)	64+65	VARIES	28 LF
45	GUARDRAIL END TREATMENT, TYPE 1-31, TEST LEVEL 3 (721001)	24+56	A	1 EA
46	GALVANIZED STEEL BEAM GUARDRAIL, TYPE 1-31 (720021)	25+07	VARIES	475 LF
47	GALVANIZED STEEL BEAM GUARDRAIL, TYPE 1-31 (720021)	58+50	VARIES	62.5 LF
48	TYPE 1-31 TO TYPE 1-27 TRANSITION SECTION (720021)	59+14	VARIES	28 LF
49	GUARDRAIL TO BARRIER CONNECTION, APPROACH TYPE 1-27 (721014)	59+42	B	1 EA
50	GUARDRAIL TO BARRIER CONNECTION, EXIT TYPE 1-27 (721013)	59+48	B	1 EA
51	TYPE 1-31 TO TYPE 1-27 TRANSITION SECTION (720021)	59+36	VARIES	28 LF
52	GALVANIZED STEEL BEAM GUARDRAIL, TYPE 1-31 (720021)	59+08	VARIES	150 LF
53	GUARDRAIL TO BARRIER CONNECTION, EXIT TYPE 1-27 (721013)	44+37	B	1 EA
54	TYPE 1-31 TO TYPE 1-27 TRANSITION SECTION (720021)	44+49	VARIES	28 LF
55	GALVANIZED STEEL BEAM GUARDRAIL, TYPE 1-31 (720021)	44+77	VARIES	162.5 LF
56	GUARDRAIL TO BARRIER CONNECTION, EXIT TYPE 1-27 (721013)	44+39	B	1 EA
57	TYPE 1-31 TO TYPE 1-27 TRANSITION SECTION (720021)	44+51	VARIES	28 LF
58	GALVANIZED STEEL BEAM GUARDRAIL, TYPE 1-31 (720021)	44+79	VARIES	600 LF

NOTES: ALL BEGINNING STATIONS ARE APPROXIMATE. EXACT LOCATIONS ARE TO BE DETERMINED BY THE ENGINEER IN THE FIELD.
A = OFFSET ATTENUATORS AS PER STANDARD DETAILS.
B = ATTACH TO P.C.C. BARRIER

NOTES:

1. THE LIMITS SHOWN ON THIS SHEET ARE ENTIRELY WITHIN THE I-95/SR-273 INTERCHANGE, AND THEREFORE EXISTING DELDOT RIGHT-OF-WAY. THE EXISTING DELDOT RIGHT-OF-WAY LINES ARE BEYOND THE LIMITS OF THIS CONSTRUCTION PLAN SHEET.
2. CONCRETE PAVEMENT PATCHING FOR FAILING SECTIONS OF THE EXISTING ROADWAY ON EASTBOUND AND WESTBOUND SR 273, WITHIN THE CONTRACT LIMITS, SHALL BE PERFORMED AS DIRECTED BY THE ENGINEER.

ADDENDA / REVISIONS

SCALE 0 30 60 90 FEET

HSIP NCC, SR 273 AND I-95 INTERCHANGE IMPROVEMENTS

CONTRACT	BRIDGE NO.	715, 715A, 715B, 715C & 715D
T200800713	DESIGNED BY:	B. BURRIS
COUNTY		
NEW CASTLE	CHECKED BY:	Z. SCHOLL

CONSTRUCTION PLAN

CP-03
SECTION
RK&K
SHEET NO.
16

14-JUL-2020
16:00
\\bdfsrv01\v20\14\20\14\14144_DetDOT\170\Task 4A - Harmony FD\Cadd\Contract\Plans\cp03_Har.dgn

DRAINAGE PIPE SCHEDULE

NO.	SIZE / TYPE	CLASS	LENGTH	SLOPE	INVERT EL.	DIS. EL.
21	15" RCP	III	152'	0.010	80.52	79.00
31	15" RCP	III	144'	*	*	*

* CONTRACTOR TO MATCH EXISTING PIPE INVERTS AND SLOPE.

CURB SCHEDULE

NO.	ITEM DESCRIPTION / TYPE	LENGTH
15	PCC CURB, TYPE 1-2	40 LF
16	PCC CURB, TYPE 1-4	423 LF
17	PCC CURB, TYPE 1-4	466 LF
19	PCC CURB, TYPE 1-4	650 LF
30	PCC CURB, TYPE 1-4	648 LF

FLARED END SECTION SCHEDULE

NO.	SIZE / TYPE	SLOPE	SAFETY GRATE
1	15" RCP	0.010	NO

RIPRAP SCHEDULE

NO.	TYPE	L	W	AREA
1	R-4	5.0'	6.0'*	3.3 SY

NOTES: *DOWNSTREAM WIDTH OF RIPRAP APRON

UNDERDRAIN OUTLETS

NO.	LENGTH	DIS. EL.
5	123 LF	*
6	123 LF	*
7	92 LF	*
8	92 LF	*
9	24 LF	*
10	16 LF	*

* TO BE VERIFIED IN FIELD BY THE ENGINEER

GUARDRAIL SCHEDULE

NO.	ITEM DESCRIPTION / TYPE	BEGIN STA.	OFFSET	LENGTH
59	GUARDRAIL END TREATMENT, TYPE 1-31, TEST LEVEL 3 (721001)	57+98	A	1 EA
60	END ANCHORAGE 31 (721006)	57+61	35'	1 EA
61	END ANCHORAGE 31 (721006)	46+38	-16'	1 EA
62	END ANCHORAGE 31 (721006)	50+74	12'	1 EA
63	TYPE 1-31 TO TYPE 1-27 TRANSITION SECTION (720021)	33+74	VARIES	28 LF
64	GUARDRAIL TO BARRIER CONNECTION, APPROACH TYPE 1-27 (721014)	34+02	B	1 EA
65	GALVANIZED STEEL BEAM GUARDRAIL, TYPE 1-31 (720021)	30+33	VARIES	387.5 LF
66	TYPE 1-31 TO TYPE 1-27 TRANSITION SECTION (720021)	34+16	VARIES	28 LF
67	GUARDRAIL TO BARRIER CONNECTION, APPROACH TYPE 1-27 (721014)	34+44	B	1 EA
68	GALVANIZED STEEL BEAM GUARDRAIL, TYPE 1-31 (720021)	19+26	VARIES	650 LF
69	END ANCHORAGE 31 (721006)	25+77	-18'	1 EA

NOTES: ALL BEGINNING STATIONS ARE APPROXIMATE. EXACT LOCATIONS ARE TO BE DETERMINED BY THE ENGINEER IN THE FIELD.
A = OFFSET ATTENUATORS AS PER STANDARD DETAILS.
B = ATTACH TO P.C.C. BARRIER

DRAINAGE INLET SCHEDULE

NO.	STATION	OFFSET	BOX SIZE	GRATE	T.G. EL.	INV. EL.
20	58+14.00	++ RT.	72" X 24"	1	+	DOGHOUSE
21	122+67.00	69.20' RT.	34" X 24"	3	89.00	80.52

NOTES: + MATCH FLOWLINE OF PROPOSED CURB
++ MATCH PROPOSED CURB LINE

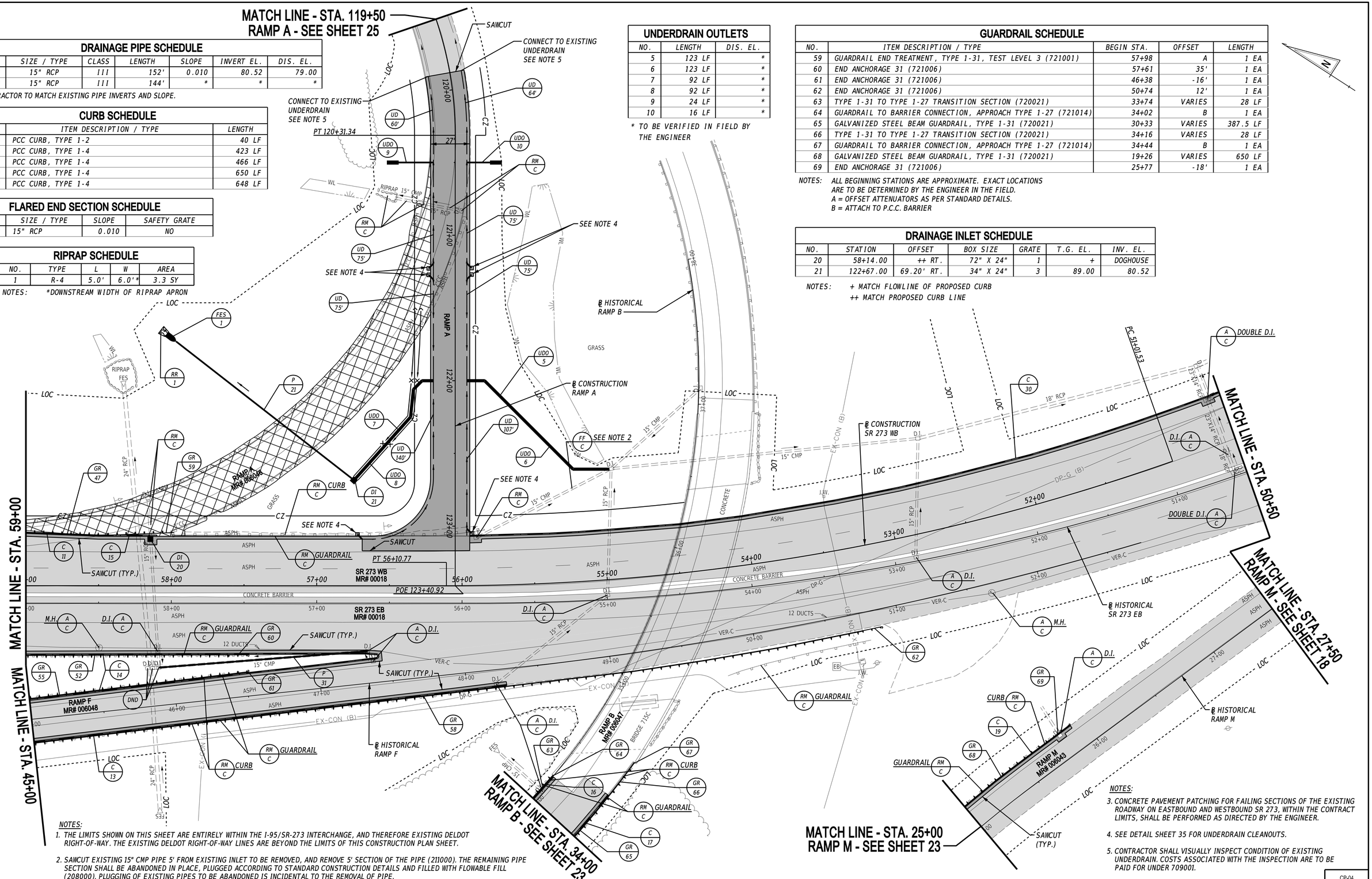

NOTES:

1. THE LIMITS SHOWN ON THIS SHEET ARE ENTIRELY WITHIN THE I-95/SR-273 INTERCHANGE, AND THEREFORE EXISTING DELDOT RIGHT-OF-WAY. THE EXISTING DELDOT RIGHT-OF-WAY LINES ARE BEYOND THE LIMITS OF THIS CONSTRUCTION PLAN SHEET.
2. SAWCUT EXISTING 15" CMP PIPE 5' FROM EXISTING INLET TO BE REMOVED, AND REMOVE 5' SECTION OF THE PIPE (211000). THE REMAINING PIPE SECTION SHALL BE ABANDONED IN PLACE, PLUGGED ACCORDING TO STANDARD CONSTRUCTION DETAILS AND FILLED WITH FLOWABLE FILL (208000). PLUGGING OF EXISTING PIPES TO BE ABANDONED IS INCIDENTAL TO THE REMOVAL OF PIPE.
3. CONCRETE PAVEMENT PATCHING FOR FAILING SECTIONS OF THE EXISTING ROADWAY ON EASTBOUND AND WESTBOUND SR 273, WITHIN THE CONTRACT LIMITS, SHALL BE PERFORMED AS DIRECTED BY THE ENGINEER.
4. SEE DETAIL SHEET 35 FOR UNDERDRAIN CLEANOUTS.
5. CONTRACTOR SHALL VISUALLY INSPECT CONDITION OF EXISTING UNDERDRAIN. COSTS ASSOCIATED WITH THE INSPECTION ARE TO BE PAID FOR UNDER 709001.

ADDENDA / REVISIONS

SCALE 0 30 60 90 FEET

HSIP NCC, SR 273 AND I-95 INTERCHANGE IMPROVEMENTS

CONTRACT	BRIDGE NO.	715, 715A, 715B, 715C & 715D
T200800713	DESIGNED BY:	B. BURRIS
COUNTY	CHECKED BY:	Z. SCHOLL
NEW CASTLE		

CONSTRUCTION PLAN

CP-04
SECTION
RK&K
SHEET NO.
17

22-JUL-2020
12:08
\\balsrv01\v20\14220\141144_DelDOT\T70\Task 4A - Harmony FD\Cadd\ContractPlans\cp04_Hardgn

NOTE:
CONCRETE PAVEMENT PATCHING FOR FAILING SECTIONS OF THE EXISTING ROADWAY ON EASTBOUND AND WESTBOUND SR 273, WITHIN THE CONTRACT LIMITS, SHALL BE PERFORMED AS DIRECTED BY THE ENGINEER.

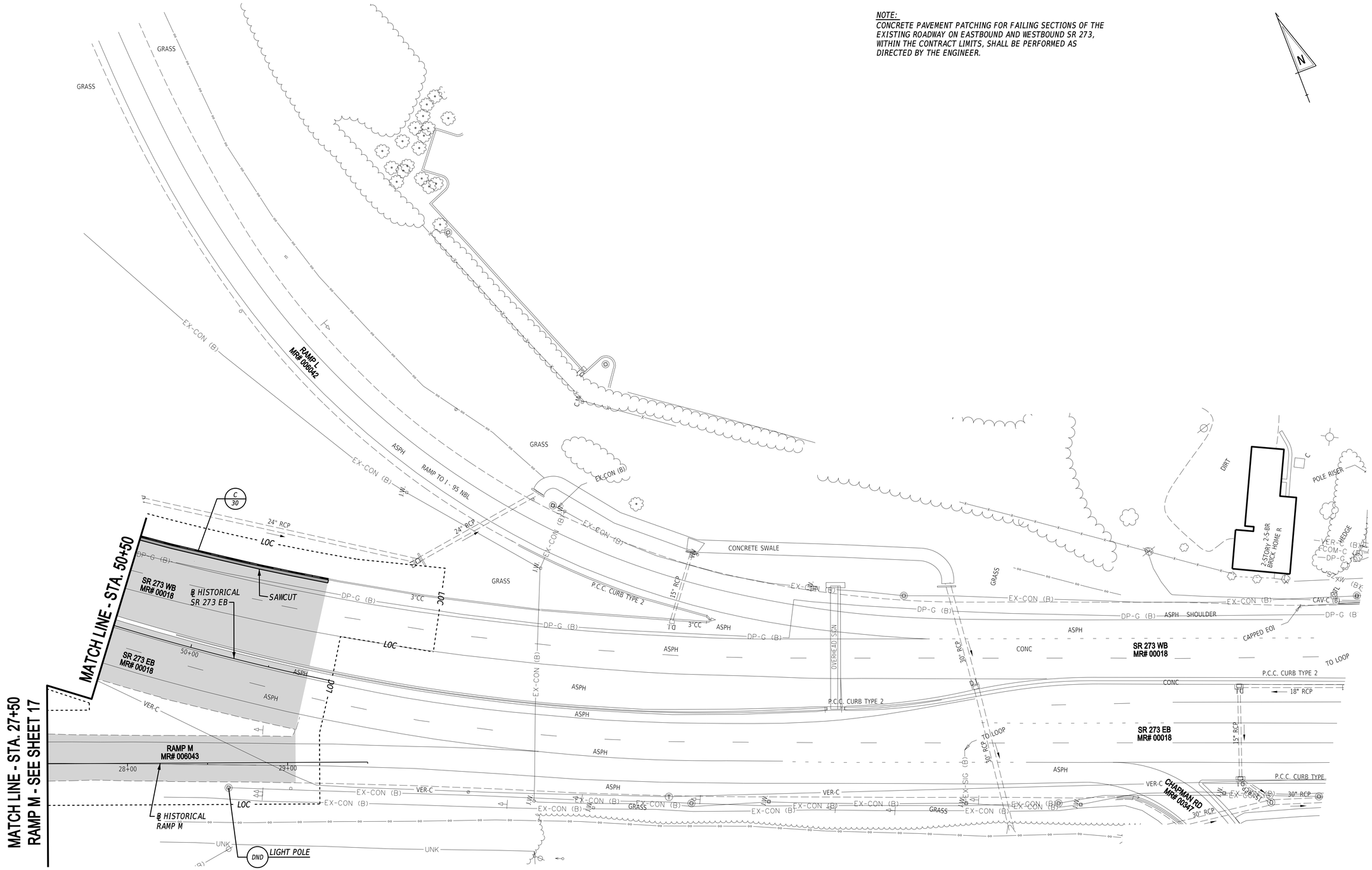

ADDENDA / REVISIONS	

SCALE
0 30 60 90
FEET

HSIP NCC, SR 273 AND I-95 INTERCHANGE IMPROVEMENTS

CONTRACT	BRIDGE NO.	715, 715A, 715B, 715C & 715D
T200800713	DESIGNED BY:	B. BURRIS
COUNTY		
NEW CASTLE	CHECKED BY:	Z. SCHOLL

CONSTRUCTION PLAN

CP-05
SECTION
RK&K
SHEET NO.
18

14-JUL-2020
16:27
\\bdfsrv01\v20\14\20\14\14144_DetDOT17\07\Task 4A - Harmony FD\Cadd\Contract\Plans\cp05_Har.dgn

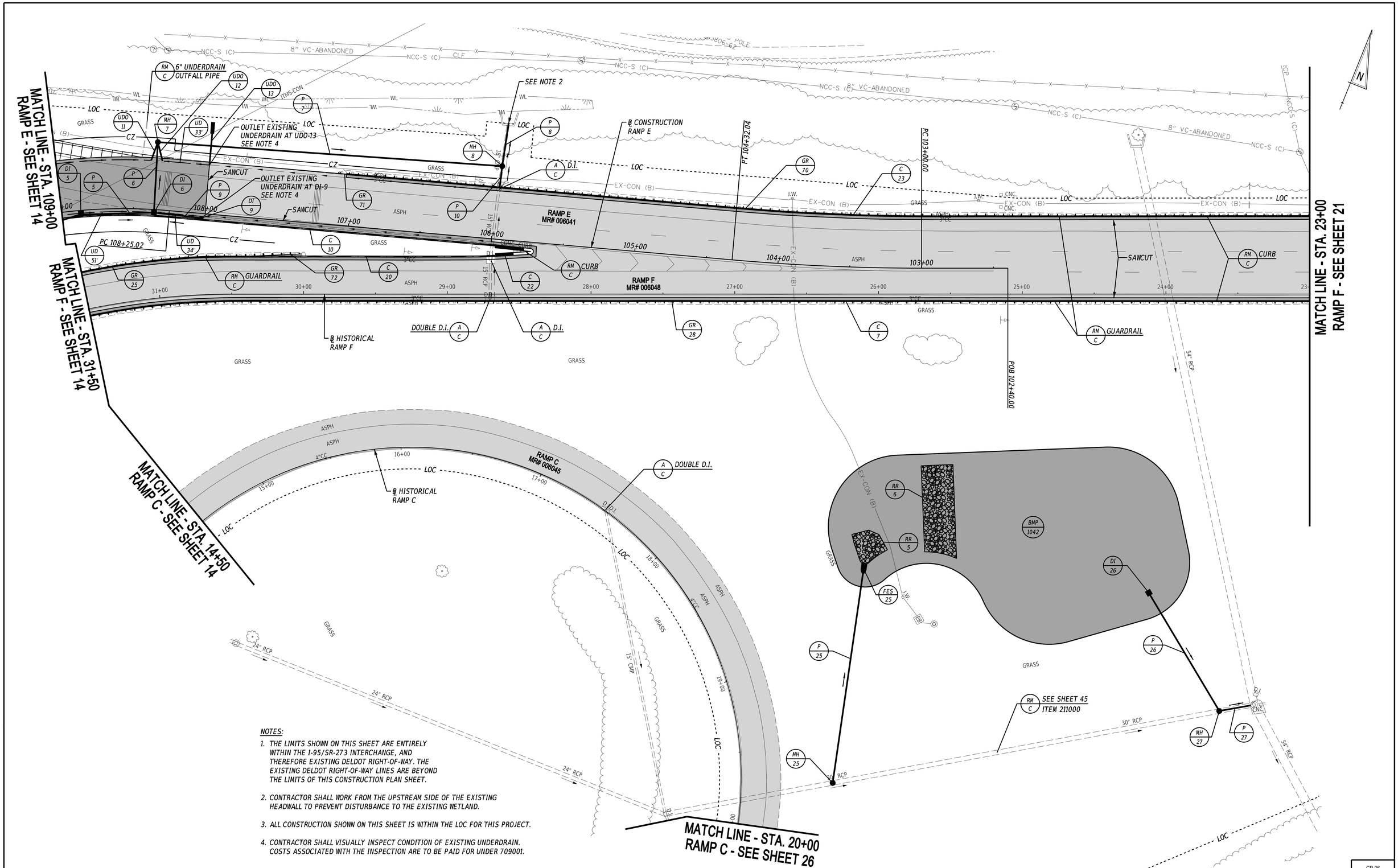

NOTES:

1. THE LIMITS SHOWN ON THIS SHEET ARE ENTIRELY WITHIN THE I-95/SR-273 INTERCHANGE, AND THEREFORE EXISTING DELDOT RIGHT-OF-WAY. THE EXISTING DELDOT RIGHT-OF-WAY LINES ARE BEYOND THE LIMITS OF THIS CONSTRUCTION PLAN SHEET.
2. CONTRACTOR SHALL WORK FROM THE UPSTREAM SIDE OF THE EXISTING HEADWALL TO PREVENT DISTURBANCE TO THE EXISTING WETLAND.
3. ALL CONSTRUCTION SHOWN ON THIS SHEET IS WITHIN THE LOC FOR THIS PROJECT.
4. CONTRACTOR SHALL VISUALLY INSPECT CONDITION OF EXISTING UNDERDRAIN. COSTS ASSOCIATED WITH THE INSPECTION ARE TO BE PAID FOR UNDER 709001.

ADDENDA / REVISIONS

SCALE 0 30 60 90 FEET

HSIP NCC, SR 273 AND I-95 INTERCHANGE IMPROVEMENTS

CONTRACT	BRIDGE NO.	715, 715A, 715B, 715C & 715D
T200800713	DESIGNED BY:	B. BURRIS
COUNTY		
NEW CASTLE	CHECKED BY:	Z. SCHOLL

CONSTRUCTION PLAN

CP-06
SECTION
RK&K
SHEET NO.
19

03-AUG-2020
16:32
\\balservb1\v2014\20\14\14144_DelDOT170/Task 4A - Harmony FD\Cadd\Contract\Plans\sp06_Her.dgn

DRAINAGE INLET SCHEDULE

NO.	STATION	OFFSET	BOX SIZE	GRATE	T.G. EL.	INV. EL.
5	108+83.00	++ LT.	48" X 30"	1	+	78.60
6	108+33.00	++ LT.	72" X 48"	1	+	78.17
9	108+02.00	++ LT.	34" X 24"	1	+	80.00
26	24+12.30	207.3' LT	POND OUTLET STRUCTURE, SEE SHEET 48			62.90

+ MATCH FLOWLINE OF PROPOSED CURB OR BARRIER
++ MATCH PROPOSED CURB LINE OR BARRIER

MANHOLE SCHEDULE

NO.	STATION	OFFSET	TYPE/SIZE	T.G. EL.	INVERT EL.
7	108+33.00	47' RT	48" X 30"	84.75	77.74
8	106+00.00	51' RT	48" X 30"	84.95	74.79
* 25	26+31.20	340' LT	48" x 48"	73.80	64.38
* 27	23+63.85	290' LT	66" x 48"	69.25	62.37

*TO BE INSTALLED AS DOGHOUSE INLET OVER EXISTING PIPE

DRAINAGE PIPE SCHEDULE

NO.	SIZE / TYPE	CLASS	LENGTH	SLOPE	INVERT EL.	DIS. EL.
5	15" RCP	III	46'	0.005	78.60	78.37
6	18" RCP	III	46'	0.005	78.17	77.94
7	18" RCP	III	237'	0.005	77.74	76.56
8	18" RCP	III	30'	0.005	74.79	74.64
9	15" RCP	III	32'	0.005	80.00	79.84
10	18" RCP	III	15'	0.005	75.07	75.00
25	30" RCP	III	152'	0.0031	64.38	63.90
26	36" RCP	III	91'	0.0047	62.90	62.47
27	36" RCP	III	21'	0.003	62.37	62.31

FLARED END SECTION SCHEDULE

NO.	SIZE / TYPE	SLOPE	SAFETY GRATE
25	30" RCP	0.0031	NO

RIPRAP SCHEDULE

NO.	TYPE	L	W	AREA
5	R-4	23'	27'*	41 SY
6	R-4	63'	22'	158 SY

*DOWNSTREAM WIDTH OF RIPRAP APRON

CURB SCHEDULE

NO.	ITEM DESCRIPTION / TYPE	LENGTH
20	PCC CURB, TYPE 1-2	185 LF
22	PCC CURB, TYPE 2	55 LF
23	PCC CURB, TYPE 1-4	1102 LF

GUARDRAIL SCHEDULE

NO.	ITEM DESCRIPTION / TYPE	BEGIN STA.	OFFSET	LENGTH
70	GALVANIZED STEEL BEAM GUARDRAIL, TYPE 1-31 (720021)	18+70	VARIES	1,100 LF
71	END ANCHORAGE 31 (721006)	106+96	36'	1 EA
72	GUARDRAIL END TREATMENT TYPE 1-31, TEST LEVEL 3 (721001)	30+01	A	1 EA

NOTES: ALL BEGINNING STATIONS ARE APPROXIMATE. EXACT LOCATIONS ARE TO BE DETERMINED BY THE ENGINEER IN THE FIELD.
A = OFFSET ATTENUATORS AS PER STANDARD DETAILS.
B = ATTACH TO P.C.C. BARRIER

UNDERDRAIN OUTLETS

NO.	LENGTH	DIS. EL.
11	14'	*
12	14'	*
13	22'	*

* TO BE VERIFIED IN FIELD BY THE ENGINEER

DELDOT SWM FACILITY SCHEDULE

NO.	TYPE / DESCRIPTION	LOCATION
1042	WET EXTENDED DETENTION POND	STA. 23+84 LT. TO STA. 26+35 LT.

GUARDRAIL SCHEDULE

NO.	ITEM DESCRIPTION / TYPE	BEGIN STA.	OFFSET	LENGTH
74	GUARDRAIL END TREATMENT, TYPE 1-31, TEST LEVEL 3 (721001)	18+18	A	1 EA
75	GUARDRAIL END TREATMENT, TYPE 1-31, TEST LEVEL 3 (721001)	18+17	A	1 EA

NOTES: ALL BEGINNING STATIONS ARE APPROXIMATE. EXACT LOCATIONS ARE TO BE DETERMINED BY THE ENGINEER IN THE FIELD.
A = OFFSET ATTENUATORS AS PER STANDARD DETAILS.
B = ATTACH TO P.C.C. BARRIER

CURB SCHEDULE

NO.	ITEM DESCRIPTION / TYPE	LENGTH
24	PCC CURB, TYPE 1-2	52 LF
25	PCC CURB, TYPE 1-2	52 LF

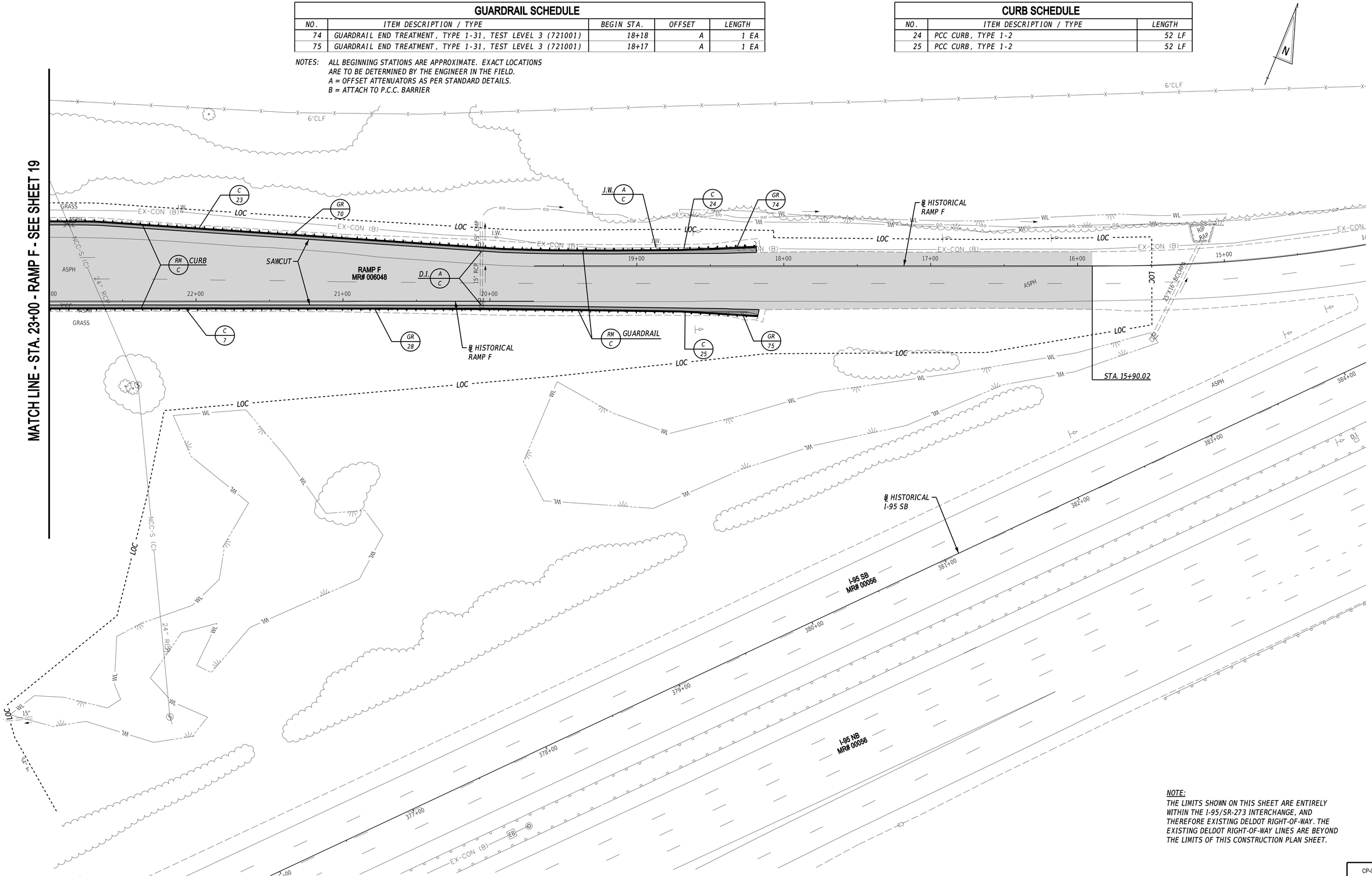

NOTE:
THE LIMITS SHOWN ON THIS SHEET ARE ENTIRELY WITHIN THE I-95/SR-273 INTERCHANGE, AND THEREFORE EXISTING DELDOT RIGHT-OF-WAY. THE EXISTING DELDOT RIGHT-OF-WAY LINES ARE BEYOND THE LIMITS OF THIS CONSTRUCTION PLAN SHEET.

ADDENDA / REVISIONS

SCALE 0 30 60 90 FEET

HSIP NCC, SR 273 AND I-95 INTERCHANGE IMPROVEMENTS

CONTRACT	BRIDGE NO.	715, 715A, 715B, 715C & 715D
T200800713	DESIGNED BY:	B. BURRIS
COUNTY	CHECKED BY:	Z. SCHOLL
NEW CASTLE		

CONSTRUCTION PLAN

CP-07
SECTION
RK&K
SHEET NO.
21

21-JUL-2020
11:30
\\balsrv01\v2014\20141144_DelDOT170\Task 4A - Harmony FD\Cadd\Contract\Plans\cp07_Har.dgn

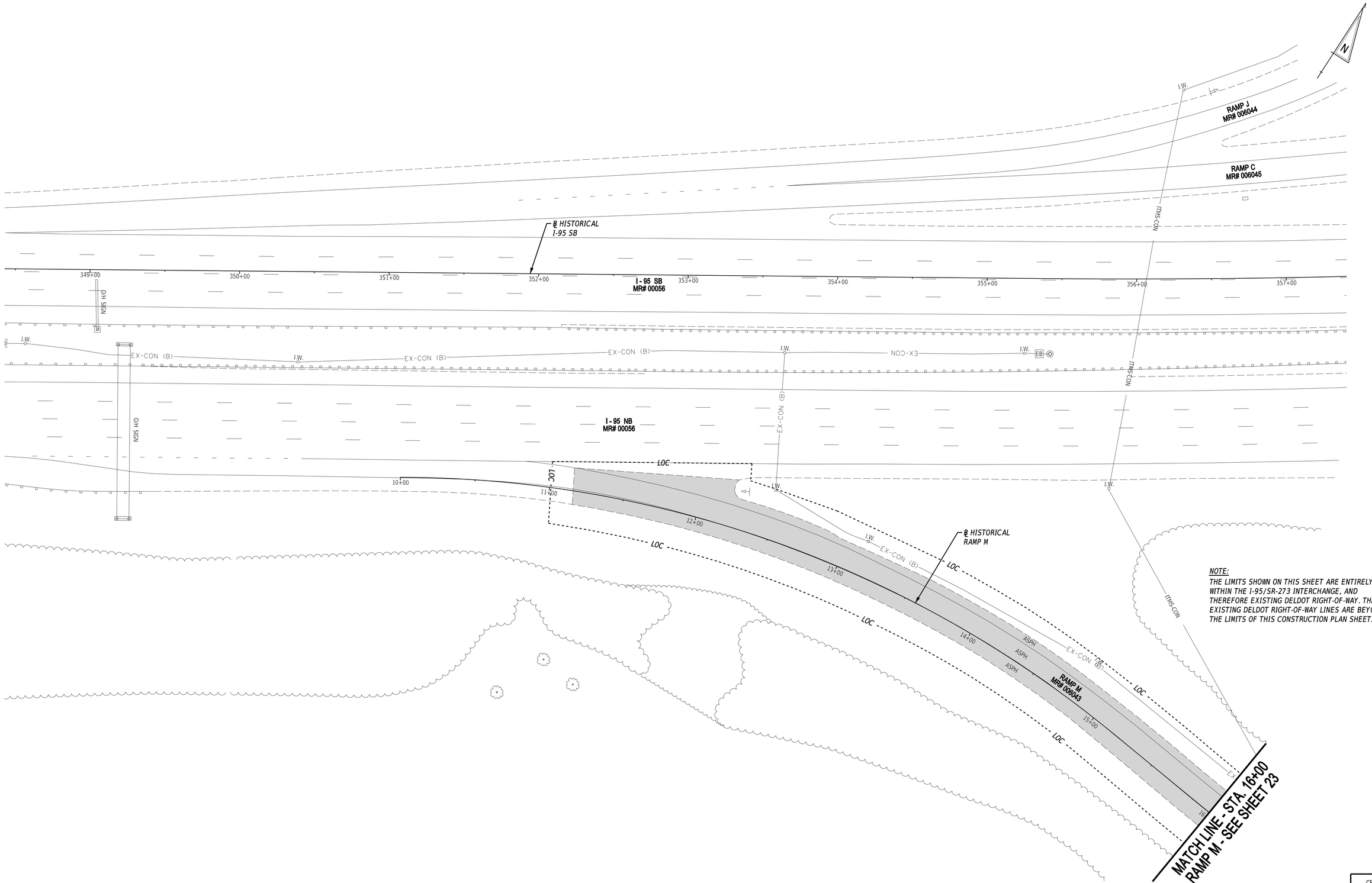

ADDENDA / REVISIONS	

SCALE
0 30 60 90
FEET

HSIP NCC, SR 273 AND I-95 INTERCHANGE IMPROVEMENTS

CONTRACT	BRIDGE NO.	715, 715A, 715B, 715C & 715D
T200800713	DESIGNED BY:	B. BURRIS
COUNTY	CHECKED BY:	Z. SCHOLL
NEW CASTLE		

CONSTRUCTION PLAN

CP-08
SECTION
RK&K
SHEET NO.
22

15-JUL-2020
09:12
\\balsnx01\v20\14\20141414144_DelDOT\707\Task 4A - Harmony FD\Cadd\Contract\Plans\cp08_Har.dgn

CURB SCHEDULE

NO.	ITEM DESCRIPTION / TYPE	LENGTH
26	PCC CURB, TYPE 1-4	486 LF

GUARDRAIL SCHEDULE

NO.	ITEM DESCRIPTION / TYPE	BEGIN STA.	OFFSET	LENGTH
76	GUARDRAIL TO BARRIER CONNECTION, EXIT TYPE 27 (721013)	29+96	B	1 EA
77	TYPE 1-31 TO TYPE 1-27 TRANSITION SECTION (720021)	30+08	-17'	28 LF
78	GALVANIZED STEEL BEAM GUARDRAIL, TYPE 1-31 (720021)	30+36	VARIES	337.5 LF
79	GUARDRAIL TO BARRIER CONNECTION, EXIT TYPE 27 (721013)	29+94	B	1 EA
80	TYPE 1-31 TO TYPE 1-27 TRANSITION SECTION (720021)	30+06	20'	28 LF
81	GUARDRAIL END TREATMENT, TYPE 1-31, TEST LEVEL 3 (721001)	18+74	A	1 EA
82	GUARDRAIL END TREATMENT, TYPE 1-31, TEST LEVEL 3 (721001)	18+60	A	1 EA
83	GALVANIZED STEEL BEAM GUARDRAIL, TYPE 1-31 (720021)	19+12	VARIES	512.5 LF
84	END ANCHORAGE 31 (721006)	24+26	11'	1 EA

NOTES: ALL BEGINNING STATIONS ARE APPROXIMATE. EXACT LOCATIONS ARE TO BE DETERMINED BY THE ENGINEER IN THE FIELD.
A = OFFSET ATTENUATORS AS PER STANDARD DETAILS.
B = ATTACH TO P.C.C. BARRIER

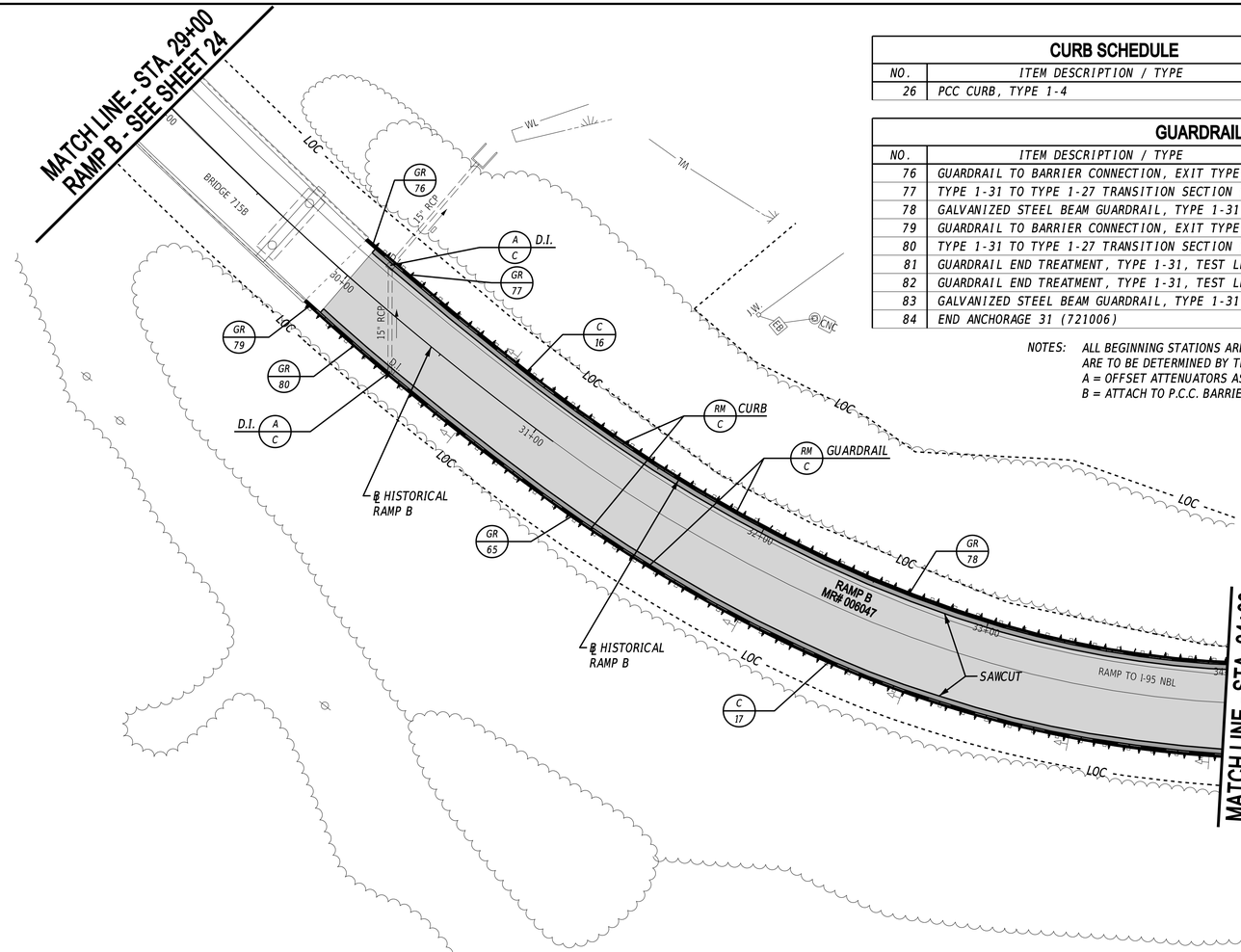

NOTE:
THE LIMITS SHOWN ON THIS SHEET ARE ENTIRELY WITHIN THE I-95/SR-273 INTERCHANGE, AND THEREFORE EXISTING DELDOT RIGHT-OF-WAY. THE EXISTING DELDOT RIGHT-OF-WAY LINES ARE BEYOND THE LIMITS OF THIS CONSTRUCTION PLAN SHEET.

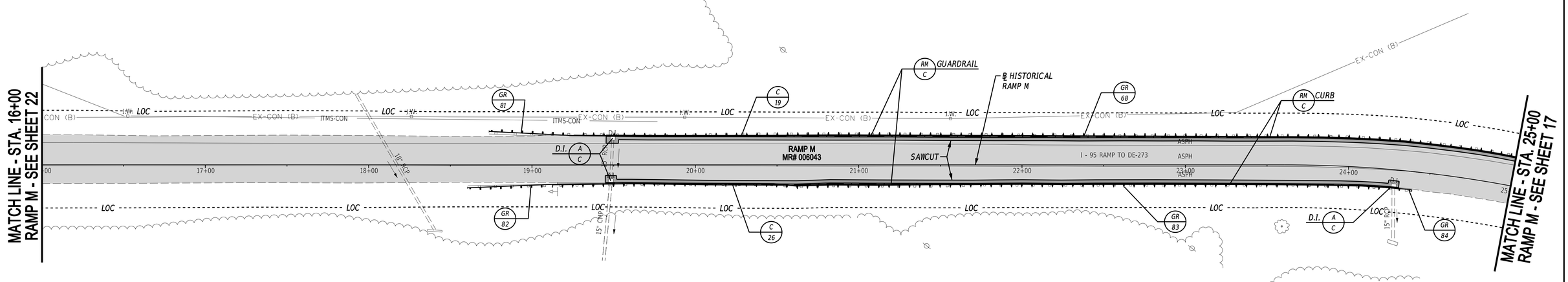

ADDENDA / REVISIONS	

SCALE
0 30 60 90
FEET

HSIP NCC, SR 273 AND I-95 INTERCHANGE IMPROVEMENTS

CONTRACT	BRIDGE NO.	715, 715A, 715B, 715C & 715D
T200800713	DESIGNED BY:	B. BURRIS
COUNTY	CHECKED BY:	Z. SCHOLL
NEW CASTLE		

CONSTRUCTION PLAN

CP-09
SECTION
RK&K
SHEET NO.
23

15-JUL-2020
09:15
\\balsrv01\v20\14220\14\144_DelDOT170\Task 4A - Harmony FD\Cadd\ContractPlans\cp09_Har.dgn

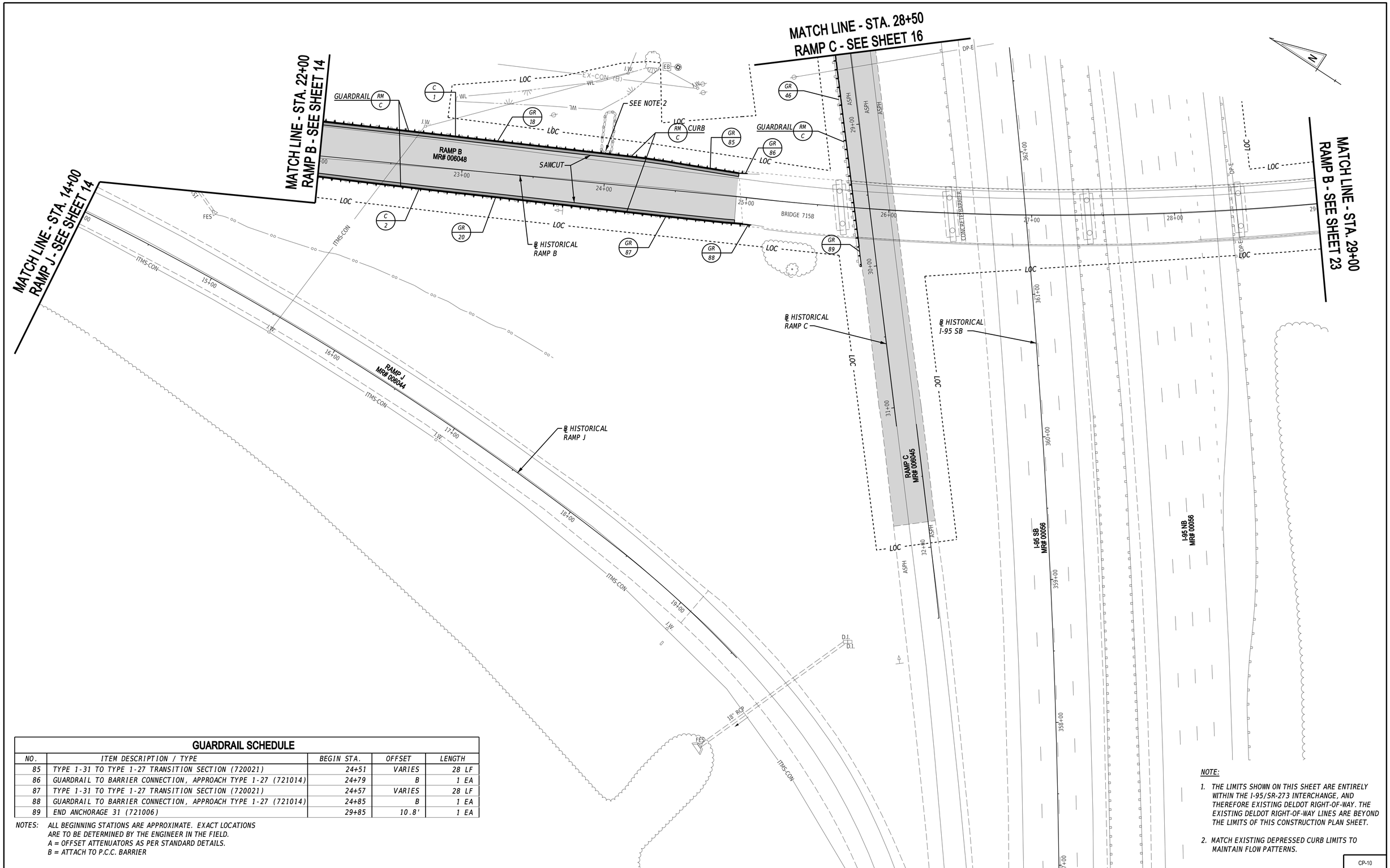

GUARDRAIL SCHEDULE

NO.	ITEM DESCRIPTION / TYPE	BEGIN STA.	OFFSET	LENGTH
85	TYPE 1-31 TO TYPE 1-27 TRANSITION SECTION (720021)	24+51	VARIES	28 LF
86	GUARDRAIL TO BARRIER CONNECTION, APPROACH TYPE 1-27 (721014)	24+79	B	1 EA
87	TYPE 1-31 TO TYPE 1-27 TRANSITION SECTION (720021)	24+57	VARIES	28 LF
88	GUARDRAIL TO BARRIER CONNECTION, APPROACH TYPE 1-27 (721014)	24+85	B	1 EA
89	END ANCHORAGE 31 (721006)	29+85	10.8'	1 EA

NOTES: ALL BEGINNING STATIONS ARE APPROXIMATE. EXACT LOCATIONS ARE TO BE DETERMINED BY THE ENGINEER IN THE FIELD.
A = OFFSET ATTENUATORS AS PER STANDARD DETAILS.
B = ATTACH TO P.C.C. BARRIER

NOTE:

1. THE LIMITS SHOWN ON THIS SHEET ARE ENTIRELY WITHIN THE I-95/SR-273 INTERCHANGE, AND THEREFORE EXISTING DELDOT RIGHT-OF-WAY. THE EXISTING DELDOT RIGHT-OF-WAY LINES ARE BEYOND THE LIMITS OF THIS CONSTRUCTION PLAN SHEET.
2. MATCH EXISTING DEPRESSED CURB LIMITS TO MAINTAIN FLOW PATTERNS.

ADDENDA / REVISIONS

SCALE 0 30 60 90 FEET

HSIP NCC, SR 273 AND I-95 INTERCHANGE IMPROVEMENTS

CONTRACT	BRIDGE NO.	715, 715A, 715B, 715C & 715D
T200800713	DESIGNED BY:	B. BURRIS
COUNTY		
NEW CASTLE	CHECKED BY:	Z. SCHOLL

CONSTRUCTION PLAN

CP-10
SECTION
RK&K
SHEET NO.
24

15-JUL-2020
09:47
\\balsnx01\v20\14\20141414144_DelDOT\70\Task 4A - Harmony FD\Cadd\Contract\Plans\cp10_Rtar.dgn

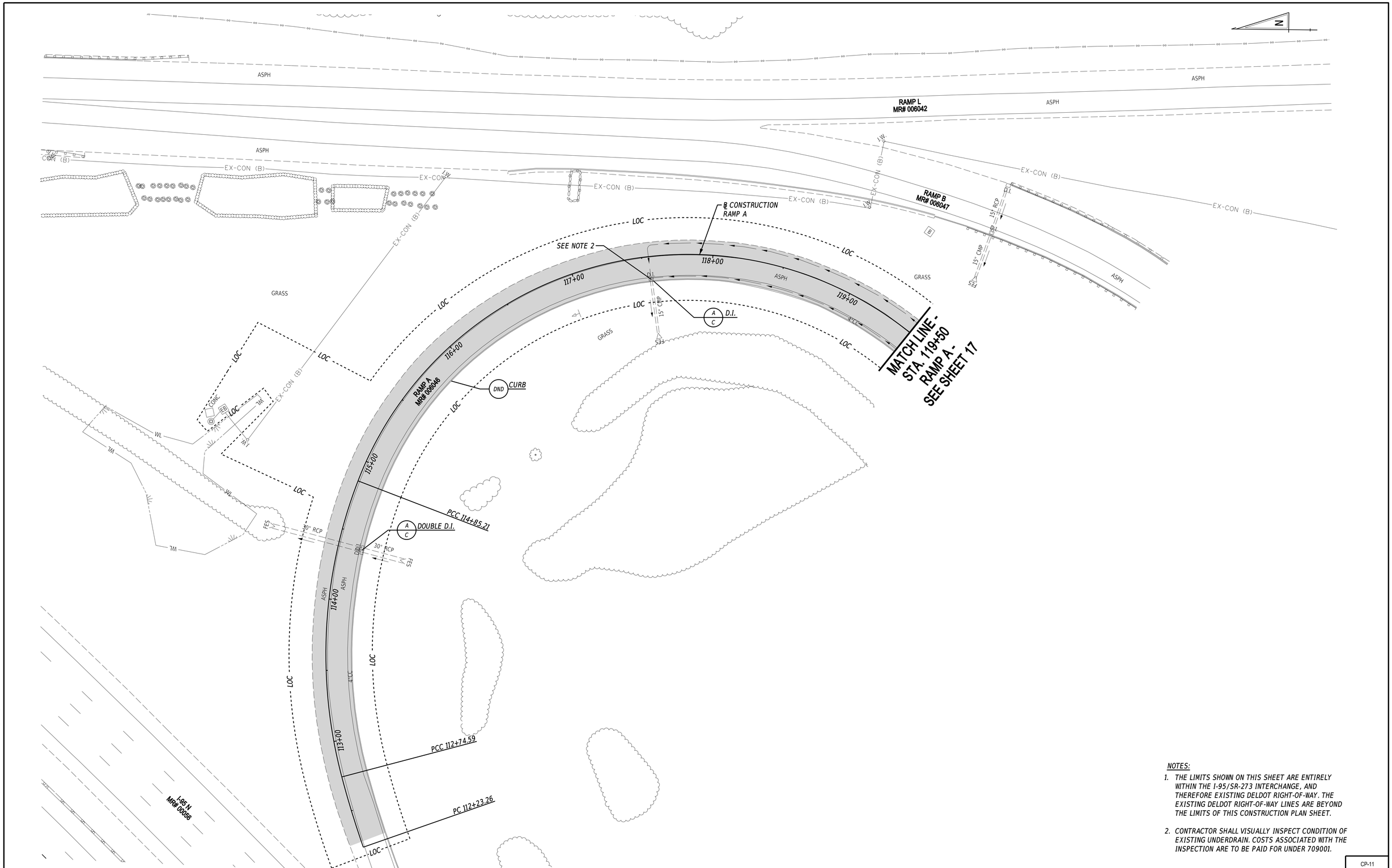

NOTES:

1. THE LIMITS SHOWN ON THIS SHEET ARE ENTIRELY WITHIN THE I-95/SR-273 INTERCHANGE, AND THEREFORE EXISTING DELDOT RIGHT-OF-WAY. THE EXISTING DELDOT RIGHT-OF-WAY LINES ARE BEYOND THE LIMITS OF THIS CONSTRUCTION PLAN SHEET.

2. CONTRACTOR SHALL VISUALLY INSPECT CONDITION OF EXISTING UNDERDRAIN. COSTS ASSOCIATED WITH THE INSPECTION ARE TO BE PAID FOR UNDER 709001.

ADDENDA / REVISIONS

SCALE
0 30 60 90
FEET

HSIP NCC, SR 273 AND I-95 INTERCHANGE IMPROVEMENTS

CONTRACT	BRIDGE NO.	715, 715A, 715B, 715C & 715D
T200800713	DESIGNED BY:	B. BURRIS
COUNTY	CHECKED BY:	Z. SCHOLL
NEW CASTLE		

CONSTRUCTION PLAN

CP-11
SECTION
RK&K
SHEET NO.
25

22-JUL-2020
13:45
\\bdfsrv01\v20\14\20\14\14144_DelDOT\70\Task 4A - Harmony FD\Cadd\Contract\Plans\cp11_Har.dgn

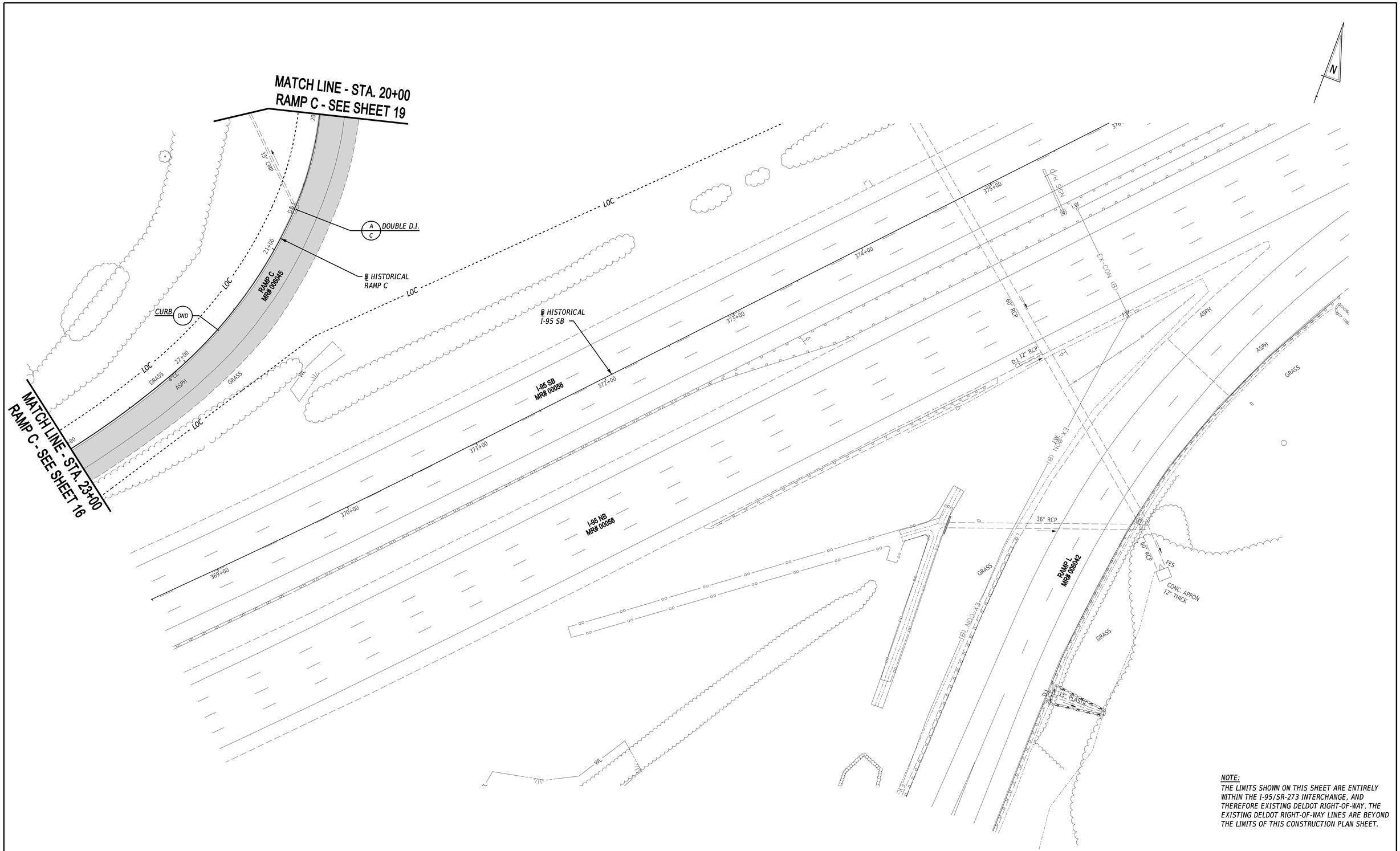

NOTE:
THE LIMITS SHOWN ON THIS SHEET ARE ENTIRELY WITHIN THE I-95/SR-273 INTERCHANGE, AND THEREFORE EXISTING DELDOT RIGHT-OF-WAY. THE EXISTING DELDOT RIGHT-OF-WAY LINES ARE BEYOND THE LIMITS OF THIS CONSTRUCTION PLAN SHEET.

ADDENDA / REVISIONS	

SCALE
0 30 60 90
FEET

HSIP NCC, SR 273 AND I-95 INTERCHANGE IMPROVEMENTS

CONTRACT	BRIDGE NO.	715, 715A, 715B, 715C & 715D
T200800713	DESIGNED BY:	B. BURRIS
COUNTY		
NEW CASTLE	CHECKED BY:	Z. SCHOLL

CONSTRUCTION PLAN

CP-12
SECTION
RK&K
SHEET NO.
26

15-JUL-2020
10:22
\\balserv01\v2014\20141414144_DelDOT170\Task 4A - Harmony FD\Cadd\Contract\Plans\cp12_Har.dgn

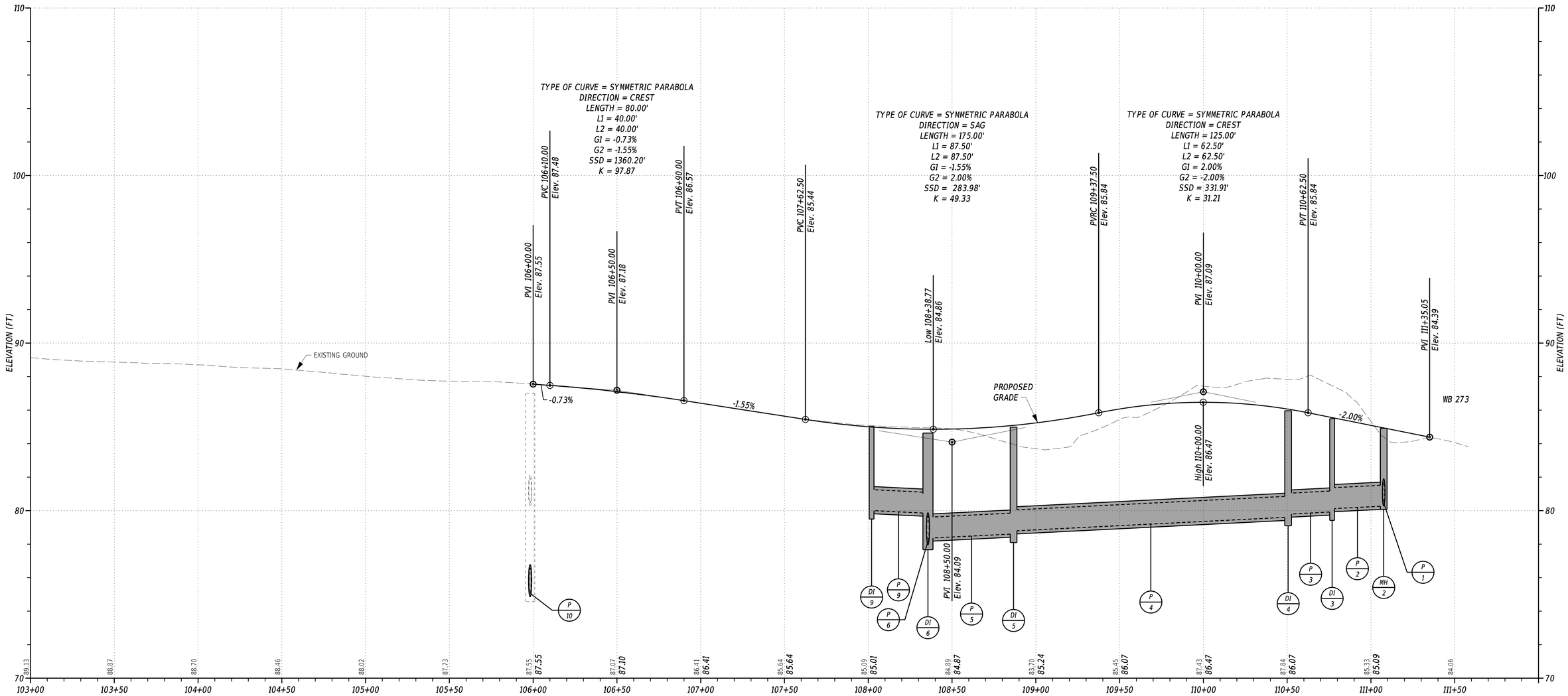

RAMP E

VERTICAL SCALE FEET
9
6
3
0

ADDENDA / REVISIONS	

SCALE
0 30 60 90
FEET

HSIP NCC, SR 273 AND I-95 INTERCHANGE IMPROVEMENTS

CONTRACT	BRIDGE NO.	715, 715A, 715B, 715C & 715D
T200800713	DESIGNED BY:	B. BURRIS
COUNTY		
NEW CASTLE	CHECKED BY:	Z. SCHOLL

PROFILES

SECTION
RK&K
SHEET NO.
27

01-JUN-2020
15:03
\\balfs\r01\v2014\2014144_DelDOT\707\Task 4A - Harmony FD\Cadd\Contract\Plans\pf01_Har.dgn

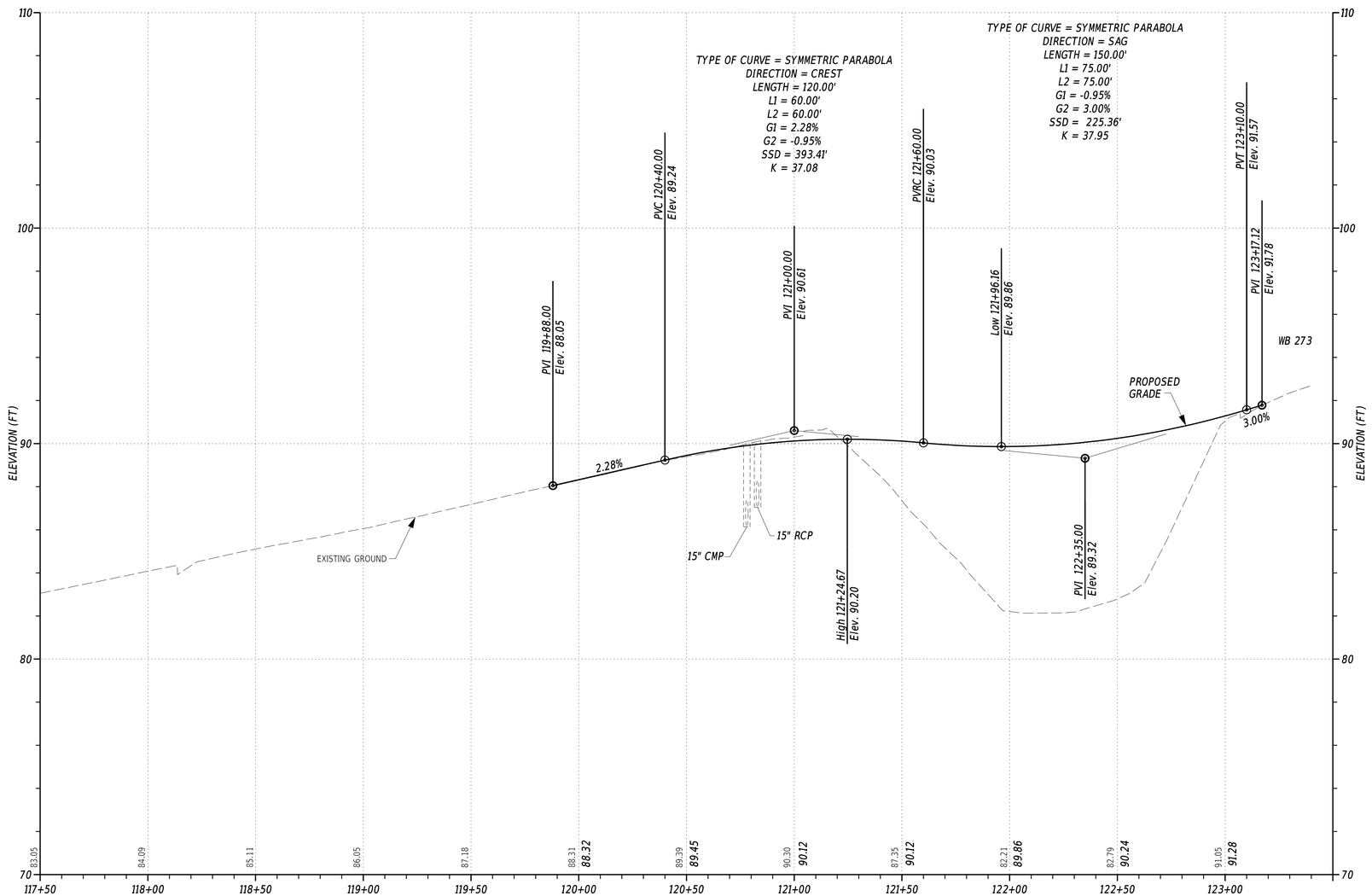

RAMP A

VERTICAL SCALE FEET 0 3 6 9

ADDENDA / REVISIONS	

SCALE 0 30 60 90 FEET

HSIP NCC, SR 273 AND I-95 INTERCHANGE IMPROVEMENTS

CONTRACT	BRIDGE NO.	715, 715A, 715B, 715C & 715D
T200800713	DESIGNED BY:	B. BURRIS
COUNTY		
NEW CASTLE	CHECKED BY:	Z. SCHOLL

PROFILES

SECTION RK&K

SHEET NO. 28

01-JUN-2020
15:06
\\balsrv01\v20141\20141414144_DelDOT170TTask 4A - Harmony FD\Cadd\Contract\Plans\pll02_Har.dgn

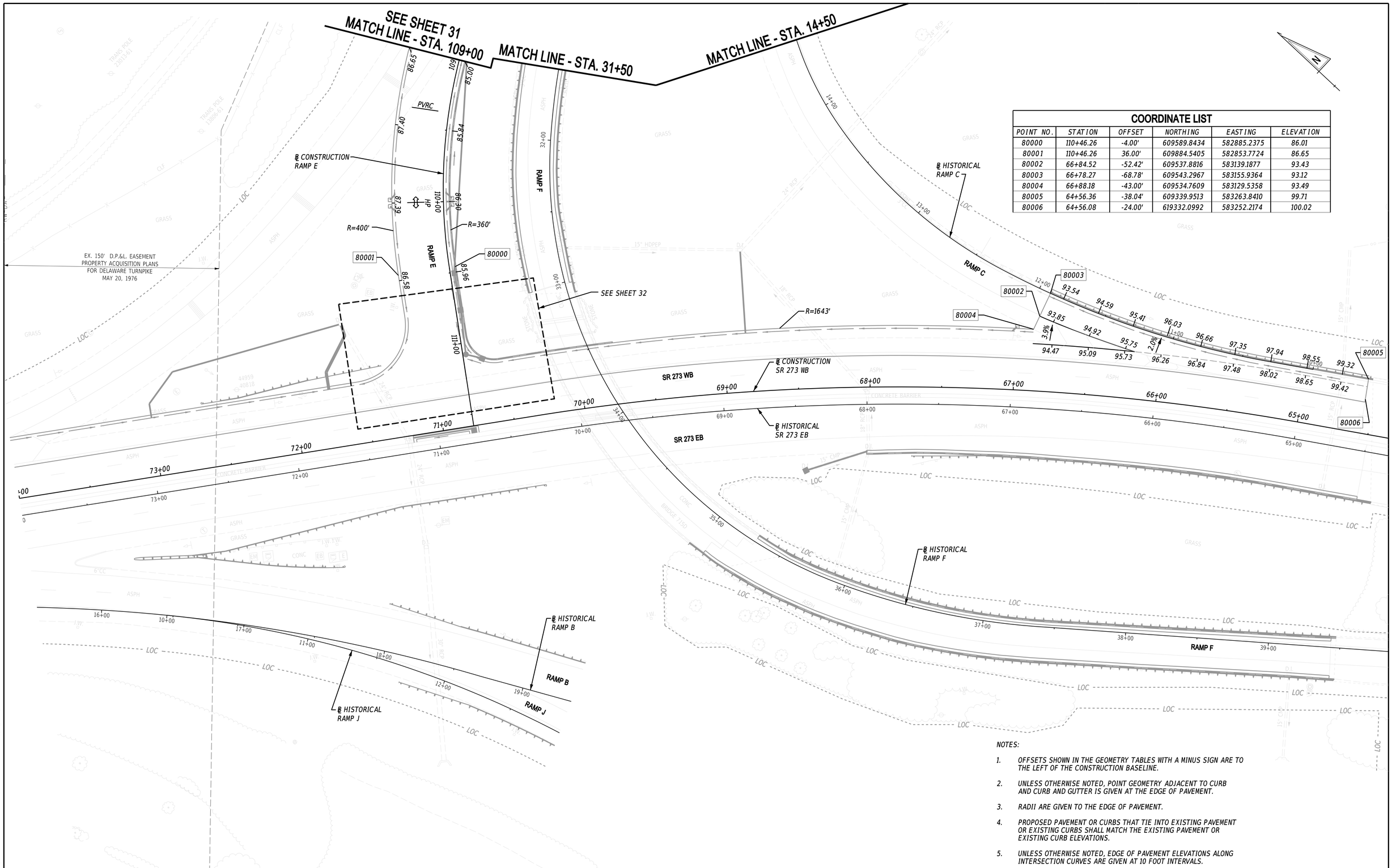

COORDINATE LIST

POINT NO.	STATION	OFFSET	NORTHING	EASTING	ELEVATION
80000	110+46.26	-4.00'	609589.8434	582885.2375	86.01
80001	110+46.26	36.00'	609884.5405	582853.7724	86.65
80002	66+84.52	-52.42'	609537.8816	583139.1877	93.43
80003	66+78.27	-68.78'	609543.2967	583155.9364	93.12
80004	66+88.18	-43.00'	609534.7609	583129.5358	93.49
80005	64+56.36	-38.04'	609339.9513	583263.8410	99.71
80006	64+56.08	-24.00'	619332.0992	583252.2174	100.02

NOTES:

1. OFFSETS SHOWN IN THE GEOMETRY TABLES WITH A MINUS SIGN ARE TO THE LEFT OF THE CONSTRUCTION BASELINE.
2. UNLESS OTHERWISE NOTED, POINT GEOMETRY ADJACENT TO CURB AND CURB AND GUTTER IS GIVEN AT THE EDGE OF PAVEMENT.
3. RADII ARE GIVEN TO THE EDGE OF PAVEMENT.
4. PROPOSED PAVEMENT OR CURBS THAT TIE INTO EXISTING PAVEMENT OR EXISTING CURBS SHALL MATCH THE EXISTING PAVEMENT OR EXISTING CURB ELEVATIONS.
5. UNLESS OTHERWISE NOTED, EDGE OF PAVEMENT ELEVATIONS ALONG INTERSECTION CURVES ARE GIVEN AT 10 FOOT INTERVALS.

ADDENDA / REVISIONS

SCALE 0 30 60 90 FEET

HSIP NCC, SR 273 AND I-95 INTERCHANGE IMPROVEMENTS

CONTRACT	BRIDGE NO.	715, 715A, 715B, 715C & 715D
T200800713	DESIGNED BY:	B. BURRIS
COUNTY		
NEW CASTLE	CHECKED BY:	Z. SCHOLL

GRADES AND GEOMETRICS

SECTION: RK&K

SHEET NO. 29

24-JUL-2020
13:20
\\balsrv01\v2014\20141\144_DelDOT\770\Task 4A - Harmony FD\Cadd\ContractPlans\ggd01_Har.dgn

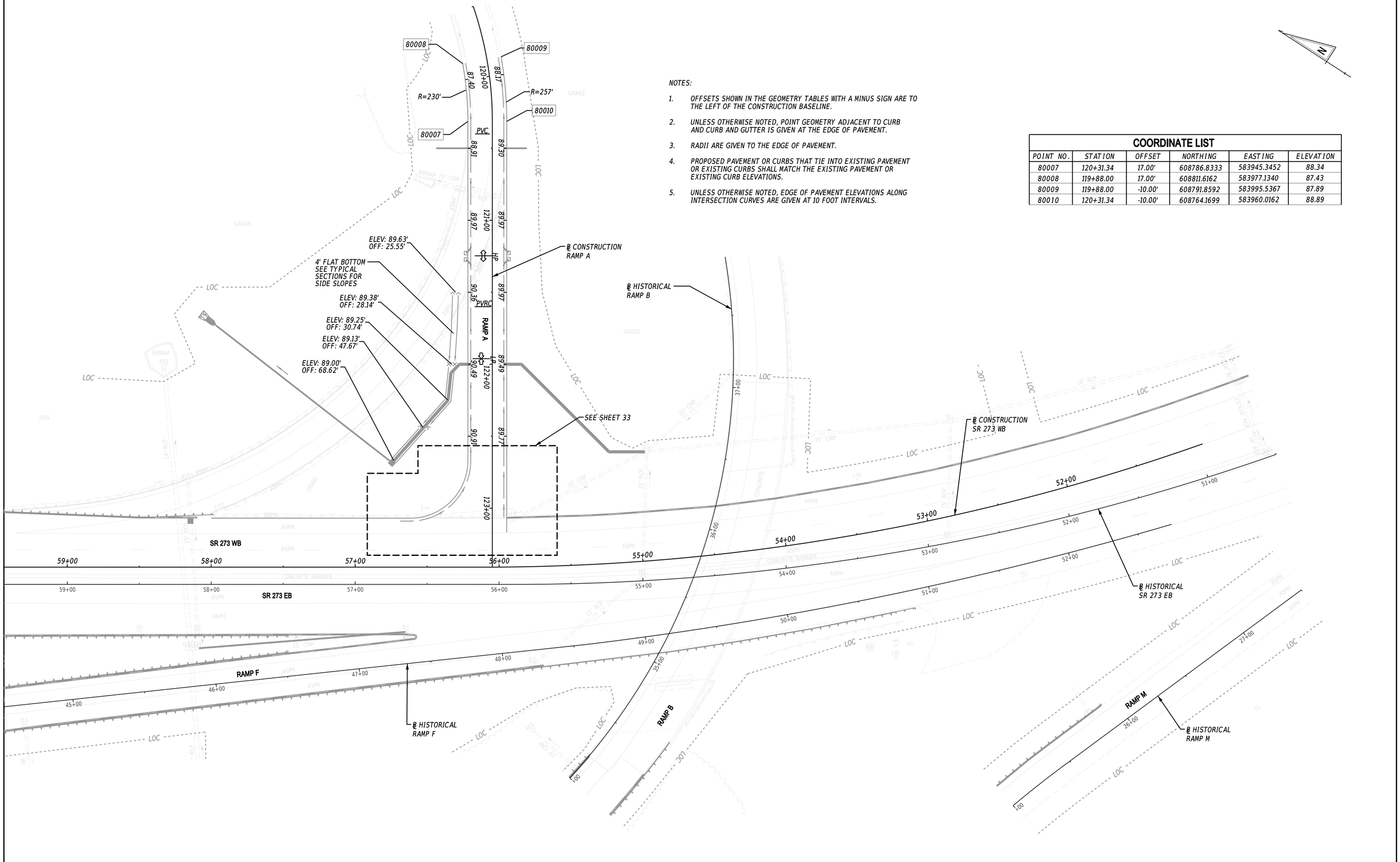

NOTES:

1. OFFSETS SHOWN IN THE GEOMETRY TABLES WITH A MINUS SIGN ARE TO THE LEFT OF THE CONSTRUCTION BASELINE.
2. UNLESS OTHERWISE NOTED, POINT GEOMETRY ADJACENT TO CURB AND CURB AND GUTTER IS GIVEN AT THE EDGE OF PAVEMENT.
3. RADII ARE GIVEN TO THE EDGE OF PAVEMENT.
4. PROPOSED PAVEMENT OR CURBS THAT TIE INTO EXISTING PAVEMENT OR EXISTING CURBS SHALL MATCH THE EXISTING PAVEMENT OR EXISTING CURB ELEVATIONS.
5. UNLESS OTHERWISE NOTED, EDGE OF PAVEMENT ELEVATIONS ALONG INTERSECTION CURVES ARE GIVEN AT 10 FOOT INTERVALS.

COORDINATE LIST

POINT NO.	STATION	OFFSET	NORTHING	EASTING	ELEVATION
80007	120+31.34	17.00'	608786.8333	583945.3452	88.34
80008	119+88.00	17.00'	608811.6162	583977.1340	87.43
80009	119+88.00	-10.00'	608791.8592	583995.5367	87.89
80010	120+31.34	-10.00'	608764.1699	583960.0162	88.89

ADDENDA / REVISIONS

SCALE
0 30 60 90
FEET

HSIP NCC, SR 273 AND I-95 INTERCHANGE IMPROVEMENTS

CONTRACT	BRIDGE NO.	715, 715A, 715B, 715C & 715D
T200800713	DESIGNED BY:	B. BARAL
COUNTY		
NEW CASTLE	CHECKED BY:	Z. SCHOLL

GRADES AND GEOMETRICS

SECTION: RK&K

SHEET NO. 30

30-JUN-2020
15:45
\\balts01\v2014\2014\14144_DelDOT\707\Task 4A - Harmony FD\Cadd\Contract\Plans\gg02_Har.dgn

COORDINATE LIST

POINT NO.	STATION	OFFSET	NORTHING	EASTING	ELEVATION
80011	108+25.02	4.00'	609981.7511	583062.8822	84.65
80012	106+00.00	4.00'	610047.7211	583278.0179	87.64
80013	106+00.00	-36.00'	610019.9935	583051.1554	86.16
80014	106+00.00	-35.70'	6100885.6801	583266.3780	87.01

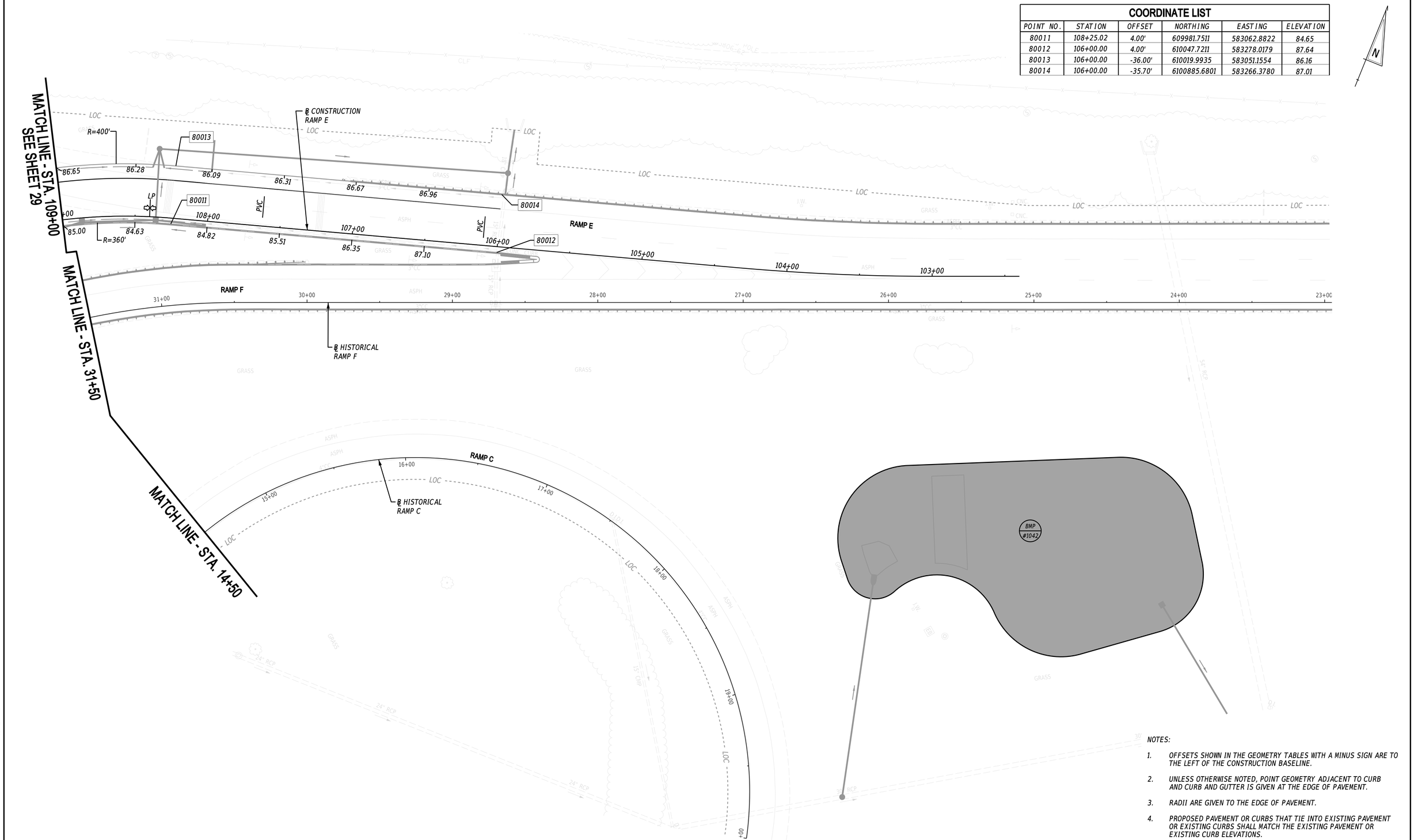

NOTES:

1. OFFSETS SHOWN IN THE GEOMETRY TABLES WITH A MINUS SIGN ARE TO THE LEFT OF THE CONSTRUCTION BASELINE.
2. UNLESS OTHERWISE NOTED, POINT GEOMETRY ADJACENT TO CURB AND CURB AND GUTTER IS GIVEN AT THE EDGE OF PAVEMENT.
3. RADII ARE GIVEN TO THE EDGE OF PAVEMENT.
4. PROPOSED PAVEMENT OR CURBS THAT TIE INTO EXISTING PAVEMENT OR EXISTING CURBS SHALL MATCH THE EXISTING PAVEMENT OR EXISTING CURB ELEVATIONS.
5. UNLESS OTHERWISE NOTED, EDGE OF PAVEMENT ELEVATIONS ALONG INTERSECTION CURVES ARE GIVEN AT 10 FOOT INTERVALS.

ADDENDA / REVISIONS

SCALE
0 30 60 90
FEET

HSIP NCC, SR 273 AND I-95 INTERCHANGE IMPROVEMENTS

CONTRACT	BRIDGE NO.	715, 715A, 715B, 715C & 715D
T200800713	DESIGNED BY:	B. BARAL
COUNTY	CHECKED BY:	Z. SCHOLL
NEW CASTLE		

GRADES AND GEOMETRICS

SECTION
RK&K
SHEET NO.
31

30-JUN-2020
18:16
\\cdaltsrv01\v20\14420\141144_DelDOT\700\Task 4A - Harmony FD\Cadd\ContractPlans\gg03_Har.dgn

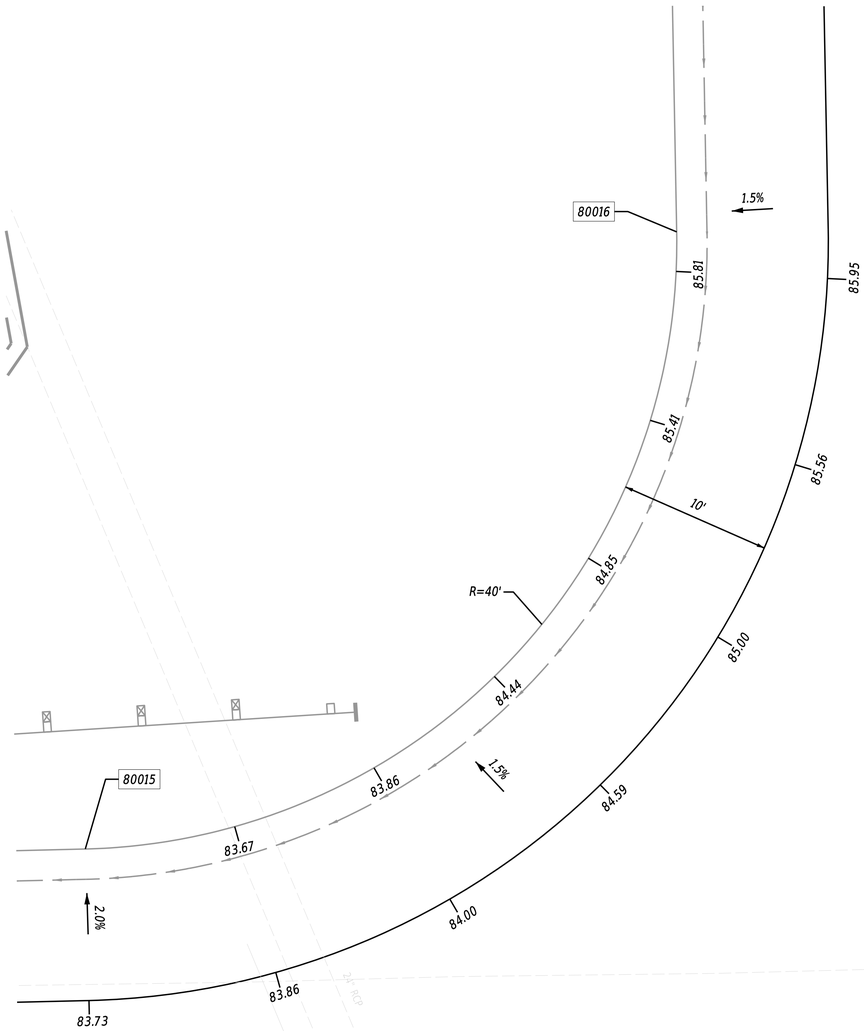

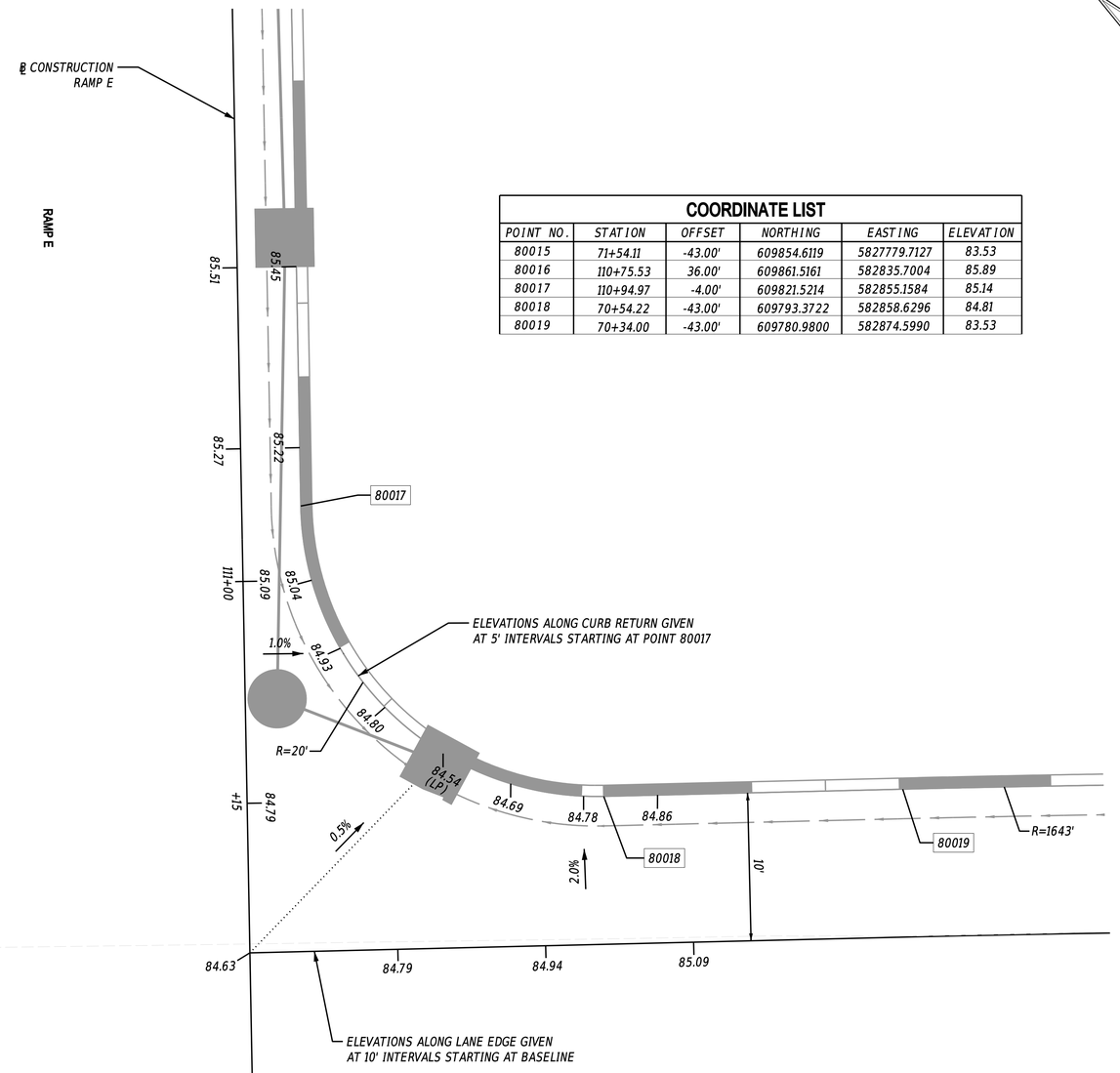

COORDINATE LIST

POINT NO.	STATION	OFFSET	NORTHING	EASTING	ELEVATION
80015	71+54.11	-43.00'	609854.6119	5827779.7127	83.53
80016	110+75.53	36.00'	609861.5161	582835.7004	85.89
80017	110+94.97	-4.00'	609821.5214	582855.1584	85.14
80018	70+54.22	-43.00'	609793.3722	582858.6296	84.81
80019	70+34.00	-43.00'	609780.9800	582874.5990	83.53

NOTES:

1. OFFSETS SHOWN IN THE GEOMETRY TABLES WITH A MINUS SIGN ARE TO THE LEFT OF THE CONSTRUCTION BASELINE.
2. UNLESS OTHERWISE NOTED, POINT GEOMETRY ADJACENT TO CURB AND CURB AND GUTTER IS GIVEN AT THE EDGE OF PAVEMENT.
3. RADII ARE GIVEN TO THE EDGE OF PAVEMENT.
4. PROPOSED PAVEMENT OR CURBS THAT TIE INTO EXISTING PAVEMENT OR EXISTING CURBS SHALL MATCH THE EXISTING PAVEMENT OR EXISTING CURB ELEVATIONS.
5. UNLESS OTHERWISE NOTED, EDGE OF PAVEMENT ELEVATIONS ALONG INTERSECTION CURVES ARE GIVEN AT 10 FOOT INTERVALS.

ADDENDA / REVISIONS

SCALE 0 5 10 15 FEET

HSIP NCC, SR 273 AND I-95 INTERCHANGE IMPROVEMENTS

CONTRACT	BRIDGE NO.	715, 715A, 715B, 715C & 715D
T200800713	DESIGNED BY:	B.BARAL
COUNTY		
NEW CASTLE	CHECKED BY:	Z. SCHOLL

GRADES AND GEOMETRICS

SECTION: RK&K

SHEET NO. 32

30-JUN-2020
16:44
\\balsvr01\v2014\2014141144_DelDOT\170\Task 4A - Harmony FD\Cadd\ContractPlans\gg04_Har.dgn

COORDINATE LIST					
POINT NO.	STATION	OFFSET	NORTHING	EASTING	ELEVATION
80020	122+66.94	14.00'	608656.2996	583749.1955	91.35
80021	123+06.93	57.00'	608670.6630	583692.2508	94.25
80022	56+68.71	-34.00'	608676.5394	583688.4472	94.59
80023	56+68.71	-32.00'	608675.4527	583686.7682	94.69
80024	56+68.71	-24.00'	608671.1057	583680.0523	95.07
80025	55+94.45	-24.00'	608609.0308	583720.3351	91.25

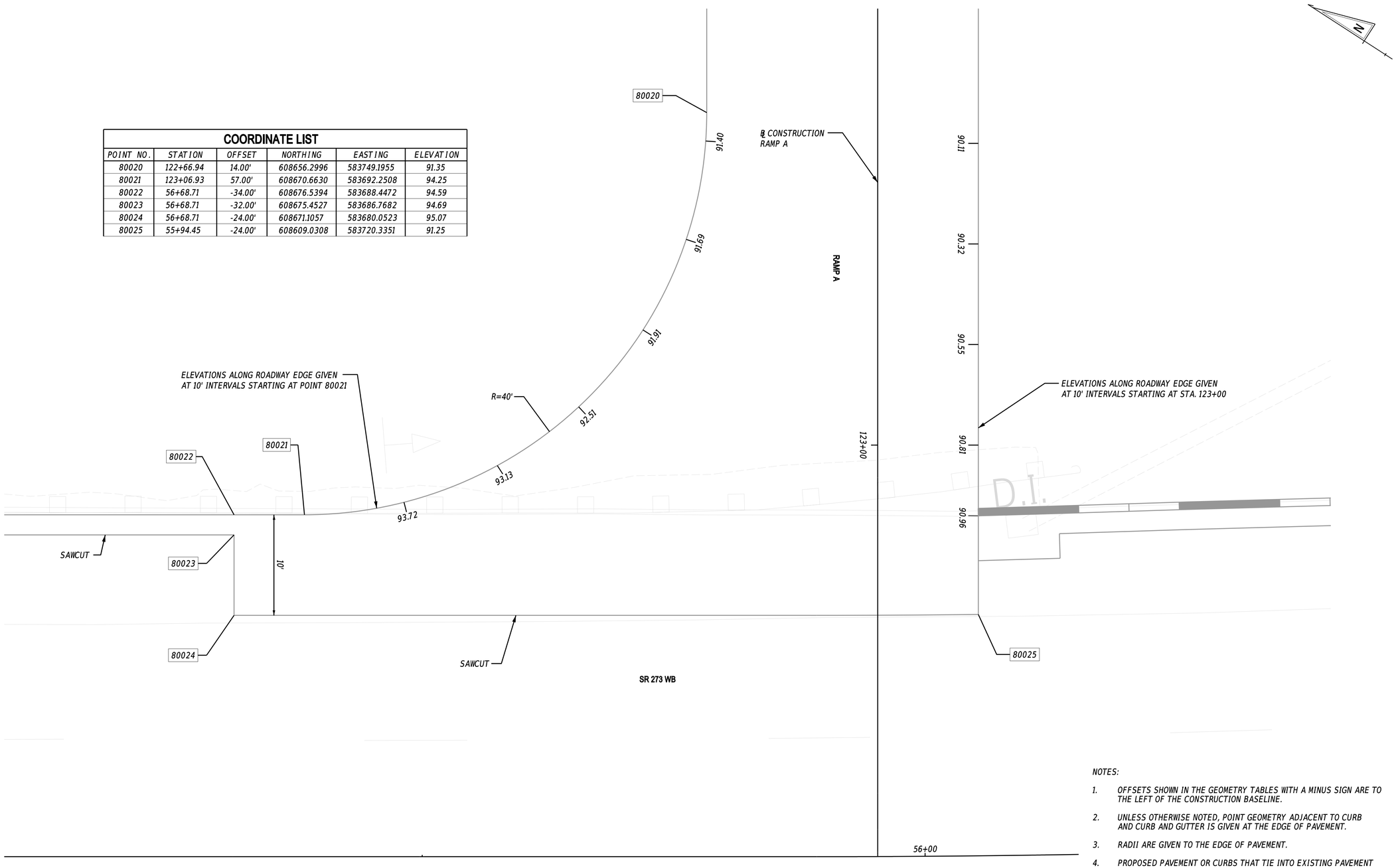

NOTES:

1. OFFSETS SHOWN IN THE GEOMETRY TABLES WITH A MINUS SIGN ARE TO THE LEFT OF THE CONSTRUCTION BASELINE.
2. UNLESS OTHERWISE NOTED, POINT GEOMETRY ADJACENT TO CURB AND CURB AND GUTTER IS GIVEN AT THE EDGE OF PAVEMENT.
3. RADII ARE GIVEN TO THE EDGE OF PAVEMENT.
4. PROPOSED PAVEMENT OR CURBS THAT TIE INTO EXISTING PAVEMENT OR EXISTING CURBS SHALL MATCH THE EXISTING PAVEMENT OR EXISTING CURB ELEVATIONS.
5. UNLESS OTHERWISE NOTED, EDGE OF PAVEMENT ELEVATIONS ALONG INTERSECTION CURVES ARE GIVEN AT 10 FOOT INTERVALS.

ADDENDA / REVISIONS

SCALE 0 5 10 15 FEET

HSIP NCC, SR 273 AND I-95 INTERCHANGE IMPROVEMENTS

CONTRACT	BRIDGE NO.	715, 715A, 715B, 715C & 715D
T200800713	DESIGNED BY:	B. BARAL
COUNTY		
NEW CASTLE	CHECKED BY:	Z. SCHOLL

GRADES AND GEOMETRICS

SECTION RK&K

SHEET NO. 33

30-JUN-2020
19:06
\\cadsrv01\v2014\20141144_DelDOT1707\Task 4A - Harmony FDI\Cadd\ContractPlans\gg05_Har.dgn

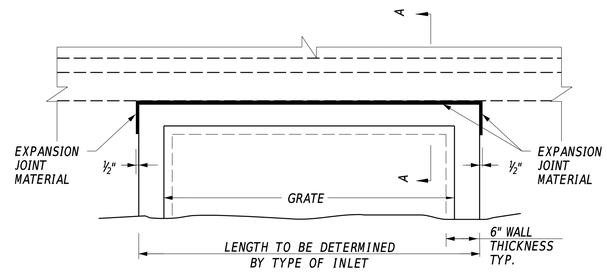

PLAN

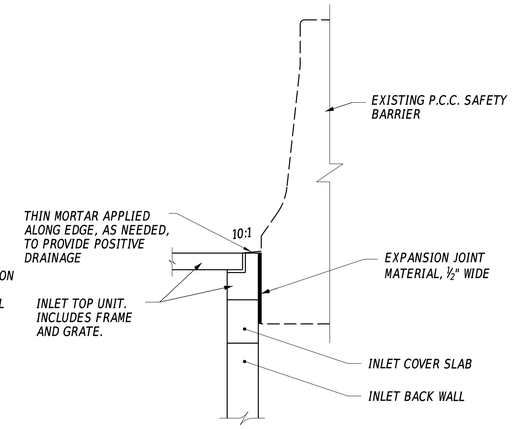

SECTION A-A

NOTE:
THE COST FOR THE THIN MORTAR AND EXPANSION JOINT MATERIAL SHALL BE INCLUDED IN THE UNIT PRICE BID FOR THE DRAINAGE INLET ITEM.

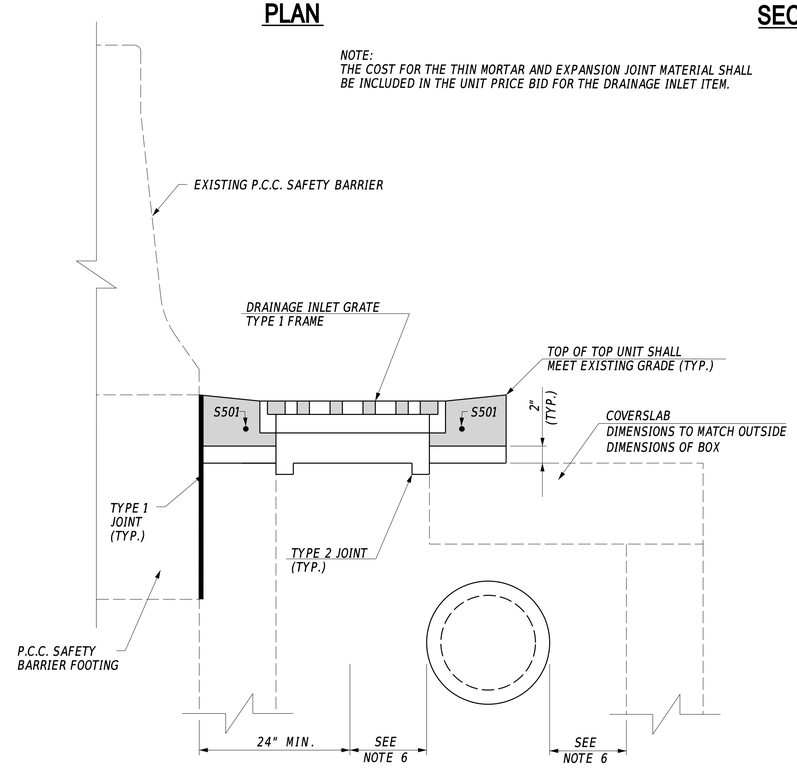

NOTES:

1. TO PREVENT REFLECTIVE CRACKING, IT IS INTENDED THAT THE TOP OF COVERSLAB BE FLUSH WITH THE BOTTOM OF THE LOWEST BITUMINOUS PAVEMENT LAYER.PROVIDE ADDITIONAL REINFORCING TO THE TOP UNIT AS DIRECTED BY THE ENGINEER.
2. REFERENCE OFFSET AND ELEVATION FOR INLETS IS THE HYPOTHETICAL GUTTER FLOWLINE.
3. TOP UNIT TO BE INCLUDED IN UNIT PRICE BID FOR INLETS.
4. SEE STD. NO. D-5 FOR ADDITIONAL INFORMATION.
5. RELOCATE ENCROACHING COVERSLAB REINFORCING BARS TO ACCOMMODATE REDUCED DISTANCE BETWEEN FRAME AND BACK EDGE OF COVERSLAB.
6. EXCAVATE AND BACKFILL WITH FLOWABLE FILL IN ACCORDANCE WITH SECTION 601.

TYPE A TOP UNIT

DRAINAGE INLET DETAIL AT EXISTING BARRIER

ADDENDA / REVISIONS	NOT TO SCALE	HSIP NCC, SR 273 AND I-95 INTERCHANGE IMPROVEMENTS	CONTRACT T200800713	BRIDGE NO. 715, 715A, 715B, 715C & 715D	CONSTRUCTION DETAILS	SECTION RK&K
			COUNTY NEW CASTLE	DESIGNED BY: S. ROUPE		SHEET NO. 34
				CHECKED BY: M. JORDAN		

23-JUL-2020
11:51
\\balsrv01\v2014\20141414144_DelDOT170\Task 4A - Harmony FD\Cadd\ContractPlans\st01_Har.dgn

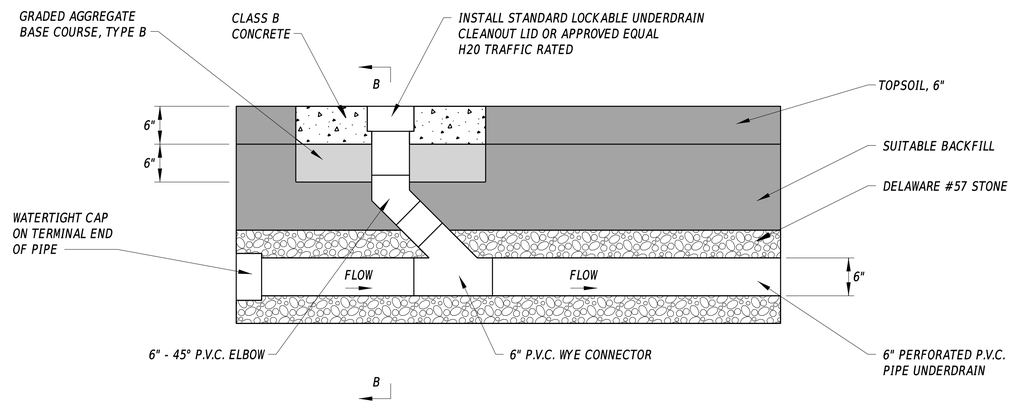

SECTION A-A

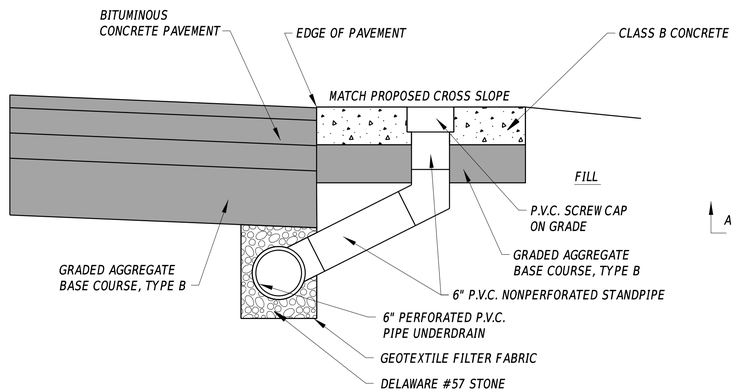

SECTION B-B

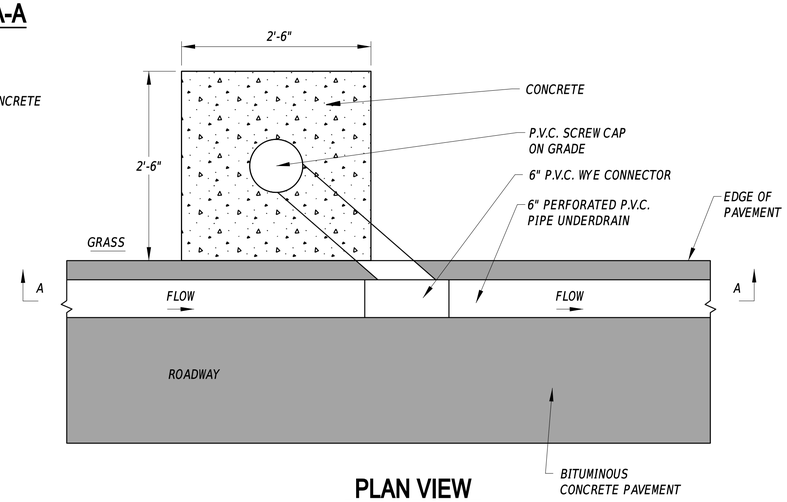

PLAN VIEW

UNDERDRAIN CLEANOUT

NOT TO SCALE

NOTE:
COSTS ASSOCIATED WITH SUPPLY AND INSTALLATION OF UNDERDRAIN CLEANOUTS ARE TO PAID UNDER ITEM 709001.

ADDENDA / REVISIONS		NOT TO SCALE	HSIP NCC, SR 273 AND I-95 INTERCHANGE IMPROVEMENTS	CONTRACT T200800713	BRIDGE NO. 715, 715A, 715B, 715C & 715D	CONSTRUCTION DETAILS	SECTION RK&K
				COUNTY NEW CASTLE	DESIGNED BY: S. ROUPE		SHEET NO. 35
					CHECKED BY: M. JORDAN		

16-JUL-2020
08:19
\\balsnx01\v2014\2014\14144_DelDOT\707\Task 4A - Harmony FD\Cadd\Contract\Plans\dt02_Her.dgn

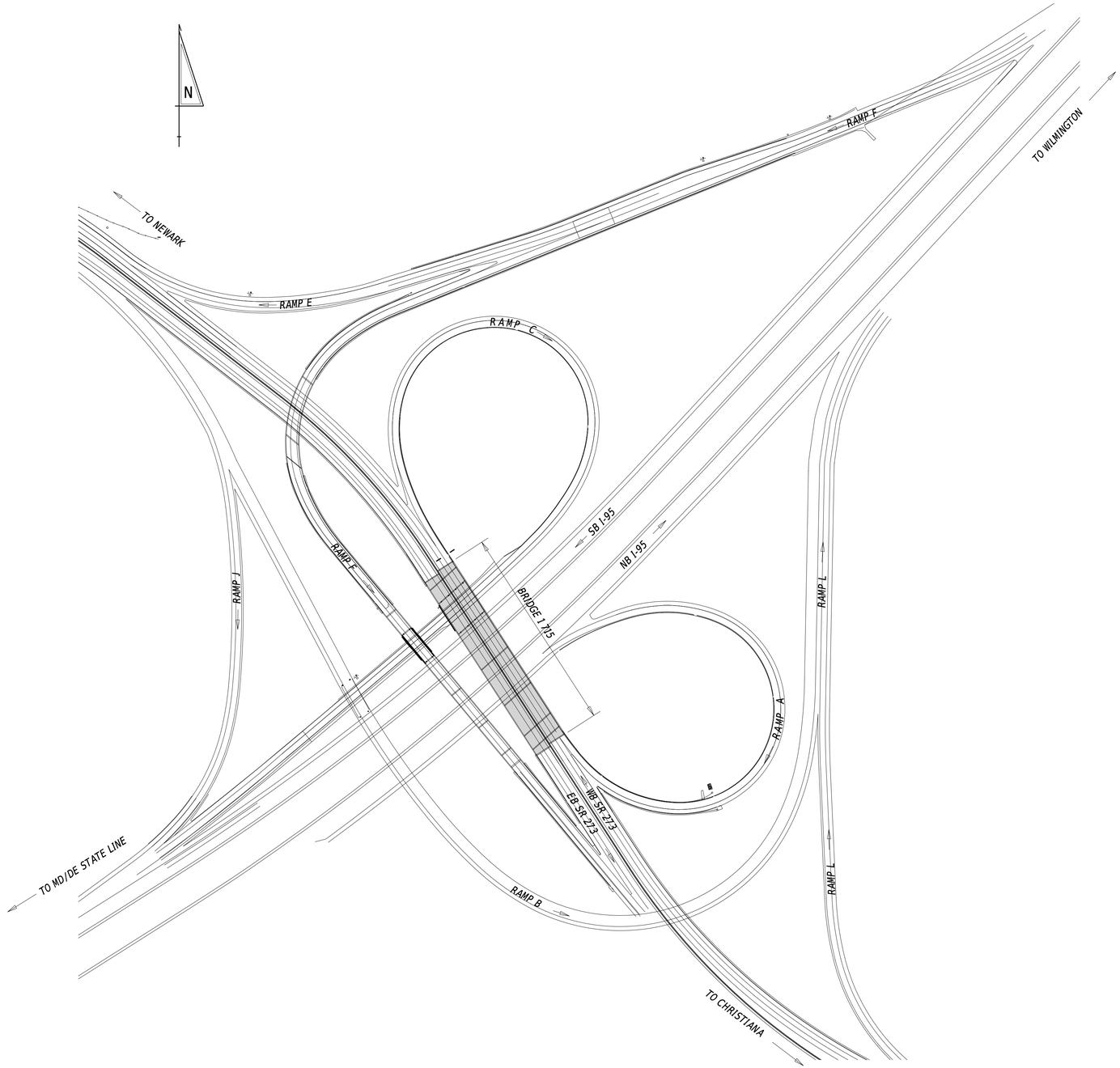

INDEX OF SHEETS		
SHEET DESCRIPTION	BRIDGE NO.	SHEET NO.
LOCATION PLAN		36
PROJECT NOTES - BRIDGES		37
GENERAL PLAN AND ELEVATION	1-715	38
SUPERSTRUCTURE TYPICAL SECTION	1-715	39
SEQUENCE OF CONSTRUCTION	1-715	40
BEARING DETAILS - 1	1-715	41
BEARING DETAILS - 2	1-715	42
JACKING DETAILS	1-715	43
JOINT REPAIRS - ABUTMENTS AND PIERS	1-715	44

NOTE:

RAMP M NOT SHOWN.

STRUCTURE LOCATION PLAN

ADDENDA / REVISIONS

SCALE
0 150 300 450
FEET

HSIP NCC, SR 273 AND I-95 INTERCHANGE IMPROVEMENTS

CONTRACT	BRIDGE NO.	1-715
T200800713	DESIGNED BY:	E. LORETE
COUNTY	CHECKED BY:	D. TUSING
NEW CASTLE		

STRUCTURE LOCATION PLAN

SECTION: RK&K

SHEET NO. 36

24-JUN-2020
11:16
\\balsv01\v20\14220\141144_DelDOT\70\Task 4A - Harmony FD\Structures\SL01BR715_Har.DGN

PROJECT NOTES

GENERAL:

1. LOCATION AND DESCRIPTION:

   REHABILITATION OF EXISTING BRIDGE NO. 1-715 CARRYING SR 273 OVER I-95 IN NEW CASTLE COUNTY, DELAWARE.

   THE WORK ON BRIDGE NO. 1-715 INVOLVES REPLACING ALL NEOPRENE STRIP SEAL GLANDS IN THE EXISTING DECK JOINTS WITH NEW CONTINUOUS SEALS, MILLING 2½-INCHES OF CONCRETE OVERLAY FROM THE EXISTING DECK AND APPLYING A CLASS D CONCRETE WEARING SURFACE AND REPLACING ALL 24 BEARINGS AT THE ABUTMENTS WITH ELASTOMERIC BEARINGS.

2. EXISTING STRUCTURE:

   PLANS OF THE EXISTING STRUCTURES ARE AVAILABLE AND MAY BE OBTAINED FROM THE DEPARTMENT AND USED IN CONJUNCTION WITH THESE PLANS WHEN DETERMINING EXISTING FEATURES, DETAILS AND/OR DIMENSIONS. ANY DAMAGE DONE BY THE CONTRACTOR'S OPERATIONS TO THE EXISTING FACILITIES TO REMAIN SHALL BE REPAIRED ALL AT THE CONTRACTOR'S EXPENSE TO THE SATISFACTION OF THE ENGINEER. THE EXISTING PLANS ARE AS FOLLOWS:

STRUCTURE	CONTRACT NO.	DESCRIPTION
1-715	7060	ORIGINAL PLANS (1970)
1-715	9707406	MILL AND OVERLAY (1997)
1-715	2207409	REHABILITATION PLANS (2003)

   ALL DIMENSIONS AND STATIONS SHOWN ARE APPROXIMATE. ALL DIMENSIONS AFFECTED BY THE GEOMETRICS, AND/OR LOCATION OF THE EXISTING STRUCTURE SHALL BE CHECKED IN THE FIELD BY THE CONTRACTOR, BEFORE ANY CONSTRUCTION IS DONE AND BEFORE ANY MATERIAL IS ORDERED OR FABRICATED. IF THE GEOMETRICS DIFFER FROM THAT SHOWN ON THE PLANS, THE ENGINEER SHALL BE CONTACTED FOR EVALUATION. IT SHALL BE THE RESPONSIBILITY OF THE CONTRACTOR TO SUPPLY THE ENGINEER WITH ALL FIELD DIMENSIONS REQUIRED TO CHECK DETAIL DRAWINGS.

3. ALL MATERIALS AND WORKMANSHIP SHALL BE IN ACCORDANCE WITH 2016 DELAWARE DEPARTMENT OF TRANSPORTATION STANDARD SPECIFICATIONS FOR ROAD AND BRIDGE CONSTRUCTION, SUPPLEMENTAL SPECIFICATIONS, AND CONTRACT SPECIAL PROVISIONS.

DESIGN SPECIFICATIONS:

1. DELAWARE DEPARTMENT OF TRANSPORTATION BRIDGE DESIGN MANUAL 2019 EDITION.

2. AASHTO LRFD BRIDGE DESIGN SPECIFICATIONS, 2017, 8TH EDITION.

3. ALL WELDS SHALL BE IN ACCORDANCE WITH AASHTO/AMERICAN WELDING SOCIETY (AWS) D1.5 BRIDGE WELDING CODE, 7TH EDITION.

LOADING:

1. HL-93 FOR JACKING AND BEARING REPLACEMENT.

2. HS 20-44 FOR EXISTING STRUCTURAL MEMBERS (AS PER ORIGINAL DESIGN). NOTE: THIS PROJECT DOES NOT AFFECT THE LIVE LOAD RATINGS.

PORTLAND CEMENT CONCRETE OVERLAY:

1. PORTLAND CEMENT CONCRETE FOR CAST-IN-PLACE ELEMENTS SHALL BE AS FOLLOWS:

   (F'C = 28 DAY COMPRESSIVE STRENGTH)
   ITEM 610017 PCC MASONRY, SUPERSTRUCTURE, CLASS D, F'C = 4,500 PSI, DECK

2. MIX REQUIREMENTS SHALL CONFORM TO SECTION 1022 OF THE STANDARD SPECIFICATIONS UNLESS NOTED OTHERWISE.

3. ALL EXPOSED EDGES SHALL BE CHAMFERED ¾" UNLESS NOTED OTHERWISE.

4. USE AN APPROVED EPOXY BONDING COMPOUND BETWEEN OLD AND NEW CONCRETE SURFACES. THE BONDING COMPOUND SHALL CONFORM TO THE REQUIREMENTS GIVEN IN SECTION 610 OF THE STANDARD SPECIFICATIONS. PAYMENT IS INCIDENTAL TO THE PCC MASONRY CLASS BEING PLACED AND BONDED.

5. GROOVES IN THE DECK SHALL BE IN ACCORDANCE WITH SECTION 610 OF THE STANDARD SPECIFICATIONS.

6. THE REMOVAL AND SCARIFICATION OF THE EXISTING DECK IS PAID UNDER THE CONCRETE OVERLAY BID ITEM 610017 PCC MASONRY, SUPERSTRUCTURE. THE EXISTING OVERLAY MATERIAL SHALL BE REMOVED FROM THE DECK IN ITS ENTIRETY.

7. PRIOR TO BEGINNING REMOVAL OPERATIONS IN EACH STAGE, THE CONTRACTOR SHALL EXPOSE THE TOP MAT OF EXISTING REINFORCING STEEL AT A MAXIMUM SPACING OF 50'-0" ALONG THE BRIDGE DECK. THE AREAS EXPOSED WILL BE AT VARIOUS LOCATIONS ACROSS THE WIDTH OF THE AREA TO BE MILLED AS DIRECTED BY THE ENGINEER IN THE FIELD. THIS WILL ALLOW THE TOP MAT OF EXISTING REBAR TO BE ACCURATELY LOCATED. MECHANICAL MILLING EQUIPMENT WILL NOT BE PERMITTED WITHIN ½" OF THE TOP MAP OF REINFORCING.

8. THE CONTRACTOR SHALL PERFORM ALL NECESSARY SURVEY TO ACCURATELY LOCATE ALL GRADE BREAKS OR CHANGES TO THE BRIDGE CROSS SECTIONS TO ACCURATELY MATCH EXISTING ELEVATIONS AND CONDITIONS. ALL GRADE BREAKS, CROSS SLOPES, ETC. SHOWN ON THE PLANS ARE APPROXIMATE AND SHALL BE CONFIRMED BY THE CONTRACTOR.

9. CLEAR COVER TO EXISTING REINFORCING VARIES. MINIMUM THICKNESS OF OVERLAY IS 2½". THE TOP 2" MAY BE REMOVED BY MECHANICAL MILLING. HOWEVER, THE EXISTING REINFORCING SHALL NOT BE DAMAGED BY THE MILLING OPERATIONS, AND THE REMAINDER SHALL BE REMOVED BY HYDRO-DEMOLITION.

10. THE BRIDGE DECK SHALL BE HYDRO-MILLED A MINIMUM OF ½" BELOW THE LIMITS OF MECHANICAL MILLING TO REMOVE ALL DETERIORATED MATERIAL AS WELL AS ADDRESS ALL MICRO-CRACKING THAT MAY RESULT FROM THE MECHANICAL MILLING.

11. AFTER THE DECK IS SCARIFIED, THE CONTRACTOR SHALL SOUND THE DECK AND PATCH AS REQUIRED IN ACCORDANCE WITH SECTION 628 OF THE STANDARD SPECIFICATIONS. PAYMENT FOR PATCHING AND ESTIMATED QUANTITIES ARE AS FOLLOWS:

ITEM NO.	DESCRIPTION	* ESTIMATED QUANTITY
628050	DECK REPAIR, ½" TO 1" DEPTH	2910 SF
628051	DECK REPAIR, 1" TO 3" DEPTH	1460 SF
628052	DECK REPAIR, 3" TO < FULL DEPTH	2180 SF
628053	DECK REPAIR, FULL DEPTH	730 SF

   * NOTE: ESTIMATED QUANTITIES INCLUDE A 10% CONTINGENCY

12. AT NO TIME SHALL ANY EXISTING CONCRETE DECK OR OVERLAY BE ALLOWED TO FALL FROM THE DECK ONTO THE ROADWAY BELOW. THE CONTRACTOR WILL BE REQUIRED TO ERECT REMOVAL SHIELDING IN ACCORDANCE WITH SECTION 604 OF THE STANDARD SPECIFICATIONS. PAYMENT FOR THE DESIGN AND COST OF REMOVAL SHIELDING SHALL BE INCLUDED UNDER BID ITEM 604001. REMOVAL SHIELDING WILL BE REQUIRED TO BE ERECTED OVER ALL ROADWAYS CROSSING BELOW THE BRIDGE, AND AN ADDITIONAL 5' BEYOND EACH EDGE OF ROAD.

BAR REINFORCEMENT:

1. ALL REINFORCING STEEL SHALL CONFORM TO AASHTO M31 (ASTM A615), GRADE 60 AND BE EPOXY COATED. ALL REINFORCING STEEL SHALL HAVE A CLEAR COVER OF 2" UNLESS OTHERWISE SPECIFIED ON THE PLANS.

2. ALL EXPOSED REINFORCING STEEL SHALL BE THOROUGHLY CLEANED AND INCORPORATED IN THE FINISHED STRUCTURE. ALL REINFORCING STEEL THAT IS DAMAGED DURING REPAIR OPERATIONS SHALL BE REPAIRED AT THE CONTRACTOR'S SOLE EXPENSE TO THE SATISFACTION OF THE ENGINEER.

STRUCTURAL STEEL:

1. ALL NEW PERMANENT STRUCTURAL STEEL SHALL CONFORM TO AASHTO M270 (ASTM A709) GRADE 50.

2. WHEN THE CONTRACTOR ELECTS TO SUPPORT PROTECTIVE SHIELDS AND CONTAINMENT SYSTEMS FROM THE EXISTING STEEL, ALL CONNECTIONS TO THE EXISTING STEEL SHALL BE MADE BY MEANS OF CLAMPS OR OTHER APPROVED DEVICES. THE DRILLING OF HOLES IN THE EXISTING STEEL, OR THE WELDING TO THE EXISTING STEEL, IS PROHIBITED.

3. AT THE TIME OF ORIGINAL CONSTRUCTION, BRIDGE NO. 1-715 HAD A LEAD-BASED PAINT SYSTEM. CONTRACTOR SHALL ASSUME LEAD MAY BE ENCOUNTERED AS PART OF THE WORK.

4. AT ALL LOCATIONS WHERE THE CONTRACTOR'S WORK DAMAGES THE EXISTING PAINT SYSTEM, THE CONTRACTOR SHALL CLEAN THE DAMAGED LOCATION AND REPAIR THE AREA AT HIS EXPENSE.

BEARINGS:

1. THE FABRICATION AND INSTALLATION OF THE ELASTOMERIC BEARING PADS SHALL CONFORM TO THE REQUIREMENTS DESCRIBED IN SECTION 623 OF THE STANDARD SPECIFICATIONS. PAYMENT FOR ELASTOMERIC BEARINGS SHALL BE INCLUDED UNDER ITEM 623000.

DECK JOINTS:

1. THE EXISTING STRIP SEAL GLAND AND ADHESIVE OVER EACH SUBSTRUCTURE UNIT AT BRIDGE NO. 1-715 SHALL BE COMPLETELY REMOVED AND REPLACED IN ACCORDANCE WITH SECTION 624 OF THE STANDARD SPECIFICATIONS.

2. THE STRIP SEAL SHALL BE FURNISHED AND PLACED IN ONE CONTINUOUS PIECE FOR THE FULL WIDTH OF THE JOINT. SPLICING THE STRIP SEAL WILL NOT BE PERMITTED. THE CONTRACTOR MAY INSTALL THE CONTINUOUS SEAL DURING THE FINAL CONSTRUCTION STAGE FOR THE FULL WIDTH OF THE BRIDGE.

UTILITIES:

1. BEFORE BEGINNING WORK, THE CONTRACTOR SHALL NOTIFY "MISS UTILITY" A MINIMUM OF 48 HOURS PRIOR TO THE START OF WORK. VERIFY AND LOCATE ALL UTILITIES PRIOR TO COMMENCING THE WORK.

2. COORDINATE THE REQUIREMENTS FOR PROTECTION OF ANY UTILITY WITH THE UTILITY OWNER PRIOR TO STARTING WORK.

3. CONDUCT OPERATIONS IN A MANNER WHICH ENSURES THAT THE UTILITIES WILL NOT BE DISTURBED OR ENDANGERED. ALL DAMAGE INCURRED TO THESE UTILITIES OR ANY OTHER UTILITIES, SHOWN OR NOT SHOWN ON THE PLANS, DUE TO THE CONTRACTOR'S OPERATIONS SHALL BE REPAIRED AT THE CONTRACTOR'S EXPENSE TO THE SATISFACTION OF THE APPROPRIATE UTILITY COMPANY. THE DEPARTMENT DOES NOT ASSUME RESPONSIBILITY FOR REIMBURSEMENT, PARTICIPATION IN DESIGN AND/OR REVISIONS, OR LIABILITY FOR ACCURACY OF TYPE, SIZE AND LOCATION OF ALL UTILITIES.

4. THE CONTRACTOR IS RESPONSIBLE FOR TEMPORARILY SUPPORTING, PROTECTING, OR RELOCATING ALL UTILITIES (INCLUDING UNDERBRIDGE LIGHTING) DURING CONSTRUCTION. WHERE NECESSARY, THE COST FOR THIS WORK WILL BE INCIDENTAL TO THE CONTRACT.

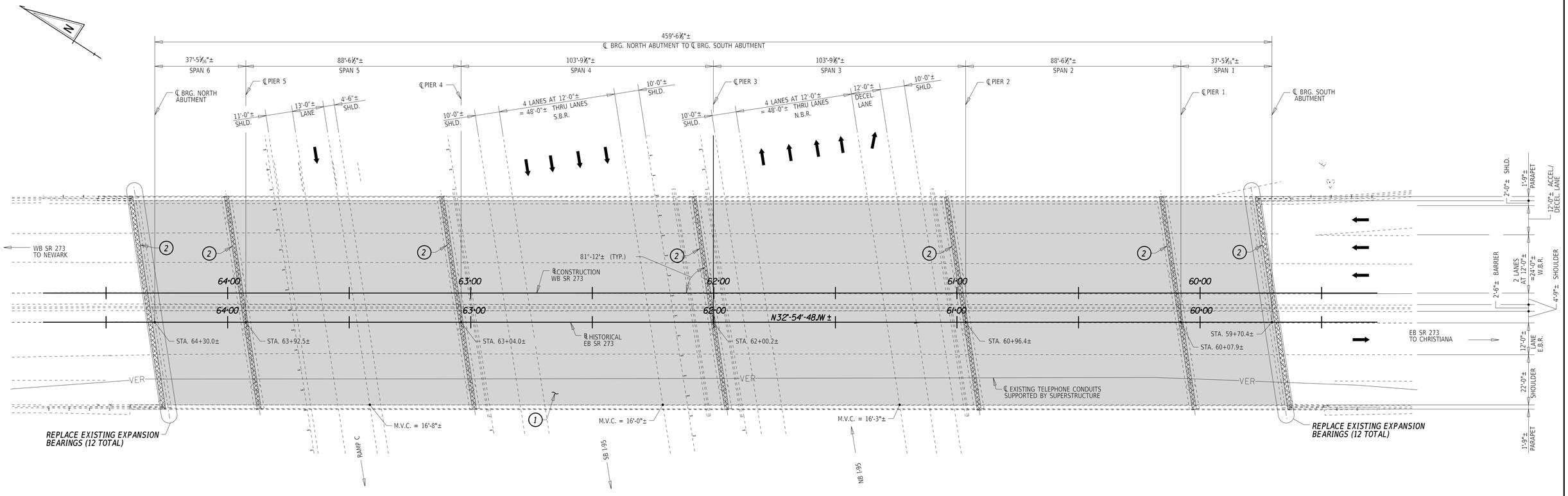

PLAN
SCALE: 1"=20'-0"

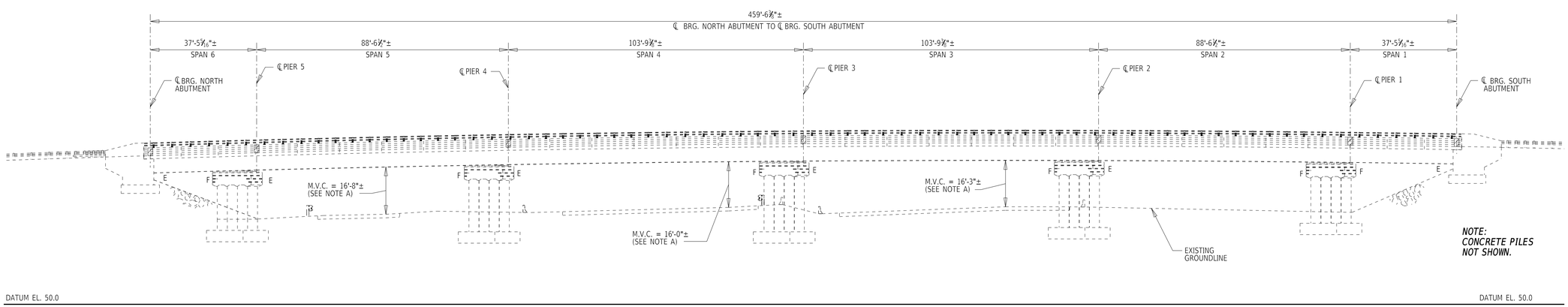

ELEVATION
SCALE: 1"=20'-0"

LEGEND:

1. REMOVE 2½" OF EXISTING CONCRETE OVERLAY AND PLACE 2½" CLASS D CONCRETE OVERLAY, FINISHED DECK ELEVATIONS TO MATCH THOSE PRIOR TO THE MILLING OPERATION.
2. REMOVAL OF EXISTING STRIP SEAL GLAND AND ADHESIVE AND REPLACEMENT WITH NEW CONTINUOUS SEAL.

NOTE A:
FOR LOCATION OF MINIMUM VERTICAL CLEARANCE (M.V.C.) SEE PLAN VIEW

NOTES:
1. THE DECK MILLINGS SHALL BE STORED AT A LOCATION TO BE DETERMINED BY THE ENGINEER. COST WILL BE INCIDENTAL TO THE CONTRACT.
2. PLEASE SEE CONSTRUCTION PLANS FOR ROADWAY & DRAINAGE INFORMATION.

ADDENDA / REVISIONS		SCALE 0 20 40 60 FEET	HSIP NCC, SR 273 AND I-95 INTERCHANGE IMPROVEMENTS	CONTRACT T200800713	BRIDGE NO. 1-715	GENERAL PLAN AND ELEVATION	SECTION RK&K
				COUNTY NEW CASTLE	DESIGNED BY: E. LORETE		SHEET NO. 38
					CHECKED BY: D. TUSING		

24-JUN-2020
11:20
\\dotservd1\v20\14\20141414144_DelDOT1707\Task 4A - Harmony FD\Structures\pe0\fbr715_Har.dgn

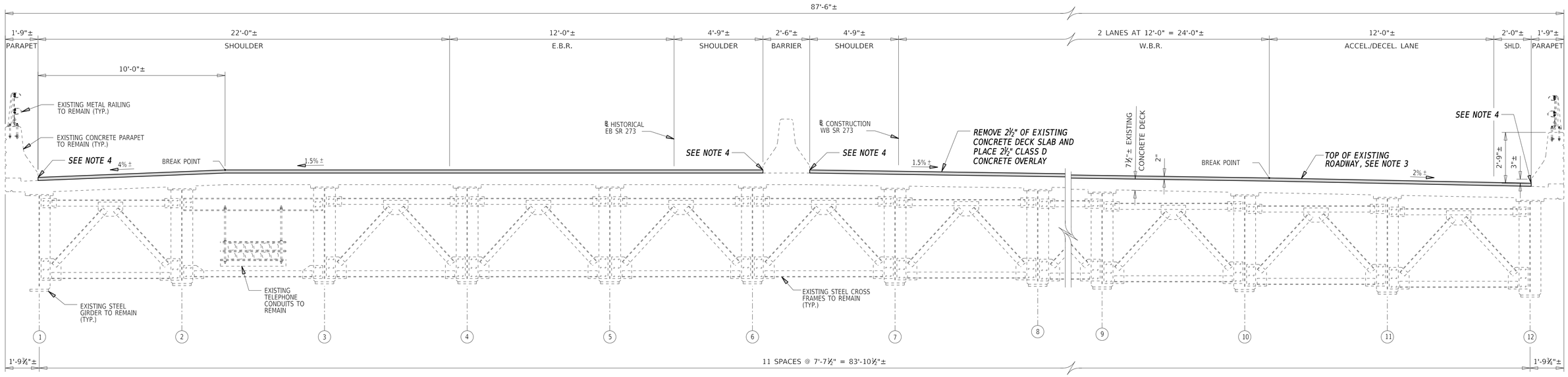

SUPERSTRUCTURE TYPICAL SECTION

LOOKING STATION AHEAD
SCALE: ⅜" =1'-0"

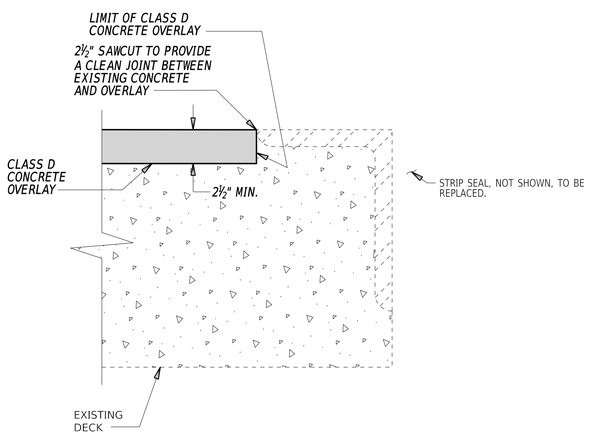

OVERLAY DETAIL AT EXISTING ROADWAY JOINT ANGLES

SCALE: 3" =1'-0"

NOTES:

1. *FOLLOWING THE REMOVAL OF 2½" OF THE EXISTING CONCRETE DECK AND BEFORE APPLYING THE CLASS D CONCRETE OVERLAY, THE CONTRACTOR SHALL VISUALLY INSPECT THE CONDITION OF THE EXPOSED DECK SURFACE IN THE PRESENCE OF THE ENGINEER. THIS VISUAL INSPECTION SHALL DOCUMENT ALL AREAS OF THE DECK SURFACE IN NEED OF REPAIR. THE ACTUAL LIMITS OF THE REPAIRS SHALL BE DEFINED AND DOCUMENTED BY THE ENGINEER AND SHALL BE PAID FOR UNDER ITEMS 628050,628051, 628052, AND 628053. REFERENCE SECTION 628 OF THE STANDARD SPECIFICATIONS FOR REPAIR DETAILS.*
2. *COST FOR SAWCUTTING DECK ADJACENT TO EXISTING ROADWAY ANGLE AND REMOVING 2½" OF EXISTING CONCRETE DECK WILL BE PAID FOR UNDER ITEM 610017 PCC MASONRY, SUPERSTRUCTURE, CLASS D CONCRETE.*
3. *CONDUCT MILLING AND PLACE CONCRETE OVERLAY TO MAINTAIN EXISTING DECK GRADE AND CROSS SLOPES.*
4. *A 2½" SAWCUT SHALL BE PROVIDED AT THE INTERFACE BETWEEN THE EXISTING CONCRETE DECK SLAB AND THE FACE OF ALL EXISTING BARRIERS. THE SAWCUT SHALL BE PLACED IN A SIMILAR MANNER AS SHOWN IN THE OVERLAY DETAIL AT EXISTING ROADWAY ANGLES.*

ADDENDA / REVISIONS		SCALE AS NOTED	HSIP NCC, SR 273 AND I-95 INTERCHANGE IMPROVEMENTS	CONTRACT	BRIDGE NO. 1-715	SUPERSTRUCTURE TYPICAL SECTION	SECTION
				T200800713	DESIGNED BY: E. LORETE		RK&K
				COUNTY			SHEET NO.
				NEW CASTLE	CHECKED BY: D. TUSING		39

24-JUN-2020
11:21
\\dallsrv01\v2014\20141414_DelDOT1707\Task 4A - Harmony FD\Structures\ts01bx715_Har.dgn

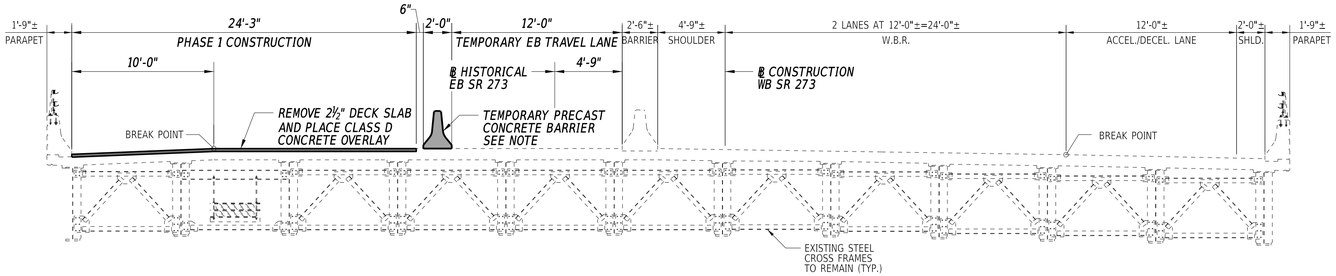

TYPICAL SECTION - PHASE 1

SCALE: 3/16"=1'-0"

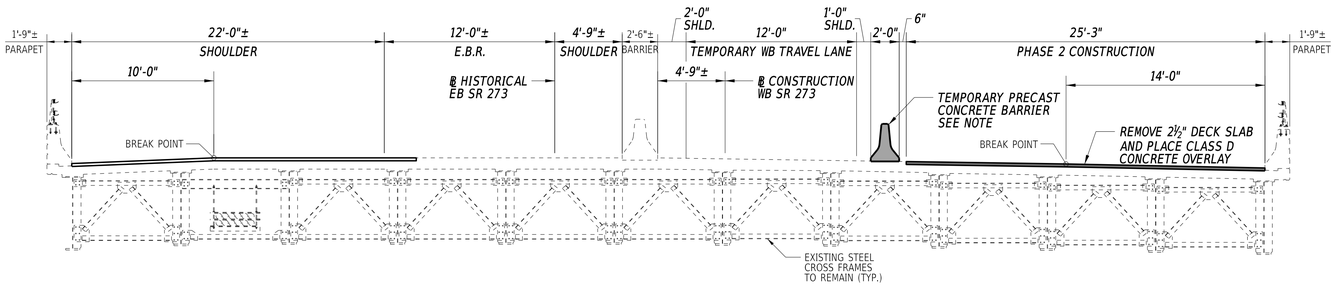

TYPICAL SECTION - PHASE 2

SCALE: 3/16"=1'-0"

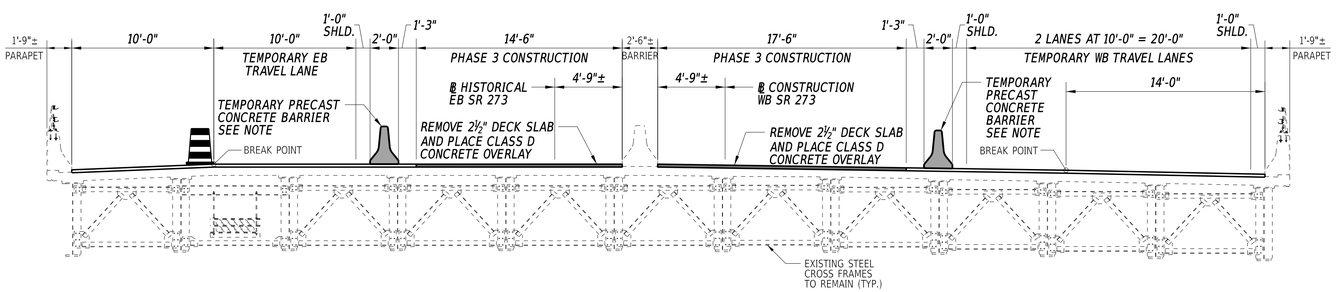

TYPICAL SECTION - PHASE 3

SCALE: 3/16"=1'-0"

NOTES:

1. DO NOT BOLT TEMPORARY PRECAST CONCRETE BARRIER TO DECK.
2. FOR TEMPORARY STRIPING ON BRIDGE 1-715, REFER TO TYPICAL SECTIONS ON CONSTRUCTION PHASING SHEETS.

ADDENDA / REVISIONS	

SCALE: 0 5 10 15 FEET

HSIP NCC, SR 273 AND I-95 INTERCHANGE IMPROVEMENTS

CONTRACT	BRIDGE NO.	1-715
T200800713	DESIGNED BY:	E. LORETE
COUNTY		
NEW CASTLE	CHECKED BY:	D. TUSING

SEQUENCE OF CONSTRUCTION

SECTION
RK&K
SHEET NO.
40

24-JUN-2020
11:22
\\pdsnv01\v20140201414144_DelDOT1707\Task 4A - Harmony FD\Structures\ts\02ex715_Har.dgn

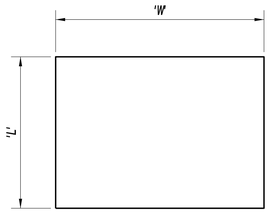

PROPOSED STEEL REINFORCED ELASTOMERIC BEARING PLAN
N.T.S

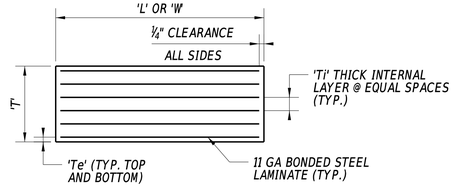

PROPOSED STEEL REINFORCED ELASTOMERIC BEARING ELEVATION
N.T.S.

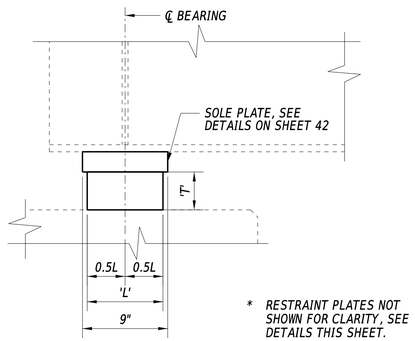

PROPOSED BEARING SIDE ELEVATION
SCALE: 1½"=1'-0"

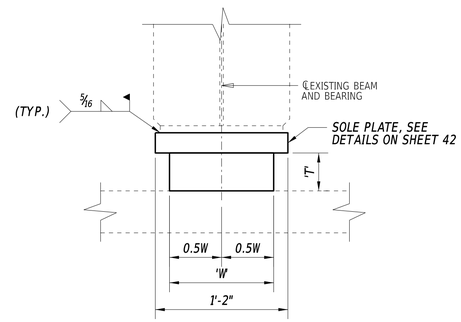

PROPOSED BEARING ELEVATION
SCALE: 1½"=1'-0"

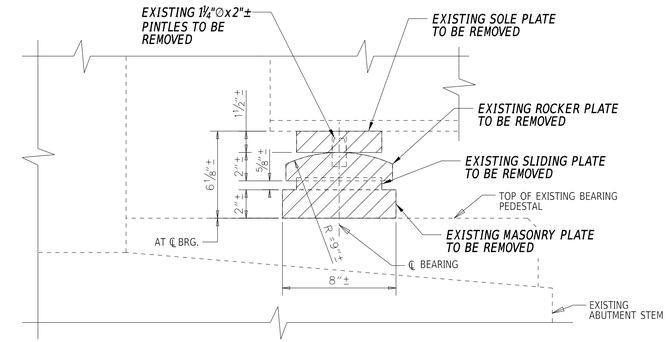

EXISTING EXPANSION SHOE SIDE ELEVATION
SCALE: 1½"=1'-0"

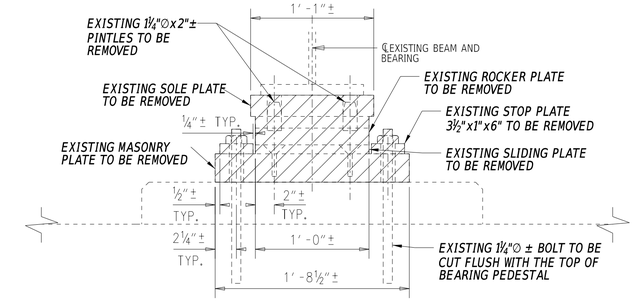

EXISTING EXPANSION SHOE END ELEVATION
SCALE: 1½"=1'-0"

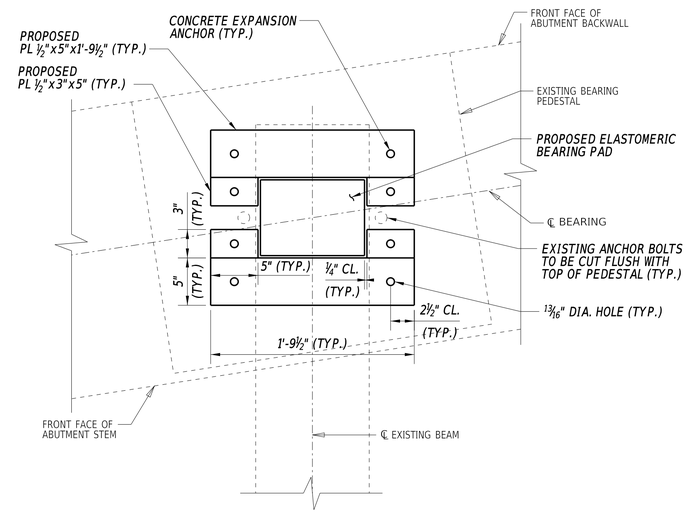

PROPOSED ELASTOMERIC RESTRAINT SYSTEM PLAN
SCALE: 1½"=1'-0"

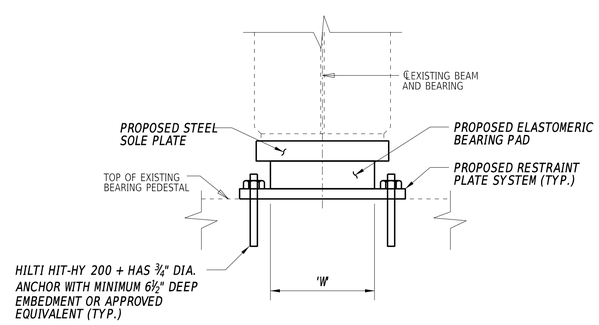

PROPOSED ELASTOMERIC RESTRAINT SYSTEM ELEVATION
SCALE: 1½"=1'-0"

STEEL REINFORCED ELASTOMERIC BEARING SCHEDULE

LOCATION	BEARING DESIGNATION						LAMINATED ELASTOMERIC BEARING					
	MARK	TYPE	NEOPRENE HARDNESS (SHORE A)	TOTAL NO. REQD.	CAPACITY PER PAD		DIMENSION					TOTAL PAD THICKNESS 'T'
					REACTION ⊗	MOVEMENT ⊠	'L'	'W'	LAYER THICKNESS 'Ti'	LAYER THICKNESS 'Te'	INTERIOR LAYERS	
NORTH ABUTMENT	EX	EXP.	60± 5 DURO	12	93 KIP	¼"	8"	11"	7/16"	¼"	6	4"
SOUTH ABUTMENT	EX	EXP.	60± 5 DURO	12	93 KIP	¼"	8"	11"	7/16"	¼"	6	4"

LEGEND:

⊗ MAX. UN-FACTORED SERVICE I REACTION (W/O DYNAMIC LOAD ALLOWANCE).

⊠ TEMPERATURE MOVEMENT.

STEEL REINFORCED ELASTOMERIC BEARING NOTES:

1. PROVIDE ALL STEEL REINFORCED ELASTOMERIC BEARINGS IN ACCORDANCE WITH SECTION 623-'BEARING DEVICES' OF THE STANDARD SPECIFICATIONS.
2. SOLE PLATES SHALL BE AASHTO M270, GRADE 50 (ASTM A709, GRADE 50) AND TO BE BEVELED TO MATCH GRADE WHEN GRADE EXCEEDS 1 PERCENT. STEEL SURFACES OF SOLE PLATES TO BE MACHINE FINISHED AS SHOWN IN THE DETAILS, MEASURED IN ACCORDANCE WITH ANSI B46.1.
3. SOLE PLATES SHALL MEET A FLATNESS REQUIREMENT OF 0.5 PERCENT IN THE DIRECTION BEING MEASURED
4. BEARING SHALL BE PLACED NORMAL TO CENTERLINE OF BEAM.
5. TOP OF ELASTOMERIC PAD SHALL BE SHOP VULCANIZED TO THE BOTTOM OF THE SOLE PLATE.
6. STEEL REINFORCED ELASTOMERIC BEARINGS SHALL BE ATTACHED TO THE TOP OF CONCRETE PEDESTAL WITH AN APPROVED EPOXY ADHESIVE IN ACCORDANCE WITH SECTION 623.03(C) OF THE STANDARD SPECIFICATIONS IN SUCH A WAY THAT VISIBLE CONCRETE SURFACES WILL NOT BE STAINED. ENSURE THE EPOXY ADHESIVE HAS SET PRIOR TO LOWERING OF BEAMS.
7. PAYMENT FOR FABRICATION AND INSTALLATION OF STEEL REINFORCED ELASTOMERIC BEARINGS, STEEL RESTRAINT PLATES, SOLE PLATES, AND CUTTING EXISTING ANCHOR BOLTS FLUSH WITH THE TOP SURFACE OF THE CONCRETE PEDESTAL SHALL BE INCIDENTAL TO 623000 ELASTOMERIC BEARINGS.
8. COST FOR INSTALLING EXPANSION ANCHORS FOR RESTRAINT PLATES WILL BE PAID FOR UNDER ITEM 628070 DRILLING HOLES AND INSTALLING DOWELS.

SUGGESTED SEQUENCE OF CONSTRUCTION:

1. PRIOR TO THE START OF WORK, THE CONTRACTOR SHALL VERIFY, IN THE PRESENCE OF THE ENGINEER THAT CONCRETE/STEEL TO SUPPORT THE JACK AND SUPPORT ASSEMBLY IS STRUCTURALLY SOUND.
2. PRIOR TO ANY JACKING OPERATION, THE CONTRACTOR SHALL RECORD THE EXISTING GIRDER ELEVATION TO ENSURE THE GIRDER MAINTAINS THIS ELEVATION AFTER THE BEARINGS ARE REPLACED.
3. AT THE NORTH ABUTMENT ONLY, PERFORM CONCRETE PEDESTAL EXTENSION WORK. REFER TO SHEET NO. 42 FOR DETAILS. ADDITIONAL WORK AT THE NORTH ABUTMENT, INCLUDING JACKING OF THE GIRDERS SHALL NOT BEGIN UNTIL NEW CONCRETE FOR PEDESTAL EXTENSION HAS REACHED A MINIMUM COMPRESSIVE STRENGTH OF 3,000 PSI.
4. INSTALL JACKING STIFFENER PLATES. REFER TO SHEET NO. 43 FOR DETAILS.
5. LOOSEN ANCHOR BOLT NUTS AT THE GIRDER TO BE JACKED AND AT ADJACENT GIRDERS.
6. RELIEVE GIRDER OF LOAD BY HYDRAULIC JACK. INSERT SHIM PLATES AS REQUIRED TO TRANSFER LOAD TO JACK SUPPORT ASSEMBLY. REFER TO SHEET NO. 43 FOR DETAILS.
7. REMOVE EXISTING BEARING PLATES AS SHOWN IN DETAILS ON THIS SHEET. CUT EXISTING ANCHOR BOLTS FLUSH WITH TOP OF BEARING PEDESTAL.
8. INSTALL NEW STEEL SOLE PLATE AND ELASTOMERIC BEARING PAD.
9. REMOVE HYDRAULIC JACK AND SUPPORT ASSEMBLY.
10. INSTALL ELASTOMERIC RESTRAINT PLATE SYSTEM.

24-JUN-2020
12:48
\\balsrv01\v2014\20141144\144_DelDOT170\Task 4A - Harmony FD\Structures\EX02br715_Har.dgn

ADDENDA / REVISIONS	SCALE AS NOTED	HSIP NCC, SR 273 AND I-95 INTERCHANGE IMPROVEMENTS	CONTRACT T200800713	BRIDGE NO. 1-715	BEARING DETAILS - 1	SECTION RK&K
			COUNTY NEW CASTLE	DESIGNED BY: E. LORETE		SHEET NO. 41
				CHECKED BY: D. TUSING		

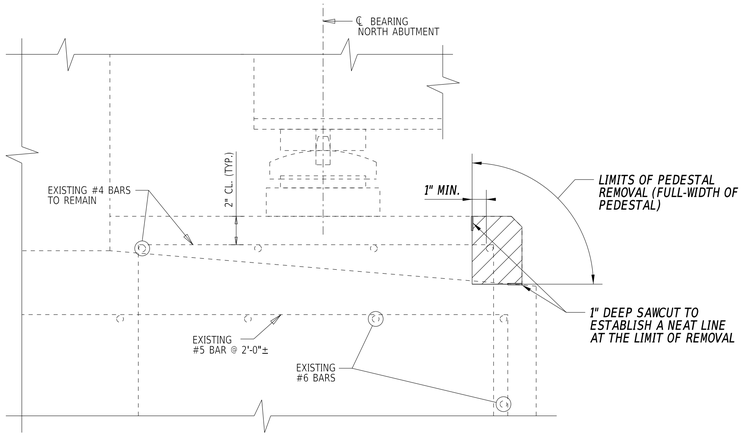

PEDESTAL REMOVAL - SECTION

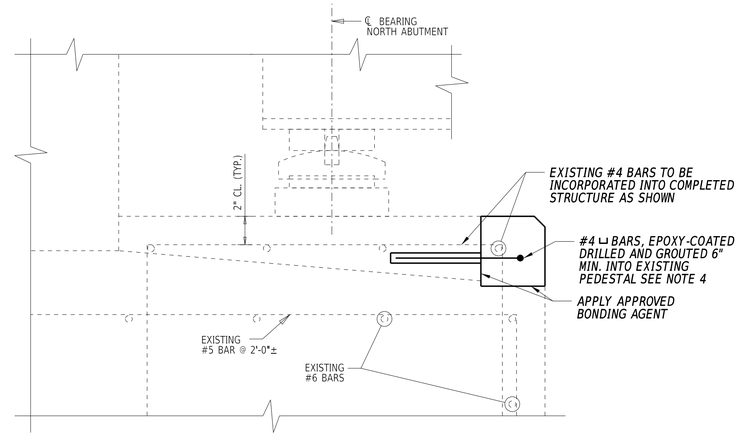

PEDESTAL REPAIR - SECTION

CONCRETE PEDSTAL EXTENSION NOTES:

1. SAWCUTTING SHALL BE IN ACCORDANCE WITH SECTION 628.03(E)(3).
2. REMOVE EXISTING CONCRETE A MINIMUM OF 1" BEHIND THE EXISTING REINFORCING STEEL AS SHOWN. COLLECT ALL DEBRIS AND PREVENT ANY FALLING MATERIAL FROM REACHING THE ROADWAY BELOW. ALL REMOVED MATERIAL SHALL BECOME THE PROPERTY OF THE CONTRACTOR AND SHALL BE REMOVED FROM THE SITE AND DISPOSED OF IN ACCORDANCE WITH SECTION 106.08.
3. TAKE CARE NOT TO DAMAGE THE EXISTING REINFORCEMENT. ALL EXISTING REINFORCING SHALL BE LOCATED PRIOR TO ANY REMOVAL WORK. REFER TO SECTION 628.03(E)(7) FOR PREPARATION OF EXISTING REINFORCING BARS AND FOR SUPPLEMENTAL REINFORCING BARS IN CASES OF DAMAGED OR BROKEN REINFORCING BARS.
4. FOR PEDESTALS WITH HEIGHTS OVER 5", DRILL AND GROUT #4 "U" BARS SPACED VERTICALLY AT 6" MAX. THE CONTRACTOR SHALL USE HILTI HIT-RE 500 V3 EPOXY MORTAR OR APPROVED EQUAL. REFER TO SECTION 628.03(G).
5. CLEAN AND PREPARE THE EXPOSED CONCRETE SURFACE IN ACCORDANCE WITH THE BONDING AGENT MANUFACTURER SPECIFICATIONS.
6. APPLY CONCRETE IN ACCORDANCE WITH SECTION 610. CLASS A CONCRETE, OR APPROVED EQUAL, SHALL BE USED. APPLY AN APPROVED BONDING AGENT TO THE EXISTING CONCRETE PRIOR TO PLACING CONCRETE.
7. PROVIDE ¾ INCH CHAMFERS AT ALL FINAL EXPOSED EDGES.
8. PAYMENT FOR CONCRETE REMOVAL, ADDITIONAL REINFORCING STEEL, AND CONCRETE PLACEMENT SHALL BE INCIDENTAL TO 623000 ELASTOMERIC BEARINGS.

CONCETE PEDESTAL EXTENSION DETAILS

SCALE: 1½"=1'-0"
(NORTH ABUTMENT ONLY)

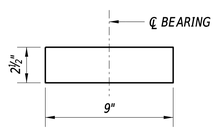

SOLE PLATE DETAIL - SOUTH ABUTMENT

SCALE: 1½"=1'-0"

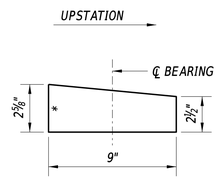

SOLE PLATE DETAIL - NORTH ABUTMENT

SCALE: 1½"=1'-0"

* NOTE:
FABRICATOR SHALL DENOTE THICKER EDGE OF SOLE PLATE TO ENSURE CORRECT ORIENTATION DURING INSTALLATION.

ADDENDA / REVISIONS		SCALE AS NOTED	HSIP NCC, SR 273 AND I-95 INTERCHANGE IMPROVEMENTS	CONTRACT T200800713	BRIDGE NO. 1-715	BEARING DETAILS - 2	SECTION RK&K
				COUNTY NEW CASTLE	DESIGNED BY: E. LORETE		SHEET NO. 42
					CHECKED BY: D. TUSING		

24-JUN-2020
12:49
\\balsrv01\v2014\2014\14144_Del\DOT170/Task 4A - Harmony FD\Structures\EX03br715_Fbr.dgn

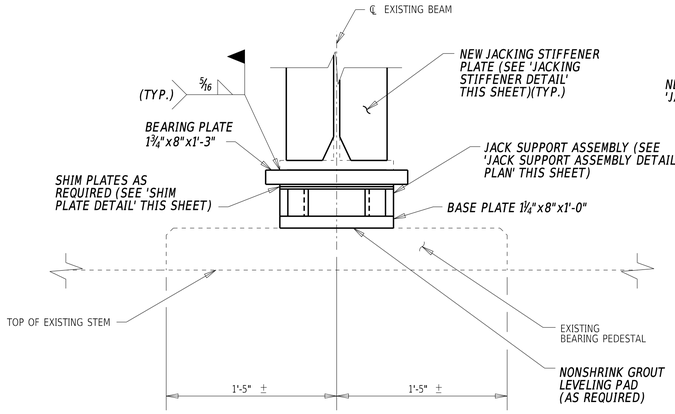

ABUTMENT - ELEVATION

SCALE: 1½"=1'-0"

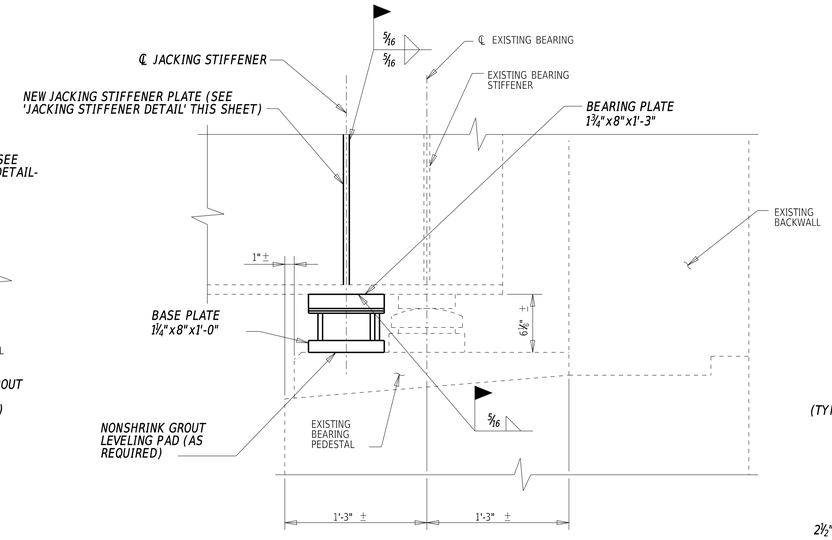

ABUTMENT - SECTION

SCALE: 1½"=1'-0"

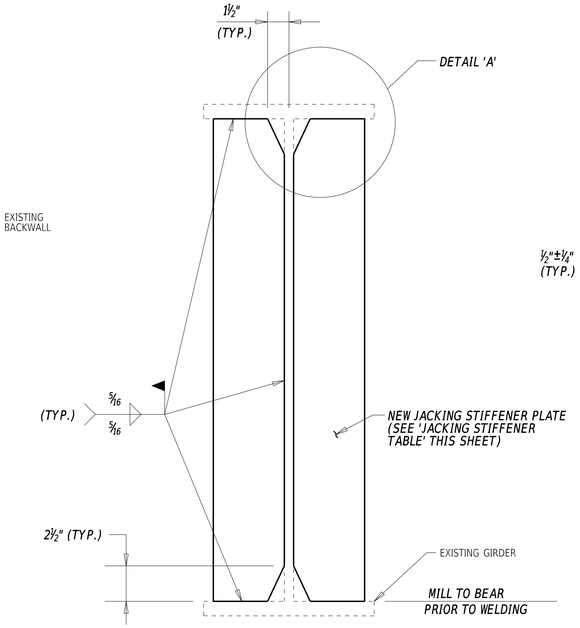

JACKING STIFFENER DETAIL

N.T.S.

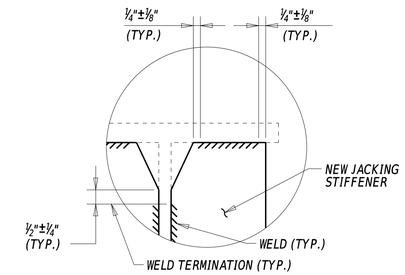

DETAIL 'A'

N.T.S.

JACKING STIFFENER DETAIL	
LOCATION	PLATE SIZE
SPANS 1 AND 6	½" X 5½"

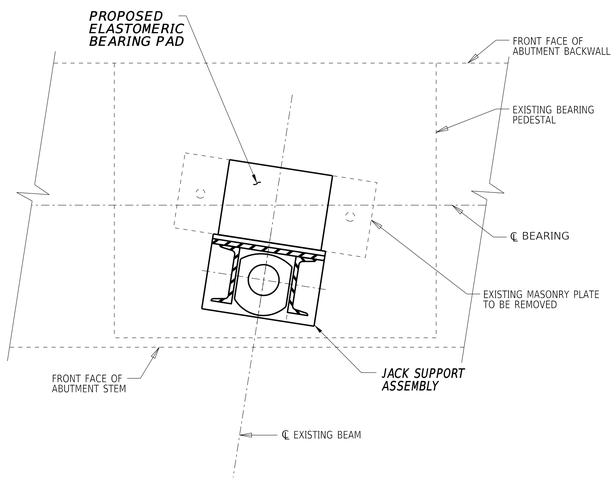

ABUTMENT JACKING PLAN

SCALE: 1½"=1'-0"

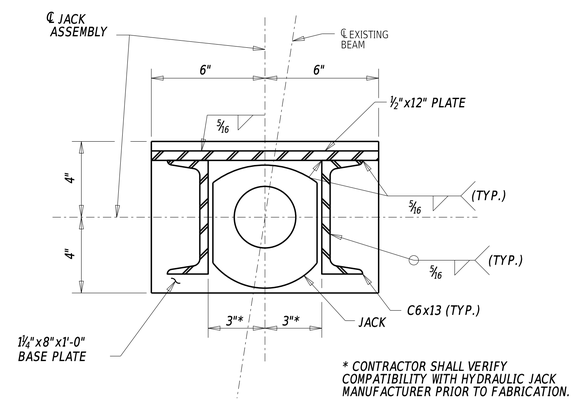

JACK SUPPORT ASSEMBLY DETAIL - PLAN

SCALE: 3"=1'-0"

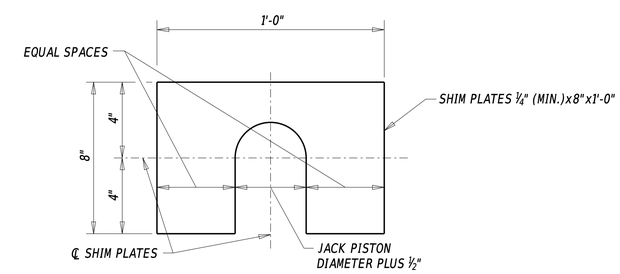

SHIM PLATE DETAIL

SCALE: 3"=1'-0"

UNFACTORED LOADS FOR JACKING			
LOCATION	GIRDER	DL + 15% KIPS	DL + LL W/IMP KIPS
SOUTH ABUTMENT	EXTERIOR	28	71
	INTERIOR	33	99
NORTH ABUTMENT	EXTERIOR	28	71
	INTERIOR	33	99

FACTORED LOADS FOR JACKING			
LOCATION	GIRDER	DL + 15% KIPS	DL + LL W/IMP KIPS
SOUTH ABUTMENT	EXTERIOR	36	114
	INTERIOR	42	161
NORTH ABUTMENT	EXTERIOR	36	114
	INTERIOR	42	161

NOTE:

MIN. JACK CAPACITY MUST PROVIDE A SAFETY FACTOR NOT LESS THAN 1.65 BASED ON THE CALCULATED UNFACTORED DESIGN JACKING LOADS.

LIFTING OF THE BRIDGE VIA HYDRAULIC PRESSURE UNDER LIVE LOAD IS PROHIBITED UNLESS APPROVED BY THE ENGINEER CALCULATIONS SHALL BE SUBMITTED AS PART OF THE JACKING SUPPORT ASSEMBLY WORKING DRAWINGS THAT ARE CUSTOM FIT TO THE JACK BEING USED.

NOTES:

1. THE SHIM PLATE IS NOT WELDED TO THE JACK SUPPORT ASSEMBLY.
2. GIRDERS SHALL NOT BE RAISED MORE THAN ⅛" ABOVE ITS EXISTING ELEVATION.
3. ALL LOADS SHALL BE SECURED AND SUPPORTED BY JACK SUPPORT ASSEMBLY BEFORE ANY WORK IS PERFORMED TO REMOVE THE EXISTING BEARINGS. HYDRAULIC PRESSURE IS NOT TO BE USED TO SUPPORT LOADS, EVEN IF THE HYDRAULIC PRESSURE IS MAINTAINED.
4. MINIMUM THICKNESS OF THE GROUT LEVELING PAD SHALL BE AS RECOMMENDED BY THE MANUFACTURER.
5. THE LENGTH OF CHANNELS AND PLATE IN THE JACKING SUPPORT ASSEMBLY ARE TO BE CUSTOM FIT TO THE JACK BEING USED. CONTRACTOR SHALL SUBMIT WORKING DRAWINGS AND CALCULATIONS SHOWING THE JACKING SUPPORT ASSEMBLY DETAILS AT EACH BEARING LOCATION.
6. ALL MATERIAL FOR JACKING SUPPORT ASSEMBLY AND STIFFENER PLATES SHALL BE AASHTO M270 (ASTM A709) GRADE 36 OR GRADE 50.
7. PAYMENT FOR THE JACKING SUPPORT ASSEMBLY, NONSHRINK GROUT LEVELING PAD, AND JACKING STIFFENER PLATES WILL BE PAID UNDER ITEM 604000 JACKING BRIDGE. NEW JACKING STIFFENER MAY BE LEFT IN PLACE AFTER CONSTRUCTION IS COMPLETE.

ADDENDA / REVISIONS

SCALE AS NOTED

HSIP NCC, SR 273 AND I-95 INTERCHANGE IMPROVEMENTS

CONTRACT	BRIDGE NO.	1-715	JACKING DETAILS	SECTION
T200800713	DESIGNED BY:	E. LORETE		RK&K
COUNTY				SHEET NO.
NEW CASTLE	CHECKED BY:	D. TUSING		43

24-JUN-2020
12:52
\\balserv01\v20141201414144_DelDOT1707\Task 4A - Harmony FD\Structures\md01br715_Har.dgn

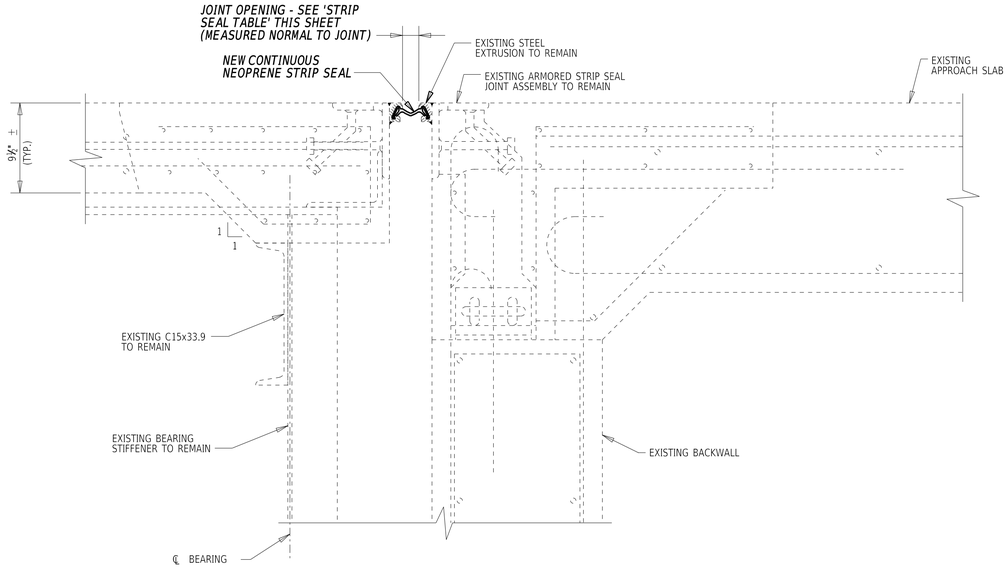

TYPICAL SECTION @ ABUTMENTS

SCALE: 1½"=1'-0"

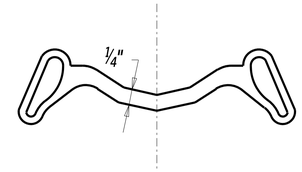

3" STRIP SEAL

SCALE: NOT TO SCALE

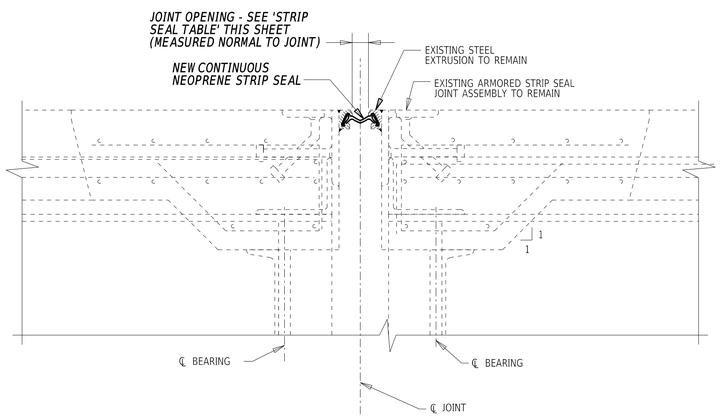

TYPICAL SECTION @ PIERS

SCALE: 1½"=1'-0"

STRIP SEAL TABLE							
TEMP. (F)	S. ABUTMENT	N. ABUTMENT	PIER 1	PIER 2	PIER 3	PIER 4	PIER 5
40	2 1/16"	2 1/16"	2"	2 1/8"	2 3/16"	2 3/16"	2 1/8"
50	2 1/16"	2 1/16"	2"	2 1/16"	2 1/16"	2 1/16"	2 1/16"
60	2"	2"	2"	2"	2"	2"	2"
70	1 15/16"	1 15/16"	2"	1 15/16"	1 15/16"	1 15/16"	1 15/16"
80	1 15/16"	1 15/16"	2"	1 7/8"	1 7/8"	1 7/8"	1 7/8"
90	1 7/8"	1 7/8"	2"	1 13/16"	1 3/4"	1 3/4"	1 13/16"

NOTES:

1. THE PERMANENT NEOPRENE STRIP SEAL SHALL BE CONTINUOUS THE FULL WIDTH OF THE JOINT.
2. PAYMENT FOR REMOVING EXISTING STRIP SEAL AND ADHESIVE, CLEANING, AND PLACING NEW CONTINUOUS STRIP SEAL GLAND WILL BE PAID UNDER ITEM 624005 STRIP SEAL GLAND, 3".
3. THE CONTRACTOR SHALL FIELD VERIFY TYPE AND SIZE OF THE EXISTING STRIP SEALS PRIOR TO ORDERING MATERIAL. THE CONTRACTOR SHALL CONFIRM WITH STRIP SEAL MANUFACTURER THAT THE EXISTING STEEL EXTRUSIONS ARE COMPATIBLE WITH THE NEW STRIP SEALS AND MAY BE REUSED.

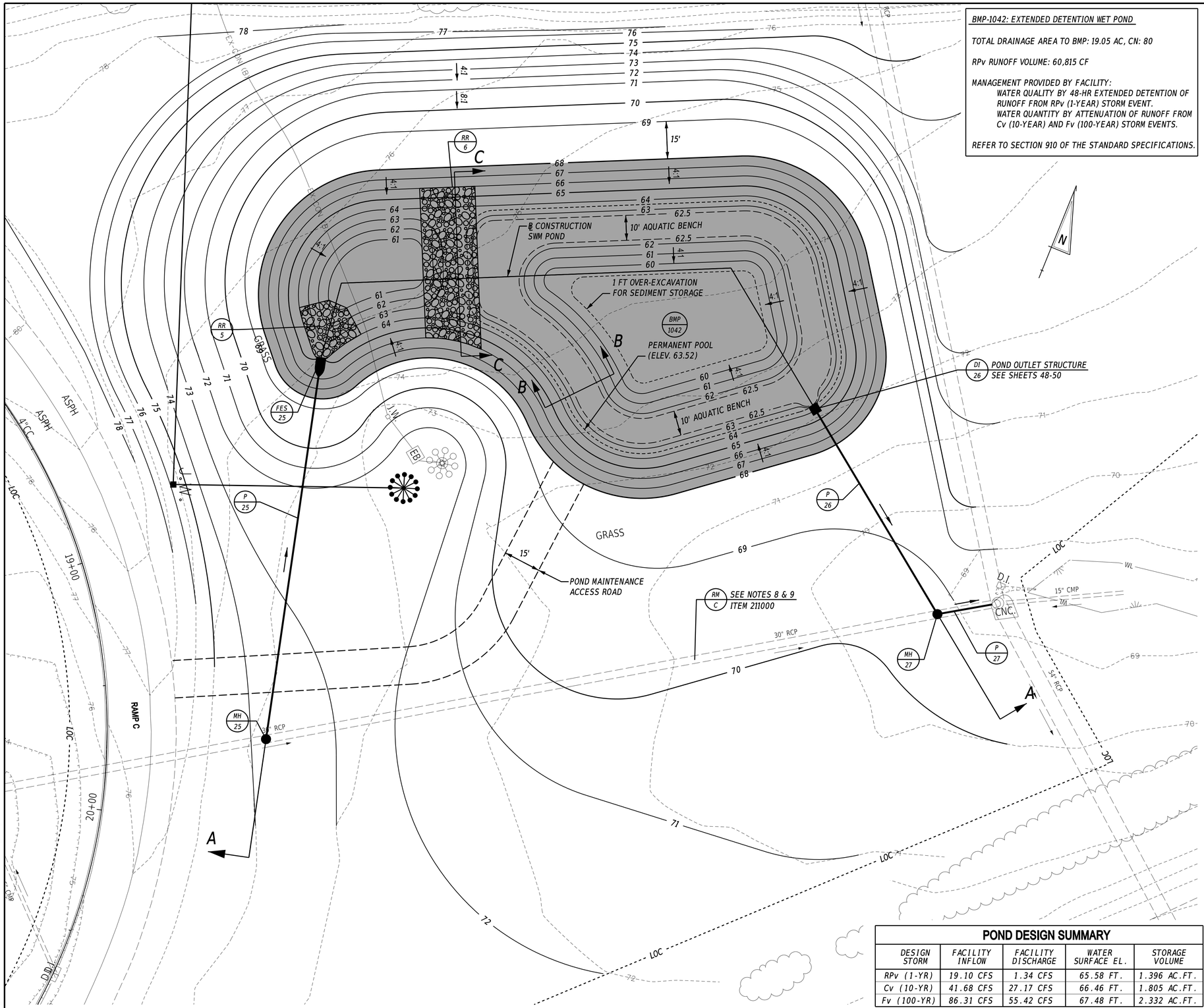

BMP-1042: EXTENDED DETENTION WET POND

TOTAL DRAINAGE AREA TO BMP: 19.05 AC, CN: 80

RPv RUNOFF VOLUME: 60,815 CF

MANAGEMENT PROVIDED BY FACILITY:
WATER QUALITY BY 48-HR EXTENDED DETENTION OF RUNOFF FROM RPv (1-YEAR) STORM EVENT.
WATER QUANTITY BY ATTENUATION OF RUNOFF FROM Cv (10-YEAR) AND Fv (100-YEAR) STORM EVENTS.

REFER TO SECTION 910 OF THE STANDARD SPECIFICATIONS.

GENERAL NOTES:

1. POND AREA ABOVE ELEVATION 63.50 SHALL BE 6" TOPSOIL (AND/OR TOPSOILING), EROSION CONTROL BLANKET AND SEEDING AS FOLLOWS:
   EROSION CONTROL BLANKET MULCH AND GRASS SEEDING- STORMWATER FACILITY MIX TO BE PLACED FROM EXISTING WATERLINE AT TIME OF SEEDING UP TO DISTURBED ELEVATION 70.00
2. EXCAVATED MATERIAL SHALL BE USED IF DETERMINED SUITABLE BY THE ENGINEER IN FIELD.
3. UPON COMPLETION OF THE POND CONSTRUCTION, AS-BUILT PLANS SHALL BE SUBMITTED TO THE DELDOT STORMWATER ENGINEER.*

SEQUENCE OF CONSTRUCTION NOTES:

1. BEFORE ANY CONSTRUCTION BEGINS ON THE WET POND, CONTACT THE DESIGNATED CCR A MINIMUM OF 2 WORKING DAYS IN ADVANCE SO THAT THE REQUIRED FACILITY CONSTRUCTION CHECKLIST CAN BE COMPLETED.
2. IN GENERAL, CONSTRUCT STORMWATER MANAGEMENT FACILITY WORKING FROM DOWNSTREAM TO UPSTREAM.

INITIAL CONSTRUCTION

1. INSTALL STABILIZED CONSTRUCTION ENTRANCE AS SHOWN ON THE CONSTRUCTION PHASING PLANS.
2. CLEAR AND GRUB FOR INSTALLATION OF THE PERIMETER EROSION AND SEDIMENT CONTROLS AS SHOWN ON THE PHASE 3 CONSTRUCTION PHASING PLANS.
3. INSTALL PERIMETER EROSION AND SEDIMENT CONTROLS SURROUNDING THE POND CONSTRUCTION AS SHOWN ON THE PHASE 3 CONSTRUCTION PHASING PLANS.
4. INSTALL MH-27 AS A DOGHOUSE MANHOLE ON EXISTING 30"RCP WHERE SHOWN ON PLANS. MAINTAIN DOWNSTREAM CONNECTION. INSTALL P-26 FROM MH-27 IN THE DIRECTION OF THE POND OUTLET CONTROL STRUCTURE.
5. CLEAR AND GRUB REMAINING AREA FOR WET POND CONSTRUCTION.
6. EXCAVATE AREA FOR OUTLET STRUCTURE INSTALLATION. DEWATER FOUNDATION AS NEEDED IN ACCORDANCE WITH DEWATERING PRACTICES AS SHOWN IN SECTION 900 OF THE STANDARD SPECIFICATIONS.
7. CONSTRUCT POND OUTLET STRUCTURE (DI-26). INSTALL SKIMMER DEWATERING DEVICE AND/OR OTHER TEMPORARY MODIFICATIONS AS NEEDED IN ACCORDANCE WITH SECTION 900.
8. COMPLETE POND BASIN EXCAVATION TO LINES AND GRADES SHOWN. INSTALL RIPRAP (RR-5 & RR-6) WHERE SHOWN ON PLANS. PLACE TOPSOIL AT ELEVATIONS NOTED ON PLANS.
9. INSTALL MH-25 AS A DOGHOUSE MANHOLE ON EXISTING 30"RCP WHERE SHOWN ON PLANS. INSTALL P-25 AND FES-25 WHERE SHOWN ON PLANS. FOLLOWING INSTALLATION, CUT AND REMOVE EXISTING 30"RCP FROM MH-25 TO MH-27.
10. PUMP AS NECESSARY FROM POND OUTLET CONTROL STRUCTURE TO EXISTING STRUCTURE DOWNSTREAM OF MH-27 AND INSTALL P-27 FROM MH-27 TO EXISTING STRUCTURE. REMOVE PUMP ONCE INSTALLATION IS COMPLETE.
11. ALL DISTURBED AREAS MEETING FINAL ELEVATIONS AND GRADES ABOVE THE PERMANENT BOTTOM ELEVATION (OR THE EXISTING WATER SURFACE ELEVATION AT TIME OF SEEDING) SHALL BE SEEDED WITH GRASS SEEDING-STORMWATER FACILITY AND MULCHED WITH EROSION CONTROL BLANKET MULCH.

MAINTENANCE OF SEDIMENT BASIN

1. THE CONTRACTOR SHALL INSPECT THE BASIN THE NEXT WORK DAY FOLLOWING A RAIN EVENT AND MAKE ANY REPAIRS AS NEEDED.
2. ANY EXCESS SEDIMENT AROUND THE POND OUTLET CONTROL STRUCTURE AREA WILL BE REMOVED WITHIN TWO WORKING DAYS AND DISPOSED AT A LOCATION APPROVED BY THE ENGINEER.

CONVERSION TO PERMANENT WET POND FACILITY

1. CONVERT THE SEDIMENT BASIN AFTER ALL AREAS DRAINING TO IT HAVE ATTAINED FINAL STABILIZATION AND THE STORMWATER ENGINEER HAS CONCURRED WITH THE CONVERSION.
2. REMOVE ANY EXCESS SEDIMENT FROM THE POND BOTTOM ABOVE ELEVATION 60.00. PERMANENT POND DEPTH SHALL BE NO GREATER THAN 8 FT IN ACCORDANCE WITH SECTIONS 11.13.6.2 AND 11.13.6.3 OF THE DELAWARE SEDIMENT & STORMWATER REGULATIONS.
3. REMOVE ANY EXCESS SEDIMENT FROM THE FOREBAY(S) ABOVE ELEVATION 61.00.
4. COMPLETE STABILIZATION OF ALL BARE AREAS WITH GRASS SEEDING STORMWATER FACILITY AND EROSION CONTROL BLANKET MULCH.
5. WITH APPROVAL FROM THE ENGINEER, REMOVE REMAINING E&S CONTROLS.

*AS-BUILT DRAWINGS WILL BE COMPLETED BY THE CONTRACTOR AND CERTIFIED BY A DELAWARE PLS BEFORE THE DELDOT INITIAL INSPECTION DATE. THESE DRAWINGS SHALL BE SENT TO THE STORMWATER ENGINEER FOR VERIFICATION. AS-BUILT DRAWINGS WILL INCLUDE, BUT NOT BE LIMITED TO:
-GENERAL TOPOGRAPHY OF THE WHOLE FACILITY AT 1-FOOT CONTOURS INCLUDING FOREBAY AND TOP/TOE OF ANY EMBANKMENT.
-INVERT OF PIPE THAT INFLOWS TO THE POND.
-OUTLINE OF ALL RIPRAP AND OBTAIN SPOT ELEVATIONS ON TOP OF THE RIPRAP.
-OUTLET STRUCTURE INVERTS OF ANY AND ALL ORIFICES/WEIRS, TOP OF STRUCTURE, OUTLET PIPE, ETC.
-PRIMARY OUTFLOW PIPE INVERTS AT THE ENTRANCE AND EXIT.

POND DESIGN SUMMARY

DESIGN STORM	FACILITY INFLOW	FACILITY DISCHARGE	WATER SURFACE EL.	STORAGE VOLUME
RPv (1-YR)	19.10 CFS	1.34 CFS	65.58 FT.	1.396 AC.FT.
Cv (10-YR)	41.68 CFS	27.17 CFS	66.46 FT.	1.805 AC.FT.
Fv (100-YR)	86.31 CFS	55.42 CFS	67.48 FT.	2.332 AC.FT.

ADDENDA / REVISIONS

SCALE 0 20 40 60 FEET

HSIP NCC, SR 273 AND I-95 INTERCHANGE IMPROVEMENTS

CONTRACT	BRIDGE NO.	715, 715A, 715B, 715C & 715D
T200800713	DESIGNED BY:	S. ROUPE
COUNTY		
NEW CASTLE	CHECKED BY:	T. CUTILLO

STORMWATER MANAGEMENT PLAN

SECTION: RK&K

SHEET NO. 45

03-AUG-2020
17:00
\\balsnv01\v20\142014\14144_DelDOT\170\Task 4A - Harmony FD\Cadd\Contract\Plans\swp01_Har.dgn

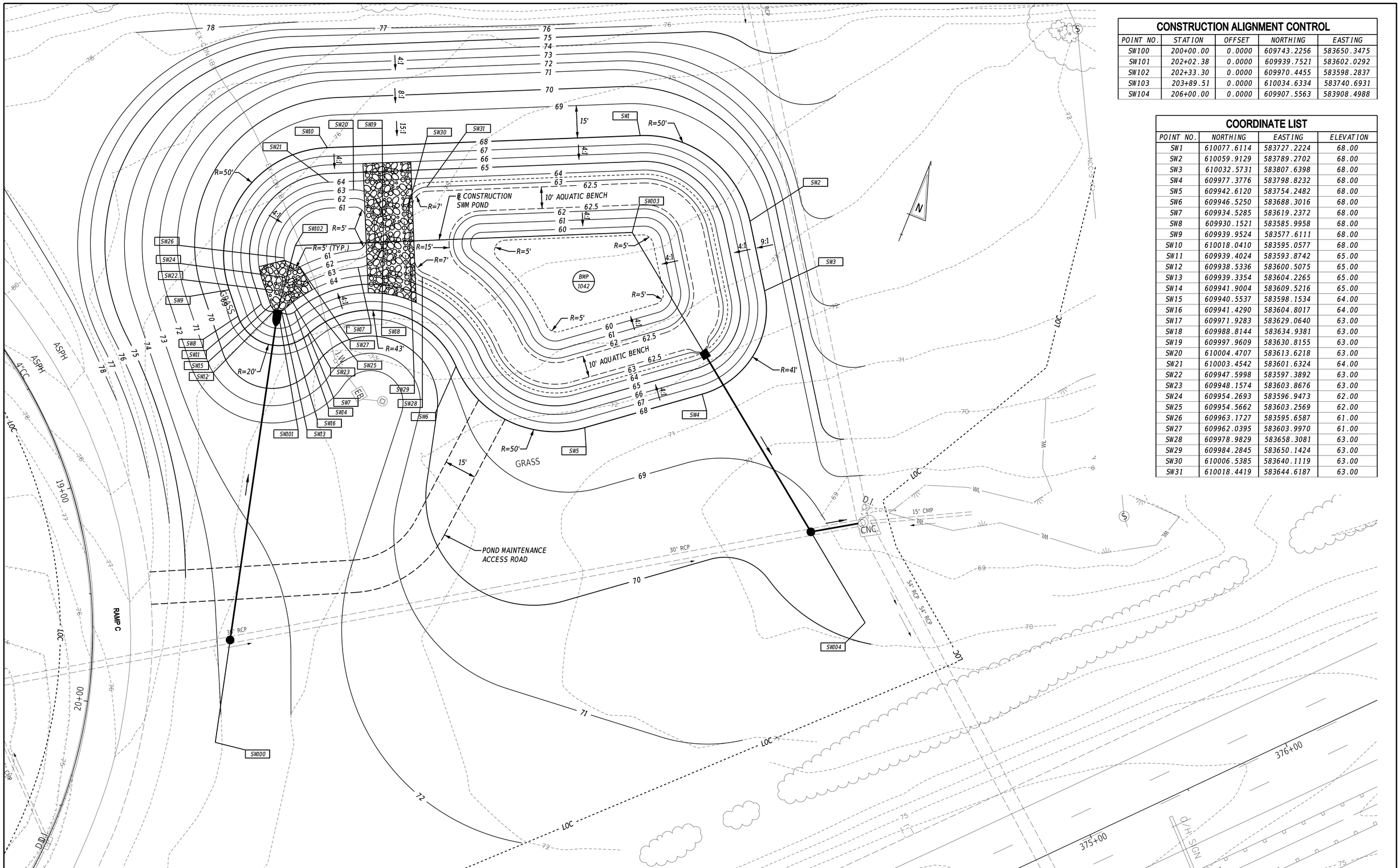

CONSTRUCTION ALIGNMENT CONTROL

POINT NO.	STATION	OFFSET	NORTHING	EASTING
SW100	200+00.00	0.0000	609743.2256	583650.3475
SW101	202+02.38	0.0000	609939.7521	583602.0292
SW102	202+33.30	0.0000	609970.4455	583598.2837
SW103	203+89.51	0.0000	610034.6334	583740.6931
SW104	206+00.00	0.0000	609907.5563	583908.4988

COORDINATE LIST

POINT NO.	NORTHING	EASTING	ELEVATION
SW1	610077.6114	583727.2224	68.00
SW2	610059.9129	583789.2702	68.00
SW3	610032.5731	583807.6398	68.00
SW4	609977.3776	583798.8232	68.00
SW5	609942.6120	583754.2482	68.00
SW6	609946.5250	583688.3016	68.00
SW7	609934.5285	583619.2372	68.00
SW8	609930.1521	583585.9958	68.00
SW9	609939.9524	583577.6111	68.00
SW10	610018.0410	583595.0577	68.00
SW11	609939.4024	583593.8742	65.00
SW12	609938.5336	583600.5075	65.00
SW13	609939.3354	583604.2265	65.00
SW14	609941.9004	583609.5216	65.00
SW15	609940.5537	583598.1534	64.00
SW16	609941.4290	583604.8017	64.00
SW17	609971.9283	583629.0640	63.00
SW18	609988.8144	583634.9381	63.00
SW19	609997.9609	583630.8155	63.00
SW20	610004.4707	583613.6218	63.00
SW21	610003.4542	583601.6324	64.00
SW22	609947.5998	583597.3892	63.00
SW23	609948.1574	583603.8676	63.00
SW24	609954.2693	583596.9473	62.00
SW25	609954.5662	583603.2569	62.00
SW26	609963.1727	583595.6587	61.00
SW27	609962.0395	583603.9970	61.00
SW28	609978.9829	583658.3081	63.00
SW29	609984.2845	583650.1424	63.00
SW30	610006.5385	583640.1119	63.00
SW31	610018.4419	583644.6187	63.00

ADDENDA / REVISIONS

SCALE 0 20 40 60 FEET

HSIP NCC, SR 273 AND I-95 INTERCHANGE IMPROVEMENTS

CONTRACT	BRIDGE NO.	715, 715A, 715B, 715C & 715D
T200800713	DESIGNED BY:	S. ROUPE
COUNTY		
NEW CASTLE	CHECKED BY:	T. CUTILLO

STORMWATER MANAGEMENT POND GRADING AND STAKEOUT PLAN

SECTION RK&K

SHEET NO. 46

30-JUN-2020
16:19
\\bdfsrv01\v20\14\20\14\14144_DetDOT\70\Task 4A - Harmony FD\Cadd\Contract\Plans\sw01A_Har.dgn

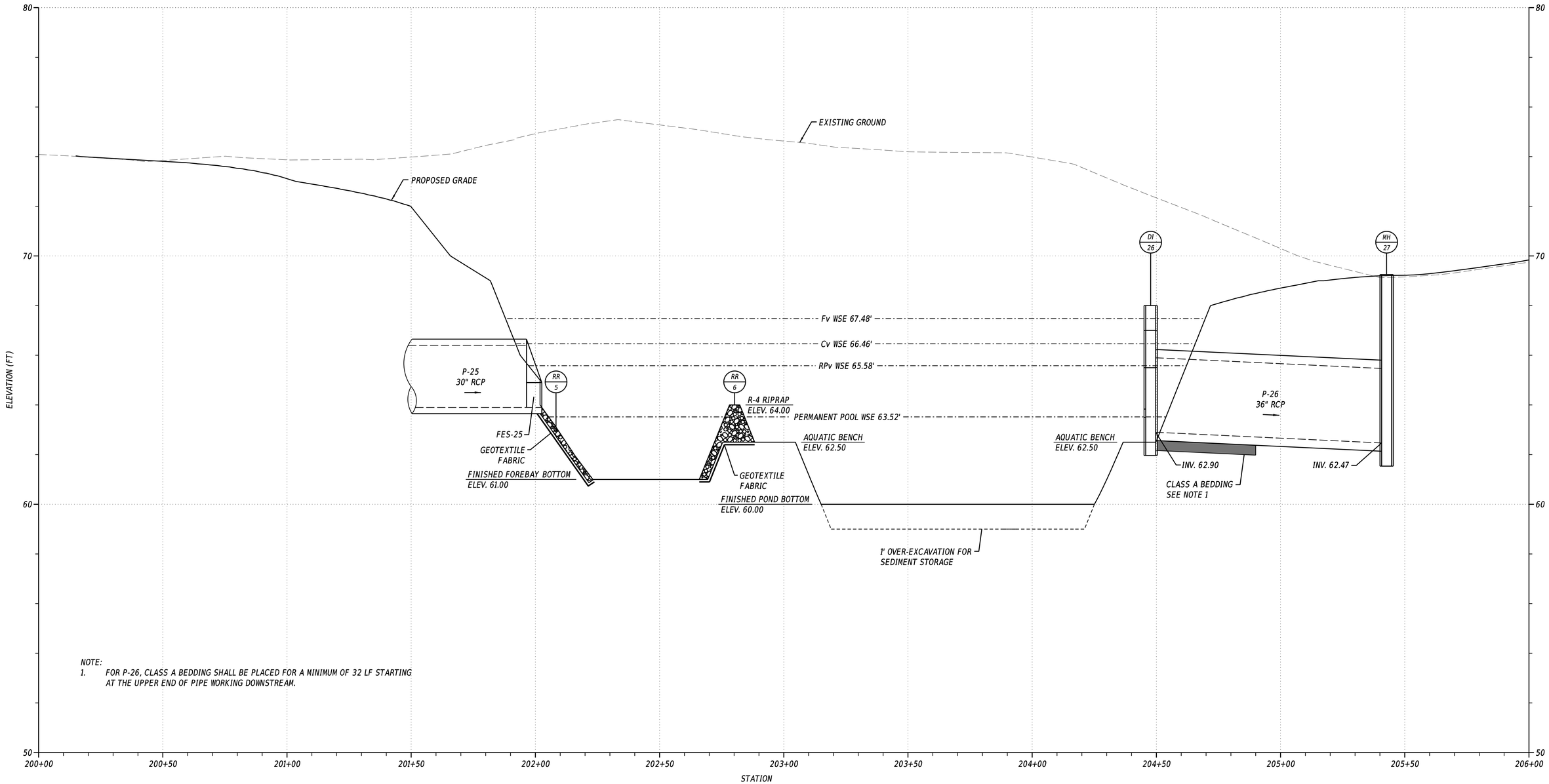

NOTE:
1. FOR P-26, CLASS A BEDDING SHALL BE PLACED FOR A MINIMUM OF 32 LF STARTING AT THE UPPER END OF PIPE WORKING DOWNSTREAM.

SECTION A-A

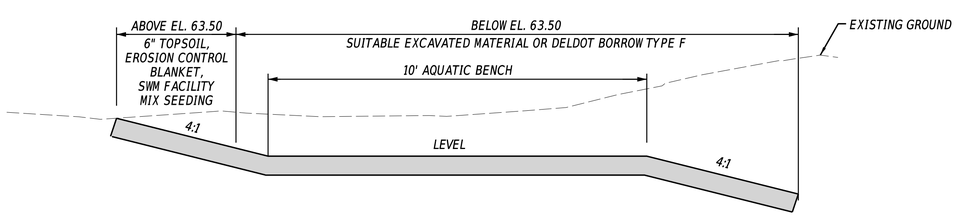

SECTION B-B

NOT TO SCALE

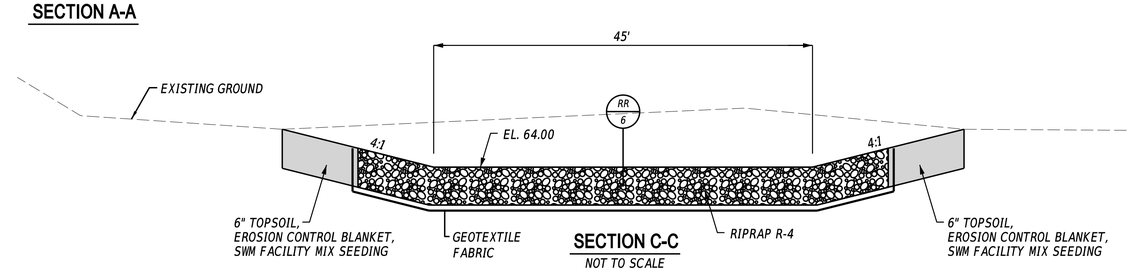

SECTION C-C

NOT TO SCALE

VERTICAL SCALE FEET
0 2 4 6

ADDENDA / REVISIONS		SCALE 0 20 40 60 FEET	HSIP NCC, SR 273 AND I-95 INTERCHANGE IMPROVEMENTS	CONTRACT T200800713	BRIDGE NO. 715, 715A, 715B, 715C & 715D	STORMWATER MANAGEMENT POND PROFILES	SECTION RK&K
				COUNTY NEW CASTLE	DESIGNED BY: S. ROUPE		SHEET NO. 47
					CHECKED BY: T. CUTILLO		

22-JUL-2020
21:14
\\balserv01\v2014\20141414144_DelDOT\700T\Task 4A - Harmony FD\Cadd\Contract\Plans\sw02_Har.dgn

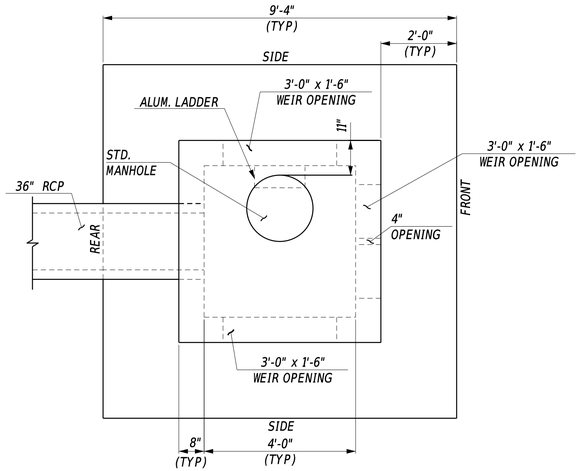

PLAN VIEW DI-26

SCALE: 1/2" = 1'

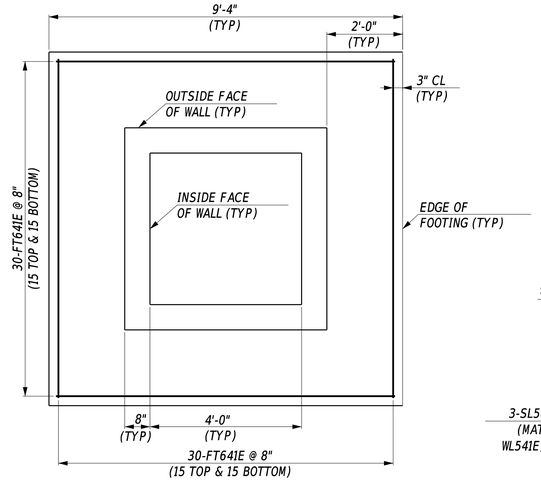

FOOTING PLAN DI-26

SCALE: 1/2" = 1'

NOTE: PIPES AND STEPS NOT SHOWN FOR CLARITY.

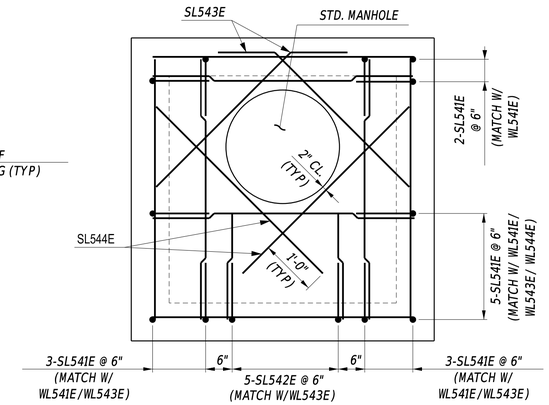

TOP SLAB DI-26

SCALE: 3/4" = 1'

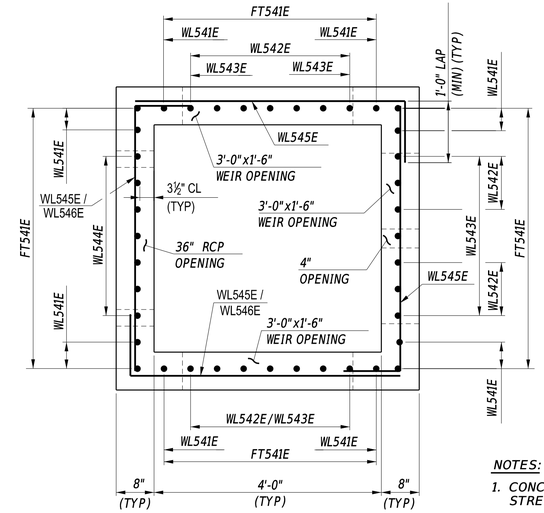

TYPICAL CROSS SECTION DI-26

SCALE: 3/4" = 1'

NOTES:

1. CONCRETE 28-DAY COMPRESSIVE STRENGTH EQUAL TO 4500 PSI.
2. SEE SHEET 50 FOR BAR SCHEDULE.

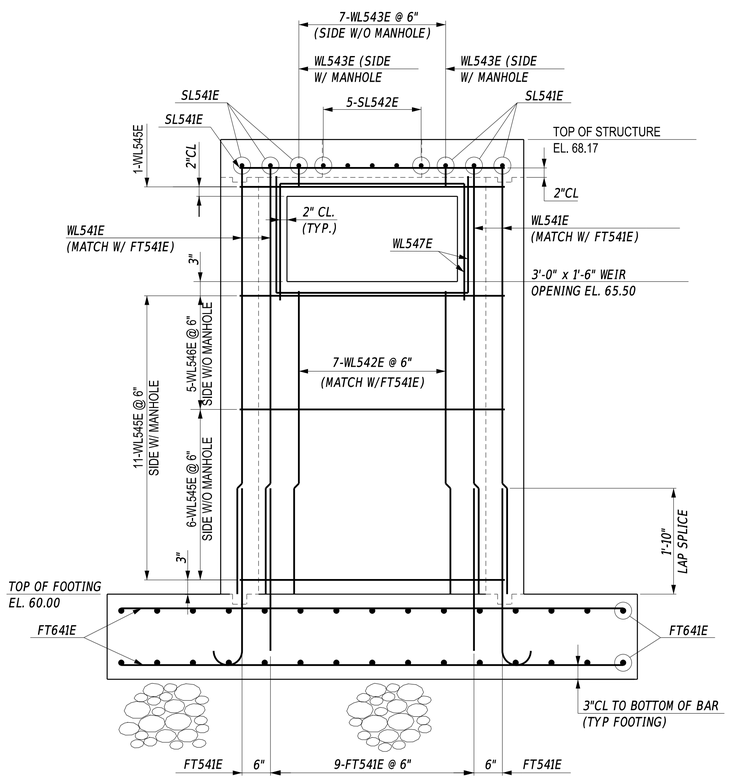

SIDE ELEVATION DI-26

NOT TO SCALE

(BOTH SIDES IDENTICAL EXCEPT WHERE NOTED)

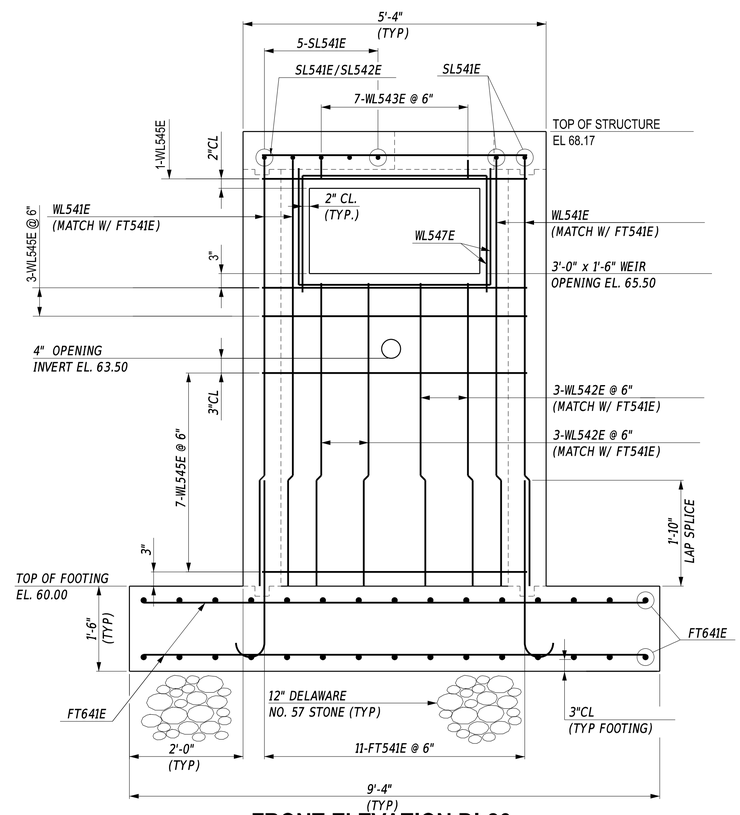

FRONT ELEVATION DI-26

NOT TO SCALE

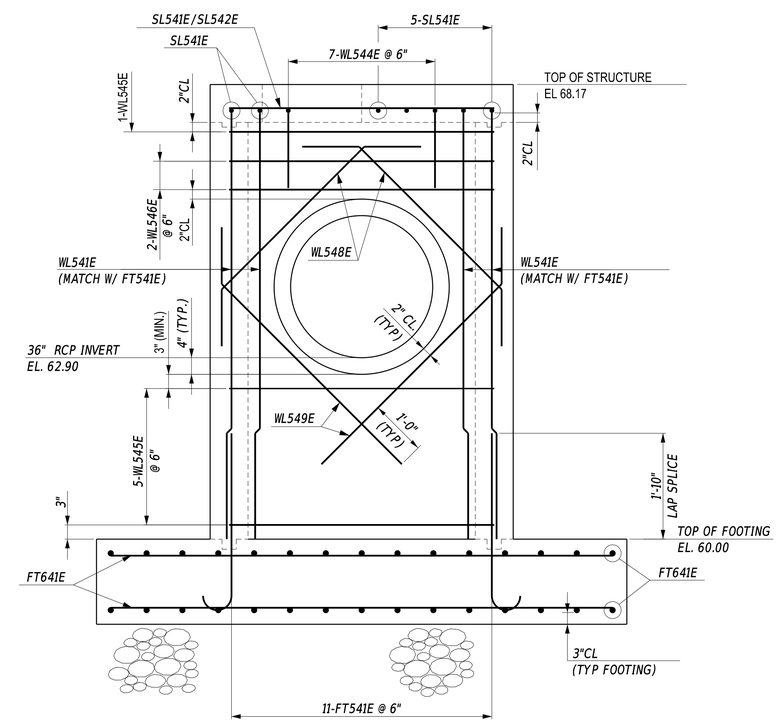

REAR ELEVATION DI-26

NOT TO SCALE

ADDENDA / REVISIONS		SCALE AS NOTED	HSIP NCC, SR 273 AND I-95 INTERCHANGE IMPROVEMENTS	CONTRACT T200800713	BRIDGE NO. 715, 715A, 715B, 715C & 715D	STORMWATER MANAGEMENT POND OUTLET STRUCTURE DETAILS	SECTION RK&K
				COUNTY NEW CASTLE	DESIGNED BY: E. LORETE		SHEET NO. 48
					CHECKED BY: D. TUSING		

29-JUN-2020
11:51
\\balsrv01\v2014\2014144_DelDOT17\07\Task 4A - Harmony FD\Cadd\Contract\Plans\sw03_Har.dgn

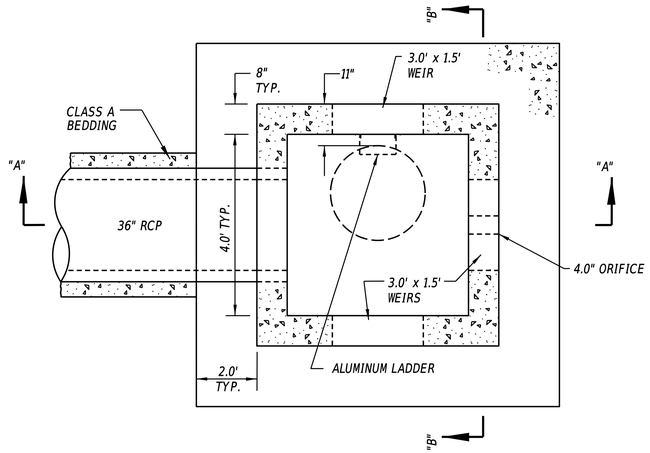

POND OUTLET STRUCTURE DI-26

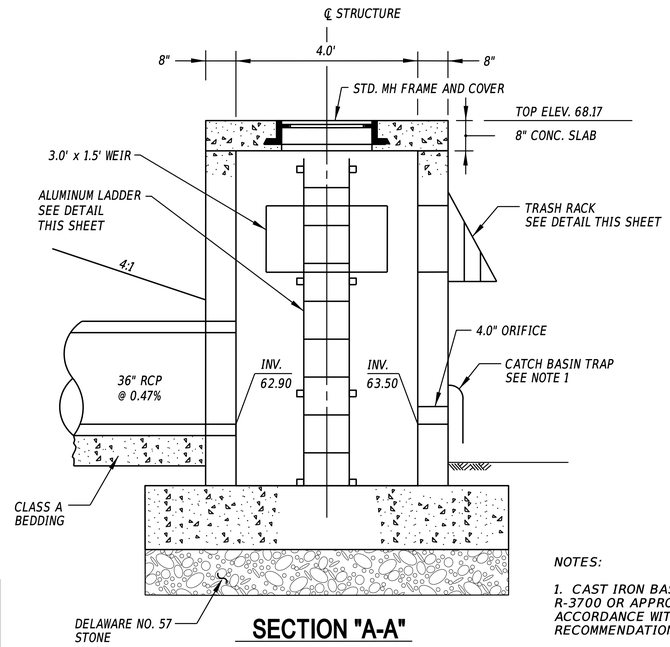

SECTION "A-A"

NOTES:

1. CAST IRON BASIN TRAP SHALL BE NEENAH R-3700 OR APPROVED EQUAL. MOUNTED IN ACCORDANCE WITH MANUFACTURER'S RECOMMENDATIONS.

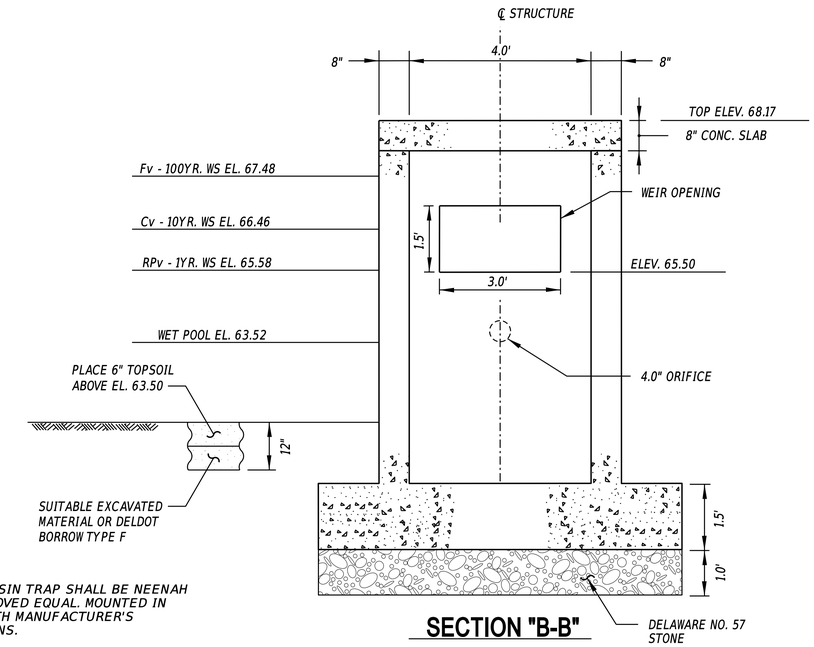

SECTION "B-B"

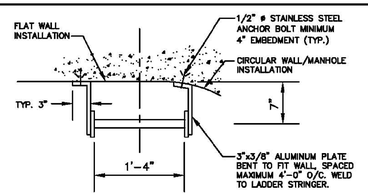

PLAN

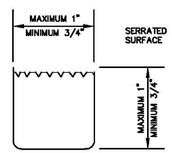

ALUMINUM RUNG DETAIL

RUNG SHALL BE FREE OF SHARP EDGES.

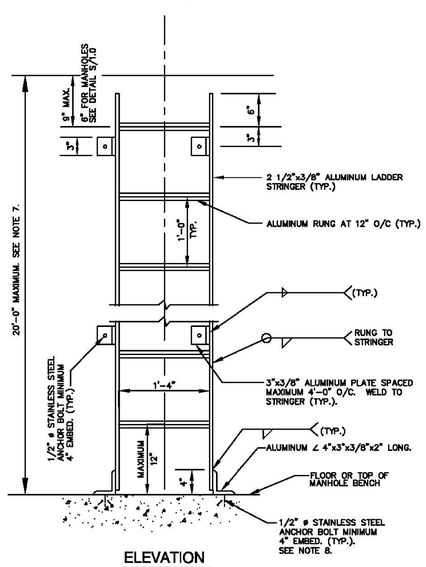

ELEVATION

NOTES

1. RUNG SHALL BE SOLID.
2. WHERE ALUMINUM CONTACTS CONCRETE, COAT ALUMINUM WITH AN EPOXY COATING SYSTEM.
3. ACCESS OPENING SHALL BE MINIMUM 30" SQUARE OR 30" DIAMETER FRAME AND COVER.
4. RUNG SHALL BEAR ON STRINGER 3/16" MINIMUM.
5. ALL WELDS SHALL BE MINIMUM 3/16" WIDE.
6. KEEP LADDER FREE OF OBSTACLES THAT WILL INTERFERE WITH THE PLACEMENT OF FEET OR HANDS.
7. FOR DEPTH OVER 20' PROVIDE FALL PREVENTION SYSTEM.
8. FOR SEWER MANHOLES SET ANCHOR BOLTS MIN 6" FROM EDGE OF CHANNEL.

ALUMINUM LADDER DETAIL

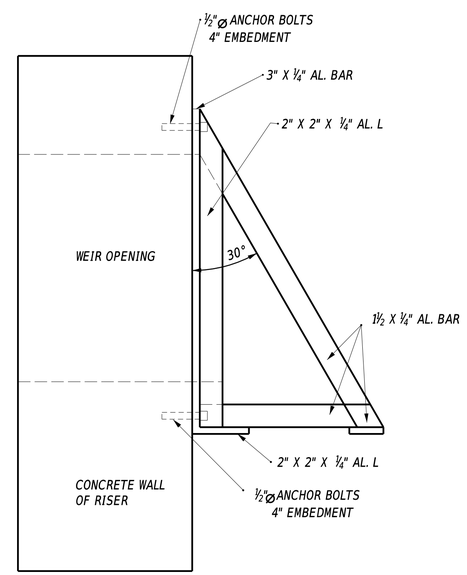

SIDE VIEW

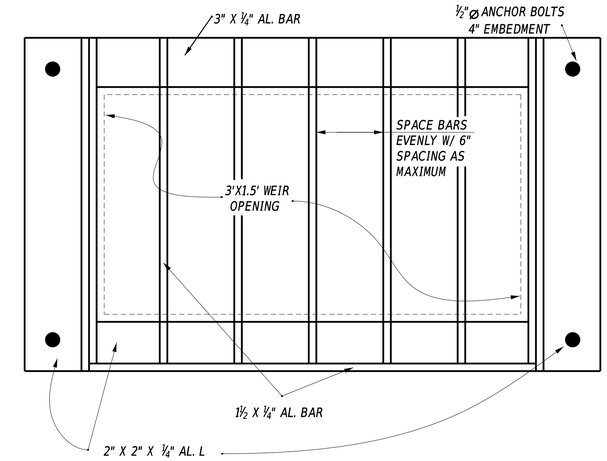

FRONT VIEW

SIDE TRASH RACK DETAIL

NOTES:

1. THERE SHOULD BE NO SPACES LARGER THAN 6" THROUGH ANY OPENING. THEREFORE, ADDITIONAL BARS MAY BE NECESSARY.
2. THE WHOLE STRUCTURE SHALL BE MADE OF ALUMINIUM. THE ANCHOR BOLTS, NUTS AND WASHERS SHALL BE CORROSION RESISTANT.
3. ¾" DIAMETER RODS CAN BE USED IN PLACE OF BARS, BUT THE ABOVE NOTES SHALL STILL APPLY.
4. WHERE ALUMINUM CONTACTS CONCRETE, COAT ALUMINUM WITH AN EPOXY COATING SYSTEM.

ADDENDA / REVISIONS		NOT TO SCALE	HSIP NCC, SR 273 AND I-95 INTERCHANGE IMPROVEMENTS	CONTRACT T200800713	BRIDGE NO. 715, 715A, 715B, 715C & 715D	STORMWATER MANAGEMENT FACILITY DETAILS	SECTION RK&K
				COUNTY NEW CASTLE	DESIGNED BY: E. LORETE		SHEET NO. 49
					CHECKED BY: D. TUSING		

29-JUN-2020
11:55
\\dallsrv01\v20\14\20141414\4_Dell\DOT1707\Task 4A - Harmony FD\Cadd\ContractPlans\sv\04_Har.dgn

(1) ANY MARK NUMBER WITH SUFFIX 'E' DENOTES EPOXY-COATED REINFORCING STEEL.

(2) ALL MARK 'LOCATION PREFIXES' SHALL CONSIST OF TWO LETTERS AND ARE AS FOLLOWS: AB = ABUTMENT, AS = APPROACH SLAB, BC = BOX CULVERT, BW = BACKWALL, CL = COLUMN, DK = DECK, DL = DOWEL, FT = FOOTING, HW = HEADWALL, MS = MISC. BARS, PA = PARAPET, PR = PIER, SC = SHEETPILE CAP, SL = SLAB, TW = TOEWALL, WL = WALL (UNIQUE LOCATION), WW = WINGWALL

SPECIFICATIONS					BENDING DIMENSIONS (FEET-INCHES / QUARTER INCH)										
QTY.	SIZE	LENGTH	MARK	TYPE	A	B	C	D	E	F/R	G	H	J	K	O
POND OUTLET STRUCTURE D1-26															
40	5	3'-8"	FT541E	1	7"	3'-1"					0"		5"		
60	6	8'-10"	FT641E	STR											
12	5	8'-8"	WL541E	2	1'-0"	7'-8"					0"				
20	5	5'-4"	WL542E	STR											
16	5	1'-6"	WL543E	2	6"	1'-0"					0"				
7	5	2'-0"	WL544E	2	1'-0"	1'-0"					0"				
36	5	5'-7¾"	WL545E	2	1'-0"	4'-7¾"					0"				
8	5	4'-10"	WL546E	STR											
6	5	7'-4"	WL547E	17		2'-0"	3'-4"	2'-0"							
2	5	7'-5¼"	WL548E	14		2'-0"	3'-5¼"	2'-0"				1'-5"		1'-5"	6'-3¼"
2	5	6'-7"	WL549E	50			4'-7"	2'-0"				1'-5"		1'-5"	
13	5	4'-10"	SL541E	STR											
5	5	2'-0"	SL542E	STR											
2	5	5'-3½"	SL543E	50			3'-3½"	2'-0"				1'-5"		1'-5"	
2	5	4'-4"	SL544E	STR											

SPECIFICATIONS					BENDING DIMENSIONS (FEET-INCHES / QUARTER INCH)										
QTY.	SIZE	LENGTH	MARK	TYPE	A	B	C	D	E	F/R	G	H	J	K	O

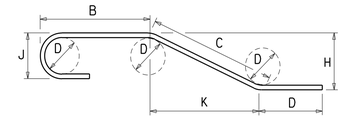

NOTES:

1. FIGURES SHOWN IN CIRCLES REPRESENT BAR BEND TYPES.
2. STANDARD BAR BENDS INCLUDE ONLY TYPES 1-32, S1-S12, AND T1-T16.
3. ALL DIMENSIONS ARE OUT-TO-OUT OF BAR EXCEPT "A" AND "G" ON STANDARD 180° AND 135° HOOKS.
4. "J" DIMENSIONS ON 180° HOOKS TO BE SHOWN ONLY WHERE NECESSARY TO RESTRICT HOOK SIZE, OTHERWISE STANDARD HOOKS ARE TO BE USED.
5. WHERE "J" IS NOT SHOWN, "J" WILL BE KEPT EQUAL TO OR LESS THAN "H" ON TRUSS BARS. WHERE "J" CAN EXCEED "H", IT SHALL BE SHOWN.
6. "H" DIMENSIONS OF STIRRUPS TO BE SHOWN WHERE NECESSARY TO FIT WITHIN THE CONCRETE.
7. UNLESS OTHERWISE NOTED, DIAMETER "D" IS THE SAME FOR ALL BENDS AND HOOKS ON A BAR.
8. WHERE SLOPE DIFFERS FROM 45° OFFSET, "H" AND "K" MUST BE SHOWN.
9. WHERE BARS ARE TO BE BENT MORE ACCURATELY THAN STANDARD BENDING TOLERANCES, BENDING DIMENSIONS WHICH REQUIRE CLOSER FABRICATION SHOULD HAVE LIMITS INDICATED.
10. FOR RECOMMENDED DIAMETER "D", OF BENDS, HOOKS, ETC., REFER TO TABLE AT RIGHT, 'CRSI' OR 'ACI' TABLES.
11. TYPE S1-S12, T1-T16 APPLY TO BAR SIZES 3 THROUGH 6.

ASTM STANDARD ENGLISH REINFORCING BARS				RECOMMENDED END HOOKS, APPLICABLE TO ALL GRADES			
	NOMINAL DIMENSIONS				180° HOOKS		90° HOOKS
BAR SIZE	DIAMETER (inches)	AREA (inches²)	WEIGHT (lbs./ft.)	D	A OR G	J	A OR G
3	0.375	0.110	0.376	2¼"	5"	3"	6"
4	0.500	0.200	0.668	3"	6"	4"	8"
5	0.625	0.310	1.043	3¾"	7"	5"	10"
6	0.750	0.440	1.502	4½"	8"	6"	1'-0"
7	0.875	0.600	2.044	5¼"	10"	7"	1'-2"
8	1.000	0.790	2.670	6"	11"	8"	1'-4"
9	1.128	1.000	3.400	9½"	1'-3"	11¾"	1'-7"
10	1.270	1.270	4.303	10¾"	1'-5"	1'-1¼"	1'-10"
11	1.410	1.560	5.313	1'-0"	1'-7"	1'-2¾"	2'-0"
14	1.693	2.250	7.650	1'-6¼"	2'-3"	1'-9¾"	2'-7"
18	2.257	4.000	13.600	2'-0"	3'-0"	2'-4½"	3'-5"

STANDARD BAR BENDS

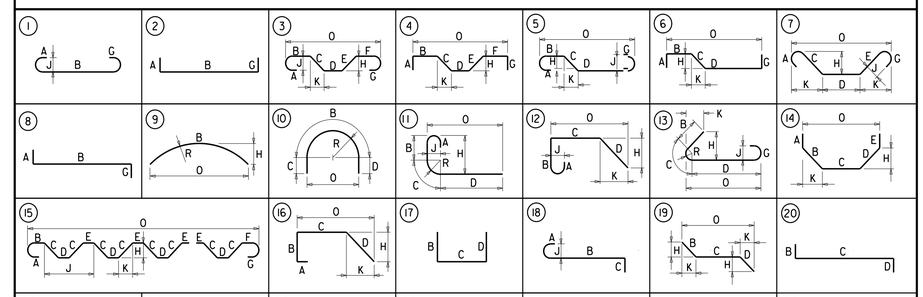

SPECIAL BAR BENDS

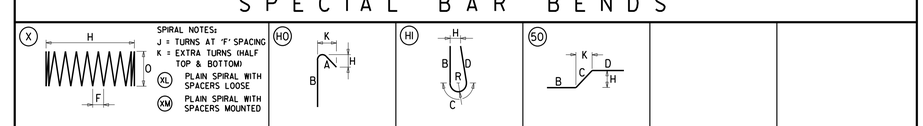

ADDENDA / REVISIONS	

NOT TO SCALE

HSIP NCC, SR 273 AND I-95 INTERCHANGE IMPROVEMENTS

CONTRACT	BRIDGE NO.	715, 715A, 715B, 715C & 715D
T200800713	DESIGNED BY:	E. LORETE
COUNTY		
NEW CASTLE	CHECKED BY:	D. TUSING

STORMWATER MANAGEMENT FACILITY REINFORCING BAR LIST

SECTION
RK&K
SHEET NO.
50

29-JUN-2020
12:08
\\balservh\h2014201414141_DetbOFF1167\Task-14 - Harmony FEK\Cadd\Contract\Plans\sw05_bar.dgn

ENVIRONMENTAL COMPLIANCE NOTES

1. GENERAL NOTES:

   A. THE PURPOSE OF THIS SHEET IS TO IDENTIFY THOSE ITEMS ASSOCIATED WITH ENVIRONMENTAL COMPLIANCE. IMPACT CALCULATIONS ARE FOR AGENCY PERMIT REPORTING PURPOSES ONLY AND ARE NOT TO BE USED FOR BIDDING PURPOSES.

   B. IF A DEPARTURE FROM THE APPROVED PLANS (WHICH WOULD AFFECT ANY NATURAL AND/OR CULTURAL RESOURCES) IS NECESSARY, CONTACT THE ENVIRONMENTAL STUDIES SECTION AT 302-760-2264 OR DOT_ENVIRONMENTALSTUDIES@DELAWARE.GOV TO ALLOW FOR COORDINATION WITH THE APPROPRIATE RESOURCE AGENCIES FOR APPROVAL.

   C. USE OF THESE SHEETS DOES NOT ALLEVIATE THE CONTRACTOR'S RESPONSIBILITY TO COMPLY WITH ALL CONDITIONS SET FORTH IN THE ENVIRONMENTAL STATEMENT AND PERMITS.

   D. THE IDENTIFIED PERMANENT AND TEMPORARY IMPACTS TO JURISDICTIONAL RESOURCES SHOWN ON THE ENVIRONMENTAL COMPLIANCE SHEETS ARE THE ONLY AUTHORIZED IMPACTS.

2. NATURAL RESOURCE ISSUES:

   A. PERMIT REQUIREMENTS/APPROVALS :
   U.S. ARMY CORPS OF ENGINEERS (COE): NONE
   DNREC - WETLANDS & SUBAQUEOUS LANDS (WLSL): NONE
   DNREC - WATER QUALITY (WQC) & COASTAL ZONE CONSISTENCY (CZM): NONE
   NCC DEPT. OF LAND USE (NCC): NONE (NO MAPPED FLOODPLAIN)

   B. CONSTRUCTION RESTRICTIONS:
   FISHERIES - NONE
   ENDANGERED SPECIES - NONE
   MIGRATORY BIRDS - NONE

3. CULTURAL RESOURCE ISSUES:

   A. IF ANY UNANTICIPATED DISCOVERIES OF ARCHAEOLOGICAL OR HUMAN REMAINS OCCUR DURING CONSTRUCTION, ALL WORK SHALL BE IMMEDIATELY SUSPENDED IN THE AREA OF THE DISCOVERY AND THE ENGINEER SHALL BE CONTACTED. THE ENGINEER WILL CONTACT DELDOT CULTURAL RESOURCES, SHPO AND USACE TO COMMENCE THE NECESSARY FEDERAL AND STATE COORDINATION. WORK SHALL NOT RESUME UNTIL APPROPRIATE RESOURCE AGENCY COORDINATION, INVESTIGATION AND/OR RECOVERY IS COMPLETE.

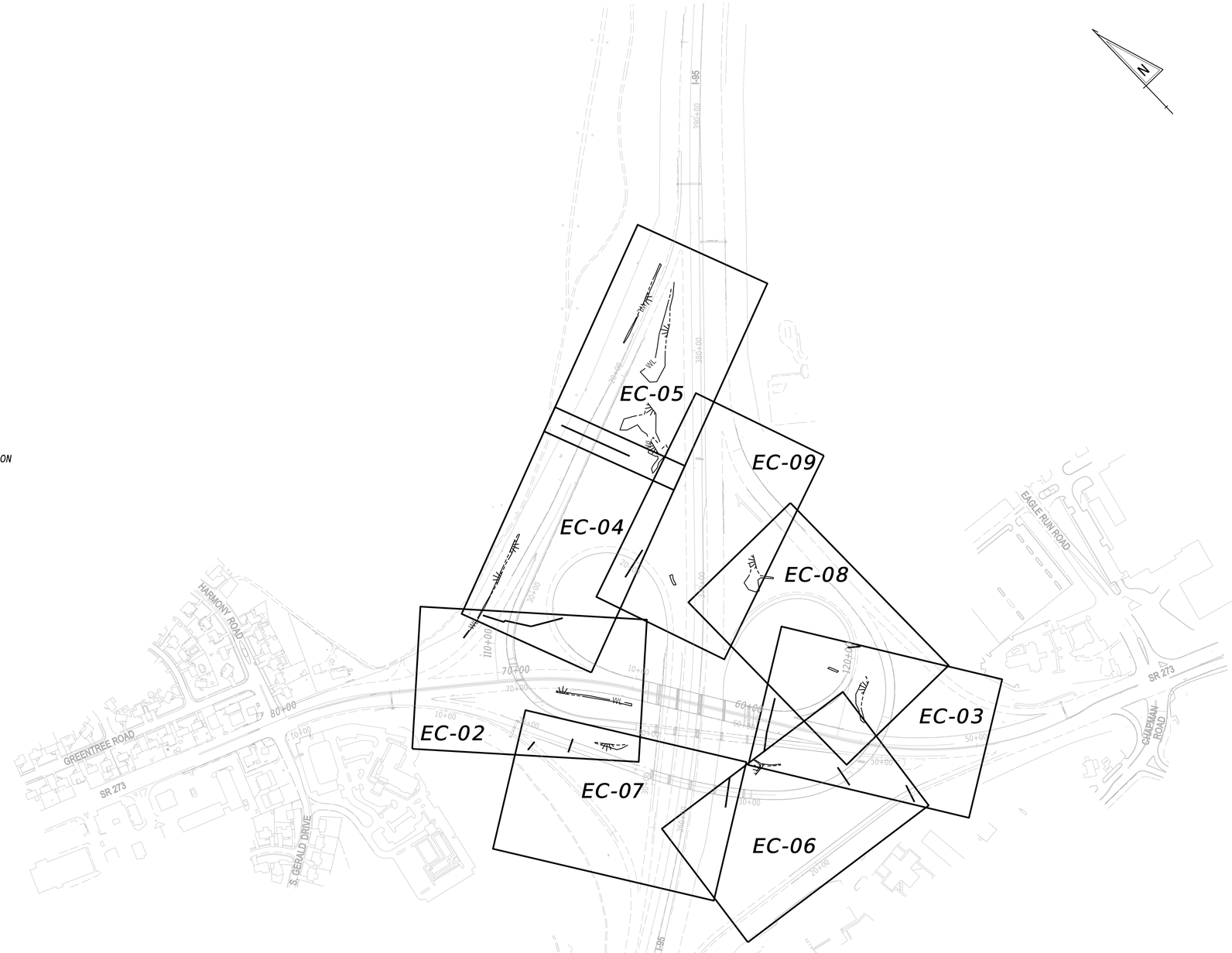

ADDENDA / REVISIONS	

SCALE
0 250 500 750
FEET

HSIP NCC, SR 273 AND I-95 INTERCHANGE IMPROVEMENTS

CONTRACT	BRIDGE NO.	715, 715A, 715B, 715C & 715D
T200800713	DESIGNED BY:	K. ROUTH
COUNTY		
NEW CASTLE	CHECKED BY:	J. REEL

ENVIRONMENTAL COMPLIANCE PLAN

EC-01
SECTION
RK&K
SHEET NO.
51

29-JUN-2020
12:37
\\balsvr01\v2014\20141414144_DelDOT\170\Task 4A - Harmony FD\Cadd\Contract\Plans\ec01_Har.dgn

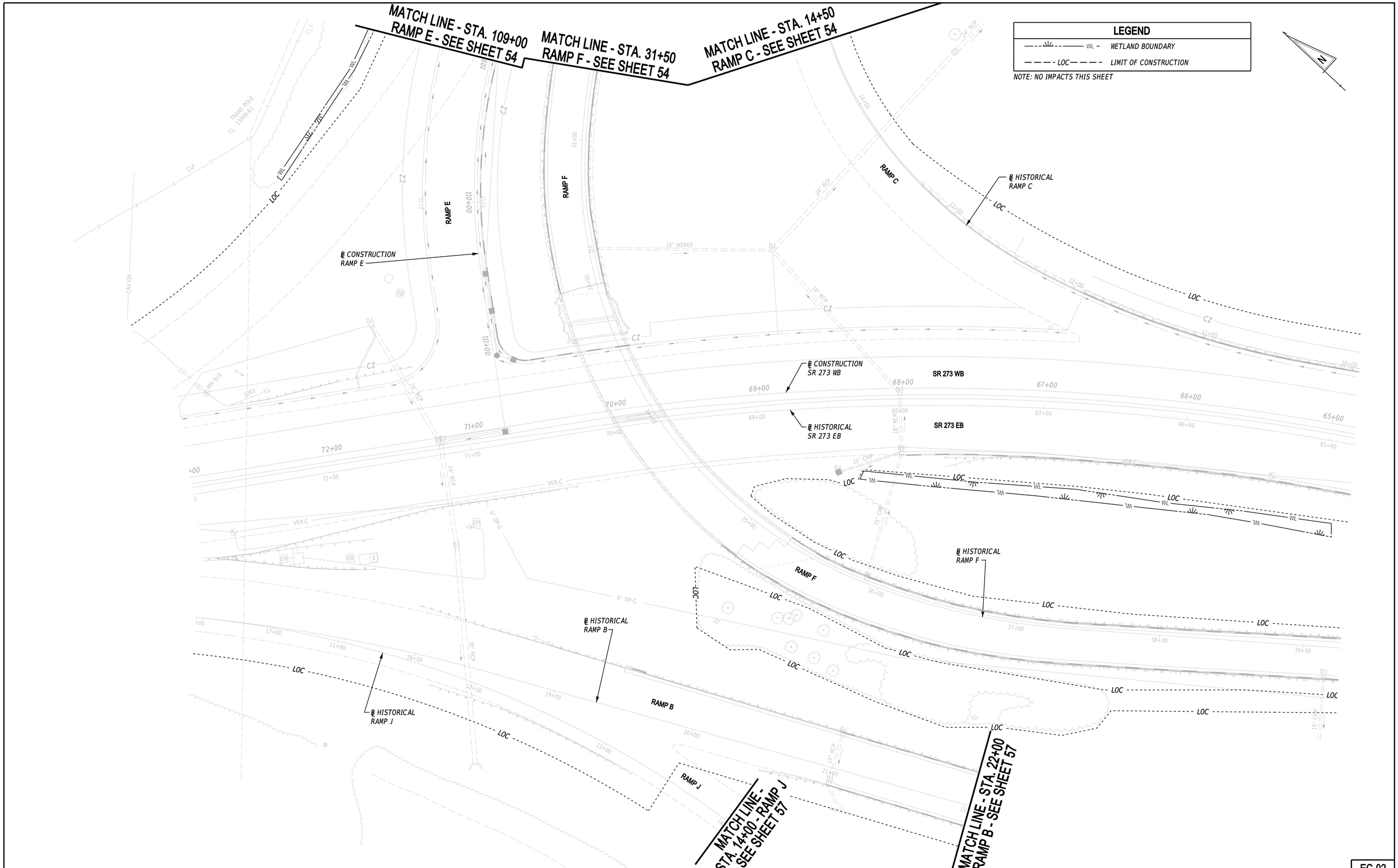

ADDENDA / REVISIONS	

SCALE
0 30 60 90
FEET

HSIP NCC, SR 273 AND I-95 INTERCHANGE IMPROVEMENTS

CONTRACT	BRIDGE NO.	715, 715A, 715B, 715C & 715D
T200800713	DESIGNED BY:	K. ROUTH
COUNTY	CHECKED BY:	Z. SEEBOLL
NEW CASTLE		

ENVIRONMENTAL COMPLIANCE PLAN

EC-02
SECTION
RK&K
SHEET NO.
52

24-JUL-2020
13:28
\\balservd1\v20142014144_DelDOT170\Task 4A - Harmony FD\Cadd\Contract\Plans\ec02_Har.dgn

MATCH LINE - STA. 119+50
RAMP A - SEE SHEET 58

℄ CONSTRUCTION
RAMP A

℄ HISTORICAL
RAMP B

℄ CONSTRUCTION
SR 273 WB

℄ HISTORICAL
SR 273 EB

℄ HISTORICAL
RAMP M

℄ HISTORICAL
RAMP F

MATCH LINE - STA. 34+00
RAMP B - SEE SHEET 56

MATCH LINE - STA. 25+00
RAMP M - SEE SHEET 56

RAMP A
RAMP B
RAMP F
RAMP M
SR 273 WB
SR 273 EB
BRIDGE 715C

LEGEND

WL	WETLAND BOUNDARY
LOC	LIMIT OF CONSTRUCTION

NOTE: NO IMPACTS THIS SHEET

ADDENDA / REVISIONS

SCALE
0 30 60 90
FEET

HSIP NCC, SR 273 AND I-95 INTERCHANGE IMPROVEMENTS

CONTRACT	BRIDGE NO.	715, 715A, 715B, 715C & 715D
T200800713	DESIGNED BY:	K. ROUTH
COUNTY		
NEW CASTLE	CHECKED BY:	J. REEL

ENVIRONMENTAL COMPLIANCE PLAN

EC-03

SECTION
RK&K

SHEET NO.
53

29-JUN-2020
12:55
\\dallsrv01\v2014\20141144_DelDOT1700\Task 4A - Harmony FD\Cadd\ContractPlans\sec03_Har.dgn

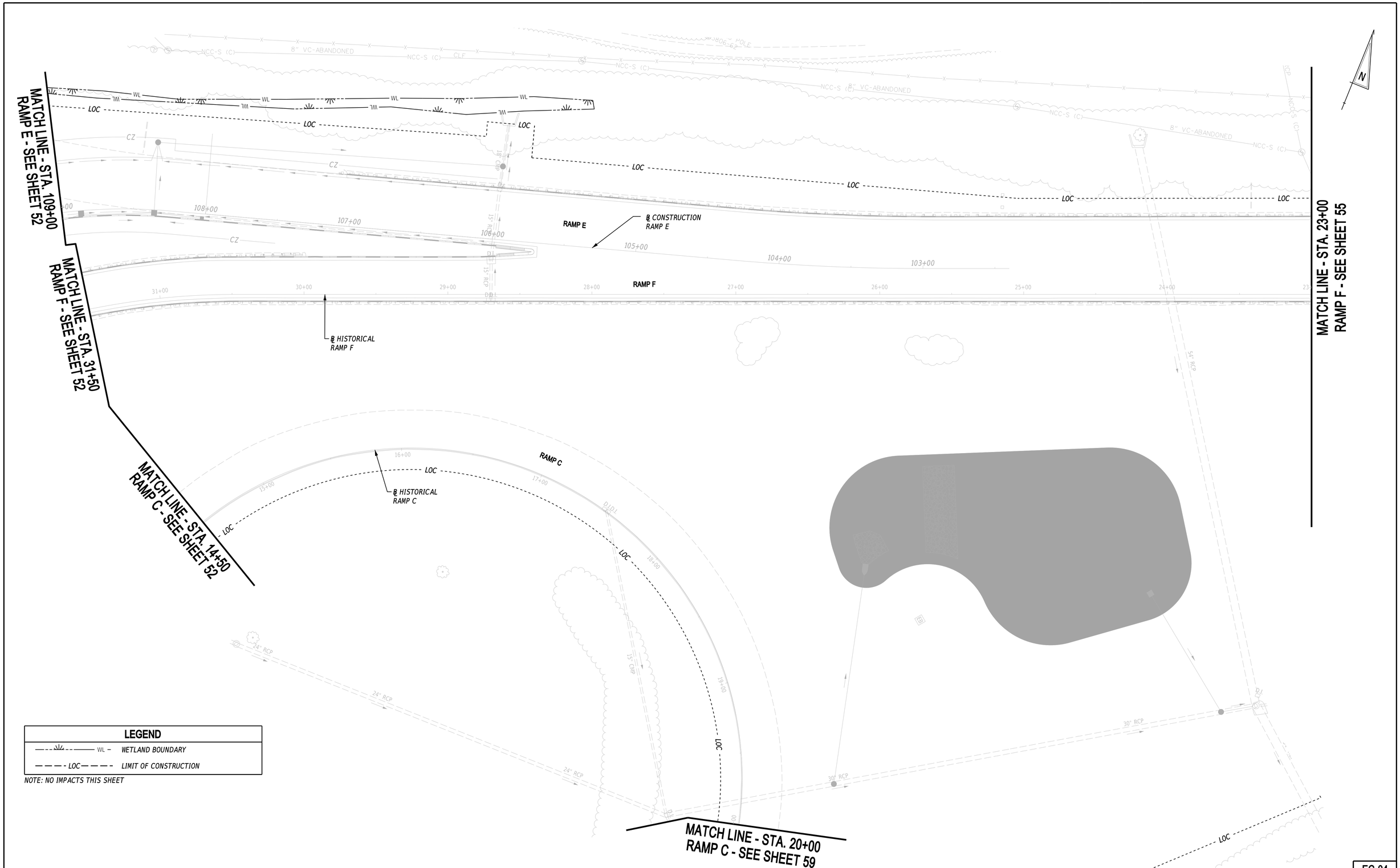

LEGEND

WL	WETLAND BOUNDARY
LOC	LIMIT OF CONSTRUCTION

NOTE: NO IMPACTS THIS SHEET

ADDENDA / REVISIONS

SCALE
0 30 60 90
FEET

HSIP NCC, SR 273 AND I-95 INTERCHANGE IMPROVEMENTS

CONTRACT	BRIDGE NO.	715, 715A, 715B, 715C & 715D
T200800713	DESIGNED BY:	K. ROUTH
COUNTY	CHECKED BY:	J. REEL
NEW CASTLE		

ENVIRONMENTAL COMPLIANCE PLAN

EC-04
SECTION
RK&K
SHEET NO.
54

30-JUN-2020
18:02
\\balsrv01\v2014\2014144_DelDOT17\07\Task 4A - Harmony FD\Cadd\Contract\Plans\sec04_Har.dgn

MATCH LINE - STA. 23+00 - RAMP F - SEE SHEET 54

N

6'CLF

LOC

WL

RAMP F

15" RCP

19+00

18+00

17+00

16+00

15+00

22+00

21+00

20+00

ASPH

℄ HISTORICAL RAMP F

NCC-S 1(C) 24" RCP

25"x16" BECHMA

384+00

383+00

382+00

381+00

380+00

379+00

378+00

377+00

℄ HISTORICAL I-95 SB

I-95 SB

I-95 NB

EB

LEGEND

WL	WETLAND BOUNDARY
LOC	LIMIT OF CONSTRUCTION

NOTE: NO IMPACTS THIS SHEET

EC-05

ADDENDA / REVISIONS	

SCALE 0 30 60 90 FEET

HSIP NCC, SR 273 AND I-95 INTERCHANGE IMPROVEMENTS

CONTRACT	BRIDGE NO.	715, 715A, 715B, 715C & 715D
T200800713	DESIGNED BY:	K. ROUTH
COUNTY	CHECKED BY:	Z. BEELL
NEW CASTLE		

ENVIRONMENTAL COMPLIANCE PLAN

SECTION
RK&K
SHEET NO.
55

21-JUL-2020
13:09
\\balservb1\v20\14\20\14\14144_DelDOT\70\Task 4A - Harmony FD\Cadd\Contract\Plans\ec05_Her.dgn

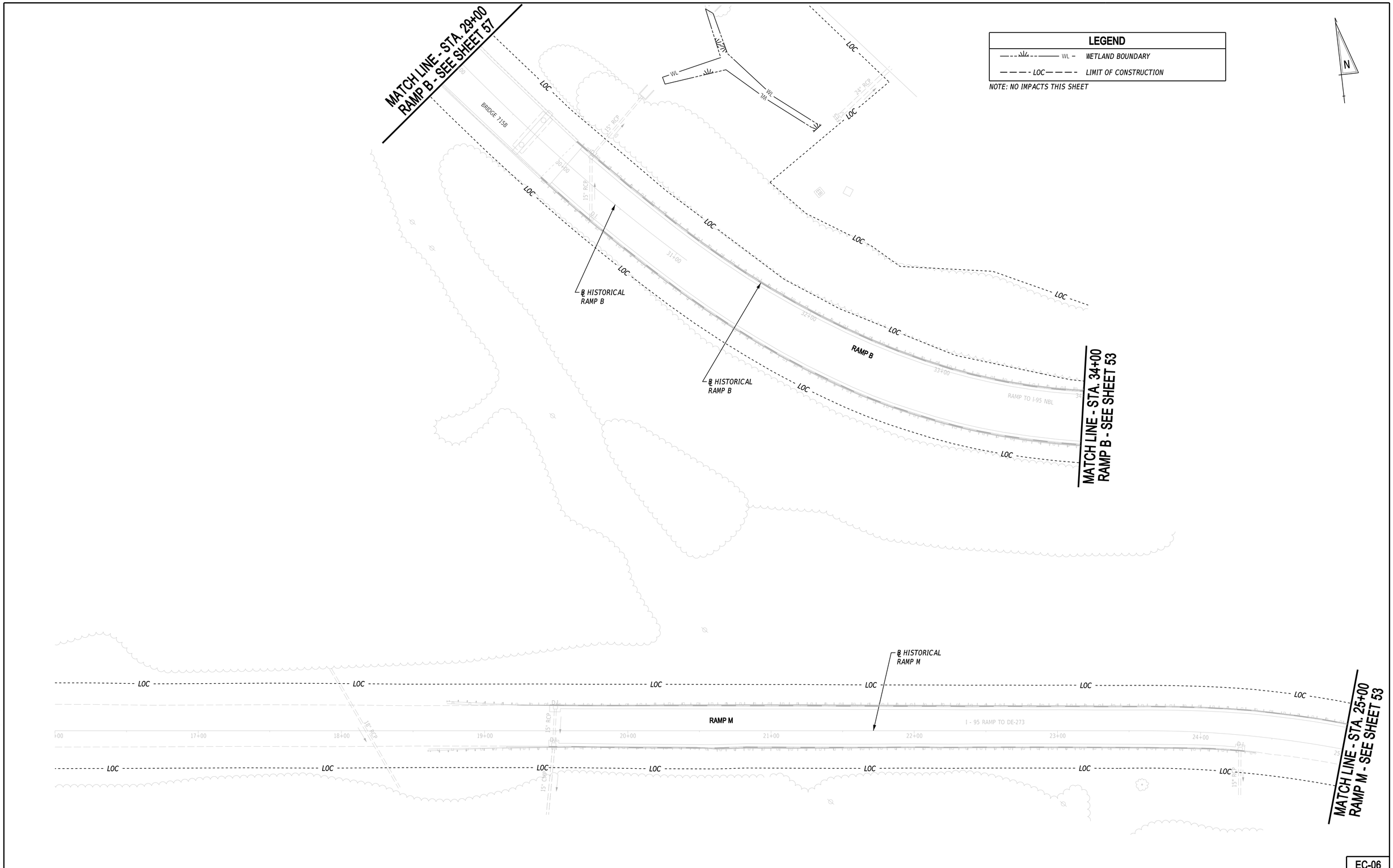

ADDENDA / REVISIONS	

SCALE
0 30 60 90
FEET

HSIP NCC, SR 273 AND I-95 INTERCHANGE IMPROVEMENTS

CONTRACT	BRIDGE NO.	715, 715A, 715B, 715C & 715D
T200800713	DESIGNED BY:	K. ROUTH
COUNTY	CHECKED BY:	J. REEL
NEW CASTLE		

ENVIRONMENTAL COMPLIANCE PLAN

EC-06

SECTION
RK&K
SHEET NO.
56

29-JUN-2020
13:03
\\balsrv01\v20\14\20141\141\44_Del\OT1707\Task 4A - Harmony FD\Cadd\ContractPlans\ec06_Har.dgn

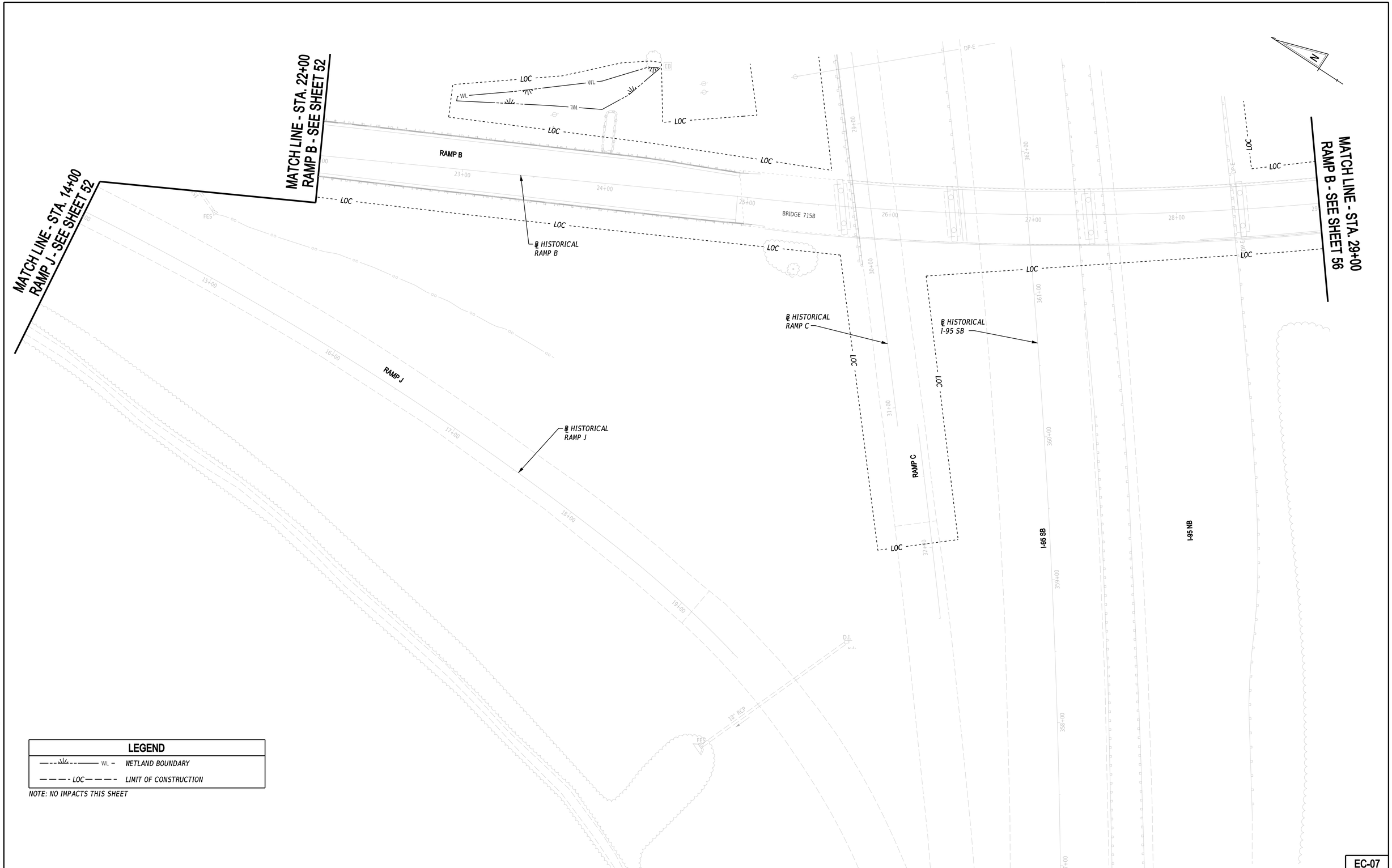

LEGEND

WL	WETLAND BOUNDARY
LOC	LIMIT OF CONSTRUCTION

NOTE: NO IMPACTS THIS SHEET

ADDENDA / REVISIONS	

SCALE
0 30 60 90
FEET

HSIP NCC, SR 273 AND I-95 INTERCHANGE IMPROVEMENTS

CONTRACT	BRIDGE NO.	715, 715A, 715B, 715C & 715D
T200800713	DESIGNED BY:	K. ROUTH
COUNTY		
NEW CASTLE	CHECKED BY:	J. REEL

ENVIRONMENTAL COMPLIANCE PLAN

EC-07

SECTION
RK&K
SHEET NO.
57

30-JUN-2020
18:03
\\balfs\v01\v20\14\20141\141141_DelDOT1710\Task 4A - Harmony FD\Cadd\ContractPlans\ec07_Har.dgn

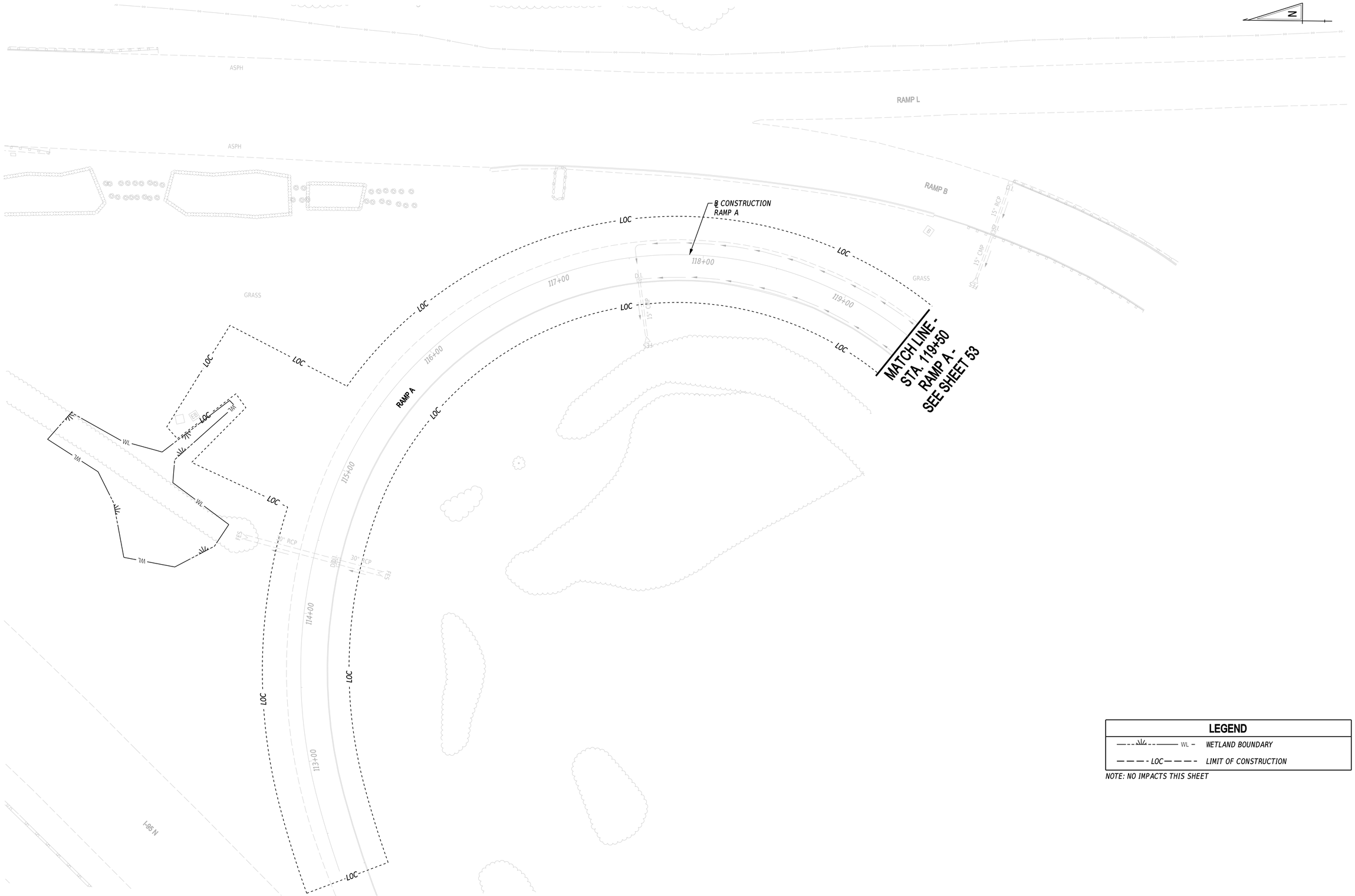

LEGEND

—·—·—WL—	*WETLAND BOUNDARY*
— — — LOC — — —	*LIMIT OF CONSTRUCTION*

NOTE: NO IMPACTS THIS SHEET

ADDENDA / REVISIONS

SCALE
0 30 60 90
FEET

HSIP NCC, SR 273 AND I-95 INTERCHANGE IMPROVEMENTS

CONTRACT	BRIDGE NO.	715, 715A, 715B, 715C & 715D
T200800713	DESIGNED BY:	K. ROUTH
COUNTY		
NEW CASTLE	CHECKED BY:	J. REEL

ENVIRONMENTAL COMPLIANCE PLAN

EC-08

SECTION
RK&K
SHEET NO.
58

29-JUN-2020
1330B
\\cadsrv01\v20\14\20\14\14\44_Del\DOT1707\Task 4A - Harmony FD\Cadd\Contract\Plans\ec08_Har.dgn

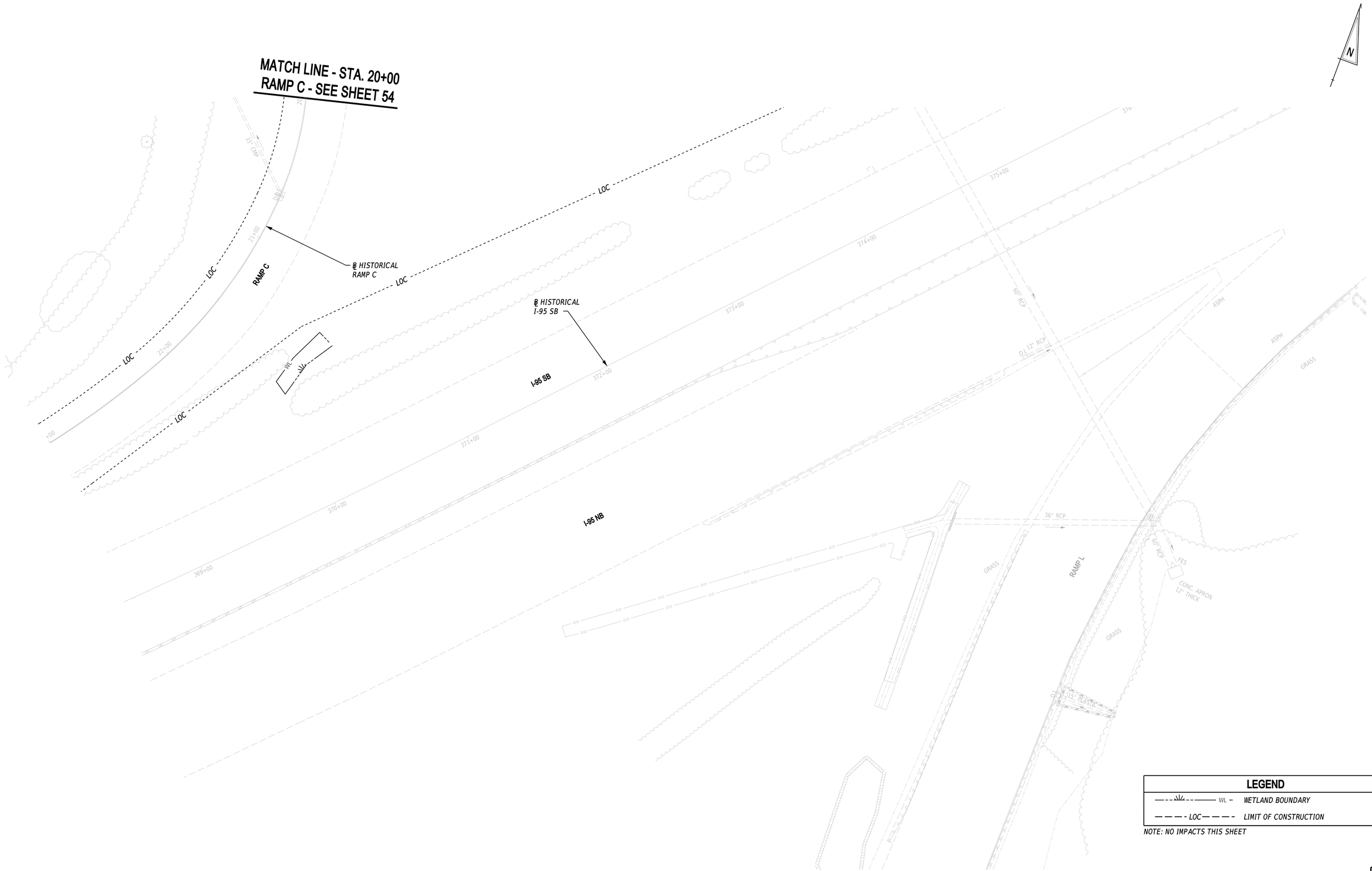

LEGEND

—— WL ——	*WETLAND BOUNDARY*
— — — LOC — — —	*LIMIT OF CONSTRUCTION*

NOTE: NO IMPACTS THIS SHEET

EC-09

ADDENDA / REVISIONS	

SCALE
0 30 60 90
FEET

HSIP NCC, SR 273 AND I-95 INTERCHANGE IMPROVEMENTS

CONTRACT	BRIDGE NO.	715, 715A, 715B, 715C & 715D
T200800713	DESIGNED BY:	K. ROUTH
COUNTY		
NEW CASTLE	CHECKED BY:	J. REEL

ENVIRONMENTAL COMPLIANCE PLAN

SECTION
RK&K
SHEET NO.
59

29-JUN-2020
13:10
\\balservd1\v20142014144144_DelDOT170/Task 4A - Harmony FD/Cadd/Contract/Plans/ec09_Har.dgn

CONSTRUCTION PHASING, M.O.T. AND EROSION AND SEDIMENT CONTROL SHEET INDEX CROSS REFERENCE			
PHASE 1	64	65	66
PHASE 2	67	68	69
PHASE 3	70	71	72
PHASE 4	73	74	--

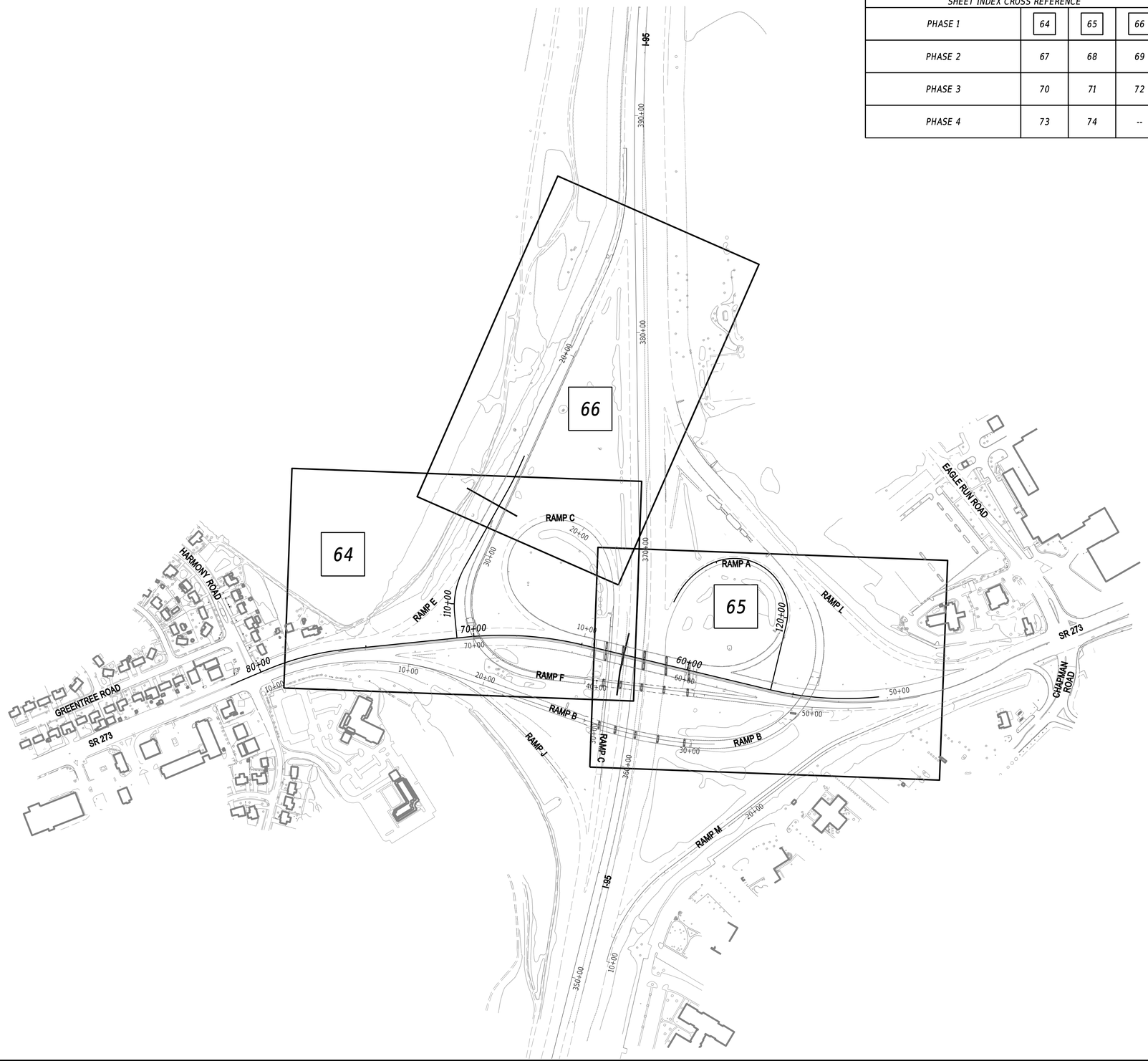

ADDENDA / REVISIONS	

SCALE
0 250 500 750
FEET

HSIP NCC, SR 273 AND I-95 INTERCHANGE IMPROVEMENTS

CONTRACT	BRIDGE NO.	715, 715A, 715B, 715C & 715D
T200800713	DESIGNED BY:	W. RIDENOUR
COUNTY		
NEW CASTLE	CHECKED BY:	Z. SCHOLL

CONSTRUCTION PHASING, M.O.T., AND EROSION CONTROL PLAN

SECTION
RK&K
SHEET NO.
60

23-JUN-2020
16:52
\\balserv01\v2014\20141414\4_DelDOT\70\Task 4A - Harmony FD\Cadd\Contract\Plans\cs01_Har.dgn

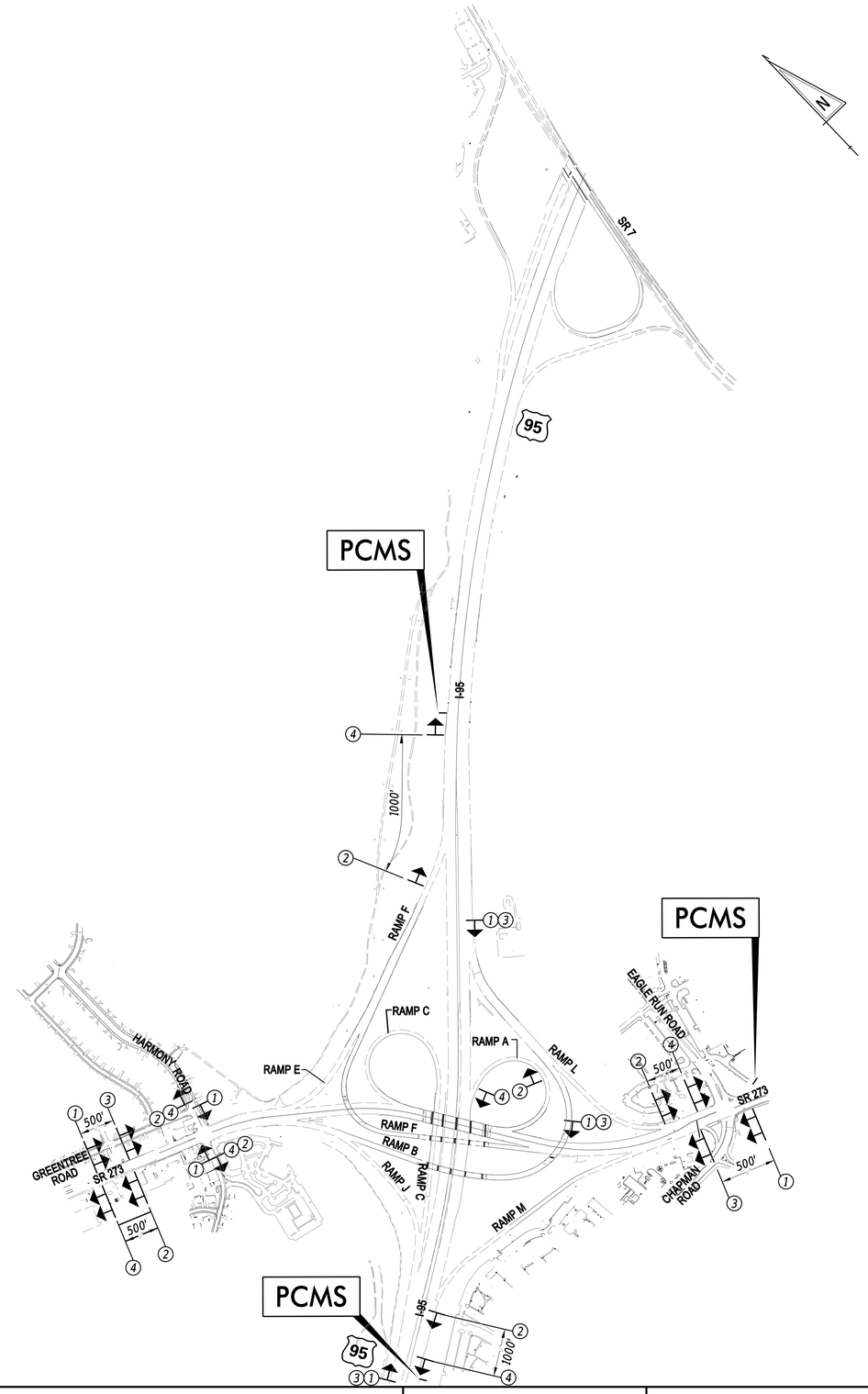

WARNING SIGN LEGEND

END ROAD WORK	BEGIN HIGHER FINES ZONE	END HIGHER FINES ZONE	ROAD WORK AHEAD
G20-2A 48"X24" (1)	R2-10 36"X48" (2)	R2-10 36"X48" (3)	W20-1 48"X48" (4)

NOTES:

1. SEE INDIVIDUAL PHASING PLANS FOR PLACEMENT OF PHASE-SPECIFIC TEMPORARY WARNING SIGNS. FINAL LOCATION OF ALL WARNING SIGNS SHALL BE COORDINATED WITH THE ENGINEER.
2. ON DIVIDED HIGHWAYS, PERMANENT WARNING SIGNS SHALL BE INSTALLED ADJACENT TO BOTH RIGHT AND LEFT SHOULDERS.
3. PORTABLE CHANGEABLE MESSAGE SIGNS SHOWN ON THIS SHEET ARE TO BE USED FOR TRANSPORTATION MANAGEMENT ONLY. THE PORTABLE CHANGEABLE MESSAGE SIGNS SHALL BE PLACED 10 DAYS PRIOR TO THE BEGINNING OF WORK AT THE LOCATIONS SHOWN ON THIS PLAN. THE MESSAGE SHALL READ "WORK BEGINS XX/XX EXPECT DELAYS". APPROVAL OF ALTERNATE MESSAGES, LOCATIONS AND USE SHALL BE APPROVED BY DELDOT TRAFFIC SAFETY.

ADDENDA / REVISIONS

SCALE 0 500 1000 1500 FEET

HSIP NCC, SR 273 AND I-95 INTERCHANGE IMPROVEMENTS

CONTRACT	BRIDGE NO.	715, 715A, 715B, 715C & 715D
T200800713	DESIGNED BY:	B. BARAL
COUNTY		
NEW CASTLE	CHECKED BY:	Z. SCHOLL

CONSTRUCTION PHASING, M.O.T., AND EROSION CONTROL - PERMANENT WARNING SIGNS PLAN

SECTION RK&K

SHEET NO. 61

24-JUL-2020
11:18
\\balsvr01\v20142014141144_DelDOT170\Task 4A - Harmony FDI\Cadd\Contract\Plans\cst02_Har.dgn

MAINTENANCE OF TRAFFIC NOTES

1. AMERICAN TRAFFIC SAFETY SERVICES ASSOCIATION (ATSSA) CERTIFIED TRAFFIC CONTROL SUPERVISOR REQUIREMENT FOR THIS PROJECT.

( )	THE CONTRACTOR SHALL NOT BE REQUIRED TO HAVE AN ATSSA SUPERVISOR ASSIGNED TO THIS PROJECT.
(X)	THE CONTRACTOR SHALL HAVE AN ATSSA SUPERVISOR ASSIGNED TO THIS PROJECT. THE CONTRACTOR'S GENERAL SUPERINTENDENT FOR THIS PROJECT OR ANOTHER ATSSA CERTIFIED MEMBER OF THE CONTRACTOR'S PROJECT STAFF MAY BE THE ATSSA SUPERVISOR. PAYMENT FOR ATSSA SUPERVISOR IS INCIDENTAL TO ITEM 801000.

2. THE USE OF MILLINGS AND GRADED AGGREGATE BASE COURSE (GABC) IN THE TRAVEL WAY, TEMPORARY TRAVEL WAY, HIGH VOLUME ENTRANCES AND ACCESS RAMP FOR THE PURPOSE OF PROVIDING A TEMPORARY ROADWAY SURFACE, POTHOLE REPAIR, TAPERED EDGE FOR UTILITIES, BUTT JOINTS, AND LONGITUDINAL DROP-OFFS (MILLING AND PAVING OPERATIONS) IS PROHIBITED UNLESS IT IS OTHERWISE DESIGNATED TO BE USED IN THE CONTRACT PLANS. USE COLD PATCH, BITUMINOUS CONCRETE, BITUMINOUS CONCRETE WEDGE, OR TAPER MILL, AS NOTED IN THE CONTRACT DOCUMENTS OR APPROVED BY THE ENGINEER. PAYMENT FOR COLD PATCH, BITUMINOUS CONCRETE OR BITUMINOUS CONCRETE WEDGE SHALL BE PAID AS NOTED IN THE CONTRACT DOCUMENTS. TAPER MILL BITUMINOUS CONCRETE SHALL BE PAID UNDER THE BITUMINOUS CONCRETE MILLING ITEM.

   MILLINGS OR GABC SHALL BE USED AT THE FOLLOWING LOCATIONS WHERE ACCESS TO A BUSINESS, RESIDENCE, OR EDGE DROP OFF NEEDS TO BE MAINTAINED UNLESS OTHERWISE NOTED IN THE PLANS OR DIRECTED BY THE ENGINEER TO USE BITUMINOUS CONCRETE OR COLD PATCH. ALL MILLINGS AND GABC WILL BE ROLLED AND COMPACTED TO HELP PREVENT THE MATERIAL FROM UNRAVELLING:
   a. DRIVEWAYS
   b. ENTRANCES
   c. LOW VOLUME ACCESS RAMPS (IDENTIFIED IN THE CONTRACT DOCUMENTS)
   d. EDGE DROP-OFFS ADJACENT TO LIVE ROADWAY(LANES AND SHOULDER) AND THE PROPOSED ROAD CONSTRUCTION
   e. EDGE OF ROADWAY DROP-OFF

   GRADING AND MAINTAINING BASE COURSE THAT IS BEING USED FOR ROADWAY WEDGE/FILLET BETWEEN TRAVEL LANES AND PAVEMENT BOX, EDGE OF TRAVELWAY, DRIVEWAY OR ENTRANCE ACCESS SHALL BE INCIDENTAL TO ITEM NO. 801000 - MAINTENANCE OF TRAFFIC. THE BASE COURSE MATERIAL SHALL BE PLACED AT NO GREATER THAN THE SLOPE SPECIFIED IN TABLE 6G-1 AND SHALL BE COMPACTED. EXCESS BASE COURSE MATERIAL SHALL BE PUSHED AHEAD AND USED IN THE NEXT SEGMENT AND SHALL BE INCIDENTAL TO THE PARTICULAR BASE COURSE PAY ITEM. NO SEPARATE PAYMENT SHALL BE MADE FOR MILLINGS OR GABC TEMPORARY ROADWAY MATERIAL (TRM) USED TO PROTECT EDGE DROP-OFFS, UNLESS THE MATERIAL IS EVENTUALLY UTILIZED AS PART OF A PERMANENT ROADWAY AT WHICH TIME THE MATERIAL WOULD BE PAID FOR UNDER THE RESPECTIVE CONTRACT MATERIAL ITEM.

   VERTICAL DIFFERENCES SHALL BE CORRECTED IN ACCORDANCE WITH TABLE 6G-1 OF THE DELAWARE MUTCD.

3. THIS PROJECT IS CONSIDERED A SIGNIFICANT PROJECT AS DEFINED BY DELDOT'S WORK ZONE MOBILITY PROCEDURES AND GUIDELINES. A TYPE B TRANSPORTATION MANAGEMENT PLAN (TMP) HAS BEEN PREPARED AND IS AVAILABLE FOR VIEWING BY CONTACTING THE DEPARTMENT'S SAFETY PROGRAMS MANAGER AT (302)659-4060. ALL MONITORING REQUIREMENTS OF THE TMP SHALL BE CONDUCTED BY DELDOT FORCES UNLESS OTHERWISE DIRECTED BY THE ENGINEER. MODIFICATIONS TO THE TMP SHALL BE COMPLETED BY THE CONTRACTOR IF CHANGES TO THE TIME RESTRICTIONS OR THE TRAFFIC CONTROL PLAN ARE DESIRED. THE MODIFIED TMP SHALL BE PREPARED BY A PROFESSIONAL ENGINEER, REGISTERED IN THE STATE OF DELAWARE.

4. A TYPE II TRUCK MOUNTED ATTENUATOR (TMA) SHALL BE REQUIRED ON THIS PROJECT DURING THE FOLLOWING PAVEMENT OPERATIONS: TEMPORARY/PERMANENT PAVEMENT MARKINGS, ROADSIDE SPRAYING, PATCHING, MILLING, SWEEPING, TEMPORARY TRAFFIC BARRIER PLACEMENT OR AS DIRECTED BY THE ENGINEER. THE ROLL AHEAD DISTANCE SHALL BE AS PER THE MANUFACTURER'S RECOMMENDATIONS. THE TMA SHALL CONFORM TO THE REQUIREMENTS OF SECTION 6F OF THE DELAWARE MUTCD.

5. LANE CLOSURES AND ROAD CLOSURES ARE PROHIBITED FROM OCCURRING DURING THE FIREFLY MUSIC FESTIVAL EVENT IN DOVER, DE FROM 12:00 AM WEDNESDAY PRIOR TO THE EVENT THROUGH 12:00 AM TUESDAY FOLLOWING THE EVENT. THE ENGINEER WILL PROVIDE THE DATES OF THE EVENT TWO WEEKS PRIOR TO THE RESTRICTION BEING IMPLEMENTED.

6. MAINTENANCE OF TRAFFIC DURING LANE CLOSURES AND LANE SHIFTS SHALL CONFORM TO TYPICAL APPLICATIONS 5, 5A, 5B, 33, 34, 35, 35B, 35D, 35H, AND 36 OF THE DELAWARE MUTCD.

EROSION AND SEDIMENT CONTROL NOTES

1. THE SEDIMENT AND STORMWATER MANAGEMENT PLANS HAVE BEEN APPROVED BY DELDOT'S STORMWATER ENGINEER UNDER DELDOT'S DELEGATED AUTHORITY. THE SEDIMENT AND STORMWATER MANAGEMENT PLANS ARE VALID FOR A FIVE YEAR PERIOD, BEGINNING ON THE DATE THE STORMWATER ENGINEER SIGNED THE CONSTRUCTION TITLE SHEET. IF THE FINAL ACCEPTANCE OF THE PROJECT IS ANTICIPATED TO EXTEND BEYOND THE FIVE YEARS, THE CONTRACTOR WILL INFORM THE ENGINEER THREE MONTHS PRIOR TO THE EXPIRATION OF THE APPROVED SEDIMENT AND STORMWATER MANAGEMENT PLANS. THE STORMWATER ENGINEER WILL REVIEW THE CURRENT SEDIMENT AND STORMWATER MANAGEMENT PLAN AND ISSUE AN EXTENSION WITH ANY APPROPRIATE MODIFICATIONS.

2.

EROSION POTENTIAL FOR THIS PROJECT	CONTRACTOR EROSION AND SEDIMENT CONTROL SUPERVISOR REQUIREMENT
( ) INSIGNIFICANT	NONE
( ) MINOR	CONTRACTOR TRAINING PROGRAM, AS DEFINED IN SECTION 6.2 OF THE DELAWARE SEDIMENT AND STORMWATER REGULATIONS.
(X) MAJOR	CERTIFIED CONSTRUCTION REVIEWER (CCR), AS DEFINED IN SECTION 6.3 OF THE DELAWARE SEDIMENT AND STORMWATER REGULATIONS.

3. THE DISTURBED AREA FOR THIS PROJECT IS 8.5 ACRES.

4. THE DECREASE IN IMPERVIOUS AREA FOR THIS PROJECT IS 5,800 SQUARE FEET.

Figure 12: Allowable Lane Closure Hours for Ramp F During Construction Phases 1,2 and 3

	12:00 AM	1:00 AM	2:00 AM	3:00 AM	4:00 AM	5:00 AM	6:00 AM	7:00 AM	8:00 AM	9:00 AM	10:00 AM	11:00 AM	12:00 PM	1:00 PM	2:00 PM	3:00 PM	4:00 PM	5:00 PM	6:00 PM	7:00 PM	8:00 PM	9:00 PM	10:00 PM	11:00 PM
SUNDAY	✓	✓	✓	✓	✓	✓																✓	✓	✓
MONDAY	✓	✓	✓	✓	✓	✓																✓	✓	✓
TUESDAY	✓	✓	✓	✓	✓	✓																✓	✓	✓
WEDNESDAY	✓	✓	✓	✓	✓	✓																✓	✓	✓
THURSDAY	✓	✓	✓	✓	✓	✓																✓	✓	✓
FRIDAY	✓	✓	✓	✓	✓	✓																✓	✓	✓
SATURDAY	✓	✓	✓	✓	✓	✓																✓	✓	✓

✓ Southbound I-95 Off-Ramp to Eastbound SR 273 (Ramp F) Closed
Southbound I-95 Off-Ramp to Eastbound SR 273 (Ramp F) Open

Figure 11: Allowable Lane Closure Hours on Westbound SR 273 During Construction Phase 2A

	12:00 AM	1:00 AM	2:00 AM	3:00 AM	4:00 AM	5:00 AM	6:00 AM	7:00 AM	8:00 AM	9:00 AM	10:00 AM	11:00 AM	12:00 PM	1:00 PM	2:00 PM	3:00 PM	4:00 PM	5:00 PM	6:00 PM	7:00 PM	8:00 PM	9:00 PM	10:00 PM	11:00 PM
SUNDAY	✓	✓	✓	✓	✓	✓	✓	✓	✓	✓	✓	✓	✓	✓	✓	✓	✓	✓	✓	✓	✓	✓	✓	✓
MONDAY	✓	✓	✓	✓	✓	✓	✓	✓	✓	✓	✓	✓	✓	✓	✓	✓	✓	✓	✓	✓	✓	✓	✓	✓
TUESDAY	✓	✓	✓	✓	✓	✓	✓	✓	✓	✓	✓	✓	✓	✓	✓	✓	✓	✓	✓	✓	✓	✓	✓	✓
WEDNESDAY	✓	✓	✓	✓	✓	✓	✓	✓	✓	✓	✓	✓	✓	✓	✓	✓	✓	✓	✓	✓	✓	✓	✓	✓
THURSDAY	✓	✓	✓	✓	✓	✓	✓	✓	✓	✓	✓	✓	✓	✓	✓	✓	✓	✓	✓	✓	✓	✓	✓	✓
FRIDAY	✓	✓	✓	✓	✓	✓	✓	✓	✓	✓	✓	✓	✓	✓	✓	✓	✓	✓	✓	✓	✓	✓	✓	✓
SATURDAY	✓	✓	✓	✓	✓	✓	✓	✓	✓	✓	✓	✓	✓	✓	✓	✓	✓	✓	✓	✓	✓	✓	✓	✓

✓ One Westbound SR 273 Lane Closed
All Eastbound and Westbound SR 273 Lanes Remain Open

Figure 14: Allowable Lane Closure Hours for Ramp F During Construction Phase 5

	12:00 AM	1:00 AM	2:00 AM	3:00 AM	4:00 AM	5:00 AM	6:00 AM	7:00 AM	8:00 AM	9:00 AM	10:00 AM	11:00 AM	12:00 PM	1:00 PM	2:00 PM	3:00 PM	4:00 PM	5:00 PM	6:00 PM	7:00 PM	8:00 PM	9:00 PM	10:00 PM	11:00 PM
SUNDAY	✓	✓	✓	✓	✓	✓	✓	✓	✓	✓	✓	✓	✓	✓	✓	✓	✓	✓	✓	✓	✓	✓	✓	✓
MONDAY	✓	✓	✓	✓	✓	✓																✓	✓	✓
TUESDAY	✓	✓	✓	✓	✓	✓																✓	✓	✓
WEDNESDAY	✓	✓	✓	✓	✓	✓																✓	✓	✓
THURSDAY	✓	✓	✓	✓	✓	✓																✓	✓	✓
FRIDAY	✓	✓	✓	✓	✓	✓																✓	✓	✓
SATURDAY	✓	✓	✓	✓	✓	✓	✓	✓	✓	✓	✓	✓	✓	✓	✓	✓	✓	✓	✓	✓	✓	✓	✓	✓

✓ One Lane on Southbound I-95 Off-Ramp to Eastbound SR 273 (Ramp F) Closed
All Lanes on Southbound I-95 Off-Ramp to Eastbound SR 273 (Ramp F) Open

Figure 15: Allowable Lane Closure Hours on Westbound SR 273 During Phase 5

	12:00 AM	1:00 AM	2:00 AM	3:00 AM	4:00 AM	5:00 AM	6:00 AM	7:00 AM	8:00 AM	9:00 AM	10:00 AM	11:00 AM	12:00 PM	1:00 PM	2:00 PM	3:00 PM	4:00 PM	5:00 PM	6:00 PM	7:00 PM	8:00 PM	9:00 PM	10:00 PM	11:00 PM
SUNDAY	✓	✓	✓	✓	✓	✓	✓	✓	✓	✓	✓	✓	✓	✓	✓	✓	✓	✓	✓	✓	✓	✓	✓	✓
MONDAY	✓	✓	✓	✓	✓	✓														✓	✓	✓	✓	✓
TUESDAY	✓	✓	✓	✓	✓	✓														✓	✓	✓	✓	✓
WEDNESDAY	✓	✓	✓	✓	✓	✓														✓	✓	✓	✓	✓
THURSDAY	✓	✓	✓	✓	✓	✓														✓	✓	✓	✓	✓
FRIDAY	✓	✓	✓	✓	✓	✓														✓	✓	✓	✓	✓
SATURDAY	✓	✓	✓	✓	✓	✓	✓	✓	✓	✓	✓	✓	✓	✓	✓	✓	✓	✓	✓	✓	✓	✓	✓	✓

✓ One Westbound SR 273 Lane Closed
All Westbound SR 273 Lanes Remain Open

Figure 17: Allowable Lane Closure Hours for Right-most or Left-most Lane on I-95 in Phase 5

	12:00 AM	1:00 AM	2:00 AM	3:00 AM	4:00 AM	5:00 AM	6:00 AM	7:00 AM	8:00 AM	9:00 AM	10:00 AM	11:00 AM	12:00 PM	1:00 PM	2:00 PM	3:00 PM	4:00 PM	5:00 PM	6:00 PM	7:00 PM	8:00 PM	9:00 PM	10:00 PM	11:00 PM
SUNDAY																								
MONDAY	✓	✓	✓	✓	✓																		✓	✓
TUESDAY	✓	✓	✓	✓	✓																		✓	✓
WEDNESDAY	✓	✓	✓	✓	✓																		✓	✓
THURSDAY	✓	✓	✓	✓	✓																		✓	✓
FRIDAY	✓	✓	✓	✓	✓																		✓	✓
SATURDAY																								

✓ One Northbound or Southbound I-95 Lane Closed
All Northbound and Southbound I-95 Lanes Remain Open

Figure 18: Allowable Lane Closure Hours for Northbound and Southbound I-95 Lanes in Phase 5

	12:00 AM	1:00 AM	2:00 AM	3:00 AM	4:00 AM	5:00 AM	6:00 AM	7:00 AM	8:00 AM	9:00 AM	10:00 AM	11:00 AM	12:00 PM	1:00 PM	2:00 PM	3:00 PM	4:00 PM	5:00 PM	6:00 PM	7:00 PM	8:00 PM	9:00 PM	10:00 PM	11:00 PM
SUNDAY																								
MONDAY		✓	✓	✓																				
TUESDAY		✓	✓	✓																				
WEDNESDAY		✓	✓	✓																				
THURSDAY		✓	✓	✓																				
FRIDAY		✓	✓	✓																				
SATURDAY																								

✓ All Northbound and Southbound I-95 Lanes Closed
All Northbound and Southbound I-95 Lanes Remain Open

CONSTRUCTION PHASING & M.O.T

	BARRICADE, TYPE 3
	CONCRETE SAFETY BARRIER - PORTABLE
CSF XXX	CONSTRUCTION SAFETY FENCE / LENGTH
CSF	CONSTRUCTION SAFETY FENCE
	CONSTRUCTION WARNING SIGN LOCATION
END ROAD WORK	CONSTRUCTION WARNING SIGN
	CRASH CUSHION ARRAY
	DRUM - TRAFFIC CONTROL
	FLAGGER LOCATION
PHASE	PHASING TRAFFIC FLOW ARROW
	TEMPORARY CONSTRUCTION
	TEMPORARY PAVEMENT MARKING ARROW
	TRUCK WITH MOUNTED ATTENUATOR
	WORK AREA - ACTIVE PHASE

EROSION & SEDIMENT CONTROL

CFL	COMPOST FILTER LOG
CFL	COMPOST FILTER LOG / LENGTH
DWBAG	DEWATERING BAG
DWB	DEWATERING BASIN
ED	EARTH DIKE
	INLET SEDIMENT CONTROL
	PERIMETER DIKE/SWALE
PST	PORTABLE SEDIMENT TANK
SBD	SANDBAG DIKE
SB	SANDBAG DIVERSION
	STONE CHECK DAM
ASCE	STABILIZED CONSTRUCTION ENTRANCE
SF	SILT FENCE / LENGTH
SF	SILT FENCE
RSF	REINFORCED SILT FENCE / LENGTH
RSF	REINFORCED SILT FENCE
SSF	SUPER SILT FENCE / LENGTH
SSF	SUPER SILT FENCE
SP	SUMP PIT
ST	SEDIMENT TRAP / NUMBER
ST	SEDIMENT TRAP
ST	SEDIMENT TRAP WITH INLET AS OUTLET
ST	SEDIMENT TRAP PIPE OUTLET
SW	STILLING WELL
	TEMPORARY SWALE
TSD	TEMPORARY SLOPE DRAIN
T XXX	TURBIDITY CURTAIN / LENGTH
T	TURBIDITY CURTAIN

Vincent W. Davis 07/27/2020
DELDOT STORMWATER ENGINEER DATE

"I CERTIFY TO THE BEST OF MY KNOWLEDGE AND BELIEF THAT THESE PLANS MEET THE REQUIREMENTS OF THE DELAWARE SEDIMENT AND STORMWATER REGULATIONS AND THAT ALL CLEARING, GRADING, AND CONSTRUCTION WILL BE ACCOMPLISHED PURSUANT TO THE PLAN."

ADDENDA / REVISIONS	

NOT TO SCALE

HSIP NCC, SR 273 AND I-95 INTERCHANGE IMPROVEMENTS

CONTRACT	BRIDGE NO.	715, 715A, 715B, 715C & 715D
T200800713	DESIGNED BY:	B. BURRIS
COUNTY	CHECKED BY:	Z. SCHOLL
NEW CASTLE		

CONSTRUCTION PHASING, M.O.T., AND EROSION CONTROL NOTES

SECTION
RK&K
SHEET NO.
62

24-JUL-2020
11:34
\\balsrv01\v20\14\20\14\14144_DelDOT\70\Task 4A - Harmony FD\Cadd\Contract\Plans\cs03_Har.dgn

Figure 16: Allowable Lane Closure Hours on Eastbound SR 273 During Phase 5

	12:00 AM	1:00 AM	2:00 AM	3:00 AM	4:00 AM	5:00 AM	6:00 AM	7:00 AM	8:00 AM	9:00 AM	10:00 AM	11:00 AM	12:00 PM	1:00 PM	2:00 PM	3:00 PM	4:00 PM	5:00 PM	6:00 PM	7:00 PM	8:00 PM	9:00 PM	10:00 PM	11:00 PM
SUNDAY	✓	✓	✓	✓	✓	✓	✓	✓	✓	✓	✓	✓	✓	✓	✓	✓	✓	✓	✓	✓	✓	✓	✓	✓
MONDAY	✓	✓	✓	✓	✓	✓															✓	✓	✓	✓
TUESDAY	✓	✓	✓	✓	✓	✓															✓	✓	✓	✓
WEDNESDAY	✓	✓	✓	✓	✓	✓															✓	✓	✓	✓
THURSDAY	✓	✓	✓	✓	✓	✓															✓	✓	✓	✓
FRIDAY	✓	✓	✓	✓	✓	✓															✓	✓	✓	✓
SATURDAY	✓	✓	✓	✓	✓	✓	✓	✓	✓	✓	✓	✓	✓	✓	✓	✓	✓	✓	✓	✓	✓	✓	✓	✓

✓ One Eastbound SR 273 Through Lane and One Southbound Harmony Road Left-turn Lane Closed

All Eastbound SR 273 Through Lanes and Southbound Harmony Road Left-turn Lanes Open

SEQUENCE OF CONSTRUCTION

PHASE 1 - RAMP A RECONSTRUCTION AND PAVE & REHAB, FIRST PHASE OF BRIDGE 715 WORK, RAMP F, RAMP B AND RAMP J CURB AND GUARDRAIL REPLACEMENT

1. *SEE CONSTRUCTION PHASING PLANS.*

PHASE 2 - FIRST PHASE OF RAMP E RECONSTRUCTION, FIRST PHASE OF WESTBOUND SR273 WIDENING, BRIDGE 715 WORK, RAMP F CURB AND GUARDRAIL REPLACEMENT AND RAMP C PAVE & REHAB

1. *SEE CONSTRUCTION PHASING PLANS.*

PHASE 3 - COMPLETE RAMP E RECONSTRUCTION, RAMP F MILL & OVERLAY, COMPLETE WESTBOUND SR273 WIDENING & COMPLETE BRIDGE 715 WORK

1. *SEE CONSTRUCTION PHASING PLANS.*

PHASE 4 - RAMP M PAVE & REHAB AND COMPLETE CURB & GUARDRAIL REPLACEMENT ON RAMP B

1. *SEE CONSTRUCTION PHASING PLANS.*

PHASE 5 - MILL, OVERLAY AND STRIPING OF SR273, RAMP B, AND THE REMAINING LENGTHS OF RAMP E AND RAMP F

1. *CLEAR AND GRUB AND INSTALL EROSION AND SEDIMENT CONTROL DEVICES AS DIRECTED BY THE ENGINEER, INCLUDING BUT NOT LIMITED TO INLET PROTECTION ON DRAINAGE INLETS WITHIN THE WORK AREA, SILT FENCE AND COMPOST FILTER LOGS. LONGITUDINAL EDGE DROP OFFS SHALL BE CORRECTED AT THE END OF EACH WORK NIGHT IN ACCORDANCE WITH TABLE 6G-1 OF THE DELAWARE MUTCD.*
2. *INSTALL PROPOSED SIGN STRUCTURES ON RAMP F AND I-95 AS SHOWN ON SIGNING AND STRIPING PLANS. THIS WORK SHALL BE RESTRICTED TO NIGHTTIME HOURS ONLY. ROLLING ROAD BLOCKS IN ACCORDANCE WITH DELDOT MUTCD STANDARD TA-35H SHALL BE USED FOR SHOULDER CLOSURES. THE CONTRACTOR SHALL COORDINATE WITH DELDOT CONSTRUCTION AND TRAFFIC SAFETY AS TO THE DURATION AND WORK HOUR RESTRICTIONS FOR THE ROLLING ROAD BLOCKS.*
3. *REMOVE EXISTING SIGN STRUCTURES ON I-95 AS SHOWN ON SIGNING AND STRIPING PLANS. THIS WORK SHALL BE RESTRICTED TO NIGHTTIME HOURS ONLY. ROLLING ROAD BLOCKS IN ACCORDANCE WITH DELDOT MUTCD STANDARD TA-35H SHALL BE USED FOR SHOULDER CLOSURES. THE CONTRACTOR SHALL COORDINATE WITH DELDOT CONSTRUCTION AND TRAFFIC SAFETY AS TO THE DURATION AND WORK HOUR RESTRICTIONS FOR THE ROLLING ROAD BLOCKS.*
4. *USE TA-5B TO CLOSE SHOULDERS ON I-95 AS NEEDED TO REMOVE EXISTING SIGN FOUNDATIONS TO A DEPTH OF 2' BELOW EXISTING GRADE AS SHOWN ON SIGNING AND STRIPING PLANS. REMOVE CURB AND GUARDRAIL TO THE EXTENTS SHOWN ON THE SIGNING AND STRIPING PLANS.*
5. *USE TA-5B TO REMOVE EXISTING GROUND MOUNTED SIGNS ON RAMP F AS SHOWN ON THE SIGNING AND STRIPING PLANS.*
6. *EXISTING SIGN STRUCTURE MAY NOT BE REMOVED UNTIL AFTER THE NEW REPLACEMENT SIGN STRUCTURE IS INSTALLED AND ACCEPTED, UNLESS OTHERWISE APPROVED BY THE ENGINEER.*
7. *USE TA-36 TO MILL, OVERLAY AND APPLY HIGH FRICTION SURFACE TREATMENT ON RAMP B DURING ALLOWABLE LANE CLOSURE HOURS AS SHOWN ON PLANS. USE TA-33 TO MILL AND OVERLAY SR273 AND THE REMAINING PORTIONS OF RAMP E AND RAMP F DURING ALLOWABLE LANE CLOSURE HOURS AS SHOWN ON PLANS. DURING THE MILL AND OVERLAY OPERATIONS, PATCHING OF EXISTING FAILING CONCRETE PAVEMENT ON SR273 WILL BE COMPLETED AS DIRECTED BY THE ENGINEER. ADJUST INLETS AND MANHOLES AS SHOWN ON PLANS. USE TA-35B OR TA-35D TO INSTALL PERMANENT PAVEMENT MARKINGS.*
8. *INSTALL TEMPORARY PAVEMENT MARKINGS AS DIRECTED BY THE ENGINEER IN ORDER TO REOPEN LANES OR RAMPS TO TRAFFIC DURING NON-WORK PERIODS.*
9. *REOPEN TRAVEL LANES EACH MORNING IN ACCORDANCE WITH THE ALLOWABLE LANE CLOSURE SCHEDULE.*
10. *STABILIZE AREA IN ACCORDANCE WITH DELDOT STANDARD SPECIFICATIONS. REMOVE EROSION AND SEDIMENT CONTROL DEVICES AFTER FINAL VEGETATIVE STABILIZATION OF ALL DISTURBED AREAS AS DETERMINED BY THE ENGINEER. REMOVE ALL TRAFFIC CONTROL DEVICES.*

PHASE 1 - RAMP A RECONSTRUCTION AND PAVE & REHAB, FIRST PHASE OF BRIDGE 715 WORK, RAMP F, RAMP B AND RAMP J CURB & GUARDRAIL REPLACEMENT

1. PLACE ALL PERMANENT WARNING SIGNS AS SHOWN ON THE PERMANENT WARNING SIGNS PLAN.
2. USE NIGHT TIME DETOUR TO CLOSE RAMP F AND INSTALL TEMPORARY BARRIER. USE TA-35B TO INSTALL TEMPORARY TAPE AND PAVEMENT MARKINGS ON RAMP F. ONCE ALL TEMPORARY BARRIER AND STRIPING ON RAMP F IS SET, BAG RAMP F DETOUR SIGNS FOR REMAINDER OF PHASE AND REOPEN RAMP F TO TRAFFIC.
3. USE DETOUR PLAN TO CLOSE EXIT 3B (RAMP A) FROM NORTHBOUND I-95 TO WESTBOUND SR273.
4. INSTALL TEMPORARY BARRIER USING TA-34 FOR EASTBOUND SR273 AND USING TA-36 FOR WESTBOUND SR273. USE TA-35B TO APPLY BLACKOUT TAPE, REMOVE EXISTING PAVEMENT MARKINGS AND TO INSTALL TEMPORARY TAPE AND PAVEMENT MARKINGS ON WESTBOUND 273, EASTBOUND SR273, AND RAMP E AS SHOWN ON PHASE 1 PLANS. INSTALL ADDITIONAL TRAFFIC CONTROL DEVICES AND WARNING SIGNS TO SHIFT TRAFFIC AS SHOWN.
5. CLEAR AND GRUB PHASE 1 WORK AREA AND INSTALL EROSION AND SEDIMENT CONTROL DEVICES AS SHOWN ON PLANS.
6. CONTRACTOR SHALL SUBMIT ALL OVERHEAD SIGN STRUCTURE AND FOUNDATION SHOP DRAWINGS PRIOR TO PHASE 1 WORK.
7. COMMENCE BRIDGE 715 REPAIRS AS SHOWN ON PHASE 1 PLANS. SEE BRIDGE PLANS FOR SCOPE OF WORK.
8. JACK BRIDGE 715 AND REPLACE BEARINGS ON EASTBOUND SR273. THE JACKING OPERATION SHALL BE RESTRICTED TO NIGHTTIME HOURS ONLY, UTILIZING ROLLING ROAD BLOCKS IN ACCORDANCE WITH DELDOT MUTCD STANDARD TA-35H FOR CLOSURE OF EASTBOUND SR273. THE CONTRACTOR SHALL COORDINATE WITH DELDOT CONSTRUCTION AND TRAFFIC SAFETY AS TO THE DURATION AND WORK HOUR RESTRICTIONS FOR THE ROLLING ROAD BLOCKS. SEE BRIDGE PLANS FOR BEARING REPLACEMENT SEQUENCE OF CONSTRUCTION.
9. REMOVAL AND INSTALLATION OF HIGH MAST LIGHTING SHALL BE COMPLETED IN PHASE 1. USE TA-5A TO CLOSE SHOULDERS AS NEEDED. FOR SPECIFIC CONSTRUCTION DETAILS SEE LIGHTING PLAN GENERAL NOTES, SHEET 83.
10. USE TA-5 TO INSTALL CURB, GUARDRAIL AND NEW OVERHEAD SIGN STRUCTURE FOUNDATIONS ON I-95 AS SHOWN ON SIGNING AND STRIPING PLANS.
11. USE TA-5A TO INSTALL GUARDRAIL ON RAMP J AS SHOWN ON CONSTRUCTION PLANS.
12. USE TA-5B TO INSTALL TEMPORARY BARRIER ON RAMP B AS SHOWN ON PHASE 1 PLANS. USE TA-35B TO APPLY BLACKOUT TAPE, APPLY TEMPORARY TAPE AND INSTALL TEMPORARY PAVEMENT MARKINGS ON RAMP B AS SHOWN ON PHASE 1 PLANS. ON RAMP B, SAWCUT AND REMOVE EXISTING PAVEMENT, CURB AND GUARDRAIL AND INSTALL NEW CURB, GUARDRAIL AND PERMANENT BARRIER AS SHOWN ON PHASE 1 PLANS.
13. ON RAMP F AND EASTBOUND 273, SAWCUT AND REMOVE EXISTING PAVEMENT, CURB, GUARDRAIL AND 15"CMP PIPE AND INSTALL NEW 15"RCP PIPE, CURB AND GUARDRAIL AS SHOWN ON PHASE 1 PLANS. ADJUST DRAINAGE INLETS AS SHOWN ON CONSTRUCTION PLANS.
14. ON RAMP A, SAWCUT AND REMOVE EXISTING PAVEMENT AND DRAINAGE STRUCTURES AND EXCAVATE FOR FULL DEPTH PAVEMENT CONSTRUCTION AS SHOWN ON PLANS. ON WESTBOUND 273, SAWCUT AND REMOVE EXISTING CURB, GUARDRAIL, DRAINAGE STRUCTURES AND MAINTENANCE PAVEMENT AS REQUIRED. ROUGH GRADE TO PROPOSED SUBGRADE, INSTALL UNDERDRAINS AND UNDERDRAIN OUTFALLS AS SHOWN ON PLANS. COMPLETE NEW DRAINAGE DITCH AND DRAINAGE SYSTEM ALONG RAMP A WORKING UPSTREAM FROM OUTFALL POINT(S). CONSTRUCT NEW CURB, GUARDRAIL AND DRAINAGE INLET ON WESTBOUND 273. CONSTRUCT NEW PAVEMENT SECTION ON RAMP A TO THE TOP OF THE B COURSE.
15. MILL THE REMAINING PORTION OF RAMP A AND OVERLAY ALL OF RAMP A AS SHOWN ON PHASE 1 PLANS, ADJUST INLETS, INSTALL PERMANENT TRAFFIC SIGNS, AND INSTALL PERMANENT PAVEMENT MARKINGS ON RAMP A FROM I-95 TO STATION 122+50.
16. USE TA-33 TO CLOSE THE INSIDE SHOULDER AND LANE ON WESTBOUND 273 AT NIGHT DURING ALLOWABLE LANE CLOSURE HOURS TO INSTALL DRAINAGE PIPE AND INLET.
17. STABILIZE AREA IN ACCORDANCE WITH DELDOT STANDARD SPECIFICATIONS BEFORE PROCEEDING TO THE NEXT PHASE. REMOVE EROSION AND SEDIMENT CONTROL DEVICES AFTER FINAL VEGETATIVE STABILIZATION OF ALL DISTURBED AREAS AS DETERMINED BY THE ENGINEER. REMOVE ALL TRAFFIC CONTROL DEVICES NOT REQUIRED FOR FUTURE PHASES.

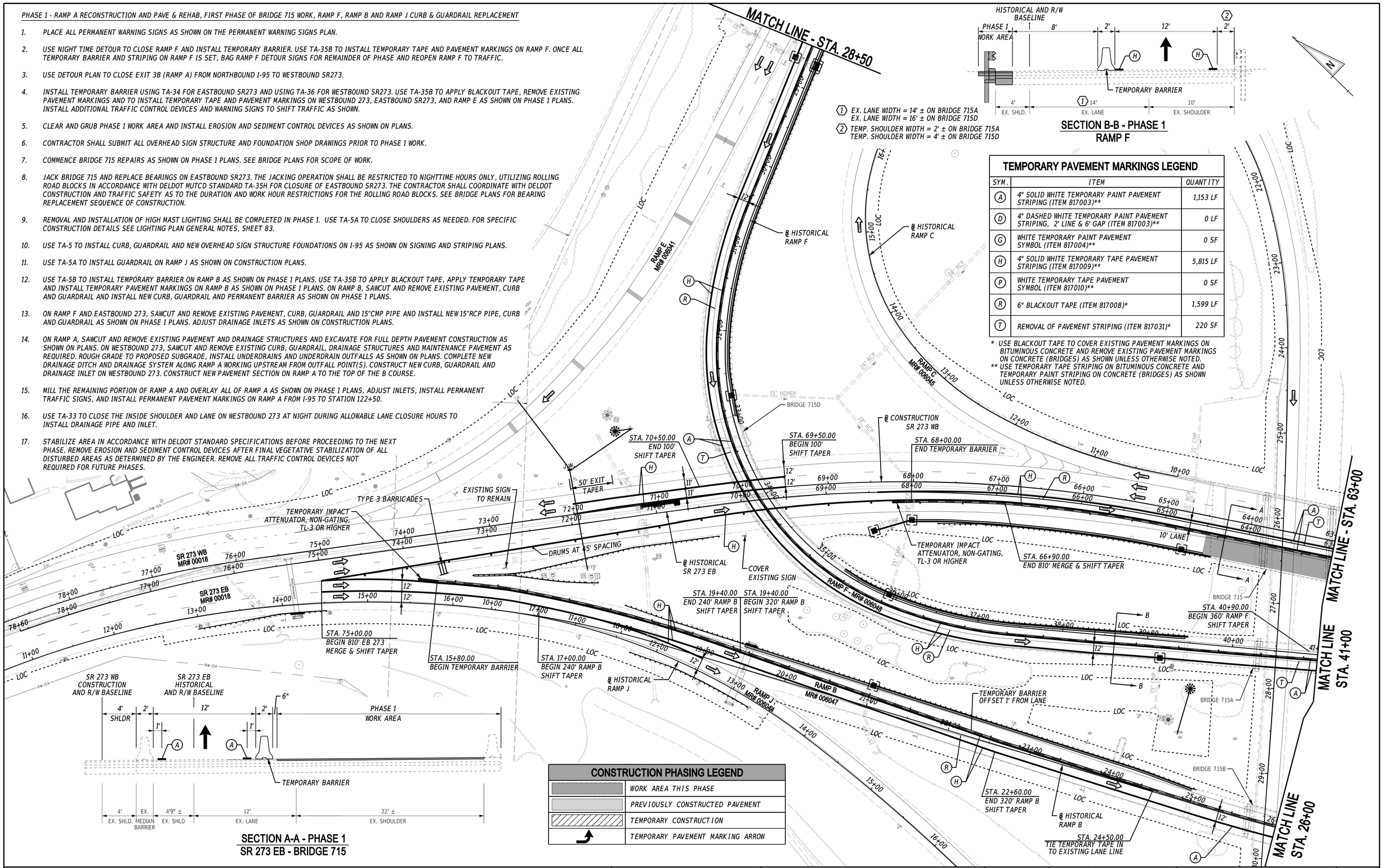

1 EX. LANE WIDTH = 14' ± ON BRIDGE 715A
EX. LANE WIDTH = 16' ± ON BRIDGE 715D

2 TEMP. SHOULDER WIDTH = 2' ± ON BRIDGE 715A
TEMP. SHOULDER WIDTH = 4' ± ON BRIDGE 715D

SECTION B-B - PHASE 1
RAMP F

TEMPORARY PAVEMENT MARKINGS LEGEND

SYM.	ITEM	QUANTITY
A	4" SOLID WHITE TEMPORARY PAINT PAVEMENT STRIPING (ITEM 817003)**	1,153 LF
D	4" DASHED WHITE TEMPORARY PAINT PAVEMENT STRIPING, 2' LINE & 6' GAP (ITEM 817003)**	0 LF
G	WHITE TEMPORARY PAINT PAVEMENT SYMBOL (ITEM 817004)**	0 SF
H	4" SOLID WHITE TEMPORARY TAPE PAVEMENT STRIPING (ITEM 817009)**	5,815 LF
P	WHITE TEMPORARY TAPE PAVEMENT SYMBOL (ITEM 817010)**	0 SF
R	6" BLACKOUT TAPE (ITEM 817008)*	1,599 LF
T	REMOVAL OF PAVEMENT STRIPING (ITEM 817031)*	220 SF

* USE BLACKOUT TAPE TO COVER EXISTING PAVEMENT MARKINGS ON BITUMINOUS CONCRETE AND REMOVE EXISTING PAVEMENT MARKINGS ON CONCRETE (BRIDGES) AS SHOWN UNLESS OTHERWISE NOTED.
** USE TEMPORARY TAPE STRIPING ON BITUMINOUS CONCRETE AND TEMPORARY PAINT STRIPING ON CONCRETE (BRIDGES) AS SHOWN UNLESS OTHERWISE NOTED.

SECTION A-A - PHASE 1
SR 273 EB - BRIDGE 715

CONSTRUCTION PHASING LEGEND

	WORK AREA THIS PHASE
	PREVIOUSLY CONSTRUCTED PAVEMENT
	TEMPORARY CONSTRUCTION
	TEMPORARY PAVEMENT MARKING ARROW

ADDENDA / REVISIONS

SCALE 0 50 100 150 FEET

HSIP NCC, SR 273 AND I-95 INTERCHANGE IMPROVEMENTS

CONTRACT	BRIDGE NO.	715, 715A, 715B, 715C & 715D
T200800713	DESIGNED BY:	B. BURRIS
COUNTY		
NEW CASTLE	CHECKED BY:	Z. SCHOLL

CONSTRUCTION PHASING, M.O.T., AND EROSION CONTROL PLAN - PHASE 1

SECTION RK&K
SHEET NO. 64

17-AUG-2020
15:43
\\balserv01\v2014\20141414144_DelDOT170\Task 4A - Harmony FD\Cadd\Contract\Plans\cs05_Har.dgn

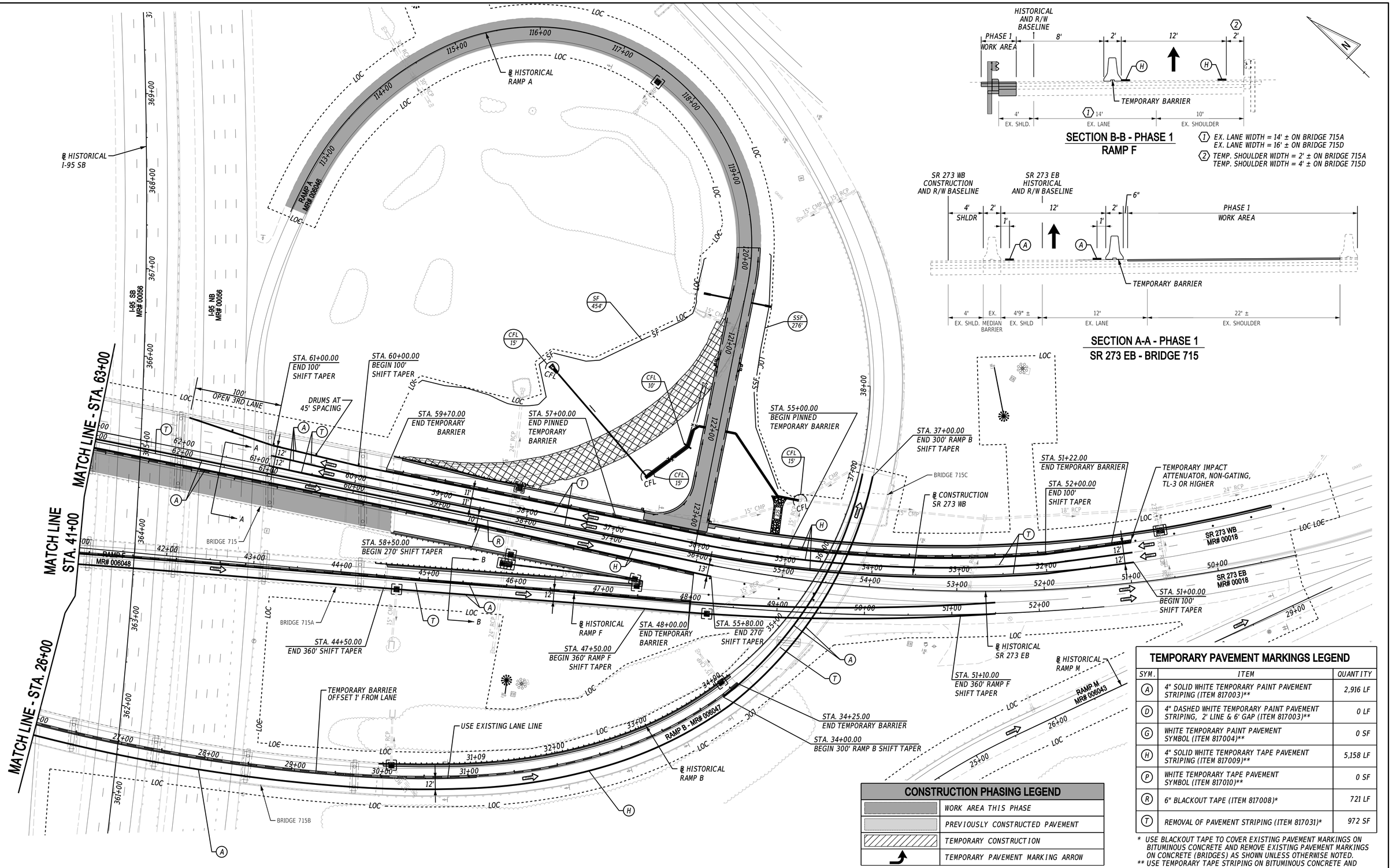

SECTION B-B - PHASE 1
RAMP F

1 EX. LANE WIDTH = 14' ± ON BRIDGE 715A
EX. LANE WIDTH = 16' ± ON BRIDGE 715D

2 TEMP. SHOULDER WIDTH = 2' ± ON BRIDGE 715A
TEMP. SHOULDER WIDTH = 4' ± ON BRIDGE 715D

SECTION A-A - PHASE 1
SR 273 EB - BRIDGE 715

TEMPORARY PAVEMENT MARKINGS LEGEND

SYM.	ITEM	QUANTITY
A	4" SOLID WHITE TEMPORARY PAINT PAVEMENT STRIPING (ITEM 817003)**	2,916 LF
D	4" DASHED WHITE TEMPORARY PAINT PAVEMENT STRIPING, 2' LINE & 6' GAP (ITEM 817003)**	0 LF
G	WHITE TEMPORARY PAINT PAVEMENT SYMBOL (ITEM 817004)**	0 SF
H	4" SOLID WHITE TEMPORARY TAPE PAVEMENT STRIPING (ITEM 817009)**	5,158 LF
P	WHITE TEMPORARY TAPE PAVEMENT SYMBOL (ITEM 817010)**	0 SF
R	6" BLACKOUT TAPE (ITEM 817008)*	721 LF
T	REMOVAL OF PAVEMENT STRIPING (ITEM 817031)*	972 SF

* USE BLACKOUT TAPE TO COVER EXISTING PAVEMENT MARKINGS ON BITUMINOUS CONCRETE AND REMOVE EXISTING PAVEMENT MARKINGS ON CONCRETE (BRIDGES) AS SHOWN UNLESS OTHERWISE NOTED.
** USE TEMPORARY TAPE STRIPING ON BITUMINOUS CONCRETE AND TEMPORARY PAINT STRIPING ON CONCRETE (BRIDGES) AS SHOWN UNLESS OTHERWISE NOTED.

CONSTRUCTION PHASING LEGEND

	WORK AREA THIS PHASE
	PREVIOUSLY CONSTRUCTED PAVEMENT
	TEMPORARY CONSTRUCTION
	TEMPORARY PAVEMENT MARKING ARROW

ADDENDA / REVISIONS

SCALE 0 50 100 150 FEET

HSIP NCC, SR 273 AND I-95 INTERCHANGE IMPROVEMENTS

CONTRACT	BRIDGE NO.	715, 715A, 715B, 715C & 715D
T200800713	DESIGNED BY:	B. BURRIS
COUNTY	CHECKED BY:	Z. SCHOLL
NEW CASTLE		

CONSTRUCTION PHASING, M.O.T., AND EROSION CONTROL PLAN - PHASE 1

SECTION: RK&K
SHEET NO. 65

13-AUG-2020
13:49
\\balservb1\v2014\20\14\14144_DelDOT\70\Task 4A - Harmony FD\Cadd\Contract\Plans\ss96_Har.dgn

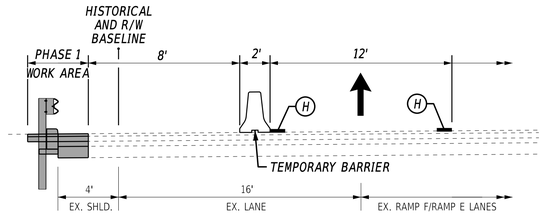

SECTION B-B - PHASE 1
RAMP F

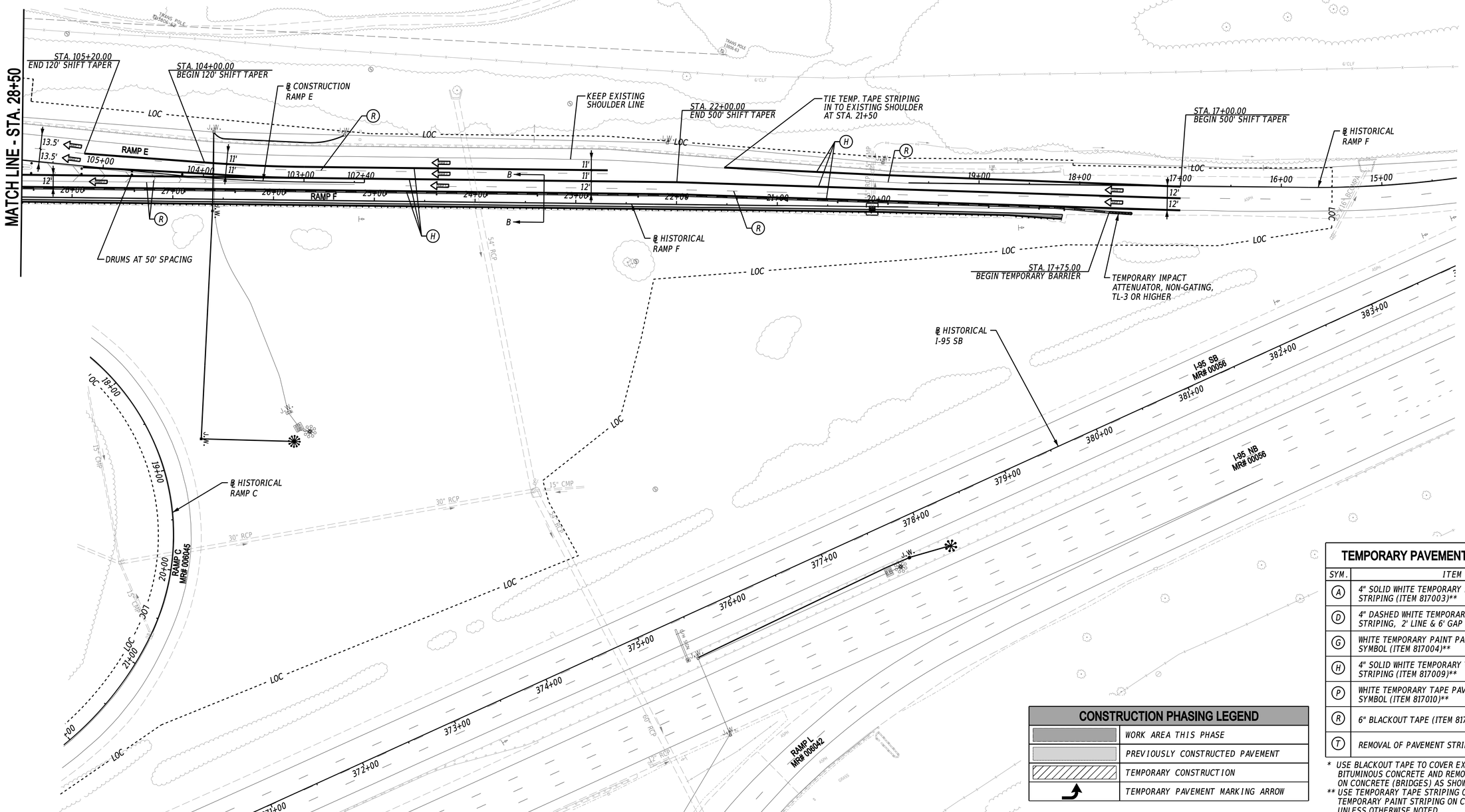

TEMPORARY PAVEMENT MARKINGS LEGEND

SYM.	ITEM	QUANTITY
A	4" SOLID WHITE TEMPORARY PAINT PAVEMENT STRIPING (ITEM 817003)**	0 LF
D	4" DASHED WHITE TEMPORARY PAINT PAVEMENT STRIPING, 2' LINE & 6' GAP (ITEM 817003)**	0 LF
G	WHITE TEMPORARY PAINT PAVEMENT SYMBOL (ITEM 817004)**	0 SF
H	4" SOLID WHITE TEMPORARY TAPE PAVEMENT STRIPING (ITEM 817009)**	3,483 LF
P	WHITE TEMPORARY TAPE PAVEMENT SYMBOL (ITEM 817010)**	0 SF
R	6" BLACKOUT TAPE (ITEM 817008)*	1,325 LF
T	REMOVAL OF PAVEMENT STRIPING (ITEM 817031)*	0 SF

* USE BLACKOUT TAPE TO COVER EXISTING PAVEMENT MARKINGS ON BITUMINOUS CONCRETE AND REMOVE EXISTING PAVEMENT MARKINGS ON CONCRETE (BRIDGES) AS SHOWN UNLESS OTHERWISE NOTED.

** USE TEMPORARY TAPE STRIPING ON BITUMINOUS CONCRETE AND TEMPORARY PAINT STRIPING ON CONCRETE (BRIDGES) AS SHOWN UNLESS OTHERWISE NOTED.

CONSTRUCTION PHASING LEGEND

	WORK AREA THIS PHASE
	PREVIOUSLY CONSTRUCTED PAVEMENT
	TEMPORARY CONSTRUCTION
	TEMPORARY PAVEMENT MARKING ARROW

ADDENDA / REVISIONS

SCALE
0 50 100 150
FEET

HSIP NCC, SR 273 AND I-95 INTERCHANGE IMPROVEMENTS

CONTRACT	BRIDGE NO.	715, 715A, 715B, 715C & 715D
T200800713	DESIGNED BY:	B. BURRIS
COUNTY		
NEW CASTLE	CHECKED BY:	Z. SCHOLL

CONSTRUCTION PHASING, M.O.T., AND EROSION CONTROL PLAN - PHASE 1

SECTION: RK&K

SHEET NO. 66

13-AUG-2020
13:11
\\balservb1\v2014\20\14\14144_DelDOT170T\Task 4A - Harmony FD\Cadd\Contract\Plans\cs817_Har.dgn

PHASE 2 - FIRST PHASE OF RAMP E RECONSTRUCTION, FIRST PHASE OF WESTBOUND SR273 WIDENING, RAMP F CURB AND GUARDRAIL REPLACEMENT AND RAMP C PAVE & REHAB

1. REMOVE BAGS FROM RAMP F DETOUR SIGNS TO CLOSE RAMP F DURING ALLOWABLE NIGHT TIME HOURS AND RELOCATE/REMOVE TEMPORARY BARRIER AS SHOWN ON PHASE 2 PLANS UTILIZING TEMPORARY STRIPING PLACED IN PHASE 1. ONCE ALL TEMPORARY BARRIER ON RAMP F IS SET, BAG RAMP F DETOUR SIGNS FOR REMAINDER OF PHASE AND REOPEN RAMP F TO TRAFFIC.

2. USE DETOUR PLAN TO CLOSE ENTRANCE RAMP C FROM WESTBOUND SR273 TO SOUTHBOUND I-95.

3. USE TA-34 TO RELOCATE TEMPORARY BARRIER ON EASTBOUND SR273, RAMP B, AND WESTBOUND SR 273 TO THE PHASE 2 ALIGNMENTS. USE TA-5B TO INSTALL RELOCATED TEMPORARY BARRIER ON RAMP E. USE TA-35B TO REMOVE EXISTING PAVEMENT MARKINGS AND TAPE, APPLY TEMPORARY STRIPING AND BLACKOUT TAPE, AND INSTALL TEMPORARY PAVEMENT MARKINGS AS SHOWN ON PHASE 2 PLANS. INSTALL ADDITIONAL TRAFFIC CONTROL DEVICES AND WARNING SIGNS TO SHIFT TRAFFIC ON WESTBOUND SR273 AND RAMP E AS SHOWN.

4. WITH PRIOR APPROVAL FROM ENGINEER, IMPLEMENT PHASE 2A TO CLOSE WESTBOUND SR 273 DOWN TO ONE LANE AND COMMENCE BRIDGE 715 DECK REPAIRS. SEE PHASE 2A PLANS FOR PHASE 2A TRAFFIC CONTROL. THIS WORK IS EXPECTED TO TAKE A MAXIMUM OF 40 DAYS TO COMPLETE. PHASE 2A TO BE CONCURRENT AT ANY TIME DURING PHASE 2.

5. CLEAR AND GRUB PHASE 2 WORK AREA AND INSTALL EROSION AND SEDIMENT CONTROL DEVICES AS SHOWN ON PLANS.

6. JACK BRIDGE 715 AND REPLACE BEARINGS ON WESTBOUND SR273. THE JACKING OPERATION SHALL BE RESTRICTED TO NIGHTTIME HOURS ONLY, UTILIZING ROLLING ROAD BLOCKS IN ACCORDANCE WITH DELDOT MUTCD STANDARD TA-35H FOR CLOSURE OF WESTBOUND SR273. THE CONTRACTOR SHALL COORDINATE WITH DELDOT CONSTRUCTION AND TRAFFIC SAFETY AS TO THE DURATION AND WORK HOUR RESTRICTIONS FOR THE ROLLING ROAD BLOCKS. SEE BRIDGE PLANS FOR BEARING REPLACEMENT SEQUENCE OF CONSTRUCTION.

7. COMMENCE CONSTRUCTION ACTIVITIES ON RAMP E AND WESTBOUND 273. SAWCUT AND REMOVE EXISTING PAVEMENT AND EXCAVATE FOR FULL DEPTH PAVEMENT CONSTRUCTION AS SHOWN ON PLANS. REMOVE EXISTING GUARDRAIL, CURB AND MAINTENANCE PAVEMENT AS REQUIRED. ROUGH GRADE TO PROPOSED SUBGRADE, INSTALL UNDERDRAINS AND UNDERDRAIN OUTFALLS AS SHOWN ON PLANS. COMPLETE FIRST HALF OF DRAINAGE SYSTEM AS SHOWN ON PHASE 2 ALONG RAMP E WORKING UPSTREAM FROM OUTFALL POINT(S). INSTALL NEW CURB AND GUARDRAIL WITHIN THE PHASE 2 WORK AREA.

8. ON RAMP F, SAWCUT AND REMOVE EXISTING PAVEMENT, CURB, GUARDRAIL AND INSTALL NEW CURB AND GUARDRAIL AS SHOWN ON PHASE 2 PLANS. ADJUST DRAINAGE INLETS AS SHOWN ON CONSTRUCTION PLANS.

9. COMPLETE ALL NEW TRAFFIC SIGNAL INSTALLATIONS AT THE INTERSECTION OF RAMP E AND WESTBOUND SR273, ENSURING THAT QUEUE DETECTION IS FUNCTIONAL AND STOP LINES ARE IN PLACE PRIOR TO THIS INTERSECTION BEING OPEN TO TRAFFIC.

10. INSTALL NEW OVERHEAD SIGN STRUCTURE FOUNDATIONS ON SR273. CONSTRUCT NEW PAVEMENT SECTION TO FINAL GRADE ON WESTBOUND SR273 AND RAMP E AND FINAL GRADE SIDE SLOPES. KEEP EXISTING RAMP E TRAFFIC PATTERNS OPEN.

11. INSTALL NEW OVERHEAD SIGN STRUCTURE ON SR273. INSTALLATION SHALL BE RESTRICTED TO NIGHTTIME HOURS ONLY, UTILIZING ROLLING ROAD BLOCKS IN ACCORDANCE WITH DELDOT MUTCD STANDARD TA-35H FOR CLOSURES. THE CONTRACTOR SHALL COORDINATE WITH DELDOT CONSTRUCTION AND TRAFFIC SAFETY AS TO THE DURATION AND WORK HOUR RESTRICTIONS FOR THE ROLLING ROAD BLOCKS.

12. PHASE 3 WORK SHALL NOT COMMENCE UNTIL THE NEW SIGN STRUCTURE IS INSTALLED AND ACCEPTED BY THE ENGINEER.

13. ON RAMP C, REMOVE EXISTING CURB, GUARDRAIL & MAINTENANCE PAVEMENT AND INSTALL NEW GUARDRAIL AS SHOWN ON CONSTRUCTION PLANS. MILL, OVERLAY AND APPLY HIGH FRICTION SURFACE TREATMENT ON RAMP C. ADJUST INLETS AND INSTALL PERMANENT TRAFFIC SIGNS AND PERMANENT PAVEMENT MARKINGS.

14. STABILIZE AREA IN ACCORDANCE WITH DELDOT STANDARD SPECIFICATIONS BEFORE PROCEEDING TO THE NEXT PHASE. REMOVE EROSION AND SEDIMENT CONTROL DEVICES AFTER FINAL VEGETATIVE STABILIZATION OF ALL DISTURBED AREAS AS DETERMINED BY THE ENGINEER. REMOVE ALL TRAFFIC CONTROL DEVICES NOT REQUIRED FOR FUTURE PHASES.

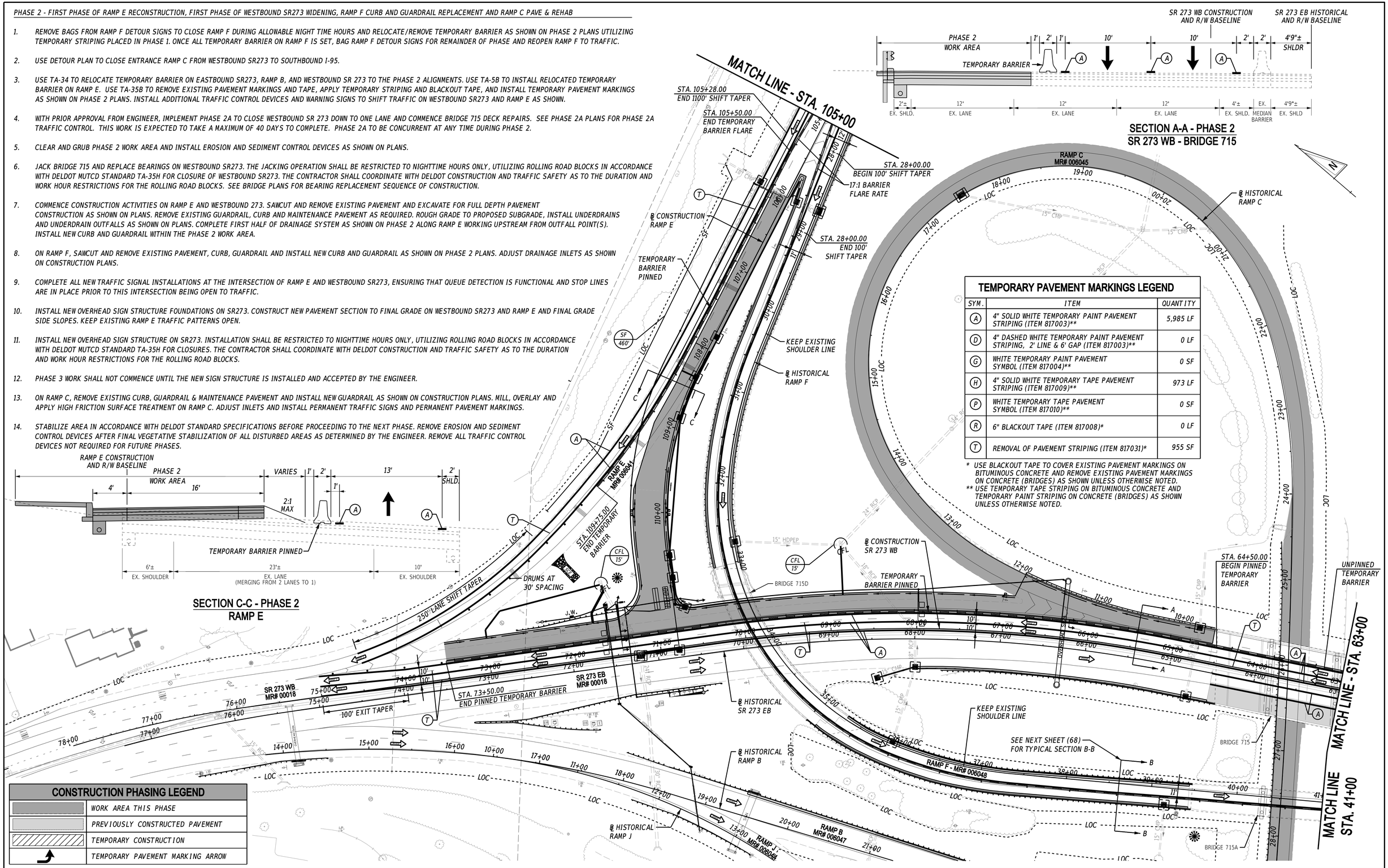

TEMPORARY PAVEMENT MARKINGS LEGEND

SYM.	ITEM	QUANTITY
A	4" SOLID WHITE TEMPORARY PAINT PAVEMENT STRIPING (ITEM 817003)**	5,985 LF
D	4" DASHED WHITE TEMPORARY PAINT PAVEMENT STRIPING, 2' LINE & 6' GAP (ITEM 817003)**	0 LF
G	WHITE TEMPORARY PAINT PAVEMENT SYMBOL (ITEM 817004)**	0 SF
H	4" SOLID WHITE TEMPORARY TAPE PAVEMENT STRIPING (ITEM 817009)**	973 LF
P	WHITE TEMPORARY TAPE PAVEMENT SYMBOL (ITEM 817010)**	0 SF
R	6" BLACKOUT TAPE (ITEM 817008)*	0 LF
T	REMOVAL OF PAVEMENT STRIPING (ITEM 817031)*	955 SF

* USE BLACKOUT TAPE TO COVER EXISTING PAVEMENT MARKINGS ON BITUMINOUS CONCRETE AND REMOVE EXISTING PAVEMENT MARKINGS ON CONCRETE (BRIDGES) AS SHOWN UNLESS OTHERWISE NOTED.
** USE TEMPORARY TAPE STRIPING ON BITUMINOUS CONCRETE AND TEMPORARY PAINT STRIPING ON CONCRETE (BRIDGES) AS SHOWN UNLESS OTHERWISE NOTED.

CONSTRUCTION PHASING LEGEND

	WORK AREA THIS PHASE
	PREVIOUSLY CONSTRUCTED PAVEMENT
	TEMPORARY CONSTRUCTION
	TEMPORARY PAVEMENT MARKING ARROW

ADDENDA / REVISIONS

SCALE 0 50 100 150 FEET

HSIP NCC, SR 273 AND I-95 INTERCHANGE IMPROVEMENTS

CONTRACT	BRIDGE NO.	715, 715A, 715B, 715C & 715D
T200800713	DESIGNED BY:	B. BURRIS
COUNTY		
NEW CASTLE	CHECKED BY:	Z. SCHOLL

CONSTRUCTION PHASING, M.O.T., AND EROSION CONTROL PLAN - PHASE 2

SECTION RK&K

SHEET NO. 67

17-AUG-2020
15:36
\\balsvr01\v2014\20141414144_DelDOT\170\Task 4A - Harmony FD\Cadd\Contract\Plans\cs06_1ter.dgn

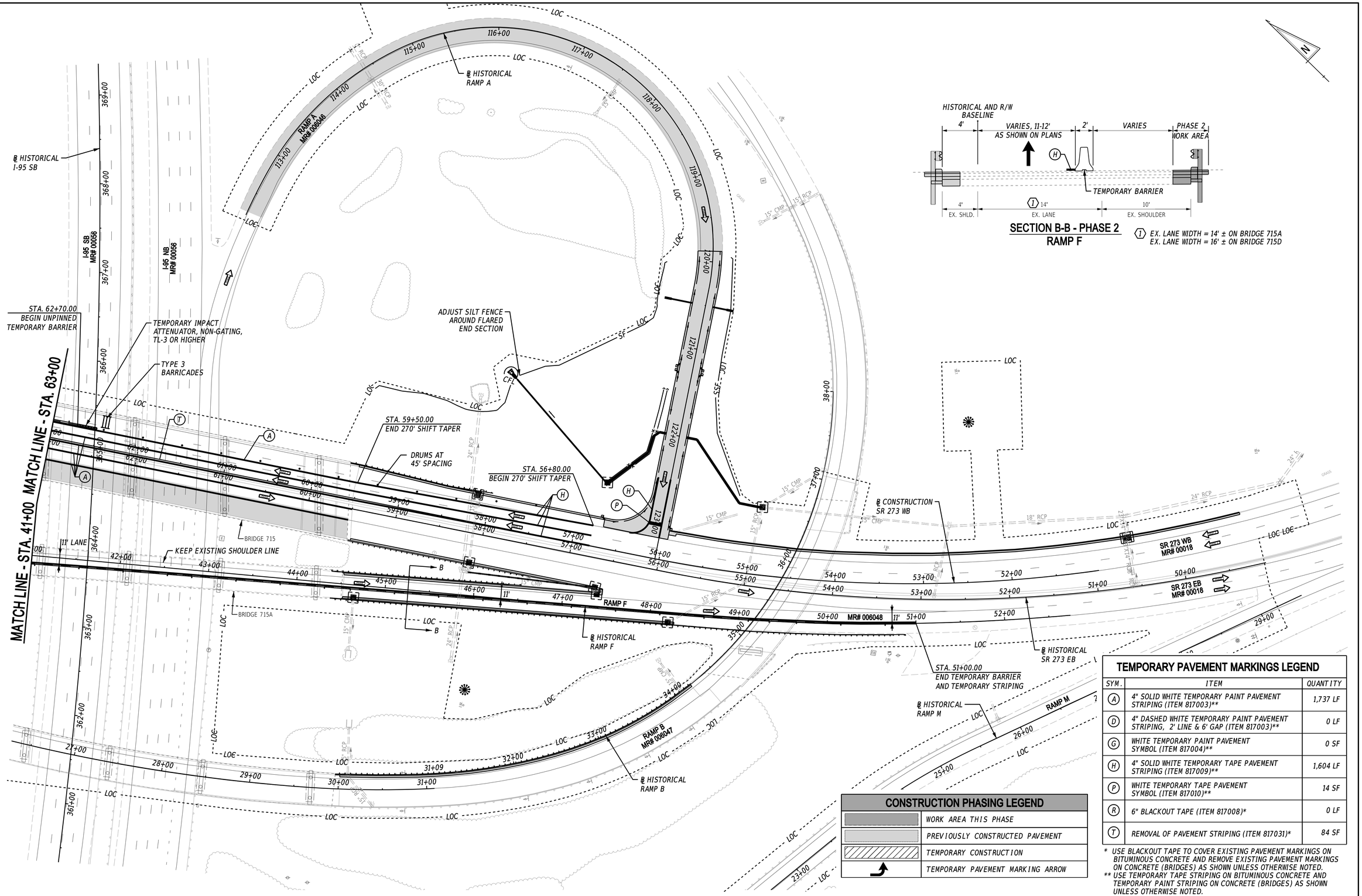

SECTION B-B - PHASE 2
RAMP F

(I) EX. LANE WIDTH = 14' ± ON BRIDGE 715A
EX. LANE WIDTH = 16' ± ON BRIDGE 715D

TEMPORARY PAVEMENT MARKINGS LEGEND

SYM.	ITEM	QUANTITY
(A)	4" SOLID WHITE TEMPORARY PAINT PAVEMENT STRIPING (ITEM 817003)**	1,737 LF
(D)	4" DASHED WHITE TEMPORARY PAINT PAVEMENT STRIPING, 2' LINE & 6' GAP (ITEM 817003)**	0 LF
(G)	WHITE TEMPORARY PAINT PAVEMENT SYMBOL (ITEM 817004)**	0 SF
(H)	4" SOLID WHITE TEMPORARY TAPE PAVEMENT STRIPING (ITEM 817009)**	1,604 LF
(P)	WHITE TEMPORARY TAPE PAVEMENT SYMBOL (ITEM 817010)**	14 SF
(R)	6" BLACKOUT TAPE (ITEM 817008)*	0 LF
(T)	REMOVAL OF PAVEMENT STRIPING (ITEM 817031)*	84 SF

* USE BLACKOUT TAPE TO COVER EXISTING PAVEMENT MARKINGS ON BITUMINOUS CONCRETE AND REMOVE EXISTING PAVEMENT MARKINGS ON CONCRETE (BRIDGES) AS SHOWN UNLESS OTHERWISE NOTED.
** USE TEMPORARY TAPE STRIPING ON BITUMINOUS CONCRETE AND TEMPORARY PAINT STRIPING ON CONCRETE (BRIDGES) AS SHOWN UNLESS OTHERWISE NOTED.

CONSTRUCTION PHASING LEGEND

	WORK AREA THIS PHASE
	PREVIOUSLY CONSTRUCTED PAVEMENT
	TEMPORARY CONSTRUCTION
	TEMPORARY PAVEMENT MARKING ARROW

ADDENDA / REVISIONS

SCALE 0 50 100 150 FEET

HSIP NCC, SR 273 AND I-95 INTERCHANGE IMPROVEMENTS

CONTRACT	BRIDGE NO.	715, 715A, 715B, 715C & 715D
T200800713	DESIGNED BY:	B. BURRIS
COUNTY		
NEW CASTLE	CHECKED BY:	Z. SCHOLL

CONSTRUCTION PHASING, M.O.T., AND EROSION CONTROL PLAN - PHASE 2

SECTION RK&K

SHEET NO. 68

13-AUG-2020
1533
\\bdsfs\ro01\v2014\20141414\4_Dell\DOT1700\Task 4A - Harmony FD\Cadd\ContractPlans\cs09_Har.dgn

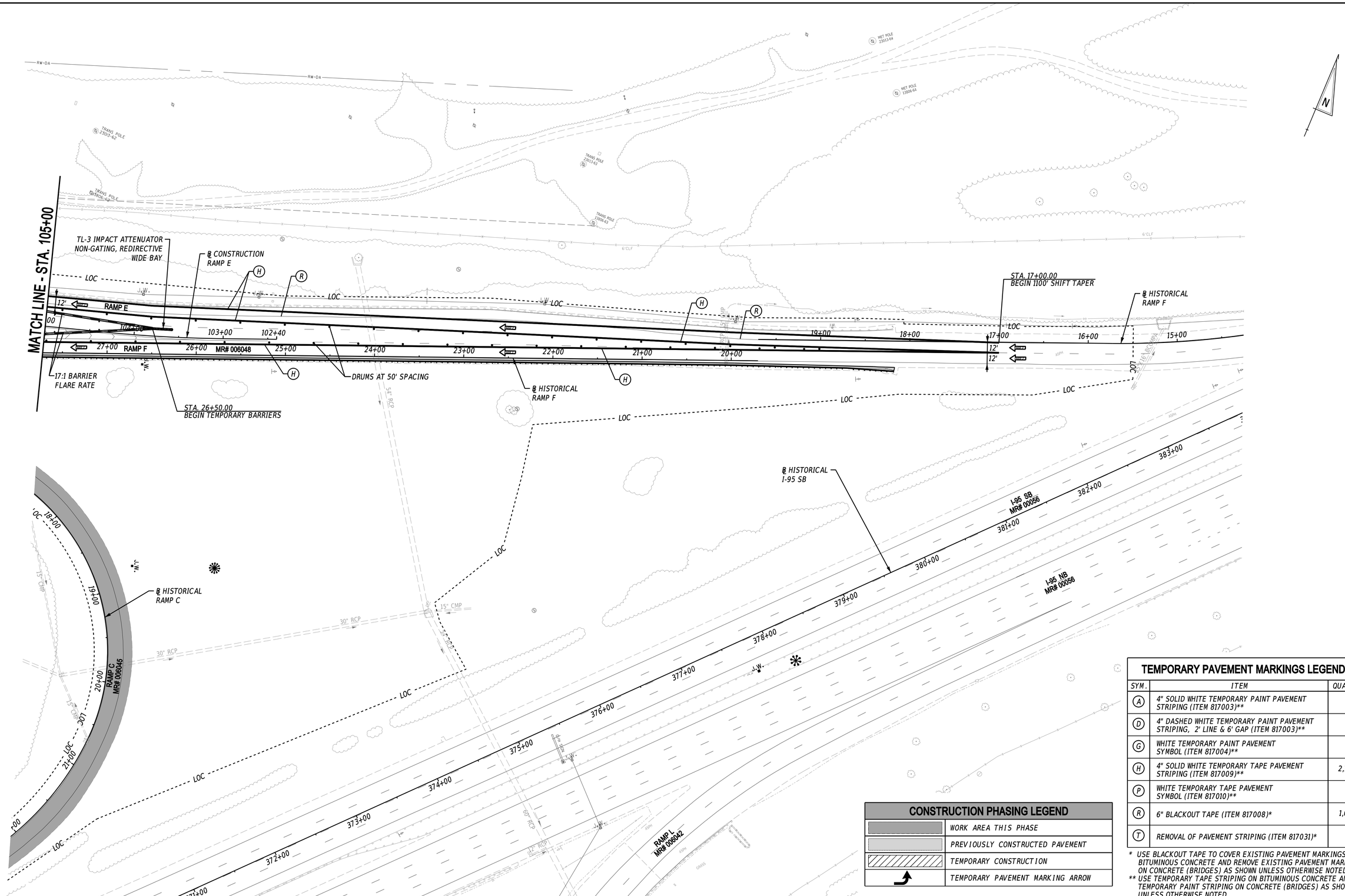

TEMPORARY PAVEMENT MARKINGS LEGEND

SYM.	ITEM	QUANTITY
A	4" SOLID WHITE TEMPORARY PAINT PAVEMENT STRIPING (ITEM 817003)**	0 LF
D	4" DASHED WHITE TEMPORARY PAINT PAVEMENT STRIPING, 2' LINE & 6' GAP (ITEM 817003)**	0 LF
G	WHITE TEMPORARY PAINT PAVEMENT SYMBOL (ITEM 817004)**	0 SF
H	4" SOLID WHITE TEMPORARY TAPE PAVEMENT STRIPING (ITEM 817009)**	2,757 LF
P	WHITE TEMPORARY TAPE PAVEMENT SYMBOL (ITEM 817010)**	0 SF
R	6" BLACKOUT TAPE (ITEM 817008)*	1,069 LF
T	REMOVAL OF PAVEMENT STRIPING (ITEM 817031)*	0 SF

* USE BLACKOUT TAPE TO COVER EXISTING PAVEMENT MARKINGS ON BITUMINOUS CONCRETE AND REMOVE EXISTING PAVEMENT MARKINGS ON CONCRETE (BRIDGES) AS SHOWN UNLESS OTHERWISE NOTED.

** USE TEMPORARY TAPE STRIPING ON BITUMINOUS CONCRETE AND TEMPORARY PAINT STRIPING ON CONCRETE (BRIDGES) AS SHOWN UNLESS OTHERWISE NOTED.

CONSTRUCTION PHASING LEGEND

	WORK AREA THIS PHASE
	PREVIOUSLY CONSTRUCTED PAVEMENT
	TEMPORARY CONSTRUCTION
	TEMPORARY PAVEMENT MARKING ARROW

ADDENDA / REVISIONS

SCALE 0 50 100 150 FEET

HSIP NCC, SR 273 AND I-95 INTERCHANGE IMPROVEMENTS

CONTRACT	BRIDGE NO.	715, 715A, 715B, 715C & 715D
T200800713	DESIGNED BY:	B. BURRIS
COUNTY		
NEW CASTLE	CHECKED BY:	Z. SCHOLL

CONSTRUCTION PHASING, M.O.T., AND EROSION CONTROL PLAN - PHASE 2

SECTION: RK&K

SHEET NO. 69

13-AUG-2020
13:39
\\balservb1\v2014\20\14\14144_DelDOT170T\Task 4A - Harmony FD\Cadd\Contract\Plans\cs10_Har.dgn

PHASE 2A - BRIDGE 715 DECK REPAIRS ON WESTBOUND SR 273

1. USE TA-34 TO RELOCATE TEMPORARY ATTENUATOR, TEMPORARY BARRIER AND PLACE ADDITIONAL TEMPORARY BARRIER ON WESTBOUND SR 273 TO THE PHASE 2A ALIGNMENT.
2. USE TA-35B TO REMOVE THE TEMPORARY PHASE 2 PAVEMENT MARKINGS AND INSTALL TEMPORARY PAVEMENT MARKINGS AS SHOWN ON PHASE 2A PLANS. INSTALL ADDITIONAL TRAFFIC CONTROL DEVICES AND WARNING SIGNS TO SHIFT TRAFFIC ON WESTBOUND SR273 AS SHOWN.
3. COMMENCE BRIDGE 715 DECK REPAIRS AS SHOWN ON PHASE 2A PLANS. SEE BRIDGE PLANS FOR SCOPE OF WORK.
4. SEE PHASE 2 PLAN SHEET 67 FOR REMAINING PHASE 2 SEQUENCE OF CONSTRUCTION.
5. PHASE 2A TO BE CONCURRENT AT ANY TIME DURING PHASE 2.
6. PHASE 2A SHALL ONLY BE USED TO PERFORM THE REQUIRED BRIDGE DECK REPAIRS TO BRIDGE 715 ON WESTBOUND SR 273 AS SHOWN ON PLANS.
7. IT IS ANTICIPATED THAT PHASE 2A SHALL TAKE A MAXMIMUM OF 40 DAYS TO COMPLETE. EFFORT SHALL BE MADE TO LIMIT THAT DURATION.

SECTION A-A - PHASE 2A
SR 273 WB - BRIDGE 715

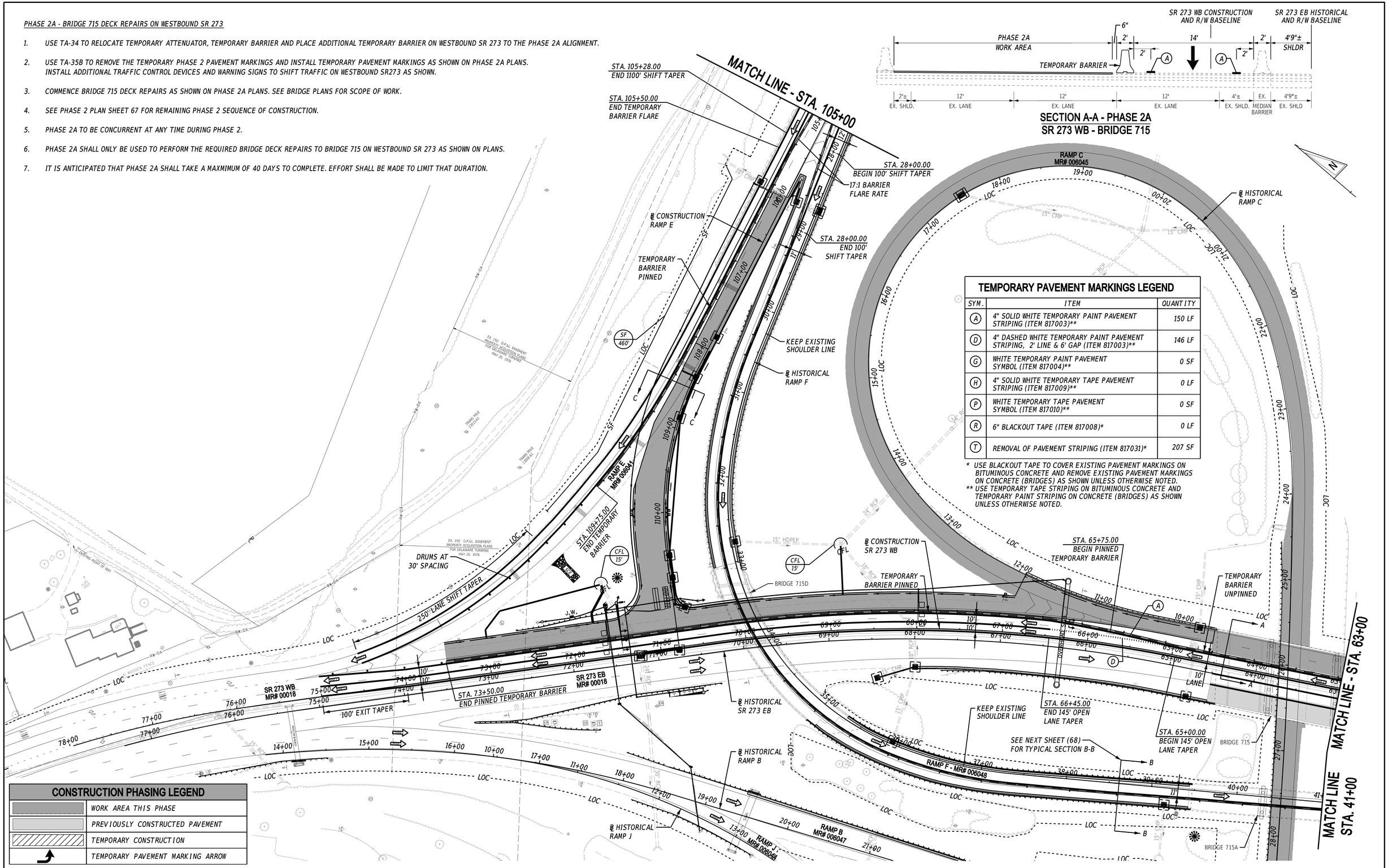

TEMPORARY PAVEMENT MARKINGS LEGEND

SYM.	ITEM	QUANTITY
A	4" SOLID WHITE TEMPORARY PAINT PAVEMENT STRIPING (ITEM 817003)**	150 LF
D	4" DASHED WHITE TEMPORARY PAINT PAVEMENT STRIPING, 2' LINE & 6' GAP (ITEM 817003)**	146 LF
G	WHITE TEMPORARY PAINT PAVEMENT SYMBOL (ITEM 817004)**	0 SF
H	4" SOLID WHITE TEMPORARY TAPE PAVEMENT STRIPING (ITEM 817009)**	0 LF
P	WHITE TEMPORARY TAPE PAVEMENT SYMBOL (ITEM 817010)**	0 SF
R	6" BLACKOUT TAPE (ITEM 817008)*	0 LF
T	REMOVAL OF PAVEMENT STRIPING (ITEM 817031)*	207 SF

* USE BLACKOUT TAPE TO COVER EXISTING PAVEMENT MARKINGS ON BITUMINOUS CONCRETE AND REMOVE EXISTING PAVEMENT MARKINGS ON CONCRETE (BRIDGES) AS SHOWN UNLESS OTHERWISE NOTED.
** USE TEMPORARY TAPE STRIPING ON BITUMINOUS CONCRETE AND TEMPORARY PAINT STRIPING ON CONCRETE (BRIDGES) AS SHOWN UNLESS OTHERWISE NOTED.

CONSTRUCTION PHASING LEGEND

	WORK AREA THIS PHASE
	PREVIOUSLY CONSTRUCTED PAVEMENT
	TEMPORARY CONSTRUCTION
	TEMPORARY PAVEMENT MARKING ARROW

ADDENDA / REVISIONS

SCALE 0 50 100 150 FEET

HSIP NCC, SR 273 AND I-95 INTERCHANGE IMPROVEMENTS

CONTRACT	BRIDGE NO.	715, 715A, 715B, 715C & 715D
T200800713	DESIGNED BY:	B. BURRIS
COUNTY		
NEW CASTLE	CHECKED BY:	Z. SCHOLL

CONSTRUCTION PHASING, M.O.T., AND EROSION CONTROL PLAN - PHASE 2A

SECTION: RK&K
SHEET NO. 70

17-AUG-2020
14:52
\\balsvr01\v2014\2014\14144_Del\00170\Task 4A - Harmony FD\Cadd\Contract\Plans\cs11_1far.dgn

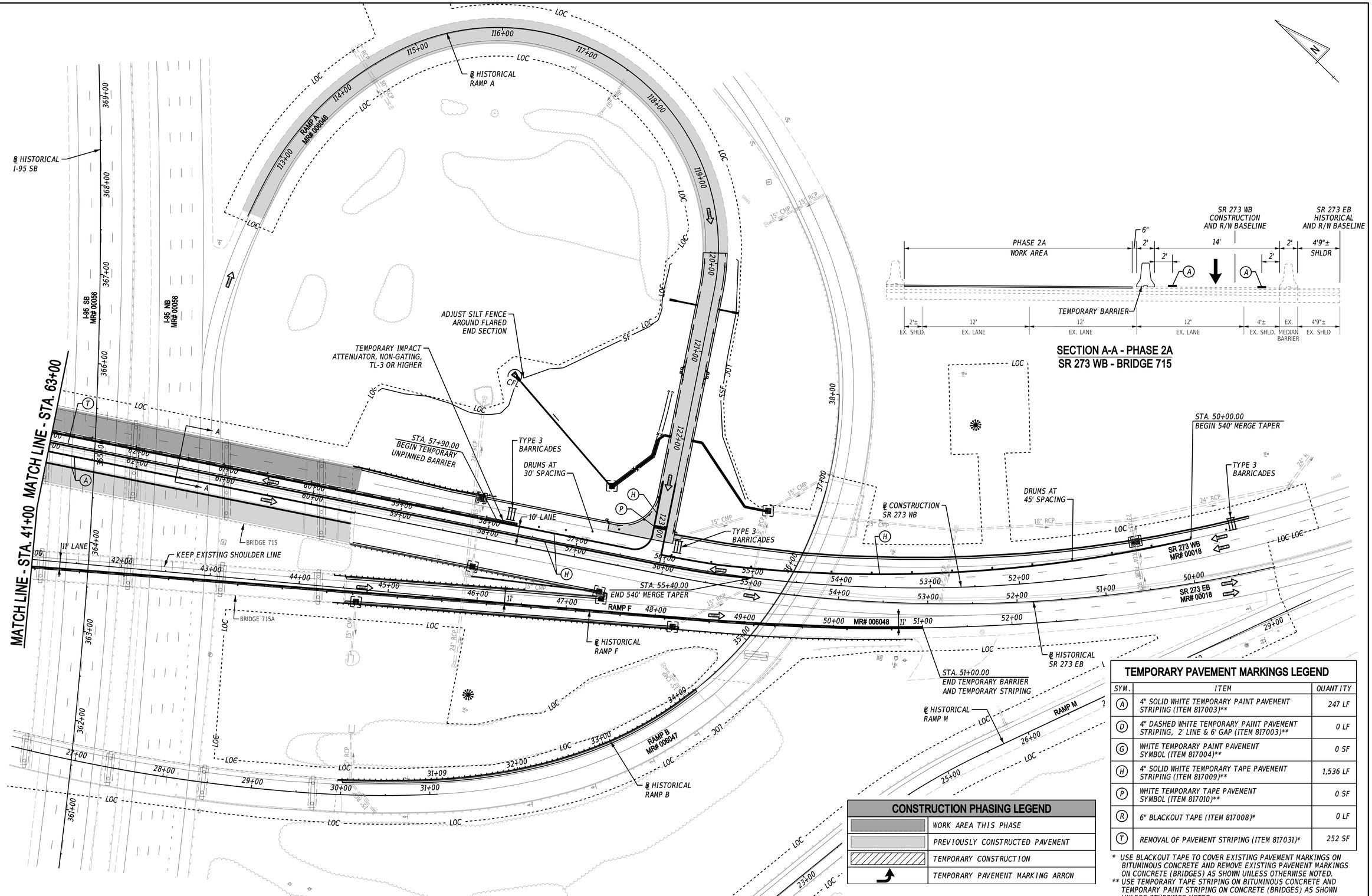

SECTION A-A - PHASE 2A
SR 273 WB - BRIDGE 715

CONSTRUCTION PHASING LEGEND

	WORK AREA THIS PHASE
	PREVIOUSLY CONSTRUCTED PAVEMENT
	TEMPORARY CONSTRUCTION
	TEMPORARY PAVEMENT MARKING ARROW

TEMPORARY PAVEMENT MARKINGS LEGEND

SYM.	ITEM	QUANTITY
A	4" SOLID WHITE TEMPORARY PAINT PAVEMENT STRIPING (ITEM 817003)**	247 LF
D	4" DASHED WHITE TEMPORARY PAINT PAVEMENT STRIPING, 2' LINE & 6' GAP (ITEM 817003)**	0 LF
G	WHITE TEMPORARY PAINT PAVEMENT SYMBOL (ITEM 817004)**	0 SF
H	4" SOLID WHITE TEMPORARY TAPE PAVEMENT STRIPING (ITEM 817009)**	1,536 LF
P	WHITE TEMPORARY TAPE PAVEMENT SYMBOL (ITEM 817010)**	0 SF
R	6" BLACKOUT TAPE (ITEM 817008)*	0 LF
T	REMOVAL OF PAVEMENT STRIPING (ITEM 817031)*	252 SF

* USE BLACKOUT TAPE TO COVER EXISTING PAVEMENT MARKINGS ON BITUMINOUS CONCRETE AND REMOVE EXISTING PAVEMENT MARKINGS ON CONCRETE (BRIDGES) AS SHOWN UNLESS OTHERWISE NOTED.

** USE TEMPORARY TAPE STRIPING ON BITUMINOUS CONCRETE AND TEMPORARY PAINT STRIPING ON CONCRETE (BRIDGES) AS SHOWN UNLESS OTHERWISE NOTED.

ADDENDA / REVISIONS

SCALE 0 50 100 150 FEET

HSIP NCC, SR 273 AND I-95 INTERCHANGE IMPROVEMENTS

CONTRACT	BRIDGE NO.	715, 715A, 715B, 715C & 715D
T200800713	DESIGNED BY:	B. BURRIS
COUNTY		
NEW CASTLE	CHECKED BY:	Z. SCHOLL

CONSTRUCTION PHASING, M.O.T., AND EROSION CONTROL PLAN - PHASE 2A

SECTION: RK&K

SHEET NO. 71

13-AUG-2020
15:35
\\balsrv01\v2014\2014144_DelDOT170\Task 4A - Harmony FD\Cadd\Contract\Plans\cs12_1tar.dgn

PHASE 3 - COMPLETE RAMP E RECONSTRUCTION, RAMP F PAVE & REHAB, COMPLETE WESTBOUND SR273 WIDENING & COMPLETE BRIDGE 715 WORK

1. REMOVE BAGS FROM RAMP F DETOUR SIGNS TO CLOSE RAMP F DURING ALLOWABLE NIGHT TIME CLOSURE HOURS TO REMOVE TEMPORARY BARRIER AND TEMPORARY TAPE STRIPING, MILL, OVERLAY, APPLY HIGH FRICTION SURFACE TREATMENT AND COMPLETE PERMANENT STRIPING STARTING AT STATION 28+50, ADJUSTING INLETS AND MANHOLES AS NEEDED. ONCE ALL WORK ON RAMP F HAS BEEN COMPLETED, REMOVE RAMP F DETOUR SIGNING FROM PROJECT AREA.

2. USE TA-5B FOR RAMP E AND USE TA-34 FOR WESTBOUND SR273 TO RELOCATE TEMPORARY BARRIER TO THE PHASE 3 ALIGNMENT. USE TA-34 TO INSTALL TEMPORARY BARRIER ON EASTBOUND SR273 AS SHOWN ON PLANS. USE TA-35B TO REMOVE EXISTING PAVEMENT MARKINGS, REMOVE PAVEMENT MARKING TAPE, REMOVE PHASE 2 TEMPORARY PAVEMENT MARKINGS, AND TO INSTALL PHASE 3 TEMPORARY PAVEMENT MARKINGS AS SHOWN ON PLANS. INSTALL ADDITIONAL TRAFFIC CONTROL DEVICES AND WARNING SIGNS TO SHIFT TRAFFIC ON BOTH WESTBOUND AND EASTBOUND SR273 AND ON RAMP E AS SHOWN.

3. CLEAR AND GRUB PHASE 3 WORK AREA AND INSTALL EROSION AND SEDIMENT CONTROL DEVICES AS SHOWN ON PLANS.

4. COMMENCE BRIDGE 715 REPAIRS AS SHOWN ON PHASE 3 PLANS. SEE BRIDGE PLANS FOR SCOPE OF WORK.

5. ALL WORK ASSOCIATED WITH THE STORMWATER MANAGEMENT POND TO BE COMPLETED IN PHASE 3 WITH CONSTRUCTION ACCESS FROM RAMP C. SEE STORMWATER MANAGEMENT PLAN SHEET 45 FOR SEQUENCE OF CONSTRUCTION.

6. INSTALL NEW OVERHEAD SIGN STRUCTURE FOUNDATIONS ON RAMP F AS SHOWN ON PHASE 3 PLANS.

7. SAWCUT AND REMOVE EXISTING PAVEMENT AND EXCAVATE FOR FULL DEPTH PAVEMENT CONSTRUCTION ON RAMP E AND WESTBOUND 273 AS SHOWN ON PLANS. ROUGH GRADE TO PROPOSED SUBGRADE, INSTALL NEW STREET LIGHT AND CONDUIT, UNDERDRAINS AND UNDERDRAIN OUTFALLS AS SHOWN ON PLANS. COMPLETE NEW DRAINAGE SYSTEM ALONG RAMP E WORKING UPSTREAM FROM OUTFALL POINT(S).

8. ON RAMP E/RAMP F, SAWCUT AND REMOVE EXISTING PAVEMENT, CURB, AND GUARDRAIL AND INSTALL CURB AND GUARDRAIL AS SHOWN ON PHASE 3 PLANS. ADJUST DRAINAGE INLETS AS SHOWN ON CONSTRUCTION PLANS.

9. CONSTRUCT NEW RAMP E AND WESTBOUND 273 PAVEMENT SECTION TO FINAL GRADE AND FINAL GRADE SIDE SLOPES AS SHOWN ON PLANS.

10. USE TA-5B TO REMOVE PHASE 3 TEMPORARY BARRIER. USE TA-35B TO REMOVE PHASE 3 TEMPORARY PAVEMENT MARKINGS AND TAPE AND TO INSTALL TEMPORARY PAVEMENT MARKINGS IN THE PERMANENT CONFIGURATION ON WESTBOUND SR273 AND RAMP E BEFORE TRANSITIONING TO PHASE 4.

11. STABILIZE AREA IN ACCORDANCE WITH DELDOT STANDARD SPECIFICATIONS BEFORE PROCEEDING TO THE NEXT PHASE. REMOVE EROSION AND SEDIMENT CONTROL DEVICES AFTER FINAL VEGETATIVE STABILIZATION OF ALL DISTURBED AREAS AS DETERMINED BY THE ENGINEER. REMOVE ALL TRAFFIC CONTROL DEVICES NOT REQUIRED FOR FUTURE PHASES.

SECTION A-A - PHASE 3
SR 273 EB - BRIDGE 715

SECTION B-B - PHASE 3
SR 273 WB - BRIDGE 715

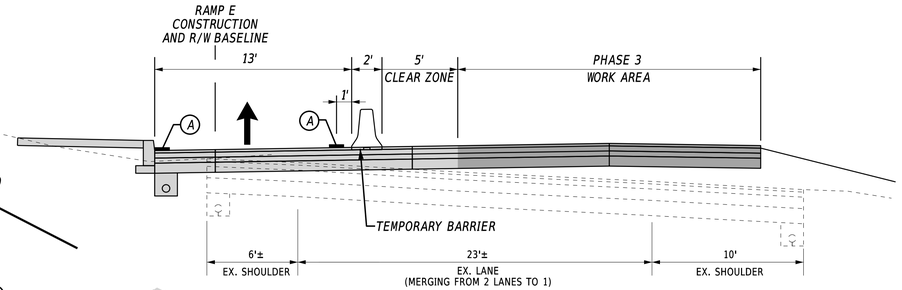

SECTION C-C - PHASE 3
RAMP E

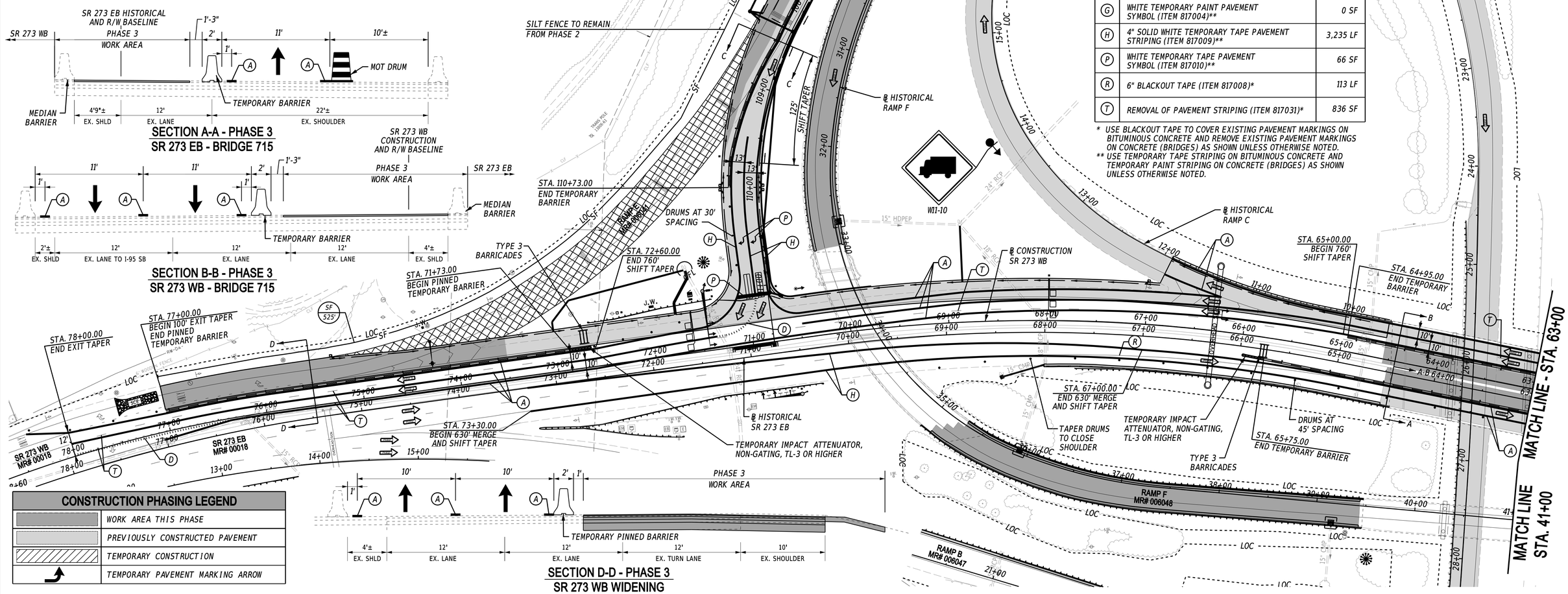

SECTION D-D - PHASE 3
SR 273 WB WIDENING

TEMPORARY PAVEMENT MARKINGS LEGEND

SYM.	ITEM	QUANTITY
A	4" SOLID WHITE TEMPORARY PAINT PAVEMENT STRIPING (ITEM 817003)**	4,705 LF
D	4" DASHED WHITE TEMPORARY PAINT PAVEMENT STRIPING, 2' LINE & 6' GAP (ITEM 817003)**	229 LF
G	WHITE TEMPORARY PAINT PAVEMENT SYMBOL (ITEM 817004)**	0 SF
H	4" SOLID WHITE TEMPORARY TAPE PAVEMENT STRIPING (ITEM 817009)**	3,235 LF
P	WHITE TEMPORARY TAPE PAVEMENT SYMBOL (ITEM 817010)**	66 SF
R	6" BLACKOUT TAPE (ITEM 817008)*	113 LF
T	REMOVAL OF PAVEMENT STRIPING (ITEM 817031)*	836 SF

* USE BLACKOUT TAPE TO COVER EXISTING PAVEMENT MARKINGS ON BITUMINOUS CONCRETE AND REMOVE EXISTING PAVEMENT MARKINGS ON CONCRETE (BRIDGES) AS SHOWN UNLESS OTHERWISE NOTED.
** USE TEMPORARY TAPE STRIPING ON BITUMINOUS CONCRETE AND TEMPORARY PAINT STRIPING ON CONCRETE (BRIDGES) AS SHOWN UNLESS OTHERWISE NOTED.

CONSTRUCTION PHASING LEGEND

	WORK AREA THIS PHASE
	PREVIOUSLY CONSTRUCTED PAVEMENT
	TEMPORARY CONSTRUCTION
	TEMPORARY PAVEMENT MARKING ARROW

ADDENDA / REVISIONS

SCALE 0 50 100 150 FEET

HSIP NCC, SR 273 AND I-95 INTERCHANGE IMPROVEMENTS

CONTRACT	BRIDGE NO.	715, 715A, 715B, 715C & 715D
T200800713	DESIGNED BY:	B. BURRIS
COUNTY		
NEW CASTLE	CHECKED BY:	Z. SCHOLL

CONSTRUCTION PHASING, M.O.T., AND EROSION CONTROL PLAN - PHASE 3

SECTION: RK&K
SHEET NO. 72

13-AUG-2020
13:33
\\balsrv01\v2014\20141414144_DelDOT170T\Task 4A - Harmony FD\Cadd\Contract\Plans\cs13_Plan.dgn

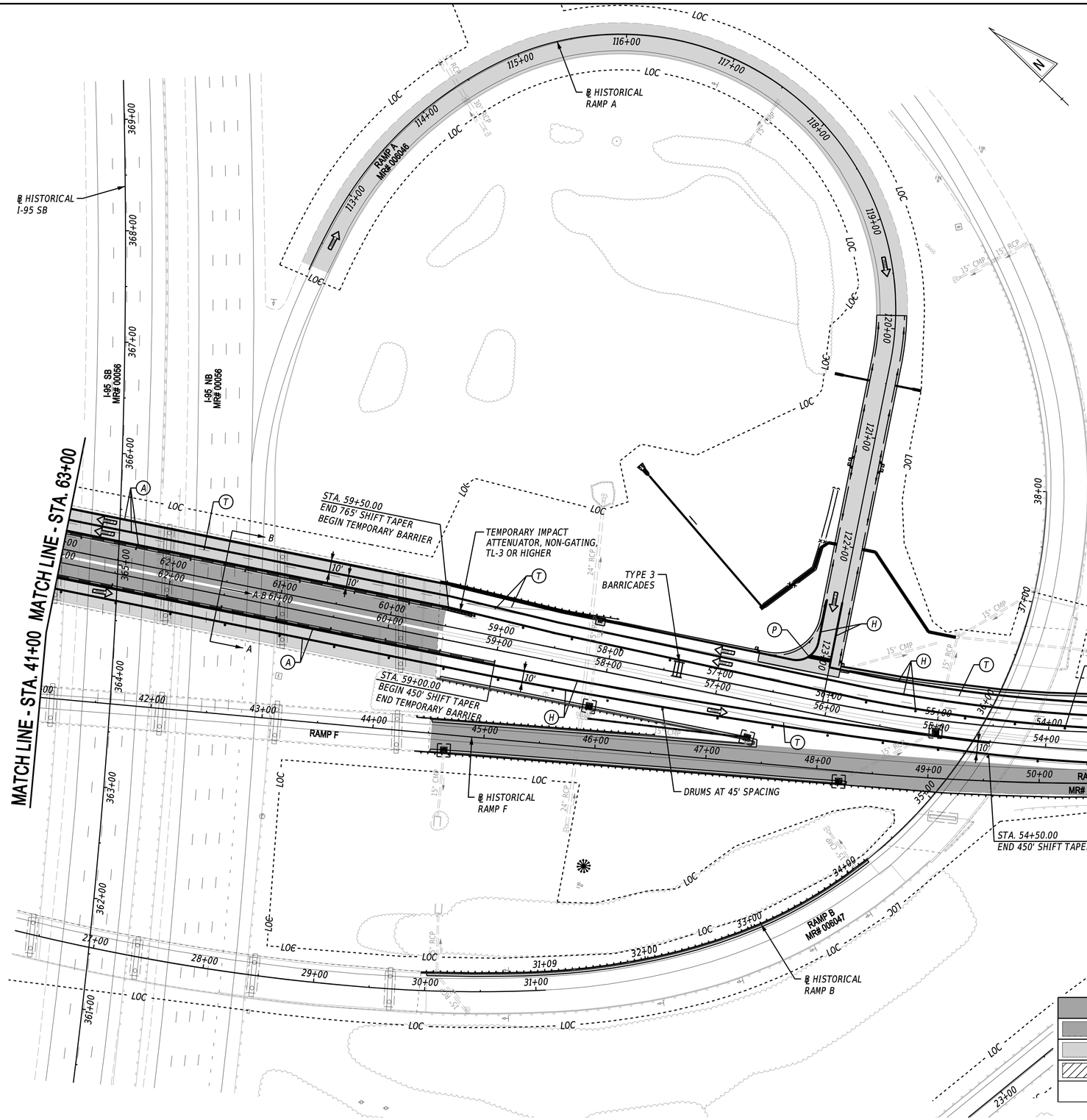

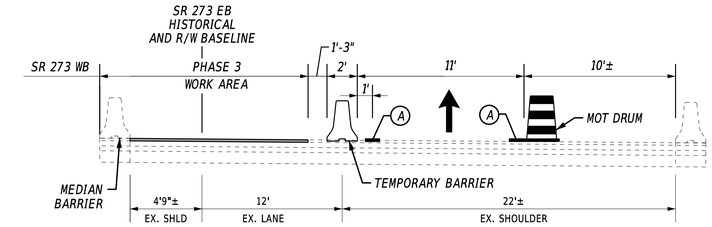

SECTION A-A - PHASE 3
SR 273 EB - BRIDGE 715

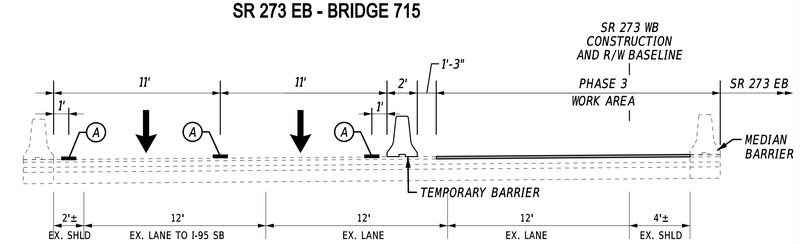

SECTION B-B - PHASE 3
SR 273 WB - BRIDGE 715

TEMPORARY PAVEMENT MARKINGS LEGEND

SYM.	ITEM	QUANTITY
A	4" SOLID WHITE TEMPORARY PAINT PAVEMENT STRIPING (ITEM 817003)**	1,749 LF
D	4" DASHED WHITE TEMPORARY PAINT PAVEMENT STRIPING, 2' LINE & 6' GAP (ITEM 817003)**	0 LF
G	WHITE TEMPORARY PAINT PAVEMENT SYMBOL (ITEM 817004)**	0 SF
H	4" SOLID WHITE TEMPORARY TAPE PAVEMENT STRIPING (ITEM 817009)**	3,659 LF
P	WHITE TEMPORARY TAPE PAVEMENT SYMBOL (ITEM 817010)**	20 SF
R	6" BLACKOUT TAPE (ITEM 817008)*	386 LF
T	REMOVAL OF PAVEMENT STRIPING (ITEM 817031)*	342 SF

* USE BLACKOUT TAPE TO COVER EXISTING PAVEMENT MARKINGS ON BITUMINOUS CONCRETE AND REMOVE EXISTING PAVEMENT MARKINGS ON CONCRETE (BRIDGES) AS SHOWN UNLESS OTHERWISE NOTED.
** USE TEMPORARY TAPE STRIPING ON BITUMINOUS CONCRETE AND TEMPORARY PAINT STRIPING ON CONCRETE (BRIDGES) AS SHOWN UNLESS OTHERWISE NOTED.

CONSTRUCTION PHASING LEGEND

	WORK AREA THIS PHASE
	PREVIOUSLY CONSTRUCTED PAVEMENT
	TEMPORARY CONSTRUCTION
	TEMPORARY PAVEMENT MARKING ARROW

ADDENDA / REVISIONS

SCALE 0 50 100 150 FEET

HSIP NCC, SR 273 AND I-95 INTERCHANGE IMPROVEMENTS

CONTRACT	BRIDGE NO.	715, 715A, 715B, 715C & 715D
T200800713	DESIGNED BY:	B. BURRIS
COUNTY		
NEW CASTLE	CHECKED BY:	Z. SCHOLL

CONSTRUCTION PHASING, M.O.T., AND EROSION CONTROL PLAN - PHASE 3

SECTION RK&K

SHEET NO. 73

13-AUG-2020
14:07
\\balsrv01\v2014\20141144_DelDOT\T700\Task 4A - Harmony FD\Cadd\Contract\Plans\cs14_Har.dgn

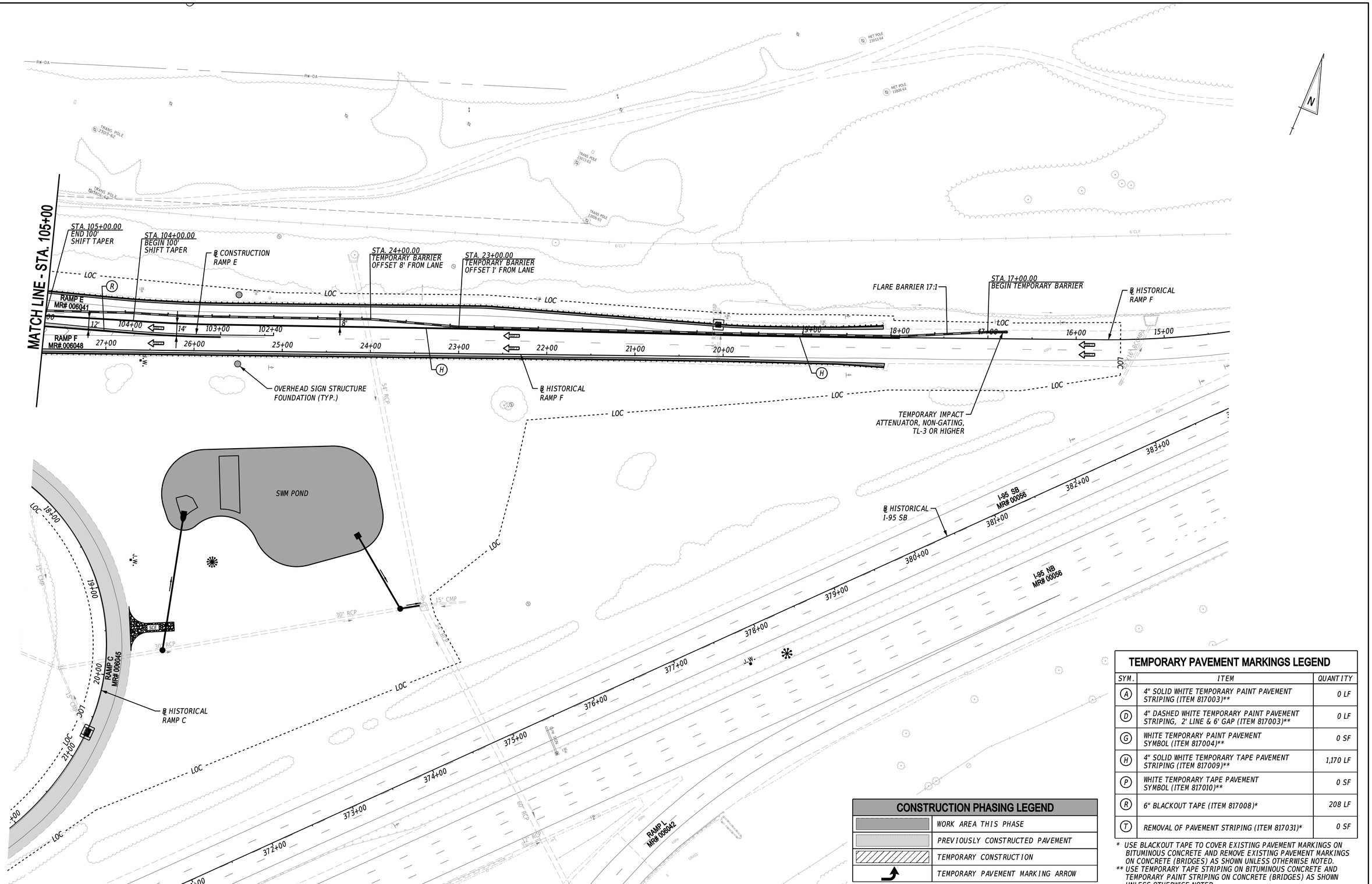

TEMPORARY PAVEMENT MARKINGS LEGEND

SYM.	ITEM	QUANTITY
A	4" SOLID WHITE TEMPORARY PAINT PAVEMENT STRIPING (ITEM 817003)**	0 LF
D	4" DASHED WHITE TEMPORARY PAINT PAVEMENT STRIPING, 2' LINE & 6' GAP (ITEM 817003)**	0 LF
G	WHITE TEMPORARY PAINT PAVEMENT SYMBOL (ITEM 817004)**	0 SF
H	4" SOLID WHITE TEMPORARY TAPE PAVEMENT STRIPING (ITEM 817009)**	1,170 LF
P	WHITE TEMPORARY TAPE PAVEMENT SYMBOL (ITEM 817010)**	0 SF
R	6" BLACKOUT TAPE (ITEM 817008)*	208 LF
T	REMOVAL OF PAVEMENT STRIPING (ITEM 817031)*	0 SF

* USE BLACKOUT TAPE TO COVER EXISTING PAVEMENT MARKINGS ON BITUMINOUS CONCRETE AND REMOVE EXISTING PAVEMENT MARKINGS ON CONCRETE (BRIDGES) AS SHOWN UNLESS OTHERWISE NOTED.

** USE TEMPORARY TAPE STRIPING ON BITUMINOUS CONCRETE AND TEMPORARY PAINT STRIPING ON CONCRETE (BRIDGES) AS SHOWN UNLESS OTHERWISE NOTED.

CONSTRUCTION PHASING LEGEND

	WORK AREA THIS PHASE
	PREVIOUSLY CONSTRUCTED PAVEMENT
	TEMPORARY CONSTRUCTION
	TEMPORARY PAVEMENT MARKING ARROW

ADDENDA / REVISIONS

SCALE 0 50 100 150 FEET

HSIP NCC, SR 273 AND I-95 INTERCHANGE IMPROVEMENTS

CONTRACT	BRIDGE NO.	715, 715A, 715B, 715C & 715D
T200800713	DESIGNED BY:	B. BURRIS
COUNTY		
NEW CASTLE	CHECKED BY:	Z. SCHOLL

CONSTRUCTION PHASING, M.O.T., AND EROSION CONTROL PLAN - PHASE 3

SECTION RK&K

SHEET NO. 74

13-AUG-2020
14:06
\\balsrv01\v2014\2014\14144_DelDOT170\Task 4A - Harmony FD\Cadd\Contract\Plans\cs15_1tar.dgn

PHASE 4 - RAMP M PAVE & REHAB AND COMPLETE CURB & GUARDRAIL REPLACEMENT ON RAMP B

1. USE DETOUR PLAN TO CLOSE ENTRANCE RAMP M FROM NORTHBOUND I-95 TO EASTBOUND SR273.
2. CLEAR AND GRUB AND INSTALL EROSION AND SEDIMENT CONTROL DEVICES AS DIRECTED BY THE ENGINEER, INCLUDING BUT NOT LIMITED TO INLET PROTECTION ON DRAINAGE INLETS WITHIN THE WORK AREA, SILT FENCE AND COMPOST FILTER LOGS. LONGITUDINAL EDGE DROP OFFS SHALL BE CORRECTED AT THE END OF EACH WORK NIGHT IN ACCORDANCE WITH TABLE 6G-1 OF THE DELAWARE MUTCD.
3. COMPLETE ALL CURB AND GUARDRAIL REPLACEMENT ON RAMP M IN PHASE 4. MILL, OVERLAY AND COMPLETE FINAL STRIPING ON RAMP M ADJUSTING INLETS AND MANHOLES AS NEEDED.
4. USE TA-5B TO INSTALL TEMPORARY BARRIER ON RAMP B AS SHOWN ON PHASE 4 PLANS. USE TA-35B TO APPLY TEMPORARY STRIPING AS SHOWN ON PHASE 4 PLANS. COMPLETE CURB AND GUARDRAIL REPLACEMENT ON RAMP B BEHIND BARRIER AS SHOWN ON PHASE 4 PLANS.
5. USE TA-5B TO REMOVE ALL TEMPORARY BARRIER ON RAMP B.
6. STABILIZE AREA IN ACCORDANCE WITH DELDOT STANDARD SPECIFICATIONS. REMOVE EROSION AND SEDIMENT CONTROL DEVICES AFTER FINAL VEGETATIVE STABILIZATION OF ALL DISTURBED AREAS AS DETERMINED BY THE ENGINEER. REMOVE ALL TRAFFIC CONTROL DEVICES.

CONSTRUCTION PHASING LEGEND	
	WORK AREA THIS PHASE
	PREVIOUSLY CONSTRUCTED PAVEMENT
	TEMPORARY CONSTRUCTION
	TEMPORARY PAVEMENT MARKING ARROW

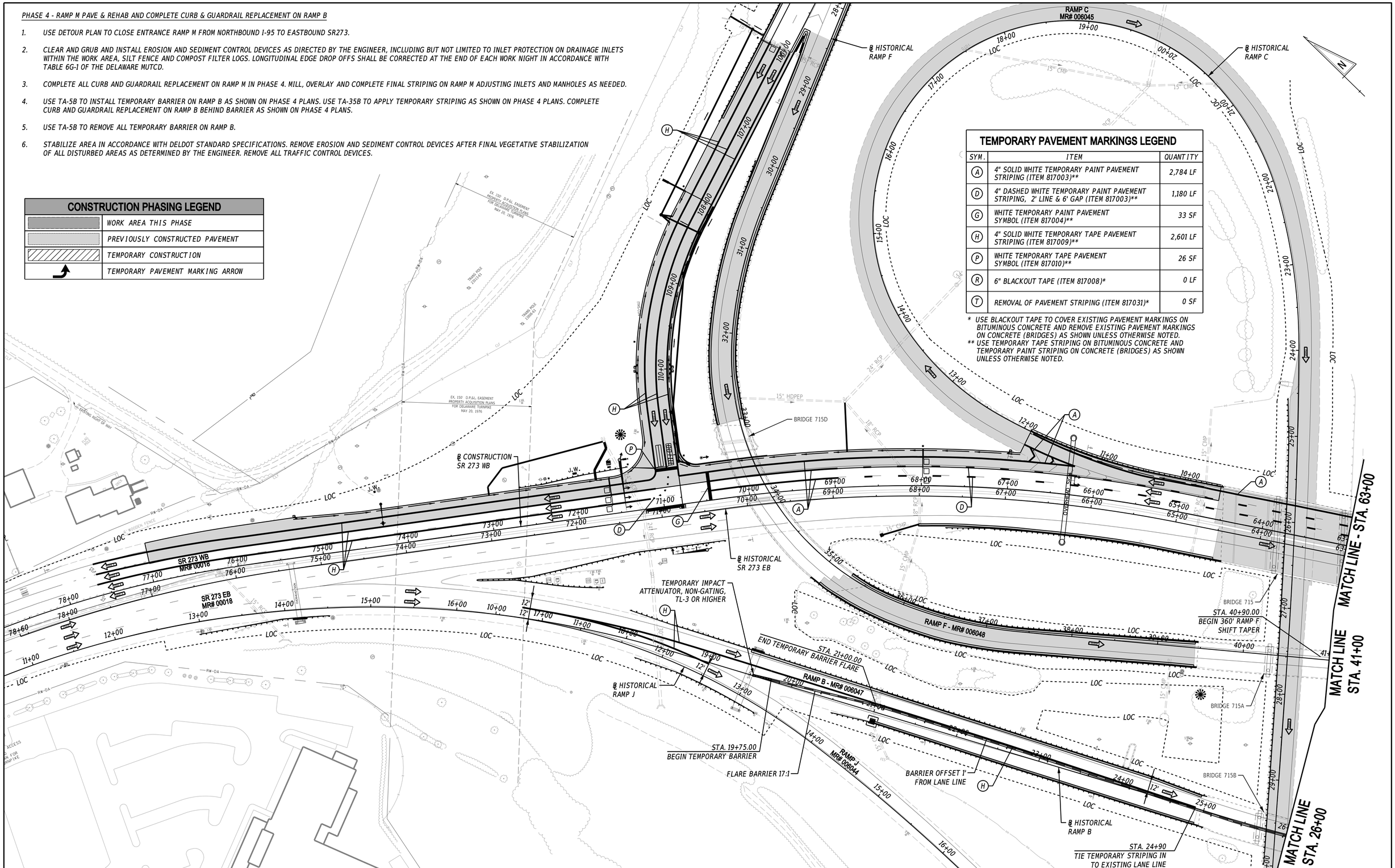

TEMPORARY PAVEMENT MARKINGS LEGEND

SYM.	ITEM	QUANTITY
A	4" SOLID WHITE TEMPORARY PAINT PAVEMENT STRIPING (ITEM 817003)**	2,784 LF
D	4" DASHED WHITE TEMPORARY PAINT PAVEMENT STRIPING, 2' LINE & 6' GAP (ITEM 817003)**	1,180 LF
G	WHITE TEMPORARY PAINT PAVEMENT SYMBOL (ITEM 817004)**	33 SF
H	4" SOLID WHITE TEMPORARY TAPE PAVEMENT STRIPING (ITEM 817009)**	2,601 LF
P	WHITE TEMPORARY TAPE PAVEMENT SYMBOL (ITEM 817010)**	26 SF
R	6" BLACKOUT TAPE (ITEM 817008)*	0 LF
T	REMOVAL OF PAVEMENT STRIPING (ITEM 817031)*	0 SF

* USE BLACKOUT TAPE TO COVER EXISTING PAVEMENT MARKINGS ON BITUMINOUS CONCRETE AND REMOVE EXISTING PAVEMENT MARKINGS ON CONCRETE (BRIDGES) AS SHOWN UNLESS OTHERWISE NOTED.
** USE TEMPORARY TAPE STRIPING ON BITUMINOUS CONCRETE AND TEMPORARY PAINT STRIPING ON CONCRETE (BRIDGES) AS SHOWN UNLESS OTHERWISE NOTED.

ADDENDA / REVISIONS

SCALE 0 50 100 150 FEET

HSIP NCC, SR 273 AND I-95 INTERCHANGE IMPROVEMENTS

CONTRACT	BRIDGE NO.	715, 715A, 715B, 715C & 715D
T200800713	DESIGNED BY:	B. BURRIS
COUNTY		
NEW CASTLE	CHECKED BY:	Z. SCHOLL

CONSTRUCTION PHASING, M.O.T., AND EROSION CONTROL PLAN - PHASE 4

SECTION: RK&K
SHEET NO.: 75

13-AUG-2020
14:02
\\balsrv01\v2014\2014144_DelDOT170\Task 4A - Harmony FD\Cadd\ContractPlans\cs15_1tar.dgn

CONSTRUCTION PHASING LEGEND

	WORK AREA THIS PHASE
	PREVIOUSLY CONSTRUCTED PAVEMENT
	TEMPORARY CONSTRUCTION
	TEMPORARY PAVEMENT MARKING ARROW

TEMPORARY PAVEMENT MARKINGS LEGEND

SYM.	ITEM	QUANTITY
A	4" SOLID WHITE TEMPORARY PAINT PAVEMENT STRIPING (ITEM 817003)**	1,303 LF
D	4" DASHED WHITE TEMPORARY PAINT PAVEMENT STRIPING, 2' LINE & 6' GAP (ITEM 817003)**	1,683 LF
G	WHITE TEMPORARY PAINT PAVEMENT SYMBOL (ITEM 817004)**	50 SF
H	4" SOLID WHITE TEMPORARY TAPE PAVEMENT STRIPING (ITEM 817009)**	164 LF
P	WHITE TEMPORARY TAPE PAVEMENT SYMBOL (ITEM 817010)**	24 SF
R	6" BLACKOUT TAPE (ITEM 817008)*	0 LF
T	REMOVAL OF PAVEMENT STRIPING (ITEM 817031)*	0 SF

* USE BLACKOUT TAPE TO COVER EXISTING PAVEMENT MARKINGS ON BITUMINOUS CONCRETE AND REMOVE EXISTING PAVEMENT MARKINGS ON CONCRETE (BRIDGES) AS SHOWN UNLESS OTHERWISE NOTED.

** USE TEMPORARY TAPE STRIPING ON BITUMINOUS CONCRETE AND TEMPORARY PAINT STRIPING ON CONCRETE (BRIDGES) AS SHOWN UNLESS OTHERWISE NOTED.

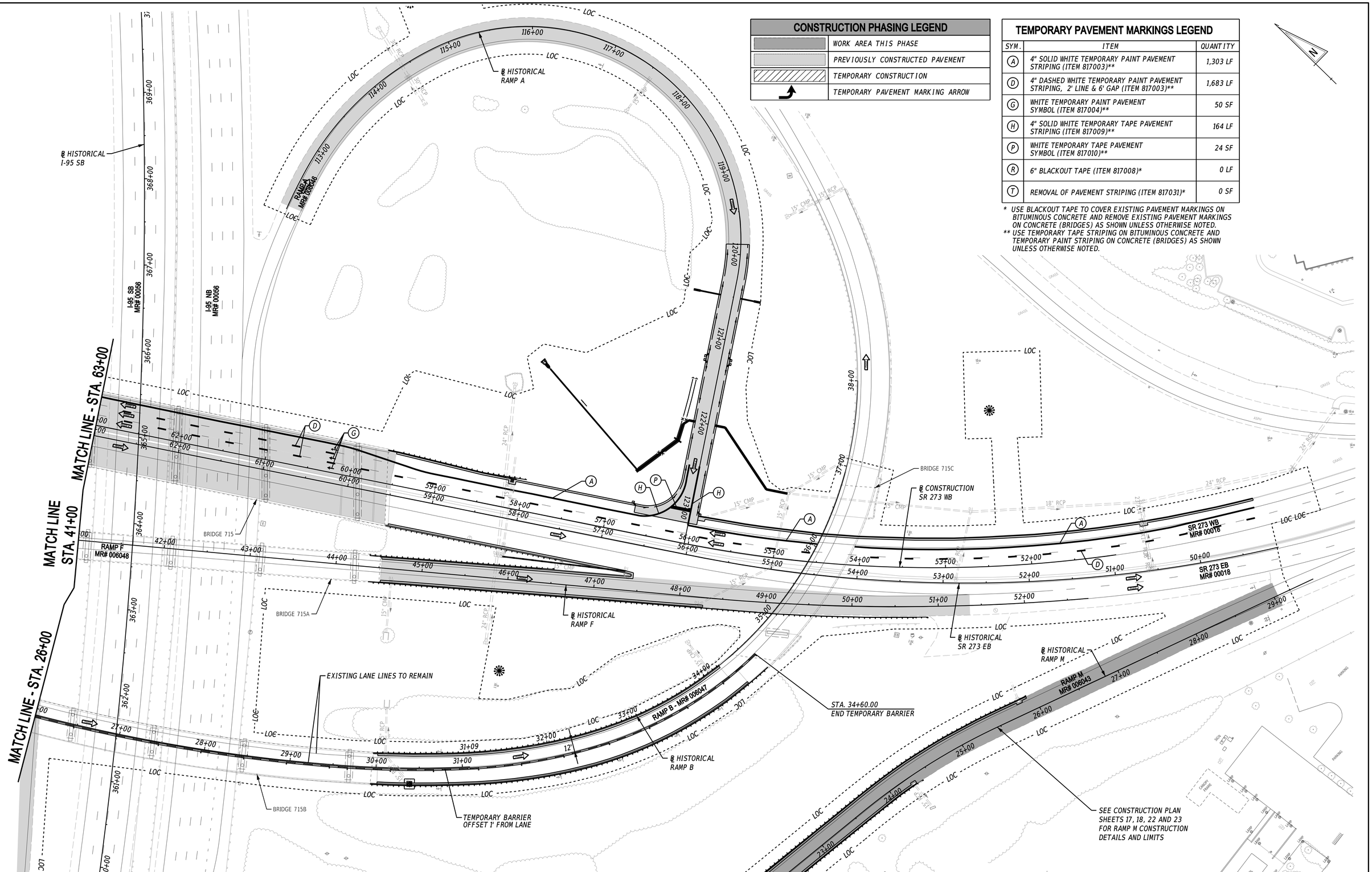

ADDENDA / REVISIONS

SCALE 0 50 100 150 FEET

HSIP NCC, SR 273 AND I-95 INTERCHANGE IMPROVEMENTS

CONTRACT	BRIDGE NO.	715, 715A, 715B, 715C & 715D
T200800713	DESIGNED BY:	B. BURRIS
COUNTY	CHECKED BY:	Z. SCHOLL
NEW CASTLE		

CONSTRUCTION PHASING, M.O.T., AND EROSION CONTROL PLAN - PHASE 4

SECTION RK&K

SHEET NO. 76

13-AUG-2020 15:05 \\balsrv01\v2014\2014141144_Del\DOT1707\Task 4A - Harmony FD\Cadd\ContractPlans\cs17_Har.dgn

PORTABLE CHANGEABLE MESSAGE SIGNS

PRIOR TO DETOUR
(10 DAYS PRIOR TO BEGINNING OF DETOUR)

PCMS-1

EXIT 3B TO WB273 TO CLOSE	STARTING XX/XX/XX

DURING DETOUR
(DISPLAY FOR 5 DAYS AFTER IMPLEMENTATION OF DETOUR)

PCMS-1

EXIT 3B TO WB273 CLOSED	FOLLOW DETOUR

SPECIAL SIGNS

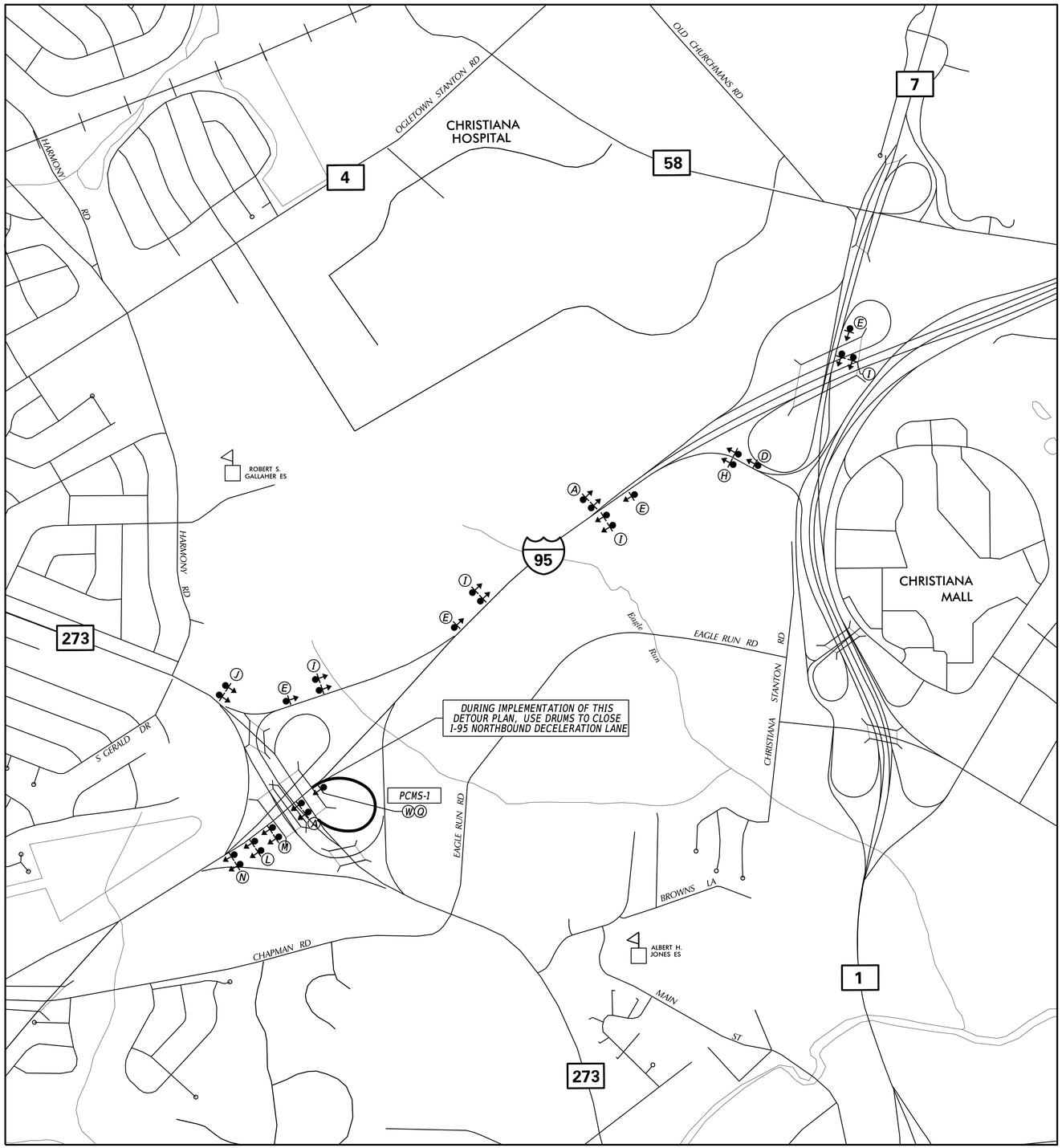

NOTE: * PLEASE REFER TO SHEET 76 FOR SIZE AND DIMENSIONS OF ALL SIGNS ON THIS DETOUR PLAN.

LEGEND

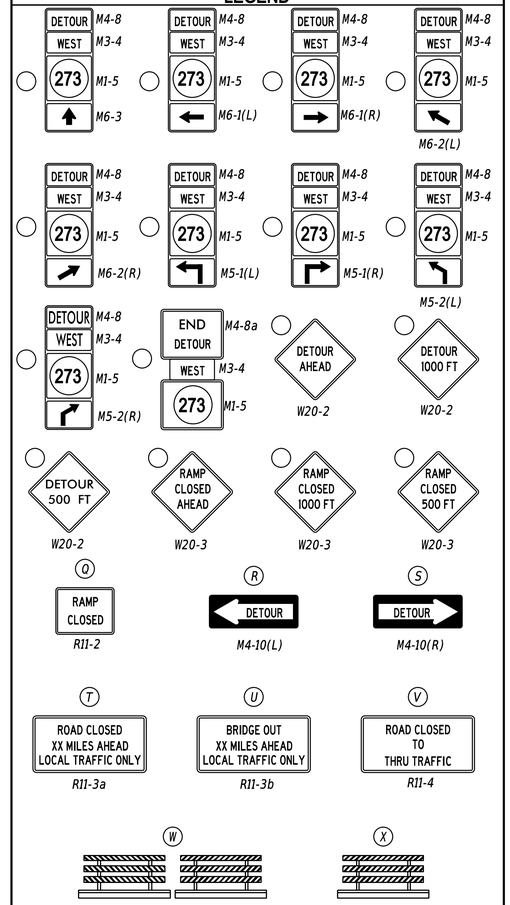

GENERAL NOTES

1. ALL TEMPORARY TRAFFIC CONTROL DEVICES ARE TO BE SUPPLIED AND MAINTAINED BY THE GENERAL CONTRACTOR AND SHALL BE IN COMPLIANCE WITH THIS PLAN AND THE DELAWARE MANUAL ON UNIFORM TRAFFIC CONTROL DEVICES (DE MUTCD) LATEST EDITION.
2. SIGNS "N" THROUGH "Q" AND "T" AND "V", THE WORD "ROAD" SHALL BE CHANGED TO "RAMP", "RR XING" OR "BRIDGE" WHERE APPLICABLE.
3. "W" TYPE 3 BARRICADES AT A ROAD CLOSURE SHALL BE PLACED COMPLETELY ACROSS THE ROADWAY, FROM CURB TO CURB, OR FROM EDGE OF ROAD TO EDGE OF ROAD, WITH THE STRIPES POSITIONED DOWNWARD TOWARD THE CENTER OF THE ROADWAY.
4. BARRICADES SHALL BE A MINIMUM OF 6 FEET WIDE UNLESS DIRECTED BY THE ENGINEER.

PREPARED BY

RK&K

Carey D. Webb — 07/07/2020
THIS SEAL ONLY APPLIES TO THIS DETOUR SHEET — DATE

CAREY DANIEL WEBB LICENSED No. 18515 DELAWARE PROFESSIONAL ENGINEER
SEAL

Zachary J Scholl — 07/07/2020
QA/QC REVIEWER — DATE

"I CERTIFY TO THE BEST OF MY KNOWLEDGE AND BELIEF THAT THIS DETOUR PLAN HAS BEEN PREPARED IN ACCORDANCE WITH THE DELAWARE MANUAL ON UNIFORM TRAFFIC CONTROL DEVICES."

CONCURRENCE FOR IMPLEMENTATION

Leandra A Magyar-Jones — 7/7/20
TRAFFIC SAFETY — DATE

ADDENDA / REVISIONS	NOT TO SCALE	HSIP NCC, SR 273 AND I-95 INTERCHANGE IMPROVEMENTS	CONTRACT T200800713	PERMIT NO. X	DETOUR PLAN - EXIT RAMP I-95 NB TO SR 273 WB	SECTION RK&K
			COUNTY NEW CASTLE	DESIGNED BY: B.BURRIS		SHEET NO. 77
				CHECKED BY: Z. SCHOLL		

02-JUL-2020 13:58 \\balsrv01\v2014\2014\141144_DelDOT1707\Task 4A - Harmony FD\Cadd\Contract\Plans\dp01_Har.dgn

PORTABLE CHANGEABLE MESSAGE SIGNS

SPECIAL SIGNS

SIGN ASSEMBLEY TO BE FABRICATED AS A SINGLE SIGN PANEL (TYP).

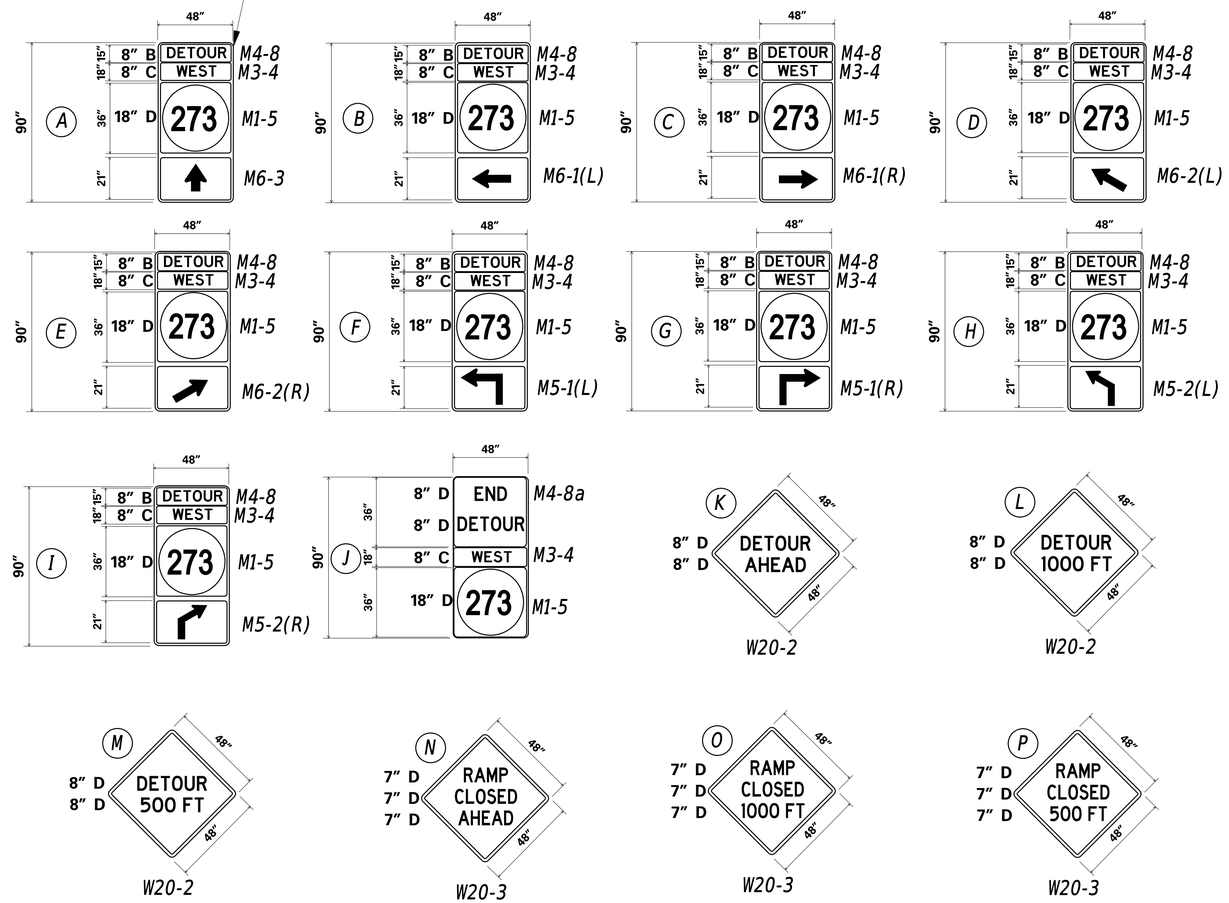

LEGEND

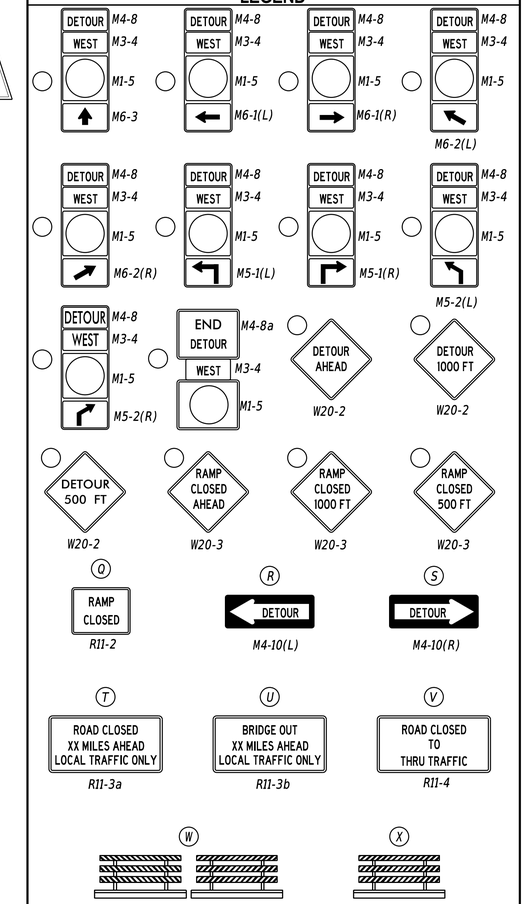

GENERAL NOTES

1. ALL TEMPORARY TRAFFIC CONTROL DEVICES ARE TO BE SUPPLIED AND MAINTAINED BY THE GENERAL CONTRACTOR AND SHALL BE IN COMPLIANCE WITH THIS PLAN AND THE DELAWARE MANUAL ON UNIFORM TRAFFIC CONTROL DEVICES (DE MUTCD) LATEST EDITION.
2. SIGNS "N" THROUGH "Q" AND "T" AND "V", THE WORD "ROAD" SHALL BE CHANGED TO "RAMP", "RR XING" OR "BRIDGE" WHERE APPLICABLE.
3. "W" TYPE 3 BARRICADES AT A ROAD CLOSURE SHALL BE PLACED COMPLETELY ACROSS THE ROADWAY, FROM CURB TO CURB, OR FROM EDGE OF ROAD TO EDGE OF ROAD, WITH THE STRIPES POSITIONED DOWNWARD TOWARD THE CENTER OF THE ROADWAY.
4. BARRICADES SHALL BE A MINIMUM OF 6 FEET WIDE UNLESS DIRECTED BY THE ENGINEER.

*INTERSTATE/FREEWAY/EXPRESSWAY SIGN DIMENSIONS
*IF STATE ROUTE SIGN HAS 3 DIGITS, M1-5 WIDTH SHALL BE 48"

*COLOR (TYPICAL) :
M4-8 BLACK ON FLUORESCENT ORANGE
M5-1 BLACK ON FLUORESCENT ORANGE
M5-2 BLACK ON FLUORESCENT ORANGE
M6-1 BLACK ON FLUORESCENT ORANGE
M6-2 BLACK ON FLUORESCENT ORANGE
M6-3 BLACK ON FLUORESCENT ORANGE
W20-2 BLACK ON FLUORESCENT ORANGE
W20-3 BLACK ON FLUORESCENT ORANGE
M1-5 BLACK ON WHITE
M3-1 BLACK ON WHITE

PREPARED BY
RK&K

Carey D. Webb — 07/07/2020
THIS SEAL ONLY APPLIES TO THIS DETOUR SHEET — DATE

CAREY DANIEL WEBB LICENSED No. 18515 DELAWARE PROFESSIONAL ENGINEER
SEAL

Zachary J Scholl — 07/07/2020
QA/QC REVIEWER — DATE

"I CERTIFY TO THE BEST OF MY KNOWLEDGE AND BELIEF THAT THIS DETOUR PLAN HAS BEEN PREPARED IN ACCORDANCE WITH THE DELAWARE MANUAL ON UNIFORM TRAFFIC CONTROL DEVICES."

CONCURRENCE FOR IMPLEMENTATION
TRAFFIC SAFETY — 7/7/20 DATE

ADDENDA / REVISIONS

NOT TO SCALE

HSIP NCC, SR 273 AND I-95 INTERCHANGE IMPROVEMENTS

CONTRACT	PERMIT NO.	X
T200800713	DESIGNED BY:	B.BURRIS
COUNTY		
NEW CASTLE	CHECKED BY:	Z. SCHOLL

DETOUR PLAN - EXIT RAMP I-95 NB TO SR 273 WB

SECTION: RK&K
SHEET NO.: 78

02-JUL-2020 14:00 \\balsrv01\v2014\2014\14144_DelDOT1707\Task 4A - Harmony FD\Cadd\Contract\Plans\dp02_Har.dgn

PORTABLE CHANGEABLE MESSAGE SIGNS

PRIOR TO DETOUR

(10 DAYS PRIOR TO BEGINNING OF DETOUR)

PCMS-1

RAMP TO I 95 SB TO CLOSE	STARTING XX/XX/XX

DURING DETOUR

(DISPLAY FOR 5 DAYS AFTER IMPLEMENTATION OF DETOUR)

PCMS-1

RAMP TO I 95 SB CLOSED	FOLLOW DETOUR

SPECIAL SIGNS

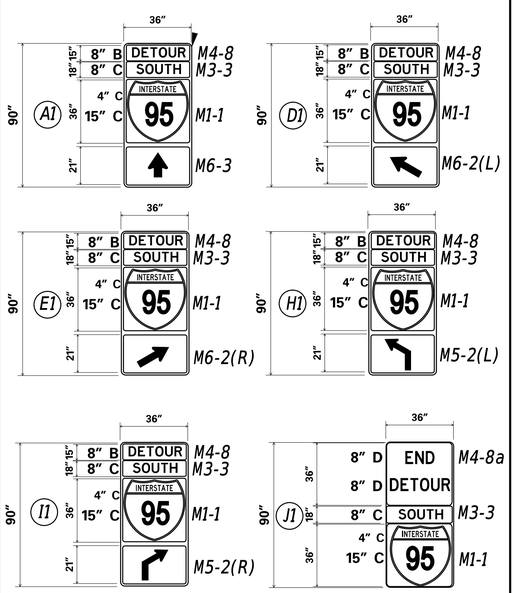

PREPARED BY

RK&K

Carey D. Webb — 04/30/2020

THIS SEAL ONLY APPLIES TO THIS DETOUR SHEET — DATE

CAREY DANIEL WEBB — LICENSED — No. 18515 — DELAWARE — PROFESSIONAL ENGINEER

SEAL

Zachary Scholl — Digitally signed by Zachary Scholl DN: E=zscholl@rkk.com, CN=Zachary Scholl, OU=baltimore, OU=rkk, OU=UserAccounts, DC=ad, DC=rkk, DC=com Date: 2020.04.30 08:55:26-04'00' — 04/30/20

QA/QC REVIEWER — DATE

"I CERTIFY TO THE BEST OF MY KNOWLEDGE AND BELIEF THAT THIS DETOUR PLAN HAS BEEN PREPARED IN ACCORDANCE WITH THE DELAWARE MANUAL ON UNIFORM TRAFFIC CONTROL DEVICES."

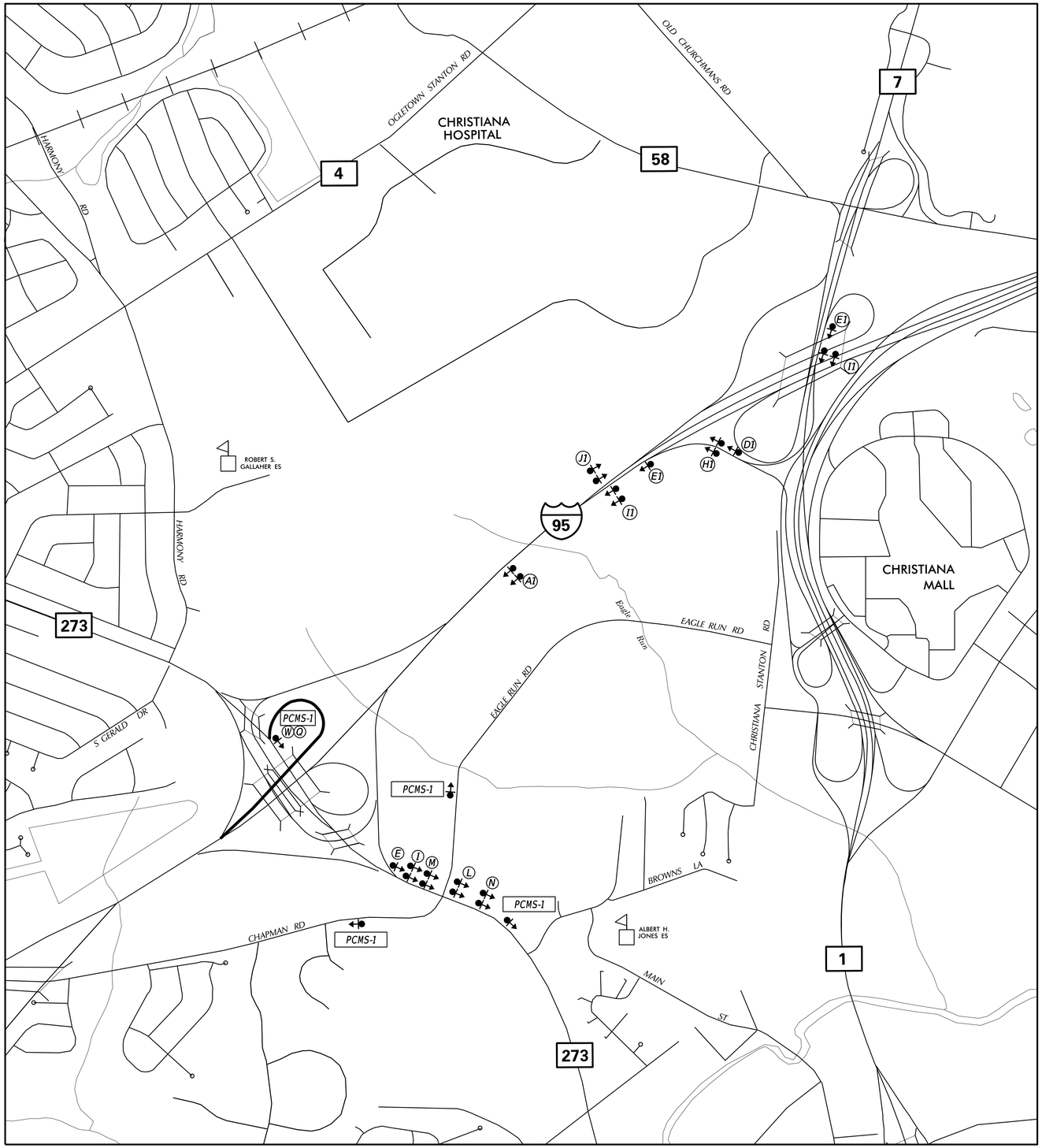

LEGEND

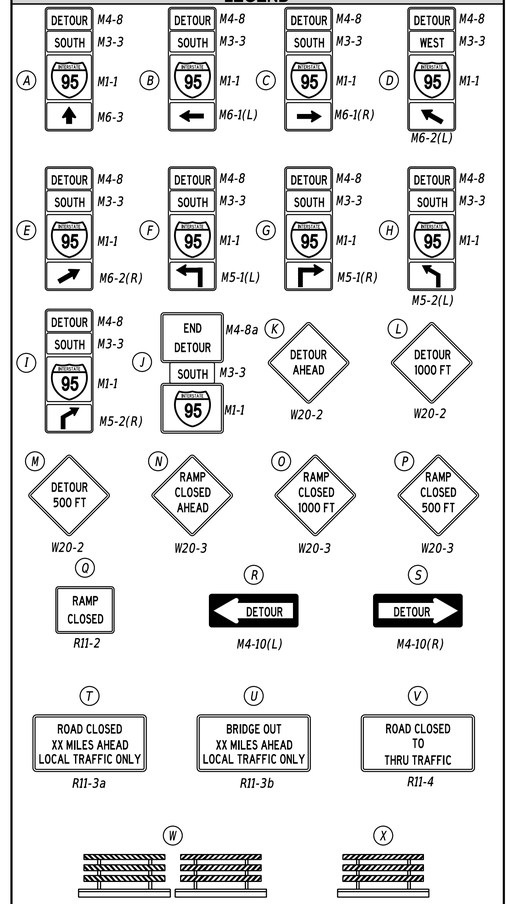

GENERAL NOTES

1. *ALL TEMPORARY TRAFFIC CONTROL DEVICES ARE TO BE SUPPLIED AND MAINTAINED BY THE GENERAL CONTRACTOR AND SHALL BE IN COMPLIANCE WITH THIS PLAN AND THE DELAWARE MANUAL ON UNIFORM TRAFFIC CONTROL DEVICES (DE MUTCD) LATEST EDITION.*
2. *SIGNS "N" THROUGH "Q" AND "T" AND "V", THE WORD "ROAD" SHALL BE CHANGED TO "RAMP", "RR XING" OR "BRIDGE" WHERE APPLICABLE.*
3. *"W" TYPE 3 BARRICADES AT A ROAD CLOSURE SHALL BE PLACED COMPLETELY ACROSS THE ROADWAY, FROM CURB TO CURB, OR FROM EDGE OF ROAD TO EDGE OF ROAD, WITH THE STRIPES POSITIONED DOWNWARD TOWARD THE CENTER OF THE ROADWAY.*
4. *BARRICADES SHALL BE A MINIMUM OF 6 FEET WIDE UNLESS DIRECTED BY THE ENGINEER.*

CONCURRENCE FOR IMPLEMENTATION

Gerald A. Nagurneto Jr. — 4/29/20

TRAFFIC SAFETY — DATE

ADDENDA / REVISIONS

NOT TO SCALE

HSIP NCC, SR 273 AND I-95 INTERCHANGE IMPROVEMENTS

CONTRACT	PERMIT NO.	X	DETOUR PLAN - ENTRANCE RAMP SR 273 WB TO I-95 SB	SECTION
T200800713	DESIGNED BY:	B. BURRIS		RK&K
COUNTY				SHEET NO.
NEW CASTLE	CHECKED BY:	Z. SCHOLL		79

28-APR-2020 09:03 \\balsrv01\v2014\2014\141144_DelDOT1707\Task 4A - Harmony FD\Cadd\Contract\Plans\dp03_Har.dgn

PORTABLE CHANGEABLE MESSAGE SIGNS

PRIOR TO DETOUR
(10 DAYS PRIOR TO BEGINNING OF DETOUR)

PCMS-1

EXIT 3 TO EB273 TO CLOSE	STARTING XX/XX/XX XXPM XXAM

DURING DETOUR
(DISPLAY FOR DURATION OF DETOUR)

PCMS-1

EXIT 3 TO EB273 CLOSED	CONTINUE TO EXIT 1A

DURING DETOUR
(DISPLAY FOR DURATION OF DETOUR)

PCMS-2

EXIT 3 TO EB273 CLOSED	FOLLOW DETOUR	USE EXIT 4A TO SB SR 1

SPECIAL SIGNS

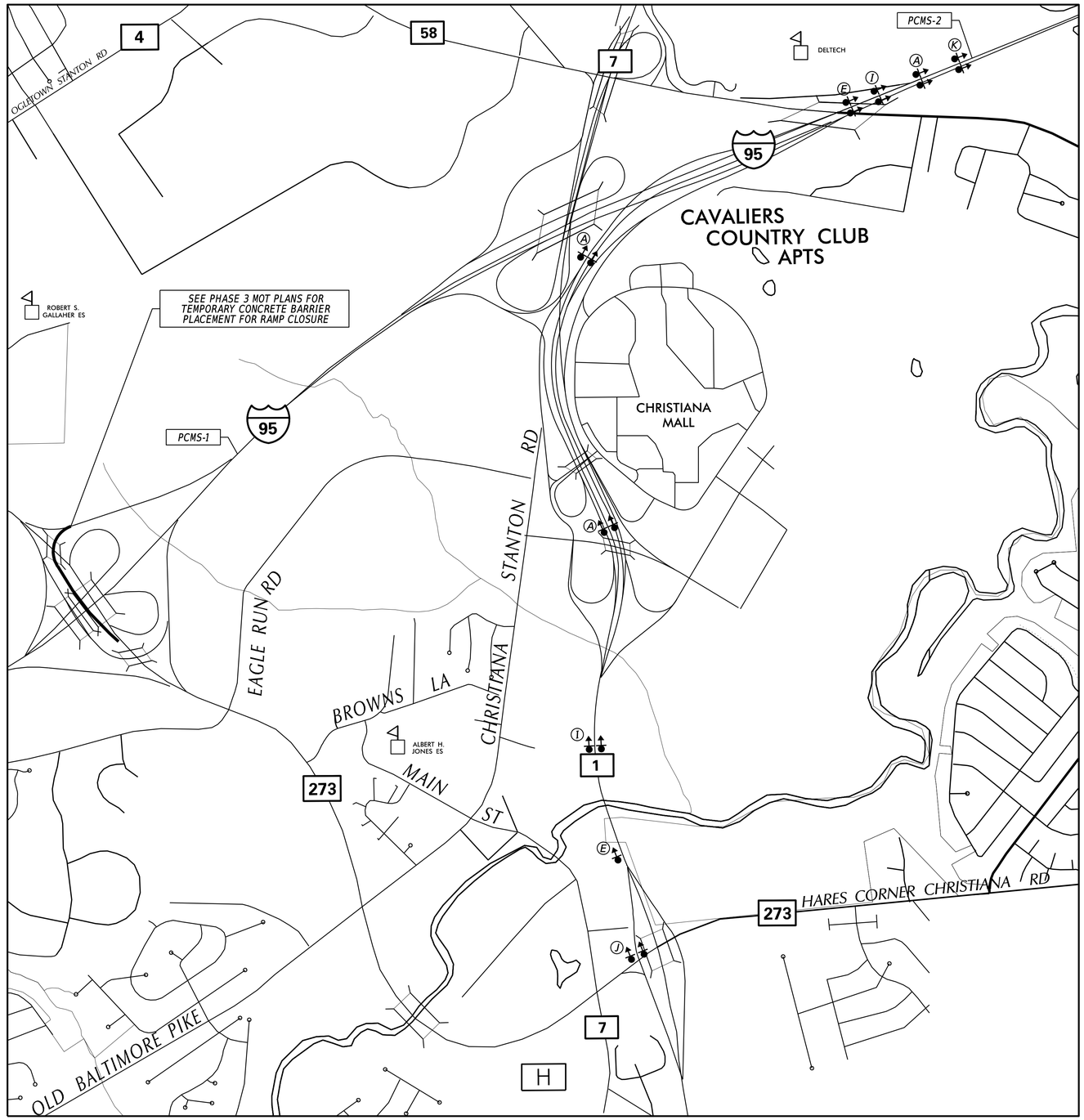

NOTE: * PLEASE REFER TO SHEET 80 FOR SIZE AND DIMENSIONS OF ALL SIGNS ON THIS DETOUR PLAN.

LEGEND

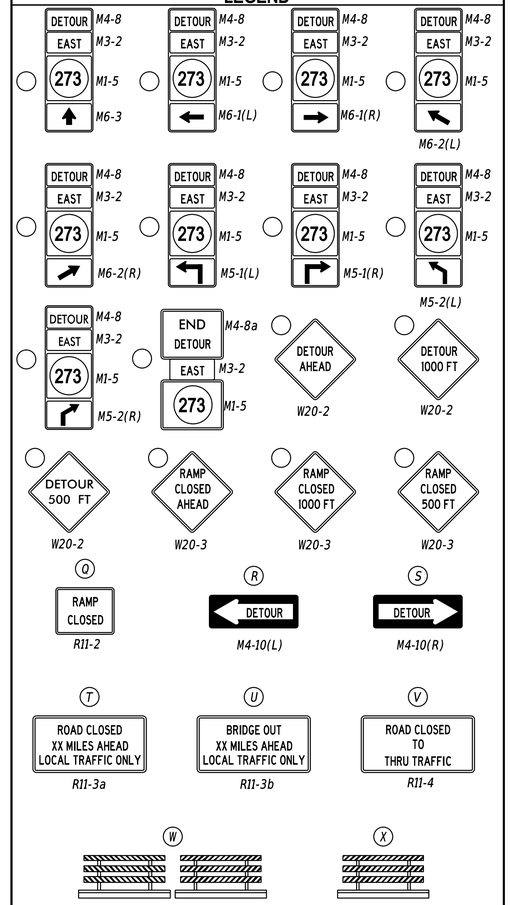

GENERAL NOTES

1. ALL TEMPORARY TRAFFIC CONTROL DEVICES ARE TO BE SUPPLIED AND MAINTAINED BY THE GENERAL CONTRACTOR AND SHALL BE IN COMPLIANCE WITH THIS PLAN AND THE DELAWARE MANUAL ON UNIFORM TRAFFIC CONTROL DEVICES (DE MUTCD) LATEST EDITION.
2. SIGNS "N" THROUGH "Q" AND "T" AND "V", THE WORD "ROAD" SHALL BE CHANGED TO "RAMP", "RR XING" OR "BRIDGE" WHERE APPLICABLE.
3. "W" TYPE 3 BARRICADES AT A ROAD CLOSURE SHALL BE PLACED COMPLETELY ACROSS THE ROADWAY, FROM CURB TO CURB, OR FROM EDGE OF ROAD TO EDGE OF ROAD, WITH THE STRIPES POSITIONED DOWNWARD TOWARD THE CENTER OF THE ROADWAY.
4. BARRICADES SHALL BE A MINIMUM OF 6 FEET WIDE UNLESS DIRECTED BY THE ENGINEER.

PREPARED BY

RK&K

Carey D. Webb — 07/07/2020

THIS SEAL ONLY APPLIES TO THIS DETOUR SHEET — DATE

CAREY DANIEL WEBB LICENSED No. 18515 DELAWARE PROFESSIONAL ENGINEER

SEAL

Zachary J Scholl — 07/07/2020

QA/QC REVIEWER — DATE

"I CERTIFY TO THE BEST OF MY KNOWLEDGE AND BELIEF THAT THIS DETOUR PLAN HAS BEEN PREPARED IN ACCORDANCE WITH THE DELAWARE MANUAL ON UNIFORM TRAFFIC CONTROL DEVICES."

CONCURRENCE FOR IMPLEMENTATION

TRAFFIC SAFETY — 7/7/20 DATE

ADDENDA / REVISIONS

NOT TO SCALE

HSIP NCC, SR 273 AND I-95 INTERCHANGE IMPROVEMENTS

CONTRACT	PERMIT NO.	X
T200800713	DESIGNED BY:	B.BURRIS
COUNTY		
NEW CASTLE	CHECKED BY:	Z. SCHOLL

DETOUR PLAN - EXIT 3 RAMP F, I-95 SB TO SR 273 EB (NIGHTS ONLY)

SECTION: RK&K

SHEET NO. 80

07-JUL-2020 08:53 \\balsrv01\v2014\2014144\2014144_DelDOT1707\Task 4A - Harmony FD\Cadd\ContractPlans\dp04_Har.dgn

PORTABLE CHANGEABLE MESSAGE SIGNS

PRIOR TO DETOUR
(10 DAYS PRIOR TO BEGINNING OF DETOUR)

PCMS-1

EXIT 3A TO EB273 TO CLOSE	STARTING XX/XX/XX

DURING DETOUR
(DISPLAY FOR 5 DAYS AFTER IMPLEMENTATION OF DETOUR)

PCMS-1

EXIT 3A TO EB273 CLOSED	FOLLOW DETOUR

SPECIAL SIGNS

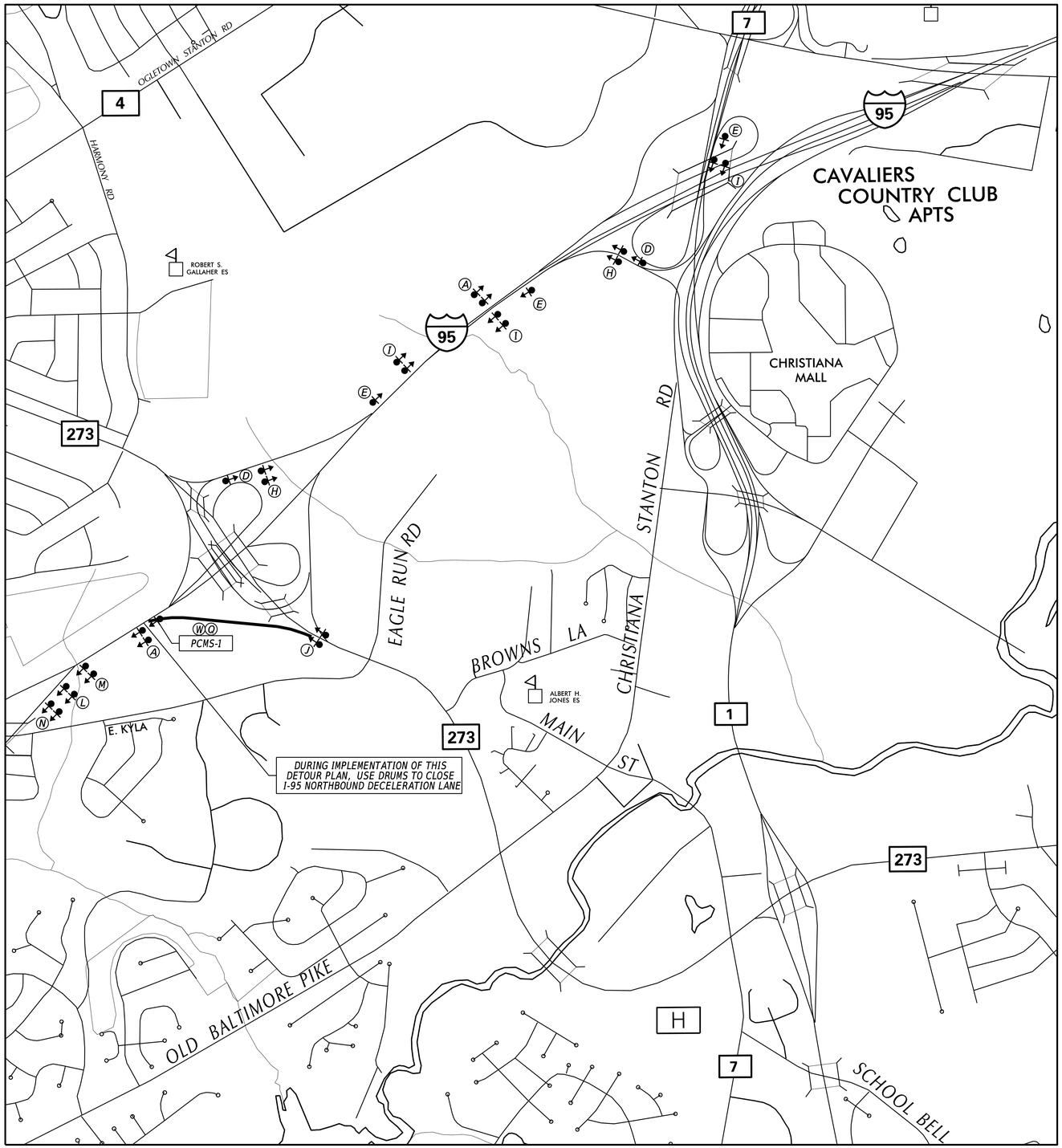

NOTE: * PLEASE REFER TO SHEET 80 FOR SIZE AND DIMENSIONS OF ALL SIGNS ON THIS DETOUR PLAN.

LEGEND

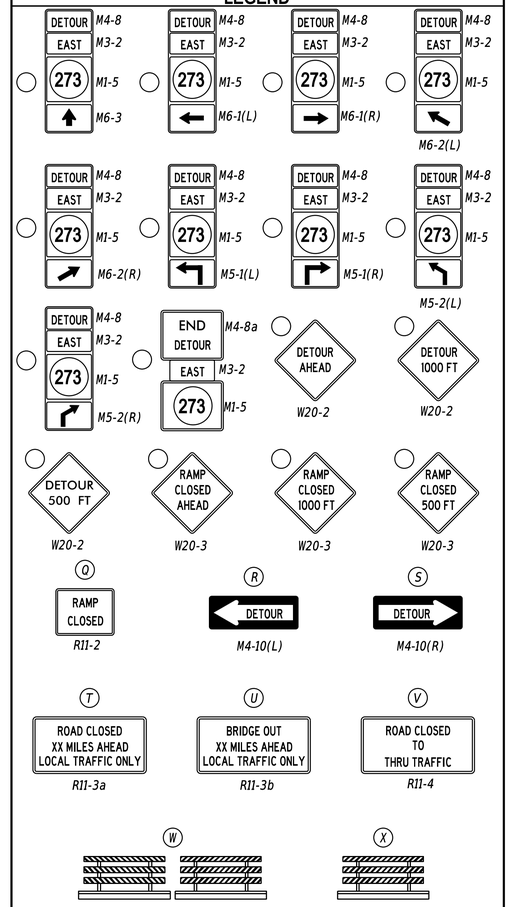

GENERAL NOTES

1. ALL TEMPORARY TRAFFIC CONTROL DEVICES ARE TO BE SUPPLIED AND MAINTAINED BY THE GENERAL CONTRACTOR AND SHALL BE IN COMPLIANCE WITH THIS PLAN AND THE DELAWARE MANUAL ON UNIFORM TRAFFIC CONTROL DEVICES (DE MUTCD) LATEST EDITION.
2. SIGNS "N" THROUGH "Q" AND "T" AND "V", THE WORD "ROAD" SHALL BE CHANGED TO "RAMP", "RR XING" OR "BRIDGE" WHERE APPLICABLE.
3. "W" TYPE 3 BARRICADES AT A ROAD CLOSURE SHALL BE PLACED COMPLETELY ACROSS THE ROADWAY, FROM CURB TO CURB, OR FROM EDGE OF ROAD TO EDGE OF ROAD, WITH THE STRIPES POSITIONED DOWNWARD TOWARD THE CENTER OF THE ROADWAY.
4. BARRICADES SHALL BE A MINIMUM OF 6 FEET WIDE UNLESS DIRECTED BY THE ENGINEER.

CONCURRENCE FOR IMPLEMENTATION

TRAFFIC SAFETY — DATE: 7/7/20

PREPARED BY

RK&K

Carey D. Webb — 07/07/2020

THIS SEAL ONLY APPLIES TO THIS DETOUR SHEET — DATE

CAREY DANIEL WEBB LICENSED No. 18515 DELAWARE PROFESSIONAL ENGINEER — SEAL

Zachary J Scholl — 07/07/2020

QA/QC REVIEWER — DATE

"I CERTIFY TO THE BEST OF MY KNOWLEDGE AND BELIEF THAT THIS DETOUR PLAN HAS BEEN PREPARED IN ACCORDANCE WITH THE DELAWARE MANUAL ON UNIFORM TRAFFIC CONTROL DEVICES."

ADDENDA / REVISIONS

NOT TO SCALE

HSIP NCC, SR 273 AND I-95 INTERCHANGE IMPROVEMENTS

CONTRACT	PERMIT NO.	X
T200800713	DESIGNED BY:	B.BURRIS
COUNTY	CHECKED BY:	Z. SCHOLL
NEW CASTLE		

DETOUR PLAN - EXIT 3A RAMP M, I-95 NB TO SR 273 EB

SECTION: RK&K

SHEET NO. 81

02-JUL-2020 13:54 \\balsrv01\v2014\2014\414144_DelDOT1707\Task 4A - Harmony FD\Cadd\Contract\Plans\dp05_Har.dgn

PORTABLE CHANGEABLE MESSAGE SIGNS

SPECIAL SIGNS

SIGN ASSEMBLEY TO BE FABRICATED AS A SINGLE SIGN PANEL (TYP).

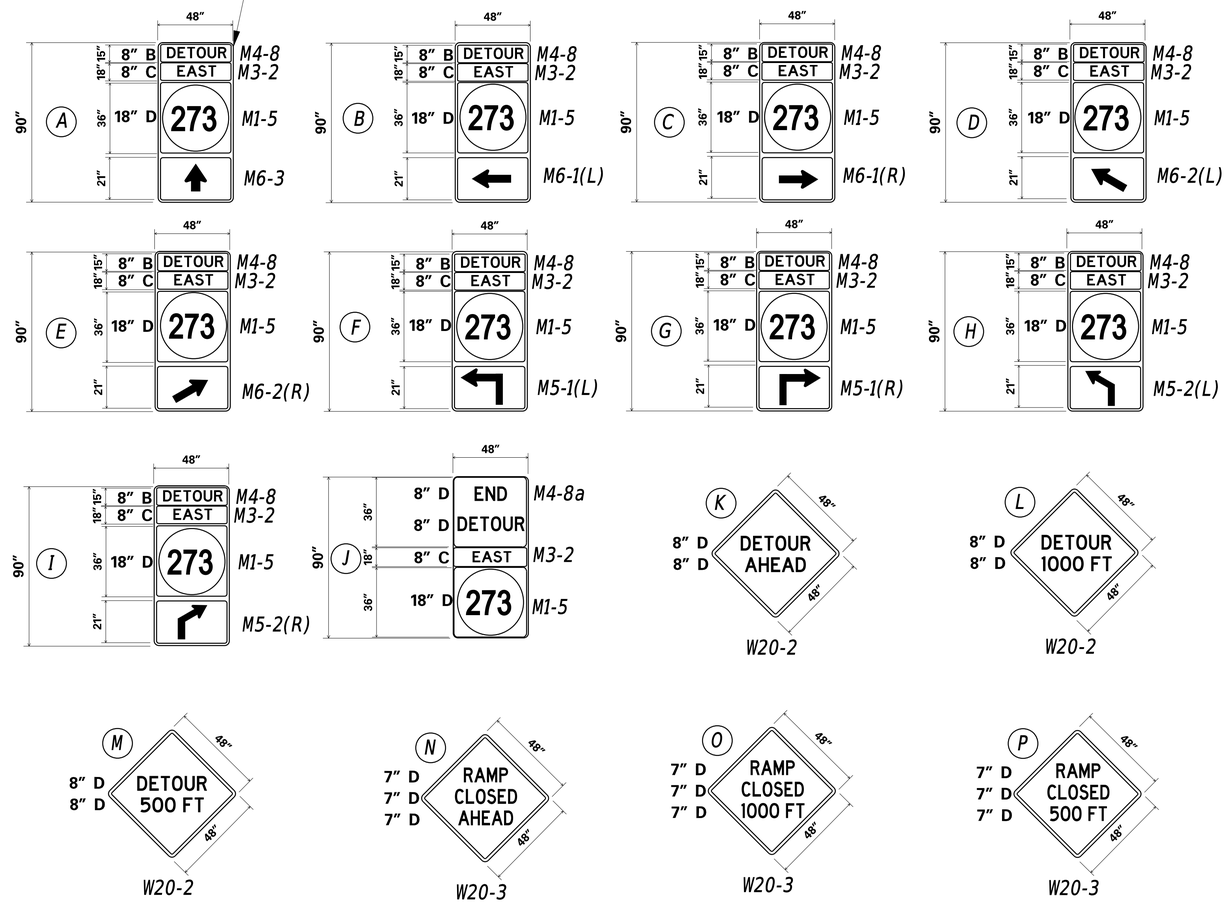

*INTERSTATE/FREEWAY/EXPRESSWAY SIGN DIMENSIONS

*IF STATE ROUTE SIGN HAS 3 DIGITS, M1-5 WIDTH SHALL BE 48"

*COLOR (TYPICAL) : M4-8 BLACK ON FLUORESCENT ORANGE
M5-1 BLACK ON FLUORESCENT ORANGE
M5-2 BLACK ON FLUORESCENT ORANGE
M6-1 BLACK ON FLUORESCENT ORANGE
M6-2 BLACK ON FLUORESCENT ORANGE
M6-3 BLACK ON FLUORESCENT ORANGE
W20-2 BLACK ON FLUORESCENT ORANGE
W20-3 BLACK ON FLUORESCENT ORANGE
M1-5 BLACK ON WHITE
M3-1 BLACK ON WHITE

LEGEND

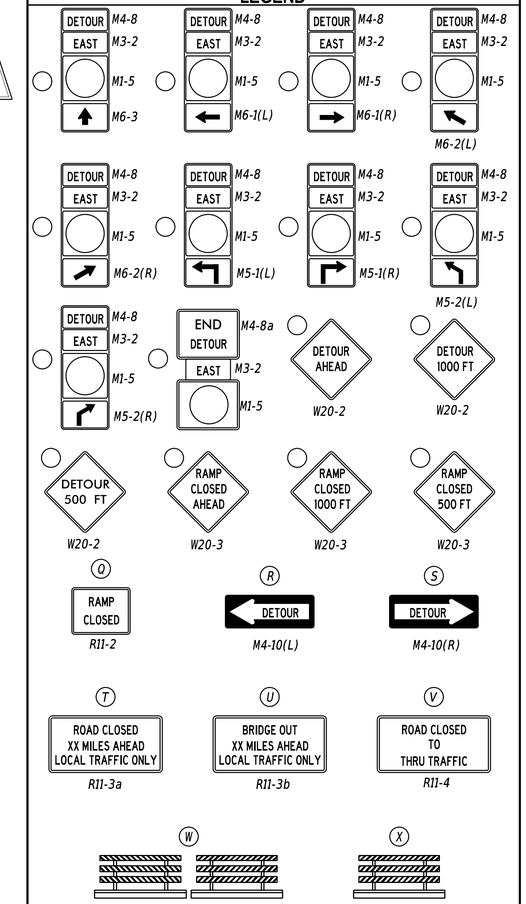

GENERAL NOTES

1. ALL TEMPORARY TRAFFIC CONTROL DEVICES ARE TO BE SUPPLIED AND MAINTAINED BY THE GENERAL CONTRACTOR AND SHALL BE IN COMPLIANCE WITH THIS PLAN AND THE DELAWARE MANUAL ON UNIFORM TRAFFIC CONTROL DEVICES (DE MUTCD) LATEST EDITION.
2. SIGNS "N" THROUGH "Q" AND "T" AND "V", THE WORD "ROAD" SHALL BE CHANGED TO "RAMP", "RR XING" OR "BRIDGE" WHERE APPLICABLE.
3. "W" TYPE 3 BARRICADES AT A ROAD CLOSURE SHALL BE PLACED COMPLETELY ACROSS THE ROADWAY, FROM CURB TO CURB, OR FROM EDGE OF ROAD TO EDGE OF ROAD, WITH THE STRIPES POSITIONED DOWNWARD TOWARD THE CENTER OF THE ROADWAY.
4. BARRICADES SHALL BE A MINIMUM OF 6 FEET WIDE UNLESS DIRECTED BY THE ENGINEER.

CONCURRENCE FOR IMPLEMENTATION

TRAFFIC SAFETY — DATE: 7/7/20

PREPARED BY

RK&K

Carey D. Webb — 07/07/2020

THIS SEAL ONLY APPLIES TO THIS DETOUR SHEET — DATE

CAREY DANIEL WEBB — LICENSED — No. 18515 — DELAWARE — PROFESSIONAL ENGINEER

SEAL

Zachary J Scholl — 07/07/2020

QA/QC REVIEWER — DATE

"I CERTIFY TO THE BEST OF MY KNOWLEDGE AND BELIEF THAT THIS DETOUR PLAN HAS BEEN PREPARED IN ACCORDANCE WITH THE DELAWARE MANUAL ON UNIFORM TRAFFIC CONTROL DEVICES."

ADDENDA / REVISIONS

NOT TO SCALE

HSIP NCC, SR 273 AND I-95 INTERCHANGE IMPROVEMENTS

CONTRACT	PERMIT NO.	X
T200800713	DESIGNED BY:	B.BURRIS
COUNTY		
NEW CASTLE	CHECKED BY:	Z. SCHOLL

DETOUR PLAN - RAMP F & M SIGNING

SECTION: RK&K

SHEET NO. 82

02-JUL-2020 14:03 \\balsrv01\v2014\2014\414144_DelDOT1707\Task 4A - Harmony FD\Cadd\Contract\Plans\dp06_Har.dgn

GENERAL NOTES

1. ALL ELECTRICAL WORK SHALL BE PERFORMED AND ALL MATERIAL PROVIDED SHALL BE IN ACCORDANCE WITH THE NATIONAL ELECTRIC CODE OF THE NATIONAL FIRE PROTECTION ASSOCIATION, TO ALL LOCAL AND SPECIAL LAWS, AND/OR TO ORDINANCES GOVERNING SUCH MATERIAL. CODE SHALL BE CONSIDERED THE MINIMUM REQUIREMENTS FOR THE ELECTRICAL WORK AND IF THERE IS A CONFLICT BETWEEN THE REQUIREMENTS SPECIFIED IN THE CONTRACT DOCUMENTS AND THE CODE, THE MORE STRINGENT REQUIREMENT WILL APPLY AS DETERMINED AND APPROVED BY THE ENGINEER. WHEN THESE REQUIREMENTS DO NOT GOVERN, AND WHERE NOT OTHERWISE SPECIFIED, ELECTRICAL MATERIALS SHALL CONFORM TO THE STANDARDIZATION RULES OF THE INSTITUTE OF ELECTRICAL ENGINEERS.

2. THE CONTRACTOR SHALL PROVIDE AND SECURE ALL ELECTRICAL INSPECTIONS AS REQUIRED AND PAY FOR THE SAME. THE ELECTRICAL CONTRACTOR SHALL OBTAIN AT HIS EXPENSE ALL NECESSARY PERMITS AND CERTIFICATES AS REQUIRED.

3. THE ELECTRICAL CONTRACTOR SHALL COORDINATE HIS WORK WITH ALL THE CONTRACTORS INVOLVED ON THIS PROJECT. THE ELECTRICAL CONTRACTOR SHALL COORDINATE WITH THE ENGINEER AND THE GENERAL SUPERINTENDENT ON THE LOCATIONS OF ALL CONDUIT AND POLE BASES TO ELIMINATE CONSTRUCTION CONFLICTS.

4. BURIED ELECTRICAL CABLE AND CONDUIT, AND OTHER UTILITIES MAY EXIST THROUGHOUT THIS PROJECT. THE EXISTING UTILITY LOCATIONS SHOWN ON THE PLANS ARE APPROXIMATE.THE CONTRACTOR SHALL BE RESPONSIBLE FOR LOCATING AND PREVENTING DAMAGE TO THEM, AND MAINTAINING THEM IN SERVICE WHEN AND WHERE REQUIRED. THE CONTRACTOR SHALL VERIFY THE EXACT LOCATIONS PRIOR TO COMMENCING WORK. THE CONTRACTOR SHALL VERIFY THE LOCATION OF ALL EXISTING UTILITIES BY HAND EXCAVATION PRIOR TO TRENCHING BY MACHINE.

5. THE ELECTRICAL CONTRACTOR SHALL GUARANTEE ALL WORK MATERIAL AND LABOR TO BE FREE FROM DEFECTS FOR A ONE YEAR PERIOD FROM THE TIME OF OWNER ACCEPTANCE. ANY DEFECTS OCCURRING DURING THIS PERIOD SHALL BE CORRECTED BY THE ELECTRICAL CONTRACTOR AT NO ADDITIONAL COST TO THE OWNER.

6. SERVICE RUNS ARE SHOWN IN APPROXIMATE LOCATIONS. THE CONTRACTOR SHALL LOCATE THE SERVICE RUNS IN A MANNER THAT AVOIDS CONFLICTS WITH ALL EXISTING AND PROPOSED FEATURES AS FIELD CONDITIONS DICTATE AND AS APPROVED BY THE ENGINEER.

7. TERMINATE ALL CONDUITS WHEN ENTERING ENCLOSURES WITH LOCKNUT AND BONDING BUSHINGS. ALL OTHER CONDUITS SHALL BE PROVIDED WITH BONDING BUSHINGS. ALL CONDUITS SHALL BE BONDED WITH THE GROUND WIRE.

8. COLOR CODING SHALL BE PROVIDED THROUGHOUT THE ENTIRE NETWORK FOR SERVICE, FEEDER, BRANCH AND CONTROL CONDUCTORS. EACH PHASE SHALL BE AN INDEPENDENT COLOR. CONDUCTORS SHALL HAVE FACTORY IMPREGNATED COLOR THROUGHOUT THEIR ENTIRE LENGTH. PHASE TAPING IS NOT PERMITTED.

9. EXISTING LIGHT POLES, JUNCTION WELLS, AND CABINETS TO BE REMOVED SHALL BE SALVAGED AND DELIVERED TO DELDOT NORTH DISTRICT MAINTENANCE SHOP, 39 EAST REGAL BLVD, NEWARK, DELAWARE.

10. ALL LIGHTING POLE BASES TO BE REMOVED SHALL BE REMOVED TO A MINIMUM OF 6 INCHES BELOW GRADE.THE AREA SHALL BE BACKFILLED, SEEDED AND MULCHED.

11. THE CONTRACTOR SHALL NOTIFY DELMARVA POWER TWO WEEKS IN ADVANCE TO ARRANGE FINAL POWER CONNECTIONS. CONTACT: MR. TOM SMITH 302-283-5757.

12. ALL FUSED CONNECTIONS SHALL BE MADE IN THE POLE BASE. SPLICES IN JUNCTION WELLS, JUNCTION AND PULL BOXES SHALL NOT BE FUSED.

13. THE CONTRACTOR SHALL VERIFY ALL DIMENSIONS AND CONDITIONS AT SITE PRIOR TO WORK.

14. WORK INCLUDES FURNISHING LABOR, MATERIAL, EQUIPMENT AND SERVICE NECESSARY AND INCIDENTAL TO PROPER COMPLETION OF THE ELECTRICAL WORK AS SHOWN. MINOR ITEMS, ACCESSORIES OR DEVICES NECESSARY FOR COMPLETION AND PROPER OPERATION OF ANY SYSTEM SHALL BE PROVIDED WHETHER OR NOT THEY ARE SPECIFICALLY CALLED FOR BY SPECIFICATIONS OR DRAWINGS.

15. USE CAUTION WHEN INSTALLING CONDUITS UNDER EXISTING STORM WATER MANAGEMENT FACILITIES. WHEN COMPLETE, ENSURE ALL STORM WATER MANAGEMENT FACILITIES ARE RESTORED TO EXISTING CONDITIONS.

16. ALL CONDUITS, JUNCTION WELLS, LIGHTING STANDARDS, ETC. SHALL BE STAKED OUT AND EVERY LOCATION APPROVED BY THE ENGINEER BEFORE ANY WORK IS DONE.

17. ALL GROUNDING CONDUCTORS IN PROPOSED UNDERGROUND CONDUITS SHALL BE STRANDED COPPER WITH SIZE AS NOTED IN THE LIGHTING SERVICE SCHEDULE.

18. THE CONTRACTOR SHALL VERIFY THE OPERATING VOLTAGE OF ALL CIRCUITS OF THE EXISTING LIGHTING SYSTEMS THAT ARE BEING TIED INTO TO ENSURE COMPATIBILITY WITH PROPOSED LUMINAIRES.

19. THE CONTRACTOR SHALL VERIFY THE OPERATING CIRCUIT AND PHASE OF ALL EXISTING ROADWAY LIGHTING EQUIPMENT WHERE THE ELECTRICAL SERVICE IS BEING INTERRUPTED. THE EXISTING ROADWAY EQUIPMENT SHALL BE RECONNECTED TO THE SAME CIRCUIT AND PHASE AS IS EXISTING UNLESS OTHERWISE NOTED ON THE PLANS.

20. ALL STATION, OFFSET AND DIMENSION INFORMATION SHOWN FOR PROPOSED HIGH MAST TOWERS IS TO THE CENTER OF THE POLE BASE.

21. THE ELECTRICAL CONTRACTOR SHALL COORDINATE THE INSTALLATION OF LIGHTING CONDUITS WITH ITMS CONDUITS. ITMS AND LIGHTING CONDUITS MAY SHARE A COMMON TRENCH BUT SHALL NOT SHARE COMMON JUNCTION WELLS.

22. EXISTING ROADWAY LIGHTING CONDUITS SHALL BE EXISTING TO REMAIN UNLESS NOTED OTHERWISE ON THE PLANS.

23. SPLICES FOR ALL ROADWAY LIGHTING ELECTRICAL CABLES, INCLUDING RE-CONNECTION OF EXISTING IMPACTED ELECTRICAL CABLES, SHALL BE COMPLETED USING APPROVED SPLICE KITS OR METHODS APPROVED BY THE ENGINEER AND SHALL BE INCIDENTAL TO THE SUPPLY AND INSTALLATION OF VARIOUS ROADWAY LIGHTING ELECTRICAL CABLES.

24. ALL PROPOSED DAVIT ARM LIGHTING STANDARDS SHALL BE INSTALLED WITH BREAKAWAY TRANSFORMER BASES, WHETHER PROTECTED OR UNPROTECTED, UNLESS OTHERWISE NOTED.

25. PAYMENT FOR THE REMOVAL OF EXISTING HIGH MAST LIGHT TOWERS SHALL BE MADE UNDER ITEM 851532 - REMOVAL OF HIGH MAST LIGHT. PAYMENT FOR REMOVAL OF THE EXISTING HIGH MAST ELECTRICAL CABINET AND EQUIPMENT SHALL BE PAID FOR UNDER ITEM 847001 - REMOVAL OF POLE OR POST MOUNTED CABINET.

26. POLE NUMBERS, CIRCUITS AND CABLE SIZES FOR EXISTING ROADWAY LIGHTING OBTAINED FROM DELDOT CONTRACT NOS. 93-101-01, 91-101-04, AND 7072.

27. UNDERGROUND CONDUITS SHALL BE SLOPED TO DRAIN TO THE NEAREST JUNCTION WELL. IF THIS CANNOT BE ACCOMPLISHED, PROVIDE A DRAINAGE TEE AT LOW POINT OF CONDUIT RUN. DRAINAGE TEES SHALL BE INCIDENTAL TO THE PERTINENT FURNISH AND INSTALL ELECTRICAL CABLE ITEMS.

28. ALL GROUND WIRE CONNECTIONS TO GROUND RODS SHALL BE COMPLETED USING EXOTHERMIC WELDS.

29. ALL CONDUITS SHALL BE BONDED IN A CONTINUOS RUN FROM THE SOURCE BY A COPPER GROUNDING CONDUCTOR WITH SIZE AS NOTED ON PLANS. 10 FEET OF ADDITIONAL SLACK FOR EACH GROUND WIRE IN EACH JUNCTION WELL SHALL BE PROVIDED AND NEATLY COILED.

30. ALL PROPOSED CONDUITS (SERVICE RUNS) SHALL BE RIGID POLYVINYL CHLORIDE SCHEDULE 80 WHEN INSTALLED BY TRENCHING AND SDR-13.5 HDPE WHEN INSTALLED BY BORING, UNLESS OTHERWISE NOTED ON PLANS.

31. THE EXISTING ELECTRICAL CABLES IN ALL CONDUITS DESIGNATED TO BE ABANDONED SHALL BE REMOVED AS DIRECTED BY THE ENGINEER. THE EXISTING CONDUITS SHALL BE CAPPED AND ABANDONED IN PLACE.

32. ALL PROPOSED LIGHTING CONDUITS (SERVICE RUNS) SHALL BE SEALED WITH A DUCT SEAL/WATER BLOCK FOAM (POLYWATER FST OR APPROVED EQUAL). SEALING LIGHTING CONDUITS WILL NOT BE MEASURED AND PAID FOR BUT WILL BE INCIDENTAL TO THE PERTINENT FURNISH AND INSTALL ELECTRICAL CABLE ITEMS.

33. THE CONTRACTOR SHALL VERIFY THAT THE REMOVAL OF AN EXISTING JUNCTION WELL DESIGNATED TO BE REMOVED OR THE ABANDONING OF EXISTING ELECTRICAL CONDUITS AND CABLES DESIGNATED TO BE ABANDONED WILL NOT ADVERSELY AFFECT EXISTING EQUIPMENT TO REMAIN PRIOR TO REMOVAL OR ABANDONING OF EQUIPMENT AS SHOWN ON THE PLANS.

34. EXISTING UTILITY LOCATIONS SHOWN ON THE PLAN ARE APPROXIMATE. IT SHALL BE THE RESPONSIBILITY OF THE CONTRACTOR TO VERIFY THE EXACT LOCATIONS PRIOR TO COMMENCING WORK.

35. THIS PROJECT IS TO BE CONSTRUCTED IN ACCORDANCE WITH THE DELAWARE DEPARTMENT OF TRANSPORTATION "STANDARD SPECIFICATIONS", DATED AUGUST 2016 AND THE DELAWARE DEPARTMENT OF TRANSPORTATION "STANDARD CONSTRUCTION DETAILS" DATED OCTOBER 2018, INCLUDING ALL REVISIONS UP TO THE DATE OF ADVERTISEMENT.

36. THE CONTRACTOR SHALL FOLLOW ALL STATE AND LOCAL ORDINANCES CONCERNING CONSTRUCTION NOISE DURING THE DURATION OF THE CONSTRUCTION ACTIVITIES.

LEGEND

HM EX / HM X	HIGH MAST TOWER AND LUMINAIRES (EXISTING AND PROPOSED)
LSR X / LSR X	LIGHTING SERVICE RUN IDENTIFIER (EXISTING AND PROPOSED)
JW X / JW X	JUNCTION WELL & TYPE (EXISTING AND PROPOSED)
LST EX	LIGHTING STANDARD IDENTIFIER (EXISTING)
CA EX	LIGHTING CONTROL CENTER & TYPE (EXISTING)
	EXISTING LIGHTING STANDARD
CONCRETE SLAB; EXISTING HIGH MAST TOWER, (8) 1100W HPS LUMINAIRES; DIRECTION FOR LOWERING POLE	
EB	EXISTING HIGH MAST TOWER ELECTRICAL CABINET
	PROPOSED HIGHMAST TOWER (12) 468W LED LUMINAIRES
	PROPOSED HIGHMAST TOWER (8) 468W LED LUMINAIRES
	EXISTING LIGHTING CONTROL CABINET
	PROPOSED LIGHTING CONDUIT
	EXISTING LIGHTING CONDUIT
J.W.	EXISTING JUNCTION WELL
J.W.	PROPOSED JUNCTION WELL, TYPE 1
RM C	REMOVE BY CONTRACTOR
AB C	ABANDON BY CONTRACTOR

ADDENDA / REVISIONS

NOT TO SCALE

HSIP NCC, SR 273 AND I-95 INTERCHANGE IMPROVEMENTS

CONTRACT	BRIDGE NO.	715, 715A, 715B, 715C & 715D
T200800713	DESIGNED BY:	N. MONACO
COUNTY		
NEW CASTLE	CHECKED BY:	J. RASHID

LIGHTING PLAN

SECTION RK&K

SHEET NO. 83

11-AUG-2020
18:52
\\balserv01\v2014\20141414144_DelDOT1700\Task 4A - Harmony FD\Cadd\Contract\Plans\I01_Har.dgn

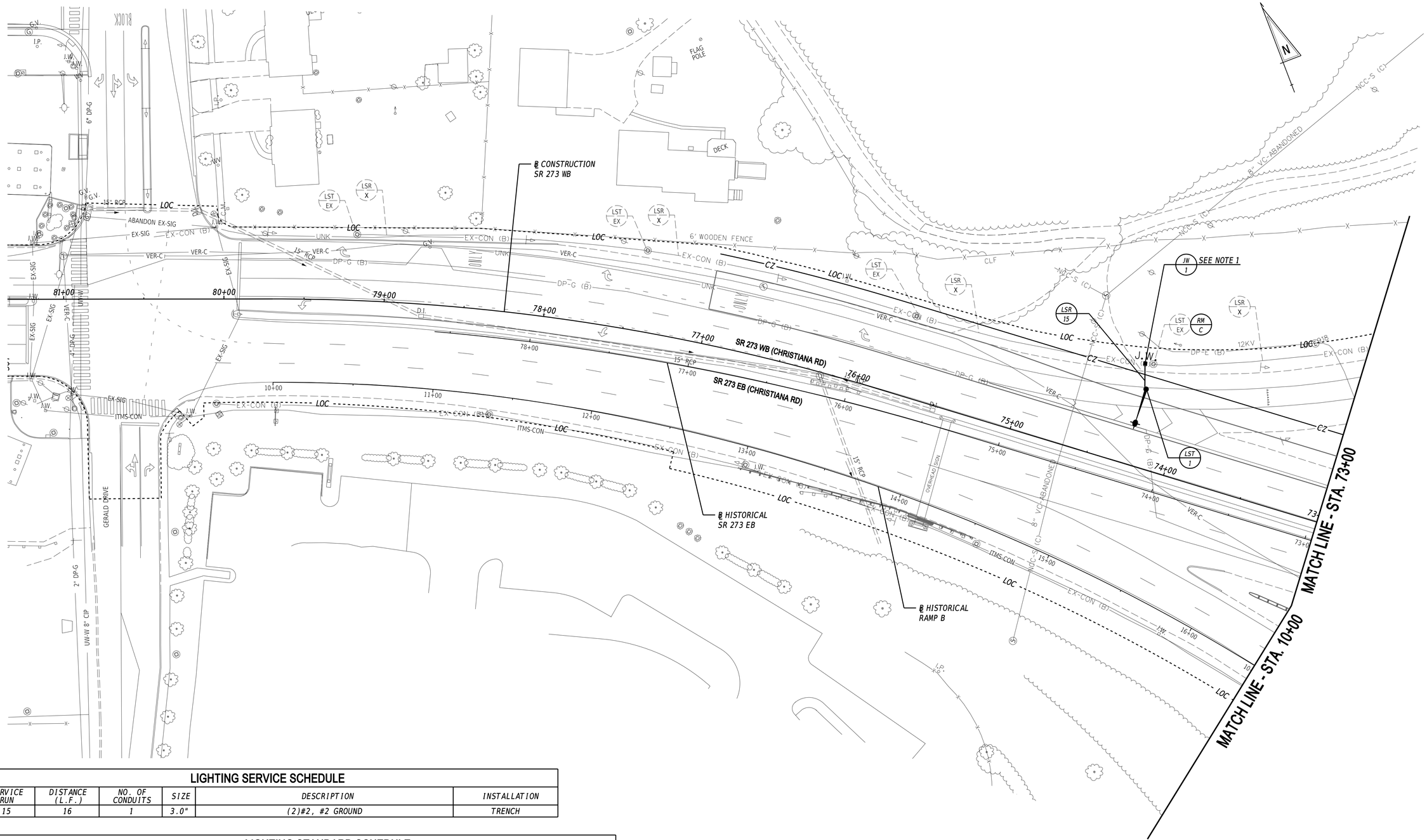

LIGHTING SERVICE SCHEDULE

SERVICE RUN	DISTANCE (L.F.)	NO. OF CONDUITS	SIZE	DESCRIPTION	INSTALLATION
15	16	1	3.0"	(2)#2, #2 GROUND	TRENCH

LIGHTING STANDARD SCHEDULE

NO.	ARM LENGTH	BASE LINE	STATION	OFFSET	HEIGHT	LAMP	DISTR.	CATALOG
1	15'	SR 273 EB	74+26.1	48.1' R	40'	160W, LED	5	HFL-276L-530-NW-G1-5W

NOTES:

1. INSTALL JUNCTION WELL OVER EXISTING CONDUIT. SPLICE PROPOSED ELECTRICAL CABLES TO EXISTING CIRCUIT IN THE JUNCTION WELL TO PROVIDE SERVICE TO THE PROPOSED LIGHTING STANDARD.

ADDENDA / REVISIONS

SCALE
0 30 60 90
FEET

HSIP NCC, SR 273 AND I-95 INTERCHANGE IMPROVEMENTS

CONTRACT	BRIDGE NO.	715, 715A, 715B, 715C & 715D
T200800713	DESIGNED BY:	N. MONACO
COUNTY		
NEW CASTLE	CHECKED BY:	J. RASHID

LIGHTING PLAN

SECTION: RK&K
SHEET NO.: 84

11-AUG-2020
18:53
\\balsnx01\v20\14\20140144\144_DelDOT\70\Task 4A - Harmony FD\Cadd\Contract\Plans\l02_Har.dgn

HIGH MAST SCHEDULE

NO.	ARM LENGTH	BASE LINE	STATION	OFFSET	HEIGHT	LAMP	ARRAY	DISTR.	CATALOG
1	2'	RAMP E	110+68.5	60.9' R	150'	468W, LED	12 @ 30°	5	HFL-276L-530-NW-G1-5W
2	2'	RAMP F	39+54.9	53.4' R	150'	468W, LED	12 @ 30°	5	HFL-276L-530-NW-G1-5W

LIGHTING SERVICE SCHEDULE

SERVICE RUN	DISTANCE (L.F.)	NO. OF CONDUITS	SIZE	DESCRIPTION	INSTALLATION
1	18	1	3.0"	(3)#2, #2 GROUND	TRENCH
2	85	1	3.0"	(3)#2, #2 GROUND	TRENCH
3	100	1	3.0"	(3)#2, #2 GROUND	BORED
4	117	1	3.0"	(3)#2, #2 GROUND	BORED
5	55	1	3.0"	(3)#2, #2 GROUND	TRENCH

NOTES:

1. SPLICE PROPOSED ELECTRICAL CABLES TO EXISTING CIRCUIT 3N IN THE JUNCTION WELL TO PROVIDE SERVICE TO THE PROPOSED HIGH MAST LIGHT.
2. ADJUST EXISTING JUNCTION WELL TO FINAL GRADE.

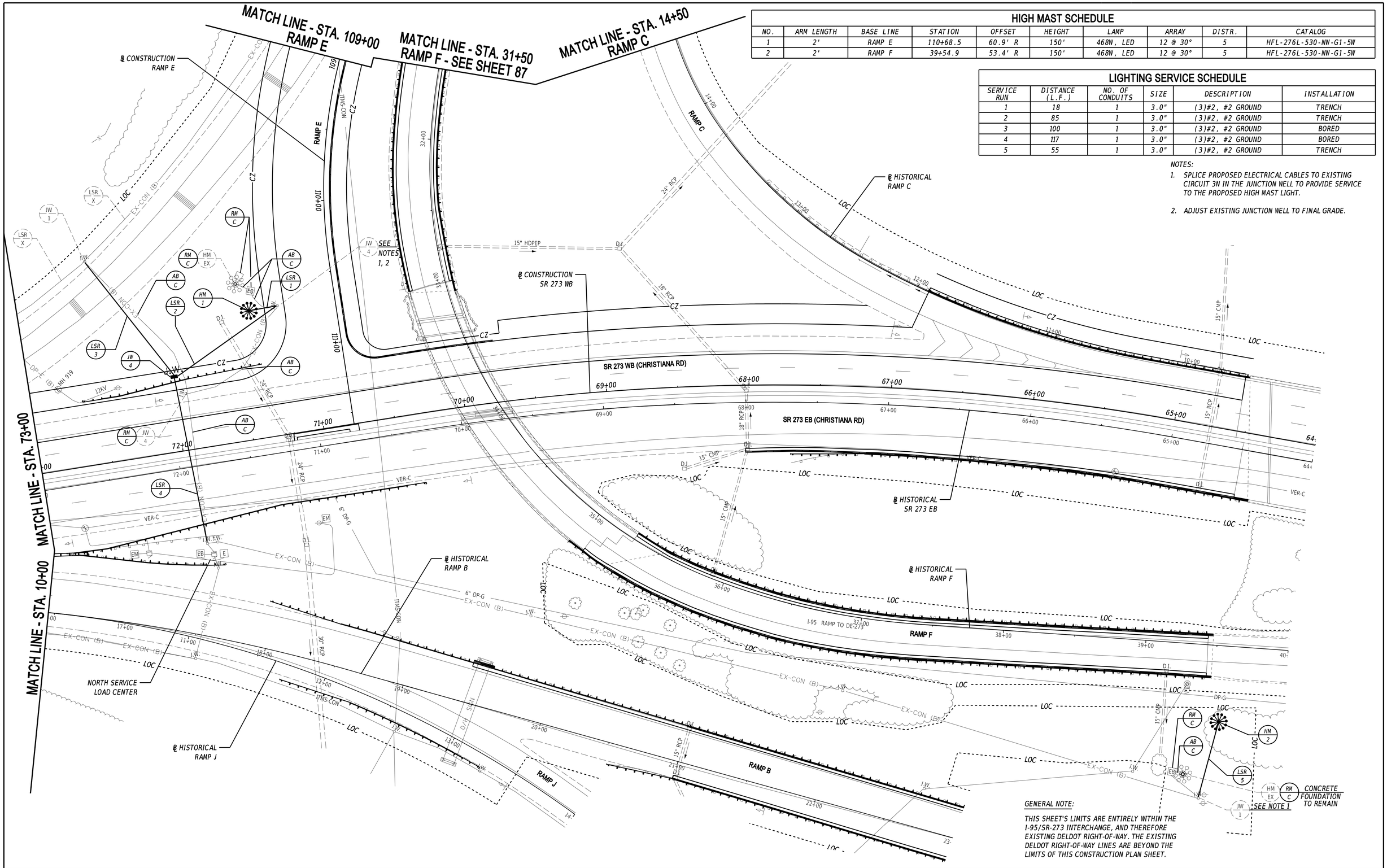

GENERAL NOTE:

THIS SHEET'S LIMITS ARE ENTIRELY WITHIN THE I-95/SR-273 INTERCHANGE, AND THEREFORE EXISTING DELDOT RIGHT-OF-WAY. THE EXISTING DELDOT RIGHT-OF-WAY LINES ARE BEYOND THE LIMITS OF THIS CONSTRUCTION PLAN SHEET.

ADDENDA / REVISIONS

SCALE 0 30 60 90 FEET

HSIP NCC, SR 273 AND I-95 INTERCHANGE IMPROVEMENTS

CONTRACT	BRIDGE NO.	715, 715A, 715B, 715C & 715D
T200800713	DESIGNED BY:	N. MONACO
COUNTY		
NEW CASTLE	CHECKED BY:	J. RASHID

LIGHTING PLAN

SECTION RK&K

SHEET NO. 85

12-AUG-2020
10:43
\\bdsrv01\v20140214144_DelDOT1707\Task 4A - Harmony FD\Cadd\Contract\Plans\I03_Plan.dgn

HIGH MAST SCHEDULE

NO.	ARM LENGTH	BASE LINE	STATION	OFFSET	HEIGHT	LAMP	ARRAY	DISTR.	CATALOG
3	2'	RAMP B	37+81.3	153.9' R	150'	468W, LED	12 @ 30°	5	HFL-276L-530-NW-G1-5W

LIGHTING SERVICE SCHEDULE

SERVICE RUN	DISTANCE (L.F.)	NO. OF CONDUITS	SIZE	DESCRIPTION	INSTALLATION
6	58	1	3.0"	(3)#2, #2 GROUND	TRENCH

NOTES:

1. SPLICE PROPOSED ELECTRICAL CABLES TO EXISTING CIRCUIT 3S IN THE JUNCTION WELL TO PROVIDE SERVICE TO THE PROPOSED HIGH MAST LIGHT.

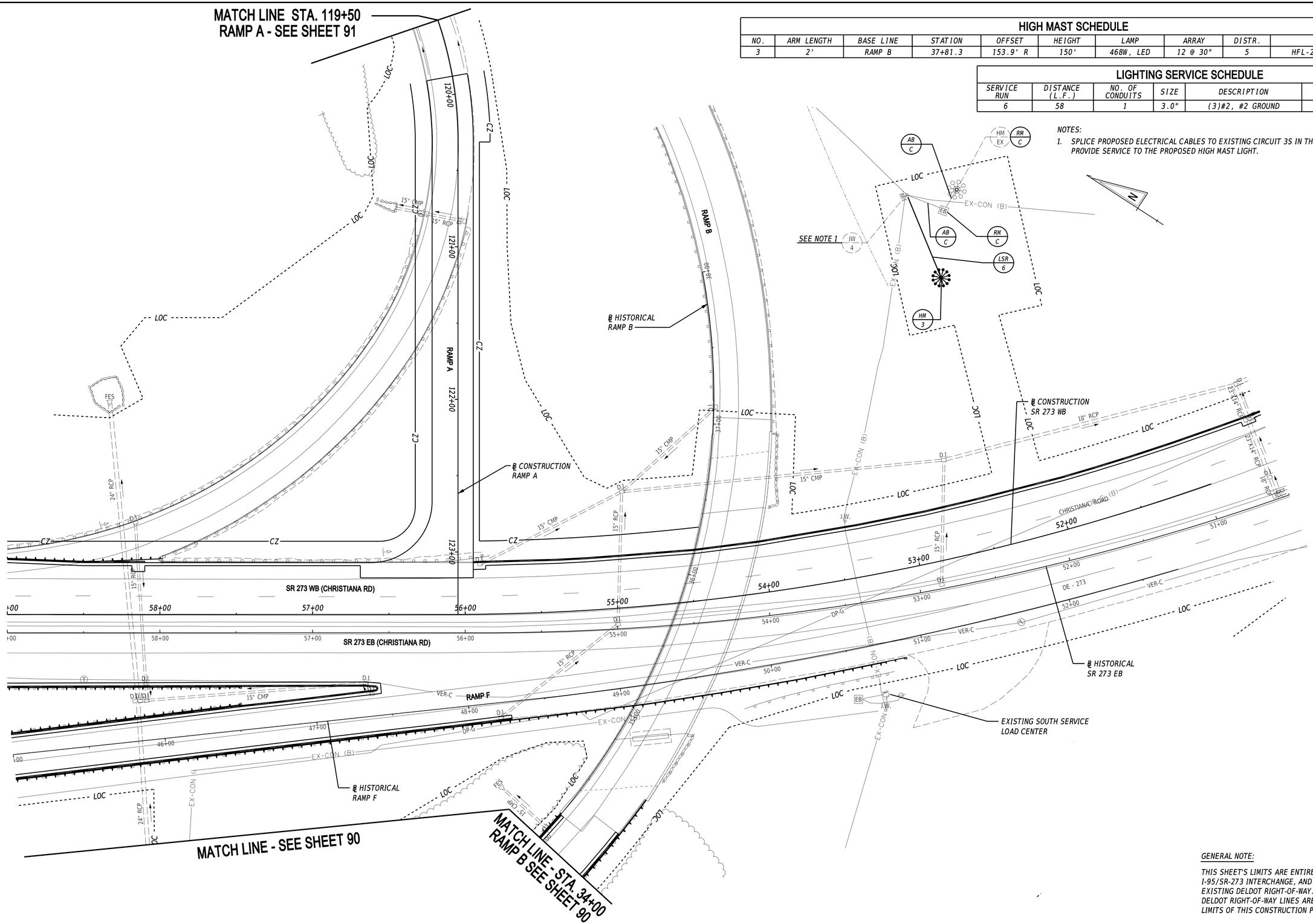

GENERAL NOTE:

THIS SHEET'S LIMITS ARE ENTIRELY WITHIN THE I-95/SR-273 INTERCHANGE, AND THEREFORE EXISTING DELDOT RIGHT-OF-WAY. THE EXISTING DELDOT RIGHT-OF-WAY LINES ARE BEYOND THE LIMITS OF THIS CONSTRUCTION PLAN SHEET.

ADDENDA / REVISIONS

SCALE 0 30 60 90 FEET

HSIP NCC, SR 273 AND I-95 INTERCHANGE IMPROVEMENTS

CONTRACT	BRIDGE NO.	715, 715A, 715B, 715C & 715D
T200800713	DESIGNED BY:	N. MONACO
COUNTY		
NEW CASTLE	CHECKED BY:	J. RASHID

LIGHTING PLAN

SECTION RK&K

SHEET NO. 86

12-AUG-2020
10:58
\\balsrv01\v2014\20142014144_DelDOT1707\Task 4A - Harmony FD\Cadd\ContractPlans\II04_Har.dgn

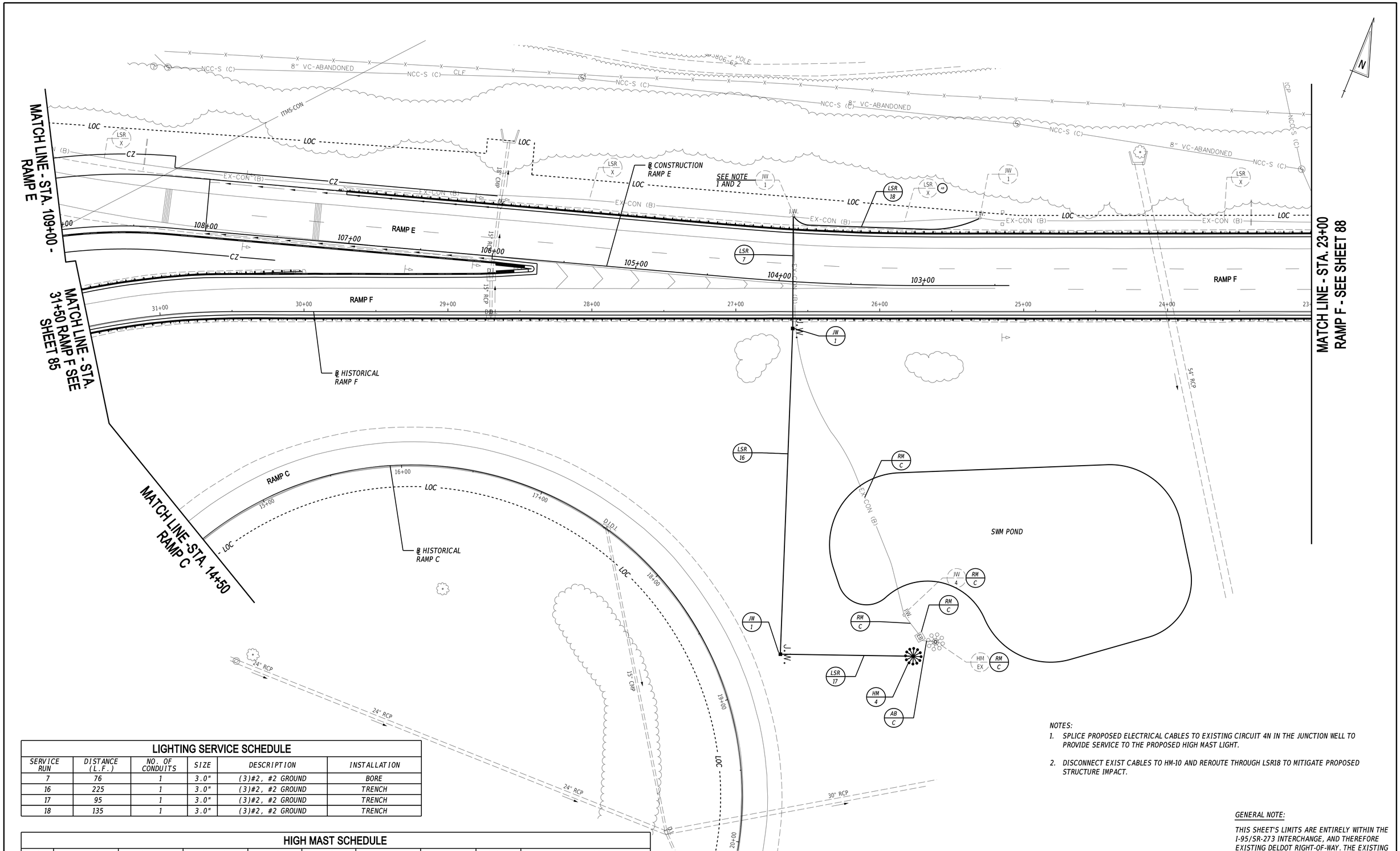

LIGHTING SERVICE SCHEDULE

SERVICE RUN	DISTANCE (L.F.)	NO. OF CONDUITS	SIZE	DESCRIPTION	INSTALLATION
7	76	1	3.0"	(3)#2, #2 GROUND	BORE
16	225	1	3.0"	(3)#2, #2 GROUND	TRENCH
17	95	1	3.0"	(3)#2, #2 GROUND	TRENCH
18	135	1	3.0"	(3)#2, #2 GROUND	TRENCH

HIGH MAST SCHEDULE

NO.	ARM LENGTH	BASE LINE	STATION	OFFSET	HEIGHT	LAMP	ARRAY	DISTR.	CATALOG
4	2'	RAMP C	19+05.5	132.1' L	150'	468W, LED	12 @ 30°	5	HFL-276L-530-NW-G1-5W

NOTES:

1. SPLICE PROPOSED ELECTRICAL CABLES TO EXISTING CIRCUIT 4N IN THE JUNCTION WELL TO PROVIDE SERVICE TO THE PROPOSED HIGH MAST LIGHT.
2. DISCONNECT EXIST CABLES TO HM-10 AND REROUTE THROUGH LSR18 TO MITIGATE PROPOSED STRUCTURE IMPACT.

GENERAL NOTE:

THIS SHEET'S LIMITS ARE ENTIRELY WITHIN THE I-95/SR-273 INTERCHANGE, AND THEREFORE EXISTING DELDOT RIGHT-OF-WAY. THE EXISTING DELDOT RIGHT-OF-WAY LINES ARE BEYOND THE LIMITS OF THIS CONSTRUCTION PLAN SHEET.

ADDENDA / REVISIONS

SCALE 0 30 60 90 FEET

HSIP NCC, SR 273 AND I-95 INTERCHANGE IMPROVEMENTS

CONTRACT	BRIDGE NO.	715, 715A, 715B, 715C & 715D
T200800713	DESIGNED BY:	N. MONACO
COUNTY		
NEW CASTLE	CHECKED BY:	J. RASHID

LIGHTING PLAN

SECTION RK&K

SHEET NO. 87

12-AUG-2020
11:02
\\bdsrv01\v2014\2014\14144_DelDOT\70\Task 4A - Harmony FD\Cadd\Contract\Plans\I05_Har.dgn

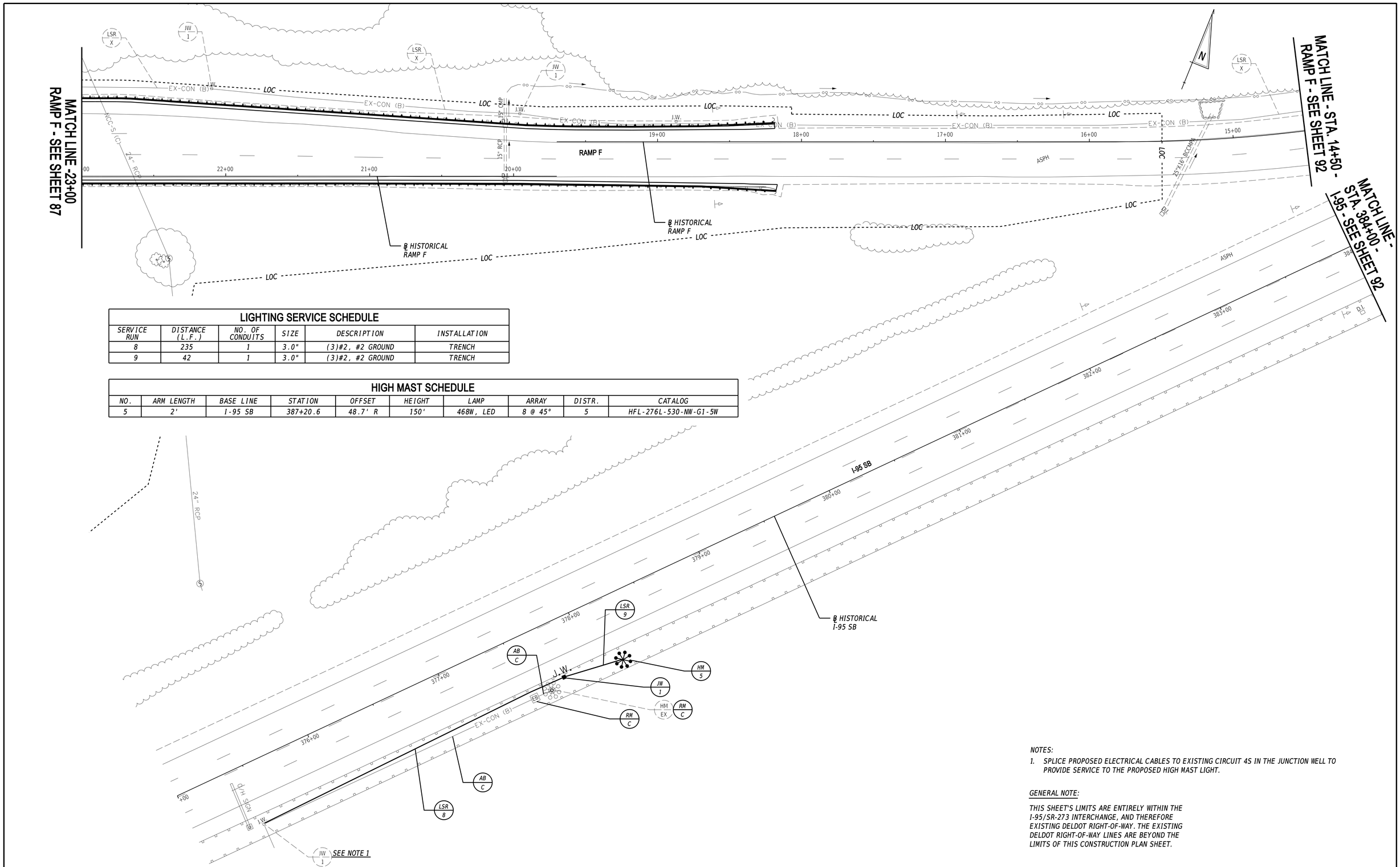

LIGHTING SERVICE SCHEDULE

SERVICE RUN	DISTANCE (L.F.)	NO. OF CONDUITS	SIZE	DESCRIPTION	INSTALLATION
8	235	1	3.0"	(3)#2, #2 GROUND	TRENCH
9	42	1	3.0"	(3)#2, #2 GROUND	TRENCH

HIGH MAST SCHEDULE

NO.	ARM LENGTH	BASE LINE	STATION	OFFSET	HEIGHT	LAMP	ARRAY	DISTR.	CATALOG
5	2'	I-95 SB	387+20.6	48.7' R	150'	468W, LED	8 @ 45°	5	HFL-276L-530-NW-G1-5W

NOTES:

1. SPLICE PROPOSED ELECTRICAL CABLES TO EXISTING CIRCUIT 4S IN THE JUNCTION WELL TO PROVIDE SERVICE TO THE PROPOSED HIGH MAST LIGHT.

GENERAL NOTE:

THIS SHEET'S LIMITS ARE ENTIRELY WITHIN THE I-95/SR-273 INTERCHANGE, AND THEREFORE EXISTING DELDOT RIGHT-OF-WAY. THE EXISTING DELDOT RIGHT-OF-WAY LINES ARE BEYOND THE LIMITS OF THIS CONSTRUCTION PLAN SHEET.

ADDENDA / REVISIONS

SCALE 0 30 60 90 FEET

HSIP NCC, SR 273 AND I-95 INTERCHANGE IMPROVEMENTS

CONTRACT	BRIDGE NO.	715, 715A, 715B, 715C & 715D
T200800713	DESIGNED BY:	N. MONACO
COUNTY		
NEW CASTLE	CHECKED BY:	J. RASHID

LIGHTING PLAN

SECTION RK&K

SHEET NO. 88

12-AUG-2020
11:07
\\bdsfs-fs01\v20\14\20141414\4_DelDOT\700\Task 4A - Harmony FD\Cadd\ContractPlans\I06_Ftar.dgn

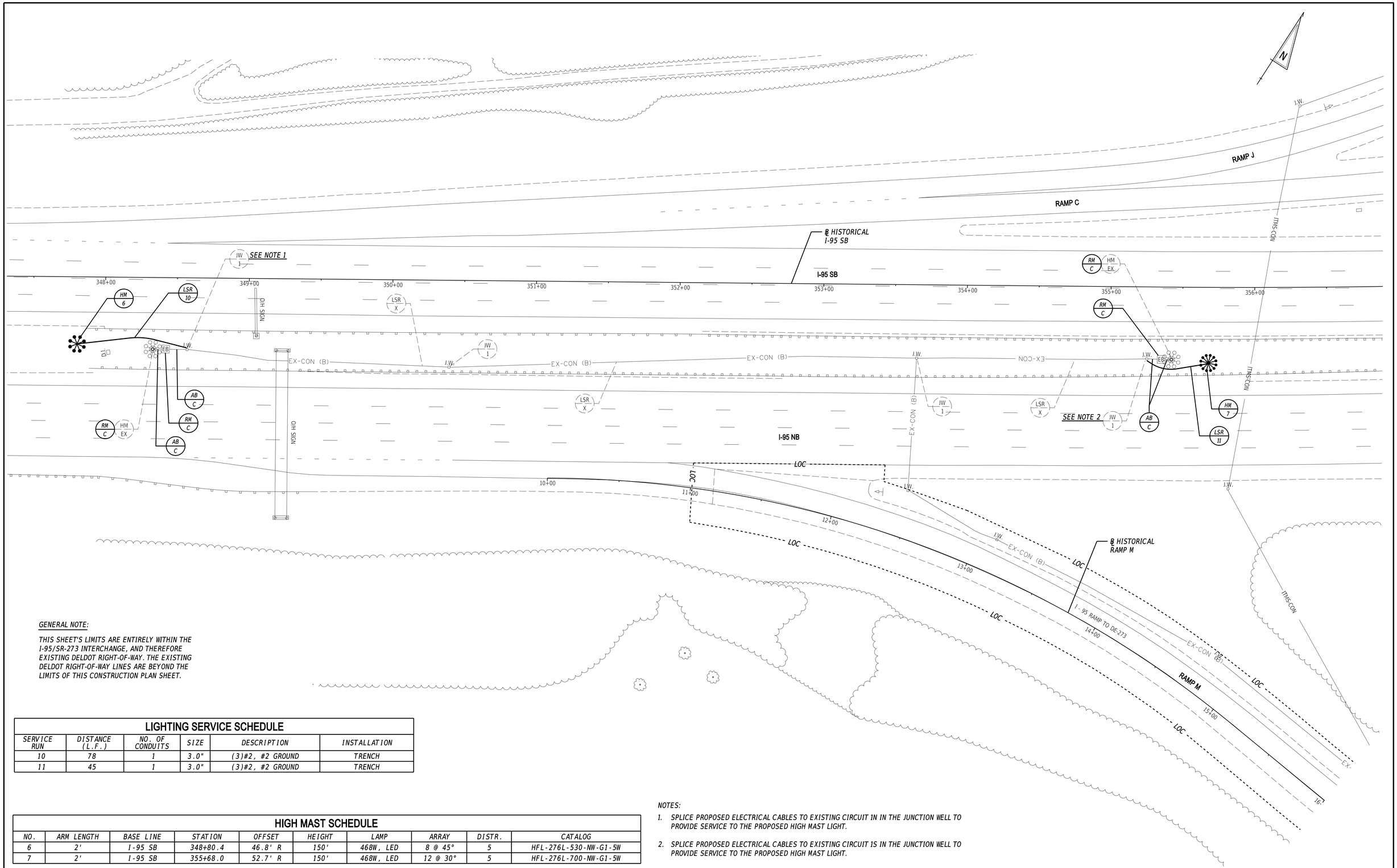

GENERAL NOTE:

THIS SHEET'S LIMITS ARE ENTIRELY WITHIN THE I-95/SR-273 INTERCHANGE, AND THEREFORE EXISTING DELDOT RIGHT-OF-WAY. THE EXISTING DELDOT RIGHT-OF-WAY LINES ARE BEYOND THE LIMITS OF THIS CONSTRUCTION PLAN SHEET.

LIGHTING SERVICE SCHEDULE

SERVICE RUN	DISTANCE (L.F.)	NO. OF CONDUITS	SIZE	DESCRIPTION	INSTALLATION
10	78	1	3.0"	(3)#2, #2 GROUND	TRENCH
11	45	1	3.0"	(3)#2, #2 GROUND	TRENCH

HIGH MAST SCHEDULE

NO.	ARM LENGTH	BASE LINE	STATION	OFFSET	HEIGHT	LAMP	ARRAY	DISTR.	CATALOG
6	2'	I-95 SB	348+80.4	46.8' R	150'	468W, LED	8 @ 45°	5	HFL-276L-530-NW-G1-5W
7	2'	I-95 SB	355+68.0	52.7' R	150'	468W, LED	12 @ 30°	5	HFL-276L-700-NW-G1-5W

NOTES:

1. SPLICE PROPOSED ELECTRICAL CABLES TO EXISTING CIRCUIT 1N IN THE JUNCTION WELL TO PROVIDE SERVICE TO THE PROPOSED HIGH MAST LIGHT.
2. SPLICE PROPOSED ELECTRICAL CABLES TO EXISTING CIRCUIT 1S IN THE JUNCTION WELL TO PROVIDE SERVICE TO THE PROPOSED HIGH MAST LIGHT.

ADDENDA / REVISIONS

SCALE 0 30 60 90 FEET

HSIP NCC, SR 273 AND I-95 INTERCHANGE IMPROVEMENTS

CONTRACT	BRIDGE NO.	715, 715A, 715B, 715C & 715D
T200800713	DESIGNED BY:	N. MONACO
COUNTY		
NEW CASTLE	CHECKED BY:	J. RASHID

LIGHTING PLAN

SECTION RK&K

SHEET NO. 89

11-AUG-2020
21:12
\\balserv01\v2014\20141414144_DelDOT170TTask 4A - Harmony FD\Cadd\Contract\Plans\I07_Plan.dgn

GENERAL NOTE:

THIS SHEET'S LIMITS ARE ENTIRELY WITHIN THE I-95/SR-273 INTERCHANGE, AND THEREFORE EXISTING DELDOT RIGHT-OF-WAY. THE EXISTING DELDOT RIGHT-OF-WAY LINES ARE BEYOND THE LIMITS OF THIS CONSTRUCTION PLAN SHEET.

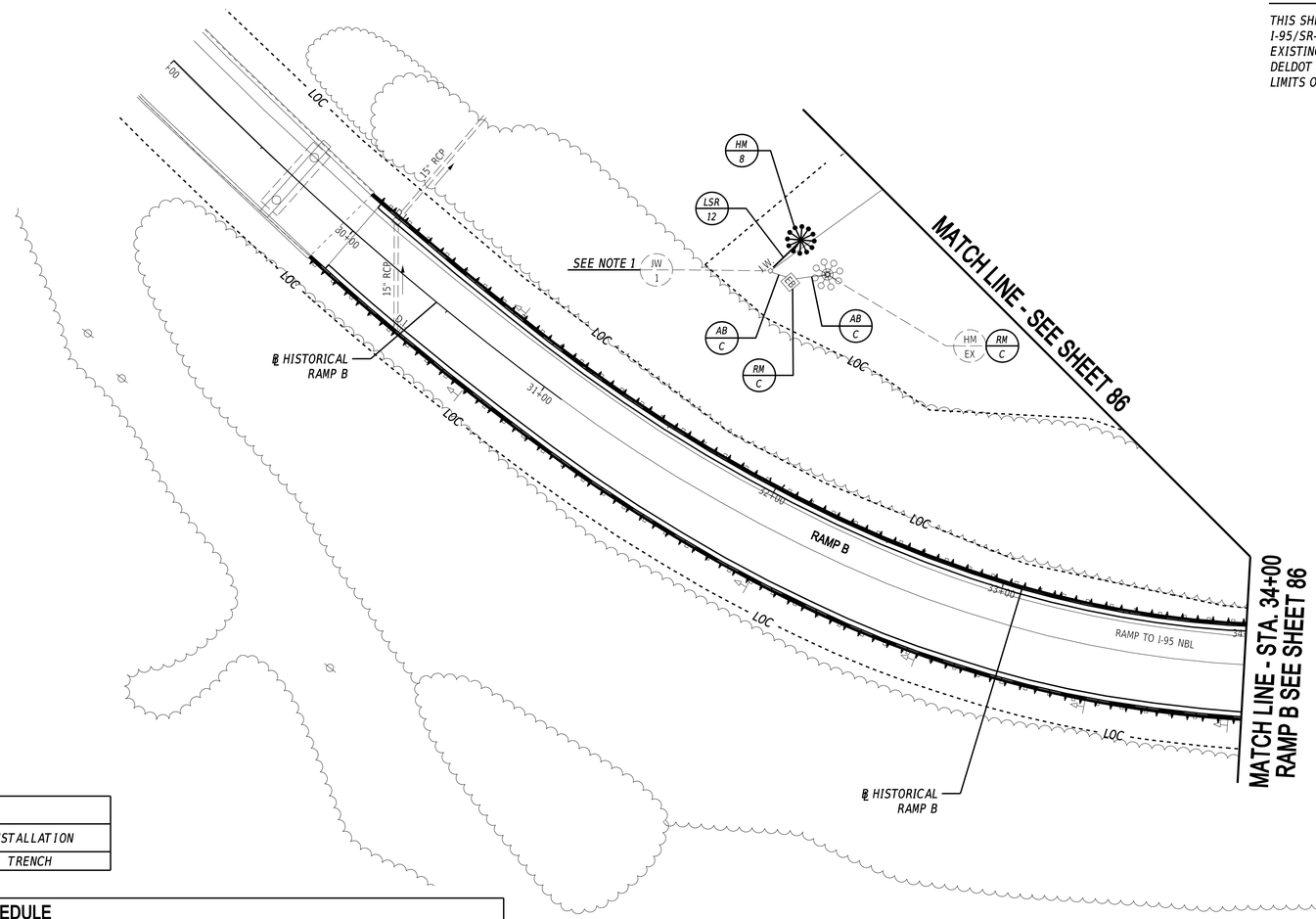

NOTES:

1. SPLICE PROPOSED ELECTRICAL CABLES TO EXISTING CIRCUIT 2S IN THE JUNCTION WELL TO PROVIDE SERVICE TO THE PROPOSED HIGH MAST LIGHT.

LIGHTING SERVICE SCHEDULE

SERVICE RUN	DISTANCE (L.F.)	NO. OF CONDUITS	SIZE	DESCRIPTION	INSTALLATION
12	17	1	3.0"	(3)#2, #2 GROUND	TRENCH

HIGH MAST SCHEDULE

NO.	ARM LENGTH	BASE LINE	STATION	OFFSET	HEIGHT	LAMP	ARRAY	DISTR.	CATALOG
8	2'	RAMP B	31+56.0	92.2' L	150'	468W, LED	12 @ 30°	5	HFL-276L-530-NW-G1-5W

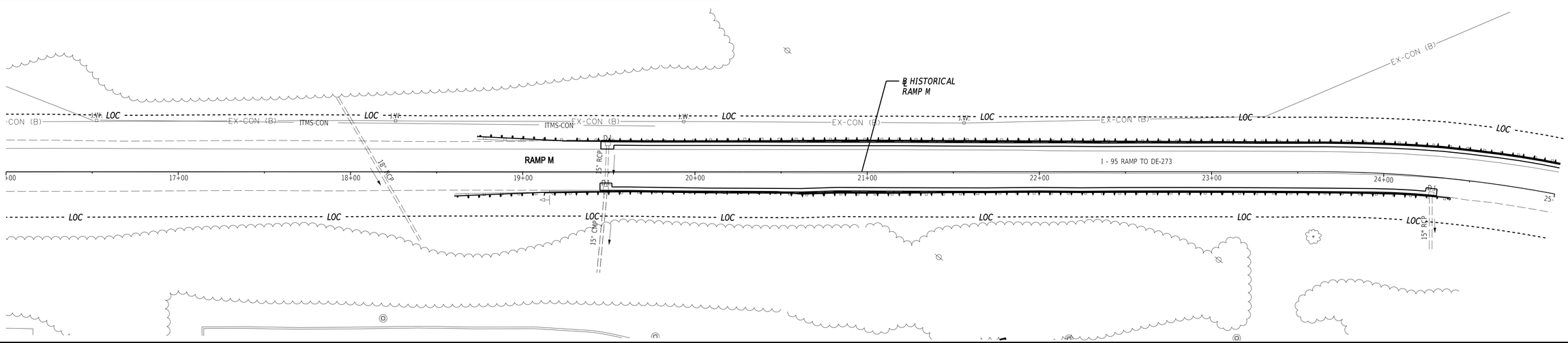

ADDENDA / REVISIONS	

SCALE 0 30 60 90 FEET

HSIP NCC, SR 273 AND I-95 INTERCHANGE IMPROVEMENTS

CONTRACT	BRIDGE NO.	715, 715A, 715B, 715C & 715D
T200800713	DESIGNED BY:	N. MONACO
COUNTY		
NEW CASTLE	CHECKED BY:	J. RASHID

LIGHTING PLAN

SECTION
RK&K
SHEET NO.
90

12-AUG-2020
11:18
\\balts01\v2014\20141414144_DelDOT170\Task 4A - Harmony FD\Cadd\Contract\Plans\I08_Har.dgn

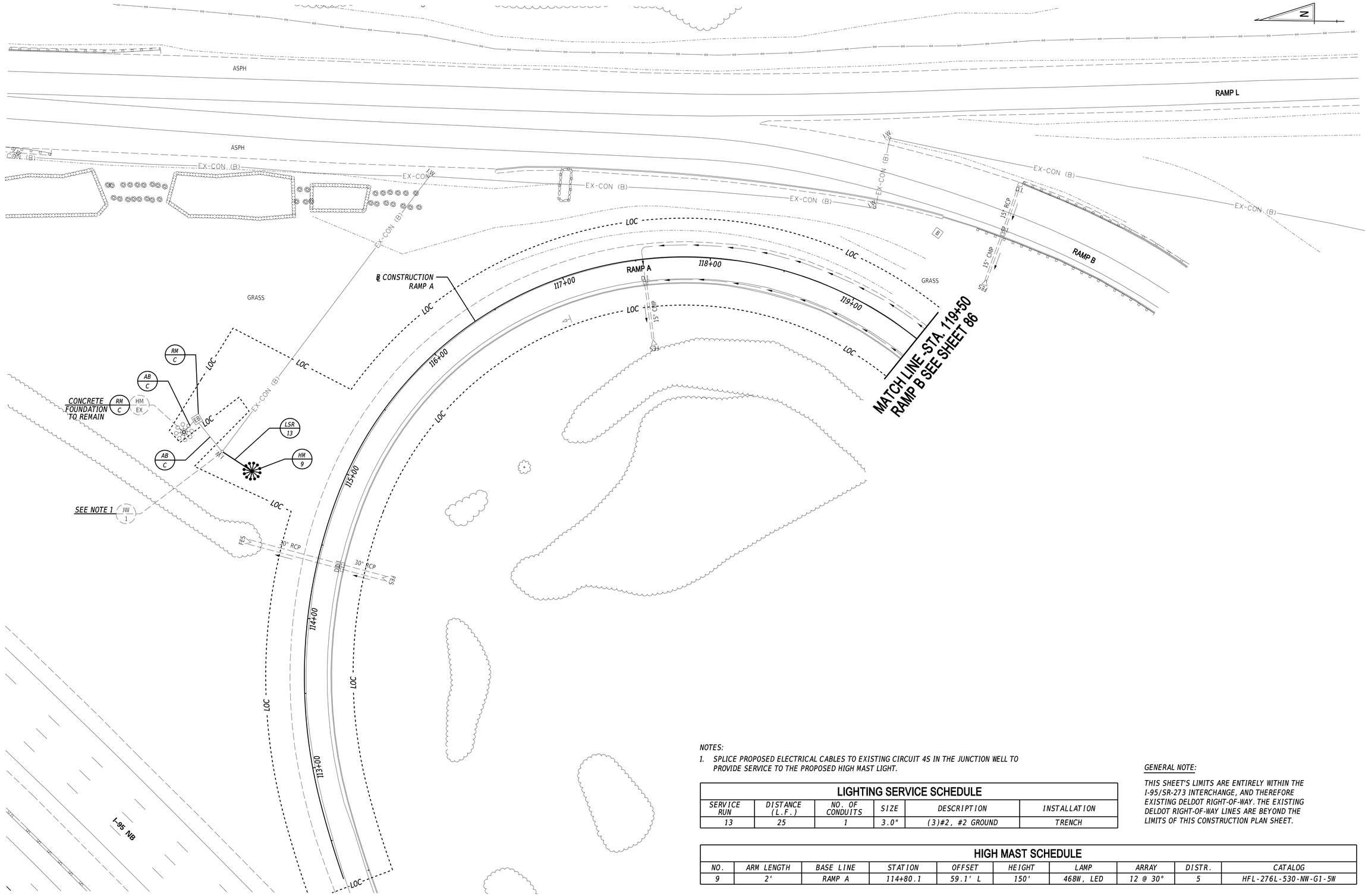

NOTES:

1. SPLICE PROPOSED ELECTRICAL CABLES TO EXISTING CIRCUIT 4S IN THE JUNCTION WELL TO PROVIDE SERVICE TO THE PROPOSED HIGH MAST LIGHT.

LIGHTING SERVICE SCHEDULE

SERVICE RUN	DISTANCE (L.F.)	NO. OF CONDUITS	SIZE	DESCRIPTION	INSTALLATION
13	25	1	3.0"	(3)#2, #2 GROUND	TRENCH

HIGH MAST SCHEDULE

NO.	ARM LENGTH	BASE LINE	STATION	OFFSET	HEIGHT	LAMP	ARRAY	DISTR.	CATALOG
9	2'	RAMP A	114+80.1	59.1' L	150'	468W, LED	12 @ 30°	5	HFL-276L-530-NW-G1-5W

GENERAL NOTE:

THIS SHEET'S LIMITS ARE ENTIRELY WITHIN THE I-95/SR-273 INTERCHANGE, AND THEREFORE EXISTING DELDOT RIGHT-OF-WAY. THE EXISTING DELDOT RIGHT-OF-WAY LINES ARE BEYOND THE LIMITS OF THIS CONSTRUCTION PLAN SHEET.

ADDENDA / REVISIONS

SCALE 0 30 60 90 FEET

HSIP NCC, SR 273 AND I-95 INTERCHANGE IMPROVEMENTS

CONTRACT	BRIDGE NO.	715, 715A, 715B, 715C & 715D
T200800713	DESIGNED BY:	N. MONACO
COUNTY		
NEW CASTLE	CHECKED BY:	J. RASHID

LIGHTING PLAN

SECTION RK&K

SHEET NO. 91

12-AUG-2020
11:22
\\balsnv01\v20\142014\14144_DelDOT\70\Task 4A - Harmony FD\Cadd\Contract\Plans\I09_Har.dgn

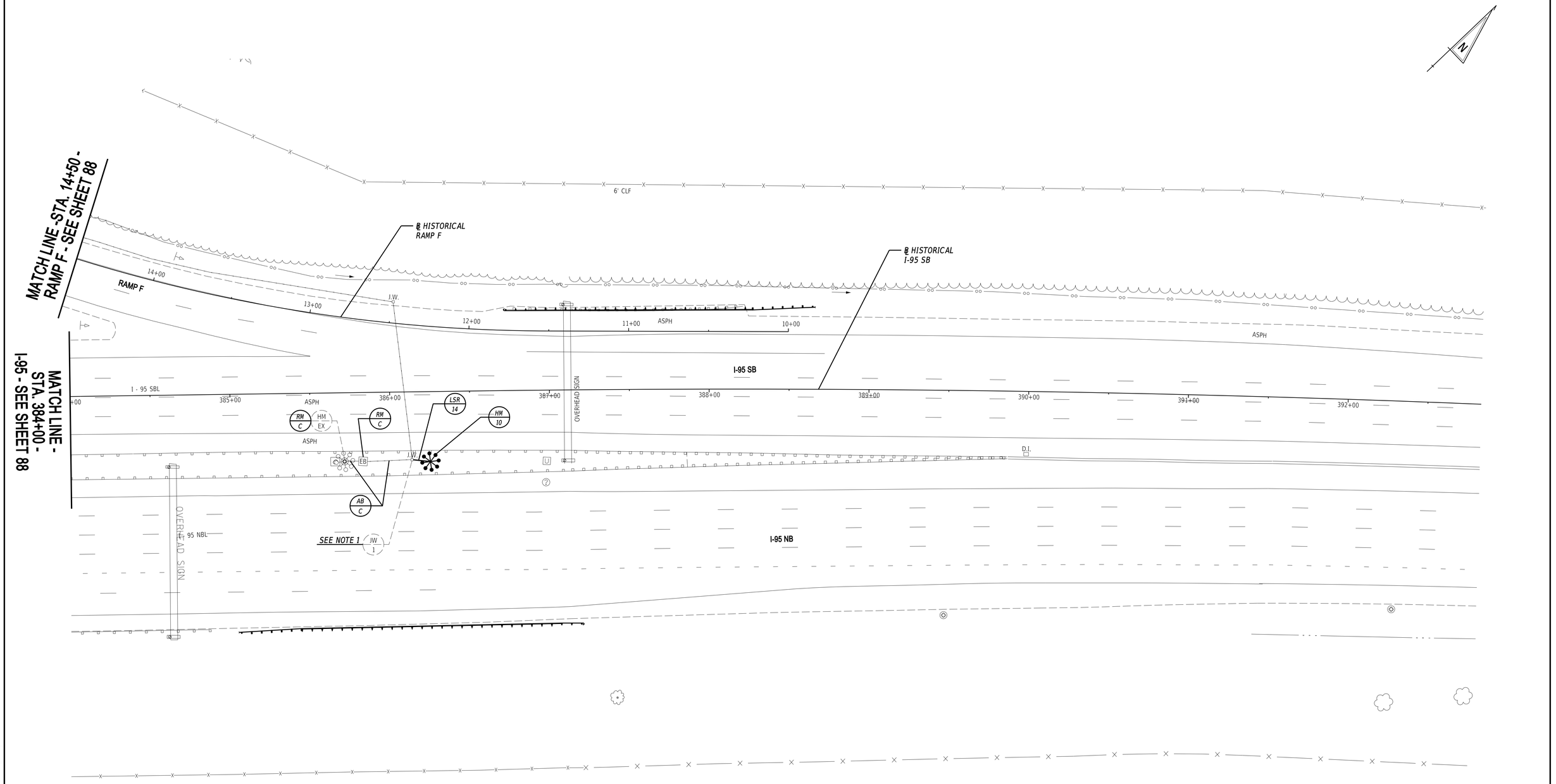

LIGHTING SERVICE SCHEDULE

SERVICE RUN	DISTANCE (L.F.)	NO. OF CONDUITS	SIZE	DESCRIPTION	INSTALLATION
14	12	1	3.0"	(3)#2, #2 GROUND	TRENCH

HIGH MAST SCHEDULE

NO.	ARM LENGTH	BASE LINE	STATION	OFFSET	HEIGHT	LAMP	ARRAY	DISTR.	CATALOG
10	2'	I-95 SB	386+25.0	43.8' R	150'	468W, LED	8 @ 45°	5	HFL-276L-530-NW-G1-5W

NOTES:

1. SPLICE PROPOSED ELECTRICAL CABLES TO EXISTING CIRCUIT 4N IN THE JUNCTION WELL TO PROVIDE SERVICE TO THE PROPOSED HIGH MAST LIGHT.

GENERAL NOTE:

THIS SHEET'S LIMITS ARE ENTIRELY WITHIN THE I-95/SR-273 INTERCHANGE, AND THEREFORE EXISTING DELDOT RIGHT-OF-WAY. THE EXISTING DELDOT RIGHT-OF-WAY LINES ARE BEYOND THE LIMITS OF THIS CONSTRUCTION PLAN SHEET.

ADDENDA / REVISIONS

SCALE 0 30 60 90 FEET

HSIP NCC, SR 273 AND I-95 INTERCHANGE IMPROVEMENTS

CONTRACT	BRIDGE NO.	715, 715A, 715B, 715C & 715D
T200800713	DESIGNED BY:	N. MONACO
COUNTY		
NEW CASTLE	CHECKED BY:	J. RASHID

LIGHTING PLAN

SECTION: RK&K

SHEET NO. 92

12-AUG-2020
11:29
\\balsvr01\v2014\20141414144_DelDOT\700\Task 4A - Harmony FD\Cadd\Contract\Plans\I10_Hard.dgn

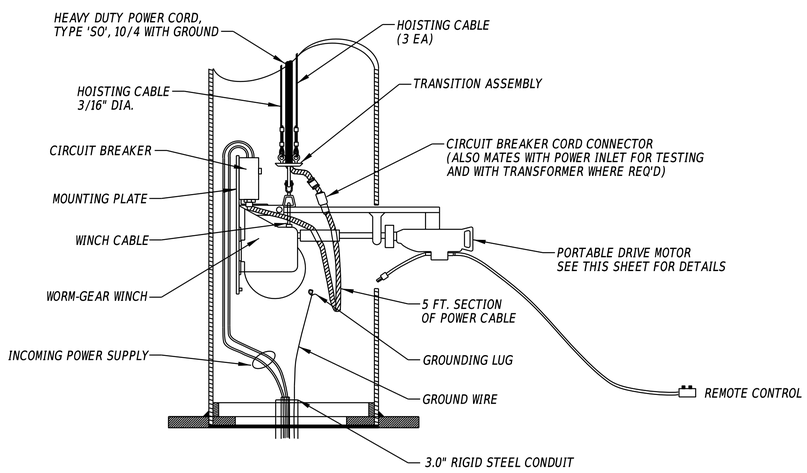

POLE BASE DETAIL

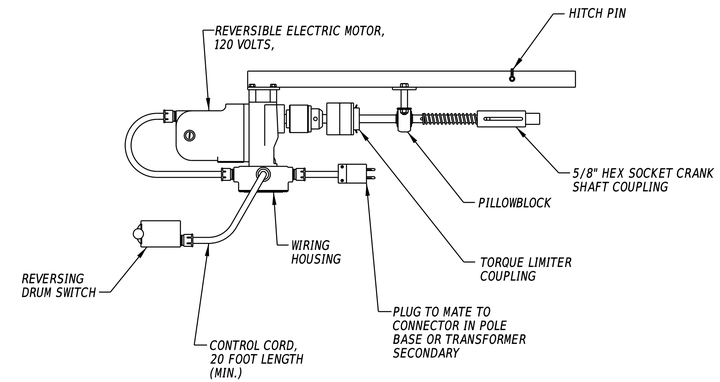

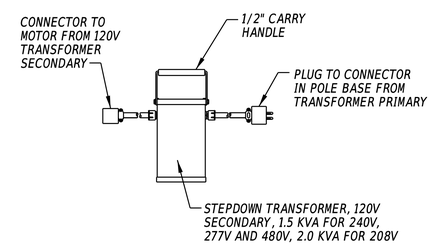

PORTABLE DRIVE MOTOR

ADDENDA / REVISIONS	NOT TO SCALE	HSIP NCC, SR 273 AND I-95 INTERCHANGE IMPROVEMENTS	CONTRACT T200800713	BRIDGE NO. 715, 715A, 715B, 715C & 715D	LIGHTING DETAILS	SECTION RK&K
			COUNTY NEW CASTLE	DESIGNED BY: N. MONACO		SHEET NO. 93
				CHECKED BY: J. RASHID		

11-AUG-2020
2:23
\\balfs\v01\v20\14\20\14\14144_DelDOT\T70\Task 4A - Harmony FD\Cadd\ContractPlans\911_Har.dgn

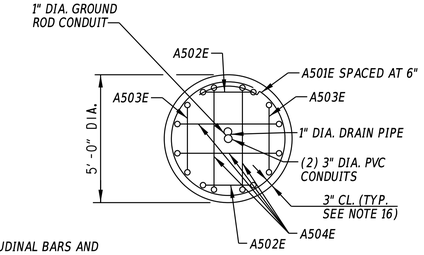

NOTE:

A901E LONGITUDINAL BARS AND ANCHOR BOLTS NOT SHOWN FOR CLARITY.

SECTION A-A

NOT TO SCALE

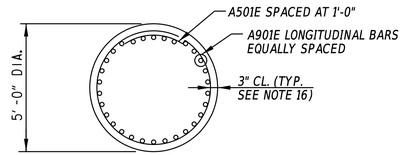

SECTION B-B

NOT TO SCALE

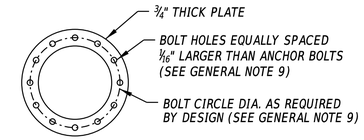

ANCHOR PLATE DETAIL

NOT TO SCALE

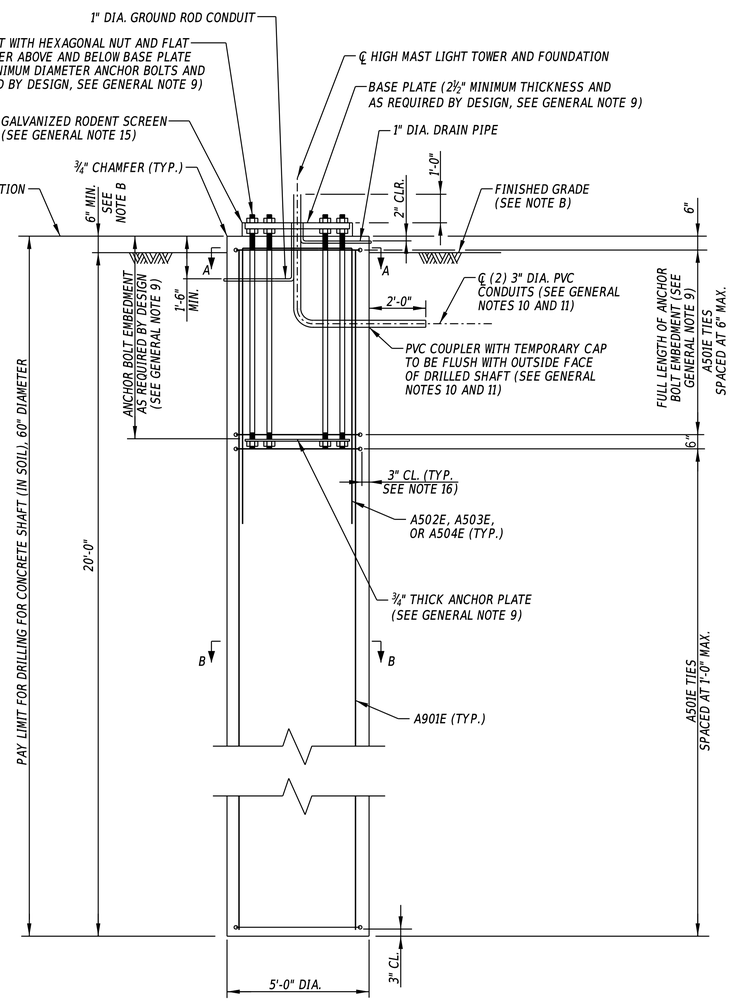

CAISSON FOUNDATION DETAIL

SCALE: ⅜"=1'-0"

NOTES:

A. HIGH MAST LIGHT POLE NOT SHOWN FOR CLARITY.

B. IF THE HIGH MAST LIGHT POLE IS LOCATED AT A SLOPED GROUND SURFACE, THE MAXIMUM EXPOSED CONCRETE SHAFT FACE IS NOT TO EXCEED 3 FEET. NOTIFY THE ENGINEER IN THE FIELD IF THIS 3 FOOT DIMENSION IS EXCEEDED.

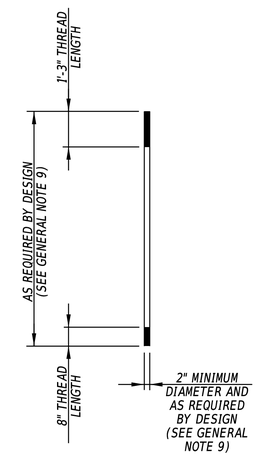

ANCHOR BOLT DETAIL

NOT TO SCALE

HIGH MAST LIGHTING FOUNDATION ELEVATIONS

POLE I.D.	FINISHED GRADE	TOP OF CAISSON ELEV
HM1	82.66	83.16
HM2	103.63	104.13
HM3	77.60	78.10
HM4	72.25	72.75
HM5	72.20	72.70
HM6	80.92	81.42
HM7	85.40	85.90
HM8	85.13	85.63
HM9	72.53	73.03
HM10	63.32	63.82

BENDING DIAGRAM

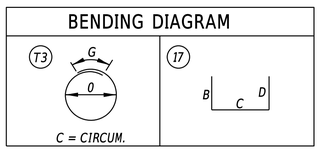

BAR MARK	SIZE	NO. REQ'D.	LENGTH	TYPE	DIM. B	DIM. C	DIM. D	DIM. G	DIM. O
A501E	5	*	16'-6"	T3		14'-2"		2'-4"	4'-6"
A502E	5	2	20'-6"	17	9'-3"	2'-0"	9'-3"		
A503E	5	2	21'-4"	17	9'-3"	2'-10"	9'-3"		
A504E	5	4	22'-8"	17	9'-3"	4'-2"	9'-3"		
A901E	9	30	19'-6"	STR.					

* NUMBER OF A501E TIES AS REQUIRED BY DESIGN BASED UPON REQUIRED ANCHOR BOLT EMBEDMENT LENGTH.

GENERAL NOTES:

1. BEFORE CONSTRUCTING THE DRILLED SHAFT THE CONTRACTOR SHALL ACCURATELY LOCATE EXISTING UNDERGROUND UTILITIES IN THE VICINITY OF NEW CONSTRUCTION TO DETERMINE IF THERE IS A CONFLICT. IF A CONFLICT EXISTS, ADJUST THE LOCATION OF THE DRILLED SHAFT TO AVOID CONFLICT AND COMMENCE WITH CONSTRUCTION ONCE APPROVED BY ENGINEER.
2. ALL REINFORCEMENT SHALL BE GRADE 60 MINIMUM AND EPOXY COATED IN ACCORDANCE WITH AASHTO M 284 (ASTM A 775). ALL BAR DIMENSIONS ARE MEASURED OUT TO OUT AND MINIMUM COVER SHALL BE 3" UNLESS OTHERWISE NOTED.
3. CONCRETE IN DRILLED SHAFT FOUNDATION SHALL BE CLASS A (4500 P.S.I.) SEE SPECIAL PROVISIONS.
4. ALL NEW STEEL PLATES SHALL CONFORM TO A709, GRADE 36.
5. ANCHOR BOLTS SHALL CONFORM TO F 1554 GRADE 105 UNC THREAD. HEX NUTS SHALL BE USED AND CONFORM TO A 194 GRADE 2H OR A 563 GR. DH. HEAVY WASHERS SHALL BE USED AND CONFORM TO F 436. ANCHOR BOLTS SHALL BE THREADED FOR 15" AT THE TOP END AND 8" AT THE BOTTOM END. NUTS, WASHERS, AND THE ANCHOR BOLTS SHALL BE GALVANIZED PER A 153. THE ANCHOR BOLTS SHALL STICK THROUGH THE TOP BASE PLATE NUTS FOR A LENGTH OF 1½".
6. STEEL TEMPLATES SHALL BE USED TO SET ANCHOR BOLTS PLUMB WHEN POURING THE CONCRETE FOUNDATION. STEEL TEMPLATES SHALL CONTAIN HOLES FOR THE ANCHOR BOLTS 1/16" LARGER THAN THE ANCHOR BOLT DIAMETER.
7. ANCHOR BOLTS SHALL BE INSTALLED WITH MISALIGNMENTS OF LESS THAN 1:40 FROM VERTICAL. AFTER INSTALLATION, FIRM CONTACT SHALL EXIST BETWEEN THE ANCHOR BOLT NUTS, WASHER, AND BASE PLATE. IF ANY ANCHOR BOLT IS IN A MISALIGNED POSITION, A BEVELED WASHER IS REQUIRED IF MISALIGNMENT OF THE ANCHOR ROD IS GREATER THAN 1:40.
8. THE INSTALLATION AND TIGHTENING OF THE ANCHOR BOLTS SHALL BE PERFORMED IN STRICT CONFORMANCE WITH THE SEQUENCE OUTLINED IN APPENDIX A, PART 1 AND 2, SECTION 5.2 OF THE NATIONAL COOPERATIVE HIGHWAY RESEARCH PROGRAM (NCHRP) REPORT 469 - FATIGUE RESISTANCE DESIGN OF CANTILEVER SIGNAL, SIGN AND LIGHT SUPPORTS. SEE SPECIAL PROVISIONS.
9. HIGH MAST POLE AND POLE ANCHORAGE ARE TO BE DESIGNED BY THE CONTRACTOR. ALL DIMENSIONING, DETAILS, AND SUPPORTING DESIGN COMPUTATIONS FOR THE POLE AND POLE ANCHORAGE, INCLUDING ANCHOR BOLTS AND BASE PLATE, ARE TO BE INCLUDED WITH THE POLE FABRICATORS DESIGN SUBMISSION.
10. THE ORIENTATION OF THE PVC EXTENSION OUT OF THE DRILLED SHAFT FOUNDATION SHALL BE DETERMINED BY THE ENGINEER IN THE FIELD.
11. UPON COMPLETION OF INSTALLING THE DRILLED SHAFT FOUNDATION, THE CONTRACTOR SHALL LOCATE THE CONDUIT CAST INTO THE DRILLED SHAFT AND INSTALL THE PVC EXTENSION WITH CAP.
12. PAYMENT FOR THE CAISSON FOUNDATION WILL BE MADE UNDER THE DRILLING FOR CONCRETE SHAFT (IN SOIL) 60" DIAMETER ITEM.
13. TEMPORARY STEEL CASING SHALL BE PROVIDED IN ACCORDANCE WITH THE SPECIAL PROVISIONS AND SHALL BE INCIDENTAL TO THE DRILLING FOR CONCRETE SHAFT (IN SOIL) 60" DIAMETER ITEM.
14. THE FOUNDATION HAS BEEN DESIGNED IN ACCORDANCE WITH AASHTO LTS-6 WITH 2015 INTERIM REVISIONS AND AASHTO LRFD BRIDGE DESIGN SPECIFICATIONS, 7TH EDITION WITH 2015 AND 2016 INTERIM REVISIONS.
15. SEAL GAP BETWEEN BASE PLATE AND CONCRETE DRILLED SHAFT WITH GALVANIZED SCREEN, 1/2" x 1/2" MESH AND 0.063" DIAMETER WIRES, TO PREVENT ENTRY OF RODENTS WHILE PERMITTING DRAINAGE. SCREEN IS TO BE REMOVABLE AND ATTACHED TO BASE PLATE WITH STAINLESS STEEL HARDWARE.
16. CONCRETE COVER SPECIFIED ON THIS SHEET TO THE HOOP REINFORCING IS BASED UPON THE CONTRACTOR UTILIZING TEMPORARY STEEL CASING TO CONSTRUCT THE DRILLED SHAFTS. IN THE EVENT TEMPROARY CASING IS NOT UTILIZED, THE CONTRACTOR SHALL INCREASE THE CLEAR COVER TO THE HOOP REINFORCING TO 6" AND UPDATE THE HOOP REINFORCEMENT DIAMETER ACCORDINGLY.

ADDENDA / REVISIONS

SCALE AS NOTED

HSIP NCC, SR 273 AND I-95 INTERCHANGE IMPROVEMENTS

CONTRACT	BRIDGE NO.	715, 715A, 715B, 715C & 715D
T200800713	DESIGNED BY:	J. PAMPUCH
COUNTY		
NEW CASTLE	CHECKED BY:	J. RASHID

LIGHTING DETAILS

SECTION: RK&K

SHEET NO. 94

11-AUG-2020
21:24
\\balsrv01\v2014\2014\14144_DelDOT\70\Task 4A - Harmony FD\Cadd\Contract\Plans\I12_Har.dgn

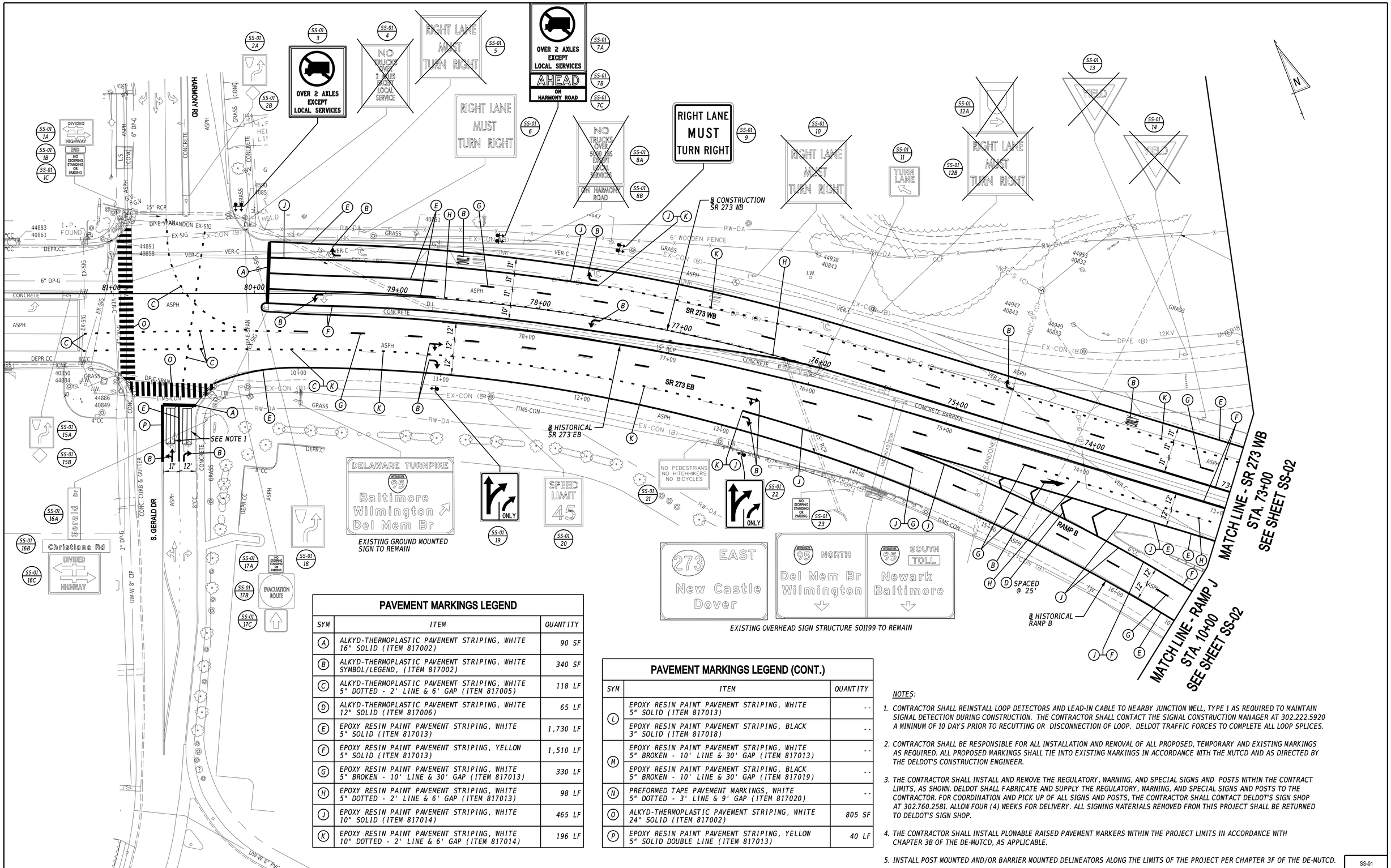

PAVEMENT MARKINGS LEGEND

SYM	ITEM	QUANTITY
A	ALKYD-THERMOPLASTIC PAVEMENT STRIPING, WHITE 16" SOLID (ITEM 817002)	90 SF
B	ALKYD-THERMOPLASTIC PAVEMENT STRIPING, WHITE SYMBOL/LEGEND, (ITEM 817002)	340 SF
C	ALKYD-THERMOPLASTIC PAVEMENT STRIPING, WHITE 5" DOTTED - 2' LINE & 6' GAP (ITEM 817005)	118 LF
D	ALKYD-THERMOPLASTIC PAVEMENT STRIPING, WHITE 12" SOLID (ITEM 817006)	65 LF
E	EPOXY RESIN PAINT PAVEMENT STRIPING, WHITE 5" SOLID (ITEM 817013)	1,730 LF
F	EPOXY RESIN PAINT PAVEMENT STRIPING, YELLOW 5" SOLID (ITEM 817013)	1,510 LF
G	EPOXY RESIN PAINT PAVEMENT STRIPING, WHITE 5" BROKEN - 10' LINE & 30' GAP (ITEM 817013)	330 LF
H	EPOXY RESIN PAINT PAVEMENT STRIPING, WHITE 5" DOTTED - 2' LINE & 6' GAP (ITEM 817013)	98 LF
J	EPOXY RESIN PAINT PAVEMENT STRIPING, WHITE 10" SOLID (ITEM 817014)	465 LF
K	EPOXY RESIN PAINT PAVEMENT STRIPING, WHITE 10" DOTTED - 2' LINE & 6' GAP (ITEM 817014)	196 LF

PAVEMENT MARKINGS LEGEND (CONT.)

SYM	ITEM	QUANTITY
L	EPOXY RESIN PAINT PAVEMENT STRIPING, WHITE 5" SOLID (ITEM 817013)	--
	EPOXY RESIN PAINT PAVEMENT STRIPING, BLACK 3" SOLID (ITEM 817018)	--
M	EPOXY RESIN PAINT PAVEMENT STRIPING, WHITE 5" BROKEN - 10' LINE & 30' GAP (ITEM 817013)	--
	EPOXY RESIN PAINT PAVEMENT STRIPING, BLACK 5" BROKEN - 10' LINE & 30' GAP (ITEM 817019)	--
N	PREFORMED TAPE PAVEMENT MARKINGS, WHITE 5" DOTTED - 3' LINE & 9' GAP (ITEM 817020)	--
O	ALKYD-THERMOPLASTIC PAVEMENT STRIPING, WHITE 24" SOLID (ITEM 817002)	805 SF
P	EPOXY RESIN PAINT PAVEMENT STRIPING, YELLOW 5" SOLID DOUBLE LINE (ITEM 817013)	40 LF

NOTES:

1. CONTRACTOR SHALL REINSTALL LOOP DETECTORS AND LEAD-IN CABLE TO NEARBY JUNCTION WELL, TYPE 1 AS REQUIRED TO MAINTAIN SIGNAL DETECTION DURING CONSTRUCTION. THE CONTRACTOR SHALL CONTACT THE SIGNAL CONSTRUCTION MANAGER AT 302.222.5920 A MINIMUM OF 10 DAYS PRIOR TO RECUTTING OR DISCONNECTION OF LOOP. DELDOT TRAFFIC FORCES TO COMPLETE ALL LOOP SPLICES.
2. CONTRACTOR SHALL BE RESPONSIBLE FOR ALL INSTALLATION AND REMOVAL OF ALL PROPOSED, TEMPORARY AND EXISTING MARKINGS AS REQUIRED. ALL PROPOSED MARKINGS SHALL TIE INTO EXISTING MARKINGS IN ACCORDANCE WITH THE MUTCD AND AS DIRECTED BY THE DELDOT'S CONSTRUCTION ENGINEER.
3. THE CONTRACTOR SHALL INSTALL AND REMOVE THE REGULATORY, WARNING, AND SPECIAL SIGNS AND POSTS WITHIN THE CONTRACT LIMITS, AS SHOWN. DELDOT SHALL FABRICATE AND SUPPLY THE REGULATORY, WARNING, AND SPECIAL SIGNS AND POSTS TO THE CONTRACTOR. FOR COORDINATION AND PICK UP OF ALL SIGNS AND POSTS, THE CONTRACTOR SHALL CONTACT DELDOT'S SIGN SHOP AT 302.760.2581. ALLOW FOUR (4) WEEKS FOR DELIVERY. ALL SIGNING MATERIALS REMOVED FROM THIS PROJECT SHALL BE RETURNED TO DELDOT'S SIGN SHOP.
4. THE CONTRACTOR SHALL INSTALL PLOWABLE RAISED PAVEMENT MARKERS WITHIN THE PROJECT LIMITS IN ACCORDANCE WITH CHAPTER 3B OF THE DE-MUTCD, AS APPLICABLE.
5. INSTALL POST MOUNTED AND/OR BARRIER MOUNTED DELINEATORS ALONG THE LIMITS OF THE PROJECT PER CHAPTER 3F OF THE DE-MUTCD.

ADDENDA / REVISIONS

SCALE 0 30 60 90 FEET

HSIP NCC, SR 273 AND I-95 INTERCHANGE IMPROVEMENTS

CONTRACT	BRIDGE NO.	715, 715A, 715B, 715C & 715D
T200800713	DESIGNED BY:	K. AMBROSE
COUNTY	CHECKED BY:	J. RASHID
NEW CASTLE		

SIGNING, STRIPING AND CONDUIT PLAN

SS-01
SECTION
RK&K
SHEET NO.
95

11-AUG-2020
21:32
\\adlservd1\v20\14\20141414\4_DelDOT\T70\Task 4A - Harmony FD\Cadd\ContractPlans\ss01_Hsr.dgn

PAVEMENT MARKINGS LEGEND

SYM	ITEM	QUANTITY
A	ALKYD-THERMOPLASTIC PAVEMENT STRIPING, WHITE 16" SOLID (ITEM 817002)	85 SF
B	ALKYD-THERMOPLASTIC PAVEMENT STRIPING, WHITE SYMBOL/LEGEND, (ITEM 817002)	296 SF
C	ALKYD-THERMOPLASTIC PAVEMENT STRIPING, WHITE 5" DOTTED - 2' LINE & 6' GAP (ITEM 817005)	10 LF
D	ALKYD-THERMOPLASTIC PAVEMENT STRIPING, WHITE 12" SOLID (ITEM 817006)	190 LF
E	EPOXY RESIN PAINT PAVEMENT STRIPING, WHITE 5" SOLID (ITEM 817013)	3,580 LF
F	EPOXY RESIN PAINT PAVEMENT STRIPING, YELLOW 5" SOLID (ITEM 817013)	3,405 LF
G	EPOXY RESIN PAINT PAVEMENT STRIPING, WHITE 5" BROKEN - 10' LINE & 30' GAP (ITEM 817013)	330 LF
H	EPOXY RESIN PAINT PAVEMENT STRIPING, WHITE 5" DOTTED - 2' LINE & 6' GAP (ITEM 817013)	100 LF

PAVEMENT MARKINGS LEGEND (CONT.)

SYM	ITEM	QUANTITY
J	EPOXY RESIN PAINT PAVEMENT STRIPING, WHITE 10" SOLID (ITEM 817014)	625 LF
K	EPOXY RESIN PAINT PAVEMENT STRIPING, WHITE 10" DOTTED - 2' LINE & 6' GAP (ITEM 817014)	6 LF
L	EPOXY RESIN PAINT PAVEMENT STRIPING, WHITE 5" SOLID (ITEM 817013)	240 LF
	EPOXY RESIN PAINT PAVEMENT STRIPING, BLACK 3" SOLID (ITEM 817018)	240 LF
M	EPOXY RESIN PAINT PAVEMENT STRIPING, WHITE 5" BROKEN - 10' LINE & 30' GAP (ITEM 817013)	--
	EPOXY RESIN PAINT PAVEMENT STRIPING, BLACK 5" BROKEN - 10' LINE & 30' GAP (ITEM 817019)	--
N	PREFORMED TAPE PAVEMENT MARKINGS, WHITE 5" DOTTED - 3' LINE & 9' GAP (ITEM 817020)	--

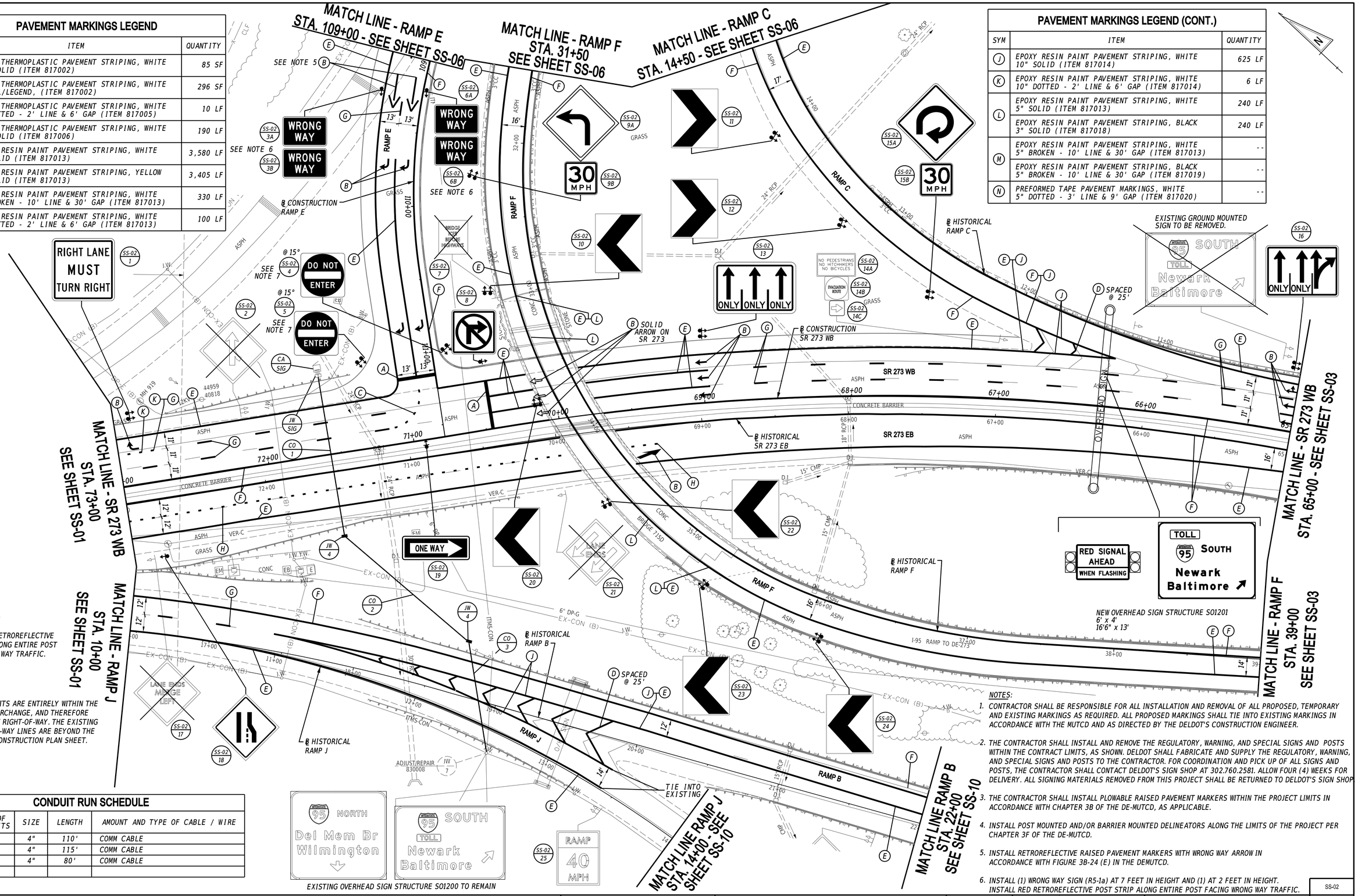

NOTES (CONT.):

7. INSTALL RED RETROREFLECTIVE POST STRIP ALONG ENTIRE POST FACING WRONG WAY TRAFFIC.

NOTE:

THIS SHEET'S LIMITS ARE ENTIRELY WITHIN THE I-95/SR-273 INTERCHANGE, AND THEREFORE EXISTING DELDOT RIGHT-OF-WAY. THE EXISTING DELDOT RIGHT-OF-WAY LINES ARE BEYOND THE LIMITS OF THIS CONSTRUCTION PLAN SHEET.

NOTES:

1. CONTRACTOR SHALL BE RESPONSIBLE FOR ALL INSTALLATION AND REMOVAL OF ALL PROPOSED, TEMPORARY AND EXISTING MARKINGS AS REQUIRED. ALL PROPOSED MARKINGS SHALL TIE INTO EXISTING MARKINGS IN ACCORDANCE WITH THE MUTCD AND AS DIRECTED BY THE DELDOT'S CONSTRUCTION ENGINEER.
2. THE CONTRACTOR SHALL INSTALL AND REMOVE THE REGULATORY, WARNING, AND SPECIAL SIGNS AND POSTS WITHIN THE CONTRACT LIMITS, AS SHOWN. DELDOT SHALL FABRICATE AND SUPPLY THE REGULATORY, WARNING, AND SPECIAL SIGNS AND POSTS TO THE CONTRACTOR. FOR COORDINATION AND PICK UP OF ALL SIGNS AND POSTS, THE CONTRACTOR SHALL CONTACT DELDOT'S SIGN SHOP AT 302.760.2581. ALLOW FOUR (4) WEEKS FOR DELIVERY. ALL SIGNING MATERIALS REMOVED FROM THIS PROJECT SHALL BE RETURNED TO DELDOT'S SIGN SHOP
3. THE CONTRACTOR SHALL INSTALL PLOWABLE RAISED PAVEMENT MARKERS WITHIN THE PROJECT LIMITS IN ACCORDANCE WITH CHAPTER 3B OF THE DE-MUTCD, AS APPLICABLE.
4. INSTALL POST MOUNTED AND/OR BARRIER MOUNTED DELINEATORS ALONG THE LIMITS OF THE PROJECT PER CHAPTER 3F OF THE DE-MUTCD.
5. INSTALL RETROREFLECTIVE RAISED PAVEMENT MARKERS WITH WRONG WAY ARROW IN ACCORDANCE WITH FIGURE 3B-24 (E) IN THE DEMUTCD.
6. INSTALL (1) WRONG WAY SIGN (R5-1a) AT 7 FEET IN HEIGHT AND (1) AT 2 FEET IN HEIGHT. INSTALL RED RETROREFLECTIVE POST STRIP ALONG ENTIRE POST FACING WRONG WAY TRAFFIC.

CONDUIT RUN SCHEDULE

CR NO.	NO. OF CONDUITS	SIZE	LENGTH	AMOUNT AND TYPE OF CABLE / WIRE
1	1	4"	110'	COMM CABLE
2	1	4"	115'	COMM CABLE
3	1	4"	80'	COMM CABLE

ADDENDA / REVISIONS

SCALE 0 30 60 90 FEET

HSIP NCC, SR 273 AND I-95 INTERCHANGE IMPROVEMENTS

CONTRACT	BRIDGE NO.	715, 715A, 715B, 715C & 715D
T200800713	DESIGNED BY:	K. AMBROSE
COUNTY		
NEW CASTLE	CHECKED BY:	J. RASHID

SIGNING, STRIPING AND CONDUIT PLAN

SS-02
SECTION
RK&K
SHEET NO.
96

11-AUG-2020
21:34
\\dallsrv01\v2014\20141414\4_DelDOT\T707\Task 4A - Harmony FD\Cadd\Contract\Plans\ss02_Hsir.dgn

PAVEMENT MARKINGS LEGEND

SYM	ITEM	QUANTITY
A	ALKYD-THERMOPLASTIC PAVEMENT STRIPING, WHITE 16" SOLID (ITEM 817002)	--
B	ALKYD-THERMOPLASTIC PAVEMENT STRIPING, WHITE SYMBOL/LEGEND, (ITEM 817002)	--
C	ALKYD-THERMOPLASTIC PAVEMENT STRIPING, WHITE 5" DOTTED - 2' LINE & 6' GAP (ITEM 817005)	--
D	ALKYD-THERMOPLASTIC PAVEMENT STRIPING, WHITE 12" SOLID (ITEM 817006)	--
E	EPOXY RESIN PAINT PAVEMENT STRIPING, WHITE 5" SOLID (ITEM 817013)	825 LF
F	EPOXY RESIN PAINT PAVEMENT STRIPING, YELLOW 5" SOLID (ITEM 817013)	2,355 LF
G	EPOXY RESIN PAINT PAVEMENT STRIPING, WHITE 5" BROKEN - 10' LINE & 30' GAP (ITEM 817013)	40 LF
H	EPOXY RESIN PAINT PAVEMENT STRIPING, WHITE 5" DOTTED - 2' LINE & 6' GAP (ITEM 817013)	--
J	EPOXY RESIN PAINT PAVEMENT STRIPING, WHITE 10" SOLID (ITEM 817014)	--
K	EPOXY RESIN PAINT PAVEMENT STRIPING, WHITE 10" DOTTED - 2' LINE & 6' GAP (ITEM 817014)	--
L	EPOXY RESIN PAINT PAVEMENT STRIPING, WHITE 5" SOLID (ITEM 817013)	1,530 LF
	EPOXY RESIN PAINT PAVEMENT STRIPING, BLACK 3" SOLID (ITEM 817018)	1,530 LF
M	EPOXY RESIN PAINT PAVEMENT STRIPING, WHITE 5" BROKEN - 10' LINE & 30' GAP (ITEM 817013)	240 LF
	EPOXY RESIN PAINT PAVEMENT STRIPING, BLACK 5" BROKEN - 10' LINE & 30' GAP (ITEM 817019)	240 LF
N	PREFORMED TAPE PAVEMENT MARKINGS, WHITE 5" DOTTED - 3' LINE & 9' GAP (ITEM 817020)	--
O	PREFORMED PATTERNED TAPE MARKINGS, WHITE SYMBOL/LEGEND (ITEM 817012)	45 SF

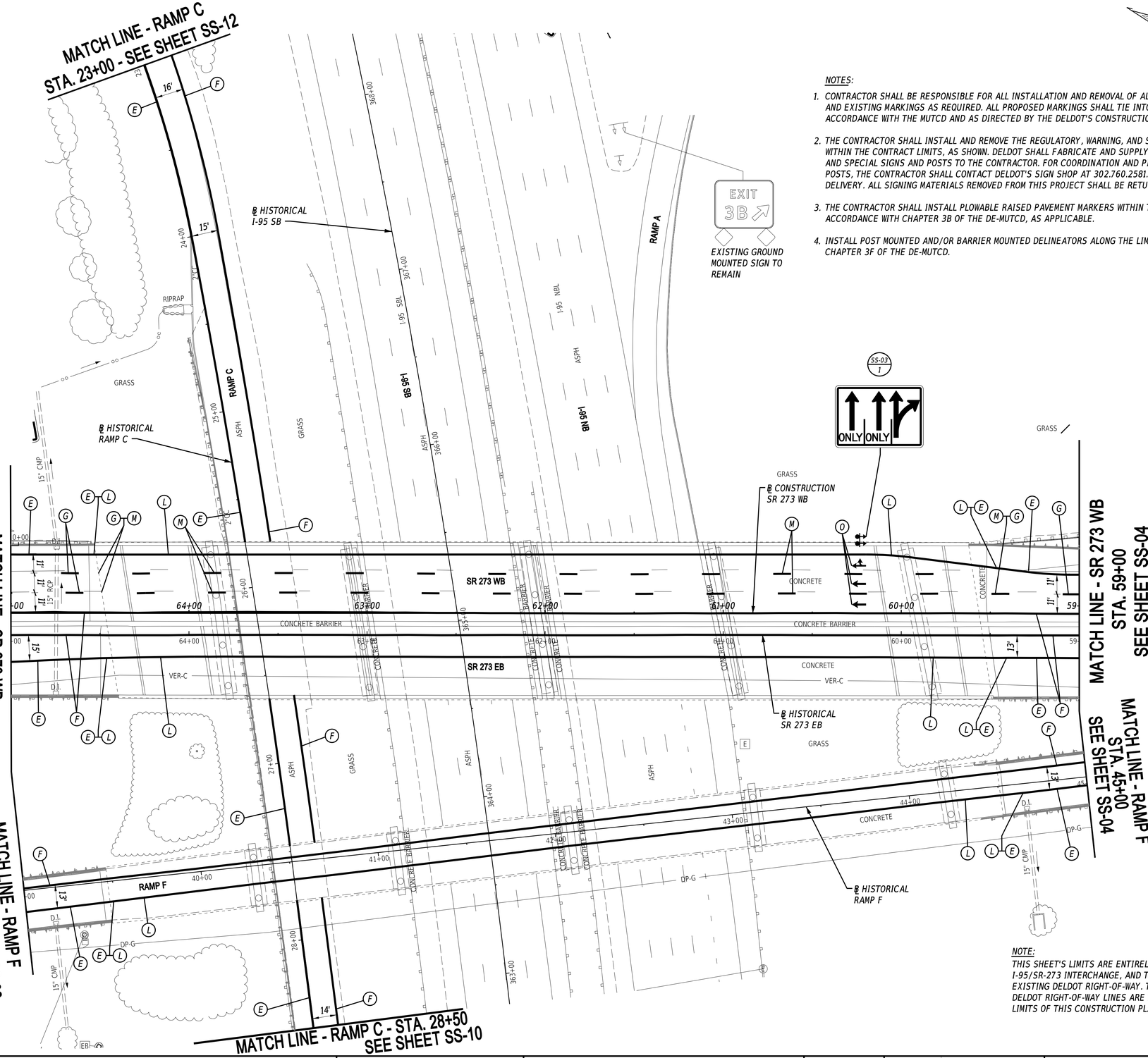

NOTES:

1. CONTRACTOR SHALL BE RESPONSIBLE FOR ALL INSTALLATION AND REMOVAL OF ALL PROPOSED, TEMPORARY AND EXISTING MARKINGS AS REQUIRED. ALL PROPOSED MARKINGS SHALL TIE INTO EXISTING MARKINGS IN ACCORDANCE WITH THE MUTCD AND AS DIRECTED BY THE DELDOT'S CONSTRUCTION ENGINEER.
2. THE CONTRACTOR SHALL INSTALL AND REMOVE THE REGULATORY, WARNING, AND SPECIAL SIGNS AND POSTS WITHIN THE CONTRACT LIMITS, AS SHOWN. DELDOT SHALL FABRICATE AND SUPPLY THE REGULATORY, WARNING, AND SPECIAL SIGNS AND POSTS TO THE CONTRACTOR. FOR COORDINATION AND PICK UP OF ALL SIGNS AND POSTS, THE CONTRACTOR SHALL CONTACT DELDOT'S SIGN SHOP AT 302.760.2581. ALLOW FOUR (4) WEEKS FOR DELIVERY. ALL SIGNING MATERIALS REMOVED FROM THIS PROJECT SHALL BE RETURNED TO DELDOT'S SIGN SHOP.
3. THE CONTRACTOR SHALL INSTALL PLOWABLE RAISED PAVEMENT MARKERS WITHIN THE PROJECT LIMITS IN ACCORDANCE WITH CHAPTER 3B OF THE DE-MUTCD, AS APPLICABLE.
4. INSTALL POST MOUNTED AND/OR BARRIER MOUNTED DELINEATORS ALONG THE LIMITS OF THE PROJECT PER CHAPTER 3F OF THE DE-MUTCD.

NOTE:
THIS SHEET'S LIMITS ARE ENTIRELY WITHIN THE I-95/SR-273 INTERCHANGE, AND THEREFORE EXISTING DELDOT RIGHT-OF-WAY. THE EXISTING DELDOT RIGHT-OF-WAY LINES ARE BEYOND THE LIMITS OF THIS CONSTRUCTION PLAN SHEET.

ADDENDA / REVISIONS

SCALE 0 30 60 90 FEET

HSIP NCC, SR 273 AND I-95 INTERCHANGE IMPROVEMENTS

CONTRACT	BRIDGE NO.	715, 715A, 715B, 715C & 715D
T200800713	DESIGNED BY:	K. AMBROSE
COUNTY		
NEW CASTLE	CHECKED BY:	J. RASHID

SIGNING, STRIPING AND CONDUIT PLAN

SS-03
SECTION
RK&K
SHEET NO.
97

11-AUG-2020
21:37
\\balsv01\v20\14\20\14\14144_DelDOT\T70\Task 4A - Harmony FD\Caddd\ContractPlans\ss03_Har.dgn

NOTES:

1. CONTRACTOR SHALL BE RESPONSIBLE FOR ALL INSTALLATION AND REMOVAL OF ALL PROPOSED, TEMPORARY AND EXISTING MARKINGS AS REQUIRED. ALL PROPOSED MARKINGS SHALL TIE INTO EXISTING MARKINGS IN ACCORDANCE WITH THE MUTCD AND AS DIRECTED BY THE DELDOT'S CONSTRUCTION ENGINEER.
2. THE CONTRACTOR SHALL INSTALL AND REMOVE THE REGULATORY, WARNING, AND SPECIAL SIGNS AND POSTS WITHIN THE CONTRACT LIMITS, AS SHOWN. DELDOT SHALL FABRICATE AND SUPPLY THE REGULATORY, WARNING, AND SPECIAL SIGNS AND POSTS TO THE CONTRACTOR. FOR COORDINATION AND PICK UP OF ALL SIGNS AND POSTS, THE CONTRACTOR SHALL CONTACT DELDOT'S SIGN SHOP AT 302.760.2581. ALLOW FOUR (4) WEEKS FOR DELIVERY. ALL SIGNING MATERIALS REMOVED FROM THIS PROJECT SHALL BE RETURNED TO DELDOT'S SIGN SHOP.
3. THE CONTRACTOR SHALL INSTALL PLOWABLE RAISED PAVEMENT MARKERS WITHIN THE PROJECT LIMITS IN ACCORDANCE WITH CHAPTER 3B OF THE DE-MUTCD, AS APPLICABLE.
4. INSTALL POST MOUNTED AND/OR BARRIER MOUNTED DELINEATORS ALONG THE LIMITS OF THE PROJECT PER CHAPTER 3F OF THE DE-MUTCD.
5. INSTALL RETROREFLECTIVE RAISED PAVEMENT MARKERS WITH WRONG WAY ARROW IN ACCORDANCE WITH FIGURE 3B-24 (E) IN THE DEMUTCD.
6. INSTALL (1) WRONG WAY SIGN (R5-1a) AT 7 FEET IN HEIGHT AND (1) AT 2 FEET IN HEIGHT. INSTALL RED RETROREFLECTIVE POST STRIP ALONG ENTIRE POST FACING WRONG WAY TRAFFIC.
7. INSTALL RED RETROREFLECTIVE POST STRIP ALONG ENTIRE POST FACING WRONG WAY TRAFFIC.

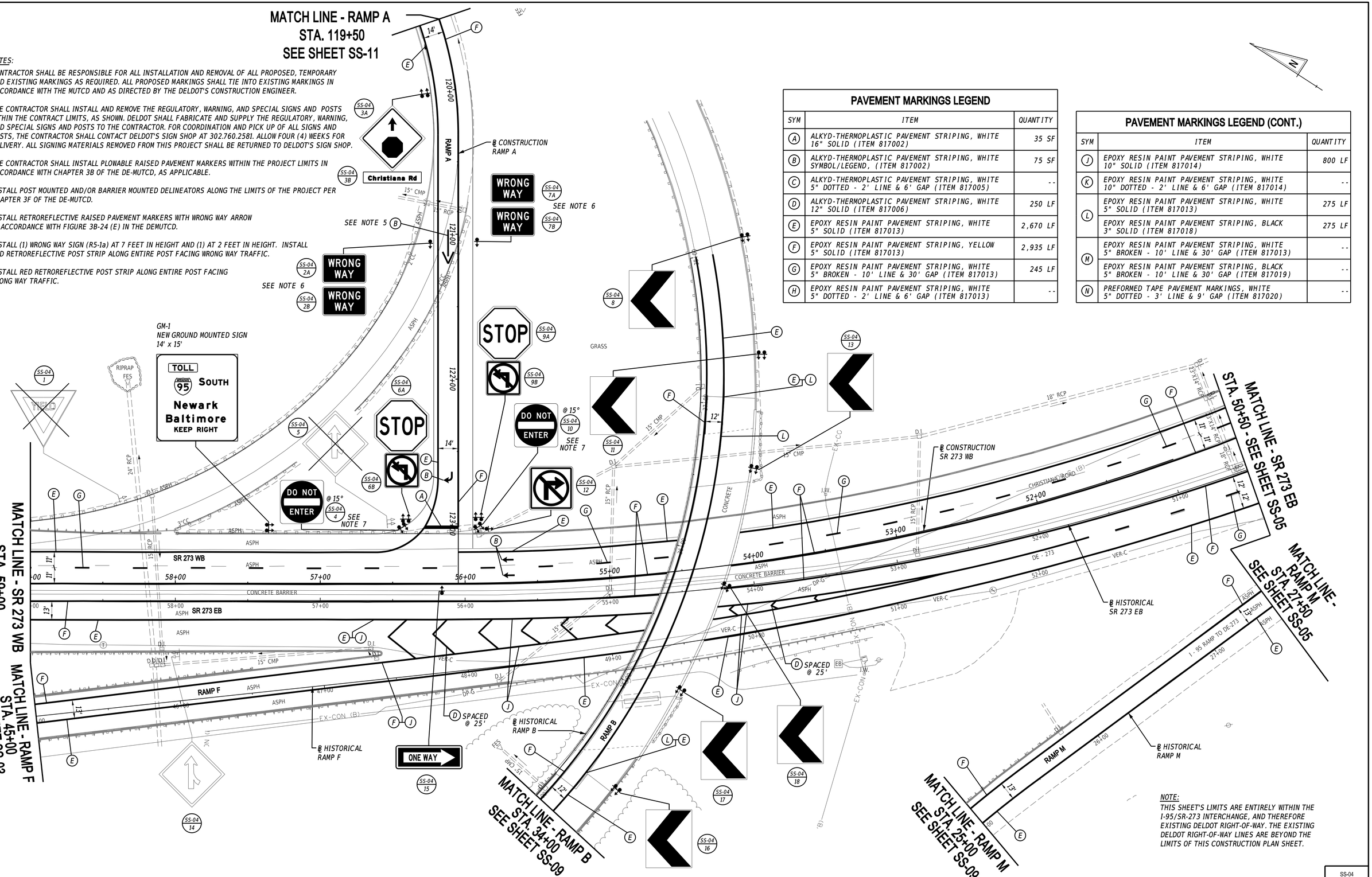

PAVEMENT MARKINGS LEGEND

SYM	ITEM	QUANTITY
A	ALKYD-THERMOPLASTIC PAVEMENT STRIPING, WHITE 16" SOLID (ITEM 817002)	35 SF
B	ALKYD-THERMOPLASTIC PAVEMENT STRIPING, WHITE SYMBOL/LEGEND, (ITEM 817002)	75 SF
C	ALKYD-THERMOPLASTIC PAVEMENT STRIPING, WHITE 5" DOTTED - 2' LINE & 6' GAP (ITEM 817005)	--
D	ALKYD-THERMOPLASTIC PAVEMENT STRIPING, WHITE 12" SOLID (ITEM 817006)	250 LF
E	EPOXY RESIN PAINT PAVEMENT STRIPING, WHITE 5" SOLID (ITEM 817013)	2,670 LF
F	EPOXY RESIN PAINT PAVEMENT STRIPING, YELLOW 5" SOLID (ITEM 817013)	2,935 LF
G	EPOXY RESIN PAINT PAVEMENT STRIPING, WHITE 5" BROKEN - 10' LINE & 30' GAP (ITEM 817013)	245 LF
H	EPOXY RESIN PAINT PAVEMENT STRIPING, WHITE 5" DOTTED - 2' LINE & 6' GAP (ITEM 817013)	--

PAVEMENT MARKINGS LEGEND (CONT.)

SYM	ITEM	QUANTITY
J	EPOXY RESIN PAINT PAVEMENT STRIPING, WHITE 10" SOLID (ITEM 817014)	800 LF
K	EPOXY RESIN PAINT PAVEMENT STRIPING, WHITE 10" DOTTED - 2' LINE & 6' GAP (ITEM 817014)	--
L	EPOXY RESIN PAINT PAVEMENT STRIPING, WHITE 5" SOLID (ITEM 817013)	275 LF
	EPOXY RESIN PAINT PAVEMENT STRIPING, BLACK 3" SOLID (ITEM 817018)	275 LF
M	EPOXY RESIN PAINT PAVEMENT STRIPING, WHITE 5" BROKEN - 10' LINE & 30' GAP (ITEM 817013)	--
	EPOXY RESIN PAINT PAVEMENT STRIPING, BLACK 5" BROKEN - 10' LINE & 30' GAP (ITEM 817019)	--
N	PREFORMED TAPE PAVEMENT MARKINGS, WHITE 5" DOTTED - 3' LINE & 9' GAP (ITEM 817020)	--

NOTE:
THIS SHEET'S LIMITS ARE ENTIRELY WITHIN THE I-95/SR-273 INTERCHANGE, AND THEREFORE EXISTING DELDOT RIGHT-OF-WAY. THE EXISTING DELDOT RIGHT-OF-WAY LINES ARE BEYOND THE LIMITS OF THIS CONSTRUCTION PLAN SHEET.

ADDENDA / REVISIONS

SCALE 0 30 60 90 FEET

HSIP NCC, SR 273 AND I-95 INTERCHANGE IMPROVEMENTS

CONTRACT	BRIDGE NO.	715, 715A, 715B, 715C & 715D
T200800713	DESIGNED BY:	K. AMBROSE
COUNTY		
NEW CASTLE	CHECKED BY:	J. RASHID

SIGNING, STRIPING AND CONDUIT PLAN

SS-04
SECTION
RK&K
SHEET NO.
98

11-AUG-2020
21:40
\\balsrv01\v2014\20142014144_DelDOT1707\Task 4A - Harmony FD\Cadd\ContractPlans\ss04_Plan.dgn

NOTES:

1. CONTRACTOR SHALL BE RESPONSIBLE FOR ALL INSTALLATION AND REMOVAL OF ALL PROPOSED, TEMPORARY AND EXISTING MARKINGS AS REQUIRED. ALL PROPOSED MARKINGS SHALL TIE INTO EXISTING MARKINGS IN ACCORDANCE WITH THE MUTCD AND AS DIRECTED BY THE DELDOT'S CONSTRUCTION ENGINEER.

2. THE CONTRACTOR SHALL INSTALL AND REMOVE THE REGULATORY, WARNING, AND SPECIAL SIGNS AND POSTS WITHIN THE CONTRACT LIMITS, AS SHOWN. DELDOT SHALL FABRICATE AND SUPPLY THE REGULATORY, WARNING, AND SPECIAL SIGNS AND POSTS TO THE CONTRACTOR. FOR COORDINATION AND PICK UP OF ALL SIGNS AND POSTS, THE CONTRACTOR SHALL CONTACT DELDOT'S SIGN SHOP AT 302.760.2581. ALLOW FOUR (4) WEEKS FOR DELIVERY. ALL SIGNING MATERIALS REMOVED FROM THIS PROJECT SHALL BE RETURNED TO DELDOT'S SIGN SHOP.

3. THE CONTRACTOR SHALL INSTALL PLOWABLE RAISED PAVEMENT MARKERS WITHIN THE PROJECT LIMITS IN ACCORDANCE WITH CHAPTER 3B OF THE DE-MUTCD, AS APPLICABLE.

4. INSTALL POST MOUNTED AND/OR BARRIER MOUNTED DELINEATORS ALONG THE LIMITS OF THE PROJECT PER CHAPTER 3F OF THE DE-MUTCD.

PAVEMENT MARKINGS LEGEND

SYM	ITEM	QUANTITY
A	ALKYD-THERMOPLASTIC PAVEMENT STRIPING, WHITE 16" SOLID (ITEM 817002)	--
B	ALKYD-THERMOPLASTIC PAVEMENT STRIPING, WHITE SYMBOL/LEGEND, (ITEM 817002)	--
C	ALKYD-THERMOPLASTIC PAVEMENT STRIPING, WHITE 5" DOTTED - 2' LINE & 6' GAP (ITEM 817005)	--
D	ALKYD-THERMOPLASTIC PAVEMENT STRIPING, WHITE 12" SOLID (ITEM 817006)	--
E	EPOXY RESIN PAINT PAVEMENT STRIPING, WHITE 5" SOLID (ITEM 817013)	410 LF
F	EPOXY RESIN PAINT PAVEMENT STRIPING, YELLOW 5" SOLID (ITEM 817013)	410 LF
G	EPOXY RESIN PAINT PAVEMENT STRIPING, WHITE 5" BROKEN - 10' LINE & 30' GAP (ITEM 817013)	60 LF
H	EPOXY RESIN PAINT PAVEMENT STRIPING, WHITE 5" DOTTED - 2' LINE & 6' GAP (ITEM 817013)	--

PAVEMENT MARKINGS LEGEND (CONT.)

SYM	ITEM	QUANTITY
J	EPOXY RESIN PAINT PAVEMENT STRIPING, WHITE 10" SOLID (ITEM 817014)	--
K	EPOXY RESIN PAINT PAVEMENT STRIPING, WHITE 10" DOTTED - 2' LINE & 6' GAP (ITEM 817014)	--
L	EPOXY RESIN PAINT PAVEMENT STRIPING, WHITE 5" SOLID (ITEM 817013)	--
	EPOXY RESIN PAINT PAVEMENT STRIPING, BLACK 3" SOLID (ITEM 817018)	--
M	EPOXY RESIN PAINT PAVEMENT STRIPING, WHITE 5" BROKEN - 10' LINE & 30' GAP (ITEM 817013)	--
	EPOXY RESIN PAINT PAVEMENT STRIPING, BLACK 5" BROKEN - 10' LINE & 30' GAP (ITEM 817019)	--
N	PREFORMED TAPE PAVEMENT MARKINGS, WHITE 5" DOTTED - 3' LINE & 9' GAP (ITEM 817020)	--

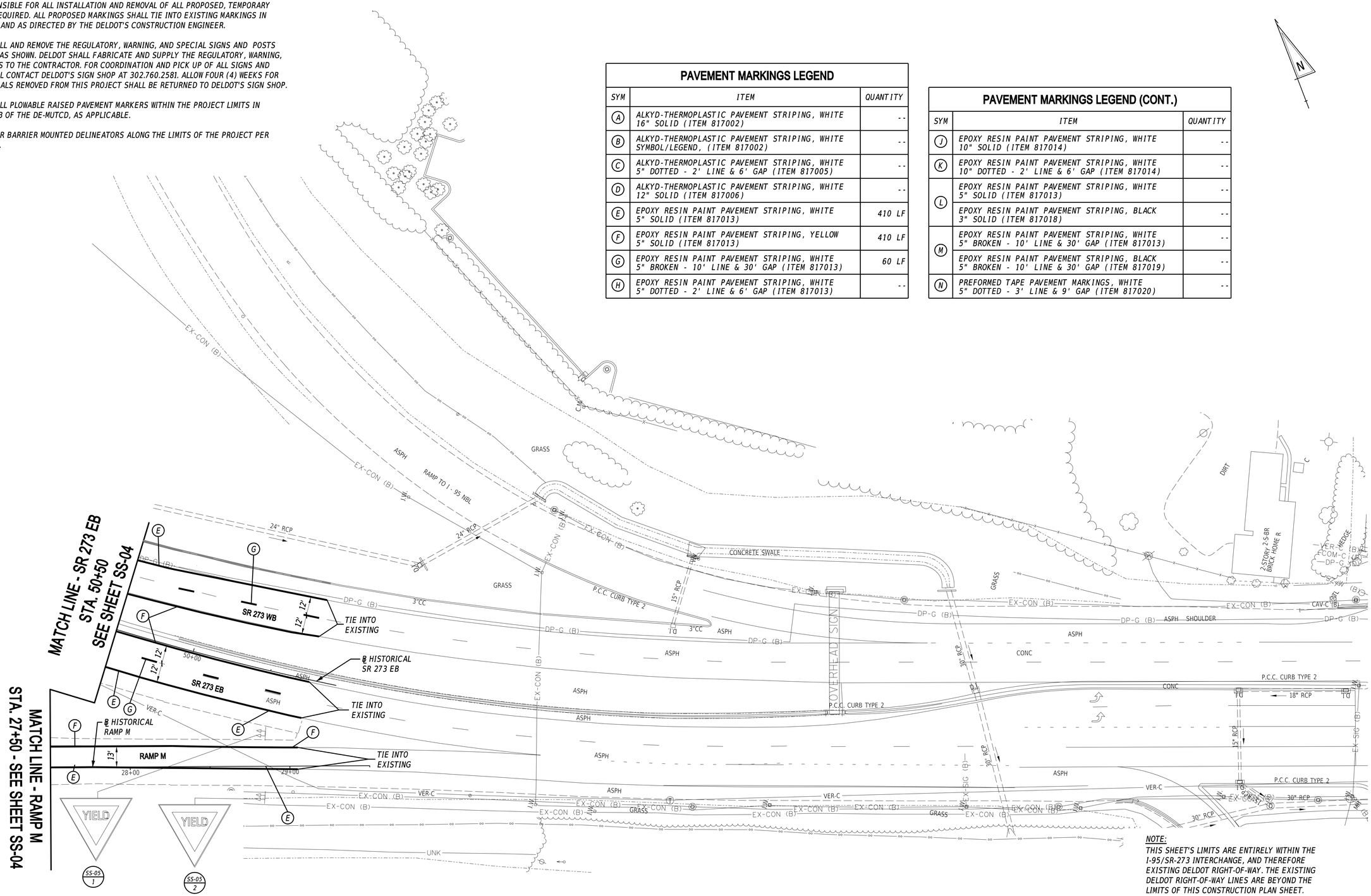

NOTE:
THIS SHEET'S LIMITS ARE ENTIRELY WITHIN THE I-95/SR-273 INTERCHANGE, AND THEREFORE EXISTING DELDOT RIGHT-OF-WAY. THE EXISTING DELDOT RIGHT-OF-WAY LINES ARE BEYOND THE LIMITS OF THIS CONSTRUCTION PLAN SHEET.

ADDENDA / REVISIONS

SCALE 0 30 60 90 FEET

HSIP NCC, SR 273 AND I-95 INTERCHANGE IMPROVEMENTS

CONTRACT	BRIDGE NO.	715, 715A, 715B, 715C & 715D
T200800713	DESIGNED BY:	K. AMBROSE
COUNTY		
NEW CASTLE	CHECKED BY:	J. RASHID

SIGNING, STRIPING AND CONDUIT PLAN

SS-05
SECTION
RK&K
SHEET NO.
99

11-AUG-2020
21:43
\\balservi\\v20140201414144_DelDOT1707\Task 4A - Harmony FD\Cadd\Contract\Plans\ss05_1far.dgn

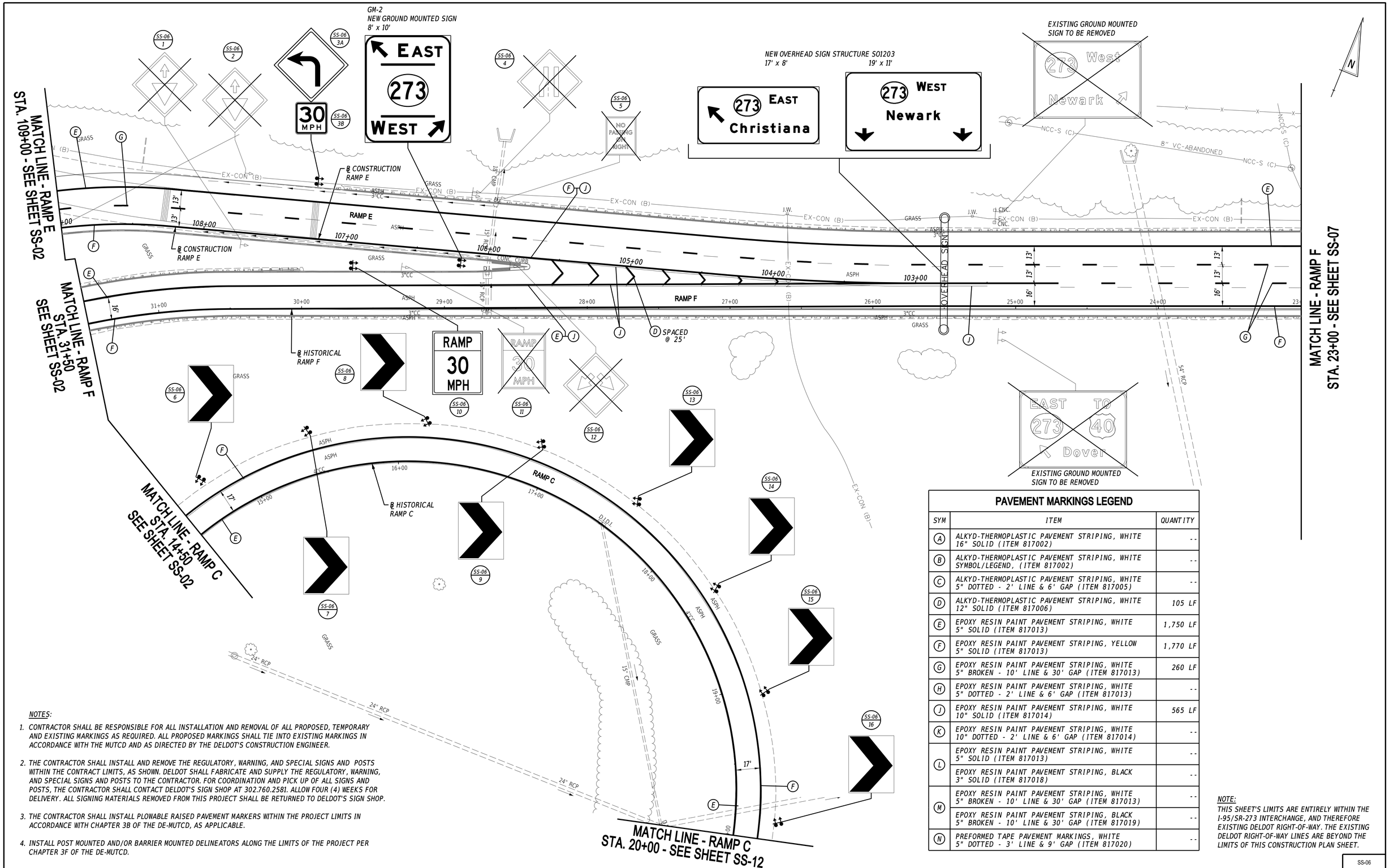

PAVEMENT MARKINGS LEGEND

SYM	ITEM	QUANTITY
A	ALKYD-THERMOPLASTIC PAVEMENT STRIPING, WHITE 16" SOLID (ITEM 817002)	--
B	ALKYD-THERMOPLASTIC PAVEMENT STRIPING, WHITE SYMBOL/LEGEND, (ITEM 817002)	--
C	ALKYD-THERMOPLASTIC PAVEMENT STRIPING, WHITE 5" DOTTED - 2' LINE & 6' GAP (ITEM 817005)	--
D	ALKYD-THERMOPLASTIC PAVEMENT STRIPING, WHITE 12" SOLID (ITEM 817006)	105 LF
E	EPOXY RESIN PAINT PAVEMENT STRIPING, WHITE 5" SOLID (ITEM 817013)	1,750 LF
F	EPOXY RESIN PAINT PAVEMENT STRIPING, YELLOW 5" SOLID (ITEM 817013)	1,770 LF
G	EPOXY RESIN PAINT PAVEMENT STRIPING, WHITE 5" BROKEN - 10' LINE & 30' GAP (ITEM 817013)	260 LF
H	EPOXY RESIN PAINT PAVEMENT STRIPING, WHITE 5" DOTTED - 2' LINE & 6' GAP (ITEM 817013)	--
J	EPOXY RESIN PAINT PAVEMENT STRIPING, WHITE 10" SOLID (ITEM 817014)	565 LF
K	EPOXY RESIN PAINT PAVEMENT STRIPING, WHITE 10" DOTTED - 2' LINE & 6' GAP (ITEM 817014)	--
L	EPOXY RESIN PAINT PAVEMENT STRIPING, WHITE 5" SOLID (ITEM 817013)	--
	EPOXY RESIN PAINT PAVEMENT STRIPING, BLACK 3" SOLID (ITEM 817018)	--
M	EPOXY RESIN PAINT PAVEMENT STRIPING, WHITE 5" BROKEN - 10' LINE & 30' GAP (ITEM 817013)	--
	EPOXY RESIN PAINT PAVEMENT STRIPING, BLACK 5" BROKEN - 10' LINE & 30' GAP (ITEM 817019)	--
N	PREFORMED TAPE PAVEMENT MARKINGS, WHITE 5" DOTTED - 3' LINE & 9' GAP (ITEM 817020)	--

NOTES:

1. CONTRACTOR SHALL BE RESPONSIBLE FOR ALL INSTALLATION AND REMOVAL OF ALL PROPOSED, TEMPORARY AND EXISTING MARKINGS AS REQUIRED. ALL PROPOSED MARKINGS SHALL TIE INTO EXISTING MARKINGS IN ACCORDANCE WITH THE MUTCD AND AS DIRECTED BY THE DELDOT'S CONSTRUCTION ENGINEER.
2. THE CONTRACTOR SHALL INSTALL AND REMOVE THE REGULATORY, WARNING, AND SPECIAL SIGNS AND POSTS WITHIN THE CONTRACT LIMITS, AS SHOWN. DELDOT SHALL FABRICATE AND SUPPLY THE REGULATORY, WARNING, AND SPECIAL SIGNS AND POSTS TO THE CONTRACTOR. FOR COORDINATION AND PICK UP OF ALL SIGNS AND POSTS, THE CONTRACTOR SHALL CONTACT DELDOT'S SIGN SHOP AT 302.760.2581. ALLOW FOUR (4) WEEKS FOR DELIVERY. ALL SIGNING MATERIALS REMOVED FROM THIS PROJECT SHALL BE RETURNED TO DELDOT'S SIGN SHOP.
3. THE CONTRACTOR SHALL INSTALL PLOWABLE RAISED PAVEMENT MARKERS WITHIN THE PROJECT LIMITS IN ACCORDANCE WITH CHAPTER 3B OF THE DE-MUTCD, AS APPLICABLE.
4. INSTALL POST MOUNTED AND/OR BARRIER MOUNTED DELINEATORS ALONG THE LIMITS OF THE PROJECT PER CHAPTER 3F OF THE DE-MUTCD.

NOTE:
THIS SHEET'S LIMITS ARE ENTIRELY WITHIN THE I-95/SR-273 INTERCHANGE, AND THEREFORE EXISTING DELDOT RIGHT-OF-WAY. THE EXISTING DELDOT RIGHT-OF-WAY LINES ARE BEYOND THE LIMITS OF THIS CONSTRUCTION PLAN SHEET.

ADDENDA / REVISIONS

SCALE
0 30 60 90
FEET

HSIP NCC, SR 273 AND I-95 INTERCHANGE IMPROVEMENTS

CONTRACT	BRIDGE NO.	715, 715A, 715B, 715C & 715D
T200800713	DESIGNED BY:	K. AMBROSE
COUNTY		
NEW CASTLE	CHECKED BY:	J. RASHID

SIGNING, STRIPING AND CONDUIT PLAN

SS-06
SECTION
RK&K
SHEET NO.
100

11-AUG-2020
21:46
\\balsrv01\v20\14220\141144_DelDOT\170\Task 4A - Harmony FD\Cadd\ContractPlans\ss06_Hardgn

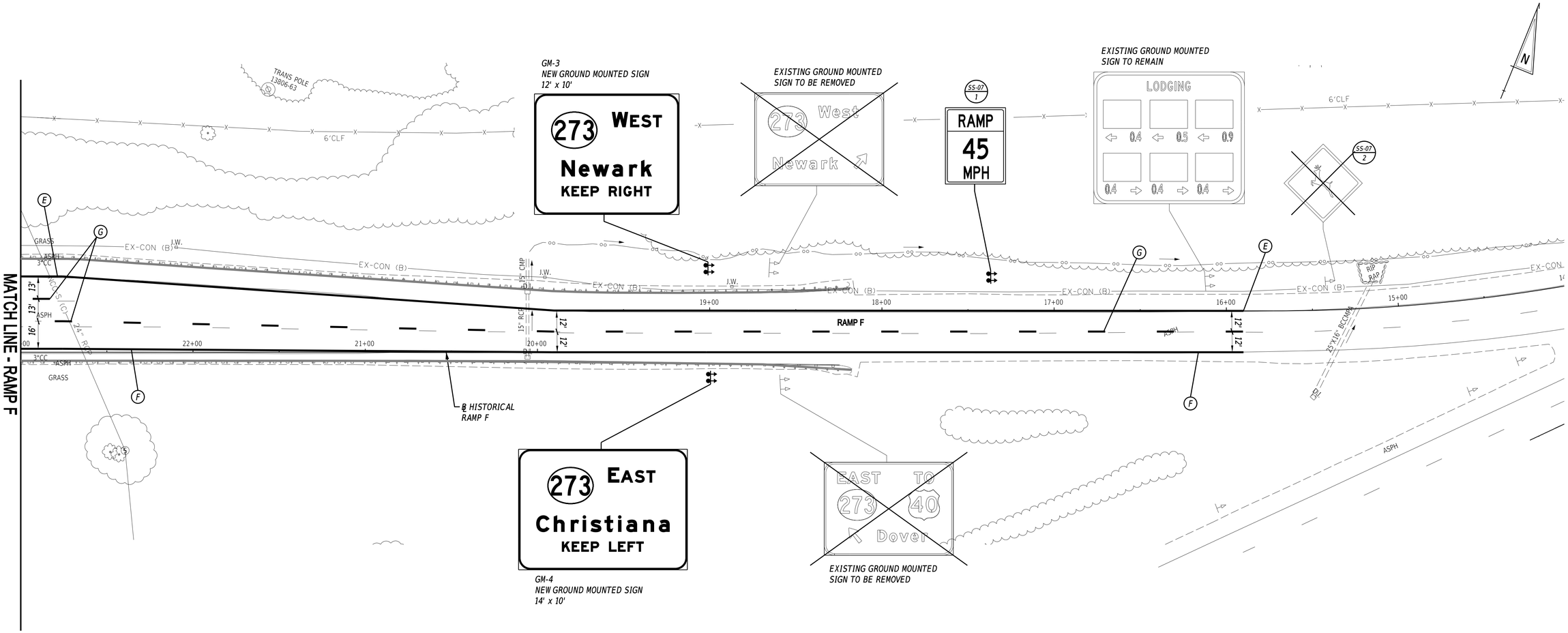

PAVEMENT MARKINGS LEGEND

SYM	ITEM	QUANTITY
A	ALKYD-THERMOPLASTIC PAVEMENT STRIPING, WHITE 16" SOLID (ITEM 817002)	--
B	ALKYD-THERMOPLASTIC PAVEMENT STRIPING, WHITE SYMBOL/LEGEND, (ITEM 817002)	--
C	ALKYD-THERMOPLASTIC PAVEMENT STRIPING, WHITE 5" DOTTED - 2' LINE & 6' GAP (ITEM 817005)	--
D	ALKYD-THERMOPLASTIC PAVEMENT STRIPING, WHITE 12" SOLID (ITEM 817006)	--
E	EPOXY RESIN PAINT PAVEMENT STRIPING, WHITE 5" SOLID (ITEM 817013)	715 LF
F	EPOXY RESIN PAINT PAVEMENT STRIPING, YELLOW 5" SOLID (ITEM 817013)	710 LF
G	EPOXY RESIN PAINT PAVEMENT STRIPING, WHITE 5" BROKEN - 10' LINE & 30' GAP (ITEM 817013)	190 LF
H	EPOXY RESIN PAINT PAVEMENT STRIPING, WHITE 5" DOTTED - 2' LINE & 6' GAP (ITEM 817013)	--

PAVEMENT MARKINGS LEGEND (CONT.)

SYM	ITEM	QUANTITY
J	EPOXY RESIN PAINT PAVEMENT STRIPING, WHITE 10" SOLID (ITEM 817014)	--
K	EPOXY RESIN PAINT PAVEMENT STRIPING, WHITE 10" DOTTED - 2' LINE & 6' GAP (ITEM 817014)	--
L	EPOXY RESIN PAINT PAVEMENT STRIPING, WHITE 5" SOLID (ITEM 817013)	--
	EPOXY RESIN PAINT PAVEMENT STRIPING, BLACK 3" SOLID (ITEM 817018)	--
M	EPOXY RESIN PAINT PAVEMENT STRIPING, WHITE 5" BROKEN - 10' LINE & 30' GAP (ITEM 817013)	--
	EPOXY RESIN PAINT PAVEMENT STRIPING, BLACK 5" BROKEN - 10' LINE & 30' GAP (ITEM 817019)	--
N	PREFORMED TAPE PAVEMENT MARKINGS, WHITE 5" DOTTED - 3' LINE & 9' GAP (ITEM 817020)	--

NOTES:

1. CONTRACTOR SHALL BE RESPONSIBLE FOR ALL INSTALLATION AND REMOVAL OF ALL PROPOSED, TEMPORARY AND EXISTING MARKINGS AS REQUIRED. ALL PROPOSED MARKINGS SHALL TIE INTO EXISTING MARKINGS IN ACCORDANCE WITH THE MUTCD AND AS DIRECTED BY THE DELDOT'S CONSTRUCTION ENGINEER.
2. THE CONTRACTOR SHALL INSTALL AND REMOVE THE REGULATORY, WARNING, AND SPECIAL SIGNS AND POSTS WITHIN THE CONTRACT LIMITS, AS SHOWN. DELDOT SHALL FABRICATE AND SUPPLY THE REGULATORY, WARNING, AND SPECIAL SIGNS AND POSTS TO THE CONTRACTOR. FOR COORDINATION AND PICK UP OF ALL SIGNS AND POSTS, THE CONTRACTOR SHALL CONTACT DELDOT'S SIGN SHOP AT 302.760.2581. ALLOW FOUR (4) WEEKS FOR DELIVERY. ALL SIGNING MATERIALS REMOVED FROM THIS PROJECT SHALL BE RETURNED TO DELDOT'S SIGN SHOP.
3. THE CONTRACTOR SHALL INSTALL PLOWABLE RAISED PAVEMENT MARKERS WITHIN THE PROJECT LIMITS IN ACCORDANCE WITH CHAPTER 3B OF THE DE-MUTCD, AS APPLICABLE.
4. INSTALL POST MOUNTED AND/OR BARRIER MOUNTED DELINEATORS ALONG THE LIMITS OF THE PROJECT PER CHAPTER 3F OF THE DE-MUTCD.

NOTE:
THIS SHEET'S LIMITS ARE ENTIRELY WITHIN THE I-95/SR-273 INTERCHANGE, AND THEREFORE EXISTING DELDOT RIGHT-OF-WAY. THE EXISTING DELDOT RIGHT-OF-WAY LINES ARE BEYOND THE LIMITS OF THIS CONSTRUCTION PLAN SHEET.

ADDENDA / REVISIONS

SCALE 0 30 60 90 FEET

HSIP NCC, SR 273 AND I-95 INTERCHANGE IMPROVEMENTS

CONTRACT	BRIDGE NO.	715, 715A, 715B, 715C & 715D	SIGNING, STRIPING AND CONDUIT PLAN
T200800713	DESIGNED BY:	K. AMBROSE	
COUNTY			
NEW CASTLE	CHECKED BY:	J. RASHID	

SS-07
SECTION
RK&K
SHEET NO.
101

11-AUG-2020
21:53
\\balts01\v2014\20141\14144_DelDOT\707\Task 4A - Harmony FD\Cadd\Contract\Plans\ss07_Har.dgn

NOTES:

1. CONTRACTOR SHALL BE RESPONSIBLE FOR ALL INSTALLATION AND REMOVAL OF ALL PROPOSED, TEMPORARY AND EXISTING MARKINGS AS REQUIRED. ALL PROPOSED MARKINGS SHALL TIE INTO EXISTING MARKINGS IN ACCORDANCE WITH THE MUTCD AND AS DIRECTED BY THE DELDOT'S CONSTRUCTION ENGINEER.

2. THE CONTRACTOR SHALL INSTALL AND REMOVE THE REGULATORY, WARNING, AND SPECIAL SIGNS AND POSTS WITHIN THE CONTRACT LIMITS, AS SHOWN. DELDOT SHALL FABRICATE AND SUPPLY THE REGULATORY, WARNING, AND SPECIAL SIGNS AND POSTS TO THE CONTRACTOR. FOR COORDINATION AND PICK UP OF ALL SIGNS AND POSTS, THE CONTRACTOR SHALL CONTACT DELDOT'S SIGN SHOP AT 302.760.2581. ALLOW FOUR (4) WEEKS FOR DELIVERY. ALL SIGNING MATERIALS REMOVED FROM THIS PROJECT SHALL BE RETURNED TO DELDOT'S SIGN SHOP.

3. THE CONTRACTOR SHALL INSTALL PLOWABLE RAISED PAVEMENT MARKERS WITHIN THE PROJECT LIMITS IN ACCORDANCE WITH CHAPTER 3B OF THE DE-MUTCD, AS APPLICABLE.

4. INSTALL POST MOUNTED AND/OR BARRIER MOUNTED DELINEATORS ALONG THE LIMITS OF THE PROJECT PER CHAPTER 3F OF THE DE-MUTCD.

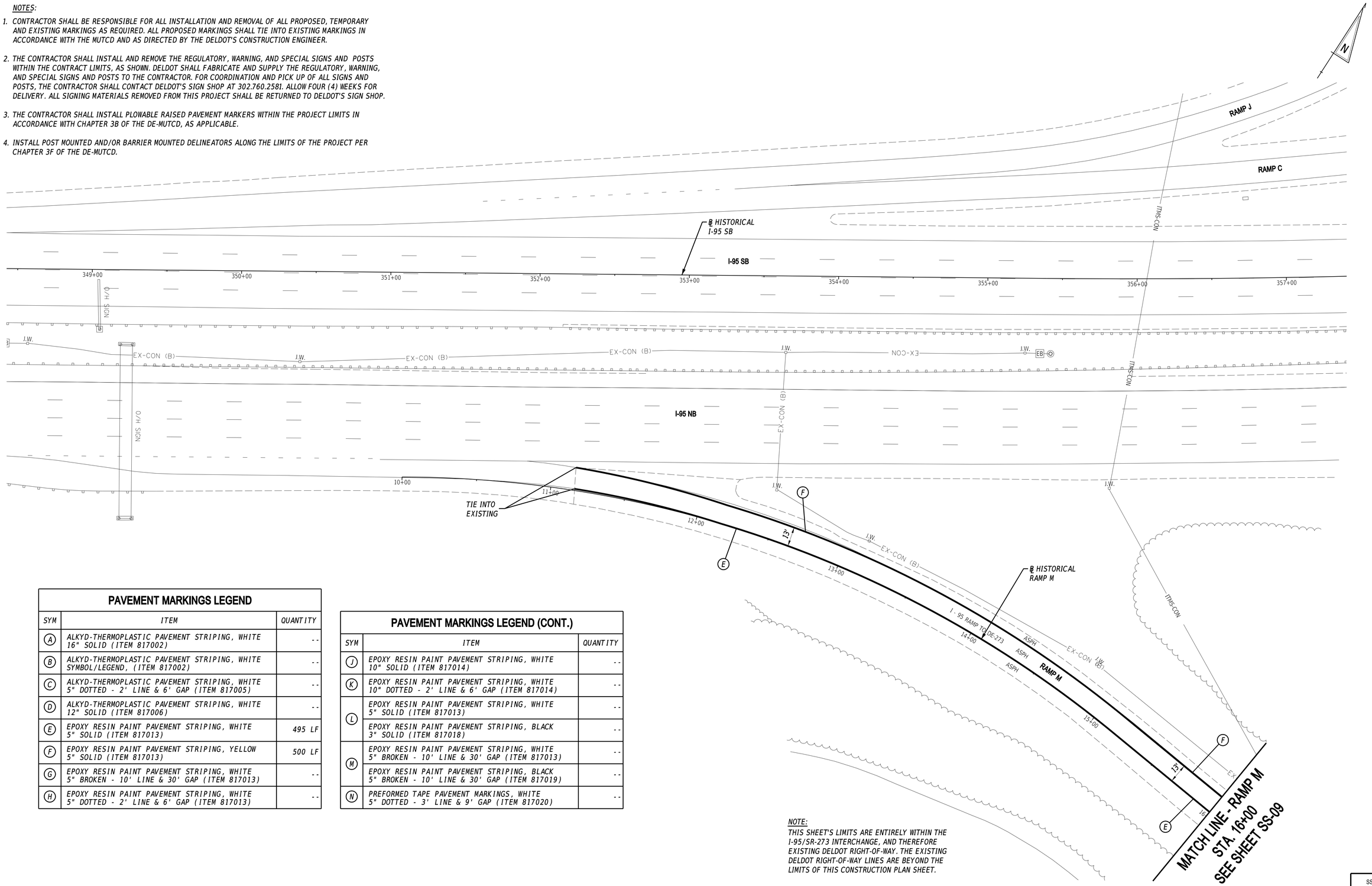

NOTE:
THIS SHEET'S LIMITS ARE ENTIRELY WITHIN THE I-95/SR-273 INTERCHANGE, AND THEREFORE EXISTING DELDOT RIGHT-OF-WAY. THE EXISTING DELDOT RIGHT-OF-WAY LINES ARE BEYOND THE LIMITS OF THIS CONSTRUCTION PLAN SHEET.

PAVEMENT MARKINGS LEGEND

SYM	ITEM	QUANTITY
A	ALKYD-THERMOPLASTIC PAVEMENT STRIPING, WHITE 16" SOLID (ITEM 817002)	--
B	ALKYD-THERMOPLASTIC PAVEMENT STRIPING, WHITE SYMBOL/LEGEND, (ITEM 817002)	--
C	ALKYD-THERMOPLASTIC PAVEMENT STRIPING, WHITE 5" DOTTED - 2' LINE & 6' GAP (ITEM 817005)	--
D	ALKYD-THERMOPLASTIC PAVEMENT STRIPING, WHITE 12" SOLID (ITEM 817006)	--
E	EPOXY RESIN PAINT PAVEMENT STRIPING, WHITE 5" SOLID (ITEM 817013)	495 LF
F	EPOXY RESIN PAINT PAVEMENT STRIPING, YELLOW 5" SOLID (ITEM 817013)	500 LF
G	EPOXY RESIN PAINT PAVEMENT STRIPING, WHITE 5" BROKEN - 10' LINE & 30' GAP (ITEM 817013)	--
H	EPOXY RESIN PAINT PAVEMENT STRIPING, WHITE 5" DOTTED - 2' LINE & 6' GAP (ITEM 817013)	--

PAVEMENT MARKINGS LEGEND (CONT.)

SYM	ITEM	QUANTITY
J	EPOXY RESIN PAINT PAVEMENT STRIPING, WHITE 10" SOLID (ITEM 817014)	--
K	EPOXY RESIN PAINT PAVEMENT STRIPING, WHITE 10" DOTTED - 2' LINE & 6' GAP (ITEM 817014)	--
L	EPOXY RESIN PAINT PAVEMENT STRIPING, WHITE 5" SOLID (ITEM 817013)	--
	EPOXY RESIN PAINT PAVEMENT STRIPING, BLACK 3" SOLID (ITEM 817018)	--
M	EPOXY RESIN PAINT PAVEMENT STRIPING, WHITE 5" BROKEN - 10' LINE & 30' GAP (ITEM 817013)	--
	EPOXY RESIN PAINT PAVEMENT STRIPING, BLACK 5" BROKEN - 10' LINE & 30' GAP (ITEM 817019)	--
N	PREFORMED TAPE PAVEMENT MARKINGS, WHITE 5" DOTTED - 3' LINE & 9' GAP (ITEM 817020)	--

ADDENDA / REVISIONS

SCALE
0 30 60 90
FEET

HSIP NCC, SR 273 AND I-95 INTERCHANGE IMPROVEMENTS

CONTRACT	BRIDGE NO.	715, 715A, 715B, 715C & 715D
T200800713	DESIGNED BY:	K. AMBROSE
COUNTY		
NEW CASTLE	CHECKED BY:	J. RASHID

SIGNING, STRIPING AND CONDUIT PLAN

SS-08
SECTION
RK&K
SHEET NO.
102

11-AUG-2020
21:54
\\balsrv01\v20\14\20\14\14144_DelDOT\70\Task 4A - Harmony FD\Cadd\Contract\Plans\ss\09_Har.dgn

PAVEMENT MARKINGS LEGEND

SYM	ITEM	QUANTITY
A	ALKYD-THERMOPLASTIC PAVEMENT STRIPING, WHITE 16" SOLID (ITEM 817002)	--
B	ALKYD-THERMOPLASTIC PAVEMENT STRIPING, WHITE SYMBOL/LEGEND, (ITEM 817002)	--
C	ALKYD-THERMOPLASTIC PAVEMENT STRIPING, WHITE 5" DOTTED - 2' LINE & 6' GAP (ITEM 817005)	--
D	ALKYD-THERMOPLASTIC PAVEMENT STRIPING, WHITE 12" SOLID (ITEM 817006)	--
E	EPOXY RESIN PAINT PAVEMENT STRIPING, WHITE 5" SOLID (ITEM 817013)	1300 LF
F	EPOXY RESIN PAINT PAVEMENT STRIPING, YELLOW 5" SOLID (ITEM 817013)	1400 LF
G	EPOXY RESIN PAINT PAVEMENT STRIPING, WHITE 5" BROKEN - 10' LINE & 30' GAP (ITEM 817013)	--
H	EPOXY RESIN PAINT PAVEMENT STRIPING, WHITE 5" DOTTED - 2' LINE & 6' GAP (ITEM 817013)	--
J	EPOXY RESIN PAINT PAVEMENT STRIPING, WHITE 10" SOLID (ITEM 817014)	--
K	EPOXY RESIN PAINT PAVEMENT STRIPING, WHITE 10" DOTTED - 2' LINE & 6' GAP (ITEM 817014)	--
L	EPOXY RESIN PAINT PAVEMENT STRIPING, WHITE 5" SOLID (ITEM 817013)	100 LF
	EPOXY RESIN PAINT PAVEMENT STRIPING, BLACK 3" SOLID (ITEM 817018)	100 LF
M	EPOXY RESIN PAINT PAVEMENT STRIPING, WHITE 5" BROKEN - 10' LINE & 30' GAP (ITEM 817013)	--
	EPOXY RESIN PAINT PAVEMENT STRIPING, BLACK 5" BROKEN - 10' LINE & 30' GAP (ITEM 817019)	--
N	PREFORMED TAPE PAVEMENT MARKINGS, WHITE 5" DOTTED - 3' LINE & 9' GAP (ITEM 817020)	--

NOTES:

1. CONTRACTOR SHALL BE RESPONSIBLE FOR ALL INSTALLATION AND REMOVAL OF ALL PROPOSED, TEMPORARY AND EXISTING MARKINGS AS REQUIRED. ALL PROPOSED MARKINGS SHALL TIE INTO EXISTING MARKINGS IN ACCORDANCE WITH THE MUTCD AND AS DIRECTED BY THE DELDOT'S CONSTRUCTION ENGINEER.
2. THE CONTRACTOR SHALL INSTALL AND REMOVE THE REGULATORY, WARNING, AND SPECIAL SIGNS AND POSTS WITHIN THE CONTRACT LIMITS, AS SHOWN. DELDOT SHALL FABRICATE AND SUPPLY THE REGULATORY, WARNING, AND SPECIAL SIGNS AND POSTS TO THE CONTRACTOR. FOR COORDINATION AND PICK UP OF ALL SIGNS AND POSTS, THE CONTRACTOR SHALL CONTACT DELDOT'S SIGN SHOP AT 302.760.2581. ALLOW FOUR (4) WEEKS FOR DELIVERY. ALL SIGNING MATERIALS REMOVED FROM THIS PROJECT SHALL BE RETURNED TO DELDOT'S SIGN SHOP.
3. THE CONTRACTOR SHALL INSTALL PLOWABLE RAISED PAVEMENT MARKERS WITHIN THE PROJECT LIMITS IN ACCORDANCE WITH CHAPTER 3B OF THE DE-MUTCD, AS APPLICABLE.
4. INSTALL POST MOUNTED AND/OR BARRIER MOUNTED DELINEATORS ALONG THE LIMITS OF THE PROJECT PER CHAPTER 3F OF THE DE-MUTCD.

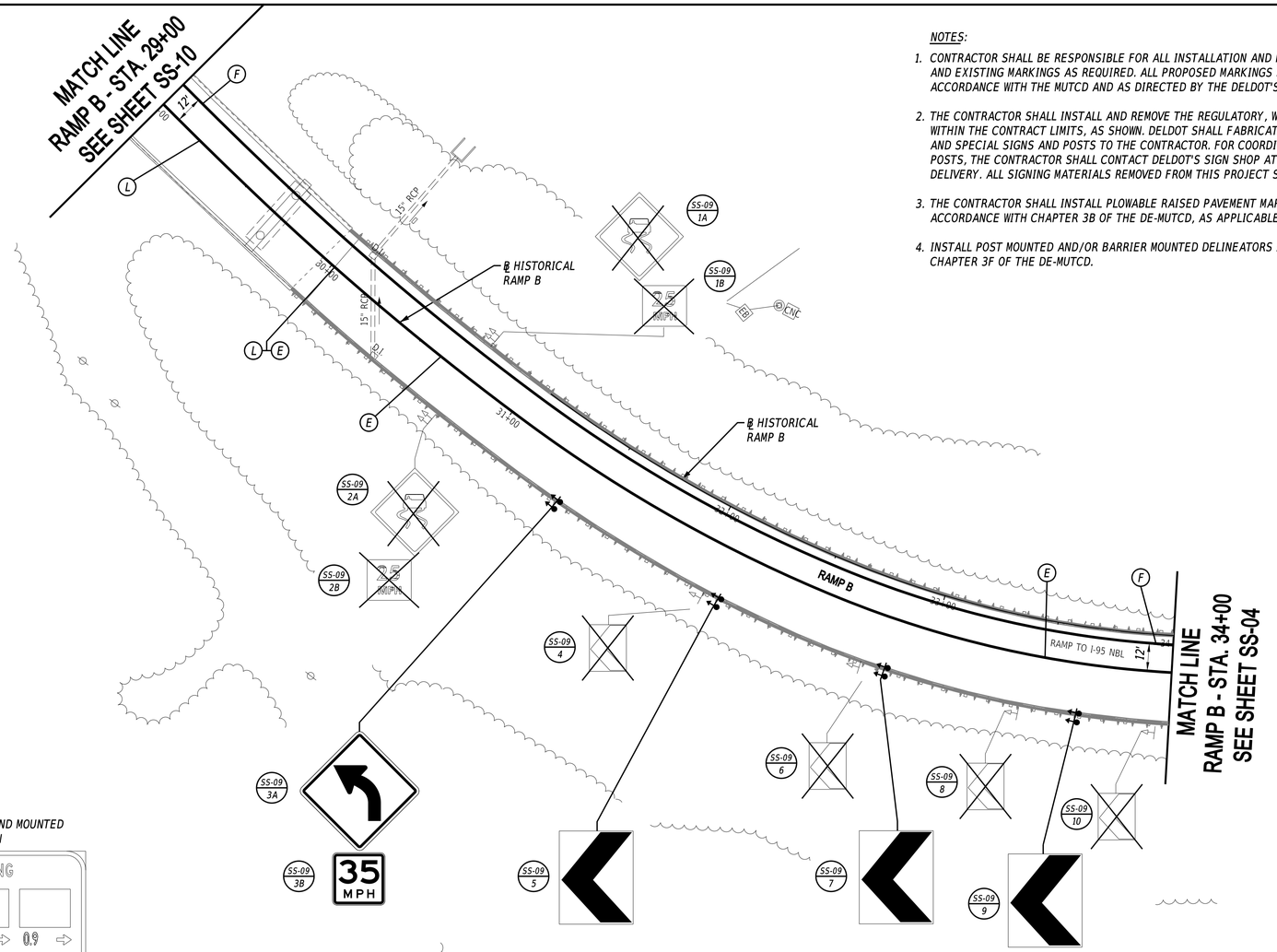

NOTE:
THIS SHEET'S LIMITS ARE ENTIRELY WITHIN THE I-95/SR-273 INTERCHANGE, AND THEREFORE EXISTING DELDOT RIGHT-OF-WAY. THE EXISTING DELDOT RIGHT-OF-WAY LINES ARE BEYOND THE LIMITS OF THIS CONSTRUCTION PLAN SHEET.

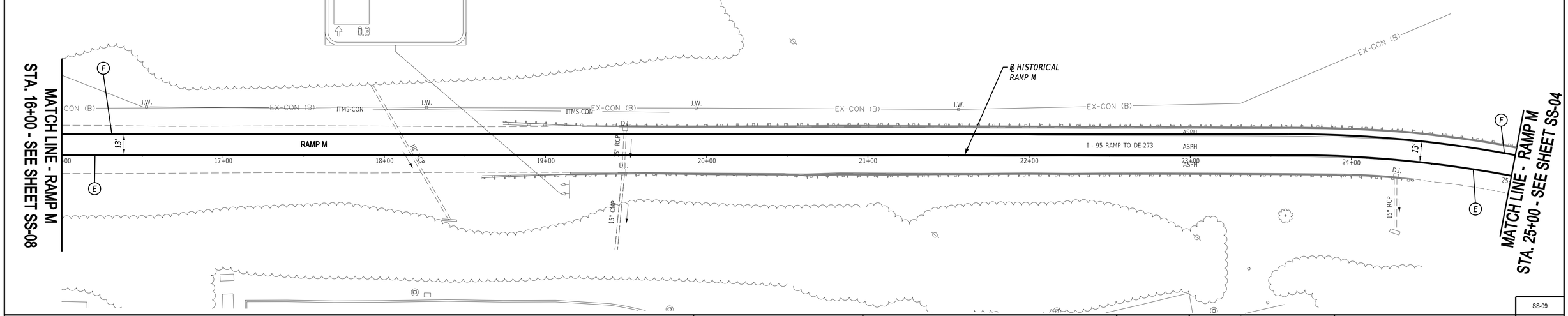

ADDENDA / REVISIONS	SCALE 0 30 60 90 FEET	HSIP NCC, SR 273 AND I-95 INTERCHANGE IMPROVEMENTS	CONTRACT T200800713	BRIDGE NO. 715, 715A, 715B, 715C & 715D	SIGNING, STRIPING AND CONDUIT PLAN	SS-09
			COUNTY NEW CASTLE	DESIGNED BY: K. AMBROSE		SECTION RK&K
				CHECKED BY: J. RASHID		SHEET NO. 103

11-AUG-2020
21:56
\\balsrv01\v2014\2014\141144_DelDOT170\Task 4A - Harmony FD\Cadd\Contract\Plans\ss09_Har.dgn

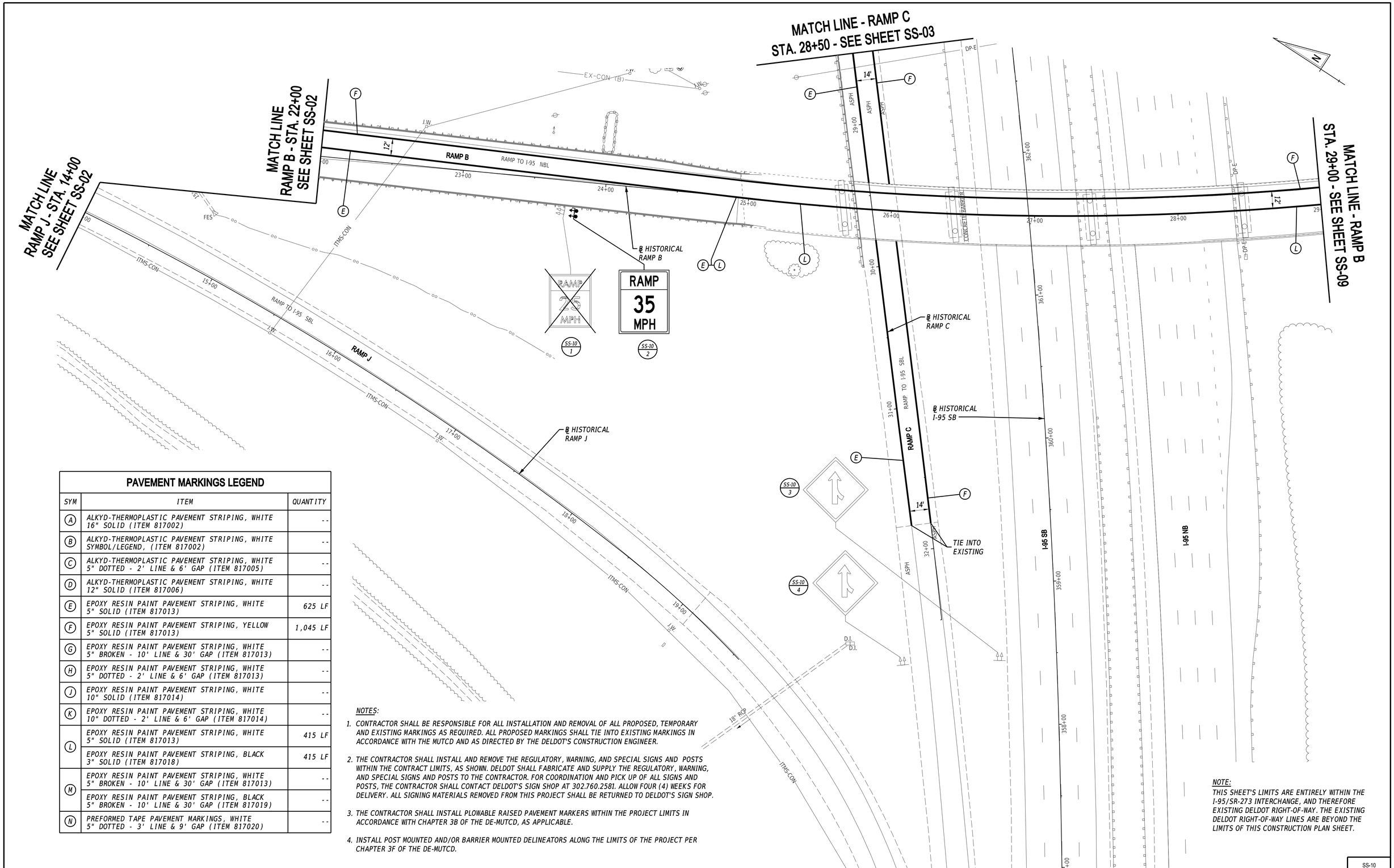

PAVEMENT MARKINGS LEGEND

SYM	ITEM	QUANTITY
A	ALKYD-THERMOPLASTIC PAVEMENT STRIPING, WHITE 16" SOLID (ITEM 817002)	--
B	ALKYD-THERMOPLASTIC PAVEMENT STRIPING, WHITE SYMBOL/LEGEND, (ITEM 817002)	--
C	ALKYD-THERMOPLASTIC PAVEMENT STRIPING, WHITE 5" DOTTED - 2' LINE & 6' GAP (ITEM 817005)	--
D	ALKYD-THERMOPLASTIC PAVEMENT STRIPING, WHITE 12" SOLID (ITEM 817006)	--
E	EPOXY RESIN PAINT PAVEMENT STRIPING, WHITE 5" SOLID (ITEM 817013)	625 LF
F	EPOXY RESIN PAINT PAVEMENT STRIPING, YELLOW 5" SOLID (ITEM 817013)	1,045 LF
G	EPOXY RESIN PAINT PAVEMENT STRIPING, WHITE 5" BROKEN - 10' LINE & 30' GAP (ITEM 817013)	--
H	EPOXY RESIN PAINT PAVEMENT STRIPING, WHITE 5" DOTTED - 2' LINE & 6' GAP (ITEM 817013)	--
J	EPOXY RESIN PAINT PAVEMENT STRIPING, WHITE 10" SOLID (ITEM 817014)	--
K	EPOXY RESIN PAINT PAVEMENT STRIPING, WHITE 10" DOTTED - 2' LINE & 6' GAP (ITEM 817014)	--
L	EPOXY RESIN PAINT PAVEMENT STRIPING, WHITE 5" SOLID (ITEM 817013)	415 LF
	EPOXY RESIN PAINT PAVEMENT STRIPING, BLACK 3" SOLID (ITEM 817018)	415 LF
M	EPOXY RESIN PAINT PAVEMENT STRIPING, WHITE 5" BROKEN - 10' LINE & 30' GAP (ITEM 817013)	--
	EPOXY RESIN PAINT PAVEMENT STRIPING, BLACK 5" BROKEN - 10' LINE & 30' GAP (ITEM 817019)	--
N	PREFORMED TAPE PAVEMENT MARKINGS, WHITE 5" DOTTED - 3' LINE & 9' GAP (ITEM 817020)	--

NOTES:

1. CONTRACTOR SHALL BE RESPONSIBLE FOR ALL INSTALLATION AND REMOVAL OF ALL PROPOSED, TEMPORARY AND EXISTING MARKINGS AS REQUIRED. ALL PROPOSED MARKINGS SHALL TIE INTO EXISTING MARKINGS IN ACCORDANCE WITH THE MUTCD AND AS DIRECTED BY THE DELDOT'S CONSTRUCTION ENGINEER.
2. THE CONTRACTOR SHALL INSTALL AND REMOVE THE REGULATORY, WARNING, AND SPECIAL SIGNS AND POSTS WITHIN THE CONTRACT LIMITS, AS SHOWN. DELDOT SHALL FABRICATE AND SUPPLY THE REGULATORY, WARNING, AND SPECIAL SIGNS AND POSTS TO THE CONTRACTOR. FOR COORDINATION AND PICK UP OF ALL SIGNS AND POSTS, THE CONTRACTOR SHALL CONTACT DELDOT'S SIGN SHOP AT 302.760.2581. ALLOW FOUR (4) WEEKS FOR DELIVERY. ALL SIGNING MATERIALS REMOVED FROM THIS PROJECT SHALL BE RETURNED TO DELDOT'S SIGN SHOP.
3. THE CONTRACTOR SHALL INSTALL PLOWABLE RAISED PAVEMENT MARKERS WITHIN THE PROJECT LIMITS IN ACCORDANCE WITH CHAPTER 3B OF THE DE-MUTCD, AS APPLICABLE.
4. INSTALL POST MOUNTED AND/OR BARRIER MOUNTED DELINEATORS ALONG THE LIMITS OF THE PROJECT PER CHAPTER 3F OF THE DE-MUTCD.

NOTE:
THIS SHEET'S LIMITS ARE ENTIRELY WITHIN THE I-95/SR-273 INTERCHANGE, AND THEREFORE EXISTING DELDOT RIGHT-OF-WAY. THE EXISTING DELDOT RIGHT-OF-WAY LINES ARE BEYOND THE LIMITS OF THIS CONSTRUCTION PLAN SHEET.

ADDENDA / REVISIONS

SCALE 0 30 60 90 FEET

HSIP NCC, SR 273 AND I-95 INTERCHANGE IMPROVEMENTS

CONTRACT	BRIDGE NO.	715, 715A, 715B, 715C & 715D
T200800713	DESIGNED BY:	K. AMBROSE
COUNTY	CHECKED BY:	J. RASHID
NEW CASTLE		

SIGNING, STRIPING AND CONDUIT PLAN

SS-10
SECTION
RK&K
SHEET NO.
104

11-AUG-2020
21:58
\\balsrv01\v20\14\20141\141\44_DelDOT170\Task 4A - Harmony FD\Cadd\ContractPlans\ss10_Har.dgn

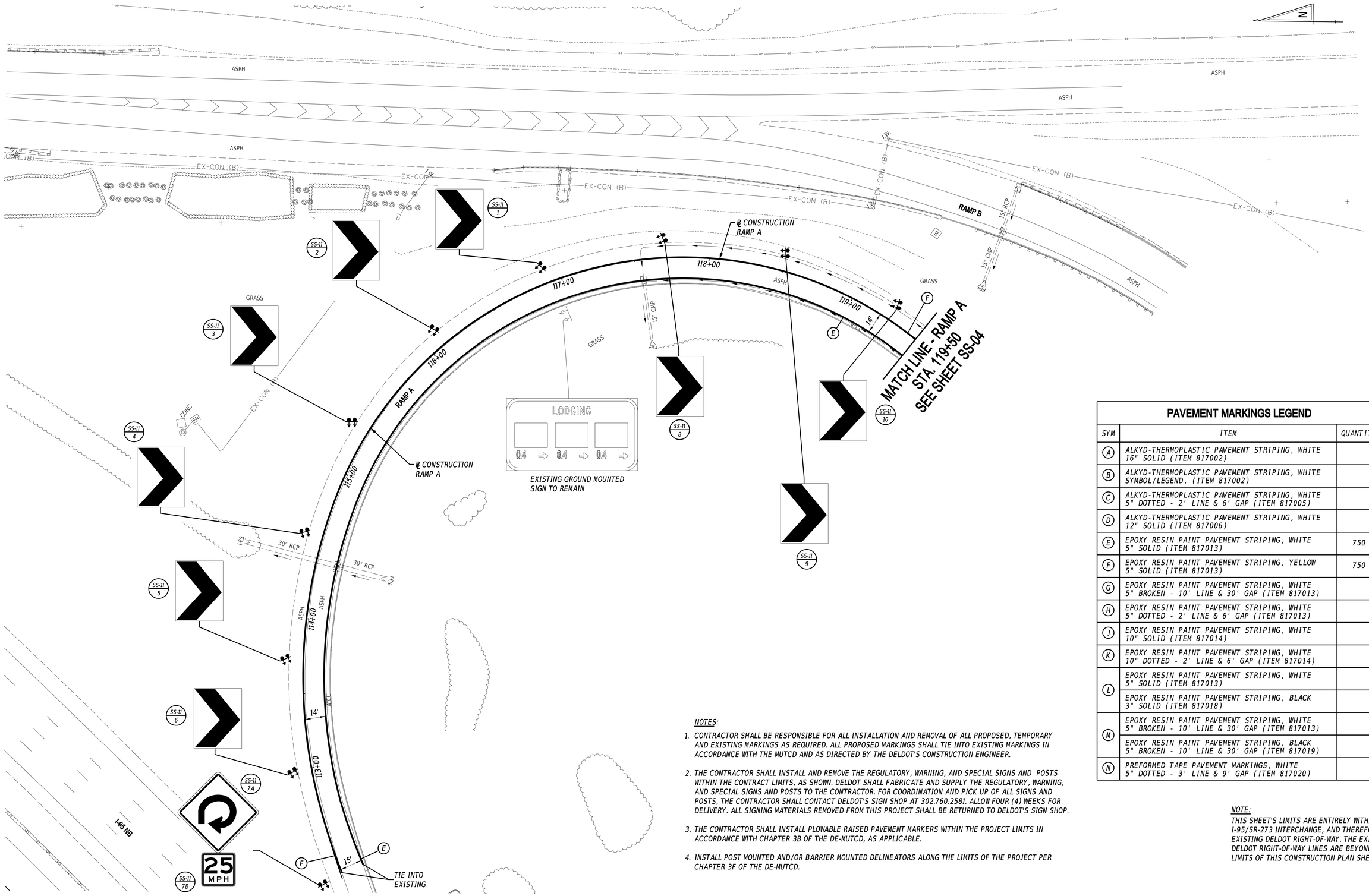

PAVEMENT MARKINGS LEGEND

SYM	ITEM	QUANTITY
A	ALKYD-THERMOPLASTIC PAVEMENT STRIPING, WHITE 16" SOLID (ITEM 817002)	--
B	ALKYD-THERMOPLASTIC PAVEMENT STRIPING, WHITE SYMBOL/LEGEND, (ITEM 817002)	--
C	ALKYD-THERMOPLASTIC PAVEMENT STRIPING, WHITE 5" DOTTED - 2' LINE & 6' GAP (ITEM 817005)	--
D	ALKYD-THERMOPLASTIC PAVEMENT STRIPING, WHITE 12" SOLID (ITEM 817006)	--
E	EPOXY RESIN PAINT PAVEMENT STRIPING, WHITE 5" SOLID (ITEM 817013)	750 LF
F	EPOXY RESIN PAINT PAVEMENT STRIPING, YELLOW 5" SOLID (ITEM 817013)	750 LF
G	EPOXY RESIN PAINT PAVEMENT STRIPING, WHITE 5" BROKEN - 10' LINE & 30' GAP (ITEM 817013)	--
H	EPOXY RESIN PAINT PAVEMENT STRIPING, WHITE 5" DOTTED - 2' LINE & 6' GAP (ITEM 817013)	--
J	EPOXY RESIN PAINT PAVEMENT STRIPING, WHITE 10" SOLID (ITEM 817014)	--
K	EPOXY RESIN PAINT PAVEMENT STRIPING, WHITE 10" DOTTED - 2' LINE & 6' GAP (ITEM 817014)	--
L	EPOXY RESIN PAINT PAVEMENT STRIPING, WHITE 5" SOLID (ITEM 817013)	--
	EPOXY RESIN PAINT PAVEMENT STRIPING, BLACK 3" SOLID (ITEM 817018)	--
M	EPOXY RESIN PAINT PAVEMENT STRIPING, WHITE 5" BROKEN - 10' LINE & 30' GAP (ITEM 817013)	--
	EPOXY RESIN PAINT PAVEMENT STRIPING, BLACK 5" BROKEN - 10' LINE & 30' GAP (ITEM 817019)	--
N	PREFORMED TAPE PAVEMENT MARKINGS, WHITE 5" DOTTED - 3' LINE & 9' GAP (ITEM 817020)	--

NOTES:

1. CONTRACTOR SHALL BE RESPONSIBLE FOR ALL INSTALLATION AND REMOVAL OF ALL PROPOSED, TEMPORARY AND EXISTING MARKINGS AS REQUIRED. ALL PROPOSED MARKINGS SHALL TIE INTO EXISTING MARKINGS IN ACCORDANCE WITH THE MUTCD AND AS DIRECTED BY THE DELDOT'S CONSTRUCTION ENGINEER.
2. THE CONTRACTOR SHALL INSTALL AND REMOVE THE REGULATORY, WARNING, AND SPECIAL SIGNS AND POSTS WITHIN THE CONTRACT LIMITS, AS SHOWN. DELDOT SHALL FABRICATE AND SUPPLY THE REGULATORY, WARNING, AND SPECIAL SIGNS AND POSTS TO THE CONTRACTOR. FOR COORDINATION AND PICK UP OF ALL SIGNS AND POSTS, THE CONTRACTOR SHALL CONTACT DELDOT'S SIGN SHOP AT 302.760.2581. ALLOW FOUR (4) WEEKS FOR DELIVERY. ALL SIGNING MATERIALS REMOVED FROM THIS PROJECT SHALL BE RETURNED TO DELDOT'S SIGN SHOP.
3. THE CONTRACTOR SHALL INSTALL PLOWABLE RAISED PAVEMENT MARKERS WITHIN THE PROJECT LIMITS IN ACCORDANCE WITH CHAPTER 3B OF THE DE-MUTCD, AS APPLICABLE.
4. INSTALL POST MOUNTED AND/OR BARRIER MOUNTED DELINEATORS ALONG THE LIMITS OF THE PROJECT PER CHAPTER 3F OF THE DE-MUTCD.

NOTE:
THIS SHEET'S LIMITS ARE ENTIRELY WITHIN THE I-95/SR-273 INTERCHANGE, AND THEREFORE EXISTING DELDOT RIGHT-OF-WAY. THE EXISTING DELDOT RIGHT-OF-WAY LINES ARE BEYOND THE LIMITS OF THIS CONSTRUCTION PLAN SHEET.

ADDENDA / REVISIONS

SCALE 0 30 60 90 FEET

HSIP NCC, SR 273 AND I-95 INTERCHANGE IMPROVEMENTS

CONTRACT	BRIDGE NO.	715, 715A, 715B, 715C & 715D
T200800713	DESIGNED BY:	K. AMBROSE
COUNTY		
NEW CASTLE	CHECKED BY:	J. RASHID

SIGNING, STRIPING AND CONDUIT PLAN

SS-11
SECTION
RK&K
SHEET NO.
105

11-AUG-2020
22:00
\\balservd1\v20142014144_DelDOT170?\Task 4A - Harmony FD\Cadd\Contract\Plans\ss11_1far.dgn

NOTES:

1. CONTRACTOR SHALL BE RESPONSIBLE FOR ALL INSTALLATION AND REMOVAL OF ALL PROPOSED, TEMPORARY AND EXISTING MARKINGS AS REQUIRED. ALL PROPOSED MARKINGS SHALL TIE INTO EXISTING MARKINGS IN ACCORDANCE WITH THE MUTCD AND AS DIRECTED BY THE DELDOT'S CONSTRUCTION ENGINEER.

2. THE CONTRACTOR SHALL INSTALL AND REMOVE THE REGULATORY, WARNING, AND SPECIAL SIGNS AND POSTS WITHIN THE CONTRACT LIMITS, AS SHOWN. DELDOT SHALL FABRICATE AND SUPPLY THE REGULATORY, WARNING, AND SPECIAL SIGNS AND POSTS TO THE CONTRACTOR. FOR COORDINATION AND PICK UP OF ALL SIGNS AND POSTS, THE CONTRACTOR SHALL CONTACT DELDOT'S SIGN SHOP AT 302.760.2581. ALLOW FOUR (4) WEEKS FOR DELIVERY. ALL SIGNING MATERIALS REMOVED FROM THIS PROJECT SHALL BE RETURNED TO DELDOT'S SIGN SHOP.

3. THE CONTRACTOR SHALL INSTALL PLOWABLE RAISED PAVEMENT MARKERS WITHIN THE PROJECT LIMITS IN ACCORDANCE WITH CHAPTER 3B OF THE DE-MUTCD, AS APPLICABLE.

4. INSTALL POST MOUNTED AND/OR BARRIER MOUNTED DELINEATORS ALONG THE LIMITS OF THE PROJECT PER CHAPTER 3F OF THE DE-MUTCD.

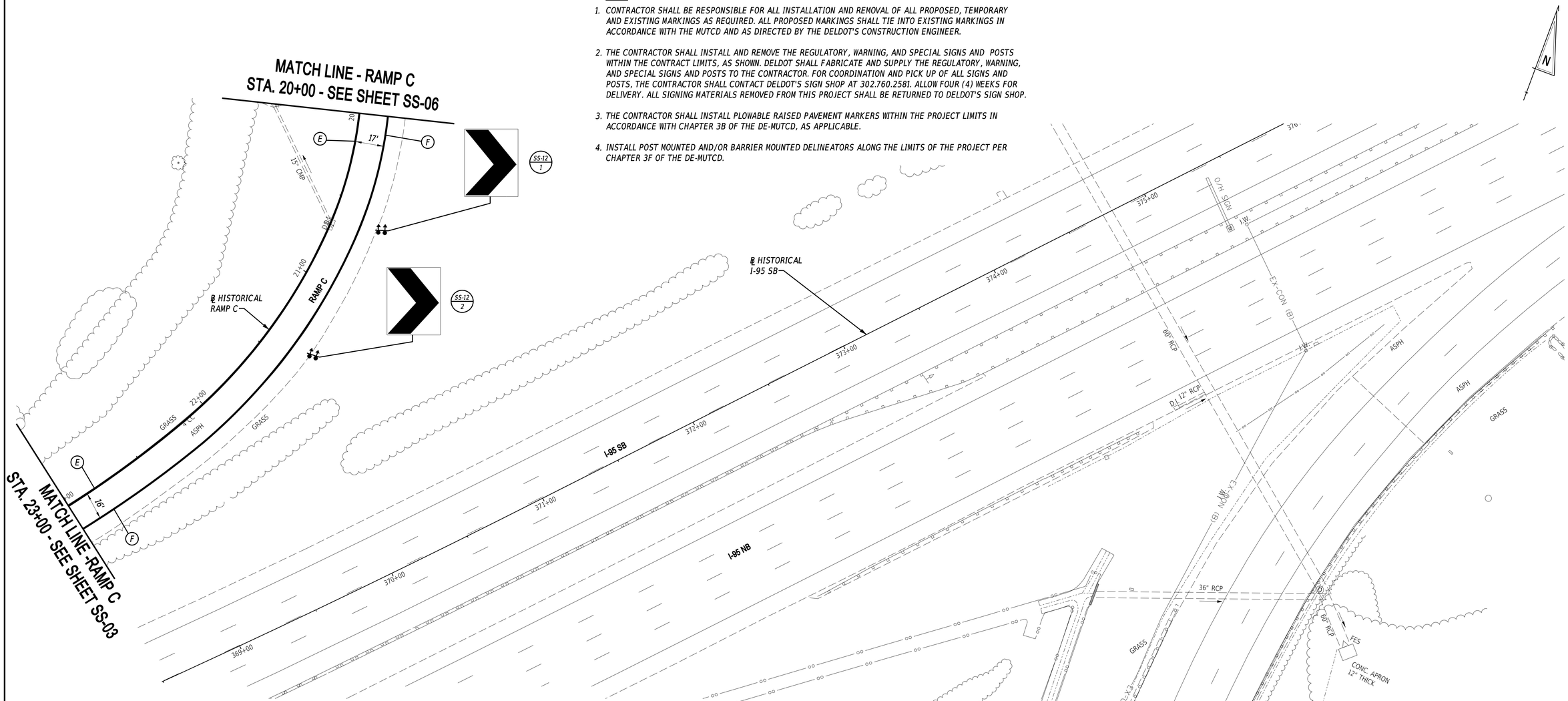

PAVEMENT MARKINGS LEGEND

SYM	ITEM	QUANTITY
A	ALKYD-THERMOPLASTIC PAVEMENT STRIPING, WHITE 16" SOLID (ITEM 817002)	--
B	ALKYD-THERMOPLASTIC PAVEMENT STRIPING, WHITE SYMBOL/LEGEND, (ITEM 817002)	--
C	ALKYD-THERMOPLASTIC PAVEMENT STRIPING, WHITE 5" DOTTED - 2' LINE & 6' GAP (ITEM 817005)	--
D	ALKYD-THERMOPLASTIC PAVEMENT STRIPING, WHITE 12" SOLID (ITEM 817006)	--
E	EPOXY RESIN PAINT PAVEMENT STRIPING, WHITE 5" SOLID (ITEM 817013)	305 LF
F	EPOXY RESIN PAINT PAVEMENT STRIPING, YELLOW 5" SOLID (ITEM 817013)	320 LF
G	EPOXY RESIN PAINT PAVEMENT STRIPING, WHITE 5" BROKEN - 10' LINE & 30' GAP (ITEM 817013)	--
H	EPOXY RESIN PAINT PAVEMENT STRIPING, WHITE 5" DOTTED - 2' LINE & 6' GAP (ITEM 817013)	--

PAVEMENT MARKINGS LEGEND (CONT.)

SYM	ITEM	QUANTITY
J	EPOXY RESIN PAINT PAVEMENT STRIPING, WHITE 10" SOLID (ITEM 817014)	--
K	EPOXY RESIN PAINT PAVEMENT STRIPING, WHITE 10" DOTTED - 2' LINE & 6' GAP (ITEM 817014)	--
L	EPOXY RESIN PAINT PAVEMENT STRIPING, WHITE 5" SOLID (ITEM 817013)	--
	EPOXY RESIN PAINT PAVEMENT STRIPING, BLACK 3" SOLID (ITEM 817018)	--
M	EPOXY RESIN PAINT PAVEMENT STRIPING, WHITE 5" BROKEN - 10' LINE & 30' GAP (ITEM 817013)	--
	EPOXY RESIN PAINT PAVEMENT STRIPING, BLACK 5" BROKEN - 10' LINE & 30' GAP (ITEM 817019)	--
N	PREFORMED TAPE PAVEMENT MARKINGS, WHITE 5" DOTTED - 3' LINE & 9' GAP (ITEM 817020)	--

NOTE:
THIS SHEET'S LIMITS ARE ENTIRELY WITHIN THE I-95/SR-273 INTERCHANGE, AND THEREFORE EXISTING DELDOT RIGHT-OF-WAY. THE EXISTING DELDOT RIGHT-OF-WAY LINES ARE BEYOND THE LIMITS OF THIS CONSTRUCTION PLAN SHEET.

ADDENDA / REVISIONS

SCALE
0 30 60 90
FEET

HSIP NCC, SR 273 AND I-95 INTERCHANGE IMPROVEMENTS

CONTRACT	BRIDGE NO.	715, 715A, 715B, 715C & 715D
T200800713	DESIGNED BY:	K. AMBROSE
COUNTY		
NEW CASTLE	CHECKED BY:	J. RASHID

SIGNING, STRIPING AND CONDUIT PLAN

SS-12
SECTION
RK&K
SHEET NO.
106

11-AUG-2020
22:02
\\balsrv01\v20\14220\14\14144_DelDOT\T70\Task 4A - Harmony FD\Cadd\Contract\Plans\ss12_Har.dgn

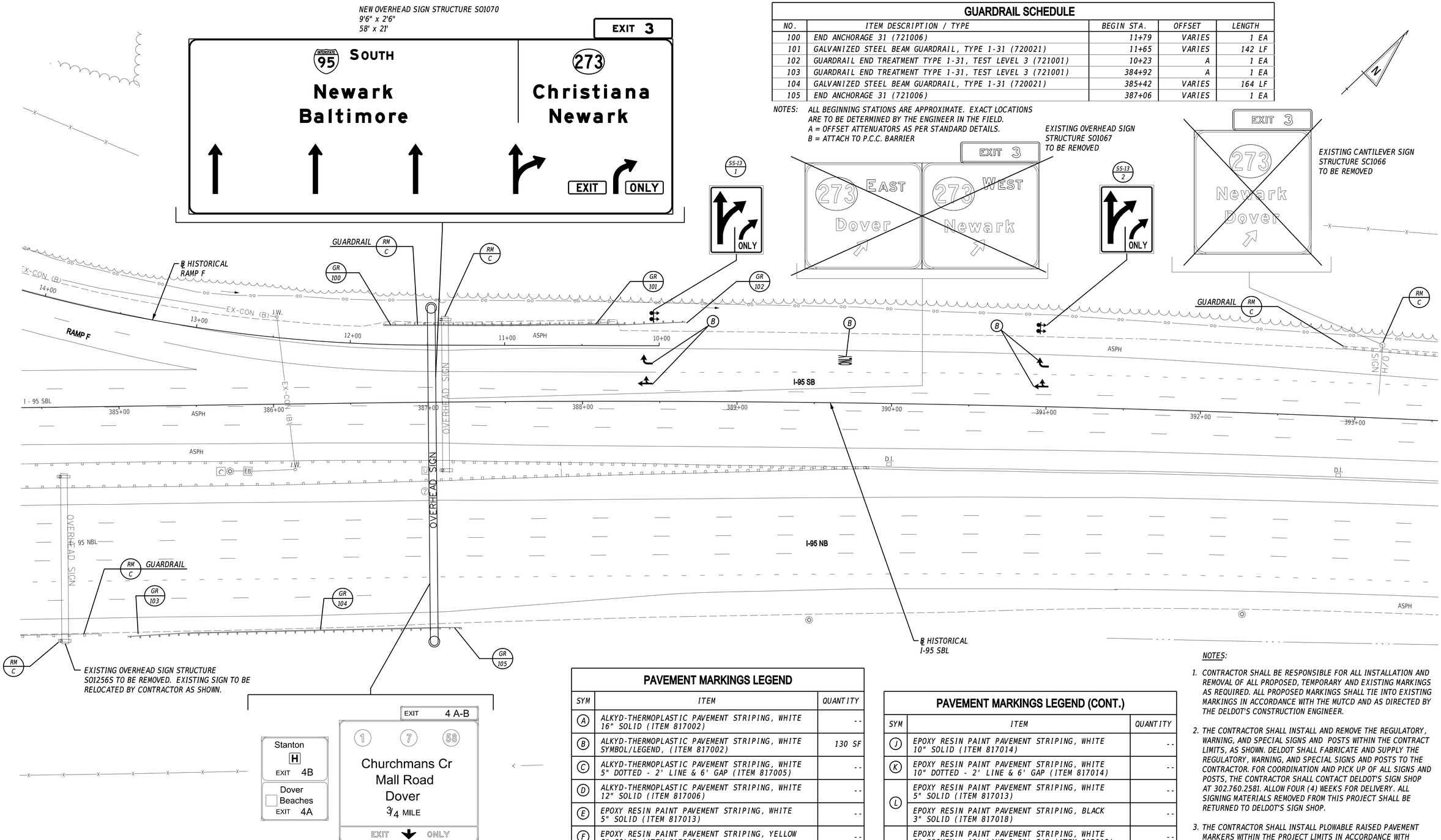

GUARDRAIL SCHEDULE

NO.	ITEM DESCRIPTION / TYPE	BEGIN STA.	OFFSET	LENGTH
100	END ANCHORAGE 31 (721006)	11+79	VARIES	1 EA
101	GALVANIZED STEEL BEAM GUARDRAIL, TYPE 1-31 (720021)	11+65	VARIES	142 LF
102	GUARDRAIL END TREATMENT TYPE 1-31, TEST LEVEL 3 (721001)	10+23	A	1 EA
103	GUARDRAIL END TREATMENT TYPE 1-31, TEST LEVEL 3 (721001)	384+92	A	1 EA
104	GALVANIZED STEEL BEAM GUARDRAIL, TYPE 1-31 (720021)	385+42	VARIES	164 LF
105	END ANCHORAGE 31 (721006)	387+06	VARIES	1 EA

NOTES: ALL BEGINNING STATIONS ARE APPROXIMATE. EXACT LOCATIONS ARE TO BE DETERMINED BY THE ENGINEER IN THE FIELD.
A = OFFSET ATTENUATORS AS PER STANDARD DETAILS.
B = ATTACH TO P.C.C. BARRIER

PAVEMENT MARKINGS LEGEND

SYM	ITEM	QUANTITY
A	ALKYD-THERMOPLASTIC PAVEMENT STRIPING, WHITE 16" SOLID (ITEM 817002)	--
B	ALKYD-THERMOPLASTIC PAVEMENT STRIPING, WHITE SYMBOL/LEGEND, (ITEM 817002)	130 SF
C	ALKYD-THERMOPLASTIC PAVEMENT STRIPING, WHITE 5" DOTTED - 2' LINE & 6' GAP (ITEM 817005)	--
D	ALKYD-THERMOPLASTIC PAVEMENT STRIPING, WHITE 12" SOLID (ITEM 817006)	--
E	EPOXY RESIN PAINT PAVEMENT STRIPING, WHITE 5" SOLID (ITEM 817013)	--
F	EPOXY RESIN PAINT PAVEMENT STRIPING, YELLOW 5" SOLID (ITEM 817013)	--
G	EPOXY RESIN PAINT PAVEMENT STRIPING, WHITE 5" BROKEN - 10' LINE & 30' GAP (ITEM 817013)	--
H	EPOXY RESIN PAINT PAVEMENT STRIPING, WHITE 5" DOTTED - 2' LINE & 6' GAP (ITEM 817013)	--

PAVEMENT MARKINGS LEGEND (CONT.)

SYM	ITEM	QUANTITY
J	EPOXY RESIN PAINT PAVEMENT STRIPING, WHITE 10" SOLID (ITEM 817014)	--
K	EPOXY RESIN PAINT PAVEMENT STRIPING, WHITE 10" DOTTED - 2' LINE & 6' GAP (ITEM 817014)	--
L	EPOXY RESIN PAINT PAVEMENT STRIPING, WHITE 5" SOLID (ITEM 817013)	--
	EPOXY RESIN PAINT PAVEMENT STRIPING, BLACK 3" SOLID (ITEM 817018)	--
M	EPOXY RESIN PAINT PAVEMENT STRIPING, WHITE 5" BROKEN - 10' LINE & 30' GAP (ITEM 817013)	--
	EPOXY RESIN PAINT PAVEMENT STRIPING, BLACK 5" BROKEN - 10' LINE & 30' GAP (ITEM 817019)	--
N	PREFORMED TAPE PAVEMENT MARKINGS, WHITE 5" DOTTED - 3' LINE & 9' GAP (ITEM 817020)	--

NOTES:

1. CONTRACTOR SHALL BE RESPONSIBLE FOR ALL INSTALLATION AND REMOVAL OF ALL PROPOSED, TEMPORARY AND EXISTING MARKINGS AS REQUIRED. ALL PROPOSED MARKINGS SHALL TIE INTO EXISTING MARKINGS IN ACCORDANCE WITH THE MUTCD AND AS DIRECTED BY THE DELDOT'S CONSTRUCTION ENGINEER.
2. THE CONTRACTOR SHALL INSTALL AND REMOVE THE REGULATORY, WARNING, AND SPECIAL SIGNS AND POSTS WITHIN THE CONTRACT LIMITS, AS SHOWN. DELDOT SHALL FABRICATE AND SUPPLY THE REGULATORY, WARNING, AND SPECIAL SIGNS AND POSTS TO THE CONTRACTOR. FOR COORDINATION AND PICK UP OF ALL SIGNS AND POSTS, THE CONTRACTOR SHALL CONTACT DELDOT'S SIGN SHOP AT 302.760.2581. ALLOW FOUR (4) WEEKS FOR DELIVERY. ALL SIGNING MATERIALS REMOVED FROM THIS PROJECT SHALL BE RETURNED TO DELDOT'S SIGN SHOP.
3. THE CONTRACTOR SHALL INSTALL PLOWABLE RAISED PAVEMENT MARKERS WITHIN THE PROJECT LIMITS IN ACCORDANCE WITH CHAPTER 3B OF THE DE-MUTCD, AS APPLICABLE.
4. INSTALL POST MOUNTED AND/OR BARRIER MOUNTED DELINEATORS ALONG THE LIMITS OF THE PROJECT PER CHAPTER 3F OF THE DE-MUTCD.

ADDENDA / REVISIONS

SCALE 0 30 60 90 FEET

HSIP NCC, SR 273 AND I-95 INTERCHANGE IMPROVEMENTS

CONTRACT	BRIDGE NO.	715, 715A, 715B, 715C & 715D
T200800713	DESIGNED BY:	K. AMBROSE
COUNTY		
NEW CASTLE	CHECKED BY:	J. RASHID

SIGNING, STRIPING AND CONDUIT PLAN

SS-13
SECTION
RK&K
SHEET NO.
107

11-AUG-2020
22:04
\\balts01\v2014\20141144_DelDOT\70\Task 4A - Harmony FD\Cadd\Contract\Plans\ss13_Har.dgn

NOTES:

1. CONTRACTOR SHALL BE RESPONSIBLE FOR ALL INSTALLATION AND REMOVAL OF ALL PROPOSED, TEMPORARY AND EXISTING MARKINGS AS REQUIRED. ALL PROPOSED MARKINGS SHALL TIE INTO EXISTING MARKINGS IN ACCORDANCE WITH THE MUTCD AND AS DIRECTED BY THE DELDOT'S CONSTRUCTION ENGINEER.
2. THE CONTRACTOR SHALL INSTALL AND REMOVE THE REGULATORY, WARNING, AND SPECIAL SIGNS AND POSTS WITHIN THE CONTRACT LIMITS, AS SHOWN. DELDOT SHALL FABRICATE AND SUPPLY THE REGULATORY, WARNING, AND SPECIAL SIGNS AND POSTS TO THE CONTRACTOR. FOR COORDINATION AND PICK UP OF ALL SIGNS AND POSTS, THE CONTRACTOR SHALL CONTACT DELDOT'S SIGN SHOP AT 302.760.2581. ALLOW FOUR (4) WEEKS FOR DELIVERY. ALL SIGNING MATERIALS REMOVED FROM THIS PROJECT SHALL BE RETURNED TO DELDOT'S SIGN SHOP.
3. THE CONTRACTOR SHALL INSTALL PLOWABLE RAISED PAVEMENT MARKERS WITHIN THE PROJECT LIMITS IN ACCORDANCE WITH CHAPTER 3B OF THE DE-MUTCD, AS APPLICABLE.
4. INSTALL POST MOUNTED AND/OR BARRIER MOUNTED DELINEATORS ALONG THE LIMITS OF THE PROJECT PER CHAPTER 3F OF THE DE-MUTCD.

EXISTING CANTILEVER SIGN STRUCTURE SC1065 TO BE REMOVED

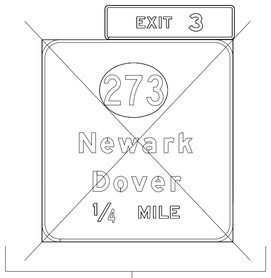

NEW OVERHEAD SIGN STRUCTURE SO1066
9'6" x 2'6"
58' x 23'

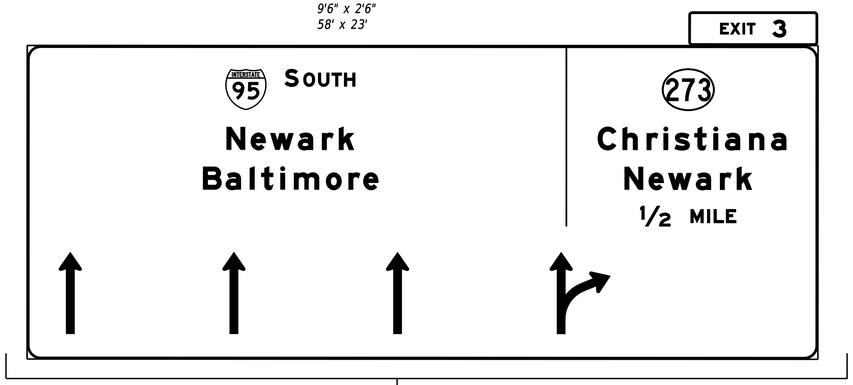

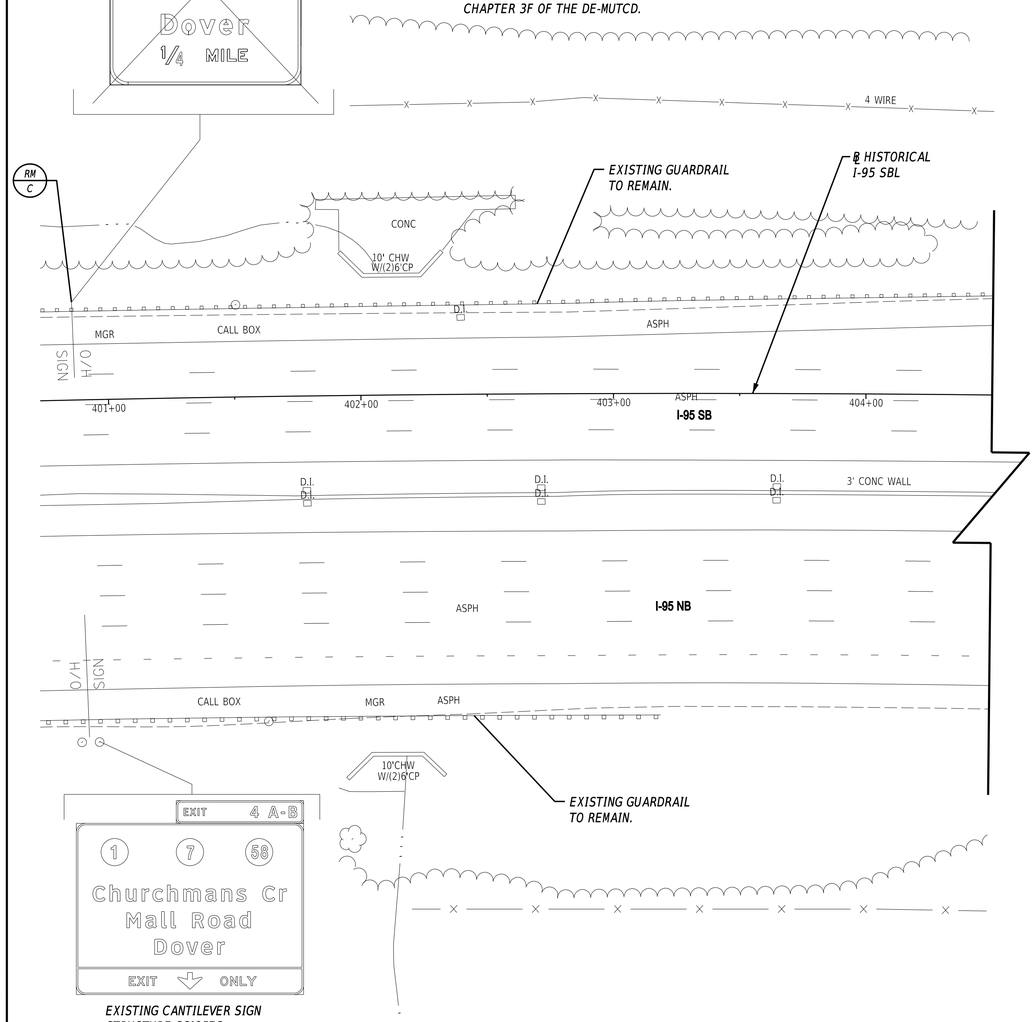

EXISTING CANTILEVER SIGN STRUCTURE SC1257G TO REMAIN

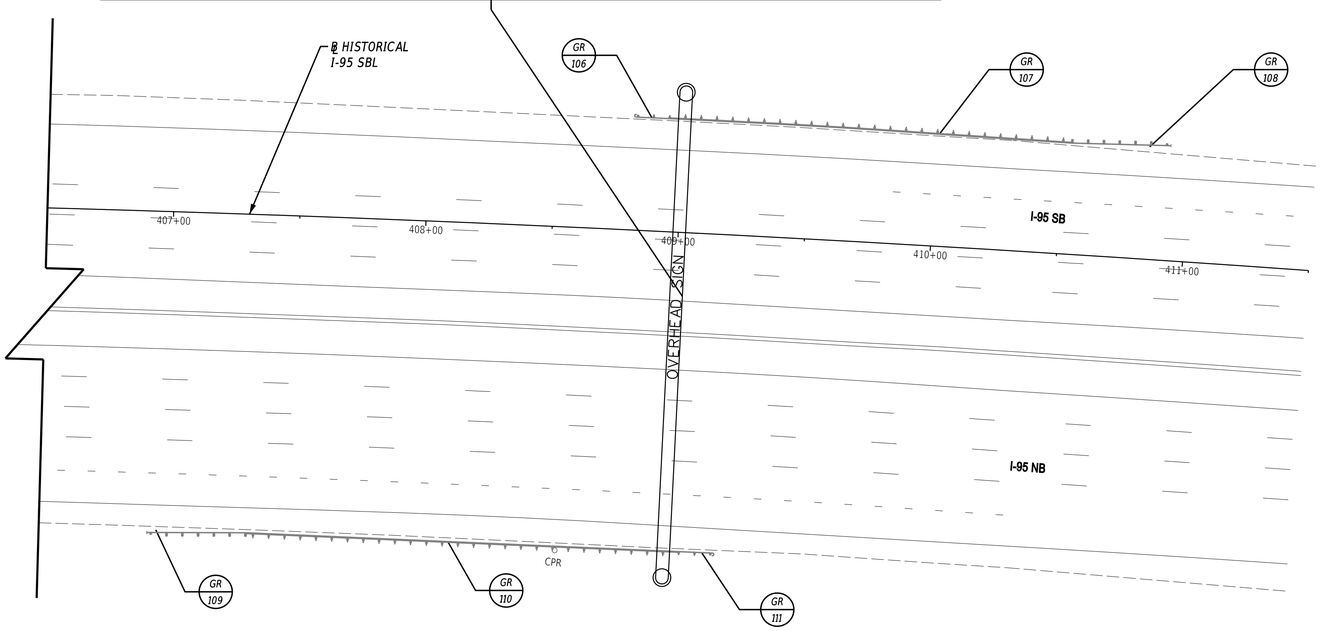

GUARDRAIL SCHEDULE

NO.	ITEM DESCRIPTION / TYPE	BEGIN STA.	OFFSET	LENGTH
106	END ANCHORAGE 31 (721006)	408+81	VARIES	1 EA
107	GALVANIZED STEEL BEAM GUARDRAIL, TYPE 1-31 (720021)	408+95	VARIES	158 LF
108	GUARDRAIL END TREATMENT TYPE 1-31, TEST LEVEL 3 (721001)	410+53	A	1 EA
109	GUARDRAIL END TREATMENT TYPE 1-31, TEST LEVEL 3 (721001)	406+81	A	1 EA
110	GALVANIZED STEEL BEAM GUARDRAIL, TYPE 1-31 (720021)	407+31	VARIES	175 LF
111	END ANCHORAGE 31 (721006)	409+06	VARIES	1 EA

PAVEMENT MARKINGS LEGEND

SYM	ITEM	QUANTITY
A	ALKYD-THERMOPLASTIC PAVEMENT STRIPING, WHITE 16" SOLID (ITEM 817002)	--
B	ALKYD-THERMOPLASTIC PAVEMENT STRIPING, WHITE SYMBOL/LEGEND, (ITEM 817002)	--
C	ALKYD-THERMOPLASTIC PAVEMENT STRIPING, WHITE 5" DOTTED - 2' LINE & 6' GAP (ITEM 817005)	--
D	ALKYD-THERMOPLASTIC PAVEMENT STRIPING, WHITE 12" SOLID (ITEM 817006)	--
E	EPOXY RESIN PAINT PAVEMENT STRIPING, WHITE 5" SOLID (ITEM 817013)	--
F	EPOXY RESIN PAINT PAVEMENT STRIPING, YELLOW 5" SOLID (ITEM 817013)	--
G	EPOXY RESIN PAINT PAVEMENT STRIPING, WHITE 5" BROKEN - 10' LINE & 30' GAP (ITEM 817013)	--
H	EPOXY RESIN PAINT PAVEMENT STRIPING, WHITE 5" DOTTED - 2' LINE & 6' GAP (ITEM 817013)	--

PAVEMENT MARKINGS LEGEND (CONT.)

SYM	ITEM	QUANTITY
J	EPOXY RESIN PAINT PAVEMENT STRIPING, WHITE 10" SOLID (ITEM 817014)	--
K	EPOXY RESIN PAINT PAVEMENT STRIPING, WHITE 10" DOTTED - 2' LINE & 6' GAP (ITEM 817014)	--
L	EPOXY RESIN PAINT PAVEMENT STRIPING, WHITE 5" SOLID (ITEM 817013)	--
	EPOXY RESIN PAINT PAVEMENT STRIPING, BLACK 3" SOLID (ITEM 817018)	--
M	EPOXY RESIN PAINT PAVEMENT STRIPING, WHITE 5" BROKEN - 10' LINE & 30' GAP (ITEM 817013)	--
	EPOXY RESIN PAINT PAVEMENT STRIPING, BLACK 5" BROKEN - 10' LINE & 30' GAP (ITEM 817019)	--
N	PREFORMED TAPE PAVEMENT MARKINGS, WHITE 5" DOTTED - 3' LINE & 9' GAP (ITEM 817020)	--

ADDENDA / REVISIONS

SCALE 0 30 60 90 FEET

HSIP NCC, SR 273 AND I-95 INTERCHANGE IMPROVEMENTS

CONTRACT	BRIDGE NO.	715, 715A, 715B, 715C & 715D
T200800713	DESIGNED BY:	K. AMBROSE
COUNTY		
NEW CASTLE	CHECKED BY:	J. RASHID

SIGNING, STRIPING AND CONDUIT PLAN

SS-14
SECTION
RK&K
SHEET NO.
108

11-AUG-2020
22:06
\\balserv01\v2014\20141414\4_DelDOT\170\Task 4A - Harmony FD\Cadd\Contract\Plans\ss14_1far.dgn

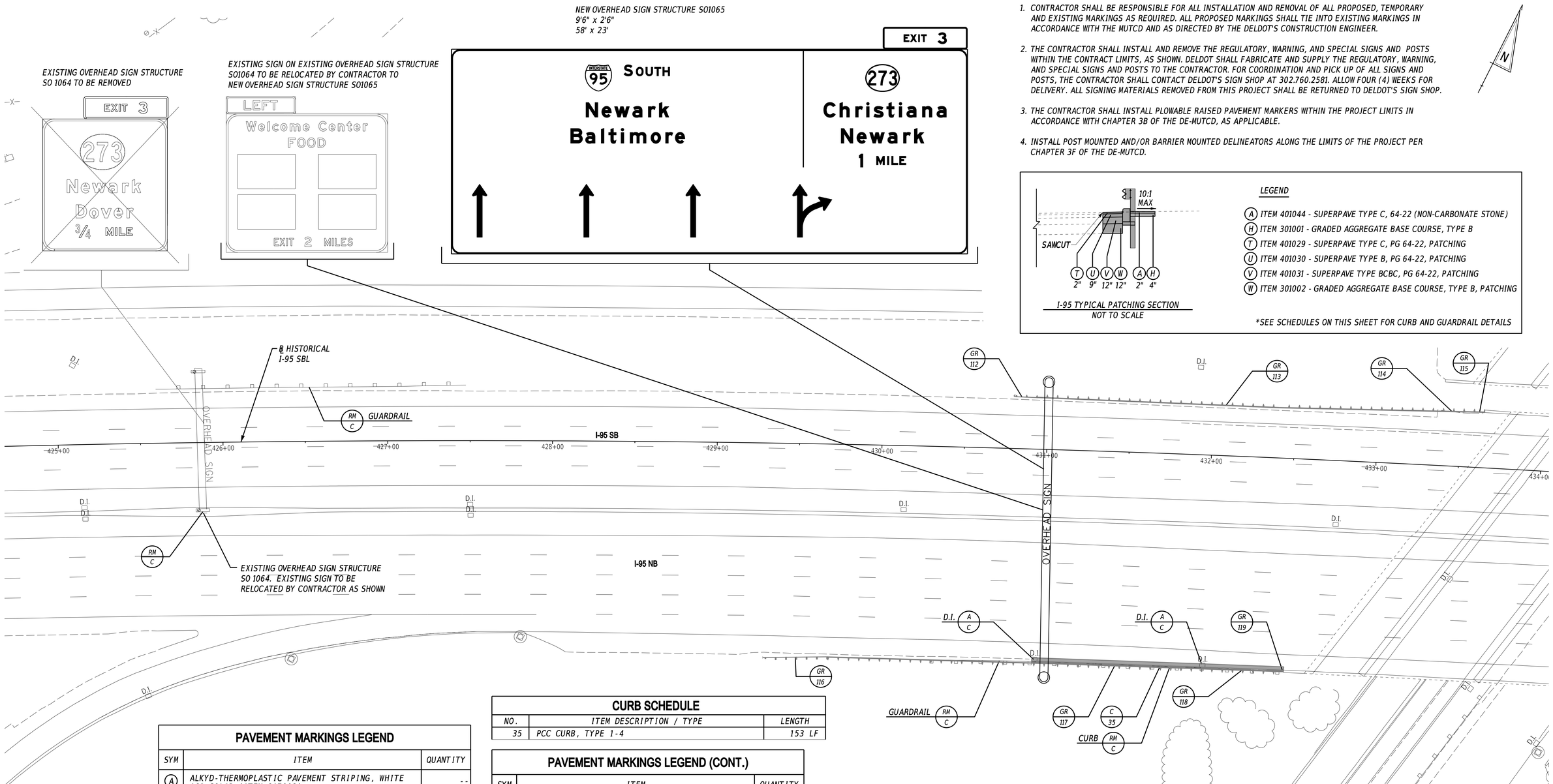

NOTES:

1. CONTRACTOR SHALL BE RESPONSIBLE FOR ALL INSTALLATION AND REMOVAL OF ALL PROPOSED, TEMPORARY AND EXISTING MARKINGS AS REQUIRED. ALL PROPOSED MARKINGS SHALL TIE INTO EXISTING MARKINGS IN ACCORDANCE WITH THE MUTCD AND AS DIRECTED BY THE DELDOT'S CONSTRUCTION ENGINEER.
2. THE CONTRACTOR SHALL INSTALL AND REMOVE THE REGULATORY, WARNING, AND SPECIAL SIGNS AND POSTS WITHIN THE CONTRACT LIMITS, AS SHOWN. DELDOT SHALL FABRICATE AND SUPPLY THE REGULATORY, WARNING, AND SPECIAL SIGNS AND POSTS TO THE CONTRACTOR. FOR COORDINATION AND PICK UP OF ALL SIGNS AND POSTS, THE CONTRACTOR SHALL CONTACT DELDOT'S SIGN SHOP AT 302.760.2581. ALLOW FOUR (4) WEEKS FOR DELIVERY. ALL SIGNING MATERIALS REMOVED FROM THIS PROJECT SHALL BE RETURNED TO DELDOT'S SIGN SHOP.
3. THE CONTRACTOR SHALL INSTALL PLOWABLE RAISED PAVEMENT MARKERS WITHIN THE PROJECT LIMITS IN ACCORDANCE WITH CHAPTER 3B OF THE DE-MUTCD, AS APPLICABLE.
4. INSTALL POST MOUNTED AND/OR BARRIER MOUNTED DELINEATORS ALONG THE LIMITS OF THE PROJECT PER CHAPTER 3F OF THE DE-MUTCD.

1-95 TYPICAL PATCHING SECTION
NOT TO SCALE

LEGEND

- (A) ITEM 401044 - SUPERPAVE TYPE C, 64-22 (NON-CARBONATE STONE)
- (H) ITEM 301001 - GRADED AGGREGATE BASE COURSE, TYPE B
- (T) ITEM 401029 - SUPERPAVE TYPE C, PG 64-22, PATCHING
- (U) ITEM 401030 - SUPERPAVE TYPE B, PG 64-22, PATCHING
- (V) ITEM 401031 - SUPERPAVE TYPE BCBC, PG 64-22, PATCHING
- (W) ITEM 301002 - GRADED AGGREGATE BASE COURSE, TYPE B, PATCHING

*SEE SCHEDULES ON THIS SHEET FOR CURB AND GUARDRAIL DETAILS

PAVEMENT MARKINGS LEGEND

SYM	ITEM	QUANTITY
A	ALKYD-THERMOPLASTIC PAVEMENT STRIPING, WHITE 16" SOLID (ITEM 817002)	--
B	ALKYD-THERMOPLASTIC PAVEMENT STRIPING, WHITE SYMBOL/LEGEND, (ITEM 817002)	--
C	ALKYD-THERMOPLASTIC PAVEMENT STRIPING, WHITE 5" DOTTED - 2' LINE & 6' GAP (ITEM 817005)	--
D	ALKYD-THERMOPLASTIC PAVEMENT STRIPING, WHITE 12" SOLID (ITEM 817006)	--
E	EPOXY RESIN PAINT PAVEMENT STRIPING, WHITE 5" SOLID (ITEM 817013)	--
F	EPOXY RESIN PAINT PAVEMENT STRIPING, YELLOW 5" SOLID (ITEM 817013)	--
G	EPOXY RESIN PAINT PAVEMENT STRIPING, WHITE 5" BROKEN - 10' LINE & 30' GAP (ITEM 817013)	--
H	EPOXY RESIN PAINT PAVEMENT STRIPING, WHITE 5" DOTTED - 2' LINE & 6' GAP (ITEM 817013)	--

CURB SCHEDULE

NO.	ITEM DESCRIPTION / TYPE	LENGTH
35	PCC CURB, TYPE 1-4	153 LF

PAVEMENT MARKINGS LEGEND (CONT.)

SYM	ITEM	QUANTITY
J	EPOXY RESIN PAINT PAVEMENT STRIPING, WHITE 10" SOLID (ITEM 817014)	--
K	EPOXY RESIN PAINT PAVEMENT STRIPING, WHITE 10" DOTTED - 2' LINE & 6' GAP (ITEM 817014)	--
L	EPOXY RESIN PAINT PAVEMENT STRIPING, WHITE 5" SOLID (ITEM 817013)	--
	EPOXY RESIN PAINT PAVEMENT STRIPING, BLACK 3" SOLID (ITEM 817018)	--
M	EPOXY RESIN PAINT PAVEMENT STRIPING, WHITE 5" BROKEN - 10' LINE & 30' GAP (ITEM 817013)	--
	EPOXY RESIN PAINT PAVEMENT STRIPING, BLACK 5" BROKEN - 10' LINE & 30' GAP (ITEM 817019)	--
N	PREFORMED TAPE PAVEMENT MARKINGS, WHITE 5" DOTTED - 3' LINE & 9' GAP (ITEM 817020)	--

GUARDRAIL SCHEDULE

NO.	ITEM DESCRIPTION / TYPE	BEGIN STA.	OFFSET	LENGTH
112	END ANCHORAGE 31 (721006)	430+79	VARIES	1 EA
113	GALVANIZED STEEL BEAM GUARDRAIL, TYPE 1-31 (720021)	430+93	VARIES	232 LF
114	TYPE 1-31 TO TYPE 1-27 TRANSITION SECTION (720021)	433+25	VARIES	28 LF
115	GUARDRAIL TO BARRIER CONNECTION, EXIT TYPE 1-27 (721013)	433+53	B	1 EA
116	GUARDRAIL END TREATMENT TYPE 1-31, TEST LEVEL 3 (721001)	429+17	A	1 EA
117	GALVANIZED STEEL BEAM GUARDRAIL, TYPE 1-31 (720021)	429+69	VARIES	229 LF
118	TYPE 1-31 TO TYPE 1-27 TRANSITION SECTION (720021)	432+01	VARIES	28 LF
119	GUARDRAIL TO BARRIER CONNECTION, APPROACH TYPE 1-27 (721014)	432+29	B	1 EA

NOTES: ALL BEGINNING STATIONS ARE APPROXIMATE. EXACT LOCATIONS ARE TO BE DETERMINED BY THE ENGINEER IN THE FIELD.
A = OFFSET ATTENUATORS AS PER STANDARD DETAILS.
B = ATTACH TO P.C.C. BARRIER

ADDENDA / REVISIONS

SCALE
0 30 60 90
FEET

HSIP NCC, SR 273 AND I-95 INTERCHANGE IMPROVEMENTS

CONTRACT T200800713	BRIDGE NO.	715, 715A, 715B, 715C & 715D
COUNTY NEW CASTLE	DESIGNED BY:	K. AMBROSE
	CHECKED BY:	J. RASHID

SIGNING, STRIPING AND CONDUIT PLAN

SS-15
SECTION
RK&K
SHEET NO.
109

11-AUG-2020
22:08
\\balsvr01\v2014\2014\14144_DelDOT\70\Task 4A - Harmony FD\Cadd\Contract\Plans\ss15_1tar.dgn

PANEL DESIGNATION	SHEET NUMBER	QUANTITY	LEGEND	SIZE AREA	SIZE HEIGHT	SIZE WIDTH	COLOR LEGEND	COLOR BCKGRND	BORDER WIDTH	BORDER RADIUS	ARROW	SHIELD	REMARKS
S01201	SS-02	1	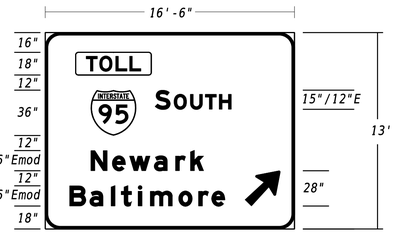	214.5 □'	13'-0"	16'-6"	W	G	2"	12"	TYPE A @45° 28"	(1) M1-1 36"	- EXTRUDED ALUMINUM - M4-15 36"x18"PLAQUE
S01203	SS-06	1	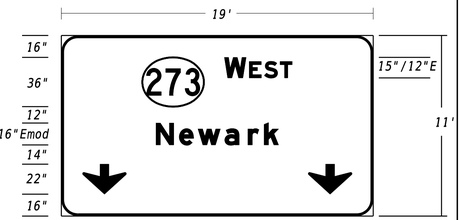	209 □'	11'-0"	19'-0"	W	G	2"	12"	(2) DOWN 22"	(1) M1-5 45" x36"	- EXTRUDED ALUMINUM
GM-1	SS-04	1	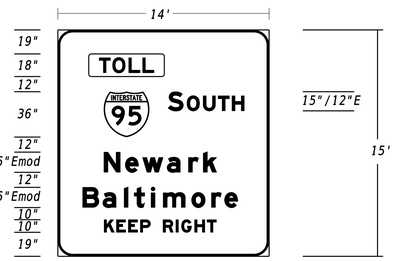	210 □'	15'-0"	14'-0"	W	G	2"	12"	--	(1) M1-1 36"	- EXTRUDED ALUMINUM - M4-15 36"x18"PLAQUE
GM-3	SS-07	1	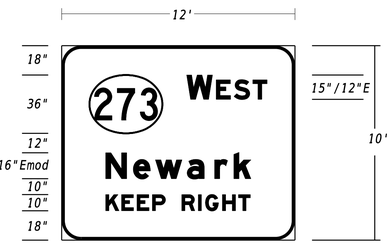	120 □'	10'-0"	12'-0"	W	G	2"	12"	--	(1) M1-5 45" x36"	- EXTRUDED ALUMINUM
GM-2	SS-06	1	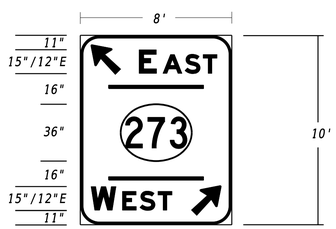	80 □'	10'-0"	8'-0"	W	G	2"	12"	(2) TYPE A @45° 23"	(1) M1-5 45" x36"	- EXTRUDED ALUMINUM
GM-4	SS-07	1		140 □'	10'-0"	14'-0"	W	G	2"	12"	--	(1) M1-5 45" x36"	- EXTRUDED ALUMINUM
S01203	SS-06	1	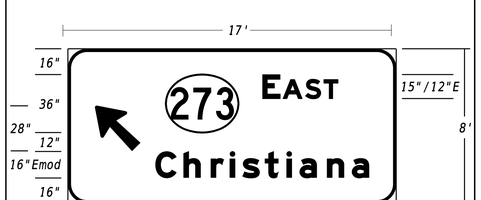	136 □'	8'-0"	17'-0"	W	G	2"	12"	(1) TYPE A @45° 28"	(1) M1-5 45" x36"	- EXTRUDED ALUMINUM

NOTES:
1. COLORS: B=BLACK, BL=BLUE, BR=BROWN, G=GREEN, W=WHITE/SILVER, Y=YELLOW.
2. THE CONTRACTOR WILL FURNISH AND INSTALL ALL SIGNS SHOWN ON THIS SHEET.

ADDENDA / REVISIONS

NOT TO SCALE

HSIP NCC, SR 273 AND I-95 INTERCHANGE IMPROVEMENTS

CONTRACT	BRIDGE NO.	715, 715A, 715B, 715C & 715D
T200800713	DESIGNED BY:	K. AMBROSE
COUNTY		
NEW CASTLE	CHECKED BY:	J. RASHID

GUIDE SIGN DETAILS

SS-16
SECTION
RK&K
SHEET NO.
110

11-AUG-2020
22:09
\\balsn01\v20\2014\20141144_DelDOT\70\Task 4A - Harmony FD\Cadd\Contract\Plans\ss16_Fin.dgn

PANEL DESIGNATION	SHEET NUMBER	QUANTITY	LEGEND	SIZE AREA	SIZE HEIGHT	SIZE WIDTH	COLOR LEGEND	COLOR BCKGRND	BORDER WIDTH	BORDER RADIUS	ARROW	SHIELD	REMARKS
S01070	SS-13	1	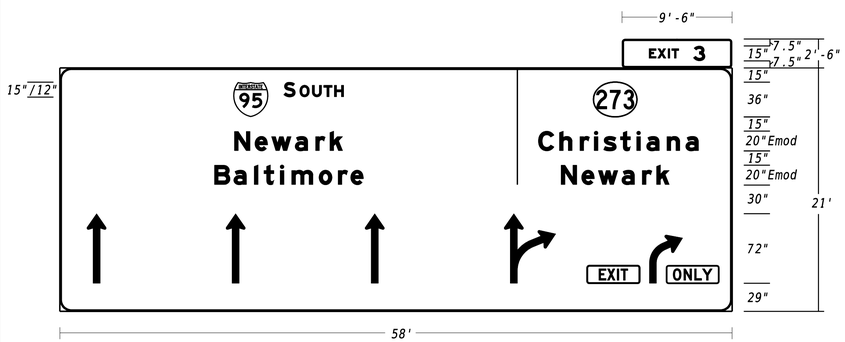	1241.75	2'-6" 21'-0"	9'-6" 58'-0"	W W	G G	2" 2"	3.25" 12"	- TYPE A EXTENDED 72"	- (1) M1-1 36" (1) M1-5 36"	- EXTRUDED ALUMINUM - E11-1a 66"x18"PLAQUE - E11-1b 66"x18"PLAQUE
S01066	SS-14	1	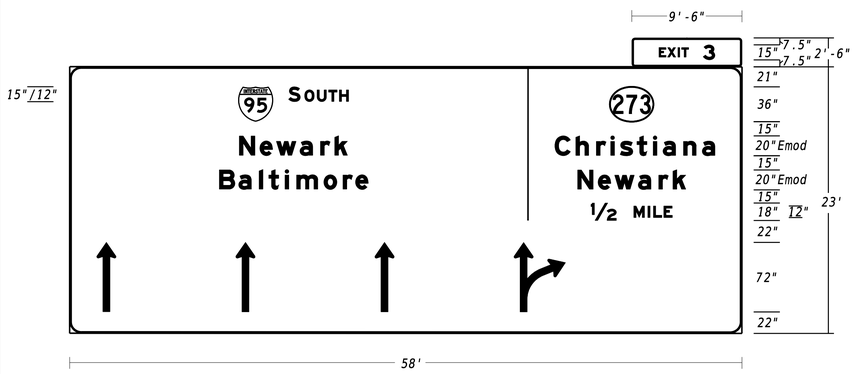	1357.75	2'-6" 23'-0"	9'-6" 58'-0"	W W	G G	2" 2"	3.25" 12"	- TYPE A EXTENDED 72"	- (1) M1-1 36" (1) M1-5 36"	- EXTRUDED ALUMINUM
S01065	SS-15	1	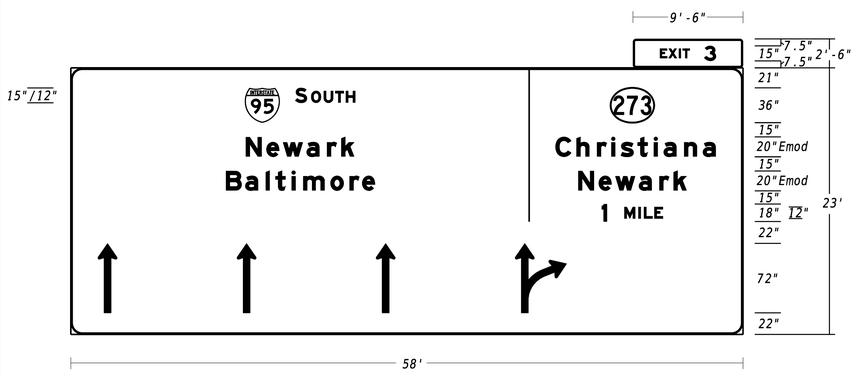	1357.75	2'-6" 23'-0"	9'-6" 58'-0"	W W	G G	2" 2"	3.25" 12"	- TYPE A EXTENDED 72"	- (1) M1-1 36" (1) M1-5 36"	- EXTRUDED ALUMINUM

NOTES:
1. COLORS: B=BLACK, BL=BLUE, BR=BROWN, G=GREEN, W=WHITE/SILVER, Y=YELLOW.
2. THE CONTRACTOR WILL FURNISH AND INSTALL ALL SIGNS SHOWN ON THIS SHEET.

GROUND MOUNTED SIGN DETAIL

SIGN CLEARANCE

SEE SUPPORT CHARTS (THIS SHEET) FOR ALTERNATIVE SUPPORT SPACING FOR BREAKAWAY SUPPORTS

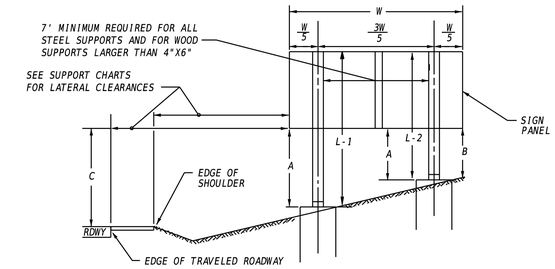

VERTICAL CLEARANCE OF SIGNS

A. 7'6" MINIMUM FOR BREAKAWAY SUPPORTS OR 5'-6" FOR NON-BREAKAWAY SUPPORTS.
B. 2.0' MINIMUM
C. 7'6" MINIMUM & PREFERABLE. THIS DIMENSION IS TO BE INCREASED ONLY WHEN REQUIRED TO MEET A = 7'-6" FOR BREAKAWAY OR A (MIN.) = 5'-6" FOR NON-BREAKAWAY AND B (MIN) 2'-0"

ALL DIMENSIONS ARE TO BOTTOM OF SIGN

*TOTAL WEIGHT BELOW THE HINGES SHOULD BE LESS THAN 600 POUNDS

LATERAL CLEARANCE

SEE SUPPORT CHARTS

** OBJECT CODES
W = FACE OF W-BEAM TRAFFIC BARRIER
FOC = FACE OF CURB
ES = EDGE OF SHOULDER
ETR = EDGE OF TRAVELED ROADWAY
CM = CENTERED IN MEDIAN
CG = CENTERED IN GORE (6' MINIMUM FROM EDGE OF PAVEMENT)
EF = EDGE OF FENCE

BREAKAWAY AND NON-BREAKAWAY TYPE A SIGN POST FOUNDATIONS

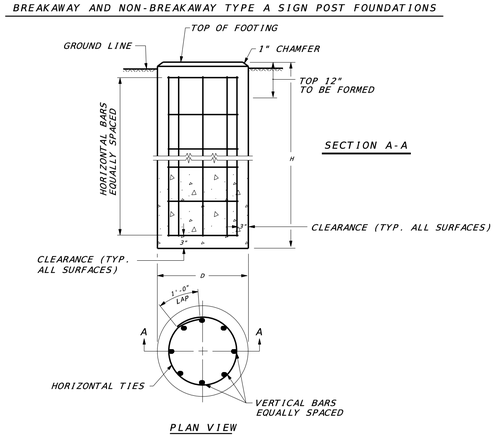

FOUNDATION DATA TABLE

POST SIZE	D	H	VERTICAL REINFORCEMENT	HORIZONTAL REINFORCEMENT	CONCRETE REQ'D C.Y.
W6 x 12 OR TS 5"x 5"x ¼"	30"	6'-0"	EIGHT (8)- NO.7	SEVEN (7)- NO.4	1.1
W6 x 15 OR W6 x 16 OR TS 6"x 6"x ¼"	30"	6'-6"	EIGHT (8)- NO.7	SEVEN (7)- NO.4	1.2
W8 x 18	30"	7'-6"	EIGHT (8)- NO.9	EIGHT (8)- NO.4	1.4
W12 x 26	36"	10'-0"	EIGHT (8)- NO.10	ELEVEN (11)- NO.4	2.7

GUIDE SIGN STEEL SUPPORT CHART

SIGN NO.	SHEET NO.	POST SIZE	*BW OR NBW	SUPPORT L - 1	SUPPORT L - 2	SUPPORT L - 3	LATERAL CLEARANCE OFFSET	LATERAL CLEARANCE OBJECT**	SUPPORT SPACING FROM LEFT EDGE OF SIGN
GM-1	SS-04	W12x26	BW	23'-0"	24'-0"	-	6'	W	2.8'-8.4'-2.8'
GM-2	SS-06	W6x12	BW	18'-0"	18'-6"	-	-	CM	.5'-7'-.5'
GM-3	SS-07	W6x15	BW	18'-0"	18'-6"	-	6'	W	2.4'-7.2'-2.4'
GM-4	SS-07	W8x18	BW	18'-6"	19'-6"	-	6'	W	2.8'-8.4'-2.8'

*BW = BREAKAWAY NBW = NON-BREAKAWAY

ADDENDA / REVISIONS

NOT TO SCALE

HSIP NCC, SR 273 AND I-95 INTERCHANGE IMPROVEMENTS

CONTRACT	BRIDGE NO.	715, 715A, 715B, 715C & 715D
T200800713	DESIGNED BY:	K. AMBROSE
COUNTY		
NEW CASTLE	CHECKED BY:	J. RASHID

GUIDE SIGN AND GROUND MOUNT DETAILS

SS-17
SECTION
RK&K
SHEET NO.
111

11-AUG-2020
22:10
\\dalsrv01\v20\14120\14114\14_Dell\DOT1707\Task 4A - Harmony FD\Cadd\Contract\Plans\ss17_Har.dgn

PERMANENT SIGN SCHEDULE

SHEET NO.	PLAN IDENTIFIER	SIGN DESIGNATION	QTY.	DESCRIPTION	SIGN WIDTH (IN)	SIGN HEIGHT (IN)	SIGN AREA (SF)	ITEM 819018 INSTALLATION OR REMOVAL OF TRAFFIC SIGN(S) ON SINGLE POST (EACH)			ITEM 819019 INSTALLATION OR REMOVAL OF TRAFFIC SIGN(S) ON MULTIPLE SIGN POSTS (SF)			POST INSTALLATION TYPE	Code X11 12' Post (W/ Basepost) (EACH)	ITEM 819016 4" HOLE, 0-6" (EACH)	ITEM 819017 4" HOLE, >6" (EACH)	REMARKS
								SIGN DISPOSITION	REMOVE	INSTALL	SIGN DISPOSITION	REMOVE	INSTALL					
SS-01	1A	R6-3(30)	1	DIVIDED HIGHWAY CROSSING (4 - Legged Intersection) - 30x24	30	24		REMAIN										
SS-01	1B	R7-202aP-DE1	1	END (plaque - red)	12	6		REMAIN										
SS-01	1C	R7-4-DE(12)	1	NO STOPPING, STANDING, OR PARKING - 12x18	12	18		REMAIN										
SS-01	2A	R4-7(24)	1	KEEP RIGHT (Symbol) - 24x30	24	30		REMAIN										
SS-01	2B	OM1-3	1	TYPE 1 OBJECT MARKER	18	18		REMAIN										
SS-01	3	SP	1	NO TRUCKS OVER 2 AXLES EXCEPT LOCAL SERVICES	36	48	12.0				NEW		12.0	SOIL	2			
SS-01	4	R12-3-DE	1	NO TRUCKS OVER 2 AXLES EXCEPT LOCAL SERVICES	24	36		REMOVE	1									
SS-01	5	R3-7_R(36)	1	RIGHT LANE MUST TURN RIGHT - 36"x36"	36	36		REMOVE	1									
SS-01	6	R3-7_R(36)	1	RIGHT LANE MUST TURN RIGHT - 36"x36"	36	36		REMAIN										
SS-01	7A	SP	1	NO TRUCKS OVER 2 AXLES EXCEPT LOCAL SERVICES	36	48	12.0				NEW		12.0	SOIL	2			
SS-01	7B	SP	1	AHEAD (PLAQUE)	36	12	3.0				ADD TO ASSEMBLY		3.0					
SS-01	7C	SP	1	ON HARMONY ROAD (PLAQUE)	36	12	3.0				ADD TO ASSEMBLY		3.0					"ON HARMONY ROAD"
SS-01	8A	R12-3-DE	1	NO TRUCKS OVER 2 AXLES EXCEPT LOCAL SERVICES	24	36		REMOVE	1									
SS-01	8B	SP	1	ON HARMONY ROAD	24	12		REMOVE	1									
SS-01	9	R3-7_R(36)	1	RIGHT LANE MUST TURN RIGHT - 36"x36"	36	36	9.0				NEW		9.0	SOIL	2			
SS-01	10	R3-7_R(36)	1	RIGHT LANE MUST TURN RIGHT - 36"x36"	36	36		REMOVE	1									
SS-01	11	R3-20-DE	1	TURN LANE	18	18		REMAIN										
SS-01	12A	SP	1	SP	18	24		REMOVE	1									
SS-01	12B	R3-7_R(36)	1	RIGHT LANE MUST TURN RIGHT - 36"x36"	36	36		REMOVE	1									
SS-01	13	R1-2(36)	1	YIELD	36	36		REMOVE	1									
SS-01	14	R1-2(36)	1	YIELD	36	36		REMOVE	1									
SS-01	15A	R4-7(24)	1	KEEP RIGHT (Symbol) - 24x30	24	30		REMAIN										
SS-01	15B	OM1-3	1	TYPE 1 OBJECT MARKER	18	18		REMAIN										
SS-01	16A	D3-1(12)	2	STREET NAME (1 Line)	36	12		REMAIN										"GERALD DR"
SS-01	16B	D3-1(12)	2	STREET NAME (1 Line)	36	12		REMAIN										"CHRISTIANA RD"
SS-01	16C	R6-3(30)	1	DIVIDED HIGHWAY CROSSING (4 - Legged Intersection) - 30x24	30	24		REMAIN										
SS-01	17A	R7-4-DE(12)	1	NO STOPPING, STANDING, OR PARKING - 12x18	12	18		REMAIN										
SS-01	17B	EM-1-DE	1	EVACUATION ROUTE	24	24		REMAIN										
SS-01	17C	M6-3(21)	1	DIRECTIONAL ARROW (Up) - 21x15	21	15		REMAIN										
SS-01	18	R4-7(24)	1	KEEP RIGHT (Symbol) - 24x30	24	30		REMAIN										
SS-01	19	R3-8(30)	1	ADVANCE INTERSECTION LANE CONTROL (Right -Ahead, Right) - 30"x30"	30	30	6.3	NEW		1				SOIL	1			
SS-01	20	R2-1-45(30)	1	SPEED LIMIT (45 MPH - 30x36)	30	36		REMAIN										
SS-01	21	SP	1	"NO PEDESTRIANS, NO HITCHHIKERS, NO BICYCLES"	36"	24"		REMAIN										
SS-01	22	R3-8(30)	1	ADVANCE INTERSECTION LANE CONTROL (Right -Ahead, Right) - 30"x30"	30	30	6.3	NEW		1				SOIL	1			
SS-01	23	R7-4-DE(12)	1	NO STOPPING, STANDING, OR PARKING - 12x18	12	18		REMAIN										
SS-02	1	R3-7_R(36)	1	RIGHT LANE MUST TURN RIGHT - 36"x36"	36	36	9.0				NEW		9.0	SOIL	2			
SS-02	2	W4-1_R(36)	1	MERGE (Right) - 36x36	36	36					REMOVE	9.0						
SS-02	3A	R5-1a(42)	1	WRONG WAY - 42x30	42	30	8.8	NEW		1				SOIL	1			Install Red Reflective Post Strip along Entire Post Facing Wrong Way Traffic
SS-02	3B	R5-1a(42)	1	WRONG WAY - 42x30	42	30	8.8	ADD TO ASSEMBLY		1								
SS-02	4	R5-1(48)	1	DO NOT ENTER - 48x48	48	48	16.0				NEW		16.0	SOIL	2			Install Red Reflective Post Strip along Entire Post Facing Wrong Way Traffic
SS-02	5	R5-1(48)	1	DO NOT ENTER - 48x48	48	48	16.0				NEW		16.0	SOIL	2			Install Red Reflective Post Strip along Entire Post Facing Wrong Way Traffic
SS-02	6A	R5-1a(42)	1	WRONG WAY - 42x30	42	30	8.8	NEW		1				SOIL	1			Install Red Reflective Post Strip along Entire Post Facing Wrong Way Traffic
SS-02	6B	R5-1a(42)	1	WRONG WAY - 42x30	42	30	8.8	ADD TO ASSEMBLY		1								
SS-02	7	W8-13(36)	1	BRIDGE ICES BEFORE HIGHWAY - 36x36	36	36		REMOVE	1									
SS-02	8	R3-1(36)	1	RIGHT TURN PROHIBITION (Symbol) - 36x36	36	36	9.0	NEW		1				SOIL	1			
SS-02	9A	W1-1_L(36)	1	TURN (Left) - 36x36	36	36	9.0				NEW		9.0	SOIL	2			
SS-02	9B	W13-1P-30(30)	1	ADVISORY SPEED (30 MPH) 30x30	30	30	6.3				ADD TO ASSEMBLY		6.3					
SS-02	10	W1-8(36)	1	CHEVRON ALIGNMENT - 36x48	36	48	12.0				NEW		12.0	SOIL	2			
SS-02	11	W1-8(36)	1	CHEVRON ALIGNMENT - 36x48	36	48	12.0				NEW		12.0	SOIL	2			
SS-02	12	W1-8(36)	1	CHEVRON ALIGNMENT - 36x48	36	48	12.0				NEW		12.0	SOIL	2			
SS-02	13	R3-8(MOD)	1	ADVANCE INTERSECTION LANE CONTROL (Ahead, Ahead, Ahead)	48	30	10.0				NEW		10.0	SOIL	2			
SS-02	14A	SP	1	"NO PEDESTRIANS, NO HITCHHIKERS, NO BICYCLES"	36"	24"		REMAIN										
SS-02	14B	EM-1-DE	1	EVACUATION ROUTE	24	24		REMAIN										
SS-02	14C	M6-1_R(21)	1	DIRECTIONAL ARROW (Right) - 21x15	21	15		REMAIN										
PAGE TOTALS							198		10	7		9	141		27	0	0	

ADDENDA / REVISIONS

NOT TO SCALE

HSIP NCC, SR 273 AND I-95 INTERCHANGE IMPROVEMENTS

CONTRACT	BRIDGE NO.	715, 715A, 715B, 715C & 715D
T200800713	DESIGNED BY:	K. AMBROSE
COUNTY		
NEW CASTLE	CHECKED BY:	J. RASHID

SIGN SCHEDULE

SS-18
SECTION
RK&K
SHEET NO.
112

11-AUG-2020
22:11
\\balsrv01\v20140201414144_DelDOT1707\Task 4A - Harmony FD\Cadd\ContractPlans\ss18_Har.dgn

PERMANENT SIGN SCHEDULE

SHEET NO.	PLAN IDENTIFIER	CODE	QTY.	DESCRIPTION	SIGN WIDTH (IN)	SIGN HEIGHT (IN)	SIGN AREA (SF)	ITEM 819018 INSTALLATION OR REMOVAL OF TRAFFIC SIGN(S) ON SINGLE POST (EACH)			ITEM 819019 INSTALLATION OR REMOVAL OF TRAFFIC SIGN(S) ON MULTIPLE SIGN POSTS (SF)			POST INSTALLATION TYPE	Code X11 12' Post (W/ Basepost) (EACH)	ITEM 819016 4" HOLE, 0-6" (EACH)	ITEM 819017 4" HOLE, >6" (EACH)	REMARKS
								SIGN DISPOSITION	REMOVE	INSTALL	SIGN DISPOSITION	REMOVE	INSTALL					
SS-02	15A	W1-15(48)	1	270-DEGREE LOOP - 48x48	48	48	16.0				NEW		16.0	SOIL	2			
SS-02	15B	W13-1P-30(30)	1	ADVISORY SPEED (30 MPH) 30x30	30	30	6.3				ADD TO ASSEMBLY		6.3					
SS-02	16	R3-8 (MOD)	1	ADVANCE INTERSECTION LANE CONTROL (Ahead, Ahead, Ahead -Right) - 30"x30"	48	30	10.0				NEW		10.0	SOIL	2			
SS-02	17	W9-2_L(36)	1	LANE ENDS MERGE LEFT - 36x36	36	36		REMOVE	1									
SS-02	18	W4-2_R(36)	1	LANE ENDS (Right) - 36x36	36	36	9.0				NEW		9.0	SOIL	2			
SS-02	19	R6-1_R(54)	1	ONE WAY (ENCLOSED IN RIGHT ARROW) - 54x18	54	18	6.8											BARRIER MOUNTED
SS-02	20	W1-8(36)	1	CHEVRON ALIGNMENT - 36x48	36	48	12.0											BARRIER MOUNTED
SS-02	21	W9-2-DE_R(36)	1	LANE ENDS (Right Arrows) - 36x36	36	36		REMOVE	1									
SS-02	22	W1-8(36)	1	CHEVRON ALIGNMENT - 36x48	36	48	12.0											BARRIER MOUNTED
SS-02	23	W1-8(36)	1	CHEVRON ALIGNMENT - 36x48	36	48	12.0				NEW		12.0	SOIL	2			
SS-02	24	W1-8(36)	1	CHEVRON ALIGNMENT - 36x48	36	48	12.0				NEW		12.0	SOIL	2			
SS-02	25	W13-3(24)	1	ADVISORY RAMP SPEED - 24x30	24	30					REMAIN							"40 MPH"
SS-03	1	R3-8 (MOD)	1	ADVANCE INTERSECTION LANE CONTROL (Ahead, Ahead, Ahead -Right) - 30"x30"	48	30	10.0				NEW		10.0	SOIL	2			
SS-04	1	R1-2(36)	1	YIELD	36	36		REMOVE	1									
SS-04	2A	R5-1a(42)	1	WRONG WAY - 42x30	42	30	8.8	NEW		1				SOIL	1			Install Red Reflective Post Strip along Entire Post Facing Wrong Way Traffic
SS-04	2B	R5-1a(42)	1	WRONG WAY - 42x30	42	30	8.8	ADD TO ASSEMBLY		1								
SS-04	3A	W3-1(48)	1	STOP AHEAD (Symbol) - 48x48	48	48	16.0				NEW		16.0	SOIL	2			
SS-04	3B	W16-8P	1	ADVANCE STREET NAME (1 - line plaque)	36	9	2.3				ADD TO ASSEMBLY		2.3	SOIL				"CHRISTIANA RD"
SS-04	4	R5-1(48)	1	DO NOT ENTER - 48x48	48	48	16.0				NEW		16.0	SOIL	2			Install Red Reflective Post Strip along Entire Post Facing Wrong Way Traffic
SS-04	5	W4-1_R(48)	1	MERGE (Right) - 48x48	48	48					REMOVE	16.0						
SS-04	6A	R1-1(48)	1	STOP	48	48	13.3				NEW		13.3	SOIL	2			
SS-04	6B	R3-2(48)	1	LEFT TURN PROHIBITION (Symbol) - 48x48	48	48	16.0				ADD TO ASSEMBLY		16.0					
SS-04	7A	R5-1a(42)	1	WRONG WAY - 42x30	42	30	8.8	NEW		1				SOIL	1			Install Red Reflective Post Strip along Entire Post Facing Wrong Way Traffic
SS-04	7B	R5-1a(42)	1	WRONG WAY - 42x30	42	30	8.8	ADD TO ASSEMBLY		1								
SS-04	8	W1-8(36)	1	CHEVRON ALIGNMENT - 36x48	36	48	12.0				NEW		12.0	SOIL	2			
SS-04	9A	R1-1(48)	1	STOP	48	48	13.3				NEW		13.3	SOIL	2			
SS-04	9B	R3-2(48)	1	LEFT TURN PROHIBITION (Symbol) - 48x48	48	48	16.0				ADD TO ASSEMBLY		16.0					
SS-04	10	R5-1(48)	1	DO NOT ENTER - 48x48	48	48	16.0				NEW		16.0	SOIL	2			Install Red Reflective Post Strip along Entire Post Facing Wrong Way Traffic
SS-04	11	W1-8(36)	1	CHEVRON ALIGNMENT - 36x48	36	48	12.0				NEW		12.0	SOIL	2			
SS-04	12	R3-1(36)	1	RIGHT TURN PROHIBITION (Symbol) - 36x36	36	36	9.0	NEW		1				SOIL	1			
SS-04	13	W1-8(36)	1	CHEVRON ALIGNMENT - 36x48	36	48	12.0											BARRIER MOUNTED
SS-04	14	W4-1_R(48)	1	MERGE (Right) - 48x48	48	48					REMAIN							
SS-04	15	R6-1_R(54)	1	ONE WAY (ENCLOSED IN RIGHT ARROW) - 54x18	54	18	6.8											BARRIER MOUNTED
SS-04	16	W1-8(36)	1	CHEVRON ALIGNMENT - 36x48	36	48	12.0				NEW		12.0	SOIL	2			
SS-04	17	W1-8(36)	1	CHEVRON ALIGNMENT - 36x48	36	48	12.0											BARRIER MOUNTED
SS-04	18	W1-8(36)	1	CHEVRON ALIGNMENT - 36x48	36	48	12.0											BARRIER MOUNTED
SS-05	1	R1-2(60)	1	YIELD	60	60					REMAIN							
SS-05	2	R1-2(60)	1	YIELD	60	60					REMAIN							
SS-06	1	W3-2(48)	1	YIELD AHEAD (Symbol) - 48x48	48	48		REMOVE	1									
SS-06	2	W3-2(48)	1	YIELD AHEAD (Symbol) - 48x48	48	48		REMOVE	1									
SS-06	3A	W1-1_L(36)	1	TURN (Left) - 36x36	36	36	9.0				NEW		9.0	SOIL	2			"30 MPH"
SS-06	3B	W13-1P-30(30)	1	ADVISORY SPEED (30 MPH) 30x30	30	30	6.3				ADD TO ASSEMBLY		6.3					
SS-06	4	W4-2_L(48)	1	LANE ENDS (Left) - 48x48	48	48					REMOVE	16.0						
SS-06	5	SP	1	"NO PASSING ON RIGHT"	24	30		REMOVE	1									
SS-06	6	W1-8(36)	1	CHEVRON ALIGNMENT - 36x48	36	48	12.0				NEW		12.0	SOIL	2			
SS-06	7	W1-8(36)	1	CHEVRON ALIGNMENT - 36x48	36	48	12.0				NEW		12.0	SOIL	2			
SS-06	8	W1-8(36)	1	CHEVRON ALIGNMENT - 36x48	36	48	12.0				NEW		12.0	SOIL	2			
SS-06	9	W1-8(36)	1	CHEVRON ALIGNMENT - 36x48	36	48	12.0				NEW		12.0	SOIL	2			
SS-06	10	W13-3(48)	1	ADVISORY RAMP SPEED - 48x60	48	60	20.0				NEW		20.0	SOIL	2			"30 MPH"
SS-06	11	W13-3(36)	1	ADVISORY RAMP SPEED - 36x48	36	48		REMOVE	1									"30 MPH"
SS-06	12	W12-1(36)	1	DOUBLE ARROW - 36x36	36	36		REMOVE	1									
SS-06	13	W1-8(36)	1	CHEVRON ALIGNMENT - 36x48	36	48	12.0				NEW		12.0	SOIL	2			
SS-06	14	W1-8(36)	1	CHEVRON ALIGNMENT - 36x48	36	48	12.0				NEW		12.0	SOIL	2			
SS-06	15	W1-8(36)	1	CHEVRON ALIGNMENT - 36x48	36	48	12.0				NEW		12.0	SOIL	2			
SS-06	16	W1-8(36)	1	CHEVRON ALIGNMENT - 36x48	36	48	12.0				NEW		12.0	SOIL	2			
SS-07	1	W13-3(48)	1	ADVISORY RAMP SPEED - 48x60	48	60	20.0				NEW		20.0	SOIL	2			"45 MPH"
SS-07	2	W11-3(36)	1	DEER (Symbol) - 36x36	36	36		REMOVE	1									
PAGE TOTALS							489		9	5		32	371		53	0	0	

ADDENDA / REVISIONS

NOT TO SCALE

HSIP NCC, SR 273 AND I-95 INTERCHANGE IMPROVEMENTS

CONTRACT	BRIDGE NO.	715, 715A, 715B, 715C & 715D
T200800713	DESIGNED BY:	K. AMBROSE
COUNTY		
NEW CASTLE	CHECKED BY:	J. RASHID

SIGN SCHEDULE

SS-19

SECTION RK&K

SHEET NO. 113

11-AUG-2020
22:13
\\balservh\v20142014\14144_DelDOT\170?\Task 4A - Harmony FD\Cadd\Contract\Plans\ss19_Har.dgn

PERMANENT SIGN SCHEDULE

SHEET NO.	PLAN IDENTIFIER	CODE	QTY.	DESCRIPTION	SIGN WIDTH (IN)	SIGN HEIGHT (IN)	SIGN AREA (SF)	ITEM 819018 INSTALLATION OR REMOVAL OF TRAFFIC SIGN(S) ON SINGLE POST (EACH)			ITEM 819019 INSTALLATION OR REMOVAL OF TRAFFIC SIGN(S) ON MULTIPLE SIGN POSTS (SF)			POST INSTALLATION TYPE	Code X11 12' Post (W/ Basepost) (EACH)	ITEM 819016 4" HOLE, 0-6" (EACH)	ITEM 819017 4" HOLE, >6" (EACH)	REMARKS
								SIGN DISPOSITION	REMOVE	INSTALL	SIGN DISPOSITION	REMOVE	INSTALL					
SS-09	1A	W8-5(48)	1	SLIPPERY WHEN WET (Symbol) - 48x48	48	48					REMOVE	16.0						
SS-09	1B	W13-1P-25(30)	1	ADVISORY SPEED (25 MPH) 30x30	30	30					REMOVE	6.3						
SS-09	2A	W8-5(48)	1	SLIPPERY WHEN WET (Symbol) - 48x48	48	48					REMOVE	16.0						
SS-09	2B	W13-1P-25(30)	1	ADVISORY SPEED (25 MPH) 30x30	30	30					REMOVE	6.3						
SS-09	3A	W1-2_L(36)	1	CURVE (Left) - 36x36	36	36	9.0				NEW		9.0	SOIL	2			
SS-09	3B	W13-1P-35(30)	1	ADVISORY SPEED (35 MPH) 30x30	30	30	6.3				ADD TO ASSEMBLY		6.3					
SS-09	4	W1-8(18)	1	CHEVRON ALIGNMENT - 18x24	18	24		REMOVE	1									
SS-09	5	W1-8(36)	1	CHEVRON ALIGNMENT - 36x48	36	48	12.0				NEW		12.0	SOIL	2			
SS-09	6	W1-8(18)	1	CHEVRON ALIGNMENT - 18x24	18	24		REMOVE	1									
SS-09	7	W1-8(36)	1	CHEVRON ALIGNMENT - 36x48	36	48	12.0				NEW		12.0	SOIL	2			
SS-09	8	W1-8(18)	1	CHEVRON ALIGNMENT - 18x24	18	24		REMOVE	1									
SS-09	9	W1-8(36)	1	CHEVRON ALIGNMENT - 36x48	36	48	12.0				NEW		12.0	SOIL	2			
SS-09	10	W1-8(18)	1	CHEVRON ALIGNMENT - 18x24	18	24		REMOVE	1									
SS-10	1	W13-3(48)	1	ADVISORY RAMP SPEED - 48x60	48	60					REMOVE	20.0						"25 MPH"
SS-10	2	W13-3(48)	1	ADVISORY RAMP SPEED - 48x60	48	60	20.0				NEW		20.0		2			"35 MPH"
SS-10	3	W4-1_R(48)	1	MERGE (Right) - 48x48	48	48					REMAIN							
SS-10	4	W4-1_R(48)	1	MERGE (Right) - 48x48	48	48					REMAIN							
SS-11	1	W1-8(36)	1	CHEVRON ALIGNMENT - 36x48	36	48	12.0				NEW		12.0	SOIL	2			
SS-11	2	W1-8(36)	1	CHEVRON ALIGNMENT - 36x48	36	48	12.0				NEW		12.0	SOIL	2			
SS-11	3	W1-8(36)	1	CHEVRON ALIGNMENT - 36x48	36	48	12.0				NEW		12.0	SOIL	2			
SS-11	4	W1-8(36)	1	CHEVRON ALIGNMENT - 36x48	36	48	12.0				NEW		12.0	SOIL	2			
SS-11	5	W1-8(36)	1	CHEVRON ALIGNMENT - 36x48	36	48	12.0				NEW		12.0	SOIL	2			
SS-11	6	W1-8(36)	1	CHEVRON ALIGNMENT - 36x48	36	48	12.0				NEW		12.0	SOIL	2			
SS-11	7A	W1-15(48)	1	270-DEGREE LOOP - 48x48	48	48	16.0				NEW		16.0	SOIL	2			
SS-11	7B	W13-1P-25(30)	1	ADVISORY SPEED (25 MPH) 30x30	30	30	6.3				ADD TO ASSEMBLY		6.3					
SS-11	8	W1-8(36)	1	CHEVRON ALIGNMENT - 36x48	36	48	12.0				NEW		12.0	SOIL	2			
SS-11	9	W1-8(36)	1	CHEVRON ALIGNMENT - 36x48	36	48	12.0				NEW		12.0	SOIL	2			
SS-11	10	W1-8(36)	1	CHEVRON ALIGNMENT - 36x48	36	48	12.0				NEW		12.0	SOIL	2			
SS-12	1	W1-8(36)	1	CHEVRON ALIGNMENT - 36x48	36	48	12.0				NEW		12.0	SOIL	2			
SS-12	2	W1-8(36)	1	CHEVRON ALIGNMENT - 36x48	36	48	12.0				NEW		12.0	SOIL	2			
SS-13	1	R3-8-MOD(48)	1	ADVANCE INTERSECTION LANE CONTROL (Right, Right-Ahead)	48	48	16.0				NEW		16.0	SOIL	2			
SS-13	2	R3-8(48)	1	ADVANCE INTERSECTION LANE CONTROL (Right, Right-Ahead)	48	48	16.0				NEW		16.0	SOIL	2			
PAGE TOTALS							258		4	0		65	258		38	0	0	

PERMANENT SIGN SCHEDULE

SHEET NO.	PLAN IDENTIFIER	CODE	QTY.	DESCRIPTION	SIGN WIDTH (IN)	SIGN HEIGHT (IN)	SIGN AREA (SF)	ITEM 819018 INSTALLATION OR REMOVAL OF TRAFFIC SIGN(S) ON SINGLE POST (EACH)			ITEM 819019 INSTALLATION OR REMOVAL OF TRAFFIC SIGN(S) ON MULTIPLE SIGN POSTS (SF)			POST INSTALLATION TYPE	Code X11 12' Post (W/ Basepost) (EACH)	ITEM 819016 4" HOLE, 0-6" (EACH)	ITEM 819017 4" HOLE, >6" (EACH)	REMARKS
								SIGN DISPOSITION	REMOVE	INSTALL	SIGN DISPOSITION	REMOVE	INSTALL					
SG01	A	R3-1(36)	1	RIGHT TURN PROHIBITION (Symbol) - 36x36	36	36	9.0											SIGNAL MOUNT
SG01	B	R3-5_R	1	MANDATORY MOVEMENT LANE CONTROL (Right)	30	36	7.5											SIGNAL MOUNT
SG01	C	R3-5_R	1	MANDATORY MOVEMENT LANE CONTROL (Right)	30	36	7.5											SIGNAL MOUNT
SG01	D	R10-11-DE(36)	1	NO TURN ON RED (Arrow) - 36x48	36	48	12.0											SIGNAL MOUNT
SG01	E	D3-1(18)	1	STREET NAME (1 Line) Posted speed > 40 MPH	72	18	9.0											"West (273) ->" SIGNAL MOUNT
SG01	F	W3-3-DE(72)	1	RED SIGNAL AHEAD WHEN FLASHING - 72x48	72	48	24.0											STRUCTURE MOUNTED
PAGE TOTALS							69		0	0		0	0		0	0	0	
JOB TOTALS							1013		23	12		106	770		118	0	0	

ADDENDA / REVISIONS

NOT TO SCALE

HSIP NCC, SR 273 AND I-95 INTERCHANGE IMPROVEMENTS

CONTRACT	BRIDGE NO.	715, 715A, 715B, 715C & 715D
T200800713	DESIGNED BY:	K. AMBROSE
COUNTY		
NEW CASTLE	CHECKED BY:	J. RASHID

SIGN SCHEDULE

SS-20

SECTION RK&K

SHEET NO. 114

11-AUG-2020
22:14
\\balsrv01\v2014\2014\14144_DelDOT170\Task 4A - Harmony FD\Cadd\Contract\Plans\ss20_1tar.dgn

GENERAL NOTES:

DESIGN SPECIFICATIONS:

1. AASHTO "LRFD SPECIFICATIONS FOR STRUCTURAL SUPPORTS FOR HIGHWAY SIGNS, LUMINAIRES, AND TRAFFIC SIGNALS", 2015, 1ST EDITION.

2. AASHTO "LRFD BRIDGE DESIGN SPECIFICATIONS, 8TH EDITION, 2017", WITH INTERIMS THROUGH 2018.

3. DELAWARE DEPARTMENT OF TRANSPORTATION BRIDGE DESIGN MANUAL, 2019 EDITION.

4. AASHTO/AWS D1.5 BRIDGE WELDING CODE AND AWS D1.1 STRUCTURAL WELDING CODE.

DESIGN LOADS:

1. THE DESIGN WIND SPEED IS 115 MPH (STRENGTH DESIGN)AND 76 MPH (SERVICE LOAD DESIGN).

2. THE DESIGN SIGN PANEL AREA INCLUDES AN ADDITIONAL 15% INCREASE IN AREA OVER THE ACTUAL SIGN PANEL AREA, EXCEPT FOR SIGN STRUCTURE AT S01066 (STA 409+00) AND S01070 (431+00).

3. FATIGUE DESIGN FOR OVERHEAD SIGN STRUCTURES IS BASED ON FATIGUE CATEGORY I FOR NATURAL WIND GUSTS AND TRUCK-INDUCED GUSTS.

MATERIALS:

1. SIGN STRUCTURE POSTS AND OVERHEAD MEMBERS SHALL BE ROUND, NON-TAPERED, TUBULAR STEEL PIPE CONFORMING TO THE FOLLOWING REQUIREMENTS AND AS DIRECTED BY STANDARD SPECIFICATION 1039.08 (E.):

   A. THE PIPE SHALL HAVE A MINIMUM YIELD STRENGTH OF 52,000 PSI AND CONFORM TO ONE OF THE FOLLOWING MATERIAL DESIGNATIONS:

      ASTM A53, GRADE B, TYPE E OR S
      API 5LX, GRADE X52
      ASTM A106, GRADE C, TYPE S
      ASTM A500, GRADE B

   B. STRUCTURE S01065, S01066, AND S01070 PIPE SHALL HAVE A MINIMUM YIELD STRENGTH OF 52,000 PSI AND IN ADDTION TO THE PREVIOUS LISTED MATERIAL DESIGNATIONS IS ALLOWED TO CONFORM TO ASTM 252, GRADE 3.

   C. MILL CERTIFICATIONS FOR EACH SIGN STRUCTURE SHALL BE SUBMITTED TO THE ENGINEER FOR APPROVAL.

   D. THE PIPE SHALL HAVE A MINIMUM CHARPY V-NOTCH IMPACT TEST RESULT OF 25 FT-LB AT 40°F. CHARPY V-NOTCH SAMPLING AND TESTING PROCEDURES SHALL BE IN ACCORDANCE WITH ASTM A673, FREQUENCY H.

2. ALL STEEL PLATES AND SHAPES SHALL CONFORM TO AASHTO M270, GRADE 36 OR BETTER. ALL STEEL PLATES AND SHAPES SHALL MEET THE CHARPY V-NOTCH REQUIREMENTS FOR ZONE 2, NON-FRACTURE CRITICAL.

3. THE STRUCTURE SHALL BE GALVANIZED IN ACCORDANCE WITH AASHTO M111.

4. ALL CONNECTION BOLTS SHALL CONFORM TO AASHTO M164. WASHERS SHALL CONFORM TO AASHTO M293, AND NUTS SHALL CONFORM TO AASHTO M291, GRADE DH, OR AASHTO M292, GRADE 2H.

5. ANCHOR BOLTS SHALL CONFORM TO AASHTO M314, GRADE 55. ANCHOR NUTS SHALL CONFORM TO AASHTO M291, GRADE DH, OR AASHTO M292, GRADE 2H. WASHERS SHALL CONFORM TO AASHTO M293.

6. ALL HARDWARE SHALL BE GALVANIZED IN ACCORDANCE WITH AASHTO M232.

7. PORTLAND CEMENT CONCRETE FOR PEDESTALS AND FOUNDATIONS SHALL BE DELDOT CLASS B (f'c = 3,000 PSI).

8. ALL EXPOSED EDGES OF CONCRETE SHALL BE CHAMFERED 3/4" UNLESS OTHERWISE NOTED.

9. REINFORCING STEEL SHALL CONFORM TO AASHTO M31, GRADE 60.

10. ALL REINFORCING STEEL SHALL HAVE A CLEAR COVER OF 2" UNLESS OTHERWISE NOTED.

GENERAL:

1. THE CENTERLINE OF THE DESIGN PANEL AND MAST ARM SHALL NOT BE MOUNTED LESS THAN A HEIGHT OF 17'-6" + (1/2 x DESIGN SIGN HEIGHT) MEASURED FROM THE HIGH POINT OF THE ROADWAY. CONTRACTOR SHALL SURVEY THE LOCATION OF EACH SIGN STRUCTURE TO VERIFY MOUNTING HEIGHT, SPAN LENGTH, AND FOUNDATION ELEVATIONS AND NOTIFY THE ENGINEER IMMEDIATELY OF ANY DISCREPANCIES AND PRIOR TO ORDERING OR FABRICATING ANY MATERIALS.

2. FORM MASTS FOR SIGN STRUCTURES TO THE RADII SHOWN ON THE PLANS IN ACCORDANCE WITH THE TUBE AND PIPE ASSOCIATION INTERNATIONAL RECOMMENDED STANDARDS FOR INDUCTION BENDING OF PIPE AND TUBE (TPA-IBS-98).

3. STEEL TEMPLATES SHALL BE USED TO SET ANCHOR BOLTS PLUMB WHEN POURING THE FOUNDATION.

4. BASE PLATES SHALL BE IN FULL CONTACT WITH ALL FLAT WASHERS.

5. ALL ANCHOR BOLTS SHALL BE TIGHTENED USING TURN OF NUT METHOD (1/6 TURN AFTER SNUG TIGHT).

6. THREADS OF ANCHOR BOLTS SHALL BE BURRED OFF AT FACE OF NUT AFTER COLUMN IS INSTALLED.

7. LOCK WASHERS WITH FLAT WASHERS SHALL ONLY BE USED FOR U-BOLT CONNECTIONS AND NUTS SHALL BE TURNED UNTIL THE LOCK WASHER IS FLAT.

8. MAST AND MAST ARM O.D. DIMENSIONS ARE ACTUAL.

9. THE CONTRACTOR SHALL FIELD VERIFY ALL DIMENSIONS BEFORE ORDERING ANY MATERIALS.

10. FABRICATE ALL SIGN STRUCTURES INTO THE LARGEST PRACTICAL SECTIONS PRIOR TO GALVANIZING. SUBMIT SPLICE LOCATIONS TO THE ENGINEER FOR APPROVAL. DO NOT COMMENCE FABRICATION UNTIL SUCH SPLICE LOCATIONS ARE APPROVED.

11. DO NOT USE GROUT BETWEEN BASE PLATE AND CONCRETE PEDESTAL.

12. SLOPE TOP OF PEDESTAL 4% FROM CENTER TO NEAR EDGES FOR DRAINAGE.

13. PROVIDE DOUBLE NUTS AND WASHERS FOR EACH ANCHOR BOLT.

14. PERMANENT CAMBER EQUAL TO L/1000 HAS BEEN PROVIDED IN ADDITION TO THE DEAD LOAD CAMBER. CAMBER SHALL BE INCORPORATED DURING FABRICATION.

15. THE COST OF THE ROUND, NON-TAPERED, TUBULAR STEEL PIPE AND STRUCTURAL STEEL SHAPES, PLATES AND BARS, INCLUDING FABRICATION, COATING, ERECTION AND CONNECTIONS SHALL BE PAID FOR UNDER THE PERTINENT "STEEL SIGN STRUCTURES, TUBULAR ARCH, OVERHEAD" ITEM NO. 617001.

16. THE COST OF EACH FOUNDATION, INCLUDING EXCAVATION, REINFORCEMENT, CONCRETE AND ANCHORAGE MATERIALS, SHALL BE PAID FOR UNDER THE PERTINENT DRILLED SHAFT FOUNDATION ITEM.

17. ALL TOWER SUPPORTS SHALL BE LOCATED BEHIND PHYSICAL TRAFFIC BARRIERS, IF PRESENT.

SIGN STRUCTURE LOCATION

SIGN STRUCTURE NUMBER	STRUCTURE TYPE	BASELINE	STATION	OFFSET "A"	OFFSET "B"
S01065	OVERHEAD	I-95 SB	387+10	58.85' LT	153.15' RT
S01066	OVERHEAD	I-95 SB	409+00	55.15' LT	136.35' RT
S01070	OVERHEAD	I-95 SB	431+00	41.15' LT	138.35' RT
S01201	OVERHEAD	SR 273 WB	66+25	53.45' LT	60.55' RT
S01203	OVERHEAD	RAMP F	25+50	13.42 LT	62.58' RT

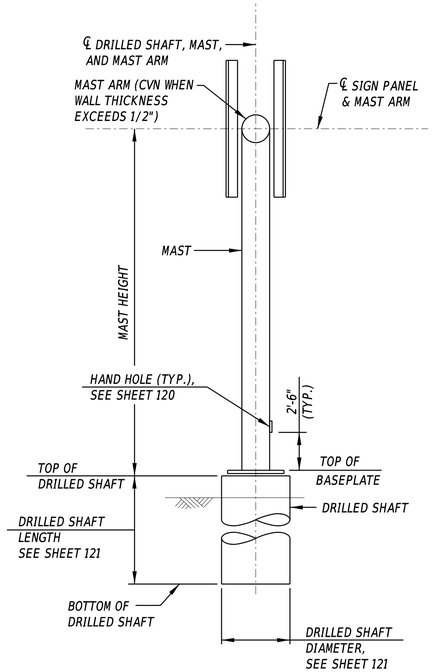

END VIEW

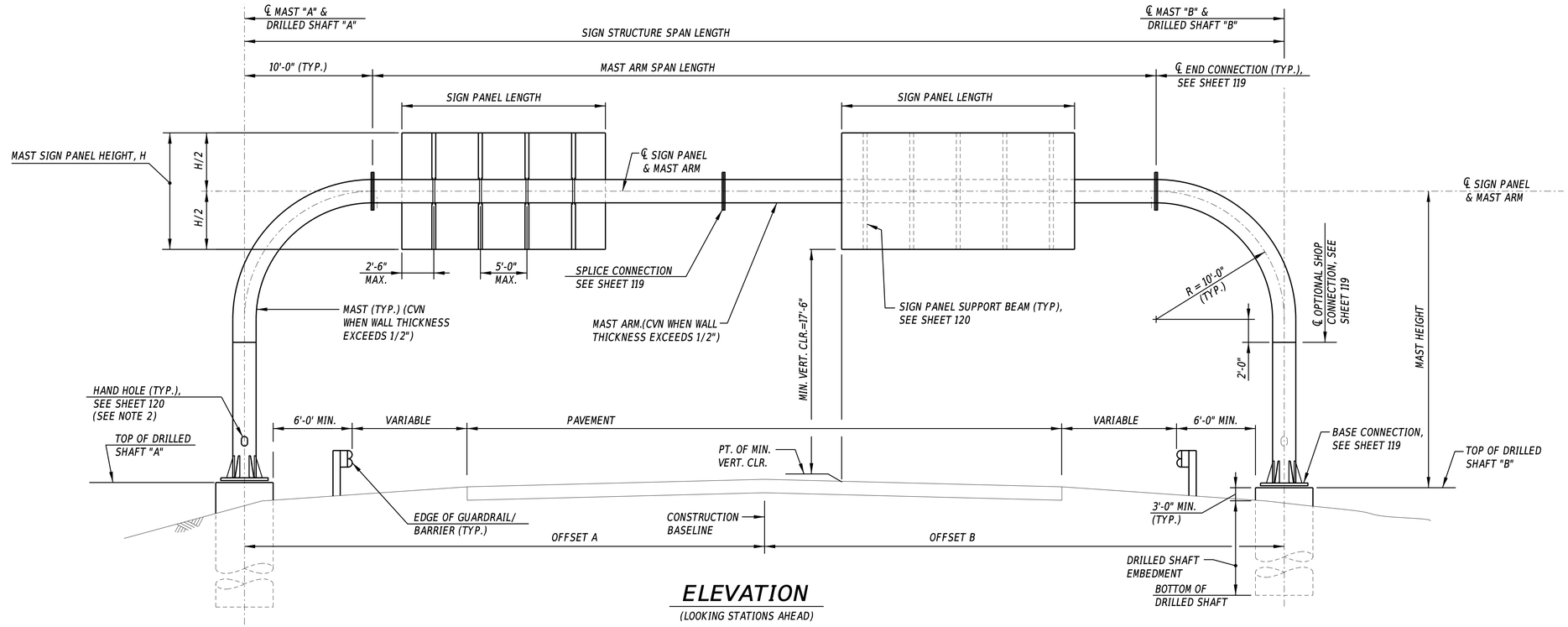

ELEVATION

(LOOKING STATIONS AHEAD)

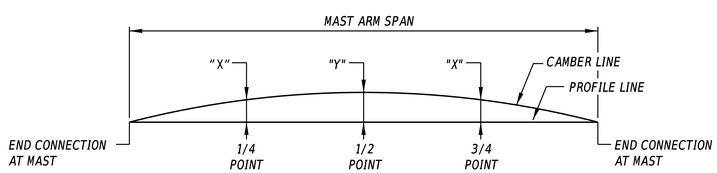

CAMBER DIAGRAM

MAXIMUM CAMBER (AT 1/2 POINT) REPRESENTS MAXIMUM DEAD LOAD CAMBER PLUS L/1000 WHERE L = SIGN STRUCTURE SPAN.

NOTES:

1. SEAL GAP BETWEEN BASE PLATE AND CONCRETE DRILLED SHAFT WITH GALVANIZED SCREEN, 1/2" x 1/2" MESH AND 0.063" DIAMETER WIRES, TO PREVENT ENTRY OF RODENTS. SCREEN IS TO BE REMOVABLE AND ATTACHED TO BASE PLATE WITH STAINLESS STEEL HARDWARE. SCREEN IS TO BE OF SUFFICIENT STIFFNESS TO PREVENT ENTRY BETWEEN SCREEN AND FOUNDATION WHILE PERMITTING DRAINAGE.
2. LOCATE HAND HOLE ON THE DOWN-TRAFFIC SIDE OF EACH MAST, WITH A DIRECTION THAT IS 90 DEGREES TO THE PLANE CONTAINING THE MAST ARM.
3. FOR ATTACHMENT OF FLEXIBLE CONDUIT TO MONOTUBE STRUCTURE SEE SHEET 125.

CROSS-REFERENCE NOTES:

1. FOR SIGN STRUCTURE LOCATIONS, SEE SHEETS NO. 96, 100, 107-109.
2. FOR SIGN PANEL LAYOUTS, SEE SHEETS NO. 110-111, 124.
3. FOR SIGN STRUCTURE NOTES, SEE SHEET NO. 115.
4. FOR OVERHEAD SIGN SUPPORT STRUCTURE CHART, SEE SHEET NO. 118.
5. FOR BASE PLATE CONNECTION DETAILS, SEE SHEET NO. 119.
6. FOR END CONNECTION DETAILS, SEE SHEET NO. 119.
7. FOR OPTIONAL SHOP CONNECTION DETAILS, SEE SHEET NO. 119.
8. FOR MAST ARM END DETAILS, SEE SHEET NO. 119.
9. FOR SIGN PANEL SUPPORT BEAM DETAILS, SEE SHEET NO. 120.
10. FOR HAND HOLE DETAIL, SEE SHEET NO. 120.
11. FOR FOUNDATION DETAILS, SEE SHEET NO. 121.
12. FOR SIGN PANEL LOCATION ON STRUCTURE, SEE SHEET NO. 122-123.

OVERHEAD SIGN STRUCTURE GEOMETRY

SIGN STRUCTURE NO.	ACTUAL SIGN PANEL AREA (SF)	DESIGN SIGN PANEL AREA (SF)	SIGN STRUCTURE SPAN LENGTH	MAST ARM SPAN LENGTH	TOP OF DRILLED SHAFT "A" EL.	TOP OF DRILLED SHAFT "B" EL.	℄ MAST ARM EL.	MAST "A" HEIGHT	MAST "B" HEIGHT	CAMBER "X" (INCHES)	CAMBER "Y" (INCHES)
S01201	244.0	280.5	114'-0"	94'-0"	96.40	97.82	119.93	23'-6 3/8"	22'-1 5/16"	2.10	3.34
S01203	345.0	346.8	76'-0"	56'-0"	91.74	91.70	112.56	20'-9 13/16"	20'-10 3/8"	0.88	1.51

ADDENDA / REVISIONS

NOT TO SCALE

HSIP NCC, SR 273 AND I-95 INTERCHANGE IMPROVEMENTS

CONTRACT	BRIDGE NO.	715, 715A, 715B, 715C & 715D
T200800713	DESIGNED BY:	M. GREENBERG
COUNTY		
NEW CASTLE	CHECKED BY:	J. PAMPUCH

OVERHEAD SIGN STRUCTURE - ELEVATION AND END VIEWS

SECTION RK&K

SHEET NO. 116

12-AUG-2020
12:44
\\balsrv01\v2014\2014\14144_Del\DOT1707\Task 4A - Harmony FD\Cadd\Contract\Plans\Structures\ps102_Har.dgn

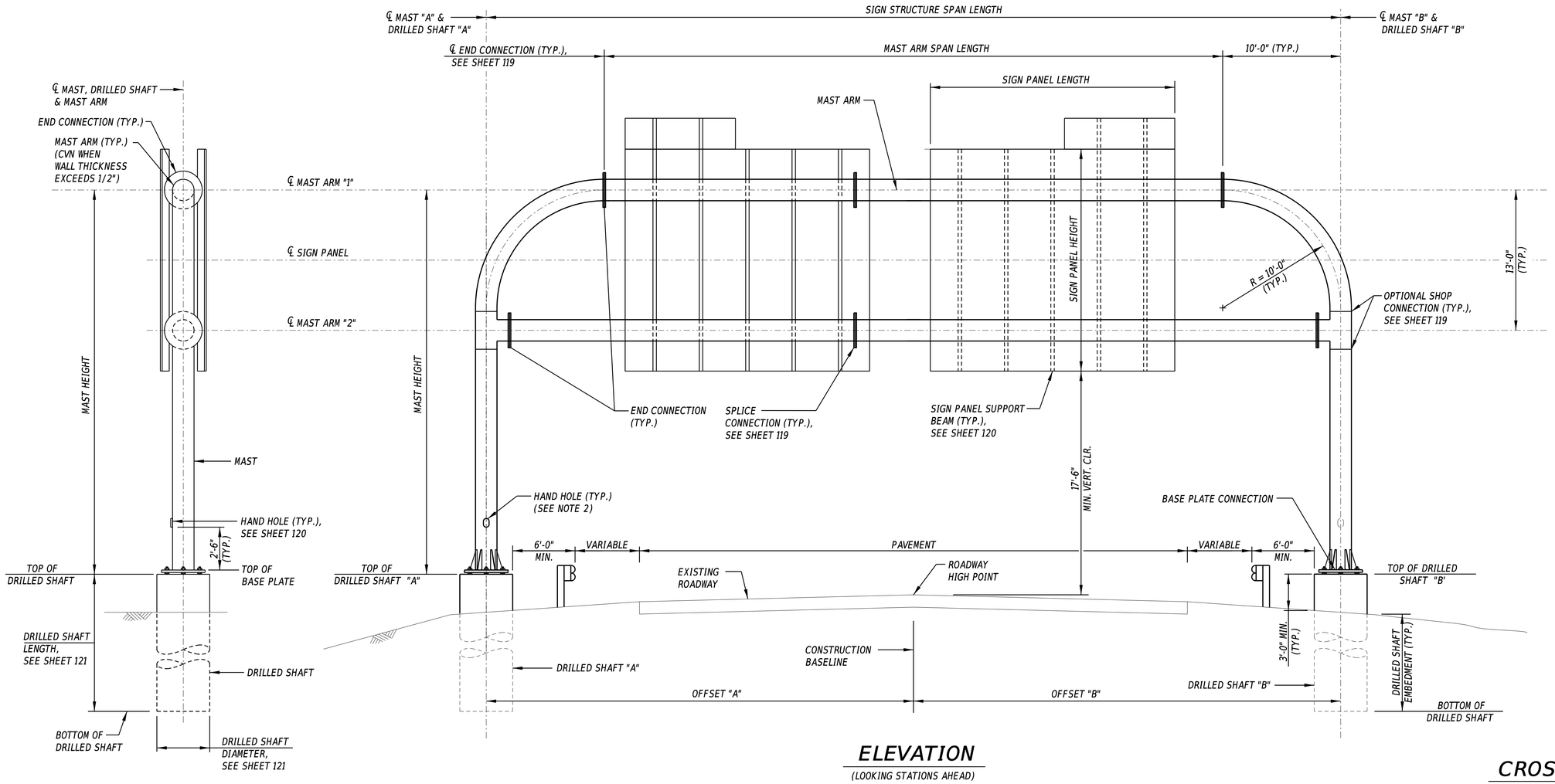

END VIEW

ELEVATION

(LOOKING STATIONS AHEAD)

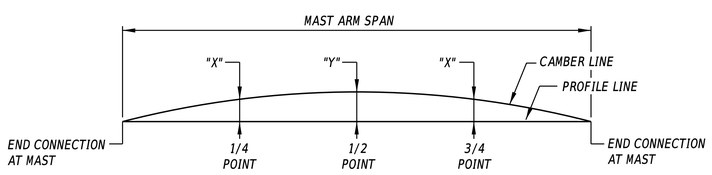

CAMBER DIAGRAM

MAXIMUM CAMBER (AT 1/2 POINT) REPRESENTS MAXIMUM DEAD LOAD CAMBER PLUS L/1000 WHERE L = SIGN STRUCTURE SPAN.

NOTES:

1. SEAL GAP BETWEEN BASE PLATE AND CONCRETE DRILLED SHAFT WITH GALVANIZED SCREEN, 1/2" x 1/2" MESH AND 0.063" DIAMETER WIRES, TO PREVENT ENTRY OF RODENTS. SCREEN IS TO BE REMOVABLE AND ATTACHED TO BASE PLATE WITH STAINLESS STEEL HARDWARE. SCREEN IS TO BE OF SUFFICIENT STIFFNESS TO PREVENT ENTRY BETWEEN SCREEN AND FOUNDATION WHILE PERMITTING DRAINAGE.
2. LOCATE HAND-HOLE ON THE DOWN-TRAFFIC SIDE OF EACH MAST, WITH A DIRECTION THAT IS 90 DEGREES TO THE PLANE CONTAINING THE MAST ARM.

CROSS-REFERENCE NOTES:

1. FOR SIGN STRUCTURE LOCATIONS, SEE SHEETS NO. 96, 100, 107-109.
2. FOR SIGN PANEL LAYOUTS, SEE SHEETS NO. 110-111.
3. FOR SIGN STRUCTURE NOTES, SEE SHEET NO. 115.
4. FOR OVERHEAD SIGN SUPPORT STRUCTURE CHART, SEE SHEET NO. 118.
5. FOR BASE PLATE CONNECTION DETAILS, SEE SHEET NO. 119.
6. FOR END CONNECTION DETAILS, SEE SHEET NO. 119.
7. FOR OPTIONAL SHOP CONNECTION DETAILS, SEE SHEET NO. 119.
8. FOR MAST ARM END DETAILS, SEE SHEET NO. 119.
9. FOR TEE CONNECTION DETAIL, SEE SHEET NO. 119.
10. FOR SIGN PANEL SUPPORT BEAM DETAILS, SEE SHEET NO. 120.
11. FOR HAND HOLE DETAIL, SEE SHEET NO. 120.
12. FOR FOUNDATION DETAILS, SEE SHEET NO. 121.
13. FOR SIGN PANEL LOCATION ON STRUCTURE, SEE SHEET NO. 122-123.

OVERHEAD SIGN STRUCTURE GEOMETRY

SIGN STRUCTURE NO.	ACTUAL SIGN PANEL AREA (SF)	DESIGN SIGN PANEL AREA (SF)	SIGN STRUCTURE SPAN LENGTH	MAST ARM SPAN LENGTH	TOP OF DRILLED SHAFT "A" EL.	TOP OF DRILLED SHAFT "B" EL.	℄ MAST ARM "1" EL.	℄ MAST ARM "2" EL.	MAST "A" HEIGHT	MAST "B" HEIGHT	CAMBER "X" (INCHES)	CAMBER "Y" (INCHES)
S01065	2006.8	2478.8	212'-0"	192'-0"	64.80	66.90	99.50	86.50	34'-8 3/8"	32'-7 1/8"	10.01	15.02
S01066	2691.8	2958.0	191'-6"	171'-6"	59.20	56.42	91.77	78.77	32'-6 13/16"	32'-4 3/16"	7.44	11.36
S01070	2880.8	3190.9	179'-6"	159'-6"	93.73	91.51	126.72	113.72	32'-11 15/16"	35'-6 11/16"	6.12	9.40

ADDENDA / REVISIONS

NOT TO SCALE

HSIP NCC, SR 273 AND I-95 INTERCHANGE IMPROVEMENTS

CONTRACT	BRIDGE NO.	715, 715A, 715B, 715C & 715D
T200800713	DESIGNED BY:	M. BECHTEL
COUNTY		
NEW CASTLE	CHECKED BY:	J. PAMPUCH

OVERHEAD SIGN STRUCTURE - ELEVATION AND END VIEWS

SECTION RK&K

SHEET NO. 117

17-AUG-2020 12:25 \\balsrv01\v2014\20141144_DelDOT170\Task 4A - Harmony FD\Cadd\Contract\Plans\Structures\ps03_Har.dgn

OVERHEAD SIGN SUPPORT STRUCTURE CHART

			MAST AND MAST ARM				ANCHOR BOLTS				BASE PLATE			BASE PLATE STIFFENERS			H.S. (SPLICE) BOLTS			SPLICE PLATE		
SIGN STRUCTURE NO.	SIGN STRUCTURE SPAN LENGTH *	DESIGN PANEL AREA (SF)	MAST ARM SPAN LENGTH*	MINIMUM MAST HEIGHT*	DIAMETER (INCHES)	THICKNESS (INCHES)	NO. OF BOLTS	DIAMETER (INCHES)	BOLT EMBEDMENT LENGTH (INCHES)	BOLT CIRCLE (INCHES)	DIAMETER (INCHES)	THICKNESS (INCHES)	DRAIN AND VENT HOLE DIAMETER (INCHES)	NO. OF STIFFENERS	HEIGHT (INCHES)	WIDTH (INCHES)	NO. OF BOLTS	DIAMETER (INCHES)	BOLT CIRCLE (INCHES)	DIAMETER (INCHES)	THICKNESS (INCHES)	DRAIN AND VENT HOLE DIAMETER (INCHES)
S01065	212'-0"	2478.8	192'-0"	32'-7 1/8"	42	0.5	24	2	48	53	60	3 1/2	34	24	21	8	16	2	53	60	3 1/4	31
S01066	191'-6"	2958.0	171'-6"	32'-4 3/16"	42	0.5	24	2	48	53	60	3 1/2	34	24	21	8	16	2	53	60	3 1/4	31
S01070	179'-6"	3190.9	159'-6"	32'-11 15/16"	42	0.5	24	2	48	53	60	3 1/2	34	24	21	8	16	2	53	60	3 1/4	31
S01201	114'-0"	280.5	94'-0"	22'-1 5/16"	26	0.5	8	2	48	34	41	3	18	8	18	6 1/2	8	2	34	41	3	18
S01203	76'-0"	396.8	56'-0"	20'-9 13/16"	24	0.375	8	2	48	32	39	3	18	8	18	6 1/2	8	2	32	39	3	18

*NOTE: THE CONTRACTOR SHALL BE RESPONSIBLE FOR CONDUCTING SURVEYS TO VERIFY SPAN LENGTHS AND STRUCTURE HEIGHTS. SURVEY RESULTS SHALL BE SUBMITTED TO THE DEPARTMENT FOR VERIFICATION OF ALL INFORMATION PROVIDED IN THE SIGN STRUCTURE CHARTS.

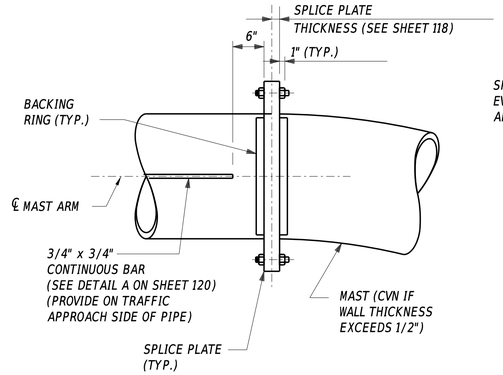

ELEVATION

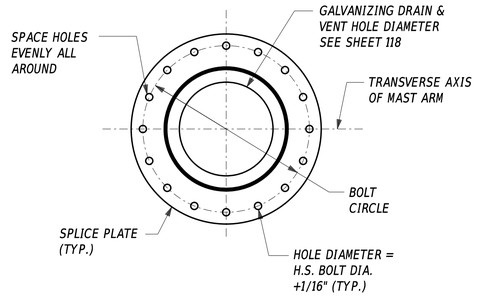

SECTION

OVERHEAD STRUCTURE END CONNECTION DETAILS

(MAST ARM SPLICE CONNECTION SIMILAR)
(16 BOLT CONFIGURATION SHOWN, 8 BOLT CONFIGURATION SIMILAR)

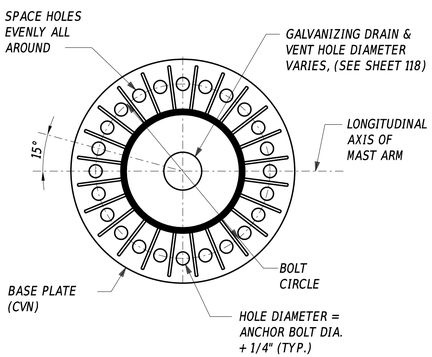

SECTION

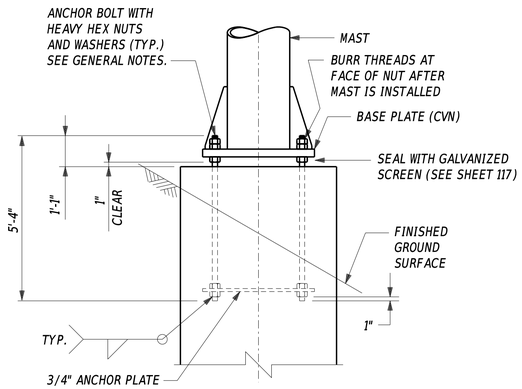

ELEVATION

(24 BOLT CONFIGURATION SHOWN)

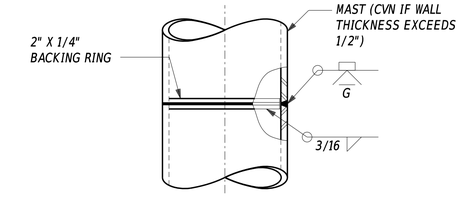

OPTIONAL SHOP CONNECTION DETAIL

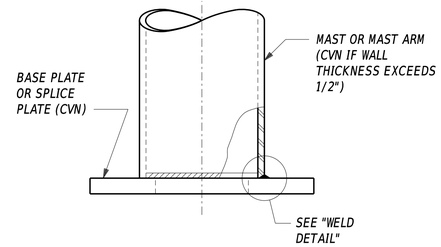

PIPE TO PLATE CONNECTION DETAIL

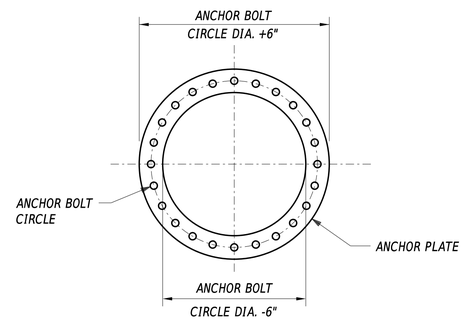

PLAN

ANCHOR PLATE DETAIL

(24 BOLT CONFIGURATION SHOWN, 8 BOLT CONFIGURATION SIMILAR)

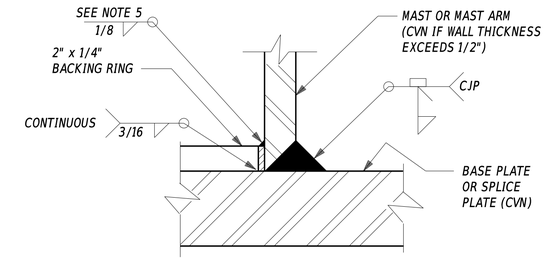

WELD DETAIL

WELD DETAIL NOTE:

BACKING RING MUST BE FITTED/SIZED TO THE PIPE COLUMN AND CONTINUOUSLY FILLET WELDED TO THE BASE PLATE BEFORE THE FULL PENETRATION GROOVE WELD IS MADE. BACKING RING MUST BE FABRICATED AS A CONTINUOUS RING.

NOTES:

1. FOR GENERAL NOTES, SEE SHEET 115.
2. FOR DRILLED SHAFT INFORMATION, SEE SHEET 121.
3. FOR SIGN PANEL SUPPORT BEAM DETAILS, SEE SHEET 120.
4. SEAL WITH GALVANIZED SCREEN, 1/2" x 1/2" MESH AND 0.063" DIAMETER WIRES, TO PREVENT ENTRY OF RODENTS. SCREEN IS TO BE REMOVABLE AND ATTACHED TO BASE PLATE WITH STAINLESS STEEL HARDWARE. SCREEN IS TO BE OF SUFFICIENT STIFFNESS TO PREVENT ENTRY BETWEEN SCREEN AND FOUNDATION WHILE PERMITTING DRAINAGE.
5. TOP WELD OF BACKING RING IS TO BE MADE AFTER ULTRASONIC INSPECTION OF THE GROOVE WELD.
6. PROVIDE SUFFICIENT DISTANCE FROM CONNECTION PLATE TO THE MAST TO INSTALL HIGH STRENGTH BOLTS.

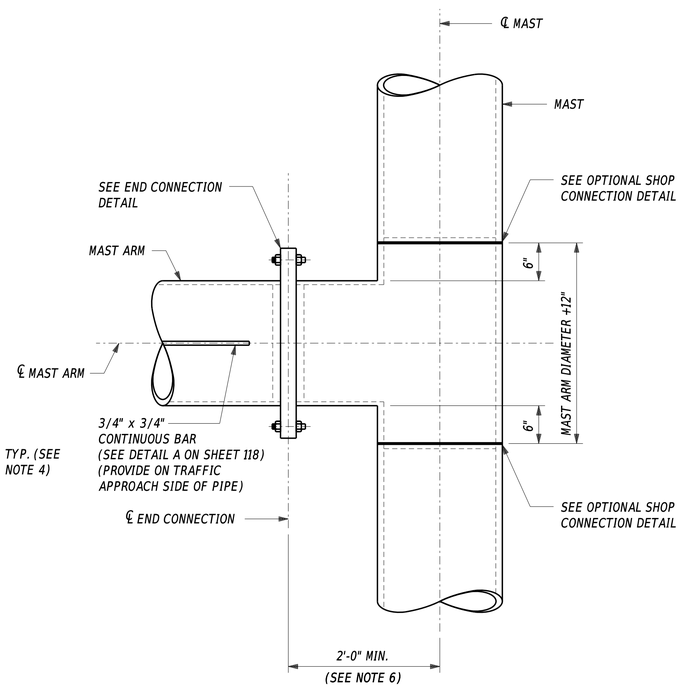

DOUBLE MAST ARM - TEE CONNECTION

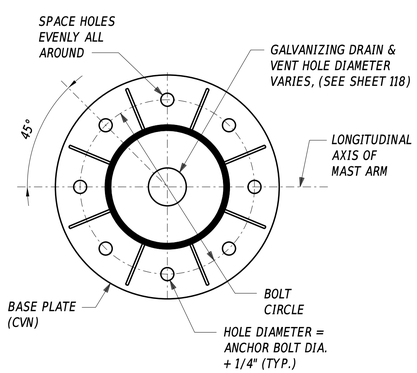

SECTION

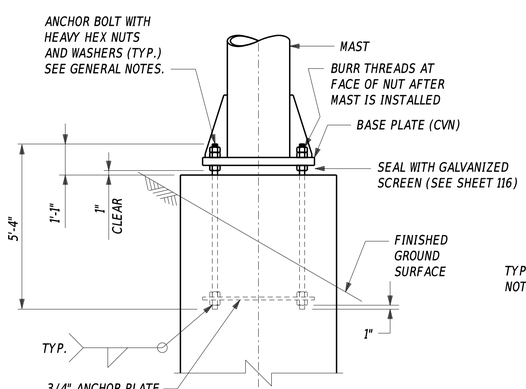

ELEVATION

(8 BOLT CONFIGURATION SHOWN)

OVERHEAD STRUCTURE BASE CONNECTION DETAILS

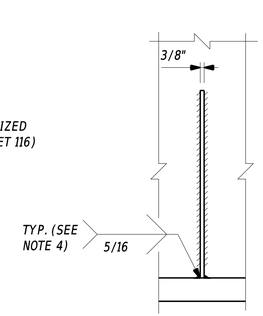

SECTION

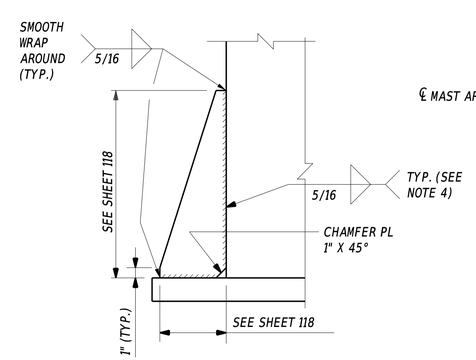

ELEVATION

STIFFENER DETAILS

(BASE CONNECTION)

ADDENDA / REVISIONS		NOT TO SCALE	HSIP NCC, SR 273 AND I-95 INTERCHANGE IMPROVEMENTS	CONTRACT T200800713	BRIDGE NO. 715, 715A, 715B, 715C & 715D	OVERHEAD SIGN STRUCTURE DETAILS	SECTION RK&K
				COUNTY NEW CASTLE	DESIGNED BY: M. BECHTEL		SHEET NO. 119
					CHECKED BY: J. PAMPUCH		

12-AUG-2020
13:11
\\balsrv01\v20\14\20\14\14144_DelDOT\170\Task 4A - Harmony FD\Cadd\Contract\Plans\Structures\pst05_Har.dgn

NOTE:

1. LOCATE SUPPORT BEAMS TO AVOID END AND SPLICE CONNECTIONS. MAXIMUM SPACING = 5'-0". MAXIMUM DISTANCE TO PANEL EDGE = 2'-6".

CROSS-REFERENCE NOTES:

1. FOR SIGN STRUCTURE NOTES, SEE SHEET NO. 115.
2. FOR SIGN PANEL DETAILS, SEE SHEETS NO. 110-111.
3. FOR SIGN PANEL LOCATION ON STRUCTURE, SEE SHEET NO. 122-123.

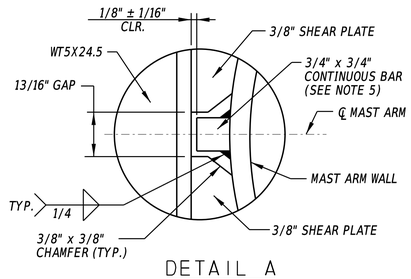

DETAIL A

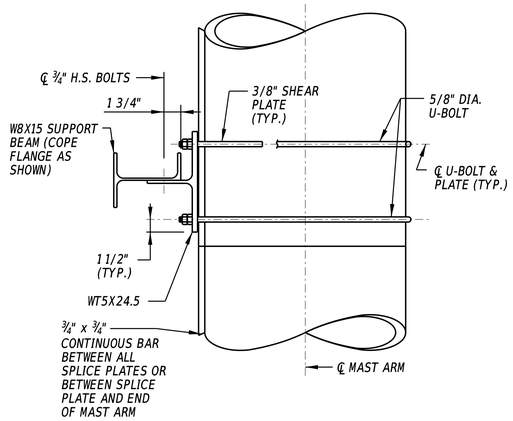

DOUBLE U-BOLT PLAN

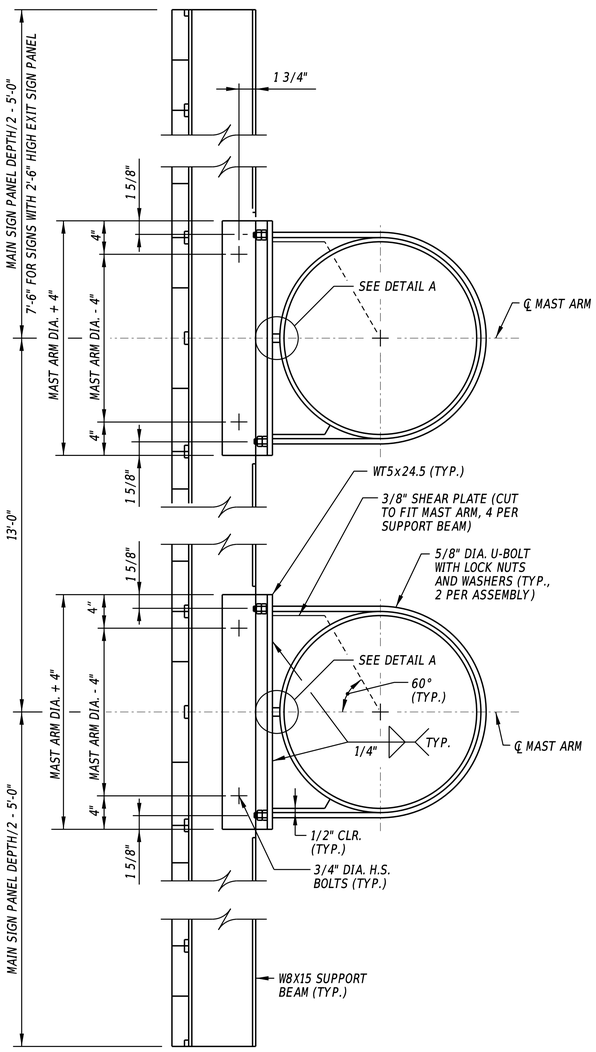

SIGN PANEL SECTION FOR DOUBLE MAST ARM

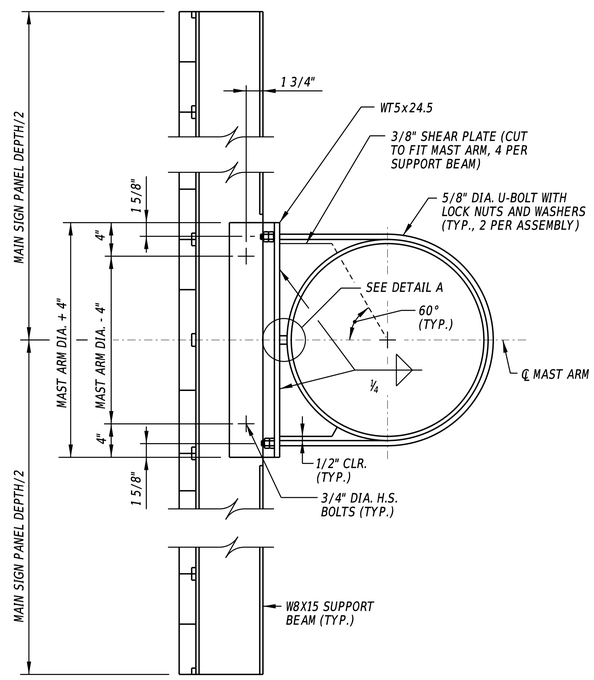

SIGN PANEL SECTION FOR SINGLE MAST ARM

SUPPORT BEAM TO MAST ARM CONNECTION DETAILS

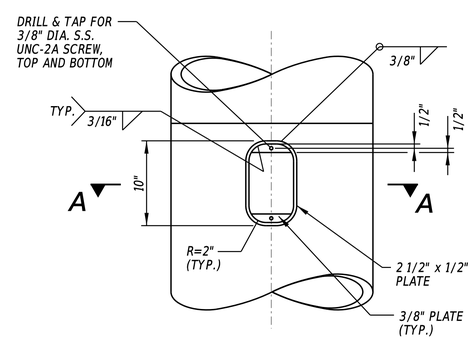

ELEVATION

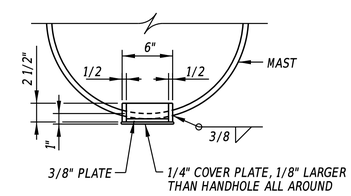

SECTION A-A

REINFORCED HANDHOLE

ADDENDA / REVISIONS	NOT TO SCALE	HSIP NCC, SR 273 AND I-95 INTERCHANGE IMPROVEMENTS	CONTRACT T200800713	BRIDGE NO. 715, 715A, 715B, 715C & 715D	SIGN STRUCTURE DETAILS	SECTION RK&K
			COUNTY NEW CASTLE	DESIGNED BY: M. BECHTEL		SHEET NO. 120
				CHECKED BY: J. PAMPUCH		

12-AUG-2020
13:13
\\pdbsrv01\v20\14\20141414\14144_DelDOT\T70\Task 4A - Harmony FD\Cadd\Contract\Plans\Structures\st06_Har.dgn

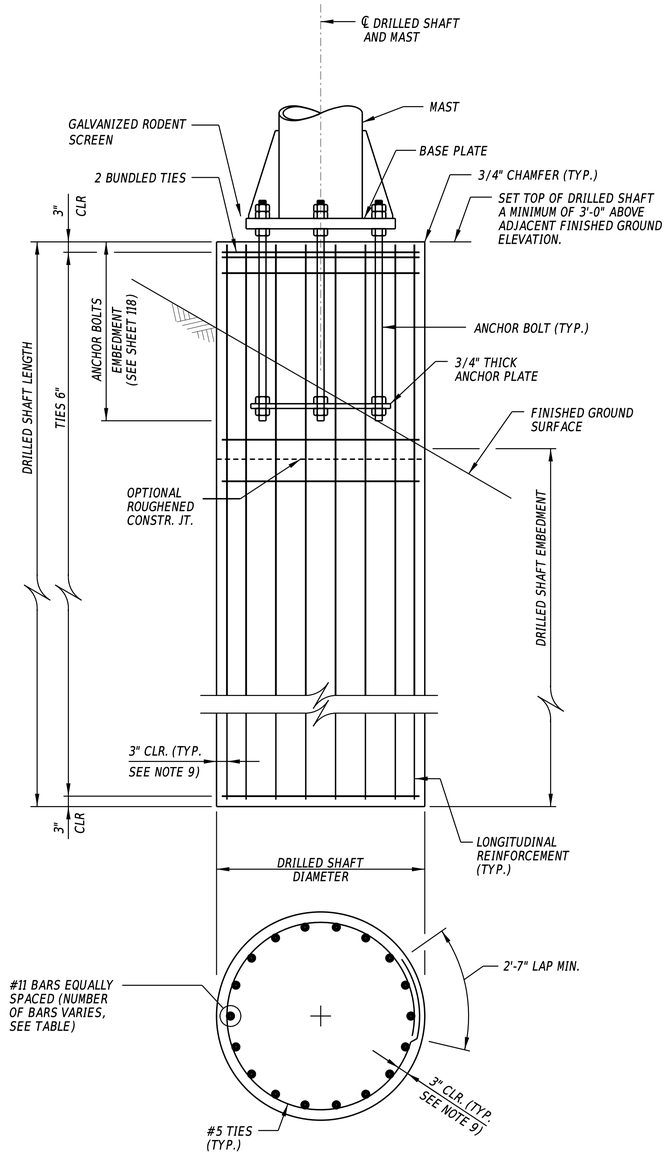

DRILLED SHAFT FOUNDATION DETAILS ROADSIDE INSTALLATION

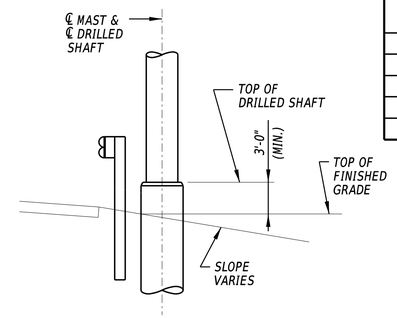

TYPICAL SHOULDER DETAIL

SIGN STRUCTURE FOUNDATIONS					
SIGN STRUCTURE NUMBER	STATION	DRILLED SHAFT DIAMETER (FT)	DRILLED SHAFT LENGTH (EA. FOUNDATION) (FT)	DRILLED SHAFT EMBEDMENT (FT)	LONGITUDINAL REINFORCEMENT
SO 1065	387+10.00	6'-6"	33'-4"	30'-0"	36-#11 BARS
SO 1066	409+00.00	6'-6"	31'-6"	28'-0"	36-#11 BARS
SO 1070	431+00.00	6'-6"	37'-3"	34'-0"	36-#11 BARS
SO 1201	66+25.00	5'-0"	21'-0"	17'-0"	22-#11 BARS
SO 1203	50+25.00	5'-0"	20'-0"	16'-0"	22-#11 BARS

NOTES:

1. FOR MORE INFORMATION REGARDING PLACEMENT, MATERIALS, AND FABRICATION OF DRILLED SHAFTS, REFER TO SECTION 606 - DRILLED SHAFTS OF THE STANDARD SPECIFICATIONS.
2. ALL ELEVATIONS SHALL BE VERIFIED IN THE FIELD PRIOR TO FABRICATION AND CONSTRUCTION.
3. COST OF REINFORCING BARS INSIDE THE DRILLED SHAFT IS INCLUDED IN THE BID PRICE FOR THE APPROPRIATE DRILLED SHAFT ITEMS. REINFORCEMENT SHALL BE EPOXY COATED.
4. CONCRETE SPACERS OR OTHER APPROVED NON -CORROSIVE SPACING DEVICES SHALL BE INSTALLED IN ACCORDANCE WITH SUBSECTION 606.03(9) OF THE STANDARD SPECIFICATIONS.
5. ACCESS TUBES FOR CROSSHOLE SONIC LOG (CSL) TESTING SHALL BE INSTALLED IN ACCORDANCE WITH SUBSECTION 606.03(13) OF THE STANDARD SPECIFICATIONS.
6. IT IS THE RESPONSIBILITY OF THE CONTRACTOR TO INSPECT THE SITE WHERE DRILLED SHAFTS WILL BE BUILT PRIOR TO SUBMITTING THEIR BID PROPOSALS, TO DETERMINE THE ACCESSIBILITY TO VARIOUS LOCATIONS, ASCERTAIN THE CONDITIONS UNDER WHICH THE WORK WILL BE CONDUCTED, AND ESTABLISH THE EQUIPMENT THAT WILL BE REQUIRED TO PERFORM THE WORK, INCLUDING WORK IN ANY AREAS WITH LOW OVERHEAD AND/OR NEAR HIGH TENSION POWER LINES, OR ADJACENT TO ACTIVE TRAFFIC.
7. CONSTRUCTION OF DRILLED SHAFT FOUNDATIONS MAY REQUIRE THE USE OF TEMPORARY CASING. THE LENGTH OF DRILLED SHAFT SHALL BE ADJUSTED IN THE FIELD AS REQUIRED.
8. IF DRILLED SHAFT EXCAVATION IS UNSHORED (WITHOUT TEMPORARY CASING), CONCRETE SHALL BE PLACED IN THE SAME WORKING DAY AS EXCAVATION TAKES PLACE.
9. CONCRETE COVER SPECIFIED ON THIS SHEET TO THE HOOP REINFORCING IS BASED UPON THE CONTRACTOR UTILIZING TEMPORARY STEEL CASING TO CONSTRUCT THE DRILLED SHAFTS. IN THE EVENT TEMPROARY CASING IS NOT UTILIZED, THE CONTRACTOR SHALL INCREASE THE CLEAR COVER TO THE HOOP REINFORCING TO 6" AND UPDATE THE HOOP REINFORCEMENT DIAMETER ACCORDINGLY.

SO1065
I-95

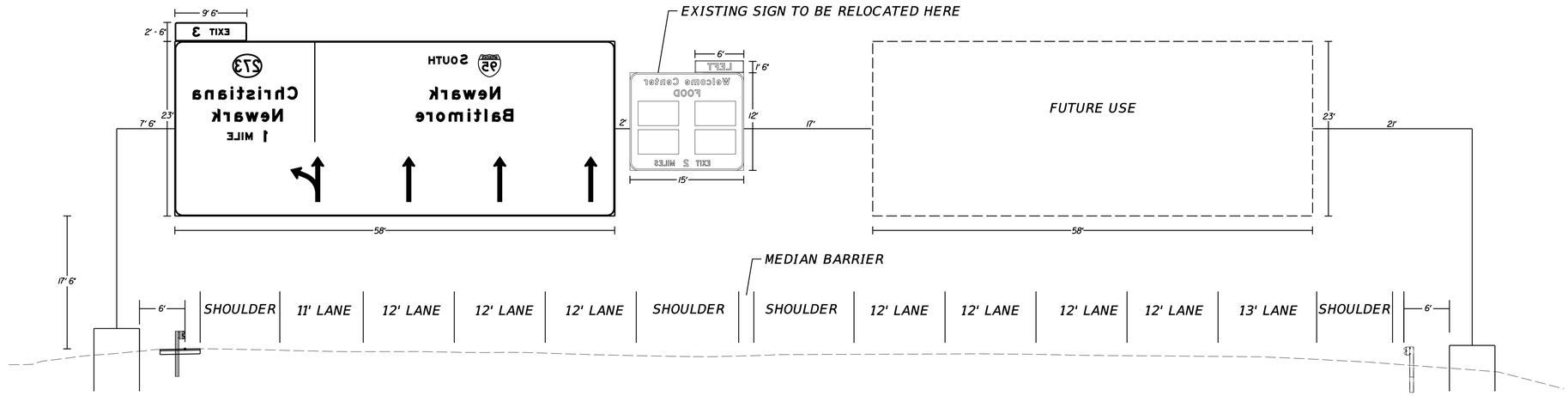

SO1066
I-95

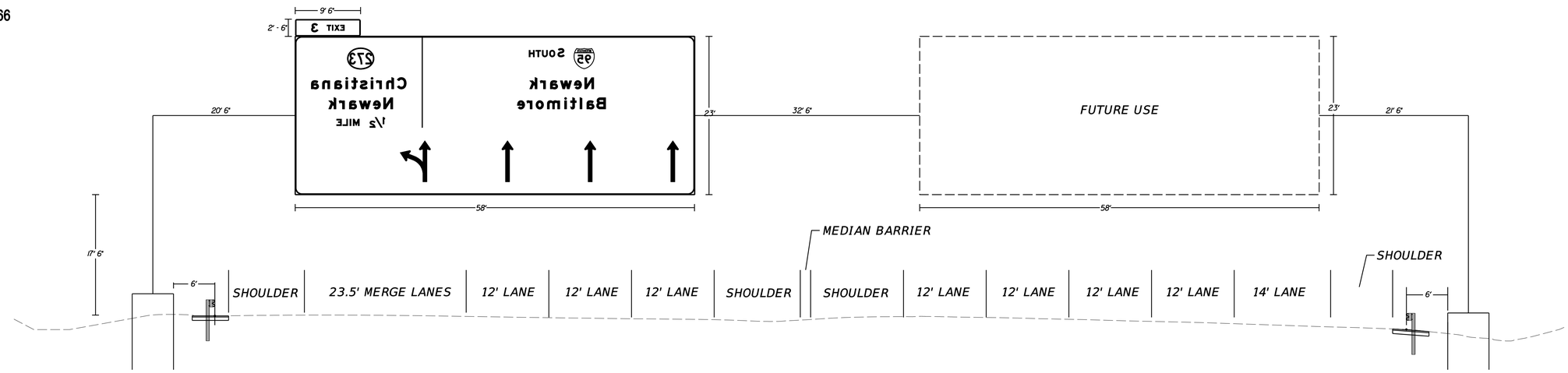

SO1070
I-95

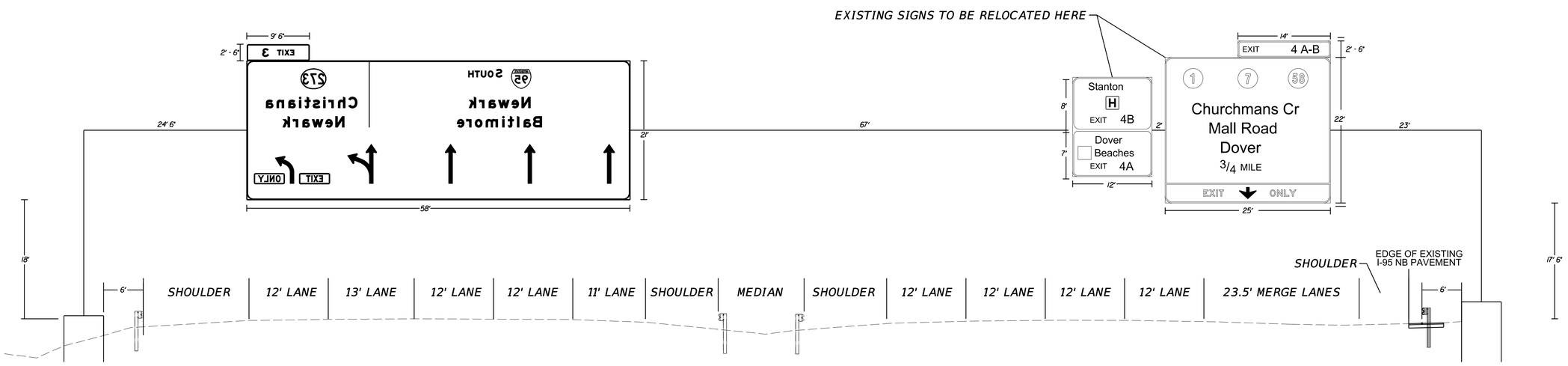

** PROPOSED CROSS SECTIONS ARE APPROXIMATE. CONTRACTOR SHALL VERIFY ALL LENGTHS PRIOR TO STRUCTURE DESIGN SUBMISSION.

ADDENDA / REVISIONS		NOT TO SCALE	HSIP NCC, SR 273 AND I-95 INTERCHANGE IMPROVEMENTS	CONTRACT T200800713	BRIDGE NO. 715, 715A, 715B, 715C & 715D	OVERHEAD SIGN LANE DIAGRAMS	SECTION RK&K
				COUNTY NEW CASTLE	DESIGNED BY: K. AMBROSE		SHEET NO. 122
					CHECKED BY: J. RASHID		

12-AUG-2020
08:48
\\balserv01\v2014\20\14414144_DelDOT170/Task 4A - Harmony FD\Cadd\Contract\Plans\lanediagrams_1.dgn

SO1201
SR 273 WB

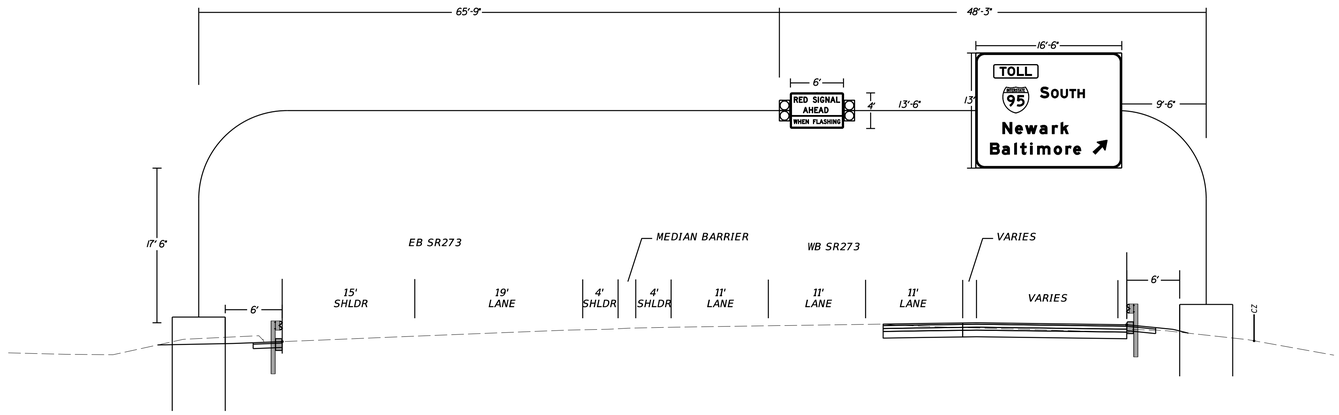

SO1203
I-95 SB RAMP TO SR 273

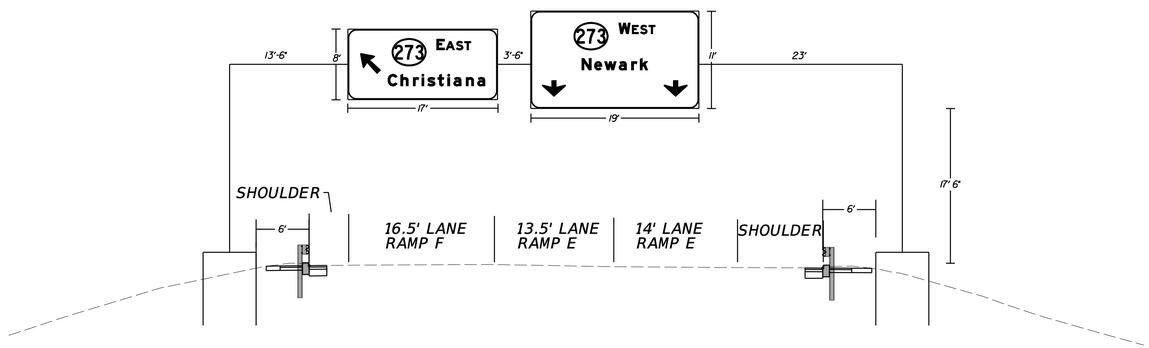

** PROPOSED CROSS SECTIONS ARE APPROXIMATE. CONTRACTOR SHALL VERIFY ALL LENGTHS PRIOR TO STRUCTURE DESIGN SUBMISSION.

ADDENDA / REVISIONS	

NOT TO SCALE

HSIP NCC, SR 273 AND I-95 INTERCHANGE IMPROVEMENTS

CONTRACT	BRIDGE NO.	715, 715A, 715B, 715C & 715D
T200800713	DESIGNED BY:	K. AMBROSE
COUNTY		
NEW CASTLE	CHECKED BY:	J. RASHID

OVERHEAD SIGN LANE DIAGRAMS

SECTION
RK&K
SHEET NO.
123

12-AUG-2020
08:54
\\balsnv01\v20\14201414144_DelDOT\700\Task 4A - Harmony FD\Cadd\Contract\Plans\lanediagrams_2.dgn

OVERHEAD SIGNS

A
R3-1
36"x36"

B,C
R3-5(R)
30"x36"

D
R10-11-DE
36"x48"

E
West 273
5" 18" 8"D 5"
6'-0"
D3-1

F
RED SIGNAL AHEAD
WHEN FLASHING
W3-3-DE
72"x48"

SIGNAL NOTES

3. SEE SHEET 125 FOR ADDITIONAL SIGNAL PLAN INFORMATION
4. CONTRACTOR SHALL CONTACT SIGNAL CONSTRUCTION MANAGER AT 302.222.5920 TEN (10) DAYS PRIOR TO ANY TRAFFIC SWITCHES AND/OR SIGNAL ADJUSTMENT NEEDS.
5. PROPOSED ITMS COMMS SHOWN FOR REFERENCE PURPOSE ONLY-SEE SIGNING, STRIPING AND CONDUIT PLANS FOR COMMUNICATION ROUTING.
6. PROPOSED MARKINGS SHOWN FOR REFERENCE PURPOSE ONLY-SEE SIGNING, STRIPING AND CONDUIT PLANS FOR LOCATION AND QUANTITIES.
7. FOR EXISTING AND PROPOSED SIGNING SEE SIGNING, STRIPING AND CONDUIT PLANS.
8. ALL CABLE AND ABOVE GROUND INSTALLATION TO BE COMPLETED BY DELDOT TRAFFIC FORCES. THE CONTRACTOR SHALL CONTACT DELDOT'S SIGNAL CONSTRUCTION MANAGER AT 302.222.5920 A MINIMUM OF TEN (10) DAYS PRIOR TO ANY REQUIRED WORK.
9. SEE INSERT FOR MAST ARM SIGNAL HEAD AND SIGNING CONFIGURATION.

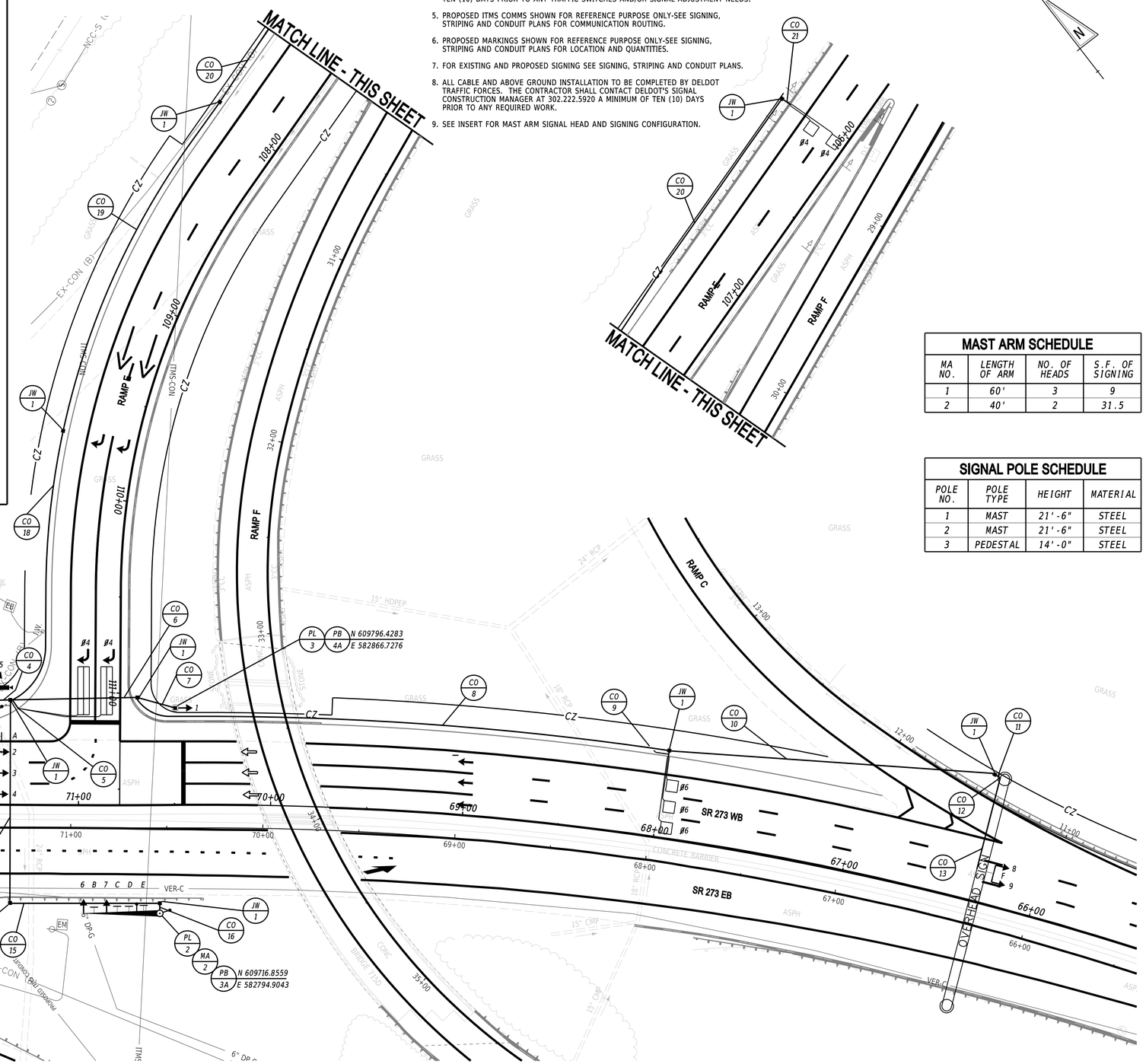

MAST ARM SCHEDULE

MA NO.	LENGTH OF ARM	NO. OF HEADS	S.F. OF SIGNING
1	60'	3	9
2	40'	2	31.5

SIGNAL POLE SCHEDULE

POLE NO.	POLE TYPE	HEIGHT	MATERIAL
1	MAST	21'-6"	STEEL
2	MAST	21'-6"	STEEL
3	PEDESTAL	14'-0"	STEEL

SIGNAL PHASING

NEMA PHASING

PHASING NOTES

1. PHASES ASSOCIATED BY A SOLID LINE WILL NOT OPERATE CONCURRENTLY.
2. PHASES ASSOCIATED BY A DASHED LINE WILL OPERATE CONCURRENTLY.

SIGNAL HEAD DIAGRAM

1,2,3,4,5 6,7 8,9

LEGEND

AB — ABANDON	OH # — EXISTING OVERHEAD RUN IDENTIFIER (# OF OVERHEAD RUN)
CA X — EXISTING CABINET IDENTIFIER (TYPE OF CABINET)	OH # — PROPOSED OVERHEAD RUN IDENTIFIER (# OF OVERHEAD RUN)
CA X — PROPOSED CABINET IDENTIFIER (TYPE OF CABINET)	PB X — EXISTING POLE BASE IDENTIFIER (TYPE OF POLE BASE)
CO # — EXISTING CONDUIT RUN IDENTIFIER (# OF CONDUIT RUN)	PB X — PROPOSED POLE BASE IDENTIFIER (TYPE OF POLE BASE)
CO # — PROPOSED CONDUIT RUN IDENTIFIER (# OF CONDUIT RUN)	PL X — EXISTING POLE IDENTIFIER (# OF POLE)
JW X — EXISTING JUNCTION WELL IDENTIFIER (TYPE OF JUNCTION WELL)	PL X — PROPOSED POLE IDENTIFIER (# OF POLE)
JW X — PROPOSED JUNCTION WELL IDENTIFIER (TYPE OF JUNCTION WELL)	RM C — REMOVE BY CONTRACTOR
MA XX — EXISTING MAST ARM IDENTIFIER (LENGTH OF ARM)	RM O — REMOVE BY OTHERS
MA XX — PROPOSED MAST ARM IDENTIFIER (LENGTH OF ARM)	RM TC — REMOVE BY TRAFFIC CONTRACTOR

	EXISTING SYMBOL	PROPOSED SYMBOL
JUNCTION WELL	J.W.	
LOOP DETECTOR, TYPE 1		
LOOP DETECTOR, TYPE 2		
LUMINAIRE		
MAST ARM		
MICROWAVE DETECTION		
OPTICOM RECEIVER		
OVERHEAD SIGNING		
PEDESTRIAN POLE/BASE		
PEDESTRIAN PUSHBUTTON		
PEDESTRIAN SIGNAL HEAD		
RIGHT-OF-WAY		R/W
SERVICE PEDESTAL		P
SIGNAL CABINET		
SIGNAL HEAD		
SIGNAL POLE/BASE		
CCTV CAMERA		
SPAN WIRE	XX	
UTILITY POLE		
VIDEO DETECTION		

GENERAL SIGNAL NOTES

1. ALL SIGNAL EQUIPMENT REMOVED FROM A PROJECT IS TO BE RETURNED TO DELDOT TRAFFIC - DOVER, DELAWARE.
2. ALL UNDERGROUND AND OVERHEAD UTILITIES SHOWN ON THESE PLANS ARE SCHEMATIC ONLY AND MAY NOT BE COMPLETE. THE CONTRACTOR SHALL BE RESPONSIBLE FOR NOTIFYING MISS UTILITY, AND/OR THE APPROPRIATE UTILITY PRIOR TO THE BEGINNING OF CONSTRUCTION FOR THE UTILITY MARKOUTS. IF THE CONTRACTOR PERCEIVES THAT A CONFLICT BETWEEN UTILITIES AND THE TRAFFIC SIGNAL WILL OCCUR, THE CONTRACTOR SHALL NOTIFY DELDOT TRAFFIC IMMEDIATELY BEFORE CONSTRUCTION.

PREPARED BY

THE CONSULTANT FIRM
RUMMEL, KLEPPER & KAHL, LLP

Barry L. Brandt — 07.22.20
THIS SEAL APPLIES TO THIS SHEET BEARING THE "RK&K" SECTION DESIGNATION. — DATE

BARRY L. BRANDT LICENSE No. 17066 DELAWARE PROFESSIONAL ENGINEER — SEAL

CONCURRENCE FOR INSTALLATION

Peter Haag DelDOT — 7/23/2020
CHIEF TRAFFIC ENGINEER — DATE

ADDENDA / REVISIONS

SCALE 0 30 60 90 FEET

HSIP NCC, SR 273 AND I-95
INTERCHANGE IMPROVEMENTS

CONTRACT	PERMIT NO.	N857 / NCAM202
T200800713	DESIGNED BY:	J.RASHID
COUNTY	CHECKED BY:	B.BRANDT
NEW CASTLE		

SIGNAL PLAN
SR 273 @ I-95 SB OFF RAMP

SECTION: RK&K
SHEET NO.: 124

LAST REVISED: 9/11/2018
12-AUG-2020
10:13
\\bsbsrv01\v2014\2014\14144_DelDOT1707\Task 4A - Harmony FD\Cadd\Contract\Plans\sg01_Har.dgn

SIGNAL NOTES

3. SEE SHEET 124 FOR ADDITIONAL SIGNAL PLAN INFORMATION
4. CONTRACTOR SHALL CONTACT SIGNAL CONSTRUCTION MANAGER AT 302.222.5920 TEN (10) DAYS PRIOR TO ANY TRAFFIC SWITCHES AND/OR SIGNAL ADJUSTMENT NEEDS.
5. PROPOSED ITMS COMMS SHOWN FOR REFERENCE PURPOSE ONLY-SEE SIGNING, STRIPING AND CONDUIT PLANS FOR COMMUNICATION ROUTING.
6. PROPOSED MARKINGS SHOWN FOR REFERENCE PURPOSE ONLY-SEE SIGNING, STRIPING AND CONDUIT PLANS FOR LOCATION AND QUANTITIES.
7. FOR EXISTING AND PROPOSED SIGNING SEE SIGNING, STRIPING AND CONDUIT PLANS.
8. ALL CABLE AND ABOVE GROUND INSTALLATION TO BE COMPLETED BY DELDOT TRAFFIC FORCES. THE CONTRACTOR SHALL CONTACT DELDOT'S SIGNAL CONSTRUCTION MANAGER AT 302.222.5920 A MINIMUM OF TEN (10) DAYS PRIOR TO ANY REQUIRED WORK.
9. SEE INSERT FOR MAST ARM SIGNAL HEAD AND SIGNING CONFIGURATION.

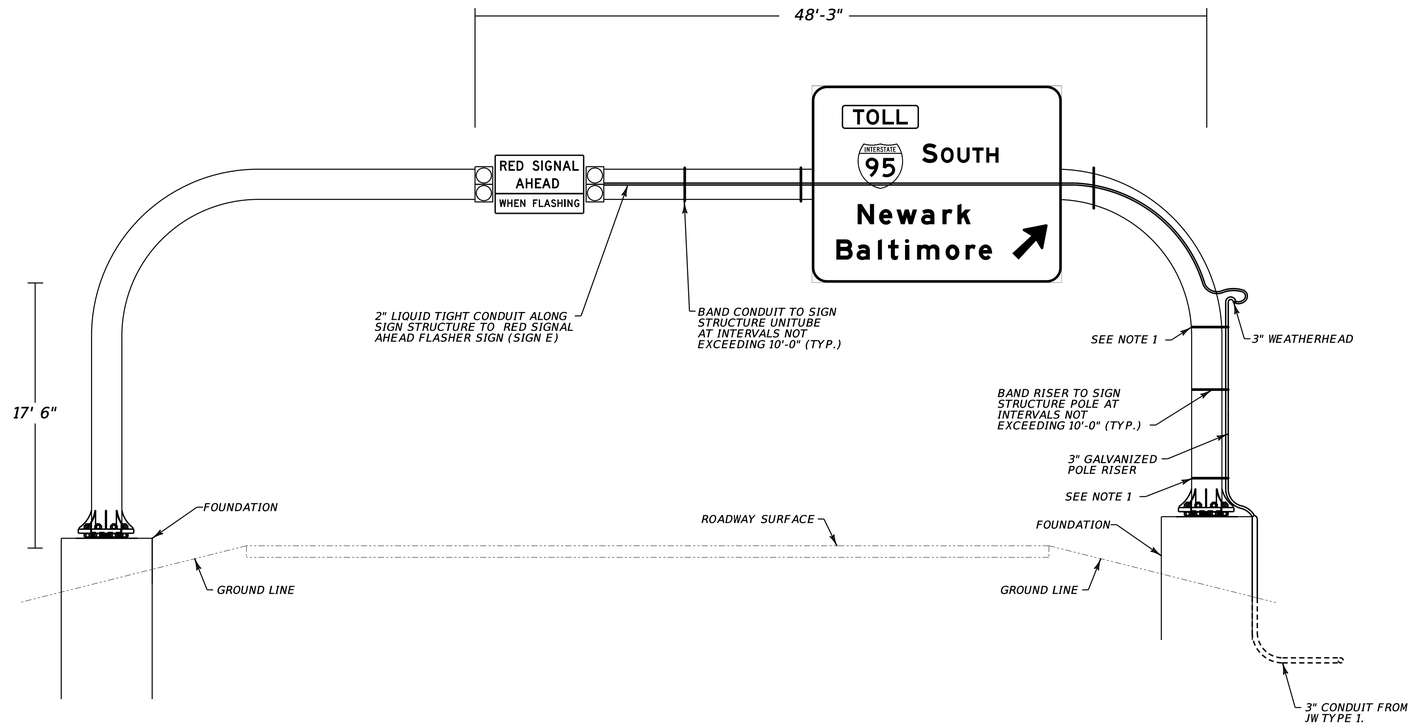

CONDUIT MOUNTING ON OVERHEAD SIGN STRUCTURE

FRONT ELEVATION VIEW - NOT TO SCALE

NOTES:

1. *CONDUITS AND RISERS SHALL BE SUPPORTED BY BANDING AT A MAXIMUM DISTANCE OF 12" FROM THE TERMINATION, WEATHER HEAD OR COUPLER, AND AT MAXIMUM INTERVAL OF 10'-0" THEREAFTER.*
2. *INSTALLATION OF 3" GALVANIZED STEEL CONDUIT RISER AND 2" LIQUID TIGHT CONDUIT ON SIGN STRUCTURE WILL BE PAID FOR UNDER ITEM NO. 831540 AND ITEM NO. 831507 RESPECTIVELY - INSTALLATION OF 3" WEATHER HEAD WILL BE INCIDENTAL TO ITEM NO. 831507.*
3. *CONDUITS ON SIGN STRUCTURES TO BE INSTALLED BY CONTRACTOR FOR FUTURE USE BY DELDOT TRAFFIC.*

CONDUIT RUN SCHEDULE

CR NO.	NO. OF CONDUITS	SIZE	TYPE	LENGTH	B/T/O/S	AMOUNT AND TYPE OF CABLE / WIRE
1A	1	2"	GALV	5'	T	(3)#8 THHN STRANDED COPPER
1B	1	2"	GALV	5'	T	(1)#8/2 U.F. W/GROUND
1C	1	2'	GALV	70'	T	(1)#8/2 U.F. W/GROUND
2	4	4"	PVC	5'	T	(2)#14/9, (1) #14/16, (3)#18/4, (2)#14/4, (12)#14/2, (4)#6 GROUND
						COMM CABLE, (1)CAT 6 CAMERA CABLE
3	1	3"	PVC	15'	T	(1)#14/16, (1)CAT 6 CAMERA CABLE, (1)#18/4, (1)#6 GROUND
4	1	4"	PVC	20'	T	(2)#14/9, (2)#18/4, (2)#14/4, (7)#14/2, (1)#6 GROUND
5	1	1.5"	PVC	10'	T	(2)#14/1, (1)#6 GROUND
6	1	4"	PVC	65'	T	(1)#14/9, (2)#14/4, (3)#14/2, (1)#6 GROUND
7	1	2.5"	PVC	25'	T	(1)#14/9, (1)#6 GROUND
8	1	4"	PVC	280'	T	(2)#14/4, (3)#14/2, (1)#6 GROUND
9	1	1.5"	PVC	5'	T	(3)#14/1, (1)#6 GROUND
10	1	4"	HDPE	170'	B	(2)#14/4, (1)#6 GROUND
11	1	3"	GALV	5'	T	(2)#14/4, (1)#6 GROUND
12	1	3"	GALV	25	S	(2)#14/4, (1)#6 GROUND
13	1	2"	Liquid Tight	50'	S	(2)#14/4, (1)#6 GROUND
14	1	4"	HDPE	105'	B	(1)#14/9, (2)#18/4, (1)#6 GROUND
15	1	4"	PVC	80'	T	(1)#14/9, (2)#18/4, (1)#6 GROUND
16	1	3"	PVC	10'	T	(1)#14/9, (2)#18/4, (1)#6 GROUND
17	1	1.5'	PVC	15'	T	(3)#14/1, (1)#6 GROUND
18	1	4"	PVC	155'	T	(2)#14/2, (1)#6 GROUND
19	1	4"	HDPE	190'	B	(2)#14/2, (1)#6 GROUND
20	1	4"	PVC	190'	T	(2)#14/2, (1)#6 GROUND
21	1	1.5"	PVC	5'	T	(2)#14/1, (1)#6 GROUND

** DENOTES EXISTING*

B- BORE, T- TRENCH, O- OPEN CUT, S- STRUCTURE

SIGNAL PHASING

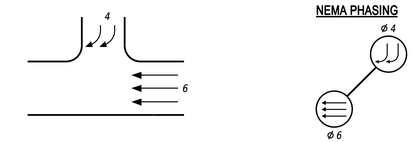

PHASING NOTES

1. *PHASES ASSOCIATED BY A SOLID LINE WILL NOT OPERATE CONCURRENTLY.*
2. *PHASES ASSOCIATED BY A DASHED LINE WILL OPERATE CONCURRENTLY.*

SIGNAL HEAD DIAGRAM

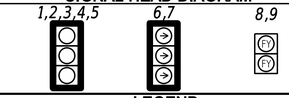

LEGEND

AB	*ABANDON*	OH #	EXISTING OVERHEAD RUN IDENTIFIER (# OF OVERHEAD RUN)
CA X	EXISTING CABINET IDENTIFIER (TYPE OF CABINET)	OH #	*PROPOSED OVERHEAD RUN IDENTIFIER (# OF OVERHEAD RUN)*
CA X	*PROPOSED CABINET IDENTIFIER (TYPE OF CABINET)*	PB X	EXISTING POLE BASE IDENTIFIER (TYPE OF POLE BASE)
CO #	EXISTING CONDUIT RUN IDENTIFIER (# OF CONDUIT RUN)	PB X	*PROPOSED POLE BASE IDENTIFIER (TYPE OF POLE BASE)*
CO #	*PROPOSED CONDUIT RUN IDENTIFIER (# OF CONDUIT RUN)*	PL X	EXISTING POLE IDENTIFIER (# OF POLE)
JW X	EXISTING JUNCTION WELL IDENTIFIER (TYPE OF JUNCTION WELL)	PL X	*PROPOSED POLE IDENTIFIER (# OF POLE)*
JW X	*PROPOSED JUNCTION WELL IDENTIFIER (TYPE OF JUNCTION WELL)*	RM C	*REMOVE BY CONTRACTOR*
MA XX	EXISTING MAST ARM IDENTIFIER (LENGTH OF ARM)	RM O	*REMOVE BY OTHERS*
MA XX	*PROPOSED MAST ARM IDENTIFIER (LENGTH OF ARM)*	RM TC	*REMOVE BY TRAFFIC CONTRACTOR*

	EXISTING SYMBOL	*PROPOSED SYMBOL*
JUNCTION WELL	J.W.	
LOOP DETECTOR, TYPE 1		
LOOP DETECTOR, TYPE 2		
LUMINAIRE		
MAST ARM		
MICROWAVE DETECTION		
OPTICOM RECEIVER		
OVERHEAD SIGNING		
PEDESTRIAN POLE/BASE		
PEDESTRIAN PUSHBUTTON		
PEDESTRIAN SIGNAL HEAD		
RIGHT-OF-WAY		R/W
SERVICE PEDESTAL		P
SIGNAL CABINET		
SIGNAL HEAD		
SIGNAL POLE/BASE		
CCTV CAMERA		
SPAN WIRE	XX	
UTILITY POLE		
VIDEO DETECTION		

GENERAL SIGNAL NOTES

1. ALL SIGNAL EQUIPMENT REMOVED FROM A PROJECT IS TO BE RETURNED TO DELDOT TRAFFIC - DOVER, DELAWARE.
2. ALL UNDERGROUND AND OVERHEAD UTILITIES SHOWN ON THESE PLANS ARE SCHEMATIC ONLY AND MAY NOT BE COMPLETE. THE CONTRACTOR SHALL BE RESPONSIBLE FOR NOTIFYING MISS UTILITY, AND/OR THE APPROPRIATE UTILITY PRIOR TO THE BEGINNING OF CONSTRUCTION FOR THE UTILITY MARKOUTS. IF THE CONTRACTOR PERCEIVES THAT A CONFLICT BETWEEN UTILITIES AND THE TRAFFIC SIGNAL WILL OCCUR, THE CONTRACTOR SHALL NOTIFY DELDOT TRAFFIC IMMEDIATELY BEFORE CONSTRUCTION.

PREPARED BY
THE CONSULTANT FIRM
RUMMEL, KLEPPER & KAHL, LLP

Barry L. Brandt — 07.22.20
THIS SEAL APPLIES TO THIS SHEET BEARING THE "RK&K" SECTION DESIGNATION. — DATE

BARRY L. BRANDT LICENSE No. 17066 DELAWARE PROFESSIONAL ENGINEER — SEAL

CONCURRENCE FOR INSTALLATION

Peter Haag DelDOT — 7/23/2020
CHIEF TRAFFIC ENGINEER — DATE

ADDENDA / REVISIONS

NOT TO SCALE

HSIP NCC, SR 273 AND I-95 INTERCHANGE IMPROVEMENTS

CONTRACT	PERMIT NO.	N857 / NCAM202
T200800713	DESIGNED BY:	J.RASHID
COUNTY		
NEW CASTLE	CHECKED BY:	B.BRANDT

SIGNAL PLAN
SR 273 @ I-95 SB OFF RAMP

SECTION: RK&K
SHEET NO.: 125

LAST REVISED: 9/11/2018
12-AUG-2020
10:24
\\balsrv01\v2014\2014\14144_DelDOT\1707\Task 4A - Harmony FD\Cadd\Contract\Plans\sg02_Har.dgn