THE STATE OF DELAWARE
DEPARTMENT OF TRANSPORTATION

U.S. CUSTOMARY UNITS

CONSTRUCTION PLANS FOR:

SR 1, SR 30
GRADE SEPARATED INTERSECTION

CONTRACT NUMBER: T200812201
FEDERAL AID PROJECT NUMBER: NH-S014 (12)

COUNTY: SUSSEX M.R. #: 14
ROADWAY LENGTH: 5300 FEET = 1.00 MILES
RAMP LENGTH: 10519 FEET = 1.99 MILES
STRUCTURE LENGTH: 210.0 FEET = 0.0398 MILES
TOTAL LENGTH: 15923.87 FEET = 3.03 MILES

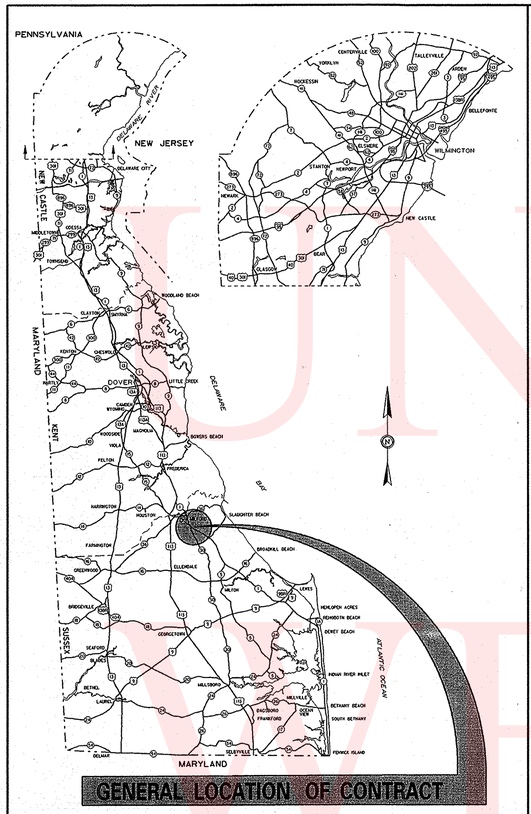

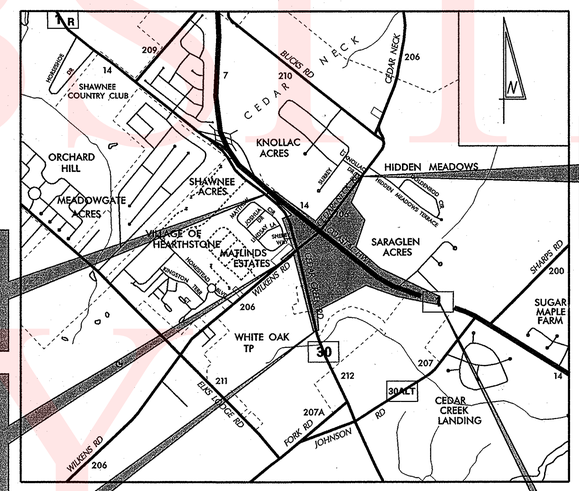

PROJECT LOCATION
NTS

LIMIT OF CONSTRUCTION STATION 430+75

END CONTRACT T200812201 STATION 53+00

LIMIT OF CONSTRUCTION STATION 400+00

LIMIT OF CONSTRUCTION STATION 899+50

BEGIN CONTRACT T200812201 STATION 605+00

DESIGN DESIGNATION

RAMPS	FUNCTIONAL CLASS: RURAL ARTERIAL RAMPS		D.H.V. PROJECTED: 790	YEAR: 2030
	TYPE OF CONSTRUCTION: NEW		DESIGN SPEED: 35 M.P.H.	
	A.A.D.T. CURRENT: 0	YEAR: 2007	TRUCKS: 12 %	
	A.A.D.T. PROJECTED: 7000	YEAR: 2030	DIRECTION OF DISTRIBUTION: 100 %	
RELOCATED WILKINS RD.	FUNCTIONAL CLASS: MAJOR COLLECTOR		D.H.V. PROJECTED: 772	YEAR: 2030
	TYPE OF CONSTRUCTION: REALIGNMENT		DESIGN SPEED: 45 M.P.H.	
	A.A.D.T. CURRENT: 3076	YEAR: 2007	TRUCKS: 12 %	
	A.A.D.T. PROJECTED: 11000	YEAR: 2030	DIRECTION OF DISTRIBUTION: 65 %	

INDEX OF SHEETS

SHEET Nº	TABLE OF CONTENTS
1	TITLE SHEET
2	PLAN SHEET INDEX
3	LEGEND
4	GENERAL AND PROJECT NOTES
5-11	TYPICAL SECTIONS
12-15	HORIZONTAL & VERTICAL CONTROLS
16-30	CONSTRUCTION PLANS
31-35	PROFILES
36-50	GRADES & GEOMETRICS
51-54	STORMWATER MANAGEMENT PLANS
55-56	CONSTRUCTION DETAILS
57-79	BRIDGE DETAILS
80-87	SIGN STRUCTURES DETAILS
88-97	CONSTRUCTION PHASING, MOT, AND EROSION CONTROL PLANS
98-101	DETOUR PLANS
102-117	SIGNING, STRIPING, CONDUIT, & LIGHTING PLANS
118-132	LIGHTING, ITMS, & UTILITY RELOCATION PLANS
133	SIGNAL PLAN

TOTAL SHEETS: 133

APPROVED DESIGN EXCEPTIONS

DESIGN PARAMETER	REQUIRED	PROVIDED	DATE

ADDENDA & REVISIONS

DESCRIPTION	NAME & DATE

ASSOCIATED CONTRACTS

CONTRACT NO.	CONTRACT NAME
96-122-01	SR 1 BUSINESS/SR 30 CONNECTOR, SOUTH OF MILFORD
68-03-001	DEL. ROUT 14, DEL ROUTE 16 TO MILFORD BYPASS
67-08-008	MILFORD BYPASS

PREPARED BY
THE CONSULTING FIRM OF

SEAL

RECOMMENDED DATE

RECOMMENDED

N/A
SQUAD MANAGER, CONSTRUCTION DATE

Bradford R. Salows 11/3/2011
GROUP ENGINEER, CONSTRUCTION DATE

N/A
ASSISTANT DIRECTOR, TRANSPORTATION SOLUTIONS (CONSTRUCTION) DATE

RECOMMENDED
Vincent W. Bavia
STORMWATER ENGINEER
DATE 5 Dec 2011
VINCENT W. BAVIA REGISTERED No. 12898 DELAWARE PROFESSIONAL ENGINEER
SEAL

RECOMMENDED
SQUAD MANAGER, TRANSPORTATION SOLUTIONS (PROJECT DEVELOPMENT OR BRIDGE DESIGN)
DATE 11/09/11
JOHN R. GAINES LICENSED No. 13553 DELAWARE PROFESSIONAL ENGINEER
SEAL

RECOMMENDED
Douglas E. Finney (Acting)
BRIDGE DESIGN ENGINEER
DATE 11/9/11
DOUGLAS E. FINNEY REGISTERED NO. 8434 DELAWARE PROFESSIONAL ENGINEER
SEAL

RECOMMENDED
GROUP ENGINEER, PROJECT DEVELOPMENT
DATE 12-5-11
JAMES M. SATTERFIELD IV LICENSED No. 10391 DELAWARE PROFESSIONAL ENGINEER
SEAL

RECOMMENDED
ASSISTANT DIRECTOR, TRANSPORTATION SOLUTIONS
DATE 12/5/11
MICHAEL H. SIMMONS REGISTERED No. 8211 DELAWARE PROFESSIONAL ENGINEER
SEAL

APPROVED
Natalie Barnhart
CHIEF ENGINEER
DATE 12-6-11
SEAL

LAST REVISED: 8/7/2008
Y:\SUSSEX\014\ROAD\281220\PLANS\FINAL\CONSTRUCTION\TC01.DGN

UNOFFICIAL WEBSITE COPY

PLAN SHEET INDEX CROSS REFERENCE								
CONSTRUCTION PLAN	16	17	18	19	20	21	22	23
PROFILES	34	34	33	35	31, 35	33	33-34	34
GRADES AND GEOMETRICS	36	37	38	39	40	41	42	43
STORMWATER MANAGEMENT PLANS	-	51-52	51-52	52-53	52-53	-	51-52	-
CONSTRUCTION PHASING, M.O.T. AND E&S	90, 93, 96	90, 93, 96	90, 93, 96 - 91, 94, 97	91, 94, 97	91, 94, 97 - 92, 95, 98	92, 95, 98	90, 93, 96	90, 93, 96 - 91, 94, 97
SIGNING & STRIPING PLANS	102	103	104	105	106	107	108	109
LIGHTING, ITMS, & UTILITY RELOCATION PLANS	120	121	122	123	124	125	-	-
SIGNALIZATION PLAN	-	-	-	-	-	-	-	-

*NOTE: LIGHTING, ITMS, & UTILITY RELOCATION PLAN SHEETS 118 AND 119 ARE LOCATED SOUTH OF CONSTRUCTION PLAN SHEET 16.

PLAN SHEET INDEX CROSS REFERENCE							
CONSTRUCTION PLAN	24	25	26	27	28	29	30
PROFILES	34	33	31	31, 33	31-32, 35	32	35
GRADES AND GEOMETRICS	44	45	46	47	48	49	50
STORMWATER MANAGEMENT PLANS	-	-	-	54	52-53	-	52-53
CONSTRUCTION PHASING, M.O.T. AND E&S	91, 94, 97	91, 94, 97 - 92, 95, 98	92, 95, 98	92, 95, 98	92, 95, 98	92, 95, 98	91, 94, 97 - 92, 95, 98
SIGNING & STRIPING PLANS	110	111	112	113	114	115	116
LIGHTING, ITMS, & UTILITY RELOCATION PLANS	126	127	128	129	130	-	-
SIGNALIZATION PLAN	-	-	-	133	-	-	-

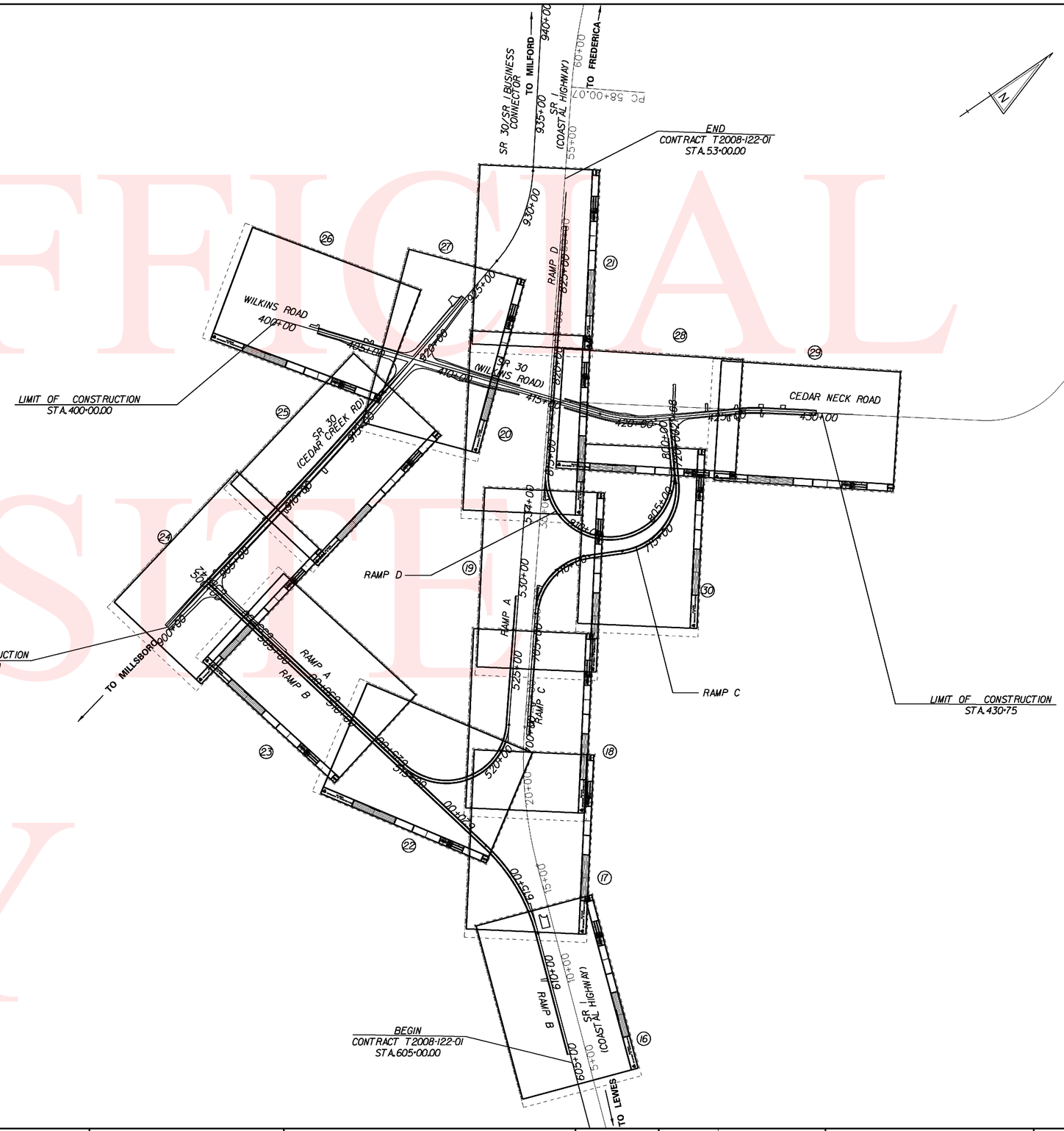

UNOFFICIAL WEBSITE COPY

Y:\SUSSEX\014\ROAD\281220\PLANS\FINAL\CONSTRUCTION\S01.DGN

DELAWARE DEPARTMENT OF TRANSPORTATION	ADDENDUMS / REVISIONS	NOT TO SCALE	SR 1, SR 30 GRADE SEPARATED INTERSECTION	CONTRACT T200812201	BRIDGE NO.	PLAN SHEET INDEX	SHEET NO. 2
				COUNTY SUSSEX	DESIGNED BY: JLC		TOTAL SHTS. 133
					CHECKED BY: JRG		

EXISTING SYMBOLS

DRAINAGE	
	DITCH OR STREAM CENTERLINE
	DIRECTIONAL STREAM FLOW ARROW
C.B.	DRAINAGE CATCH BASIN
J.B.	DRAINAGE JUNCTION BOX
D	DRAINAGE MANHOLE
SIZE/TYPE LABEL	DRAINAGE PIPE AND FLOW ARROW
	DRAINAGE PIPE HEADWALL
	RIPRAP - AREA FEATURE
	RIPRAP - LINEAR FEATURE

MANMADE ROADSIDE FEATURES	
(TYPE LABEL)	CURB
(TYPE LABEL)	CURB AND GUTTER
	FENCE - CHAINLINK OR STRANDED
	FENCE - STOCKADE OR SPLIT RAIL
FP	FLAG POLE
	GUARDRAIL - STEEL BEAM
	GUARDRAIL - WIRE ROPE
LAMP	LAMP AND POST - RESIDENTIAL
MB	MAILBOX
PM	PARKING METER AND POST
	PAVEMENT - FLEXIBLE
	PAVEMENT - RIGID
	PILE - BRIDGE
	PILLAR OR MISCELLANEOUS POST
	TRAFFIC SIGN AND POST
	WALL - BRICK OR BLOCK
	WALL - STONE

NATURAL ROADSIDE FEATURES	
	GRASS LAWN
	HEDGEROW OR THICKET
	MARSH BOUNDARY LINE
	TREE - CONIFEROUS
	TREE - DECIDUOUS
	TREE STUMP
	SHRUBBERY
WL	DELINEATED WETLAND BOUNDARY LINE
	WOODS LINE BOUNDARY

SURVEY CONTROL & MONUMENTATION	
B.M.	SURVEY BENCHMARK LOCATION
T.P.	SURVEY TIE POINT LOCATION
	SURVEY TRAVERSE POINT
	POINT OF CURVATURE OR TANGENCY
	POINT OF INTERSECTING TANGENTS
C.M.	PROPERTY MARKER - CONCRETE MON.
I.P.	PROPERTY MARKER - IRON PIPE

UTILITY	
	SOIL BORING LOCATION
	UTILITY TEST HOLE LOCATION
TV	CABLE TV DISTRIBUTION BOX
E	ELECTRIC MANHOLE
E	ELECTRIC TRANSFORMER
	POLE MOUNTED LUMINAIRE
G	GAS MANHOLE
G.M.	GAS METER
G.V.	GAS VALVE
G.P.	GAS PUMP - SERVICE STATION
	RAILROAD TRACKS
S	SANITARY SEWER MANHOLE
S.V.	SANITARY SEWER VALVE
VENT	SANITARY SEWER VENT OR CLEANOUT
S.D.F.	SEPTIC DRAIN FIELD
B	TELEPHONE BOOTH
T	TELEPHONE MANHOLE
T	TELEPHONE TEST POINT
J.W.	TRAFFIC - CONDUIT JUNCTION WELL
	TRAFFIC - LIGHT POLE AND BASE
	TRAFFIC - PEDESTRIAN POLE & BASE
	TRAFFIC - SIGNAL CABINET & BASE
	TRAFFIC - SIGNAL POLE AND BASE
U	UTILITY BOX
	UTILITY POLE GUY WIRE ANCHOR
	UTILITY POLE
F.H.	WATER - FIRE HYDRANT
W.M.	WATER METER
W.V.	WATER VALVE
WELL	WELL HEAD

UTILITY COMPANY FACILITIES	
ESNG	EASTERN SHORE NATURAL GAS
COM-CATV	COMCAST CABLE TV
VER-T	VERIZON TELEPHONE
DPL-UG	DELMARVA POWER

PROPOSED SYMBOLS

CONSTRUCTION	
	CONCRETE SAFETY BARRIER - PERMANENT
BFS	BIOFILTRATION SWALE
	BUTT JOINT
100+00	CONSTRUCTION BASELINE
	CURB, TYPE 1 & TYPE 3
	CURB, TYPE 2
	CURB & GUTTER, TYPE 1
	CURB & GUTTER, TYPE 2
	CURB & GUTTER, TYPE 3
	CURB & GUTTER, TYPE 4
CZ	CLEAR ZONE
	DRAINAGE INLET
	DITCH
	FENCE - METAL
	FENCE - WOOD
	FLARED END SECTION
	GUARDRAIL, TYPES 1 & 3
	GUARDRAIL, TYPE 2
	GUARDRAIL END TREATMENT - PARALLEL
	GUARDRAIL END TREATMENT - PARABOLIC
HC	HORIZONTAL CLEARANCE
	JUNCTION BOX - DRAINAGE
LOC	LIMIT OF CONSTRUCTION
	MANHOLE
	PAVEMENT PATCH
	PIPE & DIRECTIONAL FLOW ARROW
	RIPRAP
	P.C.C. SIDEWALK @ 4"
	P.C.C. SIDEWALK @ 6"
	UNDERDRAIN
	UNDERDRAIN OUTLET
TOF	TOE OF FILL
	PAVEMENT REMOVAL, TOPSOIL, SEED, & MULCH

CONSTRUCTION PHASING SYMBOLS	
	BARRICADE, TYPE 3
	CONCRETE SAFETY BARRIER - PORTABLE
	CONSTRUCTION WARNING SIGN LOCATION
END ROAD WORK	CONSTRUCTION WARNING SIGN
	CRASH CUSHION ARRAY
	DRUM - TRAFFIC CONTROL
	PHASING TRAFFIC FLOW ARROW

LANDSCAPING	
	SHRUBBERY
	CONIFEROUS TREE
	DECIDUOUS TREE

EROSION & SEDIMENT CONTROL	
DWB	DEWATERING BASIN
ED	EARTH DIKE
	INLET SEDIMENT CONTROL
	PERIMETER DIKE/SWALE
PST	PORTABLE SEDIMENT TANK
RSF	REINFORCED SILT FENCE
SBD	SANDBAG DIKE
SB	SANDBAG DIVERSION
	STONE CHECK DAM
SCE	STABILIZED CONSTRUCTION ENTRANCE
SF	SILT FENCE
SP-1	SUMP PIT, TYPE 1
SP-2	SUMP PIT, TYPE 2
ST	SEDIMENT TRAP
ST	SEDIMENT TRAP WITH INLET AS OUTLET
ST	SEDIMENT TRAP PIPE OUTLET
SW	STILLING WELL
	TEMPORARY SWALE
TSD	TEMPORARY SLOPE DRAIN

IDENTIFIERS	
A/C	ADJUST BY CONTRACTOR
A/O	ADJUST BY OTHERS
B	CONCRETE SAFETY BARRIER
C	CURB OR CURB & GUTTER
CJB	CONVERT TO JUNCTION BOX
CMH	CONVERT TO DRAINAGE MANHOLE
C/O	CURB OPENING
CR	CURB RAMP
CR-W	CURB RAMP - WITHOUT SIDEWALK SURFACE DETECTABLE WARNING SYSTEM
DI	DRAINAGE INLET
DND	DO NOT DISTURB
FES	FLARED END SECTION
FS	FILTRATION STRUCTURE
GR	GUARDRAIL
JB	JUNCTION BOX
LS	LANDSCAPE PLANTINGS
MH	MANHOLE
M	MONUMENT - RIGHT-OF-WAY
P	PIPE
RL/C	RELOCATE BY CONTRACTOR
RL/O	RELOCATE BY OTHERS
RM/C	REMOVE BY CONTRACTOR
RM/O	REMOVE BY OTHERS
ST	SEDIMENT TRAP
SF	SILT FENCE
UD	UNDERDRAIN
UDO	UNDERDRAIN OUTLET STRUCTURE

PAVEMENT SECTION(S)	
	OVERLAY PAVEMENT SECTION
	FULL DEPTH PAVEMENT SECTION
	DRIVEWAY PAVEMENT SECTION

RIGHT-OF-WAY SYMBOLS	
	PROPOSED RIGHT-OF-WAY MONUMENT
	EXISTING PROPERTY LINE
EASEMENT TYPE	EXISTING EASEMENT
	EXISTING RIGHT-OF-WAY
DA	PROPOSED DENIAL OF ACCESS
PE	PROPOSED PERMANENT EASEMENT
R/W	PROPOSED RIGHT-OF-WAY
R/W-DA	PROPOSED R/W & DENIAL OF ACCESS
TCE	TEMPORARY CONSTRUCTION EASEMENT
100+00	PROPOSED RIGHT-OF-WAY BASELINE
100+00	HISTORIC RIGHT-OF-WAY BASELINE

TRAFFIC	
ITMS-CON	ITMS CONDUIT
SIG-CON	SIGNAL CONDUIT
	CONDUIT JUNCTION WELL
	LUMINAIRE
	PAVEMENT MARKINGS
	PAVEMENT STRIPING
	TRAFFIC SIGN

UNOFFICIAL WEBSITE COPY

DELAWARE DEPARTMENT OF TRANSPORTATION

ADDENDUMS / REVISIONS

NOT TO SCALE

SR1, SR30 GRADE SEPARATED INTERSECTION

CONTRACT	BRIDGE NO.	LEGEND SHEET	SHEET NO.
T200812201	DESIGNED BY: JLC		3
COUNTY			TOTAL SHTS.
SUSSEX	CHECKED BY: JRG		133

GENERAL NOTES

1. THIS PROJECT IS TO BE CONSTRUCTED IN ACCORDANCE WITH THE DELAWARE DEPARTMENT OF TRANSPORTATION "STANDARD SPECIFICATIONS", DATED AUGUST 2001 AND THE DELAWARE DEPARTMENT OF TRANSPORTATION "STANDARD CONSTRUCTION DETAILS", DATED 2001, INCLUDING ALL REVISIONS UP TO THE DATE OF ADVERTISEMENT.

2. THE CONTRACTOR SHALL GIVE TWO (2) WEEKS NOTICE TO THE PROPERTY OWNER WHEN ANY FIXTURE, SHRUB OR OTHER OBJECT MUST BE REMOVED FROM THE RIGHT OF WAY OR EASEMENT AREA. IF THE OWNER HAS NOT ATTEMPTED TO SALVAGE THIS PROPERTY, THE CONTRACTOR SHALL REMOVE IT WITHOUT OBLIGATION. COMPENSATION SHALL BE INCIDENTAL TO THE CONTRACT.

3. THE ENDS OF ALL CURBS SHALL BE DEPRESSED FLUSH WITH THE PAVEMENT AT A RATIO OF TWELVE TO ONE (12:1) UNLESS OTHERWISE DIRECTED BY THE ENGINEER.

4. THE CONTRACTOR SHALL PROVIDE AND INSTALL PVC SLEEVES (4" INSIDE MINIMUM DIAMETER, 6" INSIDE MAXIMUM DIAMETER) IN PROPOSED CONCRETE SIDEWALKS, ISLANDS, AND MEDIANS FOR FUTURE TRAFFIC SIGN POSTS AS DIRECTED BY THE ENGINEER. THE LOWER END OF THE SLEEVE SHALL SIT ON THE TOP OF THE SUBBASE MATERIAL. THE COST SHALL BE INCIDENTAL TO THE CONTRACT.

5. STAGING AREAS - PROPER EROSION AND SEDIMENT CONTROL MEASURES AS DETERMINED BY THE ENGINEER SHALL BE INSTALLED IN ALL STAGING AREAS. ALL AREAS USED BY THE CONTRACTOR FOR STAGING OPERATIONS SHALL BE FULLY RESTORED BY THE CONTRACTOR UPON COMPLETION OF THE CONTRACT. IF THE STAGING AREA IS PAVED, IT SHALL BE RESTORED TO ITS ORIGINAL CONDITION. IF THE AREA IS UNPAVED, IT SHALL BE RE-GRADED, TOPSOILED, SEEDED AND MULCHED IN ACCORDANCE WITH DELAWARE STANDARD SPECIFICATIONS 732, 734 AND 735, FOR TOPSOIL, SEED AND MULCH RESPECTIVELY, TO THE SATISFACTION OF THE ENGINEER. THE SEED SHALL ADHERE TO THE SPECIFICATIONS OF SECTION 734 FOR PERMANENT GRASS SEEDING - DRY GROUND. ALL COSTS ASSOCIATED WITH RESTORATION OF THE STAGING AREA SHALL BE AT THE CONTRACTOR'S EXPENSE. IF THE ENGINEER DETERMINES THAT A SATISFACTORY STAND OF GRASS DOES NOT EXIST AT THE TIME OF FINAL INSPECTION, ALL COSTS ASSOCIATED WITH REESTABLISHING A SATISFACTORY STAND OF GRASS SHALL BE AT THE CONTRACTOR'S EXPENSE. NO CONSTRUCTION VEHICLES, AND NO STORAGE OF EQUIPMENT AND MATERIALS SHALL BE ALLOWED WITHING THE FOOTPRINT OF THE PROPOSED INFILTRATION PONDS.

6. SITE REVIEWER - AN EROSION CONTROL SITE REVIEWER SHALL BE A PERSON FROM THE CONTRACTOR'S STAFF ASSIGNED TO EROSION AND SEDIMENT CONTROL IMPLEMENTATION AND MAINTENANCE AND SHALL BE REQUIRED ON SPECIFIC PROJECTS. THE NAME AND DNREC CERTIFICATION NUMBER OF EACH SITE REVIEWER SO REQUIRED SHALL BE SUBMITTED TO THE DEPARTMENT. THE NAME OF THE DELAWARE REGISTERED PROFESSIONAL ENGINEER PROVIDING DIRECTION AND SUPERVISION OF THE SITE REVIEWER, AS REQUIRED IN SECTION 12.3 OF THE DELAWARE SEDIMENT AND STORMWATER REGULATIONS, SHALL ALSO BE SUBMITTED TO THE DEPARTMENT. THE SITE REVIEWER REQUIREMENTS IN EFFECT ON THIS PROJECT SHALL BE MARKED WITH AN "X" BELOW:

EROSION POTENTIAL FOR THIS PROJECT	SITE REVIEWER REQUIREMENT
( ) INSIGNIFICANT	NONE
( ) MINOR	CONTRACTOR CERTIFICATION COURSE TRAINING ONLY, AS DEFINED IN SECTION 1.3 OF THE DELAWARE SEDIMENT AND STORMWATER REGULATIONS.
( ) MEDIUM	AT THE TIME OF BID OF THE CONTRACT, EITHER THE SUPERINTENDENT OR A SEPARATE INDIVIDUAL FROM THE CONTRACTOR'S STAFF SHALL BE A CERTIFIED CONSTRUCTION REVIEWER (CCR), AS DEFINED IN SECTION 12 OF THE DELAWARE SEDIMENT AND STORMWATER REGULATIONS.
(X) MAJOR	SUPERINTENDENT AND AN INDIVIDUAL FROM CONTRACTOR'S STAFF SHALL BE CCR. ONE INDIVIDUAL FROM THE CONTRACTOR'S STAFF MUST BE A CCR AT THE TIME OF BID OF THE CONTRACT. THE SUPERINTENDENT MUST BECOME A CCR WITHIN ONE YEAR AFTER THE AWARD OF CONTRACT.

7. ELECTRONIC PROJECT FILES THAT WILL BE MADE AVAILABLE TO THE CONTRACTOR INCLUDE:

( )	NONE
(X)	ASCII DATA FILES WITH COORDINATES AND ELEVATIONS FOR PROPOSED POINTS AS SELECTED BY THE ENGINEER.
(X)	RASTER FILES, IN .CAL FILE FORMAT, FOR ALL PLAN SHEETS.
(X)	EXISTING DIGITAL TERRAIN MODEL, IN .DTM FILE FORMAT, COMPATIBLE WITH SOFTWARE CURRENTLY USED BY DELDOT.
(X)	PROPOSED DIGITAL TERRAIN MODEL, IN .DTM FILE FORMAT, COMPATIBLE WITH SOFTWARE CURRENTLY USED BY DELDOT.
(X)	DESIGN FILE, IN .DGN FILE FORMAT, CONTAINING ONLY THE PROPOSED 3D TRIANGLES OF THE PROPOSED DIGITAL TERRAIN MODEL (DTM).

8. AMERICAN TRAFFIC SAFETY SERVICES ASSOCIATION (ATSSA) CERTIFIED TRAFFIC CONTROL SUPERVISOR REQUIREMENT FOR THIS PROJECT.

( )	THE CONTRACTOR SHALL NOT BE REQUIRED TO HAVE AN ATSSA SUPERVISOR ASSIGNED TO THIS PROJECT.
( )	THE CONTRACTOR SHALL HAVE AN ATSSA SUPERVISOR ASSIGNED TO THIS PROJECT. THE CONTRACTOR'S GENERAL SUPERINTENDENT FOR THIS PROJECT OR ANOTHER ATSSA CERTIFIED MEMBER OF THE CONTRACTOR'S PROJECT STAFF MAY BE THE ATSSA SUPERVISOR.
(X)	THE CONTRACTOR SHALL HAVE AN ATSSA SUPERVISOR ASSIGNED TO THIS PROJECT. THE ATSSA SUPERVISOR'S SOLE JOB SHALL BE SUPERVISION OF THE INSTALLATION, OPERATION AND MAINTENANCE OF TRAFFIC CONTROL DEVICES FOR THIS PROJECT. THE CONTRACTOR'S GENERAL SUPERINTENDENT FOR THIS PROJECT SHALL NOT BE THE ATSSA SUPERVISOR.

9. THE DISTURBED AREA FOR THIS PROJECT IS 55.39 ACRES.

SECTION 100

1. ANY DAMAGE TO ITEMS NOTED TO BE RELOCATED OR RESET BY THE CONTRACTOR, AT THE DISCRETION OF THE ENGINEER, SHALL BE REPAIRED AND/OR REPLACED IN KIND AT THE CONTRACTOR'S EXPENSE.

PROJECT NOTES

2. UNLESS OTHERWISE NOTED ON THE PLANS, THE CONTRACTOR SHALL, AS PART OF HIS PROJECT SCHEDULE, SUBMIT TO THE ENGINEER AN ESTIMATE OF THE MONTHLY PAYMENTS EXPECTED TO BE RECEIVED ON THE CONTRACT. THIS WILL BE REFERENCED AS THE "MONTHLY PAYMENT CHART".

   A CHART IN MICROSOFT EXCEL, MICROSOFT WORD, OR HAND WRITTEN FORMAT WILL BE ACCEPTABLE FOR THIS PURPOSE. THE CHART SHOULD INCLUDE, AS A MINIMUM, COLUMNS FOR THE MONTH, YEAR AND ESTIMATED MONTHLY PAYMENTS. THE TOTAL OF ALL ESTIMATED MONTHLY PAYMENTS SHOULD EQUAL THE AWARDED CONTRACT TOTAL BID PRICE.

   THE ENGINEER MAY REQUEST AN UPDATED "MONTHLY PAYMENT CHART" AT HIS DISCRETION, DEPENDING ON THE ACCURACY OF THE INITIAL ESTIMATES AND ACCORDING TO THE OVERALL NEEDS OF THE DEPARTMENT.

   THE "MONTHLY PAYMENT CHART" WILL NOT BE CONSIDERED A BINDING DOCUMENT BY EITHER THE CONTRACTOR OR THE DEPARTMENT AND IS CONSIDERED SOLELY INFORMATIONAL.

   ON PROJECTS REQUIRING CPM SCHEDULES, THE CONTRACTOR MAY, BUT IS NOT REQUIRED TO, "COST LOAD" THE CPM SCHEDULE IN ORDER TO GENERATE THE MONTHLY SPEND PAYMENT CHART.

   COSTS TO PREPARE AND/OR UPDATE THE "MONTHLY PAYMENT CHART" ARE ADDRESSED AS FOLLOWS:

   A. ON CONTRACTS REQUIRING CPM SCHEDULES AND UPDATES, PREPARATION OF THE INITIAL CHART SHALL BE INCIDENTAL TO ITEM 763508. UPDATES SHALL BE INCIDENTAL TO ITEM 763509.

   B. ON CONTRACTS NOT REQUIRING CPM SCHEDULES, THE COST TO PREPARE AND UPDATE THE "MONTHLY PAYMENT CHART" SHALL BE INCLUDED IN ITEM 763000 - INITIAL EXPENSE.

SECTION 300

7. A. THE CONTRACTOR MAY ELECT TO USE ANY OF THE FOLLOWING MATERIALS TO MEET THE REQUIREMENTS OF ITEM 302007 - GRADED AGGREGATE BASE COURSE, TYPE 'B':
   a. CRUSHED STONE (PER STANDARD SPECIFICATION 821)
   b. CRUSHED CONCRETE (PER STANDARD SPECIFICATION 821)
   c. HOT-MIX MILLINGS (PER SPECIAL PROVISION 302514 MILLED HOT-MIX BASE COURSE)

   THE CONTRACTOR WILL NOT BE ALLOWED TO MIX DIFFERENT MATERIALS (OR SIMILAR MATERIALS FROM DIFFERENT SOURCES) TO MEET THE REQUIREMENTS OF ITEM 302007 - GRADED AGGREGATE BASE COURSE, TYPE 'B'.

   ALL OF THE ABOVE LISTED MATERIALS ARE PERMITTED FOR USE ON THE JOB, PROVIDED THEY ARE SEPARATED INTO APPROVED AREAS. EACH AREA OF BASE COURSE MUST BE CONSTRUCTED USING MATERIALS FROM A SINGULAR SOURCE, FULL DEPTH, IN ORDER THAT PROPER TESTING MAY BE ACCOMPLISHED. THE CONTRACTOR AND DELDOT'S PROJECT ENGINEER SHALL AGREE ON THE LIMITS OF EACH SOURCE OF MATERIAL PRIOR TO PLACEMENT.

   B. THE QUANTITY USED FOR BASE OF EACH OF THE ABOVE LISTED MATERIALS WILL BE THE CONTRACTOR'S CHOICE, WITH THE TOTAL MEETING THE ADVERTISED QUANTITY OF ITEM 302007 - GRADED AGGREGATE BASE COURSE, TYPE 'B'.

   C. THE CONTRACTOR MAY ALSO ELECT TO RECYCLE MILLINGS FOR USE IN HOT-MIX AS PERMITTED BY THE STANDARD SPECIFICATIONS. THE CHOICE OF THE QUANTITY OF MILLINGS USED FOR THIS PURPOSE, OR FOR BASE COURSE, LIES WITH THE CONTRACTOR. ALL MILLING MATERIAL SHALL BECOME PROPERTY OF THE CONTRACTOR.

   D. HOT-MIX MILLINGS MAY BE GENERATED FROM THE FOLLOWING SOURCES:
   a. MATERIAL MADE AVAILABLE WHEN MILLED ON THIS CONTRACT UNDER ITEM 760507.
   b. MATERIAL MILLED ON THIS CONTRACT AT THE CONTRACTOR'S CHOICE UNDER ITEM 202000.
   c. MILLED MATERIAL FURNISHED ON THE JOB FROM THE CONTRACTOR'S YARD OR OTHER OUTSIDE SOURCE.
   ALL MILLED MATERIALS SHALL MEET THE MATERIAL REQUIREMENTS OF ITEM 302514 - MILLED HOT-MIX BASE COURSE.

   E. PAYMENT CLARIFICATION:
   a. SHOULD THE CONTRACTOR ELECT TO MILL PORTIONS OF HOT-MIX SHOWN ON THE PLANS TO BE REMOVED UNDER ITEM 202000 - EXCAVATION AND EMBANKMENT THE COST OF MILLING THIS HOT-MIX WILL BE PAID AS ITEM 202000 - EXCAVATION AND EMBANKMENT. THE MILLINGS GENERATED MAY BE RECYCLED INTO HOT-MIX, UTILIZED FOR BASE COURSE, OR DISPOSED OF TO AN APPROVED SITE. HAULING COSTS FOR DISPOSAL AND/OR RECYCLING ARE INCIDENTAL TO ITEM 202000 - EXCAVATION AND EMBANKMENT.

   b. MILLINGS GENERATED UNDER ITEM 760502 - PAVEMENT MILLINGS, TAPERCUT MAY BE RECYCLED INTO HOT-MIX, UTILIZED FOR BASE COURSE OR DISPOSED OF BY THE CONTRACTOR TO AN APPROVED SITE. NO SEPARATE PAYMENT WILL BE MADE FOR TRANSPORTING MILLINGS ON SITE OR TO AN APPROVED DISPOSAL SITE.

   c. SHOULD THE CONTRACTOR ELECT TO TEMPORARILY STOCKPILE MILLINGS ON THE JOB SITE FOR LATER USE, ALL COSTS FOR STOCKPILING AND SUBSEQUENT REHANDLING SHALL BE INCIDENTAL TO ITEM 202000 - EXCAVATION AND EMBANKMENT.

   d. MILLINGS USED FOR BASE COURSE SHALL BE PLACED IN ACCORDANCE WITH THE REQUIREMENTS OF SPECIAL PROVISION 302514 - MILLED HOT-MIX BASE COURSE. NO SEPARATE PAYMENT WILL BE MADE TO FURNISH MILLINGS FROM AN OUTSIDE SOURCE OR TRANSPORT MILLINGS WITHIN THE PROJECT LIMITS. MILLINGS USED FOR BASE COURSE WILL BE PAID IN PLACE AT THE UNIT BID PRICE FOR ITEM 302007 - GRADED AGGREGATE BASE COURSE, TYPE 'B'.

   e. ALL COSTS TO UTILIZE MILLINGS IN RECYCLED HOT-MIX WILL BE INCIDENTAL TO THE UNIT PRICE BID FOR THE HOT-MIX ITEM USING THE RECYCLED MATERIAL.

   f. SPECIAL PROVISION 302514 - MILLED HOT-MIX BASE COURSE IS PROVIDED TO SPECIFY THE MEANS OF LAY DOWN AND COMPACTION AS WELL AS THE MATERIAL REQUIREMENTS FOR MILLINGS USED AS BASE COURSE. ALL COSTS TO BRING THE MILLINGS INTO COMPLIANCE WITH THE REQUIREMENTS OF ITEM - 302514 MILLED HOT-MIX BASE COURSE ARE INCIDENTAL TO ITEM 302007 - GRADED AGGREGATE BASE COURSE, TYPE 'B'. NO PAYMENT WILL BE MADE FOR ITEM 302514 - MILLED HOT-MIX BASE COURSE. THE QUANTITY OF MILLINGS USED FOR BASE COURSE WILL BE PAID FOR UNDER ITEM 302007 - GRADED AGGREGATE BASE COURSE.

SECTION 200

3. THE CONTRACTOR SHALL REMOVE AND RESET ALL MAILBOXES TO MAINTAIN MAIL SERVICE AS DIRECTED BY THE ENGINEER. THE CONTRACTOR SHALL RELOCATE MAILBOXES AS REQUIRED BY THE PROPOSED GEOMETRICS AND AS DIRECTED BY THE ENGINEER. WHEN RELOCATING MAILBOXES IN CURBED SECTIONS, THE FACE OF THE MAILBOX SHALL BE FLUSH WITH THE BACK EDGE OF CURB. WHEN RELOCATING MAILBOXES IN OPEN SECTIONS, THE FACE OF THE MAILBOX SHALL SET BACK 8 INCHES FROM THE EDGE OF THE PAVED SHOULDER. THE BOTTOM OF THE MAILBOX SHALL BE SET 46 INCHES ABOVE THE ROADWAY SURFACE. MAILBOXES LOCATED AT DRIVEWAY ENTRANCES SHALL BE PLACED ON THE FAR SIDE OF THE DRIVEWAY IN THE DIRECTION OF TRAVEL. POSTS BEING RESET IN CONCRETE SIDEWALK SHALL BE PLACED IN AN APPROPRIATE SIZE PVC SLEEVE. COST FOR ALL WORK AND MATERIALS SHALL BE PAID UNDER ITEM 201000 - CLEARING AND GRUBBING.

4. THE ENGINEER MAY REQUIRE THE CONTRACTOR TO EXCAVATE TEST PITS ALONG PROPOSED DRAINAGE RUNS, AT POINTS OF POSSIBLE UTILITY CONFLICTS, TO DETERMINE IF A CONFLICT EXISTS. ANY CONFLICTS SHALL BE COORDINATED BY THE CONTRACTOR, WITH THE ENGINEER AND THE UTILITY COMPANY INVOLVED. THE ENGINEER SHALL ULTIMATELY DETERMINE THE SOLUTION TO THE UTILITY CONFLICT. TEST HOLES SHALL BE MEASURED AND PAID FOR IN ACCORDANCE WITH ITEM 208000 - EXCAVATION AND BACKFILL FOR PIPE TRENCHES, BUT ONLY TO THE ACTUAL DEPTH EXCAVATED.

5. THIS PROJECT IS COVERED UNDER AN NPDES GENERAL PERMIT FOR CONSTRUCTION. UNDER THE GENERAL PERMIT, COMPLIANCE WITH DELDOT'S APPROVED SEDIMENT AND STORMWATER MANAGEMENT PLANS WILL CONSTITUTE COMPLIANCE WITH THE NPDES INDUSTRIAL PERMITTING REQUIREMENTS FOR THIS CONSTRUCTION PROJECT. A COPY OF THE NPDES GENERAL PERMIT AND NOI IS KEPT ON FILE IN EACH OF THE CONSTRUCTION OFFICES AND THE DEPARTMENT'S TEAM SUPPORT SECTION. A COPY OF THE GENERAL PERMIT OR THE NOI CAN BE OBTAINED UPON REQUEST FROM EITHER THE DEPARTMENT'S STORMWATER ENGINEER OR THE APPROPRIATE CONSTRUCTION ENGINEER.

6. ITEMS TO BE REMOVED UNDER ITEM 211000 - REMOVAL OF STRUCTURES AND OBSTRUCTIONS SHALL INCLUDE, BUT NOT BE LIMITED TO THE FOLLOWING:
   - EXISTING SIGNAL FOUNDATIONS
   - EXISTING DRAINAGE PIPES
   - EXISTING DRAINAGE STRUCTURES

SECTION 400

8. THE PAVEMENT SECTION FOR HOT-MIX RESIDENTIAL DRIVEWAYS SHALL BE 2" HOT-MIX, TYPE 'C' 160, PG 64-22 OVER 8" GRADED AGGREGATE BASE COURSE, TYPE 'B', UNLESS OTHERWISE NOTED ON THE PLANS.

SECTION 600

9. THE DEPARTMENT AND THE CONTRACTOR SHALL INSPECT ALL EXISTING PIPES AND DRAINAGE STRUCTURES TO BE USED IN THE FINAL DRAINAGE SYSTEM AND AGREE ON THE CONDITION PRIOR TO THE START OF CONSTRUCTION. EXISTING PIPES AND DRAINAGE STRUCTURES DAMAGED DUE TO CONTRACTOR OPERATIONS SHALL BE REPAIRED OR REPLACED IN-KIND AT THE CONTRACTOR'S EXPENSE. THE CONTRACTOR IS REQUIRED TO VIDEO INSPECT NEW PIPE RUNS TO CONFIRM CONDITION PRIOR TO ACCEPTANCE. PAYMENT FOR VIDEO INSPECTION OF NEW PIPES WILL BE MADE UNDER ITEM 612529 - VIDEO INSPECTION.

SECTION 700

10. STATION AND ELEVATION DATA GIVEN FOR DRAINAGE STRUCTURES ARE TO BE APPLIED TO THE CENTER OF THE GRATE FOR INLETS, AND TO THE CENTER OF THE STRUCTURE FOR JUNCTION BOXES AND MANHOLES.

11. ALL PAVED AREAS TO BE RECONSTRUCTED OR WIDENED SHALL BE SAWCUT AT THE POINT WHERE THE NEW PAVEMENT IS TO TIE INTO THE EXISTING PAVEMENT.

12. TUBULAR MARKERS MEETING THE REQUIREMENTS OF ITEM 720611 - FLEXIBLE DELINEATOR, PERMANENT SHALL BE INSTALLED ON THE CORNERS OF ISLANDS NOT OFFSET THE FULL WIDTH OF THE SHOULDER ADJACENT TO THE ROADWAY. THE COST OF PROVIDING AND INSTALLING THE TUBULAR MARKERS SHALL BE INCIDENTAL TO THE ISLAND CURBING ITEM BEING CONSTRUCTED. NO ADDITIONAL PAYMENT WILL BE MADE UNDER ITEM 720611 - FLEXIBLE DELINEATOR, PERMANENT.

MISCELLANEOUS

13. THE CONTRACTOR SHALL CONTACT MICHAEL ELLER, THE CHIEF OF SCHEDULING FOR DART FIRST STATE, 14 DAYS PRIOR TO THE START OF CONSTRUCTION AT 302-576-6061.

14. CROSS SECTIONS USED IN THE PREPARATION OF THIS CONTRACT ARE AVAILABLE FROM THE DEPARTMENT.

15. RIGHT-OF-WAY PLANS FOR RIGHT-OF-WAY OR EASEMENT STAKEOUT PURPOSES ARE AVAILABLE FROM THE DEPARTMENT.

16. CONTRACTOR SHALL CLEAR AND GRUB EVERYTHING WITHIN THE LOC UNLESS IDENTIFIED BY DND OR DIRECTED BY ENGINEER.

17. THE CONTRACTOR SHALL CONTACT SIGN SHOP SUPERVISOR 4 WEEKS BEFORE THE PROJECT STARTS.

18. THE CONTRACTOR'S ACCESS TO THE WOODED AREA LOCATED ALONG RAMP B FROM STATION 625+00 TO 635+00 LEFT (SHEETS 22-23) IS STRICTLY PROHIBITED.

19. THERE ARE NO ENVIRONMENTAL PERMITS ASSOCIATED WITH THIS PROJECT. AS SUCH, AN ENVIRONMENTAL COMPLIANCE SHEET WAS NOT PREPARED.

EARTHWORK SUMMARY

EXCAVATION	
EXCAVATION FROM CROSS SECTIONS	80,922 C.Y.
ROCK EXCAVATION FOR ROADWAY AND TRENCHES	0 C.Y.
TOPSOIL STRIPPING	19,037 C.Y.
TOTAL EXCAVATION	99,959 C.Y.
EXCAVATION AVAILABLE FOR EMBANKMENT	
EXCAVATION MEETING BORROW TYPE 'A'	0 C.Y.
EXCAVATION MEETING BORROW TYPE 'F'	71,950 C.Y.
EXCAVATION MEETING TOPSOIL	19,037 C.Y.
EMBANKMENT REQUIREMENTS	
BORROW TYPE 'A' REQUIRED (INCLUDING UNDERCUT)	15,324 C.Y.
BORROW TYPE 'F' REQUIRED	91,347 C.Y.
TOPSOIL REQUIRED	21,670 C.Y.
MATERIAL BALANCE ("+"= EXCESS, "-"= NEED)	
BORROW TYPE 'A'	-15,324 C.Y.
BORROW TYPE 'F'	-19,397 C.Y.
TOPSOIL	-2,633 C.Y.
UNSUITABLE MATERIAL	2,589 C.Y.

NOTES:
1) THE VALUES LISTED IN THE EARTHWORK SUMMARY ARE APPROXIMATE AND ARE NOT TO BE USED AS A BASIS OF PAYMENT. THE EARTHWORK SUMMARY IS CONSIDERED FOR INFORMATIONAL PURPOSES ONLY.
2) OTHER SOURCES OF EXCAVATION MAY INCLUDE PIPE TRENCH EXCAVATION, STRUCTURE EXCAVATION, UNDERCUT EXCAVATION, STORMWATER MANAGEMENT POND EXCAVATION, ENVIRONMENTAL SITE EXCAVATION, MAINTENANCE OF TRAFFIC EXCAVATION, ETC.
3) UNSUITABLE MATERIALS INCLUDE UNDERCUT SOILS, BITUMINOUS PAVEMENT, ETC.

UNOFFICIAL WEB SITE COPY

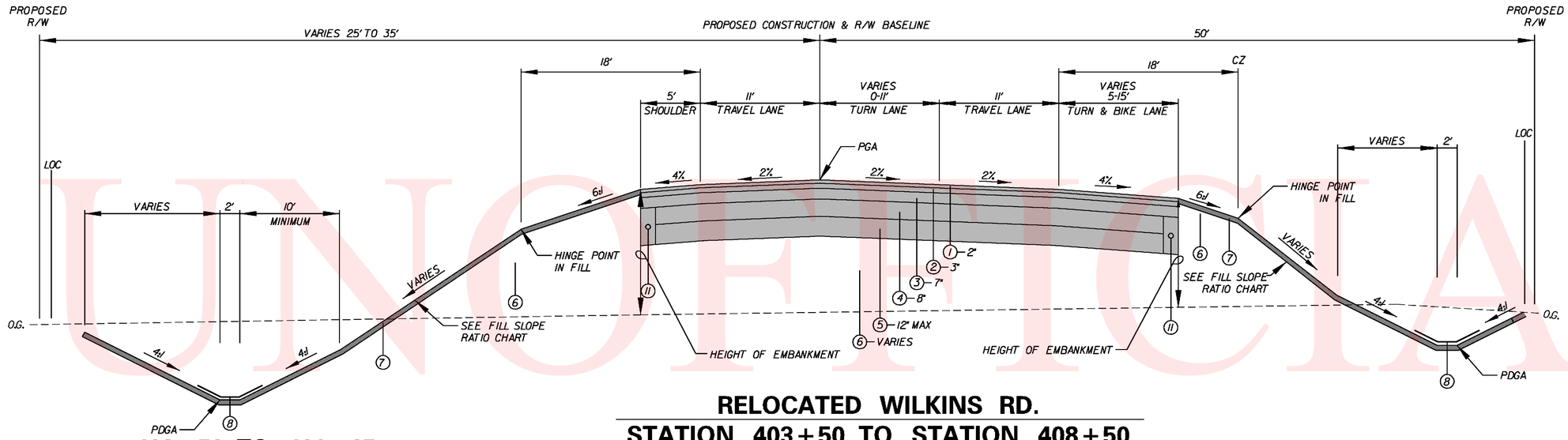

RELOCATED WILKINS RD.

STATION 403+50 TO STATION 408+50

403+50 TO 406+25

LEGEND

1. ITEM 401708, SUPERPAVE TYPE C HOT-MIX 160 GYRATIONS, PG 70-22 (NON CARBONATE STONE)
2. ITEM 401654, SUPERPAVE TYPE B HOT-MIX 160 GYRATIONS, PG 70-22
3. ITEM 401663, SUPERPAVE BCBC, PG 64-22 (6" MAXIMUM LIFT. IF GREATER THAN 6" DEPTH USE EQUAL LIFTS)
4. ITEM 302007, GABC, TYPE B
   ITEM 713002, GEOTEXTILES, SEPARATION
5. ITEM 209001, BORROW, TYPE A
6. ITEM 209006, BORROW, TYPE F (IN FILL SECTIONS)
7. ITEM 732002, TOPSOIL, 6"
   ITEM 734013, PERMANENT GRASS SEEDING, DRY GROUND
8. ITEM 735535, SOIL RETENTION BLANKET MULCH, TYPE 5 -ONE ROLL WIDTH MINIMUM
9. ITEM 720050, GALVANIZED STEEL BEAM GUARDRAIL, TYPE 1-31
10. ITEM 701011, PORTLAND CEMENT CURB, TYPE 2
11. ITEM 715001, PERFORATED PIPE UNDERDRAIN, 6"

FILL SLOPE RATIO CHART

HEIGHT OF EMBANKMENT	SLOPE RATIO
0' TO 5'	6:1
5' TO 10'	4:1
10' TO 15'	3:1
> 15'	2:1

PGA - PROFILE GRADE APPLICATION
PDGA - PROFILE DITCH GRADE APPLICATION

* HOT-MIX SAFETY EDGE TO BE INSTALLED AS PER DETAIL ON SHEET 56

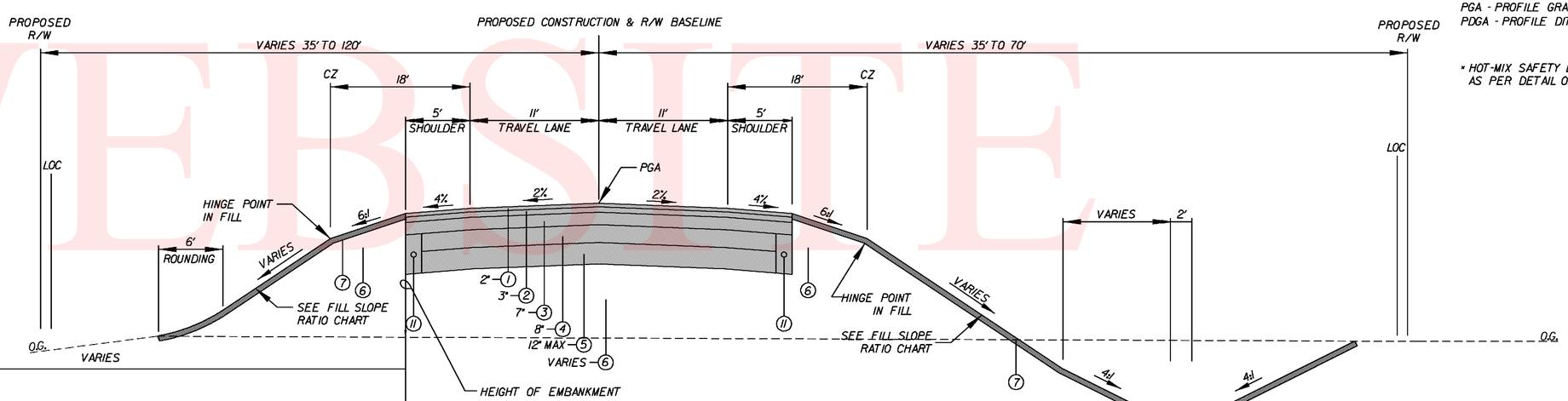

RELOCATED WILKINS RD.

STATION 402+27 TO STATION 403+50
STATION 422+60 TO STATION 429+84.97

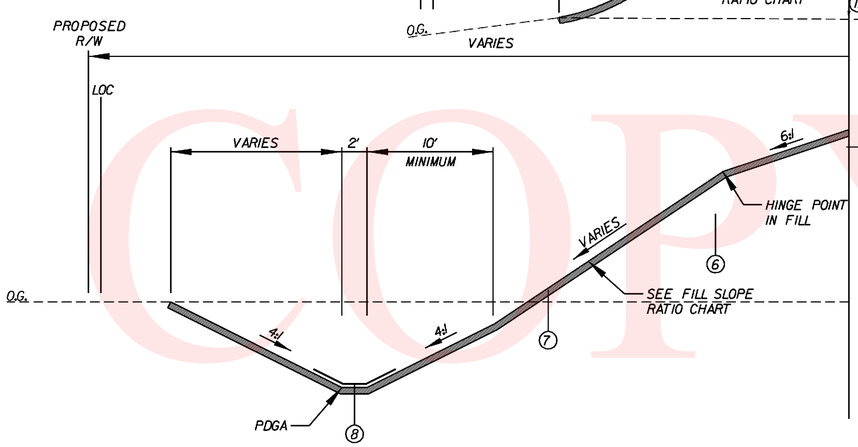

STATION 402+27 TO STATION 403+50
STATION 426+00 TO STATION 429+84.97

UNOFFICIAL WEBSITE COPY

Y:\SUSSEX\014\ROAD\2812201\PLANS\FINAL\CONSTRUCTION\TS01.DGN

DELAWARE DEPARTMENT OF TRANSPORTATION	ADDENDUMS / REVISIONS	NOT TO SCALE	SR 1, SR 30 GRADE SEPARATED INTERSECTION	CONTRACT T200812201	BRIDGE NO.	TYPICAL SECTIONS	SHEET NO. 5
				COUNTY SUSSEX	DESIGNED BY: JLC		TOTAL SHTS. 133
					CHECKED BY: JRG		

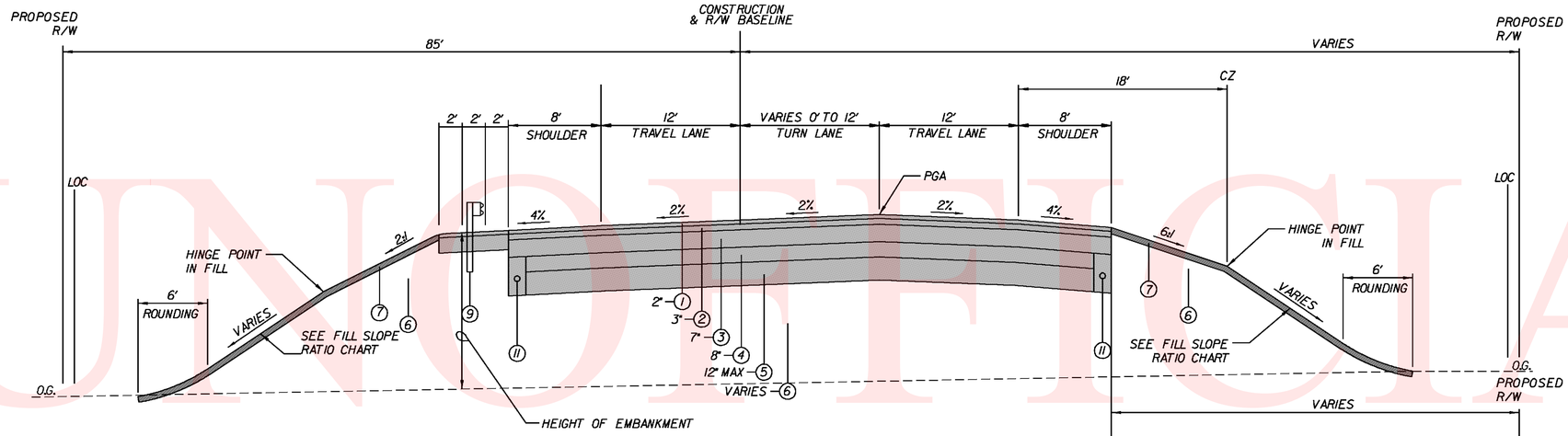

RELOCATED WILKINS RD.

STATION 411+80 TO STATION 413+29.68

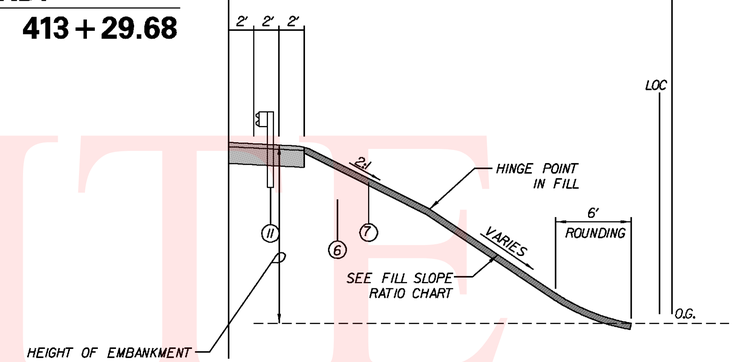

STATION 411+79.68 TO STATION 413+29.68

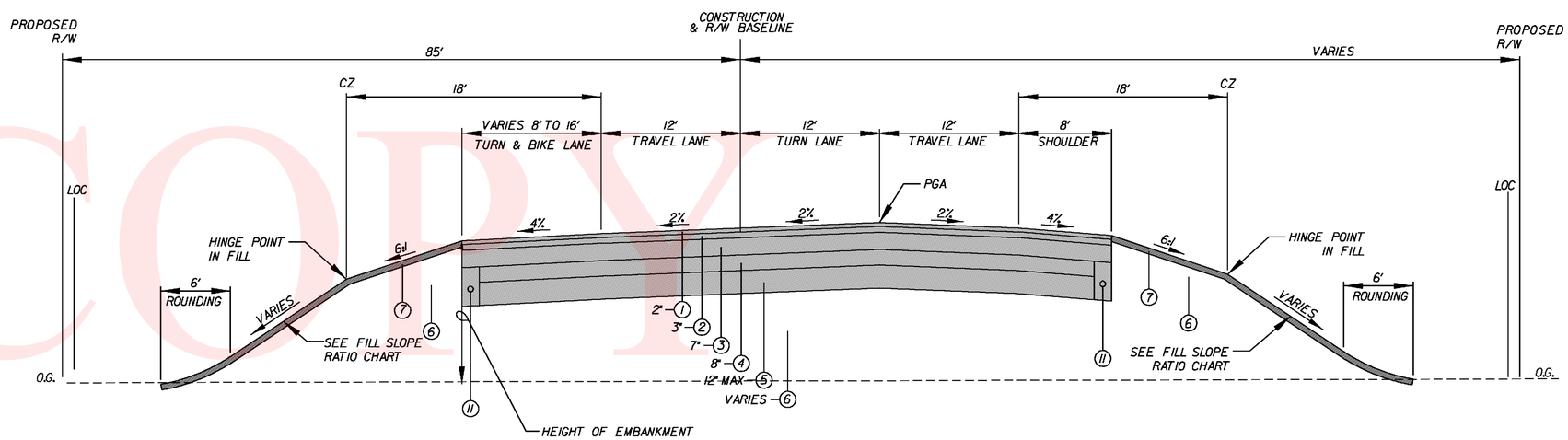

RELOCATED WILKINS RD.

STATION 408+50 TO STATION 411+21.51

LEGEND

1. ITEM 401708, SUPERPAVE TYPE C HOT-MIX 160 GYRATIONS, PG 70-22 (NON CARBONATE STONE)
2. ITEM 401654, SUPERPAVE TYPE B HOT-MIX 160 GYRATIONS, PG 70-22
3. ITEM 401663, SUPERPAVE BCBC, PG 64-22 (6" MAXIMUM LIFT. IF GREATER THAN 6" DEPTH USE EQUAL LIFTS)
4. ITEM 302007, GABC, TYPE B
   ITEM 713002, GEOTEXTILES, SEPARATION
5. ITEM 209001, BORROW, TYPE A
6. ITEM 209006, BORROW, TYPE F (IN FILL SECTIONS)
7. ITEM 732002, TOPSOIL, 6"
   ITEM 734013, PERMANENT GRASS SEEDING, DRY GROUND
8. ITEM 735535, SOIL RETENTION BLANKET MULCH, TYPE 5 -ONE ROLL WIDTH MINIMUM
9. ITEM 720050, GALVANIZED STEEL BEAM GUARDRAIL, TYPE 1-31
10. ITEM 701011, PORTLAND CEMENT CURB, TYPE 2
11. ITEM 715001, PERFORATED PIPE UNDERDRAIN, 6"

FILL SLOPE RATIO CHART

HEIGHT OF EMBANKMENT	SLOPE RATIO
0' TO 5'	6:1
5' TO 10'	4:1
10' TO 15'	3:1
> 15'	2:1

PGA - PROFILE GRADE APPLICATION
PDGA - PROFILE DITCH GRADE APPLICATION

* HOT-MIX SAFETY EDGE TO BE INSTALLED AS PER DETAIL ON SHEET 56

UNOFFICIAL WEBSITE COPY

Y:\SUSSEX\014\ROAD\2812201\PLANS\FINAL\CONSTRUCTION\TS01.DGN

DELAWARE DEPARTMENT OF TRANSPORTATION	ADDENDUMS / REVISIONS	NOT TO SCALE	SR 1, SR 30 GRADE SEPARATED INTERSECTION	CONTRACT T200812201	BRIDGE NO.	TYPICAL SECTIONS	SHEET NO. 6
				COUNTY SUSSEX	DESIGNED BY: JLC		TOTAL SHTS. 133
					CHECKED BY: JRG		

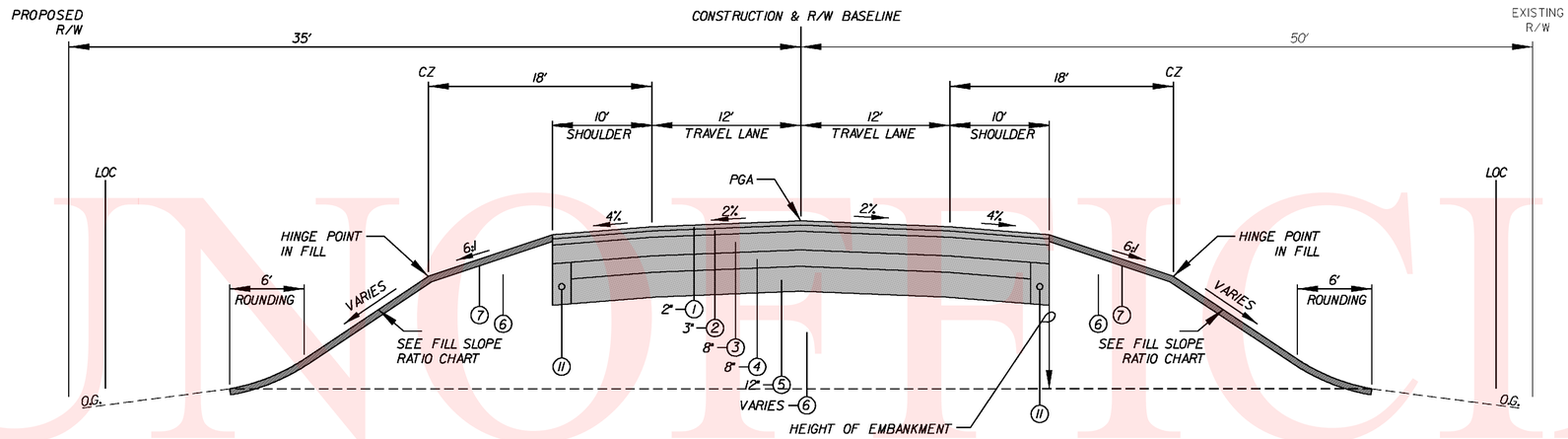

SR 30/SR 1 BUSINESS CONNECTOR
STATION 923+13 TO STATION 923+92.5

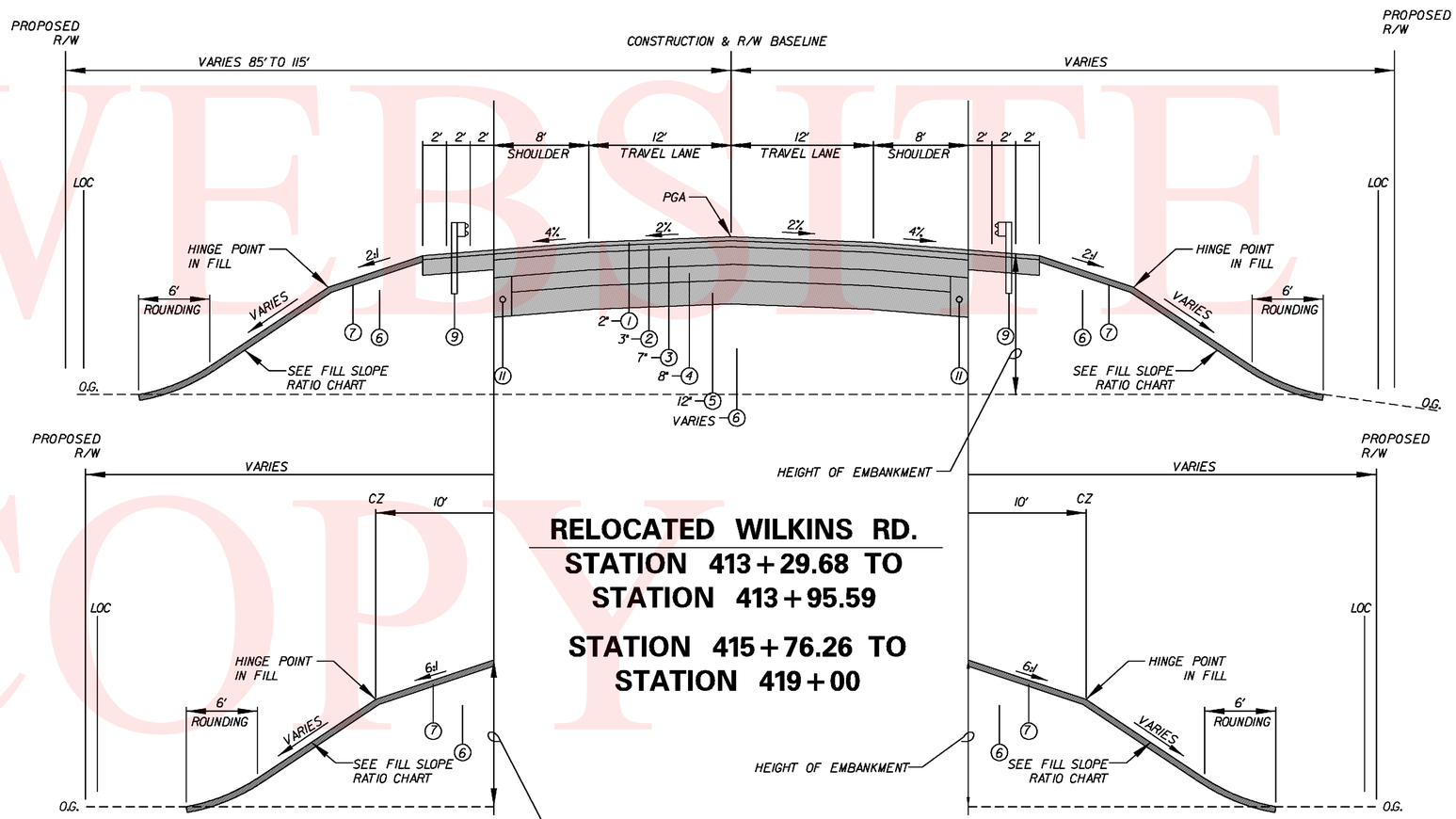

RELOCATED WILKINS RD.
STATION 413+29.68 TO STATION 413+95.59
STATION 415+76.26 TO STATION 419+00

STATION 418+00 TO STATION 422+60

STATION 419+00 TO STATION 422+60

LEGEND

1. ITEM 401708, SUPERPAVE TYPE C HOT-MIX 160 GYRATIONS, PG 70-22 (NON CARBONATE STONE)
2. ITEM 401654, SUPERPAVE TYPE B HOT-MIX 160 GYRATIONS, PG 70-22
3. ITEM 401663, SUPERPAVE BCBC, PG 64-22 (6" MAXIMUM LIFT. IF GREATER THAN 6" DEPTH USE EQUAL LIFTS)
4. ITEM 302007, GABC, TYPE B
   ITEM 713002, GEOTEXTILES, SEPARATION
5. ITEM 209001, BORROW, TYPE A
6. ITEM 209006, BORROW, TYPE F (IN FILL SECTIONS)
7. ITEM 732002, TOPSOIL, 6"
   ITEM 734013, PERMANENT GRASS SEEDING, DRY GROUND
8. ITEM 735535, SOIL RETENTION BLANKET MULCH, TYPE 5 -ONE ROLL WIDTH MINIMUM
9. ITEM 720050, GALVANIZED STEEL BEAM GUARDRAIL, TYPE 1-31
10. ITEM 701011, PORTLAND CEMENT CURB, TYPE 2
11. ITEM 715001, PERFORATED PIPE UNDERDRAIN, 6"

FILL SLOPE RATIO CHART

HEIGHT OF EMBANKMENT	SLOPE RATIO
0' TO 5'	6:1
5' TO 10'	4:1
10' TO 15'	3:1
> 15'	2:1

PGA - PROFILE GRADE APPLICATION
PDGA - PROFILE DITCH GRADE APPLICATION

* HOT-MIX SAFETY EDGE TO BE INSTALLED AS PER DETAIL ON SHEET 56

UNOFFICIAL WEBSITE COPY

Y:\SUSSEX\014\ROAD\28122011\PLANS\FINAL\CONSTRUCTION\TS01.DGN

DELAWARE DEPARTMENT OF TRANSPORTATION	ADDENDUMS / REVISIONS	NOT TO SCALE	SR 1, SR 30 GRADE SEPARATED INTERSECTION	CONTRACT T200812201	BRIDGE NO.	TYPICAL SECTIONS	SHEET NO. 7
				COUNTY SUSSEX	DESIGNED BY: JLC		TOTAL SHTS. 133
					CHECKED BY: JRG		

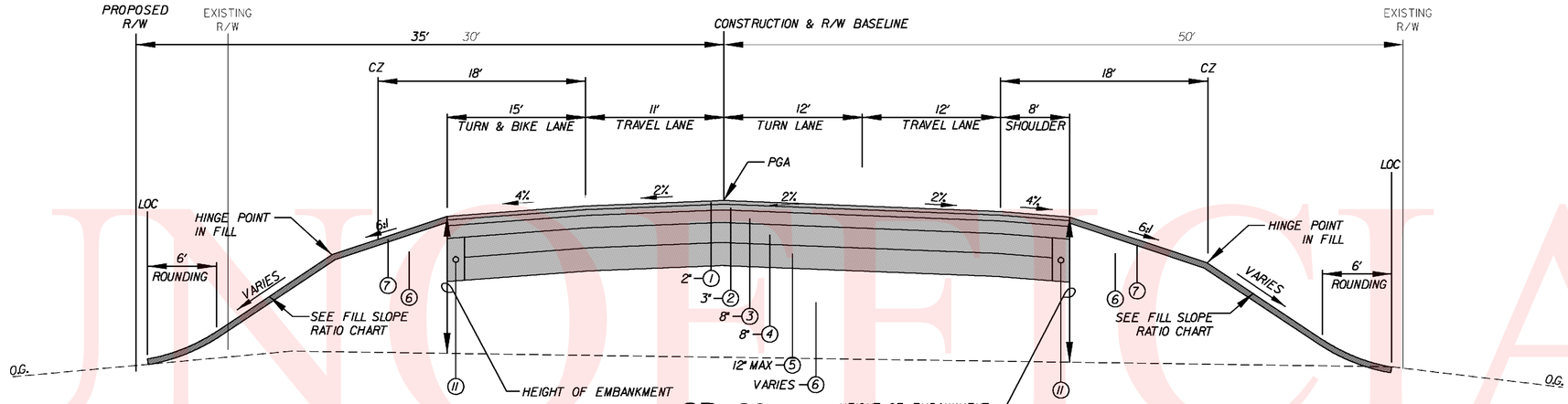

SR 30
STATION 920+28.49 TO STATION 923+13

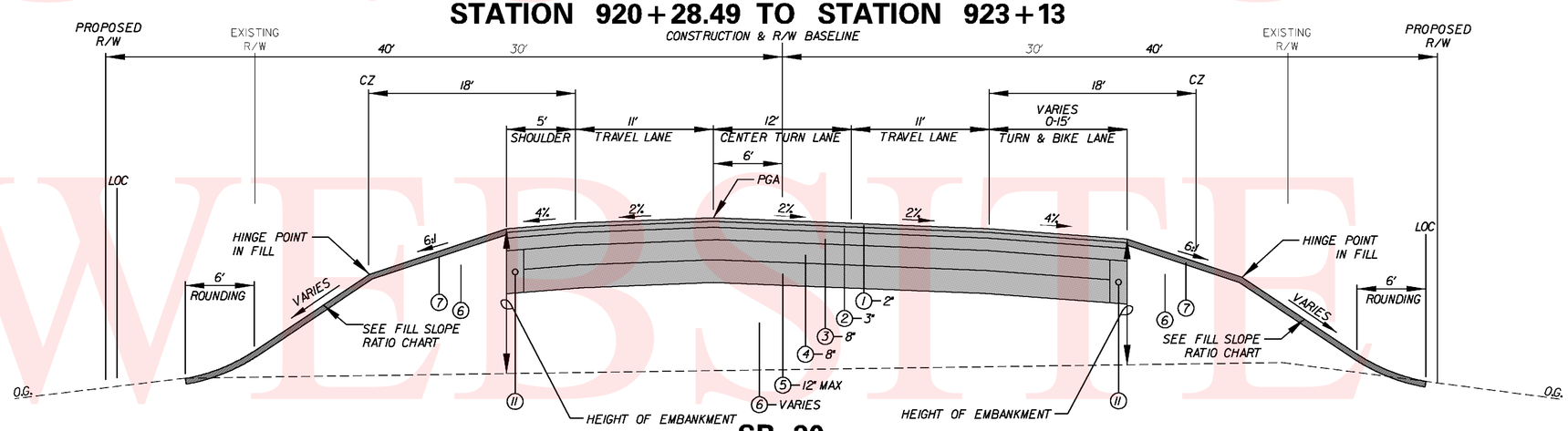

SR 30
STATION 915+40 TO STATION 918+84

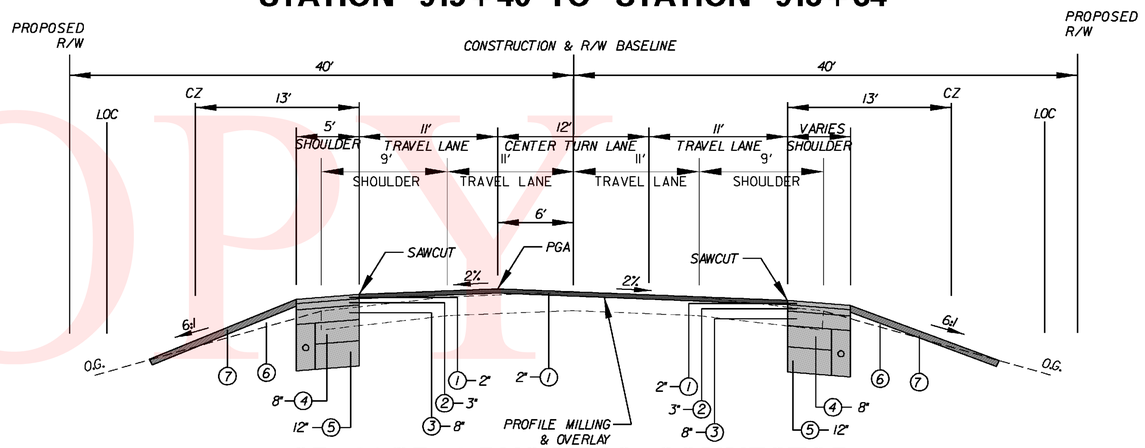

SR 30/SR 1 BUSINESS CONNECTOR
STATION 900+00 TO STATION 915+00

LEGEND

1. ITEM 401708, SUPERPAVE TYPE C HOT-MIX 160 GYRATIONS, PG 70-22 (NON CARBONATE STONE)
2. ITEM 401654, SUPERPAVE TYPE B HOT-MIX 160 GYRATIONS, PG 70-22
3. ITEM 401663, SUPERPAVE BCBC, PG 64-22 (6" MAXIMUM LIFT. IF GREATER THAN 6" DEPTH USE EQUAL LIFTS)
4. ITEM 302007, GABC, TYPE B
   ITEM 713002, GEOTEXTILES, SEPARATION
5. ITEM 209001, BORROW, TYPE A
6. ITEM 209006, BORROW, TYPE F (IN FILL SECTIONS)
7. ITEM 732002, TOPSOIL, 6"
   ITEM 734013, PERMANENT GRASS SEEDING, DRY GROUND
8. ITEM 735535, SOIL RETENTION BLANKET MULCH, TYPE 5 -ONE ROLL WIDTH MINIMUM
9. ITEM 720050, GALVANIZED STEEL BEAM GUARDRAIL, TYPE 1-31
10. ITEM 701011, PORTLAND CEMENT CURB, TYPE 2
11. ITEM 715001, PERFORATED PIPE UNDERDRAIN, 6"

FILL SLOPE RATIO CHART

HEIGHT OF EMBANKMENT	SLOPE RATIO
0' TO 5'	6:1
5' TO 10'	4:1
10' TO 15'	3:1
> 15'	2:1

PGA - PROFILE GRADE APPLICATION
PDGA - PROFILE DITCH GRADE APPLICATION

* HOT-MIX SAFETY EDGE TO BE INSTALLED AS PER DETAIL ON SHEET 56

UNOFFICIAL WEBSITE COPY

Y:\SUSSEX\014\ROAD\281220\PLANS\FINAL\CONSTRUCTION\TS01.DGN

DELAWARE DEPARTMENT OF TRANSPORTATION	ADDENDUMS / REVISIONS	NOT TO SCALE	SR 1, SR 30 GRADE SEPARATED INTERSECTION	CONTRACT T200812201	BRIDGE NO.	TYPICAL SECTIONS	SHEET NO. 8
				COUNTY SUSSEX	DESIGNED BY: JLC		TOTAL SHTS. 133
					CHECKED BY: JRG		

LEGEND

1. ITEM 401708, SUPERPAVE TYPE C HOT-MIX 160 GYRATIONS, PG 70-22 (NON CARBONATE STONE)
2. ITEM 401654, SUPERPAVE TYPE B HOT-MIX 160 GYRATIONS, PG 70-22
3. ITEM 401663, SUPERPAVE BCBC, PG 64-22 (6" MAXIMUM LIFT. IF GREATER THAN 6" DEPTH USE EQUAL LIFTS)
4. ITEM 302007, GABC, TYPE B
   ITEM 713002, GEOTEXTILES, SEPARATION
5. ITEM 209001, BORROW, TYPE A
6. ITEM 209006, BORROW, TYPE F (IN FILL SECTIONS)
7. ITEM 732002, TOPSOIL, 6"
   ITEM 734013, PERMANENT GRASS SEEDING, DRY GROUND
8. ITEM 735535, SOIL RETENTION BLANKET MULCH, TYPE 5 -ONE ROLL WIDTH MINIMUM
9. ITEM 720050, GALVANIZED STEEL BEAM GUARDRAIL, TYPE 1-31
10. ITEM 701011, PORTLAND CEMENT CURB, TYPE 2
11. ITEM 715001, PERFORATED PIPE UNDERDRAIN, 6"

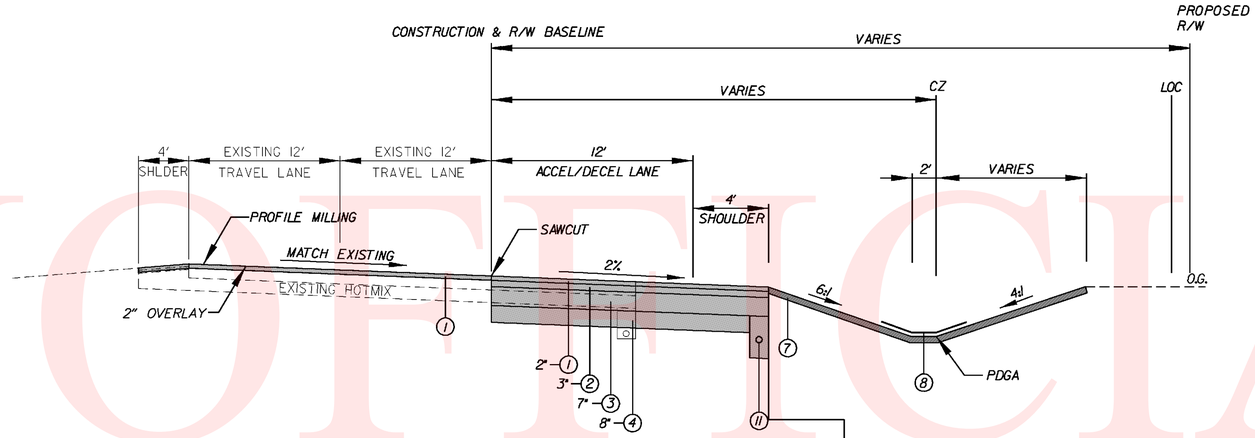

SR 1 RAMP ACCELERATION/DECELERATION LANE
STATION 700+00 TO STATION 706+55
STATION 817+00 TO STATION 827+50

FILL SLOPE RATIO CHART	
HEIGHT OF EMBANKMENT	SLOPE RATIO
0' TO 5'	6:1
5' TO 10'	4:1
10' TO 15'	3:1
> 15'	2:1

PGA - PROFILE GRADE APPLICATION
PDGA - PROFILE DITCH GRADE APPLICATION

* HOT-MIX SAFETY EDGE TO BE INSTALLED AS PER DETAIL ON SHEET 56

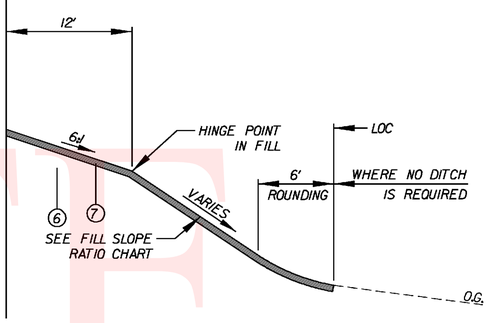

STATION 814+00 TO STATION 817+00

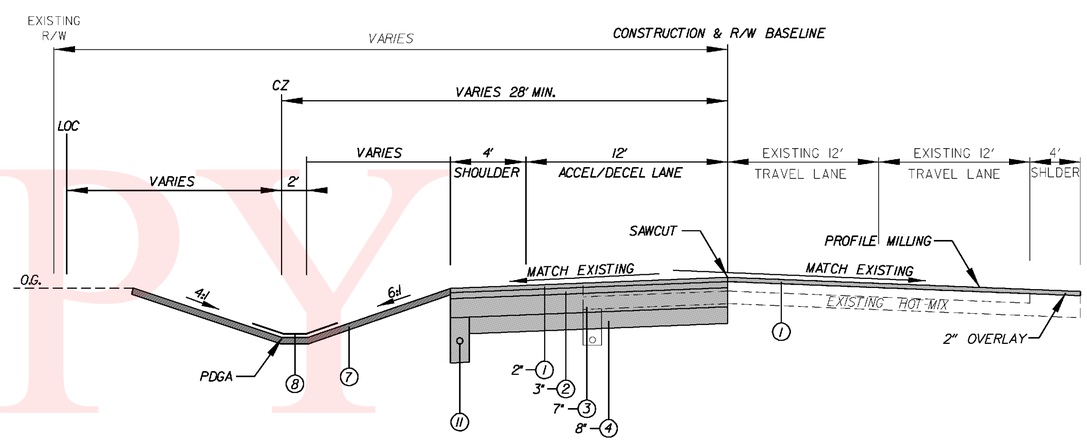

SR 1 RAMP ACCELERATION/DECELERATION LANE
STATION 522+04.66 TO STATION 529+00
STATION 605+50 TO STATION 612+23.73

UNOFFICIAL WEBSITE COPY

Y:\SUSSEX\014\ROAD\2812201\PLANS\FINAL\CONSTRUCTION\TS01.DGN

DELAWARE DEPARTMENT OF TRANSPORTATION	ADDENDUMS / REVISIONS	NOT TO SCALE	SR 1, SR 30 GRADE SEPARATED INTERSECTION	CONTRACT T200812201	BRIDGE NO.	TYPICAL SECTIONS	SHEET NO. 9
				COUNTY SUSSEX	DESIGNED BY: JLC		TOTAL SHTS.
					CHECKED BY: JRG		133

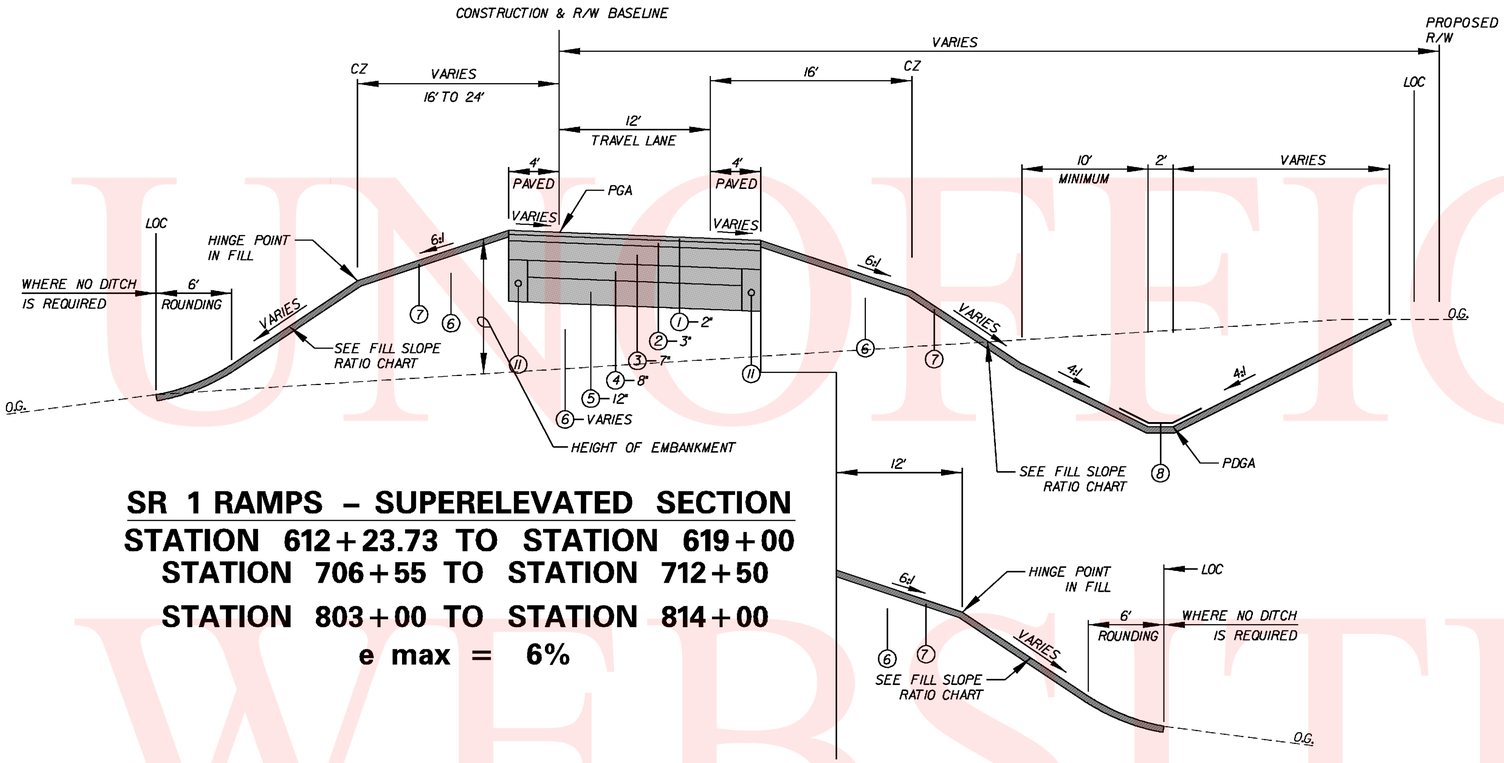

SR 1 RAMPS – SUPERELEVATED SECTION

STATION 612+23.73 TO STATION 619+00

STATION 706+55 TO STATION 712+50

STATION 803+00 TO STATION 814+00

e max = 6%

STATION 803+00 TO STATION 814+00

LEGEND

1. ITEM 401708, SUPERPAVE TYPE C HOT-MIX 160 GYRATIONS, PG 70-22 (NON CARBONATE STONE)
2. ITEM 401654, SUPERPAVE TYPE B HOT-MIX 160 GYRATIONS, PG 70-22
3. ITEM 401663, SUPERPAVE BCBC, PG 64-22 (6" MAXIMUM LIFT. IF GREATER THAN 6" DEPTH USE EQUAL LIFTS)
4. ITEM 302007, GABC, TYPE B
   ITEM 713002, GEOTEXTILES, SEPARATION
5. ITEM 209001, BORROW, TYPE A
6. ITEM 209006, BORROW, TYPE F (IN FILL SECTIONS)
7. ITEM 732002, TOPSOIL, 6"
   ITEM 734013, PERMANENT GRASS SEEDING, DRY GROUND
8. ITEM 735535, SOIL RETENTION BLANKET MULCH, TYPE 5 -ONE ROLL WIDTH MINIMUM
9. ITEM 720050, GALVANIZED STEEL BEAM GUARDRAIL, TYPE 1-31
10. ITEM 701011, PORTLAND CEMENT CURB, TYPE 2
11. ITEM 715001, PERFORATED PIPE UNDERDRAIN, 6"

FILL SLOPE RATIO CHART

HEIGHT OF EMBANKMENT	SLOPE RATIO
0' TO 5'	6:1
5' TO 10'	4:1
10' TO 15'	3:1
> 15'	2:1

PGA - PROFILE GRADE APPLICATION
PDGA - PROFILE DITCH GRADE APPLICATION

* HOT-MIX SAFETY EDGE TO BE INSTALLED AS PER DETAIL ON SHEET 56

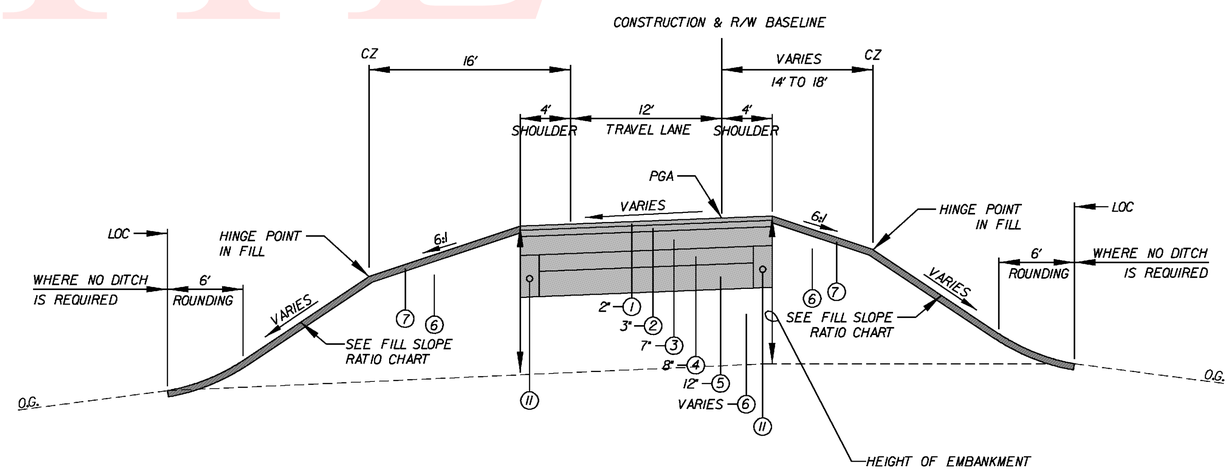

SR 1 RAMPS – SUPERELEVATED SECTION

STATION 515+00 TO STATION 521+00

STATION 712+50 TO STATION 718+13.7

e max = 6%

UNOFFICIAL WEBSITE COPY

DELAWARE DEPARTMENT OF TRANSPORTATION	ADDENDUMS / REVISIONS	NOT TO SCALE	SR 1, SR 30 GRADE SEPARATED INTERSECTION	CONTRACT T200812201	BRIDGE NO.	TYPICAL SECTIONS	SHEET NO. 10
				COUNTY SUSSEX	DESIGNED BY: JLC		TOTAL SHTS. 133
					CHECKED BY: JRG		

Y:\SUSSEX\014\ROAD\281220\PLANS\FINAL\CONSTRUCTION\TS01.DGN

LEGEND

1. ITEM 401708, SUPERPAVE TYPE C HOT-MIX 160 GYRATIONS, PG 70-22 (NON CARBONATE STONE)
2. ITEM 401654, SUPERPAVE TYPE B HOT-MIX 160 GYRATIONS, PG 70-22
3. ITEM 401663, SUPERPAVE BCBC, PG 64-22 (6" MAXIMUM LIFT. IF GREATER THAN 6" DEPTH USE EQUAL LIFTS)
4. ITEM 302007, GABC, TYPE B
   ITEM 713002, GEOTEXTILES, SEPARATION
5. ITEM 209001, BORROW, TYPE A
6. ITEM 209006, BORROW, TYPE F (IN FILL SECTIONS)
7. ITEM 732002, TOPSOIL, 6"
   ITEM 734013, PERMANENT GRASS SEEDING, DRY GROUND
8. ITEM 735535, SOIL RETENTION BLANKET MULCH, TYPE 5 -ONE ROLL WIDTH MINIMUM
9. ITEM 720050, GALVANIZED STEEL BEAM GUARDRAIL, TYPE 1-31
10. ITEM 701011, PORTLAND CEMENT CURB, TYPE 2
11. ITEM 715001, PERFORATED PIPE UNDERDRAIN, 6"

FILL SLOPE RATIO CHART

HEIGHT OF EMBANKMENT	SLOPE RATIO
0' TO 5'	6:1
5' TO 10'	4:1
10' TO 15'	3:1
> 15'	2:1

PGA - PROFILE GRADE APPLICATION
PDGA - PROFILE DITCH GRADE APPLICATION

* HOT-MIX SAFETY EDGE TO BE INSTALLED AS PER DETAIL ON SHEET 56

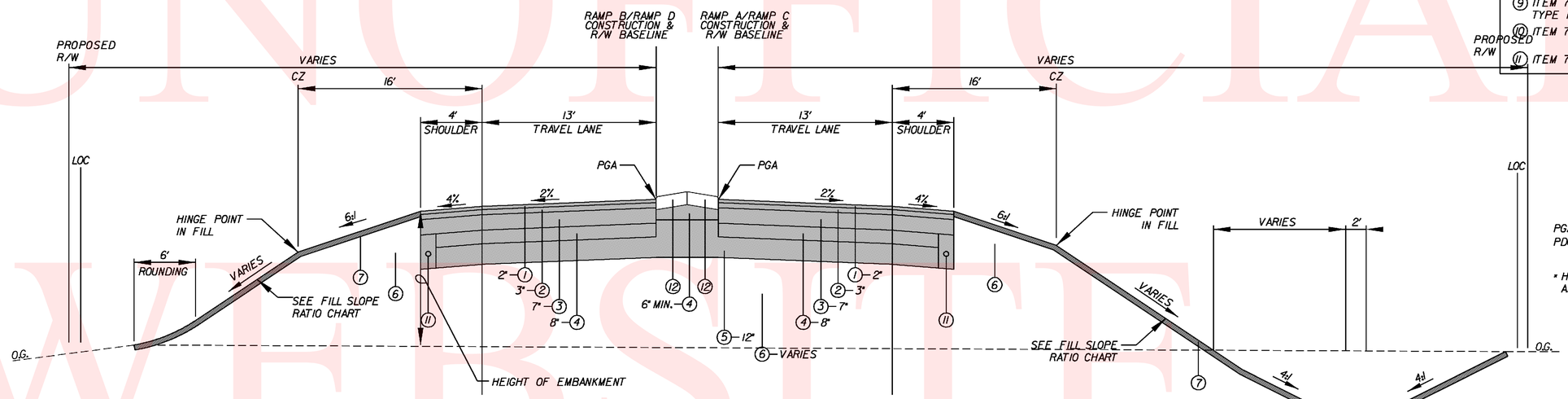

SR 1 RAMPS – RAMP TERMINALS
STATION 718+12 TO STATION 721+57

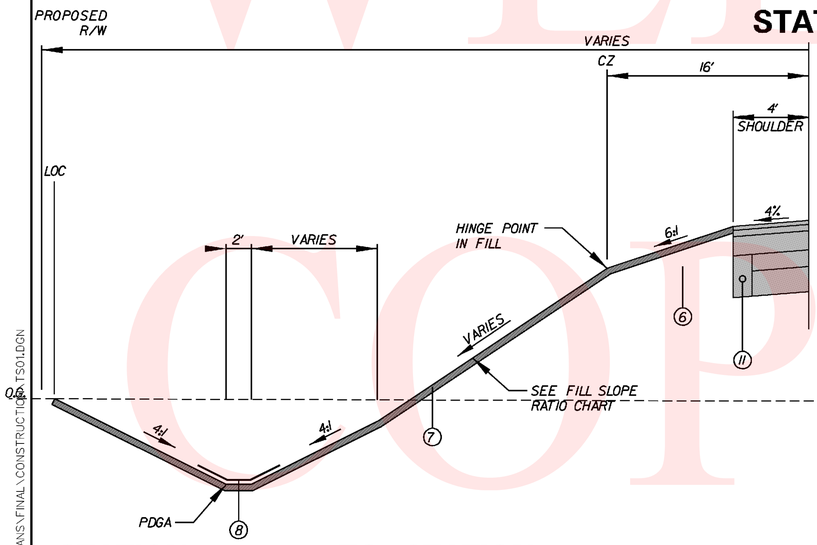

STATION 623+50 TO STATION 638+33

STATION 800+11.48 TO STATION 803+42

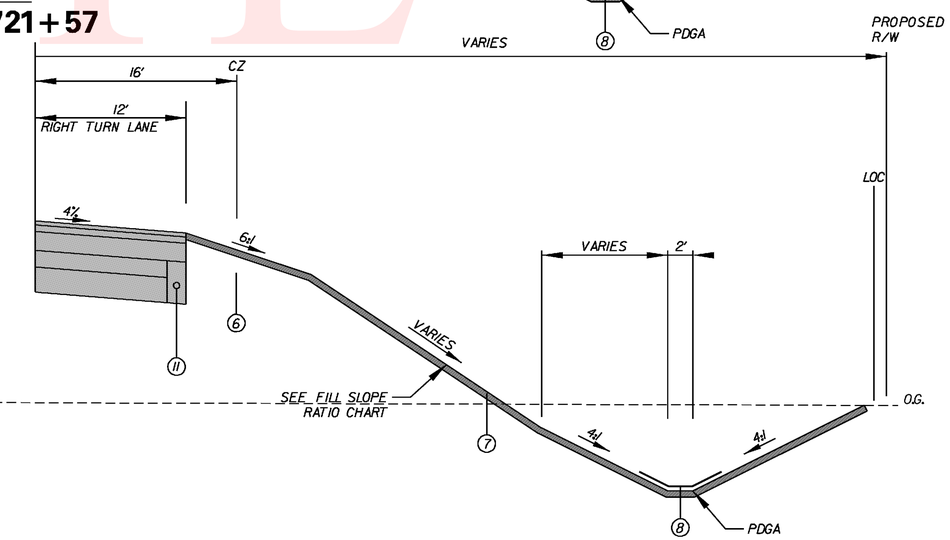

STATION 500+00 TO STATION 515+00

UNOFFICIAL WEBSITE COPY

Y:\SUSSEX\014\ROAD\281220\PLANS\FINAL\CONSTRUCTION\TS01.DGN

DELAWARE DEPARTMENT OF TRANSPORTATION	ADDENDUMS / REVISIONS	NOT TO SCALE	SR 1, SR 30 GRADE SEPARATED INTERSECTION	CONTRACT T200812201	BRIDGE NO.	TYPICAL SECTIONS	SHEET NO. 11
				COUNTY SUSSEX	DESIGNED BY: JLC		TOTAL SHTS. 133
					CHECKED BY: JRG		

CONSTRUCTION ALIGNMENT CONTROL				
POINT	STATION	OFFSET	NORTHING	EASTING
10000	0+00.00	0.0000	322563.8261	667822.2766
10001	15+79.29	0.0000	323098.2458	666336.1520
10002	19+60.45	-34.7284	323227.2264	665977.4803
10003	23+34.70	2291.8251	325254.8657	667111.6860
10004	23+34.70	0.0000	323465.3556	665679.8634
20501	514+38.29	0.0000	322804.4373	665482.6136
20502	521+53.48	455.1384	322956.1986	666181.5108
20503	522+04.66	-340.0000	323136.6943	665410.4660
20504	522+04.66	0.0000	323402.4048	665622.5932
20600	600+00.00	0.0000	322483.2987	667793.8507
20601	612+23.73	0.0000	322895.2029	666641.5261
20602	615+09.73	43.3429	322991.4693	666372.2158
20603	612+23.73	-1000.000	321953.5541	666304.9291
20604	617+80.86	0.0000	322930.7806	666092.7302
20700	700+00.00	0.0000	323450.1605	665719.4288

NOTE:
HORIZONTAL COORDINATES BASED ON NAD 83.
GPS ELEVATIONS BASED ON NAVD 88.

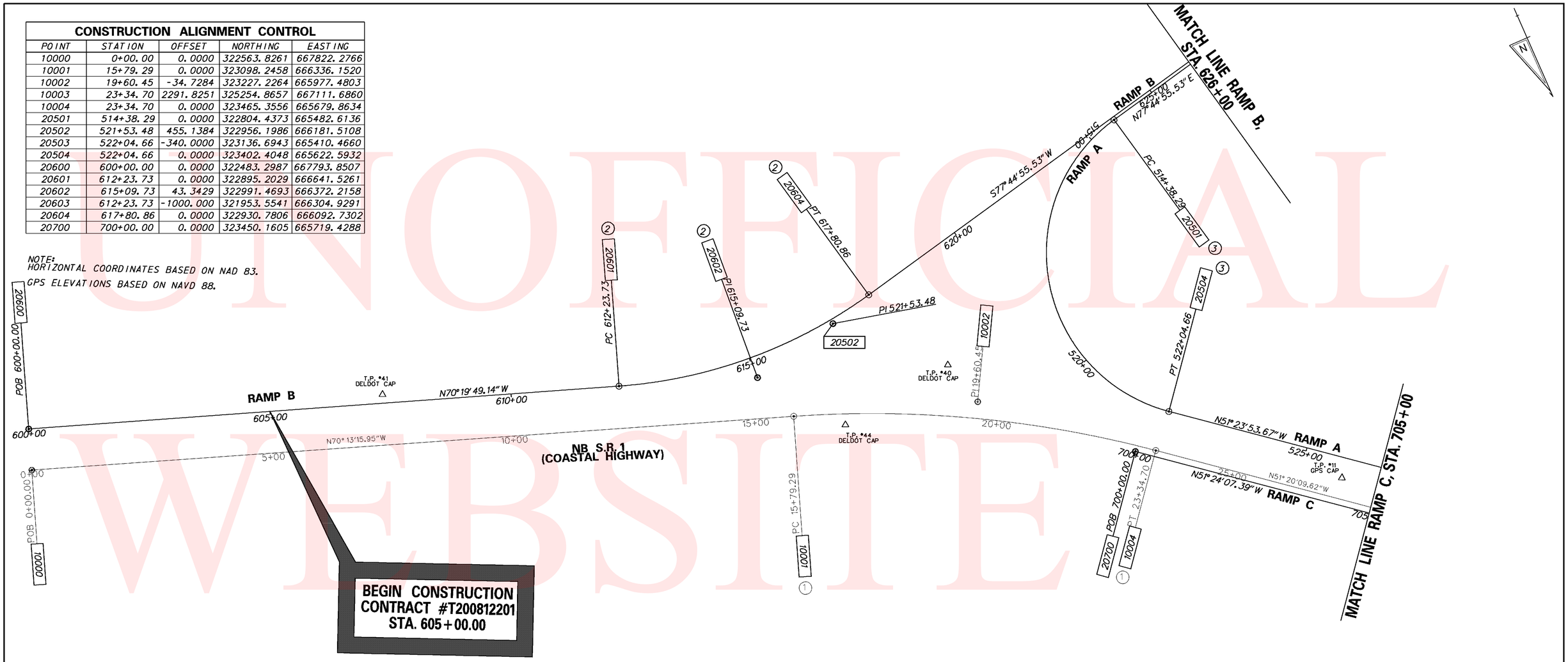

CIRCULAR CURVE NO. 1

Element: Circular	STATION	NORTHING	EASTING
PC (10001)	15+79.29	323098.2458	666336.1520
PI (10002)	19+60.45	323227.2264	665977.4803
CC (10003)		325254.8657	667111.6860
PT (10004)	23+34.70	323465.3556	665679.8634

Radius: 2291.8251
Delta: 18° 53' 06.3316" Right
Degree of Curvature(Arc): 2° 30' 00.0239"
Length: 755.4017
Tangent: 381.1579
Chord: 751.9868
Middle Ordinate: 31.0528
External: 31.4794
Tangent Direction: N 70° 13' 15.9494" W
Radial Direction: N 19° 46' 44.0506" E
Chord Direction: N 60° 46' 42.7835" W
Radial Direction: N 38° 39' 50.3823" E
Tangent Direction: N 51° 20' 09.6178" W

CIRCULAR CURVE NO. 2

Element: Circular	STATION	NORTHING	EASTING
PC (20601)	612+23.73	322895.2029	666641.5261
PI (20602)	615+09.73	322991.4693	666372.2158
CC (20603)		321953.5541	666304.9291
PT (20604)	617+80.86	322930.7806	666092.7302

Radius: 1000.0000
Delta: 31° 55' 15.3336" Left
Degree of Curvature (Arc): 5° 43' 46.4806
Length: 557.1253
Tangent: 285.9987
Chord: 549.9479
Middle Ordinate: 38.5483
External: 40.0939
Tangent Direction: N 70° 19' 49.1374" W
Radial Direction: N 19° 40' 10.8625" E
Chord Direction: N 86° 17' 26.8043" W
Radial Direction: N 12° 15' 04.4712" W
Tangent Direction: S 77° 44' 55.5290" W

CIRCULAR CURVE NO. 3

Element: Circular	STATION	NORTHING	EASTING
PC (20501)	514+38.29	322804.4373	665482.6136
PI (20502)	521+53.48	322956.1986	666181.5108
CC (20503)		323136.6943	665410.4660
PT (20504)	522+04.66	323402.4048	665622.5932

Radius: 340.0000
Delta: 129° 08' 49.2014" Left
Degree of Curvature(Arc): 16° 51' 06.1195"
Length: 766.3737
Tangent: 715.1845
Chord: 614.1330
Middle Ordinate: 194.0200
External: 451.8894
Tangent Direction: N 77° 44' 55.5289" E
Radial Direction: S 12° 15' 04.4710" E
Chord Direction: N 13° 10' 30.9282" E
Radial Direction: N 38° 36' 06.3275" E
Tangent Direction: N 51° 23' 53.6723" W

UNOFFICIAL WEBSITE COPY

Y:\SUSSEX\014\ROAD\281201\PLANS\FINAL\CONSTRUCTION\HV01.DGN

DELAWARE DEPARTMENT OF TRANSPORTATION

ADDENDUMS / REVISIONS

SCALE 0 100 200 300 FEET

SR 1, SR 30 GRADE SEPARATED INTERSECTION

CONTRACT	BRIDGE NO.	HORIZONTAL AND VERTICAL CONTROLS	SHEET NO.
T200812201	DESIGNED BY: JLC		12
COUNTY			TOTAL SHTS.
SUSSEX	CHECKED BY: JRG		133

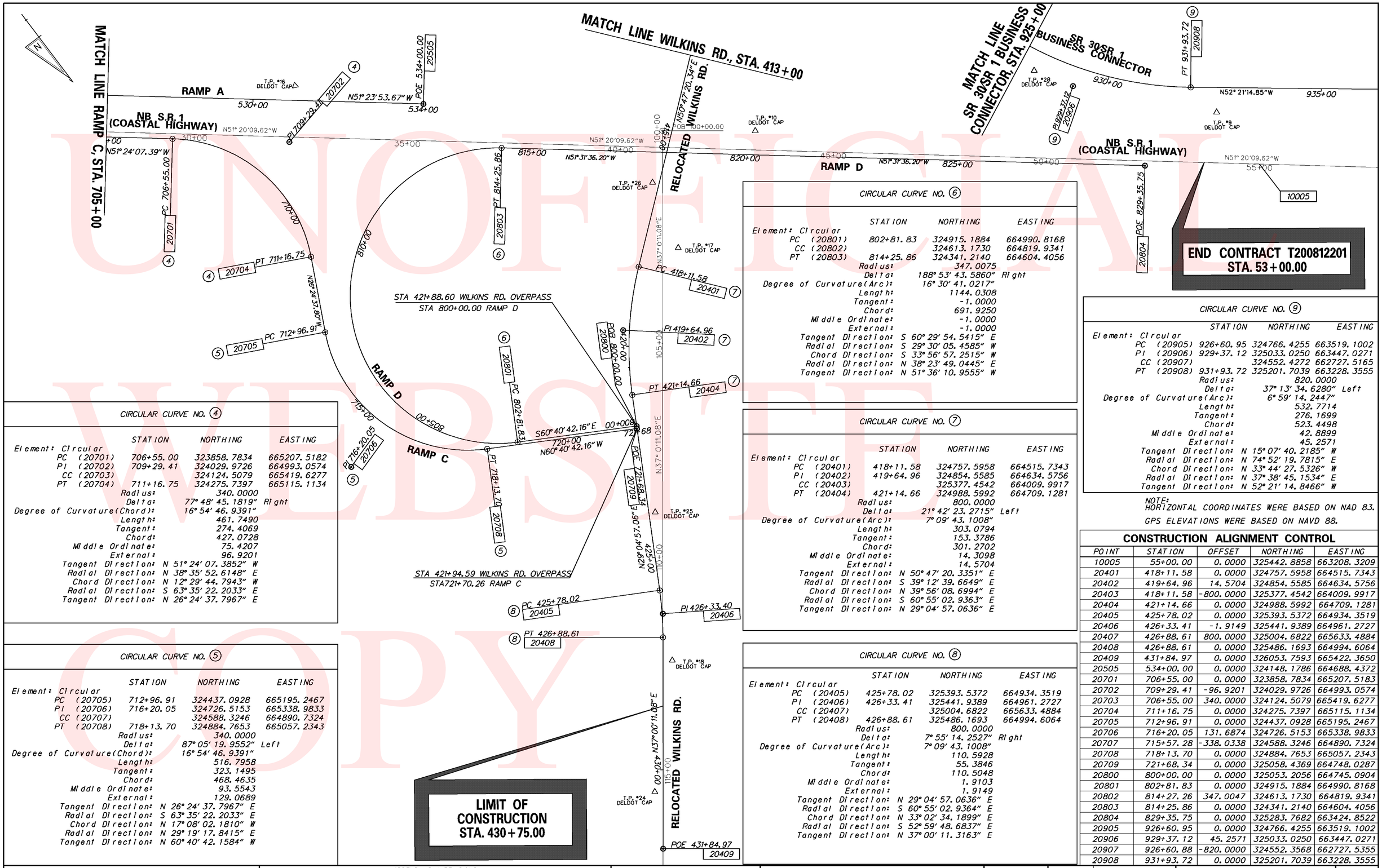

UNOFFICIAL WEBSITE COPY

Y:\SUSSEX\014\ROAD\281201\PLANS\FINAL\CONSTRUCTION\HV02.DGN

DELAWARE DEPARTMENT OF TRANSPORTATION

ADDENDUMS / REVISIONS

SCALE 0 100 200 300 FEET

SR 1, SR 30 GRADE SEPARATED INTERSECTION

CONTRACT	BRIDGE NO.	HORIZONTAL AND VERTICAL CONTROLS	SHEET NO.
T200812201	DESIGNED BY: JLC		13
COUNTY			TOTAL SHTS.
SUSSEX	CHECKED BY: JRG		133

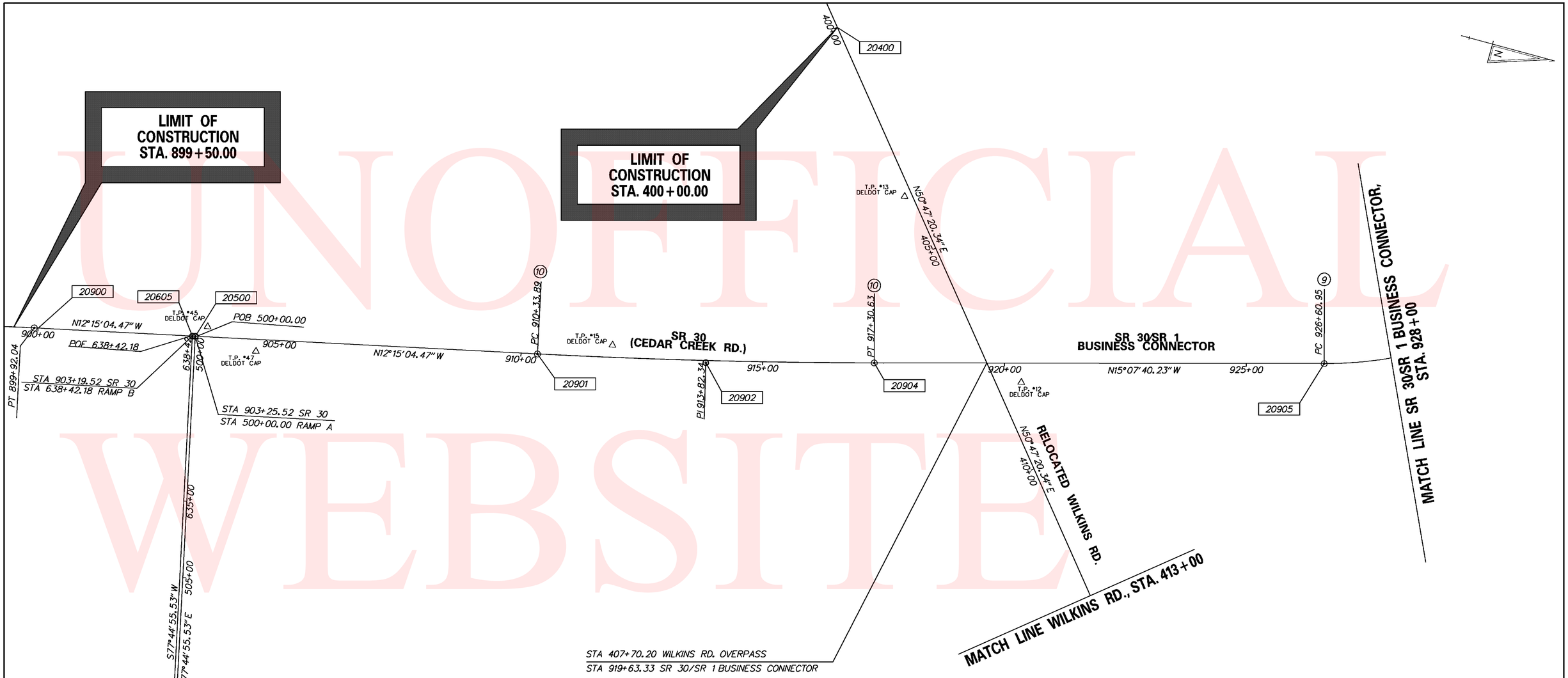

UNOFFICIAL WEBSITE COPY

CIRCULAR CURVE NO. 10

	STATION	NORTHING	EASTING
Element: Circular			
PC (20901)	910+33.89	323191.4737	663926.7616
PI (20902)	913+82.34	323531.9796	663852.8228
CC (20903)		320246.6798	650365.2812
PT (20904)	917+30.63	323868.3458	663761.8888
Radius:		13877.5200	
Delta:		2° 52' 35.7475" Left	
Degree of Curvature(Arc):		0° 24' 46.3232"	
Length:		696.7359	
Tangent:		348.4411	
Chord:		696.6627	
Middle Ordinate:		4.3723	
External:		4.3737	
Tangent Direction:		N 12° 15' 04.4711" W	
Radial Direction:		N 77° 44' 55.5289" E	
Chord Direction:		N 13° 41' 22.3448" W	
Radial Direction:		N 74° 52' 19.7815" E	
Tangent Direction:		N 15° 07' 40.2185" W	

CIRCULAR CURVE NO. 9

	STATION	NORTHING	EASTING
Element: Circular			
PC (20905)	926+60.95	324766.4255	663519.1002
PI (20906)	929+37.12	325033.0250	663447.0271
CC (20907)		324552.4272	662727.5165
PT (20908)	931+93.72	325201.7039	663228.3555
Radius:		820.0000	
Delta:		37° 13' 34.6280" Left	
Degree of Curvature(Arc):		6° 59' 14.2447"	
Length:		532.7714	
Tangent:		276.1699	
Chord:		523.4498	
Middle Ordinate:		42.8899	
External:		45.2571	
Tangent Direction:		N 15° 07' 40.2185" W	
Radial Direction:		N 74° 52' 19.7815" E	
Chord Direction:		N 33° 44' 27.5326" W	
Radial Direction:		N 37° 38' 45.1534" E	
Tangent Direction:		N 52° 21' 14.8466" W	

NOTE:
HORIZONTAL COORDINATES WERE BASED ON NAD 83.
GPS ELEVATIONS WERE BASED ON NAVD 88.

CONSTRUCTION ALIGNMENT CONTROL

POINT	STATION	OFFSET	NORTHING	EASTING
20400	400+00.00	0.0000	323612.3518	663112.0776
20500	500+00.00	0.0000	322499.2336	664006.2532
20605	638+42.18	0.0000	322493.3702	664078.3505
20900	900+00.00	0.0000	322181.1244	664146.1529
20901	910+33.89	0.0000	323191.4737	663926.7616
20902	913+82.26	4.3737	323531.9796	663852.8228
20903	910+33.89	-13877.52	320246.6798	650365.2812
20904	917+30.63	0.0000	323868.3458	663761.8888
20905	926+60.95	0.0000	324766.4255	663519.1002

DELAWARE DEPARTMENT OF TRANSPORTATION

ADDENDUMS / REVISIONS

SCALE 0 100 200 300 FEET

SR 1, SR 30 GRADE SEPARATED INTERSECTION

CONTRACT	BRIDGE NO.	
T200812201	DESIGNED BY: JLC	
COUNTY	CHECKED BY: JRG	
SUSSEX		

HORIZONTAL AND VERTICAL CONTROLS

SHEET NO. 14 / TOTAL SHTS. 133

Y:\SUSSEX\014\ROAD\2812201\PLANS\FINAL\CONSTRUCTION\HV03.DGN

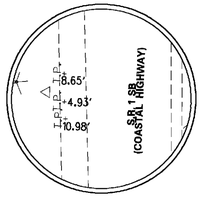

TRAVERSE POINT #9
DELDOT CAP

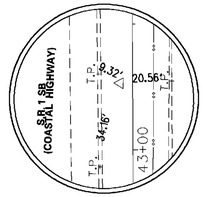

TRAVERSE POINT #10
DELDOT CAP

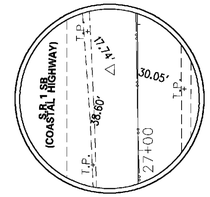

TRAVERSE POINT #11
GPS CAP

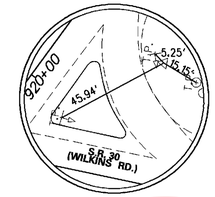

TRAVERSE POINT #12
DELDOT CAP

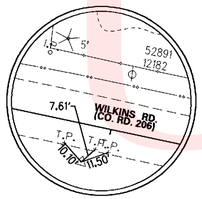

TRAVERSE POINT #13
DELDOT CAP

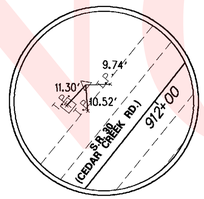

TRAVERSE POINT #15
DELDOT CAP

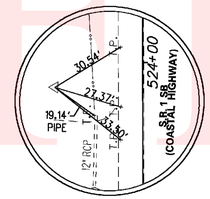

TRAVERSE POINT #16
DELDOT CAP

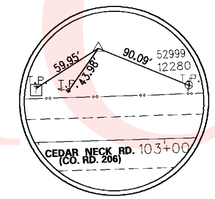

TRAVERSE POINT #17
DELDOT CAP

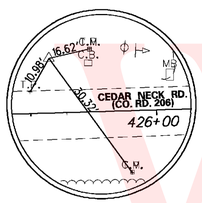

TRAVERSE POINT #18
DELDOT CAP

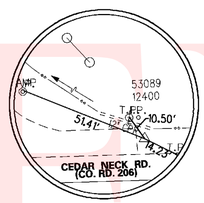

TRAVERSE POINT #19
DELDOT CAP

TRAVERSE POINT #23
DELDOT CAP

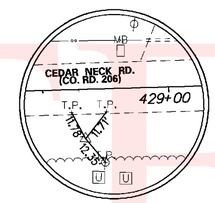

TRAVERSE POINT #24
DELDOT CAP

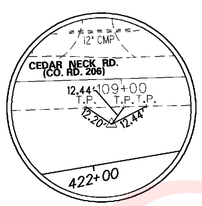

TRAVERSE POINT #25
DELDOT CAP

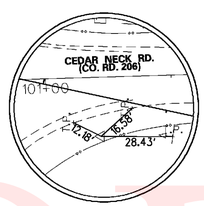

TRAVERSE POINT #26
DELDOT CAP

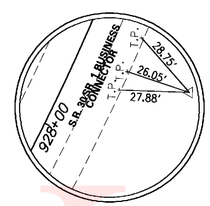

TRAVERSE POINT #28
DELDOT CAP

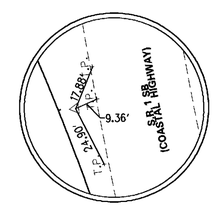

TRAVERSE POINT #40
DELDOT CAP

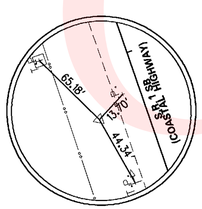

TRAVERSE POINT #41
DELDOT CAP

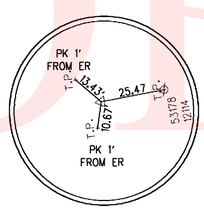

TRAVERSE POINT #44
DELDOT CAP

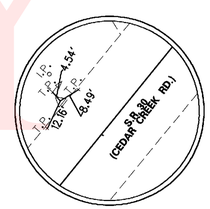

TRAVERSE POINT #45
DELDOT CAP

TRAVERSE POINT #47
DELDOT CAP

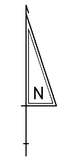

HORIZONTAL / VERTICAL CONTROL DATA

POINT	STATION	OFFSET	NORTHING	EASTING	ELEVATION
9	54+07.41	-74.48'	325285.1270	663215.2510	31.55'
10	43+26.55	-5.01'	324667.7794	664105.1822	35.13'
11	27+32.13	-10.55'	323672.5003	665350.8222	29.53'
12	406+40.70	-48.92'	324172.2220	663720.8940	33.95'
13	401+91.13	15.03'	323838.4650	663412.9900	32.61'
15	911+88.22	-25.43'	323336.4310	663868.3900	35.65'
16	32+44.52	-85.36'	323932.3480	664902.9150	31.98'
17	102+74.79	-36.66'	324777.9300	664414.9470	36.96'
18	112+43.47	-21.83'	325542.5970	665009.7960	27.10'
19	118+37.19	-16.55'	326013.5570	665371.3470	23.77'
23	120+70.39	14.07'	326181.3730	665536.1530	24.56'
24	115+52.07	19.55'	325764.1380	665228.5790	24.11'
25	108+95.60	17.89'	325240.8830	664832.1470	30.08'
26	101+21.47	23.52'	324619.2630	664370.7260	36.20'
28	928+34.57	46.73'	324949.4000	663497.9930	30.99'
40	18+95.69	-72.28'	323129.7630	666001.9150	29.15'
41	7+34.85	-76.03'	322713.5570	667095.8460	27.85'
44	16+87.48	56.62'	323157.7330	666245.6650	26.22'
45	903+49.93	-21.03'	322518.6250	664051.3500	28.68'
47	904+52.25	24.66'	322628.3070	664074.2880	28.80'

NOTE:
HORIZONTAL COORDINATES WERE BASED ON NAD 83.
GPS ELEVATIONS WERE BASED ON NAVD 88.

UNOFFICIAL WEBSITE COPY

Y:\SUSSEX\014\ROAD\281220\PLANS\FINAL\CONSTRUCTION\HV04.DGN

DELAWARE DEPARTMENT OF TRANSPORTATION	ADDENDUMS / REVISIONS	NOT TO SCALE	SR 1, SR 30 GRADE SEPARATED INTERSECTION	CONTRACT T200812201	BRIDGE NO.	HORIZONTAL AND VERTICAL CONTROLS	SHEET NO. 15
				COUNTY SUSSEX	DESIGNED BY: JLC		TOTAL SHTS. 133
					CHECKED BY: JRG		

DRAINAGE PIPE SCHEDULE						
NO.	SIZE / TYPE	CLASS	LENGTH	SLOPE	INT. EL.	DIS. EL.
29	15" RCP	IV	32.00'	0.0066	24.96'	24.75'

FLARED END SECTION SCHEDULE			
NO.	SIZE / TYPE	SLOPE	SAFETY GRATE
1B	14"x23"RC FES	0.0023	YES

UNDERDRAIN OUTLETS		
NO.	LENGTH	DIS. EL.
1	17.00	25.08'

RIGHT-OF-WAY MONUMENT SCHEDULE					
NO.	TYPE	STATION	OFFSET	NORTHING	EASTING
1	CONCRETE	612+45.71	-42.00	322862.5236	666607.4825

CURB SCHEDULE		
NO.	ITEM DESCRIPTION / TYPE	LENGTH
8	PCC CURB, TYPE 2	56.00'

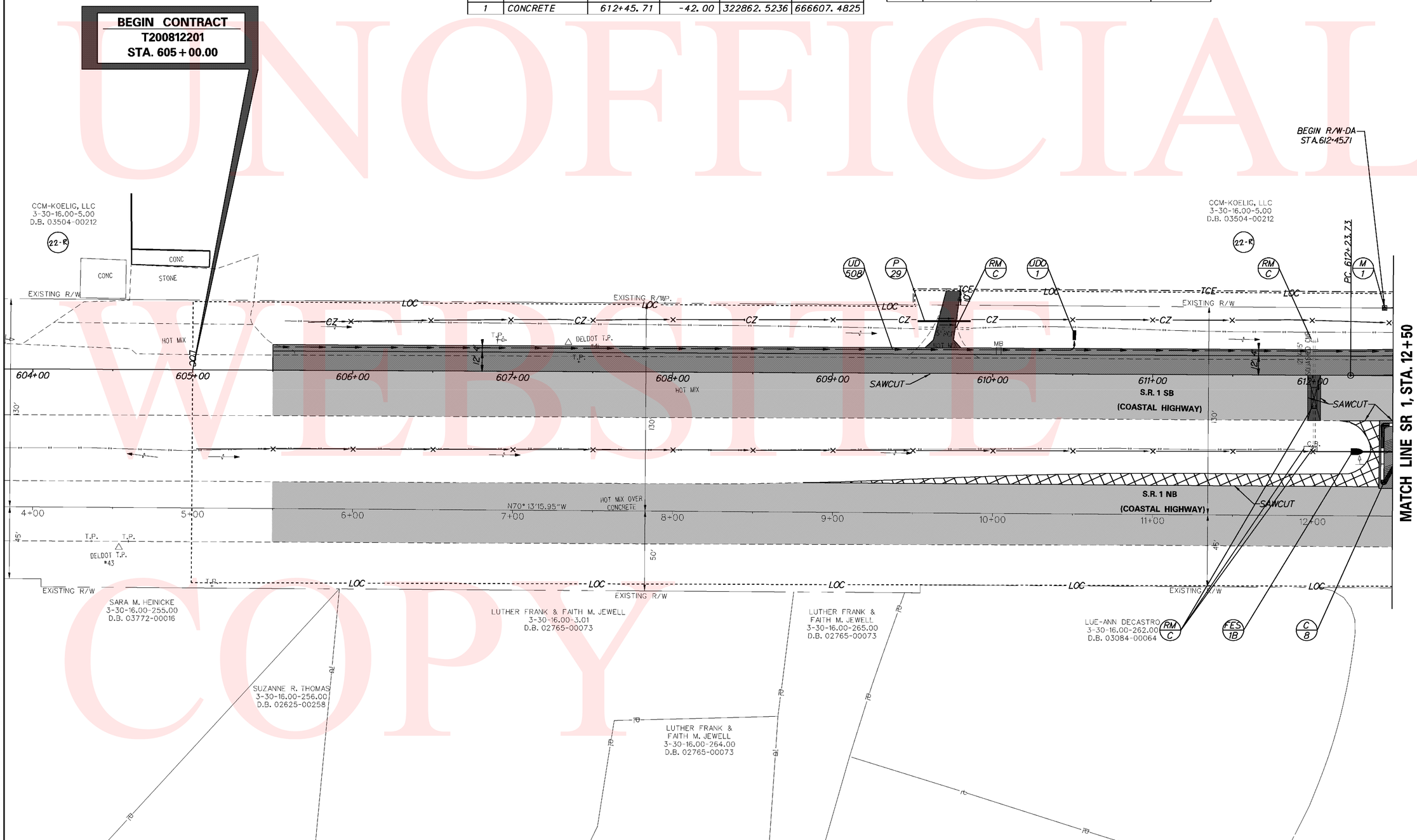

UNOFFICIAL WEBSITE COPY

Y:\SUSSEX\014\ROAD\2812201\PLANS\SEMIFINAL\CONSTRUCTION\CP01.DGN

DELAWARE DEPARTMENT OF TRANSPORTATION

ADDENDUMS / REVISIONS

SCALE 0 30 60 90 FEET

SR 1, SR 30 GRADE SEPARATED INTERSECTION

CONTRACT	BRIDGE NO.		CONSTRUCTION PLAN	SHEET NO.
T200812201	DESIGNED BY: JLC			16
COUNTY	CHECKED BY: JRG			TOTAL SHTS.
SUSSEX				133

DRAINAGE PIPE SCHEDULE

NO.	SIZE / TYPE	CLASS	LENGTH	SLOPE	INT. EL.	DIS. EL.
1B	14"x23" HERCP	IV	332.00'	0.0023	23.85'	23.10'
1A	14"x23" HERCP	IV	295.00'	0.0020	23.09'	22.50'
1	24" RCP	IV	77.00'	0.0197	23.90'	22.39'
2	36" RCP	IV	107.00'	0.0130	22.39'	21.00'
8	24" RCP	IV	72.00'	0.0034	23.25'	23.00'

DRAINAGE INLET SCHEDULE

NO.	STATION	OFFSET	BOX SIZE	GRATE	T.G. EL.	INV. EL.
1A	15+55.02	-40.92'	34" x 24"	2	25.30'	23.10'
1	18+50.01	-45.23'	72" x 72"	2	26.50'	22.39'

FLARED END SECTION SCHEDULE

NO.	SIZE / TYPE	SLOPE	SAFETY GRATE
1	24" RCP	0.0197	YES
2	36" RCP	0.0130	NO
8A	24" RCP	0.0034	NO
8B	24" RCP	0.0034	NO

UNDERDRAIN OUTLETS

NO.	LENGTH	DIS. EL.
2	17.00'	25.16'
3	17.00'	24.71'
4	17.00'	24.71'
5	17.00'	25.00'

RIGHT-OF-WAY MONUMENT SCHEDULE

NO.	TYPE	STATION	OFFSET	NORTHING	EASTING
2	CONCRETE	615+20.53	-42.00'	322910.5185	666349.4633
3	CONCRETE	617+53.58	-42.00'	322894.9334	666127.2523
4	CONCRETE	617+80.86	-42.00'	322889.7371	666101.6426

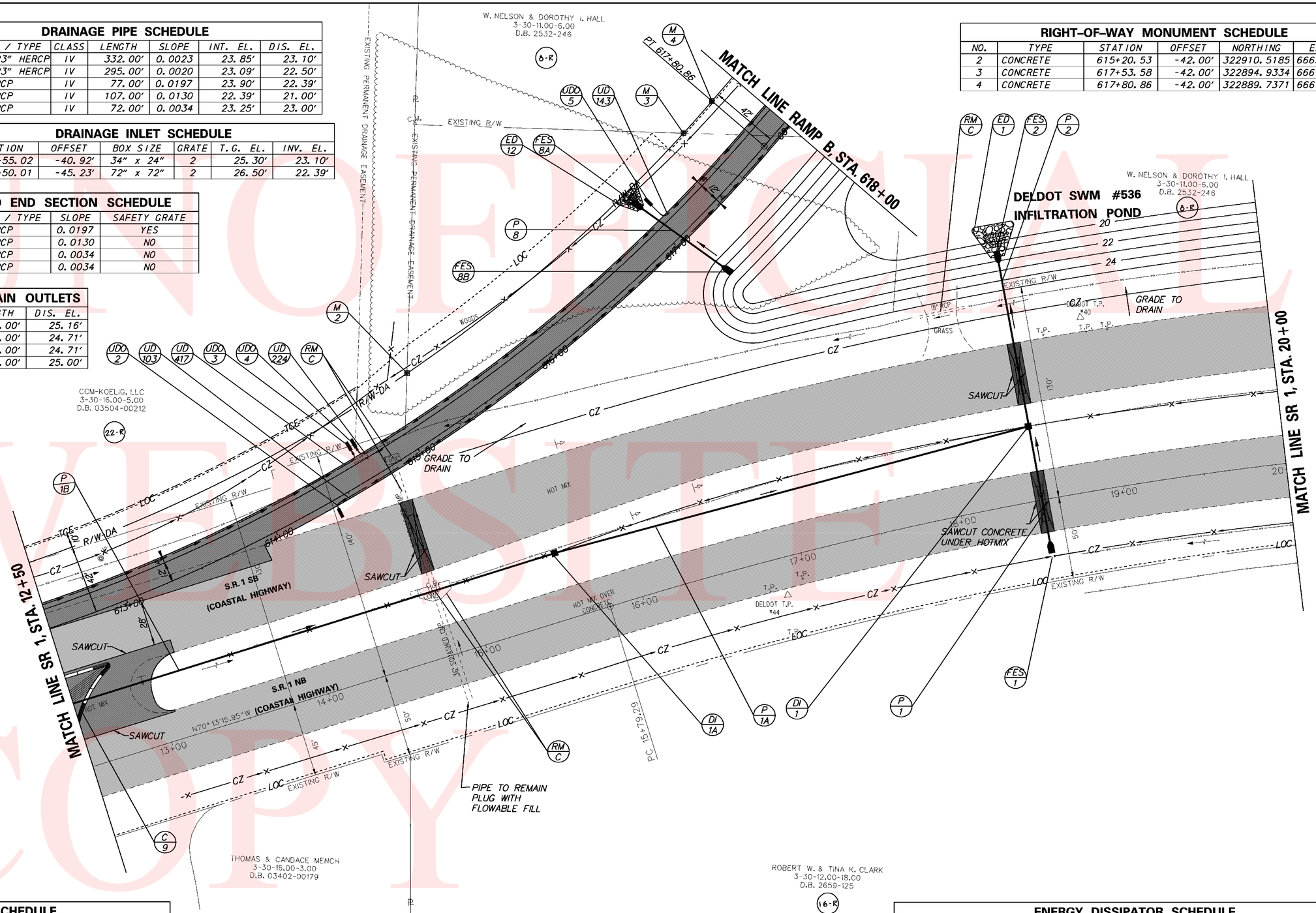

CURB SCHEDULE

NO.	ITEM DESCRIPTION / TYPE	LENGTH
9	PCC CURB, TYPE 2	70.25'

ENERGY DISSIPATOR SCHEDULE

NO.	STATION	OFFSET	RIPRAP SIZE	D (FT)	T1 (FT)	L (FT)	W1 (FT)	W2 (FT)
1	18+50.31	-172.68	R-4	1.00	1.50	6.00	2.00	6.00
12	616+97.97	-36.84	R-4	1.00	1.50	6.00	2.00	6.00

UNOFFICIAL WEBSITE COPY

Y:\SUSSEX\014\ROAD\2812201\PLANS\FINAL\CONSTRUCTION\CP02.DGN

DELAWARE DEPARTMENT OF TRANSPORTATION	ADDENDUMS / REVISIONS	SCALE 0 30 60 90 FEET	SR 1, SR 30 GRADE SEPARATED INTERSECTION	CONTRACT T200812201	BRIDGE NO.	CONSTRUCTION PLAN	SHEET NO. 17
				COUNTY SUSSEX	DESIGNED BY: JLC		TOTAL SHTS. 133
					CHECKED BY: JRG		

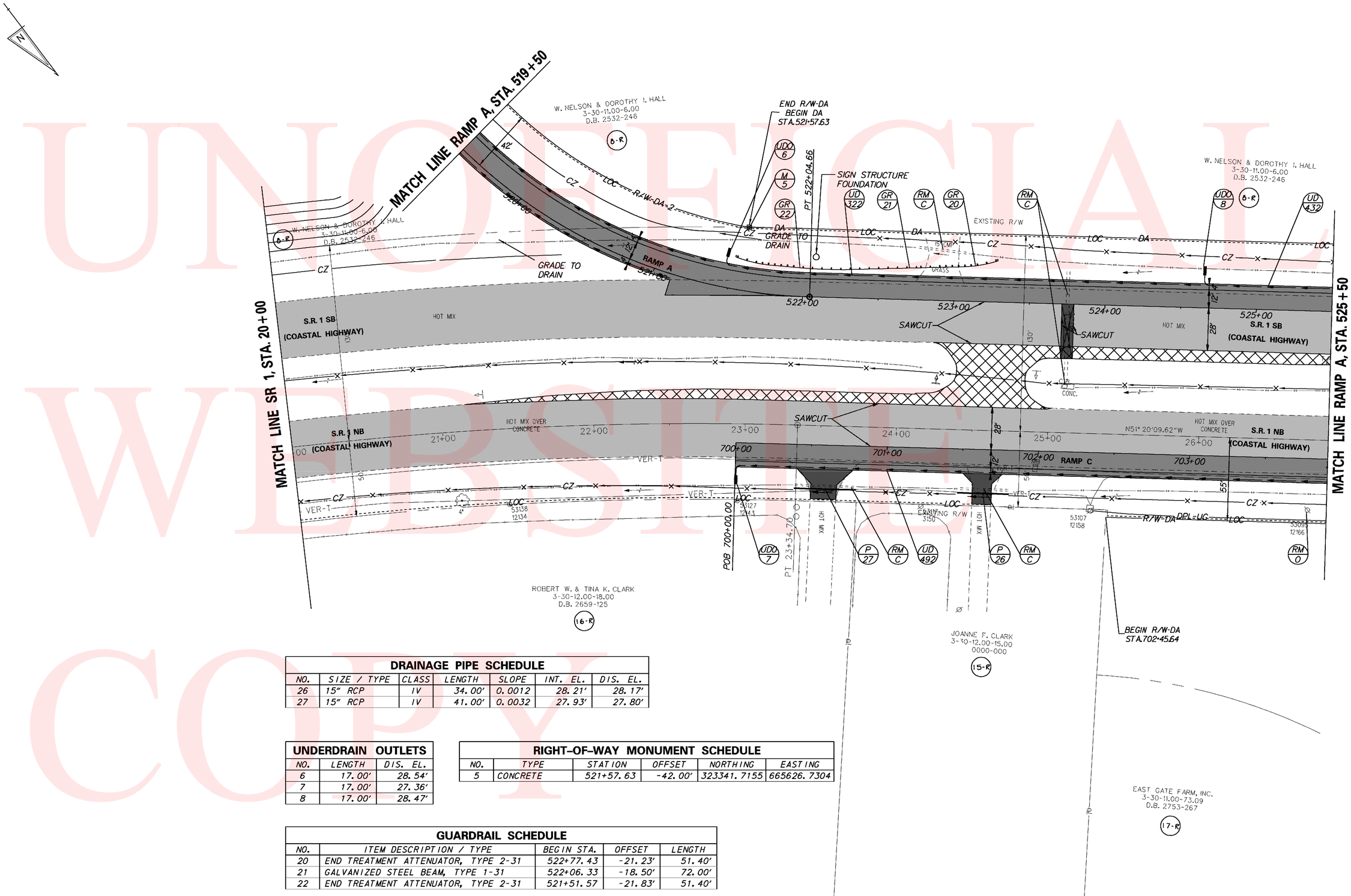

DRAINAGE PIPE SCHEDULE

NO.	SIZE / TYPE	CLASS	LENGTH	SLOPE	INT. EL.	DIS. EL.
26	15" RCP	IV	34.00'	0.0012	28.21'	28.17'
27	15" RCP	IV	41.00'	0.0032	27.93'	27.80'

UNDERDRAIN OUTLETS

NO.	LENGTH	DIS. EL.
6	17.00'	28.54'
7	17.00'	27.36'
8	17.00'	28.47'

RIGHT-OF-WAY MONUMENT SCHEDULE

NO.	TYPE	STATION	OFFSET	NORTHING	EASTING
5	CONCRETE	521+57.63	-42.00'	323341.7155	665626.7304

GUARDRAIL SCHEDULE

NO.	ITEM DESCRIPTION / TYPE	BEGIN STA.	OFFSET	LENGTH
20	END TREATMENT ATTENUATOR, TYPE 2-31	522+77.43	-21.23'	51.40'
21	GALVANIZED STEEL BEAM, TYPE 1-31	522+06.33	-18.50'	72.00'
22	END TREATMENT ATTENUATOR, TYPE 2-31	521+51.57	-21.83'	51.40'

UNOFFICIAL WEBSITE COPY

Y:\SUSSEX\014\ROAD\281220\PLANS\FINAL\CONSTRUCTION\CP03.DGN

DELAWARE DEPARTMENT OF TRANSPORTATION	ADDENDUMS / REVISIONS	SCALE 0 30 60 90 FEET	SR 1, SR 30 GRADE SEPARATED INTERSECTION	CONTRACT T200812201	BRIDGE NO.	CONSTRUCTION PLAN	SHEET NO. 18
				COUNTY SUSSEX	DESIGNED BY: JLC		TOTAL SHTS. 133
					CHECKED BY: JRG		

DRAINAGE PIPE SCHEDULE

NO.	SIZE / TYPE	CLASS	LENGTH	SLOPE	INT. EL.	DIS. EL.
6	18" RCP	IV	100.00'	0.0035	27.50'	27.15'
6A	18" RCP	IV	104.00'	0.0035	27.50'	27.14'
7	24" RCP	IV	178.00'	0.0035	27.00'	26.38'

RIPRAP SCHEDULE

NO.	STATION	OFFSET	TYPE	LENGTH	WIDTH	QUANTITY
3	709+99.18	47.45'	R-4	20.65'	18.94'	43.46 SY

UNDERDRAIN OUTLETS

NO.	LENGTH	DIS. EL.
9	17.00'	28.51'
10	17.00'	29.43'
11	17.00'	28.94'
12	17.00'	30.64'

DRAINAGE INLET SCHEDULE

NO.	STATION	OFFSET	BOX SIZE	GRATE	T.G. EL.	INV. EL.
6A	33+14.77	-37.83'	48" x 48"	TYPE 2	30.00'	27.50'

FLARED END SECTION SCHEDULE

NO.	SIZE / TYPE	SLOPE	SAFETY GRATE
6A	18" RCP	0.0035	NO
6B	18" RCP	0.0035	NO
6C	18" RCP	0.0035	NO
7A	24" RCP	0.0035	NO
7B	24" RCP	0.0035	NO

ENERGY DISSIPATOR SCHEDULE

NO.	STATION	OFFSET	RIPRAP SIZE	D (FT)	T1 (FT)	L (FT)	W1 (FT)	W2 (FT)
4	710+00.26	-61.59'	R-4	1.00	1.50	6.00	2.00	6.00
5	33+12.25	71.04'	R-4	1.00	1.50	6.00	2.00	6.00
6	810+68.17	133.36'	R-4	1.00	1.50	6.00	2.00	6.00

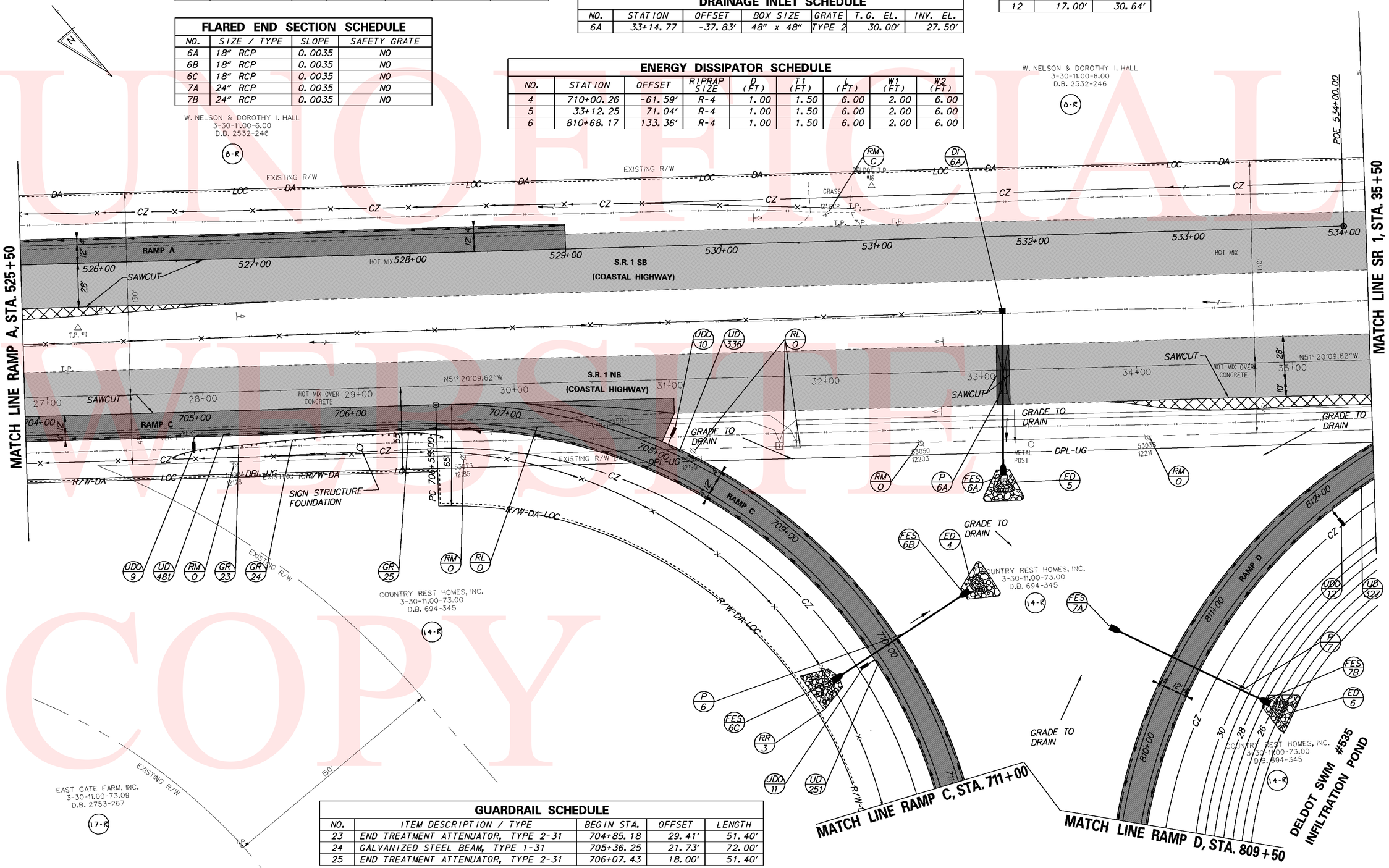

GUARDRAIL SCHEDULE

NO.	ITEM DESCRIPTION / TYPE	BEGIN STA.	OFFSET	LENGTH
23	END TREATMENT ATTENUATOR, TYPE 2-31	704+85.18	29.41'	51.40'
24	GALVANIZED STEEL BEAM, TYPE 1-31	705+36.25	21.73'	72.00'
25	END TREATMENT ATTENUATOR, TYPE 2-31	706+07.43	18.00'	51.40'

UNOFFICIAL WEBSITE COPY

DELAWARE DEPARTMENT OF TRANSPORTATION

ADDENDUMS / REVISIONS

SCALE 0 30 60 90 FEET

SR 1, SR 30 GRADE SEPARATED INTERSECTION

CONTRACT	BRIDGE NO.
T200812201	DESIGNED BY: JLC
COUNTY	
SUSSEX	CHECKED BY: JRG

CONSTRUCTION PLAN

SHEET NO. 19 TOTAL SHTS. 133

Y:\SUSSEX\014\ROAD\281220\PLANS\FINAL\CONSTRUCTION\CP04.DGN

GUARDRAIL SCHEDULE

NO.	ITEM DESCRIPTION / TYPE	BEGIN STA.	OFFSET	LENGTH
1	END TREATMENT ATTENUATOR, TYPE 3-31	816+93.40	-49.67'	50.47'
2	GALVANIZED STEEL BEAM, TYPE 1-31	817+43.87	-48.65'	161.17'
3	GALVANIZED STEEL BEAM, TYPE 1-31	817+43.87	-50.49'	161.17'
4	END TREATMENT ATTENUATOR, TYPE 3-31	819+03.73	-48.53'	50.47'
5	GALVANIZED STEEL BEAM, TYPE 1-31	416+50.00	22.00	401.75'
6	GALVANIZED STEEL BEAM, TYPE 1-31	416+50.00	-22.00	263.68'
7	BARRIER CONNECTION, APPROACH TYPE 1-31	416+10.00	22.00	40.00'
8	BARRIER CONNECTION, APPROACH TYPE 1-31	416+10.00	-22.00	40.00'
9	BARRIER CONNECTION, APPROACH TYPE 1-31	413+30.00	22.00	40.00'
10	BARRIER CONNECTION, APPROACH TYPE 1-31	413+14.58	-22.00	40.00'
11	GALVANIZED STEEL BEAM, TYPE 1-31	410+74.13	38.00'	248.60'
12	GALVANIZED STEEL BEAM, TYPE 1-31	409+59.83	-22.00	353.27'

CURB SCHEDULE

NO.	ITEM DESCRIPTION / TYPE	LENGTH
GR-5	P.C.C. CURB, TYPE 1-4	401.75'
GR-6	P.C.C. CURB, TYPE 1-4	263.68'
GR-7	P.C.C. CURB, TYPE 1-4	40.00'
GR-8	P.C.C. CURB, TYPE 1-4	40.00'
GR-9	P.C.C. CURB, TYPE 1-4	40.00'
GR-10	P.C.C. CURB, TYPE 1-4	40.00'
GR-11	P.C.C. CURB, TYPE 1-4	248.60
GR-12	P.C.C. CURB, TYPE 1-4	353.27

UNDERDRAIN OUTLETS

NO.	LENGTH	DIS. EL.
13	17.00'	33.66'

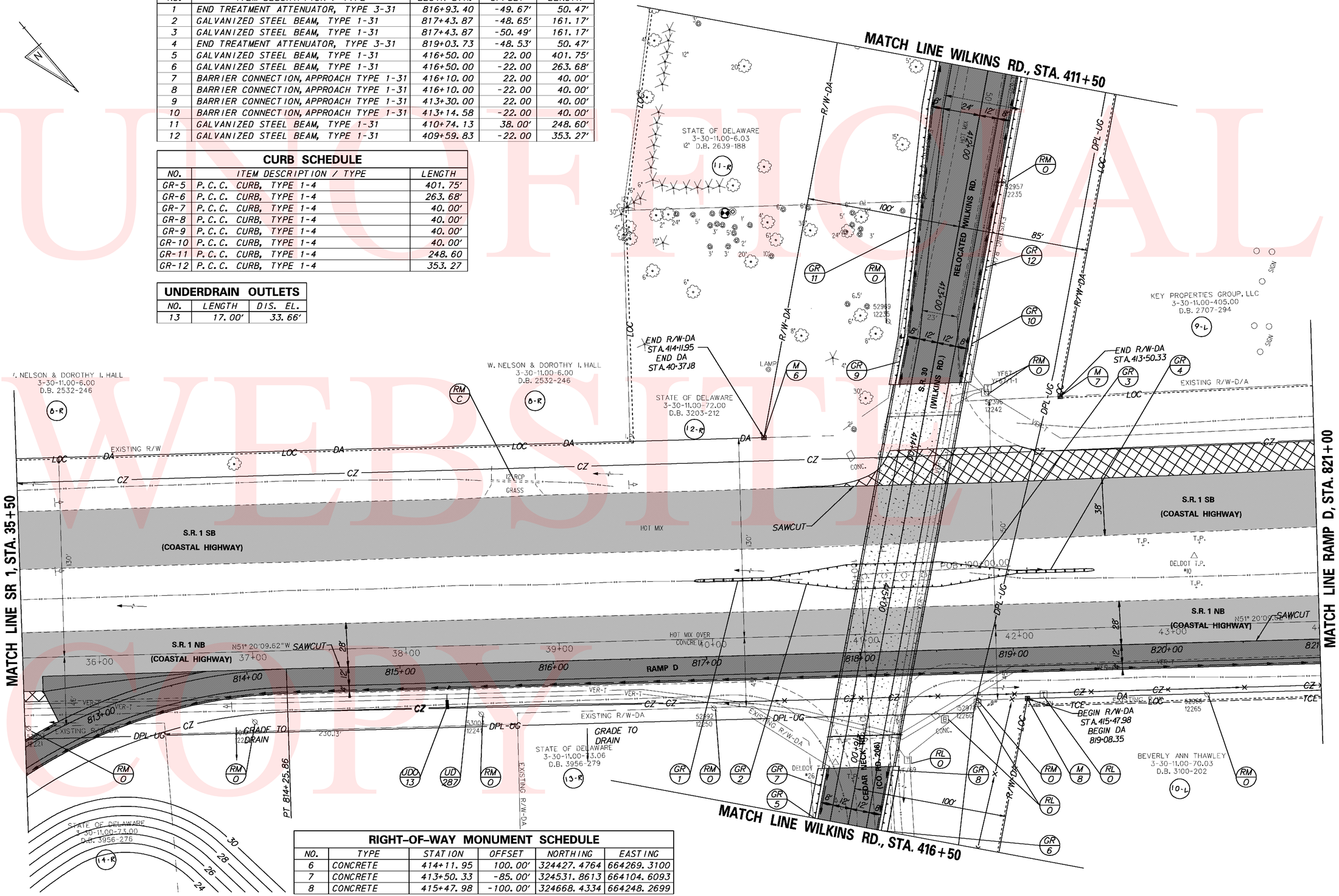

RIGHT-OF-WAY MONUMENT SCHEDULE

NO.	TYPE	STATION	OFFSET	NORTHING	EASTING
6	CONCRETE	414+11.95	100.00'	324427.4764	664269.3100
7	CONCRETE	413+50.33	-85.00'	324531.8613	664104.6093
8	CONCRETE	415+47.98	-100.00'	324668.4334	664248.2699

UNOFFICIAL WEBSITE COPY

DELAWARE DEPARTMENT OF TRANSPORTATION	ADDENDUMS / REVISIONS	SCALE 0 30 60 90 FEET	SR 1, SR 30 GRADE SEPARATED INTERSECTION	CONTRACT T200812201	BRIDGE NO.	CONSTRUCTION PLAN	SHEET NO. 20
				COUNTY SUSSEX	DESIGNED BY: JLC		TOTAL SHTS. 133
					CHECKED BY: JRG		

Y:\SUSSEX\014\ROAD\2812201\PLANS\FINAL\CONSTRUCTION\CP05.DGN

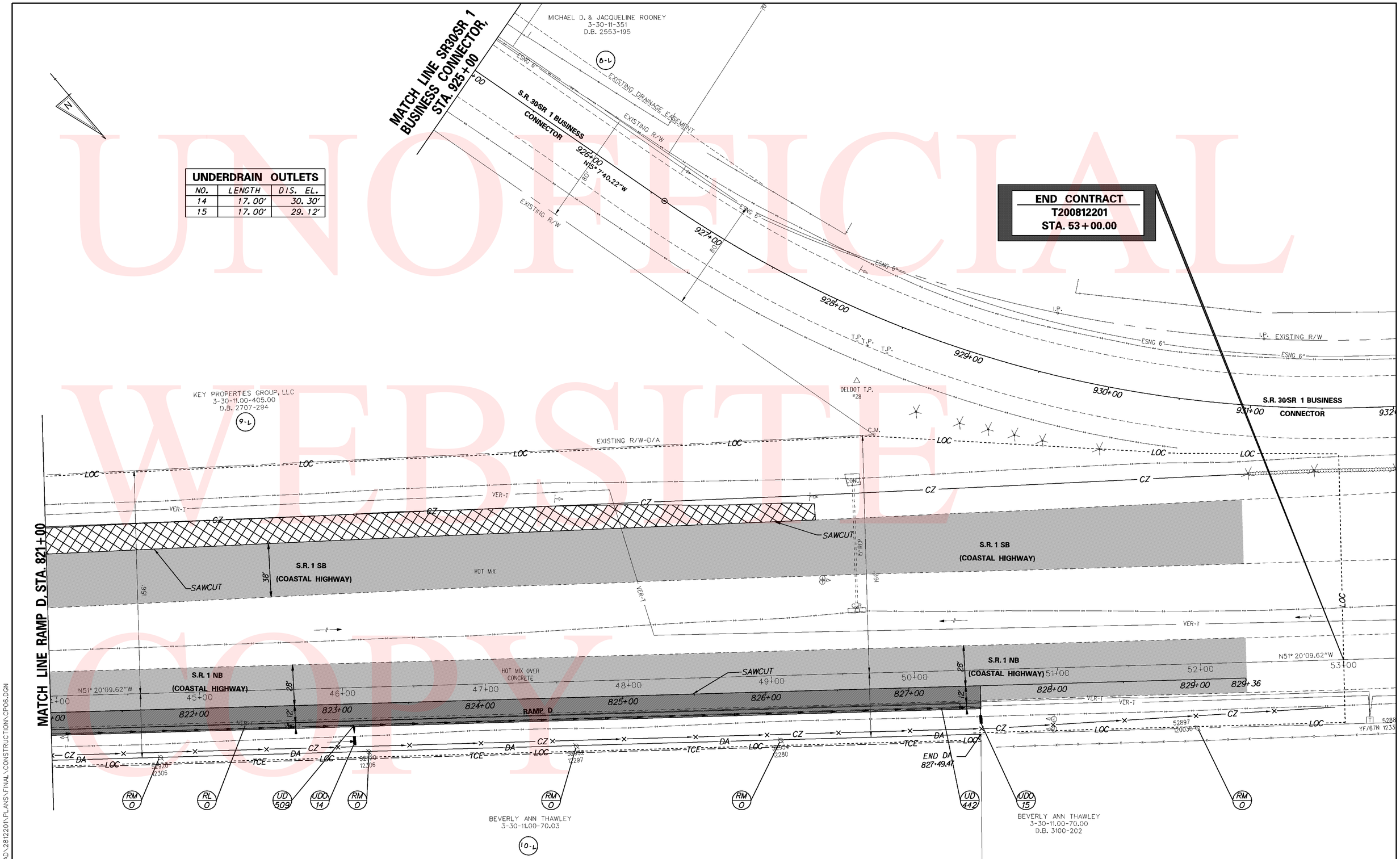

UNDERDRAIN OUTLETS		
NO.	LENGTH	DIS. EL.
14	17.00'	30.30'
15	17.00'	29.12'

UNOFFICIAL WEBSITE COPY

Y:\SUSSEX\014\ROAD\281220\PLANS\FINAL\CONSTRUCTION\CP06.DGN

DELAWARE DEPARTMENT OF TRANSPORTATION	ADDENDUMS / REVISIONS	SCALE 0 30 60 90 FEET	SR 1, SR 30 GRADE SEPARATED INTERSECTION	CONTRACT T200812201	BRIDGE NO.	CONSTRUCTION PLAN	SHEET NO. 21
				COUNTY SUSSEX	DESIGNED BY: JLC		TOTAL SHTS. 133
					CHECKED BY: JRG		

FLARED END SECTION SCHEDULE			
NO.	SIZE / TYPE	SLOPE	SAFETY GRATE
3A	22"x34"RC FES	0.0037	NO
3B	22"x34"RC FES	0.0037	NO

RIGHT-OF-WAY MONUMENT SCHEDULE					
NO.	TYPE	STATION	OFFSET	NORTHING	EASTING
9	CONCRETE	514+38.29	-42.00'	322845.4809	665473.7012

DRAINAGE PIPE SCHEDULE						
NO.	SIZE / TYPE	CLASS	LENGTH	SLOPE	INT. EL.	DIS. EL.
3	22"x34" HERCP	IV	108.00'	0.0037	23.90	23.50

ENERGY DISSIPATOR SCHEDULE								
NO.	STATION	OFFSET	RIPRAP SIZE	D (FT)	T1 (FT)	L (FT)	W1 (FT)	W2 (FT)
11	516+87.41	43.06'	R-4	1.00	1.50	6.00	2.00	6.00

UNDERDRAIN OUTLETS		
NO.	LENGTH	DIS. EL.
16	17.00'	24.14'
17	17.00'	24.02'
18	17.00'	24.01'
19	17.00'	24.59'
20	17.00'	24.89'
21	17.00'	24.98'
22	17.00'	24.48'
23	17.00'	26.94'
24	17.00'	25.42'

RIPRAP SCHEDULE						
NO.	STATION	OFFSET	TYPE	LENGTH	WIDTH	QUANTITY
2	516+02.50	-31.39	R-4	10.95'	11.65'	14.17 SY

CURB SCHEDULE		
NO.	ITEM DESCRIPTION / TYPE	LENGTH
1	P.C.C CURB, TYPE 2	576.36'

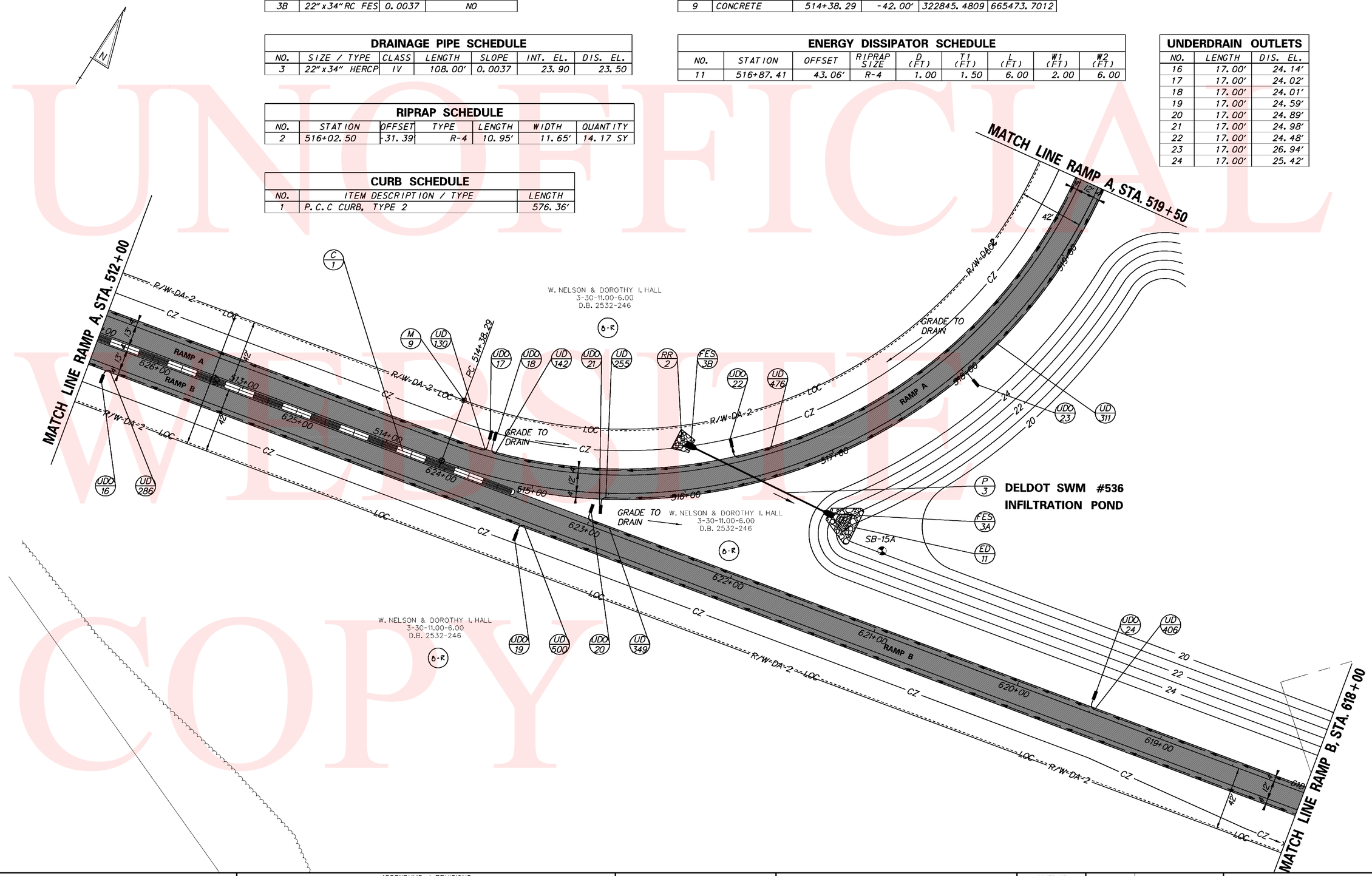

UNOFFICIAL WEBSITE COPY

Y:\SUSSEX\014\ROAD\281220\PLANS\FINAL\CONSTRUCTION\CP07.DGN

DELAWARE DEPARTMENT OF TRANSPORTATION	ADDENDUMS / REVISIONS	SCALE 0 30 60 90 FEET	SR 1, SR 30 GRADE SEPARATED INTERSECTION	CONTRACT T200812201	BRIDGE NO.	CONSTRUCTION PLAN	SHEET NO. 22
				COUNTY SUSSEX	DESIGNED BY: JLC		TOTAL SHTS. 133
					CHECKED BY: JRG		

RIPRAP SCHEDULE						
NO.	STATION	OFFSET	TYPE	LENGTH	WIDTH	QUANTITY
14	509+15.85	33.23'	R-6	15.12'	34.59'	58.11 SY

CURB SCHEDULE		
NO.	ITEM DESCRIPTION / TYPE	LENGTH
2	P.C.C CURB, TYPE 2	1800.00'

FLARED END SECTION SCHEDULE			
NO.	SIZE / TYPE	SLOPE	SAFETY GRATE
9AA	19"X30"RC FES	0.0047	NO
9AB	19"X30"RC FES	0.0047	NO
9BA	19"X30"RC FES	0.0047	NO
9BB	19"X30"RC FES	0.0047	NO
9CA	19"X30"RC FES	0.0047	NO
9CB	19"X30"RC FES	0.0047	NO

UNDERDRAIN OUTLETS		
NO.	LENGTH	DIS. EL.
25	17.00'	24.77'
26	17.00'	24.28'
27	17.00'	23.85'
28	17.00'	23.85'
29	17.00'	23.84'
30	17.00'	23.84'

DRAINAGE PIPE SCHEDULE						
NO.	SIZE / TYPE	CLASS	LENGTH	SLOPE	INT. EL.	DIS. EL.
9A	19"X30" HERCP	IV	64.00'	0.0047	22.40'	22.10'
9B	19"X30" HERCP	IV	64.00'	0.0047	22.40'	22.10'
9C	19"X30" HERCP	IV	64.00'	0.0047	22.40'	22.10'

ENERGY DISSIPATOR SCHEDULE									
NO.	STATION	OFFSET	RIPRAP SIZE	D (FT)	T1 (FT)	L (FT)	W1 (FT)	W2 (FT)
13	629+23.44	-39.92'	R-6	2.56	2.00	15.00	10.00	20.00

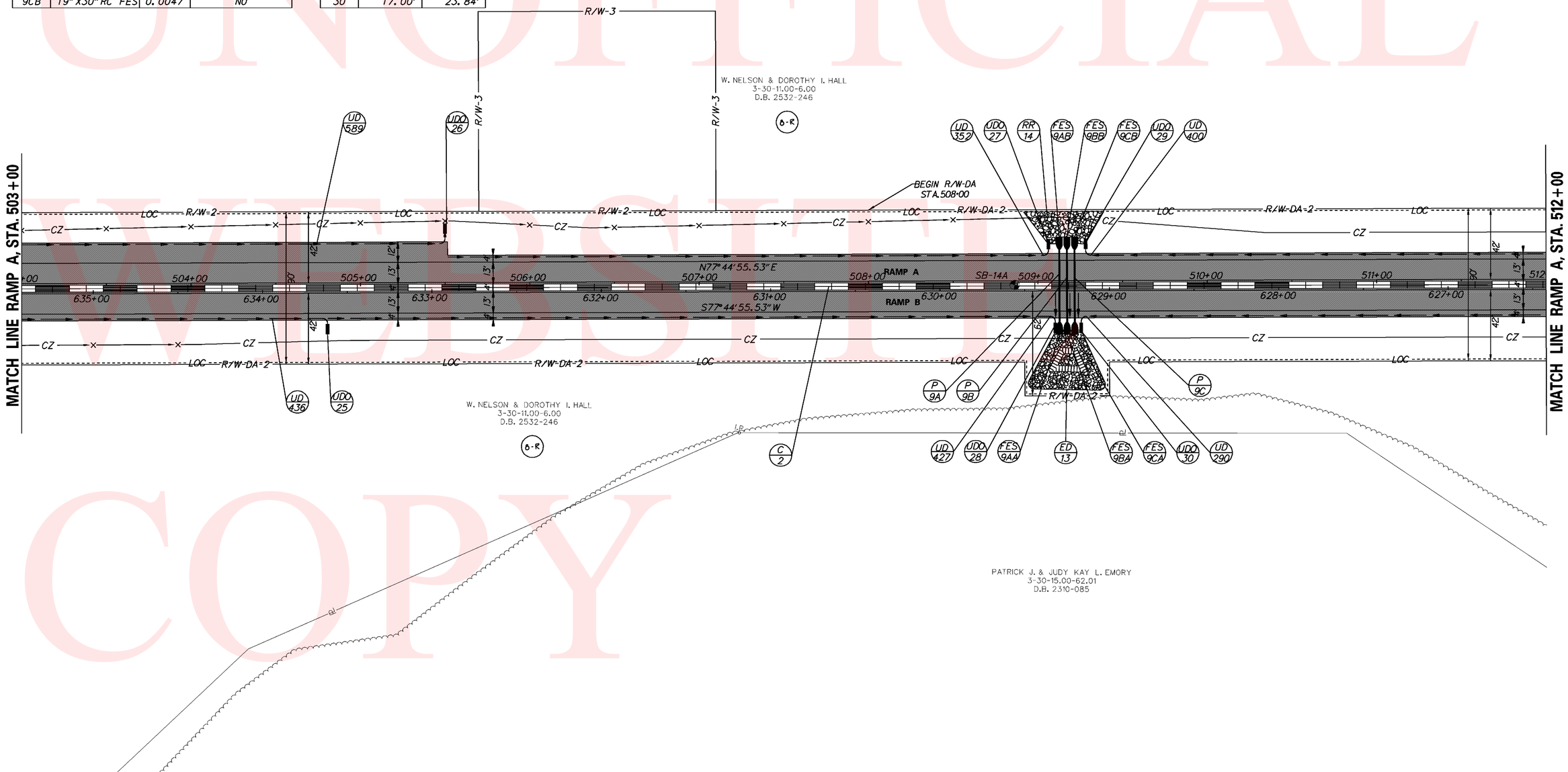

UNOFFICIAL WEBSITE COPY

Y:\SUSSEX\014\ROAD\281201\PLANS\FINAL\CONSTRUCTION\CP08.DGN

DELAWARE DEPARTMENT OF TRANSPORTATION	ADDENDUMS / REVISIONS	SCALE 0 30 60 90 FEET	SR 1, SR 30 GRADE SEPARATED INTERSECTION	CONTRACT T200812201	BRIDGE NO.	CONSTRUCTION PLAN	SHEET NO. 23
				COUNTY SUSSEX	DESIGNED BY: JLC		TOTAL SHTS. 133
					CHECKED BY: JRG		

UNOFFICIAL WEBSITE COPY

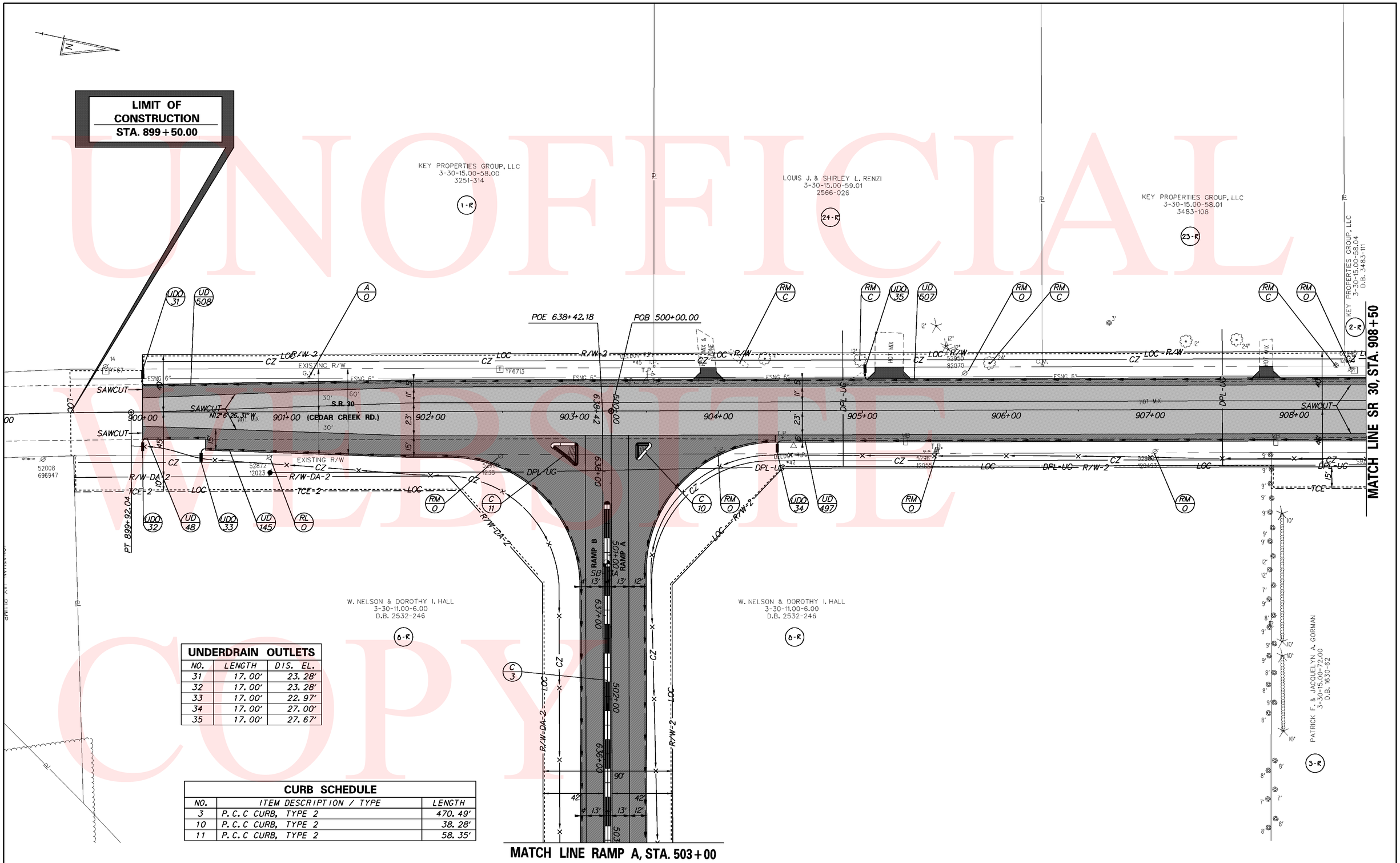

UNDERDRAIN OUTLETS

NO.	LENGTH	DIS. EL.
31	17.00'	23.28'
32	17.00'	23.28'
33	17.00'	22.97'
34	17.00'	27.00'
35	17.00'	27.67'

CURB SCHEDULE

NO.	ITEM DESCRIPTION / TYPE	LENGTH
3	P.C.C CURB, TYPE 2	470.49'
10	P.C.C CURB, TYPE 2	38.28'
11	P.C.C CURB, TYPE 2	58.35'

Y:\SUSSEX\014\ROAD\281220\PLANS\FINAL\CONSTRUCTION\CP09.DGN

DELAWARE DEPARTMENT OF TRANSPORTATION

ADDENDUMS / REVISIONS

SCALE 0 30 60 90 FEET

SR 1, SR 30 GRADE SEPARATED INTERSECTION

CONTRACT	BRIDGE NO.	
T200812201	DESIGNED BY: JLC	
COUNTY	CHECKED BY: JRG	
SUSSEX		

CONSTRUCTION PLAN

SHEET NO.
24
TOTAL SHTS.
133

UNDERDRAIN OUTLETS		
NO.	LENGTH	DIS. EL.
36	17.00'	31.00'
37	17.00'	31.78'
38	17.00'	33.53'
39	17.00'	34.59'
40	17.00'	33.94'
41	17.00'	34.62'

DRAINAGE PIPE SCHEDULE						
NO.	SIZE / TYPE	CLASS	LENGTH	SLOPE	INT. EL.	DIS. EL.
20	15" RCP	IV	24.00'	0.0062	32.86'	32.71'
25	15" RCP	IV	18.00'	0.0061	30.98'	30.87'
28	15" RCP	IV	18.00'	0.0061	31.96'	31.85'

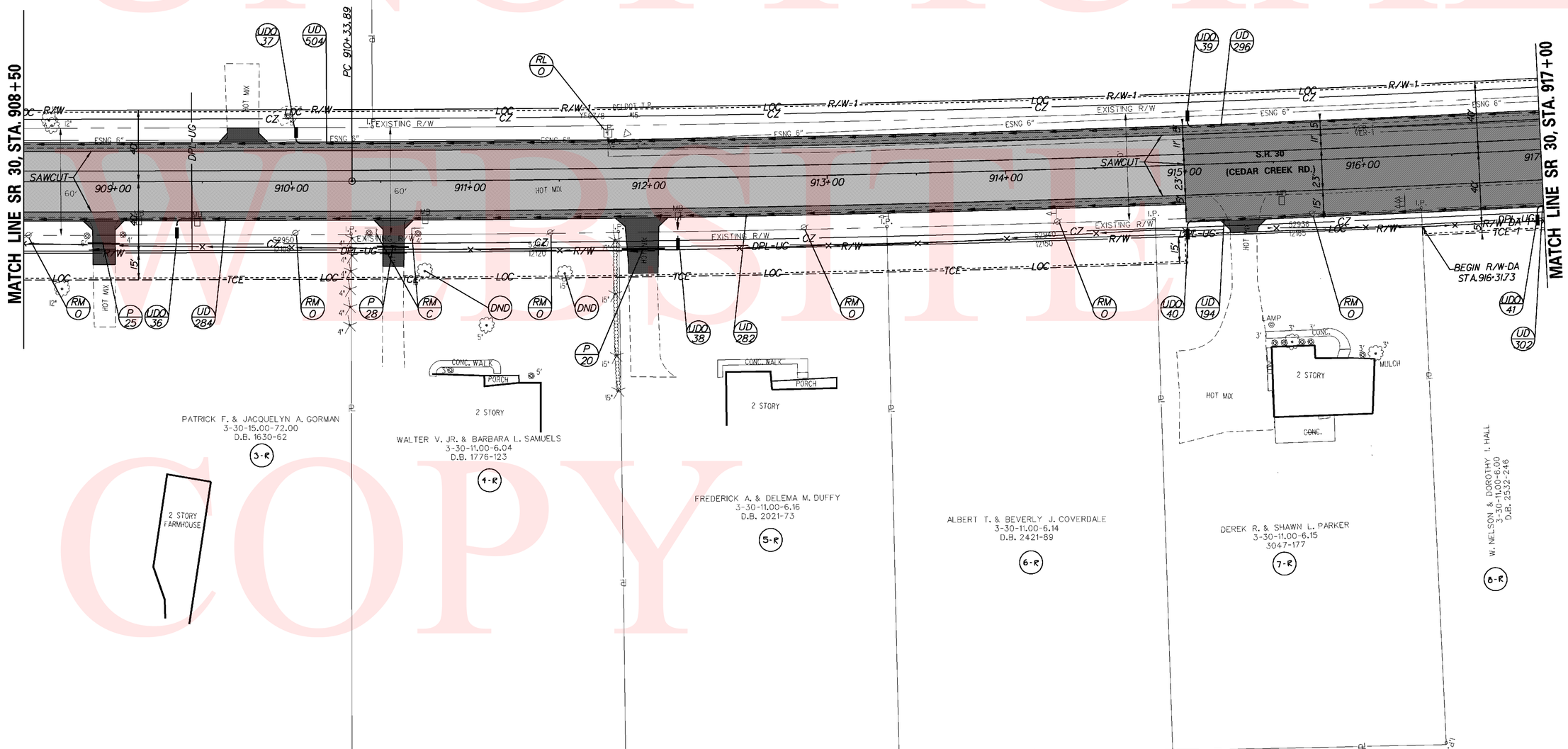

UNOFFICIAL WEBSITE COPY

Y:\SUSSEX\014\ROAD\281220\PLANS\FINAL\CONSTRUCTION\CP10.DGN

DELAWARE DEPARTMENT OF TRANSPORTATION	ADDENDUMS / REVISIONS	SCALE 0 30 60 90 FEET	SR 1, SR 30 GRADE SEPARATED INTERSECTION	CONTRACT T200812201	BRIDGE NO.	CONSTRUCTION PLAN	SHEET NO. 25
				COUNTY SUSSEX	DESIGNED BY: JLC		TOTAL SHTS. 133
					CHECKED BY: JRG		

DRAINAGE PIPE SCHEDULE						
NO.	SIZE / TYPE	CLASS	LENGTH	SLOPE	INT. EL.	DIS. EL.
11	14"x23" HERCP	IV	56.00'	0.0031	31.43'	31.26'
12	15" RCP	IV	60.00'	0.0050	32.49'	32.15'

FLARED END SECTION SCHEDULE			
NO.	SIZE / TYPE	SLOPE	SAFETY GRATE
11B	14"x23"RC FES	0.0031	NO
11A	14"x23"RC FES	0.0031	NO

UNDERDRAIN OUTLETS		
NO.	LENGTH	DIS. EL.
42	17.00'	30.33'
43	17.00'	30.44'
44	17.00'	30.95'

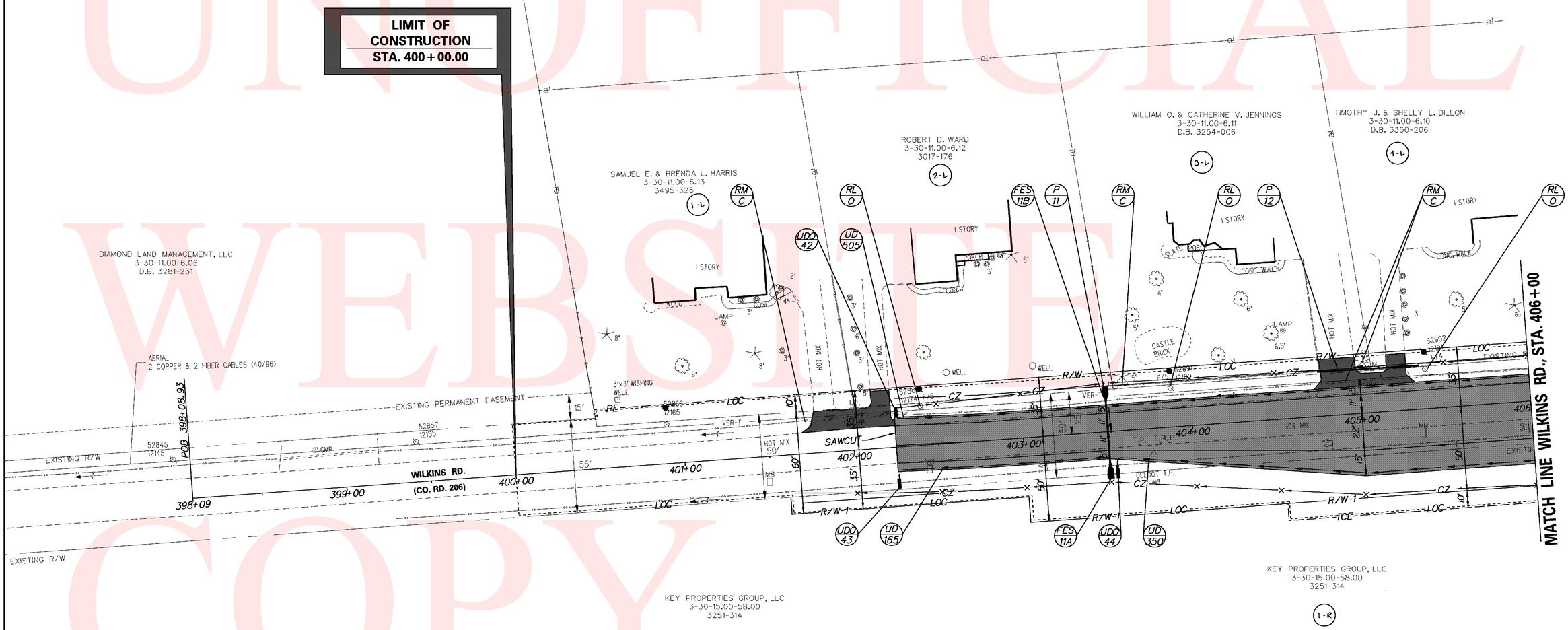

UNOFFICIAL WEBSITE COPY

Y:\SUSSEX\014\ROAD\281220\PLANS\FINAL\CONSTRUCTION\CP11.DGN

DELAWARE DEPARTMENT OF TRANSPORTATION	ADDENDUMS / REVISIONS	SCALE 0 30 60 90 FEET	SR 1, SR 30 GRADE SEPARATED INTERSECTION	CONTRACT T200812201	BRIDGE NO.	CONSTRUCTION PLAN	SHEET NO. 26
				COUNTY SUSSEX	DESIGNED BY: JLC		TOTAL SHTS. 133
					CHECKED BY: JRG		

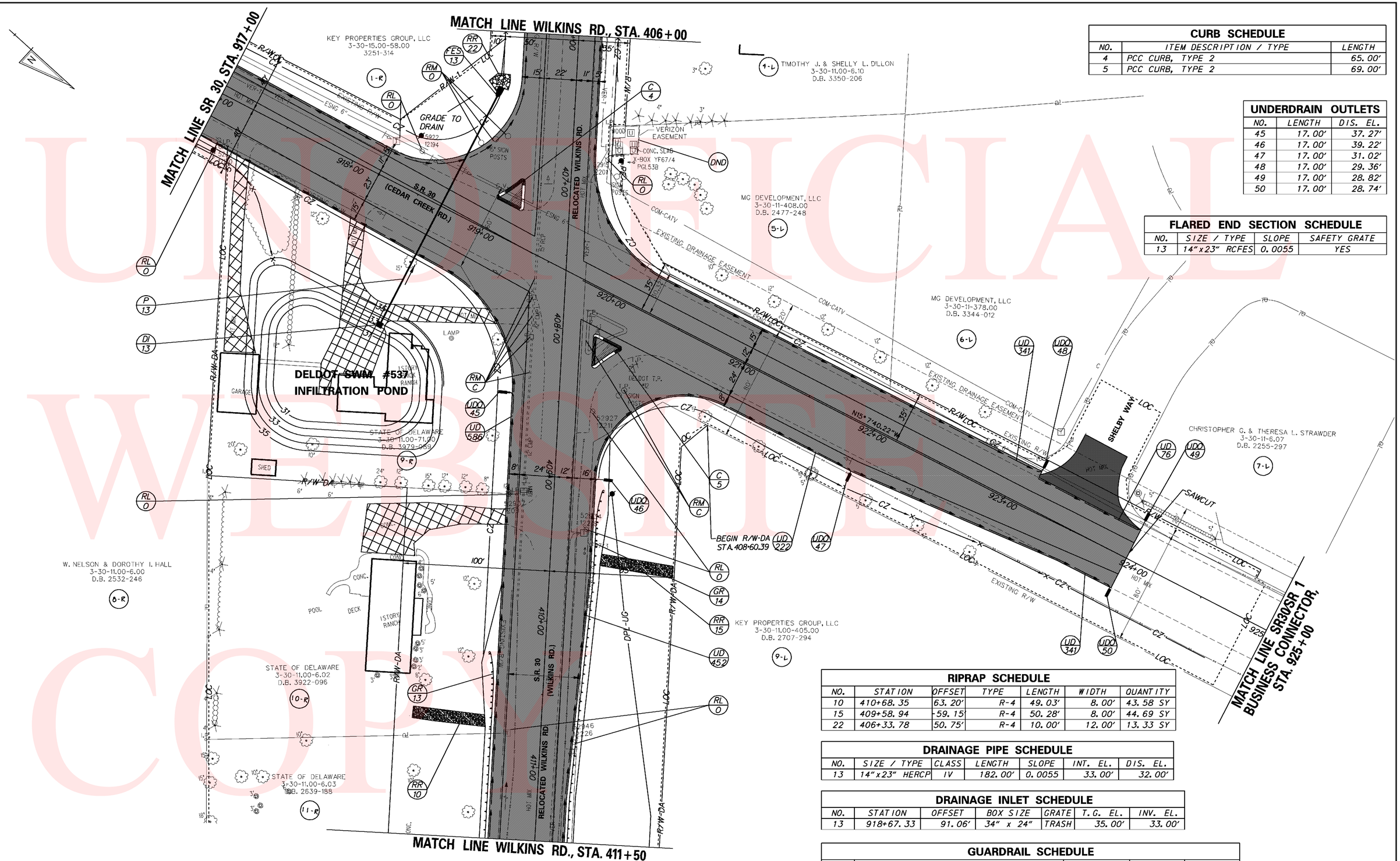

CURB SCHEDULE		
NO.	ITEM DESCRIPTION / TYPE	LENGTH
4	PCC CURB, TYPE 2	65.00'
5	PCC CURB, TYPE 2	69.00'

UNDERDRAIN OUTLETS		
NO.	LENGTH	DIS. EL.
45	17.00'	37.27'
46	17.00'	39.22'
47	17.00'	31.02'
48	17.00'	29.36'
49	17.00'	28.82'
50	17.00'	28.74'

FLARED END SECTION SCHEDULE			
NO.	SIZE / TYPE	SLOPE	SAFETY GRATE
13	14"x23" RCFES	0.0055	YES

RIPRAP SCHEDULE						
NO.	STATION	OFFSET	TYPE	LENGTH	WIDTH	QUANTITY
10	410+68.35	63.20'	R-4	49.03'	8.00'	43.58 SY
15	409+58.94	-59.15'	R-4	50.28'	8.00'	44.69 SY
22	406+33.78	50.75'	R-4	10.00'	12.00'	13.33 SY

DRAINAGE PIPE SCHEDULE						
NO.	SIZE / TYPE	CLASS	LENGTH	SLOPE	INT. EL.	DIS. EL.
13	14"x23" HERCP	IV	182.00'	0.0055	33.00'	32.00'

DRAINAGE INLET SCHEDULE						
NO.	STATION	OFFSET	BOX SIZE	GRATE	T.G. EL.	INV. EL.
13	918+67.33	91.06'	34" x 24"	TRASH	35.00'	33.00'

GUARDRAIL SCHEDULE				
NO.	ITEM DESCRIPTION / TYPE	BEGIN STA.	OFFSET	LENGTH
13	END TREATMENT ATTENUATOR, TYPE 2-31	410+22.64	30.00'	50.47'
14	END TREATMENT ATTENUATOR, TYPE 2-31	409+08.57	-30.00'	50.47'

UNOFFICIAL WEBSITE COPY

Y:\SUSSEX\014\ROAD\2812201\PLANS\FINAL\CONSTRUCTION\CP12.DGN

DELAWARE DEPARTMENT OF TRANSPORTATION

ADDENDUMS / REVISIONS

SCALE 0 30 60 90 FEET

SR 1, SR 30 GRADE SEPARATED INTERSECTION

CONTRACT T200812201 | COUNTY SUSSEX | BRIDGE NO. | DESIGNED BY: JLC | CHECKED BY: JRG

CONSTRUCTION PLAN

SHEET NO. 27 | TOTAL SHTS. 133

DRAINAGE INLET SCHEDULE

NO.	STATION	OFFSET	BOX SIZE	GRATE	T.G. EL.	INV. EL.
15	417+48.82	-84.98'	34" x 24"	TYPE 2	37.00'	33.10'
16	418+43.67	-85.12'	34" x 24"	TYPE 2	35.00'	31.80'
17	421+37.70	-86.98'	34" x 24"	TYPE 2	31.25'	25.61'
18	423+73.09	-51.46'	34" x 24"	TYPE 2	30.25'	27.92'

UNDERDRAIN OUTLETS

NO.	LENGTH	DIS. EL.
51	17.00'	37.55'
53	17.00'	26.96'
66	17.00'	36.70'

GUARDRAIL SCHEDULE

NO.	ITEM DESCRIPTION / TYPE	BEGIN STA.	OFFSET	LENGTH
15	END TREATMENT ATTENUATOR, TYPE 2-31	420+52.09	22.00'	51.47'
16	END TREATMENT ATTENUATOR, TYPE 2-31	419+13.97	-22.00'	51.47'

DRAINAGE PIPE SCHEDULE

NO.	SIZE / TYPE	CLASS	LENGTH	SLOPE	INT. EL.	DIS. EL.
15	15" RCP	IV	90.00'	0.0122	33.10'	32.00'
16	15" RCP	IV	260.00'	0.0200	31.80'	26.58'
17	24" RCP	IV	162.00'	0.0015	25.61'	25.37'
18	15" RCP	IV	236.00'	0.0028	26.37'	25.71'
19	15" RCP	IV	168.00'	0.0028	26.94'	26.47'

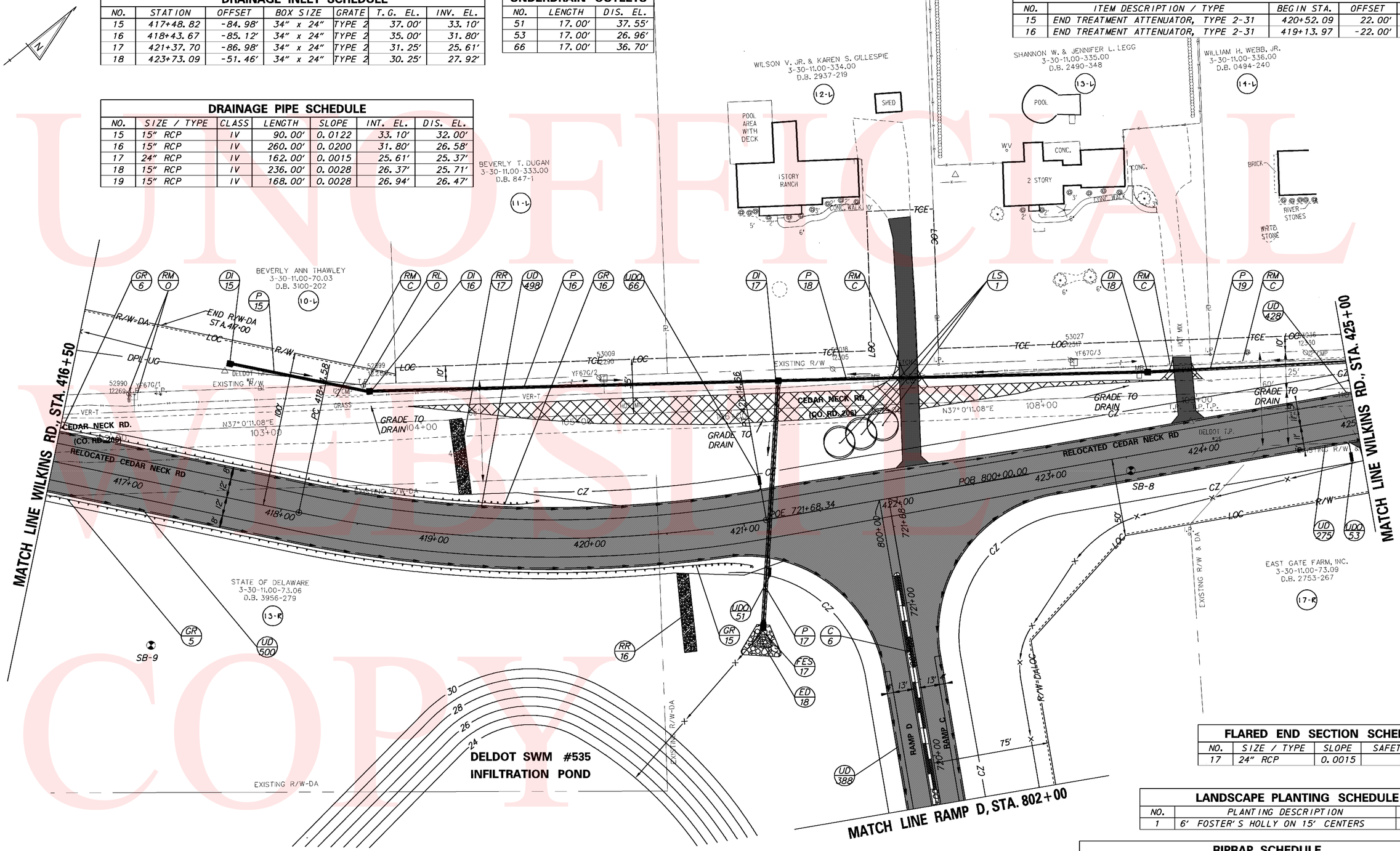

FLARED END SECTION SCHEDULE

NO.	SIZE / TYPE	SLOPE	SAFETY GRATE
17	24" RCP	0.0015	YES

LANDSCAPE PLANTING SCHEDULE

NO.	PLANTING DESCRIPTION	QUANTITY
1	6' FOSTER'S HOLLY ON 15' CENTERS	3

ENERGY DISSIPATOR SCHEDULE

NO.	STATION	OFFSET	RIPRAP SIZE	D (FT)	T1 (FT)	L (FT)	W1 (FT)	W2 (FT)
18	421+00.64	73.56'	R-4	1.00	1.50	6.00	2.00	6.00

CURB SCHEDULE

NO.	ITEM DESCRIPTION / TYPE	LENGTH
6	P.C.C. CURB, TYPE 2	300.00'

RIPRAP SCHEDULE

NO.	STATION	OFFSET	TYPE	LENGTH	WIDTH	QUANTITY
16	420+57.47	52.60'	R-4	50.44'	8.00'	44.84 SY
17	419+12.87	-50.48	R-4	50.46'	8.00'	44.86 SY

UNOFFICIAL WEBSITE COPY

Y:\SUSSEX\014\ROAD\2812201\PLANS\FINAL\CONSTRUCTION\CP13.DGN

DELAWARE DEPARTMENT OF TRANSPORTATION

ADDENDUMS / REVISIONS

SCALE 0 30 60 90 FEET

SR 1, SR 30 GRADE SEPARATED INTERSECTION

CONTRACT	BRIDGE NO.	CONSTRUCTION PLAN	SHEET NO.
T200812201	DESIGNED BY: JLC		28
COUNTY			TOTAL SHTS.
SUSSEX	CHECKED BY: JRG		133

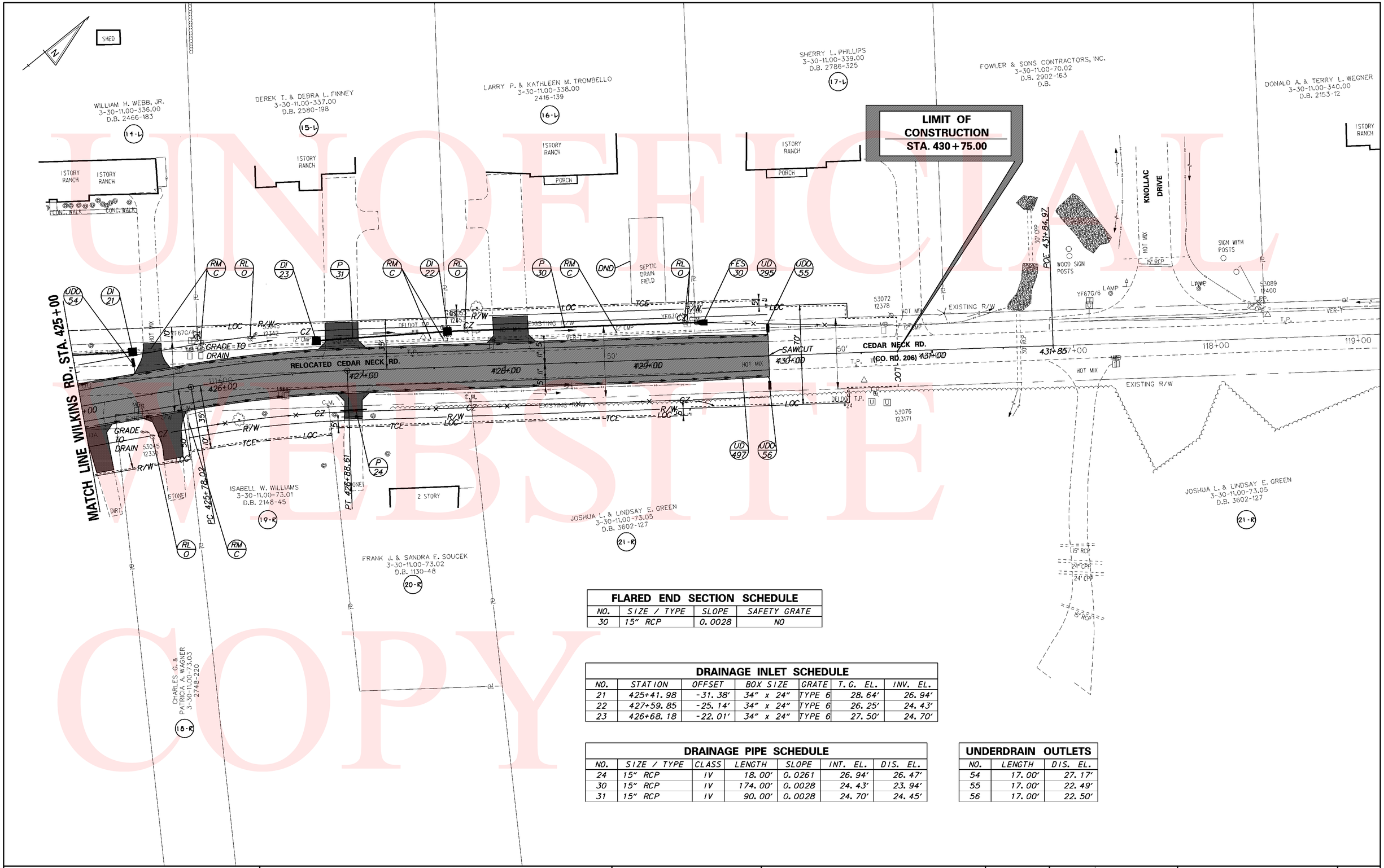

UNOFFICIAL WEBSITE COPY

FLARED END SECTION SCHEDULE

NO.	SIZE / TYPE	SLOPE	SAFETY GRATE
30	15" RCP	0.0028	NO

DRAINAGE INLET SCHEDULE

NO.	STATION	OFFSET	BOX SIZE	GRATE	T.G. EL.	INV. EL.
21	425+41.98	-31.38'	34" x 24"	TYPE 6	28.64'	26.94'
22	427+59.85	-25.14'	34" x 24"	TYPE 6	26.25'	24.43'
23	426+68.18	-22.01'	34" x 24"	TYPE 6	27.50'	24.70'

DRAINAGE PIPE SCHEDULE

NO.	SIZE / TYPE	CLASS	LENGTH	SLOPE	INT. EL.	DIS. EL.
24	15" RCP	IV	18.00'	0.0261	26.94'	26.47'
30	15" RCP	IV	174.00'	0.0028	24.43'	23.94'
31	15" RCP	IV	90.00'	0.0028	24.70'	24.45'

UNDERDRAIN OUTLETS

NO.	LENGTH	DIS. EL.
54	17.00'	27.17'
55	17.00'	22.49'
56	17.00'	22.50'

Y:\SUSSEX\014\ROAD\2812201\PLANS\FINAL\CONSTRUCTION\CP14.DGN

DELAWARE DEPARTMENT OF TRANSPORTATION

ADDENDUMS / REVISIONS

SCALE 0 30 60 90 FEET

SR 1, SR 30 GRADE SEPARATED INTERSECTION

CONTRACT T200812201 | COUNTY SUSSEX | BRIDGE NO. | DESIGNED BY: JLC | CHECKED BY: JRG

CONSTRUCTION PLAN

SHEET NO. 29 | TOTAL SHTS. 133

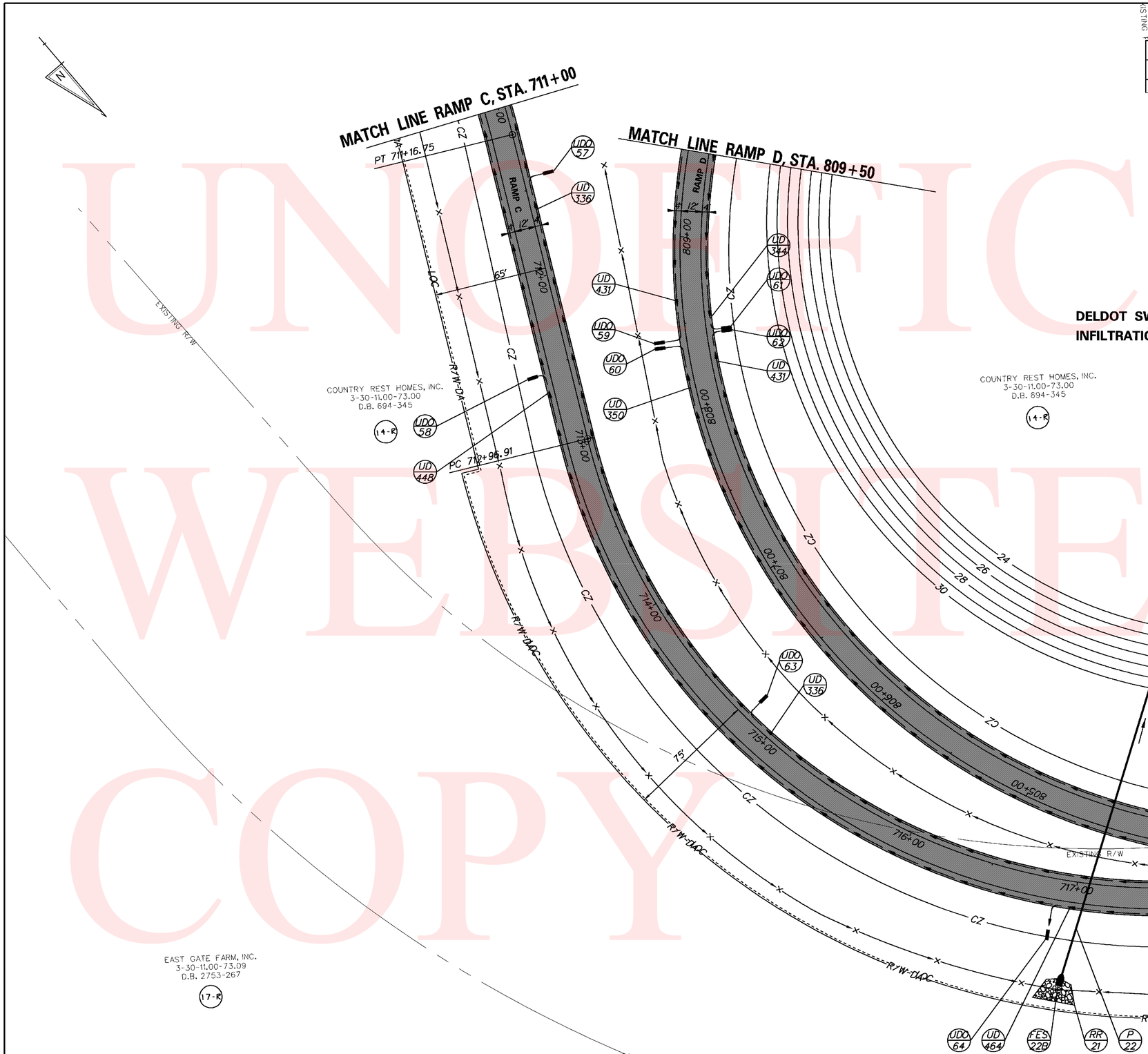

DELDOT SWM #535
INFILTRATION POND

ENERGY DISSIPATOR SCHEDULE

NO.	STATION	OFFSET	RIPRAP SIZE	D (FT)	T1 (FT)	L (FT)	W1 (FT)	W2 (FT)
20	804+49.87	138.02'	R-4	1.00	1.50	6.00	2.00	6.00

DRAINAGE PIPE SCHEDULE

NO.	SIZE / TYPE	CLASS	LENGTH	SLOPE	INT. EL.	DIS. EL.
22	18" RCP	IV	232.00'	0.0034	26.80'	26.00'

RIPRAP SCHEDULE

NO.	STATION	OFFSET	TYPE	LENGTH	WIDTH	QUANTITY
21	716+97.25	64.23'	R-4	13.05'	19.63'	28.46 SY

FLARED END SECTION SCHEDULE

NO.	SIZE / TYPE	SLOPE	SAFETY GRATE
22A	18" RCP	0.0034	NO
22B	18" RCP	0.0034	NO

CURB SCHEDULE

NO.	ITEM DESCRIPTION / TYPE	LENGTH
7	P.C.C. CURB, TYPE 2	278.71'

UNDERDRAIN OUTLETS

NO.	LENGTH	DIS. EL.
57	17.00'	30.03'
58	17.00'	30.51'
59	17.00'	29.35'
60	17.00'	29.35'
61	17.00'	28.48'
62	17.00'	28.47'
63	17.00'	30.62'
64	17.00'	32.03'
65	17.00'	30.87'

UNOFFICIAL WEBSITE COPY

Y:\SUSSEX\014\ROAD\281220\PLANS\FINAL\CONSTRUCTION\CP15.DGN

DELAWARE DEPARTMENT OF TRANSPORTATION	ADDENDUMS / REVISIONS	SCALE 0 30 60 90 FEET	SR 1, SR 30 GRADE SEPARATED INTERSECTION	CONTRACT T200812201	BRIDGE NO.	CONSTRUCTION PLAN	SHEET NO. 30
				COUNTY SUSSEX	DESIGNED BY: JLC		TOTAL SHTS. 133
					CHECKED BY: JRG		

UNOFFICIAL WEBSITE COPY

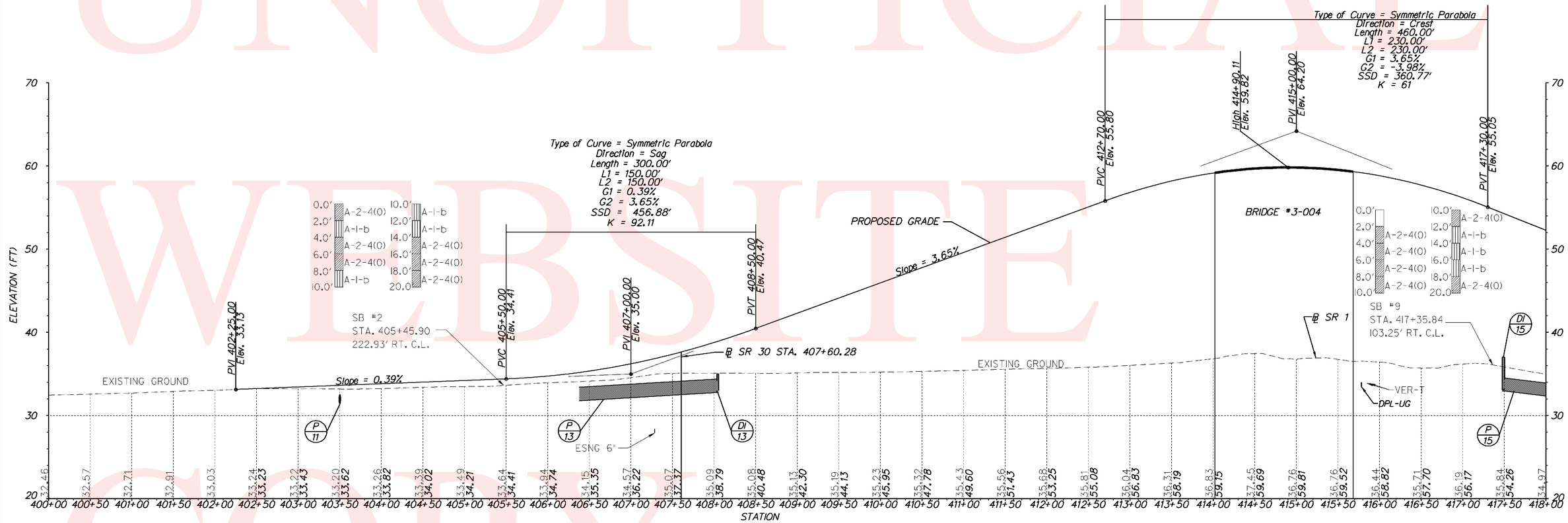

DELAWARE DEPARTMENT OF TRANSPORTATION	ADDENDUMS / REVISIONS	SR 1, SR 30 GRADE SEPARATED INTERSECTION	CONTRACT T200812201	BRIDGE NO.	PROFILES	SHEET NO. 31
			COUNTY SUSSEX	DESIGNED BY: JLC		TOTAL SHTS. 133
				CHECKED BY: JRG		

Y:\SUSSEX\014\ROAD\2812201\PLANS\FINAL\CONSTRUCTION\PF01.DGN

UNOFFICIAL WEBSITE COPY

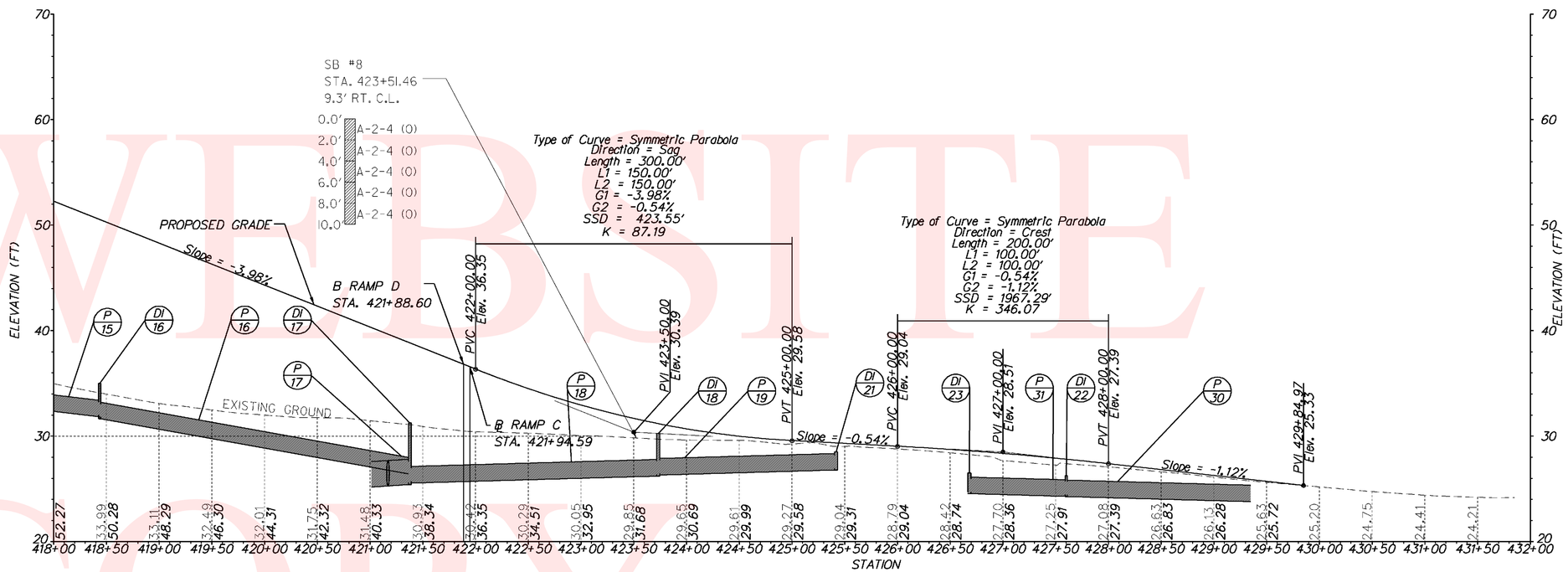

RELOCATED WILKINS ROAD

SCALE FEET
18
12
6
0

DELAWARE DEPARTMENT OF TRANSPORTATION	ADDENDUMS / REVISIONS		SR 1, SR 30 GRADE SEPARATED INTERSECTION	CONTRACT T200812201	BRIDGE NO.	PROFILES	SHEET NO. 32
				COUNTY SUSSEX	DESIGNED BY: JLC		TOTAL SHTS. 133
					CHECKED BY: JRG		

Y:\SUSSEX\014\ROAD\281220\PLANS\FINAL\CONSTRUCTION\PF01.DGN

UNOFFICIAL WEBSITE COPY

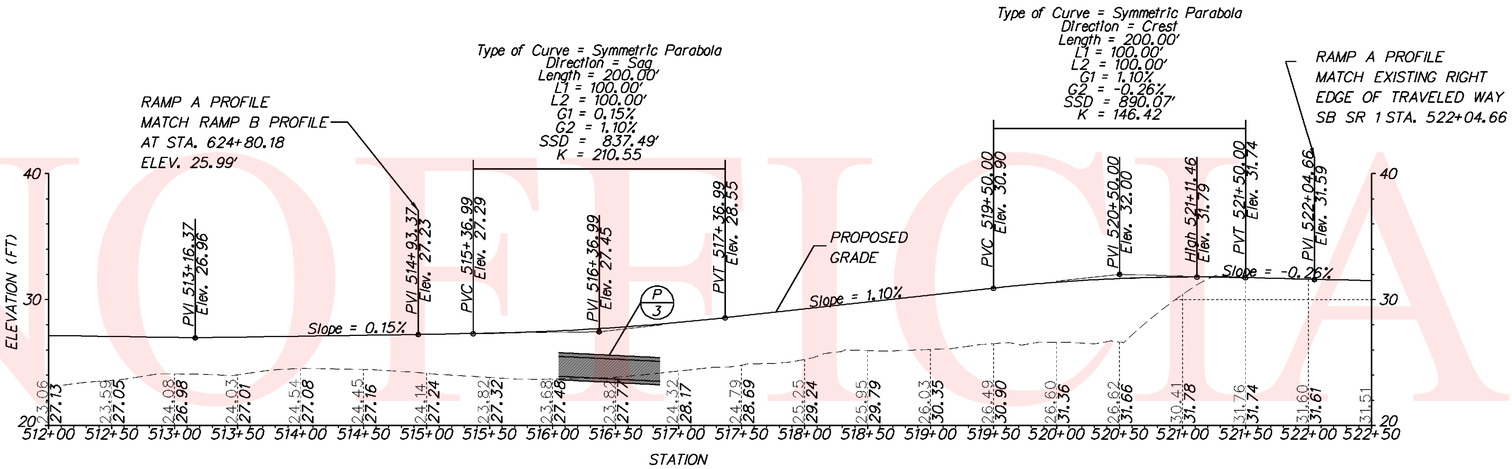

RAMP A

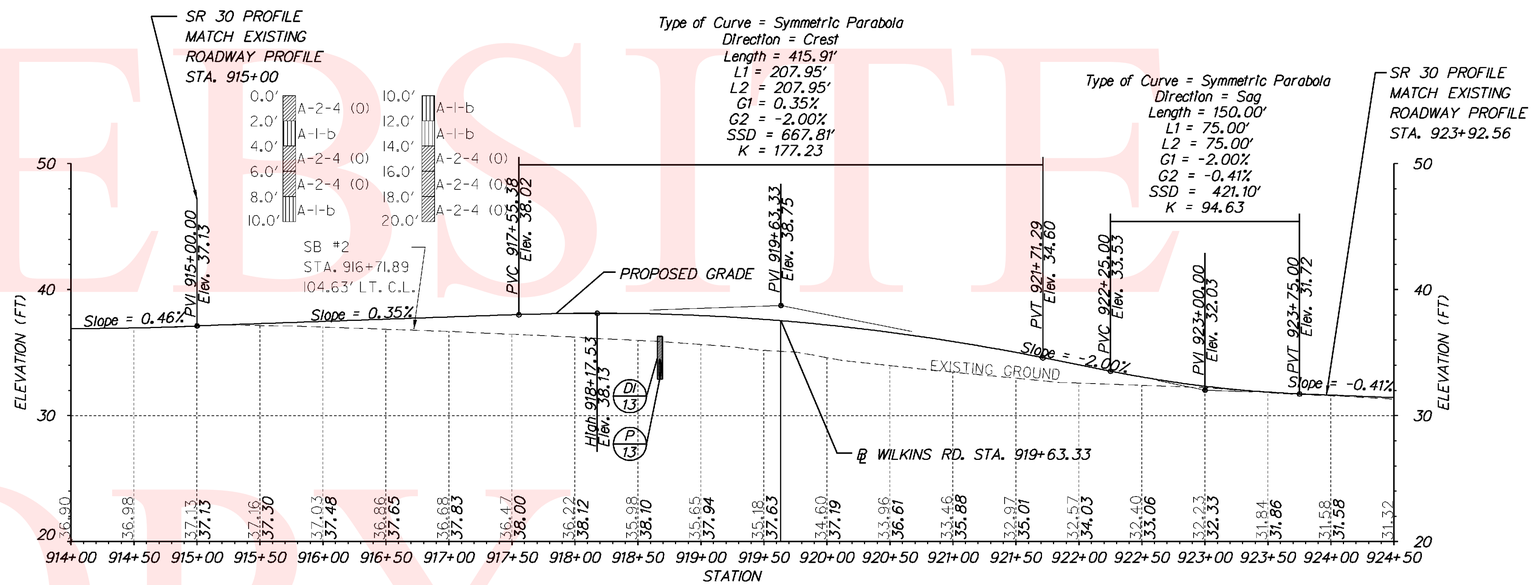

SR 30

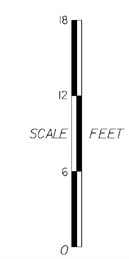

DELAWARE DEPARTMENT OF TRANSPORTATION	ADDENDUMS / REVISIONS	SR 1, SR 30 GRADE SEPARATED INTERSECTION	CONTRACT T200812201	BRIDGE NO.	PROFILES	SHEET NO. 33
			COUNTY SUSSEX	DESIGNED BY: JLC		TOTAL SHTS. 133
				CHECKED BY: JRG		

Y:\SUSSEX\014\ROAD\2812201\PLANS\FINAL\CONSTRUCTION\PF01.DGN

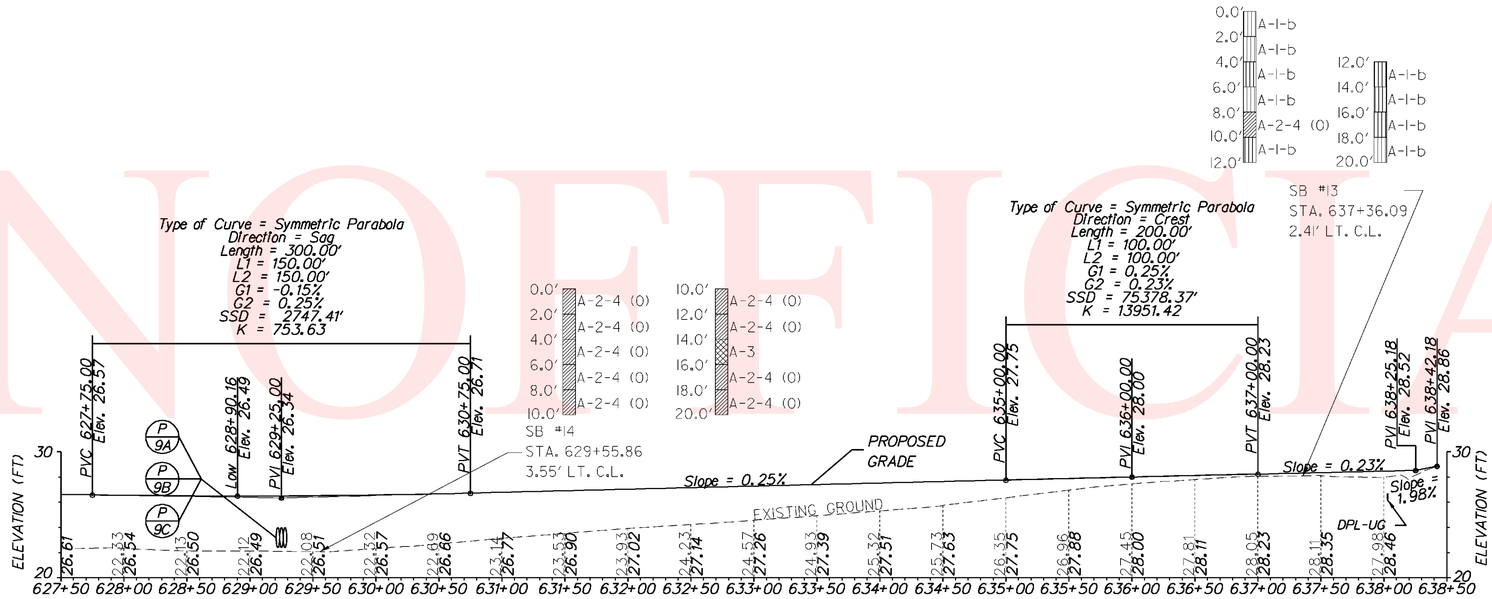

RAMP B

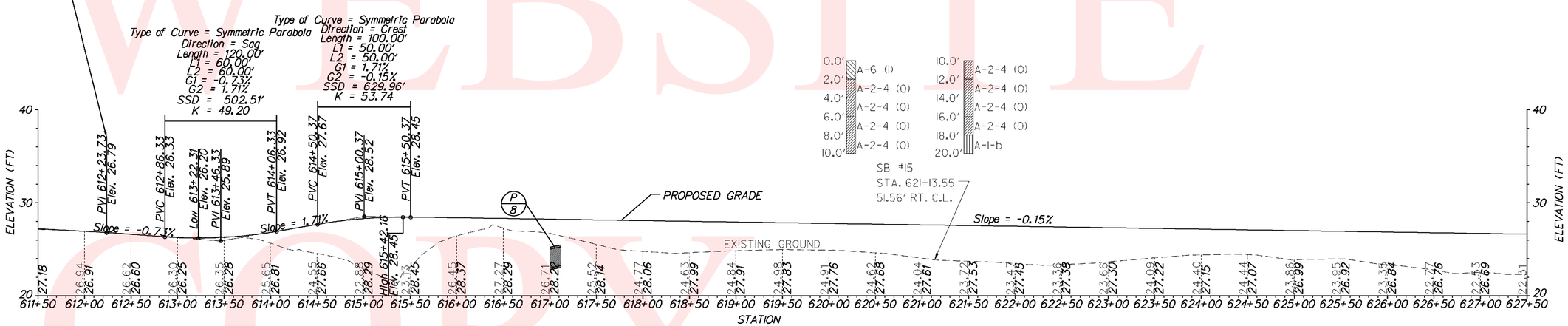

RAMP B

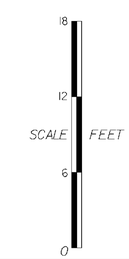

UNOFFICIAL WEBSITE COPY

Y:\SUSSEX\014\ROAD\281220\PLANS\FINAL\CONSTRUCTION\PF01.DGN

DELAWARE DEPARTMENT OF TRANSPORTATION	ADDENDUMS / REVISIONS	SR 1, SR 30 GRADE SEPARATED INTERSECTION	CONTRACT T200812201	BRIDGE NO.	PROFILES	SHEET NO. 34
			COUNTY SUSSEX	DESIGNED BY: JLC		TOTAL SHTS. 133
				CHECKED BY: JRG		

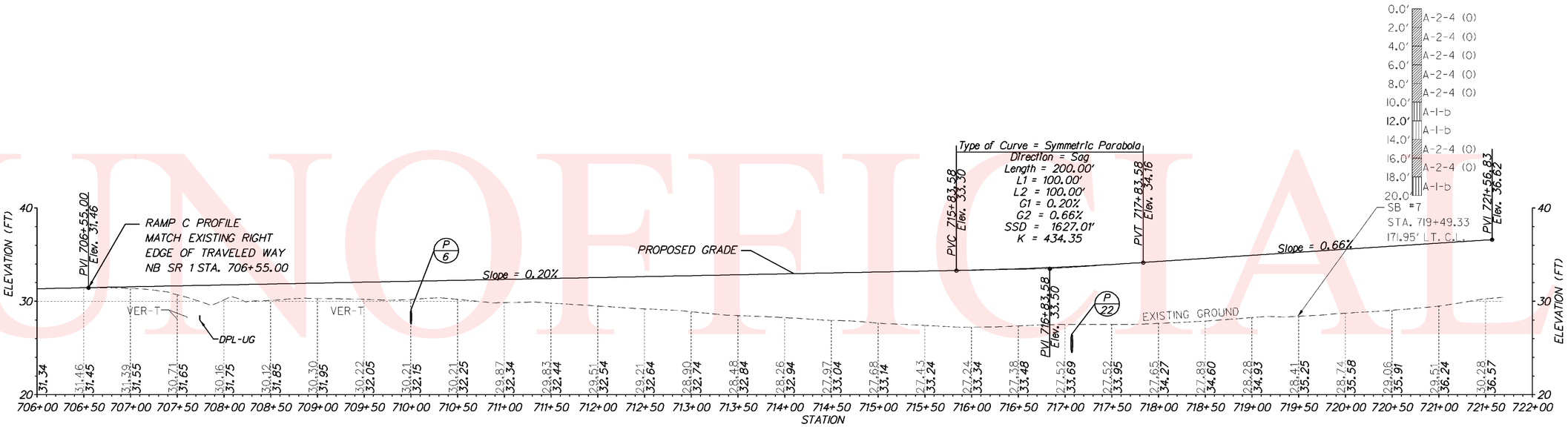

RAMP C

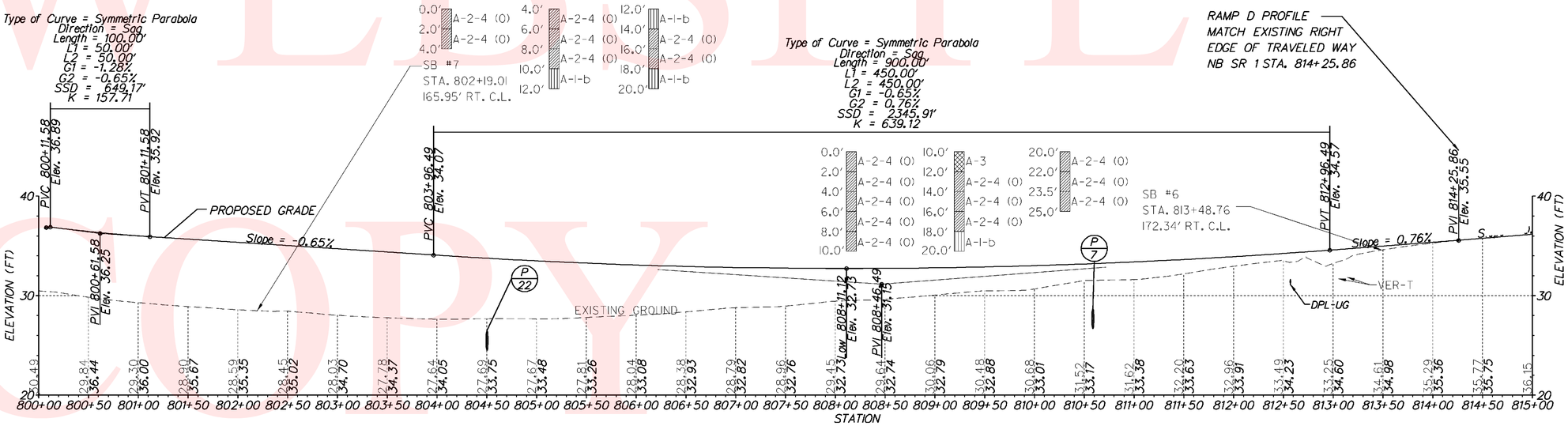

RAMP D

SCALE FEET

UNOFFICIAL WEBSITE COPY

Y:\SUSSEX\014\ROAD\281220\PLANS\FINAL\CONSTRUCTION\PF01.DGN

DELAWARE DEPARTMENT OF TRANSPORTATION	ADDENDUMS / REVISIONS	SR 1, SR 30 GRADE SEPARATED INTERSECTION	CONTRACT T200812201	BRIDGE NO.	PROFILES	SHEET NO. 35
			COUNTY SUSSEX	DESIGNED BY: JLC		TOTAL SHTS. 133
				CHECKED BY: JRG		

COORDINATE LIST				
POINT NO.	STATION	OFFSET	NORTHING	EASTING
32000	605+50.00	0.0000	322668.4271	667275.9439
32001	605+50.00	-12.0000	322657.1273	667271.9047
32002	605+50.00	-16.0000	322653.3607	667270.5583
32003	612+23.73	-16.0000	322880.1365	666636.1406
32013	612+23.73	0.0000	322895.2029	666641.5261
36000	12+41.45	-59.5763	322927.8592	666633.9090
36001	12+44.44	-56.0550	322932.1873	666632.2793
36002	12+44.43	-21.6248	322964.5801	666643.9475
36014	12+41.42	-17.2307	322967.6990	666648.2597

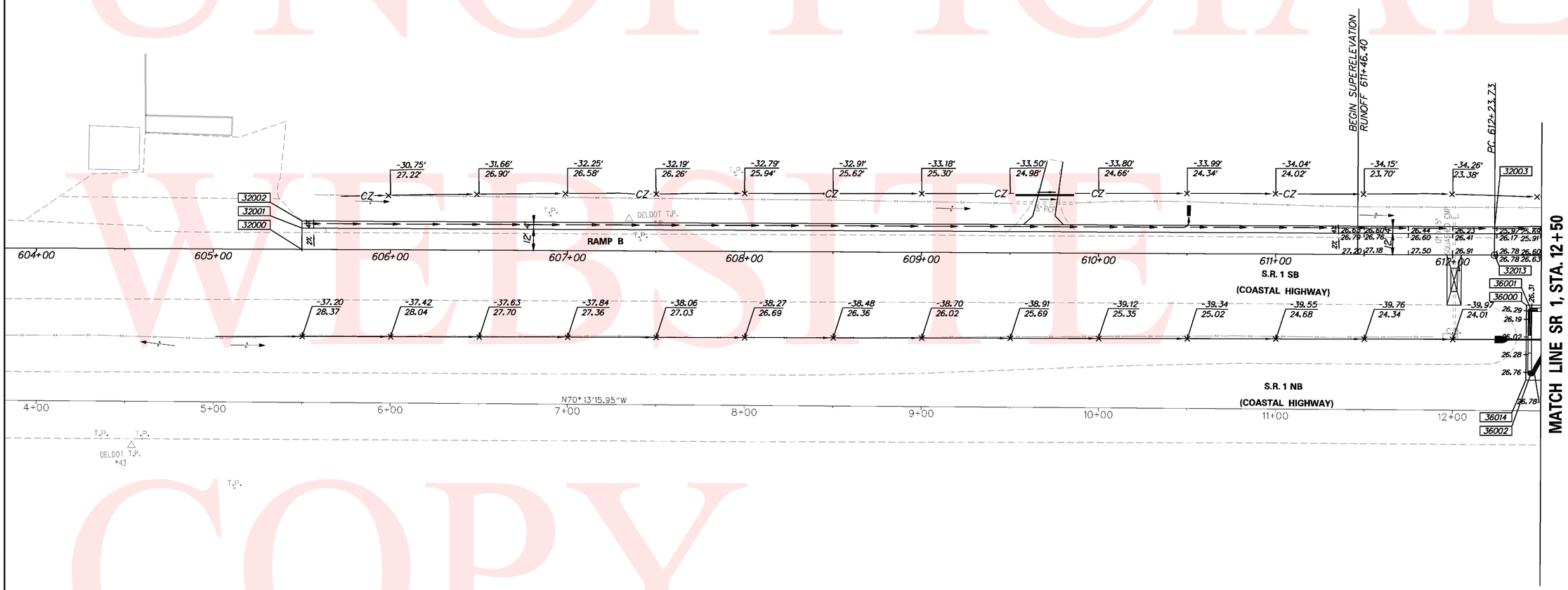

UNOFFICIAL WEBSITE COPY

Y:\SUSSEX\014\ROAD\281220\PLANS\FINAL\CONSTRUCTION\GG01.DGN

DELAWARE DEPARTMENT OF TRANSPORTATION	ADDENDUMS / REVISIONS	SCALE 0 30 60 90 FEET	SR 1, SR 30 GRADE SEPARATED INTERSECTION	CONTRACT T200812201	BRIDGE NO.	GRADES & GEOMETRICS	SHEET NO. 36
				COUNTY SUSSEX	DESIGNED BY: JLC		TOTAL SHTS. 133
					CHECKED BY: JRG		

COORDINATE LIST				
POINT NO.	STATION	OFFSET	NORTHING	EASTING
32004	617+80.86	-16.0000	322915.1450	666096.1254
32012	617+80.86	4.0000	322934.6896	666091.8814
36003	12+76.11	-56.0380	322942.9183	666602.4884
36004	13+17.65	-59.7830	322953.4498	666562.1354
36005	13+17.65	-51.8218	322960.9440	666564.8220
36006	13+17.67	-31.8218	322979.7707	666571.5714
36008	12+97.67	-31.8207	322973.0039	666590.3919
36009	12+97.67	-28.2344	322976.3788	666591.6053
36010	13+07.67	-28.2349	322979.7622	666582.1951
36012	13+07.67	-18.2349	322989.1711	666585.5821
36013	13+07.67	-17.2351	322990.1118	666585.9208

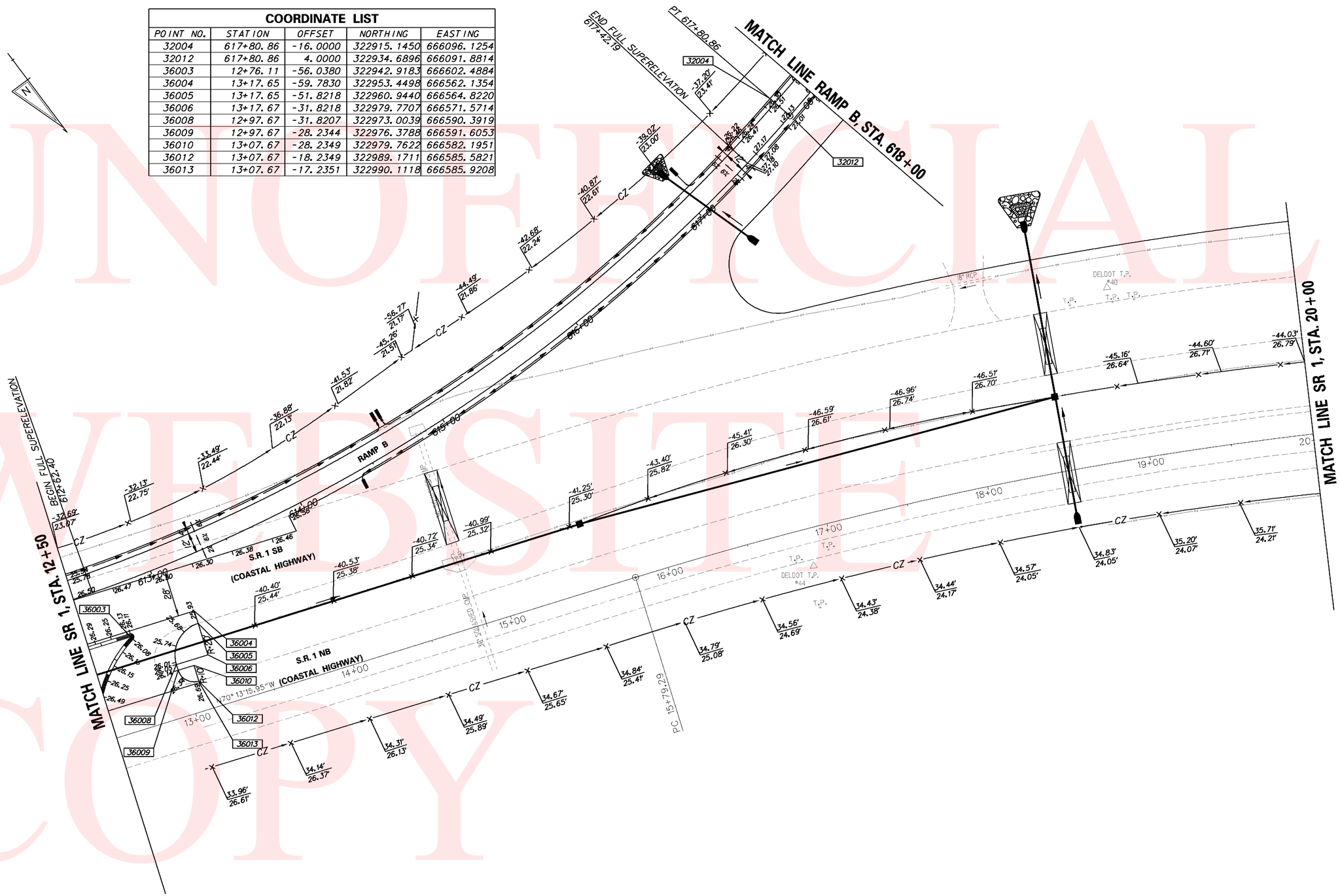

UNOFFICIAL WEBSITE COPY

Y:\SUSSEX\014\ROAD\281220\PLANS\FINAL\CONSTRUCTION\G002.DGN

DELAWARE DEPARTMENT OF TRANSPORTATION	ADDENDUMS / REVISIONS	SCALE 0 30 60 90 FEET	SR 1, SR 30 GRADE SEPARATED INTERSECTION	CONTRACT T200812201	BRIDGE NO.	GRADES & GEOMETRICS	SHEET NO. 37
				COUNTY SUSSEX	DESIGNED BY: JLC		TOTAL SHTS.
					CHECKED BY: JRG		133

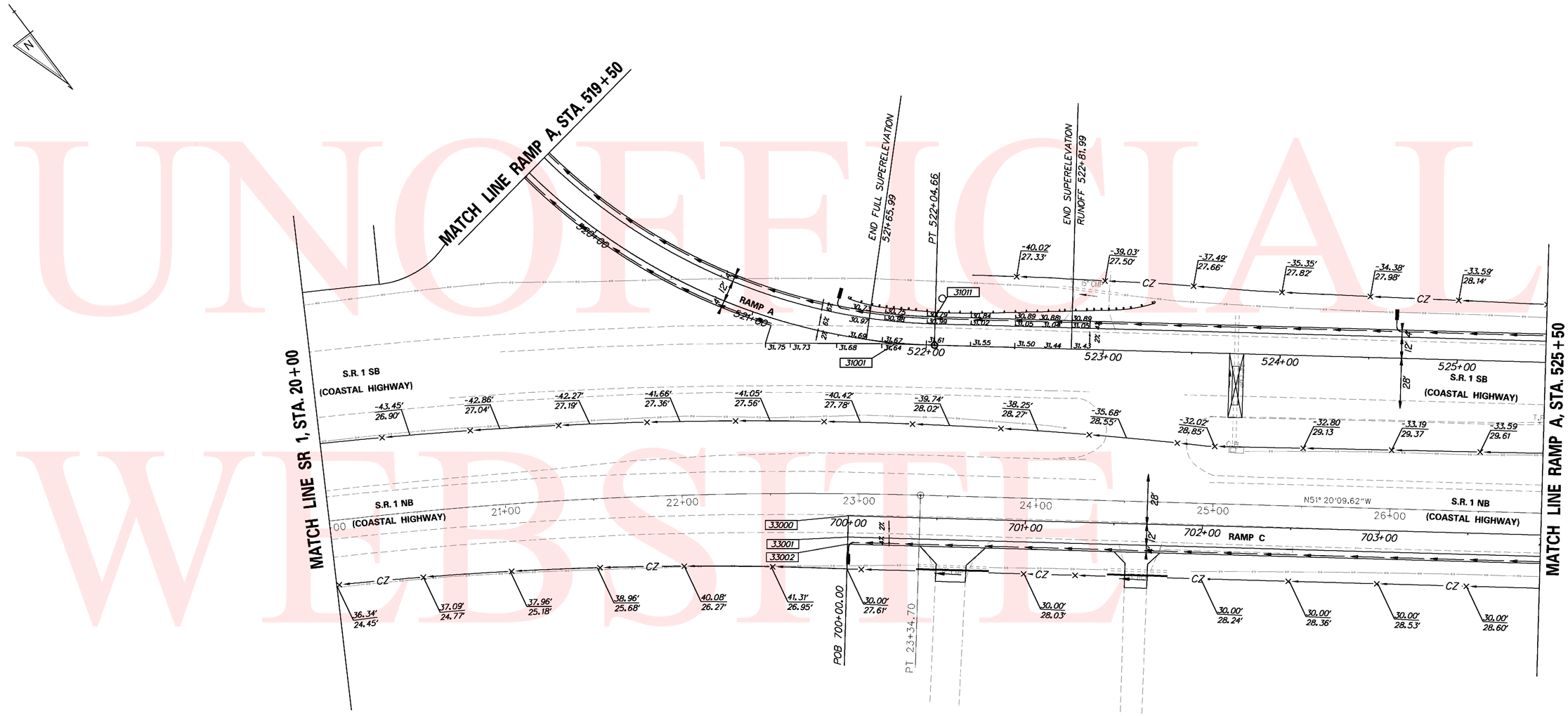

COORDINATE LIST				
POINT NO.	STATION	OFFSET	NORTHING	EASTING
31001	521+82.30	0.6668	323388.3793	665640.0494
31011	522+04.66	-16.0000	323389.9008	665612.6107
33000	700+00.00	0.0000	323450.1605	665719.4288
33001	700+00.00	12.0000	323459.5390	665726.9150
33002	700+00.00	16.0000	323462.6652	665729.4104

UNOFFICIAL WEBSITE COPY

Y:\SUSSEX\014\ROAD\2812201\PLANS\SEMIFINAL\CONSTRUCTION\GG03.DGN

DELAWARE DEPARTMENT OF TRANSPORTATION

ADDENDUMS / REVISIONS

SCALE 0 30 60 90 FEET

SR 1, SR 30 GRADE SEPARATED INTERSECTION

CONTRACT T200812201 | COUNTY SUSSEX | BRIDGE NO. | DESIGNED BY: JLC | CHECKED BY: JRG

GRADES & GEOMETRICS

SHEET NO. 38 | TOTAL SHTS. 133

COORDINATE LIST				
POINT NO.	STATION	OFFSET	NORTHING	EASTING
31000	529+00.00	0.0000	323836.2269	665079.1878
31013	529+00.00	-16.0000	323823.7228	665069.2054
31014	529+00.00	-12.0000	323826.8488	665071.7010
33003	706+55.00	16.0000	323871.2881	665217.4998
33013	707+07.58	-4.0000	323891.9215	665166.1726

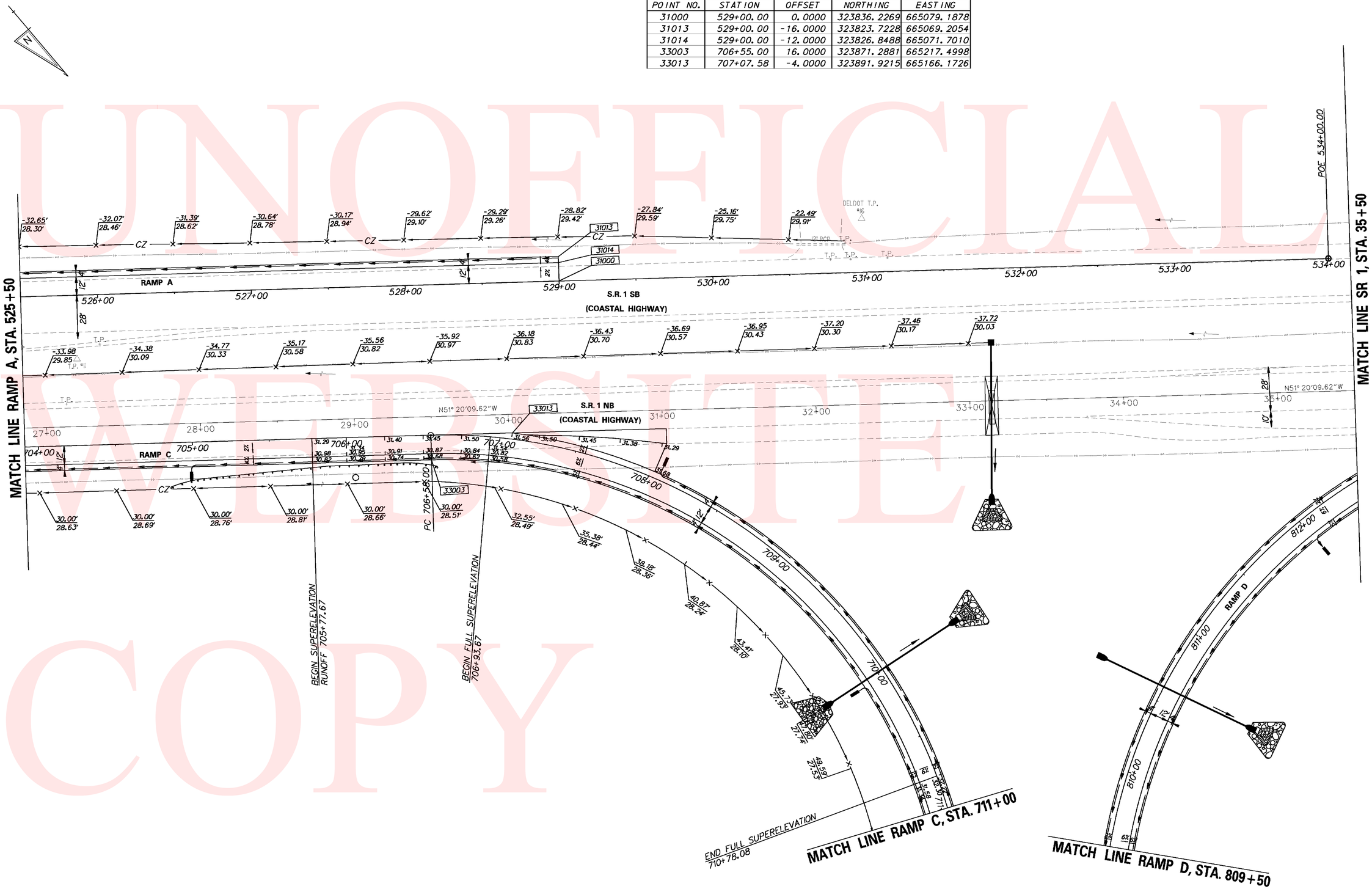

UNOFFICIAL WEBSITE COPY

Y:\SUSSEX\014\ROAD\2812201\PLANS\FINAL\CONSTRUCTION\GG04.DGN

DELAWARE DEPARTMENT OF TRANSPORTATION	ADDENDUMS / REVISIONS	SCALE 0 30 60 90 FEET	SR 1, SR 30 GRADE SEPARATED INTERSECTION	CONTRACT T200812201	BRIDGE NO.	GRADES & GEOMETRICS	SHEET NO. 39
				COUNTY SUSSEX	DESIGNED BY: JLC		TOTAL SHTS. 133
					CHECKED BY: JRG		

COORDINATE LIST				
POINT NO.	STATION	OFFSET	NORTHING	EASTING
30015	411+80.00	32.0000	324333.5279	664046.5984
30016	413+30.00	20.0000	324437.6524	664155.2356
34003	814+25.93	16.0000	324353.7536	664614.3433
34007	813+74.26	-4.0000	324308.8134	664645.0870

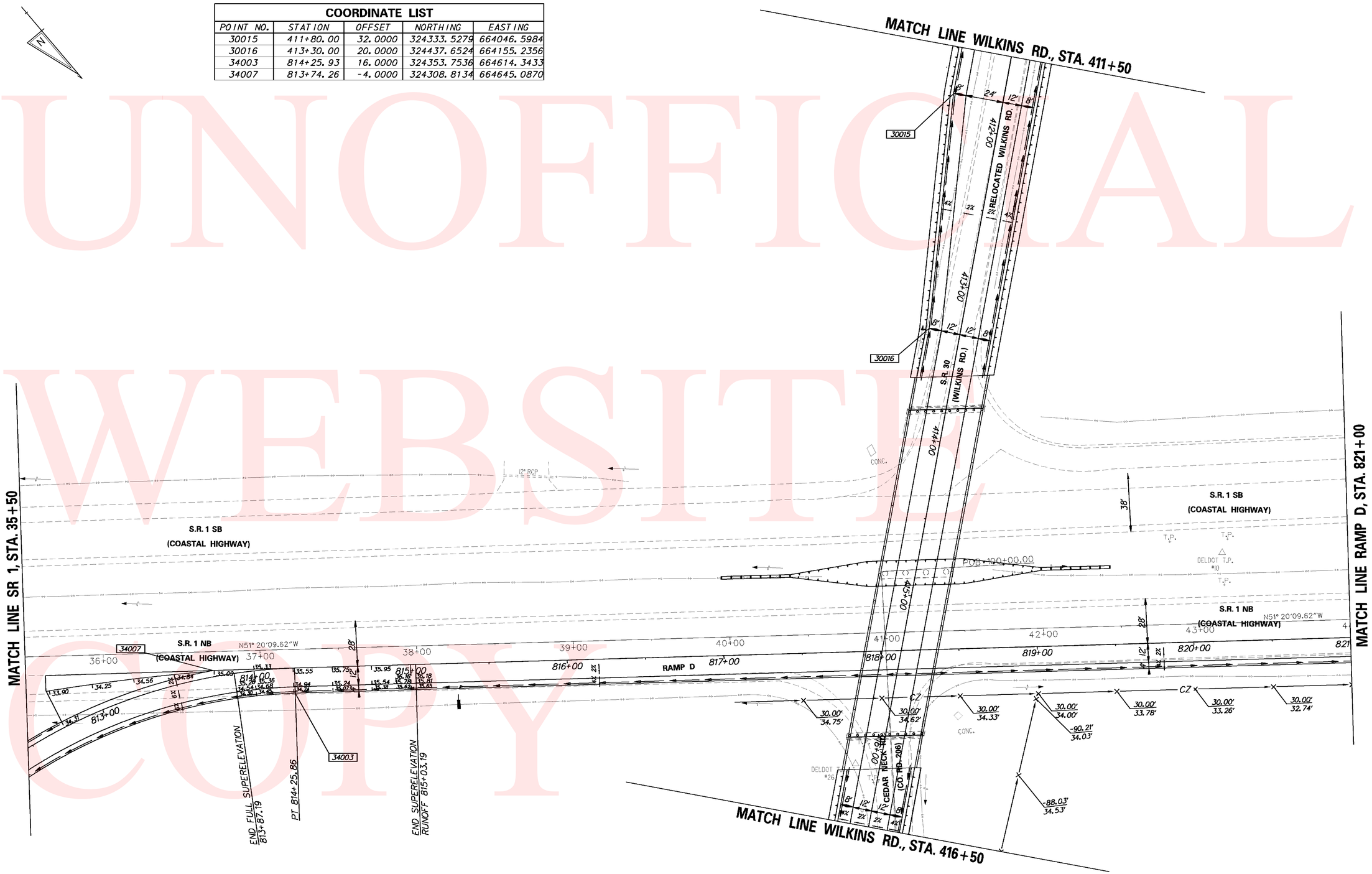

UNOFFICIAL WEBSITE COPY

Y:\SUSSEX\014\ROAD\281220\PLANS\FINAL\CONSTRUCTION\GG05.DGN

DELAWARE DEPARTMENT OF TRANSPORTATION	ADDENDUMS / REVISIONS	SCALE 0 30 60 90 FEET	SR 1, SR 30 GRADE SEPARATED INTERSECTION	CONTRACT T200812201	BRIDGE NO.	GRADES & GEOMETRICS	SHEET NO. 40
				COUNTY SUSSEX	DESIGNED BY: JLC		TOTAL SHTS. 133
					CHECKED BY: JRG		

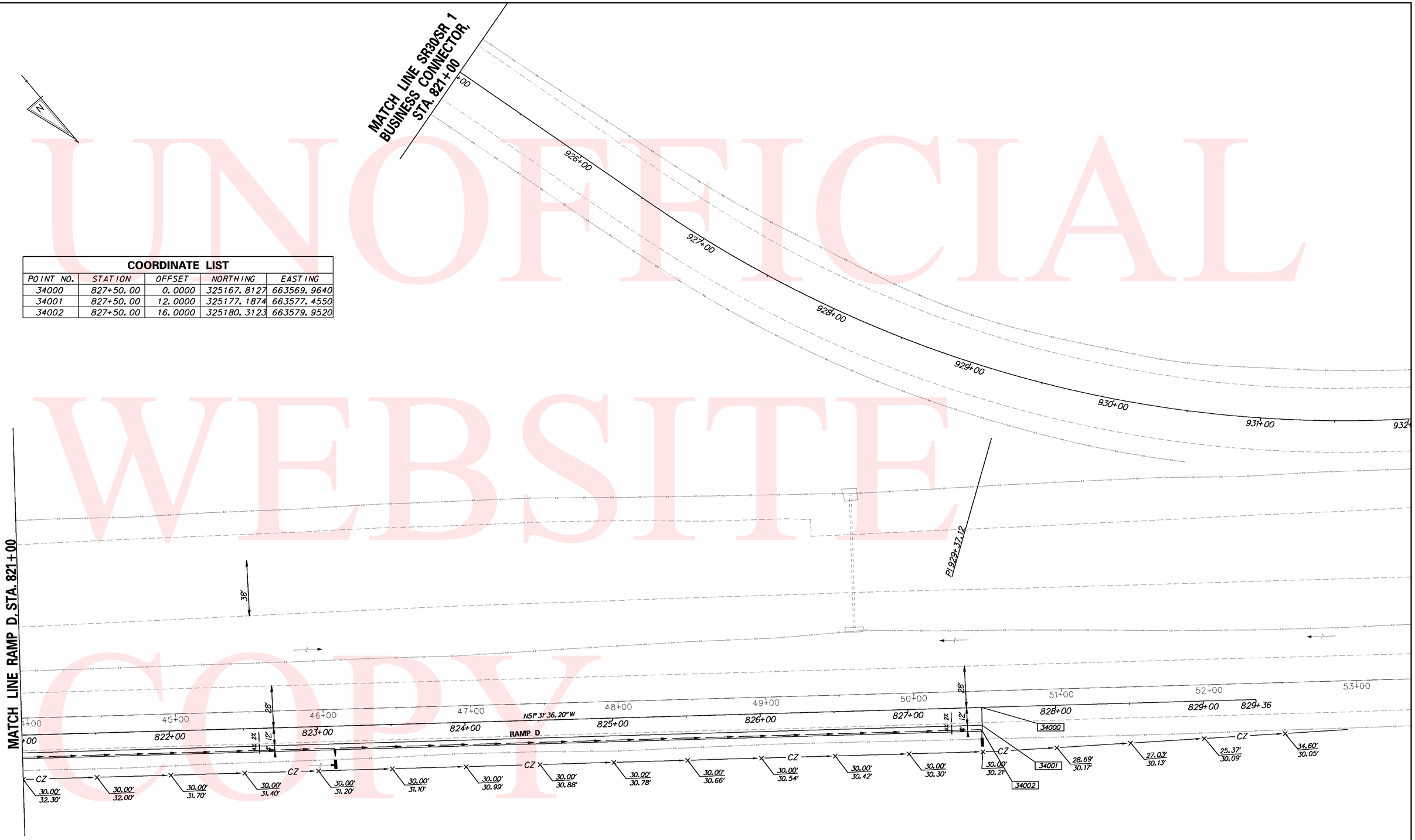

COORDINATE LIST

POINT NO.	STATION	OFFSET	NORTHING	EASTING
34000	827+50.00	0.0000	325167.8127	663569.9640
34001	827+50.00	12.0000	325177.1874	663577.4550
34002	827+50.00	16.0000	325180.3123	663579.9520

UNOFFICIAL WEBSITE COPY

Y:\SUSSEX\014\ROAD\281220\PLANS\FINAL\CONSTRUCTION\GG06.DGN

DELAWARE DEPARTMENT OF TRANSPORTATION

ADDENDUMS / REVISIONS

SCALE 0 30 60 90 FEET

SR 1, SR 30 GRADE SEPARATED INTERSECTION

CONTRACT	BRIDGE NO.	
T200812201	DESIGNED BY: JLC	
COUNTY	CHECKED BY: JRG	
SUSSEX		

GRADES & GEOMETRICS

SHEET NO.
41
TOTAL SHTS.
133

COORDINATE LIST				
POINT NO.	STATION	OFFSET	NORTHING	EASTING
31002	514+91.60	4.0000	322816.0501	665535.0585
31003	514+91.60	5.1097	322815.0158	665535.4604
31010	514+38.29	-16.0000	322820.0729	665479.2184
32010	623+52.00	3.0000	322812.5162	665533.9566
32011	623+50.00	4.0000	322813.9178	665535.6988

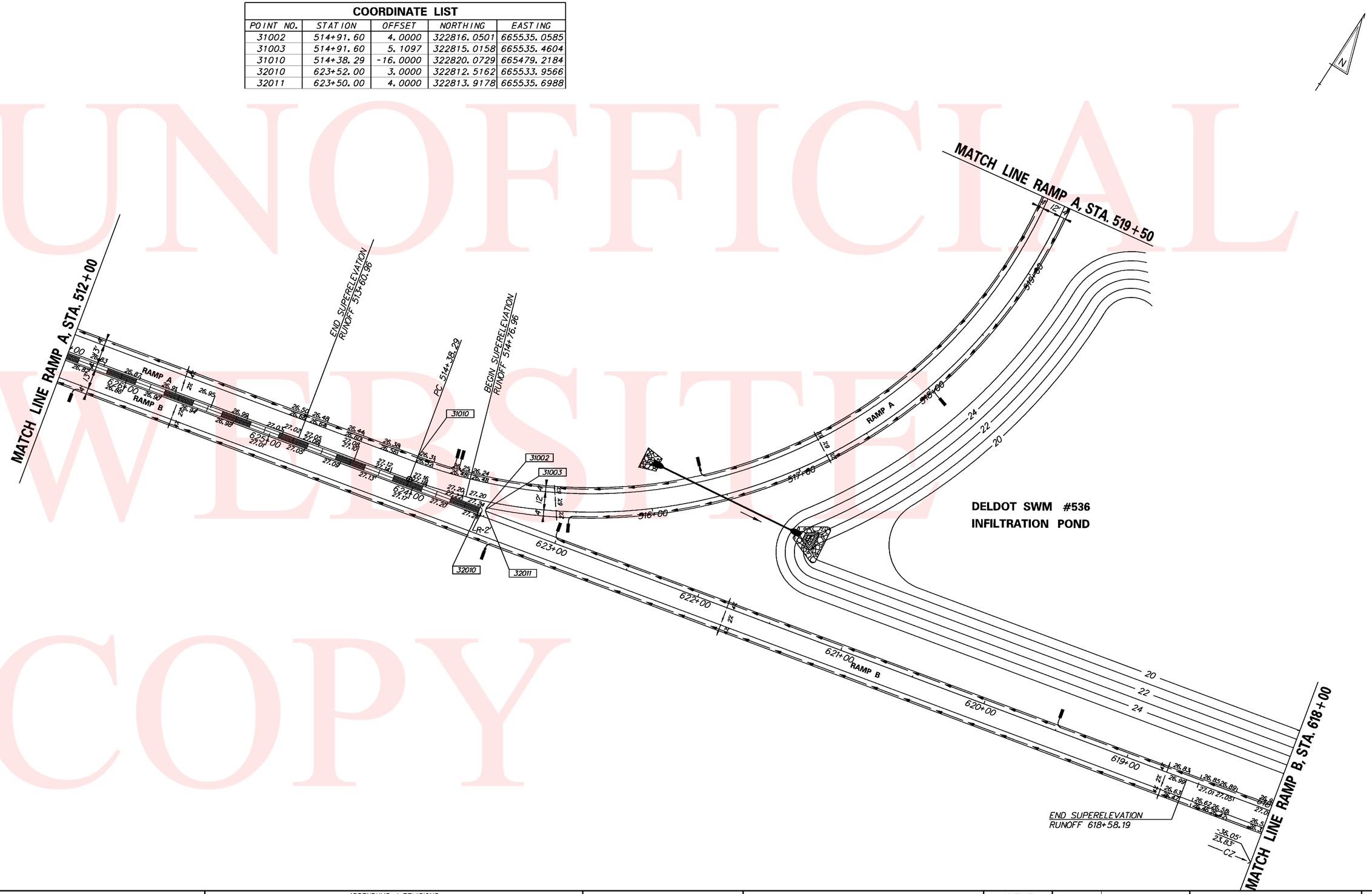

UNOFFICIAL WEBSITE COPY

Y:\SUSSEX\014\ROAD\2812201\PLANS\FINAL\CONSTRUCTION\GG07.DGN

DELAWARE DEPARTMENT OF TRANSPORTATION	ADDENDUMS / REVISIONS	SCALE 0 30 60 90 FEET	SR 1, SR 30 GRADE SEPARATED INTERSECTION	CONTRACT T200812201	BRIDGE NO.	GRADES & GEOMETRICS	SHEET NO. 42
				COUNTY SUSSEX	DESIGNED BY: JLC		TOTAL SHTS. 133
					CHECKED BY: JRG		

COORDINATE LIST				
POINT NO.	STATION	OFFSET	NORTHING	EASTING
31008	505+51.50	-24.0000	322639.7147	664610.9250
31009	505+51.50	-16.0000	322631.8969	664612.6226

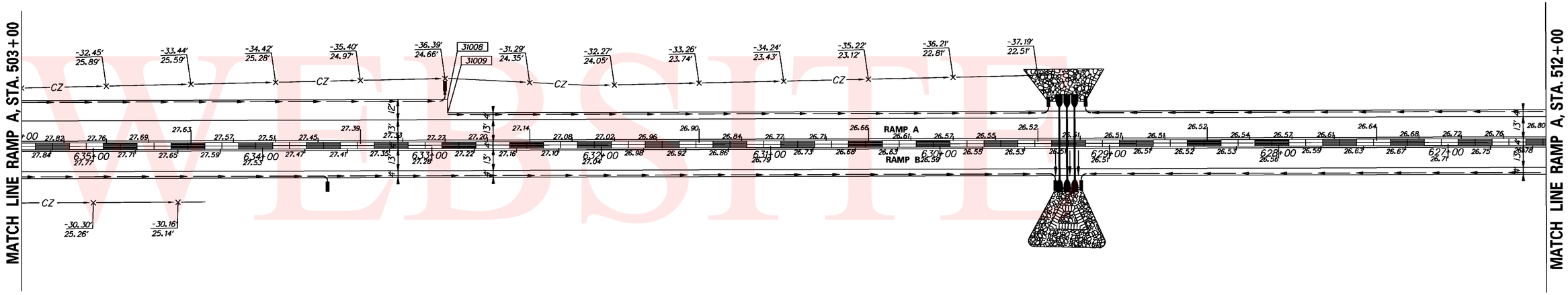

UNOFFICIAL WEBSITE COPY

Y:\SUSSEX\014\ROAD\2812201\PLANS\FINAL\CONSTRUCTION\GG08.DGN

DELAWARE DEPARTMENT OF TRANSPORTATION	ADDENDUMS / REVISIONS	SCALE 0 30 60 90 FEET	SR 1, SR 30 GRADE SEPARATED INTERSECTION	CONTRACT T200812201	BRIDGE NO.	GRADES & GEOMETRICS	SHEET NO. 43
				COUNTY SUSSEX	DESIGNED BY: JLC		TOTAL SHTS. 133
					CHECKED BY: JRG		

COORDINATE LIST				
POINT NO.	STATION	OFFSET	NORTHING	EASTING
31004	500+22.00	-54.0000	322556.6722	664087.1176
31005	500+52.00	-54.0000	322563.0382	664116.4344
31006	500+30.79	-32.7868	322537.8066	664100.2057
31017	500+33.90	-18.3561	322524.3659	664106.3136
31018	500+22.59	-17.5858	322521.2116	664095.4171
31019	500+23.23	-27.8824	322531.4114	664093.8665
32005	637+20.18	-16.0000	322503.6229	664200.9674
32006	637+20.18	-106.0000	322415.6725	664220.0653
32008	638+10.18	-106.0000	322396.5746	664132.1149
32009	637+77.43	3.0000	322510.0415	664140.9880
32015	638+06.31	-19.0000	322482.4137	664117.4318
32016	638+18.18	-33.8574	322465.3767	664108.9885
32017	638+18.18	-19.0000	322479.8957	664105.8358
35000	900+00.00	9.8528	322183.2151	664155.7813
35001	900+00.00	18.9844	322185.1528	664164.7049
35002	900+43.54	18.9514	322227.6953	664155.4333
35003	900+43.54	26.5051	322229.2982	664162.8150
35018	900+00.00	-19.1820	322177.0540	664127.4077
35019	900+00.00	-10.0024	322179.0019	664136.3782
35022	901+89.65	-22.0000	322361.7888	664084.4100
35023	901+88.34	32.0000	322371.9619	664137.4594

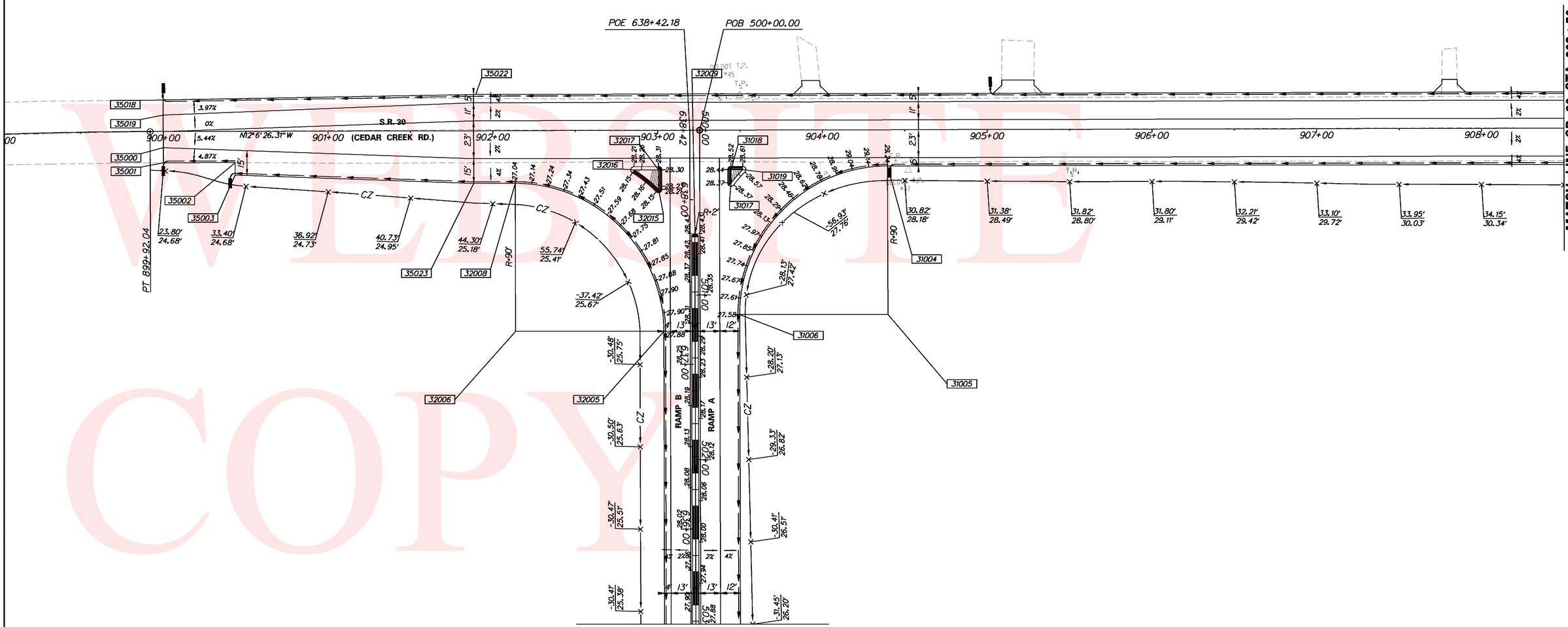

UNOFFICIAL WEBSITE COPY

Y:\SUSSEX\014\ROAD\2812201\PLANS\FINAL\CONSTRUCTION\GG09.DGN

DELAWARE DEPARTMENT OF TRANSPORTATION

ADDENDUMS / REVISIONS

SCALE 0 30 60 90 FEET

SR 1, SR 30 GRADE SEPARATED INTERSECTION

CONTRACT	BRIDGE NO.	
T200812201	DESIGNED BY: JLC	
COUNTY	CHECKED BY: JRG	
SUSSEX		

GRADES & GEOMETRICS

SHEET NO. 44

TOTAL SHTS. 133

UNOFFICIAL WEBSITE COPY

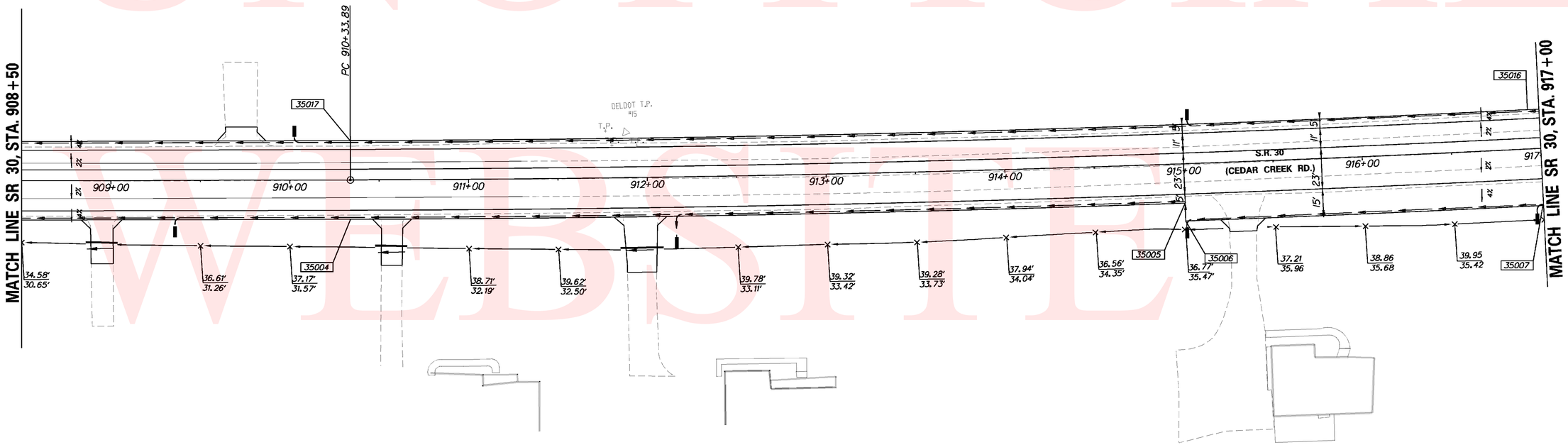

COORDINATE LIST

POINT NO.	STATION	OFFSET	NORTHING	EASTING
35004	910+33.89	22.0000	323196.1420	663948.2606
35005	915+34.96	22.0000	323684.5459	663832.9363
35006	915+34.96	33.3827	323687.3613	663843.9653
35007	916+99.83	32.0000	323846.8876	663800.8031
35016	917+30.63	-22.0000	323862.6044	663740.6512
35017	910+33.89	-22.0000	323186.8053	663905.2626

Y:\SUSSEX\014\ROAD\281220\PLANS\FINAL\CONSTRUCTION\GG10.DGN

DELAWARE DEPARTMENT OF TRANSPORTATION

ADDENDUMS / REVISIONS

SCALE 0 30 60 90 FEET

SR 1, SR 30 GRADE SEPARATED INTERSECTION

CONTRACT: T200812201
COUNTY: SUSSEX
BRIDGE NO.
DESIGNED BY: JLC
CHECKED BY: JRG

GRADES & GEOMETRICS

SHEET NO. 45
TOTAL SHTS. 133

COORDINATE LIST				
POINT NO.	STATION	OFFSET	NORTHING	EASTING
30000	402+26.95	11.0000	323747.2998	663294.8754
30001	402+26.95	16.0000	323743.4257	663298.0363
30002	403+50.01	16.0000	323821.2234	663393.3882
30003	405+00.00	37.0000	323899.7725	663522.8797
30054	402+26.95	-16.0000	323768.2200	663277.8066
30055	402+26.95	-11.0000	323764.3459	663280.9675

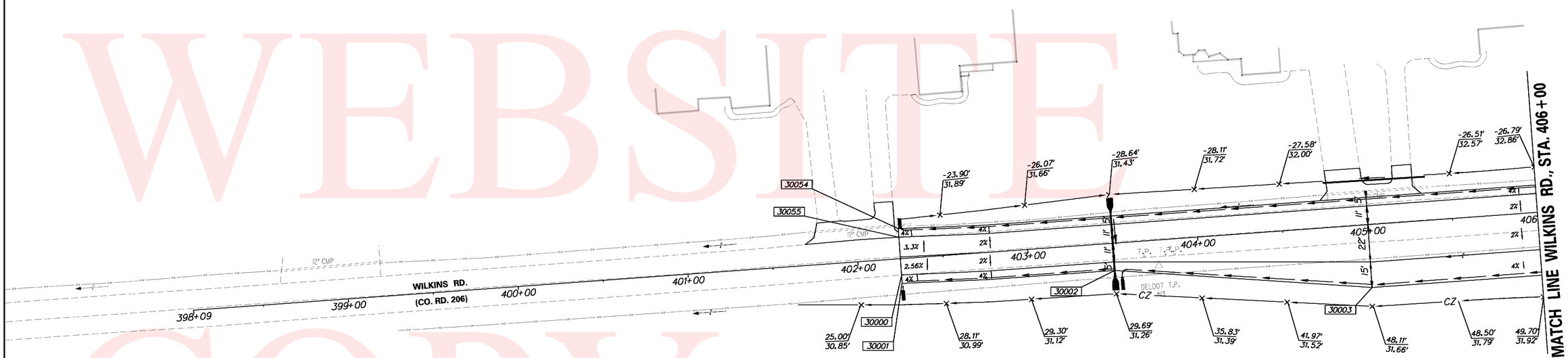

UNOFFICIAL WEBSITE COPY

Y:\SUSSEX\014\ROAD\281220\PLANS\FINAL\CONSTRUCTION\GG11.DGN

DELAWARE DEPARTMENT OF TRANSPORTATION	ADDENDUMS / REVISIONS	SCALE 0 30 60 90 FEET	SR 1, SR 30 GRADE SEPARATED INTERSECTION	CONTRACT T200812201	BRIDGE NO.	GRADES & GEOMETRICS	SHEET NO. 46
				COUNTY SUSSEX	DESIGNED BY: JLC		TOTAL SHTS. 133
					CHECKED BY: JRG		

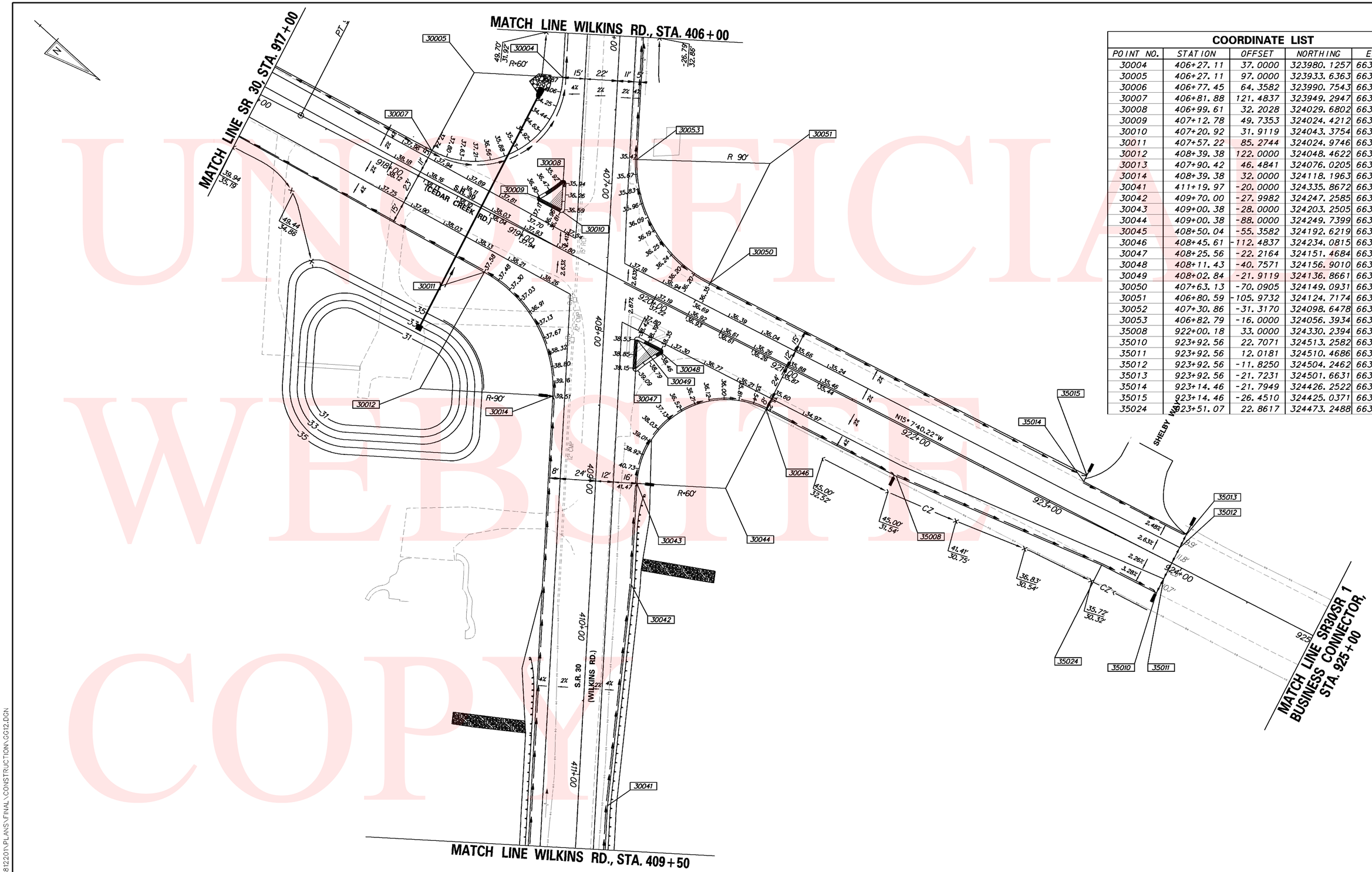

COORDINATE LIST

POINT NO.	STATION	OFFSET	NORTHING	EASTING
30004	406+27.11	37.0000	323980.1257	663621.3637
30005	406+27.11	97.0000	323933.6363	663659.2944
30006	406+77.45	64.3582	323990.7543	663677.6666
30007	406+81.88	121.4837	323949.2947	663717.2152
30008	406+99.61	32.2028	324029.6802	663674.5114
30009	407+12.78	49.7353	324024.4212	663695.7991
30010	407+20.92	31.9119	324043.3754	663690.8366
30011	407+57.22	85.2744	324024.9746	663752.6943
30012	408+39.38	122.0000	324048.4622	663839.5754
30013	407+90.42	46.4841	324076.0205	663753.8984
30014	408+39.38	32.0000	324118.1963	663782.6793
30041	411+19.97	-20.0000	324335.8672	663967.2103
30042	409+70.00	-27.9982	324247.2585	663845.9560
30043	409+00.38	-28.0000	324203.2505	663792.0153
30044	409+00.38	-88.0000	324249.7399	663754.0846
30045	408+50.04	-55.3582	324192.6219	663735.7124
30046	408+45.61	-112.4837	324234.0815	663696.1639
30047	408+25.56	-22.2164	324151.4684	663737.6977
30048	408+11.43	-40.7571	324156.9010	663715.0280
30049	408+02.84	-21.9119	324136.8661	663720.2822
30050	407+63.13	-70.0905	324149.0931	663659.0577
30051	406+80.59	-105.9732	324124.7174	663572.4215
30052	407+30.86	-31.3170	324098.6478	663658.5631
30053	406+82.79	-16.0000	324056.3934	663631.0033
35008	922+00.18	33.0000	324330.2394	663671.2042
35010	923+92.56	22.7071	324513.2582	663611.0642
35011	923+92.56	12.0181	324510.4686	663600.7456
35012	923+92.56	-11.8250	324504.2462	663577.7288
35013	923+92.56	-21.7231	324501.6631	663568.1737
35014	923+14.46	-21.7949	324426.2522	663588.4860
35015	923+14.46	-26.4510	324425.0371	663583.9913
35024	923+51.07	22.8617	324473.2488	663622.0405

UNOFFICIAL WEBSITE COPY

Y:\SUSSEX\014\ROAD\281220\PLANS\FINAL\CONSTRUCTION\GG12.DGN

DELAWARE DEPARTMENT OF TRANSPORTATION

ADDENDUMS / REVISIONS

SCALE 0 30 60 90 FEET

SR 1, SR 30 GRADE SEPARATED INTERSECTION

CONTRACT	BRIDGE NO.	
T200812201	DESIGNED BY: JLC	
COUNTY		
SUSSEX	CHECKED BY: JRG	

GRADES & GEOMETRICS

SHEET NO.
47
TOTAL SHTS.
133

COORDINATE LIST

POINT NO.	STATION	OFFSET	NORTHING	EASTING
30017	418+11.58	20.0000	324742.0994	664528.3779
30018	421+14.66	20.0000	324978.8778	664726.6065
30019	420+86.07	20.0000	324953.5260	664711.9068
30020	420+88.90	109.900	32909.8012	664790.5212
30021	421+72.15	109.790	324985.4669	664833.0204
30023	422+10.16	105.620	325020.7183	664847.8553
30024	422+99.85	105.810	325099.0051	664891.6102
30025	423+00.16	16.0000	325142.9341	664813.2765
30037	423+00.16	-16.0000	325158.4857	664785.3096
30038	421+41.51	-20.0000	325021.7833	664704.6996
30039	421+14.66	-20.0000	324998.3206	664691.6497
30040	418+11.58	-20.0000	324773.0923	664503.0908
30058	422+25.20	-154.5975	325160.3433	664627.7499
30059	422+25.54	-177.4569	325171.7504	664607.9372
30060	422+39.83	-176.5140	325183.7819	664615.7080
30061	422+36.58	-153.2716	325169.6419	664634.4390
33007	721+47.01	-2.9796	325045.3916	664765.1702

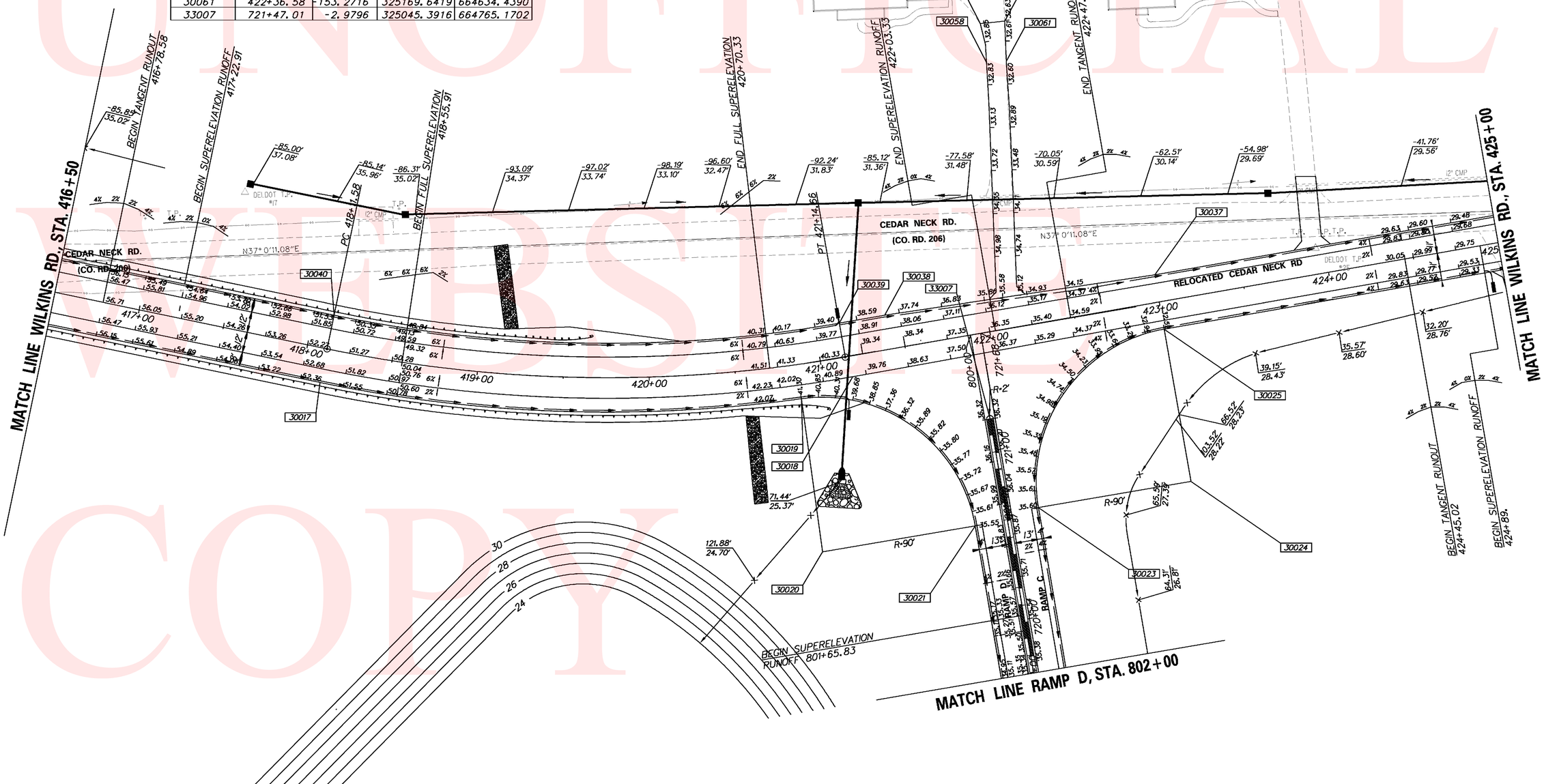

UNOFFICIAL WEBSITE COPY

Y:\SUSSEX\014\ROAD\281220\PLANS\FINAL\CONSTRUCTION\GG13.DGN

DELAWARE DEPARTMENT OF TRANSPORTATION	ADDENDUMS / REVISIONS	SCALE 0 30 60 90 FEET	SR 1, SR 30 GRADE SEPARATED INTERSECTION	CONTRACT T200812201	BRIDGE NO.	GRADES & GEOMETRICS	SHEET NO. 48
				COUNTY SUSSEX	DESIGNED BY: JLC		TOTAL SHTS. 133
					CHECKED BY: JRG		

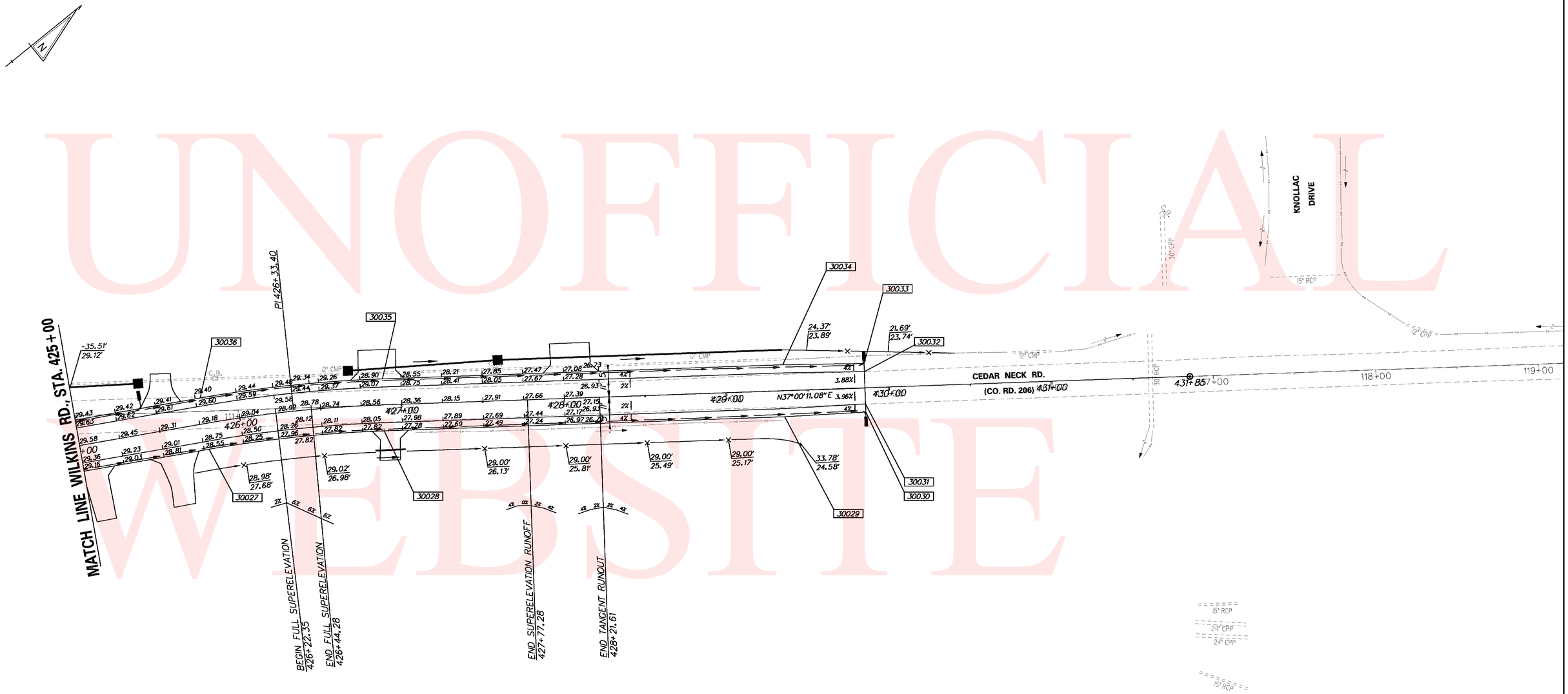

COORDINATE LIST				
POINT NO.	STATION	OFFSET	NORTHING	EASTING
30027	425+78.02	16.0000	325385.7567	664948.3328
30028	426+88.61	16.0000	325476.5396	665007.3841
30029	429+35.00	16.0000	325673.3040	665155.6736
30030	429+84.97	14.9251	325713.8571	665184.8901
30031	429+84.97	9.9251	325716.8664	665180.8971
30032	429+84.97	-10.0553	325728.8918	665164.9407
30033	429+84.97	-15.0553	325731.9011	665160.9477
30034	429+35.00	-16.0000	325692.5643	665130.1190
30035	426+88.61	-16.0000	325495.7991	664981.8288
30036	425+78.02	-16.0000	325401.3109	664920.3673

UNOFFICIAL WEBSITE COPY

Y:\SUSSEX\014\ROAD\281220\PLANS\FINAL\CONSTRUCTION\GG14.DGN

DELAWARE DEPARTMENT OF TRANSPORTATION

ADDENDUMS / REVISIONS

SCALE 0 30 60 90 FEET

SR 1, SR 30 GRADE SEPARATED INTERSECTION

CONTRACT	BRIDGE NO.	3-004
T200812201	DESIGNED BY: JLC	
COUNTY		
SUSSEX	CHECKED BY: JRG	

GRADES & GEOMETRICS

SHEET NO. 49

TOTAL SHTS. 133

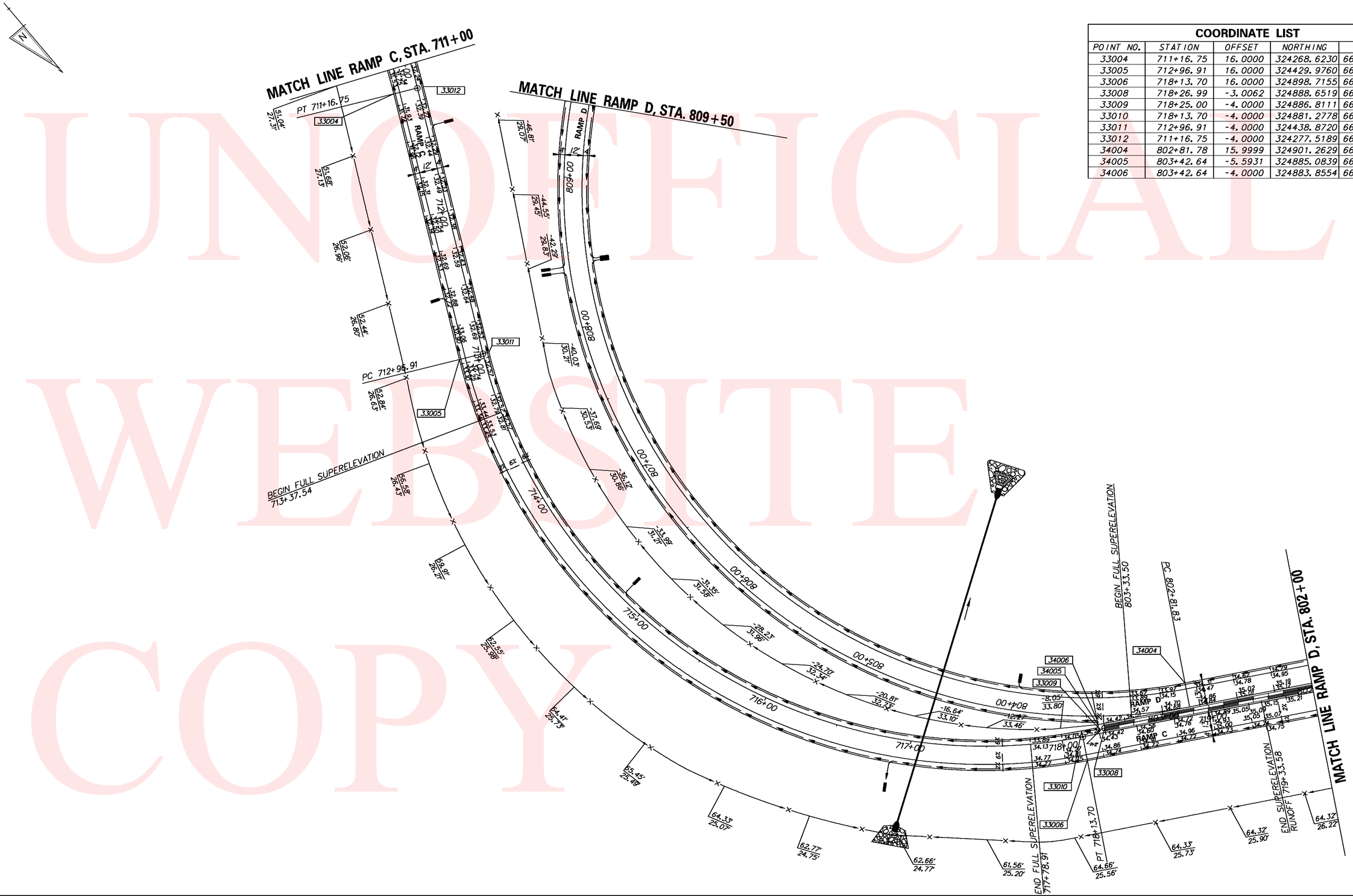

COORDINATE LIST

POINT NO.	STATION	OFFSET	NORTHING	EASTING
33004	711+16.75	16.0000	324268.6230	665129.4435
33005	712+96.91	16.0000	324429.9760	665209.5768
33006	718+13.70	16.0000	324898.7155	665065.0697
33008	718+26.99	-3.0062	324888.6519	665044.1759
33009	718+25.00	-4.0000	324886.8111	665045.4239
33010	718+13.70	-4.0000	324881.2778	665055.2755
33011	712+96.91	-4.0000	324438.8720	665191.6642
33012	711+16.75	-4.0000	324277.5189	665111.5309
34004	802+81.78	15.9999	324901.2629	664982.9377
34005	803+42.64	-5.5931	324885.0839	665044.4150
34006	803+42.64	-4.0000	324883.8554	665043.4007

UNOFFICIAL WEBSITE COPY

Y:\SUSSEX\014\ROAD\2812201\PLANS\FINAL\CONSTRUCTION\GG15.DGN

DELAWARE DEPARTMENT OF TRANSPORTATION	ADDENDUMS / REVISIONS	SCALE 0 30 60 90 FEET	SR 1, SR 30 GRADE SEPARATED INTERSECTION	CONTRACT T200812201	BRIDGE NO.	GRADES & GEOMETRICS	SHEET NO. 50
				COUNTY SUSSEX	DESIGNED BY: JLC		TOTAL SHTS. 133
					CHECKED BY: JRG		

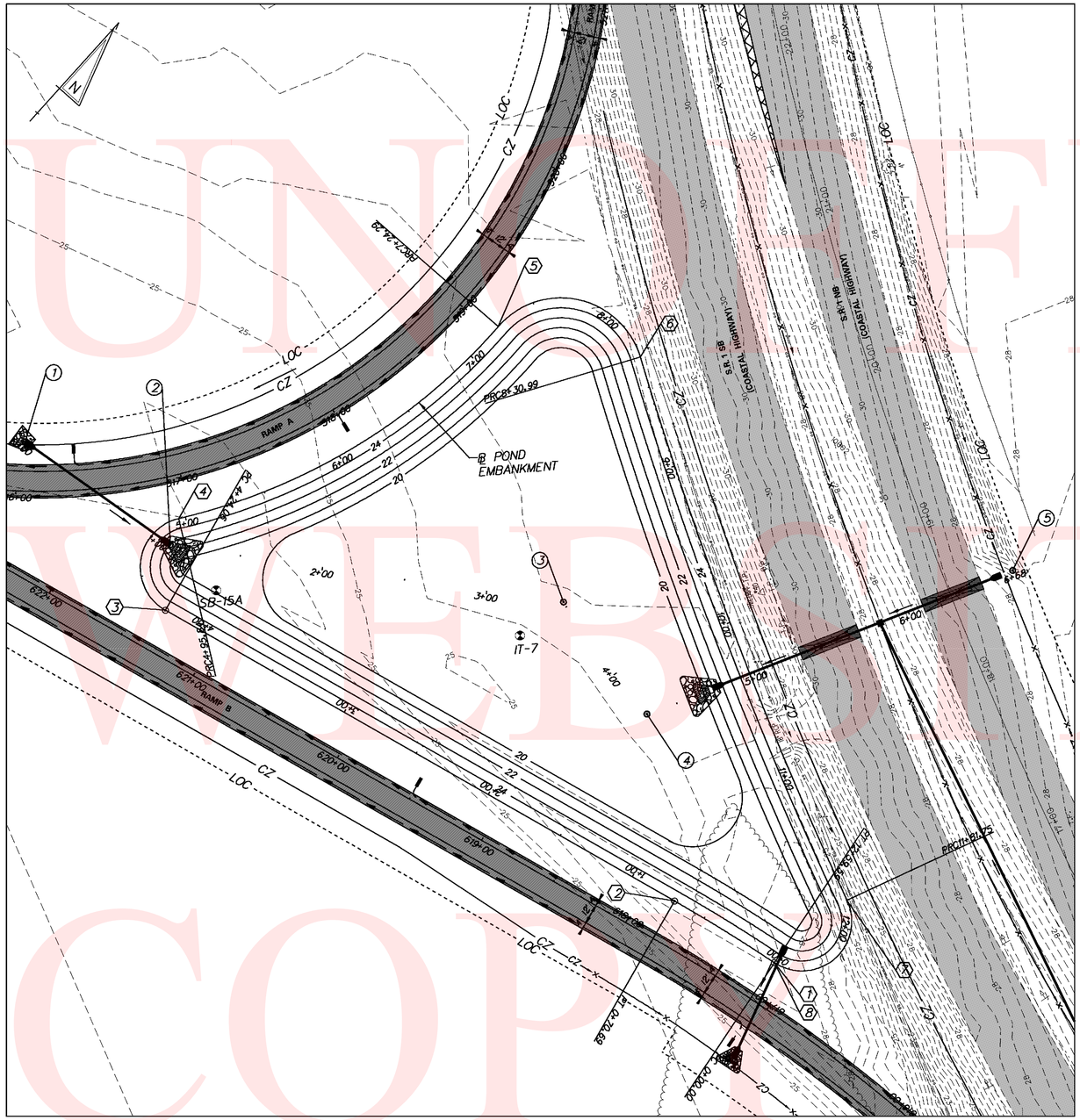

PLAN - DELDOT SWM #536

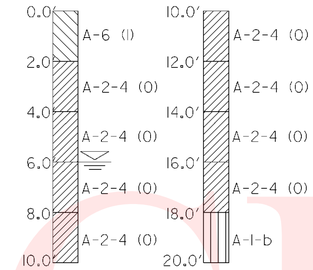

SB-15A
STA. 621+13.55
51.56' RT. C.L.
WATER LEVEL AT 6.0'

GENERAL NOTES

1. THE CONTRACTOR SHALL PROVIDE "AS-BUILT" DRAWINGS OF ALL STORMWATER MANAGEMENT FACILITIES, SUCH AS PONDS, BIOFILTRATION SWALES, BIO-RETENTION AREAS, ETC. THE "AS-BUILT" DRAWINGS SHALL SHOW THE ACTUAL FINISHED GROUND CONTOURS, OUTLET STRUCTURE DIMENSIONS AND ELEVATIONS, ETC., AS THEY EXIST AT THE COMPLETION OF THE PROJECT. THESE DRAWINGS SHALL BE SIGNED AND SEALED BY A PROFESSIONAL ENGINEER OR LAND SURVEYOR REGISTERED IN THE STATE OF DELAWARE. ALL "AS-BUILT" DRAWINGS SHALL BE SENT TO THE DELDOT STORMWATER ENGINEER. ALL COSTS FOR THIS WORK SHALL BE INCLUDED UNDER ITEM 763501 - CONSTRUCTION ENGINEERING.

2. STORMWATER MANAGEMENT PONDS SERVING AS TEMPORARY SEDIMENT BASINS DURING CONSTRUCTION SHALL HAVE SEDIMENT REMOVED AT TIMES DETERMINED BY THE ENGINEER AND AT THE CONCLUSION OF THE PROJECT AFTER ALL AREAS DRAINING TO THE POND HAVE BEEN VEGETATIVELY STABILIZED. COST FOR SEDIMENT REMOVAL SHALL BE PAID FOR UNDER ITEM 250000 - SEDIMENT REMOVAL. ACCESS SHALL BE MAINTAINED TO ALL SEDIMENT REMOVAL CONTROL DEVICES REQUIRING MAINTENANCE UNTIL CONSTRUCTION PHASING AND VEGETATIVE STABILIZATION ALLOW THE REMOVAL OF THOSE CONTROLS, WHICH ARE NO LONGER REQUIRED.

POND CONSTRUCTION SEQUENCE AND NOTES

THE STORMWATER MANAGEMENT PONDS SHALL FUNCTION AS A SEDIMENT BASIN DURING ROADWAY CONSTRUCTION. SEDMINENT BASINS TO BE CONSTRUCTED AT MINIMUM AN ELEVATON TWO FEET ABOVE THE DESIGN ELEVATION OF THE STORMWATER MANAGEMENT INFILTRATION PONDS AND SHALL BE CONSTRUCTED IN ACCORDANCE WITH THE FOLLOWING SECTIONS OF THE STANDARD SPECIFICATIONS AS IS APPLICABLE:

SECTION 271 - STORMWATER MANAGEMENT POND
SECTION 272 - POND OUTLET STRUCTURE, CONCRETE
SECTION 274 - CLAY BORROW, STORMWATER MANAGEMENT POND

1. INSTALL STABILIZED CONSTRUCTION ENTRANCE.
2. CLEAR AND GRUB OF INSTALLATION OF PERIMETER EROSION AND SEDIMENT CONTROLS.
3. INSTALL PERIMETER SEDIMENT CONTROLS AS SHOWN.
4. CLEAR AND GRUB REMAINING AREA FOR POND CONSTRUCTION.
5. CONSTRUCT POND OUTLET STRUCTURE AND PARTIAL EMBEDMENT AS NEEDED TO INSTALL POND OUTLET STRUCTURE. INSTALL SEDIMENT TRAPS AT OUTLET STRUCTURES.
6. EXCAVATE THE POND AND COMPLETE THE EMBANKMENT, EMERGENCY SPILLWAY AND BASIN TO LINES, GRADES, AND DETAILS SHOWN IN THE CONSTRUCTION PLANS. DURING EXCAVATION, THE CONTRACTOR SHALL SALVAGE AND STOCKPILE SOILS CLASSIFIED AS CH, CL, CH AND GM PER THE UNIFIED SOIL CLASSIFICATION SYSTEM TO BEUSED TO CONSTRUCT THE PROJECT LIMITS, IF NECESSARY. EXCAVATE POND BOTTOM TO ELEVATION AS SHOWN FOR SEDIMENT STORAGE DURING CONSTRUCTION.
7. STABILIZE ALL BARE AREAS USING TEMPORARY SEEDING(NO TOPSOIL). NOTE: SEE EROSION AND SEDIMENT CONTROL PLANS FOR LOCATION OF EROSION AND SEDIMENT CONTROL MEASURES.

MAINTENANCE OF POND AS A SEDIMENT BASIN

1. CONTRACTOR SHALL INSPECT THE BASIN IMMEDIATELY AFTER EVERY RAIN AND MAKE REPAIRS AS NEEDED.
2. CONTRACTOR SHALL CLEARLY MARK THE CLEANOUT ELEVATION ON A STAKE DRIVEN INTO THE GROUND AT A LOCATION CLEARLY VISIBLE FROM THE EMBANKMENT. SEDIMENT SHALL BE REMOVED WHEN THE CLEANOUT ELEVATION IS REACHED AND DISPOSED OF AT A LOCATION APPROVED BY THE ENGINEER.

CONVERSION TO PERMANENT STORMWATER MANAGEMENT POND

1. CONVERT THE BASIN INTO THE PERMANENT STORMWATER MANAGEMENT POND AFTER ALL AREAS DRAINING TO THE POND HAVE BEEN PERMANENTLY STABILIZED AND THE ENGINEER HAS APPROVED THE CONVERSION.
2. REMOVE ACCUMULATED SEDIMENT TO ELEVATION AS SHOWN BY LINES AND GRADES ON THE PLAN AND DISPOSE OF SEDIMENT AT LOCATION APPROVED BY THE ENGINEER.
3. COMPLETE STABILIZATION OF ALL BARE AREAS. REMOVE EROSION AND SEDIMENT CONTROL MEASURES . POND BOTTOMS TO BE SEEDED WITH PGS-WG AND POND SLOPES WITH DRY GROUND SEEDED WITH PGS-DG.

℄ SWM #536 INFILTRATION POND PROFILE

	STATION	NORTHING	EASTING
1	POB 0+00.00	322900.1178	665611.1287
2	PI 1+07.22	322912.5042	665717.6313
3	PI 3+46.73	323045.4445	665916.8576
4	PI 4+30.91	323028.9142	665999.3957
5	POE 6+67.68	323240.7042	666105.2680

℄ SWM#536 INFILTRATION POND EMBANKMENT

	STATION	NORTHING	EASTING
1	PC 0+00.00	322968.7982	666156.7551
	PI 0+35.36	322963.6917	666121.7668
2	PT 0+70.69	322956.1885	666087.2131
3	PC 4+24.06	322881.2032	665741.8876
	PI 5+00.38	322865.0085	665667.3070
4	PRC 4+95.84	322927.6544	665710.8962
	PI 6+13.93	323024.5856	665778.3411
5	PRC 7+24.29	323142.6566	665776.4174
	PI 8+14.99	323233.3385	665774.9399
6	PRC 8+30.99	323186.1804	665852.4093
	PI 10+06.68	323094.8287	666002.4779
7	PRC 11+81.75	323026.0923	666164.1598
	PI 12+88.71	322984.2451	666262.5928
8	PT 12+59.59	322968.7982	666156.7551

SWM #536 INFILTRATION POND DESIGN SUMMARY

DESIGN STORM	FACILITY INFLOW	FACILITY DISCHARGE	WATER SURFACE ELEV.	STORAGE VOL. (AC.FT)
WQ	2.13	0.00*	20.01'	0.011
2 - YEAR	10.43	0.00*	20.05'	0.054
10 - YEAR	27.17	0.00*	20.81'	0.865
100 - YEAR	66.67	0.25	23.49'	4.572

*INDICATES TOTAL INFILTRATION
DRAINAGE AREA TO FACILITY: 30.97 ACRES; INFILTRATION RATE USED FOR DESIGN 10 IN/HR.

UNOFFICIAL WEB COPY

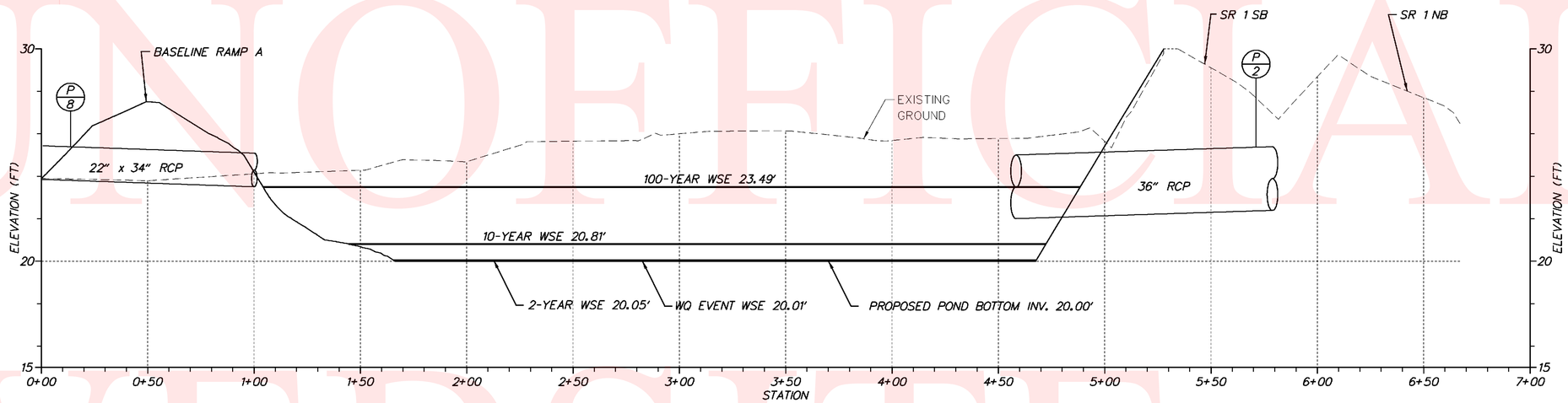

SWM #536 INFILTRATION POND PROFILE

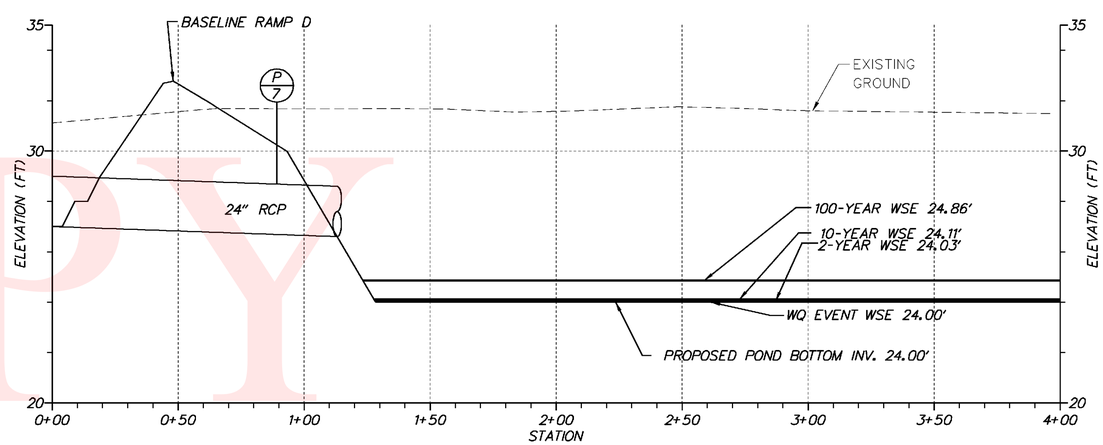

SWM #535 INFILTRATION POND PROFILE

VERTICAL SCALE FEET 0 4 8 12

UNOFFICIAL WEBSITE COPY

Y:\SUSSEX\014\ROAD\281220\PLANS\FINAL\CONSTRUCTION\SWM01.DGN

DELAWARE DEPARTMENT OF TRANSPORTATION	ADDENDUMS / REVISIONS	SCALE 0 40 80 120 FEET	SR 1, SR 30 GRADE SEPARATED INTERSECTION	CONTRACT T200812201	BRIDGE NO.	STORMWATER MANAGEMENT PLAN
				COUNTY SUSSEX	DESIGNED BY: JLC	
					CHECKED BY: JRG	

SHEET NO. 52
TOTAL SHTS. 132

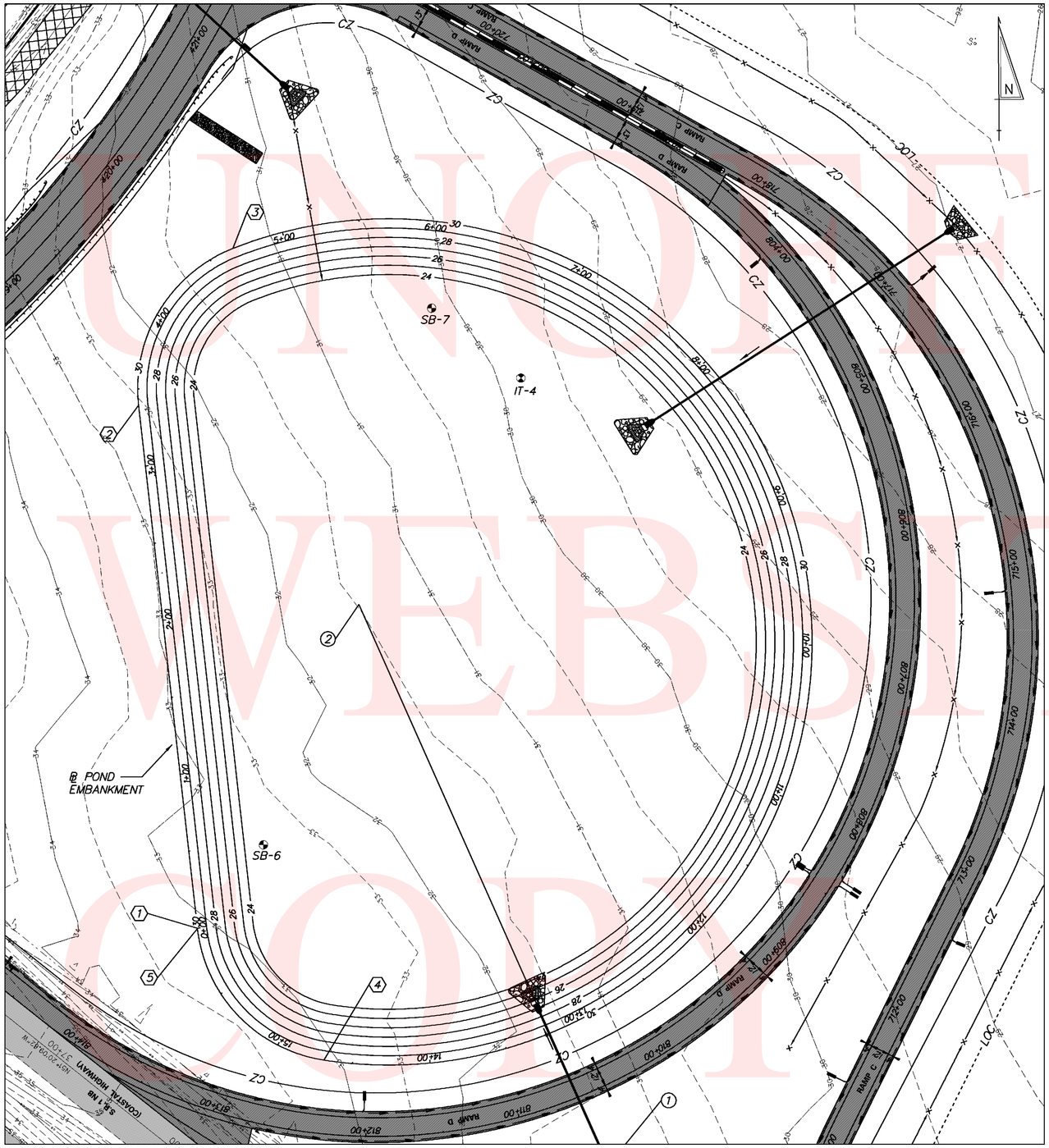

PLAN - DELDOT SWM #535

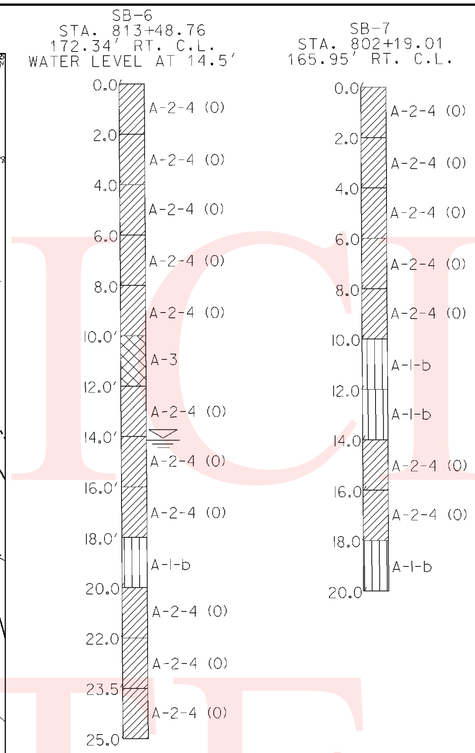

GENERAL NOTES

1. THE CONTRACTOR SHALL PROVIDE "AS-BUILT" DRAWINGS OF ALL STORMWATER MANAGEMENT FACILITIES, SUCH AS PONDS, BIOFILTRATION SWALES, BIO-RETENTION AREAS, ETC. THE "AS-BUILT" DRAWINGS SHALL SHOW THE ACTUAL FINISHED GROUND CONTOURS, OUTLET STRUCTURE DIMENSIONS AND ELEVATIONS, ETC., AS THEY EXIST AT THE COMPLETION OF THE PROJECT. THESE DRAWINGS SHALL BE SIGNED AND SEALED BY A PROFESSIONAL ENGINEER OR LAND SURVEYOR REGISTERED IN THE STATE OF DELAWARE. ALL "AS-BUILT" DRAWINGS SHALL BE SENT TO THE DELDOT STORMWATER ENGINEER. ALL COSTS FOR THIS WORK SHALL BE INCLUDED UNDER ITEM 763501 - CONSTRUCTION ENGINEERING.

2. STORMWATER MANAGEMENT PONDS SERVING AS TEMPORARY SEDIMENT BASINS DURING CONSTRUCTION SHALL HAVE SEDIMENT REMOVED AT TIMES DETERMINED BY THE ENGINEER AND AT THE CONCLUSION OF THE PROJECT AFTER ALL AREAS DRAINING TO THE POND HAVE BEEN VEGETATIVELY STABILIZED. COST FOR SEDIMENT REMOVAL SHALL BE PAID FOR UNDER ITEM 250000 - SEDIMENT REMOVAL. ACCESS SHALL BE MAINTAINED TO ALL SEDIMENT REMOVAL CONTROL DEVICES REQUIRING MAINTENANCE UNTIL CONSTRUCTION PHASING AND VEGETATIVE STABILIZATION ALLOW THE REMOVAL OF THOSE CONTROLS, WHICH ARE NO LONGER REQUIRED.

POND CONSTRUCTION SEQUENCE AND NOTES

THE STORMWATER MANAGEMENT PONDS SHALL FUNCTION AS A SEDIMENT BASIN DURING ROADWAY CONSTRUCTION. SEDIMENT BASINS TO BE CONSTRUCTED AT MINIMUM AN ELEVATON TWO FEET ABOVE THE DESIGN ELEVATION OF THE STORMWATER MANAGEMENT INFILTRATION PONDS AND SHALL BE CONSTRUCTED IN ACCORDANCE WITH THE FOLLOWING SECTIONS OF THE STANDARD SPECIFICATIONS AS IS APPLICABLE:

SECTION 271 - STORMWATER MANAGEMENT POND
SECTION 272 - POND OUTLET STRUCTURE, CONCRETE
SECTION 274 - CLAY BORROW, STORMWATER MANAGEMENT POND

1. INSTALL STABILIZED CONSTRUCTION ENTRANCE.
2. CLEAR AND GRUB OF INSTALLATION OF PERIMETER EROSION AND SEDIMENT CONTROLS.
3. INSTALL PERIMETER SEDIMENT CONTROLS AS SHOWN.
4. CLEAR AND GRUB REMAINING AREA FOR POND CONSTRUCTION.
5. CONSTRUCT POND OUTLET STRUCTURE AND PARTIAL EMBEDMENT AS NEEDED TO INSTALL POND OUTLET STRUCTURE. INSTALL SEDIMENT TRAPS AT OUTLET STRUCTURES.
6. EXCAVATE THE POND AND COMPLETE THE EMBANKMENT, EMERGENCY SPILLWAY AND BASIN TO LINES, GRADES, AND DETAILS SHOWN IN THE CONSTRUCTION PLANS. DURING EXCAVATION, THE CONTRACTOR SHALL SALVAGE AND STOCKPILE SOILS CLASSIFIED AS CH, CL, CH AND GM PER THE UNIFIED SOIL CLASSIFICATION SYSTEM TO BEUSED TO CONSTRUCT THE PROJECT LIMITS, IF NECESSARY. EXCAVATE POND BOTTOM TO ELEVATION AS SHOWN FOR SEDIMENT STORAGE DURING CONSTRUCTION.
7. STABILIZE ALL BARE AREAS USING TEMPORARY SEEDING(NO TOPSOIL). NOTE: SEE EROSION AND SEDIMENT CONTROL PLANS FOR LOCATION OF EROSION AND SEDIMENT CONTROL MEASURES.

MAINTENANCE OF POND AS A SEDIMENT BASIN

1. CONTRACTOR SHALL INSPECT THE BASIN IMMEDIATELY AFTER EVERY RAIN AND MAKE REPAIRS AS NEEDED.
2. CONTRACTOR SHALL CLEARLY MARK THE CLEANOUT ELEVATION ON A STAKE DRIVEN INTO THE GROUND AT A LOCATION CLEARLY VISIBLE FROM THE EMBANKMENT. SEDIMENT SHALL BE REMOVED WHEN THE CLEANOUT ELEVATION IS REACHED AND DISPOSED OF AT A LOCATION APPROVED BY THE ENGINEER.

CONVERSION TO PERMANENT STORMWATER MANAGEMENT POND

1. CONVERT THE BASIN INTO THE PERMANENT STORMWATER MANAGEMENT POND AFTER ALL AREAS DRAINING TO THE POND HAVE BEEN PERMANENTLY STABILIZED AND THE ENGINEER HAS APPROVED THE CONVERSION.
2. REMOVE ACCUMULATED SEDIMENT TO ELEVATION AS SHOWN BY LINES AND GRADES ON THE PLAN AND DISPOSE OF SEDIMENT AT LOCATION APPROVED BY THE ENGINEER.
3. COMPLETE STABILIZATION OF ALL BARE AREAS. REMOVE EROSION AND SEDIMENT CONTROL MEASURES. POND BOTTOMS TO BE SEEDED WITH PGS-WG AND POND SLOPES WITH DRY GROUND SEEDED WITH PGS-DG.

℄ SWM#535 INFILTRATION POND EMBANKMENT

		STATION	NORTHING	EASTING
1	POB	0+00.00	324400.4607	664704.6930
2	PC	3+39.63	324737.9712	664666.8060
	PI	4+13.80	324811.6819	664658.5316
3	PCC	4+66.28	324838.9826	664727.4983
4	PCC	14+68.57	324315.4198	664786.2706
	PI	15+42.74	324326.7500	664712.9674
5	PT	15+95.22	324400.4607	664704.6930

℄ SWM# 535 INFILTRATION POND PROFILE

		STATION	NORTHING	EASTING
1	POB	0+00.00	324247.5771	664969.5444
2	POE	3+96.01	324609.4577	664808.7167

SWM #535 INFILTRATION POND DESIGN SUMMARY

DESIGN STORM	FACILITY INFLOW	FACILITY DISCHARGE	WATER SURFACE ELEV.	STORAGE VOL. (AC.FT)
WQ	2.31	0.00*	24.00'	0.012
2 - YEAR	16.63	0.00*	24.03'	0.089
10 - YEAR	45.11	0.00*	24.11'	0.343
100 - YEAR	114.69	0.00*	24.86'	2.769

*INDICATES TOTAL INFILTRATION
DRAINAGE AREA TO FACILITY: 23.70 ACRES; DESIGN INFILTRATION RATE 10.00 IN/HR

UNOFFICIAL WEBSITE COPY

DELAWARE DEPARTMENT OF TRANSPORTATION

ADDENDUMS / REVISIONS

SCALE 0 40 80 120 FEET

SR 1, SR 30 GRADE SEPARATED INTERSECTION

CONTRACT	BRIDGE NO.	STORMWATER MANAGEMENT PLAN	SHEET NO.
T200812201	DESIGNED BY: JLC		53
COUNTY			TOTAL SHTS.
SUSSEX	CHECKED BY: JRG		133

Y:\SUSSEX\014\ROAD\281220\PLANS\FINAL\CONSTRUCTION\SWM02.DGN

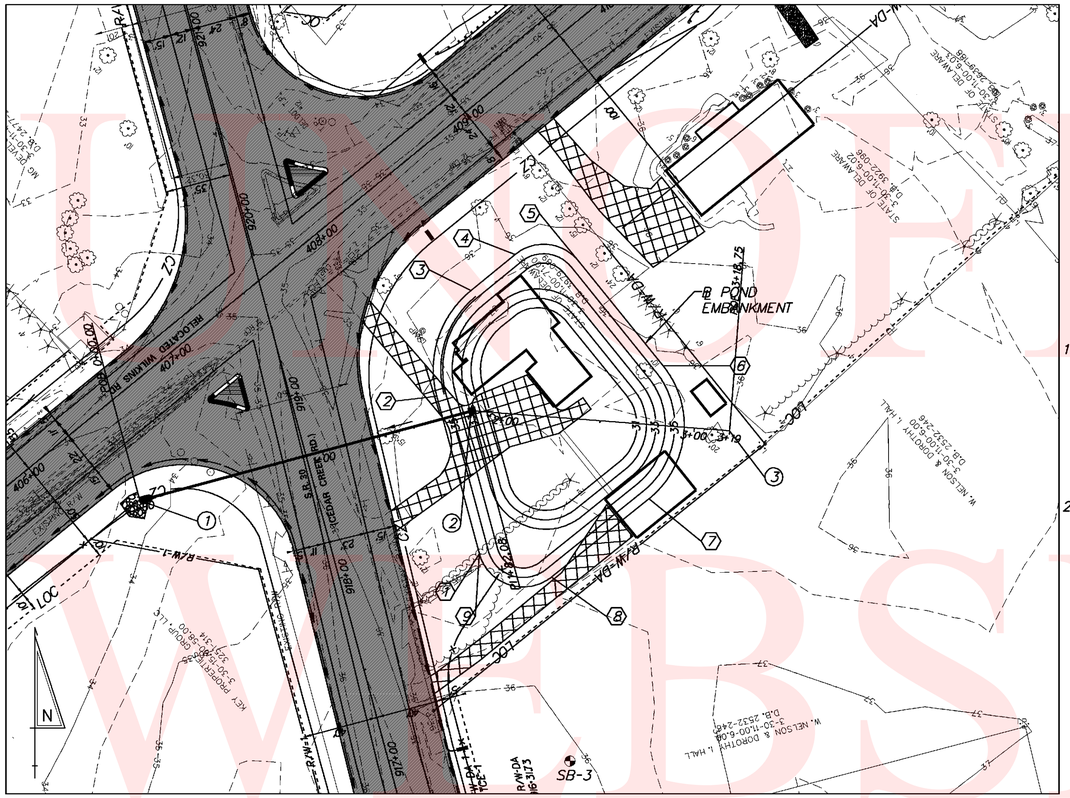

PLAN - DELDOT SWM #537

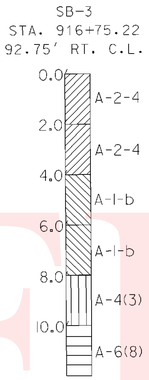

GENERAL NOTES

1. THE CONTRACTOR SHALL PROVIDE "AS-BUILT" DRAWINGS OF ALL STORMWATER MANAGEMENT FACILITIES, SUCH AS PONDS, BIOFILTRATION SWALES, BIO-RETENTION AREAS, ETC. THE "AS-BUILT" DRAWINGS SHALL SHOW THE ACTUAL FINISHED GROUND CONTOURS, OUTLET STRUCTURE DIMENSIONS AND ELEVATIONS, ETC., AS THEY EXIST AT THE COMPLETION OF THE PROJECT. THESE DRAWINGS SHALL BE SIGNED AND SEALED BY A PROFESSIONAL ENGINEER OR LAND SURVEYOR REGISTERED IN THE STATE OF DELAWARE. ALL "AS-BUILT" DRAWINGS SHALL BE SENT TO THE DELDOT STORMWATER ENGINEER. ALL COSTS FOR THIS WORK SHALL BE INCLUDED UNDER ITEM 763501 - CONSTRUCTION ENGINEERING.

2. STORMWATER MANAGEMENT PONDS SERVING AS TEMPORARY SEDIMENT BASINS DURING CONSTRUCTION SHALL HAVE SEDIMENT REMOVED AT TIMES DETERMINED BY THE ENGINEER AND AT THE CONCLUSION OF THE PROJECT AFTER ALL AREAS DRAINING TO THE POND HAVE BEEN VEGETATIVELY STABILIZED. COST FOR SEDIMENT REMOVAL SHALL BE PAID FOR UNDER ITEM 250000 - SEDIMENT REMOVAL. ACCESS SHALL BE MAINTAINED TO ALL SEDIMENT REMOVAL CONTROL DEVICES REQUIRING MAINTENANCE UNTIL CONSTRUCTION PHASING AND VEGETATIVE STABILIZATION ALLOW THE REMOVAL OF THOSE CONTROLS, WHICH ARE NO LONGER REQUIRED.

POND CONSTRUCTION SEQUENCE AND NOTES

THE STORMWATER MANAGEMENT PONDS SHALL FUNCTION AS A SEDIMENT BASIN DURING ROADWAY CONSTRUCTION. SEDMINENT BASINS TO BE CONSTRUCTED AT MINIMUM AN ELEVATON TWO FEET ABOVE THE DESIGN ELEVATION OF THE STORMWATER MANAGEMENT INFILTRATION PONDS AND SHALL BE CONSTRUCTED IN ACCORDANCE WITH THE FOLLOWING SECTIONS OF THE STANDARD SPECIFICATIONS AS IS APPLICABLE:

SECTION 271 - STORMWATER MANAGEMENT POND
SECTION 272 - POND OUTLET STRUCTURE, CONCRETE
SECTION 274 - CLAY BORROW, STORMWATER MANAGEMENT POND

1. INSTALL STABILIZED CONSTRUCTION ENTRANCE.
2. CLEAR AND GRUB OF INSTALLATION OF PERIMETER EROSION AND SEDIMENT CONTROLS.
3. INSTALL PERIMETER SEDIMENT CONTROLS AS SHOWN.
4. CLEAR AND GRUB REMAINING AREA FOR POND CONSTRUCTION.
5. CONSTRUCT POND OUTLET STRUCTURE AND PARTIAL EMBEDMENT AS NEEDED TO INSTALL POND OUTLET STRUCTURE. INSTALL SEDIMENT TRAPS AT OUTLET STRUCTURES.
6. EXCAVATE THE POND AND COMPLETE THE EMBANKMENT, EMERGENCY SPILLWAY AND BASIN TO LINES, GRADES, AND DETAILS SHOWN IN THE CONSTRUCTION PLANS. DURING EXCAVATION, THE CONTRACTOR SHALL SALVAGE AND STOCKPILE SOILS CLASSIFIED AS CH, CL, CH AND GM PER THE UNIFIED SOIL CLASSIFICATION SYSTEM TO BEUSED TO CONSTRUCT THE PROJECT LIMITS, IF NECESSARY. EXCAVATE POND BOTTOM TO ELEVATION AS SHOWN FOR SEDIMENT STORAGE DURING CONSTRUCTION.
7. STABILIZE ALL BARE AREAS USING TEMPORARY SEEDING(NO TOPSOIL). NOTE: SEE EROSION AND SEDIMENT CONTROL PLANS FOR LOCATION OF EROSION AND SEDIMENT CONTROL MEASURES.

MAINTENANCE OF POND AS A SEDIMENT BASIN

1. CONTRACTOR SHALL INSPECT THE BASIN IMMEDIATELY AFTER EVERY RAIN AND MAKE REPAIRS AS NEEDED.
2. CONTRACTOR SHALL CLEARLY MARK THE CLEANOUT ELEVATION ON A STAKE DRIVEN INTO THE GROUND AT A LOCATION CLEARLY VISIBLE FROM THE EMBANKMENT. SEDIMENT SHALL BE REMOVED WHEN THE CLEANOUT ELEVATION IS REACHED AND DISPOSED OF AT A LOCATION APPROVED BY THE ENGINEER.

CONVERSION TO PERMANENT STORMWATER MANAGEMENT POND

1. CONVERT THE BASIN INTO THE PERMANENT STORMWATER MANAGEMENT POND AFTER ALL AREAS DRAINING TO THE POND HAVE BEEN PERMANENTLY STABILIZED AND THE ENGINEER HAS APPROVED THE CONVERSION.
2. REMOVE ACCUMULATED SEDIMENT TO ELEVATION AS SHOWN BY LINES AND GRADES ON THE PLAN AND DISPOSE OF SEDIMENT AT LOCATION APPROVED BY THE ENGINEER.
3. COMPLETE STABILIZATION OF ALL BARE AREAS. REMOVE EROSION AND SEDIMENT CONTROL MEASURES. POND BOTTOMS TO BE SEEDED WITH PGS-WG AND POND SLOPES WITH DRY GROUND SEEDED WITH PGS-DG.

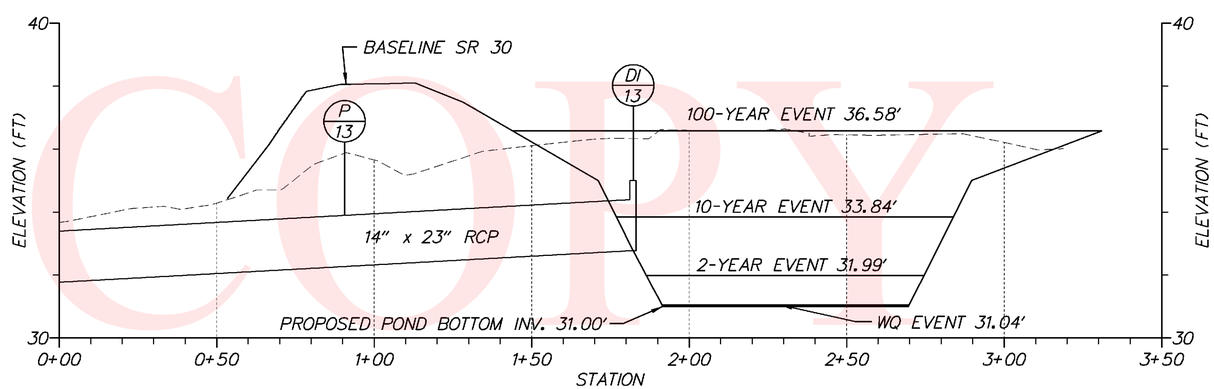

SWM #537 INFILTRATION POND PROFILE

℄ SWM #537 INFILTRATION POND PROFILE

	STATION	NORTHING	EASTING
1	POB 0+00.00	323976.5431	663638.3021
2	PI 1+82.00	324024.0601	663814.0742
3	POE 3+18.75	324013.4660	663950.3286

℄ SWM#537 INFILTRATION POND EMBANKMENT

		STATION	NORTHING	EASTING
1	POB	40+00.00	323948.5609	663817.8957
2	PC	40+86.24	324031.8151	663795.3886
	PI	41+21.26	324065.6141	663786.2513
3	PT	41+48.37	324087.7481	663813.3796
4	PC	41+78.51	324106.8022	663836.7331
	PI	42+02.64	324122.0599	663855.4336
5	PT	42+16.34	324103.2740	663870.5860
6	PC	42+87.42	324047.9494	663915.2102
	PI	43+37.47	324008.9929	663946.6321
7	PT	43+66.01	323977.6095	663907.6446
8	PC	44+32.16	323936.1288	663856.1131
	PI	44+68.91	323913.0853	663827.4862
9	PT	44+79.79	323948.5609	663817.8957

SWM #537 INFILTRATION POND DESIGN SUMMARY

DESIGN STORM	FACILITY INFLOW	FACILITY DISCHARGE	WATER SURFACE ELEV.	STORAGE VOL. (AC.FT)
WQ	0.57	0.00*	31.04'	0.005
2 - YEAR	3.27	0.00*	31.99'	0.153
10 - YEAR	8.53	0.00*	33.84	0.548
100 - YEAR	21.23	18.04	36.58'	0.887

*INDICATES TOTAL INFILTRATION
DRAINAGE AREA TO FACILITY: 6.73 ACRES; DESIGN INFILTRATION RATE 6.0 IN/HR

OFFICIAL WEBSITE COPY

Y:\SUSSEX\014\ROAD\281220\PLANS\FINAL\CONSTRUCTION\SWM03.DGN

DELAWARE DEPARTMENT OF TRANSPORTATION	ADDENDUMS / REVISIONS	SCALE 0 40 80 120 FEET	SR 1, SR 30 GRADE SEPARATED INTERSECTION	CONTRACT T200812201	BRIDGE NO.	STORMWATER MANAGEMENT PLAN	SHEET NO. 54
				COUNTY SUSSEX	DESIGNED BY: JLC		TOTAL SHTS. 133
					CHECKED BY: JRG		

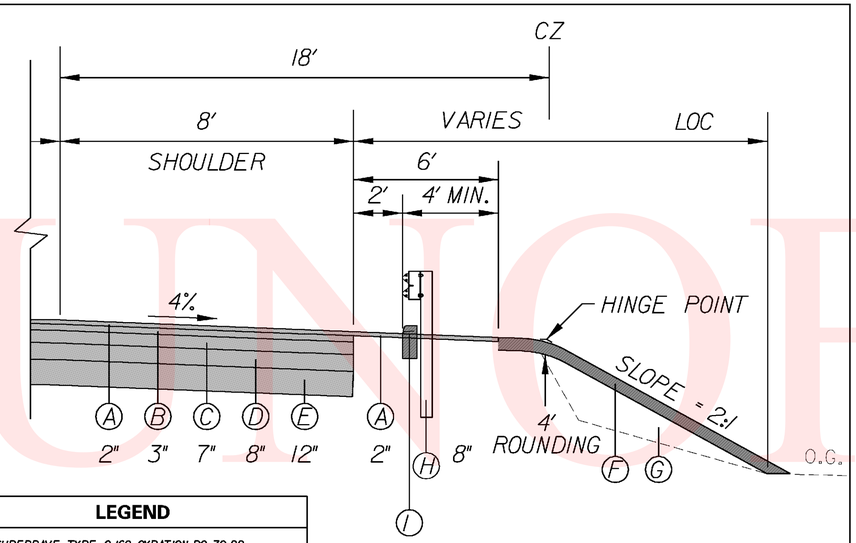

LEGEND

- Ⓐ ITEM 401651 - SUPERPAVE TYPE C,160 GYRATION,PG 70-22
- Ⓑ ITEM 401654 - SUPERPAVE TYPE B,160 GYRATION,PG 70-22
- Ⓒ ITEM 401663 - SUPERPAVE BCBC,160 GYRATION,PG 64-22
- Ⓓ ITEM 302007 - GRADED AGGREGATE BASE COURSE,TYPE B
- Ⓔ ITEM 209001 - BORROW,TYPE A
- Ⓕ ITEM 732002 - TOPSOIL,6" OR ITEM 733002 - TOPSOILING,6"
  ITEM 734013 - PERMANENT GRASS SEEDING,DRY GROUND
  ITEM 735533 - SOIL RETENTION BLANKET MULCH,TYPE 3
- Ⓖ ITEM 209006 - BORROW,TYPE F
- Ⓗ ITEM 720050 - GALVANIZED STEEL BEAM GUARDRAIL (STEEL POST)
- Ⓘ ITEM 701012 - PCC CURB,TYPE 1-4

GUARDRAIL APPLICATION

NOTE: GUARDRAIL SHALL BE CONSTRUCTED ACCORDING TO THE STANDARD CONSTRUCTION DETAIL FOR RURAL SHOULDER APPLICATION.

INLET PROTECTION – AT GRADE, ITEM 252002

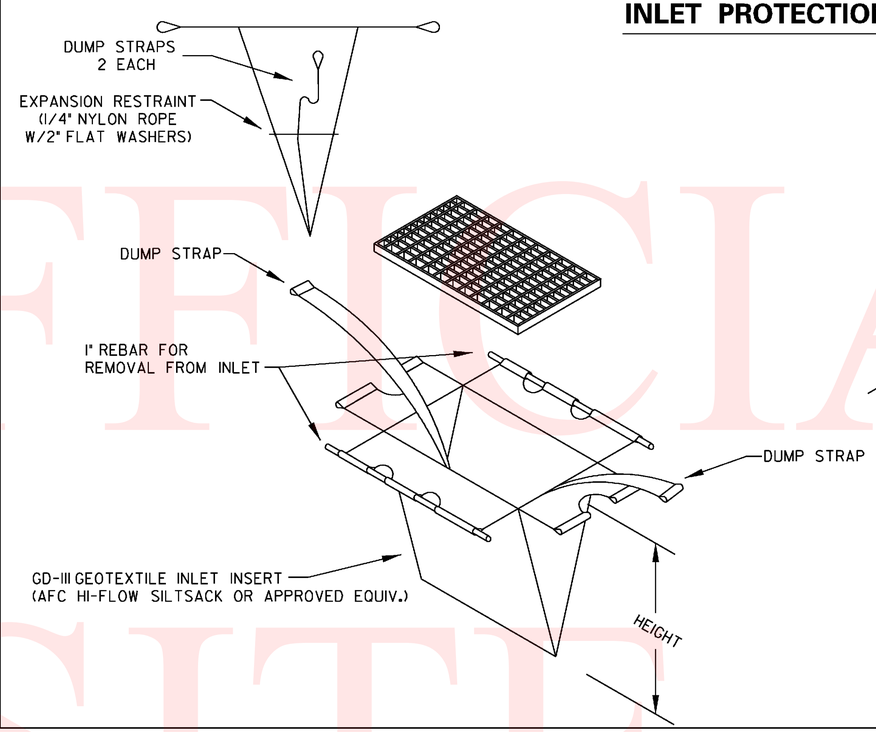

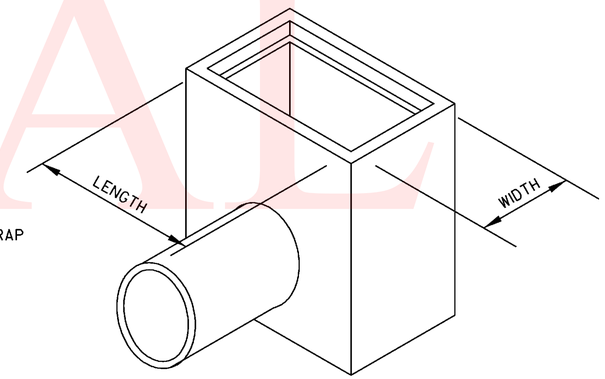

THE GEOTEXTILE INLET INSERT SHALL MEET OR EXCEED THE SPECIFICATIONS OF TYPE GD-III GEOTEXTILE IN ACCORDANCE WITH APPENDIX A-3 OF THE DELAWARE EROSUION & SEDIMENT CONTROL HANBOOK.

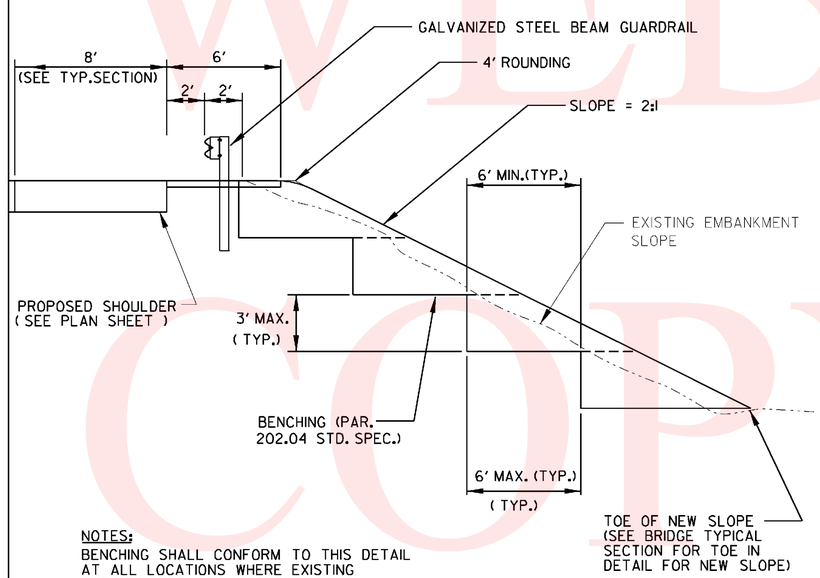

NOTES:
BENCHING SHALL CONFORM TO THIS DETAIL AT ALL LOCATIONS WHERE EXISTING EMBANKMENTS ARE WIDENED.

BENCHING DETAIL

NOT TO SCALE

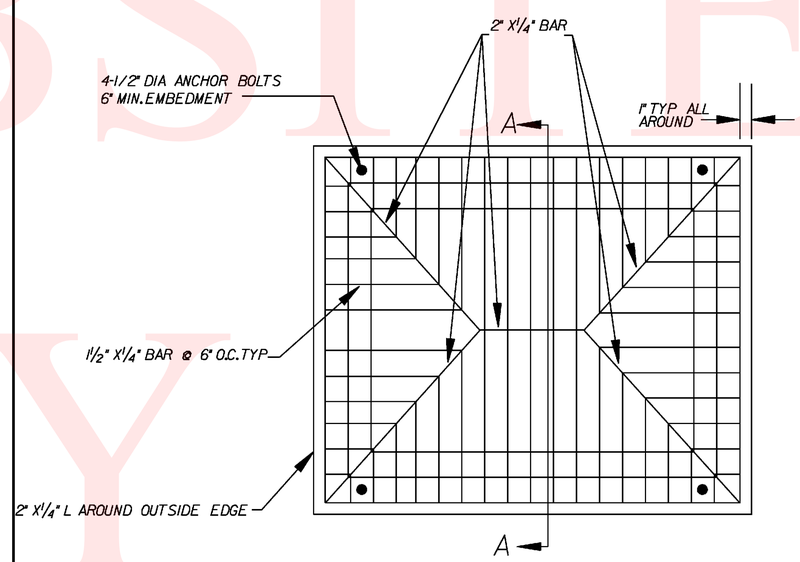

TRASH RACK

PLAN

(NOT TO SCALE)

*NOTE: LOCATED AT STA.408+34.7 OFF.99.48' INSIDE BMP #537. COSTS FOR TRASH RACKS ARE INCIDENTAL TO COST OF BID FOR DRAINAGE INLET #13.

NOTES:
1. TRASH RACK SHALL BE ALUMINUM.
2. ALL MOUNTING HARDWARE SHALL BE ALUMINUM OR STAINLESS STEEL.

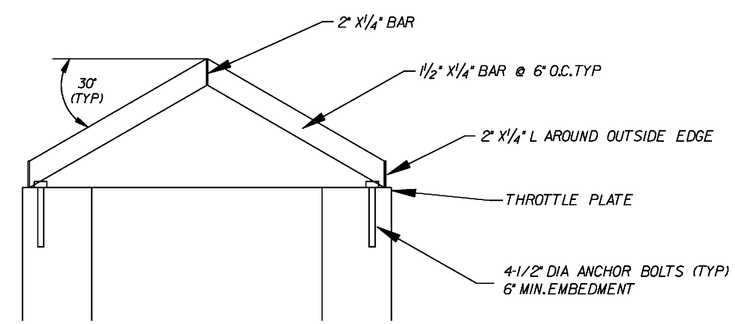

TRASH RACK

SECTION A–A

(NOT TO SCALE)

UNOFFICIAL WEBSITE COPY

DELAWARE DEPARTMENT OF TRANSPORTATION	ADDENDUMS / REVISIONS	SR 1, SR 30 GRADE SEPARATED INTERSECTION	CONTRACT T200812201	BRIDGE NO.	CONSTRUCTION DETAILS	SHEET NO. 55
			COUNTY SUSSEX	DESIGNED BY: JLC		TOTAL SHTS. 133
				CHECKED BY: JRG		

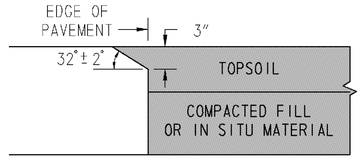

CONCRETE PAVEMENTS
NOT TO SCALE

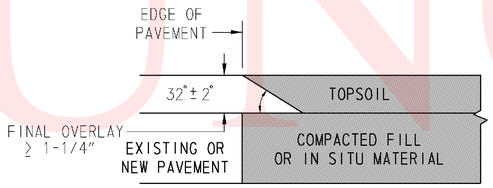

HOT-MIX PAVEMENTS AND OVERLAYS
NOT TO SCALE

SAFETY EDGE DETAIL
NOT TO SCALE

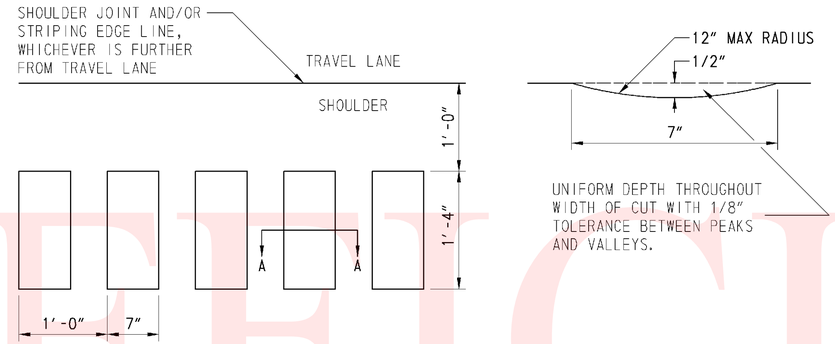

PLAN

SECTION A-A

EDGELINE RUMBLE STRIPS DETAIL
NOT TO SCALE

NOTES:
-ALL WORK REQUIRED TO COMPLETE THE INSTALLATION OF EDGELINE RUMBLE STRIPS SHALL BE INCIDENTAL TO ITEM 760504 - RUMBLE STRIPS, HOT MIX AND/OR ITEM 760506 - RUMBLE STRIPS, CONCRETE.

-EDGELINE RUMBLE STRIPS SHALL BE INSTALLED ALONG ALL SR 1 INSIDE AND OUTSIDE SHOULDERS, AS PER THIS DETAIL, THROUGHOUT THE PROJECT UNLESS OTHERWISE NOTED BELOW:

NB SR 1
- -STATION 12+25 TO STATION 13+25 INSIDE SHOULDER.
- -STATION 22+00 TO STATION 31+00 OUTSIDE SHOULDER.
- -STATION 36+00 TO STATION 50+50 OUTSIDE SHOULDER.

SB SR 1
- -STATION 05+50 TO STATION 13+91 OUTSIDE SHOULDER.
- -STATION 12+25 TO STATION 16+80 INSIDE SHOULDER.
- -STATION 22+47 TO STATION 30+35 OUTSIDE SHOULDER.

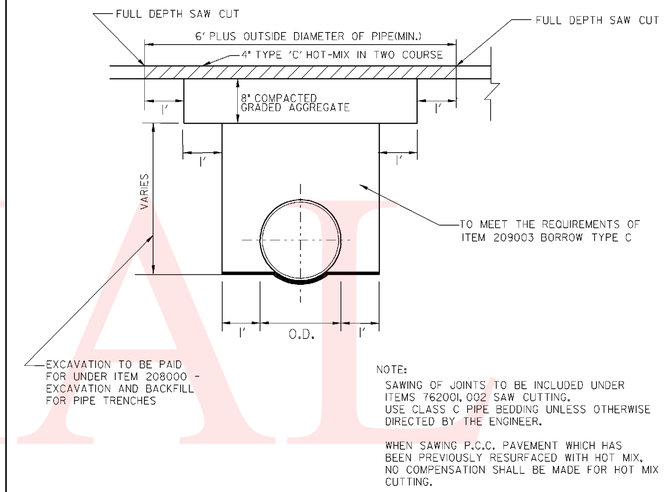

NOTE:
SAWING OF JOINTS TO BE INCLUDED UNDER ITEMS 762001, 002 SAW CUTTING.
USE CLASS C PIPE BEDDING UNLESS OTHERWISE DIRECTED BY THE ENGINEER.

WHEN SAWING P.C.C. PAVEMENT WHICH HAS BEEN PREVIOUSLY RESURFACED WITH HOT MIX, NO COMPENSATION SHALL BE MADE FOR HOT MIX CUTTING.

HOT-MIX PATCH AND PIPE TRENCH DETAILS
NOT TO SCALE

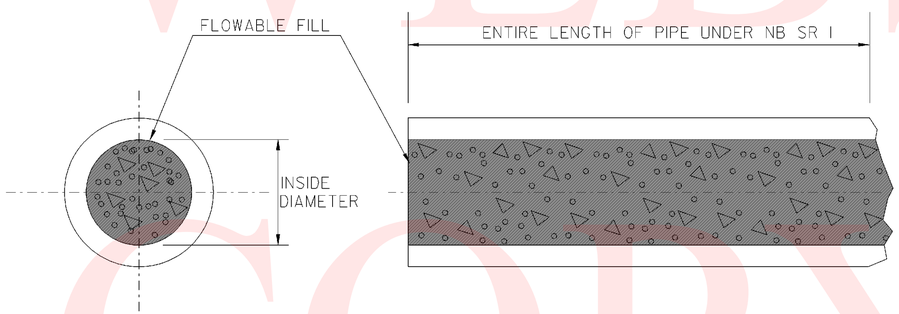

DETAIL FOR PLUGGING PIPE WITH FLOWABLE FILL
NOT TO SCALE
NB SR 1, STA. 14+80.75

THE CONTRACTOR SHALL FURNISH MATERIAL AND PLUG ABANDONED DRAINAGE PIPES WITH CONCRETE AS DIRECTED BY THE ENGINEER. THE COST SHALL BE INCIDENTAL TO THE UNIT PRICE BID FOR ITEM 202000-EXCAVATION AND EMBANKMENT.

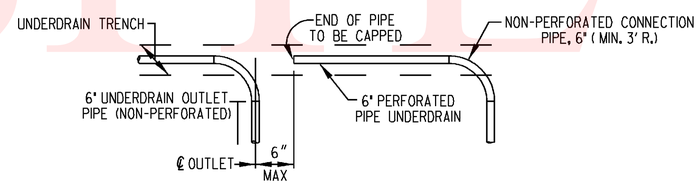

UNDERDRAIN OUTLET DETAIL
NOT TO SCALE

NOTES:

1. CONNECTION PIPE SHALL BE LAID WITH A MINIMUM RADIUS OF 3'.
2. WHEN TWO LINES OF PIPE UNDERDRAIN DRAIN TO A LOW POINT, ONLY ONE UNDERDRAIN OUTLET PIPE IS TO BE USED. CONNECTION SHALL BE MADE WITH A 'Y' AT THE END OF THE 3' RADIUS OF THE CONNECTION PIPE. FURNISHING AND INSTALLING THE 'Y' SHALL BE INCLUDED IN THE UNIT PRICE BID ITEM 715001-PERFORATED PIPE UNDERDRAINS, 6".
3. CUT GEOTEXTILE IN WALL OF UNDERDRAIN TRENCH FOR CONNECTION PIPE SO AS TO MINIMIZE EXPOSURE OF THE TRENCH. WRAP SECTION OF CONNECTION PIPE OUTSIDE TRENCH IN GEOTEXTILE AND PROVIDE 6" LAP AROUND CONNECTION PIPE AT UNDERDRAIN TRENCH WALL. GEOTEXTILE TO BE INCLUDED IN THE UNIT PRICE BID FOR ITEM 715001-PERFORATED PIPE UNDERDRAINS, 6".
4. NON-PERFORATED UNDERDRAIN OUTLET PIPE SHALL HAVE A SMOOTH INSIDE WALL AND BE THE SAME MATERIAL AS FOR PERFORATED PIPE UNDERDRAINS OR AS APPROVED BY THE ENGINEER. ALL REQUIRED CONNECTIONS SHALL BE INCIDENTAL TO ITEM 715500-UNDERDRAIN OUTLET PIPE, 6".
5. SEE UNDERDRAIN OUTLET SCHEDULE ON PLAN SHEETS FOR LOCATIONS AND LIMITS OF UNDERDRAIN OUTLETS.

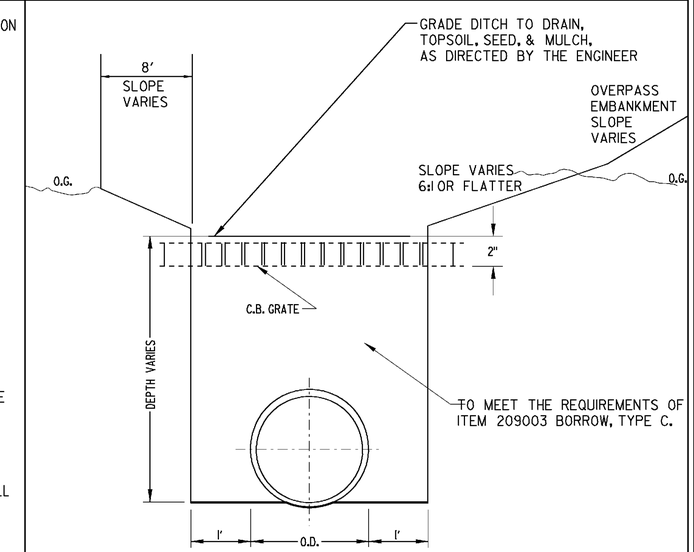

SWALE OVER PIPE TRENCH DETAIL
NOT TO SCALE
DI-15 TO DI-21 LEFT OF WILKINS ROAD OVERPASS

UNOFFICIAL WEBSITE COPY

DELAWARE DEPARTMENT OF TRANSPORTATION	ADDENDUMS / REVISIONS	SR 1, SR 30 GRADE SEPARATED INTERSECTION	CONTRACT T200812201	BRIDGE NO.	CONSTRUCTION DETAILS	SHEET NO. 56
			COUNTY SUSSEX	DESIGNED BY: JLC		TOTAL SHTS. 133
				CHECKED BY: JRG		

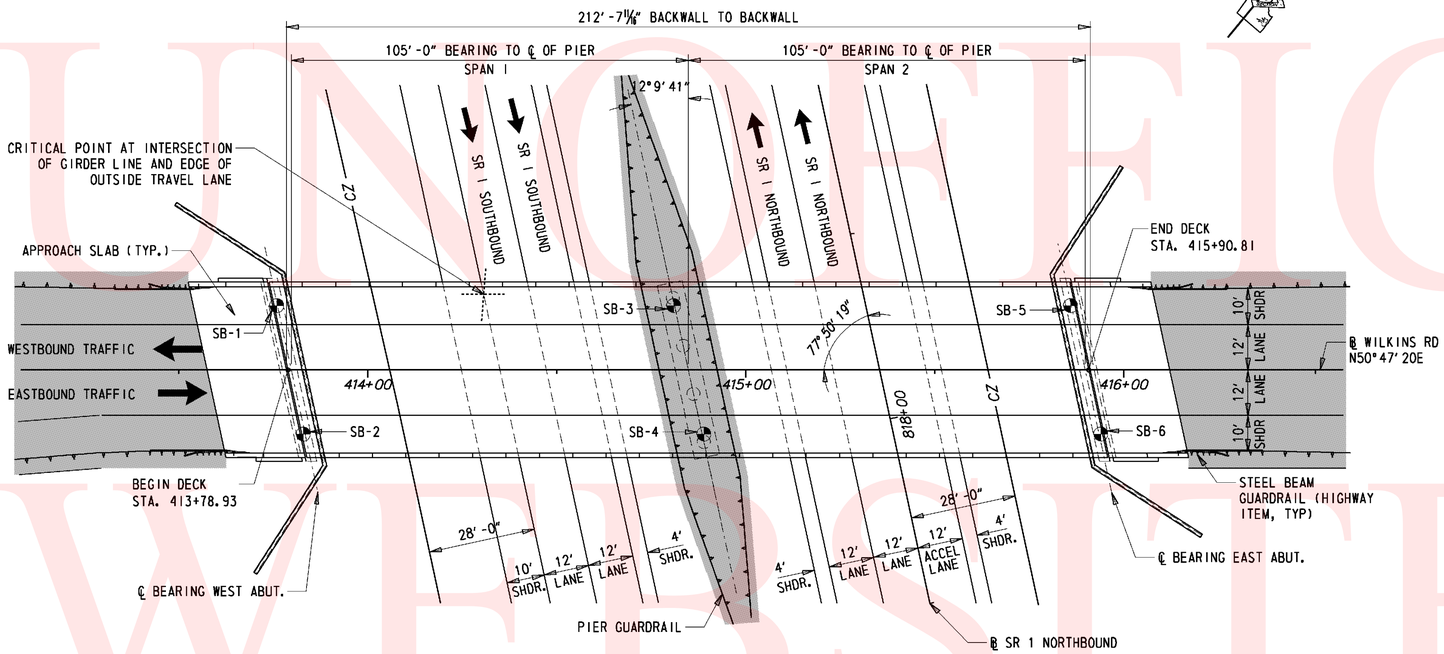

PLAN

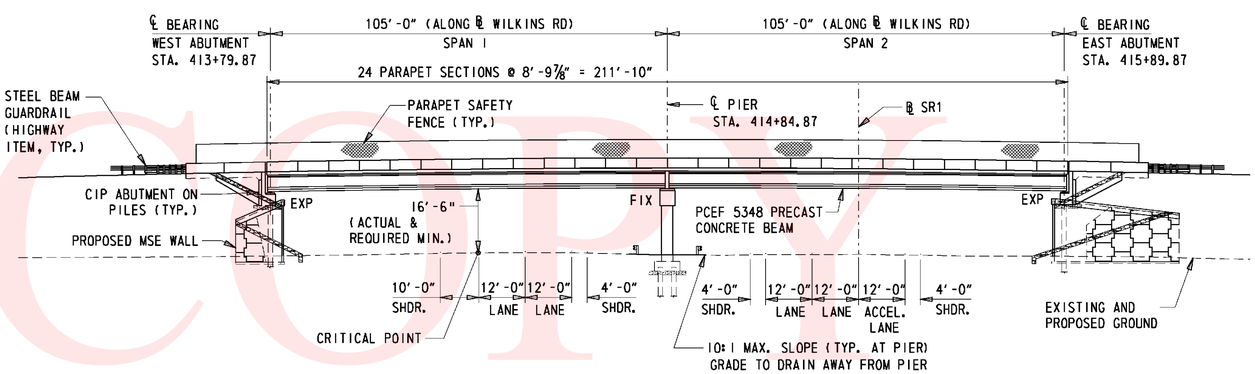

ELEVATION

BRIDGE SHEET INDEX

SHEET	DESCRIPTION
1	BRIDGE PLAN AND ELEVATION & BRIDGE NOTES
2	TYPICAL BRIDGE SECTION & BRIDGE RATINGS
3	CAST-IN-PLACE PILE DETAILS
4	MSE WALL DETAILS
5	ABUTMENT PLAN AND ELEVATION
6	ABUTMENT DETAILS
7	WINGWALL DETAILS
8	PIER AND COLUMN DETAILS
9	BEAM DETAILS
10	FRAMING PLAN & BEARING DETAILS
11	DIAPHRAGM DETAILS
12	DECK SLAB DETAILS
13	FINISHED DECK ELEVATIONS
14	EXPANSION JOINT DETAILS AND SIP FORM DETAILS
15	PARAPET & SAFETY FENCE DETAILS
16	APPROACH SLAB DETAILS
17	REINFORCING BAR LISTS
18	SOIL BORING LOG #1
19	SOIL BORING LOG #2
20	SOIL BORING LOG #3
21	SOIL BORING LOG #4
22	SOIL BORING LOG #5
23	SOIL BORING LOG #6
TOTAL BRIDGE SHEETS: 23	

BRIDGE PROJECT NOTES

1. DESIGN SPECIFICATIONS:
   AASHTO LRFD BRIDGE DESIGN SPECIFICATIONS, 4th EDITION WITH INTERIMS THROUGH 2009.

2. LOADING:
   LIVE LOAD - AASHTO HL-93
   DEAD LOAD - INCLUDES 25 PSF PROVISION FOR FUTURE WEARING SURFACE
   15 SPF PROVISION FOR STAY-IN-PLACE FORMS.

3. CONCRETE:
   SPECIFIED COMPRESSIVE STRENGTH (f'c)
   PRESTRESSED BEAMS----------8.0 KSI (f'ci = 6.4 KSI)
   DECK SLAB AND DIAPHRAGMS-------4.5 KSI, CLASS 'D'
   CONCRETE ABOVE FOOTINGS--------4.5 KSI, CLASS 'A'
   CONCRETE IN FOOTINGS----------3.0 KSI, CLASS 'B'
   BARRIER----------4.5 KSI, CLASS 'A'
   APPROACH SLAB----------4.5 KSI, CLASS 'A'
   CHAMFER ALL EXPOSED EDGES 3/4" UNLESS NOTED OTHERWISE.

4. REINFORCING STEEL:
   ALL REINFORCING STEEL SHALL BE AASHTO M31, GRADE 60. ALL REINFORCING STEEL IN THE SHALL BE EPOXY COATED IN ACCORDANCE WITH AASHTO M284.

5. BEAMS AND PIER DIAPHRAGMS:
   TIME FROM CASTING OF BEAMS TO POURING OF PIER DIAPHRAGM MUST BE NO LESS THAN 90 DAYS. IF TIME IS NOT SUFFICIENT, CONTRACTOR MUST SUBMIT DESIGN FOR APPROVAL SHOWING STRUCTURAL DESIGN CALCULATIONS TO ACCOUNT FOR RESTRAINT MOMENTS. PIER DIAPHRAGM CAN NOT BE POURED UNTIL DECK POUR 1 AND 2 ARE COMPLETED.

6. INTERMEDIATE DIAPHRAGMS:
   THE PRECASTER / CONTRACTOR MAY USE A PRECAST ALTERNATE FOR THE INTERMEDIATE DIAPHRAGMS. IF SO, DETAILS (INCLUDING THE NEW CONNECTION) SHALL BE INCLUDED THE PRESTRESSED BEAM SHOP DRAWINGS FOR REVIEW.

7. ABUTMENT SLOPE PROTECTION:
   ABUTMENT SLOPE PROTECTION SHALL CONSIST OF 1'-0" R-4 RIPRAP ON GEOTEXTILE.
   RIPRAP SHALL TERMINATE IN A 2'0" DEEP TOE. RIPRAP SHALL EXTEND 5'-0" BEYOND THE FACE OF THE NE AND SW WINGWALLS, 12'-0" BEYOND THE FACE OF THE NW AND SW WINGWALLS, AND 5'0" AT GRADE BEYOND THE END OF EACH WINGWALL.

8. CONCRETE SEALER
   SILICONE ARCYLIC CONCRETE SEALER SHALL BE APPLIED TO ALL EXPOSED CONCRETE FACES EXCEPT MSE WALLS, BEAMS AND RIDING SURACES. THIS INCLUDES ABUTMENT BACKWALL, ABUTMENT SEATS, ENTIRE PIER, WINGWALLS, BARRIER AND ALL MASONRY PADS (ALL AROUND). PAYMENT UNDER ITEM 602646 - SILICONE ACRYLIC CONCRETE SEALER.

9. MISCELLANEOUS PAYMENT NOTES:
   A. ALL DIAPHRAGM CONCRETE IS INCLUDED IN THE QUANTITY FOR ITEM 602013 - PCC MASONRY, SUPERSTRUCTURE, CLASS D. STYROFOAM FILLER USED IN THE PIER AND END DIAPHRAGMS IS INCIDENTAL TO ITEM 602013.
   B. ANY WATERSTOPS SHALL BE INCIDENTAL TO THE APPROPRIATE CONCRETE ITEM.
   C. STRUCTURAL EXCAVATION AND BACKFILL AROUND THE PIER FOOTING SHALL BE PAID UNDER ITEMS 207000 AND 210000 RESPECTIVELY.

10. THE CONTRACTOR SHALL BE RESPONSIBLE FOR ENSURING NO FALLING MATERIAL OR EQUIPTMENT INTERFERES WITH THE TRAVELLING PUBLIC. A PLAN SHOWING THE CONTRACTORS METHOD SHALL BE SUBMITTED TO THE ENGINEER FOR APPROVAL.

UNOFFICIAL WEBSITE COPY

W:\MSV8\CELLS\PROJDEV\SB.CEL

DELAWARE DEPARTMENT OF TRANSPORTATION	ADDENDUMS / REVISIONS	SCALE 0 20 40 60 FEET	SR 1, SR 30 GRADE SEPARATED INTERSECTION	CONTRACT T200812201	BRIDGE NO. 3-004	BRIDGE PLAN & ELEVATION AND BRIDGE NOTES BRIDGE SHEET 1 OF 23	SHEET NO. 57
				COUNTY SUSSEX	DESIGNED BY: KRL, EM		TOTAL SHTS. 133
					CHECKED BY: BAB, JNH		

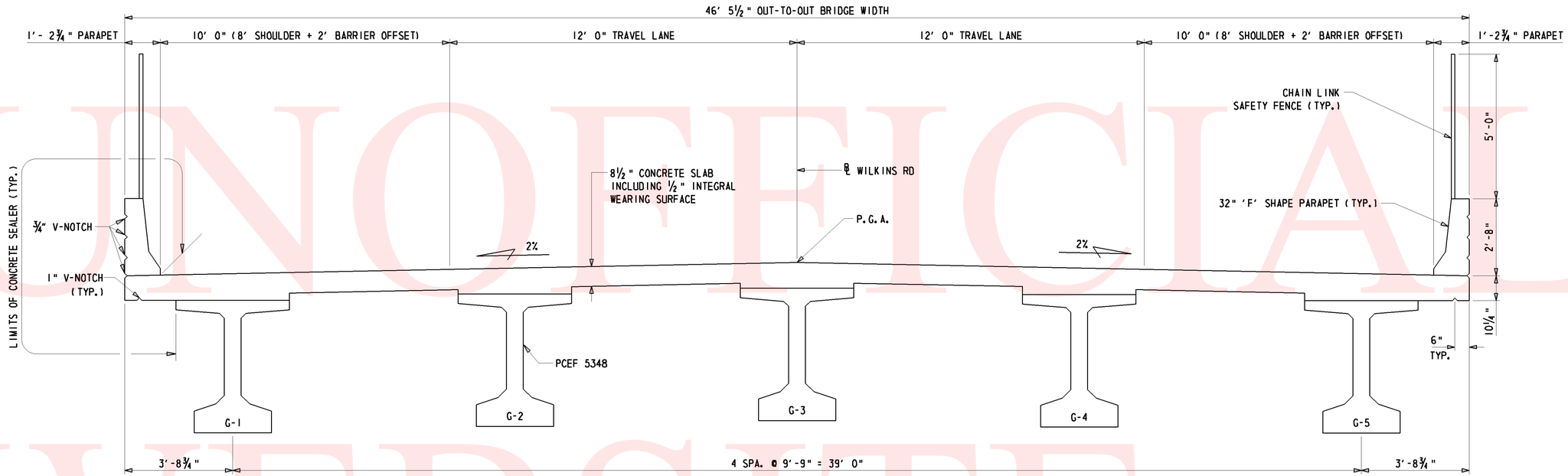

TYPICAL BRIDGE SECTION

½" = 1'-0"

LRFR LOAD RATINGS							
RATING VEHICLE	RATING TYPE	CONTROLLING UNIT/SPAN/ MEMBER	CONTROLLING POINT	LOAD EFFECT	LIMIT STATE	LOAD RATING FACTOR	LOAD RATING (tons)
HL-93 TRUCK	INVENTORY	INT. GIRDER	109.62	SHEAR	STRENGTH I	1.46	N/A
HL-93 TRAIN	INVENTORY	EXT. GIRDER	110.00	FLEXURE	STRENGTH I	1.25	N/A
HL-93 TANDEM	INVENTORY	INT. GIRDER	108.00	FLEXURE	STRENGTH I	1.27	N/A
HL-93 TRUCK	OPERATING	INT. GIRDER	109.62	SHEAR	STRENGTH II	2.04	N/A
HL-93 TRAIN	OPERATING	EXT. GIRDER	110.00	FLEXURE	STRENGTH II	2.06	N/A
HL-93 TANDEM	OPERATING	INT. GIRDER	108.00	FLEXURE	STRENGTH II	1.60	N/A
S220	LEGAL	EXT. GIRDER	105.00	FLEXURE	SERVICE III	3.98	79.63
S335	LEGAL	EXT. GIRDER	105.00	FLEXURE	SERVICE III	2.24	78.32
S437	LEGAL	EXT. GIRDER	105.00	FLEXURE	SERVICE III	2.13	78.05
T330	LEGAL	EXT. GIRDER	105.00	FLEXURE	SERVICE III	3.05	91.49
T435	LEGAL	EXT. GIRDER	105.00	FLEXURE	SERVICE III	2.64	92.33
T540	LEGAL	EXT. GIRDER	105.00	FLEXURE	SERVICE III	2.34	93.72

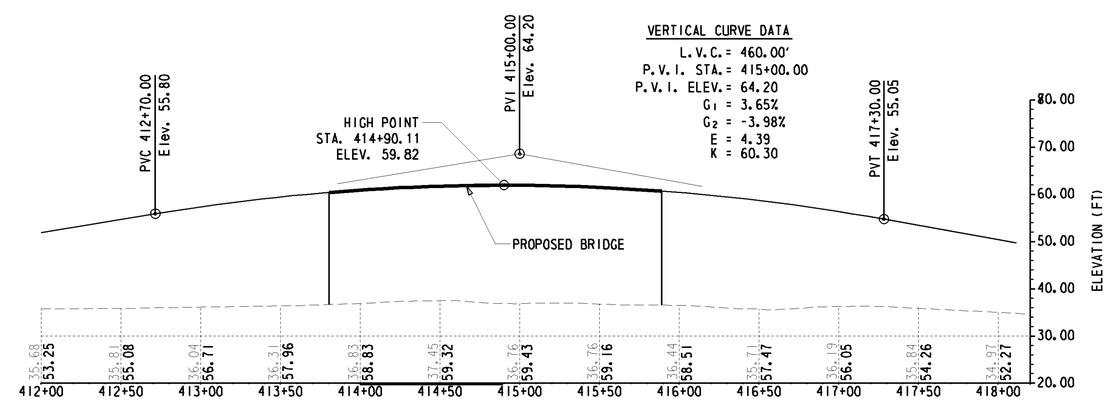

PROFILE - PROPOSED WILKINS RD

N.T.S.

UNOFFICIAL WEBSITE COPY

DELAWARE DEPARTMENT OF TRANSPORTATION	ADDENDUMS / REVISIONS	SCALE: AS NOTED	SR 1, SR 30 GRADE SEPARATED INTERSECTION	CONTRACT T200812201	BRIDGE NO. 3-004	TYPICAL BRIDGE SECTION & BRIDGE RATINGS BRIDGE SHEET 2 OF 23	SHEET NO. 58
				COUNTY SUSSEX	DESIGNED BY: KRL, EM		TOTAL SHTS. 133
					CHECKED BY: BAB, JNH		

Y:\SUSSEX\014\BRIDGE\T200812201\PLANS\PE02.DGN

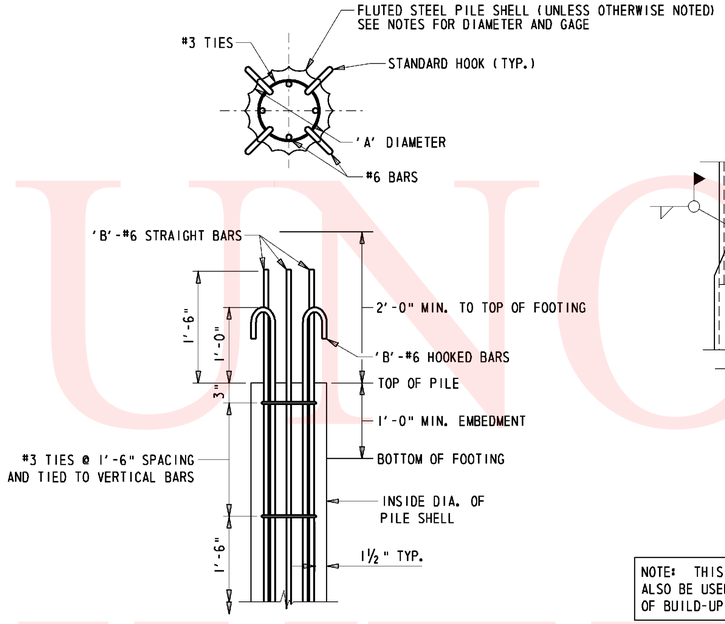

TYPICAL PILE REINFORCEMENT

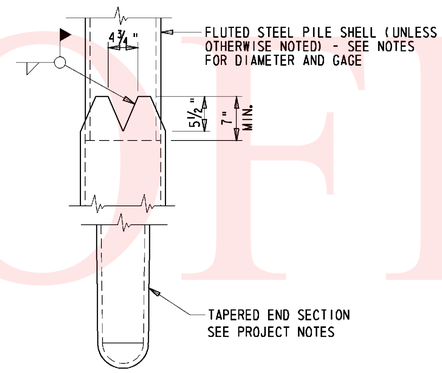

NOTE: THIS SPLICE DETAIL SHALL ALSO BE USED FOR FIELD SPLICES OF BUILD-UP SECTIONS.

TYPICAL PILE SPLICE

CAST-IN-PLACE PILE DETAILS

SCALE: ½" = 1'-0"

CAST-IN-PLACE PILE SIZES	
PILE SIZE 'A'	DOWELS OR HOOKS 'B'
12"	3
14"	4
16"	4
18"	4

ABUTMENT PROJECT SPECIFIC PILE NOTES

1. PILE TYPE
   THIS PROJECT SHALL UTILIZE 16" DIA. CAST-IN-PLACE PILES, 7 GAGE. THE TAPERED END SECTION SHALL BE A "Y" TAPER (0.40" IN/FT), 8" POINT DIAMETER x 16" BUTT DIAMETER x 20' LENGTH. REINFORCEMENT SHALL EXTEND INTO THE PILE THE MINIMUM OF 20'-0" OR THE STRAIGHT PORTION OF THE PILE.
2. ESTIMATED PRODUCTION PILE LENGTH IS 62'.
3. REQUIRED TEST PILE LENGTH IS 72'.
4. PILES SHALL BE DRIVE TO AN ULTIMATE BEARING CAPACITY OF 460 KIPS.
5. MINIMUM TIP ELEVATION SHALL NOT BE REQUIRED FOR THIS PROJECT.

PIER PROJECT SPECIFIC PILE NOTES

1. PILE TYPE
   THIS PROJECT SHALL UTILIZE 16" DIA. CAST-IN-PLACE PILES, 7 GAGE. THE TAPERED END SECTION SHALL BE A "Y" TAPER (0.40" IN/FT), 8" POINT DIAMETER x 16" BUTT DIAMETER x 20' LENGTH. REINFORCEMENT SHALL EXTEND INTO THE PILE THE MINIMUM OF 20'-0" OR THE STRAIGHT PORTION OF THE PILE.
2. ESTIMATED PRODUCTION PILE LENGTH IS 52'.
3. REQUIRED TEST PILE LENGTH IS 62'.
4. PILES SHALL BE DRIVE TO AN ULTIMATE BEARING CAPACITY OF 450 KIPS.
5. MINIMUM TIP ELEVATION SHALL NOT BE REQUIRED FOR THIS PROJECT.

GENERAL PILE NOTES

1. FOR MORE INFORMATION REGARDING PILE MATERIALS AND FABRICATION, REFER TO SECTION 618 (PILE MATERIALS) OF THE STANDARD SPECIFICATIONS. FOR MORE INFORMATION REGARDING PILE DRIVING AND INSTALLATION, REFER TO SECTION 619 (INSTALLATION OF PILES) OF THE STANDARD SPECIFICATIONS.
2. EACH TEST PILE SHALL BE DYNAMICALLY TESTED BY THE CONTRACTOR IN ACCORDANCE WITH ITEM #619519 - DYNAMIC PILE TESTING BY CONTRACTOR. THE QUANTITY FOR DYNAMIC PILE TESTING SHALL INCLUDE ONE FOR THE INITIAL DRIVE AND ONE FOR THE RE-STRIKE OF EACH TEST PILE. THE NEED TO RESTRIKE EITHER A TEST PILE OR A PRODUCTION PILE SHALL BE THE SOLE DECISION OF THE ENGINEER.
3. WAVE EQUATION ANALYSIS SHALL BE SUBMITTED BY THE CONTRACTOR FOR REVIEW BY THE ENGINEER (ELECTRONIC PREFERRED, OTHERWISE 8 COPIES MINIMUM).
4. TEST PILES SHALL BE DRIVEN AT EACH LOCATION SHOWN ON THE PLANS. PRODUCTION PILES SHALL BE ORDERED BASED ON THE RESULTS OF THE TEST PILE DRIVING.

CAST-IN-PLACE PILE NOTES

1. COST OF REINFORCING BARS INSIDE THE STEEL SHELL IS INCLUDED IN THE BID PRICE FOR THE APPROPRIATE CAST-IN-PLACE CONCRETE PILE ITEMS. REINFORCEMENT SHALL BE EPOXY COATED.
2. PILES SHALL BE COAL TAR EPOXY COATED.

UNOFFICIAL WEBSITE COPY

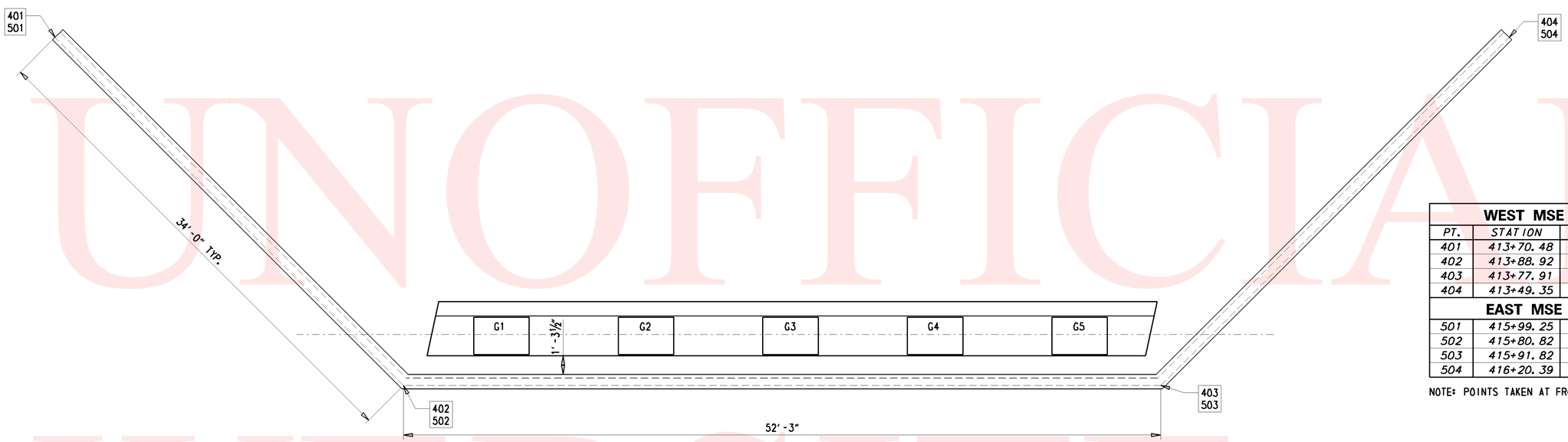

MSE WALL PLAN

¼" = 1'-0"

WEST MSE WALL WORKING POINTS				
PT.	STATION	OFFSET	NORTHING	EASTING
401	413+70.48	R 53.95	324436.94	664208.06
402	413+88.92	R 25.38	324470.73	664204.29
403	413+77.91	L 25.70	324503.35	664163.47
404	413+49.35	L 44.13	324499.57	664129.68
EAST MSE WALL WORKING POINTS				
501	415+99.25	L 53.95	324665.17	664317.11
502	415+80.82	L 25.38	324631.38	664320.89
503	415+91.82	R 25.70	324598.76	664361.71
504	416+20.39	R 44.13	324602.53	664395.50

NOTE: POINTS TAKEN AT FRONT FACE OF MSE WALL PANEL.

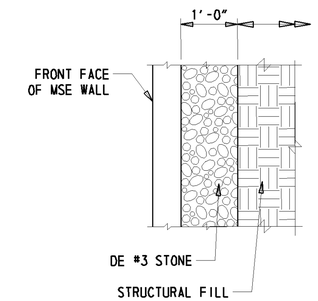

MSE WALL DETAIL

SCALE: ¾" = 1'-0"

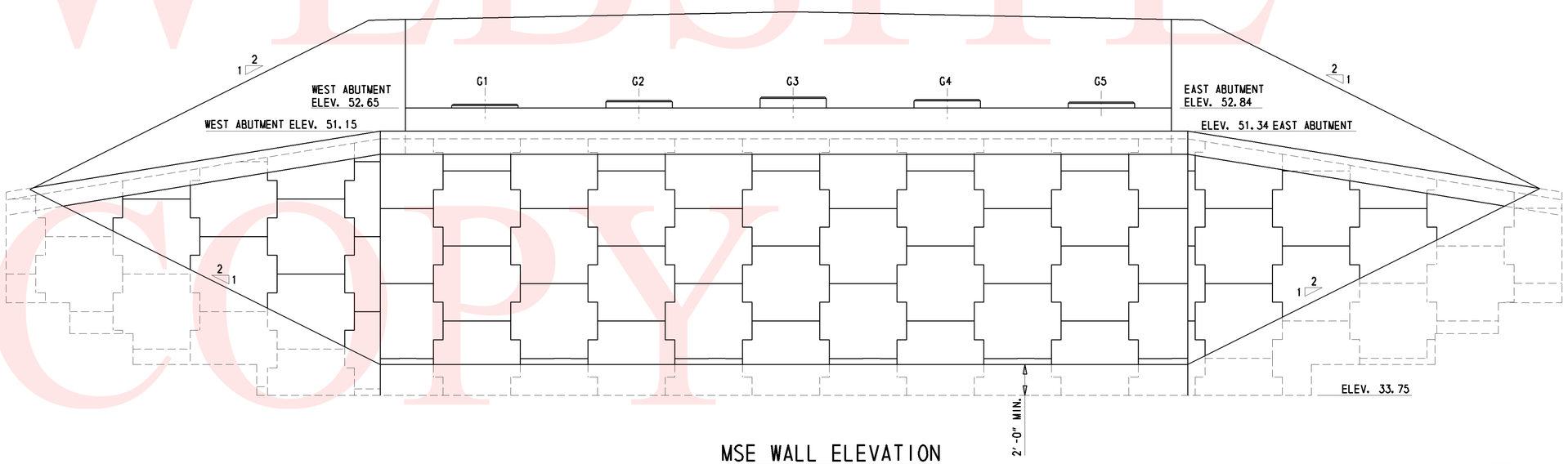

MSE WALL ELEVATION

¼" = 1'-0"

NOTES:
LEVELING PAD MAY BE STEPPED IN NO MORE THAN 2'-0' INCREMENTS.
EAST MSE WALL SHOWN. ROTATE 180° FOR WEST MSE WALL LAYOUT.

UNOFFICIAL WEBSITE COPY

Y:\SUSSEX\014\BRIDGE\T200812201\PLANS\AB06MSE.DGN

DELAWARE DEPARTMENT OF TRANSPORTATION	ADDENDUMS / REVISIONS	SCALE: AS NOTED	SR 1, SR 30 GRADE SEPARATED INTERSECTION	CONTRACT T200812201	BRIDGE NO. 3-004	MSE WALL DETAILS BRIDGE SHEET 4 OF 23	SHEET NO. 60
				COUNTY SUSSEX	DESIGNED BY: KRL, EM		TOTAL SHTS. 133
					CHECKED BY: BAB, EM		

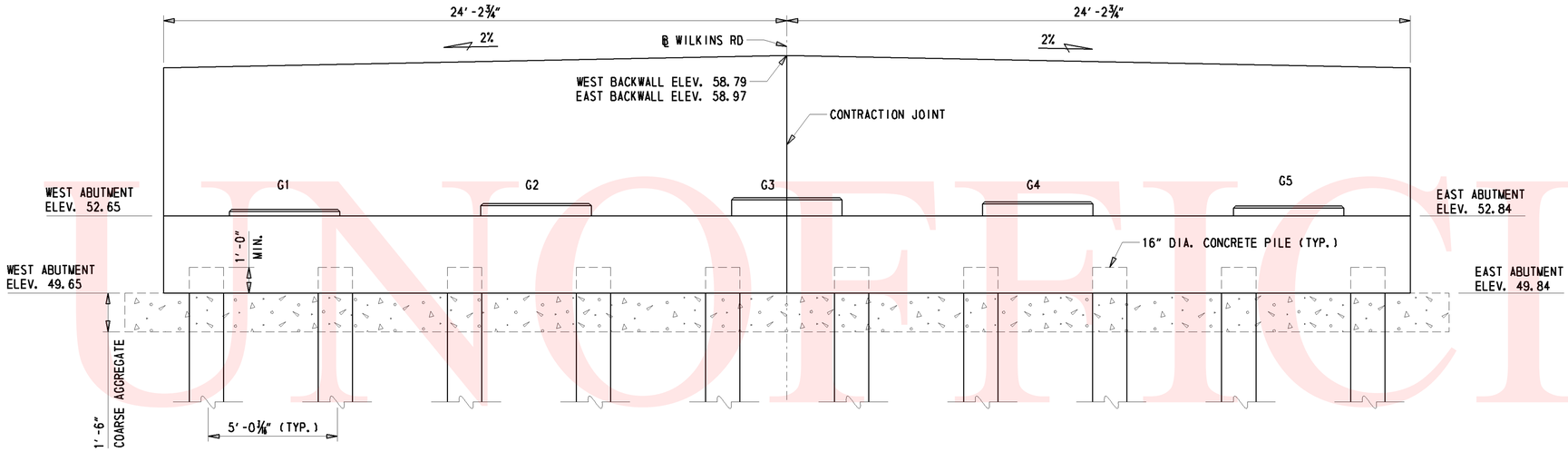

ABUTMENT ELEVATION

⅜" = 1'-0"

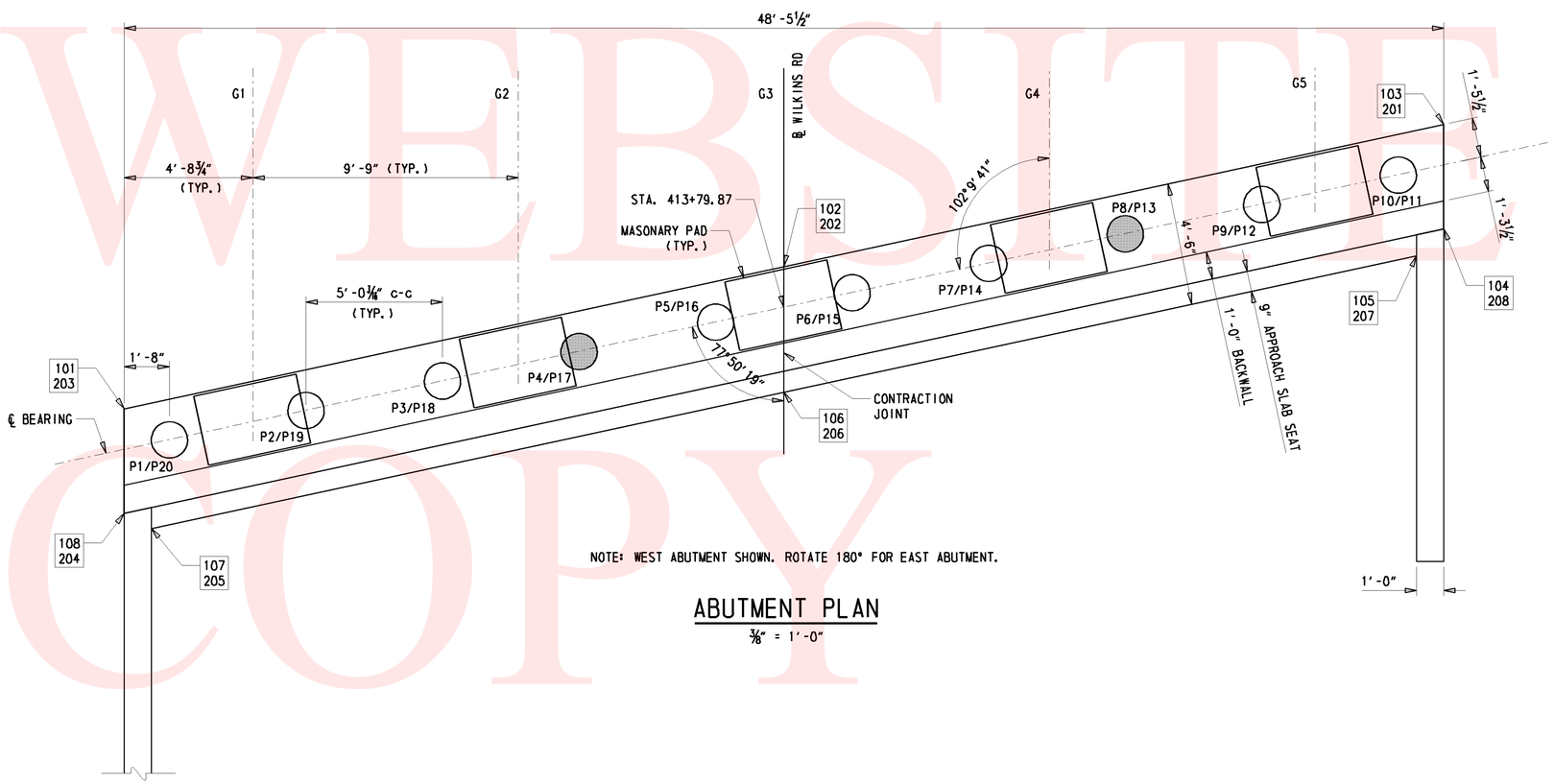

NOTE: WEST ABUTMENT SHOWN. ROTATE 180° FOR EAST ABUTMENT.

ABUTMENT PLAN

⅜" = 1'-0"

WEST ABUTMENT WORKING POINTS				
PT.	STATION	OFFSET	NORTHING	EASTING
101	413+76.14	L 24.23	324501.09	664163.03
102	416+81.36	0.00	324485.62	664182.39
103	413+86.58	R 24.23	324470.15	664201.75
104	413+82.75	R 24.23	324467.72	664198.78
105	413+81.76	R 23.23	324467.87	664197.39
106	413+76.76	0.00	324482.71	664178.82
107	413+71.75	L 23.23	324497.54	664160.26
108	413+72.30	L 24.23	324498.67	664160.05
EAST ABUTMENT WORKING POINTS				
201	415+83.16	L 24.23	324631.96	664323.43
202	415+88.38	0.00	324616.49	664342.79
203	415+93.60	R 24.23	324601.02	664362.15
204	415+97.44	R 24.23	324603.44	664365.12
205	415+97.99	R 23.23	324604.57	664364.92
206	415+92.98	0.00	324619.40	664346.36
207	415+87.98	L 23.23	324634.23	664327.79
208	415+86.99	L 24.23	324634.39	664326.40

WEST PILE COORDINATES				
PT.	STATION	OFFSET	NORTHING	EASTING
P1	413+75.01	L 22.56	324499.08	664163.20
P2	413+76.09	L 17.55	324495.88	664167.21
P3	413+77.17	L 12.53	324492.68	664171.22
P4	413+78.25	L 7.52	324489.48	664175.22
P5	413+79.33	L 2.51	324486.28	664179.23
P6	413+80.41	R 2.51	324483.07	664183.24
P7	413+81.49	R 7.52	324479.87	664187.24
P8	413+82.57	R 12.53	324476.68	664191.25
P9	413+83.65	R 17.55	324473.47	664195.26
P10	413+84.73	R 22.56	324470.27	664199.26
EAST PILE COORDINATES				
P11	415+85.01	L 22.56	324631.84	664325.91
P12	415+86.09	L 17.55	324628.64	664329.92
P13	415+87.17	L 12.53	324625.44	664333.93
P14	415+88.25	L 7.52	324622.24	664337.93
P15	415+89.33	L 2.51	324619.03	664341.94
P16	415+90.41	R 2.51	324615.83	664345.95
P17	415+91.49	R 7.52	324612.63	664349.96
P18	415+92.57	R 12.53	324609.43	664353.96
P19	415+93.65	R 17.55	324606.23	664357.97
P20	415+94.73	R 22.56	324603.02	664361.98

WEST ABUTMENT MASONRY PAD ELEVATIONS	
PAD	ELEVATION
G1	52.90
G2	53.13
G3	53.36
G4	53.21
G5	53.05

EAST ABUTMENT MASONRY PAD ELEVATIONS	
PAD	ELEVATION
G1	53.23
G2	53.39
G3	53.53
G4	53.32
G5	53.09

LEGEND

TEST PILE -

WORKING POINT - 104 / 204

UNOFFICIAL WEBSITE COPY

Y:\SUSSEX\014\BRIDGE\T200812201\PLANS\AB01.DGN

DELAWARE DEPARTMENT OF TRANSPORTATION	ADDENDUMS / REVISIONS	SCALE: AS NOTED	SR 1, SR 30 GRADE SEPARATED INTERSECTION	CONTRACT T200812201	BRIDGE NO. 3-004	ABUTMENT PLAN & ELEVATION BRIDGE SHEET 5 OF 23	SHEET NO. 61
				COUNTY SUSSEX	DESIGNED BY: KRL, EM		TOTAL SHTS. 133
					CHECKED BY: BAB, EM		

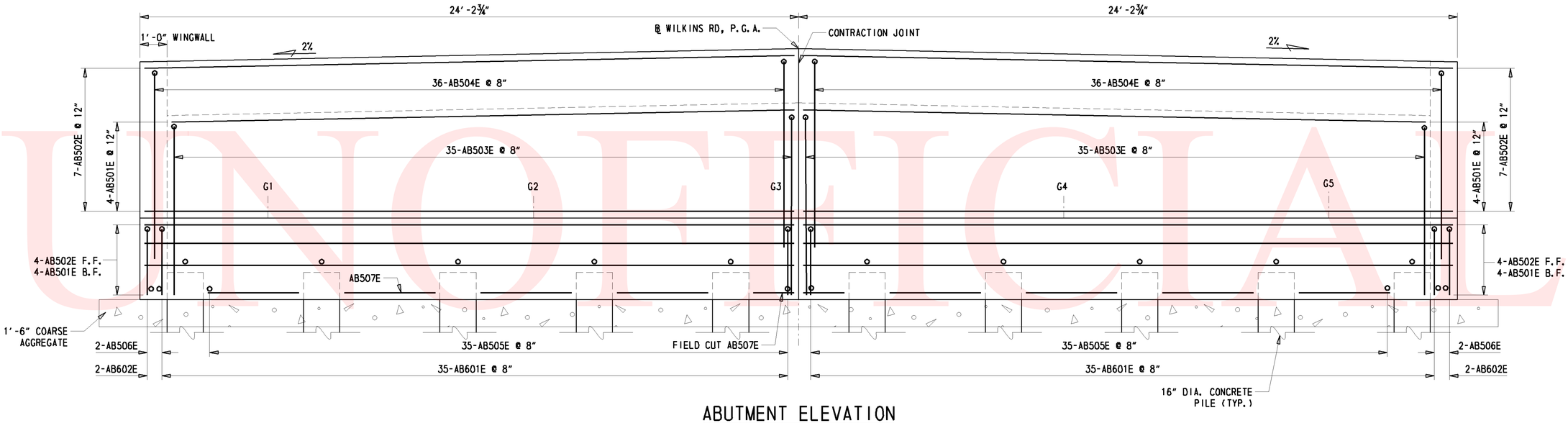

ABUTMENT ELEVATION

½" = 1'-0"

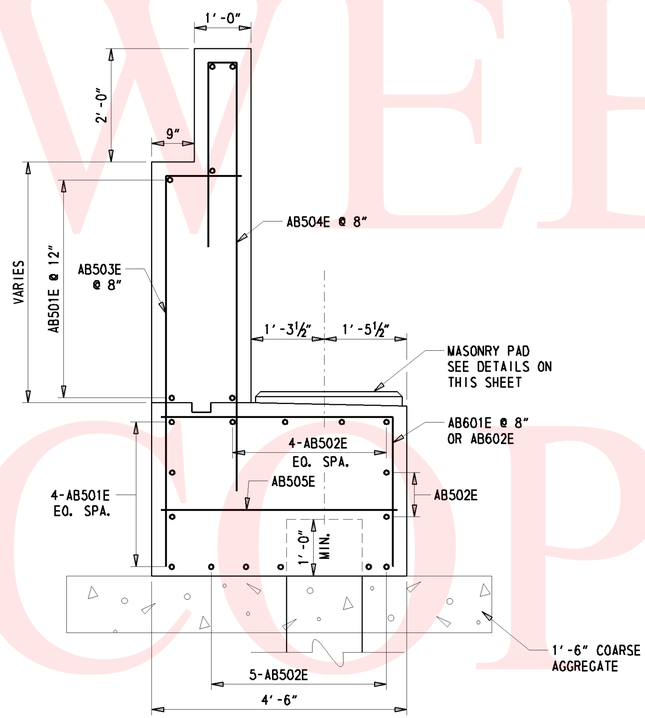

ABUTMENT SECTION

SECTION WITH PILE

¾" = 1'-0"

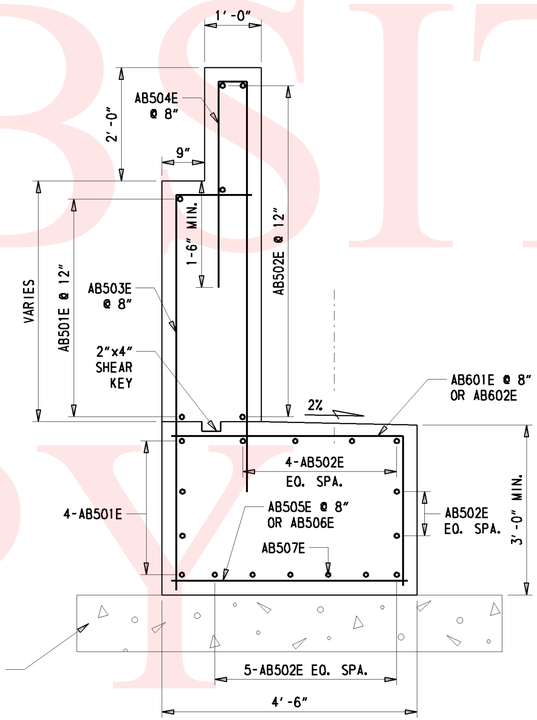

ABUTMENT SECTION

SECTION WITHOUT PILE

¾" = 1'-0"

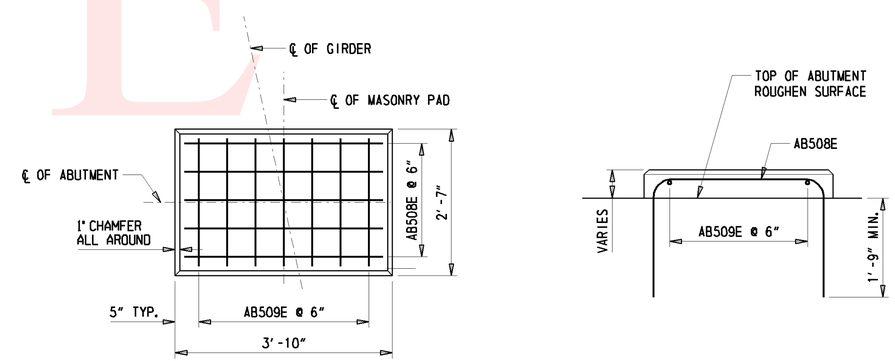

PLAN

ELEVATION

MASONRY PAD DETAILS

¾" = 1'-0"

NOTE:
TOP PORTION OF BACKWALL SHALL NOT BE PLACED UNTIL ENTIRE BRIDGE DECK SLAB IS COMPLETE AND IN PLACE.

UNOFFICIAL WEBSITE COPY

Y:\SUSSEX\014\BRIDGE\T200812201\PLANS\AB02.DGN

DELAWARE DEPARTMENT OF TRANSPORTATION	ADDENDUMS / REVISIONS	SCALE: AS NOTED	SR 1, SR 30 GRADE SEPARATED INTERSECTION	CONTRACT T200812201	BRIDGE NO. 3-004	ABUTMENT DETAILS BRIDGE SHEET 6 OF 23	SHEET NO. 62
				COUNTY SUSSEX	DESIGNED BY: KRL, EM		TOTAL SHTS. 133
					CHECKED BY: BAB, EM		

UNOFFICIAL WEBSITE COPY

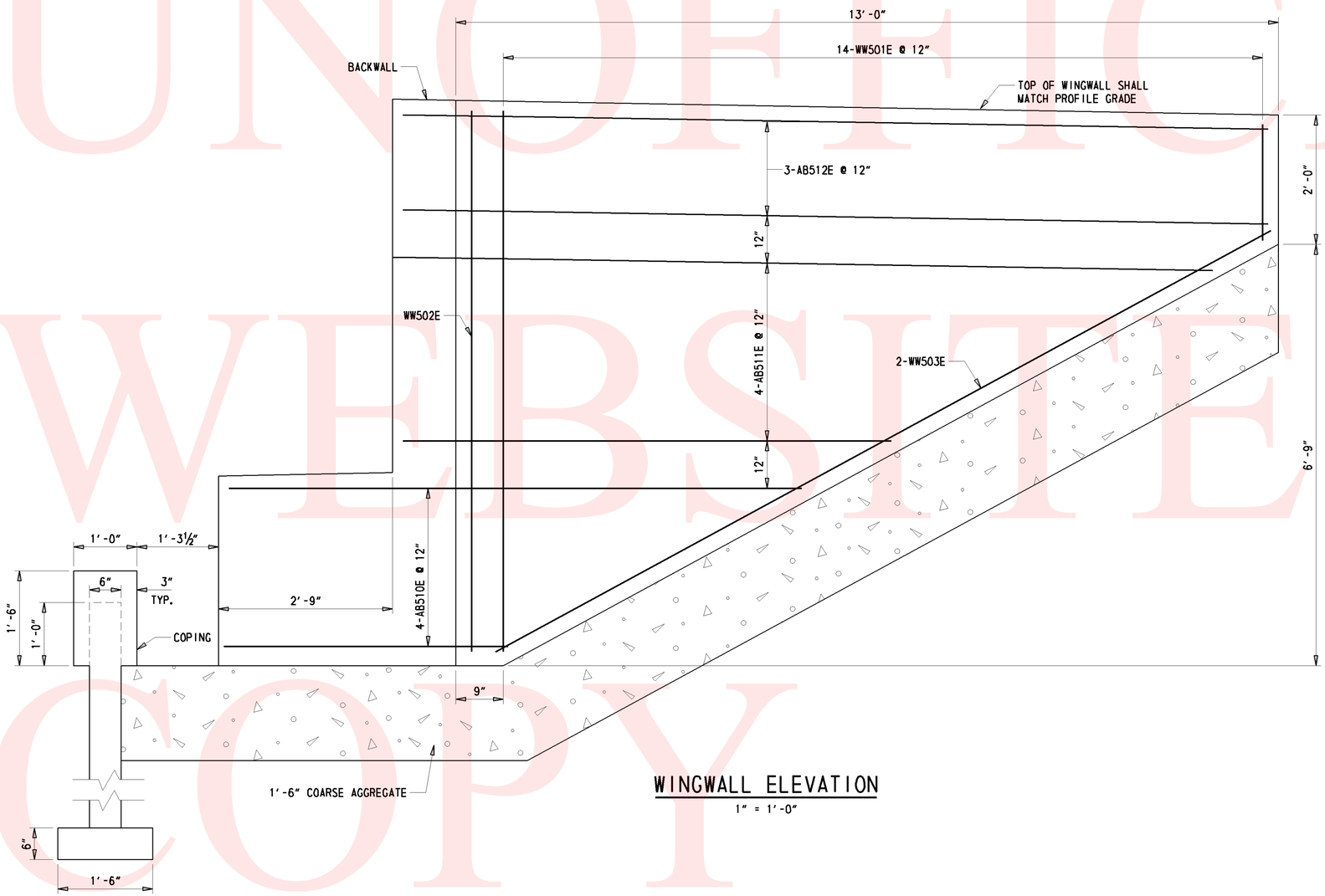

WINGWALL ELEVATION

1" = 1'-0"

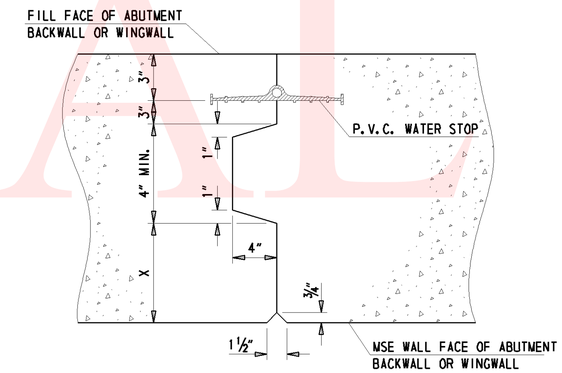

NOTES:
1. "X" SHALL VARY WITH DESIGN DIMENSIONS.
2. REINFORCING SHALL PASS THROUGH CONSTRUCTION JOINT.

CONTRACTION OR CONSTRUCTION JOINT DETAIL

SCALE : N.T.S.

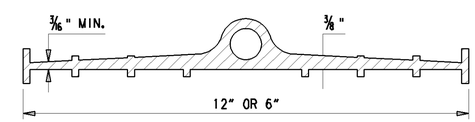

P.V.C. WATER STOP

SCALE: N.T.S.

Y:\SUSSEX\014\BRIDGE\T200812201\PLANS\WW.DGN

DELAWARE DEPARTMENT OF TRANSPORTATION	ADDENDUMS / REVISIONS	SCALE 0 1 2 3 FEET	SR 1, SR 30 GRADE SEPARATED INTERSECTION	CONTRACT T200812201	BRIDGE NO. 3-004	WINGWALL DETAILS BRIDGE SHEET 7 OF 23	SHEET NO. 63
				COUNTY SUSSEX	DESIGNED BY: KRL, EM		TOTAL SHTS. 133
					CHECKED BY: BAB, JNH		

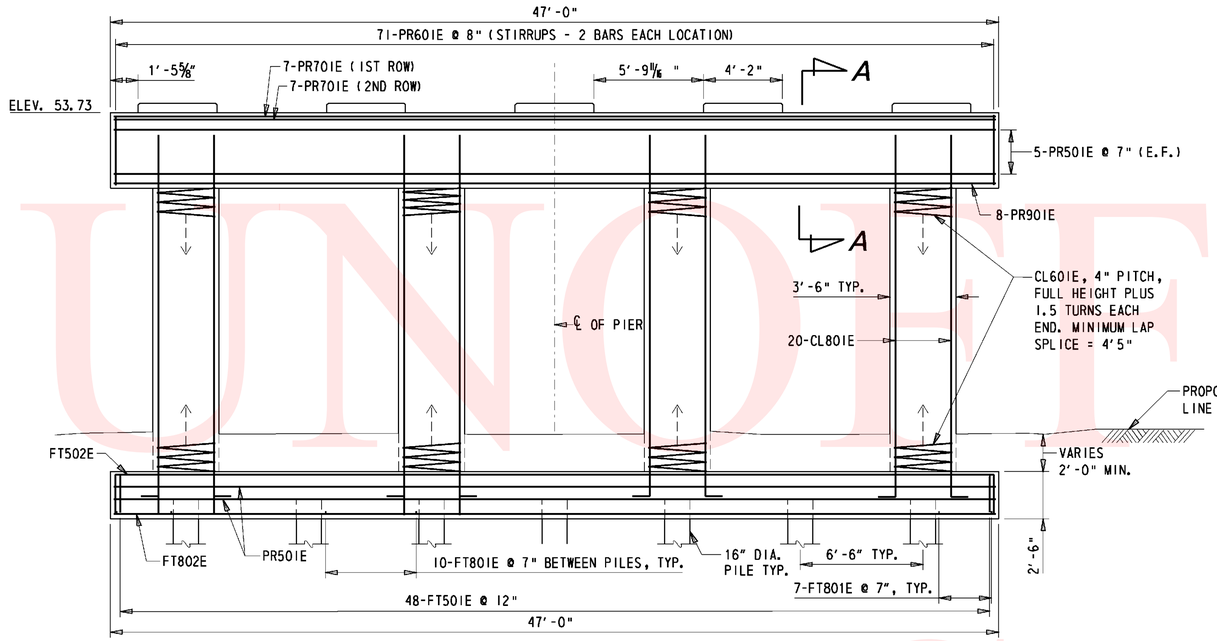

PIER ELEVATION

¼" = 1'-0"

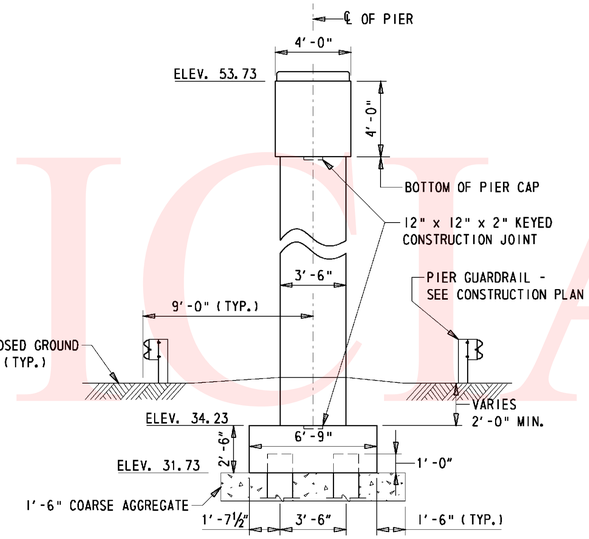

PIER TYPICAL SECTION

¼" = 1'-0"

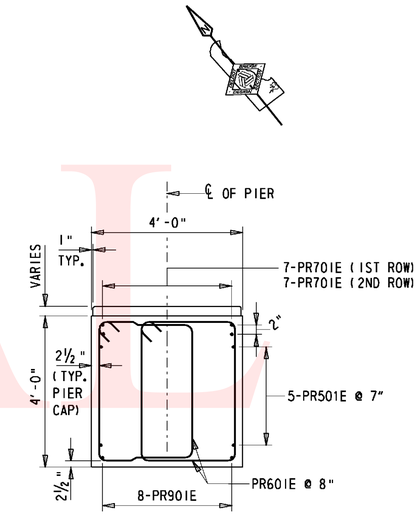

SECTION A-A

½" = 1'-0"

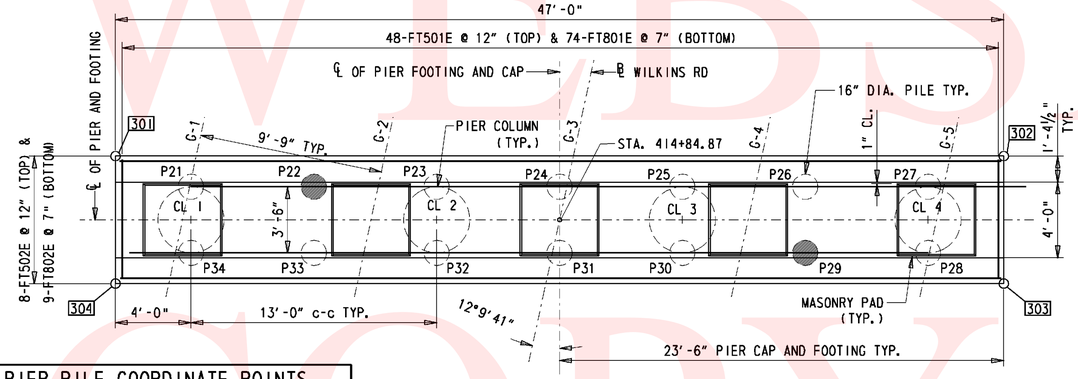

FOOTING REINFORCEMENT PLAN

¼" = 1'-0"

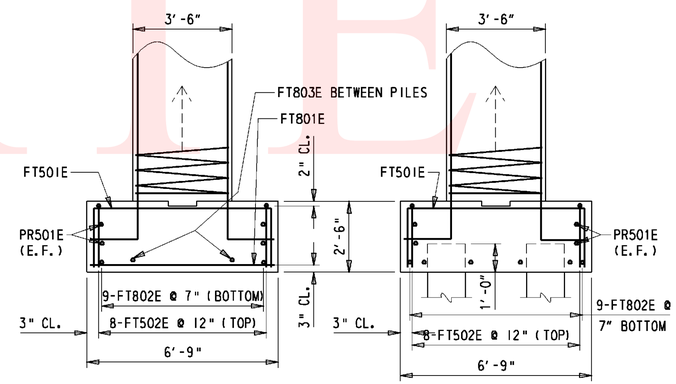

PIER FOOTING REINFORCEMENT

⅜" = 1'-0"

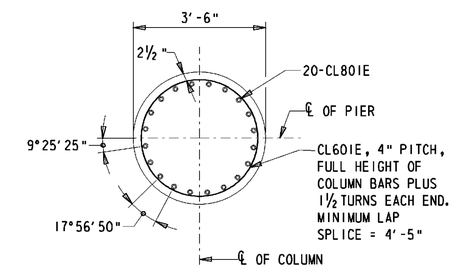

TYPICAL COLUMN SECTION

(3'-6" DIAMETER)

½" = 1'-0"

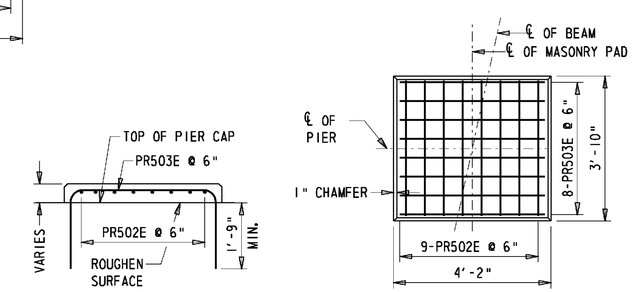

ELEVATION

PLAN

MASONRY PAD

½" = 1'-0"

PIER PILE COORDINATE POINTS				
POINT	STATION	OFFSET	NORTHING	EASTING
P21	414+82.47	L 19.43	324564.59	664248.45
P22	414+83.84	L 13.08	324560.54	664253.52
P23	414+85.21	L 6.72	324556.48	664258.60
P24	414+86.58	L 0.37	324552.42	664263.68
925	414+87.95	R 6.00	324548.36	664268.76
P26	414+89.32	R 12.34	324544.31	664273.84
P27	414+90.69	R 18.69	324540.25	664278.91
P28	414+87.27	R 19.43	324537.51	664276.73
P29	414+85.90	R 13.08	324541.57	664271.65
P30	414+84.53	R 6.72	324545.63	664266.57
P31	414+83.16	R 0.37	324549.69	664261.50
P32	414+81.79	L 6.00	324553.74	664256.42
P33	414+80.42	L 12.34	324557.80	664251.34
P34	414+79.05	L 18.69	324561.86	664246.26

LEGEND

TEST PILE -

WORKING POINT - 303

PIER WORKING POINTS				
POINT	STATION	OFFSET	NORTHING	EASTING
301	414+83.22	L 23.68	324568.36	664246.34
302	414+93.12	R 22.26	324539.02	664283.05
303	414+86.52	R 23.68	324533.75	664278.84
304	414+76.62	L 22.26	324563.09	664242.12

MASONRY PAD ELEVATIONS	
PAD	ELEVATION
G-1	53.98
G-2	54.17
G-3	54.36
G-4	54.18
G-5	53.98

UNOFFICIAL WEBSITE COPY

Y:\SUSSEX\014\BRIDGE\T200812201\PLANS\PR_RE.DGN

DELAWARE DEPARTMENT OF TRANSPORTATION

ADDENDUMS / REVISIONS

SCALE: AS NOTED

SR 1, SR 30 GRADE SEPARATED INTERSECTION

CONTRACT	BRIDGE NO. 3-004
T200812201	DESIGNED BY: KRL, EM
COUNTY	
SUSSEX	CHECKED BY: BAB, JNH

PIER DETAILS
BRIDGE SHEET 8 OF 23

SHEET NO.
64
TOTAL SHTS.
133

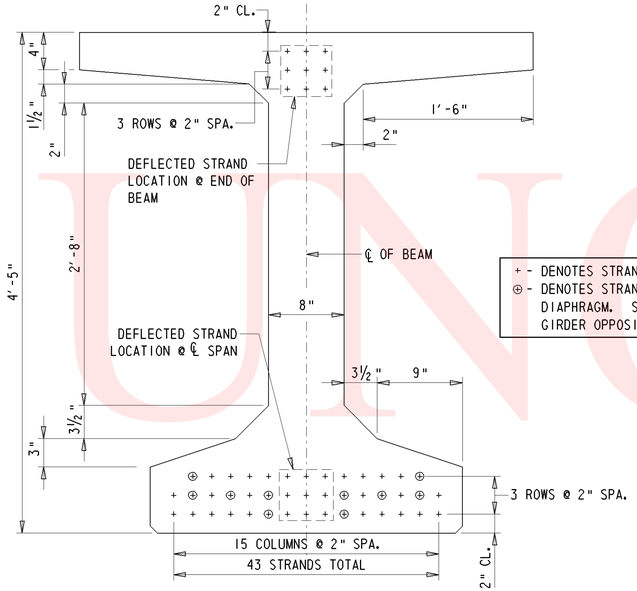

+ - DENOTES STRAND LOCATION
⊕ - DENOTES STRANDS EXTENDED INTO THE PIER DIAPHRAGM. SPAN 1 GIRDER SHOWN, SPAN 2 GIRDER OPPOSITE HAND.

TYPICAL SECTION

1½" = 1'-0"

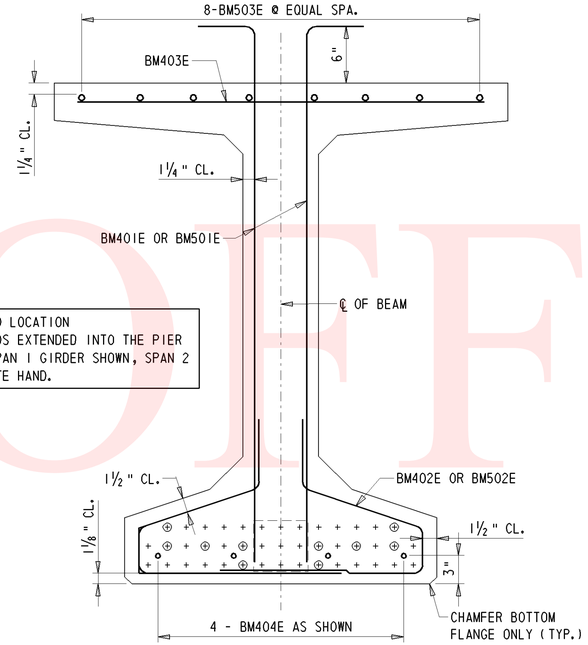

TYPICAL REINFORCING SECTION

1½" = 1'-0"

BEAM NOTES:

1. CONCRETE STRENGTH:
   f'c = 8000 psi @ 28 DAYS; f'ci= 6400 psi @ STRAND RELEASE
2. PRESTRESSING STEEL:
   ALL STRANDS SHALL BE 0.6" DIAMETER, SEVEN WIRE STRAND, 0.207 SQ. IN. NOMINAL AREA, GRADE 270, LOW RELAXATION STRANDS IN ACCORDANCE WITH ASTM DESIGNATION A416 WITH INITIAL PULL PER STRAND OF 31 KIPS.
3. REINFORCEMENT BARS SHALL CONFORM TO A615 GRADE 60. ALL BAR REINFORCEMENT AND CHAIR SUPPORTS SHALL BE PROTECTED WITH FUSION BONDED EPOXY IN ACCORDANCE WITH AASHTO M284.
4. ENDS OF PRESTRESSED BEAMS AT ROADWAY JOINTS TO BE VERTICAL. ALL OTHER ENDS TO BE NORMAL TO PROFILE GRADE.
5. TOP SURFACE OF ALL BEAMS SHALL BE "STIFF BROOM" FINISHED TRANSVERSELY TO REMOVE LATENCE AND TO ROUGHEN.
6. THREADED INSERTS SHALL HAVE A MINIMUM ULTIMATE PULLOUT CAPACITY OF 12 KIPS EACH.
7. METAL INSERTS SHALL BE PROVIDED ALONG THE TOP FLANGE OF THE PRESTRESSED CONCRETE BEAMS TO SUPPORT STAY-IN PLACE SURFACE FORMS. SIZE, SPACING AND LOCATION OF INSERTS AS REQUIRED BY STAY-IN-PLACE FORMS MANUFACTURER.
8. USE A 1" DEEP RECESS AROUND LOCAL STRAND GROUPS WITH 2" MINIMUM EDGE CLEARANCE AND FILL WITH PNEUMATICALLY APPLIED MORTAR IMMEDIATELY AFTER CLIPPING STRANDS. AN APPROVED EPOXY MORTAR COVERING THE ENDS OF STRANDS WITH A MINIMUM THICKNESS OF ⅛" MAY BE USED AS AN ALTERNATE.
9. AT DIAPHRAGM CONNECTIONS, THREADED INSERT AND/OR BAR LOCATIONS MAY BE ADJUSTED BY ½" TO AVOID CONFLICTS. ANY DEVIATIONS FROM THIS PLAN SHALL BE NOTED ON THE SUBMITTED SHOP DRAWINGS.
10. THE LOCATION OF LIFTING STRANDS SHALL BE DETAILED BY THE PRECASTER IN THE SUBMITTED SHOP DRAWINGS.
11. PAYMENT FOR FABRICATION AND INSTALLATION OF BEARING PADS AND SOLE PLATES SHALL BE INCIDENTAL TO THE PRESTRESSED CONCRETE BEAMS.
12. PRECASTER SHALL PROVIDE DETAIL OF BEAM DAP TO ENSURE BEAM END SITS FLUSH ON BEARING.

REINFORCING BAR LIST (EACH BEAM)

QTY.	SIZE	LENGTH	MARK	TYPE
280	4	5'-3"	BM401E	BENT
280	4	3'-10"	BM402E	BENT
152	4	3'-8"	BM403E	STRAIGHT
8	4	55'-0"	BM404E	STRAIGHT
24	5	5'-3"	BM501E	BENT
24	5	3'-10"	BM502E	BENT
16	5	55'-0"	BM503E	STRAIGHT

BENDING DIAGRAMS

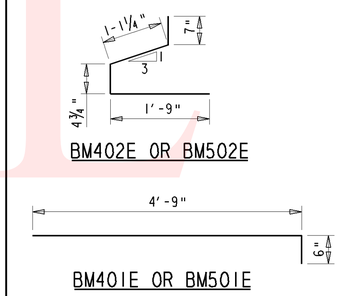

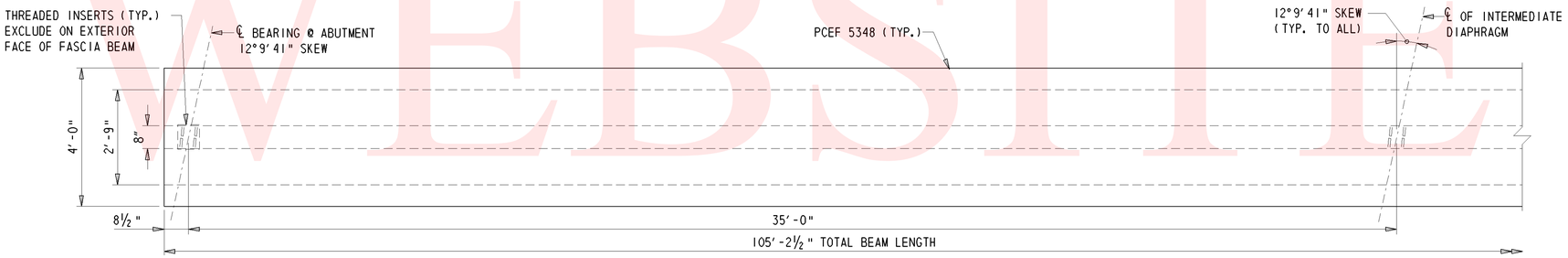

PLAN

½" = 1'-0"

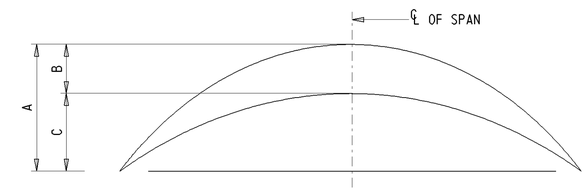

(4.869") A = ESTIMATED PRESTRESS CAMBER LESS DEFLECTION DUE TO DEAD LOAD OF BEAM TIMES CREEP FACTOR
(3.035") B = DEFLECTION DUE TO DEAD LOAD OF SLAB, DIAPHRAGMS, PARAPET, AND FUTURE PAVING ALLOWANCES TIMES CREEP FACTOR.
(1.834") C = A - B = NET CAMBER.

CAMBER DIAGRAM

N.T.S.

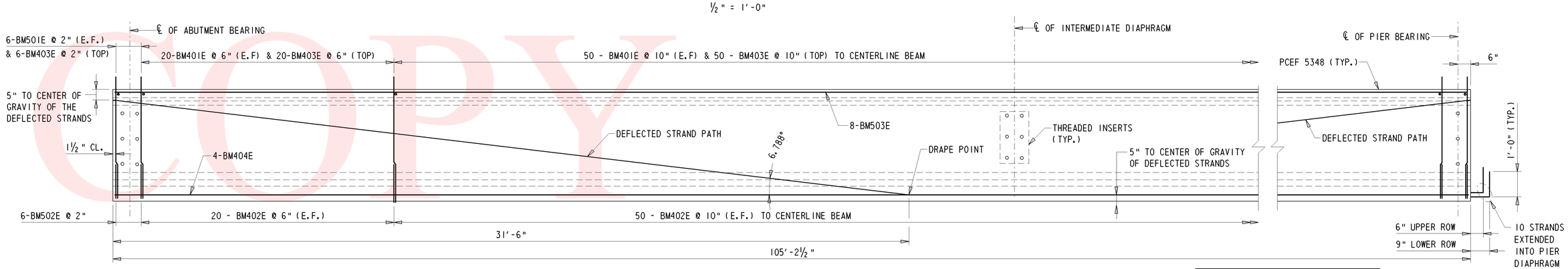

ELEVATION

½" = 1'-0"

NOTE: REINFORCEMENT IS SYMMETRICAL ABOUT THE CENTERLINE OF SPAN.

UNOFFICIAL WEBSITE COPY

DELAWARE DEPARTMENT OF TRANSPORTATION	ADDENDUMS / REVISIONS	SCALE: AS NOTED	SR 1, SR 30 GRADE SEPARATED INTERSECTION	CONTRACT T200812201	BRIDGE NO. 3-004	BEAM DETAILS BRIDGE SHEET 9 OF 23	SHEET NO. 65
				COUNTY SUSSEX	DESIGNED BY: KRL, EM		TOTAL SHTS. 133
					CHECKED BY: BAB, JNH		

Y:\SUSSEX\014\BRIDGE\T200812201\PLANS\BM01.DGN

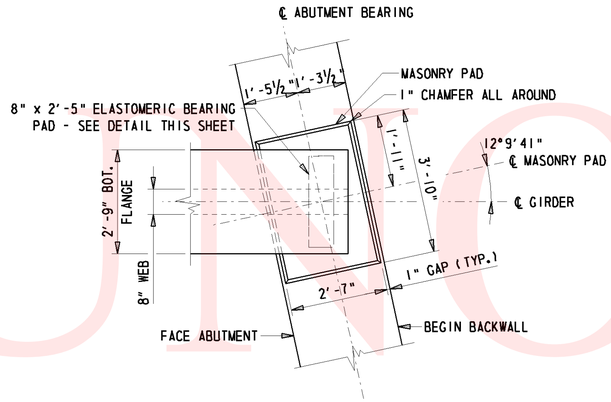

TYPICAL ABUTMENT BEARING DETAIL

½" = 1'-0"

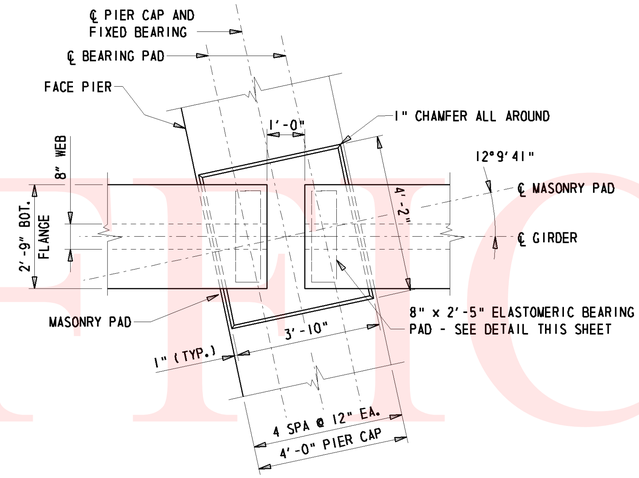

TYPICAL PIER BEARING DETAIL

½" = 1'-0"

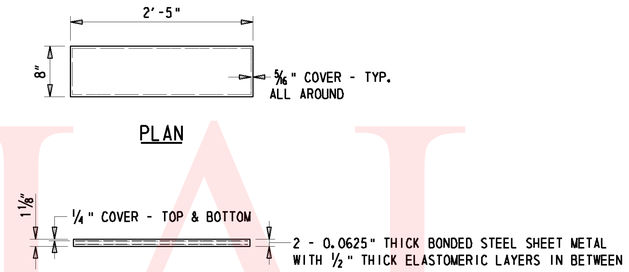

NOTES:

1. ALL ELASTOMERIC BEARING PADS SHALL BE VIRGIN CHLOROPRENE IN ACCORDANCE WITH SECTION 623.06 OF THE STANDARD SPECIFICATIONS (60 DUROMETER HARDNESS AND MINIMUM SHEAR MODULUS OF 150 psi).
2. ELASTOMERIC BEARING PADS SHALL BE ATTACHED TO THE BOTTOM OF THE BEAM / SOLE PLATE AND THE TOP OF THE MASONRY PAD WITH AN APPROVED EPOXY GLUE.
3. ELASTOMERIC BEARING PADS SHALL BE INCIDENTAL TO ITEM 623003 - PRESTRESSED REINFORCED CONCRETE MEMBERS, BULB-T BEAMS.

TYPICAL LAMINATED BEARING PAD

1" = 1'-0"

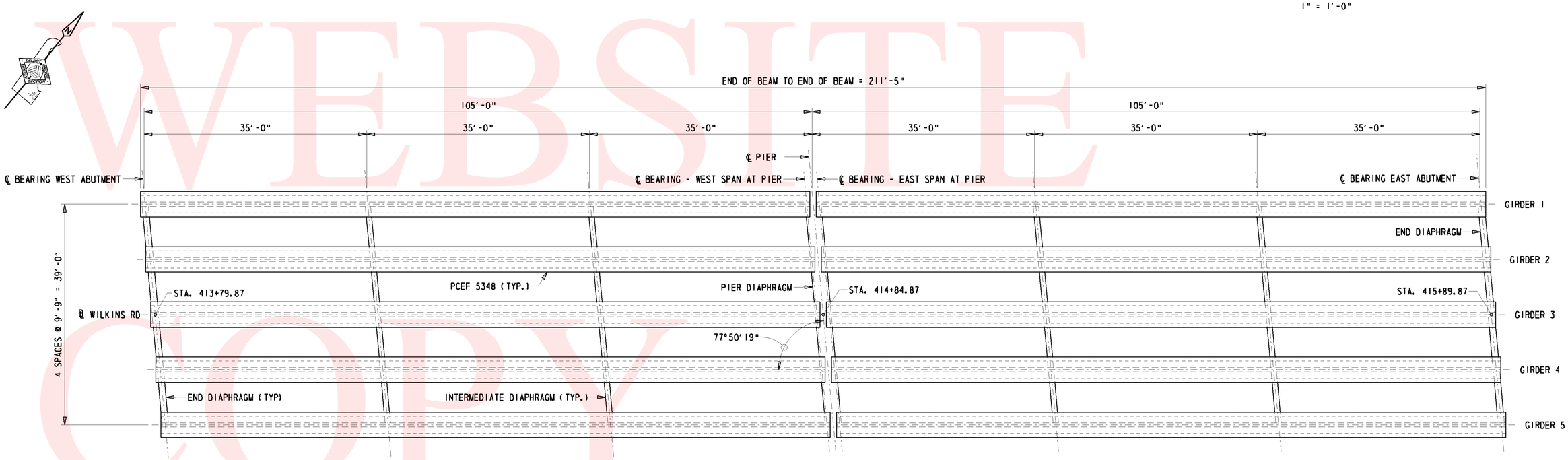

FRAMING PLAN

⅛" = 1'-0"

UNOFFICIAL WEBSITE COPY

DELAWARE DEPARTMENT OF TRANSPORTATION	ADDENDUMS / REVISIONS	SCALE: AS NOTED	SR 1, SR 30 GRADE SEPARATED INTERSECTION	CONTRACT T200812201	BRIDGE NO. 3-004	FRAMING PLAN & BEARING DETAILS BRIDGE SHEET 10 OF 23	SHEET NO. 66
				COUNTY SUSSEX	DESIGNED BY: KRL, EM		TOTAL SHTS. 133
					CHECKED BY: BAB, JNH		

Y:\SUSSEX\014\BRIDGE\T200812201\PLANS\FR.DGN