U.S. CUSTOMARY UNITS

THE STATE OF DELAWARE
DEPARTMENT OF TRANSPORTATION

CONSTRUCTION PLANS FOR:

SR1, SOUTH FREDERICA
GRADE SEPARATED INTERSECTION

CONTRACT NUMBER: T200812202
FEDERAL AID PROJECT NUMBER: NH-K008(11)

COUNTY: KENT **M.R. #: 008**

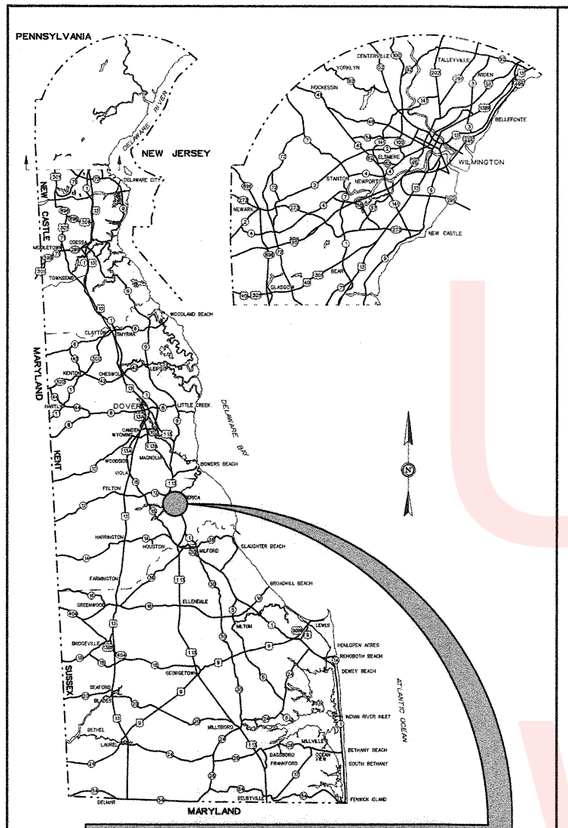

GENERAL LOCATION OF CONTRACT

DESIGN DESIGNATION

SR1 (BAY ROAD)	FUNCTIONAL CLASS: RURAL PRINCIPAL ARTERIAL		D.H.V. PROJECTED: 5,102	YEAR: 2035
	TYPE OF CONSTRUCTION: NEW CONSTRUCTION		DESIGN SPEED: 60 M.P.H.	
	A.A.D.T. CURRENT: 33,121	YEAR: 2007	TRUCKS: 9.1 %	
	A.A.D.T. PROJECTED: 47,683	YEAR: 2035	DIRECTION OF DISTRIBUTION: 51.0 %	
K120 MILFORD NECK RD.	FUNCTIONAL CLASS: MINOR COLLECTOR		D.H.V. PROJECTED: 208	YEAR: 2035
	TYPE OF CONSTRUCTION: NEW CONSTRUCTION		DESIGN SPEED: 50 M.P.H.	
	A.A.D.T. CURRENT: 810	YEAR: 2007	TRUCKS: 6.8 %	
	A.A.D.T. PROJECTED: 1,564	YEAR: 2035	DIRECTION OF DISTRIBUTION: 50.0 %	
K119 TUB MILL POND RD.	FUNCTIONAL CLASS: LOCAL		D.H.V. PROJECTED: 683	YEAR: 2035
	TYPE OF CONSTRUCTION: NEW CONSTRUCTION		DESIGN SPEED: 50 M.P.H.	
	A.A.D.T. CURRENT: 499	YEAR: 2007	TRUCKS: 3.9 %	
	A.A.D.T. PROJECTED: 5,007	YEAR: 2035	DIRECTION OF DISTRIBUTION: 51.0%	
K12 FREDERICA RD.	FUNCTIONAL CLASS: MINOR ARTERIAL		D.H.V. PROJECTED: 893	YEAR: 2035
	TYPE OF CONSTRUCTION: NEW CONSTRUCTION		DESIGN SPEED: 50 M.P.H.	
	A.A.D.T. CURRENT: 2,018	YEAR: 2007	TRUCKS: 6.8 %	
	A.A.D.T. PROJECTED: 6,714	YEAR: 2035	DIRECTION OF DISTRIBUTION: 53.0 %	

INDEX OF SHEETS

SHEET Nº	TABLE OF CONTENTS
1	TITLE SHEET
2	PLAN SHEET INDEX
3	LEGEND SHEET
4-5	NOTES
6-11	TYPICAL SECTIONS
12-15	HORIZONTAL AND VERTICAL CONTROL
16-17	TRAVERSE POINTS
18-41	CONSTRUCTION PLANS
42-66	PROFILES
67-72	SUPERELEVATION TRANSITION SHEETS
73-97	GRADES AND GEOMETRICS
98-103	CONSTRUCTION DETAILS
104-118	BRIDGE PLANS
119-129	STORMWATER MANAGEMENT PLANS
130-135	ENVIRONMENTAL COMPLIANCE PLANS
136-188	CONSTRUCTION PHASING, M.O.T., AND EROSION CONTROL PLANS
189-191	DETOUR PLANS
192-196	LANDSCAPING PLANS
197-225	UTILITY RELOCATION AND LIGHTING PLANS
226-259	SIGNING, STRIPING, AND ITMS CONDUIT PLANS
260-262	SIGNING DETAILS
263-268	GROUND MOUNT DETAILS
269	ITMS DETAILS
270-276	SIGN STRUCTURE DETAILS
277-278	SIGNALIZATION PLANS
279-280	EARTHWORK SUMMARY
281-296	SANITARY SEWER RELOCATION
296A- 296I	TEMPORARY ENTRANCE

END CONSTRUCTION
CONTRACT NO. T200812202
SR1 STATION 223+59.00

LIMIT OF CONSTRUCTION
CONTRACT NO. T200812202
STATION 553+35.00
PROPOSED FREDERICA RD.

LIMIT OF CONSTRUCTION
CONTRACT NO. T200812202
STATION 600+50.00
PROP. MILFORD NECK RD.

LIMIT OF CONSTRUCTION
CONTRACT NO. T200812202
STATION 507+00.00
PROP. TUB MILL POND RD.

BEGIN CONSTRUCTION
CONTRACT NO. T200812202
SR1 STATION 95+61.00

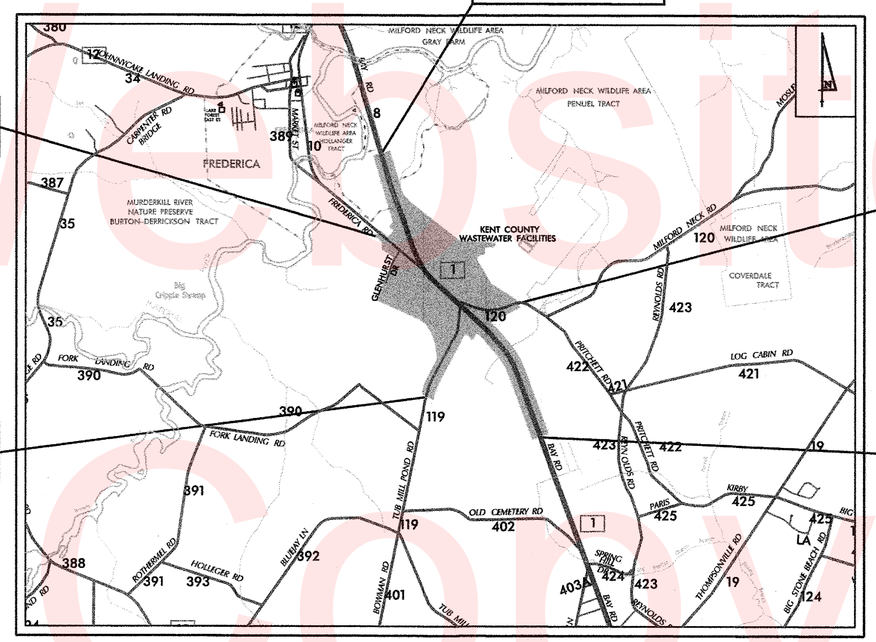

PROJECT LOCATION
NOT TO SCALE

PREPARED BY
THE CONSULTING FIRM OF

CENTURY ENGINEERING, INC.
4134 N. DUPONT HWY.
DOVER, DE 19901
(302) 734-9188

WILLIAM FRANKLYN CONWAY REGISTERED No. 12991 DELAWARE PROFESSIONAL ENGINEER
SEAL

RECOMMENDED 5-1-13 DATE

RECOMMENDED

SQUAD MANAGER, CONSTRUCTION 5-30-13 DATE

GROUP ENGINEER, CONSTRUCTION 5/30/13 DATE

N/A
ASSISTANT DIRECTOR, TRANSPORTATION SOLUTIONS (CONSTRUCTION) DATE

APPROVED DESIGN EXCEPTIONS

DESIGN PARAMETER	REQUIRED	PROVIDED	DATE

ADDENDA & REVISIONS

DESCRIPTION	NAME & DATE

RECOMMENDED
Vincent W. Davis
STORMWATER ENGINEER
DATE 5 JUNE 2013
VINCENT W. DAVIS REGISTERED No. 12898 DELAWARE PROFESSIONAL ENGINEER
SEAL

RECOMMENDED
SQUAD MANAGER, TRANSPORTATION SOLUTIONS
DATE JUNE 5, 2013
THOMAS M. BANDI LICENSED No. 13701 DELAWARE PROFESSIONAL ENGINEER
SEAL

RECOMMENDED
BRIDGE DESIGN ENGINEER
DATE JUNE 5, 2013
SHEETS: 104-118, 270-276
JASON N. HASTINGS REGISTERED No. 13545 DELAWARE PROFESSIONAL ENGINEER
SEAL

RECOMMENDED
GROUP ENGINEER, PROJECT DEVELOPMENT
DATE 6.5.13
JAMES W. SATTERFIELD IV LICENSED No. 10391 DELAWARE PROFESSIONAL ENGINEER
SEAL

RECOMMENDED
ASSISTANT DIRECTOR, TRANSPORTATION SOLUTIONS
DATE 6/5/13
MICHAEL H. SIMMONS REGISTERED No. 8211 DELAWARE PROFESSIONAL ENGINEER
SEAL

APPROVED
Natalie Dawhart
CHIEF ENGINEER
DATE 6/6/13
NATALIE M. BARNHART REGISTERED No. 9629 DELAWARE PROFESSIONAL ENGINEER
SEAL

Unofficial Website Copy

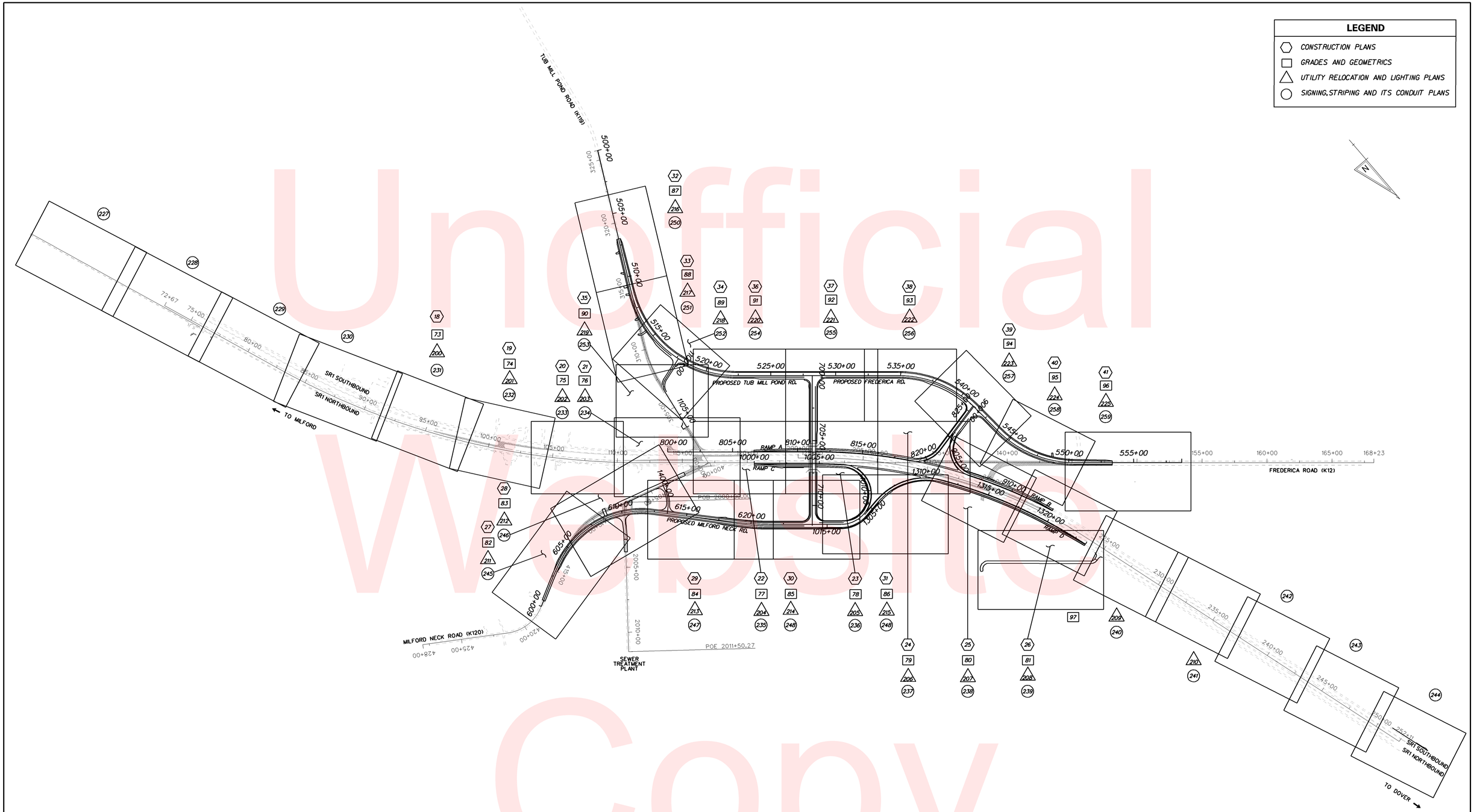

Unofficial Website Copy

DELAWARE DEPARTMENT OF TRANSPORTATION	ADDENDUMS / REVISIONS	SCALE 0 350 700 1050 FEET	SR1, SOUTH FREDERICA GRADE SEPARATED INTERSECTION	CONTRACT T200812202	BRIDGE NO. –	PLAN SHEET INDEX	SHEET NO. 2
				COUNTY KENT	DESIGNED BY: LCM		TOTAL SHTS. 296
					CHECKED BY: SFP		

5/28/2013
G:\PROJECTS\06535.00 (DelDOT Agmt. 1376 DOTS Open End)\06535.07 SR1, S. Frederica\CADD Files\XM\iso01SF.dgn
14-02-15

EXISTING SYMBOLS

DRAINAGE

	DITCH OR STREAM CENTERLINE
	DIRECTIONAL STREAM FLOW ARROW
C.B.	DRAINAGE CATCH BASIN
J.B.	DRAINAGE JUNCTION BOX
D	DRAINAGE MANHOLE
SIZE/TYPE LABEL	DRAINAGE PIPE AND FLOW ARROW
	DRAINAGE PIPE HEADWALL
	RIPRAP - AREA FEATURE
	RIPRAP - LINEAR FEATURE

MANMADE ROADSIDE FEATURES

(TYPE LABEL)	CURB
(TYPE LABEL)	CURB AND GUTTER
	FENCE - CHAINLINK OR STRANDED
	FENCE - STOCKADE OR SPLIT RAIL
FP	FLAG POLE
	GUARDRAIL - STEEL BEAM
	GUARDRAIL - WIRE ROPE
LAMP	LAMP AND POST - RESIDENTIAL
MB	MAILBOX
PM	PARKING METER AND POST
	PAVEMENT - FLEXIBLE
	PAVEMENT - RIGID
	PILE - BRIDGE
	PILLAR OR MISCELLANEOUS POST
	TRAFFIC SIGN AND POST
	WALL - BRICK OR BLOCK
	WALL - STONE

NATURAL ROADSIDE FEATURES

	GRASS LAWN
	HEDGEROW OR THICKET
	MARSH BOUNDARY LINE
	TREE - CONIFEROUS
	TREE - DECIDUOUS
	TREE STUMP
	SHRUBBERY
WL	DELINEATED WETLAND BOUNDARY LINE
	WOODS LINE BOUNDARY

SURVEY CONTROL & MONUMENTATION

B.M.	SURVEY BENCHMARK LOCATION
T.P.	SURVEY TIE POINT LOCATION
	SURVEY TRAVERSE POINT
	POINT OF CURVATURE OR TANGENCY
	POINT OF INTERSECTING TANGENTS
C.M.	PROPERTY MARKER - CONCRETE MON.
I.P.	PROPERTY MARKER - IRON PIPE

UTILITY

	SOIL BORING LOCATION
	UTILITY TEST HOLE LOCATION
TV	CABLE TV DISTRIBUTION BOX
E	ELECTRIC MANHOLE
E	ELECTRIC TRANSFORMER
	POLE MOUNTED LUMINAIRE
G	GAS MANHOLE
G.M.	GAS METER
G.V.	GAS VALVE
G.P.	GAS PUMP - SERVICE STATION
	RAILROAD TRACKS
S	SANITARY SEWER MANHOLE
S.V.	SANITARY SEWER VALVE
VENT	SANITARY SEWER VENT OR CLEANOUT
S.D.F.	SEPTIC DRAIN FIELD
B	TELEPHONE BOOTH
T	TELEPHONE MANHOLE
T	TELEPHONE TEST POINT
J.W.	TRAFFIC - CONDUIT JUNCTION WELL
	TRAFFIC - LIGHT POLE AND BASE
	TRAFFIC - PEDESTRIAN POLE & BASE
	TRAFFIC - SIGNAL CABINET & BASE
	TRAFFIC - SIGNAL POLE AND BASE
U	UTILITY BOX
	UTILITY POLE GUY WIRE ANCHOR
	UTILITY POLE
F.H.	WATER - FIRE HYDRANT
W.M.	WATER METER
W.V.	WATER VALVE
WELL	WELL HEAD

UTILITY COMPANY FACILITIES

CU-G	CHESAPEAKE UTILITY - GAS
KC-S	KENT COUNTY - SEWER
VER-C	VERIZON COMMUNICATIONS
DEC-E-UG	DELAWARE ELECTRIC COOPERATIVE
DP-E-UG	DELMARVA POWER - ELECTRIC
COM-UG	COMCAST
SHARP-P	SHARP - PROPANE

PROPOSED SYMBOLS

CONSTRUCTION

	CONCRETE SAFETY BARRIER - PERMANENT
BFS	BIOFILTRATION SWALE
	BUTT JOINT
100+00	CONSTRUCTION BASELINE
	CURB, TYPE 1 & TYPE 3
	CURB, TYPE 2
	CURB & GUTTER, TYPE 1
	CURB & GUTTER, TYPE 2
	CURB & GUTTER, TYPE 3
	CURB & GUTTER, TYPE 4
CZ	CLEAR ZONE
	DRAINAGE INLET
	DITCH & DIRECTIONAL FLOW ARROW
	FENCE - METAL
	FENCE - WOOD
	FLARED END SECTION
	GUARDRAIL, TYPES 1 & 3
	GUARDRAIL, TYPE 2
	GUARDRAIL END TREATMENT - PARALLEL
	GUARDRAIL END TREATMENT - PARABOLIC
HC	HORIZONTAL CLEARANCE
	JUNCTION BOX - DRAINAGE
LOC	LIMIT OF CONSTRUCTION
	MANHOLE
	HOT-MIX PAVEMENT PATCH
	P.C.C. PAVEMENT PATCH
	PIPE & DIRECTIONAL FLOW ARROW
	RIPRAP
	P.C.C. SIDEWALK @ 4"
	P.C.C. SIDEWALK @ 8"
	UNDERDRAIN & DIRECTIONAL FLOW ARROW
	UNDERDRAIN OUTLET

CONSTRUCTION PHASING SYMBOLS

	BARRICADE, TYPE 3
	CONCRETE SAFETY BARRIER - PORTABLE
	CONSTRUCTION WARNING SIGN LOCATION
END ROAD WORK	CONSTRUCTION WARNING SIGN
	CRASH CUSHION ARRAY
	DRUM - TRAFFIC CONTROL
PHASE	PHASING TRAFFIC FLOW ARROW

LANDSCAPING

	SHRUBBERY
	CONIFEROUS TREE
	DECIDUOUS TREE

EROSION & SEDIMENT CONTROL

	DEWATERING BASIN
ED	EARTH DIKE
	INLET SEDIMENT CONTROL
	PERIMETER DIKE/SWALE
PST	PORTABLE SEDIMENT TANK
RSF	REINFORCED SILT FENCE
SBD	SANDBAG DIKE
SB	SANDBAG DIVERSION
	STONE CHECK DAM
SCE	STABILIZED CONSTRUCTION ENTRANCE
SF	SILT FENCE
SP-1	SUMP PIT, TYPE 1
SP-2	SUMP PIT, TYPE 2
ST	SEDIMENT TRAP
ST	SEDIMENT TRAP WITH INLET AS OUTLET
ST	SEDIMENT TRAP PIPE OUTLET
SW	STILLING WELL
	TEMPORARY SWALE
TSD	TEMPORARY SLOPE DRAIN

IDENTIFIERS

A/C	ADJUST BY CONTRACTOR
A/O	ADJUST BY OTHERS
B	CONCRETE SAFETY BARRIER
C	CURB OR CURB & GUTTER
C.JB	CONVERT TO JUNCTION BOX
CMH	CONVERT TO DRAINAGE MANHOLE
C/O	CURB OPENING
CR	CURB RAMP / TYPE
CR-W	CURB RAMP / TYPE - WITHOUT SIDEWALK SURFACE DETECTABLE WARNING SYSTEM
DI	DRAINAGE INLET
DNO	DO NOT DISTURB
FES	FLARED END SECTION
FS	FILTRATION STRUCTURE
GR	GUARDRAIL
JB	JUNCTION BOX
LS	LANDSCAPE PLANTINGS
MH	MANHOLE
M	MONUMENT - RIGHT-OF-WAY
P	PIPE
RL/C	RELOCATE BY CONTRACTOR
RL/O	RELOCATE BY OTHERS
RM/C	REMOVE BY CONTRACTOR
RM/O	REMOVE BY OTHERS
RR	RIPRAP
RRC	RIPRAP CHUTE
ST	SEDIMENT TRAP
TRM	TURF REINFORCEMENT MAT
UD	UNDERDRAIN

PAVEMENT SECTION(S)

	MILL & OVERLAY PAVEMENT - SEE TYPICAL SECTIONS FOR MATERIALS AND DEPTHS
	FULL DEPTH PAVEMENT - SEE TYPICAL SECTIONS FOR MATERIALS AND DEPTHS
	DRIVEWAY AND ENTRANCE PAVEMENT - SEE PROJECT NOTES SECTION 400 FOR MATERIALS AND DEPTHS
	PAVEMENT AND BASE COURSE REMOVAL, TOPSOIL, SEED, AND MULCH

RIGHT-OF-WAY SYMBOLS

	PROPOSED RIGHT-OF-WAY MONUMENT
	EXISTING PROPERTY LINE
EASEMENT TYPE	EXISTING EASEMENT
	EXISTING RIGHT-OF-WAY
DA	PROPOSED DENIAL OF ACCESS
PE	PROPOSED PERMANENT EASEMENT
R/W	PROPOSED RIGHT-OF-WAY
R/W-DA	PROPOSED R/W & DENIAL OF ACCESS
TCE	TEMPORARY CONSTRUCTION EASEMENT
100+00	PROPOSED RIGHT-OF-WAY BASELINE
100+00	HISTORIC RIGHT-OF-WAY BASELINE

TRAFFIC

ITMS-CON	ITMS CONDUIT
SIG-CON	SIGNAL CONDUIT
	CONDUIT JUNCTION WELL
	LUMINAIRE
	PAVEMENT MARKINGS
	PAVEMENT STRIPING
	TRAFFIC SIGN

UTILITY COMPANY FACILITIES

KC-S	KENT COUNTY - SEWER
VER-UG	VERIZON COMMUNICATIONS
DEC-E-UG	DELAWARE ELECTRIC COOPERATIVE
DP-E-UG	DELMARVA POWER - ELECTRIC
COM-UG	COMCAST
FT-FO-UG	FIBERTECH

UTILITY

	UTILTY POLE
	UTILTY POLE GUY WIRE ANCHOR

Unofficial Website Copy

GENERAL NOTES

1. THIS PROJECT IS TO BE CONSTRUCTED IN ACCORDANCE WITH THE DELAWARE DEPARTMENT OF TRANSPORTATION "STANDARD SPECIFICATIONS", DATED AUGUST 2001, THE DELAWARE DEPARTMENT OF TRANSPORTATION "STANDARD CONSTRUCTION DETAILS", DATED 2001, INCLUDING ALL REVISIONS UP TO THE DATE OF ADVERTISEMENT, THE MOST CURRENT SUPPLEMENTAL APECIFICATIONS, AND MOST CURRENT DELAWARE MUTCD.

2. THE CONTRACTOR SHALL GIVE TWO (2) WEEKS NOTICE TO THE PROPERTY OWNER WHEN ANY FIXTURE, SHRUB OR OTHER OBJECT MUST BE REMOVED FROM THE RIGHT OF WAY OR EASEMENT AREA. IF THE OWNER HAS NOT ATTEMPTED TO SALVAGE THIS PROPERTY, THE CONTRACTOR SHALL REMOVE IT WITHOUT OBLIGATION. COMPENSATION SHALL BE INCIDENTAL TO THE CONTRACT.

3. THE ENDS OF ALL CURBS SHALL BE DEPRESSED FLUSH WITH THE PAVEMENT AT A RATIO OF TWELVE TO ONE (12:1) UNLESS OTHERWISE DIRECTED BY THE ENGINEER.

4. THE CONTRACTOR SHALL PROVIDE AND INSTALL PVC SLEEVES (4" INSIDE MINIMUM DIAMETER, 6" INSIDE MAXIMUM DIAMETER) IN PROPOSED CONCRETE SIDEWALKS, ISLANDS, AND MEDIANS FOR FUTURE TRAFFIC SIGN POSTS AS DIRECTED BY THE ENGINEER. THE LOWER END OF THE SLEEVE SHALL SIT ON THE TOP OF THE SUBBASE MATERIAL. THE COST SHALL BE INCIDENTAL TO THE CONTRACT.

5. STAGING AREAS - PROPER EROSION AND SEDIMENT CONTROL MEASURES AS DETERMINED BY THE ENGINEER SHALL BE INSTALLED IN ALL STAGING AREAS. ALL AREAS USED BY THE CONTRACTOR FOR STAGING OPERATIONS SHALL BE FULLY RESTORED BY THE CONTRACTOR UPON COMPLETION OF THE CONTRACT. IF THE STAGING AREA IS PAVED, IT SHALL BE RESTORED TO ITS ORIGINAL CONDITION. IF THE AREA IS UNPAVED, IT SHALL BE RE-GRADED, TOPSOILED, SEEDED AND MULCHED IN ACCORDANCE WITH DELAWARE STANDARD SPECIFICATIONS 732, 734 AND 735, FOR TOPSOIL, SEED AND MULCH RESPECTIVELY, TO THE SATISFACTION OF THE ENGINEER. THE SEED SHALL ADHERE TO THE SPECIFICATIONS OF SECTION 734 FOR PERMANENT GRASS SEEDING - DRY GROUND. ALL COSTS ASSOCIATED WITH RESTORATION OF THE STAGING AREA SHALL BE AT THE CONTRACTOR'S EXPENSE. IF THE ENGINEER DETERMINES THAT A SATISFACTORY STAND OF GRASS DOES NOT EXIST AT THE TIME OF FINAL INSPECTION, ALL COSTS ASSOCIATED WITH REESTABLISHING A SATISFACTORY STAND OF GRASS SHALL BE AT THE CONTRACTOR'S EXPENSE. ALL STAGING AREAS SHALL BE SECTIONED OFF FROM THE TRAVELING PUBLIC USING TRAFFIC CONTROL DEVICES APPROVED BY THE ENGINEER, ALL COSTS SHALL BE PAID BY THE RESPECTIVE TRAFFIC CONTROL ITEM.

6. SITE REVIEWER - AN EROSION CONTROL SITE REVIEWER SHALL BE A PERSON FROM THE CONTRACTOR'S STAFF ASSIGNED TO EROSION AND SEDIMENT CONTROL IMPLEMENTATION AND MAINTENANCE AND SHALL BE REQUIRED ON SPECIFIC PROJECTS. THE NAME AND DNREC CERTIFICATION NUMBER OF EACH SITE REVIEWER SO REQUIRED SHOULD BE SUBMITTED TO THE DEPARTMENT PRIOR TO AWARD OF THE CONTRACT SO THAT THE START OF CONSTRUCTION IS NOT DELAYED. THE NAME OF THE DELAWARE REGISTERED PROFESSIONAL ENGINEER PROVIDING DIRECTION AND SUPERVISION OF THE SITE REVIEWER, AS REQUIRED IN SECTION 12.3 OF THE DELAWARE SEDIMENT AND STORMWATER REGULATIONS, SHOULD ALSO BE SUBMITTED TO THE DEPARTMENT PRIOR TO AWARD. THE SITE REVIEWER REQUIREMENTS IN EFFECT ON THIS PROJECT SHALL BE MARKED WITH AN "X" BELOW:

EROSION POTENTIAL FOR THIS PROJECT	CONTRACTOR ESC SUPERVISOR REQUIREMENT
( ) INSIGNIFICANT	NONE
( ) MINOR	CONTRACTOR TRAINING PROGRAM, AS DEFINED IN SECTION 6.2 OF THE DELAWARE SEDIMENT AND STORMWATER REGULATIONS.
( ) MEDIUM	CONTRACTOR TRAINING PROGRAM, AS DEFINED IN SECTION 6.2 OF THE DELAWARE SEDIMENT AND STORMWATER REGULATIONS.
(X) MAJOR	CERTIFIED CONSTRUCTION REVIEWER (CCR), AS DEFINED IN SECTION 6.3 OF THE DELAWARE SEDIMENT AND STORMWATER REGULATIONS.

7. ELECTRONIC PROJECT FILES THAT WILL BE MADE AVAILABLE TO THE CONTRACTOR INCLUDE:

( )	NONE
( )	ASCII DATA FILES WITH COORDINATES AND ELEVATIONS FOR PROPOSED POINTS AS SELECTED BY THE ENGINEER.
(X)	ALL PLAN SHEETS, IN .PDF FILE FORMAT.
(X)	EXISTING DIGITAL TERRAIN MODEL, IN .DTM FILE FORMAT, COMPATIBLE WITH SOFTWARE CURRENTLY USED BY DELDOT.
( )	PROPOSED DIGITAL TERRAIN MODEL, IN .DTM FILE FORMAT, COMPATIBLE WITH SOFTWARE CURRENTLY USED BY DELDOT.
(X)	DESIGN FILE, IN .DGN FILE FORMAT, CONTAINING ONLY THE PROPOSED 3D LINE WORK OF THE TOP SURFACE.

NOTE: THE DOCUMENT ENTITLED "RELEASE FOR DELIVERY OF DOCUMENTS IN ELECTRONIC FORM TO A CONTRACTOR" MUST BE SIGNED BY ALL PARTIES PRIOR TO THE DELIVERY OF ANY ELECTRONIC PROJECT FILES.

8. THE DEPARTMENT WILL PROVIDE ELECTRONIC PLANS IN .CAL AND .DTM FORMAT TO THE CONTRACTOR. THESE FILES MAY BE USED TO ASSIST THE CONTRACTOR DURING ROUGH GRADING EARTHWORK ACTIVITIES ONLY. THEY SHALL NOT BE USED TO ESTABLISH ELEVATIONS FOR FINAL GRADING, FINAL PAVEMENT OR CURB, OR FOR ELEVATIONS AND ALIGNMENT OF STRUCTURES. THE PRINTED PLANS SHALL GOVERN THE WORK SHOULD CONFLICTS ARISE BETWEEN THE PRINTED PLANS AND ELECTRONIC FILES. NO COSTS TO CORRECT ERRORS RESULTING FROM THE USE OF THE ELECTRONIC FILES WILL BE CONSIDERED BY THE DEPARTMENT.

9. AMERICAN TRAFFIC SAFETY SERVICES ASSOCIATION (ATSSA) CERTIFIED TRAFFIC CONTROL SUPERVISOR REQUIREMENT FOR THIS PROJECT.

( )	THE CONTRACTOR SHALL NOT BE REQUIRED TO HAVE AN ATSSA SUPERVISOR ASSIGNED TO THIS PROJECT.
(X)	THE CONTRACTOR SHALL HAVE AN ATSSA SUPERVISOR ASSIGNED TO THIS PROJECT. THE CONTRACTOR'S GENERAL SUPERINTENDENT FOR THIS PROJECT OR ANOTHER ATSSA CERTIFIED MEMBER OF THE CONTRACTOR'S PROJECT STAFF MAY BE THE ATSSA SUPERVISOR. PAYMENT FOR ATSSA SUPERVISOR IS INCIDENTAL TO ITEM 743000.
( )	THE CONTRACTOR SHALL HAVE AN ATSSA SUPERVISOR ASSIGNED TO THIS PROJECT. THE ATSSA SUPERVISOR'S SOLE JOB SHALL BE SUPERVISION OF THE INSTALLATION, OPERATION AND MAINTENANCE OF TRAFFIC CONTROL DEVICES FOR THIS PROJECT. THE CONTRACTOR'S GENERAL SUPERINTENDENT FOR THIS PROJECT SHALL NOT BE THE ATSSA SUPERVISOR. PAYMENT FOR ATSSA SUPERVISOR SHALL BE PAID FOR UNDER ITEM 743031.

10. THE DISTURBED AREA FOR THIS PROJECT IS 101.7 ACRES.

11. THE SEDIMENT AND STORMWATER MANAGEMENT PLANS HAVE BEEN APPROVED BY DELDOT'S STORMWATER ENGINEER UNDER DELDOT'S DELEGATED AUTHORITY. THE SEDIMENT AND STORMWATER MANAGEMENT PLANS ARE VALID FOR A THREE YEAR PERIOD, BEGINNING ON THE DATE THE STORMWATER ENGINEER SIGNED THE CONSTRUCTION TITLE SHEET. IF THE FINAL ACCEPTANCE OF THE PROJECT IS ANTICIPATED TO EXTEND BEYOND THE THREE YEARS, THE CONTRACTOR WILL INFORM THE ENGINEER THREE MONTHS PRIOR TO THE EXPIRATION OF THE APPROVED SEDIMENT AND STORMWATER MANAGEMENT PLANS. THE STORMWATER ENGINEER WILL REVIEW THE CURRENT SEDIMENT AND STORMWATER MANAGEMENT PLAN AND ISSUE AN EXTENSION WITH ANY APPROPRIATE MODIFICATIONS.

12. THE EROSION AND SEDIMENT CONTROL PLANS HAVE BEEN APPROVED BY DELDOT'S STORMWATER ENGINEER UNDER DELDOT'S DELEGATED AUTHORITY. THE EROSION AND SEDIMENT CONTROL PLANS ARE VALID FOR A THREE YEAR PERIOD, BEGINNING ON THE DATE THE STORMWATER ENGINEER SIGNED THE CONSTRUCTION TITLE SHEET. IF THE FINAL ACCEPTANCE OF THE PROJECT IS ANTICIPATED TO EXTEND BEYOND THE THREE YEARS, THE CONTRACTOR SHALL INFORM THE ENGINEER THREE MONTHS PRIOR TO THE EXPIRATION OF THE EROSION AND SEDIMENT CONTROL PLAN APPROVAL. DELDOT WILL REVIEW THE CURRENT EROSION AND SEDIMENT CONTROL PLAN AND ISSUE AN EXTENSION WITH ANY APPROPRIATE MODIFICATIONS.

13. EXISTING UTILITIES ARE SHOWN IN ACCORDANCE WITH THE BEST AVAILABLE INFORMATION. COMPLETENESS OR CORRECTNESS THEREOF IS NOT GUARANTEED. IT SHALL BE THE CONTRACTOR'S RESPONSIBILITY TO CONTACT THE UTILITY COMPANIES INVOLVED IN ORDER TO OBTAIN THE MOST ACCURATE INFORMATION AVAILABLE AS TO UTILITY LOCATION AND ELEVATION. NO CONSTRUCTION AROUND OR ADJACENT TO UTILITIES SHALL BEGIN WITHOUT NOTIFYING THEIR OWNERS AT LEAST TWO WORKING DAYS (48 HOURS) IN ADVANCE. THE CONTRACTOR SHALL TAKE THE NECESSARY PRECAUTIONS TO PROTECT THE EXISTING UTILITIES AND MAINTAIN UNINTERRUPTED SERVICE AN ANY DAMAGE DONE TO THEM DUE TO HIS/HER NEGLIGENCE SHALL BE IMMEDIATELY AND COMPLETELY REPAIRED AT THE CONTRACTOR'S EXPENSE. TO LOCATE EXISTING UTILITIES IN THE FIELD PRIOR TO CONSTRUCTION, THE CONTRACTOR SHALL CONTACT MISS UTILITY OF DELMARVA THREE (72 HOURS) CONSECUTIVE WORKING DAYS PRIOR TO EXCAVATION, AT 1-800-282-8555.

14. THE CONTRACTOR WILL BE REQUIRED TO COORDINATE WORK WITH ANY CONSTRUCTION ACTIVITY BY UTILITY COMPANIES, OR ADJACENT CONSTRUCTION CONTRACTS. PROPOSED UTILITY RELOCATIONS ARE SHOWN ON THE PLANS. REFER TO UTILITY STATEMENT FOR DETAILED SCOPE AND TIMING OF UTILITY WORK.

15. ALL PROPOSED UTILITY WORK SHOWN ON THE PLANS SHALL BE INSTALLED BY THE RESPECTIVE UTILITY COMPANY, UNLESS OTHERWISE NOTED.

16. CONTRACTOR SHALL SUPPLY MESSAGE BOARDS THAT ARE TO BE PLACED TEN (10) DAYS PRIOR AND FIVE (5) DAYS AFTER ANY ROAD CONSTRUCTION. THE PROPER WORDING ON THE MESSAGE BOARD WILL NEED TO BE COORDINATED WITH THE DISTRICT SAFETY OFFICER.

17. THE CONTRACTOR SHALL STAKE THE RIGHT-OF-WAY AND EASEMENT LINES AND HAVE VERIFIED BY THE ENGINEER PRIOR TO PERFORMING ANY WORK. THE RIGHT OF WAY AND EASEMENT LINES MUST REMAIN STAKED FOR THE DURATION OF THE WORK. ALL COSTS ARE INCIDENTAL TO CONSTRUCTION ENGINEERING.

PROJECT NOTES

SECTION 100

1. ANY DAMAGE DONE BY THE CONTRACTOR TO ITEMS NOTED TO REMAIN OR BE RELOCATED OR RESET BY THE CONTRACTOR, AT THE DISCRETION OF THE ENGINEER, SHALL BE REPAIRED AND/OR REPLACED IN KIND AT THE CONTRACTOR'S EXPENSE.

SECTION 200

2. FOR AREAS OF THE PROJECT OUTSIDE THE LIMITS OF EMBANKMENT OR STORMWATER POND CONSTRUCTION, THE CONTRACTOR SHALL NOT STRIP THE EXISTING TOPSOIL UNLESS APPROVED BY THE ENGINEER. AREAS DISTURBED DUE TO CONTRACTOR ACTIVITIES (HAULING EQUIPMENT AND MATERIAL, MATERIAL STORAGE, ECT.) SHALL BE SCARIFIED, TOPSOILED, AND SEEDED AS DIRECTED IN THE FIELD WITH PAYMENT TO BE MADE UNDER THE APPLICABLE BID ITEMS. ANY REQUIRED SCARIFYING SHALL BE CONSIDERED INCIDENTAL TO THE "SEEDING" ITEM.

   IF DISTURBANCE IS CONSIDERED MINIMAL, SCARIFYING AND OVERSEEDING OF THE AREA MAY BE PERFORMED IF APPROVED BY THE ENGINEER WITH PAYMENT TO BE MADE UNDER THE APPLICABLE SEEDING ITEM. IN THIS CASE, ANY REQUIRED SCARIFYING IS INCIDENTAL TO THE SEEDING ITEM.

3. THE CONTRACTOR SHALL REMOVE AND RESET ALL MAILBOXES TO MAINTAIN MAIL SERVICE AS DIRECTED BY THE ENGINEER. THE CONTRACTOR SHALL RELOCATE MAILBOXES AS REQUIRED BY THE PROPOSED GEOMETRICS AND AS DIRECTED BY THE ENGINEER. WHEN RELOCATING MAILBOXES IN CURBED SECTIONS, THE FACE OF THE MAILBOX SHALL BE FLUSH WITH THE BACK EDGE OF CURB. WHEN RELOCATING MAILBOXES IN OPEN SECTIONS, THE FACE OF THE MAILBOX SHALL SET BACK 8 INCHES FROM THE EDGE OF THE PAVED SHOULDER. THE BOTTOM OF THE MAILBOX SHALL BE SET 46 INCHES ABOVE THE ROADWAY SURFACE. MAILBOXES LOCATED AT DRIVEWAY ENTRANCES SHALL BE PLACED ON THE FAR SIDE OF THE DRIVEWAY IN THE DIRECTION OF TRAVEL. POSTS BEING RESET IN CONCRETE SIDEWALK SHALL BE PLACED IN AN APPROPRIATE SIZE PVC SLEEVE. COST FOR ALL WORK AND MATERIALS SHALL BE INCIDENTAL TO ITEM 201000 - CLEARING AND GRUBBING.

4. THE ENGINEER MAY REQUIRE THE CONTRACTOR TO EXCAVATE TEST PITS ALONG PROPOSED DRAINAGE RUNS, AT POINTS OF POSSIBLE UTILITY CONFLICTS, TO DETERMINE IF CONFLICTS EXIST. ANY CONFLICTS SHALL BE COORDINATED BY THE CONTRACTOR, WITH THE ENGINEER AND THE UTILITY COMPANY INVOLVED. THE ENGINEER SHALL ULTIMATELY DETERMINE THE SOLUTION TO THE UTILITY CONFLICT. TEST HOLES SHALL BE MEASURED AND PAID FOR IN ACCORDANCE WITH ITEM 208000, BUT ONLY TO THE ACTUAL DEPTH EXCAVATED.

5. ITEMS TO BE REMOVED UNDER ITEM 211000 - REMOVAL OF STRUCTURES AND OBSTRUCTIONS SHALL INCLUDE BUT NOT BE LIMITED TO THE FOLLOWING:
   BUILDINGS, FOUNDATIONS, FENCES, STRUCTURES, DRAINAGE STRUCTURES, DRAINAGE PIPES, ABANDONED SEWER PIPES AND TRAFFIC STRUCTURES WHICH ARE NOT DESIGNATED TO REMAIN WITHIN THE LIMITS OF CONSTRUCTION.

6. THIS PROJECT IS COVERED UNDER A "NPDES" GENERAL PERMIT FOR CONSTRUCTION, UNDER THE GENERAL PERMIT, COMPLIANCE WITH DELDOT'S APPROVED SEDIMENT AND STORMWATER MANAGEMENT PLANS WILL CONSTITUTE COMPLIANCE WITH THE NPDES INDUSTRIAL PERMITTING REQUIREMENTS FOR THIS CONSTRUCTION PROJECT. A COPY OF THE NPDES GENERAL PERMIT AND NOI IS KEPT ON FILE IN EACH OF THE CONSTRUCTION OFFICES AND THE DEPARTMENT'S TEAM SUPPORT SECTION. A COPY OF THE GENERAL PERMIT OR THE NOI CAN BE OBTAINED UPON REQUEST FROM EITHER THE DEPARTMENT'S STORMWATER ENGINEER OR THE APPROPRIATE CONSTRUCTION ENGINEER.

7. REMOVAL OF EXISTING UNDERDRAIN SHALL BE INCLUDED UNDER ITEM 202000. CONNECTING TO AN EXISTING UNDERDRAIN SYSTEM SHALL BE INCIDENTAL TO THE UNDERDRAIN ITEM BEING INSTALLED AS SHOWN ON THE PLANS.

8. UNSUITABLE MATERIALS FROM ROADWAY AND UNDERCUT EXCAVATION SHALL NOT BE USED AS FILL AND SHALL BE LEGALLY DISPOSED OF OUTSIDE THE PROJECT AREA. ALL COSTS INCIDENTAL TO THE ITEM BEING REMOVED. BORROW TYPE A, OR EXCAVATED MATERIAL MEETING TYPE A REQUIREMENTS, SHALL BE USED TO BACKFILL ALL DRY UNDERCUT AREAS AS DIRECTED BY THE ENGINEER. BORROW TYPE B, OR EXCAVATED MATERIAL MEETING TYPE B REQUIREMENTS, SHALL BE USED IN UNDERCUT WITH WET CONDITIONS AS DIRECTED BY THE ENGINEER.

9. THE CONTRACTOR, WITH THE APPROVAL OF THE ENGINEER, SHALL BE DIRECTED TO USE EXCESS SUITABLE MATERIAL AS MAY BE FOUND IN THE EXCAVATIONS THAT ARE DETERMINED BY THE ENGINEER TO BE SUITABLE FOR USE ELSEWHERE WITHIN THE PROJECT. PAYMENT FOR PLACING THESE MATERIALS AT LOCATIONS AS DIRECTED BY THE ENGINEER SHALL BE INCIDENTAL TO THE ITEM THAT GENERATED THE MATERIAL. IT SHALL BE THE RESPONSIBILITY OF THE CONTRACTOR TO DRY OR WET THE MATERIALS, IF NEEDED, SO THAT THE MATERIALS WILL MEET THE REQUIREMENTS OF ITS INTENDED USE. THE CONTRACTOR MAY, WITH APPROVAL OF THE ENGINEER, STOCKPILE MATERIALS TO MEET THESE REQUIREMENTS. HOWEVER, MOVING THE MATERIAL FROM THE STOCKPILE AND THEN UTILIZING THE MATERIALS SHALL NOT BE MEASURED FOR PAYMENT. ALL MATERIALS ENCOUNTERED IN THE EXCAVATIONS OF THE PROJECT THAT ARE NOT USED ELSEWHERE ON THE PROJECT SHALL BE REMOVED AND DISPOSED OF BY THE CONTRACTOR. ALL COSTS ASSOCIATED WITH STOCKPILING MATERIAL, MOVING ANY MATERIAL FROM ANY STOCKPILES, WETTING AND/OR DRYING THE MATERIAL, OR REMOVAL AND FINAL DISPOSAL SHALL BE INCIDENTAL TO THE ITEM THAT GENERATED THAT MATERIAL. STANDARD SPECIFICATION 104.10 IS DELETED FROM THE CONTRACT.

10. SHOULD ON-SITE EXCAVATION PROVE SUFFICIENT TO COMPLETE THE EMBANKMENT REQUIREMENTS OF THE PROJECT, ANY REMAINING EXCAVATED MATERIAL MEETING TYPE A BORROW REQUIREMENTS SHALL BE PLACED IN THE ONE-FOOT "CAPPING" IMMEDIATELY BENEATH THE GRADED AGGREGATE BASE COURSE. COSTS TO HAUL, WET, DRY, PLACE, AND COMPACT THE MATERIAL ARE INCIDENTAL TO THE ITEM UNDER WHICH THE MATERIAL WAS EXCAVATED. SECTION 104.10 OF THE STANDARD SPECIFICATIONS IS DELETED.

11. THE CONTRACTOR IS RESPONSIBLE TO MANAGE THE EXCAVATED MATERIALS BY STOCKPILING, DEWATERING, DRYING WETTING, DOUBLE HANDLING IF NECESSARY, AND PLACING THE MATERIALS SO THAT ALL ON-SITE EXCAVATED MATERIALS MEETING EMBANKMENT SPECIFICATIONS ARE INCORPORATED INTO THE PROJECT. THE EXCAVATION QUANTITIES TO BE PAID WILL BE MEASURED ONLY WHEN THE MATERIAL IS INITIALLY EXCAVATED. SURVEY TO ESTABLISH THE ORIGINAL AND FINAL ELEVATIONS OF STRIPPED TOPSOIL AND EXCAVATED MATERIAL FOR EMBANKMENT SHALL BE AGREED UPON BY THE CONTRACTOR'S AND ENGINEER'S SURVEY PARTIES. NO EXCAVATION MAY BEGIN UNTIL ORIGINAL SURFACE ELEVATIONS HAVE BEEN ESTABLISHED BY SURVEY. NO BACKFILLING OF ANY EXCAVATED AREAS MAY PROCEED UNTIL THE BOTTOM ELEVATION HAS BEEN ESTABLISHED BY SURVEY. PLACING, STOCKPILING, DEWATERING, DRYING, WETTING, DOUBLE HANDLING, ECT. ARE INCIDENTAL TO THE ITEMS UNDER WHICH THE MATERIALS ARE EXCAVATED. OFF-SITE BORROW MAY BE UTILIZED TO COMPLETE THE EMBANKMENTS ONLY WHEN APPROVED IN ADVANCE BY THE ENGINEER.

12. STORMWATER PONDS 529 AND 532 SHALL BE CONSTRUCTED TO THE DESIGNED BOTTOM ELEVATIONS. MATERIAL EXCAVATED FROM THE PONDS SHALL BE USED TO MEET THE EMBANKMENT, AND TOPSOILING NEEDS FOR THE CONTRACT. THESE TWO PONDS MAY BE EXCAVATED BELOW FINAL PLAN ELEVATION IN ORDER TO OBTAIN ADDITIONAL EMBANKMENT MATERIAL IF DESIRED BY THE CONTRACTOR AND APPROVED BY THE ENGINEER. IF THESE PONDS ARE OVEREXCAVATED, THE CONTRACTOR MUST BACKFILL THE OVER-EXCAVATION WITH MATERIAL MEETING TYPE F BORROW REQUIREMENTS AND/OR WITH EXCESS TOPSOIL FROM THE PROJECT. HAULING AND PLACING MATERIAL TO FILL THE OVER-EXCAVATED AREA IS INCIDENTAL TO ITEM 271000. ANY DEWATERING (INCLUDING PERMITS IF REQUIRED), DRYING, OR WETTING OF MATERIAL WITHIN THE EXCAVATIONS TO MEET EMBANKMENT SPECIFICATIONS IS ALSO INCIDENTAL TO ITEM 271000. THE INITIAL OVER-EXCAVATION WILL BE PAID AT THE UNIT PRICE BID FOR ITEM 271000. THE FINAL 6 INCH TOPSOILING OF THE POND FLOORS TO THE DESIGNED ELEVATION WILL BE PAID UNDER ITEM 733002.

   STORMWATER PONDS 530 AND 531 ARE CLASSIFIED AS INFILTRATION PONDS AND MAY NOT BE EXCAVATED BELOW THE PROPOSED DESIGN ELEVATIONS. MATERIAL EXCAVATED FROM THESE PONDS SHALL BE USED FOR EMBANKMENT.

13. EXCAVATION FROM AREAS OTHER THAN THE STORMWATER PONDS WILL BE MEASURED AND PAID FOR UNDER ITEM 202000. THE WORK WILL INCLUDE EXCAVATION OF SOIL, EXISTING PAVEMENT, BASE MATERIALS, TOPSOIL, OR OTHER MATERIALS AS DESIGNATED ON THE PLANS, AND PLACEMENT OF ALL EMBANKMENTS. EXISTING CONCRETE PAVEMENT, CURB, ECT. WILL BE EXCAVATED UNDER ITEM 758000. ALSO INCIDENTAL TO ITEM 202000 IS ANY NECESSARY DRYING, WETTING, OR DEWATERING (INCLUDING PERMITS IF REQUIRED) TO BRING THE EXCAVATED MATERIAL INTO SPECIFICATION COMPLIANCE. MEASUREMENT OF ALL MATERIAL PAID FOR UNDER ITEM 202000 WILL BE MADE AT THE TIME OF ITS ORIGINAL EXCAVATION. ANY STOCKPILING OR DOUBLE HANDLING OF THE MATERIAL IS INCIDENTAL TO ITEM 202000. UNLESS OTHEWISE APPROVED BY THE ENGINEER, NO BORROW MATERIAL FROM AN OUTSIDE SOURCE WILL BE APPROVED FOR USE ON THE CONTRACT UNTILALL AVAILABLE ON-SITE EXCAVATION HAS BEEN COMPLETED AND EMBANKED.

   EXCAVATED ASPHALT PAVEMENT AND/OR CONCRETE MAY BE PLACED IN THE EMBANKMENTS, BUT ONLY IF THEY CAN BE INCORPORATED AS DETAILED IN STANDARD SPECIFICATION 202.05. EXCESS ASPHALT OR CONCRETE MAY NOT BE PLACED IN ANY OVER-EXCAVATED AREAS OR BELOW EXISTING GROUND IN ANY OTHER EXCAVATIONS.

14. AN INFIELD BORROW AREA IS ALSO BEING PROVIDED. THE ESTIMATED QUANTITY IS BASED ON EXCAVATING ONLY TO 1 FOOT ABOVE THE WATER TABLE ELEVATION. SHOULD THE CONTRACTOR WISH TO OVER-EXCAVATE THIS AREA, AFTER APPROVAL BY THE ENGINEER, HE MAY DO SO PROVIDED THAT SUFFICIENT EXCESS TOPSOIL OR OTHER SOILS ARE PLACED TO ACHIEVE THE FINAL PLAN ELEVATION. ANY DEWATERING (INCLUDING PERMITS IF REQUIRED) SHALL BE THE CONTRACTOR'S RESPONSIBILITY WITH COSTS INCIDENTAL TO ITEM 202000. ALL MATERIAL EXCAVATED AT THIS LOCATION WILL BE PAID FOR UNDER ITEM 202000 AT THE TIME OF ITS INITIAL EXCAVATION. TRANSPORTING AND PLACING MATERIAL IN THE EXCAVATED AREA IN ORDER TO MEET THE FINAL GRADING IS INCIDENTAL TO ITEM 202000, EXCEPT FOR FINAL 6 INCHES OF TOPSOILING TO BE PAID UNDER ITEM 733002. STOCKPILING, DEWATERING, DOUBLE HANDLING, DRYING, AND WETTING OF THE MATERIAL TO MEET THE EMBANKMENT SPECIFICATION REQUIREMENTS IS INCIDENTAL TO ITEM 202000.

15. FOR ESTIMATING PAYMENT FOR ALL EARTHWORK ITEMS, TWO-THIRDS (0.67) OF THE FACTORY RATED CAPACITY OF THE EARTHWORK MOVING EQUIPMENT SHALL BE USED. FOR TEN-WHEEL DUMP TRUCKS, TEN (10) CUBIC YARDS SHALL BE USED.

16. PRIOR TO BEGINNING ANY EXCAVATION ON THE PROJECT, THE CONTRACTOR SHALL SUBMIT TO THE ENGINEER A PLAN DETAILING THE INTENDED MEANS OF MEETING THE REQUIRED EMBANKMENT NEEDS, INCLUDING THE BORROW, TYPE A CAPPING. THE PLAN SHALL INCLUDE, BUT IS NOT LIMITED TO THE FOLLOWING INFORMATION:

    A. ANTICIPATED VOLUMES OF MATERIAL OBTAINED FROM EACH STORMWATER POND UNDER ITEM 271000. ANY ANTICIPATED OVER-EXCAVATION OF PONDS 529 AND/OR 532 SHOULD BE IDENTIFIED.

    B. ANTICIPATED VOLUME OF MATERIAL OBTAINED FROM THE INFIELD BORROW AREA UNDER ITEM 202000 INCLUDING ANY ANTICIPATED OVER-EXCAVATION.

    C. ANTICIPATED VOLUME OF ROADWAY EXCAVATION AVAILABLE FOR EMBANKMENT UNDER ITEM 202000.

    D. ANTICIPATED NEED FOR OUTSIDE BORROW AND THE ESTIMATED TIMEFRAME FOR BRINGING THIS MATERIAL ONTO THE PROJECT.

    E. ANTICIPATED VOLUME OF ONSITE TOPSOIL STRIPPING AND IT'S USE ON THE PROJECT TO INCLUDE TOPSOILING, OUTER PORTION OF EMBANKMENT CONSTRUCTION, AND FILLING ANY OVER-EXCAVATED AREAS.

    F. ANTICIPATED VOLUME OF MATERIALS UNSUITABLE FOR EMBANKMENT TO BE REMOVED FROM THE PROJECT.

    G. SEQUENCE OF EXCAVATION AND ANTICIPATED TIMEFRAMES TO COMPLETE EACH ELEMENT (EACH POND, INFIELD BORROW AREA, ROADWAY EXCAVATION, ETC.)

    THIS PLAN SHALL BE PERIODICALLY UPDATED AS REQUESTED BY THE ENGINEER TO REFLECT ACTUAL CONDITIONS ENCOUNTERED IN THE FIELD. ALL COSTS SHALL BE INCIDENTAL TO ITEM 202000.

17. THE INFIELD BORROW AREA SHALL BE GRADED TO DRAIN. WATER SHOULD NOT STAND ON THE SITE FOLLOWING RAIN EVENTS BUT SHALL BE CONVEYED VIA STABLE OVERLAND FLOW TO ADJACENT PROPOSED DITCHING AND OUTLET AT P-5 (INVERT 14.22') OR P-43 (INVERT 15.00'). THE FINAL ELEVATION AT ANY LOCATION SHALL NOT EXCEED THE GROUND ELEVATION AT THE START OF THE PROJECT, UNLESS OTHERWISE APPROVED BY THE ENGINEER. FOLLOWING THE FINAL TOPSOILING, INTERNAL SLOPES AND GRADING WITHIN THE INFIELD BORROW AREA SHALL BE CONTINUOUS SMOOTH LINES AND GRADES REPRESENTING A NATURALIZED CONDITION AND SHALL NOT APPEAR DISTURBED, MOUNDED, OR PILED, AS APPROVED BY THE ENGINEER. NO INTERNAL GRADE SHALL EXCEED 5:1. ALL COSTS SHALL BE INCIDENTAL TO ITEM *202000 - EXCAVATION AND EMBANKMENT.

Unofficial Web Site Copy

PROJECT NOTES (CONTINUED)

18. PROPOSALS TO EXCAVATE BELOW THE DESIGNED BOTTOM OF STORMWATER PONDS 529 AND/OR 532 WILL NOT BE APPROVED UNDER EITHER OF THE FOLLOWING CONDITIONS:

A. IF THE INTENDED USE OF THE OVER-EXCAVATED MATERIAL IS FOR FILL BELOW THE TYPE A BORROW CAPPING, AND THE AWARDED BID PRICE FOR BORROW, TYPE F (ITEM 209006) IS LOWER THAN THE BID PRICE FOR ITEM 271000 (STORMWATER MANAGEMENT POND): IN THIS CASE, THE BORROW TYPE F ITEM SHALL BE USED TO CONSTRUCT THE EMBANKMENT.

B. IF THE INTENDED USE OF THE OVER-EXCAVATED MATERIAL IS FOR THE TYPE A BORROW CAPPING, AND THE AWARDED BID PRICE FOR BORROW, TYPE A (ITEM 209001) IS LOWER THAN THE BID PRICE FOR ITEM 271000 (STORMWATER MANAGEMENT POND): IN THIS CASE, THE BORROW, TYPE A ITEM SHALL BE USED TO CONSTRUCT THE EMBANKMENT CAPPING.

PROPOSALS TO EXCAVATE BELOW THE DESIGNED BOTTOM OF THE INFIELD BORROW AREA WILL NOT BE APPROVED UNDER EITHER OF THE FOLLOWING CONDITIONS:

A. IF THE INTENDED USE OF THE OVER-EXCAVATED MATERIAL IS FOR FILL BELOW TYPE A BORROW CAPPING, AND THE AWARDED BID PRICE FOR BORROW, TYPE F (ITEM 209006) IS LOWER THAN THE BID PRICE FOR ITEM 202000 (EXCAVATION AND EMBANKMENT): IN THIS CASE, THE BORROW, TYPE F ITEM SHALL BE USED TO CONSTRUCT THE EMBANKMENT.

B. IF THE INTENDED USE OF THE OVER-EXCAVATED MATERIAL IS FOR THE TYPE A BORROW CAPPING, AND THE AWARDED BID PRICE FOR BORROW, TYPE A (ITEM 209001) IS LOWER THAN THE BID PRICE FOR ITEM 202000 (EXCAVATION AND EMBANKMENT): IN THIS CASE, THE BORROW, TYPE A ITEM SHALL BE USED TO CONSTRUCT THE EMBANKMENT CAPPING.

SECTION 300

19. A. THE CONTRACTOR MAY ELECT TO USE ANY OF THE FOLLOWING MATERIALS TO MEET THE REQUIREMENTS OF ITEM 302007 - GRADED AGGREGATE BASE COURSE, TYPE 'B':
a. CRUSHED STONE (PER STANDARD SPECIFICATION 821)
b. CRUSHED CONCRETE (PER STANDARD SPECIFICATION 821)
c. HOT-MIX MILLINGS (PER SPECIAL PROVISION 302514 - MILLED HOT-MIX BASE COURSE)

THE CONTRACTOR WILL NOT BE ALLOWED TO MIX DIFFERENT MATERIALS (OR SIMILAR MATERIALS FROM DIFFERENT SOURCES) TO MEET THE REQUIREMENTS OF ITEM 302007 - GRADED AGGREGATE BASE COURSE, TYPE 'B'.

ALL OF THE ABOVE LISTED MATERIALS ARE PERMITTED FOR USE ON THE JOB, PROVIDED THEY ARE PLACED INTO APPROVED AREAS. EACH AREA OF BASE COURSE MUST BE CONSTRUCTED USING LIKE MATERIALS, FULL DEPTH, IN ORDER THAT PROPER TESTING MAY BE ACCOMPLISHED. THE CONTRACTOR AND DELDOT'S PROJECT ENGINEER SHALL AGREE ON THE LIMITS OF EACH SOURCE OF MATERIAL PRIOR TO PLACEMENT.

B. THE QUANTITY USED FOR BASE OF EACH OF THE ABOVE LISTED MATERIALS WILL BE THE CONTRACTOR'S CHOICE, WITH THE TOTAL MEETING THE REQUIRED QUANTITY OF ITEM 302007 - GRADED AGGREGATE BASE COURSE, TYPE 'B'.

C. THE CONTRACTOR MAY ALSO ELECT TO RECYCLE MILLINGS FOR USE IN HOT-MIX AS PERMITTED BY THE STANDARD SPECIFICATIONS. THE CHOICE OF THE QUANTITY OF MILLINGS USED FOR THIS PURPOSE, OR FOR BASE COURSE, LIES WITH THE CONTRACTOR. ALL MILLING MATERIAL SHALL BECOME PROPERTY OF THE CONTRACTOR UNLESS OTHERWISE DIRECTED BY PROJECT NOTES.

D. HOT-MIX MILLINGS MAY BE GENERATED FROM THE FOLLOWING SOURCES:
a. MATERIAL MADE AVAILABLE WHEN MILLED ON THIS CONTRACT UNDER ITEM 760507.
b. MATERIAL MILLED ON THIS CONTRACT AT THE CONTRACTOR'S CHOICE UNDER ITEM 202000.
c. MILLED MATERIAL FURNISHED ON THE JOB FROM THE CONTRACTOR'S YARD OR OTHER OUTSIDE SOURCE.
(ALL MILLED MATERIALS SHALL MEET THE MATERIAL REQUIREMENTS OF ITEM 302514 - MILLED HOT-MIX BASE COURSE).

E. PAYMENT CLARIFICATION:
a. SHOULD THE CONTRACTOR ELECT TO MILL PORTIONS OF HOT-MIX SHOWN ON THE PLANS TO BE REMOVED UNDER ITEM 202000 - EXCAVATION AND EMBANKMENT THE COST OF MILLING THIS HOT-MIX WILL BE PAID AS ITEM 202000 - EXCAVATION AND EMBANKMENT. THE MILLINGS GENERATED MAY BE RECYCLED INTO HOT-MIX, UTILIZED FOR BASE COURSE, OR DISPOSED OF TO AN APPROVED SITE. HAULING COSTS FOR DISPOSAL AND/OR RECYCLING ARE INCIDENTAL TO ITEM 202000 - EXCAVATION AND EMBANKMENT.

b. MILLINGS GENERATED UNDER ITEM 760507 - PROFILE MILLING, HOTMIX, MAY BE RECYCLED INTO HOT-MIX, UTILIZED FOR BASE COURSE OR DISPOSED OF BY THE CONTRACTOR TO AN APPROVED SITE. NO SEPARATE PAYMENT WILL BE MADE FOR TRANSPORTING MILLINGS ON SITE OR TO AN APPROVED DISPOSAL SITE.

c. SHOULD THE CONTRACTOR ELECT TO TEMPORARILY STOCKPILE MILLINGS ON THE JOB SITE FOR LATER USE, ALL COSTS FOR STOCKPILING AND SUBSEQUENT REHANDLING SHALL BE INCIDENTAL TO ITEM 202000 - EXCAVATION AND EMBANKMENT.

d. MILLINGS USED FOR BASE COURSE SHALL BE PLACED IN ACCORDANCE WITH THE REQUIREMENTS OF SPECIAL PROVISION 302514 - MILLED HOT-MIX BASE COURSE. NO SEPARATE PAYMENT WILL BE MADE TO FURNISH MILLINGS FROM AN OUTSIDE SOURCE OR TRANSPORT MILLINGS WITHIN THE PROJECT LIMITS. MILLINGS USED FOR BASE COURSE WILL BE PAID IN PLACE AT THE UNIT BID PRICE FOR ITEM 302007 - GRADED AGGREGATE BASE COURSE, TYPE 'B'.

e. ALL COSTS TO UTILIZE MILLINGS IN RECYCLED HOT-MIX WILL BE INCIDENTAL TO THE UNIT PRICE BID FOR THE HOT-MIX ITEM USING THE RECYCLED MATERIAL.

f. SPECIAL PROVISION 302514 - MILLED HOT-MIX BASE COURSE IS PROVIDED TO SPECIFY THE MEANS OF LAY DOWN AND COMPACTION AS WELL AS THE MATERIAL REQUIREMENTS FOR MILLINGS USED AS BASE COURSE. ALL COSTS TO BRING THE MILLINGS INTO COMPLIANCE WITH THE REQUIREMENTS OF 302514 - MILLED HOT-MIX BASE COURSE ARE INCIDENTAL TO ITEM 302007 - GRADED AGGREGATE BASE COURSE, TYPE 'B'. NO PAYMENT WILL BE MADE FOR ITEM 302514 - MILLED HOT-MIX BASE COURSE. THE QUANTITY OF MILLINGS USED FOR BASE COURSE WILL BE PAID FOR UNDER ITEM 302007 - GRADED AGGREGATE BASE COURSE.

SECTION 400

20. THE PAVEMENT SECTION FOR HOT-MIX RESIDENTIAL DRIVEWAYS SHALL BE 2" HOT-MIX, TYPE 'C' OVER 8" GRADED AGGREGATE BASE COURSE, TYPE 'B' UNLESS OTHERWISE NOTED ON THE PLANS.

21. IT IS THE INTENT OF THIS PROJECT TO DEVELOP PROPOSED GRADES BY UTILIZING A TYPE C WEDGE LIFT ON SPECIFIED OVERLAY SECTIONS. ALL COSTS PAID UNDER THE HOT-MIX, TYPE 'C' WEDGE LIFT ITEM.

22. AT THE DIRECTION OF THE ENGINEER, THE CONTRACTOR SHALL BE REQUIRED TO REPAIR ALL STATE MAINTAINED ROADS WITHIN THE PROJECT LIMITS UTILIZED TO HAUL BORROW OR OTHER MATERIALS TO OR FROM THE PROJECT. THE REPAIRS SHALL BE MADE UNDER THE APPROPRIATE PATCHING ITEMS AT THE CONTRACT BID PRICE. IF THE ENGINEER DETERMINES THAT THE REPAIR REQUIRES AN OVERLAY OF THE STATE MAINTAINED ROAD, THE OVERLAY SHALL BE PERFORMED UNDER ITEM 401827 OR 401830 AT THE CONTRACT BID PRICE. ALL REQUIRED MAINTENANCE OF TRAFFIC ITEMS AS APPROVED BY THE ENGINEER SHALL BE PAID FOR UNDER THE APPROPRIATE ITEM AT THE CONTRACT BID PRICE.

SECTION 600

23. DEPARTMENT AND THE CONTRACTOR SHALL INSPECT ALL EXISTING PIPES AND DRAINAGE STRUCTURES TO BE USED IN THE FINAL DRAINAGE SYSTEM AND AGREE ON THE CONDITION PRIOR TO THE START OF CONSTRUCTION. EXISTING PIPES AND DRAINAGE STRUCTURES DAMAGED DUE TO CONTRACTOR OPERATIONS SHALL BE REPAIRED OR REPLACED IN-KIND AT THE CONTRACTOR'S EXPENSE. THE DEPARTMENT WILL VIDEO INSPECT NEW PIPE RUNS TO CONFIRM CONDITION PRIOR TO ACCEPTANCE. PIPE CLEANING PRIOR TO VIDEO INSPECTION AND MAINTENANCE OF TRAFFIC DURING THE VIDEO INSPECTION ARE THE RESPONSIBILITY OF THE CONTRACTOR AND INCIDENTAL TO THE PIPE ITEM THAT IS BEING VIDEO INSPECTED.

SECTION 700

24. IN AREAS WHERE PROPOSED CURB MEETS EXISTING CURB AND THE TWO CURB TYPES ARE NOT SIMILAR, THE PROPOSED CURB SHALL BE TRANSITIONED IN 10 LINEAR FEET , UNLESS OTHERWISE DIRECTED BY THE ENGINEER. PAYMENT FOR TRANSITION FORM WORK SHALL BE INCIDENTAL TO THE PROPOSED CURB ITEM.

25. WHERE NEW CONCRETE SIDEWALK IS CONSTRUCTED TO MEET EXISTING SIDEWALK, SAWCUT THE EXISTING SIDEWALK OR MEET THE NEAREST EXISTING SIDEWALK JOINT. ALL SAW CUTTING SHALL BE FULL DEPTH, UNLESS OTHERWISE NOTED ON THE PLANS OR DIRECTED BE THE ENGINEER AND SHALL BE PAID FOR IN ITEM 762002- SAWCUTTING, CONCRETE, FULL DEPTH.

26. PORTLAND CEMENT CONCRETE CHANNELIZING ISLANDS THAT ARE LESS THAN 75 SQ. FT. MAY BE POURED MONOLITHICALLY, OR AS DIRECTED BY THE ENGINEER.

27. STATION AND ELEVATION DATA GIVEN FOR DRAINAGE STRUCTURES ARE TO BE APPLIED TO THE FLOWLINE FOR CURB INLETS, THE CENTER OF THE STRUCTURE FOR LAWN BASINS AND JUNCTION BOXES, AND THE CENTER OF THE LID FOR MANHOLES.

28. THE PROJECT WILL EXTEND OVER WINTER PERIODS AND ALL SNOW REMOVAL ALONG THE STATE MAINTAINED ROADWAYS WILL BE HANDLED BY STATE FORCES. FOLLOWING THE SNOW REMOVAL OPERATION, REPAIRS TO ANY MAINTENANCE OF TRAFFIC CONTROL DEVICES SHALL BE PERFORMED BY THE CONTRACTOR. COSTS FOR REPAIRS ARE INCIDENTAL TO ITEM 743000. DEVICES REQUIRING REPLACEMENT WILL BE PAID FOR UNDER THE APPLICABLE BID ITEM.

29. THE CONTRACTOR SHALL INSTALL ALL PERMANENT SIGNAGE AND TEMPORARY SIGNAGE AS SHOWN ON THE CONTRACT DOCUMENTS. ALL COSTS COVERED UNDER THE APPROPRIATE ITEMS.

30. ALL PAVED AREAS (INCLUDING DRIVEWAYS) TO BE RECONSTRUCTED OR WIDENED SHALL BE SAWCUT AT THE POINT WHERE THE NEW PAVEMENT IS TO TIE INTO THE EXISTING PAVEMENT, UNLESS THERE IS AN EXISTING JOINT.

31. ALL HOT MIX SAW CUTTING SHALL BE FULL DEPTH, UNLESS OTHERWISE NOTED ON THE PLANS, OR AS DIRECTED BY THE ENGINEER.

32. SAWCUTTING OF HOT-MIX ON TOP OF CONCRETE PAVEMENT SHALL BE INCIDENTAL TO ITEM 762002 - SAW CUTTING, CONCRETE, FULL DEPTH.

33. THE CONTRACTOR SHALL ENCOUNTER CONCRETE PAVEMENT UNDER THE EXISTING HOT-MIX PAVEMENT AT LOCATIONS NOTED IN THE CONTRACT DOCUMENTS. WHERE CONCRETE REMOVAL IS REQUIRED FOR FULL DEPTH ROADWAY CONSTRUCTION, ALL COSTS FOR PCC REMOVAL SHALL BE PAID FOR UNDER ITEM *758000 AND THE ASPHALT REMOVAL SHALL BE PAID FOR UNDER ITEM *202000. CONCRETE REMOVAL FOR PIPE CROSSINGS TO BE PATCHED WITH CONCRETE IS INCIDENTAL TO ITEM 503001, PATCHING PCC PAVEMENT.

34. CASINGS IF REQUIRED FOR INSTALLATION OF POLE BASES SHALL BE INCIDENTAL TO THE ITEM BEING INTALLED. THE CASING SHALL BE STEEL, PVC, OR OTHER PERMANENT MATERIAL CAPABLE OF SUPPORTING THE AUGERED HOLE TO ITS FULL DEPTH. THE CASING SHALL BE ADVANCED AS THE EXCAVATION PROGRESSES TO ELIMINATE ANY VOID BETWEEN THE CASING AND THE SURROUNDING SOIL. ANY RESULTING VOIDS BETWEEN THE CASING AND ORGINAL GROUND SHALL BE PRESSURE GROUTED PRIOR TO PLACING CONCRETE FOR THE POLE BASE. THE CASING SHALL BE INSTALLED OR CUT OFF IF REQUIRED SO THAT THE TOP OF THE CASING IS AT OR SLIGHTLY BELOW THE FINISHED GROUND ELEVATION SURROUNDING THE POLE BASE. THE CASING SHALL REMAIN IN PLACE. JUST PRIOR TO CONCRETE PLACEMENT, THE EXCAVATION SHALL BE INSPECTED AND ANY EXCESS WATER SHALL BE PUMPED SO THAT THE CONCRETE IS PLACED IN A DRY HOLE. COSTS TO FURNISH AND INSTALL THE CASING, PRESSURE GROUT IF REQUIRED, CUT OFF IF REQUIRED, AND PUMP OUT ANY EXCESS WATER SHALL BE INCIDENTAL IN THE UNIT PRICE BID PER EACH POLE BASE.

35. UNDERDRAIN OUTLET PIPE (ITEM 715500) SHALL BE INSTALLED AT THE ENDS OF ALL UNDERDRAIN RUNS THAT OUTLET EITHER TO A DITCH OR TO A STORMWATER POND. THIS NON-PERFORATED PIPE SHALL BE PLACED FROM THE MAIN UNDERDRAIN RUN THAT PARALLELS THE ROADWAY TO THE FINAL OUTLET POSITION. IF THE UNDERDRAIN RUNS STRAIGHT INTO THE DITCH OR POND, NON-PERFORATED OUTLET PIPE SHALL BE RUN OUTSIDE OF THE PAVEMENT BOX. ANY BENDS, TEES OR OTHER FITTINGS TO CONNECT THE OUTLET PIPE TO THE MAIN UNDERDRAIN ARE INCIDENTAL TO ITEM 715500.

36. ALL STRIPPED TOPSOIL UNDER ITEM 202000 AND/OR ITEM 271000 SHALL BE STOCKPILED TO MEET THE TOPSOILING REQUIREMENTS OF THE PROJECT. EXCESS TOPSOIL SHALL BE PLACED IN THE OUTER PORTIONS OF THE EMBANKMENT AS DETAILED IN THE PLANS TO CONSTRUCT A PORTION OF THE EMBANKMENT FILLS. AFTER THE EMBANKMENT AND TOPSOILING NEEDS HAVE BEEN MET, ANY TOPSOIL STILL IN EXCESS SHALL BE PLACED AT THE INFIELD BORROW AREA AND OVER-EXCAVATED PORTIONS OF STORMWATER PONDS 529 AND/OR 532 AS PART OF THE FINAL RESTORATION OF THESE AREAS. ADDITIONAL EXCESS TOPSOIL WILL BECOME THE PROPERTY OF THE CONTRACTOR AT THE END OF THE CONTRACT. PAYMENT WILL BE LIMITED TO 6 INCHES THICKNESS OVER THE FINAL GRADED SURFACE UNDER ITEM 733002 IF EXCESS MATERIAL IS BEING PLACED AS WASTE. THE CONTRACTOR MAY ELECT TO PERFORM THE MINIMUM ON-SITE TOPSOILING REQUIRED BY THE PLANS AND REMOVE ANY EXCESS FROM THE JOB TO AN APPROVED OFF-SITE DISPOSAL SITE. HOWEVER, NO TOPSOIL MAY BE REMOVED FROM THE SITE UNTIL ALL EMBANKMENTS ARE COMPLETED, STORMWATER PONDS ARE FINAL GRADED, AND THE INFIELD BORROW AREA HAS BEEN RESTORED TO THE ELEVATION IN THE GRADING NOTES. ADDITIONAL MATERIAL MAY BE PLACED ON THE INFIELD AREA IF DESIRED BY THE CONTRACTOR PROVIDED THE RESULTING ELEVATION IS GRADED TO DRAIN. REMOVAL AND FINAL DISPOSAL COSTS ARE INCIDENTAL TO ITEM 202000.

MISCELLANEOUS

37. THE CONTRACTOR SHALL CONTACT THE CHIEF OF SCHEDULING FOR DART FIRST STATE, TREMICA CHERRY (302)576-6065, 14 DAYS PRIOR TO THE START OF CONSTRUCTION.

38. CROSS SECTIONS USED IN THE PREPARATION OF THIS CONTRACT ARE AVAILABLE FROM THE DEPARTMENT UPON AWARD OF THE CONTRACT.

39. RIGHT-OF-WAY PLANS FOR RIGHT-OF-WAY OR EASEMENT STAKEOUT PURPOSES ARE AVAILABLE FROM THE DEPARTMENT UPON AWARD OF THE CONTRACT.

40. THE CONTRACTOR SHALL PERFORM ITMS AND SIGNING WORK OUTSIDE OF THE LOC AS DIRECTED BY THE ENGINEER AND AS SHOWN ON THE PLANS. ALL WORK SHALL BE PERFORMED WITHIN THE EXISTING STATE OF DELAWARE RIGHT-OF-WAY AS IDENTIFIED ON THE PLANS.

41. ALL EXISTING INLETS AND PIPES LOCATED WITHIN THE PROJECT LIMITS THAT ARE TO REMAIN SHALL BE FLUSHED OF ALL DEBRIS AND SEDIMENT AT THE END OF THE PROJECT AND AS NECESSARY DURING THE PROJECT IF CLOGGED. COSTS SHALL BE INCIDENTAL TO ITEM 201000.

42. ALL DRAINAGE INLETS NOT LOCATED ALONG CURB SHALL HAVE THE GRATE CENTERED ON THE BASIN. IF A COVERSLAB IS REQUIRED, THE COVERSLAB SHALL BE CONSTRUCTED TO FACILITATE CENTERING THE GRATE OVER THE BASIN. THE CONTRACTOR SHALL SUBMIT SHOP DRAWINGS FOR NON STANDARD INLETS FOR APPROVAL BY THE ENGINEER. ALL COSTS ARE INCIDENTAL TO THE ITEM BEING INSTALLED.

43. MEASURES FOR MAINTAINING PUBLIC TRAFFIC, SUCH AS TEMPORARY ROADS, DETOURS, RUN-AROUNDS, ETC. SHALL BE CONSTRUCTED UTILIZING THE APPLICABLE STANDARD BID ITEMS, NOT TEMPORARY ROADWAY MATERIAL (TRM). TRM IS INTENDED FOR MAINTAINING INGRESS AND EGRESS TO RESIDENCES AND BUSINESSES, AS WELL AS MAINTENANCE OF EXISTING ROADWAYS. TRM SHALL ALSO BE USED TO MAINTAIN DETOUR ROADS, ETC. AFTER THEIR INITIAL CONSTRUCTION.

44. THE CONTRACTOR SHALL SPLINE GRADE ALL RAMP TIE-INS TO SR1 AS IDENTIFIED ON THE PLANS OR AS DIRECTED IN THE FIELD BY THE ENGINEER. ALL GRADES SHALL BE STAKED FOR APPROVAL. ALL COSTS PAID UNDER CONSTRUCTION ENGINEERING.

45. HIGHWAY LIGHTING SHALL BE PROVIDED ALONG ALL RAMPS AND GORE AREAS PRIOR TO OPENING THE ROADWAYS TO TRAFFIC. THE PREFERENCE WOULD BE TO HAVE THE PERMANENT LIGHTING INSTALLED AND ENERGIZED PRIOR TO OPENING THE VARIOUS PHASES OF THE PROJECT TO TRAFFIC. SHOULD THE CONTRACTOR ELECT TO COMPLETE THE PERMANENT FACILITIES AFTER THE ROADWAYS ARE OPENED TO TRAFFIC, THEN TEMPORARY LIGHT PLANTS AS DIRECTED BY THE ENGINEER MUST BE PROVIDED BY THE CONTRACTOR UNTIL THE PERMANENT FACILITIES ARE ENERGIZED WITH COSTS INCIDENTAL TO ITEM 743000. MAINTENANCE OF TRAFFIC. LIGHT PLANTS FOR THIS PURPOSE WILL NOT BE PAID SEPARATELY.

46. THE DELDOT BRIDGE SECTION IS RESPONSIBLE FOR THE DESIGN OF THE BRIDGE PLANS (SHEETS 104 TO 118) AND SIGN STRUCTURE DETAIL PLANS (SHEETS 270 TO 276).

47. MILLING OF FINISHED SURFACE CONCRETE PATCHES AT PIPE CROSSINGS WILL BE MEASURED AND PAID AS PART OF ITEM 760507. ANY ADDITIONAL COSTS TO MILL THE CONCRETE ARE INCIDENTAL TO THE PROFILE MILLING, HOTMIX ITEM.

48. THE MILLING, OVERLAY, WIDENING, TEMPORARY ENTRANCE RAMP AND TEMPORARY EXIT RAMP CONSTRUCTION SHOWN ON PLAN SHEETS 296A THROUGH 296I IS TO BE COMPLETED WITHIN THE FIRST 100 CALENDAR DAYS CHARGED TO THE CONTRACT. TO ACHIEVE COMPLETION OF THIS MILESTONE, ALL PAVING AND ROADWAY STRIPING SHOWN ON THESE PLAN SHEETS MUST BE COMPLETED SO THAT TRAFFIC MAY UTILIZE THE NEW CONSTRUCTION. USE THE TRAFFIC CONTROL PROPOSED FOR PHASE V (RAMP D) FOR CONSTRUCTION OF THE WORK INCLUDED IN THIS MILESTONE. FAILURE TO COMPLETE THIS WORK WITHIN THE FIRST 100 CALENDAR DAYS WILL RESULT IN ASSESSMENT OF LIQUIDATED DAMAGES IN THE AMOUNT OF $630.00 PER CALENDAR DAY. THESE CHARGES WILL CONTINUE ON A DAILY BASIS UNTIL THE WORK IS COMPLETED. NOTE THAT THE EXISTING SANITARY SEWER LINE MUST REMAIN IN SERVICE DURING THIS CONSTRUCTION, HOWEVER, THE DRAINAGE PIPES CROSSING SR1 IN THIS AREA CANNOT BE INSTALLED UNTIL AFTER THE SANITARY SEWER RELOCATION WORK IS COMPLETED. ALSO REFER TO SCHEDULE CONSTRAINT NOTE 9 ON PLAN SHEET 139 AND THE PHASE 1-1A NOTES ON PLAN SHEET 140 FOR ADDITIONAL INFORMATION RELATED TO THIS MILESTONE.

49. CONCRETE FOR BRIDGE DECK (602013) AND BRIDGE PARAPETS (ITEM 602017) SHALL INCLUDE A SHRINKAGE REDUCING/COMPENSATING ADMIXTURE. THE ADMIXTURE MAY BE ONE PRODUCT OR TWO SEPARATE PRODUCTS THAT PROVIDE BOTH EXPANSION AND PORE WATER SURFACE TENSION. THE ADMIXTURE(S) SHALL HAVE THE FOLLOWING CHARACTERISTICS:
1) EXPANDS AT A RATE THAT CLOSELY COMPENSATES FOR THE SHRINKAGE OF THE CONCRETE MIX
2) REDUCES CAPILLARY SURFACE TENSION OF THE CONCRETE PORE WATER
3) PROVIDES AT LEAST 80% SHRINKAGE REDUCTION AS MEASURED AND DOCUMENTED BY FIELD PERFORMANCE
4) IS FORMULATED FOR USE IN FREEZING AND THAWING WEATHER
ALL ADMIXTURES MUST BE COMPATIBLE WITH THE OVERALL MIX DESIGN. CALCIUM CHLORIDE IS NOT PERMITTED, AND NO CHEMICAL ADMIXTURES CONTAINING MORE THAN 0.1% CHLORIDE BY WEIGHT ARE PERMITTED. DOSAGE SHALL BE AS RECOMMENDED BY THE MANUFACTURER. COST TO PROVIDE THE ADMIXTURE(S) SHALL BE INCLUDED IN THE BID PRICE FOR ITEMS 602013 AND 601017.

50. PAYMENT CLARIFICATION FOR SEVERAL BRIDGE ITEMS:
1) THE SLEEPER SLABS ADJACENT TO THE APPROACH SLABS ARE TO BE PAID UNDER ITEM 602014 (PCC MASONRY, APPROACH SLAB, CLASS D)

2) ALL DIAPHRAGM CONCRETE IS TO BE PAID FOR UNDER ITEM 602013 (PCC MASONRY SUPERSTRUCTURE, CLASS D). THE ITEM DESCRIPTION ON PLAN SHEET 104, NOTE 7B IS IN ERROR.

3) ABUTMENT CAPS OVER THE PILES AND ALL WING WALL CONCRETE IS TO BE PAID UNDER ITEM 602011 (PCC MASONRY SUBSTRUCTURE, CLASS A)

IN THE CONSTRUCTION PHASING PLANS, THE TERM "MULCH BLANKET" IS USED REPEATEDLY. THIS TERM SHALL BE INTERPRETED TO MEAN "MULCH CHOSEN BY THE CONTRACTOR AS PART OF, AND WITH COSTS INCIDENTAL TO, THE APPLICABLE SEEDING ITEM". THE TERM IS NOT INTENDED AND SHALL NOT BE INTERPRETED TO REFER TO AS A SEPARATE MULCH BLANKET PAY ITEM.

Unofficial Web Site Copy

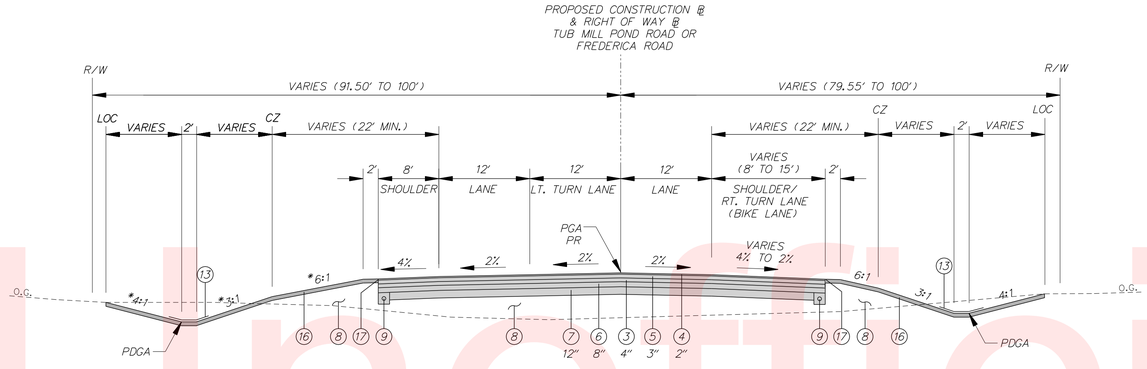

TYPICAL NORMAL SECTION – PROPOSED TUB MILL POND ROAD / FREDERICA ROAD

STATION 523+87.24 TO 528+20.06 (PROPOSED TUB MILL POND ROAD)

STATION 528+20.07 TO 533+32.53 (PROPOSED FREDERICA ROAD)

* SEE SIDE SLOPE DOUBLE DITCH CONSTRUCTION DETAIL FOR STATION 523+00 TO 533+50.

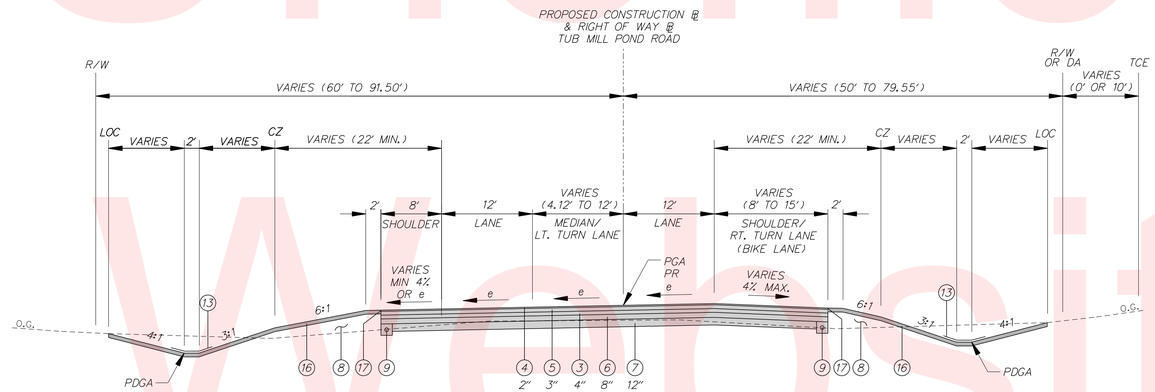

TYPICAL SUPERELEVATED SECTION – PROPOSED TUB MILL POND ROAD

STATION 509+76.02 TO 523+87.23

MAX e = 6%

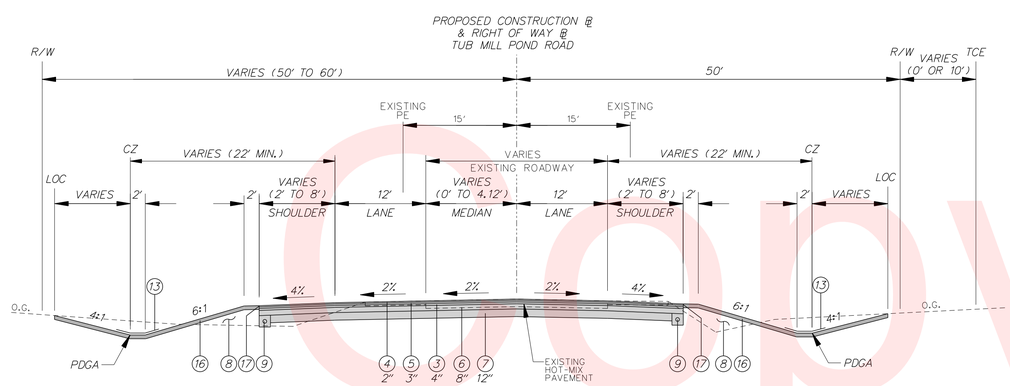

TYPICAL NORMAL SECTION – PROPOSED TUB MILL POND ROAD

STATION 507+00.00 TO 509+76.01

LEGEND

1. ITEM 401830 - BITUMINOUS CONCRETE, SUPERPAVE, TYPE C, 160 GYRATIONS, PG 70-22 (NON-CARBONATE STONE)
2. ITEM 401813 - BITUMINOUS CONCRETE, SUPERPAVE, TYPE B, 160 GYRATIONS, PG 70-22
3. ITEM 401819 - BITUMINOUS CONCRETE, SUPERPAVE, BCBC, 160 GYRATIONS, PG 64-22
4. ITEM 401827 - BITUMINOUS CONCRETE, SUPERPAVE TYPE C, 160 GYRATIONS, PG 64-22 (NON-CARBONATE STONE)
5. ITEM 401810 - BITUMINOUS CONCRETE, SUPERPAVE, TYPE B, 160 GYRATIONS, PG 64-22
6. ITEM 302007 - GRADED AGGREGATE BASE COURSE, TYPE B
7. ITEM 209001 - BORROW, TYPE A
8. ITEM 209006 - BORROW, TYPE F (IN FILL SECTIONS)
9. ITEM 715001 - PERFORATED PIPE UNDERDRAINS, 6"
10. ITEM 760507 - PROFILE MILLING, HOT-MIX
11. ITEM 701011 - PORTLAND CEMENT CONCRETE CURB, TYPE 2
12. ITEM 701022 - PCC CURB & GUTTER, TYPE 3-8
13. ITEM 735535 - SOIL RETENTION BLANKET MULCH, TYPE 5 (SEE NOTE 10)
14. ITEM 705005 - PCC SIDEWALK, 8"
15. ITEM 720050 - GALVANIZED STEEL BEAM GUARDRAIL, TYPE 1-31
16. ITEM 733002 - TOPSOILING, 6"
    ITEM 734013 - PERMANENT GRASS SEEDING, DRY GROUND
17. ITEM 401752 - SAFETY EDGE
18. ITEM 701012 - P.C.C. CURB, TYPE 1-4
19. ITEM 401824 - BITUMINOUS CONCRETE, SUPERPAVE, TYPE C, 160 GYRATIONS, PG 64-22, WEDGE

FILL SLOPE RATIO CHART	
HEIGHT OF FILL	SLOPE RATIO
0' TO 5'	6:1
> 5' TO 10'	4:1
> 10' TO 15'	3:1
> 15'	3:1 WITH GUARDRAIL

PR - POINT OF ROTATION

PDGA - PROFILE DITCH GRADE APPLICATION

PGA - PROFILE GRADE APPLICATION

MAXIMUM SINGLE LIFTS FOR THE FOLLOWING MATERIALS AFTER COMPACTION ARE:
2" = BITUMINOUS CONCRETE, TYPE C
3" = BITUMINOUS CONCRETE, TYPE B
6" = BITUMINOUS CONCRETE, BCBC

NOTES:

1. MAXIMUM ALGEBRAIC DIFFERENCE OF CROSS SLOPES SHALL NOT EXCEED 8%.
2. THE CONTRACTOR SHALL SAWCUT 1' (+/-) INTO THE EXISTING TRAVEL LANE FOR CONSTRUCTION OF THE PROPOSED FULL DEPTH PAVEMENT OR AS DIRECTED BY ENGINEER IN THE FIELD. WHERE PCC PAVEMENT IS IDENTIFIED, CONTRACTOR SHALL PRESERVE THE EXISTING EDGE OF THE CONCRETE AND CONSTRUCT THE PROPOSED PAVEMENT BOX ADJACENT TO THE EDGE.
3. PERFORATED PIPE UNDERDRAIN SHALL MAINTAIN .005% MINIMUM SLOPE IN ALL APPLICATIONS.
4. BORROW, TYPE A SHALL BE PLACED IN SUCCESSIVE LAYERS NOT TO EXCEED 8" IN DEPTH, LOOSE MEASUREMENT, UNLESS OTHERWISE APPROVED BY THE ENGINEER.
5. SEE SUPERELEVATION TRANSITION SHEETS FOR THE DESIGNED SUPERELEVATIONS OF THE PAVEMENT.
6. SEE GRADES AND GEOMETRICS SHEETS FOR FURTHER DETAILS WITHIN THE LIMITS OF THE INTERSECTIONS.
7. FOR GUARDRAIL APPLICATION, SEE CONSTRUCTION PLANS FOR STATIONING AND SEE CONSTRUCTION DETAIL FOR INSTALLATION SPECIFICATIONS.
8. HORIZONTAL CLEARANCE IS MEASURED TO THE POINT 1.5 FT. BEHIND THE BACK OF THE CURB, WHERE APPLICABLE.
9. VARIABLE HOT-MIX MILLING SHALL NOT EXCEED 2" IN DEPTH, UNLESS OTHERWISE DIRECTED BY THE ENGINEER.
10. SOIL RETENTION BLANKET MULCH, TYPE 5 SHALL BE UTILIZED ON THE BOTTOM OF DITCHES AND UP TO 2 FT. ON THE ADJACENT SLOPES.

Unofficial Website Copy

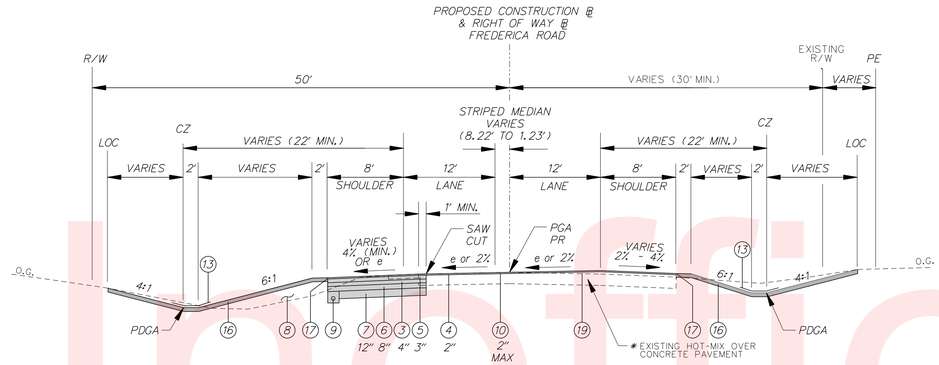

TYPICAL MILL & OVERLAY SUPERELEVATED SECTION – PROPOSED FREDERICA ROAD

STATION 548+19.88 TO 551+94.79

* EXISTING PAVEMENT BEGINS UNDER PROPOSED SECTION AT STATION 548+19.88 AND SHIFTS LEFT GOING UP STATION UNTIL PROPOSED BASELINE MEETS EXISTING BASELINE AT STATION 550+45.99 (PT).

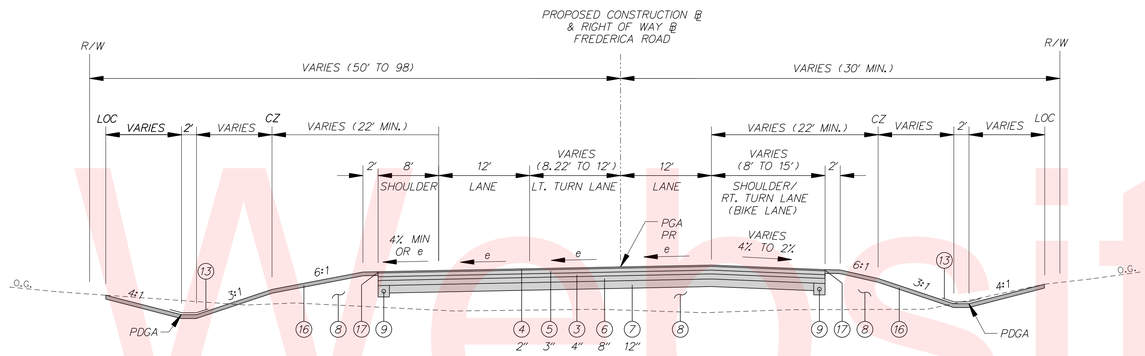

TYPICAL SUPERELEVATED SECTION – PROPOSED FREDERICA ROAD

STATION 542+63.67 TO 548+19.87 (PROPOSED FREDERICA ROAD)

MAX e = 6%

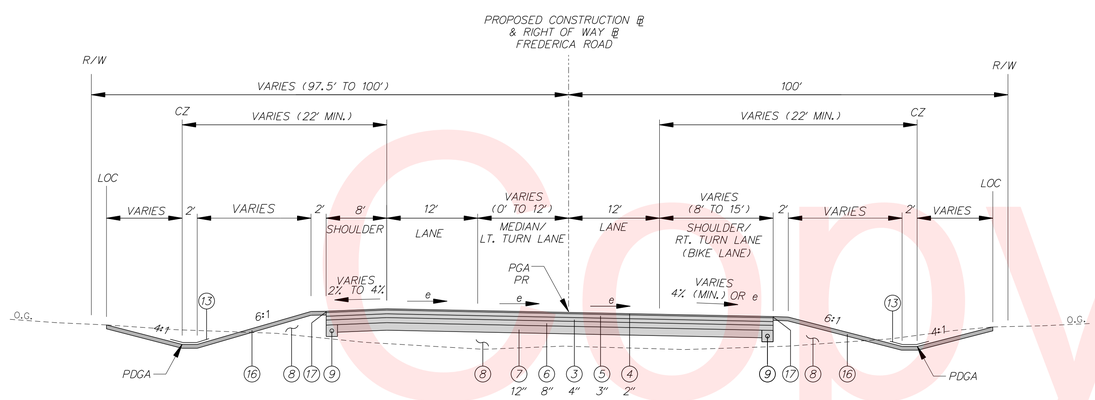

TYPICAL SUPERELEVATED SECTION – PROPOSED FREDERICA ROAD

STATION 533+32.54 TO 542+63.66

MAX e = 6%

LEGEND

1. ITEM 401830 - BITUMINOUS CONCRETE, SUPERPAVE, TYPE C, 160 GYRATIONS, PG 70-22 (NON-CARBONATE STONE)
2. ITEM 401813 - BITUMINOUS CONCRETE, SUPERPAVE, TYPE B, 160 GYRATIONS, PG 70-22
3. ITEM 401819 - BITUMINOUS CONCRETE, SUPERPAVE, BCBC, 160 GYRATIONS, PG 64-22
4. ITEM 401827 - BITUMINOUS CONCRETE, SUPERPAVE TYPE C, 160 GYRATIONS, PG 64-22 (NON-CARBONATE STONE)
5. ITEM 401810 - BITUMINOUS CONCRETE, SUPERPAVE, TYPE B, 160 GYRATIONS, PG 64-22
6. ITEM 302007 - GRADED AGGREGATE BASE COURSE, TYPE B
7. ITEM 209001 - BORROW, TYPE A
8. ITEM 209006 - BORROW, TYPE F (IN FILL SECTIONS)
9. ITEM 715001 - PERFORATED PIPE UNDERDRAINS, 6"
10. ITEM 760507 - PROFILE MILLING, HOT-MIX
11. ITEM 701011 - PORTLAND CEMENT CONCRETE CURB, TYPE 2
12. ITEM 701022 - PCC CURB & GUTTER, TYPE 3-8
13. ITEM 735535 - SOIL RETENTION BLANKET MULCH, TYPE 5 (SEE NOTE 10)
14. ITEM 705005 - PCC SIDEWALK, 8"
15. ITEM 720050 - GALVANIZED STEEL BEAM GUARDRAIL, TYPE 1-31
16. ITEM 733002 - TOPSOILING, 6"
    ITEM 734013 - PERMANENT GRASS SEEDING, DRY GROUND
17. ITEM 401752 - SAFETY EDGE
18. ITEM 701012 - P.C.C. CURB, TYPE 1-4
19. ITEM 401824 - BITUMINOUS CONCRETE, SUPERPAVE, TYPE C, 160 GYRATIONS, PG 64-22, WEDGE

FILL SLOPE RATIO CHART

HEIGHT OF FILL	SLOPE RATIO
0' TO 5'	6:1
> 5' TO 10'	4:1
> 10' TO 15'	3:1
> 15'	3:1 WITH GUARDRAIL

PR - POINT OF ROTATION

PDGA - PROFILE DITCH GRADE APPLICATION

PGA - PROFILE GRADE APPLICATION

MAXIMUM SINGLE LIFTS FOR THE FOLLOWING MATERIALS AFTER COMPACTION ARE:
2" = BITUMINOUS CONCRETE, TYPE C
3" = BITUMINOUS CONCRETE, TYPE B
6" = BITUMINOUS CONCRETE, BCBC

NOTES:

1. MAXIMUM ALGEBRAIC DIFFERENCE OF CROSS SLOPES SHALL NOT EXCEED 8%.
2. THE CONTRACTOR SHALL SAWCUT 1' (+/-) INTO THE EXISTING TRAVEL LANE FOR CONSTRUCTION OF THE PROPOSED FULL DEPTH PAVEMENT OR AS DIRECTED BY ENGINEER IN THE FIELD. WHERE PCC PAVEMENT IS IDENTIFIED, CONTRACTOR SHALL PRESERVE THE EXISTING EDGE OF THE CONCRETE AND CONSTRUCT THE PROPOSED PAVEMENT BOX ADJACENT TO THE EDGE.
3. PERFORATED PIPE UNDERDRAIN SHALL MAINTAIN .005% MINIMUM SLOPE IN ALL APPLICATIONS.
4. BORROW, TYPE A SHALL BE PLACED IN SUCCESSIVE LAYERS NOT TO EXCEED 8" IN DEPTH, LOOSE MEASUREMENT, UNLESS OTHERWISE APPROVED BY THE ENGINEER.
5. SEE SUPERELEVATION TRANSITION SHEETS FOR THE DESIGNED SUPERELEVATIONS OF THE PAVEMENT.
6. SEE GRADES AND GEOMETRICS SHEETS FOR FURTHER DETAILS WITHIN THE LIMITS OF THE INTERSECTIONS.
7. FOR GUARDRAIL APPLICATION, SEE CONSTRUCTION PLANS FOR STATIONING AND SEE CONSTRUCTION DETAIL FOR INSTALLATION SPECIFICATIONS.
8. HORIZONTAL CLEARANCE IS MEASURED TO THE POINT 1.5 FT. BEHIND THE BACK OF THE CURB, WHERE APPLICABLE.
9. VARIABLE HOT-MIX MILLING SHALL NOT EXCEED 2" IN DEPTH, UNLESS OTHERWISE DIRECTED BY THE ENGINEER.
10. SOIL RETENTION BLANKET MULCH, TYPE 5 SHALL BE UTILIZED ON THE BOTTOM OF DITCHES AND UP TO 2 FT. ON THE ADJACENT SLOPES.

Unofficial Website Copy

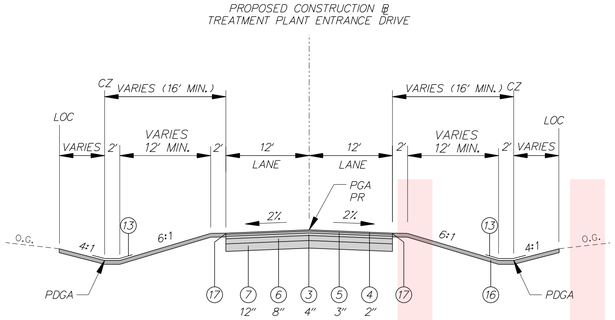

TYPICAL NORMAL SECTION – TREATMENT PLANT ENTRANCE DRIVE
STATION 1200+20.00 TO 1202+02.71

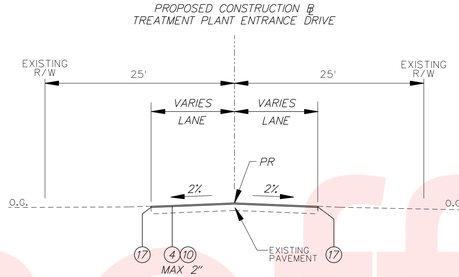

TYPICAL MILL AND OVERLAY SECTION – TREATMENT PLANT ENTRANCE DRIVE
STATION 1202+02.72 TO 1203+00.00

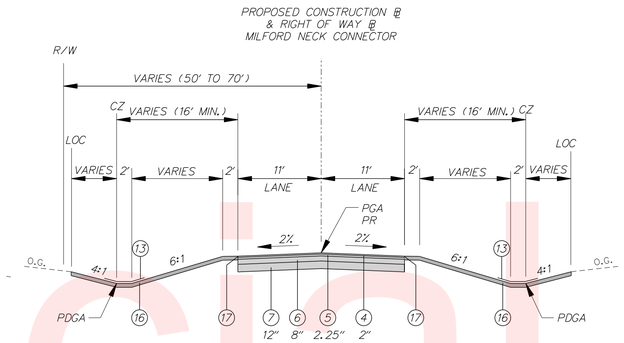

TYPICAL NORMAL SECTION – MILFORD NECK CONNECTOR
STATION 1400+00.00 TO 1402+31.62

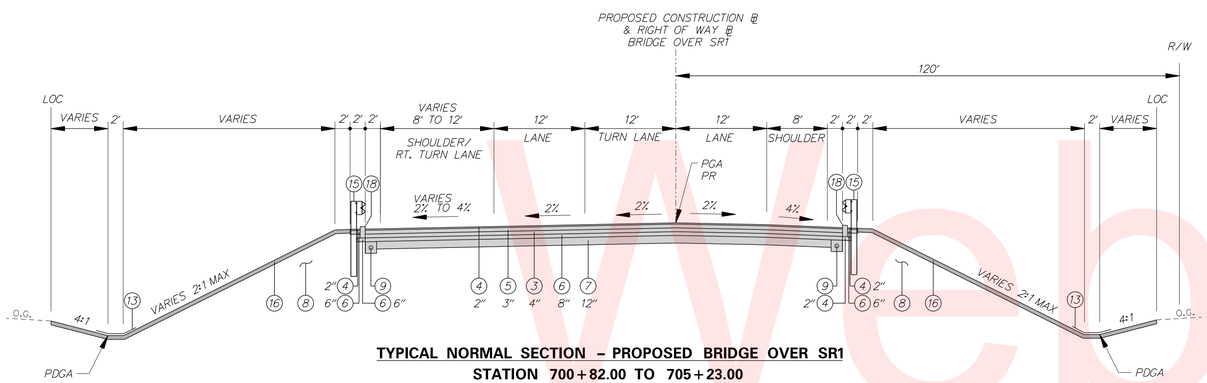

TYPICAL NORMAL SECTION – PROPOSED BRIDGE OVER SR1
STATION 700+82.00 TO 705+23.00
STATION 707+43.00 TO 710+51.06

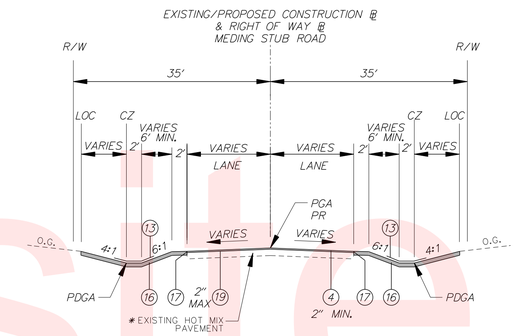

TYPICAL NORMAL OVERLAY SECTION – OLD TUB MILL POND ROAD
STATION 1102+15.69 TO 1106+09.51

* EXISTING PAVEMENT BEGINS UNDER PROPOSED SECTION AT STATION 1102+15.69 AND SHIFTS LEFT GOING UP STATION UNTIL PROPOSED BASELINE MEETS EXISTING BASELINE AT STATION 1102+96.50 (PT).

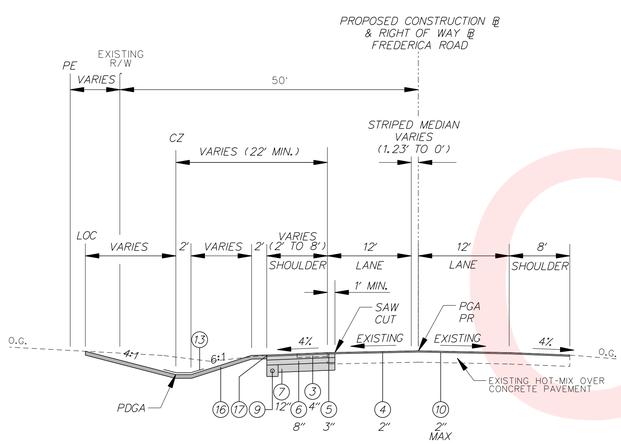

TYPICAL MILL & OVERLAY NORMAL SECTION – PROPOSED FREDERICA ROAD
STATION 551+94.80 TO 553+35.00

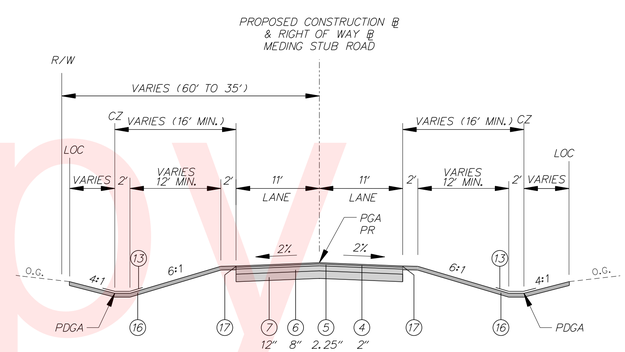

TYPICAL NORMAL SECTION – OLD TUB MILL POND ROAD
STATION 1100+74.98 TO 1102+15.68

LEGEND

1. ITEM 401830 - BITUMINOUS CONCRETE, SUPERPAVE, TYPE C, 160 GYRATIONS, PG 70-22 (NON-CARBONATE STONE)
2. ITEM 401813 - BITUMINOUS CONCRETE, SUPERPAVE, TYPE B, 160 GYRATIONS, PG 70-22
3. ITEM 401819 - BITUMINOUS CONCRETE, SUPERPAVE, BCBC, 160 GYRATIONS, PG 64-22
4. ITEM 401827 - BITUMINOUS CONCRETE, SUPERPAVE TYPE C, 160 GYRATIONS, PG 64-22 (NON-CARBONATE STONE)
5. ITEM 401810 - BITUMINOUS CONCRETE, SUPERPAVE, TYPE B, 160 GYRATIONS, PG 64-22
6. ITEM 302007 - GRADED AGGREGATE BASE COURSE, TYPE B
7. ITEM 209001 - BORROW, TYPE A
8. ITEM 209006 - BORROW, TYPE F (IN FILL SECTIONS)
9. ITEM 715001 - PERFORATED PIPE UNDERDRAINS, 6"
10. ITEM 760507 - PROFILE MILLING, HOT-MIX
11. ITEM 701011 - PORTLAND CEMENT CONCRETE CURB, TYPE 2
12. ITEM 701022 - PCC CURB & GUTTER, TYPE 3-8
13. ITEM 735535 - SOIL RETENTION BLANKET MULCH, TYPE 5 (SEE NOTE 10)
14. ITEM 705005 - PCC SIDEWALK, 8"
15. ITEM 720050 - GALVANIZED STEEL BEAM GUARDRAIL, TYPE 1-31
16. ITEM 733002 - TOPSOILING, 6"
    ITEM 734013 - PERMANENT GRASS SEEDING, DRY GROUND
17. ITEM 401752 - SAFETY EDGE
18. ITEM 701012 - P.C.C. CURB, TYPE 1-4
19. ITEM 401824 - BITUMINOUS CONCRETE, SUPERPAVE, TYPE C, 160 GYRATIONS, PG 64-22, WEDGE

FILL SLOPE RATIO CHART	
HEIGHT OF FILL	SLOPE RATIO
0' TO 5'	6:1
> 5' TO 10'	4:1
> 10' TO 15'	3:1
> 15'	3:1 WITH GUARDRAIL

PR - POINT OF ROTATION

PDGA - PROFILE DITCH GRADE APPLICATION

PGA - PROFILE GRADE APPLICATION

MAXIMUM SINGLE LIFTS FOR THE FOLLOWING MATERIALS AFTER COMPACTION ARE:
2" = BITUMINOUS CONCRETE, TYPE C
3" = BITUMINOUS CONCRETE, TYPE B
6" = BITUMINOUS CONCRETE, BCBC

NOTES:

1. MAXIMUM ALGEBRAIC DIFFERENCE OF CROSS SLOPES SHALL NOT EXCEED 8%.
2. THE CONTRACTOR SHALL SAWCUT 1' (+/-) INTO THE EXISTING TRAVEL LANE FOR CONSTRUCTION OF THE PROPOSED FULL DEPTH PAVEMENT OR AS DIRECTED BY ENGINEER IN THE FIELD. WHERE PCC PAVEMENT IS IDENTIFIED, CONTRACTOR SHALL PRESERVE THE EXISTING EDGE OF THE CONCRETE AND CONSTRUCT THE PROPOSED PAVEMENT BOX ADJACENT TO THE EDGE.
3. PERFORATED PIPE UNDERDRAIN SHALL MAINTAIN .005% MINIMUM SLOPE IN ALL APPLICATIONS.
4. BORROW, TYPE A SHALL BE PLACED IN SUCCESSIVE LAYERS NOT TO EXCEED 8" IN DEPTH, LOOSE MEASUREMENT, UNLESS OTHERWISE APPROVED BY THE ENGINEER.
5. SEE SUPERELEVATION TRANSITION SHEETS FOR THE DESIGNED SUPERELEVATIONS OF THE PAVEMENT.
6. SEE GRADES AND GEOMETRICS SHEETS FOR FURTHER DETAILS WITHIN THE LIMITS OF THE INTERSECTIONS.
7. FOR GUARDRAIL APPLICATION, SEE CONSTRUCTION PLANS FOR STATIONING AND SEE CONSTRUCTION DETAIL FOR INSTALLATION SPECIFICATIONS.
8. HORIZONTAL CLEARANCE IS MEASURED TO THE POINT 1.5 FT. BEHIND THE BACK OF THE CURB, WHERE APPLICABLE.
9. VARIABLE HOT-MIX MILLING SHALL NOT EXCEED 2" IN DEPTH, UNLESS OTHERWISE DIRECTED BY THE ENGINEER.
10. SOIL RETENTION BLANKET MULCH, TYPE 5 SHALL BE UTILIZED ON THE BOTTOM OF DITCHES AND UP TO 2 FT. ON THE ADJACENT SLOPES.

Unofficial Website Copy

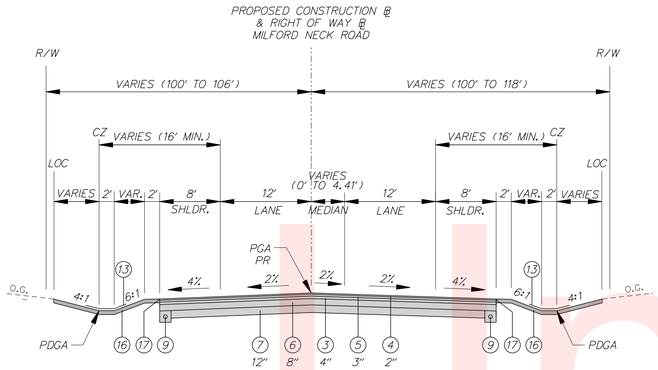

TYPICAL NORMAL SECTION – MILFORD NECK ROAD (K120)
STATION 613+75.18 TO 617+08.37

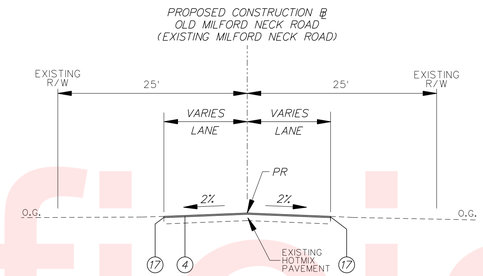

TYPICAL OVERLAY SECTION – OLD MILFORD NECK ROAD (EXISTING MILFORD NECK ROAD)
STATION 402+12.41 TO 408+98.02

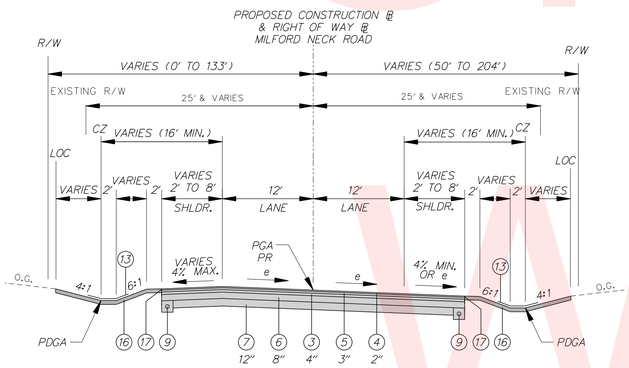

TYPICAL SUPERELEVATED SECTION – MILFORD NECK ROAD (K120)
STATION 603+00.00 TO 613+75.17
MAX e = 5.9%

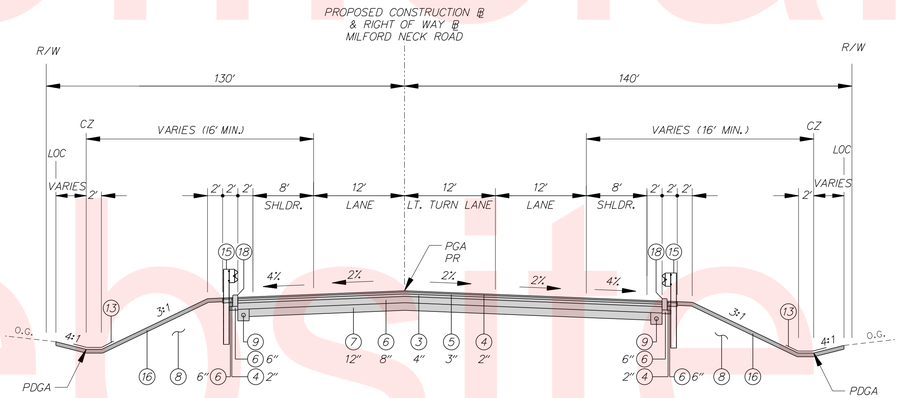

TYPICAL NORMAL SECTION – MILFORD NECK ROAD (K120)
STATION 623+19.34 TO 624+71.56

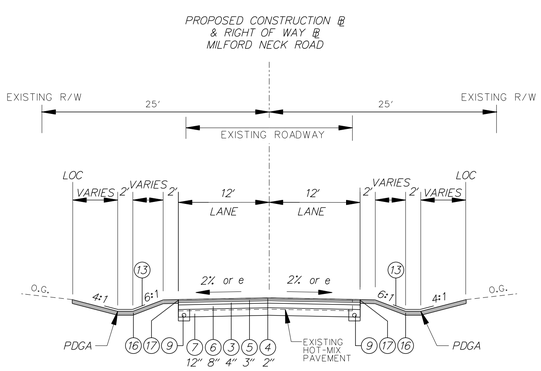

TYPICAL SECTION – PROPOSED MILFORD NECK ROAD
STATION 600+50.00 TO 602+99.99

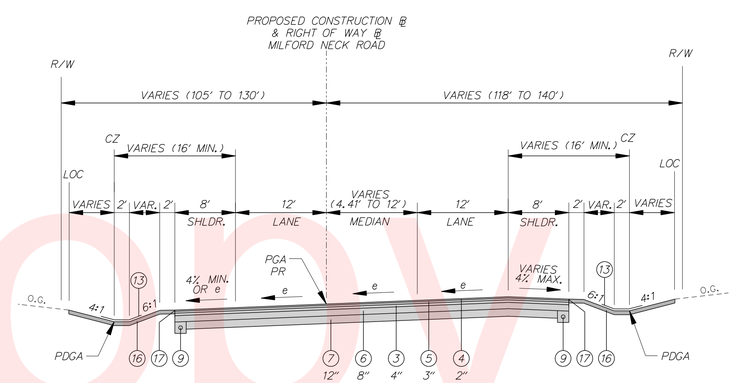

TYPICAL SUPERELEVATED SECTION – MILFORD NECK ROAD (K120)
STATION 617+08.38 TO 623+19.33
MAX e = 4.3%

LEGEND

1. ITEM 401830 - BITUMINOUS CONCRETE, SUPERPAVE, TYPE C, 160 GYRATIONS, PG 70-22 (NON-CARBONATE STONE)
2. ITEM 401813 - BITUMINOUS CONCRETE, SUPERPAVE, TYPE B, 160 GYRATIONS, PG 70-22
3. ITEM 401819 - BITUMINOUS CONCRETE, SUPERPAVE, BCBC, 160 GYRATIONS, PG 64-22
4. ITEM 401827 - BITUMINOUS CONCRETE, SUPERPAVE TYPE C, 160 GYRATIONS, PG 64-22 (NON-CARBONATE STONE)
5. ITEM 401810 - BITUMINOUS CONCRETE, SUPERPAVE, TYPE B, 160 GYRATIONS, PG 64-22
6. ITEM 302007 - GRADED AGGREGATE BASE COURSE, TYPE B
7. ITEM 209001 - BORROW, TYPE A
8. ITEM 209006 - BORROW, TYPE F (IN FILL SECTIONS)
9. ITEM 715001 - PERFORATED PIPE UNDERDRAINS, 6"
10. ITEM 760507 - PROFILE MILLING, HOT-MIX
11. ITEM 701011 - PORTLAND CEMENT CONCRETE CURB, TYPE 2
12. ITEM 701022 - PCC CURB & GUTTER, TYPE 3-8
13. ITEM 735535 - SOIL RETENTION BLANKET MULCH, TYPE 5 (SEE NOTE 10)
14. ITEM 705005 - PCC SIDEWALK, 8"
15. ITEM 720050 - GALVANIZED STEEL BEAM GUARDRAIL, TYPE 1-31
16. ITEM 733002 - TOPSOILING, 6"
    ITEM 734013 - PERMANENT GRASS SEEDING, DRY GROUND
17. ITEM 401752 - SAFETY EDGE
18. ITEM 701012 - P.C.C. CURB, TYPE 1-4
19. ITEM 401824 - BITUMINOUS CONCRETE, SUPERPAVE, TYPE C, 160 GYRATIONS, PG 64-22, WEDGE

FILL SLOPE RATIO CHART	
HEIGHT OF FILL	SLOPE RATIO
0' TO 5'	6:1
> 5' TO 10'	4:1
> 10' TO 15'	3:1
> 15'	3:1 WITH GUARDRAIL

PR - POINT OF ROTATION
PDGA - PROFILE DITCH GRADE APPLICATION
PGA - PROFILE GRADE APPLICATION

MAXIMUM SINGLE LIFTS FOR THE FOLLOWING MATERIALS AFTER COMPACTION ARE:
2" = BITUMINOUS CONCRETE, TYPE C
3" = BITUMINOUS CONCRETE, TYPE B
6" = BITUMINOUS CONCRETE, BCBC

NOTES:

1. MAXIMUM ALGEBRAIC DIFFERENCE OF CROSS SLOPES SHALL NOT EXCEED 8%.
2. THE CONTRACTOR SHALL SAWCUT 1' (+/-) INTO THE EXISTING TRAVEL LANE FOR CONSTRUCTION OF THE PROPOSED FULL DEPTH PAVEMENT OR AS DIRECTED BY ENGINEER IN THE FIELD. WHERE PCC PAVEMENT IS IDENTIFIED, CONTRACTOR SHALL PRESERVE THE EXISTING EDGE OF THE CONCRETE AND CONSTRUCT THE PROPOSED PAVEMENT BOX ADJACENT TO THE EDGE.
3. PERFORATED PIPE UNDERDRAIN SHALL MAINTAIN .005% MINIMUM SLOPE IN ALL APPLICATIONS.
4. BORROW, TYPE A SHALL BE PLACED IN SUCCESSIVE LAYERS NOT TO EXCEED 8" IN DEPTH, LOOSE MEASUREMENT, UNLESS OTHERWISE APPROVED BY THE ENGINEER.
5. SEE SUPERELEVATION TRANSITION SHEETS FOR THE DESIGNED SUPERELEVATIONS OF THE PAVEMENT.
6. SEE GRADES AND GEOMETRICS SHEETS FOR FURTHER DETAILS WITHIN THE LIMITS OF THE INTERSECTIONS.
7. FOR GUARDRAIL APPLICATION, SEE CONSTRUCTION PLANS FOR STATIONING AND SEE CONSTRUCTION DETAIL FOR INSTALLATION SPECIFICATIONS.
8. HORIZONTAL CLEARANCE IS MEASURED TO THE POINT 1.5 FT. BEHIND THE BACK OF THE CURB, WHERE APPLICABLE.
9. VARIABLE HOT-MIX MILLING SHALL NOT EXCEED 2" IN DEPTH, UNLESS OTHERWISE DIRECTED BY THE ENGINEER.
10. SOIL RETENTION BLANKET MULCH, TYPE 5 SHALL BE UTILIZED ON THE BOTTOM OF DITCHES AND UP TO 2 FT. ON THE ADJACENT SLOPES.

Unofficial Website Copy

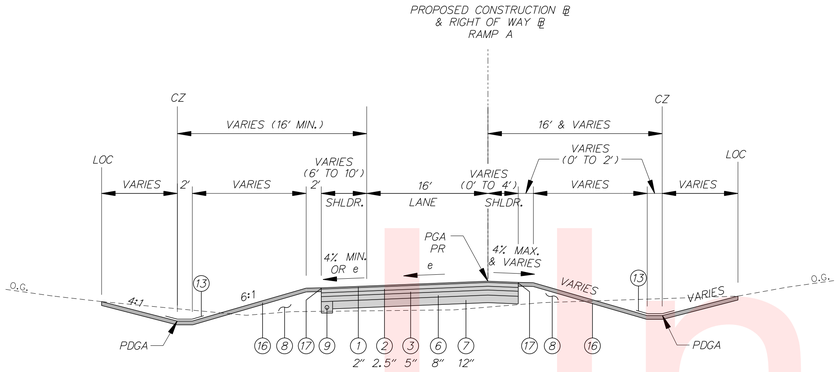

TYPICAL SECTION – RAMP A
STATION 818+12.03 TO 822+88.57
MAX e = 6%

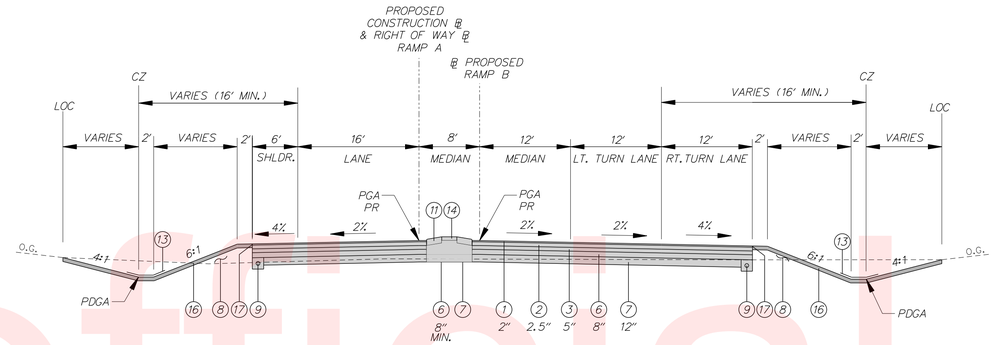

TYPICAL NORMAL SECTION – RAMP A OR B
STATION 823+86.20 TO 824+53.82 (RAMP A)
STATION 900+99.58 TO 901+67.20 (RAMP B)

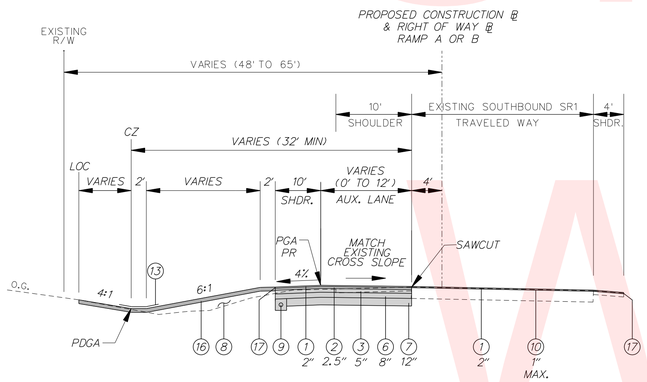

TYPICAL SECTION – RAMP A OR B
STATION 806+64.12 TO 818+12.02 (RAMP A)
STATION 906+79.30 TO 913+46.12 (RAMP B)

CONTRACTOR SHALL PLACE 2" OF TYPE C HOT-MIX TO FINAL GRADES SHOWN IN THE PLANS IN INITIAL PHASES. IN FINAL PHASE, CONTRACTOR SHALL MILL 1" OVER ENTIRE PAVED AREA AND OVERLAY WITH 2" OF TYPE C HOT-MIX.

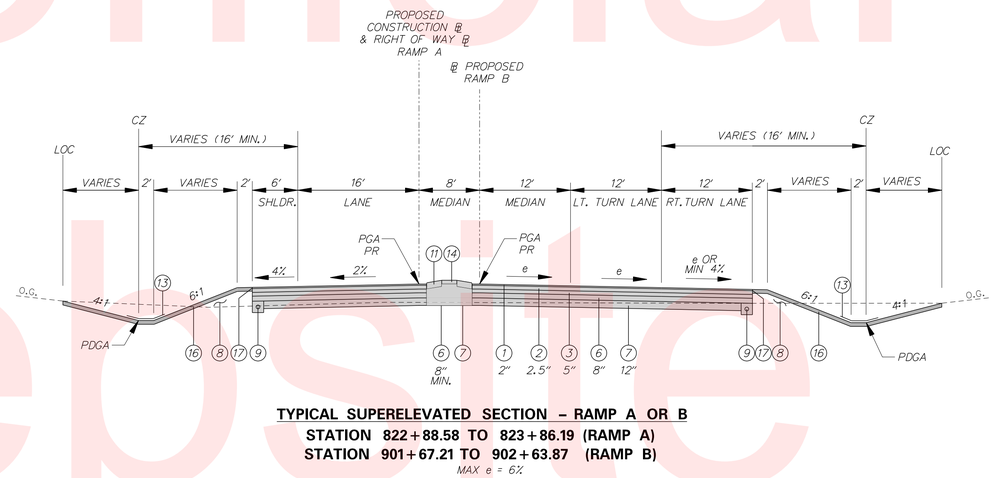

TYPICAL SUPERELEVATED SECTION – RAMP A OR B
STATION 822+88.58 TO 823+86.19 (RAMP A)
STATION 901+67.21 TO 902+63.87 (RAMP B)
MAX e = 6%

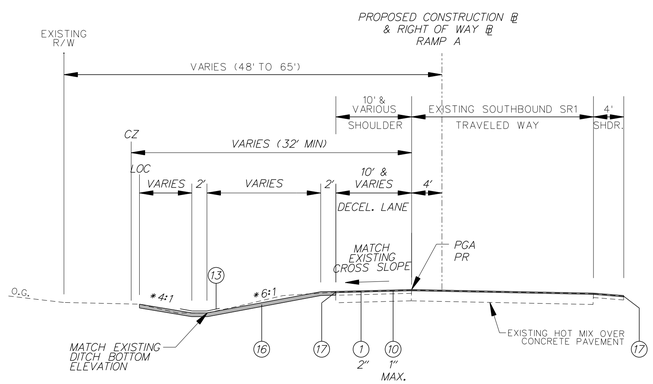

TYPICAL SECTION – RAMP A OR B
STATION 800+00.00 TO 806+64.11 (RAMP A)
* RE-GRADE DITCH

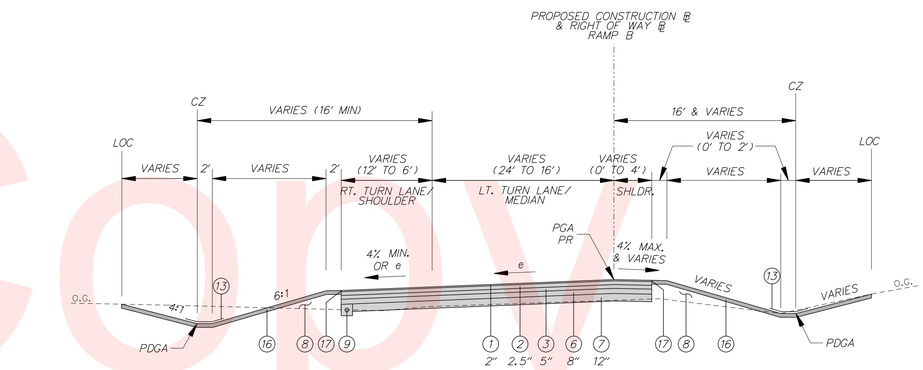

TYPICAL SUPERELEVATED SECTION – RAMP B
STATION 902+63.88 TO 906+79.29
MAX e = 6%

LEGEND

1. ITEM 401830 - BITUMINOUS CONCRETE, SUPERPAVE, TYPE C, 160 GYRATIONS, PG 70-22 (NON-CARBONATE STONE)
2. ITEM 401813 - BITUMINOUS CONCRETE, SUPERPAVE, TYPE B, 160 GYRATIONS, PG 70-22
3. ITEM 401819 - BITUMINOUS CONCRETE, SUPERPAVE, BCBC, 160 GYRATIONS, PG 64-22
4. ITEM 401827 - BITUMINOUS CONCRETE, SUPERPAVE TYPE C, 160 GYRATIONS, PG 64-22 (NON-CARBONATE STONE)
5. ITEM 401810 - BITUMINOUS CONCRETE, SUPERPAVE, TYPE B, 160 GYRATIONS, PG 64-22
6. ITEM 302007 - GRADED AGGREGATE BASE COURSE, TYPE B
7. ITEM 209001 - BORROW, TYPE A
8. ITEM 209006 - BORROW, TYPE F (IN FILL SECTIONS)
9. ITEM 715001 - PERFORATED PIPE UNDERDRAINS, 6"
10. ITEM 760507 - PROFILE MILLING, HOT-MIX
11. ITEM 701011 - PORTLAND CEMENT CONCRETE CURB, TYPE 2
12. ITEM 701022 - PCC CURB & GUTTER, TYPE 3-8
13. ITEM 735535 - SOIL RETENTION BLANKET MULCH, TYPE 5 (SEE NOTE 10)
14. ITEM 705005 - PCC SIDEWALK, 8"
15. ITEM 720050 - GALVANIZED STEEL BEAM GUARDRAIL, TYPE 1-31
16. ITEM 733002 - TOPSOILING, 6"
    ITEM 734013 - PERMANENT GRASS SEEDING, DRY GROUND
17. ITEM 401752 - SAFETY EDGE
18. ITEM 701012 - P.C.C. CURB, TYPE 1-4
19. ITEM 401824 - BITUMINOUS CONCRETE, SUPERPAVE, TYPE C, 160 GYRATIONS, PG 64-22, WEDGE

FILL SLOPE RATIO CHART	
HEIGHT OF FILL	SLOPE RATIO
0' TO 5'	6:1
> 5' TO 10'	4:1
> 10' TO 15'	3:1
> 15'	3:1 WITH GUARDRAIL

PR - POINT OF ROTATION
PDGA - PROFILE DITCH GRADE APPLICATION
PGA - PROFILE GRADE APPLICATION

MAXIMUM SINGLE LIFTS FOR THE FOLLOWING MATERIALS AFTER COMPACTION ARE:
2" = BITUMINOUS CONCRETE, TYPE C
3" = BITUMINOUS CONCRETE, TYPE B
6" = BITUMINOUS CONCRETE, BCBC

NOTES:

1. MAXIMUM ALGEBRAIC DIFFERENCE OF CROSS SLOPES SHALL NOT EXCEED 8%.
2. THE CONTRACTOR SHALL SAWCUT 1' (+/-) INTO THE EXISTING TRAVEL LANE FOR CONSTRUCTION OF THE PROPOSED FULL DEPTH PAVEMENT OR AS DIRECTED BY ENGINEER IN THE FIELD. WHERE PCC PAVEMENT IS IDENTIFIED, CONTRACTOR SHALL PRESERVE THE EXISTING EDGE OF THE CONCRETE AND CONSTRUCT THE PROPOSED PAVEMENT BOX ADJACENT TO THE EDGE.
3. PERFORATED PIPE UNDERDRAIN SHALL MAINTAIN .005% MINIMUM SLOPE IN ALL APPLICATIONS.
4. BORROW, TYPE A SHALL BE PLACED IN SUCCESSIVE LAYERS NOT TO EXCEED 8" IN DEPTH, LOOSE MEASUREMENT, UNLESS OTHERWISE APPROVED BY THE ENGINEER.
5. SEE SUPERELEVATION TRANSITION SHEETS FOR THE DESIGNED SUPERELEVATIONS OF THE PAVEMENT.
6. SEE GRADES AND GEOMETRICS SHEETS FOR FURTHER DETAILS WITHIN THE LIMITS OF THE INTERSECTIONS.
7. FOR GUARDRAIL APPLICATION, SEE CONSTRUCTION PLANS FOR STATIONING AND SEE CONSTRUCTION DETAIL FOR INSTALLATION SPECIFICATIONS.
8. HORIZONTAL CLEARANCE IS MEASURED TO THE POINT 1.5 FT. BEHIND THE BACK OF THE CURB, WHERE APPLICABLE.
9. VARIABLE HOT-MIX MILLING SHALL NOT EXCEED 2" IN DEPTH, UNLESS OTHERWISE DIRECTED BY THE ENGINEER.
10. SOIL RETENTION BLANKET MULCH, TYPE 5 SHALL BE UTILIZED ON THE BOTTOM OF DITCHES AND UP TO 2 FT. ON THE ADJACENT SLOPES.

Unofficial Website Copy

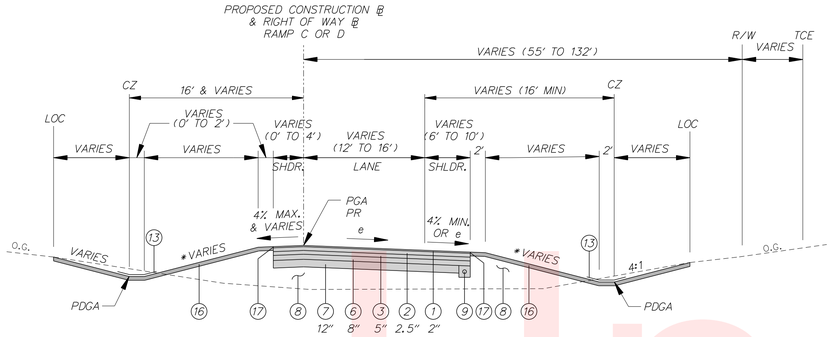

TYPICAL SUPERELEVATED SECTION – RAMP D

STATION 1006+80.01 TO 1011+64.40 (RAMP C)
STATION 1304+57.29 TO 1311+28.79 (RAMP D)

MAX e = 6% (RAMP C) & 4.8% (RAMP D)

*NOTE: WHERE GUARDRAIL IS LOCATED THE FORESLOPE SHALL BE 3:1 MAX.

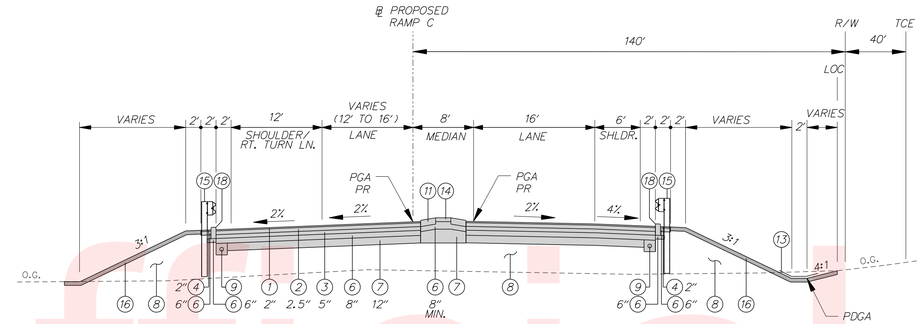

TYPICAL NORMAL SECTION – RAMPS C & D

STATION 1015+05.99 TO 1016+14.12 (RAMP C)

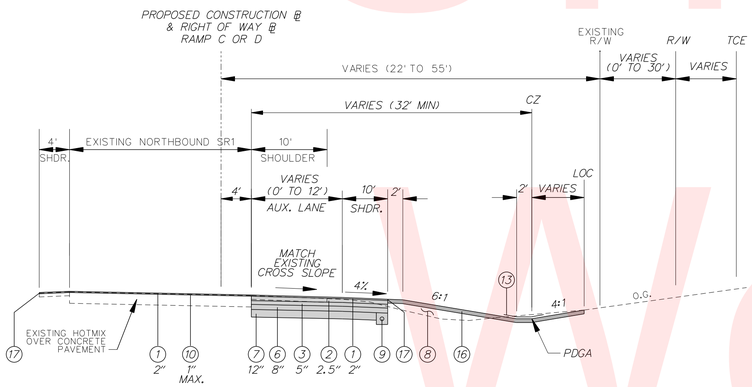

TYPICAL SECTION – RAMPS C & D

STATION 1000+00.00 TO 1006+80.00 (RAMP C)
STATION 1311+28.80 TO 1323+38.80 (RAMP D)

NOTE: CONTRACTOR SHALL PLACE 2" OF TYPE C HOT-MIX TO FINAL GRADES SHOWN IN THE PLANS IN INITIAL PHASES. IN FINAL PHASE, CONTRACTOR SHALL MILL 1" OVER ENTIRE PAVED AREA AND OVERLAY WITH 2" OF TYPE C HOT-MIX.

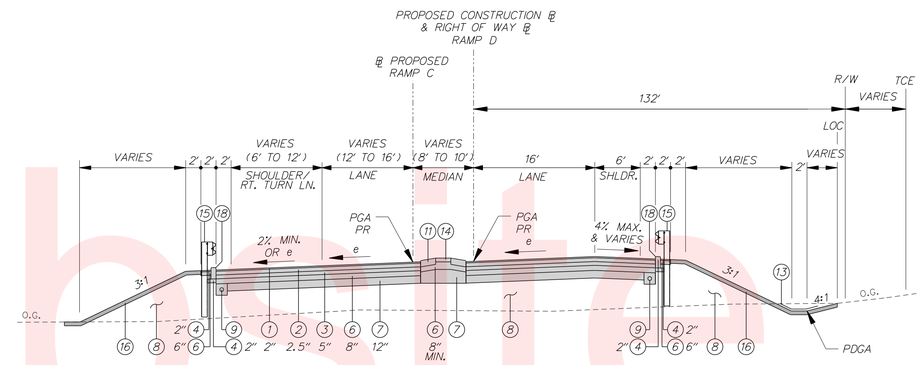

TYPICAL SUPERELEVATED SECTION – RAMPS C & D

STATION 1011+64.41 TO 1015+05.98 (RAMP C)
STATION 1304+26.56 TO 1304+57.28 (RAMP D)

MAX e = 6%

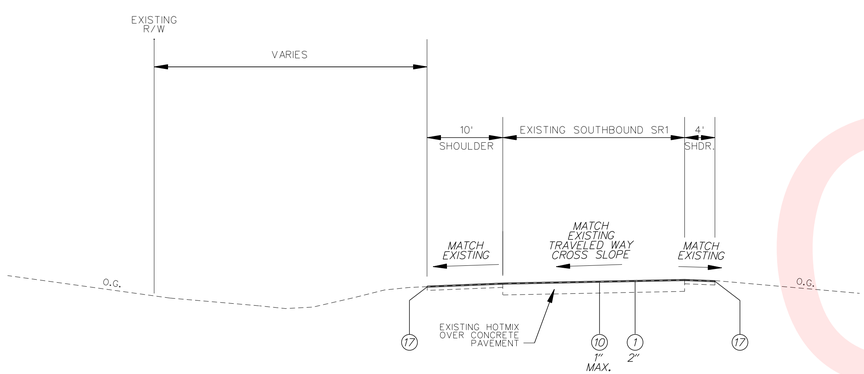

TYPICAL SECTION – MILL AND OVERLAY SR 1 SOUTHBOUND

STATION 95+61 TO 113+86 (EXISTING SR 1)
STATION 913+46.12 (RAMP B) TO 1323+38.80 (RAMP D)

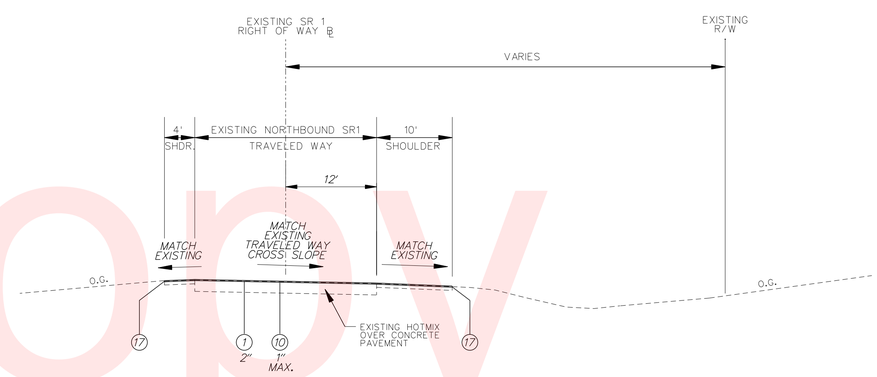

TYPICAL SECTION – MILL AND OVERLAY SR 1 NORTHBOUND

STATION 95+61 TO 120+53 (EXISTING SR 1)

LEGEND

1. ITEM 401830 - BITUMINOUS CONCRETE, SUPERPAVE, TYPE C, 160 GYRATIONS, PG 70-22 (NON-CARBONATE STONE)
2. ITEM 401813 - BITUMINOUS CONCRETE, SUPERPAVE, TYPE B, 160 GYRATIONS, PG 70-22
3. ITEM 401819 - BITUMINOUS CONCRETE, SUPERPAVE, BCBC, 160 GYRATIONS, PG 64-22
4. ITEM 401827 - BITUMINOUS CONCRETE, SUPERPAVE TYPE C, 160 GYRATIONS, PG 64-22 (NON-CARBONATE STONE)
5. ITEM 401810 - BITUMINOUS CONCRETE, SUPERPAVE, TYPE B, 160 GYRATIONS, PG 64-22
6. ITEM 302007 - GRADED AGGREGATE BASE COURSE, TYPE B
7. ITEM 209001 - BORROW, TYPE A
8. ITEM 209006 - BORROW, TYPE F (IN FILL SECTIONS)
9. ITEM 715001 - PERFORATED PIPE UNDERDRAINS, 6"
10. ITEM 760507 - PROFILE MILLING, HOT-MIX
11. ITEM 701011 - PORTLAND CEMENT CONCRETE CURB, TYPE 2
12. ITEM 701022 - PCC CURB & GUTTER, TYPE 3-8
13. ITEM 735535 - SOIL RETENTION BLANKET MULCH, TYPE 5 (SEE NOTE 10)
14. ITEM 705005 - PCC SIDEWALK, 8"
15. ITEM 720050 - GALVANIZED STEEL BEAM GUARDRAIL, TYPE 1-31
16. ITEM 733002 - TOPSOILING, 6"
    ITEM 734013 - PERMANENT GRASS SEEDING, DRY GROUND
17. ITEM 401752 - SAFETY EDGE
18. ITEM 701012 - P.C.C. CURB, TYPE 1-4
19. ITEM 401824 - BITUMINOUS CONCRETE, SUPERPAVE, TYPE C, 160 GYRATIONS, PG 64-22, WEDGE

FILL SLOPE RATIO CHART	
HEIGHT OF FILL	SLOPE RATIO
0' TO 5'	6:1
> 5' TO 10'	4:1
> 10' TO 15'	3:1
> 15'	3:1 WITH GUARDRAIL

PR - POINT OF ROTATION

PDGA - PROFILE DITCH GRADE APPLICATION

PGA - PROFILE GRADE APPLICATION

MAXIMUM SINGLE LIFTS FOR THE FOLLOWING MATERIALS AFTER COMPACTION ARE:
2" = BITUMINOUS CONCRETE, TYPE C
3" = BITUMINOUS CONCRETE, TYPE B
6" = BITUMINOUS CONCRETE, BCBC

NOTES:

1. MAXIMUM ALGEBRAIC DIFFERENCE OF CROSS SLOPES SHALL NOT EXCEED 8%.
2. THE CONTRACTOR SHALL SAWCUT 1' (+/-) INTO THE EXISTING TRAVEL LANE FOR CONSTRUCTION OF THE PROPOSED FULL DEPTH PAVEMENT OR AS DIRECTED BY ENGINEER IN THE FIELD. WHERE PCC PAVEMENT IS IDENTIFIED, CONTRACTOR SHALL PRESERVE THE EXISTING EDGE OF THE CONCRETE AND CONSTRUCT THE PROPOSED PAVEMENT BOX ADJACENT TO THE EDGE.
3. PERFORATED PIPE UNDERDRAIN SHALL MAINTAIN .005% MINIMUM SLOPE IN ALL APPLICATIONS.
4. BORROW, TYPE A SHALL BE PLACED IN SUCCESSIVE LAYERS NOT TO EXCEED 8" IN DEPTH, LOOSE MEASUREMENT, UNLESS OTHERWISE APPROVED BY THE ENGINEER.
5. SEE SUPERELEVATION TRANSITION SHEETS FOR THE DESIGNED SUPERELEVATIONS OF THE PAVEMENT.
6. SEE GRADES AND GEOMETRICS SHEETS FOR FURTHER DETAILS WITHIN THE LIMITS OF THE INTERSECTIONS.
7. FOR GUARDRAIL APPLICATION, SEE CONSTRUCTION PLANS FOR STATIONING AND SEE CONSTRUCTION DETAIL FOR INSTALLATION SPECIFICATIONS.
8. HORIZONTAL CLEARANCE IS MEASURED TO THE POINT 1.5 FT. BEHIND THE BACK OF THE CURB, WHERE APPLICABLE.
9. VARIABLE HOT-MIX MILLING SHALL NOT EXCEED 2" IN DEPTH, UNLESS OTHERWISE DIRECTED BY THE ENGINEER.
10. SOIL RETENTION BLANKET MULCH, TYPE 5 SHALL BE UTILIZED ON THE BOTTOM OF DITCHES AND UP TO 2 FT. ON THE ADJACENT SLOPES.

Unofficial Website Copy

MATCHLINE HORIZONTAL AND VERTICAL CONTROL SHEET 2 OF 4

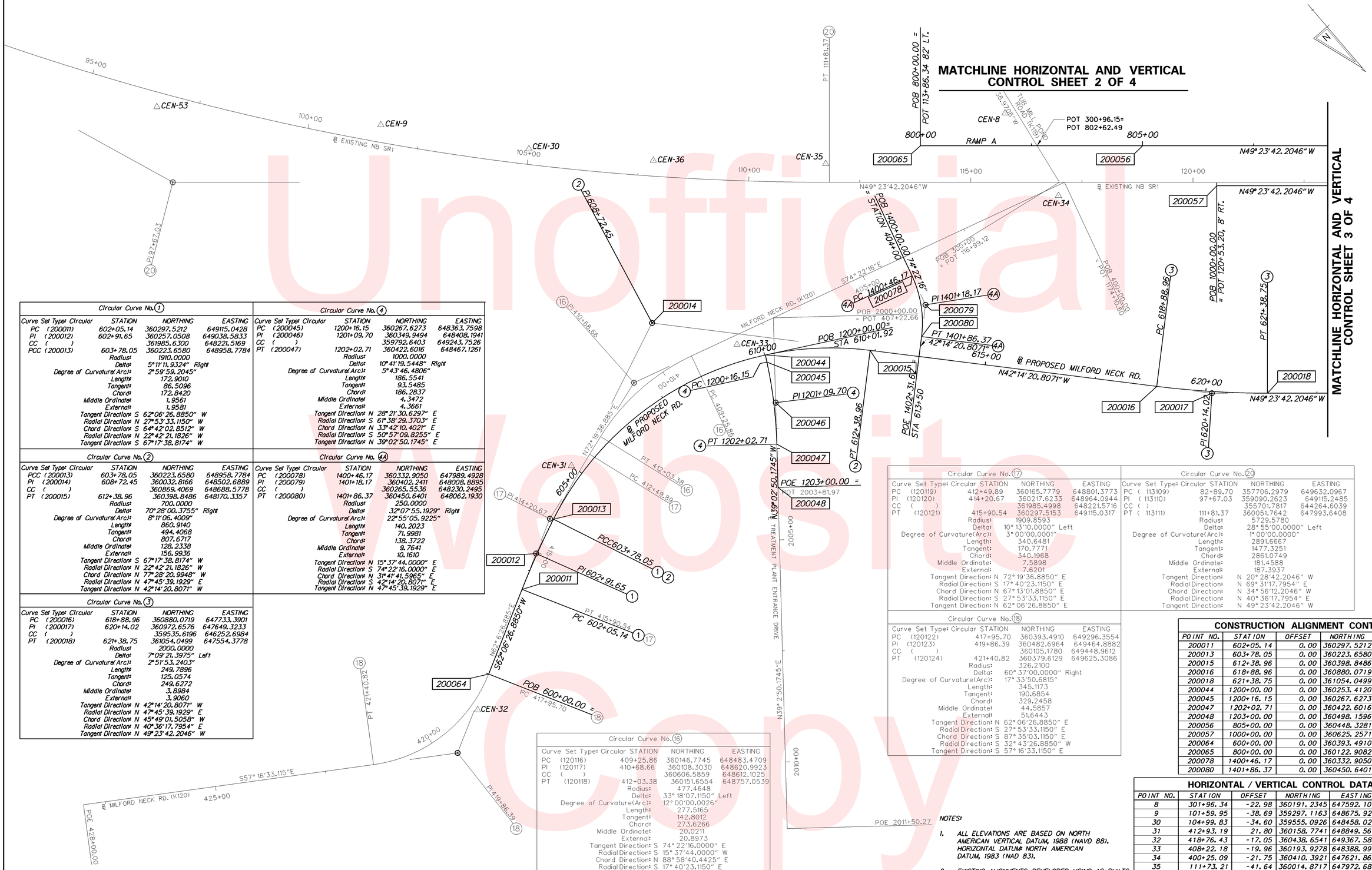

MATCHLINE HORIZONTAL AND VERTICAL CONTROL SHEET 3 OF 4

Circular Curve No. 1

Curve Set Type: Circular	STATION	NORTHING	EASTING
PC (200011)	602+05.14	360297.5212	649115.0428
PI (200012)	602+91.65	360257.0508	649038.5833
CC ( )		361985.6300	648221.5169
PCC (200013)	603+78.05	360223.6580	648958.7784

Radius: 1910.0000
Delta: 5° 11' 11.9324" Right
Degree of Curvature(Arc): 2° 59' 59.2045"
Length: 172.9010
Tangent: 86.5096
Chord: 172.8420
Middle Ordinate: 1.9561
External: 1.9581
Tangent Direction: S 62° 06' 26.8850" W
Radial Direction: N 27° 53' 33.1150" W
Chord Direction: S 64° 42' 02.8512" W
Radial Direction: N 22° 42' 21.1826" W
Tangent Direction: S 67° 17' 38.8174" W

Circular Curve No. 2

Curve Set Type: Circular	STATION	NORTHING	EASTING
PCC (200013)	603+78.05	360223.6580	648958.7784
PI (200014)	608+72.45	360032.8166	648502.6889
CC ( )		360869.4069	648688.5778
PT (200015)	612+38.96	360398.8486	648170.3357

Radius: 700.0000
Delta: 70° 28' 00.3755" Right
Degree of Curvature(Arc): 8° 11' 06.4009"
Length: 860.9140
Tangent: 494.4068
Chord: 807.6717
Middle Ordinate: 128.2338
External: 156.9936
Tangent Direction: S 67° 17' 38.8174" W
Radial Direction: N 22° 42' 21.1826" W
Chord Direction: N 77° 28' 20.9948" W
Radial Direction: N 47° 45' 39.1929" E
Tangent Direction: N 42° 14' 20.8071" W

Circular Curve No. 3

Curve Set Type: Circular	STATION	NORTHING	EASTING
PC (200016)	618+88.96	360880.0719	647733.3901
PI (200017)	620+14.02	360972.6576	647649.3233
CC ( )		359535.6196	646252.6984
PT (200018)	621+38.75	361054.0499	647554.3778

Radius: 2000.0000
Delta: 7° 09' 21.3975" Left
Degree of Curvature(Arc): 2° 51' 53.2403"
Length: 249.7896
Tangent: 125.0574
Chord: 249.6272
Middle Ordinate: 3.8984
External: 3.9060
Tangent Direction: N 42° 14' 20.8071" W
Radial Direction: N 47° 45' 39.1929" E
Chord Direction: N 45° 49' 01.5058" W
Radial Direction: N 40° 36' 17.7954" E
Tangent Direction: N 49° 23' 42.2046" W

Circular Curve No. 4

Curve Set Type: Circular	STATION	NORTHING	EASTING
PC (200045)	1200+16.15	360267.6273	648363.7598
PI (200046)	1201+09.70	360349.9494	648408.1941
CC ( )		359792.6403	649243.7526
PT (200047)	1202+02.71	360422.6016	648467.1261

Radius: 1000.0000
Delta: 10° 41' 19.5448" Right
Degree of Curvature(Arc): 5° 43' 46.4806"
Length: 186.5541
Tangent: 93.5485
Chord: 186.2837
Middle Ordinate: 4.3472
External: 4.3661
Tangent Direction: N 28° 21' 30.6297" E
Radial Direction: S 61° 38' 29.3703" E
Chord Direction: N 33° 42' 10.4021" E
Radial Direction: S 50° 57' 09.8255" E
Tangent Direction: N 39° 02' 50.1745" E

Circular Curve No. 4A

Curve Set Type: Circular	STATION	NORTHING	EASTING
PC (200078)	1400+46.17	360332.9050	647989.4928
PI (200079)	1401+18.17	360402.2411	648008.8895
CC ( )		360265.5536	648230.2495
PT (200080)	1401+86.37	360450.6401	648062.1930

Radius: 250.0000
Delta: 32° 07' 55.1929" Right
Degree of Curvature(Arc): 22° 55' 05.9225"
Length: 140.2023
Tangent: 71.9981
Chord: 138.3722
Middle Ordinate: 9.7641
External: 10.1610
Tangent Direction: N 15° 37' 44.0000" E
Radial Direction: S 74° 22' 16.0000" E
Chord Direction: N 31° 41' 41.5965" E
Radial Direction: S 42° 14' 20.8071" E
Tangent Direction: N 47° 45' 39.1929" E

Circular Curve No. 16

Curve Set Type: Circular	STATION	NORTHING	EASTING
PC (120116)	409+25.86	360146.7745	648483.4709
PI (120117)	410+68.66	360108.3030	648620.9923
CC ( )		360606.5859	648612.1025
PT (120118)	412+03.38	360151.6554	648757.0539

Radius: 477.4648
Delta: 33° 18' 07.1150" Left
Degree of Curvature(Arc): 12° 00' 00.0026"
Length: 277.5165
Tangent: 142.8012
Chord: 273.6266
Middle Ordinate: 20.0211
External: 20.8973
Tangent Direction: S 74° 22' 16.0000" E
Radial Direction: S 15° 37' 44.0000" W
Chord Direction: N 88° 58' 40.4425" E
Radial Direction: S 17° 40' 23.1150" E
Tangent Direction: N 72° 19' 36.8850" E

Circular Curve No. 17

Curve Set Type: Circular	STATION	NORTHING	EASTING
PC (120119)	412+49.89	360165.7779	648801.3773
PI (120120)	414+20.67	360217.6233	648964.0944
CC ( )		361985.4998	648221.5716
PT (120121)	415+90.54	360297.5153	649115.0317

Radius: 1909.8593
Delta: 10° 13' 10.0000" Left
Degree of Curvature(Arc): 3° 00' 00.0001"
Length: 340.6481
Tangent: 170.7771
Chord: 340.1968
Middle Ordinate: 7.5898
External: 7.6201
Tangent Direction: N 72° 19' 36.8850" E
Radial Direction: S 17° 40' 23.1150" E
Chord Direction: N 67° 13' 01.8850" E
Radial Direction: S 27° 53' 33.1150" E
Tangent Direction: N 62° 06' 26.8850" E

Circular Curve No. 18

Curve Set Type: Circular	STATION	NORTHING	EASTING
PC (120122)	417+95.70	360393.4910	649296.3554
PI (120123)	419+86.39	360482.6964	649464.8882
CC ( )		360105.1780	649448.9612
PT (120124)	421+40.82	360379.6129	649625.3086

Radius: 326.2100
Delta: 60° 37' 00.0000" Right
Degree of Curvature(Arc): 17° 33' 50.6815"
Length: 345.1173
Tangent: 190.6854
Chord: 329.2458
Middle Ordinate: 44.5857
External: 51.6443
Tangent Direction: N 62° 06' 26.8850" E
Radial Direction: S 27° 53' 33.1150" E
Chord Direction: S 87° 35' 03.1150" E
Radial Direction: S 32° 43' 26.8850" W
Tangent Direction: S 57° 16' 33.1150" E

Circular Curve No. 20

Curve Set Type: Circular	STATION	NORTHING	EASTING
PC (113109)	82+89.70	357706.2979	649632.0967
PI (113110)	97+67.03	359090.2623	649115.2485
CC ( )		355701.7817	644264.6039
PT (113111)	111+81.37	360051.7642	647993.6408

Radius: 5729.5780
Delta: 28° 55' 00.0000" Left
Degree of Curvature(Arc): 1° 00' 00.0000"
Length: 2891.6667
Tangent: 1477.3251
Chord: 2861.0749
Middle Ordinate: 181.4588
External: 187.3937
Tangent Direction: N 20° 28' 42.2046" W
Radial Direction: N 69° 31' 17.7954" E
Chord Direction: N 34° 56' 12.2046" W
Radial Direction: N 40° 36' 17.7954" E
Tangent Direction: N 49° 23' 42.2046" W

CONSTRUCTION ALIGNMENT CONTROL

POINT NO.	STATION	OFFSET	NORTHING	EASTING
200011	602+05.14	0.00	360297.5212	649115.0428
200013	603+78.05	0.00	360223.6580	648958.7784
200015	612+38.96	0.00	360398.8486	648170.3357
200016	618+88.96	0.00	360880.0719	647733.3901
200018	621+38.75	0.00	361054.0499	647554.3778
200044	1200+00.00	0.00	360253.4120	648356.0869
200045	1200+16.15	0.00	360267.6273	648363.7598
200047	1202+02.71	0.00	360422.6016	648467.1261
200048	1203+00.00	0.00	360498.1596	648528.4150
200056	805+00.00	0.00	360448.3281	647405.0515
200057	1000+00.00	0.00	360625.2571	647336.9437
200064	600+00.00	0.00	360393.4910	649296.3554
200065	800+00.00	0.00	360122.9082	647784.6591
200078	1400+46.17	0.00	360332.9050	647989.4928
200080	1401+86.37	0.00	360450.6401	648062.1930

HORIZONTAL / VERTICAL CONTROL DATA

POINT NO.	STATION	OFFSET	NORTHING	EASTING	ELEVATION
8	301+96.34	-22.98	360191.2345	647592.1018	22.649'
9	101+59.95	-38.69	359297.1163	648675.9286	24.662'
30	104+99.83	-34.60	359555.0926	648458.0274	24.514'
31	412+93.19	21.80	360158.7741	648849.5613	23.900'
32	418+76.43	-17.05	360438.6541	649367.5895	26.042'
33	408+22.18	-19.96	360193.9278	648388.9997	23.907'
34	400+25.09	-21.75	360410.3921	647621.8627	23.279'
35	111+73.21	-41.64	360014.8717	647972.6845	23.596'
36	107+82.65	-35.45	359756.7006	648262.1984	24.712'
53	96+58.93	32.51	358938.1180	649031.9724	21.400'

NOTES:

1. ALL ELEVATIONS ARE BASED ON NORTH AMERICAN VERTICAL DATUM, 1988 (NAVD 88). HORIZONTAL DATUM: NORTH AMERICAN DATUM, 1983 (NAD 83).
2. EXISTING ALIGNMENTS DEVELOPED USING AS-BUILTS IN CONTRACTS NO. 18, 254, 920, 2058, AND 919.

Unofficial Website Copy

DELAWARE DEPARTMENT OF TRANSPORTATION

ADDENDUMS / REVISIONS

SCALE 0 100 200 300 FEET

SR1, SOUTH FREDERICA GRADE SEPARATED INTERSECTION

CONTRACT	BRIDGE NO.	–
T200812202	DESIGNED BY: LCM	
COUNTY		
KENT	CHECKED BY: SFP	

HORIZONTAL AND VERTICAL CONTROL SHEET 1 OF 4

SHEET NO. 12
TOTAL SHTS. 296

5/23/2013
G:\PROJECTS\06535.00 (DelDOT Agmt. 1376 DOTS Open End)\06535.07 SR1, S. Frederica\CADD Files\XMhv01SF.dgn
16:11:59

HORIZONTAL / VERTICAL CONTROL DATA

POINT NO.	STATION	OFFSET	NORTHING	EASTING	ELEVATION
40	308+42.60	-30.99	359550.4667	647483.7808	25.810'
41	312+66.92	19.50	359181.9035	647263.6744	26.855'
42	509+41.72	-13.87	358853.0397	647100.7056	29.910'
43	500+37.08	-22.95	358052.6059	646679.0782	31.535'

CONSTRUCTION ALIGNMENT CONTROL

POINT NO.	STATION	OFFSET	NORTHING	EASTING
200001	511+24.81	0.00	359009.5386	647196.7405
200003	522+38.44	0.00	360022.7674	646998.0267
200039	1100+00.00	0.00	359630.9161	647253.3813
200040	1101+84.36	0.00	359684.0908	647429.9051
200042	1102+96.50	0.00	359764.2252	647499.8353
200043	1106+09.51	0.00	360073.3989	647548.7147
200059	500+00.00	0.00	358009.1391	646682.5366
200060	505+00.00	0.00	358453.8349	646911.1096
200061	510+00.00	0.00	358898.5307	647139.6826

NOTES:

1. ALL ELEVATIONS ARE BASED ON NORTH AMERICAN VERTICAL DATUM, 1988 (NAVD 88). HORIZONTAL DATUM NORTH AMERICAN DATUM, 1983 (NAD 83).
2. EXISTING ALIGNMENTS DEVELOPED USING AS-BUILTS IN CONTRACTS NO. 18, 254, 920, 2058, AND 919.

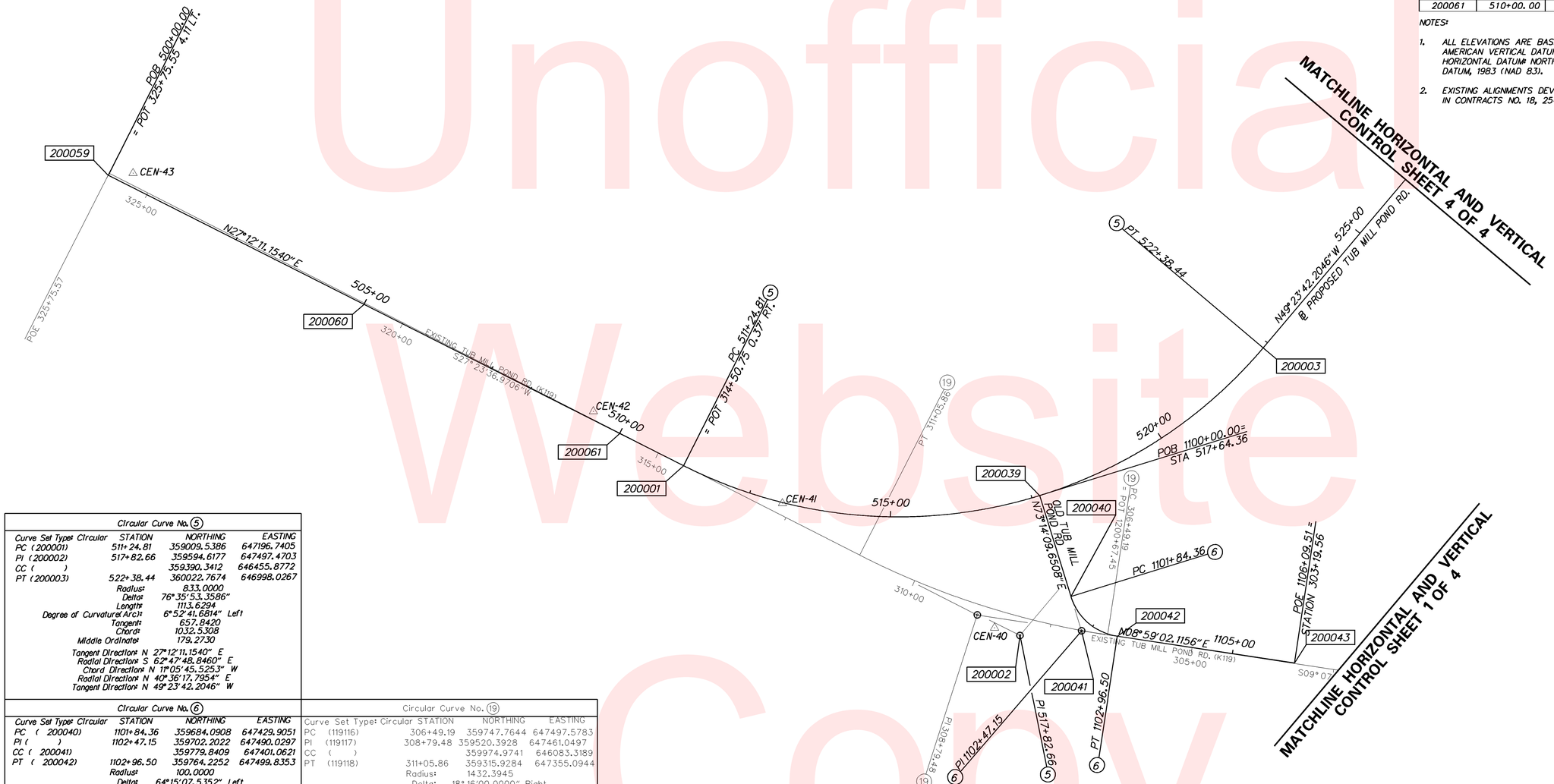

Circular Curve No. 5

Curve Set Type: Circular	STATION	NORTHING	EASTING
PC (200001)	511+24.81	359009.5386	647196.7405
PI (200002)	517+82.66	359594.6177	647497.4703
CC ( )		359390.3412	646455.8772
PT (200003)	522+38.44	360022.7674	646998.0267

Radius: 833.0000
Delta: 76°35'53.3586"
Length: 1113.6294
Degree of Curvature(Arc): 6°52'41.6814" Left
Tangent: 657.8420
Chord: 1032.5308
Middle Ordinate: 179.2730
Tangent Direction: N 27°12'11.1540" E
Radial Direction: S 62°47'48.8460" E
Chord Direction: N 11°05'45.5253" W
Radial Direction: N 40°36'17.7954" E
Tangent Direction: N 49°23'42.2046" W

Circular Curve No. 6

Curve Set Type: Circular	STATION	NORTHING	EASTING
PC (200040)	1101+84.36	359684.0908	647429.9051
PI ( )	1102+47.15	359702.2022	647490.0297
CC (200041)		359779.8409	647401.0621
PT (200042)	1102+96.50	359764.2252	647499.8353

Radius: 100.0000
Delta: 64°15'07.5352" Left
Degree of Curvature(Arc): 57°17'44.8062"
Length: 112.1411
Tangent: 62.7932
Chord: 106.3567
Middle Ordinate: 15.3120
External: 18.0804
Tangent Direction: N 73°14'09.6508" E
Radial Direction: S 16°45'50.3492" E
Chord Direction: N 41°06'35.8832" E
Radial Direction: S 81°00'57.8844" E
Tangent Direction: N 8°59'02.1156" E

Circular Curve No. 19

Curve Set Type: Circular	STATION	NORTHING	EASTING
PC (119116)	306+49.19	359747.7644	647497.5783
PI (119117)	308+79.48	359520.3928	647461.0497
CC ( )		359974.9741	646083.3189
PT (119118)	311+05.86	359315.9284	647355.0944

Radius: 1432.3945
Delta: 18°16'00.0000" Right
Degree of Curvature(Arc): 3°59'59.9999"
Length: 456.6667
Tangent: 230.2872
Chord: 454.7351
Middle Ordinate: 18.1604
External: 18.3936
Tangent Direction: S 9°07'36.9706" W
Radial Direction: N 80°52'23.0294" W
Chord Direction: S 18°15'36.9706" W
Radial Direction: N 62°36'23.0294" W
Tangent Direction: S 27°23'36.9706" W

Unofficial Website Copy

DELAWARE DEPARTMENT OF TRANSPORTATION

ADDENDUMS / REVISIONS

SCALE 0 100 200 300 FEET

SR1, SOUTH FREDERICA GRADE SEPARATED INTERSECTION

CONTRACT	BRIDGE NO.	–
T200812202	DESIGNED BY: LCM	
COUNTY		
KENT	CHECKED BY: SFP	

HORIZONTAL AND VERTICAL CONTROL SHEET 2 OF 4

SHEET NO. 13
TOTAL SHTS. 296

5/23/2013
G:\PROJECTS\06535.00 (DelDOT Agmt. 1376 DOTS Open End)\06535.07 SR1, S. Frederica\CADD Files\XM\hv02SF.dgn
16:12:41

HORIZONTAL / VERTICAL CONTROL DATA

POINT NO.	STATION	OFFSET	NORTHING	EASTING	ELEVATION
7	818+72.35	-31.65	362830.5321	645636.7497	16.042'
6	224+78.77	-94.36	361370.7684	646386.0691	20.006'
20	906+36.76	-48.72	361925.2852	645996.6963	16.741'

CONSTRUCTION ALIGNMENT CONTROL

POINT NO.	STATION	OFFSET	NORTHING	EASTING
200023	811+45.11	0.00	360868.1883	646915.2777
200025	818+74.12	0.00	361391.9011	646409.6917
200027	821+32.16	0.00	361473.2713	646178.7771
200030	902+27.15	0.00	361438.7738	645987.6124
200032	906+66.12	0.00	361784.8104	646134.2865
200033	913+46.12	0.00	362392.9590	645832.0225
200035	1004+78.24	0.00	360936.5171	646973.8539
200036	1006+80.00	0.00	361071.8585	646824.2585
200038	1013+93.36	0.00	361414.3334	647134.1012
200051	1304+26.56	0.00	361475.1837	646947.4701

CONSTRUCTION ALIGNMENT CONTROL

POINT NO.	STATION	OFFSET	NORTHING	EASTING
200052	1305+68.20	0.00	361453.6789	646807.4753
200054	1311+28.80	0.00	361664.7345	646319.4590
200055	1323+38.80	0.00	362753.9148	645804.3938
200068	705+00.00	0.00	360780.9165	646881.8717
200069	710+00.00	0.00	361160.5241	647207.2915
200070	711+45.06	0.00	361270.6564	647301.7028

MATCHLINE HORIZONTAL AND VERTICAL CONTROL SHEET 4 OF 4

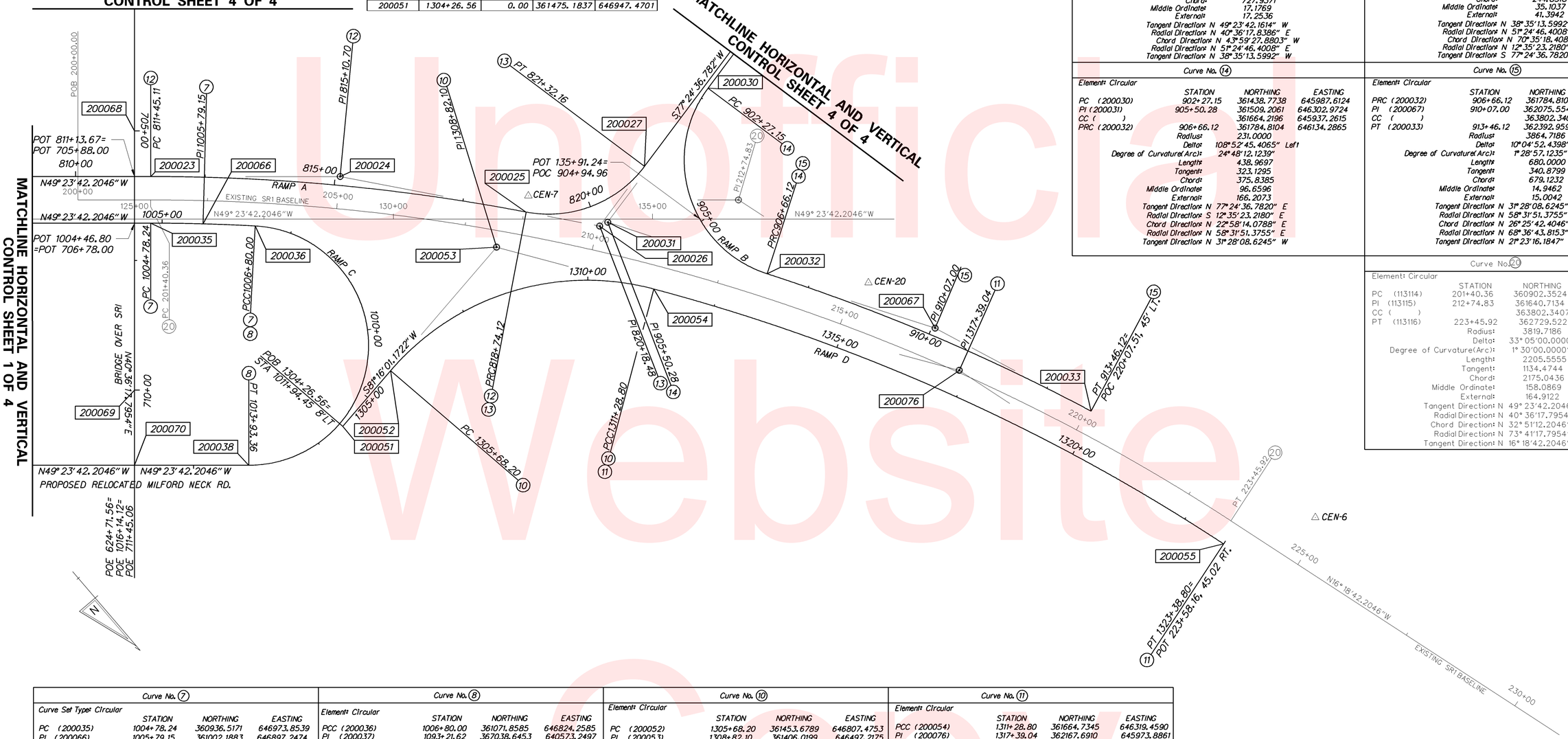

Curve No. 12

Curve Set Type: Circular

	STATION	NORTHING	EASTING
PC (200023)	811+45.11	360868.1883	646915.2777
PI (200024)	815+10.70	361106.1311	646637.7137
CC ( )		363802.3407	649430.5907
PRC (200025)	818+74.12	361391.9011	646409.6917

Radius: 3864.7186
Delta: 10°48'28.5622"
Length: 729.0175
Degree of Curvature(Arc): 1°28'57.1235" Right
Tangent: 365.5934
Chord: 727.9371
Middle Ordinate: 17.1769
External: 17.2536
Tangent Direction: N 49°23'42.1614" W
Radial Direction: N 40°36'17.8386" E
Chord Direction: N 43°59'27.8803" W
Radial Direction: N 51°24'46.4008" E
Tangent Direction: N 38°35'13.5992" W

Curve No. 13

Curve Set Type: Circular

	STATION	NORTHING	EASTING
PRC (200025)	818+74.12	361391.9011	646409.6917
PI (200026)	820+18.48	361504.7357	646319.6586
CC ( )		361247.8256	646229.1280
PT (200027)	821+32.16	361473.2713	646178.7771

Radius: 231.0000
Delta: 64°00'09.6188"
Length: 258.0402
Degree of Curvature(Arc): 24°48'12.1239" Left
Tangent: 144.3523
Chord: 244.8318
Middle Ordinate: 35.1037
External: 41.3942
Tangent Direction: N 38°35'13.5992" W
Radial Direction: N 51°24'46.4008" E
Chord Direction: N 70°35'18.4086" W
Radial Direction: N 12°35'23.2180" W
Tangent Direction: S 77°24'36.7820" W

Curve No. 14

Element: Circular

	STATION	NORTHING	EASTING
PC (200030)	902+27.15	361438.7738	645987.6124
PI (200031)	905+50.28	361509.2061	646302.9724
CC ( )		361664.2196	645937.2615
PRC (200032)	906+66.12	361784.8104	646134.2865

Radius: 231.0000
Delta: 108°52'45.4065" Left
Degree of Curvature(Arc): 24°48'12.1239"
Length: 438.9697
Tangent: 323.1295
Chord: 375.8385
Middle Ordinate: 96.6596
External: 166.2073
Tangent Direction: N 77°24'36.7820" E
Radial Direction: S 12°35'23.2180" E
Chord Direction: N 22°58'14.0788" E
Radial Direction: N 58°31'51.3755" E
Tangent Direction: N 31°28'08.6245" W

Curve No. 15

Element: Circular

	STATION	NORTHING	EASTING
PRC (200032)	906+66.12	361784.8104	646134.2865
PI (200067)	910+07.00	362075.5544	645956.3342
CC ( )		363802.3407	649430.5907
PT (200033)	913+46.12	362392.9590	645832.0225

Radius: 3864.7186
Delta: 10°04'52.4398" Right
Degree of Curvature(Arc): 1°28'57.1235"
Length: 680.0000
Tangent: 340.8799
Chord: 678.1232
Middle Ordinate: 14.9462
External: 15.0042
Tangent Direction: N 31°28'08.6245" W
Radial Direction: N 58°31'51.3755" E
Chord Direction: N 26°25'42.4046" W
Radial Direction: N 68°36'43.8153" E
Tangent Direction: N 21°23'16.1847" W

Curve No. 20

Element: Circular

	STATION	NORTHING	EASTING
PC (113114)	201+40.36	360902.3524	646944.5661
PI (113115)	212+74.83	361640.7134	646083.2560
CC ( )		363802.3407	649430.5907
PT (113116)	223+45.92	362729.5227	645764.6240

Radius: 3819.7186
Delta: 33°05'00.0000" Right
Degree of Curvature(Arc): 1°30'00.0000"
Length: 2205.5555
Tangent: 1134.4744
Chord: 2175.0436
Middle Ordinate: 158.0869
External: 164.9122
Tangent Direction: N 49°23'42.2046" W
Radial Direction: N 40°36'17.7954" E
Chord Direction: N 32°51'12.2046" W
Radial Direction: N 73°41'17.7954" E
Tangent Direction: N 16°18'42.2046" W

Curve No. 7

Curve Set Type: Circular

	STATION	NORTHING	EASTING
PC (200035)	1004+78.24	360936.5171	646973.8539
PI (200066)	1005+79.15	361002.1883	646897.2474
CC ( )		363802.3407	649430.5907
PCC (200036)	1006+80.00	361071.8582	646824.2588

Radius: 3774.7186
Delta: 3°03'44.7209"
Length: 201.7563
Degree of Curvature(Arc): 1°31'04.3757" Right
Tangent: 100.9022
Chord: 201.7323
Middle Ordinate: 1.3479
External: 1.3484
Tangent Direction: N 49°23'42.2046" W
Radial Direction: N 40°36'17.7954" E
Chord Direction: N 47°51'49.8441" W
Radial Direction: N 43°40'02.5163" E
Tangent Direction: N 46°19'57.4837" W

Curve No. 8

Element: Circular

	STATION	NORTHING	EASTING
PCC (200036)	1006+80.00	361071.8585	646824.2585
PI (200037)	1093+21.62	367038.6453	640573.2497
CC ( )		361238.9547	646983.7573
PT (200038)	1013+93.36	361414.3334	647134.1012

Radius: 231.0000
Delta: 176°56'15.2599" Right
Degree of Curvature(Arc): 24°48'12.1239"
Length: 713.3611
Tangent: 8641.6235
Chord: 461.8350
Middle Ordinate: 224.8273
External: 843.7104
Tangent Direction: N 46°19'57.4645" W
Radial Direction: N 43°40'02.5355" E
Chord Direction: N 42°08'10.1654" E
Radial Direction: S 40°36'17.7954" W
Tangent Direction: S 49°23'42.2046" E

Curve No. 10

Element: Circular

	STATION	NORTHING	EASTING
PC (200052)	1305+68.20	361453.6789	646807.4753
PI (200053)	1308+82.10	361406.0199	646497.2175
CC ( )		361947.8822	646731.5602
PCC (200054)	1311+28.80	361664.7345	646319.4590

Radius: 500.0000
Delta: 64°14'26.5369" Right
Degree of Curvature(Chord): 11°28'42.0274"
Length: 560.6059
Tangent: 313.8970
Chord: 531.6995
Middle Ordinate: 76.5334
External: 90.3654
Tangent Direction: S 81°16'01.1722" W
Radial Direction: N 8°43'58.8278" W
Chord Direction: N 66°36'45.5593" W
Radial Direction: N 55°30'27.7091" E
Tangent Direction: N 34°29'32.2909" W

Curve No. 11

Element: Circular

	STATION	NORTHING	EASTING
PCC (200054)	1311+28.80	361664.7345	646319.4590
PI (200076)	1317+39.04	362167.6910	645973.8861
CC ( )		363802.3407	649430.5907
PT (200055)	1323+38.80	362753.9148	645804.3938

Radius: 3774.7186
Delta: 18°21'58.9477" Right
Degree of Curvature(Chord): 1°31'04.5355"
Length: 1210.0000
Tangent: 610.2344
Chord: 1204.8261
Middle Ordinate: 48.3800
External: 49.0082
Tangent Direction: N 34°29'32.2909" W
Radial Direction: N 55°30'27.7091" E
Chord Direction: N 25°18'32.8170" W
Radial Direction: N 73°52'26.6569" E
Tangent Direction: N 18°07'33.3431" W

NOTES:

1. ALL ELEVATIONS ARE BASED ON NORTH AMERICAN VERTICAL DATUM, 1988 (NAVD 88). HORIZONTAL DATUM: NORTH AMERICAN DATUM, 1983 (NAD 83).
2. EXISTING ALIGNMENTS DEVELOPED USING AS-BUILTS IN CONTRACTS NO. 18, 254, 920, 2058, AND 919.

Unofficial Website Copy

DELAWARE DEPARTMENT OF TRANSPORTATION

ADDENDUMS / REVISIONS

SCALE 0 100 200 300 FEET

SR1, SOUTH FREDERICA GRADE SEPARATED INTERSECTION

CONTRACT	BRIDGE NO.	–
T200812202	DESIGNED BY: LCM	
COUNTY		
KENT	CHECKED BY: SFP	

HORIZONTAL AND VERTICAL CONTROL SHEET 3 OF 4

SHEET NO. 14
TOTAL SHTS. 296

6/6/2013 G:\PROJECTS\06535.00 (DelDOT Agmt. 1376 DOTS Open End)\06535.07 SR1, S. Frederica\CADD Files\XM\hv03SF.dgn 16:05:39

HORIZONTAL / VERTICAL CONTROL DATA					
POINT NO.	STATION	OFFSET	NORTHING	EASTING	ELEVATION
21	549+03.83	35.49	362145.7604	645586.1023	17.869'
26	555+33.37	-19.49	362526.8025	645076.5170	17.726'
27	548+02.22	20.87	362052.3642	645636.1962	18.461'

CONSTRUCTION ALIGNMENT CONTROL				
POINT NO.	STATION	OFFSET	NORTHING	EASTING
200004	534+81.33	0.00	360831.6881	646054.4076
200005	541+39.73	0.00	361404.4312	645765.6979
200006	543+87.59	0.00	361651.6535	645747.9392
200008	550+45.99	0.00	362224.3967	645459.2295
200072	527+38.44	0.00	360348.1856	646618.4211
200073	528+20.06	0.00	360401.3090	646556.4518
200074	533+20.06	0.00	360726.7270	646176.8464
200075	558+69.89	0.00	362760.6236	644833.7121
200076	825+53.40	0.00	361381.4546	645767.6684
200077	900+01.01	0.00	361389.4817	645766.9071

NOTES:

1. ALL ELEVATIONS ARE BASED ON NORTH AMERICAN VERTICAL DATUM, 1988 (NAVD 88). HORIZONTAL DATUM: NORTH AMERICAN DATUM, 1983 (NAD 83).
2. EXISTING ALIGNMENTS DEVELOPED USING AS-BUILTS IN CONTRACTS NO. 18, 254, 920, 2058, AND 919.

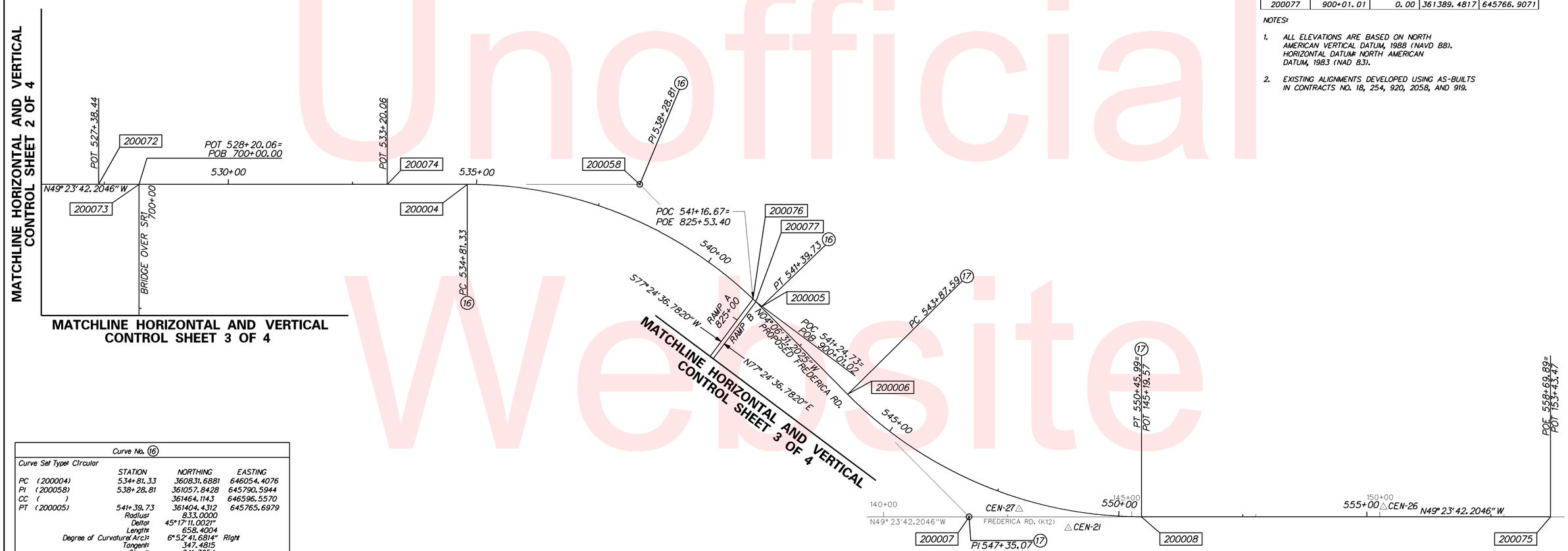

MATCHLINE HORIZONTAL AND VERTICAL CONTROL SHEET 3 OF 4

Curve No. 16			
Curve Set Type: Circular			
	STATION	NORTHING	EASTING
PC (200004)	534+81.33	360831.6881	646054.4076
PI (200058)	538+28.81	361057.8428	645790.5944
CC ( )		361464.1143	646596.5570
PT (200005)	541+39.73	361404.4312	645765.6979
Radius:		833.0000	
Delta:		45°17'11.0021"	
Length:		658.4004	
Degree of Curvature(Arc):		6°52'41.6814"	Right
Tangent:		347.4815	
Chord:		641.3954	
Middle Ordinate:		64.2074	
External:		69.5699	
Tangent Direction:	N 49°23'42.2046"	W	
Radial Direction:	N 40°36'17.7954"	E	
Chord Direction:	N 26°45'06.7035"	W	
Radial Direction:	N 85°53'28.7975"	E	
Tangent Direction:	N 4°06'31.2025"	W	

Curve No. 17			
Curve Set Type: Circular			
	STATION	NORTHING	EASTING
PC (200006)	543+87.59	361651.6535	645747.9392
PI (200007)	547+35.07	361998.2420	645723.0427
CC ( )		361591.9705	644917.0800
PT (200008)	550+45.99	362224.3967	645459.2295
Radius:		833.0000	
Delta:		45°17'11.0021"	
Length:		658.4004	
Degree of Curvature(Arc):		6°52'41.6814"	Left
Tangent:		347.4815	
Chord:		641.3954	
Middle Ordinate:		64.2074	
External:		69.5699	
Tangent Direction:	N 4°06'31.2025"	W	
Radial Direction:	N 85°53'28.7975"	E	
Chord Direction:	N 26°45'06.7035"	W	
Radial Direction:	N 40°36'17.7954"	E	
Tangent Direction:	N 49°23'42.2046"	W	

Unofficial Website Copy

DELAWARE
DEPARTMENT OF TRANSPORTATION

ADDENDUMS / REVISIONS

SCALE 0 100 200 300 FEET

SR1, SOUTH FREDERICA
GRADE SEPARATED INTERSECTION

CONTRACT	BRIDGE NO.	–
T200812202	DESIGNED BY: LCM	
COUNTY		
KENT	CHECKED BY: SFP	

HORIZONTAL AND VERTICAL CONTROL
SHEET 4 OF 4

SHEET NO. 15
TOTAL SHTS. 296

5/24/2013
G:\PROJECTS\06535.00 (DelDOT Agmt. 1376 DOTS Open End)\06535.07 SR1, S. Frederica\CADD Files\XM\hv04SF.dgn
11:57:24

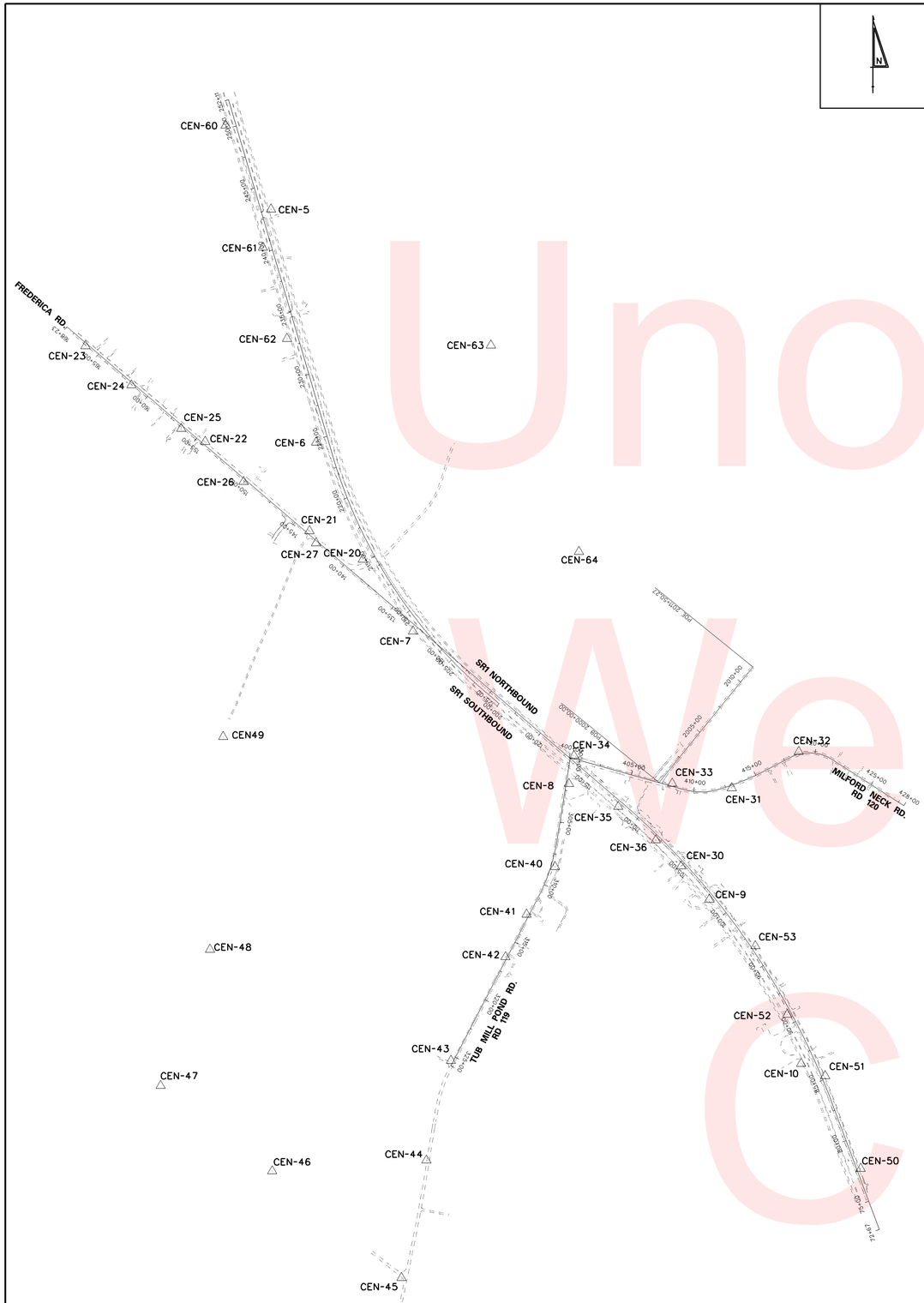

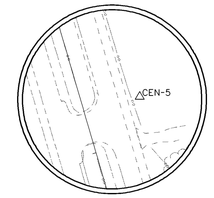

TRAVERSE POINT #5
N 364631.9492
E 645288.8348
ELE. 12.33'

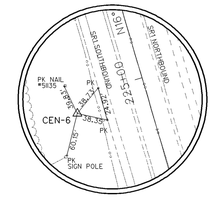

TRAVERSE POINT #6
N 362830.5321
E 645636.7497
ELE. 16.04'

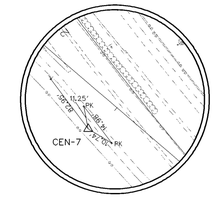

TRAVERSE POINT #7
N 361370.7684
E 646386.0690
ELE. 20.01'

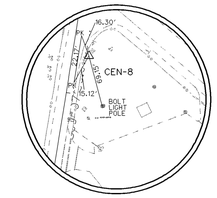

TRAVERSE POINT #8
N 360191.2345
E 647592.1018
ELE. 22.65'

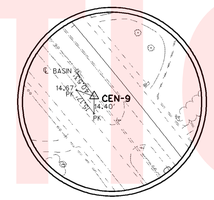

TRAVERSE POINT #9
N 359297.1163
E 648675.9286
ELE. 24.66'

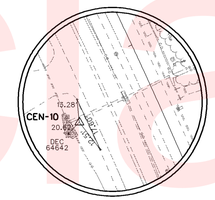

TRAVERSE POINT #10
N 358028.5686
E 649385.6922
ELE. 22.31'

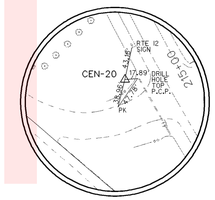

TRAVERSE POINT #20
N 361925.2852
E 645996.6963
ELE. 16.74'

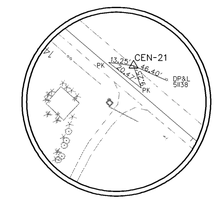

TRAVERSE POINT #21
N 362145.7604
E 645586.1023
ELE. 17.87'

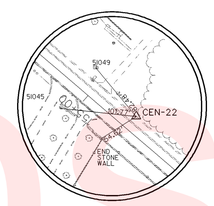

TRAVERSE POINT #22
N 362835.7299
E 644779.7856
ELE. 16.50'

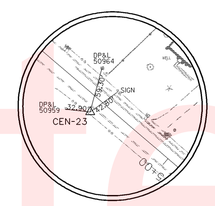

TRAVERSE POINT #23
N 363575.9062
E 643853.8964
ELE. 10.72'

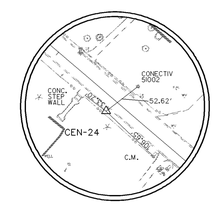

TRAVERSE POINT #24
N 363273.3071
E 644209.4274
ELE. 14.78'

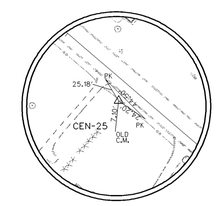

TRAVERSE POINT #25
N 362936.6173
E 644593.9453
ELE. 16.55'

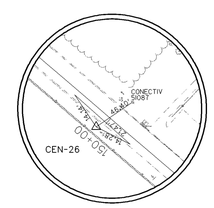

TRAVERSE POINT #26
N 362526.8025
E 645076.5170
ELE. 17.73'

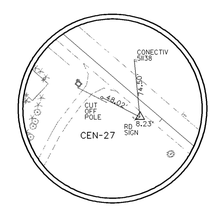

TRAVERSE POINT #27
N 362052.3642
E 645636.1962
ELE. 18.46'

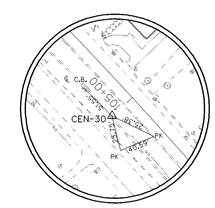

TRAVERSE POINT #30
N 359555.0926
E 648458.0274
ELE. 24.51'

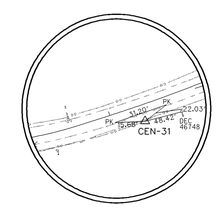

TRAVERSE POINT #31
N 360158.7741
E 648849.5613
ELE. 23.90'

NOTE:
ALL ELEVATIONS ARE BASED ON NORTH AMERICAN VERTICAL DATUM, 1988 (NAVD 88). HORIZONTAL DATUM: NORTH AMERICAN DATUM, 1983 (NAD 83).

ALL POINTS ARE CENTURY ENGINEERING, INC. CAPPED REBAR UNLESS OTHERWISE NOTED.

Unofficial Website Copy

DELAWARE
DEPARTMENT OF TRANSPORTATION

ADDENDUMS / REVISIONS

NOT TO SCALE

SR1, SOUTH FREDERICA
GRADE SEPARATED INTERSECTION

CONTRACT	BRIDGE NO.	–
T200812202	DESIGNED BY: LCM	
COUNTY		
KENT	CHECKED BY: SFP	

TRAVERSE POINTS

SHEET NO.
16
TOTAL SHTS.
296

5/23/2013
G:\PROJECTS\06535.00 (DelDOT Agmt. 1376 DOTS Open End)\06535.07 SR1, S. Frederica\CADD Files\XM\tv_trav01_SF.dgn
16:15:31

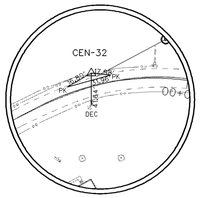

TRAVERSE POINT #32
N 360438.6541
E 649367.5895
ELE. 26.04'

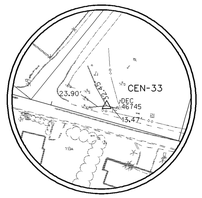

TRAVERSE POINT #33
N 360193.9278
E 648388.9997
ELE. 23.91'

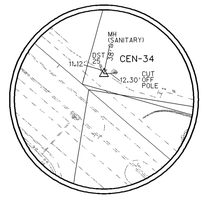

TRAVERSE POINT #34
N 360410.3921
E 647621.8627
ELE. 23.28

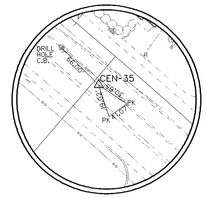

TRAVERSE POINT #35
N 360014.8717
E 647972.6845
ELE. 23.60'

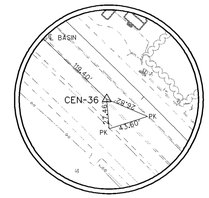

TRAVERSE POINT #36
N 359756.7006
E 648262.1985
ELE. 24.71'

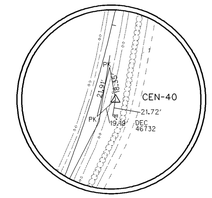

TRAVERSE POINT #40
N 359550.4666
E 647483.7808
ELE. 25.81'

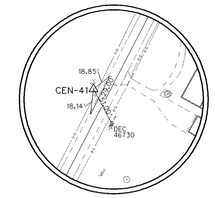

TRAVERSE POINT #41
N 359181.9035
E 647263.6744
ELE. 26.86'

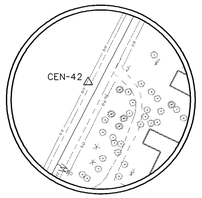

TRAVERSE POINT #42
N 358853.0397
E 647100.7056
ELE. 29.91'

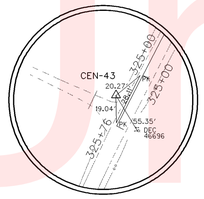

TRAVERSE POINT #43
N 358052.6059
E 646679.0782
ELE. 31.54'

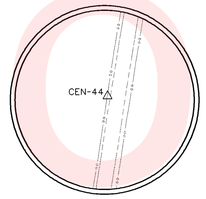

TRAVERSE POINT #44
N 357279.2107
E 646489.5230
ELE. 26.50'

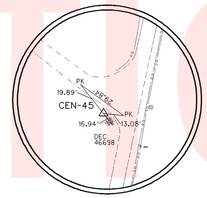

TRAVERSE POINT #45
N 356371.2021
E 646296.9653
ELE. 23.74'

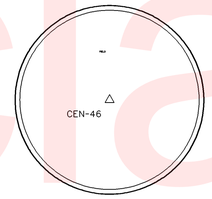

TRAVERSE POINT #46
N 357197.7988
E 645297.2597
ELE. 23.90'

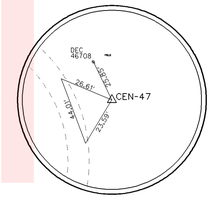

TRAVERSE POINT #47
N 357857.9959
E 644434.9905
ELE. 25.12'

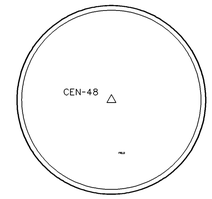

TRAVERSE POINT #48
N 358910.6506
E 644817.1830
ELE. 26.38'

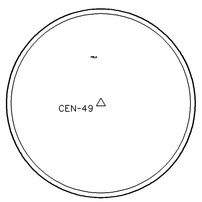

TRAVERSE POINT #49
N 360555.9624
E 644918.6142
ELE. 18.77'

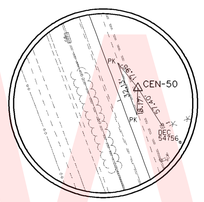

TRAVERSE POINT #50
N 357216.9115
E 649844.7808
ELE. 24.04'

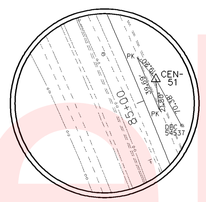

TRAVERSE POINT #51
N 357931.1884
E 649571.6813
ELE. 22.45'

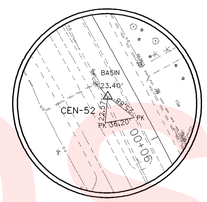

TRAVERSE POINT #52
N 358408.2659
E 649277.7879
ELE. 20.97'

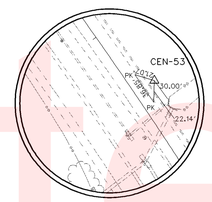

TRAVERSE POINT #53
N 358938.1180
E 649031.9724
ELE. 21.40'

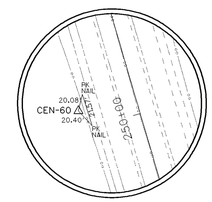

TRAVERSE POINT #60
N 365280.7072
E 644938.5588
ELE. 10.42'

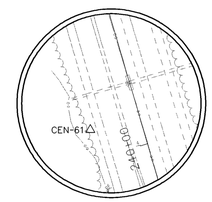

TRAVERSE POINT #61
N 364336.1072
E 645225.6839
ELE. 10.02'

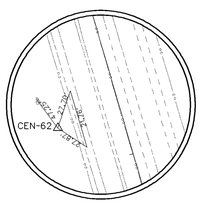

TRAVERSE POINT #62
N 363632.1545
E 645412.4746
ELE. 14.58'

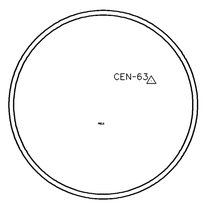

TRAVERSE POINT #63
N 363580.9857
E 646988.5278
ELE. 18.43'

TRAVERSE POINT #64
N 361985.8626
E 647669.1348
ELE. 20.68'

NOTE:
ALL ELEVATIONS ARE BASED ON NORTH AMERICAN VERTICAL DATUM, 1988 (NAVD 88). HORIZONTAL DATUM: NORTH AMERICAN DATUM, 1983 (NAD 83).

ALL POINTS ARE CENTURY ENGINEERING, INC. CAPPED REBAR UNLESS OTHERWISE NOTED.

Unofficial Website Copy

DELAWARE DEPARTMENT OF TRANSPORTATION	ADDENDUMS / REVISIONS	NOT TO SCALE	SR1, SOUTH FREDERICA GRADE SEPARATED INTERSECTION	CONTRACT T200812202	BRIDGE NO. –	TRAVERSE POINTS
				COUNTY KENT	DESIGNED BY: LCM	SHEET NO. 17
					CHECKED BY: SFP	TOTAL SHTS. 296

5/23/2013
G:\PROJECTS\06535.00 (DelDOT Agmt. 1376 DOTS Open End)\06535.07 SR1, S. Frederica\CADD Files\XM\trv_trav02_SF.dgn
16:16:19

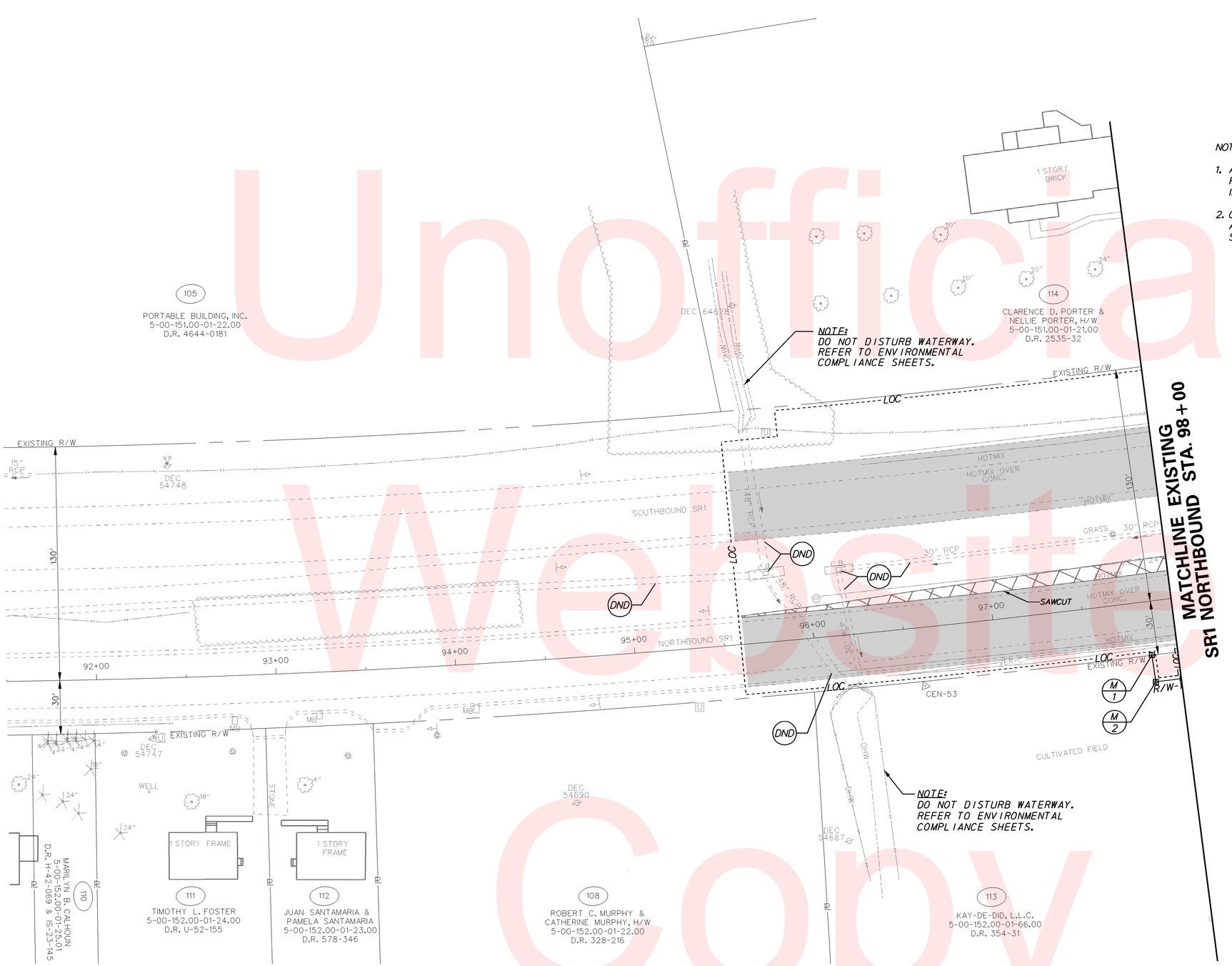

NOTES:

1. ALL EXISTING PIPES LOCATED WITHIN THE PROJECT LIMITS THAT ARE TO REMAIN SHALL BE FLUSHED OF ALL DEBRIS AND SEDIMENT. COSTS SHALL BE INCIDENTAL TO ITEM 201000.
2. CONTRACTOR SHALL INSTALL GUARDRAIL AND PAVE MAINTENANCE STRIP AT THE VARIABLE MESSAGE SIGN LOCATED AT STATION 62+50. SEE SIGNING, STRIPING, AND ITMS PLAN FOR PLACEMENT AND TYPE.

RIGHT-OF-WAY MONUMENT SCHEDULE

POINT NO.	STATION	OFFSET	NORTHING	EASTING
1	97+85.50	30.00	359041.1758	648957.2776
2	97+85.50	45.00	359050.1185	648969.3241

Unofficial Website Copy

DELAWARE DEPARTMENT OF TRANSPORTATION

ADDENDUMS / REVISIONS

SCALE 0 30 60 90 FEET

SR1, SOUTH FREDERICA GRADE SEPARATED INTERSECTION

CONTRACT	BRIDGE NO.	–
T200812202	DESIGNED BY: LCM	
COUNTY		
KENT	CHECKED BY: SFP	

CONSTRUCTION PLAN

SHEET NO. 18
TOTAL SHTS. 296

5/23/2013
G:\PROJECTS\06535.00 (DelDOT Agmt. 1376 DOTS Open End)\06535.07 SR1, S. Frederica\CADD Files\XM\cp02st.dgn
16:17:02

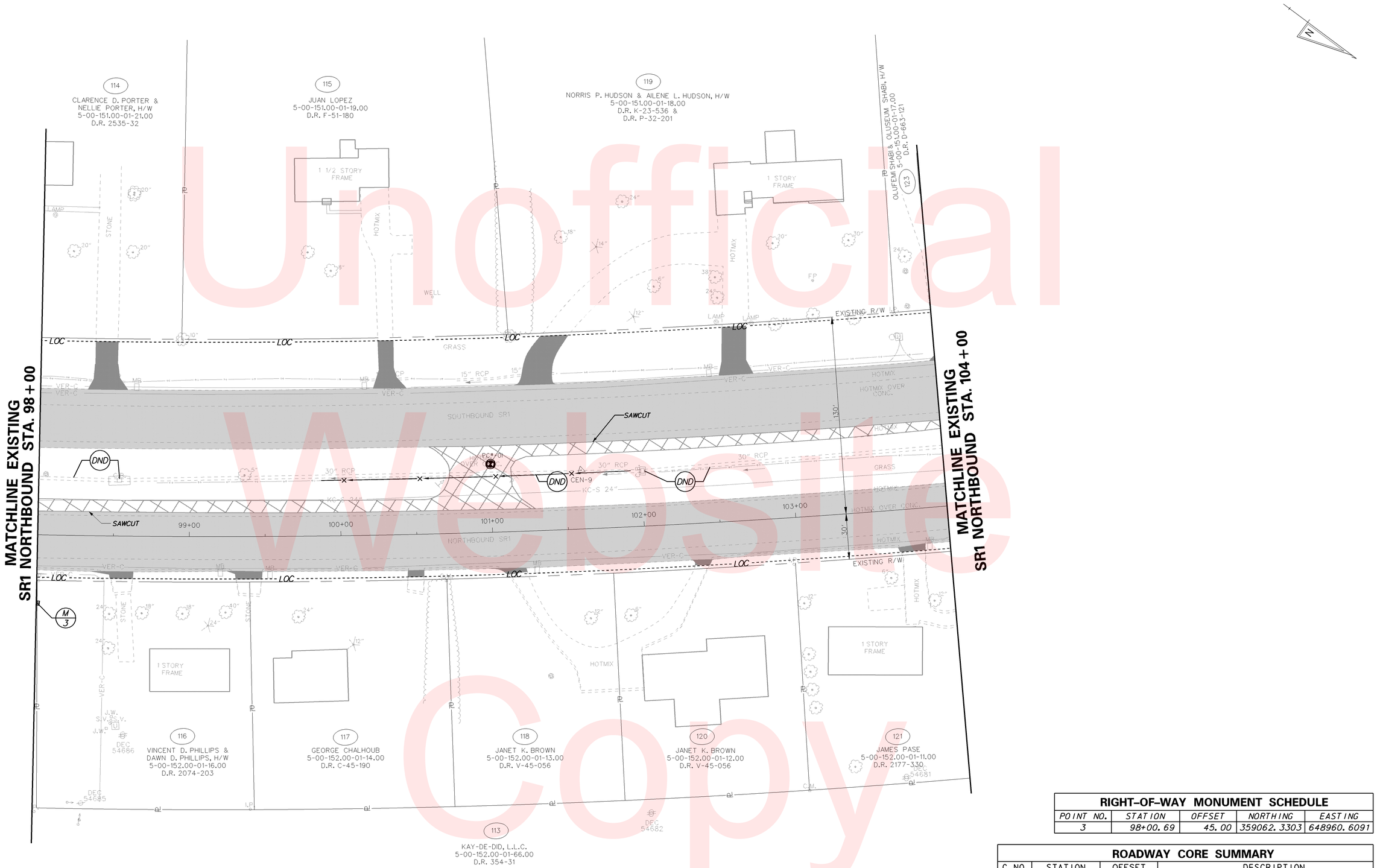

Unofficial Website Copy

RIGHT-OF-WAY MONUMENT SCHEDULE

POINT NO.	STATION	OFFSET	NORTHING	EASTING
3	98+00.69	45.00	359062.3303	648960.6091

ROADWAY CORE SUMMARY

C NO.	STATION	OFFSET	DESCRIPTION
PC-01	101+00.00	-45.0000	5 ¼" ASPHALT OVER 8 ¼" CONCRETE

DELAWARE DEPARTMENT OF TRANSPORTATION

ADDENDUMS / REVISIONS

SCALE 0 30 60 90 FEET

SR1, SOUTH FREDERICA GRADE SEPARATED INTERSECTION

CONTRACT	BRIDGE NO.	–
T200812202	DESIGNED BY: LCM	
COUNTY		
KENT	CHECKED BY: SFP	

CONSTRUCTION PLAN

SHEET NO. 19
TOTAL SHTS. 296

7/19/2013
G:\PROJECTS\06535.00 (DelDOT Agmt. 1376 DOTS Open End)\06535.07 SR1, S. Frederica\CADD Files\XM\cp03sf.dgn
07:35:13

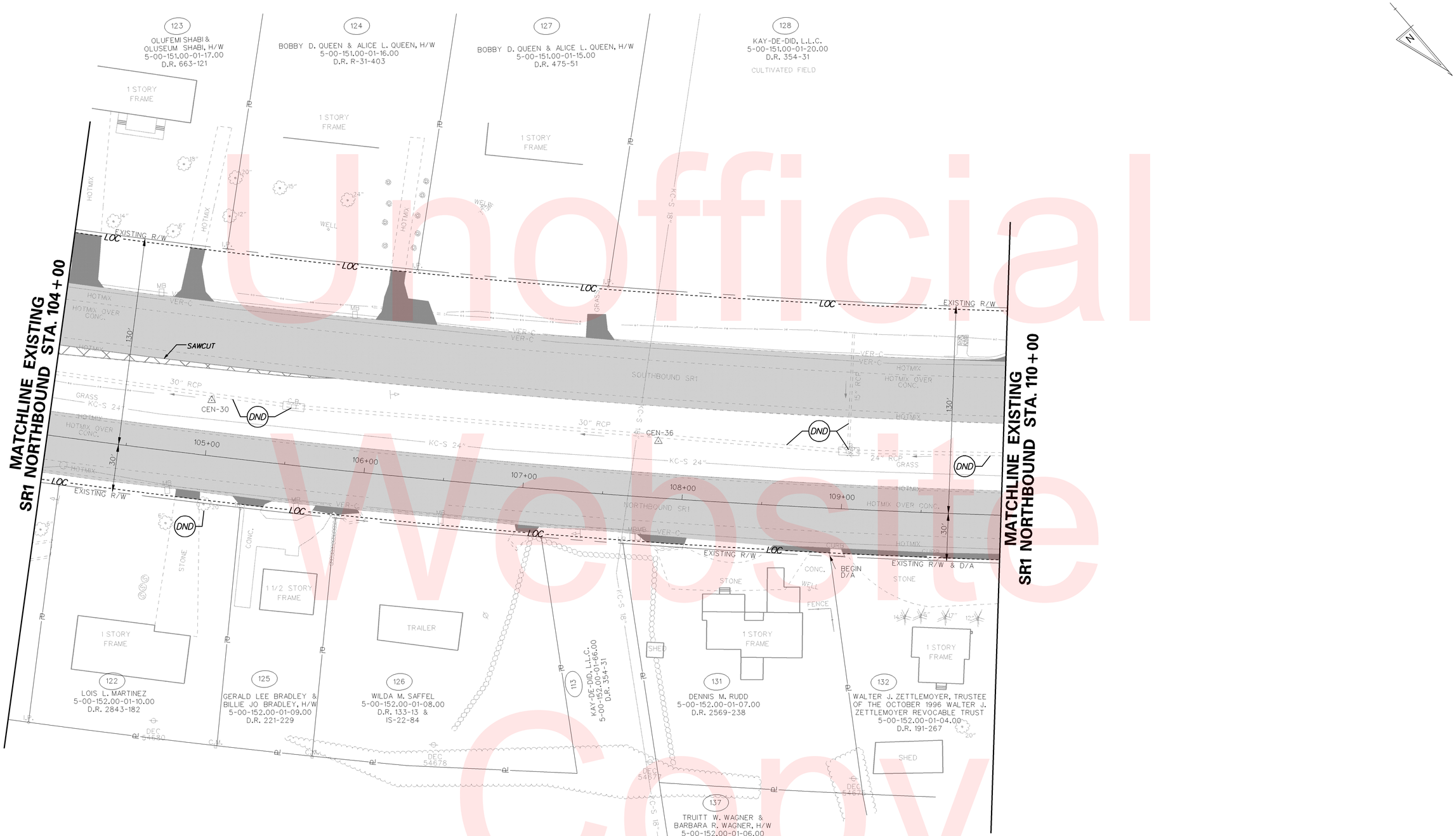

Unofficial Website Copy

DELAWARE DEPARTMENT OF TRANSPORTATION

ADDENDUMS / REVISIONS

SCALE 0 30 60 90 FEET

SR1, SOUTH FREDERICA GRADE SEPARATED INTERSECTION

CONTRACT	BRIDGE NO.	–
T200812202	DESIGNED BY: LCM	
COUNTY		
KENT	CHECKED BY: SFP	

CONSTRUCTION PLAN

SHEET NO.
20
TOTAL SHTS.
296

6/6/2013
G:\PROJECTS\06535.00 (DelDOT Agmt. 1376 DOTS Open End)\06535.07 SR1, S. Frederica\CADD Files\XM\cp04sf.dgn
16:07:34

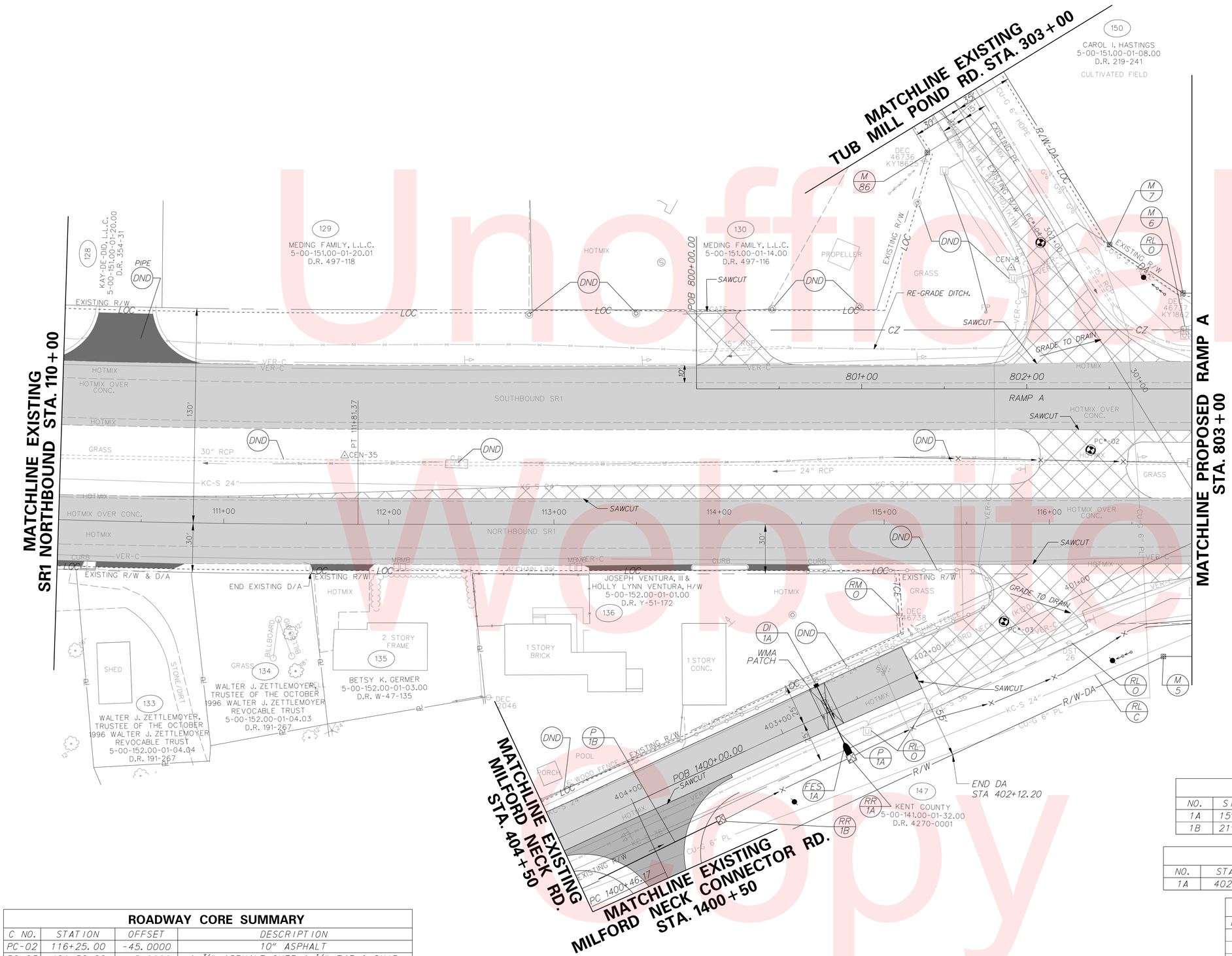

ROADWAY CORE SUMMARY

C NO.	STATION	OFFSET	DESCRIPTION
PC-02	116+25.00	-45.0000	10" ASPHALT
PC-03	401+50.00	5.0000	1 ¾" ASPHALT OVER 1 ½" TAR & CHIP
PC-04	116+25.00	-45.0000	4" TAR & CHIP

RIPRAP SCHEDULE

NO.	TYPE	AREA(SF)
1A	R-4	25.00
1B	R-4	25.00

FLARED END SECTION SCHEDULE

NO.	SIZE / TYPE	SLOPE	SAFETY GRATE
1A	15"/RCP	0.0031	NO

DRAINAGE PIPE SCHEDULE

NO.	SIZE / TYPE	CLASS	LENGTH	SLOPE	INV. EL.	DIS. EL.
1A	15"/RCP	IV	39.00'	0.0031	19.89'	19.77'
1B	21"/RCP	IV	80.00	0.0019	20.07'	19.92'

DRAINAGE INLET SCHEDULE

NO.	STATION	OFFSET	BOX SIZE	GRATE	T.G. EL.	INV. EL.
1A	402+69.37	17.81'	34" x 24"	1	22.33'	19.89'

RIGHT-OF-WAY MONUMENT SCHEDULE

POINT NO.	STATION	OFFSET	NORTHING	EASTING
5	400+71.39	55.00	360429.9396	647675.4111
6	802+94.60	58.00	360270.6085	647523.2486
7	301+77.14	35.00	360219.3954	647537.9000
86	302+82.35	30.00	360105.1671	647585.3820

NOTE: EXISTING FENCE SHALL BE REMOVED AND RESET AT DRAINAGE INLET 1A. ALL COSTS INCIDENTAL TO THE ITEM BEING INSTALLED. INLET SHALL BE INSTALLED TO AVOID EXISTING SEWER LINE.

Unofficial Website Copy

DELAWARE DEPARTMENT OF TRANSPORTATION

ADDENDUMS / REVISIONS

SCALE 0 30 60 90 FEET

SR1, SOUTH FREDERICA GRADE SEPARATED INTERSECTION

CONTRACT	BRIDGE NO.	–
T200812202	DESIGNED BY: LCM	
COUNTY		
KENT	CHECKED BY: SFP	

CONSTRUCTION PLAN

SHEET NO. 21 TOTAL SHTS. 296

10/27/2015
G:\PROJECTS\06535.00 (DelDOT Agmt. 1376 DOTS Open End)\06535.07 SR1, S. Frederica\CADD Files\XM\cp05sf.dgn
3:52:37 PM

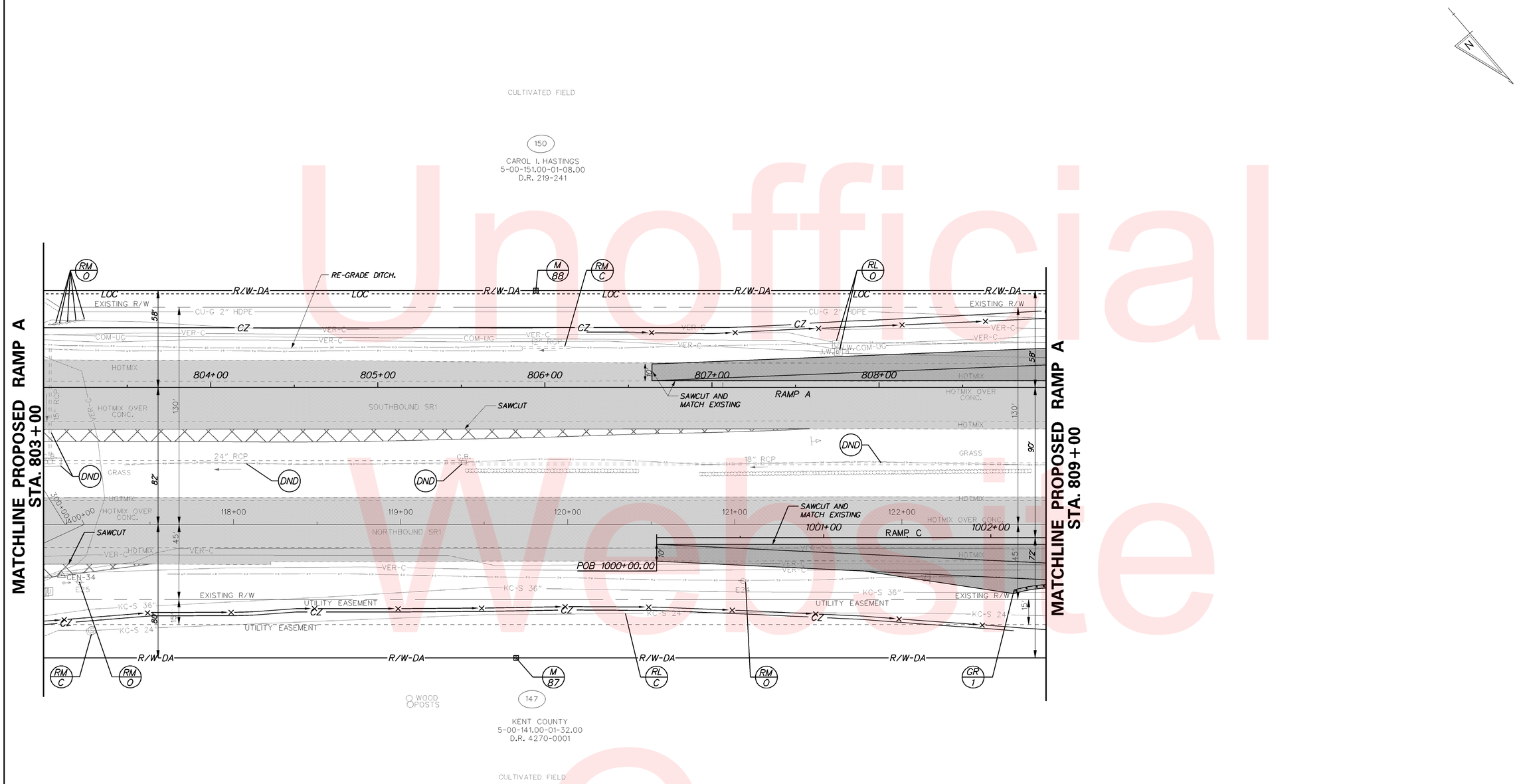

RIGHT-OF-WAY MONUMENT SCHEDULE				
POINT NO.	STATION	OFFSET	NORTHING	EASTING
87	119+69.11	80.00	360625.1919	647447.6469
88	119+80.93	-140.00	360465.8608	647295.4844

GUARDRAIL SCHEDULE				
NO.	ITEM DESCRIPTION / TYPE	BEGIN STA.	OFFSET	LENGTH
1	END TREATMENT ATTENUATOR, TYPE 2-31	1002+14.13	31.24	50.00'

DELAWARE
DEPARTMENT OF TRANSPORTATION

ADDENDUMS / REVISIONS

SCALE
0 30 60 90
FEET

SR1, SOUTH FREDERICA
GRADE SEPARATED INTERSECTION

CONTRACT	BRIDGE NO.	–
T200812202	DESIGNED BY: LCM	
COUNTY		
KENT	CHECKED BY: SFP	

CONSTRUCTION PLAN

SHEET NO. 22
TOTAL SHTS. 296

5/28/2013
G:\PROJECTS\06535.00 (DelDOT Agmt. 1376 DOTS Open End)\06535.07 SR1, S. Frederica\CADD Files\XM\cp06sf.dgn
14:04:17

Unofficial Website Copy

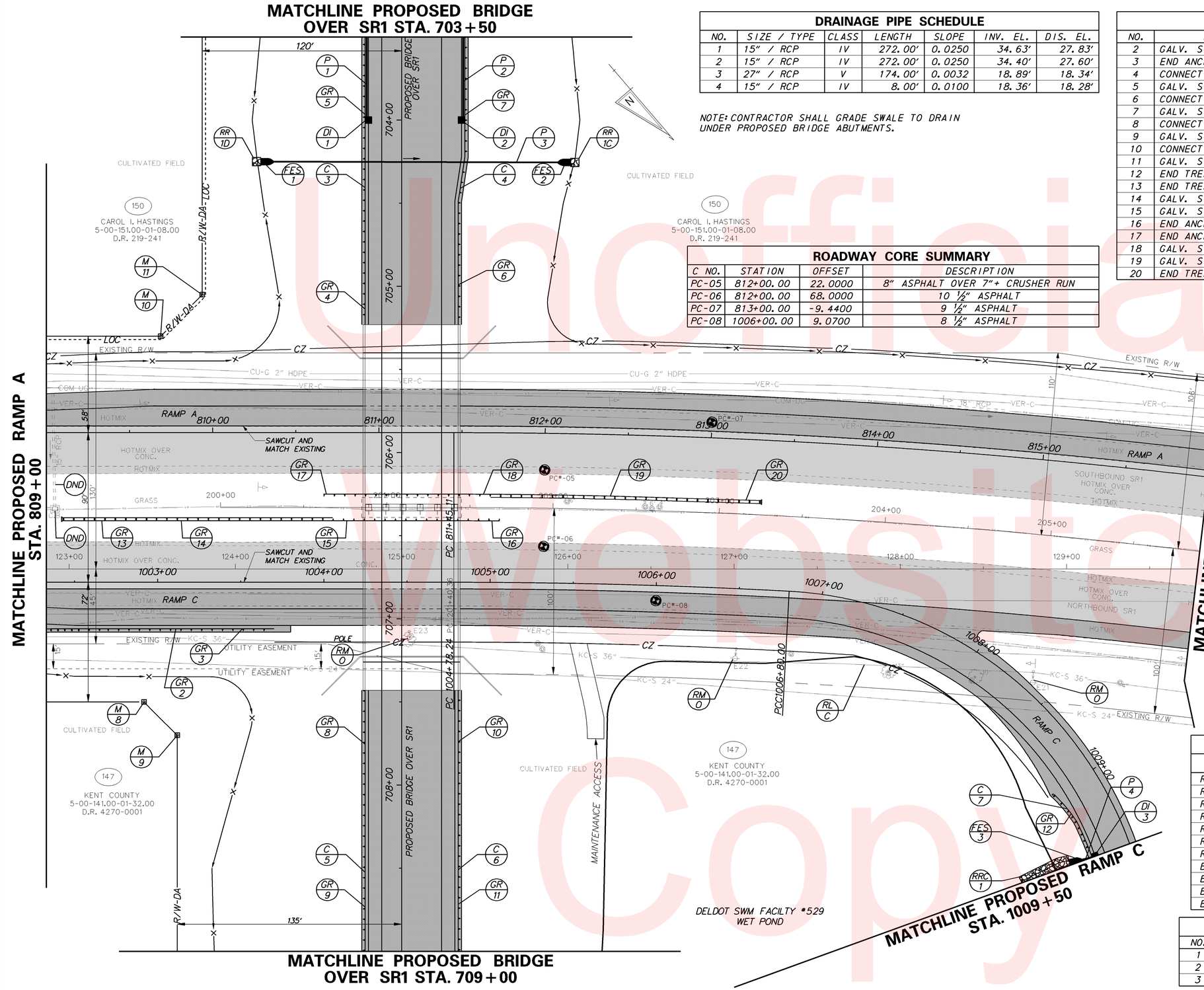

DRAINAGE PIPE SCHEDULE

NO.	SIZE / TYPE	CLASS	LENGTH	SLOPE	INV. EL.	DIS. EL.
1	15" / RCP	IV	272.00'	0.0250	34.63'	27.83'
2	15" / RCP	IV	272.00'	0.0250	34.40'	27.60'
3	27" / RCP	V	174.00'	0.0032	18.89'	18.34'
4	15" / RCP	IV	8.00'	0.0100	18.36'	18.28'

NOTE: CONTRACTOR SHALL GRADE SWALE TO DRAIN UNDER PROPOSED BRIDGE ABUTMENTS.

ROADWAY CORE SUMMARY

C NO.	STATION	OFFSET	DESCRIPTION
PC-05	812+00.00	22.0000	8" ASPHALT OVER 7"+ CRUSHER RUN
PC-06	812+00.00	68.0000	10 ½" ASPHALT
PC-07	813+00.00	-9.4400	9 ½" ASPHALT
PC-08	1006+00.00	9.0700	8 ½" ASPHALT

GUARDRAIL SCHEDULE

NO.	ITEM DESCRIPTION / TYPE	BEGIN STA.	OFFSET	LENGTH
2	GALV. STEEL BEAM GUARDRAIL, TYPE 1-31	1002+65.00	28.00	92.5'
3	END ANCHORAGE	1003+57.50	28.00	12.5'
4	CONNECTION, APPROACH TYPE 1-31	705+23.00	22.00	20.5'
5	GALV. STEEL BEAM GUARDRAIL, TYPE 1-31	703+50.00	22.00	152.5'
6	CONNECTION, APPROACH TYPE 1-31	705+23.00	-34.00	20.5'
7	GALV. STEEL BEAM GUARDRAIL, TYPE 1-31	703+50.00	-38.00	152.8'
8	CONNECTION, APPROACH TYPE 1-31	707+43.00	22.00	20.5'
9	GALV. STEEL BEAM GUARDRAIL, TYPE 1-31	707+63.50	22.00	136.5'
10	CONNECTION, APPROACH TYPE 1-31	707+43.00	-34.00	20.5'
11	GALV. STEEL BEAM GUARDRAIL, TYPE 1-31	707+63.50	-34.00	136.5'
12	END TREATMENT ATTENUATOR, TYPE 2-31	1009+00.00	28.00	50.0'
13	END TREATMENT ATTENUATOR, TYPE 3-31	1002+43.31	-37.00	50.0'
14	GALV. STEEL BEAM GUARDRAIL, TYPE 3-31	1002+93.31	-37.00	112.5'
15	GALV. STEEL BEAM GUARDRAIL, TYPE 1-31	1003+93.31	-37.00	87.5'
16	END ANCHORAGE	1004+93.31	-37.00	12.5'
17	END ANCHORAGE	810+66.67	37.00	12.5'
18	GALV. STEEL BEAM GUARDRAIL, TYPE 1-31	810+79.17	37.00	87.5'
19	GALV. STEEL BEAM GUARDRAIL, TYPE 3-31	811+79.17	37.00	112.5'
20	END TREATMENT ATTENUATOR, TYPE 3-31	812+79.17	37.00	50.0'

RIPRAP CHUTE SCHEDULE

NO.	TYPE	WIDTH	LENGTH
1	DUMPED RIPRAP	3.00'	32.00'

RIGHT-OF-WAY MONUMENT SCHEDULE

POINT NO.	STATION	OFFSET	NORTHING	EASTING
8	123+45.00	80.00	360869.8402	647162.2600
9	123+65.00	100.00	360898.0413	647160.0925
10	809+68.67	58.00	360709.3213	647011.4831
11	705+05.00	120.00	360706.6119	646976.2317

CURB SCHEDULE

NO.	ITEM DESCRIPTION / TYPE	LENGTH
3	P.C.C. CURB TYPE 1-4	173.0'
4	P.C.C. CURB TYPE 1-4	173.3'
5	P.C.C. CURB TYPE 1-4	157.0'
6	P.C.C. CURB TYPE 1-4	157.0'
7	P.C.C. CURB TYPE 1-4	45.0'

RIPRAP SCHEDULE

NO.	TYPE	AREA(SF)
1C	R-4	25.00
1D	R-4	25.00

FLARED END SECTION SCHEDULE

NO.	SIZE / TYPE	SLOPE	SAFETY GRATE
1	27" / RCP	0.0032	NO
2	27" / RCP	0.0032	NO
3	15" / RCP	0.0100	NO

UNDERDRAIN SCHEDULE

ROAD	STA. TO STA.	LENGTH	SIZE / TYPE	DISCHARGE TYPE	DISCHARGE INV.
RAMP A - LT	806+65 TO 810+00	335.00'	6" PEP	DITCH	18.97
RAMP A - LT	810+00 TO 813+00	300.00'	6" PEP	DITCH	19.09
RAMP C - RT	1000+00 TO 1003+50	350.00'	6" PEP	DITCH	18.77
RAMP C - RT	1003+50 TO 1006+00	250.00'	6" PEP	SWM	17.06
RAMP C - RT	1006+00 TO 1007+92	192.00'	6" PEP	SWM	16.05
RAMP C - RT	1009+50 TO 1007+92	158.00'	6" PEP	SWM	16.05
RAMP C - RT	1011+40 TO 1009+50	190.00'	6" PEP	DI-3	19.36
BRIDGE - RT	705+23 TO 704+00	123.00'	6" PEP	DI-1	37.12
BRIDGE - RT	704+00 TO 701+25	275.00'	6" PEP	DI-16	29.10
BRIDGE - LT	705+23 TO 704+00	123.00'	6" PEP	DI-2	37.12
BRIDGE - LT	704+00 TO 701+25	275.00'	6" PEP	DI-17	29.10

DRAINAGE INLET SCHEDULE

NO.	STATION	OFFSET	BOX SIZE	GRATE	T.G. EL.	INV. EL.
1	704+00.00	22.00'	34" x 24"	1	39.78'	34.63'
2	704+00.00	-38.00'	34" x 24"	1	39.66'	34.40'
3	1009+50.00	24.00'	34" x 24"	1	22.37'	18.36'

Unofficial Website Copy

DELAWARE DEPARTMENT OF TRANSPORTATION

ADDENDUMS / REVISIONS

SCALE 0 30 60 90 FEET

SR1, SOUTH FREDERICA GRADE SEPARATED INTERSECTION

CONTRACT	BRIDGE NO.	–
T200812202	DESIGNED BY: LCM	
COUNTY		
KENT	CHECKED BY: SFP	

CONSTRUCTION PLAN

SHEET NO. 23 TOTAL SHTS. 296

6/4/2013 G:\PROJECTS\06535.00 (DelDOT Agmt. 1376 DOTS Open End)\06535.07 SR1, S. Frederica\CADD Files\XM\cp07st.dgn 14:16:06

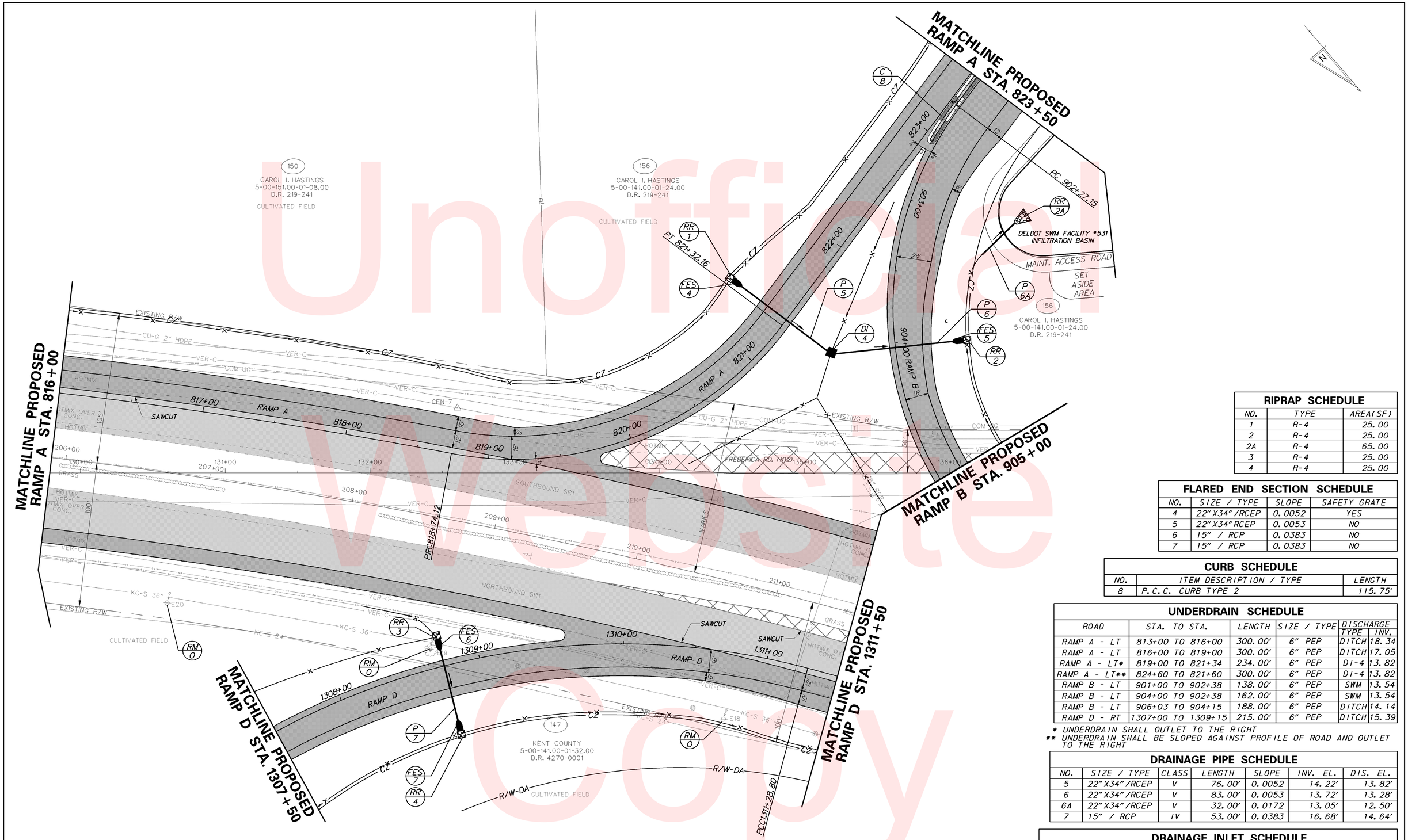

RIPRAP SCHEDULE

NO.	TYPE	AREA(SF)
1	R-4	25.00
2	R-4	25.00
2A	R-4	65.00
3	R-4	25.00
4	R-4	25.00

FLARED END SECTION SCHEDULE

NO.	SIZE / TYPE	SLOPE	SAFETY GRATE
4	22"X34"/RCEP	0.0052	YES
5	22"X34"RCEP	0.0053	NO
6	15" / RCP	0.0383	NO
7	15" / RCP	0.0383	NO

CURB SCHEDULE

NO.	ITEM DESCRIPTION / TYPE	LENGTH
8	P.C.C. CURB TYPE 2	115.75'

UNDERDRAIN SCHEDULE

ROAD	STA. TO STA.	LENGTH	SIZE / TYPE	DISCHARGE TYPE	DISCHARGE INV.
RAMP A - LT	813+00 TO 816+00	300.00'	6" PEP	DITCH	18.34
RAMP A - LT	816+00 TO 819+00	300.00'	6" PEP	DITCH	17.05
RAMP A - LT*	819+00 TO 821+34	234.00'	6" PEP	DI-4	13.82
RAMP A - LT**	824+60 TO 821+60	300.00'	6" PEP	DI-4	13.82
RAMP B - LT	901+00 TO 902+38	138.00'	6" PEP	SWM	13.54
RAMP B - LT	904+00 TO 902+38	162.00'	6" PEP	SWM	13.54
RAMP B - LT	906+03 TO 904+15	188.00'	6" PEP	DITCH	14.14
RAMP D - RT	1307+00 TO 1309+15	215.00'	6" PEP	DITCH	15.39

* UNDERDRAIN SHALL OUTLET TO THE RIGHT
** UNDERDRAIN SHALL BE SLOPED AGAINST PROFILE OF ROAD AND OUTLET TO THE RIGHT

DRAINAGE PIPE SCHEDULE

NO.	SIZE / TYPE	CLASS	LENGTH	SLOPE	INV. EL.	DIS. EL.
5	22"X34"/RCEP	V	76.00'	0.0052	14.22'	13.82'
6	22"X34"/RCEP	V	83.00'	0.0053	13.72'	13.28'
6A	22"X34"/RCEP	V	32.00'	0.0172	13.05'	12.50'
7	15" / RCP	IV	53.00'	0.0383	16.68'	14.64'

DRAINAGE INLET SCHEDULE

NO.	STATION	OFFSET	BOX SIZE	GRATE	T.G. EL.	INV. EL.
4	904+01.50	44.30	66" x 66"	2	18.00'	13.72'

DELAWARE
DEPARTMENT OF TRANSPORTATION

ADDENDUMS / REVISIONS

SCALE
0 30 60 90
FEET

SR1, SOUTH FREDERICA
GRADE SEPARATED INTERSECTION

CONTRACT	BRIDGE NO.	–
T200812202	DESIGNED BY: LCM	
COUNTY	CHECKED BY: SFP	
KENT		

CONSTRUCTION PLAN

SHEET NO. 24
TOTAL SHTS. 296

6/4/2013
14:16:58
J:\PROJECTS\06535.00 (DelDOT Agmt. 1376 DOTS Open End)\06535.07 SR1, S. Frederica\CADD Files\XM\cp08sf.dgn

Unofficial Website Copy

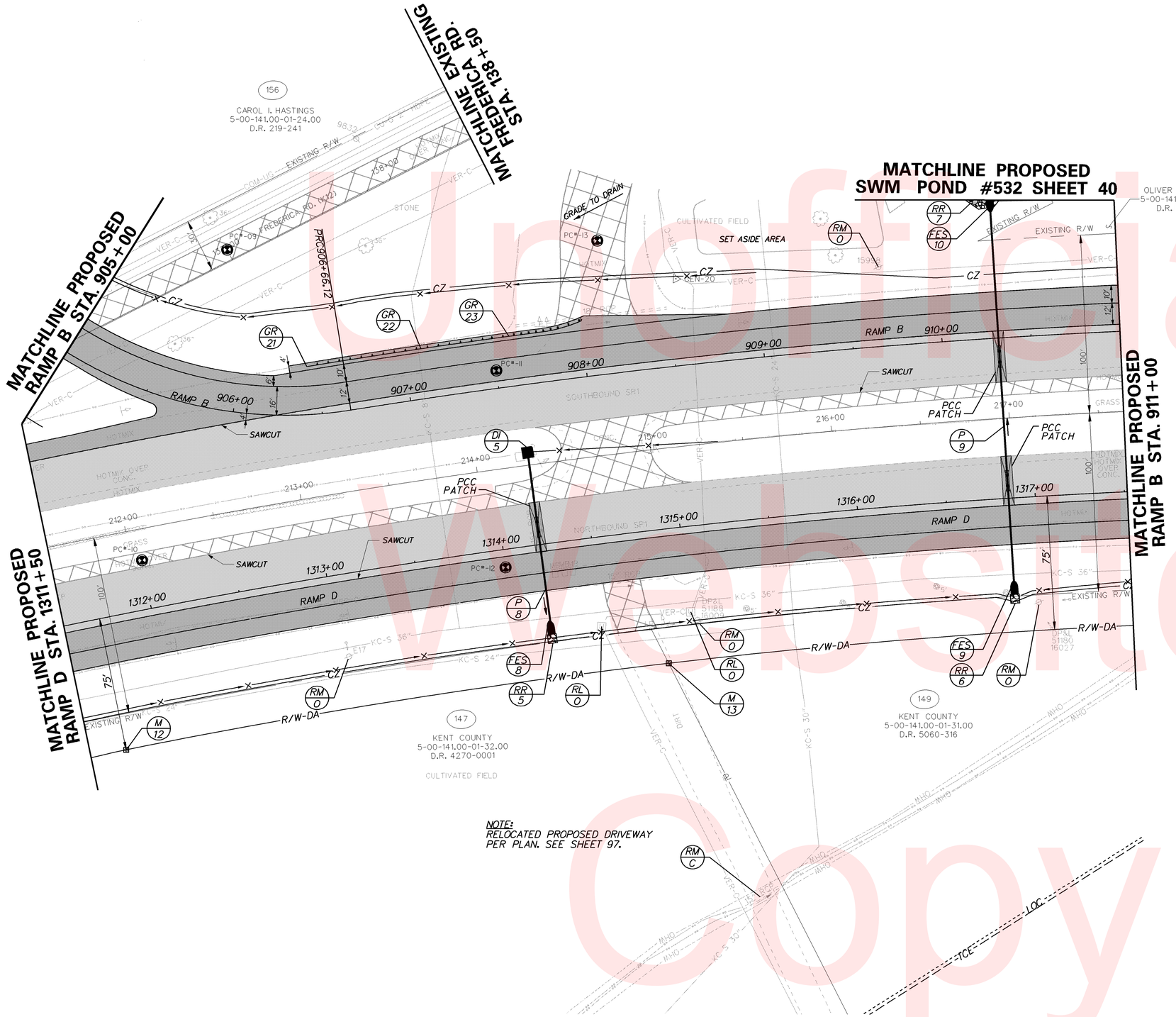

ROADWAY CORE SUMMARY			
C NO.	STATION	OFFSET	DESCRIPTION
PC-09	905+75.52	-88.9600	3 ¾" ASPHALT OVER 7 ¼" CONCRETE
PC-10	1312+00.00	-27.5200	12 ½" CONCRETE
PC-11	907+50.00	-10.0000	13 ½" ASPHALT
PC-12	1314+00.00	10.0000	9 ¼" ASPHALT
PC-13	908+14.71	-75.0000	1 ½" ASPHALT

RIPRAP SCHEDULE		
NO.	TYPE	AREA(SF)
5	R-4	25.00
6	R-4	25.00
7	R-4	1145.00

FLARED END SECTION SCHEDULE			
NO.	SIZE / TYPE	SLOPE	SAFETY GRATE
8	24" / RCP	0.0036	NO
9	34"X53"/RCEP	0.0092	NO
10	34"X53"/RCEP	0.0092	NO

UNDERDRAIN SCHEDULE					
ROAD	STA. TO STA.	LENGTH	SIZE / TYPE	DISCHARGE	
				TYPE	INV.
RAMP D - RT	1309+25 TO 1312+25	300.00'	6" PEP	DITCH	14.52
RAMP D - RT	1312+25 TO 1314+10	185.00'	6" PEP	DITCH	14.08
RAMP D - RT	1314+30 TO 1316+75	245.00'	6" PEP	DITCH	13.30
RAMP B - LT	906+03 TO 907+25	122.00'	6" PEP	DITCH	15.89
RAMP B - LT	907+25 TO 910+25	300.00'	6" PEP	SWM	15.29

DRAINAGE PIPE SCHEDULE						
NO.	SIZE / TYPE	CLASS	LENGTH	SLOPE	INV. EL.	DIS. EL.
8	24" / RCP	IV	96.00'	0.0036	13.15'	12.80'
9	34"X53"/RCEP	V	207.00'	0.0090	11.43'	9.57'

DRAINAGE INLET SCHEDULE						
NO.	STATION	OFFSET	BOX SIZE	GRATE	T.G. EL.	INV. EL.
5	1314+20.89	-52.11	34" x 24"	2	16.53'	13.15'

GUARDRAIL SCHEDULE				
NO.	ITEM DESCRIPTION / TYPE	BEGIN STA.	OFFSET	LENGTH
21	END ANCHORAGE	906+42.88	-26.91	12.5'
22	GALV. STEEL BEAM GUARDRAIL, TYPE 1-31	906+57.03	-27.75	93.44'
23	END TREATMENT ATTENUATOR, TYPE 2-31	907+50.47	-28.00	50.0'

RIGHT-OF-WAY MONUMENT SCHEDULE				
POINT NO.	STATION	OFFSET	NORTHING	EASTING
12	1311+70.44	75.00	361740.9664	646358.3515
13	1314+84.90	75.00	362003.7602	646197.4765

Unofficial Website Copy

DELAWARE DEPARTMENT OF TRANSPORTATION

ADDENDUMS / REVISIONS

SCALE 0 30 60 90 FEET

SR1, SOUTH FREDERICA GRADE SEPARATED INTERSECTION

CONTRACT	BRIDGE NO.	–
T200812202	DESIGNED BY: LCM	
COUNTY		
KENT	CHECKED BY: SFP	

CONSTRUCTION PLAN

SHEET NO. 25 / TOTAL SHTS. 296

7/19/2013
C:\PROJECTS\06535.00 (DelDOT Agmt. 1376 DOTS Open End)\06535.07 SR1, S. Frederica\CADD Files\XM\cp09sf.dgn
07:38:56

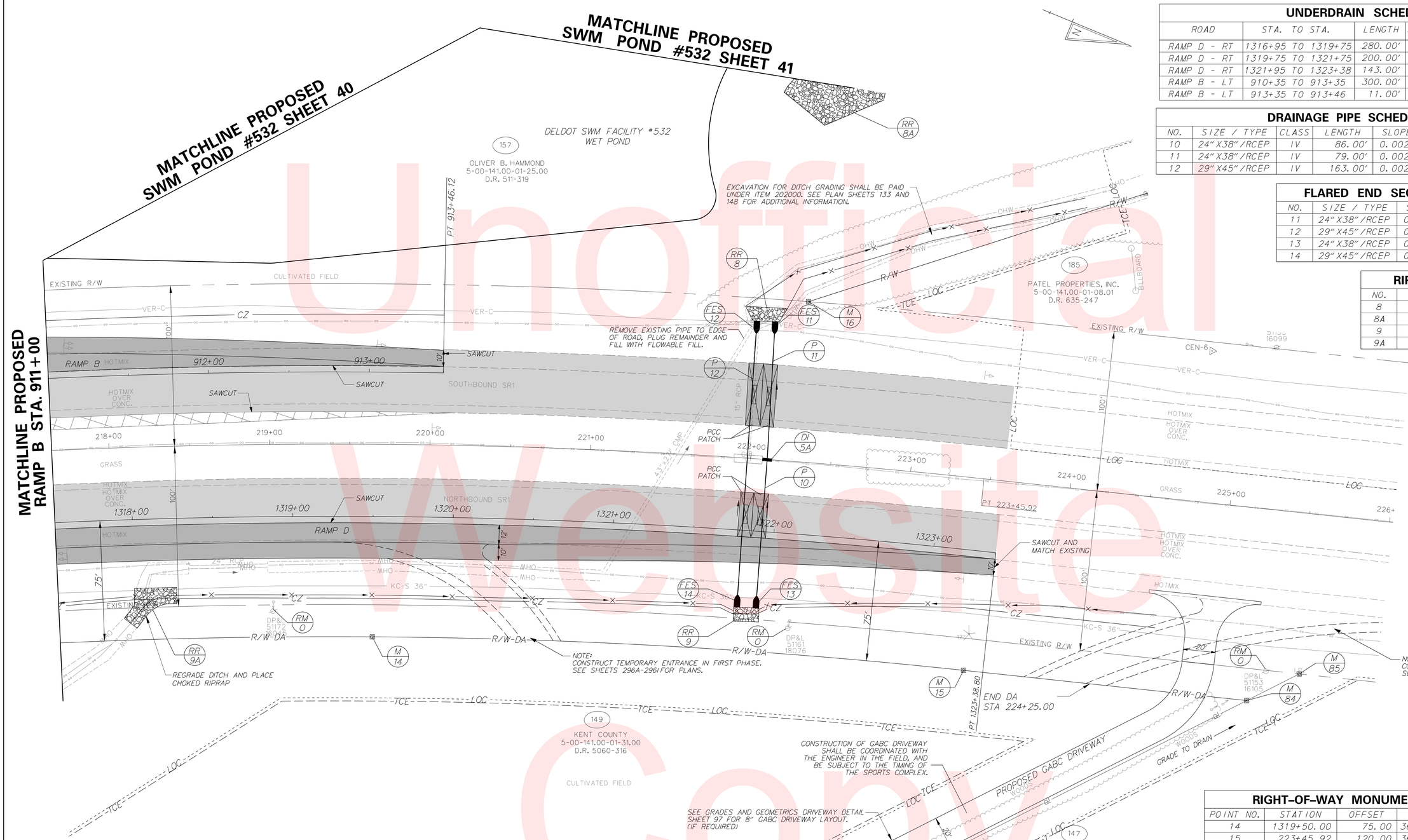

UNDERDRAIN SCHEDULE

ROAD	STA. TO STA.	LENGTH	SIZE / TYPE	DISCHARGE TYPE	DISCHARGE INV.
RAMP D - RT	1316+95 TO 1319+75	280.00'	6" PEP	DITCH	12.39
RAMP D - RT	1319+75 TO 1321+75	200.00'	6" PEP	DITCH	12.19
RAMP D - RT	1321+95 TO 1323+38	143.00'	6" PEP	DITCH	11.99
RAMP B - LT	910+35 TO 913+35	300.00'	6" PEP	SWM	13.95
RAMP B - LT	913+35 TO 913+46	11.00'	6" PEP	SWM	13.95

DRAINAGE PIPE SCHEDULE

NO.	SIZE / TYPE	CLASS	LENGTH	SLOPE	INV. EL.	DIS. EL.
10	24"X38"/RCEP	IV	86.00'	0.0028	10.23'	9.99'
11	24"X38"/RCEP	IV	79.00'	0.0028	9.99'	9.77'
12	29"X45"/RCEP	IV	163.00'	0.0028	10.23'	9.77'

FLARED END SECTION SCHEDULE

NO.	SIZE / TYPE	SLOPE	SAFETY GRATE
11	24"X38"/RCEP	0.0028	NO
12	29"X45"/RCEP	0.0028	NO
13	24"X38"/RCEP	0.0028	NO
14	29"X45"/RCEP	0.0028	NO

RIPRAP SCHEDULE

NO.	TYPE	AREA(SF)
8	R-4	788.00
8A	R-5	2588.00
9	R-4	140.00
9A	R-4	428.00

RIGHT-OF-WAY MONUMENT SCHEDULE

POINT NO.	STATION	OFFSET	NORTHING	EASTING
14	1319+50.00	75.00	362414.7548	646000.9379
15	223+45.92	120.00	362763.2263	645879.7937
16	222+28.50	-100.00	362586.3389	645704.2609
84	225+23.29	120.00	362933.4615	645829.9757
85	225+54.14	100.00	362957.4528	645802.1161

DRAINAGE INLET SCHEDULE

NO.	STATION	OFFSET	BOX SIZE	GRATE	T.G. EL.	INV. EL.
5A+*	1321+80.80	-44.40	72" x 24"	2	13.35'	9.99'

+ SPECIAL INLET TOP REQUIRED. SEE CONSTRUCTION DETAIL SHEET.
* DOUBLE GRATE INLET TOP.

NOTES:

1. CONTRACTOR SHALL INSTALL GUARDRAIL AND PAVE MAINTENANCE STRIP AT THE VARIABLE MESSAGE SIGN LOCATED AT STATION 251+40. SEE SIGNING, STRIPING, AND ITMS PLAN FOR PLACEMENT AND TYPE.

Unofficial Website Copy

DELAWARE DEPARTMENT OF TRANSPORTATION	ADDENDUMS / REVISIONS	SCALE 0 30 60 90 FEET	SR1, SOUTH FREDERICA GRADE SEPARATED INTERSECTION	CONTRACT T200812202	BRIDGE NO. –	CONSTRUCTION PLAN	SHEET NO. 26
				COUNTY KENT	DESIGNED BY: LCM		TOTAL SHTS. 296
					CHECKED BY: SFP		

10/27/2015
G:\PROJECTS\06535.00 (DelDOT Agmt. 1376 DOTS Open End)\06535.07 SR1, S. Frederica\CADD Files\XW\cp10sf.dgn
208804 PM

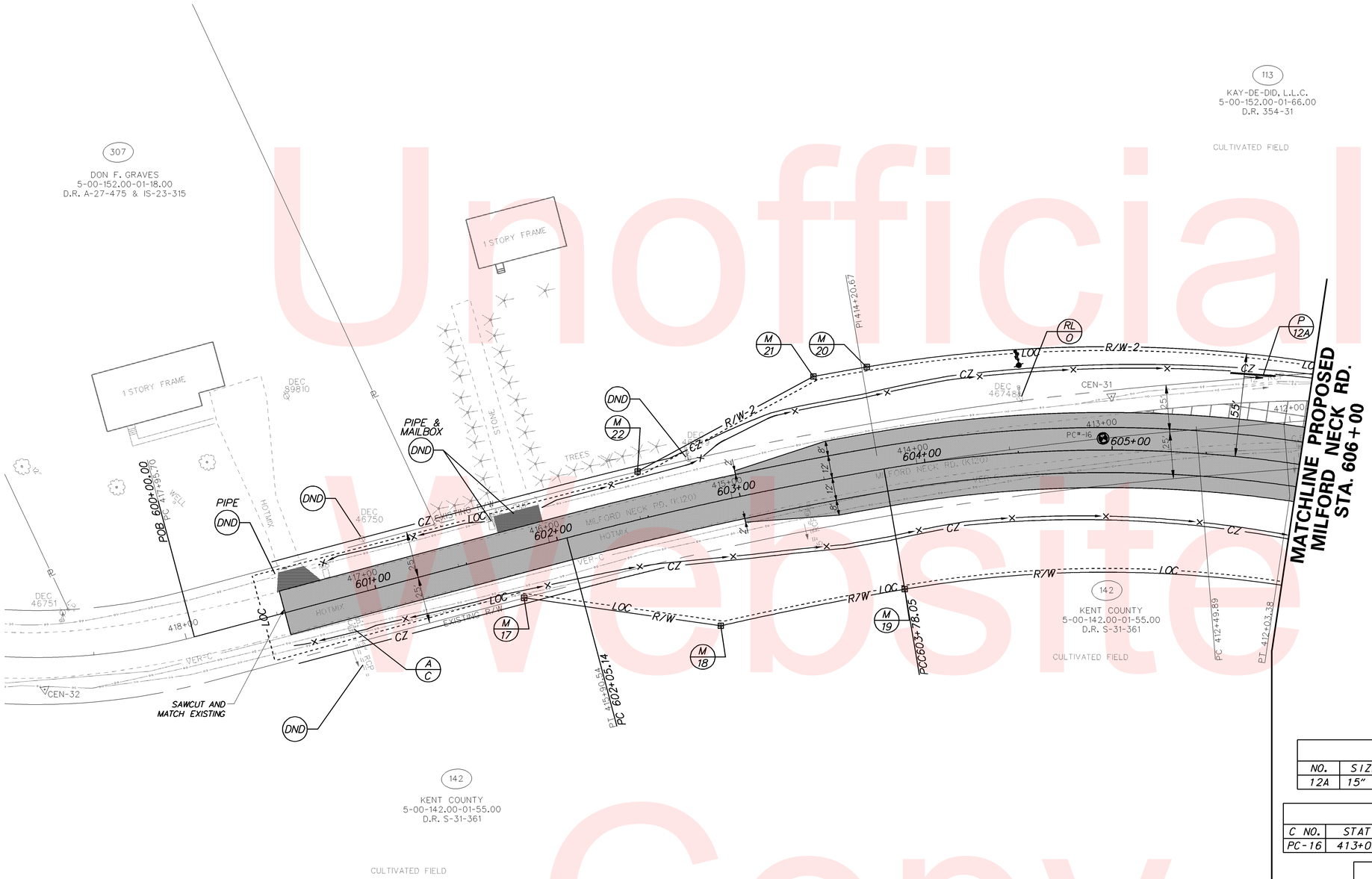

DRAINAGE PIPE SCHEDULE

NO.	SIZE / TYPE	CLASS	LENGTH	SLOPE	INV. EL.	DIS. EL.
12A	15" /RCP	IV	24.00'	0.0029	23.28'	23.21'

ROADWAY CORE SUMMARY

C NO.	STATION	OFFSET	DESCRIPTION
PC-16	413+00.00	0.0000	3" ASPHALT, 2" TAR & CHIP OVER ½" ATB

RIGHT-OF-WAY MONUMENT SCHEDULE

POINT NO.	STATION	OFFSET	NORTHING	EASTING
17	601+75.00	25.00	360333.7191	649129.9904
18	602+74.70	65.00	360324.6286	649024.6975
19	603+78.05	65.00	360283.6204	648933.6883
20	603+78.05	-55.00	360172.9206	648980.0085
21	603+50.00	-55.00	360184.2531	649006.5431
22	602+50.00	-25.00	360254.6403	649086.3294

UNDERDRAIN SCHEDULE

ROAD	STA. TO STA.	LENGTH	SIZE / TYPE	DISCHARGE TYPE	DISCHARGE INV.
MILFORD NECK - LT	602+00 TO 604+61	261.00'	6" PEP	DITCH	24.16
MILFORD NECK - LT	606+25 TO 604+61	164.00'	6" PEP	DITCH	24.16

Unofficial Website Copy

DELAWARE DEPARTMENT OF TRANSPORTATION

ADDENDUMS / REVISIONS

SCALE 0 30 60 90 FEET

SR1, SOUTH FREDERICA GRADE SEPARATED INTERSECTION

CONTRACT	BRIDGE NO.	–
T200812202	DESIGNED BY: LCM	
COUNTY		
KENT	CHECKED BY: SFP	

CONSTRUCTION PLAN

SHEET NO. 27

TOTAL SHTS. 296

5/23/2013
G:\PROJECTS\06535.00 (DelDOT Agmt. 1376 DOTS Open End)\06535.07 SR1, S. Frederica\CADD Files\XM\cp15sf.dgn
16:23:06

ROADWAY CORE SUMMARY

C NO.	STATION	OFFSET	DESCRIPTION
PC-17	407+22.67	0.0000	3 ¾" OVER ½" TAR & CHIP
PC-18	2002+00.00	0.0000	4 ½" ASPHALT

FLARED END SECTION SCHEDULE

NO.	SIZE / TYPE	SLOPE	SAFETY GRATE
15	18"/RCP	0.0035	NO
16	18"/RCP	0.0035	NO
17	19"X30"/RCEP	0.0037	NO
18	19"X30"/RCEP	0.0037	NO
18A	15"/RCP	0.0031	NO

RIPRAP SCHEDULE

NO.	TYPE	AREA(SF)
10	R-4	80.00
10A	R-4	25.00
10B	R-4	25.00
11	R-4	25.00
11A	R-4	25.00

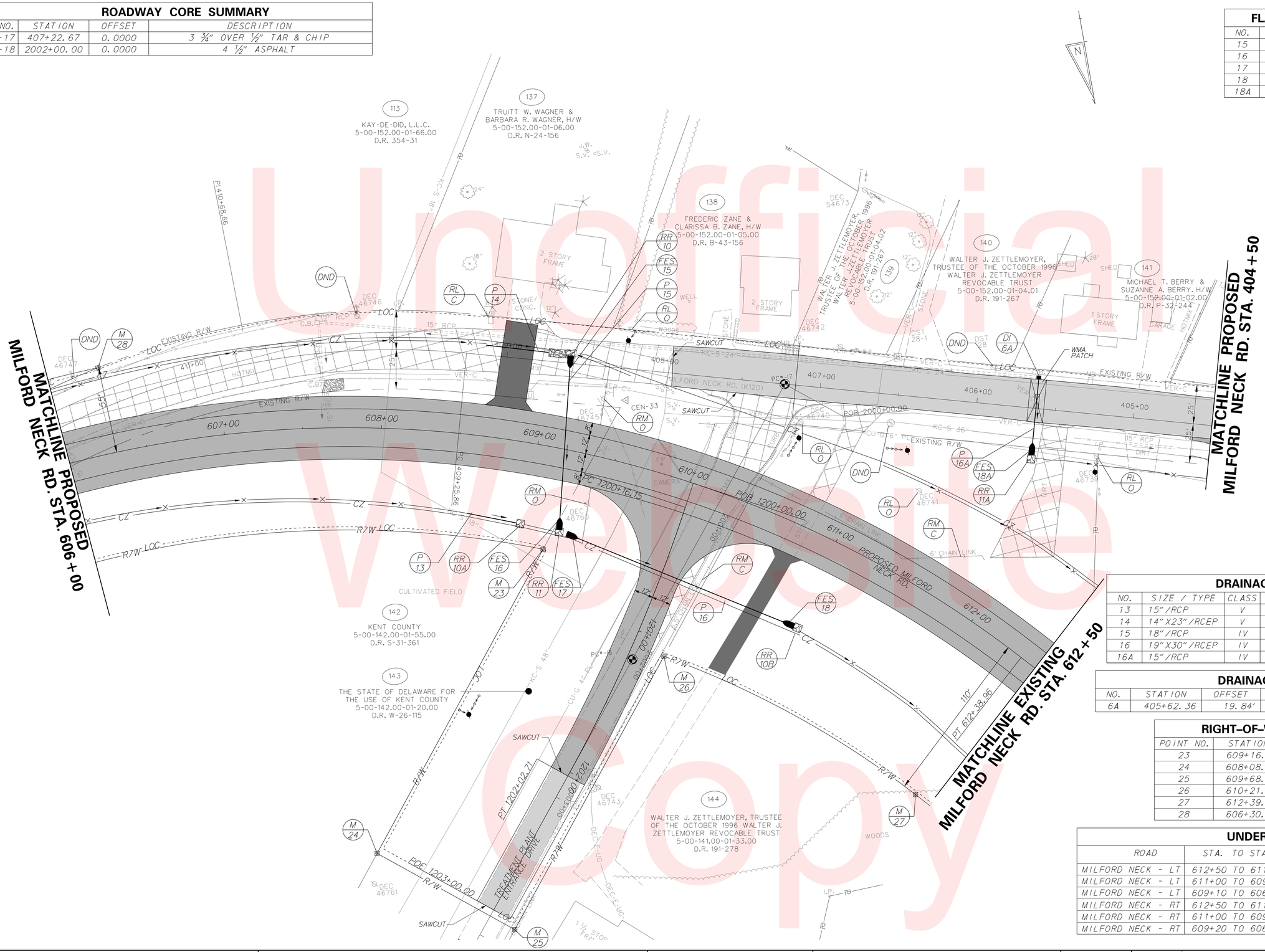

DRAINAGE PIPE SCHEDULE

NO.	SIZE / TYPE	CLASS	LENGTH	SLOPE	INV. EL.	DIS. EL.
13	15"/RCP	V	32.00'	0.0028	22.02'	21.93'
14	14"X23"/RCEP	V	40.00'	0.0027	22.38'	22.27'
15	18"/RCP	IV	99.00'	0.0035	22.21'	21.82'
16	19"X30"/RCEP	IV	144.00'	0.0037	21.81'	21.28'
16A	15"/RCP	IV	43.00'	0.0031	20.45'	20.32'

DRAINAGE INLET SCHEDULE

NO.	STATION	OFFSET	BOX SIZE	GRATE	T.G. EL.	INV. EL.
6A	405+62.36	19.84'	34" x 24"	1	22.89'	20.45'

RIGHT-OF-WAY MONUMENT SCHEDULE

POINT NO.	STATION	OFFSET	NORTHING	EASTING
23	609+16.29	65.00	360277.9831	648457.4007
24	608+08.93	270.13	360449.8286	648595.0802
25	609+68.72	304.47	360512.8259	648517.4161
26	610+21.82	110.00	360358.3901	648393.6850
27	612+39.12	110.00	360472.9120	648251.6662
28	606+30.42	-55.00	360114.8896	648715.5706

UNDERDRAIN SCHEDULE

ROAD	STA. TO STA.	LENGTH	SIZE / TYPE	DISCHARGE TYPE	DISCHARGE INV.
MILFORD NECK - LT	612+50 TO 611+00	150.00'	6" PEP	DITCH	26.68
MILFORD NECK - LT	611+00 TO 609+20	180.00'	6" PEP	DITCH	25.83
MILFORD NECK - LT	609+10 TO 606+25	285.00'	6" PEP	DITCH	24.45
MILFORD NECK - RT	612+50 TO 611+00	150.00'	6" PEP	DITCH	24.97
MILFORD NECK - RT	611+00 TO 609+30	170.00'	6" PEP	DITCH	24.23
MILFORD NECK - RT	609+20 TO 606+25	295.00'	6" PEP	DITCH	22.73

Unofficial Website Copy

DELAWARE DEPARTMENT OF TRANSPORTATION

ADDENDUMS / REVISIONS

SCALE 0 30 60 90 FEET

SR1, SOUTH FREDERICA GRADE SEPARATED INTERSECTION

CONTRACT T200812202 | BRIDGE NO. – | COUNTY KENT | DESIGNED BY: LCM | CHECKED BY: SFP

CONSTRUCTION PLAN

SHEET NO. 28 | TOTAL SHTS. 296

10/21/2015 9:48:03 AM G:\PROJECTS\06535.00 (DelDOT Agmt. 1376 DOTS Open End)\06535.07 SR1, S. Frederica\CADD Files\XM\cp16sf.dgn

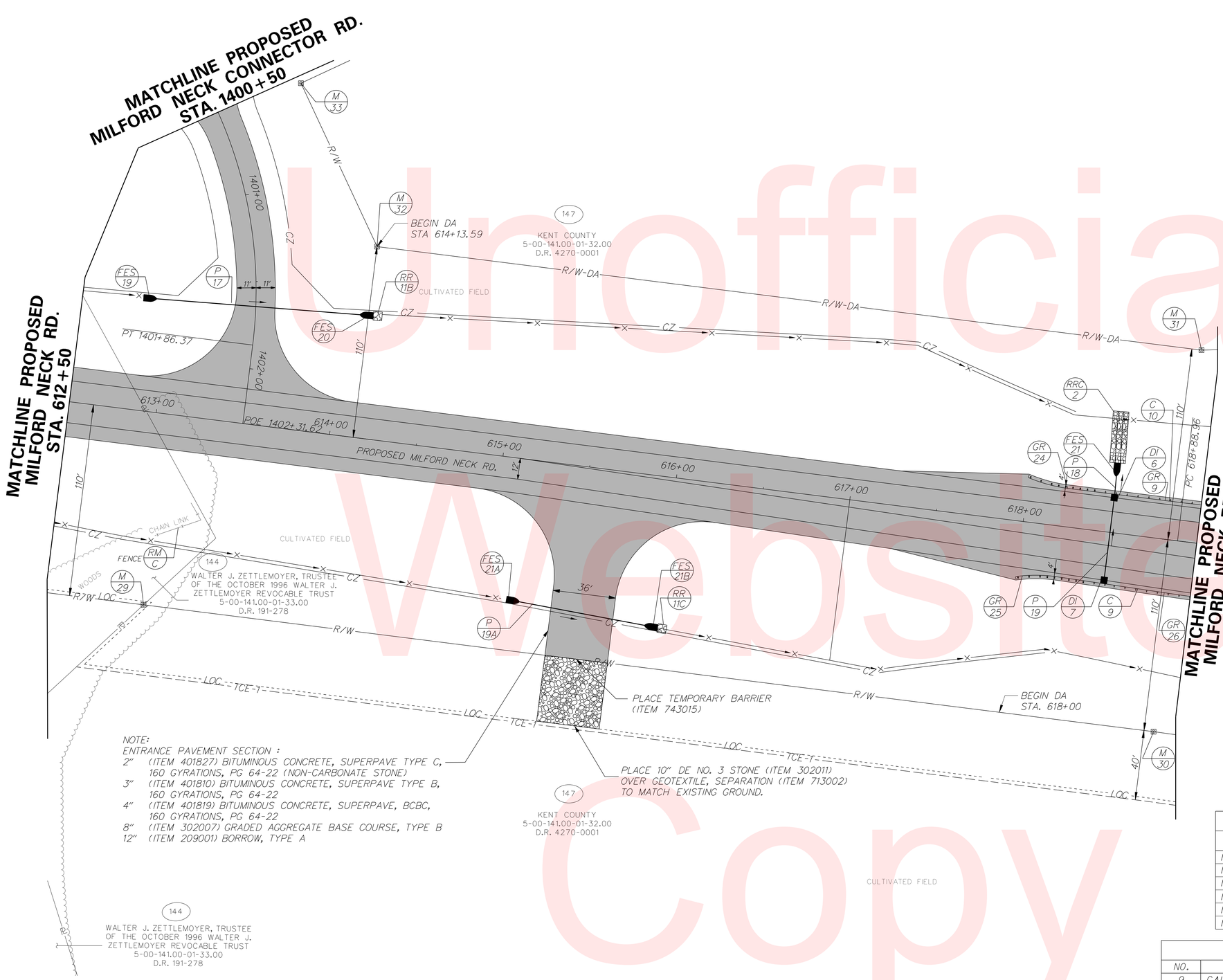

RIPRAP SCHEDULE

NO.	TYPE	AREA(SF)
11B	R-4	25.00
11C	R-4	25.00

RIPRAP CHUTE SCHEDULE

NO.	TYPE	WIDTH	LENGTH
2	DUMPED RIPRAP	3.00'	30.00'

FLARED END SECTION SCHEDULE

NO.	SIZE / TYPE	SLOPE	SAFETY GRATE
19	15" / RCP	0.0080	NO
20	15" / RCP	0.0080	NO
21	15" / RCP	0.0483	NO
21A	19"X30"/ RCEP	0.0030	NO
21B	19"X30"/ RCEP	0.0030	NO

CURB SCHEDULE

NO.	ITEM DESCRIPTION / TYPE	LENGTH
9	P.C.C. CURB TYPE 1-4	100.2'
10	P.C.C. CURB TYPE 1-4	100.0'

RIGHT-OF-WAY MONUMENT SCHEDULE

POINT NO.	STATION	OFFSET	NORTHING	EASTING
29	613+06.55	110.00	360522.8366	648206.3352
30	618+88.96	110.00	360954.0165	647814.8286
31	618+88.96	-110.00	360806.1302	647651.9492
32	614+13.59	-110.00	360454.1939	647971.5036
33	1400+53.53	50.13	360365.8804	647943.7207

DRAINAGE PIPE SCHEDULE

NO.	SIZE / TYPE	CLASS	LENGTH	SLOPE	INV. EL.	DIS. EL.
17	15" / RCP	IV	120.00'	0.0080	22.28'	21.33'
18	15" / RCP	IV	12.00'	0.0483	27.11'	26.53'
19	15" / RCP	IV	48.00'	0.0086	27.62'	27.21'
19A	19"X30"/ RCEP	IV	88.00	0.0030	20.02'	19.76'

DRAINAGE INLET SCHEDULE

NO.	STATION	OFFSET	BOX SIZE	GRATE	T.G. EL.	INV. EL.
6	618+50.00	-22.00'	34" x 24"	1	31.07'	27.11'
7	618+50.00	29.55'	34" x 24"	1	31.68'	27.62'

UNDERDRAIN SCHEDULE

ROAD	STA. TO STA.	LENGTH	SIZE / TYPE	DISCHARGE TYPE	DISCHARGE INV.
MILFORD NECK - LT	620+50 TO 618+50	200.00'	6" PEP	DI-6	28.65
MILFORD NECK - LT	618+50 TO 615+50	300.00'	6" PEP	DITCH	27.16
MILFORD NECK - LT	615+50 TO 612+50	300.00'	6" PEP	DITCH	26.79
MILFORD NECK - RT	620+50 TO 618+50	200.00'	6" PEP	DI-7	29.26
MILFORD NECK - RT	618+50 TO 615+50	300.00'	6" PEP	DITCH	27.14
MILFORD NECK - RT	615+50 TO 612+50	300.00'	6" PEP	DITCH	25.92

GUARDRAIL SCHEDULE

NO.	ITEM DESCRIPTION / TYPE	BEGIN STA.	OFFSET	LENGTH
9	GALV. STEEL BEAM GUARDRAIL, TYPE 1-31	618+50.00	-22.0	50.0'
24	END TREATMENT ATTENUATOR, TYPE 2-31	618+00.00	-25.24	50.0'
25	END TREATMENT ATTENUATOR, TYPE 2-31	618+00.00	31.69	50.0'
26	GALV. STEEL BEAM GUARDRAIL, TYPE 1-31	618+50.00	29.56	50.15'

Unofficial Website Copy

DELAWARE DEPARTMENT OF TRANSPORTATION

ADDENDUMS / REVISIONS

SCALE 0 30 60 90 FEET

SR1, SOUTH FREDERICA GRADE SEPARATED INTERSECTION

CONTRACT	BRIDGE NO.	–
T200812202	DESIGNED BY: LCM	
COUNTY		
KENT	CHECKED BY: SFP	

CONSTRUCTION PLAN

SHEET NO. 29 / TOTAL SHTS. 296

10/27/2015 G:\PROJECTS\06535.00 (DelDOT Agmt. 1376 DOTS Open End)\06535.07 SR1, S. Frederica\CADD Files\XM\cp17sf.dgn 10:16:44 AM

UNDERDRAIN SCHEDULE

ROAD	STA. TO STA.	LENGTH	SIZE / TYPE	DISCHARGE TYPE	DISCHARGE INV.
MILFORD NECK - LT	624+72 TO 621+72	300.00'	6" PEP	DITCH	35.22
MILFORD NECK - LT	621+72 TO 620+50	122.00'	6" PEP	DI-8	31.91
MILFORD NECK - RT	624+72 TO 621+72	300.00'	6" PEP	DITCH	35.97
MILFORD NECK - RT	621+72 TO 620+50	122.00'	6" PEP	DI-9	33.52
BRIDGE - LT	707+43 TO 709+75	232.00'	6" PEP	SWM	40.54
BRIDGE - LT	709+85 TO 710+51	66.00'	6" PEP	SWM	39.14
BRIDGE - RT	707+43 TO 709+90	247.00'	6" PEP	DITCH	40.54
BRIDGE - RT	710+00 TO 710+51	51.00'	6" PEP	DITCH	39.14

GUARDRAIL SCHEDULE

NO.	ITEM DESCRIPTION / TYPE	BEGIN STA.	OFFSET	LENGTH
11	GALV. STEEL BEAM GUARDRAIL, TYPE 1-31	709+00.00	-34.0	273.13'
9	GALV. STEEL BEAM GUARDRAIL, TYPE 1-31	619+00.00	-22.0	744.22'
26	GALV. STEEL BEAM GUARDRAIL, TYPE 1-31	619+00.00	30.67	689.82'

NOTE:
CONTRACTOR SHALL DEPRESS CURB AT RIPRAP CHUTES #4 AND #5.

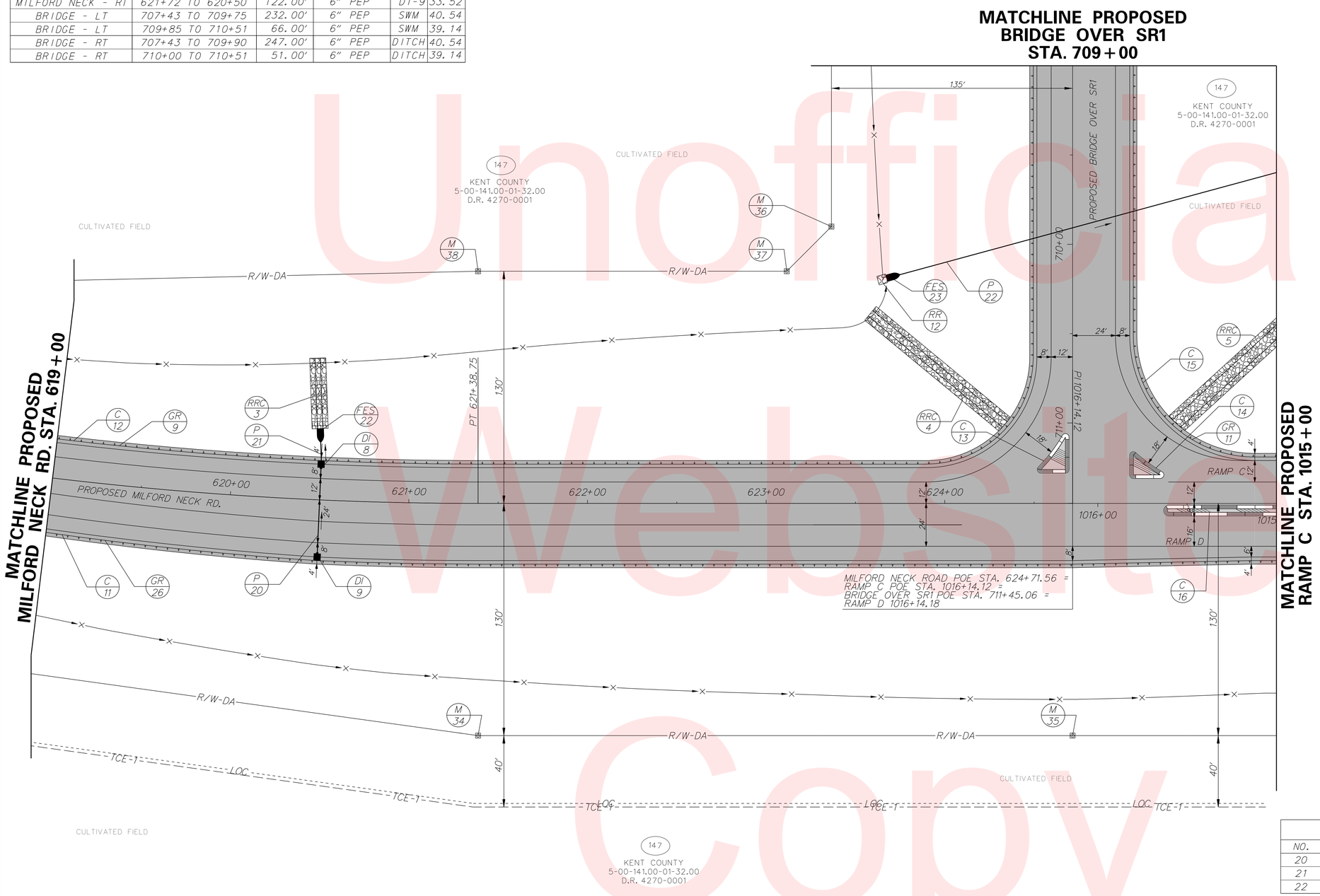

RIPRAP SCHEDULE

NO.	TYPE	AREA(SF)
12	R-4	25.00

RIPRAP CHUTE SCHEDULE

NO.	TYPE	WIDTH	LENGTH
3	DUMPED RIPRAP	3.00'	40.00'
4	GABION MATTRESS	4.00'	98.00'
5	GABION MATTRESS	6.00'	118.00'

FLARED END SECTION SCHEDULE

NO.	SIZE / TYPE	SLOPE	SAFETY GRATE
22	15" / RCP	0.0500	NO
23	36" / RCP	0.0031	YES

CURB SCHEDULE

NO.	ITEM DESCRIPTION / TYPE	LENGTH
11	P.C.C. CURB TYPE 1-4	689.8'
12	P.C.C. CURB TYPE 1-4	744.2'
13	P.C.C. CURB TYPE 2	68.0'
14	P.C.C. CURB TYPE 2	58.0'
15	P.C.C. CURB TYPE 1-4	273.1'
16	P.C.C. CURB TYPE 2	129.6'

RIGHT-OF-WAY MONUMENT SCHEDULE

POINT NO.	STATION	OFFSET	NORTHING	EASTING
34	621+38.75	130.00	361152.7479	647638.9870
35	624+71.56	130.00	361369.3544	647386.3120
36	709+90.06	135.00	361065.1147	647303.3167
37	623+11.56	130.00	361067.8241	647338.5681
38	621+38.75	130.00	360955.3520	647469.7687

DRAINAGE PIPE SCHEDULE

NO.	SIZE / TYPE	CLASS	LENGTH	SLOPE	INV. EL.	DIS. EL.
20	15" / RCP	IV	52.00'	0.0100	30.99'	30.47'
21	15" / RCP	IV	12.00'	0.0500	30.37'	29.77'
22	36" / RCP	V	224.00'	0.0031	16.73'	16.02'

DRAINAGE INLET SCHEDULE

NO.	STATION	OFFSET	BOX SIZE	GRATE	T.G. EL.	INV. EL.
8	620+50.00	-22.00'	34" X 24"	1	34.33'	30.37'
9	620+50.00	34.00'	34" X 24"	1	35.94'	30.99'

Unofficial Website Copy

DELAWARE DEPARTMENT OF TRANSPORTATION

ADDENDUMS / REVISIONS

SCALE 0 30 60 90 FEET

SR1, SOUTH FREDERICA GRADE SEPARATED INTERSECTION

CONTRACT	BRIDGE NO.	-
T200812202	DESIGNED BY: LCM	
COUNTY		
KENT	CHECKED BY: SFP	

CONSTRUCTION PLAN

SHEET NO. 30 / TOTAL SHTS. 296

10/20/2015 10:10:53 AM G:\PROJECTS\06535.00 (DelDOT Agmt. 1376 DOTS Open End)\06535.07 SR1, S. Frederica\CADD Files\XW\cp18sf.dgn

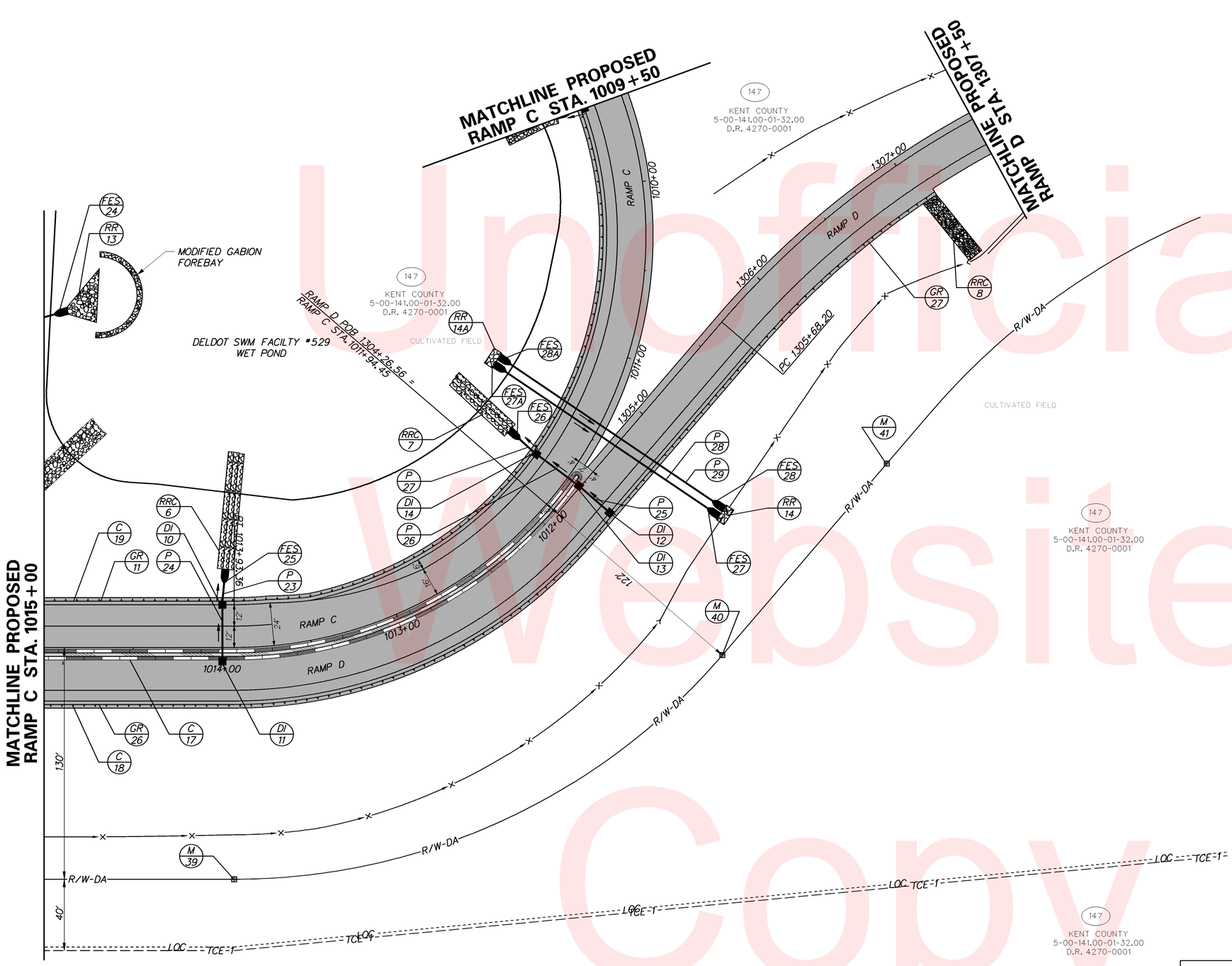

RIPRAP SCHEDULE

NO.	TYPE	AREA(SF)
13	R-4	286.00
14	R-4	50.00
14A	R-4	50.00

RIPRAP CHUTE SCHEDULE

NO.	TYPE	WIDTH	LENGTH
6	DUMPED RIPRAP	3.00'	66.00'
7	DUMPED RIPRAP	3.00'	43.00'
8	DUMPED RIPRAP	3.00'	41.00'

FLARED END SECTION SCHEDULE

NO.	SIZE / TYPE	SLOPE	SAFETY GRATE
24	36" / RCP	0.0031	NO
25	15" / RCP	0.0467	NO
26	15" / RCP	0.0761	NO
27	24" / RCP	0.0028	NO
27A	24" / RCP	0.0028	NO
28	24" / RCP	0.0028	NO
28A	24" / RCP	0.0028	NO

CURB SCHEDULE

NO.	ITEM DESCRIPTION / TYPE	LENGTH
17	P.C.C. CURB TYPE 2	673.4'
18	P.C.C. CURB TYPE 1-4	609.7'
19	P.C.C. CURB TYPE 1-4	507.6'

DRAINAGE PIPE SCHEDULE

NO.	SIZE / TYPE	CLASS	LENGTH	SLOPE	INV. EL.	DIS. EL.
23	15" / RCP	IV	12.00'	0.0467	33.30'	32.74'
24	15" / RCP	IV	30.00'	0.0071	33.61'	33.40'
25	15" / RCP	IV	23.00'	0.0100	27.10'	26.87'
26	15" / RCP	IV	28.00'	0.0100	26.17'	25.89'
27	15" / RCP	IV	12.00'	0.0761	25.79'	24.88'
28	24" / RCP	IV	140.00'	0.0028	15.98'	15.60'
29	24" / RCP	IV	140.00'	0.0028	15.98'	15.59'

RIGHT-OF-WAY MONUMENT SCHEDULE

POINT NO.	STATION	OFFSET	NORTHING	EASTING
39	1013+93.36	-130.00	361513.0312	647218.7106
40	1011+94.45	-130.00	361595.7693	646928.9468
41	1305+68.20	122.00	361574.2645	646788.9520

DRAINAGE INLET SCHEDULE

NO.	STATION	OFFSET	BOX SIZE	GRATE	T.G. EL.	INV. EL.
10	1014+00.00	26.00'	34" x 24"	1	37.30'	33.30'
11	1014+00.00	-5.57'	34" x 24"	1	38.23'	33.61'
12	1304+46.00	24.00'	34" x 24"	1	31.29'	27.10'
13	1304+46.00	-3.23'	34" x 24"	1	31.24'	26.17'
14	1011+75.00	24.00'	34" x 24"	1	29.80'	25.79'

UNDERDRAIN SCHEDULE

ROAD	STA. TO STA.	LENGTH	SIZE / TYPE	DISCHARGE TYPE	DISCHARGE INV.
RAMP C - RT	1016+14 TO 1014+00	214.00'	6" PEP	DI-10	34.80
RAMP C - RT	1014+00 TO 1011+75	225.00'	6" PEP	DI-14	26.63
RAMP C - RT	1011+60 TO 1009+50	210.00'	6" PEP	DI-3	19.36
RAMP D - LT	1016+14 TO 1013+14	300.00'	6" PEP	DITCH	34.58
RAMP D - RT	1013+14 TO 1304+46	139.00	6" PEP	DI-12	28.80
RAMP D - RT	1305+00 TO 1307+00	200.00'	6" PEP	DITCH	19.23

GUARDRAIL SCHEDULE

NO.	ITEM DESCRIPTION / TYPE	BEGIN STA.	OFFSET	LENGTH
11	GALV. STEEL BEAM GUARDRAIL, TYPE 1-31	1013+00.00	-26.0	507.56'
26	GALV. STEEL BEAM GUARDRAIL, TYPE 1-31	1301+14.12	24.0	609.74'
27	END ANCHORAGE	1306+97.50	24.0	12.5'

Unofficial Website Copy

DELAWARE
DEPARTMENT OF TRANSPORTATION

ADDENDUMS / REVISIONS

SCALE
0 30 60 90
FEET

SR1, SOUTH FREDERICA
GRADE SEPARATED INTERSECTION

CONTRACT	BRIDGE NO.	–
T200812202	DESIGNED BY: LCM	
COUNTY		
KENT	CHECKED BY: SFP	

CONSTRUCTION PLAN

SHEET NO. 31
TOTAL SHTS. 296

7/19/2013
G:\PROJECTS\06535.00 (DelDOT Agmt. 1376 DOTS Open End)\06535.07 SR1, S. Frederica\CADD Files\XM\cp19sf.dgn
07142102

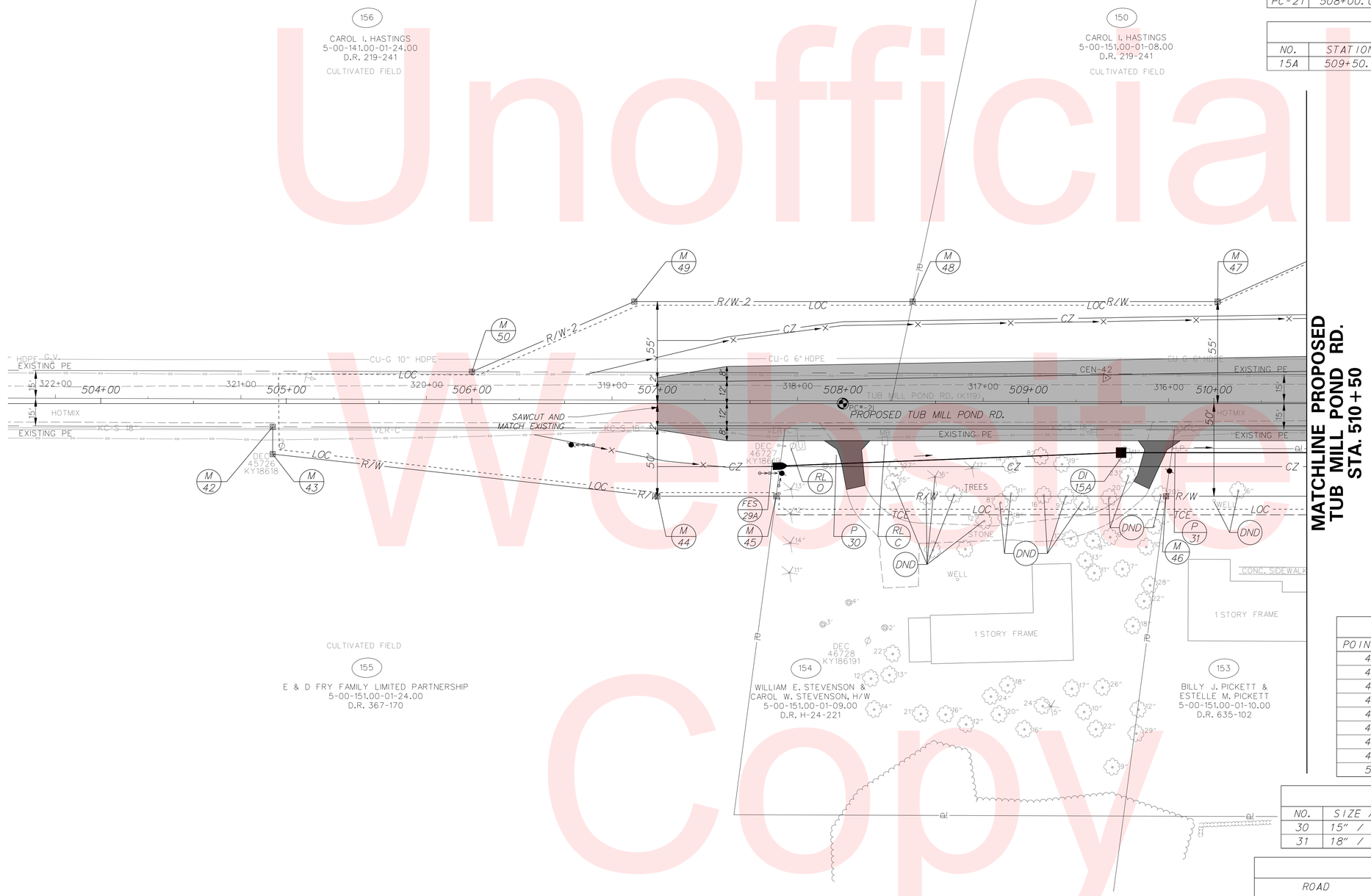

ROADWAY CORE SUMMARY

C NO.	STATION	OFFSET	DESCRIPTION
PC-21	508+00.00	0.0000	2 ½" TAR & CHIP

DRAINAGE INLET SCHEDULE

NO.	STATION	OFFSET	BOX SIZE	GRATE	T.G. EL.	INV. EL.
15A	509+50.00	26.50	48" x 30"	2	29.97'	26.33'

FLARED END SECTION SCHEDULE

NO.	SIZE / TYPE	SLOPE	SAFETY GRATE
29A	15" / RCP	0.0097	YES

RIGHT-OF-WAY MONUMENT SCHEDULE

POINT NO.	STATION	OFFSET	NORTHING	EASTING
42	320+82.80	-15.00	358441.6321	646918.9256
43	504+92.67	27.27	358434.8493	646932.0124
44	507+00.00	50.00	358608.8559	647047.0084
45	507+64.00	50.00	358665.7796	647076.2671
46	509+72.77	50.00	358846.8843	647180.5982
47	510+02.00	-55.00	358925.4525	647091.6803
48	508+37.58	-55.00	358779.2170	647016.5155
49	506+87.58	-55.00	358645.8082	646947.9436
50	506+00.05	-17.12	358550.6439	646941.6225

DRAINAGE PIPE SCHEDULE

NO.	SIZE / TYPE	CLASS	LENGTH	SLOPE	INV. EL.	DIS. EL.
30	15" / RCP	IV	180.00'	0.0097	28.77'	27.03'
31	18" / RCP	IV	100.00'	0.0056	26.33'	25.77'

UNDERDRAIN SCHEDULE

ROAD	STA. TO STA.	LENGTH	SIZE / TYPE	DISCHARGE	
				TYPE	INV.
TUB MILL POND - LT	507+00 TO 508+00	100.00'	6" PEP	DITCH	28.33
TUB MILL POND - RT	507+00 TO 510+00	300.00'	6" PEP	DITCH	27.63

Unofficial Website Copy

DELAWARE DEPARTMENT OF TRANSPORTATION

ADDENDUMS / REVISIONS

SCALE 0 30 60 90 FEET

SR1, SOUTH FREDERICA GRADE SEPARATED INTERSECTION

CONTRACT	BRIDGE NO.	–
T200812202	DESIGNED BY: LCM	
COUNTY		
KENT	CHECKED BY: SFP	

CONSTRUCTION PLAN

SHEET NO. 32

TOTAL SHTS. 296

10/27/2015
G:\PROJECTS\06535.00 (DelDOT Agmt. 1376 DOTS Open End)\06535.07 SR1, S. Frederica\CADD Files\XM\cp20sf.dgn
3:54:28 PM

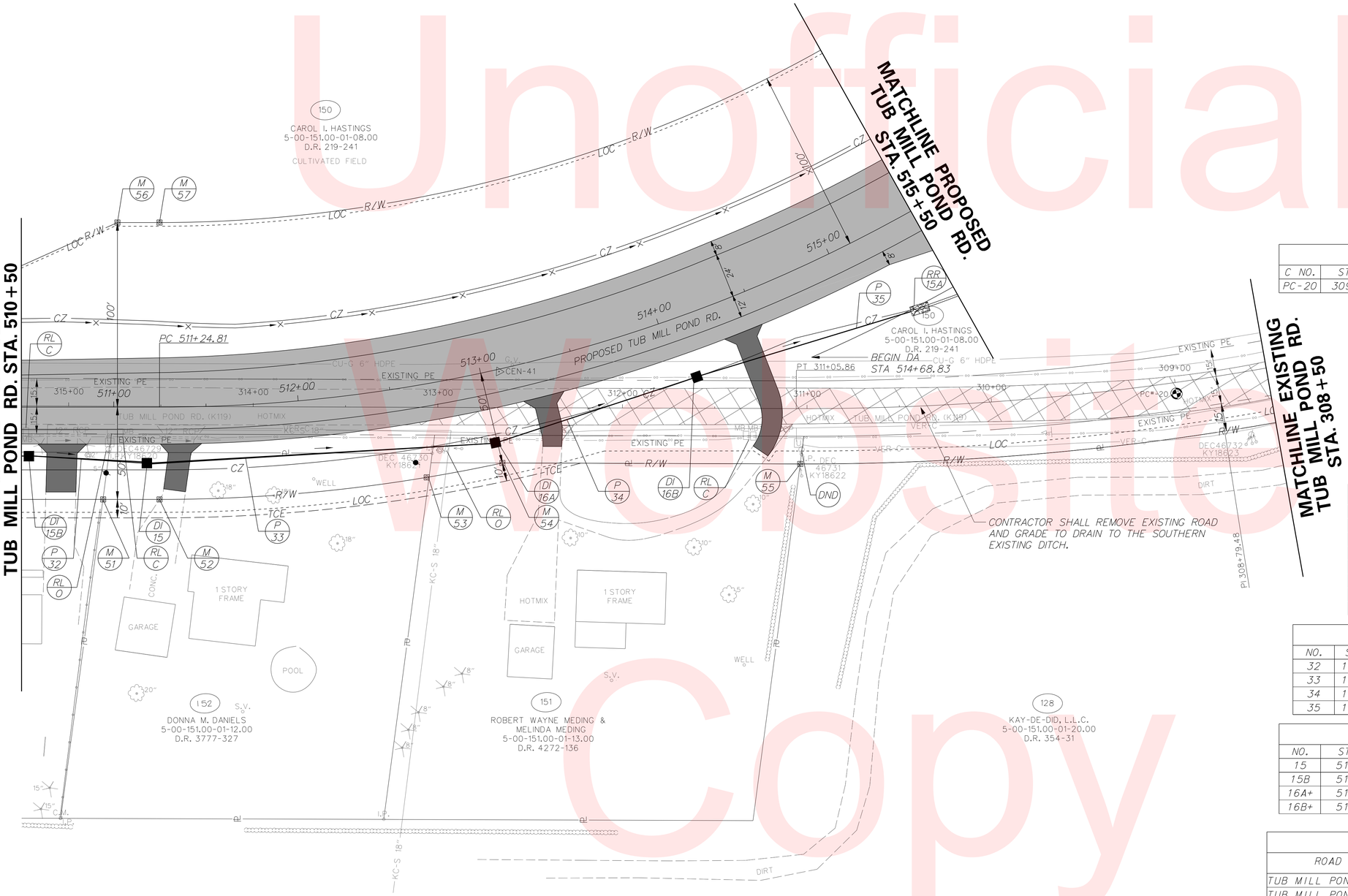

ROADWAY CORE SUMMARY

C NO.	STATION	OFFSET	DESCRIPTION
PC-20	309+00.00	-6.0000	2 ½" TAR & CHIP

RIPRAP SCHEDULE

NO.	TYPE	AREA(SF)
15A	R-4	50.00

RIGHT-OF-WAY MONUMENT SCHEDULE

POINT NO.	STATION	OFFSET	NORTHING	EASTING
51	510+94.15	50.00	358959.4064	647227.1908
52	511+24.81	50.00	358986.6813	647241.2100
53	512+63.20	50.00	359122.1063	647297.1495
54	513+01.35	50.00	359160.9036	647308.5479
55	311+03.66	30.00	359304.1227	647382.7635
56	511+02.00	-100.00	359034.9633	647097.3723
57	511+24.81	-100.00	359055.2532	647107.8013

DRAINAGE PIPE SCHEDULE

NO.	SIZE / TYPE	CLASS	LENGTH	SLOPE	INV. EL.	DIS. EL.
32	18"/RCP	IV	60.00'	0.0057	25.67'	25.33'
33	18"/RCP	IV	185.00'	0.0053	25.33'	24.35'
34	19"X30"/RCEP	V	111.00'	0.0035	24.35'	23.96'
35	19"X30"/RCEP	V	119.00'	0.0035	23.96'	23.54'

DRAINAGE INLET SCHEDULE

NO.	STATION	OFFSET	BOX SIZE	GRATE	T.G. EL.	INV. EL.
15	511+18.00	30.30'	48" x 48"	2	28.88'	25.33'
15B	510+54.00	26.50'	48" x 30"	2	29.55'	25.67'
16A+	513+00.00	38.44'	48" x 48"	2	27.10'	24.35'
16B+	514+10.00	32.92'	48" x 48"	2	26.80'	23.96'

+ SPECIAL INLET TOP REQUIRED. SEE CONSTRUCTION DETAIL SHEET.

UNDERDRAIN SCHEDULE

ROAD	STA. TO STA.	LENGTH	SIZE / TYPE	DISCHARGE TYPE	DISCHARGE INV.
TUB MILL POND - LT	508+00 TO 511+00	300.00'	6" PEP	DITCH	26.39
TUB MILL POND - RT	510+00 TO 512+50	250.00'	6" PEP	DITCH	26.68
TUB MILL POND - RT	512+50 TO 515+50	300.00'	6" PEP	DITCH	24.95

Unofficial Website Copy

10/27/2015
G:\PROJECTS\06535.00 (DelDOT Agmt. 1376 DOTS Open End)\06535.07 SR1, S. Frederica\CADD Files\XM\cp21st.dgn
3:57:19 PM

DELAWARE DEPARTMENT OF TRANSPORTATION

ADDENDUMS / REVISIONS

SCALE 0 30 60 90 FEET

SR1, SOUTH FREDERICA GRADE SEPARATED INTERSECTION

CONTRACT	BRIDGE NO.	-
T200812202	DESIGNED BY: LCM	
COUNTY		
KENT	CHECKED BY: SFP	

CONSTRUCTION PLAN

SHEET NO. 33
TOTAL SHTS. 296

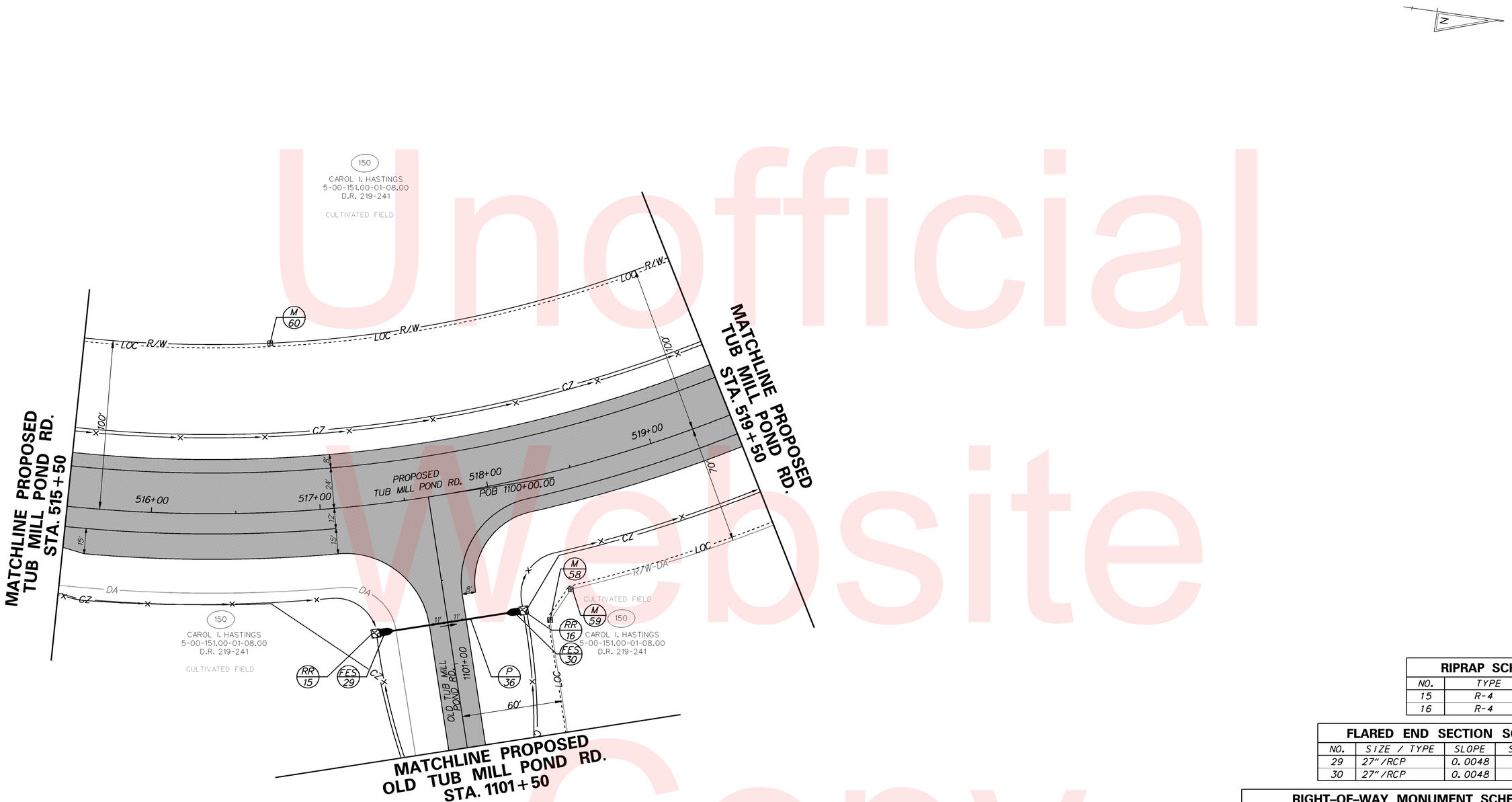

RIPRAP SCHEDULE		
NO.	TYPE	AREA(SF)
15	R-4	25.00
16	R-4	25.00

FLARED END SECTION SCHEDULE			
NO.	SIZE / TYPE	SLOPE	SAFETY GRATE
29	27"/RCP	0.0048	NO
30	27"/RCP	0.0048	NO

RIGHT-OF-WAY MONUMENT SCHEDULE				
POINT NO.	STATION	OFFSET	NORTHING	EASTING
58	518+18.81	85.03	359712.3179	647315.5879
59	518+33.53	70.00	359721.9366	647295.7900
60	516+75.00	-100.00	359525.6817	647176.2743

DRAINAGE PIPE SCHEDULE						
NO.	SIZE / TYPE	CLASS	LENGTH	SLOPE	INV. EL.	DIS. EL.
36	27"/RCP	IV	68.00'	0.0048	22.91'	22.58'

UNDERDRAIN SCHEDULE					
ROAD	STA. TO STA.	LENGTH	SIZE / TYPE	DISCHARGE	
				TYPE	INV.
TUB MILL POND - RT	515+50 TO 518+50	300.00'	6" PEP	DITCH	23.77

DELAWARE
DEPARTMENT OF TRANSPORTATION

ADDENDUMS / REVISIONS

SCALE
0 30 60 90
FEET

SR1, SOUTH FREDERICA
GRADE SEPARATED INTERSECTION

CONTRACT	BRIDGE NO.	–
T200812202	DESIGNED BY: LCM	
COUNTY	CHECKED BY: SFP	
KENT		

CONSTRUCTION PLAN

SHEET NO. 34
TOTAL SHTS. 296

Unofficial Website Copy

7/19/2013
G:\PROJECTS\06535.00 (DelDOT Agmt. 1376 DOTS Open End)\06535.07 SR1, S. Frederica\CADD Files\XM\cp22sf.dgn
07:43:50

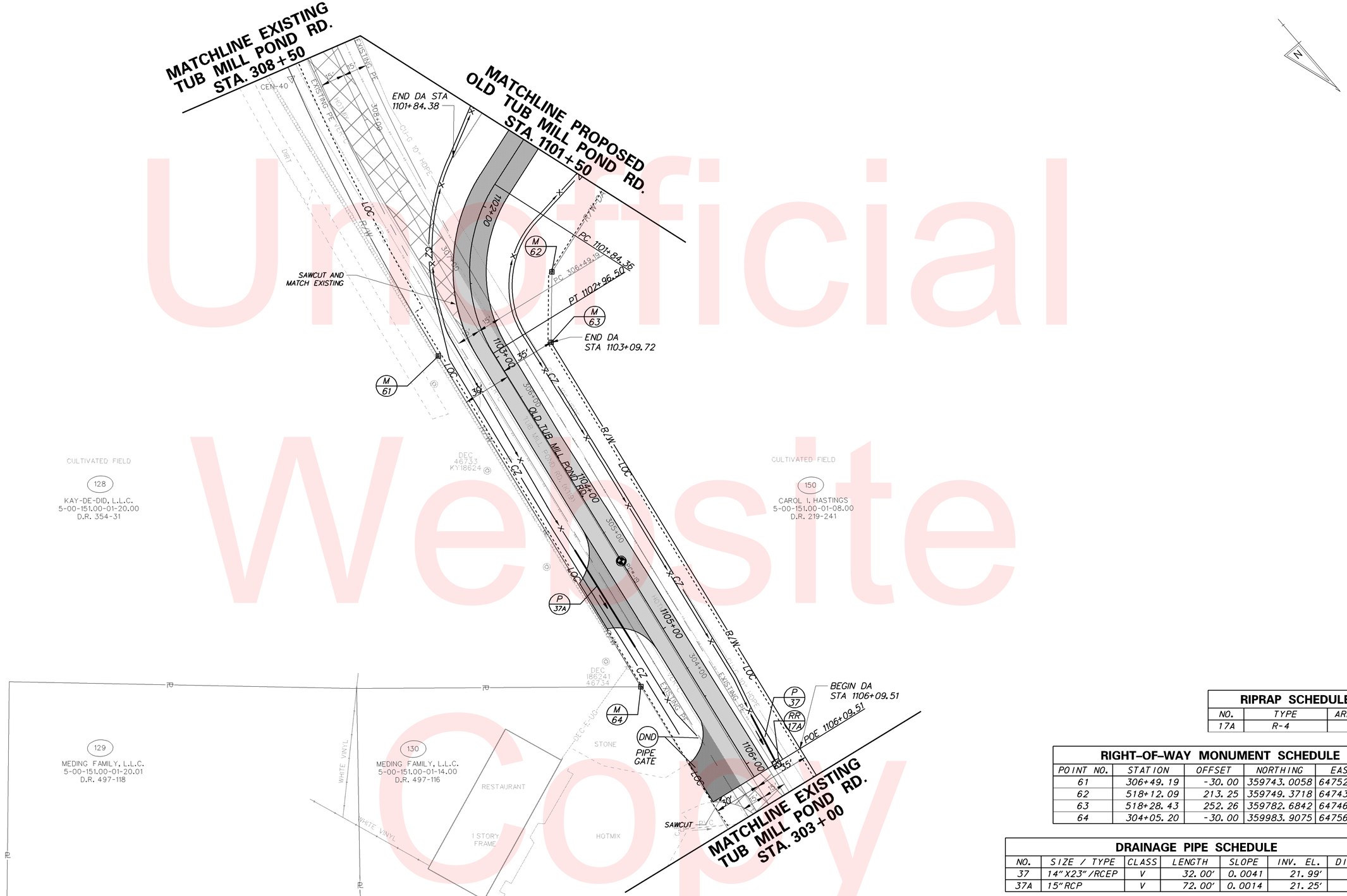

RIPRAP SCHEDULE		
NO.	TYPE	AREA(SF)
17A	R-4	25.00

RIGHT-OF-WAY MONUMENT SCHEDULE				
POINT NO.	STATION	OFFSET	NORTHING	EASTING
61	306+49.19	-30.00	359743.0058	647527.1985
62	518+12.09	213.25	359749.3718	647438.5959
63	518+28.43	252.26	359782.6842	647467.7396
64	304+05.20	-30.00	359983.9075	647565.9009

DRAINAGE PIPE SCHEDULE						
NO.	SIZE / TYPE	CLASS	LENGTH	SLOPE	INV. EL.	DIS. EL.
37	14"X23"/RCEP	V	32.00'	0.0041	21.99'	21.86'
37A	15"RCP	V	72.00'	0.0014	21.25'	21.15'

ROADWAY CORE SUMMARY			
C NO.	STATION	OFFSET	DESCRIPTION
PC-19	1104+50.00	0.0000	2 ½" TAR & CHIP

DELAWARE DEPARTMENT OF TRANSPORTATION

ADDENDUMS / REVISIONS

SCALE 0 30 60 90 FEET

SR1, SOUTH FREDERICA GRADE SEPARATED INTERSECTION

CONTRACT	BRIDGE NO.	–
T200812202	DESIGNED BY: LCM	
COUNTY		
KENT	CHECKED BY: SFP	

CONSTRUCTION PLAN

SHEET NO. 35

TOTAL SHTS. 296

7/19/2013
G:\PROJECTS\06535.00 (DelDOT Agmt. 1376 DOTS Open End)\06535.07 SR1, S. Frederica\CADD Files\XM\cp23sf.dgn
08:51:00

Unofficial Website Copy

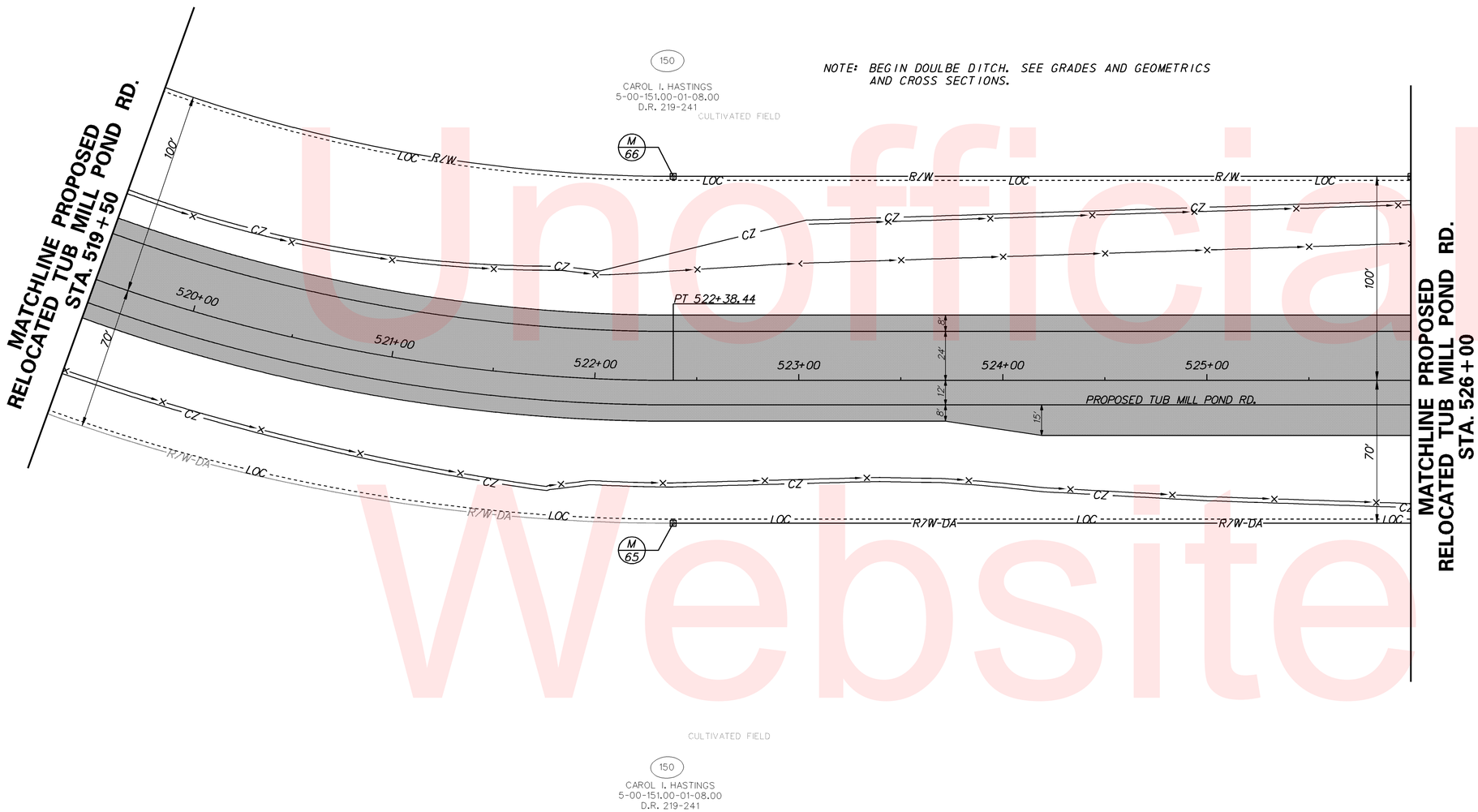

RIGHT-OF-WAY MONUMENT SCHEDULE				
POINT NO.	STATION	OFFSET	NORTHING	EASTING
65	522+38.44	70.00	360075.9122	647043.5859
66	522+38.44	-100.00	359946.8456	646932.9431

UNDERDRAIN SCHEDULE					
ROAD	STA. TO STA.	LENGTH	SIZE / TYPE	DISCHARGE TYPE	DISCHARGE INV.
TUB MILL POND - LT*	520+28 TO 521+50	122.00'	6" PEP	DITCH	20.95
TUB MILL POND - LT	524+50 TO 521+50	300.00'	6" PEP	DITCH	20.95
TUB MILL POND - LT	527+50 TO 524+50	300.00'	6" PEP	DITCH	24.31
TUB MILL POND - RT	518+50 TO 520+28	178.00'	6" PEP	DITCH	22.94
TUB MILL POND - RT	523+25 TO 520+28	297.00'	6" PEP	DITCH	22.94
TUB MILL POND - RT	526+25 TO 523+25	300.00'	6" PEP	DITCH	23.88

* UNDERDRAIN SHALL BE SLOPED AGAINST PROFILE OF ROAD

Unofficial Website Copy

DELAWARE
DEPARTMENT OF TRANSPORTATION

ADDENDUMS / REVISIONS

SCALE
0 30 60 90
FEET

SR1, SOUTH FREDERICA
GRADE SEPARATED INTERSECTION

CONTRACT: T200812202
COUNTY: KENT
BRIDGE NO.: –
DESIGNED BY: LCM
CHECKED BY: SFP

CONSTRUCTION PLAN

SHEET NO. 36
TOTAL SHTS. 296

7/19/2013
G:\PROJECTS\06535.00 (DelDOT Agmt. 1376 DOTS Open End)\06535.07 SR1, S. Frederica\CADD Files\XM\cp24sf.dgn
08-5206

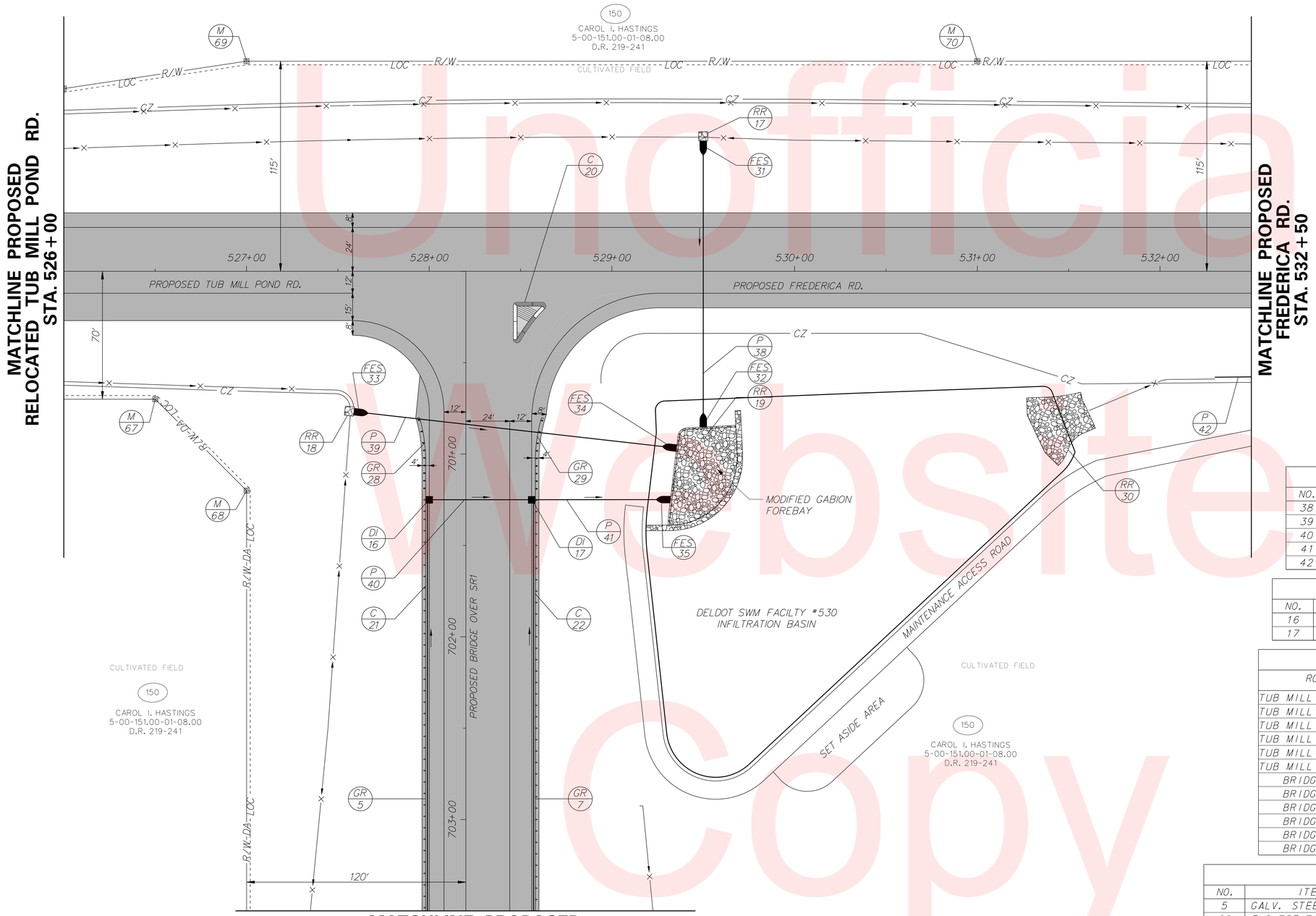

RIPRAP SCHEDULE

NO.	TYPE	AREA(SF)
17	R-4	25.00
18	R-4	25.00
19	R-4	1511.00
30*	R-4	891.00

*CHOKED RIPRAP. SEE DETAIL ON STORMWATER GENERAL DETAIL SHEET.

FLARED END SECTION SCHEDULE

NO.	SIZE / TYPE	SLOPE	SAFETY GRATE
31	30" / RCP	0.0032	NO
32	30" / RCP	0.0032	NO
33	36"/ RCP	0.0031	NO
34	36"/ RCP	0.0031	NO
35	15" / RCP	0.0527	NO

CURB SCHEDULE

NO.	ITEM DESCRIPTION / TYPE	LENGTH
20	P.C.C. CURB TYPE 2	68.00'
21	P.C.C. CURB TYPE 1-4	319.6'
22	P.C.C. CURB TYPE 1-4	319.3'

RIGHT-OF-WAY MONUMENT SCHEDULE

POINT NO.	STATION	OFFSET	NORTHING	EASTING
67	526+50.06	70.00	360343.8113	646731.0772
68	527+00.06	120.00	360414.3140	646725.6585
69	527+00.00	-115.00	360235.8576	646572.7587
70	531+00.00	-115.00	360496.1935	646269.0727

DRAINAGE PIPE SCHEDULE

NO.	SIZE / TYPE	CLASS	LENGTH	SLOPE	INV. EL.	DIS. EL.
38	30" / RCP	IV	145.00'	0.0032	18.48'	18.02'
39	36"/ RCP	IV	162.00'	0.0031	18.43'	17.92'
40	15" / RCP	IV	56.00'	0.0250	27.73'	26.33'
41	15" / RCP	IV	68.00'	0.0527	21.90'	18.32'
42	34"X53"/RCEP	V	64.00'	0.0031	17.85'	17.67'

DRAINAGE INLET SCHEDULE

NO.	STATION	OFFSET	BOX SIZE	GRATE	T.G. EL.	INV. EL.
16	701+25.00	22.00'	34" x 24"	1	31.77'	27.73'
17	701+25.00	-38.00'	34" x 24"	1	31.61'	21.90'

UNDERDRAIN SCHEDULE

ROAD	STA. TO STA.	LENGTH	SIZE / TYPE	DISCHARGE TYPE	DISCHARGE INV.
TUB MILL POND - LT	528+44 TO 527+50	94.00'	6" PEP	DITCH	26.53
TUB MILL POND - LT	528+44 TO 529+45	101.00'	6" PEP	DITCH	26.47
TUB MILL POND - LT	529+55 TO 532+50	295.00'	6" PEP	DITCH	24.65
TUB MILL POND - RT	528+44 TO 526+25	219.00'	6" PEP	DITCH	25.64
TUB MILL POND - RT	528+44 TO 529+45	101.00'	6" PEP	SWM	26.71
TUB MILL POND - RT	529+55 TO 532+50	295.00'	6" PEP	DITCH	24.89
BRIDGE - LT	700+82 TO 700+35	47.00'	6" PEP	SWM	27.88
BRIDGE - LT	701+25 TO 700+90	35.00'	6" PEP	SWM	28.16
BRIDGE - LT	704+00 TO 701+25	275.00'	6" PEP	DI-17	29.10
BRIDGE - RT	700+82 TO 700+35	47.00'	6" PEP	DITCH	27.88
BRIDGE - RT	701+25 TO 700+90	35.00'	6" PEP	DITCH	28.16
BRIDGE - RT	704+00 TO 701+25	275.00'	6" PEP	DI-16	29.10

GUARDRAIL SCHEDULE

NO.	ITEM DESCRIPTION / TYPE	BEGIN STA.	OFFSET	LENGTH
5	GALV. STEEL BEAM GUARDRAIL, TYPE 1-31	701+30.41	22.0	269.59'
28	END TREATMENT ATTENUATOR, TYPE 2-31	700+80.41	25.24	50.0'
7	GALV. STEEL BEAM GUARDRAIL, TYPE 1-31	701+30.66	-38.0	269.34'
29	END TREATMENT ATTENUATOR, TYPE 2-31	700+80.66	-41.24	50.0'

Unofficial Website Copy

DELAWARE DEPARTMENT OF TRANSPORTATION

ADDENDUMS / REVISIONS

SCALE 0 30 60 90 FEET

SR1, SOUTH FREDERICA GRADE SEPARATED INTERSECTION

CONTRACT	BRIDGE NO.	–
T200812202	DESIGNED BY: LCM	
COUNTY	CHECKED BY: SFP	
KENT		

CONSTRUCTION PLAN

SHEET NO. 37

TOTAL SHTS. 296

10/26/2015
G:\PROJECTS\06535.00 (DelDOT Agmt. 1376 DOTS Open End)\06535.07 SR1, S. Frederica\CADD Files\XM\cp25sf.dgn
11:48:24 AM

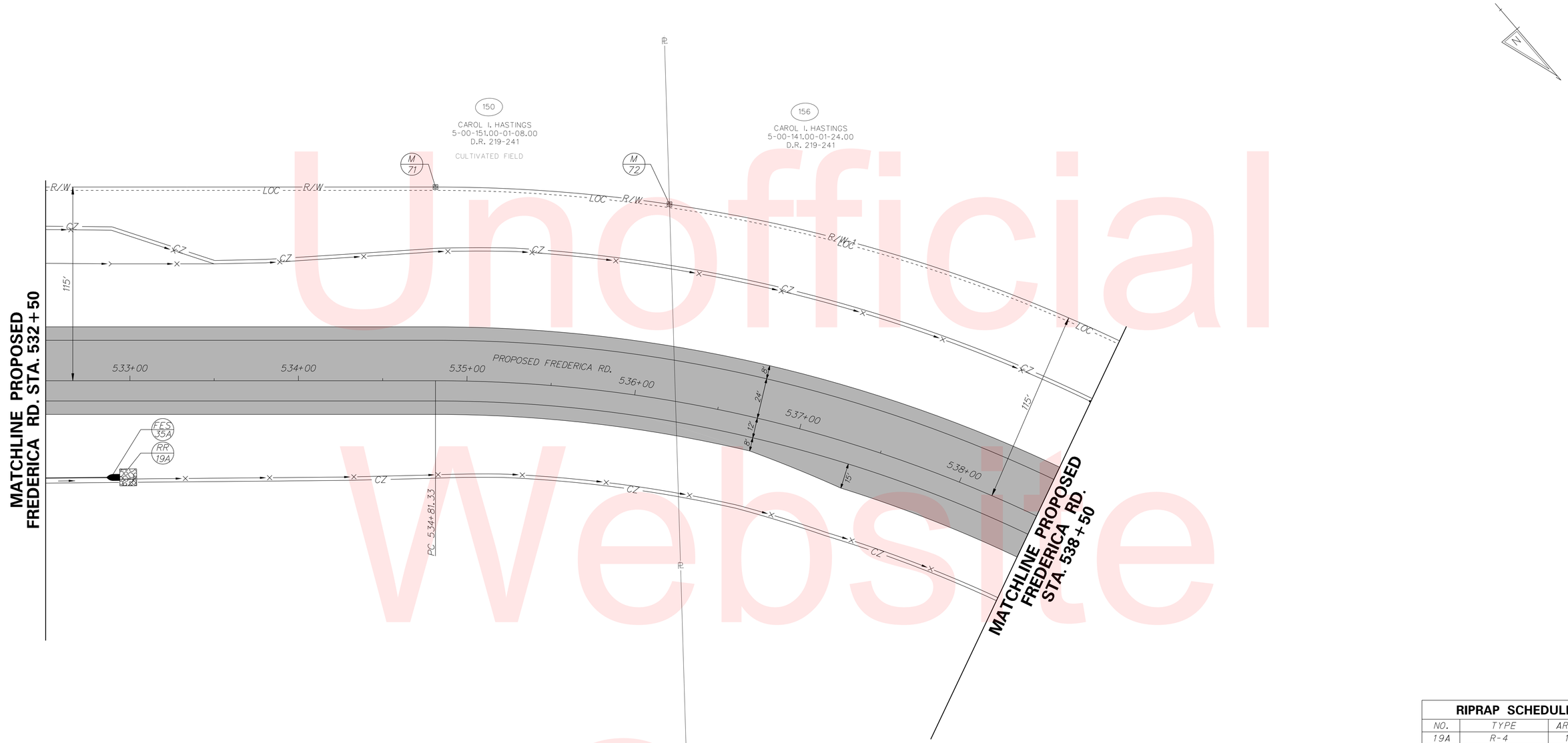

RIPRAP SCHEDULE		
NO.	TYPE	AREA(SF)
19A	R-4	100.00

FLARED END SECTION SCHEDULE			
NO.	SIZE / TYPE	SLOPE	SAFETY GRATE
35A	34"X53"/RCEP	0.0031	NO

RIGHT-OF-WAY MONUMENT SCHEDULE				
POINT NO.	STATION	OFFSET	NORTHING	EASTING
71	534+81.33	-115.00	360744.3783	645979.5610
72	536+03.81	-115.00	360842.5361	645880.7746

UNDERDRAIN SCHEDULE					
ROAD	STA. TO STA.	LENGTH	SIZE / TYPE	DISCHARGE	
				TYPE	INV.
TUB MILL POND - LT	532+50 TO 535+50	300.00'	6" PEP	DITCH	24.90
TUB MILL POND - LT	535+50 TO 538+50	300.00'	6" PEP	DITCH	23.06
TUB MILL POND - RT	532+50 TO 535+50	300.00'	6" PEP	DITCH	22.42
TUB MILL POND - RT	535+50 TO 538+50	300.00'	6" PEP	DITCH	20.16

Unofficial Website Copy

DELAWARE DEPARTMENT OF TRANSPORTATION

ADDENDUMS / REVISIONS

SCALE 0 30 60 90 FEET

SR1, SOUTH FREDERICA GRADE SEPARATED INTERSECTION

CONTRACT	BRIDGE NO.	–
T200812202	DESIGNED BY: LCM	
COUNTY		
KENT	CHECKED BY: SFP	

CONSTRUCTION PLAN

SHEET NO. 38

TOTAL SHTS. 296

10/26/2015
G:\PROJECTS\06535.00 (DelDOT Agmt. 1376 DOTS Open End)\06535.07 SR1, S. Frederica\CADD Files\XW\cp26sf.dgn
11:49:04 AM

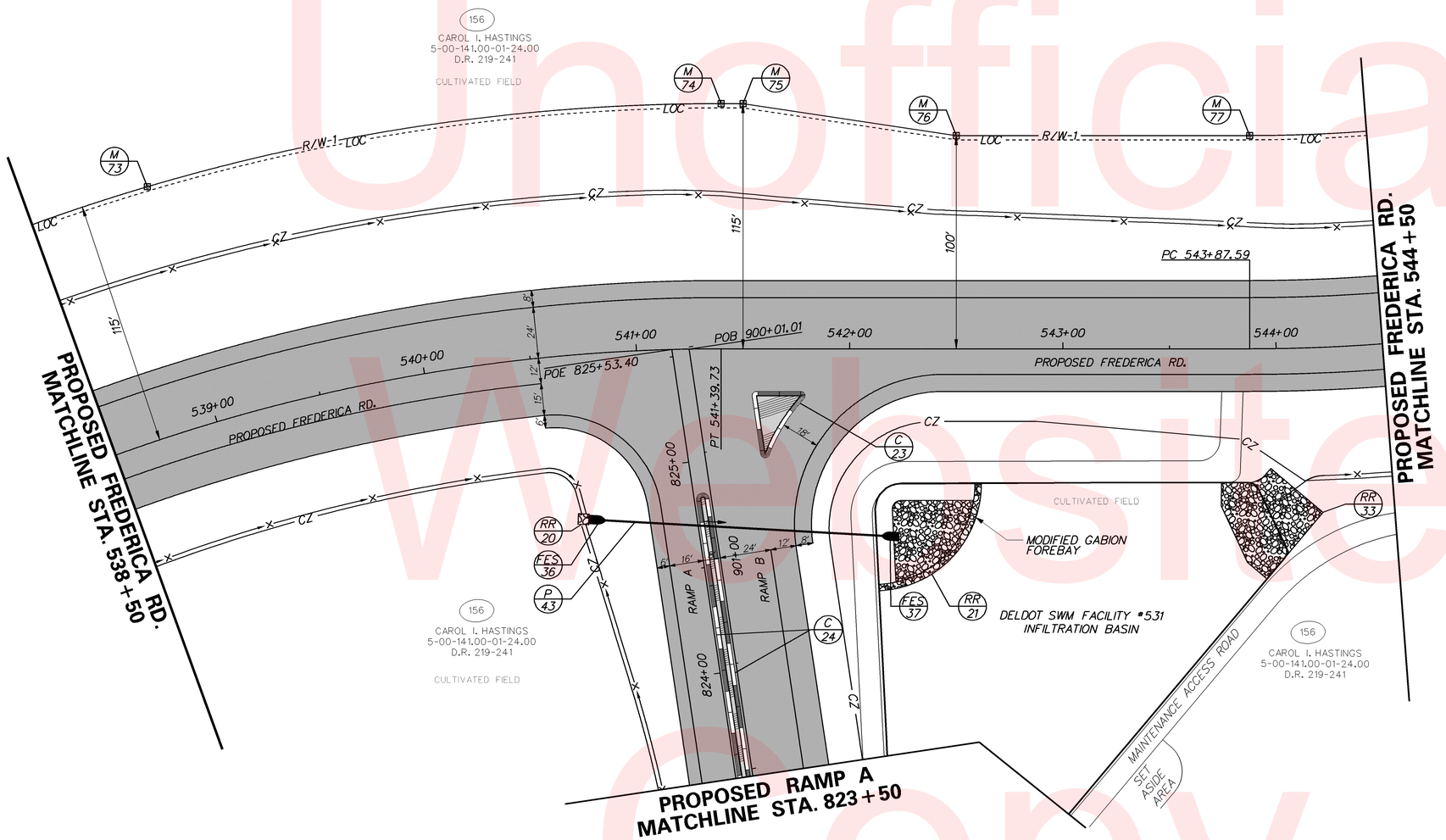

RIPRAP SCHEDULE

NO.	TYPE	AREA(SF)
20	R-4	25.00
21	R-4	1016.00
33*	R-4	1382.00

* CHOKED RIPRAP. SEE DETAIL ON STORMWATER GENERAL DETAIL SHEET

FLARED END SECTION SCHEDULE

NO.	SIZE / TYPE	SLOPE	SAFETY GRATE
36	34"X53"/RCEP	0.0188	NO
37	34"X53"/RCEP	0.0188	NO

CURB SCHEDULE

NO.	ITEM DESCRIPTION / TYPE	LENGTH
23	P.C.C. CURB TYPE 2	93.00'
24	P.C.C. CURB TYPE 2	273.25'

RIGHT-OF-WAY MONUMENT SCHEDULE

POINT NO.	STATION	OFFSET	NORTHING	EASTING
73	539+00.00	-115.00	361130.6005	645709.1605
74	541+39.73	-115.00	361396.1917	645650.9934
75	541+50.00	-115.00	361406.4347	645650.2577
76	542+50.00	-100.00	361507.2524	645658.0543
77	543+87.59	-100.00	361644.4887	645648.1962

DRAINAGE PIPE SCHEDULE

NO.	SIZE / TYPE	CLASS	LENGTH	SLOPE	INV. EL.	DIS. EL.
43	34"X53"/RCEP	V	130.00'	0.0188	15.00'	12.57'

UNDERDRAIN SCHEDULE

ROAD	STA. TO STA.	LENGTH	SIZE / TYPE	DISCHARGE	
				TYPE	INV.
TUB MILL POND - LT	538+50 TO 541+50	300.00'	6" PEP	DITCH	20.83
TUB MILL POND - LT	541+50 TO 544+50	300.00'	6" PEP	DITCH	16.20
TUB MILL POND - RT	538+50 TO 540+00	150.00'	6" PEP	DITCH	19.25
TUB MILL POND - RT	540+00 TO 543+00	300.00'	6" PEP	SWM	18.90

Unofficial Website Copy

DELAWARE DEPARTMENT OF TRANSPORTATION

ADDENDUMS / REVISIONS

SCALE 0 30 60 90 FEET

SR1, SOUTH FREDERICA GRADE SEPARATED INTERSECTION

CONTRACT	BRIDGE NO.	–
T200812202	DESIGNED BY: LCM	
COUNTY		
KENT	CHECKED BY: SFP	

CONSTRUCTION PLAN

SHEET NO. 39

TOTAL SHTS. 296

6/4/2013
G:\PROJECTS\06535.00 (DelDOT Agmt. 1376 DOTS Open End)\06535.07 SR1, S. Frederica\CADD Files\XM\cp27sf.dgn
14:19:45

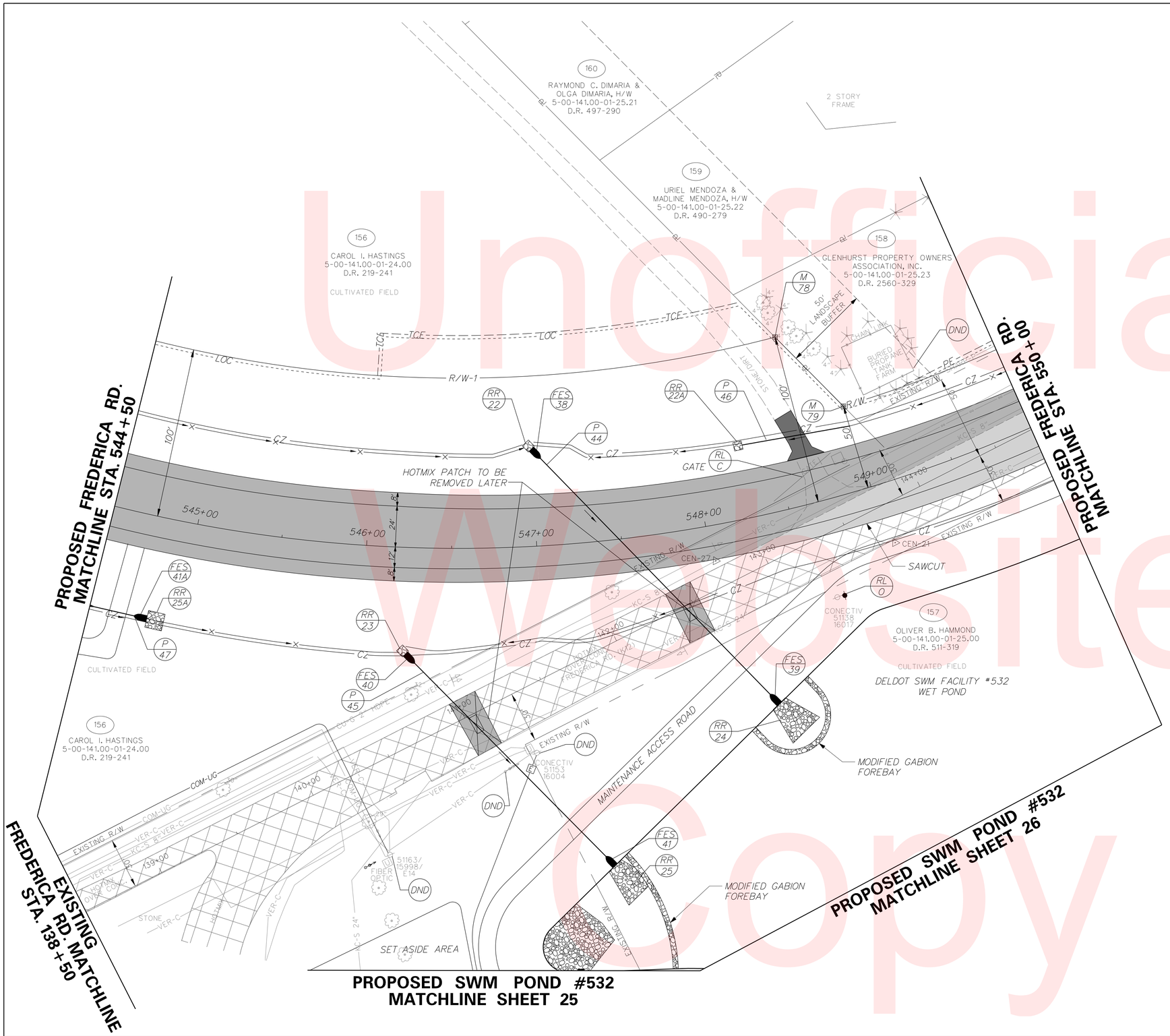

RIPRAP SCHEDULE		
NO.	TYPE	AREA(SF)
22	R-4	25.00
22A	R-4	25.00
23	R-4	25.00
24	R-4	355.00
25	R-4	317.00
25A	R-4	100.00

FLARED END SECTION SCHEDULE			
NO.	SIZE / TYPE	SLOPE	SAFETY GRATE
38	27"X42"/RCEP	0.0092	YES
39	27"X42"/RCEP	0.0092	NO
40	27"X42"/RCEP	0.0100	YES
41	27"X42"/RCEP	0.0100	NO
41A	42" / RCP	0.0066	NO

RIGHT-OF-WAY MONUMENT SCHEDULE				
POINT NO.	STATION	OFFSET	NORTHING	EASTING
78	548+67.74	-100.00	362034.4779	645501.4397
79	548+98.15	-50.00	362087.1305	645523.6322

DRAINAGE PIPE SCHEDULE						
NO.	SIZE / TYPE	CLASS	LENGTH	SLOPE	INV. EL.	DIS. EL.
44	27"X42"/RCEP	IV	193.00'	0.0092	10.93'	9.14'
45	27"X42"/RCEP	IV	160.00'	0.0100	10.65'	9.08'
46	15" / RCP	IV	64.00'	0.0036	14.96'	14.73'
47	42" / RCP	IV	32.00'	0.0066	12.58'	12.42'

NOTE:
PIPES P44 AND P45 SHALL BE INSTALLED UNDER THE EXISTING 24" AND 8" SEWER LINES. THE SEWER LINES SHALL BE SUPPORTED DURING THE INSTALLATION OF THESE PIPES.

UNDERDRAIN SCHEDULE					
ROAD	STA. TO STA.	LENGTH	SIZE / TYPE	DISCHARGE TYPE	DISCHARGE INV.
TUB MILL POND - LT	544+50 TO 547+30	280.00'	6" PEP	DITCH	14.66
TUB MILL POND - LT*	547+50 TO 548+84	134.00'	6" PEP	SWM	14.00
TUB MILL POND - RT	543+00 TO 546+00	300.00'	6" PEP	DITCH	17.76
TUB MILL POND - RT	546+00 TO 547+50	150.00'	6" PEP	DITCH	16.84
TUB MILL POND - RT	547+70 TO 548+84	114.00'	6" PEP	SWM	16.44
TUB MILL POND - RT	550+46 TO 548+84	162.00'	6" PEP	SWM	16.44

* UNDERDRAIN SHALL OUTLET TO THE RIGHT

Unofficial Website Copy

DELAWARE DEPARTMENT OF TRANSPORTATION	ADDENDUMS / REVISIONS	SCALE 0 30 60 90 FEET	SR1, SOUTH FREDERICA GRADE SEPARATED INTERSECTION	CONTRACT T200812202	BRIDGE NO. –	CONSTRUCTION PLAN	SHEET NO. 40
				COUNTY KENT	DESIGNED BY: LCM		TOTAL SHTS. 296
					CHECKED BY: SFP		

10/27/2015
S:\PROJECTS\06535.00 (DelDOT Agmt. 1376 DOTS Open End)\06535.07 SR1, S. Frederica\CADD Files\XM\cp28sf.dgn
2:19:56 PM

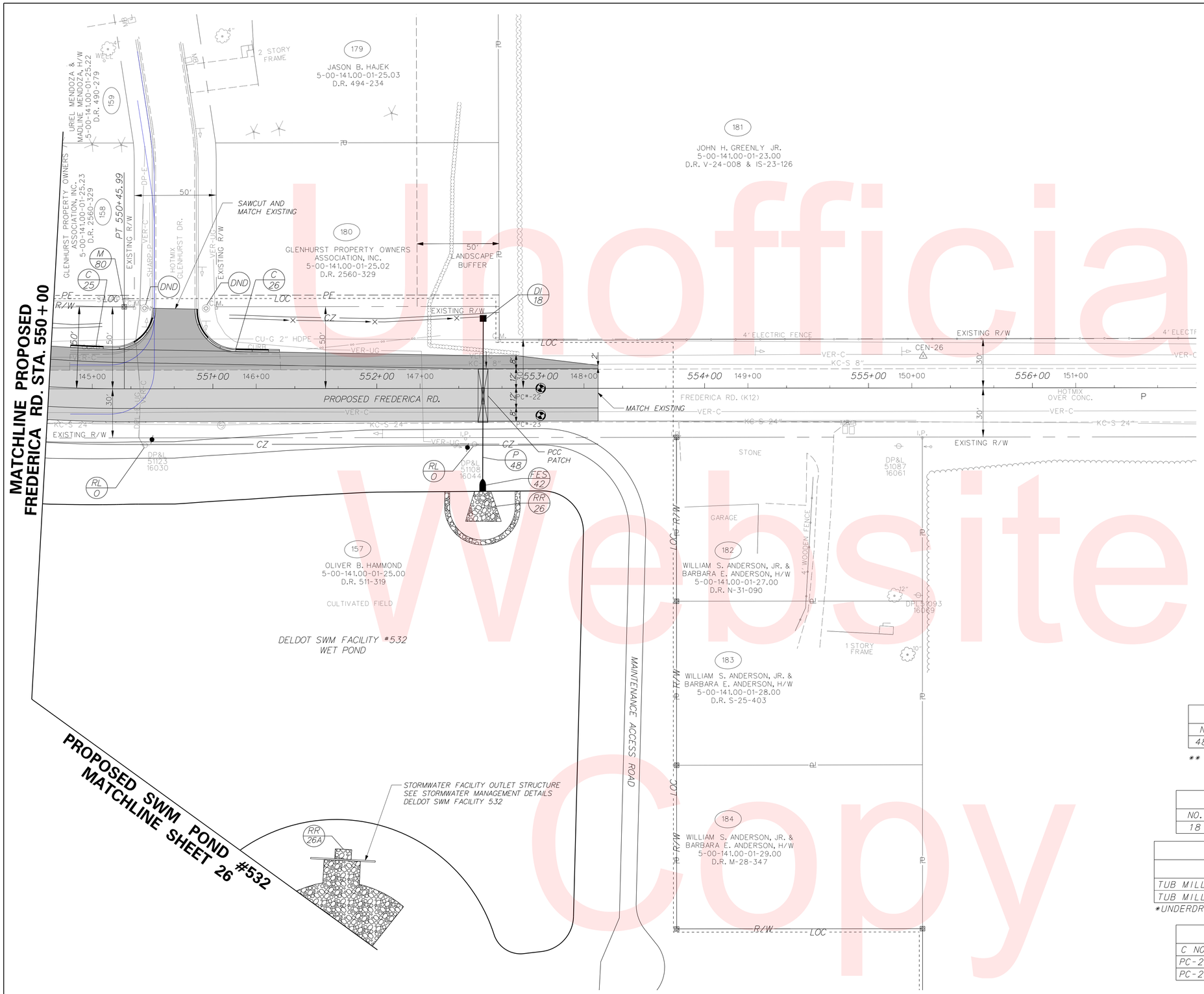

RIPRAP SCHEDULE

NO.	TYPE	AREA(SF)
26	R-4	291.00
26A	R-5	60.00

FLARED END SECTION SCHEDULE

NO.	SIZE / TYPE	SLOPE	SAFETY GRATE
42	15" / RCP	0.0049	NO

CURB SCHEDULE

NO.	ITEM DESCRIPTION / TYPE	LENGTH
25	CURB & GUTTER, TYPE 3-8	67.00'
26	CURB & GUTTER, TYPE 3-8	67.00'

RIGHT-OF-WAY MONUMENT SCHEDULE

POINT NO.	STATION	OFFSET	NORTHING	EASTING
80	550+45.99	-50.00	362186.4360	645426.6875

DRAINAGE PIPE SCHEDULE

NO.	SIZE / TYPE	CLASS	LENGTH	SLOPE	INV. EL.	DIS. EL.
48**	15" / RCP	IV	99.00'	0.0048	10.50'	10.03'

** PIPE P48 SHALL BE INSTALLED UNDER THE EXISTING 24" AND 8" SEWER LINES. THE SEWER LINES SHALL BE SUPPORTED DURING THE INSTALLATION OF THIS PIPE. ALL COSTS INCIDENTAL TO THE PIPE BEING INSTALLED.

DRAINAGE INLET SCHEDULE

NO.	STATION	OFFSET	BOX SIZE	GRATE	T.G. EL.	INV. EL.
18	552+65.00	-42.76'	34" x 24"	2	14.42'	10.50'

UNDERDRAIN SCHEDULE

ROAD	STA. TO STA.	LENGTH	SIZE / TYPE	DISCHARGE	
				TYPE	INV.
TUB MILL POND - LT*	550+00 TO 548+84	116.00'	6" PEP	SWM	14.00
TUB MILL POND - LT*	553+00 TO 550+00	300.00'	6" PEP	SWM	14.48

*UNDERDRAIN SHALL OUTLET TO THE RIGHT SIDE

ROADWAY CORE SUMMARY

C NO.	STATION	OFFSET	DESCRIPTION
PC-22	553+00.00	0.0000	5" ASPHALT OVER 9 ¼" CONCRETE
PC-23	553+00.00	16.5100	4 ½" ASPHALT OVER 9 ¼" CONCRETE

DELAWARE DEPARTMENT OF TRANSPORTATION

ADDENDUMS / REVISIONS

SCALE 0 30 60 90 FEET

SR1, SOUTH FREDERICA GRADE SEPARATED INTERSECTION

CONTRACT	BRIDGE NO.	–
T200812202	DESIGNED BY: LCM	
COUNTY		
KENT	CHECKED BY: SFP	

CONSTRUCTION PLAN

SHEET NO. 41 TOTAL SHTS. 296

10/26/2015
G:\PROJECTS\06535.00 (DelDOT Agmt. 1376 DOTS Open End)\06535.07 SR1, S. Frederica\CADD Files\XM\cp29sf.dgn
1:18:57 PM

Unofficial Website Copy

PROPOSED MILFORD NECK RD (K120)

Unofficial Website Copy

DELAWARE DEPARTMENT OF TRANSPORTATION	ADDENDUMS / REVISIONS	SCALE 0 30 60 90 FEET	SR1, SOUTH FREDERICA GRADE SEPARATED INTERSECTION	CONTRACT T200812202	BRIDGE NO. –	PROFILE	SHEET NO. 42
				COUNTY KENT	DESIGNED BY: LCM		TOTAL SHTS. 296
					CHECKED BY: SFP		

8/6/2013
G:\PROJECTS\06535.00 (DelDOT Agmt. 1376 DOTS Open End)\06535.07 SR1, S. Frederica\CADD Files\XM\p101.dgn
09:06:44

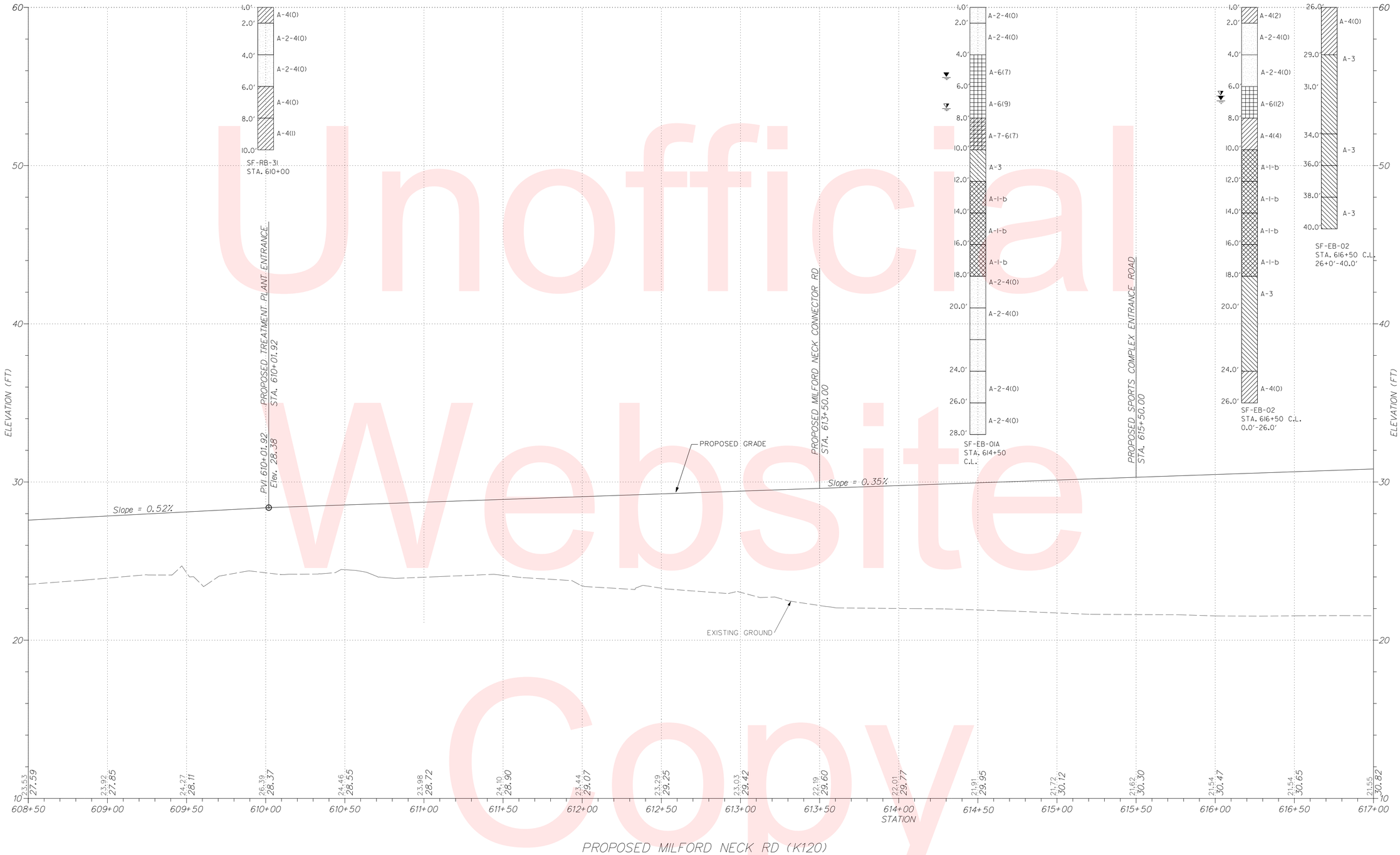

Unofficial Website Copy

VERTICAL SCALE FEET
10
5
0

DELAWARE DEPARTMENT OF TRANSPORTATION	ADDENDUMS / REVISIONS	SCALE 0 30 60 90 FEET	SR1, SOUTH FREDERICA GRADE SEPARATED INTERSECTION	CONTRACT T200812202	BRIDGE NO. –	PROFILE	SHEET NO. 43
				COUNTY KENT	DESIGNED BY: LCM		TOTAL SHTS. 296
					CHECKED BY: SFP		

10/23/2015
G:\PROJECTS\06535.00 (DelDOT Agmt. 1376 DOTS Open End)\06535.07 SR1, S. Frederica\CADD Files\XM\pf02.dgn
9:51:06 AM

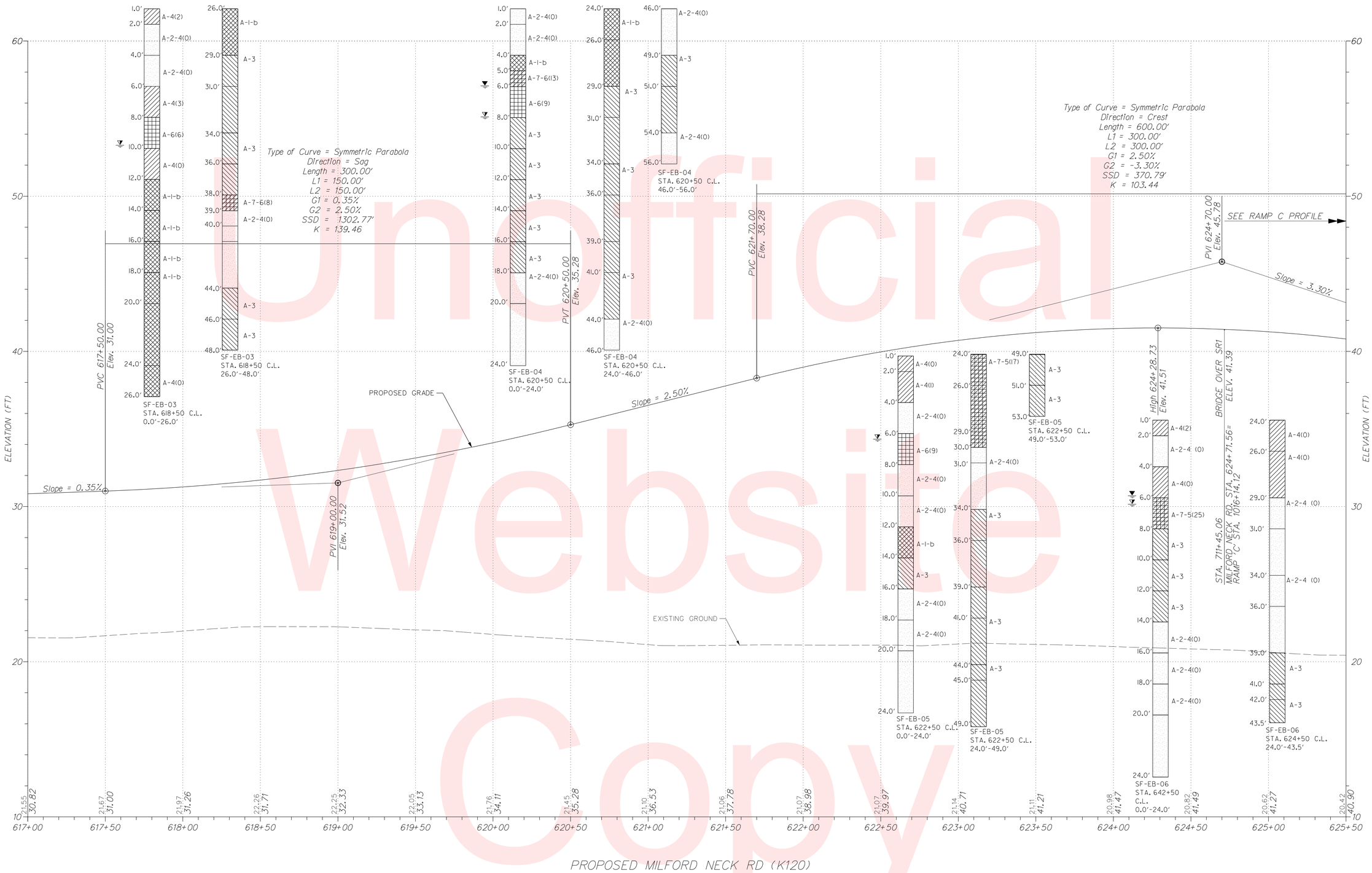

Unofficial Website Copy

DELAWARE DEPARTMENT OF TRANSPORTATION	ADDENDUMS / REVISIONS	SCALE 0 30 60 90 FEET	SR1, SOUTH FREDERICA GRADE SEPARATED INTERSECTION	CONTRACT T200812202	BRIDGE NO. –	PROFILE	SHEET NO. 44
				COUNTY KENT	DESIGNED BY: LCM		TOTAL SHTS. 296
					CHECKED BY: SFP		

10/23/2015
G:\PROJECTS\06535.00 (DelDOT Agmt. 1376 DOTS Open End)\06535.07 SR1, S. Frederica\CADD Files\XM\pl03.dgn
10:08:39 AM

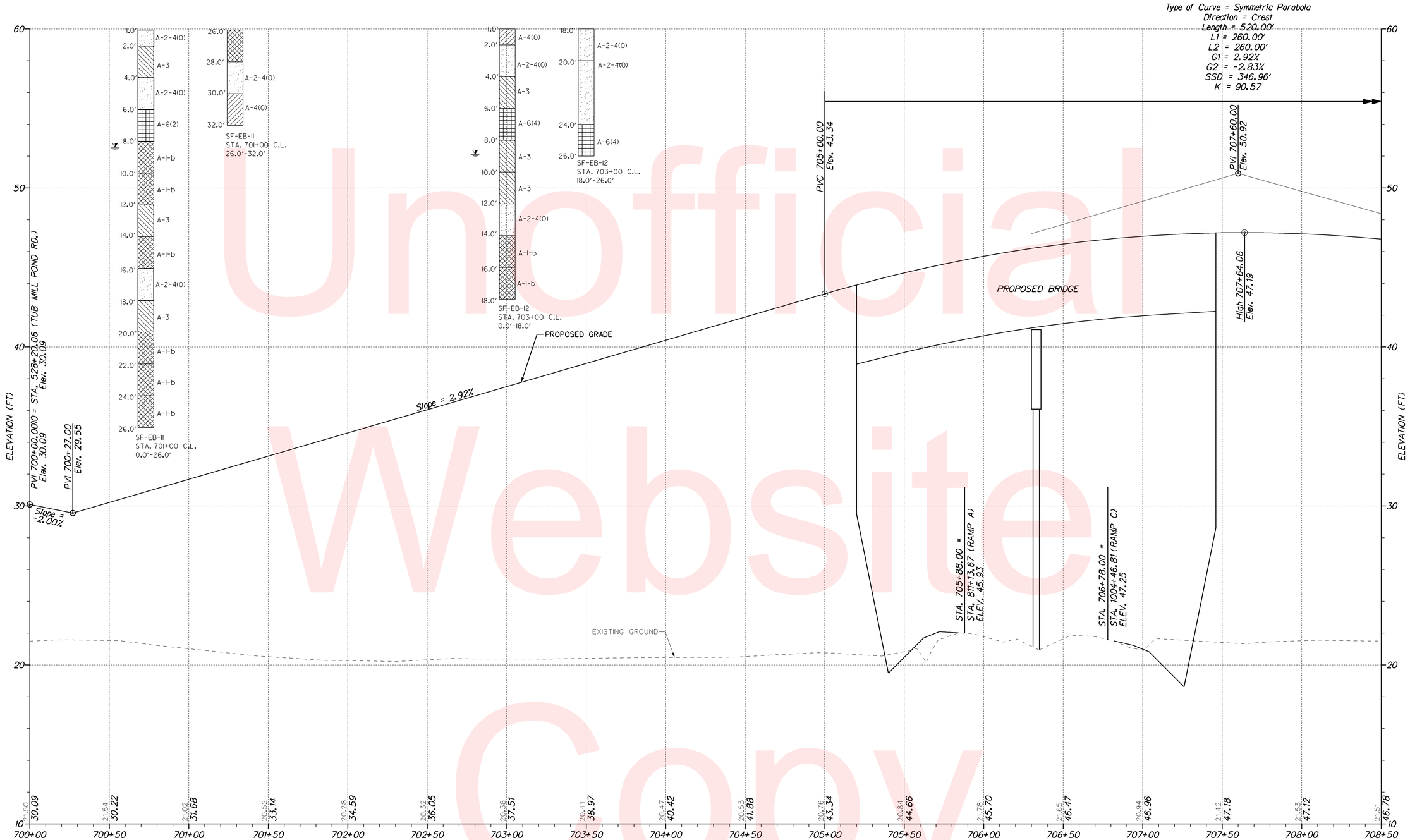

PROPOSED BRIDGE OVER SR1

Unofficial Website Copy

DELAWARE DEPARTMENT OF TRANSPORTATION	ADDENDUMS / REVISIONS	SCALE 0 30 60 90 FEET	SR1, SOUTH FREDERICA GRADE SEPARATED INTERSECTION	CONTRACT T200812202	BRIDGE NO. –	PROFILE	SHEET NO. 45
				COUNTY KENT	DESIGNED BY: LCM		TOTAL SHTS. 296
					CHECKED BY: SFP		

5/23/2013
G:\PROJECTS\06535.00 (DelDOT Agmt. 1376 DOTS Open End)\06535.07 SR1, S. Frederica\CADD Files\XM\pf04.dgn
16:46:13

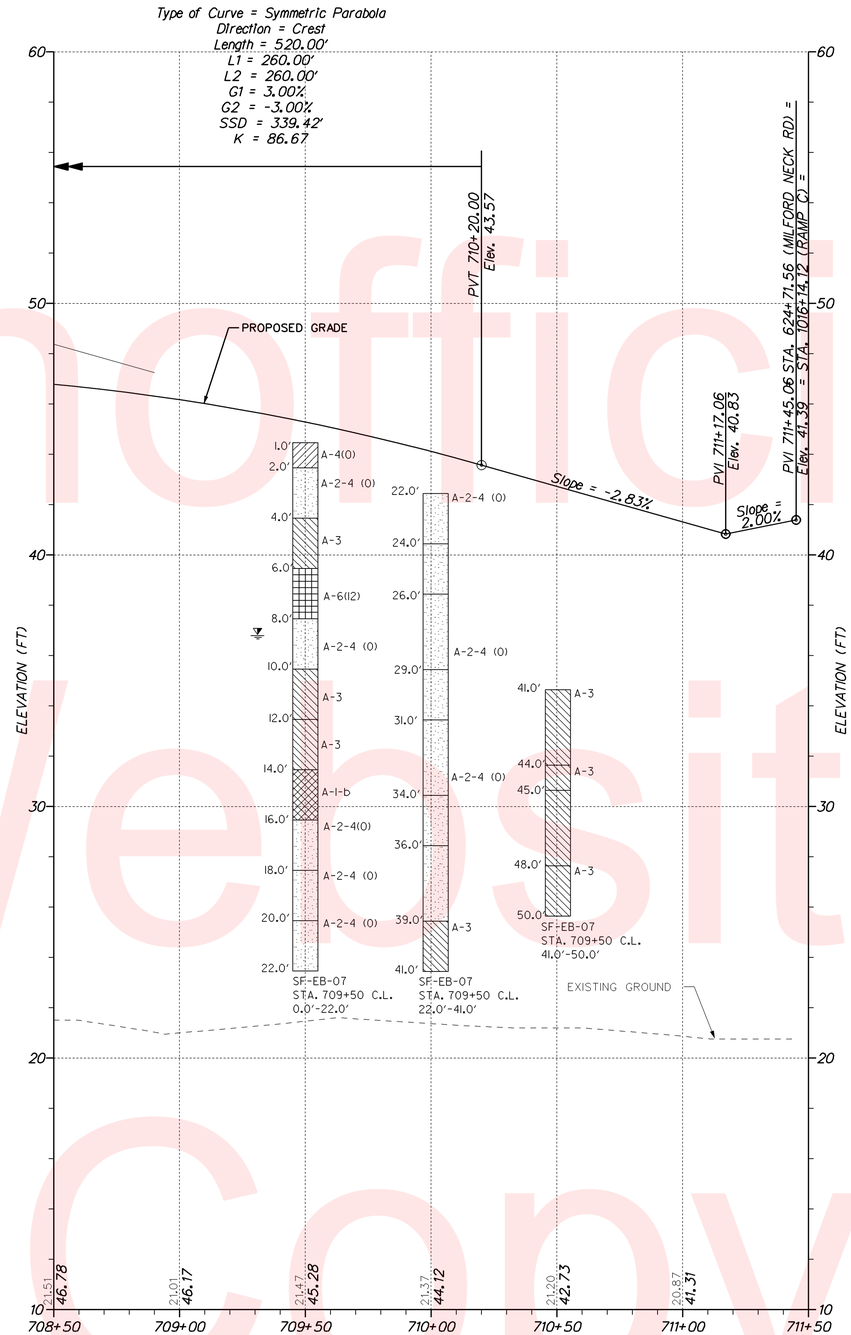

PROPOSED BRIDGE OVER SR1

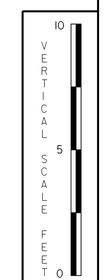

Unofficial Website Copy

DELAWARE DEPARTMENT OF TRANSPORTATION	ADDENDUMS / REVISIONS	SCALE 0 30 60 90 FEET	SR1, SOUTH FREDERICA GRADE SEPARATED INTERSECTION	CONTRACT T200812202	BRIDGE NO. –	PROFILE	SHEET NO. 46
				COUNTY KENT	DESIGNED BY: LCM		TOTAL SHTS. 296
					CHECKED BY: SFP		

5/23/2013
G:\PROJECTS\06535.00 (DelDOT Agmt. 1376 DOTS Open End)\06535.07 SR1, S. Frederica\CADD Files\XM\p105.dgn
16:46:53

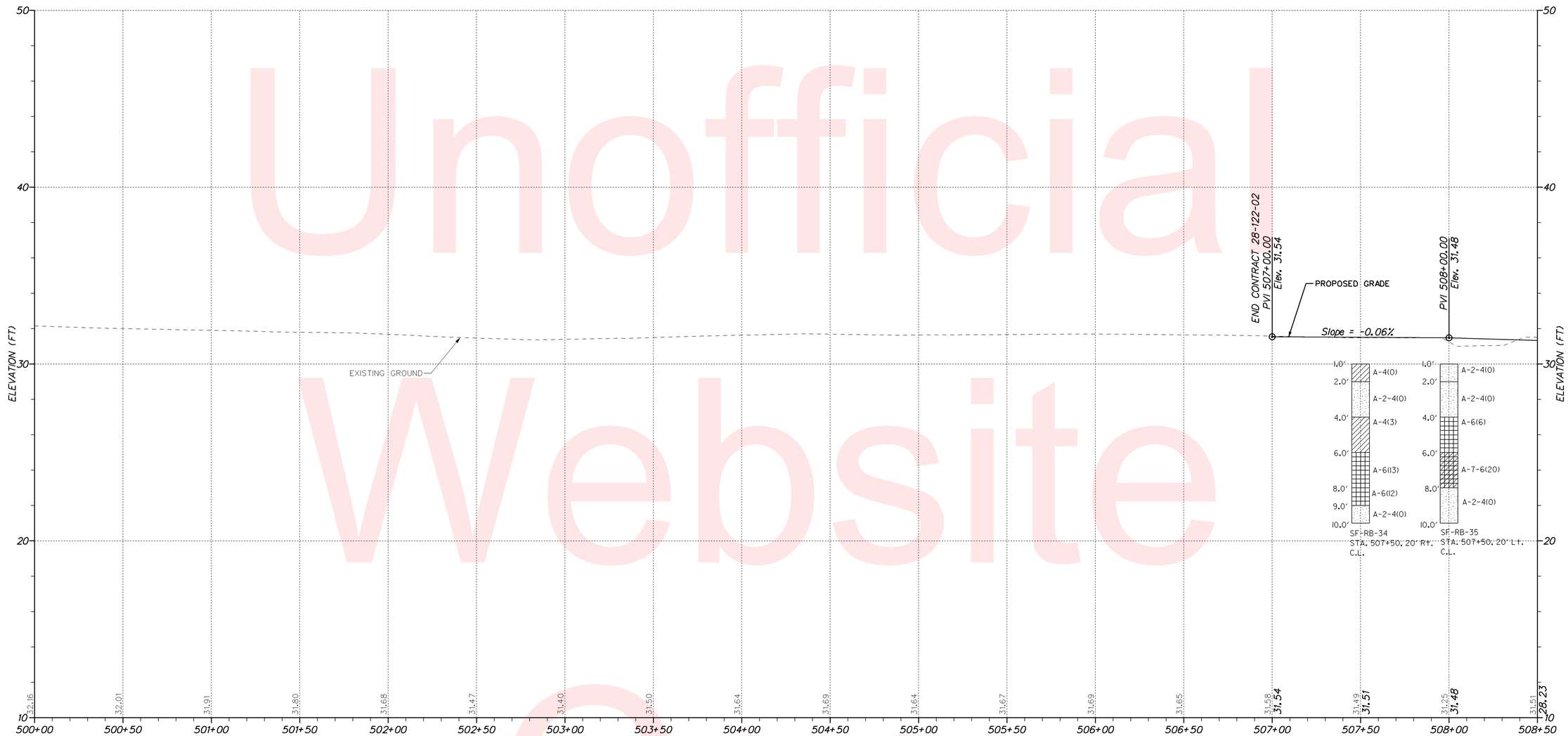

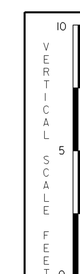

Unofficial Website Copy

DELAWARE DEPARTMENT OF TRANSPORTATION	ADDENDUMS / REVISIONS	SCALE 0 30 60 90 FEET	SR1, SOUTH FREDERICA GRADE SEPARATED INTERSECTION	CONTRACT T200812202	BRIDGE NO. –	PROFILE	SHEET NO. 47
				COUNTY KENT	DESIGNED BY: LCM		TOTAL SHTS. 296
					CHECKED BY: SFP		

5/23/2013
G:\PROJECTS\06535.00 (DelDOT Agmt. 1376 DOTS Open End)\06535.07 SR1, S. Frederica\CADD Files\XWsp106.dgn
16:47:42

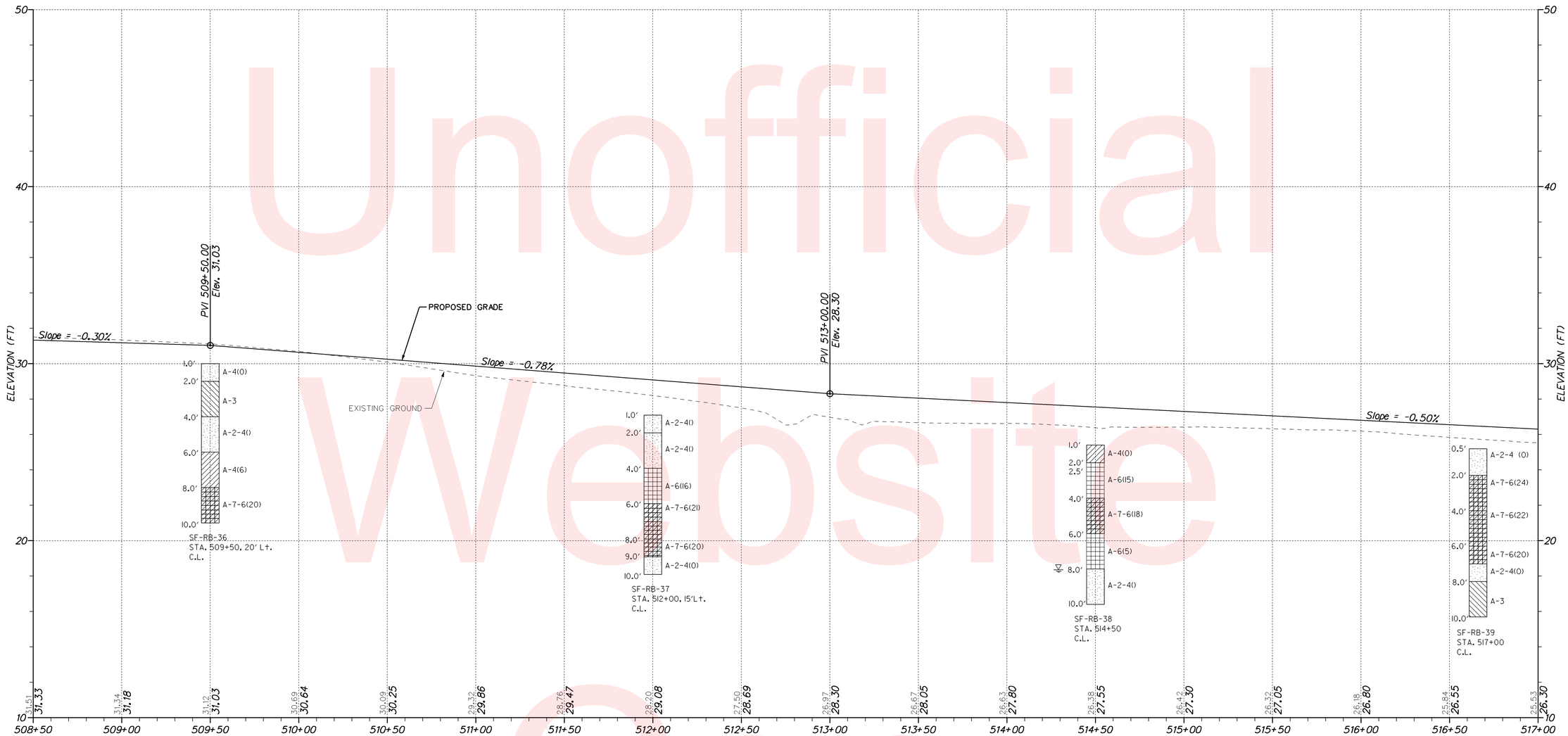

Unofficial Website Copy

DELAWARE DEPARTMENT OF TRANSPORTATION	ADDENDUMS / REVISIONS	SCALE 0 30 60 90 FEET	SR1, SOUTH FREDERICA GRADE SEPARATED INTERSECTION	CONTRACT T200812202	BRIDGE NO. –	PROFILE	SHEET NO. 48
				COUNTY KENT	DESIGNED BY: LCM		TOTAL SHTS. 296
					CHECKED BY: SFP		

5/28/2013
G:\PROJECTS\06535.00 (DelDOT Agmt. 1376 DOTS Open End)\06535.07 SR1, S. Frederica\CADD Files\XM\pf07.dgn
1409901

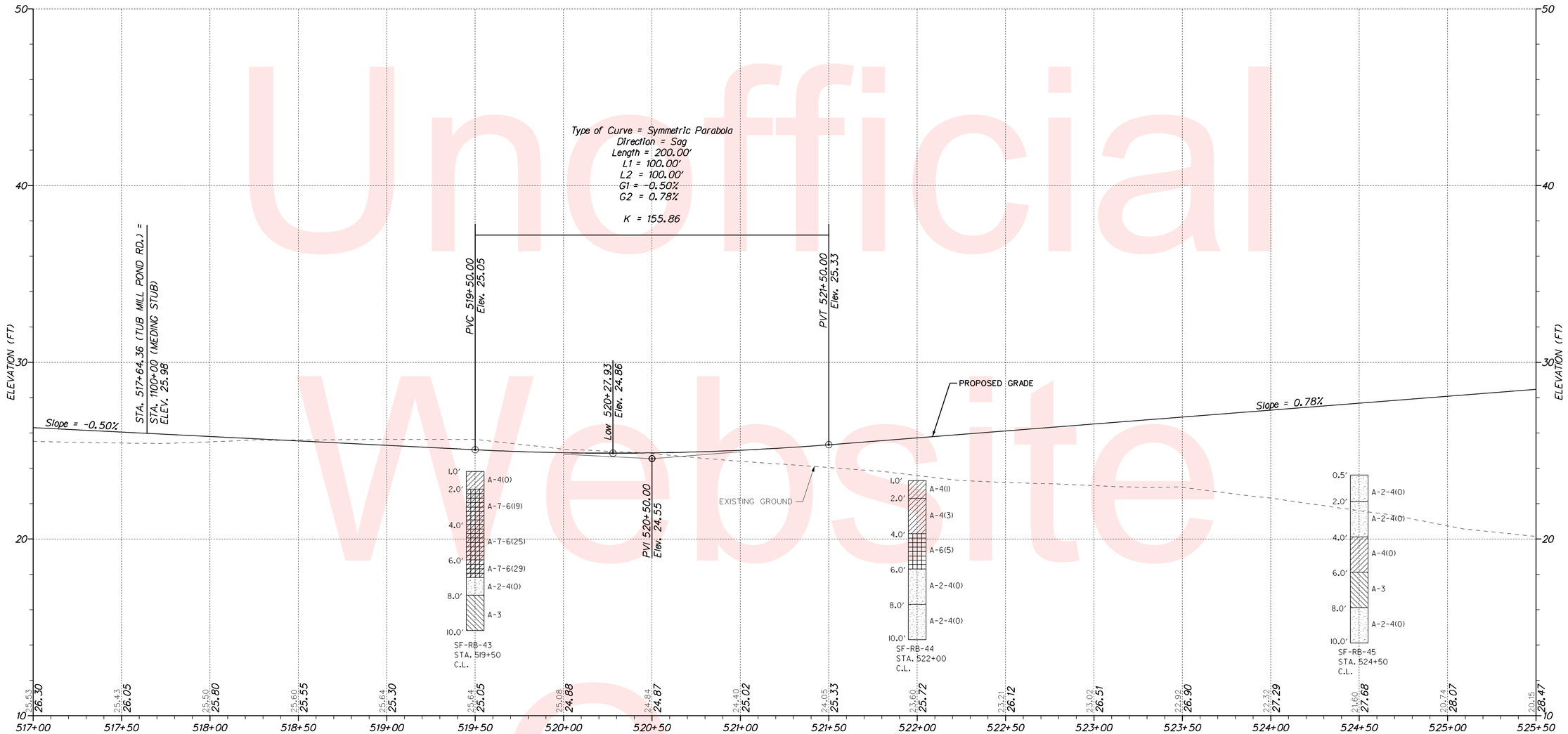

PROPOSED TUB MILL POND RD (K119)

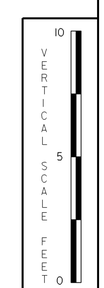

Unofficial Website Copy

DELAWARE DEPARTMENT OF TRANSPORTATION	ADDENDUMS / REVISIONS	SCALE 0 30 60 90 FEET	SR1, SOUTH FREDERICA GRADE SEPARATED INTERSECTION	CONTRACT T200812202	BRIDGE NO. –	PROFILE	SHEET NO. 49
				COUNTY KENT	DESIGNED BY: LCM		TOTAL SHTS. 296
					CHECKED BY: SFP		

5/23/2013
S:\PROJECTS\06535.00 (DelDOT Agmt. 1376 DOTS Open End)\06535.07 SR1, S. Frederica\CADD Files\VM\pf08.dgn
16:49:01

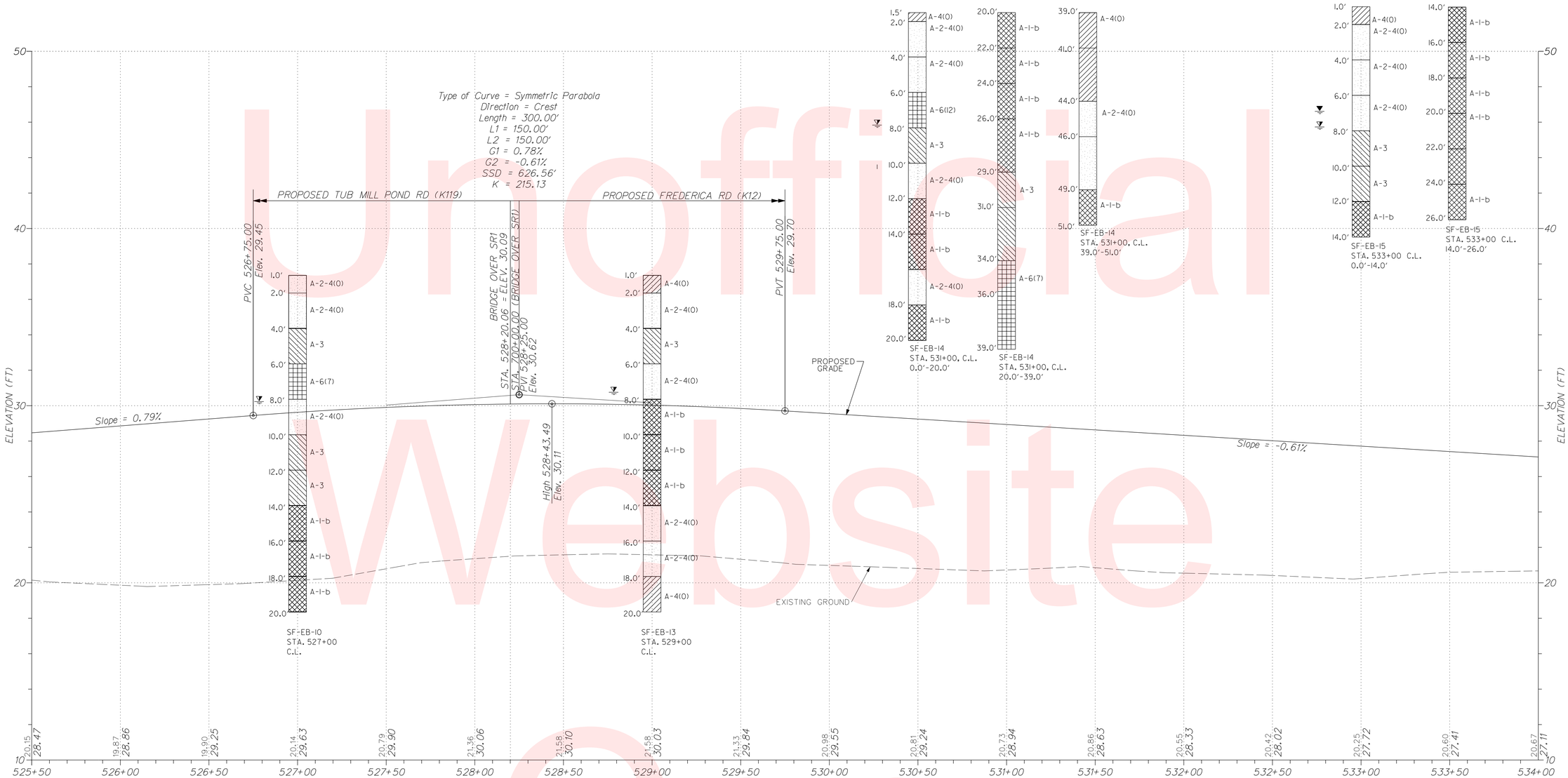

PROPOSED TUB MILL POND RD (K119) / FREDERICA RD (K12)

Unofficial Website Copy

VERTICAL SCALE FEET 0 5 10

DELAWARE DEPARTMENT OF TRANSPORTATION	ADDENDUMS / REVISIONS	SCALE 0 30 60 90 FEET	SR1, SOUTH FREDERICA GRADE SEPARATED INTERSECTION	CONTRACT T200812202	BRIDGE NO. –	PROFILE	SHEET NO. 50
				COUNTY KENT	DESIGNED BY: LCM		TOTAL SHTS. 296
					CHECKED BY: SFP		

10/23/2015
G:\PROJECTS\06535.00 (DelDOT Agmt. 1376 DOTS Open End)\06535.07 SR1, S. Frederica\CADD Files\XM\pf09.dgn
10:09:20 AM

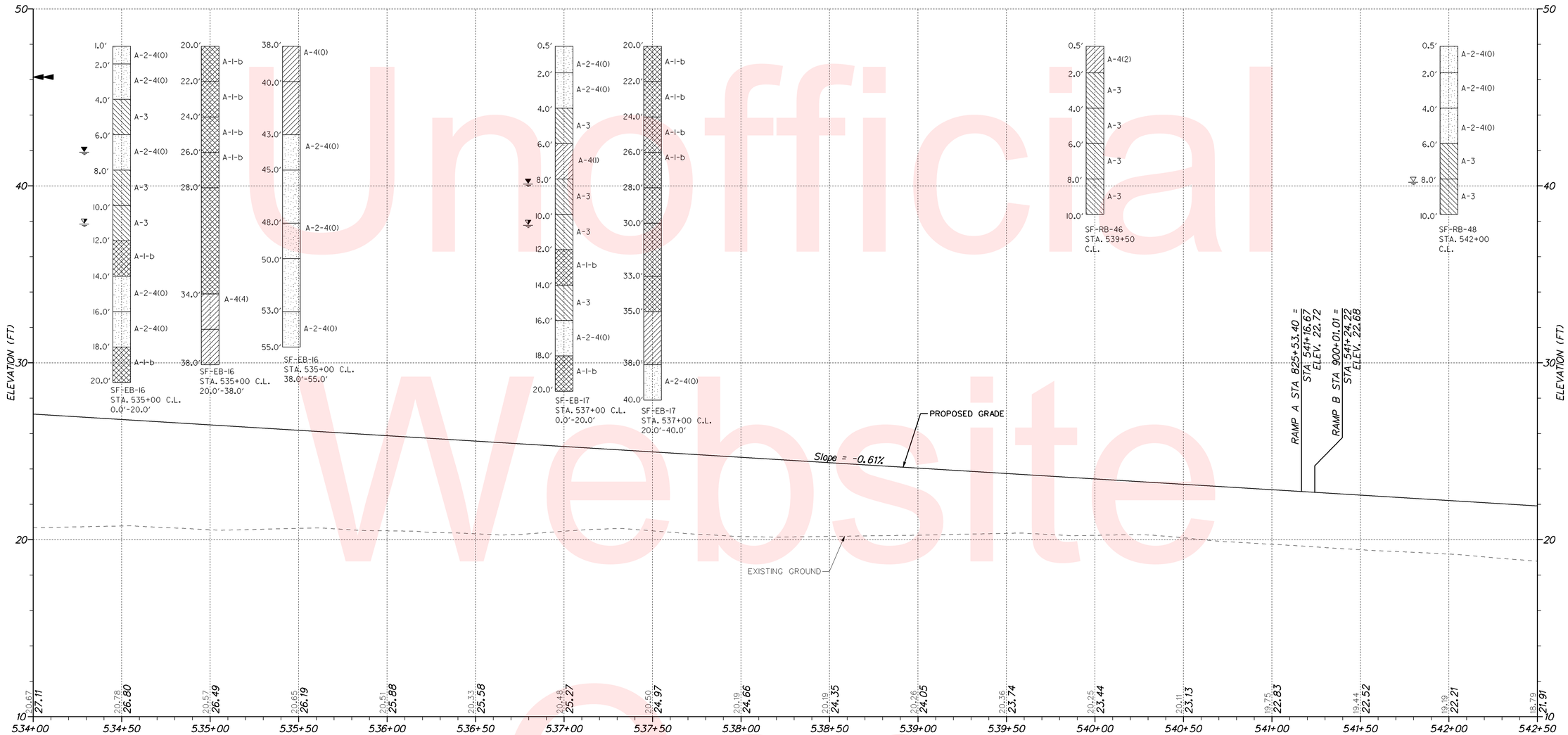

PROPOSED FREDERICA RD (K12)

Unofficial Website Copy

VERTICAL SCALE FEET 10 5 0

DELAWARE DEPARTMENT OF TRANSPORTATION	ADDENDUMS / REVISIONS	SCALE 0 30 60 90 FEET	SR1, SOUTH FREDERICA GRADE SEPARATED INTERSECTION	CONTRACT T200812202	BRIDGE NO. –	PROFILE	SHEET NO. 51
				COUNTY KENT	DESIGNED BY: LCM		TOTAL SHTS. 296
					CHECKED BY: SFP		

5/23/2013
G:\PROJECTS\06535.00 (DelDOT Agmt. 1376 DOTS Open End)\06535.07 SR1, S. Frederica\CADD Files\XM\pf10.dgn
18:50:14

PROPOSED FREDERICA RD (K12)

VERTICAL SCALE FEET 10 5 0

Unofficial Website Copy

10/23/2015
G:\PROJECTS\06535.00 (DelDOT Agmt. 1376 DOTS Open End)\06535.07 SR1, S. Frederica\CADD Files\XM\pfl1.dgn
10:10:54 AM

DELAWARE DEPARTMENT OF TRANSPORTATION	ADDENDUMS / REVISIONS	SCALE 0 30 60 90 FEET	SR1, SOUTH FREDERICA GRADE SEPARATED INTERSECTION	CONTRACT T200812202	BRIDGE NO. –	PROFILE
				COUNTY KENT	DESIGNED BY: LCM	
					CHECKED BY: SFP	

SHEET NO. 52
TOTAL SHTS. 296

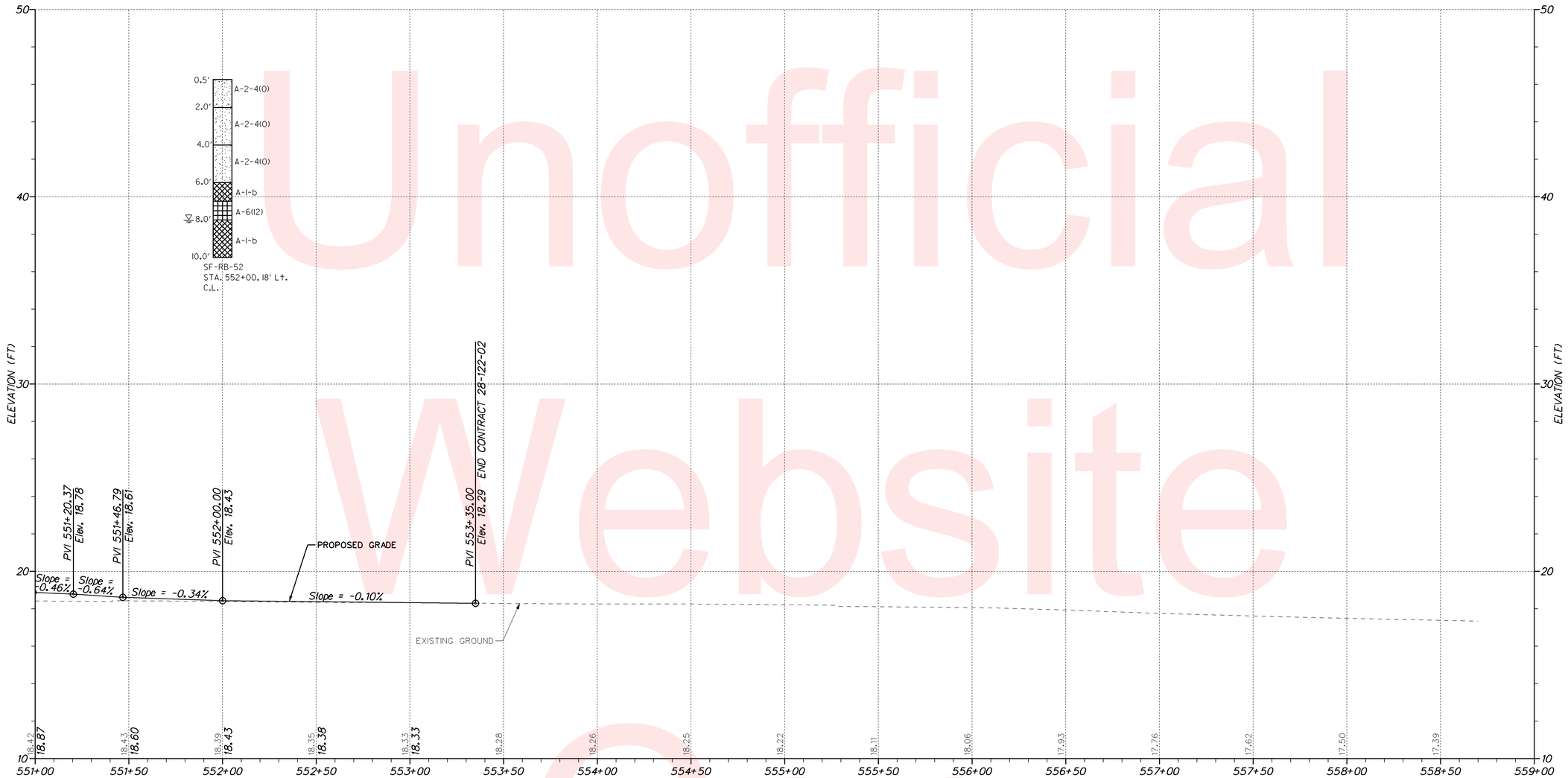

PROPOSED TUB MILL POND RD (K119)

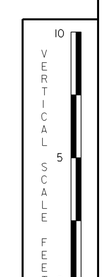

Unofficial Website Copy

5/23/2013
G:\PROJECTS\06535.00 (DelDOT Agmt. 1376 DOTS Open End)\06535.07 SR1, S. Frederica\CADD Files\XM\pf12.dgn

DELAWARE DEPARTMENT OF TRANSPORTATION	ADDENDUMS / REVISIONS	SCALE 0 30 60 90 FEET	SR1, SOUTH FREDERICA GRADE SEPARATED INTERSECTION	CONTRACT T200812202	BRIDGE NO. –	PROFILE	SHEET NO. 53
				COUNTY KENT	DESIGNED BY: LCM		TOTAL SHTS. 296
					CHECKED BY: SFP		

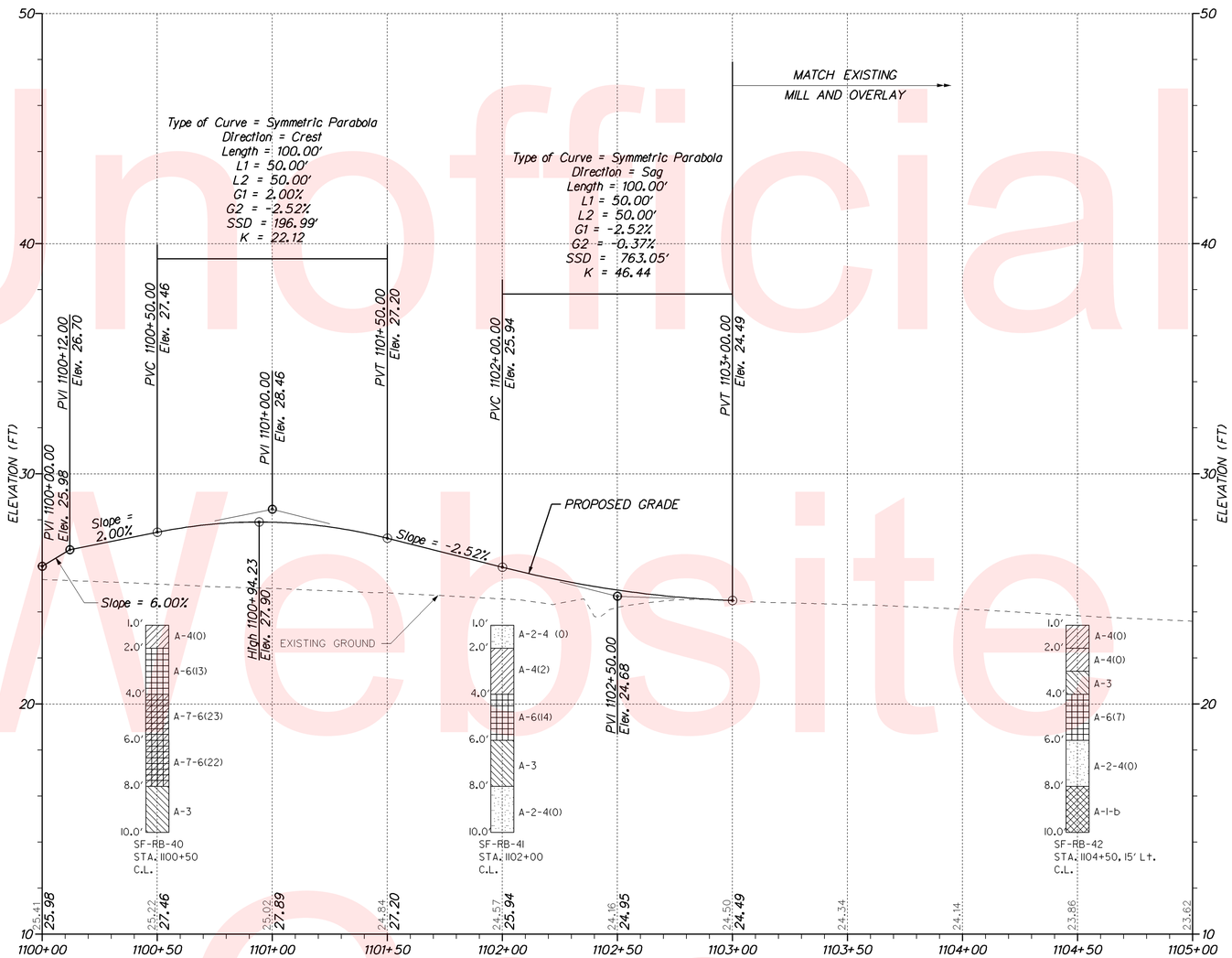

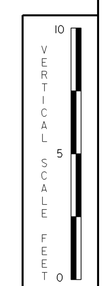

Unofficial Website Copy

DELAWARE DEPARTMENT OF TRANSPORTATION	ADDENDUMS / REVISIONS	SCALE 0 30 60 90 FEET	SR1, SOUTH FREDERICA GRADE SEPARATED INTERSECTION	CONTRACT T200812202	BRIDGE NO. –	PROFILE	SHEET NO. 54
				COUNTY KENT	DESIGNED BY: LCM		TOTAL SHTS. 296
					CHECKED BY: SFP		

7/19/2013
G:\PROJECTS\06535.00 (DelDOT Agmt. 1376 DOTS Open End)\06535.07 SR1, S. Frederica\CADD Files\XM\pl13.dgn
0714950

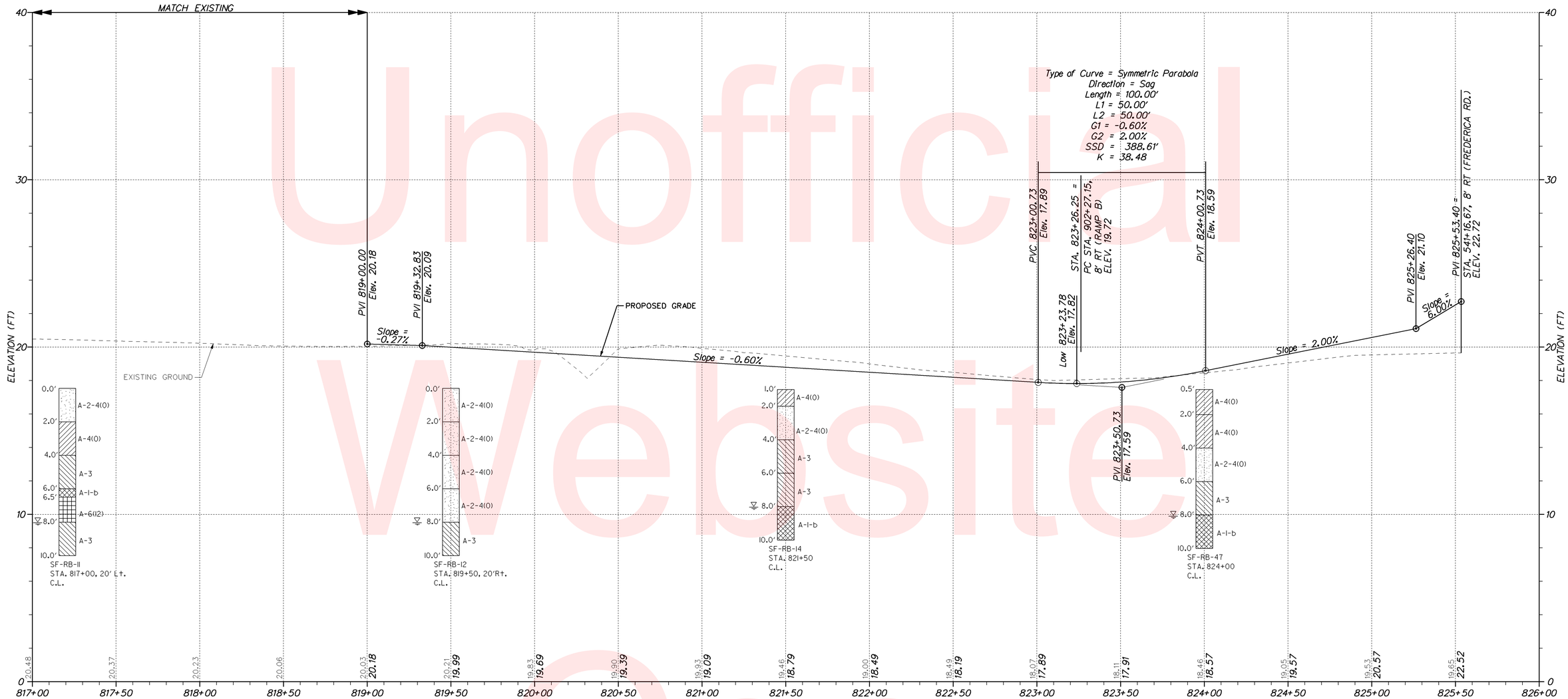

PROPOSED RAMP A (SR1 SB ON-RAMP)

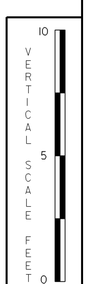

Unofficial Website Copy

DELAWARE DEPARTMENT OF TRANSPORTATION	ADDENDUMS / REVISIONS	SCALE 0 30 60 90 FEET	SR1, SOUTH FREDERICA GRADE SEPARATED INTERSECTION	CONTRACT T200812202	BRIDGE NO. –	PROFILE	SHEET NO. 55
				COUNTY KENT	DESIGNED BY: LCM		TOTAL SHTS. 296
					CHECKED BY: SFP		

5/23/2013
G:\PROJECTS\06535.00 (DelDOT Agmt. 1376 DOTS Open End)\06535.07 SR1, S. Frederica\CADD Files\XM\pf14.dgn
16:58:57

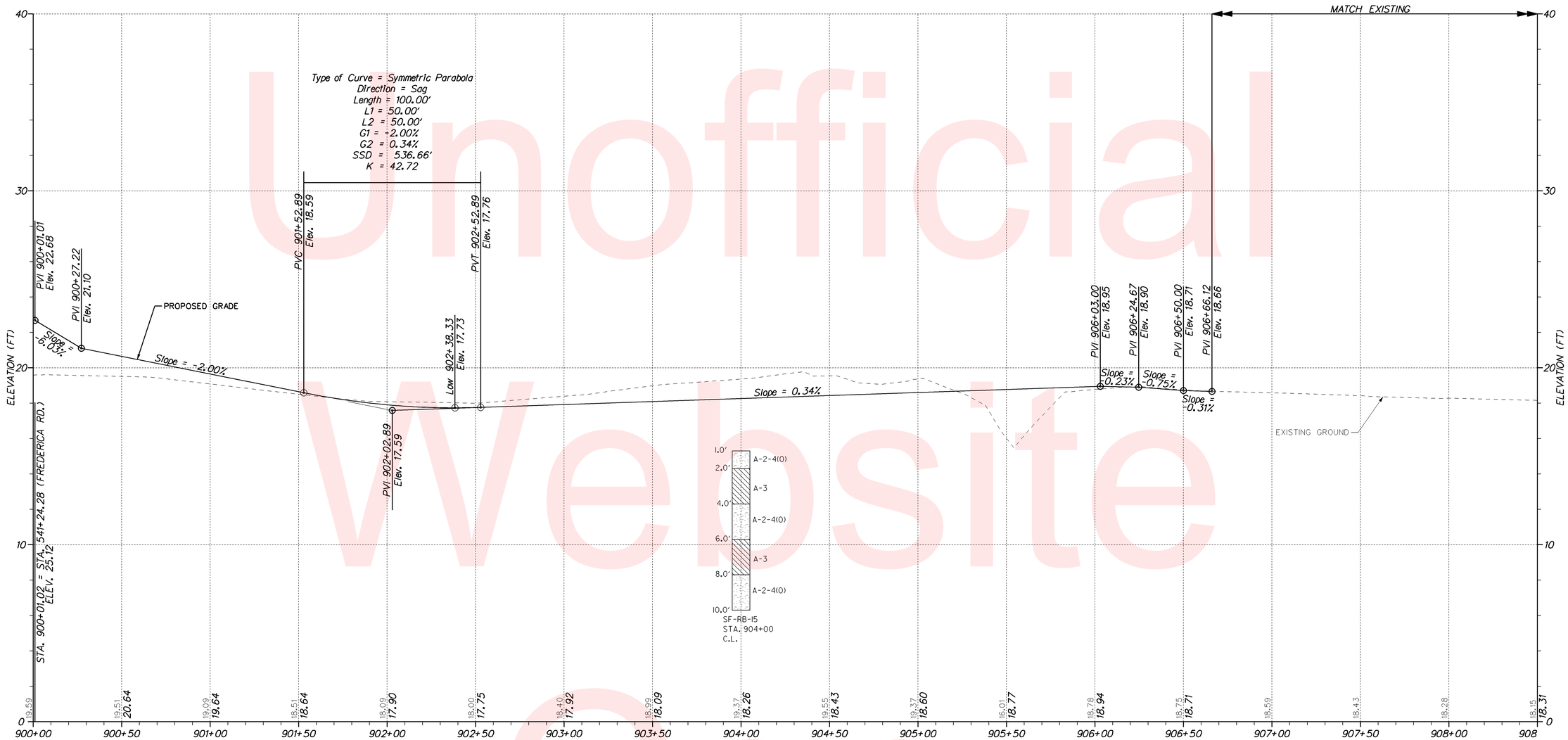

PROPOSED RAMP B (SR1 SB OFF-RAMP)

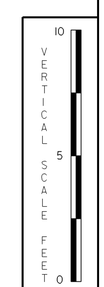

Unofficial Website Copy

DELAWARE DEPARTMENT OF TRANSPORTATION	ADDENDUMS / REVISIONS	SCALE 0 30 60 90 FEET	SR1, SOUTH FREDERICA GRADE SEPARATED INTERSECTION	CONTRACT T200812202	BRIDGE NO. –	PROFILE	SHEET NO. 56
				COUNTY KENT	DESIGNED BY: LCM		TOTAL SHTS. 296
					CHECKED BY: SFP		

5/23/2013
G:\PROJECTS\06535.00 (DelDOT Agmt. 1376 DOTS Open End)\06535.07 SR1, S. Frederica\CADD Files\XM\pf15.dgn
16:59:21

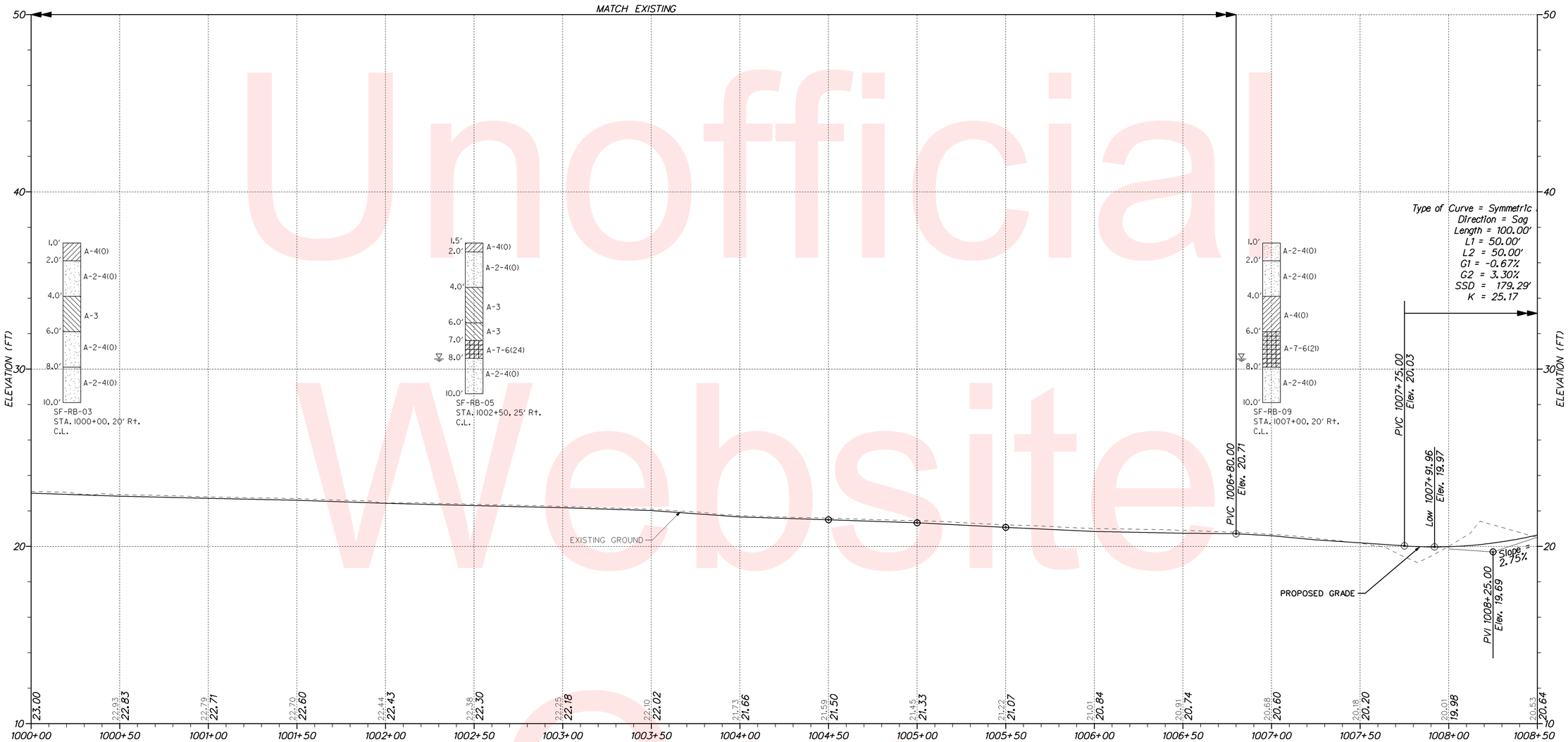

PROPOSED RAMP C (SR1 NB OFF-RAMP)

VERTICAL SCALE FEET 10 5 0

Unofficial Website Copy

DELAWARE DEPARTMENT OF TRANSPORTATION	ADDENDUMS / REVISIONS	SCALE 0 30 60 90 FEET	SR1, SOUTH FREDERICA GRADE SEPARATED INTERSECTION	CONTRACT T200812202	BRIDGE NO. –	PROFILE	SHEET NO. 57
				COUNTY KENT	DESIGNED BY: LCM		TOTAL SHTS. 296
					CHECKED BY: SFP		

5/23/2013
12:PROJECTS\06535.00 (DelDOT Agmt. 1376 DOTS Open End)\06535.07 SR1, S. Frederica\CADD Files\VM\pf16.dgn
16:59:58

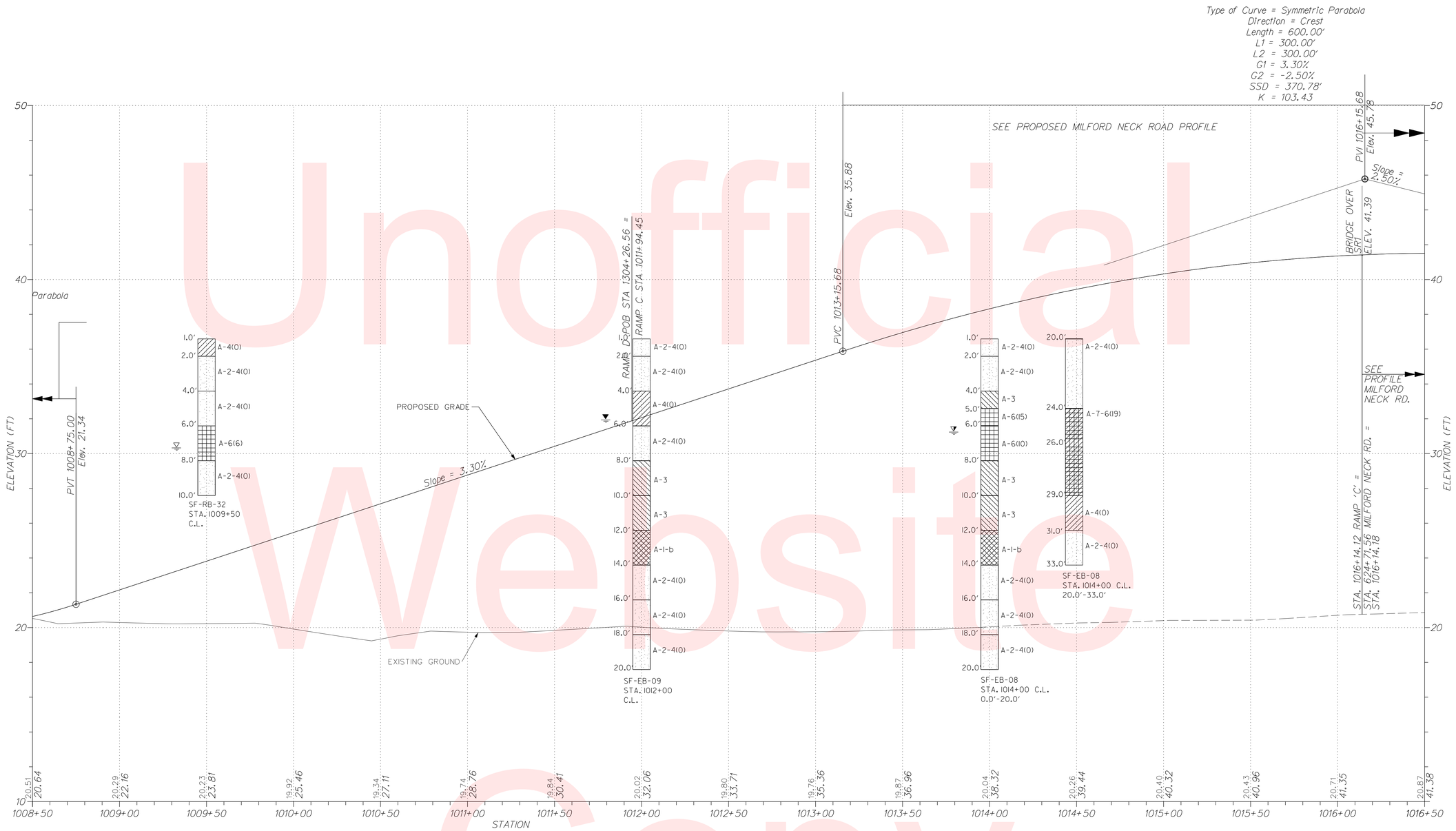

2005

PROPOSED RAMP C (SR1 NB OFF-RAMP)

Unofficial Website Copy

VERTICAL SCALE FEET 0 5 10

DELAWARE DEPARTMENT OF TRANSPORTATION	ADDENDUMS / REVISIONS	SCALE 0 30 60 90 FEET	SR1, SOUTH FREDERICA GRADE SEPARATED INTERSECTION	CONTRACT T200812202	BRIDGE NO. –	PROFILE	SHEET NO. 58
				COUNTY KENT	DESIGNED BY: LCM		TOTAL SHTS. 296
					CHECKED BY: SFP		

10/23/2015
G:\PROJECTS\06535.00 (DelDOT Agmt. 1376 DOTS Open End)\06535.07 SR1, S. Frederica\CADD Files\XM\pl17.dgn
10:16:23 AM

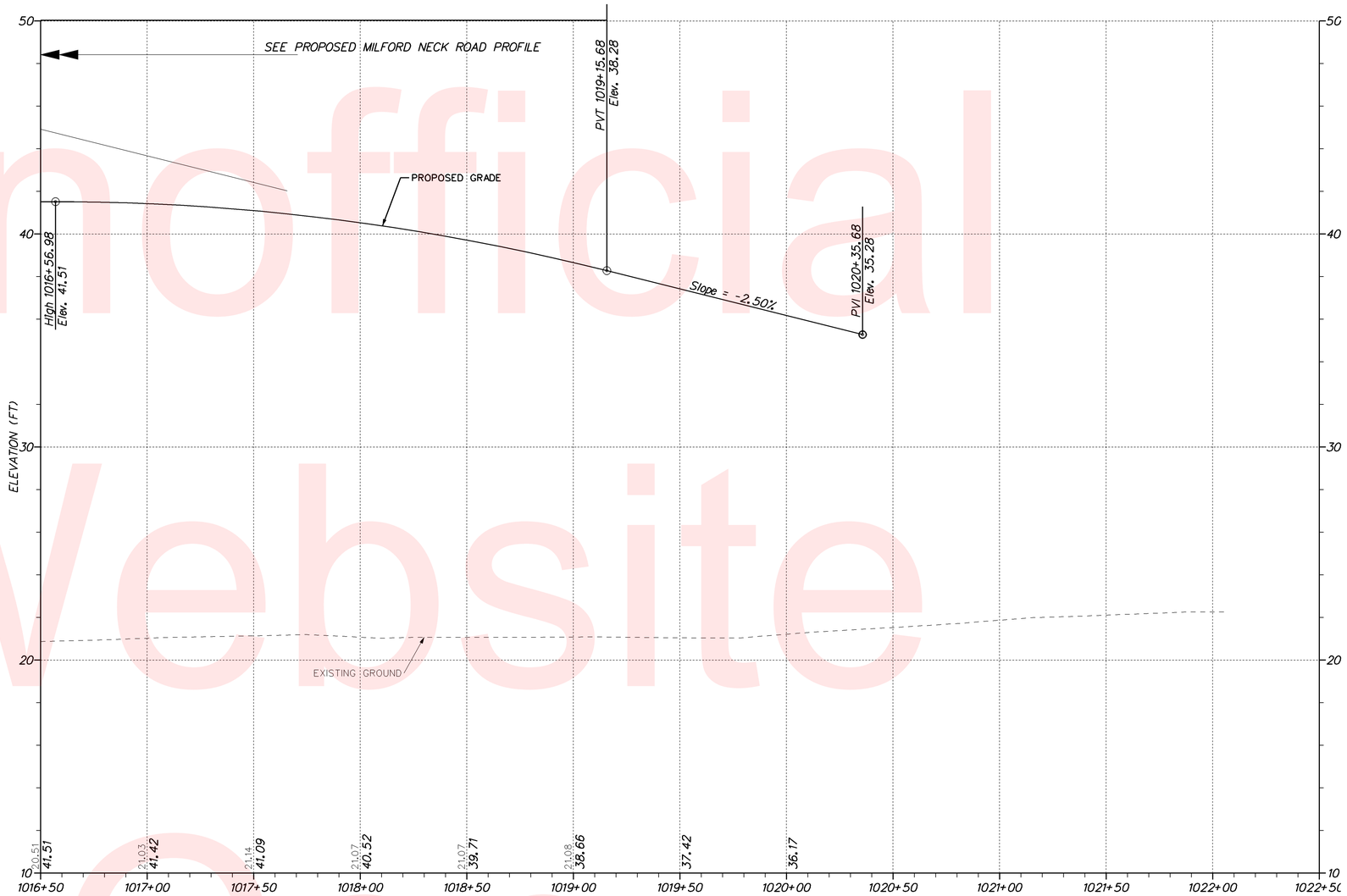

PROPOSED RAMP C (SR1 NB OFF-RAMP)

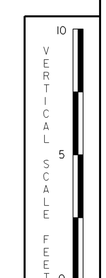

Unofficial Website Copy

DELAWARE DEPARTMENT OF TRANSPORTATION	ADDENDUMS / REVISIONS	SCALE 0 30 60 90 FEET	SR1, SOUTH FREDERICA GRADE SEPARATED INTERSECTION	CONTRACT T200812202	BRIDGE NO. –	PROFILE	SHEET NO. 59
				COUNTY KENT	DESIGNED BY: LCM		TOTAL SHTS. 296
					CHECKED BY: SFP		

5/23/2013
G:\PROJECTS\06535.00 (DelDOT Agmt. 1376 DOTS Open End)\06535.07 SR1, S. Frederica\CADD Files\XWspf18.dgn
17:01:10

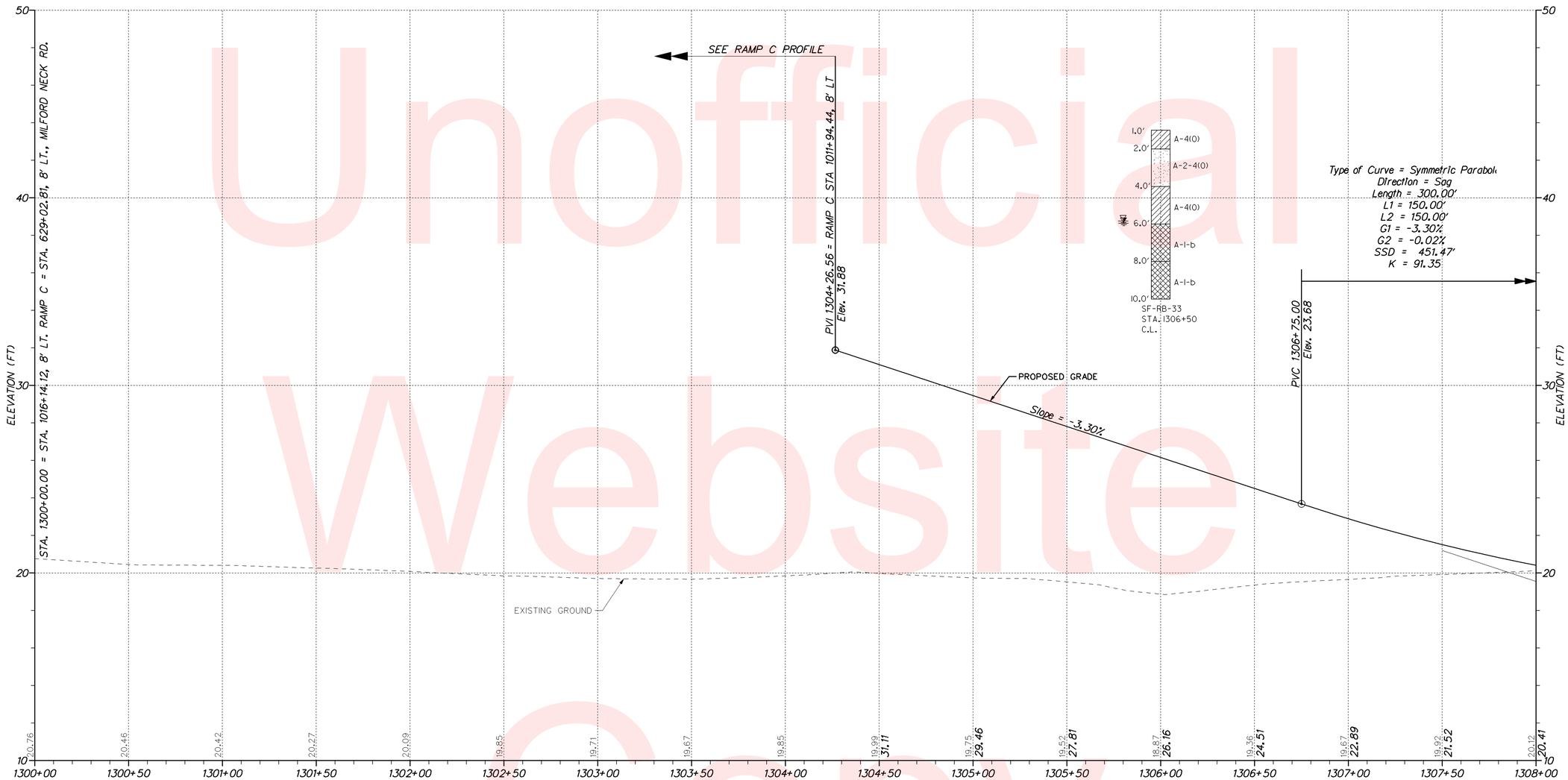

PROPOSED RAMP D (SR1 NB OFF-RAMP)

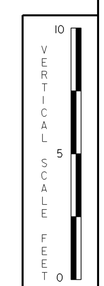

Unofficial Website Copy

DELAWARE DEPARTMENT OF TRANSPORTATION	ADDENDUMS / REVISIONS	SCALE 0 30 60 90 FEET	SR1, SOUTH FREDERICA GRADE SEPARATED INTERSECTION	CONTRACT T200812202	BRIDGE NO. –	PROFILE	SHEET NO. 60
				COUNTY KENT	DESIGNED BY: LCM		TOTAL SHTS. 296
					CHECKED BY: SFP		

5/23/2013
C:\PROJECTS\06535.00 (DelDOT Agmt. 1376 DOTS Open End)\06535.07 SR1, S. Frederica\CADD Files\XM\prf19.dgn
17:01:47

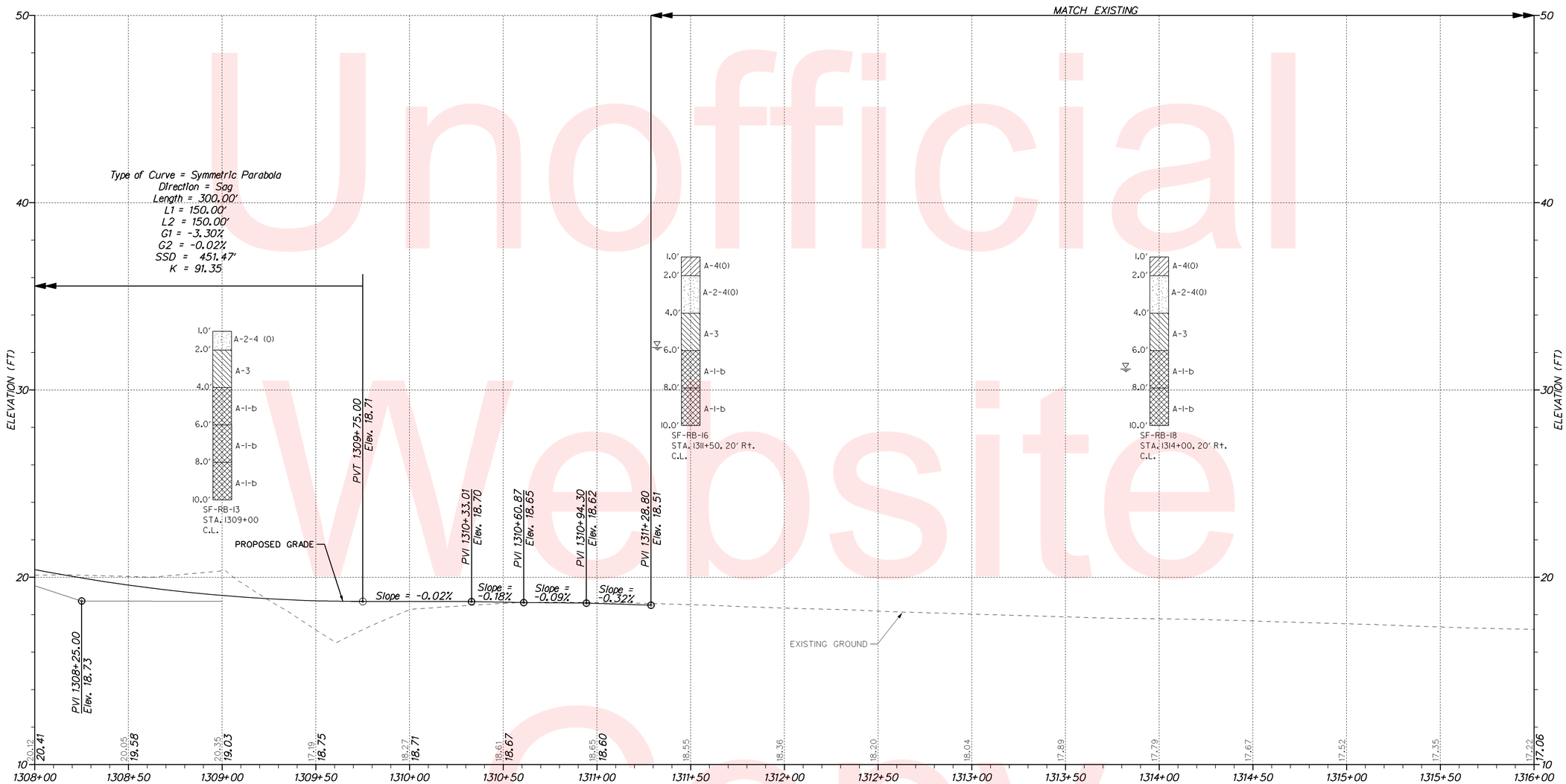

PROPOSED RAMP D (SR1 NB OFF-RAMP)

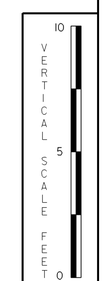

Unofficial Website Copy

DELAWARE DEPARTMENT OF TRANSPORTATION	ADDENDUMS / REVISIONS	SCALE 0 30 60 90 FEET	SR1, SOUTH FREDERICA GRADE SEPARATED INTERSECTION	CONTRACT T200812202	BRIDGE NO. –	PROFILE	SHEET NO. 61
				COUNTY KENT	DESIGNED BY: LCM		TOTAL SHTS. 296
					CHECKED BY: SFP		

5/23/2013
G:\PROJECTS\06535.00 (DelDOT Agmt. 1376 DOTS Open End)\06535.07 SR1, S. Frederica\CADD Files\XM\pf20.dgn
17-02-25

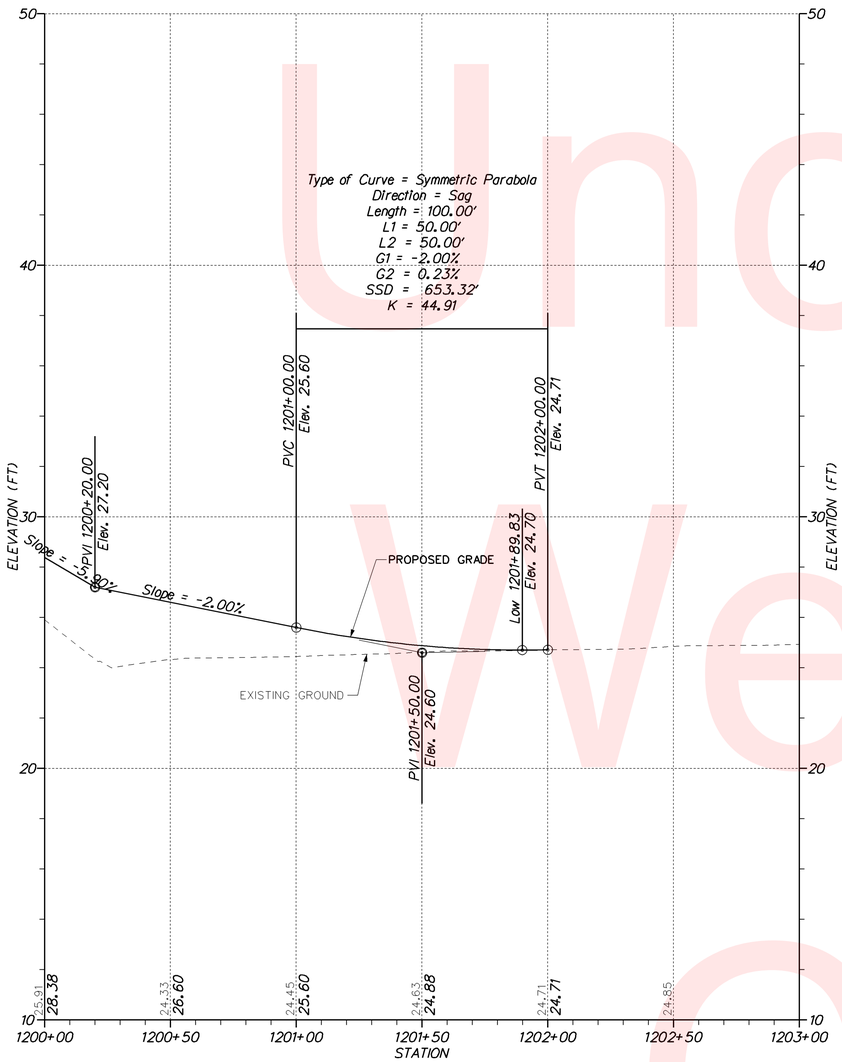

PROPOSED KENT COUNTY SEWER TREATMENT PLANT ENTRANCE

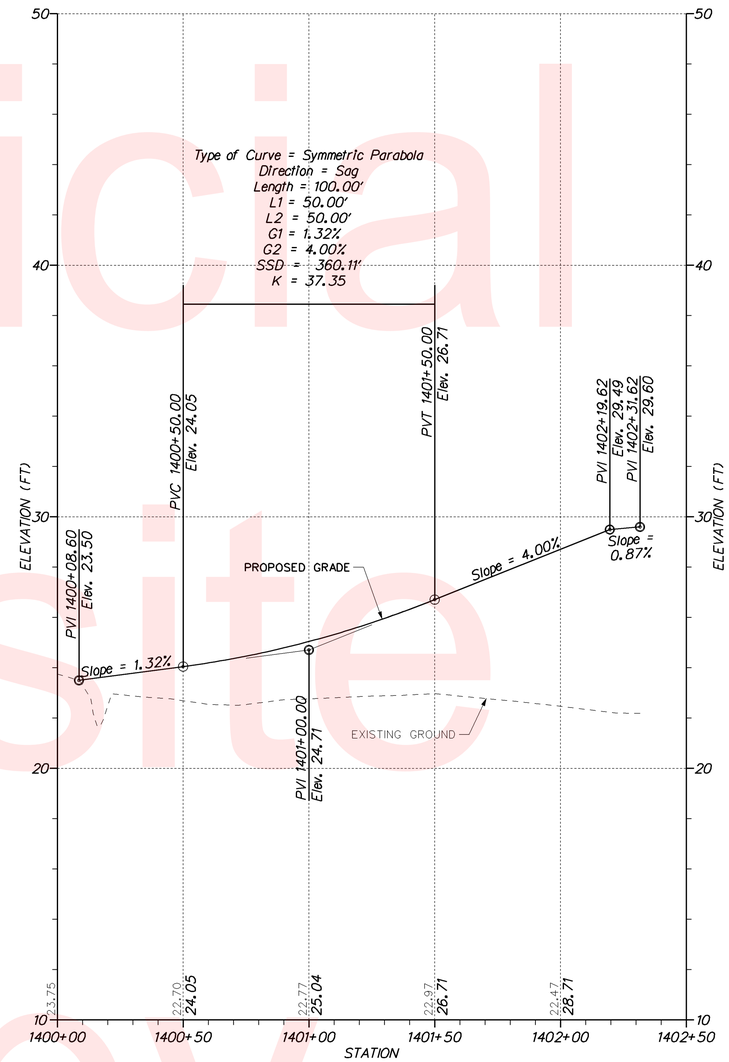

PROPOSED MILFORD NECK CONNECTOR ROAD

VERTICAL SCALE FEET
10
5
0

Unofficial Website Copy

DELAWARE DEPARTMENT OF TRANSPORTATION	ADDENDUMS / REVISIONS	SCALE 0 30 60 90 FEET	SR1, SOUTH FREDERICA GRADE SEPARATED INTERSECTION	CONTRACT T200812202	BRIDGE NO. –	PROFILE	SHEET NO. 62
				COUNTY KENT	DESIGNED BY: LCM		TOTAL SHTS. 296
					CHECKED BY: SFP		

5/23/2013
2:\PROJECTS\06535.00 (DelDOT Agmt. 1376 DOTS Open End)\06535.07 SR1, S. Frederica\CADD Files\VM\pf21.dgn
17:03:01

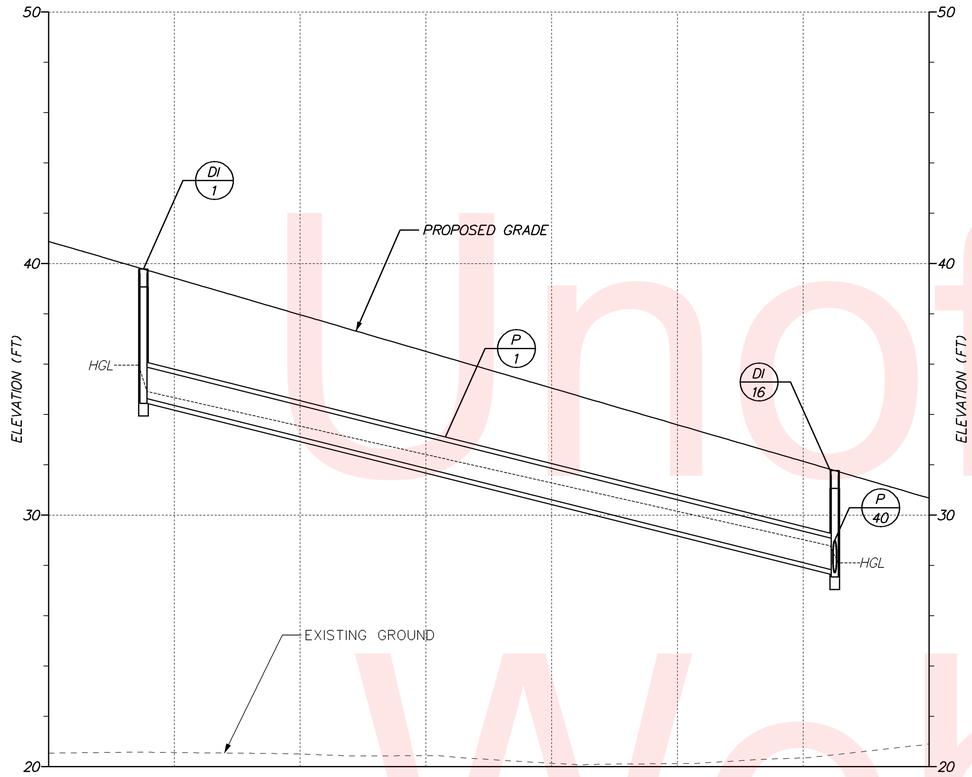

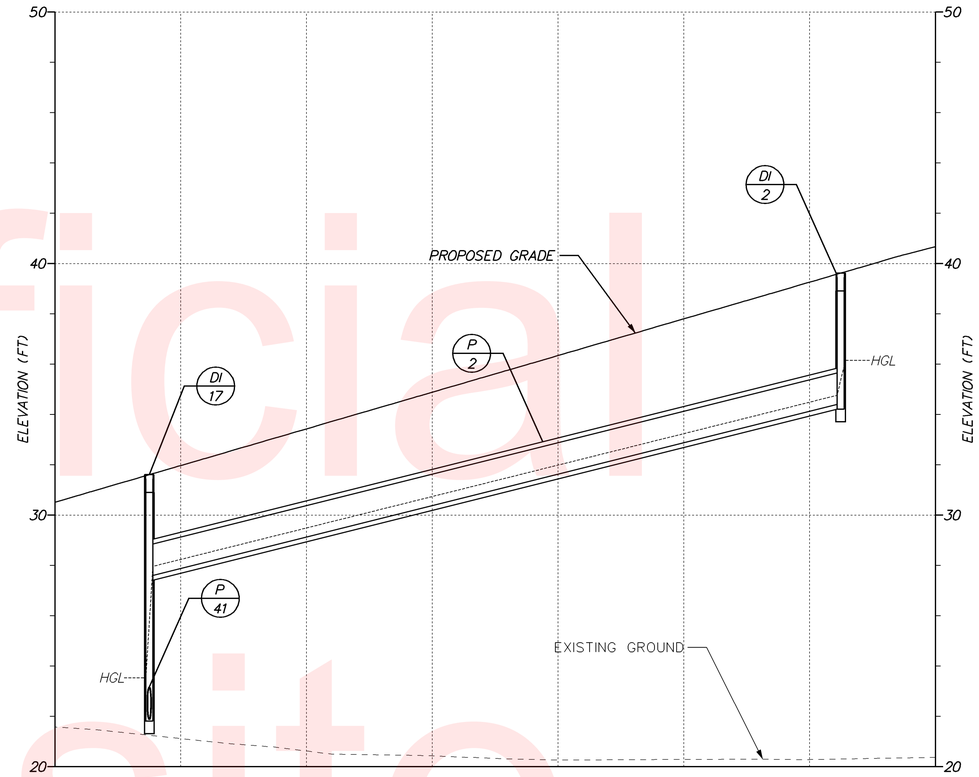

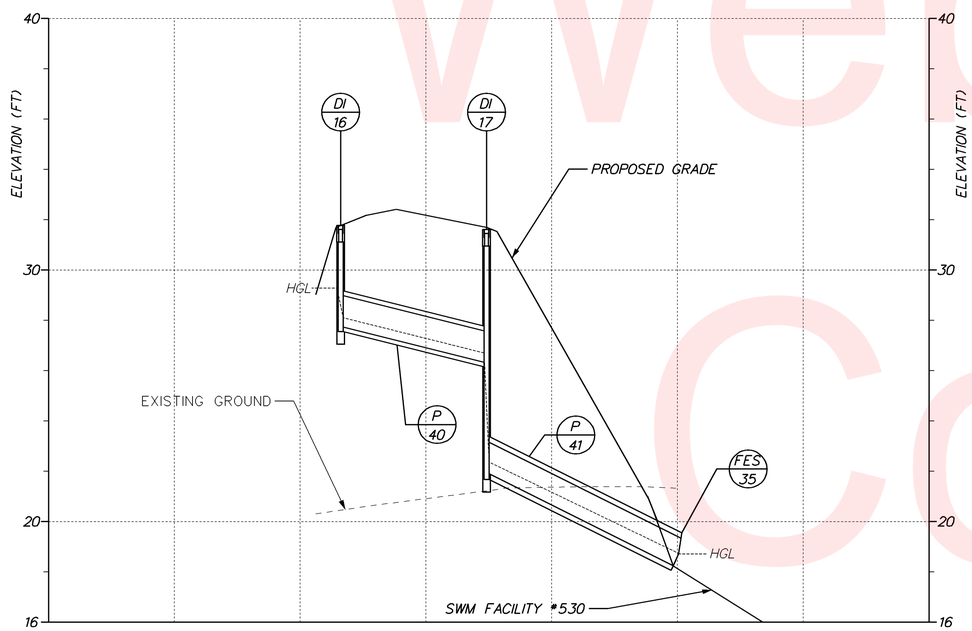

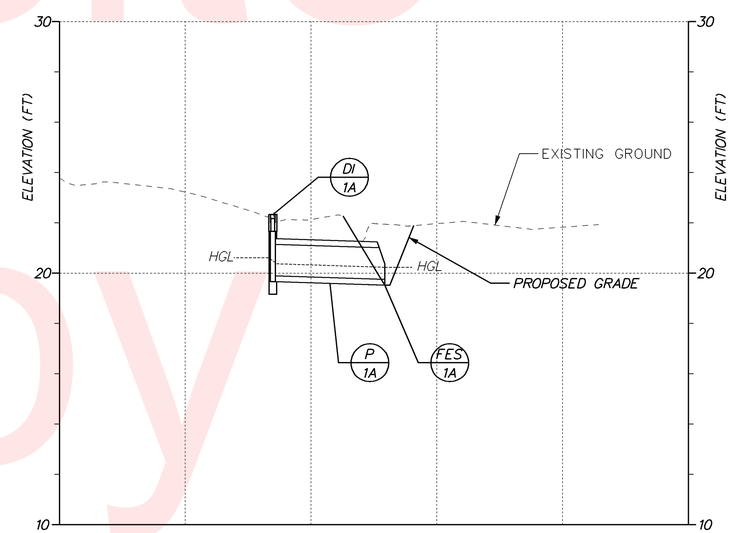

VERTICAL SCALE FEET 10 5 0

Unofficial Website Copy

DELAWARE DEPARTMENT OF TRANSPORTATION

ADDENDUMS / REVISIONS

SCALE 0 30 60 90 FEET

SR1, SOUTH FREDERICA GRADE SEPARATED INTERSECTION

CONTRACT	BRIDGE NO.	–
T200812202	DESIGNED BY: LCM	
COUNTY		
KENT	CHECKED BY: SFP	

PIPE PROFILE

SHEET NO.
63
TOTAL SHTS.
296

5/23/2013
G:\PROJECTS\06535.00 (DelDOT Agmt. 1376 DOTS Open End)\06535.07 SR1, S. Frederica\CADD Files\XM\ppf1.dgn
17:04:24

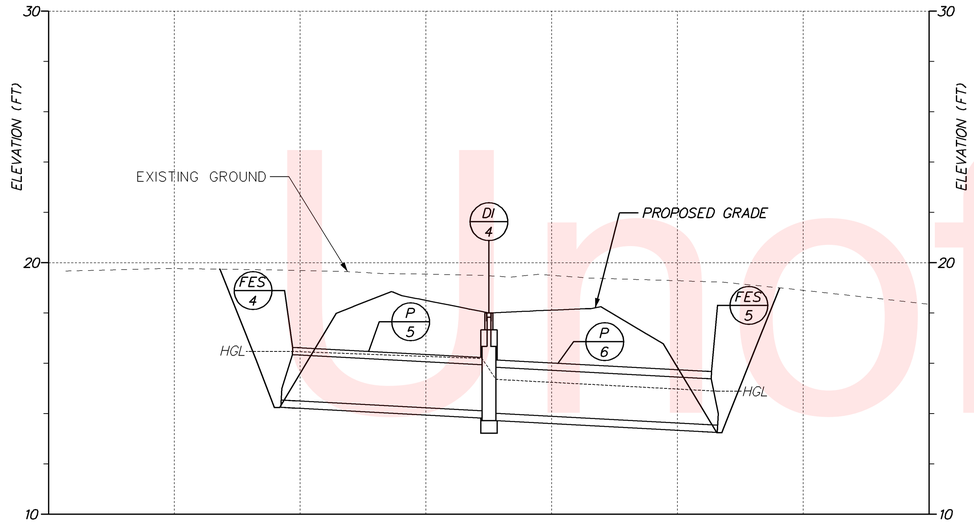

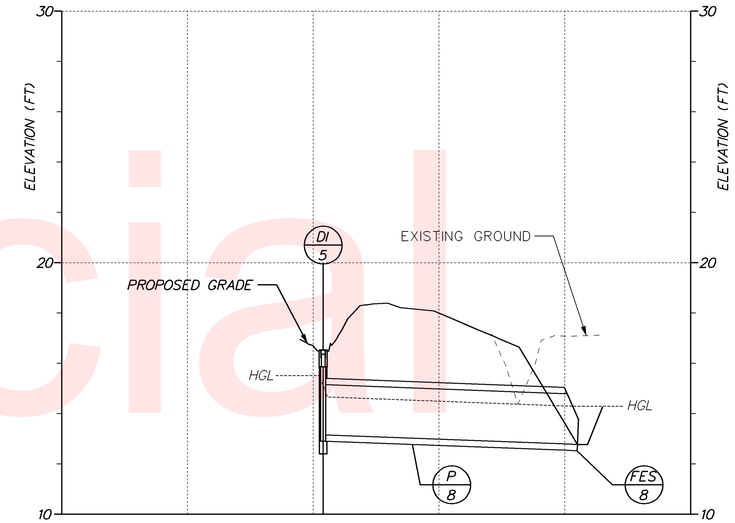

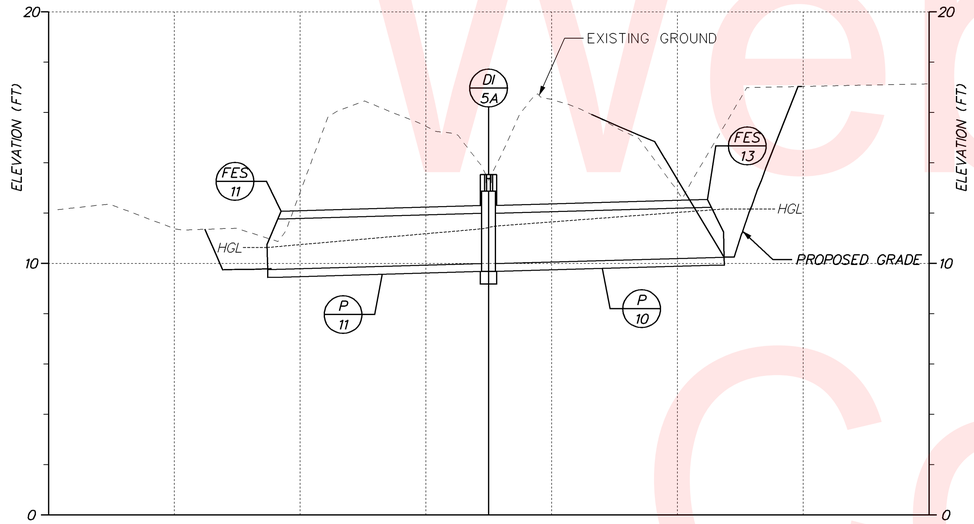

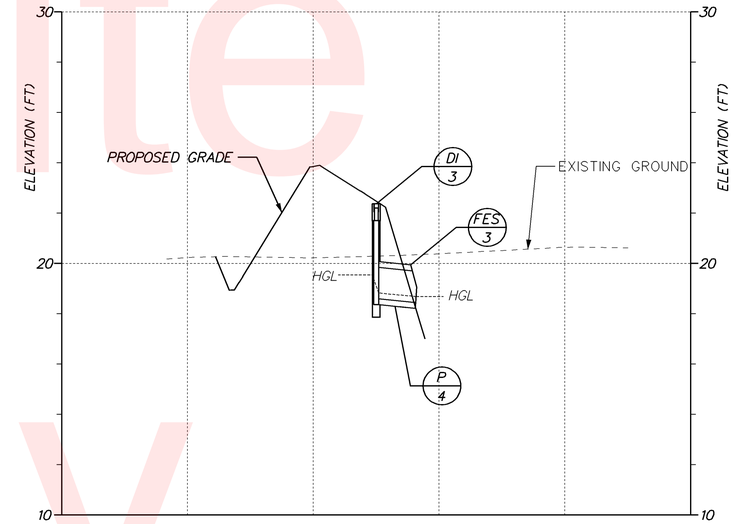

VERTICAL SCALE FEET 10 5 0

Unofficial Website Copy

DELAWARE DEPARTMENT OF TRANSPORTATION

ADDENDUMS / REVISIONS

SCALE 0 30 60 90 FEET

SR1, SOUTH FREDERICA GRADE SEPARATED INTERSECTION

CONTRACT	BRIDGE NO. –
T200812202	DESIGNED BY: LCM
COUNTY	
KENT	CHECKED BY: SFP

PIPE PROFILE

SHEET NO. 64

TOTAL SHTS. 296

5/23/2013
G:\PROJECTS\06535.00 (DelDOT Agmt. 1376 DOTS Open End)\06535.07 SR1, S. Frederica\CADD Files\XM\ppf2.dgn
17-0619

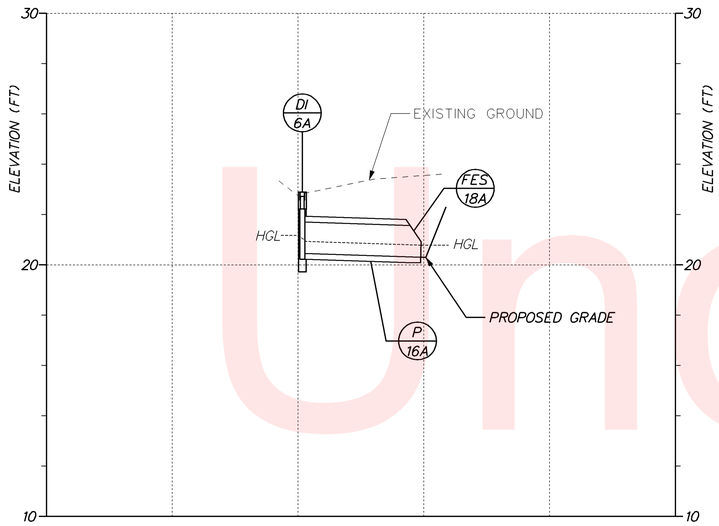

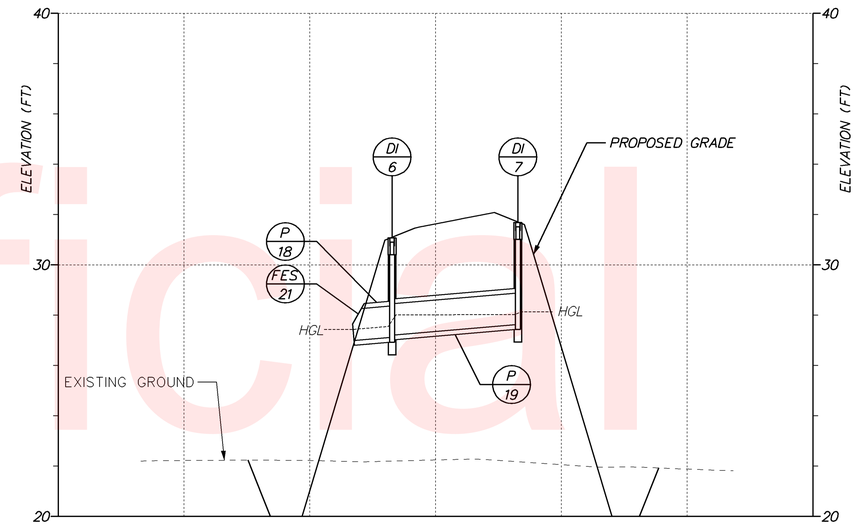

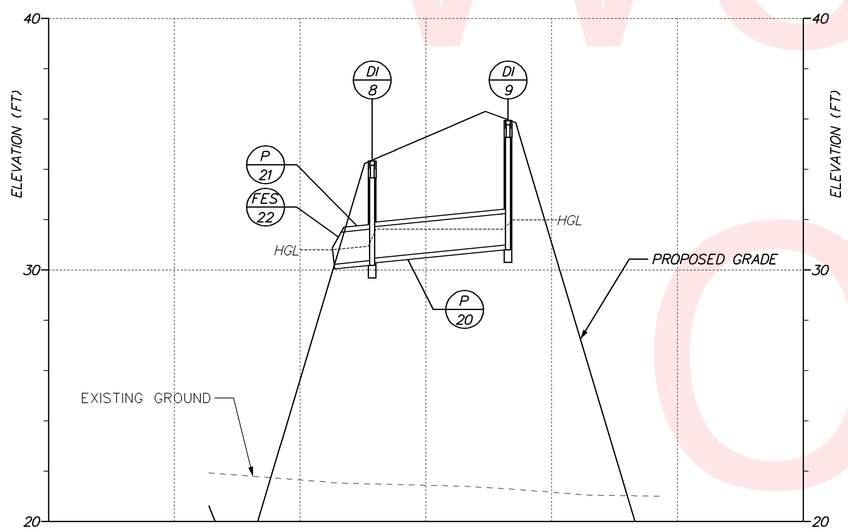

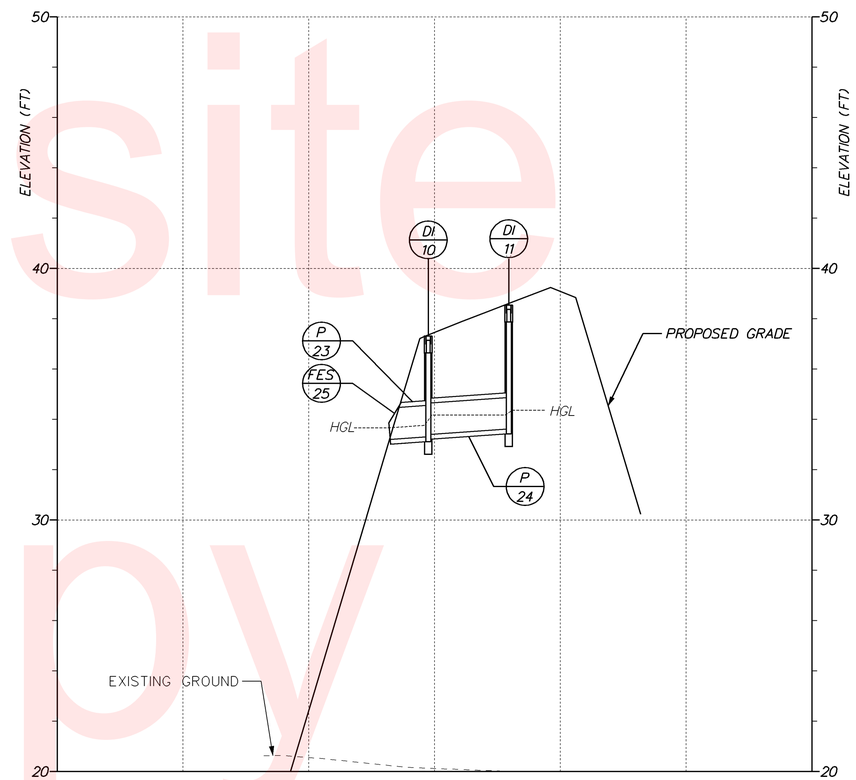

VERTICAL SCALE FEET 10 5 0

Unofficial Website Copy

DELAWARE DEPARTMENT OF TRANSPORTATION	ADDENDUMS / REVISIONS	SCALE 0 30 60 90 FEET	SR1, SOUTH FREDERICA GRADE SEPARATED INTERSECTION	CONTRACT T200812202	BRIDGE NO. –	PIPE PROFILE	SHEET NO. 65
				COUNTY KENT	DESIGNED BY: LCM		TOTAL SHTS. 296
					CHECKED BY: SFP		

5/23/2013
G:\PROJECTS\06535.00 (DelDOT Agmt. 1376 DOTS Open End)\06535.07 SR1, S. Frederica\CADD Files\XM\ppf3.dgn
17-06-57

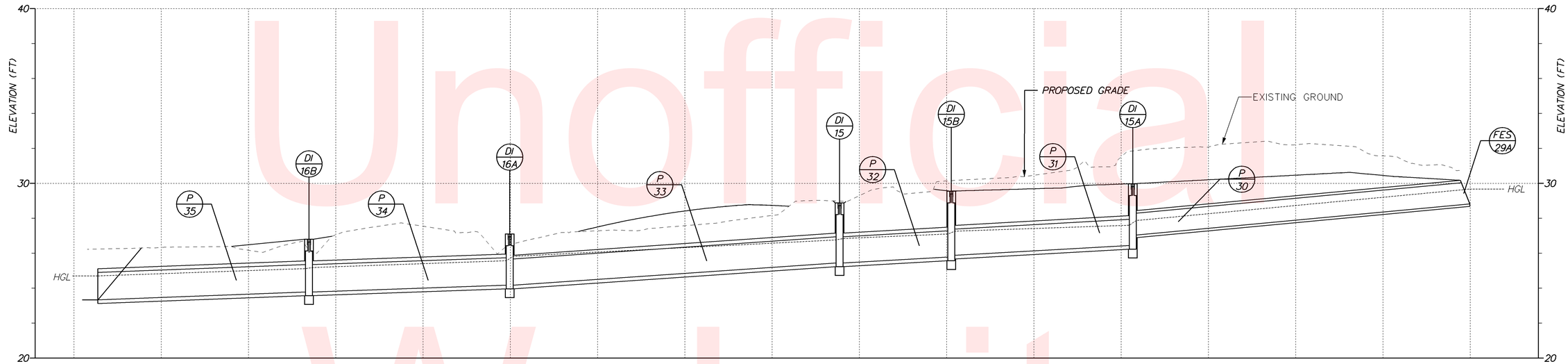

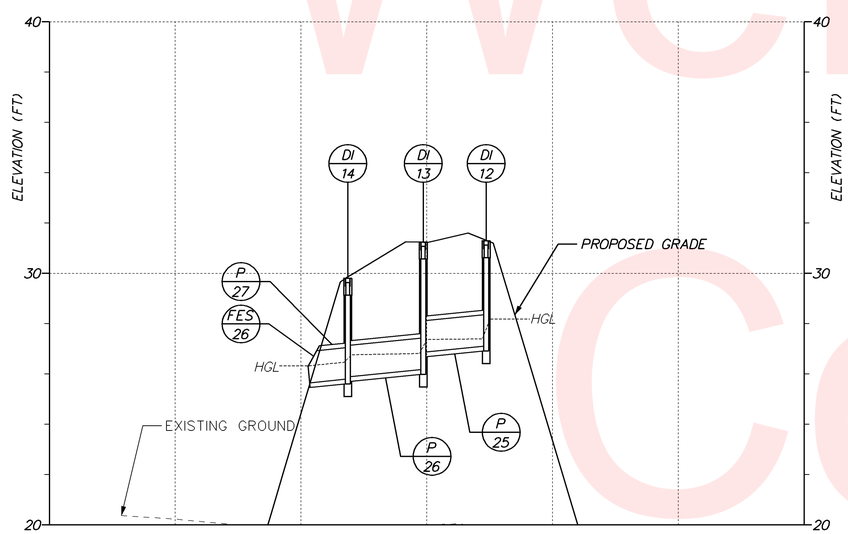

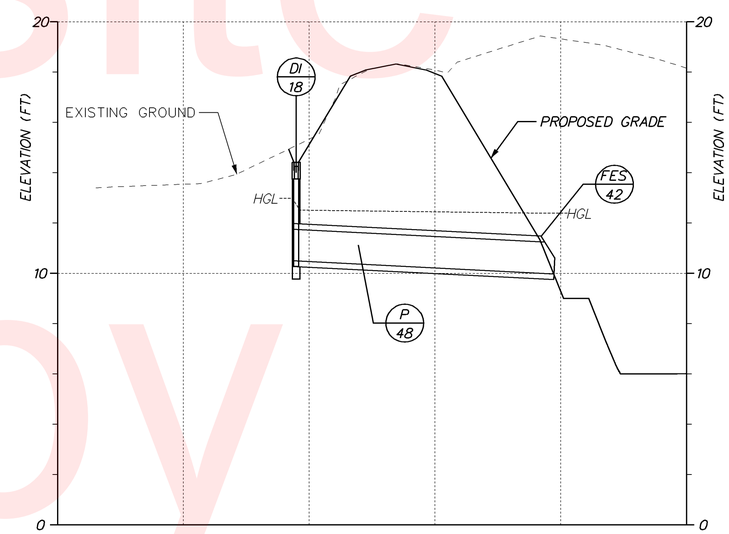

VERTICAL SCALE FEET 10 5 0

Unofficial Website Copy

DELAWARE DEPARTMENT OF TRANSPORTATION

ADDENDUMS / REVISIONS

SCALE 0 30 60 90 FEET

SR1, SOUTH FREDERICA GRADE SEPARATED INTERSECTION

CONTRACT	BRIDGE NO.	–
T200812202	DESIGNED BY: LCM	
COUNTY		
KENT	CHECKED BY: SFP	

PIPE PROFILE

SHEET NO.
66
TOTAL SHTS.
296

5/23/2013
G:\PROJECTS\06535.00 (DelDOT Agmt. 1376 DOTS Open End)\06535.07 SR1, S. Frederica\CADD Files\XM\ppf4.dgn
17:07:37

PROPOSED TUB MILL POND ROAD (RD. 119)
CURVE #5 (LT)
CONSTR ℄

POINT OF GRADE APPLICATION
POINT OF ROTATION

8′ SHOULDER	24′ MAX. 16.12′ MIN. WIDTH VARIES* ROADWAY	12′ ROADWAY	VARIES* 8′ TO 15′ SHOULDER/ TURN LANE	
.04 FT/FT	.02 FT/FT	.02 FT/FT	.04 FT/FT	STA. 523+87.24 — END TRANSITION
				TANGENT RUNOUT= 48.0′ S.E. RATE= .0004167 FT/FT
.04 FT/FT	.02 FT/FT	0.0 FT/FT	.04 FT/FT	STA. 523+39.24
				70% RUNOFF= 100.8′ S.E. RATE= .0004167 FT/FT
.04 FT/FT	.02 FT/FT	.02 FT/FT	.04 FT/FT	STA. 522+91.24
				30% RUNOFF= 43.2′ S.E. RATE= .0004167 FT/FT
.042 FT/FT	.042 FT/FT	.042 FT/FT	.038 FT/FT	PT STA. 522+38.24
.06 FT/FT	.06 FT/FT	.06 FT/FT	.02 FT/FT **	STA. 521+95.24 — FULL SUPERELEVATION
.06 FT/FT	.06 FT/FT	.06 FT/FT	.02 FT/FT **	STA. 511+68.01 — FULL SUPERELEVATION
				30% RUNOFF= 43.2′ S.E. RATE= .0004167 FT/FT
.042 FT/FT	.042 FT/FT	.042 FT/FT	.038 FT/FT	PC STA. 511+24.81
.04 FT/FT	.02 FT/FT	.02 FT/FT	.04 FT/FT	STA. 510+72.01
				70% RUNOFF= 100.8′ S.E. RATE= .0004167 FT/FT
.04 FT/FT	.02 FT/FT	0.0 FT/FT	.04 FT/FT	STA. 510+24.01
				TANGENT RUNOUT= 48.0′ S.E. RATE= .0004167 FT/FT
.04 FT/FT	.02 FT/FT	.02 FT/FT	.04 FT/FT	STA. 509+76.01 — BEGIN TRANSITION

* WIDTH VARIES
SEE ROADWAY PLANS

PROPOSED FREDERICA ROAD (RD. 12)
CURVE #16 (RT)
CONSTR ℄

POINT OF GRADE APPLICATION
POINT OF ROTATION

8′ SHOULDER	24′ ROADWAY	12′ ROADWAY	VARIES 8′ TO 15′* SHOULDER/ TURN LANE	
.04 FT/FT	0.0 FT/FT	0.0 FT/FT	.04 FT/FT	STA. 542+63.66 — END TRANSITION
				86% RUNOFF= 123.93′ S.E. RATE= .0004167 FT/FT
.0284 FT/FT	.0516 FT/FT	.0516 FT/FT	.0516 FT/FT	PT STA. 541+39.73
				14% RUNOFF= 20.07′ S.E. RATE= .0004167 FT/FT
.02 FT/FT	.06 FT/FT	.06 FT/FT	.06 FT/FT	STA. 541+19.66 — FULL SUPERELEVATION
.02 FT/FT	.06 FT/FT	.06 FT/FT	.06 FT/FT	STA. 535+24.53 — FULL SUPERELEVATION
				30% RUNOFF= 43.2′ S.E. RATE= .0004167 FT/FT
.038 FT/FT	.042 FT/FT	.042 FT/FT	.042 FT/FT	PC STA. 534+81.33
.04 FT/FT	.02 FT/FT	.02 FT/FT	.04 FT/FT	STA. 534+28.53
				70% RUNOFF= 100.8′ S.E. RATE= .0004167 FT/FT
.04 FT/FT	0.0 FT/FT	.02 FT/FT	.04 FT/FT	STA. 533+80.53
				TANGENT RUNOUT= 48.0′ S.E. RATE= .0004167 FT/FT
.04 FT/FT	.02 FT/FT	.02 FT/FT	.04 FT/FT	STA. 533+32.53 — BEGIN TRANSITION

* WIDTH VARIES
SEE ROADWAY PLANS

** SHOULDER SLOPE VARIES TO FROM -0.02 TO +0.02 FT/FT FROM STATION 515+62.47 TO 517+08.27 FOR RIGHT TURN LANE

Unofficial Website Copy

DELAWARE DEPARTMENT OF TRANSPORTATION	ADDENDUMS / REVISIONS	NOT TO SCALE	SR1, SOUTH FREDERICA GRADE SEPARATED INTERSECTION	CONTRACT T200812202	BRIDGE NO. –	SUPERELEVATION SHEETS	SHEET NO. 67
				COUNTY KENT	DESIGNED BY: LCM		TOTAL SHTS. 296
					CHECKED BY: SFP		

5/23/2013
J:\PROJECTS\06535.00 (DelDOT Agmt. 1376 DOTS Open End)\06535.07 SR1, S. Frederica\CADD Files\XM\supelv01SF.dgn
22-10-11

PROPOSED FREDERICA ROAD (RD. 12)
CURVE #17 (LT)
CONSTR ℄

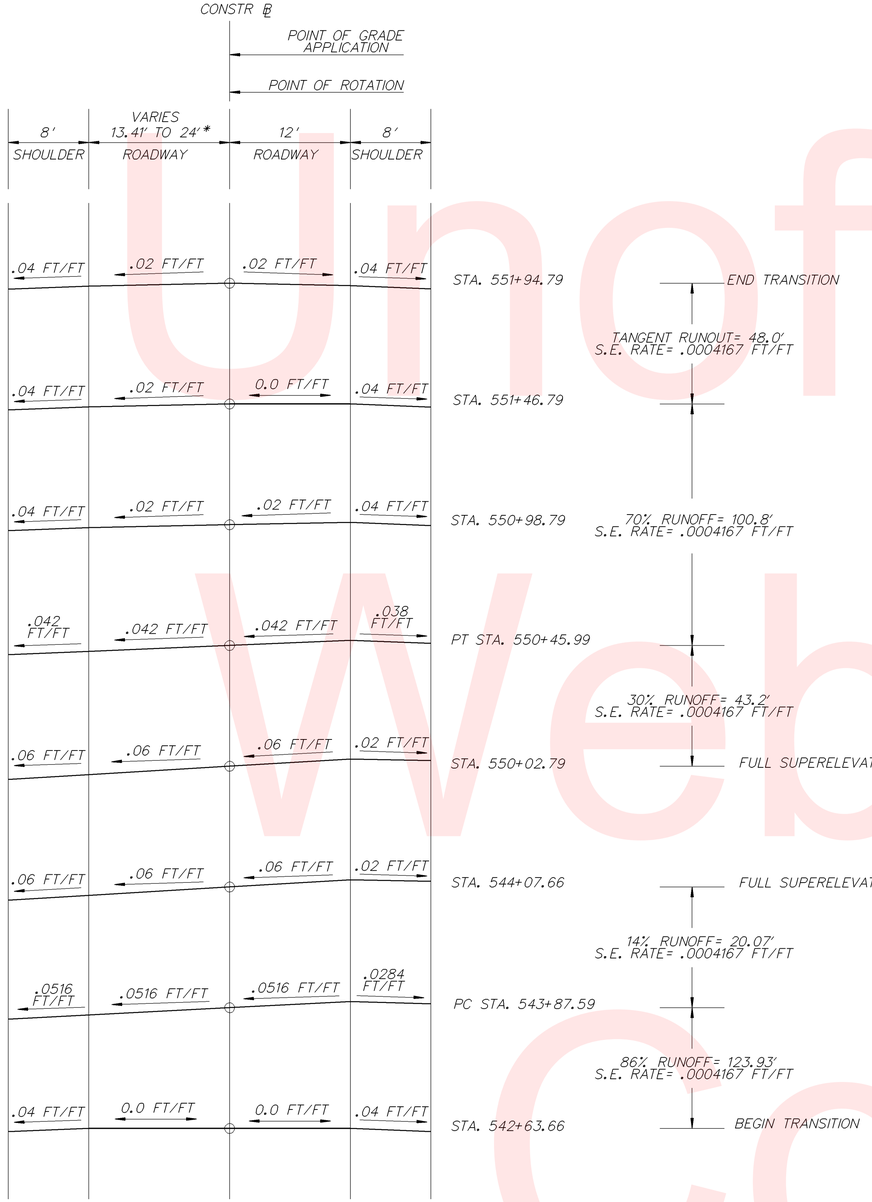

* WIDTH VARIES
SEE ROADWAY PLANS

PROPOSED MILFORD NECK ROAD (RD.120)
CURVE #1(RT)
CONSTR ℄

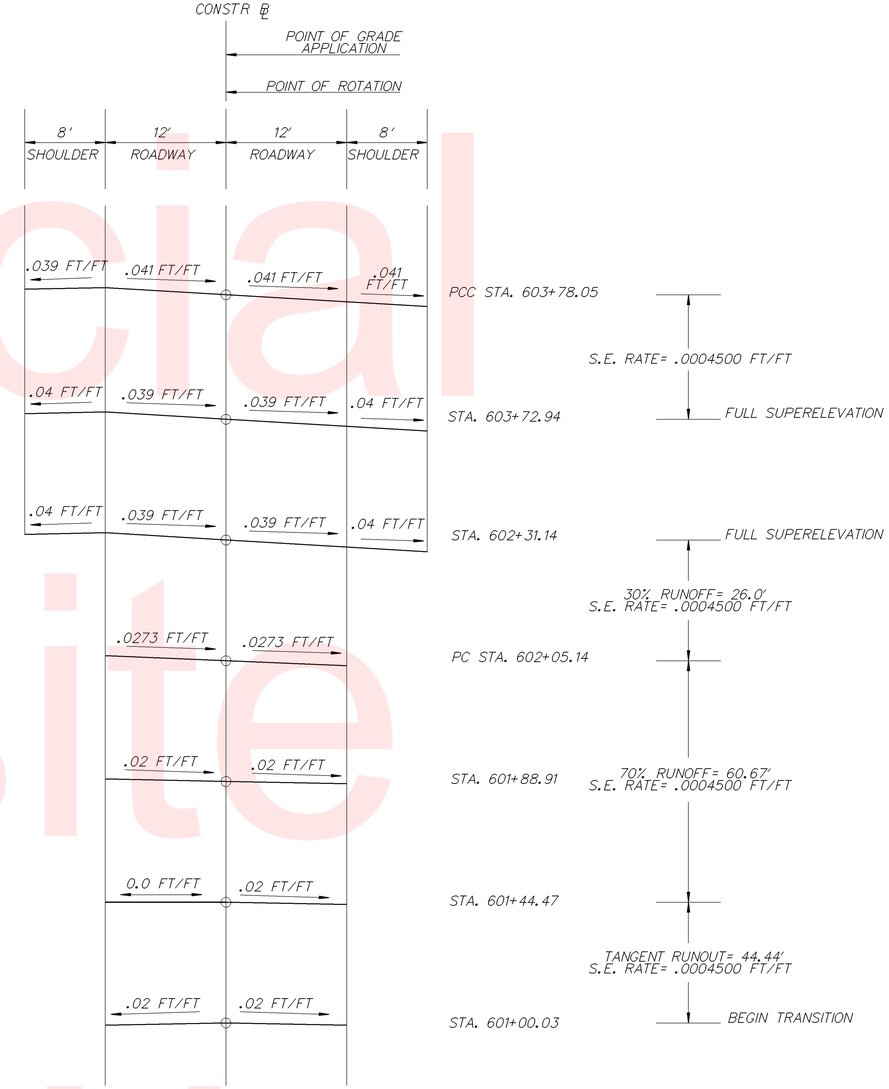

Unofficial Website Copy

DELAWARE DEPARTMENT OF TRANSPORTATION	ADDENDUMS / REVISIONS	NOT TO SCALE	SR1, SOUTH FREDERICA GRADE SEPARATED INTERSECTION	CONTRACT T200812202	BRIDGE NO. –	SUPERELEVATION SHEETS	SHEET NO. 68
				COUNTY KENT	DESIGNED BY: LCM		TOTAL SHTS. 296
					CHECKED BY: SFP		

5/23/2013
G:\PROJECTS\06535.00 (DelDOT Agmt. 1376 DOTS Open End)\06535.07 SR1, S. Frederica\CADD Files\XM\supelv02SF.dgn
22:11:03

PROPOSED MILFORD NECK ROAD (RD.120)
CURVE #2 (RT)
CONSTR ℄

POINT OF GRADE APPLICATION

POINT OF ROTATION

8′ SHOULDER	12′ ROADWAY	12′ ROADWAY	8′ SHOULDER		
.04 FT/FT	.02 FT/FT	.02 FT/FT	.04 FT/FT	STA. 613+75.18	END TRANSITION
					TANGENT RUNOUT= 44.44′ S.E. RATE= .0004155 FT/FT
.04 FT/FT	0.0 FT/FT	.02 FT/FT	.04 FT/FT	STA. 613+30.74	
.04 FT/FT	.02 FT/FT	.02 FT/FT	.04 FT/FT	STA. 612+86.30	70% RUNOFF= 91.78′ S.E. RATE= .0004500 FT/FT
.0387 FT/FT	.0413 FT/FT	.0413 FT/FT	.0413 FT/FT	PT STA. 612+38.96	
					30% RUNOFF= 39.33′ S.E. RATE= .0004500 FT/FT
.021 FT/FT	.059 FT/FT	.059 FT/FT	.059 FT/FT	STA. 611+99.63	FULL SUPERELEVATION
.021 FT/FT	.059 FT/FT	.059 FT/FT	.059 FT/FT	STA. 604+17.38	FULL SUPERELEVATION
					S.E. RATE= .0004500 FT/FT
.039 FT/FT	.041 FT/FT	.041 FT/FT	.041 FT/FT	PCC STA. 603+78.05	FULL SUPERELEVATION

PROPOSED MILFORD NECK ROAD (RD. 120)
CURVE #3 (LT)
CONSTR ℄

POINT OF GRADE APPLICATION

POINT OF ROTATION

8′ SHOULDER	12′ ROADWAY	WIDTH VARIES 16.41′ to 24′* ROADWAY	8′ SHOULDER		
.04 FT/FT	.02 FT/FT	.02 FT/FT	.04 FT/FT	STA. 623+19.34	END TRANSITION
					TANGENT RUNOUT= 72.09′ S.E. RATE= .0002774 FT/FT
.04 FT/FT	.02 FT/FT	0.0 FT/FT	.04 FT/FT	STA. 622+47.25	
.04 FT/FT	.02 FT/FT	.02 FT/FT	.04 FT/FT	STA. 621+75.16	70% RUNOFF= 108.5′ S.E. RATE= .0002774 FT/FT
.04 FT/FT	.03 FT/FT	.03 FT/FT	.04 FT/FT	PT STA. 621+38.75	
					30% RUNOFF= 46.5′ S.E. RATE= .0002774 FT/FT
.043 FT/FT	.043 FT/FT	.043 FT/FT	.037 FT/FT	STA.620+92.25	FULL SUPERELEVATION
.043 FT/FT	.043 FT/FT	.043 FT/FT	.037 FT/FT	STA. 619+36.54	FULL SUPERELEVATION
					30% RUNOFF= 47.58′ S.E. RATE= .0002755 FT/FT
.04 FT/FT	.03 FT/FT	.03 FT/FT	.04 FT/FT	PC STA. 618+88.96	
.04 FT/FT	.02 FT/FT	.02 FT/FT	.04 FT/FT	STA. 618+52.55	70% RUNOFF= 108.5′ S.E. RATE= .0002755 FT/FT
.04 FT/FT	.02 FT/FT	0.0 FT/FT	.04 FT/FT	STA. 617+80.46	
					TANGENT RUNOUT= 72.09′ S.E. RATE= .0002774 FT/FT
.04 FT/FT	.02 FT/FT	.02 FT/FT	.04 FT/FT	STA. 617+08.37	BEGIN TRANSITION

*WIDTH VARIES
SEE ROADWAY PLANS

Unofficial Website Copy

DELAWARE DEPARTMENT OF TRANSPORTATION	ADDENDUMS / REVISIONS	NOT TO SCALE	SR1, SOUTH FREDERICA GRADE SEPARATED INTERSECTION	CONTRACT T200812202	BRIDGE NO. –	SUPERELEVATION SHEETS	SHEET NO. 69
				COUNTY KENT	DESIGNED BY: LCM		TOTAL SHTS. 296
					CHECKED BY: SFP		

5/23/2013
2:\PROJECTS\06535.00 (DelDOT Agmt. 1376 DOTS Open End)\06535.07 SR1, S. Frederica\CADD Files\XM\supelv03SF.dgn
22:14:13

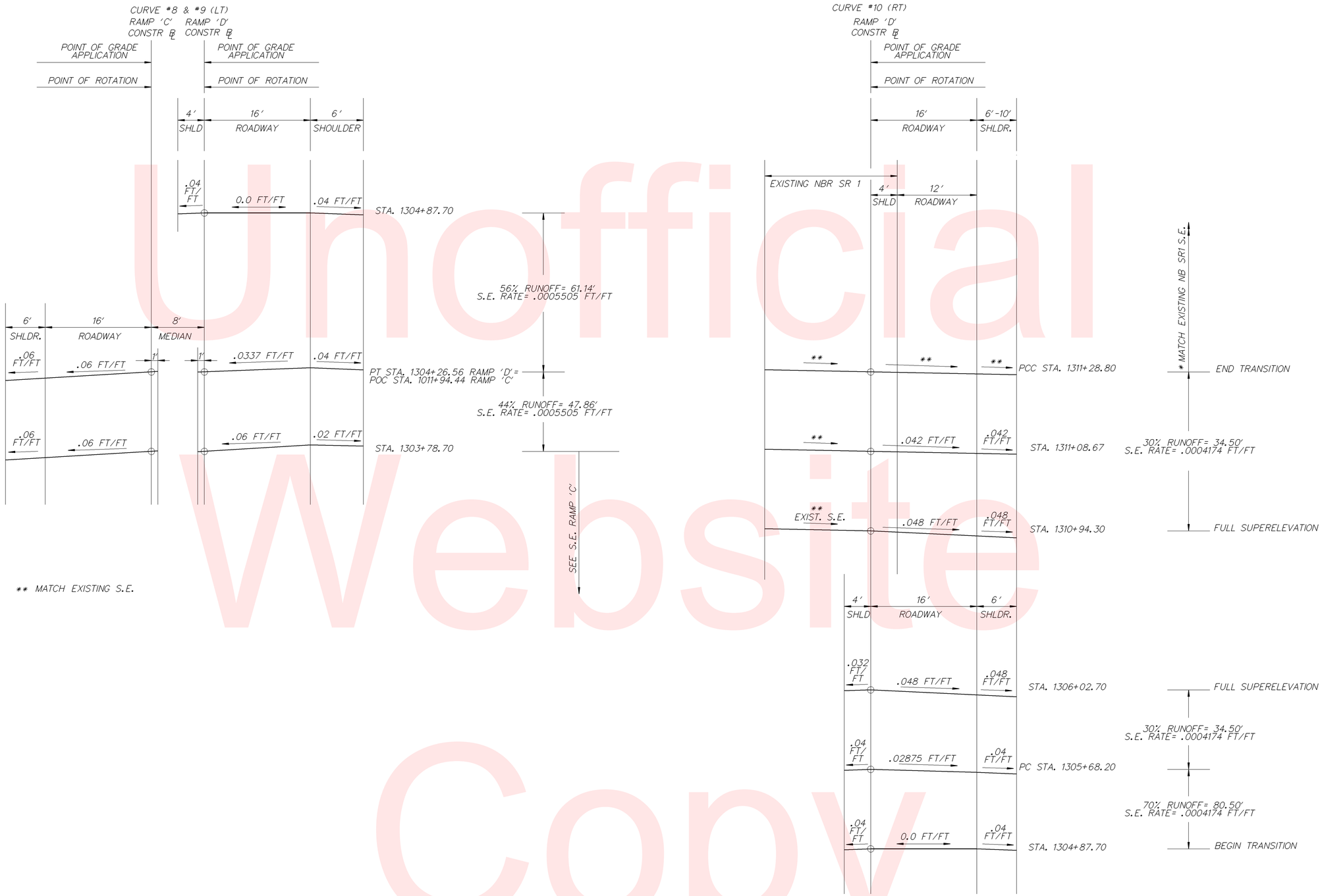

Unofficial Website Copy

DELAWARE DEPARTMENT OF TRANSPORTATION	ADDENDUMS / REVISIONS	NOT TO SCALE	SR1, SOUTH FREDERICA GRADE SEPARATED INTERSECTION	CONTRACT T200812202	BRIDGE NO. –	SUPERELEVATION SHEETS	SHEET NO. 70
				COUNTY KENT	DESIGNED BY: LCM		TOTAL SHTS. 296
					CHECKED BY: SFP		

5/23/2013
G:\PROJECTS\06535.00 (DelDOT Agmt. 1376 DOTS Open End)\06535.07 SR1, S. Frederica\CADD Files\XM\superlv04SF.dgn
22:15:00

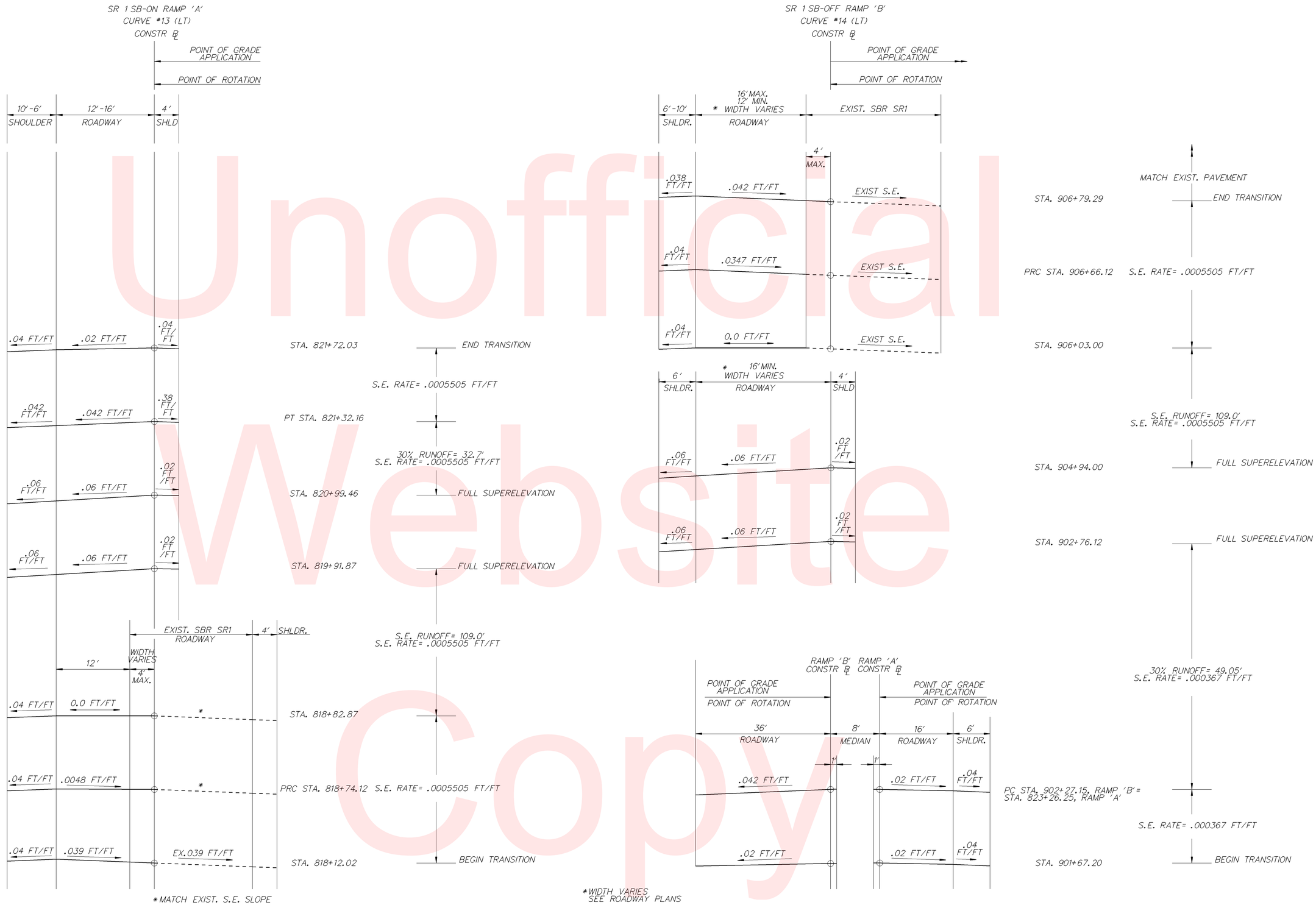

Unofficial Website Copy

DELAWARE DEPARTMENT OF TRANSPORTATION	ADDENDUMS / REVISIONS	NOT TO SCALE	SR1, SOUTH FREDERICA GRADE SEPARATED INTERSECTION	CONTRACT T200812202	BRIDGE NO. –	SUPERELEVATION SHEETS	SHEET NO. 71
				COUNTY KENT	DESIGNED BY: LCM		TOTAL SHTS. 296
					CHECKED BY: SFP		

5/23/2013
07:PROJECTS\06535.00 (DelDOT Agmt. 1376 DOTS Open End)\06535.07 SR1, S. Frederica\CADD Files\XM\supelv05SF.dgn
22:15:50

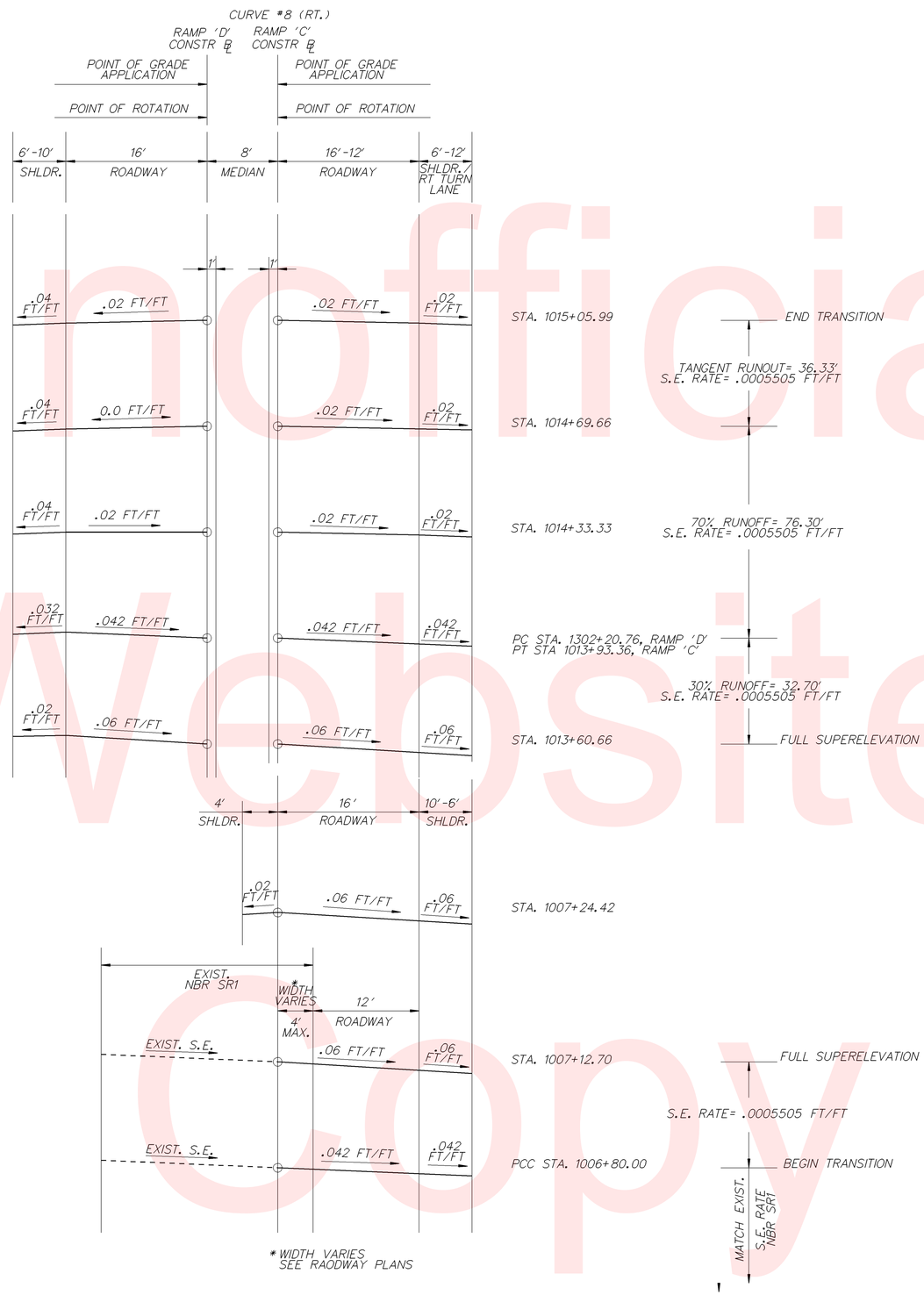

Unofficial Website Copy

DELAWARE DEPARTMENT OF TRANSPORTATION	ADDENDUMS / REVISIONS	NOT TO SCALE	SR1, SOUTH FREDERICA GRADE SEPARATED INTERSECTION	CONTRACT T200812202	BRIDGE NO. –	SUPERELEVATION SHEETS	SHEET NO. 72
				COUNTY KENT	DESIGNED BY: LCM		TOTAL SHTS. 296
					CHECKED BY: SFP		

5/23/2013
C:\PROJECTS\06535.00 (DelDOT Agmt. 1376 DOTS Open End)\06535.07 SR1, S. Frederica\CADD Files\XM\supelv06SF.dgn
22-161-37

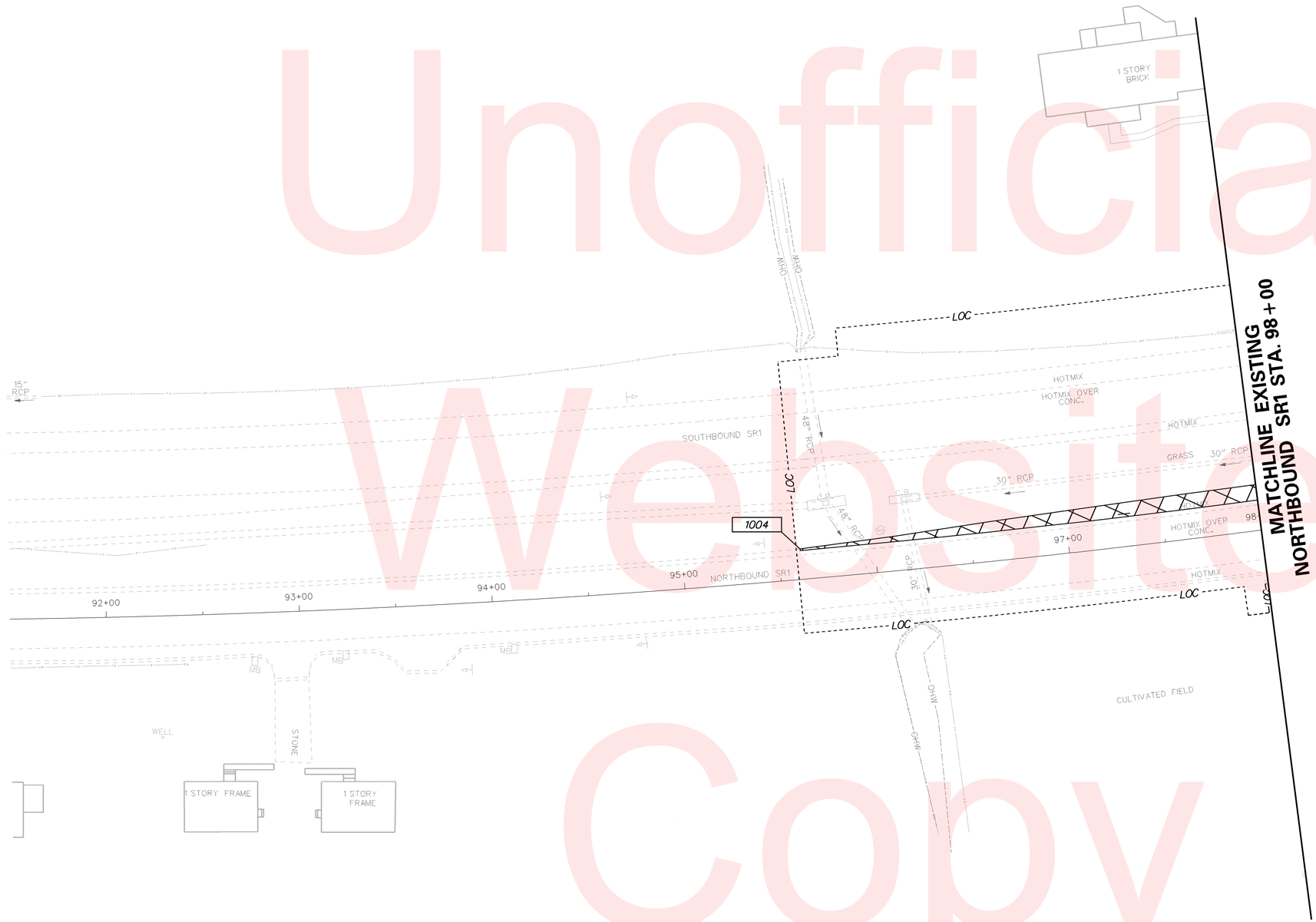

COORDINATE LIST				
POINT NO.	STATION	OFFSET	NORTHING	EASTING
1004	95+61.09	-15.81	358829.7864	649046.1008

NOTES:

1. OFFSETS SHOWN IN THE GEOMETRY TABLES WITH A MINUS SIGN ARE TO THE LEFT OF THE CONSTRUCTION & R/W BASELINE.
2. UNLESS OTHERWISE NOTED, POINT GEOMETRY ADJACENT TO CURB AND CURB AND GUTTER IS GIVEN TO THE EDGE OF PAVEMENT.
3. RADII ARE GIVEN TO EDGE OF PAVEMENT.
4. UNLESS OTHERWISE NOTED, EDGE OF PAVEMENT ELEVATIONS AT CURB RETURNS ARE GIVEN AT 10 FOOT INTERVALS.
5. ALL WORK REQUIRED FOR CALCULATING AND STAKING OF GRADES SHALL BE PAID FOR UNDER ITEM 763501-CONSTRUCTION ENGINEERING.
6. PROPOSED CURBS OR PAVEMENT THAT TIE INTO EXISTING PAVEMENT SHALL MATCH ELEVATIONS.

Unofficial Website Copy

DELAWARE DEPARTMENT OF TRANSPORTATION

ADDENDUMS / REVISIONS

SCALE 0 30 60 90 FEET

SR1, SOUTH FREDERICA GRADE SEPARATED INTERSECTION

CONTRACT	BRIDGE NO.	–
T200812202	DESIGNED BY: LCM	
COUNTY		
KENT	CHECKED BY: SFP	

GRADES AND GEOMETRICS

SHEET NO. 73 TOTAL SHTS. 296

5/23/2013 G:\PROJECTS\06535.00 (DelDOT Agmt. 1376 DOTS Open End)\06535.07 SR1, S. Frederica\CADD Files\XM\gg02sf.dgn 22:17:41

COORDINATE LIST				
POINT NO.	STATION	OFFSET	NORTHING	EASTING
1005	100+59.16	-57.39	359207.4113	648723.7870
1006	101+28.75	-14.60	359288.1596	648714.1991

NOTES:

1. OFFSETS SHOWN IN THE GEOMETRY TABLES WITH A MINUS SIGN ARE TO THE LEFT OF THE CONSTRUCTION & R/W BASELINE.
2. UNLESS OTHERWISE NOTED, POINT GEOMETRY ADJACENT TO CURB AND CURB AND GUTTER IS GIVEN TO THE EDGE OF PAVEMENT.
3. RADII ARE GIVEN TO EDGE OF PAVEMENT.
4. UNLESS OTHERWISE NOTED, EDGE OF PAVEMENT ELEVATIONS AT CURB RETURNS ARE GIVEN AT 10 FOOT INTERVALS.
5. ALL WORK REQUIRED FOR CALCULATING AND STAKING OF GRADES SHALL BE PAID FOR UNDER ITEM 763501-CONSTRUCTION ENGINEERING.
6. PROPOSED CURBS OR PAVEMENT THAT TIE INTO EXISTING PAVEMENT SHALL MATCH ELEVATIONS.

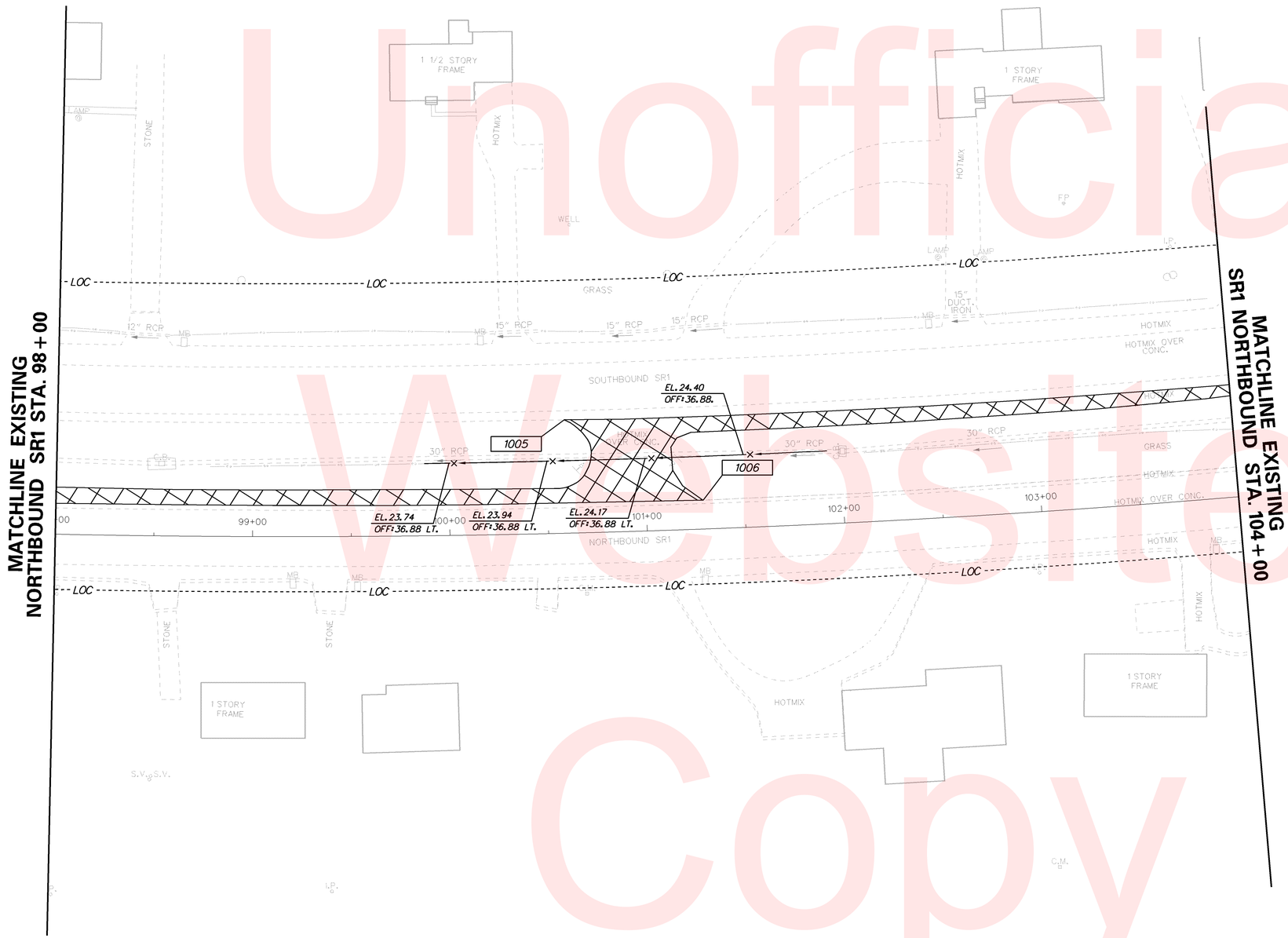

Unofficial Website Copy

DELAWARE DEPARTMENT OF TRANSPORTATION

ADDENDUMS / REVISIONS

SCALE 0 30 60 90 FEET

SR1, SOUTH FREDERICA GRADE SEPARATED INTERSECTION

CONTRACT	BRIDGE NO.	–
T200812202	DESIGNED BY: LCM	
COUNTY		
KENT	CHECKED BY: SFP	

GRADES AND GEOMETRICS

SHEET NO. 74

TOTAL SHTS. 296

7/19/2013
G:\PROJECTS\06535.00 (DelDOT Agmt. 1376 DOTS Open End)\06535.07 SR1, S. Frederica\CADD Files\XM\gg03sf.dgn
07506450

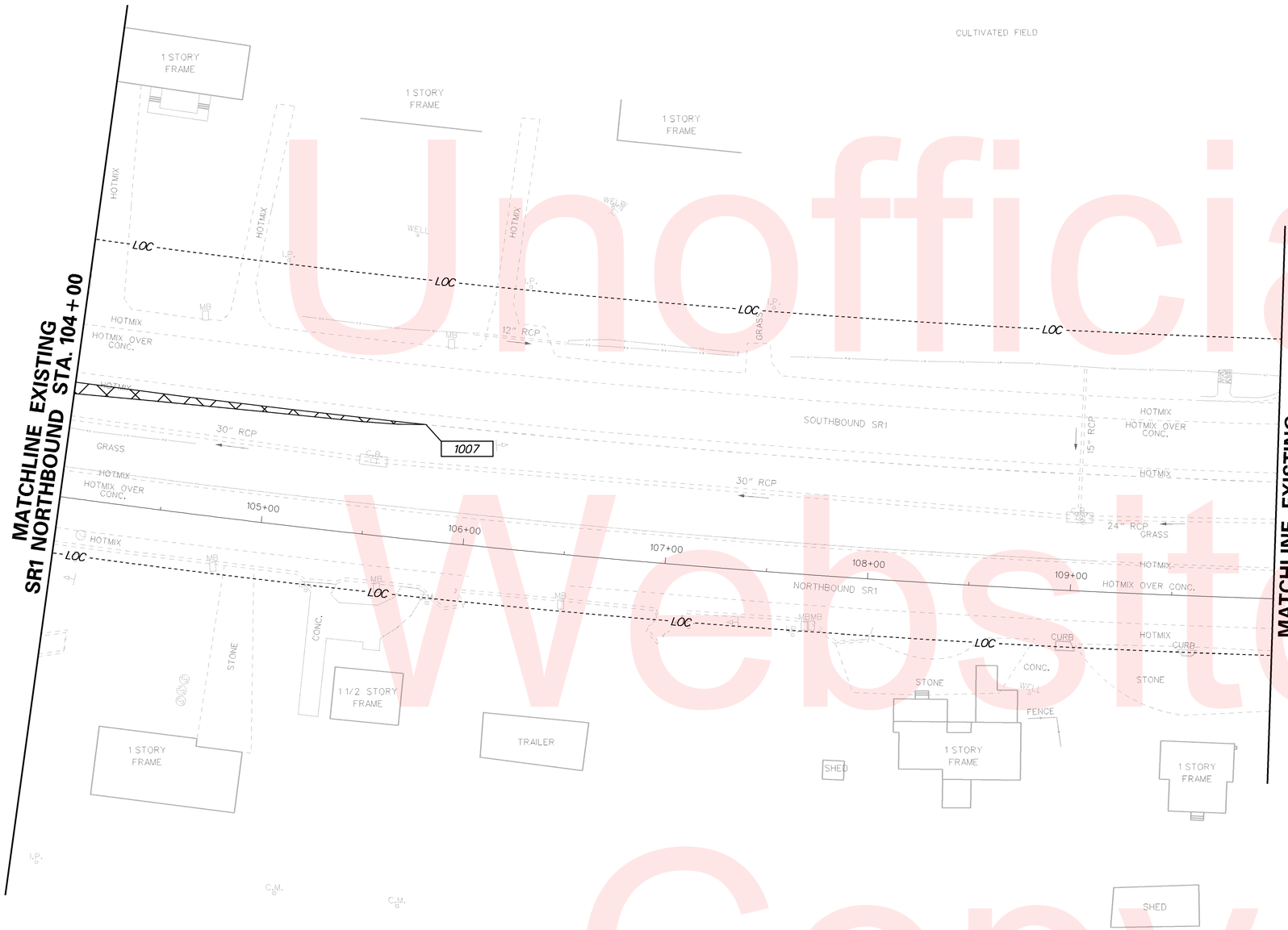

COORDINATE LIST

POINT NO.	STATION	OFFSET	NORTHING	EASTING
1007	105+75.75	-56.96	359594.9639	648390.3395

NOTES:

1. OFFSETS SHOWN IN THE GEOMETRY TABLES WITH A MINUS SIGN ARE TO THE LEFT OF THE CONSTRUCTION & R/W BASELINE.
2. UNLESS OTHERWISE NOTED, POINT GEOMETRY ADJACENT TO CURB AND CURB AND GUTTER IS GIVEN TO THE EDGE OF PAVEMENT.
3. RADII ARE GIVEN TO EDGE OF PAVEMENT.
4. UNLESS OTHERWISE NOTED, EDGE OF PAVEMENT ELEVATIONS AT CURB RETURNS ARE GIVEN AT 10 FOOT INTERVALS.
5. ALL WORK REQUIRED FOR CALCULATING AND STAKING OF GRADES SHALL BE PAID FOR UNDER ITEM 763501-CONSTRUCTION ENGINEERING.
6. PROPOSED CURBS OR PAVEMENT THAT TIE INTO EXISTING PAVEMENT SHALL MATCH ELEVATIONS.

Unofficial Website Copy

DELAWARE DEPARTMENT OF TRANSPORTATION

ADDENDUMS / REVISIONS

SCALE 0 30 60 90 FEET

SR1, SOUTH FREDERICA GRADE SEPARATED INTERSECTION

CONTRACT	BRIDGE NO.	–
T200812202	DESIGNED BY: LCM	
COUNTY		
KENT	CHECKED BY: SFP	

GRADES AND GEOMETRICS

SHEET NO. 75
TOTAL SHTS. 296

5/23/2013
G:\PROJECTS\06535.00 (DelDOT Agmt. 1376 DOTS Open End)\06535.07 SR1, S. Frederica\CADD Files\XM\gg04st.dgn
2219904

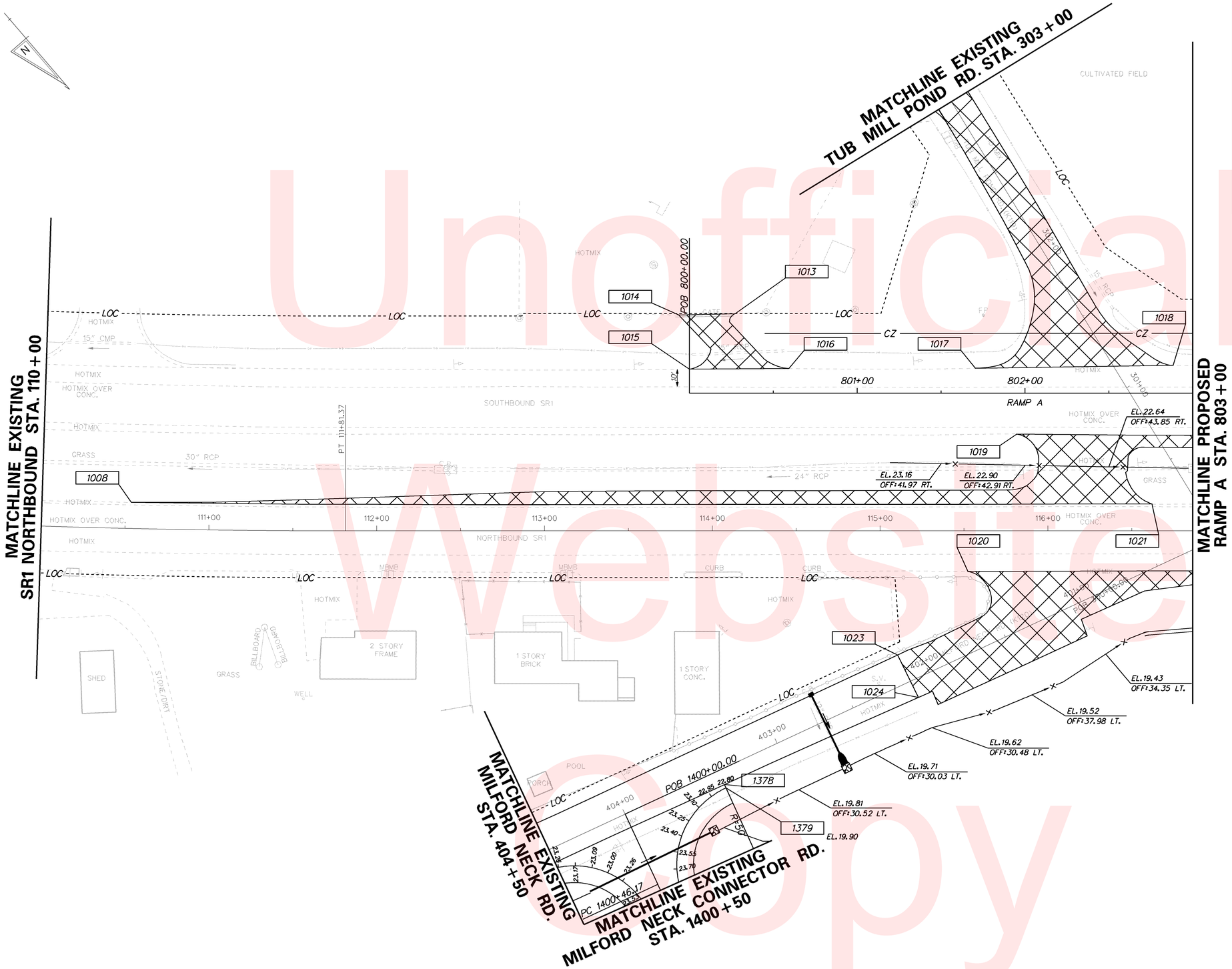

COORDINATE LIST

POINT NO.	STATION	OFFSET	NORTHING	EASTING
1008	110+53.40	-15.57	359955.8119	648079.4605
1013	800+27.10	-47.36	360104.5905	647733.2640
1014	113+80.06	-128.67	360083.3893	647759.0503
1015	800+00.05	-14.33	360112.0643	647775.2956
1016	800+59.16	-14.70	360150.2514	647730.1776
1017	801+70.44	-14.85	360222.5665	647645.5931
1018	802+88.27	-16.62	360297.9054	647554.9796
1019	801+94.96	24.33	360268.2707	647652.4784
1020	401+53.72	44.80	360311.6494	647727.8161
1021	802+75.65	66.02	360352.4323	647618.3510
1023	402+12.75	17.42	360322.1097	647792.0368
1024	402+12.20	10.77	360349.4094	647799.4094
1378	403+38.87	-9.04	360313.6220	647920.6179
1379	403+38.87	-11.20	360315.6999	647921.2053
1380	800+84.49	-14.58	360166.8290	647711.0249

NOTES:

1. OFFSETS SHOWN IN THE GEOMETRY TABLES WITH A MINUS SIGN ARE TO THE LEFT OF THE CONSTRUCTION & R/W BASELINE.
2. UNLESS OTHERWISE NOTED, POINT GEOMETRY ADJACENT TO CURB AND CURB AND GUTTER IS GIVEN TO THE EDGE OF PAVEMENT.
3. RADII ARE GIVEN TO EDGE OF PAVEMENT.
4. UNLESS OTHERWISE NOTED, EDGE OF PAVEMENT ELEVATIONS AT CURB RETURNS ARE GIVEN AT 10 FOOT INTERVALS.
5. ALL WORK REQUIRED FOR CALCULATING AND STAKING OF GRADES SHALL BE PAID FOR UNDER ITEM 763501-CONSTRUCTION ENGINEERING.
6. PROPOSED CURBS OR PAVEMENT THAT TIE INTO EXISTING PAVEMENT SHALL MATCH ELEVATIONS.

Unofficial Website Copy

DELAWARE DEPARTMENT OF TRANSPORTATION	ADDENDUMS / REVISIONS	SCALE 0 30 60 90 FEET	SR1, SOUTH FREDERICA GRADE SEPARATED INTERSECTION	CONTRACT T200812202	BRIDGE NO. –	GRADES AND GEOMETRICS	SHEET NO. 76
				COUNTY KENT	DESIGNED BY: LCM		TOTAL SHTS. 296
					CHECKED BY: SFP		

7/19/2013
G:\PROJECTS\06535.00 (DelDOT Agmt. 1376 DOTS Open End)\06535.07 SR1, S. Frederica\CADD Files\XM\gg05sf.dgn
07:51:36

COORDINATE LIST				
POINT NO.	STATION	OFFSET	NORTHING	EASTING
1022	803+64.77	105.69	360440.5537	647576.5097
1025	806+64.12	-14.74	360544.5149	647271.3374
1026	806+64.12	-4.00	360552.1070	647277.8457
1027	807+58.22	-24.77	360635.1981	647225.1286
1028	1000+00.00	4.00	360628.2940	647339.5471
1029	1000+00.00	14.01	360635.8949	647346.0630
1030	1001+24.00	19.96	360721.1179	647255.7941
1034	1002+13.69	33.45	360789.7278	647196.4792

NOTES:

1. OFFSETS SHOWN IN THE GEOMETRY TABLES WITH A MINUS SIGN ARE TO THE LEFT OF THE CONSTRUCTION & R/W BASELINE.
2. UNLESS OTHERWISE NOTED, POINT GEOMETRY ADJACENT TO CURB AND CURB AND GUTTER IS GIVEN TO THE EDGE OF PAVEMENT.
3. RADII ARE GIVEN TO EDGE OF PAVEMENT.
4. UNLESS OTHERWISE NOTED, EDGE OF PAVEMENT ELEVATIONS AT CURB RETURNS ARE GIVEN AT 10 FOOT INTERVALS.
5. ALL WORK REQUIRED FOR CALCULATING AND STAKING OF GRADES SHALL BE PAID FOR UNDER ITEM 763501-CONSTRUCTION ENGINEERING.
6. PROPOSED CURBS OR PAVEMENT THAT TIE INTO EXISTING PAVEMENT SHALL MATCH ELEVATIONS.

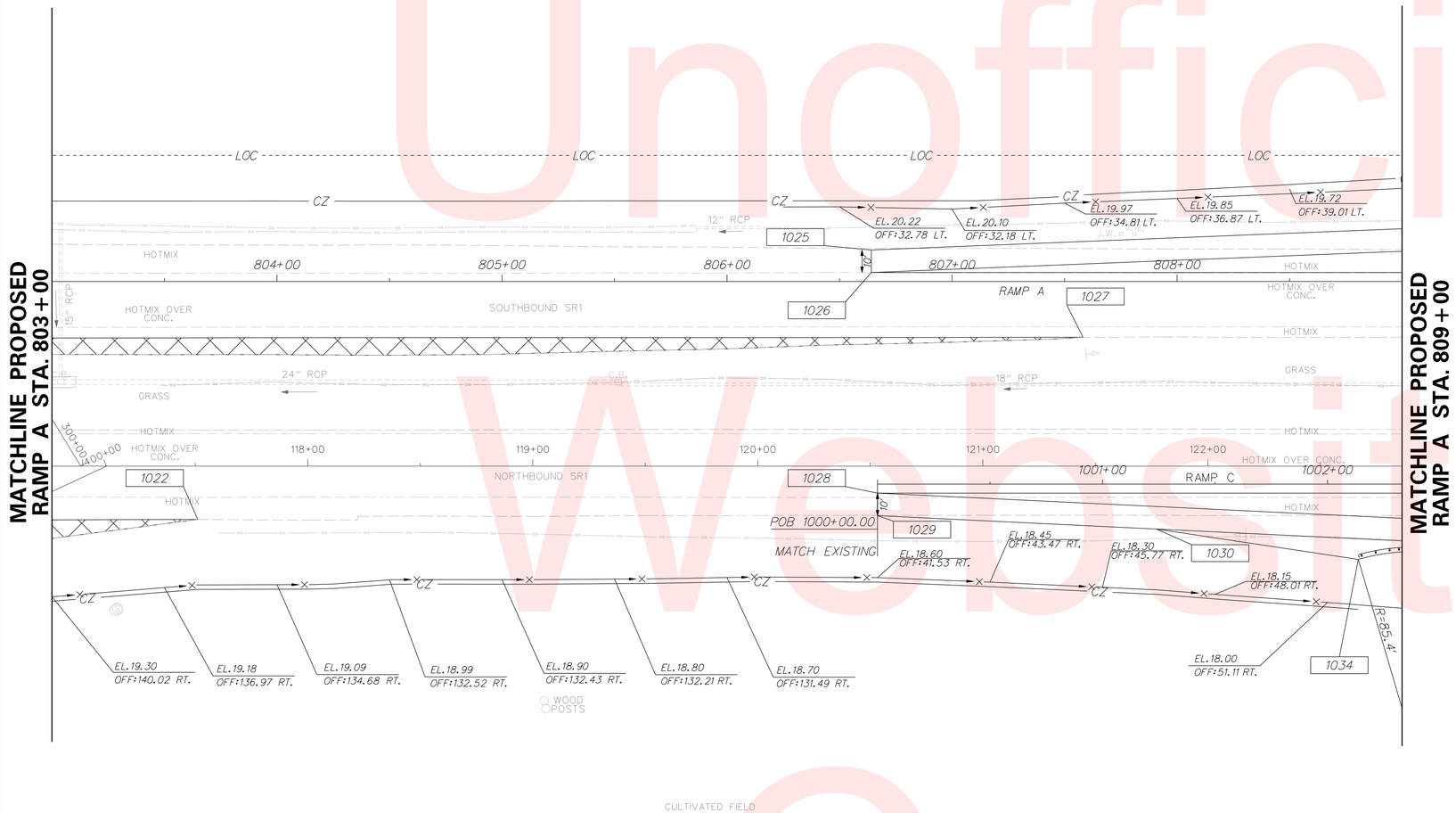

Unofficial Website Copy

10/23/2015
G:\PROJECTS\06535.00 (DelDOT Agmt. 1376 DOTS Open End)\06535.07 SR1, S. Frederica\CADD Files\XW\gg06sf1.dgn
10:18:19 AM

DELAWARE DEPARTMENT OF TRANSPORTATION	ADDENDUMS / REVISIONS	SCALE 0 30 60 90 FEET	SR1, SOUTH FREDERICA GRADE SEPARATED INTERSECTION	CONTRACT T200812202	BRIDGE NO. –	GRADES AND GEOMETRICS	SHEET NO. 77
				COUNTY KENT	DESIGNED BY: LCM		TOTAL SHTS. 296
					CHECKED BY: SFP		

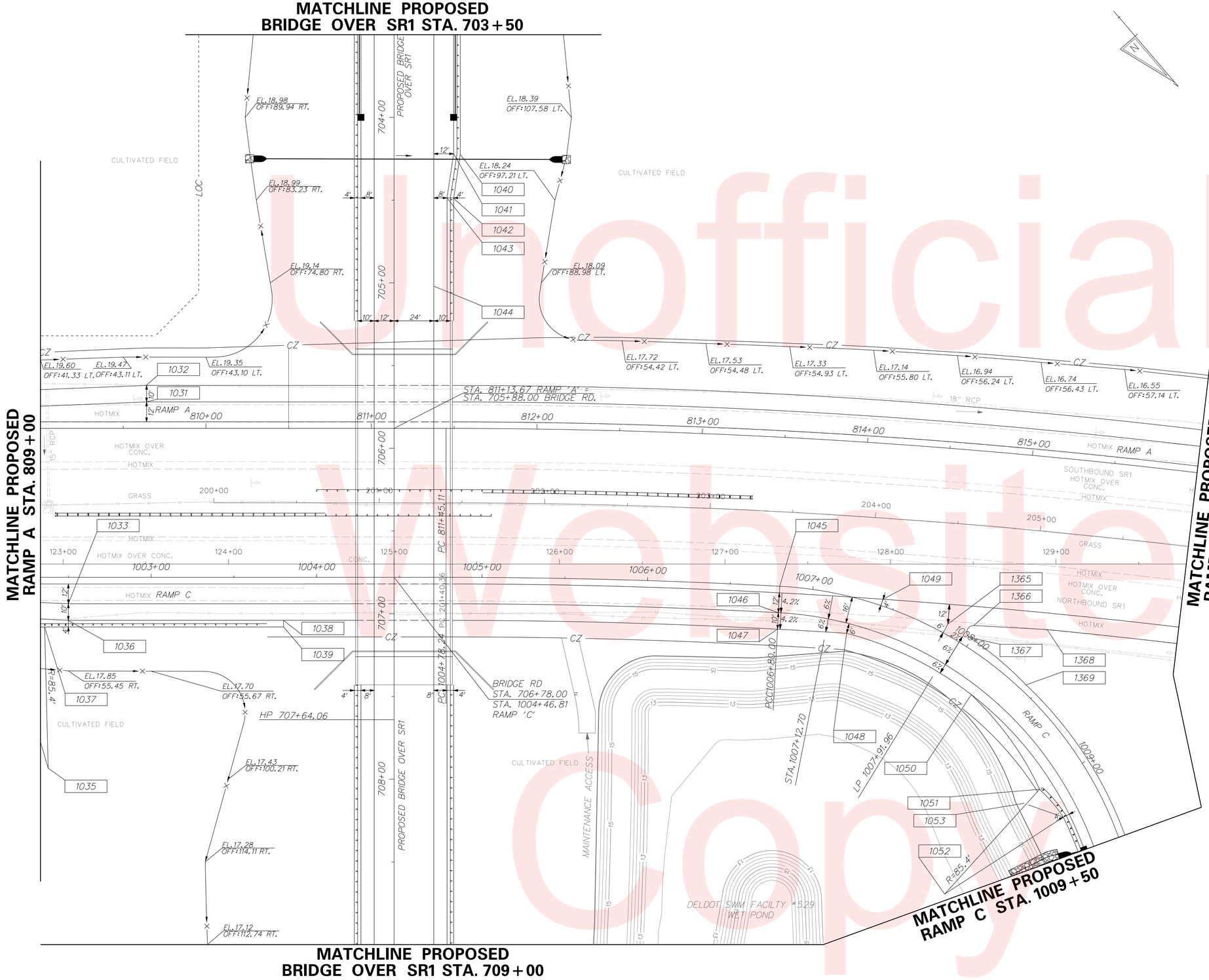

COORDINATE LIST

POINT NO.	STATION	OFFSET	NORTHING	EASTING
1031	809+64.12	-16.00	360738.2484	647042.2711
1032	809+64.12	-26.00	360730.6562	647035.7627
1033	1002+50.00	16.00	360800.1145	647157.5534
1035	1002+37.80	115.38	360867.6254	647231.4900
1036	1002+49.76	26.00	360807.5506	647164.2439
1037	1002+35.64	30.00	360801.3944	647177.5711
1038	1003+80.00	26.00	360892.3158	647065.3638
1039	1003+80.00	30.00	360895.3527	647067.9672
1040	704+22.30	-40.00	360747.9578	646800.9317
1041	704+22.00	-36.00	360745.1280	646803.7744
1042	704+48.96	-36.00	360765.6002	646821.3243
1043	704+48.67	-32.00	360762.7704	646824.1670
1044	705+02.00	-24.00	360798.0551	646864.9522
1045	1006+80.00	0.00	361071.8585	646824.2585
1046	1006+80.00	16.00	361083.4320	646835.3063
1047	1006+80.00	26.00	361090.6658	646842.2108
1048	1007+26.57	22.00	361119.7334	646812.0970
1049	1007+42.40	-4.00	361118.4279	646782.0192
1050	1008+20.00	22.00	361196.9010	646779.0321
1051	1008+99.42	30.21	361267.2176	646784.9627
1052	1009+42.91	110.45	361277.9602	646869.6881
1053	1009+24.16	26.00	361289.3400	646785.0459
1365	1007+83.52	-6.00	361155.3519	646761.9926
1366	1007+96.93	-13.19	361166.2177	646750.6541
1367	1007+98.69	-5.69	361170.1740	646757.2763
1368	1008+30.44	-37.41	361196.8755	646718.6624
1369	1008+42.22	-4.00	361214.0006	646750.0861

NOTES:

1. OFFSETS SHOWN IN THE GEOMETRY TABLES WITH A MINUS SIGN ARE TO THE LEFT OF THE CONSTRUCTION & R/W BASELINE.
2. UNLESS OTHERWISE NOTED, POINT GEOMETRY ADJACENT TO CURB AND CURB AND GUTTER IS GIVEN TO THE EDGE OF PAVEMENT.
3. RADII ARE GIVEN TO EDGE OF PAVEMENT.
4. UNLESS OTHERWISE NOTED, EDGE OF PAVEMENT ELEVATIONS AT CURB RETURNS ARE GIVEN AT 10 FOOT INTERVALS.
5. ALL WORK REQUIRED FOR CALCULATING AND STAKING OF GRADES SHALL BE PAID FOR UNDER ITEM 763501-CONSTRUCTION ENGINEERING.
6. PROPOSED CURBS OR PAVEMENT THAT TIE INTO EXISTING PAVEMENT SHALL MATCH ELEVATIONS.

Unofficial Website Copy

DELAWARE DEPARTMENT OF TRANSPORTATION	ADDENDUMS / REVISIONS	SCALE 0 30 60 90 FEET	SR1, SOUTH FREDERICA GRADE SEPARATED INTERSECTION	CONTRACT T200812202	BRIDGE NO. –	GRADES AND GEOMETRICS	SHEET NO. 78
				COUNTY KENT	DESIGNED BY: LCM		TOTAL SHTS. 296
					CHECKED BY: SFP		

10/23/2015
G:\PROJECTS\06535.00 (DelDOT Agmt. 1376 DOTS Open End)\06535.07 SR1, S. Frederica\CADD Files\XW\gg07sf.dgn
10:19:54 AM

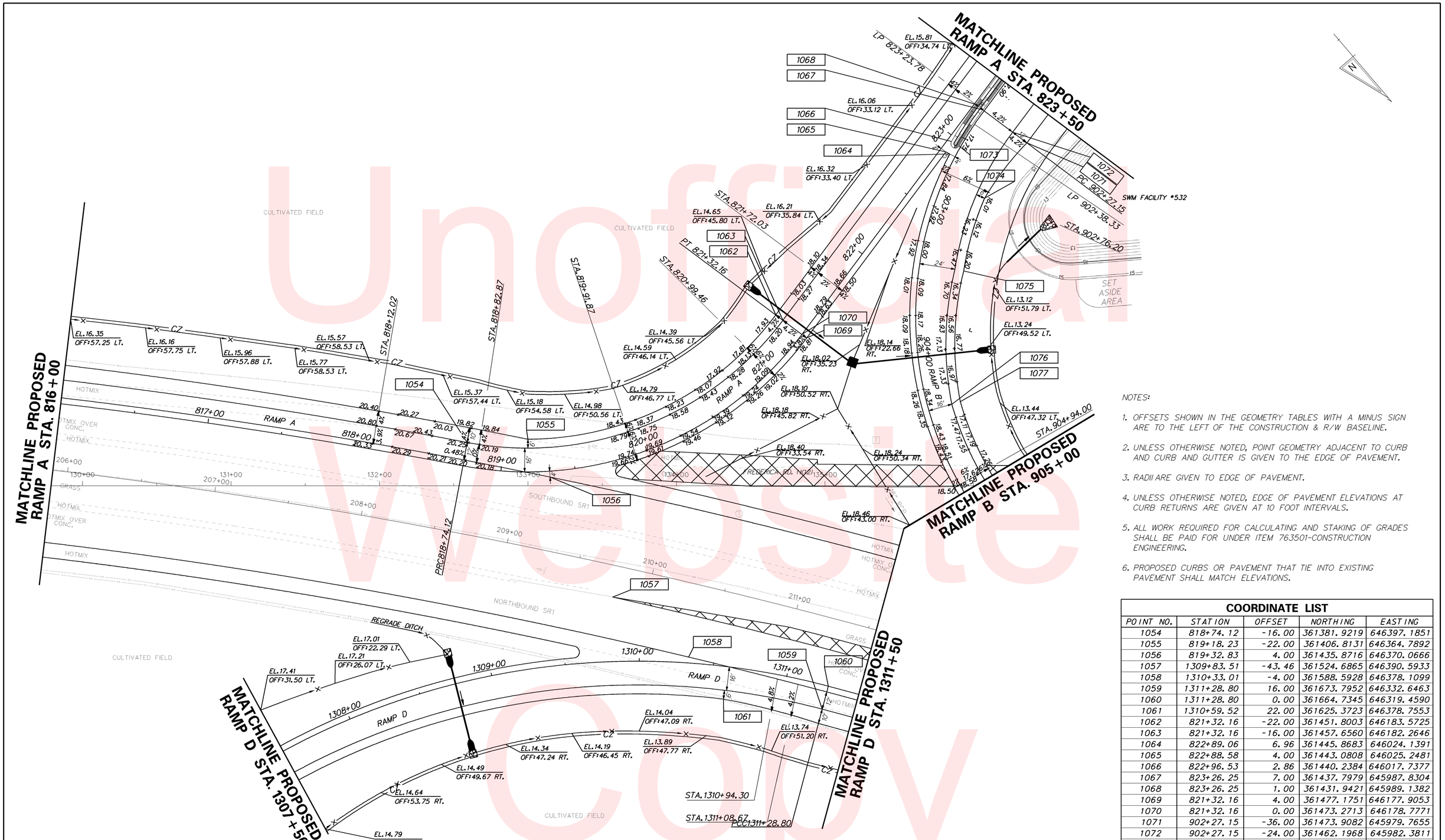

NOTES:

1. OFFSETS SHOWN IN THE GEOMETRY TABLES WITH A MINUS SIGN ARE TO THE LEFT OF THE CONSTRUCTION & R/W BASELINE.
2. UNLESS OTHERWISE NOTED, POINT GEOMETRY ADJACENT TO CURB AND CURB AND GUTTER IS GIVEN TO THE EDGE OF PAVEMENT.
3. RADII ARE GIVEN TO EDGE OF PAVEMENT.
4. UNLESS OTHERWISE NOTED, EDGE OF PAVEMENT ELEVATIONS AT CURB RETURNS ARE GIVEN AT 10 FOOT INTERVALS.
5. ALL WORK REQUIRED FOR CALCULATING AND STAKING OF GRADES SHALL BE PAID FOR UNDER ITEM 763501-CONSTRUCTION ENGINEERING.
6. PROPOSED CURBS OR PAVEMENT THAT TIE INTO EXISTING PAVEMENT SHALL MATCH ELEVATIONS.

COORDINATE LIST

POINT NO.	STATION	OFFSET	NORTHING	EASTING
1054	818+74.12	-16.00	361381.9219	646397.1851
1055	819+18.23	-22.00	361406.8131	646364.7892
1056	819+32.83	4.00	361435.8716	646370.0666
1057	1309+83.51	-43.46	361524.6865	646390.5933
1058	1310+33.01	-4.00	361588.5928	646378.1099
1059	1311+28.80	16.00	361673.7952	646332.6463
1060	1311+28.80	0.00	361664.7345	646319.4590
1061	1310+59.52	22.00	361625.3723	646378.7553
1062	821+32.16	-22.00	361451.8003	646183.5725
1063	821+32.16	-16.00	361457.6560	646182.2646
1064	822+89.06	6.96	361445.8683	646024.1391
1065	822+88.58	4.00	361443.0808	646025.2481
1066	822+96.53	2.86	361440.2384	646017.7377
1067	823+26.25	7.00	361437.7979	645987.8304
1068	823+26.25	1.00	361431.9421	645989.1382
1069	821+32.16	4.00	361477.1751	646177.9053
1070	821+32.16	0.00	361473.2713	646178.7771
1071	902+27.15	-36.00	361473.9082	645979.7655
1072	902+27.15	-24.00	361462.1968	645982.3811
1073	902+56.07	1.00	361445.8850	646015.7089
1074	902+81.62	-30.00	361483.7175	646025.6923
1075	903+40.37	-30.00	361511.7714	646068.2598
1076	904+40.00	-16.00	361574.6643	646132.7221
1077	904+40.00	-22.00	361577.1635	646127.2674

Unofficial Website Copy

DELAWARE DEPARTMENT OF TRANSPORTATION

ADDENDUMS / REVISIONS

SCALE 0 30 60 90 FEET

SR1, SOUTH FREDERICA GRADE SEPARATED INTERSECTION

CONTRACT	BRIDGE NO.	–
T200812202	DESIGNED BY: LCM	
COUNTY		
KENT	CHECKED BY: SFP	

GRADES AND GEOMETRICS

SHEET NO. 79 TOTAL SHTS. 296

5/23/2013
G:\PROJECTS\06535.00 (DelDOT Agmt. 1376 DOTS Open End)\06535.07 SR1, S. Frederica\CADD Files\XM\gg08sf.dgn
22-22115

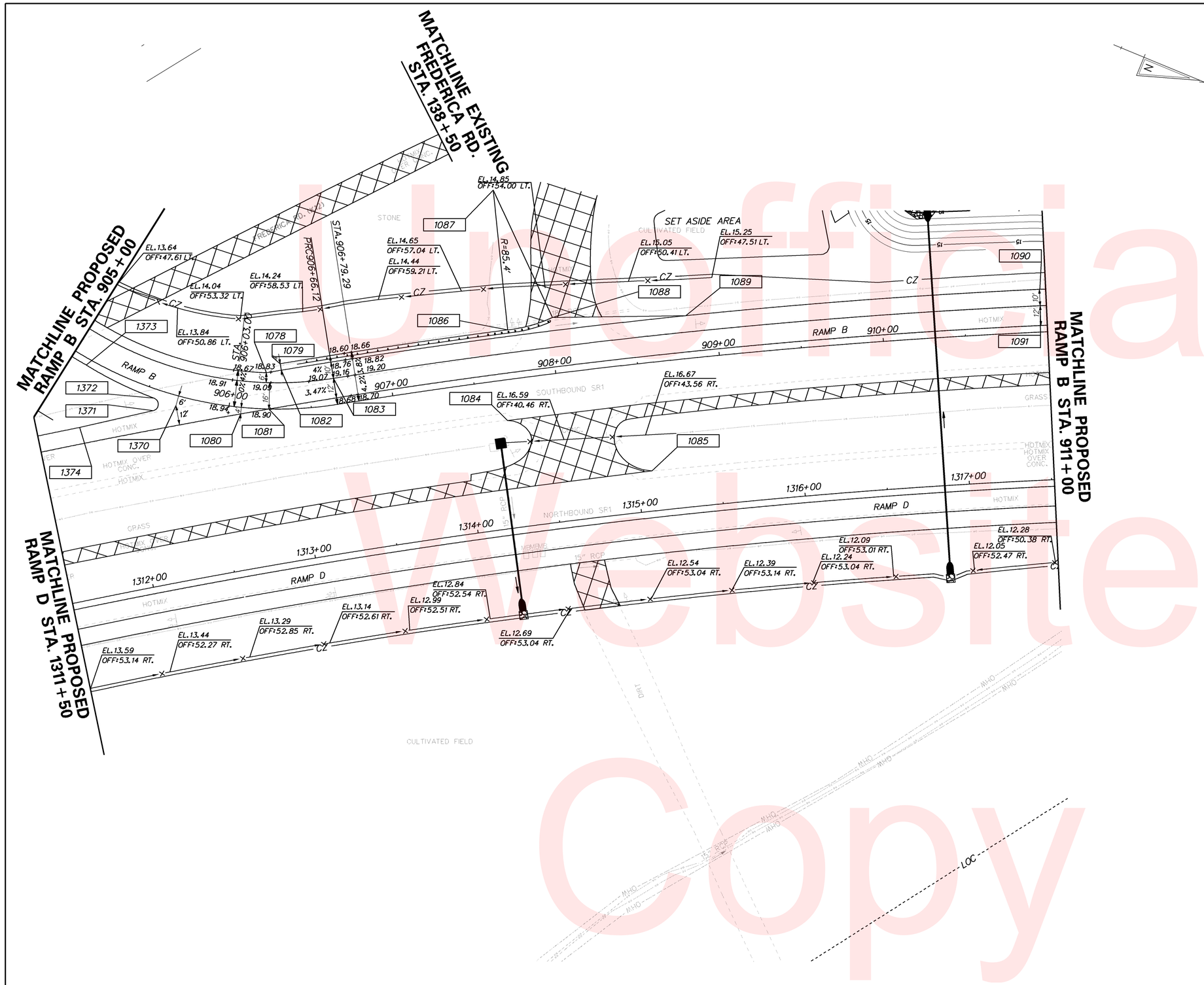

COORDINATE LIST

POINT NO.	STATION	OFFSET	NORTHING	EASTING
1078	906+22.01	-22.00	361737.5143	646132.9880
1079	906+31.33	-27.58	361743.1775	646124.7353
1080	906+07.41	4.00	361732.5635	646162.1039
1081	906+24.29	0.00	361747.3589	646152.7814
1082	906+32.02	-23.64	361745.2769	646128.1250
1083	906+66.12	-16.00	361776.4578	646120.6398
1084	907+67.24	24.63	361884.0439	646103.9720
1085	908+51.57	65.56	361976.7503	646098.8035
1086	907+74.46	-30.00	361863.0622	646053.0129
1087	907+76.71	-115.37	361822.5594	645977.8243
1088	908+02.15	-34.00	361885.3390	646035.7253
1089	908+82.00	-26.00	361959.6773	646003.8893
1090	910+96.12	-26.00	362152.5023	645906.9953
1091	910+96.12	-16.00	362156.5008	645916.1650
1370	905+68.65	6.00	361694.3074	646172.3439
1371	905+56.74	13.00	361682.6822	646180.5610
1372	905+54.89	-5.58	361680.2266	646173.2972
1373	905+09.95	-4.00	361634.4947	646170.3740
1374	905+23.04	-39.41	361645.2700	646207.0051

NOTES:

1. OFFSETS SHOWN IN THE GEOMETRY TABLES WITH A MINUS SIGN ARE TO THE LEFT OF THE CONSTRUCTION & R/W BASELINE.
2. UNLESS OTHERWISE NOTED, POINT GEOMETRY ADJACENT TO CURB AND CURB AND GUTTER IS GIVEN TO THE EDGE OF PAVEMENT.
3. RADII ARE GIVEN TO EDGE OF PAVEMENT.
4. UNLESS OTHERWISE NOTED, EDGE OF PAVEMENT ELEVATIONS AT CURB RETURNS ARE GIVEN AT 10 FOOT INTERVALS.
5. ALL WORK REQUIRED FOR CALCULATING AND STAKING OF GRADES SHALL BE PAID FOR UNDER ITEM 763501-CONSTRUCTION ENGINEERING.
6. PROPOSED CURBS OR PAVEMENT THAT TIE INTO EXISTING PAVEMENT SHALL MATCH ELEVATIONS.

Unofficial Website Copy

DELAWARE DEPARTMENT OF TRANSPORTATION

ADDENDUMS / REVISIONS

SCALE 0 30 60 90 FEET

SR1, SOUTH FREDERICA GRADE SEPARATED INTERSECTION

CONTRACT	BRIDGE NO.	–
T200812202	DESIGNED BY: LCM	
COUNTY		
KENT	CHECKED BY: SFP	

GRADES AND GEOMETRICS

SHEET NO. 80

TOTAL SHTS. 296

7/19/2013
G:\PROJECTS\06535.00 (DelDOT Agmt. 1376 DOTS Open End)\06535.07 SR1, S. Frederica\CADD Files\XM\gg09sf.dgn
07:53:35

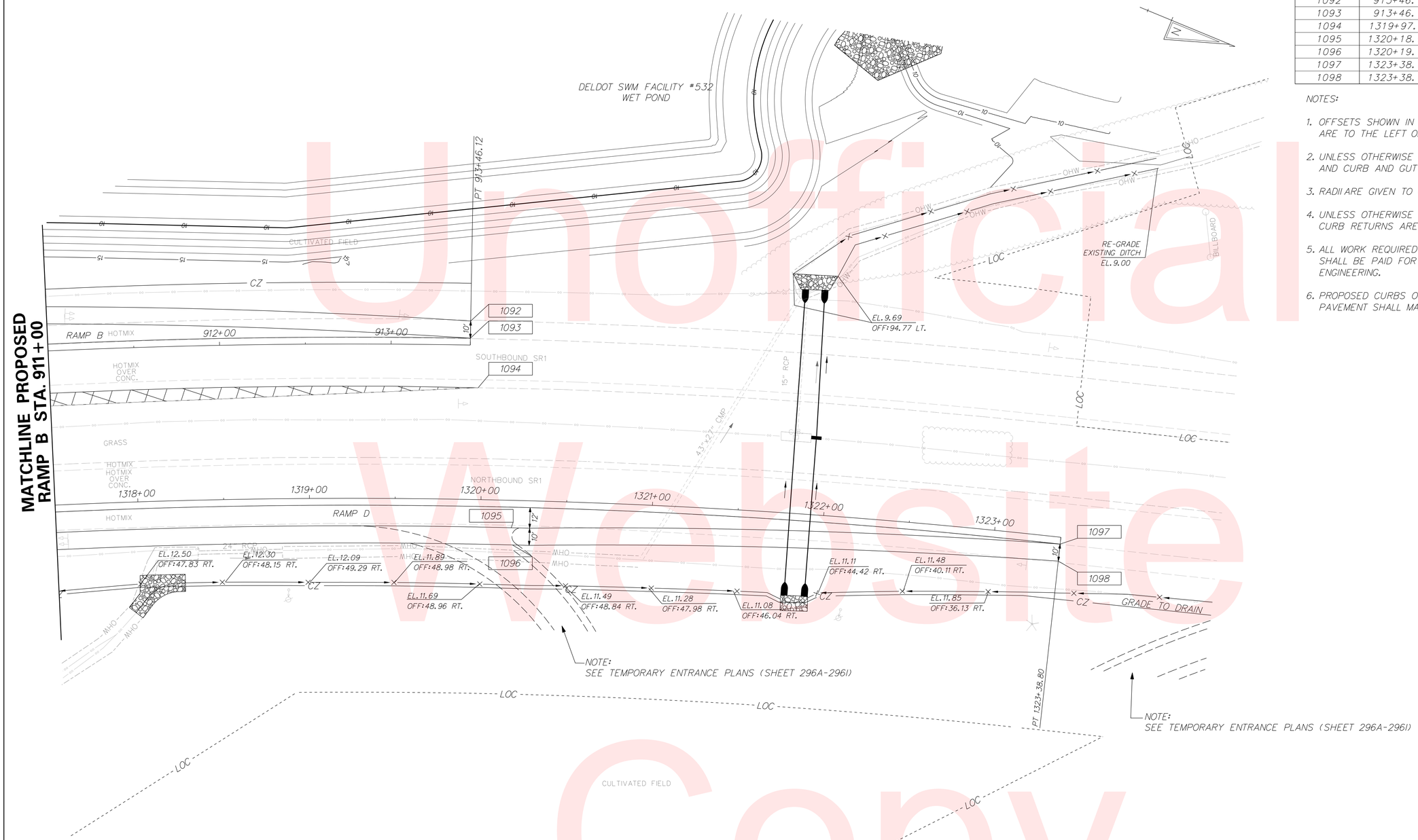

COORDINATE LIST

POINT NO.	STATION	OFFSET	NORTHING	EASTING
1092	913+46.12	-14.00	362387.8493	645818.9759
1093	913+46.12	4.00	362391.5003	645828.2980
1094	1319+97.11	-65.21	362406.7067	645853.2686
1095	1320+18.00	16.00	362455.6209	645921.4154
1096	1320+19.50	26.00	362460.5947	645930.2181
1097	1323+38.80	4.00	362755.0258	645808.2364
1098	1323+38.80	14.00	362757.7995	645817.8441

NOTES:

1. OFFSETS SHOWN IN THE GEOMETRY TABLES WITH A MINUS SIGN ARE TO THE LEFT OF THE CONSTRUCTION & R/W BASELINE.
2. UNLESS OTHERWISE NOTED, POINT GEOMETRY ADJACENT TO CURB AND CURB AND GUTTER IS GIVEN TO THE EDGE OF PAVEMENT.
3. RADII ARE GIVEN TO EDGE OF PAVEMENT.
4. UNLESS OTHERWISE NOTED, EDGE OF PAVEMENT ELEVATIONS AT CURB RETURNS ARE GIVEN AT 10 FOOT INTERVALS.
5. ALL WORK REQUIRED FOR CALCULATING AND STAKING OF GRADES SHALL BE PAID FOR UNDER ITEM 763501-CONSTRUCTION ENGINEERING.
6. PROPOSED CURBS OR PAVEMENT THAT TIE INTO EXISTING PAVEMENT SHALL MATCH ELEVATIONS.

Unofficial Website Copy

9/11/2015
G:\PROJECTS\06535.00 (DelDOT Agmt. 1376 DOTS Open End)\06535.07 SR1, S. Frederica\CADD Files\XM\gg10sf.dgn
11:50:29 AM

DELAWARE DEPARTMENT OF TRANSPORTATION	ADDENDUMS / REVISIONS	SCALE 0 30 60 90 FEET	SR1, SOUTH FREDERICA GRADE SEPARATED INTERSECTION	CONTRACT T200812202	BRIDGE NO. –	GRADES AND GEOMETRICS	SHEET NO. 81
				COUNTY KENT	DESIGNED BY: LCM		TOTAL SHTS. 296
					CHECKED BY: SFP		

COORDINATE LIST

POINT NO.	STATION	OFFSET	NORTHING	EASTING
1107	600+50.00	-12.00	360359.4944	649257.7778
1108	600+50.00	12.00	360380.7062	649246.5503
1109	602+05.14	12.00	360308.1271	649109.4290
1110	602+05.14	0.00	360297.5212	649115.0428
1111	602+05.14	-12.00	360286.9153	649120.6566
1112	603+00.00	14.00	360267.9296	649024.2131
1113	603+50.00	20.00	360253.0080	648976.5803
1114	603+00.00	-14.00	360242.5627	649036.0673
1115	603+50.00	-20.00	360216.3387	648992.5604
1116	603+78.05	20.00	360242.1080	648951.0584
1117	603+78.05	12.00	360234.7280	648954.1464
1118	603+78.05	0.00	360223.6580	648958.7784
1119	603+78.05	-12.00	360212.5880	648963.4104
1120	603+78.05	-20.00	360205.2080	648966.4984

NOTES:

1. OFFSETS SHOWN IN THE GEOMETRY TABLES WITH A MINUS SIGN ARE TO THE LEFT OF THE CONSTRUCTION & R/W BASELINE.
2. UNLESS OTHERWISE NOTED, POINT GEOMETRY ADJACENT TO CURB AND CURB AND GUTTER IS GIVEN TO THE EDGE OF PAVEMENT.
3. RADII ARE GIVEN TO EDGE OF PAVEMENT.
4. UNLESS OTHERWISE NOTED, EDGE OF PAVEMENT ELEVATIONS AT CURB RETURNS ARE GIVEN AT 10 FOOT INTERVALS.
5. ALL WORK REQUIRED FOR CALCULATING AND STAKING OF GRADES SHALL BE PAID FOR UNDER ITEM 763501-CONSTRUCTION ENGINEERING.
6. PROPOSED CURBS OR PAVEMENT THAT TIE INTO EXISTING PAVEMENT SHALL MATCH ELEVATIONS.

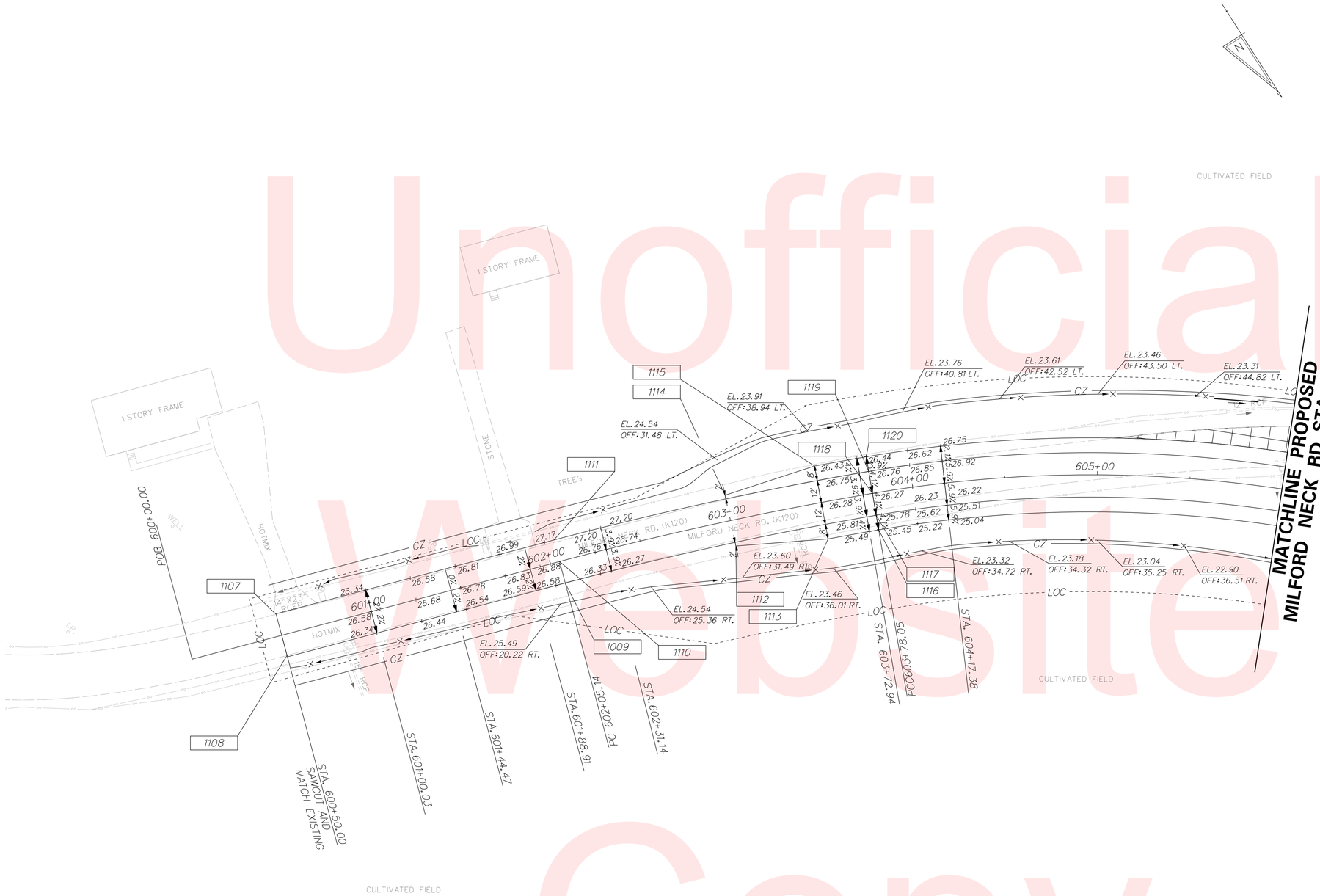

Unofficial Website Copy

DELAWARE DEPARTMENT OF TRANSPORTATION	ADDENDUMS / REVISIONS	SCALE 0 30 60 90 FEET	SR1, SOUTH FREDERICA GRADE SEPARATED INTERSECTION	CONTRACT T200812202	BRIDGE NO. –	GRADES AND GEOMETRICS	SHEET NO. 82
				COUNTY KENT	DESIGNED BY: LCM		TOTAL SHTS. 296
					CHECKED BY: SFP		

10/23/2015
G:\PROJECTS\06535.00 (DelDOT Agmt. 1376 DOTS Open End)\06535.07 SR1, S. Frederica\CADD Files\XM\gg15s1.dgn
10:30:47 AM

COORDINATE LIST

POINT NO.	STATION	OFFSET	NORTHING	EASTING
1121	1400+08.49	61.54	360280.0375	648038.6062
1122	1400+10.49	61.54	360281.9635	648039.1451
1123	407+95.29	17.27	360139.1495	648457.3060
1124	407+94.09	-8.18	360162.9059	648462.6724
1127	1200+24.03	68.77	360241.4046	648427.7847
1128	1200+77.04	62.00	360287.5812	648446.9606
1129	1200+77.04	12.00	360313.9640	648404.4877
1130	1203+00.00	12.00	360490.6001	648537.7346
1131	1203+00.00	10.71	360491.4107	648536.7351
1132	1203+00.00	-12.00	360505.7191	648519.0955
1133	1203+00.00	-9.85	360504.3650	648520.7649
1134	1200+69.62	-12.00	360320.2337	648380.1617
1135	1200+69.62	-62.00	360346.3006	648337.4942
1136	1200+22.71	-65.31	360304.7842	648309.6304

COORDINATE LIST

POINT NO.	STATION	OFFSET	NORTHING	EASTING
1141	612+26.40	-20.00	360375.9185	648164.2982
1142	612+38.96	-12.00	360390.7819	648161.4516
1143	612+38.96	-20.00	360385.4041	648155.5288
1144	612+38.96	0.00	360398.8486	648170.3357
1145	612+27.75	20.00	360404.2915	648192.5258
1146	612+38.96	12.00	360406.9153	648179.2199
1147	612+38.96	20.00	360412.2931	648185.1426
2000	609+10.00	-59.02	360160.0210	648418.6094
2001	609+24.51	51.03	360267.7892	648445.2299

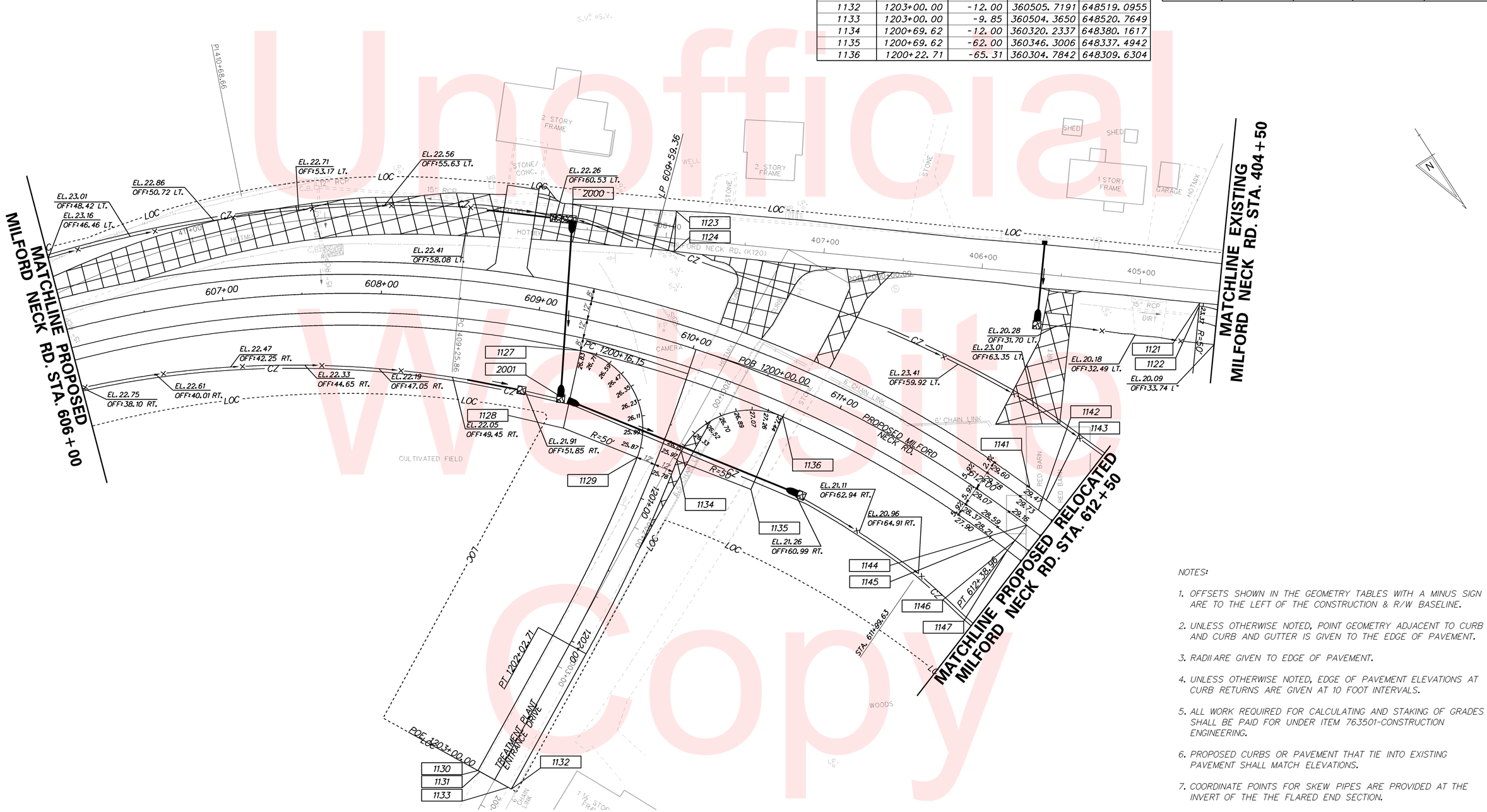

NOTES:

1. OFFSETS SHOWN IN THE GEOMETRY TABLES WITH A MINUS SIGN ARE TO THE LEFT OF THE CONSTRUCTION & R/W BASELINE.
2. UNLESS OTHERWISE NOTED, POINT GEOMETRY ADJACENT TO CURB AND CURB AND GUTTER IS GIVEN TO THE EDGE OF PAVEMENT.
3. RADII ARE GIVEN TO EDGE OF PAVEMENT.
4. UNLESS OTHERWISE NOTED, EDGE OF PAVEMENT ELEVATIONS AT CURB RETURNS ARE GIVEN AT 10 FOOT INTERVALS.
5. ALL WORK REQUIRED FOR CALCULATING AND STAKING OF GRADES SHALL BE PAID FOR UNDER ITEM 763501-CONSTRUCTION ENGINEERING.
6. PROPOSED CURBS OR PAVEMENT THAT TIE INTO EXISTING PAVEMENT SHALL MATCH ELEVATIONS.
7. COORDINATE POINTS FOR SKEW PIPES ARE PROVIDED AT THE INVERT OF THE THE FLARED END SECTION.

Unofficial Web Copy

DELAWARE DEPARTMENT OF TRANSPORTATION

ADDENDUMS / REVISIONS

SCALE 0 30 60 90 FEET

SR1, SOUTH FREDERICA GRADE SEPARATED INTERSECTION

CONTRACT	BRIDGE NO.	-
T200812202	DESIGNED BY: LCM	
COUNTY		
KENT	CHECKED BY: SFP	

GRADES AND GEOMETRICS

SHEET NO. 83 TOTAL SHTS. 296

5/28/2013
G:\PROJECTS\06535.00 (DelDOT Agmt. 1376 DOTS Open End)\06535.07 SR1, S. Frederica\CADD Files\XM\qg16sf.dgn
14:09:43

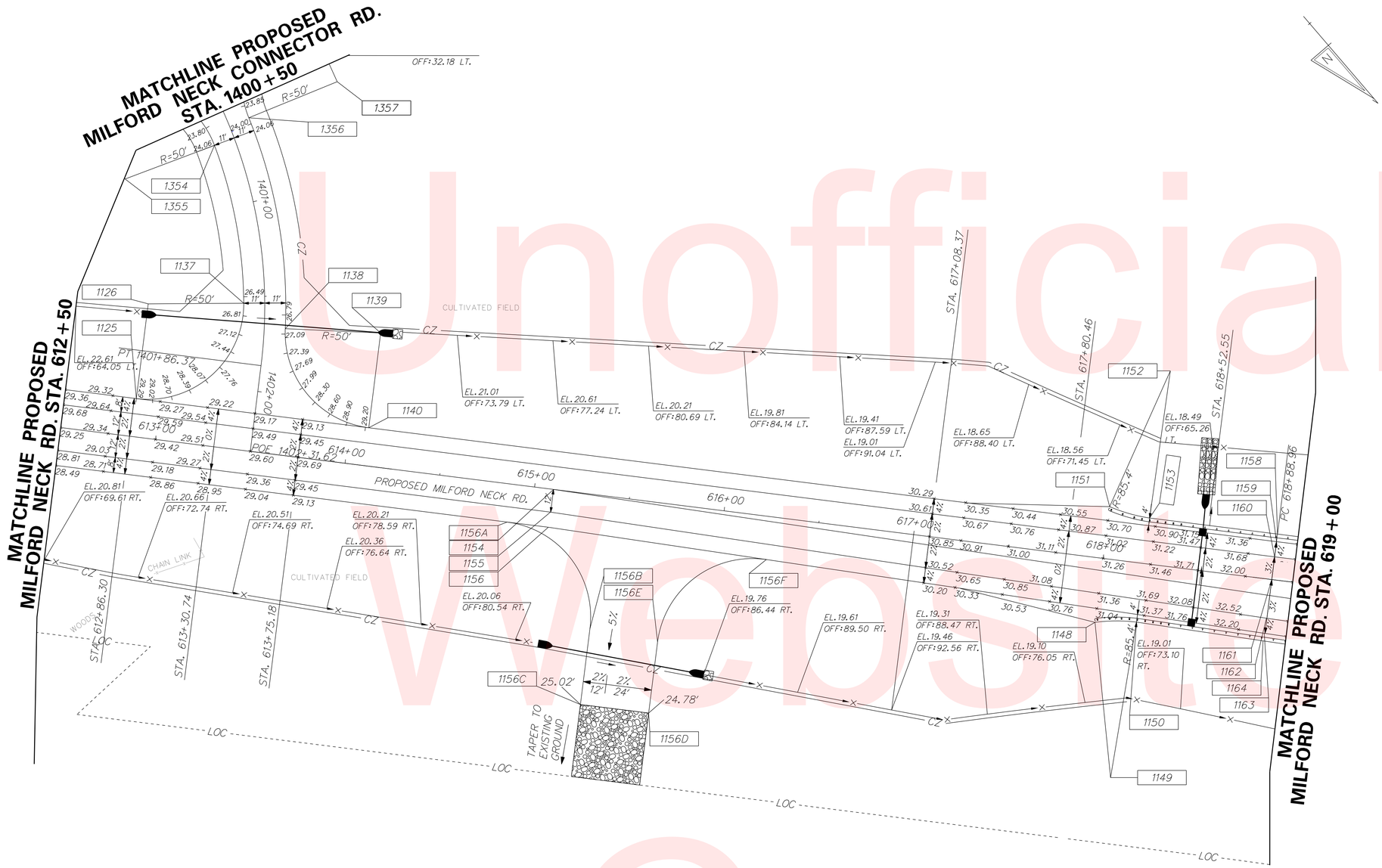

COORDINATE LIST

POINT NO.	STATION	OFFSET	NORTHING	EASTING
1125	609+85.15	-50.00	360201.0689	648348.2482
1126	609+85.15	-20.00	360227.8024	648361.8614
1137	610+11.05	-38.08	360224.5330	648329.5551
1138	610+43.83	-46.66	360234.7552	648295.2365
1139	610+7172	-50.00	360248.1594	648268.3975
1140	610+71.72	-20.00	360273.0093	648285.2047
1148	617+99.93	33.77	360836.8578	647818.2400
1149	618+18.14	113.43	360903.8925	647864.9686
1150	618+21.50	30.93	360850.9192	647801.6357
1151	618+00.00	-27.32	360795.8477	647772.9644
1152	618+22.65	-101.81	360762.5418	647702.5831
1153	618+21.50	-24.00	360813.9990	647760.9663
1154	615+10.00	0.00	360599.5120	647988.1355
1155	615+09.87	12.00	360607.4800	647997.1093
1156	615+09.78	20.00	360612.7920	648003.0948
1156A	614+88.00	20.00	360596.6689	648017.7314
1156B	615+38.00	70.00	360667.2975	648021.1374
1156C	615+38.00	110.00	360694.1865	648050.7513
1156D	615+74.00	110.00	360720.8390	648026.5511
1156E	615+74.00	72.55	360695.6645	647998.8256
1156F	616+25.11	22.56	360699.9012	647927.4594
1158	618+88.96	-24.00	360863.9385	647715.6218
1159	618+88.96	-20.00	360866.6274	647718.5832
1160	618+88.96	-12.00	360872.0052	647724.5060
1161	618+88.96	0.00	360880.0719	647733.3901
1162	618+88.69	20.42	360893.6018	647748.6846
1163	618+88.52	28.42	360898.8467	647754.7254
1164	618+88.43	32.42	360901.4710	647757.7441
1354	1400+65.13	11.00	360347.1936	648005.6255
1355	1400+65.13	61.00	360330.1141	648052.6180
1356	1400+58.26	-11.00	360347.9348	647982.5918
1357	1400+58.26	-61.00	360363.7167	647935.1478

NOTES:

1. OFFSETS SHOWN IN THE GEOMETRY TABLES WITH A MINUS SIGN ARE TO THE LEFT OF THE CONSTRUCTION & R/W BASELINE.
2. UNLESS OTHERWISE NOTED, POINT GEOMETRY ADJACENT TO CURB AND CURB AND GUTTER IS GIVEN TO THE EDGE OF PAVEMENT.
3. RADII ARE GIVEN TO EDGE OF PAVEMENT.
4. UNLESS OTHERWISE NOTED, EDGE OF PAVEMENT ELEVATIONS AT CURB RETURNS ARE GIVEN AT 10 FOOT INTERVALS.
5. ALL WORK REQUIRED FOR CALCULATING AND STAKING OF GRADES SHALL BE PAID FOR UNDER ITEM 763501-CONSTRUCTION ENGINEERING.
6. PROPOSED CURBS OR PAVEMENT THAT TIE INTO EXISTING PAVEMENT SHALL MATCH ELEVATIONS.

Unofficial Website Copy

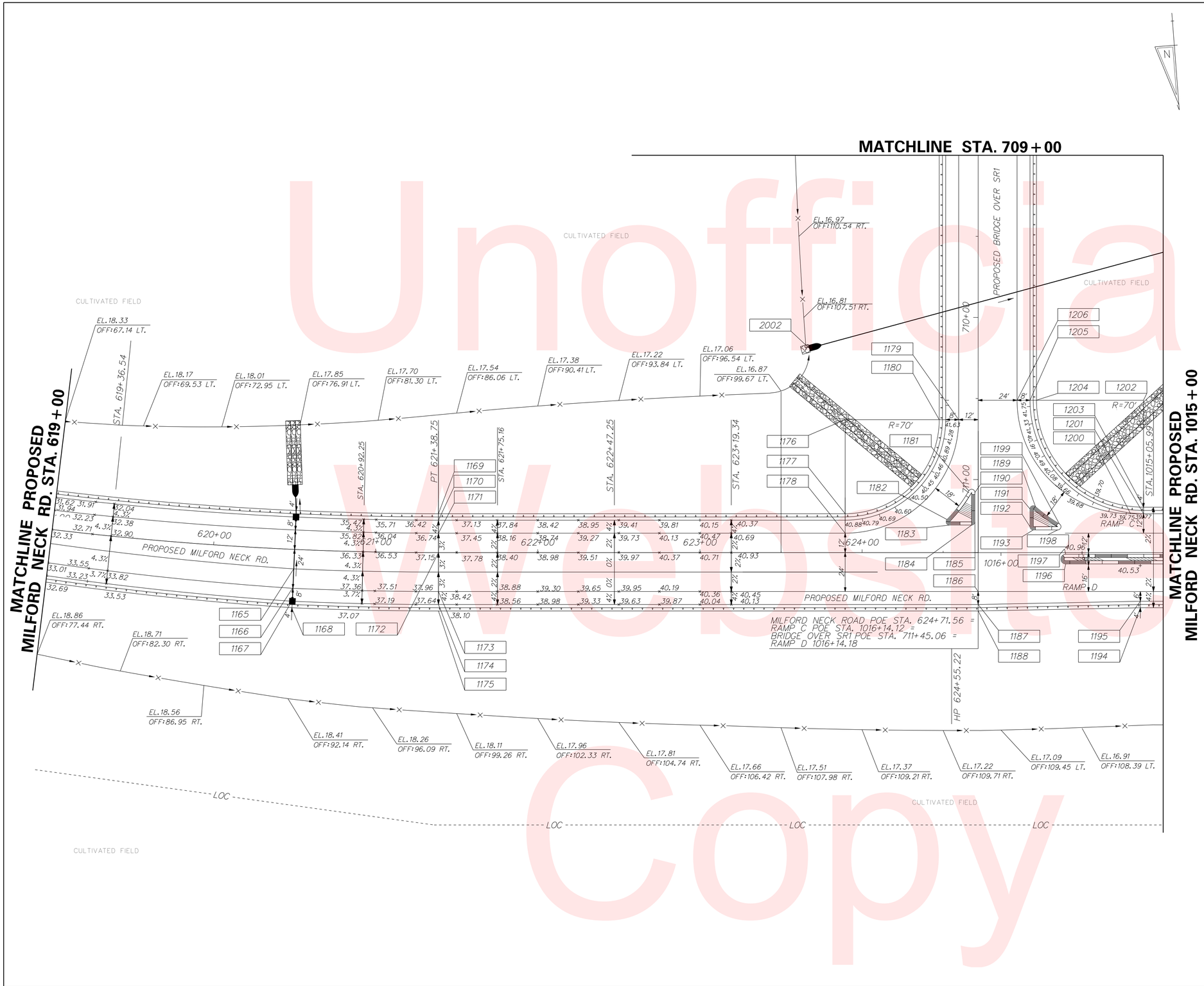

COORDINATE LIST

POINT NO.	STATION	OFFSET	NORTHING	EASTING
1165	620+50.00	12.00	361003.5690	647628.6594
1166	620+49.74	24.00	361012.1425	647637.0597
1167	620+49.74	32.00	361017.9785	647642.5315
1168	620+49.74	36.00	361020.8965	647645.2674
1169	621+38.75	-24.00	361035.8288	647538.7577
1170	621+38.75	-20.00	361038.8656	647541.3610
1171	621+38.75	-12.00	361044.9393	647546.5678
1172	621+38.75	0.00	361054.0499	647554.3778
1173	621+38.75	24.00	361072.2711	647569.9980
1174	621+38.75	32.00	361078.3448	647575.2047
1175	621+38.75	36.00	361081.3817	647577.8081
1176	710+63.06	82.00	361155.0319	647310.5896
1177	711+21.06	82.00	361199.0664	647348.3383
1178	711+33.06	82.00	361208.1770	647356.1484
1179	710+63.06	12.00	361200.5907	647257.4445
1180	710+63.06	24.00	361192.7806	647266.5551
1181	711+06.96	5.73	361238.0004	647281.2600
1182	711+24.66	19.16	361242.7013	647302.9688
1183	711+28.06	17.73	361246.2122	647304.0973
1184	711+28.06	4.00	361255.1464	647293.6754
1185	711+26.06	2.00	361254.9297	647290.8553
1186	624+71.56	24.00	361317.3230	647288.8776
1187	624+71.56	32.00	361294.9513	647322.5297
1188	624+71.60	36.00	361298.0142	647325.1027
1189	711+16.65	-35.33	361272.0845	647256.3877
1190	711+07.96	2.00	361241.1878	647279.0750
1191	711+18.14	-32.00	361271.0468	647259.8887
1192	711+29.06	-32.00	361279.3358	647266.9945
1193	711+31.06	-34.00	361282.1560	647266.7777
1194	1015+14.08	-34.00	361361.5797	647247.8795
1195	1015+14.12	-30.00	361358.5168	647245.3065
1196	1015+60.09	-7.00	361311.1373	647265.2366
1197	1015+60.09	-1.00	361306.5820	647261.3315
1198	711+31.06	-49.10	361291.9837	647255.3135
1199	711+27.33	-50.10	361289.7987	647252.1262
1200	711+21.06	-94.00	361313.6142	647214.7164
1201	711+21.06	-102.00	361318.8209	647208.6427
1202	710+51.06	-102.00	361265.6758	647163.0839
1203	711+17.06	-102.00	361315.7840	647206.0394
1204	710+51.06	-36.00	361222.7204	647213.1921
1205	710+51.06	-32.00	361220.1171	647216.2290
1206	710+51.06	-24.00	361214.9103	647222.3027
2002	710+19.00	-104.12	361107.1838	647298.7070

NOTES:

1. OFFSETS SHOWN IN THE GEOMETRY TABLES WITH A MINUS SIGN ARE TO THE LEFT OF THE CONSTRUCTION & R/W BASELINE.
2. UNLESS OTHERWISE NOTED, POINT GEOMETRY ADJACENT TO CURB AND CURB AND GUTTER IS GIVEN TO THE EDGE OF PAVEMENT.
3. RADII ARE GIVEN TO EDGE OF PAVEMENT.
4. UNLESS OTHERWISE NOTED, EDGE OF PAVEMENT ELEVATIONS AT CURB RETURNS ARE GIVEN AT 10 FOOT INTERVALS.
5. ALL WORK REQUIRED FOR CALCULATING AND STAKING OF GRADES SHALL BE PAID FOR UNDER ITEM 763501-CONSTRUCTION ENGINEERING.
6. PROPOSED CURBS OR PAVEMENT THAT TIE INTO EXISTING PAVEMENT SHALL MATCH ELEVATIONS.
7. COORDINATE POINTS FOR SKEW PIPES ARE PROVIDED AT THE INVERT OF THE THE FLARED END SECTION.

Unofficial Web Copy

DELAWARE DEPARTMENT OF TRANSPORTATION

ADDENDUMS / REVISIONS

SCALE 0 30 60 90 FEET

SR1, SOUTH FREDERICA GRADE SEPARATED INTERSECTION

CONTRACT	BRIDGE NO.	-
T200812202	DESIGNED BY: LCM	
COUNTY		
KENT	CHECKED BY: SFP	

GRADES AND GEOMETRICS

SHEET NO. 85 / TOTAL SHTS. 296

10/23/2015
G:\PROJECTS\06535.00 (DelDOT Agmt. 1376 DOTS Open End)\06535.07 SR1, S. Frederica\CADD Files\XM\gg18sf.dgn
10:34:49 AM

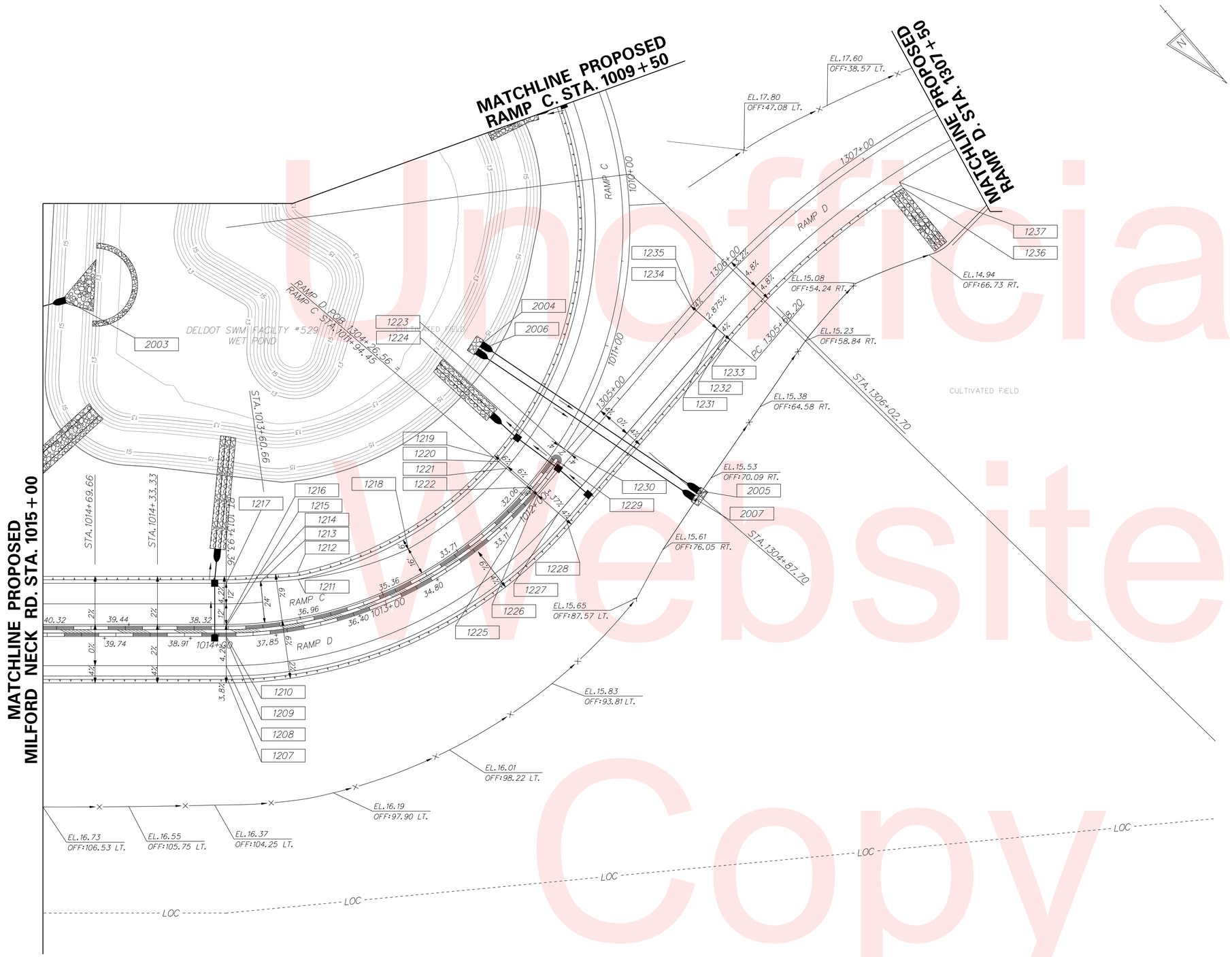

COORDINATE LIST

POINT NO.	STATION	OFFSET	NORTHING	EASTING
1207	1013+93.36	-30.00	361437.1097	647153.6267
1208	1013+93.36	-24.00	361432.5544	647149.7216
1209	1013+93.36	-8.00	361420.4069	647139.3082
1210	1013+93.36	-7.00	361419.6477	647138.6574
1211	1013+46.60	22.00	361421.7391	647085.1024
1212	1013+46.39	26.00	361418.3295	647083.0027
1213	1013+70.90	24.00	361408.4514	647102.5844
1214	1013+70.69	28.00	361405.2803	647100.1394
1215	1013+93.36	-1.00	361415.0924	647134.7523
1216	1013+93.36	0.00	361414.3332	647134.1015
1217	1013+93.36	24.00	361396.1123	647118.4811
1218	1012+74.24	16.00	361449.9616	647025.0006
1219	1011+94.45	26.00	361441.5779	646952.6323
1220	1011+94.45	22.00	361445.5315	646952.0250
1221	1011+94.44	16.00	361451.4617	646951.1126
1222	1011+94.45	-1.00	361468.2651	646948.5328
1223	1011+64.41	-4.00	361464.6444	646918.2664
1224	1011+72.29	-1.00	361463.8382	646926.7359
1225	1304+26.56	-1.00	361474.1953	646947.6219
1226	1304+26.56	0.00	361475.1837	646947.4701
1227	1304+26.56	16.00	361490.9982	646945.0408
1228	1304+26.56	22.00	361496.9286	646944.1298
1229	1304+49.47	-2.11	361469.6244	646925.1513
1230	1304+57.29	-4.00	361466.5652	646917.7090
1231	1305+68.20	16.00	361469.4935	646805.0460
1232	1305+68.20	22.00	361475.4239	646804.1350
1233	1305+68.20	26.00	361479.3775	646803.5277
1234	1305+68.20	-4.00	361449.7253	646808.0826
1235	1305+68.20	0.00	361453.6789	646807.4753
1236	1307+10.00	26.00	361477.9550	646669.5571
1237	1307+10.00	22.00	361473.9894	646669.0339
2003	709+56.22	127.28	361210.1238	647082.1689
2004	1011+29.40	67.60	361387.2016	646915.0481
2005	1304+89.49	69.26	361534.0826	646874.7537
2006	1011+36.42	68.30	361388.5830	646919.8539
2007	1304+84.53	69.83	361535.4054	646879.5756

NOTES:

1. OFFSETS SHOWN IN THE GEOMETRY TABLES WITH A MINUS SIGN ARE TO THE LEFT OF THE CONSTRUCTION & R/W BASELINE.
2. UNLESS OTHERWISE NOTED, POINT GEOMETRY ADJACENT TO CURB AND CURB AND GUTTER IS GIVEN TO THE EDGE OF PAVEMENT.
3. RADII ARE GIVEN TO EDGE OF PAVEMENT.
4. UNLESS OTHERWISE NOTED, EDGE OF PAVEMENT ELEVATIONS AT CURB RETURNS ARE GIVEN AT 10 FOOT INTERVALS.
5. ALL WORK REQUIRED FOR CALCULATING AND STAKING OF GRADES SHALL BE PAID FOR UNDER ITEM 763501-CONSTRUCTION ENGINEERING.
6. PROPOSED CURBS OR PAVEMENT THAT TIE INTO EXISTING PAVEMENT SHALL MATCH ELEVATIONS.
7. COORDINATE POINTS FOR SKEW PIPES ARE PROVIDED AT THE INVERT OF THE THE FLARED END SECTION.

Unofficial Website Copy

10/23/2015
G:\PROJECTS\06535.00 (DelDOT Agmt. 1376 DOTS Open End)\06535.07 SR1, S. Frederica\CADD Files\XM\gg19sf.dgn
10:56:18 AM

DELAWARE DEPARTMENT OF TRANSPORTATION	ADDENDUMS / REVISIONS	SCALE 0 30 60 90 FEET	SR1, SOUTH FREDERICA GRADE SEPARATED INTERSECTION	CONTRACT T200812202	BRIDGE NO. –	GRADES AND GEOMETRICS	SHEET NO. 86
				COUNTY KENT	DESIGNED BY: LCM		TOTAL SHTS. 296
					CHECKED BY: SFP		

COORDINATE LIST				
POINT NO.	STATION	OFFSET	NORTHING	EASTING
1238	507+00.00	14.00	358625.3132	647014.9903
1239	507+00.00	-14.00	358638.1133	646990.0873
1240	507+37.47	20.00	358655.8958	647037.4559
1241	507+37.47	-20.00	358674.1791	647001.8789

NOTES:

1. OFFSETS SHOWN IN THE GEOMETRY TABLES WITH A MINUS SIGN ARE TO THE LEFT OF THE CONSTRUCTION & R/W BASELINE.
2. UNLESS OTHERWISE NOTED, POINT GEOMETRY ADJACENT TO CURB AND CURB AND GUTTER IS GIVEN TO THE EDGE OF PAVEMENT.
3. RADII ARE GIVEN TO EDGE OF PAVEMENT.
4. UNLESS OTHERWISE NOTED, EDGE OF PAVEMENT ELEVATIONS AT CURB RETURNS ARE GIVEN AT 10 FOOT INTERVALS.
5. ALL WORK REQUIRED FOR CALCULATING AND STAKING OF GRADES SHALL BE PAID FOR UNDER ITEM 763501-CONSTRUCTION ENGINEERING.
6. PROPOSED CURBS OR PAVEMENT THAT TIE INTO EXISTING PAVEMENT SHALL MATCH ELEVATIONS.

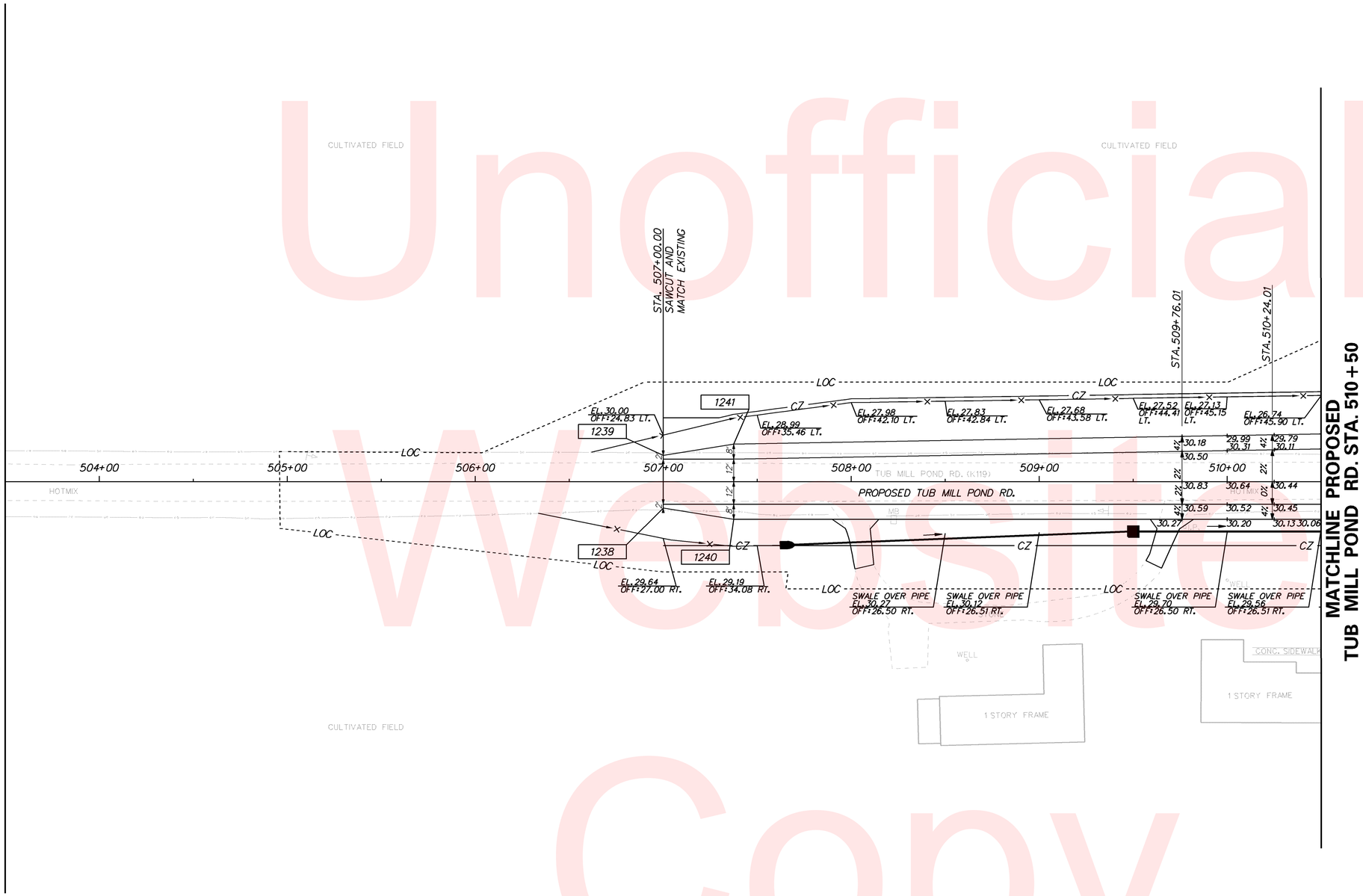

Unofficial Website Copy

DELAWARE
DEPARTMENT OF TRANSPORTATION

ADDENDUMS / REVISIONS

SCALE
0 30 60 90
FEET

SR1, SOUTH FREDERICA
GRADE SEPARATED INTERSECTION

CONTRACT	BRIDGE NO.	–
T200812202	DESIGNED BY: LCM	
COUNTY		
KENT	CHECKED BY: SFP	

GRADES AND GEOMETRICS

SHEET NO.
87
TOTAL SHTS.
296

8/6/2013
G:\PROJECTS\06535.00 (DelDOT Agmt. 1376 DOTS Open End)\06535.07 SR1, S. Frederica\CADD Files\XM\gg20sf.dgn
0902231

COORDINATE LIST

POINT NO.	STATION	OFFSET	NORTHING	EASTING
1242	511+24.81	20.00	359000.3956	647214.5283
1243	511+24.81	12.00	359004.0528	647207.4132
1244	511+24.81	0.00	359009.5368	647196.7405
1245	511+25.70	-18.71	359018.8601	647180.4930
1246	511+25.56	-26.71	359022.3937	647173.3157
1247	514+65.27	12.00	359334.5509	647299.0334
1248	515+26.32	20.00	359396.5025	647308.8550

NOTES:

1. OFFSETS SHOWN IN THE GEOMETRY TABLES WITH A MINUS SIGN ARE TO THE LEFT OF THE CONSTRUCTION & R/W BASELINE.
2. UNLESS OTHERWISE NOTED, POINT GEOMETRY ADJACENT TO CURB AND CURB AND GUTTER IS GIVEN TO THE EDGE OF PAVEMENT.
3. RADII ARE GIVEN TO EDGE OF PAVEMENT.
4. UNLESS OTHERWISE NOTED, EDGE OF PAVEMENT ELEVATIONS AT CURB RETURNS ARE GIVEN AT 10 FOOT INTERVALS.
5. ALL WORK REQUIRED FOR CALCULATING AND STAKING OF GRADES SHALL BE PAID FOR UNDER ITEM 763501-CONSTRUCTION ENGINEERING.
6. PROPOSED CURBS OR PAVEMENT THAT TIE INTO EXISTING PAVEMENT SHALL MATCH ELEVATIONS.

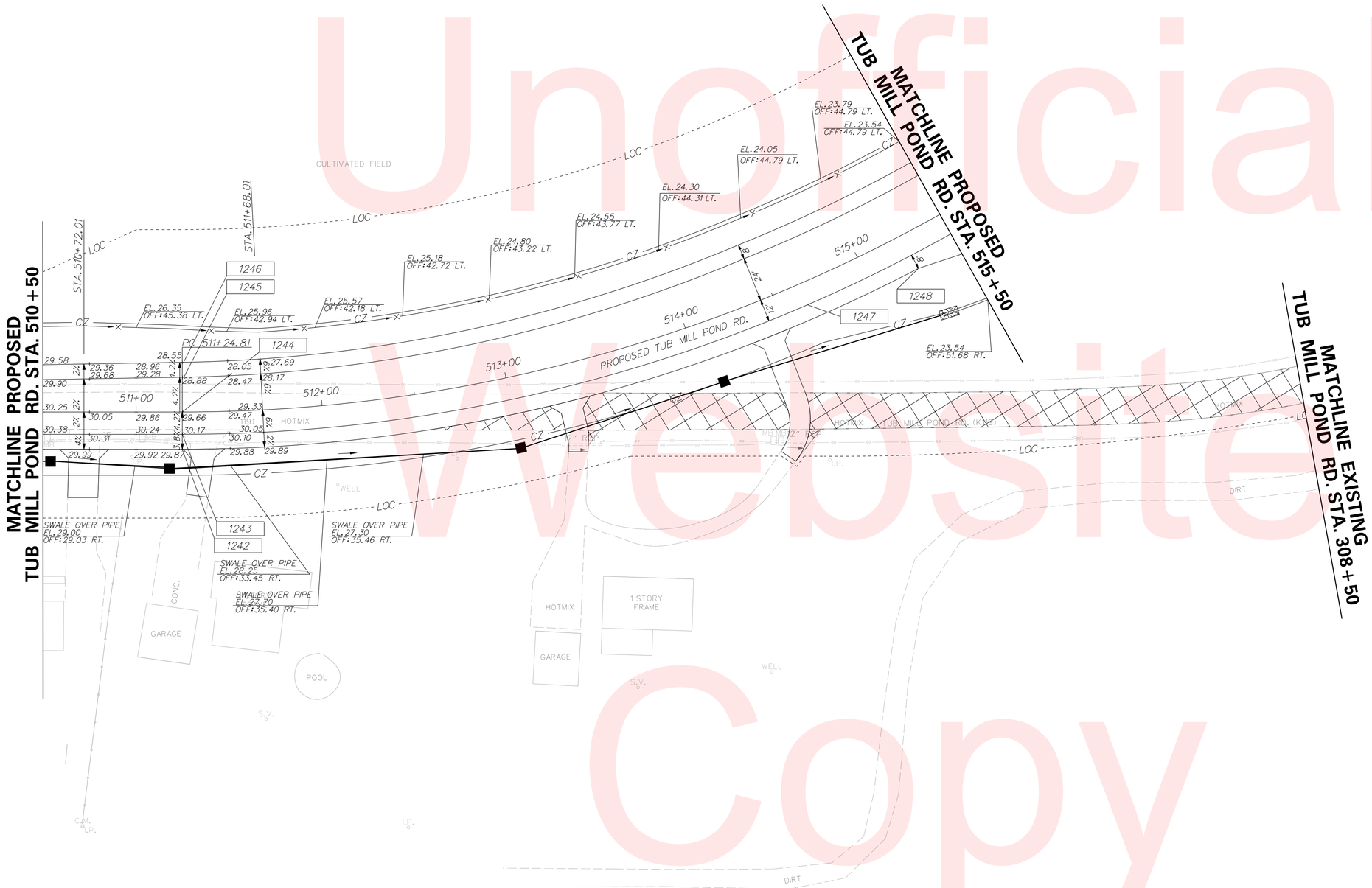

Unofficial Website Copy

DELAWARE DEPARTMENT OF TRANSPORTATION

ADDENDUMS / REVISIONS

SCALE 0 30 60 90 FEET

SR1, SOUTH FREDERICA GRADE SEPARATED INTERSECTION

CONTRACT	BRIDGE NO.	-
T200812202	DESIGNED BY: LCM	
COUNTY		
KENT	CHECKED BY: SFP	

GRADES AND GEOMETRICS

SHEET NO. 88 / TOTAL SHTS. 296

10/23/2015
G:\PROJECTS\06535.00 (DelDOT Agmt. 1376 DOTS Open End)\06535.07 SR1, S. Frederica\CADD Files\XM\gg21sf.dgn
11:10:16 AM

COORDINATE LIST				
POINT NO.	STATION	OFFSET	NORTHING	EASTING
1249	515+62.47	27.00	359433.8503	647314.7759
1250	1100+25.07	57.86	359582.7511	647294.0771
1251	1100+74.98	-61.00	359594.1337	647342.7643
1252	1100+74.98	-11.00	359642.0087	647328.3428
1253	1100+59.90	11.00	359658.7246	647307.5595
1254	1100+10.01	-57.57	359688.9316	647246.3636
1255	1100+18.00	-58.12	359691.7585	647253.8475
1256	1100+59.90	61.00	359706.5997	647293.1380
1257	1100+59.90	19.00	359666.3846	647305.2520

NOTES:

1. OFFSETS SHOWN IN THE GEOMETRY TABLES WITH A MINUS SIGN ARE TO THE LEFT OF THE CONSTRUCTION & R/W BASELINE.
2. UNLESS OTHERWISE NOTED, POINT GEOMETRY ADJACENT TO CURB AND CURB AND GUTTER IS GIVEN TO THE EDGE OF PAVEMENT.
3. RADII ARE GIVEN TO EDGE OF PAVEMENT.
4. UNLESS OTHERWISE NOTED, EDGE OF PAVEMENT ELEVATIONS AT CURB RETURNS ARE GIVEN AT 10 FOOT INTERVALS.
5. ALL WORK REQUIRED FOR CALCULATING AND STAKING OF GRADES SHALL BE PAID FOR UNDER ITEM 763501-CONSTRUCTION ENGINEERING.
6. PROPOSED CURBS OR PAVEMENT THAT TIE INTO EXISTING PAVEMENT SHALL MATCH ELEVATIONS.

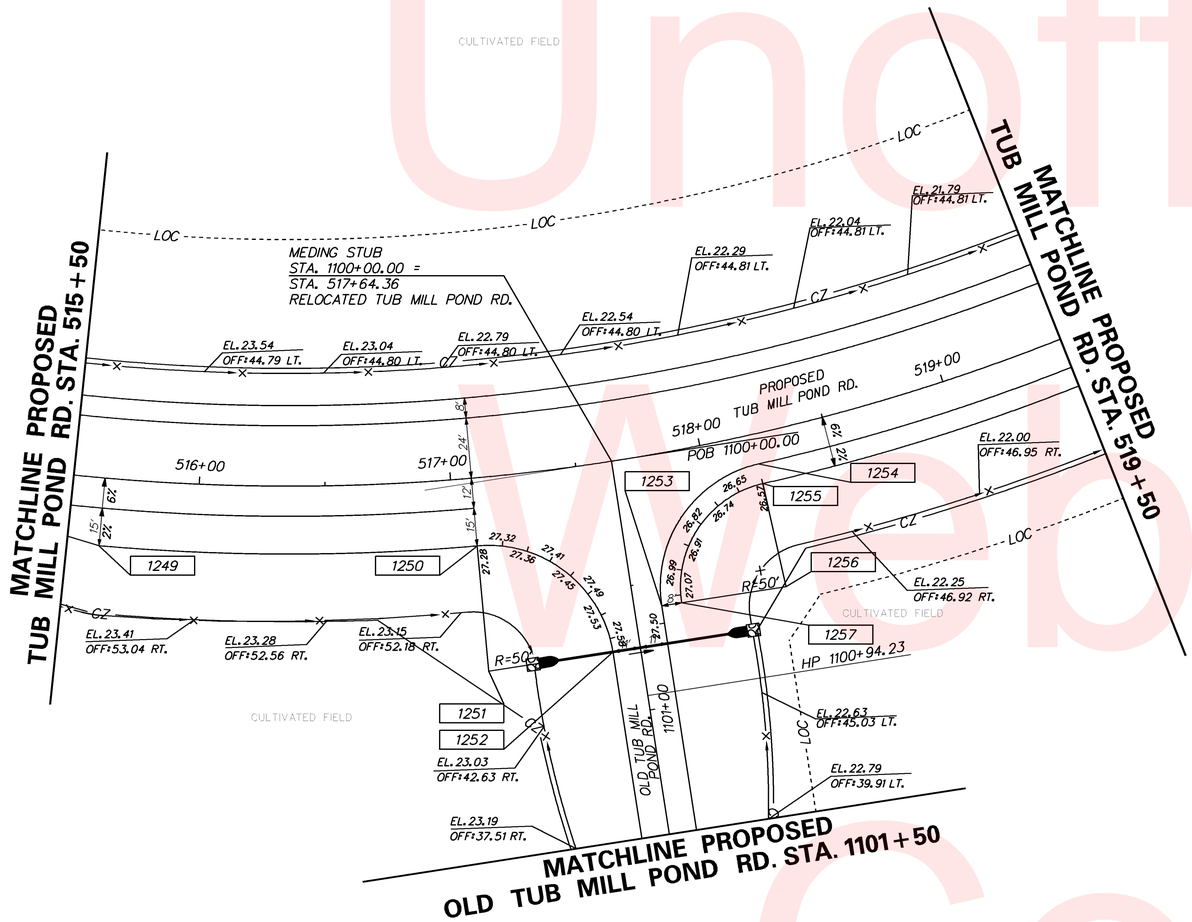

Unofficial Website Copy

DELAWARE DEPARTMENT OF TRANSPORTATION

ADDENDUMS / REVISIONS

SCALE 0 30 60 90 FEET

SR1, SOUTH FREDERICA GRADE SEPARATED INTERSECTION

CONTRACT	BRIDGE NO.	–
T200812202	DESIGNED BY: LCM	
COUNTY		
KENT	CHECKED BY: SFP	

GRADES AND GEOMETRICS

SHEET NO. 89

TOTAL SHTS. 296

7/19/2013
G:\PROJECTS\06535.00 (DelDOT Agmt. 1376 DOTS Open End)\06535.07 SR1, S. Frederica\CADD Files\XM\gg22s1.dgn
07:56:34

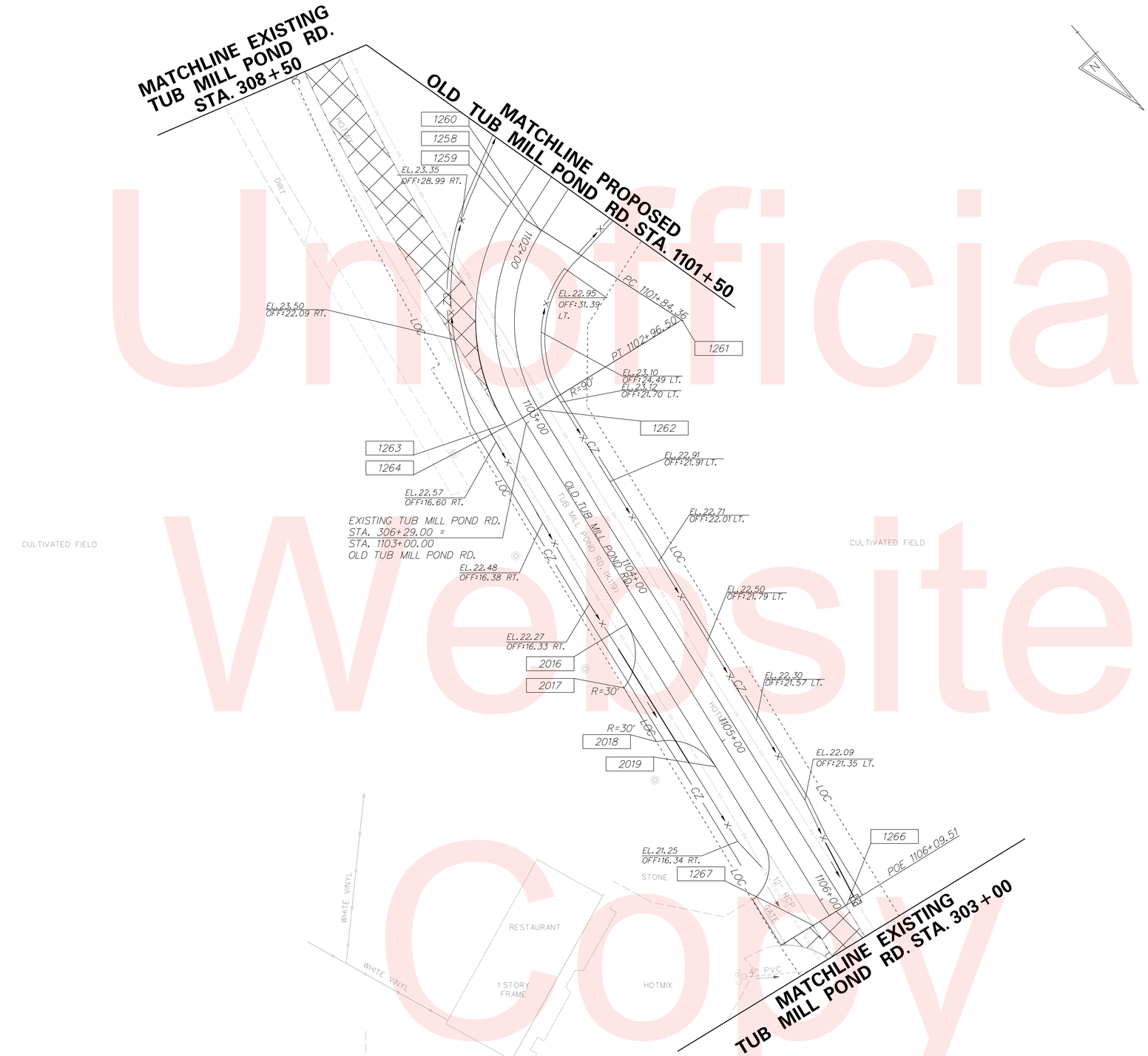

COORDINATE LIST

POINT NO.	STATION	OFFSET	NORTHING	EASTING
1258	1101+84.36	0.00	359684.0908	647429.9051
1259	1101+83.50	11.00	359673.3114	647432.2584
1260	1101+85.30	-11.00	359694.8639	647427.5312
1261	1102+96.50	-100.00	359779.8409	647401.0621
1262	1102+97.38	-9.68	359766.6043	647490.4074
1263	1102+94.51	9.68	359760.5648	647509.0364
1264	1102+96.50	0.00	359764.2252	647499.8353
1266	1106+09.51	-10.38	360075.0204	647538.4582
1267	1106+09.48	10.09	360071.7858	647558.6743
2016	1104+19.89	10.37	359884.4791	647529.3483
2017	1104+48.03	29.68	359909.2605	647552.8090
2018	1104+81.71	29.94	359942.4875	647558.3326
2019	1105+09.82	9.93	359973.3802	647542.9528

NOTES:

1. OFFSETS SHOWN IN THE GEOMETRY TABLES WITH A MINUS SIGN ARE TO THE LEFT OF THE CONSTRUCTION & R/W BASELINE.
2. UNLESS OTHERWISE NOTED, POINT GEOMETRY ADJACENT TO CURB AND CURB AND GUTTER IS GIVEN TO THE EDGE OF PAVEMENT.
3. RADII ARE GIVEN TO EDGE OF PAVEMENT.
4. UNLESS OTHERWISE NOTED, EDGE OF PAVEMENT ELEVATIONS AT CURB RETURNS ARE GIVEN AT 10 FOOT INTERVALS.
5. ALL WORK REQUIRED FOR CALCULATING AND STAKING OF GRADES SHALL BE PAID FOR UNDER ITEM 763501-CONSTRUCTION ENGINEERING.
6. PROPOSED CURBS OR PAVEMENT THAT TIE INTO EXISTING PAVEMENT SHALL MATCH ELEVATIONS.

Unofficial Website Copy

10/23/2015
G:\PROJECTS\06535.00 (DelDOT Agmt. 1376 DOTS Open End)\06535.07 SR1, S. Frederica\CADD Files\XM\gg23sf.dgn
1:1=203 AM

DELAWARE DEPARTMENT OF TRANSPORTATION	ADDENDUMS / REVISIONS	SCALE 0 30 60 90 FEET	SR1, SOUTH FREDERICA GRADE SEPARATED INTERSECTION	CONTRACT T200812202	BRIDGE NO. –	GRADES AND GEOMETRICS	SHEET NO. 90
				COUNTY KENT	DESIGNED BY: LCM		TOTAL SHTS. 296
					CHECKED BY: SFP		

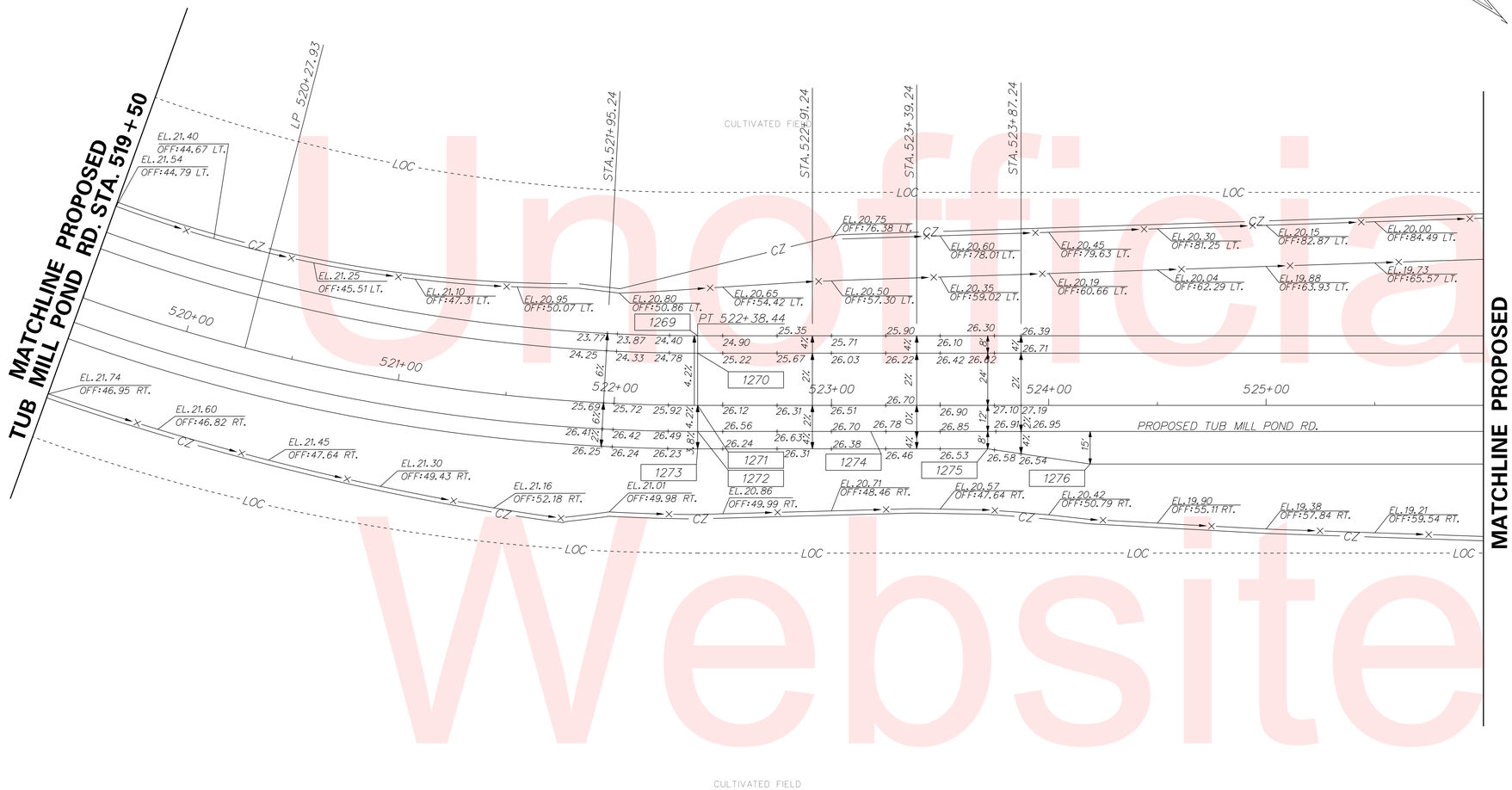

CULTIVATED FIELD

COORDINATE LIST

POINT NO.	STATION	OFFSET	NORTHING	EASTING
1269	522+38.44	-32.00	359998.4725	646977.1998
1270	522+38.44	-24.00	360004.5463	646982.4065
1271	522+38.44	0.00	360022.7674	646998.0267
1272	522+38.44	12.00	360031.8780	647005.8368
1273	522+38.44	20.00	360037.9517	647011.0435
1274	523+18.06	12.00	360083.6980	646945.3879
1275	523+71.91	20.00	360124.8207	646909.7094
1276	524+19.04	27.00	360160.8031	646878.4907

NOTES:

1. OFFSETS SHOWN IN THE GEOMETRY TABLES WITH A MINUS SIGN ARE TO THE LEFT OF THE CONSTRUCTION & R/W BASELINE.
2. UNLESS OTHERWISE NOTED, POINT GEOMETRY ADJACENT TO CURB AND CURB AND GUTTER IS GIVEN TO THE EDGE OF PAVEMENT.
3. RADII ARE GIVEN TO EDGE OF PAVEMENT.
4. UNLESS OTHERWISE NOTED, EDGE OF PAVEMENT ELEVATIONS AT CURB RETURNS ARE GIVEN AT 10 FOOT INTERVALS.
5. ALL WORK REQUIRED FOR CALCULATING AND STAKING OF GRADES SHALL BE PAID FOR UNDER ITEM 763501-CONSTRUCTION ENGINEERING.
6. PROPOSED CURBS OR PAVEMENT THAT TIE INTO EXISTING PAVEMENT SHALL MATCH ELEVATIONS.

Unofficial Website Copy

10/23/2015
G:\PROJECTS\06535.00 (DelDOT Agmt. 1376 DOTS Open End)\06535.07 SR1, S. Frederica\CADD Files\XM\gg24st.dgn
11:47:01 AM

DELAWARE DEPARTMENT OF TRANSPORTATION	ADDENDUMS / REVISIONS	SCALE 0 30 60 90 FEET	SR1, SOUTH FREDERICA GRADE SEPARATED INTERSECTION	CONTRACT T200812202	BRIDGE NO. –	GRADES AND GEOMETRICS	SHEET NO. 91
				COUNTY KENT	DESIGNED BY: LCM		TOTAL SHTS. 296
					CHECKED BY: SFP		

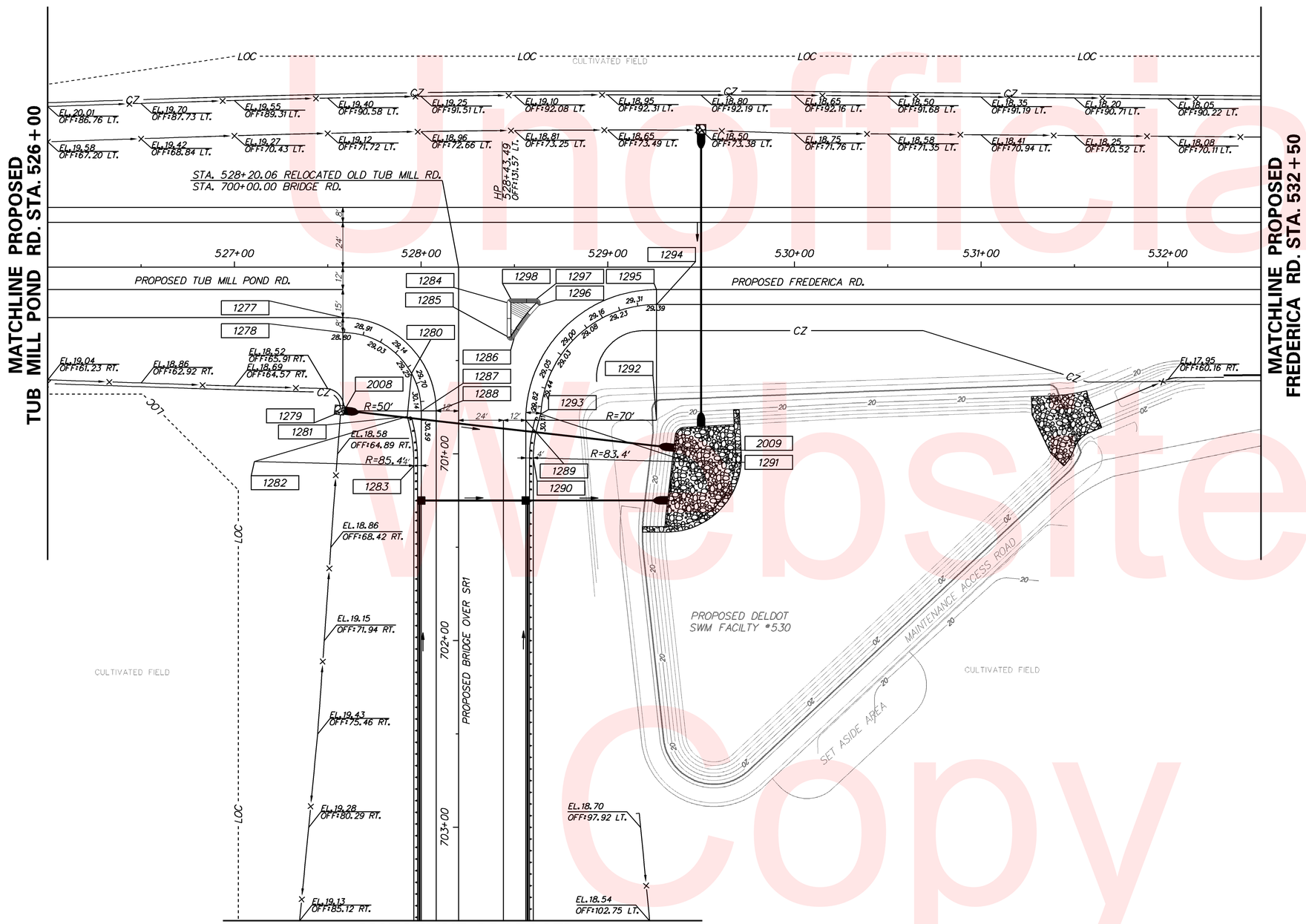

MATCHLINE PROPOSED
BRIDGE OVER SR1 STA. 703+50

COORDINATE LIST

POINT NO.	STATION	OFFSET	NORTHING	EASTING
1277	527+58.06	27.00	360381.4557	646621.0958
1278	700+35.00	62.00	360387.5294	646626.3026
1279	700+77.00	62.00	360419.4165	646653.6378
1280	700+56.91	25.12	360428.1704	646612.5602
1281	700+80.00	27.44	360444.1898	646629.3488
1282	701+04.08	109.38	360409.1410	646707.2294
1283	701+06.29	24.00	360466.3833	646643.8486
1284	700+19.00	-26.00	360432.6559	646549.0782
1285	700+37.10	-26.00	360446.3978	646560.8585
1286	700+38.10	-29.73	360449.5851	646558.6734
1287	700+77.00	20.00	360446.7518	646621.7508
1288	700+77.00	12.00	360451.9598	646615.6771
1289	700+82.00	-36.00	360486.9948	646582.4889
1290	701+02.14	-40.00	360504.8861	646592.5577
1291	701+04.23	-123.38	360560.7417	646530.6194
1292	700+82.00	-106.00	360532.5536	646529.3439
1293	700+78.63	-44.00	360489.6431	646574.2219
1294	529.26.06	20.00	360485.4823	646488.9918
1295	529+26.06	12.00	360479.4086	646483.7851
1296	528+63.22	20.40	360444.8842	646536.9647
1297	528+61.79	17.00	360441.3733	646535.8362
1298	528+48.06	17.00	360432.4391	646546.2581
2008	700+76.81	-61.26	360419.7521	646652.9503
2009	700+96.73	115.34	360549.8178	646531.8439

NOTES:

1. OFFSETS SHOWN IN THE GEOMETRY TABLES WITH A MINUS SIGN ARE TO THE LEFT OF THE CONSTRUCTION & R/W BASELINE.
2. UNLESS OTHERWISE NOTED, POINT GEOMETRY ADJACENT TO CURB AND CURB AND GUTTER IS GIVEN TO THE EDGE OF PAVEMENT.
3. RADII ARE GIVEN TO EDGE OF PAVEMENT.
4. UNLESS OTHERWISE NOTED, EDGE OF PAVEMENT ELEVATIONS AT CURB RETURNS ARE GIVEN AT 10 FOOT INTERVALS.
5. ALL WORK REQUIRED FOR CALCULATING AND STAKING OF GRADES SHALL BE PAID FOR UNDER ITEM 763501-CONSTRUCTION ENGINEERING.
6. PROPOSED CURBS OR PAVEMENT THAT TIE INTO EXISTING PAVEMENT SHALL MATCH ELEVATIONS.
7. COORDINATE POINTS FOR SKEW PIPES ARE PROVIDED AT THE INVERT OF THE THE FLARED END SECTION.

Unofficial Website Copy

DELAWARE DEPARTMENT OF TRANSPORTATION	ADDENDUMS / REVISIONS	SCALE 0 30 60 90 FEET	SR1, SOUTH FREDERICA GRADE SEPARATED INTERSECTION	CONTRACT T200812202	BRIDGE NO. –	GRADES AND GEOMETRICS	SHEET NO. 92
				COUNTY KENT	DESIGNED BY: LCM		TOTAL SHTS. 296
					CHECKED BY: SFP		

5/23/2013
G:\PROJECTS\06535.00 (DelDOT Agmt. 1376 DOTS Open End)\06535.07 SR1, S. Frederica\CADD Files\XM\gg25sf.dgn
22:30:07

COORDINATE LIST				
POINT NO.	STATION	OFFSET	NORTHING	EASTING
1299	534+81.33	-32.00	360807.3932	646033.5807
1300	534+81.33	-24.00	360813.4669	646038.7874
1301	534+81.33	0.00	360831.6881	646054.4076
1302	534+81.33	12.00	360840.8011	646062.2148
1303	534+81.33	20.00	360846.8748	646067.4215
1304	536+05.97	12.00	360927.4187	645975.2690
1305	536+74.12	20.00	360984.7037	645939.9488
1306	537+33.82	27.00	361036.6601	645913.2424
1307	537+33.82	17.00	361031.3567	645904.7645

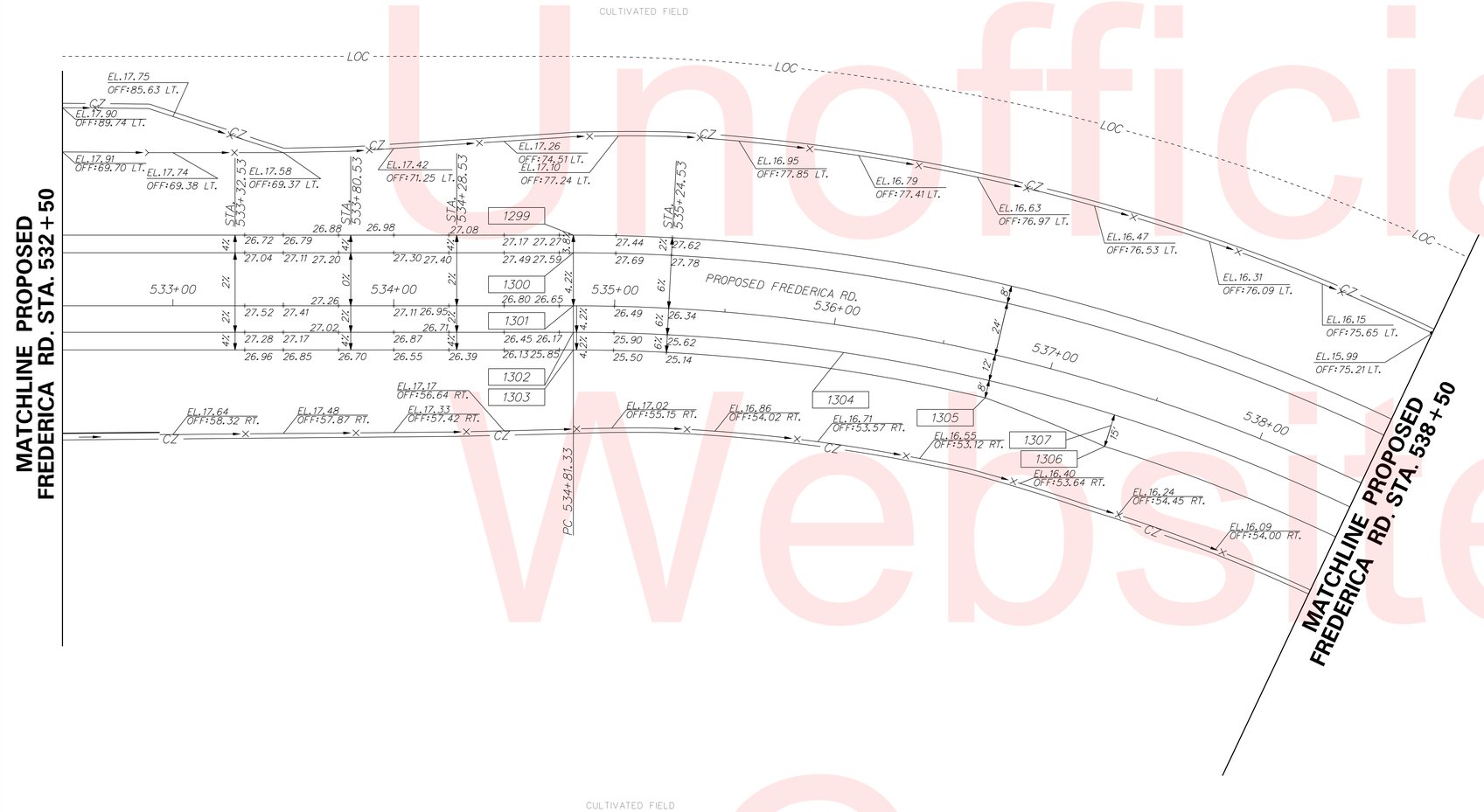

NOTES:

1. OFFSETS SHOWN IN THE GEOMETRY TABLES WITH A MINUS SIGN ARE TO THE LEFT OF THE CONSTRUCTION & R/W BASELINE.
2. UNLESS OTHERWISE NOTED, POINT GEOMETRY ADJACENT TO CURB AND CURB AND GUTTER IS GIVEN TO THE EDGE OF PAVEMENT.
3. RADII ARE GIVEN TO EDGE OF PAVEMENT.
4. UNLESS OTHERWISE NOTED, EDGE OF PAVEMENT ELEVATIONS AT CURB RETURNS ARE GIVEN AT 10 FOOT INTERVALS.
5. ALL WORK REQUIRED FOR CALCULATING AND STAKING OF GRADES SHALL BE PAID FOR UNDER ITEM 763501-CONSTRUCTION ENGINEERING.
6. PROPOSED CURBS OR PAVEMENT THAT TIE INTO EXISTING PAVEMENT SHALL MATCH ELEVATIONS.

Unofficial Website Copy

10/23/2015
G:\PROJECTS\06535.00 (DelDOT Agmt. 1376 DOTS Open End)\06535.07 SR1, S. Frederica\CADD Files\XM\gg26sf.dgn
11:48:51 AM

DELAWARE DEPARTMENT OF TRANSPORTATION	ADDENDUMS / REVISIONS	SCALE 0 30 60 90 FEET	SR1, SOUTH FREDERICA GRADE SEPARATED INTERSECTION	CONTRACT T200812202	BRIDGE NO. –	GRADES AND GEOMETRICS	SHEET NO. 93
				COUNTY KENT	DESIGNED BY: LCM		TOTAL SHTS. 296
					CHECKED BY: SFP		

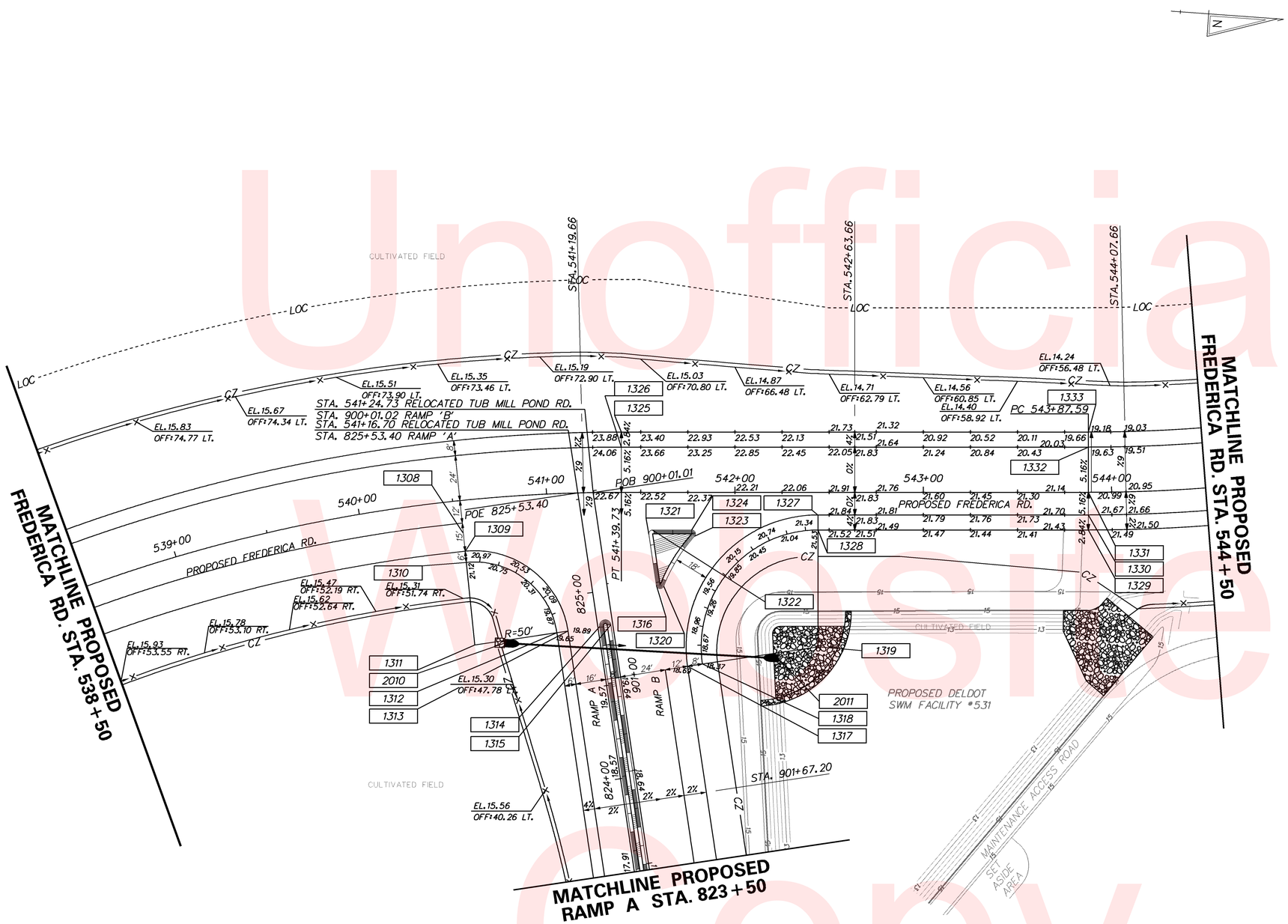

COORDINATE LIST

POINT NO.	STATION	OFFSET	NORTHING	EASTING
1308	540+53.75	17.00	361322.1044	645793.0092
1309	540+53.90	27.00	361323.9860	645802.8316
1310	540+53.90	33.00	361325.0291	645808.7402
1311	824+81.66	-66.00	361332.6788	645852.0702
1312	824+81.66	-22.00	361375.6209	645842.4795
1313	824+81.66	-16.00	361381.4766	645841.1717
1314	824+81.66	1.00	361398.0672	645837.4632
1315	900+71.74	1.00	361403.9229	645836.1555
1316	900+54.68	-26.00	361426.5563	645813.6256
1317	900+99.58	-36.00	361446.1027	645855.2662
1318	900+99.58	-44.00	361453.9103	645853.5225
1319	900+99.58	-106.00	361514.4196	645840.0084
1320	900+55.68	-29.73	361430.4174	645813.7857
1321	541+54.32	22.29	361786.5852	645786.8899
1322	541+56.30	20.00	361422.3938	645784.4591
1323	541+78.52	23.33	361444.7934	645786.1920
1324	541+77.03	20.00	361443.0677	645782.9741
1325	541+39.73	-32.00	361402.1385	645733.7801
1326	541+39.73	-24.00	361741.7117	645741.7596
1327	542+44.11	12.00	361509.4042	645770.1883
1328	542+44.11	20.00	361509.9774	645778.1677
1329	543+87.59	20.00	361653.0865	645767.8878
1330	543+87.59	12.00	361652.5133	645759.9083
1331	543+87.59	0.00	361651.6535	645747.9392
1332	543+87.59	-24.00	361649.9340	645724.0009
1333	543+87.59	-32.00	361649.3608	645716.0214
2010	824+80.31	-50.29	361348.3087	645849.9590
2011	824+50.87	92.25	361493.8376	361493.8376

NOTES:

1. OFFSETS SHOWN IN THE GEOMETRY TABLES WITH A MINUS SIGN ARE TO THE LEFT OF THE CONSTRUCTION & R/W BASELINE.
2. UNLESS OTHERWISE NOTED, POINT GEOMETRY ADJACENT TO CURB AND CURB AND GUTTER IS GIVEN TO THE EDGE OF PAVEMENT.
3. RADII ARE GIVEN TO EDGE OF PAVEMENT.
4. UNLESS OTHERWISE NOTED, EDGE OF PAVEMENT ELEVATIONS AT CURB RETURNS ARE GIVEN AT 10 FOOT INTERVALS.
5. ALL WORK REQUIRED FOR CALCULATING AND STAKING OF GRADES SHALL BE PAID FOR UNDER ITEM 763501-CONSTRUCTION ENGINEERING.
6. PROPOSED CURBS OR PAVEMENT THAT TIE INTO EXISTING PAVEMENT SHALL MATCH ELEVATIONS.
7. COORDINATE POINTS FOR SKEW PIPES ARE PROVIDED AT THE INVERT OF THE THE FLARED END SECTION.

Unofficial Website Copy

DELAWARE DEPARTMENT OF TRANSPORTATION

ADDENDUMS / REVISIONS

SCALE 0 30 60 90 FEET

SR1, SOUTH FREDERICA GRADE SEPARATED INTERSECTION

CONTRACT	BRIDGE NO.	–
T200812202	DESIGNED BY: LCM	
COUNTY		
KENT	CHECKED BY: SFP	

GRADES AND GEOMETRICS

SHEET NO. 94

TOTAL SHTS. 296

5/23/2013
G:\PROJECTS\06535.00 (DelDOT Agmt. 1376 DOTS Open End)\06535.07 SR1, S. Frederica\CADD Files\XM\gg27sf.dgn
22:31:32

COORDINATE LIST				
POINT NO.	STATION	OFFSET	NORTHING	EASTING
1334	546+16.89	-24.00	361867.0818	645677.8657
1335	546+17.08	-32.00	361864.5323	645670.2806
2012	547+00.00	-57.12	361927.1804	645616.8112
2013	548+21.53	110.31	362118.8663	645699.5179
2014	546+25.00	62.56	361904.6982	645756.2616
2015	547+28.96	190.60	362066.0219	645824.2877

NOTES:

1. OFFSETS SHOWN IN THE GEOMETRY TABLES WITH A MINUS SIGN ARE TO THE LEFT OF THE CONSTRUCTION & R/W BASELINE.
2. UNLESS OTHERWISE NOTED, POINT GEOMETRY ADJACENT TO CURB AND CURB AND GUTTER IS GIVEN TO THE EDGE OF PAVEMENT.
3. RADII ARE GIVEN TO EDGE OF PAVEMENT.
4. UNLESS OTHERWISE NOTED, EDGE OF PAVEMENT ELEVATIONS AT CURB RETURNS ARE GIVEN AT 10 FOOT INTERVALS.
5. ALL WORK REQUIRED FOR CALCULATING AND STAKING OF GRADES SHALL BE PAID FOR UNDER ITEM 763501-CONSTRUCTION ENGINEERING.
6. PROPOSED CURBS OR PAVEMENT THAT TIE INTO EXISTING PAVEMENT SHALL MATCH ELEVATIONS.
7. COORDINATE POINTS FOR SKEW PIPES ARE PROVIDED AT THE INVERT OF THE THE FLARED END SECTION.

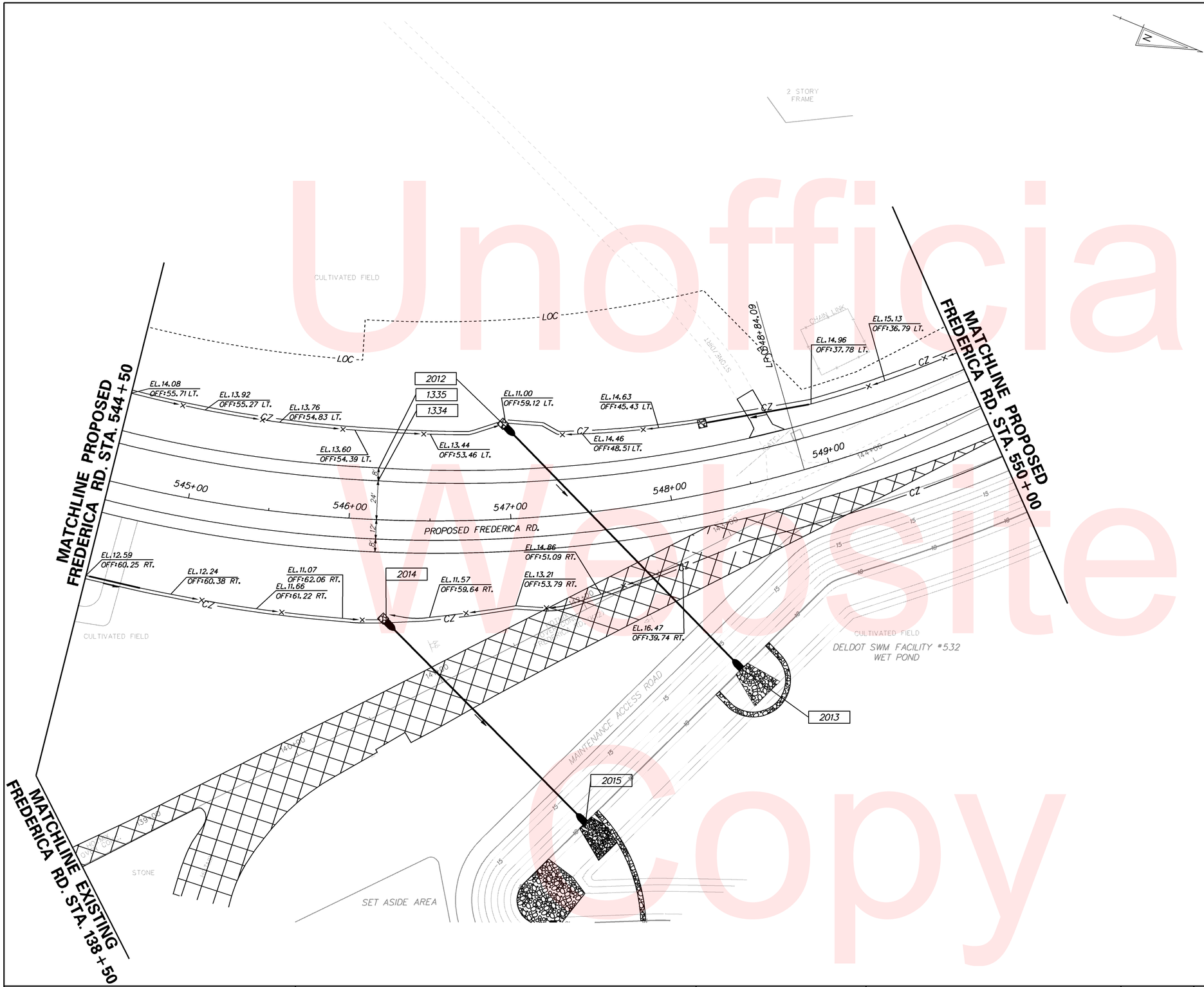

Unofficial Website Copy

DELAWARE
DEPARTMENT OF TRANSPORTATION

ADDENDUMS / REVISIONS

SCALE 0 30 60 90 FEET

SR1, SOUTH FREDERICA
GRADE SEPARATED INTERSECTION

CONTRACT	BRIDGE NO.	–
T200812202	DESIGNED BY: LCM	
COUNTY		
KENT	CHECKED BY: SFP	

GRADES AND GEOMETRICS

SHEET NO. 95
TOTAL SHTS. 296

7/19/2013
G:\PROJECTS\06535.00 (DelDOT Agmt. 1376 DOTS Open End)\06535.07 SR1, S. Frederica\CADD Files\XM\gg28sf.dgn
11:09:24

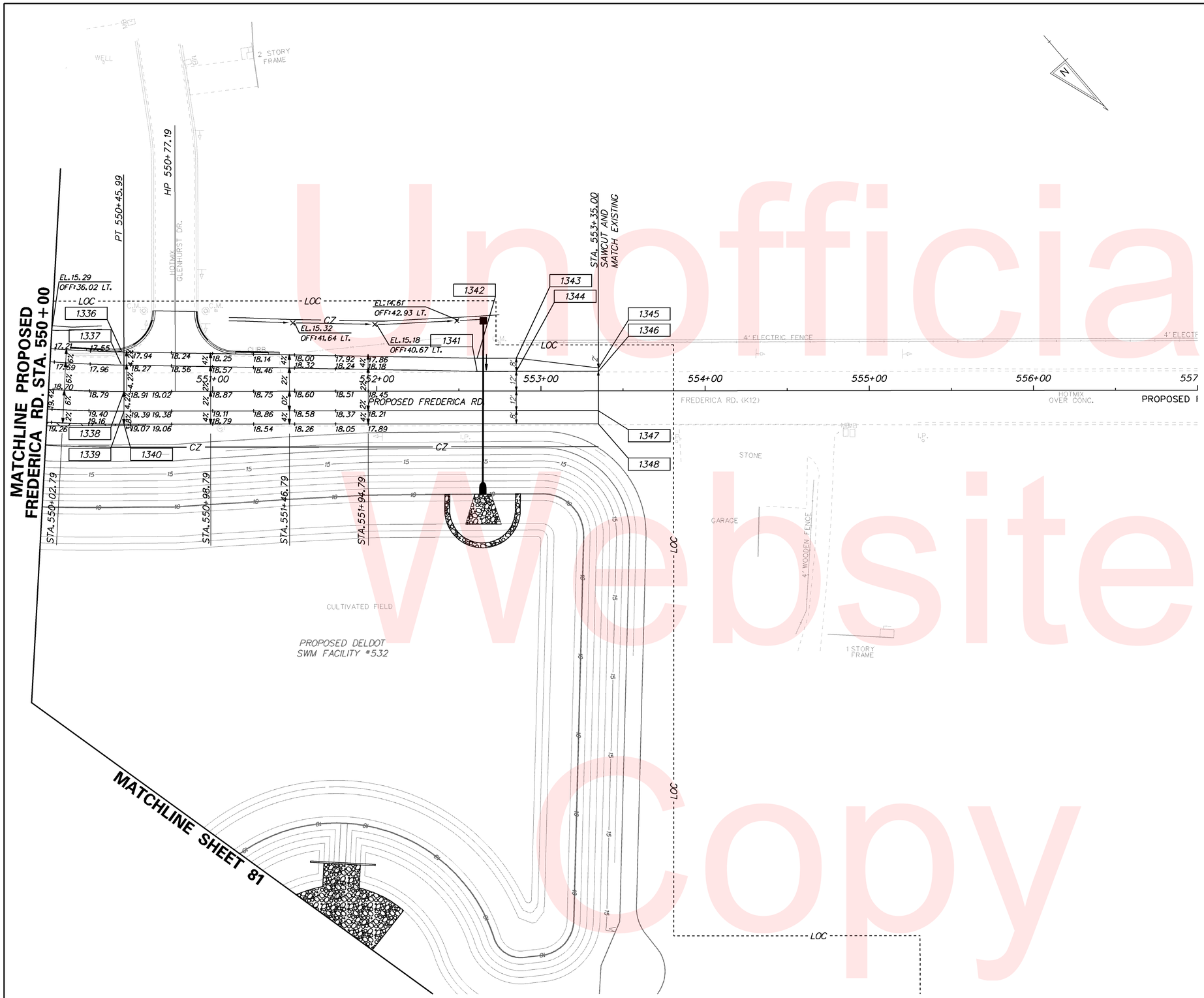

COORDINATE LIST

POINT NO.	STATION	OFFSET	NORTHING	EASTING
1336	550+44.47	-24.61	362204.7498	645444.3338
1337	550+44.33	-16.61	362210.7278	645449.6502
1338	550+45.99	0.00	362224.3967	645459.2295
1339	550+45.99	12.00	362233.5073	645467.0396
1340	550+45.99	20.00	362239.5810	645472.2463
1341	552+61.12	-12.00	362355.2997	645288.0913
1342	552+61.12	-20.00	362349.2260	645282.8846
1343	552+85.00	-20.00	362364.7694	645264.7529
1344	552+85.00	-12.00	362370.8431	645269.9596
1345	553+35.00	-14.00	362401.8667	645230.6972
1346	553+35.00	-12.00	362403.3851	645232.9989
1347	553+35.00	12.00	362421.6063	645247.6190
1348	553+35.00	20.00	362427.6800	645252.8258

NOTES:

1. OFFSETS SHOWN IN THE GEOMETRY TABLES WITH A MINUS SIGN ARE TO THE LEFT OF THE CONSTRUCTION & R/W BASELINE.
2. UNLESS OTHERWISE NOTED, POINT GEOMETRY ADJACENT TO CURB AND CURB AND GUTTER IS GIVEN TO THE EDGE OF PAVEMENT.
3. RADII ARE GIVEN TO EDGE OF PAVEMENT.
4. UNLESS OTHERWISE NOTED, EDGE OF PAVEMENT ELEVATIONS AT CURB RETURNS ARE GIVEN AT 10 FOOT INTERVALS.
5. ALL WORK REQUIRED FOR CALCULATING AND STAKING OF GRADES SHALL BE PAID FOR UNDER ITEM 763501-CONSTRUCTION ENGINEERING.
6. PROPOSED CURBS OR PAVEMENT THAT TIE INTO EXISTING PAVEMENT SHALL MATCH ELEVATIONS.

Unofficial Website Copy

DELAWARE DEPARTMENT OF TRANSPORTATION	ADDENDUMS / REVISIONS	SCALE 0 30 60 90 FEET	SR1, SOUTH FREDERICA GRADE SEPARATED INTERSECTION	CONTRACT T200812202	BRIDGE NO. –	GRADES AND GEOMETRICS	SHEET NO. 96
				COUNTY KENT	DESIGNED BY: LCM		TOTAL SHTS. 296
					CHECKED BY: SFP		

5/29/2013
G:\PROJECTS\06535.00 (DelDOT Agmt. 1376 DOTS Open End)\06535.07 SR1, S. Frederica\CADD Files\XM\gg29st.dgn
092510

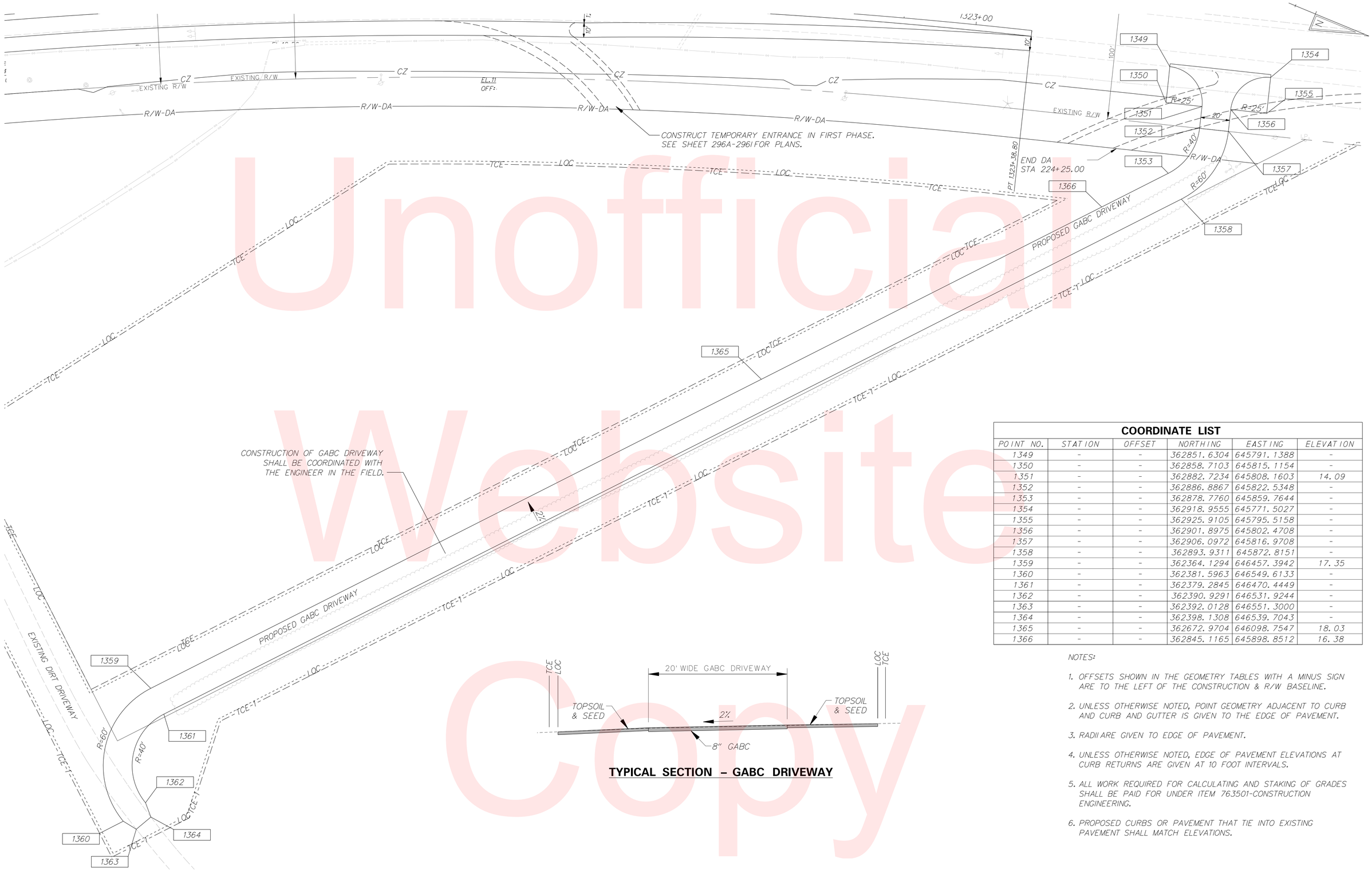

TYPICAL SECTION – GABC DRIVEWAY

COORDINATE LIST

POINT NO.	STATION	OFFSET	NORTHING	EASTING	ELEVATION
1349	-	-	362851.6304	645791.1388	-
1350	-	-	362858.7103	645815.1154	-
1351	-	-	362882.7234	645808.1603	14.09
1352	-	-	362886.8867	645822.5348	-
1353	-	-	362878.7760	645859.7644	-
1354	-	-	362918.9555	645771.5027	-
1355	-	-	362925.9105	645795.5158	-
1356	-	-	362901.8975	645802.4708	-
1357	-	-	362906.0972	645816.9708	-
1358	-	-	362893.9311	645872.8151	-
1359	-	-	362364.1294	646457.3942	17.35
1360	-	-	362381.5963	646549.6133	-
1361	-	-	362379.2845	646470.4449	-
1362	-	-	362390.9291	646531.9244	-
1363	-	-	362392.0128	646551.3000	-
1364	-	-	362398.1308	646539.7043	-
1365	-	-	362672.9704	646098.7547	18.03
1366	-	-	362845.1165	645898.8512	16.38

NOTES:

1. OFFSETS SHOWN IN THE GEOMETRY TABLES WITH A MINUS SIGN ARE TO THE LEFT OF THE CONSTRUCTION & R/W BASELINE.
2. UNLESS OTHERWISE NOTED, POINT GEOMETRY ADJACENT TO CURB AND CURB AND GUTTER IS GIVEN TO THE EDGE OF PAVEMENT.
3. RADII ARE GIVEN TO EDGE OF PAVEMENT.
4. UNLESS OTHERWISE NOTED, EDGE OF PAVEMENT ELEVATIONS AT CURB RETURNS ARE GIVEN AT 10 FOOT INTERVALS.
5. ALL WORK REQUIRED FOR CALCULATING AND STAKING OF GRADES SHALL BE PAID FOR UNDER ITEM 763501-CONSTRUCTION ENGINEERING.
6. PROPOSED CURBS OR PAVEMENT THAT TIE INTO EXISTING PAVEMENT SHALL MATCH ELEVATIONS.

Unofficial Website Copy

DELAWARE DEPARTMENT OF TRANSPORTATION	ADDENDUMS / REVISIONS	SCALE 0 30 60 90 FEET	SR1, SOUTH FREDERICA GRADE SEPARATED INTERSECTION	CONTRACT T200812202	BRIDGE NO. –	GRADES AND GEOMETRICS PROPOSED DRIVEWAY RELOCATION	SHEET NO. 97
				COUNTY KENT	DESIGNED BY: LCM		TOTAL SHTS. 296
					CHECKED BY: SFP		

9/14/2015
G:\PROJECTS\06535.00 (DelDOT Agmt. 1376 DOTS Open End)\06535.07 SR1, S. Frederica\CADD Files\XW\gg30sf.dgn
11:20:36 AM

POST MOUNTED DELINEATORS

* STEEL POST ARE TO BE USED.
* STEEL POSTS ARE GALVANIZED.
* REFLECTORIZATION IS HIGH INTENSITY WHITE OR YELLOW REFLECTIVE SHEETING APPLIED TO CENTER-MOUNT DELINEATORS FOR THE STEEL POST.
* CENTER-MOUNT DELINEATORS ARE ROUND HAVING A 3¼" DIAMETER AND ARE PLACED SINGLY AND DOUBLY (VERTICALLY).
* STEEL POST ARE DRIVEN INTO THE GROUND.
* REFER TO THE SPECIFICATIONS FOR INFORMATION ON MATERIALS THAT ARE ACCEPTABLE.
* REFER TO OTHER DETAILS REGARDING LOCATION AND INSTALLATION OF POST MOUNTED DELINEATORS.

NOTE: SKETCHES ARE DESCRIPTIVE ONLY, NOT TO SCALE. INDICATED HEIGHTS ARE GENERAL, SEE DETAIL 1.2 FOR SPECIFIC HEIGHT INFORMATION.

STEEL POST

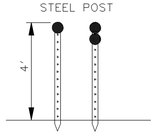

- A-36 STEEL
- 1.12#/FT
- GALVANIZED ASTM A123
- 3/8" HOLES - 4" C-C

NOTE: DELINEATOR COLOR IS TO BE THE SAME AS THE ADJACENT EDGE LINE (YELLOW ON THE LEFT AND WHITE ON THE RIGHT).

DETAIL 1.1

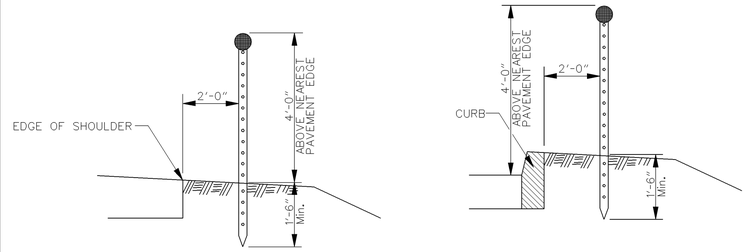

OPEN SECTION **CURBED SECTION**

PLACEMENT OF POST MOUNTED DELINEATOR

DETAIL 1.2

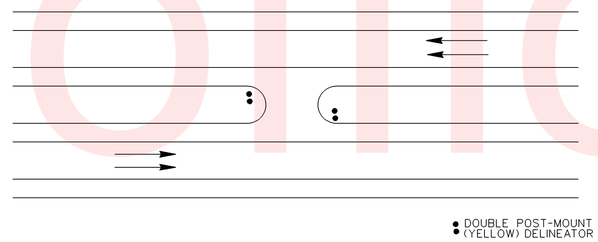

TYPICAL FOR DELINEATOR PLACEMENT AT TEMPORARY CROSSOVER

REFER TO SECTION 3D-4 OF THE MUTCD

DETAIL 1.3

ACCEL/DECEL LANE DELINEATION

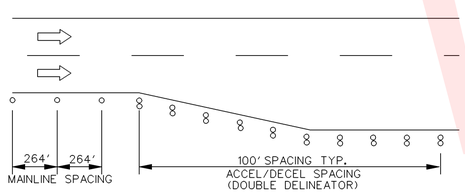

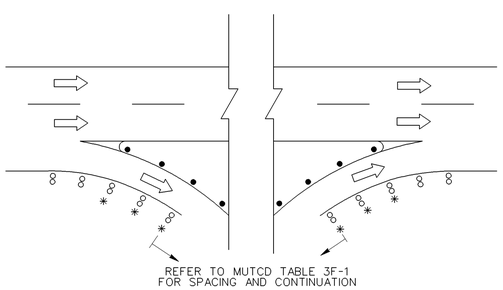

NOTE: DOUBLE DELINEATORS CONTINUE 3 INSTALLATIONS BEYOND PHYSICAL GORE.

TYPICAL RAMP A, B, C, & D SPACING FOR POST MOUNTED DELINEATORS
MAINLINE - 264'
ACCEL/DECEL AND C/D ROADS - 100' (DOUBLE DELINEATORS)
RAMPS - REFER TO DETAIL 1.5

LEGEND
- o SINGLE WHITE
- 8 DOUBLE WHITE
- ● SINGLE YELLOW

DETAIL 1.4

RAMP DELINEATION

TABLE 3F-1 - APPROX. SPACING FOR DELINEATORS ON HORIZONTAL CURVES	
RADIUS (R) OF CURVE	APPROXIMATE SPACING (S) ON CURVE
50 FEET	20 FEET
115 FEET	25 FEET
180 FEET	35 FEET
250 FEET	40 FEET
300 FEET	55 FEET
400 FEET	60 FEET
500 FEET	65 FEET
600 FEET	70 FEET
700 FEET	75 FEET
800 FEET	80 FEET
900 FEET	85 FEET
1000 FEET	90 FEET

RAMP MARKERS AND DELINEATORS SHALL BE PLACED ON:
- THE RIGHT SIDE OF TANGENT SECTIONS
- THE OUTSIDE OF CURVED SECTIONS
- * BOTH SIDES OF THE RAMP (3 INSTALLATIONS) WHERE THE CURVE ENTERS A TANGENT SECTION OR REVERSES.

RAMP DELINEATOR SPACING
- SPACING SHOULD BE AS SPECIFIED IN MUTCD TABLE 3F-1

NOTES:
1. SPACING FOR SPECIFIC RADII MAY BE INTERPOLATED FROM TABLE.
2. THE MIN. SPACING SHOULD BE 20 FEET.
3. THE SPACING ON CURVES SHOULD NOT EXCEED 300 FEET.
4. IN ADVANCE OF OR BEYOND A CURVE, AND PROCEEDING AWAY FROM THE END OF THE CURVE, THE SPACING OF THE FIRST DELINEATOR IS 2S, THE SECOND 3S, AND THE THIRD 6S, BUT NOT TO EXCEED 300 FEET.
5. S REFERS TO THE DELINEATOR SPACING FOR SPECIFIC RADII COMPUTED FROM THE FORMULA $S=3\sqrt{R}-50$.
6. THE DISTANCES FOR S SHOWN IN THE TABLE ABOVE WERE ROUNDED TO THE NEAREST 5 FEET.

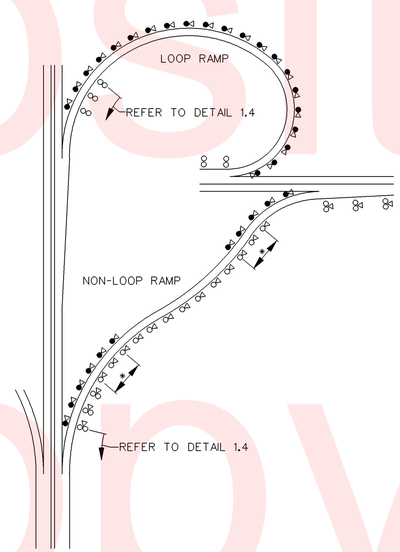

LEGEND
- o SINGLE WHITE
- 8 DOUBLE WHITE
- ● SINGLE YELLOW
- △ SINGLE RED

DETAIL 1.5

Standard Detail & Specifications

Inlet Protection - Type 2

DELAWARE EROSION & SEDIMENT CONTROL HANDBOOK

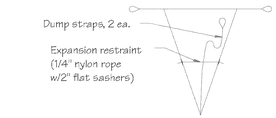

Bag Detail

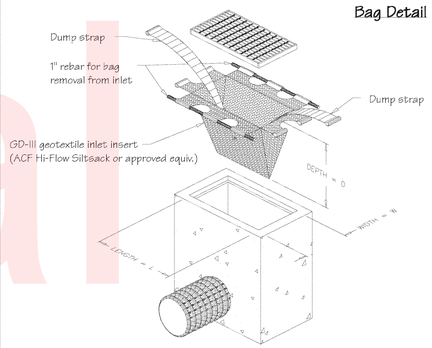

Perspective

Source:	Symbol:	Detail No.
Adapted from ACF Products, Inc.	IP-2	DE-ESC-3.1.5.2 Sheet 1 of 2 Date: 12/03

DELAWARE EROSION & SEDIMENT CONTROL HANDBOOK

Standard Detail & Specifications

Inlet Protection - Type 2

Notes:

1. This practice shall only be used in situations in which Inlet Protection - Type 1 cannot be used due to site constraints. These include, but are not limited to partially completed parking areas, streets, roads, etc.
2. It may be necessary to transition from Type 1 to Type 2 Inlet Protection as construction proceeds.
3. For areas where there is a concern for oil run-off or spills, insert shall meet one of the above specifications with an oil-absorbant pillow or shall be made completely from an oil-absorbant material with a woven pillow.

Materials:

The geotextile inlet insert shall meet or exceed the specifications of Type GD-III geotextile in accordance with Appendix A-3 of the Delaware Erosion & Sediment Control Handbook.

Source:	Symbol:	Detail No.
Adapted from ACF Products, Inc.	IP-2	DE-ESC-3.1.5.2 Sheet 2 of 2 Date: 12/03

Unofficial Website Copy

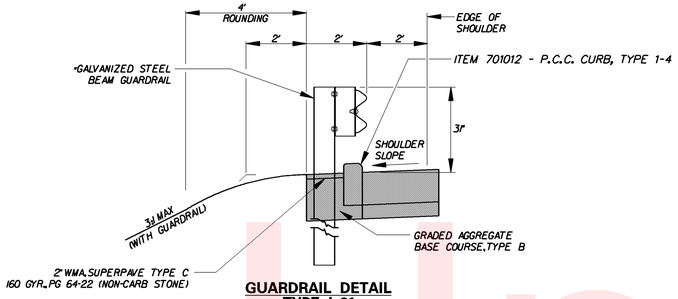

GUARDRAIL DETAIL
TYPE I-31

* - SEE CONSTRUCTION PLAN SHEETS FOR LOCATION OF GUARDRAIL

REINFORCED CONCRETE FLARED END SECTION
12" - 72" DIAMETER

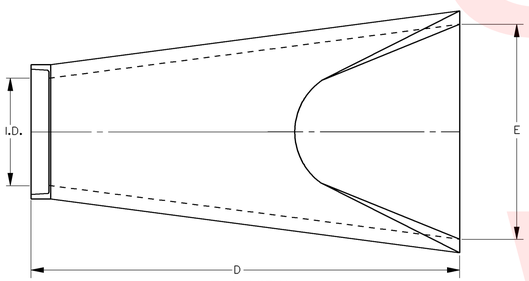

TOP VIEW

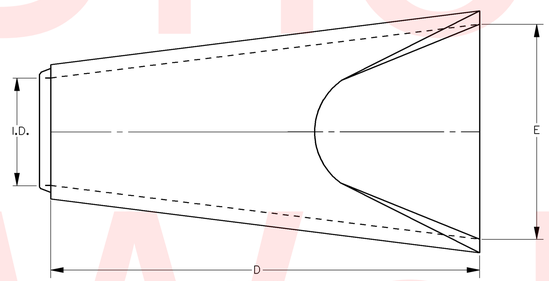

TOP VIEW

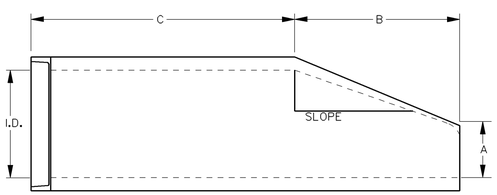

SIDE VIEW

FLARED END SECTION - OUTLET
N.T.S.

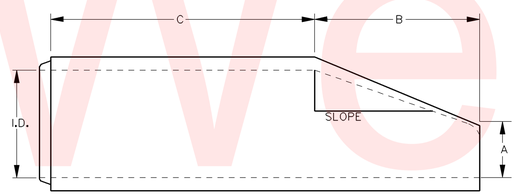

SIDE VIEW

FLARED END SECTION - INLET
N.T.S.

PIPE I.D.	SLOPE	WALL	A (INCHES)	B (INCHES)	C (INCHES)	D (INCHES)	E (INCHES)
12	3:1	2	4	24	48 7/8	72 7/8	30
15	3:1	2 1/4	6	27	46	73	30
18	3:1	2 1/2	9	27	46	73	36
24	3:1	3	9 1/2	43 1/2	30	73 1/2	48
30	3:1	3 1/2	12	54	19 3/4	73 3/4	60
36	3:1	4	15	63	34 3/4	97 3/4	72
42	3:1	4 1/2	21	63	35	98	78
48	3:1	5	24	72	26	98	84
54	2:1	5 1/2	27	65	35	100	90
60	2:1	6	30	60	39	99	96
66	2:1	6 1/2	32	78	21	99	102
72	2:1	7	34	78	21	99	108

NOTES:
1. THIS DRAWING IS NOT INTENDED TO SHOW REINFORCEMENT DESIGN - EITHER AS TO PLACEMENT OR STEEL AREA. ACTUAL PROJECT SPECIFICATION OR INDUSTRY STANDARD WILL GOVERN.
2. MANUFACTURED TO ASTM C-76 AND AASHTO M-170 WITH CLASS 3 REINFORCEMENT.

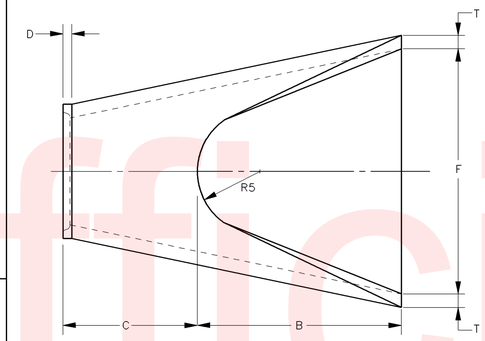

TOP VIEW

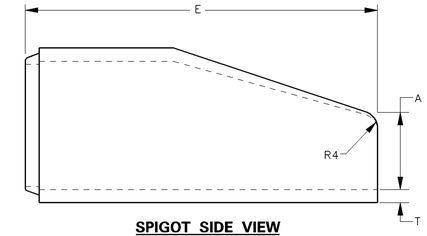

SPIGOT SIDE VIEW

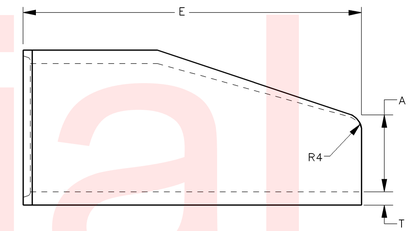

BELL SIDE VIEW

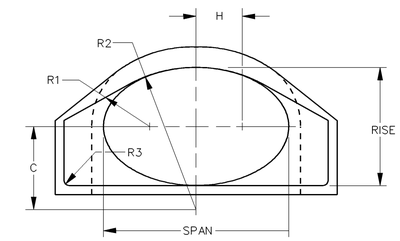

FRONT VIEW

FLARED END SECTION - ELLIPTICAL
N.T.S.

ELLIPTICAL FLARED END SECTIONS
TABLE OF DIMENSIONS

NOMINAL RISE	NOMINAL SPAN	EQUIVALENT DIA.	ACTUAL RISE	ACTUAL SPAN	T (INCHES)	A (INCHES)	B	C	D (INCHES)	E	F (INCHES)	G (INCHES)	H (INCHES)	R1 (INCHES)	R2 (INCHES)	R3 (INCHES)	R4 (INCHES)	R5 (INCHES)
14	23	18	14 5/8	22 7/8	2 3/4	6	2'-2"	3'-11"	2	6'-1"	36	12 25/32	5 11/32	8 27/32	20 11/16	1 1/2	3	12
19	30	24	19 1/8	30 1/8	3 1/4	9	2'-7"	3'-6"	2	6'-1"	48	16 11/16	6 27/32	11 15/32	29 1/2	1 1/2	3	14
22	34	27	21 9/16	34	3 1/2	10 1/2	2'-9"	3'-4"	2 1/4	6'-1"	54	18 3/4	7 3/4	12 3/4	33 1/32	1 1/2	3	14 1/2
24	38	30	24	37 7/8	3 3/4	12	4'-6"	1'-6"	2 1/2	6'-0"	60	20 13/16	8 11/16	14	36 9/16	1 1/2	3	15
27	42	33	26 23/32	41 15/16	4 1/2	11	5'-3"	2'-9"	3	8'-0"	72	24 31/32	10 5/16	16 13/16	43 7/8	1 1/2	4	18
29	45	36	28 13/16	45 7/16	4 1/2	11	5'-3"	2'-9"	3	8'-0"	72	24 31/32	10 5/16	16 13/16	43 7/8	1 1/2	4	18
34	53	42	34	53 1/4	5	18	3'-11"	4'-3"	3 1/2	8'-2"	78	28 29/32	12 1/32	19 19/32	50 29/32	1 1/2	4	20
38	60	48	38 5/16	59 15/16	5 1/2	22	4'-0"	4'-2"	3 3/4	8'-2"	84	32 7/16	13 17/32	21 15/16	57 3/32	1 1/2	4	22
43	68	54	43 3/16	67 5/8	6	22	5'-5"	2'-7"	4	8'-0"	90	36 11/16	15 9/32	24 17/32	64 9/32	1 1/2	4	24

NOTES:
1. THIS DRAWING IS NOT INTENDED TO SHOW REINFORCEMENT DESIGN - EITHER AS TO PLACEMENT OR STEEL AREA. ACTUAL PROJECT SPECIFICATION OR INDUSTRY STANDARD WILL GOVERN.

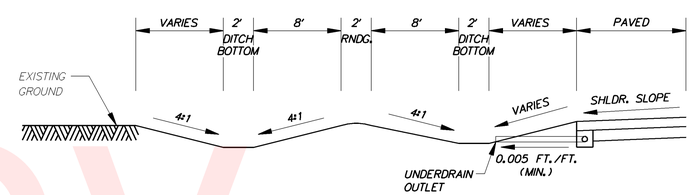

TYPICAL SIDE SLOPE DOUBLE DITCH DETAIL
STATION 523+00 TO 533+50

Unofficial Website Copy

5/23/2013
G:\PROJECTS\06535.00 (DelDOT Agmt. 1376 DOTS Open End)\06535.07 SR1, S. Frederica\CADD Files\XM\dt_details01st.dgn
22-34-4S

DELAWARE DEPARTMENT OF TRANSPORTATION

ADDENDUMS / REVISIONS

NOT TO SCALE

SR1, SOUTH FREDERICA GRADE SEPARATED INTERSECTION

CONTRACT: T200812202
COUNTY: KENT
BRIDGE NO.: -
DESIGNED BY: LCM
CHECKED BY: SFP

CONSTRUCTION DETAILS

SHEET NO. 99
TOTAL SHTS. 296

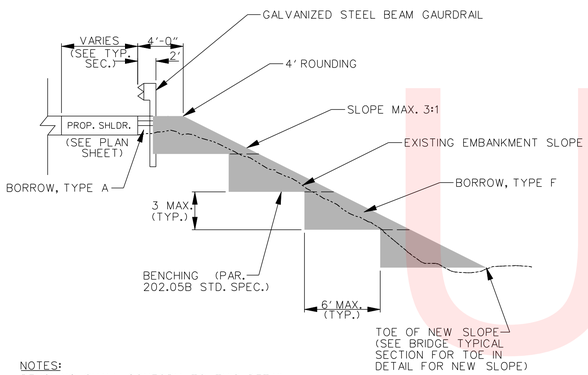

NOTES:
BENCHING SHALL CONFORM TO THIS DETAIL AT ALL LOCATIONS WHERE EXISTING EMBANKMENTS ARE WIDENED.

BENCHING DETAIL
N.T.S.

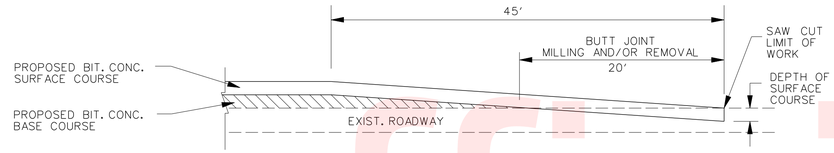

BUTT JOINT DETAIL
N.T.S.

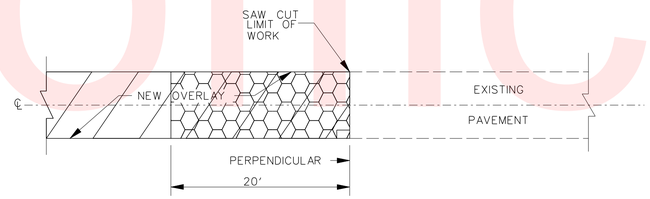

NOTE:
PAYMENT TO BE MADE USING PROFILE MILLING (ITEM 760507) FOR THE AREA ACTUALLY MILLED, AND SAW CUTTING (ITEM 762001) AS NEEDED. BUTT JOINT WILL NOT BE A SEPARATE PAY ITEM.

BUTT JOINT PLAN VIEW
N.T.S.

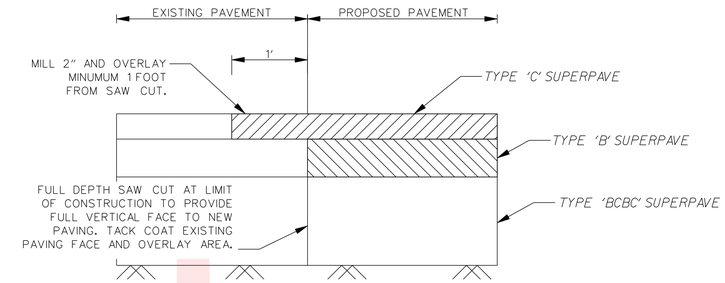

PAVEMENT TIE-IN DETAIL
(FULL DEPTH RECONSTRUCTION)
N.T.S.

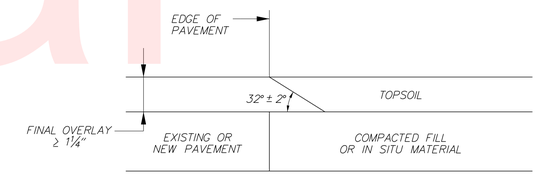

SAFETY EDGE FOR BITUMINOUS CONCRETE PAVEMENTS AND OVERLAYS DETAIL
N.T.S.

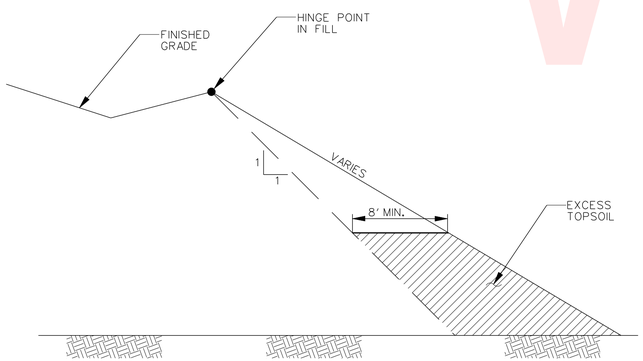

USE OF EXCESS TOPSOIL IN OUTER PORTIONS OF EMBANKMENT
N.T.S.

NOTE:
EXCESS TOPSOIL SHALL BE PLACED IN LIFTS CONCURRENTLY WITH THE CONSTRUCTION OF THE REST OF THE EMBANKMENT AND SHALL BE PLACED AND COMPACTED IN ACCORDANCE WITH SECTIONS 202.04, 202.05, 202.06 AND 202.07 WITH ALL COSTS INCIDENTAL TO ITEM 202000.

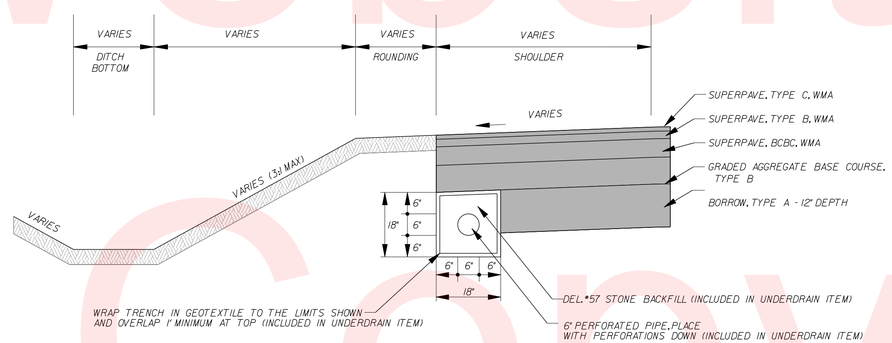

PERFORATED PIPE UNDERDRAIN DETAIL

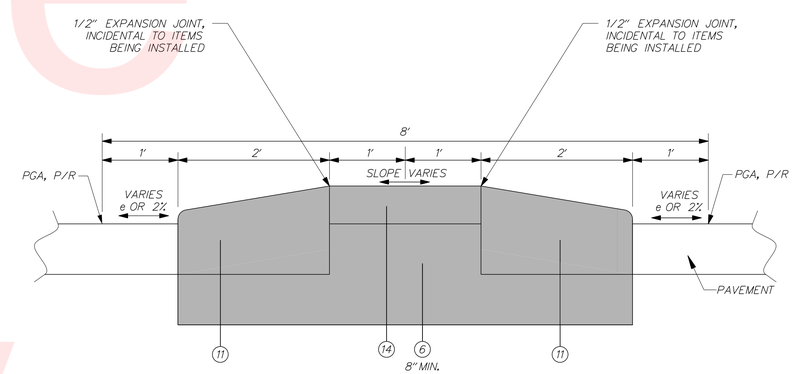

DETAIL - CONCRETE MEDIAN

(6) ITEM 302007 - GRADED AGGREGATE BASE COURSE, TYPE B
(11) ITEM 701011 - PORTLAND CEMENT CONCRETE CURB, TYPE 2
(14) ITEM 705005 - PCC SIDEWALK, 8"

Unofficial Website Copy

DELAWARE DEPARTMENT OF TRANSPORTATION	ADDENDUMS / REVISIONS	NOT TO SCALE	SR1, SOUTH FREDERICA GRADE SEPARATED INTERSECTION	CONTRACT T200812202	BRIDGE NO. –	CONSTRUCTION DETAILS	SHEET NO. 100
				COUNTY KENT	DESIGNED BY: LCM		TOTAL SHTS. 296
					CHECKED BY: SFP		

10/22/2015
G:\PROJECTS\06535.00 (DelDOT Agmt. 1376 DOTS Open End)\06535.07 SR1, S. Frederica\CADD Files\XM\dt_details01st.dgn
11:07:23 AM

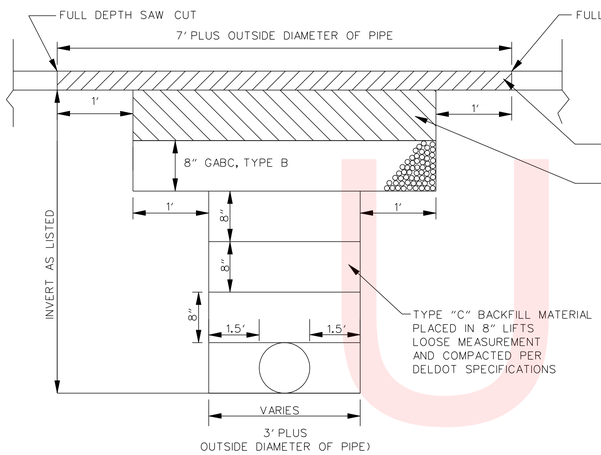

PERMANENT CROSS-ROAD OR LONGITUDINAL PATCH DETAIL

N.T.S.

NOTES:

1. PATCHES MUST HAVE A WIDTH OF 7 FEET PLUS OUTSIDE DIAMETER OF THE PIPE (AS MEASURED ALONG THE ROADWAY CENTERLINE) AND THE WIDTH OF THE LANE OR LANES DISTURBED.
2. THIS IS A MINIMUM PATCH. IF THE EXISTING ROADWAY HAS A HEAVIER CROSS SECTION THAN SHOWN HERE, IT WILL BE REPLACED WITH THAT CROSS SECTION, OR AS DIRECTED BY THE ENGINEER.
3. ALL MATERIALS AND METHODS OR CONSTRUCTION SHALL MEET THE REQUIREMENTS SET FORTH IN THE CURRENT DELAWARE DEPARTMENT OF TRANSPORTATION STANDARDS SPECIFICATIONS FOR ROAD AND BRIDGE CONSTRUCTION.

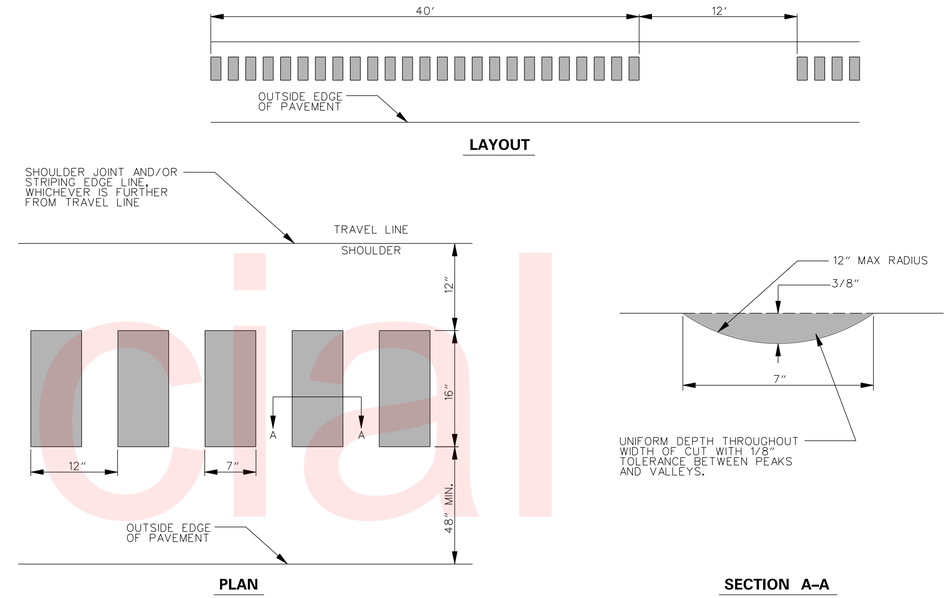

BICYCLE-FRIENDLY EDGELINE RUMBLE STRIPS DETAIL

N.T.S.

NOTES:

1. ALL WORK REQUIRED TO COMPLETE THE INSTALLATION OF EDGELINE RUMBLE STRIPS SHALL BE INCIDENTAL TO ITEM 760012-RUMBLE STRIPS, HOT MIX.
2. EDGELINE RUMBLE STRIPS SHALL BE INSTALLED ALONG ALL SHOULDERS, AS PER THIS DETAIL, ALONG MILFORD NECK RD, TUB MILL POND RD, AND FREDERICA RD.

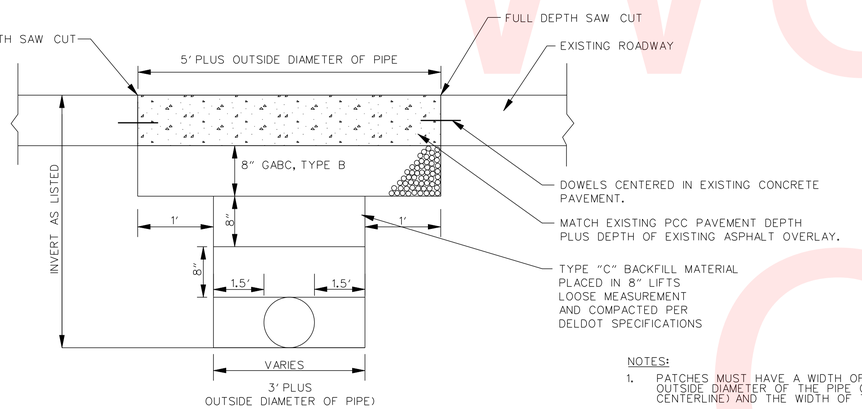

PERMANENT CROSS-ROAD OR LONGITUDINAL PATCH DETAIL

N.T.S.

*** EXISTING CONCRETE PAVEMENT LOCATIONS**

NOTES:

1. PATCHES MUST HAVE A WIDTH OF 5 FEET PLUS OUTSIDE DIAMETER OF THE PIPE (AS MEASURED ALONG THE ROADWAY CENTERLINE) AND THE WIDTH OF THE LANE OR LANES DISTURBED.
2. THIS IS A MINIMUM PATCH. IF THE EXISTING ROADWAY HAS A HEAVIER CROSS SECTION THAN SHOWN HERE, IT WILL BE REPLACED WITH THAT CROSS SECTION, OR AS DIRECTED BY THE ENGINEER.
3. ALL MATERIALS AND METHODS OR CONSTRUCTION SHALL MEET THE REQUIREMENTS SET FORTH IN THE CURRENT DELAWARE DEPARTMENT OF TRANSPORTATION STANDARDS SPECIFICATIONS FOR ROAD AND BRIDGE CONSTRUCTION.

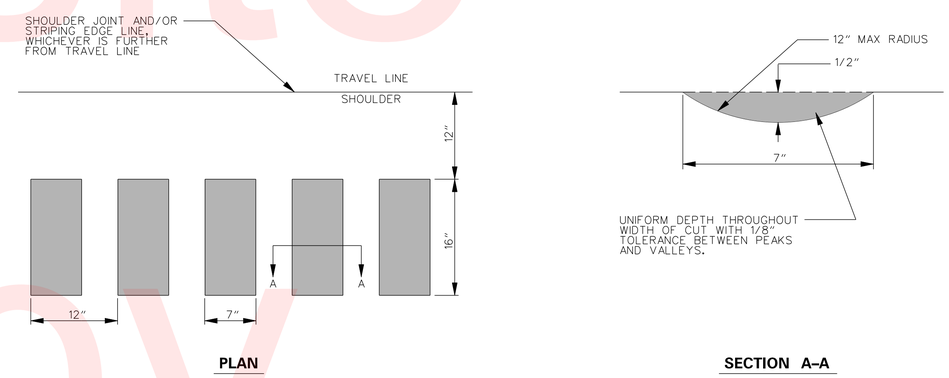

CONTINUOUS LONGITUDINAL EDGELINE RUMBLE STRIPS DETAIL

N.T.S.

NOTES:

1. ALL WORK REQUIRED TO COMPLETE THE INSTALLATION OF EDGELINE RUMBLE STRIPS SHALL BE INCIDENTAL TO ITEM 760016-RUMBLE STRIPS, HOT MIX.
2. EDGELINE RUMBLE STRIPS SHALL BE INSTALLED ALONG ALL INSIDE AND OUTSIDE SHOULDERS, AS PER THIS DETAIL, ALONG SR1 AND RAMPS A, B, C, AND D.

Unofficial Website Copy

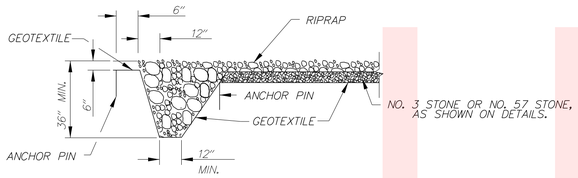

RIPRAP KEY-IN DETAIL

NOTES:

1. FOR GABION MATTRESS RIPRAP CHUTE KEY-IN SHALL BE CONSTRUCTED ENTIRELY OF NO. 3 STONE.

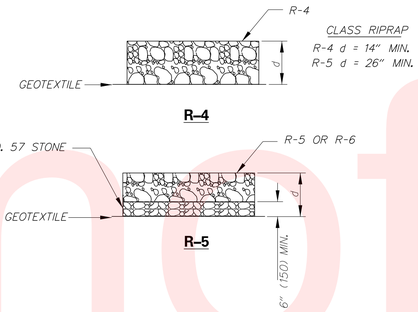

RIPRAP BLANKET SECTION DETAILS

NOTES:

1. SEE CONSTRUCTION PLANS FOR LOCATIONS AND SIZES OF RIPRAP BLANKET.
2. RIPRAP SHALL BE KEYED IN AT DOWNSTREAM END OF BLANKET FOLLOWING RIPRAP KEY-IN DETAIL.

NOTES:

1. GEOTEXTILE SHALL BE KEYED IN AT TOP OF SLOPE AND AT BOTTOM OF SLOPE AS SHOWN IN THE RIPRAP KEY-IN DETAIL. ANCHOR PINS SHALL BE INSTALLED EVERY 2 FEET ALONG THE PROFILE OF THE SLOPE. ANCHOR PINS SHALL BE A MINIMUM OF 18 INCHES IN LENGTH AND SHALL BE SUBMITTED TO THE ENGINEER FOR REVIEW AND APPROVAL PRIOR TO USE. COST FOR ANCHOR PINS SHALL BE INCIDENTAL TO ITEM #713003, GEOTEXTILE, RIPRAP.
2. NO. 3 STONE SHALL BE KEYED IN AT TOP AND BOTTOM OF CHUTE FOLLOWING THE RIPRAP KEY-IN DETAIL.

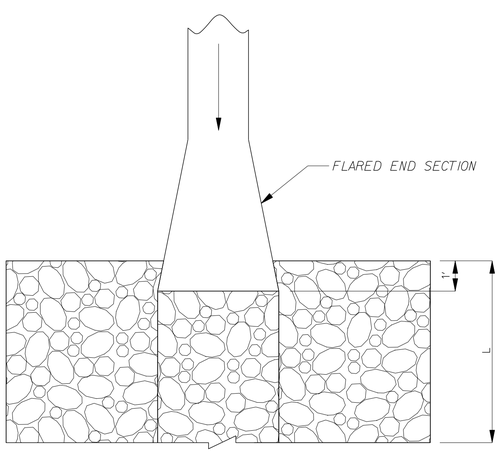

DUMPED RIPRAP CHUTE DETAIL – PLAN

N.T.S.

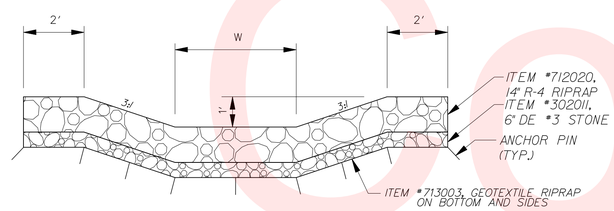

DUMPED RIPRAP CHUTE DETAIL – ELEVATION

N.T.S.

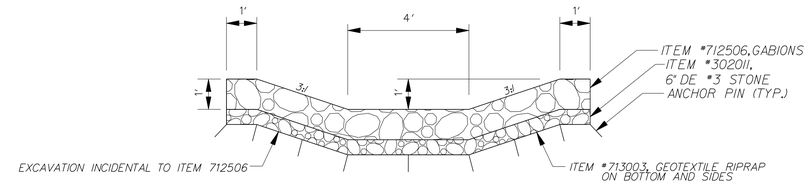

GABION MATTRESS RIPRAP CHUTE DETAIL – SECTION A–A

N.T.S.

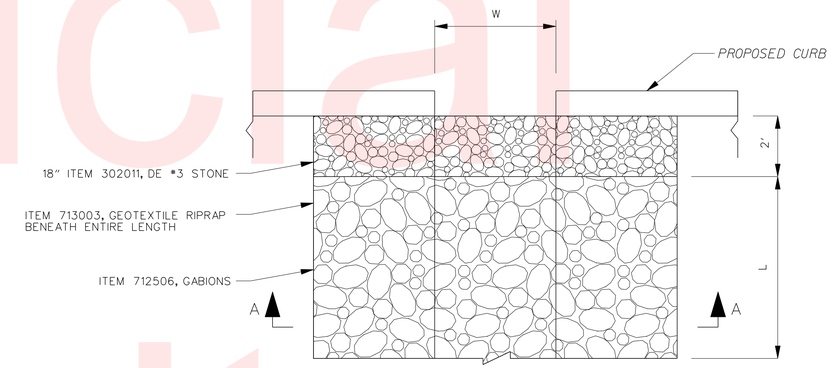

GABION MATTRESS RIPRAP CHUTE DETAIL – PLAN

N.T.S.

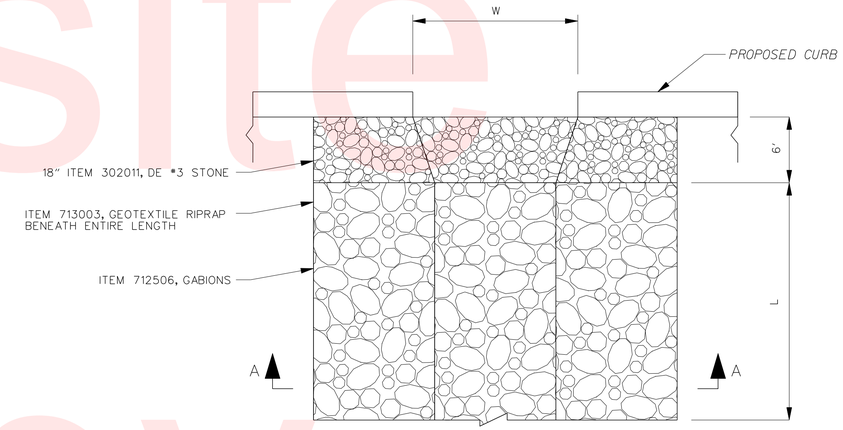

GABION MATTRESS RIPRAP CHUTE DETAIL WITH TRANSITION – PLAN

N.T.S.

NOTES:

1. CURB OPENING WIDTH "W" AND GABION CHUTE LENGTH "L" IS GIVEN ON PLAN SHEETS.
2. IF W=4' NO TRANSITION IS REQUIRED. IF W=6' THE TRANSITION IS REQUIRED.
3. GABION MATTRESS SHALL BE ANCHORED PER MANUFACTURER'S SPECIFICATIONS.
4. STONE FOR THE GABIONS SHALL BE INCLUDED IN ITEM #712506, GABIONS.
5. GEOTEXTILE SHALL BE KEYED IN AT TOP OF SLOPE AND AT BOTTOM OF SLOPE AS SHOWN IN THE RIPRAP KEY-IN DETAIL. ANCHOR PINS SHALL BE INSTALLED EVERY 2 FEET ALONG THE PROFILE OF THE SLOPE. ANCHOR PINS SHALL BE A MINIMUM OF 18 INCHES IN LENGTH AND SHALL BE SUBMITTED TO THE ENGINEER FOR REVIEW AND APPROVAL PRIOR TO USE. COST FOR ANCHOR PINS SHALL BE INCIDENTAL TO ITEM #713003, GEOTEXTILE, RIPRAP.
4. NO. 3 STONE SHALL BE KEYED IN AT TOP AND BOTTOM OF CHUTE FOLLOWING THE RIPRAP KEY-IN DETAIL.

Unofficial Website Copy

CONSTRUCTION DETAILS
ITEM 708512–DRAINAGE INLET, SPECIAL I
ITEM 708513–DRAINAGE INLET, SPECIAL II

SPECIAL DRAINAGE INLET SPECIFICATIONS			
BASIN NO.	SIZE (L×W) (INSIDE DIMENSIONS)	STATION	CROSS SLOPE(S)
DI-5A	72"X24"	1321+80.80, 44.40'L	0.0%
DI-16A	48"X48"	513+00.00, 38.44'R	0.0%
DI-16B	48"X48"	514+10.00, 32.92'R	0.0%

NOTES:
1. INLET COVERS SHALL BE PRE-CAST AND MUST BE SIZED TO FIT INLET BOX DIMENSIONS.
2. ALL BARS ARE TO BE #5 SPACED EVENLY @ 6"+/- UNLESS NOTED OTHERWISE.
3. MINIMUM BAR COVER = 1 1/2".

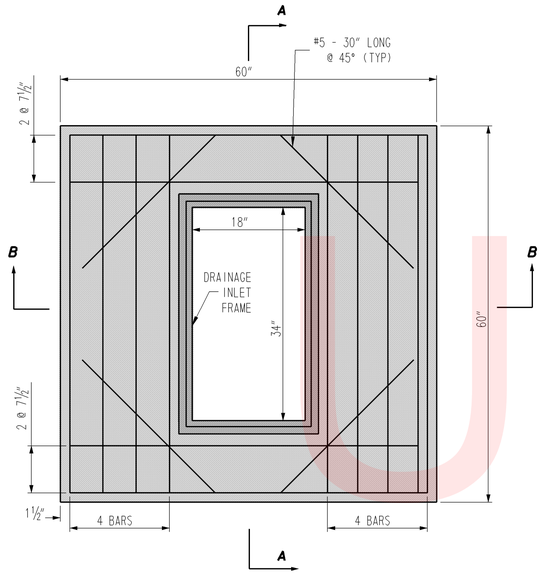

ITEM 708512
48" x 48" SPECIAL TOP

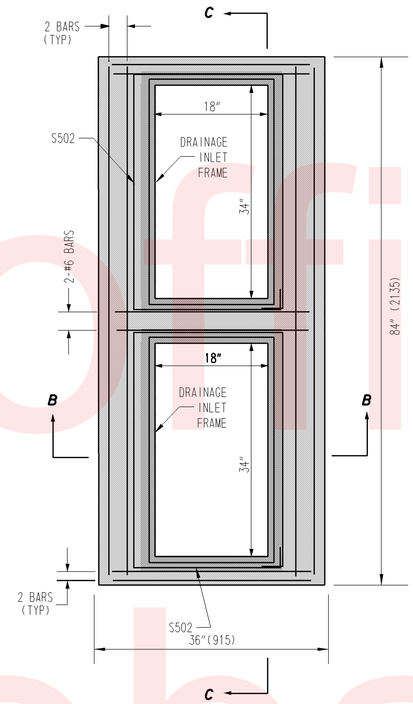

ITEM 708513
72" x 24" SPECIAL TOP

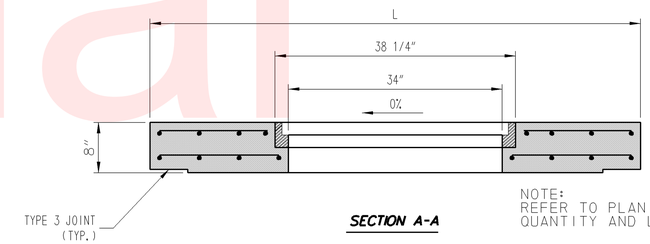

SECTION A-A

NOTE:
REFER TO PLAN FOR REBAR QUANTITY AND LAYOUT

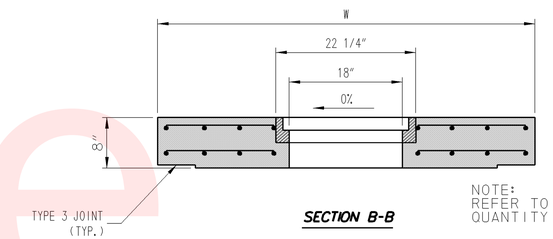

SECTION B-B

NOTE:
REFER TO PLAN FOR REBAR QUANTITY AND LAYOUT

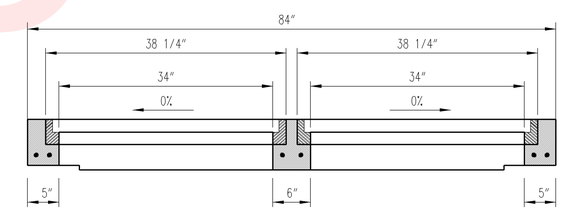

SECTION C-C

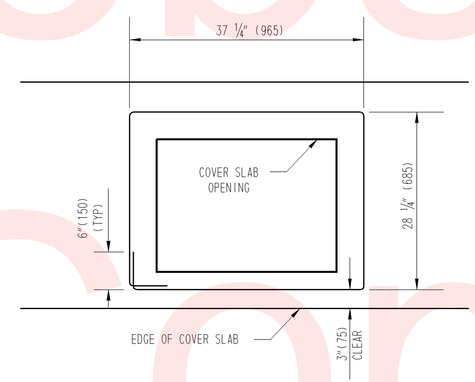

S502 BENDING DIAGRAM

S502 IS NOT REQUIRED TO BE ONE CONTINUOUS BAR. IF MORE THAN ONE BAR IS USED, THERE MUST BE A 12" (300) OVERLAP BETWEEN BARS.

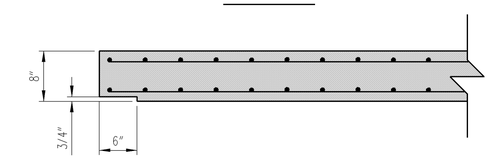

TYPE 3 JOINT DETAIL

Unofficial Website Copy

5/23/2013
G:\PROJECTS\06535.00 (DelDOT Agmt. 1376 DOTS Open End)\06535.07 SR1, S. Frederica\CADD Files\XM\DT_INLETS.dgn
22-9627

DELAWARE DEPARTMENT OF TRANSPORTATION	ADDENDUMS / REVISIONS	SCALE 0 30 60 90 FEET	SR1, SOUTH FREDERICA GRADE SEPARATED INTERSECTION	CONTRACT T200812202	BRIDGE NO. –	SPECIAL INLET AND MANHOLE TOPS	SHEET NO. 103
				COUNTY KENT	DESIGNED BY: LCM		TOTAL SHTS. 296
					CHECKED BY: SFP		

GENERAL BRIDGE NOTES

1. DESIGN CRITERIA
AASHTO LRFD BRIDGE DESIGN SPECIFICATIONS, 4TH EDITION (2007) WITH 2008 INTERIMS

2. LOADING
LIVE LOAD - HL-93
DEAD LOAD - INCLUDES 25 PSF FOR FUTURE WEARING SURFACE AND 15 PSF FOR S.I.P. FORMS

3. CONCRETE
SPECIFIED COMPRESSIVE STRENGTH @ 28 days:
PRESTRESSED BEAMS----------6.0 KSI(f'ci=5.0 KSI)
DECK SLAB AND DIAPHRAGMS----------4.5 KSI(CLASS A)
APPROACH SLAB AND SLEEPER SLAB----------4.5 KSI(CLASS D)
BARRIER----------4.5 KSI(CLASS A)
CONCRETE ABOVE FOOTINGS (PIER AND PILE CAP)---------4.5 KSI(CLASS A)
CONCRETE IN FOOTINGS----------3.0 KSI(CLASS B)
MIX REQUIREMENTS SHALL CONFORM TO SECTION 812 OF THE STANDARD SPECIFICATIONS.
ALL EXPOSED EDGES SHALL BE CHAMFERED ¾" UNLESS OTHERWISE NOTED.
IT IS THE CONTRACTOR'S RESPONSIBILITY TO UTILIZE ANY APPROVED CONCRETE ADDITIVES TO ACCELERATE CONCRETE CURING TIME DURING COLD WEATHER. PAYMENT SHALL BE INCIDENTAL TO THE RESPECTIVE CONCRETE ITEM. SLIP FORMING OF THE BARRIERS WILL NOT BE ALLOWED.

4. REINFORCING STEEL
UNCOATED REINFORCING STEEL SHALL BE AASHTO M31, GRADE 60. REINFORCING STEEL DESIGNATED BY THE 'Z' SUFFIX SHALL BE ZINC AND EPOXY DUAL-COATED AND SHALL CONFORM TO THE SPECIAL PROVISIONS. UNCOATED REINFORCING STEEL SHALL NOT BE ALLOWED TO COME IN CONTACT WITH COATED REINFORCING STEEL.
CONCRETE COVER SHALL BE 2" UNLESS OTHERWISE NOTED.

5. ABUTMENT SLOPE PROTECTION
ABUTMENT SLOPE PROTECTION SHALL CONSIST OF 1'-0" R-4 RIPRAP ON GEOTEXTILE. RIPRAP SHALL TERMINATE IN A 2'-0" DEEP TOE. RIPRAP SHALL EXTEND 5'-0" BEYOND THE FACE OF EACH WINGWALL AND 5'-0" AT GRADE BEYOND THE END OF EACH WINGWALL.

6. CONCRETE SEALER
SILICONE ACRYLIC CONCRETE SEALER SHALL BE APPLIED TO THE EXPOSED FACES OF THE BARRIERS, ABUTMENTS, PIERS, COLUMNS, WINGWALLS AND MSE WALL CAPS AND SLIP JOINTS (BUT NOT THE PANELS). PAYMENT SHALL BE MADE UNDER ITEM *602646 - SILICONE ACRYLIC CONCRETE SEALER.

7. MISCELLANEOUS PAYMENT NOTES
A. ANY WATERSTOPS SHALL BE INCIDENTAL TO THE APPROPRIATE CONCRETE ITEM.
B. ALL DIAPHRAGM CONCRETE IS INCLUDED IN THE QUANTITY FOR ITEM 602013- SUPERSTRUCTURE, CLASS A.
C. STYROFOAM FILLER USED IN THE PIER AND END DIAPHRAGMS IS INCIDENTAL TO ITEM 602013.
D. DECK SLAB INCLUDES ½" INTEGRAL WEARING SURFACE. PAYMENT INCLUDED IN APPROPRIATE CONCRETE ITEM.

8. BEAMS AND DIAPHRAGMS
TIME FROM CASTING OF BEAMS TO POURING OF PIER AND ABUTMENT DIAPHRAGMS MUST BE NO LESS THAN 90 DAYS. IF TIME IS NOT SUFFICIENT, CONTRACTOR MUST SUBMIT DESIGN FOR APPROVAL SHOWING STRUCTURAL DESIGN CALCULATIONS TO ACCOUNT FOR RESTRAINT MOMENTS. THE PIER DIAPHRAGM CAN NOT BE POURED UNTIL DECK POURS 1 & 2 ARE COMPLETED. THE ABUTMENT DIAPHRAGMS SHALL BE POURS 4 & 5 AND CANNOT BE POURED UNTIL POURS 1, 2 & 3 ARE COMPLETED. INTERMEDIATE DIAPHRAGMS SHALL BE PLACED PRIOR TO ANY DECK POURS.

9. TEMPORARY SHIELD
THE CONTRACTOR SHALL BE RESPONSIBLE FOR ENSURING NO FALLING MATERIAL OR EQUIPTMENT INTERFERES WITH THE TRAVELLING PUBLIC. A PLAN SHOWING THE CONTRATORS METHOD SHALL BE SUBMITTED TO THE ENGINEER FOR APPROVAL. PAYMENT FOR SHIELDING SHALL BE INCIDENTAL TO THE GIRDERS.

10. LOAD RATINGS
LRFR LOAD RATINGS SHOWN ARE IN ACCORDANCE WITH THE 2008 AASHTO MANUAL FOR BRIDGE EVALUATION.

LRFR LOAD RATINGS

RATING VEHICLE	RATING TYPE	CONTROLLING UNIT/SPAN/ MEMBER	CONTROLLING POINT	LOAD EFFECT	LIMIT STATE	LOAD RATING FACTOR	LOAD RATING (tons)
HL-93 TRUCK	INVENTORY	INT. GIRDER	109.54	SHEAR	STRENGTH I	1.12	N/A
HL-93 TRAIN	INVENTORY	EXT. GIRDER	110.00	FLEXURE	STRENGTH I	1.17	N/A
HL-93 TANDEM	INVENTORY	EXT. GIRDER	108.00	FLEXURE	STRENGTH I	1.24	N/A
HL-93 TRUCK	OPERATING	INT. GIRDER	109.00	SHEAR	STRENGTH II	1.51	N/A
HL-93 TRAIN	OPERATING	EXT. GIRDER	110.00	FLEXURE	STRENGTH II	1.51	N/A
HL-93 TANDEM	OPERATING	EXT. GIRDER	108.00	FLEXURE	STRENGTH II	1.55	N/A
S220	LEGAL	INT. GIRDER	205.00	FLEXURE	SERVICE III	2.32	46.48
S335	LEGAL	INT. GIRDER	205.00	FLEXURE	SERVICE III	1.30	45.49
S437	LEGAL	INT. GIRDER	205.00	FLEXURE	SERVICE III	1.24	45.31
T330	LEGAL	INT. GIRDER	205.00	FLEXURE	SERVICE III	1.81	54.25
T435	LEGAL	INT. GIRDER	205.00	FLEXURE	SERVICE III	1.57	54.94
T540	LEGAL	INT. GIRDER	205.00	FLEXURE	SERVICE III	1.40	55.93

INDEX OF BRIDGE SHEETS

BR. SHEET	TABLE OF CONTENTS
1	BRIDGE NOTES & TYPICAL SECTION
2	BRIDGE PLAN & ELEVATION
3	PIER DETAILS
4	PILE DETAILS
5	MSE WALL DETAILS
6	LIMITS OF PAYMENT
7	ABUTMENT DETAILS
8	BEAM DETAILS
9	FRAMING PLAN AND BEARING DETAILS
10	DECK DETAILS
11	DIAPHRAGM DETAILS
12	DECK ELEVATIONS
13	APPROACH SLAB, WINGWALL AND PARAPET DETAILS
14	BRIDGE SAFETY FENCE DETAILS
15	REINFORCEMENT BAR LIST
	TOTAL BRIDGE SHEETS: 15

GRADE DATA - BRIDGE 2-008C

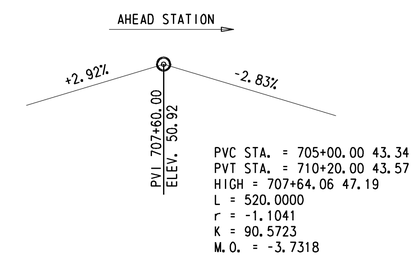

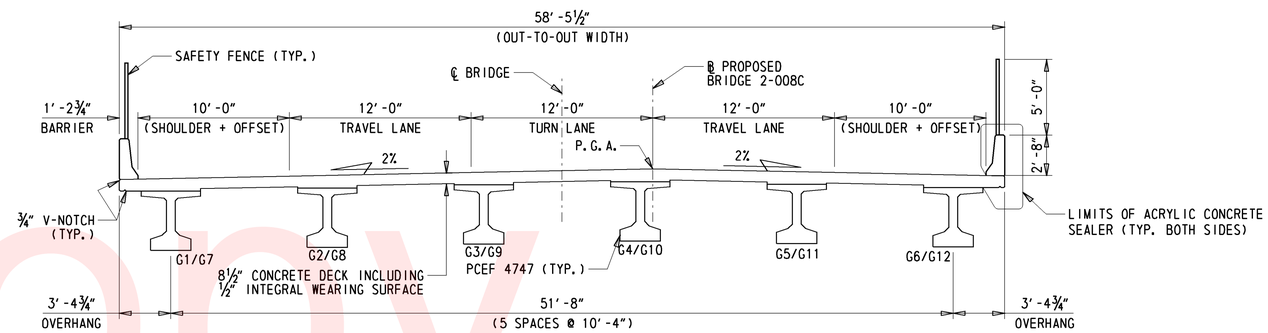

TYPICAL SECTION
(LOOKING AHEAD STATION)
1" = 5'-0"

NOTES:
1. 10'-0" SHOULDER ON BRIDGE CONSISTS OF 8'-0" SHOULDER PLUS 2'-0" LATERAL OFFSET FROM BARRIER

Unofficial Website Copy

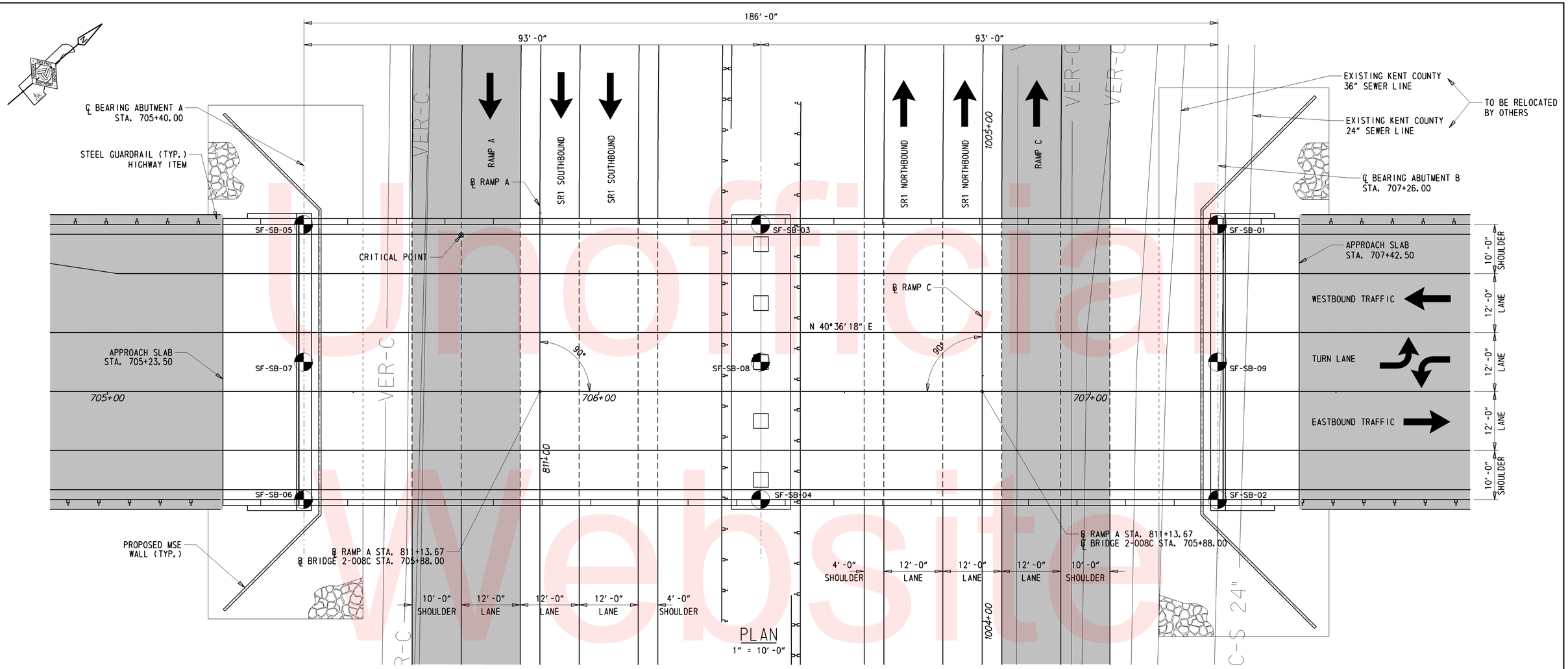

Unofficial Website Copy

Y:\KENT\008\BRIDGE\2812202\PLANS\BRIDGE\PE01.DGN

DELAWARE DEPARTMENT OF TRANSPORTATION

ADDENDUMS / REVISIONS

SCALE 0 10 20 30 FEET

SR1, SOUTH FREDERICA GRADE SEPARATED INTERSECTION

CONTRACT	BRIDGE NO.	2-008C
T200812202	DESIGNED BY: JAT	
COUNTY		
KENT	CHECKED BY: JNH	

BRIDGE PLAN & ELEVATION BRIDGE SHEET 2 OF 15

SHEET NO.
105
TOTAL SHTS.
296

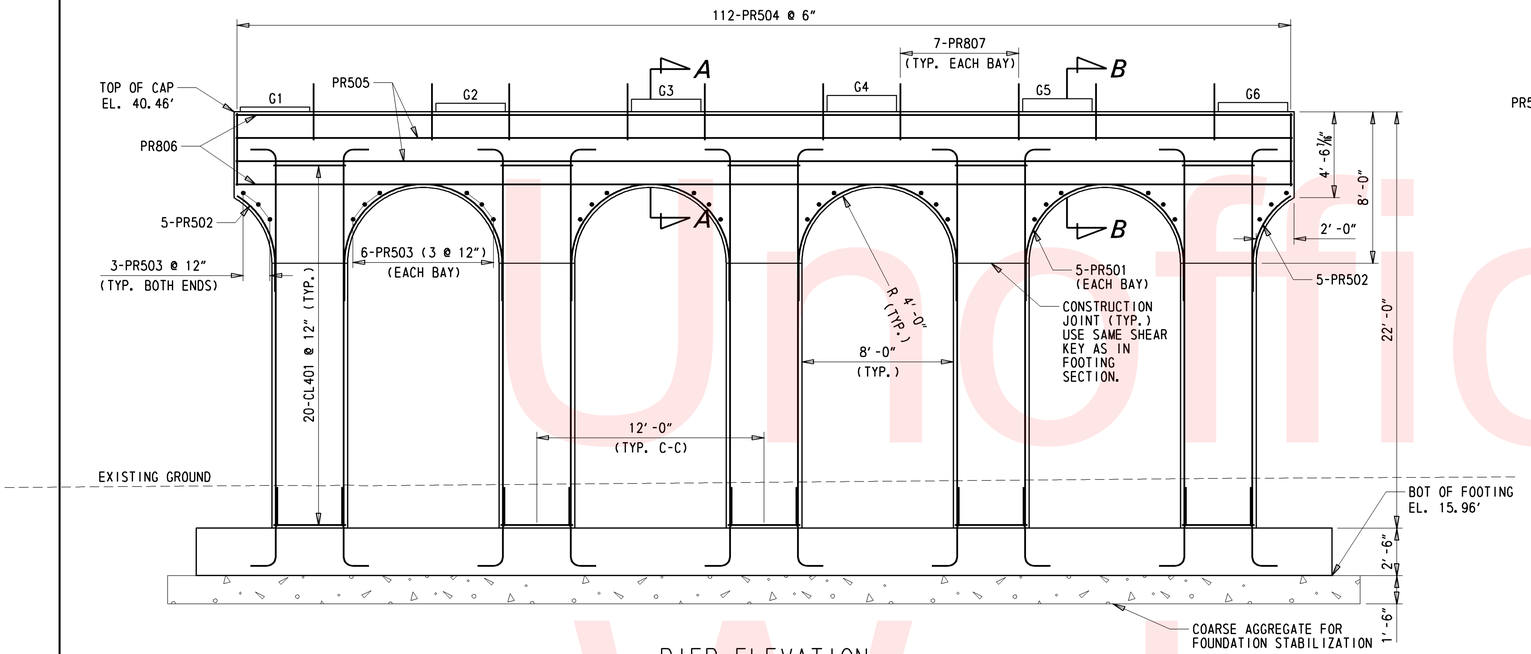

PIER ELEVATION

1/4" = 1'-0"

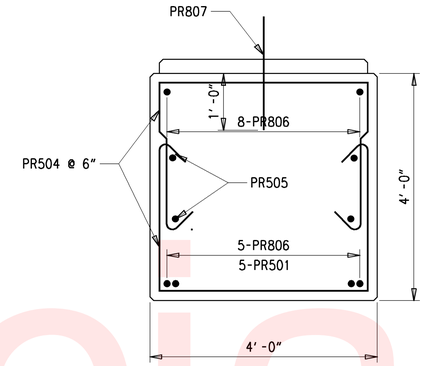

SECTION A-A

3/4" = 1'-0"

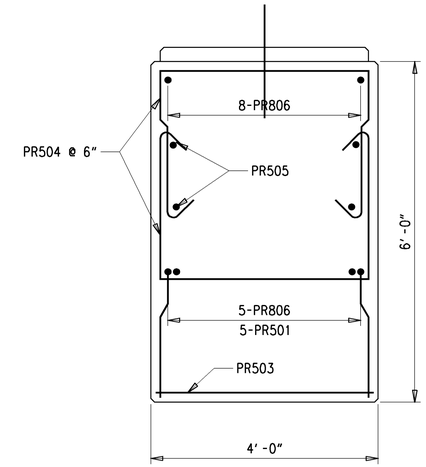

SECTION B-B

3/4" = 1'-0"

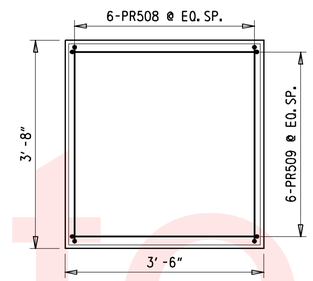

MASONRY PAD PLAN

3/4" = 1'-0"

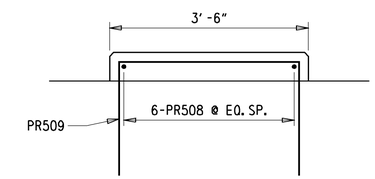

MASONRY PAD SECTION

3/4" = 1'-0"

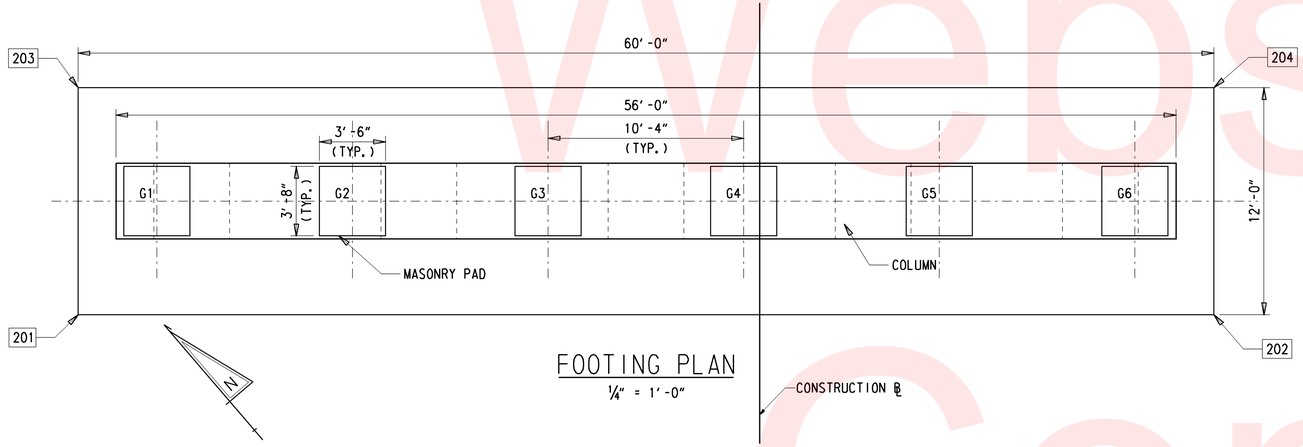

FOOTING PLAN

1/4" = 1'-0"

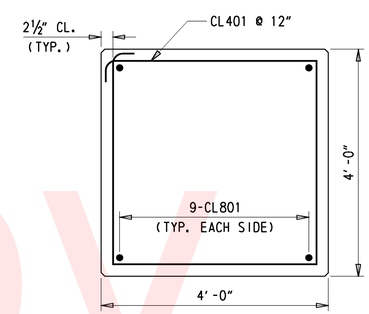

COLUMN SECTION

3/4" = 1'-0"

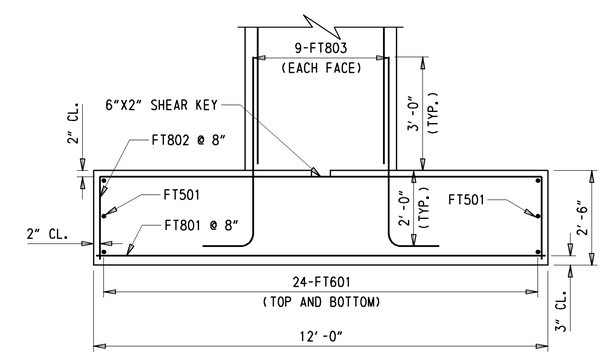

FOOTING SECTION

1/2" = 1'-0"

WORKING POINTS

POINT	STATION	OFFSET	NORTHING	EASTING
201	706+27.00	L 36.00	360900.77	646937.20
202	706+27.00	R 24.00	360861.72	646982.75
203	706+39.00	L 36.00	360909.88	646945.01
204	706+39.00	R 24.00	360870.83	646990.56

NOTE: WORKING POINTS SHOWN AT BOTTOM OF FOOTER

MASONRY PAD ELEVATIONS

PAD	ELEV. (FT)	PAD	ELEV. (FT)
G1	40.80	G4	41.42
G2	41.00	G5	41.24
G3	41.21	G6	41.04

Unofficial Website Copy

Y:\KENT\008\BRIDGE\2812202\PLANS\BRIDGE\PR01.DGN

DELAWARE DEPARTMENT OF TRANSPORTATION	ADDENDUMS / REVISIONS	SCALE AS NOTED	SR1, SOUTH FREDERICA GRADE SEPARATED INTERSECTION	CONTRACT T200812202	BRIDGE NO. 2-008C	PIER DETAILS BRIDGE SHEET 3 OF 15	SHEET NO. 106
				COUNTY KENT	DESIGNED BY: JAT		TOTAL SHTS. 296
					CHECKED BY: JNH		

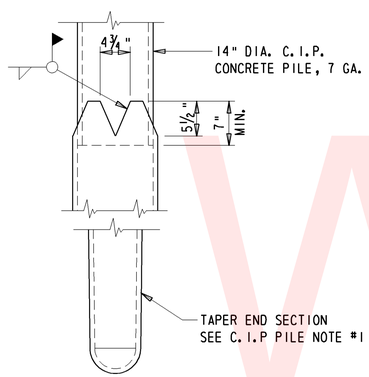

TYPICAL PILE SPLICE

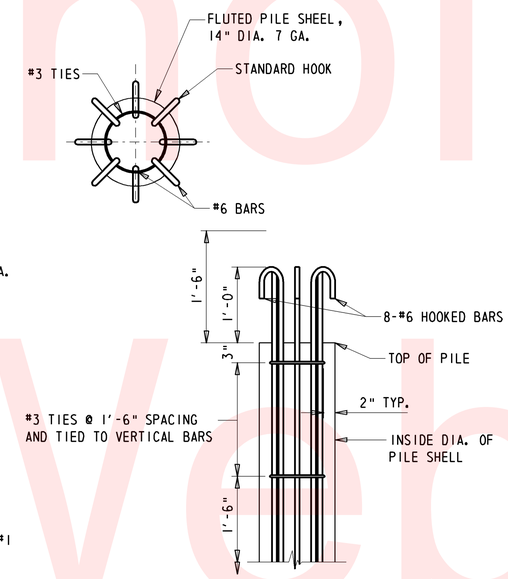

TYPICAL PILE REINFORCEMENT

CAST-IN-PLACE PILE DETAILS

PROJECT SPECIFIC PILE NOTES

1. PILE TYPE
   THIS PROJECT SHALL UTILIZE 14" DIA. CAST-IN-PLACE FLUTED PIPE PILES. THE PILE TAPERED SECTION SHALL BE "Y" TAPER (0.40 IN/FT), 8" POINT DIAMETER x 14" BUTT DIAMETER x 15' LENGTH. REINFORCEMENT SHALL EXTEND 25'-0" INTO EACH PILE.
2. ESTIMATED PRODUCTION PILE LENGTH IS 70'.
3. REQUIRED TEST PILE LENGTH IS 80'.
4. PILES SHALL BE DRIVEN TO A MINIMUM SAFE BEARING CAPACITY OF 400 KIPS.
5. MINIMUM TIP ELEVATION SHALL NOT BE REQUIRED FOR THIS PROJECT.

GENERAL PILE NOTES

1. FOR MORE INFORMATION REGARDING PILE MATERIALS AND FABRICATION, REFER TO SECTION 618 (PILE MATERIALS) OF THE STANDARD SPECIFICATIONS. FOR MORE INFORMATION REGARDING PILE DRIVING AND INSTALLATION, REFER TO SECTION 619 (INSTALLATION OF PILES) OF THE STANDARD SPECIFICATIONS.
2. EACH TEST PILE SHALL BE DYNAMICALLY TESTED BY THE CONTRACTOR IN ACCORDANCE WITH ITEM #619519 - DYNAMIC PILE TESTING BY CONTRACTOR. THE NEED TO RESTRIKE EITHER A TEST PILE OR A PRODUCTION PILE SHALL BE THE SOLE DECISION OF THE ENGINEER.
3. WAVE EQUATION ANALYSIS SHALL BE SUBMITTED BY THE CONTRACTOR FOR REVIEW BY THE ENGINEER (MINIMUM OF 8 COPIES).
4. TEST PILES SHALL BE DRIVEN AT EACH LOCATION SHOWN ON THE PLANS. PRODUCTION PILES SHALL BE ORDERED BASED ON THE RESULTS OF THE TEST PILE DRIVING.

CAST-IN-PLACE PILE NOTES

1. COST OF REINFORCING BARS INSIDE THE STEEL SHELL IS INCLUDED IN THE BID PRICE FOR THE APPROPRIATE CAST-IN-PLACE CONCRETE PILE ITEMS.
2. PILES SHALL BE COAL TAR EPOXY COATED.

Unofficial Website Copy

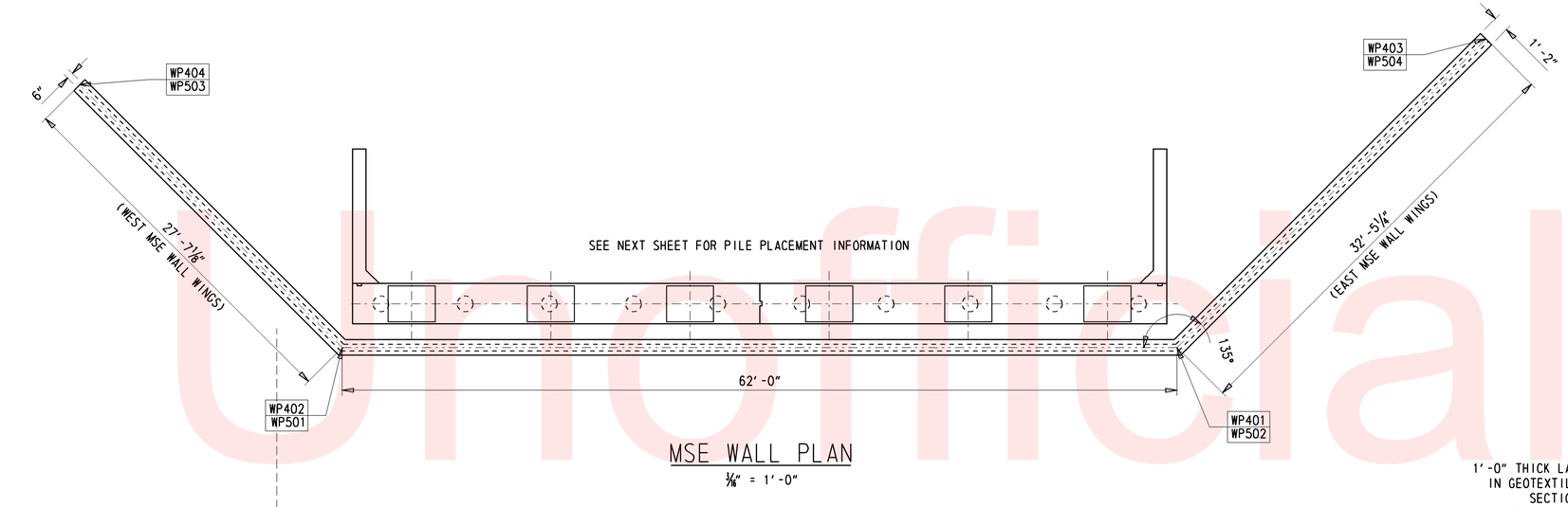

MSE WALL PLAN

3/16" = 1'-0"

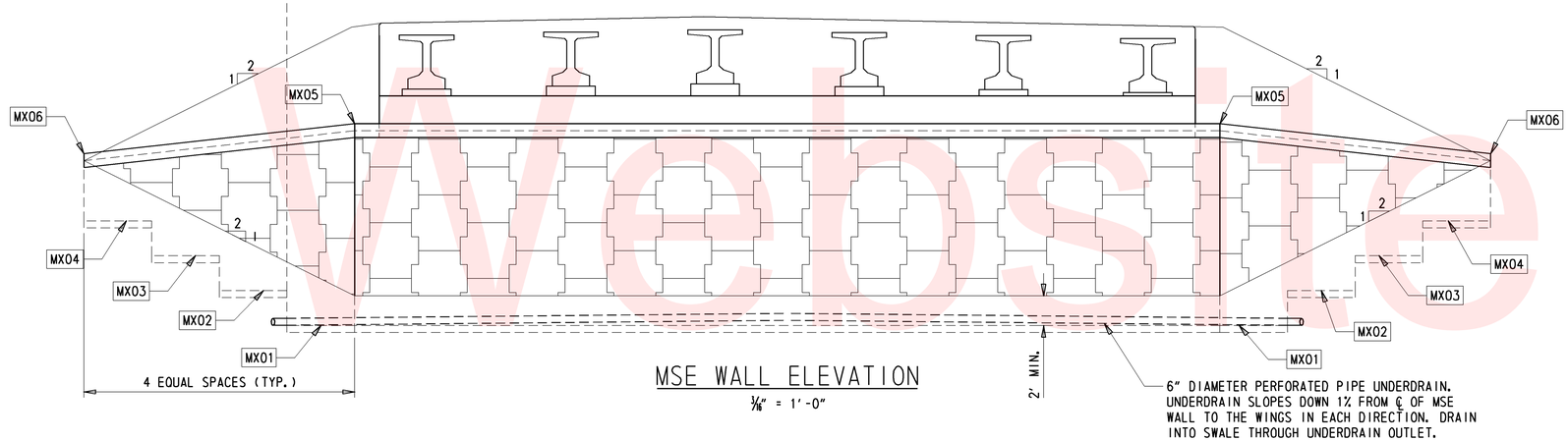

MSE WALL ELEVATION

3/16" = 1'-0"

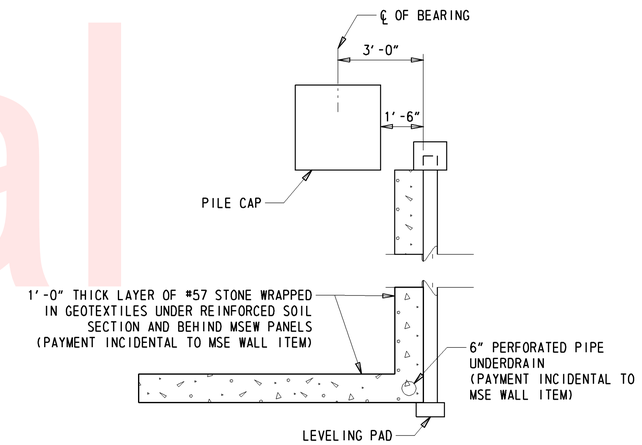

MSE WALL SECTION

NOT TO SCALE

WORKING POINTS

POINT	STATION	OFFSET	NORTHING	EASTING
WP401	705+43.25	L 37.00	360837.83	646881.93
WP402	705+43.25	R 25.00	360797.48	646929.00
WP403	705+23.74	L 56.51	360835.72	646854.42
WP404	705+23.74	R 44.51	360769.97	646931.12
WP501	707+22.75	L 37.00	360974.11	646998.76
WP502	707+22.75	R 25.00	360933.76	647045.83
WP503	707+45.81	L 60.06	361006.63	646996.26
WP504	707+45.81	R 48.06	360936.26	647078.35

NOTE: WP401-WP404 CORRESPOND TO THE WEST MSE WALL
WP501-WP504 CORRESPOND TO THE EAST MSE WALL

ELEVATIONS

POINT	ELEV. (FT)	POINT	ELEV. (FT)
M101	22.27	M201	21.42
M102	24.77	M202	24.42
M103	27.27	M203	27.42
M104	29.77	M204	30.42
M105	36.74	M205	39.39
M106	34.59	M206	35.51

NOTE: M101-M106 CORRESPOND TO THE WEST MSE WALL
M201-M206 CORRESPOND TO THE EAST MSE WALL

Unofficial Website Copy

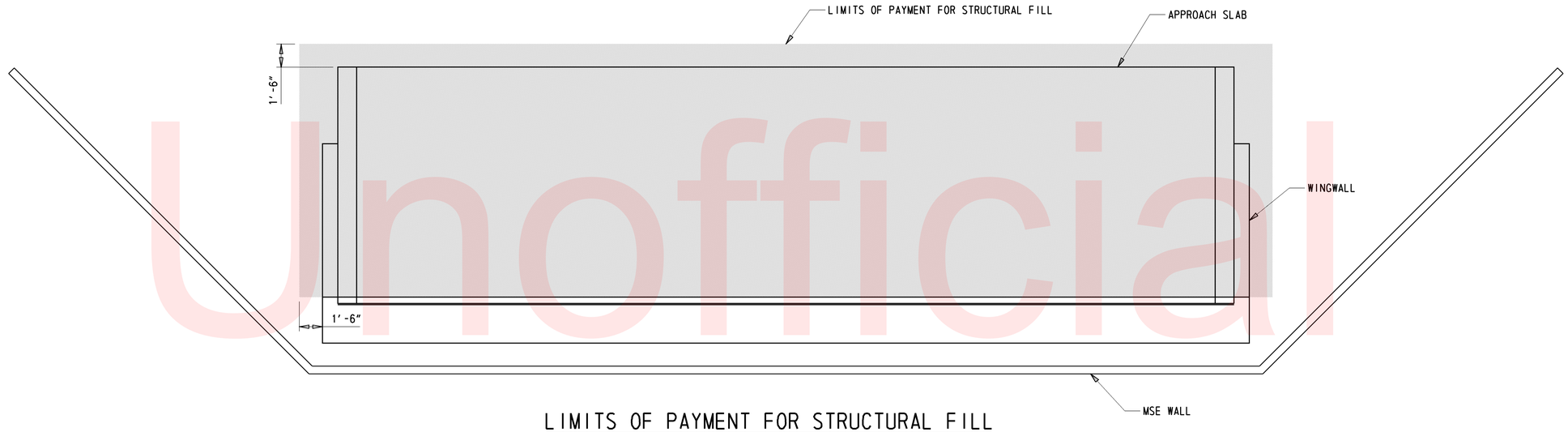

LIMITS OF PAYMENT FOR STRUCTURAL FILL

¼" = 1'-0"

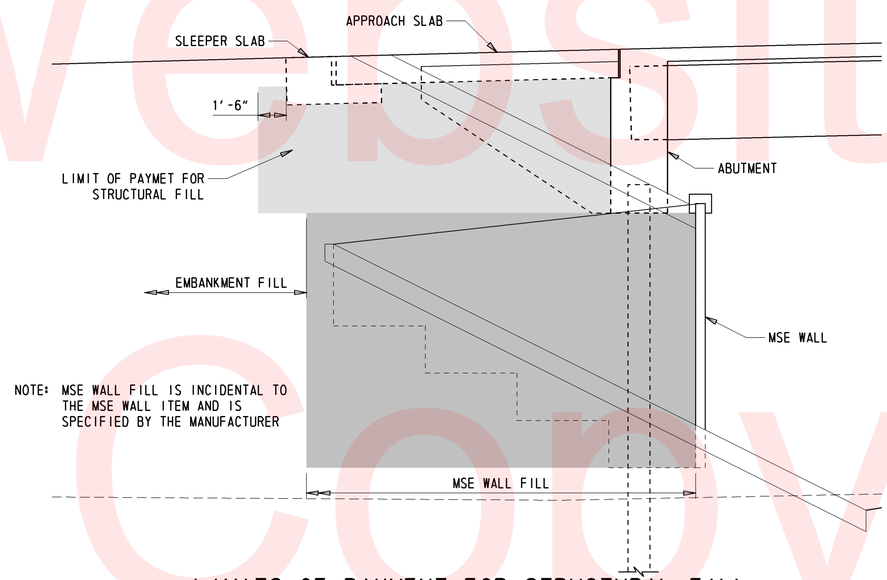

LIMITS OF PAYMENT FOR STRUCTURAL FILL

¼" = 1'-0"

Unofficial Website Copy

Y:\KENT\008\BRIDGE\2812202\PLANS\BRIDGE\PE01.DGN

DELAWARE DEPARTMENT OF TRANSPORTATION	ADDENDUMS / REVISIONS	SCALE 0 4 8 12 FEET	SR1, SOUTH FREDERICA GRADE SEPARATED INTERSECTION	CONTRACT T200812202	BRIDGE NO. 2-008C	LIMITS OF PAYMENT BRIDGE SHEET 6 OF 15	SHEET NO. 109
				COUNTY KENT	DESIGNED BY: JAT		TOTAL SHTS. 296
					CHECKED BY:		

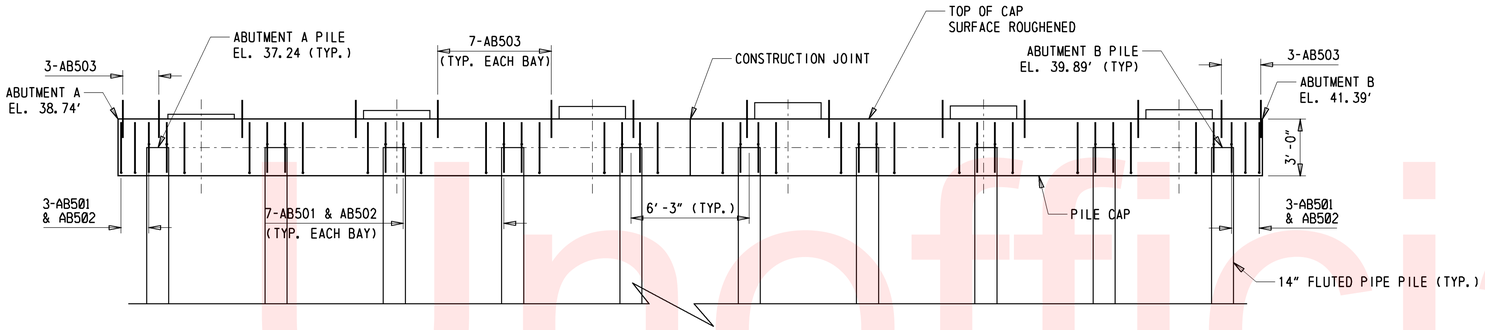

ABUTMENT ELEVATION

¼" = 1'-0"

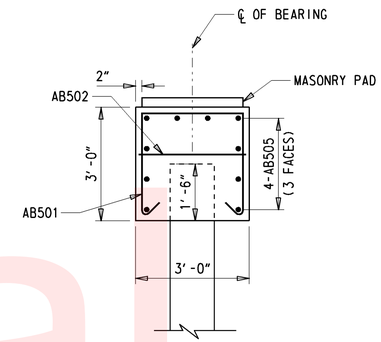

ABUTMENT SECTION

(PILE AT SECTION)

½" = 1'-0"

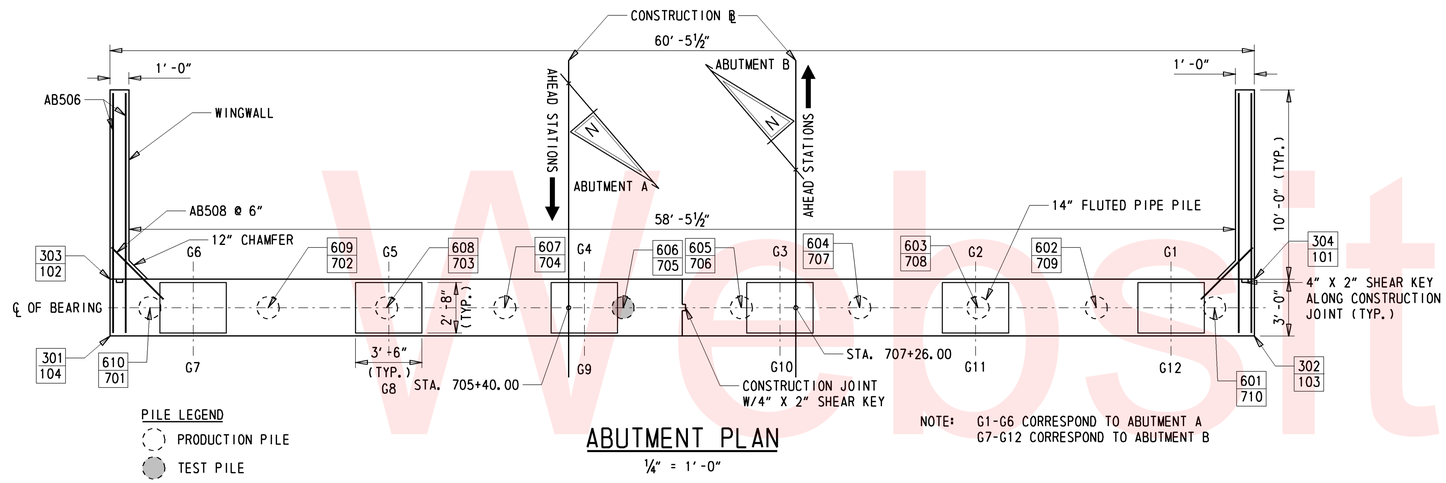

NOTE: G1-G6 CORRESPOND TO ABUTMENT A
G7-G12 CORRESPOND TO ABUTMENT B

ABUTMENT PLAN

¼" = 1'-0"

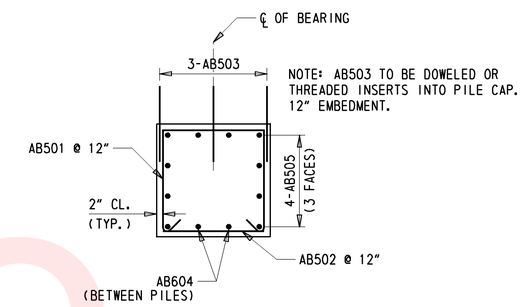

NOTE: AB503 TO BE DOWELED OR THREADED INSERTS INTO PILE CAP. 12" EMBEDMENT.

ABUTMENT SECTION

(NO PILE AT SECTION)

½" = 1'-0"

ABUTMENT A WORKING POINTS				
NO.	STATION	OFFSET	NORTHING	EASTING
101	705+38.50	L 36.23	360833.73	646879.42
102	705+38.50	R 24.23	360794.38	646925.32
103	705+41.50	L 36.23	360836.00	646881.38
104	705+41.50	R 24.23	360796.65	646927.52
ABUTMENT A PILE WORKING POINTS				
NO.	STATION	OFFSET	NORTHING	EASTING
601	705+40.00	L 34.13	360833.50	646822.00
602	705+40.00	L 27.88	360829.43	646866.74
603	705+40.00	L 21.62	360825.36	646891.49
604	705+40.00	L 15.38	360821.29	646896.23
605	705+40.00	L 9.13	360817.22	646900.98
606	705+40.00	L 2.88	360813.16	646910.47
607	705+40.00	R 3.37	360809.09	646910.47
608	705+40.00	R 9.62	360805.02	646915.21
609	705+40.00	R 15.87	360800.95	646919.96
610	705+40.00	R 22.12	360796.89	646924.70

ABUTMENT A PILES
CUTOFF ELEVATION = 37.24'
ESTIMATED TIP ELEVATION = -39'

ABUTMENT B WORKING POINTS				
NO.	STATION	OFFSET	NORTHING	EASTING
301	707+24.50	L 36.23	360974.94	647000.48
302	707+24.50	R 24.23	360935.59	647045.62
303	707+27.50	L 36.23	360977.22	647002.43
304	707+27.50	R 24.23	360937.87	647048.33
ABUTMENT B PILE WORKING POINTS				
NO.	STATION	OFFSET	NORTHING	EASTING
701	707+26.00	L 34.12	360974.71	647003.05
702	707+26.00	L 27.88	360970.64	647007.80
703	707+26.00	L 21.63	360966.57	647012.54
704	707+26.00	L 15.38	360962.51	647017.29
705	707+26.00	L 9.13	360958.44	647022.03
706	707+26.00	L 2.88	360954.37	647026.78
707	707+26.00	R 3.37	360950.30	647031.52
708	707+26.00	R 9.63	360946.23	647036.72
709	707+26.00	R 15.87	360942.17	647041.01
710	707+26.00	R 22.12	360938.10	647045.76

ABUTMENT B PILES
CUTOFF ELEVATION = 39.89'
ESTIMATED TIP ELEVATION = -39'

MASONRY PAD ELEVATIONS			
PAD	ELEV. (FT)	PAD	ELEV. (FT)
G1	38.99	G7	41.64
G2	39.20	G8	41.84
G3	39.40	G9	42.05
G4	39.61	G10	42.26
G5	39.44	G11	42.08
G6	39.23	G12	41.88

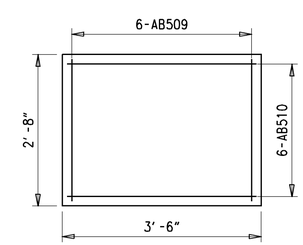

MASONRY PAD PLAN

¾" = 1'-0"

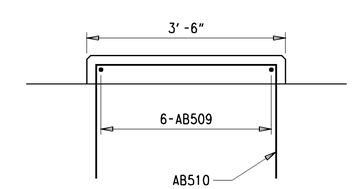

MASONRY PAD SECTION

¾" = 1'-0"

Unofficial Website Copy

DELAWARE DEPARTMENT OF TRANSPORTATION	ADDENDUMS / REVISIONS	SCALE AS NOTED	SR1, SOUTH FREDERICA GRADE SEPARATED INTERSECTION	CONTRACT T200812202	BRIDGE NO. 2-008C	ABUTMENT DETAILS BRIDGE SHEET 7 OF 15	SHEET NO. 110
				COUNTY KENT	DESIGNED BY: JAT		TOTAL SHTS. 296
					CHECKED BY: JNH		

Y:\KENT\008\BRIDGE\2812202\PLANS\BRIDGE\AB01.DGN

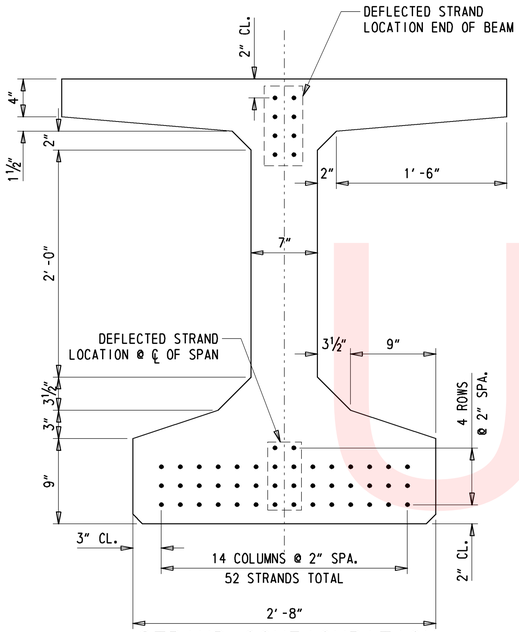

STRAND CONFIGURATION
1½" = 1'-0"

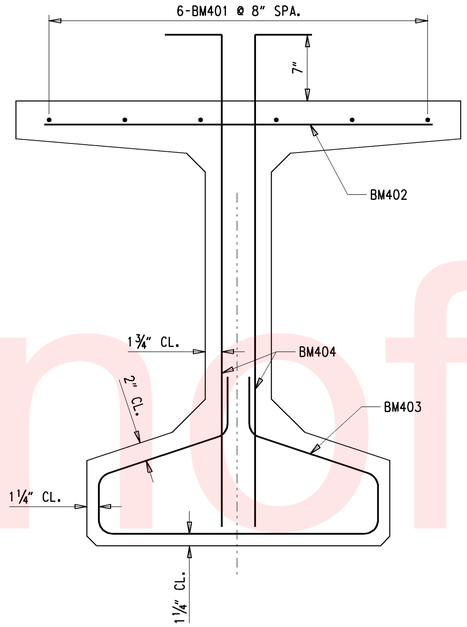

TYPICAL REINFORCING SECTION
1½" = 1'-0"

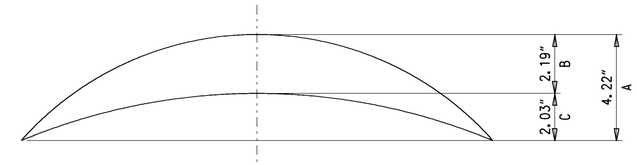

A = ESTIMATED PRESTRESS CAMBER LESS DEFLECTION DUE TO DEAD LOAD OF BEAM TIMES CREEP.
B = DEFLECTION DUE TO DEAD LOAD OF SLAB AND PARAPET.
C = A - B = NET CAMBER.

CAMBER DIAGRAM
N.T.S.

BENDING DIAGRAMS

ALL DIMENSIONS ARE FROM OUT TO OUT.

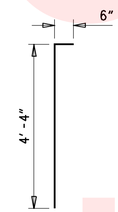

BM404

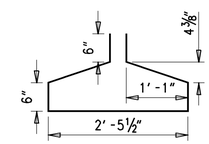

BM403

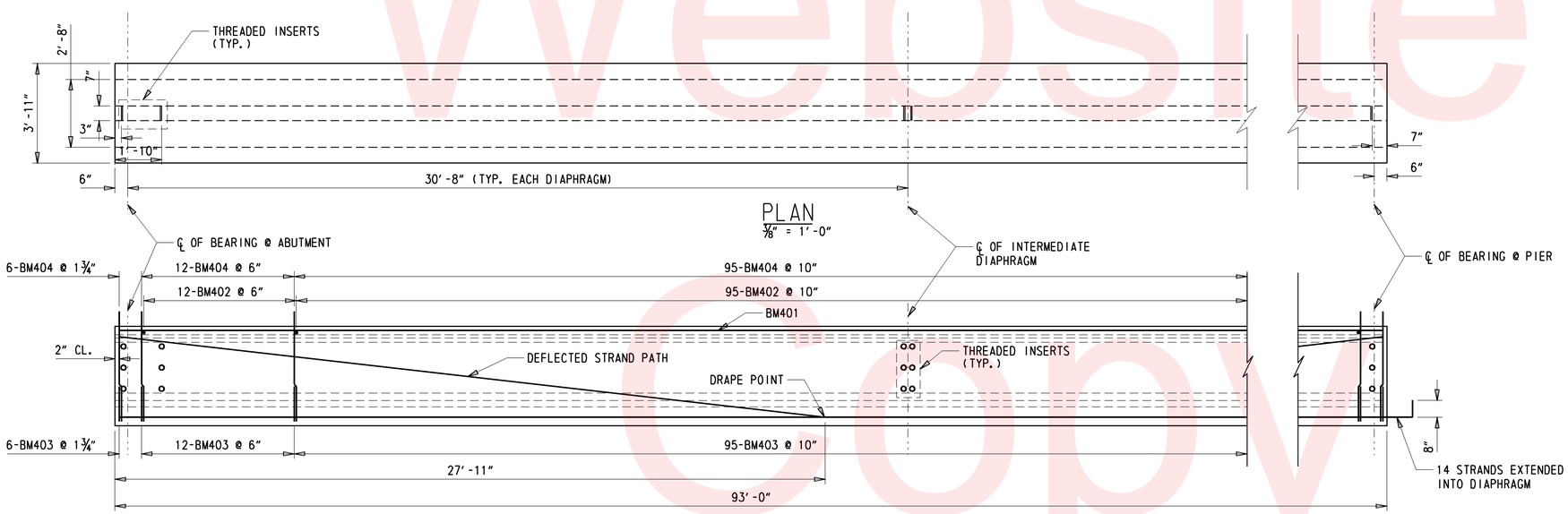

PLAN
⅜" = 1'-0"

ELEVATION
⅜" = 1'-0"

REINFORCING BAR LIST

STRAIGHT BARS				BENT BARS			
MARK	SIZE	NUMBER	LENGTH	MARK	SIZE	NUMBER	LENGTH
BM401	4	12	47'-9"	BM403	4	131	6'-6¼"
BM402	4	119	3'-6"	BM404	4	262	4'-8"

PRESTRESSED BEAM NOTES (PCEF 4747)

DESIGN PLANS - WORKING DRAWINGS

INFORMATION PERTAINING TO THE PRECAST PRESTRESSED REINFORCED CONCRETE BULB-T BEAMS IS INTENDED TO SERVE AS AN INDICATION OF THE TYPE OF CONSTRUCTION ACCEPTABLE FOR USE. THE CONTRACTOR SHALL PREPARE AND SUBMIT, FOR APPROVAL, A COMPLETE SET OF DETAILED SHOP PLANS FOR THE PRESTRESSED PRECAST CONCRETE UNITS THEY PROPOSE TO FURNISH. PAYMENT SHALL BE INCIDENTAL TO ITEM 623003 - PRESTRESSED REINFORCED CONCRETE MEMBERS, BULB-T BEAMS.

CONCRETE STRENGTH

THE MINIMUM COMPRESSIVE STRENGTH AT THE TIME OF THE INITIAL PRESTRESS EQUALS 5000 PSI. THE MINIMUM COMPRESSIVE STRENGTH AT 28 DAYS EQUALS 6000 PSI.

BAR REINFORCEMENT

BAR REINFORCEMENT SHALL CONFORM TO AASHTO M31, GRADE 60. ALL BAR REINFORCEMENT SHALL HAVE A MINIMUM CLEAR COVER OF 2" UNLESS OTHERWISE NOTED OR DETAILED ON THE PLANS. PAYMENT SHALL BE INCIDENTAL TO ITEM 623003 - PRESTRESSED REINFORCED CONCRETE MEMBERS, BULB-T BEAMS.

PRESTRESSING STEEL

ALL STRANDS SHALL BE ½" DIAMETER, SEVEN WIRE STRAND, 0.153 SQ. IN. NOMINAL AREA, LOW RELAXATION STRANDS IN ACCORDANCE WITH AASHTO M203, GRADE 270. MINIMUM INITIAL PULL PER STRAND SHALL BE 31,000 POUNDS. MINIMUM ULTIMATE STRENGTH PER STRAND EQUALS 41,000 POUNDS. USE A 1" DEEP RECESS AROUND LOCAL STRAND GROUPS WITH 2" MINIMUM EDGE CLEARANCE AND FILL WITH PNEUMATICALLY APPLIED MORTAR IMMEDIATELY AFTER CLIPPING STRANDS. AN APPROVED EPOXY MORTAR COVERING THE ENDS OF STRANDS WITH A MINIMUM THICKNESS OF ⅛" MAY BE USED AS AN ALTERNATE.

CONCRETE FINISH

TOP SURFACE OF ALL BEAMS SHALL HAVE A "STIFF BROOM" HEAVY SCORED FINISH IN THE TRANSVERSE DIRECTION TO REMOVE LATENCE AND TO ROUGHEN THE SURFACE. PAYMENT SHALL BE INCIDENTAL TO ITEM 623003 - PRESTRESSED REINFORCED CONCRETE MEMBERS, BULB-T BEAMS.

HANDLING

PRESTRESSES BEAMS SHALL BE HANDLED ONLY BY LIFTING STRANDS PROVIDED ESPECIALLY FOR THIS PURPOSE. THE APPROXIMATE DEAD WEIGHT OF EACH MEMBER IS 24.18 TONS. LOCATION OF LIFTING STRANDS SHALL BE DETERMINED BY THE PRECASTER AND DETAILED IN THE SHOP PLANS. PAYMENT SHALL BE INCIDENTAL TO ITEM 623003 - PRESTRESSED REINFORCED CONCRETE MEMBERS, BULB-T BEAMS.

THREADED INSERTS

AT DIAPHRAGM CONNECTIONS, THREADED INSERTS SHALL HAVE A MINIMUM ULTIMATE PULLOUT CAPACITY OF 11,900 POUNDS EACH. THREADED INSERT AND/OR BAR LOCATIONS MAY BE ADJUSTED BY ½" TO AVOID CONFLICTS. ANY DEVIATIONS FROM THIS PLAN SHALL BE NOTED ON THE SHOP DRAWINGS.

STAY-IN-PLACE FORMS

METAL INSERTS SHALL BE PROVIDED ALONG THE TOP FLANGE OF THE PRESTRESSED CONCRETE BEAMS TO SUPPORT STAY-IN-PLACE FORMS. SIZE, SPACING, AND LOCATION OF INSERTS SHALL BE DETERMINED BY STAY-IN-PLACE FORM MANUFACTURER. PAYMENT SHALL BE INCIDENTAL TO ITEM 623003 - PRESTRESSED REINFORCED CONCRETE MEMBERS, BULB-T BEAMS.

BEARING AREA

BEAMS SHALL BE DAPPED AT ENDS TO REST LEVEL ON THEIR BEARING SURFACE AFTER DECK PLACEMENT. A DETAIL OF THE DAP SHALL BE PROVIDED.

Unofficial Website Copy

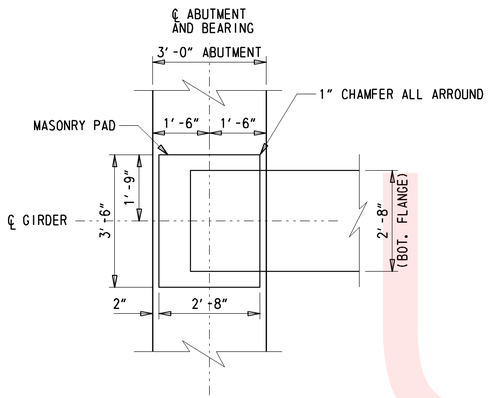

ABUTMENT BEARING

½″ = 1′-0″

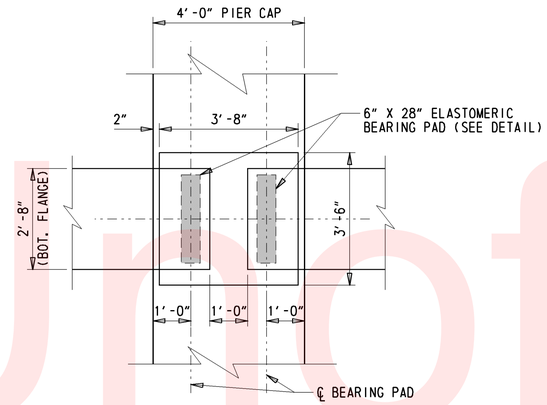

PIER BEARING

½″ = 1′-0″

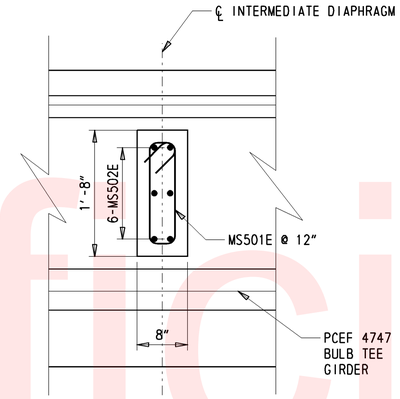

INTERMEDIATE DIAPHRAGM SECTION

1″ = 1′-0″

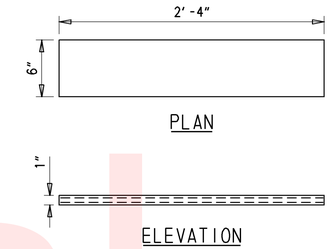

BEARING PAD DIMENSIONS

LENGTH = 6″
WIDTH = 28″
COVER LAYER THICKNESS = ¼″
INTERNAL LAYER THICKNESS = ⅜″
NUMBER OF STEEL LAYERS = 2
STEEL LAYER GAGE = 16
EDGE DISTANCE = ⅛″

NOTES:

1. *ALL ELASTOMERIC PADS SHALL BE VIRGIN CHLOROPRENE IN ACCORDANCE WITH SECTION 623.06 OF THE STANDARD SPECIFICATIONS (60 DUROMETER HARDNESS).*
2. *ELASTOMERIC BEARING PADS SHALL BE ATTACHED TO THE BOTTOM OF THE BEAM AND THE TOP OF THE MASONRY PAD WITH AN APPROVED EPOXY GLUE.*
3. *ELASTOMERIC BEARING PADS SHALL BE INCIDENTAL TO ITEM 623003 - PRESTRESSED REINFORCED CONCRETE MEMBERS, BULB-T BEAMS.*

TYPICAL BEARING PAD

1½″ = 1′-0″

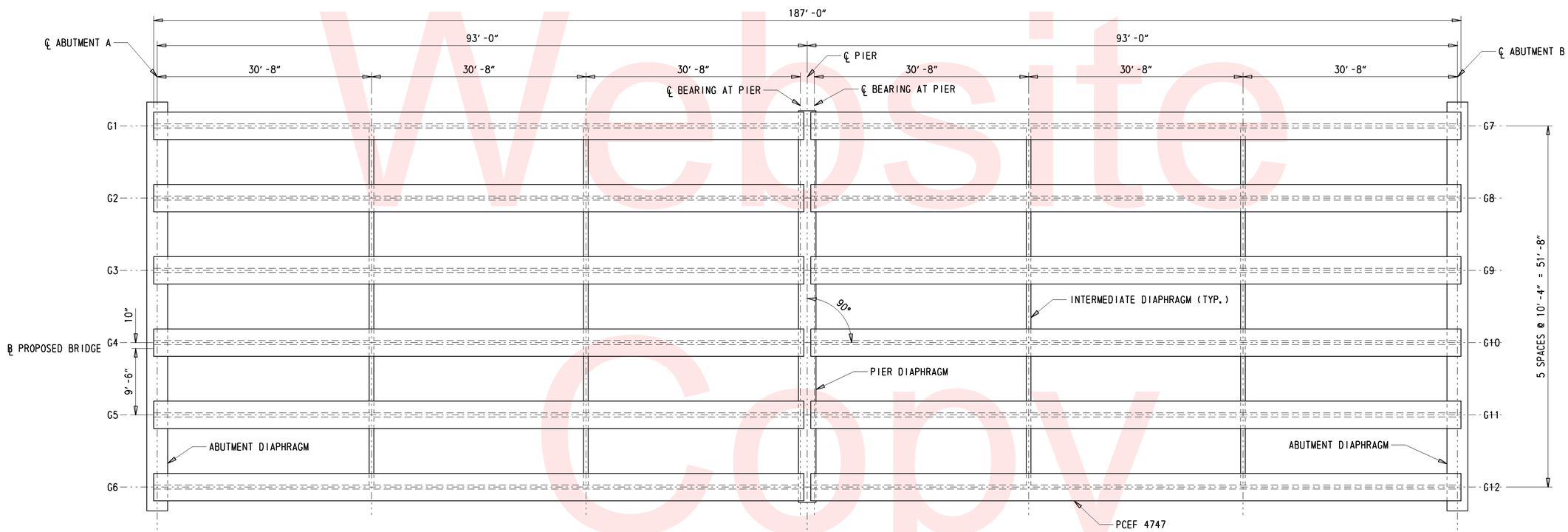

FRAMING PLAN

⅛″ = 1′-0″

Unofficial Website Copy

DELAWARE DEPARTMENT OF TRANSPORTATION	ADDENDUMS / REVISIONS	SCALE AS NOTED	SR1, SOUTH FREDERICA GRADE SEPARATED INTERSECTION	CONTRACT T200812202 / COUNTY KENT	BRIDGE NO. 2-008C / DESIGNED BY: JAT / CHECKED BY: JNH	FRAMING PLAN & BEARING DETAILS BRIDGE SHEET 9 OF 15	SHEET NO. 112 / TOTAL SHTS. 296

Y:\KENT\008\BRIDGE\2812202\PLANS\BRIDGE\FR01.DGN

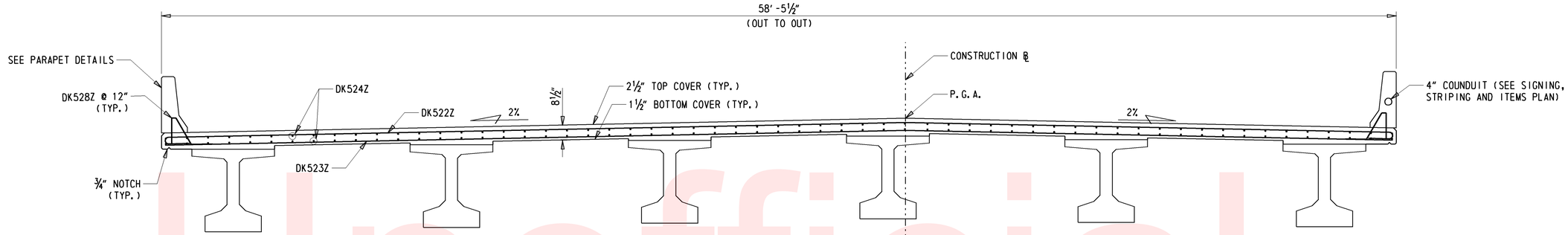

DECK SECTION

⅜" = 1'-0"

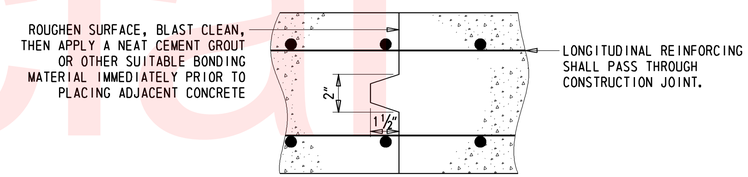

CONSTRUCTION JOINT DETAILS

N.T.S.

NOTE: POURS 4 & 5 INCLUDE THE ABUTMENT DIAPHRAGMS

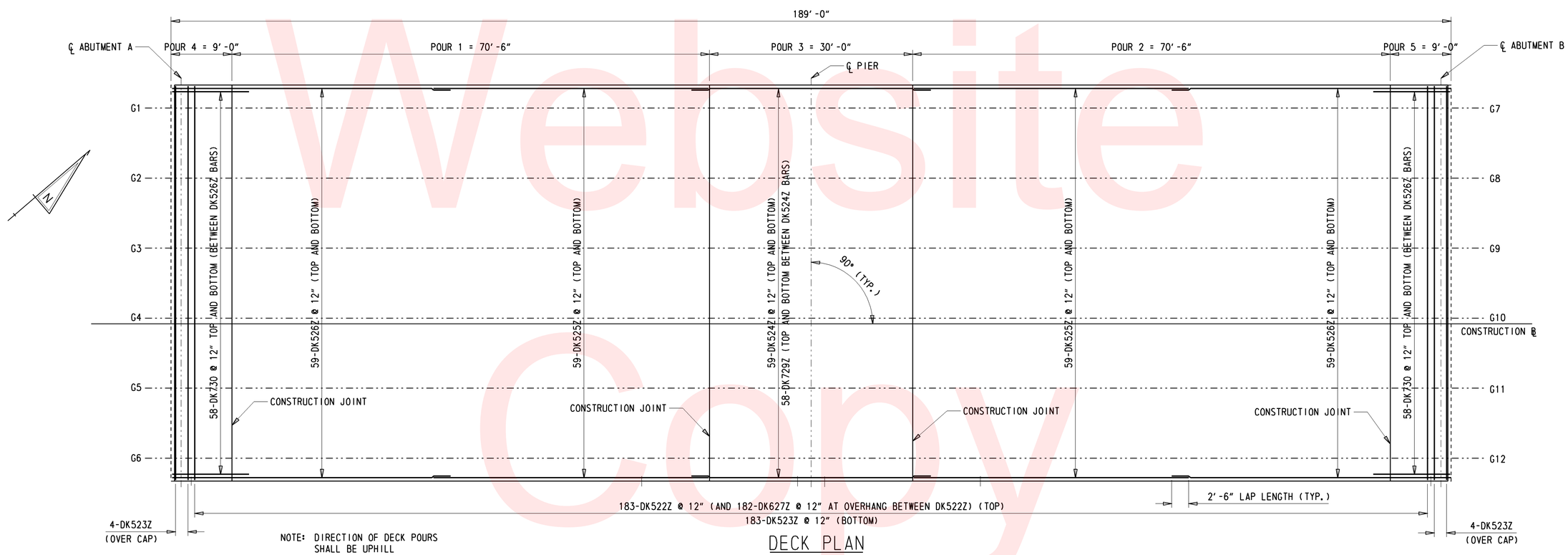

NOTE: DIRECTION OF DECK POURS SHALL BE UPHILL

DECK PLAN

⅛" = 1'-0"

Unofficial Website Copy

Y:\KENT\008\BRIDGE\2812202\PLANS\BRIDGE\DK01.DGN

DELAWARE DEPARTMENT OF TRANSPORTATION	ADDENDUMS / REVISIONS	SCALE AS NOTED	SR1, SOUTH FREDERICA GRADE SEPARATED INTERSECTION	CONTRACT T200812202 / COUNTY KENT	BRIDGE NO. 2-008C / DESIGNED BY: JAT / CHECKED BY: JNH	DECK DETAILS BRIDGE SHEET 10 OF 15	SHEET NO. 113 / TOTAL SHTS. 296

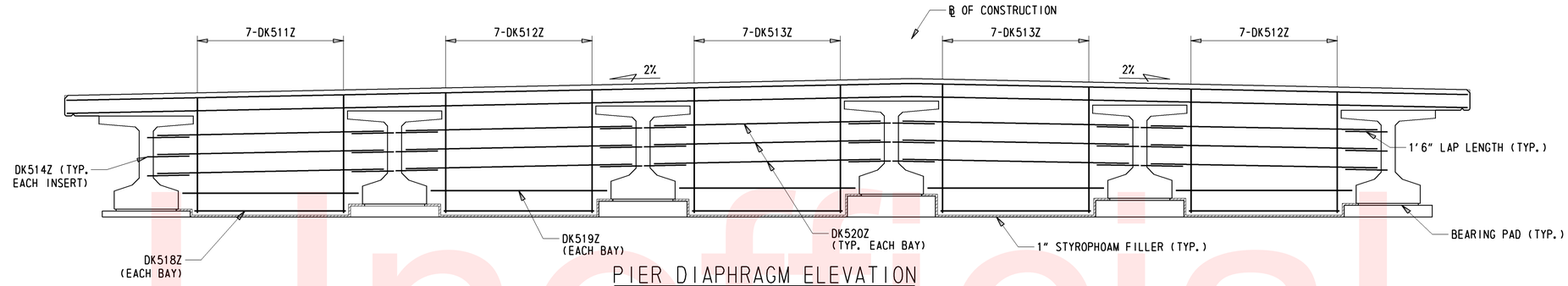

PIER DIAPHRAGM ELEVATION

3/8" = 1'-0"

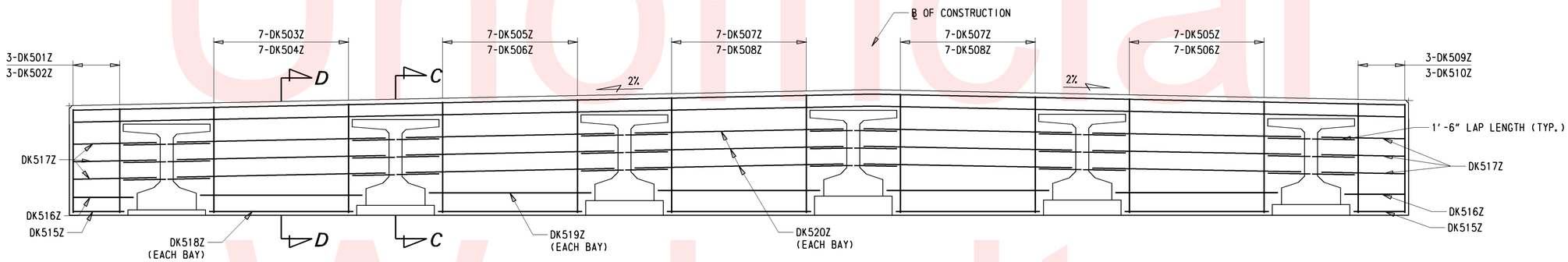

ABUTMENT DIAPHRAGM ELEVATION

3/8" = 1'-0"

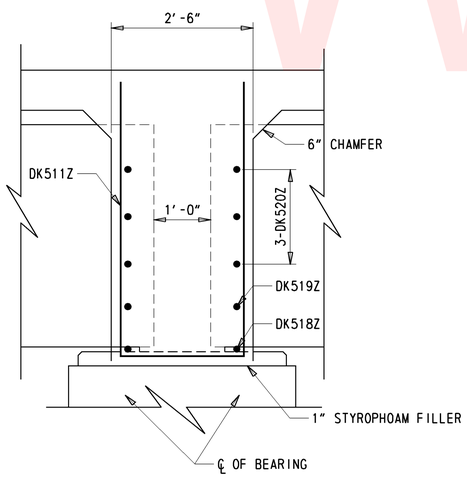

PIER DIAPHRAGM SECTION

3/4" = 1'-0"

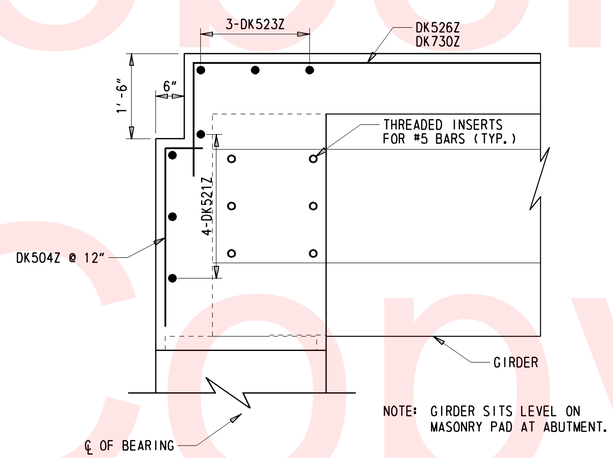

NOTE: GIRDER SITS LEVEL ON MASONRY PAD AT ABUTMENT.

SECTION C-C

3/4" = 1'-0"

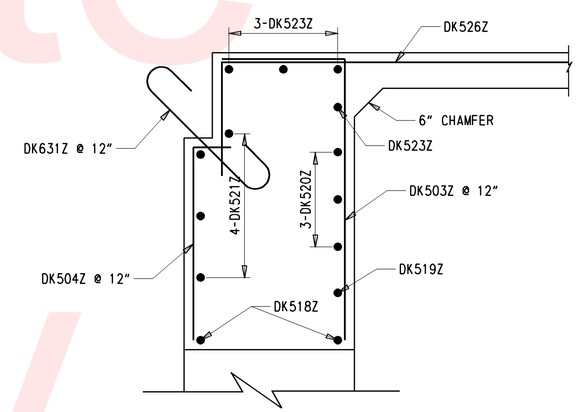

SECTION D-D

3/4" = 1'-0"

Unofficial Website Copy

DELAWARE DEPARTMENT OF TRANSPORTATION	ADDENDUMS / REVISIONS	SCALE AS NOTED	SR1, SOUTH FREDERICA GRADE SEPARATED INTERSECTION	CONTRACT T200812202	BRIDGE NO. 2-008C	DIAPHRAGM DETAILS BRIDGE SHEET 11 OF 15	SHEET NO. 114
				COUNTY KENT	DESIGNED BY: JAT		TOTAL SHTS. 296
					CHECKED BY: JNH		

Y:\KENT\008\BRIDGE\2812202\PLANS\BRIDGE\DK02.DGN

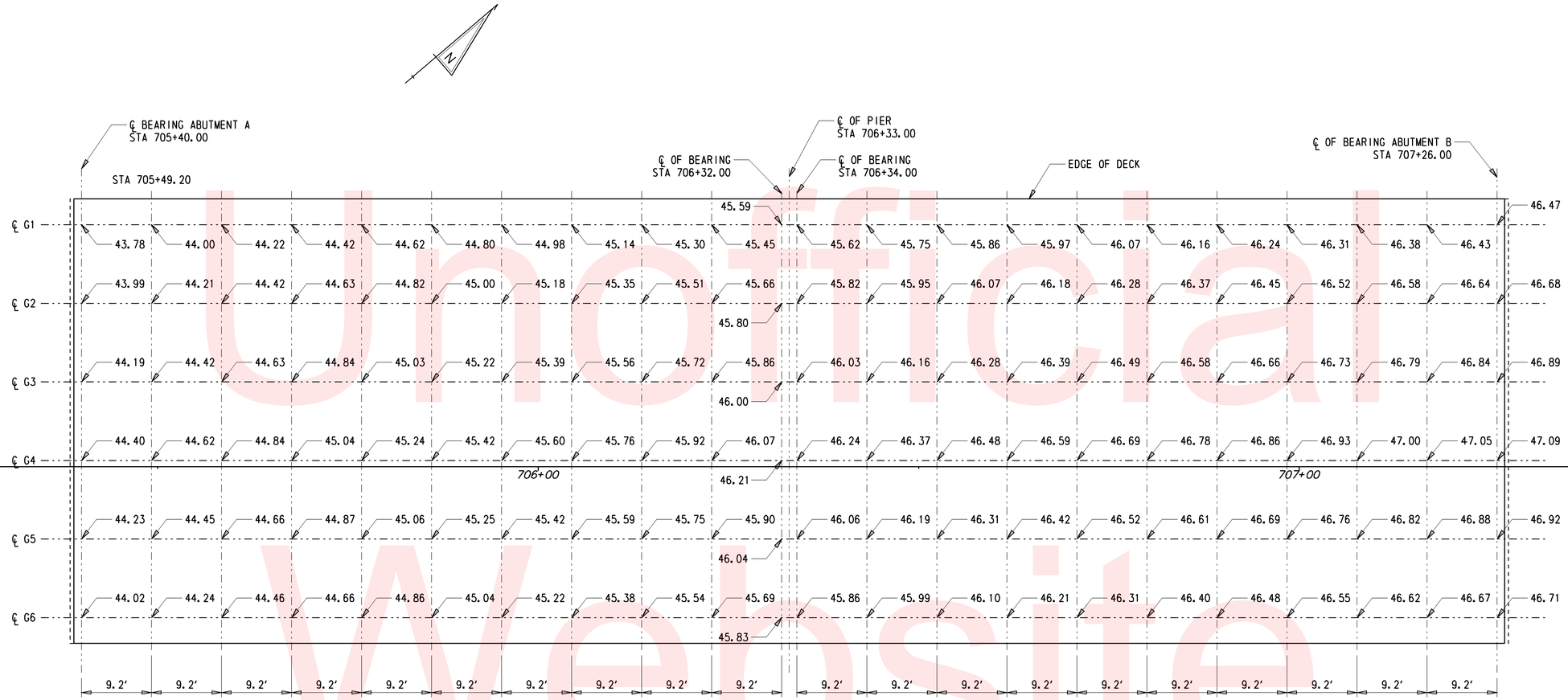

DECK ELEVATIONS

1/8" = 1'-0"

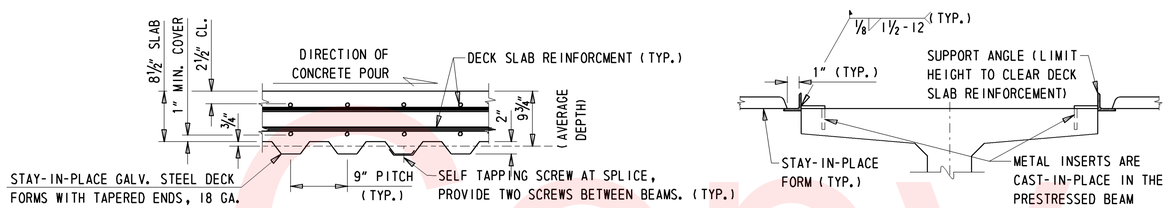

(ELEVATION)

(COMPRESSION FLANGE)

NOTE :

SHOP DRAWINGS SHALL BE SUBMITTED FOR REVIEW AND APPROVAL BY THE ENGINEER. METAL FORMS MUST BE GALVANIZED, MORTAR TIGHT AND STEEL METAL SCREWS MUST BE NON-CORROSIVE. SELF TAPPING SCREWS SHALL BE INSTALLED AT THE SIDE LAP OF THE SHEETS AT MID-SPAN BETWEEN SUPPORTS. NO WELD WILL BE PERMITTED AT NEGATIVE MOMENT ZONE.

STAY-IN-PLACE FORM DETAILS

N.T.S.

Unofficial Website Copy

Y:\KENT\008\BRIDGE\2812202\PLANS\BRIDGE\DK03.DGN

DELAWARE DEPARTMENT OF TRANSPORTATION	ADDENDUMS / REVISIONS	SCALE 0 8 16 24 FEET	SR1, SOUTH FREDERICA GRADE SEPARATED INTERSECTION	CONTRACT T200812202	BRIDGE NO. 2–008C	DECK ELEVATIONS BRIDGE SHEET 12 OF 15	SHEET NO. 115
				COUNTY KENT	DESIGNED BY: JAT		TOTAL SHTS. 296
					CHECKED BY: JNH		

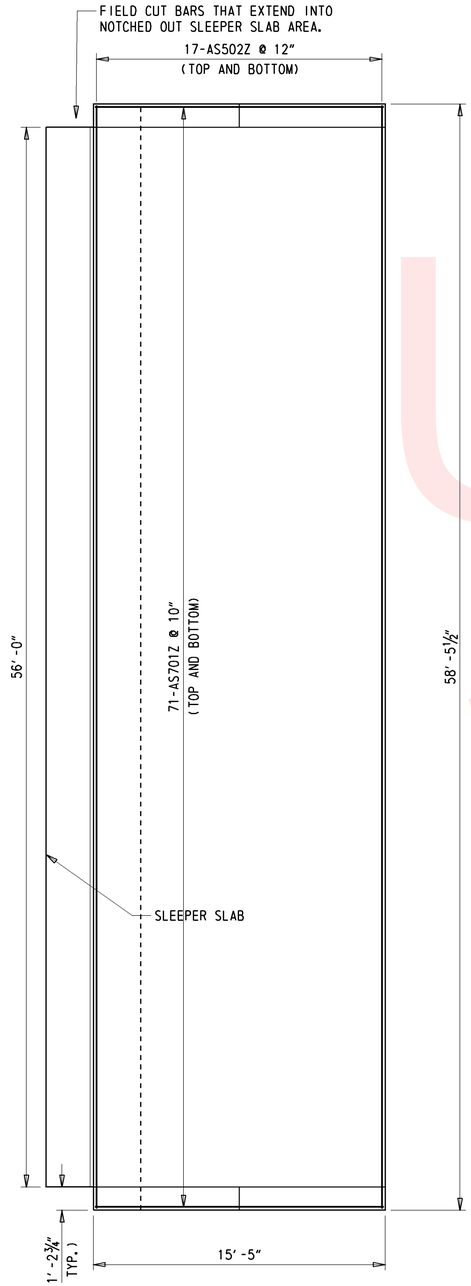

APPROACH SLAB PLAN

¼" = 1'-0"

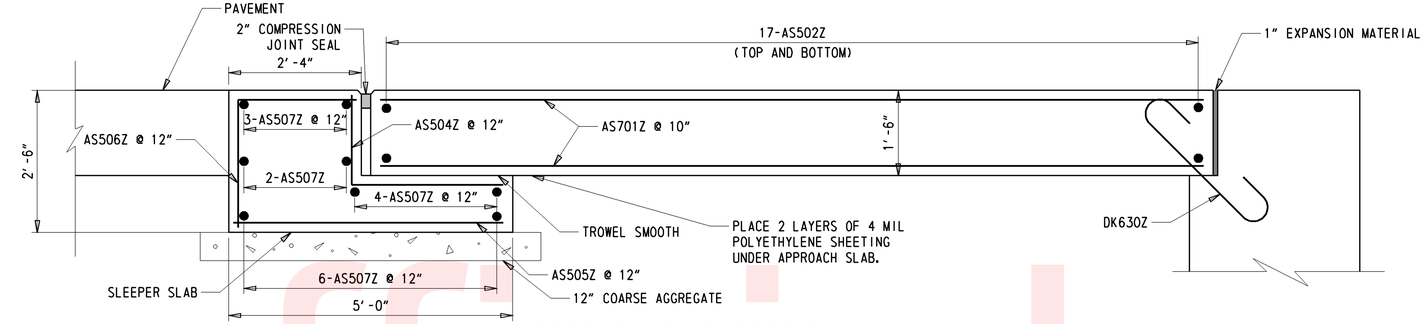

APPROACH SLAB SECTION

¾" = 1'-0"

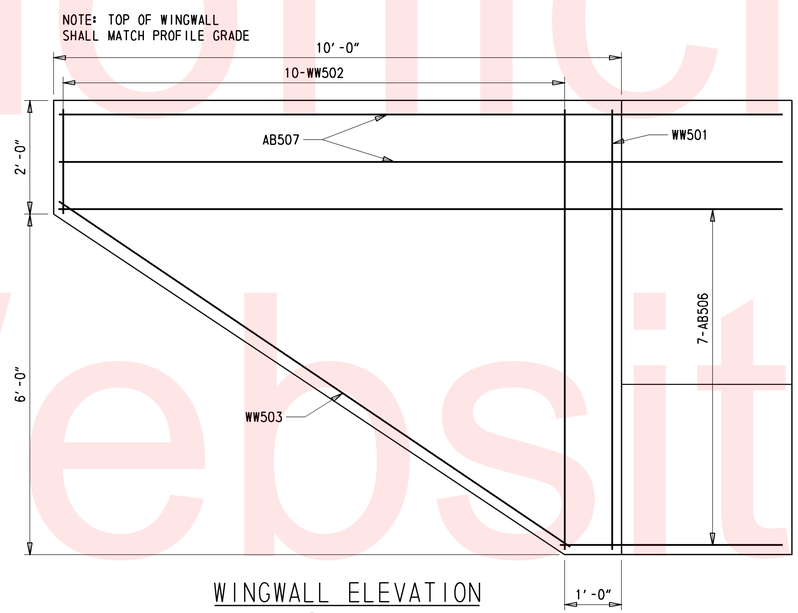

WINGWALL ELEVATION

¾" = 1'-0"

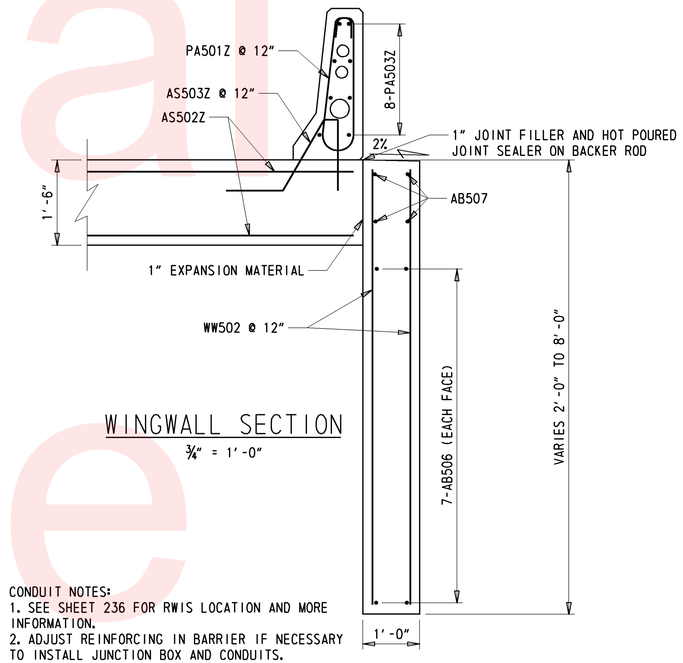

WINGWALL SECTION

¾" = 1'-0"

CONDUIT NOTES:
1. SEE SHEET 236 FOR RWIS LOCATION AND MORE INFORMATION.
2. ADJUST REINFORCING IN BARRIER IF NECESSARY TO INSTALL JUNCTION BOX AND CONDUITS. REINFORCING SHALL NOT BE CUT.
3. EXTEND 4" PVC CONDUIT THROUGH THE LENGTH OF THE BRIDGE. INSTALL 1 EA JUNCTION BOX AT THE CENTER OF THE BRIDGE FOR ACCESS.

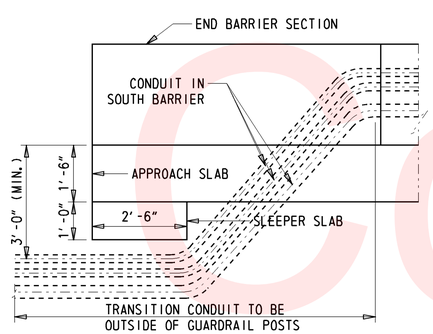

END BARRIER ELEVATION

½" = 1'-0"

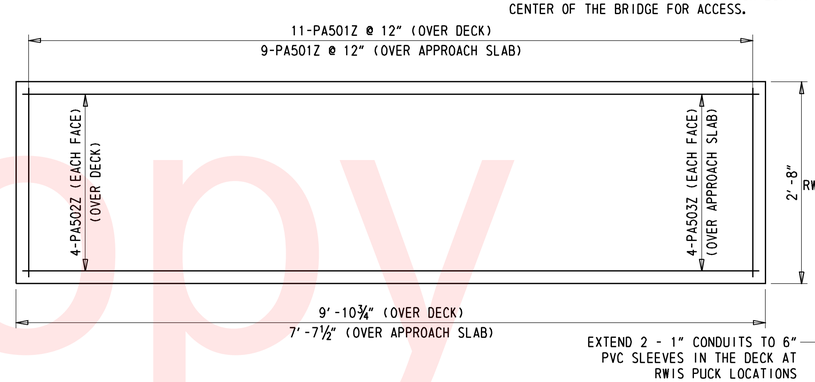

BARRIER ELEVATION

1" = 1'-0"

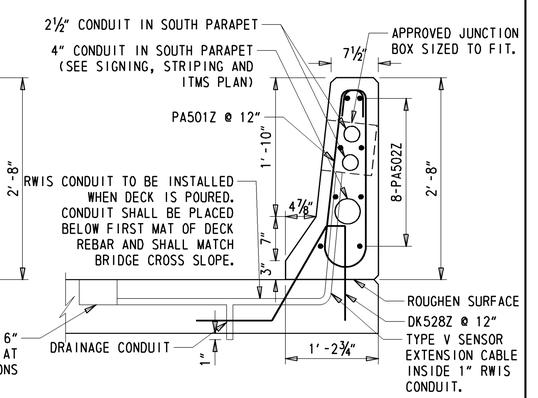

BARRIER TYPICAL SECTION

1" = 1'-0"

Unofficial Website Copy

DELAWARE DEPARTMENT OF TRANSPORTATION	ADDENDUMS / REVISIONS	SCALE AS NOTED	SR1, SOUTH FREDERICA GRADE SEPARATED INTERSECTION	CONTRACT T200812202	BRIDGE NO. 2-008C	APPROACH SLAB, WINGWALL AND PARAPET DETAILS BRIDGE SHEET 13 OF 15	SHEET NO. 116
				COUNTY KENT	DESIGNED BY: JAT		TOTAL SHTS. 296
					CHECKED BY: JNH		

Y:\KENT\008\BRIDGE\2812202\PLANS\BRIDGE\AS01.DGN

BRIDGE SAFETY FENCE NOTES

1. MATERIALS - SEE SPECIAL PROVISIONS FOR ITEM 727507 - BRIDGE SAFETY FENCE.
2. POST SPACING - POST SPACING ALL BE DETERMINED BY THE CONTRACTOR AND INCLUDED IN THE SHOP DRAWINGS. EACH POST MUST BE A MINIMUM OF 1'-0" FROM ANY PARAPET JOINT.
3. WORKING DRAWINGS - CONTRACTOR SHALL SUBMIT WORKING DRAWINGS FOR THE FENCE FOR REVIEW BY THE ENGINEER
4. PAYMENT - CHAIN LINK FENCE INCLUDING ANTI-CLIMB SHIELD ITEMS WILL BE PAID UNDER ITEM 727507 - BRIDGE SAFETY FENCE.

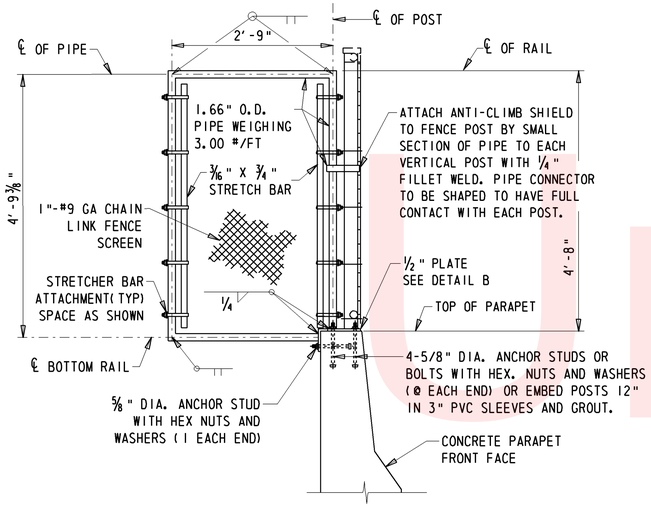

SECTION Q-Q

N.T.S

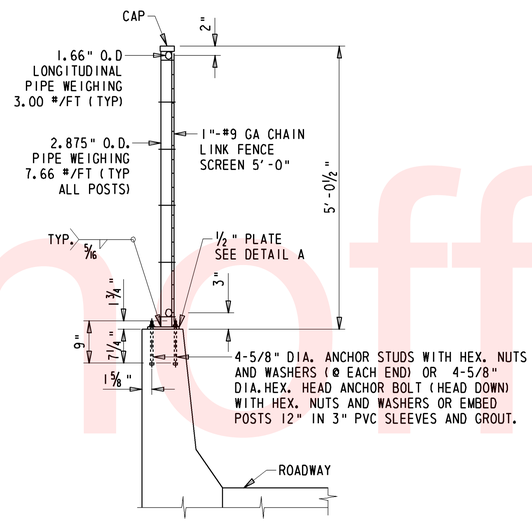

SECTION R-R

N.T.S

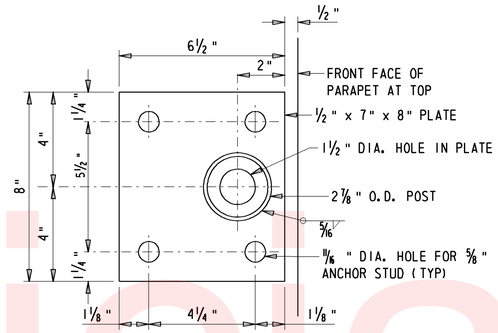

DETAIL A

N.T.S

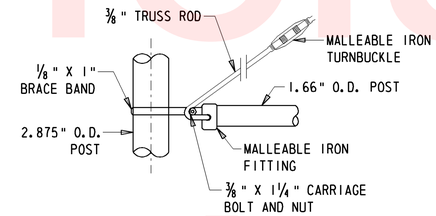

TRUSS ROD ATTACHMENT

N.T.S

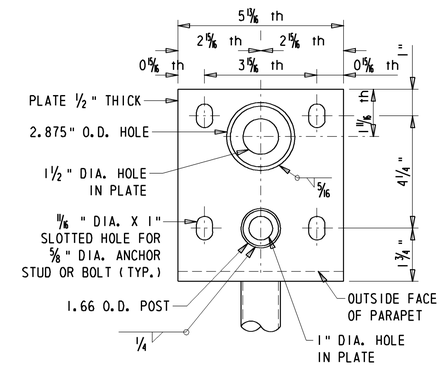

PLAN VIEW

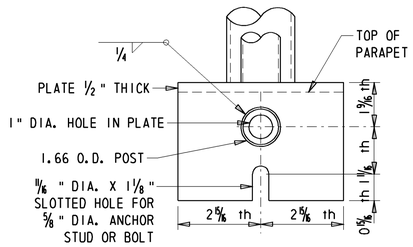

SIDE VIEW

DETAIL B

N.T.S

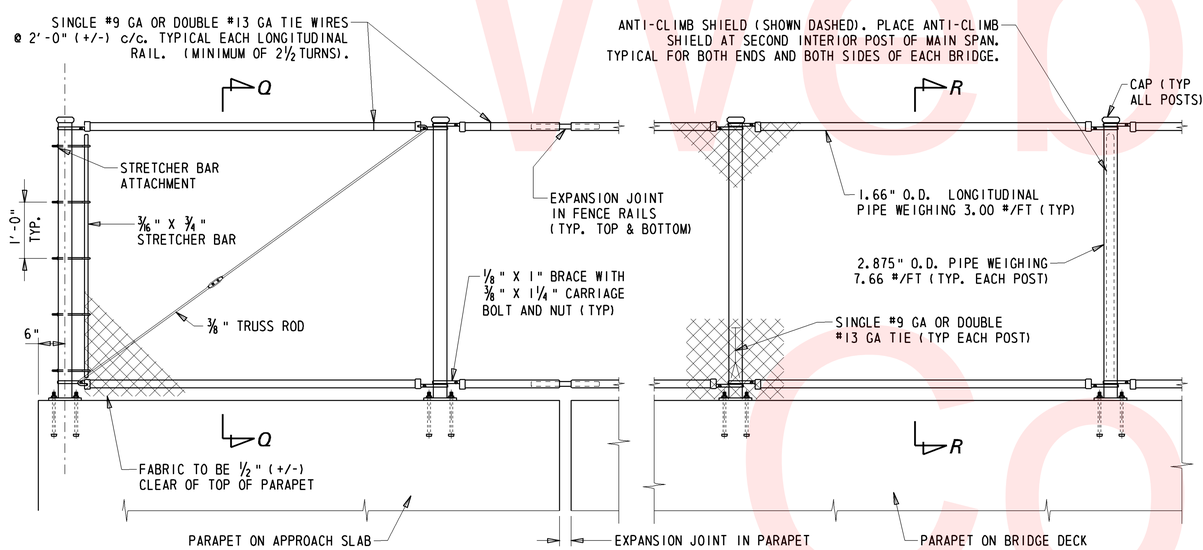

SAFETY FENCE ELEVATION

N.T.S

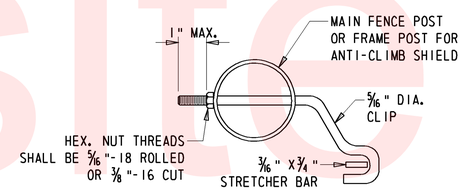

STRETCHER BAR ATTACHMENT

1 1/2" = 1'-0"

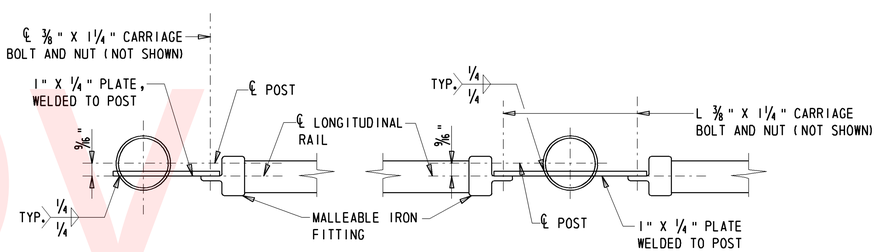

TOP LONGITUDINAL RAIL-POST ATTACHMENT

N.T.S

Unofficial Website Copy

DELAWARE DEPARTMENT OF TRANSPORTATION	ADDENDUMS / REVISIONS	SCALE AS NOTED	SR1, SOUTH FREDERICA GRADE SEPARATED INTERSECTION	CONTRACT T200812202	BRIDGE NO. 2-008C	SAFETY FENCE DETAILS BRIDGE SHEET 14 OF 15	SHEET NO. 117
				COUNTY KENT	DESIGNED BY: JAT		TOTAL SHTS. 296
					CHECKED BY: JNH		

Y:\KENT\008\BRIDGE\2812202\PLANS\BRIDGE\DK04.DGN

① ANY MARK NUMBER WITH SUFFIX 'Z' DENOTES ZINC AND EPOXY DUAL-COATED REINFORCING STEEL.

② ALL MARK 'LOCATION PREFIXES' SHALL CONSIST OF TWO LETTERS AND ARE AS FOLLOWS: AB = ABUTMENT, AS = APPROACH SLAB, BC = BOX CULVERT, BW = BACKWALL, CL = COLUMN, DK = DECK, DL = DOWEL, FT = FOOTING, HW = HEADWALL, MS = MISC. BARS, PA = PARAPET, PR = PIER, SC = SHEETPILE CAP, SL = SLAB, TW = TOEWALL, WL = WALL (UNIQUE LOCATION), WW = WINGWALL

SPECIFICATIONS					BENDING DIMENSIONS (FEET-INCHES /QUARTER INCH)											
QTY.	SIZE	LENGTH	MARK	TYPE	A	B	C	D	E	F/R	G	H	J	K	O
138	5	8-11⅒	AB501	S3	0-52	2-80	2-80	2-80			0-52	0-33			
138	5	2-80	AB502	STR		2-80	2-80	1-92							
82	5	2-00	AB503	STR		2-00									
36	6	11-70	AB604	17		2-100	5-110	2-100							
20	5	60-12	AB505	STR		60-12									
8X7	5	3-100	AB506	STR		3-100									
		T0				T0									
		12-80				12-80									
16	5	12-80	AB507	STR		12-80									
60	5	3-90	AB508	STR		3-90									
72	5	6-40	AB509	17		2-00	2-40	2-00							
72	5	7-20	AB510	17		2-00	3-20	2-00							
2	5	59-80	FT501	STR		59-80									
48	6	59-80	FT602	STR		59-80									
90	8	11-80	FT803	STR		11-80									
90	8	15-100	FT804	17		2-10	11-80	2-10							
120	8	6-40	FT805	17		5-00	1-40								
100	4	15-10	CL401	T2	0-42	3-70	3-70	3-70	3-70		0-42				
160	8	21-20	CL802	17		19-100	1-40								
20	5	16-10	PR501	10		13-10	1-60	1-60		4-20					8-40
10	5	8-02	PR502	11			6-62	1-60		4-20		2-00			5-80
30	5	3-80	PR503	STR		3-80									
224	5	9-11⅒	PR504	S3	0-52	2-80	3-80	2-80			0-52	0-33			
4	5	55-80	PR505	STR		55-80									
13	8	55-80	PR806	STR		55-80									
35	8	3-00	PR807	STR		3-00									
36	5	7-20	PR508	17		2-00	3-20	2-00							
36	5	7-40	PR509	17		2-00	3-40	2-00							
160	5	4-30	MS501	T1	0-52	0-40	1-40	0-40	1-40		0-52				
120	5	9-50	MS502	STR		9-50									
6	5	6-92	DK501Z	17		2-20	4-72								
6	5	3-100	DK502Z	17		0-80	3-20								
14	5	6-11⅔	DK503Z	17		2-20	4-92								
14	5	4-00	DK504Z	17		0-80	3-40								
28	5	7-20	DK505Z	17		2-20	5-00								

SPECIFICATIONS					BENDING DIMENSIONS (FEET-INCHES /QUARTER INCH)											
QTY.	SIZE	LENGTH	MARK	TYPE	A	B	C	D	E	F/R	G	H	J	K	O
28	5	4-22	DK506Z	17		0-80	3-62								
28	5	7-42	DK507Z	17		2-20	5-22								
28	5	4-50	DK508Z	17		0-80	3-90								
6	5	7-02	DK509Z	17		2-20	4-102								
6	5	4-10	DK510Z	17		0-80	3-50								
7	5	11-90	DK511Z	17		4-92	2-20	4-92							
14	5	12-20	DK512Z	17		5-00	2-20	5-00							
14	5	12-70	DK513Z	17		5-22	2-20	5-22							
192	5	1-11⅒	DK514Z	STR		1-11⅒									
8	5	2-33	DK515Z	STR		2-33									
8	5	2-83	DK516Z	STR		2-83									
12	5	3-91	DK517Z	STR		3-91									
30	5	6-60	DK518Z	STR		6-60									
20	5	7-40	DK519Z	STR		7-40									
60	5	9-50	DK520Z	STR		9-50									
8	5	60-11	DK521Z	STR		60-11									
183	5	59-33	DK522Z	1	0-70	58-13					0-70		0-50		
191	5	58-13	DK523Z	STR		58-13									
118	5	35-40	DK524Z	STR		35-40									
236	5	40-70	DK525Z	STR		40-70									
236	5	42-70	DK526Z	17		2-00	40-70								
364	6	7-70	DK627Z	1	0-80	7-00					0-80		0-60		
378	5	4-00	DK528Z	T15	0-60	1-30	0-30		1-51	1-00		1-30			0-113
58	7	35-40	DK729Z	STR		35-40									
232	7	11-40	DK730Z	STR		11-40									
78	6	3-80	DK631Z	1	0-80	2-40					0-80		0-60		
8	5	7-70	WW501	STR		7-70									
8X10	5	7-70	WW502	STR		7-70									
		T0				T0									
		1-80				1-80									
8	5	10-83	WW503	STR		10-83									
284	7	17-50	AS701Z	2	1-20	15-10					1-20				
68	5	59-92	AS502Z	2	0-100	58-12					0-100				
36	5	4-00	AS503Z	T15	0-60	1-30	0-30		1-51	1-00		1-30			0-113
120	5	4-20	AS504Z	17		1-60	2-80								
120	5	4-80	AS505Z	STR		4-80									
120	5	4-20	AS506Z	17		2-00	2-20								
30	5	58-12	AS507Z	STR		58-12									

SPECIFICATIONS					BENDING DIMENSIONS (FEET-INCHES /QUARTER INCH)											
QTY.	SIZE	LENGTH	MARK	TYPE	A	B	C	D	E	F/R	G	H	J	K	O
490	5	6-63	PA501Z	H1	0-60	2-01	0-101	2-03		0-31	0-60	0-33			
304	5	9-63	PA502Z	STR		9-63									
64	5	7-32	PA503Z	STR		7-32									

ASTM STANDARD ENGLISH REINFORCING BARS				RECOMMENDED END HOOKS, APPLICABLE TO ALL GRADES				STIRRUP AND TIE HOOKS, APPLICABLE TO ALL GRADES		
NOMINAL DIMENSIONS				180° HOOKS			90° HOOKS	90° HOOK	135° HOOK	
BAR SIZE	DIAMETER (INCHES)	AREA (INCHES²)	WEIGHT (LBS./FT.)	D	A OR G	J	A OR G	D	A OR G	A OR G	A OR G
3	0.375	0.110	0.376	2¼"	5"	3"	6"	1½"	4"	4"	2½"
4	0.500	0.200	0.668	3"	6"	4"	8"	2"	4½"	4½"	3"
5	0.625	0.310	1.043	3¾"	7"	5"	10"	2½"	6"	5½"	3¾"
6	0.750	0.440	1.502	4½"	8"	6"	1-0"	4½"	1-0"	8"	4½"
7	0.875	0.600	2.044	5¼"	10"	7"	1-2"	5¼"	1-2"	9"	5¼"
8	1.000	0.790	2.670	6"	11"	8"	1-4"	6"	1-4"	10½"	6"
9	1.128	1.000	3.400	9½"	1-3"	11¾"	1-7"				
10	1.270	1.270	4.303	10¾"	1-5"	1-1¼"	1-10"				
11	1.410	1.560	5.313	1-0"	1-7"	1-2¾"	2-0"				
14	1.693	2.250	7.650	1-6¼"	2-3"	1-9¾"	2-7"				
18	2.257	4.000	13.600	2-0"	3-0"	2-4½"	3-5"				

NOTES:

1. FIGURES SHOWN IN CIRCLES REPRESENT BAR BEND TYPES.
2. STANDARD BAR BENDS INCLUDE ONLY THOSE TYPES BELOW, INDICATED AS SUCH.
3. ALL DIMENSIONS OUT-TO-OUT, EXCEPT "A" AND "G" ON STD. 180° AND 135° HOOKS.
4. "J" DIMENSIONS ON 180° HOOKS TO BE SHOWN ONLY WHERE NECESSARY TO RESTRICT HOOK SIZE, OTHERWISE STANDARD 'ACI' HOOKS ARE TO BE USED.
5. WHERE "J" IS NOT SHOWN, "J" WILL BE KEPT EQUAL TO OR LESS THAN "H" ON TYPES 3, 5 AND 22. WHERE "J" CAN EXCEED "H", IT SHALL BE SHOWN.
6. "H" DIMENSIONS OF STIRRUPS TO BE SHOWN AS NEEDED TO FIT WITHIN THE CONCRETE.
7. UNLESS OTHERWISE NOTED, DIAMETER "D" IS THE SAME FOR ALL BENDS AND HOOKS ON A BAR (EXCEPT FOR BEND TYPES 11 AND 13).
8. WHERE SLOPE DIFFERS FROM 45° OFFSET, "H" AND "K" MUST BE SHOWN.
9. WHERE BARS ARE TO BE BENT MORE ACCURATELY THAN STANDARD BENDING TOLERANCES, BENDING DIMENSIONS REQUIRING CLOSER FABRICATION SHOULD HAVE LIMITS INDICATED.
10. FOR RECOMMENDED DIAMETER "D", OF BENDS, HOOKS, ETC., REFER TO TABLE ABOVE, 'CRSI' OR 'ACI' TABLES WHERE APPLICABLE AND REQUIRED.
11. TYPE S1-S6, S11, T1-T3 AND T6-T9 APPLICABLE TO BAR SIZES #3 THROUGH #8.

STANDARD BAR BENDS

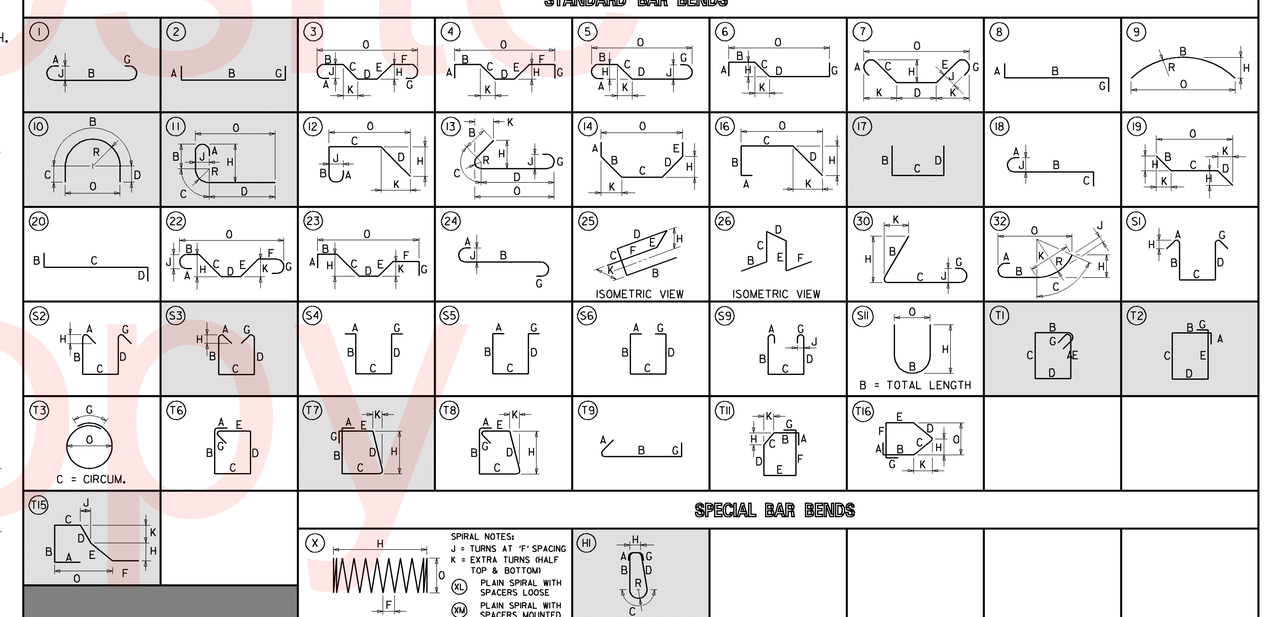

STIRRUP AND TIE HOOKS

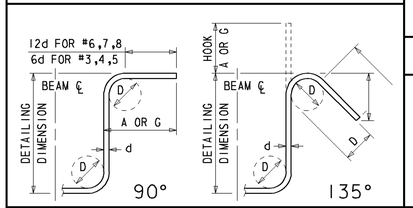

180° AND 90° END HOOKS

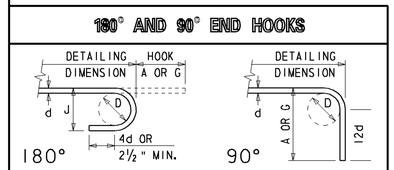

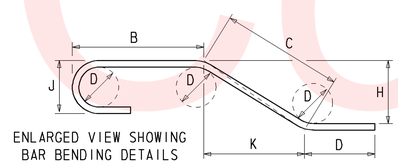

ENLARGED VIEW SHOWING BAR BENDING DETAILS

SPECIAL BAR BENDS

Unofficial Website Copy

DELAWARE DEPARTMENT OF TRANSPORTATION

ADDENDUMS / REVISIONS

SR1, SOUTH FREDERICA GRADE SEPARATED INTERSECTION

CONTRACT	BRIDGE NO.	2-008C	REINFORCEMENT BAR LIST BRIDGE SHEET 15 OF 15	SHEET NO.
28-122-02	DESIGNED BY: JAT			118
COUNTY	CHECKED BY: JNH			TOTAL SHTS.
KENT				296

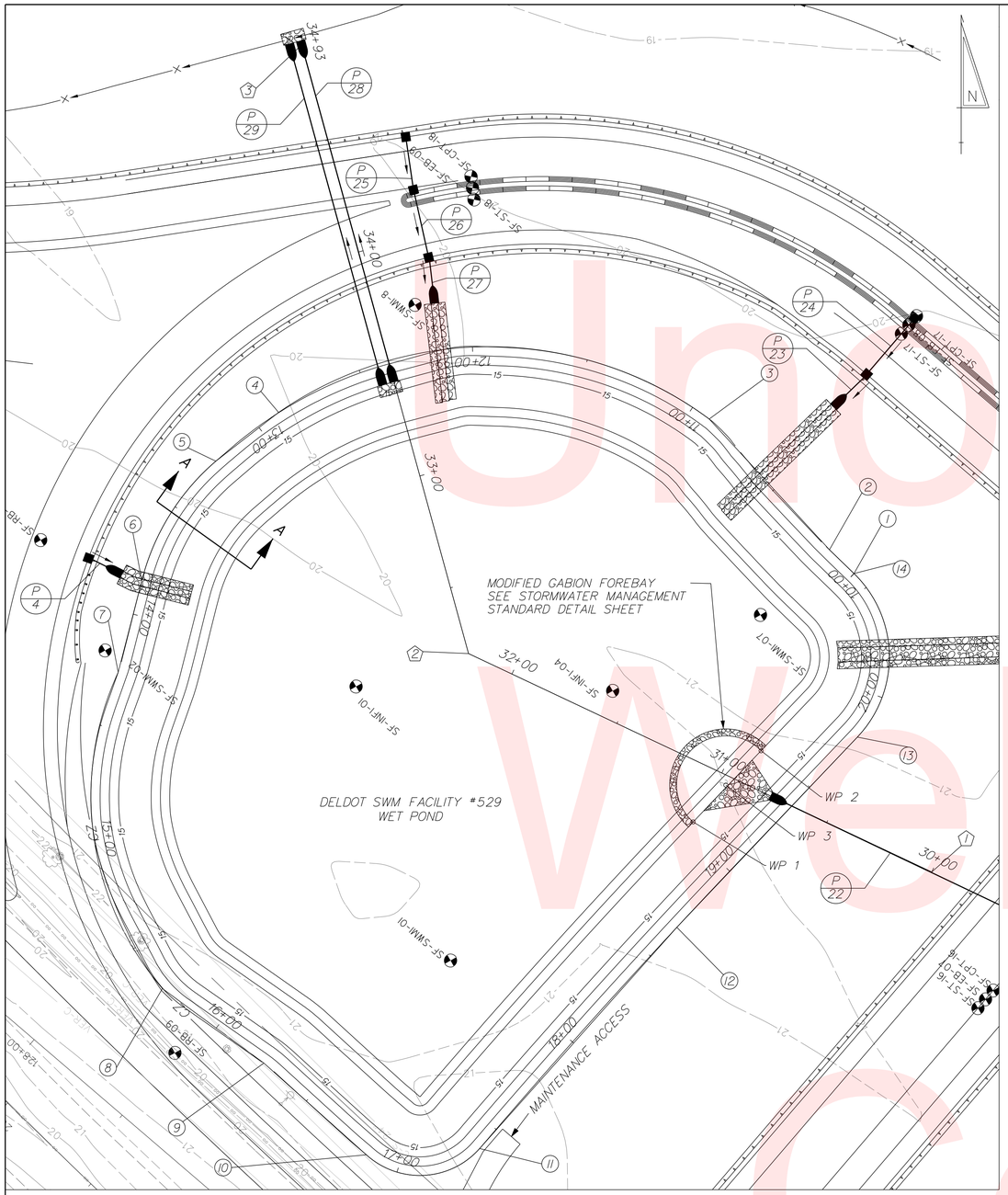

PLAN – DELDOT SWM FACILITY #529

POND DESIGN SUMMARY FOR BMP #529				
DESIGN STORM	FACILITY INFLOW	FACILITY DISCHARGE	WATER SURFACE ELEVATION	STORAGE VOLUME (AC.FT)
QUALITY STORM (2.0")	2.49	0.36	16.23	0.413
2 - YEAR	8.62	2.08	16.53	0.971
10 - YEAR	19.85	7.02	16.99	1.817
100 - YEAR	44.08	20.06	17.83	3.439

HAZARD CLASSIFICATION: CLASS A AS PER POND CODE 378

DRAINAGE AREA TO FACILITY: 18.28 ACRES

MANAGEMENT PROVIDED BY FACILITY: WATER QUALITY BY EXTENDED DETENTION OF FIRST 2.0" OF RUNOFF, WATER QUANTITY FOR 2&10 YEAR STORMS.

POND CONSTRUCTION SEQUENCE AND NOTES

THE STORMWATER MANAGEMENT POND SHALL FUNCTION AS A SEDIMENT BASIN DURING ROADWAY CONSTRUCTION AND SHALL BE CONSTRUCTED IN ACCORDANCE WITH THE FOLLOWING SECTIONS OF THE STANDARD SPECIFICATIONS AS IS APPLICABLE:

SECTION 271 - STORMWATER MANAGEMENT POND

1. INSTALL STABILIZED CONSTRUCTION ENTRANCE AS SHOWN ON EROSION AND SEDIMENT CONTROL PLANS.
2. CLEAR AND GRUB FOR INSTALLATION OF PERIMETER EROSION AND SEDIMENT CONTROLS.
3. INSTALL PERIMETER SEDIMENT CONTROLS AS SHOWN ON EROSION AND SEDIMENT CONTROL PLANS.
4. CLEAR AND GRUB REMAINING AREA FOR POND CONSTRUCTION.
5. CONSTRUCT POND OUTLET PIPES AND PARTIAL EMBANKMENT AS NEEDED TO INSTALL PIPES. INSTALL FLARED END SECTIONS ON BOTH OUTLET PIPES. PLACE 24" DIAMETER COMPOST FILTER LOGS AROUND FLARED END SECTIONS. TOP OF FILTER LOGS SHALL BE AT A MINIMUM ELEVATION OF 17.00'. FILTER LOGS SHALL BE INSTALLED PER MANUFACTURER INSTALLATION DIRECTIONS. COST OF FILTER LOGS SHALL BE INCLUDED IN ITEM 271000.
6. EXCAVATE THE POND AND COMPLETE THE EMBANKMENT AND BASIN.
7. STABILIZE ALL BARE AREAS USING ITEM 734018, TEMPORARY SEEDING, WET GROUND (NO TOPSOIL).
   NOTE: SEE EROSION AND SEDIMENT CONTROL PLANS FOR LOCATION OF EROSION AND SEDIMENT CONTROL MEASURES.

MAINTENANCE OF POND AS A SEDIMENT BASIN

1. CONTRACTOR SHALL INSPECT THE BASIN IMMEDIATELY AFTER EVERY RAIN AND MAKE REPAIRS AS NEEDED.
2. CONTRACTOR SHALL CLEARLY MARK THE CLEANOUT ELEVATION (14.00') ON A STAKE DRIVEN INTO THE GROUND AT A LOCATION CLEARLY VISIBLE FROM THE EMBANKMENT. SEDIMENT SHALL BE REMOVED WHEN CLEANOUT ELEVATION IS REACHED AND DISPOSED OF AT A LOCATION APPROVED BY THE ENGINEER.

CONVERSION TO PERMANENT STORMWATER MANAGEMENT POND

1. CONVERT THE BASIN INTO THE PERMANENT STORMWATER MANAGEMENT POND AFTER ALL AREAS DRAINING TO THE POND HAVE BEEN PERMANENTLY STABILIZED AND THE ENGINEER HAS APPROVED THE CONVERSION.
2. REMOVE ANY ACCUMULATED SEDIMENT ABOVE ELEVATION 12.00' AS SHOWN BY LINES AND GRADES ON THE PLAN AND DISPOSE OF SEDIMENT AT LOCATION APPROVED BY THE ENGINEER. INSTALL MODIFIED GABION CHECKDAMS.
3. INSTALL MAINTENANCE ACCESS ROAD. COMPLETE STABILIZATION OF ALL BARE AREAS USING 6" TOPSOIL AND PERMANENT SEEDING. REMOVE EROSION AND SEDIMENT CONTROL MEASURES.
4. INSTALL PERMANENT BMP MARKER AS STATED IN BMP MARKER GENERAL NOTES ON THE STORMWATER MANAGEMENT STANDARD DETAILS SHEET.

℄ EMBANKMENT

	STATION	NORTHING	EASTING	RADIUS
1	POB 10+00.00	361305.9591	647118.0897	
2	PI 10+14.74	361316.2080	647107.4934	
3	PC 10+91.28	361372.5335	647055.6700	
	PI 12+05.31	361440.2068	646963.8943	160'
4	PT 12+89.33	361375.3646	646870.0970	
5	PC 13+23.56	361354.3705	646843.0520	
	PI 13+55.34	361333.6975	646818.9229	100'
6	PT 13+85.09	361302.8885	646811.1516	
7	PC 14+25.84	361263.4378	646800.9765	
	PI 15+07.67	361189.1765	646766.5890	127'
8	PT 15+71.21	361127.2036	646820.0361	
9	PI 16+25.45	361095.1030	646863.7512	
10	PC 16+84.71	361055.5959	646907.9237	
	PI 17+19.51	361032.2228	646933.7042	34'
11	PT 17+39.12	361058.2980	646956.7480	
12	PI 18+66.78	361153.5756	647041.7154	
13	PC 19+79.78	361235.5218	647119.5207	
	PI 20+29.41	361271.4507	647153.7673	50'
14	PT/POE 20+57.95	361305.9591	647118.0897	

NOTE: ALIGNMEMT IS LOCATED AT TOP OF POND, ELEVATION 18.00'.

℄ SPILLWAY

	STATION	NORTHING	EASTING
1	POB 30+00.00	361177.4085	647151.5693
2	PI 32+20.66	361271.4975	646951.9743
3	POE 34+92.56	361533.7076	646880.0413

GABION WORKING POINTS

POINT NO.	NORTHING	EASTING	RADIUS
WP 1	361198.9820	647048.7531	
WP 2	361229.6301	647078.0357	
WP 3	361214.8384	647062.8372	21.2'

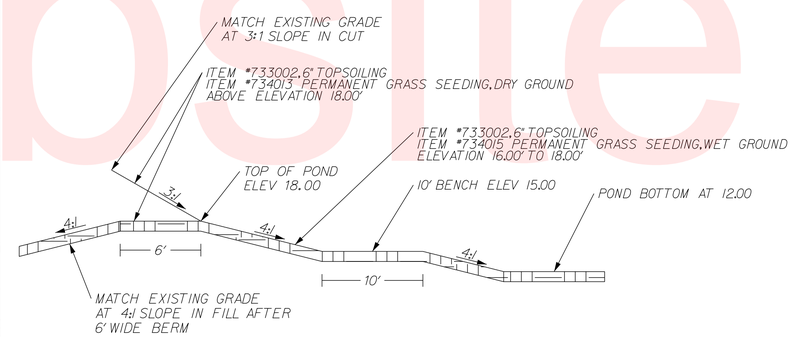

SECTION A – A

SCALE: NONE

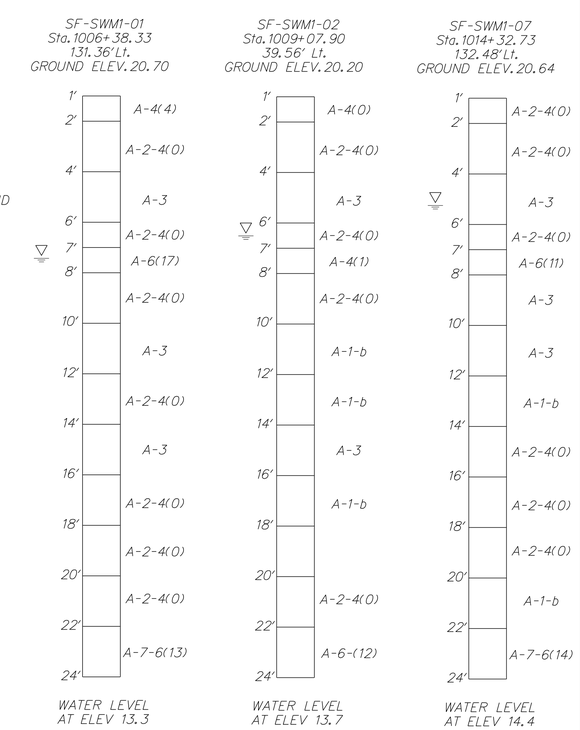

Unofficial Website Copy

DELAWARE DEPARTMENT OF TRANSPORTATION	ADDENDUMS / REVISIONS	NOT TO SCALE	SR1, SOUTH FREDERICA GRADE SEPARATED INTERSECTION	CONTRACT T200812202	BRIDGE NO. –	STORMWATER MANAGEMENT DETAILS DELDOT SWM FACILTY #529	SHEET NO. 119
				COUNTY KENT	DESIGNED BY: LCM		TOTAL SHTS. 296
					CHECKED BY: SFP		

10/26/2015
G:\PROJECTS\06535.00 (DelDOT Agmt. 1376 DOTS Open End)\06535.07 SR1, S. Frederica\CADD Files\XM\swm_detail1.tsf.dgn
1:57:41 PM

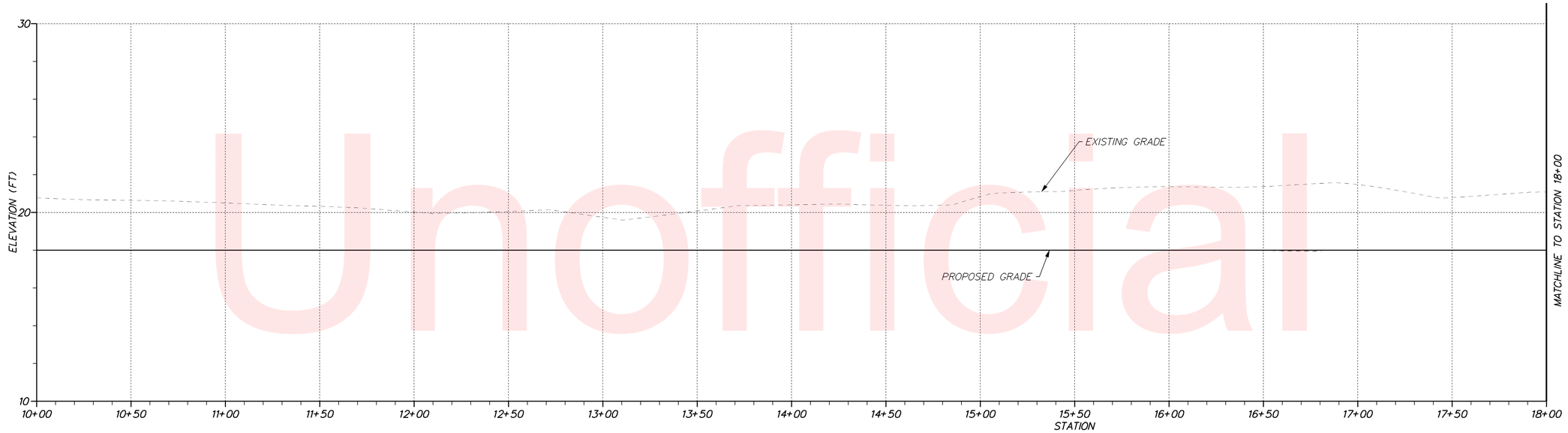

DELDOT SWM FACILITY #529 EMBANKMENT

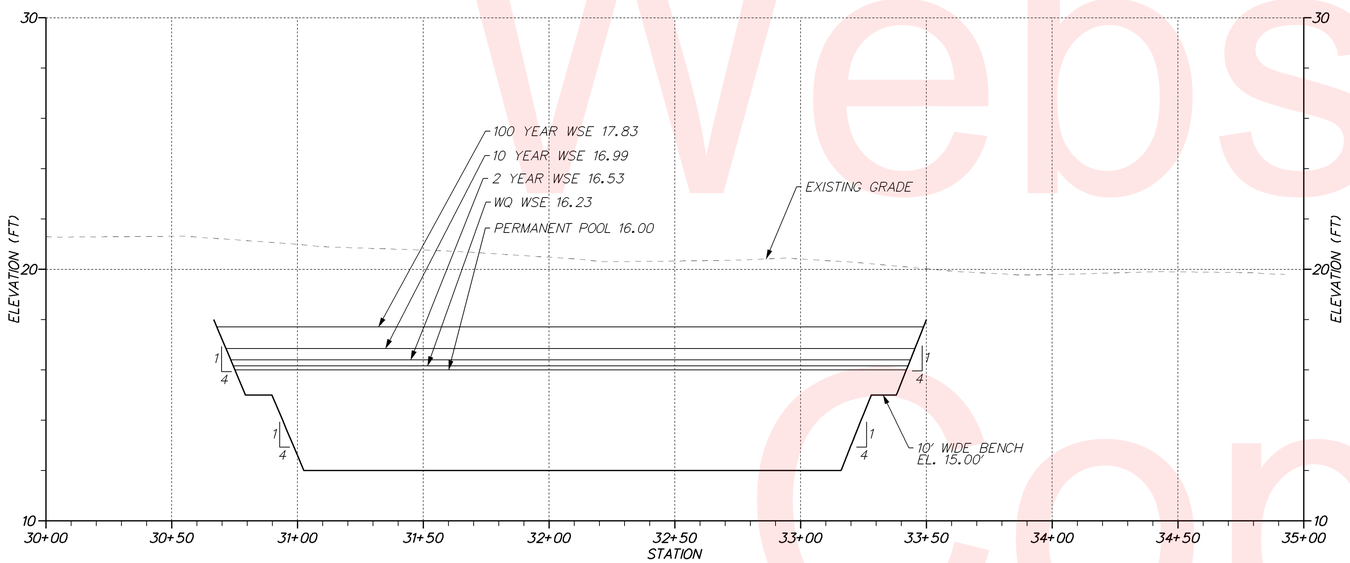

DELDOT SWM FACILITY #529 SPILLWAY

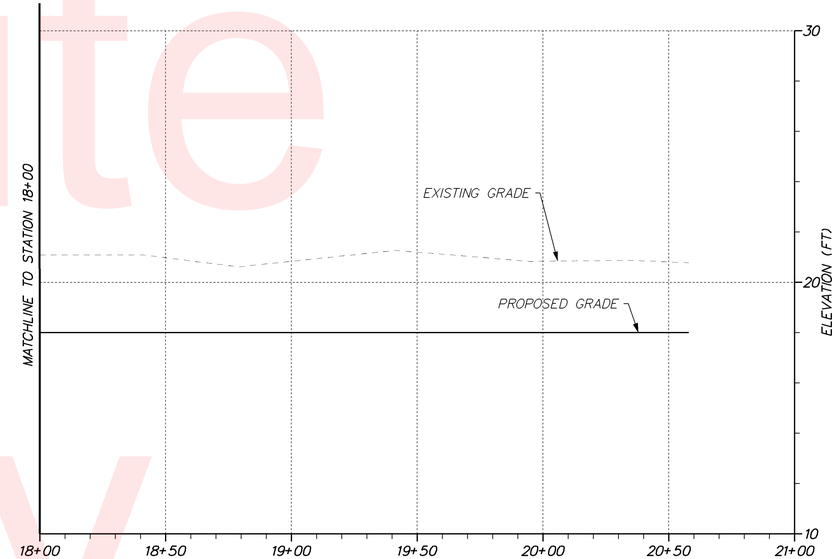

DELDOT SWM FACILITY #529 EMBANKMENT

VERTICAL SCALE FEET 10 5 0

Unofficial Website Copy

DELAWARE DEPARTMENT OF TRANSPORTATION	ADDENDUMS / REVISIONS	SCALE 0 30 60 90 FEET	SR1, SOUTH FREDERICA GRADE SEPARATED INTERSECTION	CONTRACT T200812202	BRIDGE NO. –	STORMWATER MANAGEMENT DETAILS DELDOT SWM FACILITY #529	SHEET NO. 120
				COUNTY KENT	DESIGNED BY: LCM		TOTAL SHTS. 296
					CHECKED BY: SFP		

5/23/2013
G:\PROJECTS\06535.00 (DelDOT Agmt. 1376 DOTS Open End)\06535.07 SR1, S. Frederica\CADD Files\XM\swm_detail1.2sf.dgn
22:38:49

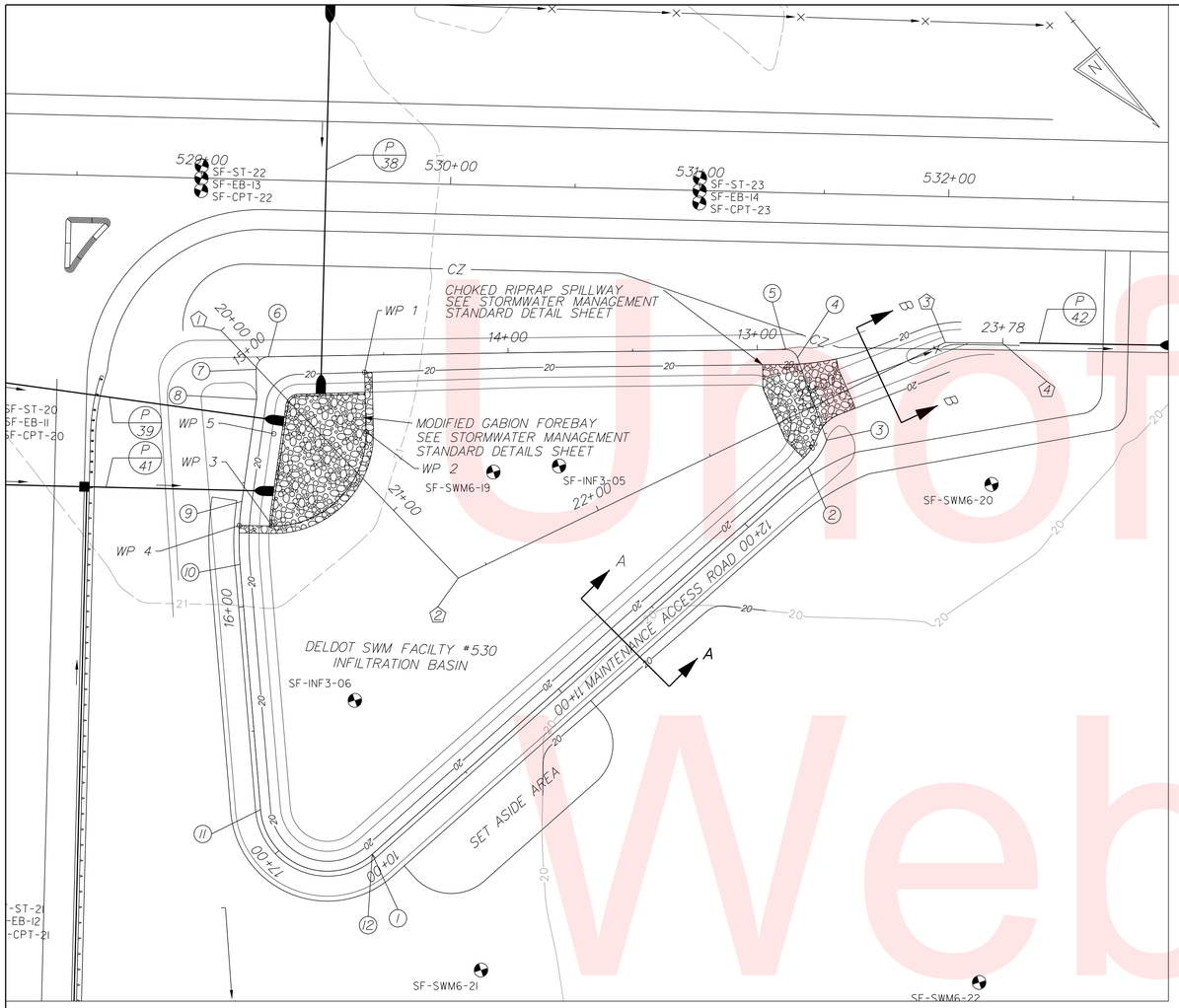

PLAN – DELDOT SWM FACILITY #530

POND DESIGN SUMMARY FOR BMP #530				
DESIGN STORM	FACILITY INFLOW	FACILITY DISCHARGE	WATER SURFACE ELEVATION	STORAGE VOLUME (AC.FT)
QUALITY STORM (2.0")	2.34	0.00	18.03	0.120
2 - YEAR	9.05	0.00	19.40	0.891
10 - YEAR	22.04	10.62	20.10	1.337
100 - YEAR	50.44	42.72	20.61	1.677

HAZARD CLASSIFICATION: CLASS A AS PER POND CODE 378

DRAINAGE AREA TO FACILITY: 17.64 ACRES

MANAGEMENT PROVIDED BY FACILITY: WATER QUALITY BY INFILTRATION OF FIRST 2.0" OF RUNOFF, WATER QUANTITY FOR 2&10 YEAR STORMS.

POND CONSTRUCTION SEQUENCE AND NOTES

THE STORMWATER MANAGEMENT POND SHALL NOT FUNCTION AS A SEDIMENT BASIN DURING ROADWAY CONSTRUCTION. A CONSTRUCTION SAFETY FENCE SHALL BE INSTALLED FOLLOWING POND EXCAVATION TO PREVENT EQUIPMENT AND CONSTRUCTION TRAFFIC FROM COMPACTING THE POND. THE SAFETY FENCE MAY BE REMOVED UPON FINAL STABILIZATION OF THE POND AND ALL UPSTREAM AREAS. SAFETY FENCE WILL BE PAID UNDER ITEM 727014. THE STORMWATER FACILITY SHALL BE CONSTRUCTED IN ACCORDANCE WITH THE FOLLOWING SECTIONS OF THE STANDARD SPECIFICATIONS AS APPLICABLE:

SECTION 271 - STORMWATER MANAGEMENT POND

1. INSTALL STABILIZED CONSTRUCTION ENTRANCE AS SHOWN ON EROSION AND SEDIMENT CONTROL PLANS.
2. CLEAR AND GRUB FOR INSTALLATION OF PERIMETER EROSION AND SEDIMENT CONTROLS.
3. INSTALL PERIMETER SEDIMENT CONTROLS AS SHOWN ON EROSION AND SEDIMENT CONTROL PLANS.
4. CLEAR AND GRUB REMAINING AREA FOR POND CONSTRUCTION.
5. RECONSTRUCT POND OUTLET DITCH AND PARTIAL EMBANKMENT AS NEEDED TO CONSTRUCT POND SPILLWAY. CONSTRUCT CHOKED RIPRAP SPILLWAY.
6. EXCAVATE THE POND TO ELEVATION 18.80' AND COMPLETE THE EMBANKMENT, AND OUTLET TO LINES, GRADES, AND DETAILS SHOWN IN THE CONSTRUCTION PLANS.
7. COMPLETE EXCAVATION OF THE BASIN TO ELEVATION 17.80 USING A WORK-YOUR-WAY OUT METHOD, I.E. STARTING IN THE MIDDLE AND EXCAVATING TOWARDS THE SIDES. AT NO TIME SHALL ANY EQUIPMENT BE USED ON SOIL BELOW ELEVATION 18.80'. THE BOTTOM OF THE BASIN SHALL BE LEFT ROUGH AND SHALL BE EXCAVATED WITH A TOOTHED BUCKET.
8. STABILIZE ALL BARE AREAS USING PERMANENT SEEDING. 6" TOPSOIL SHALL BE PLACED ON THE SIDES OF THE INFILTRATION FACILITY ABOVE ELEVATION 18.80'. NO TOPSOIL SHALL BE PLACED ON THE BOTTOM OF THE FACILITY OR THE SIDES BELOW ELEVATION 18.80'. TOPSOIL FROM ELEVATION 18.80' TO 19.30' SHALL VARY IN DEPTH FROM 0" TO 6" TO ACHIEVE A GRADUAL TRANSITION. SEEDING SHALL BE AS SHOWN ON THE DETAILS BELOW.
9. INSTALL PERMANENT BMP MARKER AS STATED IN BMP MARKER GENERAL NOTES ON THE STORMWATER MANAGEMENT GENERAL DETAIL SHEET.

℄ EMBANKMENT

	STATION	NORTHING	EASTING	RADIUS
1	POB 10+00.00	360707.0350	646614.1175	
2	PC 12+33.97	360697.1664	646380.3540	
	PI 12+40.80	360696.8783	646373.5282	27'
3	PT 12+47.35	360693.3783	646367.6608	
4	PC 12+82.39	360660.3783	646355.8911	
	PI 12+85.97	360657.0114	646354.6903	5'
5	PT 12+88.60	360654.7859	646357.4877	
	PI 13+93.18	360589.6780	646439.3266	
6	PC 14+96.23	360525.8643	646520.2489	
	PI 15+01.23	360522.7669	646524.1767	5'
7	PT 15+04.09	360526.6961	646527.2724	
8	PI 15+16.17	360536.1828	646534.7467	
9	PC 15+57.49	360564.1591	646565.1578	
	PI 15+70.24	360572.7936	646574.5439	112'
10	PT 15+82.89	360583.3173	646581.7484	
11	PC 16+81.64	360664.8067	646637.5356	
	PI 17+35.57	360709.3097	646668.0022	27'
12	PT/POE 17+41.40	360707.0350	646614.1175	

NOTE: ALIGNMENT IS LOCATED AT TOP OF POND, ELEVATION 21.00'.

℄ SPILLWAY

	STATION	NORTHING	EASTING
1	POB 20+00.00	360505.7735	646528.3303
2	PI 21+37.57	360642.9002	646517.2762
3	PI 23+54.70	360693.0852	646306.0221
4	POE 23+77.77	360707.8902	646288.3355

GABION WORKING POINTS

POINT NO	NORTHING	EASTING	RADIUS
WP 1	360555.1144	646494.2429	
WP 2	360573.9322	646508.8613	
WP 3	360579.5151	646561.9375	
WP 4	360570.9743	646572.0624	
WP 5	360551.2335	646538.0806	37'

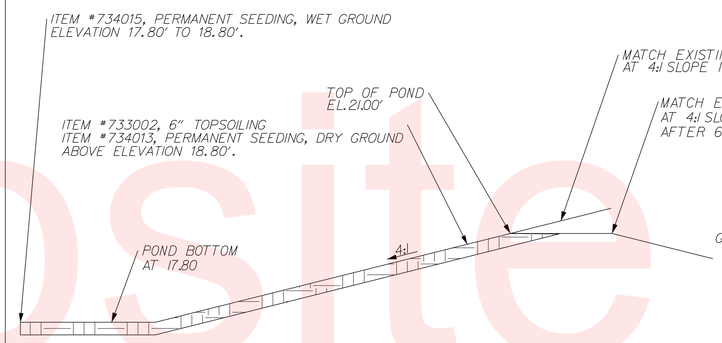

SECTION A – A

SCALE: NONE

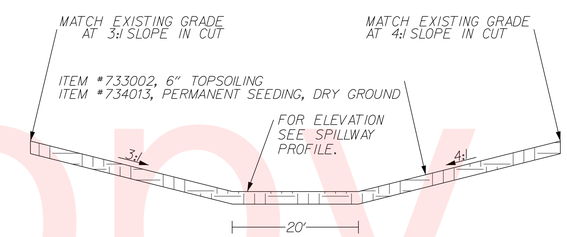

SECTION B – B

SCALE : NONE

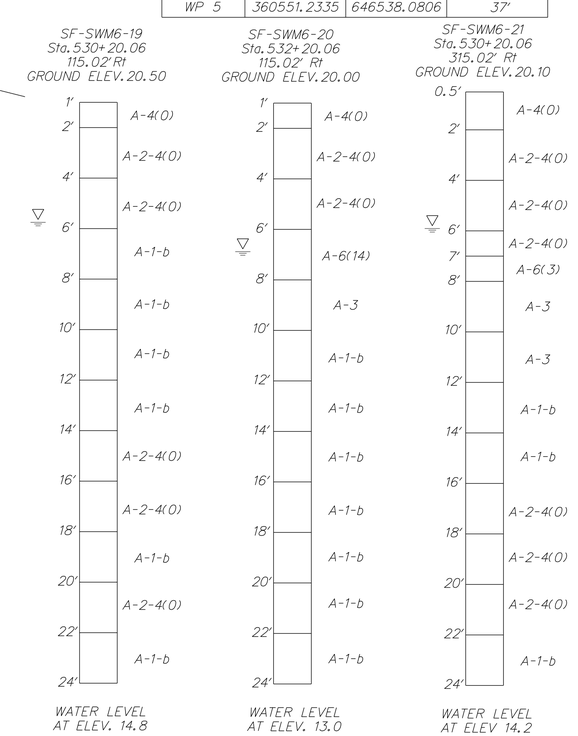

Unofficial Website Copy

DELAWARE DEPARTMENT OF TRANSPORTATION

ADDENDUMS / REVISIONS

NOT TO SCALE

SR1, SOUTH FREDERICA GRADE SEPARATED INTERSECTION

CONTRACT	BRIDGE NO.	–
T200812202	DESIGNED BY: LCM	
COUNTY		
KENT	CHECKED BY: SFP	

STORMWATER MANAGEMENT DETAILS DELDOT SWM FACILTY #530

SHEET NO. 121

TOTAL SHTS. 296

10/26/2015
G:\PROJECTS\06535.00 (DelDOT Agmt. 1376 DOTS Open End)\06535.07 SR1, S. Frederica\CADD Files\XM\swm_detail 3.tsf.dgn
14:44:30 PM

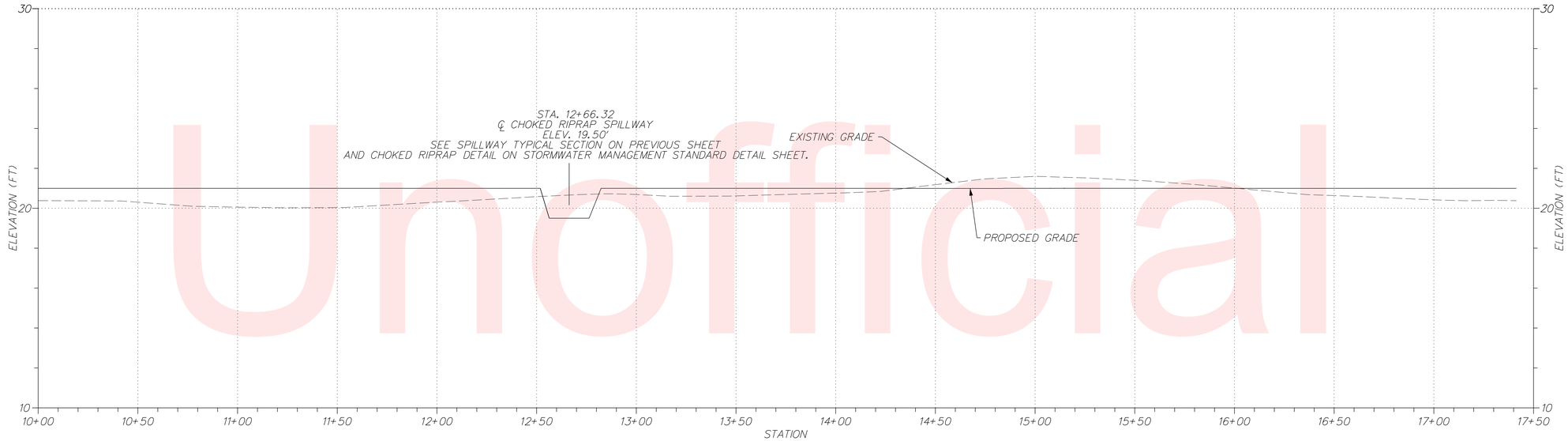

DELDOT SWM FACILITY #530 EMBANKMENT

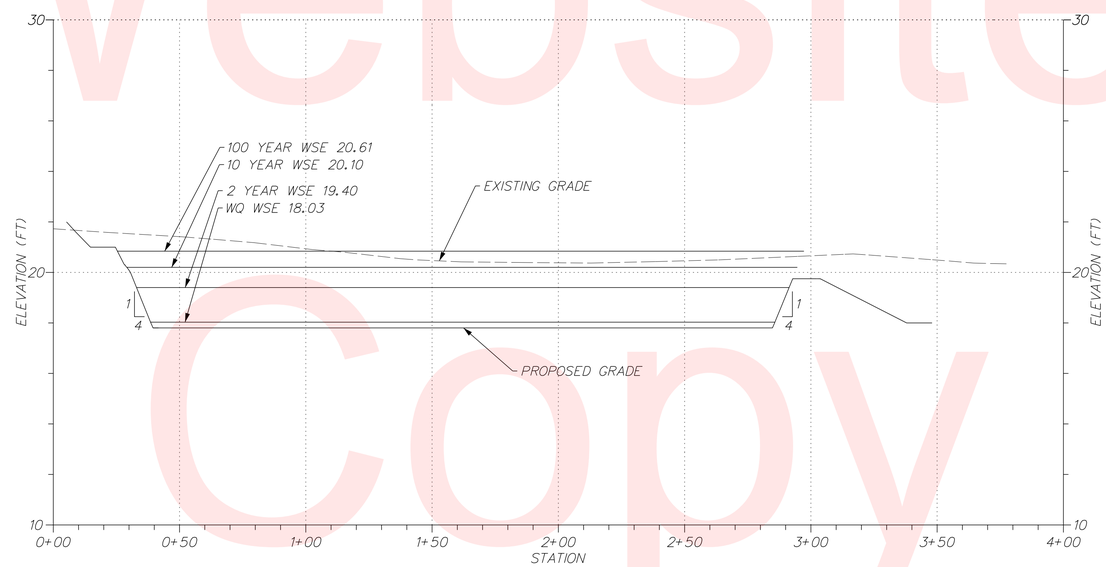

DELDOT SWM FACILITY #530 SPILLWAY

VERTICAL SCALE FEET 0 5 10

Unofficial Website Copy

DELAWARE DEPARTMENT OF TRANSPORTATION	ADDENDUMS / REVISIONS	SCALE 0 30 60 90 FEET	SR1, SOUTH FREDERICA GRADE SEPARATED INTERSECTION	CONTRACT T200812202 / COUNTY KENT	BRIDGE NO. – / DESIGNED BY: LCM / CHECKED BY: SFP	STORMWATER MANAGEMENT DETAILS DELDOT SWM FACILTY #530	SHEET NO. 122 / TOTAL SHTS. 296

10/26/2015
G:\PROJECTS\06535.00 (DelDOT Agmt. 1376 DOTS Open End)\06535.07 SR1, S. Frederica\CADD Files\XM\swm_detail3.2sf.dgn
11:45:37 PM

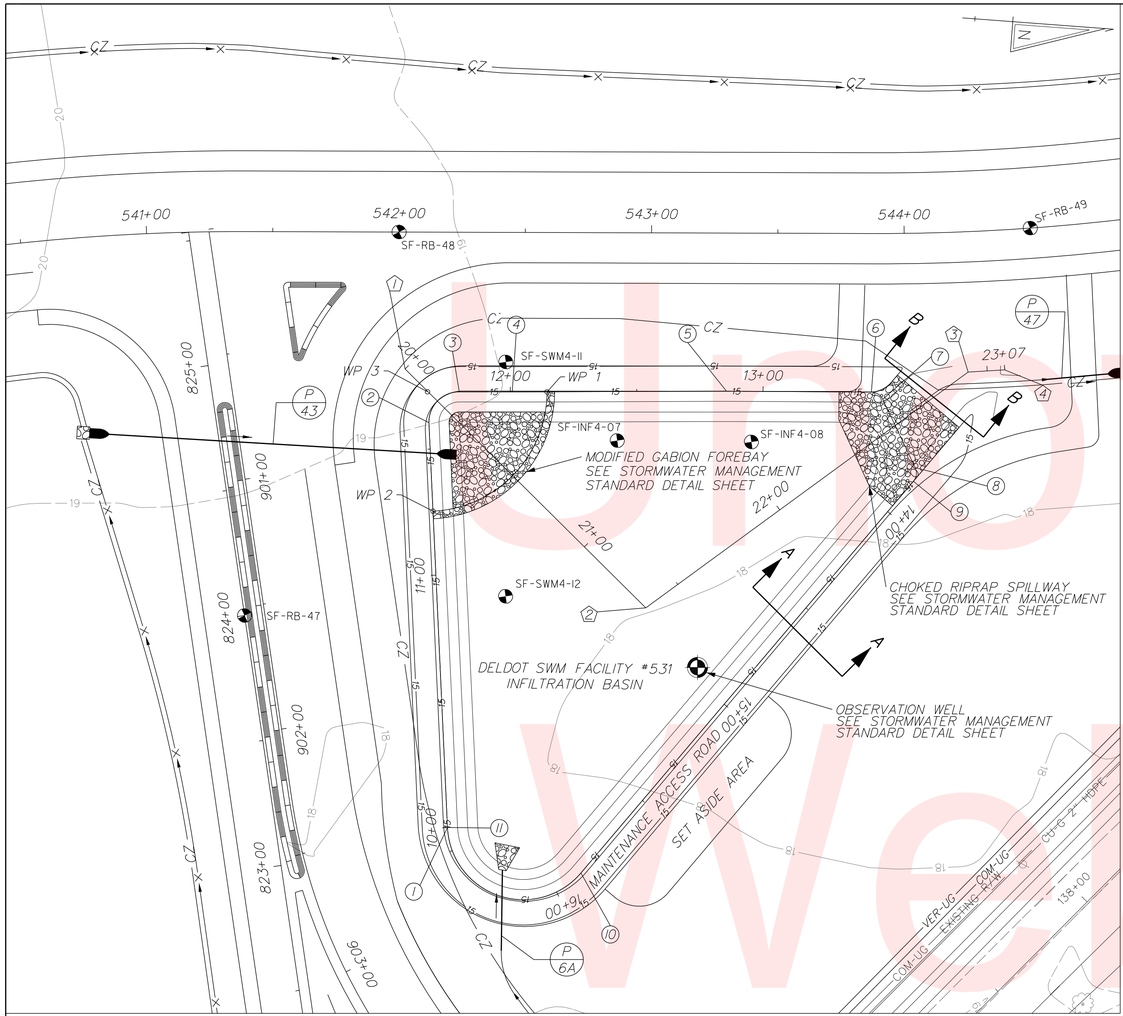

PLAN – DELDOT SWM FACILITY #531

POND DESIGN SUMMARY FOR BMP #531				
DESIGN STORM	FACILITY INFLOW	FACILITY DISCHARGE	WATER SURFACE ELEVATION	STORAGE VOLUME (AC.FT)
QUALITY STORM (2.0")	0.58	0.00	12.02	0.009
2 - YEAR	4.72	0.12	13.52	0.696
10 - YEAR	20.85	19.01	14.02	0.956
100 - YEAR	82.81	76.19	14.95	1.476

HAZARD CLASSIFICATION: CLASS A AS PER POND CODE 378

DRAINAGE AREA TO FACILITY: 22.48 ACRES

MANAGEMENT PROVIDED BY FACILITY: WATER QUALITY BY INFILTRATION OF FIRST 2.0" OF RUNOFF, WATER QUANTITY FOR 2&10 YEAR STORMS.

POND CONSTRUCTION SEQUENCE AND NOTES

THE STORMWATER MANAGEMENT POND SHALL NOT FUNCTION AS A SEDIMENT BASIN DURING ROADWAY CONSTRUCTION. A CONSTRUCTION SAFETY FENCE SHALL BE INSTALLED FOLLOWING POND EXCAVATION TO PREVENT EQUIPMENT AND CONSTRUCTION TRAFFIC FROM COMPACTING THE POND. THE SAFETY FENCE MAY BE REMOVED UPON FINAL STABILIZATION OF THE POND AND ALL UPSTREAM AREAS. SAFETY FENCE WILL BE PAID UNDER ITEM 727014. THE STORMWATER FACILITY SHALL BE CONSTRUCTED IN ACCORDANCE WITH THE FOLLOWING SECTIONS OF THE STANDARD SPECIFICATIONS AS APPLICABLE:

SECTION 271 - STORMWATER MANAGEMENT POND

1. INSTALL STABILIZED CONSTRUCTION ENTRANCE AS SHOWN ON EROSION AND SEDIMENT CONTROL PLANS.

2. CLEAR AND GRUB FOR INSTALLATION OF PERIMETER EROSION AND SEDIMENT CONTROLS.

3. INSTALL PERIMETER SEDIMENT CONTROLS AS SHOWN ON EROSION AND SEDIMENT CONTROL PLANS.

4. CLEAR AND GRUB REMAINING AREA FOR POND CONSTRUCTION.

5. RECONSTRUCT POND OUTLET DITCH AND PARTIAL EMBANKMENT AS NEEDED TO CONSTRUCT POND SPILLWAY. CONSTRUCT CHOKED RIPRAP SPILLWAY.

6. EXCAVATE THE POND TO ELEVATION 13.00' AND COMPLETE THE EMBANKMENT, AND OUTLET TO LINES, GRADES, AND DETAILS SHOWN IN THE CONSTRUCTION PLANS.

7. COMPLETE EXCAVATION OF THE BASIN TO ELEVATION 12.00 USING A WORK-YOUR-WAY OUT METHOD, I.E. STARTING IN THE MIDDLE AND EXCAVATING TOWARDS THE SIDES. AT NO TIME SHALL ANY EQUIPMENT BE USED ON SOIL BELOW ELEVATION 13.00'. THE BOTTOM OF THE BASIN SHALL BE LEFT ROUGH AND SHALL BE EXCAVATED WITH A TOOTHED BUCKET.

8. STABILIZE ALL BARE AREAS USING PERMANENT SEEDING. 6" TOPSOIL SHALL BE PLACED ON THE SIDES OF THE INFILTRATION FACILITY ABOVE ELEVATION 13.00'. NO TOPSOIL SHALL BE PLACED ON THE BOTTOM OF THE FACILITY OR THE SIDES BELOW ELEVATION 13.00'. TOPSOIL FROM ELEVATION 13.00' TO 13.50' SHALL VARY IN DEPTH FROM 0" TO 6" TO ACHIEVE A GRADUAL TRANSITION. SEEDING SHALL BE AS SHOWN ON THE DETAILS BELOW.

9. INSTALL PERMANENT BMP MARKER AS STATED IN BMP MARKER GENERAL NOTES ON THE STORMWATER MANAGEMENT GENERAL DETAIL SHEET.

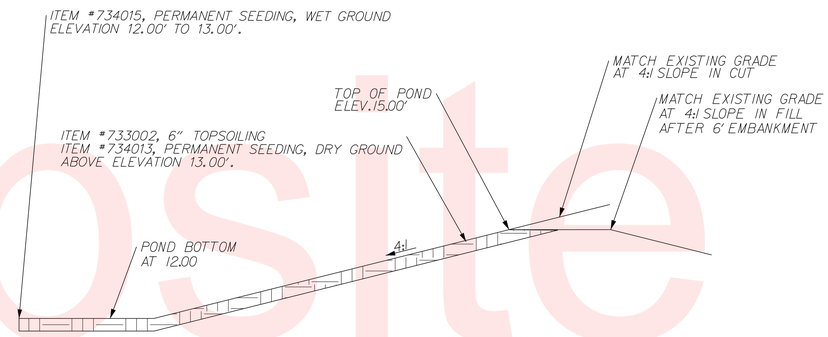

SECTION A – A

SCALE: NONE

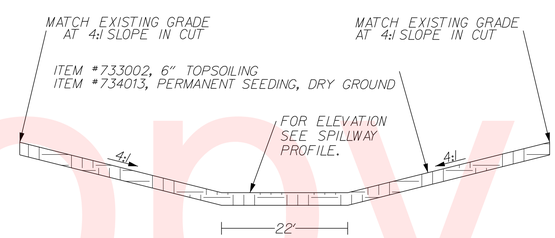

SECTION B – B

SCALE : NONE

℄ EMBANKMENT				
	STATION	NORTHING	EASTING	RADIUS
1	POB 10+00.00	361501.2903	645995.0525	
2	PC 11+60.72	361481.9877	645835.7743	
	PI 11+72.95	361480.8525	645823.5943	12'
3	PT 11+79.80	361493.0520	645822.6932	
4	PI 12+00.80	361513.9977	645821.1479	
5	PI 12+85.52	361598.5476	645814.5333	
6	PC 13+42.91	361655.8028	645810.5922	
	PI 13+46.05	361658.9355	645810.3766	5'
7	PT 13+48.51	361660.4902	645813.1047	
8	PC 13+78.49	361675.3337	645839.1508	
	PI 13+81.72	361676.9327	645841.9567	5'
9	PT 13+84.23	361675.0327	645844.5681	
10	PC 15+87.69	361555.3332	646009.0910	
	PI 16+63.96	361510.4651	646070.7743	30'
11	PT/POE 16+59.45	361501.2903	645995.0525	

NOTE: ALIGNMENT IS LOCATED AT TOP OF POND, ELEVATION 15.00'.

℄ SPILLWAY			
	STATION	NORTHING	EASTING
1	POB 20+00.00	361470.9776	645815.2807
2	PI 21+34.28	361573.0912	645902.4780
3	PI 22+92.44	361693.4222	645799.8288
4	POE 23+06.94	361707.7904	645797.8840

GABION WORKING POINTS			
POINT NO	NORTHING	EASTING	RADIUS
WP 1	361527.7004	645820.1370	
WP 2	361486.2068	645870.5886	
WP 3	361480.5146	645823.6182	37'

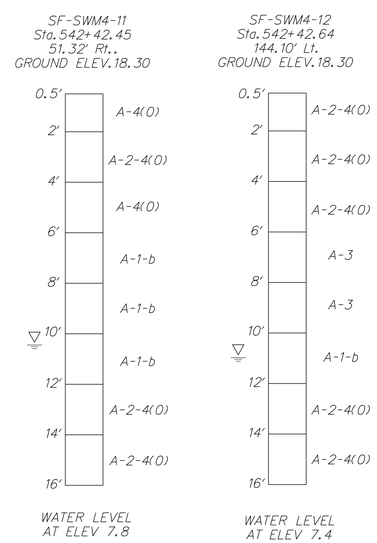

Unofficial Website Copy

DELAWARE DEPARTMENT OF TRANSPORTATION

ADDENDUMS / REVISIONS

NOT TO SCALE

SR1, SOUTH FREDERICA GRADE SEPARATED INTERSECTION

CONTRACT	BRIDGE NO.	–
T200812202	DESIGNED BY: LCM	
COUNTY		
KENT	CHECKED BY: SFP	

STORMWATER MANAGEMENT DETAILS DELDOT SWM FACILTY #531

SHEET NO. 123

TOTAL SHTS. 296

10/26/2015
G:\PROJECTS\06535.00 (DelDOT Agmt. 1376 DOTS Open End)\06535.07 SR1, S. Frederica\CADD Files\XM\swm_detail4.1st.dgn
11:46:51 PM

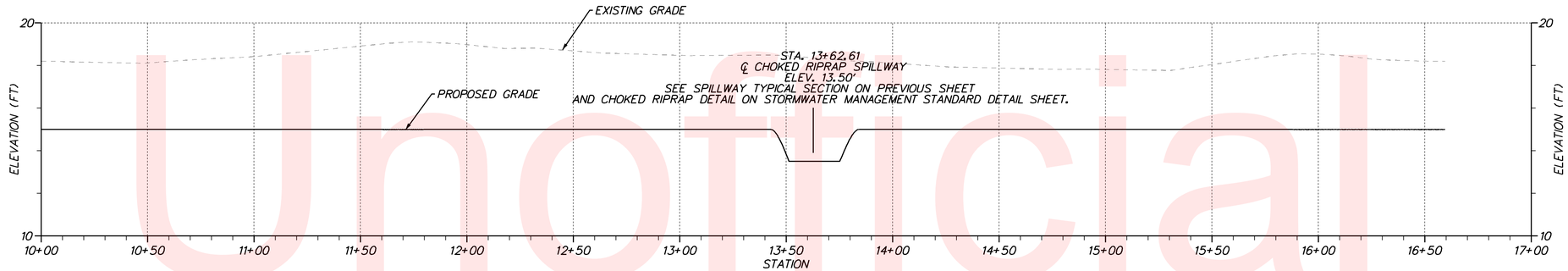

DELDOT SWM FACILITY #531 EMBANKMENT

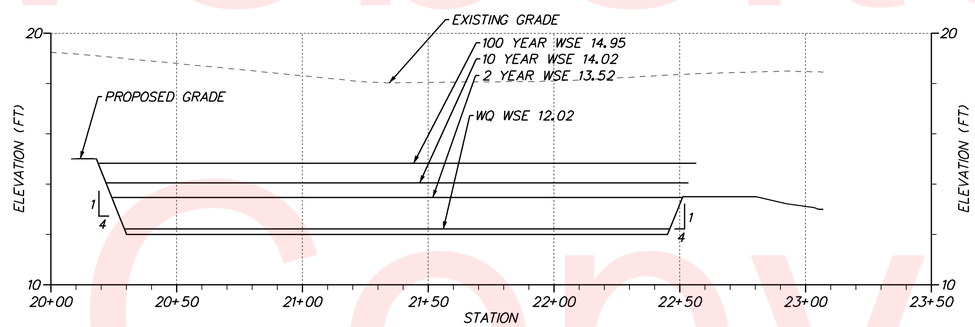

DELDOT SWM FACILITY #531 SPILLWAY

VERTICAL SCALE FEET 10 5 0

Unofficial Website Copy

DELAWARE DEPARTMENT OF TRANSPORTATION	ADDENDUMS / REVISIONS	SCALE 0 30 60 90 FEET	SR1, SOUTH FREDERICA GRADE SEPARATED INTERSECTION	CONTRACT T200812202 / COUNTY KENT	BRIDGE NO. – / DESIGNED BY: LCM / CHECKED BY: SFP	STORMWATER MANAGEMENT DETAILS DELDOT SWM FACILITY #531	SHEET NO. 124 / TOTAL SHTS. 296

5/23/2013
G:\PROJECTS\06535.00 (DelDOT Agmt. 1376 DOTS Open End)\06535.07 SR1, S. Frederica\CADD Files\XM\swm_detail4.2st.dgn
22:41:43

PLAN – DELDOT SWM FACILITY #532

POND CONSTRUCTION SEQUENCE AND NOTES

THE STORMWATER MANAGEMENT POND SHALL FUNCTION AS A SEDIMENT BASIN DURING ROADWAY CONSTRUCTION AND SHALL BE CONSTRUCTED IN ACCORDANCE WITH THE FOLLOWING SECTIONS OF THE STANDARD SPECIFICATIONS AS IS APPLICABLE:

SECTION 271 - STORMWATER MANAGEMENT POND
SECTION 272 - POND OUTLET STRUCTURE, CONCRETE

1. INSTALL STABILIZED CONSTRUCTION ENTRANCE AS SHOWN IN EROSION AND SEDIMENT CONTROL PLANS.
2. CLEAR AND GRUB FOR INSTALLATION OF PERIMETER EROSION AND SEDIMENT CONTROLS.
3. INSTALL PERIMETER SEDIMENT CONTROLS AS SHOWN IN EROSION AND SEDIMENT CONTROL PLANS.
4. CLEAR AND GRUB REMAINING AREA FOR POND CONSTRUCTION.
5. CONSTRUCT POND OUTLET STRUCTURE AND PARTIAL EMBANKMENT AS NEEDED TO INSTALL POND OUTLET STRUCTURE. INSTALL SKIMMER DEWATERING DEVICE. DE-WATER FOUNDATION AS NEEDED IN ACCORDANCE WITH SECTION 110.13 AND USE SUMP PIT FOR PUMPING. (SEE STORMWATER MANAGEMENT DETAILS FOR SKIMMER DEWATERING DEVICE INSTALLATION.)
6. EXCAVATE THE POND AND COMPLETE THE EMBANKMENT, SPILLWAY AND BASIN.
7. STABILIZE ALL BARE AREAS USING ITEM #734018, TEMPORARY SEEDING, WET GROUND (NO TOPSOIL). NOTE: SEE EROSION AND SEDIMENT CONTROL PLANS FOR LOCATION OF EROSION AND SEDIMENT CONTROL MEASURES.

MAINTENANCE OF POND AS A SEDIMENT BASIN

1. CONTRACTOR SHALL INSPECT THE BASIN IMMEDIATELY AFTER EVERY RAIN AND MAKE REPAIRS AS NEEDED.
2. CONTRACTOR SHALL CLEARLY MARK THE CLEANOUT ELEVATION (11.00') ON A STAKE DRIVEN INTO THE GROUND AT A LOCATION CLEARLY VISIBLE FROM THE EMBANKMENT. SEDIMENT SHALL BE REMOVED WHEN CLEANOUT ELEVATION IS REACHED AND DISPOSED OF AT A LOCATION APPROVED BY THE ENGINEER.

CONVERSION TO PERMANENT STORMWATER MANAGEMENT POND

1. CONVERT THE BASIN INTO THE PERMANENT STORMWATER MANAGEMENT POND AFTER ALL AREAS DRAINING TO THE POND HAVE BEEN PERMANENTLY STABILIZED AND THE ENGINEER HAS APPROVED THE CONVERSION.
2. REMOVE ANY ACCUMULATED SEDIMENT ABOVE ELEVATION 6.00 AS SHOWN BY LINES AND GRADES ON THE PLAN AND DISPOSE OF SEDIMENT AT LOCATION APPROVED BY THE ENGINEER. INSTALL MODIFIED GABION CHECK DAMS AS SHOWN.
3. INSTALL MAINTENANCE ACCES ROAD. COMPLETE STABILIZATION OF ALL BARE AREAS USING 6" TOPSOIL AND PERMANENT SEEDING. REMOVE EROSION AND SEDIMENT CONTROL MEASURES AND DEACTIVATE SKIMMER DEWATERING DEVICE.
4. INSTALL PERMANENT BMP MARKER AS STATED IN BMP MARKER GENERAL NOTES ON THE STORMWATER MANAGEMENT STANDARD DETAIL SHEET.

℄ EMBANKMENT

	STATION	NORTHING	EASTING	RADIUS
1	POB 10+00.00	362026.8603	645865.1838	
2	PC 12+59.27	362128.4765	645626.6562	
	PI 12+70.38	362132.8288	645616.4397	47'
3	PT 12+81.08	362141.2934	645609.2516	
4	PI 13+40.53	362186.4751	645570.6157	
5	PC 13+89.88	362222.7913	645537.2056	
	PI 13+99.00	362229.5076	645531.0268	150'
6	PT 14+08.11	362235.4252	645524.0794	
7	PI 14+80.91	362282.6371	645468.6516	
8	PI 15+98.75	362353.8643	645374.7817	
9	PI 16+04.22	362357.3426	645370.5535	
10	PC 17+05.08	362422.5066	645293.5744	
	PI 17+51.59	362452.5573	645258.0752	45'
11	PT 17+77.25	362487.0454	645289.2812	
12	PC 20+11.50	362660.7409	645446.4476	
	PI 20+47.90	362687.7335	645470.8715	42'
13	PT 20+71.48	362667.3922	645501.0601	
14	PC 20+82.46	362661.2592	645510.1621	
	PI 21+12.89	362644.2535	645535.4004	37'
15	PRC 21+33.40	362616.2083	645523.5838	
	PI 24+53.24	362321.4562	645399.3921	81'
16	PRC 23+47.96	362521.3801	645649.0575	
	PI 23+89.97	362547.6352	645681.8450	35'
17	PT 24+09.29	362510.6488	645701.7536	
18	PC 26+72.97	362278.4685	645826.7292	
	PI 26+75.17	362276.5283	645827.7736	35'
19	PT 26+77.37	362274.4724	645828.5664	
20	PI 28+25.52	362136.3500	645882.1339	
21	PC 28+94.50	362073.5776	645910.7486	
	PI 29+84.69	361991.5122	645948.1579	35'
22	PT 29+78.55	362026.8603	645865.1838	

NOTE: ALIGNMENT IS LOCATED AT TOP OF POND, ELEVATION 15.00'.

℄ SPILLWAY

	STATION	NORTHING	EASTING
1	POB 40+00.00	362019.7151	645922.3723
2	PI 46+29.26	362449.5512	645462.7948
3	PC 48+05.41	362571.9732	645589.4516
	PI 48+17.52	362580.3871	645598.1565
4	PT 48+27.96	362592.4337	645596.9532
5	POE 49+10.14	362674.2031	645588.7855

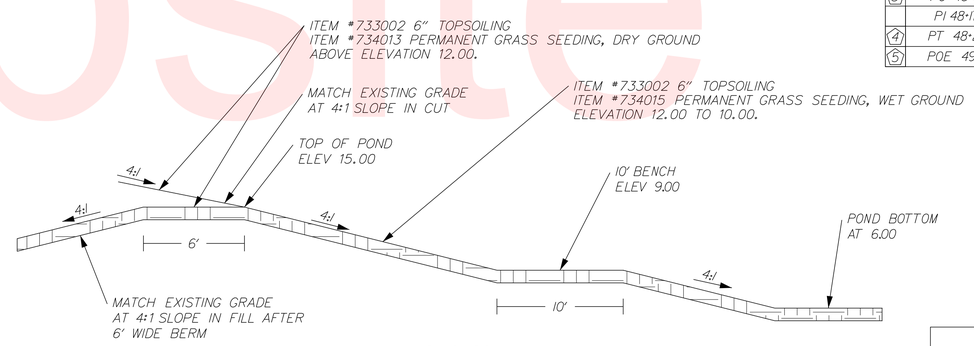

SECTION A – A

SCALE: NONE

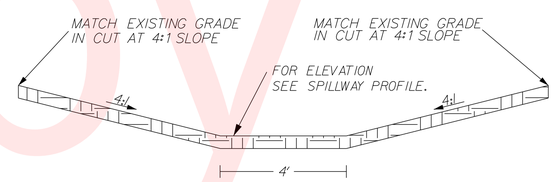

SECTION B – B

SCALE : NONE

GABION WORKING POINTS

POINT NO	NORTHING	EASTING	RADIUS
WP 1	362427.0867	645318.9491	
WP 2	362434.6532	645325.4874	
WP 3	362408.8830	645356.0757	
WP 4	362401.3740	645349.5859	
WP 5	362421.7681	645340.7816	20'
WP 6	362127.1162	645680.8030	
WP 7	362136.2689	645684.8315	
WP 8	362120.6157	645721.6381	
WP 9	362111.5321	645717.6390	
WP 10	362128.2119	645703.1368	20'
WP 11	362120.6986	645867.2886	
WP 12	362069.1299	645816.9921	
WP 13	362030.1110	645908.5828	99.55'

POND DESIGN SUMMARY FOR BMP #532

DESIGN STORM	FACILITY INFLOW	FACILITY DISCHARGE	WATER SURFACE ELEVATION	STORAGE VOLUME (AC.FT)
QUALITY STORM (2.0")	6.83	0.96	10.44	1.444
2 - YEAR	24.26	4.55	11.14	3.820
10 - YEAR	61.80	28.35	12.40	8.235
100 - YEAR	203.69	132.65	14.03	14.379

HAZARD CLASSIFICATION: CLASS A AS PER POND CODE 378
DRAINAGE AREA TO FACILITY: 54.89 ACRES
MANAGEMENT PROVIDED BY FACILITY: WATER QUALITY BY EXTENDED DETENTION OF FIRST 2.0" OF RUNOFF, WATER QUANTITY FOR 2&10 YEAR STORMS.

Unofficial Website Copy

DELAWARE DEPARTMENT OF TRANSPORTATION	ADDENDUMS / REVISIONS	NOT TO SCALE	SR1, SOUTH FREDERICA GRADE SEPARATED INTERSECTION	CONTRACT T200812202 / COUNTY KENT	BRIDGE NO. – / DESIGNED BY: LCM / CHECKED BY: SFP
STORMWATER MANAGEMENT DETAILS DELDOT SWM FACILTY #532	SHEET NO. 125 / TOTAL SHTS. 296				

10/26/2015
G:\PROJECTS\06535.00 (DelDOT Agmt. 1376 DOTS Open End)\06535.07 SR1, S. Frederica\CADD Files\XM\swm_detail5.1sf.dgn
14:7:56 PM

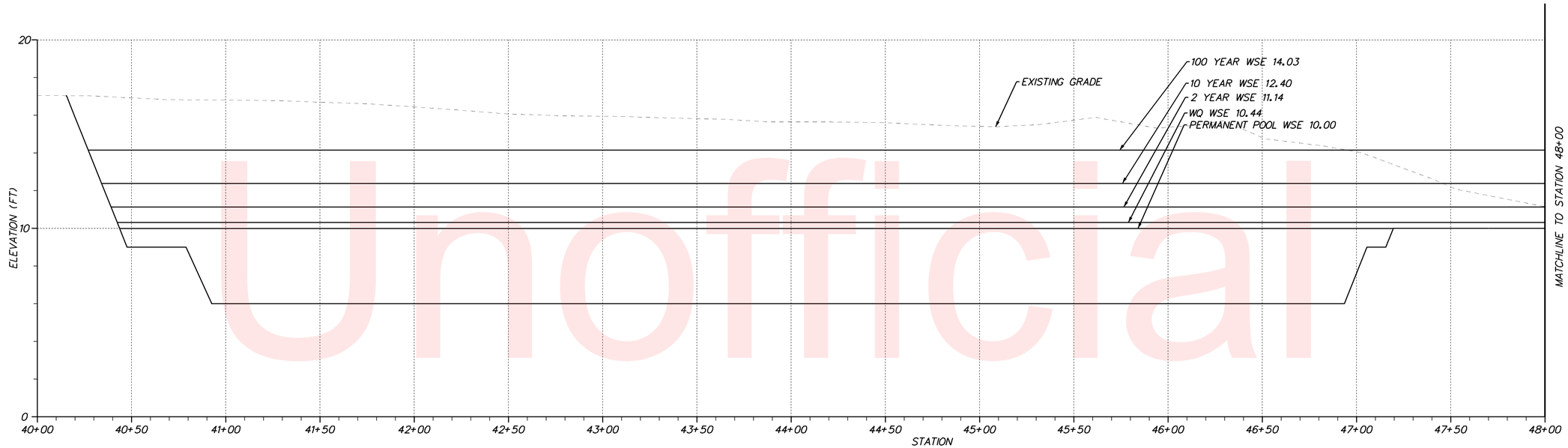

DELDOT SWM FACILITY #532 SPILLWAY

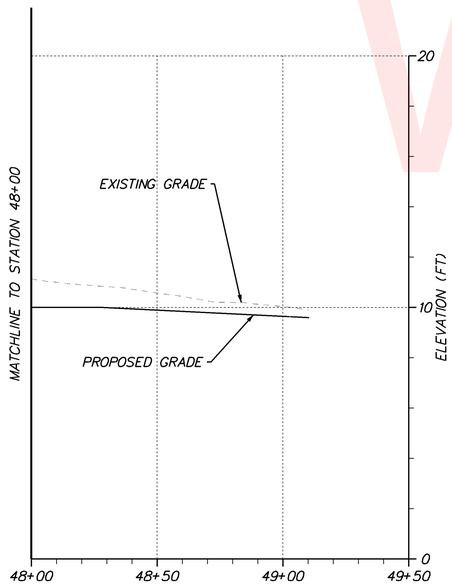

DELDOT SWM FACILITY #532 SPILLWAY

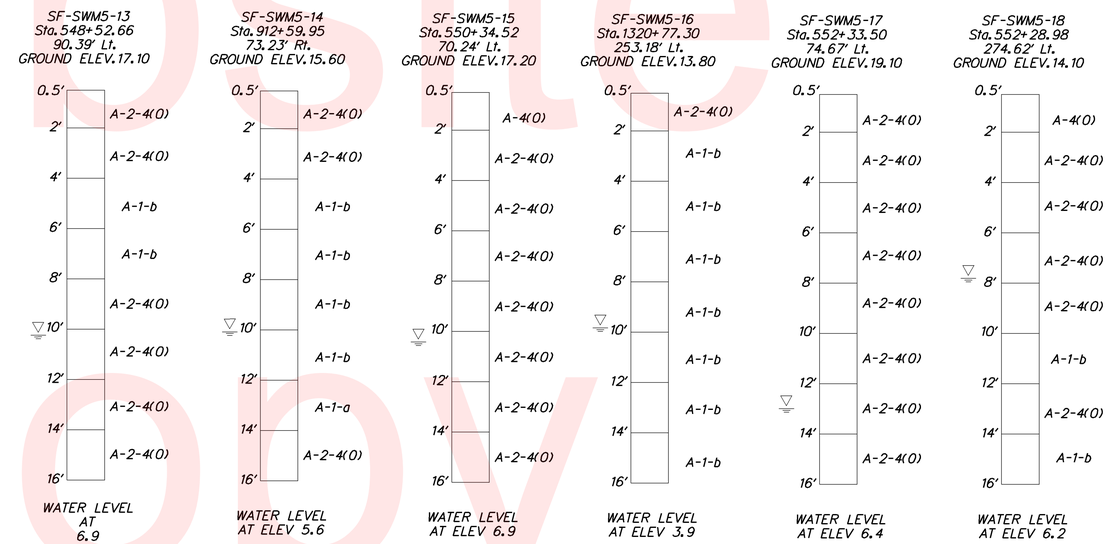

VERTICAL SCALE FEET 10 5 0

Unofficial Website Copy

DELAWARE DEPARTMENT OF TRANSPORTATION	ADDENDUMS / REVISIONS	SCALE 0 30 60 90 FEET	SR1, SOUTH FREDERICA GRADE SEPARATED INTERSECTION	CONTRACT T200812202 / COUNTY KENT	BRIDGE NO. – / DESIGNED BY: LCM / CHECKED BY: SFP	STORMWATER MANAGEMENT DETAILS DELDOT SWM FACILITY #532	SHEET NO. 126 / TOTAL SHTS. 296

5/23/2013
G:\PROJECTS\06535.00 (DelDOT Agmt. 1376 DOTS Open End)\06535.07 SR1, S. Frederica\CADD Files\XM\swm_detail5.2st.dgn
2244414

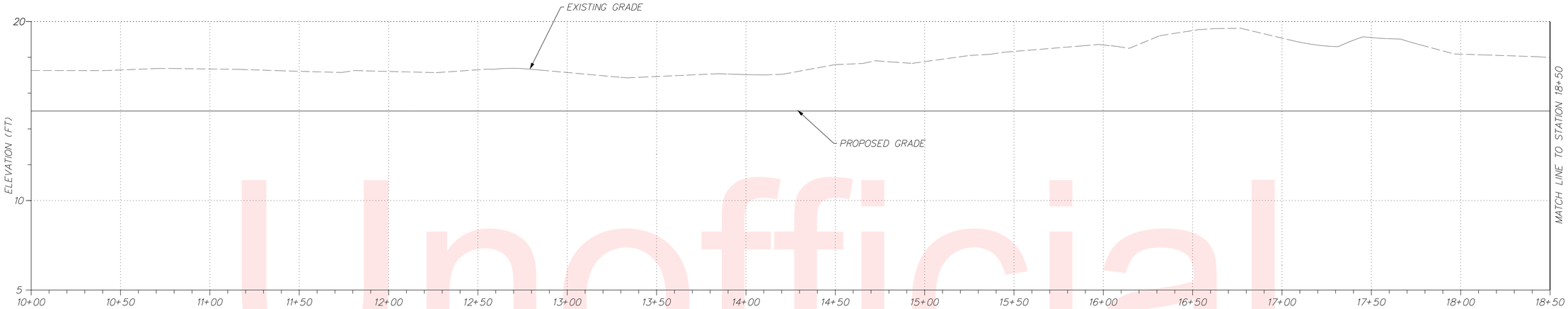

DELDOT SWM FACILITY #532 SPILLWAY

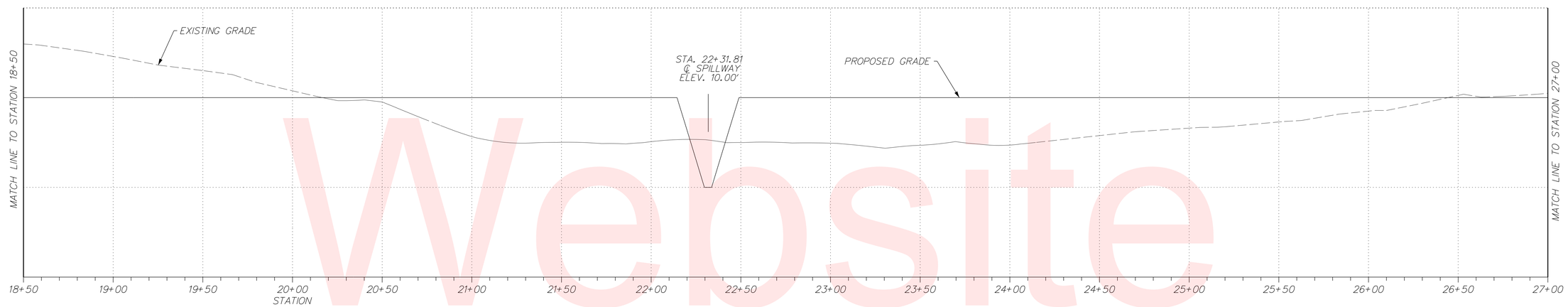

DELDOT SWM FACILITY #532 SPILLWAY

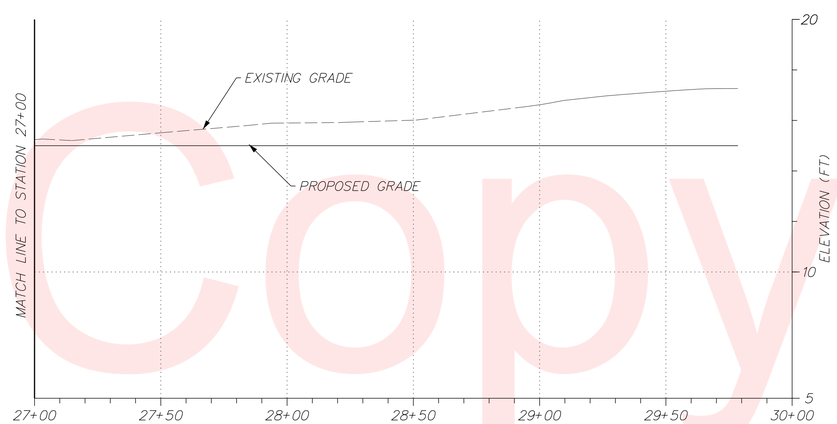

DELDOT SWM FACILITY #532 SPILLWAY

VERTICAL SCALE FEET 10 5 0

Unofficial Website Copy

DELAWARE DEPARTMENT OF TRANSPORTATION	ADDENDUMS / REVISIONS	SCALE 0 30 60 90 FEET	**SR1, SOUTH FREDERICA GRADE SEPARATED INTERSECTION**	CONTRACT T200812202 / COUNTY KENT	BRIDGE NO. – / DESIGNED BY: LCM / CHECKED BY: SFP	**STORMWATER MANAGEMENT DETAILS DELDOT SWM FACILITY #532**	SHEET NO. 127 / TOTAL SHTS. 296

10/26/2015 G:\PROJECTS\06535.00 (DelDOT Agmt. 1376 DOTS Open End)\06535.07 SR1, S. Frederica\CADD Files\XM\swm_detail5.3sf.dgn 1:48:19 PM

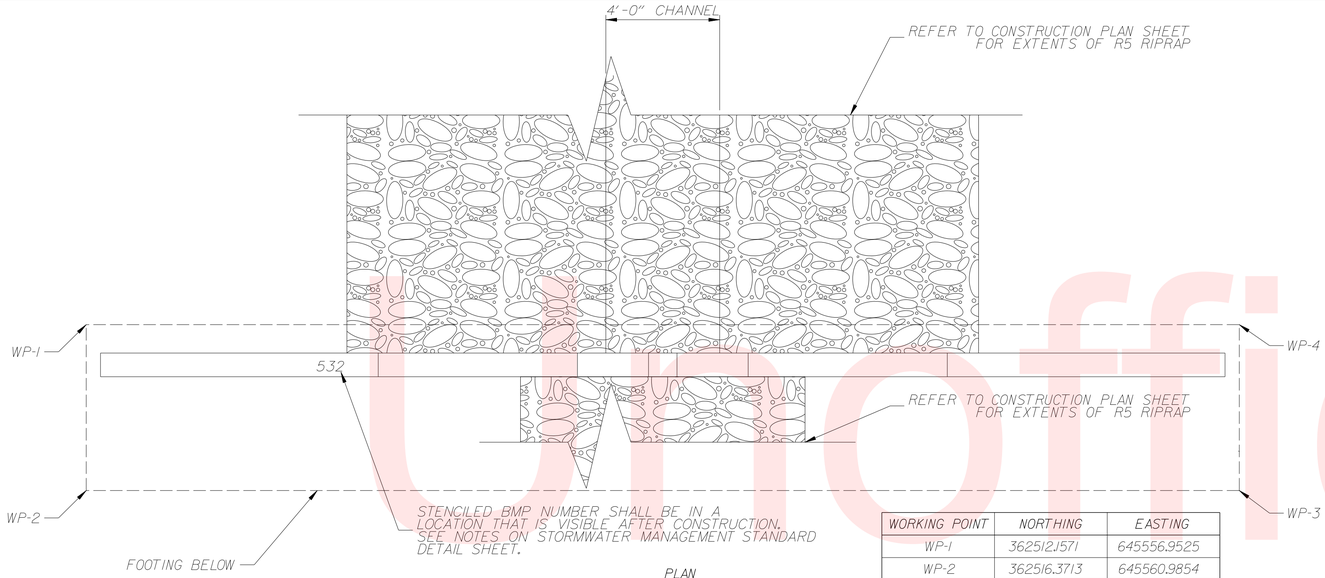

PLAN
SCALE: 3/8"=1'-0"

WORKING POINT	NORTHING	EASTING
WP-1	362512.1571	645556.9525
WP-2	362516.3713	645560.9854
WP-3	362544.3730	645531.7253
WP-4	362540.1588	645527.6924

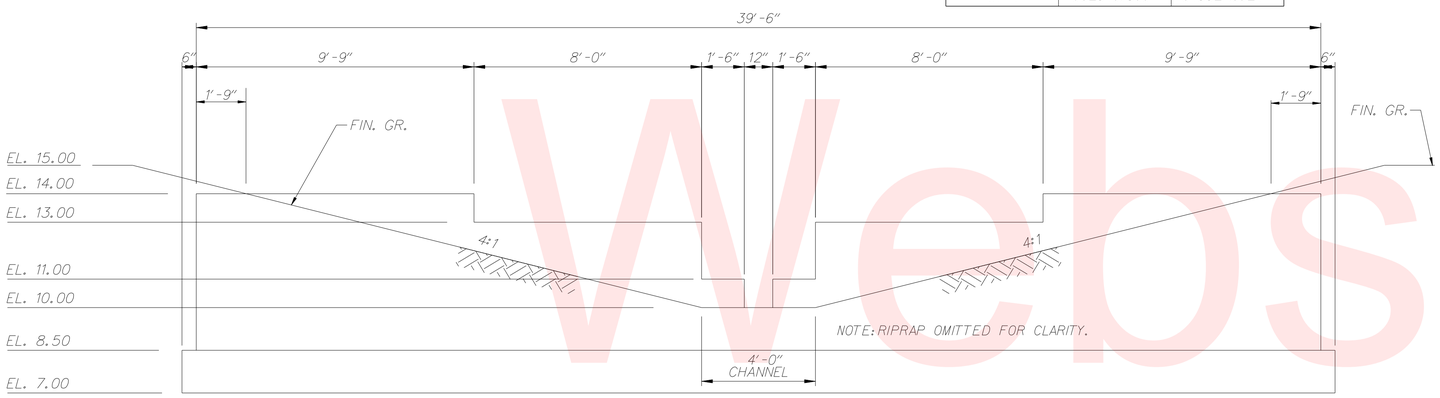

ELEVATION
SCALE: 3/8"=1'-0"

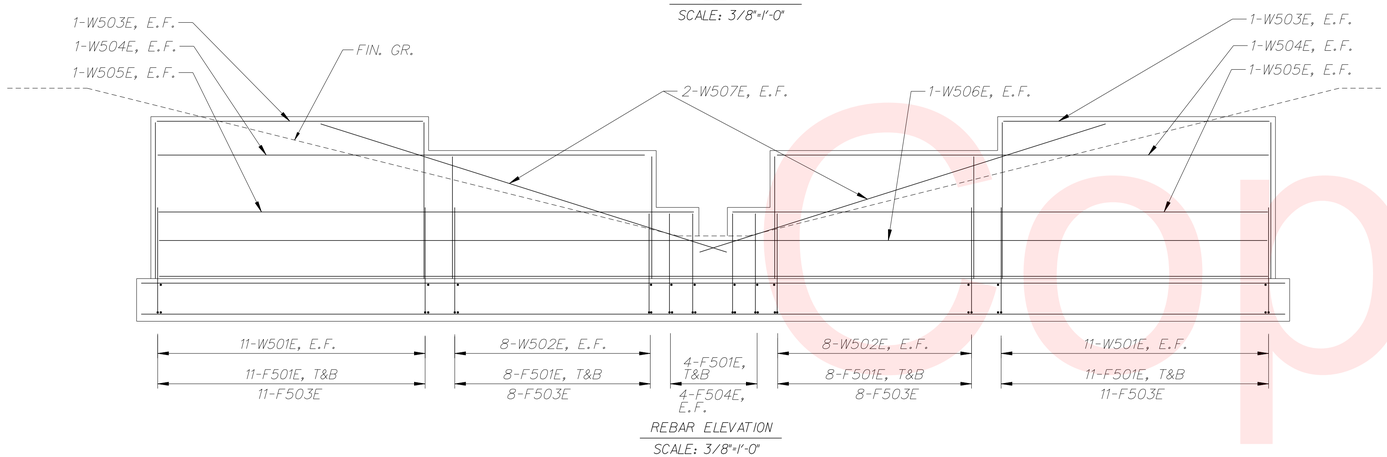

REBAR ELEVATION
SCALE: 3/8"=1'-0"

GENERAL NOTES:

1. SPECIFICATIONS:

   DELAWARE DEPARTMENT OF TRANSPORTATION - STANDARD SPECIFICATIONS FOR ROAD AND BRIDGE CONSTRUCTION. AUGUST 2001. INCLUDING ALL SUPPLEMENTS.

2. MATERIALS:

   CONCRETE FOR FOOTINGS SHALL BE CLASS "B" CONCRETE WITH f'c - 3000 PSI MIN. AT 28 DAYS. CONCRETE ABOVE FOOTINGS SHALL BE CLASS "A" CONCRETE WITH f'c - 4500 PSI MIN. AT 28 DAYS. REINFORCING STEEL SHALL BE A.A.S.H.T.O. M31 GRADE 60. ALL COSTS INCLUDED IN ITEM #272000-POND OUTLET STRUCTURE, CONCRETE, #1.

   REINFORCING STEEL AND TIES SHALL BE EPOXY COATED IN ACCORDANCE WITH A.A.S.H.T.O. M284 WHERE NOTED.

   GEOTEXTILE SHALL BE PAID FOR UNDER ITEM NUMBER 713002 - GEOTEXTILES, SEPARATION.

3. BACKFILL MATERIAL OVER FOUNDATIONS SHALL BE TYPE F BORROW. EXCAVATED MATERIAL MEETING BORROW TYPE F, OR AS APPROVED BY THE ENGINEER. FURNISHING AND PLACING BACKFILL MATERIAL SHALL BE INCLUDED IN ITEM #272000-POND OUTLET STRUCTURE, CONCRETE, #1. ALL DIMENSIONS, ELEVATIONS, AND FIELD CONDITIONS SHALL BE VERIFIED PRIOR TO CONSTRUCTION.

4. FURNISHING, CONSTRUCTING AND PLACING ALL ITEMS ASSOCIATED WITH THE STRUCTURE, INCLUDING BUT NOT LIMITED TO, EXCAVATION, CONCRETE, REINFORCING STEEL, STONE BEDDING, GEOTEXTILE, FASTNERS AND BACKFILL MATERIAL SHALL BE INCLUDED IN ITEM NO. 272000.

5. ALL CONCRETE FOR OUTLET STRUCTURE SHALL BE PORTLAND CEMENT CONCRETE CLASS A.

6. REINFORCING STEEL SHALL BE EPOXY COATED AND SHALL CONFORM TO A.A.S.H.T.O. M 31M-94, GRADE 60. ALL FASTNERS SHALL BE GRADE 8.

7. WEIR STRUCTURE #532 SHALL BE CAST-IN-PLACE. IF THE CONTRACTOR ELECTS TO CONSTRUCT A PRECAST UNIT, THE CONTRACTOR SHALL SUBMIT SHOP DRAWINGS DETAILING ALL REBAR, JOINTS, LAYOUT AND DESIGN OF THE WEIR STRUCTURE.

REINFORCING BAR LIST - BMP #532

LENGTHS AND QUANTITIES SHOWN REPRESENT ONE STRUCTURE.

MARK	SIZE	NUMBER	LENGTH	TYPE	A	B
F501E	5	84	5-6	STR.	-	-
F502E	5	10	40-2	STR.	-	-
F503E	5	38	5-3	1	1-6	3-9
F504E	5	6	5-1	1	1-6	3-7
W501E	5	44	5-4	STR.	-	-
W502E	5	32	4-4	STR.	-	-
W503E	5	4	9-5	STR.	-	-
W504E	5	4	17-5.2	STR.	-	-
W505E	5	4	18-10.4	STR.	-	-
W506E	5	2	39-2.2	STR.	-	-
W507E	5	4	14-2	STR.	-	-

BENDING DIAGRAMS

(E) DENOTES EPOXY COATED BARS.
ALL DIMENSIONS ARE FROM OUT TO OUT.

DIMENSIONS GIVEN IN FEET, INCHES AND EIGHTHS OF INCHES.

TYPE 1

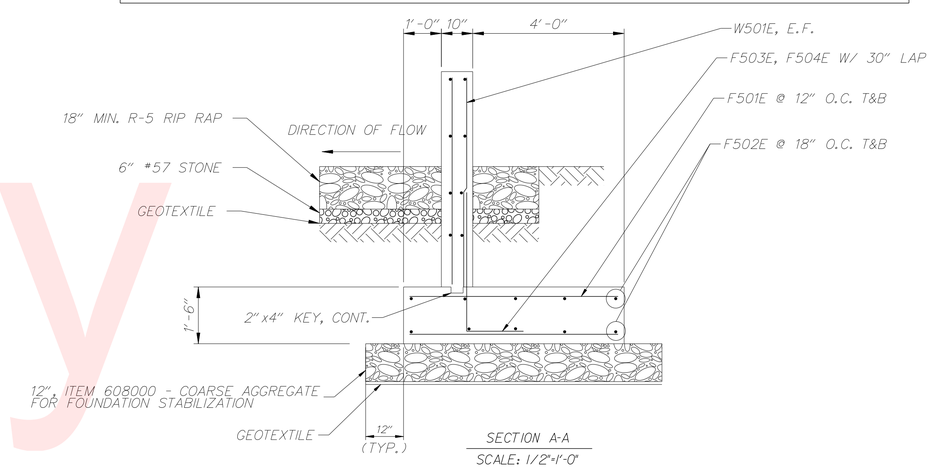

SECTION A-A
SCALE: 1/2"=1'-0"

Unofficial Website Copy

DELAWARE DEPARTMENT OF TRANSPORTATION	ADDENDUMS / REVISIONS	SCALE: AS SHOWN	SR1, SOUTH FREDERICA GRADE SEPARATED INTERSECTION	CONTRACT T200812202	BRIDGE NO. -	STORMWATER MANAGEMENT WEIR STRUCTURE BMP #532	SHEET NO. 128
				COUNTY KENT	DESIGNED BY: LCM		TOTAL SHTS. 296
					CHECKED BY: SFP		

10/26/2015
G:\PROJECTS\06535.00 (DelDOT Agmt. 1376 DOTS Open End)\06535.07 SR1, S. Frederica\CADD Files\XM\swm_detail5.4st.dgn
1:49:14 PM

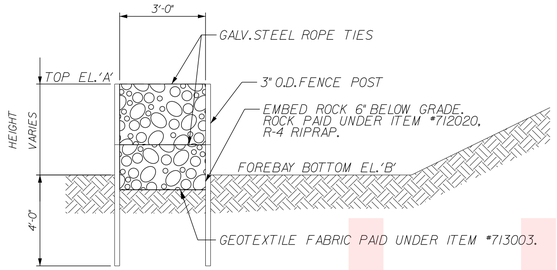

MODIFIED GABION CHECK DAM SECTION

SWM FACILITY NO.	A	B
529	15.00	12.00
530	18.80	17.80
531	13.00	12.00
532	9.00	6.00

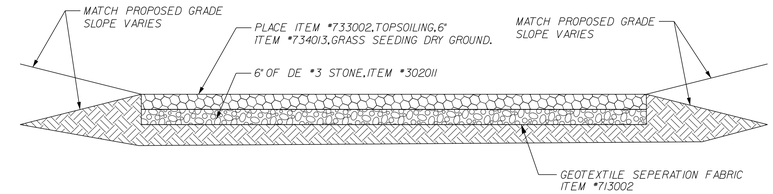

MAINTENANCE ACCESS ROAD DETAIL

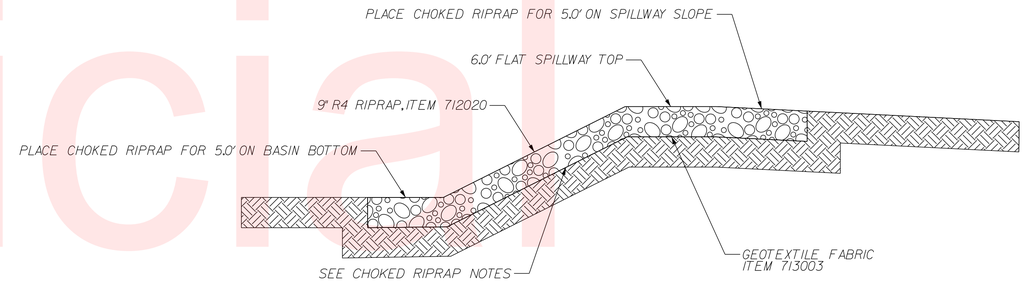

CHOKED RIPRAP SECTION

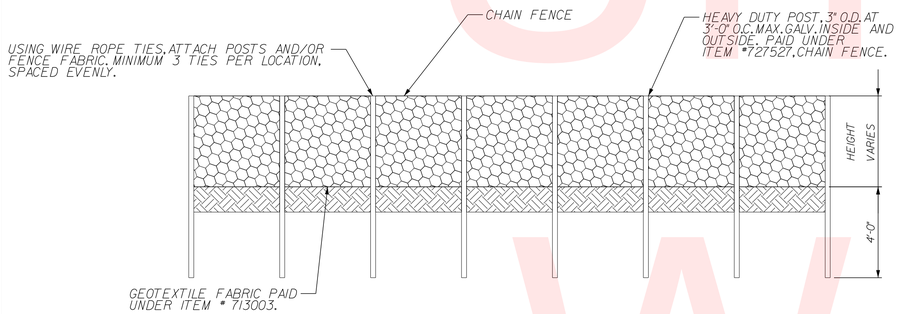

MODIFIED GABION CHECK DAM ELEVATION

BMP MARKER GENERAL NOTES:

1. FOR BMPS THAT DO NOT HAVE A CONCRETE OUTLET STRUCTURE CONTRACTOR SHALL INSTALL A 6"x12"x6" CONCRETE MARKER ALONG THE PERIMETER OF THE FACILITY. THE MARKER SHALL BE PLACED AT THE TOP OF BANK AND FLUSH WITH THE GROUND AT A LOCATION THAT IS CLEARLY VISIBLE FROM THE ROADWAY. THE APPROVED DELDOT BMP NUMBER SHALL BE STENCILED ONTO THE CONCRETE MARKER WITH 4" TALL LETTERING AND PERMANENT BLACK PAINT. COST SHALL BE INCIDENTAL TO ITEM NO. 271000.

2. FOR BMPS THAT HAVE A CONCRETE OUTLET STRUCTURE CONTRACTOR SHALL STENCIL THE APPROVED DELDOT BMP NUMBER ON THE OUTLET STRUCTURE. WEIR STRUCTURES SHALL HAVE THE BMP NUMBER STENCILED ON THE TOP AND DOWNSTREAM FACE. ALL OTHER STRUCTURES SHALL HAVE THE BMP NUMBER STENCILED ON TWO SIDES THAT ARE CLEARLY VISIBLE FROM THE ROADWAY. THE APPROVED DELDOT BMP NUMBER SHALL BE STENCILED WITH 4" TALL LETTERING AND PERMANENT BLACK PAINT. COST SHALL BE INCIDENTAL TO ITEM NO. 271000.

CHOKED RIPRAP GENERAL NOTES:

1. CHOKED RIPRAP SHALL BE USED TO LINE OVERFLOW SPILLWAYS FROM INFILTRATION FACILITIES AS NOTED ON THE STORMWATER DETAIL SHEETS.

2. R4 RIPRAP SHALL BE PLACED TO A DEPTH OF 9". GEOTEXTILE SHALL BE PLACED UNDERNEATH THE RIPRAP. THE RIPRAP SHALL CONFORM TO THE LINES AND GRADES SHOWN ON THE STORMWATER DETAIL SHEETS AND BE FREE OF PROTRUSIONS.

3. ALL CHOKED RIPRAP, SHALL BE CHOKED WITH DELAWARE #57 STONE, FILLED WITH TOPSOIL, SEEDED, AND MULCHED WITH ECB. ECB SHALL BE TRENCHED IN ON ALL SIDES. STAPLES SHALL NOT BE REQUIRED. PLACE JUST ENOUGH CHOKE MATERIAL TO PREVENT THE LOSS OF TOPSOIL THROUGH THE RIPRAP, AND THEN FINISH FILLING THE VOIDS WITH TOPSOIL SO THAT THE RIPRAP PEAKS ARE BARELY VISIBLE. AN ADDITIONAL 4-INCH TOPSOIL LAYER SHALL BE PLACED ON TOP OF THE RIPRAP. SEEDING SHALL FOLLOW TYPICAL SECTION ON STORMWATER FACILITY DETAIL SHEET. ALL WORK, STARTING WITH THE INITIAL CHOKING WITH TOPSOIL THROUGH THE SEEDING, SHALL BE COMPLETED PRIOR TO ANY RAIN EVENT. PAYMENT FOR RIPRAP AND DELAWARE #57 STONE SHALL BE PAID FOR UNDER THE RIPRAP ITEM. ALL OTHER ITEMS SHALL BE PAID FOR UNDER THEIR RESPECTIVE ITEMS. TOPSOILING IS TO BE PERFORMED AS DESCRIBED IN THIS NOTE WITH PAYMENT TO BE MADE UNDER ITEM 733002, TOPSOILING, 6" DEPTH.

MODIFIED GABION CHECKDAM GENERAL NOTES:

1. FENCE POST SHALL BE TIED TOGETHER USING 1/4" GALVANIZED STEEL ROPE. THREE TIES PER FENCE POST PAIR. FENCE POST AND TIES SHALL BE PAID UNDER ITEM #727527, CHAIN FENCE.

2. CHAIN LINK FENCE SHALL BE TIED TOGETHER USING 1/4" GALVANIZED STEEL ROPE. TIES SHALL BE SPACED 1'-6" O.C. ALONG LENGTH. TIES SHALL BE PLACED AT TOP, MIDDLE, AND BOTTOM OF EACH SECTION. WHERE TIES FALL ON A FENCE POST THE SAME TIE MAY BE USED TO TIE THE FENCE POSTS AS IS USED TO TIE THE FENCE. CHAIN LINK FENCE AND TIES SHALL BE PAID UNDER ITEM #727527, CHAIN FENCE.

3. THE STONE PLACED INSIDE MODIFIED GABION SHALL BE R-4 RIPRAP. SPECIAL CARE SHALL BE TAKEN WHEN PLACING THE ROCK TO ENSURE THAT THE COATING ON THE FENCE IS NOT DAMAGED. RIPRAP SHALL BE PAID UNDER ITEM #712020, R-4 RIPRAP.

4. GEOTEXTILE BENEATH THE MODIFIED GABION CHECKDAM SHALL BE PAID UNDER ITEM #713003.

5. EXCAVATION REQUIRED TO INSTALL THE MODIFIED GABION CHECKDAM SHALL BE PAID UNDER ITEM #271000 - STORMWATER MANAGEMENT POND.

Unofficial Website Copy

1. GENERAL NOTES:

A. THE PURPOSE OF THESE SHEETS IS TO IDENTIFY THOSE ITEMS ASSOCIATED WITH ENVIRONMENTAL COMPLIANCE. IMPACT CALCULATIONS ARE FOR AGENCY PERMIT REPORTING PURPOSES ONLY AND ARE NOT TO BE USED FOR BIDDING PURPOSES.

B. IF A DEPARTURE FROM THE APPROVED PLANS (WHICH WOULD AFFECT ANY OF THE NATURAL AND/OR CULTURAL RESOURCE ISSUES) IS NECESSARY, THE ENVIRONMENTAL STUDIES SECTION SHALL BE CONTACTED AT (302) 760-2264 TO ALLOW THE DEPARTMENT TO COORDINATE WITH THE APPROPRIATE RESOURCE AGENCIES FOR APPROVAL.

C. USE OF THESE SHEETS DOES NOT ALLEVIATE THE CONTRACTOR'S RESPONSIBILITY TO COMPLY WITH ALL CONDITIONS SET FORTH IN THE ENVIRONMENTAL STATEMENT AND PERMITS.

2. NATURAL RESOURCE ISSUES:

A. PERMIT REQUIREMENTS / APPROVALS*:

CORPS OF ENGINEERS - NWP23**

DNREC WETLANDS AND SUBAQUEOUS LANDS (WLSL) - PROJECT CONSISTENT WITH DEL. CODE CH. 72, SECTION 7217, AS AMENDED BY SB 186 (DRAINAGE AREA LESS THAN 800 ACRES).

DNREC - WATER QUALITY (WQC) AND COASTAL ZONE CONSISTENCY (CZM) - ISSUED

* THE PERMITS AND APPROVALS LISTED ARE THOSE REQUIRED FOR THIS PROJECT. THE ENVIRONMENTAL STUDIES SECTION IS RESPONSIBLE FOR COORDINATING AND OBTAINING THESE PERMITS/APPROVALS.

**THE CONTRACTOR MUST ENSURE THAT THEY ARE IN POSSESSION OF THIS PERMIT (CORPS) PRIOR TO THE BEGINNING OF CONSTRUCTION IN THE PERMITTED AREA(S). THE PERMIT SHALL BE DISPLAYED ON -SITE DURING THE ENTIRE CONSTRUCTION PERIOD.

B. CONSTRUCTION RESTRICTIONS:
FISHERIES - NONE
MIGRATORY BIRDS - NONE
ENDANGERED SPECIES - NONE

C. PROTECTION OF RESOURCES (WETLANDS/WATERS/NATURAL AREA):
IN ORDER TO PROTECT RESOURCES LOCATED ALONG THE PROJECT, SILT FENCE OR PROTECTIVE FENCING SHALL BE PLACED AT THE LIMITS OF CONSTRUCTION AT ALL JURISDICTIONAL WETLANDS AND WATERS LOCATIONS. THE CONTRACTOR SHALL NOT ENTER THE WETLANDS EXCEPT WHERE THE CONTRACT DOCUMENTS SPECIFICALLY STIPULATE OTHERWISE.

3. CULTURAL RESOURCES ISSUES:

A. THE PROJECT HAS BEEN COORDINATED WITH THE FEDERAL HIGHWAY ADMINISTRATION (FHWA), THE DELAWARE STATE HISTORIC PRESERVATION OFFICE (SHPO), AND DELDOT FOR SECTION 106 COMPLIANCE NEEDS. IN ANTICIPATION OF THE PRESENCE OF FIVE NATIONAL REGISTER OF HISTORIC PLACES (NRHP) ARCHAEOLOGICAL SITES, A DOCUMENTATION OF ADVERSE EFFECT HAS BEEN PREPARED AND APPROVED BY THE SHPO. A MEMORANDUM OF AGREEMENT (MOA) OUTLINING DELDOT'S COMMITMENT TO FOLLOW THROUGH WITH ALL APPROPRIATE DATA RECOVERY AND SECTION 106 COMPLIANCE REQUIREMENTS HAS BEEN SIGNED BY THE SHPO, FHWA AND DELDOT ON MARCH 2, 2011.

B. STAGING, STOCKPILING AND DISPOSAL

1. STOCKPILING, STAGING, AND DISPOSAL MUST BE IN UPLAND, NON -ARCHAEOLOGICALLY SENSITIVE SITES REVIEWED AND APPROVED BY THE STATE HISTORIC PRESERVATION OFFICE (SHPO). THE DEPARTMENT WILL NOT CONSIDER ANY DELAYS OR MONETARY CLAIMS OF ANY NATURE RESULTING FROM THE CONTRACTOR'S FAILURE OR DIFFICULTY IN FINDING NECESSARY DISPOSAL SITES TO MEET THE TIME FRAMES AND CAPACITIES REQUIRED. THE CONTRACTOR SHALL BE RESPONSIBLE FOR ALL PLANS, PERMITS, EROSION AND SEDIMENTATION CONTROL MEASURES, ETC. REQUIRED BY THE APPROPRIATE REGULATORY AGENCY FOR UTILIZING OFF- SITE DISPOSAL AREAS. SEE ENVIRONMENTAL STATEMENT FOR MORE DETAILS.

2. ALL EXCESS EXCAVATED MATERIAL NOT USED IN HIGHWAY OR COMPENSATORY MITIGATION SITE CONSTRUCTION SHALL BE DISPOSED OF IN UPLAND, NON -WETLAND DISPOSAL SITE(S) OR SENSITIVE SITE(S). THE EXCAVATED MATERIAL SHALL BE PROPERLY CONTAINED AND STABILIZED TO PREVENT ITS ENTRY INTO ANY ADJACENT WETLANDS OR WATERWAYS. NO DISPOSAL/WASTING OPERATION SHALL COMMENCE UNTIL THE PERMITTEE OBTAINS WRITTEN APPROVAL OF ANY DISPOSAL SITE(S) FROM THE CORPS OF ENGINEERS AND THE STATE HISTORIC PRESERVATION OFFICE. THE DEPARTMENT WILL NOT CONSIDER ANY DELAYS OR MONETARY CLAIMS OF ANY NATURE RESULTING FROM THE CONTRACTOR'S FAILURE OR DIFFICULTY IN FINDING NECESSARY DISPOSAL SITES TO MEET THE TIME FRAMES AND CAPACITIES REQUIRED. THE CONTRACTOR SHALL BE RESPONSIBLE FOR ALL PLANS, PERMITS, EROSION AND SEDIMENTATION CONTROL MEASURES, ETC. REQUIRED BY THE APPROPRIATE REGULATORY AGENCY FOR UTILIZING OFF- SITE SPOIL AREAS.

4. STREAM RESTORATION AND SLOPE RIPRAP TREATMENT:

A. THE CONTRACTOR SHALL FOLLOW THE SPECIAL PROVISIONS OF ITEM *712531 CHANNEL BED FILL IN REGARDS TO THE SALVAGING OF ON -SITE NATURAL STREAM BOTTOM MATERIAL OR THE FURNISHING OF MATERIAL. ALL RIPRAP IN THE CHANNEL BOTTOM (I.E. BELOW THE WATER LINE) SHALL BE RECESSED ONE FOOT BELOW STREAM BED ELEVATION AND CHOKED WITH BORROW TYPE B SO THAT ALL OF THE VOIDS IN THE RIPRAP ARE FILLED WITH MATERIAL. PAYMENT UNDER ITEM *209002 BORROW TYPE B. THE RIPRAP SHALL THEN BE COVERED WITH 12" CHANNEL BED FILL TO MATCH EXISTING UPSTREAM/DOWNSTREAM STREAM CHANNEL ELEVATIONS. PAYMENT UNDER ITEM *712531 CHANNEL BED FILL.

B. OTHER AREAS OF THE CHANNEL BOTTOM AFFECTED BY CONSTRUCTION (INCLUDING, BUT NOT LIMITED TO, THE LOCATION OF SUMP PITS, STABILIZED OUTFALLS, TEMPORARY PIPES AND/OR SANDBAG DIKES AND DIVERSIONS) SHALL BE RESTORED TO EXISTING CONDITIONS. ANY CAVITIES OR SCOUR HOLES RESULTING FROM CONSTRUCTION ACTIVITIES SHALL BE FILLED WITH CHANNEL BED FILL. PAYMENT UNDER ITEM *712531 CHANNEL BED FILL.

C. WHEN ALL EROSION AND SEDIMENT CONTROL MEASURES ARE REMOVED AND THE STREAM RETURNS TO ITS NATURAL FLOW CONDITIONS, THE FLOW MUST REMAIN ABOVE GROUND AND ABOVE THE RIPRAP (I.E. THE FLOW CANNOT BE 'LOST' IN THE RIPRAP OR BENEATH THE STRUCTURE). IF THIS IS NOT ACHIEVED, THE CONTRACTOR WILL BE REQUIRED TO TAKE CORRECTIVE ACTION AT THE CONTRACTOR'S EXPENSE.

D. ALL RIPRAP ON THE STREAM BANK, OUTSIDE THE CHANNEL BED, SHALL BE CHOKED WITH DELAWARE *57 STONE, FILLED WITH TOPSOIL AND SEEDED. PLACE JUST ENOUGH CHOKE MATERIAL TO PREVENT THE LOSS OF TOPSOIL THROUGH THE RIPRAP, AND THEN FINISH FILLING THE VOIDS WITH TOPSOIL SO THAT THE RIPRAP PEAKS ARE BARELY VISIBLE. AN ADDITIONAL 4-INCH TOPSOIL LAYER SHALL BE PLACED ON TOP OF THE RIPRAP. SEEDING SHALL BE PERMANENT GRASS SEEDING WET GROUND (ITEM NO. 734015) FROM STREAM BASE FLOW ELEVATION TO 2-FEET UP THE SLOPE AND PERMANENT GRASS SEEDING DRY GROUND (ITEM NO. 734013) ON THE REMAINING SLOPE. ALL WORK, STARTING WITH THE INITIAL CHOKING WITH TOPSOIL THROUGH THE SEEDING AND MULCHING, SHALL BE COMPLETED PRIOR TO ANY RAIN EVENT. PAYMENT FOR RIPRAP AND DELAWARE *57 STONE SHALL BE PAID FOR UNDER THE RIPRAP ITEM. ALL OTHER ITEMS SHALL BE PAID FOR UNDER THEIR RESPECTIVE ITEMS. TOPSOILING IS TO BE PERFORMED AS DESCRIBED IN THIS NOTE WITH PAYMENT TO BE MADE UNDER ITEM 733002, TOPSOILING, 6" DEPTH.

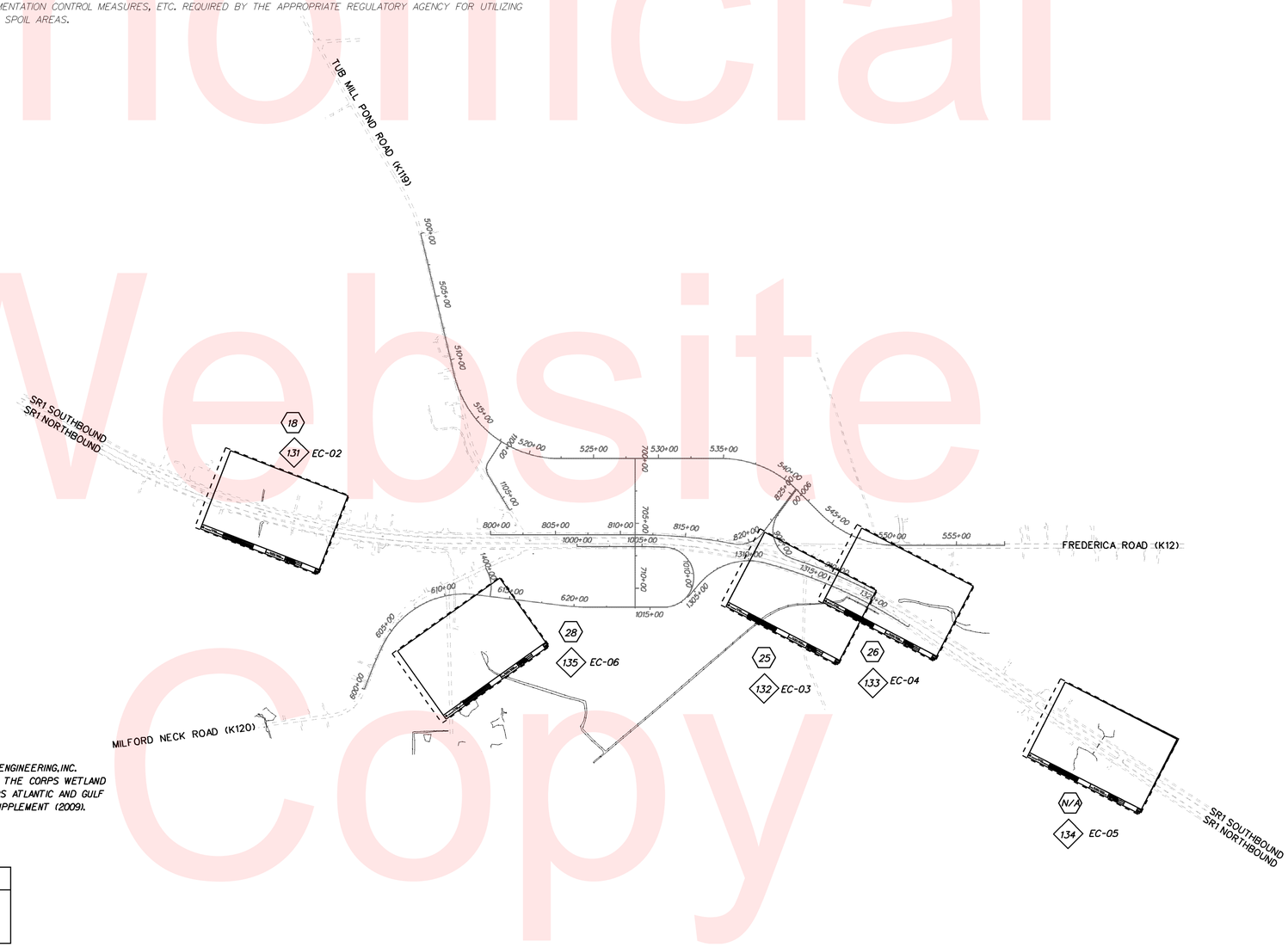

TEMPORARY OPEN WATER IMPACTS			
AREA	AREA (ft^2)	AREA (ACRES)	VOLUME (yd^3)
3-OT1 REMOVE PIPE	288.00	0.0066	16.00
3-OT2 DIKE	49.93	0.0011	2.77
4-OT1 DEWATERING	143.30	0.0033	2.65
4-OT2 GRADING	2898.22	0.0665	53.67
4-OT3 GRADING	126.02	0.0029	1.17
4-OT4 SEWER	426.56	0.0098	3.95
TOTAL	3932.03	0.0902	80.21

PERMANENT OPEN WATER IMPACTS			
AREA	AREA (ft^2)	AREA (ACRES)	VOLUME (yd^3)
4-01 RIPRAP	289.64	0.0066	5.36
4-02 PIPES	645.00	0.0148	1.76
4-03 FILL	1369.92	0.0314	12.68
4-04 GRADING	98.14	0.0023	0.59
4-05 GRADING	266.53	0.0061	2.47
4-06 RIPRAP	204.20	0.0047	1.89
TOTAL	2873.43	0.0660	24.76

CREATION AREA SCHEDULE			
AREA	AREA (ft^2)	AREA (ACRES)	VOLUME (yd^3)
4-OC1 PIPES	1088.5	0.0250	5.02
4-OC2 DITCH	746.5	0.0171	6.91
TOTAL	1835.0	0.0421	11.93

SHEET PREPARED BY:
CENTURY ENGINEERING, INC.
4134 N. DUPONT HWY
DOVER, DELAWARE 19901
MAY 25, 2010
SHEET UPDATED: APRIL 17, 2013

WETLAND DELINEATION BY CENTURY ENGINEERING, INC. ON JUNE 2009, IN ACCORDANCE WITH THE CORPS WETLAND DELINEATION MANUAL AND THE CORPS ATLANTIC AND GULF COASTAL PLAIN INTERIM REGIONAL SUPPLEMENT (2009).

JURISDICTIONAL DETERMINATION
SUBMITTED: MAY 13, 2010
APPROVED: JUNE 27, 2012

LEGEND

- CONSTRUCTION PLANS
- ENVIRONMENTAL COMPLIANCE

Unofficial Website Copy

DELAWARE DEPARTMENT OF TRANSPORTATION

ADDENDUMS / REVISIONS

SCALE 0 500 1000 1500 FEET

SR1, SOUTH FREDERICA GRADE SEPARATED INTERSECTION

CONTRACT	BRIDGE NO.	–
T200812202	DESIGNED BY: LCM	
COUNTY		
KENT	CHECKED BY: SFP	

ENVIRONMENTAL COMPLIANCE SUMMARY

EC-01

SHEET NO.
130
TOTAL SHTS.
296

5/23/2013
G:\PROJECTS\06535.00 (DelDOT Agmt. 1376 DOTS Open End)\06535.07 SR1, S. Frederica\CADD Files\XM\EnvComp_01sf.dgn
22:56:32

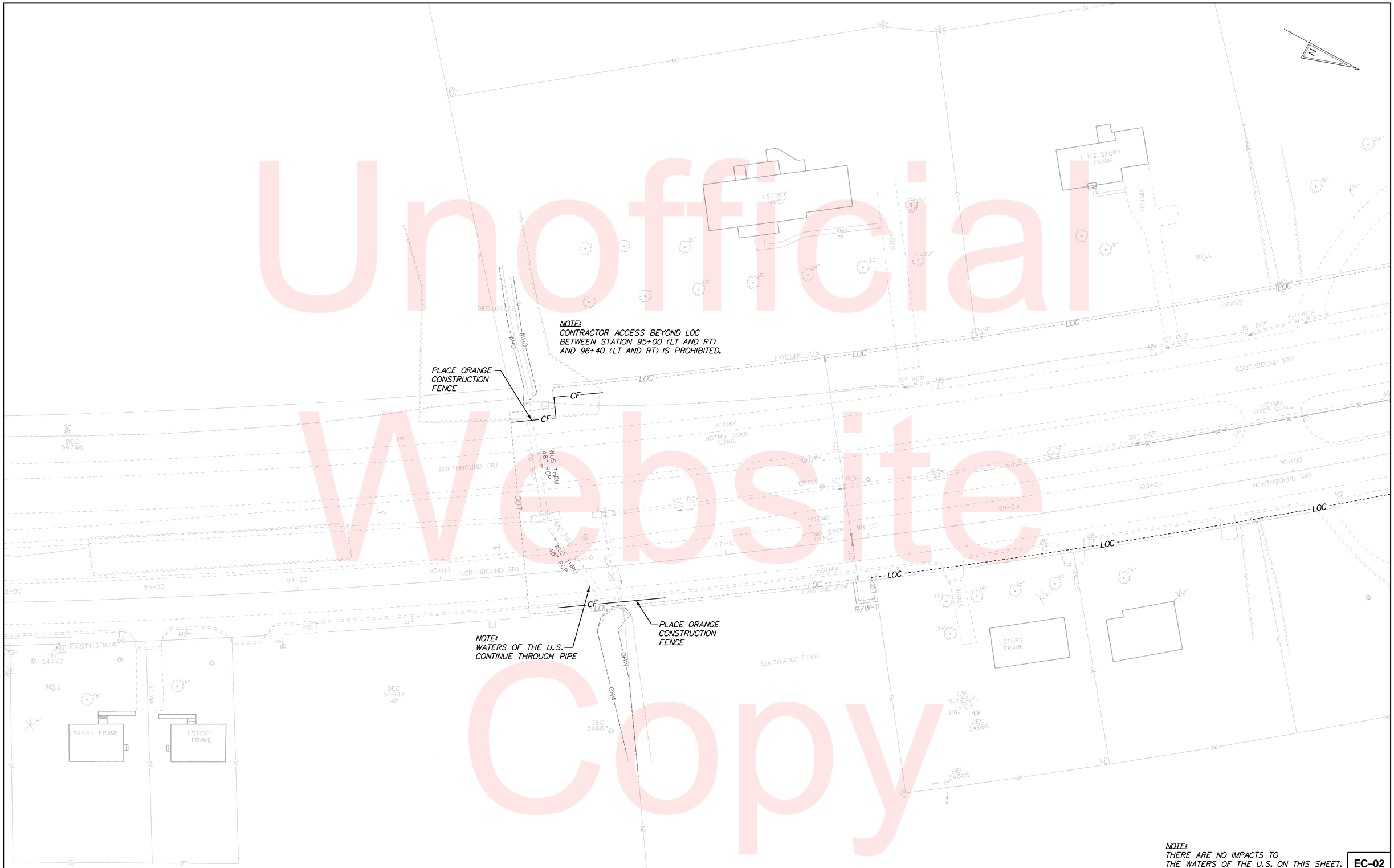

Unofficial Website Copy

NOTE:
THERE ARE NO IMPACTS TO THE WATERS OF THE U.S. ON THIS SHEET.

EC-02

DELAWARE DEPARTMENT OF TRANSPORTATION	ADDENDUMS / REVISIONS	SCALE 0 30 60 90 FEET	**SR1, SOUTH FREDERICA GRADE SEPARATED INTERSECTION**	CONTRACT T200812202 / COUNTY KENT	BRIDGE NO. – / DESIGNED BY: LCM / CHECKED BY: SFP	**ENVIRONMENTAL COMPLIANCE**	SHEET NO. 131 / TOTAL SHTS. 296

7/19/2013
G:\PROJECTS\06535.00 (DelDOT Agmt. 1376 DOTS Open End)\06535.07 SR1, S. Frederica\CADD Files\XM\EnvComp_02sf.dgn
10:48:45

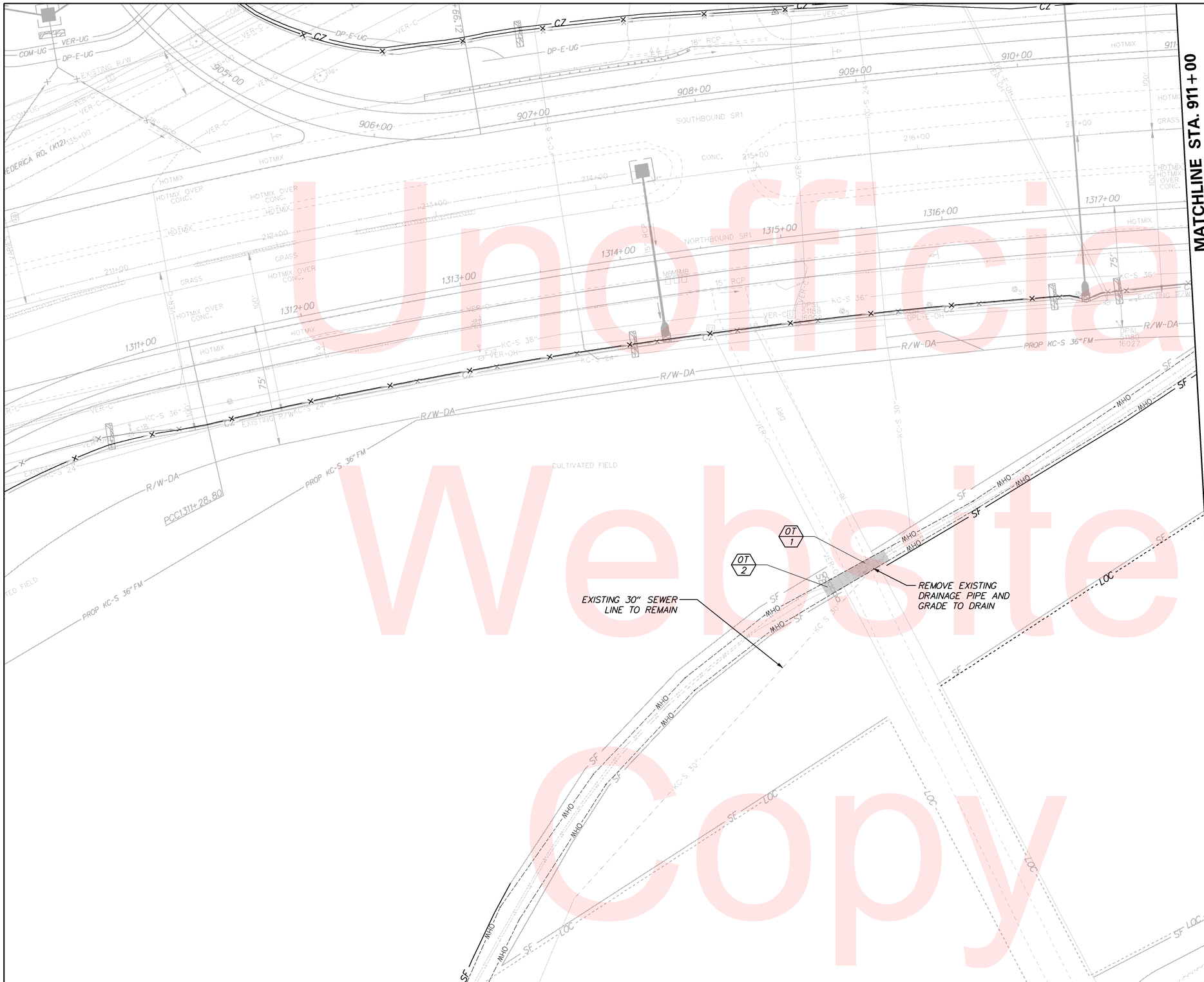

LEGEND

	TEMPORARY IMPACT AREA
------OHW------	ORDINARY HIGH WATER
——WL——	WETLAND BOUNDARY
XX / X	IMPACT AREA TYPE ID. (SEE BELOW) / IMPACT AREA ID. AND/OR NUMBER

O = OPEN WATER IMPACT T = TEMPORARY IMPACT

TEMPORARY OPEN WATER IMPACT SCHEDULE

AREA	AREA (ft^2)	AREA (ACRES)	VOLUME (yd^3)
3-OT1 REMOVE PIPE	288.00	0.0066	16.00
3-OT2 DIKE	49.93	0.0011	2.77
TOTAL	337.93	0.0077	18.77

Unofficial Website Copy

5/23/2013
G:\PROJECTS\06535.00 (DelDOT Agmt. 1376 DOTS Open End)\06535.07 SR1, S. Frederica\CADD Files\XM\EnvComp_03sf.dgn
22:57:54

DELAWARE DEPARTMENT OF TRANSPORTATION

ADDENDUMS / REVISIONS

SCALE 0 30 60 90 FEET

SR1, SOUTH FREDERICA GRADE SEPARATED INTERSECTION

CONTRACT	BRIDGE NO.	–
T200812202	DESIGNED BY: LCM	
COUNTY		
KENT	CHECKED BY: SFP	

ENVIRONMENTAL COMPLIANCE

EC–03

SHEET NO. 132

TOTAL SHTS. 296

TEMPORARY OPEN WATER IMPACT SCHEDULE

AREA	AREA (ft^2)	AREA (ACRES)	VOLUME (yd^3)
4-OT1 DEWATERING	143.30	0.0033	2.65
4-OT2 GRADING	2898.22	0.0665	53.67
4-OT3 GRADING	126.02	0.0029	1.17
4-OT4 SEWER	426.56	0.0098	3.95
TOTAL	3594.10	0.0825	61.44

CREATION AREA SCHEDULE

AREA	AREA (ft^2)	AREA (ACRES)	VOLUME (yd^3)
4-OC1 PIPES	1088.50	0.0250	5.02
4-OC2 DITCH	746.50	0.0171	6.91
TOTAL	1835.00	0.0421	11.93

PERMANENT OPEN WATER IMPACT SCHEDULE

AREA	AREA (ft^2)	AREA (ACRES)	VOLUME (yd^3)
4-01 RIPRAP	289.64	0.0066	5.36
4-02 PIPE	645.00	0.0148	1.76
4-03 FILL	1369.92	0.0314	12.68
4-04 PIPE	98.14	0.0023	0.59
4-05 FILL	266.53	0.0061	2.47
4-06 RIPRAP	204.20	0.0047	1.89
TOTAL	2873.43	0.0660	24.76

LEGEND

- PERMANENT IMPACT AREA
- TEMPORARY IMPACT AREA
- CREATION AREA
- OHW — ORDINARY HIGH WATER
- WL — WETLAND BOUNDARY
- XX / X — IMPACT AREA TYPE ID. (SEE BELOW) / IMPACT AREA ID. AND/OR NUMBER

O = OPEN WATER IMPACT T = TEMPORARY IMPACT
C = CREATION AREA

CONTRACTOR SHALL UTILIZE SHEET PILING IN TEMPORARY STREAM DIVERSION IN ORDER TO PERFORM NECESSARY GRADING TO DITCH. ALL COSTS FOR NECESSARY MATERIALS (SHEET PILES, DIVERSION PIPES AND BYPASS PUMP) SHALL BE INCIDENTAL TO THE PROPOSED SR1 CROSS PIPES BEING INSTALLED. THE CONTRACTOR MAY ELECT TO SUBMIT AN ALTERNATE SCHEME FOR REVIEW AND APPROVAL. ALL COSTS SHALL BE INCIDENTAL TO THE PIPES BEING INSTALLED.

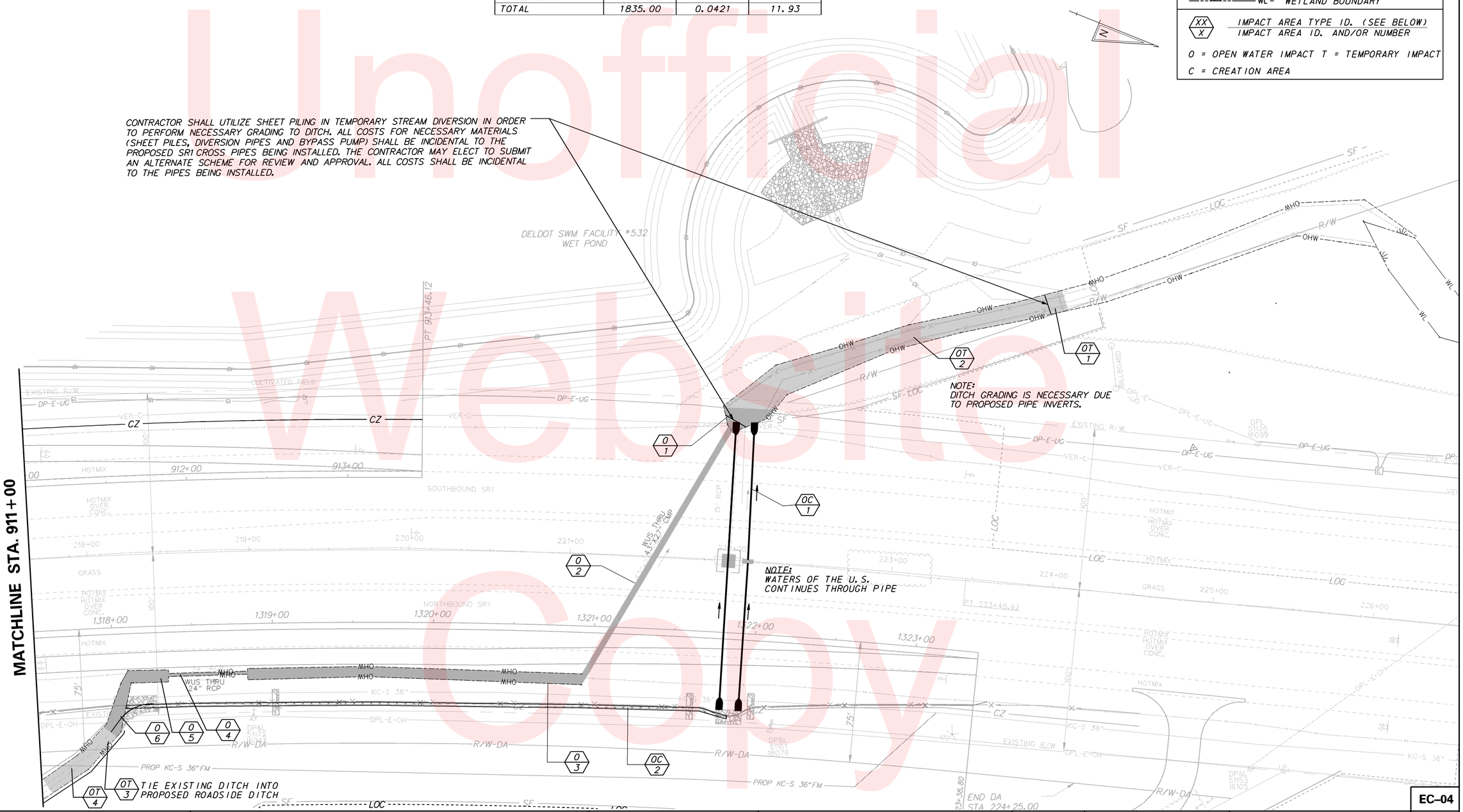

Unofficial Website Copy

DELAWARE DEPARTMENT OF TRANSPORTATION

ADDENDUMS / REVISIONS

SCALE 0 30 60 90 FEET

SR1, SOUTH FREDERICA GRADE SEPARATED INTERSECTION

CONTRACT	BRIDGE NO.	–
T200812202	DESIGNED BY: LCM	
COUNTY		
KENT	CHECKED BY: SFP	

ENVIRONMENTAL COMPLIANCE

EC–04
SHEET NO. 133
TOTAL SHTS. 296

6/6/2013
G:\PROJECTS\06535.00 (DelDOT Agmt. 1376 DOTS Open End)\06535.07 SR1, S. Frederica\CADD Files\XM\EnvComp_04sf.dgn
16:11:50

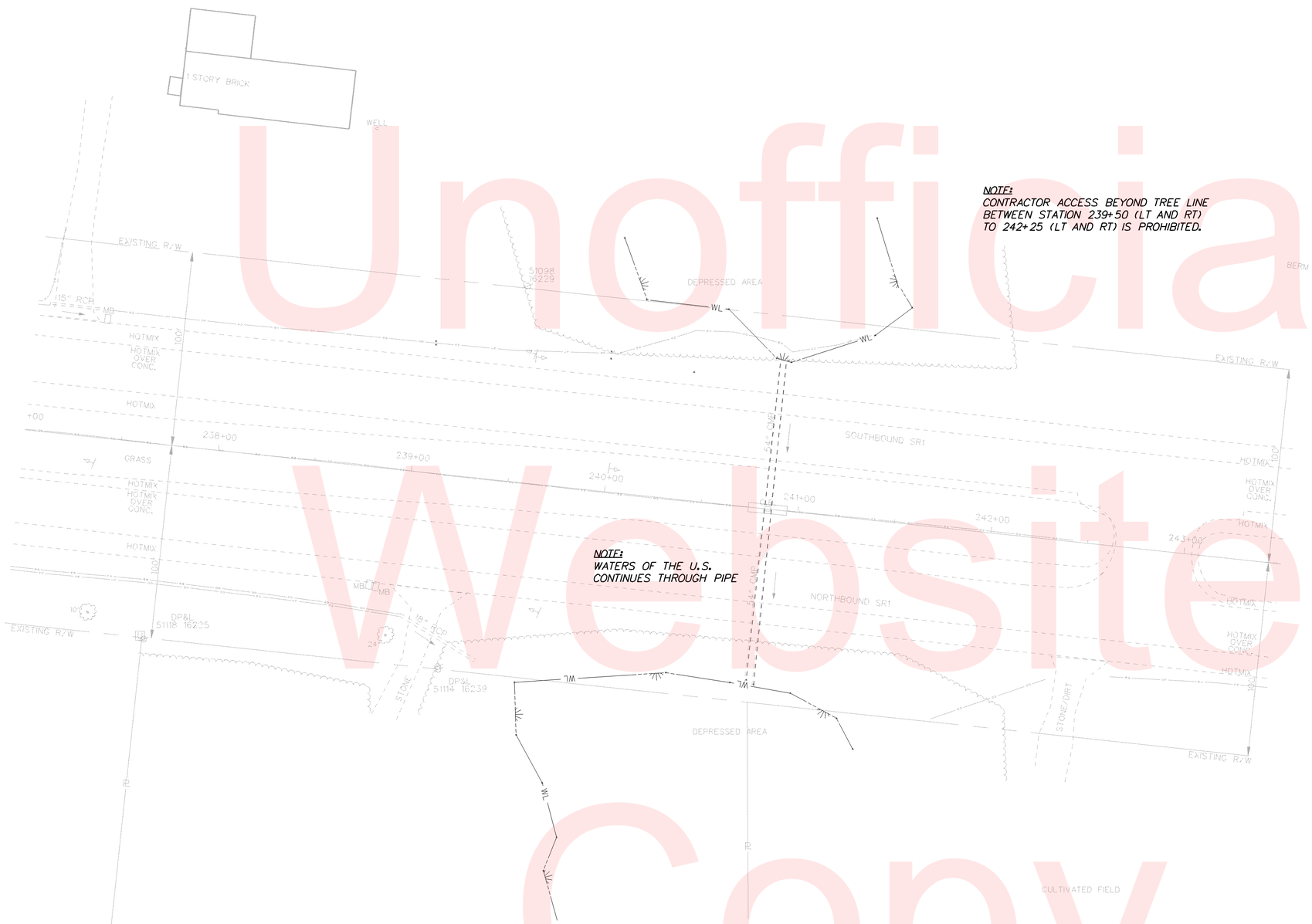

Unofficial Website Copy

NOTE:
THERE ARE NO IMPACTS TO THE WATERS OF THE U.S. ON THIS SHEET.

EC–05

DELAWARE DEPARTMENT OF TRANSPORTATION

ADDENDUMS / REVISIONS

SCALE 0 30 60 90 FEET

SR1, SOUTH FREDERICA GRADE SEPARATED INTERSECTION

CONTRACT	BRIDGE NO.	–
T200812202	DESIGNED BY: LCM	
COUNTY		
KENT	CHECKED BY: SFP	

ENVIRONMENTAL COMPLIANCE

SHEET NO. 134
TOTAL SHTS. 296

5/23/2013
G:\PROJECTS\06535.00 (DelDOT Agmt. 1376 DOTS Open End)\06535.07 SR1, S. Frederica\CADD Files\XM\EnvComp_05sf.dgn
22:59:24

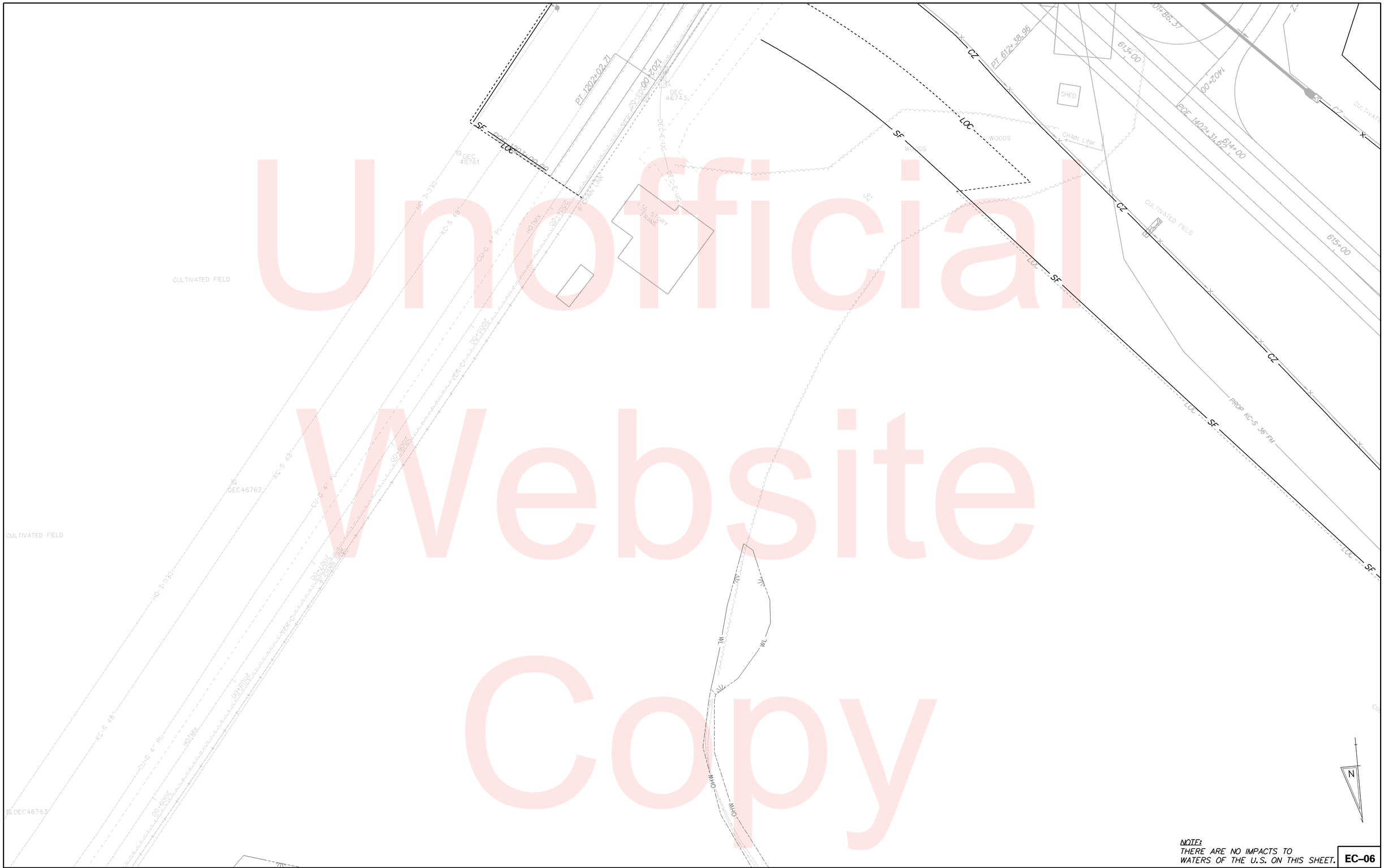

Unofficial Website Copy

NOTE:
THERE ARE NO IMPACTS TO WATERS OF THE U.S. ON THIS SHEET.

EC–06

DELAWARE DEPARTMENT OF TRANSPORTATION

ADDENDUMS / REVISIONS

SCALE 0 30 60 90 FEET

SR1, SOUTH FREDERICA GRADE SEPARATED INTERSECTION

CONTRACT	BRIDGE NO.	–
T200812202	DESIGNED BY: LCM	
COUNTY		
KENT	CHECKED BY: SFP	

ENVIRONMENTAL COMPLIANCE

SHEET NO.
135
TOTAL SHTS.
296

5/23/2013
G:\PROJECTS\06535.00 (DelDOT Agmt. 1376 DOTS Open End)\06535.07 SR1, S. Frederica\CADD Files\XM\EnvComp_06sf.dgn
23-00419

TRAFFIC CONTROL NOTES

1) FOR THIS PROJECT NIGHT WORK SHALL BE RESTRICTED TO THE HOURS OF 7:00 PM TO 6:00 AM AND IS SUBJECT TO THE RESTRICTIONS ON LANE CLOSURES IN ITEM - 743000 OR OTHER RESTRICTIONS AS NOTED IN THE CONTRACT DOCUMENTS OR AS DIRECTED BY THE ENGINEER.

2) FOR THIS PROJECT PEAK HOURS ARE DEFINED AS 6:00 AM TO 9:00 AM AND 3:00 PM TO 7:00 PM, MONDAY THROUGH FRIDAY AND IS SUBJECT TO THE RESTRICTIONS ON LANE CLOSURES IN ITEM - 743000 OR OTHER RESTRICTIONS AS NOTED IN THE CONTRACT DOCUMENTS OR AS DIRECTED BY THE ENGINEER.

3) ALL TRAFFIC CONTROL DEVICES SHALL MEET THE REQUIREMENTS OF THE LATEST EDITION OF THE DE MUTCD PART 6. PLEASE NOTE THAT AS OF JANUARY 4, 2010, THERE ARE NEW SHEETING REQUIREMENTS FOR ALL SIGNS, CHANNELIZING DEVICES,ETC. SEE DE MUTCD PART 6 SECTIONS 6F.02, AND 6F.58 THRU 6F.63 OF THE DE MUTCD PART 6.

4) ALL ROADWAYS AND ENTRANCES NOT OPEN TO TRAFFIC SHALL BE CLOSED USING TYPE III BARRICADES AND SHALL BE PLACED PER DE MUTCD PART 6, SECTION 6F.63. BARRICADES SHALL BE EQUIPPED WITH "ROAD CLOSED" (R11-2) SIGN/S ON EACH BARRICADE THAT CLOSES A LANE OR ENTRANCE.

5) LATERAL TAPERS OF PORTABLE P.C.C. SAFETY BARRIER TOWARDS A TRAVEL LANE SHALL BE INSTALLED AS FOLLOWS UNLESS OTHERWISE NOTED ON THE PLANS OR DIRECTED BY THE ENGINEER.

LOCATION	TAPER RATE
SR1, FREDERICA RD, PROPOSED SERVICE ROADS	17 TO 1
ALL OTHER STREETS	15 TO 1

6) ENDS OF PORTABLE P.C.C. SAFETY BARRIER SHALL BE PROTECTED WITH AN IMPACT ATTENUATOR. CRASH CUSHIONS SHALL NOT BE ALLOWED ON THIS PROJECT UNLESS OTHERWISE APPROVED BY THE ENGINEER. THE ATTENUATORS SHOULD BE NON-GATING, REDIRECTIVE DEVICES.

7) THE CONTRACTOR SHALL NOT BE PERMITTED TO CROSS OVER THE UNPAVED MEDIAN OF SR1 OUTSIDE THE AREA PROTECTED BY P.C.C. SAFETY BARRIER UNDER ANY CIRCUMSTANCES.

8) A TYPE II TRUCK MOUNTED ATTENUATOR (TMA) SHALL BE REQUIRED ON THIS PROJECT DURING THE FOLLOWING PAVEMENT OPERATIONS: TEMPORARY/PERMANENT PAVEMENT MARKINGS, ROADSIDE SPRAYING, PATCHING, MILLING, SWEEPING, TEMPORARY TRAFFIC BARRIER PLACEMENT OR AS DIRECTED BY THE ENGINEER. THE ROLL AHEAD DISTANCE SHALL BE AS PER THE MANUFACTURER'S RECOMMENDATIONS. THE TMA SHALL CONFORM TO THE REQUIREMENTS OF SECTION 6F.82 OF THE DELAWARE MUTCD.

9) LANE SHIFTS ON NORTHBOUND AND SOUTHBOUND SR1 SHALL BE SET UP TO FOLLOW THE TEMPORARY SIGNING AND STRIPING SHOWN IN TA-33 AND TA-36. LANE CLOSURES ON MILFORD NECK ROAD AND TUB MILL POND ROAD SHALL BE SET UP TO FOLLOW THE TEMPORARY SIGNING SHOWN IN TA-10.

10) NEW DRAINAGE STRUCTURES MAY REQUIRE TEMPORARY COVERS DURING CONSTRUCTION FOR SAFETY PURPOSES. STEEL PLATES SHALL BE USED IN ALL INSTANCES WHERE AN ERRANT VEHICLE COULD CONTACT THE STRUCTURE, WITH COSTS INCIDENTAL TO THE LUMP SUM BID FOR MAINTENANCE OF TRAFFIC.

11) ACCESS TO ALL BUSINESSES AND RESIDENCIES SHALL BE MAINTAINED AT ALL TIMES. ANY CLOSURE OF ENTRANCES/RESIDENCIES SHALL BE COORDINATED WITH THE LAND OWNER PRIOR TO ANY CLOSURES.

12) ROLLING ROAD BLOCKS MAY OCCUR FOR A DURATION OF FIFTEEN (15) MINUTES AT A TIME. NO CRANES ARE PERMITTED ON THE TRAVEL LANES OF SR1. EQUIPMENT MUST BE CLEARED FROM CLEAR ZONES AT THE END OF WORK PERIODS.

13) THIS PROJECT IS CONSIDERED A SIGNIFICANT PROJECT AS DEFINED BY DELDOT'S WORK ZONE MOBILITY PROCEDURES AND GUIDELINES. A TYPE B TRANSPORTATION MANAGEMENT PLAN (TMP) HAS BEEN PREPARED AND IS AVAILABLE FOR VIEWING BY CONTACTING THE DEPARTMENT'S SAFETY PROGRAMS MANAGER AT (302)659-4060. ALL MONITORING REQUIREMENTS OF THE TMP SHALL BE CONDUCTED BY DELDOT FORCES UNLESS OTHERWISE DIRECTED BY THE ENGINEER. MODIFICATIONS TO THE TMP SHALL BE COMPLETED BY THE CONTRACTOR IF CHANGES TO THE TIME RESTRICTIONS OR THE TRAFFIC CONTROL PLAN ARE DESIRED. THE MODIFIED TMP SHALL BE PREPARED BY A PROFESSIONAL ENGINEER, REGISTERED IN THE STATE OF DELAWARE.

14) LONGITUDINAL EDGE DROP-OFFS SHALL BE CORRECTED IN ACCORDANCE WITH TABLE 6G-1 OF THE DELAWARE MUTCD.

a) WHERE PLACEMENT OF A WEDGE/FILLET BETWEEN TRAVEL LANES AND A PAVEMENT BOX IS REQUIRED, APPROVED BASE COURSE MATERIAL SHALL BE USED FOR THE FILLET MATERIAL. THE BASE COURSE MATERIAL SHALL BE PLACED AT NO GREATER THAN THE SLOPE SPECIFIED IN TABLE 6G-1 AND SHALL BE COMPACTED. EXCESS BASE COURSE MATERIAL SHALL BE PUSHED AHEAD AND USED IN THE NEXT SEGMENT AND SHALL BE INCIDENTAL TO THE PARTICULAR BASE COURSE ITEM.

b) WHERE PLACEMENT OF A WEDGE/FILLET AT THE EDGE OF THE ROADWAY IS REQUIRED, PAVEMENT MILLINGS SHALL BE USED FOR THE FILLET MATERIAL. PAYMENT FOR PAVEMENT MILLINGS SHALL BE INCIDENTAL TO ITEM 743000. NO SEPARATE PAYMENT SHALL BE MADE FOR PAVEMENT MILLINGS TO CORRECT PAVEMENT EDGE DROP-OFFS, UNLESS THE MATERIAL IS EVENTUALLY USED AS PART OF A PERMANENT ROADWAY, AT WHICH TIME THE MATERIAL WOULD BE PAID FOR UNDER THE RESPECTIVE CONTRACT BID ITEM.

LANE RESTRICTIONS

WORK ZONE	NORTHBOUND		SOUTHBOUND	
	1-Lane Closure Permitted	1-Lane Closure NOT Recommended	1-Lane Closure Permitted	1-Lane Closure NOT Recommended
Non-Summer Weekday				
Monday - Thursday	9:00 AM - 3:00 PM 6:00 PM - 7:00 AM	7:00 AM - 9:00 AM 3:00 PM - 6:00 PM	6:00 PM - 3:00 PM	3:00 PM - 6:00 PM
Friday	8:00 AM - 2:00 PM 6:00 PM - 7:00 AM	7:00 AM - 8:00 AM 2:00 PM - 6:00 PM	9:00 PM - 10:00 AM	10:00 AM - 9:00 PM
Summer Weekday				
Monday - Thursday	7:00 PM - 7:00 AM	7:00 AM - 7:00 PM	7:00 PM - 8:00 AM	8:00 AM - 7:00 PM
Friday	7:00 PM - 7:00 AM	7:00 AM - 7:00 PM	11:00 PM - 7:00 AM	7:00 AM - 11:00 PM
Non-Summer Weekend				
Saturday	5:00 PM - 3:00 PM	3:00 PM - 5:00 PM	5:00 PM - 10:00 AM	10:00 AM - 5:00 PM
Sunday	7:00 PM - 10:00 AM	10:00 AM - 7:00 PM	24 Hours	N/A
Summer Weekend				
Saturday	9:00 PM - 8:00 AM	8:00 AM - 9:00 PM	7:00 PM - 8:00 AM	8:00 AM - 7:00 PM
Sunday	10:00 PM - 9:00 AM	9:00 AM - 10:00 PM	7:00 PM - 9:00 AM	9:00 AM - 7:00 PM

LANE RESTRICTION NOTES:

1. IN ADDITION TO THE CONDITIONS NOTED ELSEWHERE IN THE CONTRACT DOCUMENTS, THERE SHALL BE NO LANE CLOSURES ON THE ROADWAYS INDICATED BELOW DURING THE FOLLOWING TIME PERIODS:

SR 1 - TRAVEL LANES

A. HOLIDAY WEEKEND (HOLIDAY OBSERVED ON FRIDAY):
NORTHBOUND & SOUTHBOUND DIRECTION 11:00 A.M. THURSDAY TO 11:00 A.M. MONDAY

B. HOLIDAY WEEKEND (HOLIDAY OBSERVED ON MONDAY):
NORTHBOUND & SOUTHBOUND DIRECTION 11:00 A.M. FRIDAY TO 11:00 A.M. TUESDAY

C. HOLIDAY WEEKDAY (HOLIDAY-TUESDAY, WEDNESDAY, OR THURSDAY):
NORTHBOUND & SOUTHBOUND DIRECTION 11:00 A.M. DAY PRIOR TO 11:00 A.M. DAY AFTER

D. HOLIDAY WEEKEND (THANKSGIVING HOLIDAY-THURSDAY):
NORTHBOUND & SOUTHBOUND DIRECTION 11:00 A.M. WEDNESDAY TO 11:00 A.M. MONDAY

E DOVER INTERNATIONAL SPEEDWAY RACE WEEKENDS:
NORTHBOUND & SOUTHBOUND DIRECTION 11:00 A.M. THURSDAY TO 11:00 A.M. MONDAY

2. SUMMER LANE RESTRICTIONS WILL BE IN EFFECT ON SR 1 FROM MAY 1ST THROUGH SEPTEMBER 30TH. NON-SUMMER LANE RESTRICTIONS WILL BE IN EFFECT ON SR 1 FROM OCTOBER 1ST THROUGH APRIL 30TH.

3. LANE CLOSURES ON ROADWAYS OTHER THAN SR 1 MAY OCCUR MONDAY THROUGH FRIDAY, 8:00 AM TO 4:00 PM, OR AS PERMITTED BY THE CENTRAL DISTRICT SAFETY OFFICER.

4. SEE THE CONTRACT SPECIFICATIONS, ITEM 743000 AND THE CONSTRUCTION STAGING FOR ADDITIONAL CONDITIONS REGARDING LANE CLOSURES.

PROJECT NOTES FOR SEDIMENT AND STORMWATER MANAGEMENT

1) DUST CONTROL
DUST IS TO BE CONTROLLED EXCLUSIVELY THROUGH THE USE OF WATER. COSTS ASSOCIATED WITH THE FURNISHING AND APPLICATION OF WATER FOR DUST CONTROL SHALL BE INCIDENTAL TO ALL THE CONTRACT ITEMS.

2) SLOPE MAINTENANCE
PRIOR TO APPLYING TOPSOIL OR ANY SEEDING ITEM ON FINAL SLOPES, THE SLOPES SHALL BE TRACKED BY DRIVING A BULLDOZER UP AND DOWN THE SLOPES SUCH THAT THE CLEATS MAKE HORIZONTALLY ORIENTED INDENTATIONS IN THE SLOPE. ALL COSTS ASSOCIATED WITH PERFORMING THIS WORK SHALL BE INCIDENTAL TO THE SEEDING ITEM BEING APPLIED TO THE FINAL SLOPE.

3) EXISTING INLETS AND PIPES
ALL EXISTING INLETS AND PIPES WITHIN THE PROJECT LIMITS TO REMAIN SHALL BE CLEANED OUT. THE COST OF CLEANING OUT THE EXISTING PIPES TO REMAIN IS INCIDENTAL TO ITEM #201000.

4) CHECKDAM REMOVAL
ALL CHECKDAMS ARE TO BE REMOVED AT THE COMPLETION OF THE JOB OR AS DIRECTED BY THE ENGINEER IN THE FIELD. THIS WORK SHALL BE INCIDENTAL TO THE CONTRACT.

5) HERBICIDE APPLICATION
THE CONTRACTOR SHALL APPLY AS DIRECTED BY ENGINEER IN THE FIELD. ALL WORK PAID FOR UNDER ITEM #735501.

6) REVIEW AND OR APPROVAL OF THE SEDIMENT AND STORMWATER MANAGEMENT PLAN SHALL NOT RELIEVE THE CONTRACTOR FROM HIS OR HER RESPONSIBILITIES FOR COMPLIANCE WITH THE REQUIREMENTS OF THE SEDIMENT AND STORMWATER REGULATIONS, NOR SHALL IT RELIEVE THE CONTRACTOR FROM ERRORS OR OMISSIONS IN THE APPROVED PLAN.

7) SOIL DISTURBANCE
FOLLOWING SOIL DISTURBANCE OR REDISTURBANCE, PERMANENT OR TEMPORARY STABILIZATION SHALL BE COMPLETED WITHIN 14 CALENDAR DAYS.

8) THE CONTRACTOR SHALL BE RESPONSIBLE FOR MAINTENANCE AND REPAIR OF ALL EROSION AND SEDIMENT CONTROLS, AND STORMWATER MANAGEMENT PRACTICES DURING THE PROJECT.

9) SLOPE DRAINS
THE CONTRACTOR SHALL INSTALL AND MAINTAIN TEMPORARY SLOPE DRAINS DURING THE CONSTRUCTION OF THE EMBANKMENT, LOCATIONS TO BE DETERMINED IN THE FIELD AS DIRECTED BY THE ENGINEER. ALL COSTS SHALL BE INCLUDED IN ITEM #261000, TEMPORARY SLOPE DRAIN, 12".

10) EROSION CONTROL MEASURES SHALL BE INSTALLED AS SHOWN ON THE PLANS OR AS DIRECTED BY ENGINEER IN THE FIELD.

11) CONTRACTOR SHALL MOW GRASS AREAS AS DIRECTED BY THE ENGINEER. PAYMENT SHALL BE MADE UNDER ITEM 736502 - MOWING.

Unofficial Website Copy

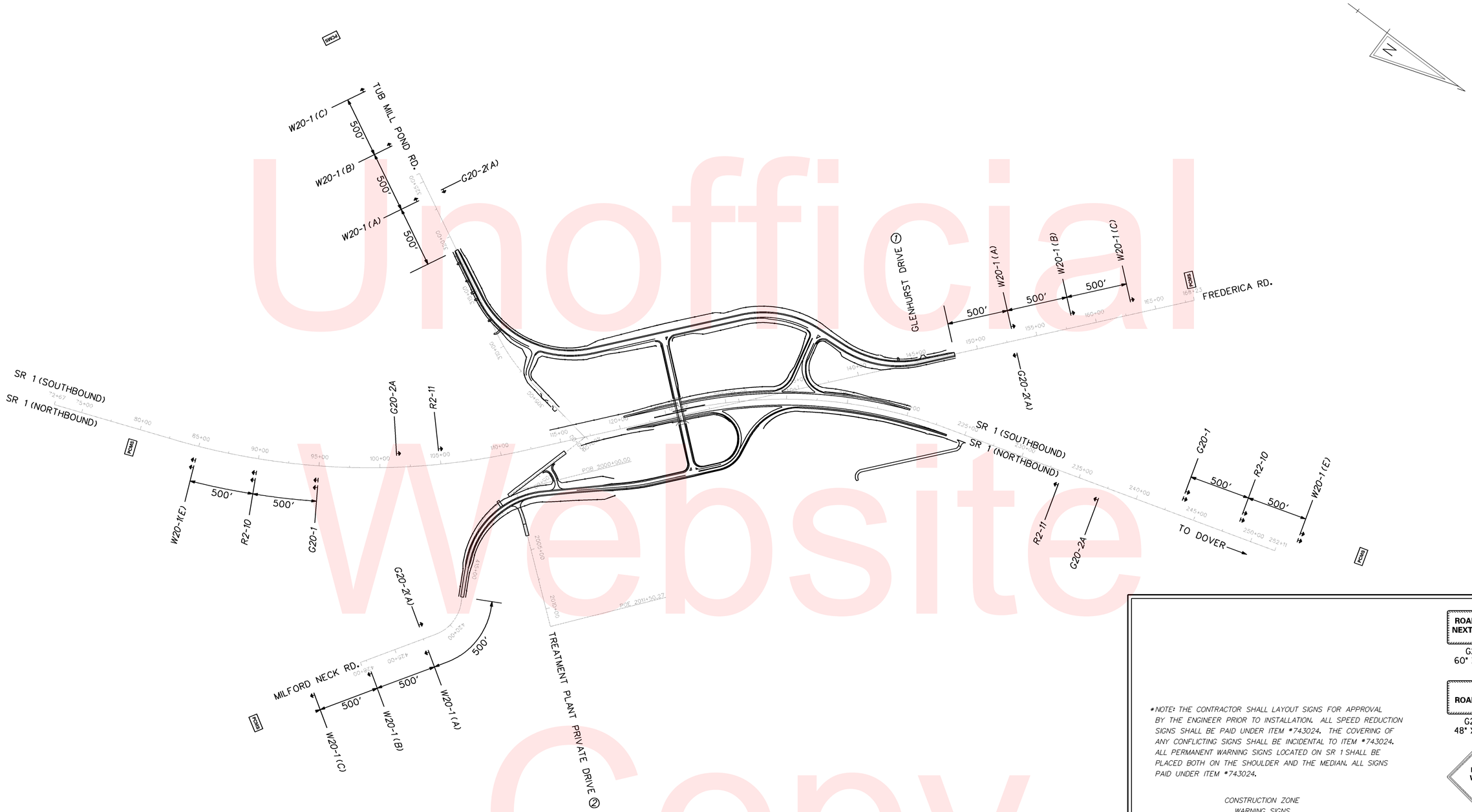

WARNING SIGNS LAYOUT

PCMS PORTABLE CHANGEABLE MESSAGE SIGN LOCATIONS

PLACE ROAD WORK AHEAD AND END ROAD WORK SIGNS ON THE FOLLOWING INTERSECTING STREETS AND SUBDIVISION STREETS:

(1) GLENHURST DRIVE

(2) TREATMENT PLANT PRIVATE DRIVE

*NOTE: THE CONTRACTOR SHALL LAYOUT SIGNS FOR APPROVAL BY THE ENGINEER PRIOR TO INSTALLATION. ALL SPEED REDUCTION SIGNS SHALL BE PAID UNDER ITEM *743024. THE COVERING OF ANY CONFLICTING SIGNS SHALL BE INCIDENTAL TO ITEM *743024. ALL PERMANENT WARNING SIGNS LOCATED ON SR 1 SHALL BE PLACED BOTH ON THE SHOULDER AND THE MEDIAN. ALL SIGNS PAID UNDER ITEM *743024.

CONSTRUCTION ZONE WARNING SIGNS

*DISTANCE LEGEND

LETTER	DISTANCE
A	500 FT
B	1000 FT
C	1500 FT
D	½ MILE
E	AHEAD
F	BOTH SHOULDERS CLOSED

NOTE: ALL WARNING SIGNS PAID UNDER ITEM *743024.

ROAD WORK NEXT 2 MILES
G20-1
60" X 24"

END ROAD WORK
G20-2
48" X 24"

ROAD WORK *
W20-1
48" X 48"

BEGIN HIGHER FINES ZONE
R2-10
36" X 48"

END HIGHER FINES ZONE
R2-11
36" X 48"

DELAWARE DEPARTMENT OF TRANSPORTATION	ADDENDUMS / REVISIONS	SCALE 0 200 400 800 1200 FEET	SR1, SOUTH FREDERICA GRADE SEPARATED INTERSECTION	CONTRACT T200812202	BRIDGE NO. –	CONSTRUCTION PHASING, M.O.T., AND EROSION CONTROL PLANS	SHEET NO. 137
				COUNTY KENT	DESIGNED BY: LCM		TOTAL SHTS. 296
					CHECKED BY: SFP		

7/19/2013
G:\PROJECTS\06535.00 (DelDOT Agmt. 1376 DOTS Open End)\06535.07 SR1, S. Frederica\CADD Files\XM\cs_ows_plan01sf.dgn
08-04-12

Unofficial Website Copy

PHASE I – 1A SEE SHEET 139.

PHASE I

STAGE 1:

1) AS SHOWN ON THE PERMANENT WARNING SIGNS LAYOUT, PLACE CHANGEABLE MESSAGE SIGNS ON NORTHBOUND SR1, SOUTHBOUND SR1, SOUTHBOUND FREDERICA ROAD, TUB MILL POND ROAD, AND MILFORD NECK ROAD TEN (10) CALENDAR DAYS IN ADVANCE OF AND FIVE (5) DAYS AFTER THE START OF CONSTRUCTION TO INFORM TRAVELING PUBLIC OF IMPENDING ROAD CONSTRUCTION.

STAGE 2:

1) PLACE EROSION AND SEDIMENT CONTROL MEASURES FOR EXISTING DRAINAGE SYSTEM AND THE EMBANKMENT FOR PROPOSED ROAD CONSTRUCTION, OR AS DIRECTED BY THE ENGINEER IN THE FIELD. INSTALL REINFORCED SILT FENCE ALONG THE LIMITS OF CONSTRUCTION. INSTALL ALL STABILIZED CONSTRUCTION ENTRANCES REQUIRED FOR PHASE I, SHOWN IN THESE PLANS OR AS DIRECTED IN THE FIELD BY THE ENGINEER.

2) CLEAR ALL EXISTING VEGETATION AND DEBRIS WITHIN THE PROPOSED LIMITS OF CONSTRUCTION. HAUL MATERIAL TO AN APPROVED OFFSITE FACILITY.

STAGE 3:

1) BEGIN UTILITY INSTALLATIONS AND RELOCATION OF KENT COUNTY SEWER, DEC, DELMARVA ELECTRIC, CHESAPEAKE UTILITIES, AND VERIZON FACILITIES AS DESCRIBED ON THE PLANS AND IN THE UTILITY STATEMENT. SEE SEWER RELOCATION PLANS FOR DETAILED CONSTRUCTION SEQUENCING. ALL UTILITY INSTALLATIONS AND RELOCATIONS SHALL BE COMPLETED BY THE END OF PHASE I.

STAGE 4:

1) CONSTRUCT STORMWATER POND #532 AS DIRECTED ON THE STORMWATER DETAIL SHEETS. PLACE THE EXCAVATED SUITABLE FILL MATERIAL IN PORTIONS OF THE EMBANKMENT FOR THE BRIDGE APPROACHES AND PROPOSED ROADWAYS.

2) INSTALL DRAINAGE PIPE(S) CROSSING EXISTING NORTHBOUND AND SOUTHBOUND SR1 AT STATION 216+97. ALL WORK IN THIS OPERATION SHALL BE PERFORMED DURING NIGHT HOURS UTILIZING TA-33, WHERE APPLICABLE. CONTRACTOR SHALL PATCH EXISTING PAVEMENT UP TO EXISTING GRADE USING LIKE MATERIALS BY THE END OF THE WORK SHIFT OR AS INDICATED IN ITEM 743000.

3) INSTALL DRAINAGE PIPE(S) CROSSING EXISTING NORTHBOUND AND SOUTHBOUND SR1 AT STATION 221+98. ALL WORK IN THIS OPERATION SHALL BE PERFORMED DURING NIGHT HOURS UTILIZING TA-33, WHERE APPLICABLE. CONTRACTOR SHALL PATCH EXISTING PAVEMENT UP TO EXISTING GRADE USING LIKE MATERIALS BY THE END OF THE WORK SHIFT OR AS INDICATED IN ITEM 743000. FILL EXISTING PIPE CROSSING AT STATION 221+50 WITH FLOWABLE FILL CONCRETE IN ACCORDANCE WITH THE PLANS. SEE PLAN SHEET 148 FOR SUGGESTED SEQUENCE OF CONSTRUCTION.

4) INSTALL DRAINAGE PIPE(S) CROSSING EXISTING NORTHBOUND SR1 AT STATION 214+30. ALL WORK IN THIS OPERATION SHALL BE PERFORMED DURING NIGHT HOURS UTILIZING TA-33, WHERE APPLICABLE. CONTRACTOR SHALL PATCH EXISTING PAVEMENT UP TO EXISTING GRADE USING LIKE MATERIALS BY THE END OF THE WORK SHIFT OR AS INDICATED IN ITEM 743000.

5) UTILIZING TA-10 DURING OFF PEAK HOURS, INSTALL DRAINAGE PIPE(S) UNDER FREDERICA ROAD AT STATION 553+00, STATION 142+44 AND STATION 141+02. CONTRACTOR SHALL PATCH EXISTING PAVEMENT UP TO EXISTING GRADE USING LIKE MATERIALS BY THE END OF THE WORK SHIFT OR AS INDICATED IN ITEM 743000.

STAGE 5:

1) CONSTRUCT STORMWATER PONDS #529, #530, AND #531 AS DIRECTED ON THE STORMWATER DETAIL SHEETS. EXCAVATE THE INFIELD THE INFIELD BORROW AREA. PLACE THE EXCAVATED SUITABLE FILL MATERIAL IN PORTIONS OF THE EMBANKMENT FOR THE BRIDGE APPROACHES AND PROPOSED ROADWAYS.

2) CONSTRUCT APPROPRIATE DRAINAGE FACILITIES FOR THIS PORTION OF WORK AS SHOWN ON THE PLANS OR AS DIRECTED BY THE ENGINEER IN THE FIELD. UTILIZING TA-10 DURING OFF PEAK HOURS, INSTALL DRAINAGE PIPE(S) UNDER MILFORD NECK ROAD AT STATION 402+69 AND STATION 405+62. CONTRACTOR SHALL PATCH EXISTING PAVEMENT UP TO EXISTING GRADE USING LIKE MATERIALS BY THE END OF THE WORK SHIFT OR AS INDICATED IN ITEM 743000. CONTRACTOR SHALL INSTALL INLET PROTECTION AND OTHER EROSION AND SEDIMENT CONTROL DEVICES AS SHOWN ON THE PLANS.

3) CONSTRUCT THE PORTION OF PROPOSED ROADWAYS AND RAMPS OFF THE EXISTING TRAVELED WAY, WITHOUT INTERFERING WITH THE TRAVELING PUBLIC, TO FINAL GRADES PER TYPICAL SECTIONS AS SHOWN IN THIS PHASE OR AS DIRECTED BY THE ENGINEER IN THE FIELD. INSTALL PROPOSED LIGHTING CONDUIT AND DEVICES ALONG THE RAMPS AND PROPOSED ROADWAYS. INSTALL PROPOSED UNDERGROUND TRAFFIC SIGNAL FEATURES TO BE UTILIZED IN THE FUTURE. POUR PCC CURB MEDIAN.

STAGE 6:

1) UTILIZE TA-33 DURING OFF PEAK HOURS TO SET TEMPORARY PCC BARRIER ALONG THE OUTSIDE AND MEDIAN EDGES OF EXISTING SOUTHBOUND AND NORTHBOUND SR1 UNDER THE PROPOSED BRIDGE TO CONSTRUCT THE BRIDGE PIER, MSE WALLS, AND ABUTMENTS, AS SHOWN IN THE CONSTRUCTION TYPICAL SECTION FOR THIS PHASE.

2) BEHIND BARRIER, CONSTRUCT THE BRIDGE PIER, BRIDGE ABUTMENTS, AND MSE WALLS. INSTALL GUARDRAIL AROUND THE BRIDGE PIER.

3) UTILIZE TA-33 DURING OFF PEAK HOURS TO REMOVE TEMPORARY PCC BARRIER.

STAGE 7:

1) SET BRIDGE BEAMS UNDER A ROLLING ROAD BLOCK BETWEEN 12:00 A.M. THROUGH 5:00 A.M., ON MONDAYS THROUGH THURSDAYS ONLY. COMPLETE BRIDGE CONSTRUCTION ACTIVITIES UTILIZING TA-33 ON SR1 DURING NIGHT TIME HOURS OR AS DIRECTED BY THE ENGINEER.

2) INSTALL PROPOSED GUARDRAIL CONNECTING TO THE PARAPET WALLS AFTER BRIDGE IS COMPLETE.

STAGE 8:

1) UTILIZE TA-33 ON NORTHBOUND SR1 DURING OFF PEAK HOURS TO CONSTRUCT THE NEW ACCESS FROM THE PRIVATE DRIVEWAY TO SR1 NORTHBOUND AT STATION 225+00.

2) ALL DISTURBED AREAS SHALL BE GRADED TO DRAIN PROPERLY. THE CONTRACTOR SHALL PLACE TOPSOIL, PERMANENT SEEDING AND MULCH BLANKET ON ALL AREAS IN FINAL CONDITIONS OR DIRECTED BY THE ENGINEER IN THE FIELD.

3) THE CONTRACTOR SHALL COORDINATE THE PLACEMENT OF THE FINAL SIGNAGE WITH STATE FORCES PRIOR TO PROCEEDING TO THE NEXT PHASE, WHERE APPLICABLE. THE CONTRACTOR SHALL NOT REMOVE ANY TEMPORARY SIGNAGE UNLESS APPROVED BY THE ENGINEER IN THE FIELD.

4) THE CONTRACTOR SHALL REMOVE ALL EROSION AND SEDIMENT CONTROL SYSTEMS STILL REMAINING IN THIS PHASE PER THE APPROVAL OF THE SEDIMENT CONTROL INSPECTOR.

PHASE II

STAGE 1:

1) REMOVE EXISTING ENTRANCE TO PRIVATE DRIVEWAY AT RAMP D STATION 1314+65. REMOVE EXISTING PIPE IN THIS LOCATION AND GRADE PROPOSED DITCHING. PLACE TEMPORARY SEEDING AND MULCH.

STAGE 2:

1) UTILIZING TA-10 LANE CLOSURE ON EXISTING TUB MILL POND ROAD, CONSTRUCT PROPOSED OLD TUB MILL POND ROAD TIE-IN AT STATION 1102+00 AS A TEMPORARY T-INTERSECTION AND BARREL-OFF UNTIL FUTURE STAGE.

STAGE 3:

1) AS SHOWN ON THE PERMANENT WARNING SIGNS LAYOUT, PLACE CHANGEABLE MESSAGE SIGNS ON NORTHBOUND SR1, SOUTHBOUND SR1 AND SOUTHBOUND FREDERICA ROAD TEN (10) CALENDAR DAYS IN ADVANCE OF AND FIVE (5) DAYS AFTER THE START OF CONSTRUCTION TO INFORM TRAVELING PUBLIC THAT FREDERICA ROAD WILL BE CLOSED TO THROUGH TRAFFIC AND A DETOUR WILL BE IN USE FOR THIS STAGE, SHOWN ON SHEET DP-1. MAINTAIN ACCESS FROM SR1 FOR EMERGENCY VEHICLES ONLY AND RESIDENTS WITHIN LIMITS.

2) CLOSE FREDERICA ROAD IN ACCORDANCE WITH THE PLANS AND DELDOT TRAFFIC CONTROL MANUAL. MAINTAIN LOCAL ACCESS TO GLENHURST DRIVE. CONSTRUCT PROPOSED TIE-IN PAVEMENT FROM FREDERICA ROAD TO PROPOSED FREDERICA ROAD AS SHOWN IN THIS STAGE. REMOVE THE NECESSARY ABANDONED PAVEMENT AND COMPLETE DRAINAGE FACILITIES SHOWN IN THIS STAGE. PAVE TO FINAL GRADE WITH TYPE C HOT-MIX. LAYOUT AND PLACE PERMANENT STRIPING AS SHOWN IN THE PLANS, OR AS DIRECTED BY THE ENGINEER IN THE FIELD.

3) ALL DISTURBED AREAS SHALL BE GRADED TO DRAIN PROPERLY. THE CONTRACTOR SHALL PLACE TOPSOIL, PERMANENT SEEDING AND MULCH BLANKET ON ALL AREAS IN FINAL CONDITIONS OR AS DIRECTED BY THE ENGINEER IN THE FIELD.

4) THE CONTRACTOR SHALL COORDINATE THE PLACEMENT OF THE FINAL SIGNAGE WITH STATE FORCES PRIOR TO PROCEEDING TO THE NEXT PHASE, WHERE APPLICABLE. THE CONTRACTOR SHALL NOT REMOVE ANY TEMPORARY SIGNAGE UNLESS APPROVED BY THE ENGINEER IN THE FIELD.

5) THE CONTRACTOR SHALL REMOVE ALL EROSION AND SEDIMENT CONTROL SYSTEMS STILL REMAINING IN THIS PHASE PER THE APPROVAL OF THE SEDIMENT CONTROL INSPECTOR.

PHASE III

STAGE 1:

1) AS SHOWN ON THE PERMANENT WARNING SIGNS LAYOUT, PLACE CHANGEABLE MESSAGE SIGNS ON EASTBOUND AND WESTBOUND TUB MILL POND ROAD AND SOUTHBOUND FREDERICA ROAD TEN (10) CALENDAR DAYS IN ADVANCE OF AND FIVE (5) DAYS AFTER THE START OF CONSTRUCTION TO INFORM TRAVELING PUBLIC THAT FREDERICA ROAD WILL OPEN TO A NEW TEMPORARY TRAFFIC PATTERN.

2) MAINTAIN TEMPORARY BARRICADES AT ALL NECESSARY LOCATIONS. OPEN PROPOSED TUB MILL POND ROAD AND PROPOSED FREDERICA ROAD TO TRAFFIC. SET DETOUR SIGNAGE, AS SHOWN ON SHEET DP-01, TO INFORM TRAVELING PUBLIC OF THE NEW TEMPORARY TRAFFIC PATTERN IN ACCORDANCE WITH THE PLANS AND DELDOT TRAFFIC CONTROL MANUAL.

STAGE 2:

1) UTILIZE TA-33 DURING OFF PEAK HOURS TO REMOVE THE CROSSOVER PAVEMENT BETWEEN STATION 210+00 TO STATION 220+00. GRADE PROPOSED DITCHING AND PLACE TOPSOIL, SEEDING, AND MULCH.

STAGE 3:

1) UTILIZING TA-33 DURING OFF PEAK HOURS, CONSTRUCT EIGHT (8) FOOT WIDE SHOULDERS ALONG THE MEDIAN OF SR1 NORTHBOUND AND SOUTHBOUND AS SHOWN IN THIS STAGE FOR FUTURE MAINTENANCE OF TRAFFIC LANE SHIFTING. MINIMIZE THE LENGTH OF LANE CLOSURE DEPENDING ON THE WORK BEING PERFORMED.

PHASE IV

STAGE 1:

1) AS SHOWN ON THE PERMANENT WARNING SIGNS LAYOUT, PLACE CHANGEABLE MESSAGE SIGNS ON NORTHBOUND SR1 AND SOUTHBOUND SR1 TEN (10) CALENDAR DAYS IN ADVANCE OF AND FIVE (5) DAYS AFTER THE START OF CONSTRUCTION TO INFORM TRAVELING PUBLIC OF IMPENDING ROAD CONSTRUCTION. MAINTAIN DETOUR SETUP IN PREVIOUS PHASE, SHOWN ON SHEET DP-01.

2) UTILIZE TA-33 DURING OFF PEAK HOURS TO SET TEMPORARY PCC BARRIER ON EXISTING SOUTHBOUND SR1 BETWEEN STATION 221+50 AND RAMP A STATION 806+64, FOR RAMP A AND RAMP B CONSTRUCTION AS SHOWN IN THIS STAGE, OR AS DIRECTED BY THE ENGINEER IN THE FIELD.

3) BEHIND BARRIER, COMPLETE CONSTRUCTION OF RAMP A AND RAMP B. CONSTRUCT DRAINAGE FACILITIES SHOWN IN THIS STAGE. PAVE RAMPS TO FINAL GRADE. REMOVE REMAINING ABANDONED PAVEMENT AS SHOWN AND GRADE TO DRAIN. INSTALL PROPOSED LIGHTING DEVICES, GUARDRAIL AND SIGNING. PLACE PERMANENT PAVEMENT MARKINGS, AS SHOWN IN THE PLANS.

4) ALL DISTURBED AREAS SHALL BE GRADED TO DRAIN PROPERLY. THE CONTRACTOR SHALL PLACE TOPSOIL, PERMANENT SEEDING AND MULCH BLANKET ON ALL AREAS IN FINAL CONDITIONS OR AS DIRECTED BY THE ENGINEER IN THE FIELD.

5) THE CONTRACTOR SHALL COORDINATE THE PLACEMENT OF THE FINAL SIGNAGE WITH STATE FORCES PRIOR TO PROCEEDING TO THE NEXT PHASE, WHERE APPLICABLE. THE CONTRACTOR SHALL NOT REMOVE ANY TEMPORARY SIGNAGE UNLESS APPROVED BY THE ENGINEER IN THE FIELD.

6) THE CONTRACTOR SHALL REMOVE ALL EROSION AND SEDIMENT CONTROL SYSTEMS STILL REMAINING IN THIS PHASE PER THE APPROVAL OF THE SEDIMENT CONTROL INSPECTOR.

PHASE V

STAGE 1:

1) UTILIZE TA-33 DURING OFF PEAK HOURS TO RELOCATE PCC BARRIER FROM SOUTHBOUND SR1 (RAMP A AND RAMP B) TO NORTHBOUND SR1 (RAMP D) FROM STATION 205+00 TO STATION 224+00 IN ORDER TO CONSTRUCT RAMP D. MAINTAIN RAMP A CLOSURE WITH TEMPORARY TRAFFIC CONTROL DEVICES. OPEN RAMP B TO TRAFFIC IN ACCORDANCE WITH THE PLANS AND DELDOT TRAFFIC CONTROL MANUAL.

2) BEHIND BARRIER, COMPLETE CONSTRUCTION OF RAMP D. CONSTRUCT DRAINAGE FACILITIES SHOWN IN THIS STAGE. PAVE RAMP D TO FINAL GRADE. INSTALL PROPOSED LIGHTING DEVICES AND SIGNING. PLACE PERMANENT PAVEMENT MARKINGS, AS SHOWN IN THE PLANS.

3) ALL DISTURBED AREAS SHALL BE GRADED TO DRAIN PROPERLY. THE CONTRACTOR SHALL PLACE TOPSOIL, PERMANENT SEEDING AND MULCH BLANKET ON ALL AREAS IN FINAL CONDITIONS OR DIRECTED BY THE ENGINEER IN THE FIELD.

4) THE CONTRACTOR SHALL COORDINATE THE PLACEMENT OF THE FINAL SIGNAGE WITH STATE FORCES PRIOR TO PROCEEDING TO THE NEXT PHASE, WHERE APPLICABLE. THE CONTRACTOR SHALL NOT REMOVE ANY TEMPORARY SIGNAGE UNLESS APPROVED BY THE ENGINEER IN THE FIELD.

5) THE CONTRACTOR SHALL REMOVE ALL EROSION AND SEDIMENT CONTROL SYSTEMS STILL REMAINING IN THIS PHASE PER THE APPROVAL OF THE SEDIMENT CONTROL INSPECTOR.

PHASE VI

STAGE 1:

1) UTILIZE TA-33 DURING OFF PEAK HOURS TO REMOVE PCC BARRIER FROM SR1.

2) PLACE TEMPORARY BARRICADES AT ALL NECESSARY LOCATIONS. OPEN RAMP D AND THE PROPOSED BRIDGE OVER SR1 TO TRAFFIC IN ACCORDANCE WITH THE PLANS AND DELDOT TRAFFIC CONTROL MANUAL.

STAGE 2:

1) AS SHOWN ON THE PERMANENT WARNING SIGNS LAYOUT, PLACE CHANGEABLE MESSAGE SIGNS ON NORTHBOUND SR1, SOUTHBOUND SR1, TUB MILL POND ROAD, AND MILFORD NECK ROAD TEN (10) CALENDAR DAYS IN ADVANCE OF AND FIVE (5) DAYS AFTER THE START OF CONSTRUCTION TO INFORM TRAVELING PUBLIC THE CROSSOVER WILL BE CLOSED.

2) INSTALL TEMPORARY SIGNING AT THE INTERSECTION OF TUB MILL POND ROAD AND OLD TUB MILL POND ROAD TO DIRECT (NORTHBOUND SR1) TRAFFIC FROM EASTBOUND TUB MILL POND ROAD TO RAMP D.

3) UTILIZE TA-33 DURING OFF PEAK HOURS TO REMOVE CROSSOVER BETWEEN STATION 110+50 TO 121+50. MAINTAIN AN EIGHT (8) FOOT SHOULDER FOR FUTURE MAINTENANCE OF TRAFFIC. GRADE PROPOSED DITCHING.

Unofficial Website Copy

STAGE 3:

1) AS SHOWN ON THE PERMANENT WARNING SIGNS LAYOUT, PLACE CHANGEABLE MESSAGE SIGNS ON NORTHBOUND SR1, SOUTHBOUND SR1, AND MILFORD NECK ROAD TEN (10) CALENDAR DAYS IN ADVANCE OF AND FIVE (5) DAYS AFTER THE START OF CONSTRUCTION TO INFORM TRAVELING PUBLIC THAT MILFORD NECK ROAD WILL BE CLOSED TO THROUGH TRAFFIC AND A DETOUR WILL BE IN USE FOR THIS STAGE, SHOWN ON SHEET DP-03. MAINTAIN ACCESS FOR EMERGENCY VEHICLES ONLY AND RESIDENTS WITHIN LIMITS.

2) CLOSE MILFORD NECK ROAD IN ACCORDANCE WITH THE PLANS AND DELDOT TRAFFIC CONTROL MANUAL. CONSTRUCT PROPOSED TIE-IN PAVEMENT FROM MILFORD NECK ROAD TO PROPOSED MILFORD NECK ROAD AS SHOWN IN THIS STAGE. CONSTRUCT DRAINAGE FACILITIES SHOWN IN THIS STAGE. PAVE TO FINAL GRADE WITH TYPE C HOT-MIX. REMOVE ALL ABANDONED PAVEMENT SHOWN IN THIS STAGE AND GRADE TO DRAIN. PLACE PERMANENT PAVEMENT MARKINGS, AS SHOWN IN THE PLANS.

3) ALL DISTURBED AREAS SHALL BE GRADED TO DRAIN PROPERLY. THE CONTRACTOR SHALL PLACE TOPSOIL, PERMANENT SEEDING AND MULCH BLANKET ON ALL AREAS IN FINAL CONDITIONS OR AS DIRECTED BY THE ENGINEER IN THE FIELD.

4) THE CONTRACTOR SHALL COORDINATE THE PLACEMENT OF THE FINAL SIGNAGE WITH STATE FORCES PRIOR TO PROCEEDING TO THE NEXT PHASE, WHERE APPLICABLE. THE CONTRACTOR SHALL NOT REMOVE ANY TEMPORARY SIGNAGE UNLESS APPROVED BY THE ENGINEER IN THE FIELD.

5) THE CONTRACTOR SHALL REMOVE ALL EROSION AND SEDIMENT CONTROL SYSTEMS STILL REMAINING IN THIS PHASE PER THE APPROVAL OF THE SEDIMENT CONTROL INSPECTOR.

PHASE VII

STAGE 1:

1) AS SHOWN ON THE PERMANENT WARNING SIGNS LAYOUT, PLACE CHANGEABLE MESSAGE SIGNS ON NORTHBOUND SR1, SOUTHBOUND SR1, AND MILFORD NECK ROAD TEN (10) CALENDAR DAYS IN ADVANCE OF AND FIVE (5) DAYS AFTER THE START OF CONSTRUCTION TO INFORM TRAVELING PUBLIC THAT MILFORD NECK ROAD WILL OPEN TO A NEW TRAFFIC PATTERN.

2) OPEN PROPOSED MILFORD NECK ROAD TO TRAFFIC IN ACCORDANCE WITH THE PLANS AND DELDOT TRAFFIC CONTROL MANUAL.

STAGE 2:

1) UTILIZE TA-33 DURING OFF PEAK HOURS TO SET TEMPORARY PCC BARRIER ON EXISTING NORTHBOUND SR1 BETWEEN STATION 119+50 TO STATION 207+00, AS SHOWN IN THIS STAGE, OR AS DIRECTED BY THE ENGINEER IN THE FIELD.

2) BEHIND BARRIER, COMPLETE CONSTRUCTION OF RAMP C PAVEMENT. CONSTRUCT DRAINAGE FACILITIES SHOWN IN THIS STAGE. PAVE RAMP C TO FINAL GRADE. INSTALL PROPOSED LIGHTING DEVICES, SIGNING, AND GUARDRAIL. PLACE PERMANENT PAVEMENT MARKINGS, AS SHOWN IN THE PLANS.

PHASE VIII

STAGE 1:

1) AS SHOWN ON THE PERMANENT WARNING SIGNS LAYOUT, PLACE CHANGEABLE MESSAGE SIGNS ON NORTHBOUND SR1 AND SOUTHBOUND SR1 TEN (10) CALENDAR DAYS IN ADVANCE OF AND FIVE (5) DAYS AFTER THE START OF CONSTRUCTION TO INFORM TRAVELING PUBLIC THAT RAMP C WILL OPEN TO TRAFFIC AND THE EXISTING ACCESS TO MILFORD NECK ROAD WILL CLOSE.

2) UTILIZE TA-33 DURING OFF PEAK HOURS TO REMOVE PCC BARRIER FROM RAMP C. OPEN RAMP C TO TRAFFIC IN ACCORDANCE WITH THE PLANS AND DELDOT TRAFFIC CONTROL MANUAL.

3) UTILIZE TA-33 DURING OFF PEAK HOURS TO SAWCUT AND REMOVE ABANDONED PAVEMENT SHOWN IN THIS STAGE AT THE EXISTING ACCESS FROM SR1 TO MILFORD NECK ROAD. REMOVE STRIPING CORRESPONDING TO THE EXISTING DECELERATION LANE. GRADE AREA TO PROPOSED DITCHING. PLACE TOPSOIL, SEEDING, AND MULCH.

STAGE 2:

1) AS SHOWN ON THE PERMANENT WARNING SIGNS LAYOUT, PLACE CHANGEABLE MESSAGE SIGNS ON NORTHBOUND SR1, SOUTHBOUND SR1, AND TUB MILL POND ROAD TEN (10) CALENDAR DAYS IN ADVANCE OF AND FIVE (5) DAYS AFTER THE START OF CONSTRUCTION TO INFORM TRAVELING PUBLIC THAT TUB MILL POND ROAD WILL BE CLOSED TO THROUGH TRAFFIC AND A DETOUR WILL BE IN USE FOR THIS STAGE, SHOWN ON SHEET DP-04. MAINTAIN ACCESS FOR EMERGENCY VEHICLES ONLY AND RESIDENTS WITHIN LIMITS.

2) CLOSE TUB MILL POND ROAD IN ACCORDANCE WITH THE PLANS AND DELDOT TRAFFIC CONTROL MANUAL. CONSTRUCT PROPOSED TIE-IN PAVEMENT FROM TUB MILL POND ROAD TO PROPOSED TUB MILL POND ROAD AS SHOWN IN THIS STAGE. CONSTRUCT DRAINAGE FACILITIES SHOWN IN THIS STAGE. PAVE TO FINAL GRADE WITH TYPE C HOT-MIX. REMOVE ALL ABANDONED PAVEMENT AS SHOWN AND GRADE PROPOSED DITCHING. PLACE PERMANENT PAVEMENT MARKINGS, AS SHOWN IN THE PLANS.

3) ALL DISTURBED AREAS SHALL BE GRADED TO DRAIN PROPERLY. THE CONTRACTOR SHALL PLACE TOPSOIL, PERMANENT SEEDING AND MULCH BLANKET ON ALL AREAS IN FINAL CONDITIONS OR DIRECTED BY THE ENGINEER IN THE FIELD.

4) THE CONTRACTOR SHALL COORDINATE THE PLACEMENT OF THE FINAL SIGNAGE WITH STATE FORCES PRIOR TO PROCEEDING TO THE NEXT PHASE, WHERE APPLICABLE. THE CONTRACTOR SHALL NOT REMOVE ANY TEMPORARY SIGNAGE UNLESS APPROVED BY THE ENGINEER IN THE FIELD.

5) THE CONTRACTOR SHALL REMOVE ALL EROSION AND SEDIMENT CONTROL SYSTEMS STILL REMAINING IN THIS PHASE PER THE APPROVAL OF THE SEDIMENT CONTROL INSPECTOR.

PHASE IX

STAGE 1:

1) AS SHOWN ON THE PERMANENT WARNING SIGNS LAYOUT, PLACE CHANGEABLE MESSAGE SIGNS ON NORTHBOUND SR1, SOUTHBOUND SR1, SOUTHBOUND FREDERICA ROAD, AND TUB MILL POND ROAD TEN (10) CALENDAR DAYS IN ADVANCE OF AND FIVE (5) DAYS AFTER THE START OF CONSTRUCTION TO INFORM TRAVELING PUBLIC THAT TUB MILL POND ROAD WILL BE OPEN TO A NEW TRAFFIC PATTERN, THE EXISTING ACCESS TO SR1 WILL BE CLOSED, AND RAMP A WILL OPEN.

2) OPEN RAMP A AND PROPOSED TUB MILL POND ROAD TO TRAFFIC IN ACCORDANCE WITH THE PLANS AND DELDOT TRAFFIC CONTROL MANUAL. CLOSE EXISTING ACCESS TO TUB MILL ROAD WITH BARRICADES.

3) CONSTRUCT PROPOSED DRAINAGE FACILITIES AS SHOWN IN THIS STAGE.

4) ON OLD TUB MILL POND ROAD, UTILIZE TA-10 TO MILL AND OVERLAY WITH TYPE C HOT-MIX. TIE INTO THE ENTRANCE TO MEDING SEAFOOD AT STATION 1106+00 WITH THIS OPERATION AS SHOWN ON THE PLANS, OR AS DIRECTED BY THE ENGINEER IN THE FIELD. PLACE PERMANENT PAVEMENT MARKINGS, AS SHOWN IN THE PLANS.

STAGE 2:

1) UTILIZE TA-33 DURING OFF PEAK HOURS TO SET TEMPORARY PCC BARRIER ON EXISTING SOUTHBOUND SR1 BETWEEN STATION 800+00 TO 806+50 AS SHOWN IN THIS STAGE, OR AS DIRECTED BY THE ENGINEER IN THE FIELD.

2) BEHIND PCC BARRIER, REMOVE ABANDONED PAVEMENT SHOWN IN THIS STAGE. GRADE AREA TO DRAIN. PLACE TOPSOIL, SEEDING, AND MULCH.

3) UTILIZE TA-33 DURING OFF PEAK HOURS TO REMOVE TEMPORARY PCC BARRIER.

STAGE 3:

1) FOLLOWING APPROVAL OF THE ENGINEER IN THE FIELD CONVERT STORMWATER PONDS #529, #530, #531 AND #532 TO PERMANENT STORMWATER FACILITIES AS SPECIFIED ON THE STORMWATER DETAIL SHEETS.

PHASE X

STAGE 1:

1) UTILIZE TA-33 DURING OFF PEAK HOURS TO REMOVE CROSSOVER AT SR1 STATION 101+00, AS SHOWN IN THIS STAGE. MAINTAIN FOUR (4) FOOT SHOULDERS IN THIS AREA. GRADE PROPOSED DITCHING AND PLACE TOPSOIL, SEEDING, AND MULCH.

2) UTILIZE TA-33 DURING OFF PEAK HOURS TO SAWCUT AND REMOVE ALL TEMPORARY PAVEMENT ALONG THE MEDIAN OF SR1. MAINTAIN FOUR (4) FOOT SHOULDERS ALONG SR1 MEDIAN WITHIN THE PROJECT LIMITS. RE-GRADE DITCHING IN THE MEDIAN AS SHOWN IN THE PLANS, OR DIRECTED BY THE ENGINEER IN THE FIELD. PLACE TOPSOIL, SEEDING, AND MULCH.

3) USE TA-33 ON NORTHBOUND AND SOUTHBOUND SR1 TO MILL 1" AND OVERLAY EXISTING PAVEMENT WITH 2" OF TYPE C ASPHALT, PER TYPICAL SECTIONS, FROM STATION 95+61 (SR 1) TO STATION 1323+38.80 (RAMP D). THE CONTRACTOR SHALL CONSTRUCT FULL-DEPTH RESIDENTIAL DRIVEWAYS IN ORDER TO TIE INTO THE EXISTING ENTRANCES.

4) LAYOUT AND PLACE PERMANENT PAVEMENT MARKINGS ON NORTHBOUND AND SOUTHBOUND SR 1 AS SHOWN ON THE SIGNING AND STRIPING PLANS.

STAGE 2:

1) UTILIZE TA-10 TO MILL AND OVERLAY MILFORD NECK ROAD TO FINAL GRADES PER TYPICAL SECTIONS. PLACE PERMANENT PAVEMENT MARKINGS, AS SHOWN IN THE PLANS.

2) UTILIZE TA-10 TO PLACE TOPSOIL AND REGRADE THE EXISTING DRAINAGE ON MILFORD NECK ROAD.

3) ALL DISTURBED AREAS SHALL BE GRADED TO DRAIN PROPERLY. THE CONTRACTOR SHALL PLACE TOPSOIL, PERMANENT SEEDING AND MULCH BLANKET ON ALL AREAS IN FINAL CONDITIONS OR DIRECTED BY THE ENGINEER.

4) THE CONTRACTOR SHALL COORDINATE THE PLACEMENT OF THE FINAL SIGNAGE WITH STATE FORCES, WHERE APPLICABLE. THE CONTRACTOR SHALL NOT REMOVE ANY TEMPORARY SIGNAGE UNLESS APPROVED BY THE ENGINEER IN THE FIELD.

5) THE CONTRACTOR SHALL REMOVE ALL EROSION AND SEDIMENT CONTROL SYSTEMS STILL REMAINING IN THIS PHASE PER THE APPROVAL OF THE SEDIMENT CONTROL INSPECTOR.

SCHEDULE CONSTRAINTS

1) THE SEWER RELOCATION MUST BE COMPLETED PRIOR TO BEGINNING ANY PILE DRIVING ON THE EAST SIDE OF SR1.

2) THE BRIDGE MUST BE READY TO ACCOMMODATE TRAFFIC PRIOR TO BEGINNING WORK ON PHASE VI.

3) PHASES II AND IV MAY BE BUILT CONCURRENTLY.

4) RELOCATED FREDERICA ROAD (PHASE I PAVING) MUST BE READY TO ACCOMODATE TRAFFIC AT THE END OF PHASE II.

5) PHASE III SHOULD BE COMPLETED PRIOR TO BEGINNING WORK ON THE BRIDGE PIER FOUNDATION (CONCURRENT WITH PHASE I WORK). HOWEVER, THE CROSSOVER LOCATED AT SR1 STA. 214+75 +/- SHOULD NOT BE REMOVED UNTIL JUST PRIOR TO BEGINNING WORK ON PHASE IV CONSTRUCTION.

6) PHASE V MAY BE CONSTRUCTED CONCURRENT WITH PHASE IV. (HOWEVER, ADDITIONAL PCC BARRIER MAY BE REQUIRED IF THE PHASES ARE WORKED CONCURRENTLY.)

7) UNLESS OTHERWISE APPROVED BY THE ENGINEER, PHASES VI THROUGH X SHALL BE CONSTRUCTED CONSECUTIVELY (PHASE BY PHASE), IN ORDER TO ACCOMODATE THE PROPOSED DETOURS AND TRAFFIC PATTERNS. THE WORK IN THESE PHASES WAS NOT ANTICIPATED TO BE ONGOING CONCURRENTLY.

8) THE CONSTRUCTION PHASING PLANS ARE A SUGGESTED SEQUENCE FOR BUILDING THE PROJECT WITHIN THE MAINTENANCE OF TRAFFIC AND SCHEDULING CONSTRAINTS PROVIDED IN THE CONTRACT DOCUMENTS. THE CONTRACTOR MAY SUBMIT AN ALTERNATE PHASING PLAN FOR APPROVAL, HOWEVER, ANY ALTERNATE PLAN MUST COMPLY WITH THE SCHEDULE CONSTRAINTS, TRAFFIC CONTROL AND LANE RESTRICTION NOTES (PLAN SHEET 136), AND ANY OTHER APPLICABLE PROJECT NOTES OR CONTRACT RESTRICTIONS INCLUDED WITHIN THE CONTRACT DOCUMENTS. UNLESS APPROVED OTHERWISE, THE ALTERNATE PHASING PLAN MAY NOT ADD COST OR TIME TO THE CONTRACT.

9) PRIOR TO BEGINNING THE WORK SHOWN ON PLAN SHEETS 296A THROUGH 296I, THE FOLLOWING WORK MUST BE COMPLETED AND SHALL BE STARTED AS EARLY AS POSSIBLE IN THE CONTRACTOR'S SCHEDULE:

* THE ADVANCE MOT AND DETOUR SHOWN FOR PHASE III, STAGE 1 MUST BE IN PLACE
* THE SR1 MEDIAN SHOULDER WIDENING DETAILED IN PHASE III, STAGE 3 MUST BE COMPLETED
* A PORTION OF RAMP D (PHASE V, STAGE 1) WILL BE COMPLETED AS PART OF THE WORK SHOWN ON PLAN SHEETS 296A THROUGH 296I

GENERAL NOTES

1) TEMPORARY WARNING SIGNS DEPICTED WITHIN THE PHASING PLANS ARE SHOWN TO ASSIST IN CLARIFYING THE INTENT OF THE PHASED CONSTRUCTION. ADDITIONAL SIGNING TO COMPLY WITH THE DELAWARE MUTCD WILL BE REQUIRED.

PHASE I – 1A

1) CLOSE SOUTHBOUND U-TURN LANE AT CROSSOVERS LOCATED AT STATION 116+25 AND STATION 215+00, FOLLOWING THE SIGNING AND STRIPING WITHIN THE TEMPORARY ENTRANCE PLAN.

2) CONSTRUCT A PORTION OF THE EIGHT (8) FOOT WIDE SHOULDER WIDENING, SHOWN IN PHASE III, ON NORTHBOUND SR1 FROM STATION 204+00 TO STATION 227+00 FOR FUTURE MAINTENANCE OF TRAFFIC.

3) CONSTRUCT TEMPORARY ENTRANCE UTILIZING THE TRAFFIC CONTROL APPLICATION AS SHOWN FOR PHASE V IN THE CONSTRUCTION SEQUENCING.

4) DURING OFF PEAK TIME, MILL AND OVERLAY, WITH 2" OF TYPE C, THE LIMITS OF THE TEMPORARY ENTRANCE. PLACE TEMPORARY PAVEMENT MARKINGS SHOWN IN THE TEMPORARY ENTRANCE PLANS.

Unofficial Web Copy

PHASE I

STAGE 1:

1) AS SHOWN ON THE PERMANENT WARNING SIGNS LAYOUT, PLACE CHANGEABLE MESSAGE SIGNS ON NORTHBOUND SR1, SOUTHBOUND SR1, SOUTHBOUND FREDERICA ROAD, TUB MILL POND ROAD, AND MILFORD NECK ROAD TEN (10) CALENDAR DAYS IN ADVANCE OF AND FIVE (5) DAYS AFTER THE START OF CONSTRUCTION TO INFORM TRAVELING PUBLIC OF IMPENDING ROAD CONSTRUCTION.

STAGE 2:

1) PLACE EROSION AND SEDIMENT CONTROL MEASURES FOR EXISTING DRAINAGE SYSTEM AND THE EMBANKMENT FOR PROPOSED ROAD CONSTRUCTION, OR AS DIRECTED BY THE ENGINEER IN THE FIELD. INSTALL REINFORCED SILT FENCE ALONG THE LIMITS OF CONSTRUCTION. INSTALL ALL STABILIZED CONSTRUCTION ENTRANCES REQUIRED FOR PHASE I, SHOWN IN THESE PLANS OR AS DIRECTED IN THE FIELD BY THE ENGINEER.

2) CLEAR ALL EXISTING VEGETATION AND DEBRIS WITHIN THE PROPOSED LIMITS OF CONSTRUCTION. HAUL MATERIAL TO AN APPROVED OFFSITE FACILITY.

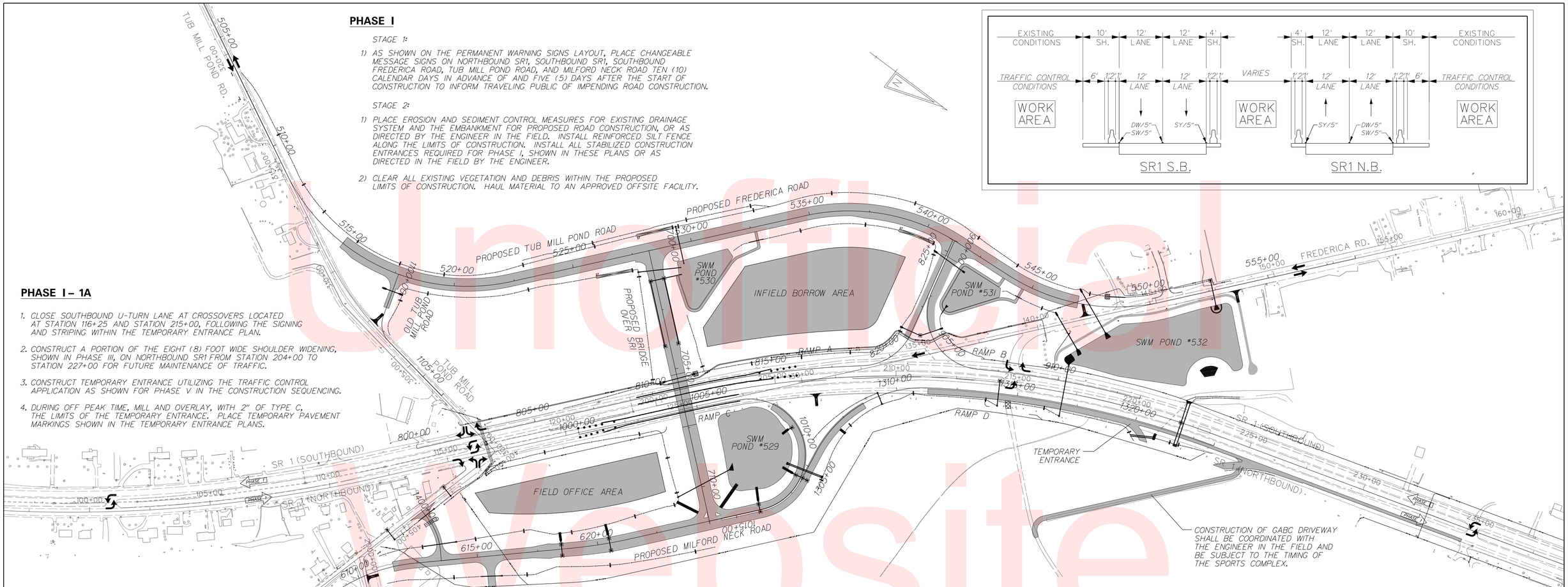

PHASE I – 1A

1. CLOSE SOUTHBOUND U-TURN LANE AT CROSSOVERS LOCATED AT STATION 116+25 AND STATION 215+00, FOLLOWING THE SIGNING AND STRIPING WITHIN THE TEMPORARY ENTRANCE PLAN.
2. CONSTRUCT A PORTION OF THE EIGHT (8) FOOT WIDE SHOULDER WIDENING, SHOWN IN PHASE III, ON NORTHBOUND SR1 FROM STATION 204+00 TO STATION 227+00 FOR FUTURE MAINTENANCE OF TRAFFIC.
3. CONSTRUCT TEMPORARY ENTRANCE UTILIZING THE TRAFFIC CONTROL APPLICATION AS SHOWN FOR PHASE V IN THE CONSTRUCTION SEQUENCING.
4. DURING OFF PEAK TIME, MILL AND OVERLAY, WITH 2" OF TYPE C, THE LIMITS OF THE TEMPORARY ENTRANCE. PLACE TEMPORARY PAVEMENT MARKINGS SHOWN IN THE TEMPORARY ENTRANCE PLANS.

STAGE 3:

1) BEGIN UTILITY INSTALLATIONS AND RELOCATION OF KENT COUNTY SEWER, DEC, DELMARVA ELECTRIC, CHESAPEAKE UTILITIES, AND VERIZON FACILITIES AS DESCRIBED ON THE PLANS AND IN THE UTILITY STATEMENT. SEE SEWER RELOCATION PLANS FOR DETAILED CONSTRUCTION SEQUENCING. ALL UTILITY INSTALLATIONS AND RELOCATIONS SHALL BE COMPLETED BY THE END OF PHASE I.

STAGE 4:

1) CONSTRUCT STORMWATER POND #532 AS DIRECTED ON THE STORMWATER DETAIL SHEETS. PLACE THE EXCAVATED SUITABLE FILL MATERIAL IN PORTIONS OF THE EMBANKMENT FOR THE BRIDGE APPROACHES AND PROPOSED ROADWAYS.

2) INSTALL DRAINAGE PIPE(S) CROSSING EXISTING NORTHBOUND AND SOUTHBOUND SR1 AT STATION 216+97. ALL WORK IN THIS OPERATION SHALL BE PERFORMED DURING NIGHT HOURS UTILIZING TA-33, WHERE APPLICABLE. CONTRACTOR SHALL PATCH EXISTING PAVEMENT UP TO EXISTING GRADE USING LIKE MATERIALS BY THE END OF THE WORK SHIFT OR AS INDICATED IN ITEM 743000.

3) INSTALL DRAINAGE PIPE(S) CROSSING EXISTING NORTHBOUND AND SOUTHBOUND SR1 AT STATION 221+98. ALL WORK IN THIS OPERATION SHALL BE PERFORMED DURING NIGHT HOURS UTILIZING TA-33, WHERE APPLICABLE. CONTRACTOR SHALL PATCH EXISTING PAVEMENT UP TO EXISTING GRADE USING LIKE MATERIALS BY THE END OF THE WORK SHIFT OR AS INDICATED IN ITEM 743000. FILL EXISTING PIPE CROSSING AT STATION 221+50 WITH FLOWABLE FILL CONCRETE IN ACCORDANCE WITH THE PLANS. SEE PLAN SHEET 148 FOR SUGGESTED SEQUENCE OF CONSTRUCTION.

4) INSTALL DRAINAGE PIPE(S) CROSSING EXISTING NORTHBOUND SR1 AT STATION 214+30. ALL WORK IN THIS OPERATION SHALL BE PERFORMED DURING NIGHT HOURS UTILIZING TA-33, WHERE APPLICABLE. CONTRACTOR SHALL PATCH EXISTING PAVEMENT UP TO EXISTING GRADE USING LIKE MATERIALS BY THE END OF THE WORK SHIFT OR AS INDICATED IN ITEM 743000.

5) UTILIZING TA-10 DURING OFF PEAK HOURS, INSTALL DRAINAGE PIPE(S) UNDER FREDERICA ROAD AT STATION 553+00, STATION 142+44 AND STATION 141+02. CONTRACTOR SHALL PATCH EXISTING PAVEMENT UP TO EXISTING GRADE USING LIKE MATERIALS BY THE END OF THE WORK SHIFT OR AS INDICATED IN ITEM 743000.

STAGE 5:

1) CONSTRUCT STORMWATER PONDS #529, #530, AND #531 AS DIRECTED ON THE STORMWATER DETAIL SHEETS. EXCAVATE THE INFIELD THE INFIELD BORROW AREA. PLACE THE EXCAVATED SUITABLE FILL MATERIAL IN PORTIONS OF THE EMBANKMENT FOR THE BRIDGE APPROACHES AND PROPOSED ROADWAYS.

2) CONSTRUCT APPROPRIATE DRAINAGE FACILITIES FOR THIS PORTION OF WORK AS SHOWN ON THE PLANS OR AS DIRECTED BY THE ENGINEER IN THE FIELD. UTILIZING TA-10 DURING OFF PEAK HOURS, INSTALL DRAINAGE PIPE(S) UNDER MILFORD NECK ROAD AT STATION 402+69 AND STATION 405+62. CONTRACTOR SHALL PATCH EXISTING PAVEMENT UP TO EXISTING GRADE USING LIKE MATERIALS BY THE END OF THE WORK SHIFT OR AS INDICATED IN ITEM 743000. CONTRACTOR SHALL INSTALL INLET PROTECTION AND OTHER EROSION AND SEDIMENT CONTROL DEVICES AS SHOWN ON THE PLANS.

3) CONSTRUCT THE PORTION OF PROPOSED ROADWAYS AND RAMPS OFF THE EXISTING TRAVELED WAY, WITHOUT INTERFERING WITH THE TRAVELING PUBLIC, TO FINAL GRADES PER TYPICAL SECTIONS AS SHOWN IN THIS PHASE OR AS DIRECTED BY THE ENGINEER IN THE FIELD. INSTALL PROPOSED LIGHTING CONDUIT AND DEVICES ALONG THE RAMPS AND PROPOSED ROADWAYS. INSTALL PROPOSED UNDERGROUND TRAFFIC SIGNAL FEATURES TO BE UTILIZED IN THE FUTURE. POUR PCC CURB MEDIAN.

STAGE 6:

1) UTILIZE TA-33 DURING OFF PEAK HOURS TO SET TEMPORARY PCC BARRIER ALONG THE OUTSIDE AND MEDIAN EDGES OF EXISTING SOUTHBOUND AND NORTHBOUND SR1 UNDER THE PROPOSED BRIDGE TO CONSTRUCT THE BRIDGE PIER, MSE WALLS, AND ABUTMENTS, AS SHOWN IN THE CONSTRUCTION TYPICAL SECTION FOR THIS PHASE.

2) BEHIND BARRIER, CONSTRUCT THE BRIDGE PIER, BRIDGE ABUTMENTS, AND MSE WALLS. INSTALL GUARDRAIL AROUND THE BRIDGE PIER.

3) UTILIZE TA-33 DURING OFF PEAK HOURS TO REMOVE TEMPORARY PCC BARRIER.

STAGE 7:

1) SET BRIDGE BEAMS UNDER A ROLLING ROAD BLOCK BETWEEN 12:00 A.M. THROUGH 5:00 A.M., ON MONDAYS THROUGH THURSDAYS ONLY. COMPLETE BRIDGE CONSTRUCTION ACTIVITIES UTILIZING TA-33 ON SR1 DURING NIGHT TIME HOURS OR AS DIRECTED BY THE ENGINEER.

2) INSTALL PROPOSED GUARDRAIL CONNECTING TO THE PARAPET WALLS AFTER BRIDGE IS COMPLETE.

STAGE 8:

1) UTILIZE TA-33 ON NORTHBOUND SR1 DURING OFF PEAK HOURS TO CONSTRUCT THE NEW ACCESS FROM THE PRIVATE DRIVEWAY TO SR1 NORTHBOUND AT STATION 225+00.

2) ALL DISTURBED AREAS SHALL BE GRADED TO DRAIN PROPERLY. THE CONTRACTOR SHALL PLACE TOPSOIL, PERMANENT SEEDING AND MULCH BLANKET ON ALL AREAS IN FINAL CONDITIONS OR DIRECTED BY THE ENGINEER IN THE FIELD.

3) THE CONTRACTOR SHALL COORDINATE THE PLACEMENT OF THE FINAL SIGNAGE WITH STATE FORCES PRIOR TO PROCEEDING TO THE NEXT PHASE, WHERE APPLICABLE. THE CONTRACTOR SHALL NOT REMOVE ANY TEMPORARY SIGNAGE UNLESS APPROVED BY THE ENGINEER IN THE FIELD.

4) THE CONTRACTOR SHALL REMOVE ALL EROSION AND SEDIMENT CONTROL SYSTEMS STILL REMAINING IN THIS PHASE PER THE APPROVAL OF THE SEDIMENT CONTROL INSPECTOR.

PHASE I: (STAGES 1–8)

CONSTRUCTION PHASING PLANS LEGEND

- WORK AREA
- WORK AREA (REMOVAL)
- WORK COMPLETED IN PREVIOUS PHASING
- TRAFFIC FLOW ARROW
- PHASE 2-WAY SR1 TRAFFIC FLOW ARROW

* SEE 60 SCALE PLANS FOR STAGING

EROSION AND SEDIMENT CONTROL PLANS LEGEND

* SEE 60 SCALE PLANS FOR STAGING

Unofficial Website Copy

PHASE I: STAGE 1–3

EROSION AND SEDIMENT CONTROL PLANS LEGEND

- INLET SEDIMENT CONTROL
- SF — SILT FENCE
- CHECK DAM
- SCE — STABILIZED CONSTRUCTION ENTRANCE
- SEDIMENT TRAP
- TSD — TEMPORARY SLOPE DRAIN

CONSTRUCTION PHASING PLANS LEGEND

- WORK AREA
- WORK AREA (REMOVAL)
- WORK COMPLETED IN PREVIOUS PHASING
- CONCRETE SAFETY BARRIER
- TRAFFIC FLOW ARROW
- TEMPORARY PAVEMENT STRIPING
- PLASTIC DRUM
- TYPE 3 BARRICADE

PHASE I

STAGE 1:

1) AS SHOWN ON THE PERMANENT WARNING SIGNS LAYOUT, PLACE CHANGEABLE MESSAGE SIGNS ON NORTHBOUND SR1, SOUTHBOUND SR1, SOUTHBOUND FREDERICA ROAD, TUB MILL POND ROAD, AND MILFORD NECK ROAD TEN (10) CALENDAR DAYS IN ADVANCE OF AND FIVE (5) DAYS AFTER THE START OF CONSTRUCTION TO INFORM TRAVELING PUBLIC OF IMPENDING ROAD CONSTRUCTION.

STAGE 2:

1) PLACE EROSION AND SEDIMENT CONTROL MEASURES FOR EXISTING DRAINAGE SYSTEM AND THE EMBANKMENT FOR PROPOSED ROAD CONSTRUCTION, OR AS DIRECTED BY THE ENGINEER IN THE FIELD. INSTALL REINFORCED SILT FENCE ALONG THE LIMITS OF CONSTRUCTION. INSTALL ALL STABILIZED CONSTRUCTION ENTRANCES REQUIRED FOR PHASE I, SHOWN IN THESE PLANS OR AS DIRECTED IN THE FIELD BY THE ENGINEER.

2) CLEAR ALL EXISTING VEGETATION AND DEBRIS WITHIN THE PROPOSED LIMITS OF CONSTRUCTION. HAUL MATERIAL TO AN APPROVED OFFSITE FACILITY.

STAGE 3:

1) BEGIN UTILITY INSTALLATIONS AND RELOCATION OF KENT COUNTY SEWER, DEC, DELMARVA ELECTRIC, CHESAPEAKE UTILITIES, AND VERIZON FACILITIES AS DESCRIBED ON THE PLANS AND IN THE UTILITY STATEMENT. SEE SEWER RELOCATION PLANS FOR DETAILED CONSTRUCTION SEQUENCING. ALL UTILITY INSTALLATIONS AND RELOCATIONS SHALL BE COMPLETED BY THE END OF PHASE I.

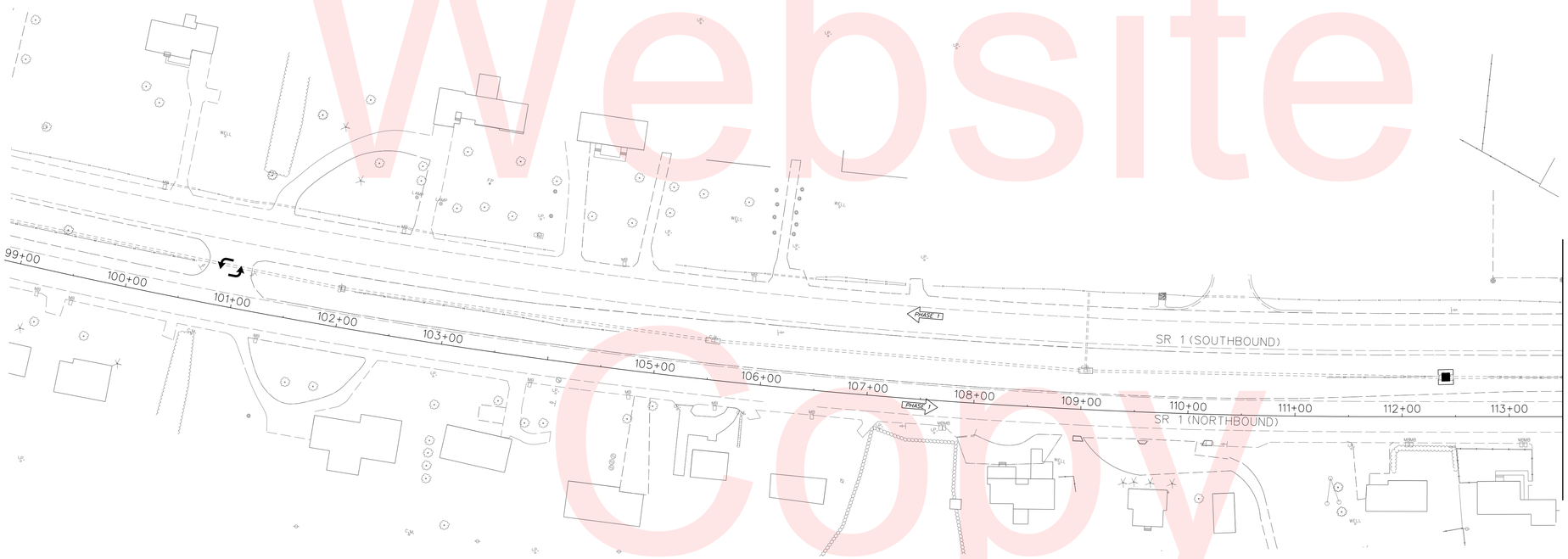

MATCHLINE STA. 113+50

Unofficial Website Copy

DELAWARE DEPARTMENT OF TRANSPORTATION	ADDENDUMS / REVISIONS	SCALE 0 60 120 180 FEET	SR1, SOUTH FREDERICA GRADE SEPARATED INTERSECTION	CONTRACT T200812202	BRIDGE NO. –	CONSTRUCTION PHASING, M.O.T. AND EROSION CONTROL PLANS	SHEET NO. 141
				COUNTY KENT	DESIGNED BY: LCM		TOTAL SHTS. 296
					CHECKED BY: SFP		

9/14/2015
G:\PROJECTS\06535.00 (DelDOT Agmt. 1376 DOTS Open End)\06535.07 SR1, S. Frederica\CADD Files\XM\cs_010101sf.dgn
11:57:26 PM

PHASE I: STAGE 1–3

EROSION AND SEDIMENT CONTROL PLANS LEGEND

- INLET SEDIMENT CONTROL
- SF — SILT FENCE
- CHECK DAM
- STABILIZED CONSTRUCTION ENTRANCE
- SEDIMENT TRAP
- TSD — TEMPORARY SLOPE DRAIN

CONSTRUCTION PHASING PLANS LEGEND

- WORK AREA
- WORK AREA (REMOVAL)
- WORK COMPLETED IN PREVIOUS PHASING
- CONCRETE SAFETY BARRIER
- TRAFFIC FLOW ARROW
- TEMPORARY PAVEMENT STRIPING
- PLASTIC DRUM
- TYPE 3 BARRICADE

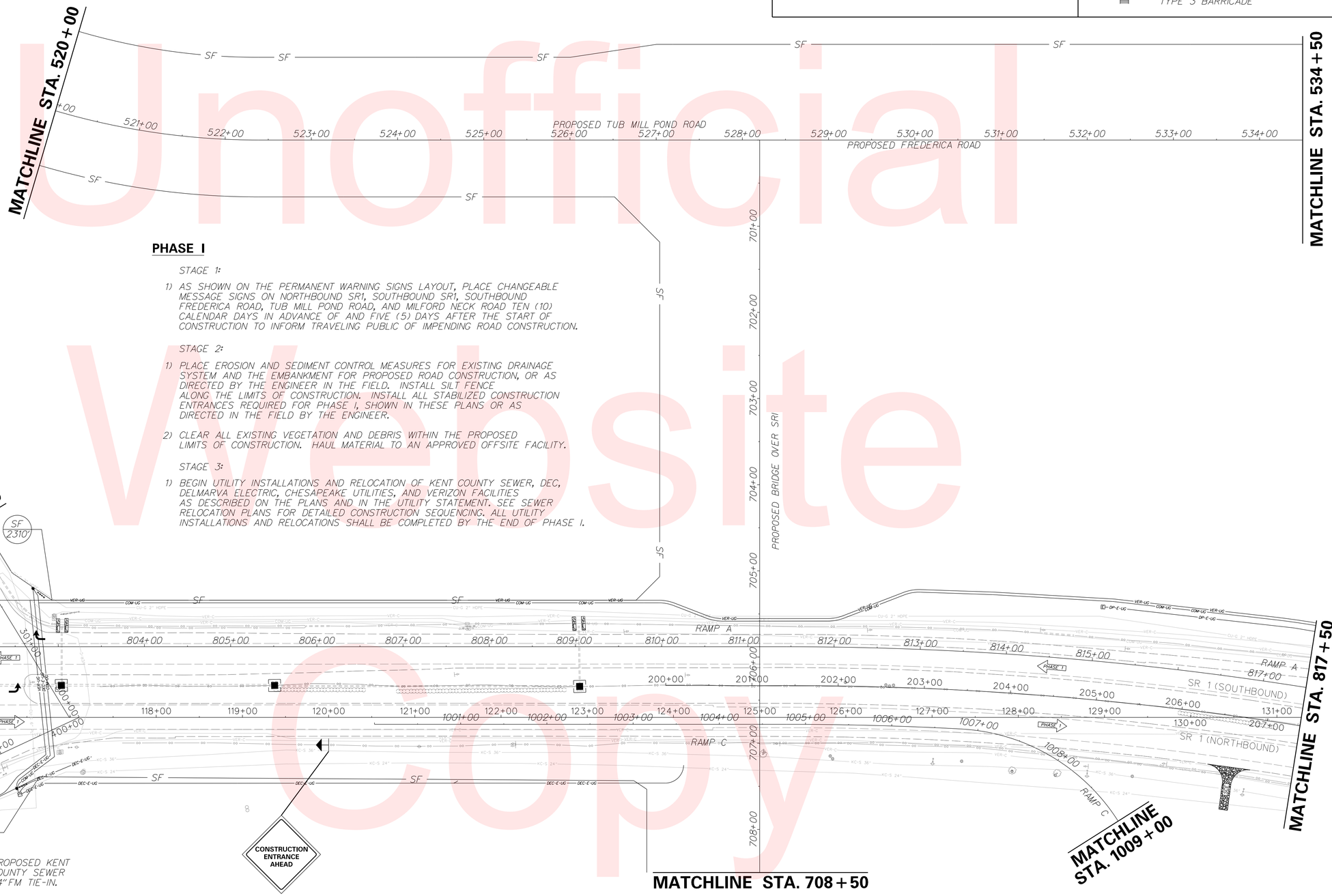

PHASE I

STAGE 1:

1) AS SHOWN ON THE PERMANENT WARNING SIGNS LAYOUT, PLACE CHANGEABLE MESSAGE SIGNS ON NORTHBOUND SR1, SOUTHBOUND SR1, SOUTHBOUND FREDERICA ROAD, TUB MILL POND ROAD, AND MILFORD NECK ROAD TEN (10) CALENDAR DAYS IN ADVANCE OF AND FIVE (5) DAYS AFTER THE START OF CONSTRUCTION TO INFORM TRAVELING PUBLIC OF IMPENDING ROAD CONSTRUCTION.

STAGE 2:

1) PLACE EROSION AND SEDIMENT CONTROL MEASURES FOR EXISTING DRAINAGE SYSTEM AND THE EMBANKMENT FOR PROPOSED ROAD CONSTRUCTION, OR AS DIRECTED BY THE ENGINEER IN THE FIELD. INSTALL SILT FENCE ALONG THE LIMITS OF CONSTRUCTION. INSTALL ALL STABILIZED CONSTRUCTION ENTRANCES REQUIRED FOR PHASE I, SHOWN IN THESE PLANS OR AS DIRECTED IN THE FIELD BY THE ENGINEER.

2) CLEAR ALL EXISTING VEGETATION AND DEBRIS WITHIN THE PROPOSED LIMITS OF CONSTRUCTION. HAUL MATERIAL TO AN APPROVED OFFSITE FACILITY.

STAGE 3:

1) BEGIN UTILITY INSTALLATIONS AND RELOCATION OF KENT COUNTY SEWER, DEC, DELMARVA ELECTRIC, CHESAPEAKE UTILITIES, AND VERIZON FACILITIES AS DESCRIBED ON THE PLANS AND IN THE UTILITY STATEMENT. SEE SEWER RELOCATION PLANS FOR DETAILED CONSTRUCTION SEQUENCING. ALL UTILITY INSTALLATIONS AND RELOCATIONS SHALL BE COMPLETED BY THE END OF PHASE I.

Unofficial Website Copy

DELAWARE DEPARTMENT OF TRANSPORTATION	ADDENDUMS / REVISIONS	SCALE 0 60 120 180 FEET	SR1, SOUTH FREDERICA GRADE SEPARATED INTERSECTION	CONTRACT T200812202	BRIDGE NO. –	CONSTRUCTION PHASING, M.O.T. AND EROSION CONTROL PLANS	SHEET NO. 142
				COUNTY KENT	DESIGNED BY: LCM		TOTAL SHTS. 296
					CHECKED BY: SFP		

10/26/2015
G:\PROJECTS\06535.00 (DelDOT Agmt. 1376 DOTS Open End)\06535.07 SR1, S. Frederica\CADD Files\XM\cs_010102sf.dgn
2:05:07 PM

PHASE I: STAGE 1–3

EROSION AND SEDIMENT CONTROL PLANS LEGEND

- INLET SEDIMENT CONTROL
- SF — SILT FENCE
- CHECK DAM
- STABILIZED CONSTRUCTION ENTRANCE
- SEDIMENT TRAP
- TSD — TEMPORARY SLOPE DRAIN

CONSTRUCTION PHASING PLANS LEGEND

- WORK AREA
- WORK AREA (REMOVAL)
- WORK COMPLETED IN PREVIOUS PHASING
- CONCRETE SAFETY BARRIER
- TRAFFIC FLOW ARROW
- TEMPORARY PAVEMENT STRIPING
- PLASTIC DRUM
- TYPE 3 BARRICADE

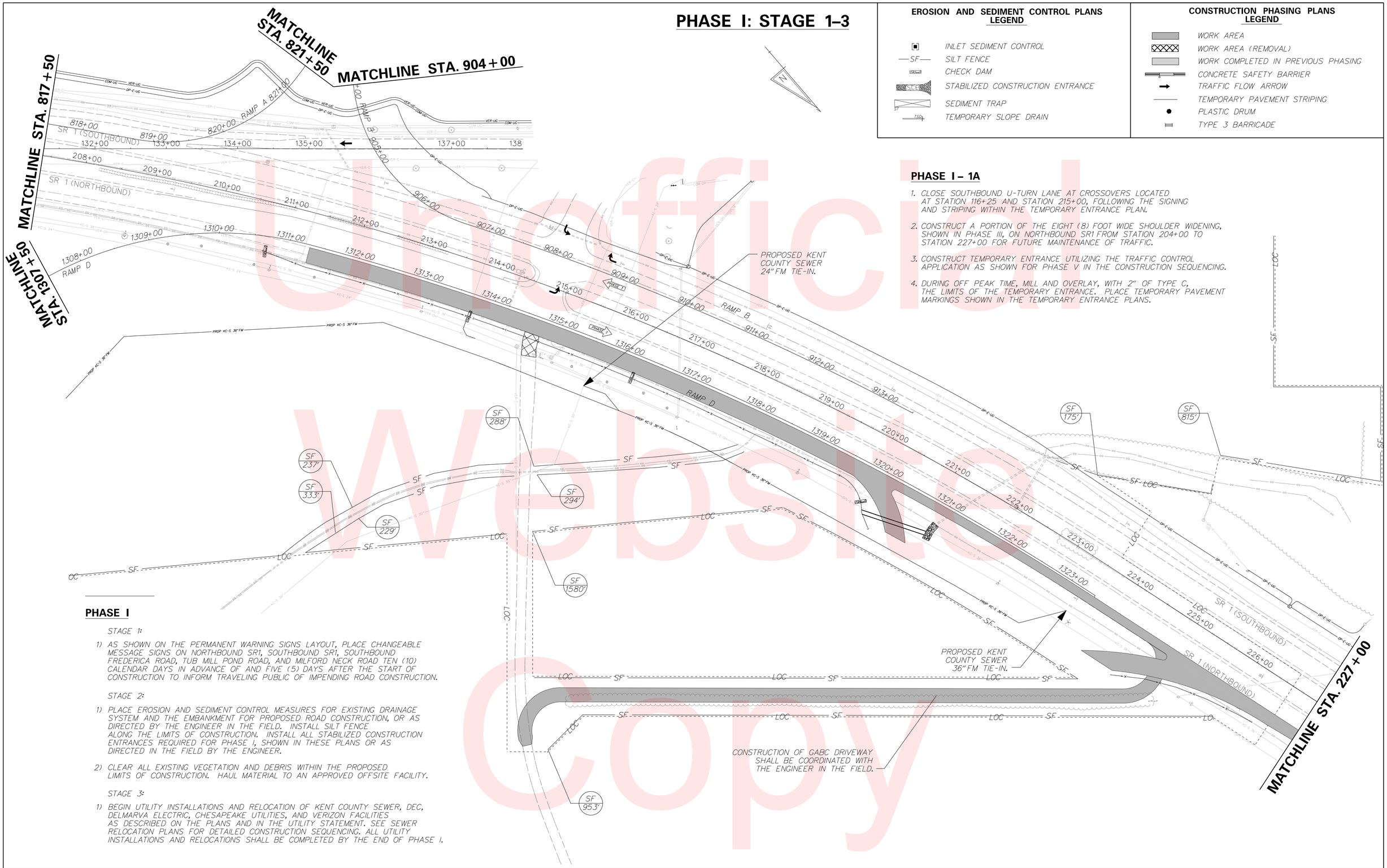

PHASE I – 1A

1. CLOSE SOUTHBOUND U-TURN LANE AT CROSSOVERS LOCATED AT STATION 116+25 AND STATION 215+00, FOLLOWING THE SIGNING AND STRIPING WITHIN THE TEMPORARY ENTRANCE PLAN.
2. CONSTRUCT A PORTION OF THE EIGHT (8) FOOT WIDE SHOULDER WIDENING, SHOWN IN PHASE III, ON NORTHBOUND SR1 FROM STATION 204+00 TO STATION 227+00 FOR FUTURE MAINTENANCE OF TRAFFIC.
3. CONSTRUCT TEMPORARY ENTRANCE UTILIZING THE TRAFFIC CONTROL APPLICATION AS SHOWN FOR PHASE V IN THE CONSTRUCTION SEQUENCING.
4. DURING OFF PEAK TIME, MILL AND OVERLAY, WITH 2" OF TYPE C, THE LIMITS OF THE TEMPORARY ENTRANCE. PLACE TEMPORARY PAVEMENT MARKINGS SHOWN IN THE TEMPORARY ENTRANCE PLANS.

PHASE I

STAGE 1:

1) AS SHOWN ON THE PERMANENT WARNING SIGNS LAYOUT, PLACE CHANGEABLE MESSAGE SIGNS ON NORTHBOUND SR1, SOUTHBOUND SR1, SOUTHBOUND FREDERICA ROAD, TUB MILL POND ROAD, AND MILFORD NECK ROAD TEN (10) CALENDAR DAYS IN ADVANCE OF AND FIVE (5) DAYS AFTER THE START OF CONSTRUCTION TO INFORM TRAVELING PUBLIC OF IMPENDING ROAD CONSTRUCTION.

STAGE 2:

1) PLACE EROSION AND SEDIMENT CONTROL MEASURES FOR EXISTING DRAINAGE SYSTEM AND THE EMBANKMENT FOR PROPOSED ROAD CONSTRUCTION, OR AS DIRECTED BY THE ENGINEER IN THE FIELD. INSTALL SILT FENCE ALONG THE LIMITS OF CONSTRUCTION. INSTALL ALL STABILIZED CONSTRUCTION ENTRANCES REQUIRED FOR PHASE I, SHOWN IN THESE PLANS OR AS DIRECTED IN THE FIELD BY THE ENGINEER.
2) CLEAR ALL EXISTING VEGETATION AND DEBRIS WITHIN THE PROPOSED LIMITS OF CONSTRUCTION. HAUL MATERIAL TO AN APPROVED OFFSITE FACILITY.

STAGE 3:

1) BEGIN UTILITY INSTALLATIONS AND RELOCATION OF KENT COUNTY SEWER, DEC, DELMARVA ELECTRIC, CHESAPEAKE UTILITIES, AND VERIZON FACILITIES AS DESCRIBED ON THE PLANS AND IN THE UTILITY STATEMENT. SEE SEWER RELOCATION PLANS FOR DETAILED CONSTRUCTION SEQUENCING. ALL UTILITY INSTALLATIONS AND RELOCATIONS SHALL BE COMPLETED BY THE END OF PHASE I.

Unofficial Website Copy

PHASE I: STAGE 1–3

EROSION AND SEDIMENT CONTROL PLANS LEGEND

- INLET SEDIMENT CONTROL
- SF — SILT FENCE
- CHECK DAM
- STABILIZED CONSTRUCTION ENTRANCE
- SEDIMENT TRAP
- TSD — TEMPORARY SLOPE DRAIN

CONSTRUCTION PHASING PLANS LEGEND

- WORK AREA
- WORK AREA (REMOVAL)
- WORK COMPLETED IN PREVIOUS PHASING
- CONCRETE SAFETY BARRIER
- TRAFFIC FLOW ARROW
- TEMPORARY PAVEMENT STRIPING
- PLASTIC DRUM
- TYPE 3 BARRICADE

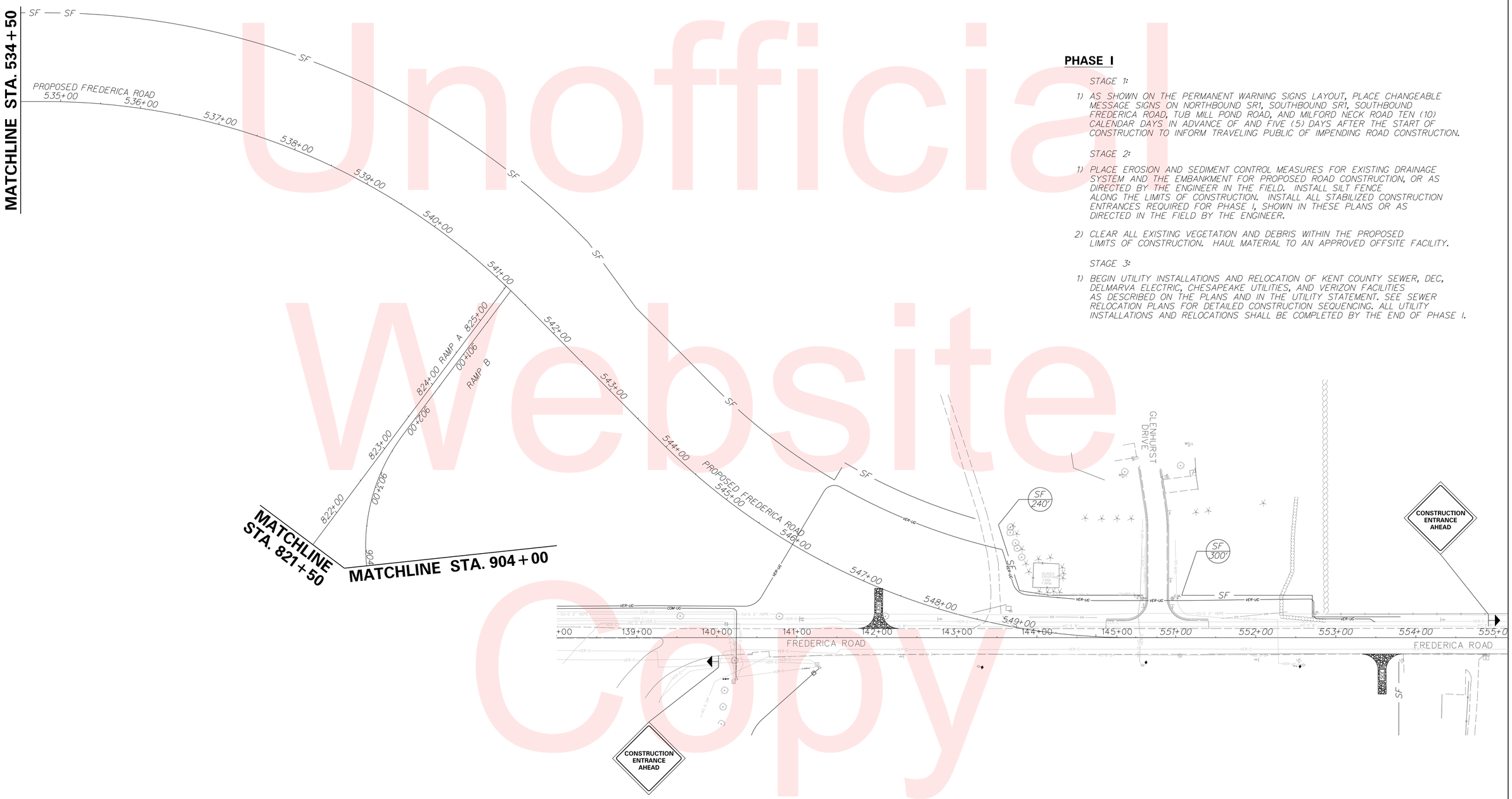

PHASE I

STAGE 1:

1) AS SHOWN ON THE PERMANENT WARNING SIGNS LAYOUT, PLACE CHANGEABLE MESSAGE SIGNS ON NORTHBOUND SR1, SOUTHBOUND SR1, SOUTHBOUND FREDERICA ROAD, TUB MILL POND ROAD, AND MILFORD NECK ROAD TEN (10) CALENDAR DAYS IN ADVANCE OF AND FIVE (5) DAYS AFTER THE START OF CONSTRUCTION TO INFORM TRAVELING PUBLIC OF IMPENDING ROAD CONSTRUCTION.

STAGE 2:

1) PLACE EROSION AND SEDIMENT CONTROL MEASURES FOR EXISTING DRAINAGE SYSTEM AND THE EMBANKMENT FOR PROPOSED ROAD CONSTRUCTION, OR AS DIRECTED BY THE ENGINEER IN THE FIELD. INSTALL SILT FENCE ALONG THE LIMITS OF CONSTRUCTION. INSTALL ALL STABILIZED CONSTRUCTION ENTRANCES REQUIRED FOR PHASE I, SHOWN IN THESE PLANS OR AS DIRECTED IN THE FIELD BY THE ENGINEER.

2) CLEAR ALL EXISTING VEGETATION AND DEBRIS WITHIN THE PROPOSED LIMITS OF CONSTRUCTION. HAUL MATERIAL TO AN APPROVED OFFSITE FACILITY.

STAGE 3:

1) BEGIN UTILITY INSTALLATIONS AND RELOCATION OF KENT COUNTY SEWER, DEC, DELMARVA ELECTRIC, CHESAPEAKE UTILITIES, AND VERIZON FACILITIES AS DESCRIBED ON THE PLANS AND IN THE UTILITY STATEMENT. SEE SEWER RELOCATION PLANS FOR DETAILED CONSTRUCTION SEQUENCING. ALL UTILITY INSTALLATIONS AND RELOCATIONS SHALL BE COMPLETED BY THE END OF PHASE I.

Unofficial Website Copy

DELAWARE DEPARTMENT OF TRANSPORTATION	ADDENDUMS / REVISIONS	SCALE 0 60 120 180 FEET	SR1, SOUTH FREDERICA GRADE SEPARATED INTERSECTION	CONTRACT T200812202	BRIDGE NO. –	CONSTRUCTION PHASING, M.O.T. AND EROSION CONTROL PLANS	SHEET NO. 144
				COUNTY KENT	DESIGNED BY: LCM		TOTAL SHTS. 296
					CHECKED BY: SFP		

10/26/2015
G:\PROJECTS\06535.00 (DelDOT Agmt. 1376 DOTS Open End)\06535.07 SR1, S. Frederica\CADD Files\XW\cs_010104sf.dgn
2:06:11 PM

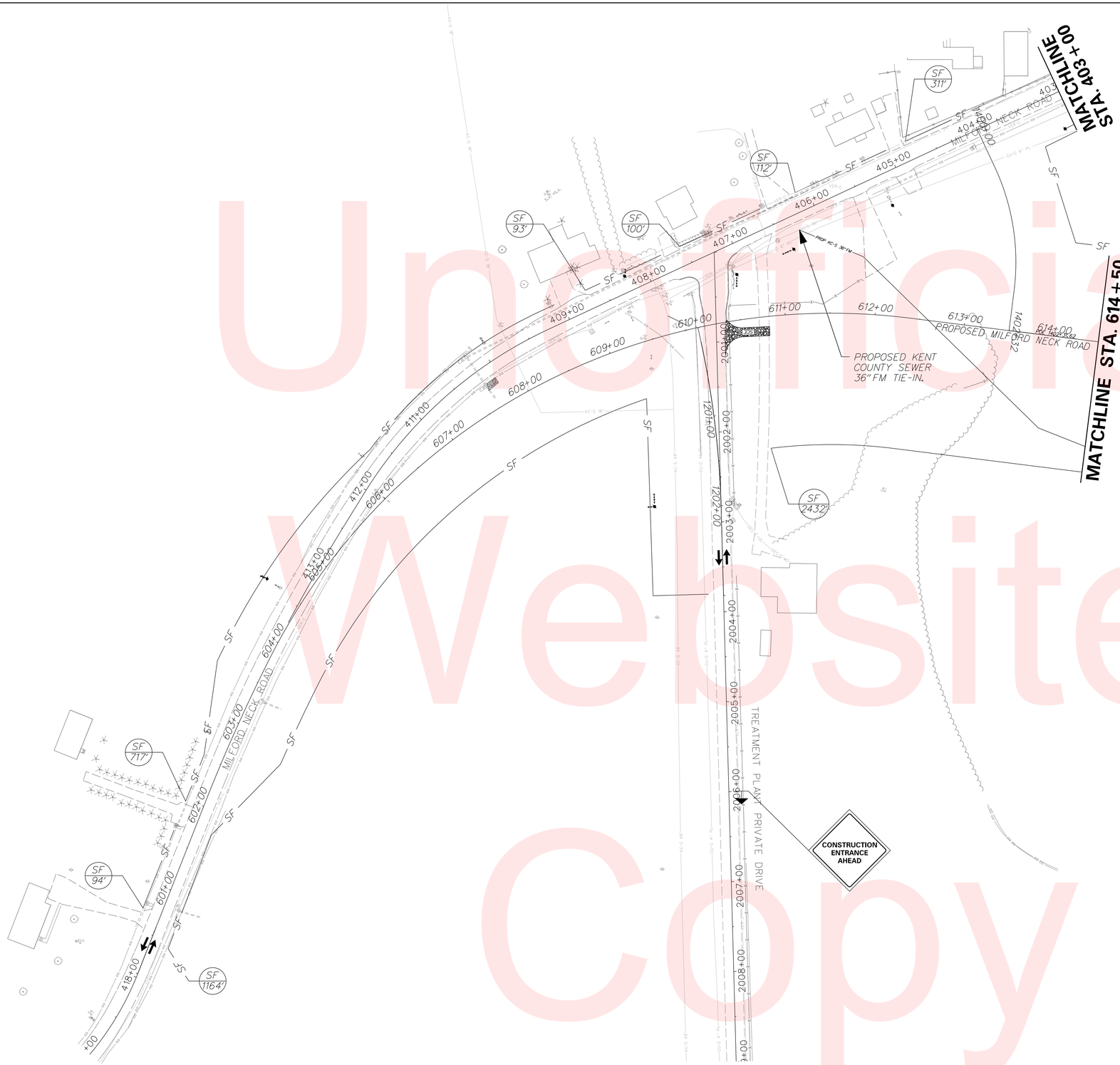

CONSTRUCTION PHASING PLANS LEGEND

- WORK AREA
- WORK AREA (REMOVAL)
- WORK COMPLETED IN PREVIOUS PHASING
- CONCRETE SAFETY BARRIER
- TRAFFIC FLOW ARROW
- TEMPORARY PAVEMENT STRIPING
- PLASTIC DRUM
- TYPE 3 BARRICADE

EROSION AND SEDIMENT CONTROL PLANS LEGEND

- INLET SEDIMENT CONTROL
- SF — SILT FENCE
- CHECK DAM
- SCE — STABILIZED CONSTRUCTION ENTRANCE
- ST — SEDIMENT TRAP
- TSD — TEMPORARY SLOPE DRAIN

PHASE I: STAGE 1–3

N

PHASE I

STAGE 1:

1) AS SHOWN ON THE PERMANENT WARNING SIGNS LAYOUT, PLACE CHANGEABLE MESSAGE SIGNS ON NORTHBOUND SR1, SOUTHBOUND SR1, SOUTHBOUND FREDERICA ROAD, TUB MILL POND ROAD, AND MILFORD NECK ROAD TEN (10) CALENDAR DAYS IN ADVANCE OF AND FIVE (5) DAYS AFTER THE START OF CONSTRUCTION TO INFORM TRAVELING PUBLIC OF IMPENDING ROAD CONSTRUCTION.

STAGE 2:

1) PLACE EROSION AND SEDIMENT CONTROL MEASURES FOR EXISTING DRAINAGE SYSTEM AND THE EMBANKMENT FOR PROPOSED ROAD CONSTRUCTION, OR AS DIRECTED BY THE ENGINEER IN THE FIELD. INSTALL SILT FENCE ALONG THE LIMITS OF CONSTRUCTION. INSTALL ALL STABILIZED CONSTRUCTION ENTRANCES REQUIRED FOR PHASE I, SHOWN IN THESE PLANS OR AS DIRECTED IN THE FIELD BY THE ENGINEER.

2) CLEAR ALL EXISTING VEGETATION AND DEBRIS WITHIN THE PROPOSED LIMITS OF CONSTRUCTION. HAUL MATERIAL TO AN APPROVED OFFSITE FACILITY.

STAGE 3:

1) BEGIN UTILITY INSTALLATIONS AND RELOCATION OF KENT COUNTY SEWER, DEC, DELMARVA ELECTRIC, CHESAPEAKE UTILITIES, AND VERIZON FACILITIES AS DESCRIBED ON THE PLANS AND IN THE UTILITY STATEMENT. SEE SEWER RELOCATION PLANS FOR DETAILED CONSTRUCTION SEQUENCING. ALL UTILITY INSTALLATIONS AND RELOCATIONS SHALL BE COMPLETED BY THE END OF PHASE I.

Unofficial Website Copy

PHASE I: STAGE 1–3

PHASE I

STAGE 1:

1) AS SHOWN ON THE PERMANENT WARNING SIGNS LAYOUT, PLACE CHANGEABLE MESSAGE SIGNS ON NORTHBOUND SR1, SOUTHBOUND SR1, SOUTHBOUND FREDERICA ROAD, TUB MILL POND ROAD, AND MILFORD NECK ROAD TEN (10) CALENDAR DAYS IN ADVANCE OF AND FIVE (5) DAYS AFTER THE START OF CONSTRUCTION TO INFORM TRAVELING PUBLIC OF IMPENDING ROAD CONSTRUCTION.

STAGE 2:

1) PLACE EROSION AND SEDIMENT CONTROL MEASURES FOR EXISTING DRAINAGE SYSTEM AND THE EMBANKMENT FOR PROPOSED ROAD CONSTRUCTION, OR AS DIRECTED BY THE ENGINEER IN THE FIELD. INSTALL SILT FENCE ALONG THE LIMITS OF CONSTRUCTION. INSTALL ALL STABILIZED CONSTRUCTION ENTRANCES REQUIRED FOR PHASE I, SHOWN IN THESE PLANS OR AS DIRECTED IN THE FIELD BY THE ENGINEER.

2) CLEAR ALL EXISTING VEGETATION AND DEBRIS WITHIN THE PROPOSED LIMITS OF CONSTRUCTION. HAUL MATERIAL TO AN APPROVED OFFSITE FACILITY.

STAGE 3:

1) BEGIN UTILITY INSTALLATIONS AND RELOCATION OF KENT COUNTY SEWER, DEC, DELMARVA ELECTRIC, CHESAPEAKE UTILITIES, AND VERIZON FACILITIES AS DESCRIBED ON THE PLANS AND IN THE UTILITY STATEMENT. SEE SEWER RELOCATION PLANS FOR DETAILED CONSTRUCTION SEQUENCING. ALL UTILITY INSTALLATIONS AND RELOCATIONS SHALL BE COMPLETED BY THE END OF PHASE I.

EROSION AND SEDIMENT CONTROL PLANS LEGEND

- INLET SEDIMENT CONTROL
- SF — SILT FENCE
- CHECK DAM
- STABILIZED CONSTRUCTION ENTRANCE
- SEDIMENT TRAP
- TSD — TEMPORARY SLOPE DRAIN

CONSTRUCTION PHASING PLANS LEGEND

- WORK AREA
- WORK AREA (REMOVAL)
- WORK COMPLETED IN PREVIOUS PHASING
- CONCRETE SAFETY BARRIER
- TRAFFIC FLOW ARROW
- TEMPORARY PAVEMENT STRIPING
- PLASTIC DRUM
- TYPE 3 BARRICADE

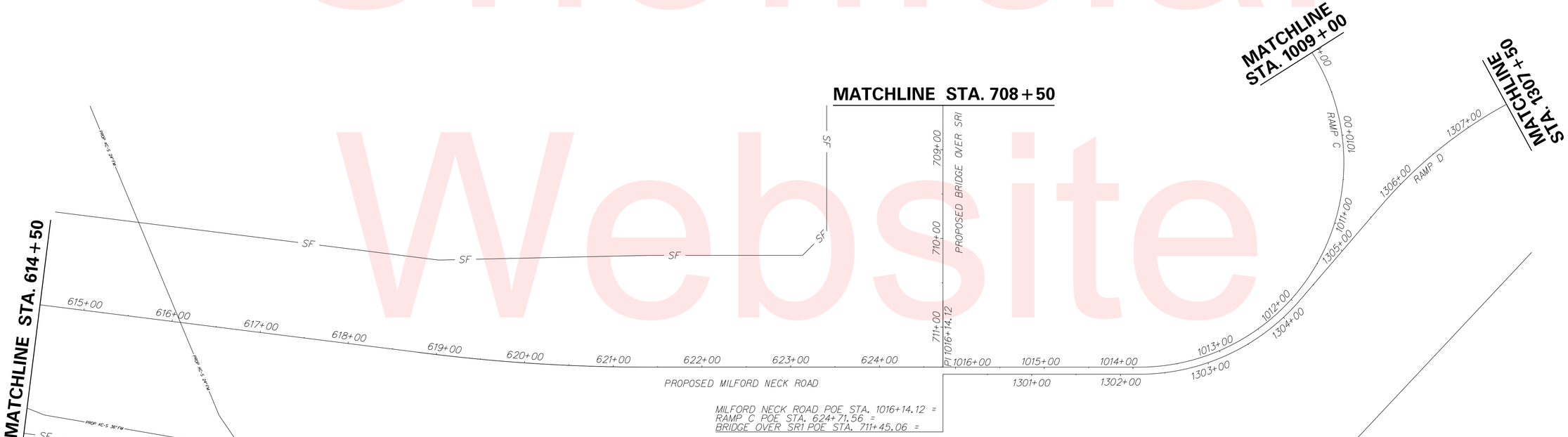

Unofficial Website Copy

DELAWARE DEPARTMENT OF TRANSPORTATION	ADDENDUMS / REVISIONS	SCALE 0 60 120 180 FEET	SR1, SOUTH FREDERICA GRADE SEPARATED INTERSECTION	CONTRACT T200812202 / COUNTY KENT	BRIDGE NO. – / DESIGNED BY: LCM / CHECKED BY: SFP	CONSTRUCTION PHASING, M.O.T. AND EROSION CONTROL PLANS	SHEET NO. 146 / TOTAL SHTS. 296

10/26/2015
G:\PROJECTS\06535.00 (DelDOT Agmt. 1376 DOTS Open End)\06535.07 SR1, S. Frederica\CADD Files\XM\cs_010106sf.dgn
2:07:59 PM

PHASE I

STAGE 1:

1) AS SHOWN ON THE PERMANENT WARNING SIGNS LAYOUT, PLACE CHANGEABLE MESSAGE SIGNS ON NORTHBOUND SR1, SOUTHBOUND SR1, SOUTHBOUND FREDERICA ROAD, TUB MILL POND ROAD, AND MILFORD NECK ROAD TEN (10) CALENDAR DAYS IN ADVANCE OF AND FIVE (5) DAYS AFTER THE START OF CONSTRUCTION TO INFORM TRAVELING PUBLIC OF IMPENDING ROAD CONSTRUCTION.

STAGE 2:

1) PLACE EROSION AND SEDIMENT CONTROL MEASURES FOR EXISTING DRAINAGE SYSTEM AND THE EMBANKMENT FOR PROPOSED ROAD CONSTRUCTION, OR AS DIRECTED BY THE ENGINEER IN THE FIELD. INSTALL SILT FENCE ALONG THE LIMITS OF CONSTRUCTION. INSTALL ALL STABILIZED CONSTRUCTION ENTRANCES REQUIRED FOR PHASE I, SHOWN IN THESE PLANS OR AS DIRECTED IN THE FIELD BY THE ENGINEER.

2) CLEAR ALL EXISTING VEGETATION AND DEBRIS WITHIN THE PROPOSED LIMITS OF CONSTRUCTION. HAUL MATERIAL TO AN APPROVED OFFSITE FACILITY.

STAGE 3:

1) BEGIN UTILITY INSTALLATIONS AND RELOCATION OF KENT COUNTY SEWER, DEC, DELMARVA ELECTRIC, CHESAPEAKE UTILITIES, AND VERIZON FACILITIES AS DESCRIBED ON THE PLANS AND IN THE UTILITY STATEMENT. SEE SEWER RELOCATION PLANS FOR DETAILED CONSTRUCTION SEQUENCING. ALL UTILITY INSTALLATIONS AND RELOCATIONS SHALL BE COMPLETED BY THE END OF PHASE I.

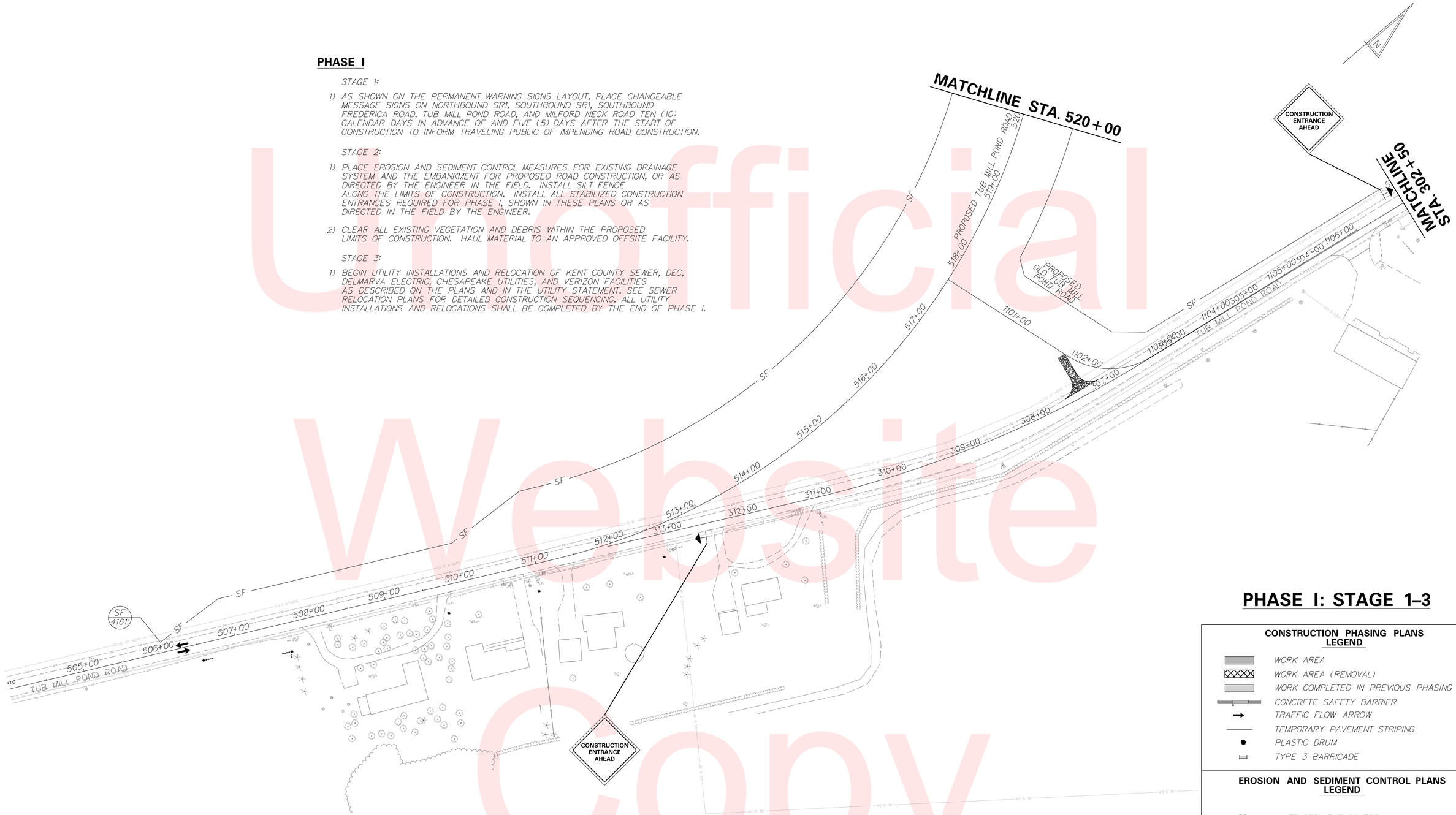

PHASE I: STAGE 1–3

CONSTRUCTION PHASING PLANS LEGEND

- WORK AREA
- WORK AREA (REMOVAL)
- WORK COMPLETED IN PREVIOUS PHASING
- CONCRETE SAFETY BARRIER
- TRAFFIC FLOW ARROW
- TEMPORARY PAVEMENT STRIPING
- PLASTIC DRUM
- TYPE 3 BARRICADE

EROSION AND SEDIMENT CONTROL PLANS LEGEND

- INLET SEDIMENT CONTROL
- SF — SILT FENCE
- CHECK DAM
- SCE — STABILIZED CONSTRUCTION ENTRANCE
- ST — SEDIMENT TRAP
- TSD — TEMPORARY SLOPE DRAIN

Unofficial Website Copy

DELAWARE DEPARTMENT OF TRANSPORTATION	ADDENDUMS / REVISIONS	SCALE 0 60 120 180 FEET	SR1, SOUTH FREDERICA GRADE SEPARATED INTERSECTION	CONTRACT T200812202	BRIDGE NO. –	CONSTRUCTION PHASING, M.O.T. AND EROSION CONTROL PLANS	SHEET NO. 147
				COUNTY KENT	DESIGNED BY: LCM		TOTAL SHTS. 296
					CHECKED BY: SFP		

10/26/2015
S:\PROJECTS\06535.00 (DelDOT Agmt. 1376 DOTS Open End)\06535.07 SR1, S. Frederica\CADD Files\XM\cs_010107sf.dgn
2:08:12 PM

PHASE I: STAGE 4

EROSION AND SEDIMENT CONTROL PLANS LEGEND

- INLET SEDIMENT CONTROL
- SF — SILT FENCE
- CHECK DAM
- SCE — STABILIZED CONSTRUCTION ENTRANCE
- SEDIMENT TRAP
- TSD — TEMPORARY SLOPE DRAIN

CONSTRUCTION PHASING PLANS LEGEND

- WORK AREA
- WORK AREA (REMOVAL)
- WORK COMPLETED IN PREVIOUS PHASING
- CONCRETE SAFETY BARRIER
- TRAFFIC FLOW ARROW
- TEMPORARY PAVEMENT STRIPING
- PLASTIC DRUM
- TYPE 3 BARRICADE

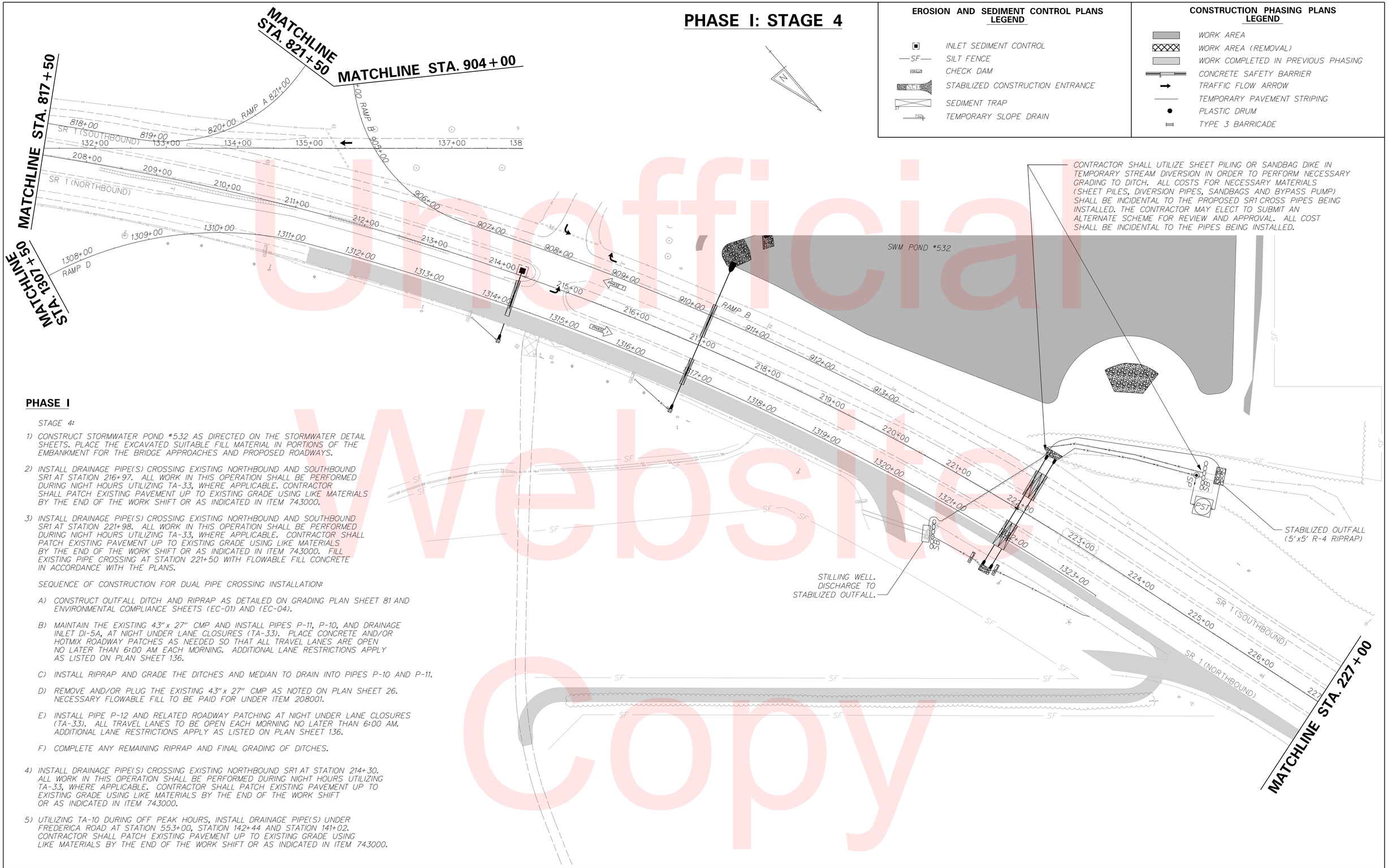

PHASE I

STAGE 4:

1) CONSTRUCT STORMWATER POND #532 AS DIRECTED ON THE STORMWATER DETAIL SHEETS. PLACE THE EXCAVATED SUITABLE FILL MATERIAL IN PORTIONS OF THE EMBANKMENT FOR THE BRIDGE APPROACHES AND PROPOSED ROADWAYS.

2) INSTALL DRAINAGE PIPE(S) CROSSING EXISTING NORTHBOUND AND SOUTHBOUND SR1 AT STATION 216+97. ALL WORK IN THIS OPERATION SHALL BE PERFORMED DURING NIGHT HOURS UTILIZING TA-33, WHERE APPLICABLE. CONTRACTOR SHALL PATCH EXISTING PAVEMENT UP TO EXISTING GRADE USING LIKE MATERIALS BY THE END OF THE WORK SHIFT OR AS INDICATED IN ITEM 743000.

3) INSTALL DRAINAGE PIPE(S) CROSSING EXISTING NORTHBOUND AND SOUTHBOUND SR1 AT STATION 221+98. ALL WORK IN THIS OPERATION SHALL BE PERFORMED DURING NIGHT HOURS UTILIZING TA-33, WHERE APPLICABLE. CONTRACTOR SHALL PATCH EXISTING PAVEMENT UP TO EXISTING GRADE USING LIKE MATERIALS BY THE END OF THE WORK SHIFT OR AS INDICATED IN ITEM 743000. FILL EXISTING PIPE CROSSING AT STATION 221+50 WITH FLOWABLE FILL CONCRETE IN ACCORDANCE WITH THE PLANS.

   SEQUENCE OF CONSTRUCTION FOR DUAL PIPE CROSSING INSTALLATION:

   A) CONSTRUCT OUTFALL DITCH AND RIPRAP AS DETAILED ON GRADING PLAN SHEET 81 AND ENVIRONMENTAL COMPLIANCE SHEETS (EC-01) AND (EC-04).

   B) MAINTAIN THE EXISTING 43" x 27" CMP AND INSTALL PIPES P-11, P-10, AND DRAINAGE INLET DI-5A, AT NIGHT UNDER LANE CLOSURES (TA-33). PLACE CONCRETE AND/OR HOTMIX ROADWAY PATCHES AS NEEDED SO THAT ALL TRAVEL LANES ARE OPEN NO LATER THAN 6:00 AM EACH MORNING. ADDITIONAL LANE RESTRICTIONS APPLY AS LISTED ON PLAN SHEET 136.

   C) INSTALL RIPRAP AND GRADE THE DITCHES AND MEDIAN TO DRAIN INTO PIPES P-10 AND P-11.

   D) REMOVE AND/OR PLUG THE EXISTING 43" x 27" CMP AS NOTED ON PLAN SHEET 26. NECESSARY FLOWABLE FILL TO BE PAID FOR UNDER ITEM 208001.

   E) INSTALL PIPE P-12 AND RELATED ROADWAY PATCHING AT NIGHT UNDER LANE CLOSURES (TA-33). ALL TRAVEL LANES TO BE OPEN EACH MORNING NO LATER THAN 6:00 AM. ADDITIONAL LANE RESTRICTIONS APPLY AS LISTED ON PLAN SHEET 136.

   F) COMPLETE ANY REMAINING RIPRAP AND FINAL GRADING OF DITCHES.

4) INSTALL DRAINAGE PIPE(S) CROSSING EXISTING NORTHBOUND SR1 AT STATION 214+30. ALL WORK IN THIS OPERATION SHALL BE PERFORMED DURING NIGHT HOURS UTILIZING TA-33, WHERE APPLICABLE. CONTRACTOR SHALL PATCH EXISTING PAVEMENT UP TO EXISTING GRADE USING LIKE MATERIALS BY THE END OF THE WORK SHIFT OR AS INDICATED IN ITEM 743000.

5) UTILIZING TA-10 DURING OFF PEAK HOURS, INSTALL DRAINAGE PIPE(S) UNDER FREDERICA ROAD AT STATION 553+00, STATION 142+44 AND STATION 141+02. CONTRACTOR SHALL PATCH EXISTING PAVEMENT UP TO EXISTING GRADE USING LIKE MATERIALS BY THE END OF THE WORK SHIFT OR AS INDICATED IN ITEM 743000.

Unofficial Website Copy

DELAWARE DEPARTMENT OF TRANSPORTATION	ADDENDUMS / REVISIONS	SCALE 0 60 120 180 FEET	SR1, SOUTH FREDERICA GRADE SEPARATED INTERSECTION	CONTRACT T200812202 / COUNTY KENT	BRIDGE NO. – / DESIGNED BY: LCM / CHECKED BY: SFP	CONSTRUCTION PHASING, M.O.T. AND EROSION CONTROL PLANS	SHEET NO. 148 / TOTAL SHTS. 296

10/26/2015
S:\PROJECTS\06535.00 (DelDOT Agmt. 1376 DOTS Open End)\06535.07 SR1, S. Frederica\CADD Files\XM\cs_010401sf.dgn
2:08:56 PM

PHASE I: STAGE 4

EROSION AND SEDIMENT CONTROL PLANS LEGEND

- INLET SEDIMENT CONTROL
- SF — SILT FENCE
- CHECK DAM
- STABILIZED CONSTRUCTION ENTRANCE
- SEDIMENT TRAP
- TSD — TEMPORARY SLOPE DRAIN

CONSTRUCTION PHASING PLANS LEGEND

- WORK AREA
- WORK AREA (REMOVAL)
- WORK COMPLETED IN PREVIOUS PHASING
- CONCRETE SAFETY BARRIER
- TRAFFIC FLOW ARROW
- TEMPORARY PAVEMENT STRIPING
- PLASTIC DRUM
- TYPE 3 BARRICADE

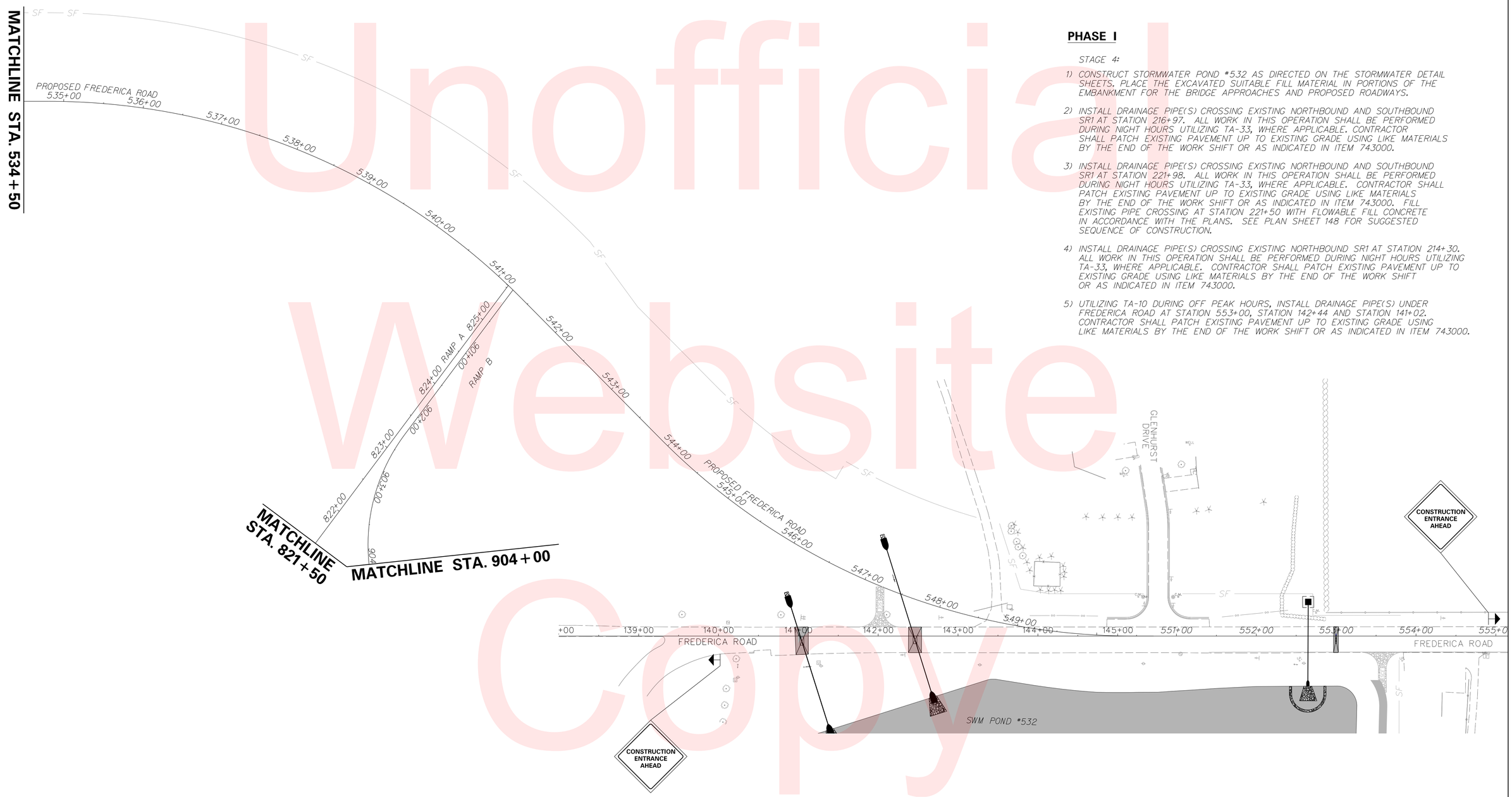

PHASE I

STAGE 4:

1) CONSTRUCT STORMWATER POND #532 AS DIRECTED ON THE STORMWATER DETAIL SHEETS. PLACE THE EXCAVATED SUITABLE FILL MATERIAL IN PORTIONS OF THE EMBANKMENT FOR THE BRIDGE APPROACHES AND PROPOSED ROADWAYS.

2) INSTALL DRAINAGE PIPE(S) CROSSING EXISTING NORTHBOUND AND SOUTHBOUND SR1 AT STATION 216+97. ALL WORK IN THIS OPERATION SHALL BE PERFORMED DURING NIGHT HOURS UTILIZING TA-33, WHERE APPLICABLE. CONTRACTOR SHALL PATCH EXISTING PAVEMENT UP TO EXISTING GRADE USING LIKE MATERIALS BY THE END OF THE WORK SHIFT OR AS INDICATED IN ITEM 743000.

3) INSTALL DRAINAGE PIPE(S) CROSSING EXISTING NORTHBOUND AND SOUTHBOUND SR1 AT STATION 221+98. ALL WORK IN THIS OPERATION SHALL BE PERFORMED DURING NIGHT HOURS UTILIZING TA-33, WHERE APPLICABLE. CONTRACTOR SHALL PATCH EXISTING PAVEMENT UP TO EXISTING GRADE USING LIKE MATERIALS BY THE END OF THE WORK SHIFT OR AS INDICATED IN ITEM 743000. FILL EXISTING PIPE CROSSING AT STATION 221+50 WITH FLOWABLE FILL CONCRETE IN ACCORDANCE WITH THE PLANS. SEE PLAN SHEET 148 FOR SUGGESTED SEQUENCE OF CONSTRUCTION.

4) INSTALL DRAINAGE PIPE(S) CROSSING EXISTING NORTHBOUND SR1 AT STATION 214+30. ALL WORK IN THIS OPERATION SHALL BE PERFORMED DURING NIGHT HOURS UTILIZING TA-33, WHERE APPLICABLE. CONTRACTOR SHALL PATCH EXISTING PAVEMENT UP TO EXISTING GRADE USING LIKE MATERIALS BY THE END OF THE WORK SHIFT OR AS INDICATED IN ITEM 743000.

5) UTILIZING TA-10 DURING OFF PEAK HOURS, INSTALL DRAINAGE PIPE(S) UNDER FREDERICA ROAD AT STATION 553+00, STATION 142+44 AND STATION 141+02. CONTRACTOR SHALL PATCH EXISTING PAVEMENT UP TO EXISTING GRADE USING LIKE MATERIALS BY THE END OF THE WORK SHIFT OR AS INDICATED IN ITEM 743000.

Unofficial Website Copy

DELAWARE DEPARTMENT OF TRANSPORTATION	ADDENDUMS / REVISIONS	SCALE 0 60 120 180 FEET	SR1, SOUTH FREDERICA GRADE SEPARATED INTERSECTION	CONTRACT T200812202	BRIDGE NO. –	CONSTRUCTION PHASING, M.O.T. AND EROSION CONTROL PLANS	SHEET NO. 149
				COUNTY KENT	DESIGNED BY: LCM		TOTAL SHTS. 296
					CHECKED BY: SFP		

9/14/2015
G:\PROJECTS\06535.00 (DelDOT Agmt. 1376 DOTS Open End)\06535.07 SR1, S. Frederica\CADD Files\XW\cs_010402sf.dgn
2:16:42 PM

SEDIMENT TRAP SCHEDULE							
NO.	D.A.	VOL. PROVIDED	LENGTH	WIDTH	BOTTOM EL.	WIER CREST EL.	CLEAN OUT EL.
2	35.90	1805	150'	4'	17.55'	19.00'	18.28'
3	32.71	1775	150'	4'	17.57'	19.20'	18.39'

PHASE I: STAGE 5–7

EROSION AND SEDIMENT CONTROL PLANS LEGEND

- INLET SEDIMENT CONTROL
- SF — SILT FENCE
- CHECK DAM
- STABILIZED CONSTRUCTION ENTRANCE
- SEDIMENT TRAP
- TSD — TEMPORARY SLOPE DRAIN

CONSTRUCTION PHASING PLANS LEGEND

- WORK AREA
- WORK AREA (REMOVAL)
- WORK COMPLETED IN PREVIOUS PHASING
- CONCRETE SAFETY BARRIER
- TRAFFIC FLOW ARROW
- TEMPORARY PAVEMENT STRIPING
- PLASTIC DRUM
- TYPE 3 BARRICADE

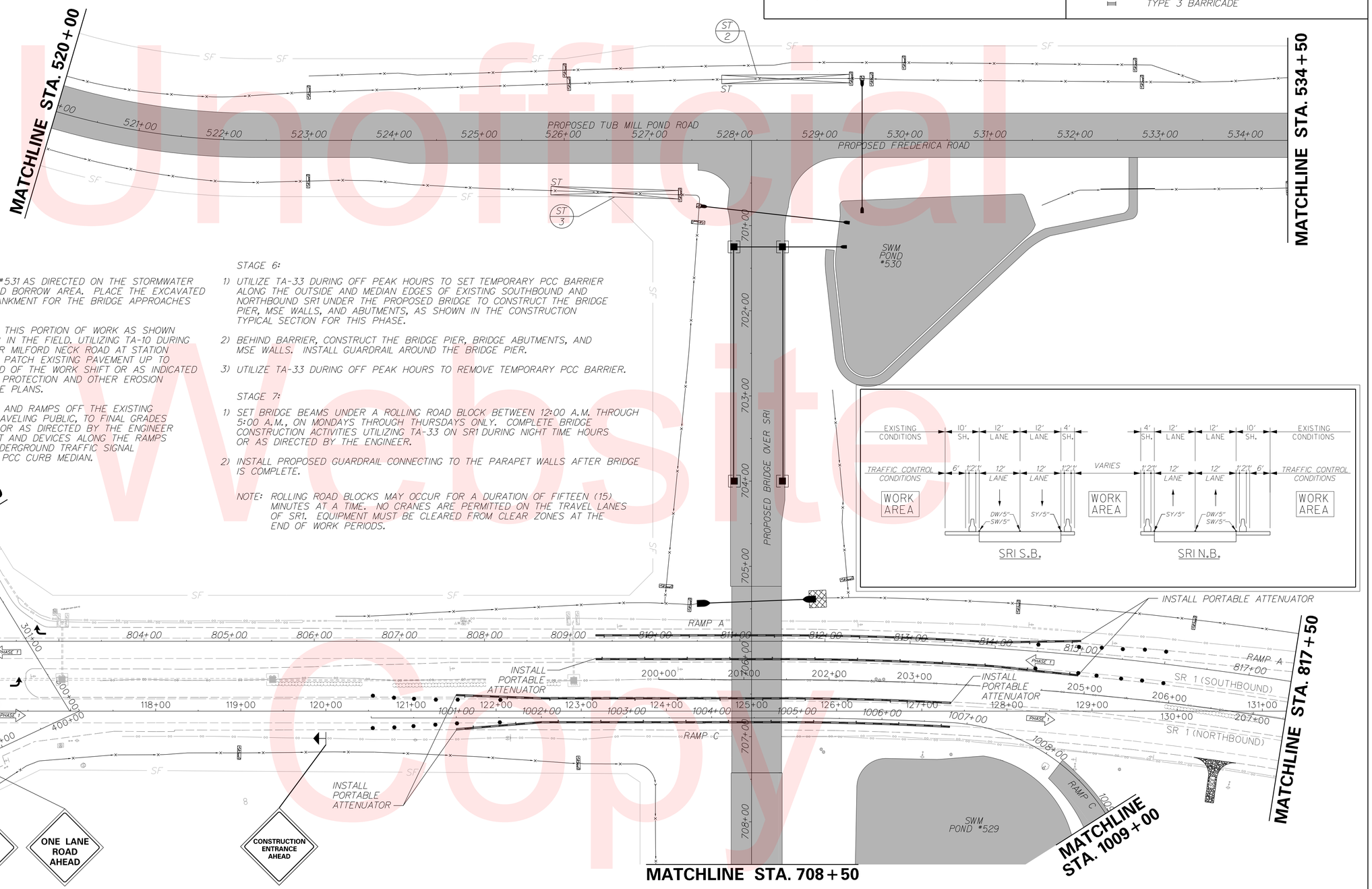

PHASE I

STAGE 5:

1) CONSTRUCT STORMWATER PONDS #529, #530, AND #531 AS DIRECTED ON THE STORMWATER DETAIL SHEETS. EXCAVATE THE INFIELD THE INFIELD BORROW AREA. PLACE THE EXCAVATED SUITABLE FILL MATERIAL IN PORTIONS OF THE EMBANKMENT FOR THE BRIDGE APPROACHES AND PROPOSED ROADWAYS.

2) CONSTRUCT APPROPRIATE DRAINAGE FACILITIES FOR THIS PORTION OF WORK AS SHOWN ON THE PLANS OR AS DIRECTED BY THE ENGINEER IN THE FIELD. UTILIZING TA-10 DURING OFF PEAK HOURS, INSTALL DRAINAGE PIPE(S) UNDER MILFORD NECK ROAD AT STATION 402+69 AND STATION 405+62. CONTRACTOR SHALL PATCH EXISTING PAVEMENT UP TO EXISTING GRADE USING LIKE MATERIALS BY THE END OF THE WORK SHIFT OR AS INDICATED IN ITEM 743000. CONTRACTOR SHALL INSTALL INLET PROTECTION AND OTHER EROSION AND SEDIMENT CONTROL DEVICES AS SHOWN ON THE PLANS.

3) CONSTRUCT THE PORTION OF PROPOSED ROADWAYS AND RAMPS OFF THE EXISTING TRAVELED WAY, WITHOUT INTERFERING WITH THE TRAVELING PUBLIC, TO FINAL GRADES PER TYPICAL SECTIONS AS SHOWN IN THIS PHASE OR AS DIRECTED BY THE ENGINEER IN THE FIELD. INSTALL PROPOSED LIGHTING CONDUIT AND DEVICES ALONG THE RAMPS AND PROPOSED ROADWAYS. INSTALL PROPOSED UNDERGROUND TRAFFIC SIGNAL FEATURES TO BE UTILIZED IN THE FUTURE. POUR PCC CURB MEDIAN.

STAGE 6:

1) UTILIZE TA-33 DURING OFF PEAK HOURS TO SET TEMPORARY PCC BARRIER ALONG THE OUTSIDE AND MEDIAN EDGES OF EXISTING SOUTHBOUND AND NORTHBOUND SR1 UNDER THE PROPOSED BRIDGE TO CONSTRUCT THE BRIDGE PIER, MSE WALLS, AND ABUTMENTS, AS SHOWN IN THE CONSTRUCTION TYPICAL SECTION FOR THIS PHASE.

2) BEHIND BARRIER, CONSTRUCT THE BRIDGE PIER, BRIDGE ABUTMENTS, AND MSE WALLS. INSTALL GUARDRAIL AROUND THE BRIDGE PIER.

3) UTILIZE TA-33 DURING OFF PEAK HOURS TO REMOVE TEMPORARY PCC BARRIER.

STAGE 7:

1) SET BRIDGE BEAMS UNDER A ROLLING ROAD BLOCK BETWEEN 12:00 A.M. THROUGH 5:00 A.M., ON MONDAYS THROUGH THURSDAYS ONLY. COMPLETE BRIDGE CONSTRUCTION ACTIVITIES UTILIZING TA-33 ON SR1 DURING NIGHT TIME HOURS OR AS DIRECTED BY THE ENGINEER.

2) INSTALL PROPOSED GUARDRAIL CONNECTING TO THE PARAPET WALLS AFTER BRIDGE IS COMPLETE.

NOTE: ROLLING ROAD BLOCKS MAY OCCUR FOR A DURATION OF FIFTEEN (15) MINUTES AT A TIME. NO CRANES ARE PERMITTED ON THE TRAVEL LANES OF SR1. EQUIPMENT MUST BE CLEARED FROM CLEAR ZONES AT THE END OF WORK PERIODS.

Unofficial Website Copy

DELAWARE DEPARTMENT OF TRANSPORTATION	ADDENDUMS / REVISIONS	SCALE 0 60 120 180 FEET	SR1, SOUTH FREDERICA GRADE SEPARATED INTERSECTION	CONTRACT T200812202	BRIDGE NO. –	CONSTRUCTION PHASING, M.O.T. AND EROSION CONTROL PLANS	SHEET NO. 150
				COUNTY KENT	DESIGNED BY: LCM		TOTAL SHTS. 296
					CHECKED BY: SFP		

9/14/2015
G:\PROJECTS\06535.00 (DelDOT Agmt. 1376 DOTS Open End)\06535.07 SR1, S. Frederica\CADD Files\XWlcs_010501sf.dgn
2:17:12 PM

PHASE I: STAGE 5–7

EROSION AND SEDIMENT CONTROL PLANS LEGEND

- INLET SEDIMENT CONTROL
- SF — SILT FENCE
- CHECK DAM
- STABILIZED CONSTRUCTION ENTRANCE
- SEDIMENT TRAP
- TSD — TEMPORARY SLOPE DRAIN

CONSTRUCTION PHASING PLANS LEGEND

- WORK AREA
- WORK AREA (REMOVAL)
- WORK COMPLETED IN PREVIOUS PHASING
- CONCRETE SAFETY BARRIER
- TRAFFIC FLOW ARROW
- TEMPORARY PAVEMENT STRIPING
- PLASTIC DRUM
- TYPE 3 BARRICADE

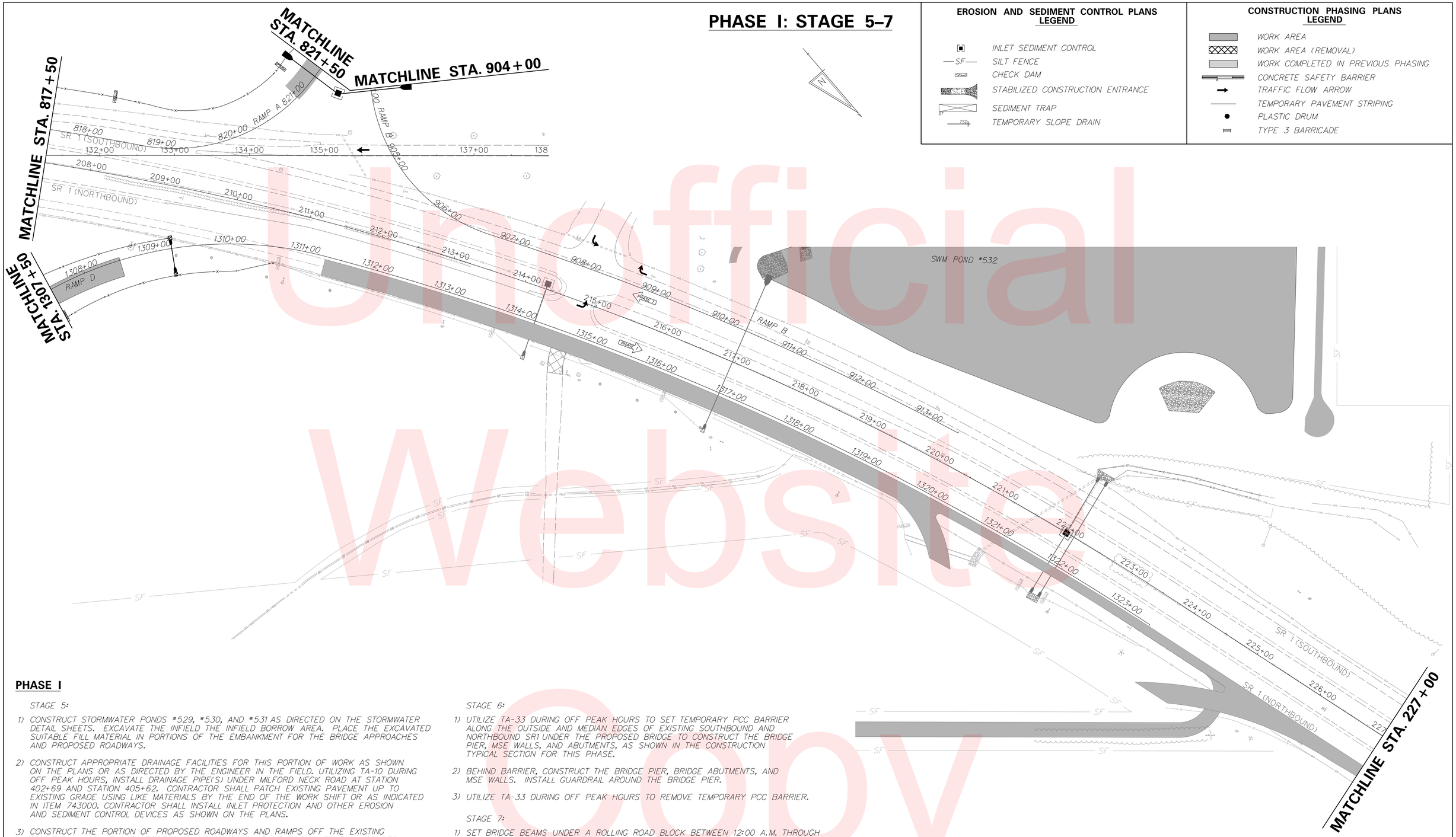

PHASE I

STAGE 5:

1) CONSTRUCT STORMWATER PONDS #529, #530, AND #531 AS DIRECTED ON THE STORMWATER DETAIL SHEETS. EXCAVATE THE INFIELD THE INFIELD BORROW AREA. PLACE THE EXCAVATED SUITABLE FILL MATERIAL IN PORTIONS OF THE EMBANKMENT FOR THE BRIDGE APPROACHES AND PROPOSED ROADWAYS.

2) CONSTRUCT APPROPRIATE DRAINAGE FACILITIES FOR THIS PORTION OF WORK AS SHOWN ON THE PLANS OR AS DIRECTED BY THE ENGINEER IN THE FIELD. UTILIZING TA-10 DURING OFF PEAK HOURS, INSTALL DRAINAGE PIPE(S) UNDER MILFORD NECK ROAD AT STATION 402+69 AND STATION 405+62. CONTRACTOR SHALL PATCH EXISTING PAVEMENT UP TO EXISTING GRADE USING LIKE MATERIALS BY THE END OF THE WORK SHIFT OR AS INDICATED IN ITEM 743000. CONTRACTOR SHALL INSTALL INLET PROTECTION AND OTHER EROSION AND SEDIMENT CONTROL DEVICES AS SHOWN ON THE PLANS.

3) CONSTRUCT THE PORTION OF PROPOSED ROADWAYS AND RAMPS OFF THE EXISTING TRAVELED WAY, WITHOUT INTERFERING WITH THE TRAVELING PUBLIC, TO FINAL GRADES PER TYPICAL SECTIONS AS SHOWN IN THIS PHASE OR AS DIRECTED BY THE ENGINEER IN THE FIELD. INSTALL PROPOSED LIGHTING CONDUIT AND DEVICES ALONG THE RAMPS AND PROPOSED ROADWAYS. INSTALL PROPOSED UNDERGROUND TRAFFIC SIGNAL FEATURES TO BE UTILIZED IN THE FUTURE. POUR PCC CURB MEDIAN.

STAGE 6:

1) UTILIZE TA-33 DURING OFF PEAK HOURS TO SET TEMPORARY PCC BARRIER ALONG THE OUTSIDE AND MEDIAN EDGES OF EXISTING SOUTHBOUND AND NORTHBOUND SR1 UNDER THE PROPOSED BRIDGE TO CONSTRUCT THE BRIDGE PIER, MSE WALLS, AND ABUTMENTS, AS SHOWN IN THE CONSTRUCTION TYPICAL SECTION FOR THIS PHASE.

2) BEHIND BARRIER, CONSTRUCT THE BRIDGE PIER, BRIDGE ABUTMENTS, AND MSE WALLS. INSTALL GUARDRAIL AROUND THE BRIDGE PIER.

3) UTILIZE TA-33 DURING OFF PEAK HOURS TO REMOVE TEMPORARY PCC BARRIER.

STAGE 7:

1) SET BRIDGE BEAMS UNDER A ROLLING ROAD BLOCK BETWEEN 12:00 A.M. THROUGH 5:00 A.M., ON MONDAYS THROUGH THURSDAYS ONLY. COMPLETE BRIDGE CONSTRUCTION ACTIVITIES UTILIZING TA-33 ON SR1 DURING NIGHT TIME HOURS OR AS DIRECTED BY THE ENGINEER.

2) INSTALL PROPOSED GUARDRAIL CONNECTING TO THE PARAPET WALLS AFTER BRIDGE IS COMPLETE.

Unofficial Website Copy

DELAWARE DEPARTMENT OF TRANSPORTATION	ADDENDUMS / REVISIONS	SCALE 0 60 120 180 FEET	SR1, SOUTH FREDERICA GRADE SEPARATED INTERSECTION	CONTRACT T200812202	BRIDGE NO. –	CONSTRUCTION PHASING, M.O.T. AND EROSION CONTROL PLANS	SHEET NO. 151
				COUNTY KENT	DESIGNED BY: LCM		TOTAL SHTS. 296
					CHECKED BY: SFP		

9/14/2015
S:\PROJECTS\06535.00 (DelDOT Agmt. 1376 DOTS Open End)\06535.07 SR1, S. Frederica\CADD Files\XM\cs_010502sf.dgn
2:17:41 PM

SEDIMENT TRAP SCHEDULE							
NO.	D.A.	VOL. PROVIDED	LENGTH	WIDTH	BOTTOM EL.	WIER CREST EL.	CLEAN OUT EL.
4	83.82	1738	150'	4'	14.34'	15.81'	15.08'

PHASE I: STAGE 5–7

EROSION AND SEDIMENT CONTROL PLANS LEGEND

- INLET SEDIMENT CONTROL
- SF — SILT FENCE
- CHECK DAM
- STABILIZED CONSTRUCTION ENTRANCE
- SEDIMENT TRAP
- TSD — TEMPORARY SLOPE DRAIN

CONSTRUCTION PHASING PLANS LEGEND

- WORK AREA
- WORK AREA (REMOVAL)
- WORK COMPLETED IN PREVIOUS PHASING
- CONCRETE SAFETY BARRIER
- TRAFFIC FLOW ARROW
- TEMPORARY PAVEMENT STRIPING
- PLASTIC DRUM
- TYPE 3 BARRICADE

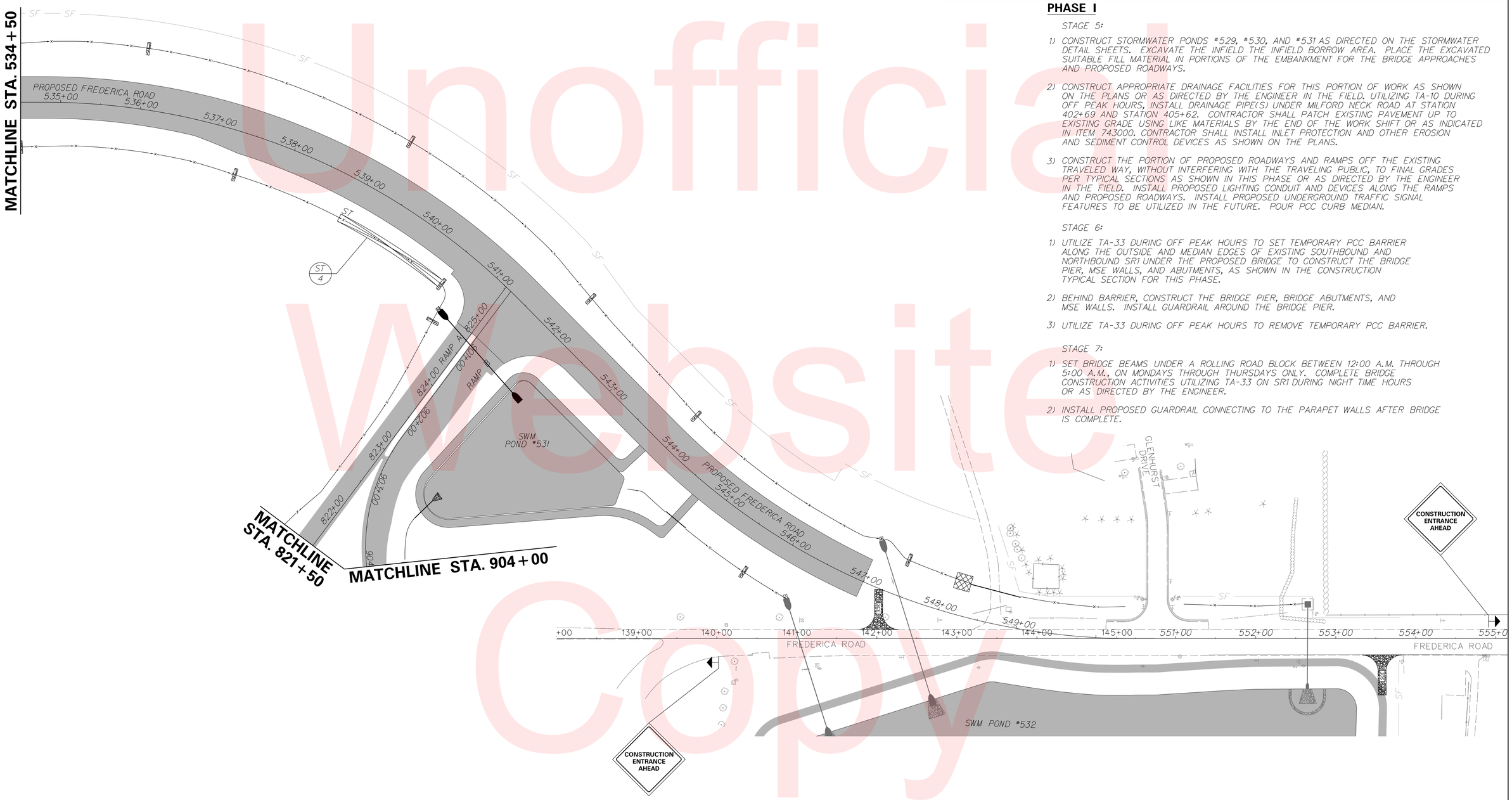

PHASE I

STAGE 5:

1) CONSTRUCT STORMWATER PONDS #529, #530, AND #531 AS DIRECTED ON THE STORMWATER DETAIL SHEETS. EXCAVATE THE INFIELD THE INFIELD BORROW AREA. PLACE THE EXCAVATED SUITABLE FILL MATERIAL IN PORTIONS OF THE EMBANKMENT FOR THE BRIDGE APPROACHES AND PROPOSED ROADWAYS.

2) CONSTRUCT APPROPRIATE DRAINAGE FACILITIES FOR THIS PORTION OF WORK AS SHOWN ON THE PLANS OR AS DIRECTED BY THE ENGINEER IN THE FIELD. UTILIZING TA-10 DURING OFF PEAK HOURS, INSTALL DRAINAGE PIPE(S) UNDER MILFORD NECK ROAD AT STATION 402+69 AND STATION 405+62. CONTRACTOR SHALL PATCH EXISTING PAVEMENT UP TO EXISTING GRADE USING LIKE MATERIALS BY THE END OF THE WORK SHIFT OR AS INDICATED IN ITEM 743000. CONTRACTOR SHALL INSTALL INLET PROTECTION AND OTHER EROSION AND SEDIMENT CONTROL DEVICES AS SHOWN ON THE PLANS.

3) CONSTRUCT THE PORTION OF PROPOSED ROADWAYS AND RAMPS OFF THE EXISTING TRAVELED WAY, WITHOUT INTERFERING WITH THE TRAVELING PUBLIC, TO FINAL GRADES PER TYPICAL SECTIONS AS SHOWN IN THIS PHASE OR AS DIRECTED BY THE ENGINEER IN THE FIELD. INSTALL PROPOSED LIGHTING CONDUIT AND DEVICES ALONG THE RAMPS AND PROPOSED ROADWAYS. INSTALL PROPOSED UNDERGROUND TRAFFIC SIGNAL FEATURES TO BE UTILIZED IN THE FUTURE. POUR PCC CURB MEDIAN.

STAGE 6:

1) UTILIZE TA-33 DURING OFF PEAK HOURS TO SET TEMPORARY PCC BARRIER ALONG THE OUTSIDE AND MEDIAN EDGES OF EXISTING SOUTHBOUND AND NORTHBOUND SR1 UNDER THE PROPOSED BRIDGE TO CONSTRUCT THE BRIDGE PIER, MSE WALLS, AND ABUTMENTS, AS SHOWN IN THE CONSTRUCTION TYPICAL SECTION FOR THIS PHASE.

2) BEHIND BARRIER, CONSTRUCT THE BRIDGE PIER, BRIDGE ABUTMENTS, AND MSE WALLS. INSTALL GUARDRAIL AROUND THE BRIDGE PIER.

3) UTILIZE TA-33 DURING OFF PEAK HOURS TO REMOVE TEMPORARY PCC BARRIER.

STAGE 7:

1) SET BRIDGE BEAMS UNDER A ROLLING ROAD BLOCK BETWEEN 12:00 A.M. THROUGH 5:00 A.M., ON MONDAYS THROUGH THURSDAYS ONLY. COMPLETE BRIDGE CONSTRUCTION ACTIVITIES UTILIZING TA-33 ON SR1 DURING NIGHT TIME HOURS OR AS DIRECTED BY THE ENGINEER.

2) INSTALL PROPOSED GUARDRAIL CONNECTING TO THE PARAPET WALLS AFTER BRIDGE IS COMPLETE.

Unofficial Website Copy

DELAWARE DEPARTMENT OF TRANSPORTATION	ADDENDUMS / REVISIONS	SCALE 0 60 120 180 FEET	SR1, SOUTH FREDERICA GRADE SEPARATED INTERSECTION	CONTRACT T200812202	BRIDGE NO. –	CONSTRUCTION PHASING, M.O.T. AND EROSION CONTROL PLANS	SHEET NO. 152
				COUNTY KENT	DESIGNED BY: LCM		TOTAL SHTS. 296
					CHECKED BY: SFP		

9/14/2015
G:\PROJECTS\06535.00 (DelDOT Agmt. 1376 DOTS Open End)\06535.07 SR1, S. Frederica\CADD Files\XM\cs_010503sf.dgn
2:18:24 PM

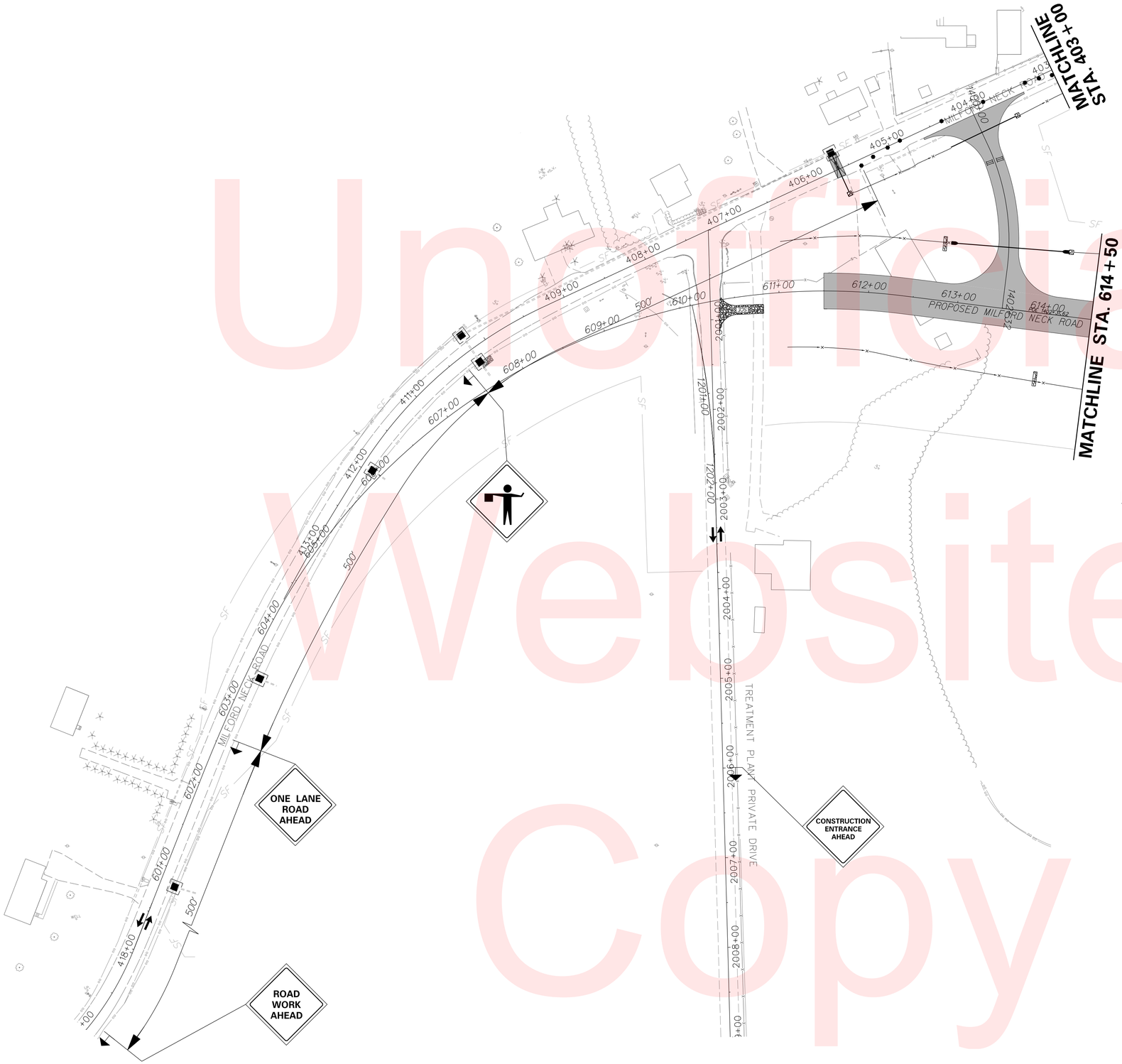

CONSTRUCTION PHASING PLANS LEGEND

- WORK AREA
- WORK AREA (REMOVAL)
- WORK COMPLETED IN PREVIOUS PHASING
- CONCRETE SAFETY BARRIER
- TRAFFIC FLOW ARROW
- TEMPORARY PAVEMENT STRIPING
- PLASTIC DRUM
- TYPE 3 BARRICADE

EROSION AND SEDIMENT CONTROL PLANS LEGEND

- INLET SEDIMENT CONTROL
- —SF— SILT FENCE
- CHECK DAM
- SCE STABILIZED CONSTRUCTION ENTRANCE
- SEDIMENT TRAP
- TSD TEMPORARY SLOPE DRAIN

PHASE I: STAGE 5–7

N

PHASE I

STAGE 5:

1) CONSTRUCT STORMWATER PONDS #529, #530, AND #531 AS DIRECTED ON THE STORMWATER DETAIL SHEETS. EXCAVATE THE INFIELD THE INFIELD BORROW AREA. PLACE THE EXCAVATED SUITABLE FILL MATERIAL IN PORTIONS OF THE EMBANKMENT FOR THE BRIDGE APPROACHES AND PROPOSED ROADWAYS.

2) CONSTRUCT APPROPRIATE DRAINAGE FACILITIES FOR THIS PORTION OF WORK AS SHOWN ON THE PLANS OR AS DIRECTED BY THE ENGINEER IN THE FIELD. UTILIZING TA-10 DURING OFF PEAK HOURS, INSTALL DRAINAGE PIPE(S) UNDER MILFORD NECK ROAD AT STATION 402+69 AND STATION 405+62. CONTRACTOR SHALL PATCH EXISTING PAVEMENT UP TO EXISTING GRADE USING LIKE MATERIALS BY THE END OF THE WORK SHIFT OR AS INDICATED IN ITEM 743000. CONTRACTOR SHALL INSTALL INLET PROTECTION AND OTHER EROSION AND SEDIMENT CONTROL DEVICES AS SHOWN ON THE PLANS.

3) CONSTRUCT THE PORTION OF PROPOSED ROADWAYS AND RAMPS OFF THE EXISTING TRAVELED WAY, WITHOUT INTERFERING WITH THE TRAVELING PUBLIC, TO FINAL GRADES PER TYPICAL SECTIONS AS SHOWN IN THIS PHASE OR AS DIRECTED BY THE ENGINEER IN THE FIELD. INSTALL PROPOSED LIGHTING CONDUIT AND DEVICES ALONG THE RAMPS AND PROPOSED ROADWAYS. INSTALL PROPOSED UNDERGROUND TRAFFIC SIGNAL FEATURES TO BE UTILIZED IN THE FUTURE. POUR PCC CURB MEDIAN.

STAGE 6:

1) UTILIZE TA-33 DURING OFF PEAK HOURS TO SET TEMPORARY PCC BARRIER ALONG THE OUTSIDE AND MEDIAN EDGES OF EXISTING SOUTHBOUND AND NORTHBOUND SR1 UNDER THE PROPOSED BRIDGE TO CONSTRUCT THE BRIDGE PIER, MSE WALLS, AND ABUTMENTS, AS SHOWN IN THE CONSTRUCTION TYPICAL SECTION FOR THIS PHASE.

2) BEHIND BARRIER, CONSTRUCT THE BRIDGE PIER, BRIDGE ABUTMENTS, AND MSE WALLS. INSTALL GUARDRAIL AROUND THE BRIDGE PIER.

3) UTILIZE TA-33 DURING OFF PEAK HOURS TO REMOVE TEMPORARY PCC BARRIER.

STAGE 7:

1) SET BRIDGE BEAMS UNDER A ROLLING ROAD BLOCK BETWEEN 12:00 A.M. THROUGH 5:00 A.M., ON MONDAYS THROUGH THURSDAYS ONLY. COMPLETE BRIDGE CONSTRUCTION ACTIVITIES UTILIZING TA-33 ON SR1 DURING NIGHT TIME HOURS OR AS DIRECTED BY THE ENGINEER.

2) INSTALL PROPOSED GUARDRAIL CONNECTING TO THE PARAPET WALLS AFTER BRIDGE IS COMPLETE.

Unofficial Website Copy

9/14/2015
S:\PROJECTS\06535.00 (DelDOT Agmt. 1376 DOTS Open End)\06535.07 SR1, S. Frederica\CADD Files\XM\cs_010504st.dgn
2:18:53 PM

DELAWARE DEPARTMENT OF TRANSPORTATION	ADDENDUMS / REVISIONS	SCALE 0 60 120 180 FEET	SR1, SOUTH FREDERICA GRADE SEPARATED INTERSECTION	CONTRACT T200812202	BRIDGE NO. –	CONSTRUCTION PHASING, M.O.T. AND EROSION CONTROL PLANS	SHEET NO. 153
				COUNTY KENT	DESIGNED BY: LCM		TOTAL SHTS. 296
					CHECKED BY: SFP		

EROSION AND SEDIMENT CONTROL PLANS LEGEND

- INLET SEDIMENT CONTROL
- SF — SILT FENCE
- CHECK DAM
- SCE — STABILIZED CONSTRUCTION ENTRANCE
- SEDIMENT TRAP
- TSD — TEMPORARY SLOPE DRAIN

CONSTRUCTION PHASING PLANS LEGEND

- WORK AREA
- WORK AREA (REMOVAL)
- WORK COMPLETED IN PREVIOUS PHASING
- CONCRETE SAFETY BARRIER
- TRAFFIC FLOW ARROW
- TEMPORARY PAVEMENT STRIPING
- PLASTIC DRUM
- TYPE 3 BARRICADE

PHASE I: STAGE 5–7

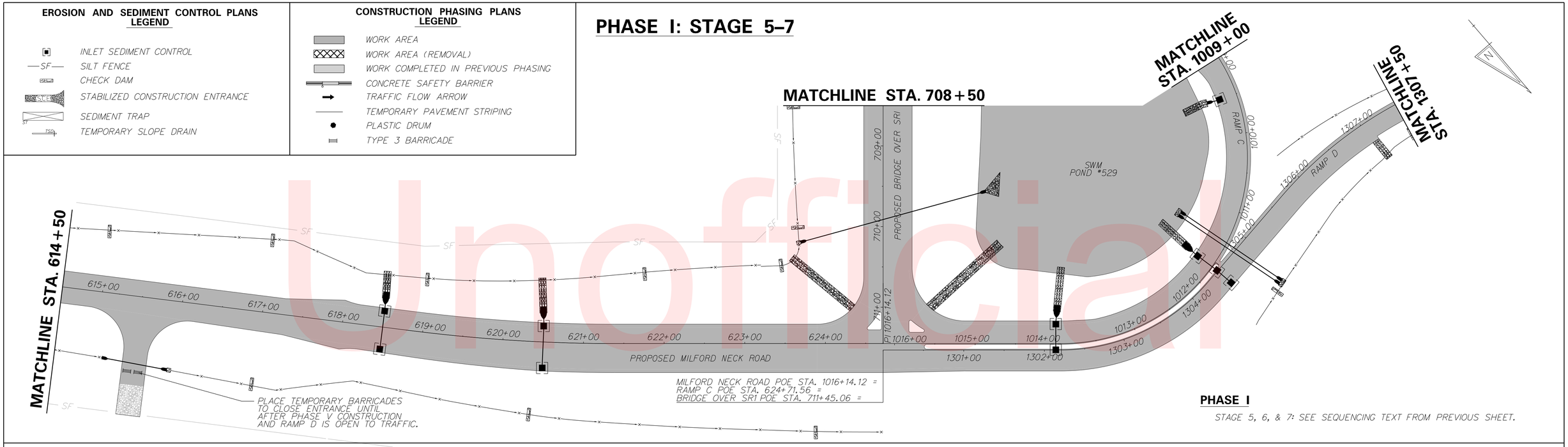

PHASE I

STAGE 5, 6, & 7: SEE SEQUENCING TEXT FROM PREVIOUS SHEET.

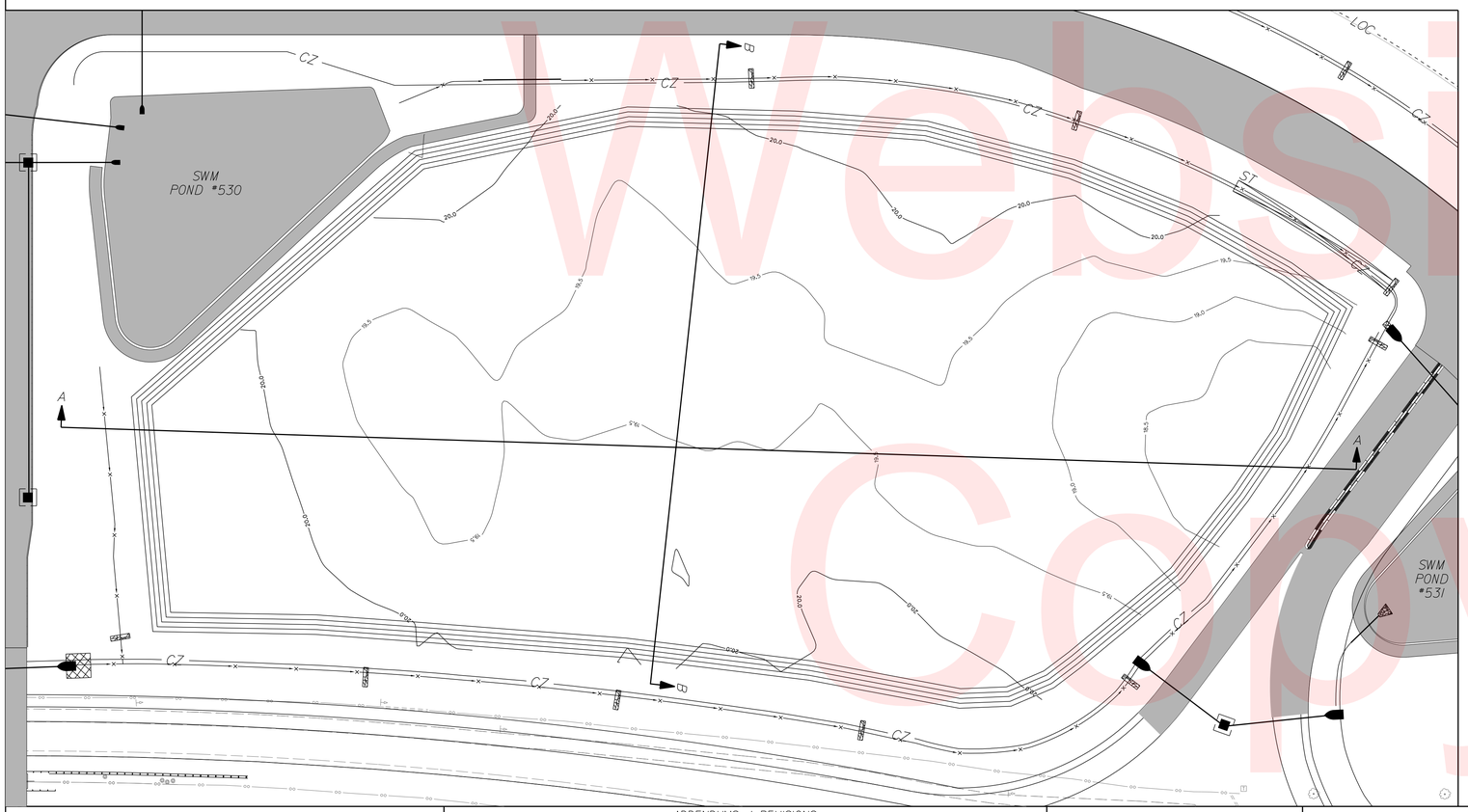

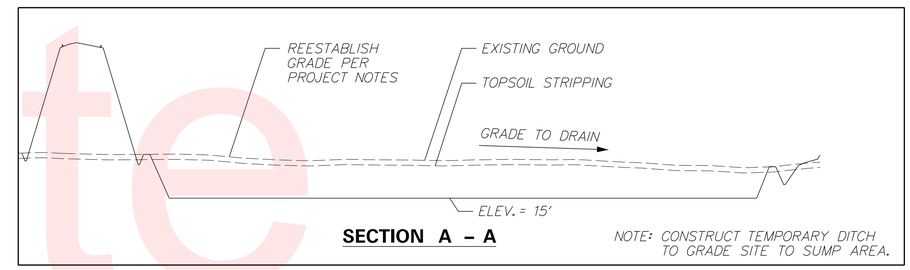

SECTION A – A

NOTE: CONSTRUCT TEMPORARY DITCH TO GRADE SITE TO SUMP AREA.

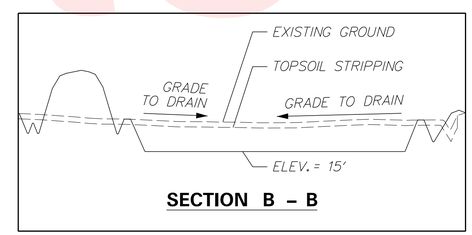

SECTION B – B

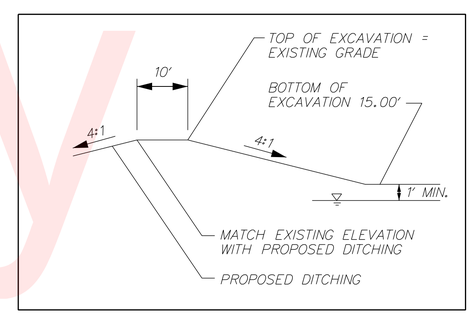

INFIELD EXCAVATION NOTES:

1. THE CONTRACTOR MAY ENCOUNTER GROUND WATER DURING EXCAVATION. DEWATERING OPERATIONS SHALL COMPLY WITH THE PROVISIONS OF SECTION 111. ALL COSTS INCIDENTAL TO ITEM #202000.
2. DURING CONSTRUCTION ACTIVITIES, THE BORROW SITE SHALL BE GRADED TO DRAIN TOWARD EROSION AND SEDIMENT CONTROL DEVICES TO BE PLACED AS ADJACENT TO RAMP A. ALL COSTS FOR ADDITIONAL EROSION AND SEDIMENT MEASURES FOR THE SITE ARE INCIDENTAL TO THE CONTRACT.
3. THE CONTRACTOR SHALL REESTABLISH THE EXISTING GROUND TO GRADE TOWARD THE PROPOSED DITCHES AS DESCRIBED IN THE PROJECT NOTES.

Unofficial Website Copy

PHASE I

STAGE 5:

1) CONSTRUCT STORMWATER PONDS #529, #530, AND #531 AS DIRECTED ON THE STORMWATER DETAIL SHEETS. EXCAVATE THE INFIELD THE INFIELD BORROW AREA. PLACE THE EXCAVATED SUITABLE FILL MATERIAL IN PORTIONS OF THE EMBANKMENT FOR THE BRIDGE APPROACHES AND PROPOSED ROADWAYS.

2) CONSTRUCT APPROPRIATE DRAINAGE FACILITIES FOR THIS PORTION OF WORK AS SHOWN ON THE PLANS OR AS DIRECTED BY THE ENGINEER IN THE FIELD. UTILIZING TA-10 DURING OFF PEAK HOURS, INSTALL DRAINAGE PIPE(S) UNDER MILFORD NECK ROAD AT STATION 402+69 AND STATION 405+62. CONTRACTOR SHALL PATCH EXISTING PAVEMENT UP TO EXISTING GRADE USING LIKE MATERIALS BY THE END OF THE WORK SHIFT OR AS INDICATED IN ITEM 743000. CONTRACTOR SHALL INSTALL INLET PROTECTION AND OTHER EROSION AND SEDIMENT CONTROL DEVICES AS SHOWN ON THE PLANS.

3) CONSTRUCT THE PORTION OF PROPOSED ROADWAYS AND RAMPS OFF THE EXISTING TRAVELED WAY, WITHOUT INTERFERING WITH THE TRAVELING PUBLIC, TO FINAL GRADES PER TYPICAL SECTIONS AS SHOWN IN THIS PHASE OR AS DIRECTED BY THE ENGINEER IN THE FIELD. INSTALL PROPOSED LIGHTING CONDUIT AND DEVICES ALONG THE RAMPS AND PROPOSED ROADWAYS. INSTALL PROPOSED UNDERGROUND TRAFFIC SIGNAL FEATURES TO BE UTILIZED IN THE FUTURE. POUR PCC CURB MEDIAN.

STAGE 6:

1) UTILIZE TA-33 DURING OFF PEAK HOURS TO SET TEMPORARY PCC BARRIER ALONG THE OUTSIDE AND MEDIAN EDGES OF EXISTING SOUTHBOUND AND NORTHBOUND SR1 UNDER THE PROPOSED BRIDGE TO CONSTRUCT THE BRIDGE PIER, MSE WALLS, AND ABUTMENTS, AS SHOWN IN THE CONSTRUCTION TYPICAL SECTION FOR THIS PHASE.

2) BEHIND BARRIER, CONSTRUCT THE BRIDGE PIER, BRIDGE ABUTMENTS, AND MSE WALLS. INSTALL GUARDRAIL AROUND THE BRIDGE PIER.

3) UTILIZE TA-33 DURING OFF PEAK HOURS TO REMOVE TEMPORARY PCC BARRIER.

STAGE 7:

1) SET BRIDGE BEAMS UNDER A ROLLING ROAD BLOCK BETWEEN 12:00 A.M. THROUGH 5:00 A.M., ON MONDAYS THROUGH THURSDAYS ONLY. COMPLETE BRIDGE CONSTRUCTION ACTIVITIES UTILIZING TA-33 ON SR1 DURING NIGHT TIME HOURS OR AS DIRECTED BY THE ENGINEER.

2) INSTALL PROPOSED GUARDRAIL CONNECTING TO THE PARAPET WALLS AFTER BRIDGE IS COMPLETE.

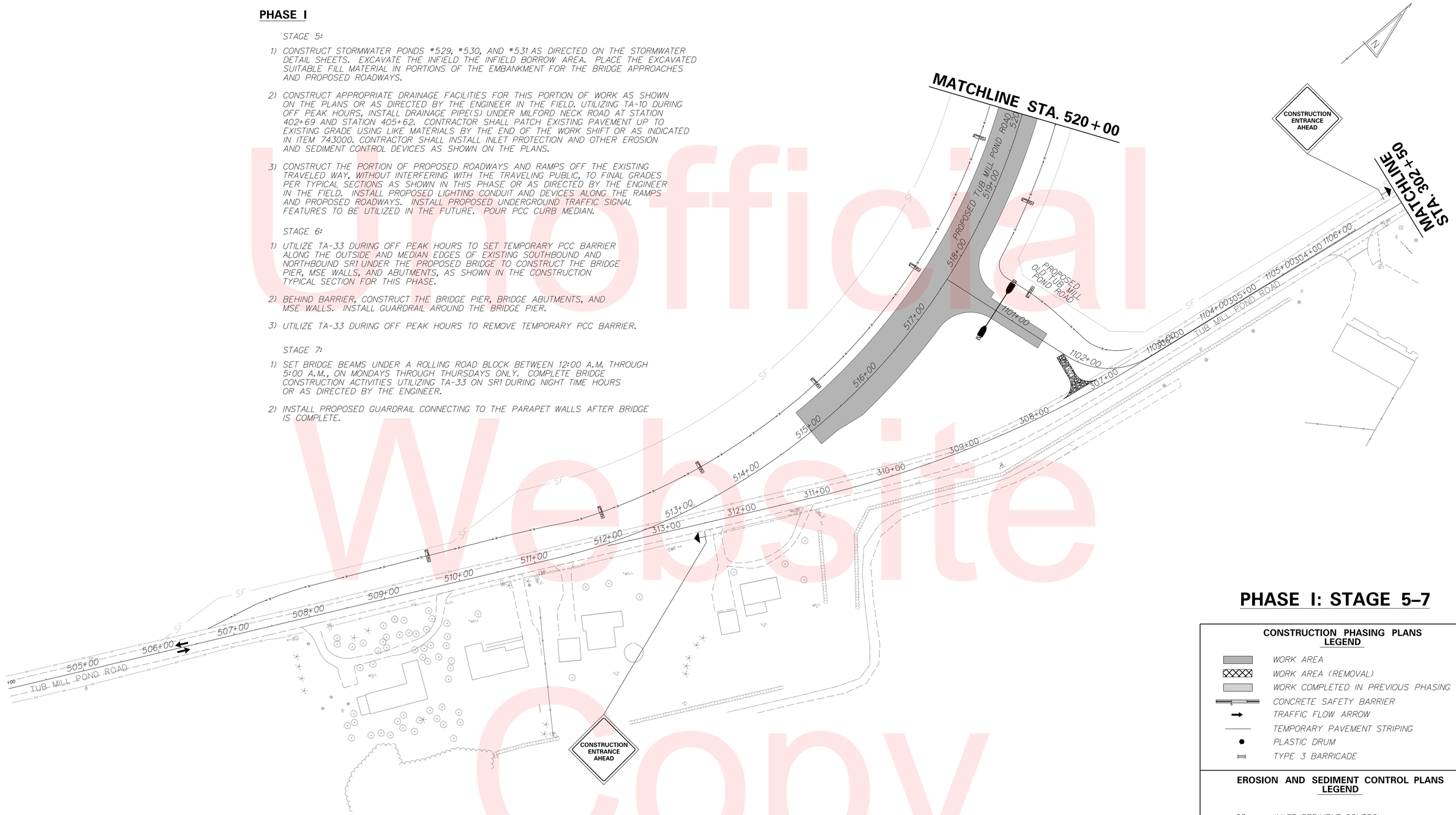

PHASE I: STAGE 5–7

CONSTRUCTION PHASING PLANS LEGEND

- WORK AREA
- WORK AREA (REMOVAL)
- WORK COMPLETED IN PREVIOUS PHASING
- CONCRETE SAFETY BARRIER
- TRAFFIC FLOW ARROW
- TEMPORARY PAVEMENT STRIPING
- PLASTIC DRUM
- TYPE 3 BARRICADE

EROSION AND SEDIMENT CONTROL PLANS LEGEND

- INLET SEDIMENT CONTROL
- —SF— SILT FENCE
- CHECK DAM
- SCE STABILIZED CONSTRUCTION ENTRANCE
- ST SEDIMENT TRAP
- TSD TEMPORARY SLOPE DRAIN

Unofficial Website Copy

DELAWARE DEPARTMENT OF TRANSPORTATION	ADDENDUMS / REVISIONS	SCALE 0 60 120 180 FEET	SR1, SOUTH FREDERICA GRADE SEPARATED INTERSECTION	CONTRACT T200812202	BRIDGE NO. –	CONSTRUCTION PHASING, M.O.T. AND EROSION CONTROL PLANS	SHEET NO. 155
				COUNTY KENT	DESIGNED BY: LCM		TOTAL SHTS. 296
					CHECKED BY: SFP		

9/14/2015
G:\PROJECTS\06535.00 (DelDOT Agmt. 1376 DOTS Open End)\06535.07 SR1, S. Frederica\CADD Files\XM\cs_010506sf.dgn
2:21:55 PM

PHASE I: STAGE 8

EROSION AND SEDIMENT CONTROL PLANS LEGEND

- INLET SEDIMENT CONTROL
- SF — SILT FENCE
- CHECK DAM
- STABILIZED CONSTRUCTION ENTRANCE
- SEDIMENT TRAP
- TSD — TEMPORARY SLOPE DRAIN

CONSTRUCTION PHASING PLANS LEGEND

- WORK AREA
- WORK AREA (REMOVAL)
- WORK COMPLETED IN PREVIOUS PHASING
- CONCRETE SAFETY BARRIER
- TRAFFIC FLOW ARROW
- TEMPORARY PAVEMENT STRIPING
- PLASTIC DRUM
- TYPE 3 BARRICADE

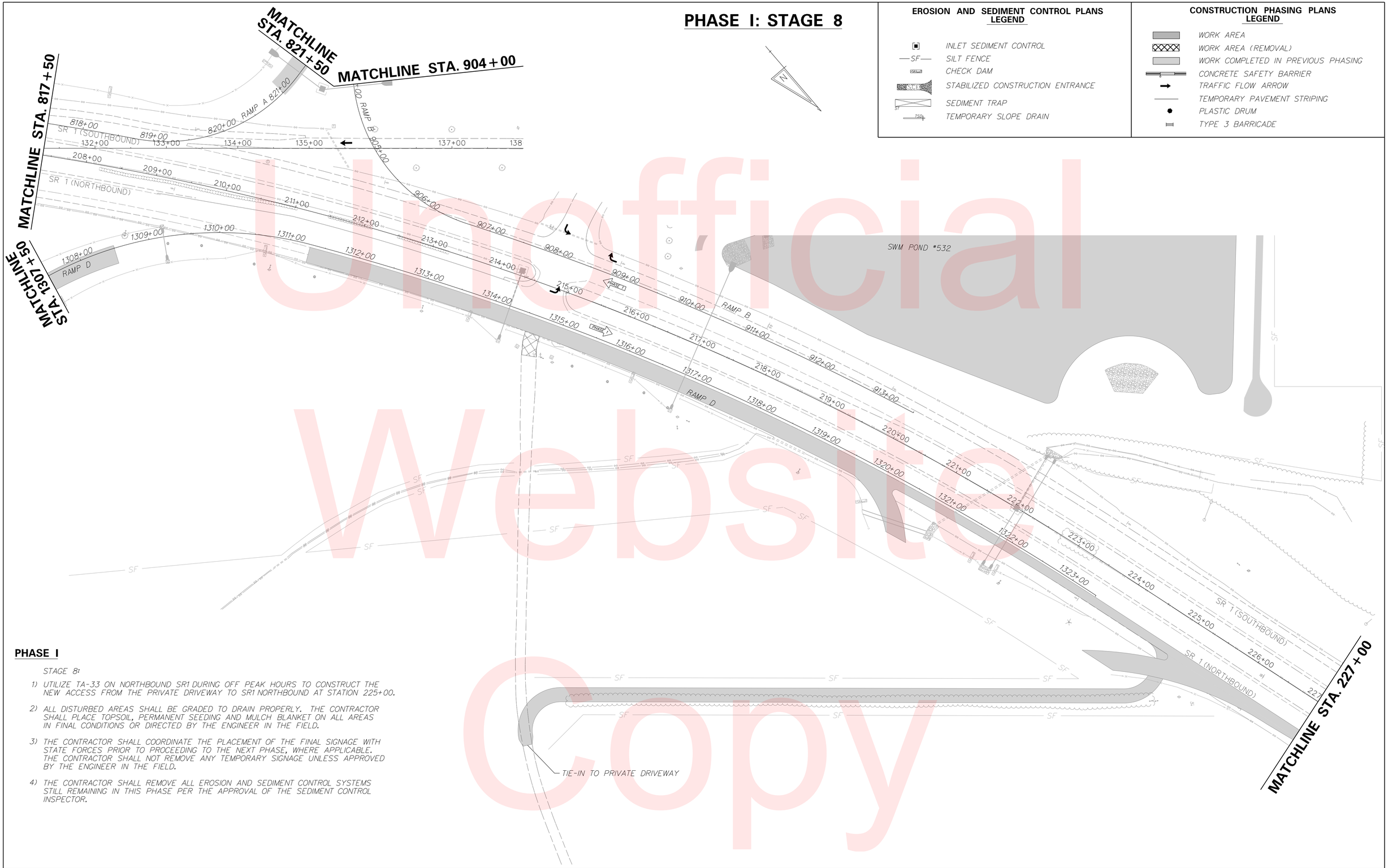

PHASE I

STAGE 8:

1) UTILIZE TA-33 ON NORTHBOUND SR1 DURING OFF PEAK HOURS TO CONSTRUCT THE NEW ACCESS FROM THE PRIVATE DRIVEWAY TO SR1 NORTHBOUND AT STATION 225+00.

2) ALL DISTURBED AREAS SHALL BE GRADED TO DRAIN PROPERLY. THE CONTRACTOR SHALL PLACE TOPSOIL, PERMANENT SEEDING AND MULCH BLANKET ON ALL AREAS IN FINAL CONDITIONS OR DIRECTED BY THE ENGINEER IN THE FIELD.

3) THE CONTRACTOR SHALL COORDINATE THE PLACEMENT OF THE FINAL SIGNAGE WITH STATE FORCES PRIOR TO PROCEEDING TO THE NEXT PHASE, WHERE APPLICABLE. THE CONTRACTOR SHALL NOT REMOVE ANY TEMPORARY SIGNAGE UNLESS APPROVED BY THE ENGINEER IN THE FIELD.

4) THE CONTRACTOR SHALL REMOVE ALL EROSION AND SEDIMENT CONTROL SYSTEMS STILL REMAINING IN THIS PHASE PER THE APPROVAL OF THE SEDIMENT CONTROL INSPECTOR.

Unofficial Website Copy

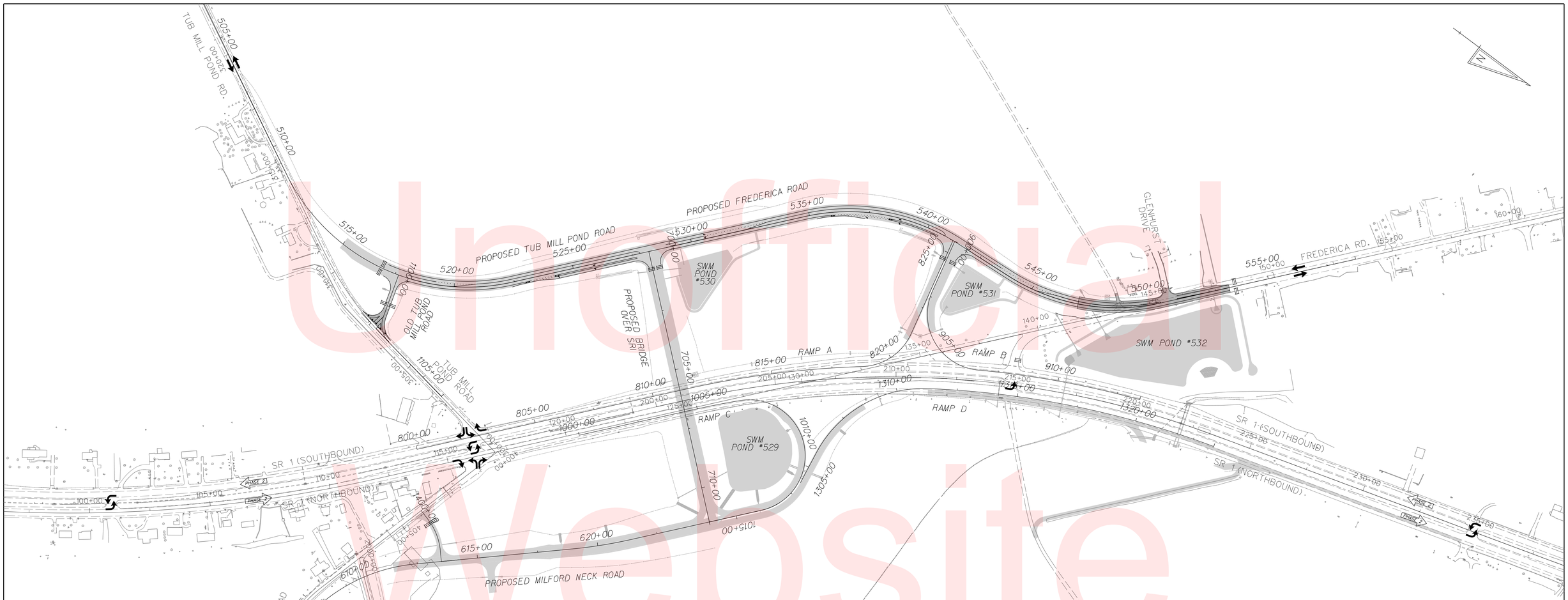

PHASE II

STAGE 1:

1) REMOVE EXISTING ENTRANCE TO PRIVATE DRIVEWAY AT RAMP D STATION 1314+65. REMOVE EXISTING PIPE IN THIS LOCATION AND GRADE PROPOSED DITCHING. PLACE TEMPORARY SEEDING AND MULCH.

STAGE 2:

1) UTILIZING TA-10 LANE CLOSURE ON EXISTING TUB MILL POND ROAD, CONSTRUCT PROPOSED OLD TUB MILL POND ROAD TIE-IN AT STATION 1102+00 AS A TEMPORARY T-INTERSECTION AND BARREL-OFF UNTIL FUTURE STAGE.

STAGE 3:

1) AS SHOWN ON THE PERMANENT WARNING SIGNS LAYOUT, PLACE CHANGEABLE MESSAGE SIGNS ON NORTHBOUND SR1, SOUTHBOUND SR1 AND SOUTHBOUND FREDERICA ROAD TEN (10) CALENDAR DAYS IN ADVANCE OF AND FIVE (5) DAYS AFTER THE START OF CONSTRUCTION TO INFORM TRAVELING PUBLIC THAT FREDERICA ROAD WILL BE CLOSED TO THROUGH TRAFFIC AND A DETOUR WILL BE IN USE FOR THIS STAGE, SHOWN ON SHEET DP-1. MAINTAIN ACCESS FROM SR1 FOR EMERGENCY VEHICLES ONLY AND RESIDENTS WITHIN LIMITS.

2) CLOSE FREDERICA ROAD IN ACCORDANCE WITH THE PLANS AND DELDOT TRAFFIC CONTROL MANUAL. MAINTAIN LOCAL ACCESS TO GLENHURST DRIVE. CONSTRUCT PROPOSED TIE-IN PAVEMENT FROM FREDERICA ROAD TO PROPOSED FREDERICA ROAD AS SHOWN IN THIS STAGE. REMOVE THE NECESSARY ABANDONED PAVEMENT AND COMPLETE DRAINAGE FACILITIES SHOWN IN THIS STAGE. PAVE TO FINAL GRADE WITH TYPE C HOT-MIX. LAYOUT AND PLACE PERMANENT STRIPING AS SHOWN IN THE PLANS, OR AS DIRECTED BY THE ENGINEER IN THE FIELD.

3) ALL DISTURBED AREAS SHALL BE GRADED TO DRAIN PROPERLY. THE CONTRACTOR SHALL PLACE TOPSOIL, PERMANENT SEEDING AND MULCH BLANKET ON ALL AREAS IN FINAL CONDITIONS OR AS DIRECTED BY THE ENGINEER IN THE FIELD.

4) THE CONTRACTOR SHALL COORDINATE THE PLACEMENT OF THE FINAL SIGNAGE WITH STATE FORCES PRIOR TO PROCEEDING TO THE NEXT PHASE, WHERE APPLICABLE. THE CONTRACTOR SHALL NOT REMOVE ANY TEMPORARY SIGNAGE UNLESS APPROVED BY THE ENGINEER IN THE FIELD.

5) THE CONTRACTOR SHALL REMOVE ALL EROSION AND SEDIMENT CONTROL SYSTEMS STILL REMAINING IN THIS PHASE PER THE APPROVAL OF THE SEDIMENT CONTROL INSPECTOR.

PHASE II: (STAGES 1–3)

CONSTRUCTION PHASING PLANS LEGEND

- WORK AREA
- WORK AREA (REMOVAL)
- WORK COMPLETED IN PREVIOUS PHASING
- TRAFFIC FLOW ARROW
- PHASE 2-WAY SR1 TRAFFIC FLOW ARROW

* SEE 60 SCALE PLANS FOR STAGING

EROSION AND SEDIMENT CONTROL PLANS LEGEND

* SEE 60 SCALE PLANS FOR STAGING

Unofficial Website Copy

PHASE II: STAGE 1

EROSION AND SEDIMENT CONTROL PLANS LEGEND

- INLET SEDIMENT CONTROL
- SF — SILT FENCE
- CHECK DAM
- STABILIZED CONSTRUCTION ENTRANCE
- SEDIMENT TRAP
- TSD — TEMPORARY SLOPE DRAIN

CONSTRUCTION PHASING PLANS LEGEND

- WORK AREA
- WORK AREA (REMOVAL)
- WORK COMPLETED IN PREVIOUS PHASING
- CONCRETE SAFETY BARRIER
- TRAFFIC FLOW ARROW
- TEMPORARY PAVEMENT STRIPING
- PLASTIC DRUM
- TYPE 3 BARRICADE

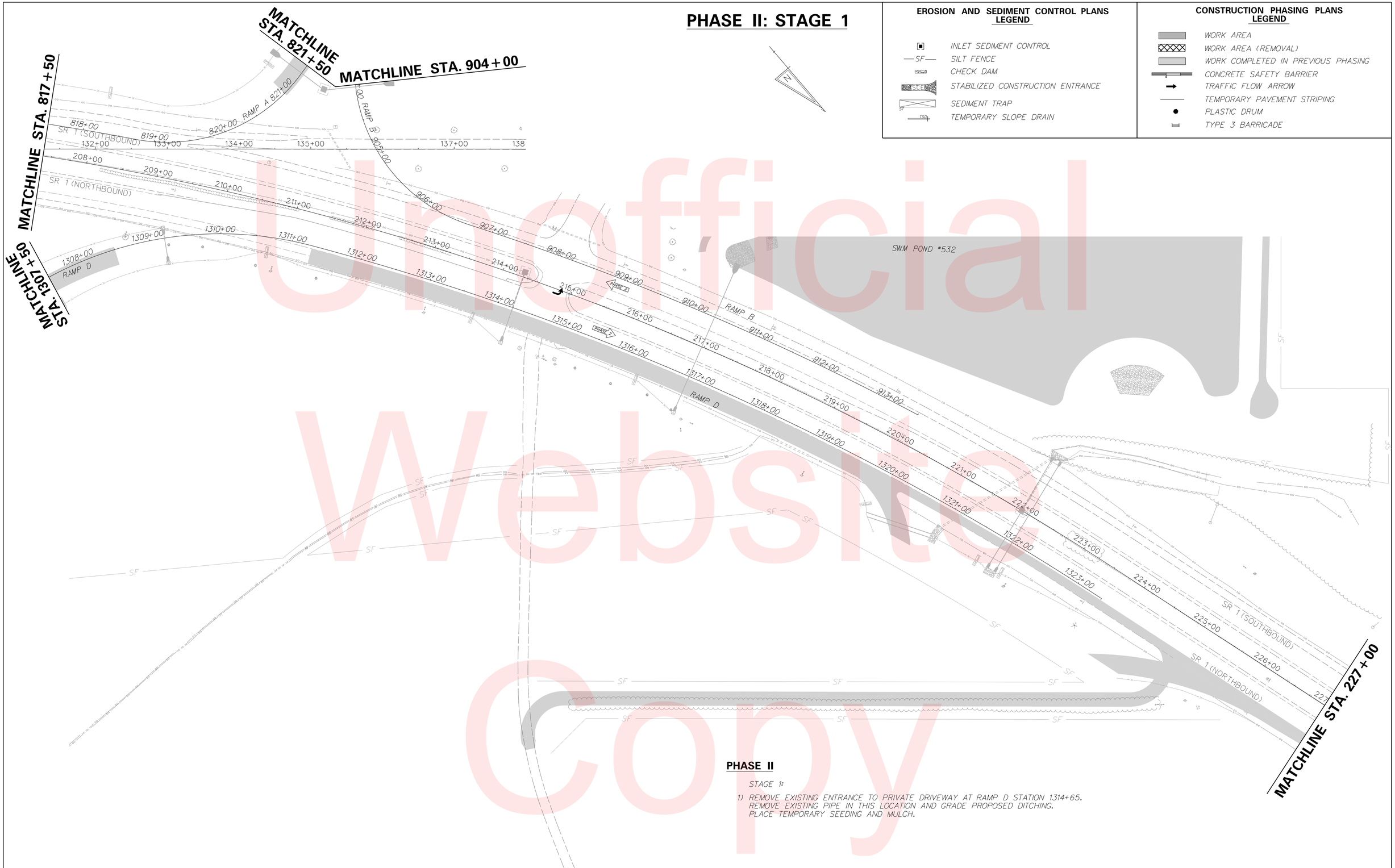

PHASE II

STAGE 1:

1) REMOVE EXISTING ENTRANCE TO PRIVATE DRIVEWAY AT RAMP D STATION 1314+65. REMOVE EXISTING PIPE IN THIS LOCATION AND GRADE PROPOSED DITCHING. PLACE TEMPORARY SEEDING AND MULCH.

Unofficial Website Copy

DELAWARE DEPARTMENT OF TRANSPORTATION	ADDENDUMS / REVISIONS	SCALE 0 60 120 180 FEET	SR1, SOUTH FREDERICA GRADE SEPARATED INTERSECTION	CONTRACT T200812202	BRIDGE NO. –	CONSTRUCTION PHASING, M.O.T. AND EROSION CONTROL PLANS	SHEET NO. 158
				COUNTY KENT	DESIGNED BY: LCM		TOTAL SHTS. 296
					CHECKED BY: SFP		

9/14/2015
C:\PROJECTS\06535.00 (DelDOT Agmt. 1376 DOTS Open End)\06535.07 SR1, S. Frederica\CADD Files\XM\cs_020101sf.dgn
2:23:07 PM

PHASE II

STAGE 2:

1) UTILIZING TA-10 LANE CLOSURE ON EXISTING TUB MILL POND ROAD, CONSTRUCT PROPOSED OLD TUB MILL POND ROAD TIE-IN AT STATION 1102+00 AS A TEMPORARY T-INTERSECTION AND BARREL-OFF UNTIL FUTURE STAGE.

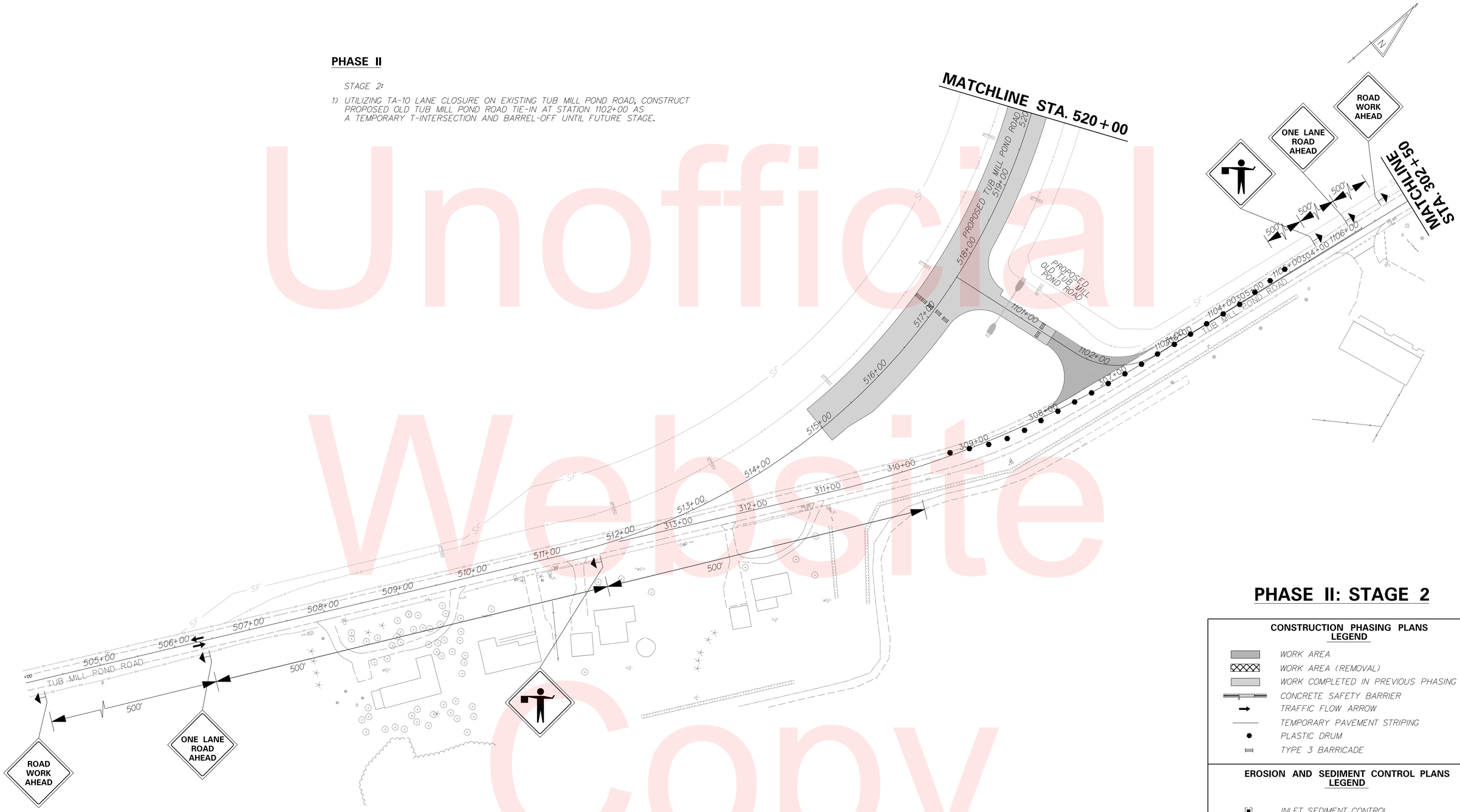

PHASE II: STAGE 2

CONSTRUCTION PHASING PLANS LEGEND

- WORK AREA
- WORK AREA (REMOVAL)
- WORK COMPLETED IN PREVIOUS PHASING
- CONCRETE SAFETY BARRIER
- TRAFFIC FLOW ARROW
- TEMPORARY PAVEMENT STRIPING
- PLASTIC DRUM
- TYPE 3 BARRICADE

EROSION AND SEDIMENT CONTROL PLANS LEGEND

- INLET SEDIMENT CONTROL
- SF — SILT FENCE
- CHECK DAM
- SCE — STABILIZED CONSTRUCTION ENTRANCE
- ST — SEDIMENT TRAP
- TSD — TEMPORARY SLOPE DRAIN

Unofficial Website Copy

DELAWARE DEPARTMENT OF TRANSPORTATION	ADDENDUMS / REVISIONS	SCALE 0 60 120 180 FEET	SR1, SOUTH FREDERICA GRADE SEPARATED INTERSECTION	CONTRACT T200812202	BRIDGE NO. –	CONSTRUCTION PHASING, M.O.T. AND EROSION CONTROL PLANS	SHEET NO. 159
				COUNTY KENT	DESIGNED BY: LCM		TOTAL SHTS. 296
					CHECKED BY: SFP		

9/14/2015
G:\PROJECTS\06535.00 (DelDOT Agmt. 1376 DOTS Open End)\06535.07 SR1, S. Frederica\CADD Files\XM\cs_020201sf.dgn
2:23:40 PM

PHASE II: STAGE 3

EROSION AND SEDIMENT CONTROL PLANS LEGEND

- INLET SEDIMENT CONTROL
- SF — SILT FENCE
- CHECK DAM
- SCE — STABILIZED CONSTRUCTION ENTRANCE
- ST — SEDIMENT TRAP
- TSD — TEMPORARY SLOPE DRAIN

CONSTRUCTION PHASING PLANS LEGEND

- WORK AREA
- WORK AREA (REMOVAL)
- WORK COMPLETED IN PREVIOUS PHASING
- CONCRETE SAFETY BARRIER
- TRAFFIC FLOW ARROW
- TEMPORARY PAVEMENT STRIPING
- PLASTIC DRUM
- TYPE 3 BARRICADE

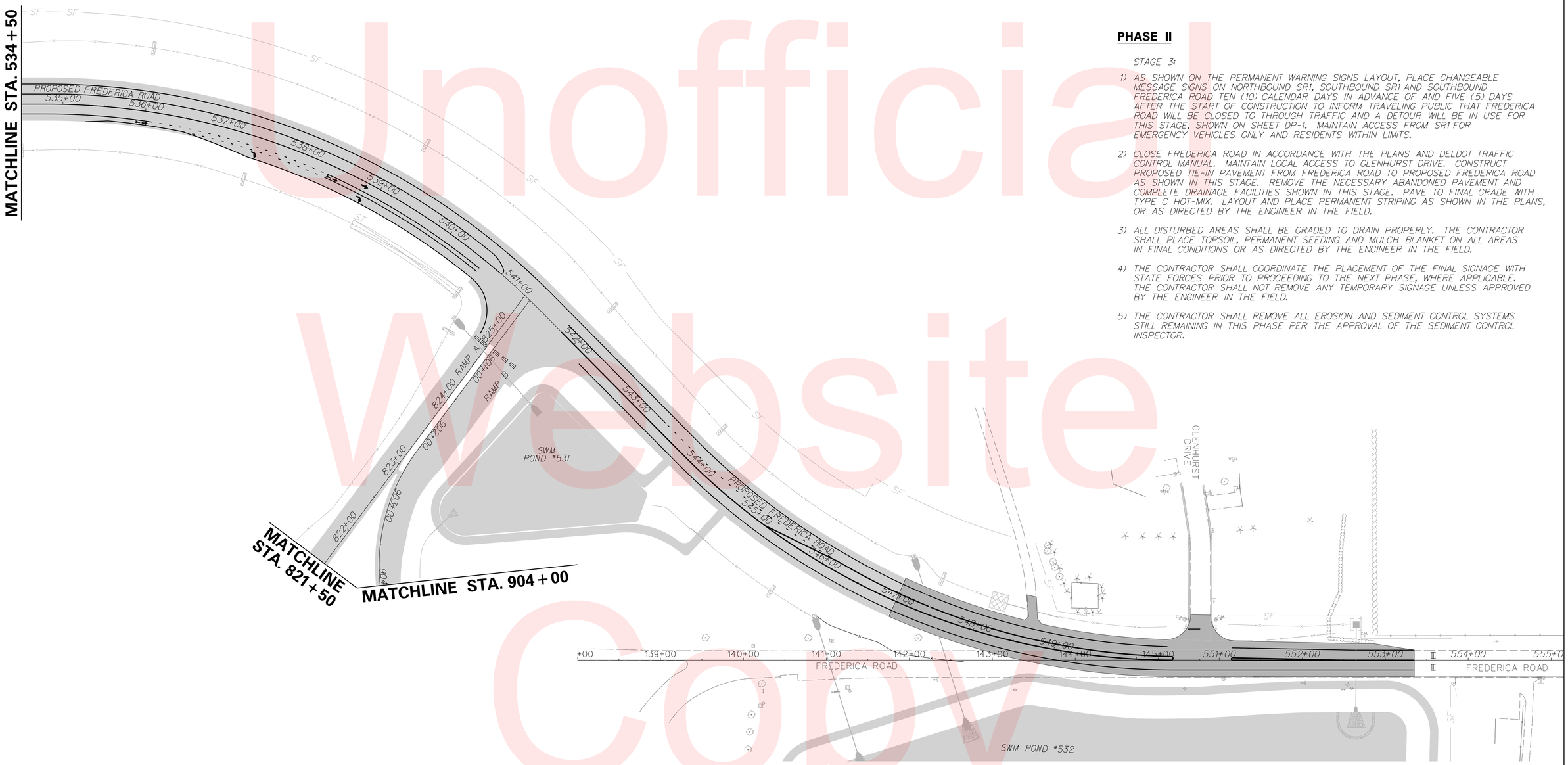

PHASE II

STAGE 3:

1) AS SHOWN ON THE PERMANENT WARNING SIGNS LAYOUT, PLACE CHANGEABLE MESSAGE SIGNS ON NORTHBOUND SR1, SOUTHBOUND SR1 AND SOUTHBOUND FREDERICA ROAD TEN (10) CALENDAR DAYS IN ADVANCE OF AND FIVE (5) DAYS AFTER THE START OF CONSTRUCTION TO INFORM TRAVELING PUBLIC THAT FREDERICA ROAD WILL BE CLOSED TO THROUGH TRAFFIC AND A DETOUR WILL BE IN USE FOR THIS STAGE, SHOWN ON SHEET DP-1. MAINTAIN ACCESS FROM SR1 FOR EMERGENCY VEHICLES ONLY AND RESIDENTS WITHIN LIMITS.

2) CLOSE FREDERICA ROAD IN ACCORDANCE WITH THE PLANS AND DELDOT TRAFFIC CONTROL MANUAL. MAINTAIN LOCAL ACCESS TO GLENHURST DRIVE. CONSTRUCT PROPOSED TIE-IN PAVEMENT FROM FREDERICA ROAD TO PROPOSED FREDERICA ROAD AS SHOWN IN THIS STAGE. REMOVE THE NECESSARY ABANDONED PAVEMENT AND COMPLETE DRAINAGE FACILITIES SHOWN IN THIS STAGE. PAVE TO FINAL GRADE WITH TYPE C HOT-MIX. LAYOUT AND PLACE PERMANENT STRIPING AS SHOWN IN THE PLANS, OR AS DIRECTED BY THE ENGINEER IN THE FIELD.

3) ALL DISTURBED AREAS SHALL BE GRADED TO DRAIN PROPERLY. THE CONTRACTOR SHALL PLACE TOPSOIL, PERMANENT SEEDING AND MULCH BLANKET ON ALL AREAS IN FINAL CONDITIONS OR AS DIRECTED BY THE ENGINEER IN THE FIELD.

4) THE CONTRACTOR SHALL COORDINATE THE PLACEMENT OF THE FINAL SIGNAGE WITH STATE FORCES PRIOR TO PROCEEDING TO THE NEXT PHASE, WHERE APPLICABLE. THE CONTRACTOR SHALL NOT REMOVE ANY TEMPORARY SIGNAGE UNLESS APPROVED BY THE ENGINEER IN THE FIELD.

5) THE CONTRACTOR SHALL REMOVE ALL EROSION AND SEDIMENT CONTROL SYSTEMS STILL REMAINING IN THIS PHASE PER THE APPROVAL OF THE SEDIMENT CONTROL INSPECTOR.

Unofficial Website Copy

DELAWARE DEPARTMENT OF TRANSPORTATION	ADDENDUMS / REVISIONS	SCALE 0 60 120 180 FEET	SR1, SOUTH FREDERICA GRADE SEPARATED INTERSECTION	CONTRACT T200812202	BRIDGE NO. –	CONSTRUCTION PHASING, M.O.T. AND EROSION CONTROL PLANS	SHEET NO. 160
				COUNTY KENT	DESIGNED BY: LCM		TOTAL SHTS. 296
					CHECKED BY: SFP		

9/14/2015
G:\PROJECTS\06535.00 (DelDOT Agmt. 1376 DOTS Open End)\06535.07 SR1, S. Frederica\CADD Files\XW\cs_020301sf.dgn
2:24:04 PM

PHASE II: STAGE 3

EROSION AND SEDIMENT CONTROL PLANS LEGEND

- INLET SEDIMENT CONTROL
- SF — SILT FENCE
- CHECK DAM
- SCE — STABILIZED CONSTRUCTION ENTRANCE
- ST — SEDIMENT TRAP
- TSD — TEMPORARY SLOPE DRAIN

CONSTRUCTION PHASING PLANS LEGEND

- WORK AREA
- WORK AREA (REMOVAL)
- WORK COMPLETED IN PREVIOUS PHASING
- CONCRETE SAFETY BARRIER
- TRAFFIC FLOW ARROW
- TEMPORARY PAVEMENT STRIPING
- PLASTIC DRUM
- TYPE 3 BARRICADE

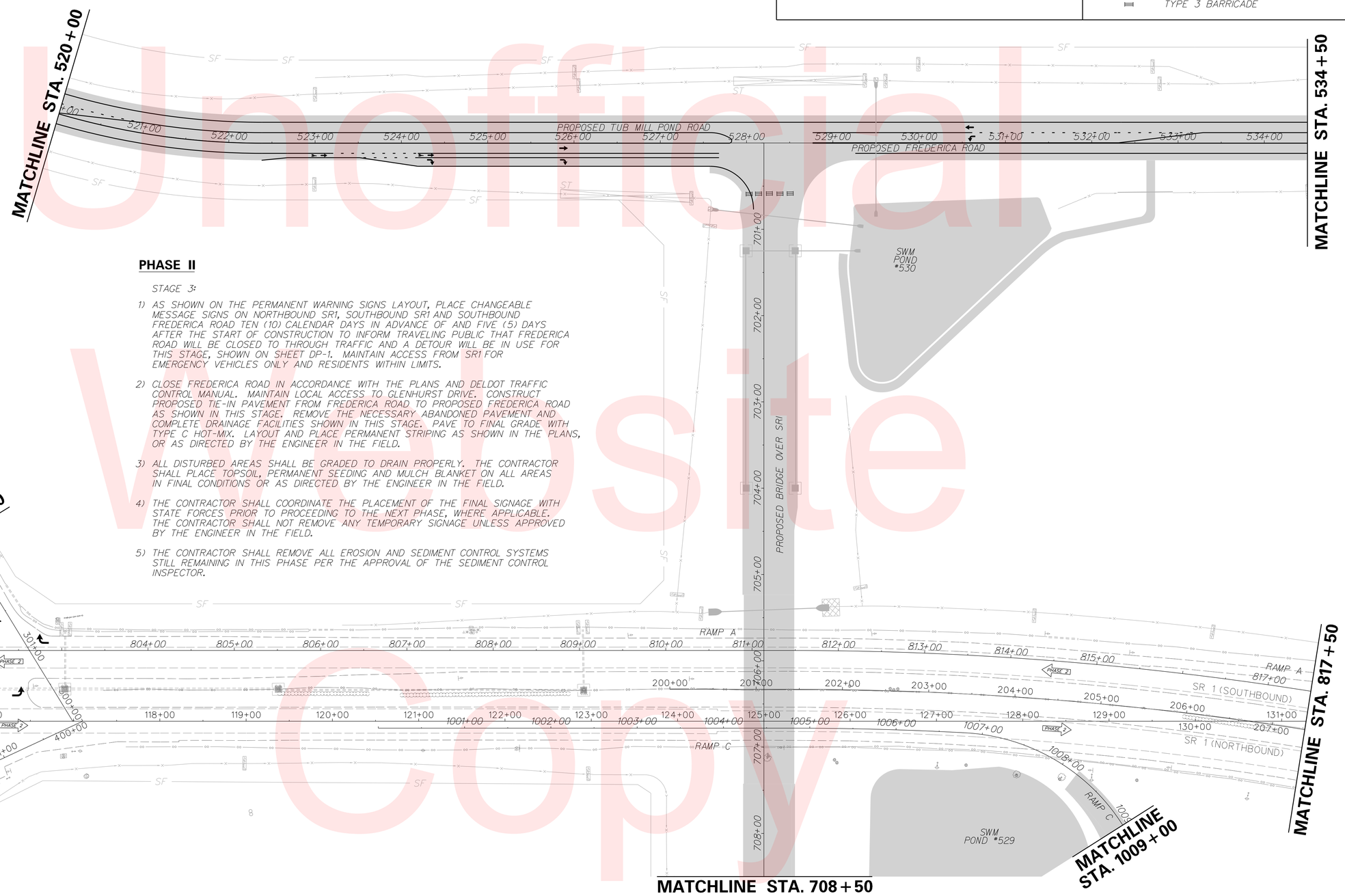

PHASE II

STAGE 3:

1) AS SHOWN ON THE PERMANENT WARNING SIGNS LAYOUT, PLACE CHANGEABLE MESSAGE SIGNS ON NORTHBOUND SR1, SOUTHBOUND SR1 AND SOUTHBOUND FREDERICA ROAD TEN (10) CALENDAR DAYS IN ADVANCE OF AND FIVE (5) DAYS AFTER THE START OF CONSTRUCTION TO INFORM TRAVELING PUBLIC THAT FREDERICA ROAD WILL BE CLOSED TO THROUGH TRAFFIC AND A DETOUR WILL BE IN USE FOR THIS STAGE, SHOWN ON SHEET DP-1. MAINTAIN ACCESS FROM SR1 FOR EMERGENCY VEHICLES ONLY AND RESIDENTS WITHIN LIMITS.

2) CLOSE FREDERICA ROAD IN ACCORDANCE WITH THE PLANS AND DELDOT TRAFFIC CONTROL MANUAL. MAINTAIN LOCAL ACCESS TO GLENHURST DRIVE. CONSTRUCT PROPOSED TIE-IN PAVEMENT FROM FREDERICA ROAD TO PROPOSED FREDERICA ROAD AS SHOWN IN THIS STAGE. REMOVE THE NECESSARY ABANDONED PAVEMENT AND COMPLETE DRAINAGE FACILITIES SHOWN IN THIS STAGE. PAVE TO FINAL GRADE WITH TYPE C HOT-MIX. LAYOUT AND PLACE PERMANENT STRIPING AS SHOWN IN THE PLANS, OR AS DIRECTED BY THE ENGINEER IN THE FIELD.

3) ALL DISTURBED AREAS SHALL BE GRADED TO DRAIN PROPERLY. THE CONTRACTOR SHALL PLACE TOPSOIL, PERMANENT SEEDING AND MULCH BLANKET ON ALL AREAS IN FINAL CONDITIONS OR AS DIRECTED BY THE ENGINEER IN THE FIELD.

4) THE CONTRACTOR SHALL COORDINATE THE PLACEMENT OF THE FINAL SIGNAGE WITH STATE FORCES PRIOR TO PROCEEDING TO THE NEXT PHASE, WHERE APPLICABLE. THE CONTRACTOR SHALL NOT REMOVE ANY TEMPORARY SIGNAGE UNLESS APPROVED BY THE ENGINEER IN THE FIELD.

5) THE CONTRACTOR SHALL REMOVE ALL EROSION AND SEDIMENT CONTROL SYSTEMS STILL REMAINING IN THIS PHASE PER THE APPROVAL OF THE SEDIMENT CONTROL INSPECTOR.

Unofficial Website Copy

DELAWARE DEPARTMENT OF TRANSPORTATION	ADDENDUMS / REVISIONS	SCALE 0 60 120 180 FEET	SR1, SOUTH FREDERICA GRADE SEPARATED INTERSECTION	CONTRACT T200812202	BRIDGE NO. –	CONSTRUCTION PHASING, M.O.T. AND EROSION CONTROL PLANS	SHEET NO. 161
				COUNTY KENT	DESIGNED BY: LCM		TOTAL SHTS. 296
					CHECKED BY: SFP		

9/14/2015
C:\PROJECTS\06535.00 (DelDOT Agmt. 1376 DOTS Open End)\06535.07 SR1, S. Frederica\CADD Files\XM\cs_020302sf.dgn
2:24:27 PM

PHASE II

STAGE 3:

1) AS SHOWN ON THE PERMANENT WARNING SIGNS LAYOUT, PLACE CHANGEABLE MESSAGE SIGNS ON NORTHBOUND SR1, SOUTHBOUND SR1 AND SOUTHBOUND FREDERICA ROAD TEN (10) CALENDAR DAYS IN ADVANCE OF AND FIVE (5) DAYS AFTER THE START OF CONSTRUCTION TO INFORM TRAVELING PUBLIC THAT FREDERICA ROAD WILL BE CLOSED TO THROUGH TRAFFIC AND A DETOUR WILL BE IN USE FOR THIS STAGE, SHOWN ON SHEET DP-1. MAINTAIN ACCESS FROM SR1 FOR EMERGENCY VEHICLES ONLY AND RESIDENTS WITHIN LIMITS.

2) CLOSE FREDERICA ROAD IN ACCORDANCE WITH THE PLANS AND DELDOT TRAFFIC CONTROL MANUAL. MAINTAIN LOCAL ACCESS TO GLENHURST DRIVE. CONSTRUCT PROPOSED TIE-IN PAVEMENT FROM FREDERICA ROAD TO PROPOSED FREDERICA ROAD AS SHOWN IN THIS STAGE. REMOVE THE NECESSARY ABANDONED PAVEMENT AND COMPLETE DRAINAGE FACILITIES SHOWN IN THIS STAGE. PAVE TO FINAL GRADE WITH TYPE C HOT-MIX. LAYOUT AND PLACE PERMANENT STRIPING AS SHOWN IN THE PLANS, OR AS DIRECTED BY THE ENGINEER IN THE FIELD.

3) ALL DISTURBED AREAS SHALL BE GRADED TO DRAIN PROPERLY. THE CONTRACTOR SHALL PLACE TOPSOIL, PERMANENT SEEDING AND MULCH BLANKET ON ALL AREAS IN FINAL CONDITIONS OR AS DIRECTED BY THE ENGINEER IN THE FIELD.

4) THE CONTRACTOR SHALL COORDINATE THE PLACEMENT OF THE FINAL SIGNAGE WITH STATE FORCES PRIOR TO PROCEEDING TO THE NEXT PHASE, WHERE APPLICABLE. THE CONTRACTOR SHALL NOT REMOVE ANY TEMPORARY SIGNAGE UNLESS APPROVED BY THE ENGINEER IN THE FIELD.

5) THE CONTRACTOR SHALL REMOVE ALL EROSION AND SEDIMENT CONTROL SYSTEMS STILL REMAINING IN THIS PHASE PER THE APPROVAL OF THE SEDIMENT CONTROL INSPECTOR.

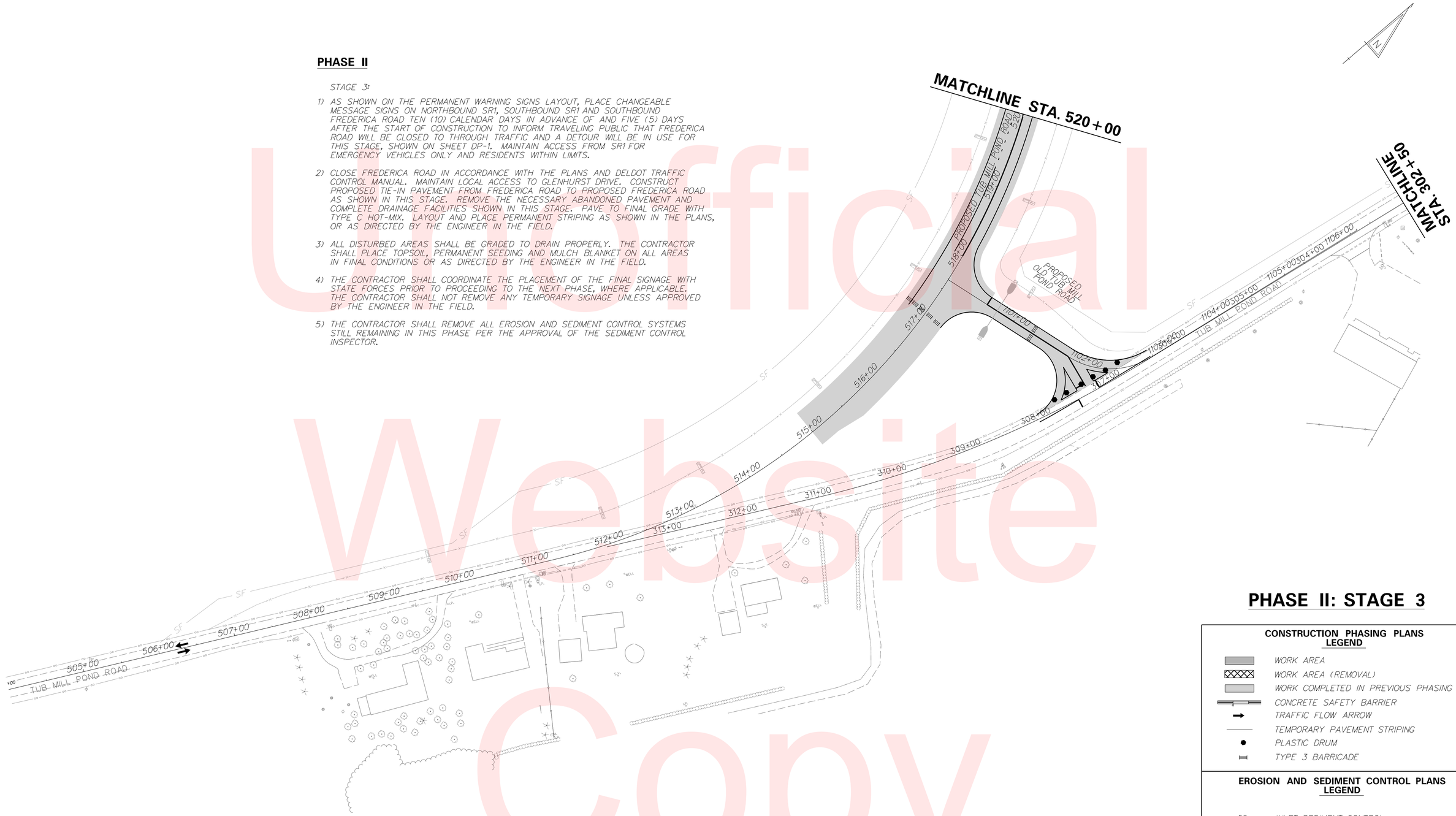

PHASE II: STAGE 3

CONSTRUCTION PHASING PLANS LEGEND

- WORK AREA
- WORK AREA (REMOVAL)
- WORK COMPLETED IN PREVIOUS PHASING
- CONCRETE SAFETY BARRIER
- TRAFFIC FLOW ARROW
- TEMPORARY PAVEMENT STRIPING
- PLASTIC DRUM
- TYPE 3 BARRICADE

EROSION AND SEDIMENT CONTROL PLANS LEGEND

- INLET SEDIMENT CONTROL
- SF — SILT FENCE
- CHECK DAM
- SCE — STABILIZED CONSTRUCTION ENTRANCE
- ST — SEDIMENT TRAP
- TSD — TEMPORARY SLOPE DRAIN

Unofficial Website Copy

DELAWARE DEPARTMENT OF TRANSPORTATION	ADDENDUMS / REVISIONS	SCALE 0 60 120 180 FEET	SR1, SOUTH FREDERICA GRADE SEPARATED INTERSECTION	CONTRACT T200812202	BRIDGE NO. –	CONSTRUCTION PHASING, M.O.T. AND EROSION CONTROL PLANS	SHEET NO. 162
				COUNTY KENT	DESIGNED BY: LCM		TOTAL SHTS. 296
					CHECKED BY: SFP		

9/14/2015
G:\PROJECTS\06535.00 (DelDOT Agmt. 1376 DOTS Open End)\06535.07 SR1, S. Frederica\CADD Files\XM\cs_020303sf.dgn
2:24:55 PM

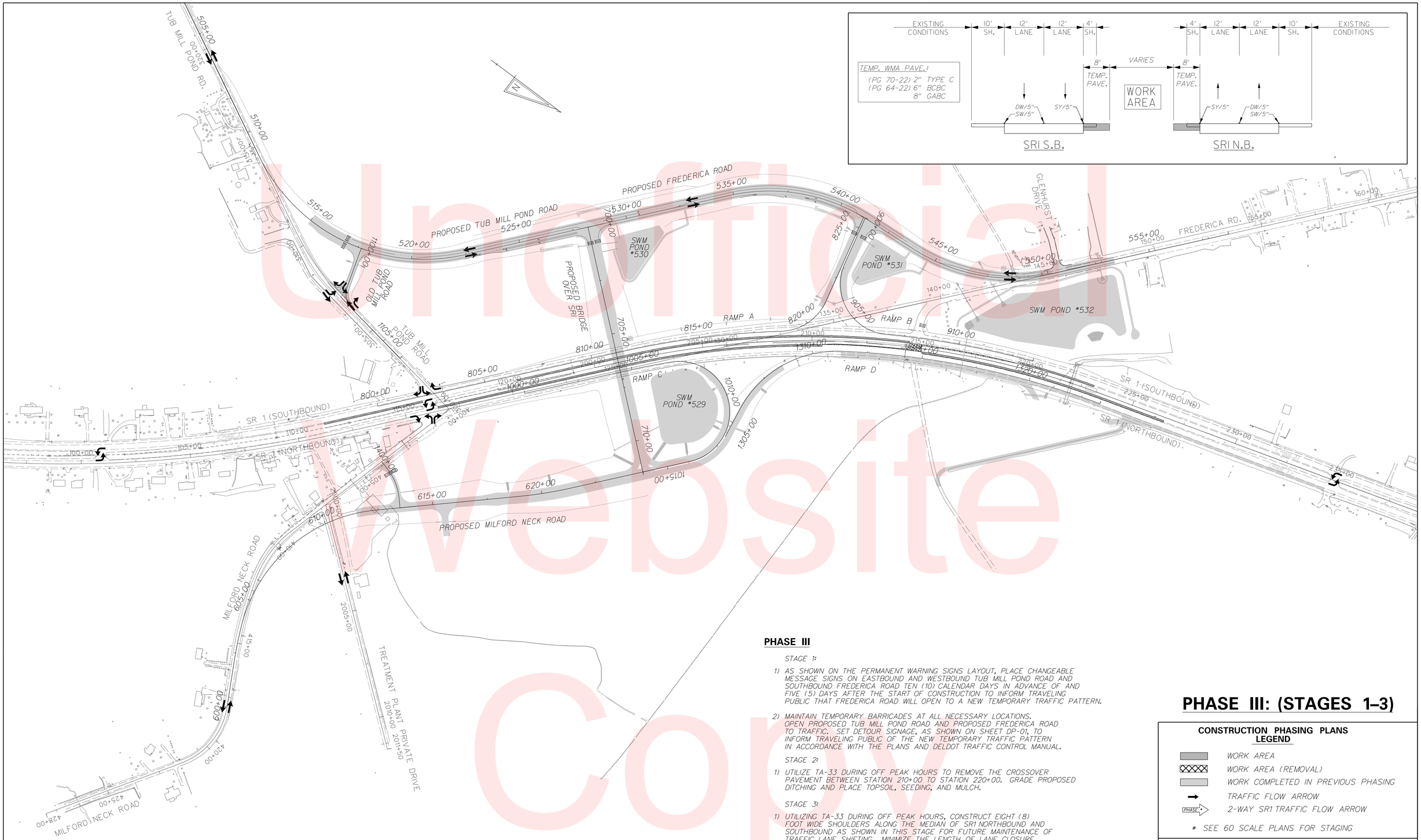

Unofficial Website Copy

PHASE III

STAGE 1:

1) AS SHOWN ON THE PERMANENT WARNING SIGNS LAYOUT, PLACE CHANGEABLE MESSAGE SIGNS ON EASTBOUND AND WESTBOUND TUB MILL POND ROAD AND SOUTHBOUND FREDERICA ROAD TEN (10) CALENDAR DAYS IN ADVANCE OF AND FIVE (5) DAYS AFTER THE START OF CONSTRUCTION TO INFORM TRAVELING PUBLIC THAT FREDERICA ROAD WILL OPEN TO A NEW TEMPORARY TRAFFIC PATTERN.

2) MAINTAIN TEMPORARY BARRICADES AT ALL NECESSARY LOCATIONS. OPEN PROPOSED TUB MILL POND ROAD AND PROPOSED FREDERICA ROAD TO TRAFFIC. SET DETOUR SIGNAGE, AS SHOWN ON SHEET DP-01, TO INFORM TRAVELING PUBLIC OF THE NEW TEMPORARY TRAFFIC PATTERN IN ACCORDANCE WITH THE PLANS AND DELDOT TRAFFIC CONTROL MANUAL.

STAGE 2:

1) UTILIZE TA-33 DURING OFF PEAK HOURS TO REMOVE THE CROSSOVER PAVEMENT BETWEEN STATION 210+00 TO STATION 220+00. GRADE PROPOSED DITCHING AND PLACE TOPSOIL, SEEDING, AND MULCH.

STAGE 3:

1) UTILIZING TA-33 DURING OFF PEAK HOURS, CONSTRUCT EIGHT (8) FOOT WIDE SHOULDERS ALONG THE MEDIAN OF SR1 NORTHBOUND AND SOUTHBOUND AS SHOWN IN THIS STAGE FOR FUTURE MAINTENANCE OF TRAFFIC LANE SHIFTING. MINIMIZE THE LENGTH OF LANE CLOSURE DEPENDING ON THE WORK BEING PERFORMED.

PHASE III: (STAGES 1–3)

CONSTRUCTION PHASING PLANS LEGEND

- WORK AREA
- WORK AREA (REMOVAL)
- WORK COMPLETED IN PREVIOUS PHASING
- TRAFFIC FLOW ARROW
- PHASE — 2-WAY SR1 TRAFFIC FLOW ARROW

* SEE 60 SCALE PLANS FOR STAGING

EROSION AND SEDIMENT CONTROL PLANS LEGEND

* SEE 60 SCALE PLANS FOR STAGING

DELAWARE DEPARTMENT OF TRANSPORTATION	ADDENDUMS / REVISIONS	SCALE 0 200 400 600 FEET	SR1, SOUTH FREDERICA GRADE SEPARATED INTERSECTION	CONTRACT T200812202 / COUNTY KENT	BRIDGE NO. – / DESIGNED BY: LCM / CHECKED BY: SFP	CONSTRUCTION PHASING, M.O.T. AND EROSION CONTROL PLANS	SHEET NO. 163 / TOTAL SHTS. 296

9/14/2015
G:\PROJECTS\06535.00 (DelDOT Agmt. 1376 DOTS Open End)\06535.07 SR1, S. Frederica\CADD Files\XM\cs_030000sf.dgn
23041 PM

PHASE III: STAGE 1&2

EROSION AND SEDIMENT CONTROL PLANS LEGEND

- INLET SEDIMENT CONTROL
- SF — SILT FENCE
- CHECK DAM
- STABILIZED CONSTRUCTION ENTRANCE
- SEDIMENT TRAP
- TSD — TEMPORARY SLOPE DRAIN

CONSTRUCTION PHASING PLANS LEGEND

- WORK AREA
- WORK AREA (REMOVAL)
- WORK COMPLETED IN PREVIOUS PHASING
- CONCRETE SAFETY BARRIER
- TRAFFIC FLOW ARROW
- TEMPORARY PAVEMENT STRIPING
- PLASTIC DRUM
- TYPE 3 BARRICADE

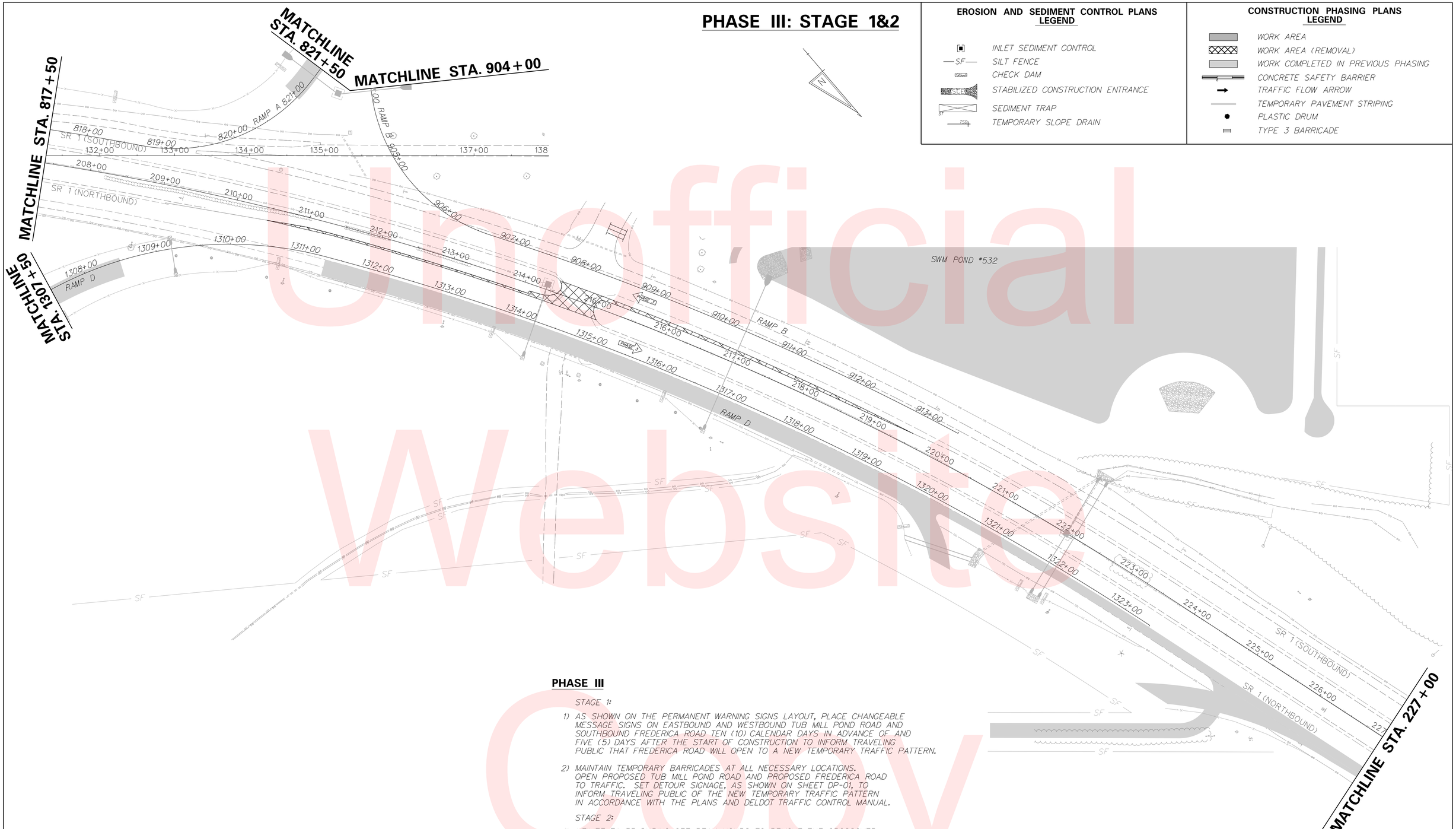

PHASE III

STAGE 1:

1) AS SHOWN ON THE PERMANENT WARNING SIGNS LAYOUT, PLACE CHANGEABLE MESSAGE SIGNS ON EASTBOUND AND WESTBOUND TUB MILL POND ROAD AND SOUTHBOUND FREDERICA ROAD TEN (10) CALENDAR DAYS IN ADVANCE OF AND FIVE (5) DAYS AFTER THE START OF CONSTRUCTION TO INFORM TRAVELING PUBLIC THAT FREDERICA ROAD WILL OPEN TO A NEW TEMPORARY TRAFFIC PATTERN.

2) MAINTAIN TEMPORARY BARRICADES AT ALL NECESSARY LOCATIONS. OPEN PROPOSED TUB MILL POND ROAD AND PROPOSED FREDERICA ROAD TO TRAFFIC. SET DETOUR SIGNAGE, AS SHOWN ON SHEET DP-01, TO INFORM TRAVELING PUBLIC OF THE NEW TEMPORARY TRAFFIC PATTERN IN ACCORDANCE WITH THE PLANS AND DELDOT TRAFFIC CONTROL MANUAL.

STAGE 2:

1) UTILIZE TA-33 DURING OFF PEAK HOURS TO REMOVE THE CROSSOVER PAVEMENT BETWEEN STATION 210+00 TO STATION 220+00. GRADE PROPOSED DITCHING AND PLACE TOPSOIL, SEEDING, AND MULCH.

Unofficial Website Copy

DELAWARE DEPARTMENT OF TRANSPORTATION	ADDENDUMS / REVISIONS	SCALE 0 60 120 180 FEET	SR1, SOUTH FREDERICA GRADE SEPARATED INTERSECTION	CONTRACT T200812202	BRIDGE NO. –	CONSTRUCTION PHASING, M.O.T. AND EROSION CONTROL PLANS	SHEET NO. 164
				COUNTY KENT	DESIGNED BY: LCM		TOTAL SHTS. 296
					CHECKED BY: SFP		

9/14/2015
C:\PROJECTS\06535.00 (DelDOT Agmt. 1376 DOTS Open End)\06535.07 SR1, S. Frederica\CADD Files\XM\cs_030101sf.dgn
2:34:49 PM

PHASE III: STAGE 3

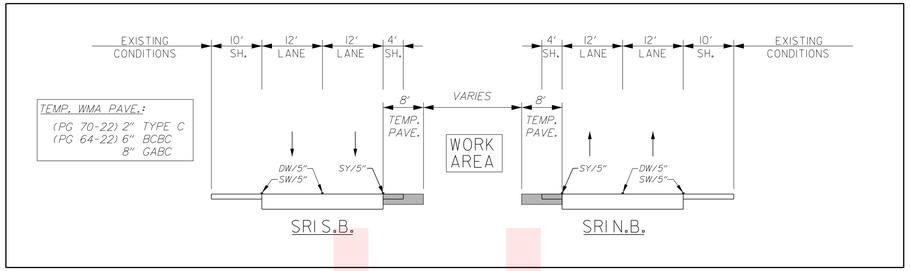

EROSION AND SEDIMENT CONTROL PLANS LEGEND

- INLET SEDIMENT CONTROL
- SF — SILT FENCE
- CHECK DAM
- SCE — STABILIZED CONSTRUCTION ENTRANCE
- SEDIMENT TRAP
- TSD — TEMPORARY SLOPE DRAIN

CONSTRUCTION PHASING PLANS LEGEND

- WORK AREA
- WORK AREA (REMOVAL)
- WORK COMPLETED IN PREVIOUS PHASING
- CONCRETE SAFETY BARRIER
- TRAFFIC FLOW ARROW
- TEMPORARY PAVEMENT STRIPING
- PLASTIC DRUM
- TYPE 3 BARRICADE

PHASE III

STAGE 3:

1) UTILIZING TA-33 DURING OFF PEAK HOURS, CONSTRUCT EIGHT (8) FOOT WIDE SHOULDERS ALONG THE MEDIAN OF SR1 NORTHBOUND AND SOUTHBOUND AS SHOWN IN THIS STAGE FOR FUTURE MAINTENANCE OF TRAFFIC LANE SHIFTING. MINIMIZE THE LENGTH OF LANE CLOSURE DEPENDING ON THE WORK BEING PERFORMED.

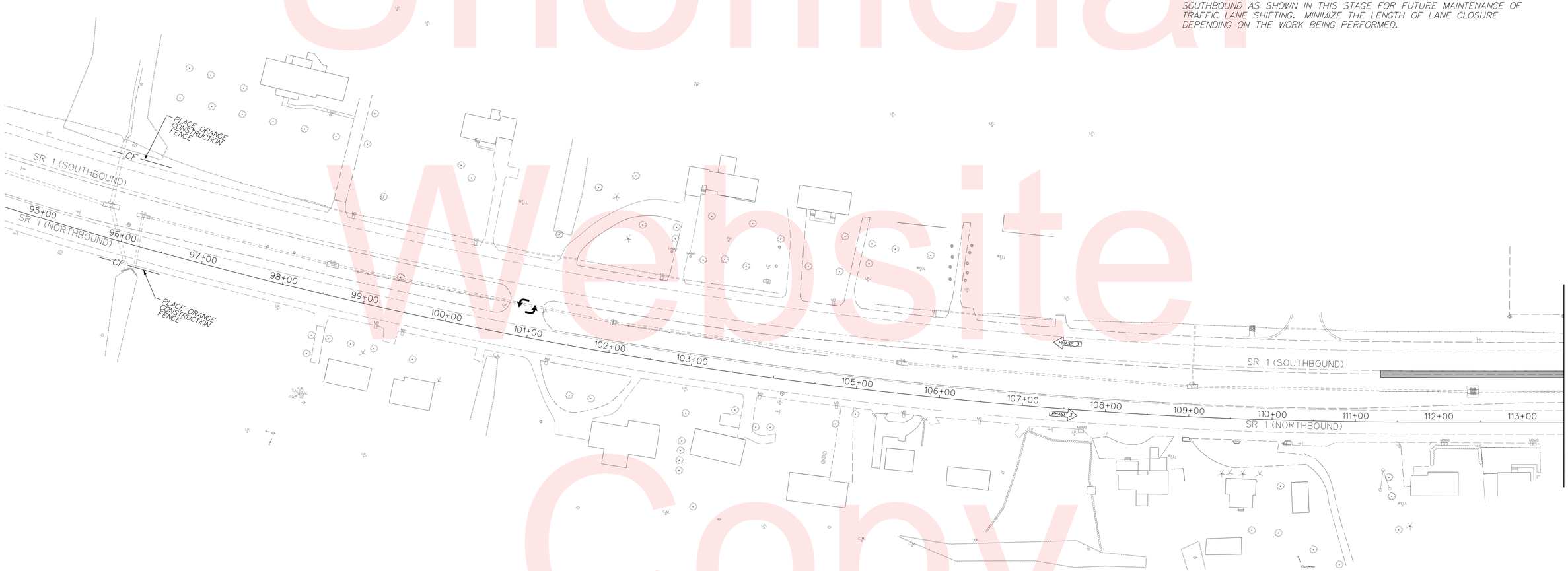

Unofficial Website Copy

9/14/2015
C:\PROJECTS\06535.00 (DelDOT Agmt. 1376 DOTS Open End)\06535.07 SR1, S. Frederica\CADD Files\XM\cs_030301st.dgn
2:36:28 PM

DELAWARE DEPARTMENT OF TRANSPORTATION	ADDENDUMS / REVISIONS	SCALE 0 60 120 180 FEET	SR1, SOUTH FREDERICA GRADE SEPARATED INTERSECTION	CONTRACT T200812202	BRIDGE NO. –	CONSTRUCTION PHASING, M.O.T. AND EROSION CONTROL PLANS	SHEET NO. 165
				COUNTY KENT	DESIGNED BY: LCM		TOTAL SHTS. 296
					CHECKED BY: SFP		

PHASE III: STAGE 3

EROSION AND SEDIMENT CONTROL PLANS LEGEND

- INLET SEDIMENT CONTROL
- SF — SILT FENCE
- CHECK DAM
- SCE — STABILIZED CONSTRUCTION ENTRANCE
- ST — SEDIMENT TRAP
- TSD — TEMPORARY SLOPE DRAIN

CONSTRUCTION PHASING PLANS LEGEND

- WORK AREA
- WORK AREA (REMOVAL)
- WORK COMPLETED IN PREVIOUS PHASING
- CONCRETE SAFETY BARRIER
- TRAFFIC FLOW ARROW
- TEMPORARY PAVEMENT STRIPING
- PLASTIC DRUM
- TYPE 3 BARRICADE

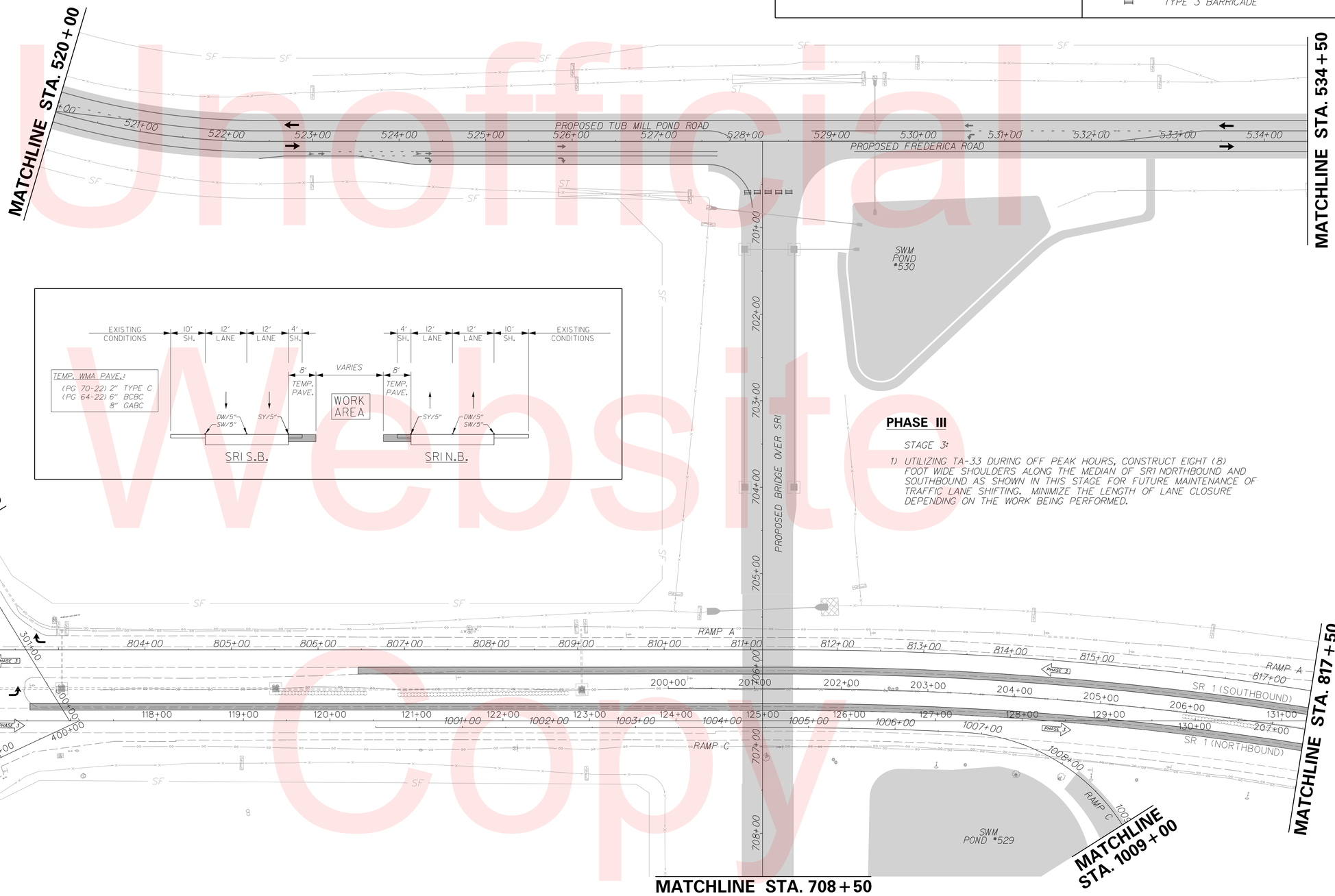

PHASE III

STAGE 3:

1) UTILIZING TA-33 DURING OFF PEAK HOURS, CONSTRUCT EIGHT (8) FOOT WIDE SHOULDERS ALONG THE MEDIAN OF SR1 NORTHBOUND AND SOUTHBOUND AS SHOWN IN THIS STAGE FOR FUTURE MAINTENANCE OF TRAFFIC LANE SHIFTING. MINIMIZE THE LENGTH OF LANE CLOSURE DEPENDING ON THE WORK BEING PERFORMED.

Unofficial Website Copy

DELAWARE DEPARTMENT OF TRANSPORTATION	ADDENDUMS / REVISIONS	SCALE 0 60 120 180 FEET	SR1, SOUTH FREDERICA GRADE SEPARATED INTERSECTION	CONTRACT T200812202	BRIDGE NO. –	CONSTRUCTION PHASING, M.O.T. AND EROSION CONTROL PLANS	SHEET NO. 166
				COUNTY KENT	DESIGNED BY: LCM		TOTAL SHTS. 296
					CHECKED BY: SFP		

9/14/2015
G:\PROJECTS\06535.00 (DelDOT Agmt. 1376 DOTS Open End)\06535.07 SR1, S. Frederica\CADD Files\XWlcs_030302sf.dgn
2:36:51 PM

PHASE III: STAGE 3

EROSION AND SEDIMENT CONTROL PLANS LEGEND

- INLET SEDIMENT CONTROL
- SF — SILT FENCE
- CHECK DAM
- STABILIZED CONSTRUCTION ENTRANCE
- SEDIMENT TRAP
- TSD — TEMPORARY SLOPE DRAIN

CONSTRUCTION PHASING PLANS LEGEND

- WORK AREA
- WORK AREA (REMOVAL)
- WORK COMPLETED IN PREVIOUS PHASING
- CONCRETE SAFETY BARRIER
- TRAFFIC FLOW ARROW
- TEMPORARY PAVEMENT STRIPING
- PLASTIC DRUM
- TYPE 3 BARRICADE

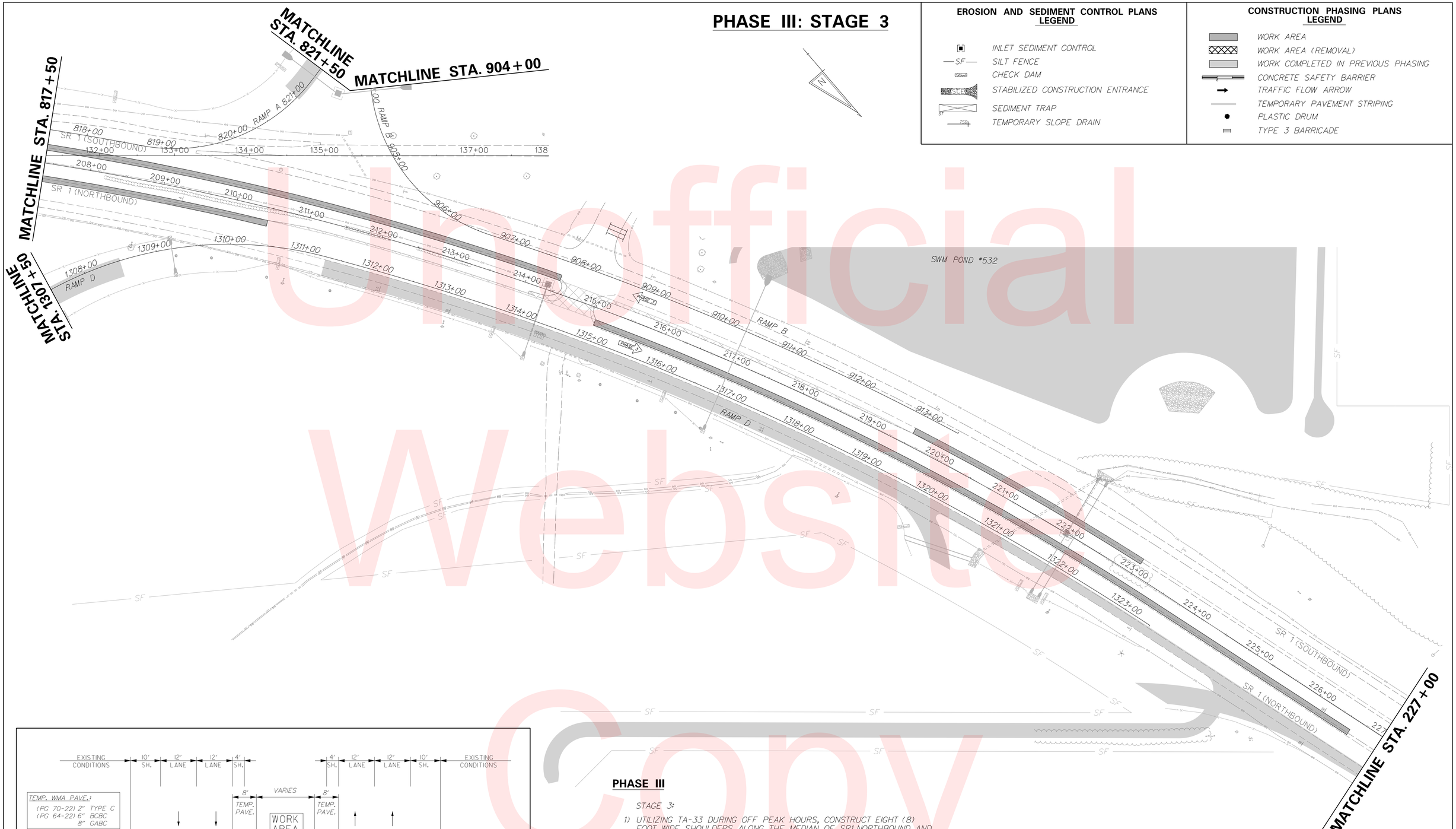

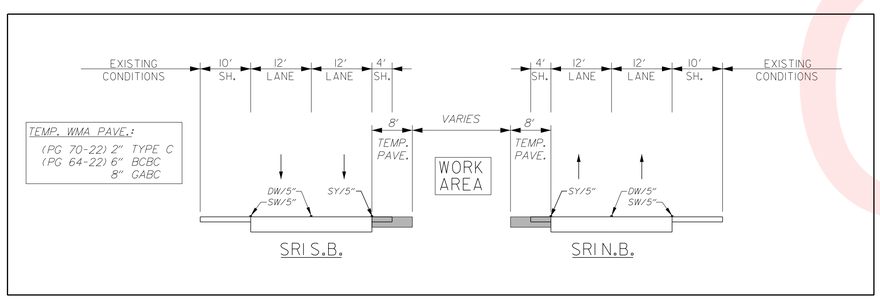

PHASE III

STAGE 3:

1) UTILIZING TA-33 DURING OFF PEAK HOURS, CONSTRUCT EIGHT (8) FOOT WIDE SHOULDERS ALONG THE MEDIAN OF SR1 NORTHBOUND AND SOUTHBOUND AS SHOWN IN THIS STAGE FOR FUTURE MAINTENANCE OF TRAFFIC LANE SHIFTING. MINIMIZE THE LENGTH OF LANE CLOSURE DEPENDING ON THE WORK BEING PERFORMED.

Unofficial Website Copy

DELAWARE DEPARTMENT OF TRANSPORTATION	ADDENDUMS / REVISIONS	SCALE 0 60 120 180 FEET	SR1, SOUTH FREDERICA GRADE SEPARATED INTERSECTION	CONTRACT T200812202 / COUNTY KENT	BRIDGE NO. – / DESIGNED BY: LCM / CHECKED BY: SFP	CONSTRUCTION PHASING, M.O.T. AND EROSION CONTROL PLANS	SHEET NO. 167 / TOTAL SHTS. 296

9/14/2015
G:\PROJECTS\06535.00 (DelDOT Agmt. 1376 DOTS Open End)\06535.07 SR1, S. Frederica\CADD Files\XM\cs_030303sf.dgn
2:37:17 PM

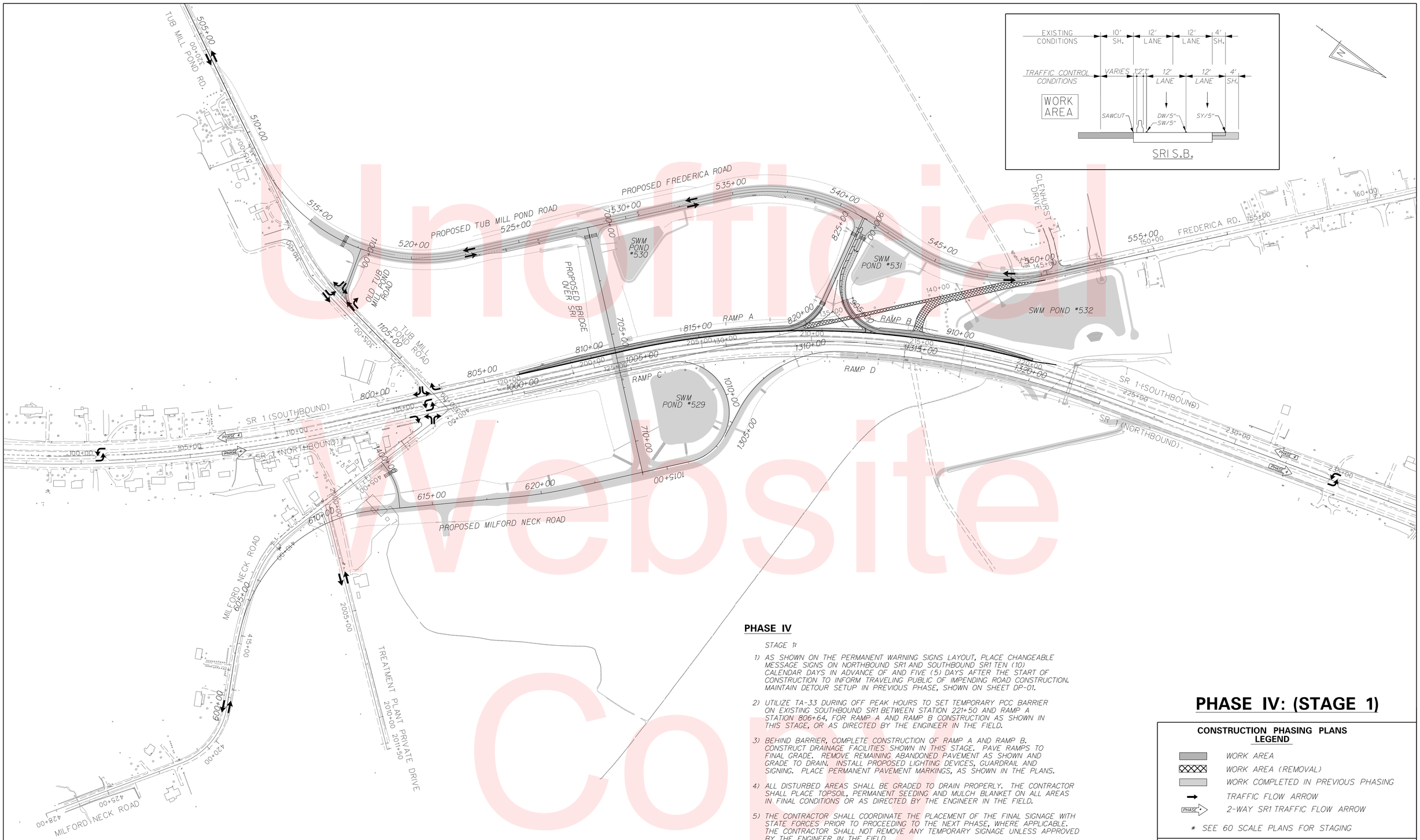

PHASE IV

STAGE 1:

1) AS SHOWN ON THE PERMANENT WARNING SIGNS LAYOUT, PLACE CHANGEABLE MESSAGE SIGNS ON NORTHBOUND SR1 AND SOUTHBOUND SR1 TEN (10) CALENDAR DAYS IN ADVANCE OF AND FIVE (5) DAYS AFTER THE START OF CONSTRUCTION TO INFORM TRAVELING PUBLIC OF IMPENDING ROAD CONSTRUCTION. MAINTAIN DETOUR SETUP IN PREVIOUS PHASE, SHOWN ON SHEET DP-01.

2) UTILIZE TA-33 DURING OFF PEAK HOURS TO SET TEMPORARY PCC BARRIER ON EXISTING SOUTHBOUND SR1 BETWEEN STATION 221+50 AND RAMP A STATION 806+64, FOR RAMP A AND RAMP B CONSTRUCTION AS SHOWN IN THIS STAGE, OR AS DIRECTED BY THE ENGINEER IN THE FIELD.

3) BEHIND BARRIER, COMPLETE CONSTRUCTION OF RAMP A AND RAMP B. CONSTRUCT DRAINAGE FACILITIES SHOWN IN THIS STAGE. PAVE RAMPS TO FINAL GRADE. REMOVE REMAINING ABANDONED PAVEMENT AS SHOWN AND GRADE TO DRAIN. INSTALL PROPOSED LIGHTING DEVICES, GUARDRAIL AND SIGNING. PLACE PERMANENT PAVEMENT MARKINGS, AS SHOWN IN THE PLANS.

4) ALL DISTURBED AREAS SHALL BE GRADED TO DRAIN PROPERLY. THE CONTRACTOR SHALL PLACE TOPSOIL, PERMANENT SEEDING AND MULCH BLANKET ON ALL AREAS IN FINAL CONDITIONS OR AS DIRECTED BY THE ENGINEER IN THE FIELD.

5) THE CONTRACTOR SHALL COORDINATE THE PLACEMENT OF THE FINAL SIGNAGE WITH STATE FORCES PRIOR TO PROCEEDING TO THE NEXT PHASE, WHERE APPLICABLE. THE CONTRACTOR SHALL NOT REMOVE ANY TEMPORARY SIGNAGE UNLESS APPROVED BY THE ENGINEER IN THE FIELD.

6) THE CONTRACTOR SHALL REMOVE ALL EROSION AND SEDIMENT CONTROL SYSTEMS STILL REMAINING IN THIS PHASE PER THE APPROVAL OF THE SEDIMENT CONTROL INSPECTOR.

PHASE IV: (STAGE 1)

CONSTRUCTION PHASING PLANS LEGEND

- WORK AREA
- WORK AREA (REMOVAL)
- WORK COMPLETED IN PREVIOUS PHASING
- TRAFFIC FLOW ARROW
- PHASE 2-WAY SR1 TRAFFIC FLOW ARROW

* SEE 60 SCALE PLANS FOR STAGING

EROSION AND SEDIMENT CONTROL PLANS LEGEND

* SEE 60 SCALE PLANS FOR STAGING

Unofficial Website Copy

DELAWARE DEPARTMENT OF TRANSPORTATION	ADDENDUMS / REVISIONS	SCALE 0 200 400 600 FEET	SR1, SOUTH FREDERICA GRADE SEPARATED INTERSECTION	CONTRACT T200812202	BRIDGE NO. –	CONSTRUCTION PHASING, M.O.T. AND EROSION CONTROL PLANS	SHEET NO. 168
				COUNTY KENT	DESIGNED BY: LCM		TOTAL SHTS. 296
					CHECKED BY: SFP		

9/14/2015
G:\APROJECTS\06535.00 (DelDOT Agmt. 1376 DOTS Open End)\06535.07 SR1, S. Frederica\CADD Files\XM\cs_040000sf.dgn
3:03:52 PM

PHASE IV: STAGE 1

EROSION AND SEDIMENT CONTROL PLANS LEGEND

- INLET SEDIMENT CONTROL
- SF — SILT FENCE
- CHECK DAM
- SCE — STABILIZED CONSTRUCTION ENTRANCE
- ST — SEDIMENT TRAP
- TSD — TEMPORARY SLOPE DRAIN

CONSTRUCTION PHASING PLANS LEGEND

- WORK AREA
- WORK AREA (REMOVAL)
- WORK COMPLETED IN PREVIOUS PHASING
- CONCRETE SAFETY BARRIER
- TRAFFIC FLOW ARROW
- TEMPORARY PAVEMENT STRIPING
- PLASTIC DRUM
- TYPE 3 BARRICADE

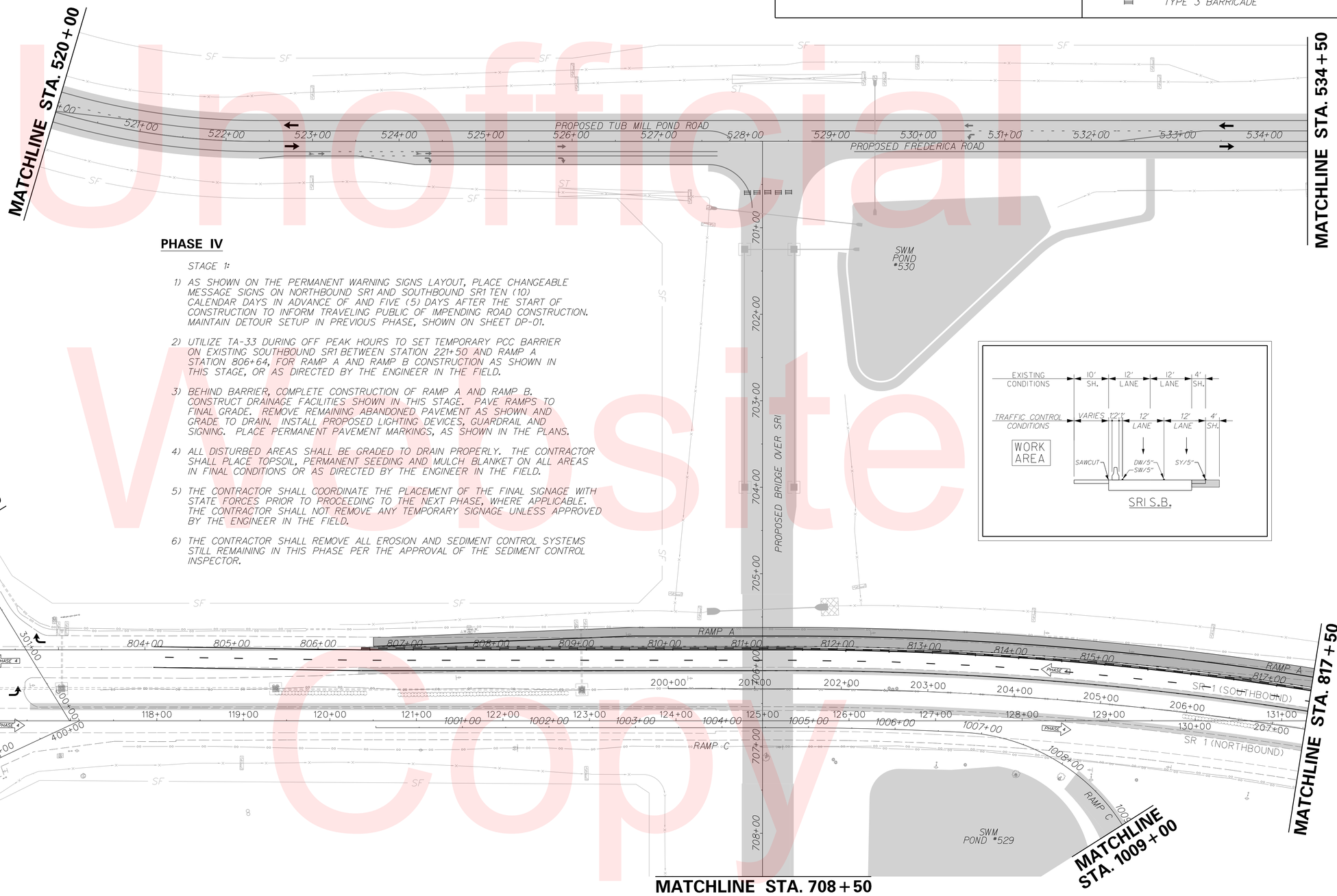

PHASE IV

STAGE 1:

1) AS SHOWN ON THE PERMANENT WARNING SIGNS LAYOUT, PLACE CHANGEABLE MESSAGE SIGNS ON NORTHBOUND SR1 AND SOUTHBOUND SR1 TEN (10) CALENDAR DAYS IN ADVANCE OF AND FIVE (5) DAYS AFTER THE START OF CONSTRUCTION TO INFORM TRAVELING PUBLIC OF IMPENDING ROAD CONSTRUCTION. MAINTAIN DETOUR SETUP IN PREVIOUS PHASE, SHOWN ON SHEET DP-01.

2) UTILIZE TA-33 DURING OFF PEAK HOURS TO SET TEMPORARY PCC BARRIER ON EXISTING SOUTHBOUND SR1 BETWEEN STATION 221+50 AND RAMP A STATION 806+64, FOR RAMP A AND RAMP B CONSTRUCTION AS SHOWN IN THIS STAGE, OR AS DIRECTED BY THE ENGINEER IN THE FIELD.

3) BEHIND BARRIER, COMPLETE CONSTRUCTION OF RAMP A AND RAMP B. CONSTRUCT DRAINAGE FACILITIES SHOWN IN THIS STAGE. PAVE RAMPS TO FINAL GRADE. REMOVE REMAINING ABANDONED PAVEMENT AS SHOWN AND GRADE TO DRAIN. INSTALL PROPOSED LIGHTING DEVICES, GUARDRAIL AND SIGNING. PLACE PERMANENT PAVEMENT MARKINGS, AS SHOWN IN THE PLANS.

4) ALL DISTURBED AREAS SHALL BE GRADED TO DRAIN PROPERLY. THE CONTRACTOR SHALL PLACE TOPSOIL, PERMANENT SEEDING AND MULCH BLANKET ON ALL AREAS IN FINAL CONDITIONS OR AS DIRECTED BY THE ENGINEER IN THE FIELD.

5) THE CONTRACTOR SHALL COORDINATE THE PLACEMENT OF THE FINAL SIGNAGE WITH STATE FORCES PRIOR TO PROCEEDING TO THE NEXT PHASE, WHERE APPLICABLE. THE CONTRACTOR SHALL NOT REMOVE ANY TEMPORARY SIGNAGE UNLESS APPROVED BY THE ENGINEER IN THE FIELD.

6) THE CONTRACTOR SHALL REMOVE ALL EROSION AND SEDIMENT CONTROL SYSTEMS STILL REMAINING IN THIS PHASE PER THE APPROVAL OF THE SEDIMENT CONTROL INSPECTOR.

Unofficial Website Copy

DELAWARE DEPARTMENT OF TRANSPORTATION	ADDENDUMS / REVISIONS	SCALE 0 60 120 180 FEET	SR1, SOUTH FREDERICA GRADE SEPARATED INTERSECTION	CONTRACT T200812202 / COUNTY KENT	BRIDGE NO. – / DESIGNED BY: LCM / CHECKED BY: SFP	CONSTRUCTION PHASING, M.O.T. AND EROSION CONTROL PLANS	SHEET NO. 169 / TOTAL SHTS. 296

9/14/2015
G:\PROJECTS\06535.00 (DelDOT Agmt. 1376 DOTS Open End)\06535.07 SR1, S. Frederica\CADD Files\XW\cs_040101sf.dgn
3:04:04 PM

PHASE IV: STAGE 1

EROSION AND SEDIMENT CONTROL PLANS LEGEND

- INLET SEDIMENT CONTROL
- SF — SILT FENCE
- CHECK DAM
- SCE — STABILIZED CONSTRUCTION ENTRANCE
- SEDIMENT TRAP
- TSD — TEMPORARY SLOPE DRAIN

CONSTRUCTION PHASING PLANS LEGEND

- WORK AREA
- WORK AREA (REMOVAL)
- WORK COMPLETED IN PREVIOUS PHASING
- CONCRETE SAFETY BARRIER
- TRAFFIC FLOW ARROW
- TEMPORARY PAVEMENT STRIPING
- PLASTIC DRUM
- TYPE 3 BARRICADE

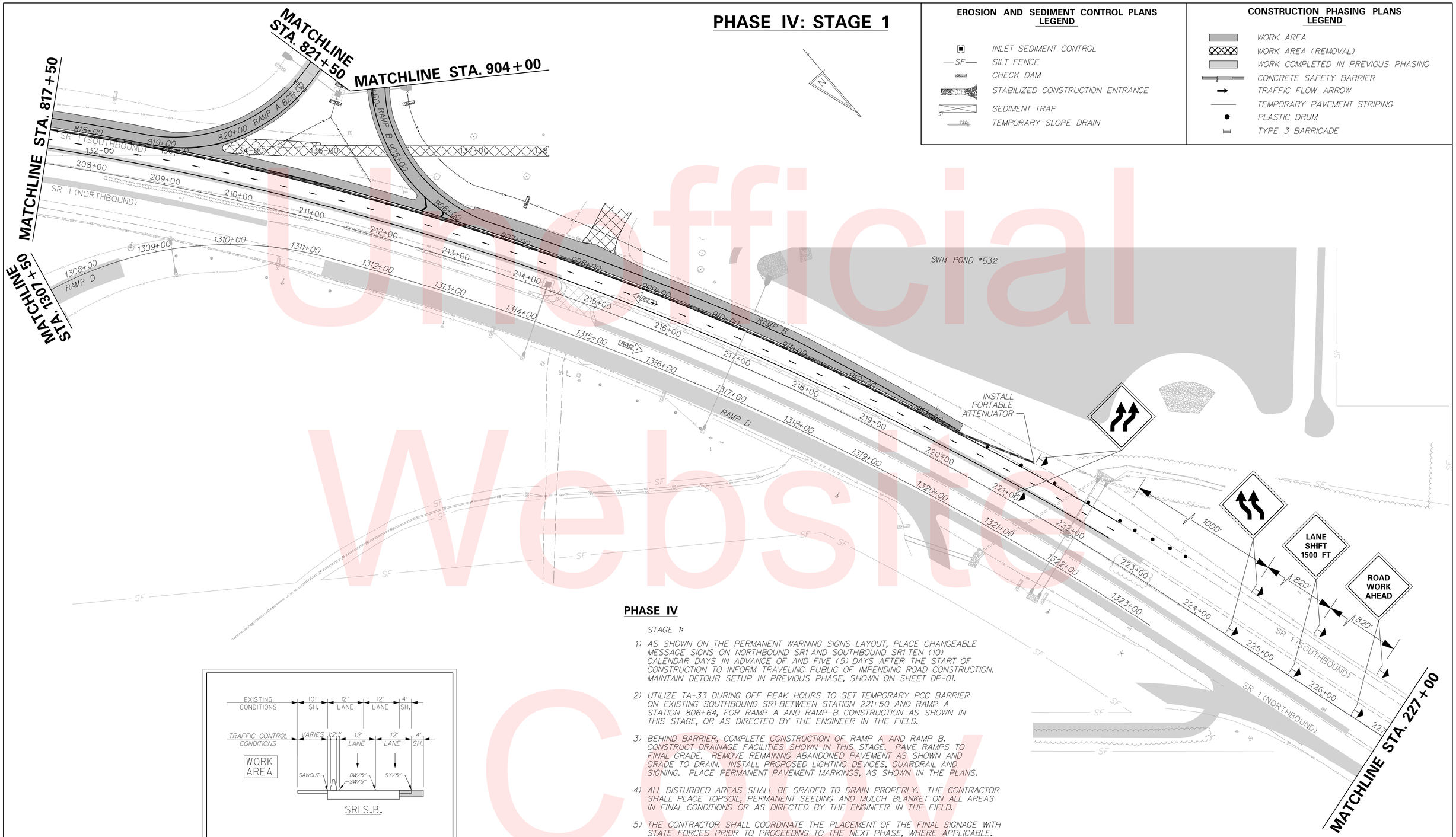

PHASE IV

STAGE 1:

1) AS SHOWN ON THE PERMANENT WARNING SIGNS LAYOUT, PLACE CHANGEABLE MESSAGE SIGNS ON NORTHBOUND SR1 AND SOUTHBOUND SR1 TEN (10) CALENDAR DAYS IN ADVANCE OF AND FIVE (5) DAYS AFTER THE START OF CONSTRUCTION TO INFORM TRAVELING PUBLIC OF IMPENDING ROAD CONSTRUCTION. MAINTAIN DETOUR SETUP IN PREVIOUS PHASE, SHOWN ON SHEET DP-01.

2) UTILIZE TA-33 DURING OFF PEAK HOURS TO SET TEMPORARY PCC BARRIER ON EXISTING SOUTHBOUND SR1 BETWEEN STATION 221+50 AND RAMP A STATION 806+64, FOR RAMP A AND RAMP B CONSTRUCTION AS SHOWN IN THIS STAGE, OR AS DIRECTED BY THE ENGINEER IN THE FIELD.

3) BEHIND BARRIER, COMPLETE CONSTRUCTION OF RAMP A AND RAMP B. CONSTRUCT DRAINAGE FACILITIES SHOWN IN THIS STAGE. PAVE RAMPS TO FINAL GRADE. REMOVE REMAINING ABANDONED PAVEMENT AS SHOWN AND GRADE TO DRAIN. INSTALL PROPOSED LIGHTING DEVICES, GUARDRAIL AND SIGNING. PLACE PERMANENT PAVEMENT MARKINGS, AS SHOWN IN THE PLANS.

4) ALL DISTURBED AREAS SHALL BE GRADED TO DRAIN PROPERLY. THE CONTRACTOR SHALL PLACE TOPSOIL, PERMANENT SEEDING AND MULCH BLANKET ON ALL AREAS IN FINAL CONDITIONS OR AS DIRECTED BY THE ENGINEER IN THE FIELD.

5) THE CONTRACTOR SHALL COORDINATE THE PLACEMENT OF THE FINAL SIGNAGE WITH STATE FORCES PRIOR TO PROCEEDING TO THE NEXT PHASE, WHERE APPLICABLE. THE CONTRACTOR SHALL NOT REMOVE ANY TEMPORARY SIGNAGE UNLESS APPROVED BY THE ENGINEER IN THE FIELD.

6) THE CONTRACTOR SHALL REMOVE ALL EROSION AND SEDIMENT CONTROL SYSTEMS STILL REMAINING IN THIS PHASE PER THE APPROVAL OF THE SEDIMENT CONTROL INSPECTOR.

Unofficial Website Copy

DELAWARE DEPARTMENT OF TRANSPORTATION	ADDENDUMS / REVISIONS	SCALE 0 60 120 180 FEET	SR1, SOUTH FREDERICA GRADE SEPARATED INTERSECTION	CONTRACT T200812202	BRIDGE NO. –	CONSTRUCTION PHASING, M.O.T. AND EROSION CONTROL PLANS	SHEET NO. 170
				COUNTY KENT	DESIGNED BY: LCM		TOTAL SHTS. 296
					CHECKED BY: SFP		

9/14/2015
G:\PROJECTS\06535.00 (DelDOT Agmt. 1376 DOTS Open End)\06535.07 SR1, S. Frederica\CADD Files\XM\cs_040102sf.dgn
3:04:28 PM

PHASE IV: STAGE 1

EROSION AND SEDIMENT CONTROL PLANS LEGEND

- INLET SEDIMENT CONTROL
- SF — SILT FENCE
- CHECK DAM
- SCE — STABILIZED CONSTRUCTION ENTRANCE
- ST — SEDIMENT TRAP
- TSD — TEMPORARY SLOPE DRAIN

CONSTRUCTION PHASING PLANS LEGEND

- WORK AREA
- WORK AREA (REMOVAL)
- WORK COMPLETED IN PREVIOUS PHASING
- CONCRETE SAFETY BARRIER
- TRAFFIC FLOW ARROW
- TEMPORARY PAVEMENT STRIPING
- PLASTIC DRUM
- TYPE 3 BARRICADE

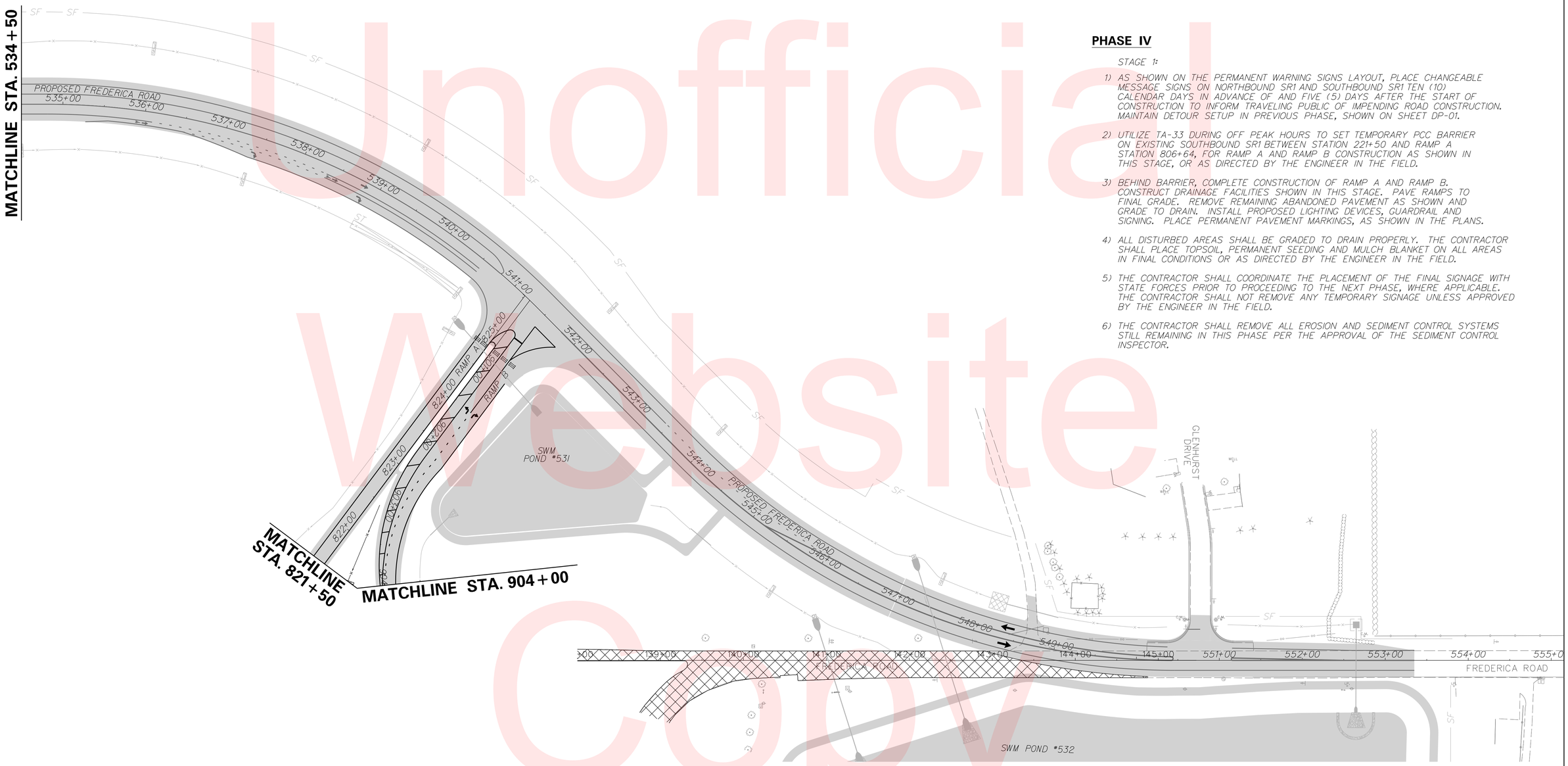

PHASE IV

STAGE 1:

1) AS SHOWN ON THE PERMANENT WARNING SIGNS LAYOUT, PLACE CHANGEABLE MESSAGE SIGNS ON NORTHBOUND SR1 AND SOUTHBOUND SR1 TEN (10) CALENDAR DAYS IN ADVANCE OF AND FIVE (5) DAYS AFTER THE START OF CONSTRUCTION TO INFORM TRAVELING PUBLIC OF IMPENDING ROAD CONSTRUCTION. MAINTAIN DETOUR SETUP IN PREVIOUS PHASE, SHOWN ON SHEET DP-01.

2) UTILIZE TA-33 DURING OFF PEAK HOURS TO SET TEMPORARY PCC BARRIER ON EXISTING SOUTHBOUND SR1 BETWEEN STATION 221+50 AND RAMP A STATION 806+64, FOR RAMP A AND RAMP B CONSTRUCTION AS SHOWN IN THIS STAGE, OR AS DIRECTED BY THE ENGINEER IN THE FIELD.

3) BEHIND BARRIER, COMPLETE CONSTRUCTION OF RAMP A AND RAMP B. CONSTRUCT DRAINAGE FACILITIES SHOWN IN THIS STAGE. PAVE RAMPS TO FINAL GRADE. REMOVE REMAINING ABANDONED PAVEMENT AS SHOWN AND GRADE TO DRAIN. INSTALL PROPOSED LIGHTING DEVICES, GUARDRAIL AND SIGNING. PLACE PERMANENT PAVEMENT MARKINGS, AS SHOWN IN THE PLANS.

4) ALL DISTURBED AREAS SHALL BE GRADED TO DRAIN PROPERLY. THE CONTRACTOR SHALL PLACE TOPSOIL, PERMANENT SEEDING AND MULCH BLANKET ON ALL AREAS IN FINAL CONDITIONS OR AS DIRECTED BY THE ENGINEER IN THE FIELD.

5) THE CONTRACTOR SHALL COORDINATE THE PLACEMENT OF THE FINAL SIGNAGE WITH STATE FORCES PRIOR TO PROCEEDING TO THE NEXT PHASE, WHERE APPLICABLE. THE CONTRACTOR SHALL NOT REMOVE ANY TEMPORARY SIGNAGE UNLESS APPROVED BY THE ENGINEER IN THE FIELD.

6) THE CONTRACTOR SHALL REMOVE ALL EROSION AND SEDIMENT CONTROL SYSTEMS STILL REMAINING IN THIS PHASE PER THE APPROVAL OF THE SEDIMENT CONTROL INSPECTOR.

Unofficial Website Copy

DELAWARE DEPARTMENT OF TRANSPORTATION	ADDENDUMS / REVISIONS	SCALE 0 60 120 180 FEET	SR1, SOUTH FREDERICA GRADE SEPARATED INTERSECTION	CONTRACT T200812202	BRIDGE NO. –	CONSTRUCTION PHASING, M.O.T. AND EROSION CONTROL PLANS	SHEET NO. 171
				COUNTY KENT	DESIGNED BY: LCM		TOTAL SHTS. 296
					CHECKED BY: SFP		

9/14/2015
G:\PROJECTS\06535.00 (DelDOT Agmt. 1376 DOTS Open End)\06535.07 SR1, S. Frederica\CADD Files\XWrks_040103sf.dgn
3:04:56 PM

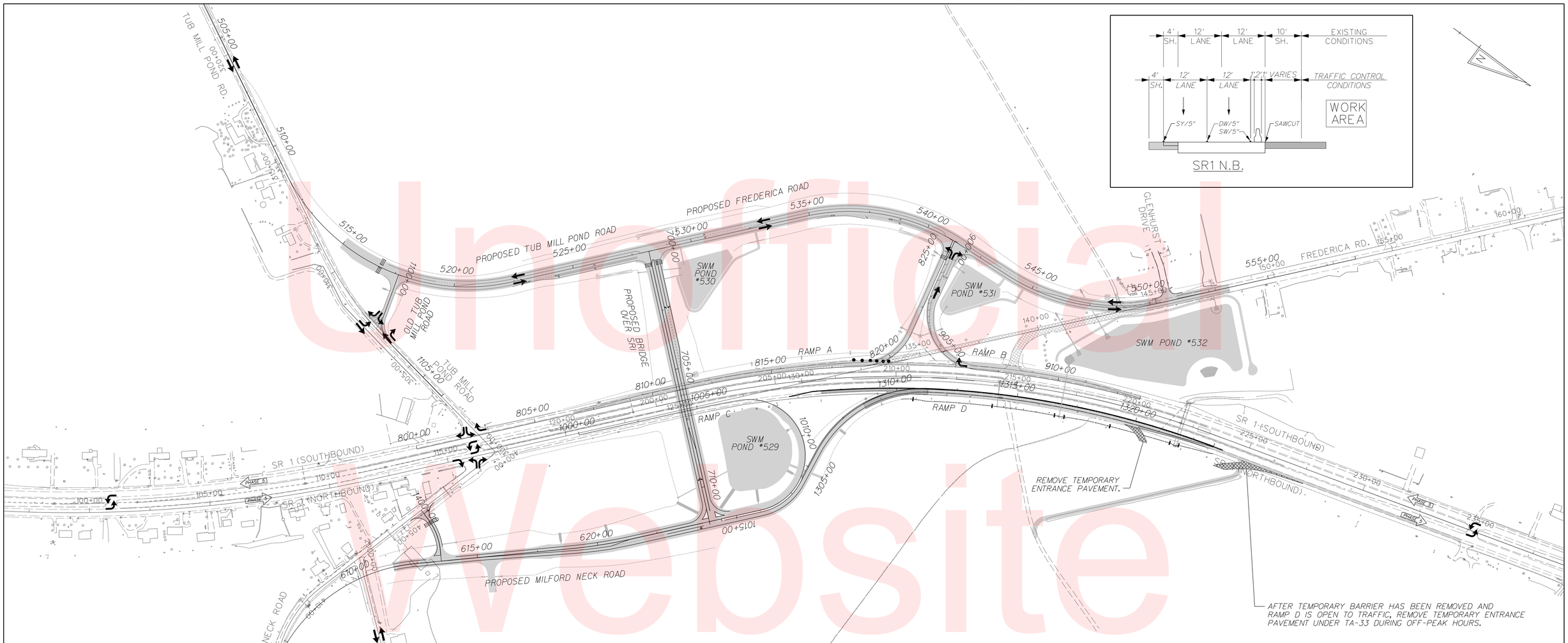

Unofficial Website Copy

PHASE V

STAGE 1:

1) UTILIZE TA-33 DURING OFF PEAK HOURS TO RELOCATE PCC BARRIER FROM SOUTHBOUND SR1 (RAMP A AND RAMP B) TO NORTHBOUND SR1 (RAMP D) FROM STATION 205+00 TO STATION 224+00 IN ORDER TO CONSTRUCT RAMP D. MAINTAIN RAMP A CLOSURE WITH TEMPORARY TRAFFIC CONTROL DEVICES. OPEN RAMP B TO TRAFFIC IN ACCORDANCE WITH THE PLANS AND DELDOT TRAFFIC CONTROL MANUAL.

2) BEHIND BARRIER, COMPLETE CONSTRUCTION OF RAMP D. CONSTRUCT DRAINAGE FACILITIES SHOWN IN THIS STAGE. PAVE RAMP D TO FINAL GRADE. INSTALL PROPOSED LIGHTING DEVICES AND SIGNING. PLACE PERMANENT PAVEMENT MARKINGS, AS SHOWN IN THE PLANS.

3) ALL DISTURBED AREAS SHALL BE GRADED TO DRAIN PROPERLY. THE CONTRACTOR SHALL PLACE TOPSOIL, PERMANENT SEEDING AND MULCH BLANKET ON ALL AREAS IN FINAL CONDITIONS OR DIRECTED BY THE ENGINEER IN THE FIELD.

4) THE CONTRACTOR SHALL COORDINATE THE PLACEMENT OF THE FINAL SIGNAGE WITH STATE FORCES PRIOR TO PROCEEDING TO THE NEXT PHASE, WHERE APPLICABLE. THE CONTRACTOR SHALL NOT REMOVE ANY TEMPORARY SIGNAGE UNLESS APPROVED BY THE ENGINEER IN THE FIELD.

5) THE CONTRACTOR SHALL REMOVE ALL EROSION AND SEDIMENT CONTROL SYSTEMS STILL REMAINING IN THIS PHASE PER THE APPROVAL OF THE SEDIMENT CONTROL INSPECTOR.

PHASE V: (STAGE 1)

CONSTRUCTION PHASING PLANS LEGEND

- WORK AREA
- WORK AREA (REMOVAL)
- WORK COMPLETED IN PREVIOUS PHASING
- TRAFFIC FLOW ARROW
- PHASE 2-WAY SR1 TRAFFIC FLOW ARROW

* SEE 60 SCALE PLANS FOR STAGING

EROSION AND SEDIMENT CONTROL PLANS LEGEND

* SEE 60 SCALE PLANS FOR STAGING

DELAWARE DEPARTMENT OF TRANSPORTATION	ADDENDUMS / REVISIONS	SCALE 0 200 400 600 FEET	SR1, SOUTH FREDERICA GRADE SEPARATED INTERSECTION	CONTRACT T200812202 / COUNTY KENT	BRIDGE NO. – / DESIGNED BY: LCM / CHECKED BY: SFP	CONSTRUCTION PHASING, M.O.T. AND EROSION CONTROL PLANS	SHEET NO. 172 / TOTAL SHTS. 296

9/14/2015
G:\PROJECTS\06535.00 (DelDOT Agmt. 1376 DOTS Open End)\06535.07 SR1, S. Frederica\CADD Files\XM\cs_050000sf.dgn
S-30149 TM

PHASE V: STAGE 1

EROSION AND SEDIMENT CONTROL PLANS LEGEND

- INLET SEDIMENT CONTROL
- SF — SILT FENCE
- CHECK DAM
- SCE — STABILIZED CONSTRUCTION ENTRANCE
- ST — SEDIMENT TRAP
- TSD — TEMPORARY SLOPE DRAIN

CONSTRUCTION PHASING PLANS LEGEND

- WORK AREA
- WORK AREA (REMOVAL)
- WORK COMPLETED IN PREVIOUS PHASING
- CONCRETE SAFETY BARRIER
- TRAFFIC FLOW ARROW
- TEMPORARY PAVEMENT STRIPING
- PLASTIC DRUM
- TYPE 3 BARRICADE

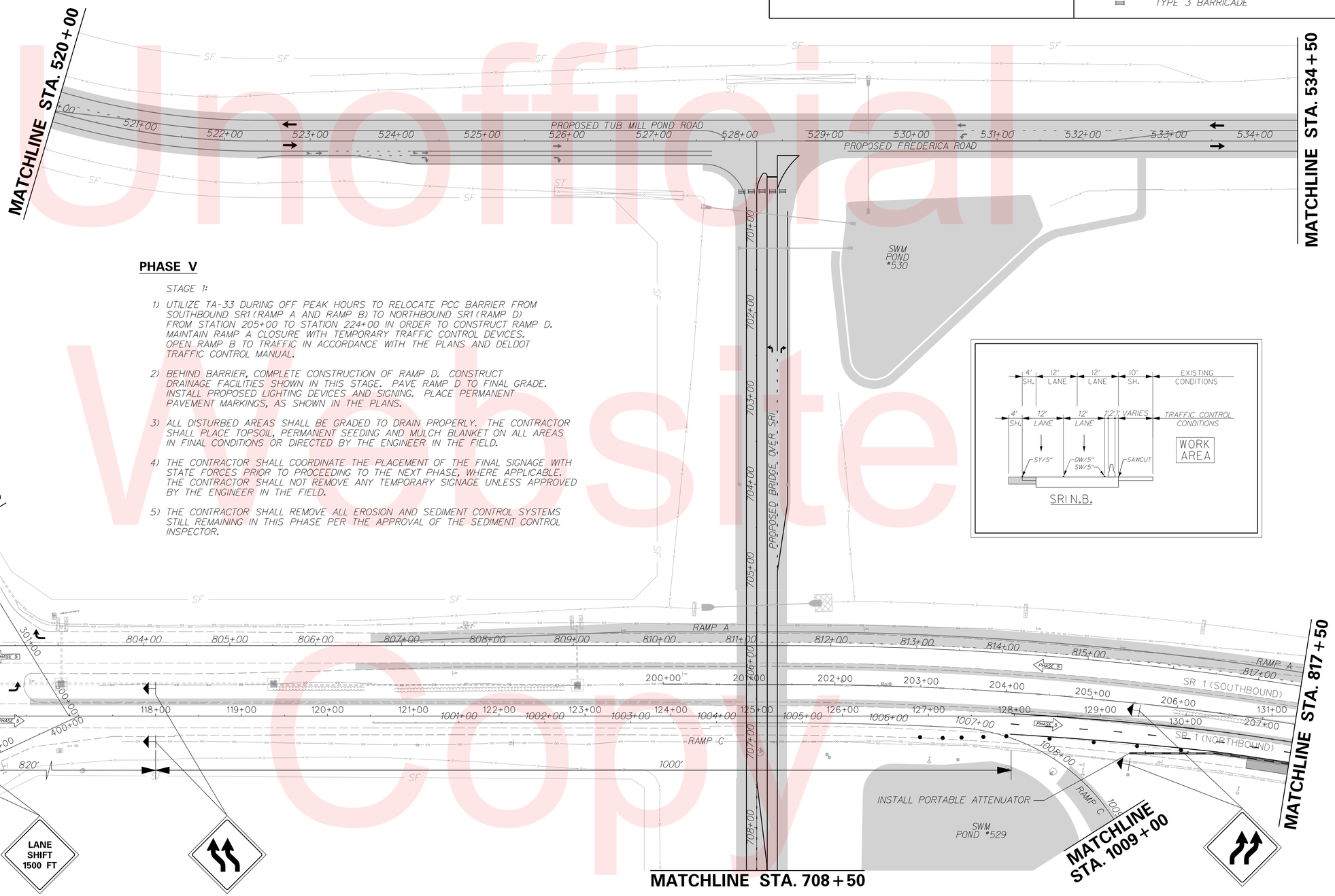

PHASE V

STAGE 1:

1) UTILIZE TA-33 DURING OFF PEAK HOURS TO RELOCATE PCC BARRIER FROM SOUTHBOUND SR1 (RAMP A AND RAMP B) TO NORTHBOUND SR1 (RAMP D) FROM STATION 205+00 TO STATION 224+00 IN ORDER TO CONSTRUCT RAMP D. MAINTAIN RAMP A CLOSURE WITH TEMPORARY TRAFFIC CONTROL DEVICES. OPEN RAMP B TO TRAFFIC IN ACCORDANCE WITH THE PLANS AND DELDOT TRAFFIC CONTROL MANUAL.

2) BEHIND BARRIER, COMPLETE CONSTRUCTION OF RAMP D. CONSTRUCT DRAINAGE FACILITIES SHOWN IN THIS STAGE. PAVE RAMP D TO FINAL GRADE. INSTALL PROPOSED LIGHTING DEVICES AND SIGNING. PLACE PERMANENT PAVEMENT MARKINGS, AS SHOWN IN THE PLANS.

3) ALL DISTURBED AREAS SHALL BE GRADED TO DRAIN PROPERLY. THE CONTRACTOR SHALL PLACE TOPSOIL, PERMANENT SEEDING AND MULCH BLANKET ON ALL AREAS IN FINAL CONDITIONS OR DIRECTED BY THE ENGINEER IN THE FIELD.

4) THE CONTRACTOR SHALL COORDINATE THE PLACEMENT OF THE FINAL SIGNAGE WITH STATE FORCES PRIOR TO PROCEEDING TO THE NEXT PHASE, WHERE APPLICABLE. THE CONTRACTOR SHALL NOT REMOVE ANY TEMPORARY SIGNAGE UNLESS APPROVED BY THE ENGINEER IN THE FIELD.

5) THE CONTRACTOR SHALL REMOVE ALL EROSION AND SEDIMENT CONTROL SYSTEMS STILL REMAINING IN THIS PHASE PER THE APPROVAL OF THE SEDIMENT CONTROL INSPECTOR.

Unofficial Website Copy

DELAWARE DEPARTMENT OF TRANSPORTATION	ADDENDUMS / REVISIONS	SCALE 0 60 120 180 FEET	SR1, SOUTH FREDERICA GRADE SEPARATED INTERSECTION	CONTRACT T200812202	BRIDGE NO. –	CONSTRUCTION PHASING, M.O.T. AND EROSION CONTROL PLANS	SHEET NO. 173
				COUNTY KENT	DESIGNED BY: LCM		TOTAL SHTS. 296
					CHECKED BY: SFP		

9/14/2015
G:\PROJECTS\06535.00 (DelDOT Agmt. 1376 DOTS Open End)\06535.07 SR1, S. Frederica\CADD Files\XWrks_050101sf.dgn
3:06:29 PM

PHASE V: STAGE 1

EROSION AND SEDIMENT CONTROL PLANS LEGEND

- INLET SEDIMENT CONTROL
- SF — SILT FENCE
- CHECK DAM
- SCE — STABILIZED CONSTRUCTION ENTRANCE
- SEDIMENT TRAP
- TSD — TEMPORARY SLOPE DRAIN

CONSTRUCTION PHASING PLANS LEGEND

- WORK AREA
- WORK AREA (REMOVAL)
- WORK COMPLETED IN PREVIOUS PHASING
- CONCRETE SAFETY BARRIER
- TRAFFIC FLOW ARROW
- TEMPORARY PAVEMENT STRIPING
- PLASTIC DRUM
- TYPE 3 BARRICADE

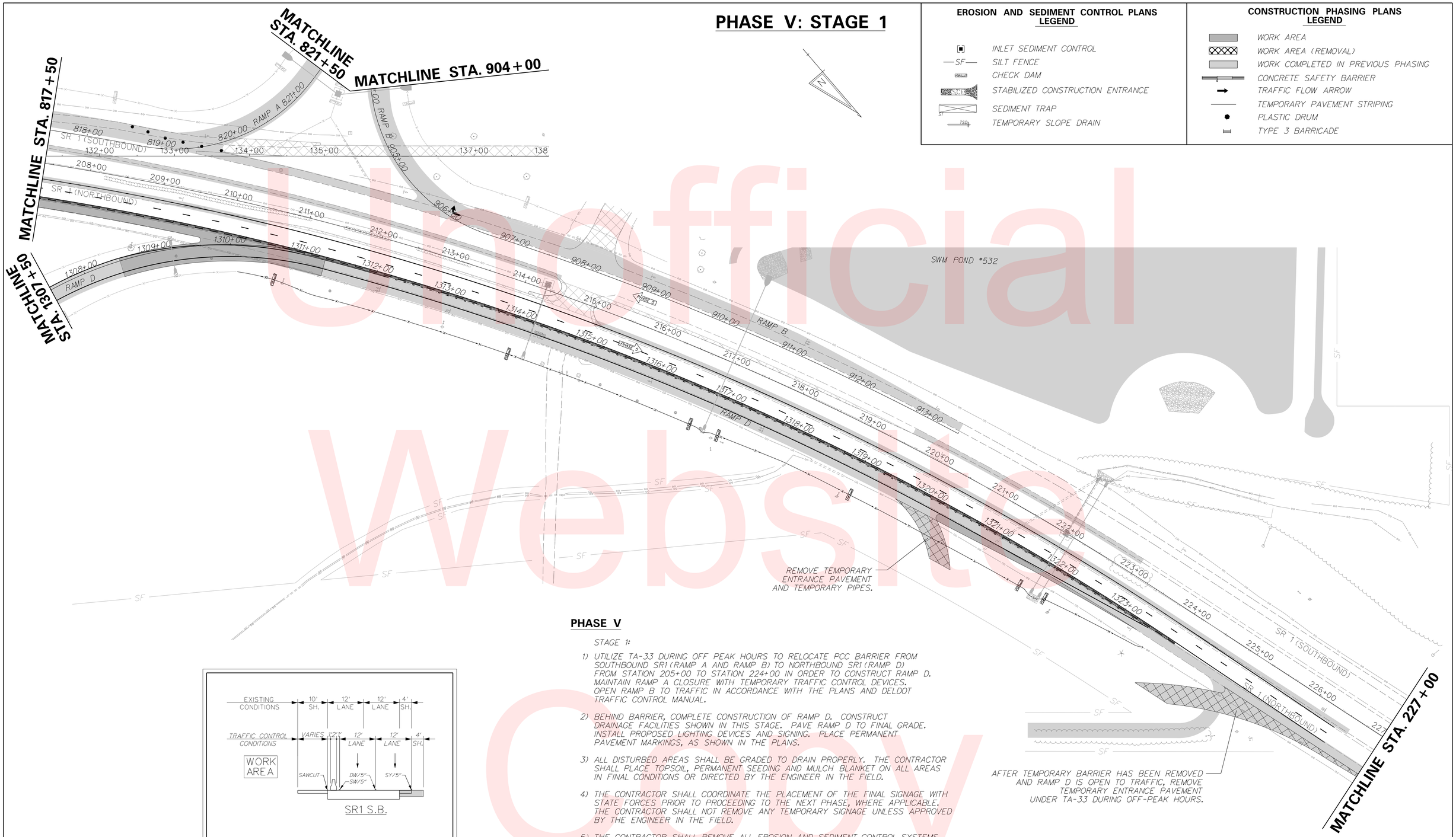

PHASE V

STAGE 1:

1) UTILIZE TA-33 DURING OFF PEAK HOURS TO RELOCATE PCC BARRIER FROM SOUTHBOUND SR1 (RAMP A AND RAMP B) TO NORTHBOUND SR1 (RAMP D) FROM STATION 205+00 TO STATION 224+00 IN ORDER TO CONSTRUCT RAMP D. MAINTAIN RAMP A CLOSURE WITH TEMPORARY TRAFFIC CONTROL DEVICES. OPEN RAMP B TO TRAFFIC IN ACCORDANCE WITH THE PLANS AND DELDOT TRAFFIC CONTROL MANUAL.

2) BEHIND BARRIER, COMPLETE CONSTRUCTION OF RAMP D. CONSTRUCT DRAINAGE FACILITIES SHOWN IN THIS STAGE. PAVE RAMP D TO FINAL GRADE. INSTALL PROPOSED LIGHTING DEVICES AND SIGNING. PLACE PERMANENT PAVEMENT MARKINGS, AS SHOWN IN THE PLANS.

3) ALL DISTURBED AREAS SHALL BE GRADED TO DRAIN PROPERLY. THE CONTRACTOR SHALL PLACE TOPSOIL, PERMANENT SEEDING AND MULCH BLANKET ON ALL AREAS IN FINAL CONDITIONS OR DIRECTED BY THE ENGINEER IN THE FIELD.

4) THE CONTRACTOR SHALL COORDINATE THE PLACEMENT OF THE FINAL SIGNAGE WITH STATE FORCES PRIOR TO PROCEEDING TO THE NEXT PHASE, WHERE APPLICABLE. THE CONTRACTOR SHALL NOT REMOVE ANY TEMPORARY SIGNAGE UNLESS APPROVED BY THE ENGINEER IN THE FIELD.

5) THE CONTRACTOR SHALL REMOVE ALL EROSION AND SEDIMENT CONTROL SYSTEMS STILL REMAINING IN THIS PHASE PER THE APPROVAL OF THE SEDIMENT CONTROL INSPECTOR.

Unofficial Website Copy

DELAWARE DEPARTMENT OF TRANSPORTATION	ADDENDUMS / REVISIONS	SCALE 0 60 120 180 FEET	SR1, SOUTH FREDERICA GRADE SEPARATED INTERSECTION	CONTRACT T200812202	BRIDGE NO. –	CONSTRUCTION PHASING, M.O.T. AND EROSION CONTROL PLANS	SHEET NO. 174
				COUNTY KENT	DESIGNED BY: LCM		TOTAL SHTS. 296
					CHECKED BY: SFP		

9/14/2015
C:\PROJECTS\06535.00 (DelDOT Agmt. 1376 DOTS Open End)\06535.07 SR1, S. Frederica\CADD Files\XM\cs_050102sf.dgn
5:33:34 PM

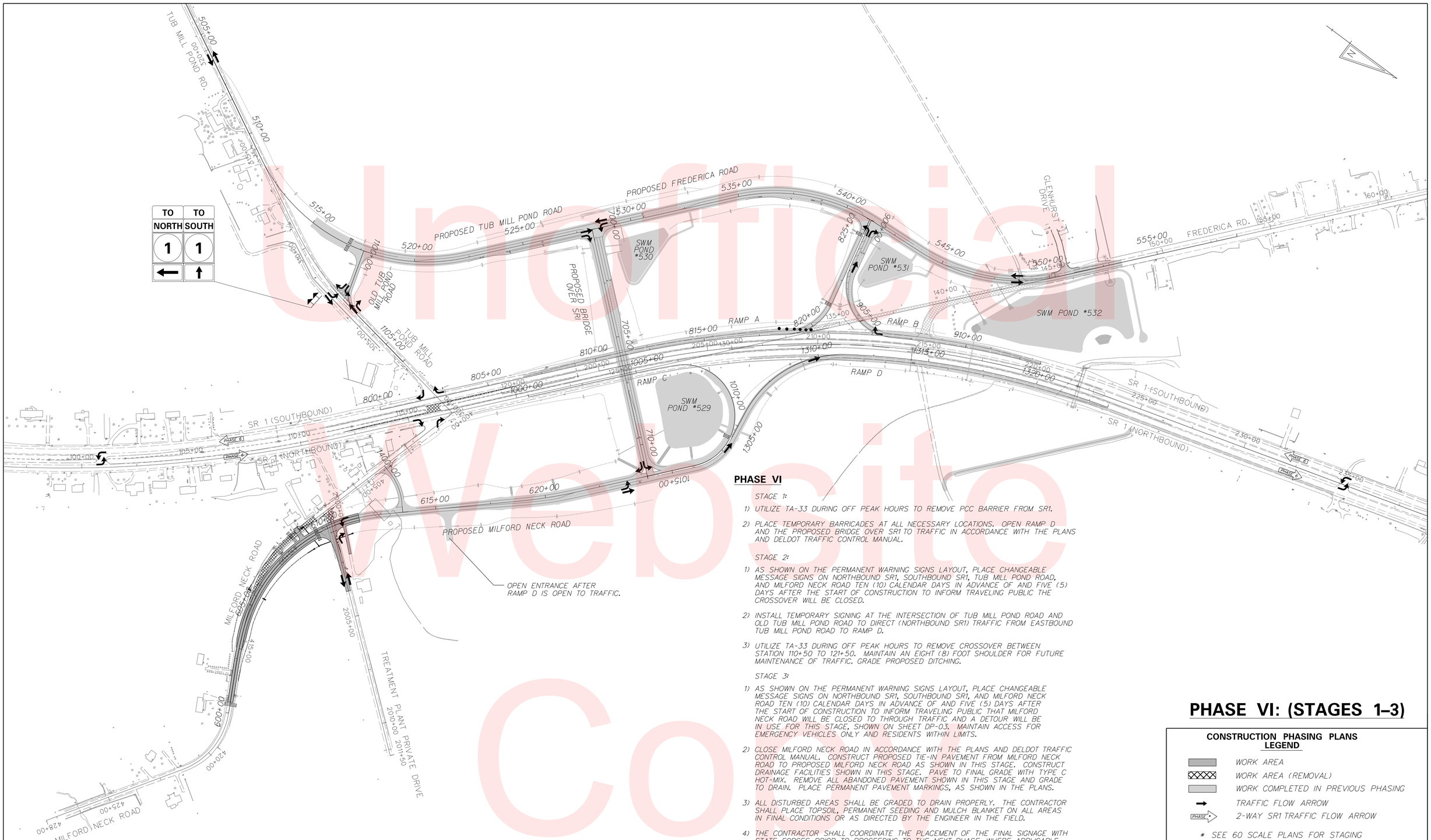

PHASE VI

STAGE 1:

1) UTILIZE TA-33 DURING OFF PEAK HOURS TO REMOVE PCC BARRIER FROM SR1.

2) PLACE TEMPORARY BARRICADES AT ALL NECESSARY LOCATIONS. OPEN RAMP D AND THE PROPOSED BRIDGE OVER SR1 TO TRAFFIC IN ACCORDANCE WITH THE PLANS AND DELDOT TRAFFIC CONTROL MANUAL.

STAGE 2:

1) AS SHOWN ON THE PERMANENT WARNING SIGNS LAYOUT, PLACE CHANGEABLE MESSAGE SIGNS ON NORTHBOUND SR1, SOUTHBOUND SR1, TUB MILL POND ROAD, AND MILFORD NECK ROAD TEN (10) CALENDAR DAYS IN ADVANCE OF AND FIVE (5) DAYS AFTER THE START OF CONSTRUCTION TO INFORM TRAVELING PUBLIC THE CROSSOVER WILL BE CLOSED.

2) INSTALL TEMPORARY SIGNING AT THE INTERSECTION OF TUB MILL POND ROAD AND OLD TUB MILL POND ROAD TO DIRECT (NORTHBOUND SR1) TRAFFIC FROM EASTBOUND TUB MILL POND ROAD TO RAMP D.

3) UTILIZE TA-33 DURING OFF PEAK HOURS TO REMOVE CROSSOVER BETWEEN STATION 110+50 TO 121+50. MAINTAIN AN EIGHT (8) FOOT SHOULDER FOR FUTURE MAINTENANCE OF TRAFFIC. GRADE PROPOSED DITCHING.

STAGE 3:

1) AS SHOWN ON THE PERMANENT WARNING SIGNS LAYOUT, PLACE CHANGEABLE MESSAGE SIGNS ON NORTHBOUND SR1, SOUTHBOUND SR1, AND MILFORD NECK ROAD TEN (10) CALENDAR DAYS IN ADVANCE OF AND FIVE (5) DAYS AFTER THE START OF CONSTRUCTION TO INFORM TRAVELING PUBLIC THAT MILFORD NECK ROAD WILL BE CLOSED TO THROUGH TRAFFIC AND A DETOUR WILL BE IN USE FOR THIS STAGE, SHOWN ON SHEET DP-03. MAINTAIN ACCESS FOR EMERGENCY VEHICLES ONLY AND RESIDENTS WITHIN LIMITS.

2) CLOSE MILFORD NECK ROAD IN ACCORDANCE WITH THE PLANS AND DELDOT TRAFFIC CONTROL MANUAL. CONSTRUCT PROPOSED TIE-IN PAVEMENT FROM MILFORD NECK ROAD TO PROPOSED MILFORD NECK ROAD AS SHOWN IN THIS STAGE. CONSTRUCT DRAINAGE FACILITIES SHOWN IN THIS STAGE. PAVE TO FINAL GRADE WITH TYPE C HOT-MIX. REMOVE ALL ABANDONED PAVEMENT SHOWN IN THIS STAGE AND GRADE TO DRAIN. PLACE PERMANENT PAVEMENT MARKINGS, AS SHOWN IN THE PLANS.

3) ALL DISTURBED AREAS SHALL BE GRADED TO DRAIN PROPERLY. THE CONTRACTOR SHALL PLACE TOPSOIL, PERMANENT SEEDING AND MULCH BLANKET ON ALL AREAS IN FINAL CONDITIONS OR AS DIRECTED BY THE ENGINEER IN THE FIELD.

4) THE CONTRACTOR SHALL COORDINATE THE PLACEMENT OF THE FINAL SIGNAGE WITH STATE FORCES PRIOR TO PROCEEDING TO THE NEXT PHASE, WHERE APPLICABLE. THE CONTRACTOR SHALL NOT REMOVE ANY TEMPORARY SIGNAGE UNLESS APPROVED BY THE ENGINEER IN THE FIELD.

5) THE CONTRACTOR SHALL REMOVE ALL EROSION AND SEDIMENT CONTROL SYSTEMS STILL REMAINING IN THIS PHASE PER THE APPROVAL OF THE SEDIMENT CONTROL INSPECTOR.

PHASE VI: (STAGES 1–3)

CONSTRUCTION PHASING PLANS LEGEND

- WORK AREA
- WORK AREA (REMOVAL)
- WORK COMPLETED IN PREVIOUS PHASING
- TRAFFIC FLOW ARROW
- PHASE 2-WAY SR1 TRAFFIC FLOW ARROW

* SEE 60 SCALE PLANS FOR STAGING

EROSION AND SEDIMENT CONTROL PLANS LEGEND

* SEE 60 SCALE PLANS FOR STAGING

Unofficial Website Copy

PHASE VI: STAGE 1&2

EROSION AND SEDIMENT CONTROL PLANS LEGEND

- INLET SEDIMENT CONTROL
- SF — SILT FENCE
- CHECK DAM
- SCE — STABILIZED CONSTRUCTION ENTRANCE
- ST — SEDIMENT TRAP
- TSD — TEMPORARY SLOPE DRAIN

CONSTRUCTION PHASING PLANS LEGEND

- WORK AREA
- WORK AREA (REMOVAL)
- WORK COMPLETED IN PREVIOUS PHASING
- CONCRETE SAFETY BARRIER
- TRAFFIC FLOW ARROW
- TEMPORARY PAVEMENT STRIPING
- PLASTIC DRUM
- TYPE 3 BARRICADE

PHASE VI

STAGE 1:

1) UTILIZE TA-33 DURING OFF PEAK HOURS TO REMOVE PCC BARRIER FROM SR1.

2) PLACE TEMPORARY BARRICADES AT ALL NECESSARY LOCATIONS. OPEN RAMP D AND THE PROPOSED BRIDGE OVER SR1 TO TRAFFIC IN ACCORDANCE WITH THE PLANS AND DELDOT TRAFFIC CONTROL MANUAL.

STAGE 2:

1) AS SHOWN ON THE PERMANENT WARNING SIGNS LAYOUT, PLACE CHANGEABLE MESSAGE SIGNS ON NORTHBOUND SR1, SOUTHBOUND SR1, TUB MILL POND ROAD, AND MILFORD NECK ROAD TEN (10) CALENDAR DAYS IN ADVANCE OF AND FIVE (5) DAYS AFTER THE START OF CONSTRUCTION TO INFORM TRAVELING PUBLIC THE CROSSOVER WILL BE CLOSED.

2) INSTALL TEMPORARY SIGNING AT THE INTERSECTION OF TUB MILL POND ROAD AND OLD TUB MILL POND ROAD TO DIRECT (NORTHBOUND SR1) TRAFFIC FROM EASTBOUND TUB MILL POND ROAD TO RAMP D.

3) UTILIZE TA-33 DURING OFF PEAK HOURS TO REMOVE CROSSOVER BETWEEN STATION 110+50 TO 121+50. MAINTAIN AN EIGHT (8) FOOT SHOULDER FOR FUTURE MAINTENANCE OF TRAFFIC. GRADE PROPOSED DITCHING.

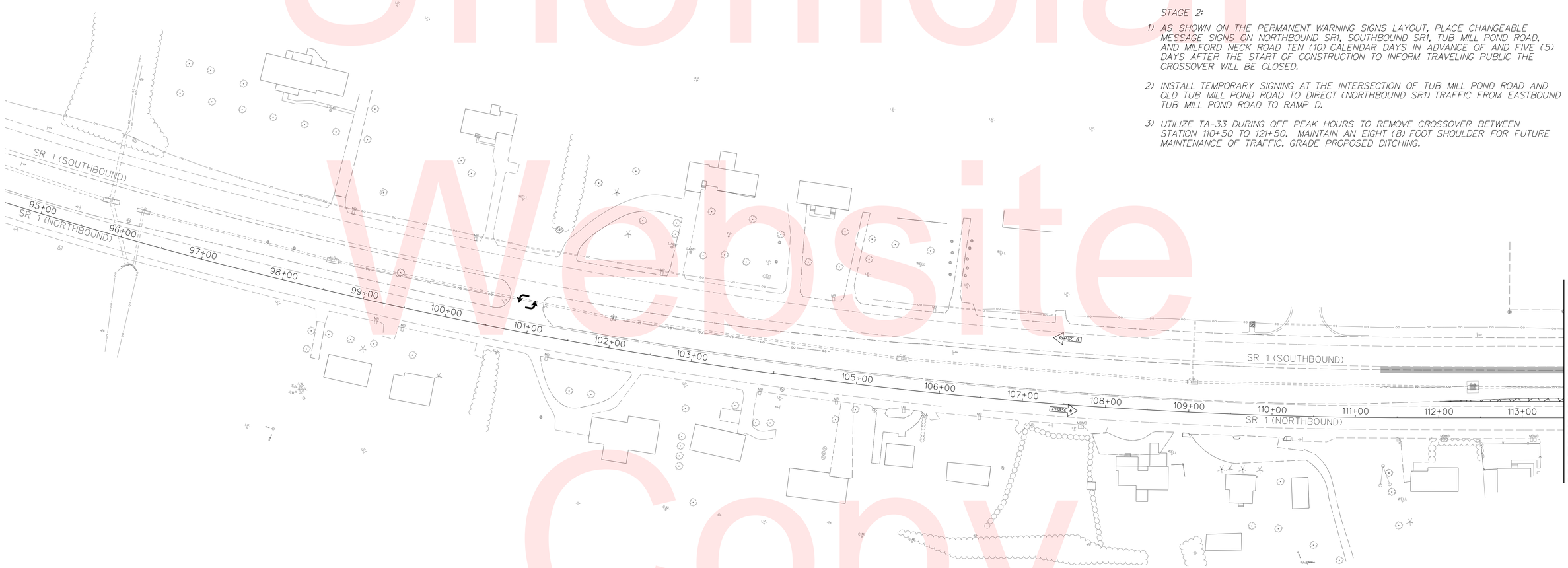

Unofficial Website Copy

DELAWARE DEPARTMENT OF TRANSPORTATION	ADDENDUMS / REVISIONS	SCALE 0 60 120 180 FEET	SR1, SOUTH FREDERICA GRADE SEPARATED INTERSECTION	CONTRACT T200812202	BRIDGE NO. –	CONSTRUCTION PHASING, M.O.T. AND EROSION CONTROL PLANS	SHEET NO. 176
				COUNTY KENT	DESIGNED BY: LCM		TOTAL SHTS. 296
					CHECKED BY: SFP		

9/14/2015
G:\PROJECTS\06535.00 (DelDOT Agmt. 1376 DOTS Open End)\06535.07 SR1, S. Frederica\CADD Files\XM\cs_060101sf.dgn
3:09:53 PM

PHASE VI: STAGE 1&2

EROSION AND SEDIMENT CONTROL PLANS LEGEND

- INLET SEDIMENT CONTROL
- SF — SILT FENCE
- CHECK DAM
- STABILIZED CONSTRUCTION ENTRANCE
- SEDIMENT TRAP
- TSD — TEMPORARY SLOPE DRAIN

CONSTRUCTION PHASING PLANS LEGEND

- WORK AREA
- WORK AREA (REMOVAL)
- WORK COMPLETED IN PREVIOUS PHASING
- CONCRETE SAFETY BARRIER
- TRAFFIC FLOW ARROW
- TEMPORARY PAVEMENT STRIPING
- PLASTIC DRUM
- TYPE 3 BARRICADE

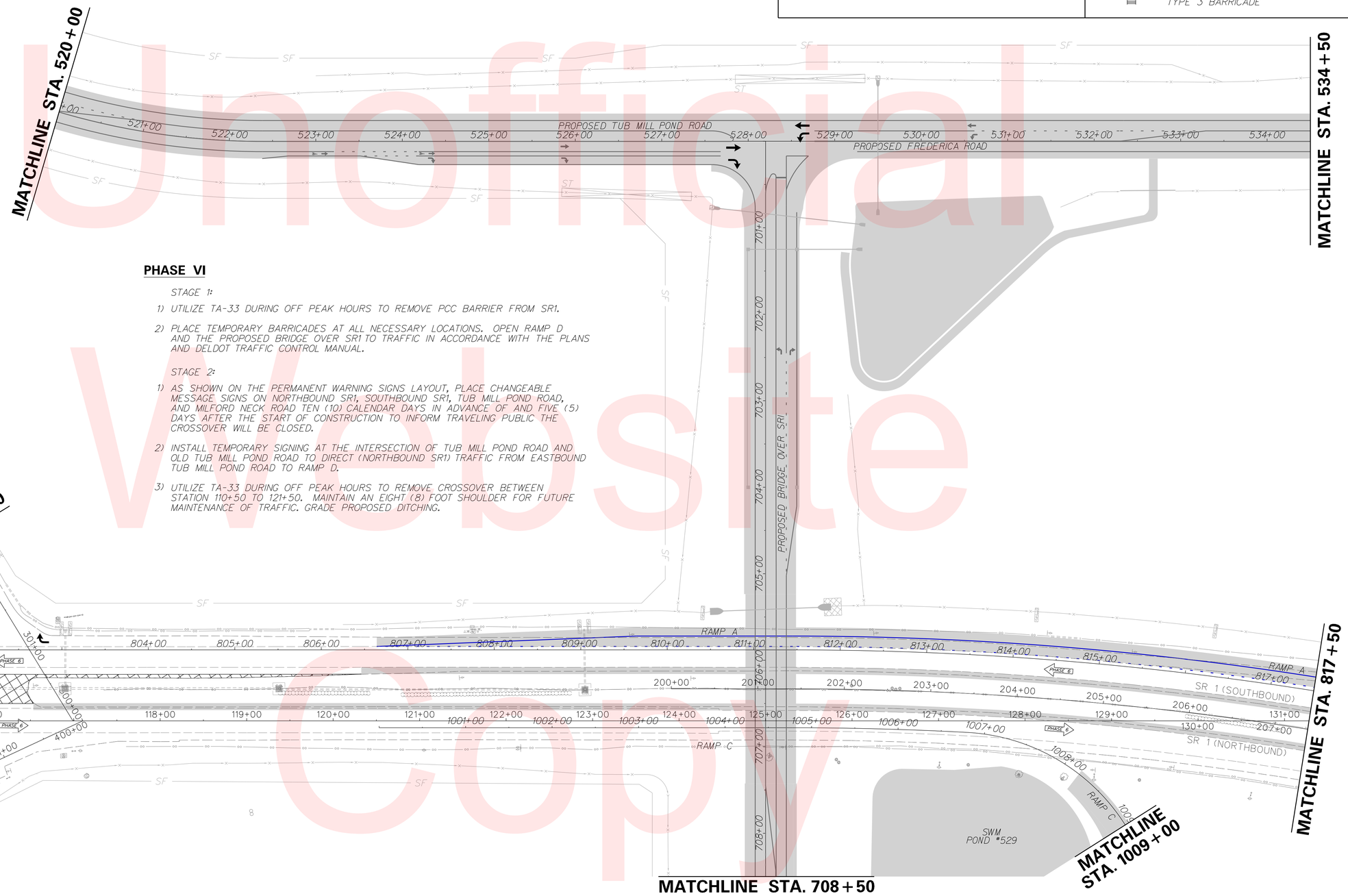

PHASE VI

STAGE 1:

1) UTILIZE TA-33 DURING OFF PEAK HOURS TO REMOVE PCC BARRIER FROM SR1.

2) PLACE TEMPORARY BARRICADES AT ALL NECESSARY LOCATIONS. OPEN RAMP D AND THE PROPOSED BRIDGE OVER SR1 TO TRAFFIC IN ACCORDANCE WITH THE PLANS AND DELDOT TRAFFIC CONTROL MANUAL.

STAGE 2:

1) AS SHOWN ON THE PERMANENT WARNING SIGNS LAYOUT, PLACE CHANGEABLE MESSAGE SIGNS ON NORTHBOUND SR1, SOUTHBOUND SR1, TUB MILL POND ROAD, AND MILFORD NECK ROAD TEN (10) CALENDAR DAYS IN ADVANCE OF AND FIVE (5) DAYS AFTER THE START OF CONSTRUCTION TO INFORM TRAVELING PUBLIC THE CROSSOVER WILL BE CLOSED.

2) INSTALL TEMPORARY SIGNING AT THE INTERSECTION OF TUB MILL POND ROAD AND OLD TUB MILL POND ROAD TO DIRECT (NORTHBOUND SR1) TRAFFIC FROM EASTBOUND TUB MILL POND ROAD TO RAMP D.

3) UTILIZE TA-33 DURING OFF PEAK HOURS TO REMOVE CROSSOVER BETWEEN STATION 110+50 TO 121+50. MAINTAIN AN EIGHT (8) FOOT SHOULDER FOR FUTURE MAINTENANCE OF TRAFFIC. GRADE PROPOSED DITCHING.

Unofficial Website Copy

DELAWARE DEPARTMENT OF TRANSPORTATION	ADDENDUMS / REVISIONS	SCALE 0 60 120 180 FEET	SR1, SOUTH FREDERICA GRADE SEPARATED INTERSECTION	CONTRACT T200812202	BRIDGE NO. –	CONSTRUCTION PHASING, M.O.T. AND EROSION CONTROL PLANS	SHEET NO. 177
				COUNTY KENT	DESIGNED BY: LCM		TOTAL SHTS. 296
					CHECKED BY: SFP		

9/14/2015 G:\PROJECTS\06535.00 (DelDOT Agmt. 1376 DOTS Open End)\06535.07 SR1, S. Frederica\CADD Files\XM\cs_060102sf.dgn 3:09:57 PM

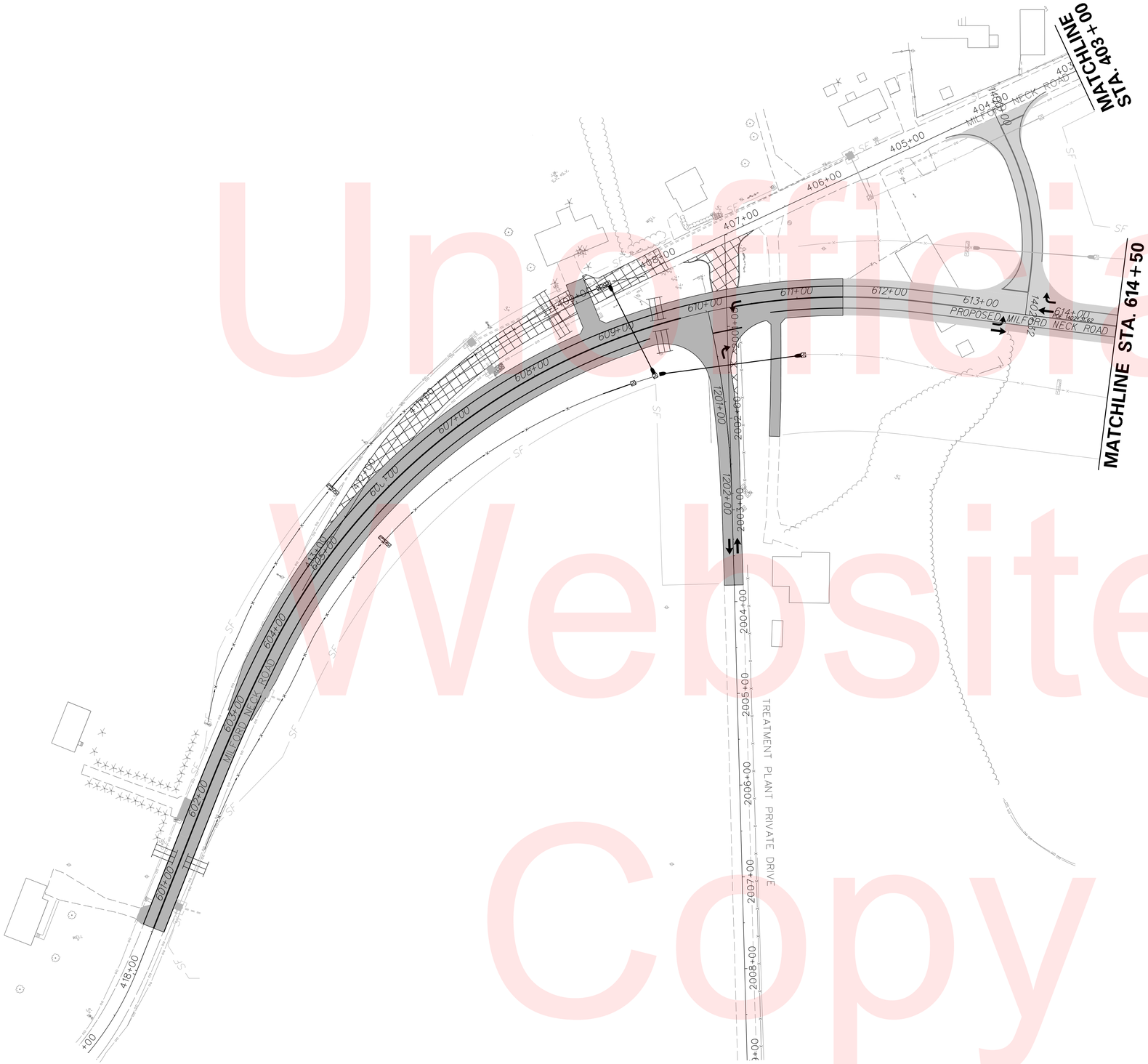

CONSTRUCTION PHASING PLANS LEGEND

- WORK AREA
- WORK AREA (REMOVAL)
- WORK COMPLETED IN PREVIOUS PHASING
- CONCRETE SAFETY BARRIER
- TRAFFIC FLOW ARROW
- TEMPORARY PAVEMENT STRIPING
- PLASTIC DRUM
- TYPE 3 BARRICADE

EROSION AND SEDIMENT CONTROL PLANS LEGEND

- INLET SEDIMENT CONTROL
- —SF— SILT FENCE
- CHECK DAM
- SCE STABILIZED CONSTRUCTION ENTRANCE
- ST SEDIMENT TRAP
- TSD TEMPORARY SLOPE DRAIN

PHASE VI: STAGE 3

PHASE VI

STAGE 3:

1) AS SHOWN ON THE PERMANENT WARNING SIGNS LAYOUT, PLACE CHANGEABLE MESSAGE SIGNS ON NORTHBOUND SR1, SOUTHBOUND SR1, AND MILFORD NECK ROAD TEN (10) CALENDAR DAYS IN ADVANCE OF AND FIVE (5) DAYS AFTER THE START OF CONSTRUCTION TO INFORM TRAVELING PUBLIC THAT MILFORD NECK ROAD WILL BE CLOSED TO THROUGH TRAFFIC AND A DETOUR WILL BE IN USE FOR THIS STAGE, SHOWN ON SHEET DP-03. MAINTAIN ACCESS FOR EMERGENCY VEHICLES ONLY AND RESIDENTS WITHIN LIMITS.

2) CLOSE MILFORD NECK ROAD IN ACCORDANCE WITH THE PLANS AND DELDOT TRAFFIC CONTROL MANUAL. CONSTRUCT PROPOSED TIE-IN PAVEMENT FROM MILFORD NECK ROAD TO PROPOSED MILFORD NECK ROAD AS SHOWN IN THIS STAGE. CONSTRUCT DRAINAGE FACILITIES SHOWN IN THIS STAGE. PAVE TO FINAL GRADE WITH TYPE C HOT-MIX. REMOVE ALL ABANDONED PAVEMENT SHOWN IN THIS STAGE AND GRADE TO DRAIN. PLACE PERMANENT PAVEMENT MARKINGS, AS SHOWN IN THE PLANS.

3) ALL DISTURBED AREAS SHALL BE GRADED TO DRAIN PROPERLY. THE CONTRACTOR SHALL PLACE TOPSOIL, PERMANENT SEEDING AND MULCH BLANKET ON ALL AREAS IN FINAL CONDITIONS OR AS DIRECTED BY THE ENGINEER IN THE FIELD.

4) THE CONTRACTOR SHALL COORDINATE THE PLACEMENT OF THE FINAL SIGNAGE WITH STATE FORCES PRIOR TO PROCEEDING TO THE NEXT PHASE, WHERE APPLICABLE. THE CONTRACTOR SHALL NOT REMOVE ANY TEMPORARY SIGNAGE UNLESS APPROVED BY THE ENGINEER IN THE FIELD.

5) THE CONTRACTOR SHALL REMOVE ALL EROSION AND SEDIMENT CONTROL SYSTEMS STILL REMAINING IN THIS PHASE PER THE APPROVAL OF THE SEDIMENT CONTROL INSPECTOR.

Unofficial Website Copy

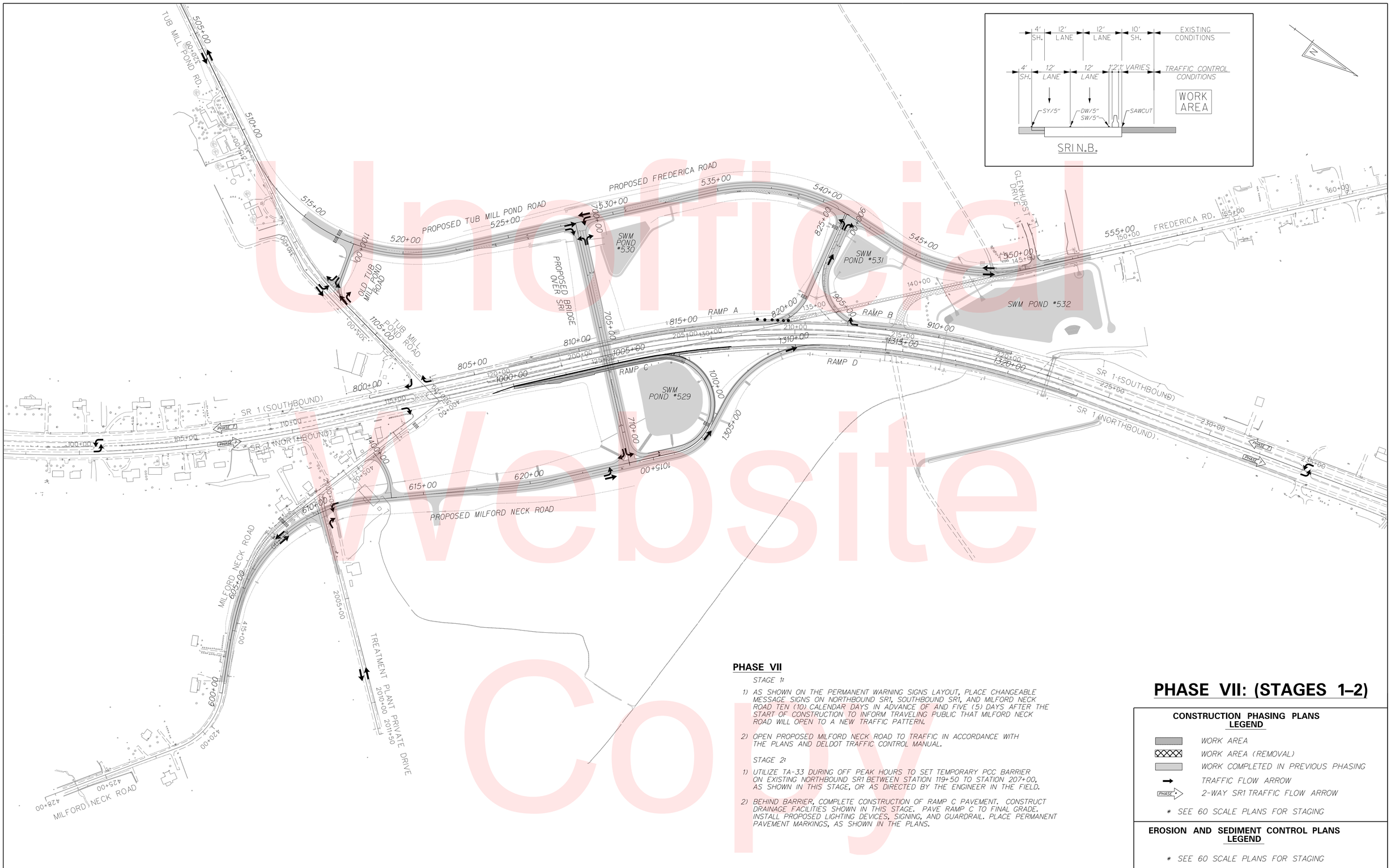

PHASE VII

STAGE 1:

1) AS SHOWN ON THE PERMANENT WARNING SIGNS LAYOUT, PLACE CHANGEABLE MESSAGE SIGNS ON NORTHBOUND SR1, SOUTHBOUND SR1, AND MILFORD NECK ROAD TEN (10) CALENDAR DAYS IN ADVANCE OF AND FIVE (5) DAYS AFTER THE START OF CONSTRUCTION TO INFORM TRAVELING PUBLIC THAT MILFORD NECK ROAD WILL OPEN TO A NEW TRAFFIC PATTERN.

2) OPEN PROPOSED MILFORD NECK ROAD TO TRAFFIC IN ACCORDANCE WITH THE PLANS AND DELDOT TRAFFIC CONTROL MANUAL.

STAGE 2:

1) UTILIZE TA-33 DURING OFF PEAK HOURS TO SET TEMPORARY PCC BARRIER ON EXISTING NORTHBOUND SR1 BETWEEN STATION 119+50 TO STATION 207+00, AS SHOWN IN THIS STAGE, OR AS DIRECTED BY THE ENGINEER IN THE FIELD.

2) BEHIND BARRIER, COMPLETE CONSTRUCTION OF RAMP C PAVEMENT. CONSTRUCT DRAINAGE FACILITIES SHOWN IN THIS STAGE. PAVE RAMP C TO FINAL GRADE. INSTALL PROPOSED LIGHTING DEVICES, SIGNING, AND GUARDRAIL. PLACE PERMANENT PAVEMENT MARKINGS, AS SHOWN IN THE PLANS.

PHASE VII: (STAGES 1–2)

CONSTRUCTION PHASING PLANS LEGEND

- WORK AREA
- WORK AREA (REMOVAL)
- WORK COMPLETED IN PREVIOUS PHASING
- TRAFFIC FLOW ARROW
- PHASE 2-WAY SR1 TRAFFIC FLOW ARROW

* SEE 60 SCALE PLANS FOR STAGING

EROSION AND SEDIMENT CONTROL PLANS LEGEND

* SEE 60 SCALE PLANS FOR STAGING

Unofficial Website Copy

DELAWARE DEPARTMENT OF TRANSPORTATION	ADDENDUMS / REVISIONS	SCALE 0 200 400 600 FEET	SR1, SOUTH FREDERICA GRADE SEPARATED INTERSECTION	CONTRACT T200812202	BRIDGE NO. –	CONSTRUCTION PHASING, M.O.T. AND EROSION CONTROL PLANS	SHEET NO. 179
				COUNTY KENT	DESIGNED BY: LCM		TOTAL SHTS. 296
					CHECKED BY: SFP		

9/14/2015
G:\PROJECTS\06535.00 (DelDOT Agmt. 1376 DOTS Open End)\06535.07 SR1, S. Frederica\CADD Files\XM\cs_070000sf.dgn
5:29:38 PM

PHASE VII: STAGE 1&2

EROSION AND SEDIMENT CONTROL PLANS LEGEND

- INLET SEDIMENT CONTROL
- SF — SILT FENCE
- CHECK DAM
- STABILIZED CONSTRUCTION ENTRANCE
- SEDIMENT TRAP
- TSD — TEMPORARY SLOPE DRAIN

CONSTRUCTION PHASING PLANS LEGEND

- WORK AREA
- WORK AREA (REMOVAL)
- WORK COMPLETED IN PREVIOUS PHASING
- CONCRETE SAFETY BARRIER
- TRAFFIC FLOW ARROW
- TEMPORARY PAVEMENT STRIPING
- PLASTIC DRUM
- TYPE 3 BARRICADE

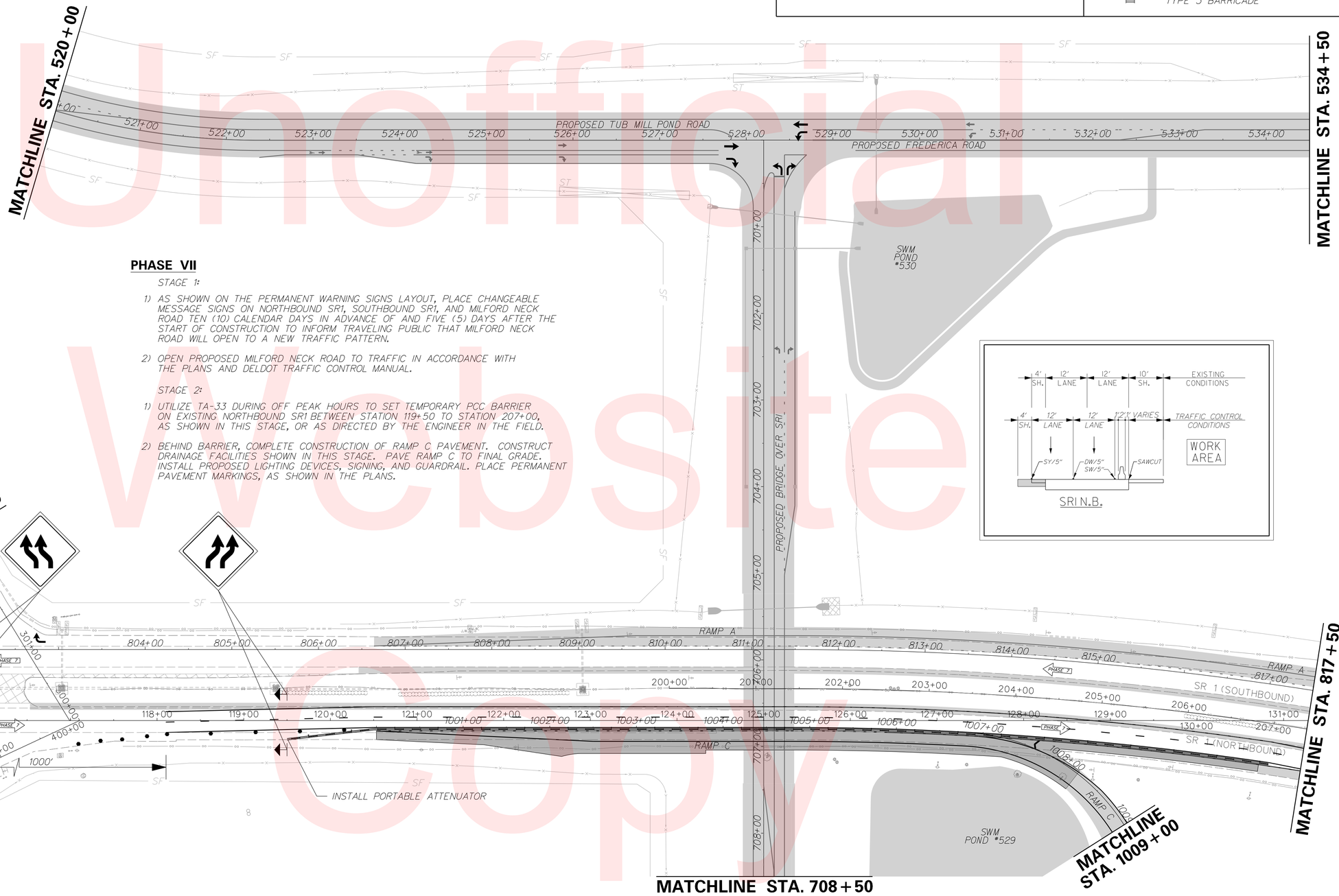

PHASE VII

STAGE 1:

1) AS SHOWN ON THE PERMANENT WARNING SIGNS LAYOUT, PLACE CHANGEABLE MESSAGE SIGNS ON NORTHBOUND SR1, SOUTHBOUND SR1, AND MILFORD NECK ROAD TEN (10) CALENDAR DAYS IN ADVANCE OF AND FIVE (5) DAYS AFTER THE START OF CONSTRUCTION TO INFORM TRAVELING PUBLIC THAT MILFORD NECK ROAD WILL OPEN TO A NEW TRAFFIC PATTERN.

2) OPEN PROPOSED MILFORD NECK ROAD TO TRAFFIC IN ACCORDANCE WITH THE PLANS AND DELDOT TRAFFIC CONTROL MANUAL.

STAGE 2:

1) UTILIZE TA-33 DURING OFF PEAK HOURS TO SET TEMPORARY PCC BARRIER ON EXISTING NORTHBOUND SR1 BETWEEN STATION 119+50 TO STATION 207+00, AS SHOWN IN THIS STAGE, OR AS DIRECTED BY THE ENGINEER IN THE FIELD.

2) BEHIND BARRIER, COMPLETE CONSTRUCTION OF RAMP C PAVEMENT. CONSTRUCT DRAINAGE FACILITIES SHOWN IN THIS STAGE. PAVE RAMP C TO FINAL GRADE. INSTALL PROPOSED LIGHTING DEVICES, SIGNING, AND GUARDRAIL. PLACE PERMANENT PAVEMENT MARKINGS, AS SHOWN IN THE PLANS.

Unofficial Website copy

DELAWARE DEPARTMENT OF TRANSPORTATION	ADDENDUMS / REVISIONS	SCALE 0 60 120 180 FEET	SR1, SOUTH FREDERICA GRADE SEPARATED INTERSECTION	CONTRACT T200812202	BRIDGE NO. –	CONSTRUCTION PHASING, M.O.T. AND EROSION CONTROL PLANS	SHEET NO. 180
				COUNTY KENT	DESIGNED BY: LCM		TOTAL SHTS. 296
					CHECKED BY: SFP		

9/14/2015
G:\PROJECTS\06535.00 (DelDOT Agmt. 1376 DOTS Open End)\06535.07 SR1, S. Frederica\CADD Files\VM\cs_070101sf.dgn
3:21:35 PM

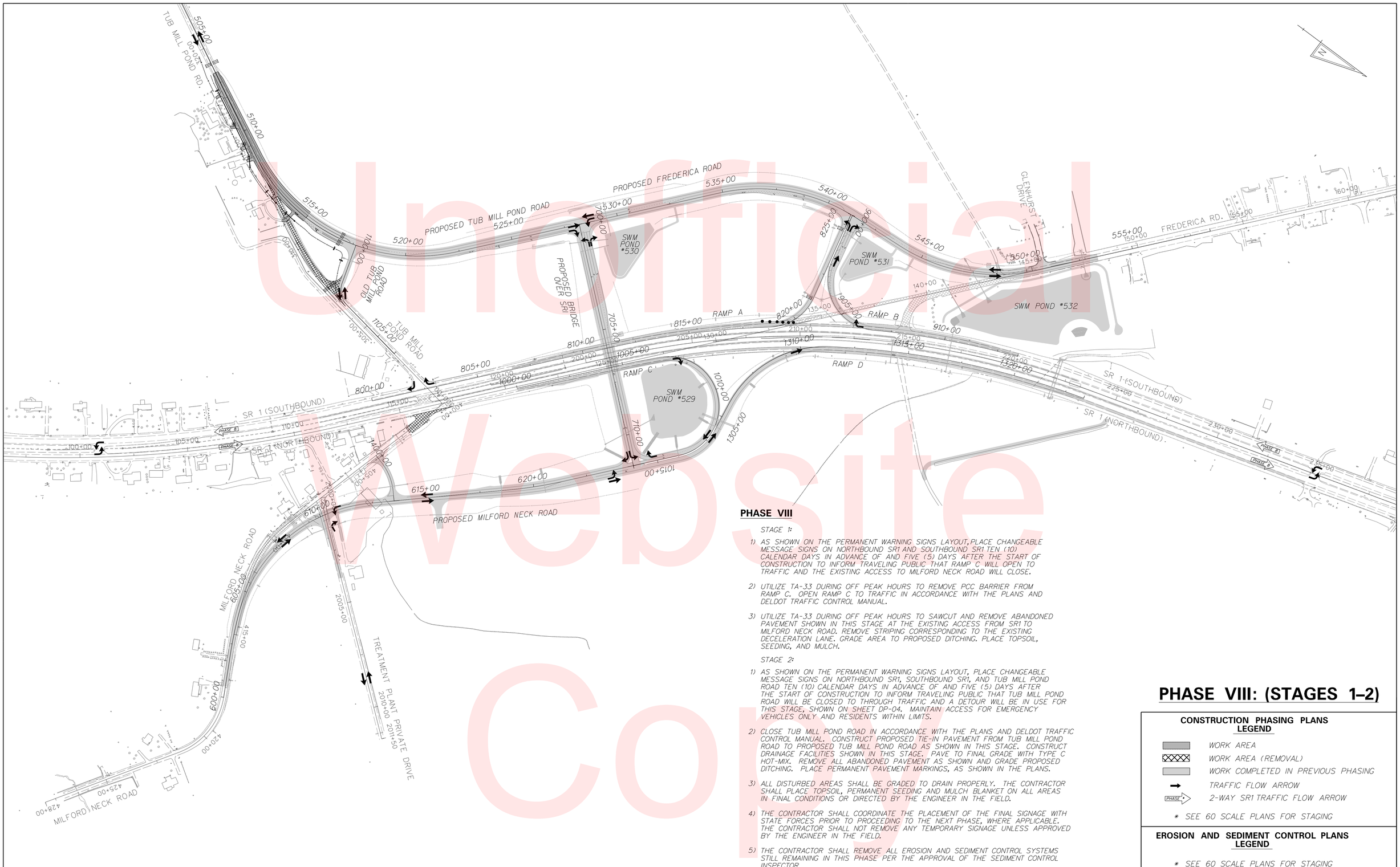

PHASE VIII

STAGE 1:

1) AS SHOWN ON THE PERMANENT WARNING SIGNS LAYOUT, PLACE CHANGEABLE MESSAGE SIGNS ON NORTHBOUND SR1 AND SOUTHBOUND SR1 TEN (10) CALENDAR DAYS IN ADVANCE OF AND FIVE (5) DAYS AFTER THE START OF CONSTRUCTION TO INFORM TRAVELING PUBLIC THAT RAMP C WILL OPEN TO TRAFFIC AND THE EXISTING ACCESS TO MILFORD NECK ROAD WILL CLOSE.

2) UTILIZE TA-33 DURING OFF PEAK HOURS TO REMOVE PCC BARRIER FROM RAMP C. OPEN RAMP C TO TRAFFIC IN ACCORDANCE WITH THE PLANS AND DELDOT TRAFFIC CONTROL MANUAL.

3) UTILIZE TA-33 DURING OFF PEAK HOURS TO SAWCUT AND REMOVE ABANDONED PAVEMENT SHOWN IN THIS STAGE AT THE EXISTING ACCESS FROM SR1 TO MILFORD NECK ROAD. REMOVE STRIPING CORRESPONDING TO THE EXISTING DECELERATION LANE. GRADE AREA TO PROPOSED DITCHING. PLACE TOPSOIL, SEEDING, AND MULCH.

STAGE 2:

1) AS SHOWN ON THE PERMANENT WARNING SIGNS LAYOUT, PLACE CHANGEABLE MESSAGE SIGNS ON NORTHBOUND SR1, SOUTHBOUND SR1, AND TUB MILL POND ROAD TEN (10) CALENDAR DAYS IN ADVANCE OF AND FIVE (5) DAYS AFTER THE START OF CONSTRUCTION TO INFORM TRAVELING PUBLIC THAT TUB MILL POND ROAD WILL BE CLOSED TO THROUGH TRAFFIC AND A DETOUR WILL BE IN USE FOR THIS STAGE, SHOWN ON SHEET DP-04. MAINTAIN ACCESS FOR EMERGENCY VEHICLES ONLY AND RESIDENTS WITHIN LIMITS.

2) CLOSE TUB MILL POND ROAD IN ACCORDANCE WITH THE PLANS AND DELDOT TRAFFIC CONTROL MANUAL. CONSTRUCT PROPOSED TIE-IN PAVEMENT FROM TUB MILL POND ROAD TO PROPOSED TUB MILL POND ROAD AS SHOWN IN THIS STAGE. CONSTRUCT DRAINAGE FACILITIES SHOWN IN THIS STAGE. PAVE TO FINAL GRADE WITH TYPE C HOT-MIX. REMOVE ALL ABANDONED PAVEMENT AS SHOWN AND GRADE PROPOSED DITCHING. PLACE PERMANENT PAVEMENT MARKINGS, AS SHOWN IN THE PLANS.

3) ALL DISTURBED AREAS SHALL BE GRADED TO DRAIN PROPERLY. THE CONTRACTOR SHALL PLACE TOPSOIL, PERMANENT SEEDING AND MULCH BLANKET ON ALL AREAS IN FINAL CONDITIONS OR DIRECTED BY THE ENGINEER IN THE FIELD.

4) THE CONTRACTOR SHALL COORDINATE THE PLACEMENT OF THE FINAL SIGNAGE WITH STATE FORCES PRIOR TO PROCEEDING TO THE NEXT PHASE, WHERE APPLICABLE. THE CONTRACTOR SHALL NOT REMOVE ANY TEMPORARY SIGNAGE UNLESS APPROVED BY THE ENGINEER IN THE FIELD.

5) THE CONTRACTOR SHALL REMOVE ALL EROSION AND SEDIMENT CONTROL SYSTEMS STILL REMAINING IN THIS PHASE PER THE APPROVAL OF THE SEDIMENT CONTROL INSPECTOR.

PHASE VIII: (STAGES 1–2)

CONSTRUCTION PHASING PLANS LEGEND

- WORK AREA
- WORK AREA (REMOVAL)
- WORK COMPLETED IN PREVIOUS PHASING
- TRAFFIC FLOW ARROW
- PHASE 2-WAY SR1 TRAFFIC FLOW ARROW

* SEE 60 SCALE PLANS FOR STAGING

EROSION AND SEDIMENT CONTROL PLANS LEGEND

* SEE 60 SCALE PLANS FOR STAGING

Unofficial Website Copy

PHASE VIII: STAGE 1

EROSION AND SEDIMENT CONTROL PLANS LEGEND

- INLET SEDIMENT CONTROL
- SF — SILT FENCE
- CHECK DAM
- SCE — STABILIZED CONSTRUCTION ENTRANCE
- ST — SEDIMENT TRAP
- TSD — TEMPORARY SLOPE DRAIN

CONSTRUCTION PHASING PLANS LEGEND

- WORK AREA
- WORK AREA (REMOVAL)
- WORK COMPLETED IN PREVIOUS PHASING
- CONCRETE SAFETY BARRIER
- TRAFFIC FLOW ARROW
- TEMPORARY PAVEMENT STRIPING
- PLASTIC DRUM
- TYPE 3 BARRICADE

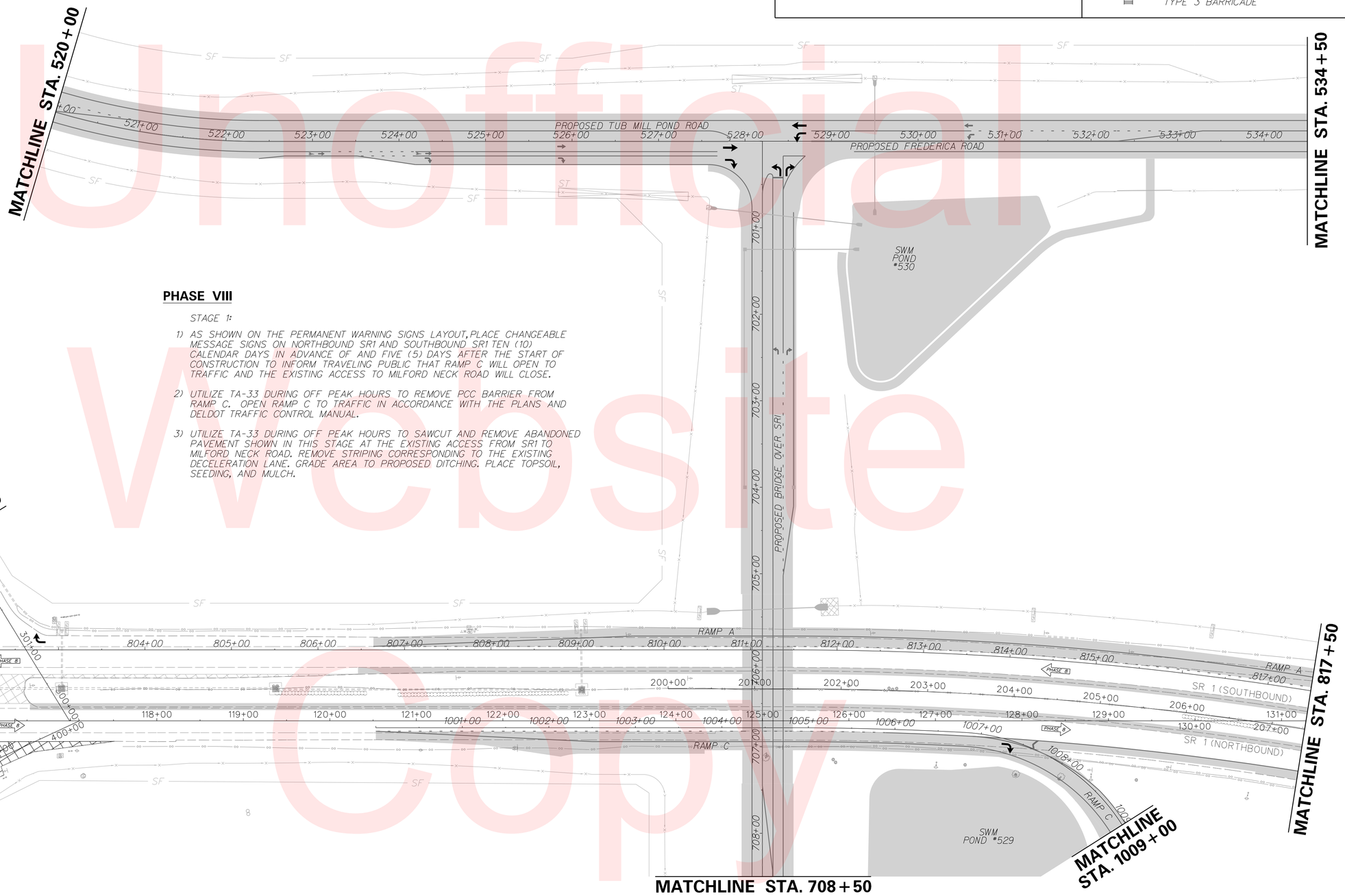

PHASE VIII

STAGE 1:

1) AS SHOWN ON THE PERMANENT WARNING SIGNS LAYOUT, PLACE CHANGEABLE MESSAGE SIGNS ON NORTHBOUND SR1 AND SOUTHBOUND SR1 TEN (10) CALENDAR DAYS IN ADVANCE OF AND FIVE (5) DAYS AFTER THE START OF CONSTRUCTION TO INFORM TRAVELING PUBLIC THAT RAMP C WILL OPEN TO TRAFFIC AND THE EXISTING ACCESS TO MILFORD NECK ROAD WILL CLOSE.

2) UTILIZE TA-33 DURING OFF PEAK HOURS TO REMOVE PCC BARRIER FROM RAMP C. OPEN RAMP C TO TRAFFIC IN ACCORDANCE WITH THE PLANS AND DELDOT TRAFFIC CONTROL MANUAL.

3) UTILIZE TA-33 DURING OFF PEAK HOURS TO SAWCUT AND REMOVE ABANDONED PAVEMENT SHOWN IN THIS STAGE AT THE EXISTING ACCESS FROM SR1 TO MILFORD NECK ROAD. REMOVE STRIPING CORRESPONDING TO THE EXISTING DECELERATION LANE. GRADE AREA TO PROPOSED DITCHING. PLACE TOPSOIL, SEEDING, AND MULCH.

Unofficial Website Copy

DELAWARE DEPARTMENT OF TRANSPORTATION	ADDENDUMS / REVISIONS	SCALE 0 60 120 180 FEET	SR1, SOUTH FREDERICA GRADE SEPARATED INTERSECTION	CONTRACT T200812202	BRIDGE NO. –	CONSTRUCTION PHASING, M.O.T. AND EROSION CONTROL PLANS	SHEET NO. 182
				COUNTY KENT	DESIGNED BY: LCM		TOTAL SHTS. 296
					CHECKED BY: SFP		

9/14/2015
G:\PROJECTS\06535.00 (DelDOT Agmt. 1376 DOTS Open End)\06535.07 SR1, S. Frederica\CADD Files\XM\cs_080101sf.dgn
3:23:01 PM

PHASE VIII

STAGE 2:

1) AS SHOWN ON THE PERMANENT WARNING SIGNS LAYOUT, PLACE CHANGEABLE MESSAGE SIGNS ON NORTHBOUND SR1, SOUTHBOUND SR1, AND TUB MILL POND ROAD TEN (10) CALENDAR DAYS IN ADVANCE OF AND FIVE (5) DAYS AFTER THE START OF CONSTRUCTION TO INFORM TRAVELING PUBLIC THAT TUB MILL POND ROAD WILL BE CLOSED TO THROUGH TRAFFIC AND A DETOUR WILL BE IN USE FOR THIS STAGE, SHOWN ON SHEET DP-04. MAINTAIN ACCESS FOR EMERGENCY VEHICLES ONLY AND RESIDENTS WITHIN LIMITS.

2) CLOSE TUB MILL POND ROAD IN ACCORDANCE WITH THE PLANS AND DELDOT TRAFFIC CONTROL MANUAL. CONSTRUCT PROPOSED TIE-IN PAVEMENT FROM TUB MILL POND ROAD TO PROPOSED TUB MILL POND ROAD AS SHOWN IN THIS STAGE. CONSTRUCT DRAINAGE FACILITIES SHOWN IN THIS STAGE. PAVE TO FINAL GRADE WITH TYPE C HOT-MIX. REMOVE ALL ABANDONED PAVEMENT AS SHOWN AND GRADE PROPOSED DITCHING. PLACE PERMANENT PAVEMENT MARKINGS, AS SHOWN IN THE PLANS.

3) ALL DISTURBED AREAS SHALL BE GRADED TO DRAIN PROPERLY. THE CONTRACTOR SHALL PLACE TOPSOIL, PERMANENT SEEDING AND MULCH BLANKET ON ALL AREAS IN FINAL CONDITIONS OR DIRECTED BY THE ENGINEER IN THE FIELD.

4) THE CONTRACTOR SHALL COORDINATE THE PLACEMENT OF THE FINAL SIGNAGE WITH STATE FORCES PRIOR TO PROCEEDING TO THE NEXT PHASE, WHERE APPLICABLE. THE CONTRACTOR SHALL NOT REMOVE ANY TEMPORARY SIGNAGE UNLESS APPROVED BY THE ENGINEER IN THE FIELD.

5) THE CONTRACTOR SHALL REMOVE ALL EROSION AND SEDIMENT CONTROL SYSTEMS STILL REMAINING IN THIS PHASE PER THE APPROVAL OF THE SEDIMENT CONTROL INSPECTOR.

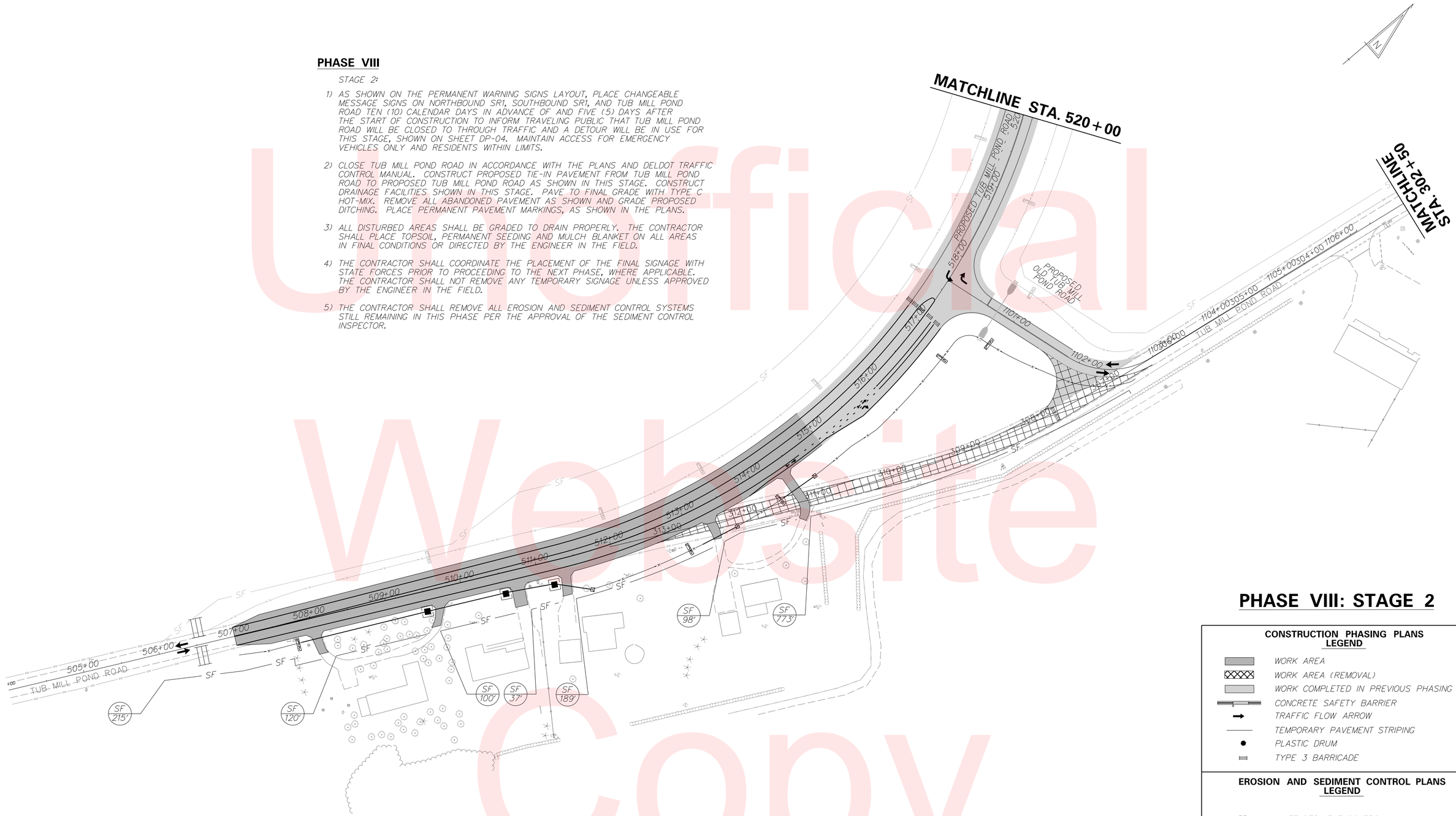

PHASE VIII: STAGE 2

CONSTRUCTION PHASING PLANS LEGEND

- WORK AREA
- WORK AREA (REMOVAL)
- WORK COMPLETED IN PREVIOUS PHASING
- CONCRETE SAFETY BARRIER
- TRAFFIC FLOW ARROW
- TEMPORARY PAVEMENT STRIPING
- PLASTIC DRUM
- TYPE 3 BARRICADE

EROSION AND SEDIMENT CONTROL PLANS LEGEND

- INLET SEDIMENT CONTROL
- SF — SILT FENCE
- CHECK DAM
- SCE — STABILIZED CONSTRUCTION ENTRANCE
- ST — SEDIMENT TRAP
- TSD — TEMPORARY SLOPE DRAIN

Unofficial Website Copy

DELAWARE DEPARTMENT OF TRANSPORTATION	ADDENDUMS / REVISIONS	SCALE 0 60 120 180 FEET	SR1, SOUTH FREDERICA GRADE SEPARATED INTERSECTION	CONTRACT T200812202	BRIDGE NO. –	CONSTRUCTION PHASING, M.O.T. AND EROSION CONTROL PLANS	SHEET NO. 183
				COUNTY KENT	DESIGNED BY: LCM		TOTAL SHTS. 296
					CHECKED BY: SFP		

9/14/2015
G:\PROJECTS\06535.00 (DelDOT Agmt. 1376 DOTS Open End)\06535.07 SR1, S. Frederica\CADD Files\XM\cs_080301st.dgn
3:23:25 PM

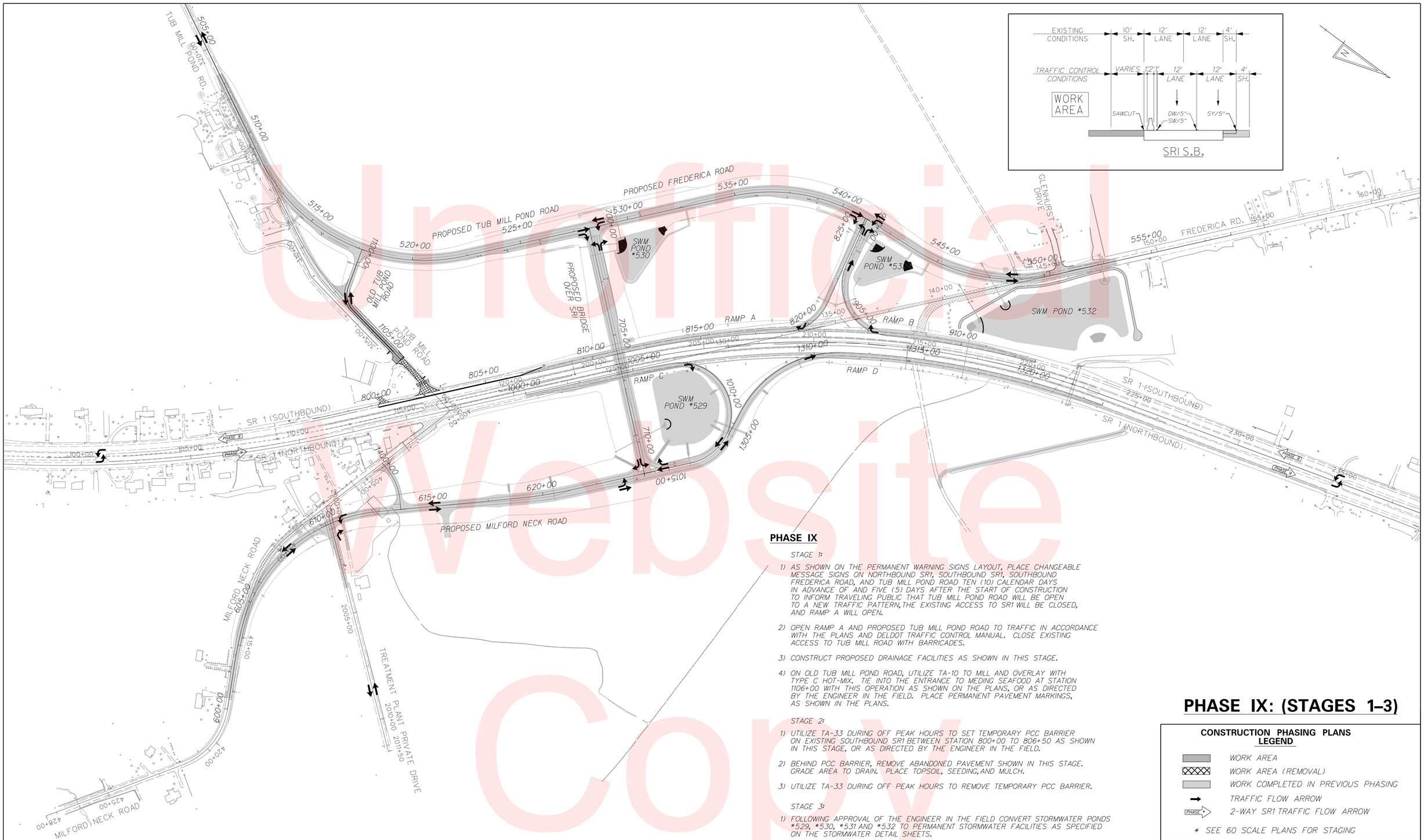

PHASE IX

STAGE 1:

1) AS SHOWN ON THE PERMANENT WARNING SIGNS LAYOUT, PLACE CHANGEABLE MESSAGE SIGNS ON NORTHBOUND SR1, SOUTHBOUND SR1, SOUTHBOUND FREDERICA ROAD, AND TUB MILL POND ROAD TEN (10) CALENDAR DAYS IN ADVANCE OF AND FIVE (5) DAYS AFTER THE START OF CONSTRUCTION TO INFORM TRAVELING PUBLIC THAT TUB MILL POND ROAD WILL BE OPEN TO A NEW TRAFFIC PATTERN, THE EXISTING ACCESS TO SR1 WILL BE CLOSED, AND RAMP A WILL OPEN.

2) OPEN RAMP A AND PROPOSED TUB MILL POND ROAD TO TRAFFIC IN ACCORDANCE WITH THE PLANS AND DELDOT TRAFFIC CONTROL MANUAL. CLOSE EXISTING ACCESS TO TUB MILL ROAD WITH BARRICADES.

3) CONSTRUCT PROPOSED DRAINAGE FACILITIES AS SHOWN IN THIS STAGE.

4) ON OLD TUB MILL POND ROAD, UTILIZE TA-10 TO MILL AND OVERLAY WITH TYPE C HOT-MIX. TIE INTO THE ENTRANCE TO MEDING SEAFOOD AT STATION 1106+00 WITH THIS OPERATION AS SHOWN ON THE PLANS, OR AS DIRECTED BY THE ENGINEER IN THE FIELD. PLACE PERMANENT PAVEMENT MARKINGS, AS SHOWN IN THE PLANS.

STAGE 2:

1) UTILIZE TA-33 DURING OFF PEAK HOURS TO SET TEMPORARY PCC BARRIER ON EXISTING SOUTHBOUND SR1 BETWEEN STATION 800+00 TO 806+50 AS SHOWN IN THIS STAGE, OR AS DIRECTED BY THE ENGINEER IN THE FIELD.

2) BEHIND PCC BARRIER, REMOVE ABANDONED PAVEMENT SHOWN IN THIS STAGE. GRADE AREA TO DRAIN. PLACE TOPSOIL, SEEDING, AND MULCH.

3) UTILIZE TA-33 DURING OFF PEAK HOURS TO REMOVE TEMPORARY PCC BARRIER.

STAGE 3:

1) FOLLOWING APPROVAL OF THE ENGINEER IN THE FIELD CONVERT STORMWATER PONDS #529, #530, #531 AND #532 TO PERMANENT STORMWATER FACILITIES AS SPECIFIED ON THE STORMWATER DETAIL SHEETS.

PHASE IX: (STAGES 1–3)

CONSTRUCTION PHASING PLANS LEGEND

- WORK AREA
- WORK AREA (REMOVAL)
- WORK COMPLETED IN PREVIOUS PHASING
- TRAFFIC FLOW ARROW
- PHASE 2-WAY SR1 TRAFFIC FLOW ARROW

* SEE 60 SCALE PLANS FOR STAGING

EROSION AND SEDIMENT CONTROL PLANS LEGEND

* SEE 60 SCALE PLANS FOR STAGING

Unofficial Website Copy

PHASE IX

STAGE 1:

1) AS SHOWN ON THE PERMANENT WARNING SIGNS LAYOUT, PLACE CHANGEABLE MESSAGE SIGNS ON NORTHBOUND SR1, SOUTHBOUND SR1, SOUTHBOUND FREDERICA ROAD, AND TUB MILL POND ROAD TEN (10) CALENDAR DAYS IN ADVANCE OF AND FIVE (5) DAYS AFTER THE START OF CONSTRUCTION TO INFORM TRAVELING PUBLIC THAT TUB MILL POND ROAD WILL BE OPEN TO A NEW TRAFFIC PATTERN, THE EXISTING ACCESS TO SR1 WILL BE CLOSED, AND RAMP A WILL OPEN.

2) OPEN RAMP A AND PROPOSED TUB MILL POND ROAD TO TRAFFIC IN ACCORDANCE WITH THE PLANS AND DELDOT TRAFFIC CONTROL MANUAL. CLOSE EXISTING ACCESS TO TUB MILL ROAD WITH BARRICADES.

3) CONSTRUCT PROPOSED DRAINAGE FACILITIES AS SHOWN IN THIS STAGE.

4) ON OLD TUB MILL POND ROAD, UTILIZE TA-10 TO MILL AND OVERLAY WITH TYPE C HOT-MIX. TIE INTO THE ENTRANCE TO MEDING SEAFOOD AT STATION 1106+00 WITH THIS OPERATION AS SHOWN ON THE PLANS, OR AS DIRECTED BY THE ENGINEER IN THE FIELD. PLACE PERMANENT PAVEMENT MARKINGS, AS SHOWN IN THE PLANS.

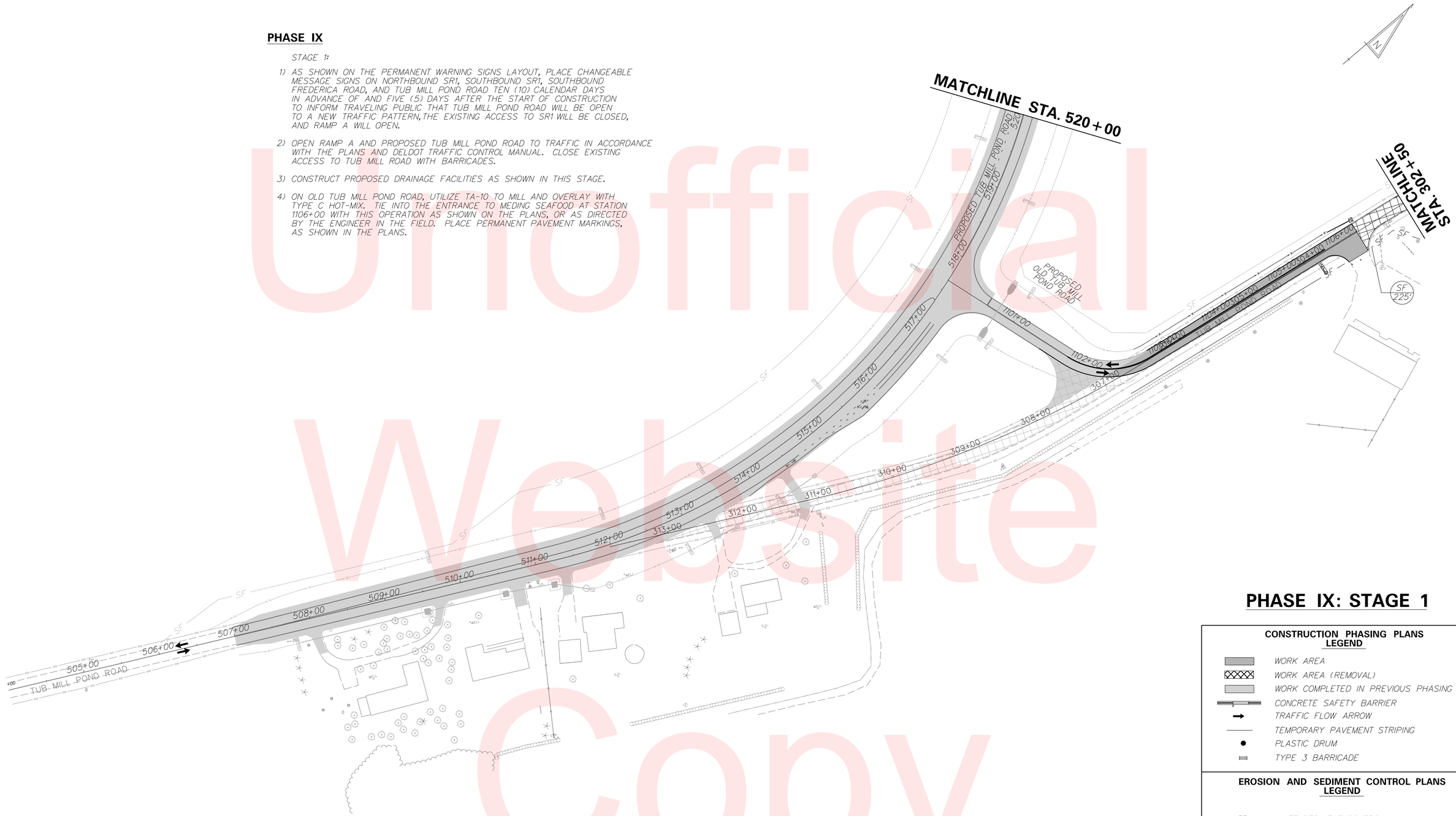

PHASE IX: STAGE 1

CONSTRUCTION PHASING PLANS LEGEND

- WORK AREA
- WORK AREA (REMOVAL)
- WORK COMPLETED IN PREVIOUS PHASING
- CONCRETE SAFETY BARRIER
- TRAFFIC FLOW ARROW
- TEMPORARY PAVEMENT STRIPING
- PLASTIC DRUM
- TYPE 3 BARRICADE

EROSION AND SEDIMENT CONTROL PLANS LEGEND

- INLET SEDIMENT CONTROL
- SF — SILT FENCE
- CHECK DAM
- SCE — STABILIZED CONSTRUCTION ENTRANCE
- ST — SEDIMENT TRAP
- TSD — TEMPORARY SLOPE DRAIN

Unofficial Website Copy

DELAWARE DEPARTMENT OF TRANSPORTATION	ADDENDUMS / REVISIONS	SCALE 0 60 120 180 FEET	SR1, SOUTH FREDERICA GRADE SEPARATED INTERSECTION	CONTRACT T200812202 / COUNTY KENT	BRIDGE NO. – / DESIGNED BY: LCM / CHECKED BY: SFP	CONSTRUCTION PHASING, M.O.T. AND EROSION CONTROL PLANS	SHEET NO. 185 / TOTAL SHTS. 296

9/14/2015
G:\PROJECTS\06535.00 (DelDOT Agmt. 1376 DOTS Open End)\06535.07 SR1, S. Frederica\CADD Files\XM\cs_090101sf.dgn
3:24:15 PM

PHASE IX: STAGE 2–3

EROSION AND SEDIMENT CONTROL PLANS LEGEND

- INLET SEDIMENT CONTROL
- SF — SILT FENCE
- CHECK DAM
- SCE — STABILIZED CONSTRUCTION ENTRANCE
- ST — SEDIMENT TRAP
- TSD — TEMPORARY SLOPE DRAIN

CONSTRUCTION PHASING PLANS LEGEND

- WORK AREA
- WORK AREA (REMOVAL)
- WORK COMPLETED IN PREVIOUS PHASING
- CONCRETE SAFETY BARRIER
- TRAFFIC FLOW ARROW
- TEMPORARY PAVEMENT STRIPING
- PLASTIC DRUM
- TYPE 3 BARRICADE

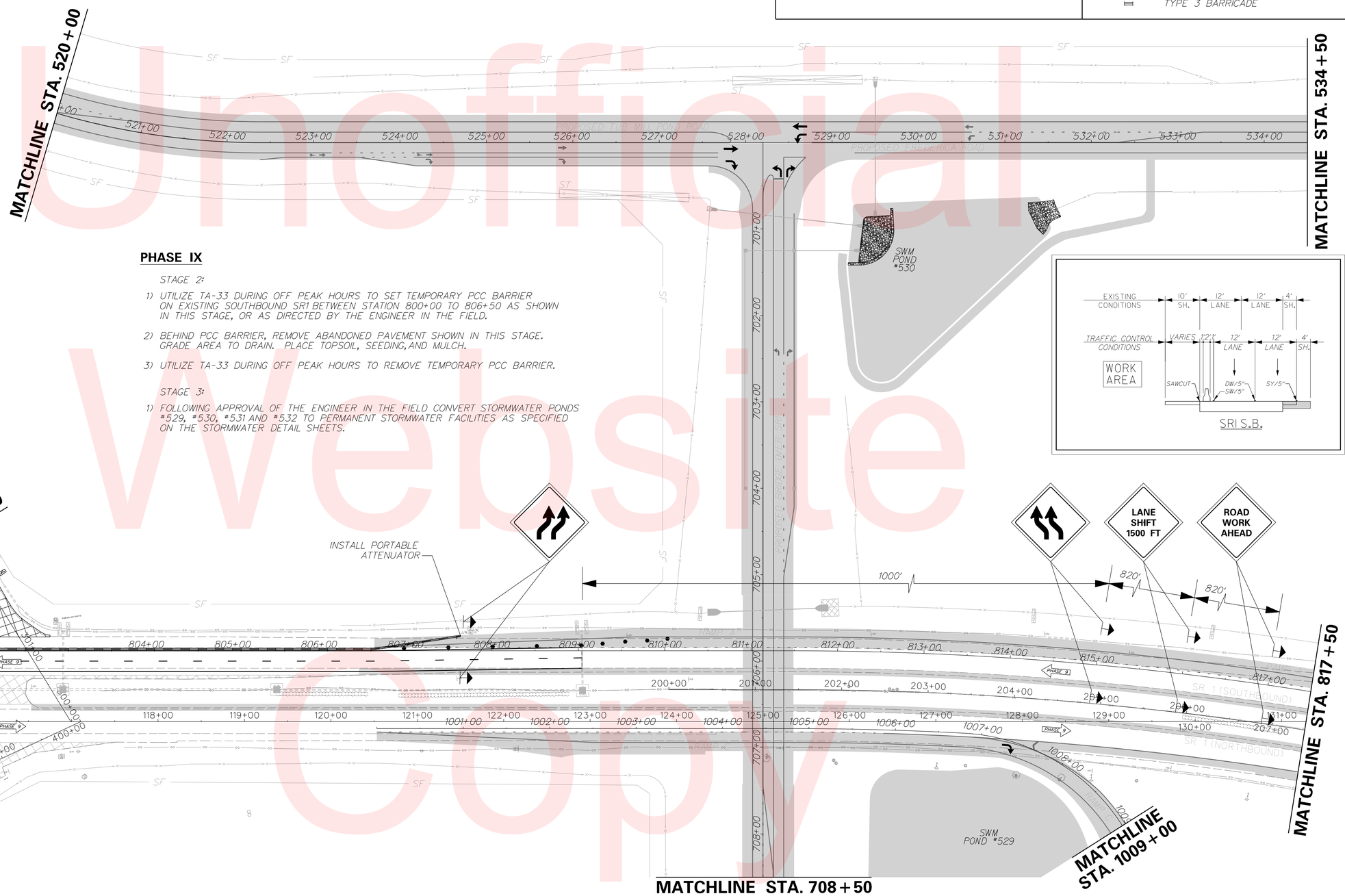

PHASE IX

STAGE 2:

1) UTILIZE TA-33 DURING OFF PEAK HOURS TO SET TEMPORARY PCC BARRIER ON EXISTING SOUTHBOUND SR1 BETWEEN STATION 800+00 TO 806+50 AS SHOWN IN THIS STAGE, OR AS DIRECTED BY THE ENGINEER IN THE FIELD.

2) BEHIND PCC BARRIER, REMOVE ABANDONED PAVEMENT SHOWN IN THIS STAGE. GRADE AREA TO DRAIN. PLACE TOPSOIL, SEEDING, AND MULCH.

3) UTILIZE TA-33 DURING OFF PEAK HOURS TO REMOVE TEMPORARY PCC BARRIER.

STAGE 3:

1) FOLLOWING APPROVAL OF THE ENGINEER IN THE FIELD CONVERT STORMWATER PONDS *529, *530, *531 AND *532 TO PERMANENT STORMWATER FACILITIES AS SPECIFIED ON THE STORMWATER DETAIL SHEETS.

Unofficial Website Copy

PHASE IX: STAGE 2–3

EROSION AND SEDIMENT CONTROL PLANS LEGEND

- INLET SEDIMENT CONTROL
- SF — SILT FENCE
- CHECK DAM
- SCE — STABILIZED CONSTRUCTION ENTRANCE
- ST — SEDIMENT TRAP
- TSD — TEMPORARY SLOPE DRAIN

CONSTRUCTION PHASING PLANS LEGEND

- WORK AREA
- WORK AREA (REMOVAL)
- WORK COMPLETED IN PREVIOUS PHASING
- CONCRETE SAFETY BARRIER
- TRAFFIC FLOW ARROW
- TEMPORARY PAVEMENT STRIPING
- PLASTIC DRUM
- TYPE 3 BARRICADE

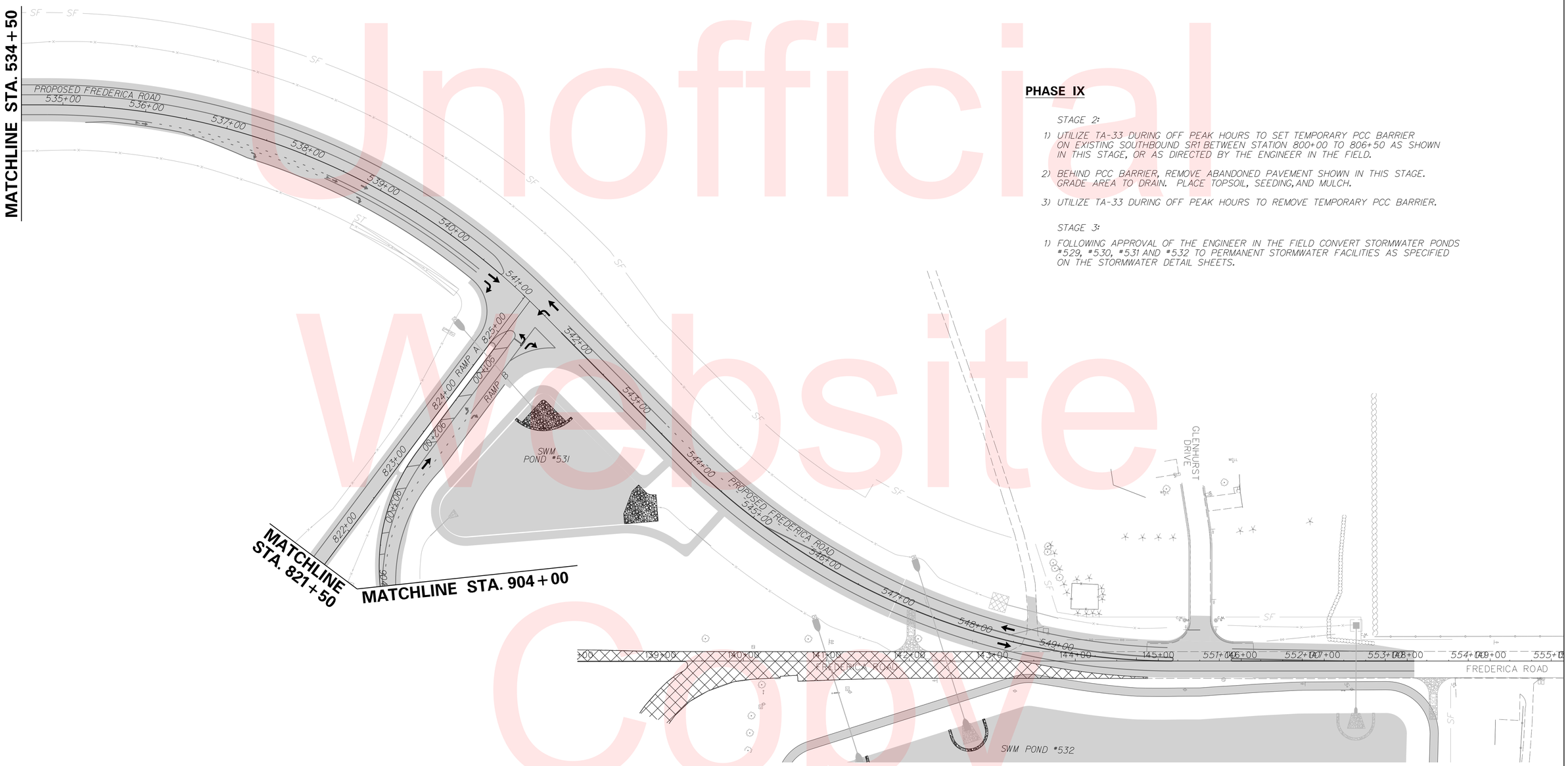

PHASE IX

STAGE 2:

1) UTILIZE TA-33 DURING OFF PEAK HOURS TO SET TEMPORARY PCC BARRIER ON EXISTING SOUTHBOUND SR1 BETWEEN STATION 800+00 TO 806+50 AS SHOWN IN THIS STAGE, OR AS DIRECTED BY THE ENGINEER IN THE FIELD.
2) BEHIND PCC BARRIER, REMOVE ABANDONED PAVEMENT SHOWN IN THIS STAGE. GRADE AREA TO DRAIN. PLACE TOPSOIL, SEEDING, AND MULCH.
3) UTILIZE TA-33 DURING OFF PEAK HOURS TO REMOVE TEMPORARY PCC BARRIER.

STAGE 3:

1) FOLLOWING APPROVAL OF THE ENGINEER IN THE FIELD CONVERT STORMWATER PONDS #529, #530, #531 AND #532 TO PERMANENT STORMWATER FACILITIES AS SPECIFIED ON THE STORMWATER DETAIL SHEETS.

Unofficial Website Copy

DELAWARE DEPARTMENT OF TRANSPORTATION	ADDENDUMS / REVISIONS	SCALE 0 60 120 180 FEET	SR1, SOUTH FREDERICA GRADE SEPARATED INTERSECTION	CONTRACT T200812202	BRIDGE NO. –	CONSTRUCTION PHASING, M.O.T. AND EROSION CONTROL PLANS	SHEET NO. 187
				COUNTY KENT	DESIGNED BY: LCM		TOTAL SHTS. 296
					CHECKED BY: SFP		

9/14/2015
G:\PROJECTS\06535.00 (DelDOT Agmt. 1376 DOTS Open End)\06535.07 SR1, S. Frederica\CADD Files\XM\cs_090202sf.dgn
3:25:00 PM

PHASE X

STAGE 1:

1) UTILIZE TA-33 DURING OFF PEAK HOURS TO REMOVE CROSSOVER AT SR1 STATION 101+00, AS SHOWN IN THIS STAGE. MAINTAIN FOUR (4) FOOT SHOULDERS IN THIS AREA. GRADE PROPOSED DITCHING AND PLACE TOPSOIL, SEEDING, AND MULCH.

2) UTILIZE TA-33 DURING OFF PEAK HOURS TO SAWCUT AND REMOVE ALL TEMPORARY PAVEMENT ALONG THE MEDIAN OF SR1. MAINTAIN FOUR (4) FOOT SHOULDERS ALONG SR1 MEDIAN WITHIN THE PROJECT LIMITS. RE-GRADE DITCHING IN THE MEDIAN AS SHOWN IN THE PLANS, OR DIRECTED BY THE ENGINEER IN THE FIELD. PLACE TOPSOIL, SEEDING, AND MULCH.

3) USE TA-33 ON NORTHBOUND AND SOUTHBOUND SR1 TO MILL 1" AND OVERLAY EXISTING PAVEMENT WITH 2" OF TYPE C ASPHALT, PER TYPICAL SECTIONS, FROM STATION 95+61 (SR 1) TO STATION 1323+38.80 (RAMP D). THE CONTRACTOR SHALL CONSTRUCT FULL-DEPTH RESIDENTIAL DRIVEWAYS IN ORDER TO TIE INTO THE EXISTING ENTRANCES.

4) LAYOUT AND PLACE PERMANENT PAVEMENT MARKINGS ON NORTHBOUND AND SOUTHBOUND SR 1 AS SHOWN ON THE SIGNING AND STRIPING PLANS.

STAGE 2:

1) UTILIZE TA-10 TO MILL AND OVERLAY MILFORD NECK ROAD TO FINAL GRADES PER TYPICAL SECTIONS. PLACE PERMANENT PAVEMENT MARKINGS, AS SHOWN IN THE PLANS.

2) UTILIZE TA-10 TO PLACE TOPSOIL AND REGRADE THE EXISTING DRAINAGE ON MILFORD NECK ROAD.

3) ALL DISTURBED AREAS SHALL BE GRADED TO DRAIN PROPERLY. THE CONTRACTOR SHALL PLACE TOPSOIL, PERMANENT SEEDING AND MULCH BLANKET ON ALL AREAS IN FINAL CONDITIONS OR DIRECTED BY THE ENGINEER.

4) THE CONTRACTOR SHALL COORDINATE THE PLACEMENT OF THE FINAL SIGNAGE WITH STATE FORCES, WHERE APPLICABLE. THE CONTRACTOR SHALL NOT REMOVE ANY TEMPORARY SIGNAGE UNLESS APPROVED BY THE ENGINEER IN THE FIELD.

5) THE CONTRACTOR SHALL REMOVE ALL EROSION AND SEDIMENT CONTROL SYSTEMS STILL REMAINING IN THIS PHASE PER THE APPROVAL OF THE SEDIMENT CONTROL INSPECTOR.

PHASE X: (STAGES 1–2)

CONSTRUCTION PHASING PLANS LEGEND

- WORK AREA
- WORK AREA (REMOVAL)
- WORK COMPLETED IN PREVIOUS PHASING
- TRAFFIC FLOW ARROW
- PHASE 2-WAY SR1 TRAFFIC FLOW ARROW

* SEE 60 SCALE PLANS FOR STAGING

EROSION AND SEDIMENT CONTROL PLANS LEGEND

* SEE 60 SCALE PLANS FOR STAGING

Unofficial Website Copy

DELAWARE DEPARTMENT OF TRANSPORTATION	ADDENDUMS / REVISIONS	SCALE 0 200 400 600 FEET	SR1, SOUTH FREDERICA GRADE SEPARATED INTERSECTION	CONTRACT T200812202	BRIDGE NO. –	CONSTRUCTION PHASING, M.O.T. AND EROSION CONTROL PLANS	SHEET NO. 188
				COUNTY KENT	DESIGNED BY: LCM		TOTAL SHTS. 296
					CHECKED BY: SFP		

9/14/2015
G:\PROJECTS\06535.00 (DelDOT Agmt. 1376 DOTS Open End)\06535.07 SR1, S. Frederica\CADD Files\XM\cs_100000sf.dgn
5:31:14 PM

CHANGEABLE MESSAGE BOARDS

PRIOR TO DETOUR
(10 DAYS PRIOR TO BEGINNING OF DETOUR)

PCMS-1

FRED- ERICA ROAD	CLOSING AT DE 1 XX/XX/XX

DURING DETOUR
(DISPLAY FOR 5 DAYS AFTER IMPLEMENTATION OF DETOUR)

PCMS-1

XXXXXXXX XXXXXXXX XXXXXXXX	XXXXXXXX XXXXXXXX XXXXXXXX

PRIOR TO DETOUR
(10 DAYS PRIOR TO BEGINNING OF DETOUR)

PCMS-2

XXXXXXXX XXXXXXXX XXXXXXXX	XXXXXXXX XXXXXXXX XXXXXXXX

DURING DETOUR
(DISPLAY FOR 5 DAYS AFTER IMPLEMENTATION OF DETOUR)

PCMS-2

FRED- ERICA RD CLOSED	AT DE 1 FOLLOW DETOUR

SPECIAL SIGNS

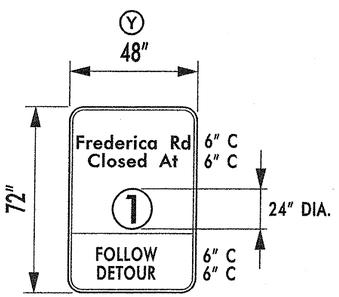

D/G RETROREFLECTIVE
FLOURESCENT ORANGE;
BLACK LEGEND;
ROUTE SHIELD - BLACK ON WHITE

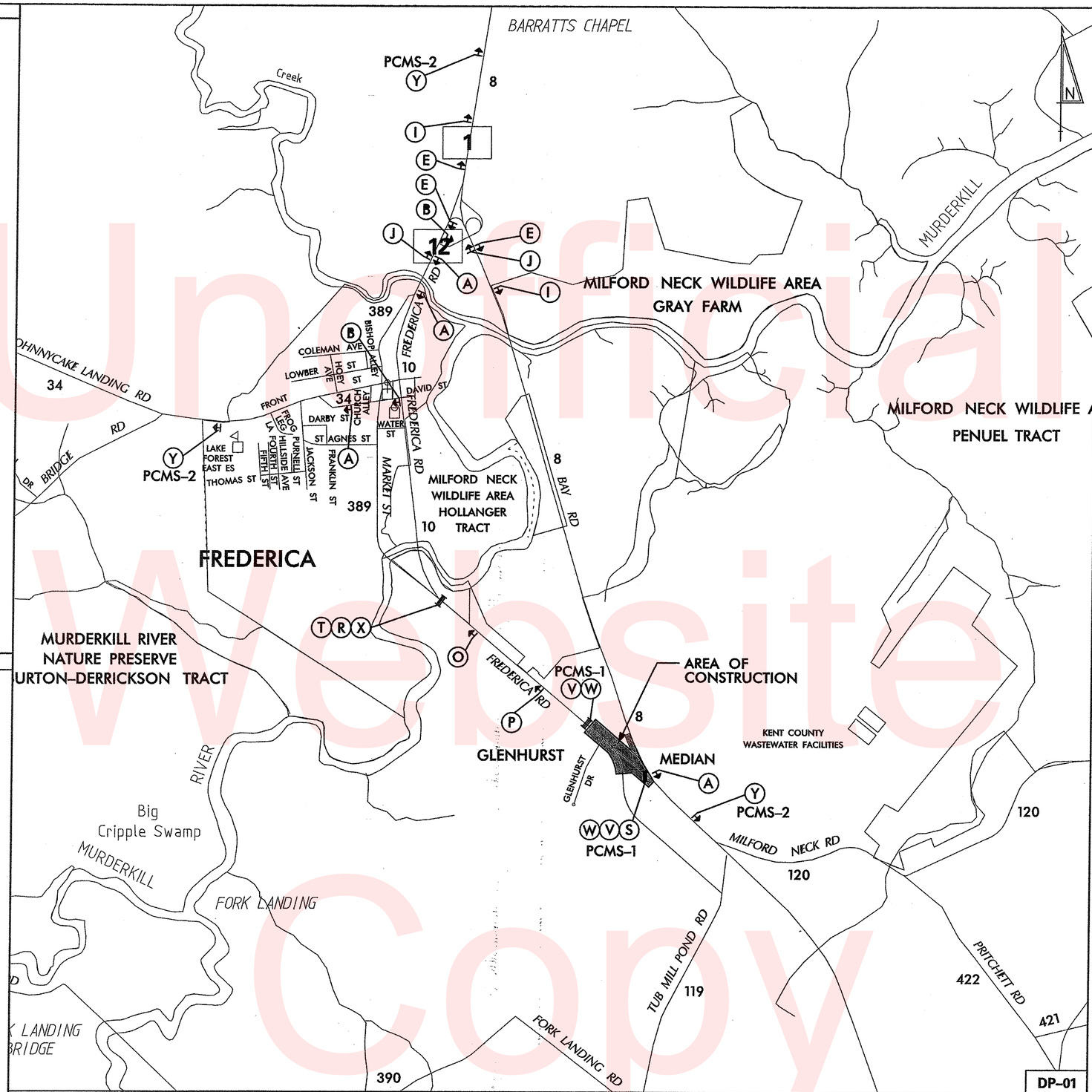

PHASE II, STAGE 3; PHASE III; PHASE IV

LEGEND

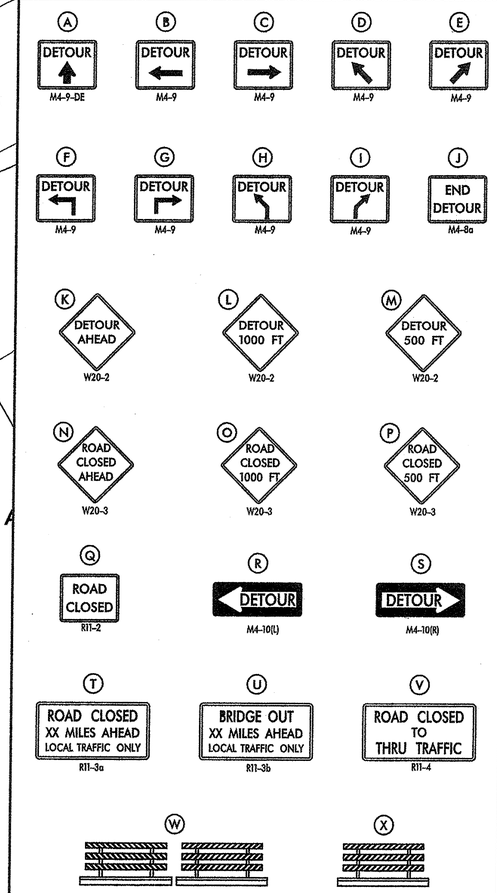

GENERAL NOTES

1. ALL DETOUR SIGNING, INCLUDING TRAILBLAZERS, ARE TO BE SUPPLIED AND MAINTAINED BY THE GENERAL CONTRACTOR IN COMPLIANCE WITH "THE DELAWARE MANUAL OF UNIFORM TRAFFIC CONTROL DEVICES" (DE MUTCD.)
2. THE CONTRACTOR SHALL COMPLY WITH GUIDELINES IN "THE DELAWARE MANUAL ON UNIFORM TRAFFIC CONTROL DEVICES" (DE MUTCD PART 6) FOR BARRICADES AND SIGNS (AS PER LATEST REVISION.)
3. DESIGN OF ALL SIGNS SHALL BE IN ACCORDANCE WITH THE FHWA STANDARD HIGHWAY SIGNS BOOK.
4. SIZES OF ALL SIGNS SHALL BE IN ACCORDANCE WITH "THE DELAWARE MANUAL OF UNIFORM TRAFFIC CONTROL DEVICES" (DE MUTCD.) SIZE OF SIGN SHALL BE BASED ON TYPE OF ROADWAY ON WHICH THE SIGN IS INSTALLED.
5. SIGNS NO LONGER IN USE SHALL BE COMPLETELY COVERED WITH NO RETROREFLECTIVE MATERIAL SHOWING, OR SHALL BE REMOVED, AS DIRECTED BY THE ENGINEER.
6. FIELD CONDITIONS MAY DICTATE CHANGES AT SOME TIME DURING THE LIFE OF THE CONTRACT. IN THE EVENT OF OMISSIONS OR CORRECTIONS, THE SIGNING PROVISIONS OF "THE DELAWARE MANUAL ON UNIFORM TRAFFIC CONTROL DEVICES" (DE MUTCD) WILL PREVAIL.
7. SIGNS "N" THROUGH "Q" AND "T" AND "V", THE WORD "ROAD" SHOULD BE CHANGED TO "RAMP", "RR XING", OR "BRIDGE" WHERE APPLICABLE.
8. WARNING SIGNS AND DETOUR TRAILBLAZERS SHALL BE MOUNTED ON BREAKAWAY POSTS AND HAVE RETROREFLECTIVE FLUORESCENT ORANGE SHEETING.
9. "W" BARRICADES SHALL COMPLETELY RUN THE FULL WIDTH OF THE ROADWAY.
10. BARRICADES SHALL BE A MINIMUM OF 6 FEET WIDE UNLESS DIRECTED BY THE ENGINEER.
11. SIGNS ON DIVIDED HIGHWAY ARE PLACED IN MEDIAN AND RIGHT SIDE OF ROADWAY.

RECOMMENDED [signature] DATE: 2/26/13 | RECOMMENDED _____ DATE: _____ | RECOMMENDED [signature] DATE: 2/26/13 | APPROVED CHIEF SAFETY OFFICER [signature] DATE: 2-28-13 | APPROVED TRAFFIC ENGINEER [signature] DATE: 2/28/13

DELAWARE DEPARTMENT OF TRANSPORTATION

ADDENDUM / REVISIONS

NOT TO SCALE

SR1, SOUTH FREDERICA GRADE SEPARATED INTERSECTION

CONTRACT	PERMIT NO.	–
T200812202	DESIGNED BY: LCM	
COUNTY		
KENT	CHECKED BY: SFP	

DETOUR PLAN (FREDERICA ROAD)

SHEET NO. 189 | TOTAL SHTS. 296

G:\PROJECTS\A35.00 (DELDOT AGMT. 1376 DOTS OPEN END)\A35.07 SR1, S. FREDERICA\CADD FILES\XM\DP_FRED.DGN

Unofficial Website Copy

CHANGEABLE MESSAGE BOARDS

PRIOR TO DETOUR
(10 DAYS PRIOR TO BEGINNING OF DETOUR)

PCMS-1

MILFORD NECK RD CLOSING	AT DE 1 STARTING XX/XX/XX

DURING DETOUR
(DISPLAY FOR 5 DAYS AFTER IMPLEMENTATION OF DETOUR)

PCMS-1

XXXXXXXX XXXXXXXX XXXXXXXX	XXXXXXXX XXXXXXXX XXXXXXXX

PRIOR TO DETOUR
(10 DAYS PRIOR TO BEGINNING OF DETOUR)

PCMS-2

XXXXXXXX XXXXXXXX XXXXXXXX	XXXXXXXX XXXXXXXX XXXXXXXX

DURING DETOUR
(DISPLAY FOR 5 DAYS AFTER IMPLEMENTATION OF DETOUR)

PCMS-2

MILFORD NECK RD CLOSED	AT DE 1 FOLLOW DETOUR

SPECIAL SIGNS

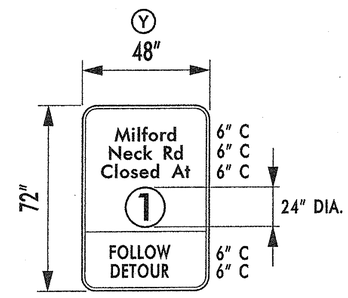

D/G RETROREFLECTIVE
FLOURESCENT ORANGE;
BLACK LEGEND;
ROUTE SHIELD - BLACK ON WHITE

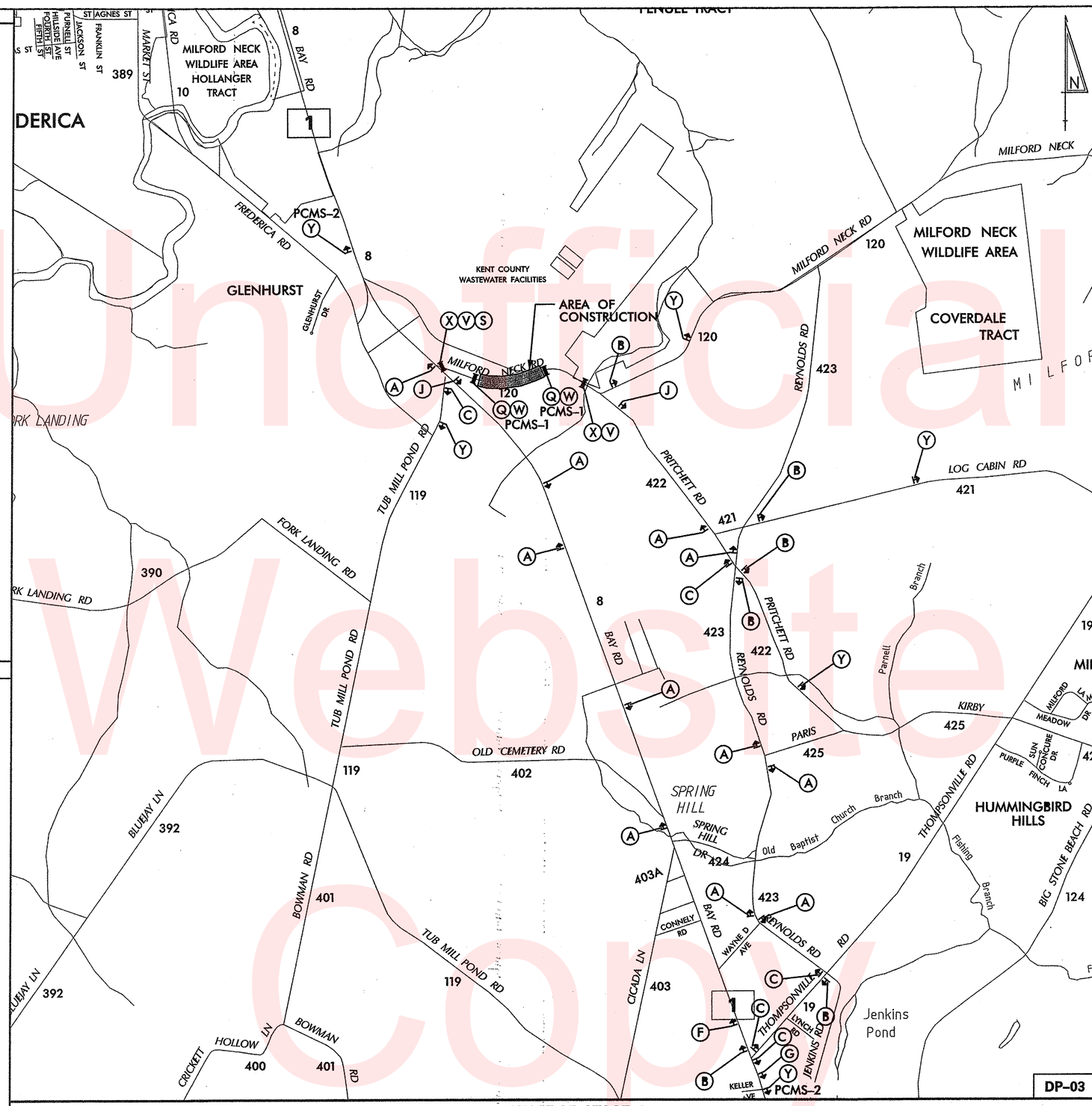

PHASE VI, STAGE 3

LEGEND

A DETOUR M4-9-DE	B DETOUR M4-9	C DETOUR M4-9	D DETOUR M4-9	E DETOUR M4-9
F DETOUR M4-9	G DETOUR M4-9	H DETOUR M4-9	I DETOUR M4-9	J END DETOUR M4-8a
K DETOUR AHEAD W20-2	L DETOUR 1000 FT W20-2	M DETOUR 500 FT W20-2		
N ROAD CLOSED AHEAD W20-3	O ROAD CLOSED 1000 FT W20-3	P ROAD CLOSED 500 FT W20-3		
Q ROAD CLOSED R11-2	R DETOUR M4-10(L)	S DETOUR M4-10(R)		
T ROAD CLOSED XX MILES AHEAD LOCAL TRAFFIC ONLY R11-3a	U BRIDGE OUT XX MILES AHEAD LOCAL TRAFFIC ONLY R11-3b	V ROAD CLOSED TO THRU TRAFFIC R11-4		
W	X			

GENERAL NOTES

1. ALL DETOUR SIGNING, INCLUDING TRAILBLAZERS, ARE TO BE SUPPLIED AND MAINTAINED BY THE GENERAL CONTRACTOR IN COMPLIANCE WITH "THE DELAWARE MANUAL OF UNIFORM TRAFFIC CONTROL DEVICES" (DE MUTCD.)
2. THE CONTRACTOR SHALL COMPLY WITH GUIDELINES IN "THE DELAWARE MANUAL ON UNIFORM TRAFFIC CONTROL DEVICES" (DE MUTCD PART 6) FOR BARRICADES AND SIGNS (AS PER LATEST REVISION.)
3. DESIGN OF ALL SIGNS SHALL BE IN ACCORDANCE WITH THE FHWA STANDARD HIGHWAY SIGNS BOOK.
4. SIZES OF ALL SIGNS SHALL BE IN ACCORDANCE WITH "THE DELAWARE MANUAL OF UNIFORM TRAFFIC CONTROL DEVICES" (DE MUTCD.) SIZE OF SIGN SHALL BE BASED ON TYPE OF ROADWAY ON WHICH THE SIGN IS INSTALLED.
5. SIGNS NO LONGER IN USE SHALL BE COMPLETELY COVERED WITH NO RETROREFLECTIVE MATERIAL SHOWING, OR SHALL BE REMOVED, AS DIRECTED BY THE ENGINEER.
6. FIELD CONDITIONS MAY DICTATE CHANGES AT SOME TIME DURING THE LIFE OF THE CONTRACT. IN THE EVENT OF OMISSIONS OR CORRECTIONS, THE SIGNING PROVISIONS OF "THE DELAWARE MANUAL ON UNIFORM TRAFFIC CONTROL DEVICES" (DE MUTCD) WILL PREVAIL.
7. SIGNS "N" THROUGH "Q" AND "T" AND "V", THE WORD "ROAD" SHOULD BE CHANGED TO "RAMP", "RR XING", OR "BRIDGE" WHERE APPLICABLE.
8. WARNING SIGNS AND DETOUR TRAILBLAZERS SHALL BE MOUNTED ON BREAKAWAY POSTS AND HAVE RETROREFLECTIVE FLUORESCENT ORANGE SHEETING.
9. "W" BARRICADES SHALL COMPLETELY RUN THE FULL WIDTH OF THE ROADWAY.
10. BARRICADES SHALL BE A MINIMUM OF 6 FEET WIDE UNLESS DIRECTED BY THE ENGINEER.
11. SIGNS ON DIVIDED HIGHWAY ARE PLACED IN MEDIAN AND RIGHT SIDE OF ROADWAY.

Unofficial Website Copy

RECOMMENDED [signature] DATE: 2/26/13 | RECOMMENDED _____ DATE: _____ | RECOMMENDED [signature] DATE: 2/26/13 | APPROVED CHIEF SAFETY OFFICER [signature] DATE: 2-28-13 | APPROVED TRAFFIC ENGINEER [signature] DATE: 2/28/13

DELAWARE DEPARTMENT OF TRANSPORTATION	ADDENDUM / REVISIONS	NOT TO SCALE	SR1, SOUTH FREDERICA GRADE SEPARATED INTERSECTION	CONTRACT T200812202 / COUNTY KENT	PERMIT NO. – / DESIGNED BY: LCM / CHECKED BY: SFP
DETOUR PLAN (MILFORD NECK ROAD)	SHEET NO. 190 / TOTAL SHTS. 296				

2/20/2013
G:\PROJECTS\06535.00 (DelDOT Agmt. 1376 DOTS Open End)\06535.07 SR1, S. Frederica\CADD Files\XM\dp_MN.dgn
4:17:57 PM

CHANGEABLE MESSAGE BOARDS

PRIOR TO DETOUR
(10 DAYS PRIOR TO BEGINNING OF DETOUR)

PCMS-1

TUBMILL POND RD CLOSING	AT DE 1 STARTING XX/XX/XX

DURING DETOUR
(DISPLAY FOR 5 DAYS AFTER IMPLEMENTATION OF DETOUR)

PCMS-1

XXXXXXXX XXXXXXXX XXXXXXXX	XXXXXXXX XXXXXXXX XXXXXXXX

PRIOR TO DETOUR
(10 DAYS PRIOR TO BEGINNING OF DETOUR)

PCMS-2

XXXXXXXX XXXXXXXX XXXXXXXX	XXXXXXXX XXXXXXXX XXXXXXXX

DURING DETOUR
(DISPLAY FOR 5 DAYS AFTER IMPLEMENTATION OF DETOUR)

PCMS-2

TUBMILL POND RD CLOSED	AT DE 1 FOLLOW DETOUR

SPECIAL SIGNS

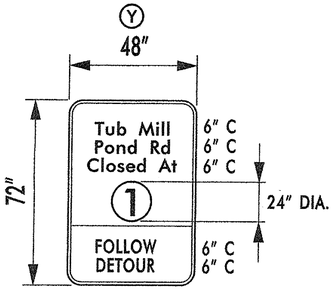

D/G RETROREFLECTIVE FLOURESCENT ORANGE; BLACK LEGEND; ROUTE SHIELD – BLACK ON WHITE

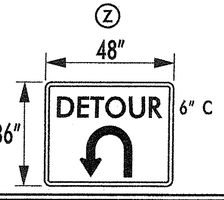

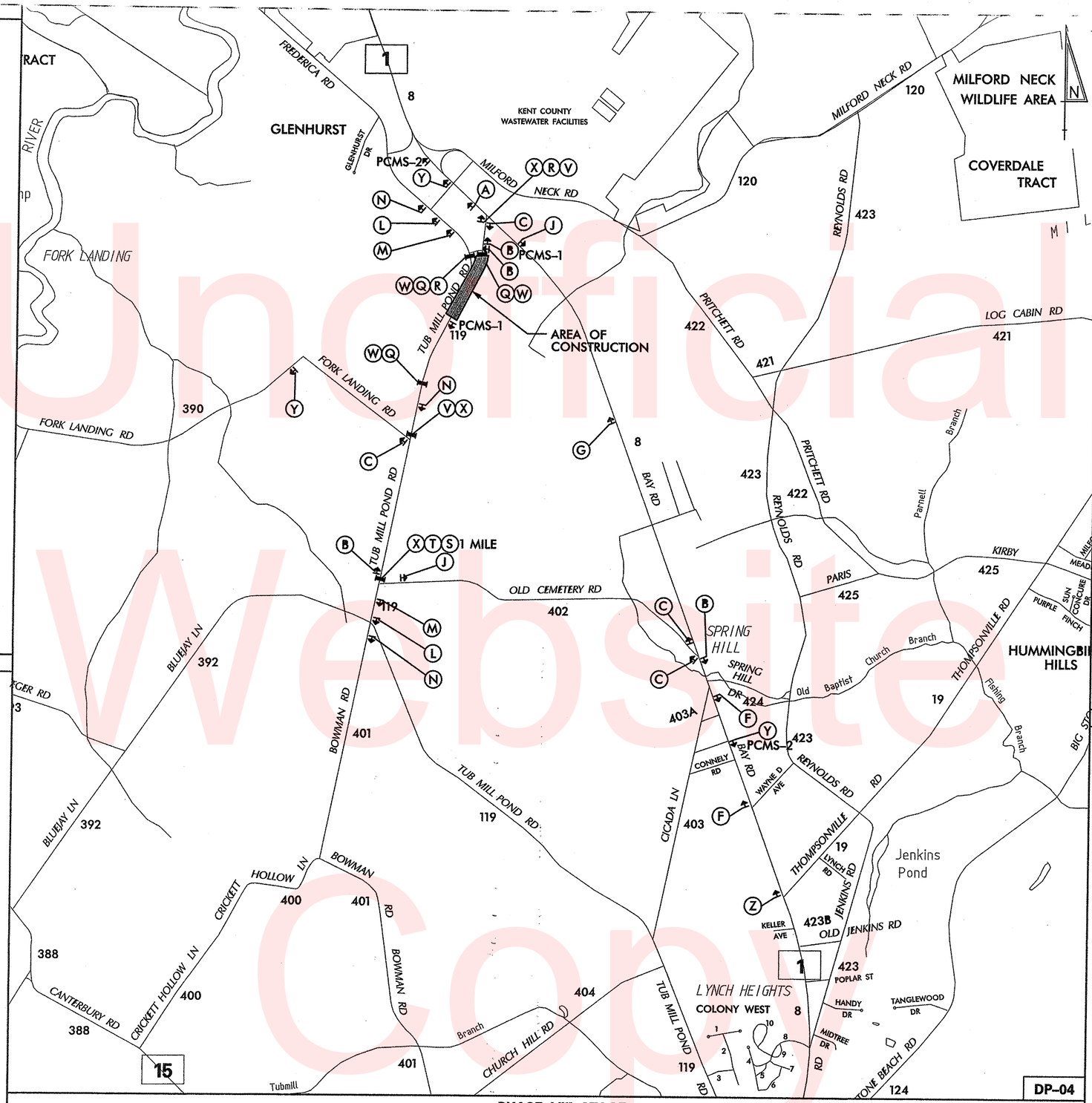

PHASE VIII, STAGE 2

LEGEND

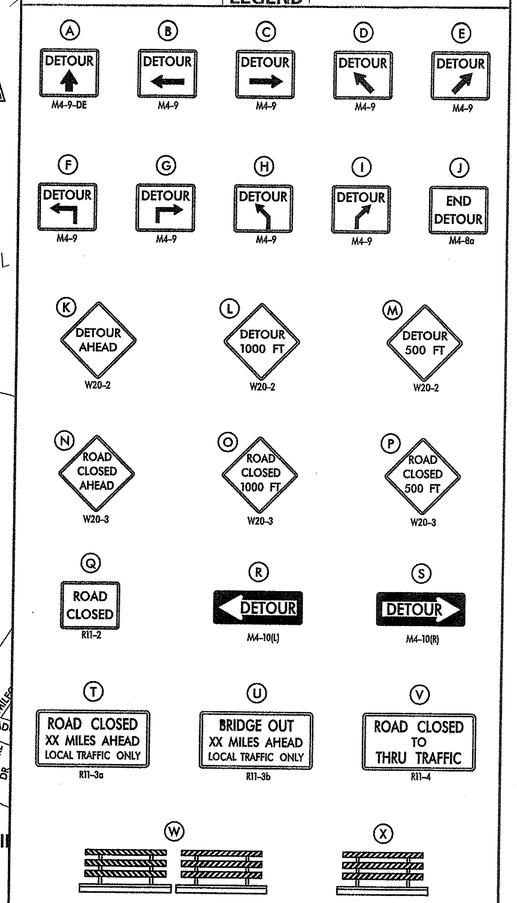

GENERAL NOTES

1. ALL DETOUR SIGNING, INCLUDING TRAILBLAZERS, ARE TO BE SUPPLIED AND MAINTAINED BY THE GENERAL CONTRACTOR IN COMPLIANCE WITH "THE DELAWARE MANUAL OF UNIFORM TRAFFIC CONTROL DEVICES" (DE MUTCD.)
2. THE CONTRACTOR SHALL COMPLY WITH GUIDELINES IN "THE DELAWARE MANUAL ON UNIFORM TRAFFIC CONTROL DEVICES" (DE MUTCD PART 6) FOR BARRICADES AND SIGNS (AS PER LATEST REVISION.)
3. DESIGN OF ALL SIGNS SHALL BE IN ACCORDANCE WITH THE FHWA STANDARD HIGHWAY SIGNS BOOK.
4. SIZES OF ALL SIGNS SHALL BE IN ACCORDANCE WITH "THE DELAWARE MANUAL OF UNIFORM TRAFFIC CONTROL DEVICES" (DE MUTCD.) SIZE OF SIGN SHALL BE BASED ON TYPE OF ROADWAY ON WHICH THE SIGN IS INSTALLED.
5. SIGNS NO LONGER IN USE SHALL BE COMPLETELY COVERED WITH NO RETROREFLECTIVE MATERIAL SHOWING, OR SHALL BE REMOVED, AS DIRECTED BY THE ENGINEER.
6. FIELD CONDITIONS MAY DICTATE CHANGES AT SOME TIME DURING THE LIFE OF THE CONTRACT. IN THE EVENT OF OMISSIONS OR CORRECTIONS, THE SIGNING PROVISIONS OF "THE DELAWARE MANUAL ON UNIFORM TRAFFIC CONTROL DEVICES" (DE MUTCD) WILL PREVAIL.
7. SIGNS "N" THROUGH "Q" AND "T" AND "V", THE WORD "ROAD" SHOULD BE CHANGED TO "RAMP", "RR XING", OR "BRIDGE" WHERE APPLICABLE.
8. WARNING SIGNS AND DETOUR TRAILBLAZERS SHALL BE MOUNTED ON BREAKAWAY POSTS AND HAVE RETROREFLECTIVE FLUORESCENT ORANGE SHEETING.
9. "W" BARRICADES SHALL COMPLETELY RUN THE FULL WIDTH OF THE ROADWAY.
10. BARRICADES SHALL BE A MINIMUM OF 6 FEET WIDE UNLESS DIRECTED BY THE ENGINEER.
11. SIGNS ON DIVIDED HIGHWAY ARE PLACED IN MEDIAN AND RIGHT SIDE OF ROADWAY.

RECOMMENDED _____ DATE: 2/26/13 | RECOMMENDED _____ DATE: _____ | RECOMMENDED _____ DATE: 2/26/13 | APPROVED CHIEF SAFETY OFFICER _____ DATE: 2-28-13 | APPROVED TRAFFIC ENGINEER _____ DATE: 2/26/13

DELAWARE DEPARTMENT OF TRANSPORTATION

ADDENDUM / REVISIONS

NOT TO SCALE

SR1, SOUTH FREDERICA GRADE SEPARATED INTERSECTION

CONTRACT	PERMIT NO.	–
T200812202	DESIGNED BY: LCM	
COUNTY		
KENT	CHECKED BY: SFP	

DETOUR PLAN (TUB MILL POND ROAD)

SHEET NO. 191 | TOTAL SHTS. 296

G:\PROJECTS\A35.00 (DELDOT AGMT. 1376 DOTS OPEN END)\A35.07 SR1, S. FREDERICA\CADD FILES\XM\DP_TMP.DGN

Unofficial Website Copy

LANDSCAPING NOTES:

1. PLANTING PLAN SHEETS ARE FOR PLANTING AND LANDSCAPING PURPOSES ONLY. AS-BUILT CONDITIONS MAY VARY. THE CONTRACTOR SHALL VERIFY ALL EXISTING CONDITIONS AND UTILITY LOCATIONS AS SHOWN AND DESCRIBED ON THE DRAWINGS, AND SHALL INFORM THE OWNER OF ANY DISCREPANCIES OR POTENTIAL PROBLEMS PRIOR TO COMMENCING WORK.

2. PLANT LOCATIONS SHALL BE FIELD ADJUSTED TO AVOID UTILITIES. DO NOT PLANT TREES OR SHRUBS WITHIN 5' OF THE CENTERLINE OF ANY UNDERGROUND UTILITY LINES. DO NOT PLANT TREES WITHIN 10' OF THE CENTERLINE OF ANY OVERHEAD UTILITY LINES. "MISS UTILITY" 1-800-257-7777 MUST BE CONTACTED A MINIMUM OF 72 HOURS PRIOR TO PROCEEDING WITH ANY EXCAVATION FOR PLANT MATERIAL INSTALLATION.

3. NO PLANT MATERIAL SHALL BE PLANTED DIRECTLY IN FRONT OF ROADWAY SIGHT LINES. ALL PLANT MATERIAL SHALL BE GREATER THAN 6' FROM CENTERLINE OF DITCHES, EDGE, OF PAVEMENT AND FENCES. ALL TREES SHALL BE PLANTED OUTSIDE OF THE ROADWAY CLEAR ZONE. NO TREES SHALL BE PLANTED WITHIN 25' OF POND EMBANKMENTS.

4. PLANTING SHALL BE IN CONFORMANCE WITH THESE PLANS AND DETAILS AND THE STATE OF DELAWARE, DEPARTMENT OF TRANSPORTATION STANDARD SPECIFICATION SECTION 737.

5. WITHIN THE LANDSCAPING AREA ALL DISTURBED GROUND SHALL BE PERMANENTLY SEEDED WITH ITEM 734520 - MEADOW SEEDING. LIMITS SHALL BE AS INDICATED ON THE PLANS AND SHALL GENERALLY FOLLOW THE TOP OF BANK OF THE PROPOSED DITCHES. TEMPORARY STABILIZATION WITH TEMPORARY SEEDING SHALL BE ACCEPTABLE. THE CONTRACTOR SHALL MAKE EVERY EFFORT TO MAINTAIN THE TEXTURE OF THE TILLABLE SOIL FOR MEADOW SEEDING DURING PLANTING AND IMPROVE ANY SOIL COMPACTION OR DISTURBANCE OF MEADOW SEED THAT MAY OCCUR.

6. THE CONTRACTOR SHALL STAKE THE LOCATION OF THE PROPOSED LANDSCAPING FOR APPROVAL BY THE ENGINEER PRIOR TO INSTALLATION. ALL COSTS PAID UNDER ITEM 763501.

7. CONTRACTOR SHALL BE REQUIRED TO WATER ALL MAJOR AND MINOR TREES, SHRUBS, AND ALL HERBACEOUS BEDS BI-WEEKLY DURING THE PERIOD FROM JUNE 15 THROUGH OCTOBER 1. WATERING, ONCE INITIATED, SHALL CONTINUE WITHOUT INTERRUPTION UNTIL ALL PLANTS ON THE PROJECT HAVE BEEN WATERED. PAYMENT SHALL BE INCIDENTAL TO ITEM 737523 AND SHALL BE BASED ON THE FOLLOWING SCHEDULE:
   - MAJOR TREES - 15 GALLONS PER TREE
   - MINOR TREES - 10 GALLONS PER TREE
   - SHRUBS - 5 GALLONS PER SHRUB
   - PERENNIALS - 10 GALLONS PER 100 SQUARE FEET OF PLANTING BED

   WATER USED FOR THIS ITEM SHALL MEET THE REQUIREMENTS OF SECTION 803 OF THE STANDARD SPECIFICATIONS. TREE WATERING BAGS, IF UTILIZED, SHALL BE FILLED AS A PART OF THE WATERING OPERATION; PAYMENT SHALL BE AS DETAILED HEREIN. TREE WATERING BAGS SHALL REMAIN THE PROPERTY OF THE CONTRACTOR AND SHALL BE REMOVED PRIOR TO FINAL INSPECTION.

8. SHRUBS SHALL BE PLANTED IN RANDOM SEQUENCE WITH THE TOTAL NUMBER OF EACH SHRUB SPECIES PLANTED EQUALING THE TOTAL SHOWN ON THE IDENTIFIER.

9. WORK ACTIVITIES ASSOCIATED WITH ITEMS 737523 - PLANTINGS, AND 734520 - MEADOW SEEDING, WILL NOT BE PART OF THE CONTRACT CPM SCHEDULE, AND WILL NOT BE SUBJECT TO THE ADVERTISED COMPLETION TIME. A SEPARATE TIME PERIOD OF 33 WORKING DAYS WILL BE UTILIZED TO GOVERN COMPLETION OF WORK ITEMS 737523 AND 734520. THE CONTRACTOR SHALL SUBMIT A SEPARATE SCHEDULE IN BAR CHART FORMAT REFLECTING ALL WORK ASSOCIATED WITH THESE ITEMS. FAILURE TO COMPLETE ITEMS 737523 AND 734520 WITHIN THE SPECIFIED NUMBER OF WORKING DAYS ABOVE WILL RESULT IN ASSESSMENT OF LIQUIDATED DAMAGES BASED ON THE TOTAL OF ITEMS 737523 AND 734520 PER WORKING DAY, AS DETAILED UNDER THE CONTRACT'S ADVERTISED SCHEDULE OF LIQUIDATED DAMAGES. NO CHANGE TO THE METHOD OF MEASUREMENT, BASIS OF PAYMENT, OR EXTENDED PLANT ESTABLISHMENT PERIOD LISTED IN THE SPECIAL PROVISIONS ARE TO BE MADE AS A RESULT OF THIS NOTE.

STREAM MIX NOTES:

1. THE STREAM MIX SHALL BE COMPRISED OF FIVE SPECIES:
   - EUPATORIUM MACULATUM
   - HELIOPSIS HELIANTHOIDES
   - LOBELIA CARDINALIS
   - RUDBECKIA LACINIATA
   - SOLIDAGO RUGOSA

2. THE STREAM MIX SHALL BE PLANTED ALONG THE DITCH AREA AS SHOWN IN THE LANDSCAPING PLANS. THE STREAM MIX SHALL NOT BE PLANTED ON THE BOTTOM OF THE DITCH.

3. THE STREAM MIX SHALL BE PLANTED USING A RANDOM PATTERN OF THE FIVE SPECIES. THE PLANTINGS SHALL BE PLACED SO THAT THE SAME SPECIES OCCURS IN GROUPS OF 10-15 PLANTINGS. AN EQUAL NUMBER OF EACH SPECIES SHALL BE USED THROUGHOUT THE ENTIRE PLANTING AREA. PRIOR TO PLACING STREAM BED MIX THE CONTRACTOR SHALL SCHEDULE AND ATTEND A SITE MEETING WITH THE DESIGN ENGINEER TO COORDINATE THE PLANTING SCHEDULE AND LAYOUT. COST FOR THIS COORDINATION SHALL BE INCLUDED IN ITEM 737523 - PLANTINGS.

4. THE STREAM MIX SHALL NOT BE PLANTED UNTIL AFTER ALL UPSTREAM AREAS HAVE BEEN STABILIZED.

5. STREAM MIX PLANTING AND WATERING SHALL BE INCIDENTAL TO ITEM 737523 - PLANTINGS.

AQUATIC MIX NOTES:

1. THE AQUATIC MIX SHALL BE COMPRISED OF FOUR SPECIES:
   - ACORUS AMERICANUS
   - SCIRPUS CYPERINUS
   - SAGGITARIA LATIFOLIA
   - ZIZANIA AQUATICA.

2. THE AQUATIC MIX SHALL BE PLANTED IN A 6' WIDE BAND AROUND THE POND AS SHOWN ON THE PLANS. THE BAND SHALL EXTEND FROM ELEVATION 9.50' TO 11.00'. THE PLANTINGS SHALL NOT BE PLACED IN WATER DEEPER THAN 6". AT THE TIME OF THE PLANTING THE POND MUST BE AT THE NORMAL POOL DEPTH. PRIOR TO PLACING AQUATIC MIX THE CONTRACTOR SHALL SCHEDULE AND ATTEND A SITE MEETING WITH THE DESIGN ENGINEER TO COORDINATE THE PLANTING SCHEDULE AND LAYOUT. COST FOR THIS COORDINATION SHALL BE INCLUDED IN ITEM 737523 - PLANTINGS.

3. THE AQUATIC MIX SHALL BE PLANTED USING A RANDOM PATTERN OF THE FOUR SPECIES. THE PLANTINGS SHALL BE PLACED SO THAT THE SAME SPECIES OCCURS IN GROUPS OF 3-5 PLANTINGS. AN EQUAL NUMBER OF EACH SPECIES SHALL BE USED THROUGHOUT THE ENTIRE PLANTING AREA.

4. THE AQUATIC MIX SHALL NOT BE PLANTED UNTIL AFTER THE POND HAS BEEN CONVERTED FROM A SEDIMENT BASIN.

5. AQUATIC MIX PLANTING AND WATERING SHALL BE INCIDENTAL TO ITEM 737523 - PLANTINGS.

LANDSCAPE PLANTING SUMMARY SCHEDULE

ID	QTY	BOTANICAL NAME	COMMON NAME	SIZE	SPACING	COMMENTS
		RUSHES/WETLAND PLANTS				
BM	2690	ACORUS AMERICANUS	AMERICAN SWEET FLAG	PLUG	12" O.C.	PART OF AQUATIC BENCH MIX
BM	2690	SCIRPUS CYPERINUS	WOOLGRASS	PLUG	12" O.C.	PART OF AQUATIC BENCH MIX
BM	2690	SAGGITARIA LATIFOLIA	ARROWHEAD	PLUG	12" O.C.	PART OF AQUATIC BENCH MIX
BM	2690	ZIZANIA AQUATICA	WILD RICE	PLUG	12" O.C.	PART OF AQUATIC BENCH MIX
		HERBACEOUS PLANTS				
SM	1450	EUPATORIUM MACULATUM	SPOTTED JOE PYE WEED	PLUG	12" O.C.	PART OF STREAM MIX
SM	1450	HELIOPSIS HELIANTHOIDES	OX-EYE SUNFLOWER	PLUG	12" O.C.	PART OF STREAM MIX
SM	1450	LOBELIA CARDINALIS	CARDINAL FLOWER	PLUG	12" O.C.	PART OF STREAM MIX
SM	1450	RUDBECKIA LACINIATA	TALL CONEFLOWER	PLUG	12" O.C.	PART OF STREAM MIX
SM	1450	SOLIDAGO RUGOSA	WRINKLE-LEAF GOLDENROD	PLUG	12" O.C.	PART OF STREAM MIX
		DECIDUOUS TREES				
AN	13	ACER NEGUNDO	BOX ELDER	2.5" CALIPER, B&B	40' O.C.	
AR	20	ACER RUBRUM	RED MAPLE	3" CALIPER, B&B	50' O.C.	
BN	6	BETULA NIGRA 'CULLY'	RIVER BIRCH	3" CALIPER, B&B	50' O.C.	
CC	12	CERCIS CANADENSIS	REDBUD	2.5" CALIPER, B&B	40' O.C.	
QP	10	QUERCUS PHELLOS	WILLOW OAK	3" CALIPER, B&B	50' O.C.	

NOTES:

1. PLANTING PLAN SHEETS ARE FOR INFORMATIONAL PURPOSES ONLY. LANDSCAPING TO BE FURNISHED AND INSTALLED BY OTHERS UNDER A SEPARATE CONTRACT.

Unofficial Website Copy

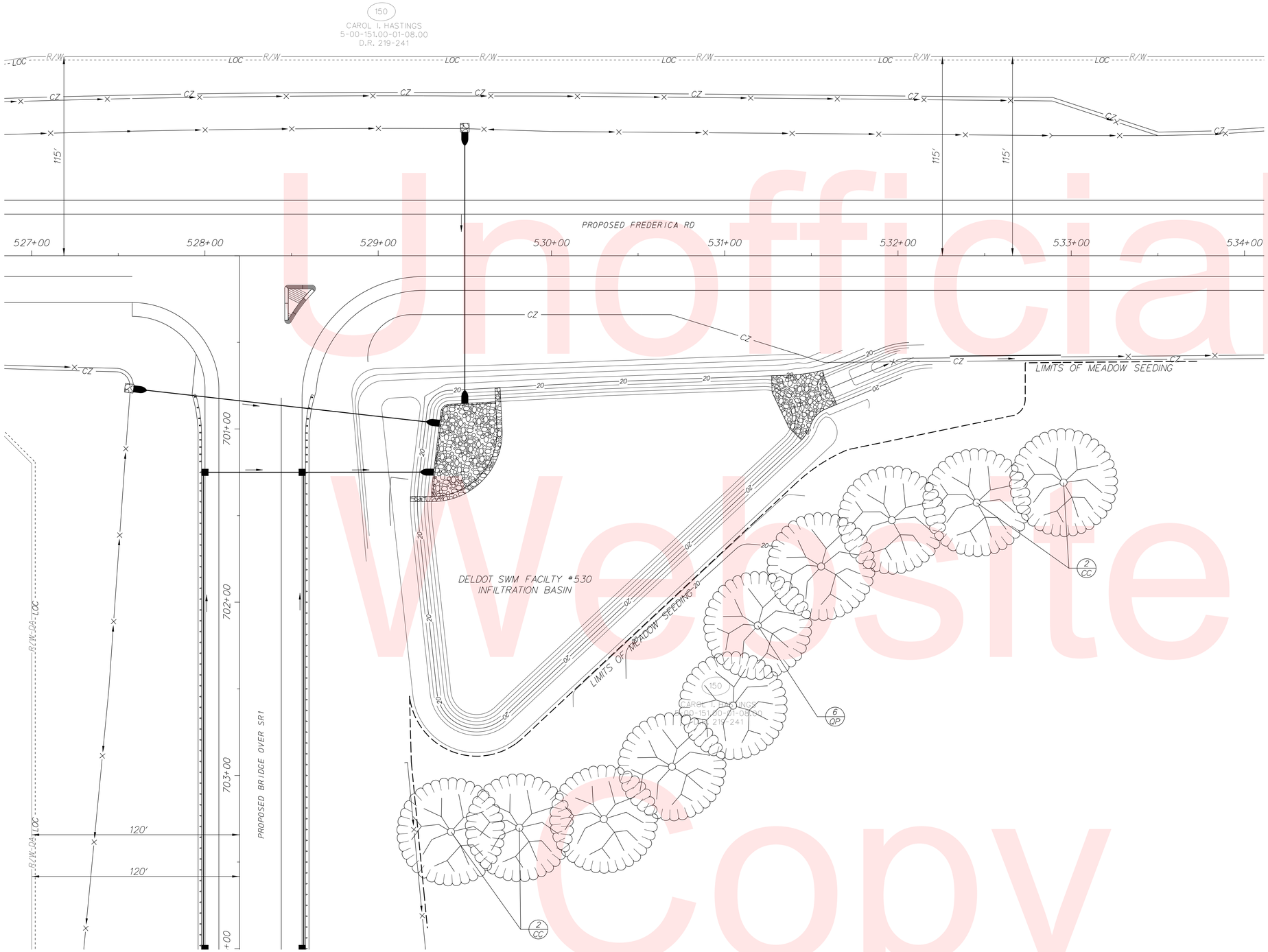

LEGEND

PROPOSED DECIDUOUS TREE	
AQUATIC MIX	
STREAM MIX	

LANDSCAPE PLANTING SCHEDULE		
KEY	PLANTING DESCRIPTION	QUANTITY
	DECIDUOUS TREES	
CC	CERCIS CANADENSIS	4
OP	QUERCUS PHELLOS	6

NOTES:

1. PLANTING PLAN SHEETS ARE FOR INFORMATIONAL PURPOSES ONLY. LANDSCAPING TO BE FURNISHED AND INSTALLED BY OTHERS UNDER A SEPARATE CONTRACT.

Unofficial Website Copy

DELAWARE DEPARTMENT OF TRANSPORTATION

ADDENDUMS / REVISIONS

SCALE 0 30 60 90 FEET

SR1, SOUTH FREDERICA GRADE SEPARATED INTERSECTION

CONTRACT	BRIDGE NO.	–
T200812202	DESIGNED BY: LCM	
COUNTY		
KENT	CHECKED BY: SFP	

LANDSCAPING PLANS

SHEET NO. 193

TOTAL SHTS. 296

10/15/2015
G:\PROJECTS\06535.00 (DelDOT Agmt. 1376 DOTS Open End)\06535.07 SR1, S. Frederica\CADD Files\XM\s01SF.dgn
11:17:17 AM

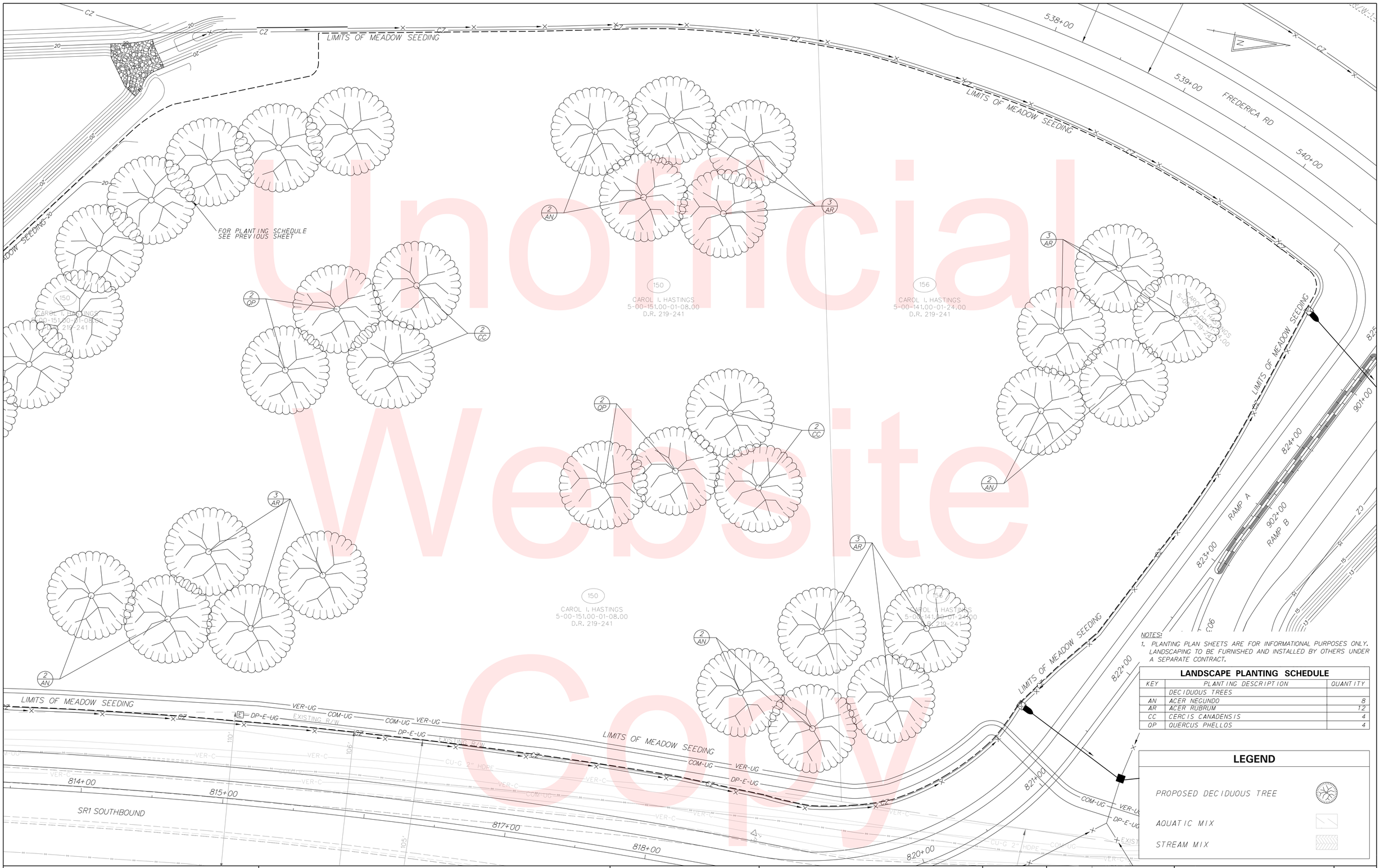

NOTES:

1. PLANTING PLAN SHEETS ARE FOR INFORMATIONAL PURPOSES ONLY. LANDSCAPING TO BE FURNISHED AND INSTALLED BY OTHERS UNDER A SEPARATE CONTRACT.

LANDSCAPE PLANTING SCHEDULE

KEY	PLANTING DESCRIPTION	QUANTITY
	DECIDUOUS TREES	
AN	ACER NEGUNDO	8
AR	ACER RUBRUM	12
CC	CERCIS CANADENSIS	4
OP	QUERCUS PHELLOS	4

LEGEND

PROPOSED DECIDUOUS TREE

AQUATIC MIX

STREAM MIX

Unofficial Website Copy

DELAWARE DEPARTMENT OF TRANSPORTATION

ADDENDUMS / REVISIONS

SCALE 0 30 60 90 FEET

SR1, SOUTH FREDERICA GRADE SEPARATED INTERSECTION

CONTRACT	BRIDGE NO.	–
T200812202	DESIGNED BY: LCM	
COUNTY		
KENT	CHECKED BY: SFP	

LANDSCAPING PLANS

SHEET NO.
194
TOTAL SHTS.
296

10/15/2015
G:\PROJECTS\06535.00 (DelDOT Agmt. 1376 DOTS Open End)\06535.07 SR1, S. Frederica\CADD Files\XM\is02SF.dgn
11:21:04 AM

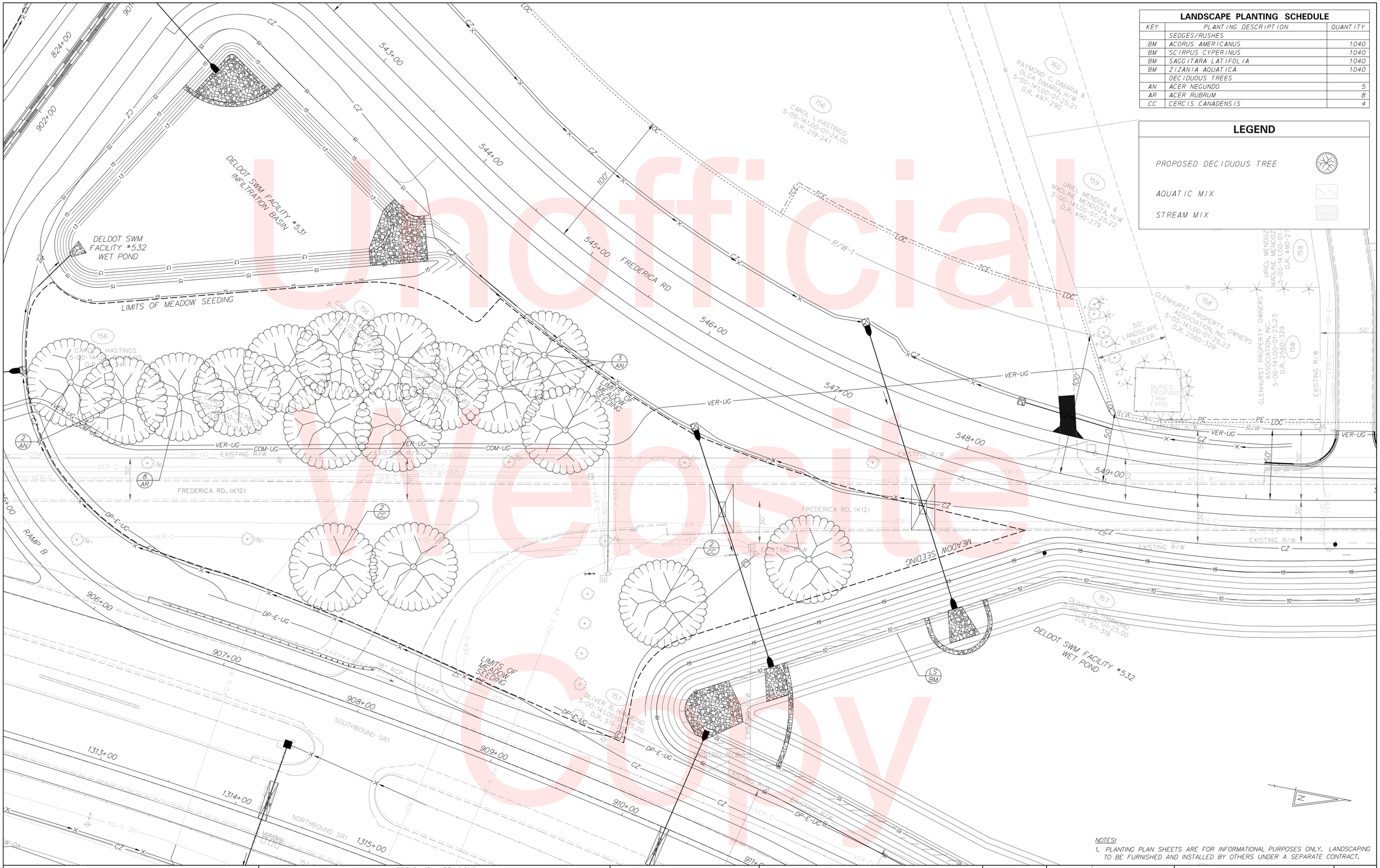

LANDSCAPE PLANTING SCHEDULE

KEY	PLANTING DESCRIPTION	QUANTITY
	SEDGES/RUSHES	
BM	ACORUS AMERICANUS	1040
BM	SCIRPUS CYPERINUS	1040
BM	SAGGITARA LATIFOLIA	1040
BM	ZIZANIA AQUATICA	1040
	DECIDUOUS TREES	
AN	ACER NEGUNDO	5
AR	ACER RUBRUM	8
CC	CERCIS CANADENSIS	4

LEGEND

PROPOSED DECIDUOUS TREE

AQUATIC MIX

STREAM MIX

NOTES:

1. PLANTING PLAN SHEETS ARE FOR INFORMATIONAL PURPOSES ONLY. LANDSCAPING TO BE FURNISHED AND INSTALLED BY OTHERS UNDER A SEPARATE CONTRACT.

Unofficial Website Copy

DELAWARE DEPARTMENT OF TRANSPORTATION

ADDENDUMS / REVISIONS

SCALE 0 30 60 90 FEET

SR1, SOUTH FREDERICA GRADE SEPARATED INTERSECTION

CONTRACT	BRIDGE NO.	–	LANDSCAPING PLANS	SHEET NO.
T200812202	DESIGNED BY: LCM			195
COUNTY				TOTAL SHTS.
KENT	CHECKED BY: SFP			296

10/15/2015
G:\PROJECTS\06535.00 (DelDOT Agmt. 1376 DOTS Open End)\06535.07 SR1, S. Frederica\CADD Files\XM\is035F.dgn
11:22:20 AM

LANDSCAPE PLANTING SCHEDULE

KEY	PLANTING DESCRIPTION	QUANTITY
	SEDGES/RUSHES	
BM	ACORUS AMERICANUS	1650
BM	SCIRPUS CYPERINUS	1650
BM	SAGGITARIA LATIFOLIA	1650
BM	ZIZANIA AQUATICA	1650
	HERBACEOUS PLANTS	
SM	EUPATORIUM MACULATUM	1450
SM	HELIOPSIS HELIANTHOIDES	1450
SM	LOBELIA CARDINALIS	1450
SM	RUDBECKIA LACINIATA	1450
SM	SOLIDAGO RUGOSA	1450
	DECIDUOUS TREES	
BN	BETULA NIGRA 'CULLY'	6

LEGEND

PROPOSED DECIDUOUS TREE

AQUATIC MIX

STREAM MIX

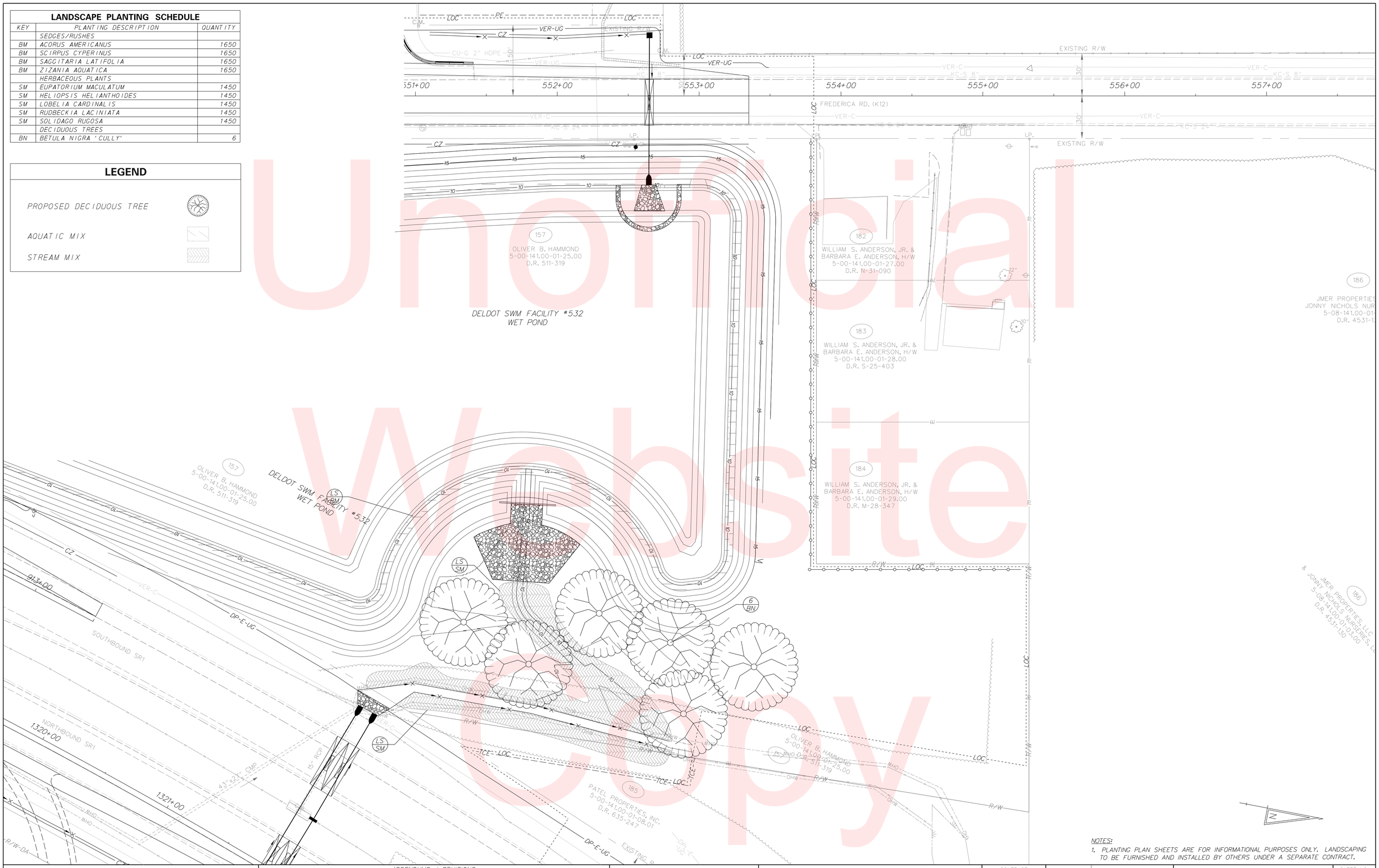

NOTES:

1. PLANTING PLAN SHEETS ARE FOR INFORMATIONAL PURPOSES ONLY. LANDSCAPING TO BE FURNISHED AND INSTALLED BY OTHERS UNDER A SEPARATE CONTRACT.

Unofficial Website Copy

DELAWARE DEPARTMENT OF TRANSPORTATION	ADDENDUMS / REVISIONS	SCALE 0 30 60 90 FEET	SR1, SOUTH FREDERICA GRADE SEPARATED INTERSECTION	CONTRACT T200812202 / COUNTY KENT	BRIDGE NO. – / DESIGNED BY: LCM / CHECKED BY: SFP	LANDSCAPING PLANS	SHEET NO. 196 / TOTAL SHTS. 296

10/15/2015
G:\PROJECTS\06535.00 (DelDOT Agmt. 1376 DOTS Open End)\06535.07 SR1, S. Frederica\CADD Files\XM\ls04SF.dgn
11:25:06 AM

LIGHTING PROJECT NOTES

1) CENTER OF CONDUIT TRENCH SHALL BE RUN IN STRAIGHT LINE BETWEEN THE LIGHTING STANDARDS, WHERE POSSIBLE.

2) AT ALL LOCATIONS WHERE THE INSTALLATION OF CONDUITS REQUIRES CROSSING OF EXISTING UNDERDRAINS. THE CONTRACTOR SHALL HAND EXCAVATE. THE CONTRACTOR SHALL TAKE SPECIAL CARE TO AVOID EXISTING UNDERDRAINS WHERE POSSIBLE.

3) THE ENGINEER SHALL BE NOTIFIED IMMEDIATELY IN CASE OF INADVERTENT DAMAGE TO AN EXISTING UNDERDRAIN LINE OR STRUCTURE. ALL REPAIRS SHALL BE MADE TO THE SATISFACTION OF THE ENGINEER. REPAIR COSTS SHALL BE CONSIDERED INCIDENTAL TO THE BID ITEMS.

4) THE CONTRACTOR SHALL BOND ALL METALLIC BOXES, CONDUITS, POLES, JUNCTION WELL COVERS & GROUND RODS TO FEEDER GROUND CABLES. COSTS INCIDENTAL TO ITEMS BEING INSTALLED.

5) CONDUCTORS SHALL NOT BE SPLICED EXCEPT IN THE POLE BASE. THE CONTRACTOR SHALL INCLUDE 10' OF SLACK CABLE FOR JUNCTION WELLS AND 4' OF SLACK CABLE FOR POLE-JUNCTION BOXES, NEATLY COILED AND BOUND FOR FUTURE USE.

6) ALL CONDUITS, JUNCTION WELLS, LIGHTING STANDARDS ETC., SHALL BE STAKED OUT BY THE CONTRACTOR AND EVERY LOCATION APPROVED BY THE ENGINEER BEFORE ANY WORK IS DONE. ALL TEMPROARY BYPASSES OF CIRCUITS SHALL BE ESTABLISHED PRIOR TO EXCAVATION.

7) CONTRACTOR WILL BE RESPONSIBLE FOR CONTACTING THE DELAWARE DEPARTMENT OF TRANSPORTATION TO INITIATE SERVICE APPLICATION AT LEAST 90 DAYS BEFORE POWER IS REQUIRED ON THE PROJECT. ALL POWER COSTS DURING CONSTRUCTION WILL BE AT THE CONTRACTOR'S EXPENSE.

8) ALL LIGHTING STANDARDS NOT PROTECTED BY A GUARDRAIL SHALL BE ON AASHTO-APPROVED BREAKAWAY TRANSFORMER BASES.

9) MOUNTING HEIGHT SHALL BE MEASURED FROM THE CENTER LINE OF THE LUMINAIRE TO THE TOP OF THE ROADWAY AT THE SHOULDER LINE.

10) BURIED ELECTRICAL CABLE, CONDUIT, AND UTILITY PIPES MAY EXIST THROUGHOUT THIS PROJECT. THE EXACT LOCATIONS OF THESE CABLES, CONDUITS, AND PIPES ARE NOT KNOWN. THE CONTRACTOR SHALL BE RESPONSIBLE FOR LOCATING AND PREVENTING DAMAGE TO THEM, AND MAINTAINING THEM IN SERVICE WHEN AND WHERE REQUIRED.

11) ANY GUARDRAIL OR FENCE MATERIAL REMOVED FOR EASE OF CONSTRUCTION SHALL BE REPLACED THE SAME DAY. GUARDRAIL AND FENCE MATERIAL REMOVAL AND REPLACEMENT WILL BE CONSIDERED INCIDENTAL TO THE BID ITEMS.

12) ALL CONCRETE SHALL BE CLASS B, UNLESS OTHERWISE NOTED.

13) WHERE CONDUIT HAS PREVIOUSLY BEEN INSTALLED, THE CONNECTION TO THE CONDUIT IN THE BASE WILL BE MADE BEFORE POURING CONCRETE.

14) ALL LIGHTING BASES WILL CONTAIN TWO 2" PVC CONDUIT SWEEPS WHICH SHALL BE INCLUDED IN THE COST OF THE BASE. THIS INCLUDES POLES AT THE END OF A CONDUIT RUN. ANY SWEEP NOT USED WILL BE CAPPED IN THE GROUND. AN ARROW SHALL BE PLACED IN THE BASE SURFACE INDICATING WHERE CONDUITS LEAVE THE BASE. COST FOR CAPS ARE INCIDENTAL TO ITEM 746852, POLE BASE, TYPE 6.

15) USE A 90° ELBOW WITH A 24" RADIUS FOR CONDUIT SWEEPS INTO POLE FOUNDATIONS. CONDUIT SWEEPS INTO LIGHTING CONTROL PANELS SHALL BE 4" DIA. WITH A 90° BEND AND 30" RADIUS. ALL 90° CONDUIT SWEEPS SHALL BE MANUFACTURED, FIELD BENDS ARE NOT ACCEPTABLE.

16) CONDUIT SWEEPS AT LIGHTING CONTROL PANELS SHALL BE CONSIDERED INCIDENTAL TO THE LIGHTING ITEMS. CONTRACTOR SHALL PROVIDE FOUR SPARE 4" CONDUIT SWEEPS (CAPPED AT BOTH ENDS) IN EACH CONCRETE PAD.

17) IN STABLE SOIL, FORMS BELOW 12" FROM THE SURFACE ARE NOT REQUIRED. ALL BASES SHALL BE EDGED AND HAVE A BROOM FINISH.

18) REINFORCING BARS SHALL CONFORM TO A.S.T.M. A615, GRADE 60. WHERE HORIZONTAL BARS AND VERTICAL BARS INTERSECT, THEY WILL BE WIRED TOGETHER. NO WELDING WILL BE ACCEPTED.

19) THE ANCHOR SYSTEM FOR POLE BASES WILL BE SUPPLIED BY THE CONTRACTOR AND INCLUDED IN THE COST OF THE BASE. A TYPE 6 BASE REQUIRES FOUR 1¼" x 48" ANCHOR BOLTS WITH NUTS OR AS APPROVED BY THE ENGINEER. THE ANCHOR BOLTS FOR BASES WILL HAVE A MINIMUM YIELDING STRESS OF 55,000 PSI.

20) ANCHOR BOLTS, NUTS, AND HEX BOLTS WILL BE HOT DIPPED GALVANIZED IN ACCORDANCE WITH THE LATEST A.S.T.M. SPECIFICATIONS.

21) ALL CONDUIT JUNCTION WELLS CONSTRUCTED WITHIN PAVEMENTS, SIDEWALKS, ETC. WILL BE CONSTRUCTED FLUSH WITH THE SURFACE OF THE SAME. INSTALLATIONS IN UNPAVED AREAS WILL BE CONSTRUCTED SUCH THAT THE TOP OF THE COVER IS ONE INCH ABOVE FINAL GRADE. SURROUNDING AREA SHALL BE GRADED TO DRAIN AWAY FROM CONDUIT JUNCTION WELL.

22) CAST IRON FRAMES AND/OR COVERS WILL CONFORM TO STANDARD SPECIFICATIONS SECTION 708.05, CASTINGS, AND SHALL BE INCLUDED IN UNIT PRICE BID FOR CONDUIT JUNCTIONS WELLS.

23) IN ALL JUNCTION WELLS AND POLE BASES, THE CONTRACTOR SHALL LABEL ALL BRANCH CIRCUIT CONDUCTORS WITH THEIR RESPECTIVE BRANCH CIRCUIT NUMBERS AND LIGHTING PANELS: 3(ON), 7(AS), ETC. INCIDENTAL TO ALL LIGHTING ITEMS.

24) THE DRAWINGS ARE DIAGRAMMATIC AND DO NOT SHOW ALL SURFACE AND UNDERGROUND FEATURES. CONTRACTOR SHALL VERIFY THE LOCATION AND ELEVATION OF ALL UNDERGROUND UTILITIES AND SHALL COORDINATE ALL ELECTRICAL INSTALLATION TO AVOID ANY CONFLICTS. ANY CURBS, ROADS, WALKS, FENCES, UTILITIES, OR STRUCTURES DISTURBED AS A RESULT OF THE WORK SHALL BE REPLACED OR REPAIRED TO THE ORIGINAL CONDITION, AT THE CONTRACTOR'S EXPENSE.

25) THE CONTRACTOR SHALL EXPECT TO INSTALL CONDUIT, JUNCTION WELLS, AND POLE BASES ON 2:1 SLOPES. ANY SPECIALIZED EQUIPMENT OR CONSTRUCTION TECHNIQUES NECESSARY FOR INSTALLATION SHALL BE INCLUDED IN THE UNIT PRICE BID FOR SAID ITEM. POLE FOUNDATION SHALL BE INSTALLED TO SPECIFIED 40' OR 30' MOUNTING HEIGHT. REFER TO TYPICAL POLE FOUNDATION ON SLOPE DETAIL.

26) POLES AND TRANSFORMER BASES SHALL HAVE STRUCTURAL CAPABILITIES EQUAL TO OR EXCEEDING THOSE INTENDED BY THE LATEST EDITION OF A.A.S.H.T.O.'S "STANDARD SPECIFICATIONS FOR STRUCTURAL SUPPORTS FOR HIGHWAY SIGN, LUMINAIRES, AND TRAFFIC SIGNALS".

27) HANDHOLES SHALL BE INSTALLED ON THE SIDE OF THE LIGHTING POLE SUCH THAT THE ℄ OF THE HANDHOLE COVER WILL BE PLACED SUCH THAT MAINTAINER FACES ONCOMING TRAFFIC.

28) IDENTIFICATION TAG SHALL BE LOCATED ON THE QUADRANT OF THE SURFACE OF THE POLE THAT FACES ONCOMING TRAFFIC, SO THAT A VEHICLE DRIVING BY CAN EASILY VIEW THE TAG.

29) CONDUIT FIELD BENDS ARE ACCEPTABLE ONLY FOR NECESSARY NON-STANDARD BENDS OR OFFSETS OR AS DIRECTED BY THE ENGINEER IN THE FIELD.

30) ALL THE TRENCHING, BACKFILL, AND COMPACTION SHALL BE CONSIDERED INCIDENTAL TO THE PROVISION OF THE CONDUIT.

31) ALL FOUNDATION EXCAVATIONS SHALL BE POURED IN THE SAME DAY OR THE HOLE SHALL BE COVERED AND DEWATERED BEFORE POURING. THE CONTRACTOR SHALL MAKE ANY AND ALL ADJUSTMENTS AS NECESSARY IN THE EVENT THAT HIGH GROUNDWATER OR UNSTABLE SOIL IS ENCOUNTERED. CONTRACTOR SHALL DIRECT ALL SEDIMENT LADEN WATER TO AN APPROVED SEDIMENT TRAPPING DEVICE PRIOR TO RELEASING IT TO ANY DRAINAGE INLET, STORM DRAIN, OR WATER COURSE.

32) AT LOCATIONS WHERE CONTRACTOR IS WORKING AT OR NEAR EXISTING LIGHTING SERVICES, THERE SHALL BE NO OVERNIGHT LIGHTING OUTAGES.

33) THE CONTRACTOR SHALL ESTABLISH ALL TEMPORARY BYPASSES OF CIRCUITS PRIOR TO EXCAVATION.

34) COPPER COATED GROUND RODS (3/4" x 20' MIN.) SHALL BE PLACED FOR ALL EXISTING AND PROPOSED JUNCTION WELLS, LIGHT ASSEMBLIES, AND CONTROL BOXES AS SHOWN ON PLANS WITH 6'-0" MINIMUM OF THE ROD IN UNDISTURBED EARTH OR AS DIRECTED BY ENGINEER IN THE FIELD. COST FOR GROUND RODS TO BE INCIDENTAL TO THE ITEM BEING GROUNDED.

35) SETBACK DISTANCES AND STATION LOCATIONS ARE APPROXIMATE AND MAY BE VARIED 2' FURTHER FROM THE ROAD AT THE CONTRACTOR'S DISCRETION TO FACILITATE CONSTRUCTION.

36) PROVIDE A 250W, 30A, 8 POLE LIGHTING CONTACTOR TO CONTROL THE LIGHTS, ONE CONTACTOR SHALL BE INSTALLED IN EACH OF THE CABINETS WITH THE PANEL AND CONTROLLED BY A PHOTOCELL MOUNTED ON TOP OF THE CABINET. THE CONTRACTOR SHALL PROVIDE AND INSTALL THE CONTACTOR AND PHOTOCELL AND MAKE ALL FINAL CONNECTIONS. ALL COSTS INCIDENTAL TO THE LIGHTING ITEMS.

37) ALL LIGHTING STANDARD STATION AND OFFSET REFER TO THE CENTER OF POLE BASE.

38) THE PROPOSED LIGHTING CIRCUIT AND PANEL DESIGNS ARE FOR INFORMATIONAL PURPOSES ONLY. THE CONTRACTOR SHALL SUBMIT A CIRCUIT, PANEL AND WIRING DIAGRAM FOR APPROVAL BY THE ENGINEER, PRIOR TO CONSTRUCTION. THE DIAGRAMS SHALL BE SEALED BY AN ELECTRICAL ENGINEER AND MEET ALL DELDOT AND ELECTRIC CODE REQUIREMENTS. ALL COSTS FOR SHOP DRAWINGS AND WIRING DIAGRAMS ARE INCIDENTAL TO THE LIGHTING ITEMS.

Unofficial Website Copy

POLE SCHEDULE

POLE NO.	TYPE OF POLE	MAST ARM LENGTH	LUMINAIRE WATTAGE	TYPE OF BASE	STATION LOCATION STATION	STATION LOCATION OFFSET	NOTES
1	40' ROUND ALUMINUM	15'	250 HPS	TYPE 6 (BREAK AWAY)	804+00	19'L	
2	40' ROUND ALUMINUM	15'	250 HPS	TYPE 6 (BREAK AWAY)	806+00	19'L	
3	40' ROUND ALUMINUM	15'	250 HPS	TYPE 6 (BREAK AWAY)	808+00	24.5'L	
4	40' ROUND ALUMINUM	15'	250 HPS	TYPE 6 (BREAK AWAY)	810+00	31'L	
5	40' ROUND ALUMINUM	15'	250 HPS	TYPE 6 (BREAK AWAY)	812+00	31'L	
6	40' ROUND ALUMINUM	15'	250 HPS	TYPE 6 (BREAK AWAY)	814+00	31'L	
7	40' ROUND ALUMINUM	15'	250 HPS	TYPE 6 (BREAK AWAY)	816+00	31'L	
8	40' ROUND ALUMINUM	15'	250 HPS	TYPE 6 (BREAK AWAY)	818+00	31'L	
9	40' ROUND ALUMINUM	15'	250 HPS	TYPE 6 (BREAK AWAY)	820+00	27'L	
10	40' ROUND ALUMINUM	15'	250 HPS	TYPE 6 (BREAK AWAY)	822+00	27'L	
11	40' ROUND ALUMINUM	15'	250 HPS	TYPE 6 (BREAK AWAY)	EX.210+00	64'L	
12	40' ROUND ALUMINUM	15'	250 HPS	TYPE 6 (BREAK AWAY)	1311+35	109'L	
13	40' ROUND ALUMINUM	15'	250 HPS	TYPE 6 (BREAK AWAY)	906+00	27'L	
14	40' ROUND ALUMINUM	15'	250 HPS	TYPE 6 (BREAK AWAY)	907+50	31'L	
15	40' ROUND ALUMINUM	15'	250 HPS	TYPE 6 (BREAK AWAY)	909+50	31'L	
16	40' ROUND ALUMINUM	15'	250 HPS	TYPE 6 (BREAK AWAY)	911+50	28.4'L	
17	40' ROUND ALUMINUM	15'	250 HPS	TYPE 6 (BREAK AWAY)	1319+96	109.5'L	
18	40' ROUND ALUMINUM	15'	250 HPS	TYPE 6 (BREAK AWAY)	1322+08	109.5'L	
19	40' ROUND ALUMINUM	15'	250 HPS	TYPE 6 (BREAK AWAY)	903+75	28'L	
20	30' ROUND ALUMINUM	15'	250 HPS	TYPE 6 (BREAK AWAY)	902+00	41'L	
21	30' ROUND ALUMINUM	15'	250 HPS	TYPE 6 (BREAK AWAY)	900+75	55'L	
22	30' ROUND ALUMINUM	15'	250 HPS	TYPE 6 (BREAK AWAY)	543+25	25'R	
23	30' ROUND ALUMINUM	15'	250 HPS	TYPE 6 (BREAK AWAY)	542+25	37'L	
24	30' ROUND ALUMINUM	15'	250 HPS	TYPE 6 (BREAK AWAY)	544+25	37'L	
25	30' ROUND ALUMINUM	15'	250 HPS	TYPE 6 (BREAK AWAY)	539+50	37'L	
26	30' ROUND ALUMINUM	15'	250 HPS	TYPE 6 (BREAK AWAY)	824+25	27'L	
27	30' ROUND ALUMINUM	15'	250 HPS	TYPE 6 (BREAK AWAY)	540+50	32'R	
28	30' ROUND ALUMINUM	15'	250 HPS	TYPE 6 (BREAK AWAY)	538+50	32'R	
29	30' ROUND ALUMINUM	15'	250 HPS	TYPE 6 (BREAK AWAY)	530+00	25'R	
30	30' ROUND ALUMINUM	15'	250 HPS	TYPE 6 (BREAK AWAY)	531+00	37'L	
31	30' ROUND ALUMINUM	15'	250 HPS	TYPE 6 (BREAK AWAY)	529+00	37'L	
32	30' ROUND ALUMINUM	15'	250 HPS	TYPE 6 (BREAK AWAY)	526+50	37'L	
33	30' ROUND ALUMINUM	15'	250 HPS	TYPE 6 (BREAK AWAY)	700+70	51'L	
34	30' ROUND ALUMINUM	15'	250 HPS	TYPE 6 (BREAK AWAY)	702+70	41'L	
35	30' ROUND ALUMINUM	15'	250 HPS	TYPE 6 (BREAK AWAY)	701+75	25'R	
36	30' ROUND ALUMINUM	15'	250 HPS	TYPE 6 (BREAK AWAY)	527+50	32'R	
37	30' ROUND ALUMINUM	15'	250 HPS	TYPE 6 (BREAK AWAY)	525+50	32'R	
38	40' ROUND ALUMINUM	15'	250 HPS	TYPE 6 (BREAK AWAY)	EX.118+28	27'R	
39	40' ROUND ALUMINUM	15'	250 HPS	TYPE 6 (BREAK AWAY)	EX.120+28	27'R	
40	40' ROUND ALUMINUM	15'	250 HPS	TYPE 6 (BREAK AWAY)	1001+75	34'R	
41	40' ROUND ALUMINUM	15'	250 HPS	TYPE 6 (BREAK AWAY)	1003+75	31'R	
42	40' ROUND ALUMINUM	15'	250 HPS	TYPE 6 (BREAK AWAY)	1006+10	31'R	
43	40' ROUND ALUMINUM	15'	250 HPS	TYPE 6 (BREAK AWAY)	1008+00	27'R	
44	40' ROUND ALUMINUM	15'	250 HPS	TYPE 6 (BREAK AWAY)	1009+75	27'R	
45	40' ROUND ALUMINUM	15'	250 HPS	TYPE 6 (BREAK AWAY)	1011+50	27'R	
46	30' ROUND ALUMINUM	15'	250 HPS	TYPE 6 (BREAK AWAY)	1013+50	27'R	
47	30' ROUND ALUMINUM	15'	250 HPS	TYPE 6 (BREAK AWAY)	1015+25	31'R	
48	30' ROUND ALUMINUM	15'	250 HPS	TYPE 6 (BREAK AWAY)	710+00	37'L	
49	30' ROUND ALUMINUM	15'	250 HPS	TYPE 6 (BREAK AWAY)	708+83	25'R	
50	30' ROUND ALUMINUM	15'	250 HPS	TYPE 6 (BREAK AWAY)	710+83	30'R	
51	30' ROUND ALUMINUM	15'	250 HPS	TYPE 6 (BREAK AWAY)	623+50	25'L	
52	30' ROUND ALUMINUM	15'	250 HPS	TYPE 6 (BREAK AWAY)	622+50	37'R	
53	30' ROUND ALUMINUM	15'	250 HPS	TYPE 6 (BREAK AWAY)	624+50	37'R	
54	30' ROUND ALUMINUM	15'	250 HPS	TYPE 6 (BREAK AWAY)	1014+50	35'L	
55	40' ROUND ALUMINUM	15'	250 HPS	TYPE 6 (BREAK AWAY)	815+59	109'R	
56	40' ROUND ALUMINUM	15'	250 HPS	TYPE 6 (BREAK AWAY)	817+15	109'R	
57	40' ROUND ALUMINUM	15'	250 HPS	TYPE 6 (BREAK AWAY)	EX.209+12	64'R	
58	40' ROUND ALUMINUM	15'	250 HPS	TYPE 6 (BREAK AWAY)	1307+50	27'R	
59	40' ROUND ALUMINUM	15'	250 HPS	TYPE 6 (BREAK AWAY)	1305+50	27'R	
60	40' ROUND ALUMINUM	15'	250 HPS	TYPE 6 (BREAK AWAY)	1309+50	27'R	
61	40' ROUND ALUMINUM	15'	250 HPS	TYPE 6 (BREAK AWAY)	1311+50	31'R	
62	40' ROUND ALUMINUM	15'	250 HPS	TYPE 6 (BREAK AWAY)	1313+50	31'R	
63	40' ROUND ALUMINUM	15'	250 HPS	TYPE 6 (BREAK AWAY)	1315+50	31'R	
64	40' ROUND ALUMINUM	15'	250 HPS	TYPE 6 (BREAK AWAY)	1317+50	31'R	
65	40' ROUND ALUMINUM	15'	250 HPS	TYPE 6 (BREAK AWAY)	1319+50	31'R	
66	40' ROUND ALUMINUM	15'	250 HPS	TYPE 6 (BREAK AWAY)	1321+50	26.3'R	
67	40' ROUND ALUMINUM	15'	250 HPS	TYPE 6 (BREAK AWAY)	EX.223+70	64'R	
68	40' ROUND ALUMINUM	15'	250 HPS	TYPE 6 (BREAK AWAY)	EX.225+70	64'R	

SCHEDULE OF PANEL A (STATION 909+25 LT.)

120/240V. 3Ø. 4W. 100A. MAIN LUGS — LAMPS AT 240V

CKT. NO.	EQUIPMENT SERVED	CONNECTED LOAD KW	PHASE AND VOLTS	BRANCH CIRCUIT BREAKERS NO. OF POLES	BRANCH CIRCUIT BREAKERS FRAME SIZE	BRANCH CIRCUIT BREAKERS TRIP SIZE	AMPS -
A-1	POLES 15,16,17,18 SEE NOTE 1	1.2	1 / 240	2	100	20	4.8
A-2	POLES 7,8,9,10,11,12 SEE NOTE 1	1.8	1 / 240	2	100	20	7.2
A-3	POLES 1,2,3,4,5,6 SEE NOTE 1	1.8	1 / 240	2	100	20	7.2
A-4	POLES 13,14,19,20,21,22 SEE NOTE 1	1.8	1 / 240	2	100	20	7.2
A-5	POLES 23,24,25,26,27,28 SEE NOTE 1	1.8	1 / 240	2	100	20	7.2
A-6	POLES 29,30,31,32 SEE NOTE 1	1.2	1 / 240	2	100	20	4.8
A-7	POLES 33,34,35,36,37 SEE NOTE 1	1.5	1 / 240	2	100	20	6.0
A-8	SPACE		/				
A-9	SPACE		/				
A-10	SPACE		/				
A-11	SPACE		/				
A-12	SPACE		/				
A-13	SPACE		/				
A-14	SPACE		/				
A-15	SPACE		/				
A-16	SPACE		/				

SCHEDULE OF PANEL B (STATION 803+39 RT.)

120/240V. 3Ø. 4W. 100A. MAIN LUGS — LAMPS AT 240V

CKT. NO.	EQUIPMENT SERVED	CONNECTED LOAD KW	PHASE AND VOLTS	BRANCH CIRCUIT BREAKERS NO. OF POLES	BRANCH CIRCUIT BREAKERS FRAME SIZE	BRANCH CIRCUIT BREAKERS TRIP SIZE	AMPS -
B-1	POLES 38,39,40,41,49,50 SEE NOTE 1	1.8	1 / 240	2	100	20	7.2
B-2	POLES 51,52,53,54 SEE NOTE 1	1.2	1 / 240	2	100	20	4.8
B-3	POLES 42,43,44,45,46,47,48 SEE NOTE 1	2.0	1 / 240	2	100	20	8.4
B-4	POLES 55,56,57,58,59 SEE NOTE 1	1.5	1 / 240	2	100	20	6.0
B-5	POLES 60,61,62,63,64 SEE NOTE 1	1.5	1 / 240	2	100	20	6.0
B-6	POLES 65,66,67,68 SEE NOTE 1	1.2	1 / 240	2	100	20	4.8
B-7	SPACE		/				
B-8	SPACE		/				
B-9	SPACE		/				
B-10	SPACE		/				
B-11	SPACE		/				
B-12	SPACE		/				
B-13	SPACE		/				
B-14	SPACE		/				
B-15	SPACE		/				
B-16	SPACE		/				

CONSTRUCTION NOTES:

1. PROVIDE A 250W, 30A, 8 POLE LIGHTING CONTACTOR TO CONTROL THE LIGHTS. ONE CONTACTOR SHALL BE INSTALLED IN EACH OF THE CABINETS WITH THE PANEL AND CONTROLLED BY A PHOTOCELL MOUNTED ON TOP OF THE CABINET. THE CONTRACTOR SHALL PROVIDE AND INSTALL THE CONTACTOR AND PHOTOCELL AND MAKE ALL FINAL CONNECTIONS. ALL COSTS INCIDENTAL TO THE LIGHTING ITEMS.

LEGEND

SYMBOL	DESCRIPTION
	250 W COBRAHEAD LUMINAIRE (CUTOFF FIXTURE) ON GRND. MOUNT LIGHTING STRUCTURE
C	CONTROL AND DISTRIBUTION BOX 240V, 1 . 3Ø WIRE WITH PHOTOCELL
J	JUNCTION BOX
∅	UTILITY POLE
- - - -	PVC CONDUIT UNDER NEW PAVEMENT OR SODDED TRENCH, 24" MIN. BELOW FINISHED GRADE.

Unofficial Website Copy

5/23/2013 G:\PROJECTS\06535.00 (DelDOT Agmt. 1376 DOTS Open End)\06535.07 SR1, S. Frederica\CADD Files\XMVii_scd01sf.dgn 23:56:28

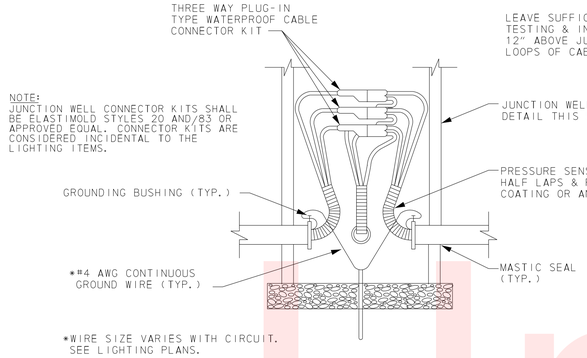

THREE WAY SPLICE
N.T.S.

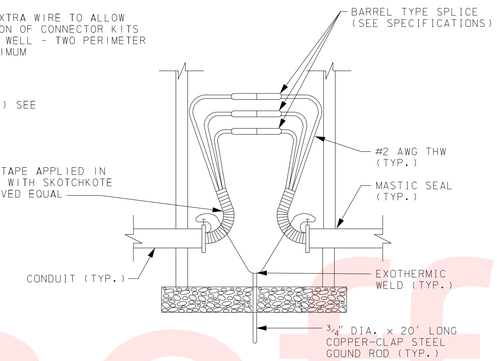

STRAIGHT THROUGH SPLICE
N.T.S.

TYPICAL JUNCTION WELL SPLICES
N.T.S.

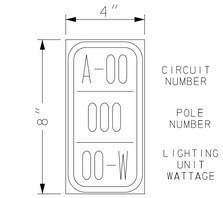

E/G YELLOW REFLECTIVE SHEETING
BLACK LEGEND ADHERED TO .080 ALIMINUM REMOVEABLE PLATE

1 1/4" NUMBER, PLACE TAG TO FACE SHOULDER

* INCIDENTAL TO THE LIGHTING ITEMS.

DELDOT LIGHTING IDENTIFICATION TAG
N.T.S.

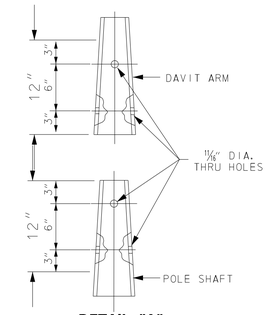

DETAIL "A"
N.T.S.

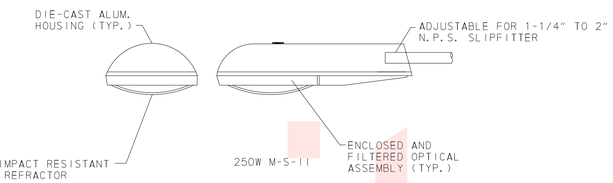

250 WATT HIGH PRESSURE SODIUM LUMINAIRES (CUTOFF WITH SAG LENS)
N.T.S.

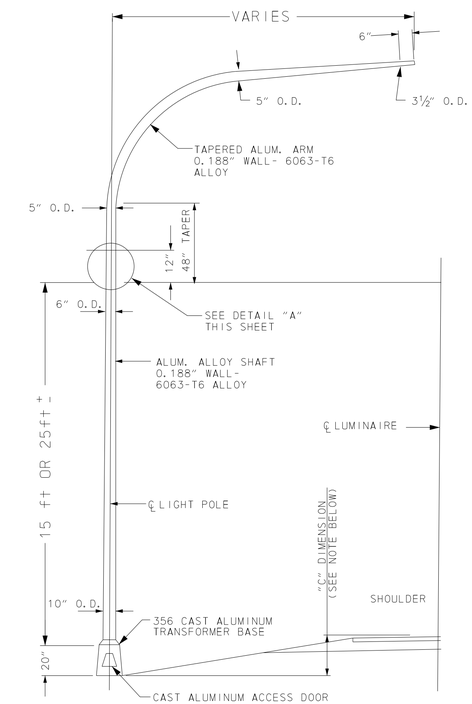

LIGHTING POLE DETAIL
N.T.S.

NOTES:

1. STATION AND OFFSET NOTED IN LIGHTING STANDARD SCHEDULE IS GIVEN TO THE CENTER OF THE POLE.
2. POLE BASE SHOULD BE OF BREAK AWAY TYPE.
3. PAYMENT FOR LIGHT POLE, FIXTURE AND ALL AMENITIES SHOWN ABOVE (EXCEPT POLE BASE,CONDUIT AND CABLES) SHALL BE MADE UNDER ITEM 746519 - ALUMINUM LIGHTING STANDARD WITH SINGLE DAVIT ARM, 40' OR 30' POLE.
4. GROUND WIRE TO BE BONDED TO CONDUIT BUSHING.

Unofficial Website Copy

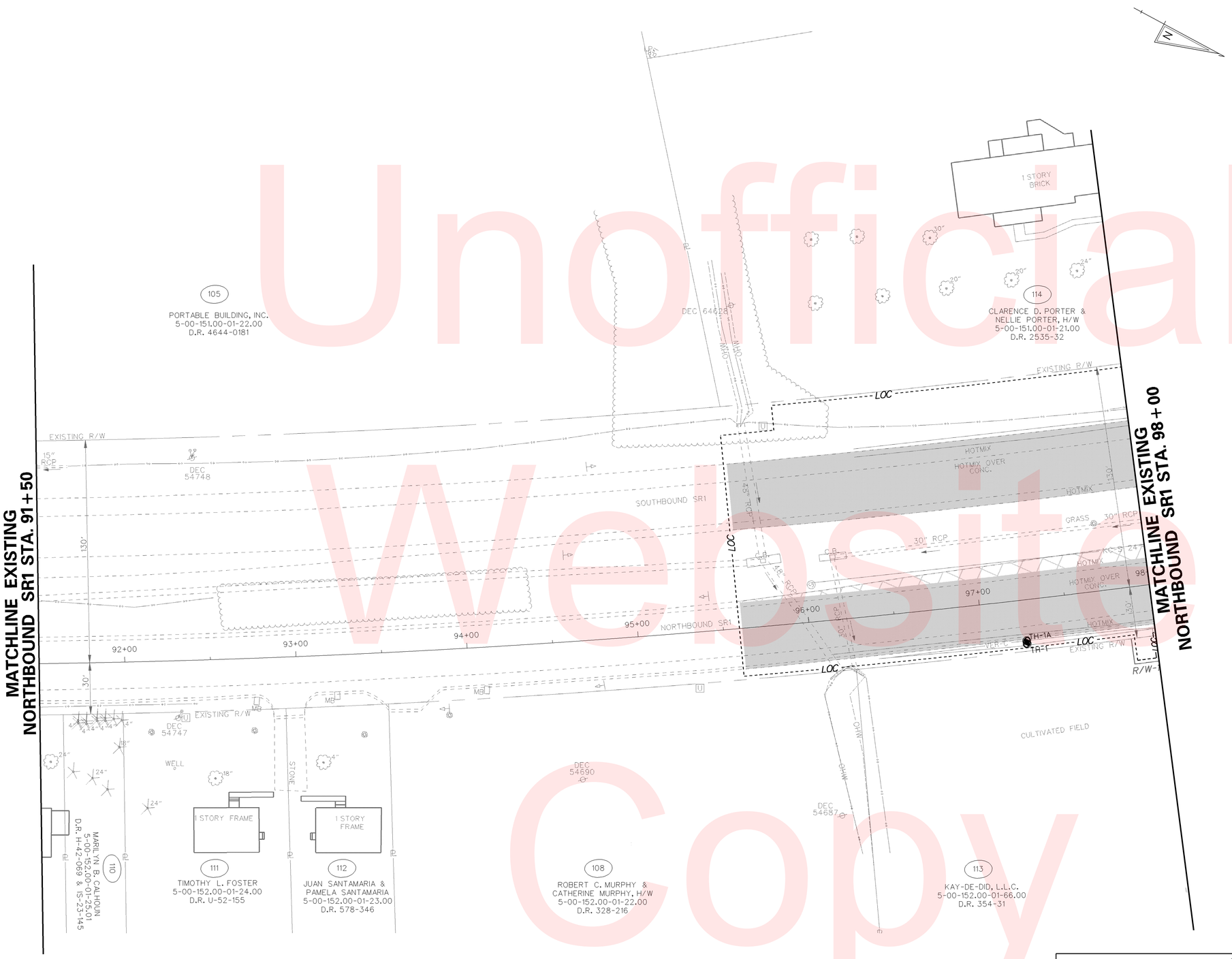

NOTES:

1. ALL LIGHTING STANDARD POLE BASES SHALL BE BREAKAWAY TYPE 6.
2. ALL LIGHTING JUNCTION WELLS SHALL BE TYPE 1, UNLESS OTHERWISE NOTED IN THE PLANS.
3. LIGHTING CIRCUITS ARE AS NOTED IN LIGHTING SERVICE SCHEDULE.
4. LOCATION OF CONDUIT MAY BE ADJUSTED IN FIELD TO AVOID EXISTING OR OTHER PROPOSED CONSTRUCTION FEATURES, SUBJECT TO APPROVAL OF THE ENGINEER. ALL CONDUITS AND POLES SHALL BE LOCATED WITHIN EXISTING PROPOSED RIGHT-OF-WAY OR PERMANENT EASEMENT.
5. SEE PRIMARY SERVICE AND LOAD CENTER DETAIL ON LIGHTING DETAILS SHEET FOR SERVICE REQUIREMENTS.

LIGHTING LEGEND

- 250W HPS COBRA-HEAD LUMINARE
- C - CABINET
- J - JUNCTION WELL
- PVC CONDUIT UNDER NEW PAVEMENT OR SODDED TRENCH, 24" MIN. BELOW FINISHED GRADE.
- LST X - LIGHTING STANDARD IDENTIFIER
- LSR X - LIGHTING SERVICE IDENTIFIER

UTILITY TEST HOLE SCHEDULE

NO.	UTILITY	STATION	OFFSET	GRND EL.	COVER	O.D. & MATERIAL
1	VERIZON	96+92.07	26.98' R	22.38'	2.21'	1" BLK TEL CBL(DIRECT BURY)
1A	VERIZON	97+25.08	23.95' R	22.70'	1.37'	.5"(DIRECT BURY) CBL TEL

Unofficial Website Copy

DELAWARE DEPARTMENT OF TRANSPORTATION

ADDENDUMS / REVISIONS

SCALE 0 30 60 90 FEET

SR1, SOUTH FREDERICA GRADE SEPARATED INTERSECTION

CONTRACT	BRIDGE NO.	–
T200812202	DESIGNED BY: LCM	
COUNTY		
KENT	CHECKED BY: SFP	

UTILITY RELOCATION AND LIGHTING PLAN

SHEET NO. 200
TOTAL SHTS. 296

5/23/2013
G:\PROJECTS\06535.00 (DelDOT Agmt. 1376 DOTS Open End)\06535.07 SR1, S. Frederica\CADD Files\XWut02sf.dgn
2357759

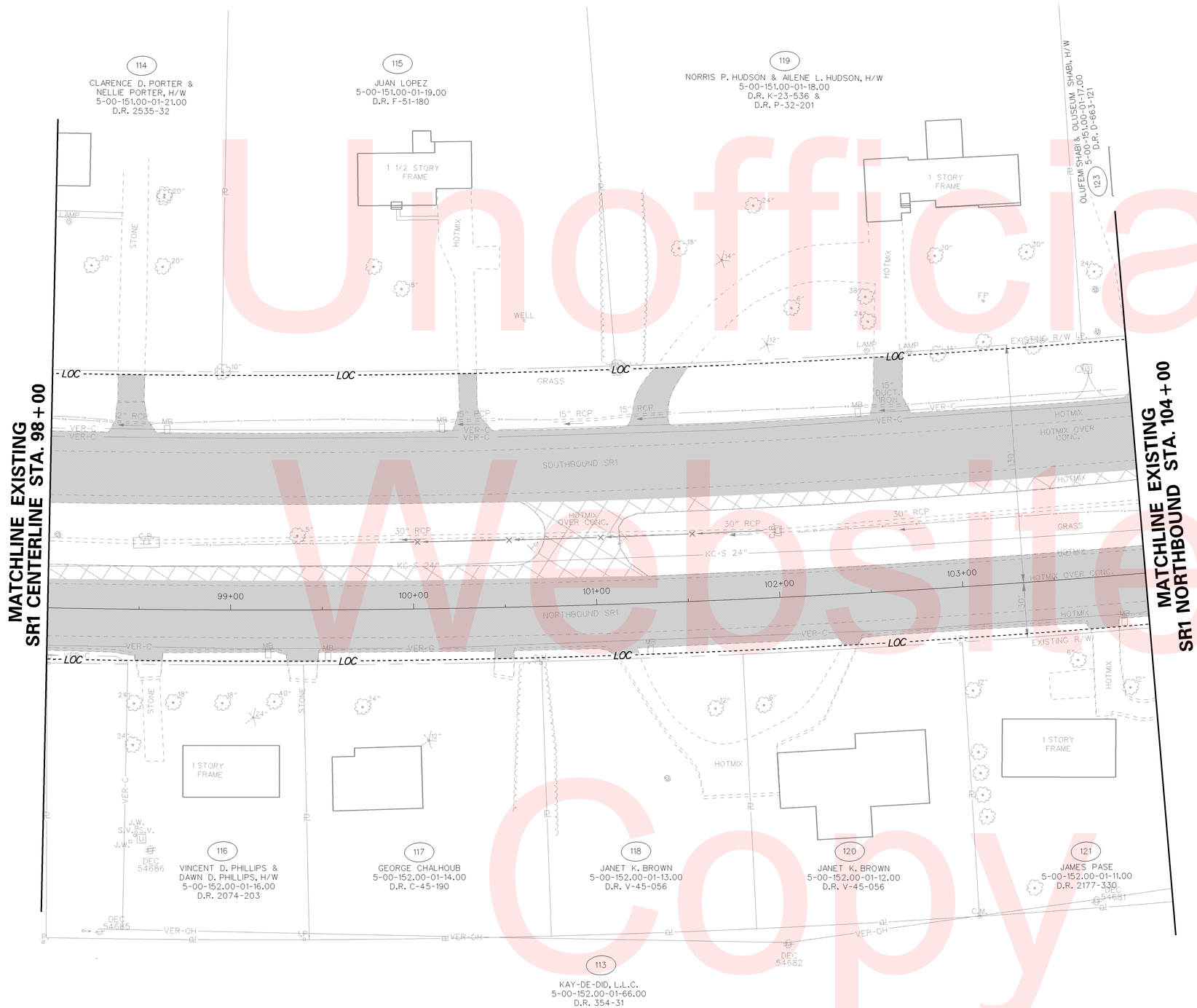

NOTES:

1. ALL LIGHTING STANDARD POLE BASES SHALL BE BREAKAWAY TYPE 6.
2. ALL LIGHTING JUNCTION WELLS SHALL BE TYPE 1, UNLESS OTHERWISE NOTED IN THE PLANS.
3. LIGHTING CIRCUITS ARE AS NOTED IN LIGHTING SERVICE SCHEDULE.
4. LOCATION OF CONDUIT MAY BE ADJUSTED IN FIELD TO AVOID EXISTING OR OTHER PROPOSED CONSTRUCTION FEATURES, SUBJECT TO APPROVAL OF THE ENGINEER. ALL CONDUITS AND POLES SHALL BE LOCATED WITHIN EXISTING PROPOSED RIGHT-OF-WAY OR PERMANENT EASEMENT.
5. SEE PRIMARY SERVICE AND LOAD CENTER DETAIL ON LIGHTING DETAILS SHEET FOR SERVICE REQUIREMENTS.

LIGHTING LEGEND

- 250W HPS COBRA-HEAD LUMINARE
- C - CABINET
- J - JUNCTION WELL
- PVC CONDUIT UNDER NEW PAVEMENT OR SODDED TRENCH, 24" MIN. BELOW FINISHED GRADE.
- LST/X - LIGHTING STANDARD IDENTIFIER
- LSR/X - LIGHTING SERVICE IDENTIFIER

Unofficial Website Copy

DELAWARE DEPARTMENT OF TRANSPORTATION	ADDENDUMS / REVISIONS	SCALE 0 30 60 90 FEET	SR1, SOUTH FREDERICA GRADE SEPARATED INTERSECTION	CONTRACT T200812202	BRIDGE NO. –	UTILITY RELOCATION AND LIGHTING PLAN	SHEET NO. 201
				COUNTY KENT	DESIGNED BY: LCM		TOTAL SHTS. 296
					CHECKED BY: SFP		

7/19/2013
G:\PROJECTS\06535.00 (DelDOT Agmt. 1376 DOTS Open End)\06535.07 SR1, S. Frederica\CADD Files\XM\ut03sf.dgn
08:26:45

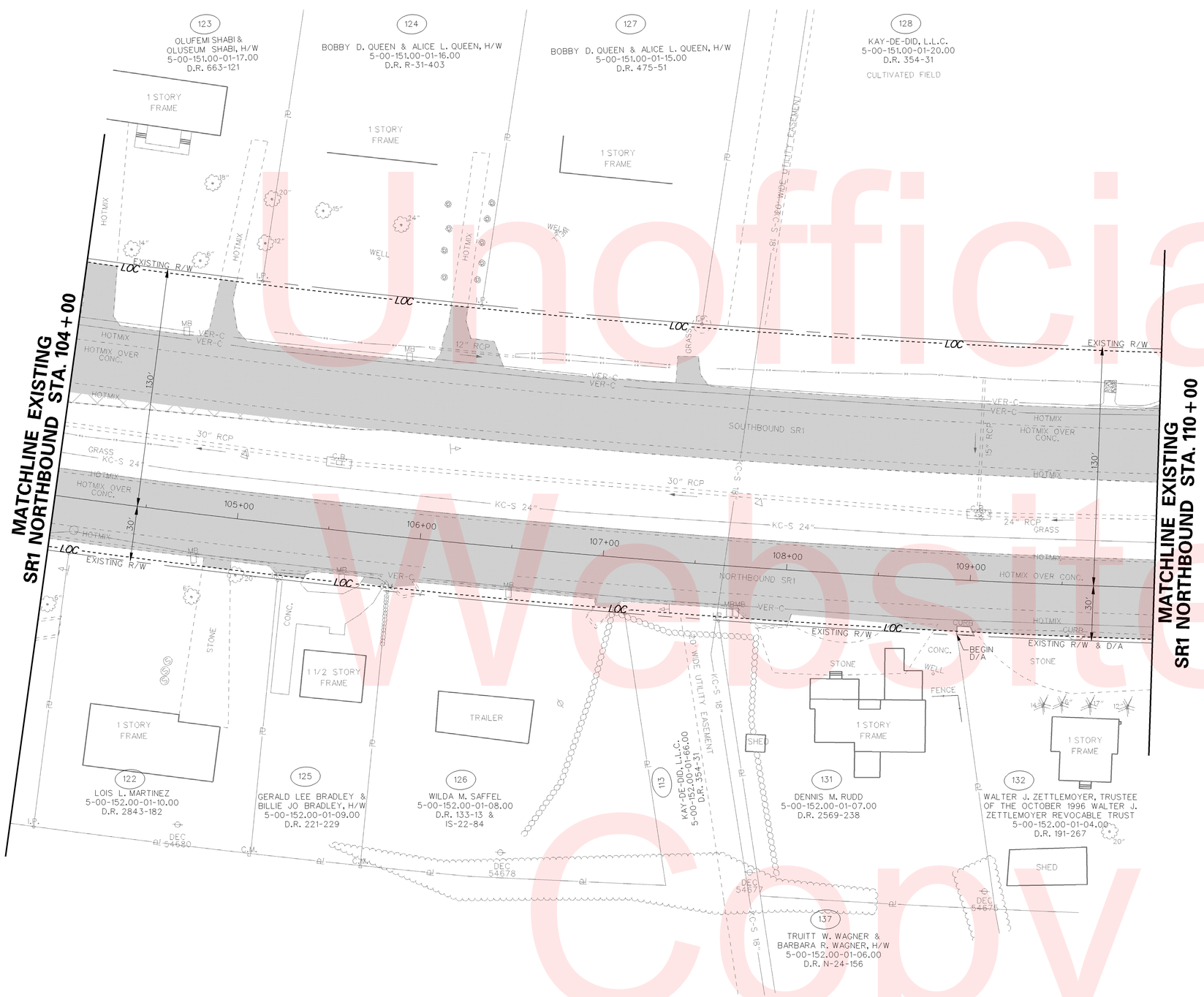

Unofficial Website Copy

NOTES:

1. ALL LIGHTING STANDARD POLE BASES SHALL BE BREAKAWAY TYPE 6.
2. ALL LIGHTING JUNCTION WELLS SHALL BE TYPE 1, UNLESS OTHERWISE NOTED IN THE PLANS.
3. LIGHTING CIRCUITS ARE AS NOTED IN LIGHTING SERVICE SCHEDULE.
4. LOCATION OF CONDUIT MAY BE ADJUSTED IN FIELD TO AVOID EXISTING OR OTHER PROPOSED CONSTRUCTION FEATURES, SUBJECT TO APPROVAL OF THE ENGINEER. ALL CONDUITS AND POLES SHALL BE LOCATED WITHIN EXISTING PROPOSED RIGHT-OF-WAY OR PERMANENT EASEMENT.
5. SEE PRIMARY SERVICE AND LOAD CENTER DETAIL ON LIGHTING DETAILS SHEET FOR SERVICE REQUIREMENTS.

LIGHTING LEGEND

- 250W HPS COBRA-HEAD LUMINARE
- C - CABINET
- J - JUNCTION WELL
- - - - PVC CONDUIT UNDER NEW PAVEMENT OR SODDED TRENCH, 24" MIN. BELOW FINISHED GRADE.
- LST X - LIGHTING STANDARD IDENTIFIER
- LSR X - LIGHTING SERVICE IDENTIFIER

DELAWARE DEPARTMENT OF TRANSPORTATION	ADDENDUMS / REVISIONS	SCALE 0 30 60 90 FEET	SR1, SOUTH FREDERICA GRADE SEPARATED INTERSECTION	CONTRACT T200812202	BRIDGE NO. –	UTILITY RELOCATION AND LIGHTING PLAN	SHEET NO. 202
				COUNTY KENT	DESIGNED BY: LCM		TOTAL SHTS. 296
					CHECKED BY: SFP		

5/23/2013
G:\PROJECTS\06535.00 (DelDOT Agmt. 1376 DOTS Open End)\06535.07 SR1, S. Frederica\CADD Files\XM\ut04sf.dgn
2393906

UTILITY TEST HOLE SCHEDULE

NO.	UTILITY	STATION	OFFSET	GRND EL.	COVER	O.D. & MATERIAL
2	VERIZON	801+71.30	18.06' L	23.27'	1.73'	1"(DIRECT BURY) CBL TEL
3	VERIZON	801+81.73	14.23' L	23.26'	2.42'	1.5"(DIRECT BURY) CBL TEL
4	VERIZON	801+80.03	9.73' L	23.46'	1.61'	1.5" CBL IN 3" MTL CON TEL
5	N/A	802+3.74	12.49' L	XXXX.XX	XX.XX	NO UTIL. FOUND HOLE CLEARED TO 7.96'
6	VERIZON	401+54.73	20.94' R	23.03'	2.43'	1.75"(DIRECT BURY) CBL TEL
7	KENT CO.	402+07.98	16.23' R	22.34'	1.79'	24" CONC ENC SAN FM
8	VERIZON	401+73.81	12.85' L	22.36'	2.37'	2.5"(DIRECT BURY) CBL TEL
9	KENT CO.	401+77.10	26.95' L	22.40'	3.56'	36" CONC ENC FM SAN
9A	KENT CO.	401+79.30	45.37' L	22.32'	4.86'	24" BLK MTL FM SAN

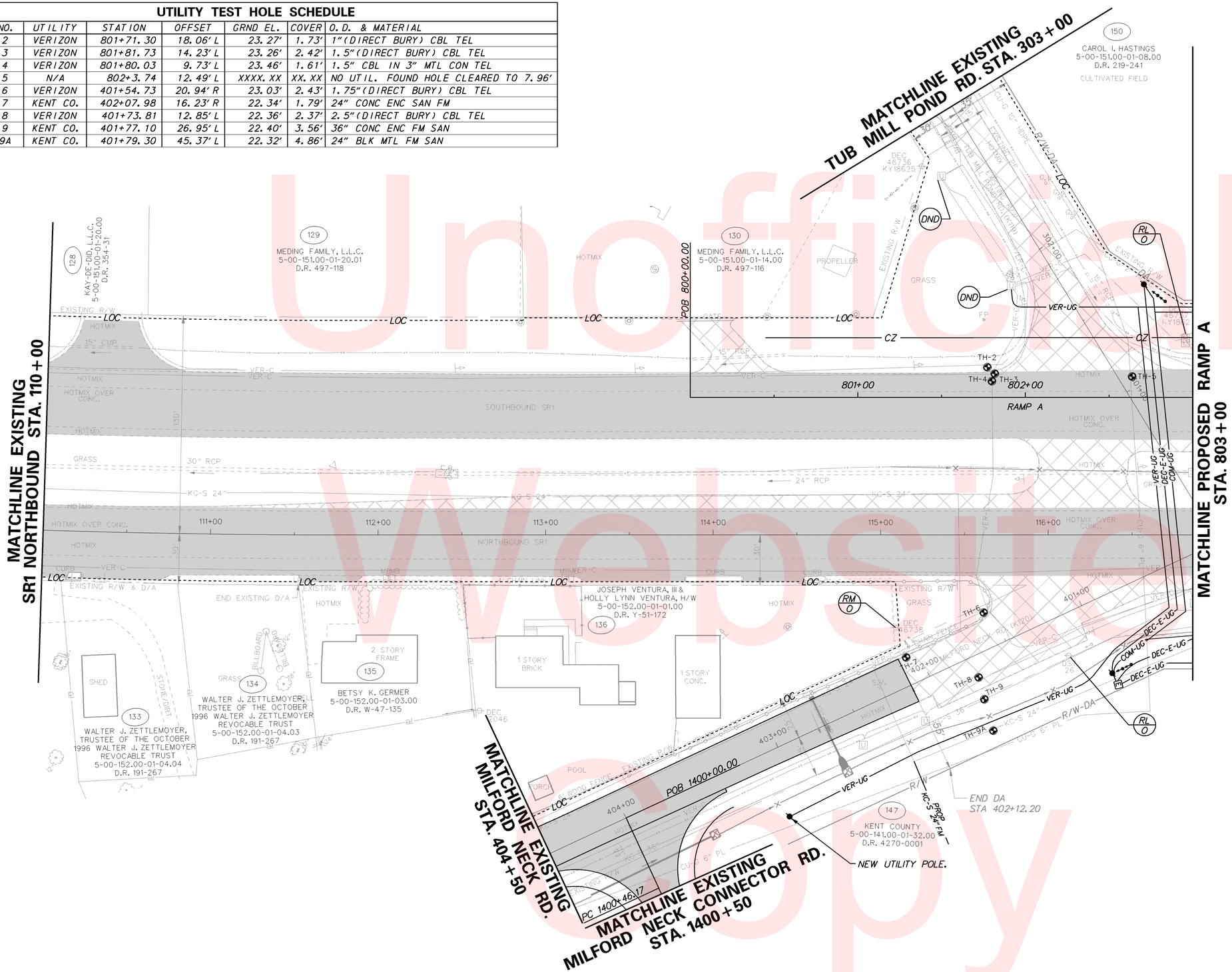

NOTES:

1. ALL LIGHTING STANDARD POLE BASES SHALL BE BREAKAWAY TYPE 6.
2. ALL LIGHTING JUNCTION WELLS SHALL BE TYPE 1, UNLESS OTHERWISE NOTED IN THE PLANS.
3. LIGHTING CIRCUITS ARE AS NOTED IN LIGHTING SERVICE SCHEDULE.
4. LOCATION OF CONDUIT MAY BE ADJUSTED IN FIELD TO AVOID EXISTING OR OTHER PROPOSED CONSTRUCTION FEATURES, SUBJECT TO APPROVAL OF THE ENGINEER. ALL CONDUITS AND POLES SHALL BE LOCATED WITHIN EXISTING PROPOSED RIGHT-OF-WAY OR PERMANENT EASEMENT.
5. SEE PRIMARY SERVICE AND LOAD CENTER DETAIL ON LIGHTING DETAILS SHEET FOR SERVICE REQUIREMENTS.

LIGHTING LEGEND

- 250W HPS COBRA-HEAD LUMINARE
- C - CABINET
- J - JUNCTION WELL
- PVC CONDUIT UNDER NEW PAVEMENT OR SODDED TRENCH, 24" MIN. BELOW FINISHED GRADE.
- LST/X - LIGHTING STANDARD IDENTIFIER
- LSR/X - LIGHTING SERVICE IDENTIFIER

Unofficial Website Copy

DELAWARE DEPARTMENT OF TRANSPORTATION

ADDENDUMS / REVISIONS

SCALE 0 30 60 90 FEET

SR1, SOUTH FREDERICA GRADE SEPARATED INTERSECTION

CONTRACT	BRIDGE NO.	–
T200812202	DESIGNED BY: LCM	
COUNTY		
KENT	CHECKED BY: SFP	

UTILITY RELOCATION AND LIGHTING PLAN

SHEET NO. 203 / TOTAL SHTS. 296

7/19/2013
C:\PROJECTS\06535.00 (DelDOT Agmt. 1376 DOTS Open End)\06535.07 SR1, S. Frederica\CADD Files\XM\ut05sf.dgn
08:29:21

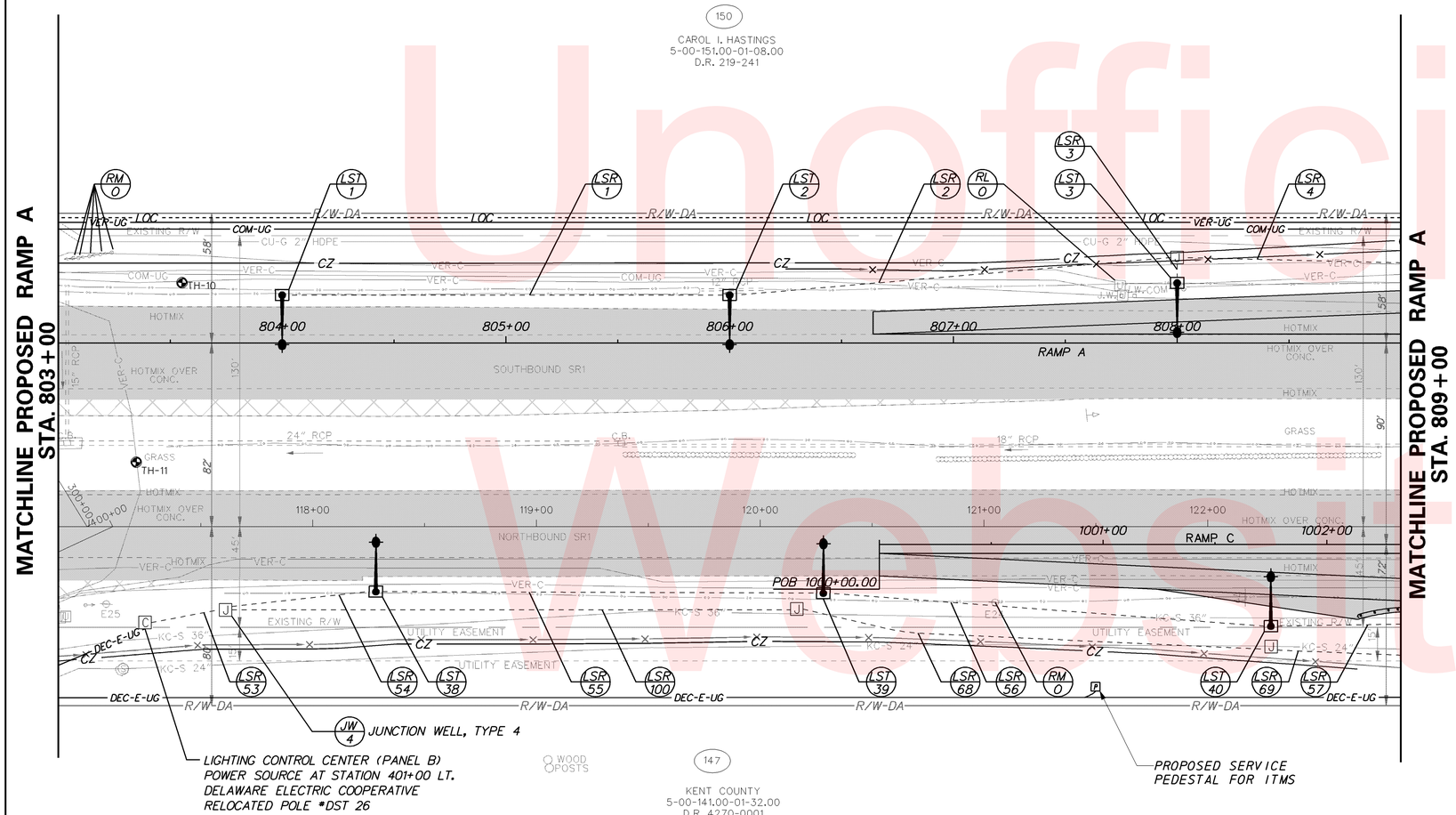

UTILITY TEST HOLE SCHEDULE

NO.	UTILITY	STATION	OFFSET	GRND EL.	COVER	O.D. & MATERIAL
10	VERIZON	803+55.24	26.96' L	22.03'	3.38'	2" ORANGE TEL COND
11	VERIZON	803+34.77	53.17' R	23.47'	2.55'	.75 TEL CBL(DIRECT BURY)

NOTES:

1. ALL LIGHTING STANDARD POLE BASES SHALL BE BREAKAWAY TYPE 6.
2. ALL LIGHTING JUNCTION WELLS SHALL BE TYPE 1, UNLESS OTHERWISE NOTED IN THE PLANS.
3. LIGHTING CIRCUITS ARE AS NOTED IN LIGHTING SERVICE SCHEDULE.
4. LOCATION OF CONDUIT MAY BE ADJUSTED IN FIELD TO AVOID EXISTING OR OTHER PROPOSED CONSTRUCTION FEATURES, SUBJECT TO APPROVAL OF THE ENGINEER. ALL CONDUITS AND POLES SHALL BE LOCATED WITHIN EXISTING PROPOSED RIGHT-OF-WAY OR PERMANENT EASEMENT.
5. SEE PRIMARY SERVICE AND LOAD CENTER DETAIL ON LIGHTING DETAILS SHEET FOR SERVICE REQUIREMENTS.

LIGHTING LEGEND

- 250W HPS COBRA-HEAD LUMINARE
- C - CABINET
- J - JUNCTION WELL
- PVC CONDUIT UNDER NEW PAVEMENT OR SODDED TRENCH, 24" MIN. BELOW FINISHED GRADE.
- LST X - LIGHTING STANDARD IDENTIFIER
- LSR X - LIGHTING SERVICE IDENTIFIER

LIGHTING STANDARD SCHEDULE

NO.	CIRCUIT NO.	STATION	OFFSET	ARM	LIGHT STANDARD
1	A-3	804+00	19.0' LT.	15	250 WATT HPS LUMINAIRE
2	A-3	806+00	19.0' LT.	15	250 WATT HPS LUMINAIRE
3	A-3	808+00	24.5' LT.	15	250 WATT HPS LUMINAIRE
38	B-1	EX. 118+28	27.0' RT.	15	250 WATT HPS LUMINAIRE
39	B-1	EX. 120+28	27.0' RT.	15	250 WATT HPS LUMINAIRE
40	B-1	1001+75	34.0' RT.	15	250 WATT HPS LUMINAIRE

LIGHTING SERVICE SCHEDULE

SERVICE RUN	DISTANCE (L.F.)	DESCRIPTION	INSTALLATION
1	200	2#6 + 1#6 GND. IN 3" PVC CONDUIT	DIRECT BURIAL
2	200	2#6 + 1#6 GND. IN 3" PVC CONDUIT	DIRECT BURIAL
3	7	2#6 + 1#6 GND. IN 3" PVC CONDUIT	DIRECT BURIAL
4	100	2#6 + 1#6 GND. IN 3" PVC CONDUIT	DIRECT BURIAL
*53A	31	4#6 + 1#6 GND. IN 4" PVC CONDUIT	DIRECT BURIAL
*53B	31	2#2, 6#4 +1#6 GND. IN 4" PVC CONDUIT	DIRECT BURIAL
*53C	31	SPARE 4" PVC CONDUIT	DIRECT BURIAL
*53D	31	SPARE 4" PVC CONDUIT	DIRECT BURIAL
54	62	4#6 + 1#6 GND. IN 3" PVC CONDUIT	DIRECT BURIAL
55	200	4#6 + 1#6 GND. IN 3" PVC CONDUIT	DIRECT BURIAL
56	200	4#6 + 1#6 GND. IN 3" PVC CONDUIT	DIRECT BURIAL
57	56	4#6 + 1#6 GND. IN 3" PVC CONDUIT	DIRECT BURIAL
68	208	2#2, 6#4 +1#6 GND. IN 4" PVC CONDUIT	DIRECT BURIAL
69	56	2#2, 6#4 +1#6 GND. IN 4" PVC CONDUIT	DIRECT BURIAL
100	250	2#2, 6#4 +1#6 GND. IN 4" PVC CONDUIT	DIRECT BURIAL

* LSR-53 HAS FOUR (4) CONDUIT RUNS IDENTIFIED AS A,B,C,& D.

Unofficial Website Copy

DELAWARE DEPARTMENT OF TRANSPORTATION

ADDENDUMS / REVISIONS

SCALE 0 30 60 90 FEET

SR1, SOUTH FREDERICA GRADE SEPARATED INTERSECTION

CONTRACT T200812202 | COUNTY KENT | BRIDGE NO. – | DESIGNED BY: LCM | CHECKED BY: SFP

UTILITY RELOCATION AND LIGHTING PLAN

SHEET NO. 204 | TOTAL SHTS. 296

5/24/2013
G:\PROJECTS\06535.00 (DelDOT Agmt. 1376 DOTS Open End)\06535.07 SR1, S. Frederica\CADD Files\XM\ut06st.dgn
11:48:42

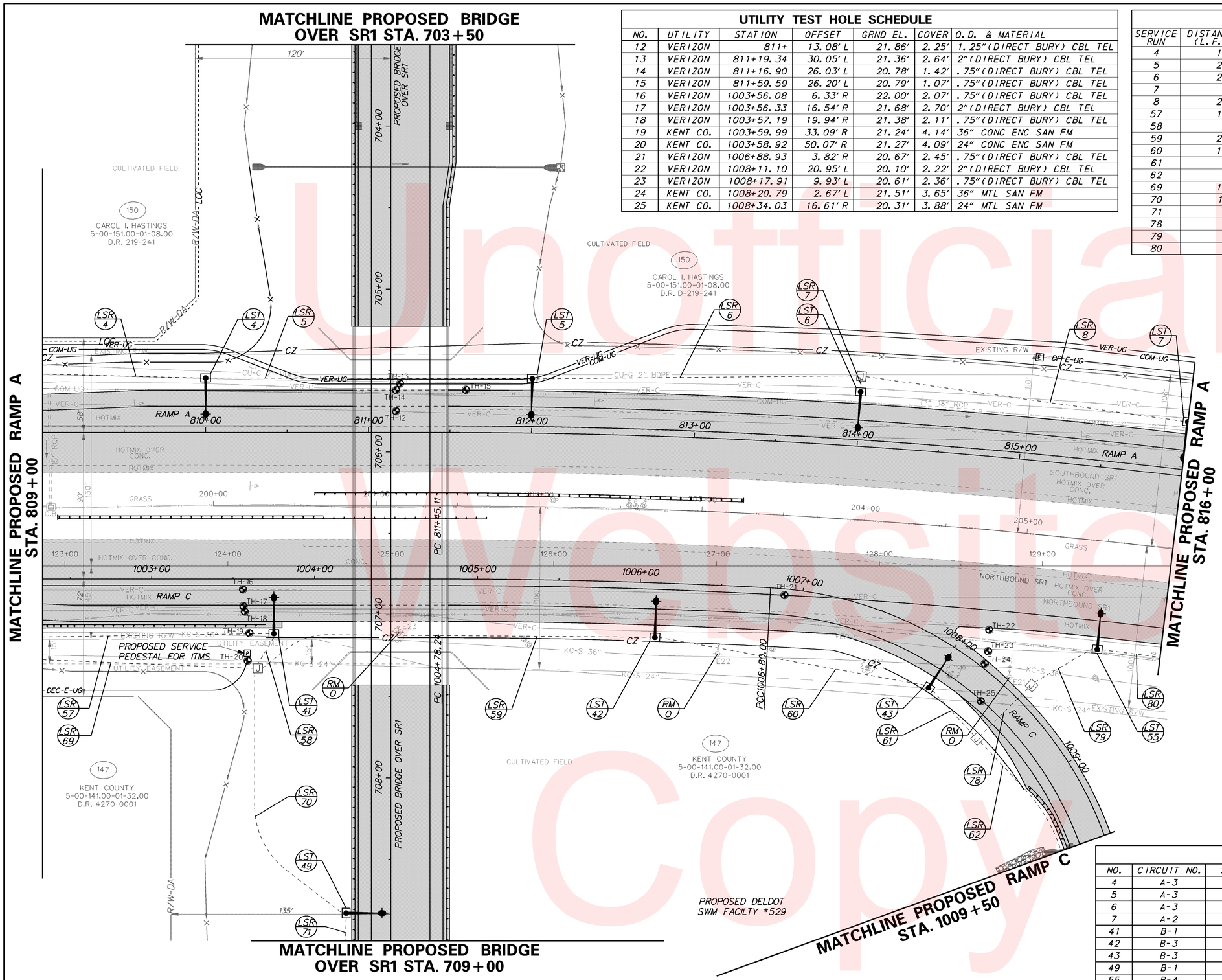

UTILITY TEST HOLE SCHEDULE

NO.	UTILITY	STATION	OFFSET	GRND EL.	COVER	O.D. & MATERIAL
12	VERIZON	811+	13.08' L	21.86'	2.25'	1.25"(DIRECT BURY) CBL TEL
13	VERIZON	811+19.34	30.05' L	21.36'	2.64'	2"(DIRECT BURY) CBL TEL
14	VERIZON	811+16.90	26.03' L	20.78'	1.42'	.75"(DIRECT BURY) CBL TEL
15	VERIZON	811+59.59	26.20' L	20.79'	1.07'	.75"(DIRECT BURY) CBL TEL
16	VERIZON	1003+56.08	6.33' R	22.00'	2.07'	.75"(DIRECT BURY) CBL TEL
17	VERIZON	1003+56.33	16.54' R	21.68'	2.70'	2"(DIRECT BURY) CBL TEL
18	VERIZON	1003+57.19	19.94' R	21.38'	2.11'	.75"(DIRECT BURY) CBL TEL
19	KENT CO.	1003+59.99	33.09' R	21.24'	4.14'	36" CONC ENC SAN FM
20	KENT CO.	1003+58.92	50.07' R	21.27'	4.09'	24" CONC ENC SAN FM
21	VERIZON	1006+88.93	3.82' R	20.67'	2.45'	.75"(DIRECT BURY) CBL TEL
22	VERIZON	1008+11.10	20.95' L	20.10'	2.22'	2"(DIRECT BURY) CBL TEL
23	VERIZON	1008+17.91	9.93' L	20.61'	2.36'	.75"(DIRECT BURY) CBL TEL
24	KENT CO.	1008+20.79	2.67' L	21.51'	3.65'	36" MTL SAN FM
25	KENT CO.	1008+34.03	16.61' R	20.31'	3.88'	24" MTL SAN FM

LIGHTING SERVICE SCHEDULE

SERVICE RUN	DISTANCE (L.F.)	DESCRIPTION	INSTALLATION
4	100	2#6 + 1#6 GND. IN 3" PVC CONDUIT	DIRECT BURIAL
5	200	2#6 + 1#6 GND. IN 3" PVC CONDUIT	DIRECT BURIAL
6	200	2#6 + 1#6 GND. IN 3" PVC CONDUIT	DIRECT BURIAL
7	5	2#6 + 1#6 GND. IN 3" PVC CONDUIT	DIRECT BURIAL
8	200	2#4 + 1#6 GND. IN 3" PVC CONDUIT	DIRECT BURIAL
57	139	4#6 +1#6 GND. IN 3" PVC CONDUIT	DIRECT BURIAL
58	20	4#6 +1#6 GND. IN 3" PVC CONDUIT	DIRECT BURIAL
59	245	2#2, 4#4, 2#6+1#6GND. IN 3"PVC CONDUIT	DIRECT BURIAL
60	165	2#2, 4#4, 2#6+1#6GND. IN 3"PVC CONDUIT	DIRECT BURIAL
61	38	2#2, 4#4, 2#6+1#6GND. IN 3"PVC CONDUIT	DIRECT BURIAL
62	85	2#6 + 1#6 GND. IN 3" PVC CONDUIT	DIRECT BURIAL
69	130	2#2, 6#4 +1#6 GND. IN 4" PVC CONDUIT	DIRECT BURIAL
70	171	4#6 +1#6 GND. IN 3" PVC CONDUIT	DIRECT BURIAL
71	14	4#6 +1#6 GND. IN 3" PVC CONDUIT	DIRECT BURIAL
78	42	2#2, 4#4 +1#6 GND. IN 4" PVC CONDUIT	DIRECT BURIAL
79	41	2#2, 2#4, 2#6+1#6GND. IN 3"PVC CONDUIT	DIRECT BURIAL
80	36	2#2, 2#4, 2#6+1#6GND. IN 3"PVC CONDUIT	DIRECT BURIAL

LIGHTING LEGEND

- 250W HPS COBRA-HEAD LUMINARE
- C - CABINET
- J - JUNCTION WELL
- PVC CONDUIT UNDER NEW PAVEMENT OR SODDED TRENCH, 24" MIN. BELOW FINISHED GRADE.
- LST X - LIGHTING STANDARD IDENTIFIER
- LSR X - LIGHTING SERVICE IDENTIFIER

NOTES:

1. ALL LIGHTING STANDARD POLE BASES SHALL BE BREAKAWAY TYPE 6.
2. ALL LIGHTING JUNCTION WELLS SHALL BE TYPE 1, UNLESS OTHERWISE NOTED IN THE PLANS.
3. LIGHTING CIRCUITS ARE AS NOTED IN LIGHTING SERVICE SCHEDULE.
4. LOCATION OF CONDUIT MAY BE ADJUSTED IN FIELD TO AVOID EXISTING OR OTHER PROPOSED CONSTRUCTION FEATURES, SUBJECT TO APPROVAL OF THE ENGINEER. ALL CONDUITS AND POLES SHALL BE LOCATED WITHIN EXISTING PROPOSED RIGHT-OF-WAY OR PERMANENT EASEMENT.
5. SEE PRIMARY SERVICE AND LOAD CENTER DETAIL ON LIGHTING DETAILS SHEET FOR SERVICE REQUIREMENTS.

LIGHTING STANDARD SCHEDULE

NO.	CIRCUIT NO.	STATION	OFFSET	ARM	LIGHT STANDARD
4	A-3	810+00	31.0' LT.	15	250 WATT HPS LUMINAIRE
5	A-3	812+00	31.0' LT.	15	250 WATT HPS LUMINAIRE
6	A-3	814+00	31.0' LT.	15	250 WATT HPS LUMINAIRE
7	A-2	816+00	31.0' LT.	15	250 WATT HPS LUMINAIRE
41	B-1	1003+75	31.0' RT.	15	250 WATT HPS LUMINAIRE
42	B-3	1006+10	31.0' RT.	15	250 WATT HPS LUMINAIRE
43	B-3	1008+00	27.0' RT.	15	250 WATT HPS LUMINAIRE
49	B-1	708+83	25.0' RT.	15	250 WATT HPS LUMINAIRE
55	B-4	815+59	109.0' RT.	15	250 WATT HPS LUMINAIRE

Unofficial Website Copy

DELAWARE DEPARTMENT OF TRANSPORTATION

ADDENDUMS / REVISIONS

SCALE 0 30 60 90 FEET

SR1, SOUTH FREDERICA GRADE SEPARATED INTERSECTION

CONTRACT	BRIDGE NO.	–
T200812202	DESIGNED BY: LCM	
COUNTY	CHECKED BY: SFP	
KENT		

UTILITY RELOCATION AND LIGHTING PLAN

SHEET NO. 205 / TOTAL SHTS. 296

5/24/2013
G:\PROJECTS\06535.00 (DelDOT Agmt. 1376 DOTS Open End)\06535.07 SR1, S. Frederica\CADD Files\XM\ut07sf.dgn
TMSOHS

UTILITY TEST HOLE SCHEDULE

NO.	UTILITY	STATION	OFFSET	GRND EL.	COVER	O.D. & MATERIAL
26	VERIZON	819+88.42	42.15' I	20.43'	2.74'	2"(DIRECT BURY) CBL TEL
27	VERIZON	819+74.94	22.89' L	18.93'	3.15'	2" PLSTC CON TEL
28	VERIZON	819+15.67	35.34' L	18.98'	3.30'	2" PLSTC CON TEL
29	VERIZON	819+70.70	13.04' L	20.00'	2.23'	1.5"(DIRECT BURY) CBL TEL
30	VERIZON	904+42.72	41.72' R	20.01'	2.72'	2"(DIRECT BURY) CBL TEL
31	VERIZON	1309+54.58	12.36' L	18.66'	2.39'	2"(DIRECT BURY) CBL TEL
32	VERIZON	1309+49.60	1.18' L	17.27'	2.22'	.75"(DIRECT BURY) CBL TEL
33	KENT CO.	1309+41.67	8.79' R	19.61'	2.89'	36"CONC ENC MTL FM SAN
34	KENT CO.	1309+25.92	25.61' R	19.62'	4.20'	24" BLK MTL FM SAN
35A	VERIZON	1311+21.00	16.84' R	18.02'	1.90'	2" TEL CBL OVER 35B
35B	VERIZON	1311+21.00	16.84' R	18.14'	2.62'	.75" BLK TEL CBL

LIGHTING STANDARD SCHEDULE

NO.	CIRCUIT NO.	STATION	OFFSET	ARM	LIGHT STANDARD
8	A-2	818+00	31.0' LT.	15	250 WATT HPS LUMINAIRE
9	A-2	820+00	27.0' LT.	15	250 WATT HPS LUMINAIRE
10	A-2	822+00	27.0' LT.	15	250 WATT HPS LUMINAIRE
11	A-2	EX. 210+00	64.0' LT.	15	250 WATT HPS LUMINAIRE
12	A-2	1311+35	109.0' LT.	15	250 WATT HPS LUMINAIRE
19	A-4	903+75	28.0' LT.	15	250 WATT HPS LUMINAIRE
56	B-4	817+15	109.0' RT.	15	250 WATT HPS LUMINAIRE
57	B-4	EX. 209+12	64.0' RT.	15	250 WATT HPS LUMINAIRE
58	B-4	1307+50	27.0' RT.	15	250 WATT HPS LUMINAIRE
60	B-5	1309+50	27.0' RT.	15	250 WATT HPS LUMINAIRE
61	B-5	1311+50	31.0' RT.	15	250 WATT HPS LUMINAIRE

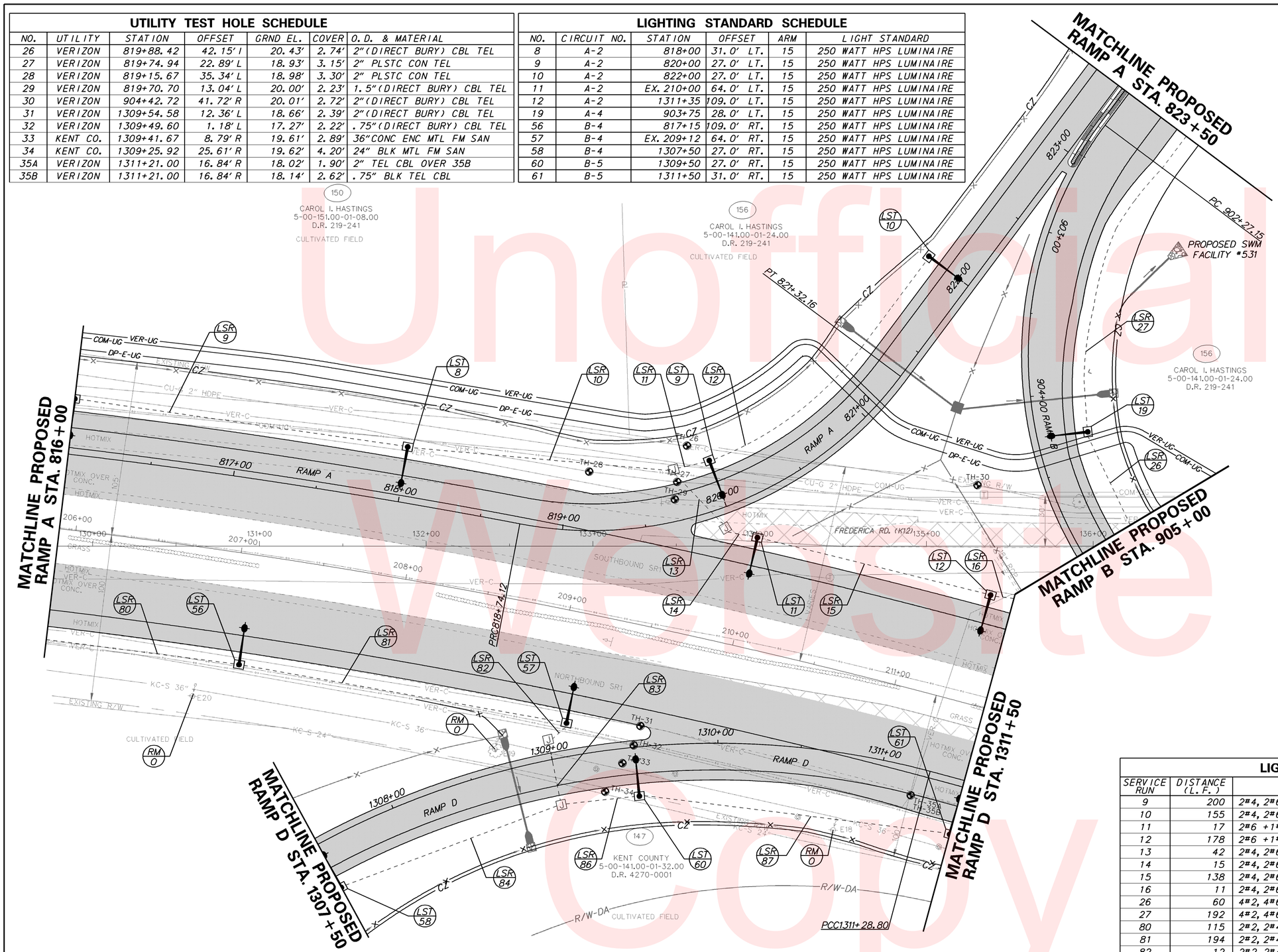

NOTES:

1. ALL LIGHTING STANDARD POLE BASES SHALL BE BREAKAWAY TYPE 6.
2. ALL LIGHTING JUNCTION WELLS SHALL BE TYPE 1, UNLESS OTHERWISE NOTED IN THE PLANS.
3. LIGHTING CIRCUITS ARE AS NOTED IN LIGHTING SERVICE SCHEDULE.
4. LOCATION OF CONDUIT MAY BE ADJUSTED IN FIELD TO AVOID EXISTING OR OTHER PROPOSED CONSTRUCTION FEATURES, SUBJECT TO APPROVAL OF THE ENGINEER. ALL CONDUITS AND POLES SHALL BE LOCATED WITHIN EXISTING PROPOSED RIGHT-OF-WAY OR PERMANENT EASEMENT.
5. SEE PRIMARY SERVICE AND LOAD CENTER DETAIL ON LIGHTING DETAILS SHEET FOR SERVICE REQUIREMENTS.

LIGHTING LEGEND

- 250W HPS COBRA-HEAD LUMINARE
- C - CABINET
- J - JUNCTION WELL
- PVC CONDUIT UNDER NEW PAVEMENT OR SODDED TRENCH, 24" MIN. BELOW FINISHED GRADE.
- LST X - LIGHTING STANDARD IDENTIFIER
- LSR X - LIGHTING SERVICE IDENTIFIER

LIGHTING SERVICE SCHEDULE

SERVICE RUN	DISTANCE (L.F.)	DESCRIPTION	INSTALLATION
9	200	2#4, 2#6 +1#6 GND. IN 3" PVC CONDUIT	DIRECT BURIAL
10	155	2#4, 2#6 +1#6 GND. IN 3" PVC CONDUIT	DIRECT BURIAL
11	17	2#6 +1#6 GND. IN 3" PVC CONDUIT	DIRECT BURIAL
12	178	2#6 +1#6 GND. IN 3" PVC CONDUIT	DIRECT BURIAL
13	42	2#4, 2#6 +1#6 GND. IN 4" PVC CONDUIT	DIRECT BURIAL
14	15	2#4, 2#6 +1#6 GND. IN 3" PVC CONDUIT	DIRECT BURIAL
15	138	2#4, 2#6 +1#6 GND. IN 3" PVC CONDUIT	DIRECT BURIAL
16	11	2#4, 2#6 +1#6 GND. IN 3" PVC CONDUIT	DIRECT BURIAL
26	60	4#2, 4#6 +1#6 GND. IN 3"PVC CONDUIT	DIRECT BURIAL
27	192	4#2, 4#6 +1#6 GND. IN 3"PVC CONDUIT	DIRECT BURIAL
80	115	2#2, 2#4, 2#6+1#6GND. IN 3"PVC CONDUIT	DIRECT BURIAL
81	194	2#2, 2#4, 2#6+1#6GND. IN 3"PVC CONDUIT	DIRECT BURIAL
82	12	2#2, 2#4 +1#6 GND. IN 3" PVC CONDUIT	DIRECT BURIAL
83	35	2#2, 2#4 +1#6 GND. IN 4" PVC CONDUIT	DIRECT BURIAL
84	136	2#6 + 1#6 GND. IN 3" PVC CONDUIT	DIRECT BURIAL
86	42	2#2, 2#6 +1#6 GND. IN 3" PVC CONDUIT	DIRECT BURIAL
87	182	2#2, 2#6 +1#6 GND. IN 3" PVC CONDUIT	DIRECT BURIAL

Unofficial Website Copy

DELAWARE DEPARTMENT OF TRANSPORTATION

ADDENDUMS / REVISIONS

SCALE 0 30 60 90 FEET

SR1, SOUTH FREDERICA GRADE SEPARATED INTERSECTION

CONTRACT	BRIDGE NO.	–
T200812202	DESIGNED BY: LCM	
COUNTY		
KENT	CHECKED BY: SFP	

UTILITY RELOCATION AND LIGHTING PLAN

SHEET NO. 206 TOTAL SHTS. 296

5/24/2013 G:\PROJECTS\06535.00 (DelDOT Agmt. 1376 DOTS Open End)\06535.07 SR1, S. Frederica\CADD Files\XM\ut08sf.dgn 0000726

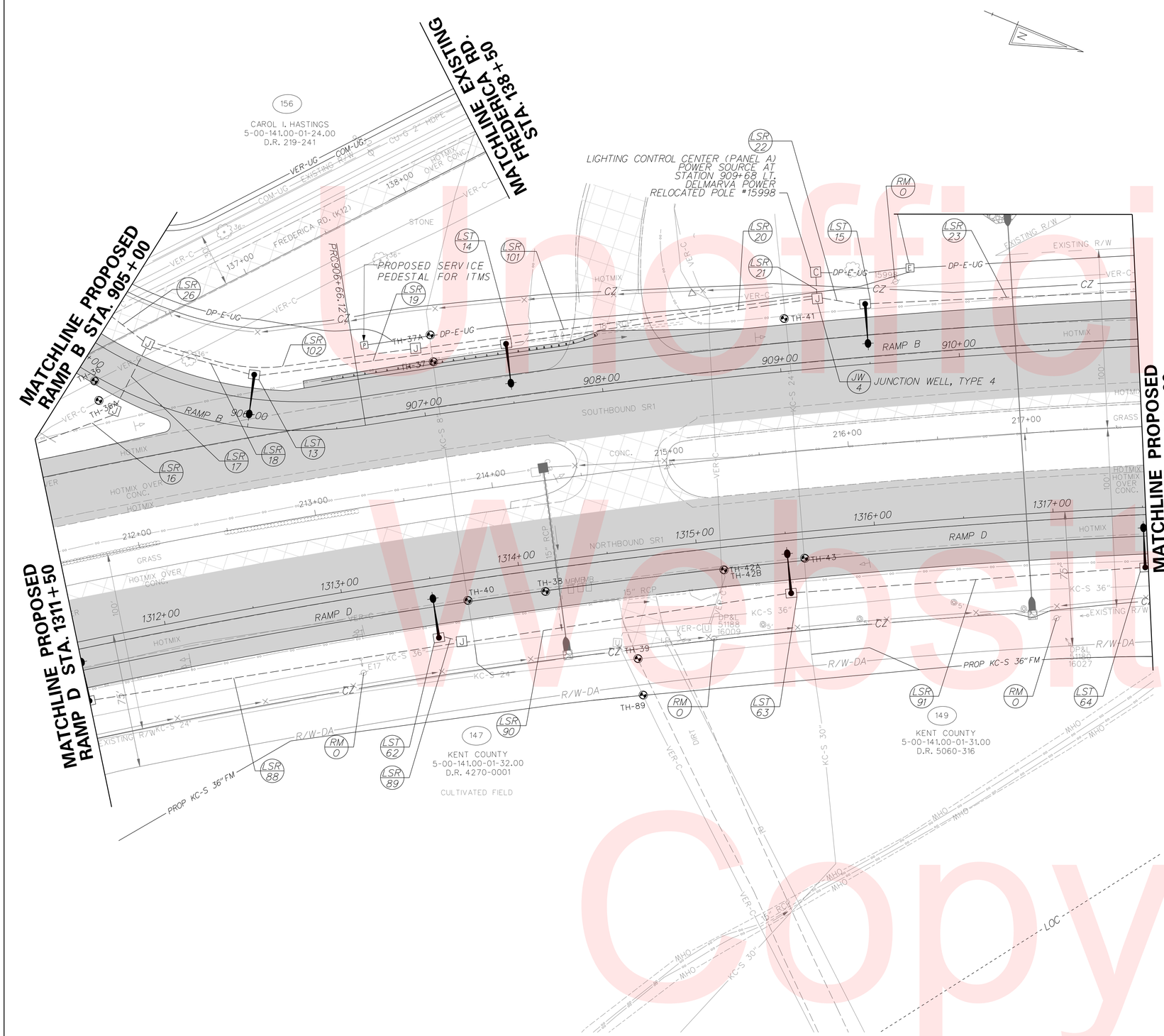

UTILITY TEST HOLE SCHEDULE

NO.	UTILITY	STATION	OFFSET	GRND EL.	COVER	O.D. & MATERIAL
36	VERIZON	905+10.87	2.59' R	19.36'	2.16'	.75"(DIRECT BURY) CBL TEL
36A	VERIZON	905+17.93	10.99' R	18.78'	2.38'	.75"(DIRECT BURY) CBL TEL
37	N/A	907+08.82	29.30' L	15.40'	1.86'	2" MTL UNKNOWN PIPE
37A	KENT CO.	907+09.27	44.35' L	17.56'	4.00'	8" BLK MTL FM SAN
38	VERIZON	1314+12.98	16.43' R	17.16'	2.57'	2"(DIRECT BURY) CBL TEL
39	KENT CO.	1314+59.85	60.25' R	16.77'	5.13'	24" BLK MTL FM SAN
40	KENT CO.	1313+69.25	15.29' R	17.28'	5.19'	8" BLK MTL FM SAN
41	KENT CO.	909+04.66	29.44' L	15.00'	6.98'	24" CONC ENC FM SAN
42A	VERIZON	1315+13.78	19.95' R	16.93'	2.73'	2" TEL CBL OVER 42B
42B	VERIZON	1315+12.78	19.95' R	16.93'	3.82'	2" TEL CBL
43	KENT CO.	1315+59.52	14.76' R	16.86'	8.82'	24" FM SAN
89	VERIZON	1314+60.27	80.78' R	18.53'	3.08'	.75"(DIRECT BURY) CBL TEL

NOTES:

1. ALL LIGHTING STANDARD POLE BASES SHALL BE BREAKAWAY TYPE 6.
2. ALL LIGHTING JUNCTION WELLS SHALL BE TYPE 1, UNLESS OTHERWISE NOTED IN THE PLANS.
3. LIGHTING CIRCUITS ARE AS NOTED IN LIGHTING SERVICE SCHEDULE.
4. LOCATION OF CONDUIT MAY BE ADJUSTED IN FIELD TO AVOID EXISTING OR OTHER PROPOSED CONSTRUCTION FEATURES, SUBJECT TO APPROVAL OF THE ENGINEER. ALL CONDUITS AND POLES SHALL BE LOCATED WITHIN EXISTING PROPOSED RIGHT-OF-WAY OR PERMANENT EASEMENT.
5. SEE PRIMARY SERVICE AND LOAD CENTER DETAIL ON LIGHTING DETAILS SHEET FOR SERVICE REQUIREMENTS.

LIGHTING LEGEND

- 250W HPS COBRA-HEAD LUMINARE
- [C] - CABINET
- [J] - JUNCTION WELL
- - - - RGS CONDUIT UNDER NEW PAVEMENT OR SODDED TRENCH, 24" MIN. BELOW FINISHED GRADE.
- (LST / X) - LIGHTING STANDARD IDENTIFIER
- (LSR / X) - LIGHTING SERVICE IDENTIFIER

LIGHTING STANDARD SCHEDULE

NO.	CIRCUIT NO.	STATION	OFFSET	ARM	LIGHT STANDARD
13	A-4	906+00	27.0' LT.	15	250 WATT HPS LUMINAIRE
14	A-4	907+50	31.0' LT.	15	250 WATT HPS LUMINAIRE
15	A-1	909+50	31.0' LT.	15	250 WATT HPS LUMINAIRE
62	B-5	1313+50	31.0' RT.	15	250 WATT HPS LUMINAIRE
63	B-5	1315+50	31.0' RT.	15	250 WATT HPS LUMINAIRE
64	B-5	1317+50	31.0' RT.	15	250 WATT HPS LUMINAIRE

LIGHTING SERVICE SCHEDULE

SERVICE RUN	DISTANCE (L.F.)	DESCRIPTION	INSTALLATION
16	46	2#4, 2#6+ 1#6 GND. IN 3" PVC CONDUIT	DIRECT BURIAL
17	37	2#4, 2#6+ 1#6 GND. IN 4" PVC CONDUIT	DIRECT BURIAL
18	58	2#6 + 1#6 GND. IN 3" PVC CONDUIT	DIRECT BURIAL
19	138	2#6 + 1#6 GND. IN 3" PVC CONDUIT	DIRECT BURIAL
20	172	2#6 + 1#6 GND. IN 3" PVC CONDUIT	DIRECT BURIAL
*21A	12	4#2, 2#4, 4#6+1#6GND. IN 4"PVC CONDUIT	DIRECT BURIAL
*21B	12	4#6 + 1#6GND. IN 4"PVC CONDUIT	DIRECT BURIAL
*21C	12	SPARE 4" PVC CONDUIT	DIRECT BURIAL
*21D	12	SPARE 4" PVC CONDUIT	DIRECT BURIAL
22	24	2#6 + 1#6 GND. IN 3" PVC CONDUIT	DIRECT BURIAL
23	149	2#6 + 1#6 GND. IN 3" PVC CONDUIT	DIRECT BURIAL
26	23	4#2, 4#6 +1#6 GND. IN 4"PVC CONDUIT	DIRECT BURIAL
88	205	2#2, 2#6 +1#6 GND. IN 3" PVC CONDUIT	DIRECT BURIAL
89	8	2#6 +1#6 GND. IN 3" PVC CONDUIT	DIRECT BURIAL
90	182	2#2, 2#6 +1#6 GND. IN 3" PVC CONDUIT	DIRECT BURIAL
91	194	2#2, 2#6 +1#6 GND. IN 3" PVC CONDUIT	DIRECT BURIAL
101	222	4#2, 2#4, 4#6+1#6GND. IN 4"PVC CONDUIT	DIRECT BURIAL
102	148	4#2, 2#4, 4#6+1#6GND. IN 4"PVC CONDUIT	DIRECT BURIAL

* LSR-21 HAS FOUR (4) CONDUIT RUNS IDENTIFIED AS A,B,C,& D.

Unofficial Website Copy

DELAWARE DEPARTMENT OF TRANSPORTATION

ADDENDUMS / REVISIONS

SCALE 0 30 60 90 FEET

SR1, SOUTH FREDERICA GRADE SEPARATED INTERSECTION

CONTRACT	BRIDGE NO.	-
T200812202	DESIGNED BY: LCM	
COUNTY		
KENT	CHECKED BY: SFP	

UTILITY RELOCATION AND LIGHTING PLAN

SHEET NO. 207 TOTAL SHTS. 296

10/15/2015 G:\PROJECTS\06535.00 (DelDOT Agmt. 1376 DOTS Open End)\06535.07 SR1, S. Frederica\CADD Files\XM\ul09st.dgn 11:30:54 AM

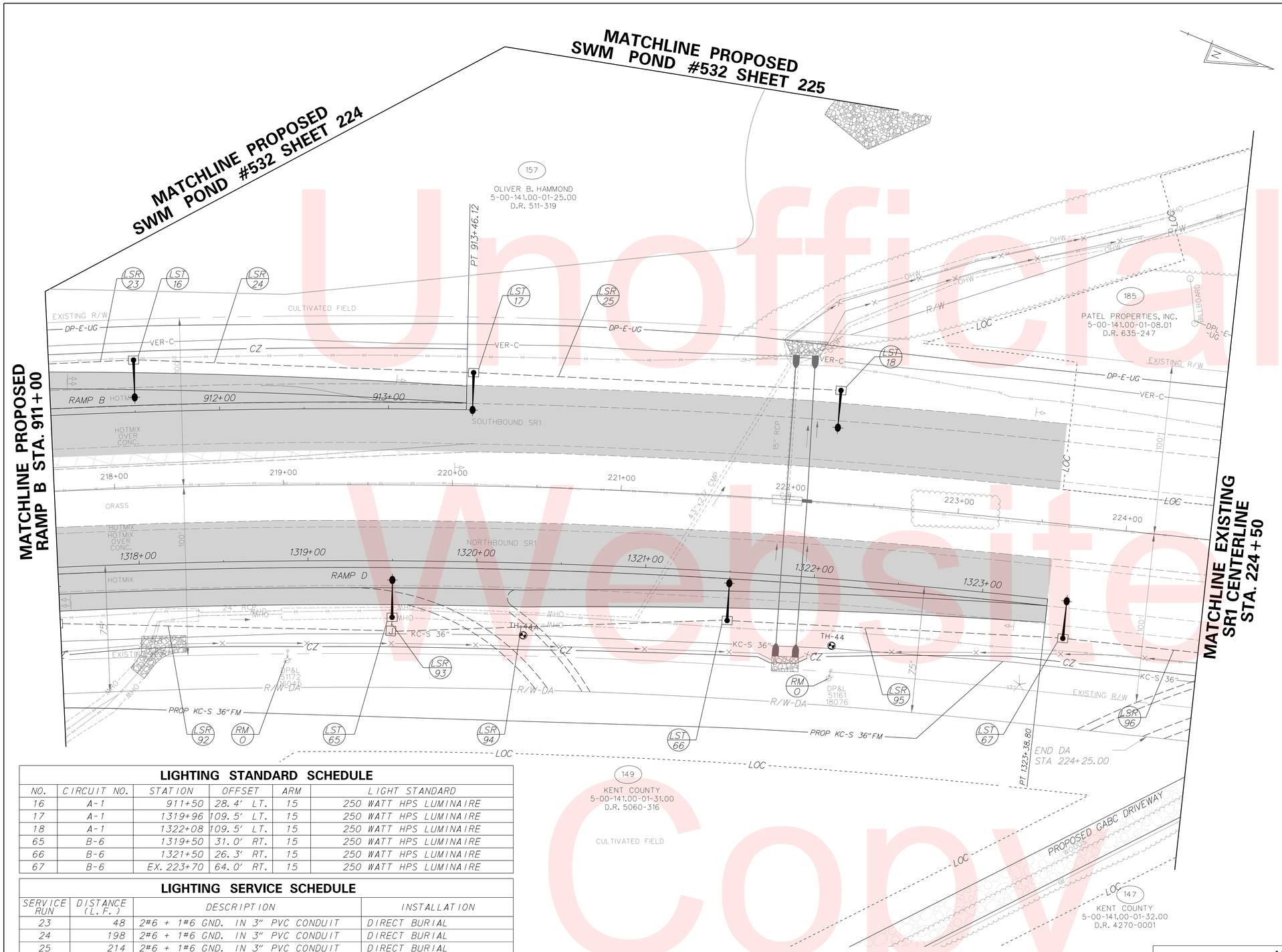

NOTES:

1. ALL LIGHTING STANDARD POLE BASES SHALL BE BREAKAWAY TYPE 6.
2. ALL LIGHTING JUNCTION WELLS SHALL BE TYPE 1, UNLESS OTHERWISE NOTED IN THE PLANS.
3. LIGHTING CIRCUITS ARE AS NOTED IN LIGHTING SERVICE SCHEDULE.
4. LOCATION OF CONDUIT MAY BE ADJUSTED IN FIELD TO AVOID EXISTING OR OTHER PROPOSED CONSTRUCTION FEATURES, SUBJECT TO APPROVAL OF THE ENGINEER. ALL CONDUITS AND POLES SHALL BE LOCATED WITHIN EXISTING PROPOSED RIGHT-OF-WAY OR PERMANENT EASEMENT.
5. SEE PRIMARY SERVICE AND LOAD CENTER DETAIL ON LIGHTING DETAILS SHEET FOR SERVICE REQUIREMENTS.

LIGHTING LEGEND

- 250W HPS COBRA-HEAD LUMINARE
- C - CABINET
- J - JUNCTION WELL
- PVC CONDUIT UNDER NEW PAVEMENT OR SODDED TRENCH, 24" MIN. BELOW FINISHED GRADE.
- LST X - LIGHTING STANDARD IDENTIFIER
- LSR X - LIGHTING SERVICE IDENTIFIER

LIGHTING STANDARD SCHEDULE

NO.	CIRCUIT NO.	STATION	OFFSET	ARM	LIGHT STANDARD
16	A-1	911+50	28.4' LT.	15	250 WATT HPS LUMINAIRE
17	A-1	1319+96	109.5' LT.	15	250 WATT HPS LUMINAIRE
18	A-1	1322+08	109.5' LT.	15	250 WATT HPS LUMINAIRE
65	B-6	1319+50	31.0' RT.	15	250 WATT HPS LUMINAIRE
66	B-6	1321+50	26.3' RT.	15	250 WATT HPS LUMINAIRE
67	B-6	EX. 223+70	64.0' RT.	15	250 WATT HPS LUMINAIRE

LIGHTING SERVICE SCHEDULE

SERVICE RUN	DISTANCE (L.F.)	DESCRIPTION	INSTALLATION
23	48	2#6 + 1#6 GND. IN 3" PVC CONDUIT	DIRECT BURIAL
24	198	2#6 + 1#6 GND. IN 3" PVC CONDUIT	DIRECT BURIAL
25	214	2#6 + 1#6 GND. IN 3" PVC CONDUIT	DIRECT BURIAL
92	192	2#2, 2#6 +1#6 GND. IN 3" PVC CONDUIT	DIRECT BURIAL
93	5	2#6 + 1#6 GND. IN 3" PVC CONDUIT	DIRECT BURIAL
94	194	2#6 + 1#6 GND. IN 3" PVC CONDUIT	DIRECT BURIAL
95	194	2#6 + 1#6 GND. IN 3" PVC CONDUIT	DIRECT BURIAL
96	75	2#6 + 1#6 GND. IN 3" PVC CONDUIT	DIRECT BURIAL

UTILITY TEST HOLE SCHEDULE

NO.	UTILITY	STATION	OFFSET	GRND EL.	COVER	O.D. & MATERIAL
44	KENT CO.	1322+13.25	39.48' R	13.83'	3.69'	36" CONC ENC FM SAN
44A	KENT CO.	1320+28.53	42.81' R	14.23'	3.73'	36" CONC ENC FM SAN

DELAWARE DEPARTMENT OF TRANSPORTATION

ADDENDUMS / REVISIONS

SCALE 0 30 60 90 FEET

SR1, SOUTH FREDERICA GRADE SEPARATED INTERSECTION

CONTRACT	BRIDGE NO.	–
T200812202	DESIGNED BY: LCM	
COUNTY		
KENT	CHECKED BY: SFP	

UTILITY RELOCATION AND LIGHTING PLAN

SHEET NO. 208

TOTAL SHTS. 296

9/11/2015
G:\PROJECTS\06535.00 (DelDOT Agmt. 1376 DOTS Open End)\06535.07 SR1, S. Frederica\CADD Files\XW\ut10st.dgn
2:21:52 PM

Unofficial Website Copy

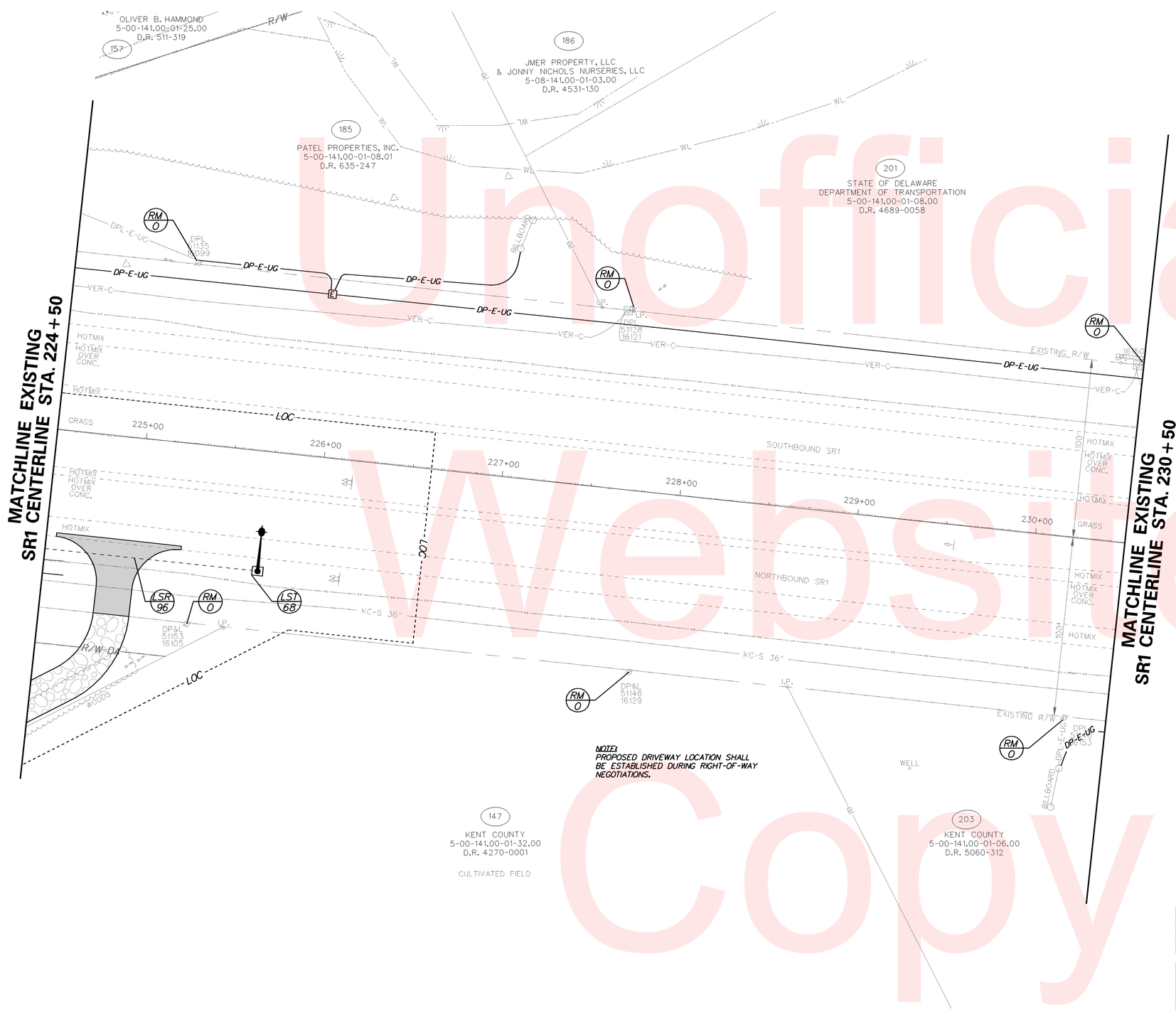

NOTE:
PROPOSED DRIVEWAY LOCATION SHALL BE ESTABLISHED DURING RIGHT-OF-WAY NEGOTIATIONS.

NOTES:

1. *ALL LIGHTING STANDARD POLE BASES SHALL BE BREAKAWAY TYPE 6.*
2. *ALL LIGHTING JUNCTION WELLS SHALL BE TYPE 1, UNLESS OTHERWISE NOTED IN THE PLANS.*
3. *LIGHTING CIRCUITS ARE AS NOTED IN LIGHTING SERVICE SCHEDULE.*
4. *LOCATION OF CONDUIT MAY BE ADJUSTED IN FIELD TO AVOID EXISTING OR OTHER PROPOSED CONSTRUCTION FEATURES, SUBJECT TO APPROVAL OF THE ENGINEER. ALL CONDUITS AND POLES SHALL BE LOCATED WITHIN EXISTING PROPOSED RIGHT-OF-WAY OR PERMANENT EASEMENT.*
5. *SEE PRIMARY SERVICE AND LOAD CENTER DETAIL ON LIGHTING DETAILS SHEET FOR SERVICE REQUIREMENTS.*

LIGHTING LEGEND

- 250W HPS COBRA-HEAD LUMINARE
- C - CABINET
- J - JUNCTION WELL
- - - - PVC CONDUIT UNDER NEW PAVEMENT OR SODDED TRENCH, 24" MIN. BELOW FINISHED GRADE.
- LST X - LIGHTING STANDARD IDENTIFIER
- LSR X - LIGHTING SERVICE IDENTIFIER

LIGHTING STANDARD SCHEDULE

NO.	CIRCUIT NO.	STATION	OFFSET	ARM	LIGHT STANDARD
68	B-6	EX. 225+70	64.0' RT.	15	250 WATT HPS LUMINAIRE

LIGHTING SERVICE SCHEDULE

SERVICE RUN	DISTANCE (L.F.)	DESCRIPTION	INSTALLATION
96	117	2#6 + 1#6 GND. IN 3" PVC CONDUIT	DIRECT BURIAL

DELAWARE DEPARTMENT OF TRANSPORTATION

ADDENDUMS / REVISIONS

SCALE 0 30 60 90 FEET

SR1, SOUTH FREDERICA GRADE SEPARATED INTERSECTION

CONTRACT	BRIDGE NO.	–
T200812202	DESIGNED BY: LCM	
COUNTY: KENT	CHECKED BY: SFP	

UTILITY RELOCATION AND LIGHTING PLAN

SHEET NO. 209 / TOTAL SHTS. 296

Unofficial Website Copy

5/24/2013
G:\PROJECTS\06535.00 (DelDOT Agmt. 1376 DOTS Open End)\06535.07 SR1, S. Frederica\CADD Files\XM\utl1sf.dgn
08:11:53

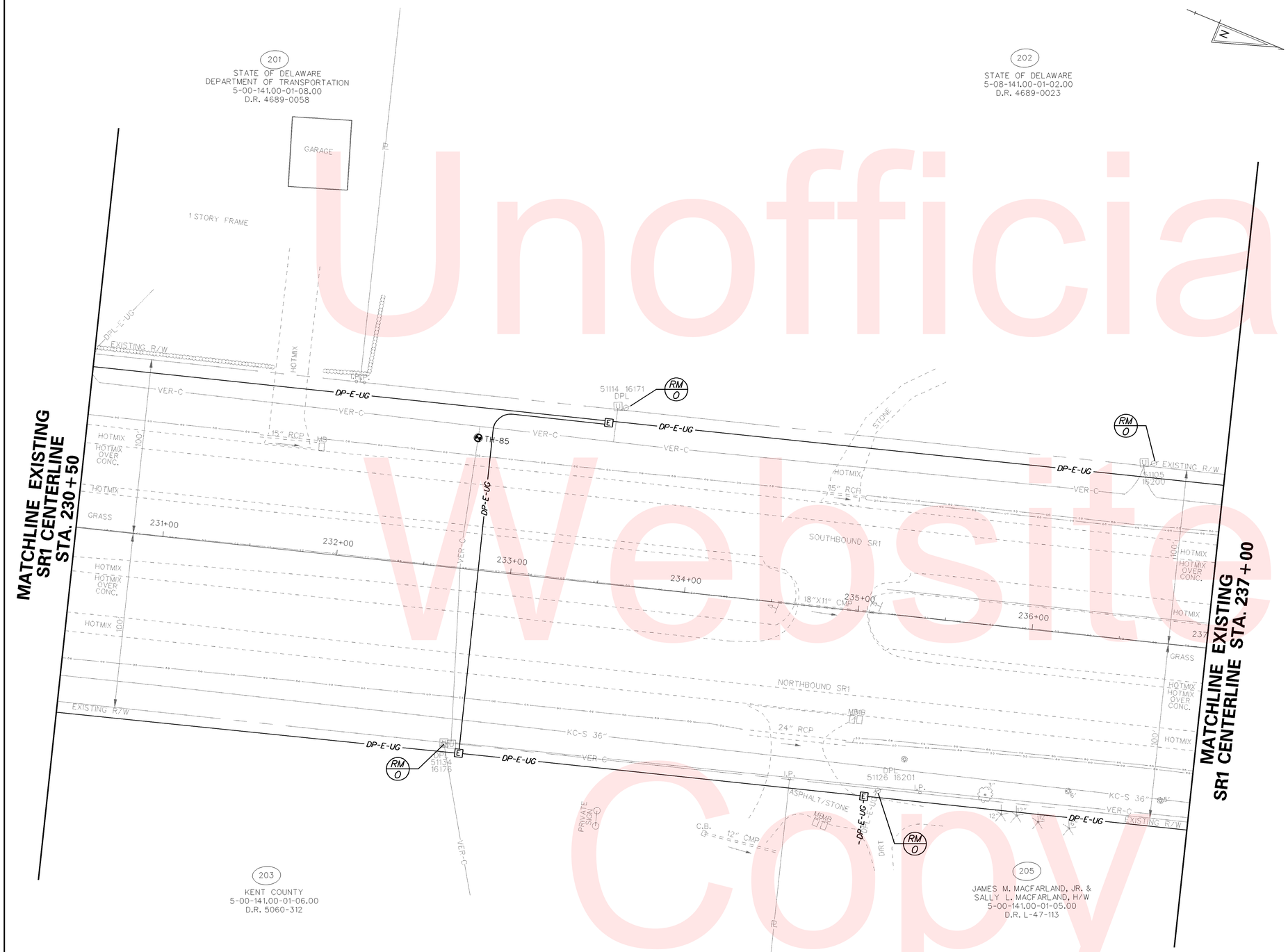

NOTES:

1. ALL LIGHTING STANDARD POLE BASES SHALL BE BREAKAWAY TYPE 6.
2. ALL LIGHTING JUNCTION WELLS SHALL BE TYPE 1, UNLESS OTHERWISE NOTED IN THE PLANS.
3. LIGHTING CIRCUITS ARE AS NOTED IN LIGHTING SERVICE SCHEDULE.
4. LOCATION OF CONDUIT MAY BE ADJUSTED IN FIELD TO AVOID EXISTING OR OTHER PROPOSED CONSTRUCTION FEATURES, SUBJECT TO APPROVAL OF THE ENGINEER. ALL CONDUITS AND POLES SHALL BE LOCATED WITHIN EXISTING PROPOSED RIGHT-OF-WAY OR PERMANENT EASEMENT.
5. SEE PRIMARY SERVICE AND LOAD CENTER DETAIL ON LIGHTING DETAILS SHEET FOR SERVICE REQUIREMENTS.

LIGHTING LEGEND

- 250W HPS COBRA-HEAD LUMINARE
- C - CABINET
- J - JUNCTION WELL
- - - - PVC CONDUIT UNDER NEW PAVEMENT OR SODDED TRENCH, 24" MIN. BELOW FINISHED GRADE.
- LST X - LIGHTING STANDARD IDENTIFIER
- LSP X - LIGHTING SERVICE IDENTIFIER

UTILITY TEST HOLE SCHEDULE

NO.	UTILITY	STATION	OFFSET	GRND EL.	COVER	O.D. & MATERIAL
85	VERIZON	232+73.30	75.39' L	11.65'	2.89'	.50"(DIRECT BURY) CBL TEL

Unofficial Website Copy

DELAWARE DEPARTMENT OF TRANSPORTATION

ADDENDUMS / REVISIONS

SCALE 0 30 60 90 FEET

SR1, SOUTH FREDERICA GRADE SEPARATED INTERSECTION

CONTRACT	BRIDGE NO.	–
T200812202	DESIGNED BY: LCM	
COUNTY		
KENT	CHECKED BY: SFP	

UTILITY RELOCATION AND LIGHTING PLAN

SHEET NO. 210
TOTAL SHTS. 296

5/24/2013
G:\PROJECTS\06535.00 (DelDOT Agmt. 1376 DOTS Open End)\06535.07 SR1, S. Frederica\CADD Files\XM\ut12sf.dgn
0009456

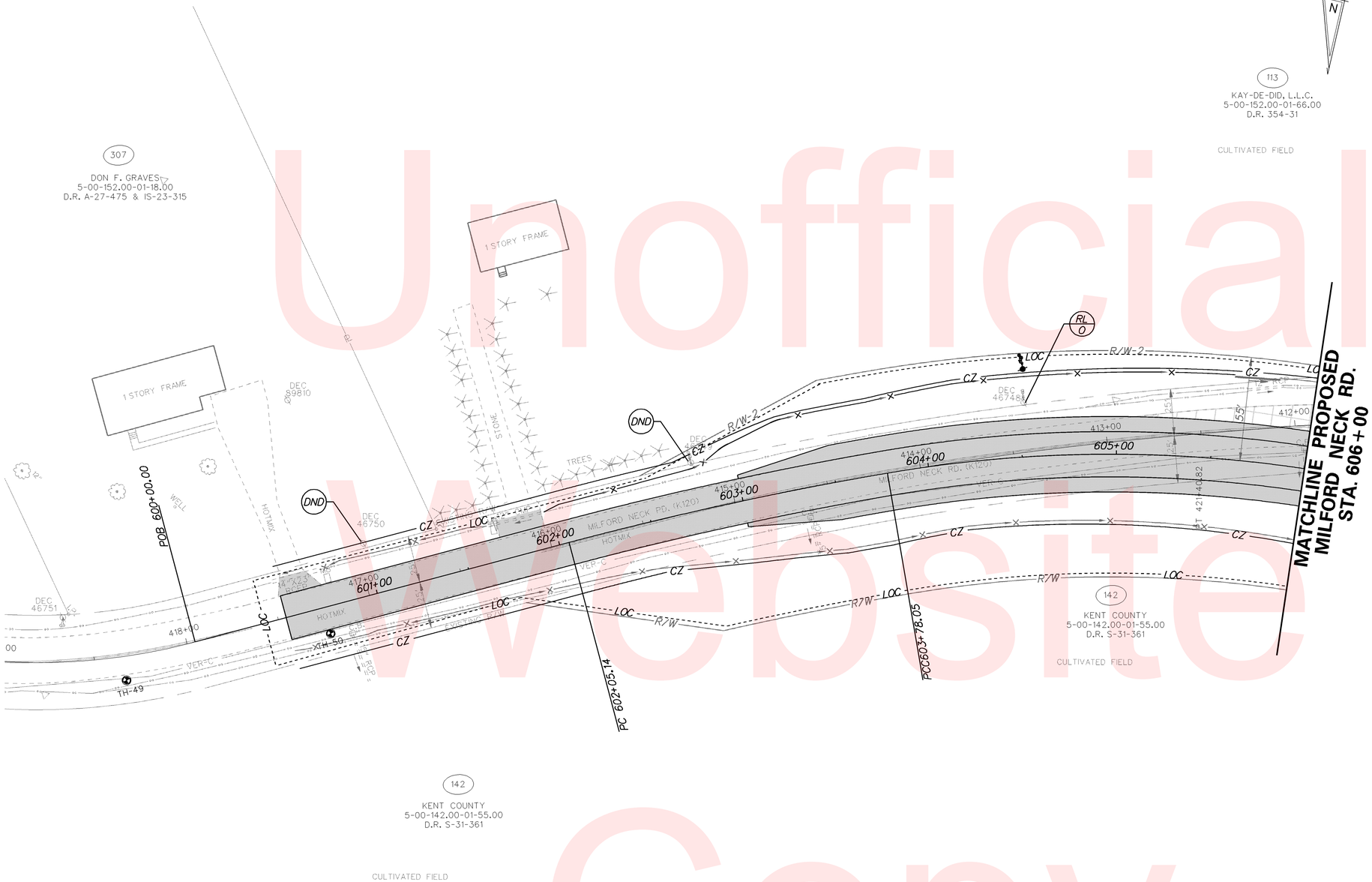

NOTES:

1. ALL LIGHTING STANDARD POLE BASES SHALL BE BREAKAWAY TYPE 6.
2. ALL LIGHTING JUNCTION WELLS SHALL BE TYPE 1, UNLESS OTHERWISE NOTED IN THE PLANS.
3. LIGHTING CIRCUITS ARE AS NOTED IN LIGHTING SERVICE SCHEDULE.
4. LOCATION OF CONDUIT MAY BE ADJUSTED IN FIELD TO AVOID EXISTING OR OTHER PROPOSED CONSTRUCTION FEATURES, SUBJECT TO APPROVAL OF THE ENGINEER. ALL CONDUITS AND POLES SHALL BE LOCATED WITHIN EXISTING PROPOSED RIGHT-OF-WAY OR PERMANENT EASEMENT.
5. SEE PRIMARY SERVICE AND LOAD CENTER DETAIL ON LIGHTING DETAILS SHEET FOR SERVICE REQUIREMENTS.

LIGHTING LEGEND

- 250W HPS COBRA-HEAD LUMINARE
- C - CABINET
- J - JUNCTION WELL
- PVC CONDUIT UNDER NEW PAVEMENT OR SODDED TRENCH, 24" MIN. BELOW FINISHED GRADE.
- LST X - LIGHTING STANDARD IDENTIFIER
- LSR X - LIGHTING SERVICE IDENTIFIER

UTILITY TEST HOLE SCHEDULE

NO.	UTILITY	STATION	OFFSET	GRND EL.	COVER	O.D. & MATERIAL
49	VERIZON	418+34.60	12.81' L	26.41	2.29'	2"(DIRECT BURY) CBL TEL
50	VERIZON	600+70.63	14.20' R	25.93	2.16'	2"(DIRECT BURY) CBL TEL

Unofficial Website Copy

DELAWARE DEPARTMENT OF TRANSPORTATION

ADDENDUMS / REVISIONS

SCALE 0 30 60 90 FEET

SR1, SOUTH FREDERICA GRADE SEPARATED INTERSECTION

CONTRACT T200812202 | COUNTY KENT | BRIDGE NO. – | DESIGNED BY: LCM | CHECKED BY: SFP

UTILITY RELOCATION AND LIGHTING PLAN

SHEET NO. 211 | TOTAL SHTS. 296

5/24/2013
G:\PROJECTS\06535.00 (DelDOT Agmt. 1376 DOTS Open End)\06535.07 SR1, S. Frederica\CADD Files\XM\ut15sf.dgn
0041028

UTILITY TEST HOLE SCHEDULE

NO.	UTILITY	STATION	OFFSET	GRND EL.	COVER	O.D. & MATERIAL
53	VERIZON	410+82.26	16.77' L	22.69'	2.55'	2" MTL CON TEL
54	KENT CO.	407+97.10	7.23' L	23.77'	7.08'	24" CONC ENC MTL FM SAN
55	KENT CO.	407+44.77	15.08' R	23.67'	2.64'	24" CONC ENC MTL FM SAN
56	VERIZON	407+21.89	20.04' L	23.83'	3.82'	4" PLSTC CON TEL
57	CHSPK GAS	407+22.06	24.95' L	23.85'	4.10'	8" PLSTC PIPE GM
58	KENT CO.	407+22.10	22.02' L	23.82'	4.76'	36" CONC ENC FM SAN
59	VERIZON	1200+71.25	42.44' R	24.50'	1.92'	.75"(DRCT BRY)CBL TEL
60	VERIZON	406+64.49	12.60' R	23.51'	2.25'	2" MTL CON TEL
61	KENT CO.	405+07.69	16.11' R	23.29'	3.32'	24" CONC ENC FM SAN
62	KENT CO.	404+99.54	23.16' L	23.64'	3.28'	36" CONC ENC FM SAN
86	KENT CO.	1200+73.41	16.11' R	23.90'	3.90'	48" CONC ENC FM SAN
87	CHSPK GAS	1200+69.99	13.08' R	23.75'	3.34'	4" YEL PLSTC PIPE GAS
88	CHSPK GAS	611+10.26	80.84' L	25.31'	5.10'	8" YEL PLSTC PIPE GAS

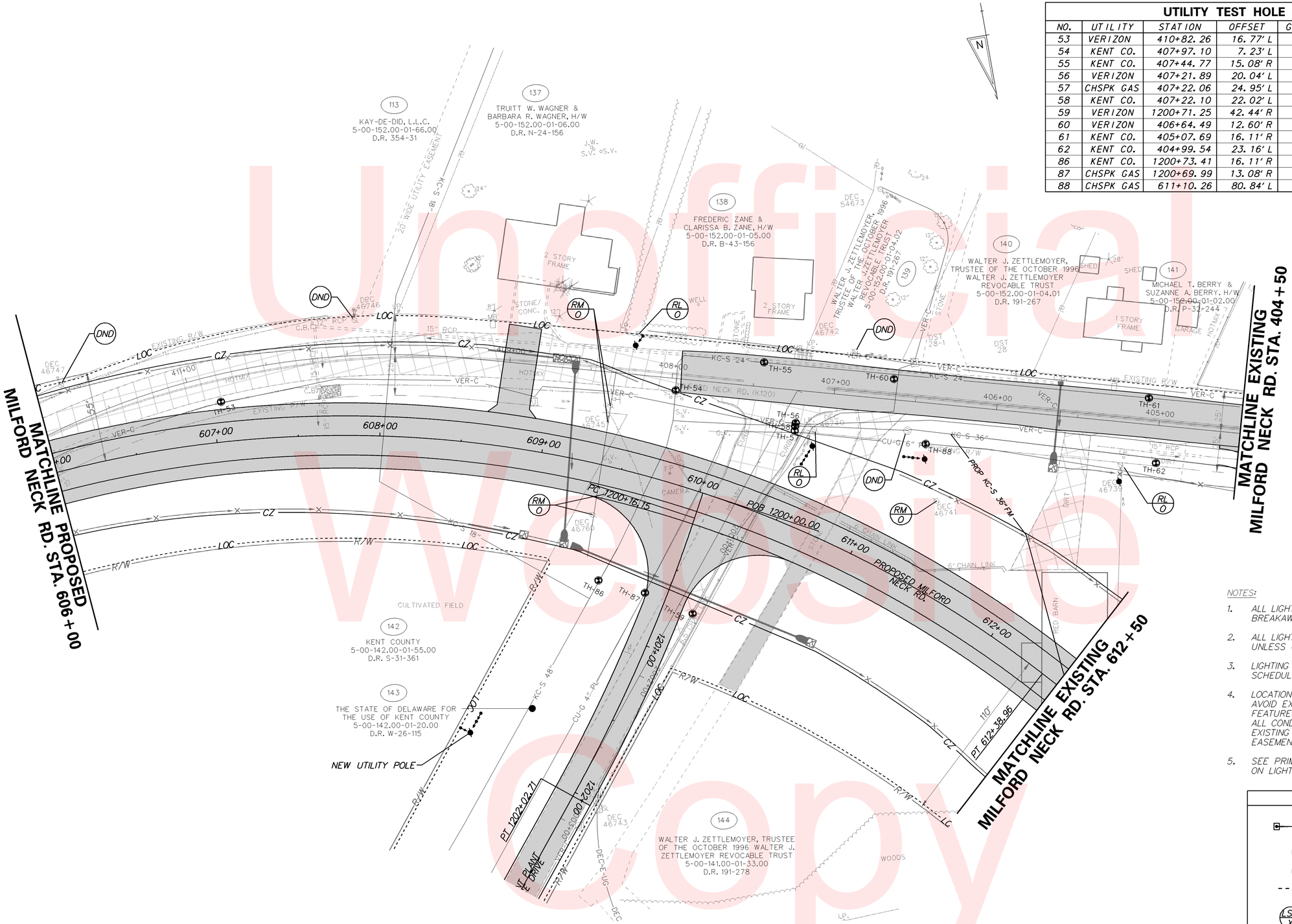

NOTES:

1. ALL LIGHTING STANDARD POLE BASES SHALL BE BREAKAWAY TYPE 6.
2. ALL LIGHTING JUNCTION WELLS SHALL BE TYPE 1, UNLESS OTHERWISE NOTED IN THE PLANS.
3. LIGHTING CIRCUITS ARE AS NOTED IN LIGHTING SERVICE SCHEDULE.
4. LOCATION OF CONDUIT MAY BE ADJUSTED IN FIELD TO AVOID EXISTING OR OTHER PROPOSED CONSTRUCTION FEATURES, SUBJECT TO APPROVAL OF THE ENGINEER. ALL CONDUITS AND POLES SHALL BE LOCATED WITHIN EXISTING PROPOSED RIGHT-OF-WAY OR PERMANENT EASEMENT.
5. SEE PRIMARY SERVICE AND LOAD CENTER DETAIL ON LIGHTING DETAILS SHEET FOR SERVICE REQUIREMENTS.

LIGHTING LEGEND

- 250W HPS COBRA-HEAD LUMINARE
- C - CABINET
- J - JUNCTION WELL
- PVC CONDUIT UNDER NEW PAVEMENT OR SODDED TRENCH, 24" MIN. BELOW FINISHED GRADE.
- LST X - LIGHTING STANDARD IDENTIFIER
- LSR X - LIGHTING SERVICE IDENTIFIER

Unofficial Website Copy

DELAWARE DEPARTMENT OF TRANSPORTATION

ADDENDUMS / REVISIONS

SCALE 0 30 60 90 FEET

SR1, SOUTH FREDERICA GRADE SEPARATED INTERSECTION

CONTRACT	BRIDGE NO.	–
T200812202	DESIGNED BY: LCM	
COUNTY: KENT	CHECKED BY: SFP	

UTILITY RELOCATION AND LIGHTING PLAN

SHEET NO. 212 / TOTAL SHTS. 296

5/24/2013 G:\PROJECTS\06535.00 (DelDOT Agmt. 1376 DOTS Open End)\06535.07 SR1, S. Frederica\CADD Files\XMUt16sf.dgn 00:12:52

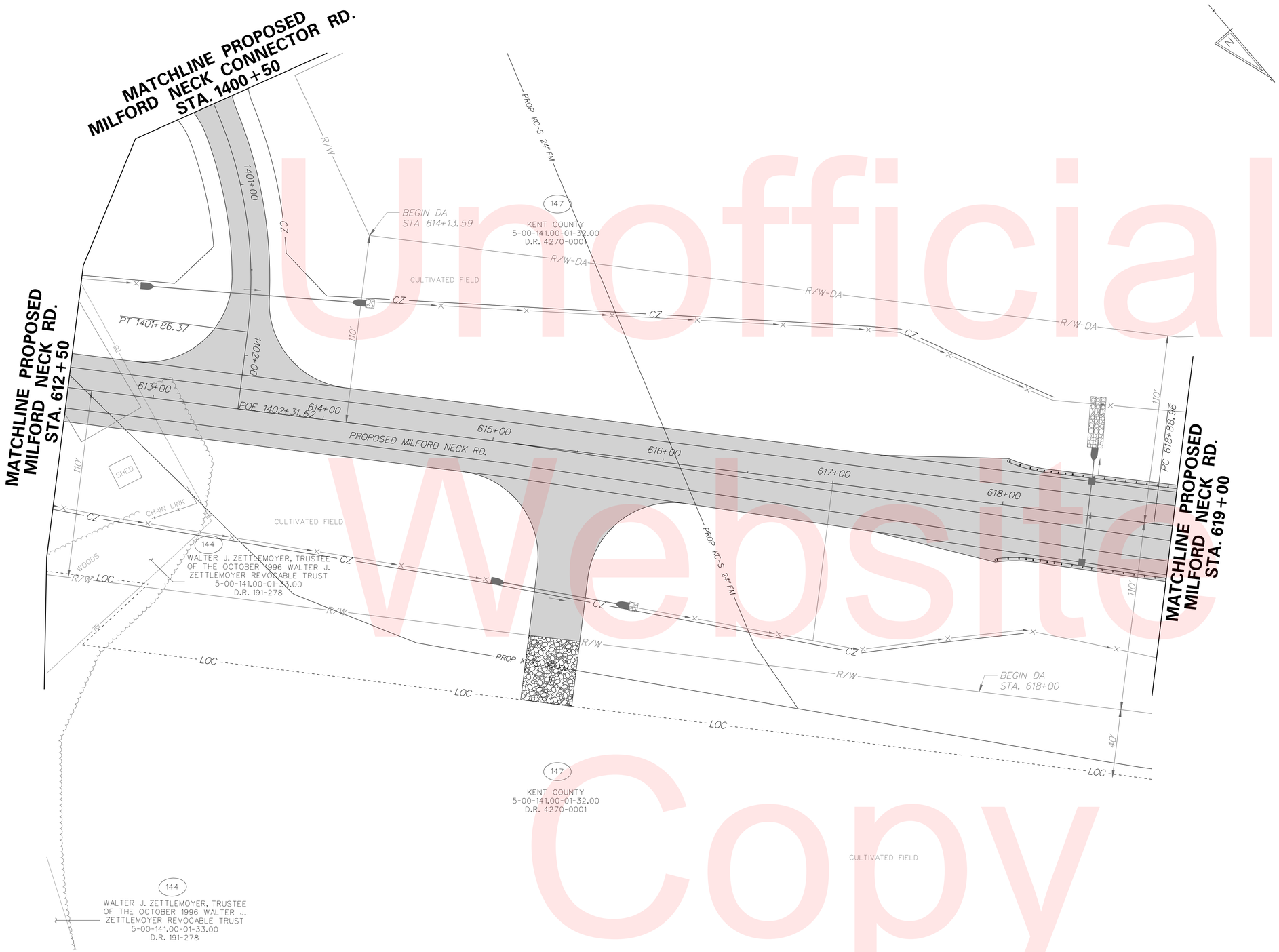

NOTES:

1. ALL LIGHTING STANDARD POLE BASES SHALL BE BREAKAWAY TYPE 6.
2. ALL LIGHTING JUNCTION WELLS SHALL BE TYPE 1, UNLESS OTHERWISE NOTED IN THE PLANS.
3. LIGHTING CIRCUITS ARE AS NOTED IN LIGHTING SERVICE SCHEDULE.
4. LOCATION OF CONDUIT MAY BE ADJUSTED IN FIELD TO AVOID EXISTING OR OTHER PROPOSED CONSTRUCTION FEATURES, SUBJECT TO APPROVAL OF THE ENGINEER. ALL CONDUITS AND POLES SHALL BE LOCATED WITHIN EXISTING PROPOSED RIGHT-OF-WAY OR PERMANENT EASEMENT.
5. SEE PRIMARY SERVICE AND LOAD CENTER DETAIL ON LIGHTING DETAILS SHEET FOR SERVICE REQUIREMENTS.

LIGHTING LEGEND

- 250W HPS COBRA-HEAD LUMINARE
- C - CABINET
- J - JUNCTION WELL
- PVC CONDUIT UNDER NEW PAVEMENT OR SODDED TRENCH, 24" MIN. BELOW FINISHED GRADE.
- LST/X - LIGHTING STANDARD IDENTIFIER
- LSR/X - LIGHTING SERVICE IDENTIFIER

Unofficial Website Copy

DELAWARE DEPARTMENT OF TRANSPORTATION	ADDENDUMS / REVISIONS	SCALE 0 30 60 90 FEET	SR1, SOUTH FREDERICA GRADE SEPARATED INTERSECTION	CONTRACT T200812202	BRIDGE NO. –	UTILITY RELOCATION AND LIGHTING PLAN	SHEET NO. 213
				COUNTY KENT	DESIGNED BY: LCM		TOTAL SHTS. 296
					CHECKED BY: SFP		

9/11/2015
G:\PROJECTS\06535.00 (DelDOT Agmt. 1376 DOTS Open End)\06535.07 SR1, S. Frederica\CADD Files\XM\ut17sf.dgn
2:22:42 PM

LIGHTING SERVICE SCHEDULE			
SERVICE RUN	DISTANCE (L.F.)	DESCRIPTION	INSTALLATION
66	23	2#6 + 1#6 GND. IN 3" PVC CONDUIT	DIRECT BURIAL
67	132	2#6 + 1#6 GND. IN 3" PVC CONDUIT	DIRECT BURIAL
71	182	2#6 + 1#6 GND. IN 3" PVC CONDUIT	DIRECT BURIAL
72	50	2#6 + 1#6 GND. IN 3" PVC CONDUIT	DIRECT BURIAL
73	44	2#6 + 1#6 GND. IN 3" PVC CONDUIT	DIRECT BURIAL
74	65	2#6 + 1#6 GND. IN 3" PVC CONDUIT	DIRECT BURIAL
75	143	2#6 + 1#6 GND. IN 3" PVC CONDUIT	DIRECT BURIAL
76	48	2#6 + 1#6 GND. IN 3" PVC CONDUIT	DIRECT BURIAL
77	133	2#6 + 1#6 GND. IN 3" PVC CONDUIT	DIRECT BURIAL

NOTES:

1. ALL LIGHTING STANDARD POLE BASES SHALL BE BREAKAWAY TYPE 6.
2. ALL LIGHTING JUNCTION WELLS SHALL BE TYPE 1, UNLESS OTHERWISE NOTED IN THE PLANS.
3. LIGHTING CIRCUITS ARE AS NOTED IN LIGHTING SERVICE SCHEDULE.
4. LOCATION OF CONDUIT MAY BE ADJUSTED IN FIELD TO AVOID EXISTING OR OTHER PROPOSED CONSTRUCTION FEATURES, SUBJECT TO APPROVAL OF THE ENGINEER. ALL CONDUITS AND POLES SHALL BE LOCATED WITHIN EXISTING PROPOSED RIGHT-OF-WAY OR PERMANENT EASEMENT.
5. SEE PRIMARY SERVICE AND LOAD CENTER DETAIL ON LIGHTING DETAILS SHEET FOR SERVICE REQUIREMENTS.

LIGHTING LEGEND

- 250W HPS COBRA-HEAD LUMINARE
- C - CABINET
- J - JUNCTION WELL
- PVC CONDUIT UNDER NEW PAVEMENT OR SODDED TRENCH, 24" MIN. BELOW FINISHED GRADE.
- LST X - LIGHTING STANDARD IDENTIFIER
- LSR X - LIGHTING SERVICE IDENTIFIER

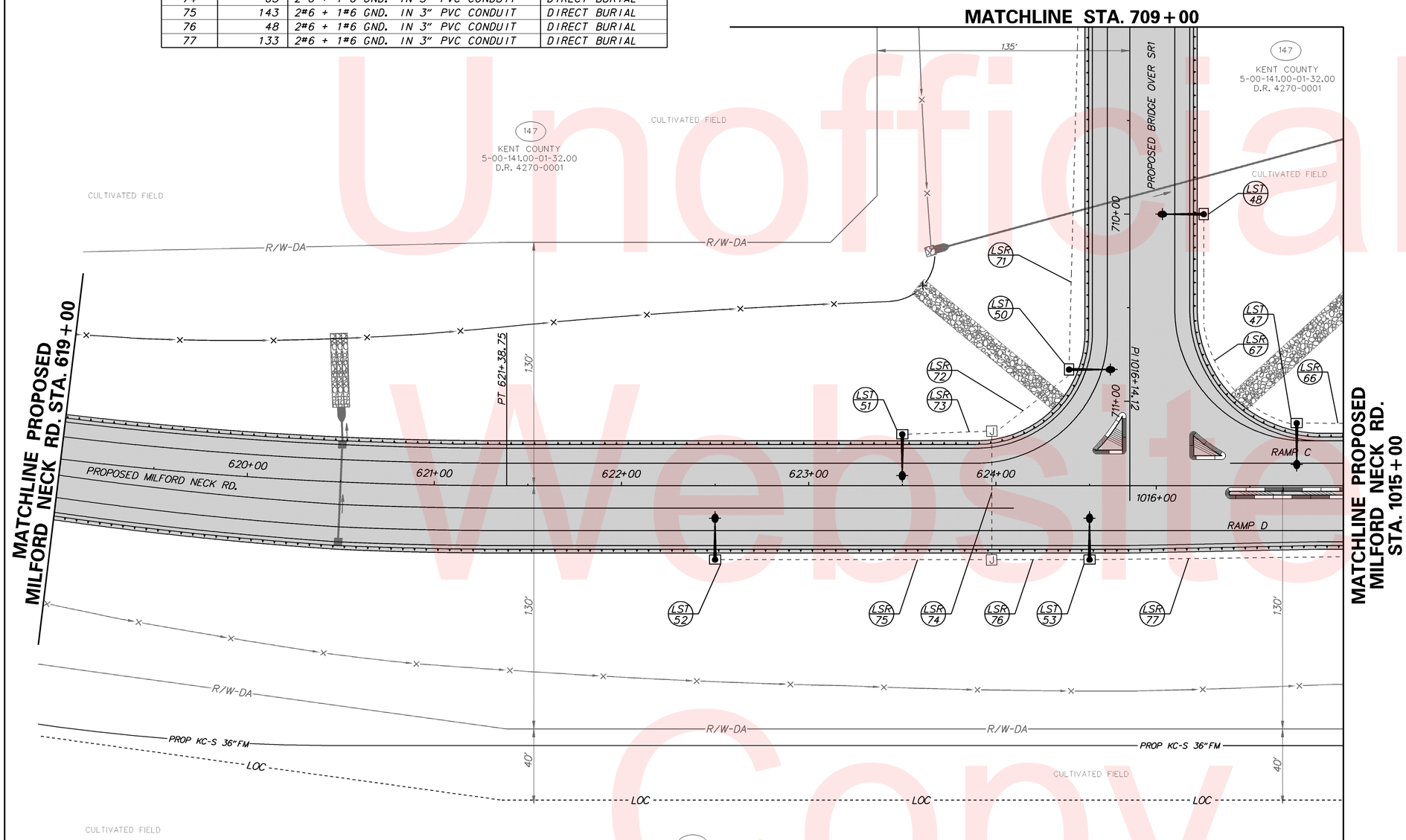

LIGHTING STANDARD SCHEDULE					
NO.	CIRCUIT NO.	STATION	OFFSET	ARM	LIGHT STANDARD
47	B-3	1015+25	31.0' RT.	15	250 WATT HPS LUMINAIRE
48	B-3	710+00	37.0' LT.	15	250 WATT HPS LUMINAIRE
50	B-1	710+83	30.0' RT.	15	250 WATT HPS LUMINAIRE
51	B-2	623+50	25.0' LT.	15	250 WATT HPS LUMINAIRE
52	B-2	622+50	37.0' RT.	15	250 WATT HPS LUMINAIRE
53	B-2	624+50	37.0' RT.	15	250 WATT HPS LUMINAIRE

Unofficial Website Copy

DELAWARE DEPARTMENT OF TRANSPORTATION

ADDENDUMS / REVISIONS

SCALE 0 30 60 90 FEET

SR1, SOUTH FREDERICA GRADE SEPARATED INTERSECTION

CONTRACT	BRIDGE NO.	–
T200812202	DESIGNED BY: LCM	
COUNTY		
KENT	CHECKED BY: SFP	

UTILITY RELOCATION AND LIGHTING PLAN

SHEET NO. 214

TOTAL SHTS. 296

5/28/2013 2:17PM
G:\PROJECTS\06535.00 (DelDOT Agmt. 1376 DOTS Open End)\06535.07 SR1, S. Frederica\CADD Files\XM\ut18st.dgn

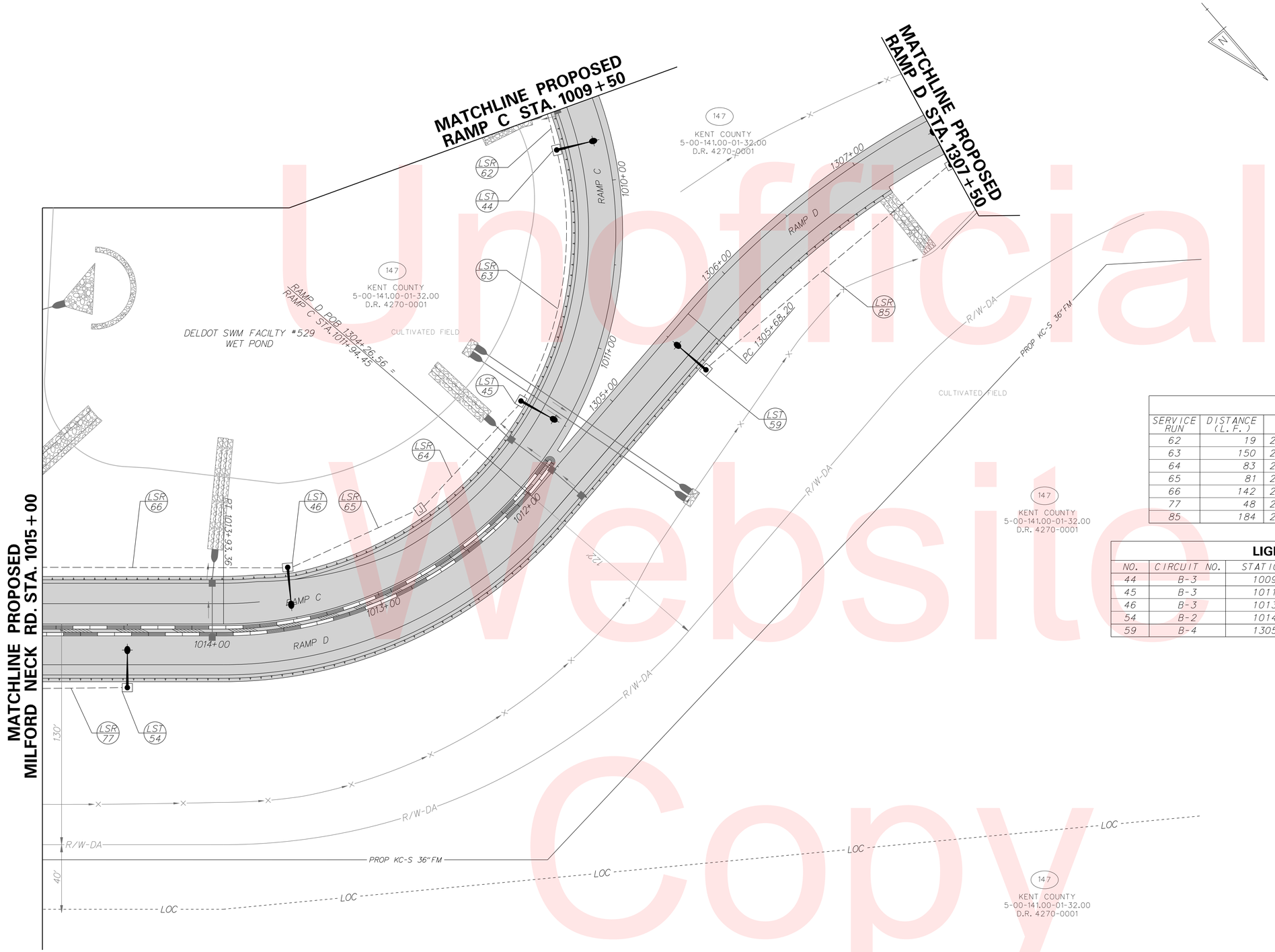

NOTES:

1. ALL LIGHTING STANDARD POLE BASES SHALL BE BREAKAWAY TYPE 6.
2. ALL LIGHTING JUNCTION WELLS SHALL BE TYPE 1, UNLESS OTHERWISE NOTED IN THE PLANS.
3. LIGHTING CIRCUITS ARE AS NOTED IN LIGHTING SERVICE SCHEDULE.
4. LOCATION OF CONDUIT MAY BE ADJUSTED IN FIELD TO AVOID EXISTING OR OTHER PROPOSED CONSTRUCTION FEATURES, SUBJECT TO APPROVAL OF THE ENGINEER. ALL CONDUITS AND POLES SHALL BE LOCATED WITHIN EXISTING PROPOSED RIGHT-OF-WAY OR PERMANENT EASEMENT.
5. SEE PRIMARY SERVICE AND LOAD CENTER DETAIL ON LIGHTING DETAILS SHEET FOR SERVICE REQUIREMENTS.

LIGHTING LEGEND

- 250W HPS COBRA-HEAD LUMINARE
- C - CABINET
- J - JUNCTION WELL
- - - - PVC CONDUIT UNDER NEW PAVEMENT OR SODDED TRENCH, 24" MIN. BELOW FINISHED GRADE.
- LST X - LIGHTING STANDARD IDENTIFIER
- LSR X - LIGHTING SERVICE IDENTIFIER

LIGHTING SERVICE SCHEDULE

SERVICE RUN	DISTANCE (L.F.)	DESCRIPTION	INSTALLATION
62	19	2#6 + 1#6 GND. IN 3" PVC CONDUIT	DIRECT BURIAL
63	150	2#6 + 1#6 GND. IN 3" PVC CONDUIT	DIRECT BURIAL
64	83	2#6 + 1#6 GND. IN 3" PVC CONDUIT	DIRECT BURIAL
65	81	2#6 + 1#6 GND. IN 3" PVC CONDUIT	DIRECT BURIAL
66	142	2#6 + 1#6 GND. IN 3" PVC CONDUIT	DIRECT BURIAL
77	48	2#6 + 1#6 GND. IN 3" PVC CONDUIT	DIRECT BURIAL
85	184	2#6 + 1#6 GND. IN 3" PVC CONDUIT	DIRECT BURIAL

LIGHTING STANDARD SCHEDULE

NO.	CIRCUIT NO.	STATION	OFFSET	ARM	LIGHT STANDARD
44	B-3	1009+75	27.0' RT.	15	250 WATT HPS LUMINAIRE
45	B-3	1011+50	27.0' RT.	15	250 WATT HPS LUMINAIRE
46	B-3	1013+50	27.0' RT.	15	250 WATT HPS LUMINAIRE
54	B-2	1014+50	35.0' LT.	15	250 WATT HPS LUMINAIRE
59	B-4	1305+50	27.0' RT.	15	250 WATT HPS LUMINAIRE

Unofficial Website Copy

DELAWARE DEPARTMENT OF TRANSPORTATION

ADDENDUMS / REVISIONS

SCALE 0 30 60 90 FEET

SR1, SOUTH FREDERICA GRADE SEPARATED INTERSECTION

CONTRACT	BRIDGE NO.	-
T200812202	DESIGNED BY: LCM	
COUNTY		
KENT	CHECKED BY: SFP	

UTILITY RELOCATION AND LIGHTING PLAN

SHEET NO. 215

TOTAL SHTS. 296

10/27/2015
G:\PROJECTS\06535.00 (DelDOT Agmt. 1376 DOTS Open End)\06535.07 SR1, S. Frederica\CADD Files\XM\ut19sf.dgn
11:08:48 AM

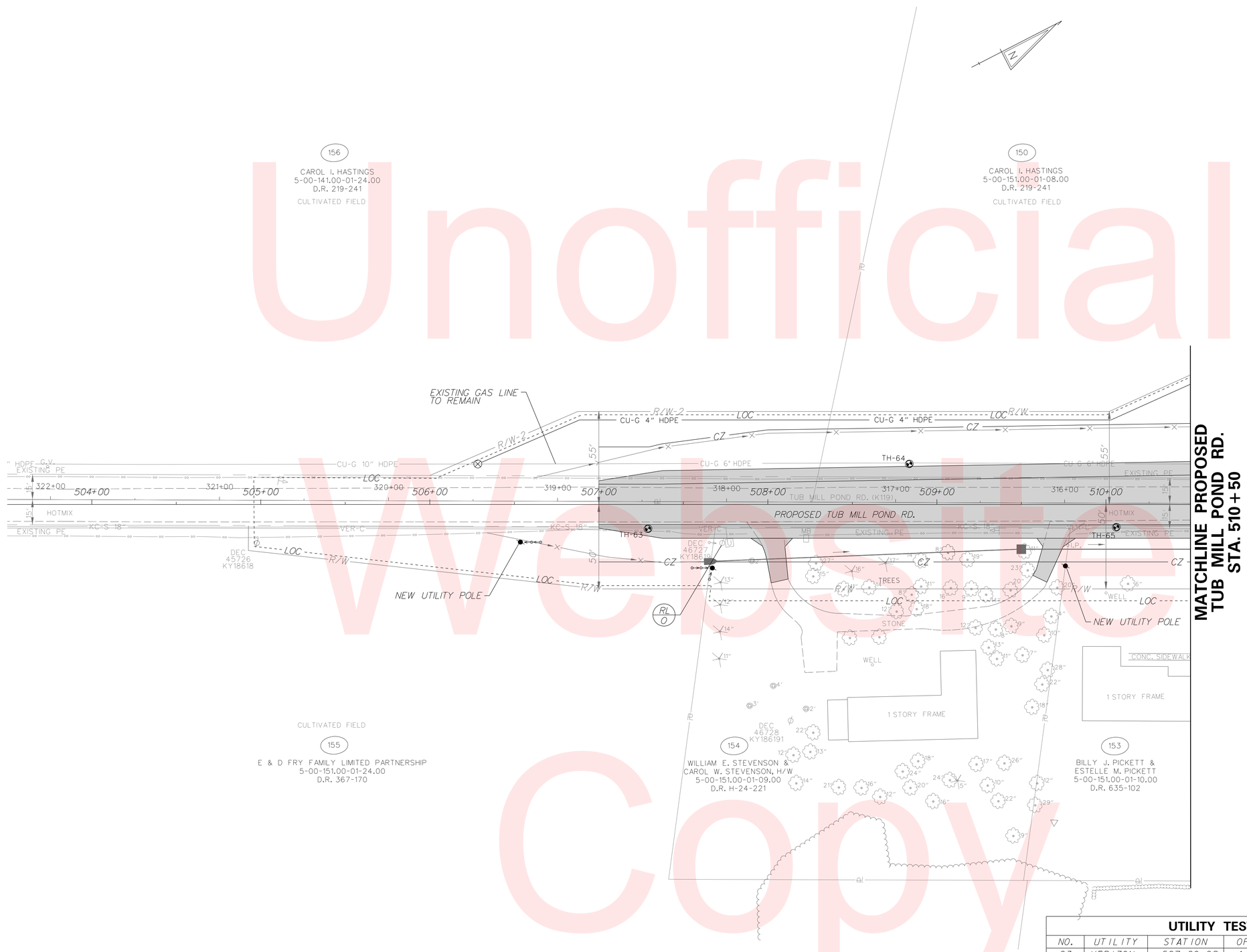

NOTES:

1. ALL LIGHTING STANDARD POLE BASES SHALL BE BREAKAWAY TYPE 6.
2. ALL LIGHTING JUNCTION WELLS SHALL BE TYPE 1, UNLESS OTHERWISE NOTED IN THE PLANS.
3. LIGHTING CIRCUITS ARE AS NOTED IN LIGHTING SERVICE SCHEDULE.
4. LOCATION OF CONDUIT MAY BE ADJUSTED IN FIELD TO AVOID EXISTING OR OTHER PROPOSED CONSTRUCTION FEATURES, SUBJECT TO APPROVAL OF THE ENGINEER. ALL CONDUITS AND POLES SHALL BE LOCATED WITHIN EXISTING PROPOSED RIGHT-OF-WAY OR PERMANENT EASEMENT.
5. SEE PRIMARY SERVICE AND LOAD CENTER DETAIL ON LIGHTING DETAILS SHEET FOR SERVICE REQUIREMENTS.

LIGHTING LEGEND

- 250W HPS COBRA-HEAD LUMINARE
- C - CABINET
- J - JUNCTION WELL
- PVC CONDUIT UNDER NEW PAVEMENT OR SODDED TRENCH, 24" MIN. BELOW FINISHED GRADE.
- LST/X - LIGHTING STANDARD IDENTIFIER
- LSR/X - LIGHTING SERVICE IDENTIFIER

UTILITY TEST HOLE SCHEDULE

NO.	UTILITY	STATION	OFFSET	GRND EL.	COVER	O.D. & MATERIAL
63	VERIZON	507+29.08	14.37' R	30.83'	2.20'	1"(DIRECT BURY) CBL TEL
64	CHSPK GAS	508+83.65	23.97' L	30.34'	4.33'	6" PLSTC PIPE GAS
65	VERIZON	510+10.45	13.63' R	30.17'	2.34'	.75"(DIRECT BURY) CBL TEL

Unofficial Website Copy

DELAWARE DEPARTMENT OF TRANSPORTATION

ADDENDUMS / REVISIONS

SCALE 0 30 60 90 FEET

SR1, SOUTH FREDERICA GRADE SEPARATED INTERSECTION

CONTRACT	BRIDGE NO.	–
T200812202	DESIGNED BY: LCM	
COUNTY		
KENT	CHECKED BY: SFP	

UTILITY RELOCATION AND LIGHTING PLAN

SHEET NO. 216
TOTAL SHTS. 296

10/16/2015
G:\PROJECTS\06535.00 (DelDOT Agmt. 1376 DOTS Open End)\06535.07 SR1, S. Frederica\CADD Files\XM\ul20sf.dgn
10:21:51 AM

NOTES:

1. ALL LIGHTING STANDARD POLE BASES SHALL BE BREAKAWAY TYPE 6.
2. ALL LIGHTING JUNCTION WELLS SHALL BE TYPE 1, UNLESS OTHERWISE NOTED IN THE PLANS.
3. LIGHTING CIRCUITS ARE AS NOTED IN LIGHTING SERVICE SCHEDULE.
4. LOCATION OF CONDUIT MAY BE ADJUSTED IN FIELD TO AVOID EXISTING OR OTHER PROPOSED CONSTRUCTION FEATURES, SUBJECT TO APPROVAL OF THE ENGINEER. ALL CONDUITS AND POLES SHALL BE LOCATED WITHIN EXISTING PROPOSED RIGHT-OF-WAY OR PERMANENT EASEMENT.
5. SEE PRIMARY SERVICE AND LOAD CENTER DETAIL ON LIGHTING DETAILS SHEET FOR SERVICE REQUIREMENTS.

LIGHTING LEGEND

- 250W HPS COBRA-HEAD LUMINARE
- C - CABINET
- J - JUNCTION WELL
- PVC CONDUIT UNDER NEW PAVEMENT OR SODDED TRENCH, 24" MIN. BELOW FINISHED GRADE.
- LST X - LIGHTING STANDARD IDENTIFIER
- LSR X - LIGHTING SERVICE IDENTIFIER

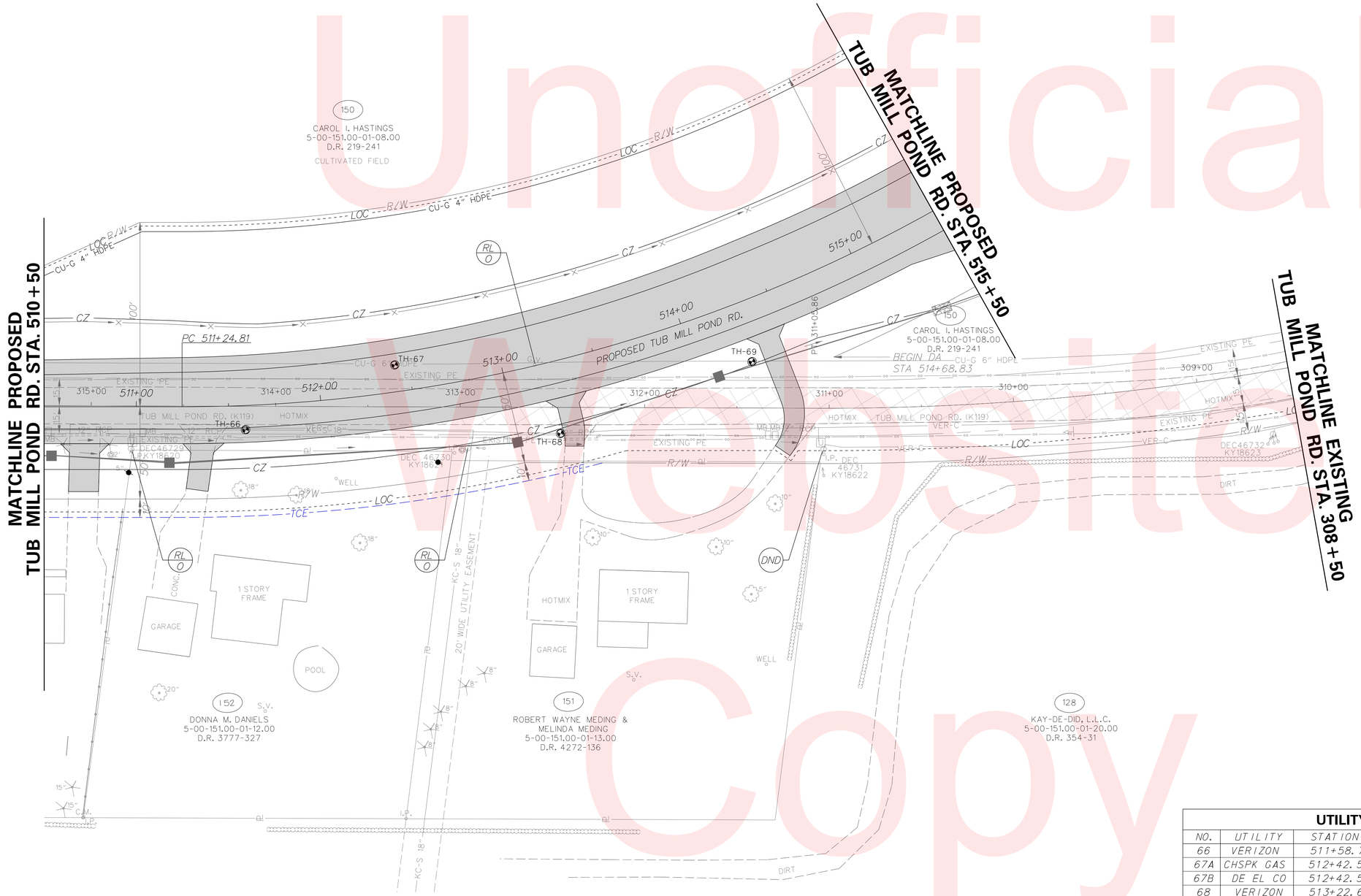

UTILITY TEST HOLE SCHEDULE

NO.	UTILITY	STATION	OFFSET	GRND EL.	COVER	O.D. & MATERIAL
66	VERIZON	511+58.71	13.15' R	28.07'	2.35'	.75"(DIRECT BURY) CBL TEL
67A	CHSPK GAS	512+42.52	14.55' L	27.27'	3.71'	6" PLSTC PIPE GAS
67B	DE EL CO	512+42.52	14.55' L	27.27'	3.80'	3 CBLS EL
68	VERIZON	513+22.69	38.93' R	27.32'	2.53'	.75"(DIRECT BURY) CBL TEL
69	CHSPK GAS	514+28.86	32.54' R	26.31'	4.24'	6" PLSTC PIPE GAS

Unofficial Website Copy

DELAWARE DEPARTMENT OF TRANSPORTATION

ADDENDUMS / REVISIONS

SCALE 0 30 60 90 FEET

SR1, SOUTH FREDERICA GRADE SEPARATED INTERSECTION

CONTRACT	BRIDGE NO.	–
T200812202	DESIGNED BY: LCM	
COUNTY		
KENT	CHECKED BY: SFP	

UTILITY RELOCATION AND LIGHTING PLAN

SHEET NO. 217
TOTAL SHTS. 296

10/16/2015
G:\PROJECTS\06535.00 (DelDOT Agmt. 1376 DOTS Open End)\06535.07 SR1, S. Frederica\CADD Files\XM\ut21st.dgn
10:24:23 AM

NOTES:

1. ALL LIGHTING STANDARD POLE BASES SHALL BE BREAKAWAY TYPE 6.
2. ALL LIGHTING JUNCTION WELLS SHALL BE TYPE 1, UNLESS OTHERWISE NOTED IN THE PLANS.
3. LIGHTING CIRCUITS ARE AS NOTED IN LIGHTING SERVICE SCHEDULE.
4. LOCATION OF CONDUIT MAY BE ADJUSTED IN FIELD TO AVOID EXISTING OR OTHER PROPOSED CONSTRUCTION FEATURES, SUBJECT TO APPROVAL OF THE ENGINEER. ALL CONDUITS AND POLES SHALL BE LOCATED WITHIN EXISTING PROPOSED RIGHT-OF-WAY OR PERMANENT EASEMENT.
5. SEE PRIMARY SERVICE AND LOAD CENTER DETAIL ON LIGHTING DETAILS SHEET FOR SERVICE REQUIREMENTS.

LIGHTING LEGEND

- 250W HPS COBRA-HEAD LUMINARE
- C - CABINET
- J - JUNCTION WELL
- PVC CONDUIT UNDER NEW PAVEMENT OR SODDED TRENCH, 24" MIN. BELOW FINISHED GRADE.
- LST X - LIGHTING STANDARD IDENTIFIER
- LSR X - LIGHTING SERVICE IDENTIFIER

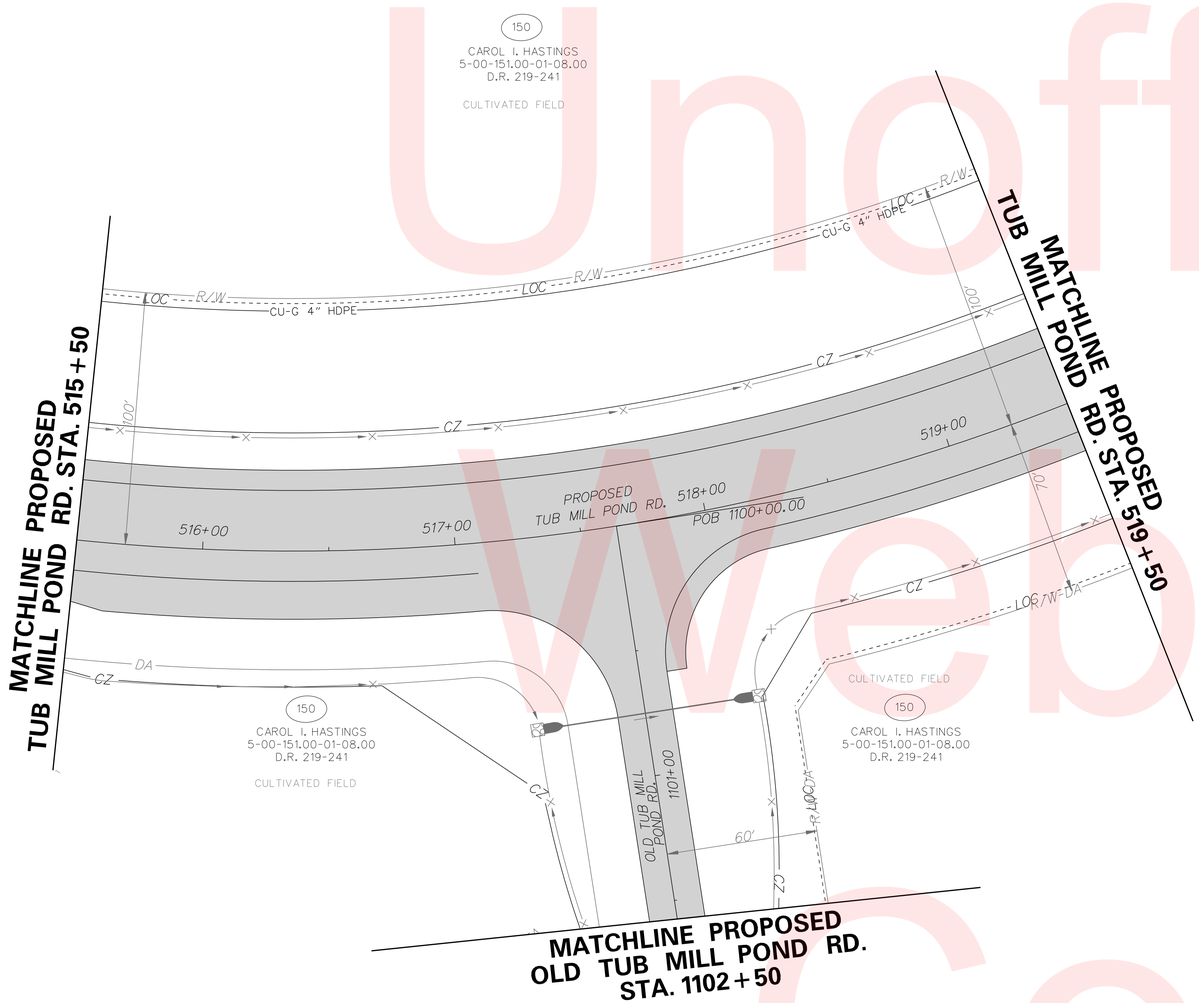

Unofficial Website Copy

DELAWARE DEPARTMENT OF TRANSPORTATION	ADDENDUMS / REVISIONS	SCALE 0 30 60 90 FEET	SR1, SOUTH FREDERICA GRADE SEPARATED INTERSECTION	CONTRACT T200812202	BRIDGE NO. –	UTILITY RELOCATION AND LIGHTING PLAN	SHEET NO. 218
				COUNTY KENT	DESIGNED BY: LCM		TOTAL SHTS. 296
					CHECKED BY: SFP		

10/15/2015
G:\PROJECTS\06535.00 (DelDOT Agmt. 1376 DOTS Open End)\06535.07 SR1, S. Frederica\CADD Files\XM\ut22sf.dgn
11:37:43 AM

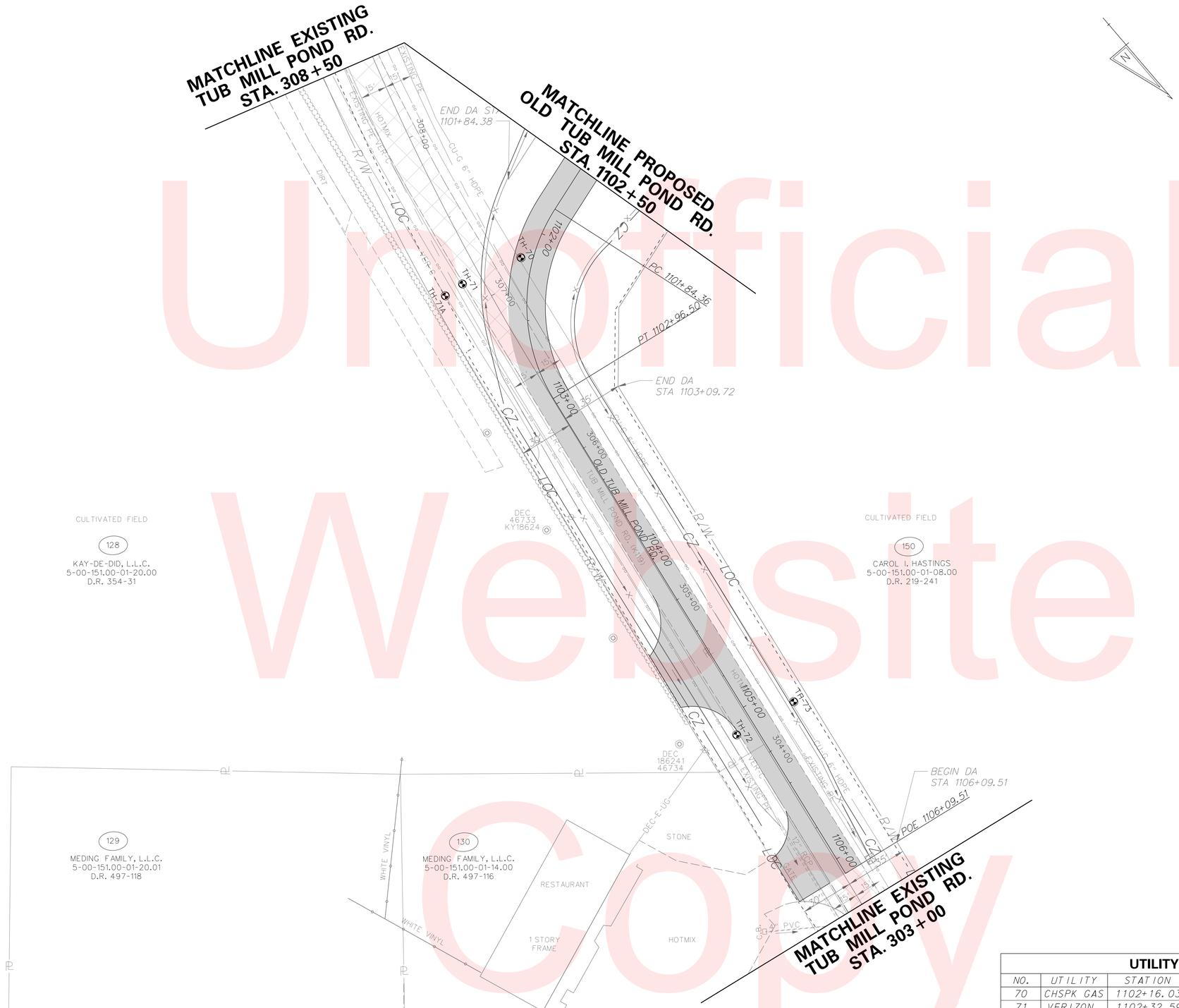

NOTES:

1. ALL LIGHTING STANDARD POLE BASES SHALL BE BREAKAWAY TYPE 6.
2. ALL LIGHTING JUNCTION WELLS SHALL BE TYPE 1, UNLESS OTHERWISE NOTED IN THE PLANS.
3. LIGHTING CIRCUITS ARE AS NOTED IN LIGHTING SERVICE SCHEDULE.
4. LOCATION OF CONDUIT MAY BE ADJUSTED IN FIELD TO AVOID EXISTING OR OTHER PROPOSED CONSTRUCTION FEATURES, SUBJECT TO APPROVAL OF THE ENGINEER. ALL CONDUITS AND POLES SHALL BE LOCATED WITHIN EXISTING PROPOSED RIGHT-OF-WAY OR PERMANENT EASEMENT.
5. SEE PRIMARY SERVICE AND LOAD CENTER DETAIL ON LIGHTING DETAILS SHEET FOR SERVICE REQUIREMENTS.

LIGHTING LEGEND

- 250W HPS COBRA-HEAD LUMINARE
- C - CABINET
- J - JUNCTION WELL
- PVC CONDUIT UNDER NEW PAVEMENT OR SODDED TRENCH, 24" MIN. BELOW FINISHED GRADE.
- LST X - LIGHTING STANDARD IDENTIFIER
- LSR X - LIGHTING SERVICE IDENTIFIER

UTILITY TEST HOLE SCHEDULE

NO.	UTILITY	STATION	OFFSET	GRND EL.	COVER	O.D. & MATERIAL
70	CHSPK GAS	1102+16.03	6.72' R	24.45'	4.24'	6" PLSTC PIPE GAS
71	VERIZON	1102+32.59	36.67' R	24.35'	2.01'	.75"(DIRECT BURY) CBL TEL
71A	VERIZON	1102+37.70	45.87' R	23.89'	1.62'	.25"(DIRECT BURY) CBL TEL
72	VERIZON	1105+11.22	11.27' R	23.02'	2.02'	.75"(DIRECT BURY) CBL TEL
73	CHSPK GAS	1105+12.22	25.78' L	23.42'	3.84'	6" PLSTC PIPE GAS

DELAWARE DEPARTMENT OF TRANSPORTATION

ADDENDUMS / REVISIONS

SCALE 0 30 60 90 FEET

SR1, SOUTH FREDERICA GRADE SEPARATED INTERSECTION

CONTRACT	BRIDGE NO.	–
T200812202	DESIGNED BY: LCM	
COUNTY		
KENT	CHECKED BY: SFP	

UTILITY RELOCATION AND LIGHTING PLAN

SHEET NO. 219
TOTAL SHTS. 296

10/16/2015
G:\PROJECTS\06535.00 (DelDOT Agmt. 1376 DOTS Open End)\06535.07 SR1, S. Frederica\CADD Files\XM\ut23sf.dgn
10:52:43 AM

Unofficial Website Copy

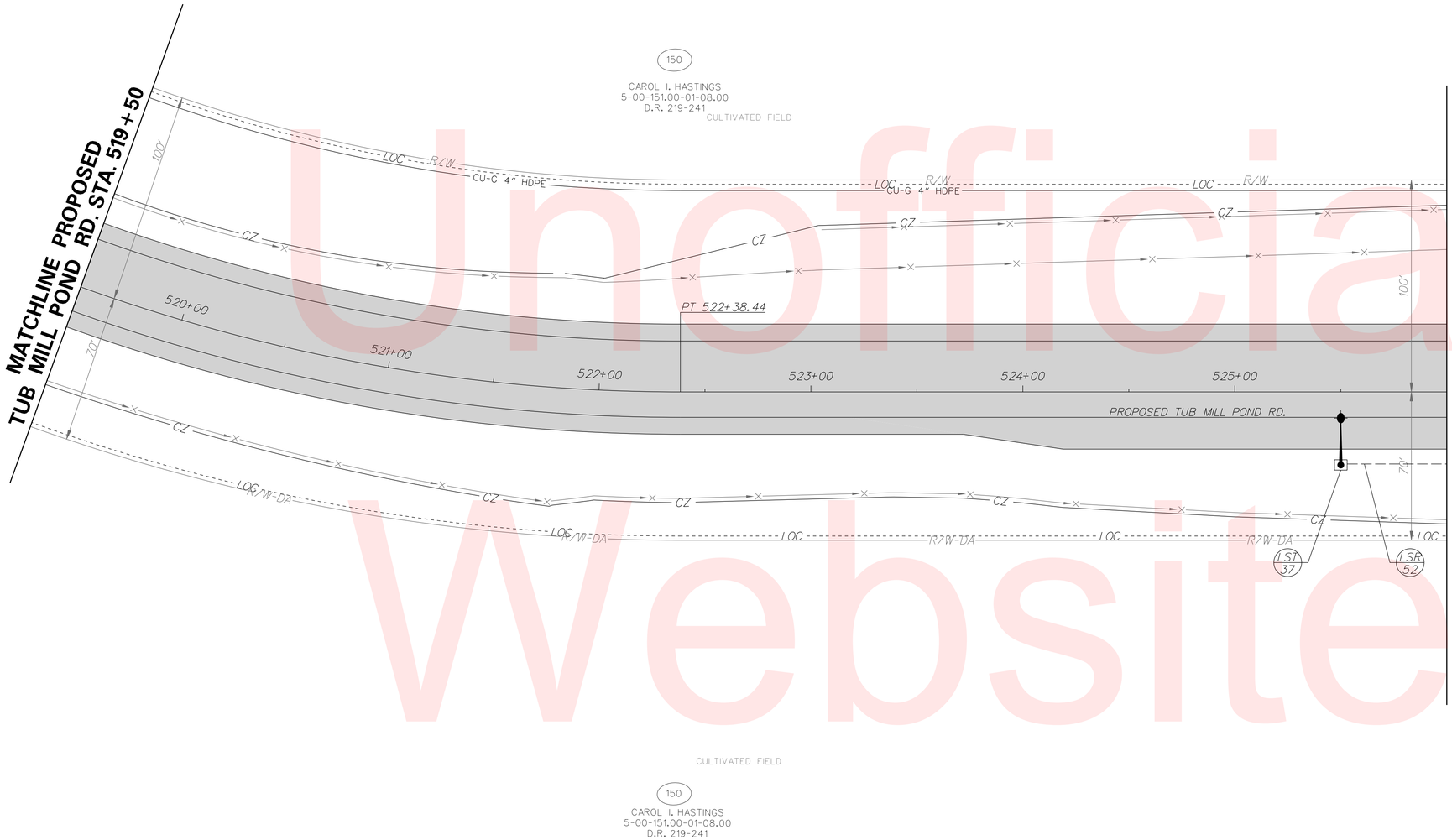

NOTES:

1. ALL LIGHTING STANDARD POLE BASES SHALL BE BREAKAWAY TYPE 6.
2. ALL LIGHTING JUNCTION WELLS SHALL BE TYPE 1, UNLESS OTHERWISE NOTED IN THE PLANS.
3. LIGHTING CIRCUITS ARE AS NOTED IN LIGHTING SERVICE SCHEDULE.
4. LOCATION OF CONDUIT MAY BE ADJUSTED IN FIELD TO AVOID EXISTING OR OTHER PROPOSED CONSTRUCTION FEATURES, SUBJECT TO APPROVAL OF THE ENGINEER. ALL CONDUITS AND POLES SHALL BE LOCATED WITHIN EXISTING PROPOSED RIGHT-OF-WAY OR PERMANENT EASEMENT.
5. SEE PRIMARY SERVICE AND LOAD CENTER DETAIL ON LIGHTING DETAILS SHEET FOR SERVICE REQUIREMENTS.

LIGHTING LEGEND

- 250W HPS COBRA-HEAD LUMINARE
- C - CABINET
- J - JUNCTION WELL
- PVC CONDUIT UNDER NEW PAVEMENT OR SODDED TRENCH, 24" MIN. BELOW FINISHED GRADE.
- LST X - LIGHTING STANDARD IDENTIFIER
- LSR X - LIGHTING SERVICE IDENTIFIER

LIGHTING SERVICE SCHEDULE

SERVICE RUN	DISTANCE (L.F.)	DESCRIPTION	INSTALLATION
52	47	2#6 + 1#6 GND. IN 3" PVC CONDUIT	DIRECT BURIAL

LIGHTING STANDARD SCHEDULE

NO.	CIRCUIT NO.	STATION	OFFSET	ARM	LIGHT STANDARD
37	A-7	525+50	32.0' RT.	15	250 WATT HPS LUMINAIRE

Unofficial Website Copy

DELAWARE DEPARTMENT OF TRANSPORTATION

ADDENDUMS / REVISIONS

SCALE 0 30 60 90 FEET

SR1, SOUTH FREDERICA GRADE SEPARATED INTERSECTION

CONTRACT	BRIDGE NO.	–
T200812202	DESIGNED BY: LCM	
COUNTY		
KENT	CHECKED BY: SFP	

UTILITY RELOCATION AND LIGHTING PLAN

SHEET NO. 220
TOTAL SHTS. 296

10/15/2015
G:\PROJECTS\06535.00 (DelDOT Agmt. 1376 DOTS Open End)\06535.07 SR1, S. Frederica\CADD Files\XM\ut24st.dgn
11:40:11 AM

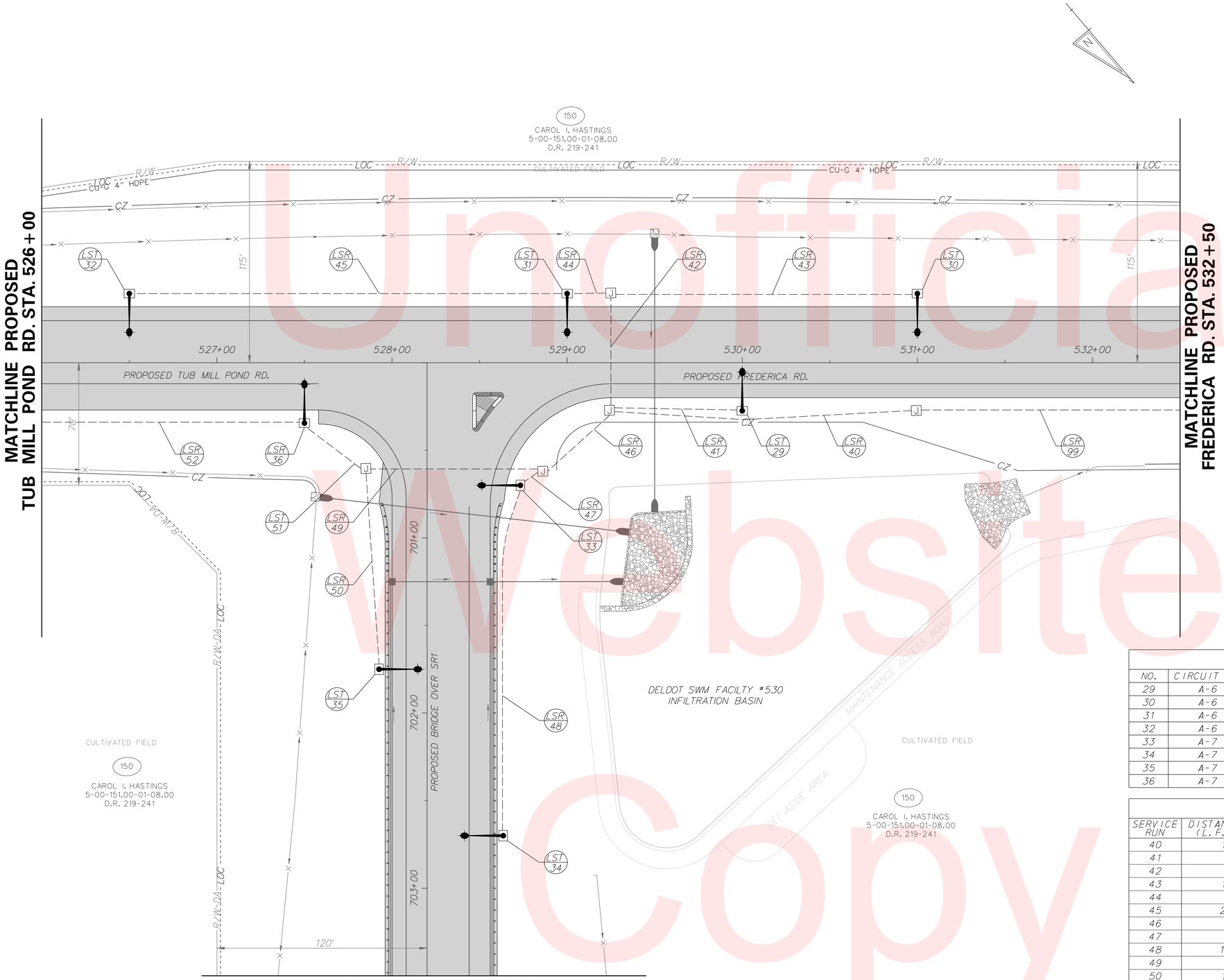

MATCHLINE PROPOSED
BRIDGE OVER SR1
STA. 703+50

NOTES:

1. ALL LIGHTING STANDARD POLE BASES SHALL BE BREAKAWAY TYPE 6.
2. ALL LIGHTING JUNCTION WELLS SHALL BE TYPE 1, UNLESS OTHERWISE NOTED IN THE PLANS.
3. LIGHTING CIRCUITS ARE AS NOTED IN LIGHTING SERVICE SCHEDULE.
4. LOCATION OF CONDUIT MAY BE ADJUSTED IN FIELD TO AVOID EXISTING OR OTHER PROPOSED CONSTRUCTION FEATURES, SUBJECT TO APPROVAL OF THE ENGINEER. ALL CONDUITS AND POLES SHALL BE LOCATED WITHIN EXISTING PROPOSED RIGHT-OF-WAY OR PERMANENT EASEMENT.
5. SEE PRIMARY SERVICE AND LOAD CENTER DETAIL ON LIGHTING DETAILS SHEET FOR SERVICE REQUIREMENTS.

LIGHTING LEGEND

- 250W HPS COBRA-HEAD LUMINARE
- C - CABINET
- J - JUNCTION WELL
- PVC CONDUIT UNDER NEW PAVEMENT OR SODDED TRENCH, 24" MIN. BELOW FINISHED GRADE.
- LST X - LIGHTING STANDARD IDENTIFIER
- LSR X - LIGHTING SERVICE IDENTIFIER

LIGHTING STANDARD SCHEDULE

NO.	CIRCUIT NO.	STATION	OFFSET	ARM	LIGHT STANDARD
29	A-6	530+00	25.0' RT.	15	250 WATT HPS LUMINAIRE
30	A-6	531+00	37.0' LT.	15	250 WATT HPS LUMINAIRE
31	A-6	529+00	37.0' LT.	15	250 WATT HPS LUMINAIRE
32	A-6	526+50	37.0' LT.	15	250 WATT HPS LUMINAIRE
33	A-7	700+70	51.0' LT.	15	250 WATT HPS LUMINAIRE
34	A-7	702+70	41.0' LT.	15	250 WATT HPS LUMINAIRE
35	A-7	701+75	25.0' RT.	15	250 WATT HPS LUMINAIRE
36	A-7	527+50	32.0' RT.	15	250 WATT HPS LUMINAIRE

LIGHTING SERVICE SCHEDULE

SERVICE RUN	DISTANCE (L.F.)	DESCRIPTION	INSTALLATION
40	171	4#2 + 1#6 GND. IN 4" PVC CONDUIT	DIRECT BURIAL
41	71	2#6 + 1#6 GND. IN 3" PVC CONDUIT	DIRECT BURIAL
42	63	2#6 + 1#6 GND. IN 3" PVC CONDUIT	DIRECT BURIAL
43	171	2#6 + 1#6 GND. IN 3" PVC CONDUIT	DIRECT BURIAL
44	20	2#6 + 1#6 GND. IN 3" PVC CONDUIT	DIRECT BURIAL
45	245	2#6 + 1#6 GND. IN 3" PVC CONDUIT	DIRECT BURIAL
46	49	2#6 + 1#6 GND. IN 3" PVC CONDUIT	DIRECT BURIAL
47	10	2#6 + 1#6 GND. IN 3" PVC CONDUIT	DIRECT BURIAL
48	197	2#6 + 1#6 GND. IN 3" PVC CONDUIT	DIRECT BURIAL
49	97	2#6 + 1#6 GND. IN 4" PVC CONDUIT	DIRECT BURIAL
50	111	2#6 + 1#6 GND. IN 3" PVC CONDUIT	DIRECT BURIAL
51	40	2#6 + 1#6 GND. IN 3" PVC CONDUIT	DIRECT BURIAL
52	148	2#6 + 1#6 GND. IN 3" PVC CONDUIT	DIRECT BURIAL
99	148	4#2 + 1#6 GND. IN 4" PVC CONDUIT	DIRECT BURIAL

Unofficial Website Copy

DELAWARE DEPARTMENT OF TRANSPORTATION

ADDENDUMS / REVISIONS

SCALE 0 30 60 90 FEET

SR1, SOUTH FREDERICA GRADE SEPARATED INTERSECTION

CONTRACT	BRIDGE NO.	–
T200812202	DESIGNED BY: LCM	
COUNTY		
KENT	CHECKED BY: SFP	

UTILITY RELOCATION AND LIGHTING PLAN

SHEET NO. 221
TOTAL SHTS. 296

10/15/2015
G:\PROJECTS\06535.00 (DelDOT Agmt. 1376 DOTS Open End)\06535.07 SR1, S. Frederica\CADD Files\XMout25sf.dgn
11:41:18 AM

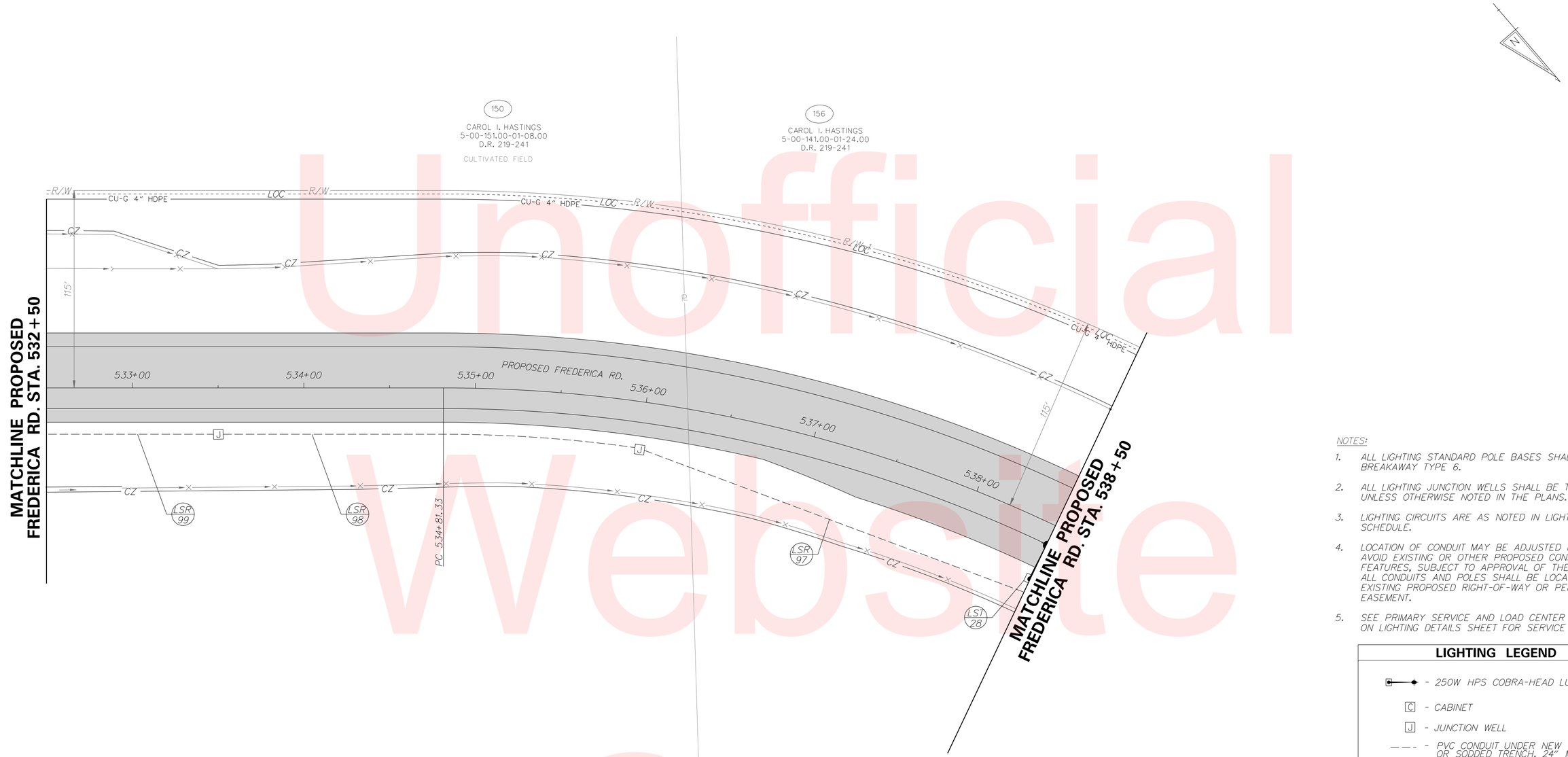

Unofficial Website Copy

NOTES:

1. ALL LIGHTING STANDARD POLE BASES SHALL BE BREAKAWAY TYPE 6.
2. ALL LIGHTING JUNCTION WELLS SHALL BE TYPE 1, UNLESS OTHERWISE NOTED IN THE PLANS.
3. LIGHTING CIRCUITS ARE AS NOTED IN LIGHTING SERVICE SCHEDULE.
4. LOCATION OF CONDUIT MAY BE ADJUSTED IN FIELD TO AVOID EXISTING OR OTHER PROPOSED CONSTRUCTION FEATURES, SUBJECT TO APPROVAL OF THE ENGINEER. ALL CONDUITS AND POLES SHALL BE LOCATED WITHIN EXISTING PROPOSED RIGHT-OF-WAY OR PERMANENT EASEMENT.
5. SEE PRIMARY SERVICE AND LOAD CENTER DETAIL ON LIGHTING DETAILS SHEET FOR SERVICE REQUIREMENTS.

LIGHTING LEGEND

- 250W HPS COBRA-HEAD LUMINARE
- C - CABINET
- J - JUNCTION WELL
- - - - PVC CONDUIT UNDER NEW PAVEMENT OR SODDED TRENCH, 24" MIN. BELOW FINISHED GRADE.
- LST X - LIGHTING STANDARD IDENTIFIER
- LSR X - LIGHTING SERVICE IDENTIFIER

LIGHTING STANDARD SCHEDULE

NO.	CIRCUIT NO.	STATION	OFFSET	ARM	LIGHT STANDARD
28	A-5	538+50	32.0' RT.	15	250 WATT HPS LUMINAIRE

LIGHTING SERVICE SCHEDULE

SERVICE RUN	DISTANCE (L.F.)	DESCRIPTION	INSTALLATION
97	238	4#2 + 1#6 GND. IN 4" PVC CONDUIT	DIRECT BURIAL
98	242	4#2 + 1#6 GND. IN 4" PVC CONDUIT	DIRECT BURIAL
99	97	4#2 + 1#6 GND. IN 4" PVC CONDUIT	DIRECT BURIAL

DELAWARE DEPARTMENT OF TRANSPORTATION

ADDENDUMS / REVISIONS

SCALE 0 30 60 90 FEET

SR1, SOUTH FREDERICA GRADE SEPARATED INTERSECTION

CONTRACT	BRIDGE NO.	–
T200812202	DESIGNED BY: LCM	
COUNTY		
KENT	CHECKED BY: SFP	

UTILITY RELOCATION AND LIGHTING PLAN

SHEET NO. 222
TOTAL SHTS. 296

10/15/2015
G:\PROJECTS\06535.00 (DelDOT Agmt. 1376 DOTS Open End)\06535.07 SR1, S. Frederica\CADD Files\XWlut26sf.dgn
11:44:17 AM

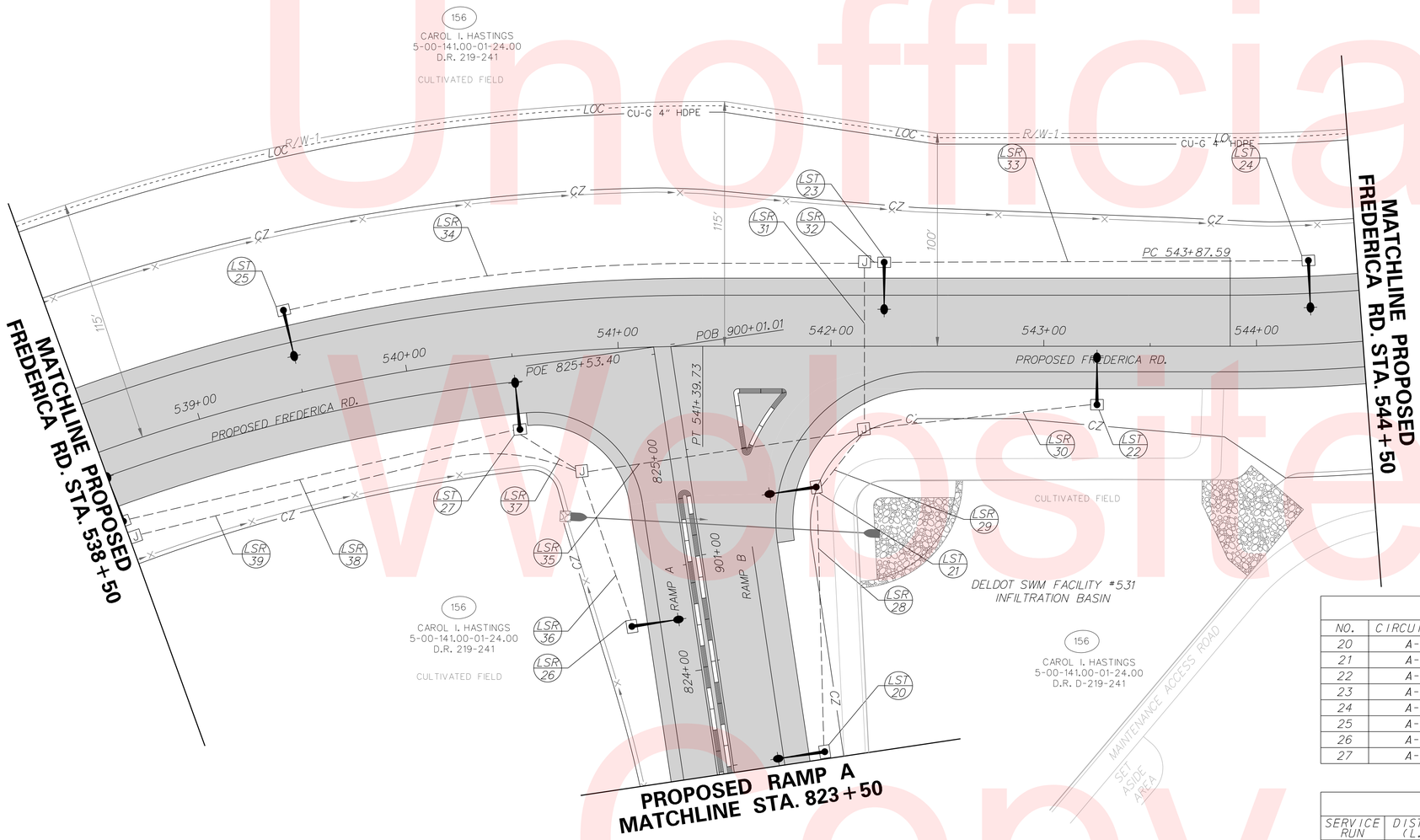

NOTES:

1. ALL LIGHTING STANDARD POLE BASES SHALL BE BREAKAWAY TYPE 6.
2. ALL LIGHTING JUNCTION WELLS SHALL BE TYPE 1, UNLESS OTHERWISE NOTED IN THE PLANS.
3. LIGHTING CIRCUITS ARE AS NOTED IN LIGHTING SERVICE SCHEDULE.
4. LOCATION OF CONDUIT MAY BE ADJUSTED IN FIELD TO AVOID EXISTING OR OTHER PROPOSED CONSTRUCTION FEATURES, SUBJECT TO APPROVAL OF THE ENGINEER. ALL CONDUITS AND POLES SHALL BE LOCATED WITHIN EXISTING PROPOSED RIGHT-OF-WAY OR PERMANENT EASEMENT.
5. SEE PRIMARY SERVICE AND LOAD CENTER DETAIL ON LIGHTING DETAILS SHEET FOR SERVICE REQUIREMENTS.

LIGHTING LEGEND

- 250W HPS COBRA-HEAD LUMINARE
- C - CABINET
- J - JUNCTION WELL
- PVC CONDUIT UNDER NEW PAVEMENT OR SODDED TRENCH, 24" MIN. BELOW FINISHED GRADE.
- LST X - LIGHTING STANDARD IDENTIFIER
- LSR X - LIGHTING SERVICE IDENTIFIER

LIGHTING STANDARD SCHEDULE

NO.	CIRCUIT NO.	STATION	OFFSET	ARM	LIGHT STANDARD
20	A-4	902+00	41.0' LT.	15	250 WATT HPS LUMINAIRE
21	A-4	900+75	55.0' LT.	15	250 WATT HPS LUMINAIRE
22	A-4	543+25	25.0' RT.	15	250 WATT HPS LUMINAIRE
23	A-5	542+25	37.0' LT.	15	250 WATT HPS LUMINAIRE
24	A-5	544+25	37.0' LT.	15	250 WATT HPS LUMINAIRE
25	A-5	539+50	37.0' LT.	15	250 WATT HPS LUMINAIRE
26	A-5	824+25	27.0' LT.	15	250 WATT HPS LUMINAIRE
27	A-5	540+50	32.0' RT.	15	250 WATT HPS LUMINAIRE

LIGHTING SERVICE SCHEDULE

SERVICE RUN	DISTANCE (L.F.)	DESCRIPTION	INSTALLATION
28	120	4#2, 4#6 + 1#6 GND. IN 3"PVC CONDUIT	DIRECT BURIAL
29	32	4#2, 4#6 + 1#6 GND. IN 3"PVC CONDUIT	DIRECT BURIAL
30	106	2#6 + 1#6 GND. IN 3" PVC CONDUIT	DIRECT BURIAL
31	74	2#6 + 1#6 GND. IN 4" PVC CONDUIT	DIRECT BURIAL
32	5	2#6 + 1#6 GND. IN 3" PVC CONDUIT	DIRECT BURIAL
33	195	2#6 + 1#6 GND. IN 3" PVC CONDUIT	DIRECT BURIAL
34	270	2#6 + 1#6 GND. IN 3" PVC CONDUIT	DIRECT BURIAL
35	130	4#2, 2#6+ 1#6 GND. IN 4" PVC CONDUIT	DIRECT BURIAL
36	73	2#6 + 1#6 GND. IN 3" PVC CONDUIT	DIRECT BURIAL
37	32	2#6 + 1#6 GND. IN 3" PVC CONDUIT	DIRECT BURIAL
38	187	2#6 + 1#6 GND. IN 3" PVC CONDUIT	DIRECT BURIAL
39	211	4#2 + 1#6 GND. IN 4" PVC CONDUIT	DIRECT BURIAL

Unofficial Website Copy

DELAWARE DEPARTMENT OF TRANSPORTATION

ADDENDUMS / REVISIONS

SCALE 0 30 60 90 FEET

SR1, SOUTH FREDERICA GRADE SEPARATED INTERSECTION

CONTRACT	BRIDGE NO.	-
T200812202	DESIGNED BY: LCM	
COUNTY		
KENT	CHECKED BY: SFP	

UTILITY RELOCATION AND LIGHTING PLAN

SHEET NO. 223
TOTAL SHTS. 296

10/16/2015
G:\PROJECTS\06535.00 (DelDOT Agmt. 1376 DOTS Open End)\06535.07 SR1, S. Frederica\CADD Files\XM\ut27sf.dgn
10:54:25 AM

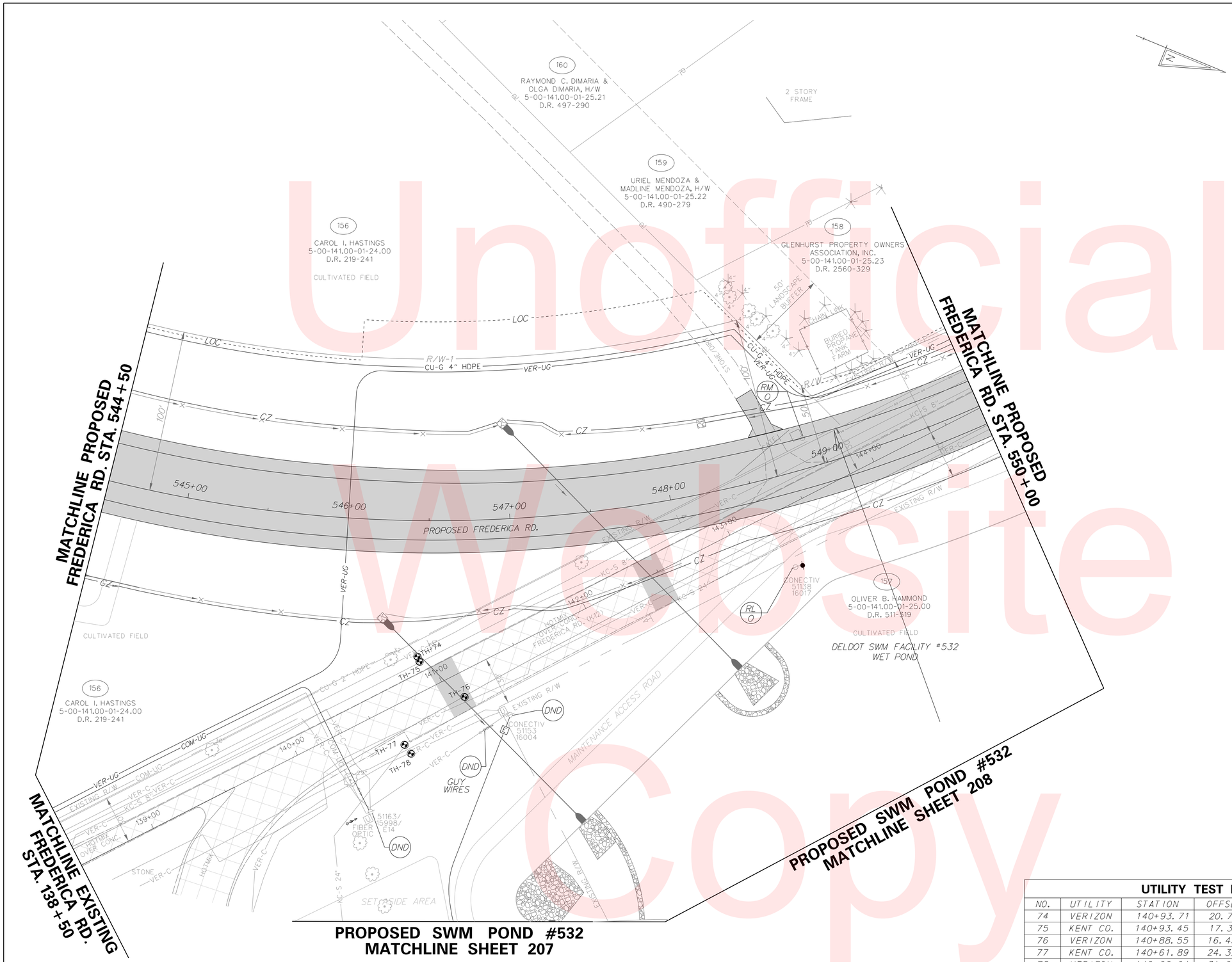

NOTES:

1. ALL LIGHTING STANDARD POLE BASES SHALL BE BREAKAWAY TYPE 6.
2. ALL LIGHTING JUNCTION WELLS SHALL BE TYPE 1, UNLESS OTHERWISE NOTED IN THE PLANS.
3. LIGHTING CIRCUITS ARE AS NOTED IN LIGHTING SERVICE SCHEDULE.
4. LOCATION OF CONDUIT MAY BE ADJUSTED IN FIELD TO AVOID EXISTING OR OTHER PROPOSED CONSTRUCTION FEATURES, SUBJECT TO APPROVAL OF THE ENGINEER. ALL CONDUITS AND POLES SHALL BE LOCATED WITHIN EXISTING PROPOSED RIGHT-OF-WAY OR PERMANENT EASEMENT.
5. SEE PRIMARY SERVICE AND LOAD CENTER DETAIL ON LIGHTING DETAILS SHEET FOR SERVICE REQUIREMENTS.

LIGHTING LEGEND

- 250W HPS COBRA-HEAD LUMINARE
- C - CABINET
- J - JUNCTION WELL
- PVC CONDUIT UNDER NEW PAVEMENT OR SODDED TRENCH, 24" MIN. BELOW FINISHED GRADE.
- LST X - LIGHTING STANDARD IDENTIFIER
- LSR X - LIGHTING SERVICE IDENTIFIER

UTILITY TEST HOLE SCHEDULE

NO.	UTILITY	STATION	OFFSET	GRND EL.	COVER	O.D. & MATERIAL
74	VERIZON	140+93.71	20.71' L	18.28'	2.63'	.75"(DIRECT BURY) CBL TEL
75	KENT CO.	140+93.45	17.34' L	18.27'	3.60'	8" CONC ENC FM SAN
76	VERIZON	140+88.55	16.43' R	18.26'	2.72'	2"(DIRECT BURY) CBL TEL
77	KENT CO.	140+61.89	24.32' R	17.94'	2.89'	24" MTL FM SAN
78	VERIZON	140+62.94	31.00' R	17.78'	2.00'	.75"(DIRECT BURY) CBL TEL

Unofficial Website Copy

DELAWARE DEPARTMENT OF TRANSPORTATION

ADDENDUMS / REVISIONS

SCALE 0 30 60 90 FEET

SR1, SOUTH FREDERICA GRADE SEPARATED INTERSECTION

CONTRACT T200812202 | BRIDGE NO. – | COUNTY KENT | DESIGNED BY: LCM | CHECKED BY: SFP

UTILITY RELOCATION AND LIGHTING PLAN

SHEET NO. 224 | TOTAL SHTS. 296

10/16/2015 11:11:54 AM G:\PROJECTS\06535.00 (DelDOT Agmt. 1376 DOTS Open End)\06535.07 SR1, S. Frederica\CADD Files\XW\u128sf.dgn

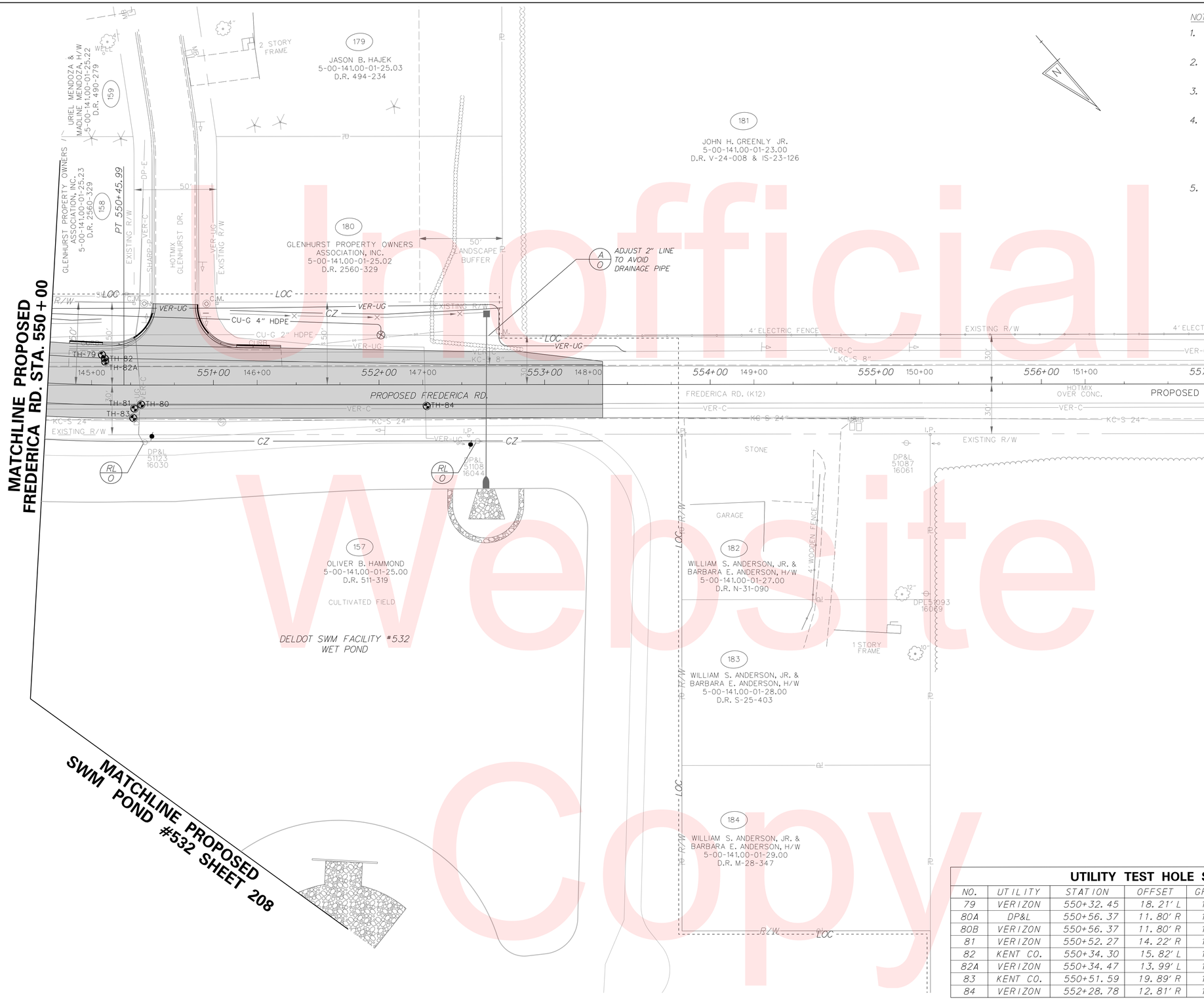

NOTES:

1. ALL LIGHTING STANDARD POLE BASES SHALL BE BREAKAWAY TYPE 6.
2. ALL LIGHTING JUNCTION WELLS SHALL BE TYPE 1, UNLESS OTHERWISE NOTED IN THE PLANS.
3. LIGHTING CIRCUITS ARE AS NOTED IN LIGHTING SERVICE SCHEDULE.
4. LOCATION OF CONDUIT MAY BE ADJUSTED IN FIELD TO AVOID EXISTING OR OTHER PROPOSED CONSTRUCTION FEATURES, SUBJECT TO APPROVAL OF THE ENGINEER. ALL CONDUITS AND POLES SHALL BE LOCATED WITHIN EXISTING PROPOSED RIGHT-OF-WAY OR PERMANENT EASEMENT.
5. SEE PRIMARY SERVICE AND LOAD CENTER DETAIL ON LIGHTING DETAILS SHEET FOR SERVICE REQUIREMENTS.

LIGHTING LEGEND

- 250W HPS COBRA-HEAD LUMINARE
- C - CABINET
- J - JUNCTION WELL
- PVC CONDUIT UNDER NEW PAVEMENT OR SODDED TRENCH, 24" MIN. BELOW FINISHED GRADE.
- LST X - LIGHTING STANDARD IDENTIFIER
- LSR X - LIGHTING SERVICE IDENTIFIER

UTILITY TEST HOLE SCHEDULE

NO.	UTILITY	STATION	OFFSET	GRND EL.	COVER	O.D. & MATERIAL
79	VERIZON	550+32.45	18.21' L	17.96'	2.99'	1"(DIRECT BURY) CBL TEL
80A	DP&L	550+56.37	11.80' R	18.30'	4.39'	3" PLSTC CON ELEC
80B	VERIZON	550+56.37	11.80' R	18.30'	4.39'	1"(DIRECT BURY) CBL TEL
81	VERIZON	550+52.27	14.22' R	18.24'	2.28'	2"(DIRECT BURY) CBL TEL
82	KENT CO.	550+34.30	15.82' L	18.03'	3.74'	8" MTL FM SAN
82A	VERIZON	550+34.47	13.99' L	18.09'	2.42'	8"(DIRECT BURY) CBL TEL
83	KENT CO.	550+51.59	19.89' R	18.06'	3.84'	24" MTL FM SAN
84	VERIZON	552+28.78	12.81' R	18.19'	3.14'	.75"(DIRECT BURY) CBL TEL

Unofficial Website Copy

DELAWARE DEPARTMENT OF TRANSPORTATION

ADDENDUMS / REVISIONS

SCALE 0 30 60 90 FEET

SR1, SOUTH FREDERICA GRADE SEPARATED INTERSECTION

CONTRACT	BRIDGE NO.	-
T200812202	DESIGNED BY: LCM	
COUNTY		
KENT	CHECKED BY: SFP	

UTILITY RELOCATION AND LIGHTING PLAN

SHEET NO. 225

TOTAL SHTS. 296

10/16/2015
G:\PROJECTS\06535.00 (DelDOT Agmt. 1376 DOTS Open End)\06535.07 SR1, S. Frederica\CADD Files\XM\ut29sf.dgn
11:16:23 AM

SIGNING & STRIPING GENERAL NOTES

1) THE CONTRACTOR SHALL BE GOVERNED BY THE STANDARDS AND REQUIREMENTS OF THE FOLLOWING PUBLICATIONS, EXCEPT AS MODIFIED BY THE SPECIAL PROVISIONS OF THIS CONTRACT OR THROUGH WRITTEN APPROVAL BY THE ENGINEER.

DELDOT	-"MANUAL ON UNIFORM TRAFFIC CONTROL DEVICES", 2011 EDITION AND SUBSEQUENT REVISIONS (M.U.T.C.D.)
A.A.S.H.T.O	-STANDARD SPECIFICATIONS FOR STRUCTURAL SUPPORTS FOR HIGHWAY SIGNS, LUMINAIRES AND TRAFFIC SIGNALS - 4TH EDITION, 2001-2006 INTERIM EDITION AND SUBSEQUENT PUBLICATIONS
F.H.W.A.	-"STANDARD HIGHWAY SIGNS", 2002 EDITION AND SUBSEQUENT REVISIONS.

2) ALL MESSAGE CHARACTERS FOR THE OVERHEAD SIGNS AND GROUND MOUNT SIGNS SHALL BE SERIES "Emod", UNLESS NOTED OTHERWISE.

3) SIGNS ARE LOCATED ON THE PLANS BY STATIONING. ANY CHANGES IN THE LOCATION OF SIGNS AS SHOWN ON PLANS SHALL HAVE THE PRIOR APPROVAL OF THE ENGINEER.

4) EVEN THOUGH THE PLANS SHOW THE SIGN PANELS WITH SQUARE CORNERS, THE SIGN PANELS SHALL BE CONSTRUCTED WITH CORNER RADII TO MEET SIGN BORDERS.

5) ALL SIGNS ERECTED THAT ARE VISIBLE TO THE TRAVELING PUBLIC WHICH CONTAIN MESSAGES FOR PORTIONS OF THE PROPOSED ROADWAYS THAT ARE NOT OPEN TO THE TRAVELING PUBLIC SHALL BE SECURELY COVERED SO THAT NO PORTION OF THE MESSAGE IS VISIBLE. THE METHOD AND MATERIAL FOR COVERING THE SIGN, MAINTAINING THE COVER AND REMOVING SHALL BE INCIDENTAL TO THE PRICE BID FOR ITEM 749500 - SIGN PANEL. THE SIGN COVER MATERIAL SHALL BECOME THE PROPERTY OF THE CONTRACTOR AT THE COMPLETION OF THE CONTRACT.

6) ALL MATERIAL AND LABOR TO CORRECT ANY DAMAGE TO EMBANKMENTS OR SEEDING, ETC. CAUSED BY THE INSTALLATION OR REMOVAL OF OVERHEAD, CANTILEVER OR GROUND MOUNTED SIGNS SHALL BE FURNISHED AND INSTALLED BY THE CONTRACTOR AS APPROVED BY THE ENGINEER, WITH ALL COSTS INCIDENTAL TO THE ITEM THAT WAS BEING INSTALLED.

7) THE CONTRACTOR SHALL LAYOUT THE LOCATION OF ALL PAVEMENT MARKINGS, INCLUDING INDIVIDUAL SKIP MARKS, FOR APPROVAL BY THE ENGINEER PRIOR TO BEGINNING ANY WORK ASSOCIATED WITH INSTALLING THE MARKINGS.

8) THE EXISTING SIGNS THAT CONTAIN MESSAGES CONTRARY TO THE FINAL ROADWAY CONFIGURATION SHALL BE IMMEDIATELY COVERED OR REMOVED AFTER OPENING THAT PHASE TO TRAFFIC. THE METHOD AND MATERIAL FOR COVERING THE SIGN, MAINTAINING THE COVER, AND REMOVING SHALL BE INCIDENTAL TO THE PRICE BID UNDER ITEM 211000. THE SIGN COVER MATERIAL SHALL BECOME THE PROPERTY OF THE CONTRACTOR AT THE COMPLETION OF THE CONTRACT.

9) FOR SPECIFIED LOCATIONS WHERE EXISTING SIGN PANELS ARE TO BE RELOCATED, THE CONTRACTOR SHALL BE RESPONSIBLE FOR FURNISHING AND INSTALLING ALL NEW MATERIAL AND HARDWARE TO CONNECT THE EXISTING SIGN TO THE NEW GROUND MOUNT STRUCTURE.

10) ALL MATERIAL DEEMED SALVAGEABLE BY THE ENGINEER FROM THE REMOVAL OF EXISTING GROUND MOUNT SIGNS, SUPPORTS AND FOUNDATIONS SHALL BE DELIVERED TO THE DELDOT SIGN SHOP. ALL OTHER MATERIALS SHALL BE PROPERLY DISPOSED OF. ALL COSTS SHALL BE INCIDENTAL TO ITEM *211000.

11) THE CONTRACTOR SHALL NOTIFY MISS UTILITY PRIOR TO INSTALLING THE GROUND MOUNT SIGN FOUNDATIONS. ONCE ALL UTILITIES ARE DESIGNATED THE CONTRACTOR SHALL NOTIFY THE ENGINEER FOR FINAL APPROVAL AND LOCATION OF THE GROUND MOUNT SIGN FOUNDATIONS. ALL COST ARE INCIDENTAL TO THE CONTRACT.

12) THE CONTRACTOR SHALL IDENTIFY ALL EXISTING AND PROPOSED UNDERDRAIN OUTLET PIPES PRIOR TO INSTALLING THE GROUND MOUNT SIGN FOUNDATIONS. PER THE DIRECTION OF THE ENGINEER THE GROUND MOUNT SIGN FOUNDATIONS SHALL NOT CONFLICT WITH THE EXISTING UNDERDRAIN. ALL COST ARE INCIDENTAL TO THE CONTRACT.

13) THE CONTRACTOR SHALL INSTALL RUMBLE STRIPS THROUGHOUT THE PROJECT LIMITS AS PER THE CONSTRUCTION DETAILS IN THE PLANS AND AS DIRECTED IN THE FIELD BY THE ENGINEER. IT SHOULD BE NOTED THAT RUMBLE STRIPS SHALL BE PROVIDED ALONG EACH SIDE OF SR1 NORTHBOUND AND SOUTHBOUND WITHIN THE PROJECT LIMITS.

14) THE CONTRACTOR SHALL INSTALL RAISED PAVEMENT MARKINGS THROUGHOUT THE PROJECT LIMITS AS PER THE DELAWARE MUTCD (PAGES 3B-48 TO 3B-58) AND AS DIRECTED IN THE FIELD BY THE ENGINEER. IT SHOULD BE NOTED THAT RPM'S SHALL BE PROVIDED ON SR1, TUB MILL POND ROAD, FREDERICA ROAD, MILFORD NECK ROAD AND ALL RAMPS IN ACCORANCE WITH THE STANDARDS.

15) PLACE VERTICAL DELINEATORS AT ON/OFF RAMPS AS SHOWN IN PROJECT DETAILS.

16) SIGN PANELS, SUPPORTS, HARDWARE, ETC. DESIGNATED AS TYPES GM OR C ON PLAN SHEET 260 ARE TO BE FURNISHED AND INSTALLED BY THE CONTRACTOR. SIGN TYPES GG ON PLAN SHEET 260 AND ALL SIGNS DETAILED ON PLANS SHEETS 261 AND 262, INCLUDING MOUNTING POSTS AND HARDWARE, WILL BE SUPPLIED TO THE CONTRACTOR BY DELDOT.

17) ALL PROPOSED GG's, 'D3-1' AND 'W16-8a' SIGN LEGENDS WILL USE HIGHWAY GOTHIC FONT.

ITMS GENERAL NOTES

1) ALL TRENCHED 4" CONDUIT FOR ITMS SHALL BE SCHEDULE 80 PVC.

2) ALL BORED 4" CONDUIT FOR ITMS SHALL BE SDR-13.5 HDPE.

3) CONDUITS FOR FIBER OPTIC CABLES SHALL HAVE FOUR 1" INNER DUCTS WHICH SHALL BE SUPPLIED BY THE FIBER CONTRACTOR.

4) JUNCTION WELLS HAVING STEEL FRAMES AND GRATES SHALL BE BONDED AND GROUNDED AS SHOWN ON DELDOT STANDARD CONSTRUCTION DETAIL SHEET T-2. COSTS INCIDENTAL TO THE JUNCTION WELL BEING GROUNDED.

Unofficial Website Copy

ITMS GENERAL NOTES

1. AT THE PROPOSED OFFSET OF 28' FROM THE FIRST DETECTION LANE, THE RECOMMENDED MOUNTING HEIGHT OF THE RADAR DETECTOR IS 27' OR AS SPECIFIED BY MANUFACTURER.

CONDUIT RUN SCHEDULE

CO#	# OF CONDUITS	SIZE	LENGTH	B/T/O/P	AMOUNT AND TYPE OF CABLE/ WIRE
1A	1	2"	10'	T	(1) 2/#8 U.F.w/GROUND
1B	1	2"	20'	T/P	(1) 2/#8 U.F.w/GROUND
F1	1	3"	10'	T	(1) 12 CNT SM
F2	6	4"	10'	T	(1) 12 CNT SM, VMS CABLE
F3	1	3"	10'	T	VMS CABLE
F4	1	4"	140'	B	(2) 12 CNT SM
F5	1	4"	190'	T	(1) 144 CNT SM, (1) 48 CNT SM
F6	1	4"	455'	T	(1) 144 CNT SM, (1) 48 CNT SM

* DENOTES EXISTING B-BORE T-TRENCH O-OPEN P-ATTACH TO POLE SM-SINGLE MODE

POLE SCHEDULE

POLE #	POLE TYPE	HEIGHT	MATERIAL
1	RTMS	40'	STEEL

NOTE: POLE SHALL BE INSTALLED BY OTHERS.

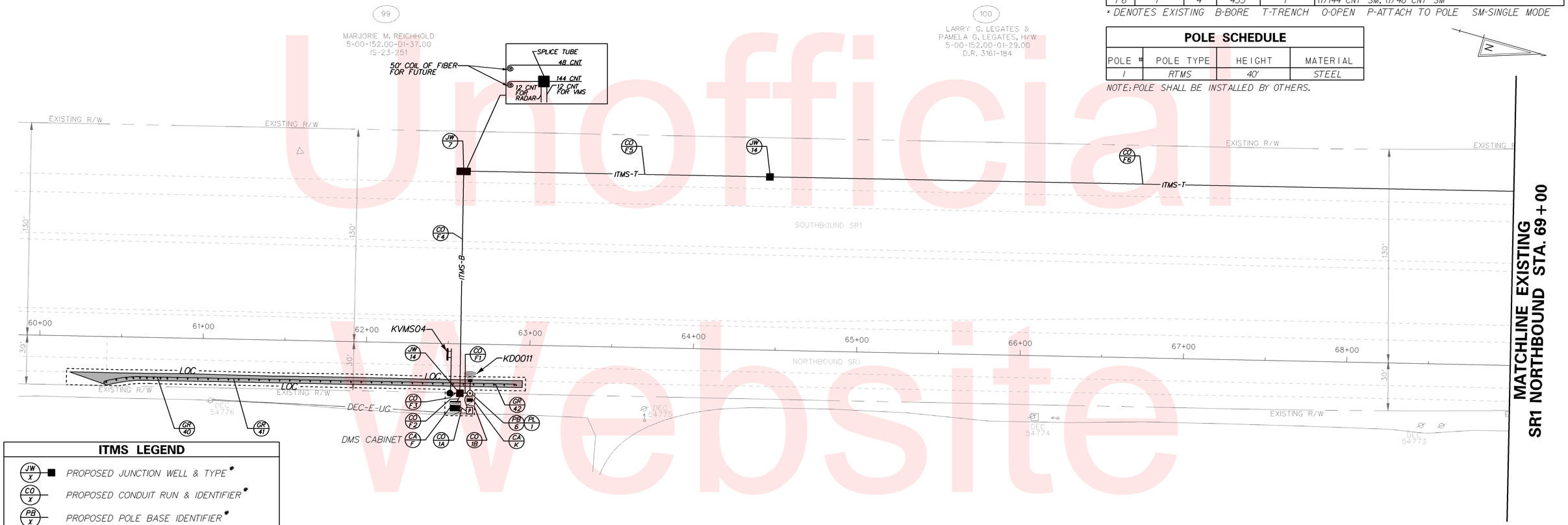

ITMS LEGEND

- JW X — PROPOSED JUNCTION WELL & TYPE *
- CO X — PROPOSED CONDUIT RUN & IDENTIFIER *
- PB X — PROPOSED POLE BASE IDENTIFIER *
- PL X — PROPOSED POLE IDENTIFIER
- PROPOSED POLE BASE *
- PROPOSED RADAR DETECTION
- EXISTING RADAR DETECTION
- 6'x6' SYSTEM LOOP
- CA X — PROPOSED ITMS CABINET & TYPE
- EXISTING SIGNAL CABINET (TYPE P) OR (TYPE M) AS NOTED
- P — PROPOSED SERVICE PEDESTAL
- HH X — PROPOSED HAND HOLE IDENTIFIER
- PROPOSED ROAD WEATHER INFORMATION SYSTEM (RWIS) PUCK SENSOR
- EXISTING ROAD WEATHER INFORMATION SYSTEM (RWIS) PUCK SENSOR
- ATR — AUTOMATIC TRAFFIC RECORDER (ATR)
- ITMS-T — 4" MULTIDUCT, PVC (TRENCH) WITH * (4) 1" RIBBED INNER DUCT
- ITMS-B — 4" MULTIDUCT, SDR-13.5 HDPE (BORE), * WITH (4) 1" RIBBED INNER DUCT
- VARIABLE MESSAGE SIGN WITH * BUTTERFLY CANTILEVER
- PROPOSED VIDEO MONITORING CAMERA (CCTV) ON 75' POLE WITH LOWERING DEVICE

ITMS LEGEND NOTES

* INDICATES ITMS TO BE PERFORMED BY THE CONTRACTOR. WORK ON THE VARIABLE MESSAGE SIGN IS LIMITED TO THE FOUNDATION AND SUPPORT STRUCTURE.

ALL OTHER ITEMS LISTED IN THE LEGEND WILL BE PERFORMED BY OTHERS. THIS INCLUDES ALL INNER-DUCT, WIRING WITHIN CONDUITS, AND THE VARIABLE MESSAGE SIGNS.

GUARDRAIL SCHEDULE

NO.	ITEM DESCRIPTION / TYPE	BEGIN STA.	OFFSET	LENGTH
40	END TREATMENT ATTENUATOR, TYPE 2-31	60+41.00	22.50	50.0'
41	GALV. STEEL BEAM GUARDRAIL, TYPE 1-31	60+91.00	22.50	187.5'
42	END ANCHORAGE	62+78.50	22.50	12.5'

SIGNING LEGEND

1	REMOVE EXISTING SIGN
2	EXISTING SIGN TO REMAIN
3	PLACE NEW SIGN
4	RENEW EXISTING SIGN
5	REPOSITION EXISTING SIGN

PAVEMENT MARKINGS LEGEND

SYMBOL	ITEM	QUANTITY
A	5" SOLID WHITE EPOXY RESIN PAVEMENT STRIPING (ITEM 748548)	0 LF
B	5" SOLID YELLOW EPOXY RESIN PAVEMENT STRIPING (ITEM 748548)	0 LF
C	5" SOLID DOUBLE YELLOW EPOXY RESIN PAVEMENT STRIPING (ITEM 748548)	0 LF
D	5" DASHED WHITE EPOXY RESIN PAVEMENT STRIPING, 2' LINE & 6' GAP (ITEM 748548)	0 LF
E	5" DASHED WHITE EPOXY RESIN PAVEMENT STRIPING, 10' LINE & 30' GAP (ITEM 748548)	0 LF
F	5" DASHED YELLOW EPOXY RESIN PAVEMENT STRIPING, 10' LINE & 30' GAP (ITEM 748548)	0 LF
G	16" SOLID WHITE ALKYD THERMOPLASTIC PAVEMENT STRIPING (ITEM 748015)	0 SF
H	24" SOLID WHITE ALKYD THERMOPLASTIC PAVEMENT STRIPING (ITEM 748015)	0 SF
J	WHITE ALKYD THERMOPLASTIC PAVEMENT SYMBOL (ITEM 748015)	0 SF
K	10" SOLID WHITE EPOXY RESIN PAVEMENT STRIPING (ITEM 748549)	0 LF
L	10" SOLID YELLOW EPOXY RESIN PAVEMENT STRIPING (ITEM 748549)	0 LF
M	10" DASHED WHITE EPOXY RESIN PAVEMENT STRIPING, 3' LINE & 9' GAP (ITEM 748549)	0 LF
N	WHITE RETROREFLECTIVE PREFORMED PATTERNED MARKINGS, BIKE SYMBOL (ITEM 748553)	0 SF

DELAWARE
DEPARTMENT OF TRANSPORTATION

ADDENDUMS / REVISIONS

SCALE 0 30 60 90 FEET

SR1, SOUTH FREDERICA
GRADE SEPARATED INTERSECTION

CONTRACT	BRIDGE NO.	–
T200812202	DESIGNED BY: LCM	
COUNTY		
KENT	CHECKED BY: SFP/BAM	

SIGNING, STRIPING, AND ITMS PLAN

SHEET NO. 227
TOTAL SHTS. 296

5/24/2013
C:\PROJECTS\06535.00 (DelDOT Agmt. 1376 DOTS Open End)\06535.07 SR1, S. Frederica\CADD Files\XM\ss01_1st.dgn
08-35340

Unofficial Website Copy

ITMS LEGEND

- JW X — PROPOSED JUNCTION WELL & TYPE *
- CO X — PROPOSED CONDUIT RUN & IDENTIFIER *
- PB X — PROPOSED POLE BASE IDENTIFIER *
- PL X — PROPOSED POLE IDENTIFIER
- PROPOSED POLE BASE *
- PROPOSED RADAR DETECTION
- EXISTING RADAR DETECTION
- 6'x6' SYSTEM LOOP
- CA X — PROPOSED ITMS CABINET & TYPE
- EXISTING SIGNAL CABINET (TYPE P) OR (TYPE M) AS NOTED
- P — PROPOSED SERVICE PEDESTAL
- HH X — PROPOSED HAND HOLE IDENTIFIER
- PROPOSED ROAD WEATHER INFORMATION SYSTEM (RWIS) PUCK SENSOR
- EXISTING ROAD WEATHER INFORMATION SYSTEM (RWIS) PUCK SENSOR
- ATR — AUTOMATIC TRAFFIC RECORDER (ATR)
- ITMS-T — 4" MULTIDUCT, PVC (TRENCH) WITH * (4) 1" RIBBED INNER DUCT
- ITMS-B — 4" MULTIDUCT, SDR-13.5 HDPE (BORE), * WITH (4) 1" RIBBED INNER DUCT
- VARIABLE MESSAGE SIGN WITH * BUTTERFLY CANTILEVER
- PROPOSED VIDEO MONITORING CAMERA (CCTV) ON 75' POLE WITH LOWERING DEVICE

ITMS LEGEND NOTES

* INDICATES ITMS TO BE PERFORMED BY THE CONTRACTOR. WORK ON THE VARIABLE MESSAGE SIGN IS LIMITED TO THE FOUNDATION AND SUPPORT STRUCTURE.

ALL OTHER ITEMS LISTED IN THE LEGEND WILL BE PERFORMED BY OTHERS. THIS INCLUDES ALL INNER-DUCT, WIRING WITHIN CONDUITS, AND THE VARIABLE MESSAGE SIGNS.

PAVEMENT MARKINGS LEGEND

SYMBOL	ITEM	QUANTITY
A	5" SOLID WHITE EPOXY RESIN PAVEMENT STRIPING (ITEM 748548)	0 LF
B	5" SOLID YELLOW EPOXY RESIN PAVEMENT STRIPING (ITEM 748548)	0 LF
C	5" SOLID DOUBLE YELLOW EPOXY RESIN PAVEMENT STRIPING (ITEM 748548)	0 LF
D	5" DASHED WHITE EPOXY RESIN PAVEMENT STRIPING, 2' LINE & 6' GAP (ITEM 748548)	0 LF
E	5" DASHED WHITE EPOXY RESIN PAVEMENT STRIPING, 10' LINE & 30' GAP (ITEM 748548)	0 LF
F	5" DASHED YELLOW EPOXY RESIN PAVEMENT STRIPING, 10' LINE & 30' GAP (ITEM 748548)	0 LF
G	16" SOLID WHITE ALKYD THERMOPLASTIC PAVEMENT STRIPING (ITEM 748015)	0 SF
H	24" SOLID WHITE ALKYD THERMOPLASTIC PAVEMENT STRIPING (ITEM 748015)	0 SF
J	WHITE ALKYD THERMOPLASTIC PAVEMENT SYMBOL (ITEM 748015)	0 SF
K	10" SOLID WHITE EPOXY RESIN PAVEMENT STRIPING (ITEM 748549)	0 LF
L	10" SOLID YELLOW EPOXY RESIN PAVEMENT STRIPING (ITEM 748549)	0 LF
M	10" DASHED WHITE EPOXY RESIN PAVEMENT STRIPING, 3' LINE & 9' GAP (ITEM 748549)	0 LF
N	WHITE RETROREFLECTIVE PREFORMED PATTERNED MARKINGS, BIKE SYMBOL (ITEM 748553)	0 SF

SIGNING LEGEND

1. REMOVE EXISTING SIGN
2. EXISTING SIGN TO REMAIN
3. PLACE NEW SIGN
4. RENEW EXISTING SIGN
5. REPOSITION EXISTING SIGN

CONDUIT RUN SCHEDULE

CO#	# OF CONDUITS	SIZE	LENGTH	B/T/O/P	AMOUNT AND TYPE OF CABLE/ WIRE
F6	1	4"	145'	T	(1) 144 CNT SM, (1) 48 CNT SM
F7	1	4"	600'	T	(1) 144 CNT SM, (1) 48 CNT SM

* DENOTES EXISTING B-BORE T-TRENCH O-OPEN P-ATTACH TO POLE SM-SINGLE MODE

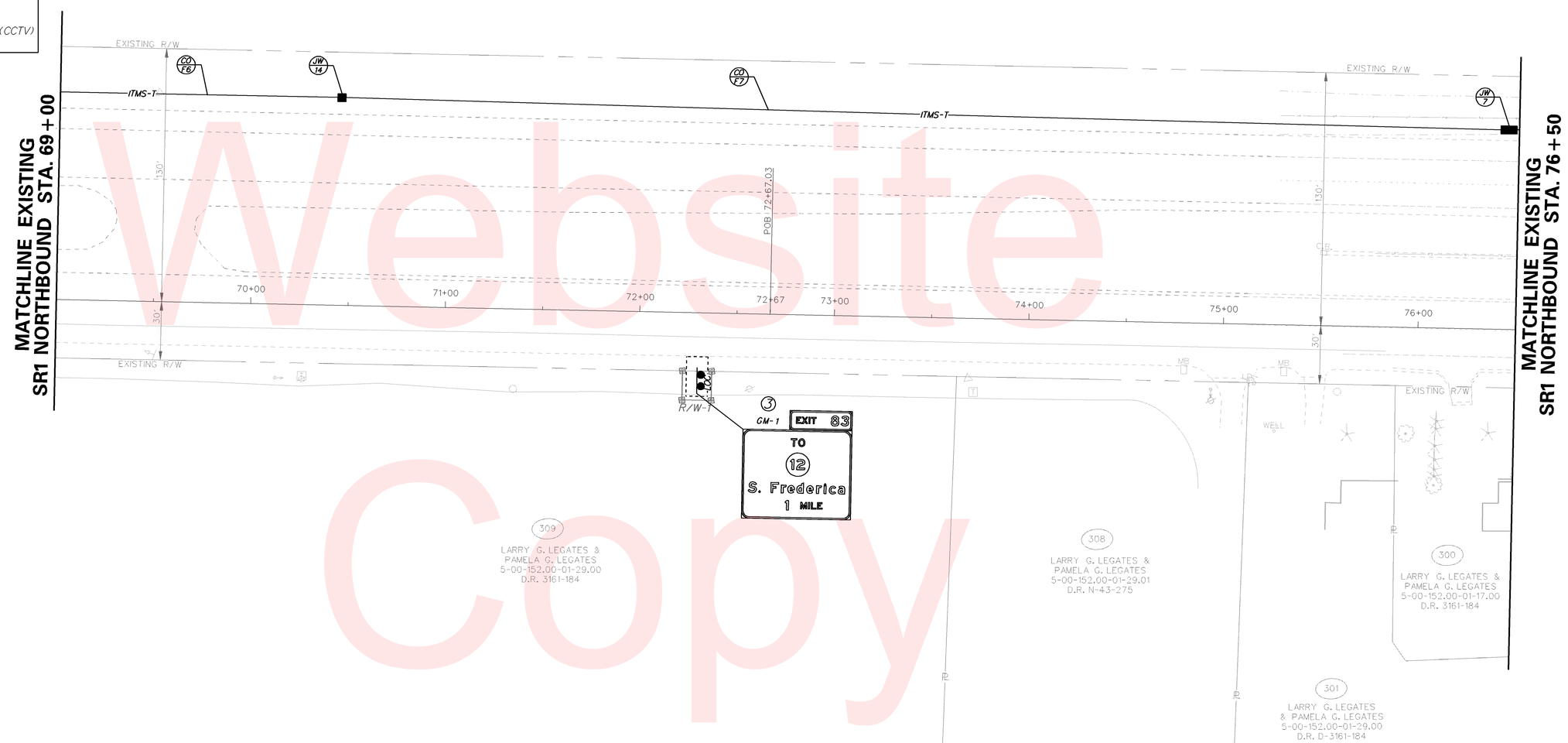

Unofficial Website Copy

DELAWARE DEPARTMENT OF TRANSPORTATION	ADDENDUMS / REVISIONS	SCALE 0 30 60 90 FEET	SR1, SOUTH FREDERICA GRADE SEPARATED INTERSECTION	CONTRACT T200812202	BRIDGE NO. –	SIGNING, STRIPING, AND ITMS PLAN	SHEET NO. 228
				COUNTY KENT	DESIGNED BY: LCM		TOTAL SHTS. 296
					CHECKED BY: SFP/BAM		

5/24/2013
G:\PROJECTS\06535.00 (DelDOT Agmt. 1376 DOTS Open End)\06535.07 SR1, S. Frederica\CADD Files\XM\ss01_2st.dgn
08:34:07

ITMS LEGEND

- JW X — PROPOSED JUNCTION WELL & TYPE*
- CO X — PROPOSED CONDUIT RUN & IDENTIFIER*
- PB X — PROPOSED POLE BASE IDENTIFIER*
- PL X — PROPOSED POLE IDENTIFIER
- PROPOSED POLE BASE*
- PROPOSED RADAR DETECTION
- EXISTING RADAR DETECTION
- 6'x6' SYSTEM LOOP
- CA X — PROPOSED ITMS CABINET & TYPE
- EXISTING SIGNAL CABINET (TYPE P) OR (TYPE M) AS NOTED
- P — PROPOSED SERVICE PEDESTAL
- HH X — PROPOSED HAND HOLE IDENTIFIER
- PROPOSED ROAD WEATHER INFORMATION SYSTEM (RWIS) PUCK SENSOR
- EXISTING ROAD WEATHER INFORMATION SYSTEM (RWIS) PUCK SENSOR
- ATR — AUTOMATIC TRAFFIC RECORDER (ATR)
- ITMS-T — 4" MULTIDUCT, PVC (TRENCH) WITH* (4) 1" RIBBED INNER DUCT
- ITMS-B — 4" MULTIDUCT, SDR-13.5 HDPE (BORE),* WITH (4) 1" RIBBED INNER DUCT
- VARIABLE MESSAGE SIGN WITH* BUTTERFLY CANTILEVER
- PROPOSED VIDEO MONITORING CAMERA (CCTV) ON 75' POLE WITH LOWERING DEVICE

ITMS LEGEND NOTES

* INDICATES ITMS TO BE PERFORMED BY THE CONTRACTOR. WORK ON THE VARIABLE MESSAGE SIGN IS LIMITED TO THE FOUNDATION AND SUPPORT STRUCTURE.

ALL OTHER ITEMS LISTED IN THE LEGEND WILL BE PERFORMED BY OTHERS. THIS INCLUDES ALL INNER-DUCT, WIRING WITHIN CONDUITS, AND THE VARIABLE MESSAGE SIGNS.

PAVEMENT MARKINGS LEGEND

SYMBOL	ITEM	QUANTITY
A	5" SOLID WHITE EPOXY RESIN PAVEMENT STRIPING (ITEM 748548)	0 LF
B	5" SOLID YELLOW EPOXY RESIN PAVEMENT STRIPING (ITEM 748548)	0 LF
C	5" SOLID DOUBLE YELLOW EPOXY RESIN PAVEMENT STRIPING (ITEM 748548)	0 LF
D	5" DASHED WHITE EPOXY RESIN PAVEMENT STRIPING, 2' LINE & 6' GAP (ITEM 748548)	0 LF
E	5" DASHED WHITE EPOXY RESIN PAVEMENT STRIPING, 10' LINE & 30' GAP (ITEM 748548)	0 LF
F	5" DASHED YELLOW EPOXY RESIN PAVEMENT STRIPING, 10' LINE & 30' GAP (ITEM 748548)	0 LF
G	16" SOLID WHITE ALKYD THERMOPLASTIC PAVEMENT STRIPING (ITEM 748015)	0 SF
H	24" SOLID WHITE ALKYD THERMOPLASTIC PAVEMENT STRIPING (ITEM 748015)	0 SF
J	WHITE ALKYD THERMOPLASTIC PAVEMENT SYMBOL (ITEM 748015)	0 SF
K	10" SOLID WHITE EPOXY RESIN PAVEMENT STRIPING (ITEM 748549)	0 LF
L	10" SOLID YELLOW EPOXY RESIN PAVEMENT STRIPING (ITEM 748549)	0 LF
M	10" DASHED WHITE EPOXY RESIN PAVEMENT STRIPING, 3' LINE & 9' GAP (ITEM 748549)	0 LF
N	WHITE RETROREFLECTIVE PREFORMED PATTERNED MARKINGS, BIKE SYMBOL (ITEM 748553)	0 SF

SIGNING LEGEND

1. REMOVE EXISTING SIGN
2. EXISTING SIGN TO REMAIN
3. PLACE NEW SIGN
4. RENEW EXISTING SIGN
5. REPOSITION EXISTING SIGN

CONDUIT RUN SCHEDULE

CO#	# OF CONDUITS	SIZE	LENGTH	B/T/O/P	AMOUNT AND TYPE OF CABLE/ WIRE
F8	1	4"	600'	T	(1) 144 CNT SM, (1) 48 CNT SM
F9	1	4"	145'	T	(1) 144 CNT SM, (1) 48 CNT SM

* DENOTES EXISTING B-BORE T-TRENCH O-OPEN P-ATTACH TO POLE SM-SINGLE MODE

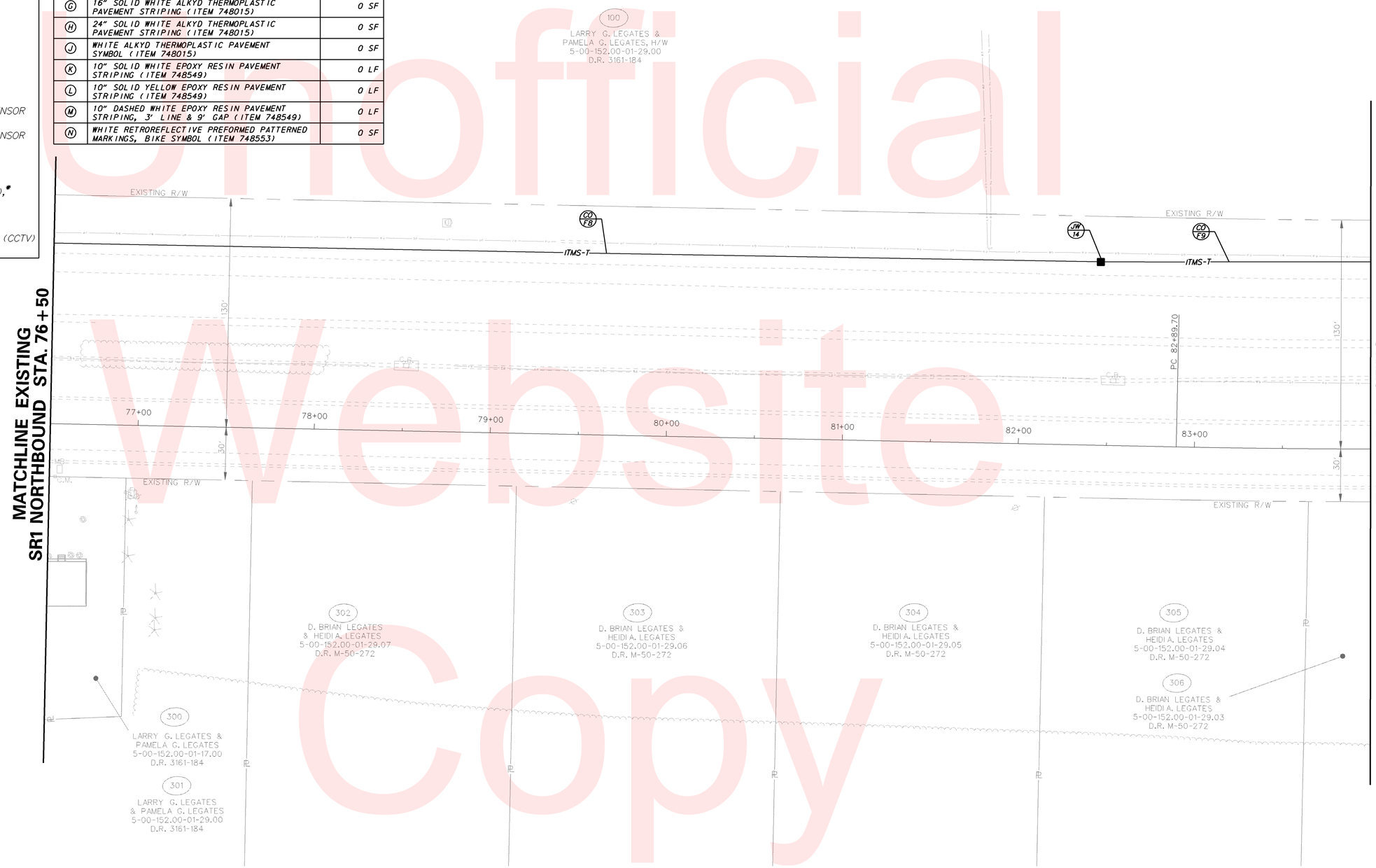

Unofficial Website Copy

DELAWARE DEPARTMENT OF TRANSPORTATION	ADDENDUMS / REVISIONS	SCALE 0 30 60 90 FEET	SR1, SOUTH FREDERICA GRADE SEPARATED INTERSECTION	CONTRACT T200812202	BRIDGE NO. –	SIGNING, STRIPING, AND ITMS PLAN	SHEET NO. 229
				COUNTY KENT	DESIGNED BY: LCM		TOTAL SHTS. 296
					CHECKED BY: SFP/BAM		

5/24/2013
09:14 PROJECTS\06535.00 (DelDOT Agmt. 1376 DOTS Open End)\06535.07 SR1, S. Frederica\CADD Files\XM\ss01_3sf.dgn

PAVEMENT MARKINGS LEGEND

SYMBOL	ITEM	QUANTITY
A	5" SOLID WHITE EPOXY RESIN PAVEMENT STRIPING (ITEM 748548)	0 LF
B	5" SOLID YELLOW EPOXY RESIN PAVEMENT STRIPING (ITEM 748548)	0 LF
C	5" SOLID DOUBLE YELLOW EPOXY RESIN PAVEMENT STRIPING (ITEM 748548)	0 LF
D	5" DASHED WHITE EPOXY RESIN PAVEMENT STRIPING, 2' LINE & 6' GAP (ITEM 748548)	0 LF
E	5" DASHED WHITE EPOXY RESIN PAVEMENT STRIPING, 10' LINE & 30' GAP (ITEM 748548)	0 LF
F	5" DASHED YELLOW EPOXY RESIN PAVEMENT STRIPING, 10' LINE & 30' GAP (ITEM 748548)	0 LF
G	16" SOLID WHITE ALKYD THERMOPLASTIC PAVEMENT STRIPING (ITEM 748015)	0 SF
H	24" SOLID WHITE ALKYD THERMOPLASTIC PAVEMENT STRIPING (ITEM 748015)	0 SF
J	WHITE ALKYD THERMOPLASTIC PAVEMENT SYMBOL (ITEM 748015)	0 SF
K	10" SOLID WHITE EPOXY RESIN PAVEMENT STRIPING (ITEM 748549)	0 LF
L	10" SOLID YELLOW EPOXY RESIN PAVEMENT STRIPING (ITEM 748549)	0 LF
M	10" DASHED WHITE EPOXY RESIN PAVEMENT STRIPING, 3' LINE & 9' GAP (ITEM 748549)	0 LF
N	WHITE RETROREFLECTIVE PREFORMED PATTERNED MARKINGS, BIKE SYMBOL (ITEM 748553)	0 SF

SIGNING LEGEND

1	REMOVE EXISTING SIGN
2	EXISTING SIGN TO REMAIN
3	PLACE NEW SIGN
4	RENEW EXISTING SIGN
5	REPOSITION EXISTING SIGN

CONDUIT RUN SCHEDULE

CO#	# OF CONDUITS	SIZE	LENGTH	B/T/O/P	AMOUNT AND TYPE OF CABLE/ WIRE
F9	1	4"	455'	B/T	(1) 144 CNT SM, (1) 48 CNT SM
F10	1	4"	130'	B	(1) 12 CNT SM
F11	1	4"	290'	B/T	(1) 144 CNT SM, (1) 48 CNT SM

* DENOTES EXISTING B-BORE T-TRENCH O-OPEN P-ATTACH TO POLE SM-SINGLE MODE

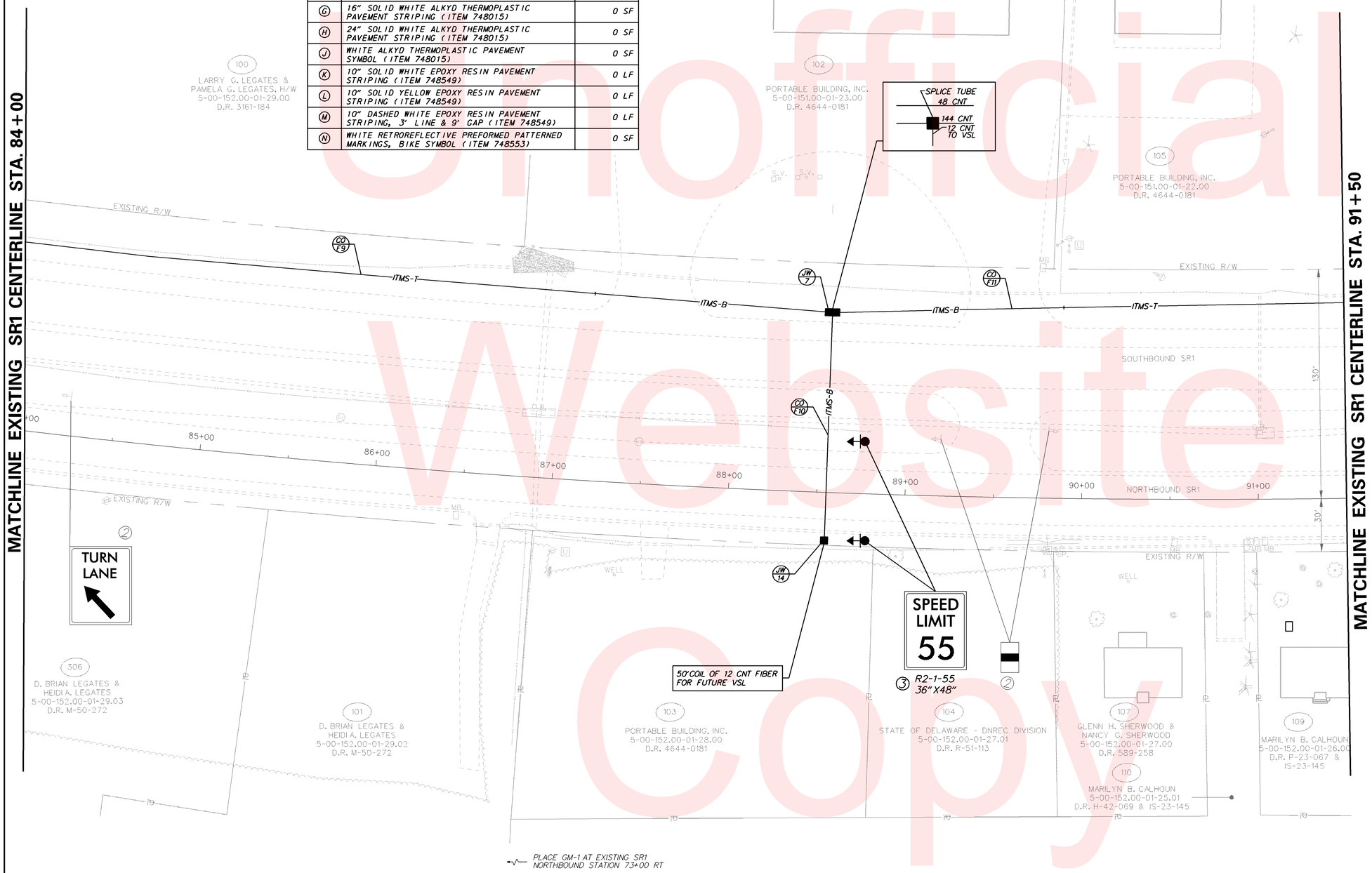

ITMS LEGEND NOTES

* INDICATES ITMS TO BE PERFORMED BY THE CONTRACTOR. WORK ON THE VARIABLE MESSAGE SIGN IS LIMITED TO THE FOUNDATION AND SUPPORT STRUCTURE.

ALL OTHER ITEMS LISTED IN THE LEGEND WILL BE PERFORMED BY OTHERS. THIS INCLUDES ALL INNER-DUCT, WIRING WITHIN CONDUITS, AND THE VARIABLE MESSAGE SIGNS.

ITMS LEGEND

- JW X — PROPOSED JUNCTION WELL & TYPE *
- CO X — PROPOSED CONDUIT RUN & IDENTIFIER *
- PB X — PROPOSED POLE BASE IDENTIFIER *
- PL X — PROPOSED POLE IDENTIFIER
- PROPOSED POLE BASE *
- PROPOSED RADAR DETECTION
- EXISTING RADAR DETECTION
- 6'x6' SYSTEM LOOP
- CA X — PROPOSED ITMS CABINET & TYPE
- EXISTING SIGNAL CABINET (TYPE P) OR (TYPE M) AS NOTED
- P — PROPOSED SERVICE PEDESTAL
- HH X — PROPOSED HAND HOLE IDENTIFIER
- PROPOSED ROAD WEATHER INFORMATION SYSTEM (RWIS) PUCK SENSOR
- EXISTING ROAD WEATHER INFORMATION SYSTEM (RWIS) PUCK SENSOR
- ATR — AUTOMATIC TRAFFIC RECORDER (ATR)
- ITMS-T — 4" MULTIDUCT, PVC (TRENCH) WITH * (4) 1" RIBBED INNER DUCT
- ITMS-B — 4" MULTIDUCT, SDR-13.5 HDPE (BORE), * WITH (4) 1" RIBBED INNER DUCT
- VARIABLE MESSAGE SIGN WITH * BUTTERFLY CANTILEVER
- PROPOSED VIDEO MONITORING CAMERA (CCTV) ON 75' POLE WITH LOWERING DEVICE

Unofficial Website Copy

DELAWARE DEPARTMENT OF TRANSPORTATION

ADDENDUMS / REVISIONS

SCALE 0 30 60 90 FEET

SR1, SOUTH FREDERICA GRADE SEPARATED INTERSECTION

CONTRACT	BRIDGE NO.	–
T200812202	DESIGNED BY: LCM	
COUNTY		
KENT	CHECKED BY: SFP/BAM	

SIGNING, STRIPING, AND ITMS PLAN

SHEET NO. 230
TOTAL SHTS. 296

5/24/2013
G:\PROJECTS\06535.00 (DelDOT Agmt. 1376 DOTS Open End)\06535.07 SR1, S. Frederica\CADD Files\XM\ss01sf1.dgn
09146-06

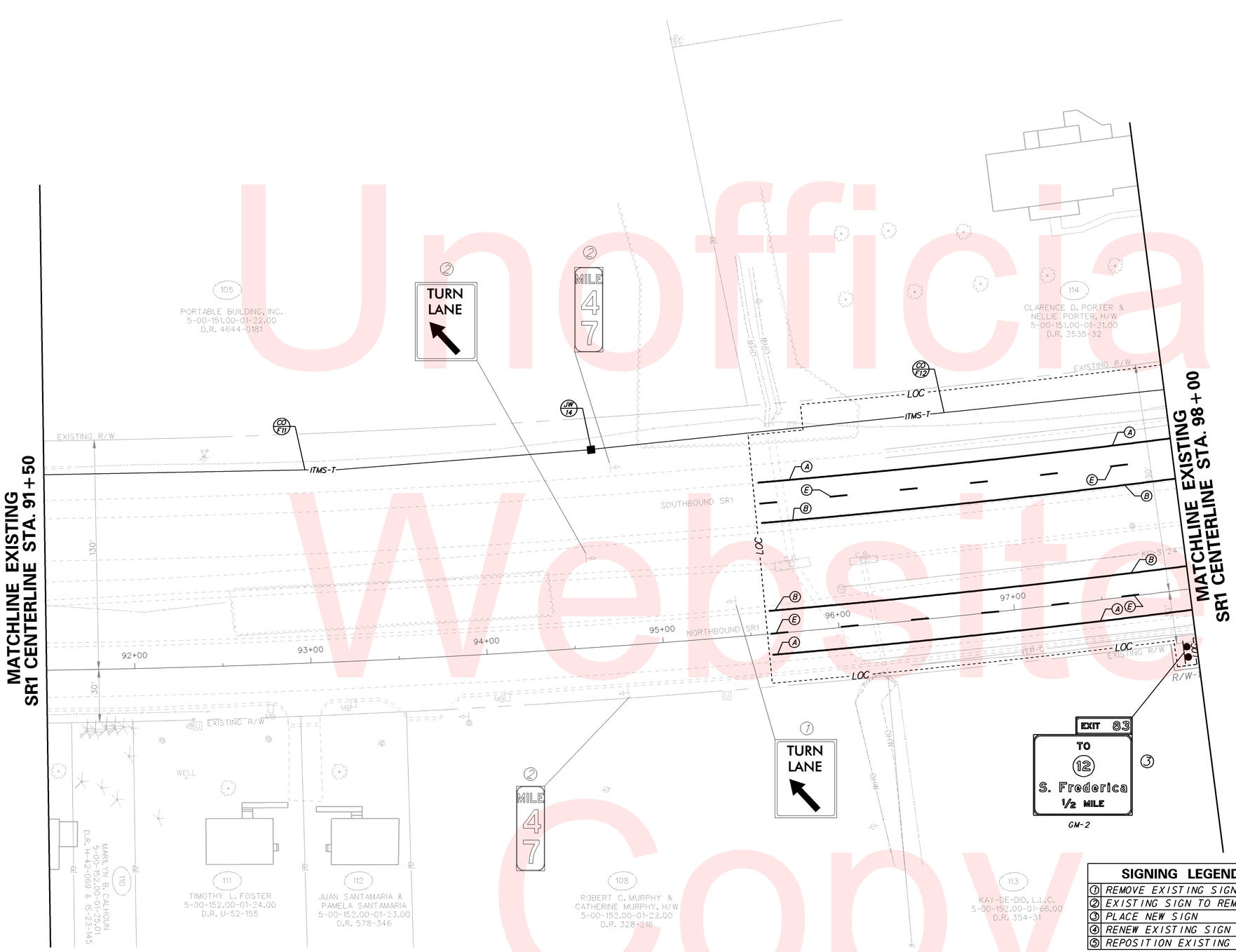

Unofficial Website Copy

ITMS LEGEND NOTES

* INDICATES ITMS TO BE PERFORMED BY THE CONTRACTOR. WORK ON THE VARIABLE MESSAGE SIGN IS LIMITED TO THE FOUNDATION AND SUPPORT STRUCTURE.

ALL OTHER ITEMS LISTED IN THE LEGEND WILL BE PERFORMED BY OTHERS. THIS INCLUDES ALL INNER-DUCT, WIRING WITHIN CONDUITS, AND THE VARIABLE MESSAGE SIGNS.

ITMS LEGEND

- JW/X — PROPOSED JUNCTION WELL & TYPE *
- CO/X — PROPOSED CONDUIT RUN & IDENTIFIER *
- PB/X — PROPOSED POLE BASE IDENTIFIER *
- PL/X — PROPOSED POLE IDENTIFIER
- PROPOSED POLE BASE *
- PROPOSED RADAR DETECTION
- EXISTING RADAR DETECTION
- 6'x6' SYSTEM LOOP
- CA/X — PROPOSED ITMS CABINET & TYPE
- EXISTING SIGNAL CABINET (TYPE P) OR (TYPE M) AS NOTED
- P — PROPOSED SERVICE PEDESTAL
- HH/X — PROPOSED HAND HOLE IDENTIFIER
- PROPOSED ROAD WEATHER INFORMATION SYSTEM (RWIS) PUCK SENSOR
- EXISTING ROAD WEATHER INFORMATION SYSTEM (RWIS) PUCK SENSOR
- ATR — AUTOMATIC TRAFFIC RECORDER (ATR)
- ITMS-T — 4" MULTIDUCT, PVC (TRENCH) WITH * (4) 1" RIBBED INNER DUCT
- ITMS-B — 4" MULTIDUCT, SDR-13.5 HDPE (BORE), * WITH (4) 1" RIBBED INNER DUCT
- VARIABLE MESSAGE SIGN WITH * BUTTERFLY CANTILEVER
- PROPOSED VIDEO MONITORING CAMERA (CCTV) ON 75' POLE WITH LOWERING DEVICE

PAVEMENT MARKINGS LEGEND

SYMBOL	ITEM	QUANTITY
A	5" SOLID WHITE EPOXY RESIN PAVEMENT STRIPING (ITEM 748548)	476 LF
B	5" SOLID YELLOW EPOXY RESIN PAVEMENT STRIPING (ITEM 748548)	476 LF
C	5" SOLID DOUBLE YELLOW EPOXY RESIN PAVEMENT STRIPING (ITEM 748548)	0 LF
D	5" DASHED WHITE EPOXY RESIN PAVEMENT STRIPING, 2' LINE & 6' GAP (ITEM 748548)	0 LF
E	5" DASHED WHITE EPOXY RESIN PAVEMENT STRIPING, 10' LINE & 30' GAP (ITEM 748548)	120 LF
F	5" DASHED YELLOW EPOXY RESIN PAVEMENT STRIPING, 10' LINE & 30' GAP (ITEM 748548)	0 LF
G	16" SOLID WHITE ALKYD THERMOPLASTIC PAVEMENT STRIPING (ITEM 748015)	0 SF
H	24" SOLID WHITE ALKYD THERMOPLASTIC PAVEMENT STRIPING (ITEM 748015)	0 SF
J	WHITE ALKYD THERMOPLASTIC PAVEMENT SYMBOL (ITEM 748015)	0 SF
K	10" SOLID WHITE EPOXY RESIN PAVEMENT STRIPING (ITEM 748549)	0 LF
L	10" SOLID YELLOW EPOXY RESIN PAVEMENT STRIPING (ITEM 748549)	0 LF
M	10" DASHED WHITE EPOXY RESIN PAVEMENT STRIPING, 3' LINE & 9' GAP (ITEM 748549)	0 LF
N	WHITE RETROREFLECTIVE PREFORMED PATTERNED MARKINGS, BIKE SYMBOL (ITEM 748553)	0 SF

SIGNING LEGEND

1	REMOVE EXISTING SIGN
2	EXISTING SIGN TO REMAIN
3	PLACE NEW SIGN
4	RENEW EXISTING SIGN
5	REPOSITION EXISTING SIGN

CONDUIT RUN SCHEDULE

CO#	# OF CONDUITS	SIZE	LENGTH	B/T/O/P	AMOUNT AND TYPE OF CABLE/ WIRE
F11	1	4"	310'	T	(1) 144 CNT SM, (1) 48 CNT SM
F12	1	4"	325'	T	(1) 144 CNT SM, (1) 48 CNT SM

* DENOTES EXISTING B-BORE T-TRENCH O-OPEN P-ATTACH TO POLE SM-SINGLE MODE

DELAWARE DEPARTMENT OF TRANSPORTATION

ADDENDUMS / REVISIONS

SCALE 0 30 60 90 FEET

SR1, SOUTH FREDERICA GRADE SEPARATED INTERSECTION

CONTRACT	BRIDGE NO.	-
T200812202	DESIGNED BY: LCM	
COUNTY		
KENT	CHECKED BY: SFP/BAM	

SIGNING, STRIPING, AND ITMS PLAN

SHEET NO. 231
TOTAL SHTS. 296

7/19/2013
G:\PROJECTS\06535.00 (DelDOT Agmt. 1376 DOTS Open End)\06535.07 SR1, S. Frederica\CADD Files\XM\ss02sf.dgn
09:19:39

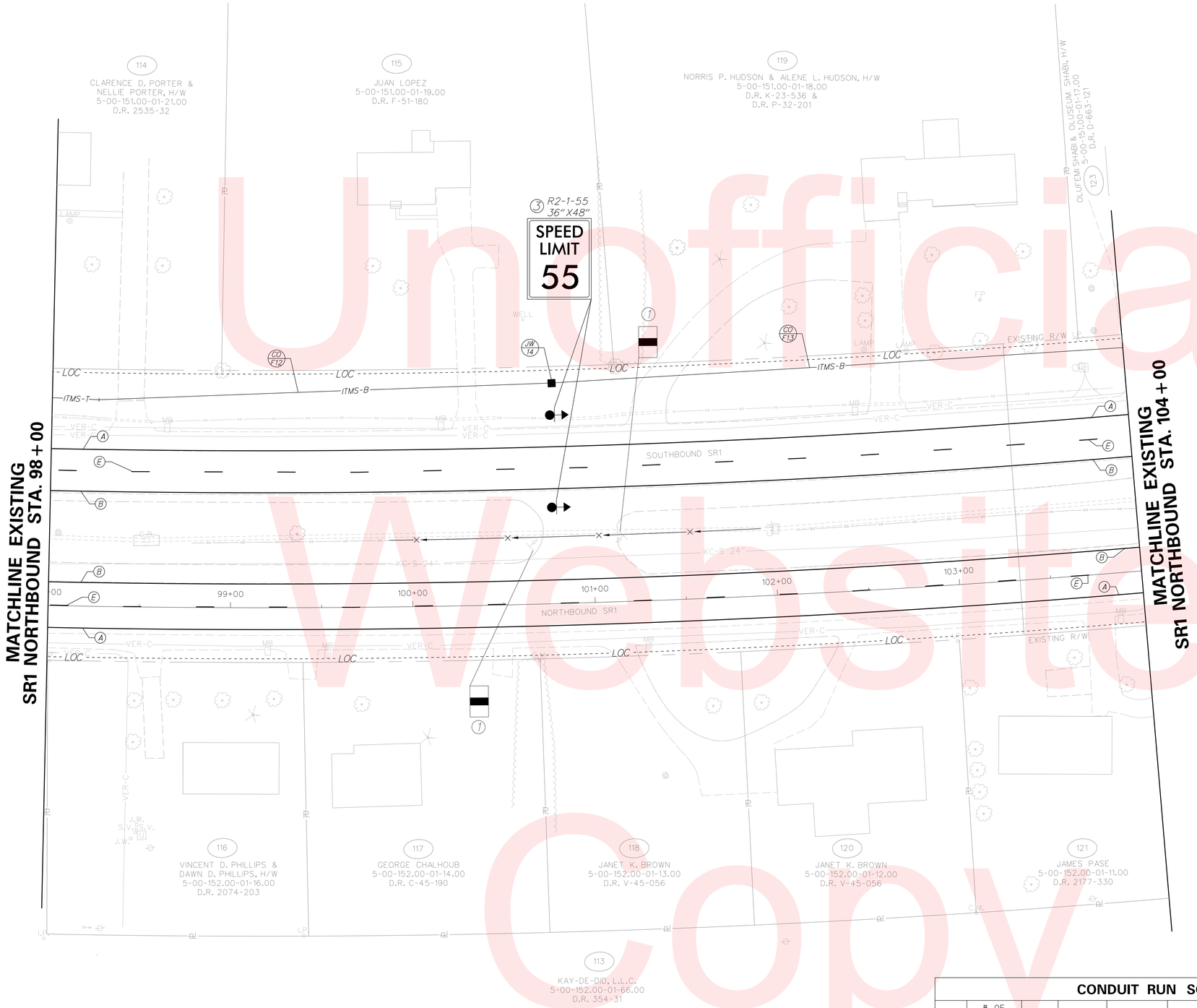

ITMS LEGEND NOTES

* INDICATES ITMS TO BE PERFORMED BY THE CONTRACTOR. WORK ON THE VARIABLE MESSAGE SIGN IS LIMITED TO THE FOUNDATION AND SUPPORT STRUCTURE.

ALL OTHER ITEMS LISTED IN THE LEGEND WILL BE PERFORMED BY OTHERS. THIS INCLUDES ALL INNER-DUCT, WIRING WITHIN CONDUITS, AND THE VARIABLE MESSAGE SIGNS.

ITMS LEGEND

- JW/X — PROPOSED JUNCTION WELL & TYPE *
- CO/X — PROPOSED CONDUIT RUN & IDENTIFIER *
- PB/X — PROPOSED POLE BASE IDENTIFIER *
- PL/X — PROPOSED POLE IDENTIFIER
- PROPOSED POLE BASE *
- PROPOSED RADAR DETECTION
- EXISTING RADAR DETECTION
- 6'x6' SYSTEM LOOP
- CA/X — PROPOSED ITMS CABINET & TYPE
- EXISTING SIGNAL CABINET (TYPE P) OR (TYPE M) AS NOTED
- P — PROPOSED SERVICE PEDESTAL
- HH/X — PROPOSED HAND HOLE IDENTIFIER
- PROPOSED ROAD WEATHER INFORMATION SYSTEM (RWIS) PUCK SENSOR
- EXISTING ROAD WEATHER INFORMATION SYSTEM (RWIS) PUCK SENSOR
- ATR — AUTOMATIC TRAFFIC RECORDER (ATR)
- ITMS-T — 4" MULTIDUCT, PVC (TRENCH) WITH * (4) 1" RIBBED INNER DUCT
- ITMS-B — 4" MULTIDUCT, SDR-13.5 HDPE (BORE),* WITH (4) 1" RIBBED INNER DUCT
- VARIABLE MESSAGE SIGN WITH * BUTTERFLY CANTILEVER
- PROPOSED VIDEO MONITORING CAMERA (CCTV) ON 75' POLE WITH LOWERING DEVICE

PAVEMENT MARKINGS LEGEND

SYMBOL	ITEM	QUANTITY
A	5" SOLID WHITE EPOXY RESIN PAVEMENT STRIPING (ITEM 748548)	1200 LF
B	5" SOLID YELLOW EPOXY RESIN PAVEMENT STRIPING (ITEM 748548)	1200 LF
C	5" SOLID DOUBLE YELLOW EPOXY RESIN PAVEMENT STRIPING (ITEM 748548)	0 LF
D	5" DASHED WHITE EPOXY RESIN PAVEMENT STRIPING, 2' LINE & 6' GAP (ITEM 748548)	0 LF
E	5" DASHED WHITE EPOXY RESIN PAVEMENT STRIPING, 10' LINE & 30' GAP (ITEM 748548)	300 LF
F	5" DASHED YELLOW EPOXY RESIN PAVEMENT STRIPING, 10' LINE & 30' GAP (ITEM 748548)	0 LF
G	16" SOLID WHITE ALKYD THERMOPLASTIC PAVEMENT STRIPING (ITEM 748015)	0 SF
H	24" SOLID WHITE ALKYD THERMOPLASTIC PAVEMENT STRIPING (ITEM 748015)	0 SF
J	WHITE ALKYD THERMOPLASTIC PAVEMENT SYMBOL (ITEM 748015)	0 SF
K	10" SOLID WHITE EPOXY RESIN PAVEMENT STRIPING (ITEM 748549)	0 LF
L	10" SOLID YELLOW EPOXY RESIN PAVEMENT STRIPING (ITEM 748549)	0 LF
M	10" DASHED WHITE EPOXY RESIN PAVEMENT STRIPING, 3' LINE & 9' GAP (ITEM 748549)	0 LF
N	WHITE RETROREFLECTIVE PREFORMED PATTERNED MARKINGS, BIKE SYMBOL (ITEM 748553)	0 SF

CONDUIT RUN SCHEDULE

CO#	# OF CONDUITS	SIZE	LENGTH	B/T/O/P	AMOUNT AND TYPE OF CABLE/ WIRE
F12	1	4"	275'	B/T	(1) 144 CNT SM, (1) 48 CNT SM
F13	1	4"	315'	B	(1) 144 CNT SM, (1) 48 CNT SM

* DENOTES EXISTING B-BORE T-TRENCH O-OPEN P-ATTACH TO POLE SM-SINGLE MODE

SIGNING LEGEND

1	REMOVE EXISTING SIGN
2	EXISTING SIGN TO REMAIN
3	PLACE NEW SIGN
4	RENEW EXISTING SIGN
5	REPOSITION EXISTING SIGN

Unofficial Website Copy

DELAWARE DEPARTMENT OF TRANSPORTATION

ADDENDUMS / REVISIONS

SCALE 0 30 60 90 FEET

SR1, SOUTH FREDERICA GRADE SEPARATED INTERSECTION

CONTRACT	BRIDGE NO.	-
T200812202	DESIGNED BY: LCM	
COUNTY		
KENT	CHECKED BY: SFP/BAM	

SIGNING, STRIPING, AND ITMS PLAN

SHEET NO. 232

TOTAL SHTS. 296

8/12/2015
G:\PROJECTS\06535.00 (DelDOT Agmt. 1376 DOTS Open End)\06535.07 SR1, S. Frederica\CADD Files\XM\ss03sf.dgn
10:37:18 AM

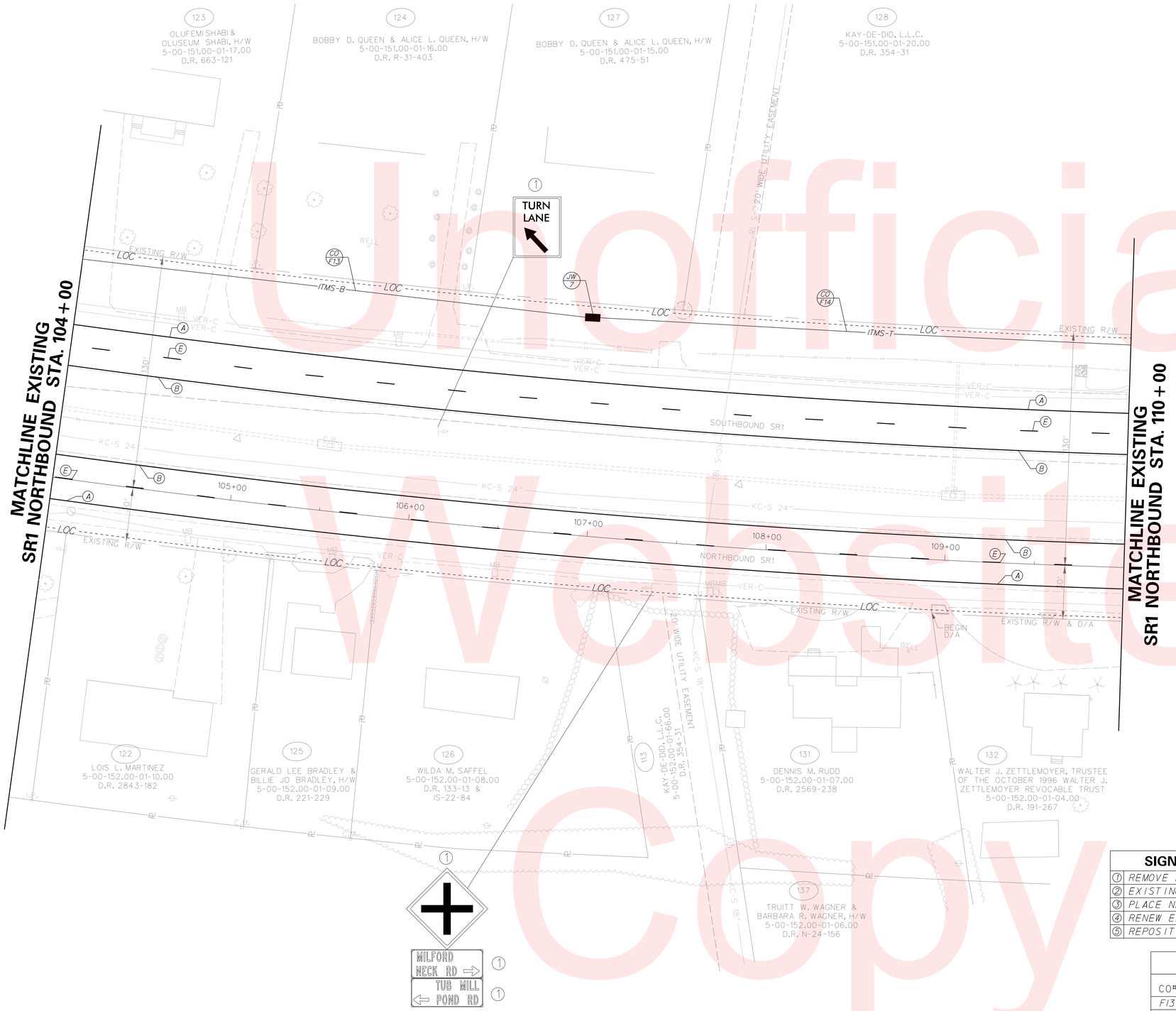

ITMS LEGEND NOTES

* INDICATES ITMS TO BE PERFORMED BY THE CONTRACTOR. WORK ON THE VARIABLE MESSAGE SIGN IS LIMITED TO THE FOUNDATION AND SUPPORT STRUCTURE.

ALL OTHER ITEMS LISTED IN THE LEGEND WILL BE PERFORMED BY OTHERS. THIS INCLUDES ALL INNER-DUCT, WIRING WITHIN CONDUITS, AND THE VARIABLE MESSAGE SIGNS.

ITMS LEGEND

- JW/X — PROPOSED JUNCTION WELL & TYPE *
- CO/X — PROPOSED CONDUIT RUN & IDENTIFIER *
- PB/X — PROPOSED POLE BASE IDENTIFIER *
- PL/X — PROPOSED POLE IDENTIFIER
- PROPOSED POLE BASE *
- PROPOSED RADAR DETECTION
- EXISTING RADAR DETECTION
- 6'x6' SYSTEM LOOP
- CA/X — PROPOSED ITMS CABINET & TYPE
- EXISTING SIGNAL CABINET (TYPE P) OR (TYPE M) AS NOTED
- P — PROPOSED SERVICE PEDESTAL
- HH/X — PROPOSED HAND HOLE IDENTIFIER
- PROPOSED ROAD WEATHER INFORMATION SYSTEM (RWIS) PUCK SENSOR
- EXISTING ROAD WEATHER INFORMATION SYSTEM (RWIS) PUCK SENSOR
- ATR — AUTOMATIC TRAFFIC RECORDER (ATR)
- ITMS-T — 4" MULTIDUCT, PVC (TRENCH) WITH * (4) 1" RIBBED INNER DUCT
- ITMS-B — 4" MULTIDUCT, SDR-13.5 HDPE (BORE), * WITH (4) 1" RIBBED INNER DUCT
- VARIABLE MESSAGE SIGN WITH * BUTTERFLY CANTILEVER
- PROPOSED VIDEO MONITORING CAMERA (CCTV) ON 75' POLE WITH LOWERING DEVICE

PAVEMENT MARKINGS LEGEND

SYMBOL	ITEM	QUANTITY
A	5" SOLID WHITE EPOXY RESIN PAVEMENT STRIPING (ITEM 748548)	1200 LF
B	5" SOLID YELLOW EPOXY RESIN PAVEMENT STRIPING (ITEM 748548)	1200 LF
C	5" SOLID DOUBLE YELLOW EPOXY RESIN PAVEMENT STRIPING (ITEM 748548)	0 LF
D	5" DASHED WHITE EPOXY RESIN PAVEMENT STRIPING, 2' LINE & 6' GAP (ITEM 748548)	0 LF
E	5" DASHED WHITE EPOXY RESIN PAVEMENT STRIPING, 10' LINE & 30' GAP (ITEM 748548)	300 LF
F	5" DASHED YELLOW EPOXY RESIN PAVEMENT STRIPING, 10' LINE & 30' GAP (ITEM 748548)	0 LF
G	16" SOLID WHITE ALKYD THERMOPLASTIC PAVEMENT STRIPING (ITEM 748015)	0 SF
H	24" SOLID WHITE ALKYD THERMOPLASTIC PAVEMENT STRIPING (ITEM 748015)	0 SF
J	WHITE ALKYD THERMOPLASTIC PAVEMENT SYMBOL (ITEM 748015)	0 SF
K	10" SOLID WHITE EPOXY RESIN PAVEMENT STRIPING (ITEM 748549)	0 LF
L	10" SOLID YELLOW EPOXY RESIN PAVEMENT STRIPING (ITEM 748549)	0 LF
M	10" DASHED WHITE EPOXY RESIN PAVEMENT STRIPING, 3' LINE & 9' GAP (ITEM 748549)	0 LF
N	WHITE RETROREFLECTIVE PREFORMED PATTERNED MARKINGS, BIKE SYMBOL (ITEM 748553)	0 SF

SIGNING LEGEND

1	REMOVE EXISTING SIGN
2	EXISTING SIGN TO REMAIN
3	PLACE NEW SIGN
4	RENEW EXISTING SIGN
5	REPOSITION EXISTING SIGN

CONDUIT RUN SCHEDULE

CO#	# OF CONDUITS	SIZE	LENGTH	B/T/O/P	AMOUNT AND TYPE OF CABLE/ WIRE
F13	1	4"	285'	B	(1) 144 CNT SM, (1) 48 CNT SM
F14	1	4"	300'	T	(1) 144 CNT SM, (1) 48 CNT SM

* DENOTES EXISTING B-BORE T-TRENCH O-OPEN P-ATTACH TO POLE SM-SINGLE MODE

Unofficial Website Copy

DELAWARE DEPARTMENT OF TRANSPORTATION

ADDENDUMS / REVISIONS

SCALE 0 30 60 90 FEET

SR1, SOUTH FREDERICA GRADE SEPARATED INTERSECTION

CONTRACT	BRIDGE NO.	-
T200812202	DESIGNED BY: LCM	
COUNTY		
KENT	CHECKED BY: SFP/BAM	

SIGNING, STRIPING, AND ITMS PLAN

SHEET NO. 233
TOTAL SHTS. 296

8/12/2015
G:\PROJECTS\06535.00 (DelDOT Agmt. 1376 DOTS Open End)\06535.07 SR1, S. Frederica\CADD Files\XM\ss04sf.dgn
10:51:12 AM

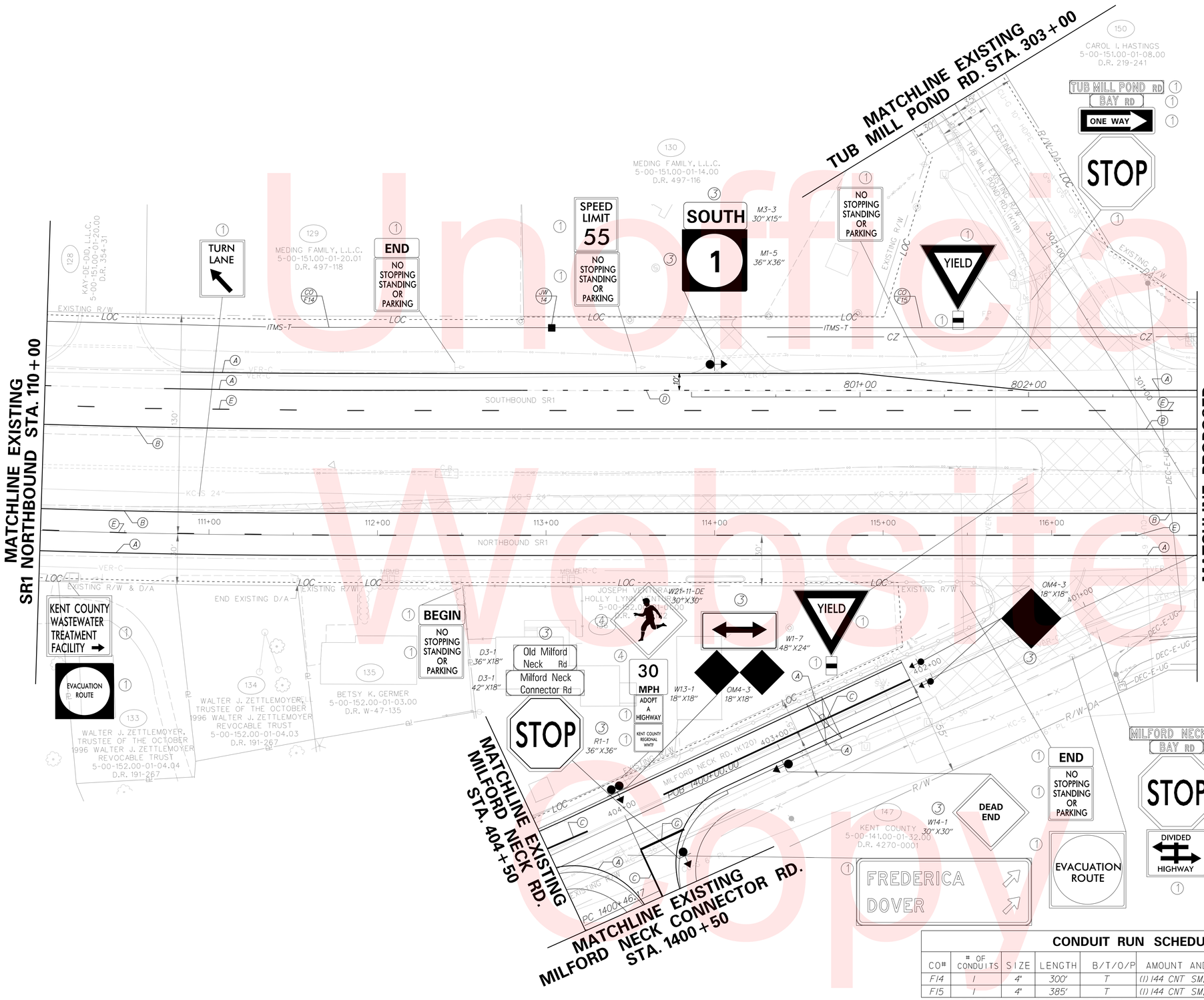

ITMS LEGEND NOTES

* INDICATES ITMS TO BE PERFORMED BY THE CONTRACTOR. WORK ON THE VARIABLE MESSAGE SIGN IS LIMITED TO THE FOUNDATION AND SUPPORT STRUCTURE.

ALL OTHER ITEMS LISTED IN THE LEGEND WILL BE PERFORMED BY OTHERS. THIS INCLUDES ALL INNER-DUCT, WIRING WITHIN CONDUITS, AND THE VARIABLE MESSAGE SIGNS.

ITMS LEGEND

- JW X — PROPOSED JUNCTION WELL & TYPE*
- CO X — PROPOSED CONDUIT RUN & IDENTIFIER*
- PB X — PROPOSED POLE BASE IDENTIFIER*
- PL X — PROPOSED POLE IDENTIFIER
- PROPOSED POLE BASE*
- PROPOSED RADAR DETECTION
- EXISTING RADAR DETECTION
- 6'x6' SYSTEM LOOP
- CA X — PROPOSED ITMS CABINET & TYPE
- EXISTING SIGNAL CABINET (TYPE P) OR (TYPE M) AS NOTED
- P — PROPOSED SERVICE PEDESTAL
- HH X — PROPOSED HAND HOLE IDENTIFIER
- PROPOSED ROAD WEATHER INFORMATION SYSTEM (RWIS) PUCK SENSOR
- EXISTING ROAD WEATHER INFORMATION SYSTEM (RWIS) PUCK SENSOR
- ATR — AUTOMATIC TRAFFIC RECORDER (ATR)
- ITMS-T — 4" MULTIDUCT, PVC (TRENCH) WITH* (4) 1" RIBBED INNER DUCT
- ITMS-B — 4" MULTIDUCT, SDR-13.5 HDPE (BORE),* WITH (4) 1" RIBBED INNER DUCT
- VARIABLE MESSAGE SIGN WITH* BUTTERFLY CANTILEVER
- PROPOSED VIDEO MONITORING CAMERA (CCTV) ON 75' POLE WITH LOWERING DEVICE

PAVEMENT MARKINGS LEGEND

SYMBOL	ITEM	QUANTITY
A	5" SOLID WHITE EPOXY RESIN PAVEMENT STRIPING (ITEM 748548)	1997 LF
B	5" SOLID YELLOW EPOXY RESIN PAVEMENT STRIPING (ITEM 748548)	1372 LF
C	5" SOLID DOUBLE YELLOW EPOXY RESIN PAVEMENT STRIPING (ITEM 748548)	434 LF
D	5" DASHED WHITE EPOXY RESIN PAVEMENT STRIPING, 2' LINE & 6' GAP (ITEM 748548)	75 LF
E	5" DASHED WHITE EPOXY RESIN PAVEMENT STRIPING, 10' LINE & 30' GAP (ITEM 748548)	344 LF
F	5" DASHED YELLOW EPOXY RESIN PAVEMENT STRIPING, 10' LINE & 30' GAP (ITEM 748548)	0 LF
G	16" SOLID WHITE ALKYD THERMOPLASTIC PAVEMENT STRIPING (ITEM 748015)	39 SF
H	24" SOLID WHITE ALKYD THERMOPLASTIC PAVEMENT STRIPING (ITEM 748015)	0 SF
J	WHITE ALKYD THERMOPLASTIC PAVEMENT SYMBOL (ITEM 748015)	0 SF
K	10" SOLID WHITE EPOXY RESIN PAVEMENT STRIPING (ITEM 748549)	0 LF
L	10" SOLID YELLOW EPOXY RESIN PAVEMENT STRIPING (ITEM 748549)	0 LF
M	10" DASHED WHITE EPOXY RESIN PAVEMENT STRIPING, 3' LINE & 9' GAP (ITEM 748549)	0 LF
N	WHITE RETROREFLECTIVE PREFORMED PATTERNED MARKINGS, BIKE SYMBOL (ITEM 748553)	0 SF

SIGNING LEGEND

1. REMOVE EXISTING SIGN
2. EXISTING SIGN TO REMAIN
3. PLACE NEW SIGN
4. RENEW EXISTING SIGN
5. REPOSITION EXISTING SIGN

CONDUIT RUN SCHEDULE

CO#	# OF CONDUITS	SIZE	LENGTH	B/T/O/P	AMOUNT AND TYPE OF CABLE/ WIRE
F14	1	4"	300'	T	(1) 144 CNT SM, (1) 48 CNT SM
F15	1	4"	385'	T	(1) 144 CNT SM, (1) 48 CNT SM

* DENOTES EXISTING B-BORE T-TRENCH O-OPEN P-ATTACH TO POLE SM-SINGLE MODE

Unofficial Website Copy

DELAWARE DEPARTMENT OF TRANSPORTATION

ADDENDUMS / REVISIONS

SCALE 0 30 60 90 FEET

SR1, SOUTH FREDERICA GRADE SEPARATED INTERSECTION

CONTRACT	BRIDGE NO.	-
T200812202	DESIGNED BY: LCM	
COUNTY		
KENT	CHECKED BY: SFP/BAM	

SIGNING, STRIPING, AND ITMS PLAN

SHEET NO. 234

TOTAL SHTS. 296

8/12/2015
G:\PROJECTS\06535.00 (DelDOT Agmt. 1376 DOTS Open End)\06535.07 SR1, S. Frederica\CADD Files\XM\ss05sf.dgn
12:02:14 PM

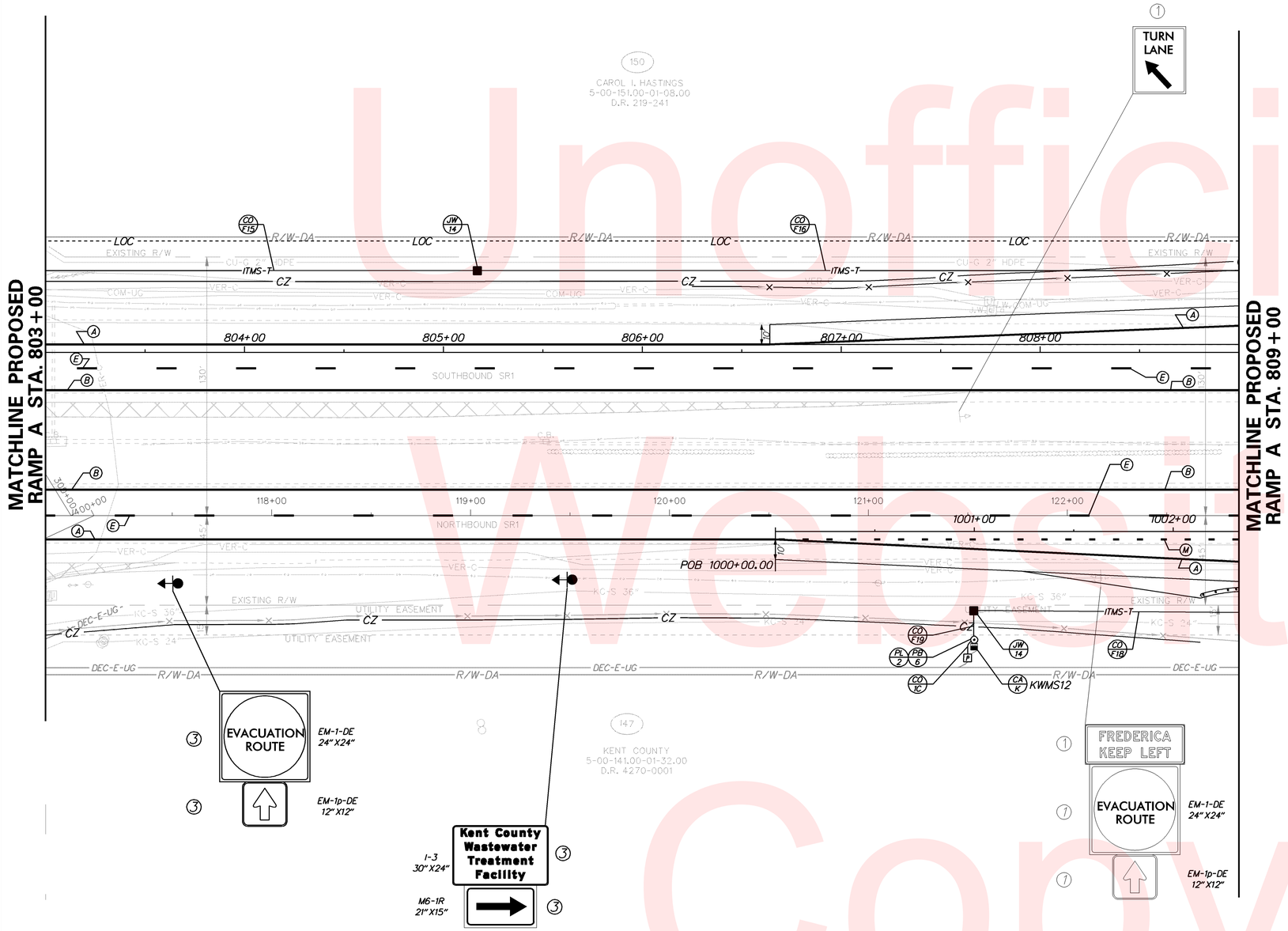

ITMS LEGEND NOTES

* INDICATES ITMS TO BE PERFORMED BY THE CONTRACTOR. WORK ON THE VARIABLE MESSAGE SIGN IS LIMITED TO THE FOUNDATION AND SUPPORT STRUCTURE.

ALL OTHER ITEMS LISTED IN THE LEGEND WILL BE PERFORMED BY OTHERS. THIS INCLUDES ALL INNER-DUCT, WIRING WITHIN CONDUITS, AND THE VARIABLE MESSAGE SIGNS.

ITMS LEGEND

- JW X — PROPOSED JUNCTION WELL & TYPE *
- CO X — PROPOSED CONDUIT RUN & IDENTIFIER *
- PB X — PROPOSED POLE BASE IDENTIFIER *
- PL X — PROPOSED POLE IDENTIFIER
- PROPOSED POLE BASE *
- PROPOSED RADAR DETECTION
- EXISTING RADAR DETECTION
- 6'x6' SYSTEM LOOP
- CA X — PROPOSED ITMS CABINET & TYPE
- EXISTING SIGNAL CABINET (TYPE P) OR (TYPE M) AS NOTED
- P — PROPOSED SERVICE PEDESTAL
- HH X — PROPOSED HAND HOLE IDENTIFIER
- PROPOSED ROAD WEATHER INFORMATION SYSTEM (RWIS) PUCK SENSOR
- EXISTING ROAD WEATHER INFORMATION SYSTEM (RWIS) PUCK SENSOR
- ATR — AUTOMATIC TRAFFIC RECORDER (ATR)
- ITMS-T — 4" MULTIDUCT, PVC (TRENCH) WITH (4) 1" RIBBED INNER DUCT *
- ITMS-B — 4" MULTIDUCT, SDR-13.5 HDPE (BORE), WITH (4) 1" RIBBED INNER DUCT *
- VARIABLE MESSAGE SIGN WITH BUTTERFLY CANTILEVER *
- PROPOSED VIDEO MONITORING CAMERA (CCTV) ON 75' POLE WITH LOWERING DEVICE

PAVEMENT MARKINGS LEGEND

SYMBOL	ITEM	QUANTITY
A	5" SOLID WHITE EPOXY RESIN PAVEMENT STRIPING (ITEM 748548)	1200 LF
B	5" SOLID YELLOW EPOXY RESIN PAVEMENT STRIPING (ITEM 748548)	1200 LF
C	5" SOLID DOUBLE YELLOW EPOXY RESIN PAVEMENT STRIPING (ITEM 748548)	0 LF
D	5" DASHED WHITE EPOXY RESIN PAVEMENT STRIPING, 2' LINE & 6' GAP (ITEM 748548)	0 LF
E	5" DASHED WHITE EPOXY RESIN PAVEMENT STRIPING, 10' LINE & 30' GAP (ITEM 748548)	300 LF
F	5" DASHED YELLOW EPOXY RESIN PAVEMENT STRIPING, 10' LINE & 30' GAP (ITEM 748548)	0 LF
G	16" SOLID WHITE ALKYD THERMOPLASTIC PAVEMENT STRIPING (ITEM 748015)	0 SF
H	24" SOLID WHITE ALKYD THERMOPLASTIC PAVEMENT STRIPING (ITEM 748015)	0 SF
J	WHITE ALKYD THERMOPLASTIC PAVEMENT SYMBOL (ITEM 748015)	0 SF
K	10" SOLID WHITE EPOXY RESIN PAVEMENT STRIPING (ITEM 748549)	0 LF
L	10" SOLID YELLOW EPOXY RESIN PAVEMENT STRIPING (ITEM 748549)	0 LF
M	10" DASHED WHITE EPOXY RESIN PAVEMENT STRIPING, 3' LINE & 9' GAP (ITEM 748549)	59 LF
N	WHITE RETROREFLECTIVE PREFORMED PATTERNED MARKINGS, BIKE SYMBOL (ITEM 748553)	0 SF

SIGNING LEGEND

1	REMOVE EXISTING SIGN
2	EXISTING SIGN TO REMAIN
3	PLACE NEW SIGN
4	RENEW EXISTING SIGN
5	REPOSITION EXISTING SIGN

ITMS GENERAL NOTES

1. RWIS ASSEMBLY SHALL BE MOUNTED ON THE RWIS POLE LOCATED AT STATION 1001+00 OFFSET RIGHT 60' FROM NORTHBOUND SR1.
2. THE COMMUNICATION MEDIA FOR RWIS ASSEMBLY SHALL BE FIBER OPTIC.
3. TRAFFIC SECTION CONTRACTOR SHALL INSTALL ALL RWIS EQUIPMENT AND CONTROL CABINET.

POLE SCHEDULE

POLE #	POLE TYPE	HEIGHT	MATERIAL
2	STRAIN	30'	STEEL

NOTE: POLE SHALL BE INSTALLED BY OTHERS.

CONDUIT RUN SCHEDULE

CO#	# OF CONDUITS	SIZE	LENGTH	B/T/O/P	AMOUNT AND TYPE OF CABLE/ WIRE
IC	1	2"	15'	T/P	(1) 2/#8 U.F.w/GROUND
F15	1	4"	215'	T	(1) 144 CNT SM, (1) 48 CNT SM
F16	1	4"	385'	T	(1) 144 CNT SM, (1) 48 CNT SM
F18	1	4"	135'	T	(4) SENSOR CABLES, (1) 12 CNT SM
F19	1	4"	15'	T	(4) SENSOR CABLES, (1) 12 CNT SM

* DENOTES EXISTING B-BORE T-TRENCH O-OPEN P-ATTACH TO POLE SM-SINGLE MODE

DELAWARE DEPARTMENT OF TRANSPORTATION

ADDENDUMS / REVISIONS

SCALE 0 30 60 90 FEET

SR1, SOUTH FREDERICA GRADE SEPARATED INTERSECTION

CONTRACT	BRIDGE NO.	–
T200812202	DESIGNED BY: LCM	
COUNTY: KENT	CHECKED BY: SFP/BAM	

SIGNING, STRIPING, AND ITMS PLAN

SHEET NO. 235 TOTAL SHTS. 296

7/19/2013 09:21:55 G:\PROJECTS\06535.00 (DelDOT Agmt. 1376 DOTS Open End)\06535.07 SR1, S. Frederica\CADD Files\XM\ss06sf.dgn

Unofficial Website Copy

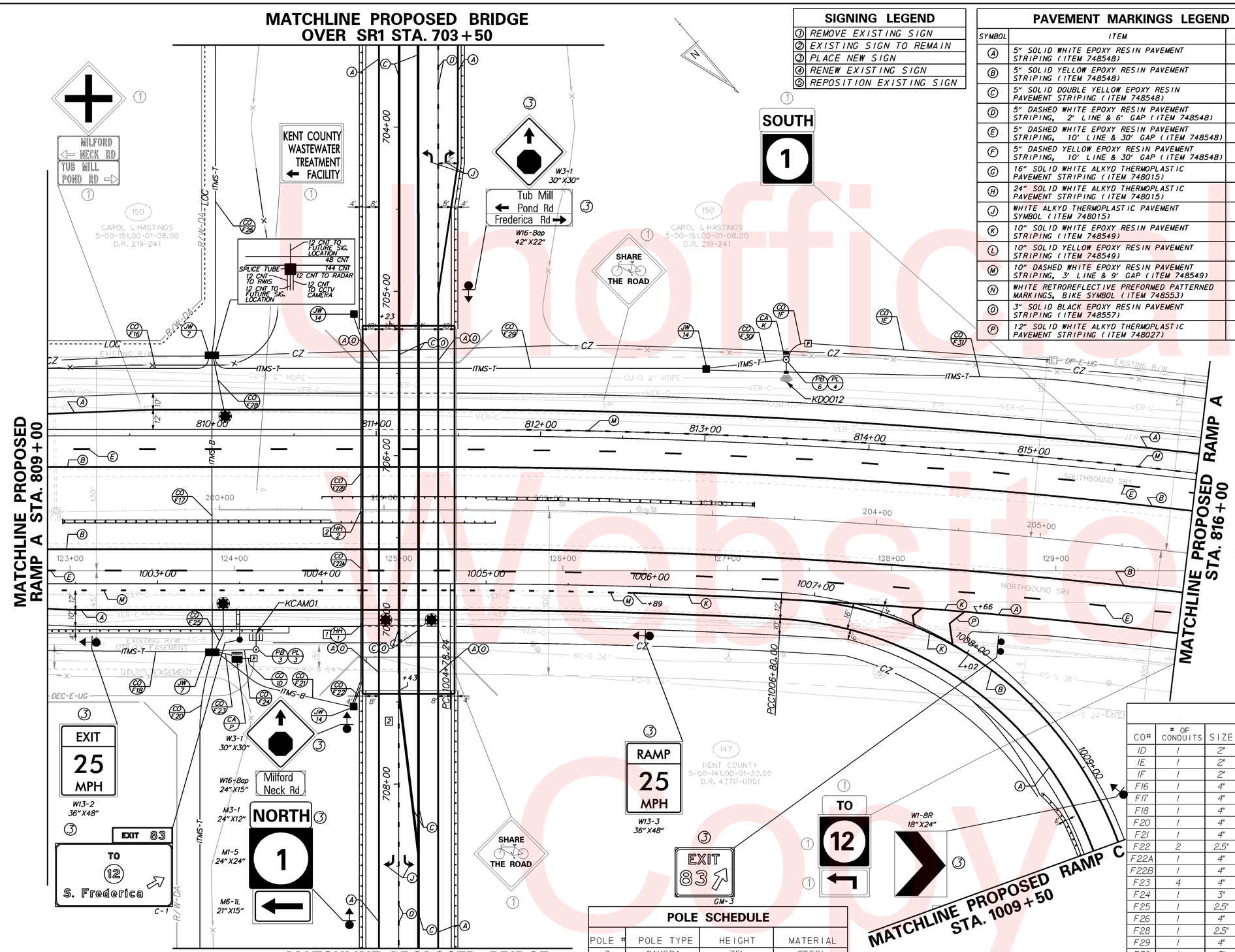

SIGNING LEGEND

1	REMOVE EXISTING SIGN
2	EXISTING SIGN TO REMAIN
3	PLACE NEW SIGN
4	RENEW EXISTING SIGN
5	REPOSITION EXISTING SIGN

PAVEMENT MARKINGS LEGEND

SYMBOL	ITEM	QUANTITY
A	5" SOLID WHITE EPOXY RESIN PAVEMENT STRIPING (ITEM 748548)	2611 LF
B	5" SOLID YELLOW EPOXY RESIN PAVEMENT STRIPING (ITEM 748548)	1549 LF
C	5" SOLID DOUBLE YELLOW EPOXY RESIN PAVEMENT STRIPING (ITEM 748548)	2092 LF
D	5" DASHED WHITE EPOXY RESIN PAVEMENT STRIPING, 2' LINE & 6' GAP (ITEM 748548)	78 LF
E	5" DASHED WHITE EPOXY RESIN PAVEMENT STRIPING, 10' LINE & 30' GAP (ITEM 748548)	350 LF
F	5" DASHED YELLOW EPOXY RESIN PAVEMENT STRIPING, 10' LINE & 30' GAP (ITEM 748548)	0 LF
G	16" SOLID WHITE ALKYD THERMOPLASTIC PAVEMENT STRIPING (ITEM 748015)	0 SF
H	24" SOLID WHITE ALKYD THERMOPLASTIC PAVEMENT STRIPING (ITEM 748015)	0 SF
J	WHITE ALKYD THERMOPLASTIC PAVEMENT SYMBOL (ITEM 748015)	62 SF
K	10" SOLID WHITE EPOXY RESIN PAVEMENT STRIPING (ITEM 748549)	313 LF
L	10" SOLID YELLOW EPOXY RESIN PAVEMENT STRIPING (ITEM 748549)	0 LF
M	10" DASHED WHITE EPOXY RESIN PAVEMENT STRIPING, 3' LINE & 9' GAP (ITEM 748549)	191 LF
N	WHITE RETROREFLECTIVE PREFORMED PATTERNED MARKINGS, BIKE SYMBOL (ITEM 748553)	0 SF
O	3" SOLID BLACK EPOXY RESIN PAVEMENT STRIPING (ITEM 748557)	900 LF
P	12" SOLID WHITE ALKYD THERMOPLASTIC PAVEMENT STRIPING (ITEM 748027)	39 LF

ITMS LEGEND

- JW X — PROPOSED JUNCTION WELL & TYPE *
- CO X — PROPOSED CONDUIT RUN & IDENTIFIER *
- PB X — PROPOSED POLE BASE IDENTIFIER *
- PL X — PROPOSED POLE IDENTIFIER
- PROPOSED POLE BASE *
- PROPOSED RADAR DETECTION
- EXISTING RADAR DETECTION
- 6'x6' SYSTEM LOOP
- CA X — PROPOSED ITMS CABINET & TYPE
- EXISTING SIGNAL CABINET (TYPE P) OR (TYPE M) AS NOTED
- P — PROPOSED SERVICE PEDESTAL
- HH X — PROPOSED HAND HOLE IDENTIFIER
- PROPOSED ROAD WEATHER INFORMATION SYSTEM (RWIS) PUCK SENSOR
- EXISTING ROAD WEATHER INFORMATION SYSTEM (RWIS) PUCK SENSOR
- ATR — AUTOMATIC TRAFFIC RECORDER (ATR)
- ITMS-T — 4" MULTIDUCT, PVC (TRENCH) WITH * (4) 1" RIBBED INNER DUCT
- ITMS-B — 4" MULTIDUCT, SDR-13.5 HDPE (BORE), * WITH (4) 1" RIBBED INNER DUCT
- VARIABLE MESSAGE SIGN WITH * BUTTERFLY CANTILEVER
- PROPOSED VIDEO MONITORING CAMERA (CCTV) ON 75' POLE WITH LOWERING DEVICE

ITMS LEGEND NOTES

* INDICATES ITMS TO BE PERFORMED BY THE CONTRACTOR. WORK ON THE VARIABLE MESSAGE SIGN IS LIMITED TO THE FOUNDATION AND SUPPORT STRUCTURE.

ALL OTHER ITEMS LISTED IN THE LEGEND WILL BE PERFORMED BY OTHERS. THIS INCLUDES ALL INNER-DUCT, WIRING WITHIN CONDUITS, AND THE VARIABLE MESSAGE SIGNS.

ITMS GENERAL NOTES

1. 9"x9"x6" HAND HOLE IN PARAPET WALL. (ITEM 746538)
2. 12"x18"x6" HAND HOLE IN PARAPET WALL. (ITEM 746538)
3. ALL PAVEMENT PUCK SENSORS SHALL BE INSTALLED APPROX. 4 FEET FROM THE EDGE OF THE TRAVEL LANE AS SHOWN.
4. SENSOR CABLE TYPE 11A SHALL BE INSTALLED IN 1" DIAMATER PVC CONDUIT THAT WILL BE CAST IN THE BRIDGE DECK UNDER ITEM 746538 - BRIDGE ELECTRICAL SYSTEM.
5. ALL PAVEMENT PUCK SENSOR HEADS SHALL BE INSTALLED FLUSH WITH FINISHED PAVEMENT SURFACE.
6. AT THE PROPOSED OFFSET OF 35' FROM THE FIRST DETECTION LANE THE RECOMMENDED MOUNTING HEIGHT FOR THE RADAR DETECTOR IS 34' OR AS SPECIFIED BY THE MANUFACTURER.

POLE SCHEDULE

POLE #	POLE TYPE	HEIGHT	MATERIAL
3	CAMERA	75'	STEEL
4	RTMS	40'	STEEL

NOTE: POLES SHALL BE INSTALLED BY OTHERS.

CONDUIT RUN SCHEDULE

CO#	# OF CONDUITS	SIZE	LENGTH	B/T/O/P	AMOUNT AND TYPE OF CABLE/ WIRE
ID	1	2"	10'	T	(1) 2/*8 U.F.w/GROUND
IE	1	2"	155'	T	(1) 2/*8 U.F.w/GROUND
IF	1	2"	10'	T/P	(1) 2/*8 U.F.w/GROUND
F16	1	4"	100'	T	(1) 144 CNT SM, (1) 48 CNT SM
F17	1	4"	180'	B	(3)12 CNT SM, (1) SENSOR CABLES
F18	1	4"	100'	T	(1) 12 CNT SM, (4) SENSOR CABLES
F20	1	4"	180'	T	(1) 12 CNT SM
F21	1	4"	100'	B	(2) SENSOR CABLES
F22	2	2.5"	55'	**	(2) SENSOR CABLES
F22A	1	4"	125'	**	EMPTY
F22B	1	4"	125'	**	EMPTY
F23	4	4"	15'	T	(1) 12 CNT SM, CAMERA CABLE
F24	1	3"	25'	T	CAMERA CABLE
F25	1	2.5"	15'	T	(1) SENSOR CABLES
F26	1	4"	190'	T	(1) 12 CNT SM
F28	1	2.5"	25'	T	(1) SENSOR CABLES
F29	1	4"	300'	T	(1) 144 CNT SM, (1) 48 CNT SM, (1) 12 CNT SM
F30	1	3"	50'	T	(1)12 CNT SM
F31	1	4"	305'	T	(1) 144 CNT SM, (1) 48 CNT SM

* DENOTES EXISTING B-BORE T-TRENCH O-OPEN P-ATTACH TO POLE SM-SINGLE MODE
** CONDUIT INSTALLED IN PARAPET WALL (ITEM 746538 - BRIDGE ELECTRICAL SYSTEM)

Unofficial Website Copy

DELAWARE DEPARTMENT OF TRANSPORTATION

ADDENDUMS / REVISIONS

SCALE 0 30 60 90 FEET

SR1, SOUTH FREDERICA GRADE SEPARATED INTERSECTION

CONTRACT	BRIDGE NO.	–
T200812202	DESIGNED BY: LCM	
COUNTY KENT	CHECKED BY: SFP/BAM	

SIGNING, STRIPING, AND ITMS PLAN

SHEET NO. 236 / TOTAL SHTS. 296

7/19/2013 G:\PROJECTS\06535.00 (DelDOT Agmt. 1376 DOTS Open End)\06535.07 SR1, S. Frederica\CADD Files\XM\ss07sf.dgn 09:22:56

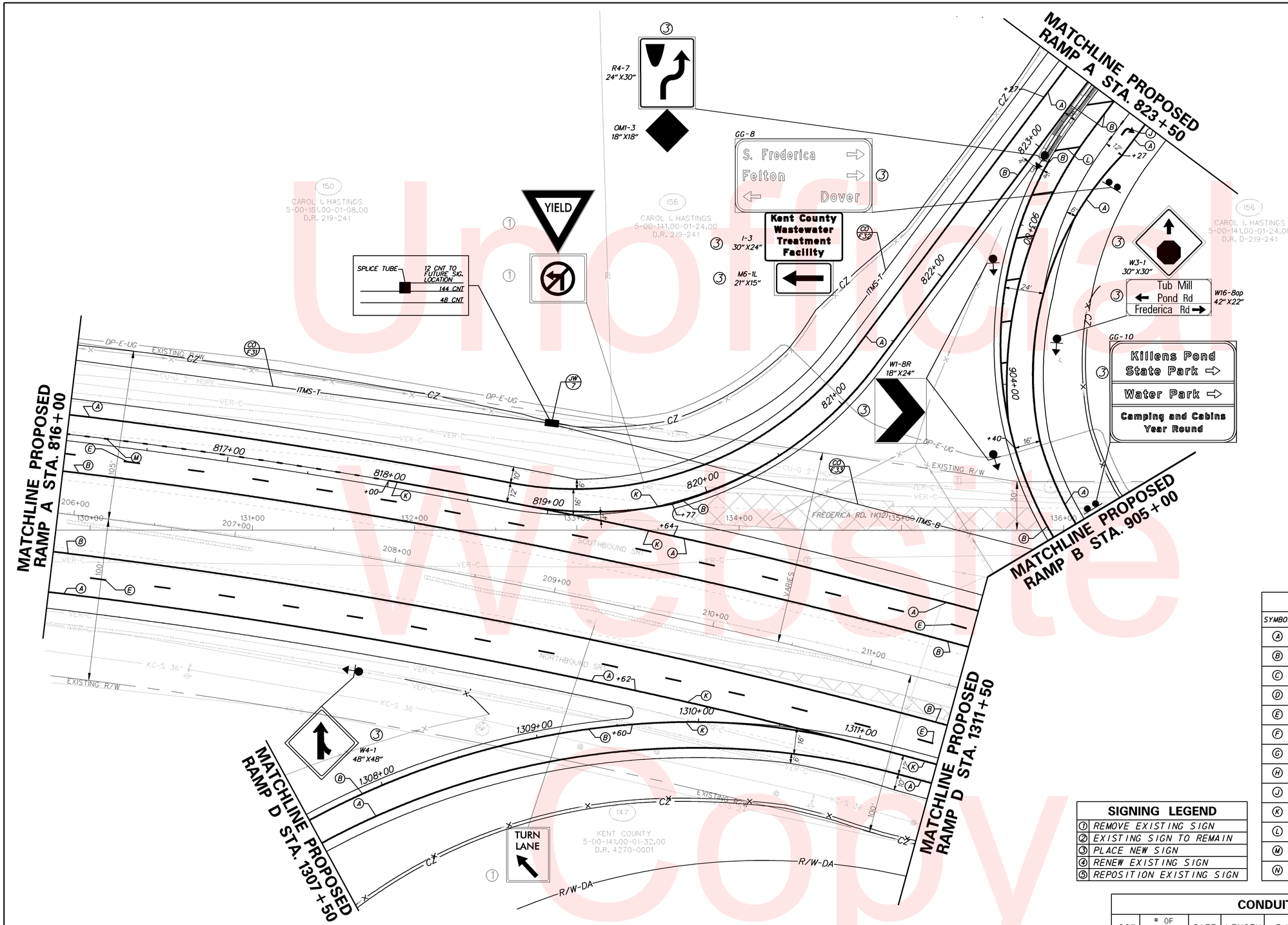

Unofficial Website Copy

ITMS LEGEND NOTES

* INDICATES ITMS TO BE PERFORMED BY THE CONTRACTOR. WORK ON THE VARIABLE MESSAGE SIGN IS LIMITED TO THE FOUNDATION AND SUPPORT STRUCTURE.

ALL OTHER ITEMS LISTED IN THE LEGEND WILL BE PERFORMED BY OTHERS. THIS INCLUDES ALL INNER-DUCT, WIRING WITHIN CONDUITS, AND THE VARIABLE MESSAGE SIGNS.

ITMS LEGEND

- JW X — PROPOSED JUNCTION WELL & TYPE *
- CO X — PROPOSED CONDUIT RUN & IDENTIFIER *
- PB X — PROPOSED POLE BASE IDENTIFIER *
- PL X — PROPOSED POLE IDENTIFIER
- PROPOSED POLE BASE *
- PROPOSED RADAR DETECTION
- EXISTING RADAR DETECTION
- 6'x6' SYSTEM LOOP
- CA X — PROPOSED ITMS CABINET & TYPE
- EXISTING SIGNAL CABINET (TYPE P) OR (TYPE M) AS NOTED
- PROPOSED SERVICE PEDESTAL
- HH X — PROPOSED HAND HOLE IDENTIFIER
- PROPOSED ROAD WEATHER INFORMATION SYSTEM (RWIS) PUCK SENSOR
- EXISTING ROAD WEATHER INFORMATION SYSTEM (RWIS) PUCK SENSOR
- ATR — AUTOMATIC TRAFFIC RECORDER (ATR)
- ITMS-T — 4" MULTIDUCT, PVC (TRENCH) WITH (4) 1" RIBBED INNER DUCT *
- ITMS-B — 4" MULTIDUCT, SDR-13.5 HDPE (BORE), WITH (4) 1" RIBBED INNER DUCT *
- VARIABLE MESSAGE SIGN WITH BUTTERFLY CANTILEVER *
- PROPOSED VIDEO MONITORING CAMERA (CCTV) ON 75' POLE WITH LOWERING DEVICE

PAVEMENT MARKINGS LEGEND

SYMBOL	ITEM	QUANTITY
A	5" SOLID WHITE EPOXY RESIN PAVEMENT STRIPING (ITEM 748548)	1929 LF
B	5" SOLID YELLOW EPOXY RESIN PAVEMENT STRIPING (ITEM 748548)	2165 LF
C	5" SOLID DOUBLE YELLOW EPOXY RESIN PAVEMENT STRIPING (ITEM 748548)	0 LF
D	5" DASHED WHITE EPOXY RESIN PAVEMENT STRIPING, 2' LINE & 6' GAP (ITEM 748548)	0 LF
E	5" DASHED WHITE EPOXY RESIN PAVEMENT STRIPING, 10' LINE & 30' GAP (ITEM 748548)	282 LF
F	5" DASHED YELLOW EPOXY RESIN PAVEMENT STRIPING, 10' LINE & 30' GAP (ITEM 748548)	0 LF
G	16" SOLID WHITE ALKYD THERMOPLASTIC PAVEMENT STRIPING (ITEM 748015)	0 SF
H	24" SOLID WHITE ALKYD THERMOPLASTIC PAVEMENT STRIPING (ITEM 748015)	0 SF
J	WHITE ALKYD THERMOPLASTIC PAVEMENT SYMBOL (ITEM 748015)	16 SF
K	10" SOLID WHITE EPOXY RESIN PAVEMENT STRIPING (ITEM 748549)	598 LF
L	10" SOLID YELLOW EPOXY RESIN PAVEMENT STRIPING (ITEM 748549)	80 LF
M	10" DASHED WHITE EPOXY RESIN PAVEMENT STRIPING, 3' LINE & 9' GAP (ITEM 748549)	50 LF
N	WHITE RETROREFLECTIVE PREFORMED PATTERNED MARKINGS, BIKE SYMBOL (ITEM 748553)	0 SF

SIGNING LEGEND

1	REMOVE EXISTING SIGN
2	EXISTING SIGN TO REMAIN
3	PLACE NEW SIGN
4	RENEW EXISTING SIGN
5	REPOSITION EXISTING SIGN

CONDUIT RUN SCHEDULE

CO#	# OF CONDUITS	SIZE	LENGTH	B/T/O/P	AMOUNT AND TYPE OF CABLE/ WIRE
F31	1	4"	295'	T	(1) 144 CNT SM, (1) 48 CNT SM
F32	1	4"	420'	T	(1) 12 CNT SM
F33	1	4"	305'	B	(1) 144 CNT SM, (1) 48 CNT SM

* DENOTES EXISTING B-BORE T-TRENCH O-OPEN P-ATTACH TO POLE SM-SINGLE MODE

DELAWARE DEPARTMENT OF TRANSPORTATION

ADDENDUMS / REVISIONS

SCALE 0 30 60 90 FEET

SR1, SOUTH FREDERICA GRADE SEPARATED INTERSECTION

CONTRACT	BRIDGE NO.	–
T200812202	DESIGNED BY: LCM	
COUNTY: KENT	CHECKED BY: SFP/BAM	

SIGNING, STRIPING, AND ITMS PLAN

SHEET NO. 237 / TOTAL SHTS. 296

7/19/2013
G:\PROJECTS\06535.00 (DelDOT Agmt. 1376 DOTS Open End)\06535.07 SR1, S. Frederica\CADD Files\XM\ss08sf.dgn
09:23:55

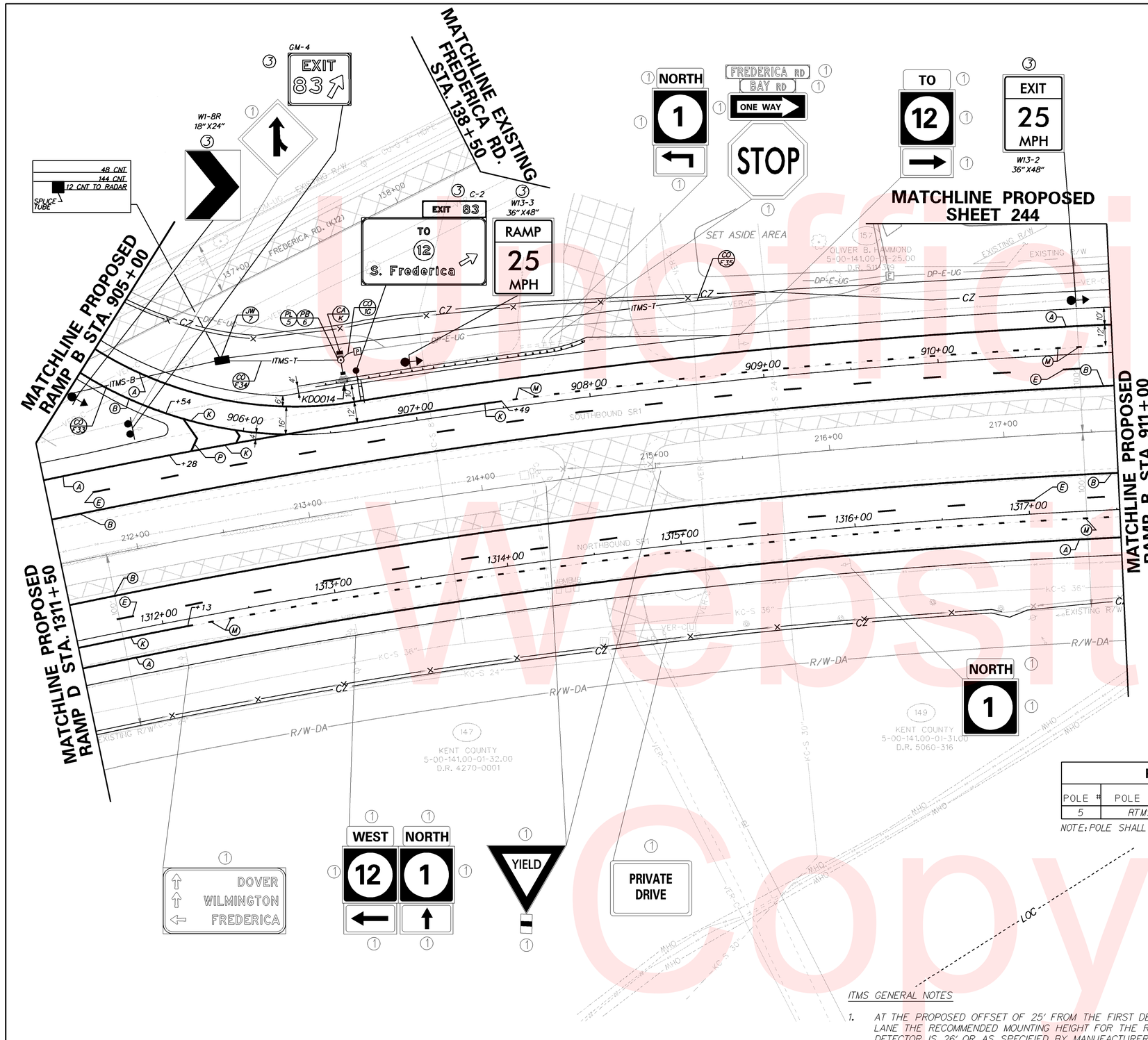

ITMS LEGEND NOTES

* INDICATES ITMS TO BE PERFORMED BY THE CONTRACTOR. WORK ON THE VARIABLE MESSAGE SIGN IS LIMITED TO THE FOUNDATION AND SUPPORT STRUCTURE.

ALL OTHER ITEMS LISTED IN THE LEGEND WILL BE PERFORMED BY OTHERS. THIS INCLUDES ALL INNER-DUCT, WIRING WITHIN CONDUITS, AND THE VARIABLE MESSAGE SIGNS.

ITMS LEGEND

JW X	PROPOSED JUNCTION WELL & TYPE *
CO X	PROPOSED CONDUIT RUN & IDENTIFIER *
PB X	PROPOSED POLE BASE IDENTIFIER *
PL X	PROPOSED POLE IDENTIFIER
	PROPOSED POLE BASE *
	PROPOSED RADAR DETECTION
	EXISTING RADAR DETECTION
	6'x6' SYSTEM LOOP
CA X	PROPOSED ITMS CABINET & TYPE
	EXISTING SIGNAL CABINET (TYPE P) OR (TYPE M) AS NOTED
P	PROPOSED SERVICE PEDESTAL
HH X	PROPOSED HAND HOLE IDENTIFIER
	PROPOSED ROAD WEATHER INFORMATION SYSTEM (RWIS) PUCK SENSOR
	EXISTING ROAD WEATHER INFORMATION SYSTEM (RWIS) PUCK SENSOR
ATR	AUTOMATIC TRAFFIC RECORDER (ATR)
—ITMS-T—	4" MULTIDUCT, PVC (TRENCH) WITH * (4) 1" RIBBED INNER DUCT
—ITMS-B—	4" MULTIDUCT, SDR-13.5 HDPE (BORE), * WITH (4) 1" RIBBED INNER DUCT
	VARIABLE MESSAGE SIGN WITH * BUTTERFLY CANTILEVER
	PROPOSED VIDEO MONITORING CAMERA (CCTV) ON 75' POLE WITH LOWERING DEVICE

PAVEMENT MARKINGS LEGEND

SYMBOL	ITEM	QUANTITY
A	5" SOLID WHITE EPOXY RESIN PAVEMENT STRIPING (ITEM 748548)	1264 LF
B	5" SOLID YELLOW EPOXY RESIN PAVEMENT STRIPING (ITEM 748548)	1255 LF
C	5" SOLID DOUBLE YELLOW EPOXY RESIN PAVEMENT STRIPING (ITEM 748548)	0 LF
D	5" DASHED WHITE EPOXY RESIN PAVEMENT STRIPING, 2' LINE & 6' GAP (ITEM 748548)	0 LF
E	5" DASHED WHITE EPOXY RESIN PAVEMENT STRIPING, 10' LINE & 30' GAP (ITEM 748548)	300 LF
F	5" DASHED YELLOW EPOXY RESIN PAVEMENT STRIPING, 10' LINE & 30' GAP (ITEM 748548)	0 LF
G	16" SOLID WHITE ALKYD THERMOPLASTIC PAVEMENT STRIPING (ITEM 748015)	0 SF
H	24" SOLID WHITE ALKYD THERMOPLASTIC PAVEMENT STRIPING (ITEM 748015)	0 SF
J	WHITE ALKYD THERMOPLASTIC PAVEMENT SYMBOL (ITEM 748015)	0 SF
K	10" SOLID WHITE EPOXY RESIN PAVEMENT STRIPING (ITEM 748549)	375 LF
L	10" SOLID YELLOW EPOXY RESIN PAVEMENT STRIPING (ITEM 748549)	0 LF
M	10" DASHED WHITE EPOXY RESIN PAVEMENT STRIPING, 3' LINE & 9' GAP (ITEM 748549)	223 LF
N	WHITE RETROREFLECTIVE PREFORMED PATTERNED MARKINGS, BIKE SYMBOL (ITEM 748553)	0 SF
O	3" SOLID BLACK EPOXY RESIN PAVEMENT STRIPING (ITEM 748557)	0 LF
P	12" SOLID WHITE ALKYD THERMOPLASTIC PAVEMENT STRIPING (ITEM 748027)	32 LF

POLE SCHEDULE

POLE #	POLE TYPE	HEIGHT	MATERIAL
5	RTMS	40'	STEEL

NOTE: POLE SHALL BE INSTALLED BY OTHERS.

SIGNING LEGEND

1	REMOVE EXISTING SIGN
2	EXISTING SIGN TO REMAIN
3	PLACE NEW SIGN
4	RENEW EXISTING SIGN
5	REPOSITION EXISTING SIGN

ITMS GENERAL NOTES

1. AT THE PROPOSED OFFSET OF 25' FROM THE FIRST DETECTION LANE THE RECOMMENDED MOUNTING HEIGHT FOR THE RADAR DETECTOR IS 26' OR AS SPECIFIED BY MANUFACTURER.

CONDUIT RUN SCHEDULE

CO#	# OF CONDUITS	SIZE	LENGTH	B/T/O/P	AMOUNT AND TYPE OF CABLE/ WIRE
IG	1	2"	15'	T/P	(1) 2/*8 U.F.w/GROUND
F33	1	4"	95'	B	(1) 144 CNT SM, (1) 48 CNT SM
F34	1	3"	70'	T	(1) 12 CNT SM
F35	1	4"	510'	T	(1) 144 CNT SM, (1) 48 CNT SM

* DENOTES EXISTING B-BORE T-TRENCH O-OPEN P-ATTACH TO POLE SM-SINGLE MODE

DELAWARE DEPARTMENT OF TRANSPORTATION

ADDENDUMS / REVISIONS

SCALE 0 30 60 90 FEET

SR1, SOUTH FREDERICA GRADE SEPARATED INTERSECTION

CONTRACT	BRIDGE NO.	–
T200812202	DESIGNED BY: LCM	
COUNTY: KENT	CHECKED BY: SFP/BAM	

SIGNING, STRIPING, AND ITMS PLAN

SHEET NO. 238 TOTAL SHTS. 296

7/19/2013
G:\PROJECTS\06535.00 (DelDOT Agmt. 1376 DOTS Open End)\06535.07 SR1, S. Frederica\CADD Files\XM\ss09sf.dgn
09:25:00

Unofficial Website Copy

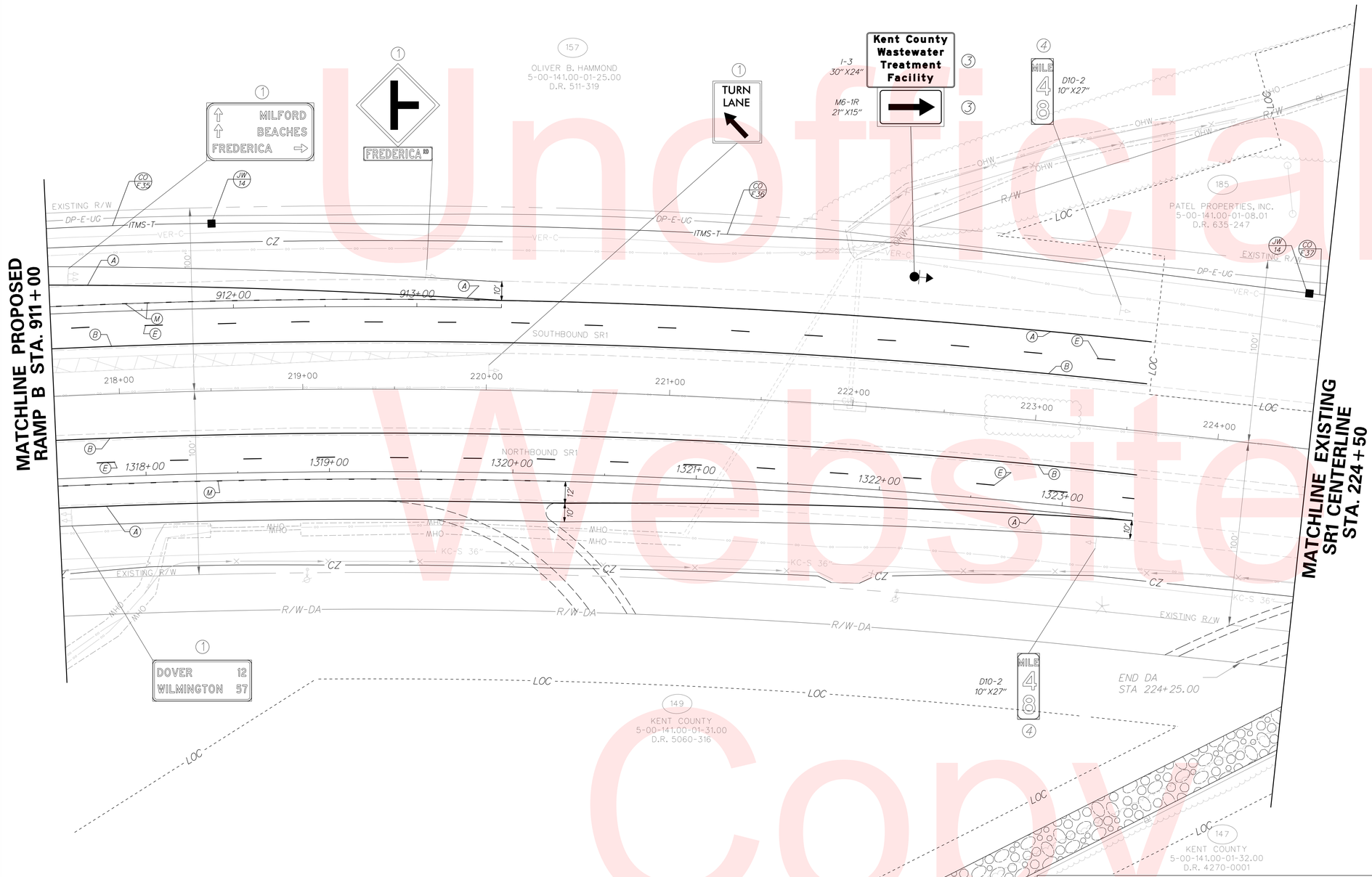

Unofficial Website Copy

ITMS LEGEND NOTES

* INDICATES ITMS TO BE PERFORMED BY THE CONTRACTOR. WORK ON THE VARIABLE MESSAGE SIGN IS LIMITED TO THE FOUNDATION AND SUPPORT STRUCTURE.

ALL OTHER ITEMS LISTED IN THE LEGEND WILL BE PERFORMED BY OTHERS. THIS INCLUDES ALL INNER-DUCT, WIRING WITHIN CONDUITS, AND THE VARIABLE MESSAGE SIGNS.

ITMS LEGEND

- JW X — PROPOSED JUNCTION WELL & TYPE *
- CO X — PROPOSED CONDUIT RUN & IDENTIFIER *
- PB X — PROPOSED POLE BASE IDENTIFIER *
- PL X — PROPOSED POLE IDENTIFIER
- PROPOSED POLE BASE *
- PROPOSED RADAR DETECTION
- EXISTING RADAR DETECTION
- 6'x6' SYSTEM LOOP
- CA X — PROPOSED ITMS CABINET & TYPE
- EXISTING SIGNAL CABINET (TYPE P) OR (TYPE M) AS NOTED
- P — PROPOSED SERVICE PEDESTAL
- HH X — PROPOSED HAND HOLE IDENTIFIER
- PROPOSED ROAD WEATHER INFORMATION SYSTEM (RWIS) PUCK SENSOR
- EXISTING ROAD WEATHER INFORMATION SYSTEM (RWIS) PUCK SENSOR
- ATR — AUTOMATIC TRAFFIC RECORDER (ATR)
- ITMS-T — 4" MULTIDUCT, PVC (TRENCH) WITH * (4) 1" RIBBED INNER DUCT
- ITMS-B — 4" MULTIDUCT, SDR-13.5 HDPE (BORE), * WITH (4) 1" RIBBED INNER DUCT
- VARIABLE MESSAGE SIGN WITH * BUTTERFLY CANTILEVER
- PROPOSED VIDEO MONITORING CAMERA (CCTV) ON 75' POLE WITH LOWERING DEVICE

PAVEMENT MARKINGS LEGEND

SYMBOL	ITEM	QUANTITY
A	5" SOLID WHITE EPOXY RESIN PAVEMENT STRIPING (ITEM 748548)	1188 LF
B	5" SOLID YELLOW EPOXY RESIN PAVEMENT STRIPING (ITEM 748548)	1180 LF
C	5" SOLID DOUBLE YELLOW EPOXY RESIN PAVEMENT STRIPING (ITEM 748548)	0 LF
D	5" DASHED WHITE EPOXY RESIN PAVEMENT STRIPING, 2' LINE & 6' GAP (ITEM 748548)	0 LF
E	5" DASHED WHITE EPOXY RESIN PAVEMENT STRIPING, 10' LINE & 30' GAP (ITEM 748548)	298 LF
F	5" DASHED YELLOW EPOXY RESIN PAVEMENT STRIPING, 10' LINE & 30' GAP (ITEM 748548)	0 LF
G	16" SOLID WHITE ALKYD THERMOPLASTIC PAVEMENT STRIPING (ITEM 748015)	0 SF
H	24" SOLID WHITE ALKYD THERMOPLASTIC PAVEMENT STRIPING (ITEM 748015)	0 SF
J	WHITE ALKYD THERMOPLASTIC PAVEMENT SYMBOL (ITEM 748015)	0 SF
K	10" SOLID WHITE EPOXY RESIN PAVEMENT STRIPING (ITEM 748549)	0 LF
L	10" SOLID YELLOW EPOXY RESIN PAVEMENT STRIPING (ITEM 748549)	0 LF
M	10" DASHED WHITE EPOXY RESIN PAVEMENT STRIPING, 3' LINE & 9' GAP (ITEM 748549)	130 LF
N	WHITE RETROREFLECTIVE PREFORMED PATTERNED MARKINGS, BIKE SYMBOL (ITEM 748553)	0 SF

CONDUIT RUN SCHEDULE

CO#	# OF CONDUITS	SIZE	LENGTH	B/T/O/P	AMOUNT AND TYPE OF CABLE/WIRE
F35	1	4"	90'	T	(1) 144 CNT SM, (1) 48 CNT SM
F36	1	4"	600'	T	(1) 144 CNT SM, (1) 48 CNT SM
F37	1	4"	10'	T	(1) 144 CNT SM, (1) 48 CNT SM

* DENOTES EXISTING B-BORE T-TRENCH O-OPEN P-ATTACH TO POLE SM-SINGLE MODE

SIGNING LEGEND

1	REMOVE EXISTING SIGN
2	EXISTING SIGN TO REMAIN
3	PLACE NEW SIGN
4	RENEW EXISTING SIGN
5	REPOSITION EXISTING SIGN

DELAWARE DEPARTMENT OF TRANSPORTATION

ADDENDUMS / REVISIONS

SCALE 0 30 60 90 FEET

SR1, SOUTH FREDERICA GRADE SEPARATED INTERSECTION

CONTRACT	BRIDGE NO.	–
T200812202	DESIGNED BY: LCM	
COUNTY		
KENT	CHECKED BY: SFP/BAM	

SIGNING, STRIPING, AND ITMS PLAN

SHEET NO. 239

TOTAL SHTS. 296

9/11/2015
G:\PROJECTS\06535.00 (DelDOT Agmt. 1376 DOTS Open End)\06535.07 SR1, S. Frederica\CADD Files\XM\ss10st.dgn
2:26:32 PM

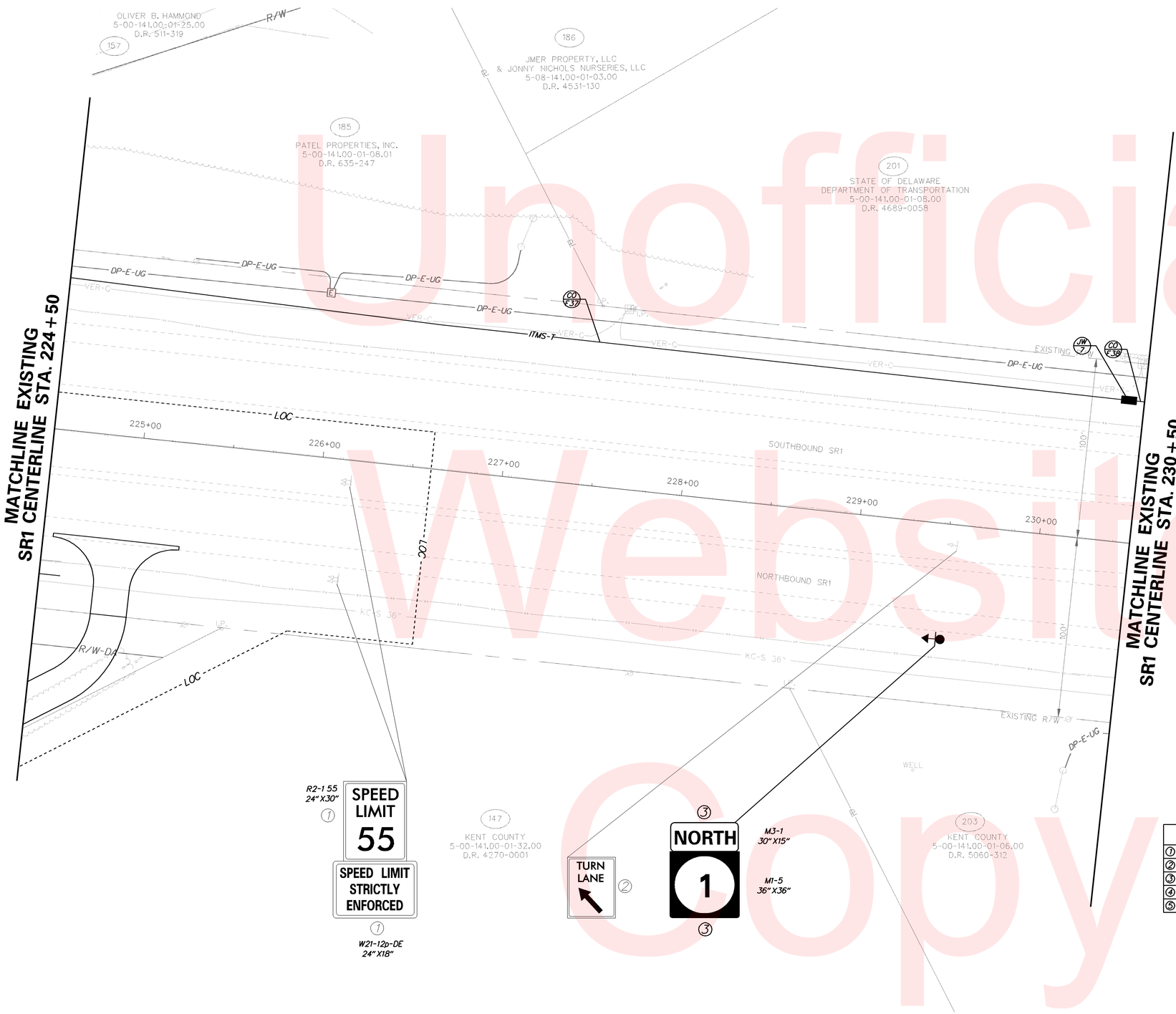

ITMS LEGEND NOTES

* INDICATES ITMS TO BE PERFORMED BY THE CONTRACTOR. WORK ON THE VARIABLE MESSAGE SIGN IS LIMITED TO THE FOUNDATION AND SUPPORT STRUCTURE.

ALL OTHER ITEMS LISTED IN THE LEGEND WILL BE PERFORMED BY OTHERS. THIS INCLUDES ALL INNER-DUCT, WIRING WITHIN CONDUITS, AND THE VARIABLE MESSAGE SIGNS.

ITMS LEGEND

JW X	PROPOSED JUNCTION WELL & TYPE *
CO X	PROPOSED CONDUIT RUN & IDENTIFIER *
PB X	PROPOSED POLE BASE IDENTIFIER *
PL X	PROPOSED POLE IDENTIFIER
	PROPOSED POLE BASE *
	PROPOSED RADAR DETECTION
	EXISTING RADAR DETECTION
	6'x6' SYSTEM LOOP
CA X	PROPOSED ITMS CABINET & TYPE
	EXISTING SIGNAL CABINET (TYPE P) OR (TYPE M) AS NOTED
P	PROPOSED SERVICE PEDESTAL
HH X	PROPOSED HAND HOLE IDENTIFIER
	PROPOSED ROAD WEATHER INFORMATION SYSTEM (RWIS) PUCK SENSOR
	EXISTING ROAD WEATHER INFORMATION SYSTEM (RWIS) PUCK SENSOR
ATR	AUTOMATIC TRAFFIC RECORDER (ATR)
—ITMS-T—	4" MULTIDUCT, PVC (TRENCH) WITH (4) 1" RIBBED INNER DUCT *
—ITMS-B—	4" MULTIDUCT, SDR-13.5 HDPE (BORE), WITH (4) 1" RIBBED INNER DUCT *
	VARIABLE MESSAGE SIGN WITH BUTTERFLY CANTILEVER *
	PROPOSED VIDEO MONITORING CAMERA (CCTV) ON 75' POLE WITH LOWERING DEVICE

PAVEMENT MARKINGS LEGEND

SYMBOL	ITEM	QUANTITY
A	5" SOLID WHITE EPOXY RESIN PAVEMENT STRIPING (ITEM 748548)	0 LF
B	5" SOLID YELLOW EPOXY RESIN PAVEMENT STRIPING (ITEM 748548)	0 LF
C	5" SOLID DOUBLE YELLOW EPOXY RESIN PAVEMENT STRIPING (ITEM 748548)	0 LF
D	5" DASHED WHITE EPOXY RESIN PAVEMENT STRIPING, 2' LINE & 6' GAP (ITEM 748548)	0 LF
E	5" DASHED WHITE EPOXY RESIN PAVEMENT STRIPING, 10' LINE & 30' GAP (ITEM 748548)	0 LF
F	5" DASHED YELLOW EPOXY RESIN PAVEMENT STRIPING, 10' LINE & 30' GAP (ITEM 748548)	0 LF
G	16" SOLID WHITE ALKYD THERMOPLASTIC PAVEMENT STRIPING (ITEM 748015)	0 SF
H	24" SOLID WHITE ALKYD THERMOPLASTIC PAVEMENT STRIPING (ITEM 748015)	0 SF
J	WHITE ALKYD THERMOPLASTIC PAVEMENT SYMBOL (ITEM 748015)	0 SF
K	10" SOLID WHITE EPOXY RESIN PAVEMENT STRIPING (ITEM 748549)	0 LF
L	10" SOLID YELLOW EPOXY RESIN PAVEMENT STRIPING (ITEM 748549)	0 LF
M	10" DASHED WHITE EPOXY RESIN PAVEMENT STRIPING, 3' LINE & 9' GAP (ITEM 748549)	0 LF
N	WHITE RETROREFLECTIVE PREFORMED PATTERNED MARKINGS, BIKE SYMBOL (ITEM 748553)	0 SF

SIGNING LEGEND

1	REMOVE EXISTING SIGN
2	EXISTING SIGN TO REMAIN
3	PLACE NEW SIGN
4	RENEW EXISTING SIGN
5	REPOSITION EXISTING SIGN

CONDUIT RUN SCHEDULE

CO#	# OF CONDUITS	SIZE	LENGTH	B/T/O/P	AMOUNT AND TYPE OF CABLE/ WIRE
F37	1	4"	590'	T	(1) 144 CNT SM, (1) 48 CNT SM
F38	1	4"	10'	B	(1) 144 CNT SM, (1) 48 CNT SM

* DENOTES EXISTING B-BORE T-TRENCH O-OPEN P-ATTACH TO POLE SM-SINGLE MODE

DELAWARE
DEPARTMENT OF TRANSPORTATION

ADDENDUMS / REVISIONS

SCALE
0 30 60 90
FEET

SR1, SOUTH FREDERICA
GRADE SEPARATED INTERSECTION

CONTRACT	BRIDGE NO.	–
T200812202	DESIGNED BY: LCM	
COUNTY	CHECKED BY: SFP/BAM	
KENT		

SIGNING, STRIPING, AND ITMS PLAN

SHEET NO. 240
TOTAL SHTS. 296

5/24/2013
G:\PROJECTS\06535.00 (DelDOT Agmt. 1376 DOTS Open End)\06535.07 SR1, S. Frederica\CADD Files\XM\ss11sf.dgn
10:13:59

Unofficial Website Copy

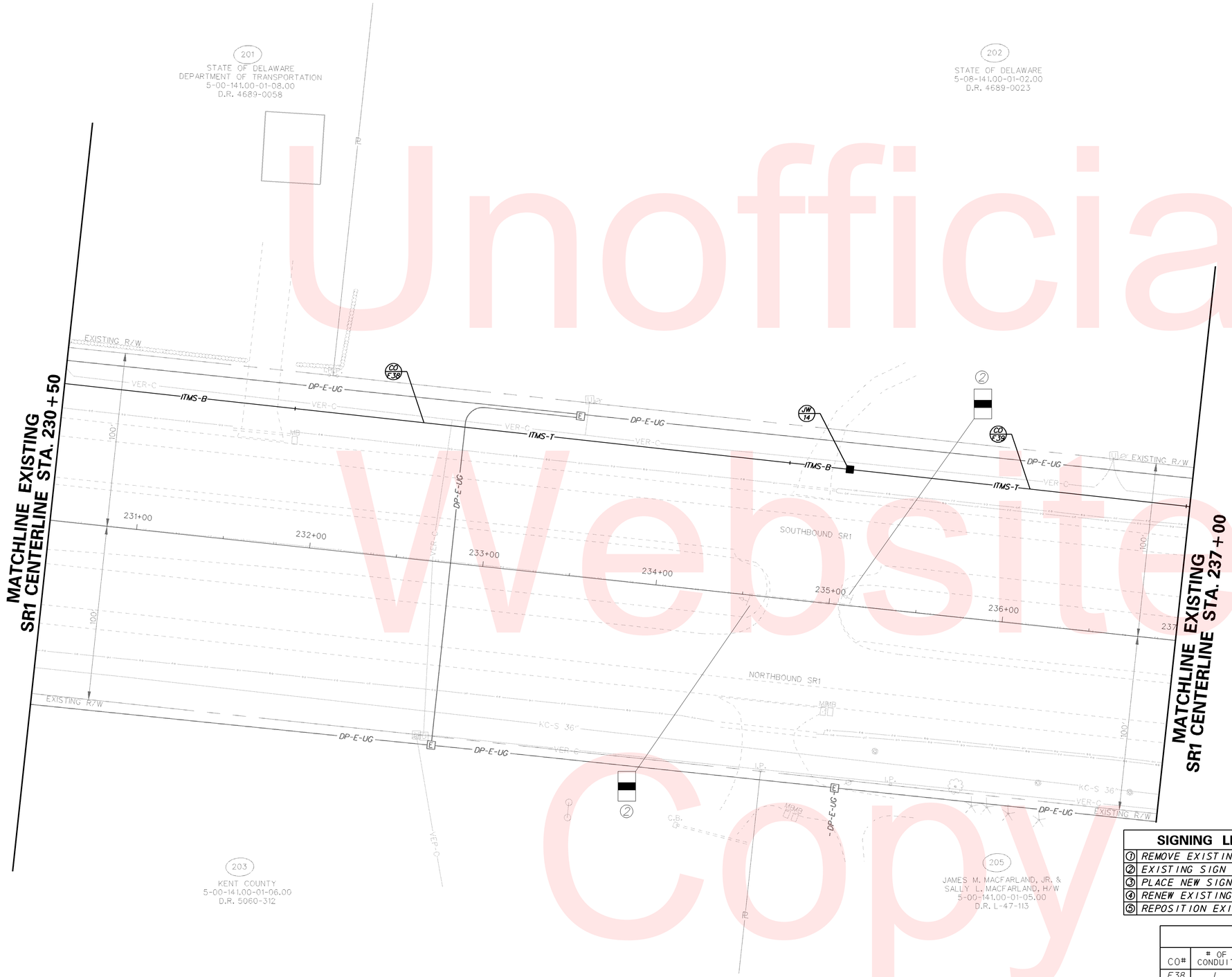

ITMS LEGEND NOTES

* INDICATES ITMS TO BE PERFORMED BY THE CONTRACTOR. WORK ON THE VARIABLE MESSAGE SIGN IS LIMITED TO THE FOUNDATION AND SUPPORT STRUCTURE.

ALL OTHER ITEMS LISTED IN THE LEGEND WILL BE PERFORMED BY OTHERS. THIS INCLUDES ALL INNER-DUCT, WIRING WITHIN CONDUITS, AND THE VARIABLE MESSAGE SIGNS.

ITMS LEGEND

- JW/X — PROPOSED JUNCTION WELL & TYPE*
- CO/X — PROPOSED CONDUIT RUN & IDENTIFIER*
- PB/X — PROPOSED POLE BASE IDENTIFIER*
- PL/X — PROPOSED POLE IDENTIFIER
- PROPOSED POLE BASE*
- PROPOSED RADAR DETECTION
- EXISTING RADAR DETECTION
- 6'x6' SYSTEM LOOP
- CA/X — PROPOSED ITMS CABINET & TYPE
- EXISTING SIGNAL CABINET (TYPE P) OR (TYPE M) AS NOTED
- P — PROPOSED SERVICE PEDESTAL
- HH/X — PROPOSED HAND HOLE IDENTIFIER
- PROPOSED ROAD WEATHER INFORMATION SYSTEM (RWIS) PUCK SENSOR
- EXISTING ROAD WEATHER INFORMATION SYSTEM (RWIS) PUCK SENSOR
- ATR — AUTOMATIC TRAFFIC RECORDER (ATR)
- ITMS-T — 4" MULTIDUCT, PVC (TRENCH) WITH* (4) 1" RIBBED INNER DUCT
- ITMS-B — 4" MULTIDUCT, SDR-13.5 HDPE (BORE),* WITH (4) 1" RIBBED INNER DUCT
- VARIABLE MESSAGE SIGN WITH* BUTTERFLY CANTILEVER
- PROPOSED VIDEO MONITORING CAMERA (CCTV) ON 75' POLE WITH LOWERING DEVICE

PAVEMENT MARKINGS LEGEND

SYMBOL	ITEM	QUANTITY
A	5" SOLID WHITE EPOXY RESIN PAVEMENT STRIPING (ITEM 748548)	0 LF
B	5" SOLID YELLOW EPOXY RESIN PAVEMENT STRIPING (ITEM 748548)	0 LF
C	5" SOLID DOUBLE YELLOW EPOXY RESIN PAVEMENT STRIPING (ITEM 748548)	0 LF
D	5" DASHED WHITE EPOXY RESIN PAVEMENT STRIPING, 2' LINE & 6' GAP (ITEM 748548)	0 LF
E	5" DASHED WHITE EPOXY RESIN PAVEMENT STRIPING, 10' LINE & 30' GAP (ITEM 748548)	0 LF
F	5" DASHED YELLOW EPOXY RESIN PAVEMENT STRIPING, 10' LINE & 30' GAP (ITEM 748548)	0 LF
G	16" SOLID WHITE ALKYD THERMOPLASTIC PAVEMENT STRIPING (ITEM 748015)	0 SF
H	24" SOLID WHITE ALKYD THERMOPLASTIC PAVEMENT STRIPING (ITEM 748015)	0 SF
J	WHITE ALKYD THERMOPLASTIC PAVEMENT SYMBOL (ITEM 748015)	0 SF
K	10" SOLID WHITE EPOXY RESIN PAVEMENT STRIPING (ITEM 748549)	0 LF
L	10" SOLID YELLOW EPOXY RESIN PAVEMENT STRIPING (ITEM 748549)	0 LF
M	10" DASHED WHITE EPOXY RESIN PAVEMENT STRIPING, 3' LINE & 9' GAP (ITEM 748549)	0 LF
N	WHITE RETROREFLECTIVE PREFORMED PATTERNED MARKINGS, BIKE SYMBOL (ITEM 748553)	0 SF

SIGNING LEGEND

1	REMOVE EXISTING SIGN
2	EXISTING SIGN TO REMAIN
3	PLACE NEW SIGN
4	RENEW EXISTING SIGN
5	REPOSITION EXISTING SIGN

CONDUIT RUN SCHEDULE

CO#	# OF CONDUITS	SIZE	LENGTH	B/T/O/P	AMOUNT AND TYPE OF CABLE/ WIRE
F38	1	4"	450'	B/T	(1) 144 CNT SM, (1) 48 CNT SM
F39	1	4"	195'	T	(1) 144 CNT SM, (1) 48 CNT SM

* DENOTES EXISTING B-BORE T-TRENCH O-OPEN P-ATTACH TO POLE SM-SINGLE MODE

Unofficial Website Copy

DELAWARE DEPARTMENT OF TRANSPORTATION

ADDENDUMS / REVISIONS

SCALE 0 30 60 90 FEET

SR1, SOUTH FREDERICA GRADE SEPARATED INTERSECTION

CONTRACT	BRIDGE NO.	–
T200812202	DESIGNED BY: LCM	
COUNTY: KENT	CHECKED BY: SFP/BAM	

SIGNING, STRIPING, AND ITMS PLAN

SHEET NO. 241 / TOTAL SHTS. 296

5/24/2013 G:\PROJECTS\06535.00 (DelDOT Agmt. 1376 DOTS Open End)\06535.07 SR1, S. Frederica\CADD Files\XM\ss12sf.dgn 10:14:25

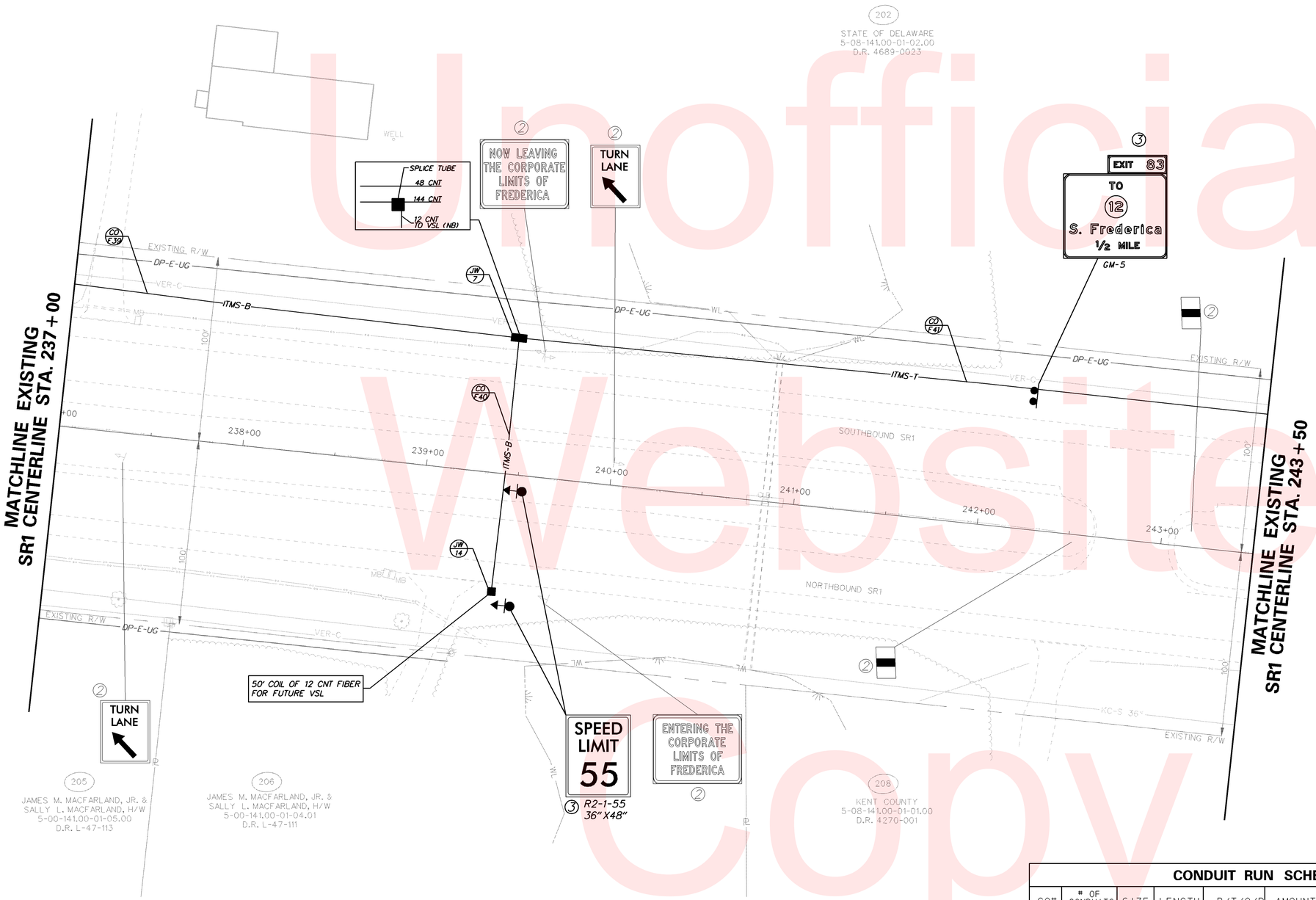

ITMS LEGEND NOTES

* INDICATES ITMS TO BE PERFORMED BY THE CONTRACTOR. WORK ON THE VARIABLE MESSAGE SIGN IS LIMITED TO THE FOUNDATION AND SUPPORT STRUCTURE.

ALL OTHER ITEMS LISTED IN THE LEGEND WILL BE PERFORMED BY OTHERS. THIS INCLUDES ALL INNER-DUCT, WIRING WITHIN CONDUITS, AND THE VARIABLE MESSAGE SIGNS.

ITMS LEGEND

- JW/X — PROPOSED JUNCTION WELL & TYPE *
- CO/X — PROPOSED CONDUIT RUN & IDENTIFIER *
- PB/X — PROPOSED POLE BASE IDENTIFIER *
- PL/X — PROPOSED POLE IDENTIFIER
- PROPOSED POLE BASE *
- PROPOSED RADAR DETECTION
- EXISTING RADAR DETECTION
- 6'x6' SYSTEM LOOP
- CA/X — PROPOSED ITMS CABINET & TYPE
- EXISTING SIGNAL CABINET (TYPE P) OR (TYPE M) AS NOTED
- P — PROPOSED SERVICE PEDESTAL
- HH/X — PROPOSED HAND HOLE IDENTIFIER
- PROPOSED ROAD WEATHER INFORMATION SYSTEM (RWIS) PUCK SENSOR
- EXISTING ROAD WEATHER INFORMATION SYSTEM (RWIS) PUCK SENSOR
- ATR — AUTOMATIC TRAFFIC RECORDER (ATR)
- ITMS-T — 4" MULTIDUCT, PVC (TRENCH) WITH * (4) 1" RIBBED INNER DUCT
- ITMS-B — 4" MULTIDUCT, SDR-13.5 HDPE (BORE), * WITH (4) 1" RIBBED INNER DUCT
- VARIABLE MESSAGE SIGN WITH * BUTTERFLY CANTILEVER
- PROPOSED VIDEO MONITORING CAMERA (CCTV) ON 75' POLE WITH LOWERING DEVICE

PAVEMENT MARKINGS LEGEND

SYMBOL	ITEM	QUANTITY
A	5" SOLID WHITE EPOXY RESIN PAVEMENT STRIPING (ITEM 748548)	0 LF
B	5" SOLID YELLOW EPOXY RESIN PAVEMENT STRIPING (ITEM 748548)	0 LF
C	5" SOLID DOUBLE YELLOW EPOXY RESIN PAVEMENT STRIPING (ITEM 748548)	0 LF
D	5" DASHED WHITE EPOXY RESIN PAVEMENT STRIPING, 2' LINE & 6' GAP (ITEM 748548)	0 LF
E	5" DASHED WHITE EPOXY RESIN PAVEMENT STRIPING, 10' LINE & 30' GAP (ITEM 748548)	0 LF
F	5" DASHED YELLOW EPOXY RESIN PAVEMENT STRIPING, 10' LINE & 30' GAP (ITEM 748548)	0 LF
G	16" SOLID WHITE ALKYD THERMOPLASTIC PAVEMENT STRIPING (ITEM 748015)	0 SF
H	24" SOLID WHITE ALKYD THERMOPLASTIC PAVEMENT STRIPING (ITEM 748015)	0 SF
J	WHITE ALKYD THERMOPLASTIC PAVEMENT SYMBOL (ITEM 748015)	0 SF
K	10" SOLID WHITE EPOXY RESIN PAVEMENT STRIPING (ITEM 748549)	0 LF
L	10" SOLID YELLOW EPOXY RESIN PAVEMENT STRIPING (ITEM 748549)	0 LF
M	10" DASHED WHITE EPOXY RESIN PAVEMENT STRIPING, 3' LINE & 9' GAP (ITEM 748549)	0 LF
N	WHITE RETROREFLECTIVE PREFORMED PATTERNED MARKINGS, BIKE SYMBOL (ITEM 748553)	0 SF

CONDUIT RUN SCHEDULE

CO#	# OF CONDUITS	SIZE	LENGTH	B/T/O/P	AMOUNT AND TYPE OF CABLE/ WIRE
F39	1	4"	245'	B	(1) 144 CNT SM, (1) 48 CNT SM
F40	1	4"	140'	B	(1) 12 CNT SM
F41	1	4"	140'	T	(1) 144 CNT SM, (1) 48 CNT SM

* DENOTES EXISTING B-BORE T-TRENCH O-OPEN P-ATTACH TO POLE SM-SINGLE MODE

SIGNING LEGEND

1	REMOVE EXISTING SIGN
2	EXISTING SIGN TO REMAIN
3	PLACE NEW SIGN
4	RENEW EXISTING SIGN
5	REPOSITION EXISTING SIGN

Unofficial Website Copy

DELAWARE DEPARTMENT OF TRANSPORTATION

ADDENDUMS / REVISIONS

SCALE 0 30 60 90 FEET

SR1, SOUTH FREDERICA GRADE SEPARATED INTERSECTION

CONTRACT T200812202 | COUNTY KENT | BRIDGE NO. – | DESIGNED BY: LCM | CHECKED BY: SFP/BAM

SIGNING, STRIPING, AND ITMS PLAN

SHEET NO. 242 | TOTAL SHTS. 296

5/24/2013
2:\PROJECTS\06535.00 (DelDOT Agmt. 1376 DOTS Open End)\06535.07 SR1, S. Frederica\CADD Files\XM\ss13sf.dgn
10:14:51

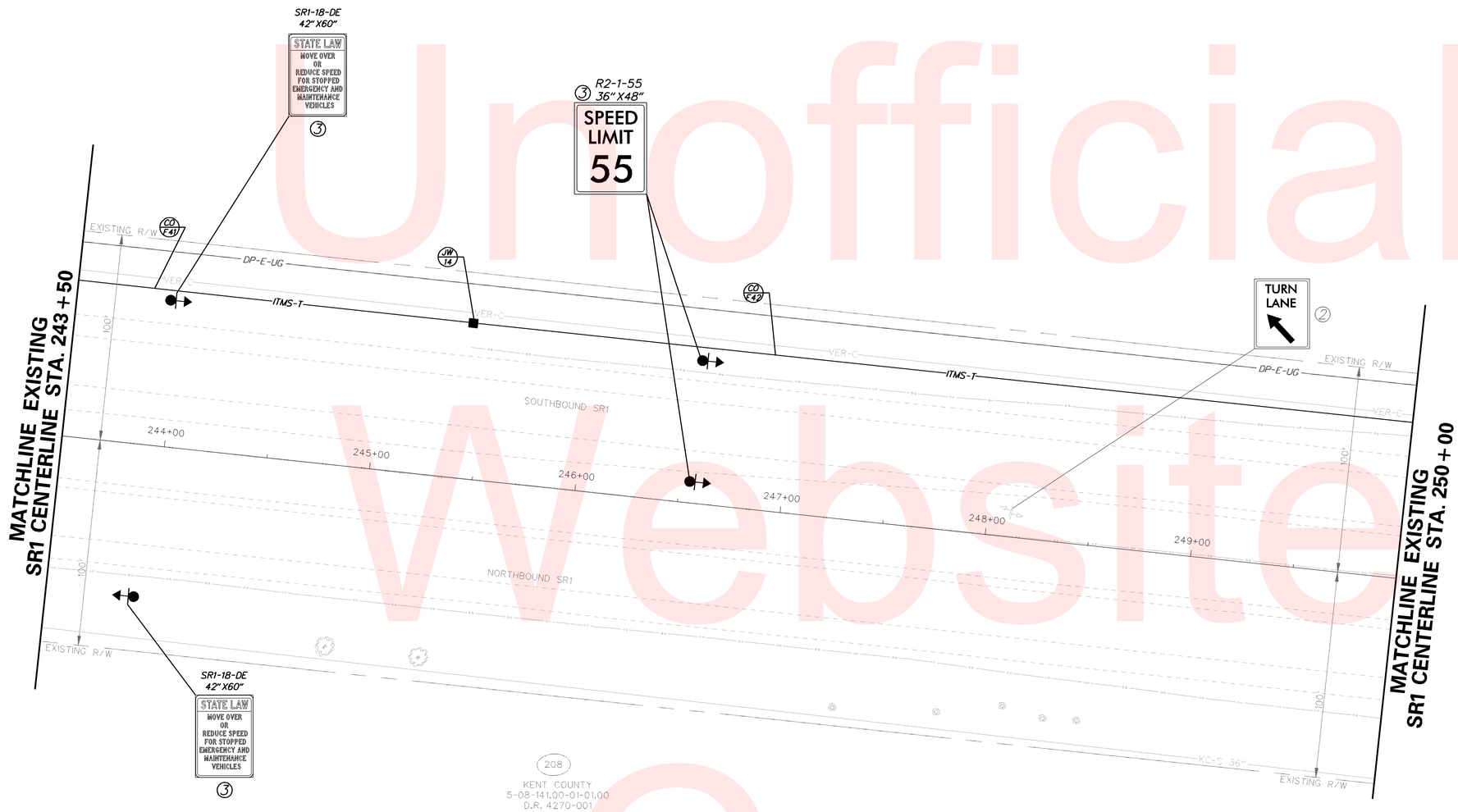

Unofficial Website Copy

ITMS LEGEND NOTES

* INDICATES ITMS TO BE PERFORMED BY THE CONTRACTOR. WORK ON THE VARIABLE MESSAGE SIGN IS LIMITED TO THE FOUNDATION AND SUPPORT STRUCTURE.

ALL OTHER ITEMS LISTED IN THE LEGEND WILL BE PERFORMED BY OTHERS. THIS INCLUDES ALL INNER-DUCT, WIRING WITHIN CONDUITS, AND THE VARIABLE MESSAGE SIGNS.

ITMS LEGEND

- JW/X — PROPOSED JUNCTION WELL & TYPE *
- CO/X — PROPOSED CONDUIT RUN & IDENTIFIER *
- PB/X — PROPOSED POLE BASE IDENTIFIER *
- PL/X — PROPOSED POLE IDENTIFIER
- PROPOSED POLE BASE *
- PROPOSED RADAR DETECTION
- EXISTING RADAR DETECTION
- 6'x6' SYSTEM LOOP
- CA/X — PROPOSED ITMS CABINET & TYPE
- EXISTING SIGNAL CABINET (TYPE P) OR (TYPE M) AS NOTED
- P — PROPOSED SERVICE PEDESTAL
- HH/X — PROPOSED HAND HOLE IDENTIFIER
- PROPOSED ROAD WEATHER INFORMATION SYSTEM (RWIS) PUCK SENSOR
- EXISTING ROAD WEATHER INFORMATION SYSTEM (RWIS) PUCK SENSOR
- ATR — AUTOMATIC TRAFFIC RECORDER (ATR)
- ITMS-T — 4" MULTIDUCT, PVC (TRENCH) WITH * (4) 1" RIBBED INNER DUCT
- ITMS-B — 4" MULTIDUCT, SDR-13.5 HDPE (BORE), * WITH (4) 1" RIBBED INNER DUCT
- VARIABLE MESSAGE SIGN WITH * BUTTERFLY CANTILEVER
- PROPOSED VIDEO MONITORING CAMERA (CCTV) ON 75' POLE WITH LOWERING DEVICE

PAVEMENT MARKINGS LEGEND

SYMBOL	ITEM	QUANTITY
A	5" SOLID WHITE EPOXY RESIN PAVEMENT STRIPING (ITEM 748548)	0 LF
B	5" SOLID YELLOW EPOXY RESIN PAVEMENT STRIPING (ITEM 748548)	0 LF
C	5" SOLID DOUBLE YELLOW EPOXY RESIN PAVEMENT STRIPING (ITEM 748548)	0 LF
D	5" DASHED WHITE EPOXY RESIN PAVEMENT STRIPING, 2' LINE & 6' GAP (ITEM 748548)	0 LF
E	5" DASHED WHITE EPOXY RESIN PAVEMENT STRIPING, 10' LINE & 30' GAP (ITEM 748548)	0 LF
F	5" DASHED YELLOW EPOXY RESIN PAVEMENT STRIPING, 10' LINE & 30' GAP (ITEM 748548)	0 LF
G	16" SOLID WHITE ALKYD THERMOPLASTIC PAVEMENT STRIPING (ITEM 748015)	0 SF
H	24" SOLID WHITE ALKYD THERMOPLASTIC PAVEMENT STRIPING (ITEM 748015)	0 SF
J	WHITE ALKYD THERMOPLASTIC PAVEMENT SYMBOL (ITEM 748015)	0 SF
K	10" SOLID WHITE EPOXY RESIN PAVEMENT STRIPING (ITEM 748549)	0 LF
L	10" SOLID YELLOW EPOXY RESIN PAVEMENT STRIPING (ITEM 748549)	0 LF
M	10" DASHED WHITE EPOXY RESIN PAVEMENT STRIPING, 3' LINE & 9' GAP (ITEM 748549)	0 LF
N	WHITE RETROREFLECTIVE PREFORMED PATTERNED MARKINGS, BIKE SYMBOL (ITEM 748553)	0 SF

SIGNING LEGEND

1	REMOVE EXISTING SIGN
2	EXISTING SIGN TO REMAIN
3	PLACE NEW SIGN
4	RENEW EXISTING SIGN
5	REPOSITION EXISTING SIGN

CONDUIT RUN SCHEDULE

CO#	# OF CONDUITS	SIZE	LENGTH	B/T/O/P	AMOUNT AND TYPE OF CABLE/ WIRE
F41	1	4"	190'	T	(1) 144 CNT SM, (1) 48 CNT SM
F42	1	4"	460'	T	(1) 144 CNT SM, (1) 48 CNT SM

* DENOTES EXISTING B-BORE T-TRENCH O-OPEN P-ATTACH TO POLE SM-SINGLE MODE

DELAWARE
DEPARTMENT OF TRANSPORTATION

ADDENDUMS / REVISIONS

SCALE
0 30 60 90
FEET

SR1, SOUTH FREDERICA
GRADE SEPARATED INTERSECTION

CONTRACT	BRIDGE NO.	–
T200812202	DESIGNED BY: LCM	
COUNTY		
KENT	CHECKED BY: SFP/BAM	

SIGNING, STRIPING, AND ITMS PLAN

SHEET NO. 243
TOTAL SHTS. 296

5/24/2013
G:\PROJECTS\06535.00 (DelDOT Agmt. 1376 DOTS Open End)\06535.07 SR1, S. Frederica\CADD Files\XM\ss14sf.dgn
10:15:18

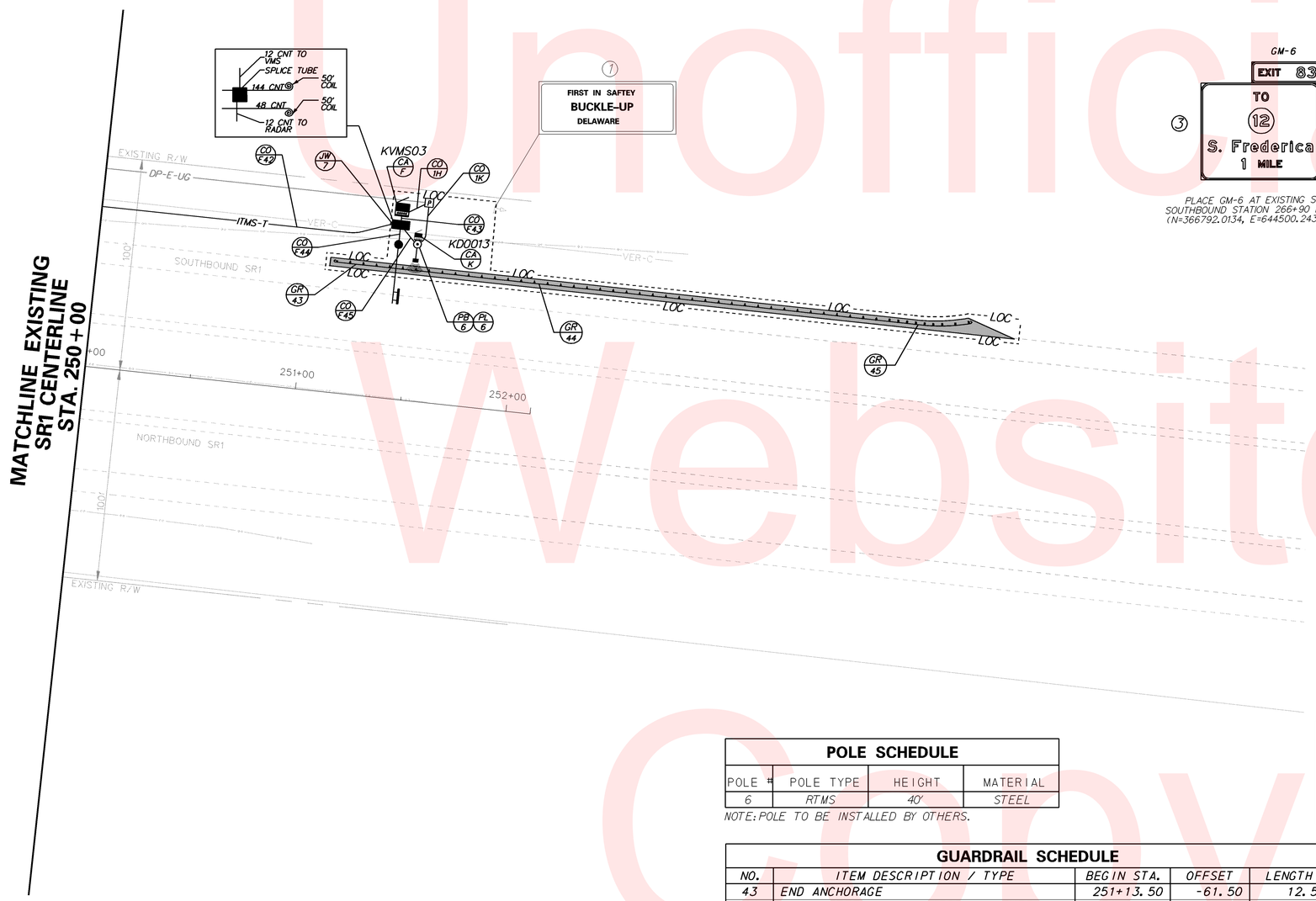

ITMS LEGEND NOTES

* INDICATES ITMS TO BE PERFORMED BY THE CONTRACTOR. WORK ON THE VARIABLE MESSAGE SIGN IS LIMITED TO THE FOUNDATION AND SUPPORT STRUCTURE.

ALL OTHER ITEMS LISTED IN THE LEGEND WILL BE PERFORMED BY OTHERS. THIS INCLUDES ALL INNER-DUCT, WIRING WITHIN CONDUITS, AND THE VARIABLE MESSAGE SIGNS.

ITMS LEGEND

- JW X — PROPOSED JUNCTION WELL & TYPE *
- CO X — PROPOSED CONDUIT RUN & IDENTIFIER *
- PB X — PROPOSED POLE BASE IDENTIFIER *
- PL X — PROPOSED POLE IDENTIFIER
- PROPOSED POLE BASE *
- PROPOSED RADAR DETECTION
- EXISTING RADAR DETECTION
- 6'x6' SYSTEM LOOP
- CA X — PROPOSED ITMS CABINET & TYPE
- EXISTING SIGNAL CABINET (TYPE P) OR (TYPE M) AS NOTED
- P — PROPOSED SERVICE PEDESTAL
- HH X — PROPOSED HAND HOLE IDENTIFIER
- PROPOSED ROAD WEATHER INFORMATION SYSTEM (RWIS) PUCK SENSOR
- EXISTING ROAD WEATHER INFORMATION SYSTEM (RWIS) PUCK SENSOR
- ATR — AUTOMATIC TRAFFIC RECORDER (ATR)
- ITMS-T — 4" MULTIDUCT, PVC (TRENCH) WITH (4) 1" RIBBED INNER DUCT *
- ITMS-B — 4" MULTIDUCT, SDR-13.5 HDPE (BORE), WITH (4) 1" RIBBED INNER DUCT *
- VARIABLE MESSAGE SIGN WITH BUTTERFLY CANTILEVER *
- PROPOSED VIDEO MONITORING CAMERA (CCTV) ON 75' POLE WITH LOWERING DEVICE

PAVEMENT MARKINGS LEGEND

SYMBOL	ITEM	QUANTITY
A	5" SOLID WHITE EPOXY RESIN PAVEMENT STRIPING (ITEM 748548)	0 LF
B	5" SOLID YELLOW EPOXY RESIN PAVEMENT STRIPING (ITEM 748548)	0 LF
C	5" SOLID DOUBLE YELLOW EPOXY RESIN PAVEMENT STRIPING (ITEM 748548)	0 LF
D	5" DASHED WHITE EPOXY RESIN PAVEMENT STRIPING, 2' LINE & 6' GAP (ITEM 748548)	0 LF
E	5" DASHED WHITE EPOXY RESIN PAVEMENT STRIPING, 10' LINE & 30' GAP (ITEM 748548)	0 LF
F	5" DASHED YELLOW EPOXY RESIN PAVEMENT STRIPING, 10' LINE & 30' GAP (ITEM 748548)	0 LF
G	16" SOLID WHITE ALKYD THERMOPLASTIC PAVEMENT STRIPING (ITEM 748015)	0 SF
H	24" SOLID WHITE ALKYD THERMOPLASTIC PAVEMENT STRIPING (ITEM 748015)	0 SF
J	WHITE ALKYD THERMOPLASTIC PAVEMENT SYMBOL (ITEM 748015)	0 SF
K	10" SOLID WHITE EPOXY RESIN PAVEMENT STRIPING (ITEM 748549)	0 LF
L	10" SOLID YELLOW EPOXY RESIN PAVEMENT STRIPING (ITEM 748549)	0 LF
M	10" DASHED WHITE EPOXY RESIN PAVEMENT STRIPING, 3' LINE & 9' GAP (ITEM 748549)	0 LF
N	WHITE RETROREFLECTIVE PREFORMED PATTERNED MARKINGS, BIKE SYMBOL (ITEM 748553)	0 SF

SIGNING LEGEND

1. REMOVE EXISTING SIGN
2. EXISTING SIGN TO REMAIN
3. PLACE NEW SIGN
4. RENEW EXISTING SIGN
5. REPOSITION EXISTING SIGN

POLE SCHEDULE

POLE #	POLE TYPE	HEIGHT	MATERIAL
6	RTMS	40'	STEEL

NOTE: POLE TO BE INSTALLED BY OTHERS.

GUARDRAIL SCHEDULE

NO.	ITEM DESCRIPTION / TYPE	BEGIN STA.	OFFSET	LENGTH
43	END ANCHORAGE	251+13.50	-61.50	12.5'
44	GALV. STEEL BEAM GUARDRAIL, TYPE 1-31	251+26.00	-61.50	237.5'
45	END TREATMENT ATTENUATOR, TYPE 2-31	253+63.50	-61.50	50.0'

ITMS GENERAL NOTES

1. AT THE PROPOSED OFFSET OF 25' FROM THE FIRST DETECTION LANE, THE RECOMMENDED MOUNTING HEIGHT FOR THE RADAR DETECTOR IS 26' OR AS SPECIFIED BY MANUFACTURER.

CONDUIT RUN SCHEDULE

CO#	# OF CONDUITS	SIZE	LENGTH	B/T/O/P	AMOUNT AND TYPE OF CABLE/ WIRE
IH	1	2"	15'	T	(1) 2/#8 U.F.w/GROUND
IK	1	2"	30'	T/P	(1) 2/#8 U.F.w/GROUND
F42	1	4"	140'	T	(1) 144 CNT SM, (1) 48 CNT SM
F43	6	4"	10'	T	(1) 12 CNT SM, VMS CABLE
F44	1	3"	10'	T	VMS CABLE
F45	1	3"	15'	T	(1) 12 CNT SM

* DENOTES EXISTING B-BORE T-TRENCH O-OPEN P-ATTACH TO POLE SM-SINGLE MODE

Unofficial Website Copy

DELAWARE DEPARTMENT OF TRANSPORTATION

ADDENDUMS / REVISIONS

SCALE 0 30 60 90 FEET

SR1, SOUTH FREDERICA GRADE SEPARATED INTERSECTION

CONTRACT	BRIDGE NO.	–
T200812202	DESIGNED BY: LCM	
COUNTY		
KENT	CHECKED BY: SFP/BAM	

SIGNING, STRIPING, AND ITMS PLAN

SHEET NO. 244

TOTAL SHTS. 296

7/19/2013
G:\PROJECTS\06535.00 (DelDOT Agmt. 1376 DOTS Open End)\06535.07 SR1, S. Frederica\CADD Files\XM\ss15sf.dgn
09402103

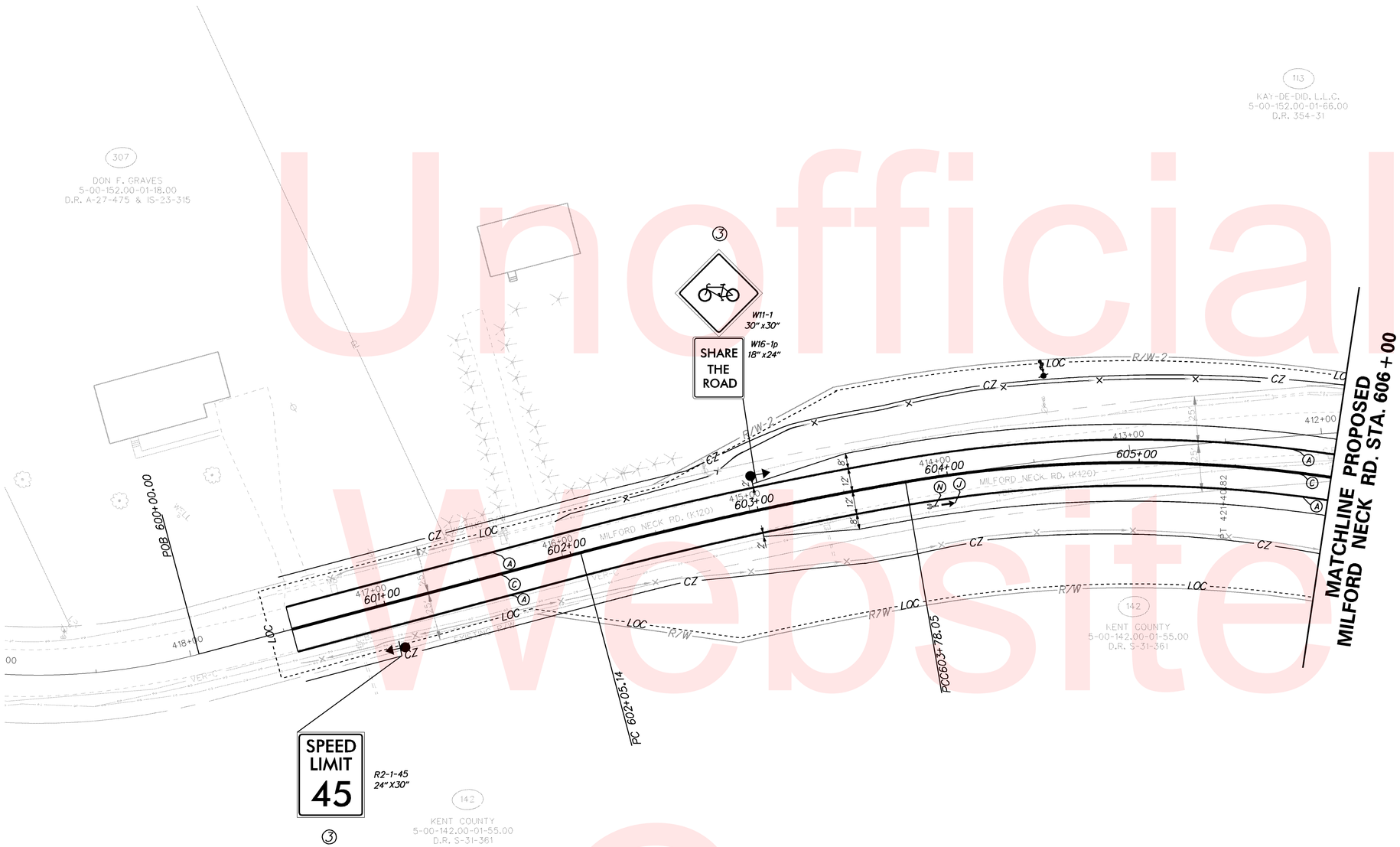

ITMS LEGEND NOTES

* INDICATES ITMS TO BE PERFORMED BY THE CONTRACTOR. WORK ON THE VARIABLE MESSAGE SIGN IS LIMITED TO THE FOUNDATION AND SUPPORT STRUCTURE.

ALL OTHER ITEMS LISTED IN THE LEGEND WILL BE PERFORMED BY OTHERS. THIS INCLUDES ALL INNER-DUCT, WIRING WITHIN CONDUITS, AND THE VARIABLE MESSAGE SIGNS.

ITMS LEGEND

JW X	PROPOSED JUNCTION WELL & TYPE *
CO X	PROPOSED CONDUIT RUN & IDENTIFIER *
PB X	PROPOSED POLE BASE IDENTIFIER *
PL X	PROPOSED POLE IDENTIFIER
	PROPOSED POLE BASE *
	PROPOSED RADAR DETECTION
	EXISTING RADAR DETECTION
	6'x6' SYSTEM LOOP
CA X	PROPOSED ITMS CABINET & TYPE
	EXISTING SIGNAL CABINET (TYPE P) OR (TYPE M) AS NOTED
P	PROPOSED SERVICE PEDESTAL
HH X	PROPOSED HAND HOLE IDENTIFIER
	PROPOSED ROAD WEATHER INFORMATION SYSTEM (RWIS) PUCK SENSOR
	EXISTING ROAD WEATHER INFORMATION SYSTEM (RWIS) PUCK SENSOR
ATR	AUTOMATIC TRAFFIC RECORDER (ATR)
—ITMS-T—	4" MULTIDUCT, PVC (TRENCH) WITH * (4) 1" RIBBED INNER DUCT
—ITMS-B—	4" MULTIDUCT, SDR-13.5 HDPE (BORE), * WITH (4) 1" RIBBED INNER DUCT
	VARIABLE MESSAGE SIGN WITH * BUTTERFLY CANTILEVER
	PROPOSED VIDEO MONITORING CAMERA (CCTV) ON 75' POLE WITH LOWERING DEVICE

PAVEMENT MARKINGS LEGEND

SYMBOL	ITEM	QUANTITY
A	5" SOLID WHITE EPOXY RESIN PAVEMENT STRIPING (ITEM 748548)	1102 LF
B	5" SOLID YELLOW EPOXY RESIN PAVEMENT STRIPING (ITEM 748548)	0 LF
C	5" SOLID DOUBLE YELLOW EPOXY RESIN PAVEMENT STRIPING (ITEM 748548)	1102 LF
D	5" DASHED WHITE EPOXY RESIN PAVEMENT STRIPING, 2' LINE & 6' GAP (ITEM 748548)	0 LF
E	5" DASHED WHITE EPOXY RESIN PAVEMENT STRIPING, 10' LINE & 30' GAP (ITEM 748548)	0 LF
F	5" DASHED YELLOW EPOXY RESIN PAVEMENT STRIPING, 10' LINE & 30' GAP (ITEM 748548)	0 LF
G	16" SOLID WHITE ALKYD THERMOPLASTIC PAVEMENT STRIPING (ITEM 748015)	0 SF
H	24" SOLID WHITE ALKYD THERMOPLASTIC PAVEMENT STRIPING (ITEM 748015)	0 SF
J	WHITE ALKYD THERMOPLASTIC PAVEMENT SYMBOL (ITEM 748015)	5 SF
K	10" SOLID WHITE EPOXY RESIN PAVEMENT STRIPING (ITEM 748549)	0 LF
L	10" SOLID YELLOW EPOXY RESIN PAVEMENT STRIPING (ITEM 748549)	0 LF
M	10" DASHED WHITE EPOXY RESIN PAVEMENT STRIPING, 3' LINE & 9' GAP (ITEM 748549)	0 LF
N	WHITE RETROREFLECTIVE PREFORMED PATTERNED MARKINGS, BIKE SYMBOL (ITEM 748553)	18 SF

SIGNING LEGEND

1	REMOVE EXISTING SIGN
2	EXISTING SIGN TO REMAIN
3	PLACE NEW SIGN
4	RENEW EXISTING SIGN
5	REPOSITION EXISTING SIGN

Unofficial Website Copy

DELAWARE DEPARTMENT OF TRANSPORTATION

ADDENDUMS / REVISIONS

SCALE 0 30 60 90 FEET

SR1, SOUTH FREDERICA GRADE SEPARATED INTERSECTION

CONTRACT	BRIDGE NO.	–
T200812202	DESIGNED BY: LCM	
COUNTY		
KENT	CHECKED BY: SFP/BAM	

SIGNING, STRIPING, AND ITMS PLAN

SHEET NO. 245

TOTAL SHTS. 296

7/19/2013
G:\PROJECTS\06535.00 (DelDOT Agmt. 1376 DOTS Open End)\06535.07 SR1, S. Frederica\CADD Files\XM\ss16sf.dgn
09:27:08

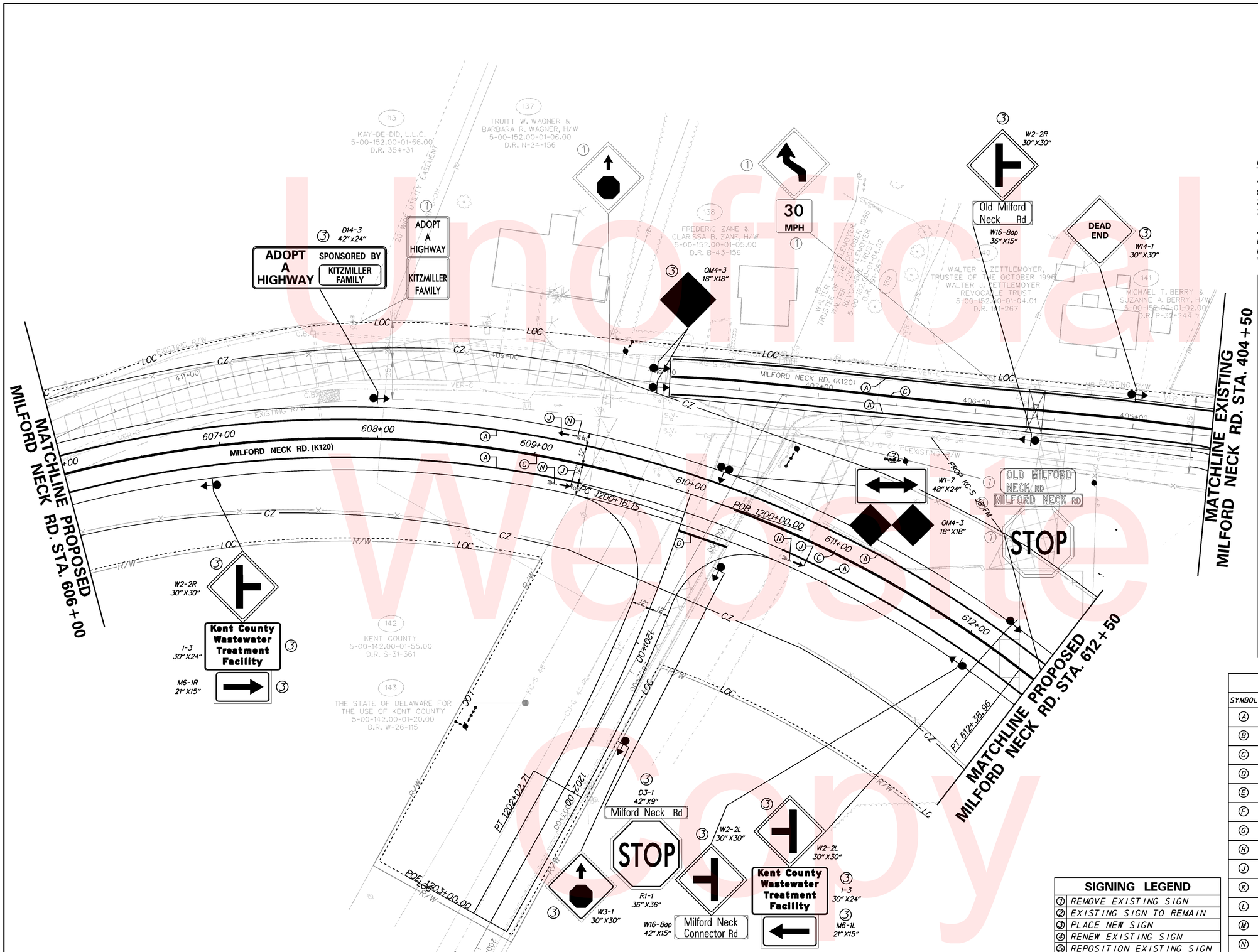

ITMS LEGEND NOTES

* INDICATES ITMS TO BE PERFORMED BY THE CONTRACTOR. WORK ON THE VARIABLE MESSAGE SIGN IS LIMITED TO THE FOUNDATION AND SUPPORT STRUCTURE.

ALL OTHER ITEMS LISTED IN THE LEGEND WILL BE PERFORMED BY OTHERS. THIS INCLUDES ALL INNER-DUCT, WIRING WITHIN CONDUITS, AND THE VARIABLE MESSAGE SIGNS.

ITMS LEGEND

- JW X — PROPOSED JUNCTION WELL & TYPE *
- CO X — PROPOSED CONDUIT RUN & IDENTIFIER *
- PB X — PROPOSED POLE BASE IDENTIFIER *
- PL X — PROPOSED POLE IDENTIFIER
- PROPOSED POLE BASE *
- PROPOSED RADAR DETECTION
- EXISTING RADAR DETECTION
- 6'x6' SYSTEM LOOP
- CA X — PROPOSED ITMS CABINET & TYPE
- EXISTING SIGNAL CABINET (TYPE P) OR (TYPE M) AS NOTED
- P — PROPOSED SERVICE PEDESTAL
- HH X — PROPOSED HAND HOLE IDENTIFIER
- PROPOSED ROAD WEATHER INFORMATION SYSTEM (RWIS) PUCK SENSOR
- EXISTING ROAD WEATHER INFORMATION SYSTEM (RWIS) PUCK SENSOR
- ATR — AUTOMATIC TRAFFIC RECORDER (ATR)
- ITMS-T — 4" MULTIDUCT, PVC (TRENCH) WITH * (4) 1" RIBBED INNER DUCT
- ITMS-B — 4" MULTIDUCT, SDR-13.5 HDPE (BORE), * WITH (4) 1" RIBBED INNER DUCT
- VARIABLE MESSAGE SIGN WITH * BUTTERFLY CANTILEVER
- PROPOSED VIDEO MONITORING CAMERA (CCTV) ON 75' POLE WITH LOWERING DEVICE

PAVEMENT MARKINGS LEGEND

SYMBOL	ITEM	QUANTITY
A	5" SOLID WHITE EPOXY RESIN PAVEMENT STRIPING (ITEM 748548)	1855 LF
B	5" SOLID YELLOW EPOXY RESIN PAVEMENT STRIPING (ITEM 748548)	0 LF
C	5" SOLID DOUBLE YELLOW EPOXY RESIN PAVEMENT STRIPING (ITEM 748548)	1870 LF
D	5" DASHED WHITE EPOXY RESIN PAVEMENT STRIPING, 2' LINE & 6' GAP (ITEM 748548)	0 LF
E	5" DASHED WHITE EPOXY RESIN PAVEMENT STRIPING, 10' LINE & 30' GAP (ITEM 748548)	0 LF
F	5" DASHED YELLOW EPOXY RESIN PAVEMENT STRIPING, 10' LINE & 30' GAP (ITEM 748548)	0 LF
G	16" SOLID WHITE ALKYD THERMOPLASTIC PAVEMENT STRIPING (ITEM 748015)	44 SF
H	24" SOLID WHITE ALKYD THERMOPLASTIC PAVEMENT STRIPING (ITEM 748015)	0 SF
J	WHITE ALKYD THERMOPLASTIC PAVEMENT SYMBOL (ITEM 748015)	15 SF
K	10" SOLID WHITE EPOXY RESIN PAVEMENT STRIPING (ITEM 748549)	0 LF
L	10" SOLID YELLOW EPOXY RESIN PAVEMENT STRIPING (ITEM 748549)	0 LF
M	10" DASHED WHITE EPOXY RESIN PAVEMENT STRIPING, 3' LINE & 9' GAP (ITEM 748549)	0 LF
N	WHITE RETROREFLECTIVE PREFORMED PATTERNED MARKINGS, BIKE SYMBOL (ITEM 748553)	54 SF

SIGNING LEGEND

1	REMOVE EXISTING SIGN
2	EXISTING SIGN TO REMAIN
3	PLACE NEW SIGN
4	RENEW EXISTING SIGN
5	REPOSITION EXISTING SIGN

Unofficial Website Copy

DELAWARE DEPARTMENT OF TRANSPORTATION

ADDENDUMS / REVISIONS

SCALE 0 30 60 90 FEET

SR1, SOUTH FREDERICA GRADE SEPARATED INTERSECTION

CONTRACT	BRIDGE NO.	–
T200812202	DESIGNED BY: LCM	
COUNTY		
KENT	CHECKED BY: SFP/BAM	

SIGNING, STRIPING, AND ITMS PLAN

SHEET NO. 246

TOTAL SHTS. 296

7/19/2013 07:PROJECTS\06535.00 (DelDOT Agmt. 1376 DOTS Open End)\06535.07 SR1, S. Frederica\CADD Files\XM\ss17sf.dgn 09:28:02

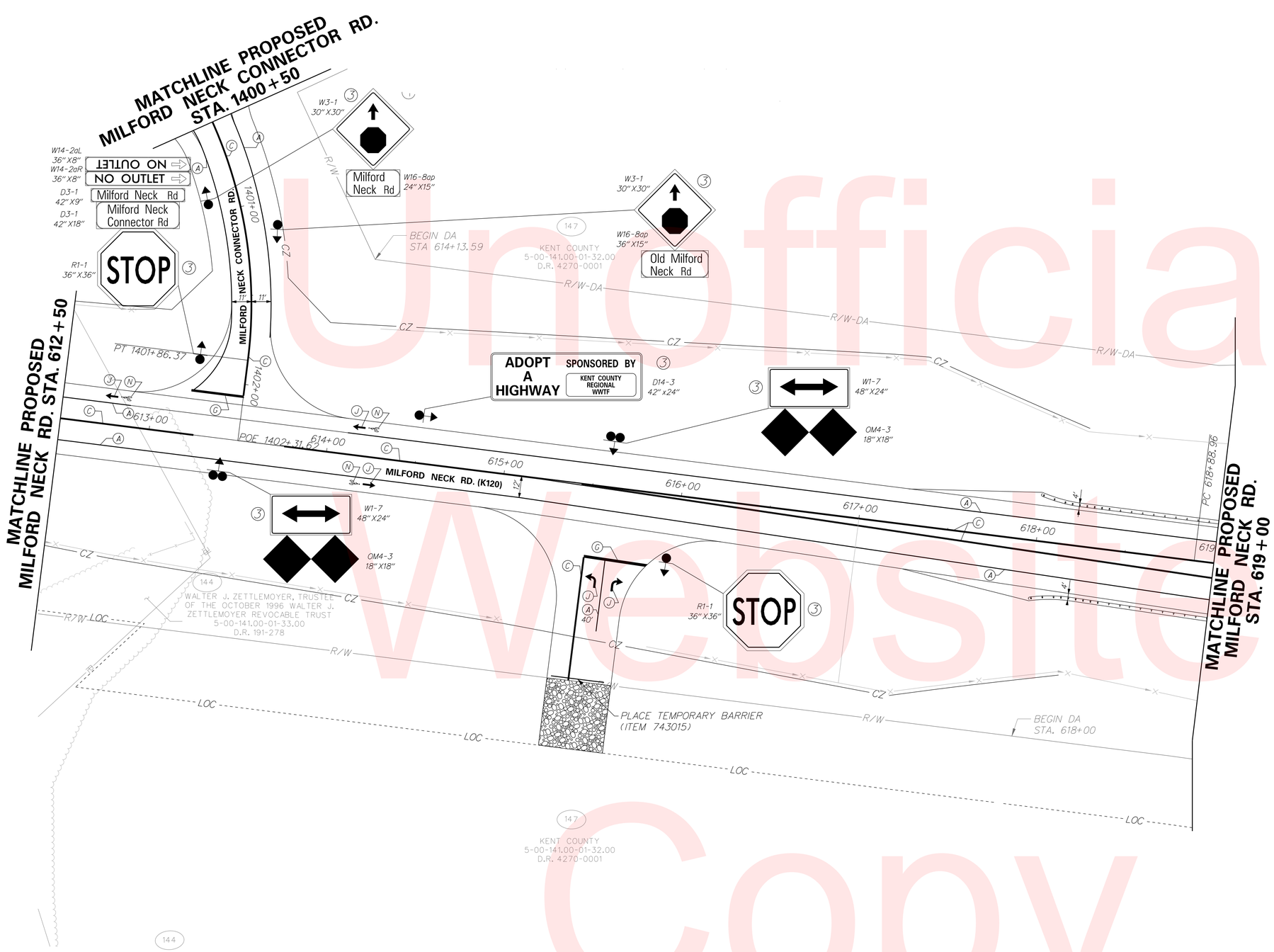

ITMS LEGEND NOTES

* INDICATES ITMS TO BE PERFORMED BY THE CONTRACTOR. WORK ON THE VARIABLE MESSAGE SIGN IS LIMITED TO THE FOUNDATION AND SUPPORT STRUCTURE.

ALL OTHER ITEMS LISTED IN THE LEGEND WILL BE PERFORMED BY OTHERS. THIS INCLUDES ALL INNER-DUCT, WIRING WITHIN CONDUITS, AND THE VARIABLE MESSAGE SIGNS.

ITMS LEGEND

- JW X — PROPOSED JUNCTION WELL & TYPE *
- CO X — PROPOSED CONDUIT RUN & IDENTIFIER *
- PB X — PROPOSED POLE BASE IDENTIFIER *
- PL X — PROPOSED POLE IDENTIFIER
- PROPOSED POLE BASE *
- PROPOSED RADAR DETECTION
- EXISTING RADAR DETECTION
- 6'x6' SYSTEM LOOP
- CA X — PROPOSED ITMS CABINET & TYPE
- EXISTING SIGNAL CABINET (TYPE P) OR (TYPE M) AS NOTED
- P — PROPOSED SERVICE PEDESTAL
- HH X — PROPOSED HAND HOLE IDENTIFIER
- PROPOSED ROAD WEATHER INFORMATION SYSTEM (RWIS) PUCK SENSOR
- EXISTING ROAD WEATHER INFORMATION SYSTEM (RWIS) PUCK SENSOR
- ATR — AUTOMATIC TRAFFIC RECORDER (ATR)
- ITMS-T — 4" MULTIDUCT, PVC (TRENCH) WITH * (4) 1" RIBBED INNER DUCT
- ITMS-B — 4" MULTIDUCT, SDR-13.5 HDPE (BORE),* WITH (4) 1" RIBBED INNER DUCT
- VARIABLE MESSAGE SIGN WITH * BUTTERFLY CANTILEVER
- PROPOSED VIDEO MONITORING CAMERA (CCTV) ON 75' POLE WITH LOWERING DEVICE

PAVEMENT MARKINGS LEGEND

SYMBOL	ITEM	QUANTITY
A	5" SOLID WHITE EPOXY RESIN PAVEMENT STRIPING (ITEM 748548)	1505 LF
B	5" SOLID YELLOW EPOXY RESIN PAVEMENT STRIPING (ITEM 748548)	0 LF
C	5" SOLID DOUBLE YELLOW EPOXY RESIN PAVEMENT STRIPING (ITEM 748548)	1971 LF
D	5" DASHED WHITE EPOXY RESIN PAVEMENT STRIPING, 2' LINE & 6' GAP (ITEM 748548)	0 LF
E	5" DASHED WHITE EPOXY RESIN PAVEMENT STRIPING, 10' LINE & 30' GAP (ITEM 748548)	0 LF
F	5" DASHED YELLOW EPOXY RESIN PAVEMENT STRIPING, 10' LINE & 30' GAP (ITEM 748548)	0 LF
G	16" SOLID WHITE ALKYD THERMOPLASTIC PAVEMENT STRIPING (ITEM 748015)	85 SF
H	24" SOLID WHITE ALKYD THERMOPLASTIC PAVEMENT STRIPING (ITEM 748015)	0 SF
J	WHITE ALKYD THERMOPLASTIC PAVEMENT SYMBOL (ITEM 748015)	46 SF
K	10" SOLID WHITE EPOXY RESIN PAVEMENT STRIPING (ITEM 748549)	0 LF
L	10" SOLID YELLOW EPOXY RESIN PAVEMENT STRIPING (ITEM 748549)	0 LF
M	10" DASHED WHITE EPOXY RESIN PAVEMENT STRIPING, 3' LINE & 9' GAP (ITEM 748549)	0 LF
N	WHITE RETROREFLECTIVE PREFORMED PATTERNED MARKINGS, BIKE SYMBOL (ITEM 748553)	54 SF

SIGNING LEGEND

1	REMOVE EXISTING SIGN
2	EXISTING SIGN TO REMAIN
3	PLACE NEW SIGN
4	RENEW EXISTING SIGN
5	REPOSITION EXISTING SIGN

Unofficial Website Copy

DELAWARE
DEPARTMENT OF TRANSPORTATION

ADDENDUMS / REVISIONS

SCALE
0 30 60 90
FEET

SR1, SOUTH FREDERICA
GRADE SEPARATED INTERSECTION

CONTRACT	BRIDGE NO.	–
T200812202	DESIGNED BY: LCM	
COUNTY		
KENT	CHECKED BY: SFP/BAM	

SIGNING, STRIPING, AND
ITMS PLAN

SHEET NO. 247
TOTAL SHTS. 296

10/27/2015
G:\PROJECTS\06535.00 (DelDOT Agmt. 1376 DOTS Open End)\06535.07 SR1, S. Frederica\CADD Files\XM\ss18sf.dgn
11:16:34 AM

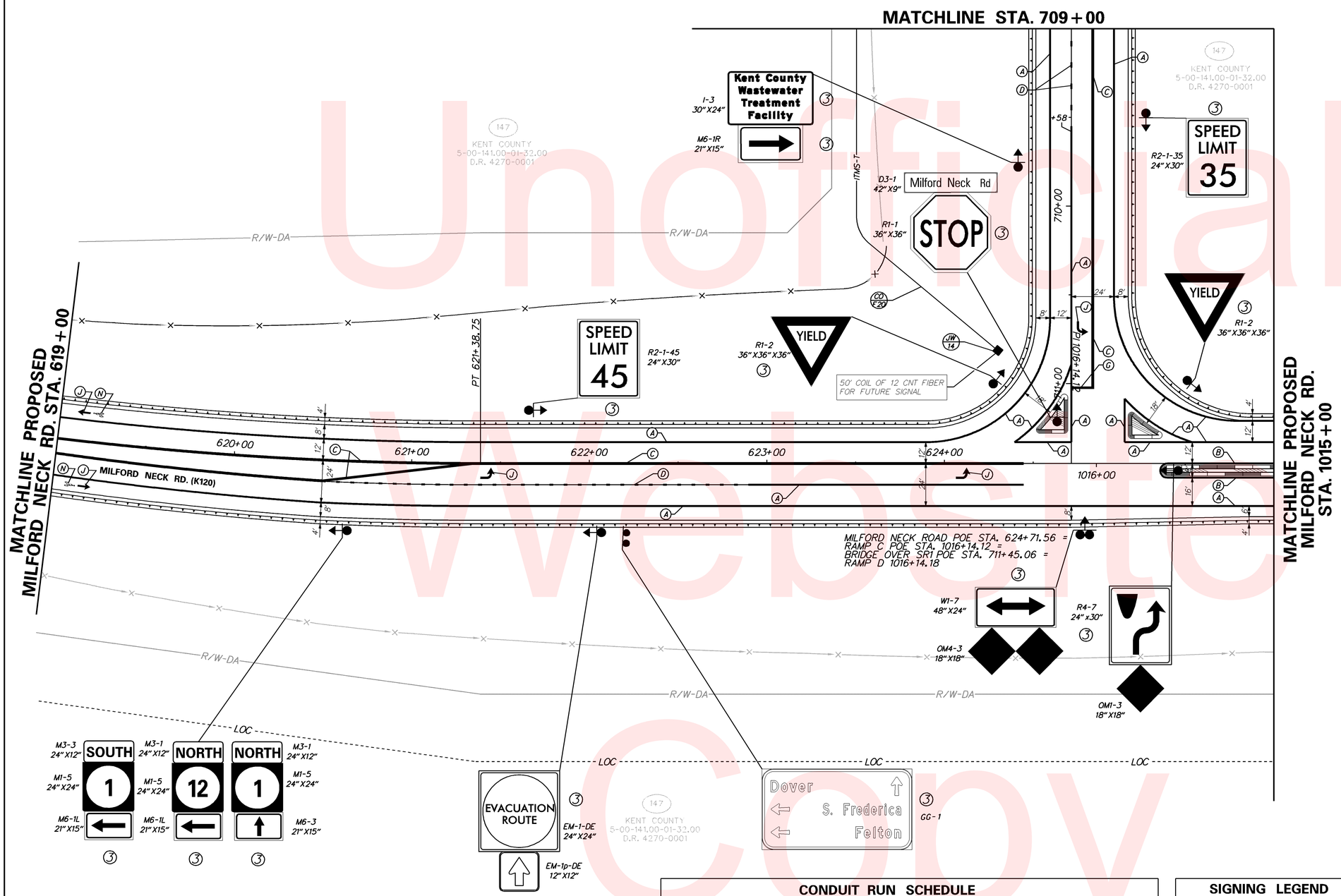

ITMS LEGEND NOTES

* INDICATES ITMS TO BE PERFORMED BY THE CONTRACTOR. WORK ON THE VARIABLE MESSAGE SIGN IS LIMITED TO THE FOUNDATION AND SUPPORT STRUCTURE.

ALL OTHER ITEMS LISTED IN THE LEGEND WILL BE PERFORMED BY OTHERS. THIS INCLUDES ALL INNER-DUCT, WIRING WITHIN CONDUITS, AND THE VARIABLE MESSAGE SIGNS.

ITMS LEGEND

- JW X — PROPOSED JUNCTION WELL & TYPE *
- CO X — PROPOSED CONDUIT RUN & IDENTIFIER *
- PB X — PROPOSED POLE BASE IDENTIFIER *
- PL X — PROPOSED POLE IDENTIFIER
- PROPOSED POLE BASE *
- PROPOSED RADAR DETECTION
- EXISTING RADAR DETECTION
- 6'x6' SYSTEM LOOP
- CA X — PROPOSED ITMS CABINET & TYPE
- EXISTING SIGNAL CABINET (TYPE P) OR (TYPE M) AS NOTED
- PROPOSED SERVICE PEDESTAL
- HH X — PROPOSED HAND HOLE IDENTIFIER
- PROPOSED ROAD WEATHER INFORMATION SYSTEM (RWIS) PUCK SENSOR
- EXISTING ROAD WEATHER INFORMATION SYSTEM (RWIS) PUCK SENSOR
- ATR — AUTOMATIC TRAFFIC RECORDER (ATR)
- ITMS-T — 4" MULTIDUCT, PVC (TRENCH) WITH * (4) 1" RIBBED INNER DUCT
- ITMS-B — 4" MULTIDUCT, SDR-13.5 HDPE (BORE), * WITH (4) 1" RIBBED INNER DUCT
- VARIABLE MESSAGE SIGN WITH * BUTTERFLY CANTILEVER
- PROPOSED VIDEO MONITORING CAMERA (CCTV) ON 75' POLE WITH LOWERING DEVICE

PAVEMENT MARKINGS LEGEND

SYMBOL	ITEM	QUANTITY
A	5" SOLID WHITE EPOXY RESIN PAVEMENT STRIPING (ITEM 748548)	2306 LF
B	5" SOLID YELLOW EPOXY RESIN PAVEMENT STRIPING (ITEM 748548)	133 LF
C	5" SOLID DOUBLE YELLOW EPOXY RESIN PAVEMENT STRIPING (ITEM 748548)	1970 LF
D	5" DASHED WHITE EPOXY RESIN PAVEMENT STRIPING, 2' LINE & 6' GAP (ITEM 748548)	76 LF
E	5" DASHED WHITE EPOXY RESIN PAVEMENT STRIPING, 10' LINE & 30' GAP (ITEM 748548)	0 LF
F	5" DASHED YELLOW EPOXY RESIN PAVEMENT STRIPING, 10' LINE & 30' GAP (ITEM 748548)	0 LF
G	16" SOLID WHITE ALKYD THERMOPLASTIC PAVEMENT STRIPING (ITEM 748015)	18 SF
H	24" SOLID WHITE ALKYD THERMOPLASTIC PAVEMENT STRIPING (ITEM 748015)	0 SF
J	WHITE ALKYD THERMOPLASTIC PAVEMENT SYMBOL (ITEM 748015)	57 SF
K	10" SOLID WHITE EPOXY RESIN PAVEMENT STRIPING (ITEM 748549)	0 LF
L	10" SOLID YELLOW EPOXY RESIN PAVEMENT STRIPING (ITEM 748549)	0 LF
M	10" DASHED WHITE EPOXY RESIN PAVEMENT STRIPING, 3' LINE & 9' GAP (ITEM 748549)	0 LF
N	WHITE RETROREFLECTIVE PREFORMED PATTERNED MARKINGS, BIKE SYMBOL (ITEM 748553)	36 SF

CONDUIT RUN SCHEDULE

CO#	# OF CONDUITS	SIZE	LENGTH	B/T/O/P	AMOUNT AND TYPE OF CABLE/ WIRE
F20	1	4"	220'	T	(1)12 CNT SM

* DENOTES EXISTING B-BORE T-TRENCH O-OPEN P-ATTACH TO POLE SM-SINGLE MODE

SIGNING LEGEND

1. REMOVE EXISTING SIGN
2. EXISTING SIGN TO REMAIN
3. PLACE NEW SIGN
4. RENEW EXISTING SIGN
5. REPOSITION EXISTING SIGN

DELAWARE DEPARTMENT OF TRANSPORTATION

ADDENDUMS / REVISIONS

SCALE 0 30 60 90 FEET

SR1, SOUTH FREDERICA GRADE SEPARATED INTERSECTION

CONTRACT	BRIDGE NO.	–
T200812202	DESIGNED BY: LCM	
COUNTY		
KENT	CHECKED BY: SFP/BAM	

SIGNING, STRIPING, AND ITMS PLAN

SHEET NO. 248

TOTAL SHTS. 296

Unofficial Website Copy

7/19/2013 09:30:29 G:\PROJECTS\06535.00 (DelDOT Agmt. 1376 DOTS Open End)\06535.07 SR1, S. Frederica\CADD Files\XM\ss19st.dgn

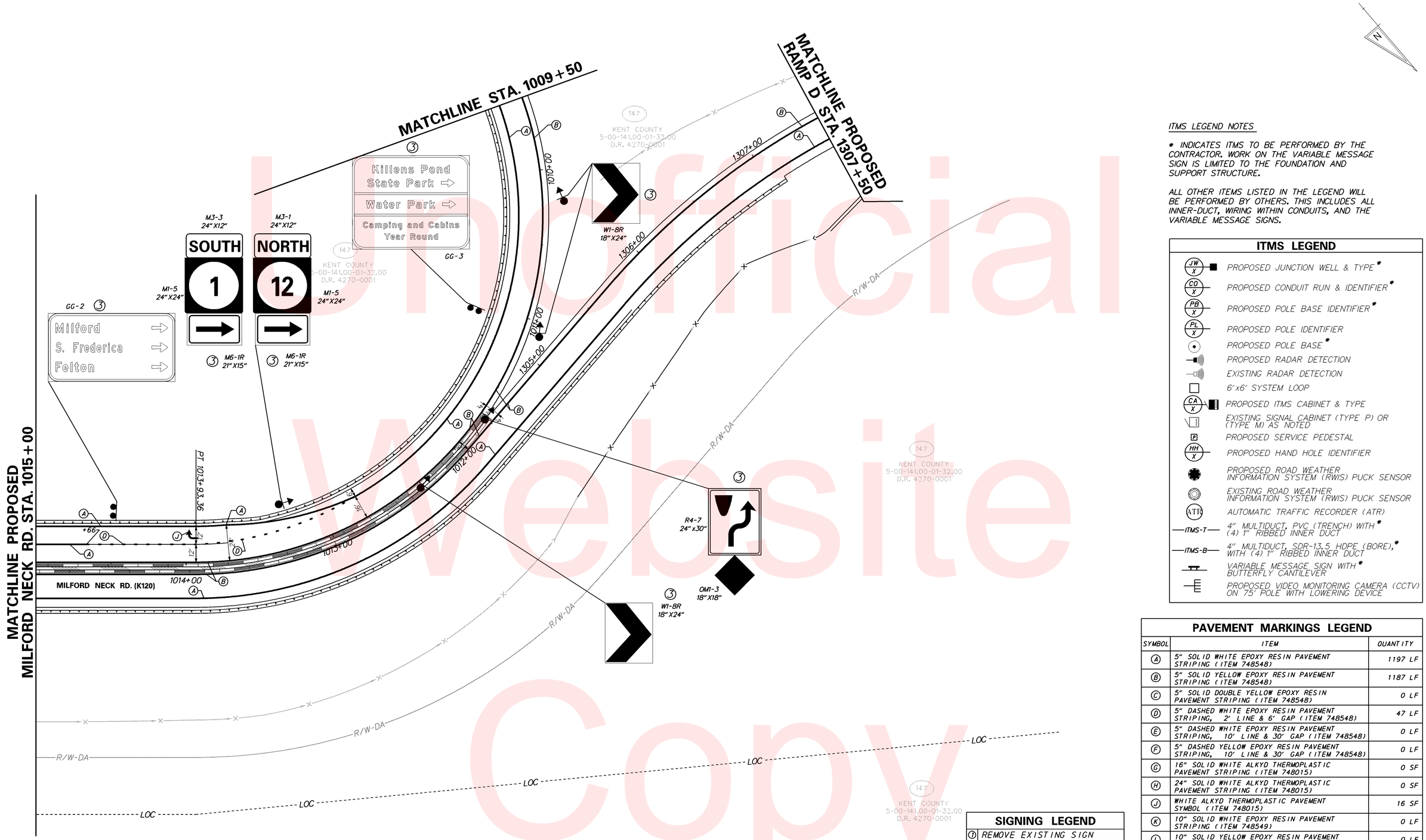

ITMS LEGEND NOTES

* INDICATES ITMS TO BE PERFORMED BY THE CONTRACTOR. WORK ON THE VARIABLE MESSAGE SIGN IS LIMITED TO THE FOUNDATION AND SUPPORT STRUCTURE.

ALL OTHER ITEMS LISTED IN THE LEGEND WILL BE PERFORMED BY OTHERS. THIS INCLUDES ALL INNER-DUCT, WIRING WITHIN CONDUITS, AND THE VARIABLE MESSAGE SIGNS.

ITMS LEGEND

- JW/X — PROPOSED JUNCTION WELL & TYPE *
- CO/X — PROPOSED CONDUIT RUN & IDENTIFIER *
- PB/X — PROPOSED POLE BASE IDENTIFIER *
- PL/X — PROPOSED POLE IDENTIFIER
- PROPOSED POLE BASE *
- PROPOSED RADAR DETECTION
- EXISTING RADAR DETECTION
- 6'x6' SYSTEM LOOP
- CA/X — PROPOSED ITMS CABINET & TYPE
- EXISTING SIGNAL CABINET (TYPE P) OR (TYPE M) AS NOTED
- P — PROPOSED SERVICE PEDESTAL
- HH/X — PROPOSED HAND HOLE IDENTIFIER
- PROPOSED ROAD WEATHER INFORMATION SYSTEM (RWIS) PUCK SENSOR
- EXISTING ROAD WEATHER INFORMATION SYSTEM (RWIS) PUCK SENSOR
- ATR — AUTOMATIC TRAFFIC RECORDER (ATR)
- ITMS-T — 4" MULTIDUCT, PVC (TRENCH) WITH * (4) 1" RIBBED INNER DUCT
- ITMS-B — 4" MULTIDUCT, SDR-13.5 HDPE (BORE), * WITH (4) 1" RIBBED INNER DUCT
- VARIABLE MESSAGE SIGN WITH * BUTTERFLY CANTILEVER
- PROPOSED VIDEO MONITORING CAMERA (CCTV) ON 75' POLE WITH LOWERING DEVICE

PAVEMENT MARKINGS LEGEND

SYMBOL	ITEM	QUANTITY
A	5" SOLID WHITE EPOXY RESIN PAVEMENT STRIPING (ITEM 748548)	1197 LF
B	5" SOLID YELLOW EPOXY RESIN PAVEMENT STRIPING (ITEM 748548)	1187 LF
C	5" SOLID DOUBLE YELLOW EPOXY RESIN PAVEMENT STRIPING (ITEM 748548)	0 LF
D	5" DASHED WHITE EPOXY RESIN PAVEMENT STRIPING, 2' LINE & 6' GAP (ITEM 748548)	47 LF
E	5" DASHED WHITE EPOXY RESIN PAVEMENT STRIPING, 10' LINE & 30' GAP (ITEM 748548)	0 LF
F	5" DASHED YELLOW EPOXY RESIN PAVEMENT STRIPING, 10' LINE & 30' GAP (ITEM 748548)	0 LF
G	16" SOLID WHITE ALKYD THERMOPLASTIC PAVEMENT STRIPING (ITEM 748015)	0 SF
H	24" SOLID WHITE ALKYD THERMOPLASTIC PAVEMENT STRIPING (ITEM 748015)	0 SF
J	WHITE ALKYD THERMOPLASTIC PAVEMENT SYMBOL (ITEM 748015)	16 SF
K	10" SOLID WHITE EPOXY RESIN PAVEMENT STRIPING (ITEM 748549)	0 LF
L	10" SOLID YELLOW EPOXY RESIN PAVEMENT STRIPING (ITEM 748549)	0 LF
M	10" DASHED WHITE EPOXY RESIN PAVEMENT STRIPING, 3' LINE & 9' GAP (ITEM 748549)	0 LF
N	WHITE RETROREFLECTIVE PREFORMED PATTERNED MARKINGS, BIKE SYMBOL (ITEM 748553)	0 SF

SIGNING LEGEND

1	REMOVE EXISTING SIGN
2	EXISTING SIGN TO REMAIN
3	PLACE NEW SIGN
4	RENEW EXISTING SIGN
5	REPOSITION EXISTING SIGN

Unofficial Website Copy

DELAWARE DEPARTMENT OF TRANSPORTATION

ADDENDUMS / REVISIONS

SCALE 0 30 60 90 FEET

SR1, SOUTH FREDERICA GRADE SEPARATED INTERSECTION

CONTRACT	BRIDGE NO.	–
T200812202	DESIGNED BY: LCM	
COUNTY		
KENT	CHECKED BY: SFP/BAM	

SIGNING, STRIPING, AND ITMS PLAN

SHEET NO. 249 TOTAL SHTS. 296

7/19/2013 G:\PROJECTS\06535.00 (DelDOT Agmt. 1376 DOTS Open End)\06535.07 SR1, S. Frederica\CADD Files\XM\ss20sf.dgn 09:31:32

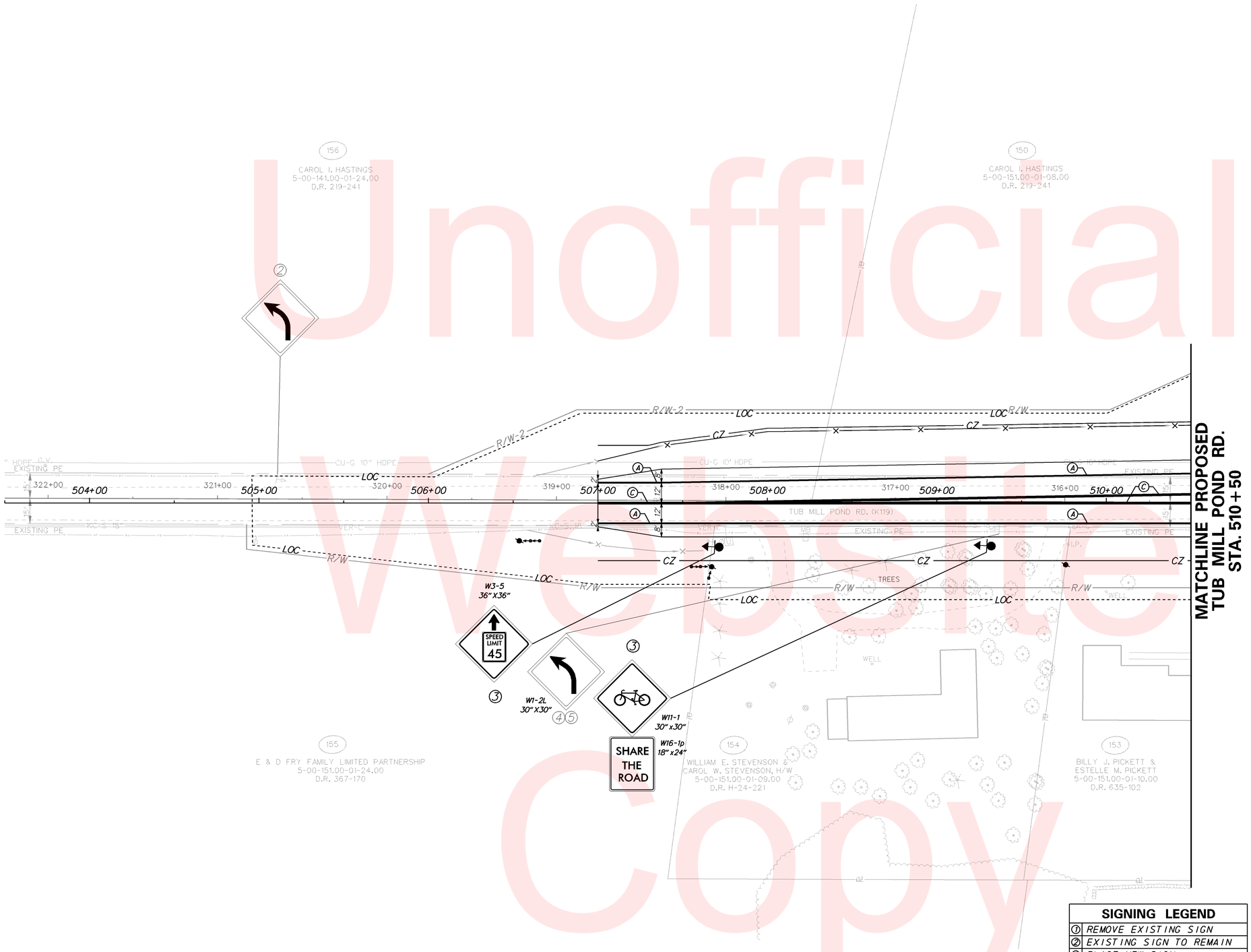

ITMS LEGEND NOTES

* INDICATES ITMS TO BE PERFORMED BY THE CONTRACTOR. WORK ON THE VARIABLE MESSAGE SIGN IS LIMITED TO THE FOUNDATION AND SUPPORT STRUCTURE.

ALL OTHER ITEMS LISTED IN THE LEGEND WILL BE PERFORMED BY OTHERS. THIS INCLUDES ALL INNER-DUCT, WIRING WITHIN CONDUITS, AND THE VARIABLE MESSAGE SIGNS.

ITMS LEGEND

- JW X — PROPOSED JUNCTION WELL & TYPE *
- CO X — PROPOSED CONDUIT RUN & IDENTIFIER *
- PB X — PROPOSED POLE BASE IDENTIFIER *
- PL X — PROPOSED POLE IDENTIFIER
- PROPOSED POLE BASE *
- PROPOSED RADAR DETECTION
- EXISTING RADAR DETECTION
- 6'x6' SYSTEM LOOP
- CA X — PROPOSED ITMS CABINET & TYPE
- EXISTING SIGNAL CABINET (TYPE P) OR (TYPE M) AS NOTED
- P — PROPOSED SERVICE PEDESTAL
- HH X — PROPOSED HAND HOLE IDENTIFIER
- PROPOSED ROAD WEATHER INFORMATION SYSTEM (RWIS) PUCK SENSOR
- EXISTING ROAD WEATHER INFORMATION SYSTEM (RWIS) PUCK SENSOR
- ATR — AUTOMATIC TRAFFIC RECORDER (ATR)
- —ITMS-T— 4" MULTIDUCT, PVC (TRENCH) WITH * (4) 1" RIBBED INNER DUCT
- —ITMS-B— 4" MULTIDUCT, SDR-13.5 HDPE (BORE), * WITH (4) 1" RIBBED INNER DUCT
- VARIABLE MESSAGE SIGN WITH * BUTTERFLY CANTILEVER
- PROPOSED VIDEO MONITORING CAMERA (CCTV) ON 75' POLE WITH LOWERING DEVICE

SIGNING LEGEND

1	REMOVE EXISTING SIGN
2	EXISTING SIGN TO REMAIN
3	PLACE NEW SIGN
4	RENEW EXISTING SIGN
5	REPOSITION EXISTING SIGN

PAVEMENT MARKINGS LEGEND

SYMBOL	ITEM	QUANTITY
A	5" SOLID WHITE EPOXY RESIN PAVEMENT STRIPING (ITEM 748548)	702 LF
B	5" SOLID YELLOW EPOXY RESIN PAVEMENT STRIPING (ITEM 748548)	0 LF
C	5" SOLID DOUBLE YELLOW EPOXY RESIN PAVEMENT STRIPING (ITEM 748548)	1298 LF
D	5" DASHED WHITE EPOXY RESIN PAVEMENT STRIPING, 2' LINE & 6' GAP (ITEM 748548)	0 LF
E	5" DASHED WHITE EPOXY RESIN PAVEMENT STRIPING, 10' LINE & 30' GAP (ITEM 748548)	0 LF
F	5" DASHED YELLOW EPOXY RESIN PAVEMENT STRIPING, 10' LINE & 30' GAP (ITEM 748548)	0 LF
G	16" SOLID WHITE ALKYD THERMOPLASTIC PAVEMENT STRIPING (ITEM 748015)	0 SF
H	24" SOLID WHITE ALKYD THERMOPLASTIC PAVEMENT STRIPING (ITEM 748015)	0 SF
J	WHITE ALKYD THERMOPLASTIC PAVEMENT SYMBOL (ITEM 748015)	0 SF
K	10" SOLID WHITE EPOXY RESIN PAVEMENT STRIPING (ITEM 748549)	0 LF
L	10" SOLID YELLOW EPOXY RESIN PAVEMENT STRIPING (ITEM 748549)	0 LF
M	10" DASHED WHITE EPOXY RESIN PAVEMENT STRIPING, 3' LINE & 9' GAP (ITEM 748549)	0 LF
N	WHITE RETROREFLECTIVE PREFORMED PATTERNED MARKINGS, BIKE SYMBOL (ITEM 748553)	0 SF

Unofficial Website Copy

DELAWARE DEPARTMENT OF TRANSPORTATION

ADDENDUMS / REVISIONS

SCALE 0 30 60 90 FEET

SR1, SOUTH FREDERICA GRADE SEPARATED INTERSECTION

CONTRACT	BRIDGE NO.	–
T200812202	DESIGNED BY: LCM	
COUNTY		
KENT	CHECKED BY: SFP/BAM	

SIGNING, STRIPING, AND ITMS PLAN

SHEET NO. 250 / TOTAL SHTS. 296

7/19/2013
G:\PROJECTS\06535.00 (DelDOT Agmt. 1376 DOTS Open End)\06535.07 SR1, S. Frederica\CADD Files\XM\ss21sf.dgn
09:22:23

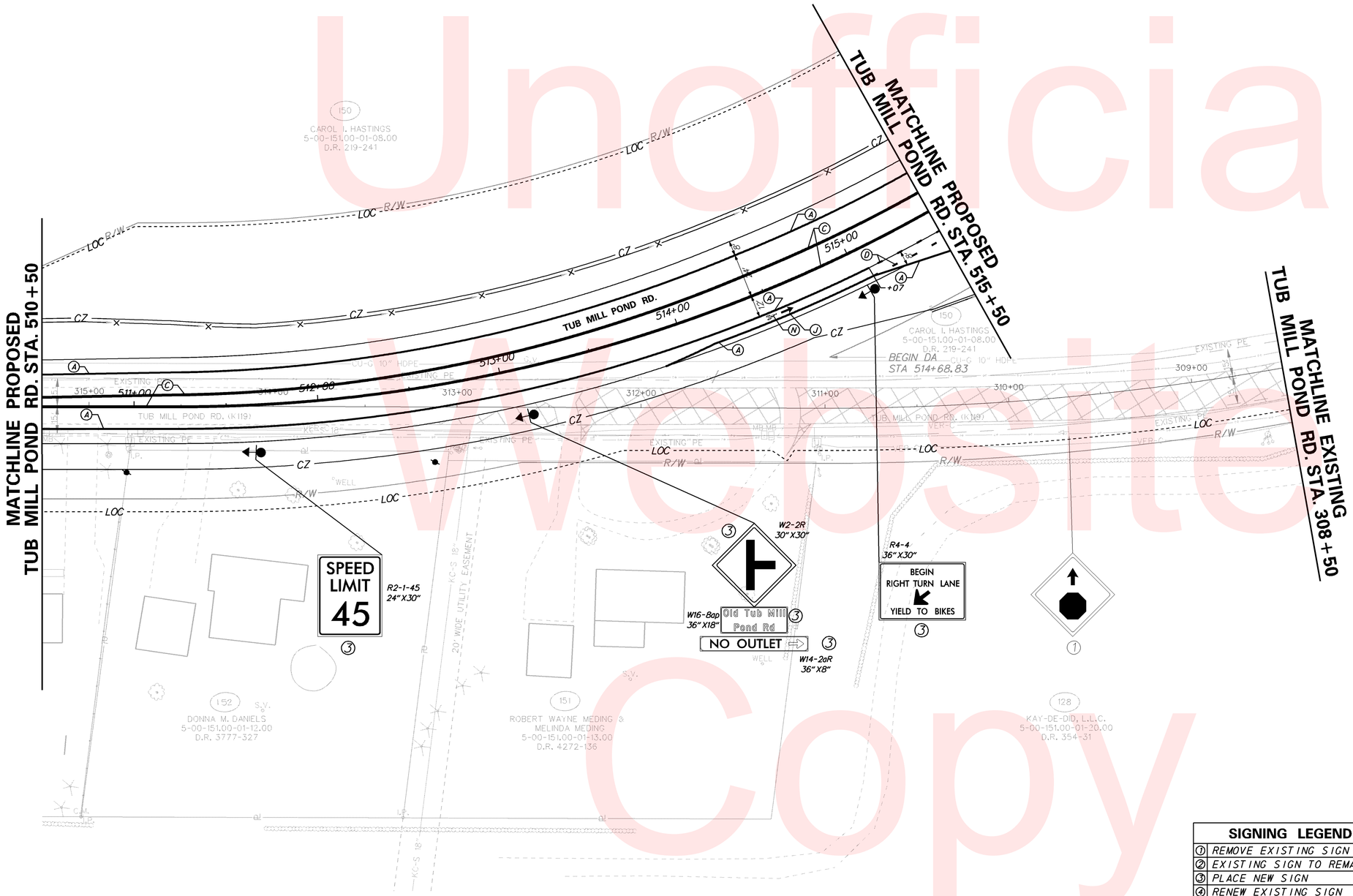

ITMS LEGEND NOTES

* INDICATES ITMS TO BE PERFORMED BY THE CONTRACTOR. WORK ON THE VARIABLE MESSAGE SIGN IS LIMITED TO THE FOUNDATION AND SUPPORT STRUCTURE.

ALL OTHER ITEMS LISTED IN THE LEGEND WILL BE PERFORMED BY OTHERS. THIS INCLUDES ALL INNER-DUCT, WIRING WITHIN CONDUITS, AND THE VARIABLE MESSAGE SIGNS.

ITMS LEGEND

- JW/X — PROPOSED JUNCTION WELL & TYPE *
- CO/X — PROPOSED CONDUIT RUN & IDENTIFIER *
- PB/X — PROPOSED POLE BASE IDENTIFIER *
- PL/X — PROPOSED POLE IDENTIFIER
- PROPOSED POLE BASE *
- PROPOSED RADAR DETECTION
- EXISTING RADAR DETECTION
- 6'x6' SYSTEM LOOP
- CA/X — PROPOSED ITMS CABINET & TYPE
- EXISTING SIGNAL CABINET (TYPE P) OR (TYPE M) AS NOTED
- PROPOSED SERVICE PEDESTAL
- HH/X — PROPOSED HAND HOLE IDENTIFIER
- PROPOSED ROAD WEATHER INFORMATION SYSTEM (RWIS) PUCK SENSOR
- EXISTING ROAD WEATHER INFORMATION SYSTEM (RWIS) PUCK SENSOR
- ATR — AUTOMATIC TRAFFIC RECORDER (ATR)
- ITMS-T — 4" MULTIDUCT, PVC (TRENCH) WITH * (4) 1" RIBBED INNER DUCT
- ITMS-B — 4" MULTIDUCT, SDR-13.5 HDPE (BORE), * WITH (4) 1" RIBBED INNER DUCT
- VARIABLE MESSAGE SIGN WITH * BUTTERFLY CANTILEVER
- PROPOSED VIDEO MONITORING CAMERA (CCTV) ON 75' POLE WITH LOWERING DEVICE

PAVEMENT MARKINGS LEGEND

SYMBOL	ITEM	QUANTITY
A	5" SOLID WHITE EPOXY RESIN PAVEMENT STRIPING (ITEM 748548)	1123 LF
B	5" SOLID YELLOW EPOXY RESIN PAVEMENT STRIPING (ITEM 748548)	0 LF
C	5" SOLID DOUBLE YELLOW EPOXY RESIN PAVEMENT STRIPING (ITEM 748548)	1992 LF
D	5" DASHED WHITE EPOXY RESIN PAVEMENT STRIPING, 2' LINE & 6' GAP (ITEM 748548)	22 LF
E	5" DASHED WHITE EPOXY RESIN PAVEMENT STRIPING, 10' LINE & 30' GAP (ITEM 748548)	0 LF
F	5" DASHED YELLOW EPOXY RESIN PAVEMENT STRIPING, 10' LINE & 30' GAP (ITEM 748548)	0 LF
G	16" SOLID WHITE ALKYD THERMOPLASTIC PAVEMENT STRIPING (ITEM 748015)	0 SF
H	24" SOLID WHITE ALKYD THERMOPLASTIC PAVEMENT STRIPING (ITEM 748015)	0 SF
J	WHITE ALKYD THERMOPLASTIC PAVEMENT SYMBOL (ITEM 748015)	5 SF
K	10" SOLID WHITE EPOXY RESIN PAVEMENT STRIPING (ITEM 748549)	0 LF
L	10" SOLID YELLOW EPOXY RESIN PAVEMENT STRIPING (ITEM 748549)	0 LF
M	10" DASHED WHITE EPOXY RESIN PAVEMENT STRIPING, 3' LINE & 9' GAP (ITEM 748549)	0 LF
N	WHITE RETROREFLECTIVE PREFORMED PATTERNED MARKINGS, BIKE SYMBOL (ITEM 748553)	18 SF

SIGNING LEGEND

1	REMOVE EXISTING SIGN
2	EXISTING SIGN TO REMAIN
3	PLACE NEW SIGN
4	RENEW EXISTING SIGN
5	REPOSITION EXISTING SIGN

Unofficial Website Copy

DELAWARE DEPARTMENT OF TRANSPORTATION

ADDENDUMS / REVISIONS

SCALE 0 30 60 90 FEET

SR1, SOUTH FREDERICA GRADE SEPARATED INTERSECTION

CONTRACT	BRIDGE NO.	–
T200812202	DESIGNED BY: LCM	
COUNTY		
KENT	CHECKED BY: SFP/BAM	

SIGNING, STRIPING, AND ITMS PLAN

SHEET NO. 251 TOTAL SHTS. 296

7/19/2013
G:\PROJECTS\06535.00 (DelDOT Agmt. 1376 DOTS Open End)\06535.07 SR1, S. Frederica\CADD Files\XW\ss22sf.dgn
09534452

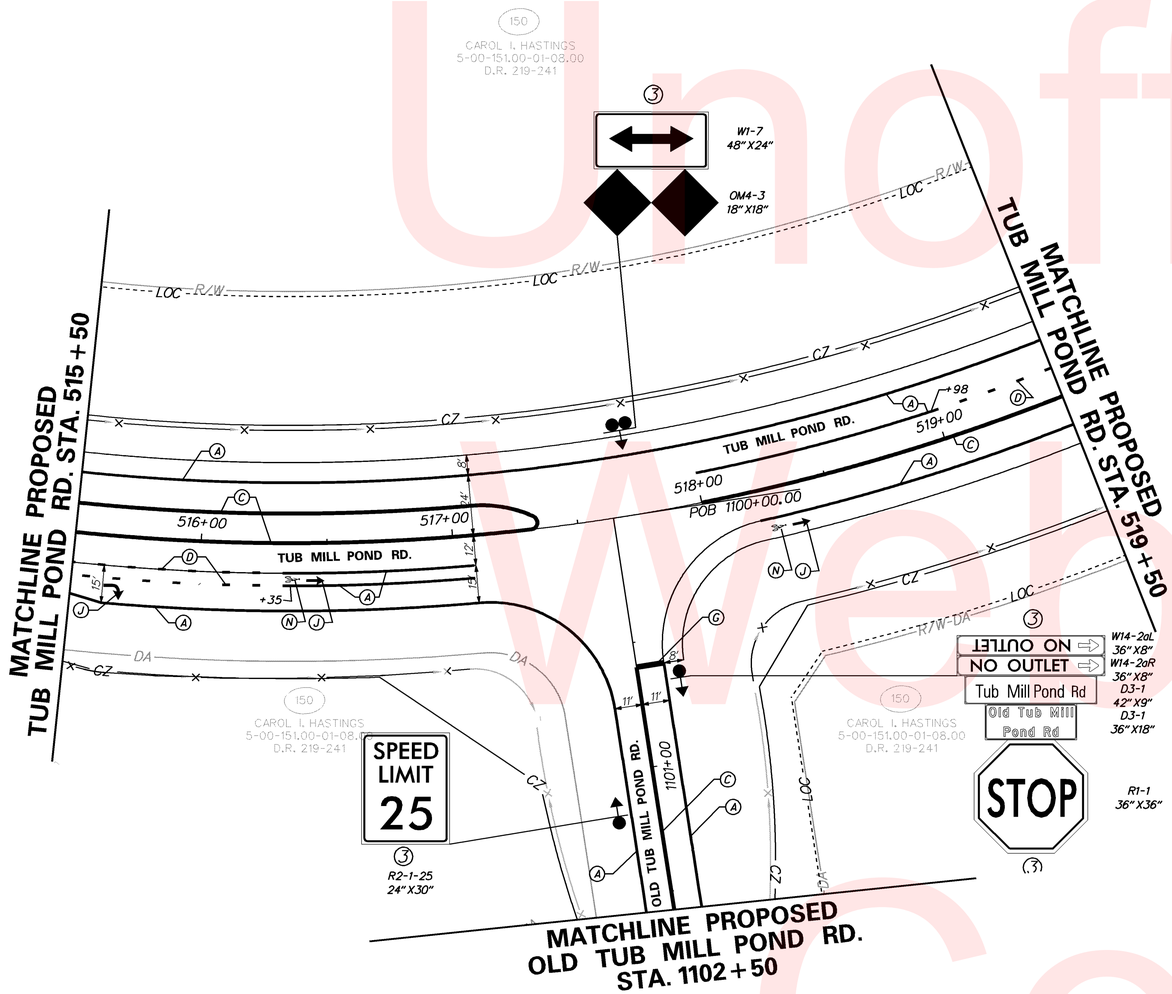

ITMS LEGEND NOTES

* INDICATES ITMS TO BE PERFORMED BY THE CONTRACTOR. WORK ON THE VARIABLE MESSAGE SIGN IS LIMITED TO THE FOUNDATION AND SUPPORT STRUCTURE.

ALL OTHER ITEMS LISTED IN THE LEGEND WILL BE PERFORMED BY OTHERS. THIS INCLUDES ALL INNER-DUCT, WIRING WITHIN CONDUITS, AND THE VARIABLE MESSAGE SIGNS.

ITMS LEGEND

- JW/X — PROPOSED JUNCTION WELL & TYPE *
- CO/X — PROPOSED CONDUIT RUN & IDENTIFIER *
- PB/X — PROPOSED POLE BASE IDENTIFIER *
- PL/X — PROPOSED POLE IDENTIFIER
- PROPOSED POLE BASE *
- PROPOSED RADAR DETECTION
- EXISTING RADAR DETECTION
- 6'x6' SYSTEM LOOP
- CA/X — PROPOSED ITMS CABINET & TYPE
- EXISTING SIGNAL CABINET (TYPE P) OR (TYPE M) AS NOTED
- P — PROPOSED SERVICE PEDESTAL
- HH/X — PROPOSED HAND HOLE IDENTIFIER
- PROPOSED ROAD WEATHER INFORMATION SYSTEM (RWIS) PUCK SENSOR
- EXISTING ROAD WEATHER INFORMATION SYSTEM (RWIS) PUCK SENSOR
- ATR — AUTOMATIC TRAFFIC RECORDER (ATR)
- ITMS-T — 4" MULTIDUCT, PVC (TRENCH) WITH (4) 1" RIBBED INNER DUCT *
- ITMS-B — 4" MULTIDUCT, SDR-13.5 HDPE (BORE), WITH (4) 1" RIBBED INNER DUCT *
- VARIABLE MESSAGE SIGN WITH BUTTERFLY CANTILEVER *
- PROPOSED VIDEO MONITORING CAMERA (CCTV) ON 75' POLE WITH LOWERING DEVICE

PAVEMENT MARKINGS LEGEND

SYMBOL	ITEM	QUANTITY
A	5" SOLID WHITE EPOXY RESIN PAVEMENT STRIPING (ITEM 748548)	1183 LF
B	5" SOLID YELLOW EPOXY RESIN PAVEMENT STRIPING (ITEM 748548)	0 LF
C	5" SOLID DOUBLE YELLOW EPOXY RESIN PAVEMENT STRIPING (ITEM 748548)	1236 LF
D	5" DASHED WHITE EPOXY RESIN PAVEMENT STRIPING, 2' LINE & 6' GAP (ITEM 748548)	57 LF
E	5" DASHED WHITE EPOXY RESIN PAVEMENT STRIPING, 10' LINE & 30' GAP (ITEM 748548)	0 LF
F	5" DASHED YELLOW EPOXY RESIN PAVEMENT STRIPING, 10' LINE & 30' GAP (ITEM 748548)	0 LF
G	16" SOLID WHITE ALKYD THERMOPLASTIC PAVEMENT STRIPING (ITEM 748015)	15 SF
H	24" SOLID WHITE ALKYD THERMOPLASTIC PAVEMENT STRIPING (ITEM 748015)	0 SF
J	WHITE ALKYD THERMOPLASTIC PAVEMENT SYMBOL (ITEM 748015)	26 SF
K	10" SOLID WHITE EPOXY RESIN PAVEMENT STRIPING (ITEM 748549)	0 LF
L	10" SOLID YELLOW EPOXY RESIN PAVEMENT STRIPING (ITEM 748549)	0 LF
M	10" DASHED WHITE EPOXY RESIN PAVEMENT STRIPING, 3' LINE & 9' GAP (ITEM 748549)	0 LF
N	WHITE RETROREFLECTIVE PREFORMED PATTERNED MARKINGS, BIKE SYMBOL (ITEM 748553)	36 SF

SIGNING LEGEND

1	REMOVE EXISTING SIGN
2	EXISTING SIGN TO REMAIN
3	PLACE NEW SIGN
4	RENEW EXISTING SIGN
5	REPOSITION EXISTING SIGN

Unofficial Website Copy

DELAWARE
DEPARTMENT OF TRANSPORTATION

ADDENDUMS / REVISIONS

SCALE 0 30 60 90 FEET

SR1, SOUTH FREDERICA
GRADE SEPARATED INTERSECTION

CONTRACT	BRIDGE NO.	–
T200812202	DESIGNED BY: LCM	
COUNTY		
KENT	CHECKED BY: SFP/BAM	

SIGNING, STRIPING, AND ITMS PLAN

SHEET NO. 252
TOTAL SHTS. 296

7/19/2013
C:\PROJECTS\06535.00 (DelDOT Agmt. 1376 DOTS Open End)\06535.07 SR1, S. Frederica\CADD Files\XM\ss23sf.dgn
09:36:01

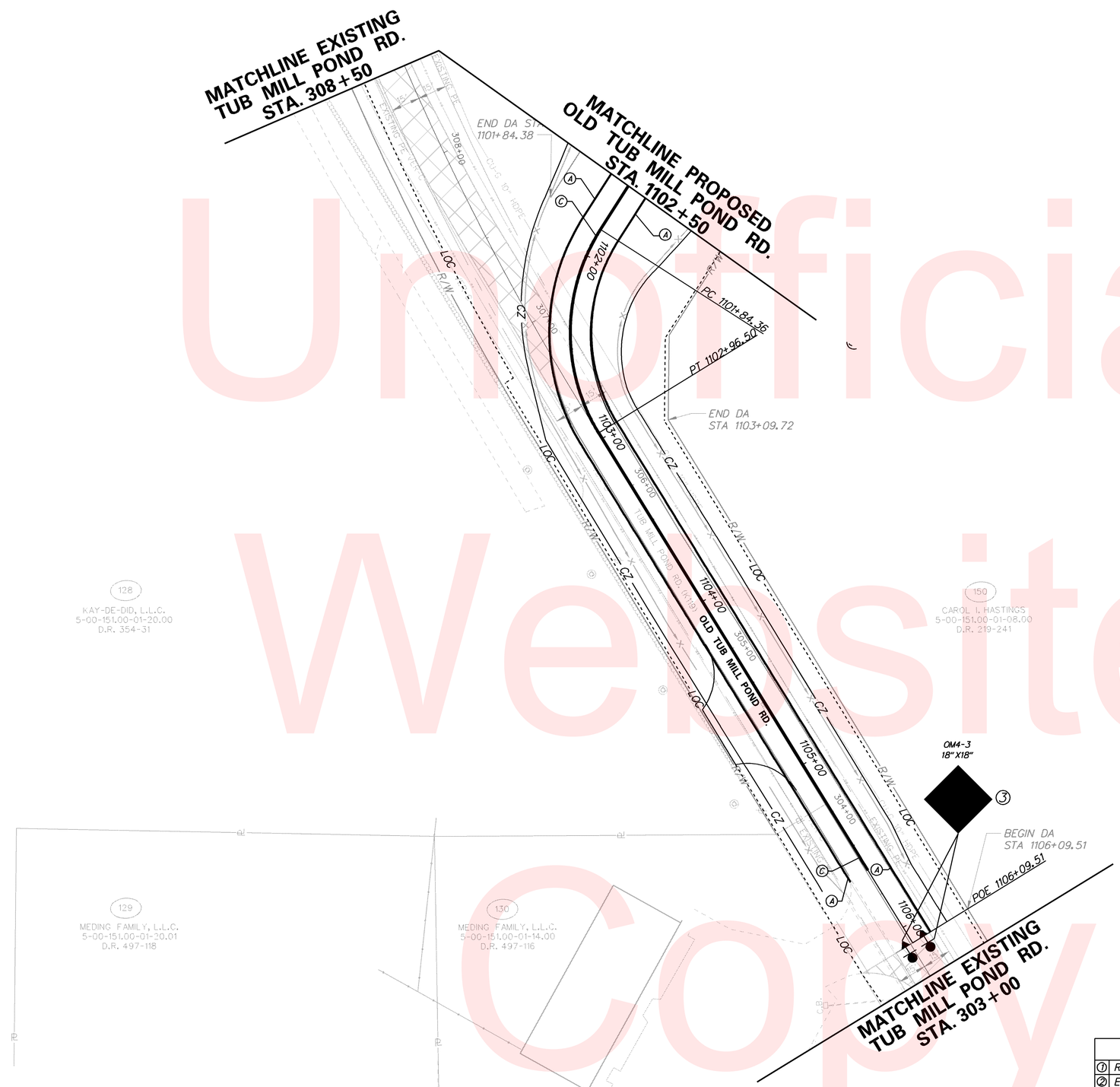

N

ITMS LEGEND NOTES

* INDICATES ITMS TO BE PERFORMED BY THE CONTRACTOR. WORK ON THE VARIABLE MESSAGE SIGN IS LIMITED TO THE FOUNDATION AND SUPPORT STRUCTURE.

ALL OTHER ITEMS LISTED IN THE LEGEND WILL BE PERFORMED BY OTHERS. THIS INCLUDES ALL INNER-DUCT, WIRING WITHIN CONDUITS, AND THE VARIABLE MESSAGE SIGNS.

ITMS LEGEND

- JW X — PROPOSED JUNCTION WELL & TYPE *
- CO X — PROPOSED CONDUIT RUN & IDENTIFIER *
- PB X — PROPOSED POLE BASE IDENTIFIER *
- PL X — PROPOSED POLE IDENTIFIER
- PROPOSED POLE BASE *
- PROPOSED RADAR DETECTION
- EXISTING RADAR DETECTION
- 6'x6' SYSTEM LOOP
- CA X — PROPOSED ITMS CABINET & TYPE
- EXISTING SIGNAL CABINET (TYPE P) OR (TYPE M) AS NOTED
- P — PROPOSED SERVICE PEDESTAL
- HH X — PROPOSED HAND HOLE IDENTIFIER
- PROPOSED ROAD WEATHER INFORMATION SYSTEM (RWIS) PUCK SENSOR
- EXISTING ROAD WEATHER INFORMATION SYSTEM (RWIS) PUCK SENSOR
- ATR — AUTOMATIC TRAFFIC RECORDER (ATR)
- ITMS-T — 4" MULTIDUCT, PVC (TRENCH) WITH * (4) 1" RIBBED INNER DUCT
- ITMS-B — 4" MULTIDUCT, SDR-13.5 HDPE (BORE), * WITH (4) 1" RIBBED INNER DUCT
- VARIABLE MESSAGE SIGN WITH * BUTTERFLY CANTILEVER
- PROPOSED VIDEO MONITORING CAMERA (CCTV) ON 75' POLE WITH LOWERING DEVICE

PAVEMENT MARKINGS LEGEND

SYMBOL	ITEM	QUANTITY
A	5" SOLID WHITE EPOXY RESIN PAVEMENT STRIPING (ITEM 748548)	860 LF
B	5" SOLID YELLOW EPOXY RESIN PAVEMENT STRIPING (ITEM 748548)	0 LF
C	5" SOLID DOUBLE YELLOW EPOXY RESIN PAVEMENT STRIPING (ITEM 748548)	816 LF
D	5" DASHED WHITE EPOXY RESIN PAVEMENT STRIPING, 2' LINE & 6' GAP (ITEM 748548)	0 LF
E	5" DASHED WHITE EPOXY RESIN PAVEMENT STRIPING, 10' LINE & 30' GAP (ITEM 748548)	0 LF
F	5" DASHED YELLOW EPOXY RESIN PAVEMENT STRIPING, 10' LINE & 30' GAP (ITEM 748548)	0 LF
G	16" SOLID WHITE ALKYD THERMOPLASTIC PAVEMENT STRIPING (ITEM 748015)	0 SF
H	24" SOLID WHITE ALKYD THERMOPLASTIC PAVEMENT STRIPING (ITEM 748015)	0 SF
J	WHITE ALKYD THERMOPLASTIC PAVEMENT SYMBOL (ITEM 748015)	0 SF
K	10" SOLID WHITE EPOXY RESIN PAVEMENT STRIPING (ITEM 748549)	0 LF
L	10" SOLID YELLOW EPOXY RESIN PAVEMENT STRIPING (ITEM 748549)	0 LF
M	10" DASHED WHITE EPOXY RESIN PAVEMENT STRIPING, 3' LINE & 9' GAP (ITEM 748549)	0 LF
N	WHITE RETROREFLECTIVE PREFORMED PATTERNED MARKINGS, BIKE SYMBOL (ITEM 748553)	0 SF

SIGNING LEGEND

1	REMOVE EXISTING SIGN
2	EXISTING SIGN TO REMAIN
3	PLACE NEW SIGN
4	RENEW EXISTING SIGN
5	REPOSITION EXISTING SIGN

Unofficial Website Copy

DELAWARE DEPARTMENT OF TRANSPORTATION

ADDENDUMS / REVISIONS

SCALE 0 30 60 90 FEET

SR1, SOUTH FREDERICA GRADE SEPARATED INTERSECTION

CONTRACT	BRIDGE NO.	–
T200812202	DESIGNED BY: LCM	
COUNTY	CHECKED BY: SFP/BAM	
KENT		

SIGNING, STRIPING, AND ITMS PLAN

SHEET NO.
253
TOTAL SHTS.
296

7/19/2013
G:\PROJECTS\06535.00 (DelDOT Agmt. 1376 DOTS Open End)\06535.07 SR1, S. Frederica\CADD Files\XM\ss24sf.dgn
09:37:02

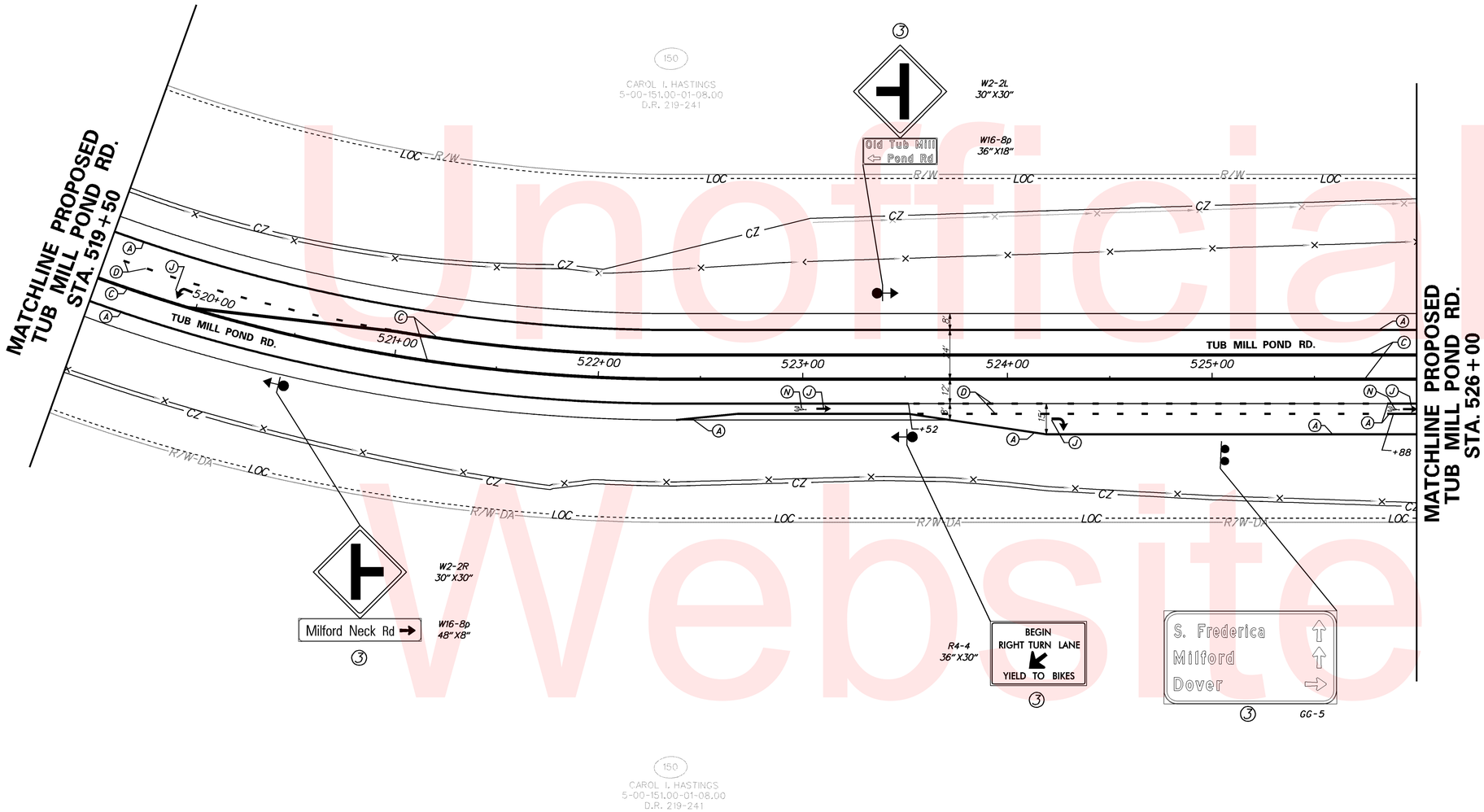

ITMS LEGEND NOTES

* INDICATES ITMS TO BE PERFORMED BY THE CONTRACTOR. WORK ON THE VARIABLE MESSAGE SIGN IS LIMITED TO THE FOUNDATION AND SUPPORT STRUCTURE.

ALL OTHER ITEMS LISTED IN THE LEGEND WILL BE PERFORMED BY OTHERS. THIS INCLUDES ALL INNER-DUCT, WIRING WITHIN CONDUITS, AND THE VARIABLE MESSAGE SIGNS.

ITMS LEGEND

- JW/X — PROPOSED JUNCTION WELL & TYPE *
- CO/X — PROPOSED CONDUIT RUN & IDENTIFIER *
- PB/X — PROPOSED POLE BASE IDENTIFIER *
- PL/X — PROPOSED POLE IDENTIFIER
- PROPOSED POLE BASE *
- PROPOSED RADAR DETECTION
- EXISTING RADAR DETECTION
- 6'x6' SYSTEM LOOP
- CA/X — PROPOSED ITMS CABINET & TYPE
- EXISTING SIGNAL CABINET (TYPE P) OR (TYPE M) AS NOTED
- P — PROPOSED SERVICE PEDESTAL
- HH/X — PROPOSED HAND HOLE IDENTIFIER
- PROPOSED ROAD WEATHER INFORMATION SYSTEM (RWIS) PUCK SENSOR
- EXISTING ROAD WEATHER INFORMATION SYSTEM (RWIS) PUCK SENSOR
- ATR — AUTOMATIC TRAFFIC RECORDER (ATR)
- ITMS-T — 4" MULTIDUCT, PVC (TRENCH) WITH * (4) 1" RIBBED INNER DUCT
- ITMS-B — 4" MULTIDUCT, SDR-13.5 HDPE (BORE), * WITH (4) 1" RIBBED INNER DUCT
- VARIABLE MESSAGE SIGN WITH * BUTTERFLY CANTILEVER
- PROPOSED VIDEO MONITORING CAMERA (CCTV) ON 75' POLE WITH LOWERING DEVICE

PAVEMENT MARKINGS LEGEND

SYMBOL	ITEM	QUANTITY
A	5" SOLID WHITE EPOXY RESIN PAVEMENT STRIPING (ITEM 748548)	1436 LF
B	5" SOLID YELLOW EPOXY RESIN PAVEMENT STRIPING (ITEM 748548)	0 LF
C	5" SOLID DOUBLE YELLOW EPOXY RESIN PAVEMENT STRIPING (ITEM 748548)	2504 LF
D	5" DASHED WHITE EPOXY RESIN PAVEMENT STRIPING, 2' LINE & 6' GAP (ITEM 748548)	156 LF
E	5" DASHED WHITE EPOXY RESIN PAVEMENT STRIPING, 10' LINE & 30' GAP (ITEM 748548)	0 LF
F	5" DASHED YELLOW EPOXY RESIN PAVEMENT STRIPING, 10' LINE & 30' GAP (ITEM 748548)	0 LF
G	16" SOLID WHITE ALKYD THERMOPLASTIC PAVEMENT STRIPING (ITEM 748015)	0 SF
H	24" SOLID WHITE ALKYD THERMOPLASTIC PAVEMENT STRIPING (ITEM 748015)	0 SF
J	WHITE ALKYD THERMOPLASTIC PAVEMENT SYMBOL (ITEM 748015)	42 SF
K	10" SOLID WHITE EPOXY RESIN PAVEMENT STRIPING (ITEM 748549)	0 LF
L	10" SOLID YELLOW EPOXY RESIN PAVEMENT STRIPING (ITEM 748549)	0 LF
M	10" DASHED WHITE EPOXY RESIN PAVEMENT STRIPING, 3' LINE & 9' GAP (ITEM 748549)	0 LF
N	WHITE RETROREFLECTIVE PREFORMED PATTERNED MARKINGS, BIKE SYMBOL (ITEM 748553)	36 SF

SIGNING LEGEND

1	REMOVE EXISTING SIGN
2	EXISTING SIGN TO REMAIN
3	PLACE NEW SIGN
4	RENEW EXISTING SIGN
5	REPOSITION EXISTING SIGN

Unofficial Website Copy

DELAWARE DEPARTMENT OF TRANSPORTATION

ADDENDUMS / REVISIONS

SCALE 0 30 60 90 FEET

SR1, SOUTH FREDERICA GRADE SEPARATED INTERSECTION

CONTRACT	BRIDGE NO.	–
T200812202	DESIGNED BY: LCM	
COUNTY		
KENT	CHECKED BY: SFP/BAM	

SIGNING, STRIPING, AND ITMS PLAN

SHEET NO. 254 / TOTAL SHTS. 296

7/19/2013
G:\PROJECTS\06535.00 (DelDOT Agmt. 1376 DOTS Open End)\06535.07 SR1, S. Frederica\CADD Files\XM\ss25sf.dgn
09:37:52

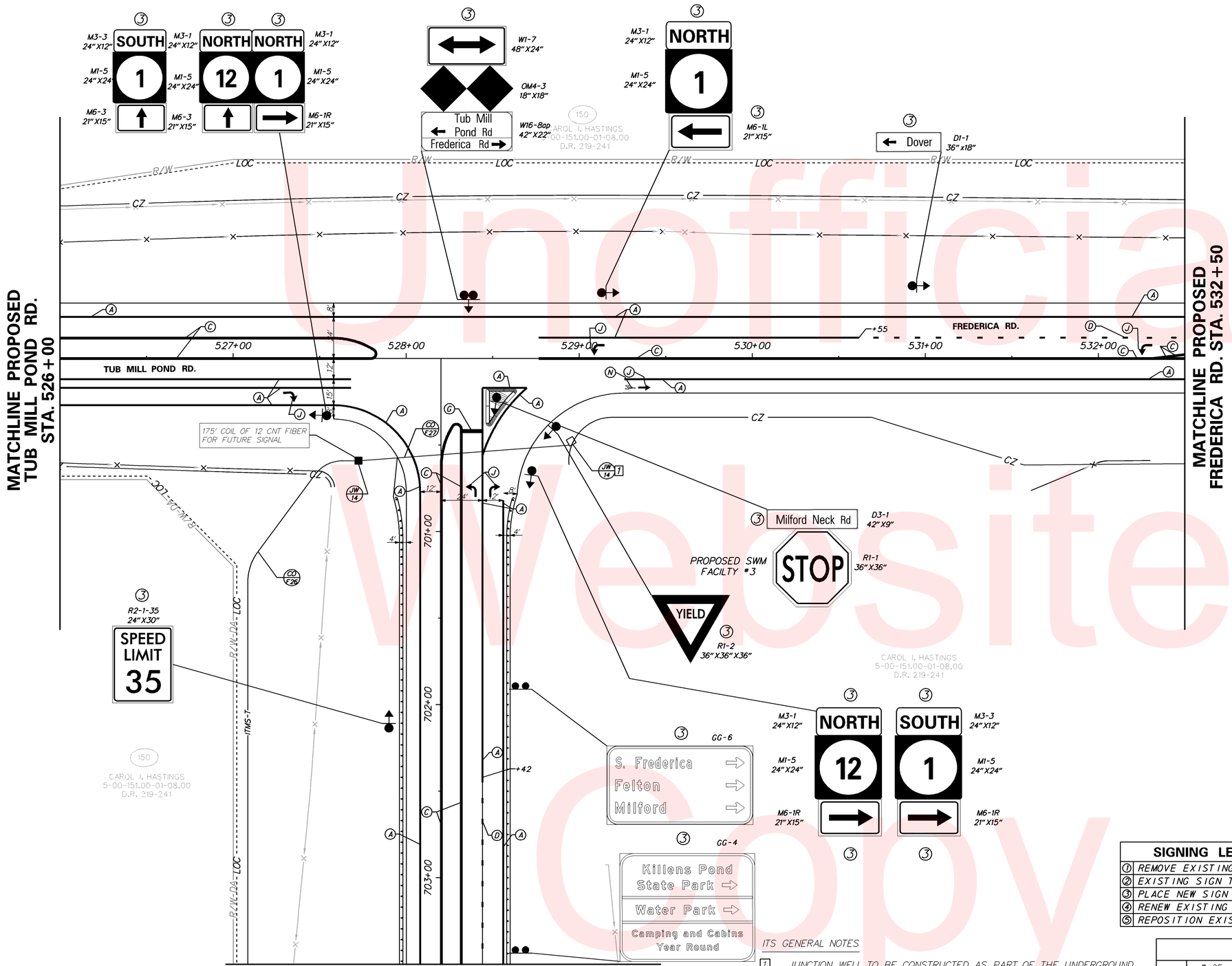

ITMS LEGEND NOTES

* INDICATES ITMS TO BE PERFORMED BY THE CONTRACTOR. WORK ON THE VARIABLE MESSAGE SIGN IS LIMITED TO THE FOUNDATION AND SUPPORT STRUCTURE.

ALL OTHER ITEMS LISTED IN THE LEGEND WILL BE PERFORMED BY OTHERS. THIS INCLUDES ALL INNER-DUCT, WIRING WITHIN CONDUITS, AND THE VARIABLE MESSAGE SIGNS.

ITMS LEGEND

- JW X — PROPOSED JUNCTION WELL & TYPE *
- CO X — PROPOSED CONDUIT RUN & IDENTIFIER *
- PB X — PROPOSED POLE BASE IDENTIFIER *
- PL X — PROPOSED POLE IDENTIFIER
- PROPOSED POLE BASE *
- PROPOSED RADAR DETECTION
- EXISTING RADAR DETECTION
- 6'x6' SYSTEM LOOP
- CA X — PROPOSED ITMS CABINET & TYPE
- EXISTING SIGNAL CABINET (TYPE P) OR (TYPE M) AS NOTED
- P — PROPOSED SERVICE PEDESTAL
- HH X — PROPOSED HAND HOLE IDENTIFIER
- PROPOSED ROAD WEATHER INFORMATION SYSTEM (RWIS) PUCK SENSOR
- EXISTING ROAD WEATHER INFORMATION SYSTEM (RWIS) PUCK SENSOR
- ATR — AUTOMATIC TRAFFIC RECORDER (ATR)
- ITMS-T — 4" MULTIDUCT, PVC (TRENCH) WITH (4) 1" RIBBED INNER DUCT *
- ITMS-B — 4" MULTIDUCT, SDR-13.5 HDPE (BORE), WITH (4) 1" RIBBED INNER DUCT *
- VARIABLE MESSAGE SIGN WITH BUTTERFLY CANTILEVER *
- PROPOSED VIDEO MONITORING CAMERA (CCTV) ON 75' POLE WITH LOWERING DEVICE

PAVEMENT MARKINGS LEGEND

SYMBOL	ITEM	QUANTITY
A	5" SOLID WHITE EPOXY RESIN PAVEMENT STRIPING (ITEM 748548)	2573 LF
B	5" SOLID YELLOW EPOXY RESIN PAVEMENT STRIPING (ITEM 748548)	0 LF
C	5" SOLID DOUBLE YELLOW EPOXY RESIN PAVEMENT STRIPING (ITEM 748548)	2584 LF
D	5" DASHED WHITE EPOXY RESIN PAVEMENT STRIPING, 2' LINE & 6' GAP (ITEM 748548)	75 LF
E	5" DASHED WHITE EPOXY RESIN PAVEMENT STRIPING, 10' LINE & 30' GAP (ITEM 748548)	0 LF
F	5" DASHED YELLOW EPOXY RESIN PAVEMENT STRIPING, 10' LINE & 30' GAP (ITEM 748548)	0 LF
G	16" SOLID WHITE ALKYD THERMOPLASTIC PAVEMENT STRIPING (ITEM 748015)	16 SF
H	24" SOLID WHITE ALKYD THERMOPLASTIC PAVEMENT STRIPING (ITEM 748015)	0 SF
J	WHITE ALKYD THERMOPLASTIC PAVEMENT SYMBOL (ITEM 748015)	83 SF
K	10" SOLID WHITE EPOXY RESIN PAVEMENT STRIPING (ITEM 748549)	0 LF
L	10" SOLID YELLOW EPOXY RESIN PAVEMENT STRIPING (ITEM 748549)	0 LF
M	10" DASHED WHITE EPOXY RESIN PAVEMENT STRIPING, 3' LINE & 9' GAP (ITEM 748549)	0 LF
N	WHITE RETROREFLECTIVE PREFORMED PATTERNED MARKINGS, BIKE SYMBOL (ITEM 748553)	18 SF

SIGNING LEGEND

1	REMOVE EXISTING SIGN
2	EXISTING SIGN TO REMAIN
3	PLACE NEW SIGN
4	RENEW EXISTING SIGN
5	REPOSITION EXISTING SIGN

ITS GENERAL NOTES

1. JUNCTION WELL TO BE CONSTRUCTED AS PART OF THE UNDERGROUND SIGNAL WORK. REFER TO SIGNAL PLAN K309 TUB MILL POND RD @ PROPOSED BRIDGE OVER SR1 FOR EXTENT OF WORK.

CONDUIT RUN SCHEDULE

CO#	# OF CONDUITS	SIZE	LENGTH	B/T/O/P	AMOUNT AND TYPE OF CABLE/ WIRE
F26	1	4"	325'	T	(1) 12 CNT SM
F27	1	4"	125'	T	EMPTY

* DENOTES EXISTING B-BORE T-TRENCH O-OPEN P-ATTACH TO POLE SM-SINGLE MODE

Unofficial Website Copy

DELAWARE DEPARTMENT OF TRANSPORTATION

ADDENDUMS / REVISIONS

SCALE 0 30 60 90 FEET

SR1, SOUTH FREDERICA GRADE SEPARATED INTERSECTION

CONTRACT	BRIDGE NO.	–
T200812202	DESIGNED BY: LCM	
COUNTY		
KENT	CHECKED BY: SFP/BAM	

SIGNING, STRIPING, AND ITMS PLAN

SHEET NO. 255

TOTAL SHTS. 296

7/19/2013
G:\PROJECTS\06535.00 (DelDOT Agmt. 1376 DOTS Open End)\06535.07 SR1, S. Frederica\CADD Files\XM\ss26sf.dgn
09:38:51

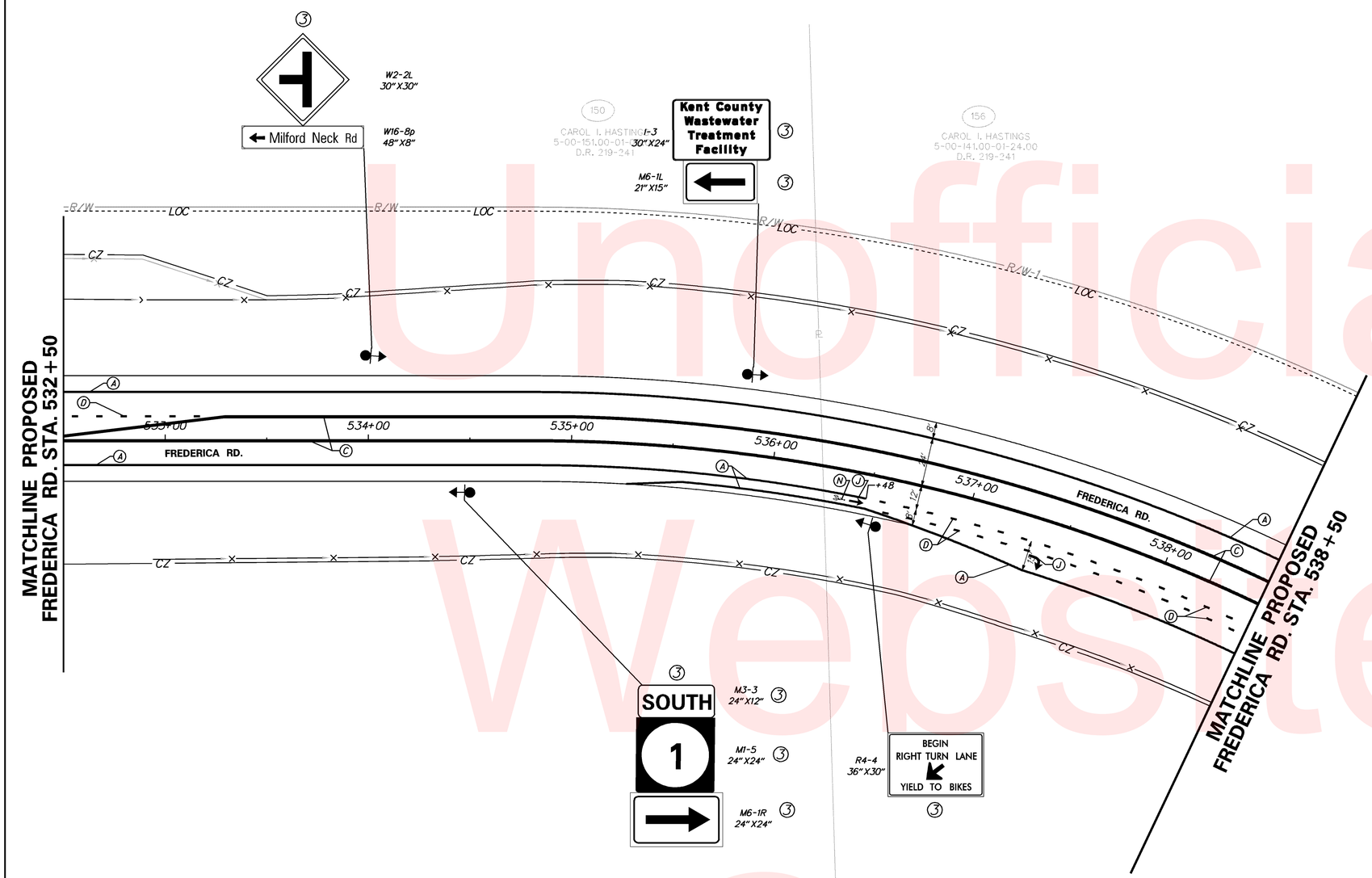

Unofficial Website Copy

ITMS LEGEND NOTES

* INDICATES ITMS TO BE PERFORMED BY THE CONTRACTOR. WORK ON THE VARIABLE MESSAGE SIGN IS LIMITED TO THE FOUNDATION AND SUPPORT STRUCTURE.

ALL OTHER ITEMS LISTED IN THE LEGEND WILL BE PERFORMED BY OTHERS. THIS INCLUDES ALL INNER-DUCT, WIRING WITHIN CONDUITS, AND THE VARIABLE MESSAGE SIGNS.

ITMS LEGEND

- JW X — PROPOSED JUNCTION WELL & TYPE *
- CO X — PROPOSED CONDUIT RUN & IDENTIFIER *
- PB X — PROPOSED POLE BASE IDENTIFIER *
- PL X — PROPOSED POLE IDENTIFIER
- PROPOSED POLE BASE *
- PROPOSED RADAR DETECTION
- EXISTING RADAR DETECTION
- 6'x6' SYSTEM LOOP
- CA X — PROPOSED ITMS CABINET & TYPE
- EXISTING SIGNAL CABINET (TYPE P) OR (TYPE M) AS NOTED
- P — PROPOSED SERVICE PEDESTAL
- HH X — PROPOSED HAND HOLE IDENTIFIER
- PROPOSED ROAD WEATHER INFORMATION SYSTEM (RWIS) PUCK SENSOR
- EXISTING ROAD WEATHER INFORMATION SYSTEM (RWIS) PUCK SENSOR
- ATR — AUTOMATIC TRAFFIC RECORDER (ATR)
- —ITMS-T— 4" MULTIDUCT, PVC (TRENCH) WITH * (4) 1" RIBBED INNER DUCT
- —ITMS-B— 4" MULTIDUCT, SDR-13.5 HDPE (BORE), * WITH (4) 1" RIBBED INNER DUCT
- VARIABLE MESSAGE SIGN WITH * BUTTERFLY CANTILEVER
- PROPOSED VIDEO MONITORING CAMERA (CCTV) ON 75' POLE WITH LOWERING DEVICE

PAVEMENT MARKINGS LEGEND

SYMBOL	ITEM	QUANTITY
A	5" SOLID WHITE EPOXY RESIN PAVEMENT STRIPING (ITEM 748548)	1322 LF
B	5" SOLID YELLOW EPOXY RESIN PAVEMENT STRIPING (ITEM 748548)	0 LF
C	5" SOLID DOUBLE YELLOW EPOXY RESIN PAVEMENT STRIPING (ITEM 748548)	2416 LF
D	5" DASHED WHITE EPOXY RESIN PAVEMENT STRIPING, 2' LINE & 6' GAP (ITEM 748548)	119 LF
E	5" DASHED WHITE EPOXY RESIN PAVEMENT STRIPING, 10' LINE & 30' GAP (ITEM 748548)	0 LF
F	5" DASHED YELLOW EPOXY RESIN PAVEMENT STRIPING, 10' LINE & 30' GAP (ITEM 748548)	0 LF
G	16" SOLID WHITE ALKYD THERMOPLASTIC PAVEMENT STRIPING (ITEM 748015)	0 SF
H	24" SOLID WHITE ALKYD THERMOPLASTIC PAVEMENT STRIPING (ITEM 748015)	0 SF
J	WHITE ALKYD THERMOPLASTIC PAVEMENT SYMBOL (ITEM 748015)	21 SF
K	10" SOLID WHITE EPOXY RESIN PAVEMENT STRIPING (ITEM 748549)	0 LF
L	10" SOLID YELLOW EPOXY RESIN PAVEMENT STRIPING (ITEM 748549)	0 LF
M	10" DASHED WHITE EPOXY RESIN PAVEMENT STRIPING, 3' LINE & 9' GAP (ITEM 748549)	0 LF
N	WHITE RETROREFLECTIVE PREFORMED PATTERNED MARKINGS, BIKE SYMBOL (ITEM 748553)	18 SF

SIGNING LEGEND

1	REMOVE EXISTING SIGN
2	EXISTING SIGN TO REMAIN
3	PLACE NEW SIGN
4	RENEW EXISTING SIGN
5	REPOSITION EXISTING SIGN

DELAWARE DEPARTMENT OF TRANSPORTATION

ADDENDUMS / REVISIONS

SCALE 0 30 60 90 FEET

SR1, SOUTH FREDERICA GRADE SEPARATED INTERSECTION

CONTRACT	BRIDGE NO.	–
T200812202	DESIGNED BY: LCM	
COUNTY		
KENT	CHECKED BY: SFP/BAM	

SIGNING, STRIPING, AND ITMS PLAN

SHEET NO. 256

TOTAL SHTS. 296

7/19/2013
G:\PROJECTS\06535.00 (DelDOT Agmt. 1376 DOTS Open End)\06535.07 SR1, S. Frederica\CADD Files\XM\ss27sf.dgn
09:39:50

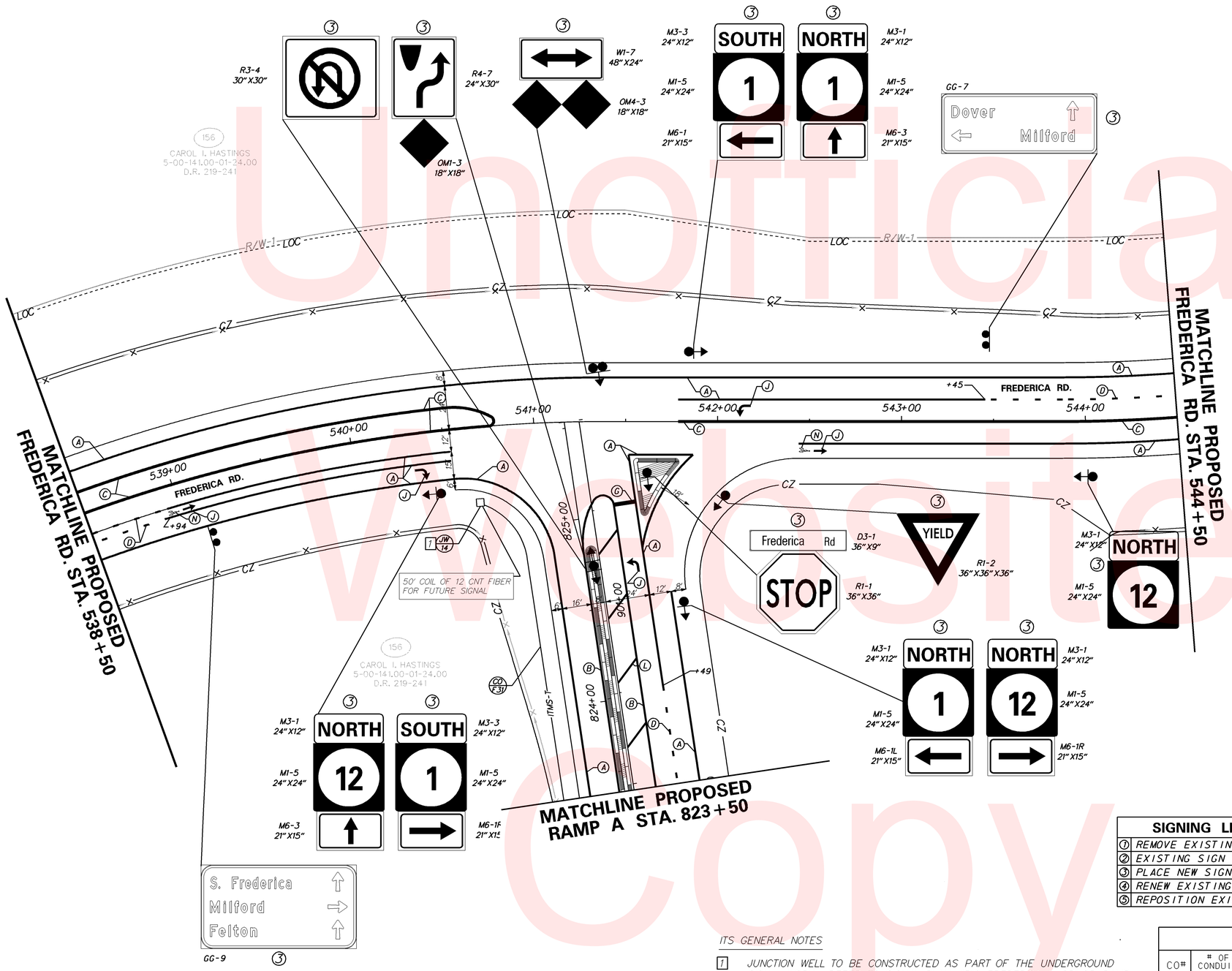

Unofficial Website Copy

ITMS LEGEND NOTES

* INDICATES ITMS TO BE PERFORMED BY THE CONTRACTOR. WORK ON THE VARIABLE MESSAGE SIGN IS LIMITED TO THE FOUNDATION AND SUPPORT STRUCTURE.

ALL OTHER ITEMS LISTED IN THE LEGEND WILL BE PERFORMED BY OTHERS. THIS INCLUDES ALL INNER-DUCT, WIRING WITHIN CONDUITS, AND THE VARIABLE MESSAGE SIGNS.

ITMS LEGEND

JW X	PROPOSED JUNCTION WELL & TYPE *
CO X	PROPOSED CONDUIT RUN & IDENTIFIER *
PB X	PROPOSED POLE BASE IDENTIFIER *
PL X	PROPOSED POLE IDENTIFIER
	PROPOSED POLE BASE *
	PROPOSED RADAR DETECTION
	EXISTING RADAR DETECTION
	6'x6' SYSTEM LOOP
CA X	PROPOSED ITMS CABINET & TYPE
	EXISTING SIGNAL CABINET (TYPE P) OR (TYPE M) AS NOTED
P	PROPOSED SERVICE PEDESTAL
HH X	PROPOSED HAND HOLE IDENTIFIER
	PROPOSED ROAD WEATHER INFORMATION SYSTEM (RWIS) PUCK SENSOR
	EXISTING ROAD WEATHER INFORMATION SYSTEM (RWIS) PUCK SENSOR
ATR	AUTOMATIC TRAFFIC RECORDER (ATR)
—ITMS-T—	4" MULTIDUCT, PVC (TRENCH) WITH * (4) 1" RIBBED INNER DUCT
—ITMS-B—	4" MULTIDUCT, SDR-13.5 HDPE (BORE), * WITH (4) 1" RIBBED INNER DUCT
	VARIABLE MESSAGE SIGN WITH * BUTTERFLY CANTILEVER
	PROPOSED VIDEO MONITORING CAMERA (CCTV) ON 75' POLE WITH LOWERING DEVICE

PAVEMENT MARKINGS LEGEND

SYMBOL	ITEM	QUANTITY
A	5" SOLID WHITE EPOXY RESIN PAVEMENT STRIPING (ITEM 748548)	2025 LF
B	5" SOLID YELLOW EPOXY RESIN PAVEMENT STRIPING (ITEM 748548)	332 LF
C	5" SOLID DOUBLE YELLOW EPOXY RESIN PAVEMENT STRIPING (ITEM 748548)	1476 LF
D	5" DASHED WHITE EPOXY RESIN PAVEMENT STRIPING, 2' LINE & 6' GAP (ITEM 748548)	56 LF
E	5" DASHED WHITE EPOXY RESIN PAVEMENT STRIPING, 10' LINE & 30' GAP (ITEM 748548)	0 LF
F	5" DASHED YELLOW EPOXY RESIN PAVEMENT STRIPING, 10' LINE & 30' GAP (ITEM 748548)	0 LF
G	16" SOLID WHITE ALKYD THERMOPLASTIC PAVEMENT STRIPING (ITEM 748015)	16 SF
H	24" SOLID WHITE ALKYD THERMOPLASTIC PAVEMENT STRIPING (ITEM 748015)	0 SF
J	WHITE ALKYD THERMOPLASTIC PAVEMENT SYMBOL (ITEM 748015)	57 SF
K	10" SOLID WHITE EPOXY RESIN PAVEMENT STRIPING (ITEM 748549)	0 LF
L	10" SOLID YELLOW EPOXY RESIN PAVEMENT STRIPING (ITEM 748549)	68 LF
M	10" DASHED WHITE EPOXY RESIN PAVEMENT STRIPING, 3' LINE & 9' GAP (ITEM 748549)	0 LF
N	WHITE RETROREFLECTIVE PREFORMED PATTERNED MARKINGS, BIKE SYMBOL (ITEM 748553)	36 SF

SIGNING LEGEND

1	REMOVE EXISTING SIGN
2	EXISTING SIGN TO REMAIN
3	PLACE NEW SIGN
4	RENEW EXISTING SIGN
5	REPOSITION EXISTING SIGN

ITS GENERAL NOTES

1 JUNCTION WELL TO BE CONSTRUCTED AS PART OF THE UNDERGROUND SIGNAL WORK. REFER TO SIGNAL PLAN K310 FREDERICA @ SR1 SB RAMP FOR EXTENT OF WORK.

CONDUIT RUN SCHEDULE

CO#	# OF CONDUITS	SIZE	LENGTH	B/T/O/P	AMOUNT AND TYPE OF CABLE/ WIRE
F31	1	4"	175'	T	(1)12 CNT SM

* DENOTES EXISTING B-BORE T-TRENCH O-OPEN P-ATTACH TO POLE SM-SINGLE MODE

DELAWARE DEPARTMENT OF TRANSPORTATION

ADDENDUMS / REVISIONS

SCALE 0 30 60 90 FEET

SR1, SOUTH FREDERICA GRADE SEPARATED INTERSECTION

CONTRACT	BRIDGE NO.	–
T200812202	DESIGNED BY: LCM	
COUNTY		
KENT	CHECKED BY: SFP/BAM	

SIGNING, STRIPING, AND ITMS PLAN

SHEET NO. 257 TOTAL SHTS. 296

7/19/2013
G:\PROJECTS\06535.00 (DelDOT Agmt. 1376 DOTS Open End)\06535.07 SR1, S. Frederica\CADD Files\XM\ss28sf.dgn
09945457

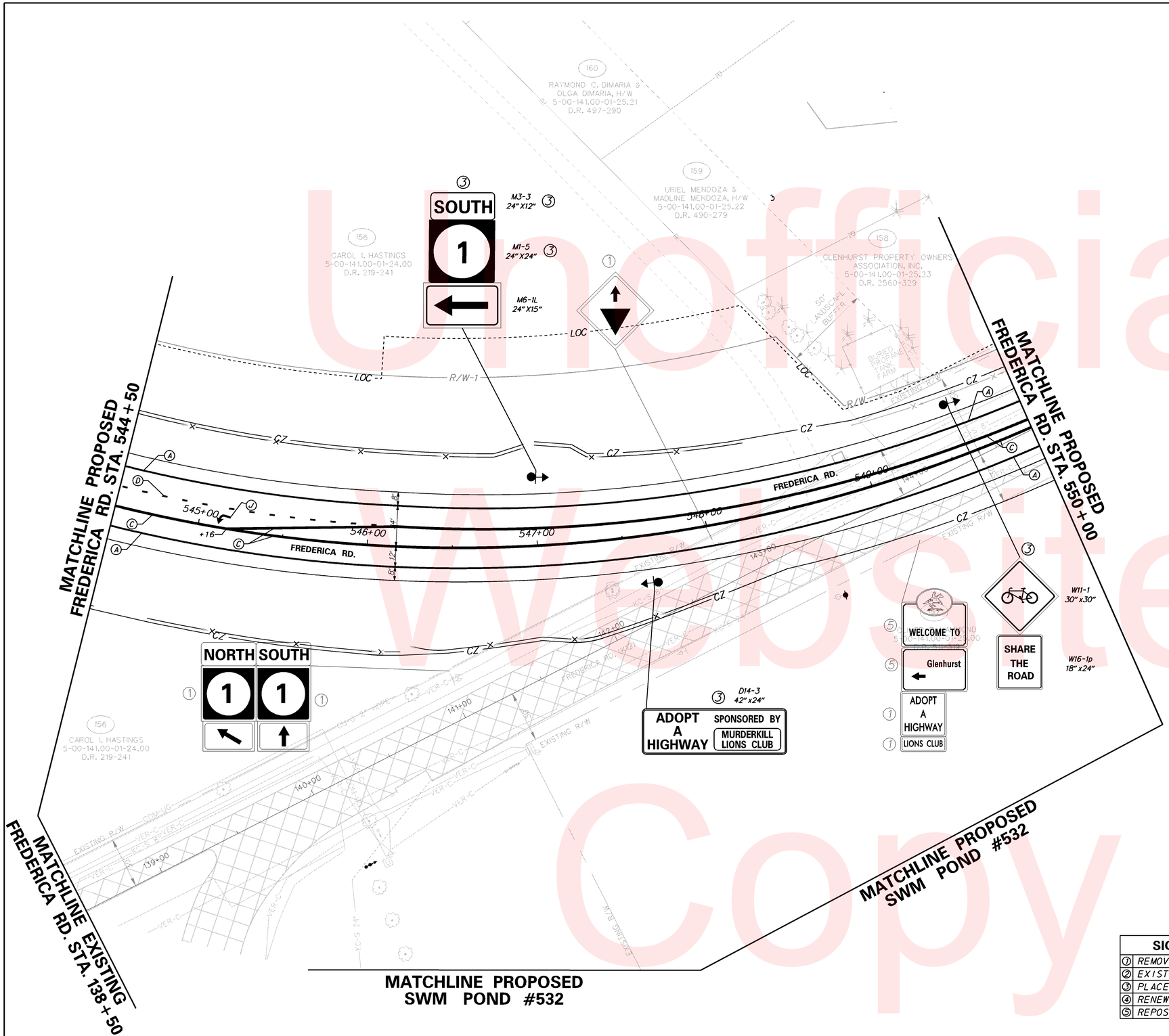

ITMS LEGEND NOTES

* INDICATES ITMS TO BE PERFORMED BY THE CONTRACTOR. WORK ON THE VARIABLE MESSAGE SIGN IS LIMITED TO THE FOUNDATION AND SUPPORT STRUCTURE.

ALL OTHER ITEMS LISTED IN THE LEGEND WILL BE PERFORMED BY OTHERS. THIS INCLUDES ALL INNER-DUCT, WIRING WITHIN CONDUITS, AND THE VARIABLE MESSAGE SIGNS.

ITMS LEGEND

- JW/X — PROPOSED JUNCTION WELL & TYPE*
- CO/X — PROPOSED CONDUIT RUN & IDENTIFIER*
- PB/X — PROPOSED POLE BASE IDENTIFIER*
- PL/X — PROPOSED POLE IDENTIFIER
- PROPOSED POLE BASE*
- PROPOSED RADAR DETECTION
- EXISTING RADAR DETECTION
- 6'x6' SYSTEM LOOP
- CA/X — PROPOSED ITMS CABINET & TYPE
- EXISTING SIGNAL CABINET (TYPE P) OR (TYPE M) AS NOTED
- P — PROPOSED SERVICE PEDESTAL
- HH/X — PROPOSED HAND HOLE IDENTIFIER
- PROPOSED ROAD WEATHER INFORMATION SYSTEM (RWIS) PUCK SENSOR
- EXISTING ROAD WEATHER INFORMATION SYSTEM (RWIS) PUCK SENSOR
- ATR — AUTOMATIC TRAFFIC RECORDER (ATR)
- ITMS-T — 4" MULTIDUCT, PVC (TRENCH) WITH* (4) 1" RIBBED INNER DUCT
- ITMS-B — 4" MULTIDUCT, SDR-13.5 HDPE (BORE),* WITH (4) 1" RIBBED INNER DUCT
- VARIABLE MESSAGE SIGN WITH* BUTTERFLY CANTILEVER
- PROPOSED VIDEO MONITORING CAMERA (CCTV) ON 75' POLE WITH LOWERING DEVICE

PAVEMENT MARKINGS LEGEND

SYMBOL	ITEM	QUANTITY
A	5" SOLID WHITE EPOXY RESIN PAVEMENT STRIPING (ITEM 748548)	1100 LF
B	5" SOLID YELLOW EPOXY RESIN PAVEMENT STRIPING (ITEM 748548)	0 LF
C	5" SOLID DOUBLE YELLOW EPOXY RESIN PAVEMENT STRIPING (ITEM 748548)	2060 LF
D	5" DASHED WHITE EPOXY RESIN PAVEMENT STRIPING, 2' LINE & 6' GAP (ITEM 748548)	56 LF
E	5" DASHED WHITE EPOXY RESIN PAVEMENT STRIPING, 10' LINE & 30' GAP (ITEM 748548)	0 LF
F	5" DASHED YELLOW EPOXY RESIN PAVEMENT STRIPING, 10' LINE & 30' GAP (ITEM 748548)	0 LF
G	16" SOLID WHITE ALKYD THERMOPLASTIC PAVEMENT STRIPING (ITEM 748015)	0 SF
H	24" SOLID WHITE ALKYD THERMOPLASTIC PAVEMENT STRIPING (ITEM 748015)	0 SF
J	WHITE ALKYD THERMOPLASTIC PAVEMENT SYMBOL (ITEM 748015)	16 SF
K	10" SOLID WHITE EPOXY RESIN PAVEMENT STRIPING (ITEM 748549)	0 LF
L	10" SOLID YELLOW EPOXY RESIN PAVEMENT STRIPING (ITEM 748549)	0 LF
M	10" DASHED WHITE EPOXY RESIN PAVEMENT STRIPING, 3' LINE & 9' GAP (ITEM 748549)	0 LF
N	WHITE RETROREFLECTIVE PREFORMED PATTERNED MARKINGS, BIKE SYMBOL (ITEM 748553)	0 SF

SIGNING LEGEND

1	REMOVE EXISTING SIGN
2	EXISTING SIGN TO REMAIN
3	PLACE NEW SIGN
4	RENEW EXISTING SIGN
5	REPOSITION EXISTING SIGN

Unofficial Website Copy

DELAWARE DEPARTMENT OF TRANSPORTATION

ADDENDUMS / REVISIONS

SCALE 0 30 60 90 FEET

SR1, SOUTH FREDERICA GRADE SEPARATED INTERSECTION

CONTRACT	BRIDGE NO.	–
T200812202	DESIGNED BY: LCM	
COUNTY		
KENT	CHECKED BY: SFP/BAM	

SIGNING, STRIPING, AND ITMS PLAN

SHEET NO. 258 TOTAL SHTS. 296

7/19/2013 G:\PROJECTS\06535.00 (DelDOT Agmt. 1376 DOTS Open End)\06535.07 SR1, S. Frederica\CADD Files\XM\ss29sf.dgn 0947701

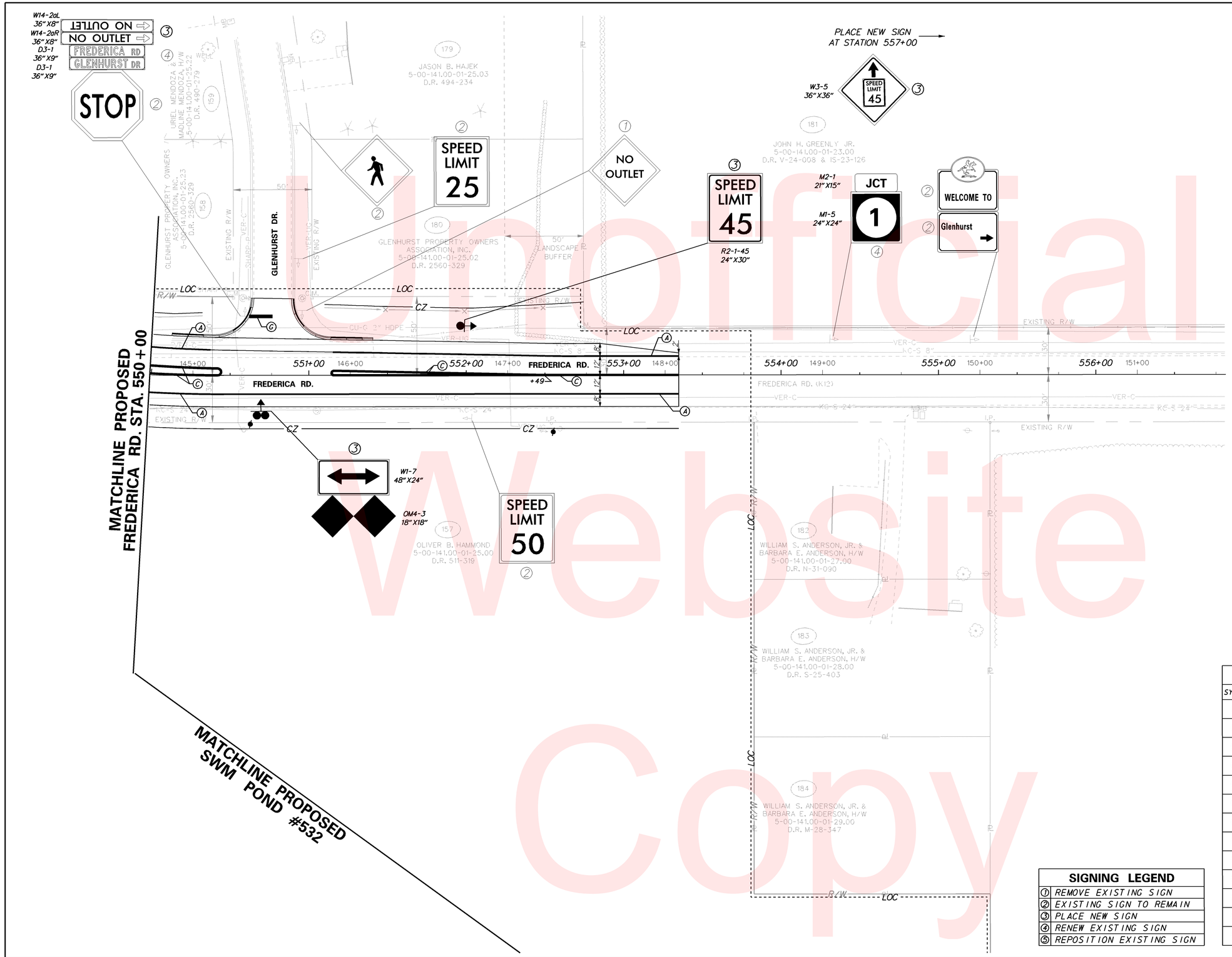

ITMS LEGEND NOTES

* INDICATES ITMS TO BE PERFORMED BY THE CONTRACTOR. WORK ON THE VARIABLE MESSAGE SIGN IS LIMITED TO THE FOUNDATION AND SUPPORT STRUCTURE.

ALL OTHER ITEMS LISTED IN THE LEGEND WILL BE PERFORMED BY OTHERS. THIS INCLUDES ALL INNER-DUCT, WIRING WITHIN CONDUITS, AND THE VARIABLE MESSAGE SIGNS.

ITMS LEGEND

- JW/X — PROPOSED JUNCTION WELL & TYPE *
- CO/X — PROPOSED CONDUIT RUN & IDENTIFIER *
- PB/X — PROPOSED POLE BASE IDENTIFIER *
- PL/X — PROPOSED POLE IDENTIFIER
- PROPOSED POLE BASE *
- PROPOSED RADAR DETECTION
- EXISTING RADAR DETECTION
- 6'x6' SYSTEM LOOP
- CA/X — PROPOSED ITMS CABINET & TYPE
- EXISTING SIGNAL CABINET (TYPE P) OR (TYPE M) AS NOTED
- P — PROPOSED SERVICE PEDESTAL
- HH/X — PROPOSED HAND HOLE IDENTIFIER
- PROPOSED ROAD WEATHER INFORMATION SYSTEM (RWIS) PUCK SENSOR
- EXISTING ROAD WEATHER INFORMATION SYSTEM (RWIS) PUCK SENSOR
- ATR — AUTOMATIC TRAFFIC RECORDER (ATR)
- —ITMS-T— 4" MULTIDUCT, PVC (TRENCH) WITH * (4) 1" RIBBED INNER DUCT
- —ITMS-B— 4" MULTIDUCT, SDR-13.5 HDPE (BORE), * WITH (4) 1" RIBBED INNER DUCT
- VARIABLE MESSAGE SIGN WITH * BUTTERFLY CANTILEVER
- PROPOSED VIDEO MONITORING CAMERA (CCTV) ON 75' POLE WITH LOWERING DEVICE

PAVEMENT MARKINGS LEGEND

SYMBOL	ITEM	QUANTITY
A	5" SOLID WHITE EPOXY RESIN PAVEMENT STRIPING (ITEM 748548)	590 LF
B	5" SOLID YELLOW EPOXY RESIN PAVEMENT STRIPING (ITEM 748548)	0 LF
C	5" SOLID DOUBLE YELLOW EPOXY RESIN PAVEMENT STRIPING (ITEM 748548)	906 LF
D	5" DASHED WHITE EPOXY RESIN PAVEMENT STRIPING, 2' LINE & 6' GAP (ITEM 748548)	0 LF
E	5" DASHED WHITE EPOXY RESIN PAVEMENT STRIPING, 10' LINE & 30' GAP (ITEM 748548)	0 LF
F	5" DASHED YELLOW EPOXY RESIN PAVEMENT STRIPING, 10' LINE & 30' GAP (ITEM 748548)	0 LF
G	16" SOLID WHITE ALKYD THERMOPLASTIC PAVEMENT STRIPING (ITEM 748015)	20 SF
H	24" SOLID WHITE ALKYD THERMOPLASTIC PAVEMENT STRIPING (ITEM 748015)	0 SF
J	WHITE ALKYD THERMOPLASTIC PAVEMENT SYMBOL (ITEM 748015)	0 SF
K	10" SOLID WHITE EPOXY RESIN PAVEMENT STRIPING (ITEM 748549)	0 LF
L	10" SOLID YELLOW EPOXY RESIN PAVEMENT STRIPING (ITEM 748549)	0 LF
M	10" DASHED WHITE EPOXY RESIN PAVEMENT STRIPING, 3' LINE & 9' GAP (ITEM 748549)	0 LF
N	WHITE RETROREFLECTIVE PREFORMED PATTERNED MARKINGS, BIKE SYMBOL (ITEM 748553)	0 SF

SIGNING LEGEND

1	REMOVE EXISTING SIGN
2	EXISTING SIGN TO REMAIN
3	PLACE NEW SIGN
4	RENEW EXISTING SIGN
5	REPOSITION EXISTING SIGN

Unofficial Website Copy

DELAWARE DEPARTMENT OF TRANSPORTATION

ADDENDUMS / REVISIONS

SCALE 0 30 60 90 FEET

SR1, SOUTH FREDERICA GRADE SEPARATED INTERSECTION

CONTRACT	BRIDGE NO.	–
T200812202	DESIGNED BY: LCM	
COUNTY	CHECKED BY: SFP/BAM	
KENT		

SIGNING, STRIPING, AND ITMS PLAN

SHEET NO. 259 TOTAL SHTS. 296

7/19/2013
G:\PROJECTS\06535.00 (DelDOT Agmt. 1376 DOTS Open End)\06535.07 SR1, S. Frederica\CADD Files\XM\ss30sf.dgn
09:49:52

PANEL DESIGNATION	SHEET NO.	QUANTITY	LEGEND	SIZE AREA (S.F.)	SIZE WIDTH	SIZE HEIGHT	COLOR LEGEND	COLOR BCKGRND	BORDER WIDTH	BORDER RADIUS	ARROW	SHIELD	REMARKS
GM-1 GM-6	228 244	2	EXIT 83 TO 12 S. Frederica 1 MILE	23.75 192	114" 192"	30" 144"	W W	G G	2" 2"	6" 12"			36" X 36" SHIELD TOTAL 215.75 S.F. ITEM NO. 749500
GM-2 GM-5	231 242	2	EXIT 83 TO 12 S. Frederica 1/2 MILE	23.75 192	114" 192"	30" 144"	W W	G G	2" 2"	6" 12"			36" X 36" SHIELD TOTAL 215.75 S.F. ITEM NO. 749500
C-1 C-2	236 238	2	EXIT 83 TO 12 S. Frederica	23.75 185	114" 222"	30" 120	W W	G G	2" 2"	6" 12"	 1		36" X 36" SHIELD ARROW: 18.2" X 29.2" @ 45 DEGREES TOTAL 208.75 S.F. ITEM NO. 749500
GM-3 GM-4	236 238	2	EXIT 83	32.5	78"	60"	W	G	2"	6"	1		ARROW: 18.2" X 29.2" @ 60 DEGREES TOTAL 32.5 S.F. ITEM NO. 749500
GG-6	255	1	S. Frederica Felton Milford	22.75	78"	42"	W	G	1.125"	6"			TOTAL 22.75 S.F.
GG-7	257	1	Dover Milford	22.75	78"	30"	W	G	1.125"	3"			TOTAL 22.75 S.F.

PANEL DESIGNATION	SHEET NO.	QUANTITY	LEGEND	SIZE AREA (S.F.)	SIZE WIDTH	SIZE HEIGHT	COLOR LEGEND	COLOR BCKGRND	BORDER WIDTH	BORDER RADIUS	ARROW	SHIELD	REMARKS
GG-1	248	1	Dover S. Frederica Felton	22.75	78"	42"	W	G	1.125"	6"			TOTAL 22.75 S.F.
GG-2	249	1	Milford S. Frederica Felton	22.75	78"	42"	W	G	1.125"	6"			TOTAL 22.75 S.F.
GG-3 GG-4 GG-10	249 255 237	3	Killens Pond State Park Water Park Camping and Cabins Year Round	38.5	84"	66"	W	Br	2"	9"			TOTAL 115.5 S.F.
GG-5	254	1	S. Frederica Milford Dover	22.75	78"	42"	W	G	1.125"	6"			TOTAL 22.75 S.F.
GG-8	237	1	S. Frederica Felton Dover	22.75	78"	42"	W	G	1.125"	6"			TOTAL 22.75 S.F.
GG-9	257	1	S. Frederica Milford Felton	22.75	78"	42"	W	G	1.125"	6"			TOTAL 22.75 S.F.

NOTE: SIGNS, POSTS, AND HARDWARE SUPPLIED BY DELDOT FOR ALL GG SIGNS.

Unofficial Website Copy

DELAWARE DEPARTMENT OF TRANSPORTATION

ADDENDUMS / REVISIONS

SR1, SOUTH FREDERICA GRADE SEPARATED INTERSECTION

CONTRACT	BRIDGE NO.	–
T200812202	DESIGNED BY: LCM	
COUNTY		
KENT	CHECKED BY: SFP	

SIGNING DETAILS

SHEET NO. 260
TOTAL SHTS. 296

7/19/2013
G:\PROJECTS\06535.00 (DelDOT Agmt. 1376 DOTS Open End)\06535.07 SR1, S. Frederica\CADD Files\XM\ss_details01sf.dgn
0909400

SIGN	M.U.T.C.D. DESIGNATION	SIZE	QUANTITY	TOTAL S.F.
NORTH	M3 - 1	24 X 12	13	26 S.F.
		30 X 15	1	3 S.F.
SOUTH	M3 - 3	24 X 12	8	16 S.F.
		30 X 15	1	3 S.F.
JCT	M2 - 1	21 X 15	1	2 S.F.
• BLK. ON WH.	M6 - 1L	21 X 15	10	22 S.F.
• BLK. ON WH.	M6 - 1R	21 X 15	12	26.25 S.F.
• BLK. ON WH.	M6 - 3	21 X 15	5	11 S.F.
BEGIN RIGHT TURN LANE YIELD TO BIKES	R4 - 4	36 X 30	3	22.5 S.F.
1	M1 - 5	24 X 24	15	60 S.F.
		36 X 36	2	18 S.F.
12	M1 - 5	24 X 24	7	28 S.F.
		36 X 36	0	0 S.F.
	W2 - 2L	30 X 30	4	25 S.F.
	W3 - 1	30 X 30	6	37.5 S.F.
	W2 - 2R	30 X 30	4	25 S.F.
RAMP 25 MPH	W13 - 3	36 X 48	2	24 S.F.
EXIT 25 MPH	W13 - 2	36 X 48	2	24 S.F.
NO OUTLET	W14 - 2aL	36 X 8	3	6 S.F.

SIGN	M.U.T.C.D. DESIGNATION	SIZE	QUANTITY	TOTAL S.F.
NO OUTLET	W14 - 2aR	36 X 8	4	8 S.F.
	W21 - 11 - DE	30 X 30	1	6.25 S.F.
SPEED LIMIT 45	W3 - 5	36 X 36	2	18 S.F.
	W1 - 2L	30 X 30	1	6.25 S.F.
	W4 - 1	48 X 48	1	16 S.F.
DEAD END	W14 - 1	30 X 30	2	12.5 S.F.
30 M.P.H.	W13 - 1	18 X 18	1	2.25 S.F.
	W1 - 7	48 X 24	8	64 S.F.
	W1 - 8R	18 X 24	7	21 S.F.
	W11 - 1	30 X 30	2	12.5 S.F.
SHARE THE ROAD	W16 - 1p	18 X 24	2	6 S.F.
DO NOT ENTER	R5 - 1	30 X 30	2	12.5 S.F.
EVACUATION ROUTE	EM - 1 - DE	24 X 24	2	8 S.F.
	EM - 1p - DE	12 X 12	2	2 S.F.
	R4 - 7	24 X 30	4	20 S.F.

SIGN	M.U.T.C.D. DESIGNATION	SIZE	QUANTITY	TOTAL S.F.
STOP	R1 - 1	36 X 36	7	63 S.F.
YIELD	R1 - 2	36 x 36 x 36	4	15.6 S.F.
SPEED LIMIT 55	R2 - 1 - 55	36 X 48	8	96 S.F.
SPEED LIMIT 45	R2 - 1 - 45	24 X 30	4	20 S.F.
SPEED LIMIT 35	R2 - 1 - 35	24 X 30	2	10 S.F.
SPEED LIMIT 25	R2 - 1 - 25	24 X 30	1	5 S.F.
STATE LAW MOVE OVER OR REDUCE SPEED FOR STOPPED EMERGENCY AND MAINTENANCE VEHICLES	SR1 - 18 - DE	42 X 60	2	35 S.F.
	R3 - 4	30 X 30	1	6.25 S.F.
Kent County Wastewater Treatment Facility	I-3	30 X 24	7	35 S.F.
	OM1 - 3	18 X 18	4	9.0 S.F.
	OM4 - 3	18 X 18	22	49.5 S.F.
ADOPT A HIGHWAY SPONSORED BY MURDERKILL LIONS CLUB	D14-3	42 X 24	1	7 S.F.
ADOPT A HIGHWAY SPONSORED BY NEW COURT METHODIST CHURCH	D14-3	42 X 24	1	7 S.F.
ADOPT A HIGHWAY SPONSORED BY KITZMILLER FAMILY	D14-3	42 X 24	1	7 S.F.

NOTE:
1. ALL SIGNS, POSTS, AND HARDWARE FOR SIGNS SHOWN ON THIS SHEET SHALL BE SUPPLIED BY DELDOT.

Unofficial Website Copy

SIGN	M.U.T.C.D. DESIGNATION	SIZE	QUANTITY	TOTAL S.F.
← Dover	D1 - 1	36 X 18	2	9 S.F.
Tub Mill Pond Rd	D3 - 1	42 X 9	4	10.5 S.F.
Milford Neck Rd	D3 - 1	42 X 9	8	21 S.F.
Old Tub Mill Pond Rd	D3 - 1	36 X 18	2	4.5 S.F.
Old Milford Neck	D3 - 1	36 X 18	2	9 S.F.
Milford Neck Connector Rd	D3 - 1	42 X 18	4	21 S.F.
Frederica Rd	D3 - 1	36 X 9	4	9 S.F.
Glenhurst Dr	D3 - 1	36 X 9	2	4.5 S.F.
MILE 4 8	D10 - 2	10 X 27	2	3.75 S.F.
Milford Neck Connector W	W16 - 8aP	42 X 15	1	8.75 S.F.
Old Milford Neck W	W16 - 8aP	36 X 15	2	7.5 S.F.
Milford Neck W	W16 - 8aP	24 X 15	2	2.5 S.F.
Old Tub Mill Pond W	W16 - 8aP	36 X 18	1	4.5 S.F.
Old Tub Mill ← Pond W	W16 - 8P	36 X 18	1	4.5 S.F.
Tub Mill ← Pond W Frederica W →	W16 - 8aP	42 X 22	3	19.25 S.F.

SIGN	M.U.T.C.D. DESIGNATION	SIZE	QUANTITY	TOTAL S.F.
Milford Neck Rd →	W16 - 8P	48 X 8	1	2.75 S.F.
← Milford Neck Rd	W16 - 8P	48 X 8	1	2.75 S.F.
-	-	-	-	-
-	-	-	-	-
-	-	-	-	-
-	-	-	-	-
-	-	-	-	-
-	-	-	-	-
-	-	-	-	-
-	-	-	-	-
-	-	-	-	-
-	-	-	-	-
-	-	-	-	-
-	-	-	-	-
-	-	-	-	-
-	-	-	-	-

SIGN	M.U.T.C.D. DESIGNATION	SIZE	QUANTITY	TOTAL S.F.
-	-	-	-	-
-	-	-	-	-
-	-	-	-	-
-	-	-	-	-
-	-	-	-	-
-	-	-	-	-
-	-	-	-	-
-	-	-	-	-
-	-	-	-	-
-	-	-	-	-
-	-	-	-	-
-	-	-	-	-
-	-	-	-	-
-	-	-	-	-
-	-	-	-	-

NOTE:
1. ALL SIGNS, POSTS, AND HARDWARE FOR SIGNS SHOWN ON THIS SHEET SHALL BE SUPPLIED BY DELDOT.

Unofficial Website Copy

7/19/2013 G:\PROJECTS\06535.00 (DelDOT Agmt. 1376 DOTS Open End)\06535.07 SR1, S. Frederica\CADD Files\XM\ss_signquantities01sf.dgn 09:11:00

Clearence code

1. - 4' Behind face of guardrail
2. -Centered at tip of soil gore, located between roadway and exit ramp
3. - 6' From edge of shoulder

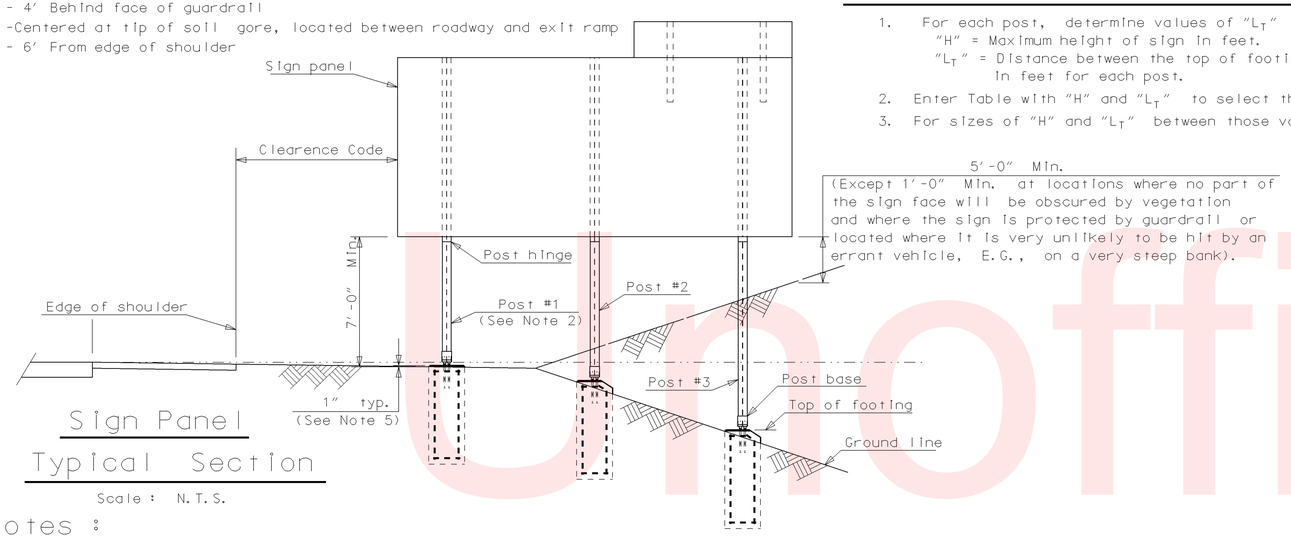

Sign Panel Typical Section

Scale : N.T.S.

General Notes for Bracket Number Selection Table

1. For each post, determine values of "L_T" and "H" as indicated in sketch.
   "H" = Maximum height of sign in feet.
   "L_T" = Distance between the top of footing and the top of sign in feet for each post.
2. Enter Table with "H" and "L_T" to select the required bracket for that post.
3. For sizes of "H" and "L_T" between those values on the table, use the next highest value.

W6 Post

Post Length (L_T) in feet

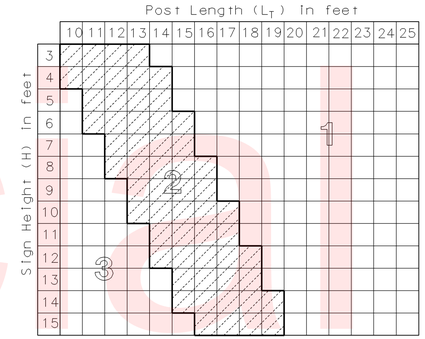

W8 Post

Post Length (L_T) in feet

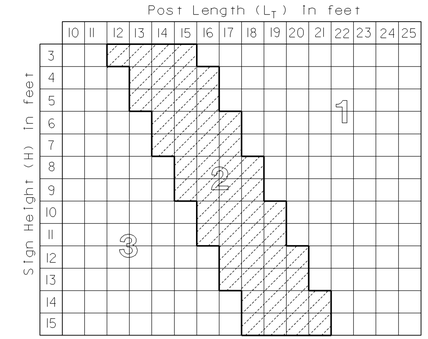

B-525 Bracket Tables

Notes :

1. Materials and workmanship in accordance with Delaware Department of Transportation Standard Specifications, unless noted otherwise.
2. Post #1 is always adjacent to roadway whether sign is located on left or right.
3. At locations with unmountable curb, guardrail or barrier, place the near edge of the sign at least 2'-0" behind the curb face, guardrail or barrier. At locations with guardrail or barrier, it is desirable to place post #1 beyond the deflection distance of the guardrail or barrier. Prior to fabrication, determine actual lateral placement in the field with the approval of the Enginner.
4. Locate signs to avoid placing support in drainage ditches.
5. Mount all sign panels above post hinges.
6. For selection of posts, refer to Post Selection Tables.
7. For post base and hinge details, refer to detail sheet.
8. For selection of footing size and reinforcement, refer to Foundation Data Table.
9. Design criteria, 2009 A.A.S.H.T.O. Standard Specifications for Structural Supports for Highway Signs, Luminaircs and Traffic Signals.

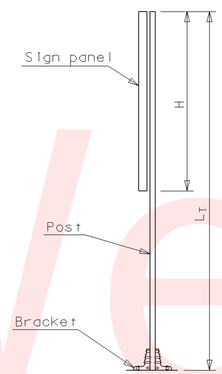

Sign Elevation

Scale : N.T.S.

W10 Post

Post Length (L_T) in feet

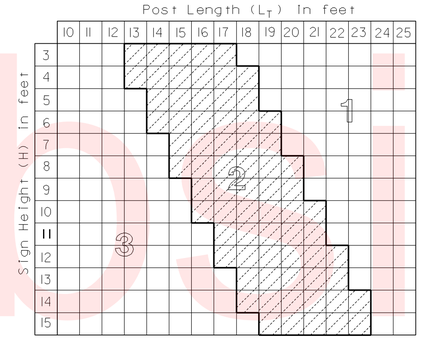

W12 Post

Post Length (L_T) in feet

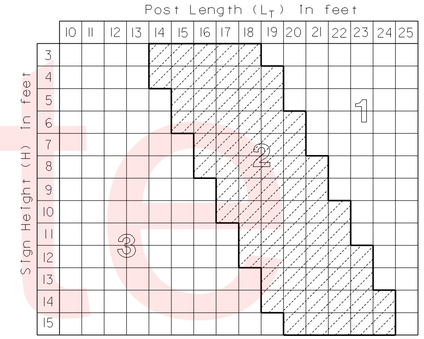

W14 Post

Post Length (L_T) in feet

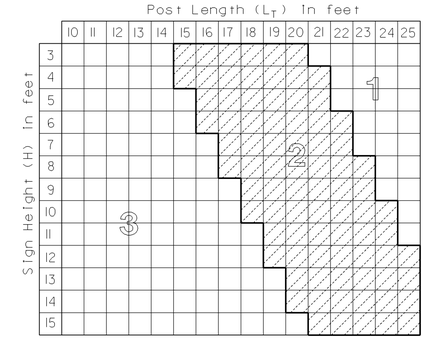

B-650 Bracket Tables

Bracket Number Selection Tables

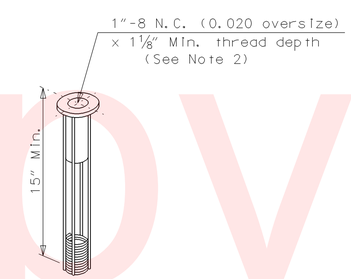

Anchor

Scale : N.T.S.

Notes:

1. Enter Foundation Data Table with required post size and find required footing values as shown in Details.
2. The anchor shall be 304 stainless steel with 1053 steel rod and coil.
3. Form the top one foot of the footing.
4. Use Class B cement concrete in all footings.
5. Exact dimensions "A" and "B" should be obtained from the manufacturer or measured from the assembled brackets prior to placement of anchores. Approximate dimensions are as follows :
   "A" (Lateral spacing of anchors)
   3" for B-525 used on W6 and W8 posts
   4" for B-650 used on W10, W12 and W14 posts.
   "B" (Longitudinal spacing of anchors)
   Bracket #1 - Depth of post selection plus 7 15/16".
   Bracket #2 - Depth of post selection plus 8 1/16".
   Bracket #3 - Depth of post selection plus 8 1/8".
6. To insure proper spacing and alignment of anchors, it is recommended that all anchors be held in place by a rigid machined template while the concrete is placed and cured.
7. Transpo Industries or approved equal.

Unofficial Website Copy

DELAWARE DEPARTMENT OF TRANSPORTATION	ADDENDUMS / REVISIONS	SR1, SOUTH FREDERICA GRADE SEPARATED INTERSECTION	CONTRACT T200812202	BRIDGE NO. –	GROUND MOUNT DETAILS	SHEET NO. 263
			COUNTY KENT	DESIGNED BY: LCM		TOTAL SHTS. 296
				CHECKED BY: SFP		

7/19/2013 G:\PROJECTS\06535.00 (DelDOT Agmt. 1376 DOTS Open End)\06535.07 SR1, S. Frederica\CADD Files\XM\ss_gm_details01sf.dgn 09:12:13

Notes :

1. The bracket number is stamped on the bracket.
2. Bolt the brackets to post, then place post and connected bracket to breakaway coupling.
3. For footing and anchor details, see attached sheets.
4. All bolts to be tightened in accordance with the manufacturer's specifications. Manufacturer's Specifications to be furnished to the DelDOT Project Resident prior to erection of the sign supports.
5. Transpo Industries or approved equal.

Bracket No.	D (Inches)
1	0.100
2	0.150
3	0.200

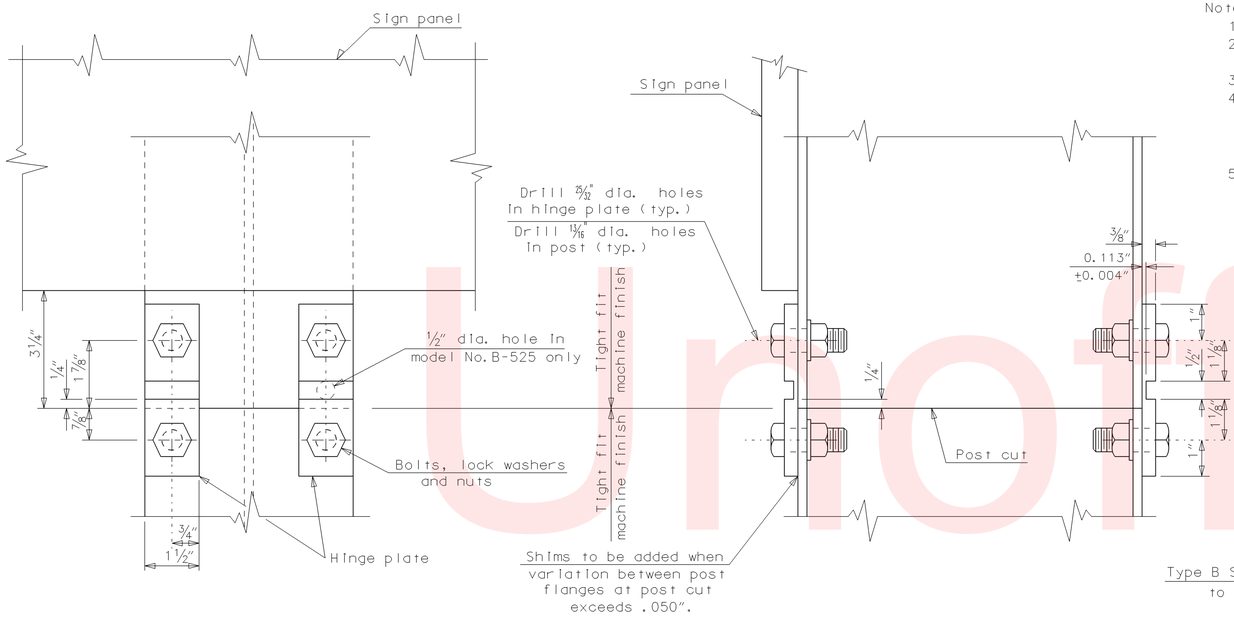

Post Hinge Detail

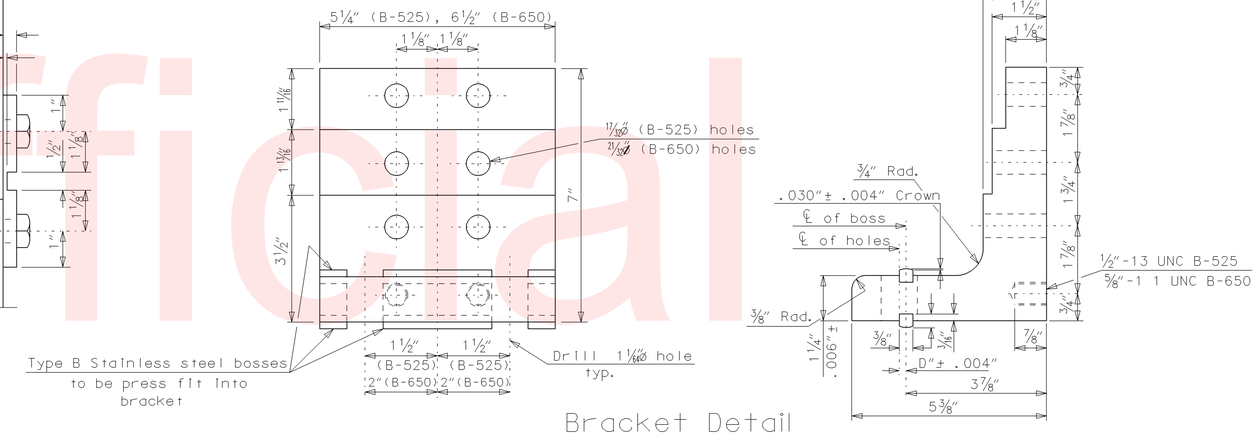

Bracket Detail

Scale : 1/2" = 1'-0"

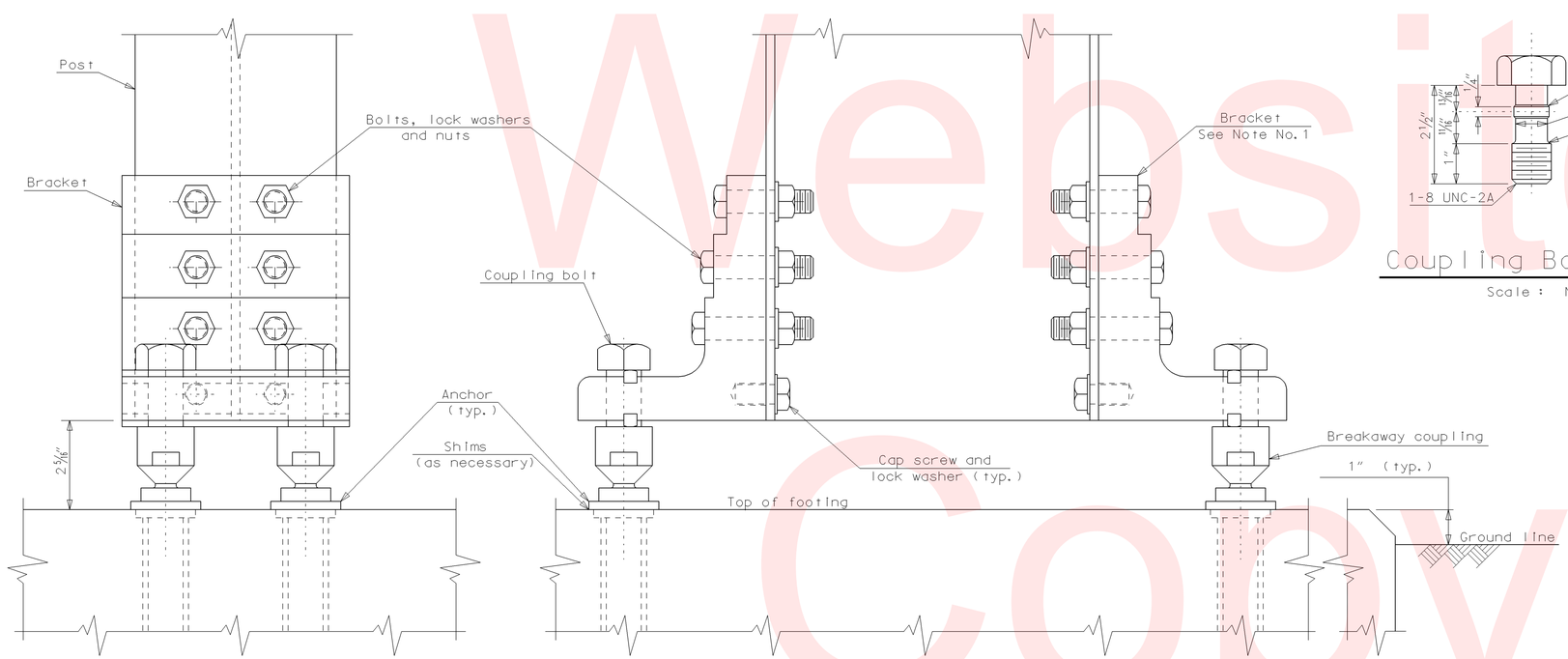

Front View

Post Base Detail

Side View

Breakaway Assemblies

Scale : 1/2" = 1'-0"

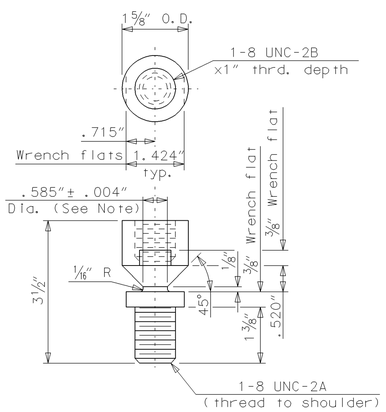

Type B - Breakaway Coupling Detail

Scale : N.T.S.

Note : Do not place torque across neck portion of coupling.

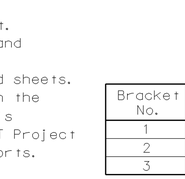

Coupling Bolt Detail

Scale : N.T.S.

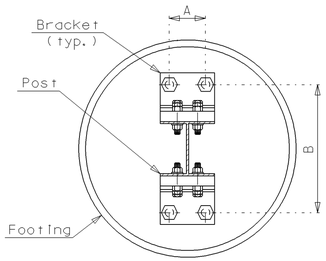

Plan View

Scale : N.T.S.

Note : For dimensions A and B, see ground mount sign and footing detail

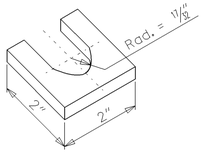

Shim Detail

Scale : N.T.S.

Note : 14 or 18 gage galvanized steel sheet

Unofficial Website Copy

DELAWARE DEPARTMENT OF TRANSPORTATION	ADDENDUMS / REVISIONS	SR1, SOUTH FREDERICA GRADE SEPARATED INTERSECTION	CONTRACT T200812202	BRIDGE NO. –	GROUND MOUNT DETAILS	SHEET NO. 264
			COUNTY KENT	DESIGNED BY: LCM		TOTAL SHTS. 296
				CHECKED BY: SFP		

5/24/2013 G:\PROJECTS\06535.00 (DelDOT Agmt. 1376 DOTS Open End)\06535.07 SR1, S. Frederica\CADD Files\XM\ss_gm_details01sf.dgn 11:53:40

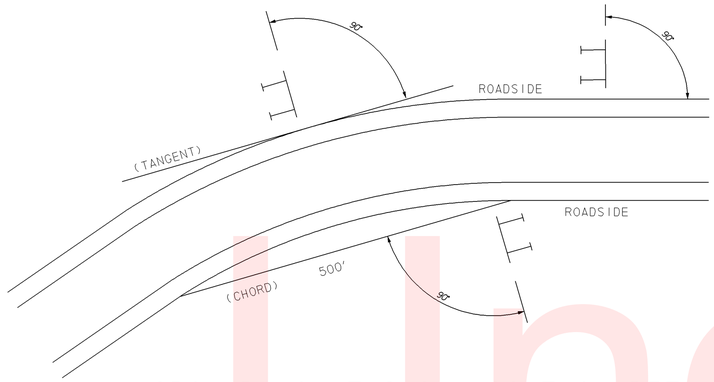

GROUND MOUNT SIGN LOCATION DETAIL

NOT TO SCALE

1. VERTICAL ALIGNMENT
   POSITION PANEL SO FACE IS PLUMB.

2. HORIZONTAL ALIGNMENT (SEE DIAGRAM ABOVE)
   a.) ON STRAIGHT ROADWAY SECTIONS, ANGLE OF SIGN FACE TO BROADWAY SHALL BE 90 DEGREE TO EDGE OF ROAD.
   b.) ON THE INSIDE OF HORIZONTAL CURVES POSITION SIGN SO FACE OF PANEL MAKES AN ANGLE OF 90 DEGREES WITH A CHORD BETWEEN A POINT ON NEAR EDGE OF PAVEMENT AT SIGN LOCATION AND A POINT ON EDGE OF PAVEMENT 500' IN ADVANCE OF SIGN.
   c.) ON THE OUTSIDE OF HORIZONTAL CURVES, POSITION SIGN SO FACE OF PANEL IS AT RIGHT ANGLES TO THE TANGENT OF THE CURVE AT SIGN LOCATION.
   d.) POSTIONING OF SIGNS AT GORES AND RAMP SEPERATIONS IS REFERRED TO THE NORMAL EDGE OF THE MANLINE ROADWAY.

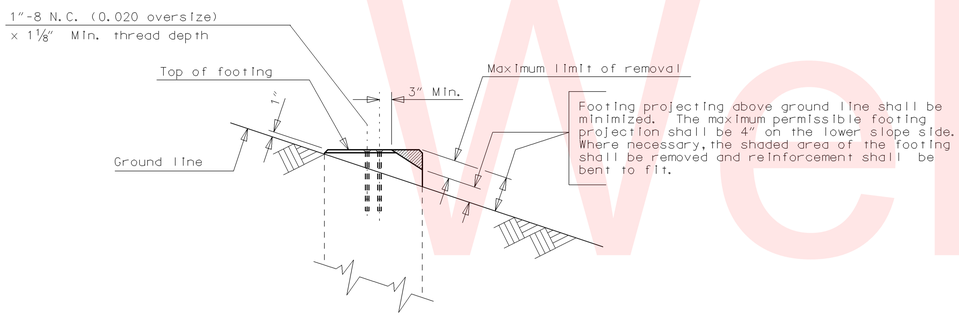

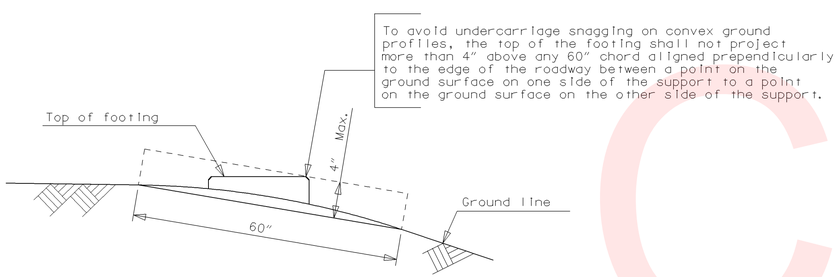

ADJUSTMENTS FOR SLOPES
(BREAKAWAY)

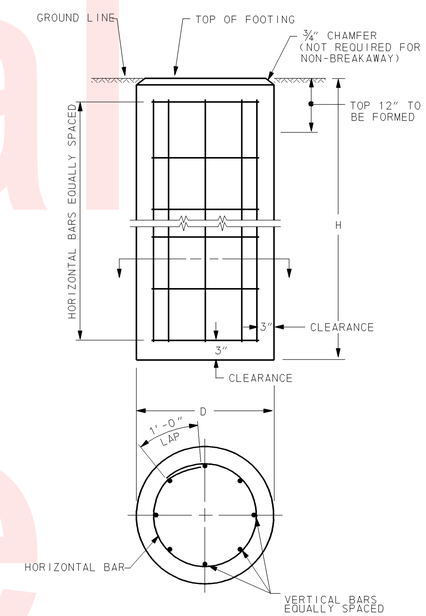

GROUND MOUNTED SIGN FOUNDATIONS
(NON-BREAKAWAY AND BREAKAWAY)

FOUNDATION DATA TABLE

POST SIZE	D	H	VERT BARS	HOR BARS	QUANTITIES CLASS B CONC	QUANTITIES REINFORCING STEEL
W6X9	30"	6'-0"	8-#7	7-#4	1.09 C.Y.	124 LBS.
W6X12	30"	7'-6"	8-#9	8-#4	1.36 C.Y.	232 LBS.
W6X15	30"	7'-6"	8-#9	8-#4	1.36 C.Y.	232 LBS.
W8X18	30"	7'-6"	8-#9	8-#4	1.36 C.Y.	232 LBS.
W8X21	30"	8'-0"	8-#9	9-#4	1.45 C.Y.	250 LBS.
W8X31	30"	10'-0"	8-#9	11-#4	1.82 C.Y.	311 LBS.
W10X22	36"	8'-6"	8-#10	9-#4	2.23 C.Y.	294 LBS.
W10X26	36"	9'-0"	8-#10	10-#4	2.36 C.Y.	355 LBS.
W12X26	36"	10'-0"	8-#10	11-#4	2.62 C.Y.	395 LBS.
W14X30	36"	11'-0"	8-#10	12-#4	2.88 C.Y.	435 LBS.
W14X34	36"	12'-6"	8-#10	13-#4	3.27 C.Y.	489 LBS.
W14X38	36"	14'-0"	8-#10	15-#4	3.67 C.Y.	552 LBS.

Unofficial Website Copy

Post Selection Table - Two Posts

W Feet	L_B Feet	Height "H" in Feet 4	5	6	7	8	9	10	11	12	13	14	15
6	6	W6x9	W6x9	W6x9	W6x9	W6x9	W6x9	W6x9	W6x9	W6x9	W6x12	W6x12	W6x12
	8	W6x9	W6x9	W6x9	W6x9	W6x9	W6x9	W6x9	W6x9	W6x12	W6x12	W6x15	W6x15
	10	W6x9	W6x9	W6x9	W6x9	W6x9	W6x9	W6x12	W6x12	W6x15	W6x15	W6x15	W6x15
	12	W6x9	W6x9	W6x12	W6x12	W6x12	W6x12	W6x12	W6x15	W6x15	W6x15	W6x15	W6x15
	14	W6x9	W6x12	W6x12	W6x12	W6x12	W6x15	W6x15	W6x15	W6x15	W6x15	W6x15	W8x18
	16	W6x12	W6x12	W6x12	W6x12	W6x15	W6x15	W6x15	W6x15	W6x15	W8x18	W8x21	W8x21
8	6	W6x9	W6x9	W6x9	W6x9	W6x9	W6x9	W6x9	W6x12	W6x12	W6x12	W6x15	W6x15
	8	W6x9	W6x9	W6x9	W6x9	W6x9	W6x9	W6x12	W6x12	W6x12	W6x15	W6x15	W6x15
	10	W6x9	W6x9	W6x9	W6x9	W6x12	W6x12	W6x15	W6x15	W6x15	W6x15	W6x15	W8x18
	12	W6x9	W6x9	W6x12	W6x12	W6x12	W6x15	W6x15	W6x15	W6x15	W6x15	W8x18	W8x21
	14	W6x12	W6x12	W6x12	W6x15	W6x15	W6x15	W6x15	W6x15	W6x15	W8x21	W8x21	W8x21
	16	W6x12	W6x12	W6x15	W6x15	W6x15	W6x15	W6x15	W8x21	W8x21	W8x21	W8x21	W10x26
10	6	W6x9	W6x9	W6x9	W6x9	W6x9	W6x9	W6x12	W6x12	W6x12	W6x15	W6x15	W6x15
	8	W6x9	W6x9	W6x9	W6x9	W6x9	W6x12	W6x12	W6x15	W6x15	W6x15	W8x18	W8x18
	10	W6x9	W6x9	W6x9	W6x12	W6x12	W6x12	W6x15	W6x15	W6x15	W8x18	W8x18	W8x18
	12	W6x9	W6x12	W6x12	W6x15	W6x15	W6x15	W6x15	W6x15	W8x18	W8x21	W8x21	W8x21
	14	W6x12	W6x12	W6x15	W6x15	W6x15	W8x18	W8x18	W8x21	W8x21	W8x21	W8x21	W10x26
	16	W6x12	W6x15	W6x15	W6x15	W6x15	W8x21	W8x21	W8x21	W8x21	W10x26	W10x26	W10x26
12	6	W6x9	W6x9	W6x9	W6x9	W6x12	W6x12	W6x12	W6x15	W6x15	W6x15	W8x18	W8x18
	8	W6x9	W6x9	W6x9	W6x12	W6x12	W6x12	W6x15	W6x15	W6x15	W6x15	W8x18	W10x22
	10	W6x9	W6x9	W6x12	W6x12	W6x15	W6x15	W6x15	W8x18	W8x18	W8x18	W8x21	W10x26
	12	W6x9	W6x12	W6x15	W6x15	W6x15	W6x15	W8x18	W8x21	W8x21	W8x21	W8x21	W10x26
	14	W6x12	W6x15	W6x15	W8x15	W6x15	W8x18	W8x21	W8x21	W10x22	W10x26	W10x26	W10x26
	16	W6x15	W6x15	W6x15	W6x15	W8x21	W8x21	W8x21	W10x26	W10x26	W10x26	W10x26	W12x26
14	6	W6x9	W6x9	W6x9	W6x9	W6x12	W6x12	W6x15	W6x15	W6x15	W8x18	W8x18	W10x22
	8	W6x9	W6x9	W6x9	W6x12	W6x12	W6x15	W6x15	W6x15	W6x15	W8x18	W10x22	W12x26
	10	W6x9	W6x12	W6x12	W6x12	W6x15	W6x15	W8x18	W8x18	W8x21	W10x22	W10x22	W12x26
	12	W6x12	W6x12	W6x15	W6x15	W6x15	W8x18	W8x21	W8x21	W8x21	W10x26	W10x26	W12x26
	14	W6x12	W6x15	W6x15	W6x15	W8x18	W8x21	W8x21	W10x26	W10x26	W10x26	W10x26	W12x26
	16	W6x15	W6x15	W6x15	W8x21	W8x21	W8x21	W10x26	W10x26	W10x26	W12x26	W14x30	W14x30
16	6	W6x9	W6x9	W6x9	W6x12	W6x12	W6x15	W6x15	W6x15	W8x18	W8x18	W10x22	W10x26
	8	W6x9	W6x9	W6x12	W6x12	W6x15	W6x15	W6x15	W6x15	W8x18	W8x18	W12x26	W14x30
	10	W6x9	W6x12	W6x12	W6x12	W6x15	W6x15	W8x18	W8x21	W8x21	W10x22	W12x26	W14x30
	12	W6x12	W6x12	W6x15	W8x15	W8x18	W8x21	W8x21	W8x21	W10x26	W10x26	W12x26	W14x30
	14	W6x15	W6x15	W6x15	W8x18	W8x21	W8x21	W10x26	W10x26	W10x26	W12x26	W14x30	W14x34
	16	W6x15	W6x15	W8x21	W8x21	W8x21	W10x26	W10x26	W10x26	W10x26	W12x26	W14x30	W14x34
18	6	W6x9	W6x9	W6x12	W6x12	W6x15	W6x15	W6x15	W8x18	W8x18	W10x22	W10x22	W12x26
	8	W6x9	W6x12	W6x12	W6x15	W6x15	W6x15	W6x15	W8x18	W8x18	W10x22	W14x30	W14x30
	10	W6x12	W6x12	W6x15	W6x15	W6x15	W8x18	W8x21	W8x21	W10x22	W12x26	W14x30	W14x30
	12	W6x12	W6x12	W6x15	W8x18	W8x18	W8x21	W8x21	W10x26	W10x26	W12x26	W14x30	W14x34
	14	W6x15	W6x15	W6x15	W6x15	W8x21	W10x22	W10x26	W10x26	W12x26	W14x30	W14x34	W14x38
	16	W6x15	W6x15	W8x21	W8x21	W10x26	W10x26	W10x26	W12x26	W14x30	W14x30	W14x38	W14x39
20	6	W6x9	W6x9	W6x12	W6x12	W6x15	W6x15	W6x15	W8x18	W8x21	W10x22	W12x26	W14x30
	8	W6x9	W6x12	W6x12	W6x15	W6x15	W6x15	W8x18	W8x18	W8x21	W10x22	W14x30	W14x30
	10	W6x12	W6x12	W6x15	W8x15	W6x15	W8x18	W8x21	W10x22	W12x26	W12x26	W14x30	W14x34
	12	W6x12	W6x15	W6x15	W8x18	W8x21	W8x21	W10x22	W10x26	W12x26	W14x30	W14x34	W14x38
	14	W6x15	W6x15	W8x18	W8x21	W8x21	W10x26	W10x26	W12x26	W14x30	W14x34	W14x38	W14x39
	16	W6x15	W8x21	W8x21	W10x26	W10x26	W10x26	W12x26	W14x30	W14x34	W14x38	W14x38	W14x43

Post Selection Table - Three Posts

W Feet	L_B Feet	Height "H" in Feet 4	5	6	7	8	9	10	11	12	13	14	15
22	6	W6x9	W6x9	W6x9	W6x12	W6x12	W6x15	W6x15	W6x15	W6x15	W8x18	W8x21	W10x22
	8	W6x9	W6x9	W6x12	W6x12	W6x15	W6x15	W6x15	W6x15	W8x18	W8x18	W10x26	W12x26
	10	W6x9	W6x12	W6x12	W6x15	W6x15	W6x15	W8x18	W8x18	W8x21	W10x22	W10x26	W12x26
	12	W6x12	W6x12	W6x15	W6x15	W8x18	W8x18	W8x21	W8x21	W8x21	W10x26	W10x26	W12x26
	14	W6x12	W6x15	W6x15	W8x21	W8x21	W8x21	W10x26	W10x26	W10x26	W12x26	W14x30	W14x30
	16	W6x15	W6x15	W6x15	W8x21	W8x21	W10x26	W10x26	W10x26	W10x26	W12x26	W14x30	W14x30
24	6	W6x9	W6x9	W6x9	W6x12	W6x12	W6x15	W6x15	W6x15	W8x18	W8x18	W10x22	W10x26
	8	W6x9	W6x9	W6x12	W6x12	W6x15	W6x15	W6x15	W6x15	W8x18	W8x18	W12x26	W14x30
	10	W6x9	W6x12	W6x12	W6x15	W6x15	W6x15	W8x18	W8x21	W10x22	W10x22	W12x26	W14x30
	12	W6x12	W6x12	W6x15	W6x15	W8x18	W8x21	W8x21	W8x21	W10x26	W10x26	W12x26	W14x30
	14	W6x12	W6x15	W6x15	W8x18	W8x21	W8x21	W10x26	W10x26	W10x26	W12x26	W14x30	W14x34
	16	W6x15	W6x15	W8x21	W8x21	W8x21	W10x26	W10x26	W10x26	W12x26	W14x30	W14x34	W14x34
26	6	W6x9	W6x9	W6x9	W6x12	W6x15	W6x15	W6x15	W6x15	W8x18	W10x22	W10x22	W12x26
	8	W6x9	W6x9	W6x12	W6x15	W6x15	W6x15	W6x15	W8x18	W8x18	W10x22	W12x26	W14x30
	10	W6x12	W6x12	W6x15	W6x15	W6x15	W6x15	W8x18	W8x21	W10x22	W12x26	W12x26	W14x30
	12	W6x12	W6x12	W6x15	W8x18	W8x18	W8x21	W8x21	W10x22	W10x26	W12x26	W12x26	W14x30
	14	W6x15	W6x15	W6x15	W8x21	W8x21	W8x21	W10x26	W10x26	W12x26	W14x30	W14x30	W14x34
	16	W6x15	W6x15	W6x21	W8x21	W10x26	W10x26	W10x26	W12x26	W14x30	W14x30	W14x34	W14x34
28	6	W6x9	W6x9	W6x12	W6x12	W6x15	W6x15	W6x15	W8x18	W8x18	W10x22	W12x26	W12x26
	8	W6x9	W6x12	W6x12	W6x15	W6x15	W6x15	W8x18	W8x18	W8x18	W10x22	W14x30	W14x30
	10	W6x12	W6x12	W6x15	W6x15	W6x15	W8x18	W8x21	W8x21	W10x22	W12x26	W14x30	W14x34
	12	W6x12	W6x15	W6x15	W8x18	W8x21	W8x21	W8x21	W10x26	W10x26	W12x26	W14x30	W14x34
	14	W6x15	W8x18	W8x18	W8x21	W8x21	W10x26	W10x26	W10x26	W12x26	W14x30	W14x34	W14x38
	16	W6x15	W8x18	W8x21	W8x21	W10x26	W10x26	W10x26	W12x26	W14x30	W14x34	W14x38	W14x38
30	6	W6x9	W6x9	W6x12	W6x12	W6x15	W6x15	W6x15	W8x18	W10x22	W10x22	W12x26	W14x30
	8	W6x9	W6x12	W6x15	W6x15	W6x15	W6x15	W8x18	W8x18	W10x22	W10x22	W14x30	W14x30
	10	W6x12	W6x12	W6x15	W6x15	W6x15	W8x18	W8x21	W10x22	W12x26	W12x26	W14x30	W14x30
	12	W6x12	W6x15	W6x15	W8x18	W8x21	W8x21	W10x22	W10x26	W12x26	W14x30	W14x34	W14x38
	14	W6x15	W8x18	W8x21	W8x21	W8x21	W10x26	W10x26	W12x26	W14x30	W14x34	W14x38	W14x39
	16	W6x15	W8x21	W8x21	W10x26	W10x26	W10x26	W12x26	W14x30	W14x34	W14x38	W14x38	W14x43

General Notes for Selection of Sign Support Posts

1. Determine values of "W", "H" and "L_B" as indicated in sketches "A" or "B".
   W = Maximum width of sign.
   H = Maximum height of sign.
   L_B = Maximum distance between top of a footing and bottom of sign.
2. For selection of posts, enter Tables with values of "W", "H" and "L_B".
3. For a size between those values of "W", "H" and "L " in the table, use next highest foot value.
4. All post sizes shown, regardless of cross hatching or text style, shall be A992 steel with a minimum yield strength of 50 ksi.
5. Use the longest post to select all the post sizes.
6. No more than 2 posts may be erected within any 7-foot path, the total combined weight of all posts within a 7-foot path should not exceed 45 Lbs. per ft. The total combined weight of all posts within a 7-foot path should not exceed 600 Lbs. below the post hinge.
7. Transpo Industries or approved equal.
8. Design wind velocity - 80 m.p.h
   Design ice load - 3 p.s.f.
9. ALL Lb DIMENSIONS SHALL BE FIELD VERIFIED BY THE CONTRACTOR. INCIDENTAL TO ALL GROUNDMOUNT ITEMS.

Post Selection Example

For a sign where :
W = 14'-0"
H = 10'-0"
L_B = 8'-0"
Two W6x15, A36 steel posts are required.

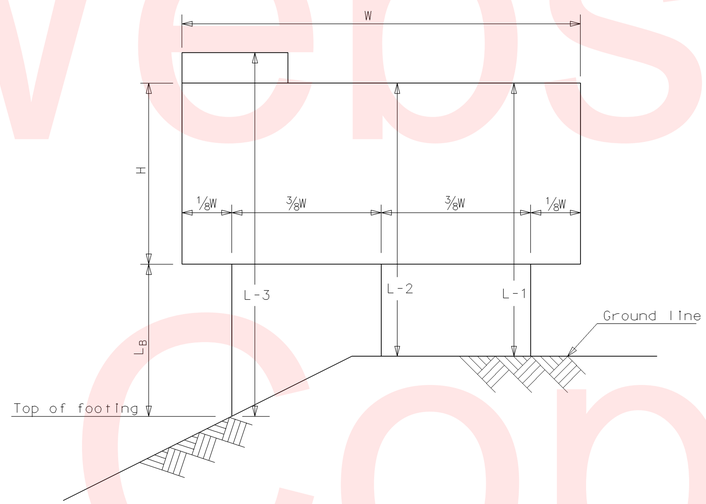

Sign on Three Posts

Sketch B

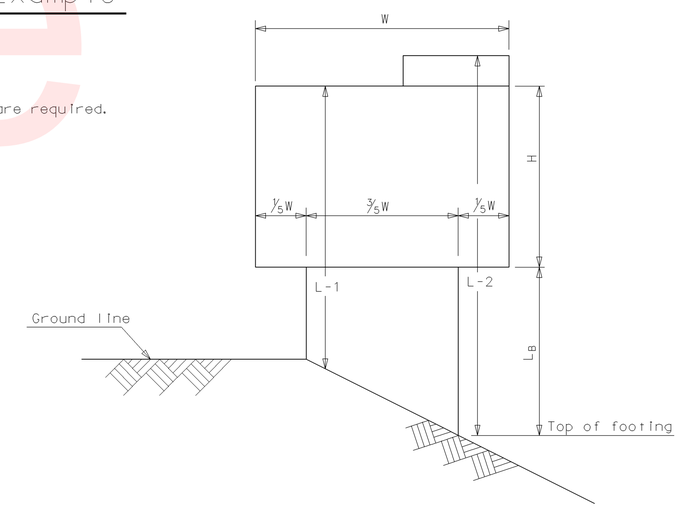

Sign on Two Posts

Sketch A

Unofficial Website Copy

DELAWARE DEPARTMENT OF TRANSPORTATION	ADDENDUMS / REVISIONS	SR1, SOUTH FREDERICA GRADE SEPARATED INTERSECTION	CONTRACT T200812202	BRIDGE NO. –	GROUND MOUNT DETAILS	SHEET NO. 266
			COUNTY KENT	DESIGNED BY: LCM		TOTAL SHTS. 296
				CHECKED BY: SFP		

5/24/2013
G:\PROJECTS\06535.00 (DelDOT Agmt. 1376 DOTS Open End)\06535.07 SR1, S. Frederica\CADD Files\XM\ss_gm_details01sf.dgn
11:55:54

GROUND MOUNT SIGN REQUIREMENTS

G.M. SIGN NO.	SHEET NO.	SUPPORT TYPE	BW OR NBW	SUPPORT L-1	SUPPORT L-2	SUPPORT L-3	LATERAL CLEARANCE CODE	POST SPACING	L_B	SIGN PANEL	
										WIDTH	HEIGHT
GM-1	N/A	W8x18	BW	19'-9"	22'-4"	N/A	3	9.6'	7'-10"	16'-0"	12'-0"
GM-2	N/A	W8x18	BW	19'-5"	23'-3"	N/A	3	9.6'	7'-9"	16'-0"	12'-0"
GM-3	N/A	W6x9	BW	13'-1"	12'-8"	N/A	3	3.6'	8'-1"	6'-6"	5'-0"
GM-4	N/A	W6x9	BW	12'-2"	12'-1"	N/A	3	3.6'	7'-2"	6'-6"	5'-0"

CLEARANCE CODE
1. - 4' BEHIND FACE OF GUARDRAIL
2. - CENTERED AT TIP OF SOIL GORE, LOCATED BETWEEN ROADWAY AND EXIT RAMP
3. - 6' FROM EDGE OF SHOULDER

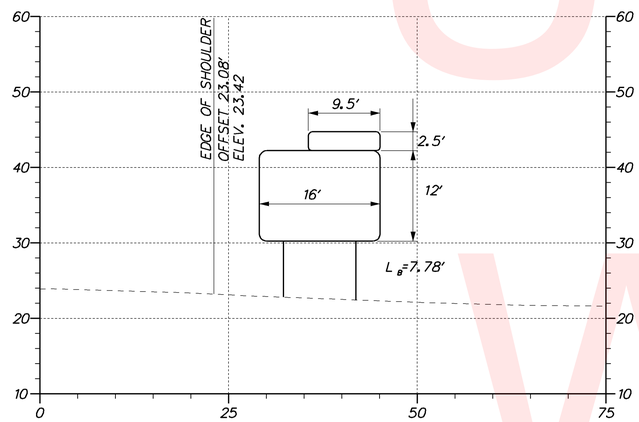

GM-2, SR1 NB EXISTING BASELINE STA. 97+93

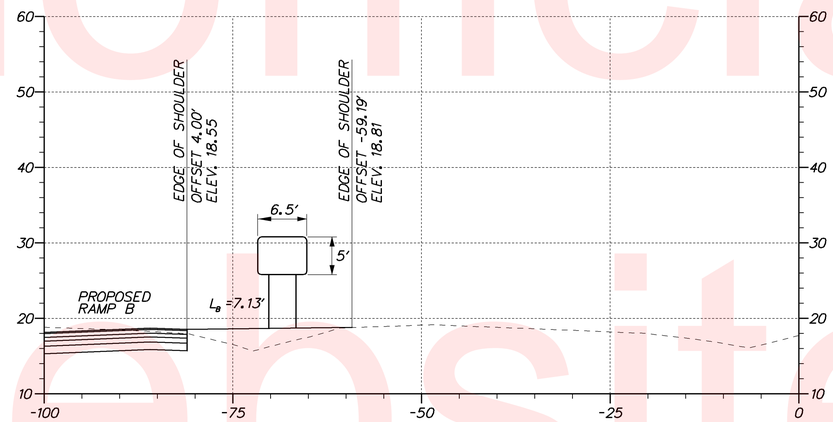

GM-4, SR1 SB EXISTING BASELINE STA. 212+10

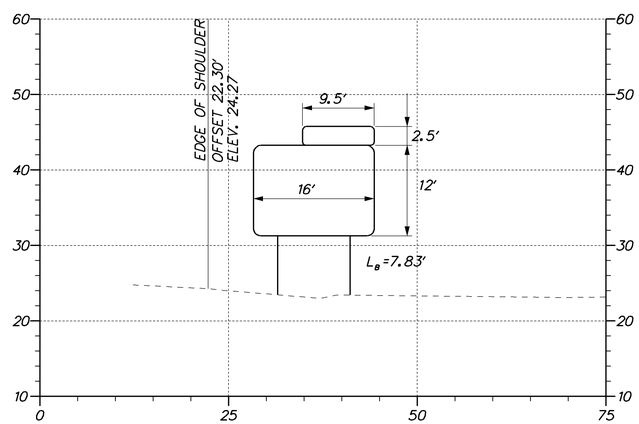

GM-1, SR1 NB EXISTING BASELINE STA. 72+30

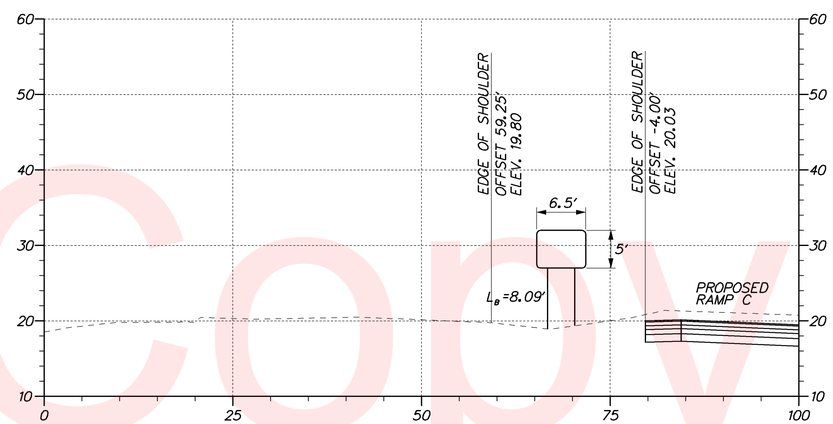

GM-3, SR1 NB EXISTING BASELINE STA. 204+80

Unofficial Website Copy

DELAWARE DEPARTMENT OF TRANSPORTATION

ADDENDUMS / REVISIONS

SCALE 0 10 20 30 FEET

SR1, SOUTH FREDERICA GRADE SEPARATED INTERSECTION

CONTRACT	BRIDGE NO.	–
T200812202	DESIGNED BY: LCM	
COUNTY		
KENT	CHECKED BY: SFP	

GROUND MOUNT SECTIONS

SHEET NO.
267
TOTAL SHTS.
296

5/24/2013 10:58:00 G:\PROJECTS\06535.00 (DelDOT Agmt. 1376 DOTS Open End)\06535.07 SR1, S. Frederica\CADD Files\XM\ss_gm_sections01sf.dgn

GROUND MOUNT SIGN REQUIREMENTS											
G.M. SIGN NO.	SHEET NO.	SUPPORT TYPE	BW OR NBW	SUPPORT L-1	SUPPORT L-2	SUPPORT L-3	LATERAL CLEARANCE CODE	POST SPACING	L_B	SIGN PANEL	
										WIDTH	HEIGHT
GM-5	N/A	W8x18	BW	19'-1"	21'-7	N/A	3	9.6'	7'-1	14'-0"	13'-6"
GM-6	N/A	W8x21	BW	21'-10	23'-10"	N/A	3	9.6'	9'-4"	14'-0"	13'-6"

CLEARANCE CODE
1. - 4' BEHIND FACE OF GUARDRAIL
2. - CENTERED AT TIP OF SOIL GORE, LOCATED BETWEEN ROADWAY AND EXIT RAMP
3. - 6' FROM EDGE OF SHOULDER

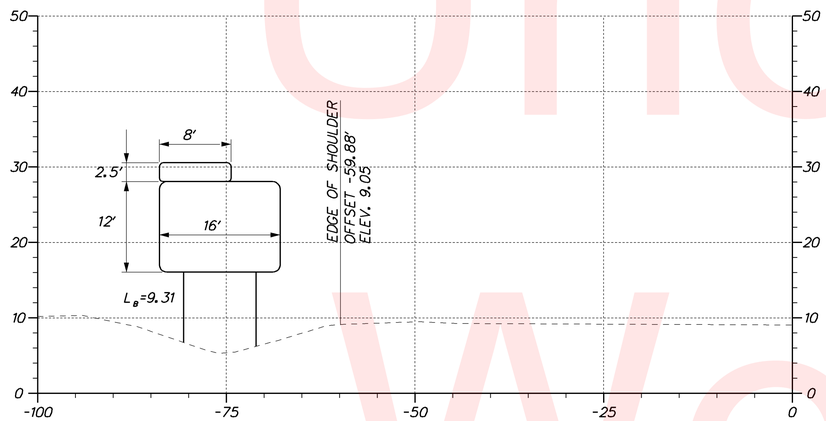

GM-6, SR1 SB EXISTING BASELINE STA. 266+00

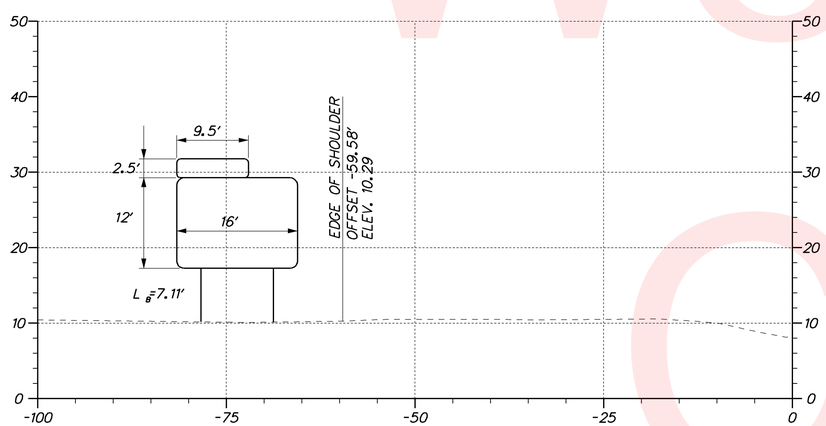

GM-5, SR1 SB EXISTING BASELINE STA. 242+25

Unofficial Website Copy

5/24/2013
G:\PROJECTS\06535.00 (DelDOT Agmt. 1376 DOTS Open End)\06535.07 SR1, S. Frederica\CADD Files\XM\ss_gm_sections01st.dgn
10:58:14

DELAWARE DEPARTMENT OF TRANSPORTATION

ADDENDUMS / REVISIONS

SCALE 0 10 20 30 FEET

SR1, SOUTH FREDERICA GRADE SEPARATED INTERSECTION

CONTRACT	BRIDGE NO.	–
T200812202	DESIGNED BY: LCM	
COUNTY		
KENT	CHECKED BY: SFP	

GROUND MOUNT SECTIONS

SHEET NO. 268
TOTAL SHTS. 296

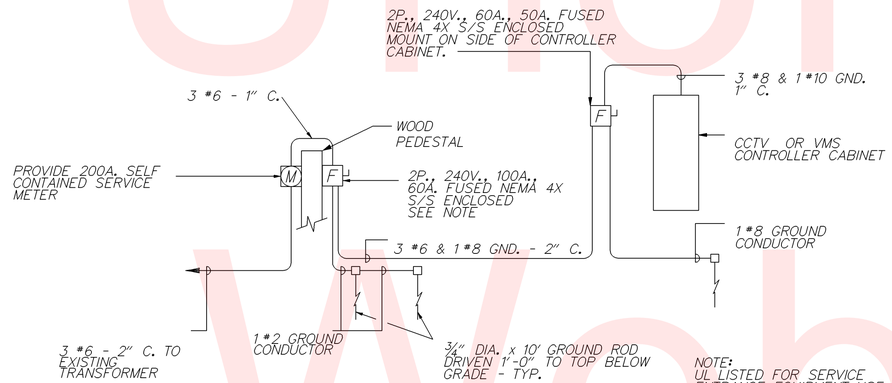

VMS OR CCTV

ELECTRICAL SERVICE SINGLE LINE DIAGRAM

CONSTRUCTION NOTES

1) ALL WORK ON THIS SHEET TO BE DONE "BY OTHERS".

2) PROPOSED POWER COMPANY SHALL PROVIDE UTILITY SERVICE FOR ITMS DEVICES

3) INSTALL WOOD PEDESTAL WITH DISCONNECT AND METER SOCKET IN ACCORDANCE WITH DELDOT AND SELECTED POWER COMPANY REQUIREMENTS, APPROXIMATELY 10 FT OF UTILITY SOURCE POLE. INSTALL ONE 1.5" PVC SCHEDULE 80 CONDUIT WITH THREE #6 AND NE #8 GND CABLES FOR POWER BETWEEN UTILITY SOURCE POLE AND WOOD PEDESTAL LOCATION, TRENCHED. EXTEND THIS POWER CONDUIT 3 FT ABOVE GRADE, ADJACENT TO UTILITY SOURCE POLE. INSTALL 33 FT RISER FROM CONDUIT TERMINATION POINT UP UTILITY POLE, WITH WEATHERHEAD. COIL APPROXIMATELY 16 FT OF POWER CABLE AT WEATHERHEAD TO FACILITATE POWER COMPANY CONNECTION TO POWER CABLES. INSTALL ONE 1.5"PVC SCHEDULE 80 CONDUIT WITH THREE #6 AND ONE #8 GND CABLES FOR POWER BETWEEN WOOD PEDESTAL AND PROPOSED ELECTRICAL JUNCTION WELL LOCATION, TRENCHED.

4) INSTALL ONE 1.5" PVC SCHEDULE 80 CONDUIT WITH 6 CNT FIBER CABLE FOR COMMUNICATION SERVICE BETWEEN DEVICE AND PROPOSED JUNCTION WELL LOCATION, TRENCHED. EXTEND CONDUIT 3 FT ABOVE GRADE, ADJACENT TO UTILITY SOURCE POLE. CONNECT FIBER TO INTERFACE WITHIN JUNCTION WELL.

5) GUARDRAIL SHALL BE INSTALLED WITH HOT-MIX MAINTENANCE. SEE GUARDRAIL SCHEDULES IN THE SIGNING AND STRIPING PLANS.

Unofficial Website Copy

INDEX OF SIGN STRUCTURE SHEETS	
SHEET Nº	TABLE OF CONTENTS
270	SIGN STRUCTURE NOTES
271	SC 2008 & SC 2009 PLAN & ELEVATION
272	SC 2014 & SC 2015 PLAN & ELEVATION
273	FOUNDATION DETAILS
274	CANTILEVERED SIGN STRUCTURE DETAILS, SHEET 1 OF 2
275	CANTILEVERED SIGN STRUCTURE DETAILS, SHEET 2 OF 2
276	VMS SIGN STRUCTURE DETAILS
	TOTAL SIGN STRUCTURE SHEETS:7

SIGN STRUCTURE SCHEDULE					
STRUCTURE NUMBER	ELEMENT	DIAMETER (IN)	THICKNESS (IN)	LENGTH (FT)	CAMBER (IN)
SC 2008/ SC 2009	POST	26	3/4	26.42	1.40
	CHORD	16	1/2	29.50	
	STRUT	5	3/8	VARIES	
	GUSSET PLATE	N.A.	1/2	VARIES	
SC 2014/ SC 2015	POST	18	3/8	22.00	-
	CHORD	12	3/8	9.63	

A. DESIGN CRITERIA

DESIGN SPECIFICATIONS

2007 AASHTO LRFD BRIDGE DESIGN SPECIFICATIONS, 4th EDITION WITH 2008 & 2009 INTERIM REVISIONS.

2009 AASHTO STANDARD SPECIFICATIONS FOR STRUCTURAL SUPPORTS FOR HIGHWAY SIGNS, LUMINAIRES, AND TRAFFIC SIGNALS.

DELAWARE DEPARTMENT OF TRANSPORTATION STANDARD SPECIFICATIONS FOR ROAD AND BRIDGE CONSTRUCTION, AUGUST 2001, INCLUDING ALL SUPPLEMENTS.

DESIGN LOADS

DESIGN WIND VELOCITY..... 100 MPH
DESIGN ICE LOAD..... 3 PSF
SIGN AREAS WERE INCREASED 15% FOR ANALYSIS

FATIGUE LOADS

ALL STRUCTURAL DETAILS HAVE BEEN DESIGNED FOR FATIGUE CATEGORY I IMPORTANCE FACTOR VALUE OF 1.0 AS DESIGNATED IN THE ABOVE AASHTO SPECIFICATIONS.
SIGN STRUCTURES WERE DESIGNED FOR THE FOLLOWING FATIGUE DESIGN LOADS:
GALLOPING (CANTILEVER STRUCTURES ONLY), TRUCK INDUCED GUST, AND NATURAL WIND GUST.

CONCRETE DESIGN STRESS

SPECIFIED COMPRESSIVE STRENGTH (f'c)(CLASS B).... 3,000 PSI
EXTREME FIBER COMPRESSIVE STRESS (f'c)..... 1,200 PSI
MIX REQUIREMENTS SHALL CONFORM TO SECTION 812 OF THE SPECIFICATIONS.
ALL EXPOSED EDGES SHALL BE CHAMFERED ¾" UNLESS OTHERWISE NOTED.
IT SHALL BE THE CONTRACTOR'S RESPONSIBILITY TO UTILIZE ANY APPROVED CONCRETE ADDITIVES OR HEATING TECHNIQUES TO MAINTAIN THE PROPER TEMPERATURE FOR ANY CONCRETE POURED DURING COLD WEATHER.
PAYMENT SHALL BE INCIDENTAL TO THE RESPECTIVE CONCRETE BID ITEM.

BAR REINFORCEMENT

REINFORCING STEEL SHALL CONFORM TO AASHTO M31 (ASTM A615), GRADE 60. ALL REINFORCING STEEL SHALL HAVE A CLEAR COVER OF 2", UNLESS OTHERWISE SPECIFIED ON THE PLANS. ALL REINFORCING STEEL SHALL BE PROTECTED WITH FUSION BONDED EPOXY. EPOXY COATED REINFORCING STEEL SHALL CONFORM TO AASHTO M284 (ASTM D3963), AND IS DENOTED WITH A SUFFIX 'E' IN THE BAR MARKS.

FOUNDATIONS

FOUNDATIONS SHALL BE DRILLED SHAFTS IN SOIL AND/OR ROCK. CANTILEVERED SIGN STRUCTURES SHALL HAVE A 4'-6" DIAMETER. OVERHEAD SIGN STRUCTURES SHALL A 4'-0" DIAMETER.

CAMBER

PERMANENT CAMBER EQUAL TO L/1000 HAS BEEN PROVIDED IN ADDITION TO THE DEAD LOAD CAMBER.

B. MATERIALS

I. STEEL

STEEL PIPE SHALL BE CERTIFIED BY MILL TEST REPORT TO MEET ASTM SPECIFICATION A53, TYPE S, GRADE B OR A500 GRADE B WITH THE EXCEPTION THAT AP15L, GRADE B MAY BE USED WHEN THE SPECIFIED WALL THICKNESS IS GREATER THAN 1/2". ONLY ELECTRICAL RESISTANCE WELDED (ERW) MANUFACTURED SINGLE SHAM PIPE IS PERMITTED. HOWEVER, WHEN THE REQUIRED PIPE SIZE IS GREATER THAN 24", DOUBLE SEAM PIPE MAY BE USED. A MILL TEST REPORT MUST BE PROVIDED, CERTIFIED AND SIGNED BY THE PIPE MANUFACTURER, CONTAINING PHYSICAL AND CHEMICAL PROPERTIES AND THE MANUFACTURING PROCESS USED TO PRODUCE THE PIPE.

ALL OTHER STEEL SHALL CONFORM TO ASTM SPECIFICATION A709 (AASHTO M270) GRADE 36 OR BETTER. ALL SPECIFIED STEEL PLATES SHALL MEET SUPPLEMENTARY REQUIREMENTS FOR NOTCH TOUGHNESS (CHARPY TESTING, ZONE #2).

UPON COMPLETION OF FABRICATION, THE FABRICATOR SHALL PROVIDE A NOTARIZED CERTIFICATION OF COMPLIANCE AS PER SPECIFICATIONS, INCLUDING A LEGIBLE COPY OF ALL MILL TEST REPORTS FOR MATERIALS INCORPORATED INTO THE WORK.

STEEL ANCHOR BOLTS, NUTS AND WASHERS SHALL CONFORM TO ASTM SPECIFICATION F1554, GRADE 55. THE ANCHOR BOLTS SHALL BE HOT DIP GALVANIZED AS PER ASTM SPECIFICATION A153 (AASHTO M232), CLASS C.

CHORD SPLICE ASSEMBLY FASTENERS SHALL BE HIGH STRENGTH STEEL CONFORMING TO ASTM SPECIFICATION A325 AND SHALL BE HOT DIPPED GALVANIZED AS PER ASTM SPECIFICATION A153, CLASS C. ALL OTHER FASTENERS SHALL BE STAINLESS STEEL CONFORMING TO ASTM SPECIFICATION A320, GRADE B8, CLASS 1.

CAPS FOR THE ENDS OF CHORDS AND TOPS OF POSTS SHALL BE STEEL CONFORMING TO ASTM SPECIFICATION A709 (AASHTO M270) GRADE 36 OR BETTER AND SHALL BE HOT DIP GALVANIZED IN ACCORDANCE WITH ASTM SPECIFICATION A123.

WELDING OF STEEL SHALL BE AS SPECIFIED IN THE CONSTRUCTION SPECIFICATIONS.

AFTER COMPLETE FABRICATION, EACH STEEL SECTION SHALL BE HOT DIP GALVANIZED ACCORDING TO THE REQUIREMENTS OF ASTM A123. A SINGLE DIP GALVANIZING PROCESS IS PREFERRED IF SIZE PERMITS.

REFER TO THE DELDOT STANDARD SPECIFICATIONS FOR CRITERIA ON FURNISHING MATERIALS OTHER THAN SPECIFIED ABOVE.

II. ALUMINUM

ALUMINUM SHALL CONFORM TO THE ASTM SPECIFICATIONS AND ALLOYS

APPLICATION	ASTM SPECIFICATION	ASTM ALLOY
ROLLED OR EXTRUDED SHAPES	B308	6061-T6
PLATES	B209	6061-T6
DRAWN SEAMLESS TUBES	B210	6061-T6
EXTRUDED TUBES	B221	6061-T6

WELDING OF ALUMINUM SHALL BE AS SPECIFIED IN AWS D1.2, CURRENT EDITION AND SPECIFICATIONS

THE SIGN PANEL SHALL BE INSTALLED LEVEL AND VERTICALLY CENTERED BETWEEN CHORDS. THE CONTRACTOR MAY FIELD DRILL THE SIGN SUPPORTS AS REQUIRED TO ACHIEVE THIS.

III. SIGN PANEL SUPPORTS

SIGN HANGERS SHALL BE STEEL OR ALUMINUM.
THE STEEL SHALL CONFORM TO ASTM A709 GRADE 36 OR BETTER AND SHALL BE HOT DIP GALVANIZED IN ACCORDANCE WITH ASTM SPECIFICATION A123. STEEL SURFACES SHALL BE PREVENTED FROM COMING INTO CONTACT WITH ALUMINUM SURFACES BY MEANS OF APPROVED PADS PLACED BETWEEN DISSIMILAR METALS.
CONNECTING U BOLTS SHALL BE STAINLESS STEEL CONFORMING TO THE SPECIFICATIONS.
SIGN HANGERS SHALL BE PAID UNDER ITEM 605664.

IV. MISCELLANEOUS MATERIALS

ALL COST OF MISCELLANEOUS MATERIALS USED OTHER THAN NOTED SHALL BE INCLUDED IN THE PRICE FOR THE APPROPRIATE SIGN STRUCTURE ITEM AT NO ADDITIONAL COST TO THE DEPARTMENT.

C. MISCELLANEOUS

WORKING DRAWINGS FOR FOUNDATIONS, STRUCTURAL STEEL AND SIGN ATTACHMENTS SHALL BE FURNISHED BY THE CONTRACTOR IN ACCORDANCE WITH SECTION 105.02 OF THE STANDARD SPECIFICATIONS.

SIGN STRUCTURES SHALL BE SHOP-ASSEMBLED TO ENSURE PROPER FIT OF SPLICE BOLTS IN THE FIELD.

ALL WELDING SHALL BE SUBJECTED TO NON-DESTRUCTIVE TESTING IN ACCORDANCE WITH THE STANDARD SPECIFICATIONS AND THE ANSI/AASHTO/AWS D1.5-08 BRIDGE WELDING CODE. WELDS IN MAIN MEMBERS SHALL BE ULTRASONICALLY INSPECTED IN ACCORDANCE WITH THE STANDARD SPECIFICATIONS.

AFTER THE SIGN STRUCTURE HAS BEEN ERECTED AND FULLY LOADED INCLUDING SIGN PANELS, THE FOUNDATION ANCHORAGE NUTS SHALL BE RETIGHTENED IN ACCORDANCE WITH THE APPLICABLE REQUIREMENTS OF SECTION 605 OF THE STANDARD SPECIFICATIONS. THE USE OF D.T.Is (DIRECT TENSION INDICATOR) SHALL NOT BE PERMITTED ON SIGN STRUCTURES.

Unofficial Website Copy

NOTE:
SIGN STRUCTURE SCHEDULE
OF TUBE SIZES PROVIDED ON
SIGN STRUCTURE NOTES SHEET.

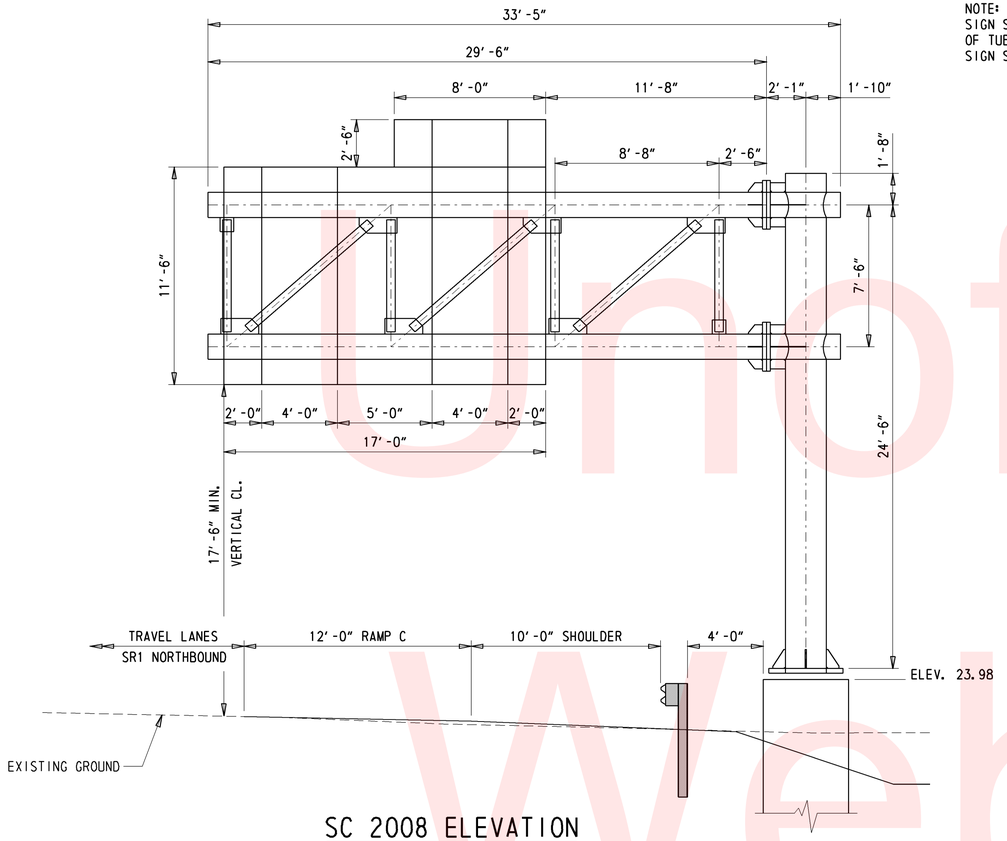

SC 2008 ELEVATION
1/4" = 1'-0"

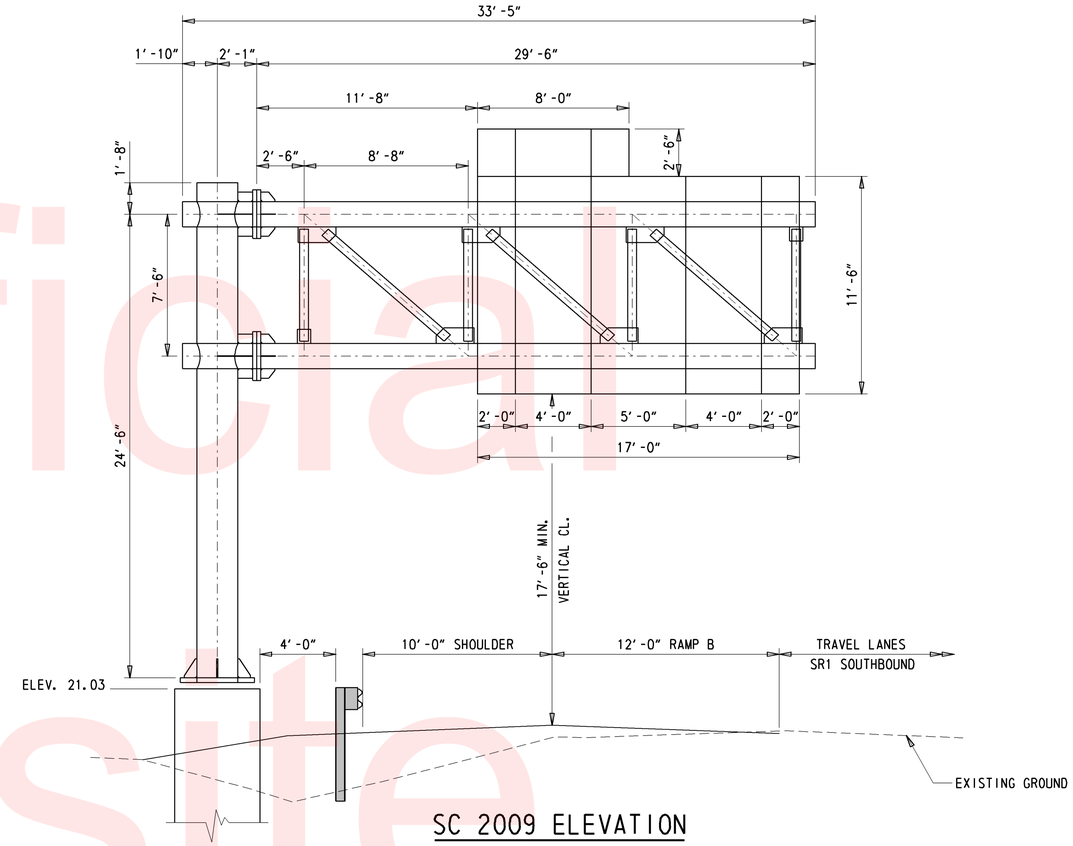

SC 2009 ELEVATION
1/4" = 1'-0"

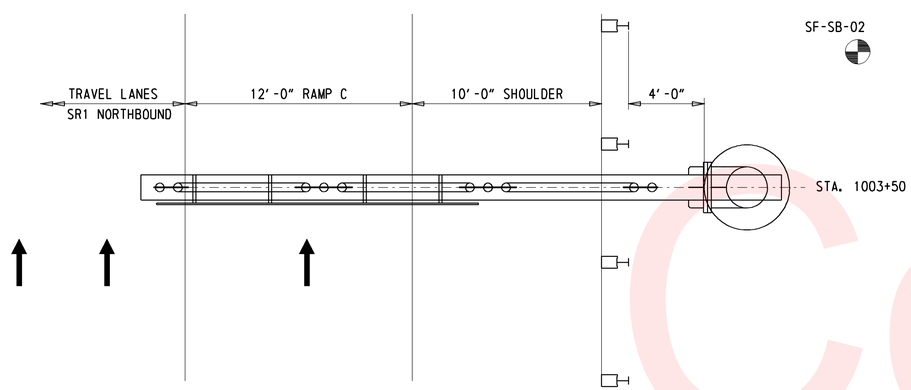

SC 2008 PLAN
1/4" = 1'-0"

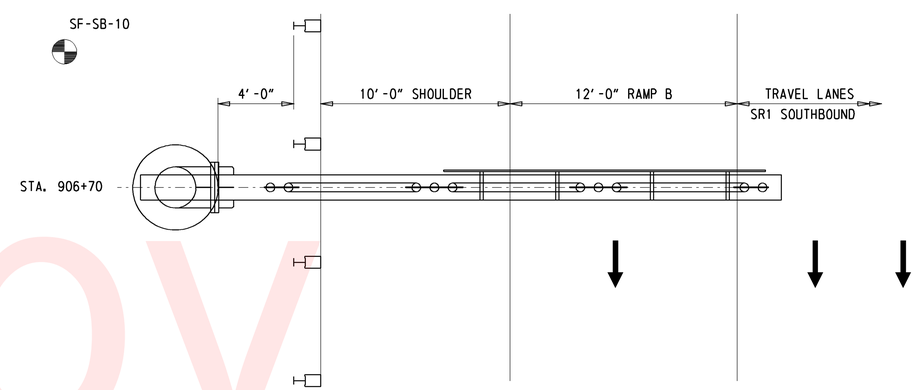

SC 2009 PLAN
1/4" = 1'-0"

Unofficial Website Copy

DELAWARE DEPARTMENT OF TRANSPORTATION	ADDENDUMS / REVISIONS	SCALE: AS NOTED	SR1, SOUTH FREDERICA GRADE SEPARATED INTERSECTION	CONTRACT T200812202 / COUNTY KENT	STRUCTURE NO. SC 2008/2009 / DESIGNED BY: E.M. / CHECKED BY:	SC 2008 & SC 2009 PLAN & ELEVATION	SHEET NO. 271 / TOTAL SHTS. 296

Y:\KENT\008\BRIDGE\2812202\PLANS\SIGN STRUCTURES\SC2008-09.DGN

NOTE:
SIGN STRUCTURE SCHEDULE OF TUBE SIZES PROVIDED ON SIGN STRUCTURE NOTES SHEET

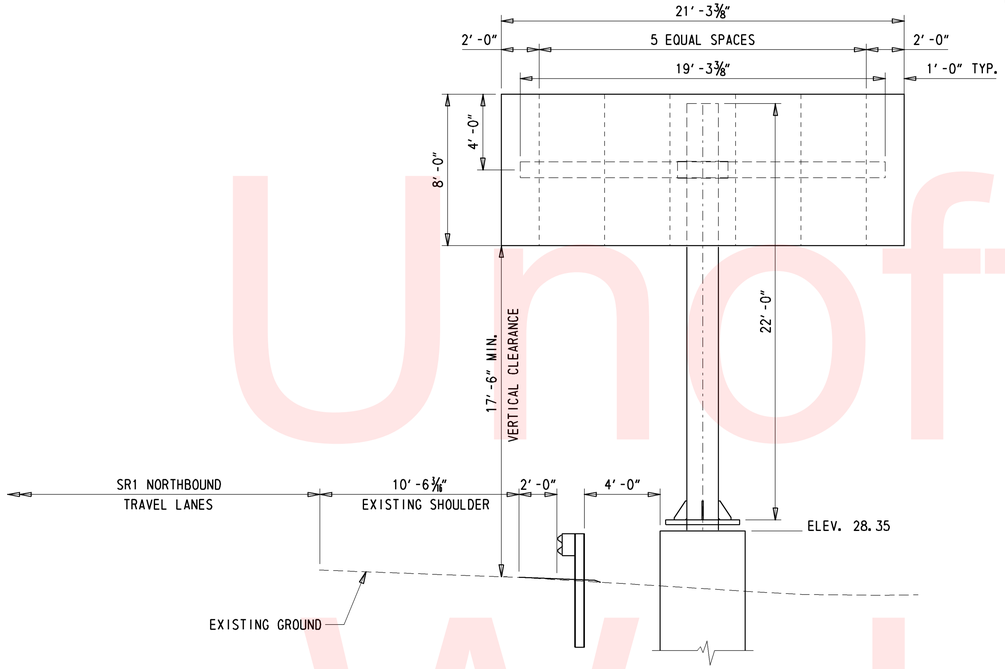

SC 2014 ELEVATION
¼" = 1'-0"

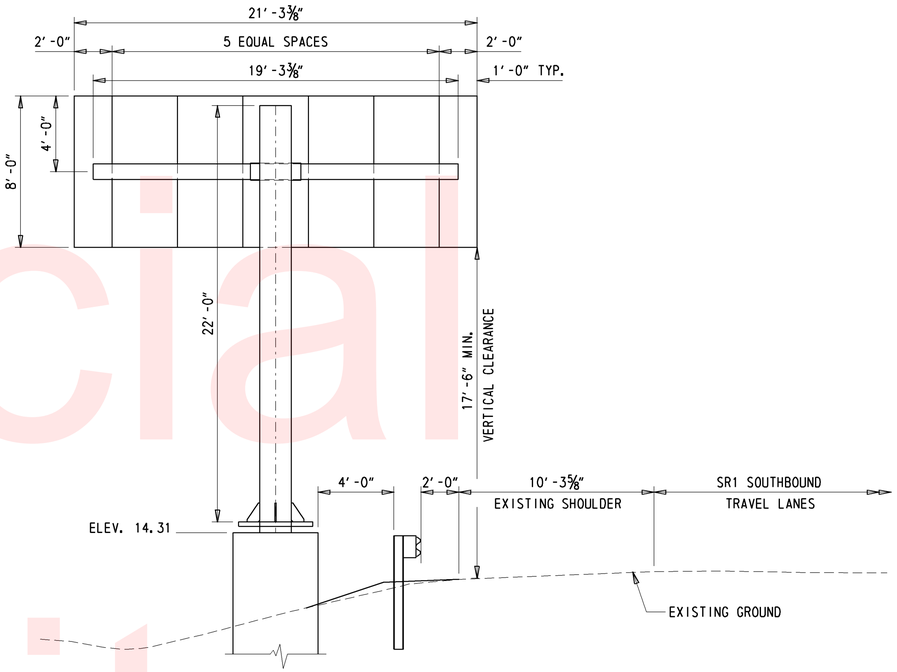

SC 2015 ELEVATION
¼" = 1'-0"

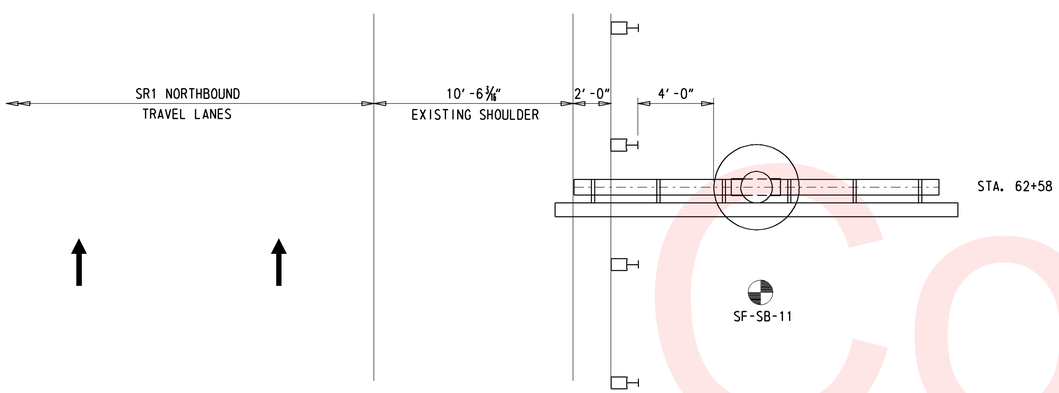

SC 2014 PLAN
¼" = 1'-0"

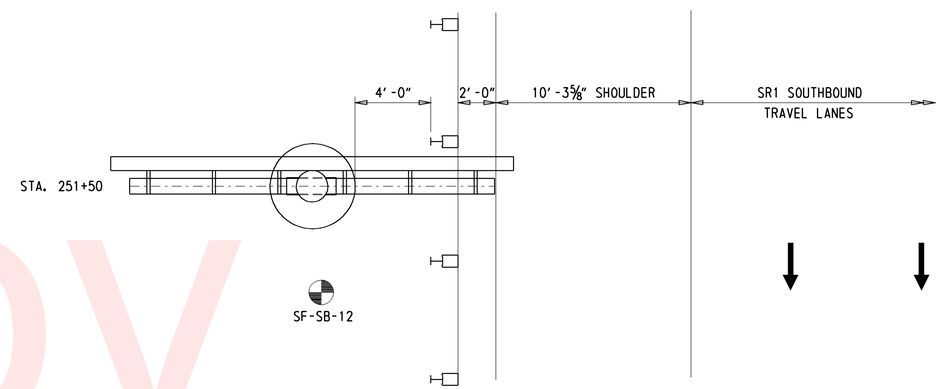

SC 2015 PLAN
¼" = 1'-0"

Unofficial Website Copy

Y:\KENT\008\BRIDGE\2812202\PLANS\SIGN STRUCTURES\SC2014-2015.DGN

DELAWARE DEPARTMENT OF TRANSPORTATION	ADDENDUMS / REVISIONS	SCALE: AS NOTED	SR1, SOUTH FREDERICA GRADE SEPARATED INTERSECTION	CONTRACT T200812202	STRUCTURE NO. SC 2014/2015	SC 2014 & SC 2015 PLAN AND ELEVATION	SHEET NO. 272
				COUNTY KENT	DESIGNED BY: EM		TOTAL SHTS. 296
					CHECKED BY:		

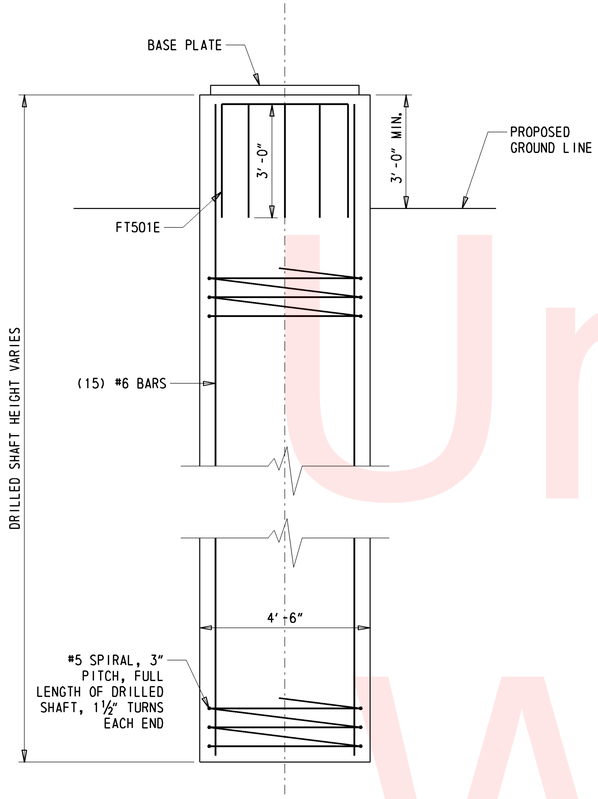

ELEVATION

½" = 1'-0"

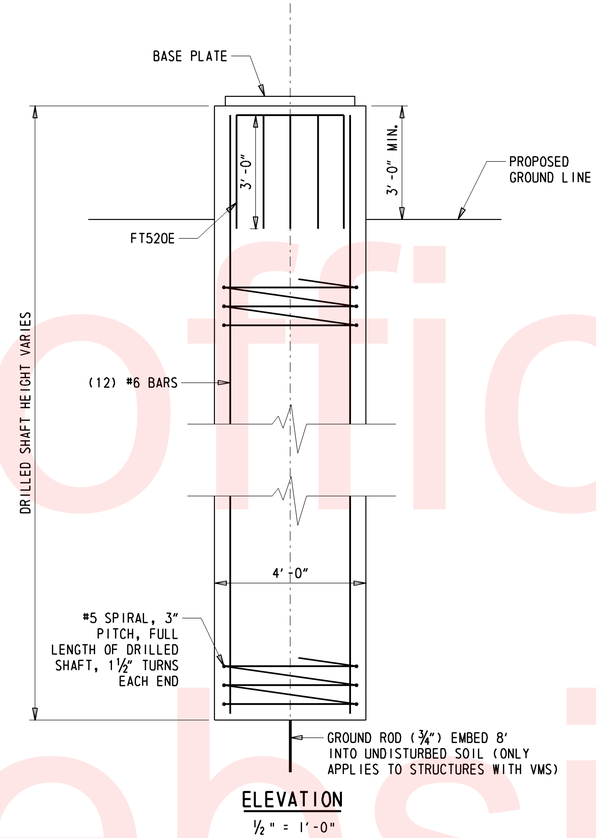

ELEVATION

½" = 1'-0"

DRILLED SHAFT SCHEDULE				
STRUCTURE NUMBER	SHAFT HEIGHT	DIAMETER (FT)	REINFORCING LENGTH	
			VERTICAL	SPIRAL
SC 2008	20	4.5	19.5	19.5
SC 2009	25	4.5	24.5	24.5
SC 2014	25	4.0	24.5	24.5
SC 2015	25	4.0	24.5	24.5

NOTES:

1. ALL ELEVATIONS SHALL BE VERIFIED IN THE FIELD PRIOR TO FABRICATION AND CONSTRUCTION.
2. APPROVED METAL SPACERS SHALL BE ATTACHED TO THE TOP AND BOTTOM SPIRALS TO ENSURE THAT THE REQUIRED CLEAR DISTANCE TO THE CASING IS MAINTAINED.
3. COST OF REINFORCING STEEL AND CONCRETE IN DRILLED SHAFT SHALL BE CLUDED IN THE PRICE FOR THE APPROPRIATE SIGN STRUCTURE ITEM AT NO ADDITIONAL COST TO THE DEPARTMENT.
4. IT IS THE RESPONSIBILITY OF THE PROSPECTIVE CONTRACTORS AND SUBCONTRACTORS TO INSPECT THE SITES IN THE FIELD WHERE DRILLED SHAFTS WILL BE BUILT PRIOR TO SUBMITTING THEIR PROPOSALS, TO DETERMINE THE ACCESSIBILITY TO THE VARIOUS LOCATIONS, ASCERTAIN THE CONDITIONS UNDER WHICH THE WORK WILL BE CONDUCTED, AND ESTABLISH THE EQUIPMENT THAT WILL BE REQUIRED TO EXPEDITIOUSLY PERFORM THE WORK, INCLUDING WORK IN ANY AREAS WITH LOW OVERHEAD AND/OR NEAR HIGH TENSION POWER LINES OR ADJACENT TO ACTIVE TRAFFIC.
5. DRILLED SHAFT INSTALLATIONS SHALL BE PERFORMED BY A SPECIALTY CONTRACTOR EXPERIENCED IN DRILLED FOUNDATION CONSTRUCTION WITH SUITABLE EQUIPMENT AND COMPETENT PERSONNEL. THE SPECIALTY CONTRACTOR SHALL BE SUBJECT TO ENGINEER APPROVAL.
6. SOILS BENEATH EXISTING GROUND SURFACE MAY CONTAIN OBSTRUCTIONS, SUCH AS COBBLES AND BOULDERS. ENGINEER SHALL VERIFY THE PRESENCE OF ANY OBSTRUCTIONS.
7. CONSTRUCTION OF DRILLED SHAFT FOUNDATIONS MAY REQUIRE THE USE OF TEMPORARY CASING. THE LENGTH OF DRILLED SHAFT SHALL BE ADJUSTED IN THE FIELD AS REQUIRED. HOWEVER, PAYMENT WILL BE BASED ON CONTRACT QUANTITIES SHOWN AND ANY ADJUSTMENTS SHOWN BY THE SPECIFICATIONS.
8. IF DRILLED SHAFT EXCAVATION IS UNSHORED (TEMPORARY CASING) CONCRETE SHALL BE PLACED IN THE SAME WORKING DAY AS EXCAVATION TAKES PLACE.

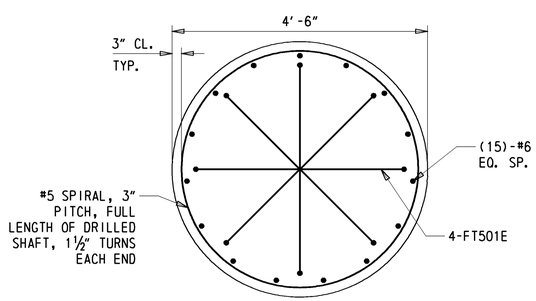

PLAN

¾" = 1'-0"

CANTILEVER DRILLED SHAFT DETAILS

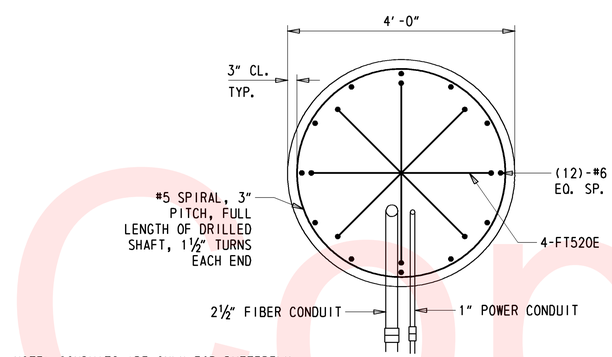

NOTE: CONDUITS ARE ONLY FOR BUTTERFLY CANTILEVER TYPE STRUCTURES WITH VMS BOARDS.

PLAN

¾" = 1'-0"

OVERHEAD AND BUTTERFLY CANTILEVERED DRILLED SHAFT DETAILS

Unofficial Website Copy

DELAWARE DEPARTMENT OF TRANSPORTATION	ADDENDUMS / REVISIONS	SCALE: AS NOTED	SR1, SOUTH FREDERICA GRADE SEPARATED INTERSECTION	CONTRACT T200812202	STRUCTURE NO. –	FOUNDATION DETAILS	SHEET NO. 273
				COUNTY KENT	DESIGNED BY: E.M.		TOTAL SHTS. 296
					CHECKED BY:		

Y:\NEWCASTL\059\BRIDGE\2510602\SIGN STRUCTURES\PLANS\FT.DGN

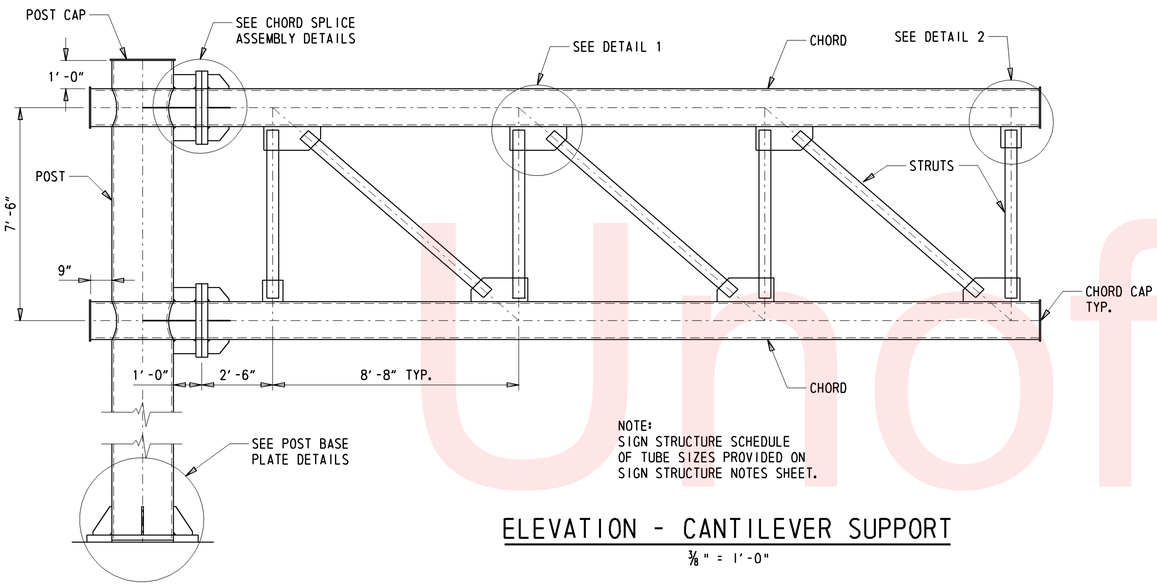

NOTE:
SIGN STRUCTURE SCHEDULE OF TUBE SIZES PROVIDED ON SIGN STRUCTURE NOTES SHEET.

ELEVATION - CANTILEVER SUPPORT

3/8" = 1'-0"

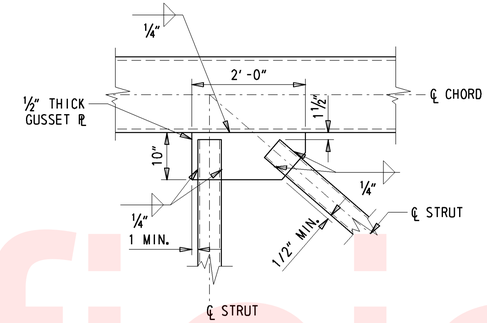

DETAIL 1

3/4" = 1'-0"

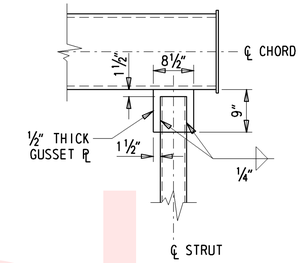

DETAIL 2

3/4" = 1'-0"

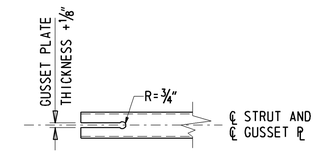

DETAIL A

3/4" = 1'-0"

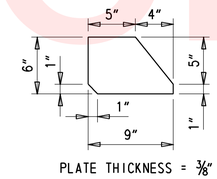

PLATE THICKNESS = 3/8"

BRACKET PLATE DETAIL

1 1/2" = 1'-0"

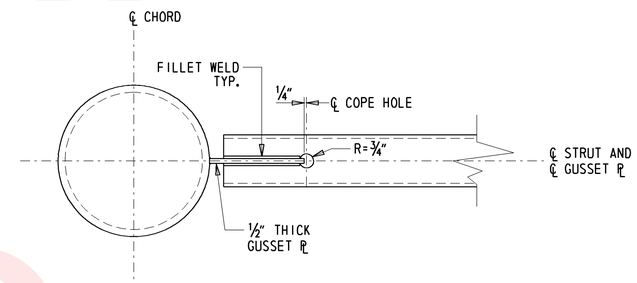

NOTE: COPE HOLES TO BE PROVIDED AT BOTH ENDS AND BOTH FACES OF ALL STRUTS.

COPE HOLE DETAIL

1 1/2" = 1'-0"

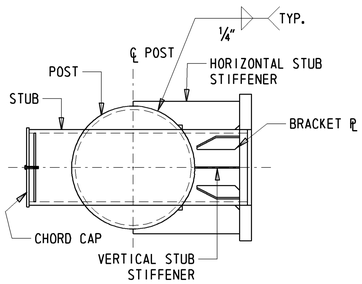

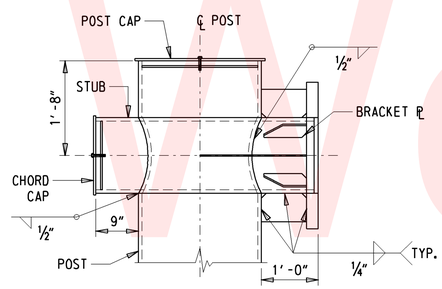

POST-STUB CONNECTION DETAILS

3/4" = 1'-0"

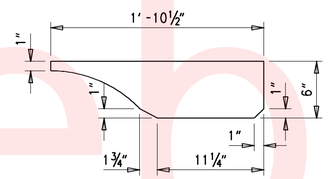

PLATE THICKNESS = 3/8"

HORIZONTAL STUB STIFFENER DETAIL

1 1/2" = 1'-0"

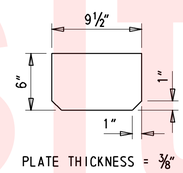

PLATE THICKNESS = 3/8"

VERTICAL STUB STIFFENER DETAIL

1 1/2" = 1'-0"

NOTES:

1. HORIZONTAL AND VERTICAL STUB STIFFENER PLATE DIMENSIONS MAY BE VARIED TO ACCOUNT FOR CAMBER.
2. CHORD INTERMEDIATE SPLICING SHALL NOT BE PERMITTED.
3. THE THREADED PORTION OF THE SPLICE BOLTS SHALL BE EXCLUDED FROM THE SHEAR PLANE OF THE SPLICE.
4. ASTM A325 SPLICE BOLTS SHALL BE HEAVY HEXAGON TYPE AND SHALL BE FURNISHED WITH HEAVY HEXAGON NUTS AND WASHERS.
5. REFER TO SECTION 605 OF THE STANDARD SPECIFICATIONS FOR THE SPLICE BOLT TIGHTENING PRODCEDURES. THE USE OF D.T.I.S SHALL NOT PERMITTED ON SIGN STRUCTURES.
6. BOLTS SHALL BE TIGHTENED IN A STAR PATTERN SUCH THAT BOLTS PLACED OPPOSITE EACH OTHER ARE TIGHTENED IN SEQUENCE.

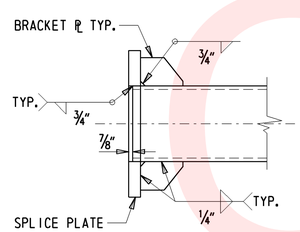

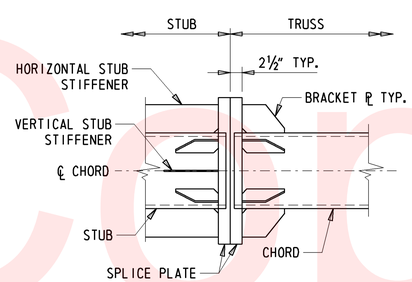

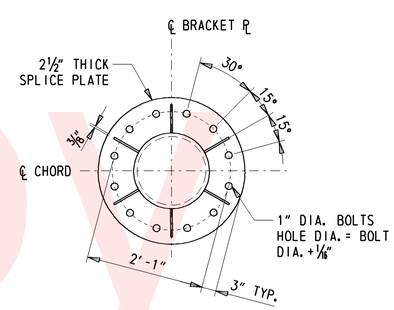

CHORD SPLICE ASSEMBLY DETAILS

3/4" = 1'-0"

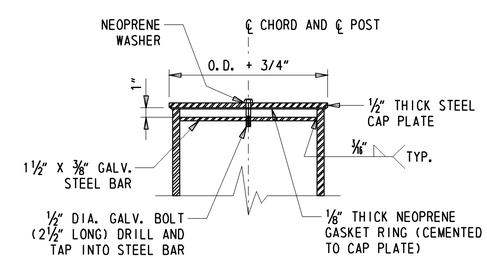

POST OR CHORD CAP DETAIL

1 1/2" = 1'-0"

Unofficial Website Copy

DELAWARE DEPARTMENT OF TRANSPORTATION	ADDENDUMS / REVISIONS	SCALE: AS NOTED	SR1, SOUTH FREDERICA GRADE SEPARATED INTERSECTION	CONTRACT T200812202 / COUNTY KENT	STRUCTURE NO. SC 2008/2009 / DESIGNED BY: E.M. / CHECKED BY:
CANTILEVERED SIGN STRUCTURE DETAILS SHEET 1 OF 2	SHEET NO. 274 / TOTAL SHTS. 296				

Y:\NEWCASTL\059\BRIDGE\2510602\SIGN STRUCTURES\DT 1.DGN

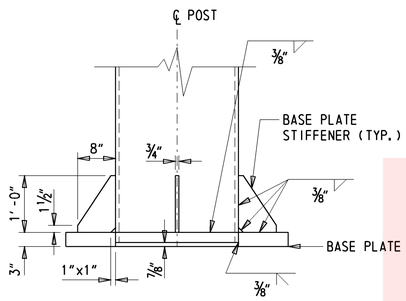

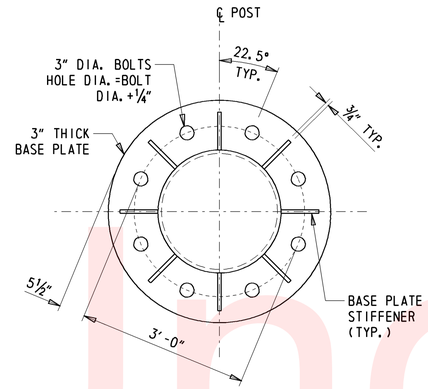

POST BASE PLATE DETAILS

3/4" = 1'-0"

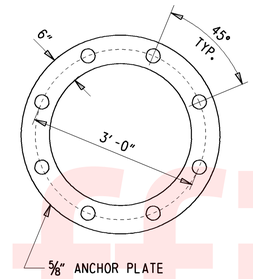

ANCHOR PLATE DETAIL

3/4" = 1'-0"

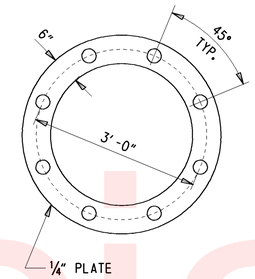

TEMPLATE PLATE DETAIL

3/4" = 1'-0"

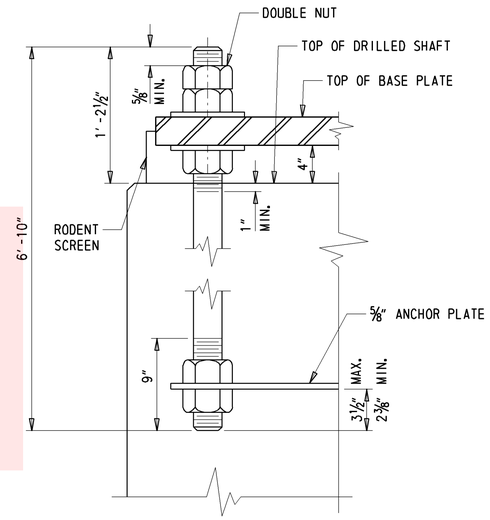

ANCHOR BOLT DETAIL

1 1/2" = 1'-0"

POST BASE NOTES:

1. TEMPLATE PLATE WITH NUTS ON BOTH SIDES SHALL BE USED TO MAINTAIN THE SPACING AND ALIGNMENT OF ANCHOR BOLTS. TEMPLATE SHALL NOT BE REMOVED UNTIL CONCRETE HAS ACHIEVED FULL DESIGN STRENGTH.

2. ANCHOR BOLTS SHALL BE PROVIDED WITH FIVE HEAVY HEXAGON NUTS AND TWO WASHERS AS SHOWN ON THE ANCHOR BOLT DETAIL.

3. ANCHOR BOLTS SHALL BE GALVANIZED AFTER THREADING.

4. REFER TO SPECIFICATIONS FOR ANCHOR BOLTS TIGHTENING PROCEDURES. BOLTS SHALL BE TIGHTENED IN A STAR PATTERN SUCH THAT BOLTS PLACED OPPOSITE EACH OTHER SHALL BE TIGHTENED IN SEQUENCE.

5. THE USE OF D.T.I.S SHALL NOT BE PERMITTED ON SIGN STRUCTURES AT LOCATIONS OTHER THAN SPLICE BOLT CONNECTIONS. IF D.T.I.S ARE TO BE USED, A SEQUENCE OF WORK SHALL BE SUBMITTED TO THE ENGINEER AND APPROVED PRIOR TO INSTALLATION.

5. APPROVED METAL SPACERS SHALL BE ATTACHED TO THE TOP AND BOTTOM SPIRALS TO ENSURE THE REQUIRED CLEAR DISTANCE TO THE CASING IS MAINTAINED.

6. RODENT SCREEN TO BE PLACED AROUND CIRCUMFERENCE OF BASEPLATE.

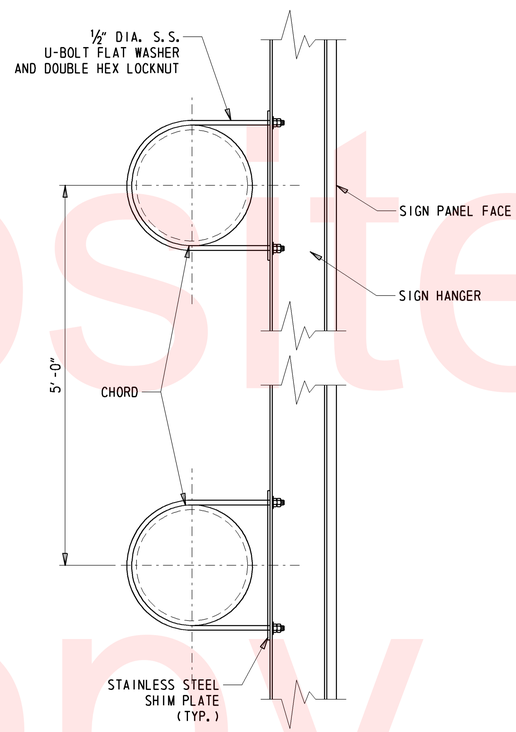

TYPICAL SIGN HANGER DETAIL

1 1/2" = 1'-0"

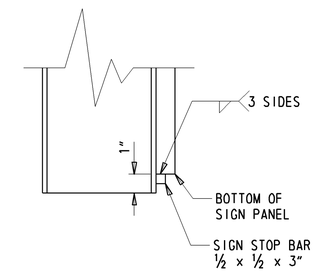

SIGN STOP DETAIL

3" = 1'-0"

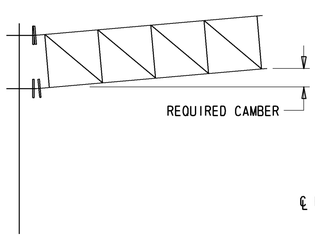

CAMBER DIAGRAM

N.T.S

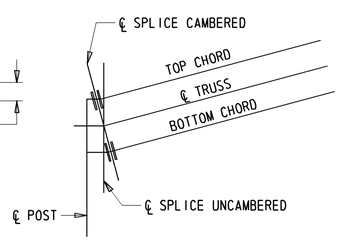

CAMBER DETAIL

N.T.S.

CAMBER NOTE:

CAMBER SHALL BE OBTAINED BY SHORTENING THE TOP CHORD STUB LENGTH AND LENGTHENING THE BOTTOM CHORD STUB LENGTH. CHORD SPLICE PLATES SHALL BE SKEWED ACCORDINGLY BEFORE WELDING TO CHORDS. NO FORCE SHALL BE APPLIED IN PROVIDING CAMBER. AN ALTERNATE METHOD OF OBTAINING CAMBER MAY BE USED AS APPROVED BY THE ENGINEER. FOR REQUIRED CAMBER SEE SCHEDULE OF STRUCTURES.

SIGN HANGER NOTES:

1. LENGTH OF SIGN HANGERS SHALL BE EQUAL TO THE SIGN PANEL HEIGHT PLUS 1" AT BOTTOM FOR STOP BAR.

2. PRIOR TO CONSTRUCTION, CONTRACTOR SHALL SUBMIT SIGN PANEL TO SIGN HANGER CONNECTION DETAILS FOR ENGINEER APPROVAL.

3. ALL SHIM PLATES, U-BOLTS, WASHERS AND NUTS ASSOCIATED WITH SIGN PANEL INSTALLATION SHALL BE STAINLESS STEEL CONFORMING TO ASTM SPECIFICATION A320 GRADE B8, CLASS 1.

4. ALUMINUM I-BEAMS (DEPTH = 4", WEB AND FLANGE THICKNESS = 1/4", FLANGE WIDTH = 3 1/2").

5. MODIFICATIONS TO ANY TRUSSING-CHORD GUSSET PLATE CONNECTION IN ORDER TO ACCOMMODATE SIGN PANEL SUPPORTS SHALL NOT BE PERMITTED.

6. SIGN HANGERS SHALL BE INCIDENTAL TO ITEM 605664 AND 749503 AS APPROPRIATE.

Unofficial Website Copy

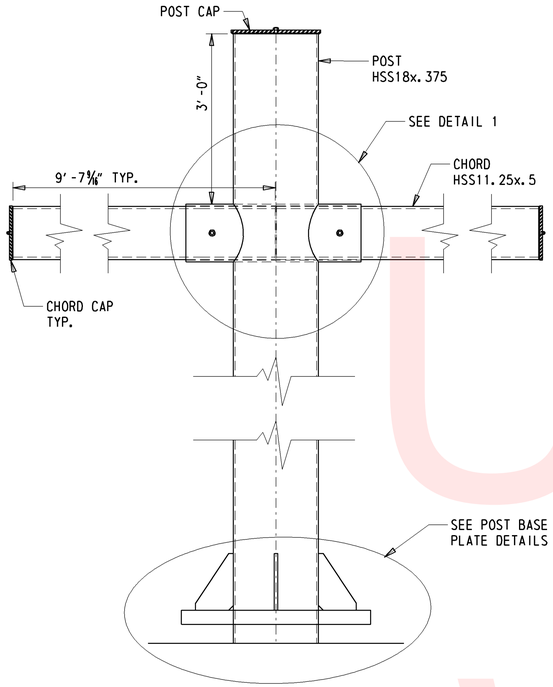

ELEVATION - VMS BUTTERFLY SUPPORT

3/4" = 1'-0"

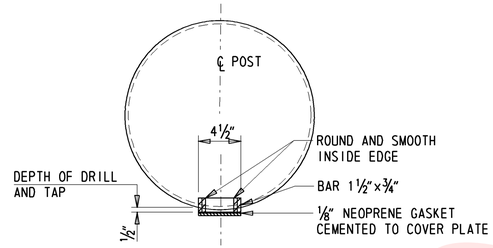

SECTION B-B

3/4" = 1'-0"

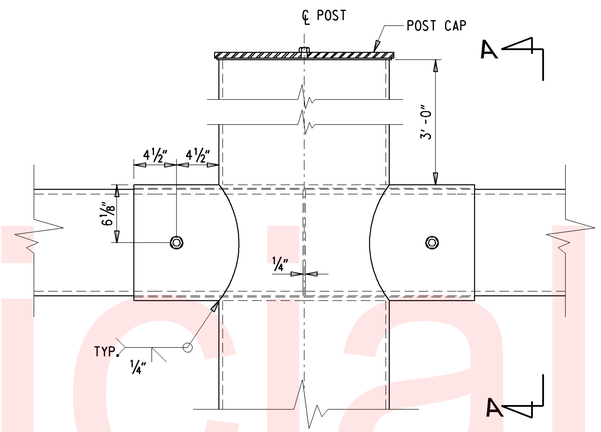

DETAIL 1

1 1/2" = 1'-0"

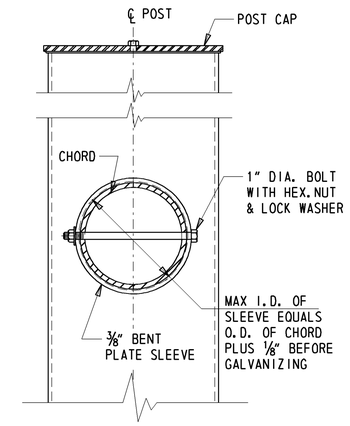

SECTION A-A

1 1/2" = 1'-0"

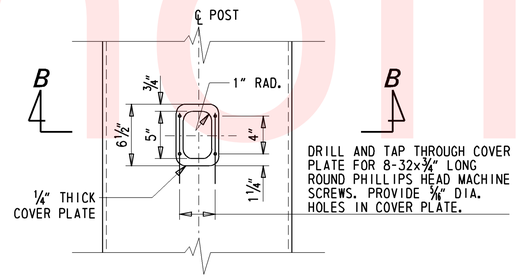

HAND HOLE DETAILS

1 1/2" = 1'-0"

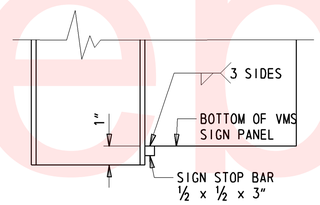

SIGN STOP DETAIL

3" = 1'-0"

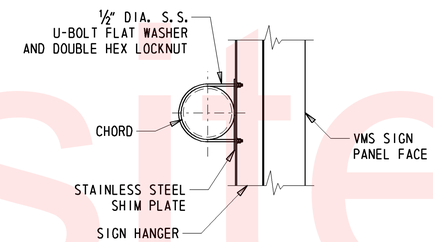

TYPICAL SIGN HANGER DETAIL

3/4" = 1'-0"

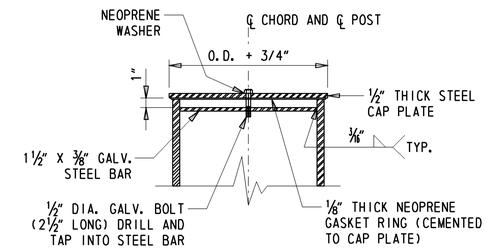

POST OR CHORD CAP DETAIL

1 1/2" = 1'-0"

NOTES:

1. LENGTH OF SIGN HANGERS SHALL BE EQUAL TO THE SIGN PANEL HEIGHT PLUS 1" AT THE BOTTOM FOR STOP BAR.
2. PRIOR TO CONSTRUCTION, CONTRACTOR SHALL SUBMIT SIGN PANEL AND SIGN HANGER CONNECTION DETAILS TO ENGINEER FOR APPROVAL. SIGN HANGERS SHALL BE INCLUDED UNDER ITEM #749503.
3. ALL SHIM PLATES, U-BOLTS, WASHERS AND NUTS ASSOCIATED WITH INSTALLING THE SIGN PANEL SHALL BE STAINLESS STEEL CONFORMING TO ASTM SPECIFICATION A320 GRADE B8, CLASS 1.
4. MODIFICATIONS TO CHORD IN ORDER TO ACCOMMODATE SIGN PANEL SUPPORTS SHALL NOT BE PERMITTED.
5. INTERMEDIATE CHORD SPLICING SHALL NOT BE PERMITTED.
6. BOLTS SHALL BE TIGHTENED IN A START PATTERN SUCH THAT BOLTS PLACED OPPOSITE EACH OTHER ARE TIGHTENED IN SEQUENCE.

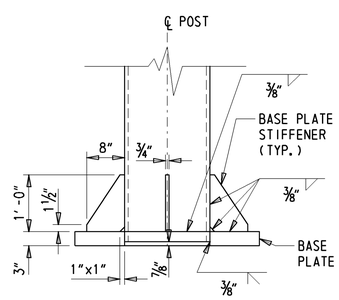

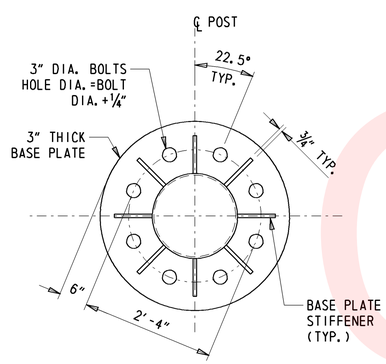

POST BASE PLATE DETAILS

3/4" = 1'-0"

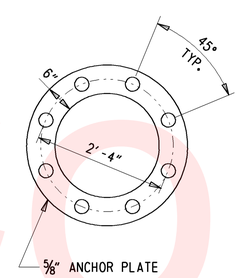

ANCHOR PLATE DETAIL

3/4" = 1'-0"

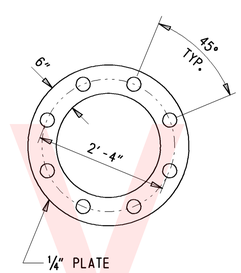

TEMPLATE PLATE DETAIL

3/4" = 1'-0"

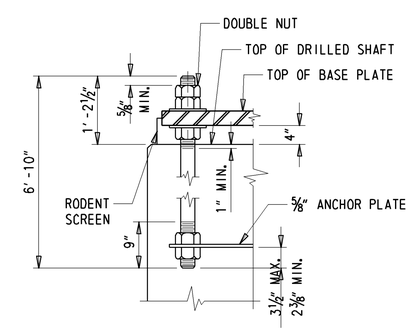

ANCHOR BOLT DETAIL

3/4" = 1'-0"

Unofficial Website Copy

DELAWARE DEPARTMENT OF TRANSPORTATION	ADDENDUMS / REVISIONS	SCALE: AS NOTED	SR1, SOUTH FREDERICA GRADE SEPARATED INTERSECTION	CONTRACT T200812202	STRUCTURE NO. SC 2014/2015	VMS SIGN STRUCTURE DETAILS	SHEET NO. 276
				COUNTY KENT	DESIGNED BY: E.M.		TOTAL SHTS. 296
					CHECKED BY:		

Y:\NEWCASTL\059\BRIDGE\2510602\SIGN STRUCTURES\DT 1.DGN

UNDERGROUND ONLY

CONDUIT RUN SCHEDULE

CO#	# OF CONDUITS	SIZE	TYPE	LENGTH	B/T/O	AMOUNT AND TYPE OF CABLE/WIRE
1	1	4"	PVC	110'	T	EMPTY
2	1	4"	PVC	165'	T	EMPTY
3	1	4"	PVC	80'	T	EMPTY
4	1	4"	PVC	120'	T	EMPTY
5	1	4"	PVC	95'	T	EMPTY
6	1	4"	PVC	120'	T	EMPTY
7	1	4"	PVC	115'	T	EMPTY

* ALL 4" CONDUIT TO BE MULTI-DUCT WITH FOUR 1" INNER DUCTS EXCEPT WHERE SHOWN

LEGEND
B BORE
T TRENCH
O OPEN CUT

SIGNAL CONSTRUCTION NOTES:

1. ALL 4" PVC CONDUIT SHALL BE SCHEDULE 80.
2. JUNCTION WELLS HAVING STEEL FRAMES AND LIDS SHALL BE BONDED AND GROUNDED AS SHOWN ON DELDOT STANDARD CONSTRUCTION DETAIL SHEET T-2. COSTS ARE INCIDENTAL TO THE JUNCTION WELL BEING GROUNDED.

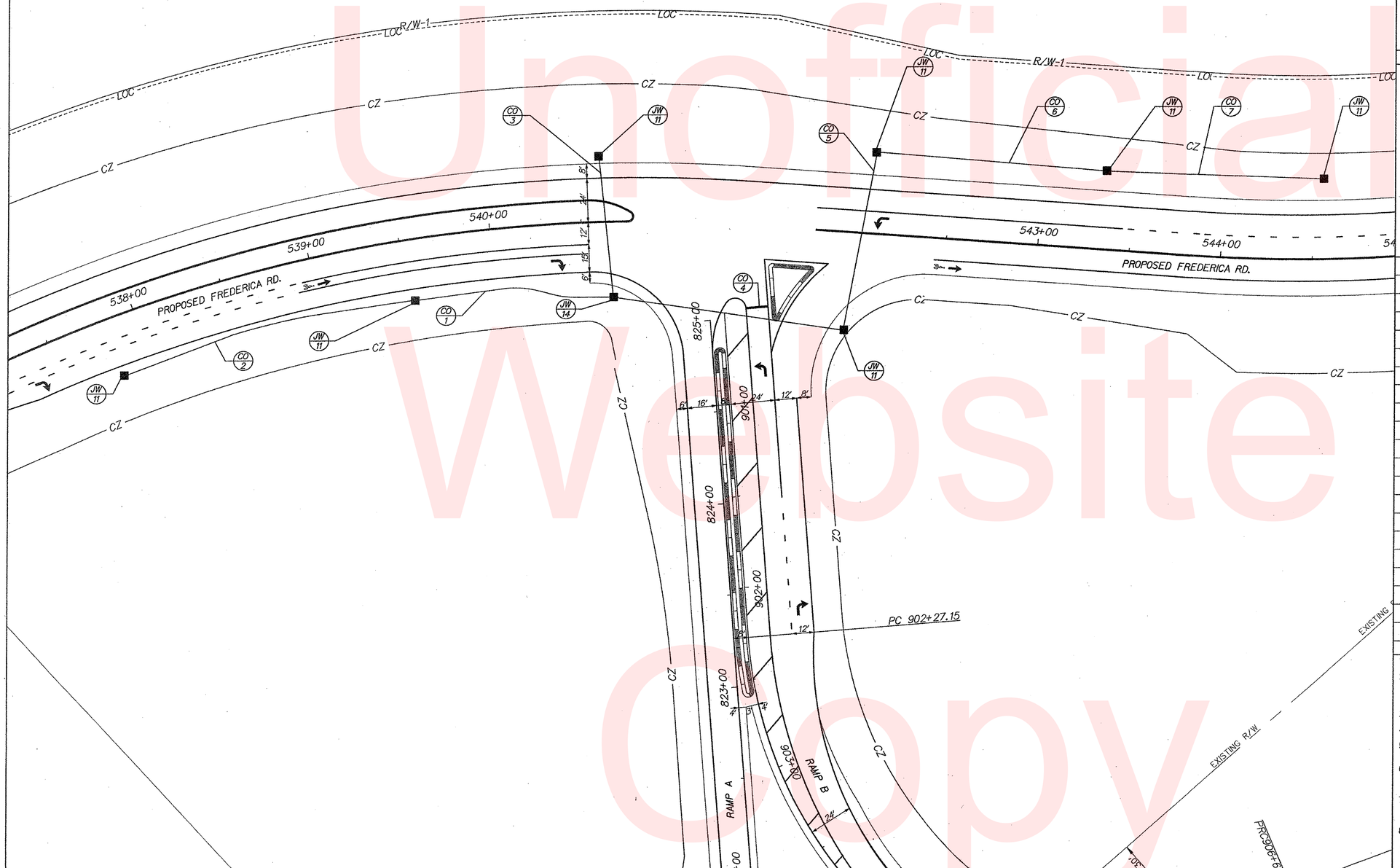

SIGNAL PHASING

SIGNAL HEAD DIAGRAM

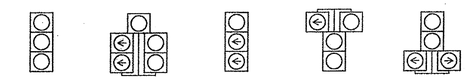

LEGEND

AB	ABANDON	OH #	EXISTING OVERHEAD RUN IDENTIFIER (# OF OVERHEAD RUN)
CA X	EXISTING CABINET IDENTIFIER (TYPE OF CABINET)	OH #	PROPOSED OVERHEAD RUN IDENTIFIER (# OF OVERHEAD RUN)
CA X	PROPOSED CABINET IDENTIFIER (TYPE OF CABINET)	PB X	EXISTING POLE BASE IDENTIFIER (TYPE OF POLE BASE)
CO #	EXISTING CONDUIT RUN IDENTIFIER (# OF CONDUIT RUN)	PB X	PROPOSED POLE BASE IDENTIFIER (TYPE OF POLE BASE)
CO #	PROPOSED CONDUIT RUN IDENTIFIER (# OF CONDUIT RUN)	PL X	EXISTING POLE IDENTIFIER (# OF POLE)
JW X	EXISTING JUNCTION WELL IDENTIFIER (TYPE OF JUNCTION WELL)	PL X	PROPOSED POLE IDENTIFIER (# OF POLE)
JW X	PROPOSED JUNCTION WELL IDENTIFIER (TYPE OF JUNCTION WELL)	RM C	REMOVE BY CONTRACTOR
MA XX	EXISTING MAST ARM IDENTIFIER (LENGTH OF ARM)	RM O	REMOVE BY OTHERS
MA XX	PROPOSED MAST ARM IDENTIFIER (LENGTH OF ARM)	RM TC	REMOVE BY TRAFFIC CONTRACTOR

	EXISTING SYMBOL	PROPOSED SYMBOL
JUNCTION WELL	J.W. d	
LOOP DETECTOR, TYPE 1		
LOOP DETECTOR, TYPE 2		
LUMINAIRE		
MAST ARM		
MICROWAVE DETECTION		
OPTICOM RECEIVER		
OVERHEAD SIGNING		
PEDESTRIAN POLE/BASE		
PEDESTRIAN PUSHBUTTON		
PEDESTRIAN SIGNAL HEAD		
RIGHT-OF-WAY		R/W
SERVICE PEDESTAL		P
SIGNAL CABINET		
SIGNAL HEAD		
SIGNAL POLE/BASE		
SPAN INSULATOR		
SPAN WIRE	XX	
UTILITY POLE		
VIDEO DETECTION		

GENERAL SIGNAL NOTES

1. DETECTION - XX M.P.H. - 4 SECONDS PASSAGE TIME AT XX FEET FROM STOP BAR.
2. LOOP DETECTORS:
   TYPE #1 - 6' x 6' - TO BE INSTALLED ON MAIN STREET THROUGH MOVEMENTS.
   TYPE #2 - 6' x 25' - TO BE INSTALLED ON MAIN STREET LEFT TURN MOVEMENTS.
   TYPE #2 - 6' x 25' - TO BE INSTALLED ON SIDE STREET THROUGH AND LEFT TURN MOVEMENTS.
3. ALL SIGNAL POLES WILL BE XX FEET, EXCEPT WHERE SHOWN.
4. CO #1 IS NOT DRAWN TO SCALE, NOR IS THE DIRECTION NECESSARILY CORRECT.
5. ALL SIGNAL EQUIPMENT REMOVED FROM A PROJECT IS TO BE RETURNED TO DELDOT TRAFFIC - DOVER, DELAWARE.
6. POLE BASES, CABINET BASE AND CONDUIT JUNCTION WELLS TO BE REMOVED IN ACCORDANCE WITH SECTION 201 AND 202 OF THE STANDARD SPECIFICATIONS OR AS DIRECTED BY ENGINEER. EXISTING CONDUIT IS TO BE ABANDONED.
7. ALL GALVANIZED CONDUIT (GRC) SHALL BE REAMED AND THREADED. ALL GRC SHALL BE THREADED TOGETHER WITH APPROVED COUPLINGS. SET SCREW, BOLTED, AND COMPRESSION FITTING ARE NOT ACCEPTABLE.
8. ALL UNDERGROUND AND OVERHEAD UTILITIES SHOWN ON THESE PLANS ARE SCHEMATIC ONLY AND MAY NOT BE COMPLETE. THE CONTRACTOR SHALL BE RESPONSIBLE FOR NOTIFYING MISS UTILITY, AND/OR THE APPROPRIATE UTILITY PRIOR TO THE BEGINNING OF CONSTRUCTION FOR THE UTILITY MARKOUTS. IF THE CONTRACTOR PERCEIVES THAT A CONFLICT BETWEEN UTILITIES AND THE TRAFFIC SIGNAL WILL OCCUR, THE CONTRACTOR SHALL NOTIFY DELDOT TRAFFIC IMMEDIATELY BEFORE CONSTRUCTION.

RECOMMENDED [signature] DATE: 3/28/13 | RECOMMENDED ____ DATE: ____ | RECOMMENDED ____ DATE: ____ | APPROVED TRAFFIC ENGINEER [signature] DATE: 3/28/13 | APPROVED FOR INSTALLATION CHIEF TRAFFIC ENGINEER [signature] DATE: 3/28/13

DELAWARE DEPARTMENT OF TRANSPORTATION

ADDENDUM / REVISIONS

SCALE 0 30 60 90 FEET

SR1, SOUTH FREDERICA GRADE SEPARATED INTERSECTION

CONTRACT	PERMIT NO.	K310
T200812202	DESIGNED BY:	DS
COUNTY	CHECKED BY:	BAM
KENT		

SIGNAL PLAN FREDERICA RD @ SR1 SB RAMP

SHEET NO. 277 TOTAL SHTS. 296

3/26/2013 11:28:37 AM G:\PROJECTS\06535.00 (DelDOT Agmt. 1376 DOTS Open End)\06535.07 SR1, S. Frederica\CADD Files\XMsg_sbramp01sf.dgn

Unofficial Website Copy

UNDERGROUND ONLY

CONDUIT RUN SCHEDULE

CO*	# OF CONDUITS	SIZE	TYPE	LENGTH	B/T/O	AMOUNT AND TYPE OF CABLE/WIRE
1	1	4"	PVC	105'	T	EMPTY
2	1	4"	PVC	130'	T	EMPTY
3	1	4"	PVC	130'	T	EMPTY
4	1	4"	PVC	105'	T	EMPTY
5	1	4"	PVC	100'	T	EMPTY
6	1	4"	PVC	125'	T	EMPTY
7	1	4"	PVC	145'	T	EMPTY

* ALL 4" CONDUIT TO BE MULTI-DUCT WITH FOUR 1" INNER DUCTS EXCEPT WHERE SHOWN

LEGEND
B BORE
T TRENCH
O OPEN CUT

SIGNAL CONSTRUCTION NOTES:

1. ALL 4" PVC CONDUIT SHALL BE SCHEDULE 80.
2. JUNCTION WELLS HAVING STEEL FRAMES AND LIDS SHALL BE BONDED AND GROUNDED AS SHOWN ON DELDOT STANDARD CONSTRUCTION DETAIL SHEET T-2. COSTS ARE INCIDENTAL TO THE JUNCTION WELL BEING GROUNDED.

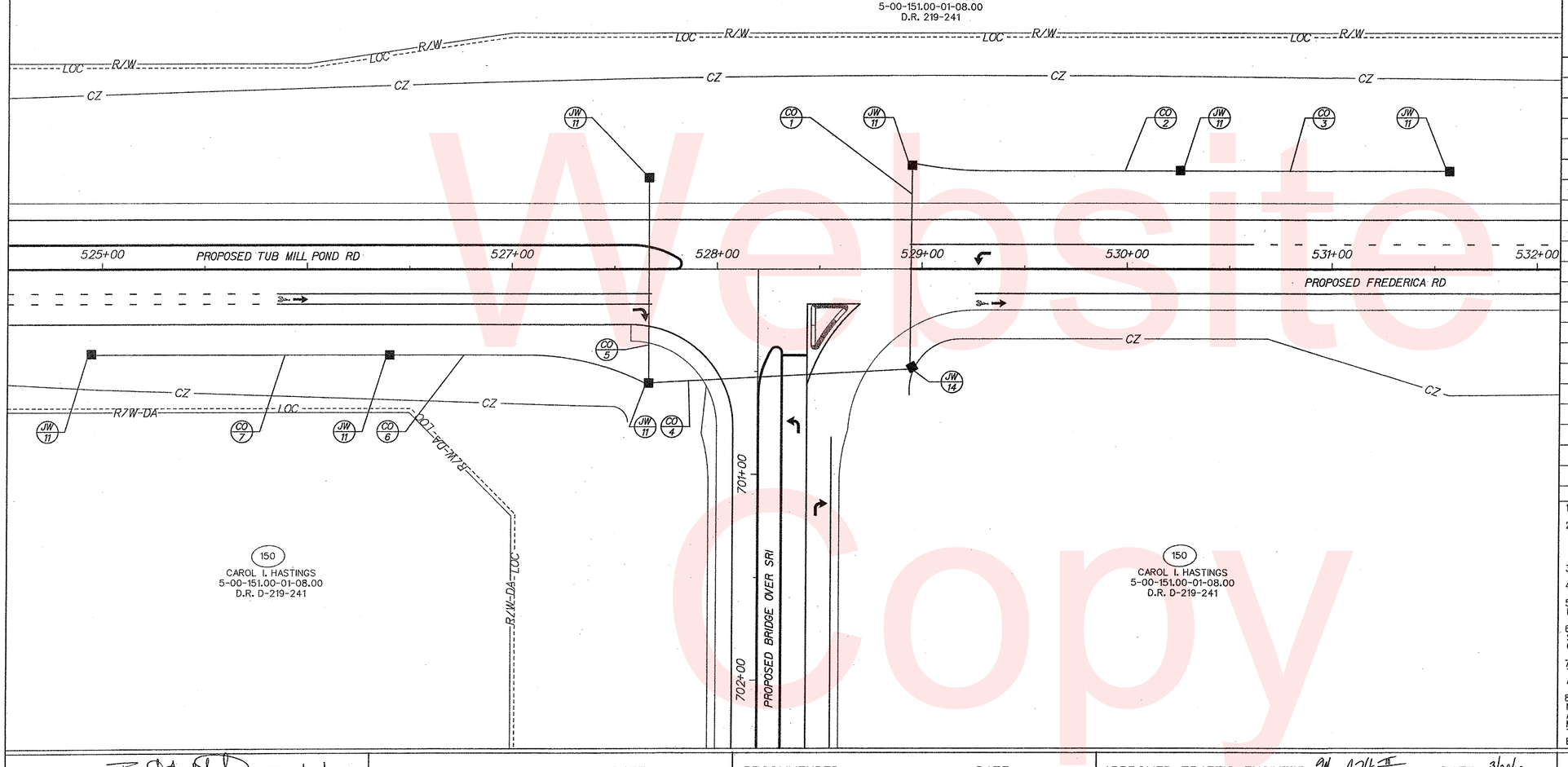

SIGNAL PHASING

SIGNAL HEAD DIAGRAM

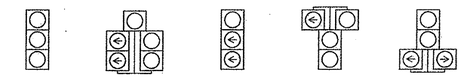

LEGEND

AB	ABANDON	OH #	EXISTING OVERHEAD RUN IDENTIFIER (# OF OVERHEAD RUN)
CA X	EXISTING CABINET IDENTIFIER (TYPE OF CABINET)	OH #	PROPOSED OVERHEAD RUN IDENTIFIER (# OF OVERHEAD RUN)
CA X	PROPOSED CABINET IDENTIFIER (TYPE OF CABINET)	PB X	EXISTING POLE BASE IDENTIFIER (TYPE OF POLE BASE)
CO #	EXISTING CONDUIT RUN IDENTIFIER (# OF CONDUIT RUN)	PB X	PROPOSED POLE BASE IDENTIFIER (TYPE OF POLE BASE)
CO #	PROPOSED CONDUIT RUN IDENTIFIER (# OF CONDUIT RUN)	PL X	EXISTING POLE IDENTIFIER (# OF POLE)
JW X	EXISTING JUNCTION WELL IDENTIFIER (TYPE OF JUNCTION WELL)	PL X	PROPOSED POLE IDENTIFIER (# OF POLE)
JW X	PROPOSED JUNCTION WELL IDENTIFIER (TYPE OF JUNCTION WELL)	RM C	REMOVE BY CONTRACTOR
MA XX	EXISTING MAST ARM IDENTIFIER (LENGTH OF ARM)	RM O	REMOVE BY OTHERS
MA XX	PROPOSED MAST ARM IDENTIFIER (LENGTH OF ARM)	RM TC	REMOVE BY TRAFFIC CONTRACTOR

	EXISTING SYMBOL	PROPOSED SYMBOL
JUNCTION WELL	J.W.	
LOOP DETECTOR, TYPE 1		
LOOP DETECTOR, TYPE 2		
LUMINAIRE		
MAST ARM		
MICROWAVE DETECTION		
OPTICOM RECEIVER		
OVERHEAD SIGNING		
PEDESTRIAN POLE/BASE		
PEDESTRIAN PUSHBUTTON		
PEDESTRIAN SIGNAL HEAD		
RIGHT-OF-WAY		R/W
SERVICE PEDESTAL		P
SIGNAL CABINET		
SIGNAL HEAD		
SIGNAL POLE/BASE		
SPAN INSULATOR		
SPAN WIRE	XX	
UTILITY POLE		
VIDEO DETECTION		

GENERAL SIGNAL NOTES

1. DETECTION - XX M.P.H. - 4 SECONDS PASSAGE TIME AT XX FEET FROM STOP BAR.
2. LOOP DETECTORS:
TYPE #1 - 6' x 6' - TO BE INSTALLED ON MAIN STREET THROUGH MOVEMENTS.
TYPE #2 - 6' x 25' - TO BE INSTALLED ON MAIN STREET LEFT TURN MOVEMENTS.
TYPE #2 - 6' x 25' - TO BE INSTALLED ON SIDE STREET THROUGH AND LEFT TURN MOVEMENTS.
3. ALL SIGNAL POLES WILL BE XX FEET, EXCEPT WHERE SHOWN.
4. CO #1 IS NOT DRAWN TO SCALE, NOR IS THE DIRECTION NECESSARILY CORRECT.
5. ALL SIGNAL EQUIPMENT REMOVED FROM A PROJECT IS TO BE RETURNED TO DELDOT TRAFFIC - DOVER, DELAWARE.
6. POLE BASES, CABINET BASE AND CONDUIT JUNCTION WELLS TO BE REMOVED IN ACCORDANCE WITH SECTION 201 AND 202 OF THE STANDARD SPECIFICATIONS OR AS DIRECTED BY ENGINEER. EXISTING CONDUIT IS TO BE ABANDONED.
7. ALL GALVANIZED CONDUIT (GRC) SHALL BE REAMED AND THREADED. ALL GRC SHALL BE THREADED TOGETHER WITH APPROVED COUPLINGS. SET SCREW, BOLTED, AND COMPRESSION FITTING ARE NOT ACCEPTABLE.
8. ALL UNDERGROUND AND OVERHEAD UTILITIES SHOWN ON THESE PLANS ARE SCHEMATIC ONLY AND MAY NOT BE COMPLETE. THE CONTRACTOR SHALL BE RESPONSIBLE FOR NOTIFYING MISS UTILITY, AND/OR THE APPROPRIATE UTILITY PRIOR TO THE BEGINNING OF CONSTRUCTION FOR THE UTILITY MARKOUTS. IF THE CONTRACTOR PERCEIVES THAT A CONFLICT BETWEEN UTILITIES AND THE TRAFFIC SIGNAL WILL OCCUR, THE CONTRACTOR SHALL NOTIFY DELDOT TRAFFIC IMMEDIATELY BEFORE CONSTRUCTION.

RECOMMENDED [signature] DATE: 3/28/13 | RECOMMENDED ____ DATE: ____ | RECOMMENDED ____ DATE: ____ | APPROVED TRAFFIC ENGINEER [signature] DATE: 3/28/13 | APPROVED FOR INSTALLATION CHIEF TRAFFIC ENGINEER [signature] DATE: 3/28/13

DELAWARE DEPARTMENT OF TRANSPORTATION

ADDENDUM / REVISIONS

SCALE 0 30 60 90 FEET

SR1, SOUTH FREDERICA GRADE SEPARATED INTERSECTION

CONTRACT	PERMIT NO.	K309
T200812202	DESIGNED BY:	DS
COUNTY		
KENT	CHECKED BY:	BAM

SIGNAL PLAN TUB MILL POND RD @ PROPOSED BRIDGE OVER SR1

SHEET NO. 278 / TOTAL SHTS. 296

3/26/2013 G:\PROJECTS\06535.00 (DelDOT Agmt. 1376 DOTS Open End)\06535.07 SR1, S. Frederica\CADD Files\XM\sg_bridge01sf.dgn 11:13:57 AM

Unofficial Website Copy

LEGEND

- EXCAVATION
- TOPSOIL REMOVED IN CUT
- TOPSOIL REMOVED UNDER FILL
- PCC PAVE. REMOVED IN CUT
- BITUMINOUS PAVEMENT REMOVED IN CUT

MATERIAL REMOVED DETAIL

N.T.S.

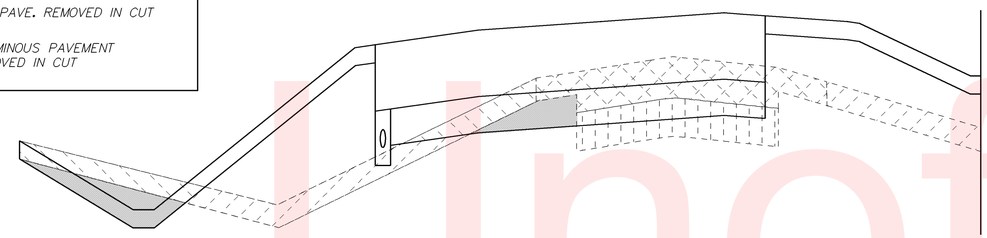

LEGEND

- TOPSOIL PLACED IN CUT
- TOPSOIL PLACED IN FILL
- BORROW (TYPE A)
- BORROW (TYPE F)

MATERIAL PLACED DETAIL

N.T.S.

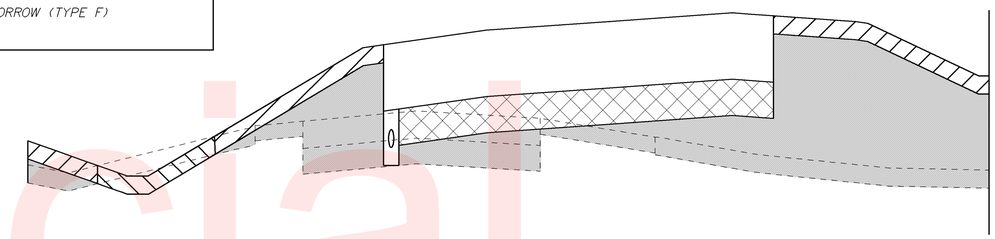

*ALL VALUES SHOWN ARE IN CUBIC YARDS.

	PHASE 1	PHASE 2	PHASE 3	PHASE 4	PHASE 5
EXCAVATION					
1 FROM CROSS SECTIONS ("TOPSOIL PLACED IN CUT" INCLUDED AND "PCC REMOVED IN CUT AND UNDER FILL" OMITTED)					
A TUB MILL POND ROAD	11,215.85	2,282.72	0.00	0.00	0.00
B MILFORD NECK ROAD	2,041.14	0.00	0.00	0.00	0.00
C BRIDGE OVER SR 1	1,414.21	0.00	0.00	0.00	0.00
D RAMP A	2,583.37	0.00	0.00	4,453.08	0.00
E RAMP B	949.07	0.00	0.00	1,847.22	0.00
F RAMP C	624.26	0.00	0.00	0.00	0.00
G RAMP D	1408.48	0.00	0.00	0.00	5,156.50
H OLD TUB MILL POND ROAD	71.39	86.25	0.00	0.00	0.00
I OLD MILFORD NECK ROAD	0.00	0.00	0.00	0.00	0.00
INTERSECTIONS:					
J TUB MILL POND ROAD AND OLD TUB MILL POND ROAD	960.78	0.00	0.00	0.00	0.00
K TUB MILL POND ROAD AND BRIDGE OVER SR 1	225.96	0.00	0.00	0.00	0.00
L TUB MILL POND ROAD AND RAMPS "A AND B"	996.19	0.00	0.00	0.00	0.00
M MILFORD NECK ROAD AND BRIDGE OVER SR 1	256.63	0.00	0.00	0.00	0.00
N MILFORD NECK ROAD AND MILFORD NECK CONNECTOR ROAD	129.96	0.00	0.00	0.00	0.00
O CONSTRUCT TEMPORARY SHOULDER ON SR 1 MEDIAN	0.00	0.00	1,095.65	0.00	0.00
P REMOVE TEMPORARY SHOULDER FROM SR 1 MEDIAN	0.00	0.00	0.00	0.00	0.00
2 PLUS TOPSOIL REMOVED UNDER FILL	22,997.84	99.90	0.00	1,466.53	450.36
3 PLUS TOPSOIL REMOVED IN CUT	26,887.47	2,217.18	0.00	6,138.14	6,627.33
4 PLUS TOPSOIL STRIPPING (OUTSIDE X SECTIONS)	27,094.28	2,994.48	0.00	0.00	0.00
5 PLUS BITUMINOUS PAVEMENT REMOVED IN CUT AND UNDER FILL	122.73	116.75	1,095.65	905.49	464.37
6 PLUS INFIELD BORROW SOURCE BELOW TOPSOIL STRIPPING	45,000.00	0.00	0.00	0.00	0.00
7 LESS ROOTMAT REMOVED IN CUT (NOT INCLUDED IN CROSS SECTIONS)	0.00	0.00	0.00	0.00	0.00
8 LESS ROCK EXCAVATION	0.00	0.00	0.00	0.00	0.00
9 TOTAL ITEM 202000 - EXCAVATION AND EMBANKMENT	144,979.61	7,797.28	2,191.31	14,810.46	12,698.56
STORMWATER MANAGEMENT POND					
10 FROM CROSS SECTIONS	74,679.60	0.00	0.00	0.00	0.00
11 PLUS TOPSOIL REMOVED IN CUT AND UNDER FILL	10,498.36	0.00	0.00	0.00	0.00
12 PLUS TOPSOIL PLACED IN CUT	4,122.33	0.00	0.00	0.00	0.00
13 PLUS OVEREXCAVATION FOR SEDIMENTATION	0.00	0.00	0.00	0.00	0.00
14 LESS ROOTMAT REMOVED IN CUT	0.00	0.00	0.00	0.00	0.00
15 LESS ROCK EXCAVATION	0.00	0.00	0.00	0.00	0.00
16 TOTAL ITEM 271000 - STORMWATER MANAGEMENT POND	89,300.29	0.00	0.00	0.00	0.00
EXCAVATION AVAILABLE FOR EMBANKMENT					
17 TOTAL EXCAVATION AND EMBANKMENT QUANTITY (ITEM 202000 - LINE 9)	144,979.61	7,797.28	2,191.31	14,810.46	12,698.56
18 PLUS STORMWATER MANAGEMENT POND EXCAVATION (ITEM 271000 - LINE 16)	89,300.29	0.00	0.00	0.00	0.00
19 PLUS EXCAVATION AND BACKFILLING FOR STRUCTURES (ITEM 207000)	234.00	0.00	0.00	0.00	0.00
20 PLUS EXCAVATION AND BACKFILLING FOR PIPE TRENCHES	3,276.00	0.00	0.00	0.00	0.00
21 LESS TOPSOIL REMOVED UNDER FILL (LINE 2)	22,997.84	99.90	0.00	1,466.53	450.36
22 LESS TOPSOIL REMOVED IN CUT (LINE 3)	26,887.47	2,217.18	0.00	6,138.14	6,627.33
23 LESS TOPSOIL REMOVED FROM STORMWATER MANAGEMENT PONDS (LINE 11)	10,498.36	0.00	0.00	0.00	0.00
24 LESS TOPSOIL STRIPPING OUTSIDE X SECTIONS (LINE 4)	27,094.28	2,994.48	0.00	0.00	0.00
25 LESS BITUMINOUS PAVEMENT REMOVED IN CUT AND UNDER FILL (LINE 5)	122.73	116.75	1,095.65	905.49	464.37
26 LESS UNSUITABLE EXCAVATION	0.00	0.00	0.00	0.00	0.00
27 LESS MATERIALS USED FOR BORROW TYPE A	0.00	0.00	0.00	0.00	0.00
28 EXCAVATION AVAILABLE FOR EMBANKMENT FROM THIS PHASE	150,189.23	2,368.97	1,095.65	6,300.31	5,156.50
BORROW, TYPE A					
29 BORROW, TYPE A FOR CAPPING	12,018.26	559.33	0.00	1,760.33	1,088.87
30 PLUS CAPPING REQUIRED X ADJUSTMENT FACTOR (0.20)	2,403.65	111.87	0.00	352.07	217.77
31 TOTAL ADJUSTED BORROW, TYPE A REQUIRED	14,421.91	671.20	0.00	2,112.39	1,306.64
BORROW, TYPE B					
32 BACKFILL FOR CHANNEL BED FILL	9.00	0.00	0.00	0.00	0.00
33 PLUS BACKFILL X ADJUSTMENTS FACTOR (0.20)	1.80	0.00	0.00	0.00	0.00
34 TOTAL ADJUSTED BORROW, TYPE B REQUIRED	10.80	0.00	0.00	0.00	0.00

	PHASE 1	PHASE 2	PHASE 3	PHASE 4	PHASE 5
EMBANKMENT					
35 EMBANKMENT REQUIRED BELOW CAPPING ("TOPSOIL STRIPPED IN FILL" AND "PCC REMOVED IN CUT OR UNDER FILL" INCLUDED)					
A TUB MILL POND ROAD	28,690.21	282.49	0.00	0.00	0.00
B MILFORD NECK ROAD	42,536.30	0.00	0.00	0.00	0.00
C BRIDGE OVER SR 1	66,034.44	0.00	0.00	0.00	0.00
D RAMP A	0.86	0.00	0.00	555.15	0.00
E RAMP B	0.00	0.00	0.00	1,270.35	0.00
F RAMP C	25,051.91	0.00	0.00	0.00	0.00
G RAMP D	2,680.05	0.00	0.00	0.00	748.19
H OLD TUB MILL POND ROAD	152.98	96.82	0.00	0.00	0.00
I OLD MILFORD NECK ROAD	0.00	0.00	0.00	0.00	0.00
INTERSECTIONS:					
J TUB MILL POND ROAD AND OLD TUB MILL POND ROAD	39.83	0.00	0.00	0.00	0.00
K TUB MILL POND ROAD AND BRIDGE OVER SR 1	5,415.78	0.00	0.00	0.00	0.00
L TUB MILL POND ROAD AND RAMPS "A AND B"	1,155.63	0.00	0.00	0.00	0.00
M MILFORD NECK ROAD AND BRIDGE OVER SR 1	20,727.09	0.00	0.00	0.00	0.00
N MILFORD NECK ROAD AND MILFORD NECK CONNECTOR ROAD	3,968.96	0.00	0.00	0.00	0.00
O CONSTRUCT TEMPORARY SHOULDER ON SR 1 MEDIAN	0.00	0.00	0.00	0.00	0.00
P REMOVE TEMPORARY SHOULDER FROM SR 1 MEDIAN	0.00	0.00	0.00	0.00	0.00
36 PLUS ROOTMAT REMOVED UNDER FILL	0.00	0.00	0.00	0.00	0.00
37 PLUS UNSUITABLE MATERIAL REMOVED UNDER FILL	0.00	0.00	0.00	0.00	0.00
38 PLUS SWM POND EMBANKMENT (BELOW TOPSOIL)	1,019.00	0.00	0.00	0.00	0.00
39 PLUS BACKFILL FOR PIPE TRENCHES (OUTSIDE LIMITS OF TYPE C)	0.00	0.00	0.00	0.00	0.00
40 LESS EXCESS TOPSOIL TO BE PLACED IN OUTER EMBANKMENTS	15,000.00	0.00	0.00	0.00	0.00
41 SUBTOTAL EMBANKMENT REQUIRED BELOW CAPPING	182,473.04	379.31	0.00	1,825.50	748.19
42 PLUS EMBANKMENT REQUIRED X ADJUSTMENT FACTOR (0.20)	36,494.61	75.86	0.00	365.10	149.64
43 TOTAL ADJUSTED EMBANKMENT REQUIRED	218,967.65	455.18	0.00	2,190.60	897.83
FURNISHING BORROW, TYPE C					
44 FOR PIPE TRENCH BACKFILL AND STRUCTURE BACKFILL (ITEM 210000)	2,642.00	0.00	0.00	0.00	0.00
45 PLUS BORROW, TYPE C REQUIRED X ADJUSTMENT FACTOR (0.30)	792.60	0.00	0.00	0.00	0.00
46 TOTAL ADJUSTED FURNISHING BORROW, TYPE C REQUIRED	3,434.60	0.00	0.00	0.00	0.00
TOPSOIL SUMMARY					
47 TOPSOIL REMOVED UNDER FILL (LINE 2)	22,997.84	99.90	0.00	1,466.53	450.36
48 PLUS TOPSOIL REMOVED IN CUT (LINE 3)	26,887.47	2,217.18	0.00	6,138.14	6,627.33
49 PLUS TOPSOIL REMOVED FROM SWM PONDS (LINE 11)	10,498.36	0.00	0.00	0.00	0.00
50 PLUS TOPSOIL STRIPPING OUTSIDE X SECTIONS (LINE 4)	27,094.28	2,994.48	0.00	0.00	0.00
51 SUBTOTAL TOPSOIL AVAILABLE FOR USE	87,477.94	5,311.56	0.00	7,604.67	7,077.69
52 LESS TOPSOILING REQUIRED FOR ROADWAY	27,926.04	1,414.42	0.00	5,800.06	5,232.28
53 LESS TOPSOILING REQUIRED FOR SWM PONDS	0.00	0.00	0.00	0.00	0.00
54 LESS TOPSOILING REQUIRED FOR OUTSIDE X SECTIONS	0.00	2,994.48	0.00	0.00	0.00
55 SUBTOTAL EXCESS (+) TOPSOIL OR NEEDED (-) TOPSOIL	59,551.90	902.66	0.00	1,804.61	1,845.42
56 LESS TOPSOIL PLACED IN OUTER EMBANKMENTS	15,000.00	0.00	0.00	0.00	0.00
57 LESS TOPSOIL PLACED IN THE INFIELD BORROW SOURCE	0.00	0.00	0.00	0.00	0.00
58 TOTAL EXCESS (+) TOPSOIL OR NEEDED (-) TOPSOIL	+44,551.90	+902.66	0.00	+1,804.61	+1,845.42
EARTHWORK SUMMARY - MATERIAL BALANCE					
59 TOTAL ADJUSTED BORROW, TYPE A REQUIRED (LINE 31)	14,421.91	671.20	0.00	2,112.39	1,306.64
60 LESS EXCAVATION MATERIALS USED FOR BORROW TYPE A (LINE 27)	0.00	0.00	0.00	0.00	0.00
61 TOTAL BORROW, TYPE A NEEDED FROM OFFSITE SOURCE	14,421.91	671.20	0.00	2,112.39	1,306.64
62 TOTAL ADJUSTED BORROW, TYPE B REQUIRED (LINE 34)	10.80	0.00	0.00	0.00	0.00
63 TOTAL ADJUSTED FURNISH BORROW, TYPE C REQUIRED (LINE 46)	3,434.60	0.00	0.00	0.00	0.00
64 EXCAVATION AVAILABLE FOR EMBANKMENT FROM THIS PHASE (LINE 28)	150,189.23	2,368.97	1,095.65	6,300.31	5,156.50
65 LESS TOTAL ADJUSTED EMBANKMENT REQUIRED (LINE 43)	218,967.65	455.18	0.00	2,190.60	897.83
66 TOTAL EXCESS (+) EXCAVATION OR NEEDED (-) BORROW, TYPE F	-68,778.42	+1,913.80	+1,095.65	+4,109.71	+4,258.67
67 ACCUMULATIVE STOCKPILED EXCAVATION FOR USE	0.00	1,913.80	3,009.45	7,119.16	11,377.83

NOTE: THE EARTHWORK SUMMARY IS PROVIDED FOR INFORMATIONAL PURPOSES ONLY. THE VALUES LISTED IN THE EARTHWORK SUMMARY ARE APPROXIMATE AND ARE NOT TO BE USED AS A BASIS OF FINAL PAYMENT.

Unofficial Website Copy

Unofficial Website Copy

*ALL VALUES SHOWN ARE IN CUBIC YARDS.

	PHASE 6	PHASE 7	PHASE 8	PHASE 9	PHASE 10	TOTAL
EXCAVATION						
1 FROM CROSS SECTIONS ("TOPSOIL PLACED IN CUT" INCLUDED AND "PCC REMOVED IN CUT AND UNDER FILL" OMITTED)						
A TUB MILL POND ROAD	0.00	0.00	2,405.56	0.00	0.00	15,904.14
B MILFORD NECK ROAD	907.45	0.00	0.00	0.00	0.00	2,948.59
C BRIDGE OVER SR 1	0.00	0.00	0.00	0.00	0.00	1,414.21
D RAMP A	0.00	0.00	0.00	12.66	0.00	7,049.11
E RAMP B	0.00	0.00	0.00	0.00	0.00	2,796.30
F RAMP C	0.00	1,798.73	0.00	0.00	0.00	2,422.99
G RAMP D	0.00	0.00	0.00	0.00	0.00	6,564.98
H OLD TUB MILL POND ROAD	0.00	0.00	0.00	123.56	0.00	281.20
I OLD MILFORD NECK ROAD	0.00	0.00	0.00	0.00	599.15	599.15
INTERSECTIONS:						
J TUB MILL POND ROAD AND OLD TUB MILL POND ROAD	0.00	0.00	0.00	0.00	0.00	960.78
K TUB MILL POND ROAD AND BRIDGE OVER SR 1	0.00	0.00	0.00	0.00	0.00	225.96
L TUB MILL POND ROAD AND RAMPS "A AND B "	0.00	0.00	0.00	0.00	0.00	996.19
M MILFORD NECK ROAD AND BRIDGE OVER SR 1	0.00	0.00	0.00	0.00	0.00	256.63
N MILFORD NECK ROAD AND MILFORD NECK CONNECTOR ROAD	0.00	0.00	0.00	0.00	0.00	129.96
O CONSTRUCT TEMPORARY SHOULDER ON SR 1 MEDIAN	0.00	0.00	0.00	0.00	0.00	1,095.65
P REMOVE TEMPORARY SHOULDER FROM SR 1 MEDIAN	0.00	0.00	0.00	0.00	1,178.07	1,178.07
2 PLUS TOPSOIL REMOVED UNDER FILL	1,524.44	329.44	206.39	219.57	0.00	27,294.47
3 PLUS TOPSOIL REMOVED IN CUT	1,432.71	2,503.93	2,768.82	1,075.34	501.01	50,151.93
4 PLUS TOPSOIL STRIPPING (OUTSIDE X SECTIONS)	0.00	0.00	0.00	0.00	0.00	30,088.76
5 PLUS BITUMINOUS PAVEMENT REMOVED IN CUT AND UNDER FILL	279.95	404.26	124.24	123.92	237.36	3,874.72
6 PLUS INFIELD BORROW SOURCE BELOW TOPSOIL STRIPPING	0.00	0.00	0.00	0.00	0.00	45,000.00
7 LESS ROOTMAT REMOVED IN CUT (NOT INCLUDED IN CROSS SECTIONS)	0.00	0.00	0.00	0.00	0.00	0.00
8 LESS ROCK EXCAVATION	0.00	0.00	0.00	0.00	0.00	0.00
9 TOTAL ITEM 202000 - EXCAVATION AND EMBANKMENT	4,144.56	5,036.36	5,505.02	1,555.05	2,515.60	201,233.80
STORMWATER MANAGEMENT POND						
10 FROM CROSS SECTIONS	0.00	0.00	0.00	0.00	0.00	74,679.60
11 PLUS TOPSOIL REMOVED IN CUT AND UNDER FILL	0.00	0.00	0.00	0.00	0.00	10,498.36
12 PLUS TOPSOIL PLACED IN CUT	0.00	0.00	0.00	0.00	0.00	4,122.33
13 PLUS OVEREXCAVATION FOR SEDIMENTATION	0.00	0.00	0.00	0.00	0.00	0.00
14 LESS ROOTMAT REMOVED IN CUT	0.00	0.00	0.00	0.00	0.00	0.00
15 LESS ROCK EXCAVATION	0.00	0.00	0.00	0.00	0.00	0.00
16 TOTAL ITEM 271000 - STORMWATER MANAGEMENT POND	0.00	0.00	0.00	0.00	0.00	89,300.29
EXCAVATION AVAILABLE FOR EMBANKMENT						
17 TOTAL EXCAVATION AND EMBANKMENT QUANTITY (ITEM 202000 - LINE 9)	4,144.56	5,036.36	5,505.02	1,555.05	2,515.60	201,233.80
18 PLUS STORMWATER MANAGEMENT POND EXCAVATION (ITEM 271000 - LINE 16)	0.00	0.00	0.00	0.00	0.00	89,300.29
19 PLUS EXCAVATION AND BACKFILLING FOR STRUCTURES (ITEM 207000)	0.00	0.00	0.00	0.00	0.00	234.00
20 PLUS EXCAVATION AND BACKFILLING FOR PIPE TRENCHES	69.00	0.00	135.00	0.00	0.00	3,480.00
21 LESS TOPSOIL REMOVED UNDER FILL (LINE 2)	1,524.44	329.44	206.39	219.57	0.00	27,294.47
22 LESS TOPSOIL REMOVED IN CUT (LINE 3)	1,432.71	2,503.93	2,768.82	1,075.34	501.01	50,151.93
23 LESS TOPSOIL REMOVED FROM STORMWATER MANAGEMENT PONDS (LINE 11)	0.00	0.00	0.00	0.00	0.00	10,498.36
24 LESS TOPSOIL STRIPPING OUTSIDE X SECTIONS (LINE 4)	0.00	0.00	0.00	0.00	0.00	30,088.76
25 LESS BITUMINOUS PAVEMENT REMOVED IN CUT AND UNDER FILL (LINE 5)	279.95	404.26	124.24	123.92	237.36	3,874.72
26 LESS UNSUITABLE EXCAVATION	0.00	0.00	0.00	0.00	0.00	0.00
27 LESS MATERIALS USED FOR BORROW TYPE A	0.00	0.00	0.00	0.00	0.00	0.00
28 EXCAVATION AVAILABLE FOR EMBANKMENT FROM THIS PHASE	976.45	1,798.73	2,540.56	136.22	1,777.22	172,339.85
BORROW, TYPE A						
29 BORROW, TYPE A FOR CAPPING	1,077.70	619.90	1,225.67	10.66	0.00	18,360.72
30 PLUS CAPPING REQUIRED X ADJUSTMENT FACTOR (0.20)	215.54	123.98	245.13	2.13	0.00	3,672.14
31 TOTAL ADJUSTED BORROW, TYPE A REQUIRED	1,293.24	743.88	1,470.80	12.79	0.00	22,032.86
BORROW, TYPE B						
32 BACKFILL FOR CHANNEL BED FILL	0.00	0.00	0.00	0.00	0.00	9.00
33 PLUS BACKFILL X ADJUSTMENTS FACTOR (0.20)	0.00	0.00	0.00	0.00	0.00	1.80
34 TOTAL ADJUSTED BORROW, TYPE B REQUIRED	0.00	0.00	0.00	0.00	0.00	10.80

	PHASE 6	PHASE 7	PHASE 8	PHASE 9	PHASE 10	TOTAL
EMBANKMENT						
35 EMBANKMENT REQUIRED BELOW CAPPING ("TOPSOIL STRIPPED IN FILL" AND "PCC REMOVED IN CUT OR UNDER FILL" INCLUDED)						
A TUB MILL POND ROAD	0.00	0.00	364.54	0.00	0.00	29,337.24
B MILFORD NECK ROAD	3,214.28	0.00	0.00	0.00	0.00	45,750.57
C BRIDGE OVER SR 1	0.00	0.00	0.00	0.00	0.00	66,034.44
D RAMP A	0.00	0.00	0.00	221.44	0.00	777.45
E RAMP B	0.00	0.00	0.00	0.00	0.00	1,270.35
F RAMP C	0.00	87.78	0.00	0.00	0.00	25,139.69
G RAMP D	0.00	0.00	0.00	0.00	0.00	3,428.23
H OLD TUB MILL POND ROAD	0.00	0.00	135.00	141.25	0.00	526.05
I OLD MILFORD NECK ROAD	186.00	0.00	0.00	0.00	204.80	390.80
INTERSECTIONS:						
J TUB MILL POND ROAD AND OLD TUB MILL POND ROAD	0.00	0.00	0.00	0.00	0.00	39.83
K TUB MILL POND ROAD AND BRIDGE OVER SR 1	0.00	0.00	0.00	0.00	0.00	5,415.78
L TUB MILL POND ROAD AND RAMPS "A AND B "	0.00	0.00	0.00	0.00	0.00	1,155.63
M MILFORD NECK ROAD AND BRIDGE OVER SR 1	0.00	0.00	0.00	0.00	0.00	20,727.09
N MILFORD NECK ROAD AND MILFORD NECK CONNECTOR ROAD	0.00	0.00	0.00	0.00	0.00	3,968.96
O CONSTRUCT TEMPORARY SHOULDER ON SR 1 MEDIAN	0.00	0.00	0.00	0.00	0.00	0.00
P REMOVE TEMPORARY SHOULDER FROM SR 1 MEDIAN	0.00	0.00	0.00	0.00	0.00	0.00
36 PLUS ROOTMAT REMOVED UNDER FILL	0.00	0.00	0.00	0.00	0.00	0.00
37 PLUS UNSUITABLE MATERIAL REMOVED UNDER FILL	0.00	0.00	0.00	0.00	0.00	0.00
38 PLUS SWM POND EMBANKMENT (BELOW TOPSOIL)	0.00	0.00	0.00	208.00	0.00	1,227.00
39 PLUS BACKFILL FOR PIPE TRENCHES (OUTSIDE LIMITS OF TYPE C)	0.00	0.00	0.00	0.00	0.00	0.00
40 LESS EXCESS TOPSOIL TO BE PLACED IN OUTER EMBANKMENTS	0.00	0.00	0.00	0.00	0.00	15,000.00
41 SUBTOTAL EMBANKMENT REQUIRED BELOW CAPPING	3,400.28	87.78	499.54	570.69	204.80	190,189.12
42 PLUS EMBANKMENT REQUIRED X ADJUSTMENT FACTOR (0.20)	680.06	17.56	99.91	114.14	40.96	38,037.82
43 TOTAL ADJUSTED EMBANKMENT REQUIRED	4,080.33	105.33	599.44	684.83	245.76	228,226.95
FURNISHING BORROW, TYPE C						
44 FOR PIPE TRENCH BACKFILL AND STRUCTURE BACKFILL (ITEM 210000)	45.00	0.00	38.00	0.00	0.00	2,725.00
45 PLUS BORROW, TYPE C REQUIRED X ADJUSTMENT FACTOR (0.30)	13.50	0.00	11.40	0.00	0.00	817.50
46 TOTAL ADJUSTED FURNISHING BORROW, TYPE C REQUIRED	58.50	0.00	49.40	0.00	0.00	3,542.50
TOPSOIL SUMMARY						
47 TOPSOIL REMOVED UNDER FILL (LINE 2)	1,524.44	329.44	206.39	219.57	0.00	27,294.47
48 PLUS TOPSOIL REMOVED IN CUT (LINE 3)	1,432.71	2,503.93	2,768.82	1,075.34	501.01	50,151.93
49 PLUS TOPSOIL REMOVED FROM SWM PONDS (LINE 11)	0.00	0.00	0.00	0.00	0.00	10,498.36
50 PLUS TOPSOIL STRIPPING OUTSIDE X SECTIONS (LINE 4)	0.00	0.00	0.00	0.00	0.00	30,088.76
51 SUBTOTAL TOPSOIL AVAILABLE FOR USE	2,957.15	2,833.37	2,975.21	1,294.91	501.01	118,033.52
52 LESS TOPSOILING REQUIRED FOR ROADWAY	1,664.21	2,113.97	1,840.64	1,286.77	1,684.60	48,962.99
53 LESS TOPSOILING REQUIRED FOR SWM PONDS	0.00	0.00	0.00	4,328.50	0.00	4,328.50
54 LESS TOPSOILING REQUIRED FOR OUTSIDE X SECTIONS	0.00	0.00	0.00	0.00	27,094.28	30,088.76
55 SUBTOTAL EXCESS (+) TOPSOIL OR NEEDED (-) TOPSOIL	1,292.94	719.40	1,134.57	-4,320.36	-28,277.87	34,653.27
56 LESS TOPSOIL PLACED IN OUTER EMBANKMENTS	0.00	0.00	0.00	0.00	0.00	15,000.00
57 LESS TOPSOIL PLACED IN THE INFIELD BORROW SOURCE	0.00	0.00	0.00	0.00	19,653.27	19,653.27
58 TOTAL EXCESS (+) TOPSOIL OR NEEDED (-) TOPSOIL	+1,292.94	+719.40	+1,134.57	-4,320.36	-47,931.14	0.00
EARTHWORK SUMMARY - MATERIAL BALANCE						
59 TOTAL ADJUSTED BORROW, TYPE A REQUIRED (LINE 31)	1,293.24	743.88	1,470.80	12.79	0.00	22,032.86
60 LESS EXCAVATION MATERIALS USED FOR BORROW TYPE A (LINE 27)	0.00	0.00	0.00	0.00	0.00	0.00
61 TOTAL BORROW, TYPE A NEEDED FROM OFFSITE SOURCE	1,293.24	743.88	1,470.80	12.79	0.00	22,032.86
62 TOTAL ADJUSTED BORROW, TYPE B REQUIRED (LINE 34)	0.00	0.00	0.00	0.00	0.00	10.80
63 TOTAL ADJUSTED FURNISH BORROW, TYPE C REQUIRED (LINE 46)	58.08	0.00	37.86	0.00	0.00	3,530.54
64 EXCAVATION AVAILABLE FOR EMBANKMENT FROM THIS PHASE (LINE 28)	976.45	1,798.73	2,540.56	136.22	1,777.22	172,339.85
65 LESS TOTAL ADJUSTED EMBANKMENT REQUIRED (LINE 43)	4,080.33	105.33	599.44	684.83	245.76	228,226.95
66 TOTAL EXCESS (+) EXCAVATION OR NEEDED (-) BORROW, TYPE F	-3,103.88	+1,693.40	+1,941.12	-548.61	+1,531.46	-68,778.42
67 ACCUMULATIVE STOCKPILED EXCAVATION FOR USE	8,273.95	9,967.82	11,908.47	11,359.86	12,891.32	12,891.32

NOTE: THE EARTHWORK SUMMARY IS PROVIDED FOR INFORMATIONAL PURPOSES ONLY. THE VALUES LISTED IN THE EARTHWORK SUMMARY ARE APPROXIMATE AND ARE NOT TO BE USED AS A BASIS OF FINAL PAYMENT.

GENERAL NOTES

1. EQUIPMENT AND/OR STOCKPILE MATERIAL SHALL NOT BE STORED IN THE DRIP LINE AREA OF ANY TREE.

2. THE CONTRACTOR SHALL CONTACT KENT COUNTY DEPARTMENT OF PUBLIC WORKS AT 302-744-2430 AT LEAST 48 HOURS IN ADVANCE OF STARTING CONSTRUCTION.

3. THE CONTRACTOR SHALL CONTACT MISS UTILITY OF DELMARVA AT 1-800-282-8555 FOR UTILITY LOCATIONS WITHIN AND SURROUNDING CONSTRUCTION AREAS NOT LESS THAN 72 HOURS BEFORE PERFORMING ANY EXCAVATION.

4. THE CONTRACTOR SHALL USE ONLY NEW MATERIALS, PARTS, AND PRODUCTS. ALL MATERIALS SHALL BE STORED SO AS TO ASSURE THE PRESERVATION OF THEIR QUALITY AND FITNESS FOR THE INTENDED WORK. ALL MATERIAL MUST BE MANUFACTURED IN THE USA.

5. ALL CONSTRUCTION SHALL BE PERFORMED TO THE SATISFACTION OF THE ENGINEER, KENT COUNTY DEPARTMENT OF PUBLIC WORKS (DPW), DELAWARE DEPARTMENT OF TRANSPORTATION (DELDOT) AND ALL RESPECTIVE UTILITY OWNER/S IN ACCORDANCE WITH ALL APPLICABLE CONTRACT DRAWINGS AND SPECIFICATIONS.

6. THE CONTRACTOR SHALL COMPLY WITH ALL APPLICABLE LAWS, ORDINANCES, RULES, REGULATIONS AND ORDERS OF ANY PUBLIC BODY HAVING JURISDICTION. THE CONTRACTOR SHALL ERECT AND MAINTAIN, AS REQUIRED BY THE CONDITIONS AND PROGRESS OF THE WORK, ALL NECESSARY SAFEGUARDS FOR SAFETY AND PROTECTION IN ACCORDANCE W/APPLICABLE OSHA REGULATION.

7. THE CONTRACTOR SHALL INSTALL THE PROPOSED SANITARY SEWER AND FORCE MAINS WITH A MINIMUM OF 3 FT. OF CLEARANCE FROM OTHER EXISTING AND PROPOSED UTILITIES. THE CONTRACTOR SHALL MAINTAIN A MINIMUM HORIZONTAL CLEARANCE OF 10 FT. AND MINIMUM VERTICAL CLEARANCE OF 18 INCHES BETWEEN WATER MAINS AND SANITARY SEWERS (BOTH EXISTING AND PROPOSED MAINS).

8. THE CONTRACTOR SHALL SUBMIT SHOP DRAWINGS FOR ALL MATERIALS FOR APPROVAL TO THE OWNER PRIOR TO COMMENCEMENT OF CONSTRUCTION. ALL MATERIALS ORDERED AND INSTALLED PRIOR TO THE OWNER'S REVIEW AND ACCEPTANCE WILL BE AT THE CONTRACTOR'S RISK.

9. THE CONTRACTOR SHALL OPEN ONLY THAT SECTION OF TRENCH OR ACCESS PITS WHICH CAN BE BACKFILLED AND STABILIZED AT THE END OF EACH WORKING DAY. STEEL PLATES SHALL BE USED ON ANY TRENCH OR ACCESS PITS WHICH MUST REMAIN OPEN OVERNIGHT. THIS REQUIREMENT DOES NOT APPLY TO AREAS COMPLETELY CLOSED AND SECURE FROM VEHICULAR OR PEDESTRIAN TRAFFIC. PAYMENT TO BE INCIDENTAL TO ITEM 743000, MAINTENANCE OF TRAFFIC.

10. CONTRACTOR SHALL AT ALL TIMES MAINTAIN A SAFE AND DRY EXCAVATION. AT A MINIMUM THAT INCLUDES SHEETING, SHEET PILES AND SHORING FOR TRENCHES IN ACCORDANCE W/ OSHA REGULATIONS AND SUFFICIENT DEWATERING FOR A DRY SUBGRADE. SEE DELDOT STANDARD SPEC. SECTION 111 REGARDING DEWATERING REQUIREMENTS.

11. PIPE PLUGS SHALL BE DESIGNED FOR PERMANENT INSTALLATION AND SHALL BE REMOVABLE. OBTAIN PLUGS FOR VARIOUS TYPES OF PIPE USED FROM THE RESPECTIVE PIPE MANUFACTURER.

12. DUCTILE IRON PRESSURE SEWER PIPE 4 INCHES TO 29 INCHES NOMINAL PIPE SIZE DIAMETER SHALL CONFORM TO AWWA C151, PRESSURE CLASS 350. PIPES 30 INCHES IN DIAMETER AND GREATER SHALL CONFORM TO AWWA C151, PRESSURE CLASS 250. THE DI PRESSURE PIPE SHALL HAVE AN INTERIOR PROTECTO 401 CERAMIC EPOXY LINING, MINIMUM THICKNESS OF 40 MILS.

13. DUCTILE IRON PRESSURE SEWER FITTINGS 8 INCHES TO 36 INCHES NOMINAL PIPE SIZE DIAMETER SHALL CONFORM TO AWWA C153; PRESSURE CLASS 250, MINIMUM, WITH AN INTERIOR OF PROTECTO 401 CERAMIC EPOXY LINING MINIMUM THICKNESS OF 40 MILS.

14. RUBBER GASKET JOINTS, LUBRICANTS, GLANDS, BOLTS AND NUTS FOR DUCTILE IRON PRESSURE PIPE AND FITTINGS SHALL CONFORM TO AWWA C111, WITH MECHANICAL JOINTS FOR BURIED FITTINGS AND MECHANICAL OR PUSH-ON JOINTS FOR BURIED PIPING.

15. ALL PIPE JOINTS AND FITTING JOINTS SHALL BE RESTRAINED. THE RESTRAINTS SHALL MEET "TR-FLEX" REQUIREMENTS OR APPROVED EQUAL.

16. ROUTINE PERIODIC INSPECTIONS DURING CONSTRUCTION WILL BE PROVIDED BY THE OWNER. THESE INSPECTIONS DO NOT RELIEVE THE CONTRACTOR FROM HIS OBLIGATION AND RESPONSIBILITY FOR CONSTRUCTING A SANITARY SEWER SYSTEM IN STRICT ACCORDANCE WITH THE STANDARDS AND SPECIFICATIONS OF THE OWNER.

17. AFTER TESTING IS COMPLETE AND ALL COMPONENTS OF THE SANITARY SEWER SYSTEM ARE DEEMED ACCEPTABLE TO THE OWNER, THE CONTRACTOR SHALL SUBMIT THE AS-BUILT DRAWINGS TO THE OWNER. ANY DISCREPANCIES NOTED DURING THE FINAL INSPECTION SHALL BE CORRECTED BY THE CONTRACTOR WITHIN 30 DAYS.

18. BASIS OF DESIGN – SPECIFIC MANUFACTURERS AND MODELS ARE LISTED THROUGHOUT THESE DRAWINGS INTENDED AS BASIS OF DESIGN. SEE TECHNICAL SPECIFICATIONS FOR ADDITIONAL PERFORMANCE REQUIREMENTS AND ALTERNATIVES. IN EVERY CASE THE RELATED MANUFACTURERS AND MODELS MUST BE ACCEPTABLE TO KENT COUNTY AND COMPATIBLE WITH KENT COUNTY STANDARDS AND CURRENT OPERATING PROCEDURES.

19. BUTTRESSES/THRUST BLOCKING HAS BEEN DESIGNED BASED ON THE FOLLOWING.

    A. A MINIMUM 3,000 PSF PASSIVE SOIL BEARING CAPACITY.
    B. A MINIMUM 28 DAY CONCRETE COMPRESSIVE STRENGTH OF 3,000 PSI.
    C. DEPTH FROM FINISHED GRADE TO TOP OF PIPE ASSUMED TO BE 2.5 FT. OR DEEPER.
    D. EXISTING SOIL CONDITIONS ARE NOT SOFT OR ORGANIC.

    DIFFERING SITE CONDITIONS AND/OR DIFFERING MATERIAL PROPERTIES SHALL REQUIRE KENT COUNTY DPW APPROVAL OF SPECIAL DESIGN DETAILS PREPARED BY THE DESIGN ENGINEER PRIOR TO INITIATING OR RESUMING CONSTRUCTION ACTIVITIES.

    THE CONTRACTOR SHALL ALLOW SUFFICIENT TIME FOLLOWING EXCAVATIONS FOR INSPECTION AND EVALUATION OF EXISTING SOIL SUBGRADE CONDITIONS BY THE CONSTRUCTION ENGINEER (AGENT FOR KENT COUNTY DPW). THE CONSTRUCTION ENGINEER SHALL INSPECT ALL STRUCTURE AND THRUST BLOCKING SUBGRADE AND PIPELINE SUBGRADE FOLLOWING EXCAVATION AND PRIOR TO CONSTRUCTION OF NEW WORK TO CONFIRM DESIGN CONDITIONS ARE MET AND SUBGRADE CONDITIONS ARE SUITABLE FOR CONSTRUCTION. IN THE EVENT THE SOIL BEARING CAPACITY IS LESS THAN THE MINIMUM DESIGN VALUE, THE CONSTRUCTION ENGINEER SHALL CAUSE AFFECTED CONSTRUCTION TO CEASE AND SHALL NOTIFY THE DESIGN ENGINEER FOR RE-DESIGN TO ACCOMMODATE THE REDUCED SOIL BEARING CAPACITY.

    THRUST BLOCK SHALL BE PROVIDED ALONG FORCE MAIN PIPING AT ALL DIRECTIONAL CHANGES.

20. THE CONTRACTOR SHALL MAINTAIN ONE COMPLETE SET OF CONTRACT DRAWINGS ON WHICH HE SHALL NOTE, IN RED, THE ALIGNMENTS AND INVERTS OF ALL UNDERGROUND UTILITIES THAT ARE INSTALLED OR ENCOUNTERED DURING THE EXECUTION OF THE WORK. ALL DISCREPANCIES BETWEEN THE PLAN LOCATIONS AND ELEVATIONS OF BOTH THE EXISTING AND PROPOSED UTILITIES SHALL BE SHOWN ON THE AS-BUILT DRAWINGS TO BE MAINTAINED BY THE CONTRACTOR IN THE FIELD. AT THE CONCLUSION OF WORK, ONE SET OF AS-BUILT DRAWINGS SHALL BE SUBMITTED TO THE OWNER. COSTS TO PREPARE & SUBMIT ALL AS-BUILTS ARE INCIDENTAL TO THE ITEM BEING RECORDED ON THE AS-BUILT DRAWINGS.

21. FOR ALL OF THE WORK ITEMS RELATED TO THE SANITARY SEWER RELOCATIONS, THE HIERARCHY OF CONTRACT DOCUMENTS SHALL, IN THE EVENT OF A CONFLICT, BE:
    PLAN NOTES AND DETAILS TAKE PRECEDENCE OVER
    SPECIAL PROVISIONS WHICH TAKE PRECEDENCE OVER
    REFERENCED DELDOT STANDARD SPECIFICATIONS WHICH TAKE PRECEDENCE OVER
    TECHNICAL SPECIFICATIONS WHICH TAKE PRECEDENCE OVER
    KENT COUNTY STANDARD DETAILS

22. ANY TEMPORARY SHEETING AND/OR SHORING SHALL BE REMOVED BY THE CONTRACTOR FOLLOWING ITS USE IN THE FIELD EXCEPT AT THE 20" STEEL BYPASS AREA. COSTS ARE INCIDENTAL TO THE ITEM REQUIRING THE PLACEMENT OF THE SHEETING OR SHORING.

SEWER RELOCATION PROJECT NOTES:

1. ALL WORK ON THE SEWER SHALL BE PERFORMED BY QUALIFIED CONTRACTORS ACCEPTED BY THE OWNER.

2. ALL EXCAVATION, BACKFILL BORROW TYPE C, BACKFILLING, AND STONE FOR BEDDING FOR ALL WORK ASSOCIATED WITH THE INSTALLATION OF THE SEWER FACILITIES, INCLUDING, BUT NOT LIMITED TO: PIPES; CASINGS; BUTTRESSES; THRUST BLOCKS; BORINGS; TEMPORARY BYPASS TAPS; REMOVAL OF EXISTING FACILITIES; ETC. SHALL BE INCIDENTAL TO THE PAY ITEM FOR INSTALLING THE MATERIAL.

3. THE CONTRACTOR SHALL BE RESPONSIBLE FOR RESTORING ALL DISTURBED AREAS TO THE SATISFACTION OF THE ENGINEER WITH ALL COSTS INCIDENTAL TO THE SEWER INSTALLATION PAY ITEMS EXCEPT TOPSOIL, TOPSOILING, AND/OR SEEDING WHICH WILL BE PAID UNDER THE APPLICABLE BID ITEMS.

4. PRIOR TO PERFORMING ANY WORK, THE CONTRACTOR SHALL STAKE OUT THE LIMITS OF CONSTRUCTION SHOWN ON THE PLANS AND PLACE SILT FENCE ALONG THESE LIMITS IN ACCORDANCE WITH STATE AND FEDERAL REQUIREMENTS. AT NO TIME SHALL THE CONTRACTOR DRIVE EQUIPMENT, PLACE MATERIAL, TRAVERSE WITH PERSONNEL OR OTHERWISE DISTURB THE AREA BEYOND THE LIMITS OF CONSTRUCTION SHOWN ON THE PLANS UNLESS APPROVED BY THE ENGINEER. COST FOR PROVIDING THE STAKEOUT IS INCIDENTAL TO ITEM 763501, CONSTRUCTION ENGINEERING.

5. AFTER THE NEW SEWER INSTALLATIONS HAVE BEEN INSTALLED, ACCEPTED BY THE ENGINEER AND THE OWNER (KENT COUNTY DEPARTMENT OF PUBLIC WORKS), AND ARE IN SERVICE, THE CONTRACTOR SHALL ABANDON THE REMAINING EXISTING PIPES. ABANDONING THE EXISTING PIPES SHALL INCLUDE, BUT IS NOT LIMITED TO: REMOVAL OF EXISTING VALVES, VALVE BOXES, AIR RELEASE VALVES, AND AIR RELEASE MANHOLES; REMOVAL OF RESIDUAL SEWAGE IN THE PIPES; PLUGS; REMOVAL OF THE EXISTING PIPES THAT WILL BE UNDER THE PROPOSED PAVEMENT FOR THE SR1 IMPROVEMENTS (SOUTH FREDERICA) SANITARY SEWER FORCE MAIN RELOCATION PROJECT AND AT OTHER LOCATIONS AS INDICATED ON THE PLANS; REMOVAL OF CONCRETE COLLARS, THRUST BLOCKS, AND SUPPORTS; BACKFILL; BACKFILLING; AND ALL OTHER ITEMS OF WORK NECESSARY TO COMPLETE THE PROJECT. ALL COSTS ASSOCIATED WITH ABANDONING THE EXISTING PIPES SHALL BE INCLUDED IN THE PRICE BID FOR ITEM 211000. ALL REMOVED MATERIAL DEEMED SALVAGEABLE BY THE OWNER SHALL BE TRANSPORTED AND STORED BY THE CONTRACTOR AT THE OWNERS YARD AT THE KENT COUNTY WASTEWATER TREATMENT FACILITY, OTHERWISE ALL REMOVED MATERIAL SHALL BE REMOVED FROM THE PROJECT SITE AND DISPOSED OF BY THE CONTRACTOR IN A SAFE AND LEGAL MANNER. FLOWABLE FILL REQUIRED TO COMPLETELY FILL ABANDONED PIPES IN PLACE WILL BE MEASURED AND PAID FOR UNDER ITEM 208001.

6. UNLESS SPECIFIED OTHERWISE, ALL COSTS ASSOCIATED WITH CONNECTING THE EXISTING SEWER PIPES TO THE NEW SEWER PIPES SHALL BE INCIDENTAL TO THE PAY ITEM FOR INSTALLING THE NEW SEWER PIPES, INCLUDING BUT NOT LIMITED TO: REMOVAL OF THE EXISTING PIPES; PLUGS; TEMPORARY BYPASSES, SHEETING AND SUPPORTS; REDUCERS; ADAPTERS; BENDS; VALVES; PROVIDING TANKERS AND HAULING SEWAGE FROM UPSTREAM LOCATIONS; REMOVING OR ABANDONING THE REMAINING EXISTING PIPES; AND ALL OTHER ITEMS OF WORK NECESSARY TO COMPLETE THE PROJECT.

INDEX OF SANITARY SEWER RELOCATION DRAWINGS	
SHEET	NAME
SS-1	GENERAL NOTES
SS-2	TABULATION AND SUMMARY SHEET
SS-3	SHEET INDEX
SS-4	36" PLAN & PROFILE - STA. 0+00 TO STA. 8+46
SS-5	36" PLAN & PROFILE - STA. 8+46 TO STA. 17+22
SS-6	36" PLAN & PROFILE - STA. 17+22 TO STA. 26+01
SS-7	36" PLAN & PROFILE - STA. 26+01 TO STA. 32+76
SS-8	36" PLAN & PROFILE - STA. 32+76 TO STA. 36+46
SS-9	24" PLAN & PROFILE - STA. 50+00 TO STA. 57+22
SS-10	8" PLAN & PROFILE - STA. 70+00 TO STA. 72+12
SS-11	SEQUENCE OF CONSTRUCTION
SS-12	BYPASS DETAILS
SS-13	DETAIL SHEET
SS-14	DETAIL SHEET
SS-15	DETAIL SHEET
SS-16	DETAIL SHEET

EXISTING UNDERGROUND UTILITIES COORDINATION NOTES:

1. THE LOCATION OF UNDERGROUND UTILITIES AS INDICATED ON PLANS HAS BEEN OBTAINED FROM EXISTING RECORDS. NEITHER THE OWNER OR THE ARCHITECT/ENGINEER ASSUMES ANY RESPONSIBILITY WHATEVER IN RESPECT TO ACCURACY, COMPLETENESS, OR SUFFICIENCY OF THE INFORMATION SHOWN. THERE IS NO GUARANTEE, EITHER EXPRESSED OR IMPLIED THAT THE LOCATIONS, SIZE AND TYPE OF MATERIALS OF EXISTING UNDERGROUND UTILITIES INDICATED ARE REPRESENTATIVE OF THOSE TO BE ENCOUNTERED DURING CONSTRUCTION. IT SHALL BE THE CONTRACTOR'S RESPONSIBILITY TO DETERMINE THE ACTUAL LOCATION OF ALL SUCH UTILITIES, INCLUDING SERVICE CONNECTIONS TO UNDERGROUND UTILITIES. PRIOR TO CONSTRUCTION, THE CONTRACTOR SHALL NOTIFY THE OWNER OF HIS OPERATIONAL PLANS. IN THE EVENT OF AN UNEXPECTED UTILITY INTERFERENCE DURING CONSTRUCTION, THE CONTRACTOR SHALL IMMEDIATELY NOTIFY THE OWNER. ANY SUCH MAINS AND/OR SERVICES DISTURBED BY THE CONTRACTOR'S OPERATIONS SHALL BE RESTORED IMMEDIATELY AT HIS EXPENSE.

2. PRIOR TO PERFORMING ANY EXCAVATION GREATER THAN 6 INCHES, THE CONTRACTOR SHALL COORDINATE WITH KENT COUNTY DEPARTMENT OF PUBLIC WORKS AND ALL PRIVATE UTILITY COMPANIES TO DETERMINE THE LOCATION OF UNDERGROUND UTILITY LINES. THE CONTRACTOR SHALL BE RESPONSIBLE FOR COORDINATING WITH ALL ORGANIZATIONS THAT CONTROL EXISTING UNDERGROUND UTILITIES IN THE CONSTRUCTION AREA OR WOULD BE AFFECTED BY CONSTRUCTION WORK AROUND THE EXISTING UTILITIES.

3. THE CONTRACTOR SHALL NOT START EXCAVATION UNTIL ALL UTILITY LINE LOCATIONS HAVE BEEN STAKED OR OTHERWISE CLEARLY MARKED AND DOCUMENTATION FURNISHED TO THE OWNER. ALL MARKINGS SHALL BE CONSIDERED APPROXIMATE, AND UTILITIES OTHER THAN THOSE SHOWN SHALL BE CONSIDERED TO EXIST.

4. THE CONTRACTOR SHALL BE RESPONSIBLE FOR THE DEFINITE LOCATION OF EACH UTILITY WITHIN THE WORK AREA. CARE SHOULD BE EXERCISED DURING EXCAVATION WORK TO AVOID DAMAGING OR DISRUPTING UTILITIES. THE CONTRACTOR SHALL BE RESPONSIBLE FOR REPAIRING (AT CONTRACTOR'S EXPENSE) DAMAGE TO ANY UTILITY CAUSED BY THE CONTRACTOR'S WORK.

5. WHERE EXISTING UNDERGROUND UTILITIES OR OTHER CONSTRUCTION ARE EXPECTED TO BE IN PROXIMITY TO PROPOSED CONSTRUCTION, OR WHEN APPROACHING EXISTING UTILITIES OR STRUCTURES FOR CONNECTIONS, THE CONTRACTOR SHALL DIG TEST PITS TO DETERMINE THE EXACT LOCATION AND INVERTS OF THE EXISTING UTILITY TO ALLOW FOR POSSIBLE CHANGES TO THE PROPOSED UTILITY IN LINE AND/OR GRADE. THE CONTRACTOR SHALL ALSO DIG TEST PITS IN THE LOCATION OF THE PROPOSED CONNECTIONS TO EXISTING UTILITIES AND SHALL MAKE ALL MEASUREMENTS NECESSARY TO ENSURE PROPER CONNECTION. ANY NECESSARY CHANGES IN LINE OR GRADE OF WORK CAUSED BY FAILURE TO TAKE SUCH PRECAUTIONS SHALL BE AT THE EXPENSE OF THE CONTRACTOR.

6. WHEN IT IS NECESSARY TO EXCAVATE NEAR OR INTERFERE WITH ANY SEWER LINE, WATER SERVICES, DRAIN PIPE, CATCH BASIN, CULVERT, OR OTHER STRUCTURES, THE CONTRACTOR SHALL MAINTAIN THE SAME IN WORKING ORDER AND SHALL REPAIR AND MAKE GOOD ANY DAMAGE DONE DURING THE PROGRESS OF THE WORK.

7. WHERE EXISTING UTILITIES CROSS THE TRENCH EXCAVATION, THEY SHALL BE ADEQUATELY SUPPORTED AND PROTECTED FROM DAMAGE DUE TO CONSTRUCTION. ALL METHODS FOR SUPPORTING AND MAINTAINING THESE UTILITIES SHALL BE SUBJECT TO REVIEW BY THE UTILITY OWNER. CARE SHALL BE TAKEN TO ENSURE THAT THE EXISTING UTILITY GRADES AND ALIGNMENT ARE MAINTAINED AND THE PIPE JOINTS ARE NOT DISTURBED. BACKFILL SHALL BE CAREFULLY PLACED AND TAMPED TO PREVENT DAMAGE OR FUTURE SETTLEMENT. ANY DAMAGE OR MISALIGNMENT OF THE UTILITIES DUE TO CONSTRUCTION OR SETTLEMENT SHALL BE REPAIRED BY THE CONTRACTOR AT THE CONTRACTOR'S EXPENSE.

8. ANY UNPROTECTED CABLE (DIRECT BURIED) ENCOUNTERED THAT IS VERIFIED AS NOT ABANDONED IN PLACE SHALL BE PROTECTED. THE UTILITY OWNER MAY DIRECT THE CABLE BE PLACED IN SPLIT DUCT OF APPROPRIATE SIZE AND CONCRETE ENCASED THROUGH THE AREA OF CONSTRUCTION. CONTRACTOR SHALL TAKE ALL REASONABLE MEASURES TO AVOID HAVING TO CUT AND SPLICE DIRECT BURIED CABLE. THE CONTRACTOR SHALL NOTE SPLIT DUCT PORTIONS ON AS-BUILTS. COSTS ARE INCIDENTAL TO THE ITEM BEING PLACED THAT NECESSITATED THE UTILITY PROTECTION.

9. ALL SUITABLE EXCESS EXCAVATED MATERIALS SHALL BE USED AS EMBANKMENT FILL ELSEWHERE ON THE PROJECT, EXCEPT FOR CONTAMINATED SOILS OR LIQUIDS. CONTAMINATED MATERIAL SHALL BE HANDLED IN ACCORDANCE WITH SPECIAL PROVISION ITEM 202560.

10. INTERRUPTION OF EXISTING UTILITIES SHALL BE IN ACCORDANCE WITH THE SPECIFICATIONS AND/OR AT THE DIRECTION OF THE UTILITY OWNER/S.

SEWER LEGEND

Ⓢ	NEW MANHOLE
Ⓜ	SEWER MARKER
M.T.	MAIN TRANSMISSION
B.T.	BYPASS TRANSMISSION

Unofficial Website Copy

9/11/2015 G:\PROJECTS\06535.00 (DelDOT Agmt. 1376 DOTS Open End)\06535.07 SR1, S. Frederica\CADD Files\XM\SS-1 ut_KCS_cp01sf.dgn 2:31:47 PM

QUANTITY SUMMARY

Item Number	Description	Quantity
753540	Installing Sanitary Sewer (Force Main), DIP, 24"	476 LF
753549	Installing Sanitary Sewer (Force Main), DIP, 36"	3728 LF
753558	Relocate Force Main	LS
	Location 1	
	Location 2	
	Location 3	
	Locatrion 4	

LUMP SUM BREAKDOWN FOR ITEM 753558; RELOCATE FORCE MAIN; SR 1, SOUTH FREDERICA INTERSECTION; DELDOT CONTRACT T200812202

Designated Area of Work	Station Location	General Work Description	Work Elements Included **
Location 1	sta 0+00 +/-	Tie-in of Proposed 36" DIP Force Main to Existing 36" PCCP Force Main	1 ea 36" PCCP to DIP Adapter Fitting; 1 ea 36" Dip Solid Sleeve Connector; 1 ea 36" Steel Coupling w/SS Hardware 1 ea 36" Spool Piece; 1 ea 36" DIP 45 Degree Bend; 1 ea 3" SS Port w/Valve 36" DIP Force main Pipe cut to fit; 1 ea Horizontal 36" MJ Gate Valve w/Bevel Gears and Valve Box; 1 ea 36" PCCP Plug and Cap 1 each Line Stopple N4
Location 2	sta 28+25 +/-	Tie-in existing 8" DIP Force main to existing 24" DIP Force Main	1 ea 8" DIP Valve 2 ea 8" DIP 45 Degree Bends 1 ea 8" Solid Sleeve Connector 8" DIP Force Main Pipe, cut to fit in the field (0+08 to 0+49 SAN-FM-8) 1 ea 24" to 8" DIP Reducer 1 ea Line Stopple N3 Plugs and Caps for existing 36" PCCP FM and existing 24" DIP FM 1 ea 8"x8"x4" Blind Tee w/ 4" Valve 4" DIP Extension (20' +/-) and Cap 1 ea 3" Stainless Steel Port with Valve
Location 3	sta 30+46 +/-	Tie-in Existing 30" DIP Force Main to Proposed 36" DIP Force Main	1 ea 24" x 30" DIP Tapping Sleeve 1 ea 24" Tapping Valve 1 ea 24" DIP Solid Sleeve Conmnector 1 ea 24" DIP 45 Degree Bend 24" DIP Force Main Pipe cut to fit in the field (0+00 to 0+58 SAN FM-7)
Location 4	sta 37+53 +/-	20" Steel Bypass of Existing 36" PCCP Force Main and Tie-in of Proposed 36" DIP Force Main to the Existing 36" PCCP Force Main	Steel PZ-35 Sheeting 1 ea 36" DIP Solid Sleeve Connector 1 ea 36" Steel Coupling w/SS Hardware 1 ea 36" DIP Spool Piece 1 ea 36" DIP 45 degree Bend 1 ea 3" SS Port w/Valve 1 ea 36" PCCP to DIP Adapter Fitting 1 ea 36" PCCP Plug and Cap 36" DIP Force Main Pipe, cut to fit in the field (11 LF) 20" Schedule 20 Welded Steel Bypass Pipe, cut to fit in the field (51 LF) 2 ea 90 Degree, 20" Steel Pipe Bends 2 ea 24" x 20", 45 Degree vertical concentric reducers Support Brackets 1 ea 20" schedule 20 Welded Steel Connection 2 each Line Stopples N1 and N2 4 ea Stainless Steel Threaded Rods w/ stainless steel couplers 1 ea 20" Gate Valve

** All locations of work include Concrete, rebar, temp. sheeting and shoring as needed, joint restraints, tying in new pipes, abandoning existing pipes, furnishing and staging tanker trucks as required, excavation, backfill, and backfilling, dewatering, disposal of unsuitable materials, testing, and other items required to complete the work and make the sewer system functional

SANITARY SEWER PIPE ITEM SCHEDULES; SR1, SOUTH FREDERICA INTERSECTION; DELDOT CONTRACT T200812202

Run Designation	Item Number	Pipe Size and Type	Length	Encasement	Top of Pipe EL In	Top of Pipe EL Out	Required Bends / Fittings / Valves
SAN FM-1	753549	36" DIP Force Main	*829 LF*		EL 19.5 @ sta 0+14	EL 15.6 @ sta 8+43	2 ea 36", 22.5 degree, DIP Bends; 1 ea 36", 11.25 degree, DIP Bend; 1 ea 36"x36"x24" DIP Wye
SAN FM-2	753549	36" DIP Force Main	*848 LF*		15.6 @ sta 8+43	14.3 @ sta 16+91	
SAN FM-3	753549	36" DIP Force Main	*857 LF*		14.3 @ sta 16+91	13.1 @ 25+48	2 ea 36", 45 degree, DIP Bends
SAN FM-4	753549	36" DIP Force Main	*852 LF*		13.1 @ sta 25+48	9.3 @ sta 34+00	1 ea 36", 22.5 degree, DIP Bends; 1 ea 36" DIP Gate Valve; 1 ea 36"x36"x24" DIP Wye
SAN FM-5	753549	36" DIP Force Main	*342 LF*		9.3 @ sta 34+00	9.9 @ sta 37+42	1 ea 36" 45 degree, DIP Bend
SAN FM-6	753540	24" DIP Force Main	*476 LF*		17.2 @ sta 0+00	15.2 @ sta 4+76	1 ea 24" 11.25 degree, DIP Bend 1 ea 24" Solid Sleeve Connector

Unofficial Website Copy

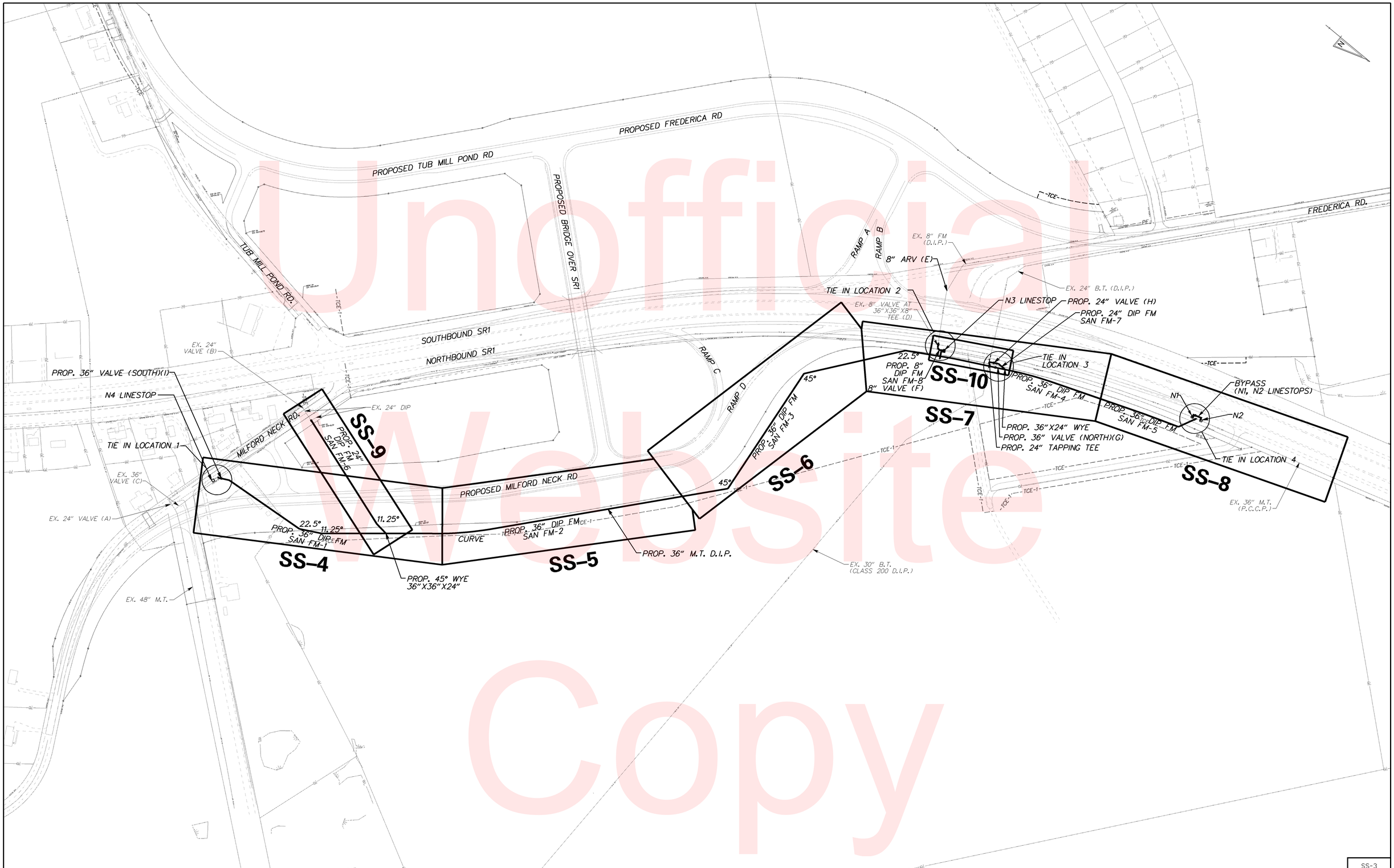

Unofficial Website Copy

DELAWARE DEPARTMENT OF TRANSPORTATION	ADDENDUMS / REVISIONS	SCALE 0 150 300 450 FEET	SR1, SOUTH FREDERICA GRADE SEPARATED INTERSECTION	CONTRACT T200812202	BRIDGE NO. –	SANITARY SEWER RELOCATION SHEET INDEX	SS-3
				COUNTY KENT	DESIGNED BY: BTP		SHEET NO. 283
					CHECKED BY: TSM		TOTAL SHTS. 296

5/24/2013
G:\PROJECTS\06535.00 (DelDOT Agmt. 1376 DOTS Open End)\06535.07 SR1, S. Frederica\CADD Files\XM\SS-3 ut_KCS_cp03sf.dgn
00:26:36

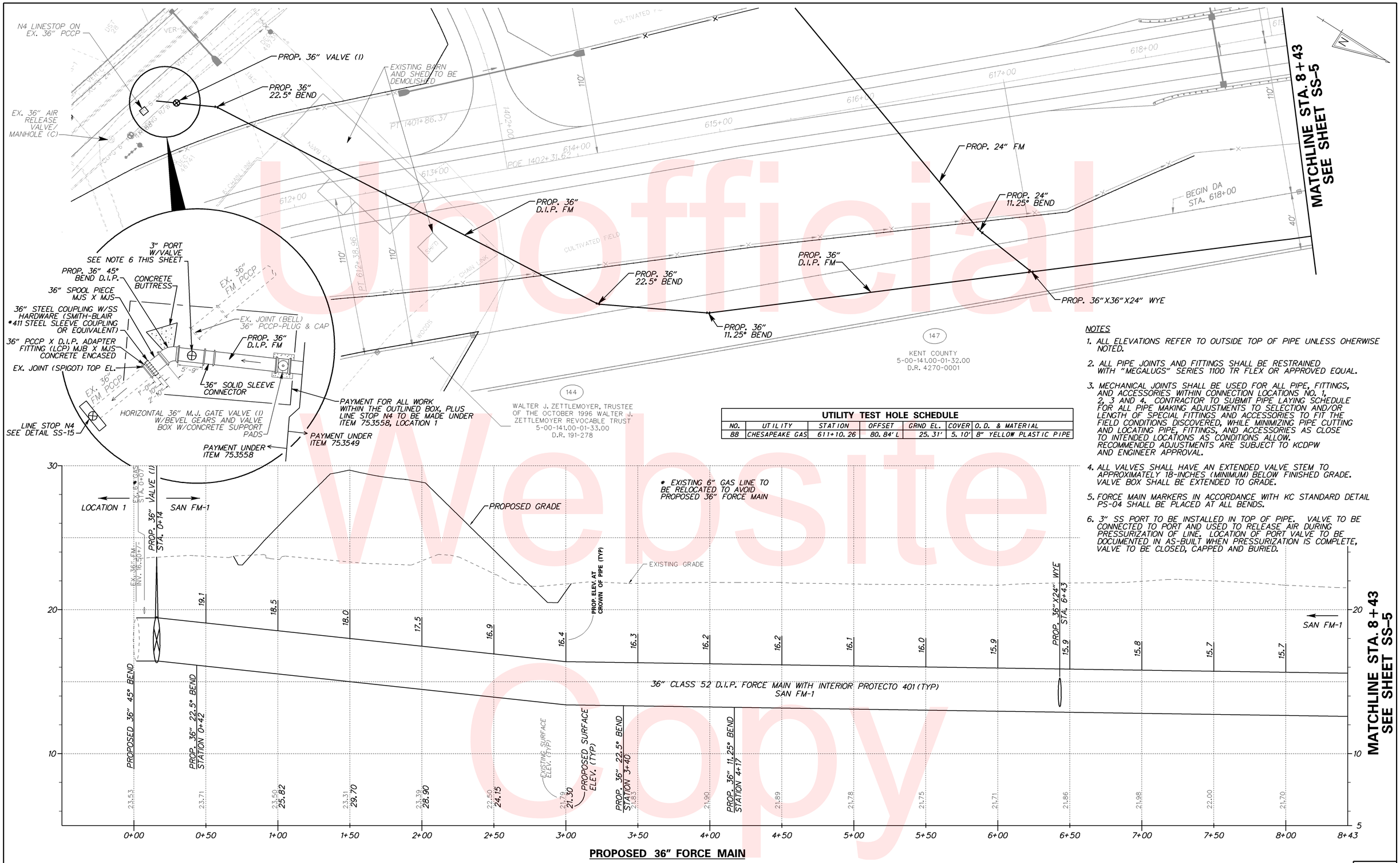

PROPOSED 36" FORCE MAIN

NOTES

1. ALL ELEVATIONS REFER TO OUTSIDE TOP OF PIPE UNLESS OHERWISE NOTED.
2. ALL PIPE JOINTS AND FITTINGS SHALL BE RESTRAINED WITH "MEGALUGS" SERIES 1100 TR FLEX OR APPROVED EQUAL.
3. MECHANICAL JOINTS SHALL BE USED FOR ALL PIPE, FITTINGS, AND ACCESSORIES WITHIN CONNECTION LOCATIONS NO. 1, 2, 3 AND 4. CONTRACTOR TO SUBMIT PIPE LAYING SCHEDULE FOR ALL PIPE MAKING ADJUSTMENTS TO SELECTION AND/OR LENGTH OF SPECIAL FITTINGS AND ACCESSORIES TO FIT THE FIELD CONDITIONS DISCOVERED, WHILE MINIMIZING PIPE CUTTING AND LOCATING PIPE, FITTINGS, AND ACCESSORIES AS CLOSE TO INTENDED LOCATIONS AS CONDITIONS ALLOW. RECOMMENDED ADJUSTMENTS ARE SUBJECT TO KCDPW AND ENGINEER APPROVAL.
4. ALL VALVES SHALL HAVE AN EXTENDED VALVE STEM TO APPROXIMATELY 18-INCHES (MINIMUM) BELOW FINISHED GRADE. VALVE BOX SHALL BE EXTENDED TO GRADE.
5. FORCE MAIN MARKERS IN ACCORDANCE WITH KC STANDARD DETAIL PS-04 SHALL BE PLACED AT ALL BENDS.
6. 3" SS PORT TO BE INSTALLED IN TOP OF PIPE. VALVE TO BE CONNECTED TO PORT AND USED TO RELEASE AIR DURING PRESSURIZATION OF LINE. LOCATION OF PORT VALVE TO BE DOCUMENTED IN AS-BUILT WHEN PRESSURIZATION IS COMPLETE, VALVE TO BE CLOSED, CAPPED AND BURIED.

UTILITY TEST HOLE SCHEDULE

NO.	UTILITY	STATION	OFFSET	GRND EL.	COVER	O.D. & MATERIAL
88	CHESAPEAKE GAS	611+10.26	80.84' L	25.31'	5.10'	8" YELLOW PLASTIC PIPE

Unofficial Website Copy

6/6/2013
G:\PROJECTS\06535.00 (DelDOT Agmt. 1376 DOTS Open End)\06535.07 SR1, S. Frederica\CADD Files\XM\SS-4 ut_KCS_cp04sf.dgn
16:16:29

DELAWARE DEPARTMENT OF TRANSPORTATION

ADDENDUMS / REVISIONS

HORIZONTAL SCALE 0 30 60 90
VERTICAL SCALE 0 3 6 9

SR1, SOUTH FREDERICA GRADE SEPARATED INTERSECTION

CONTRACT	BRIDGE NO.	–
T200812202	DESIGNED BY: BTP	
COUNTY		
KENT	CHECKED BY: TSM	

SANITARY SEWER RELOCATION 36" FORCE MAIN

SS-4
SHEET NO.
284
TOTAL SHTS.
296

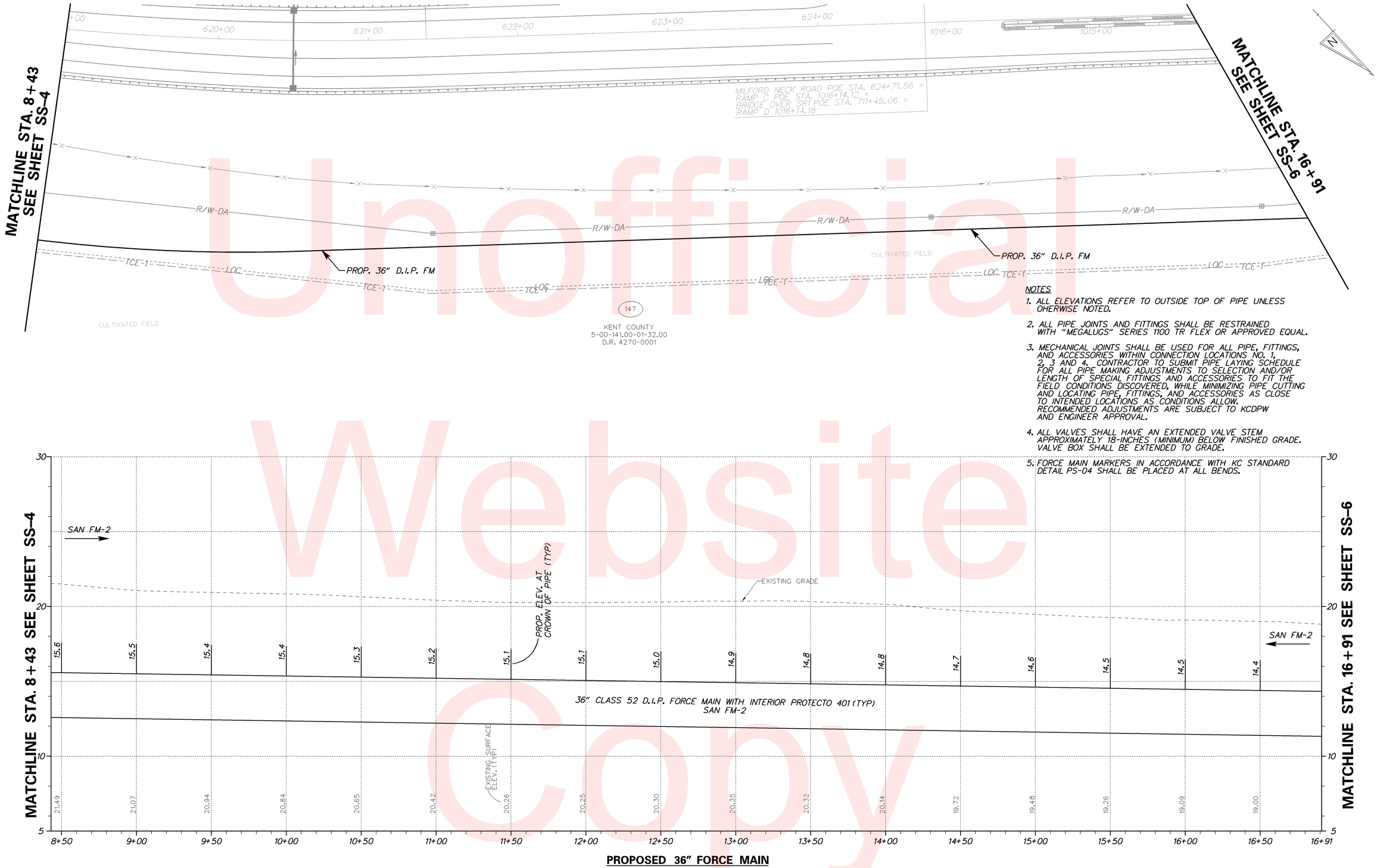

PROPOSED 36" FORCE MAIN

NOTES

1. ALL ELEVATIONS REFER TO OUTSIDE TOP OF PIPE UNLESS OHERWISE NOTED.
2. ALL PIPE JOINTS AND FITTINGS SHALL BE RESTRAINED WITH "MEGALUGS" SERIES 1100 TR FLEX OR APPROVED EQUAL.
3. MECHANICAL JOINTS SHALL BE USED FOR ALL PIPE, FITTINGS, AND ACCESSORIES WITHIN CONNECTION LOCATIONS NO. 1, 2, 3 AND 4. CONTRACTOR TO SUBMIT PIPE LAYING SCHEDULE FOR ALL PIPE MAKING ADJUSTMENTS TO SELECTION AND/OR LENGTH OF SPECIAL FITTINGS AND ACCESSORIES TO FIT THE FIELD CONDITIONS DISCOVERED, WHILE MINIMIZING PIPE CUTTING AND LOCATING PIPE, FITTINGS, AND ACCESSORIES AS CLOSE TO INTENDED LOCATIONS AS CONDITIONS ALLOW. RECOMMENDED ADJUSTMENTS ARE SUBJECT TO KCDPW AND ENGINEER APPROVAL.
4. ALL VALVES SHALL HAVE AN EXTENDED VALVE STEM APPROXIMATELY 18-INCHES (MINIMUM) BELOW FINISHED GRADE. VALVE BOX SHALL BE EXTENDED TO GRADE.
5. FORCE MAIN MARKERS IN ACCORDANCE WITH KC STANDARD DETAIL PS-04 SHALL BE PLACED AT ALL BENDS.

Unofficial Website Copy

DELAWARE DEPARTMENT OF TRANSPORTATION	ADDENDUMS / REVISIONS	HORIZONTAL SCALE 0 30 60 90 VERTICAL SCALE 0 3 6 9	SR1, SOUTH FREDERICA GRADE SEPARATED INTERSECTION	CONTRACT T200812202	BRIDGE NO. –	SANITARY SEWER RELOCATION 36" FORCE MAIN	SS-5
				COUNTY KENT	DESIGNED BY: BTP		SHEET NO. 285
					CHECKED BY: TSM		TOTAL SHTS. 296

6/6/2013
G:\PROJECTS\06535.00 (DelDOT Agmt. 1376 DOTS Open End)\06535.07 SR1, S. Frederica\CADD Files\XM\SS-5 ut_KCS_cp05sf.dgn
16:23:33

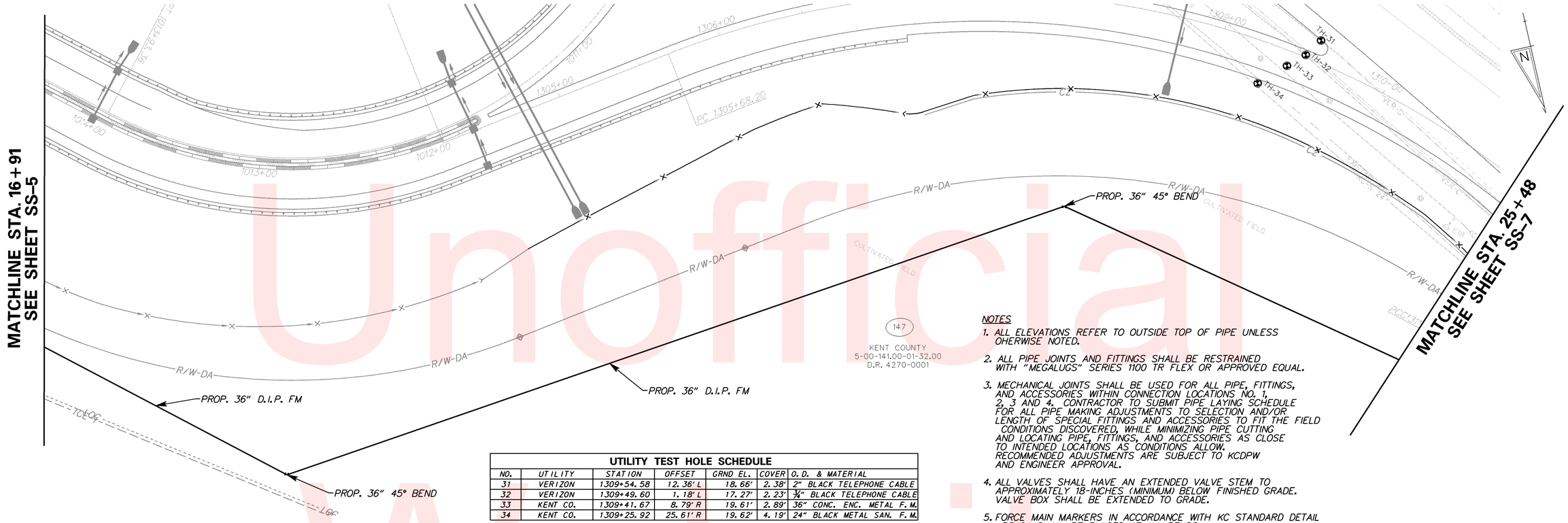

NOTES

1. ALL ELEVATIONS REFER TO OUTSIDE TOP OF PIPE UNLESS OHERWISE NOTED.
2. ALL PIPE JOINTS AND FITTINGS SHALL BE RESTRAINED WITH "MEGALUGS" SERIES 1100 TR FLEX OR APPROVED EQUAL.
3. MECHANICAL JOINTS SHALL BE USED FOR ALL PIPE, FITTINGS, AND ACCESSORIES WITHIN CONNECTION LOCATIONS NO. 1, 2, 3 AND 4. CONTRACTOR TO SUBMIT PIPE LAYING SCHEDULE FOR ALL PIPE MAKING ADJUSTMENTS TO SELECTION AND/OR LENGTH OF SPECIAL FITTINGS AND ACCESSORIES TO FIT THE FIELD CONDITIONS DISCOVERED, WHILE MINIMIZING PIPE CUTTING AND LOCATING PIPE, FITTINGS, AND ACCESSORIES AS CLOSE TO INTENDED LOCATIONS AS CONDITIONS ALLOW. RECOMMENDED ADJUSTMENTS ARE SUBJECT TO KCDPW AND ENGINEER APPROVAL.
4. ALL VALVES SHALL HAVE AN EXTENDED VALVE STEM TO APPROXIMATELY 18-INCHES (MINIMUM) BELOW FINISHED GRADE. VALVE BOX SHALL BE EXTENDED TO GRADE.
5. FORCE MAIN MARKERS IN ACCORDANCE WITH KC STANDARD DETAIL PS-04 SHALL BE PLACED AT ALL BENDS.

UTILITY TEST HOLE SCHEDULE

NO.	UTILITY	STATION	OFFSET	GRND EL.	COVER	O.D. & MATERIAL
31	VERIZON	1309+54.58	12.36' L	18.66'	2.38'	2" BLACK TELEPHONE CABLE
32	VERIZON	1309+49.60	1.18' L	17.27'	2.23'	¾" BLACK TELEPHONE CABLE
33	KENT CO.	1309+41.67	8.79' R	19.61'	2.89'	36" CONC. ENC. METAL F.M.
34	KENT CO.	1309+25.92	25.61' R	19.62'	4.19'	24" BLACK METAL SAN. F.M.

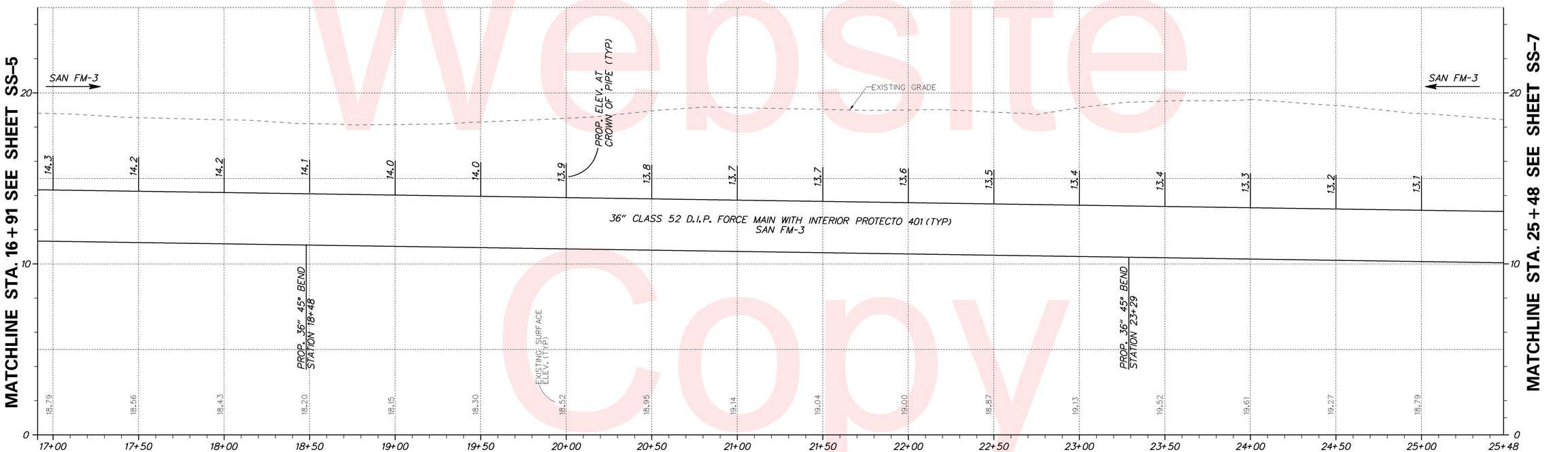

PROPOSED 36" FORCE MAIN

Unofficial Website Copy

DELAWARE DEPARTMENT OF TRANSPORTATION	ADDENDUMS / REVISIONS	HORIZONTAL SCALE 0 30 60 90 VERTICAL SCALE 0 3 6 9	SR1, SOUTH FREDERICA GRADE SEPARATED INTERSECTION	CONTRACT T200812202 COUNTY KENT	BRIDGE NO. – DESIGNED BY: BTP CHECKED BY: TSM	SANITARY SEWER RELOCATION 36" FORCE MAIN	SS-6 SHEET NO. 286 TOTAL SHTS. 296

6/6/2013
G:\PROJECTS\06535.00 (DelDOT Agmt. 1376 DOTS Open End)\06535.07 SR1, S. Frederica\CADD Files\XM\SS-6 ut_KCS_cp06sf.dgn
16:24:28

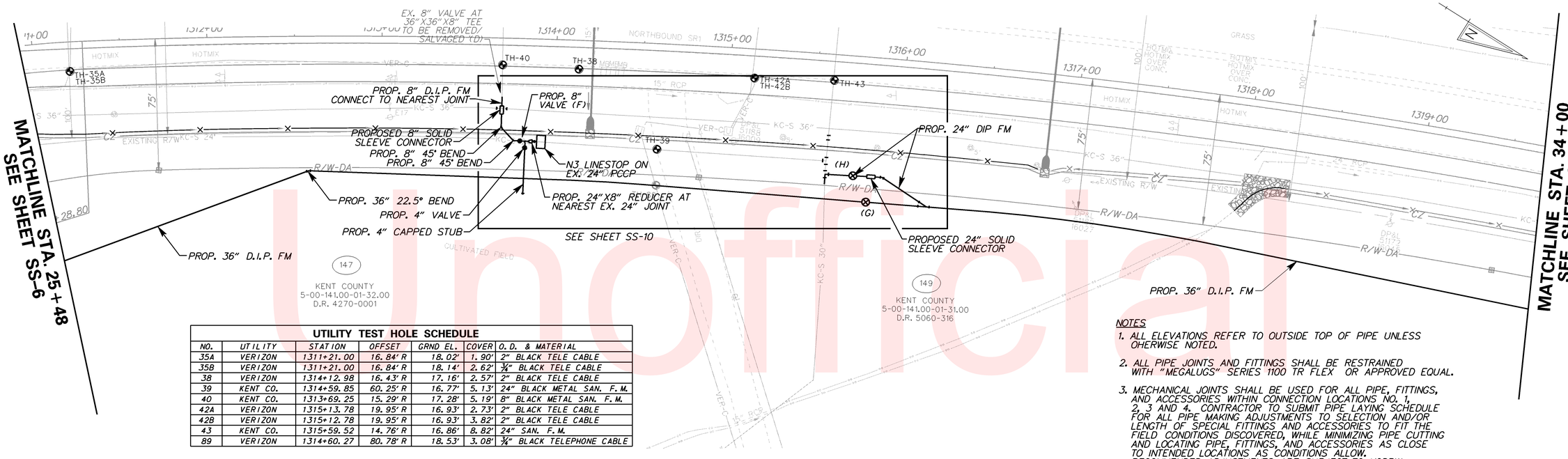

UTILITY TEST HOLE SCHEDULE

NO.	UTILITY	STATION	OFFSET	GRND EL.	COVER	O.D. & MATERIAL
35A	VERIZON	1311+21.00	16.84' R	18.02'	1.90'	2" BLACK TELE CABLE
35B	VERIZON	1311+21.00	16.84' R	18.14'	2.62'	¾" BLACK TELE CABLE
38	VERIZON	1314+12.98	16.43' R	17.16'	2.57'	2" BLACK TELE CABLE
39	KENT CO.	1314+59.85	60.25' R	16.77'	5.13'	24" BLACK METAL SAN. F.M.
40	KENT CO.	1313+69.25	15.29' R	17.28'	5.19'	8" BLACK METAL SAN. F.M.
42A	VERIZON	1315+13.78	19.95' R	16.93'	2.73'	2" BLACK TELE CABLE
42B	VERIZON	1315+12.78	19.95' R	16.93'	3.82'	2" BLACK TELE CABLE
43	KENT CO.	1315+59.52	14.76' R	16.86'	8.82'	24" SAN. F.M.
89	VERIZON	1314+60.27	80.78' R	18.53'	3.08'	¾" BLACK TELEPHONE CABLE

NOTES

1. ALL ELEVATIONS REFER TO OUTSIDE TOP OF PIPE UNLESS OHERWISE NOTED.
2. ALL PIPE JOINTS AND FITTINGS SHALL BE RESTRAINED WITH "MEGALUGS" SERIES 1100 TR FLEX OR APPROVED EQUAL.
3. MECHANICAL JOINTS SHALL BE USED FOR ALL PIPE, FITTINGS, AND ACCESSORIES WITHIN CONNECTION LOCATIONS NO. 1, 2, 3 AND 4. CONTRACTOR TO SUBMIT PIPE LAYING SCHEDULE FOR ALL PIPE MAKING ADJUSTMENTS TO SELECTION AND/OR LENGTH OF SPECIAL FITTINGS AND ACCESSORIES TO FIT THE FIELD CONDITIONS DISCOVERED, WHILE MINIMIZING PIPE CUTTING AND LOCATING PIPE, FITTINGS, AND ACCESSORIES AS CLOSE TO INTENDED LOCATIONS AS CONDITIONS ALLOW. RECOMMENDED ADJUSTMENTS ARE SUBJECT TO KCDPW AND ENGINEER APPROVAL.
4. ALL VALVES SHALL HAVE AN EXTENDED VALVE STEM TO APPROXIMATELY 18-INCHES (MINIMUM) BELOW FINISHED GRADE. VALVE BOX SHALL BE EXTENDED TO GRADE.
5. FORCE MAIN MARKERS IN ACCORDANCE WITH KC STANDARD DETAIL PS-04 SHALL BE PLACED AT ALL BENDS.

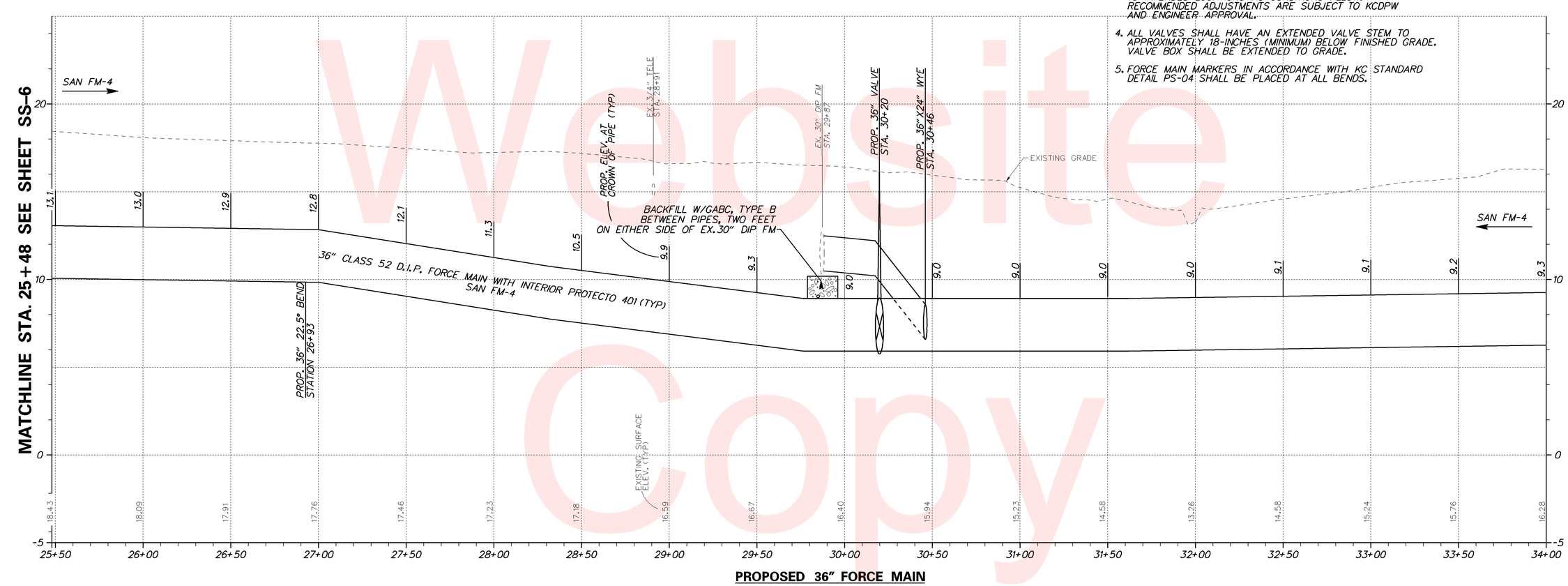

PROPOSED 36" FORCE MAIN

Unofficial Website Copy

DELAWARE DEPARTMENT OF TRANSPORTATION	ADDENDUMS / REVISIONS	HORIZONTAL SCALE 0 30 60 90 VERTICAL SCALE 0 3 6 9	SR1, SOUTH FREDERICA GRADE SEPARATED INTERSECTION	CONTRACT T200812202 COUNTY KENT BRIDGE NO. – DESIGNED BY: BTP CHECKED BY: TSM	SANITARY SEWER RELOCATION 36" FORCE MAIN

SS-7
SHEET NO. 287
TOTAL SHTS. 296

6/6/2013
G:\PROJECTS\06535.00 (DelDOT Agmt. 1376 DOTS Open End)\06535.07 SR1, S. Frederica\CADD Files\XM\SS-7 ut_KCS_cp07sf.dgn
16:25:39

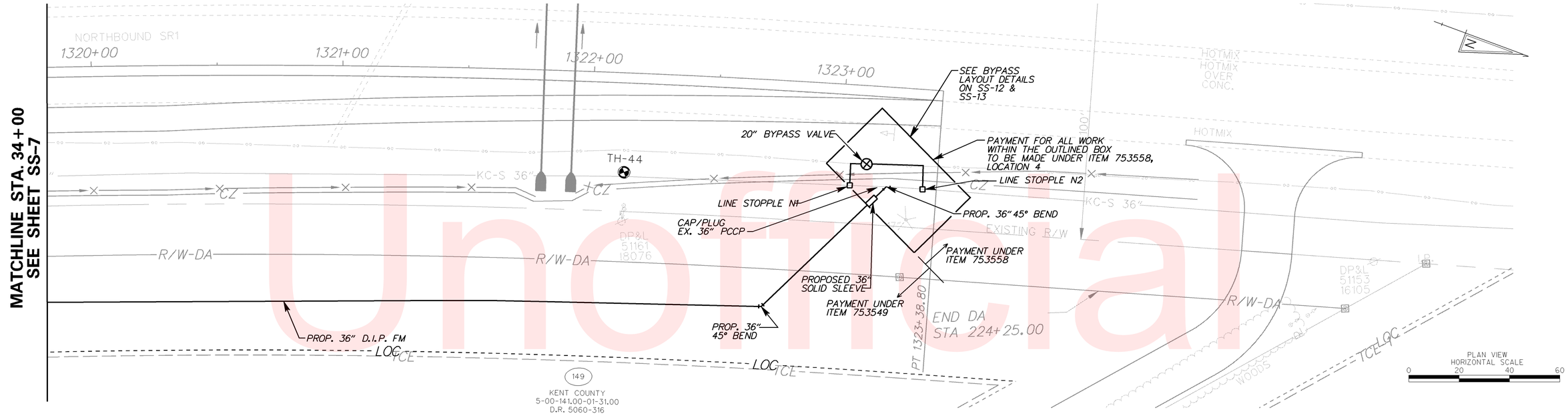

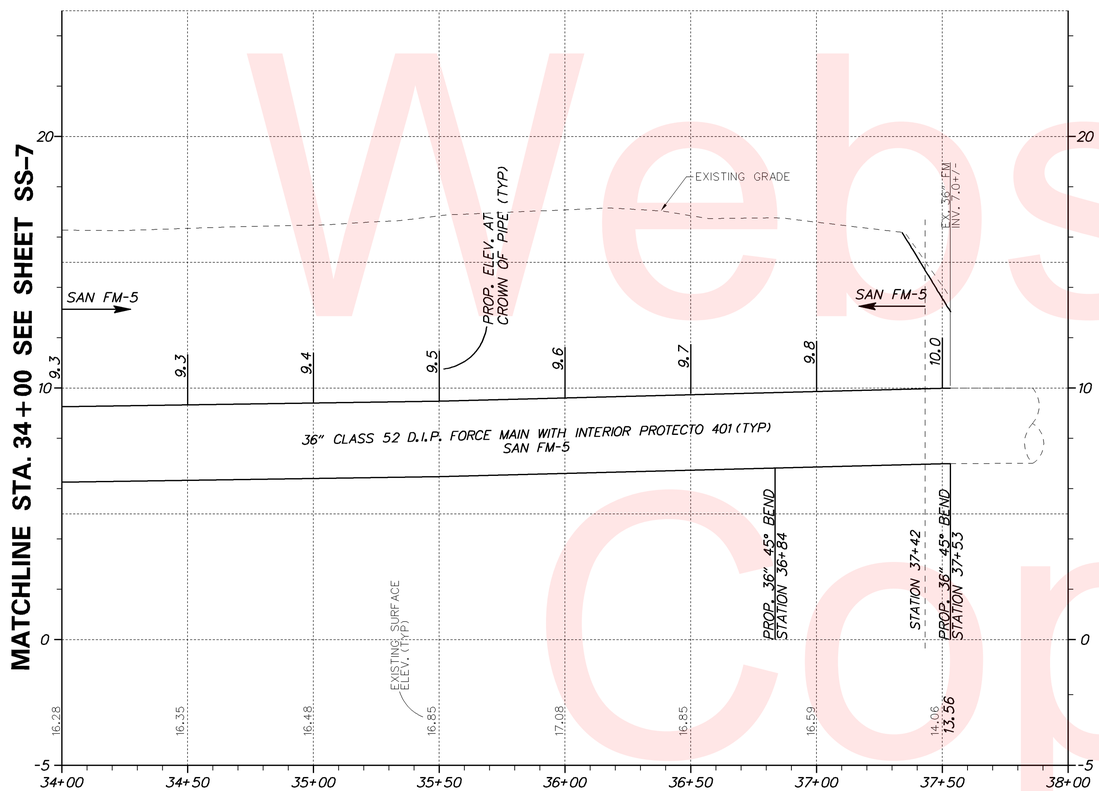

PROPOSED 36" FORCE MAIN

UTILITY TEST HOLE SCHEDULE						
NO.	UTILITY	STATION	OFFSET	GRND EL.	COVER	O.D. & MATERIAL
44	KENT CO.	1322+13.25	39.48' R	13.83'	3.69'	36" CONC. ENC. SAN. F.M.

NOTES

1. ALL ELEVATIONS REFER TO OUTSIDE TOP OF PIPE UNLESS OHERWISE NOTED.
2. ALL PIPE JOINTS AND FITTINGS SHALL BE RESTRAINED WITH "MEGALUGS" SERIES 1100 TR FLEX OR APPROVED EQUAL.
3. MECHANICAL JOINTS SHALL BE USED FOR ALL PIPE, FITTINGS, AND ACCESSORIES WITHIN CONNECTION LOCATIONS NO. 1, 2, 3 AND 4. CONTRACTOR TO SUBMIT PIPE LAYING SCHEDULE FOR ALL PIPE MAKING ADJUSTMENTS TO SELECTION AND/OR LENGTH OF SPECIAL FITTINGS AND ACCESSORIES TO FIT THE FIELD CONDITIONS DISCOVERED, WHILE MINIMIZING PIPE CUTTING AND LOCATING PIPE, FITTINGS, AND ACCESSORIES AS CLOSE TO INTENDED LOCATIONS AS CONDITIONS ALLOW. RECOMMENDED ADJUSTMENTS ARE SUBJECT TO KCDPW AND ENGINEER APPROVAL.
4. ALL VALVES SHALL HAVE AN EXTENDED VALVE STEM TO APPROXIMATELY 18-INCHES (MINIMUM) BELOW FINISHED GRADE. VALVE BOX SHALL BE EXTENDED TO GRADE.
5. FORCE MAIN MARKERS IN ACCORDANCE WITH KC STANDARD DETAIL PS-04 SHALL BE PLACED AT ALL BENDS.

Unofficial Website Copy

DELAWARE DEPARTMENT OF TRANSPORTATION

ADDENDUMS / REVISIONS

PROFILE HORIZONTAL SCALE 0 30 60 90
PROFILE VERTICAL SCALE 0 3 6 9

SR1, SOUTH FREDERICA GRADE SEPARATED INTERSECTION

CONTRACT	BRIDGE NO.	–
T200812202	DESIGNED BY: BTP	
COUNTY		
KENT	CHECKED BY: TSM	

SANITARY SEWER RELOCATION 36" FORCE MAIN

SS-8
SHEET NO.
288
TOTAL SHTS.
296

6/6/2013
G:\PROJECTS\06535.00 (DelDOT Agmt. 1376 DOTS Open End)\06535.07 SR1, S. Frederica\CADD Files\XM\SS-8 ut_KCS_cp08sf.dgn
16:26:37

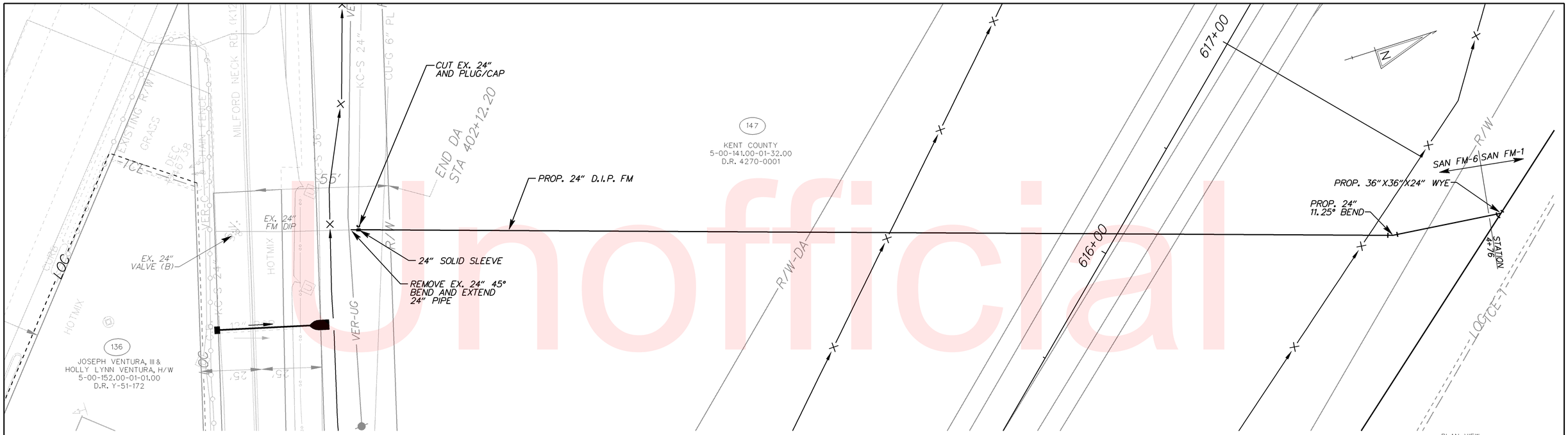

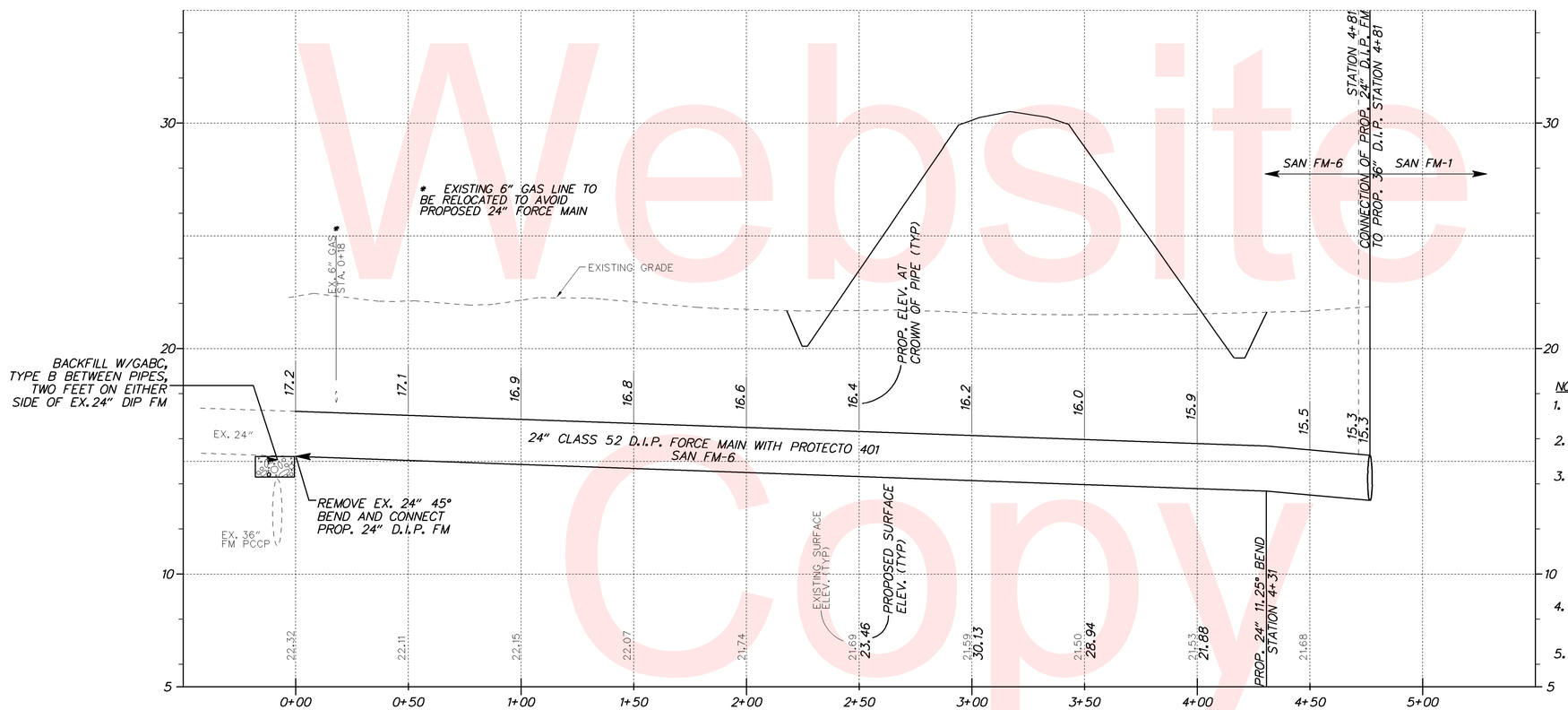

PROPOSED 24" FORCE MAIN

NOTES

1. ALL ELEVATIONS REFER TO OUTSIDE TOP OF PIPE UNLESS OHERWISE NOTED.
2. ALL PIPE JOINTS AND FITTINGS SHALL BE RESTRAINED WITH "MEGALUGS" SERIES 1100 TR FLEX OR APPROVED EQUAL.
3. MECHANICAL JOINTS SHALL BE USED FOR ALL PIPE, FITTINGS, AND ACCESSORIES WITHIN CONNECTION LOCATIONS NO. 1, 2, 3 AND 4. CONTRACTOR TO SUBMIT PIPE LAYING SCHEDULE FOR ALL PIPE MAKING ADJUSTMENTS TO SELECTION AND/OR LENGTH OF SPECIFIED FITTINGS AND ACCESSORIES TO FIT THE FIELD CONDITIONS DISCOVERED, WHILE MINIMIZING PIPE CUTTING AND LOCATING PIPE, FITTINGS, AND ACCESSORIES AS CLOSE TO INTENDED LOCATIONS AS CONDITIONS ALLOW. RECOMMENDED ADJUSTMENTS ARE SUBJECT TO KCDPW AND ENGINEER APPROVAL.
4. ALL VALVES SHALL HAVE AN EXTENDED VALVE STEM TO APPROXIMATELY 18-INCHES (MINIMUM) BELOW FINISHED GRADE. VALVE BOX SHALL BE EXTENDED TO GRADE.
5. FORCE MAIN MARKERS IN ACCORDANCE WITH KC STANDARD DETAIL PS-04 SHALL BE PLACED AT ALL BENDS.

Unofficial Website Copy

DELAWARE DEPARTMENT OF TRANSPORTATION	ADDENDUMS / REVISIONS	HORIZONTAL SCALE 0 30 60 90 VERTICAL SCALE 0 3 6 9	SR1, SOUTH FREDERICA GRADE SEPARATED INTERSECTION	CONTRACT T200812202 COUNTY KENT	BRIDGE NO. – DESIGNED BY: BTP CHECKED BY: TSM	SANITARY SEWER RELOCATION 24" FORCE MAIN	SS-9 SHEET NO. 289 TOTAL SHTS. 296

6/6/2013
G:\PROJECTS\06535.00 (DelDOT Agmt. 1376 DOTS Open End)\06535.07 SR1, S. Frederica\CADD Files\XM\SS-9 ut_KCS_cp09sf.dgn
16:27:55

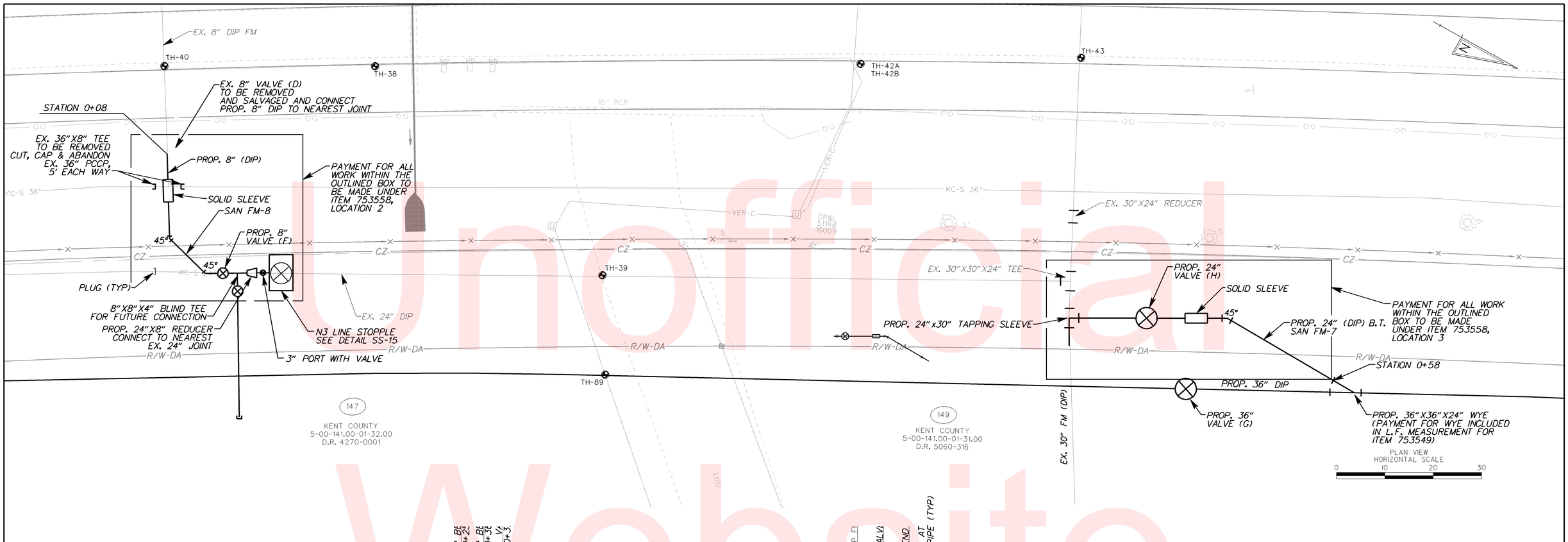

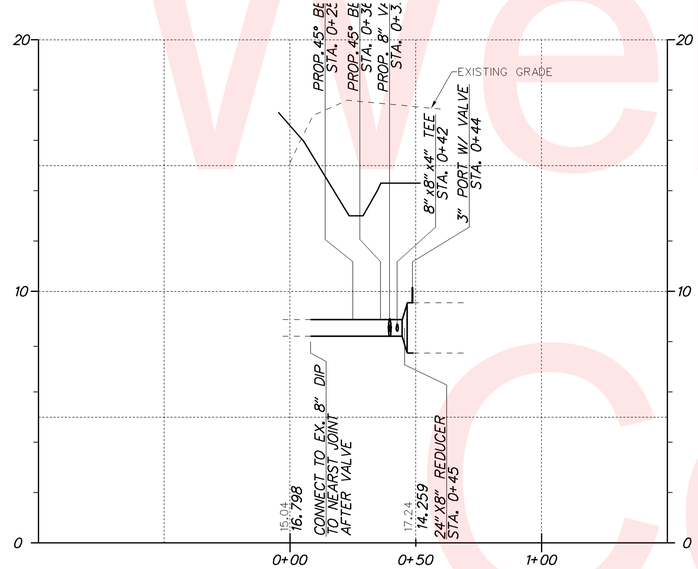

PROPOSED 8" FORCE MAIN

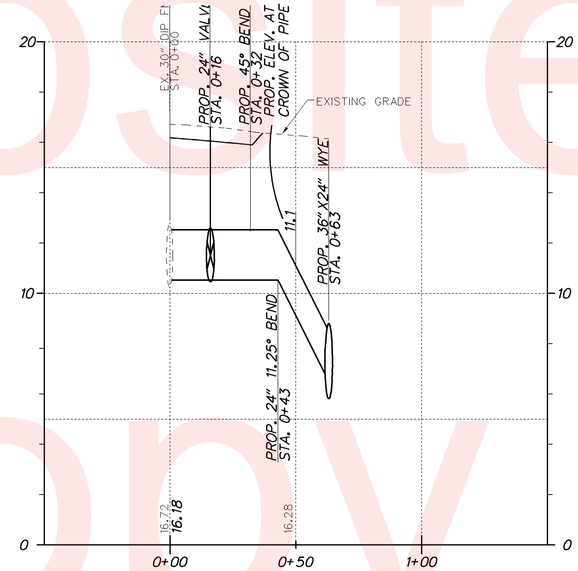

PROPOSED 24" FORCE MAIN

UTILITY TEST HOLE SCHEDULE

NO.	UTILITY	STATION	OFFSET	GRND EL.	COVER	O.D. & MATERIAL
38	VERIZON	1314+12.98	16.43' R	17.16'	2.57'	2" BLACK TELE CABLE
39	KENT CO.	1314+59.85	60.25' R	16.77'	5.13'	24" BLACK METAL SAN. F.M.
40	KENT CO.	1313+69.25	15.29' R	17.28'	5.19'	8" BLACK METAL SAN. F.M.
42A	VERIZON	1315+13.78	19.95' R	16.93'	2.73'	2" BLACK TELE CABLE
42B	VERIZON	1315+12.78	19.95' R	16.93'	3.82'	2" BLACK TELE CABLE
43	KENT CO.	1315+59.52	14.76' R	16.86'	8.82'	24" SAN. F.M.
89	VERIZON	1314+60.27	80.78' R	18.53'	3.08'	¾" BLACK TELEPHONE CABLE

NOTES

1. ALL ELEVATIONS REFER TO OUTSIDE TOP OF PIPE UNLESS OHERWISE NOTED.
2. ALL PIPE JOINTS AND FITTINGS SHALL BE RESTRAINED WITH "MEGALUGS" SERIES 1100 TR FLEX OR APPROVED EQUAL.
3. MECHANICAL JOINTS SHALL BE USED FOR ALL PIPE, FITTINGS, AND ACCESSORIES WITHIN CONNECTION LOCATIONS NO. 1, 2, 3 AND 4. CONTRACTOR TO SUBMIT PIPE LAYING SCHEDULE FOR ALL PIPE MAKING ADJUSTMENTS TO SELECTION AND/OR LENGTH OF SPECIAL FITTINGS AND ACCESSORIES TO FIT THE FIELD CONDITIONS DISCOVERED, WHILE MINIMIZING PIPE CUTTING AND LOCATING PIPE, FITTINGS, AND ACCESSORIES AS CLOSE TO INTENDED LOCATIONS AS CONDITIONS ALLOW. RECOMMENDED ADJUSTMENTS ARE SUBJECT TO KCDPW AND ENGINEER APPROVAL.
4. ALL VALVES SHALL HAVE AN EXTENDED VALVE STEM TO APPROXIMATELY 18-INCHES (MINIMUM) BELOW FINISHED GRADE. VALVE BOX SHALL BE EXTENDED TO GRADE.
5. FORCE MAIN MARKERS IN ACCORDANCE WITH KC STANDARD DETAIL PS-04 SHALL BE PLACED AT ALL BENDS.

Unofficial Website Copy

SEQUENCE OF CONSTRUCTION

GENERAL NOTES AND CONTRACTOR REQUIREMENTS FOR COORDINATION

1. THE CONTRACTOR SHALL COORDINATE WITH THE KENT COUNTY DPW TO HAVE THE FLOW IN THE EXISTING FORCE MAINS TURNED OFF OR DIVERTED WHEN SCHEDULED AND APPROVED.

TEST HOLE EXCAVATIONS FOR ALIGNMENT/DEPTH VERIFICATION AND MEASUREMENTS/TEMPLATES FOR PIPE TAPPING

1. UPON RECEIVING KENT COUNTY DPW APPROVAL, PERFORM TEST HOLE EXCAVATION AT EACH CONNECTION LOCATION, TO VERIFY FORCE MAIN ALIGNMENT, VERTICAL LOCATION, AND EXISTING PIPE ROUNDNESS. EXCAVATION SHALL BE PERFORMED BY HAND, WITHIN THE TOP 3 FEET OF PIPE, AS TO NOT TO DAMAGE THE EXISTING FORCE MAIN PIPES.

2. EXCAVATIONS SHALL BE MADE TO UNCOVER AND EXPOSE THE EXISTING 36" FORCE MAIN AT BYPASS LOCATION FOR AT LEAST 3 PIPE JOINTS. CONTRACTOR SHALL WIRE BRUSH THE EXTERIOR OF THE PIPING AS NECESSARY TO DETERMINE PIPE ROUNDNESS AND DEVELOP A TEMPLATE FOR THE TAPPING ASSEMBLIES. EXPOSED PORTION OF 36" FORCE MAIN SHALL BE KEPT TO A MINIMUM LENGTH DURING THIS OPERATION.

3. A 4" TEST TAP SHALL BE MADE ON THE EXISTING 36" FORCE MAIN IN EACH LOCATION TO DETERMINE THE ACTUAL CONDITION OF THE EXISTING PIPE, AND TO VERIFY THAT THERE IS ENOUGH CONCRETE TO MAKE THE PROPOSED 24" TAPPING CUT. THE 4" TEST TAP SHALL BE MADE IN MID-POINT OF THE PORTION OF THE 36" THAT WILL BE REMOVED WITH THE PROPOSED CONSTRUCTION.

4. INVESTIGATE THE EXISTING 36" FORCE MAIN TO DETERMINE PIPE CONDITIONS AND LOCATION OF THE PIPE JOINTS TO DETERMINE THE EXACT LOCATION FOR THE PROPOSED TAPPING SLEEVES, SHEETING AT THE BYPASS FORCE MAIN SITE ADJACENT TO SR1 AS SHOWN ON THE DRAWINGS AND MEASURE THE ACTUAL OUTSIDE DIAMETER OF THE PIPE AT THE LINE STOP LOCATION.

STAGE 1

A. 24" AND 36" FORCE MAIN INSTALLATION AND TESTING

1. INSTALL THE 36" M.T. FORCE MAIN INCLUDING VALVES (G,I) AND BUTRESSES TO THE LIMITS SHOWN ON THE DRAWINGS, BUT DO NOT MAKE THE TWO (2) CONNECTIONS TO THE EXISTING 36" PCCP FORCE MAIN.

2. INSTALL THE 24" B.T. FORCE MAIN INCLUDING VALVES AND BUTTRESSES TO THE LIMITS SHOWN ON THE DRAWINGS, BUT DO NOT MAKE THE TWO (2) CONNECTIONS TO THE EXISTING 24" DIP FORCE MAIN AND 30" DIP FORCE MAIN.

3. PERFORM A LOW PRESSURE AIR TEST (4 PSI) AND HOLD PRESSURE FOR A MINIMUM OF 30 MINUTES UNLESS OTHERWISE DIRECTED BY THE ENGINEER AND OBTAIN KENT COUNTY DPW APPROVAL OF PIPE JOINTS (INTERNAL & EXTERNAL) AND ASSOCIATED INSTALLATION.

4. CORRECT WORK AS NECESSARY TO RECEIVE KENT COUNTY DPW APPROVAL.

B. 36" BYPASS INSTALLATION (LOCATION 4)

1. THE CONTRACTOR SHALL COORDINATE WITH THE KENT COUNTY DPW TO SCHEDULE A TIME DURING THE LOWEST FLOW PERIODS TO DEPRESSURIZE THE FLOW IN THE EXISTING 36" FORCE MAIN AND PERFORM TAPPING AND BYPASS WORK AT UPSTREAM PUMP STATIONS NO. 8 (LITTLE HEAVEN) AND NO. 11 (MAGNOLIA). THE CONTRACTOR SHALL BE RESPONSIBLE FOR STAGING TANKER TRUCKS EQUIPMENT AND PERSONNEL AS NECESSARY FOR THE PURPOSES OF HAULING EXCESS FLOW FROM THE PUMP STATIONS TO THE KENT COUNTY WASTEWATER TREATMENT PLANT SOUTH OF FREDERICA. THE CONTRACTOR SHALL DEMONSTRATE TO THE COUNTY THAT THEY HAVE SUFFICIENT HAULING CAPACITY ON-SITE PRIOR TO THE EXISTING 36" LINE BYPASS WORK. 12 MONTH AVERAGE FLOWS AT PS 8 (LITTLE HEAVEN) ARE 216,000 GALLONS PER DAY. 12 MONTH AVERAGE FLOWS AT PS 11 (MAGNOLIA) ARE 142,000 GALLONS PER DAY. THE CONTRACTOR SHALL MAINTAIN THE TANKER TRUCKS, PERSONNEL AND EQUIPMENT AT THE UPSTREAM PUMP STATIONS UNTIL RELEASED BY KENT COUNTY. COSTS TO PROVIDE TANKERS AND TRANSPORT TO THE TREATMENT PLANT ARE INCIDENTAL TO ITEM 753558, RELOCATE FORCE MAIN.

2. INVESTIGATE THE EXISTING 36" FORCE MAIN TO DETERMINE PIPE CONDITION, LOCATION OF THE PIPE JOINTS AND THE PROPOSED TAPPING SLEEVES, AND INSTALL STEEL SHEETING AT THE BYPASS FORCE MAIN SITE ADJACENT TO SR1 AS SHOWN ON THE DRAWINGS. NO ENCROACHMENT SHALL BE MADE BEYOND THE RIGHT-OF-WAY LINE ON TO PRIVATE PROPERTY.

3. COMPLETE THE EXCAVATION AROUND THE EXISTING 36" PCCP FORCE MAIN, AS REQUIRED FOR INSTALLATION OF THE LINESTOP TAPPING SLEEVES ON THE EXISTING 36" PCCP FORCE MAIN AND INSTALLATION OF THE STEEL SHEET PILING.

4. INSTALL THE TWO TAPPING SLEEVES AND POUR THE CONCRETE THRUST BLOCKS AROUND THE PIPE AT TAPPING SLEEVES N-1 AND N-2 AS SHOWN ON THE DRAWINGS AND LET CURE. CONCRETE SHALL BE EXTENDED OVER THE TOP OF THE EXISTING PIPE TO THE BOTTOM OF THE TAPPING FLANGE.

5. INSTALL LINESTOP VALVES AND FITTINGS ON THE EXISTING 36" PCCP FORCE MAIN WHILE MAINTAINING OPERATION OF THE EXISTING 36" PCCP FORCE MAIN.

6. INSTALL THE WELDED 20" STEEL BYPASS PIPING, FITTINGS, VALVE, AND SUPPORT STRUCTURES ON THE STEEL SHEET PILING.

7. CONNECT THE 20" STEEL BYPASS PIPING TO THE LINESTOP VALVE ASSEMBLIES.

8. OBTAIN APPROVAL OF THE 20" STEEL BYPASS PIPING AND VALVES. DO NOT INSERT STOPPLES UNTIL APPROVAL IS ACQUIRED FROM THE COUNTY TO DO SO.

9. ONLY WHEN THE EXISTING 36" LINE HAS BEEN DEPRESSURIZED, SHALL THE CONTRACTOR MANIPULATE THE VALVE AT THE 20" TEMPORARY BYPASS LOCATION OR THE 36" LINESTOP VALVES.

STAGE 2 - CONNECT TO EX. 30" BYPASS TRANSMISSION AND RELOCATE 8" FORCE MAIN (WORK AT LOCATIONS 2, 3, AND 4)

A. CONFIRM THAT EX. 24" VALVE (B), IS CLOSED AND CONFIRM 30" LINE IS IN SERVICE.

B. INSTALL LINESTOP TAPPING SLEEVE AND FITTINGS ON THE EXISTING 24" FOR THE STOPPLE (N3) AT THE NW END OF THE 24" B.T. NEAR THE 30" B.T. EXISTING JOINTS OF 24" B.T. SHALL BE EXPOSED TO ENSURE LINE STOPPLE (N3) IS INSTALLED IN PIPE SECTION. OBTAIN APPROVAL FROM KCDPW TO INSTALL STOPPLE AT N3.

C. INSTALL 24" TAPPING SLEEVE AND PERFORM THE 24" TAP ON THE 30" B.T. AT THE LOCATION INDICATED. CONNECT TO PROP. 24" B.T. AND CONFIRM NEW 24" TAPPING VALVE (H)(NORTH) IS CLOSED. TEST CONNECTION USING LOW PRESSURE AIR TEST (4 PSI) AND HOLD PRESSURE FOR A MINIMUM OF 30 MINUTES. CORRECT WORK AS NECESSARY TO RECEIVE KCDPW APPROVAL.

D. CONFIRM THAT THE PREVIOUSLY INSTALLED PROP. 36" VALVE (G)(SOUTH) JUST DOWNSTREAM OF PROP. 36"X36"X24" WYE IS CLOSED.

E. PRIOR TO INSERTION OF STOPPLE (N3), CONTRACTOR TO CONFIRM TO KENT COUNTY THAT THE TIME REQUIRED TO COMPLETE TIE IN IS A MAXIMUM OF THREE (3) WORKING DAYS.

F. UPON RECEIVING KENT COUNTY DPW APPROVAL, INSERT THE LINESTOPS N1 AND N2, OPEN THE VALVES ON THE 20" STEEL BYPASS, AND DIVERT ALL FORCE MAIN FLOWS THROUGH THE 20" STEEL BYPASS PIPING. IN NO CASE SHALL OPERATION OF THE EXISTING 36" PCCP FORCE MAIN BE SUSPENDED.

G. CAREFULLY REMOVE THE EXISTING 36" PCCP FORCE MAIN SECTION OF PIPE BETWEEN THE EXISTING JOINTS, INSTALL ONE (1) 36" PCCP BY 36" DUCTILE IRON (D.I.) MJ ADAPTOR, ONE (1) 36" SOLID SLEEVE AND 36" PLAIN END SPOOL PIECES TOGETHER WITH THE 36" D.I. BEND AND 3" PORT VALVE, AND CONNECT THE EXISTING 36" PCCP M.T. FORCE MAIN TO THE NEW 36" D.I. M.T. WITH RESTRAINED MECHANICAL JOINT FITTINGS, AS SHOWN ON THE DRAWINGS. THE ADAPTOR JOINTS SHALL BE FULLY ENCASED IN CONCRETE. CONCRETE BUTTRESS TO BE PLACED ON BEND. INSTALL 3" PURGE PORT AND VALVE ON THE TOP OF THE NEW D.I. PIPE AS SHOWN ON THE DRAWINGS TO REMOVE AIR ENTRAPPED IN THE PIPE AND ALLOW FOR PRESSURE EQUALIZATION AROUND THE STOPPLE. TEST NORTHERN CONNECTION USING LOW PRESSURE AIR TEST (4 PSI) AND HOLD PRESSURE FOR A MINIMUM OF 30 MINUTES. CORRECT WORK AS NECESSARY TO RECEIVE KCDPW APPROVAL.

H. UPON RECEIVING KENT COUNTY DPW APPROVAL, OPEN THE NEW 24" TAPPIMG VALVE (H), PRESSURIZE THE NEW PIPING, PURGE THE AIR OUT AND REMOVE THE STOPPLE AT N-2. CONTRACTOR TO PROVIDE KENT COUNTY WITH THE DURATION OF TIME THE FLOW IS REQUIRED TO BE STOPPED IN THE 36" FORCE MAIN DURING STOPPLE REMOVAL. AFTER STOPPLE REMOVAL THE FORCE MAIN FLOW WILL FLOW FROM THE EXISTING 36" FORCE MAIN TO THE PROPOSED 36" M.T. FORCE MAIN, THEN BYPASSING INTO THE EXISTING 30" D.I. B.T. FORCE MAIN VIA PROPOSED 24" TAPPING VALVE (H) AND 24" D.I. B.T. CONNECTION. PROPOSED 24" VALVE (H) SHOULD BE OPEN. PROPOSED 36" VALVE (G) SHOULD BE CLOSED.

I. CLOSE EX. 36" VALVE (C) AT SE END TO PREVENT REVERSE FLOW. INSTALL LINE STOPPLE AT N4 UNLESS KENT COUNTY CONFIRMS THE EX. 36" VALVE (C) CAN ADEQUATELY SEAL OFF FLOW. EXISTING JOINTS OF 36" PCCP SHALL BE EXPOSED TO ENSURE LINE STOPPLE (N4) IS INSTALLED IN PIPE SECTION. COUNTY TO DIVERT EX. 8" FM IN FREDERICA TO EX. 24" FM. REMOVE STOPPLE AT N1.

J. REMOVE ANY SEWAGE IN THE 20" BYPASS PIPES AND THEN REMOVE THE 20" BYPASS ASSEMBLIES. INSTALL A COMPLETION PLUG & BLIND FLANGE ON ALL TAPPING ASSEMBLIES. STEEL SHEET PILING SHALL BE CUT OFF THREE FEET BELOW GRADE AND REMAIN IN PLACE. BACKFILL AND RESTORE ALL DISTURBED AREAS.

K. POSITION STANDBY TANKER TRUCKS AND PUMPING AT EX. 8", EX. 24", AND EX. 36" FM OPENINGS TO REMOVE PIPE LIQUID VOLUME FROM EACH SEGMENT OF OPEN PIPE TO ACCOMODATE PROP. 8" FM CONNECTION TO THE EXISTING 24" FORCE MAIN.

L. REMOVE THE EXISTING 8" VALVE (D) AND 36"X8" TEE TO EXTEND PROP. 8" FM, INSTALL PROPOSED 8" VALVE (F) IN THE OPEN POSITION, 8"X8"X4" TEE AND VALVE AND CONNECT TO EX. 24" FM VIA 24"X8" REDUCER AS SHOWN. TEST CONNECTION USING LOW PRESSURE AIR TEST (4 PSI) AND HOLD PRESSURE FOR A MINIMUM OF 30 MINUTES. CORRECT WORK AS NECESSARY TO RECEIVE KCDPW APPROVAL. KCDPW TO REMOVE 8" DIVERSION IN FREDERICA AT PS NO. 13 TO PRESSURIZE THE NEW PIPING CONNECTION. CONTRACTOR SHALL PROVIDE THE KCDPW THREE (3) DAYS NOTICE TO PERFORM THIS WORK. PURGE OUT THE AIR IN THE PIPING. REMOVE STOPPLE AT N3. INSTALL COMPLETION PLUG AND BLIND FLANGE ONTO TAPPING ASSEMBLY. PLUG BOTH ENDS OF EX. 36" AND EX. 24" (SOUTH END) WHERE SEGMENTS WERE REMOVED.

STAGE 3 - DIVERT FLOW INTO NEW 36" FORCE MAIN AND ABANDON EX. 36" FORCE MAIN AND EX. 24" BYPASS FORCE MAIN (WORK AT LOCATIONS 1, 4, AND 24" DIP CONNECTION TO 36" DIP)

A. CONNECT PROP. 36" D.I. M.T. TO EX. 36" PCCP M.T. AT THE SOUTH END. CAREFULLY REMOVE THE EXISTING 36" PCCP FORCE MAIN SECTION OF PIPE BETWEEN THE EXISTING JOINTS, INSTALL ONE (1) 36" PCCP BY 36" D.I., M.J. ADAPTER, ONE (1) 36" SOLID SLEEVE, ONE (1) 36" STEEL COUPLING, 36" PLAIN END SPOOL PIECES TOGETHER WITH THE 36" 45° BEND, 36"VALVE (I) AND CONNECT THE EXISTING 36" PCCP M.T. FORCE MAIN TO THE NEW 36" D.I. M.T. FORCE MAIN WITH RESTRAINED MECHANICAL JOINT FITTINGS, AS SHOWN ON DRAWINGS. THE ADAPTER JOINT SHALL BE FULLY ENCASED IN CONCRETE. CONCRETE BUTTRESS TO BE PLACED ON BEND. INSTALL 3" PURGE PORT VALVE ON THE TOP OF THE NEW D.I. PIPE AS SHOWN ON THE DRAWINGS TO REMOVE AIR ENTRAPPED IN THE PIPE AND ALLOW FOR PRESSURE EQUALIZATION AROUND THE STOPPLE. TEST SOUTHERN CONNECTION USING LOW PRESSURE AIR TEST (4 PSI) AND HOLD PRESSURE FOR A MINIMUM OF 30 MINUTES. CORRECT WORK AS NECESSARY TO RECEIVE KCDPW APPROVAL.

B. AFTER CONFIRMING 24" VALVE (B) IS CLOSED, ON THE 24" B.T. FORCE MAIN EAST OF THE 24" VALVE (B), REMOVE EX. 24" FM 45° FITTING AND EXTEND PROP. 24" B.T. TO CONNECT WITH 24" FM. PREVIOUSLY INSTALLED. TEST CONNECTION USING A LOW PRESSURE AIR TEST (4 PSI) AND HOLD PRESSURE FOR A MINIMUM OF 30 MINUTES. CORRECT WORK AS NECESSARY TO RECEIVE KCDPW APPROVAL.

C. AT THE SOUTH END OF THE 36" M.T., PRESSURIZE THE NEW PIPING AND PURGE OUT THE AIR, REMOVE THE STOPPLE AT N4, OPEN EXISTING AND PREVIOUSLY INSTALLED 36" VALVES (C,I). OPEN PROPOSED 36" VALVE (G) AT NORTH END AND CLOSE 24" TAPPING VALVE (H) AT NORTH END TO DIVERT ALL 36" FM FLOW INTO PROP. 36" MT FM THAT REENTERS EX. 36" FM BEFORE ENTERING THE EX. 48" FM AT THE PLANT ENTRANCE. INSTALL COMPLETION PLUG AND BLIND FLANGE ON THE TAPPING ASSEMBLY AT N4.

D. ABANDON EX. 36" M.T. FROM THE BYPASS AT THE NORTH END (N1) TO THE NEW 36" VALVE (I) AT THE SOUTH END. ABANDON 24" B.T. FROM THE SOUTH END WHERE THE BEND WAS REMOVED TO THE PLUGGED END OF THE NEW 8" FORCE MAIN CONNECTION.

Unofficial Website Copy

7/19/2013
G:\PROJECTS\06535.00 (DelDOT Agmt. 1376 DOTS Open End)\06535.07 SR1, S. Frederica\CADD Files\XM\SS-11DT01.dgn
09:15:36

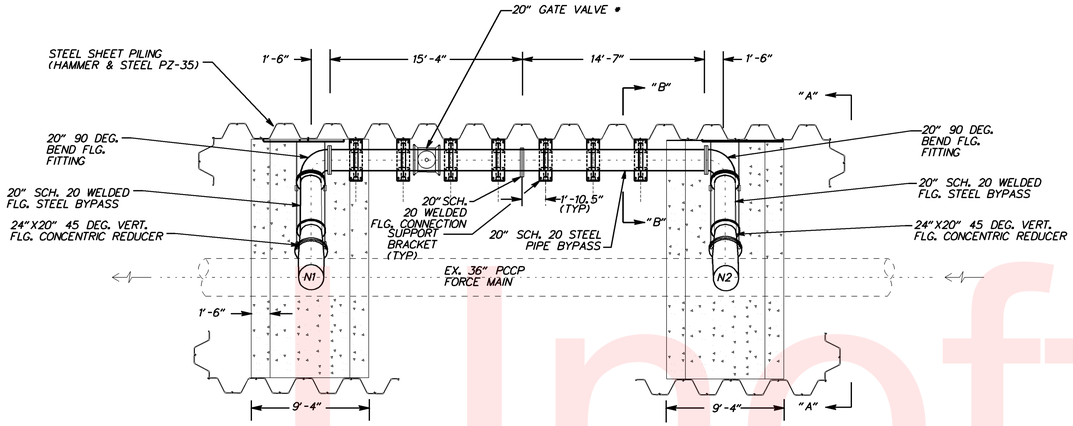

PLAN VIEW
TYPICAL 20-INCH STEEL BYPASS
EX. 36" PCCP M.T. CONNECTION
SCALE: 1" =5'

STRUCTURAL STEEL NOTES

1. ALL PLATES AND STRUCTURAL SHAPES TO BE ASTM A709, GRADE 50.
2. ALL BOLTS AND FASTENERS TO BE GALVANIZED.
3. ALL WELDING SHALL BE IN ACCORDANCE WITH AWS.D1.1.
4. GALVANIZE SHALL BE ASTM A-123.
5. ALL BOLTS TO BE ASTM A-325.
6. FLAT WASHERS SHALL BE ASTM F-436.
7. GALVANIZED HARDWARE SHALL BE ASTM A-153.
8. THREADED RODS AND COUPLERS TO BE A709, GRADE 50 - SS*316.

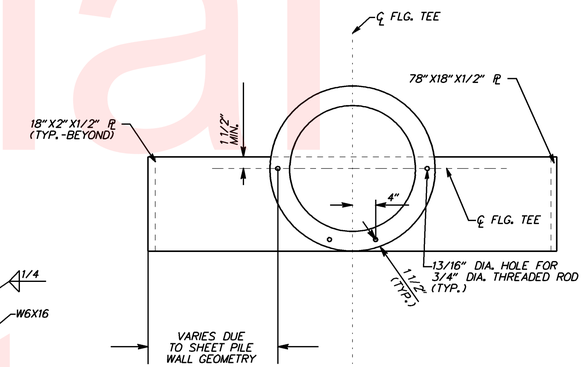

SECTION "C-C"
SUPPORT PLATE
SCALE: 1" =1'

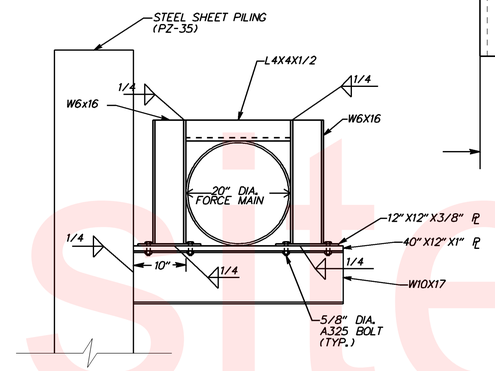

SECTION "B-B"
SUPPORT DETAIL
SCALE: 1" =1'

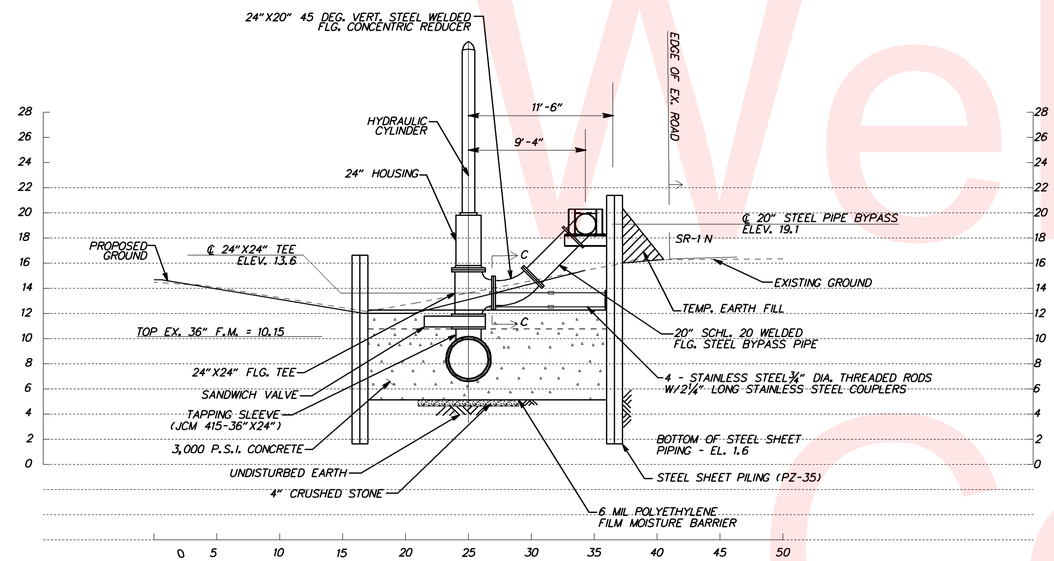

SECTION "A-A"
EX. 36" PCCP M.T. CONNECTION
SCALE: 1" =5'

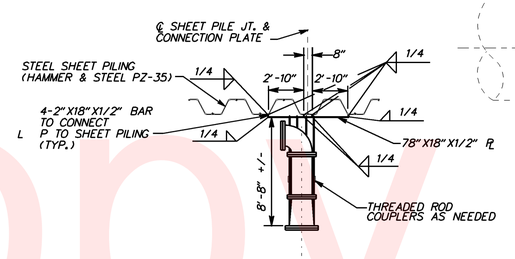

CONNECTION DETAIL
SCALE: 1" =5'

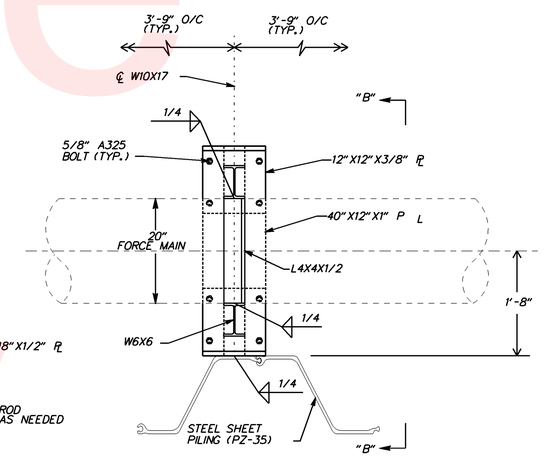

PLAN
SUPPORT BRACKET
SCALE: 1" =1'

Unofficial Website Copy

DELAWARE DEPARTMENT OF TRANSPORTATION	ADDENDUMS / REVISIONS	SR1, SOUTH FREDERICA GRADE SEPARATED INTERSECTION	CONTRACT T200812202	BRIDGE NO. –	SANITARY SEWER RELOCATION DETAIL SHEET FORCE MAIN BYPASS
			COUNTY KENT	DESIGNED BY: BTP	SS-12
				CHECKED BY: TSM	SHEET NO. 292 / TOTAL SHTS. 296

5/24/2013
C:\PROJECTS\06535.00 (DelDOT Agmt. 1376 DOTS Open End)\06535.07 SR1, S. Frederica\CADD Files\XM\SS-12 DT02.dgn
00032-54

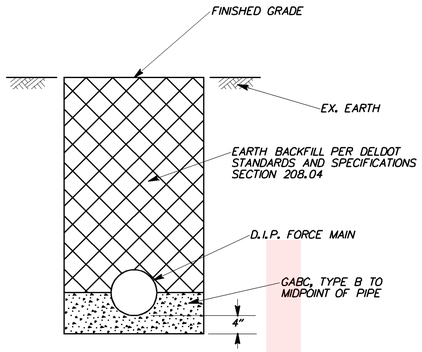

PIPE DIAMETER	MINIMUM TRENCH WIDTH
8"	44"
24"	60"
36"	72"

TRENCH DETAIL
N.T.S.

NOTES

1. ALL ELEVATIONS REFER TO OUTSIDE TOP OF PIPE UNLESS OHERWISE NOTED.
2. ALL PIPE JOINTS AND FITTINGS SHALL BE RESTRAINED WITH "MEGALUGS" SERIES 1100 TR FLEX OR APPROVED EQUAL.
3. MECHANICAL JOINTS SHALL BE USED FOR ALL PIPE, FITTINGS, AND ACCESSORIES WITHIN CONNECTION LOCATIONS NO. 1, 2, 3 AND 4. CONTRACTOR TO SUBMIT PIPE LAYING SCHEDULE FOR ALL PIPE MAKING ADJUSTMENTS TO SELECTION AND/OR LENGTH OF SPECIAL FITTINGS AND ACCESSORIES TO FIT THE FIELD CONDITIONS DISCOVERED, WHILE MINIMIZING PIPE CUTTING AND LOCATING PIPE, FITTINGS, AND ACCESSORIES AS CLOSE TO INTENDED LOCATIONS AS CONDITIONS ALLOW. RECOMMENDED ADJUSTMENTS ARE SUBJECT TO KCDPW AND ENGINEER APPROVAL.
4. VERTICAL VALVES SHALL HAVE AN EXTENDED VALVE STEM TO APPROXIMATELY 18-INCHES (MINIMUM) BELOW FINISHED GRADE. VALVE BOX SHALL BE EXTENDED TO GRADE.
5. FORCE MAIN MARKERS IN ACCORDANCE WITH KC STANDARD DETAILPS-04 SHALL BE PLACED AT ALL BENDS.
6. 3" SS PORT TO BE INSTALLED IN TOP OF PIPE. VALVE TO BE CONNECTED TO PORT AND USED TO RELEASE AIR DURING PRESSURIZATION OF LINE. LOCATION OF PORT VALVE TO BE DOCUMENTED ON AS-BUILT. WHEN PRESSURIZATION IS COMPLETE, VALVE TO BE CLOSED, CAPPED AND BURRIED.

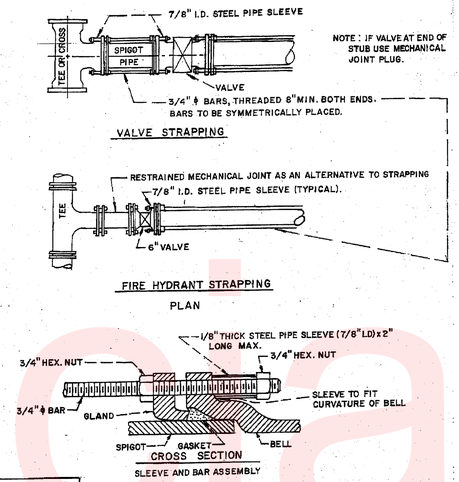

BRANCH SIZE	NUMBER OF 3/4" ϕ BARS REQUIRED
3" THRU 8"	2
10"	4
12"	6
16"	8
20"	12
24"	16
30"	20
36"	24

NOTE:
1. USE MECHANICAL JOINT D.I. FITTINGS ONLY.
2. APPLY TWO COATS OF BITUMINOUS COATING TO ALL STEEL.

METHODS OF STRAPPING PIPELINES
N.T.S.

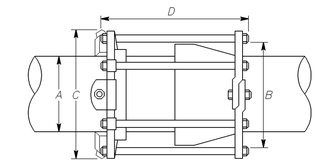

NOMINAL PIPE SIZE	A PIPE O.D.	B MAX. BELL O.D. CLEARED	C CASING CLEARANCE (W/NUTS OFF)	D THRUST ROD (QUANTITY - SIZE)
8	9.05	10.9	14.15	6 - 3/4 X 13
24	25.80	29.1	33.38	14 - 3/4 X 18
36	38.30	42.6	46.75	20 - 1 X 18

RESTRAINED HARNESS FOR PUSH ON JOINTS ON DUCTILE IRON PIPE

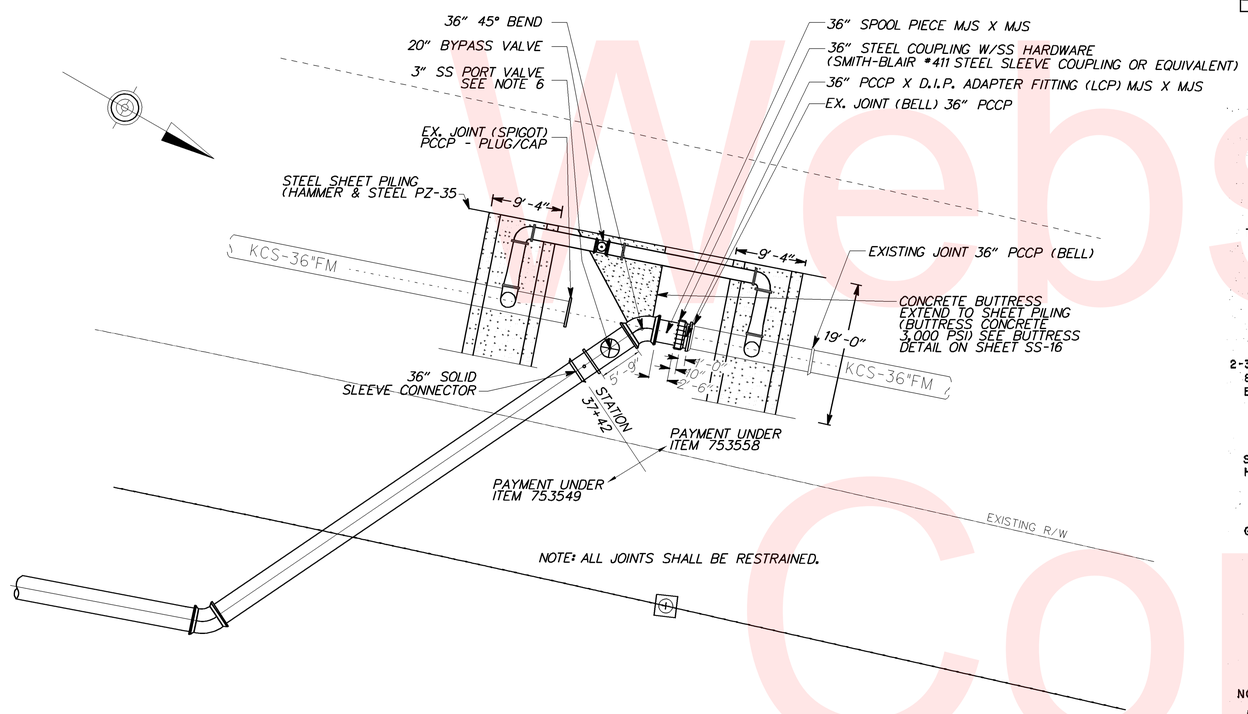

PIPE CONNECTION AND BY-PASS LAYOUT DETAIL
SCALE: 1" =10'

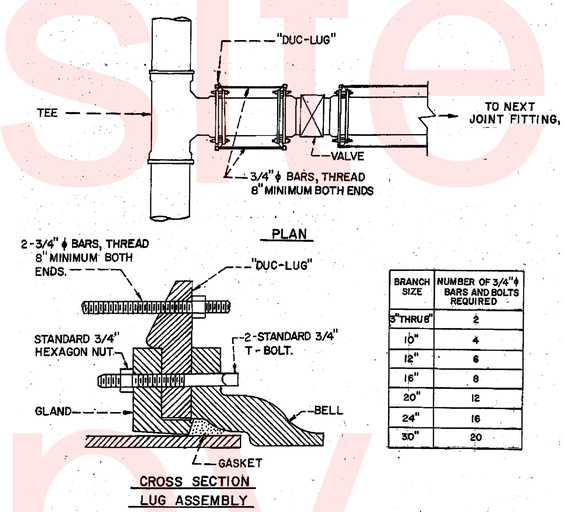

BRANCH SIZE	NUMBER OF 3/4" ϕ BARS AND BOLTS REQUIRED
3" THRU 8"	2
10"	4
12"	6
16"	8
20"	12
24"	16
30"	20

NOTE:
1. USE MECHANICAL JOINT D.I. FITTINGS ONLY.
2. APPLY TWO COATS OF BITUMINOUS COATING TO ALL STEEL.

RESTRAINED JOINT DETAIL FOR DUCTILE IRON PIPE
N.T.S.

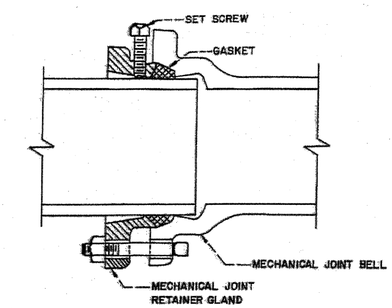

SIZE INCHES	NO. OF SET SCREWS	PRESSURE RATING IN PSI.
3"	4	300 PSI.
4"	4	300 PSI.
6"	6	300 PSI.
8"	9	200 PSI.
10"	16	200 PSI.
12"	16	200 PSI.
16"	24	200 PSI.
20"	28	200 PSI.
24"	32	150 PSI.
30"	40	150 PSI.
36"	48	150 PSI.

NOTES
1. ALL SET SCREWS ARE 5/8" SIZE WITH HARDENED CUPPED ENDS AND 5/8" SQUARE HEADS
2. SIZES 16" THROUGH 30" ARE FOR INSTALLATION ON DUCTILE IRON PIPE ONLY.
3. TIGHTEN SET SCREWS EVENLY TO 80 FOOT POUNDS ON 3"-12" GLANDS AND 65 FOOT POUNDS ON 16"-30" GLANDS.
4. MECHANICAL JOINT D.I. PIPE AND FITTINGS ONLY.
5. PRESSURE IN 3RD COLUMN IS TOTAL PRESSURE (OPERATING PLUS SURGE).
6. A TORQUE WRENCH SHALL BE USED ON ALL SET SCREW INSTALLATION.

MECHANICAL JOINT RETAINER GLAND
N.T.S.

Unofficial Website Copy

DELAWARE DEPARTMENT OF TRANSPORTATION	ADDENDUMS / REVISIONS	SR1, SOUTH FREDERICA GRADE SEPARATED INTERSECTION	CONTRACT T200812202	BRIDGE NO. –	SANITARY SEWER RELOCATION DETAILS	SS-13
			COUNTY KENT	DESIGNED BY: BTP		SHEET NO. 293
				CHECKED BY: TSM		TOTAL SHTS. 296

7/19/2013 G:\PROJECTS\06535.00 (DelDOT Agmt. 1376 DOTS Open End)\06535.07 SR1, S. Frederica\CADD Files\XM\SS-13 DT03.dgn 09:16:51

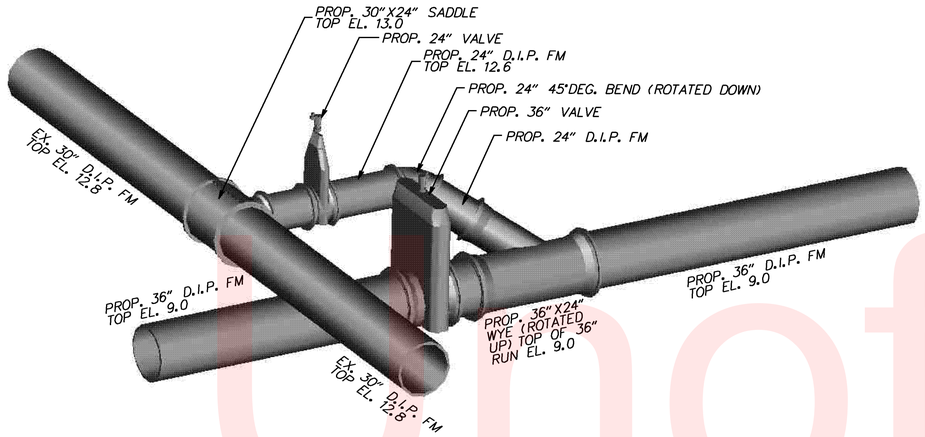

CONNECTION DETAIL AT PROP. 36" DIP TO EX. 30" B.T. DIP (LOCATION 3)

N.T.S.

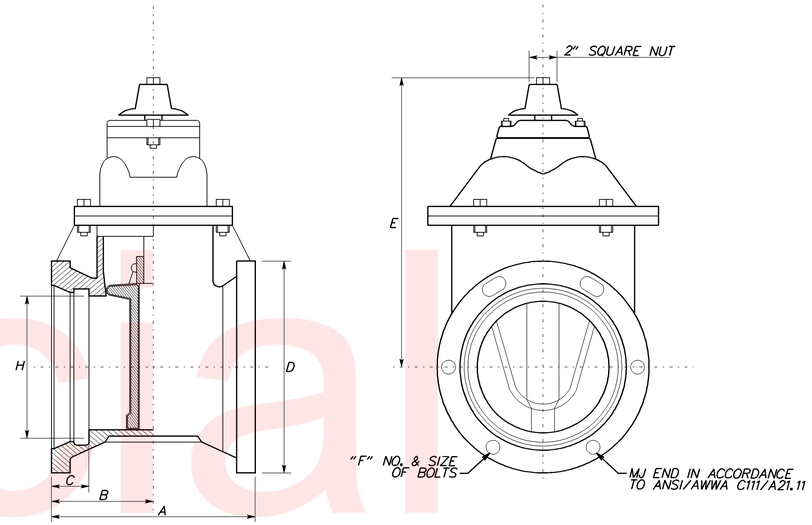

8" GATE VALVE

VALVE SIZE	A	B	C	D	E	F	H
8"	10½	5¼	2½	13¾	22½	6¾	8¼

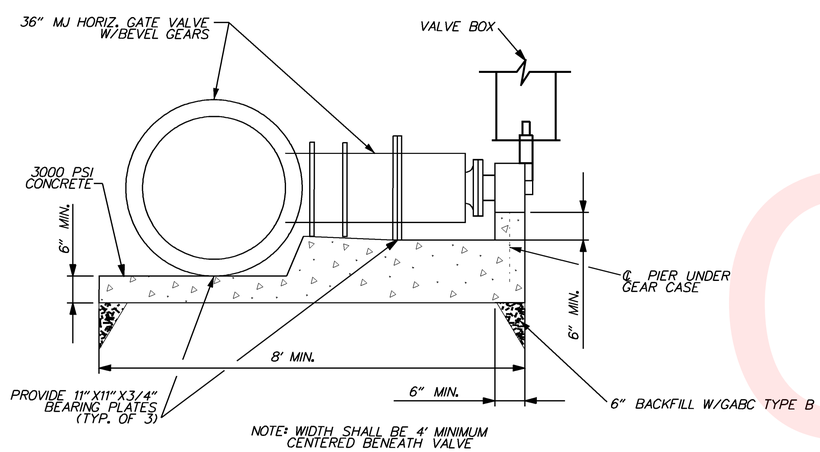

CONCRETE VALVE SUPPORT FOR HORIZONTAL GATE VALVE

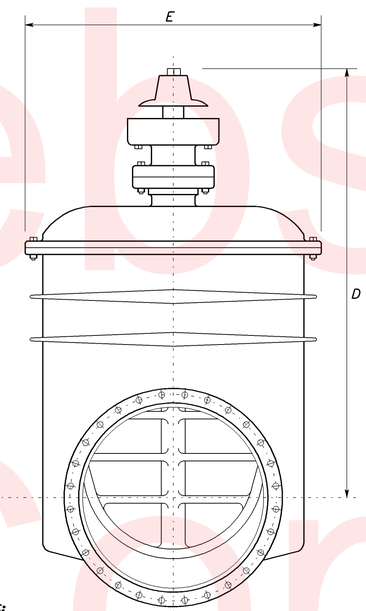

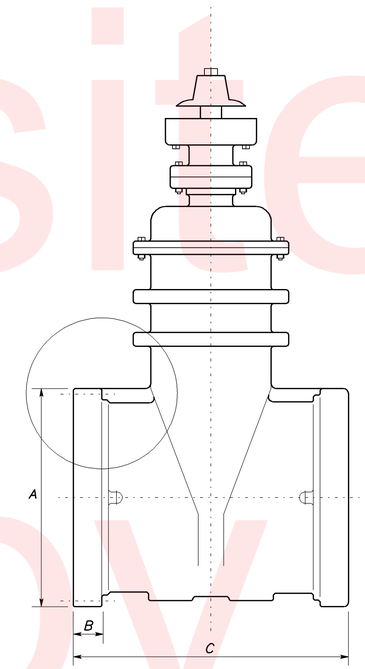

36" GATE VALVE

NOTES:

1. All Valves shall be Manufactured in the USA.
2. Design and Manufacture Conform to AWWA C509
3. Valve connections to pipe shall all be by mechanical joint.
4. Face to Face dimensions Conform to ANSI B16.10(1251b)
5. Rubber material may be also CR EPDM etc.
6. All valve and plate surfaces shall be painted with Epoxy resin paint.
7. All valves shall have an extended valve stem to approximately 18 inches (min.) below finished grade. Valve box shall be extended to grade.

VALVE SIZE	A	B	C	D	E
36"	43⅜	6-1/4	39	83-11/16	58-7/8

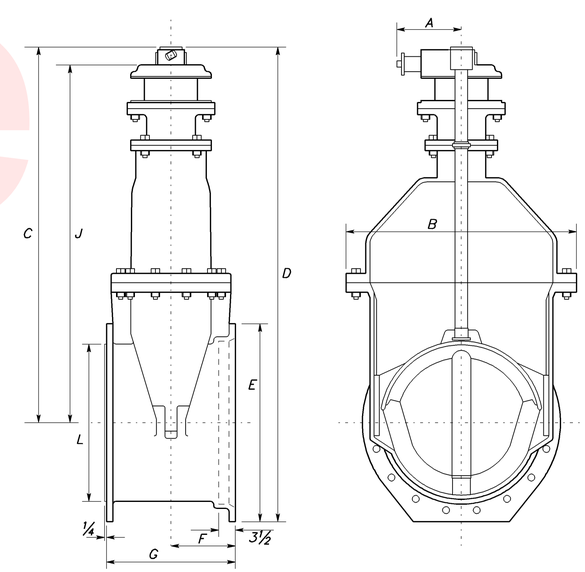

24" GATE VALVE

VALVE SIZE	A	B	C	D	E	F	G	H	J	K	L
24"	10⅛	36½	59⅞	75⅛	31½	10½	20½	20-1¼	57⅜	16¾	24 15/16

Unofficial Website Copy

5/24/2013
G:\PROJECTS\06535.00 (DelDOT Agmt. 1376 DOTS Open End)\06535.07 SR1, S. Frederica\CADD Files\XM\SS-14 DT04.dgn
0054727

DELAWARE
DEPARTMENT OF TRANSPORTATION

ADDENDUMS / REVISIONS

SR1, SOUTH FREDERICA
GRADE SEPARATED INTERSECTION

CONTRACT	BRIDGE NO.	–
T200812202	DESIGNED BY: BTP	
COUNTY		
KENT	CHECKED BY: TSM	

SANITARY SEWER
RELOCATION
DETAILS

SS-14
SHEET NO.
294
TOTAL SHTS.
296

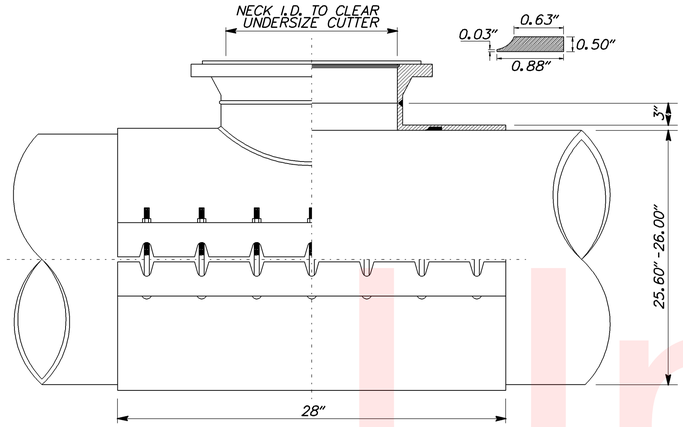

SECTION

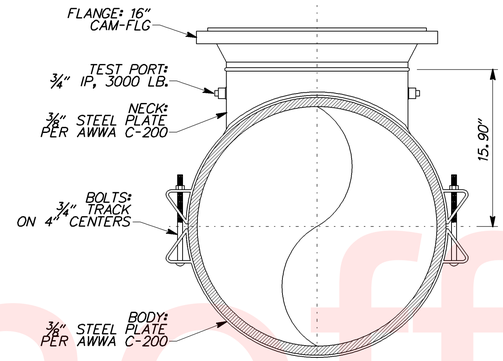

END VIEW

N3 16X24 FLANGED OUTLET TAPPING SLEEVE FOR DUCTILE IRON PIPE

NOTES:
1. ALL WELDS PER AWWA STDS.
2. WORKING PRESSURE: 150 PSI
3. FINISH: EPOXY COAT
4. FASTENERS: 304SS
5. FABRICATE TO LINE STOP ACCURACY

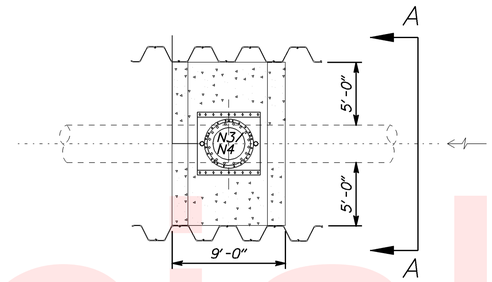

PLAN VIEW
TYPICAL 24" X 36" LINESTOP AT PCCP M.T. AND 16" X 24" LINESTOP AT DI B.T. CONNECTION

SCALE: NONE

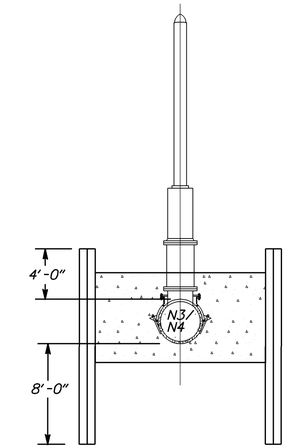

SECTION "A–A"
PROP. 24" X 36" AND 16" X 24" LINESTOP CONNECTIONS

SCALE: NONE

NOTE:
MATERIALS AND INSTALLATION SHALL BE SIMILAR TO BYPASS CONSTRUCTED AT LOCATIONS N1 AND N2.

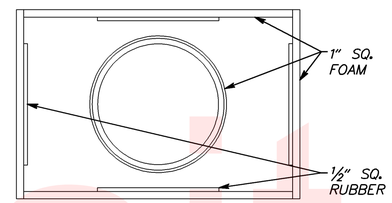

GROUT SEAL ASSEMBLY

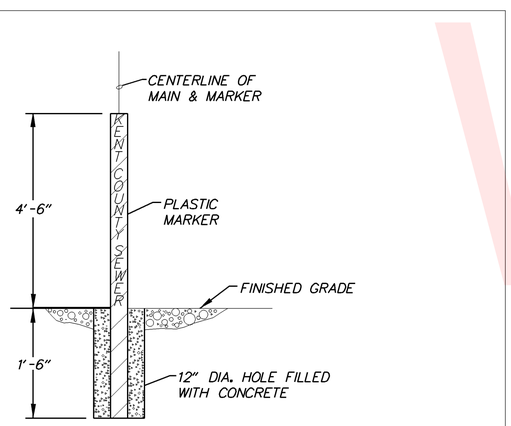

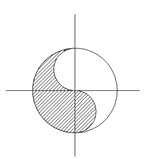

SEWER FORCE MAIN

NOTES:
1. PLASTIC MARKER SHALL BE GREEN IN COLOR.
2. PLASTIC MARKER SHALL BE LABELED "KENT COUNTY SEWER"
3. PLASTIC MARKER SHALL BE SPACED EVERY 300 FEET FROM BOTH SIDES OF ANY ROADWAY OR JUNCTION CROSSING.

STANDARD MARKER FOR SEWER FORCE MAINS IN EASEMENTS

NOT TO SCALE

KENT COUNTY DELAWARE	APPROVAL DIRECTOR OF PUBLIC WORKS DATE	DEPARTMENT OF PUBLIC WORKS STANDARD DETAILS STANDARD MARKER FOR SEWER FORCE MAINS IN EASEMENTS	ISSUED: REVISED: REVISED: 3-27-08 PLATE PS-04

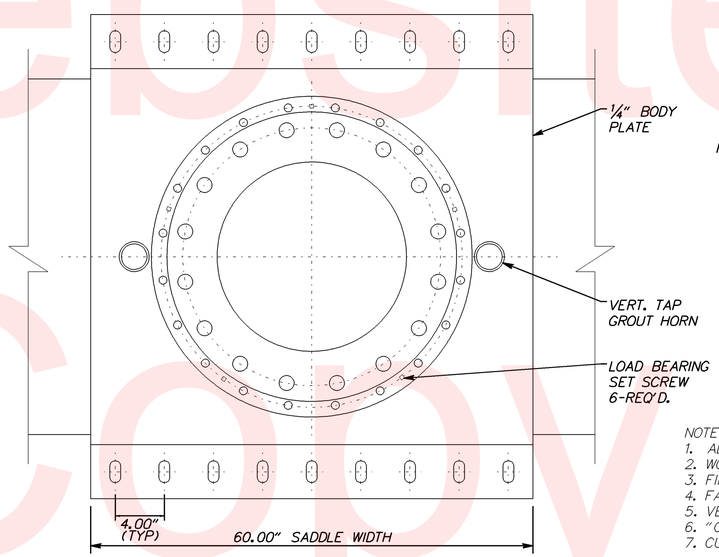

TOPVIEW

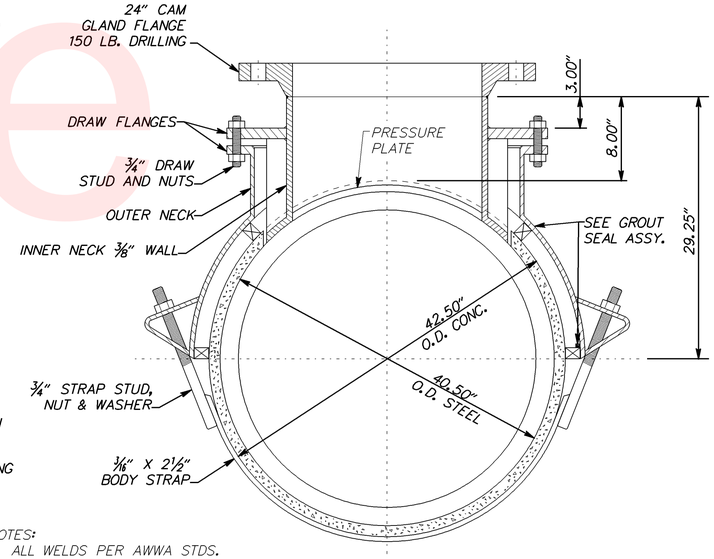

NOTES:
1. ALL WELDS PER AWWA STDS.
2. WORKING PRESSURE: 150 PSI
3. FINISH: EPOXY COAT
4. FASTENERS : 304 SS
5. VERTICAL TAP
6. "CAM-FLANGE" VALVE
7. CUTTER: UNDERSIZE (23.25 ID NECK)

SECTION

N4 24X36 TAPPING SLEEVE FOR CONCRETE STEEL CYLINDER PIPE

Unofficial Website Copy

DELAWARE DEPARTMENT OF TRANSPORTATION	ADDENDUMS / REVISIONS	SR1, SOUTH FREDERICA GRADE SEPARATED INTERSECTION	CONTRACT T200812202	BRIDGE NO. –	SANITARY SEWER RELOCATION DETAILS	SS-15
			COUNTY KENT	DESIGNED BY: LCM		SHEET NO. 295
				CHECKED BY: SFP		TOTAL SHTS. 296

5/24/2013
G:\PROJECTS\06535.00 (DelDOT Agmt. 1376 DOTS Open End)\06535.07 SR1, S. Frederica\CADD Files\XM\SS-15 DT05.dgn
0045905

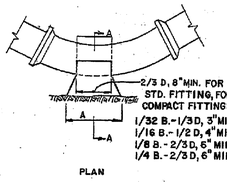

BUTTRESS FOR HORIZONTAL BENDS									
BEND		6"	8"	10"	12"	16"	20"	24"	30"	36"
1/64	A						1'-8"	2'-0"	2'-6"	3'-0"
	B						10"	1'-0"	1'-3"	1'-6"
	C						10"	1'-0"	1'-1"	1'-2"
1/32	A	6"	8"	10"	1'-0"	1'-4"	1'-8"	2'-0"	2'-6"	3'-0"
	B	7"	8"	9"	10"	1'-0"	1'-2"	1'-5"	1'-7"	1'-11"
	C	7"	7"	8"	8"	9"	10"	1'-0"	1'-1"	1'-2"
1/16	A	9"	1'-0"	1'-6"	1'-9"	2'-3"	3'-0"	3'-6"	4'-2"	5'-4"
	B	7"	8"	9"	10"	1'-0"	1'-2"	1'-4"	1'-7"	2'-0"
	C	8"	9"	10"	11"	1'-2"	1'-4"	1'-6"	1'-9"	2'-0"
1/8	A	1'-3"	1'-8"	2'-1"	2'-6"	3'-4"	4'-2"	5'-0"	6'-3"	7'-9"
	B	7"	8"	9"	11"	1'-3"	1'-6"	1'-8"	2'-0"	2'6"
	C	8"	9"	10"	11"	1'-2"	1'-4"	1'-9"	2'-3"	2'-8"
1/4	A	2'-0"	2'-6"	3'-0"	3'-8"	5'-0"	SPECIAL DESIGN			
	B	0'-6"	0'-9"	1'-0"	1'-3"	1'-6"				
	C	1'-10"	1'-9"	1'-8"	1'-7"	1'-5"				

BUTTRESS FOR HORIZONTAL BENDS

Notes
1.) All concrete shall be **3000 p.s.i.**
2.) Buttress dimensions shown are minimum. Dimensions are based upon soil bearing pressure of 3000 p.s.f. and static water pressure of 150 p.s.i. Where pressure exceeds 150 p.s.i. or where soil bearing pressure is less than 3000 p.s.f. special buttress design is required.

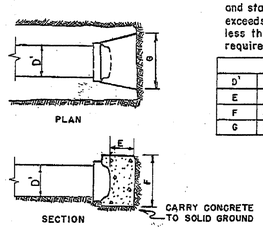

BUTTRESS FOR CAPS									
D'	6"	8"	10"	12"	16"	20"	24"	30"	36"
E	6"	8"	8"	10"	1'-0"	1'-4"	1'-8"	2'-0"	2'-0"
F	1'-0"	1'-4"	1'-8"	2'-0"	2'-8"	3'-3"	4'-0"	4'-9"	5'-9"
G	1'-5"	1'-11"	2'-5"	2'-10"	3'-9"	4'-9"	5'-8"	7'-6"	8'-10"

BUTTRESSES FOR CAPS AND HORIZONTAL BENDS
N.T.S.

Notes:
1. All concrete **shall be 3,000 p.s.i.**
2. Buttress dimensions shown are minimum. Dimensions are based upon soil bearing pressure of 3000 p.s.f. and static water pressure of 150 p.s.i. Where pressure exceeds 150 p.s.i. or where soil bearing pressure is less than 3000 p.s.f. special buttress design is required.

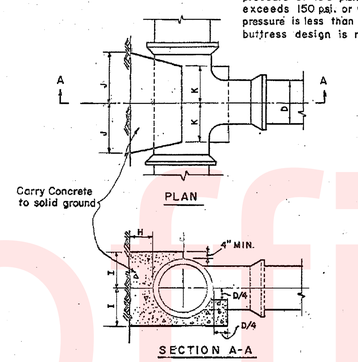

BUTTRESS FOR TEES									
SIZE OF BRANCH									
D	6"	8"	10"	12"	16"	20"	24"	30"	36"
H	8"	9"	10"	1'-0"	1'-2"	1'-4"	1'-6"	1'-9"	2'-0"
I	8"	10"	1'-0"	1'-3"	1'-8"	2'-1"	2'-6"	3'-1"	3'-9"
J	7"	9"	1'-0"	1'-2"	1'-6"	1'-11"	2'-4"	2'-10"	3'-5"
K	6"	8"	8"	8"	10"	1'-2"	1'-4"	1'-6"	1'-10"
K*	5"	5"	6"	5"					

K* FOR COMPACT FITTINGS

BUTTRESSES FOR TEES
N.T.S.

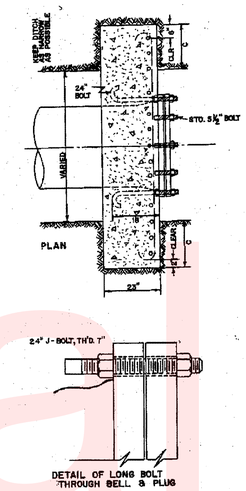

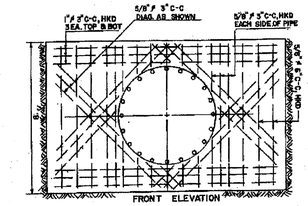

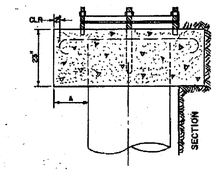

DIMENSION SCHEDULE					
PLUG SIZE	A	B	C	SPECIAL BOLTS SIZE & NO. REQ.	
12"	1'-0"	3'-1"	1'-0"	3/4"	4
14"	1'-0"	3'-3"	1'-0"	3/4"	5
16"	1'-0"	3'-6"	1'-6"	3/4"	6
18"	1'-0"	3'-8"	1'-9"	3/4"	6
20"	1'-0"	3'-10"	2'-2"	3/4"	7
24"	1'-2"	4'-6"	2'-8"	3/4"	8
30"	1'-2"	5'-0"	3'-0"	1"	10
36"	1'-4"	5'-6"	3'-6"	1"	10

NOTES:
1. ALL CONCRETE SHALL BE 4,000 p.s.i.
2. ALL BEARING SURFACES TO BE CARRIED TO UNDISTURBED EARTH.
3. ALL BACKFILL IN FRONT OF THE ANCHOR SHALL BE CAREFULLY COMPACTED.
4. ANCHOR DIMENSIONS SHOWN ARE MINIMUM. DIMENSIONS ARE BASED UPON SOIL BEARING PRESSURE OF 3000 P.S.F. AND WATER PRESSURE OF 150 P.S.I. WHERE PRESSURE EXCEEDS 150 P.S.I. OR WHERE SOIL BEARING PRESSURE IS LESS THAN 3000 P.S.F. SPECIAL ANCHOR DESIGN IS REQUIRED.
5. SPECIAL BOLTS ARE 24" INCHES LONG, THREADED 7" WITH 2" HOOK AND EQUIPPED WITH 2 STANDARD NUTS.

ANCHOR FOR 12" AND LARGER PLUGS
N.T.S.

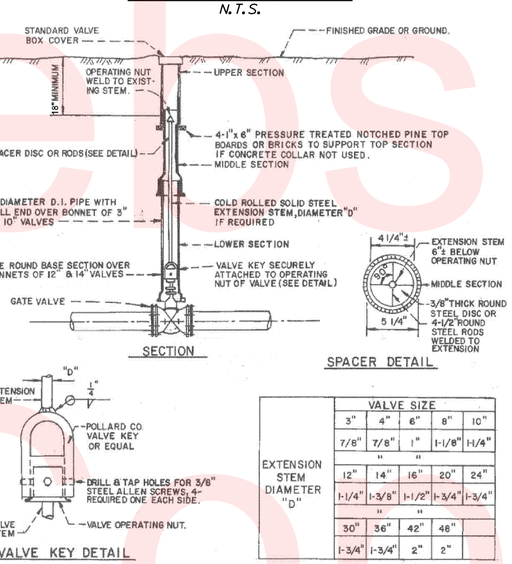

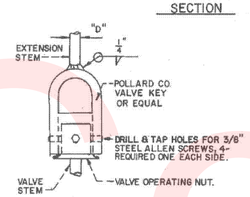

EXTENSION STEM DIAMETER "D"	VALVE SIZE				
	3"	4"	6"	8"	10"
	7/8"	7/8"	1"	1-1/8"	1-1/4"
	"		"		
	12"	14"	16"	20"	24"
	1-1/4"	1-3/8"	1-1/2"	1-3/4"	1-3/4"
	"		"		
	30"	36"	42"	48"	
	1-3/4"	1-3/4"	2"	2"	

1. SCREWS SECURING VALVE KEY TO VALVE NUT TO BE FLUSH WITH VALVE KEY.
2. EXTENSION STEM TO BE SECURELY WELDED TO VALVE KEY.
3. LENGTH OF STEM TO BE SUCH THAT OPERATING NUT WILL BE LOCATED AS PRESCRIBED ABOVE.
4. WELD 4- 1/2" ROUND STEEL RODS OR 3/8" THICK ROUND STEEL PLATE TO EXTENSION STEM TO INSURE OPERATING NUT IS CENTRALLY LOCATED WITHIN VALVE BOX.
5. APPLY 2- COATS OF BITUMINOUS COATING TO ALL STEEL.
6. THIS STANDARD DETAIL IS TO BE USED WHEN DISTANCE FROM TOP OF OPERATING NUT OF VALVE TO FINISHED GRADE OR GROUND EXCEEDS 4'-0".
7. ALL CONSTRUCTION TO BE PLUMB.

EXTENSION STEMS & VALVE BOXES FOR DEEP SETTINGS
N.T.S.

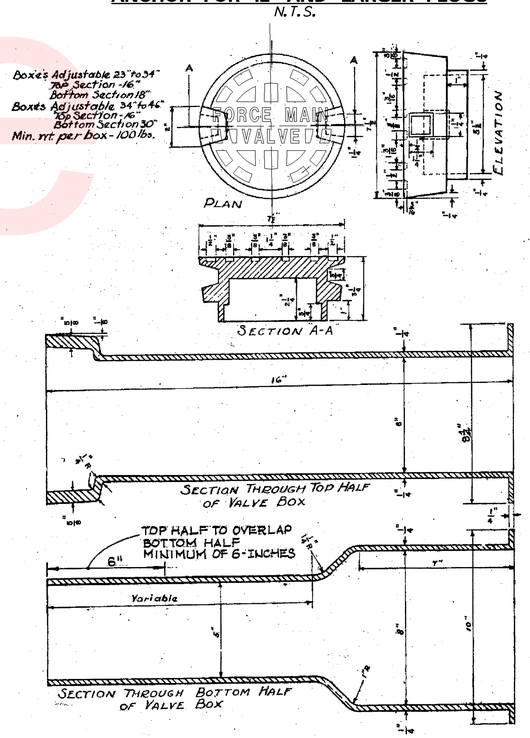

STANDARD VALVE BOX AND COVER
N.T.S.

DELAWARE DEPARTMENT OF TRANSPORTATION	ADDENDUMS / REVISIONS	SR1, SOUTH FREDERICA GRADE SEPARATED INTERSECTION	CONTRACT T200812202	BRIDGE NO. –	SANITARY SEWER RELOCATION DETAILS
			COUNTY KENT	DESIGNED BY: LCM	SHEET NO. 296
				CHECKED BY: SFP	TOTAL SHTS. 296

SS-16

5/24/2013
G:\PROJECTS\06535.00 (DelDOT Agmt. 1376 DOTS Open End)\06535.07 SR1, S. Frederica\CADD Files\XM\SS-16 DT06.dgn
00:36:00

Unofficial Website Copy

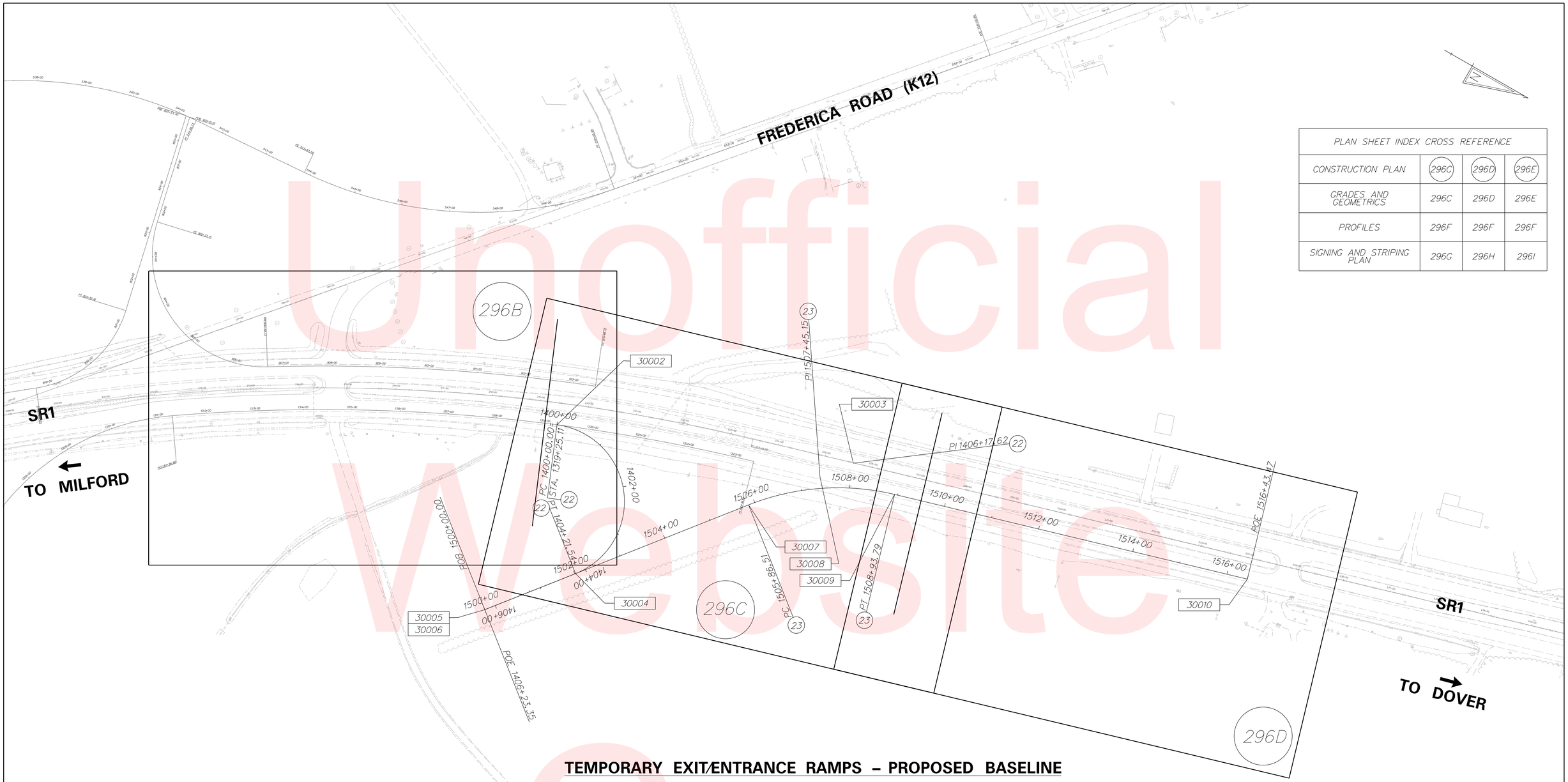

PLAN SHEET INDEX CROSS REFERENCE			
CONSTRUCTION PLAN	296C	296D	296E
GRADES AND GEOMETRICS	296C	296D	296E
PROFILES	296F	296F	296F
SIGNING AND STRIPING PLAN	296G	296H	296I

TEMPORARY EXIT/ENTRANCE RAMPS – PROPOSED BASELINE

CURVE 22

Element: Circular

	STATION	NORTHING	EASTING
PCC (30002)	1400+00.00	362363.5843	645940.8227
PI (30003)	1406+17.62	362934.5800	645705.4134
CC ( )		362424.5692	646088.7444
PT (30004)	1404+21.54	362549.7043	646188.4500

Radius: 160.0000
Delta: 150°57'09.2426" Right
Degree of Curvature(Arc): 35°48'35.5390"
Length: 421.5039
Tangent: 617.6193
Chord: 309.7441
Middle Ordinate: 119.8751
External: 478.0076
Tangent Direction: N 22°24'19.0895" W
Radial Direction: N 67°35'40.9105" E
Chord Direction: N 5°34'15.5318" E
Radial Direction: S 38°32'50.1531" W
Tangent Direction: S 51°27'09.8469" E

CURVE 23

Element: Circular

	STATION	NORTHING	EASTING
PC (30007)	1505+86.51	362789.4328	645887.5799
PI (30008)	1507+45.15	362888.2926	645763.5063
CC ( )		363181.2621	646199.7830
PT (30009)	1508+93.79	363040.5497	645718.9494

Radius: 501.0000
Delta: 35°08'27.6423" Right
Degree of Curvature(Arc): 11°26'10.6200"
Length: 307.2765
Tangent: 158.6428
Chord: 302.4829
Middle Ordinate: 23.3736
External: 24.5174
Tangent Direction: N 51°27'09.8469" W
Radial Direction: N 38°32'50.1531" E
Chord Direction: N 33°52'56.0257" W
Radial Direction: N 73°41'17.7954" E
Tangent Direction: N 16°18'42.2046" W

CONSTRUCTION ALIGNMENT CONTROL

POINT	STATION	OFFSET	NORTHING	EASTING
·30002	1400+00.00	0.00	362365.6186	645938.3627
·30004	1404+21.54	0.00	362551.6282	646186.0355
·30005	1406+23.35	0.00	362426.5511	646348.3648
·30006	1500+00.00	0.00	362423.9428	646346.2866
·30007	1505+86.51	0.00	362789.4328	645887.5799
·30009	1508+93.79	0.00	363040.5497	645718.9494
·30010	1516+43.47	0.00	363760.0566	645508.3910

Unofficial Website Copy

DELAWARE DEPARTMENT OF TRANSPORTATION

ADDENDUMS / REVISIONS

SCALE 0 30 60 90 FEET

SR1, SOUTH FREDERICA GRADE SEPARATED INTERSECTION

CONTRACT	BRIDGE NO.	–
T200812202	DESIGNED BY: LCM	
COUNTY		
KENT	CHECKED BY: SFP	

TEMPORARY ENTRANCE PLAN SHEET INDEX

SHEET NO. 296A
TOTAL SHTS. 296

9/14/2015
G:\PROJECTS\06535.00 (DelDOT Agmt. 1376 DOTS Open End)\06535.07 SR1, S. Frederica\CADD Files\XM\Sports_is01.dgn
11:28:08 AM

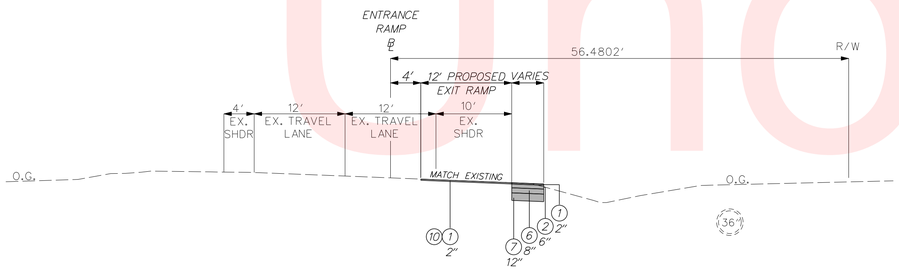

SR1 NORTHBOUND MILL AND OVERLAY
STATION 1507+66.83 TO STATION 1516+43.47

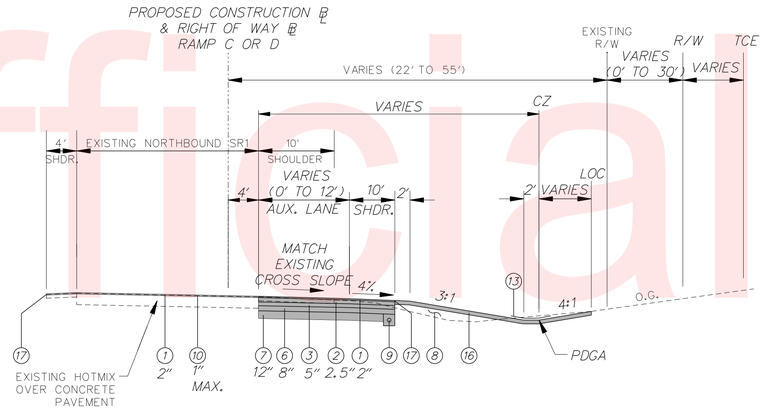

SR1 NORTHBOUND
STATION 1311+28.80 TO 1319+25.11 (RAMP D)

NOTE: CONTRACTOR SHALL PLACE 2" OF TYPE C HOT-MIX TO FINAL GRADES SHOWN IN THE PLANS IN INITIAL PHASES. IN FINAL PHASE, CONTRACTOR SHALL MILL 1" OVER ENTIRE PAVED AREA AND OVERLAY WITH 2" OF TYPE C HOT-MIX.

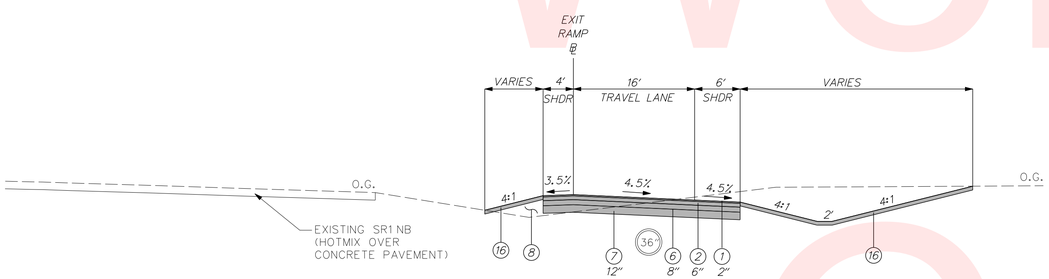

SR1 NORTHBOUND EXIT RAMP
STATION 1400+00 TO STATION 1401+64.72

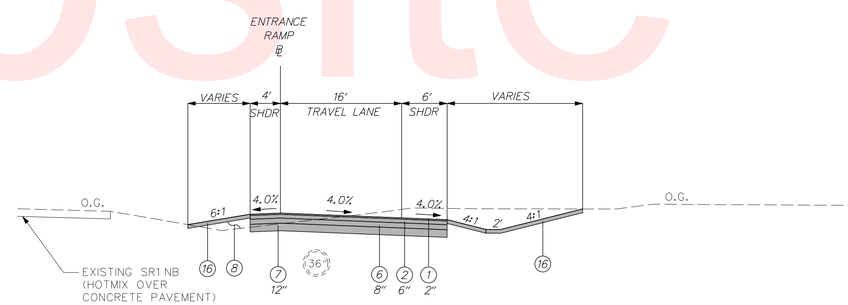

SR1 NORTHBOUND ENTRANCE RAMP
STATION 1506+13.31 TO STATION 1507+66.83

LEGEND

1. ITEM 401830 - WMA, SUPERPAVE, TYPE C HOT-MIX 160 GYRATIONS, PG 70-22 (NON-CARBONATE STONE)
2. ITEM 401813 - WMA, SUPERPAVE, TYPE B HOT-MIX 160 GYRATIONS, PG 70-22
3. ITEM 401819 - WMA, SUPERPAVE, BCBC, 160 GYRATIONS, PG 64-22
4. ITEM 401827 - WMA, SUPERPAVE TYPE C HOT-MIX 160 GYRATIONS, PG 64-22 (NON-CARBONATE STONE)
5. ITEM 401810 - WMA, SUPERPAVE TYPE B HOT-MIX 160 GYRATIONS, PG 64-22
6. ITEM 302007 - GRADED AGGREGATE BASE COURSE, TYPE B
7. ITEM 209001 - BORROW, TYPE A
8. ITEM 209006 - BORROW, TYPE F (IN FILL SECTIONS)
9. ITEM 715001 - PERFORATED PIPE UNDERDRAINS, 6"
10. ITEM 760507 - PROFILE MILLING, HOT-MIX
11. ITEM 701011 - PORTLAND CEMENT CONCRETE CURB, TYPE 2
12. ITEM 701022 - PCC CURB & GUTTER, TYPE 3-8
13. ITEM 735535 - SOIL RETENTION BLANKET MULCH, TYPE 5 (SEE NOTE 10)
14. ITEM 705005 - PCC SIDEWALK, 8"
15. ITEM 720050 - GALVANIZED STEEL BEAM GUARDRAIL, TYPE 1-31
16. ITEM 733002 - TOPSOILING, 6"
    ITEM 734013 - PERMANENT GRASS SEEDING, DRY GROUND
17. ITEM 401752 - SAFETY EDGE
18. ITEM 701012 - P.C.C. CURB, TYPE 1-4
19. ITEM 401824 - WMA, SUPERPAVE, TYPE C, 160 GYRATIONS, PG 64-22, WEDGE

FILL SLOPE RATIO CHART

HEIGHT OF FILL	SLOPE RATIO
0' TO 5'	6:1
> 5' TO 10'	4:1
> 10' TO 15'	3:1
> 15'	3:1 WITH GUARDRAIL

PR - POINT OF ROTATION

PDGA - PROFILE DITCH GRADE APPLICATION

PGA - PROFILE GRADE APPLICATION

MAXIMUM SINGLE LIFTS FOR THE FOLLOWING MATERIALS AFTER COMPACTION ARE:
2" = HOT-MIX, TYPE C
3" = HOT-MIX, TYPE B
6" = HOT-MIX, BCBC

NOTES:

1. MAXIMUM ALGEBRAIC DIFFERENCE OF CROSS SLOPES SHALL NOT EXCEED 8%.
2. THE CONTRACTOR SHALL SAWCUT 1' (+/-) INTO THE EXISTING TRAVEL LANE FOR CONSTRUCTION OF THE PROPOSED FULL DEPTH PAVEMENT OR AS DIRECTED BY ENGINEER IN THE FIELD. WHERE PCC PAVEMENT IS IDENTIFIED, CONTRACTOR SHALL PRESERVE THE EXISTING EDGE OF THE CONCRETE AND CONSTRUCT THE PROPOSED PAVEMENT BOX ADJACENT TO THE EDGE.
3. PERFORATED PIPE UNDERDRAIN SHALL MAINTAIN .005% MINIMUM SLOPE IN ALL APPLICATIONS.
4. BORROW, TYPE A SHALL BE PLACED IN SUCCESSIVE LAYERS NOT TO EXCEED 8" IN DEPTH, LOOSE MEASUREMENT, UNLESS OTHERWISE APPROVED BY THE ENGINEER.
5. SEE SUPERELEVATION TRANSITION SHEETS FOR THE DESIGNED SUPERELEVATIONS OF THE PAVEMENT.
6. SEE GRADES AND GEOMETRICS SHEETS FOR FURTHER DETAILS WITHIN THE LIMITS OF THE INTERSECTIONS.
7. FOR GUARDRAIL APPLICATION, SEE CONSTRUCTION PLANS FOR STATIONING AND SEE CONSTRUCTION DETAIL FOR INSTALLATION SPECIFICATIONS.
8. HORIZONTAL CLEARANCE IS MEASURED TO THE POINT 1.5 FT. BEHIND THE BACK OF THE CURB, WHERE APPLICABLE.
9. VARIABLE HOT-MIX MILLING SHALL NOT EXCEED 2" IN DEPTH, UNLESS OTHERWISE DIRECTED BY THE ENGINEER.
10. SOIL RETENTION BLANKET MULCH, TYPE 5 SHALL BE UTILIZED ON THE BOTTOM OF DITCHES AND UP TO 2 FT. ON THE ADJACENT SLOPES.

Unofficial Website Copy

DELAWARE DEPARTMENT OF TRANSPORTATION	ADDENDUMS / REVISIONS	SCALE 0 30 60 90 FEET	SR1, SOUTH FREDERICA GRADE SEPARATED INTERSECTION	CONTRACT T200812202	BRIDGE NO. –	TEMPORARY ENTRANCE TYPICAL SECTIONS	SHEET NO. 296B
				COUNTY KENT	DESIGNED BY: LCM		TOTAL SHTS. 296
					CHECKED BY: SFP		

10/13/2015
G:\PROJECTS\06535.00 (DelDOT Agmt. 1376 DOTS Open End)\06535.07 SR1, S. Frederica\CADD Files\XM\Sports_dt01.dgn
3:01:46 PM

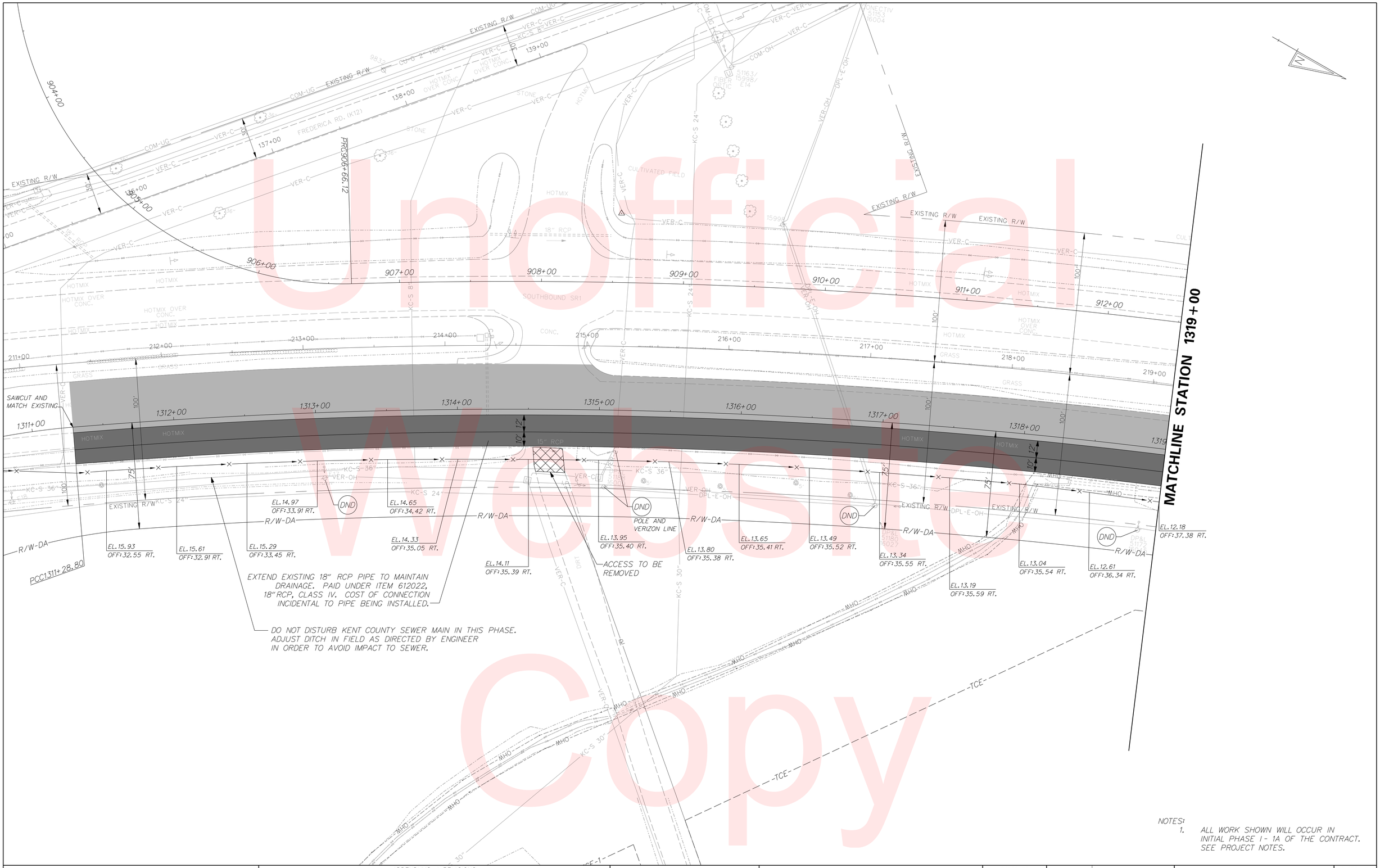

NOTES:

1. ALL WORK SHOWN WILL OCCUR IN INITIAL PHASE 1- 1A OF THE CONTRACT. SEE PROJECT NOTES.

Unofficial Website Copy

DELAWARE DEPARTMENT OF TRANSPORTATION	ADDENDUMS / REVISIONS	SCALE 0 30 60 90 FEET	SR1, SOUTH FREDERICA GRADE SEPARATED INTERSECTION	CONTRACT T200812202	BRIDGE NO. –	TEMPORARY ENTRANCE CONSTRUCTION PLAN	SHEET NO. 296C
				COUNTY KENT	DESIGNED BY: LCM		TOTAL SHTS. 296
					CHECKED BY: SFP		

10/13/2015
G:\PROJECTS\06535.00 (DelDOT Agmt. 1376 DOTS Open End)\06535.07 SR1, S. Frederica\CADD Files\XM\Sports_cp01.dgn
2:29:01 PM

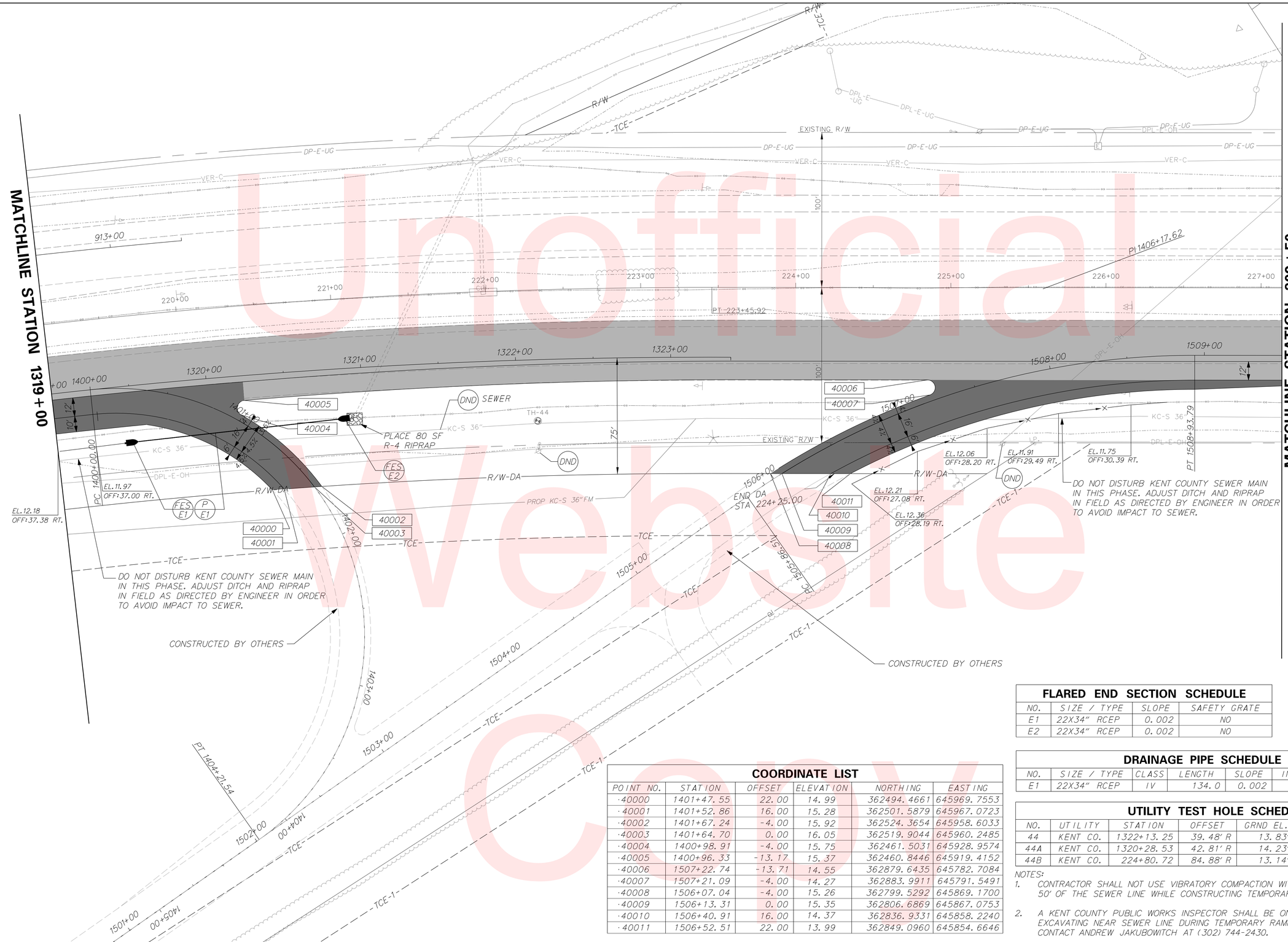

Unofficial Website Copy

FLARED END SECTION SCHEDULE

NO.	SIZE / TYPE	SLOPE	SAFETY GRATE
E1	22X34" RCEP	0.002	NO
E2	22X34" RCEP	0.002	NO

DRAINAGE PIPE SCHEDULE

NO.	SIZE / TYPE	CLASS	LENGTH	SLOPE	INT. EL.	DIS. EL.
E1	22X34" RCEP	IV	134.0	0.002	11.67	11.40

COORDINATE LIST

POINT NO.	STATION	OFFSET	ELEVATION	NORTHING	EASTING
·40000	1401+47.55	22.00	14.99	362494.4661	645969.7553
·40001	1401+52.86	16.00	15.28	362501.5879	645967.0723
·40002	1401+67.24	-4.00	15.92	362524.3654	645958.6033
·40003	1401+64.70	0.00	16.05	362519.9044	645960.2485
·40004	1400+98.91	-4.00	15.75	362461.5031	645928.9574
·40005	1400+96.33	-13.17	15.37	362460.8446	645919.4152
·40006	1507+22.74	-13.71	14.55	362879.6435	645782.7084
·40007	1507+21.09	-4.00	14.27	362883.9911	645791.5491
·40008	1506+07.04	-4.00	15.26	362799.5292	645869.1700
·40009	1506+13.31	0.00	15.35	362806.6869	645867.0753
·40010	1506+40.91	16.00	14.37	362836.9331	645858.2240
·40011	1506+52.51	22.00	13.99	362849.0960	645854.6646

UTILITY TEST HOLE SCHEDULE

NO.	UTILITY	STATION	OFFSET	GRND EL.	COVER	O.D. & MATERIAL
44	KENT CO.	1322+13.25	39.48' R	13.83'	3.69'	36" CONC ENC FM SAN
44A	KENT CO.	1320+28.53	42.81' R	14.23'	3.73'	36" CONC ENC FM SAN
44B	KENT CO.	224+80.72	84.88' R	13.14'	3.68'	36" CONC ENC FM SAN

NOTES:

1. CONTRACTOR SHALL NOT USE VIBRATORY COMPACTION WITHIN 50' OF THE SEWER LINE WHILE CONSTRUCTING TEMPORARY RAMP.
2. A KENT COUNTY PUBLIC WORKS INSPECTOR SHALL BE ON SITE WHILE EXCAVATING NEAR SEWER LINE DURING TEMPORARY RAMP CONSTRUCTION. CONTACT ANDREW JAKUBOWITCH AT (302) 744-2430.

DELAWARE DEPARTMENT OF TRANSPORTATION

ADDENDUMS / REVISIONS

SCALE 0 30 60 90 FEET

SR1, SOUTH FREDERICA GRADE SEPARATED INTERSECTION

CONTRACT	BRIDGE NO.	–
T200812202	DESIGNED BY: LCM	
COUNTY		
KENT	CHECKED BY: SFP	

TEMPORARY ENTRANCE CONSTRUCTION PLAN

SHEET NO. 296D

TOTAL SHTS. 296

10/14/2015
G:\PROJECTS\06535.00 (DelDOT Agmt. 1376 DOTS Open End)\06535.07 SR1, S. Frederica\CADD Files\XM\Sports_cp02.dgn
9:11:20 AM

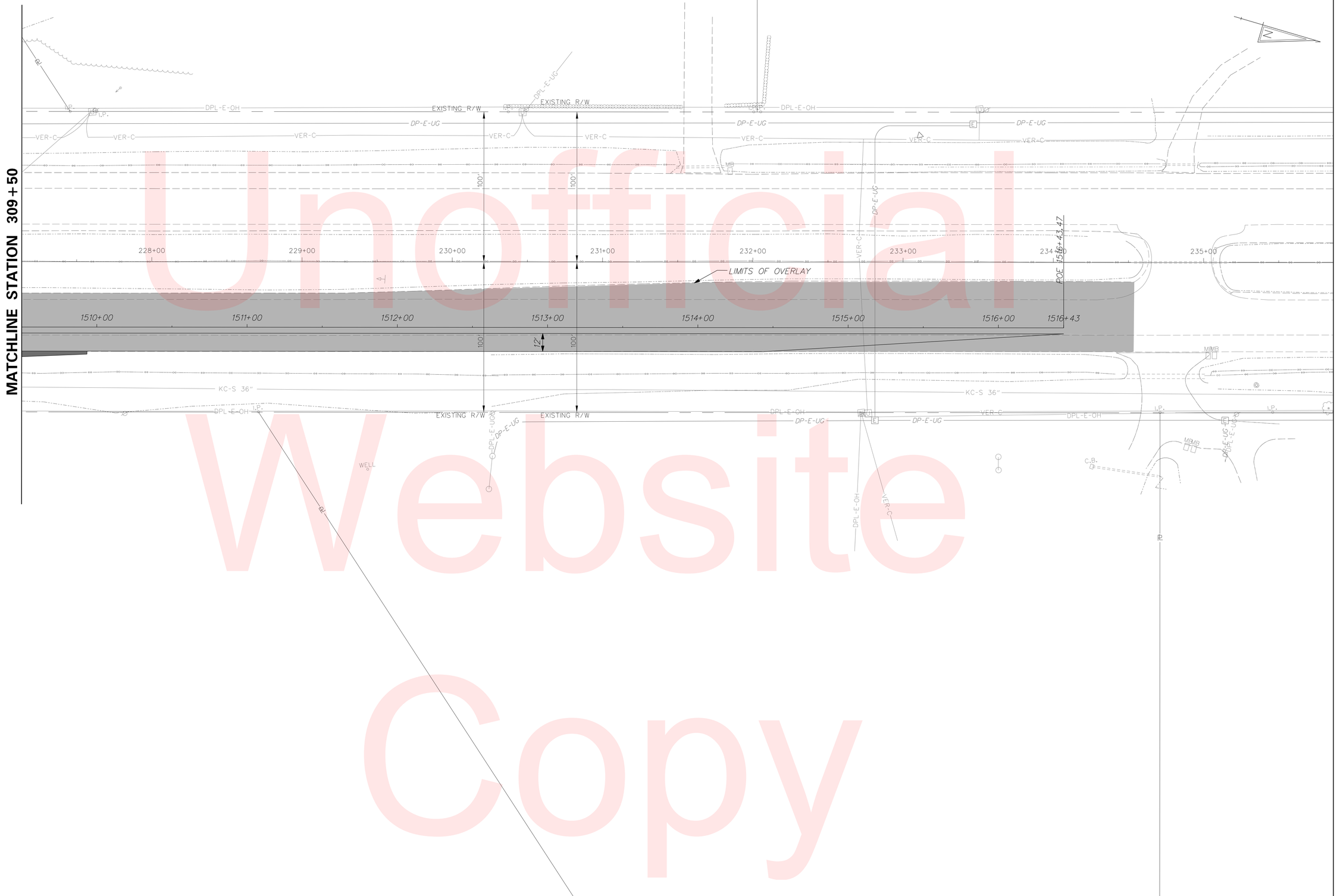

Unofficial Website Copy

DELAWARE DEPARTMENT OF TRANSPORTATION	ADDENDUMS / REVISIONS	SCALE 0 30 60 90 FEET	SR1, SOUTH FREDERICA GRADE SEPARATED INTERSECTION	CONTRACT T200812202	BRIDGE NO. –	TEMPORARY ENTRANCE CONSTRUCTION PLAN	SHEET NO. 296E
				COUNTY KENT	DESIGNED BY: LCM		TOTAL SHTS. 296
					CHECKED BY: SFP		

9/11/2015
G:\PROJECTS\06535.00 (DelDOT Agmt. 1376 DOTS Open End)\06535.07 SR1, S. Frederica\CADD Files\XM\Sports_cp03.dgn
2:17:58 PM

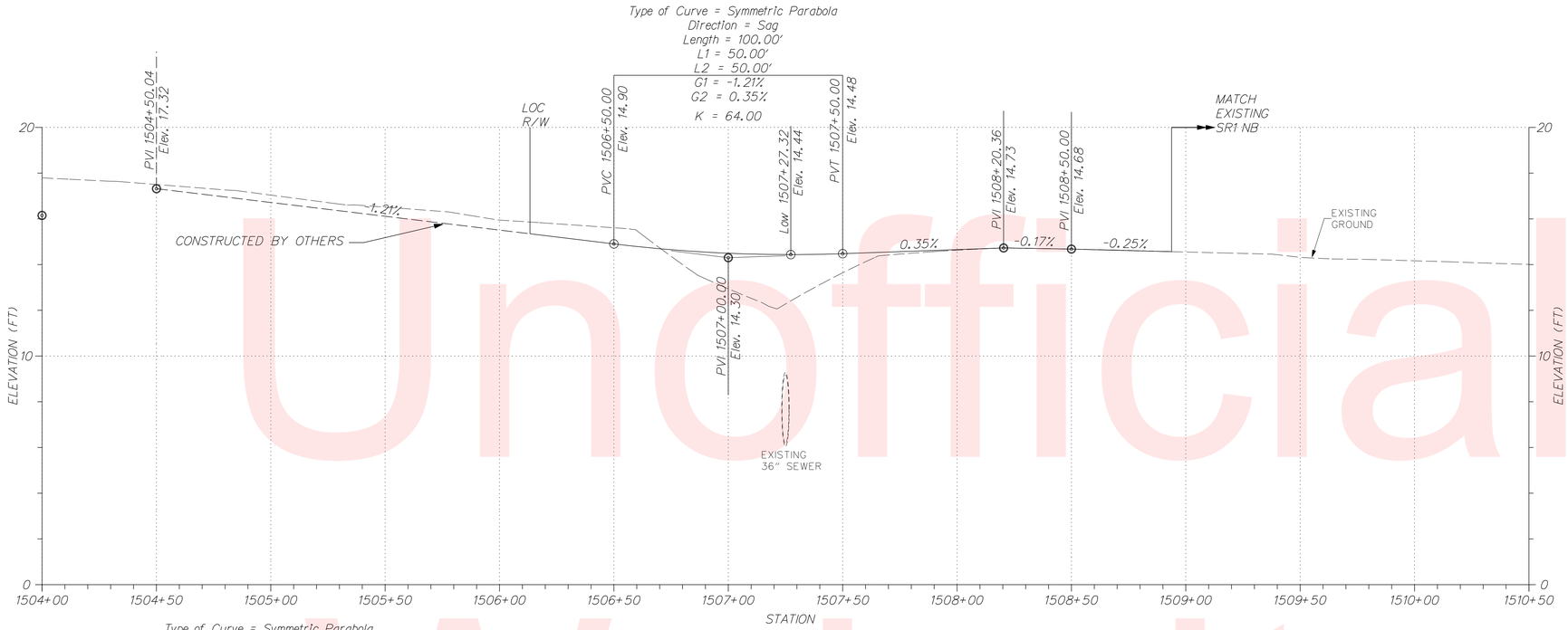

SR1 TEMPORARY ENTRANCE RAMP

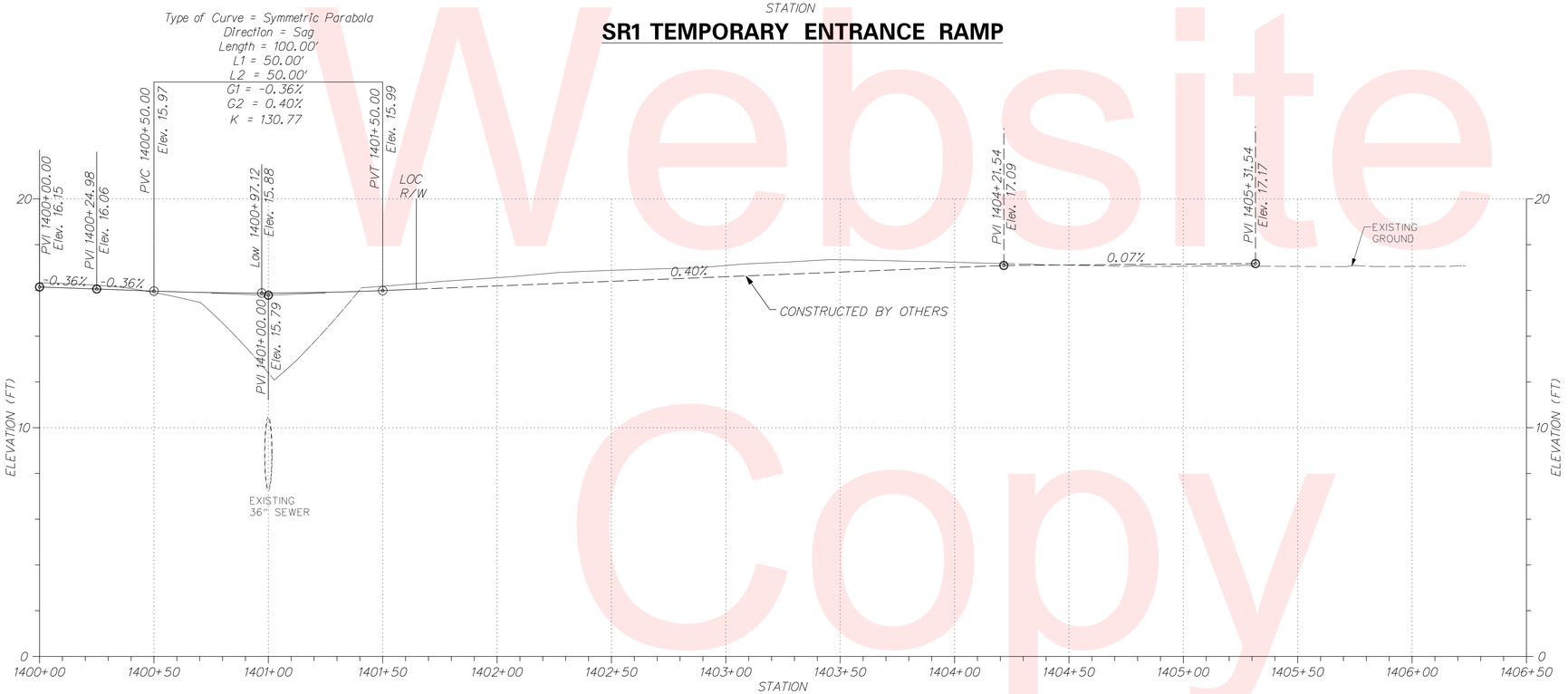

SR1 TEMPORARY EXIT RAMP

Unofficial Website Copy

VERTICAL SCALE FEET 9 6 3 0

DELAWARE DEPARTMENT OF TRANSPORTATION	ADDENDUMS / REVISIONS	SCALE 0 30 60 90 FEET	SR1, SOUTH FREDERICA GRADE SEPARATED INTERSECTION	CONTRACT T200812202	BRIDGE NO. -	TEMPORARY ENTRANCE PROFILES	SHEET NO. 296F
				COUNTY KENT	DESIGNED BY: LCM		TOTAL SHTS. 296
					CHECKED BY: SFP		

9/11/2015
G:\PROJECTS\06535.00 (DelDOT Agmt. 1376 DOTS Open End)\06535.07 SR1, S. Frederica\CADD Files\XM\Sports_PF01.dgn
2:18:56 PM

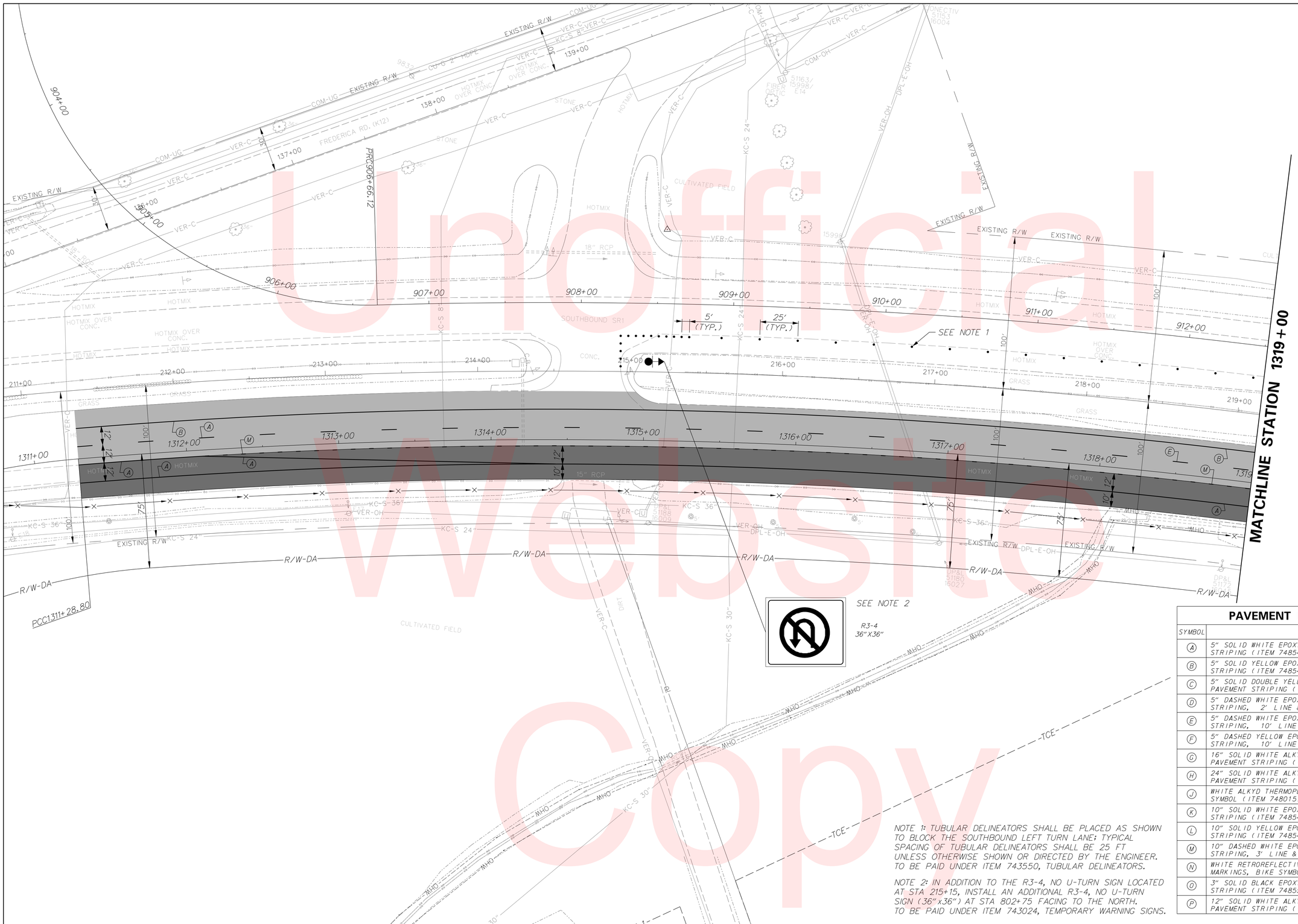

PAVEMENT MARKINGS LEGEND

SYMBOL	ITEM	QUANTITY
A	5" SOLID WHITE EPOXY RESIN PAVEMENT STRIPING (ITEM 748548)	1083 LF
B	5" SOLID YELLOW EPOXY RESIN PAVEMENT STRIPING (ITEM 748548)	776 LF
C	5" SOLID DOUBLE YELLOW EPOXY RESIN PAVEMENT STRIPING (ITEM 748548)	0 LF
D	5" DASHED WHITE EPOXY RESIN PAVEMENT STRIPING, 2' LINE & 6' GAP (ITEM 748548)	0 LF
E	5" DASHED WHITE EPOXY RESIN PAVEMENT STRIPING, 10' LINE & 30' GAP (ITEM 748548)	773 LF
F	5" DASHED YELLOW EPOXY RESIN PAVEMENT STRIPING, 10' LINE & 30' GAP (ITEM 748548)	0 LF
G	16" SOLID WHITE ALKYD THERMOPLASTIC PAVEMENT STRIPING (ITEM 748015)	0 SF
H	24" SOLID WHITE ALKYD THERMOPLASTIC PAVEMENT STRIPING (ITEM 748015)	0 SF
J	WHITE ALKYD THERMOPLASTIC PAVEMENT SYMBOL (ITEM 748015)	0 SF
K	10" SOLID WHITE EPOXY RESIN PAVEMENT STRIPING (ITEM 748549)	0 LF
L	10" SOLID YELLOW EPOXY RESIN PAVEMENT STRIPING (ITEM 748549)	0 LF
M	10" DASHED WHITE EPOXY RESIN PAVEMENT STRIPING, 3' LINE & 9' GAP (ITEM 748549)	690 LF
N	WHITE RETROREFLECTIVE PREFORMED PATTERNED MARKINGS, BIKE SYMBOL (ITEM 748553)	0 SF
O	3" SOLID BLACK EPOXY RESIN PAVEMENT STRIPING (ITEM 748557)	0 LF
P	12" SOLID WHITE ALKYD THERMOPLASTIC PAVEMENT STRIPING (ITEM 748027)	0 LF

NOTE 1: TUBULAR DELINEATORS SHALL BE PLACED AS SHOWN TO BLOCK THE SOUTHBOUND LEFT TURN LANE; TYPICAL SPACING OF TUBULAR DELINEATORS SHALL BE 25 FT UNLESS OTHERWISE SHOWN OR DIRECTED BY THE ENGINEER. TO BE PAID UNDER ITEM 743550, TUBULAR DELINEATORS.

NOTE 2: IN ADDITION TO THE R3-4, NO U-TURN SIGN LOCATED AT STA 215+15, INSTALL AN ADDITIONAL R3-4, NO U-TURN SIGN (36"x36") AT STA 802+75 FACING TO THE NORTH. TO BE PAID UNDER ITEM 743024, TEMPORARY WARNING SIGNS.

Unofficial Website Copy

DELAWARE DEPARTMENT OF TRANSPORTATION	ADDENDUMS / REVISIONS	SCALE 0 30 60 90 FEET	SR1, SOUTH FREDERICA GRADE SEPARATED INTERSECTION	CONTRACT T200812202 / COUNTY KENT	BRIDGE NO. – / DESIGNED BY: LCM / CHECKED BY: SFP	TEMPORARY ENTRANCE SIGNING AND STRIPING	SHEET NO. 296G / TOTAL SHTS. 296

9/14/2015
G:\PROJECTS\06535.00 (DelDOT Agmt. 1376 DOTS Open End)\06535.07 SR1, S. Frederica\CADD Files\XM\Sports_SS01.dgn
3:51:37 PM

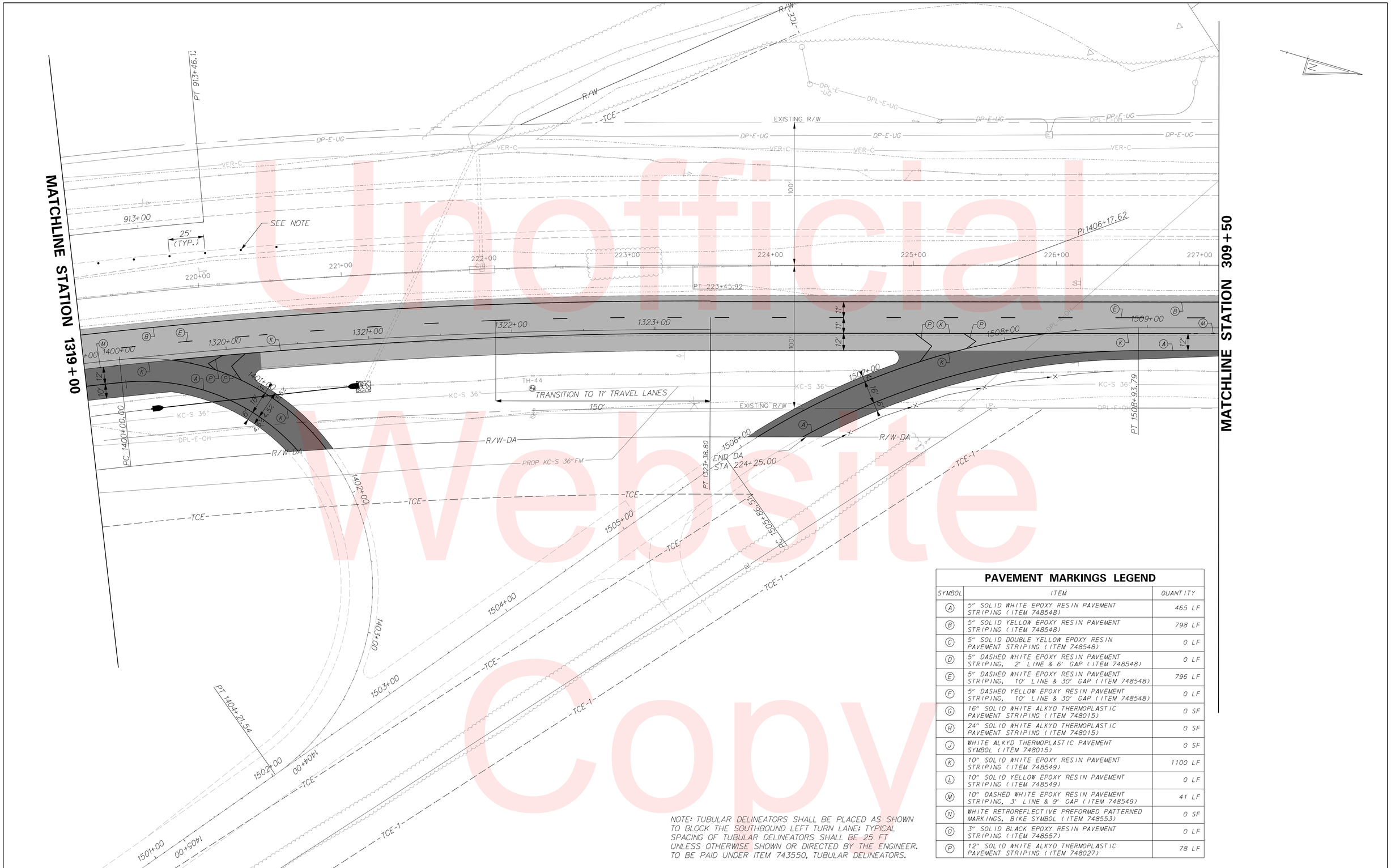

PAVEMENT MARKINGS LEGEND

SYMBOL	ITEM	QUANTITY
(A)	5" SOLID WHITE EPOXY RESIN PAVEMENT STRIPING (ITEM 748548)	465 LF
(B)	5" SOLID YELLOW EPOXY RESIN PAVEMENT STRIPING (ITEM 748548)	798 LF
(C)	5" SOLID DOUBLE YELLOW EPOXY RESIN PAVEMENT STRIPING (ITEM 748548)	0 LF
(D)	5" DASHED WHITE EPOXY RESIN PAVEMENT STRIPING, 2' LINE & 6' GAP (ITEM 748548)	0 LF
(E)	5" DASHED WHITE EPOXY RESIN PAVEMENT STRIPING, 10' LINE & 30' GAP (ITEM 748548)	796 LF
(F)	5" DASHED YELLOW EPOXY RESIN PAVEMENT STRIPING, 10' LINE & 30' GAP (ITEM 748548)	0 LF
(G)	16" SOLID WHITE ALKYD THERMOPLASTIC PAVEMENT STRIPING (ITEM 748015)	0 SF
(H)	24" SOLID WHITE ALKYD THERMOPLASTIC PAVEMENT STRIPING (ITEM 748015)	0 SF
(J)	WHITE ALKYD THERMOPLASTIC PAVEMENT SYMBOL (ITEM 748015)	0 SF
(K)	10" SOLID WHITE EPOXY RESIN PAVEMENT STRIPING (ITEM 748549)	1100 LF
(L)	10" SOLID YELLOW EPOXY RESIN PAVEMENT STRIPING (ITEM 748549)	0 LF
(M)	10" DASHED WHITE EPOXY RESIN PAVEMENT STRIPING, 3' LINE & 9' GAP (ITEM 748549)	41 LF
(N)	WHITE RETROREFLECTIVE PREFORMED PATTERNED MARKINGS, BIKE SYMBOL (ITEM 748553)	0 SF
(O)	3" SOLID BLACK EPOXY RESIN PAVEMENT STRIPING (ITEM 748557)	0 LF
(P)	12" SOLID WHITE ALKYD THERMOPLASTIC PAVEMENT STRIPING (ITEM 748027)	78 LF

NOTE: TUBULAR DELINEATORS SHALL BE PLACED AS SHOWN TO BLOCK THE SOUTHBOUND LEFT TURN LANE; TYPICAL SPACING OF TUBULAR DELINEATORS SHALL BE 25 FT UNLESS OTHERWISE SHOWN OR DIRECTED BY THE ENGINEER. TO BE PAID UNDER ITEM 743550, TUBULAR DELINEATORS.

Unofficial Website Copy

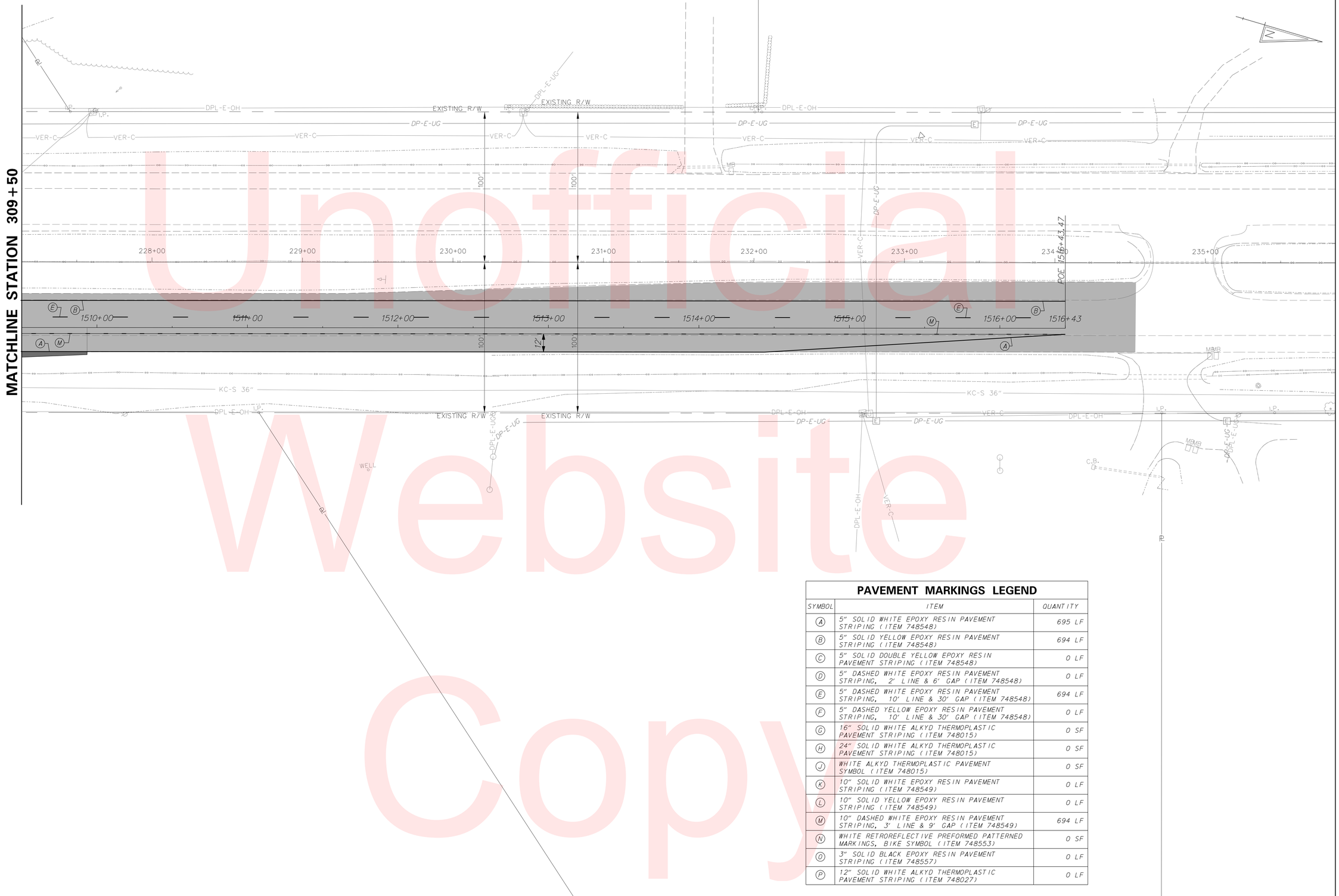

PAVEMENT MARKINGS LEGEND

SYMBOL	ITEM	QUANTITY
A	5" SOLID WHITE EPOXY RESIN PAVEMENT STRIPING (ITEM 748548)	695 LF
B	5" SOLID YELLOW EPOXY RESIN PAVEMENT STRIPING (ITEM 748548)	694 LF
C	5" SOLID DOUBLE YELLOW EPOXY RESIN PAVEMENT STRIPING (ITEM 748548)	0 LF
D	5" DASHED WHITE EPOXY RESIN PAVEMENT STRIPING, 2' LINE & 6' GAP (ITEM 748548)	0 LF
E	5" DASHED WHITE EPOXY RESIN PAVEMENT STRIPING, 10' LINE & 30' GAP (ITEM 748548)	694 LF
F	5" DASHED YELLOW EPOXY RESIN PAVEMENT STRIPING, 10' LINE & 30' GAP (ITEM 748548)	0 LF
G	16" SOLID WHITE ALKYD THERMOPLASTIC PAVEMENT STRIPING (ITEM 748015)	0 SF
H	24" SOLID WHITE ALKYD THERMOPLASTIC PAVEMENT STRIPING (ITEM 748015)	0 SF
J	WHITE ALKYD THERMOPLASTIC PAVEMENT SYMBOL (ITEM 748015)	0 SF
K	10" SOLID WHITE EPOXY RESIN PAVEMENT STRIPING (ITEM 748549)	0 LF
L	10" SOLID YELLOW EPOXY RESIN PAVEMENT STRIPING (ITEM 748549)	0 LF
M	10" DASHED WHITE EPOXY RESIN PAVEMENT STRIPING, 3' LINE & 9' GAP (ITEM 748549)	694 LF
N	WHITE RETROREFLECTIVE PREFORMED PATTERNED MARKINGS, BIKE SYMBOL (ITEM 748553)	0 SF
O	3" SOLID BLACK EPOXY RESIN PAVEMENT STRIPING (ITEM 748557)	0 LF
P	12" SOLID WHITE ALKYD THERMOPLASTIC PAVEMENT STRIPING (ITEM 748027)	0 LF

Unofficial Website Copy

9/14/2015
G:\PROJECTS\06535.00 (DelDOT Agmt. 1376 DOTS Open End)\06535.07 SR1, S. Frederica\CADD Files\XM\Sports_SS03.dgn
3:53:30 PM

DELAWARE DEPARTMENT OF TRANSPORTATION

ADDENDUMS / REVISIONS

SCALE 0 30 60 90 FEET

SR1, SOUTH FREDERICA GRADE SEPARATED INTERSECTION

CONTRACT	BRIDGE NO.	–
T200812202	DESIGNED BY: LCM	
COUNTY		
KENT	CHECKED BY: SFP	

TEMPORARY ENTRANCE SIGNING AND STRIPING

SHEET NO. 296I
TOTAL SHTS. 296