THE STATE OF DELAWARE
DEPARTMENT OF TRANSPORTATION

U.S. CUSTOMARY UNITS

CONSTRUCTION & RIGHT-OF-WAY PLANS FOR:

BR 2-203A ON TODDS MILL ROAD OVER ISAAC BRANCH

CONTRACT NUMBER: T200907201

FEDERAL AID PROJECT NUMBER: EBROS-K203(8)

COUNTY: KENT **M.R. #:** K203

UNOFFICIAL WEBSITE COPY

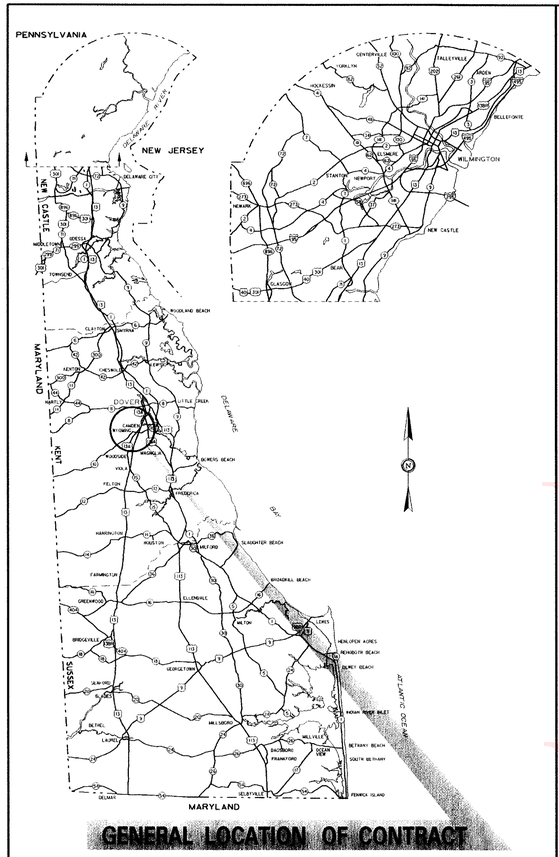

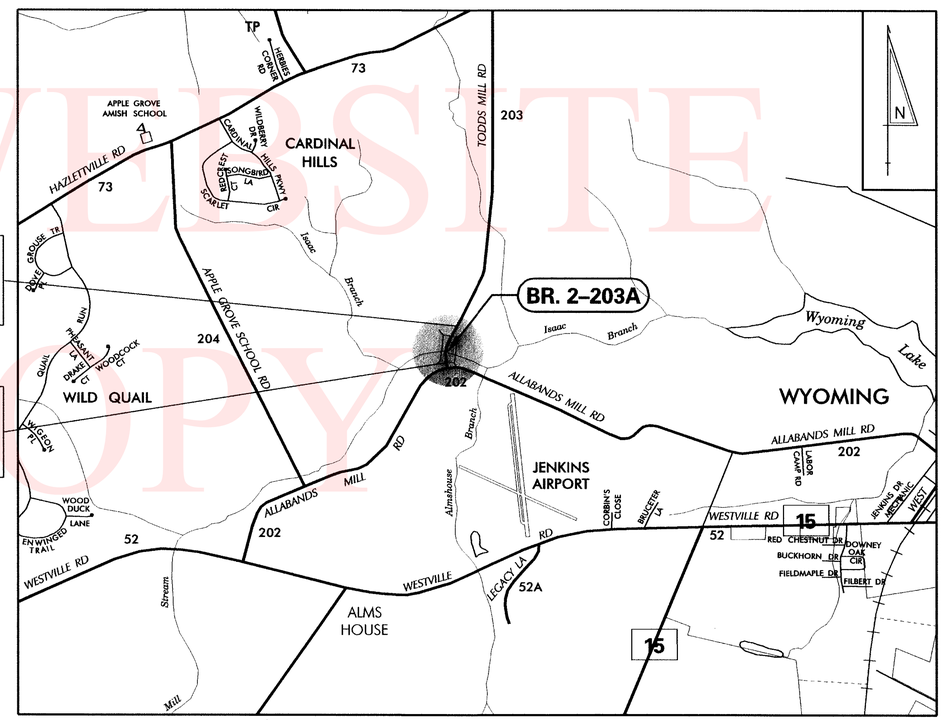

END CONTRACT STATION 3+94.80

BEGIN CONTRACT STATION 1+06.08

DESIGN DESIGNATION

FUNCTIONAL CLASS: RURAL LOCAL		D.H.V. PROJECTED: 120	YEAR: 2040
TYPE OF CONSTRUCTION: SUPERSTRUCTURE REPLACEMENT		DESIGN SPEED: 55 MPH	
A.A.D.T. CURRENT: 616	YEAR: 2008	TRUCKS: 15%	
A.A.D.T. PROJECTED: 1300	YEAR: 2040	DIRECTION OF DISTRIBUTION: 65%	

INDEX OF SHEETS

SHEET Nº	TABLE OF CONTENTS
1	TITLE SHEET
2	LEGEND SHEET
3	PROJECT NOTES SHEET
4	CONSTRUCTION PLAN
5	PROFILES
6	BRIDGE PLAN, SECTION, AND ELEVATION
7	PILE CAP DETAILS
8	FRAMING PLAN
9	INTERIOR BEAM DETAILS
10	EXTERIOR BEAM DETAILS
11	BRIDGE RAIL DETAILS
12	REINFORCEMENT BAR LIST
13	ENVIRONMENTAL NOTES
14	ENVIRONMENTAL COMPLIANCE PLAN
15	SEQUENCE OF CONSTRUCTION & E&S PLAN
16	DETOUR PLAN
17	RIGHT-OF-WAY PLAN
18	RIGHT-OF-WAY DATA SHEET
19	RIGHT-OF-WAY TABULATION SHEET

TOTAL SHEETS: 19

APPROVED DESIGN EXCEPTIONS

DESIGN PARAMETER	REQUIRED	PROVIDED	DATE

ADDENDA & REVISIONS

DESCRIPTION	NAME & DATE

ASSOCIATED CONTRACTS

CONTRACT NO.	CONTRACT NAME
1927	CONSTRUCTION OF CONTRACT NO. 1927
1869	CONTRACT NO. 1869

RECOMMENDED

Gregg D. Paulowski — 8/8/12
SQUAD MANAGER, CONSTRUCTION — DATE

8/8/12
GROUP ENGINEER, CONSTRUCTION — DATE

ASSISTANT DIRECTOR, TRANSPORTATION SOLUTIONS (CONSTRUCTION) — DATE

RECOMMENDED

Vincent W. Davis
STORMWATER ENGINEER
DATE 8 AUG 2012

VINCENT W. DAVIS REGISTERED No. 12898 DELAWARE PROFESSIONAL ENGINEER — SEAL

RECOMMENDED

SQUAD MANAGER, BRIDGE DESIGN
DATE 8/9/12

JASON N. HASTINGS REGISTERED No. 13545 DELAWARE PROFESSIONAL ENGINEER — SEAL

RECOMMENDED

Douglas Roth
BRIDGE DESIGN ENGINEER
DATE 8/9/12

DOUGLAS A. ROTH REGISTERED No. 11438 DELAWARE PROFESSIONAL ENGINEER — SEAL

RECOMMENDED

ASSISTANT DIRECTOR, BRIDGE
DATE AUGUST 10, 2012

BARRY A. BENTON REGISTERED No. 10774 DELAWARE PROFESSIONAL ENGINEER — SEAL

APPROVED

Natalie Barnhart
CHIEF ENGINEER
DATE August 10, 2012

NATALIE M. BARNHART REGISTERED No. 9629 DELAWARE PROFESSIONAL ENGINEER — SEAL

LAST REVISED: 8/7/2008
Y:\KENT\%BRIDGE\T201007205\PLANS\TC.DGN

EXISTING SYMBOLS

DRAINAGE

	DITCH OR STREAM CENTERLINE
	DIRECTIONAL STREAM FLOW ARROW
C.B. / D.I.	DRAINAGE INLET
J.B.	DRAINAGE JUNCTION BOX
D	DRAINAGE MANHOLE
SIZE/TYPE LABEL	DRAINAGE PIPE AND FLOW ARROW
	DRAINAGE PIPE HEADWALL
	RIPRAP - AREA FEATURE
	RIPRAP - LINEAR FEATURE

MANMADE ROADSIDE FEATURES

	BOLLARD - STEEL POLE
	BOLLARD - WOOD POST
(TYPE LABEL)	CURB
(TYPE LABEL)	CURB AND GUTTER
	FENCE - CHAINLINK OR STRANDED
	FENCE - STOCKADE OR SPLIT RAIL
FP	FLAG POLE
	GUARDRAIL - STEEL BEAM
	GUARDRAIL - WIRE ROPE
LAMP	LAMP AND POST - RESIDENTIAL
MB	MAILBOX
PM	PARKING METER AND POST
	PAVEMENT - FLEXIBLE
	PAVEMENT - RIGID
	PILE - BRIDGE
	PILLAR OR MISCELLANEOUS POST
	TRAFFIC SIGN AND POST
	WALL - BRICK OR BLOCK
	WALL - STONE

NATURAL ROADSIDE FEATURES

	GRASS LAWN
	HEDGEROW OR THICKET
	MARSH BOUNDARY LINE
	TREE - CONIFEROUS
	TREE - DECIDUOUS
	TREE STUMP
	SHRUBBERY
WL	DELINEATED WETLAND BOUNDARY LINE
	WOODS LINE BOUNDARY

RIGHT-OF-WAY SYMBOLS

C.M.	PROPERTY MARKER - CONCRETE MON.
I.P.	PROPERTY MARKER - IRON PIPE
100+00	HISTORIC RIGHT-OF-WAY BASELINE
	EXISTING RIGHT-OF-WAY
	EXISTING PROPERTY LINE
EASEMENT TYPE	EXISTING EASEMENT
DA	EXISTING DENIAL OF ACCESS
R/W-DA	EXISTING R/W & DENIAL OF ACCESS

SURVEY CONTROL & MONUMENTATION

B.M.	SURVEY BENCHMARK LOCATION
T.P.	SURVEY TIE POINT LOCATION
△	SURVEY TRAVERSE POINT
	POINT OF CURVATURE OR TANGENCY
	POINT OF INTERSECTING TANGENTS

UTILITY

	SOIL BORING LOCATION
	UTILITY TEST HOLE LOCATION
TV	CABLE TV DISTRIBUTION BOX
E	ELECTRIC MANHOLE
EM	ELECTRIC METER
E	ELECTRIC TRANSFORMER
	POLE MOUNTED LUMINAIRE
G	GAS MANHOLE
G.M.	GAS METER
G.V.	GAS VALVE
G.P.	GAS PUMP - SERVICE STATION
	RAILROAD TRACKS
S	SANITARY SEWER MANHOLE
S.V.	SANITARY SEWER VALVE
VENT	SANITARY SEWER VENT OR CLEANOUT
S.D.F.	SEPTIC DRAIN FIELD
B	TELEPHONE BOOTH
T	TELEPHONE MANHOLE
T	TELEPHONE TEST POINT
J.W.	TRAFFIC - CONDUIT JUNCTION WELL
	TRAFFIC - LIGHT POLE AND BASE
	TRAFFIC - PEDESTRIAN POLE & BASE
	TRAFFIC - SIGNAL CABINET & BASE
	TRAFFIC - SIGNAL POLE AND BASE
U	UTILITY BOX
	UTILITY POLE GUY WIRE ANCHOR
	UTILITY POLE
F.H.	WATER - FIRE HYDRANT
W.M.	WATER METER
W.V.	WATER VALVE
WELL	WELL HEAD
?	MANHOLE - UNDETERMINED OWNER

PROPOSED SYMBOLS

CONSTRUCTION

	CONCRETE SAFETY BARRIER - PERMANENT
BFS	BIOFILTRATION SWALE
	BOLLARD - STEEL POLE
	BOLLARD - WOOD POST
	BRICK PATTERNED SURFACE
	BUTT JOINT
100+00	CONSTRUCTION BASELINE
CSF	CONSTRUCTION SAFETY FENCE
	CURB, TYPE 1 & TYPE 3
	CURB, TYPE 2
	CURB & GUTTER, TYPE 1
	CURB & GUTTER, TYPE 2
	CURB & GUTTER, TYPE 3
	CURB & GUTTER, TYPE 4
CZ	CLEAR ZONE
	DRAINAGE INLET
	DITCH
	FENCE - METAL
	FENCE - WOOD
	FLARED END SECTION
	GUARDRAIL, TYPE 1
	GUARDRAIL, TYPE 2
	GUARDRAIL, TYPE 3
	GUARDRAIL END ANCHORAGE
	GUARDRAIL END TREATMENT, TYPE 1
	GUARDRAIL END TREATMENT, TYPE 2
	GUARDRAIL END TREATMENT, TYPE 3
HC	HORIZONTAL CLEARANCE
	IMPACT ATTENUATOR
	JUNCTION BOX - DRAINAGE
LOC	LIMIT OF CONSTRUCTION
	MANHOLE
	PAVEMENT PATCH
	PAVEMENT REMOVAL - TOPSOIL, SEED AND MULCH
	PIPE & DIRECTIONAL FLOW ARROW
	RIPRAP
	P.C.C. SIDEWALK @ 4"
	P.C.C. SIDEWALK @ 6"
	UNDERDRAIN
	UNDERDRAIN OUTLET

RIGHT-OF-WAY SYMBOLS

	PROPOSED RIGHT-OF-WAY MONUMENT
DA	PROPOSED DENIAL OF ACCESS
PE	PROPOSED PERMANENT EASEMENT
R/W	PROPOSED RIGHT-OF-WAY
R/W-DA	PROPOSED R/W & DENIAL OF ACCESS
TCE	TEMPORARY CONSTRUCTION EASEMENT
100+00	PROPOSED RIGHT-OF-WAY BASELINE

IDENTIFIERS

A/C	ADJUST BY CONTRACTOR
A/O	ADJUST BY OTHERS
B	CONCRETE SAFETY BARRIER
C	CURB OR CURB & GUTTER
C/JB	CONVERT TO JUNCTION BOX
C/MH	CONVERT TO DRAINAGE MANHOLE
C/O	CURB OPENING
CR	CURB RAMP / TYPE
CR-W	CURB RAMP / TYPE - WITHOUT SIDEWALK SURFACE DETECTABLE WARNING SYSTEM
CSF	CONSTRUCTION SAFETY FENCE
DI	DRAINAGE INLET
DND	DO NOT DISTURB
ED	ENERGY DISSIPATOR
F	FENCE
FES	FLARED END SECTION
FF/C	FILL WITH FLOWABLE FILL
FS	FILTRATION STRUCTURE
GR	GUARDRAIL
JB	JUNCTION BOX
MH	MANHOLE
M	MONUMENT - RIGHT-OF-WAY
P	PIPE
RL/C	RELOCATE BY CONTRACTOR
RL/O	RELOCATE BY OTHERS
RM/C	REMOVE BY CONTRACTOR
RM/O	REMOVE BY OTHERS
UD	UNDERDRAIN / LENGTH
UDO	UNDERDRAIN OUTLET PIPE

LANDSCAPING

LS	LANDSCAPE PLANTINGS
	SHRUBBERY
	CONIFEROUS TREE
	DECIDUOUS TREE

TRAFFIC

ITMS-CON	ITMS CONDUIT
SIG-CON	SIGNAL CONDUIT
	CONDUIT JUNCTION WELL
	LUMINAIRE
	PAVEMENT MARKINGS
	PAVEMENT STRIPING
	TRAFFIC SIGN

PAVEMENT SECTION(S)

	N/A
	1-1/4" WMA, SUPERPAVE, TYPE C 2-1/4" WMA, SUPERPAVE, TYPE B 8" GRADED AGGREGATE BASE COURSE, TYPE B
	N/A

EROSION & SEDIMENT CONTROL

	DEWATERING BAG
DWB	DEWATERING BASIN
ED	EARTH DIKE
	INLET SEDIMENT CONTROL
	PERIMETER DIKE/SWALE
PST	PORTABLE SEDIMENT TANK
SBD	SANDBAG DIKE
SB	SANDBAG DIVERSION
	STONE CHECK DAM
SCE	STABILIZED CONSTRUCTION ENTRANCE
SF	SILT FENCE / LENGTH
SF	SILT FENCE
RSF	SILT FENCE - REINFORCED
SP-1	SUMP PIT, TYPE 1
SP-2	SUMP PIT, TYPE 2
ST	SEDIMENT TRAP
ST	SEDIMENT TRAP
ST	SEDIMENT TRAP WITH INLET AS OUTLET
ST	SEDIMENT TRAP PIPE OUTLET
SW	STILLING WELL
	TEMPORARY SWALE
TSD	TEMPORARY SLOPE DRAIN
	TURBIDITY CURTAIN / LENGTH
T	TURBIDITY CURTAIN

UNOFFICIAL WEBSITE COPY

GENERAL NOTES

1. THIS PROJECT IS TO BE CONSTRUCTED IN ACCORDANCE WITH THE DELAWARE DEPARTMENT OF TRANSPORTATION "STANDARD SPECIFICATIONS", DATED AUGUST 2001 AND THE DELAWARE DEPARTMENT OF TRANSPORTATION "STANDARD CONSTRUCTION DETAILS", DATED 2001, INCLUDING ALL REVISIONS UP TO THE DATE OF ADVERTISEMENT.

2. THE CONTRACTOR SHALL GIVE TWO (2) WEEKS NOTICE TO THE PROPERTY OWNER WHEN ANY FIXTURE, SHRUB OR OTHER OBJECT MUST BE REMOVED FROM THE RIGHT OF WAY OR EASEMENT AREA. IF THE OWNER HAS NOT ATTEMPTED TO SALVAGE THIS PROPERTY, THE CONTRACTOR SHALL REMOVE IT WITHOUT OBLIGATION. COMPENSATION SHALL BE INCIDENTAL TO THE CONTRACT.

3. THE ENDS OF ALL CURBS SHALL BE DEPRESSED FLUSH WITH THE PAVEMENT AT A RATIO OF TWELVE TO ONE (12:1) UNLESS OTHERWISE DIRECTED BY THE ENGINEER.

4. THE CONTRACTOR SHALL PROVIDE AND INSTALL PVC SLEEVES (4" INSIDE MINIMUM DIAMETER, 6" INSIDE MAXIMUM DIAMETER) IN PROPOSED CONCRETE SIDEWALKS, ISLANDS, AND MEDIANS FOR FUTURE TRAFFIC SIGN POSTS AS DIRECTED BY THE ENGINEER. THE LOWER END OF THE SLEEVE SHALL SIT ON THE TOP OF THE SUBBASE MATERIAL. THE COST SHALL BE INCIDENTAL TO THE CONTRACT.

5. STAGING AREAS - PROPER EROSION AND SEDIMENT CONTROL MEASURES AS DETERMINED BY THE ENGINEER SHALL BE INSTALLED IN ALL STAGING AREAS. ALL AREAS USED BY THE CONTRACTOR FOR STAGING OPERATIONS SHALL BE FULLY RESTORED BY THE CONTRACTOR UPON COMPLETION OF THE CONTRACT. IF THE STAGING AREA IS PAVED, IT SHALL BE RESTORED TO ITS ORIGINAL CONDITION. IF THE AREA IS UNPAVED, IT SHALL BE RE-GRADED, TOPSOILED, SEEDED AND MULCHED IN ACCORDANCE WITH DELAWARE STANDARD SPECIFICATIONS 732, 734 AND 735, FOR TOPSOIL, SEED AND MULCH RESPECTIVELY, TO THE SATISFACTION OF THE ENGINEER. THE SEED SHALL ADHERE TO THE SPECIFICATIONS OF SECTION 734 FOR PERMANENT GRASS SEEDING - DRY GROUND. ALL COSTS ASSOCIATED WITH RESTORATION OF THE STAGING AREA SHALL BE AT THE CONTRACTOR'S EXPENSE. IF THE ENGINEER DETERMINES THAT A SATISFACTORY STAND OF GRASS DOES NOT EXIST AT THE TIME OF FINAL INSPECTION, ALL COSTS ASSOCIATED WITH REESTABLISHING A SATISFACTORY STAND OF GRASS SHALL BE AT THE CONTRACTOR'S EXPENSE.

6. SITE REVIEWER - AN EROSION CONTROL SITE REVIEWER SHALL BE A PERSON FROM THE CONTRACTOR'S STAFF ASSIGNED TO EROSION AND SEDIMENT CONTROL IMPLEMENTATION AND MAINTENANCE AND SHALL BE REQUIRED ON SPECIFIC PROJECTS. THE NAME AND DNREC CERTIFICATION NUMBER OF EACH SITE REVIEWER SO REQUIRED SHALL BE SUBMITTED TO THE DEPARTMENT. THE NAME OF THE DELAWARE REGISTERED PROFESSIONAL ENGINEER PROVIDING DIRECTION AND SUPERVISION OF THE SITE REVIEWER, AS REQUIRED IN SECTION 12.3 OF THE DELAWARE SEDIMENT AND STORMWATER REGULATIONS, SHALL ALSO BE SUBMITTED TO THE DEPARTMENT. THE SITE REVIEWER REQUIREMENTS IN EFFECT ON THIS PROJECT SHALL BE MARKED WITH AN "X" BELOW:

EROSION POTENTIAL FOR THIS PROJECT	SITE REVIEWER REQUIREMENT
( ) INSIGNIFICANT	NONE
( ) MINOR	CONTRACTOR CERTIFICATION COURSE TRAINING ONLY, AS DEFINED IN SECTION 13 OF THE DELAWARE SEDIMENT AND STORMWATER REGULATIONS.
(X) MEDIUM	AT THE TIME OF BID OF THE CONTRACT, EITHER THE SUPERINTENDENT OR A SEPARATE INDIVIDUAL FROM THE CONTRACTOR'S STAFF SHALL BE A CERTIFIED CONSTRUCTION REVIEWER (CCR), AS DEFINED IN SECTION 12 OF THE DELAWARE SEDIMENT AND STORMWATER REGULATIONS.
( ) MAJOR	SUPERINTENDENT AND AN INDIVIDUAL FROM CONTRACTOR'S STAFF SHALL BE CCR. ONE INDIVIDUAL FROM THE CONTRACTOR'S STAFF MUST BE A CCR AT THE TIME OF BID OF THE CONTRACT. THE SUPERINTENDENT MUST BECOME A CCR WITHIN ONE YEAR AFTER THE AWARD OF CONTRACT.

7. ELECTRONIC PROJECT FILES THAT WILL BE MADE AVAILABLE TO THE CONTRACTOR INCLUDE:

( )	NONE
( )	ASCII DATA FILES WITH COORDINATES AND ELEVATIONS FOR PROPOSED POINTS AS SELECTED BY THE ENGINEER.
(X)	RASTER FILES, IN .CAL FILE FORMAT, FOR ALL PLAN SHEETS.
( )	EXISTING DIGITAL TERRAIN MODEL, IN .DTM FILE FORMAT, COMPATIBLE WITH SOFTWARE CURRENTLY USED BY DELDOT.
( )	PROPOSED DIGITAL TERRAIN MODEL, IN .DTM FILE FORMAT, COMPATIBLE WITH SOFTWARE CURRENTLY USED BY DELDOT.
( )	DESIGN FILE, IN .DGN FILE FORMAT, CONTAINING ONLY THE PROPOSED 3D TRIANGLES OF THE PROPOSED DIGITAL TERRAIN MODEL (DTM).

8. AMERICAN TRAFFIC SAFETY SERVICES ASSOCIATION (ATSSA) CERTIFIED TRAFFIC CONTROL SUPERVISOR REQUIREMENT FOR THIS PROJECT.

(X)	THE CONTRACTOR SHALL NOT BE REQUIRED TO HAVE AN ATSSA SUPERVISOR ASSIGNED TO THIS PROJECT.
( )	THE CONTRACTOR SHALL HAVE AN ATSSA SUPERVISOR ASSIGNED TO THIS PROJECT. THE CONTRACTOR'S GENERAL SUPERINTENDENT FOR THIS PROJECT OR ANOTHER ATSSA CERTIFIED MEMBER OF THE CONTRACTOR'S PROJECT STAFF MAY BE THE ATSSA SUPERVISOR.
( )	THE CONTRACTOR SHALL HAVE AN ATSSA SUPERVISOR ASSIGNED TO THIS PROJECT. THE ATSSA SUPERVISOR'S SOLE JOB SHALL BE SUPERVISION OF THE INSTALLATION, OPERATION AND MAINTENANCE OF TRAFFIC CONTROL DEVICES FOR THIS PROJECT. THE CONTRACTOR'S GENERAL SUPERINTENDENT FOR THIS PROJECT SHALL NOT BE THE ATSSA SUPERVISOR.

9. THE DISTURBED AREA FOR THIS PROJECT IS 0.3812 ACRES.

LEGEND

1. ITEM 401800 - WMA TYPE C, PG 64-22, 115 GYRATIONS (CARBONATE STONE)
2. ITEM 401809 - WMA TYPE B, PG 64-22, 115 GYRATIONS
3. ITEM 302007 - GRADED AGGREGATE BASE COURSE, TYPE B
4. ITEM 732002 - TOPSOIL, 6" DEPTH
   ITEM 734013 - PERMANENT GRASS SEEDING, DRY GROUND
5. ITEM 209006 - BORROW, TYPE F
6. ITEM 209003 - BORROW, TYPE C
7. ITEM 720043 - GALVANIZED STEEL BEAM GUARDRAIL, TYPE 1-27
   ITEM 720637 - GUARDRAIL END TREATMENT, TYPE 1-27
   ITEM 720664 - BRIDGE RAILING, GUARDRAIL TYPE
   ITEM 720665 - GUARDRAIL ANCHORAGE, BRIDGE, NESTED TYPE

PROJECT NOTES

SECTION 100

1. ANY DAMAGE TO ITEMS NOTED TO BE RELOCATED OR RESET BY THE CONTRACTOR, AT THE DISCRETION OF THE ENGINEER, SHALL BE REPAIRED AND/OR REPLACED IN KIND AT THE CONTRACTOR'S EXPENSE.

SECTION 200

2. CONTRACTOR SHALL MINIMIZE THE AMOUNT OF CLEARING OF TREES WITHIN THE TEMPORARY CONSTRUCTION EASEMENTS ON PARCELS 1-L AND 2-L. TREES 4" IN DIAMETER OR LARGER IN THIS AREA SHALL REMAIN UNLESS APPROVED FOR REMOVAL BY THE ENGINEER.

3. ITEMS TO BE REMOVED UNDER ITEM 211000 - REMOVAL OF STRUCTURES AND OBSTRUCTIONS SHALL INCLUDE, BUT NOT BE LIMITED TO THE FOLLOWING:
   - EXISTING STEEL BEAM GUARDRAIL
   - EXISTING CONCRETE DECK SLAB
   - TOP 12" OF CONCRETE SHEET PILE ABUTMENT WALL
   - EXISTING APPROACH SLABS

SECTION 300

4. A. THE CONTRACTOR MAY ELECT TO USE ANY OF THE FOLLOWING MATERIALS TO MEET THE REQUIREMENTS OF ITEM 302007 - GRADED AGGREGATE BASE COURSE, TYPE 'B':
   a. CRUSHED STONE (PER STANDARD SPECIFICATION 821)
   b. CRUSHED CONCRETE (PER STANDARD SPECIFICATION 821)
   c. HOT-MIX MILLINGS (PER SPECIAL PROVISION 302514 MILLED HOT-MIX BASE COURSE)

   THE CONTRACTOR WILL NOT BE ALLOWED TO MIX DIFFERENT MATERIALS (OR SIMILAR MATERIALS FROM DIFFERENT SOURCES) TO MEET THE REQUIREMENTS OF ITEM 302007 - GRADED AGGREGATE BASE COURSE, TYPE 'B'.

   ALL OF THE ABOVE LISTED MATERIALS ARE PERMITTED FOR USE ON THE JOB, PROVIDED THEY ARE SEPARATED INTO APPROVED AREAS. EACH AREA OF BASE COURSE MUST BE CONSTRUCTED USING MATERIALS FROM A SINGULAR SOURCE, FULL DEPTH, IN ORDER THAT PROPER TESTING MAY BE ACCOMPLISHED. THE CONTRACTOR AND DELDOT'S PROJECT ENGINEER SHALL AGREE ON THE LIMITS OF EACH SOURCE OF MATERIAL PRIOR TO PLACEMENT.

   B. THE QUANTITY USED FOR BASE OF EACH OF THE ABOVE LISTED MATERIALS WILL BE THE CONTRACTOR'S CHOICE, WITH THE TOTAL MEETING THE ADVERTISED QUANTITY OF ITEM 302007 - GRADED AGGREGATE BASE COURSE, TYPE 'B'.

   C. THE CONTRACTOR MAY ALSO ELECT TO RECYCLE MILLINGS FOR USE IN HOT-MIX AS PERMITTED BY THE STANDARD SPECIFICATIONS. THE CHOICE OF THE QUANTITY OF MILLINGS USED FOR THIS PURPOSE, OR FOR BASE COURSE, LIES WITH THE CONTRACTOR. ALL MILLING MATERIAL SHALL BECOME PROPERTY OF THE CONTRACTOR.

   D. HOT-MIX MILLINGS MAY BE GENERATED FROM THE FOLLOWING SOURCES:
   a. MATERIAL MILLED ON THIS CONTRACT AT THE CONTRACTOR'S CHOICE UNDER ITEM 202000.
   b. MILLED MATERIAL FURNISHED ON THE JOB FROM THE CONTRACTOR'S YARD OR OTHER OUTSIDE SOURCE.
   ALL MILLED MATERIALS SHALL MEET THE MATERIAL REQUIREMENTS OF ITEM 302514 - MILLED HOT-MIX BASE COURSE.

SECTION 600

5. PORTLAND CEMENT CONCRETE
   STRUCTURAL ELEMENTS OF PORTLAND CEMENT CONCRETE SHALL BE AS NOTED:
   (F'c = 28 DAY COMPRESSIVE STRENGTH)
   CLASS A (ABUTMENTS) - f'c = 4500 psi
   MIX REQUIREMENTS SHALL CONFORM TO SECTION 812 OF THE SPECIFICATIONS WITH THE FOLLOWING MODIFICATIONS:
   ALL EXPOSED EDGES SHALL BE CHAMFERED ¾" UNLESS OTHERWISE NOTED.

6. BAR REINFORCEMENT
   REINFORCING STEEL SHALL CONFORM TO AASHTO M31 (ASTM A615), GRADE 60. ALL REINFORCING STEEL SHALL HAVE A CLEAR COVER OF 2", UNLESS OTHERWISE SPECIFIED ON THE PLANS. ALL REINFORCING STELL SHALL BE PROTECTED WITH FUSION BONDED EPOXY. EPOXY COATED REINFORCING STEEL SHALL CONFORM TO AASHTO M284 (ASTM D3963).

7. CONCRETE SEALER
   ALL EXPOSED CONCRETE SURFACES, INCLUDING THE SHEETPILE CAPS AND EXPOSED FASCIA BEAMS (TO V-NOTCH ONLY) SHALL BE COATED WITH A WHITE EXTERIOR LATEX PAINT (#37925, FEDERAL STD. 595 C). PAYMENT UNDER ITEM #602646 - SILICONE ACRYLIC CONCRETE SEALER.

SECTION 700

8. ALL PAVED AREAS TO BE RECONSTRUCTED OR WIDENED SHALL BE SAWCUT AT THE POINT WHERE THE NEW PAVEMENT IS TO TIE INTO THE EXISTING PAVEMENT. ALL HOT MIX SAWCUTTING IS TO BE FULL DEPTH, UNLESS OTHERWISE NOTED ON THE PLANS OR AS DIRECTED BY THE ENGINEER. MATCH PAVEMENT ELEVATIONS AT TIE-INS.

9. STRIPING
   PROPOSED STRIPING SHALL MATCH THE EXISTING STRIPING PATTERN OF A DOUBLE YELLOW CENTERLINE AND WHITE EDGE LINES. PAYMENT FOR PERMANENT PAVEMENT STRIPING UNDER ITEM 748548

MISCELLANEOUS

10. DESIGN CRITERIA
    2010 AASHTO LRFD BRIDGE DESIGN SPECIFICATIONS, 5TH EDITION, CUSTOMARY U.S. UNITS.

11. LOADING
    DEAD LOAD INCLUDES 25 PSF FOR FUTURE WEARING SURFACE. VEHICULAR LIVE LOAD IS HL-93.

12. HYDRAULIC DATA
    DRAINAGE AREA: 5.27 Squore miles DESIGN FREQUENCY: 25 YEARS
    DESIGN DISCHARGE: 536.00 cfs 25-YEAR FLOOD EL: 34.28 ft

13. SCOUR ANALYSIS
    THE PROPOSED STRUCTURE HAS BEEN ANALYZED FOR THE EFFECTS OF SCOUR IN ACCORDANCE WITH HEC-18 - 'EVALUATING SCOUR AT BRIDGES' AND HEC 23 - 'BRIDGE SCOUR AND STREAM INSTABILITY COUNTERMEASURES'. SCOUR COUNTERMEASURE HAS BEEN DESIGNED FOR THE LESSER OF THE OVERTOPPING FLOOD OR THE 500-yr STORM EVENT.
    DESIGN EVENT: OVERTOPPING DESIGN VELOCITY: 7.69 fps
    DESIGN DISCHARGE: 927.00 cfs DESIGN DEPTH OF FLOW: 7.50 ft

14. DATUM REFERENCE
    HORIZONTAL - THIS PROJECT IS REFERENCED TO THE DELAWARE STATE PLANE COORDINATE SYSTEM (NAD 83/91).
    VERTICAL - THIS PROJECT IS REFERENCED TO NAVD 88.

15. SEE ENVIRONMENTAL COMPLIANCE SHEET AND ENVIRONMENTAL NOTES SHEET FOR FURTHER RESTRICTIONS/GUIDANCE ASSOCIATED WITH THIS PROJECT, INCLUDING GUIDANCE REGARDING CLEARING & GRUBBING IN WETLAND AREAS.

16. THE PROPOSED DETOUR FOR THIS PROJECT SHALL NOT BE PUT IN PLACE UNTIL APPLE GROVE SCHOOL ROAD (K204) IS OPEN TO TRAFFIC.

LRFR LOAD RATINGS

RATING VEHICLE	RATING TYPE	CONTROLLING UNIT/SPAN/MEMBER	CONTROLLING POINT	LOAD EFFECT	LIMIT STATE	LOAD RATING FACTOR	LOAD RATING (tons)
HL-93 TRUCK	INVENTORY	INT. GIRDER	103.00	SHEAR	STRENGTH I	1.54	55.58
HL-93 TANDEM	INVENTORY	INT. GIRDER	103.00	SHEAR	STRENGTH I	1.35	33.65
HL-93 TRUCK	OPERATING	INT. GIRDER	103.00	SHEAR	STRENGTH I	1.97	70.90
HL-93 TANDEM	OPERATING	INT. GIRDER	103.00	SHEAR	STRENGTH I	1.70	42.82

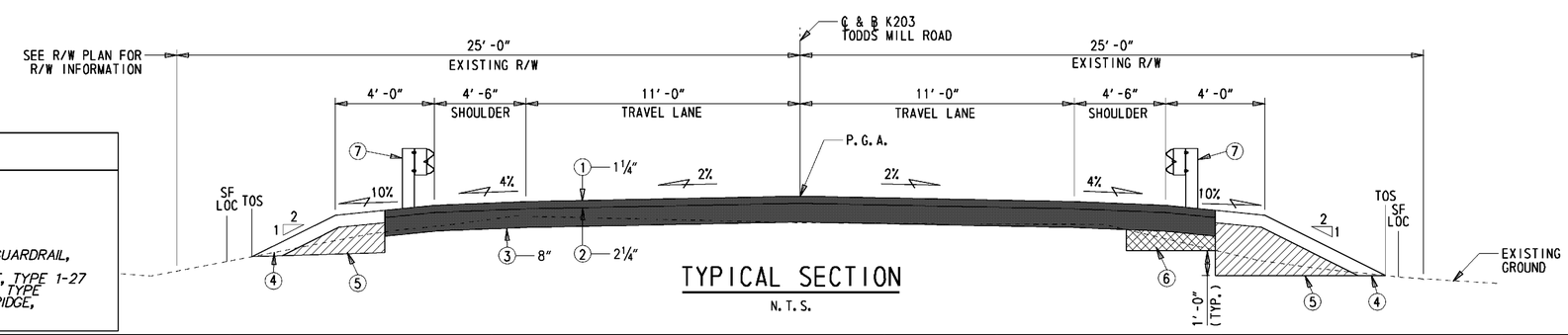

TYPICAL SECTION
N.T.S.

UNOFFICIAL WEBSITE COPY

LAST REVISED: 5/5/2009
Y:\KENT\PA\BRIDGE\T201007205\PLANS\PN.DGN

DELAWARE DEPARTMENT OF TRANSPORTATION	ADDENDUMS / REVISIONS	NOT TO SCALE	BR 2-203A ON TODDS MILL ROAD OVER ISAAC BRANCH	CONTRACT T200907201 / COUNTY KENT	BRIDGE NO. 2-203A / DESIGNED BY: TRS / CHECKED BY: JNH	PROJECT NOTES SHEET	SHEET NO. 3 / TOTAL SHTS. 19

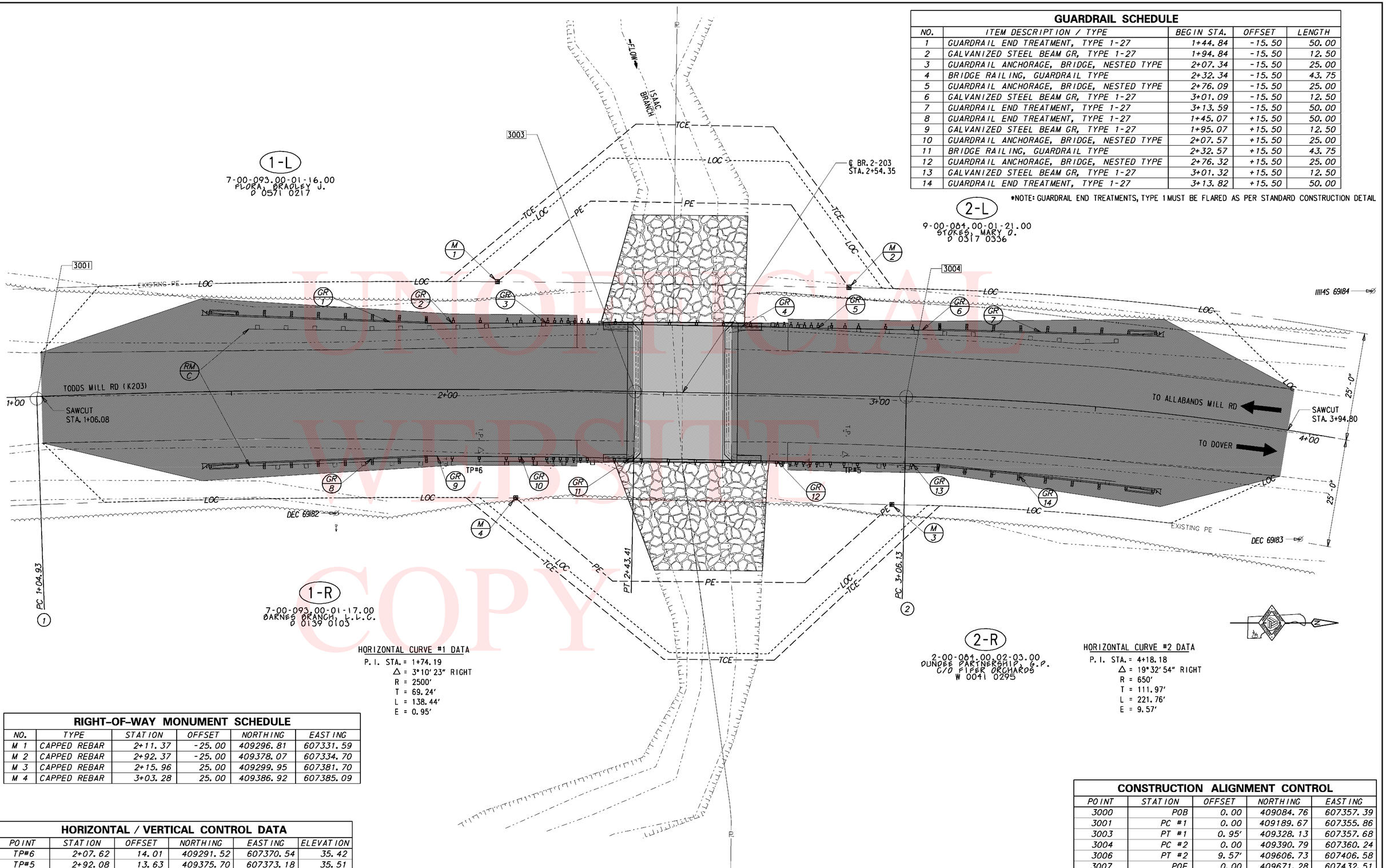

GUARDRAIL SCHEDULE

NO.	ITEM DESCRIPTION / TYPE	BEGIN STA.	OFFSET	LENGTH
1	GUARDRAIL END TREATMENT, TYPE 1-27	1+44.84	-15.50	50.00
2	GALVANIZED STEEL BEAM GR, TYPE 1-27	1+94.84	-15.50	12.50
3	GUARDRAIL ANCHORAGE, BRIDGE, NESTED TYPE	2+07.34	-15.50	25.00
4	BRIDGE RAILING, GUARDRAIL TYPE	2+32.34	-15.50	43.75
5	GUARDRAIL ANCHORAGE, BRIDGE, NESTED TYPE	2+76.09	-15.50	25.00
6	GALVANIZED STEEL BEAM GR, TYPE 1-27	3+01.09	-15.50	12.50
7	GUARDRAIL END TREATMENT, TYPE 1-27	3+13.59	-15.50	50.00
8	GUARDRAIL END TREATMENT, TYPE 1-27	1+45.07	+15.50	50.00
9	GALVANIZED STEEL BEAM GR, TYPE 1-27	1+95.07	+15.50	12.50
10	GUARDRAIL ANCHORAGE, BRIDGE, NESTED TYPE	2+07.57	+15.50	25.00
11	BRIDGE RAILING, GUARDRAIL TYPE	2+32.57	+15.50	43.75
12	GUARDRAIL ANCHORAGE, BRIDGE, NESTED TYPE	2+76.32	+15.50	25.00
13	GALVANIZED STEEL BEAM GR, TYPE 1-27	3+01.32	+15.50	12.50
14	GUARDRAIL END TREATMENT, TYPE 1-27	3+13.82	+15.50	50.00

*NOTE: GUARDRAIL END TREATMENTS, TYPE 1 MUST BE FLARED AS PER STANDARD CONSTRUCTION DETAIL

HORIZONTAL CURVE #1 DATA
P.I. STA. = 1+74.19
Δ = 3°10'23" RIGHT
R = 2500'
T = 69.24'
L = 138.44'
E = 0.95'

HORIZONTAL CURVE #2 DATA
P.I. STA. = 4+18.18
Δ = 19°32'54" RIGHT
R = 650'
T = 111.97'
L = 221.76'
E = 9.57'

RIGHT-OF-WAY MONUMENT SCHEDULE

NO.	TYPE	STATION	OFFSET	NORTHING	EASTING
M 1	CAPPED REBAR	2+11.37	-25.00	409296.81	607331.59
M 2	CAPPED REBAR	2+92.37	-25.00	409378.07	607334.70
M 3	CAPPED REBAR	2+15.96	25.00	409299.95	607381.70
M 4	CAPPED REBAR	3+03.28	25.00	409386.92	607385.09

HORIZONTAL / VERTICAL CONTROL DATA

POINT	STATION	OFFSET	NORTHING	EASTING	ELEVATION
TP#6	2+07.62	14.01	409291.52	607370.54	35.42
TP#5	2+92.08	13.63	409375.70	607373.18	35.51

CONSTRUCTION ALIGNMENT CONTROL

POINT	STATION	OFFSET	NORTHING	EASTING
3000	POB	0.00	409084.76	607357.39
3001	PC #1	0.00	409189.67	607355.86
3003	PT #1	0.95'	409328.13	607357.68
3004	PC #2	0.00	409390.79	607360.24
3006	PT #2	9.57'	409606.73	607406.58
3007	POE	0.00	409671.28	607432.51

UNOFFICIAL WEBSITE COPY

DELAWARE
DEPARTMENT OF TRANSPORTATION

ADDENDUMS / REVISIONS

SCALE
0 10 20 30
FEET

BR 2-203A ON TODDS MILL ROAD OVER ISAAC BRANCH

CONTRACT	BRIDGE NO.	2-203A
T200907201	DESIGNED BY: TRS	
COUNTY		
KENT	CHECKED BY: JNH	

CONSTRUCTION PLAN

SHEET NO. 4
TOTAL SHTS. 19

\ N \203\ I \290 201\ L NS\C 01. N

NOTE: ALL CURVE TYPES ARE SYMMETRIC PARABOLIC

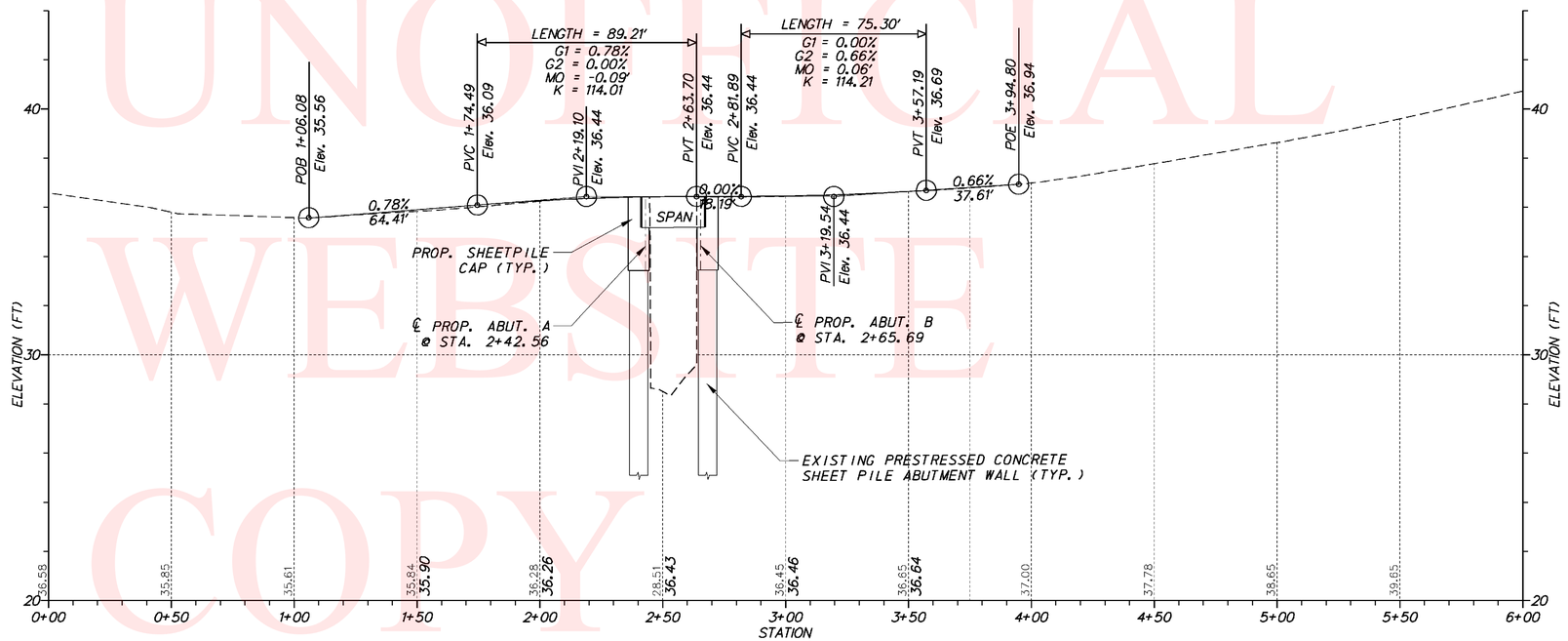

TODDS MILL ROAD (K203)

UNOFFICIAL WEBSITE COPY

VERTICAL SCALE FEET 0 3 6 9

W:\MSV8\CELLS\PROJDEV\SB.CEL

DELAWARE DEPARTMENT OF TRANSPORTATION	ADDENDUMS / REVISIONS	SCALE 0 30 60 90 FEET	BR 2-203A ON TODDS MILL ROAD OVER ISAAC BRANCH	CONTRACT T200907201	BRIDGE NO. 2-203A	PROFILES	SHEET NO. 5
				COUNTY NEW CASTLE	DESIGNED BY: TRS		TOTAL SHTS. 19
					CHECKED BY: JNH		

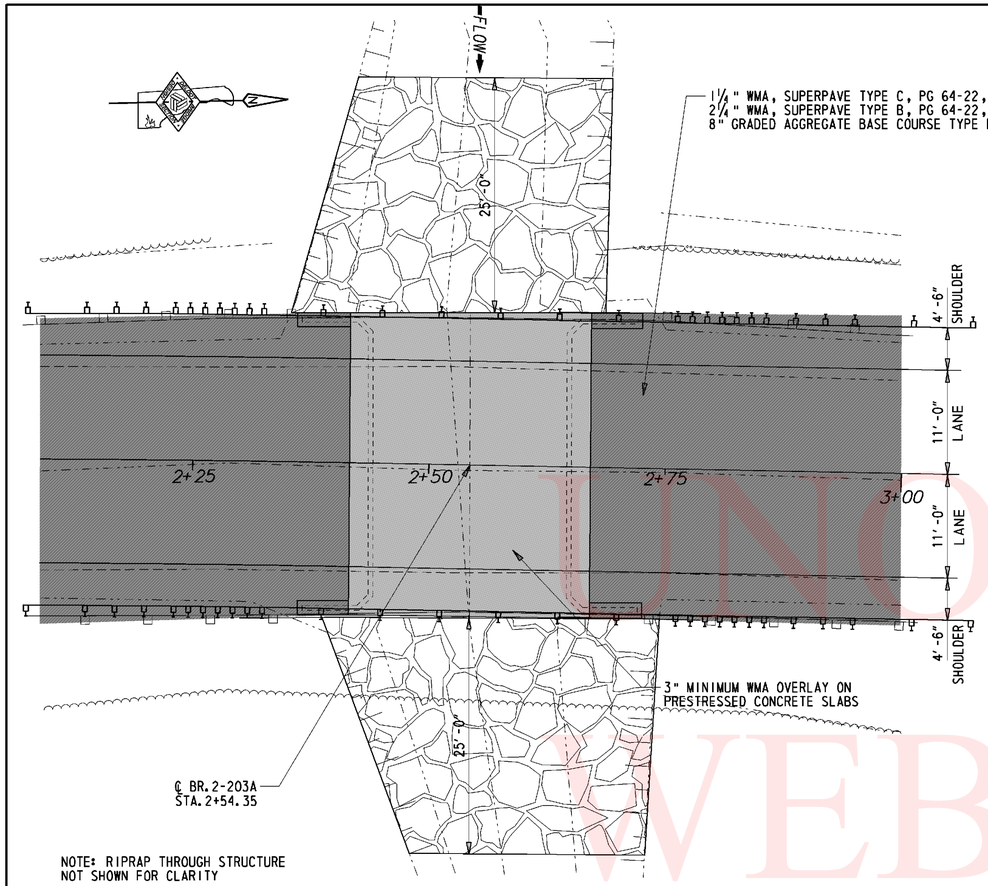

NOTE: RIPRAP THROUGH STRUCTURE NOT SHOWN FOR CLARITY

NOTE: CONTRACTOR SHALL REMOVE EXISTING CONCRETE SLAB CAREFULLY. ANY DAMAGE DONE TO EXISTING ABUTMENT SHALL BE REPAIRED TO THE SATISFACTION OF THE ENGINEER AT THE CONTRACTOR'S EXPENSE

PLAN

⅛" = 1'-0"

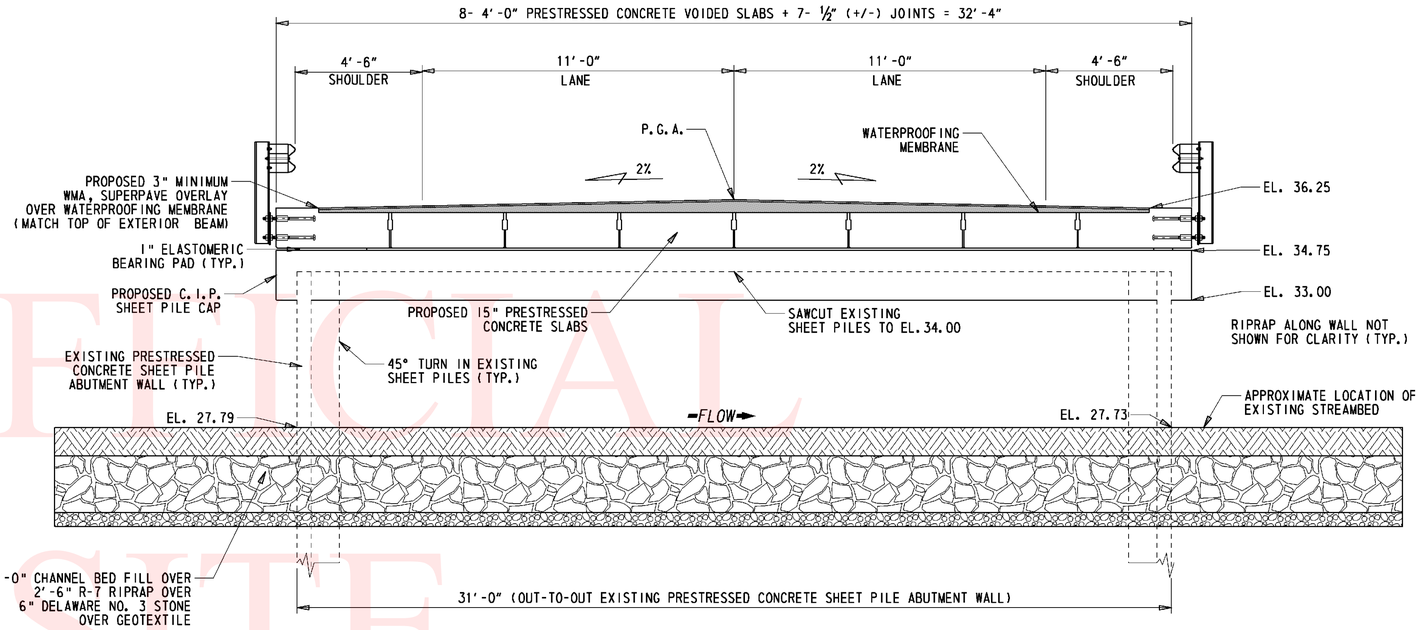

TYPICAL BRIDGE SECTION

⅜" = 1'-0"

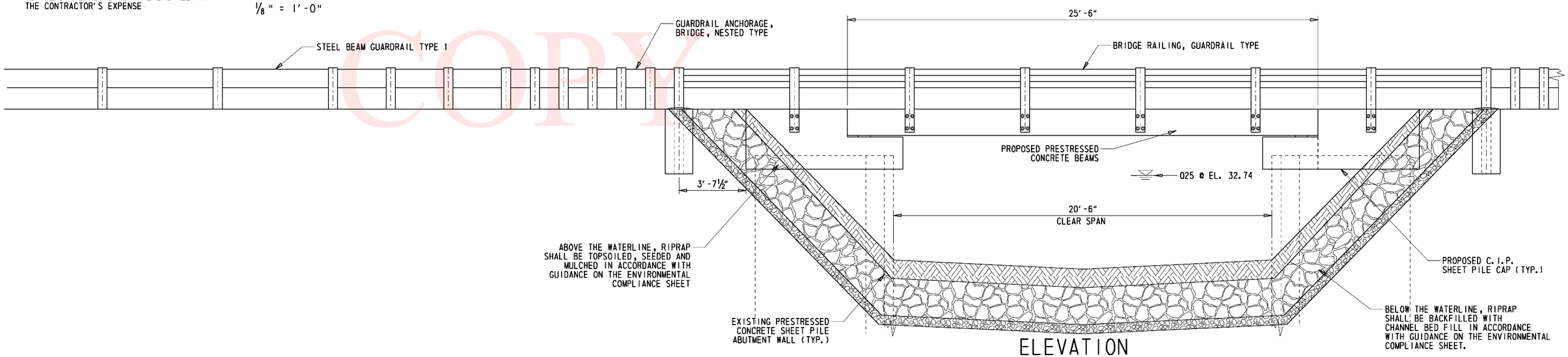

ELEVATION

⅜" = 1'-0"

UNOFFICIAL WEBSITE COPY

DELAWARE DEPARTMENT OF TRANSPORTATION	ADDENDUMS / REVISIONS	SCALE: AS NOTED	BR 2-203A ON TODDS MILL ROAD OVER ISAAC BRANCH	CONTRACT T200907201	BRIDGE NO. 2-203A	BRIDGE PLAN, SECTION, AND ELEVATION	SHEET NO. 6
				COUNTY KENT	DESIGNED BY: TRS		TOTAL SHTS. 19
					CHECKED BY: JNH		

\ N \203\ I \290 201\ L NS\ 01. N

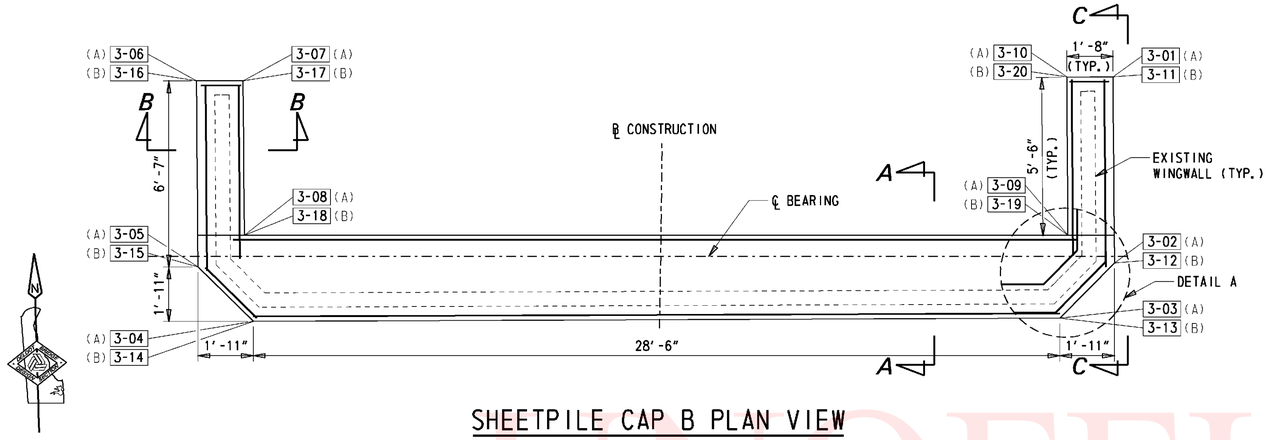

SHEETPILE CAP B PLAN VIEW

1/8" = 1'-0"

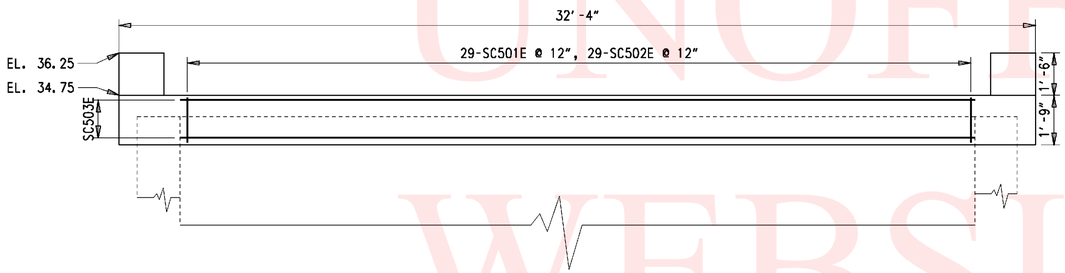

SHEETPILE CAP ELEVATION VIEW

1/8" = 1'-0"

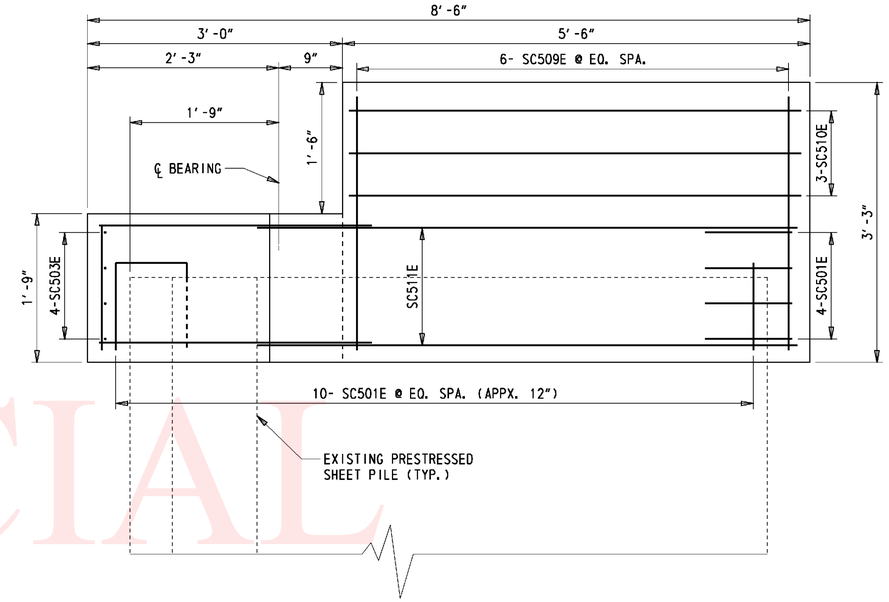

SECTION C-C

3/8" = 1'-0"

SHEETPILE CAP NOTES

1. SHEETPILE CAPS A AND B ARE IDENTICAL.
2. DURING REMOVAL OF EXISTING SUPERSTRUCTURE, EXISTING PILES SHALL BE SAW CUT 1'-0" FROM THE TOP, TO AN ELEVATION OF 34.00. AN ADDITIONAL 1'-0" OF PILES SHALL BE ROUGHENED AND BONDING AGENT SHALL BE APPLIED TO THE TOP 1'-0" OF PILES IMMEDIATELY PRIOR TO POURING OF CONCRETE FOR SHEETPILE CAP (INCIDENTAL TO ITEM #602001- PORTLAND CEMENT CONCRETE MASONRY, CLASS A).

SHEETPILE CAP A WORKING POINTS

WP	STATION	OFFSET	NORTHING	EASTING
3-01	2+35.85	-15.96	409321.17	607341.43
3-02	2+42.35	-16.07	409327.71	607341.57
3-03	2+44.34	-14.15	409329.63	607343.57
3-04	2+44.86	14.27	409328.99	607371.99
3-05	2+42.93	16.26	409326.98	607373.91
3-06	2+36.35	16.38	409320.45	607373.76
3-07	2+36.32	14.71	409328.13	607357.68
3-08	2+41.74	14.62	409325.87	607372.22
3-09	2+41.42	-14.39	409326.71	607343.22
3-10	2+35.87	-14.29	409321.14	607343.10

SHEETPILE CAP B WORKING POINTS

WP	STATION	OFFSET	NORTHING	EASTING
3-11	2+72.86	15.89	409356.90	607374.75
3-12	2+66.30	16.02	409350.34	607374.61
3-13	2+64.32	14.11	409348.44	607372.63
3-14	2+63.87	-14.34	409349.15	607344.19
3-15	2+65.79	-16.33	409351.15	607342.27
3-16	2+72.33	-16.46	409357.69	607342.41
3-17	2+72.36	-14.79	409357.66	607344.08
3-18	2+66.91	-14.69	409352.20	607343.96
3-19	2+67.25	14.36	409351.36	607373.00
3-20	2+72.83	14.26	409356.93	607373.12

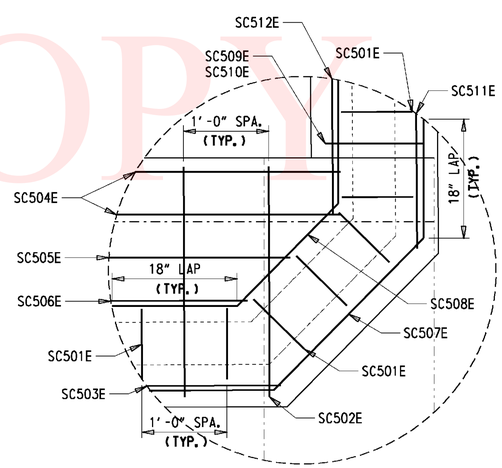

DETAIL A

3/8" = 1'-0"

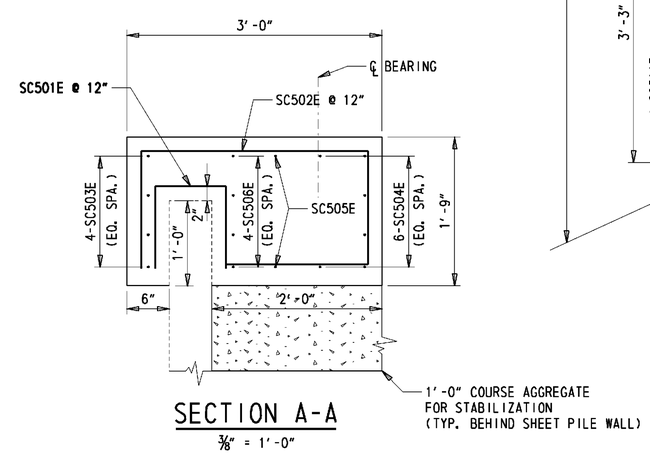

SECTION A-A

3/8" = 1'-0"

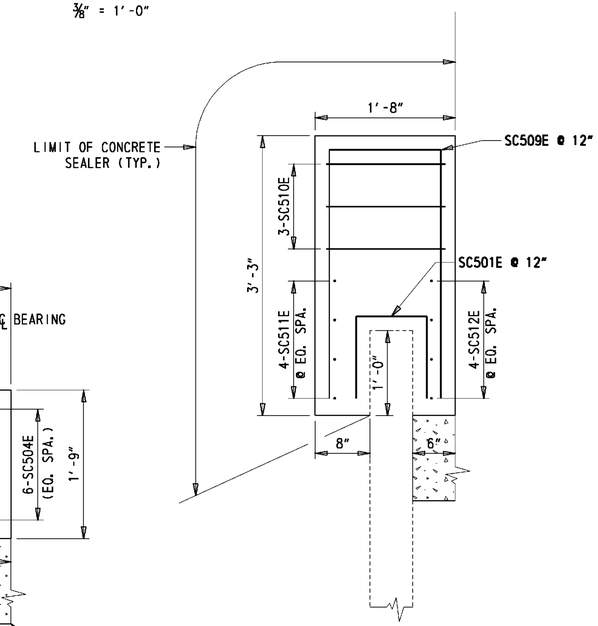

SECTION B-B

3/8" = 1'-0"

UNOFFICIAL WEBSITE COPY

W:\MSV8\CELLS\PROJDEV\SB.CEL

DELAWARE DEPARTMENT OF TRANSPORTATION	ADDENDUMS / REVISIONS	SCALE: AS NOTED	BR 2-203A ON TODDS MILL ROAD OVER ISAAC BRANCH	CONTRACT T200907201	BRIDGE NO. 2-203A	SHEETPILE CAP DETAILS	SHEET NO. 7
				COUNTY KENT	DESIGNED BY: TRS		TOTAL SHTS. 19
					CHECKED BY: JNH		

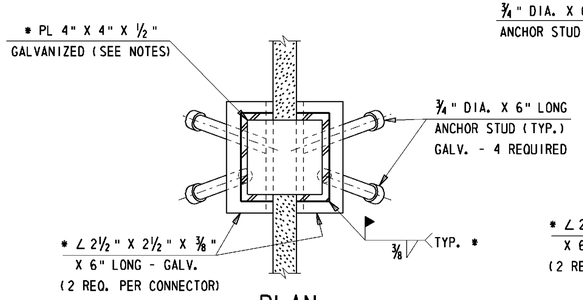

PLAN

SCALE : N.T.S.

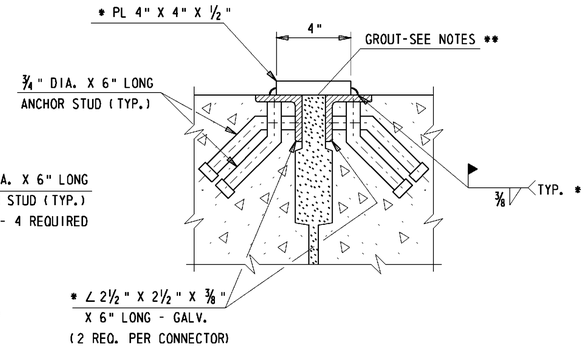

ELEVATION

SCALE : N.T.S.

SHEAR CONNECTOR DETAILS

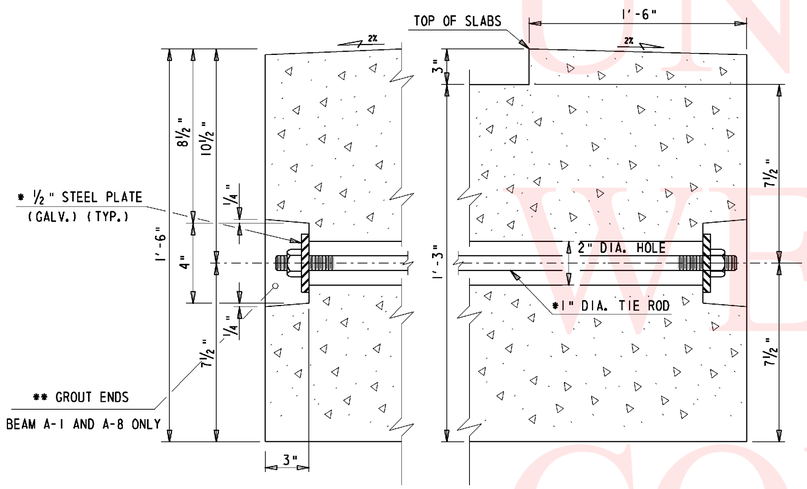

TIE ROD END DETAIL

SCALE : N.T.S.

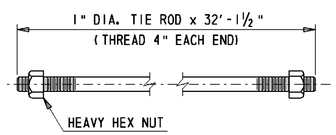

* 1" DIA. TIE ROD

SCALE: N.T.S.

NOTE: TIE RODS TO BE A.S.T.M. A572 STEEL AND PROTECTED WITH FUSION BONDED EPOXY (2 REQUIRED TOTAL).

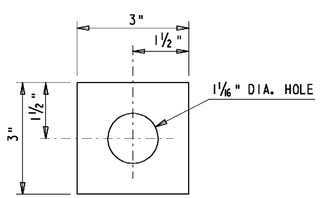

* 1/2" THK. GALVANIZED PLATE WASHER (A.S.T.M. A572)

(PROTECTED WITH FUSION BONDED EPOXY).

SCALE : N.T.S.

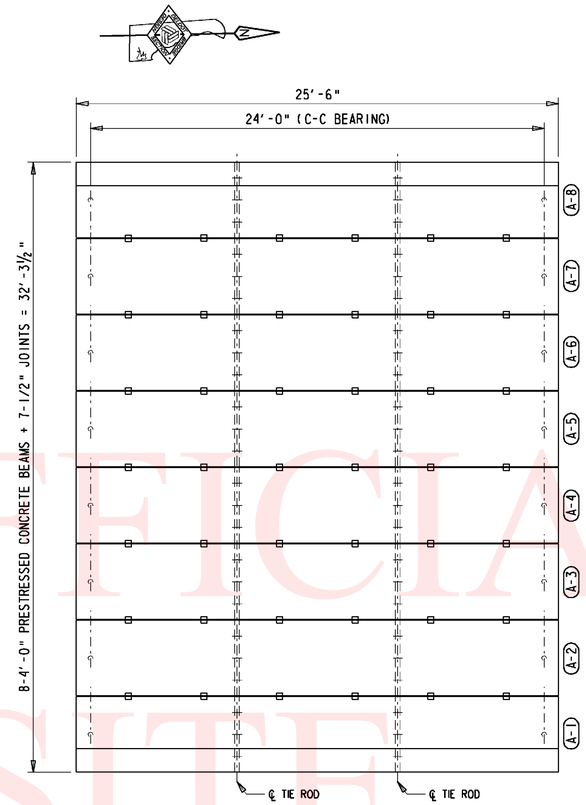

FRAMING PLAN

1/4" = 1'-0"

FRAMING PLAN NOTES

1. 42 SHEAR CONNECTORS ARE REQUIRED, SEE FRAMING PLAN FOR SPACING AND LOCATION.
2. ANGLES AND PLATES ARE TO BE STRUCTURAL STEEL CONFORMING TO M270 GRADE 50 AND SHALL BE GALVANIZED. ANCHOR STUDS ARE TO BE AUTOMATIC END-WELDED (TYP.)
3. FIELD WELD ANGLE TO SHEAR CONNECTOR ANGLES AND GALVANIZE. FILL ALL KEYWAYS AND CAVITIES WITH APPROVED HIGH-STRENGTH, NON-SHRINK, NON-STAIN GROUT **.
4. GROUTING BETWEEN BEAM SELECTIONS SHALL BE DONE WHEN AMBIENT TEMPERATURE IS ABOVE 40° F. NO TRAFFIC OR EQUIPMENT SHALL BE PERMITTED ON THE BRIDGE UNTIL THE GROUT HAS CURED FOR AT LEAST 24 HOURS AS REQUIRED BY AASHTO 623.18.
5. ADJUST BAR SPACING TO CLEAR SHEAR CONNECTORS.

* PAYMENT FOR MATERIAL AND LABOR SHALL BE INCIDENTAL TO ITEM #623000 - PRESTRESSED REINFORCED CONCRETE MEMBERS.

** GROUT SHALL BE NON-EXPANSIVE/NON-SHRINK/NON-STAINING. PAYMENT INCIDENTAL TO ITEM #623000 - PRESTRESSED REINFORCED CONCRETE MEMBERS.

NOTE:

1. 16 TOTAL BEARING PADS REQUIRED.
2. ALL BEARING PADS SHALL BE 50 DUROMETER ELASTOMERIC.
3. PADS SHALL BE GLUED TO ABUTMENTS WITH RUBBER BONDING CEMENT IN SUCH A WAY THAT VISIBLE CONCRETE SURFACES WILL NOT BE STAINED.
4. PAYMENT FOR BEARING PADS SHALL BE INCIDENTAL TO ITEM #623000 - PRESTRESSED REINFORCED CONCRETE MEMBERS.

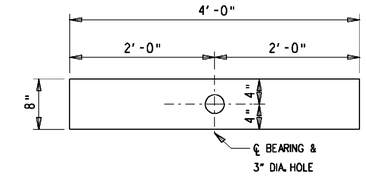

1" THICK 50 DUROMETER NEOPRENE BEARING PAD DETAILS

1" = 1'-0"

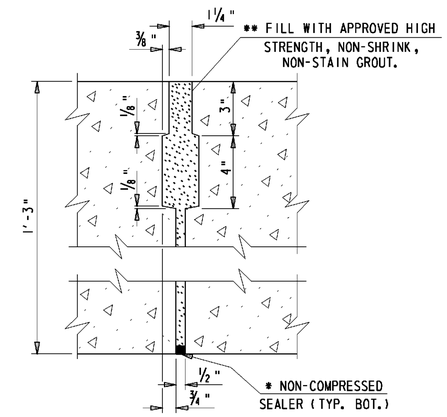

SHEAR KEY DETAIL

SCALE : N.T.S.

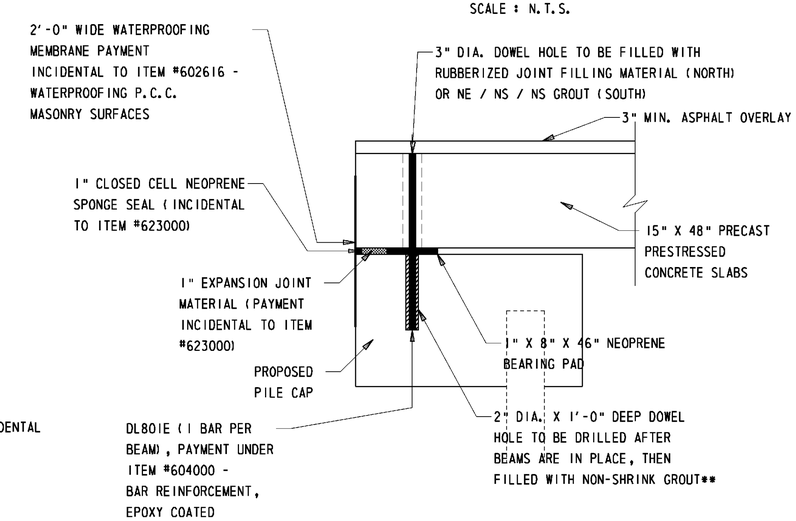

TYPICAL BEARING SECTION

1" = 1'-0"

UNOFFICIAL WEBSITE COPY

DELAWARE DEPARTMENT OF TRANSPORTATION	ADDENDUMS / REVISIONS	SCALE : AS NOTED	BR 2-203A ON TODDS MILL ROAD OVER ISAAC BRANCH	CONTRACT T200907201	BRIDGE NO. 2-203A	FRAMING PLAN	SHEET NO. 8
				COUNTY KENT	DESIGNED BY: TRS		TOTAL SHTS. 19
					CHECKED BY: JNH		

NOTE: QUANTITIES OF BARS SHOWN ARE FOR EACH INDIVIDUAL BEAM.

REINFORCING BAR LIST

STRAIGHT BARS				BENT BARS			
MARK	SIZE	QTY.	LENGTH	MARK	SIZE	QTY.	LENGTH
BM504E	5	6	25'-2"	BM501E	5	64	5'-5½"
				BM502E	5	6	15'-3"
				BM503E	5	6	12'-7"

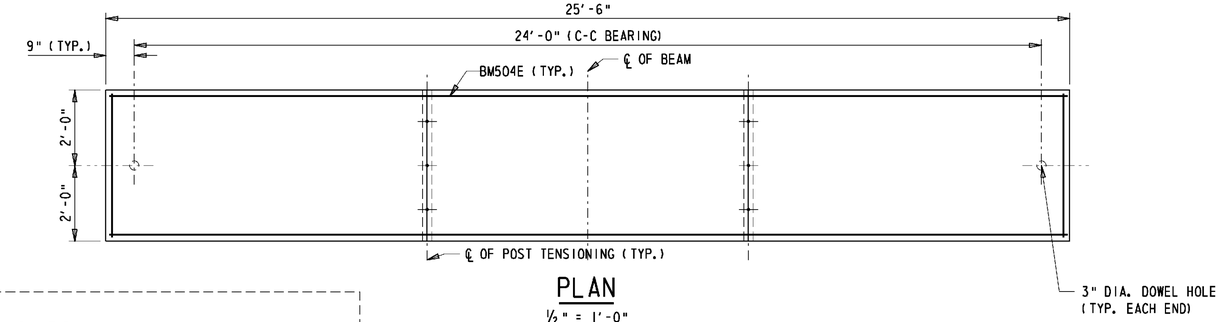

PLAN

½" = 1'-0"

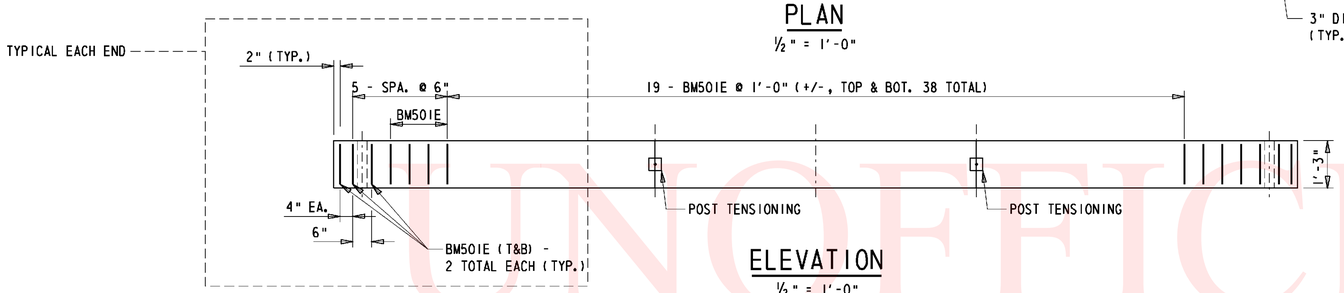

ELEVATION

½" = 1'-0"

NOTE: REINFORCING BARS AND LIFTING STRANDS SHALL BE SPACED SO THAT THEY DO NOT INTERFERE WITH THE PRESTRESSED STRAND SPACING OR THE 3" DIAMETER DOWEL HOLE. THE PRECASTER SHALL INCLUDE DETAILS OF THE PLACEMENT OF THESE ITEMS IN THEIR SUBMITTED SHOP DRAWINGS.

BENDING DIAGRAMS

NOTE: ALL DIMENSIONS ARE FROM OUT TO OUT

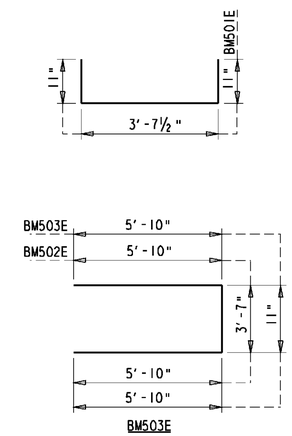

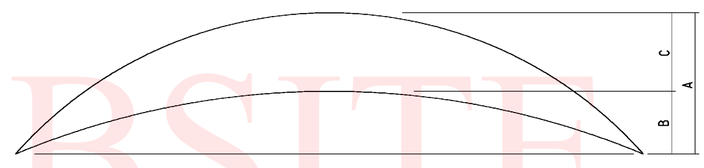

CAMBER DIAGRAM

A = ESTIMATED PRESTRESS CAMBER LESS DEFLECTION DUE TO DEAD LOAD OF BEAM TIMES CREEP = 0.587 In.
B = DEFLECTION DUE TO DEAD LOAD OF HOT MIX AND BRIDGE RAIL = 0.083 In.
C = A - B = NET CAMBER = 0.455 In.

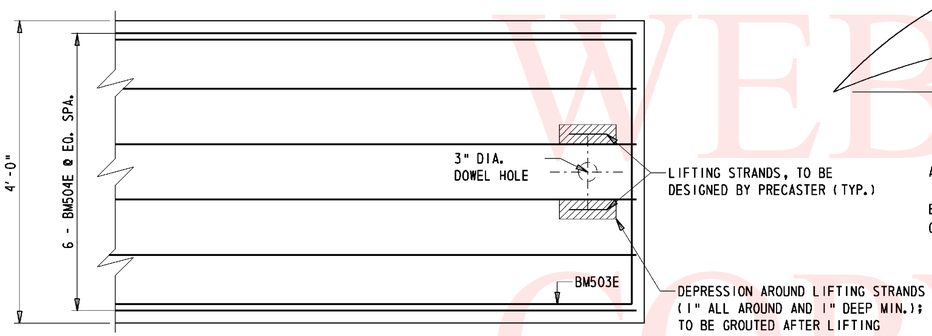

TYPICAL END BLOCK PLAN

1" = 1'-0"

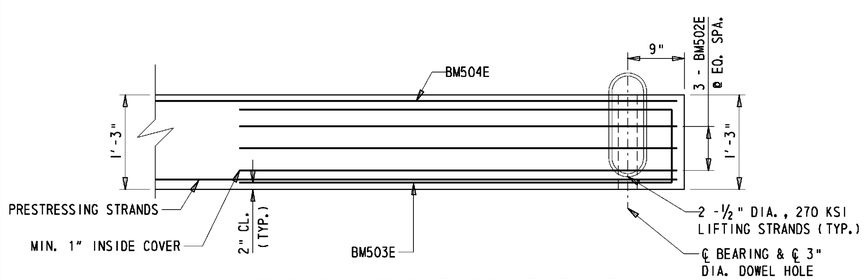

TYPICAL END BLOCK ELEVATION

1" = 1'-0"

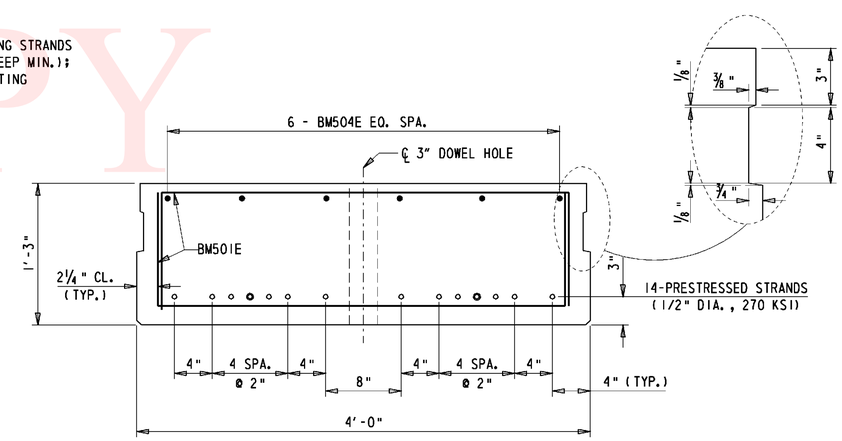

TYPICAL INTERIOR BEAM SECTION

1½" = 1'-0"

○ 1/2" DIA., 270 ksi PRESTRESSING STRANDS
● 1/2" DIA., 270 ksi PRESTRESSING STRANDS TO BE DEBONDED FOR 5'-0" @ EACH END

NOTE: 8 BEAMS TOTAL (2 EXTERIOR & 6 INTERIOR)

PRESTRESSED BEAM NOTES (48" x 15")

1. DESIGN PLANS - WORKING DRAWINGS
   INFORMATION PERTAINING TO THE PRECAST PRESTRESSED REINFORCED CONCRETE SLABS IS INTENDED TO SERVE AS AN INDICATION OF THE TYPE OF CONSTRUCTION ACCEPTABLE FOR USE. THE CONTRACTOR WILL BE REQUIRED TO PREPARE AND SUBMIT FOR APPROVAL A COMPLETE SET OF DETAILED SHOP PLANS FOR THE PRESTRESSED PRECAST CONCRETE UNITS THEY PROPOSE TO FURNISH.

2. HANDLING
   PRESTRESSED BEAMS SHALL BE HANDLED ONLY BY LIFTING STRANDS PROVIDED ESPECIALLY FOR THIS PURPOSE. THE APPROXIMATE DEAD WEIGHT OF EACH UNIT IS 9.632 TONS.

3. CONCRETE STRENGTH
   THE MINIMUM COMPRESSIVE STRENGTH AT THE TIME OF INITIAL PRESTRESS EQUALS 6400 PSI. THE MINIMUM COMPRESSIVE STRENGTH AT 28 DAYS EQUALS 8000 PSI.

4. BAR REINFORCEMENT
   MATERIALS REQUIREMENT: AASHTO M31 - GRADE 60
   ALL BAR REINFORCEMENT TO HAVE 2" MINIMUM COVER EXECPT AS NOTED OR DETAILED.
   ALL BAR REINFORCEMENT AND CHAIR SUPPORTS SHALL BE PROTECTED WITH FUSION BONDED EPOXY.
   PAYMENT FOR REINFORCING BARS IS INCIDENTAL TO ITEM #623000 - PRESTRESSED REINFORCED CONCRETE MEMBERS.

5. STRAND
   INITIAL PRESTRESSES ON EACH ½" DIA. 270 ksi LOW RELAXATION STRAND EQUALS 30975 lbs MINIMUM. ULTIMATE STRENGTH EQUALS 41310 lbs PER STRAND.

6. CONCRETE FINISH
   TOP OF BEAMS ARE TO HAVE A SMOOTH FINISH. THE BEAMS SHALL BE PROTECTED WITH A WATER MISCIBLE, PENETRATING ALKYL ALKOXY SILANE SEALER ON BOTTOM AND SIDES OF BEAMS EXCLUDING AREAS TO BE GROUTED (SHEAR KEYS). PAYMENT INCIDENTAL TO ITEM #623000- PRESTRESSED REINFORCED CONCRETE MEMBERS.

UNOFFICIAL WEBSITE COPY

DELAWARE DEPARTMENT OF TRANSPORTATION	ADDENDUMS / REVISIONS	SCALE : AS NOTED	BR 2-203A ON TODDS MILL ROAD OVER ISAAC BRANCH	CONTRACT T200907201 / COUNTY KENT	BRIDGE NO. 2-203A / DESIGNED BY: TRS / CHECKED BY: JNH	INTERIOR BEAM DETAILS	SHEET NO. 9 / TOTAL SHTS. 19

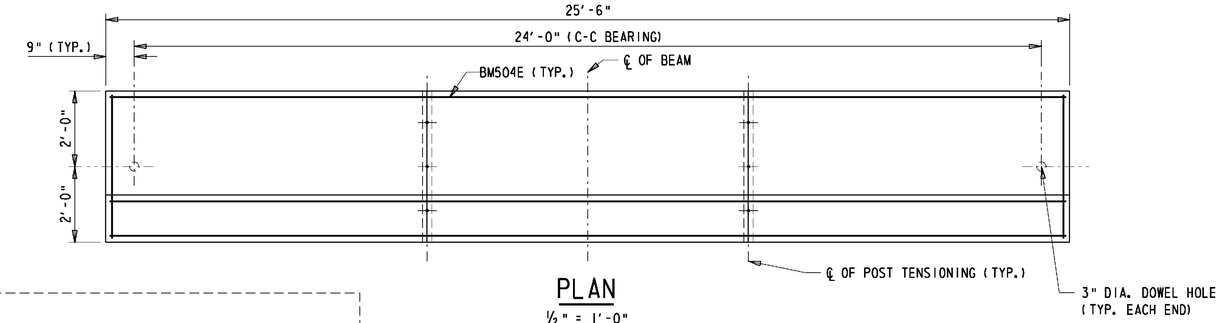

PLAN

½" = 1'-0"

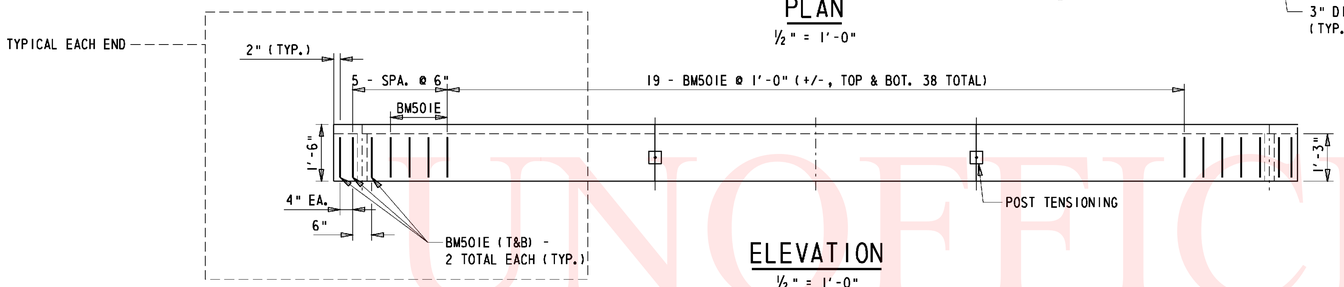

ELEVATION

½" = 1'-0"

NOTE: REINFORCING BARS AND LIFTING STRANDS SHALL BE SPACED SO THAT THEY DO NOT INTERFERE WITH THE PRESTRESSED STRAND SPACING OR THE 3" DIAMETER DOWEL HOLE. THE PRECASTER SHALL INCLUDE DETAILS OF THE PLACEMENT OF THESE ITEMS IN THEIR SUBMITTED SHOP DRAWINGS.

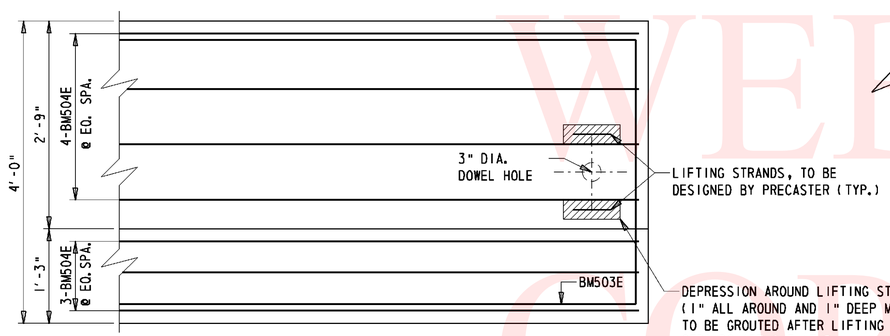

TYPICAL END BLOCK PLAN

1" = 1'-0"

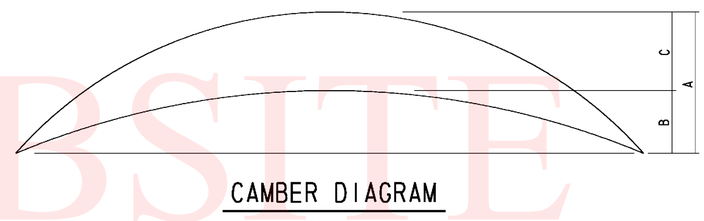

CAMBER DIAGRAM

A = ESTIMATED PRESTRESS CAMBER LESS DEFLECTION DUE TO DEAD LOAD OF BEAM TIMES CREEP = 0.549 In.
B = DEFLECTION DUE TO DEAD LOAD OF HOT MIX AND BRIDGE RAIL = 0.070 In.
C = A - B = NET CAMBER = 0.439 In.

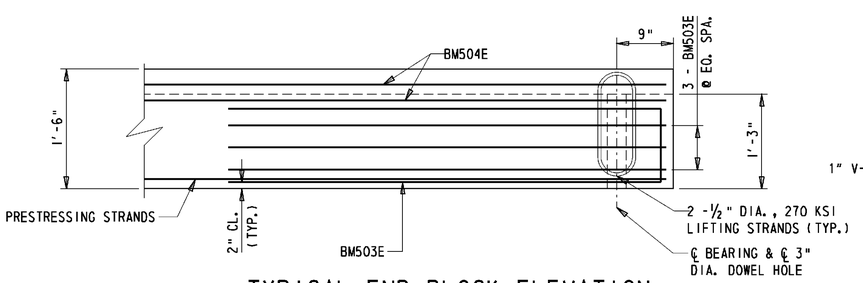

TYPICAL END BLOCK ELEVATION

1" = 1'-0"

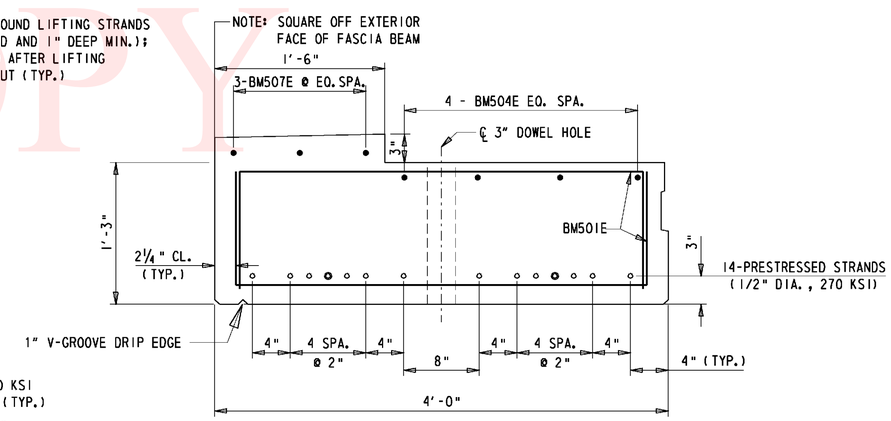

TYPICAL EXTERIOR BEAM SECTION

1½" = 1'-0"

- ○ 1/2" DIA., 270 ksi PRESTRESSING STRANDS
- ● 1/2" DIA., 270 ksi PRESTRESSING STRANDS TO BE DEBONDED FOR 5'-0" @ EACH END

NOTE: 8 BEAMS TOTAL (2 EXTERIOR & 6 INTERIOR)

NOTE: QUANTITIES OF BARS SHOWN ARE FOR EACH INDIVIDUAL BEAM.

REINFORCING BAR LIST

STRAIGHT BARS				BENT BARS			
MARK	SIZE	QTY.	LENGTH	MARK	SIZE	QTY.	LENGTH
BM504E	5	7	25'-2"	BM501E	5	64	5'-5½"
				BM502E	5	6	15'-3"
				BM503E	5	6	12'-7"

BENDING DIAGRAMS

NOTE: ALL DIMENSIONS ARE FROM OUT TO OUT

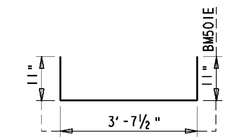

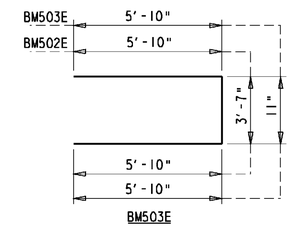

PRESTRESSED BEAM NOTES (48" x 15")

1. DESIGN PLANS - WORKING DRAWINGS
   INFORMATION PERTAINING TO THE PRECAST PRESTRESSED REINFORCED CONCRETE SLABS IS INTENDED TO SERVE AS AN INDICATION OF THE TYPE OF CONSTRUCTION ACCEPTABLE FOR USE. THE CONTRACTOR WILL BE REQUIRED TO PREPARE AND SUBMIT FOR APPROVAL A COMPLETE SET OF DETAILED SHOP PLANS FOR THE PRESTRESSED PRECAST CONCRETE UNITS THEY PROPOSE TO FURNISH.

2. HANDLING
   PRESTRESSED BEAMS SHALL BE HANDLED ONLY BY LIFTING STRANDS PROVIDED ESPECIALLY FOR THIS PURPOSE. THE APPROXIMATE DEAD WEIGHT OF EACH UNIT IS 10.228 TONS.

3. CONCRETE STRENGTH
   THE MINIMUM COMPRESSIVE STRENGTH AT THE TIME OF INITIAL PRESTRESS EQUALS 6400 PSI. THE MINIMUM COMPRESSIVE STRENGTH AT 28 DAYS EQUALS 8000 PSI.

4. BAR REINFORCEMENT
   MATERIALS REQUIREMENT: AASHTO M31 - GRADE 60
   ALL BAR REINFORCEMENT TO HAVE 2" MINIMUM COVER EXECPT AS NOTED OR DETAILED.
   ALL BAR REINFORCEMENT AND CHAIR SUPPORTS SHALL BE PROTECTED WITH FUSION BONDED EPOXY.
   PAYMENT FOR REINFORCING BARS IS INCIDENTAL TO ITEM #623000 - PRESTRESSED REINFORCED CONCRETE MEMBERS.

5. STRAND
   INITIAL PRESTRESSES ON EACH ½" DIA. 270 ksi LOW RELAXATION STRAND EQUALS 30975 lbs MINIMUM. ULTIMATE STRENGTH EQUALS 41310 lbs PER STRAND.

6. CONCRETE FINISH
   TOP OF BEAMS ARE TO HAVE A SMOOTH FINISH. THE BEAMS SHALL BE PROTECTED WITH A WATER MISCIBLE, PENETRATING ALKYL ALKOXY SILANE SEALER ON BOTTOM AND SIDES OF BEAMS EXCLUDING AREAS TO BE GROUTED (SHEAR KEYS). PAYMENT INCIDENTAL TO ITEM #623002- PRESTRESSED REINFORCED CONCRETE MEMBERS.

UNOFFICIAL WEBSITE COPY

DELAWARE DEPARTMENT OF TRANSPORTATION	ADDENDUMS / REVISIONS	SCALE : AS NOTED	BR 2-203A ON TODDS MILL ROAD OVER ISAAC BRANCH	CONTRACT T200907201	BRIDGE NO. 2-203A	EXTERIOR BEAM DETAILS	SHEET NO. 10
				COUNTY KENT	DESIGNED BY: TRS		TOTAL SHTS. 19
					CHECKED BY: JNH		

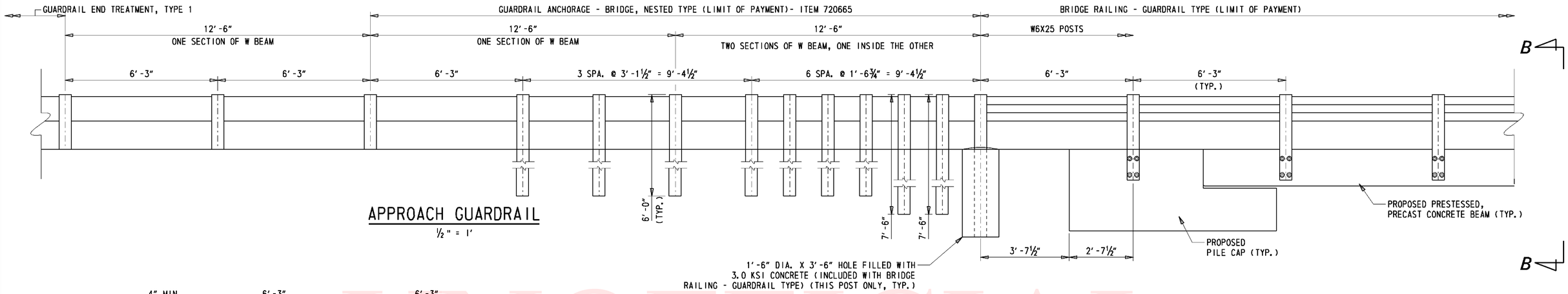

APPROACH GUARDRAIL

½" = 1'

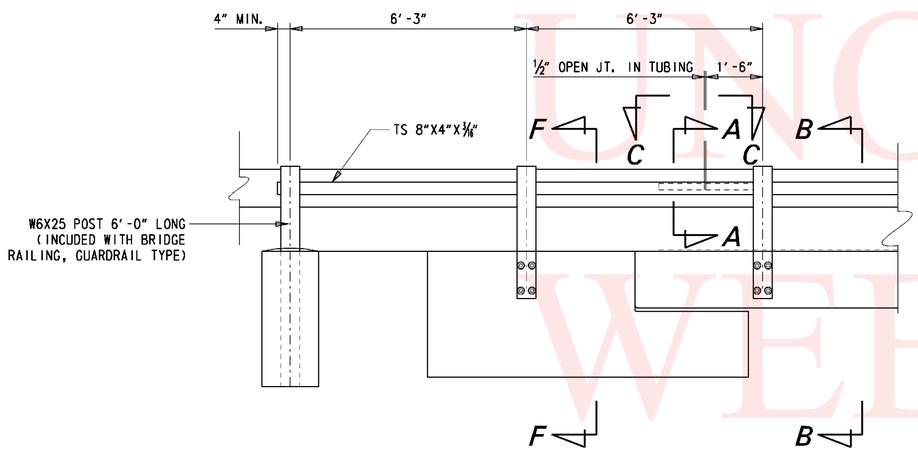

RAILING ELEVATION

½" = 1'

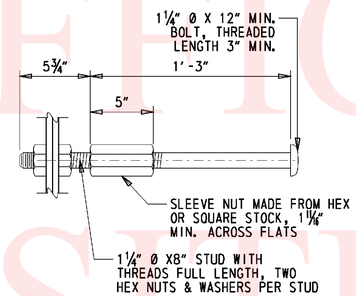

ANCHOR ASSEMBLY

ALL PARTS GALVANIZED
2" = 1'-0"

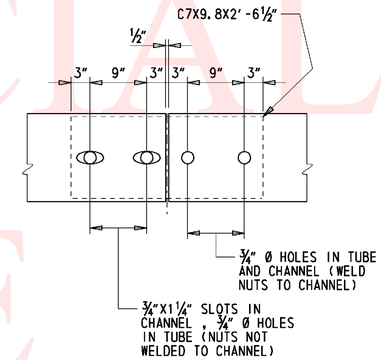

SECTION C-C

1" = 1'-0"

DETAILS SHOWN IN ACCORDANCE WITH CURRENT AASHTO SPECIFICATIONS.

BRIDGE RAILING, GUARDRAIL TYPE WILL BE PAID FOR AT THE CONTRACT UNIT PRICE PER LINEAR FOOT, WHICH PRICE INCLUDES PAYMENT IN FULL FOR ALL WORK AND MATERIAL NECESSARY TO ERECT THE RAILING. PAYMENT FOR ANCHOR ASSEMBLES EMBEDDED IN BEAMS IS INCLUDED IN ITEM 623002 -PRESTRESSED CONCRETE SLABS. PAYMENT FOR ANCHOR ASSEMBLIES EMBEDDED IN PILE CAPS IS INCLUDED IN THE BID ITEM 602014 - PCC MASONRY, PILE CAPS, CLASS D.

STEEL TUBE ELEMENTS SHALL MEET THE REQUIREMENTS OF A500 GRADE B, WITH SILICON CONTENT OF LESS THAN 0.06% OR BETWEEN 0.15% & 0.26% AND SHALL BE GALVANIZED IN ACCORDANCE WITH ASTM 123. RAIL TUBE ELEMENTS FROM ALL HEATS SUPPLIED SHALL BE TESTED PRIOR TO DELIVERY OF THE RAIL TO THE CONTRACTOR.

POST ASSEMBLIES AND CHANNELS SHALL MEET THE CHARPY V-NOTCH REQUIREMENTS AS SPECIFIED IN 9.06.04 OF THE STANDARD SPECIFICATIONS AT A TEST TEMPERATURE OF 40°F (4°C).

EXCEPT WHERE NOTED, ALL BOLTS, NUTS, AND STUDS FOR BRIDGE RAILING GUARDRAIL TYPE SHALL COMFORM TO THE PHYSICAL REQUIREMENTS OF ASTM F436. ALL HARDWARE SHALL BE GALVANIZED IN ACCORDANCE WITH ASTM A153. GALVANIZED NUTS SHALL BE TAPPED OVERSIZE PER THE REQUIREMENTS OF ASTM A563. ANCHOR ASSEMBLIES SHALL NOT COME INTO CONTACT WITH REINFORCING STEEL.

ANCHOR ASSEMBLIES CAST IN PRECAST PRESTRESSED CONCRETE VOIDED SLAB SHALL BE PRESET BY USE OF A TEMPLATE.

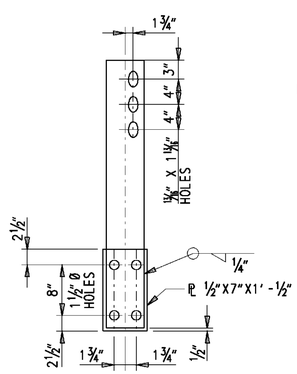

SECTION E-E

1" = 1'-0"

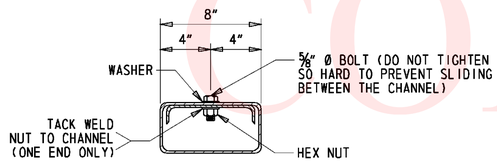

SECTION A-A

2" = 1'-0"

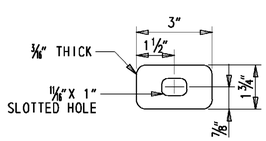

SPECIAL WASHER

8" = 1'-0"

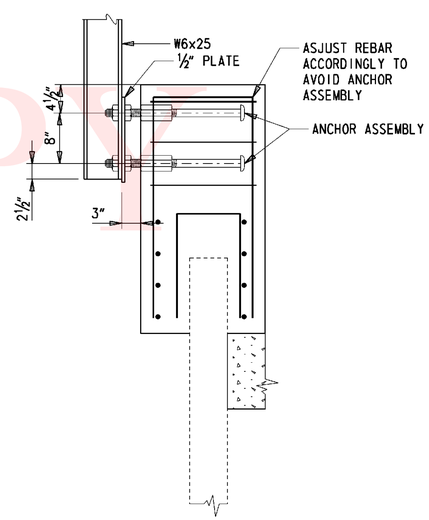

SECTION F-F

1" = 1'-0"

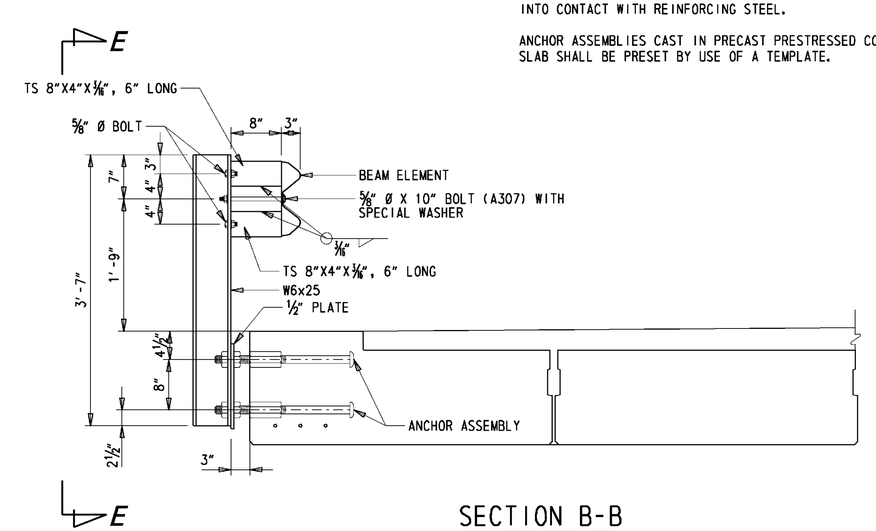

SECTION B-B

1" = 1'-0"

UNOFFICIAL WEBSITE COPY

Y:\KENT*\BRIDGE\ 2907201\PLANS\RA01.DGN

DELAWARE DEPARTMENT OF TRANSPORTATION	ADDENDUMS / REVISIONS	SCALE: AS NOTED	BR 2-203A ON TODDS MILL ROAD OVER ISAAC BRANCH	CONTRACT T200907201	BRIDGE NO. 2-203A	BRIDGE RAIL DETAILS	SHEET NO. 11
				COUNTY KENT	DESIGNED BY: TRS		TOTAL SHTS. 19
					CHECKED BY: JNH		

① ANY MARK NUMBER WITH SUFFIX 'E' DENOTES EPOXY COATED REINFORCING STEEL.

② ALL MARK 'LOCATION PREFIXES' SHALL CONSIST OF TWO LETTERS AND ARE AS FOLLOWS: AB = ABUTMENT, AS = APPROACH SLAB, BC = BOX CULVERT, BW = BACKWALL, CL = COLUMN, DK = DECK, DL = DOWEL, FT = FOOTING, HW = HEADWALL, MS = MISC. BARS, PA = PARAPET, PR = PIER, SC = SHEETPILE CAP, SL = SLAB, TW = TOEWALL, WL = WALL (UNIQUE LOCATION), WW = WINGWALL

SPECIFICATIONS					BENDING DIMENSIONS (FEET-INCHES /QUARTER INCH)										
QTY.	SIZE	LENGTH	MARK	TYPE	A	B	C	D	E	F/R	G	H	J	K	O
16	8	2-50	DL801E	STR		2-50									
114	5	3-40	SC501E	17		1-40	0-80	1-40							
58	5	7-20	SC502E	S6		1-80	1-50	2-80			1-50				
8	5	28-52	SC503E	STR		28-52									
12	5	29-80	SC504E	STR		29-80									
4	5	28-110	SC505E	STR		28-110									
8	5	27-92	SC506E	STR		27-92									
16	5	5-71	SC507E	14		1-60	2-71	1-60				1-03			4-83
16	5	4-60	SC508E	14		1-60	1-60	1-60				1-03			3-72
24	5	6-102	SC509E	17		2-100	1-22	2-100							
12	5	14-00	SC510E	T2	0-60	1-40	5-20	1-40	5-20		0-60				
16	5	6-53	SC511E	STR		6-53									
16	5	6-12	SC512E	STR		6-12									

SPECIFICATIONS					BENDING DIMENSIONS (FEET-INCHES /QUARTER INCH)										
QTY.	SIZE	LENGTH	MARK	TYPE	A	B	C	D	E	F/R	G	H	J	K	O

SPECIFICATIONS					BENDING DIMENSIONS (FEET-INCHES /QUARTER INCH)										
QTY.	SIZE	LENGTH	MARK	TYPE	A	B	C	D	E	F/R	G	H	J	K	O

UNOFFICIAL WEBSITE COPY

ASTM STANDARD ENGLISH REINFORCING BARS

BAR SIZE	NOMINAL DIMENSIONS: DIAMETER (INCHES)	AREA (INCHES²)	WEIGHT (LBS./FT.)
3	0.375	0.110	0.376
4	0.500	0.200	0.668
5	0.625	0.310	1.043
6	0.750	0.440	1.502
7	0.875	0.600	2.044
8	1.000	0.790	2.670
9	1.128	1.000	3.400
10	1.270	1.270	4.303
11	1.410	1.560	5.313
14	1.693	2.250	7.650
18	2.257	4.000	13.600

RECOMMENDED END HOOKS, APPLICABLE TO ALL GRADES

	180° HOOKS			90° HOOKS
D	A OR G	J	A OR G	
2¼"	5"	3"	6"	
3"	6"	4"	8"	
3¾"	7"	5"	10"	
4½"	8"	6"	1-0"	
5¼"	10"	7"	1-2"	
6"	11"	8"	1-4"	
9½"	1-3"	11¾"	1-7"	
10¾"	1-5"	1-1¼"	1-10"	
1-0"	1-7"	1-2¾"	2-0"	
1-6¼"	2-3"	1-9¾"	2-7"	
2-0"	3-0"	2-4½"	3-5"	

STIRRUP AND TIE HOOKS, APPLICABLE TO ALL GRADES

	90° HOOK	135° HOOK	
D	A OR G	A OR G	A OR G
1½"	4"	4"	2½"
2"	4½"	4½"	3"
2½"	6"	5½"	3¾"
4½"	1-0"	8"	4½"
5¼"	1-2"	9"	5¼"
6"	1-4"	10½"	6"

NOTES:

1. FIGURES SHOWN IN CIRCLES REPRESENT BAR BEND TYPES.
2. STANDARD BAR BENDS INCLUDE ONLY THOSE TYPES BELOW, INDICATED AS SUCH.
3. ALL DIMENSIONS OUT-TO-OUT, EXCEPT "A" AND "G" ON STD. 180° AND 135° HOOKS.
4. "J" DIMENSIONS ON 180° HOOKS TO BE SHOWN ONLY WHERE NECESSARY TO RESTRICT HOOK SIZE, OTHERWISE STANDARD 'ACI' HOOKS ARE TO BE USED.
5. WHERE "J" IS NOT SHOWN, "J" WILL BE KEPT EQUAL TO OR LESS THAN "H" ON TYPES 3, 5 AND 22. WHERE "J" CAN EXCEED "H", IT SHALL BE SHOWN.
6. "H" DIMENSIONS OF STIRRUPS TO BE SHOWN AS NEEDED TO FIT WITHIN THE CONCRETE.
7. UNLESS OTHERWISE NOTED, DIAMETER "D" IS THE SAME FOR ALL BENDS AND HOOKS ON A BAR (EXCEPT FOR BEND TYPES 11 AND 13).
8. WHERE SLOPE DIFFERS FROM 45° OFFSET, "H" AND "K" MUST BE SHOWN.
9. WHERE BARS ARE TO BE BENT MORE ACCURATELY THAN STANDARD BENDING TOLERANCES, BENDING DIMENSIONS REQUIRING CLOSER FABRICATION SHOULD HAVE LIMITS INDICATED.
10. FOR RECOMMENDED DIAMETER "D", OF BENDS, HOOKS, ETC., REFER TO TABLE ABOVE, 'CRSI' OR 'ACI' TABLES WHERE APPLICABLE AND REQUIRED.
11. TYPE S1-S6, S11, T1-T3 AND T6-T9 APPLICABLE TO BAR SIZES #3 THROUGH #8.

STANDARD BAR BENDS

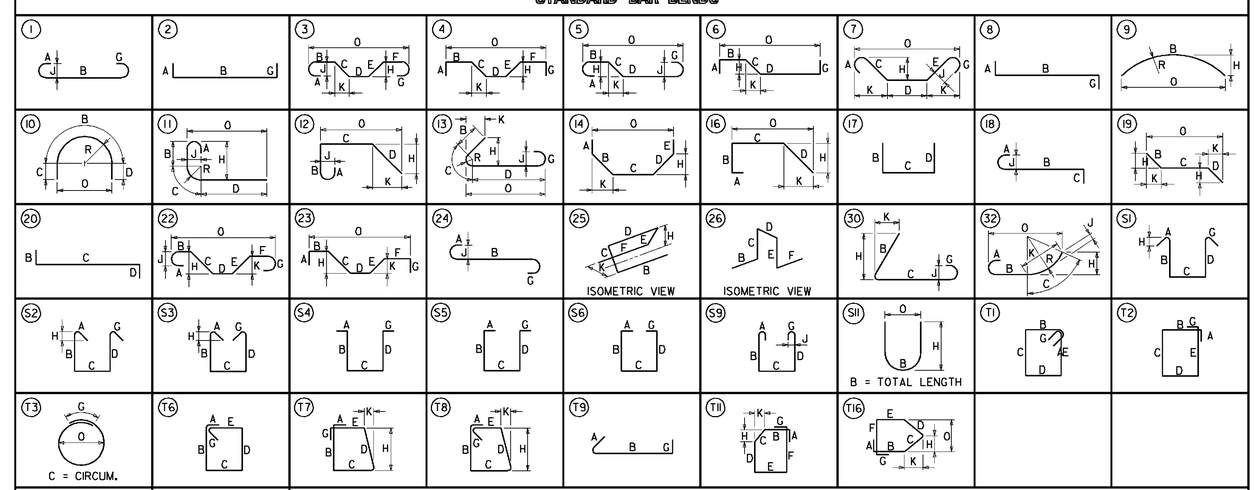

SPECIAL BAR BENDS

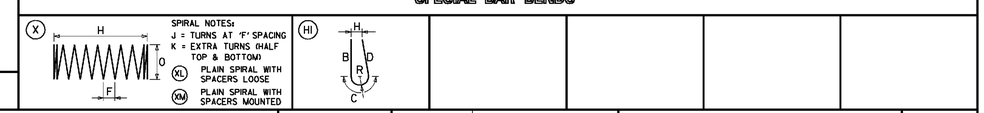

STIRRUP AND TIE HOOKS

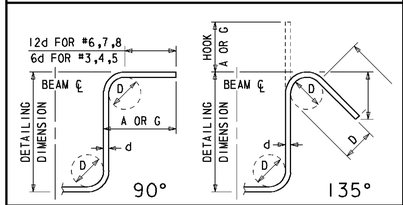

180° AND 90° END HOOKS

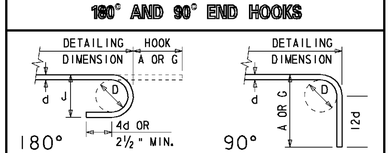

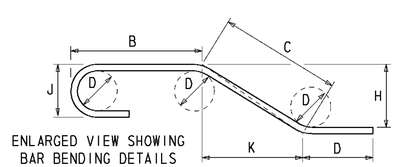

ENLARGED VIEW SHOWING BAR BENDING DETAILS

DELAWARE DEPARTMENT OF TRANSPORTATION

ADDENDUMS / REVISIONS

BR 2-203A ON TODDS MILL ROAD OVER ISAAC BRANCH

CONTRACT	BRIDGE NO.	2-203A	REINFORCEMENT BAR LIST	SHEET NO.
T200907201	DESIGNED BY: TRS			12
COUNTY				TOTAL SHTS.
KENT	CHECKED BY: JNH			19

ENVIRONMENTAL COMPLIANCE NOTES

1. GENERAL NOTES:

A. THE PURPOSE OF THESE SHEETS ARE TO IDENTIFY THOSE ITEMS ASSOCIATED WITH ENVIRONMENTAL COMPLIANCE. IMPACT CALCULATIONS ARE FOR THE AGENCY PERMIT REPORTING PURPOSES ONLY AND ARE NOT TO BE USED FOR BIDDING PURPOSES.

B. IF A DEPARTURE FROM THE APPROVED PLANS (WHICH WOULD AFFECT ANY NATURAL AND/OR CULTURAL RESOURCES) IS NECESSARY, THE ENVIRONMENTAL STUDIES SECTION SHALL BE CONTACTED AT (302)760-2264 TO ALLOW FOR COORDINATION WITH THE APPROPRIATE RESOURCE AGENCIES AND APPROVAL.

C. USE OF THESE SHEETS DOES NOT ALLEVIATE THE CONTRACTOR'S RESPONSIBILITY TO COMPLY WITH ALL CONDITIONS SET FORTH IN THE ENVIRONMENTAL STATEMENT AND PERMITS.

2. NATURAL RESOURCE ISSUES:

A. PERMIT REQUIREMENTS/APPROVALS*:
U.S. ARMY CORPS OF ENGINEERS (COE): NATIONWIDE PERMIT (NWP) #3 (a) & (c) (NO PCN)
DNREC - WETLANDS & SUBAQUEOUS LANDS (WLSL): PROJECT IS CONSISTENT WITH DEL. CODE CH. 92, SECTION 7217, SPECIAL EXEMPTION (b) AS AMENDED BY SB186
DNREC - WATER QUALITY CERTIFICATION (WQC) & COASTAL ZONE CONSISTENCY (CZM): ISSUED (PROJECT IS NOT LOCATED IN CRW).

* THE PERMITS/APPROVALS LISTED ARE THOSE REQUIRED FOR THIS PROJECT. THE ENVIRONMENTAL STUDIES SECTION IS RESPONSIBLE FOR COORDINATING AND/OR OBTAINING THIS APPROVAL.
NOTE: THE ABSENCE OF ASTERISKS AFTER A PERMIT (COE, WLSL, WQC, CZM) INDICATES THAT COORDINATION HAS BEEN DONE WITH THAT AGENCY BUT NO WRITTEN AUTHORIZATION WAS REQUIRED. AS SUCH, NO PAPERWORK FROM THAT AGENCY SHOULD BE ANTICIPATED.

B. CONSTRUCTION RESTRICTIONS:
FISHERIES - NONE
ENDANGERED SPECIES - NONE
MIGRATORY BIRDS - NONE

3. CULTURAL RESOURCE ISSUES:

A. COORDINATION ONGOING

4. STREAM RESTORATION AND SLOPE RIPRAP TREATMENT

A. THE CONTRACTOR SHALL FOLLOW THE SPECIAL PROVISIONS OF ITEM #712531 - CHANNEL BED FILL IN REGARDS TO THE SALVAGING OF ON-SITE NATURAL STREAM BOTTOM MATERIAL OR THE FURNISHING OF OFF-SITE MATERIAL. IF SUFFICIENT SOURCES FOR CHANNEL BED FILL DO NOT EXIST ON-SITE, ANY NEW MATERIAL SHALL CONFORM TO THE REQUIREMENTS OF ITEM # 712531 - CHANNEL BED FILL. ALL RIPRAP IN THE CHANNEL BOTTOM (I.E. BELOW THE WATER LINE) SHALL BE RECESSED ONE FOOT BELOW STREAM BED ELEVATION AND CHOKED WITH BORROW TYPE 'B' SO THAT ALL OF THE VOIDS IN THE RIPRAP ARE FILLED WITH MATERIAL. PAYMENT UNDER ITEM #209002 - BORROW TYPE 'B'. THE RIPRAP SHALL THEN BE COVERED WITH A MINIMUM OF 12" CHANNEL BED FILL. FINAL CHANNEL ELEVATIONS SHALL MATCH EXISTING ELEVATIONS AT THE UPSTREAM AND DOWNSTREAM PROJECT LIMITS. THROUGH THE STRUCTURE, ELEVATIONS SHALL BE AS NOTED ON THE PLANS. PAYMENT UNDER ITEM #712531 - CHANNEL BED FILL.

B. OTHER AREAS OF THE CHANNEL BOTTOM AFFECTED BY CONSTRUCTION (INCLUDING, BUT NOT LIMITED TO, THE LOCATION OF SUMP PITS, STABILIZED OUTFALLS, TEMPORARY PIPES AND/OR SANDBAG DIKES AND DIVERSIONS) SHALL BE RESTORED TO EXISTING CONDITIONS. ANY CAVITIES OR SCOUR HOLES RESULTING FROM CONSTRUCTION ACTIVITIES SHALL BE FILLED WITH CHANNEL BED FILL. PAYMENT UNDER ITEM #712531 - CHANNEL BED FILL.

C. WHEN ALL EROSION AND SEDIMENT CONTROL MEASURES ARE REMOVED AND THE STREAM RETURNS TO ITS NATURAL FLOW CONDITIONS, THE FLOW MUST REMAIN ABOVE GROUND AND ABOVE THE RIPRAP (I.E. THE FLOW CANNOT BE "LOST" IN THE RIPRAP OR BENEATH THE STRUCTURE). IF THIS IS NOT ACHIEVED, THE CONTRACTOR WILL BE REQUIRED TO TAKE CORRECTIVE ACTION AT THE CONTRACTOR'S EXPENSE.

D. ALL RIPRAP ON THE STREAM BANK, OUTSIDE THE CHANNEL BED, SHALL BE CHOKED WITH DELAWARE #57 STONE, FILLED WITH TOPSOIL, AND SEEDED. PLACE JUST ENOUGH CHOKE MATERIAL TO PREVENT THE LOSS OF TOPSOIL THROUGH THE RIPRAP, AND THEN FINISH FILLING THE VOIDS WITH TOPSOIL SO THAT THE RIPRAP PEAKS ARE BARELY VISIBLE. AN ADDITIONAL 4" TOPSOIL LAYER SHALL BE PLACED ON TOP OF THE RIPRAP. SLOPE SEEDING SHALL BE WITH ITEM # 734531, STREAMBANK SEED MIX. FOLLOWING THE SEEDING OPERATION, ITEM #733535- SOIL RETENTION BLANKET MULCH, TYPE 5, OR OTHER BLANKET AS SHOWN ON THE PLANS SHALL BE INSTALLED. ALL WORK, STARTING WITH THE INITIAL CHOKING WITH TOPSOIL THROUGH THE SEEDING, SHALL BE COMPLETED PRIOR TO ANY RAIN EVENT. PAYMENT FOR DELAWARE #57 STONE SHALL BE INCIDENTAL TO THE RIPRAP ITEM. ALL OTHER ITEMS SHALL BE PAID FOR UNDER THEIR RESPECTIVE ITEMS.

5. ACCESS:

A. THE CONTRACTOR SHALL ACCESS THE STREAM FROM THE NORTHEAST AND NORTHWEST CORNERS ONLY.

6. WETLAND CLEARING AND RESTORATION

A. CLEARING IN WETLAND AND UPLAND AREAS SHALL BE KEPT TO THE MIMIMUM ABSOLUTELY NECESSARY FOR CONSTRUCTION ACCESS. IN WETLAND AREAS THAT ARE CLEARED, THERE SHALL BE NO GRUBBING EXCEPT WHERE NECESSARY TO CONSTRUCT PROJECT COMPONENTS SUCH AS FOUNDATIONS AND RIPRAP PROTECTION. VEGETATION SHALL BE CUT FLUSH WITH THE GROUND (I.E. NO DISTURBANCE OF THE ROOT MAT).

B. ALL MATERIALS ASSOCIATED WITH A TEMPORARY ACCESS ROAD WILL BE REMOVED IN THEIR ENTIRETY UPON COMPLETION OF THE PROJECT. THE DISTURBED WETLAND AREAS WILL BE RESTORED I.e., ORIGINAL ELEVATIONS & GRADES WILL BE RE-ESTABLISHED. TOPSOIL WILL BE ADDED AS NEEDED.

C. NATURALIZE PLANTING OF RED MAPLES (1-1/2 TO 1-3/4" CAL., BB OR CONT.) ON 10' CENTER-SPACING (8' MIN. AND 12' MAX.) WITHIN DISTURBED WETLAND AREAS (ALL AREAS WITHIN LOC, EXCLUDING AREA WITHIN THE TOS AND RIPRAP PROTECTION). 20 RED MAPLE TREES (TOTAL) SHALL BE PLANTED IN DISTURBED AREAS (PAYMENT UNDER ITEM #737523- PLANTING). WET GROUND EROSION CONTROL GRASS SEEDING- FLATS SHALL BE PLACED IN DISTURBED WETLAND AREAS (PAYMENT UNDER ITEM #734552 - WET GROUND EROSION CONTROL GRASS SEEDING - FLATS).

D. THE CONTRACTOR SHALL BE REQUIRED TO WATER ALL MAJOR AND MINOR TREES, SHRUBS AND ALL HERBACEOUS BEDS BI-WEEKLY DURING THE PERIOD FROM JUNE 15 THROUGH OCTOBER 1. OVER THE COURSE OF THIS PERIOD, THERE ARE NINE DISTINCT WATERINGS. WATERING, ONCE INITIATED, SHALL CONTINUE WITHOUT INTERRUPTION UNTIL ALL PLANTS ON THE PROJECT HAVE BEEN WATERED. PAYMENT SHALL BE PER 1,000 GALS OF WATER APPLIED AND SHALL BE BASED ON APPLYING FIFTEEN (15) GALLONS OF WATER TO EACH PLANT EACH OF THE NINE WATERINGS. PAYMENT SHALL BE MADE UNDER ITEM #737523 - PLANTING. NO BREAKOUT SHEET IS PROVIDED FOR ITEM #737523 - PLANTING.

UNOFFICIAL WEBSITE COPY

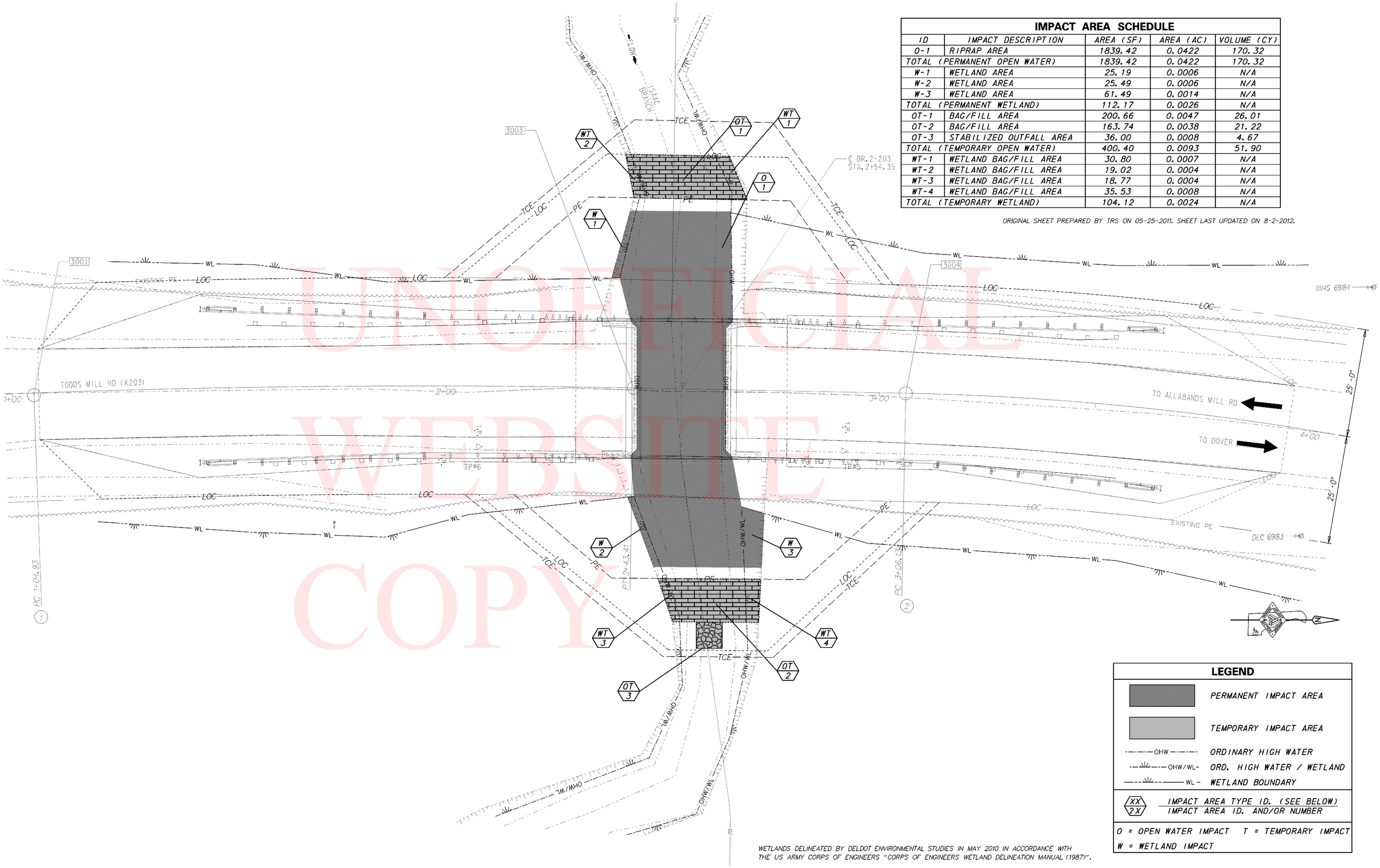

IMPACT AREA SCHEDULE				
ID	IMPACT DESCRIPTION	AREA (SF)	AREA (AC)	VOLUME (CY)
O-1	RIPRAP AREA	1839.42	0.0422	170.32
TOTAL (PERMANENT OPEN WATER)		1839.42	0.0422	170.32
W-1	WETLAND AREA	25.19	0.0006	N/A
W-2	WETLAND AREA	25.49	0.0006	N/A
W-3	WETLAND AREA	61.49	0.0014	N/A
TOTAL (PERMANENT WETLAND)		112.17	0.0026	N/A
OT-1	BAG/FILL AREA	200.66	0.0047	26.01
OT-2	BAG/FILL AREA	163.74	0.0038	21.22
OT-3	STABILIZED OUTFALL AREA	36.00	0.0008	4.67
TOTAL (TEMPORARY OPEN WATER)		400.40	0.0093	51.90
WT-1	WETLAND BAG/FILL AREA	30.80	0.0007	N/A
WT-2	WETLAND BAG/FILL AREA	19.02	0.0004	N/A
WT-3	WETLAND BAG/FILL AREA	18.77	0.0004	N/A
WT-4	WETLAND BAG/FILL AREA	35.53	0.0008	N/A
TOTAL (TEMPORARY WETLAND)		104.12	0.0024	N/A

ORIGINAL SHEET PREPARED BY TRS ON 05-25-2011. SHEET LAST UPDATED ON 8-2-2012.

LEGEND

- PERMANENT IMPACT AREA
- TEMPORARY IMPACT AREA
- OHW — ORDINARY HIGH WATER
- OHW/WL — ORD. HIGH WATER / WETLAND
- WL — WETLAND BOUNDARY
- XX / 2X — IMPACT AREA TYPE ID. (SEE BELOW) / IMPACT AREA ID. AND/OR NUMBER

O = OPEN WATER IMPACT T = TEMPORARY IMPACT
W = WETLAND IMPACT

WETLANDS DELINEATED BY DELDOT ENVIRONMENTAL STUDIES IN MAY 2010 IN ACCORDANCE WITH THE US ARMY CORPS OF ENGINEERS "CORPS OF ENGINEERS WETLAND DELINEATION MANUAL (1987)".

UNOFFICIAL WEBSITE COPY

\ N \203\ I \290 201\ L NS\C 01. N

DELAWARE DEPARTMENT OF TRANSPORTATION

ADDENDUMS / REVISIONS

SCALE 0 10 20 30 FEET

BR 2-203A ON TODDS MILL ROAD OVER ISAAC BRANCH

CONTRACT	BRIDGE NO.	2-203A
T200907201	DESIGNED BY: TRS	
COUNTY	CHECKED BY: JNH	
KENT		

ENVIRONMENTAL COMPLIANCE PLAN

SHEET NO. 14
TOTAL SHTS. 19

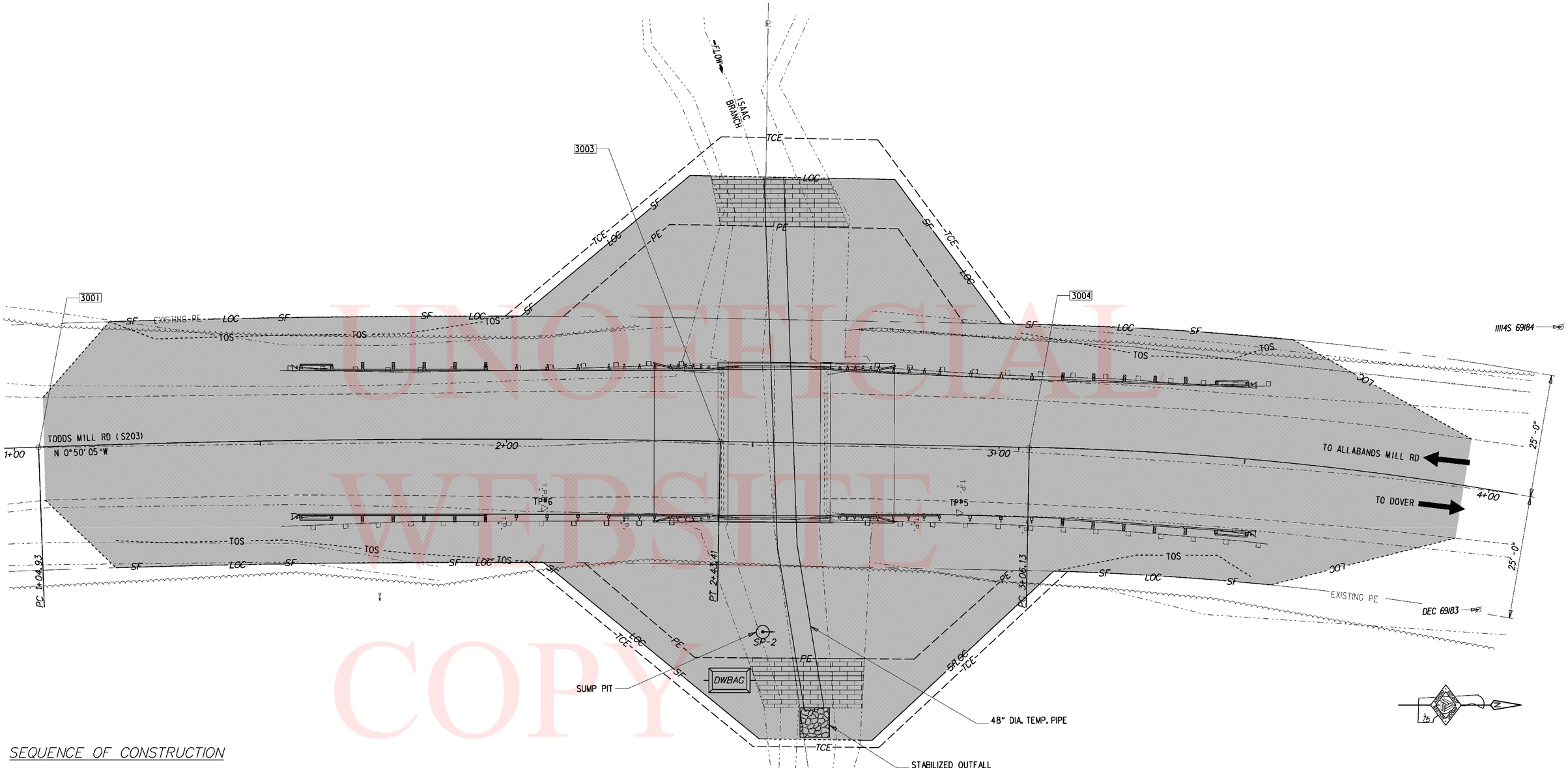

UNOFFICIAL WEBSITE COPY

SEQUENCE OF CONSTRUCTION

1. PLACE CHANGEABLE MESSAGE BOARDS AT LEAST 10 DAYS PRIOR TO ROAD CLOSURE.
2. INSTALL ALL M.O.T. ITEMS AS SHOWN ON THE DETOUR PLAN SHEET OR AS DIRECTED BY THE ENGINEER.
3. INSTALL SILT FENCE, EXCEPT CONNECTION TO SAND BAG DIKES, AS SHOWN ON THE PLANS. CONSTRUCT SAND BAG DIKES, INCLUDING TEMPORARY DIVERSION PIPE STUBS, IN CHANNEL TO EL. 33.00 AND CONNECT SILT FENCE TO THE SANDBAG DIKES TO ENCLOSE THE WORK AREA. INSTALL TEMPORARY DIVERSION PIPE BETWEEN SANDBAG DIKES.
4. INSTALL SUMP PIT, DEWATERING BAGS, AND STABILIZED OUTFALL. DEWATER WORK AREA IN ACCORDANCE WITH SECTION 111 OF THE STANDARD SPECIFICATIONS.
5. PERFORM ALL CONSTRUCTION ACTIVITY IN WORK AREA AS PER PLANS INCLUDING PLACING RIPRAP, REMOVING EXISTING SUPERSTRUCTURE AND TOP OF SHEET PILES, AND CONSTRUCTING NEW SUPERSTRUCTURE.
6. REMOVE STREAM DIVERSION INCLUDING SUMP PIT, DEWATERING BAG, TEMPORARY DIVERSION PIPE, AND SAND BAG DIKES. RESTORE DISTURBED AREAS IN ACCORDANCE WITH ENVIRONMENTAL COMPLIANCE NOTE 2C.
7. COMPLETE ALL REMAINING WORK INCLUDING GUARDRAIL INSTALLATION, ROADWAY RECONSTRUCTION, AND GRADING.
8. REMOVE ALL REMAINING TEMPORARY EROSION AND SEDIMENT CONTROL DEVICES.
9. RESTORE THE STREAM TO EXISTING CONDITIONS IN ACCORDANCE WITH GUIDANCE ON THE ENVIRONMENTAL COMPLIANCE SHEET AND THE ENVIRONMENTAL NOTES SHEET.
10. TOPSOIL, SEED, AND MULCH DISTURBED AREAS.
11. REMOVE ALL M.O.T. DEVICES.

LEGEND

DISTURBED AREA

BASELINE POINTS

POINT #	DESCRIPTION	STATION	NORTHING	EASTING
3000	POB	0+00.00	409084.76	607357.39
3001	PC #1	1+04.93	409189.67	607355.86
3003	PT #1	2+43.41	409328.13	607357.68
3004	PC #2	3+06.13	409390.79	607360.24
3006	PT #2	5+28.06	409606.73	607406.58
3007	POE	5+97.62	409671.28	607432.51

DELAWARE DEPARTMENT OF TRANSPORTATION

ADDENDUMS / REVISIONS

SCALE 0 10 20 30 FEET

BR 2-203A ON TODDS MILL ROAD OVER ISAAC BRANCH

CONTRACT	BRIDGE NO.	2-203A
T200907201	DESIGNED BY: TRS	
COUNTY		
KENT	CHECKED BY: JNH	

SEQUENCE OF CONSTRUCTION & E&S PLAN

SHEET NO. 15 / TOTAL SHTS. 19

\ N \203\ I \290 201\ L NS\C 01. N

CHANGEABLE MESSAGE BOARDS

PRIOR TO DETOUR
(60 DAYS PRIOR TO BEGINNING OF DETOUR)

CMS-1

TODDS MILL RD CLOSING	STARTING XX/XX/XX

SPECIAL SIGNS

48"

72"

Todds Mill	6"C
CLOSED	6"C
at Allabands	6"C
Mill Rd	6"C
FOLLOW	6"C
DETOUR	6"C

D/G ORANGE
BLACK LEGEND

(U)

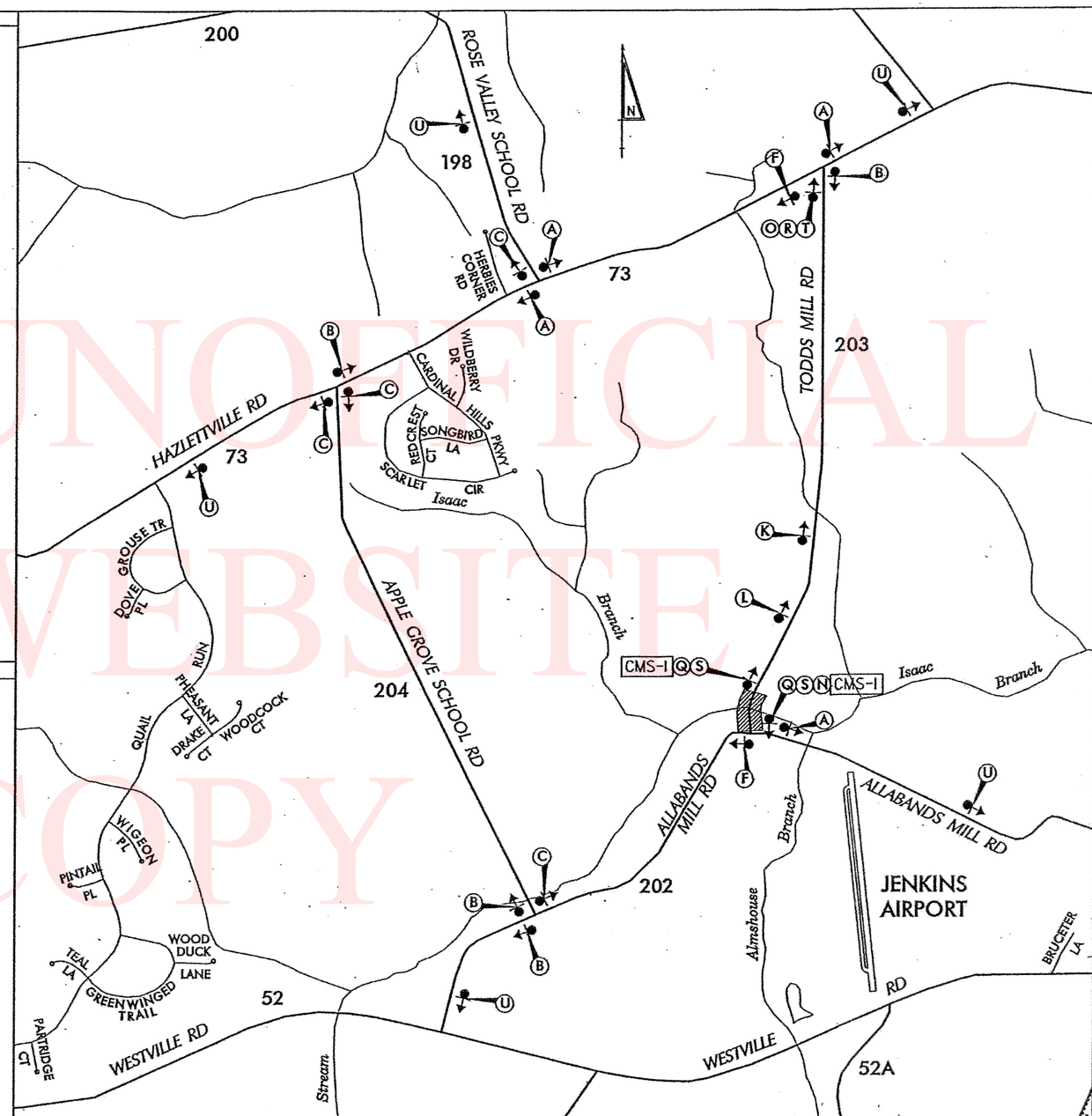

LEGEND

(A) DETOUR ↑	(B) DETOUR ←	(C) DETOUR →
(D) DETOUR ↖	(E) DETOUR ↗	(F) END DETOUR
(G) DETOUR AHEAD	(H) DETOUR 1000 FT	(I) DETOUR 500 FT
(J) ROAD CLOSED AHEAD	(K) ROAD CLOSED 1000 FT	(L) ROAD CLOSED 500 FT
(M) ROAD NAME	(N) DETOUR ←	(O) DETOUR →
(P) ROAD CLOSED XX MILES AHEAD LOCAL TRAFFIC ONLY	(Q) ROAD CLOSED	(R) ROAD CLOSED TO THRU TRAFFIC
(S)		(T)

GENERAL NOTES

1. ALL DETOUR SIGNING INCLUDING, TRAILBLAZERS, ARE TO BE SUPPLIED AND MAINTAINED BY THE GENERAL CONTRACTOR IN COMPLIANCE TO THE DE MANUAL OF UNIFORM TRAFFIC CONTROL DEVICES.
2. THE CONTRACTOR SHALL COMPLY WITH GUIDELINES IN "THE DELAWARE MANUAL ON UNIFORM TRAFFIC CONTROL DEVICES (DE- MUTCD PART 6) FOR LIGHTS, BARRICADES AND SIGNS.(AS PER LATEST REVISION)
3. FIELD CONDITIONS MAY DICTATE CHANGES AT SOME TIME DURING THE LIFE OF THE CONTRACT. IN THE EVENT OF OMISSIONS OR CORRECTIONS, THE SIGNING PROVISIONS OF THE DELAWARE MANUAL ON UNIFORM TRAFFIC CONTROL DEVICES WILL PREVAIL.
4. SIGNS J THROUGH L AND P THROUGH R ,THE WORD (ROAD) SHOULD BE CHANGED TO RAMP, R/R OR BRIDGE WHERE APPLICABLE.
5. WARNING SIGNS SHOULD BE MOUNTED ON BREAKAWAY POSTS AND HAVE RETROREFLECTIVE FLUORESCENT SHEETING.
6. "S" BARRICADES SHALL COMPLETELY RUN THE FULL WIDTH OF ROADWAY.
7. BARRICADES SHALL BE A MINIMUM OF 6 FEET WIDE UNLESS DIRECTED BY THE ENGINEER.

RECOMMENDED _____ DATE:	RECOMMENDED DATE: 4-14-10	RECOMMENDED DATE: 4/14/10	APPROVED CHIEF SAFETY OFFICER DATE: 4-14-10
			APPROVED TRAFFIC ENGINEER DATE: 4/14/10

DELAWARE DEPARTMENT OF TRANSPORTATION

ADDENDUM / REVISIONS

NOT TO SCALE

BR 2-203A ON TODDS MILL ROAD OVER ISAAC BRANCH

CONTRACT	ROAD NO.	K203
29-072-01	DESIGNED BY:	SWN
COUNTY		
KENT	CHECKED BY:	ASW

DETOUR PLAN

SHEET NO.
16
TOTAL SHTS.
19

UNOFFICIAL WEBSITE COPY

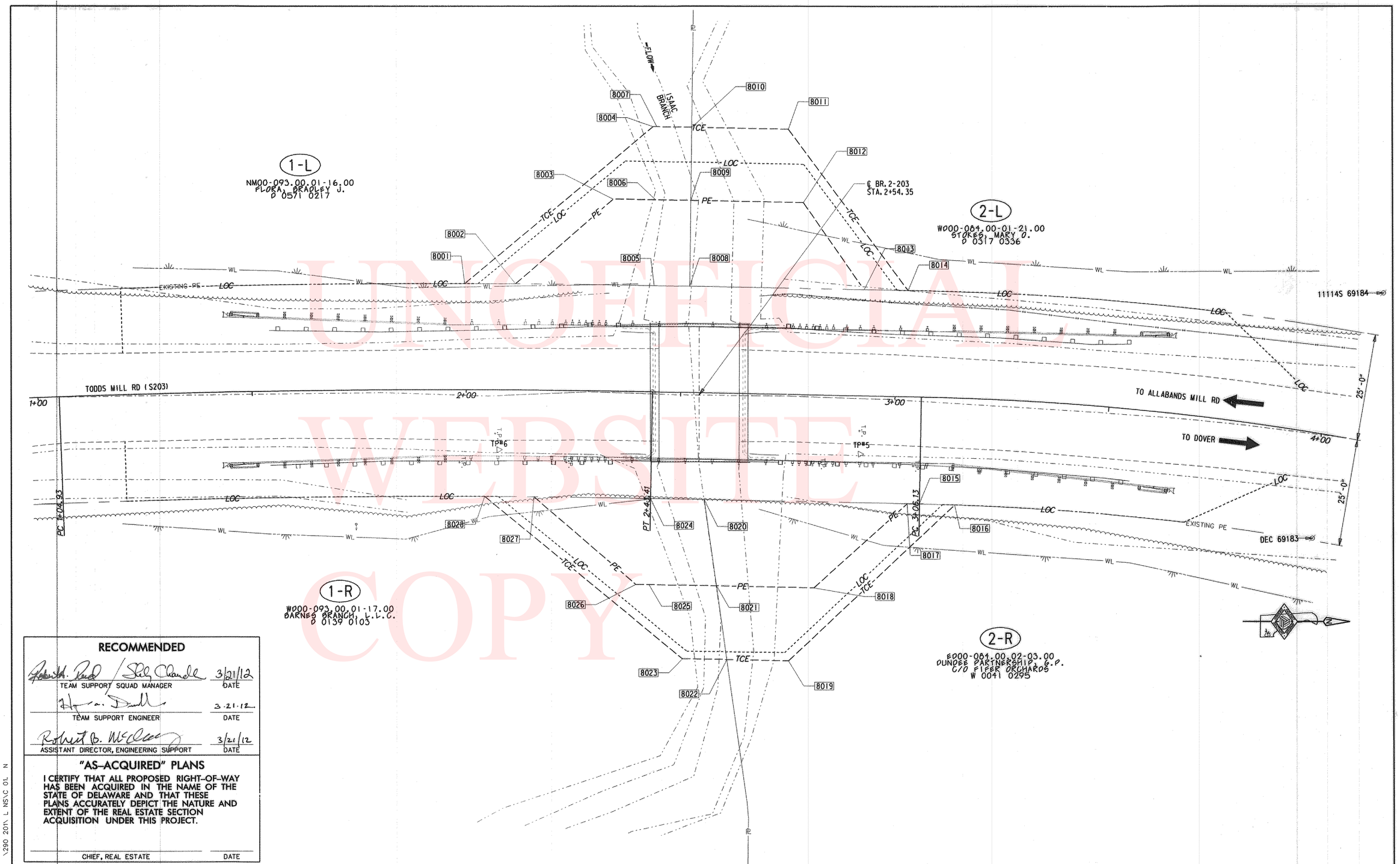

UNOFFICIAL WEBSITE COPY

RECOMMENDED

TEAM SUPPORT SQUAD MANAGER	DATE 3/21/12
TEAM SUPPORT ENGINEER	DATE 3-21-12
ASSISTANT DIRECTOR, ENGINEERING SUPPORT	DATE 3/21/12

"AS-ACQUIRED" PLANS

I CERTIFY THAT ALL PROPOSED RIGHT-OF-WAY HAS BEEN ACQUIRED IN THE NAME OF THE STATE OF DELAWARE AND THAT THESE PLANS ACCURATELY DEPICT THE NATURE AND EXTENT OF THE REAL ESTATE SECTION ACQUISITION UNDER THIS PROJECT.

CHIEF, REAL ESTATE — DATE

DELAWARE DEPARTMENT OF TRANSPORTATION

ADDENDUMS / REVISIONS

SCALE: 0 10 20 30 FEET

BR 2-203A ON TODDS MILL ROAD OVER ISAAC BRANCH

CONTRACT	BRIDGE NO.	2-203A
T200907201	DESIGNED BY: TRS	
COUNTY: KENT	CHECKED BY: JNH	

RIGHT-OF-WAY PLAN
RW SHEET 1 OF 3

SHEET NO. 17
TOTAL SHTS. 19

\N\203\ I \290 201\ L NS\C 01. N

ASSESSMENT NUMBER	OWNERSHIP OF RECORD	TYPE OF ACQUISITION	TITLE SOURCE	PARCEL AREA (ACRES)
ED00-084.00.02.03.00	(2-R) DUNDEE PARTNERSHIP, G.P. , C/O FIFER ORCHARDS	TCE	W 0041 0295	87.870

ALIGNMENT NUMBER & DESCRIPTION: 3001 - NO DESCRIPTION

PT. NO.	ALIGN. NO.	STATION	OFFSET *	NORTH	EAST	BEARING	DISTANCE	CHORD BEARING	CHORD LENGTH	ARC LENGTH	RADIUS **
8017	3001	3+03.28	25.00	409386.9236	607385.1007	N 2°20'20.79" E	2.8459				
8015	3001	3+06.13	25.00	409389.7671	607385.2169			N 2°43'00.54" E	8.2397	8.2398	625.0000
8016	3001	3+14.69	25.00	409397.9976	607385.6075	S 41°46'58.23" E	53.0686				
8019	3001	2+76.27	62.00	409358.4256	607420.9675	S 2°20'20.79" W	14.3663				
8022	3001	2+61.90	62.00	409344.0713	607420.3812	S 83°15'56.96" W	17.2154				
8021	3001	2+59.19	45.00	409342.0526	607403.2845	N 2°20'20.79" E	22.6815				
8018	3001	2+81.87	45.00	409364.7152	607404.2103	N 40°42'38.70" W	29.2983				
8017	3001	3+03.28	25.00	409386.9236	607385.1007						

FIGURE 8008 AREA = 646.8536 SQ. FT. (0.0148 ACRES)

ASSESSMENT NUMBER	OWNERSHIP OF RECORD	TYPE OF ACQUISITION	TITLE SOURCE	PARCEL AREA (ACRES)
ED00-084.00.02.03.00	(2-R) DUNDEE PARTNERSHIP, G.P. , C/O FIFER ORCHARDS	P/E	W 0041 0295	87.870

ALIGNMENT NUMBER & DESCRIPTION: 3001 - NO DESCRIPTION

PT. NO.	ALIGN. NO.	STATION	OFFSET *	NORTH	EAST	BEARING	DISTANCE	CHORD BEARING	CHORD LENGTH	ARC LENGTH	RADIUS **
8020	3001	2+55.99	25.00	409339.6775	607383.1708	N 2°20'20.79" E	47.2855				
8017	3001	3+03.28	25.00	409386.9236	607385.1007	S 40°42'38.70" E	29.2983				
8018	3001	2+81.87	45.00	409364.7152	607404.2103	S 2°20'20.79" W	22.6815				
8021	3001	2+59.19	45.00	409342.0526	607403.2845	S 83°15'55.53" W	20.2534				
8020	3001	2+55.99	25.00	409339.6775	607383.1708						

FIGURE 8007 AREA = 699.6703 SQ. FT. (0.0161 ACRES)

ASSESSMENT NUMBER	OWNERSHIP OF RECORD	TYPE OF ACQUISITION	TITLE SOURCE	PARCEL AREA (ACRES)
WD00-093.00.01-17.00	(1-R) BARNES BRANCH, L.L.C.	TCE	D 0139 0103	59.900

ALIGNMENT NUMBER & DESCRIPTION: 3001 - NO DESCRIPTION

PT. NO.	ALIGN. NO.	STATION	OFFSET *	NORTH	EAST	BEARING	DISTANCE	CHORD BEARING	CHORD LENGTH	ARC LENGTH	RADIUS **
8028	3001	2+04.40	25.00	409288.5031	607381.3821			N 1°34'39.09" E	11.4516	11.4516	2475.0000
8027	3001	2+15.96	25.00	409299.9503	607381.6974	N 41°51'11.48" E	31.2020				
8026	3001	2+40.25	45.00	409323.1913	607402.5161			N 2°18'10.57" E	3.1009	3.1009	2455.0000
8025	3001	2+43.41	45.00	409326.2897	607402.6407	N 2°20'20.79" E	15.7760				
8021	3001	2+59.19	45.00	409342.0526	607403.2845	N 83°15'56.96" E	17.2154				
8022	3001	2+61.90	62.00	409344.0713	607420.3812	S 2°20'20.79" W	10.4194				
8023	3001	2+51.48	62.00	409333.6606	607419.9559	S 40°30'15.00" W	59.3897				
8028	3001	2+04.40	25.00	409288.5031	607381.3821						

FIGURE 8006 AREA = 556.4228 SQ. FT. (0.0128 ACRES)

ASSESSMENT NUMBER	OWNERSHIP OF RECORD	TYPE OF ACQUISITION	TITLE SOURCE	PARCEL AREA (ACRES)
WD00-093.00.01-17.00	(1-R) BARNES BRANCH, L.L.C.	P/E	D 0139 0103	59.900

ALIGNMENT NUMBER & DESCRIPTION: 3001 - NO DESCRIPTION

PT. NO.	ALIGN. NO.	STATION	OFFSET *	NORTH	EAST	BEARING	DISTANCE	CHORD BEARING	CHORD LENGTH	ARC LENGTH	RADIUS **
8027	3001	2+15.96	25.00	409299.9503	607381.6974			N 2°01'28.53" E	27.1721	27.1723	2475.0000
8024	3001	2+43.41	25.00	409327.1055	607382.6573	N 2°20'20.79" E	12.5824				
8020	3001	2+55.99	25.00	409339.6775	607383.1708	N 83°15'55.53" E	20.2534				
8021	3001	2+59.19	45.00	409342.0526	607403.2845	S 2°20'20.79" W	15.7760				
8025	3001	2+43.41	45.00	409326.2897	607402.6407			S 2°18'10.57" W	3.1009	3.1009	-2455.0000
8026	3001	2+40.25	45.00	409323.1913	607402.5161	S 41°51'11.48" W	31.2020				
8027	3001	2+15.96	25.00	409299.9503	607381.6974						

FIGURE 8005 AREA = 586.7806 SQ. FT. (0.0135 ACRES)

ASSESSMENT NUMBER	OWNERSHIP OF RECORD	TYPE OF ACQUISITION	TITLE SOURCE	PARCEL AREA (ACRES)
WD00-084.00-01-21.00	(2-L) STOKES, MARY O.	TCE	D 0317 0336	2.270

ALIGNMENT NUMBER & DESCRIPTION: 3001 - NO DESCRIPTION

PT. NO.	ALIGN. NO.	STATION	OFFSET *	NORTH	EAST	BEARING	DISTANCE	CHORD BEARING	CHORD LENGTH	ARC LENGTH	RADIUS **
8013	3001	2+92.37	-25.00	409378.0668	607334.6973	S 56°25'48.82" W	24.6929				
8012	3001	2+77.89	-45.00	409364.4128	607314.1229	S 2°20'20.79" W	26.2278				
8009	3001	2+51.66	-45.00	409338.2069	607313.0524	N 87°56'06.12" W	17.0002				
8010	3001	2+51.58	-62.00	409338.8195	607296.0632	N 2°20'20.79" E	22.5521				
8011	3001	2+74.13	-62.00	409361.3528	607296.9837	N 54°43'31.31" E	46.7087				
8014	3001	3+02.64	-25.00	409388.3269	607335.1164	S 2°20'20.79" W	10.2686				
8013	3001	2+92.37	-25.00	409378.0668	607334.6973						

FIGURE 8004 AREA = 690.1283 SQ. FT. (0.0158 ACRES)

ASSESSMENT NUMBER	OWNERSHIP OF RECORD	TYPE OF ACQUISITION	TITLE SOURCE	PARCEL AREA (ACRES)
WD00-084.00-01-21.00	(2-L) STOKES, MARY O.	P/E	D 0317 0336	2.270

ALIGNMENT NUMBER & DESCRIPTION: 3001 - NO DESCRIPTION

PT. NO.	ALIGN. NO.	STATION	OFFSET *	NORTH	EAST	BEARING	DISTANCE	CHORD BEARING	CHORD LENGTH	ARC LENGTH	RADIUS **
8008	3001	2+51.76	-25.00	409337.4863	607333.0396	N 87°56'05.97" W	20.0002				
8009	3001	2+51.66	-45.00	409338.2069	607313.0524	N 2°20'20.79" E	26.2278				
8012	3001	2+77.89	-45.00	409364.4128	607314.1229	N 56°25'48.82" E	24.6929				
8013	3001	2+92.37	-25.00	409378.0668	607334.6973	S 2°20'20.79" W	40.6144				
8008	3001	2+51.76	-25.00	409337.4863	607333.0396						

FIGURE 8003 AREA = 668.4217 SQ. FT. (0.0153 ACRES)

ASSESSMENT NUMBER	OWNERSHIP OF RECORD	TYPE OF ACQUISITION	TITLE SOURCE	PARCEL AREA (ACRES)
NM00-093.00.01-16.00	(1-L) FLORA, BRADLEY J	TCE	D 0571 0217	1.900

ALIGNMENT NUMBER & DESCRIPTION: 3001 - NO DESCRIPTION

PT. NO.	ALIGN. NO.	STATION	OFFSET *	NORTH	EAST	BEARING	DISTANCE	CHORD BEARING	CHORD LENGTH	ARC LENGTH	RADIUS **
8001	3001	1+99.65	-25.00	409284.9678	607331.2816	N 38°29'05.93" W	57.1891				
8004	3001	2+42.51	-62.00	409329.7337	607295.6923			N 2°19'43.60" E	0.9227	0.9227	2562.0000
8007	3001	2+43.41	-62.00	409330.6556	607295.7298	N 2°20'20.79" E	8.1707				
8010	3001	2+51.58	-62.00	409338.8195	607296.0632	S 87°56'06.12" E	17.0002				
8009	3001	2+51.66	-45.00	409338.2069	607313.0524	S 2°20'20.79" W	8.2227				
8006	3001	2+43.44	-45.00	409329.9911	607312.7168			S 2°13'38.96" W	9.9734	9.9734	-2545.0000
8003	3001	2+33.64	-45.00	409320.0253	607312.3292	S 39°40'17.19" E	30.1642				
8002	3001	2+11.37	-25.00	409296.8074	607331.5855	S 1°28'13.74" W	11.8435				
8001	3001	1+99.65	-25.00	409284.9678	607331.2816						

FIGURE 8002 AREA = 549.0823 SQ. FT. (0.0126 ACRES)

ASSESSMENT NUMBER	OWNERSHIP OF RECORD	TYPE OF ACQUISITION	TITLE SOURCE	PARCEL AREA (ACRES)
NM00-093.00.01-16.00	(1-L) FLORA, BRADLEY J	P/E	D 0571 0217	1.900

ALIGNMENT NUMBER & DESCRIPTION: 3001 - NO DESCRIPTION

PT. NO.	ALIGN. NO.	STATION	OFFSET *	NORTH	EAST	BEARING	DISTANCE	CHORD BEARING	CHORD LENGTH	ARC LENGTH	RADIUS **
8002	3001	2+11.37	-25.00	409296.8074	607331.5855	N 39°40'17.19" W	30.1642				
8003	3001	2+33.64	-45.00	409320.0253	607312.3292			N 2°13'38.96" E	9.9734	9.9734	2545.0000
8006	3001	2+43.44	-45.00	409329.9911	607312.7168	N 2°20'20.79" E	8.2227				
8009	3001	2+51.66	-45.00	409338.2069	607313.0524	S 87°56'05.97" E	20.0002				
8008	3001	2+51.76	-25.00	409337.4863	607333.0396	S 2°20'20.79" W	8.3474				
8005	3001	2+43.41	-25.00	409329.1458	607332.6990			S 1°58'19.12" W	32.3576	32.3578	-2525.0000
8002	3001	2+11.37	-25.00	409296.8074	607331.5855						

FIGURE 8001 AREA = 588.6345 SQ. FT. (0.0135 ACRES)

UNOFFICIAL WEBSITE COPY

LEGEND

FEE AREA OF ACQUISITION
RW AREA OCCUPIED BY EXISTING RW
P/E PERMANENT EASEMENT
TCE TEMPORARY CONSTRUCTION EASEMENT

* "-" OFFSET IS LEFT OF BASELINE
** "-" CURVE TURNS TO THE LEFT

COUNTY ASSESSMENT PARCEL NUMBER	PLAN SHEET NUMBER	OWNERSHIP OF RECORD	TITLE SOURCE	PROPERTY AREA BEFORE ACQUISITION (ACRE) D=DEED C=CALCULATED A=ASSESMENT	ACQUISTITION CODE FEE, R/W, P/E, TCE	AREA TO BE ACQUIRED				PROPERTY AREA REMAINING (SQ. FEET /ACRES)	DEED RECORD OF ACQUISTITION	REMARKS
						ACQUISITION (SQ. FEET /ACRES)	AREA OCCUPIED BY EXISTING RIGHT OF WAY (SQ. FEET /ACRES)	EASEMENT PERMANENT (SQ. FEET /ACRES)	EASEMENT TEMPORARY (SQ. FEET /ACRES)			
ED00-084.00.02.03.00	-	(2-R) DUNDEE PARTNERSHIP, G.P. , C/O FIFER ORCHARDS	W 0041 0295	D - 87.87	TCE				646.8536 / 0.01			
					P/E			699.6703 / 0.02		3827617.20 / 87.87		
WD00-093.00.01-17.00	-	(1-R) BARNES BRANCH, L.L.C.	D 0139 0103	D - 59.90	TCE				556.4228 / 0.01			
					P/E			586.7806 / 0.01		2609244.00 / 59.90		
WD00-084.00-01-21.00	-	(2-L) STOKES, MARY Q.	D 0317 0336	D - 2.27	TCE				690.1283 / 0.02			
					P/E			668.4217 / 0.02		98881.20 / 2.27		
NM00-093.00.01-16.00	-	(1-L) FLORA, BRADLEY J	D 0571 0217	D - 1.90	TCE				549.0823 / 0.01			
					P/E			588.6345 / 0.01		82764.00 / 1.90		

UNOFFICIAL WEBSITE COPY

ACQUISTITION CODES

FEE - ACQUISITION
R/W - AREA OCCUPIED BY EXISTING R/W
P/E - PERMANENT EASEMENT
TCE - TEMPORARY EASEMENT

DELAWARE DEPARTMENT OF TRANSPORTATION

ADDENDUMS / REVISIONS

BR 2-203A ON TODDS MILL ROAD OVER ISAAC BRANCH

CONTRACT	BRIDGE NO.	2-203A
T200907201	DESIGNED BY: TRS	
COUNTY		
KENT	CHECKED BY: JNH	

RIGHT-OF-WAY TABULATION SHEET RW SHEET 3 OF 3

SHEET NO. 19
TOTAL SHTS. 19

\ N \203\ I \290 201\ L NS\ 01. N