THE STATE OF DELAWARE
DEPARTMENT OF TRANSPORTATION

U.S. CUSTOMARY UNITS

CONSTRUCTION PLANS FOR:

US 301
& SR 1 INTERCHANGE

CONTRACT NUMBER: T200911302
FEDERAL AID PROJECT NUMBER: NH-2015(22)

COUNTY: NEW CASTLE M.R. #: 84

UNOFFICIAL WEBSITE COPY

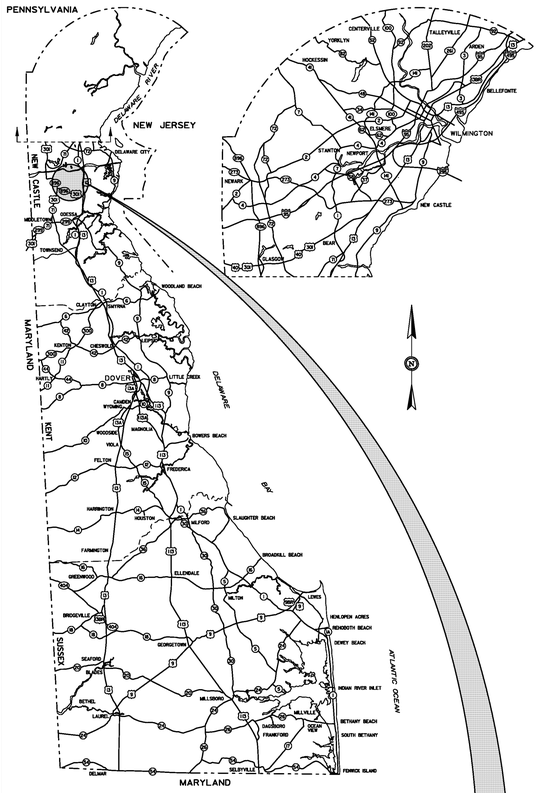

GENERAL LOCATION OF CONTRACT

LIMIT OF CONSTRUCTION RAMP Q STATION 1028+50

BEGIN CONTRACT T200911302 STATION 848+00

LIMIT OF CONSTRUCTION SR 1 STATION 1779+90

LIMIT OF CONSTRUCTION RAMP R STATION 316+00

END CONTRACT T200911302 STATION 183+20

LIMIT OF CONSTRUCTION SR 1 STATION 1827+07

LIMIT OF CONSTRUCTION US 13 STATION 185+74

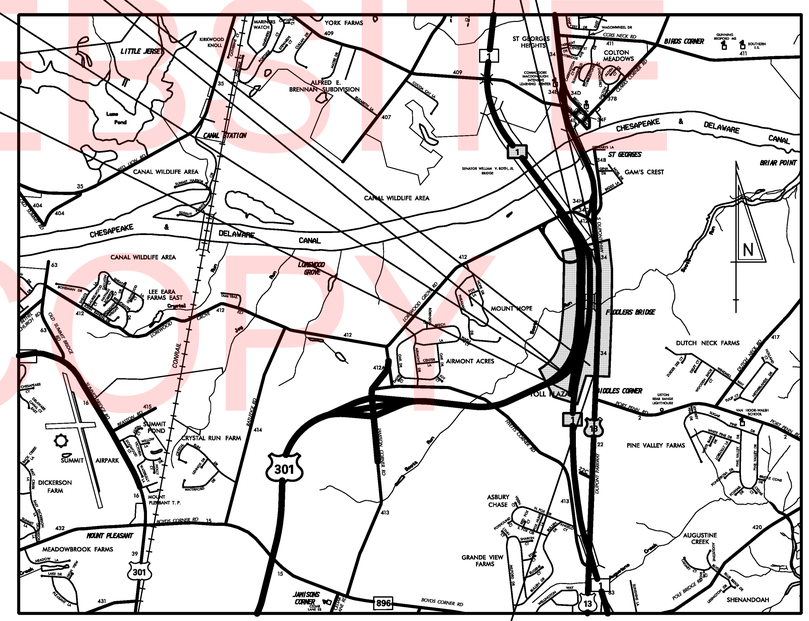

LOCATION MAP
SCALE: 1" = 3000'

LIMIT OF CONSTRUCTION US 13 STATION 144+67

DESIGN DESIGNATION – US 301

FUNCTIONAL CLASS: RURAL PRINCIPAL ARTERIAL	D.H.V. PROJECTED: 4,560	YEAR: 2030
TYPE OF CONSTRUCTION: NEW CONSTRUCTION	DESIGN SPEED: 70 M.P.H. (US 301 NB: 60 M.P.H.)	
A.A.D.T. CURRENT: N/A YEAR: N/A	TRUCKS: 9 %	
A.A.D.T. PROJECTED: 57,000 YEAR: 2030	DIRECTION OF DISTRIBUTION: 57 %	

SEE SHEET PN-02 FOR ADDITIONAL ROADWAY DESIGN DESIGNATIONS

INDEX OF SHEETS

SHEET Nº	TABLE OF CONTENTS
1	TITLE
2-4	PLAN SHEET INDEX
5	LEGEND
6-7	NOTES
8-11	EARTHWORK SUMMARY
12-31	TYPICAL SECTIONS
32-35	HORIZONTAL AND VERTICAL CONTROL
36-48	CONSTRUCTION PLANS
49-61	PROFILES
62-71	GRADES AND GEOMETRICS
72-81	PAVEMENT JOINT PLANS
82-83	BORROW SITE GRADING PLANS, LAYDOWN AREA, AND BORROW SITE NOTES
84-103	CONSTRUCTION DETAILS
104-107	TRANSITION SLAB DETAILS
108-116	BARRIER WALL DETAILS
117	STRUCTURE LOCATION PLAN
118-149	BRIDGE 1-903S - SR-1 SOUTHBOUND BRIDGE OVER SCOTT RUN
150-202	BRIDGE 1-432 - US 301 NORTHBOUND BRIDGE OVER SCOTT RUN
203-292	BRIDGE 1-433 - US 301 NORTHBOUND BRIDGE OVER SR-1
293-299	RETAINING WALL 1-1 PLANS AND DETAILS
300-326	RETAINING WALL 1-3 PLANS AND DETAILS
327-359	RETAINING WALL 1-3R PLANS AND DETAILS
360-361	MAINTENANCE OF STREAM FLOW PLANS
362-366	STORMWATER MANAGEMENT PLANS
367-373	ENVIRONMENTAL COMPLIANCE
374	GENERAL TRAFFIC CONTROL NOTES
375-427	CONSTRUCTION PHASING, M.O.T. AND EROSION CONTROL PLANS
428-432	DETOUR PLANS
433-449	LIGHTING PLANS
450-486	SIGNING, STRIPING AND CONDUIT PLANS
487	SIGNALIZATION PLAN
488-491	RIGHT-OF-WAY PLANS

TOTAL SHEETS: 491

APPROVED DESIGN EXCEPTIONS

DESIGN PARAMETER	REQUIRED	PROVIDED	DATE
HORIZONTAL SIGHT DISTANCE - US 301 NORTHBOUND	60 MPH	56 MPH	5/19/2010

ADDENDA & REVISIONS

DESCRIPTION	NAME & DATE

ASSOCIATED CONTRACTS

CONTRACT NO.	CONTRACT NAME
T200911308	US 301 SR 896 TO SR 1
T201011302	US 13 AND PORT PENN RD INTERSECTION

PREPARED BY THE CONSULTING FIRM OF
WR&A
WHITMAN, REQUARDT & ASSOCIATES, LLP
ENGINEERS · ARCHITECTS · PLANNERS EST. 1915

SEAL (JOSEPH STEPHEN MAYAR, REGISTERED, No. 7974, DELAWARE, PROFESSIONAL ENGINEER)

RECOMMENDED DATE 12/01/2015

PREPARED BY THE CONSULTING FIRM OF
McCormick Taylor
Engineers & Planners Since 1946

PLAN SHEETS
367-373, 479-486

SEAL (MICHAEL A. ANGELO, REGISTERED, NO. 6726, DELAWARE, PROFESSIONAL ENGINEER)

RECOMMENDED DATE 12/02/2015

RECOMMENDED

SQUAD MANAGER, CONSTRUCTION DATE 12/09/2015

GROUP ENGINEER, CONSTRUCTION DATE 12/09/2015

ASSISTANT DIRECTOR, TRANSPORTATION SOLUTIONS (CONSTRUCTION) DATE 12/09/2015

PREPARED BY THE CONSULTING FIRM OF
PRIME AE
PRIME AE Group, Inc.

PLAN SHEETS
118-149, 293-359

SEAL (MICHAEL K. RICE, REGISTERED, No. 12311, DELAWARE, PROFESSIONAL ENGINEER)

RECOMMENDED DATE 12/04/2015

RECOMMENDED

STORMWATER ENGINEER DATE 12/09/2015

SEAL (VINCENT W. DAVIS, REGISTERED, No. 12898, DELAWARE, PROFESSIONAL ENGINEER)

RECOMMENDED

SQUAD MANAGER, TRANSPORTATION SOLUTIONS (PROJECT DEVELOPMENT OR BRIDGE DESIGN) DATE 12/10/2015

SEAL (DIANE MARIE GUNN, LICENSE, No. 8008, DELAWARE, PROFESSIONAL ENGINEER)

RECOMMENDED

BRIDGE DESIGN ENGINEER DATE 12/08/2015

SEAL (JASON N. HASTINGS, REGISTERED, No. 13545, DELAWARE, PROFESSIONAL ENGINEER)

RECOMMENDED

GROUP ENGINEER, PROJECT DEVELOPMENT DATE 12/10/2015

SEAL (JOSEPH A. HOFSTEE, REGISTERED, No. 14581, DELAWARE, PROFESSIONAL ENGINEER)

RECOMMENDED

ASSISTANT DIRECTOR, TRANSPORTATION SOLUTIONS DATE 12/10/2015

SEAL (MARK CHRISTOPHER TUDOR, REGISTERED, No. 10803, DELAWARE, PROFESSIONAL ENGINEER)

APPROVED

CHIEF ENGINEER DATE 12/14/2015

SEAL (ROBERT BRIAN McCLEARY, REGISTERED, No. 8567, DELAWARE, PROFESSIONAL ENGINEER)

LAST REVISED: 8/7/2008
N:\31653-000\CONTRACT 1B\CADD\TC001U301_1B.DGN

PLAN SHEET INDEX CROSS REFERENCE									
CONSTRUCTION PLAN	36	37	38	40	41	43	48	N/A	N/A
PROFILES	49, 50, 58, 59	50, 51, 58	51, 52, 61	57, 58	52, 53, 56, 57	53, 54, 56	60, 61	N/A	N/A
GRADES AND GEOMETRICS	62	63	64	66	67	68	71	N/A	N/A
PAVEMENT JOINT LAYOUT PLANS	72	73	74	75	76	77	80	N/A	N/A
CONSTRUCTION PHASING, M.O.T. AND E&S	381, 393	382, 394	383, 395 409, 421	384, 396	385, 397 410, 422	386, 398 411, 423	391, 403 408	N/A	392, 404
LIGHTING PLAN	N/A	433	434	435	436	437	442	443	N/A
SIGNING, STRIPING AND CONDUIT PLAN	457	450, 458	451, 460	459	452, 461	453, 462	468	N/A	469
STORMWATER MANAGEMENT	N/A	N/A	N/A	362, 363	362, 363	N/A	N/A	N/A	N/A
SIGNALIZATION PLAN	N/A	N/A	N/A	N/A	N/A	N/A	N/A	N/A	N/A
ENVIRONMENTAL COMPLIANCE	N/A	N/A	N/A	N/A	N/A	370	373	N/A	N/A
RIGHT OF WAY PLAN	N/A	N/A	N/A	489	489, 490	490	N/A	N/A	N/A

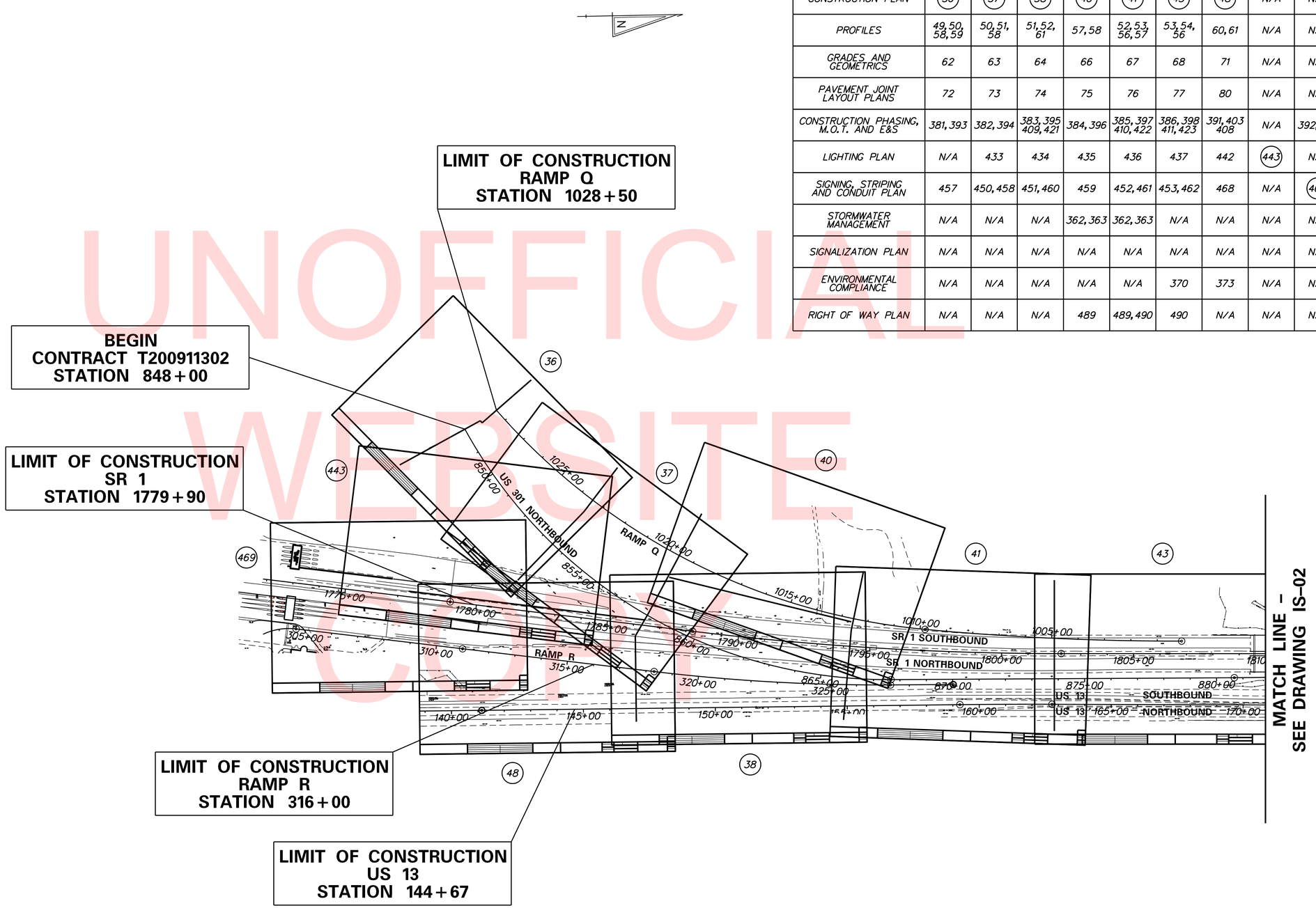

UNOFFICIAL WEBSITE COPY

N:\3653-000\CONTRACT IB\CADD\S001U301_IB.dgn
2/5/2013 9:59:01 AM

DELAWARE DEPARTMENT OF TRANSPORTATION	ADDENDUMS / REVISIONS	SCALE 0 200 400 600 FEET	US 301 & SR 1 INTERCHANGE	CONTRACT T200911302	BRIDGE NO.	PLAN SHEET INDEX	IS–01
				COUNTY NEW CASTLE	DESIGNED BY: KAH		SHEET NO. 2
					CHECKED BY: BRT		TOTAL SHTS. 491

PLAN SHEET INDEX CROSS REFERENCE					
CONSTRUCTION PLAN	45	46	47	N/A	N/A
PROFILES	54,55	55	N/A	N/A	N/A
GRADES AND GEOMETRICS	69	70	N/A	N/A	N/A
PAVEMENT JOINT LAYOUT PLAN	78	79	N/A	N/A	N/A
CONSTRUCTION PHASING, M.O.T. AND E&S	387, 399 405, 412 424	388, 400 406, 413 416, 425	389, 401 407, 414 416, 426	390, 402 415, 416 427	416
LIGHTING PLAN	438	439	440	441	N/A
SIGNING, STRIPING AND CONDUIT PLAN	454, 463	455, 464	456, 465	466	474
STORMWATER MANAGEMENT	N/A	N/A	N/A	N/A	N/A
SIGNILIZATION PLAN	487	487	N/A	N/A	N/A
ENVIRONMENTAL COMPLIANCE	371	372	N/A	N/A	N/A
RIGHT OF WAY PLAN	N/A	N/A	N/A	N/A	N/A

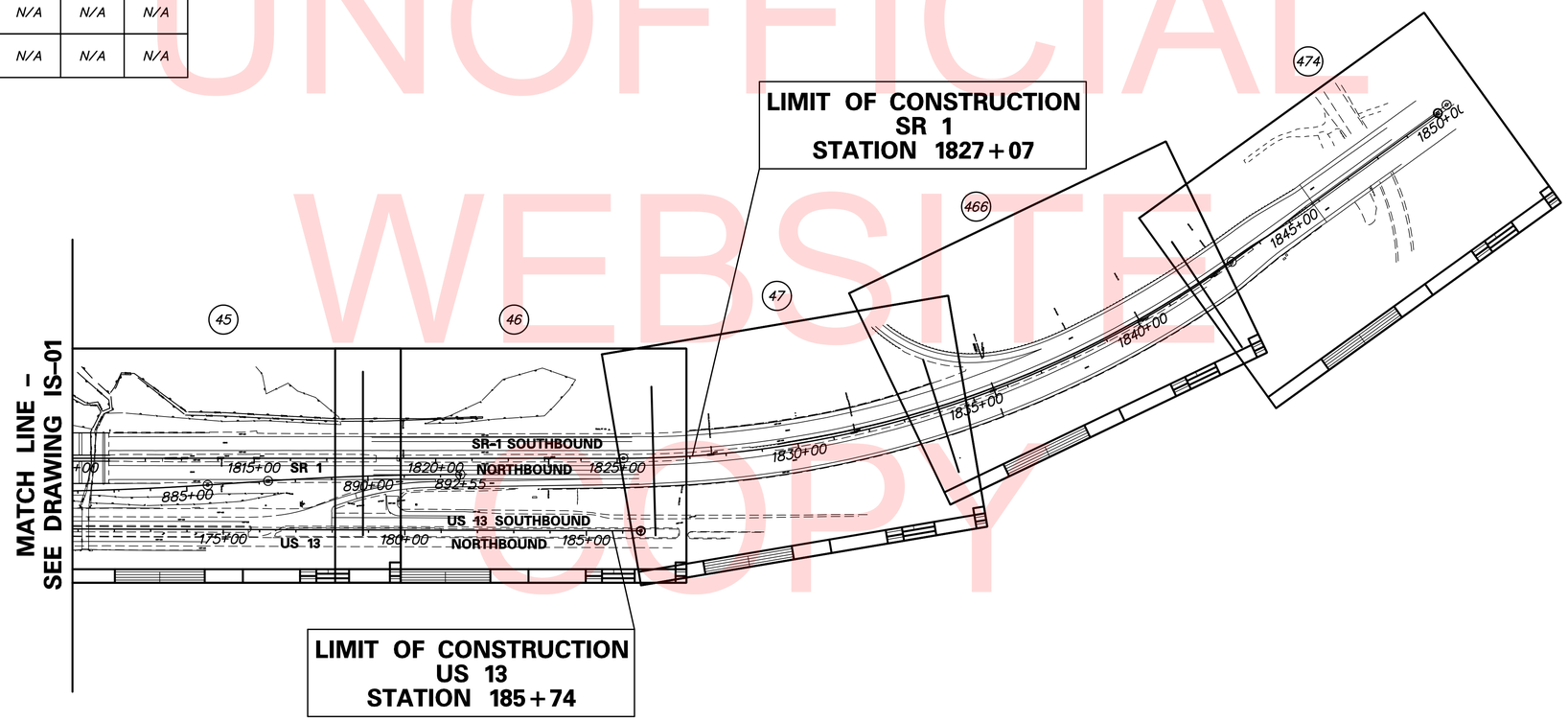

UNOFFICIAL WEBSITE COPY

IS–02

DELAWARE
DEPARTMENT OF TRANSPORTATION

ADDENDUMS / REVISIONS

SCALE
0 200 400 600
FEET

US 301 &
SR 1 INTERCHANGE

CONTRACT	BRIDGE NO.
T200911302	DESIGNED BY: KAH
COUNTY	
NEW CASTLE	CHECKED BY: BRT

PLAN SHEET INDEX

SHEET NO.
3
TOTAL SHTS.
491

n:\31653-000\contract 1b\cadd\IS002U301_1B.dgn
2/4/2013 3:47:55 PM

PLAN SHEET INDEX CROSS REFERENCE			
SIGNING, STRIPING AND CONDUIT PLAN	470	471	472
CONSTRUCTION PHASING, M.O.T. AND E&S	417, 418 427	417, 418 427	417, 418

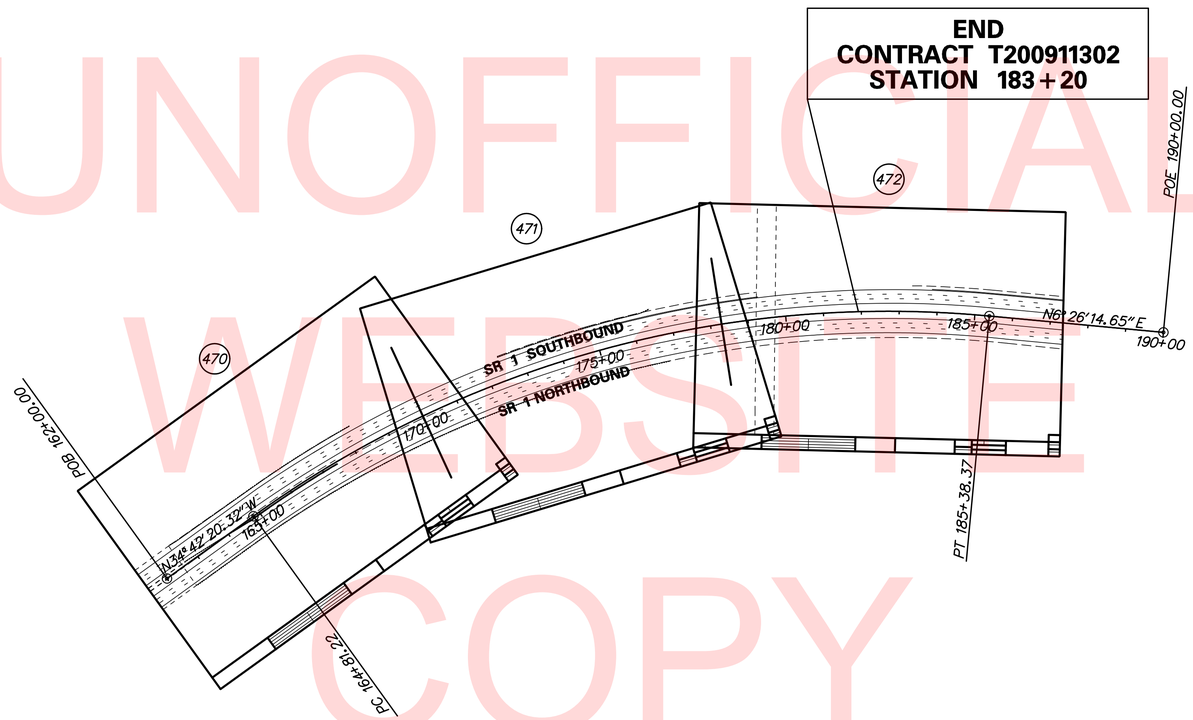

UNOFFICIAL WEBSITE COPY

DELAWARE DEPARTMENT OF TRANSPORTATION	ADDENDUMS / REVISIONS	SCALE 0 200 400 600 FEET	US 301 & SR 1 INTERCHANGE	CONTRACT T200911302	BRIDGE NO.	PLAN SHEET INDEX	IS–03 SHEET NO. 4
				COUNTY NEW CASTLE	DESIGNED BY: KAH		TOTAL SHTS. 491
					CHECKED BY: BRT		

p:\3653-000\contract_tb\cadd\IS003U301_IB.dgn
2/4/2013 3:48:02 PM

EXISTING SYMBOLS

DRAINAGE	
	DITCH OR STREAM CENTERLINE
	DIRECTIONAL STREAM FLOW ARROW
C.B.	DRAINAGE CATCH BASIN
J.B.	DRAINAGE JUNCTION BOX
D	DRAINAGE MANHOLE
SIZE/TYPE LABEL	DRAINAGE PIPE AND FLOW ARROW
	DRAINAGE PIPE HEADWALL
	RIPRAP - AREA FEATURE
	RIPRAP - LINEAR FEATURE

MANMADE ROADSIDE FEATURES	
	BOLLARD - STEEL POLE
	BOLLARD - WOOD POST
(TYPE LABEL)	CURB
(TYPE LABEL)	CURB AND GUTTER
	FENCE - CHAINLINK OR STRANDED
	FENCE - STOCKADE OR SPLIT RAIL
FP	FLAG POLE
	GUARDRAIL - STEEL BEAM
	GUARDRAIL - WIRE ROPE
LAMP	LAMP AND POST - RESIDENTIAL
MB	MAILBOX
PM	PARKING METER AND POST
	PAVEMENT - FLEXIBLE
	PAVEMENT - RIGID
	PILE - BRIDGE
	PILLAR OR MISCELLANEOUS POST
	TRAFFIC SIGN AND POST
	WALL - BRICK OR BLOCK
	WALL - STONE

NATURAL ROADSIDE FEATURES	
	GRASS LAWN
	HEDGEROW OR THICKET
	MARSH BOUNDARY LINE
	TREE - CONIFEROUS
	TREE - DECIDUOUS
	TREE STUMP
	SHRUBBERY
WL	DELINEATED WETLAND BOUNDARY LINE
	WOODS LINE BOUNDARY

RIGHT-OF-WAY SYMBOLS	
C.M.	PROPERTY MARKER - CONCRETE MON.
I.P.	PROPERTY MARKER - IRON PIPE
100+00	HISTORIC RIGHT-OF-WAY BASELINE
	EXISTING RIGHT-OF-WAY
	EXISTING PROPERTY LINE
EASEMENT TYPE	EXISTING EASEMENT
DA	EXISTING DENIAL OF ACCESS
R/W-DA	EXISTING R/W & DENIAL OF ACCESS

SURVEY CONTROL & MONUMENTATION	
B.M.	SURVEY BENCHMARK LOCATION
T.P.	SURVEY TIE POINT LOCATION
	SURVEY TRAVERSE POINT
	POINT OF CURVATURE OR TANGENCY
	POINT OF INTERSECTING TANGENTS

UTILITY	
	SOIL BORING LOCATION
	UTILITY TEST HOLE LOCATION
TV	CABLE TV DISTRIBUTION BOX
E	ELECTRIC MANHOLE
EM	ELECTRIC METER
E	ELECTRIC TRANSFORMER
	POLE MOUNTED LUMINAIRE
G	GAS MANHOLE
G.M.	GAS METER
G.V.	GAS VALVE
G.P.	GAS PUMP - SERVICE STATION
	RAILROAD TRACKS
S	SANITARY SEWER MANHOLE
S.V.	SANITARY SEWER VALVE
VENT	SANITARY SEWER VENT OR CLEANOUT
S.D.F.	SEPTIC DRAIN FIELD
B	TELEPHONE BOOTH
T	TELEPHONE MANHOLE
T	TELEPHONE TEST POINT
J.W.	TRAFFIC - CONDUIT JUNCTION WELL
	TRAFFIC - LIGHT POLE AND BASE
	TRAFFIC - PEDESTRIAN POLE & BASE
	TRAFFIC - SIGNAL CABINET & BASE
	TRAFFIC - SIGNAL POLE AND BASE
U	UTILITY BOX
	UTILITY POLE GUY WIRE ANCHOR
	UTILITY POLE
F.H.	WATER - FIRE HYDRANT
W.M.	WATER METER
W.V.	WATER VALVE
WELL	WELL HEAD
?	MANHOLE - UNDETERMINED OWNER

UTILITY COMPANY FACILITIES	
ESNG-G	EASTERN SHORE NATURAL GAS
EX-CON	DELDOT LIGHTING/TRAFFIC SIGNAL CONDUIT - EXISTING
EX-ITS	DELDOT ITMS CONDUIT - EXISTING

MISCELLANEOUS SYMBOLS	
	EXISTING OVERHEAD SIGN STRUCTURE
OHW	ORDINARY HIGH WATER
OHW/WL	ORDINARY HIGH WATER/ WETLAND
STW	STATE TIDAL WETLAND BOUNDARY LINE

PROPOSED SYMBOLS

CONSTRUCTION	
	CONCRETE SAFETY BARRIER - PERMANENT
BFS	BIOFILTRATION SWALE
	BOLLARD - STEEL POLE
	BOLLARD - WOOD POST
	BRICK PATTERNED SURFACE
	BUTT JOINT
100+00	CONSTRUCTION BASELINE
CSF	CONSTRUCTION SAFETY FENCE
	CURB, TYPE 1 & TYPE 3
	CURB, TYPE 2
	CURB & GUTTER, TYPE 1
	CURB & GUTTER, TYPE 2
	CURB & GUTTER, TYPE 3
	CURB & GUTTER, TYPE 4
CZ	CLEAR ZONE
	DRAINAGE INLET
	DITCH
	FENCE - METAL
	FENCE - WOOD
	FLARED END SECTION
	GUARDRAIL, TYPE 1
	GUARDRAIL, TYPE 2
	GUARDRAIL, TYPE 3
	GUARDRAIL END ANCHORAGE
	GUARDRAIL END TREATMENT, TYPE 1
	GUARDRAIL END TREATMENT, TYPE 2
	GUARDRAIL END TREATMENT, TYPE 3
HC	HORIZONTAL CLEARANCE
	IMPACT ATTENUATOR
	JUNCTION BOX - DRAINAGE
LOC	LIMIT OF CONSTRUCTION
	MANHOLE
	PAVEMENT PATCH
	PAVEMENT REMOVAL - TOPSOIL, SEED AND MULCH
	PIPE & DIRECTIONAL FLOW ARROW
	RIPRAP
	P.C.C. SIDEWALK @ 4"
	P.C.C. SIDEWALK @ 6"
	UNDERDRAIN
	UNDERDRAIN OUTLET

RIGHT-OF-WAY SYMBOLS	
	PROPOSED RIGHT-OF-WAY MONUMENT
DA	PROPOSED DENIAL OF ACCESS
PE	PROPOSED PERMANENT EASEMENT
R/W	PROPOSED RIGHT-OF-WAY
R/W-DA	PROPOSED R/W & DENIAL OF ACCESS
TCE	TEMPORARY CONSTRUCTION EASEMENT
100+00	PROPOSED RIGHT-OF-WAY BASELINE

IDENTIFIERS	
A/C	ADJUST BY CONTRACTOR
A/O	ADJUST BY OTHERS
B	CONCRETE SAFETY BARRIER
C	CURB OR CURB & GUTTER
CJB	CONVERT TO JUNCTION BOX
CMH	CONVERT TO DRAINAGE MANHOLE
C/O	CURB OPENING
CR	CURB RAMP / TYPE
CR-N	CURB RAMP / TYPE - WITHOUT SIDEWALK SURFACE DETECTABLE WARNING SYSTEM
CSF	CONSTRUCTION SAFETY FENCE
DI	DRAINAGE INLET
DND	DO NOT DISTURB
EW	END WALL
F	FENCE
FES	FLARED END SECTION
FF/C	FILL WITH FLOWABLE FILL
FS	FILTRATION STRUCTURE
GR	GUARDRAIL
JB	JUNCTION BOX
MH	MANHOLE
M	MONUMENT - RIGHT-OF-WAY
P	PIPE
RL/C	RELOCATE BY CONTRACTOR
RL/O	RELOCATE BY OTHERS
RM/C	REMOVE BY CONTRACTOR
RM/O	REMOVE BY OTHERS
UD	UNDERDRAIN / LENGTH
UDO	UNDERDRAIN OUTLET PIPE

LANDSCAPING	
LS	LANDSCAPE PLANTINGS
	SHRUBBERY
	CONIFEROUS TREE
	DECIDUOUS TREE

TRAFFIC	
ITMS-CON	ITMS CONDUIT
SIG-CON	SIGNAL CONDUIT
	CONDUIT JUNCTION WELL
	LUMINAIRE
	PAVEMENT MARKINGS
	PAVEMENT STRIPING
	TRAFFIC SIGN

PAVEMENT SECTION(S)	
	OVERLAY PAVEMENT - SEE TYPICAL SECTIONS FOR MATERIALS AND DEPTHS
	FULL DEPTH PAVEMENT - SEE TYPICAL SECTIONS FOR MATERIALS AND DEPTHS
	DRIVEWAY AND ENTRANCE PAVEMENT - SEE TYPICAL SECTIONS FOR MATERIALS AND DEPTHS

CONSTRUCTION PHASING SYMBOLS	
	BARRICADE, TYPE 3
	CONCRETE SAFETY BARRIER - PORTABLE
	CONSTRUCTION WARNING SIGN LOCATION
END ROAD WORK	CONSTRUCTION WARNING SIGN
	CRASH CUSHION ARRAY
	DRUM - TRAFFIC CONTROL
	PHASING TRAFFIC FLOW ARROW

EROSION & SEDIMENT CONTROL	
DWB	DEWATERING BASIN
	EROSION CONTROL BLANKET
ED	EARTH DIKE
	INLET SEDIMENT CONTROL
	PERIMETER DIKE/SWALE
PST	PORTABLE SEDIMENT TANK
RSF	REINFORCED SILT FENCE
SBD	SANDBAG DIKE
SB	SANDBAG DIVERSION
SCD	STONE CHECK DAM
SCE	STABILIZED CONSTRUCTION ENTRANCE
SF	SILT FENCE
SP-1	SUMP PIT, TYPE 1
SP-2	SUMP PIT, TYPE 2
ST	SEDIMENT TRAP
ST	SEDIMENT TRAP WITH INLET AS OUTLET
ST	SEDIMENT TRAP PIPE OUTLET
SW	STILLING WELL
	TEMPORARY SWALE
TSD	TEMPORARY SLOPE DRAIN

MISCELLANEOUS SYMBOLS	
	42" F-SHAPE CONCRETE SINGLE FACE BARRIER
	PROPOSED OVERHEAD SIGN STRUCTURE
S	STORM WATER OUTLET STRUCTURE
ST	SEDIMENT TRAP
SF	SILT FENCE
	POND MAINTENANCE ACCESS ROAD

UNOFFICIAL WEBSITE COPY

GENERAL NOTES

1. THIS PROJECT IS TO BE CONSTRUCTED IN ACCORDANCE WITH THE DELAWARE DEPARTMENT OF TRANSPORTATION "STANDARD SPECIFICATIONS", DATED AUGUST 2001 AND THE DELAWARE DEPARTMENT OF TRANSPORTATION "STANDARD CONSTRUCTION DETAILS", DATED 2001, INCLUDING ALL REVISIONS UP TO THE DATE OF ADVERTISEMENT.

2.

EROSION POTENTIAL FOR THIS PROJECT	CONTRACTOR ESC SUPERVISOR REQUIREMENT
( ) INSIGNIFICANT	NONE
( ) MINOR	CONTRACTOR TRAINING PROGRAM, AS DEFINED IN SECTION 6.2 OF THE DELAWARE SEDIMENT AND STORMWATER REGULATIONS.
( ) MEDIUM	CONTRACTOR TRAINING PROGRAM, AS DEFINED IN SECTION 6.2 OF THE DELAWARE SEDIMENT AND STORMWATER REGULATIONS.
( ) MAJOR	CERTIFIED CONSTRUCTION REVIEWER (CCR), AS DEFINED IN SECTION 6.3 OF THE DELAWARE SEDIMENT AND STORMWATER REGULATIONS.

3. ELECTRONIC PROJECT FILES THAT WILL BE MADE AVAILABLE TO THE CONTRACTOR INCLUDE:

( )	NONE
(X)	ASCII DATA FILES WITH COORDINATES AND ELEVATIONS FOR PROPOSED POINTS AS SELECTED BY THE ENGINEER.
(X)	ALL PLAN SHEETS, IN PDF FORMAT.
(X)	EXISTING DIGITAL TERRAIN MODEL, IN .DTM FILE FORMAT, COMPATIBLE WITH SOFTWARE CURRENTLY USED BY DELDOT.
(X)	PROPOSED DIGITAL TERRAIN MODEL, IN .DTM FILE FORMAT, COMPATIBLE WITH SOFTWARE CURRENTLY USED BY DELDOT.
(X)	DESIGN FILE, IN .DGN FILE FORMAT, CONTAINING ONLY THE PROPOSED 3D TRIANGLES OF THE PROPOSED DIGITAL TERRAIN MODEL (DTM).

NOTE: THE DOCUMENT ENTITLED "RELEASE FOR DELIVERY OF DOCUMENTS IN ELECTRONIC FORM TO A CONTRACTOR" MUST BE SIGNED BY ALL PARTIES PRIOR TO THE DELIVERY OF ANY ELECTRONIC PROJECT FILES.

4. PROJECT FILES THAT WILL BE MADE AVAILABLE TO THE CONTRACTOR, INCLUDE:

(X)	CROSS SECTIONS
(X)	RIGHT-OF-WAY PLANS (WILL BE MADE AVAILABLE TO THE AWARDED CONTRACTOR)

5. AMERICAN TRAFFIC SAFETY SERVICES ASSOCIATION (ATSSA) CERTIFIED TRAFFIC CONTROL SUPERVISOR REQUIREMENT FOR THIS PROJECT.

( )	THE CONTRACTOR SHALL NOT BE REQUIRED TO HAVE AN ATSSA SUPERVISOR ASSIGNED TO THIS PROJECT.
( )	THE CONTRACTOR SHALL HAVE AN ATSSA SUPERVISOR ASSIGNED TO THIS PROJECT. THE CONTRACTOR'S GENERAL SUPERINTENDENT FOR THIS PROJECT OR ANOTHER ATSSA CERTIFIED MEMBER OF THE CONTRACTOR'S PROJECT STAFF MAY BE THE ATSSA SUPERVISOR. PAYMENT FOR ATSSA SUPERVISOR IS INCIDENTAL TO ITEM 743000.
( )	THE CONTRACTOR SHALL HAVE AN ATSSA SUPERVISOR ASSIGNED TO THIS PROJECT. THE ATSSA SUPERVISOR'S SOLE JOB SHALL BE SUPERVISION OF THE INSTALLATION, OPERATION AND MAINTENANCE OF TRAFFIC CONTROL DEVICES FOR THIS PROJECT. THE CONTRACTOR'S GENERAL SUPERINTENDENT FOR THIS PROJECT SHALL NOT BE THE ATSSA SUPERVISOR. PAYMENT FOR ATSSA SUPERVISOR SHALL BE PAID FOR UNDER ITEM 743031.

6. THE DISTURBED AREA FOR THIS PROJECT IS 53.77 ACRES.

7. THE SEDIMENT AND STORMWATER MANAGEMENT PLANS HAVE BEEN APPROVED BY DELDOT'S STORMWATER ENGINEER UNDER DELDOT'S DELEGATED AUTHORITY. THE SEDIMENT AND STORMWATER MANAGEMENT PLANS ARE VALID FOR A THREE YEAR PERIOD, BEGINNING ON THE DATE THE STORMWATER ENGINEER SIGNED THE CONSTRUCTION TITLE SHEET. IF THE FINAL ACCEPTANCE OF THE PROJECT IS ANTICIPATED TO EXTEND BEYOND THE THREE YEARS, THE CONTRACTOR SHALL INFORM THE ENGINEER THREE MONTHS PRIOR TO THE EXPIRATION OF THE SEDIMENT AND STORMWATER MANAGEMENT PLAN APPROVAL. DELDOT WILL REVIEW THE CURRENT SEDIMENT AND STORMWATER MANAGEMENT PLAN AND ISSUE AN EXTENSION WITH ANY APPROPRIATE MODIFICATIONS.

PROJECT NOTES

SECTION 100

1. ANY DAMAGE TO ITEMS NOTED TO BE RELOCATED OR RESET BY THE CONTRACTOR, AT THE DISCRETION OF THE ENGINEER, SHALL BE REPAIRED AND/OR REPLACED IN KIND AT THE CONTRACTOR'S EXPENSE.

2. PRIOR TO PERFORMING ANY WORK ON THE PROJECT, THE CONTRACTOR AND THE ENGINEER'S REPRESENTATIVE SHALL JOINTLY PERFORM SUFFICIENT FIELD SURVEYS TO VERIFY THE ADVERTISED CROSS SECTIONS AND ELECTRONIC PROJECT FILES AND AGREE ON THE RESULTS TO ESTABLISH INITIAL GROUND ELEVATIONS THAT SHALL BE USED IN CALCULATING QUANTITIES. ANY DISCREPANCIES FOUND SHALL BE AGREED UPON PRIOR TO BEGINNING EARTHWORK OPERATIONS. ALL COSTS SHALL BE INCLUDED IN ITEM 763501 - CONSTRUCTION ENGINEERING.

3. PRIOR TO PERFORMING ANY WORK IN AREAS WHERE ADVANCE GRADING HAS BEEN PERFORMED UNDER OTHER CONTRACTS, THE CONTRACTOR AND THE ENGINEER'S REPRESENTATIVE SHALL JOINTLY PERFORM FIELD SURVEYS AND AGREE ON THE RESULTS TO ESTABLISH INITIAL GROUND ELEVATIONS THAT SHALL BE USED IN CALCULATING QUANTITIES. ALL COSTS SHALL BE INCLUDED IN ITEM 763501 - CONSTRUCTION ENGINEERING.

4. DELETE IN ITS ENTIRETY STANDARD SPECIFICATION SUBSECTION 104.10 "RIGHTS IN AND USE OF MATERIALS FOUND ON THE WORK" AND REPLACE WITH THE FOLLOWING: THE CONTRACTOR CAN EXPECT TO ENCOUNTER HORIZONTAL AND VERTICAL DEPOSITS OF MATERIALIN THE ON-SITE BORROW SITES, ROADWAY EXCAVATIONS, OR EXCAVATION FROM OTHER WORK ITEMS THAT WILL MEET THEREQUIREMENTS FOR BORROW TYPES A, C, D, F AND/OR FURNISHING BORROW, TYPE C AS WELL AS UNSUITABLE MATERIALS. ALL REFERENCESTO THESE VARIOUS BORROW TYPES IN THE PLANS AND SPECIAL PROVISIONS SHALL BE INTERPRETED TO MEAN MATERIALS OBTAINED FROM ON-SITE EXCAVATIONS MEETING THE GRADATION REQUIREMENTS OF THE BORROW TYPE STATED IN THE PLANS OR SPECIAL PROVISIONS. THE CONTRACTOR SHALL PERFORM THE EXCAVATIONS IN A METHOD APPROVED BY THE ENGINEER SO THAT THESE DEPOSITS OF MATERIAL ARE MADE AVAILABLE TO MEET THE PROJECT NEEDS. EXCESSIVE OR INSUFFICIENT MOISTURE CONTENT SHALL NOT BE CRITERIA FOR CLASSIFYING MATERIAL AS UNSUITABLE FOR USE. PAYMENT FOR ALL OF THESE BORROW TYPES INCORPORATED INTO THE PROJECT WILL BE MADE USING THE BID ITEM UNDER WHICH THE MATERIAL WAS ORIGINALLY EXCAVATED ON SITE. UNLESS APPROVED OR SPECIFIED OTHERWISE, BORROW, TYPE B IS INTENDED TO BE FURNISHED FROM A SOURCE OUTSIDE OF THE PROJECT LIMITS AND PAID FOR UNDER ITEM 209002. PLACEMENT, HAULING, STORING, AND COMPACTING OF ALL BORROW MATERIAL EXCAVATED ON SITE TO BE USED AS THE STATED BORROW TYPES A, C, D, F, AND OR /FURNISHING BORROW, TYPE C AS NOTED IN THE PLANS OR SPECIAL PROVISIONS IS INCIDENTAL TO THE ITEM UNDER WHICH IT WAS EXCAVATED (FOR EXAMPLE, ITEMS 202000, 207000, 208000, OR OTHERS AS APPLICABLE). THE MATERIALS SHALL BE PLACED INACCORDANCE WITH THEIR INTENDED USE BUT NO PAYMENT WILL BE MADE UNDER THE ITEMS FOR WHICH THE EXCAVATED MATERIALS ARE USED. THE CONTRACTOR IS RESPONSIBLE FOR MANAGING THE ON-SITE EXCAVATIONS TO INCLUDE LOCATING THE TYPES OF BORROW REQUIRED TO MEET THE PLAN NEEDS, STOCKPILING, HAULING, WETTING OR DRYING THE MATERIAL TO MEET STANDARD SPECIFICATION 202.05(F), AND MULTIPLE HANDLING IF NEEDED, WITH ALL COSTS INCIDENTAL TO THE ITEM UNDER WHICH THE MATERIAL WAS INITIALLY EXCAVATED. ALL REQUIRED EROSION AND SEDIMENT CONTROL WILL BE PAID SEPARATELY USING THE APPLICABLE BID ITEMS.

SECTION 200

5. THE ENGINEER MAY REQUIRE THE CONTRACTOR TO EXCAVATE TEST PITS ALONG PROPOSED DRAINAGE RUNS, AT POINTS OF POSSIBLE UTILITY CONFLICTS, TO DETERMINE IF A CONFLICT EXISTS. ANY CONFLICTS SHALL BE COORDINATED BY THE CONTRACTOR, WITH THE ENGINEER AND THE UTILITY COMPANY INVOLVED. THE ENGINEER SHALL ULTIMATELY DETERMINE THE SOLUTION TO THE UTILITY CONFLICT. TEST HOLES SHALL BE MEASURED AND PAID FOR IN ACCORDANCE WITH ITEM 208000, BUT ONLY TO THE ACTUAL DEPTH EXCAVATED.

6. ITEMS TO BE REMOVED UNDER ITEM 211000 - REMOVAL OF STRUCTURES AND OBSTRUCTIONS SHALL INCLUDE, BUT NOT BE LIMITED TO THE FOLLOWING:
   A. CONCRETE SUPPORT FOUNDATIONS FOR TRAFFIC POLES, SIGN STRUCTURES, GROUND MOUNT SIGNS, CABINETS AND LIGHT POLES; JUNCTION WELLS; ELECTRICAL SERVICES AND EQUIPMENT; LIGHT POLES AND POLES FOR OTHER TRAFFIC CONTROL DEVICES; AND OTHER MISCELLANEOUS TRAFFIC CONTROL DEVICE STRUCTURES NOT COVERED UNDER OTHER PAY ITEMS.

   B. GAS MAIN AND SLEEVE THROUGH EXISTING SCOTT RUN BOX CULVERT.

7. UNLESS OTHERWISE INDICATED IN THE PLANS, UNDER ITEM 201000-CLEARING AND GRUBBING, ALL VEGETATION, TREES, STUMPS, ROOTMAT, ETC. SHALL BE REMOVED IN THEIR ENTIRETY WITHIN THE LIMITS OF CONSTRUCTION REGARDLESS OF THE EMBANKMENT HEIGHT EXCEPT SUCH OBJECTS AS ARE DESIGNATED TO REMAIN OR ARE TO BE REMOVED IN ACCORDANCE WITH OTHER SECTIONS OF THE CONTRACT DOCUMENTS. WORK UNDER ITEM 201000 IS TO BE PERFORMED IN ITS ENTIRETY EITHER BY THE PRIME CONTRACTOR OR AN APPROVED SUBCONTRACTOR. CUTTING OF FIREWOOD BY PRIVATE CITIZENS OR OTHER PARTIES SHALL NOT BE PERMITTED.

8. RIGHT-OF-WAY FENCING IS TO BE INSTALLED ALONG THE DENIAL OF ACCESS THROUGHOUT THE PROJECT LIMITS AS SHOWN ON THE PLANS. CLEARING AND GRUBBING OUTSIDE OF THE LIMITS OF CONSTRUCTION LINE FOR INSTALLATION OF THE RIGHT-OF-WAY FENCE, UTILITY RELOCATIONS DESCRIBED IN THE UTILITY STATEMENT, OR OTHER NECESSARY CONSTRUCTION SHALL BE KEPT TO A MINIMUM AND SHALL BE INCLUDED IN ITEM 201000. THERE SHALL BE NO GRUBBING OUTSIDE THE LIMITS OF CONSTRUCTION.

9. DELETE THE FIRST SENTENCE OF STANDARD SPECIFICATION SUBSECTION 202.03 (C) AND REPLACE WITH THE FOLLOWING: "ALL TOPSOIL, IF PRESENT, SHALL BE REMOVED IN ITS ENTIRETY IN BOTH CUT AND FILL SECTIONS, REGARDLESS OF EMBANKMENT HEIGHT."

10. EXISTING MATERIALS ALONG THE PROPOSED ROADWAY ALIGNMENTS HAVE THE POTENTIAL TO MEET THE REQUIREMENTS OF THE BORROW, TYPE A PORTION OF THE PROPOSED PAVEMENT SECTIONS. THE CONTRACTOR SHALL EXCAVATE TO THE TOP OF THE BORROW, TYPE A PORTION OF THE PROPOSED PAVEMENT SECTIONS AT WHICH TIME THE MATERIALS SHALL BE EVALUATED BY THE ENGINEER. IF THE MATERIALS ARE DEEMED SUITABLE FOR THE BORROW, TYPE A PORTION OF THE PROPOSED PAVEMENT SECTION,THEN ITEM 202515 - COMPACTING IN-SITU MATERIAL SHALL BE USED AS DIRECTED BY THE ENGINEER. IF THE MATERIALS ARE NOT DEEMED SUITABLE, THEN THE MATERIALS SHALL BE REMOVED WITH PAYMENT MADE UNDER ITEM 202000 - EXCAVATION AND EMBANKMENT AS DIRECTED BY THE ENGINEER AND MATERIAL MEETING THE REQUIREMENTS OF BORROW, TYPE A SHALL BE PLACED.

11. APPROVED COVERS SHALL BE INSTALLED OVER ALL LOADED TRUCKS OR TRAILERS HAULING BORROW, EXCAVATED MATERIALS, AGGREGATES, ETC. TO OR FROM THE PROJECT SITE OVER STATE MAINTAINED ROADS. THE COVERS SHALL BE INSTALLED TO PREVENT MATERIAL FROM LEAVING THE TRUCKS OR TRAILERS. THE MATERIAL SHALL BE FULLY COVERED AND THE COVERS TIED ON THE REAR AND BOTH SIDES. ANY MATERIALS DELIVERED, TRANSPORTED, OR REMOVED IN UNCOVERED TRUCKS OR TRAILERS WILL BE INCORPORATED INTO THE PROJECT, OR REMOVED FROM THE SITE, WITH NO PAYMENT TO THE CONTRACTOR FOR FURNISHING, REMOVING, OR PLACING THE MATERIALS.

12. WHEN PERFORMING ANY EXCAVATION OR BACKFILLING OPERATION, THE CONTRACTOR SHALL PROVIDE DEWATERING MEASURES AT ALL TIMES TO KEEP THE GROUNDWATER LEVEL AT LEAST ONE FOOT BELOW THE EXCAVATION ELEVATION, IN COMPLIANCE WITH DELDOT STANDARD SPECIFICATIONS, SECTION 111 - DEWATERING OPERATIONS. THE CONTRACTOR SHALL ALSO PROVIDE NECESSARY DEWATERING TO STABILIZE EXCAVATED SLOPES DURING CONSTRUCTION AND UNTIL THE SLOPES ARE STABILIZED AS DETERMINED BY THE ENGINEER. ALL COSTS SHALL BE INCIDENTAL TO THE APPLICABLE EXCAVATION OR BACKFILLING ITEM.

13. AS NOTED IN THE CONTRACT DOCUMENTS AND DIRECTED BY THE ENGINEER, MATERIALS ARE TO BE STOCKPILED FOR LATER USE IN THE PROJECT. THE TOPSOIL FROM THESE STOCKPILE AREAS SHALL BE REMOVED IN ITS ENTIRETY AND STOCKPILED FOR REPLACEMENT IN THE AREA WHERE IT WAS EXCAVATED. THE EXCAVATION AND STOCKPILING OF THE TOPSOIL SHALL BE MEASURED FOR PAYMENT UNDER ITEM 202000 - EXCAVATION AND EMBANKMENT. THE TOPSOIL SHALL BE REPLACED IN REASONABLY CLOSE CONFORMITY TO THE ORIGINAL LINES, GRADES AND ELEVATIONS AS DIRECTED BY THE ENGINEER. ALL COSTS ASSOCIATED WITH REPLACING THE FULL DEPTH OF THE TOPSOIL REMOVED SHALL BE PAID UNDER ITEM 733002 - TOPSOILING, 6" DEPTH. THE AREA OF TOPSOIL REPLACED SHALL ONLY BE MEASURED ONCE FOR PAYMENT UNDER ITEM 733002 - TOPSOILING, 6" DEPTH, REGARDLESS OF THE FULL DEPTH OF TOPSOIL PLACED. SEEDING AND MULCHING OF THE REPLACED TOPSOIL SHALL BE PERFORMED UNDER THE APPLICABLE BID ITEMS.

14. FOR ESTIMATING PAYMENT FOR ALL EARTHWORK ITEMS, TWO-THIRDS OF THE FACTORY RATED CAPACITY OF THE EARTHWORK MOVING EQUIPMENT SHALL BE USED. FOR TEN-WHEEL DUMP TRUCKS, TEN (10) CUBIC YARDS SHALL BE USED.

PROJECT NOTES (CONT.)

SECTION 200 (CONT.)

15. STORMWATER MANAGEMENT POND EXCAVATION:
   A. CLEARING AND GRUBBING OF STORMWATER POND AREAS IS TO BE INCLUDED IN THE LUMP SUM PRICE FOR ITEM 201000.

   B. ALL EXCAVATION AND EMBANKMENT REQUIRED FOR CONSTRUCTION OF STORMWATER PONDS WILL BE PERFORMED, MEASURED AND PAID FOR UNDER ITEM 202000, EXCAVATION AND EMBANKMENT. THE WORK WILL INCLUDE MEASUREMENT FOR:
      I. GENERAL POND EXCAVATION TO THE LINES AND GRADES SHOWN ON THE PLANS, INCLUDING THE INITIAL OVEREXCAVATION FOR USE OF THE SWM FACILITY AS A SEDIMENT BASIN IF INDICATED ON THE PLANS.
      II. EXCAVATION FOR FOREBAYS, CUT-OFF TRENCHES, AND / OR CORE TRENCHES AS SHOWN ON THE PLANS.

   C. EXCAVATION BELOW THE DESIGNED POND FINISHED GRADE OR SUBGRADE ELEVATION FOR RIP-RAP PLACEMENT AND OUTLET STRUCTURE FOUNDATIONS WILL BE INCIDENTAL TO THOSE RESPECTIVE PAY ITEMS.

   D. INITIAL EXCAVATION OF SWM PONDS THAT FUNCTION AS INFILTRATION BASINS SHALL ONLY BE COMPLETED TO TWO (2) FEET ABOVE THE PERMANENT BOTTOM OF THE INFILTRATION BASIN. AFTER ALL AREAS CONTRIBUTING DRAINAGE TO THE INFILTRATION BASIN HAVE BEEN STABILIZED AS APPROVED BY THE ENGINEER, EXCAVATION TO THE PERMANENT BOTTOM ELEVATION OF THE INFILTRATION BASIN SHALL BE PERFORMED.

   E. EXCEPT AS NEEDED FOR CONSTRUCTION OF DAM FOUNDATIONS, CUTOFF TRENCHES, AND OUTLET STRUCTURES, EXCAVATED SUBGRADES WITHIN THE SWM PONDS SHALL NOT BE TEST ROLLED PER SUBSECTION 202.02 OR COMPACTED PER SUBSECTION 202.06.A.

   F. ALL REQUIREMENTS OF STANDARD SPECIFICATION SECTION 271 FOR CONSTRUCTION OF THE SWM FACILITY SHALL APPLY. IF THERE ARE CONFLICTS BETWEEN THE REQUIREMENTS IN STANDARD SPECIFICATION SECTION 271 AND STANDARD SPECIFICATION SECTION 202, THEN THE MORE STRINGENT REQUIREMENT SHALL BE FOLLOWED.

16. SEDIMENT BASIN CONSTRUCTION AND MAINTENANCE:
   A. CLEARING AND GRUBBING OF SEDIMENT BASIN POND AREAS IS TO BE INCLUDED IN THE LUMP SUM PRICE FOR ITEM 201000.

   B. ALL EXCAVATION AND EMBANKMENT REQUIRED FOR CONSTRUCTION OF SEDIMENT BASINS WILL BE PERFORMED, MEASURED AND PAID FOR UNDER ITEM 202000, EXCAVATION AND EMBANKMENT.

   C. REMOVAL OF SEDIMENT FROM THE SEDIMENT BASIN SHALL BE PERFORMED WHEN THE CLEANOUT ELEVATION IS REACHED AS NOTED ON THE PLANS.

   D. SEDIMENT REMOVAL FROM THE SEDIMENT BASIN SHALL BE MEASURED FOR PAYMENT UNDER ITEM 202000. ONLY REMOVAL OF SEDIMENT FROM A SEDIMENT BASIN SHALL BE MEASURED FOR PAYMENT UNDER ITEM 202000.

   E. REMOVAL OF SEDIMENT FROM ALL OTHER EROSION AND SEDIMENT CONTROL DEVICES AND REMOVAL OF SEDIMENT THAT HAS BYPASSED OR OTHERWISE NOT BEEN TRAPPED BY ANY SEDIMENT CONTROL DEVICE SHALL BE INCLUDED IN THE PAYMENT FOR THE SEDIMENT CONTROL ITEM PER SECTION 900.

SECTION 300

17. A. THE CONTRACTOR MAY ELECT TO USE ANY OF THE FOLLOWING MATERIALS TO MEET THE REQUIREMENTS OF ITEM 302007 - GRADED AGGREGATE BASE COURSE, TYPE 'B':
   a. CRUSHED STONE (PER STANDARD SPECIFICATION 821)
   b. CRUSHED CONCRETE (PER STANDARD SPECIFICATION 821)
   c. HOT-MIX MILLINGS (PER SPECIAL PROVISION 302514 MILLED HOT-MIX BASE COURSE)

   THE CONTRACTOR WILL NOT BE ALLOWED TO MIX DIFFERENT MATERIALS (OR SIMILAR MATERIALS FROM DIFFERENT SOURCES) TO MEET THE REQUIREMENTS OF ITEM 302007 - GRADED AGGREGATE BASE COURSE, TYPE 'B'.

   ALL OF THE ABOVE LISTED MATERIALS ARE PERMITTED FOR USE ON THE JOB, PROVIDED THEY ARE SEPARATED INTO APPROVED AREAS. EACH AREA OF BASE COURSE MUST BE CONSTRUCTED USING MATERIALS FROM A SINGULAR SOURCE, FULL DEPTH, IN ORDER THAT PROPER TESTING MAY BE ACCOMPLISHED. THE CONTRACTOR AND DELDOT'S PROJECT ENGINEER SHALL AGREE ON THE LIMITS OF EACH SOURCE OF MATERIAL PRIOR TO PLACEMENT.

   B. THE QUANTITY USED FOR BASE OF EACH OF THE ABOVE LISTED MATERIALS WILL BE THE CONTRACTOR'S CHOICE, WITH THE TOTAL MEETING THE ADVERTISED QUANTITY OF ITEM 302007 - GRADED AGGREGATE BASE COURSE, TYPE 'B'.

   C. THE CONTRACTOR MAY ALSO ELECT TO RECYCLE MILLINGS FOR USE IN WARM-MIX AS PERMITTED BY THE STANDARD SPECIFICATIONS. THE CHOICE OF THE QUANTITY OF MILLINGS USED FOR THIS PURPOSE, OR FOR BASE COURSE, LIES WITH THE CONTRACTOR. ALL MILLING MATERIAL SHALL BECOME PROPERTY OF THE CONTRACTOR.

   D. HOT-MIX MILLINGS MAY BE GENERATED FROM THE FOLLOWING SOURCES:
   a. MATERIAL MADE AVAILABLE WHEN MILLED ON THIS CONTRACT UNDER SECTION 760 - PAVEMENT MILLING.
   b.. MATERIAL MILLED ON THIS CONTRACT AT THE CONTRACTOR'S CHOICE UNDER ITEM 202000.
   c. MILLED MATERIAL FURNISHED ON THE JOB FROM THE CONTRACTOR'S YARD OR OTHER OUTSIDE SOURCE.

   ALL MILLED MATERIALS SHALL MEET THE MATERIAL REQUIREMENTS OF ITEM 302514 - MILLED HOT-MIX BASE COURSE.

   E. PAYMENT CLARIFICATION:
   a. SHOULD THE CONTRACTOR ELECT TO MILL PORTIONS OF HOT-MIX SHOWN ON THE PLANS TO BE REMOVED UNDER ITEM 202000 - EXCAVATION AND EMBANKMENT THE COST OF MILLING THIS HOT-MIX WILL BE PAID AS ITEM 202000 - EXCAVATION AND EMBANKMENT. THE MILLINGS GENERATED MAY BE RECYCLED INTO WARM-MIX, UTILIZED FOR BASE COURSE, OR DISPOSED OF TO AN APPROVED SITE. HAULING COSTS FOR DISPOSAL AND/OR RECYCLING ARE INCIDENTAL TO ITEM 202000 - EXCAVATION AND EMBANKMENT.

   b. MILLINGS GENERATED UNDER SECTION 760 - PAVEMENT MILLING, MAY BE RECYCLED INTO WARM-MIX, UTILIZED FOR BASE COURSE OR DISPOSED OF BY THE CONTRACTOR TO AN APPROVED SITE. NO SEPARATE PAYMENT WILL BE MADE FOR TRANSPORTING MILLINGS ON SITE OR TO AN APPROVED DISPOSAL SITE.

   c. SHOULD THE CONTRACTOR ELECT TO TEMPORARILY STOCKPILE MILLINGS ON THE JOB SITE FOR LATER USE, ALL COSTS FOR STOCKPILING AND SUBSEQUENT REHANDLING SHALL BE INCIDENTAL TO ITEM 202000 - EXCAVATION AND EMBANKMENT.

   d. MILLINGS USED FOR BASE COURSE SHALL BE PLACED IN ACCORDANCE WITH THE REQUIREMENTS OF SPECIAL PROVISION 302514 - MILLED HOT-MIX BASE COURSE. NO SEPARATE PAYMENT WILL BE MADE TO FURNISH MILLINGS FROM AN OUTSIDE SOURCE OR TRANSPORT MILLINGS WITHIN THE PROJECT LIMITS. MILLINGS USED FOR BASE COURSE WILL BE PAID IN PLACE AT THE UNIT BID PRICE FOR ITEM 302007 - GRADED AGGREGATE BASE COURSE, TYPE 'B'.

   e. ALL COSTS TO UTILIZE MILLINGS IN RECYCLED WARM-MIX WILL BE INCIDENTAL TO THE UNIT PRICE BID FOR THE WARM-MIX ITEM USING THE RECYCLED MATERIAL.

   f. SPECIAL PROVISION 302514 - MILLED HOT-MIX BASE COURSE IS PROVIDED TO SPECIFY THE MEANS OF LAY DOWN AND COMPACTION AS WELL AS THE MATERIAL REQUIREMENTS FOR MILLINGS USED AS BASE COURSE. ALL COSTS TO BRING THE MILLINGS INTO COMPLIANCE WITH THE REQUIREMENTS OF ITEM 302514 - MILLED HOT-MIX BASE COURSE ARE INCIDENTAL TO ITEM 302007 - GRADED AGGREGATE BASE COURSE, TYPE 'B'. NO PAYMENT WILL BE MADE FOR ITEM 302514 - MILLED HOT-MIX BASE COURSE. THE QUANTITY OF MILLINGS USED FOR BASE COURSE WILL BE PAID FOR UNDER ITEM 302007 - GRADED AGGREGATE BASE COURSE.

UNOFFICIAL WORKING FILE

PROJECT NOTES (CONT.)

SECTION 400

18. MEASURES FOR MAINTAINING PUBLIC TRAFFIC, SUCH AS TEMPORARY ROADS, DETOURS, RUN-AROUNDS, ETC, SHALL BE CONSTRUCTED UTILIZING THE APPLICABLE STANDARD BID ITEMS, NOT TEMPORARY ROADWAY MATERIAL (TRM). TRM IS INTENDED FOR MAINTAINING INGRESS AND EGRESS TO PROPERTIES OR BUSINESSES AS WELL AS MAINTENANCE OF EXISTING PUBLIC ROADWAYS. TRM SHALL ALSO BE USED TO MAINTAIN DETOUR ROADS, ETC. AFTER THEIR INITIAL CONSTRUCTION.

19. PRIOR TO PLACEMENT OF ANY SECTION OF PCC PAVEMENT, THE UNDERLYING BASE COURSES OF SOIL CEMENT AND PERMEABLE TREATED BASE SHALL BE COMPLETED TO THEIR FULL WIDTH (OUTSIDE OF SHOULDER TO OUTSIDE OF SHOULDER) AND THE UNDERDRAIN AND UNDERDRAIN OUTLETS INSTALLED FOR THE ENTIRE SECTION OF PAVING BEING CONSIDERED BY THE CONTRACTOR.

20. THE CONTRACTOR SHALL SCHEDULE HIS WORK SO THAT ALL PERMEABLE TREATED BASE (PTB) PLACED DURING ANY ONE CONSTRUCTION SEASON IS COVERED WITH PCC OR WARM MIX PAVEMENT, AS APPLICABLE, BY THE END OF THE CONSTRUCTION SEASON. ANY PTB WHICH HAS NOT BEEN PAVED OVER AT THE END OF THE SEASON MUST BE ENTIRELY COVERED WITH POLYETHYLENE SHEETING, PROPERLY ANCHORED AND OVERLAPPED AT LEAST EIGHTEEN INCHES FOR THE WINTER AND UNTIL PAVING OPERATIONS RESUME. NO CONSTRUCTION TRAFFIC OF ANY KIND WILL BE PERMITTED TO TRAVERSE OVER PTB AT ANY TIME, EITHER UNCOVERED OR COVERED WITH POLYETHYLENE, EXCEPT FOR NECESSARY EQUIPMENT UTILIZED DURING PAVING OPERATIONS. THE COST OF FURNISHING, INSTALLING AND MAINTAINING THE POLYETHYLENE SHEETING SHALL BE INCIDENTAL TO THE UNIT PRICE BID FOR THE PTB.

21. EXCEPT FOR NECESSARY EQUIPMENT UTILIZED DURING PAVING OPERATIONS, NO CONSTRUCTION TRAFFIC OF ANY KIND SHALL BE PERMITTED TO RUN ON THE SOIL CEMENT BASE COURSE.

SECTION 600

22. THE DEPARTMENT AND THE CONTRACTOR SHALL REVIEW VIDEO INSPECTION OF ALL EXISTING PIPES AND DRAINAGE STRUCTURES TO BE USED IN THE FINAL DRAINAGE SYSTEM AND AGREE ON THE CONDITION PRIOR TO THE START OF CONSTRUCTION. EXISTING PIPES AND DRAINAGE STRUCTURES DAMAGED DUE TO CONTRACTOR OPERATIONS SHALL BE REPAIRED OR REPLACED IN-KIND AT THE CONTRACTOR'S EXPENSE. THE DEPARTMENT OR ITS REPRESENTATIVE WILL INSPECT NEW PIPE RUNS TO CONFIRM CONDITION PRIOR TO ACCEPTANCE.

23. ITEM 602002-P.C.C. MASONRY, CLASS B SHALL BE USED TO CONSTRUCT MISCELLANEOUS TYPES OF STRUCTURES SUCH AS PADS, BOLLARDS, ENCASEMENTS, ETC. AS DIRECTED BY THE ENGINEER UNLESS THE WORK IS TO BE PAID OTHERWISE AS INDICATED IN THE CONTRACT DOCUMENTS. THESE MISCELLANEOUS TYPES OF STRUCTURES ARE ANTICIPATED TO INVOLVE LESS THAN FIVE CUBIC YARDS PER SITE. THE VOLUME MEASURED FOR PAYMENT SHALL BE THE VOLUME OF P.C.C. MASONRY ACTUALLY PLACED TO CONSTRUCT THE MISCELLANEOUS STRUCTURE WITHIN THE LIMITS APPROVED BY THE ENGINEER. ALL COSTS ASSOCIATED WITH FURNISHING ALL LABOR, EQUIPMENT, TOOLS AND INCIDENTALS NECESSARY TO COMPLETE THE WORK INCLUDING CONCRETE, REINFORCING STEEL, EXCAVATION, BACKFILL, BACKFILLING, ETC. SHALL BE INCLUDED IN THE UNIT PRICE BID FOR ITEM 602002 - P.C.C. MASONRY CLASS B.

24. DRAINAGE INLETS TO BE ATTACHED TO EXISTING PIPES SHALL BE CAST IN PLACE. CAST IN PLACE CONSTRUCTION SHALL BE INCIDENTAL TO THE APPLICABLE BID ITEM FOR THE SUBJET INLET.

SECTION 700

25. IN AREAS WHERE PROPOSED CURB MEETS EXISTING CURB AND THE TWO CURB TYPES ARE NOT SIMILAR, THE PROPOSED CURB SHALL BE TRANSITIONED IN 10 LINEAR FEET, UNLESS OTHERWISE DIRECTED BY THE ENGINEER. PAYMENT FOR THIS WORK, INCLUDING SAW CUTTING EXISTING CURB SHALL BE INCIDENTAL TO THE PROPOSED CURB ITEM.

26. PORTLAND CEMENT CONCRETE CHANNELIZING ISLANDS THAT ARE LESS THAN 75 SQ FT MAY BE POURED MONOLITHICALLY, OR AS DIRECTED BY THE ENGINEER.

27. STATION, OFFSET AND ELEVATION DATA GIVEN FOR DRAINAGE STRUCTURES ARE TO BE APPLIED TO THE CENTER OF THE GRATE ALONG THE FLOWLINE FOR INLETS, AND TO THE CENTER OF THE STRUCTURE FOR JUNCTION BOXES AND MANHOLES.

28. WHERE SPECIFIED ON THE PLANS, DRAINAGE INLET GRATES ADJACENT TO THE ROAD WHICH ARE NOT TYPE 1 SHALL BE REPLACED. THE ACTUAL LOCATIONS, THE NEED FOR ANY GRATE MODIFICATIONS OR FOR NEW FRAMES SHALL BE DETERMINED BY THE ENGINEER. ALL REPLACED GRATES/FRAMES SHALL BE DELIVERED TO THE NEAREST DISTRICT MAINTENANCE YARD WITH THE COST OF DELIVERY INCIDENTAL TO ITEM 708500 - REPLACING CATCH BASIN GRATES. FINAL PAYMENT FOR REPLACED GRATES/FRAMES SHALL NOT BE MADE UNTIL RECEIPT OF DELIVERED MATERIALS IS PRODUCED, SIGNED BY A DELDOT MAINTENANCE YARD SUPERVISOR.

29. ALL PAVED AREAS TO BE RECONSTRUCTED OR WIDENED SHALL BE SAWCUT AT THE POINT WHERE THE NEW PAVEMENT IS TO TIE INTO THE EXISTING PAVEMENT.

30. RAISED/RECESSED PAVEMENT MARKERS (RPM) SHALL BE INSTALLED IN ACCORDANCE WITH THE LATEST EDITION OF THE MANUAL TITLED "DELAWARE DEPARTMENT OF TRANSPORTATION MANUAL ON UNIFORM TRAFFIC CONTROL DEVICES (MUTCD) FOR STREETS AND HIGHWAYS" (PART 3) AND THE LATEST RPM GUIDELINES. PAYMENT FOR RPM INSTALLATION SHALL BE MADE UNDER ITEM 748502 - RAISED/RECESSED PAVEMENT MARKER.

31. ALL UNDERDRAIN OUTLETS, CATCH BASINS, PIPES, CONDUITS, JUNCTION WELLS, ETC. IN GUARDRAIL AREAS OR NEAR OTHER CONSTRUCTION YET TO BE PERFORMED SHALL BE VISIBLY MARKED BY THE CONTRACTOR AT THE TIME OF INSTALLATION IN ORDER TO AVOID FUTURE DAMAGE DURING DRIVING OF THE GUARDRAIL POSTS OR PERFORMANCE OF OTHER CONSTRUCTION. THE LOCATION OF GUARDRAIL POSTS AND OTHER CONSTRUCTION SHALL BE STAKED IN THE FIELD PRIOR TO PLACING THESE ITEMS. THE LOCATION OF THESE ITEMS SHALL BE ADJUSTED TO AVOID CONFLICTS WITH THE GUARDRAIL OR OTHER CONSTRUCTION. ALTERATIONS TO THE GUARDRAIL POST SPACING WILL NOT BE ALLOWED. ANY WORK REQUIRED TO RELOCATE THESE ITEMS DUE TO CONFLICTS WITH GUARDRAIL OR OTHER CONSTRUCTION SHALL BE PERFORMED TO THE SATISFACTION OF THE ENGINEER AND SHALL BE AT THE CONTRACTOR'S EXPENSE, INCLUDING ANY REMOVAL AND REPLACEMENT OF PAVEMENT.

32. DELDOT OR ITS REPRESENTATIVE SHALL FURNISH AND INSTALL RIGHT-OF-WAY MONUMENTS AFTER THE COMPLETION OF THE PROJECT. LOCATIONS OF RIGHT-OF-WAY MONUMENTS ARE PROVIDED ON THE PLANS FOR INFORMATION ONLY.

33. THE LOCATION FOR ITEM 759506 - FIELD OFFICE, TYPE II.22 SPECIAL COMPLEX SHALL BE ON THE DELDOT OWNED PARCEL EAST OF US 13 AT APPROXIMATE SR 1 STATION 1832+00. SEE DRAWING GR-02.

34. THE COST OF ANY FLOODLIGHTING NECESSARY DUE TO WORK BY THE CONTRACTOR ON ANY ITEM OCCURRING AFTER DARK SHALL BE INCIDENTAL TO THE BID PRICE OF THE ITEM BEING CONSTRUCTED AFTER DARK. DURING ALL CONSTRUCTION, ALL PERSONS WITHIN THE WORK ZONE SHALL HAVE SAFETY WEAR IN ACCORDANCE WITH THE DEMUTCD.

35. NO LESPEDEZA, ERAGROSTIS CURVULA, OR CORONILLA VARIA SHALL BE SEEDED. SECTION 734 - SEEDING HAS BEEN MODIFIED TO REMOVE LESPEDEZA, ERAGROSTIS CURVULA, AND CORONILLA VARIA.

36. INSTALLATION OF RIPRAP OUTLET PROTECTION (ITEMS 712005 AND 712006) SHALL BE IN ACCORDANCE WITH DIMENSIONS AND QUANTITIES INDICATED ON THE CONSTRUCTION PLANS. THE SPECIFIED DIMENSIONS ARE MINIMUM DIMENSIONS NECESSARY TO PROVIDE SUFFICIENT EROSION CONTROL. THE QUANTITY LISTED REPRESENTS THE SQUARE YARDAGE BASED UPON THE PLAN DEPICTION OF THE RIPRAP. DUE TO THE IRREGULAR CONFIGURATION OF SOME RIPRAP PADS, THE NOTED QUANTITY MAY NOT BE ACHIEVED BY A NOMINAL AMOUNT NOT TO EXCEED 5% LESS THAN THE NOTED QUANTITY. THE ENGINEER SHALL APPROVE ALL RIPRAP INSTALLATION. THE COST FOR SUPPLY AND INSTALLATION OF ALL STONE BEDDING BELOW PROPOSED RIPRAP SHALL BE INCIDENTAL TO THE ASSOCIATED RIPRAP ITEM.

PROJECT NOTES (CONT.)

SECTION 700 (CONT.)

37. ITEM 727000 - RIGHT-OF-WAY FENCE SHALL BE INSTALLED BY HAND IN SENSITIVE AREAS. SENSITIVE AREAS INCLUDE WOODS, WETLANDS, STREAMS, CULTURAL RESOURCE AREAS AND OTHER AREAS AS SHOWN ON THE PLANS AND AS DETERMINED BY THE ENGINEER. THERE SHALL BE NO VEHICLE ACCESS AND GRUBBING FOR THE PURPOSES OF INSTALLING RIGHT-OF-WAY FENCE IN SENSITIVE AREAS. CLEARING OF VEGETATION FOR THE PURPOSE OF INSTALLING RIGHT-OF-WAY FENCE SHALL BE KEPT TO A MINIMUM IN SENSITIVE AREAS. IF REMOVAL OF VEGETATION CANNOT BE AVOIDED, THE VEGETATION SHALL BE CUT FLUSH WITH THE GROUND SURFACE (I.E., NO DISTURBANCE OF THE ROOT MAT). HAND-MIXED CONCRETE SHALL BE USED FOR CONCRETE FOOTINGS IN SENSITIVE AREAS. POST SPACING SHALL BE ADJUSTED AS APPROVED BY THE ENGINEER TO COMPLY WITH THE MINIMUM AND MAXIMUM CLEARANCE OF THE BOTTOM OF THE FABRIC. NO EXCAVATION OR BACKFILLING OF THE EXISTING GROUND SHALL BE CONDUCTED TO COMPLY WITH THE MINIMUM AND MAXIMUM CLEARANCE OF THE BOTTOM OF FABRIC OVER GROUND IN SENSITIVE AREAS. EXCAVATIONS FOR POSTS AND FOOTERS WITHIN SENSITIVE AREAS THAT WILL BE USED FOR BACKFILLING OF THE POSTS AND FOOTERS SHALL BE PLACED ON PLASTIC AND ANY EXCESS EXCAVATIONS SHALL BE REMOVED AND DISPOSED OF IN NON-SENSITIVE AREAS AS APPROVED BY THE ENGINEER.

SECTION 900

38. THIS PROJECT IS COVERED UNDER AN NPDES GENERAL PERMIT FOR CONSTRUCTION. UNDER THE GENERAL PERMIT, COMPLIANCE WITH DELDOT'S APPROVED SEDIMENT AND STORMWATER MANAGEMENT PLANS WILL CONSTITUTE COMPLIANCE WITH THE NPDES INDUSTRIAL PERMITTING REQUIREMENTS FOR THIS CONSTRUCTION PROJECT. A COPY OF THE NPDES GENERAL PERMIT AND NOI IS KEPT ON FILE IN EACH OF THE CONSTRUCTION OFFICES AND THE DEPARTMENT'S STORMWATER SECTION. A COPY OF THE GENERAL PERMIT OR THE NOI CAN BE OBTAINED UPON REQUEST FROM EITHER THE DEPARTMENT'S STORMWATER ENGINEER OR THE APPROPRIATE CONSTRUCTION ENGINEER.

MISCELLANEOUS

39. THE CONTRACTOR SHALL CONTACT MICHAEL ELLER, THE CHIEF OF SCHEDULING FOR DART FIRST STATE, 14 DAYS PRIOR TO THE START OF CONSTRUCTION AT 302-576-6061.

40. ANY CHANGES TO OR DEVIATIONS FROM THESE PLANS REQUESTED BY THE CONTRACTOR MUST BE REVIEWED AND APPROVED BY THE ENGINEER AND ENVIRONMENTAL MONITOR PRIOR TO CONDUCTING ANY WORK. APPROVAL MAY TAKE A SIGNIFICANT AMOUNT OF TIME TO COMPLETE AND ALL CHANGES MAY NOT BE APPROVED. THE CONTRACTOR SHALL HAVE NO CLAIM AGAINST THE DEPARTMENT FOR COSTS OR DELAYS ASSOCIATED WITH THE APPROVAL OR REJECTION OF REQUESTED CHANGES OR DEVIATIONS FROM THESE PLANS.

41. RESTORATION OF TEMPORARY IMPACTS

A. PRIOR TO PERFORMING ANY WORK ASSOCIATED WITH TEMPORARY IMPACTS TO DELINEATED WETLANDS, THE CONTRACTOR SHALL STAKE THE LIMITS OF TEMPORARY DISTURBANCE WITHIN THE WETLANDS AND ALLOW 14 CALENDAR DAYS FOR DELDOT TO OBTAIN EXISTING TOPOGRAPHY SURVEY WITHIN THE TEMPORARY DISTURBANCE. THIS EXISTING SURFACE SHALL BE PROVIDED TO AND ACCEPTED BY THE CONTRACTOR BEFORE ANY WORK IS PERFORMED WITHIN THE WETLANDS. THE CONTRACTOR SHALL HAVE 5 CALENDAR DAYS TO RESPOND TO THE EXISTING SURFACE INFORMATION OR OTHERWISE IT SHALL BE CONSIDERED ACCEPTED. THE EXISTING SURFACE PLAN SHALL BE PROVIDED IN BOTH DIGITAL AND PAPER COPIES CONFORMING TO DELDOT CADD STANDARDS AT THE SAME SCALE AS THE CONTRACT PLANS.

B. UPON MUTUAL ACCEPTANCE OF THE EXISTING SURFACE TOPOGRAPHY PLAN, THE CONTRACTOR SHALL FIRST INSTALL THE RESOURCE PROTECTION FENCE, AND THEN INSTALL THE NECESSARY EROSION AND SEDIMENT CONTROL DEVICES AS SHOWN ON THE PLANS AND DIRECTED BY THE ENGINEER. THE AREA OF THE TEMPORARY DISTURBANCE MAY BE CLEARED OF VEGETATION AS NECESSARY. VEGETATION SHALL NOT BE GRUBBED, AND SHALL BE CUT FLUSH WITH THE GROUND (I.E., NO DISTURBANCE OF THE ROOT MAT).

C. INSTALL THE TEMPORARY ACCESS ROAD OR OTHER NEEDED TEMPORARY DISTURBANCE AS SHOWN ON THE PLANS OR APPROVED BY THE ENGINEER. GEOTEXTILE SHALL BE PLACED ON TOP OF THE EXISTING GROUND TO PROVIDE SEPARATION BETWEEN THE EXISTING GROUND AND ANY PLACED MATERIALS.

D. WHEN THE CONTRACTOR HAS COMPLETED THE WORK REQUIRING THE TEMPORARY WETLAND DISTURBANCE, ALL MATERIALS THAT WERE PLACED BY THE CONTRACTOR SHALL BE REMOVED IN THEIR ENTIRETY. ONCE ALL MATERIALS HAVE BEEN REMOVED, THE CONTRACTOR SHALL ALLOW 14 CALENDAR DAYS FOR DELDOT TO OBTAIN EXISTING SURFACE ELEVATIONS OF THE DISTURBED AREA FOLLOWING THE SAME PROCEDURE DESCRIBED ABOVE FOR OBTAINING ORIGINAL ELEVATIONS. THESE EXISTING SURFACE ELEVATIONS SHALL BE PROVIDED TO THE CONTRACTOR AND INCLUDE A PLAN SHOWING THE ELEVATION DIFFERENCES BETWEEN THE ORIGINAL AND EXISTING SURFACES.

E. THE CONTRACTOR SHALL BE RESPONSIBLE FOR RESTORING THE TEMPORARY DISTURBED AREA TO ORIGINAL ELEVATIONS WITH A GRADING TOLERANCE OF PLUS OR MINUS 0.1 FEET. RESTORATION OF THE DISTURBED AREA SHALL BE ACCOMPLISHED IN THE FOLLOWING MANNER:

I. TILL THE GROUND WITHIN THE DISTURBED AREA TO LOOSEN UP THE SOILS DUE TO COMPACTION DURING CONSTRUCTION IN ACCORDANCE WITH THE SPECIFICATIONS OF ITEM 202555 - SUBSOIL TILLAGE. MINIMUM VERTICAL TILLAGE DEPTH SHALL BE 24 INCHES AS MEASURED BY FIELD PERFORMANCE.

II. PLACE TOPSOIL TO FILL DEPRESSIONS TO THE ORIGINAL GROUND ELEVATIONS. TOPSOIL SHALL BE THE TOP 9 INCHES OF SOIL OBTAINED FROM AN ACTIVE OR RECENTLY (LESS THAN TWO YEARS) FALLOW OR ABANDONED CROP PRODUCING FARM FIELD OR A SANDY LOAM WITH A MINIMUM OF 4% ORGANIC MATTER. MAXIMUM DEPTH OF A SINGLE LIFT OF TOPSOIL PLACED SHALL BE 6 INCHES AND SHALL BE PLACED IN ACCORDANCE WITH SECTION 732.

III. DISK THE FINAL TOPSOIL SURFACE WITHIN THE DISTURBED AREA TO PREPARE THE AREA FOR SEED. USE A MINIMUM OF 3 PASSES OF A DISK USING LOW GROUND PRESSURE EQUIPMENT TO A MINIMUM DEPTH OF 4 INCHES.

IV. WHEN THE CONTRACTOR BELIEVES THAT RESTORATION OF THE ORIGINAL ELEVATIONS HAS BEEN ACHIEVED, 7 CALENDAR DAYS SHALL BE ALLOWED FOR THE AREA TO AGAIN BE SURVEYED BY DELDOT UNDER THE SAME CONDITIONS DESCRIBED ABOVE AND THE SURVEY PLAN OF THE RESTORED ELEVATIONS WILL BE PROVIDED TO THE CONTRACTOR. DELDOT SHALL ADVISE THE CONTRACTOR IF ADDITIONAL RESTORATION WORK IS REQUIRED AND THE CONTRACTOR SHALL ADDRESS THOSE AREAS AND ALLOW FOR 7 CALENDAR DAYS FOR NEW SURVEY INFORMATION TO BE OBTAINED UNTIL THE RESTORATION IS APPROVED BY DELDOT.

F. UPON ACCEPTANCE OF THE RESTORED ELEVATIONS, THE CONTRACTOR SHALL APPLY SEED TO THE DISTURBED WETLAND. SEEDING SHALL VARY BASED ON THE SLOPE TO BE SEEDED. ON SLOPES 5:1 OR FLATTER, SEEDING SHALL BE CONDUCTED UNDER ITEM 734552 - WET GROUND EROSION CONTROL GRASS SEEDING - FLATS. ON SLOPES GREATER THAN 5:1, SEEDING SHALL BE CONDUCTED UNDER ITEM 734013 - PERMANENT GRASS SEEDING, DRY GROUND.

G. THE RESTORED AREAS WITHIN THE LIMITS OF THE DELINEATED WETLANDS SHALL BE PLANTED IN ACCORDANCE WITH ITEM 737523 - PLANTING. SMOOTH ALDER SHALL BE PLANTED 10 FOOT ON CENTER ON SLOPES FLATTER THAN 5:1 AND SOUTHERN ARROWWOOD SHALL BE PLANTED 10 FOOT ON CENTER ON SLOPES STEEPER THAN 5:1. PLANTS SHALL BE INSTALLED DURING THE FIRST AVAILABLE PLANTING WINDOW PER THE STANDARD SPECIFICATIONS. SHRUBS SHALL NOT BE PLANTED UNDER BRIDGES. BEGIN SHRUB PLANTING 10 FEET OUTSIDE OF THE BRIDGE PARAPETS.

H. UPON FINAL ACCEPTANCE OF THE PLANTING, THE CONTRACTOR SHALL REMOVE THE RESOURCE PROTECTION FENCING AND THE EROSION AND SEDIMENT CONTROL MEASURES.

I. ALL COSTS FOR INSTALLING, REMOVING, AND RESTORING THE TEMPORARY WETLAND ACCESS SHALL BE INCLUDED IN THE LUMP SUM PRICE BID FOR ITEM 202508 - WETLAND ACCESS ROAD, TYPE II, WITH THE EXCEPTION OF THE RESOURCE PROTECTION FENCE, WHICH SHALL BE PAID UNDER ITEM 727552, AND THE REINFORCED SILT FENCE, WHICH SHALL BE PAID UNDER ITEM 251001. MAINTENANCE OF STREAM FLOW ASSOCIATED WITH THE WETLAND ACCESS ROAD, BRIDGE CONSTRUCTION AND ASSOCIATED ACTIVITIES TO BE PERFORMED IN WHOLE OR IN PART FROM THE WETLAND ACCESS ROAD, AND STREAM AND WETLAND RESTORATION ACTIVITIES SHALL BE INCIDENTAL TO THE WETLAND ACCESS ROAD, TYPE II.

PROJECT NOTES (CONT.)

MISCELLANEOUS (CONT.)

42. RESTORATION OF PERMANENT IMPACTS

A. PERMANENT IMPACTS TO CLEARED AND GRUBBED WETLANDS THAT HAVE NOT BEEN GRADED SHALL BE RESTORED WITH SEEDING AND SHRUB PLANTING AS INDICATED ON THE PLANS. SEEDING AND PLANTING SHALL BE CONDUCTED BETWEEN THE LIMITS OF GRADING AND THE LOC IN LOCATIONS DESIGNATED ON THE PLANS.

B. SEEDING SHALL VARY BASED ON SLOPE TO BE SEEDED. ON SLOPES 5:1 OR FLATTER, SEEDING SHALL BE PAID FOR AND CONDUCTED UNDER ITEM 734552 - WET GROUND EROSION CONTROL GRASS SEEDING - FLATS. ON SLOPES GREATER THAN 5:1 SEEDING SHALL PAID FOR AND CONDUCTED UNDER ITEM 734013 - PERMANENT GRASS SEEDING, DRY GROUND.

C. SHRUBS SHALL BE PLANTED IN THE PERMANENT IMPACT RESTORATION AREA. THE SHRUB PLANTING WILL VARY BASED ON SLOPE OF THE PLANTED AREA. ON SLOPES 5:1 OR FLATTER, SHRUB PLANTING SHALL CONSIST OF CONTAINERIZE 3 TO 5 FOOT TALL SMOOTH ALDER (ALNUS SERRULATA) LOCATED 10 FOOT ON CENTER. ON SLOPES GREATER THAN 5:1 SHRUB PLANTING SHALL CONSIST OF CONTAINERIZED 3 TO 5 FOOT TALL SOUTHERN ARROWWOOD (VIBURNUM DENTATUM) LOCATED 10 FOOT ON CENTER. PERMANENT IMPACT RESTORATION SHRUB PLANTING SHALL BE PAID FOR AND CONDUCTED UNDER ITEM 737523 - PLANTING.

43. IF GROWTH OF A NOXIOUS WEED AS DEFINED IN TITLE 3 OF THE DELAWARE CODE OR AS IDENTIFIED BY THE ENGINEER IS DETECTED WITHIN THE PROJECT LIMITS AS A RESULT OF USING ON-SITE MATERIALS, THE CONTRACTOR SHALL ERADICATE THE WEED USING ITEM 735501 HERBICIDE APPLICATION, NOXIOUS WEEDS. GROWTH OF NOXIOUS WEEDS RESULTING FROM THE CONTRACTOR BRINGING MATERIALS TO THE PROJECT FROM OFF-SITE SOURCES SHALL BE ERADICATED AT THE CONTRACTOR'S EXPENSE.

44. THE CONTRACTOR SHALL FOLLOW ALL STATE AND LOCAL ORDINANCES CONCERNING CONSTRUCTION NOISE DURING THE DURATION OF THE CONSTRUCTION ACTIVITIES.

45. EXCAVATION WITHIN WOODED AREAS SHALL BE INCIDENTAL TO ITEM 201000 - CLEARING AND GRUBBING. ALL OTHER EXCAVATION SHALL BE PAID FOR UNDER ITEM 202000 - EXCAVATION AND EMBANKMENT.

RIGHT-OF-WAY MONUMENT SCHEDULE

NO.	STATION	OFFSET	NORTHING	EASTING
1	1015+69.14	145.71	557558.9940	590088.9694
2	1015+20.00	385.00	557680.2870	589878.1085
3	1011+50.00	385.00	557981.9571	589956.9405
4	1009+81.26	175.00	558099.3107	590186.3460
5	1007+00.00	175.00	558374.4565	590213.4396
6	1006+00.00	87.37	558465.8978	590308.6433
7	851+50.00	176.91	556403.7354	589971.5255
8	851+50.00	148.00	556426.3170	589953.4759
9	151+50.00	-72.00	557380.1943	590570.3602
10	156+50.00	-47.00	557930.0071	590599.1854
11	159+26.77	-47.00	558206.7668	590601.1106
12	162+76.00	-47.00	558556.6712	590606.2107
13	172+00.00	-47.00	559480.4485	590626.7158
14	175+25.00	-70.78	559805.8924	590610.1513

DESIGN DESIGNATION - RAMP R

FUNCTIONAL CLASS: N/A		D.H.V. PROJECTED: 1,200	YEAR: 2030
TYPE OF CONSTRUCTION: NEW CONSTRUCITON		DESIGN SPEED: 50 M.P.H.	
A.A.D.T. CURRENT: N/A	YEAR: N/A	TRUCKS: 6%	
A.A.D.T. PROJECTED: 14,000	YEAR: 2030	DIRECTION OF DISTRIBUTION: N/A	

DESIGN DESIGNATION - US 13 (N22)

FUNCTIONAL CLASS: MINOR ARTERIAL		D.H.V. PROJECTED: 4,275	YEAR: 2030
TYPE OF CONSTRUCTION: REALIGNMENT		DESIGN SPEED: 65 M.P.H.	
A.A.D.T. CURRENT: 24,318	YEAR: 2008	TRUCKS: 7 %	
A.A.D.T. PROJECTED: 43,600	YEAR: 2030	DIRECTION OF DISTRIBUTION: 50 %	

DESIGN DESIGNATION - SR 1 (N83)

FUNCTIONAL CLASS: OTHER PRINCIPAL ARTERIAL		D.H.V. PROJECTED: 8,950	YEAR: 2030
TYPE OF CONSTRUCTION: WIDENING		DESIGN SPEED: 70 M.P.H.	
A.A.D.T. CURRENT: 71,024	YEAR: 2008	TRUCKS: 13 %	
A.A.D.T. PROJECTED: 110,000	YEAR: 2030	DIRECTION OF DISTRIBUTION: 50 %	

FOR DESIGN DESIGNATION - RAMP Q AND DESIGN DESIGNATION - US 301 NB RAMP, SEE DESIGN DESIGNATION - US 301 ON THE TITLE SHEET

UNOFFICIAL WEBSITE COPY

EARTHWORK SUMMARY – TOTALS

EXCAVATION - ALIGNMENT

FROM CROSS SECTIONS

PLUS EXCAVATION FROM US 301 NORTHBOUND WEST OF SR 1	3,072 C.Y.
PLUS EXCAVATION FROM US 301 NORTHBOUND EAST OF SR 1	5,721 C.Y.
PLUS EXCAVATION FROM RAMP Q	74,041 C.Y.
PLUS EXCAVATION FROM RAMP R	5,470 C.Y.
PLUS EXCAVATION FROM SR 1 NORTHBOUND	3,162 C.Y.
PLUS EXCAVATION FROM SR 1 SOUTHBOUND	4,499 C.Y.
PLUS EXCAVATION FROM US 13	5,892 C.Y.
PLUS EXCAVATION FROM SR1 MEDIAN	1,429 C.Y.
SUBTOTAL - EXCAVATION FROM CROSS SECTIONS	103,287 C.Y.
PLUS EXCAVATION FROM VILLAGE OF SCOTT RUN EAST BORROW SITE	
BORROW TYPE A EXCAVATED MATERIAL	0 C.Y.
BORROW TYPE C EXCAVATED MATERIAL	0 C.Y.
BORROW TYPE D EXCAVATED MATERIAL	0 C.Y.
BORROW TYPE F EXCAVATED MATERIAL	4,025 C.Y.
TOPSOIL REMOVED (VILLAGE OF SCOTT RUN EAST SITE)	3,014 C.Y.
SUBTOTAL EXCAVATION FROM VILLAGE OF SCOTT RUN EAST BORROW SITE	7,038 C.Y.
SUBTOTAL - EXCAVATION FROM CROSS SECTIONS AND BORROW SITES	110,325 C.Y.
PLUS TRANSITION SLAB EXCAVATION PAID UNDER ITEM NO. 202000	47 C.Y.
PLUS TOPSOIL REMOVED UNDER FILL	6,626 C.Y.
PLUS TOPSOIL PLACED IN CUT:	6,383 C.Y.
PLUS TOPSOIL REMOVED OUTSIDE OF CROSS SECTION TEMPLATE FOR HAUL ROAD	310 C.Y.
PLUS BITUMINOUS PAVEMENT REMOVED UNDER FILL	2,264 C.Y.
LESS ROOTMAT REMOVED IN CUT	1,189 C.Y.
LESS REMOVAL OF EXISTING PCC PAVEMENT	2,169 C.Y.
LESS ROCK EXCAVATION	0 C.Y.
PLUS SWM EXCAVATION	105,803 C.Y.
=TOTAL ITEM 202000-EXCAVATION AND EMBANKMENT	228,400 C.Y.

STORMWATER MANAGEMENT POND EXCAVATION

FROM GRID ANALYSIS*:	
SWM POND NO. 755	113,467 C.Y.
SUBTOTAL - EXCAVATION FROM GRID ANALYSIS	113,467 C.Y.
PLUS TOPSOIL REMOVED UNDER FILL	0 C.Y.
PLUS TOPSOIL PLACED IN CUT SECTIONS	3,612 C.Y.
LESS ROOTMAT REMOVED IN CUT	10,435 C.Y.
LESS BACKFILL REQUIRED FOR ROOTMAT REMOVAL	841 C.Y.
LESS ROCK EXCAVATION	0 C.Y.
=TOTAL STORMWATER MANAGEMENT POND	105,803 C.Y.

*INCLUDES 3' OF OVEREXCAVATION OF SWM PONDS

EXCAVATION AVAILABLE FOR EMBANKMENT

TOTAL EXCAVATION AND EMBANKMENT QUANTITY (ITEM 202000)	228,400 C.Y.
LESS MATERIAL REQUIRED FOR SWM EMBANKMENT	30 C.Y.
PLUS EXCAVATION AND BACKFILLING FOR STRUCTURES	2,710 C.Y.
PLUS EXCAVATION INCIDENTAL TO STRUCTURAL ITEMS	4,186 C.Y.
PLUS EXCAVATION AND BACKFILLING FOR PIPE TRENCHES	4,718 C.Y.
PLUS CHANNEL EXCAVATION	0 C.Y.
PLUS EXCAVATION FROM LATERAL OR LONGITUDINAL DITCHES	0 C.Y.
PLUS EXCAVATION FROM INSTALLATION OF UNDERDRAINS	1,903 C.Y.
LESS TOPSOIL REMOVED IN CUT AND FILL	16,256 C.Y.
LESS TOPSOIL REMOVED OUTSIDE OF CROSS SECTION TEMPLATE FOR HAUL ROAD	310 C.Y.
LESS TOPSOIL REMOVED FROM STORM WATER MANAGEMENT PONDS	1,460 C.Y.
LESS TOPSOIL REMOVED FROM BORROW SITES	3,014 C.Y.
LESS UNSUITABLE EXCAVATION	232 C.Y.
LESS UNSUITABLE MATERIAL REMOVED FROM SWM FACILITY	6,847 C.Y.
LESS MATERIAL USED FOR BORROW TYPE A**	22,342 C.Y.
LESS MATERIAL USED FOR BORROW TYPE D**	6,766 C.Y.
LESS MATERIAL USED FOR BORROW TYPE B	0 C.Y.
LESS MATERIAL USED FOR BORROW TYPE C**	10,298 C.Y.
=TOTAL EXCAVATION AVAILABLE FOR BORROW, TYPE F	174,362 C.Y.

**NOTE:SOIL TEST RESULTS IN THE VICINITY OF THE RAMP Q DIVERSION DITCH INDICATE THE PRESENCE OF MATERIALS SUITED FOR BORROW, TYPES A, C, AND D

BORROW, TYPE A CAPPING REQUIRED

BORROW, TYPE A FOR CAPPING	19,871 C.Y.
LESS TOPSOIL PLACED ON FILL SLOPES	1,252 C.Y.
=SUBTOTAL BORROW, TYPE A CAPPING REQUIRED	18,618 C.Y.
PLUS CAPPING REQUIRED X ADJUSTMENT FACTOR (0.20)	3,724 C.Y.
=SUBTOTAL ADJUSTED BORROW, TYPE A REQUIRED	22,342 C.Y.
LESS EXCAVATION AVAILABLE FOR BORROW, TYPE A	22,342 C.Y.
=TOTAL ADJUSTED BORROW, TYPE A REQUIRED	0 C.Y.

BORROW, TYPE C REQUIRED

TEST HOLE EXCAVATION BACKFILL REQUIRED	150 C.Y.
PIPE/UTILITY BACKFILL REQUIRED	5,499 C.Y.
TYPE C BACKFILL FOR STRUCTURES	2,933 C.Y.
=SUBTOTAL BORROW, TYPE C REQUIRED	8,582 C.Y.
PLUS ADJUSTMENT FACTOR	1,716 C.Y.
=SUBTOTAL ADJUSTED BORROW, TYPE C REQUIRED	10,298 C.Y.
LESS EXCAVATION AVAILABLE FOR BORROW, TYPE C	10,298 C.Y.
=TOTAL ADJUSTED BORROW, TYPE C REQUIRED	0 C.Y.

BORROW, TYPE D REQUIRED

BORROW, TYPE D FOR SOIL CEMENT BASE COURSE	5,639 C.Y.
PLUS BORROW, TYPE D REQUIRED X ADJUSTMENT FACTOR (0.20)	1,128 C.Y.
=SUBTOTAL ADJUSTED BORROW, TYPE D REQUIRED	6,766 C.Y.
LESS EXCAVATION AVAILABLE FOR BORROW, TYPE D	6,766 C.Y.
=TOTAL ADJUSTED BORROW, TYPE D REQUIRED	0 C.Y.

BORROW, TYPE B REQUIRED

BACKFILL FOR UNSTABLE SUBGRADES AFTER ROOTMAT REMOVED UNDER FILL	0 C.Y.
PLUS BACKFILL X ADJUSTMENT FACTOR (0.20)	0 C.Y.
=SUBTOTAL ADJUSTED BORROW, TYPE B REQUIRED	0 C.Y.
LESS EXCAVATION AVAILABLE FOR BORROW, TYPE B	0 C.Y.
=TOTAL ADJUSTED BORROW, TYPE B REQUIRED	0 C.Y.

EMBANKMENT AND BORROW, TYPE F REQUIRED

EMBANKMENT REQUIRED BELOW CAPPING	197,813 C.Y.
PLUS TOPSOIL REMOVED UNDER FILL	6,626 C.Y.
PLUS ROOTMAT REMOVED UNDER FILL NOT BACKFILLED WITH BORROW, TYPE B	1,448 C.Y.
PLUS UNDERCUT MATERIAL REMOVED UNDER FILL	0 C.Y.
PLUS PCC AND BITUMINOUS PAVEMENT REMOVED UNDER FILL	3,432 C.Y.
PLUS EMBANKMENT FOR PIPE BACKFILL (TYPE F)	1,243 C.Y.
PLUS EMBANKMENT FOR STRUCTURES	55 C.Y.
LESS TOPSOIL PLACED ON FILL SLOPES	4,035 C.Y.
LESS MSE WALL OR OTHER RETAINING WALL & BACKFILL	61,280 C.Y.
LESS BORROW TYPE B PLACED ABOVE ORIGINAL GROUND	0 C.Y.
=SUBTOTAL EMBANKMENT REQUIRED BELOW CAPPING	145,302 C.Y.
PLUS EMBANKMENT REQUIRED X ADJUSTMENT FACTOR (0.20)	29,060 C.Y.
=SUBTOTAL ADJUSTED EMBANKMENT REQUIRED	174,362 C.Y.
LESS TOTAL EXCAVATION AVAILABLE FOR BORROW, TYPE F	174,362 C.Y.
SURPLUS TYPE F BORROW	0 C.Y.
THEREFORE, TOTAL ADJUSTED BORROW, TYPE F REQUIRED	0 C.Y.

TOPSOIL SUMMARY

TOPSOIL SALVAGED FROM CUT AND FILL	16,256 C.Y.
PLUS TOPSOIL REMOVED OUTSIDE OF CROSS SECTION TEMPLATE FOR HAUL ROAD	310 C.Y.
PLUS TOPSOIL FROM STORMWATER MANAGEMENT POND	1,462 C.Y.
PLUS TOPSOIL FROM BORROW SITES	4,520 C.Y.
=SUBTOTAL TOPSOIL AVAILABLE	22,548 C.Y.
LESS TOPSOIL PLACED ON FILL SLOPES	5,288 C.Y.
LESS TOPSOIL PLACED ON CUT SLOPES	6,383 C.Y.
LESS TOPSOIL PLACED ON CUT SLOPES (BORROW SITE)	4,520 C.Y.
LESS TOPSOIL PLACED IN SWM FACILITIES	3,612 C.Y.
LESS TOPSOIL PLACED OUTSIDE OF CROSS SECTION TEMPLATE FOR HAUL ROAD	310 C.Y.
=SUBTOTAL EXCESS (+) TOPSOIL OR TOPSOIL NEED (-)	2,434 C.Y.
LESS CULTIVATED SOIL UNSUITABLE FOR EMBANKMENT	0 C.Y.
=TOTAL EXCESS (+) TOPSOIL OR TOPSOIL NEED (-)	2,434 C.Y.

PROPOSAL QUANTITIES

ITEM NO. 202000 EXCAVATION AND EMBANKMENT*	234,235 C.Y.
ITEM NO. 203000 CHANNEL EXCAVATION	0 C.Y.
ITEM NO. 207000 EXCAVATION AND BACKFILL FOR STRUCTURES	2,710 C.Y.
ITEM NO. 208000 EXCAVATION AND BACKFILL FOR PIPE TRENCHES	4,718 C.Y.
ITEM NO. 209001 BORROW, TYPE A	0 C.Y.
ITEM NO. 209002 BORROW, TYPE B	0 C.Y.
ITEM NO. 209003 BORROW, TYPE C	0 C.Y.
ITEM NO. 209004 BORROW, TYPE D	0 C.Y.
ITEM NO. 209006 BORROW, TYPE F	0 C.Y.
ITEM NO. 212000 UNDERCUT EXCAVATION	0 C.Y.
ITEM NO. 732002 TOPSOIL, 6" DEPTH	0 S.Y.
ITEM NO. 733002 TOPSOILING (6" DEPTH)***	111,642 S.Y.

*INCLUDES 5,835 CY OF SEDIMENT REMOVAL

***NOTE: TOPSOILING BORROW SITES SHALL BE PAID UNDER ITEM 733002 REGARDLESS OF DEPTH.

UNOFFICIAL WEBSITE COPY

EARTHWORK SUMMARY – WEST OF SR 1

EXCAVATION - ALIGNMENT

FROM CROSS SECTIONS

PLUS EXCAVATION FROM US 301 NORTHBOUND WEST OF SR 1	3,072 C.Y.
PLUS EXCAVATION FROM US 301 NORTHBOUND EAST OF SR 1	0 C.Y.
PLUS EXCAVATION FROM RAMP Q	74,041 C.Y.
PLUS EXCAVATION FROM RAMP R	0 C.Y.
PLUS EXCAVATION FROM SR 1 NORTHBOUND	0 C.Y.
PLUS EXCAVATION FROM SR 1 SOUTHBOUND	4,499 C.Y.
PLUS EXCAVATION FROM US 13	0 C.Y.
PLUS EXCAVATION FROM SR1 MEDIAN	0 C.Y.
SUBTOTAL - EXCAVATION FROM CROSS SECTIONS	81,612 C.Y.
PLUS EXCAVATION FROM VILLAGE OF SCOTT RUN EAST BORROW SITE	
BORROW TYPE A EXCAVATED MATERIAL	0 C.Y.
BORROW TYPE C EXCAVATED MATERIAL	0 C.Y.
BORROW TYPE D EXCAVATED MATERIAL	0 C.Y.
BORROW TYPE F EXCAVATED MATERIAL	4,025 C.Y.
TOPSOIL REMOVED (VILLAGE OF SCOTT RUN EAST SITE)	3,014 C.Y.
SUBTOTAL EXCAVATION FROM VILLAGE OF SCOTT RUN EAST BORROW SITE	7,038 C.Y.
SUBTOTAL - EXCAVATION FROM CROSS SECTIONS AND BORROW SITES	88,650 C.Y.
PLUS TRANSITION SLAB EXCAVATION PAID UNDER ITEM NO. 202000	47 C.Y.
PLUS TOPSOIL REMOVED UNDER FILL	3,330 C.Y.
PLUS TOPSOIL PLACED IN CUT:	5,293 C.Y.
PLUS TOPSOIL REMOVED OUTSIDE OF CROSS SECTION TEMPLATE FOR HAUL ROAD	310 C.Y.
PLUS BITUMINOUS PAVEMENT REMOVED UNDER FILL	0 C.Y.
LESS ROOTMAT REMOVED IN CUT	1,069 C.Y.
LESS REMOVAL OF EXISTING PCC PAVEMENT	0 C.Y.
LESS ROCK EXCAVATION	0 C.Y.
PLUS STORMWATER MANAGEMENT EXCAVATION	105,803 C.Y.
=TOTAL ITEM 202000-EXCAVATION AND EMBANKMENT	202,364 C.Y.

STORMWATER MANAGEMENT POND EXCAVATION

FROM GRID ANALYSIS*:	
SWM POND NO. 755	113,467 C.Y.
SUBTOTAL - EXCAVATION FROM GRID ANALYSIS	113,467 C.Y.
PLUS TOPSOIL REMOVED UNDER FILL	0 C.Y.
PLUS TOPSOIL PLACED IN CUT SECTIONS	3,612 C.Y.
LESS ROOTMAT REMOVED IN CUT	10,435 C.Y.
LESS BACKFILL REQUIRED FOR ROOTMAT REMOVAL	841 C.Y.
LESS ROCK EXCAVATION	0 C.Y.
=TOTAL STORMWATER MANAGEMENT POND	105,803 C.Y.

*INCLUDES 3' OF OVEREXCAVATION OF SWM PONDS

EXCAVATION AVAILABLE FOR EMBANKMENT

TOTAL EXCAVATION AND EMBANKMENT QUANTITY (ITEM 202000)	202,364 C.Y.
LESS MATERIAL REQUIRED FOR SWM EMBANKMENT	30 C.Y.
PLUS EXCAVATION AND BACKFILLING FOR STRUCTURES	1,274 C.Y.
PLUS EXCAVATION INCIDENTAL TO STRUCTURAL ITEMS	597 C.Y.
PLUS EXCAVATION AND BACKFILLING FOR PIPE TRENCHES	2,762 C.Y.
PLUS CHANNEL EXCAVATION	0 C.Y.
PLUS EXCAVATION FROM LATERAL OR LONGITUDINAL DITCHES	0 C.Y.
PLUS EXCAVATION FROM INSTALLATION OF UNDERDRAINS	663 C.Y.
LESS TOPSOIL REMOVED IN CUT AND FILL	10,863 C.Y.
LESS TOPSOIL REMOVED OUTSIDE OF CROSS SECTION TEMPLATE FOR HAUL ROAD	310 C.Y.
LESS TOPSOIL REMOVED FROM STORM WATER MANAGEMENT PONDS	1,460 C.Y.
LESS TOPSOIL REMOVED FROM BORROW SITES	3,014 C.Y.
LESS UNSUITABLE EXCAVATION	113 C.Y.
LESS UNSUITABLE MATERIAL REMOVED FROM SWM FACILITY	6,847 C.Y.
LESS MATERIAL USED FOR BORROW TYPE A**	10,987 C.Y.
LESS MATERIAL USED FOR BORROW TYPE D**	3,459 C.Y.
LESS MATERIAL USED FOR BORROW TYPE B	0 C.Y.
LESS MATERIAL USED FOR BORROW TYPE C**	4,040 C.Y.
=TOTAL EXCAVATION AVAILABLE FOR BORROW, TYPE F	166,538 C.Y.

**NOTE:SOIL TEST RESULTS IN THE VICINITY OF THE RAMP Q DIVERSION DITCH INDICATE THE PRESENCE OF MATERIALS SUITED FOR BORROW, TYPES A, C, AND D

BORROW, TYPE A CAPPING REQUIRED

BORROW, TYPE A FOR CAPPING	9,850 C.Y.
LESS TOPSOIL PLACED ON FILL SLOPES	694 C.Y.
=SUBTOTAL BORROW, TYPE A CAPPING REQUIRED	9,156 C.Y.
PLUS CAPPING REQUIRED X ADJUSTMENT FACTOR (0.20)	1,831 C.Y.
=SUBTOTAL ADJUSTED BORROW, TYPE A REQUIRED	10,987 C.Y.
LESS EXCAVATION AVAILABLE FOR BORROW, TYPE A	10,987 C.Y.
=TOTAL ADJUSTED BORROW, TYPE A REQUIRED	0 C.Y.

BORROW, TYPE C REQUIRED

TEST HOLE EXCAVATION BACKFILL REQUIRED	50 C.Y.
PIPE/UTILITY BACKFILL REQUIRED	1,636 C.Y.
TYPE C BACKFILL FOR STRUCTURES	1,681 C.Y.
=SUBTOTAL BORROW, TYPE C REQUIRED	3,367 C.Y.
PLUS ADJUSTMENT FACTOR	673 C.Y.
=SUBTOTAL ADJUSTED BORROW, TYPE C REQUIRED	4,040 C.Y.
LESS EXCAVATION AVAILABLE FOR BORROW, TYPE C	4,040 C.Y.
=TOTAL ADJUSTED BORROW, TYPE C REQUIRED	0 C.Y.

BORROW, TYPE D REQUIRED

BORROW, TYPE D FOR SOIL CEMENT BASE COURSE	2,882 C.Y.
PLUS BORROW, TYPE D REQUIRED X ADJUSTMENT FACTOR (0.20)	576 C.Y.
=SUBTOTAL ADJUSTED BORROW, TYPE D REQUIRED	3,459 C.Y.
LESS EXCAVATION AVAILABLE FOR BORROW, TYPE D	3,459 C.Y.
=TOTAL ADJUSTED BORROW, TYPE D REQUIRED	0 C.Y.

BORROW, TYPE B REQUIRED

BACKFILL FOR UNSTABLE SUBGRADES AFTER ROOTMAT REMOVED UNDER FILL	0 C.Y.
PLUS BACKFILL X ADJUSTMENT FACTOR (0.20)	0 C.Y.
=SUBTOTAL ADJUSTED BORROW, TYPE B REQUIRED	0 C.Y.
LESS EXCAVATION AVAILABLE FOR BORROW, TYPE B	0 C.Y.
=TOTAL ADJUSTED BORROW, TYPE B REQUIRED	0 C.Y.

EMBANKMENT AND BORROW, TYPE F REQUIRED

EMBANKMENT REQUIRED BELOW CAPPING	39,930 C.Y.
PLUS TOPSOIL REMOVED UNDER FILL	3,330 C.Y.
PLUS ROOTMAT REMOVED UNDER FILL NOT BACKFILLED WITH BORROW, TYPE B	143 C.Y.
PLUS UNDERCUT MATERIAL REMOVED UNDER FILL	0 C.Y.
PLUS PCC AND BITUMINOUS PAVEMENT REMOVED UNDER FILL	0 C.Y.
PLUS EMBANKMENT FOR PIPE BACKFILL (TYPE F)	434 C.Y.
PLUS EMBANKMENT FOR STRUCTURES	0 C.Y.
LESS TOPSOIL PLACED ON FILL SLOPES	1,767 C.Y.
LESS MSE WALL OR OTHER RETAINING WALL & BACKFILL	6 C.Y.
LESS BORROW, TYPE B PLACED ABOVE ORIGINAL GROUND	0 C.Y.
=SUBTOTAL EMBANKMENT REQUIRED BELOW CAPPING	42,064 C.Y.
PLUS EMBANKMENT REQUIRED X ADJUSTMENT FACTOR (0.20)	8,413 C.Y.
=SUBTOTAL ADJUSTED EMBANKMENT REQUIRED	50,477 C.Y.
LESS TOTAL EXCAVATION AVAILABLE FOR BORROW, TYPE F	166,538 C.Y.
SURPLUS TYPE F BORROW	116,060 C.Y.
THEREFORE, TOTAL ADJUSTED BORROW, TYPE F REQUIRED	0 C.Y.

NOTE: SURPLUS TYPE F BORROW REPRESENTS QUANTITY OF BORROW OF ALL TYPES TO BE HAULED TO THE EAST SIDE OF SR1 OR THE MEDIAN OF SR1 AS NEEDED.

TOPSOIL SUMMARY

TOPSOIL SALVAGED FROM CUT AND FILL	10,863 C.Y.
PLUS TOPSOIL REMOVED OUTSIDE OF CROSS SECTION TEMPLATE FOR HAUL ROAD	310 C.Y.
PLUS TOPSOIL FROM STORMWATER MANAGEMENT POND	1,462 C.Y.
PLUS TOPSOIL FROM BORROW SITES	4,520 C.Y.
PLUS TOPSOIL HAULED FROM EAST OF SR 1 AND THE SR 1 MEDIAN	1,476 C.Y.
=SUBTOTAL TOPSOIL AVAILABLE	18,631 C.Y.
LESS TOPSOIL PLACED ON FILL SLOPES	2,461 C.Y.
LESS TOPSOIL PLACED ON CUT SLOPES	5,293 C.Y.
LESS TOPSOIL PLACED ON CUT SLOPES (BORROW SITE)	4,520 C.Y.
LESS TOPSOIL PLACED IN SWM FACILITIES	3,612 C.Y.
LESS TOPSOIL PLACED OUTSIDE OF CROSS SECTION TEMPLATE FOR HAUL ROAD	310 C.Y.
=SUBTOTAL EXCESS (+) TOPSOIL OR TOPSOIL NEED (-)	2,434 C.Y.
LESS CULTIVATED SOIL UNSUITABLE FOR EMBANKMENT	0 C.Y.
=TOTAL EXCESS (+) TOPSOIL OR TOPSOIL NEED (-)	2,434 C.Y.

PROPOSAL QUANTITIES

ITEM NO. 202000 EXCAVATION AND EMBANKMENT	SEE EW-01
ITEM NO. 203000 CHANNEL EXCAVATION	SEE EW-01
ITEM NO. 207000 EXCAVATION AND BACKFILL FOR STRUCTURES	SEE EW-01
ITEM NO. 208000 EXCAVATION AND BACKFILL FOR PIPE TRENCHES	SEE EW-01
ITEM NO. 209001 BORROW, TYPE A	SEE EW-01
ITEM NO. 209002 BORROW, TYPE B	SEE EW-01
ITEM NO. 209003 BORROW, TYPE C	SEE EW-01
ITEM NO. 209004 BORROW, TYPE D	SEE EW-01
ITEM NO. 209006 BORROW, TYPE F	SEE EW-01
ITEM NO. 212000 UNDERCUT EXCAVATION	SEE EW-01
ITEM NO. 732002 TOPSOIL, 6" DEPTH	SEE EW-01
ITEM NO. 733002 TOPSOILING (6" DEPTH)***	SEE EW-01

UNOFFICIAL WEBSITE COPY

EARTHWORK SUMMARY – EAST OF SR 1

EXCAVATION - ALIGNMENT

FROM CROSS SECTIONS

PLUS EXCAVATION FROM US 301 NORTHBOUND WEST OF SR 1	0 C.Y.
PLUS EXCAVATION FROM US 301 NORTHBOUND EAST OF SR 1	5,721 C.Y.
PLUS EXCAVATION FROM RAMP Q	0 C.Y.
PLUS EXCAVATION FROM RAMP R	5,470 C.Y.
PLUS EXCAVATION FROM SR 1 NORTHBOUND	3,162 C.Y.
PLUS EXCAVATION FROM SR 1 SOUTHBOUND	0 C.Y.
PLUS EXCAVATION FROM US 13	5,892 C.Y.
PLUS EXCAVATION FROM SR1 MEDIAN	0 C.Y.
SUBTOTAL - EXCAVATION FROM CROSS SECTIONS	20,246 C.Y.
PLUS EXCAVATION FROM VILLAGE OF SCOTT RUN EAST BORROW SITE	
BORROW TYPE A EXCAVATED MATERIAL	0 C.Y.
BORROW TYPE C EXCAVATED MATERIAL	0 C.Y.
BORROW TYPE D EXCAVATED MATERIAL	0 C.Y.
BORROW TYPE F EXCAVATED MATERIAL	0 C.Y.
TOPSOIL REMOVED (VILLAGE OF SCOTT RUN EAST SITE)	0 C.Y.
SUBTOTAL EXCAVATION FROM VILLAGE OF SCOTT RUN EAST BORROW SITE	0 C.Y.
SUBTOTAL - EXCAVATION FROM CROSS SECTIONS AND BORROW SITES	20,246 C.Y.
PLUS TRANSITION SLAB EXCAVATION PAID UNDER ITEM NO. 202000	0 C.Y.
PLUS TOPSOIL REMOVED UNDER FILL	3,238 C.Y.
PLUS TOPSOIL PLACED IN CUT:	1,007 C.Y.
PLUS TOPSOIL REMOVED OUTSIDE OF CROSS SECTION TEMPLATE FOR HAUL ROAD	0 C.Y.
PLUS BITUMINOUS PAVEMENT REMOVED UNDER FILL	2,191 C.Y.
LESS ROOTMAT REMOVED IN CUT	119 C.Y.
LESS REMOVAL OF EXISTING PCC PAVEMENT	2,169 C.Y.
LESS ROCK EXCAVATION	0 C.Y.
PLUS SWM EXCAVATION	0 C.Y.
=TOTAL ITEM 202000-EXCAVATION AND EMBANKMENT	24,393 C.Y.

STORMWATER MANAGEMENT POND EXCAVATION

FROM GRID ANALYSIS:	
SWM POND NO.	0 C.Y.
SUBTOTAL - EXCAVATION FROM GRID ANALYSIS	0 C.Y.
PLUS TOPSOIL REMOVED UNDER FILL	0 C.Y.
PLUS TOPSOIL PLACED IN CUT SECTIONS	0 C.Y.
LESS ROOTMAT REMOVED IN CUT	0 C.Y.
LESS BACKFILL REQUIRED FOR ROOTMAT REMOVAL	0 C.Y.
LESS ROCK EXCAVATION	0 C.Y.
=TOTAL STORMWATER MANAGEMENT POND	0 C.Y.

EXCAVATION AVAILABLE FOR EMBANKMENT

TOTAL EXCAVATION AND EMBANKMENT QUANTITY (ITEM 202000)	24,393 C.Y.
LESS MATERIAL REQUIRED FOR SWM EMBANKMENT	0 C.Y.
PLUS EXCAVATION AND BACKFILLING FOR STRUCTURES	480 C.Y.
PLUS EXCAVATION INCIDENTAL TO STRUCTURAL ITEMS	3,589 C.Y.
PLUS EXCAVATION AND BACKFILLING FOR PIPE TRENCHES	1,956 C.Y.
PLUS CHANNEL EXCAVATION	0 C.Y.
PLUS EXCAVATION FROM LATERAL OR LONGITUDINAL DITCHES	0 C.Y.
PLUS EXCAVATION FROM INSTALLATION OF UNDERDRAINS	1,162 C.Y.
PLUS MATERIAL HAULED FROM WEST OF SR 1 AND SR1 MEDIAN	117,791 C.Y.
LESS TOPSOIL REMOVED IN CUT AND FILL	5,001 C.Y.
LESS TOPSOIL REMOVED OUTSIDE OF CROSS SECTION TEMPLATE FOR HAUL ROAD	0 C.Y.
LESS TOPSOIL REMOVED FROM STORM WATER MANAGEMENT PONDS	0 C.Y.
LESS TOPSOIL REMOVED FROM BORROW SITES	0 C.Y.
LESS UNSUITABLE EXCAVATION	119 C.Y.
LESS UNSUITABLE MATERIAL REMOVED FROM SWM FACILITY	0 C.Y.
LESS MATERIAL USED FOR BORROW TYPE A**	11,100 C.Y.
LESS MATERIAL USED FOR BORROW TYPE D**	3,180 C.Y.
LESS MATERIAL USED FOR BORROW TYPE B	0 C.Y.
LESS MATERIAL USED FOR BORROW TYPE C**	6,258 C.Y.
=TOTAL EXCAVATION AVAILABLE FOR BORROW, TYPE F	123,714 C.Y.

**NOTE:SOIL TEST RESULTS IN THE VICINITY OF THE RAMP Q DIVERSION DITCH INDICATE THE PRESENCE OF MATERIALS SUITED FOR BORROW, TYPES A, C, AND D

BORROW, TYPE A CAPPING REQUIRED

BORROW, TYPE A FOR CAPPING	9,808 C.Y.
LESS TOPSOIL PLACED ON FILL SLOPES	559 C.Y.
=SUBTOTAL BORROW, TYPE A CAPPING REQUIRED	9,250 C.Y.
PLUS CAPPING REQUIRED X ADJUSTMENT FACTOR (0.20)	1,850 C.Y.
=SUBTOTAL ADJUSTED BORROW, TYPE A REQUIRED	11,100 C.Y.
LESS EXCAVATION AVAILABLE FOR BORROW, TYPE A	11,100 C.Y.
=TOTAL ADJUSTED BORROW, TYPE A REQUIRED	0 C.Y.

BORROW, TYPE C REQUIRED

TEST HOLE EXCAVATION BACKFILL REQUIRED	100 C.Y.
PIPE/UTILITY BACKFILL REQUIRED	3,863 C.Y.
TYPE C BACKFILL FOR STRUCTURES	1,252 C.Y.
=SUBTOTAL BORROW, TYPE C REQUIRED	5,215 C.Y.
PLUS ADJUSTMENT FACTOR	1,043 C.Y.
=SUBTOTAL ADJUSTED BORROW, TYPE C REQUIRED	6,258 C.Y.
LESS EXCAVATION AVAILABLE FOR BORROW, TYPE C	6,258 C.Y.
=TOTAL ADJUSTED BORROW, TYPE C REQUIRED	0 C.Y.

BORROW, TYPE D REQUIRED

BORROW, TYPE D FOR SOIL CEMENT BASE COURSE	2,650 C.Y.
PLUS BORROW, TYPE D REQUIRED X ADJUSTMENT FACTOR (0.20)	530 C.Y.
=SUBTOTAL ADJUSTED BORROW, TYPE D REQUIRED	3,180 C.Y.
LESS EXCAVATION AVAILABLE FOR BORROW, TYPE D	3,180 C.Y.
=TOTAL ADJUSTED BORROW, TYPE D REQUIRED	0 C.Y.

BORROW, TYPE B REQUIRED

BACKFILL FOR UNSTABLE SUBGRADES AFTER ROOTMAT REMOVED UNDER FILL	0 C.Y.
PLUS BACKFILL X ADJUSTMENT FACTOR (0.20)	0 C.Y.
=SUBTOTAL ADJUSTED BORROW, TYPE B REQUIRED	0 C.Y.
LESS EXCAVATION AVAILABLE FOR BORROW, TYPE B	0 C.Y.
=TOTAL ADJUSTED BORROW, TYPE B REQUIRED	0 C.Y.

EMBANKMENT AND BORROW, TYPE F REQUIRED

EMBANKMENT REQUIRED BELOW CAPPING	157,828 C.Y.
PLUS TOPSOIL REMOVED UNDER FILL	3,238 C.Y.
PLUS ROOTMAT REMOVED UNDER FILL NOT BACKFILLED WITH BORROW, TYPE B	1,305 C.Y.
PLUS UNDERCUT MATERIAL REMOVED UNDER FILL	0 C.Y.
PLUS PCC AND BITUMINOUS PAVEMENT REMOVED UNDER FILL	3,359 C.Y.
PLUS EMBANKMENT FOR PIPE BACKFILL (TYPE F)	809 C.Y.
PLUS EMBANKMENT FOR STRUCTURES	55 C.Y.
LESS TOPSOIL PLACED ON FILL SLOPES	2,225 C.Y.
LESS MSE WALL OR OTHER RETAINING WALL & BACKFILL	61,274 C.Y.
LESS BORROW TYPE B PLACED ABOVE ORIGINAL GROUND	0 C.Y.
=SUBTOTAL EMBANKMENT REQUIRED BELOW CAPPING	103,095 C.Y.
PLUS EMBANKMENT REQUIRED X ADJUSTMENT FACTOR (0.20)	20,619 C.Y.
=SUBTOTAL ADJUSTED EMBANKMENT REQUIRED	123,714 C.Y.
LESS TOTAL EXCAVATION AVAILABLE FOR BORROW, TYPE F	123,714 C.Y.
SURPLUS TYPE F BORROW	0 C.Y.
THEREFORE, TOTAL ADJUSTED BORROW, TYPE F REQUIRED	0 C.Y.

TOPSOIL SUMMARY

TOPSOIL SALVAGED FROM CUT AND FILL	5,001 C.Y.
PLUS TOPSOIL REMOVED OUTSIDE OF CROSS SECTION TEMPLATE FOR HAUL ROAD	0 C.Y.
PLUS TOPSOIL FROM STORMWATER MANAGEMENT POND	0 C.Y.
PLUS TOPSOIL FROM BORROW SITES	0 C.Y.
=SUBTOTAL TOPSOIL AVAILABLE	5,001 C.Y.
LESS TOPSOIL PLACED ON FILL SLOPES	2,784 C.Y.
LESS TOPSOIL PLACED ON CUT SLOPES	1,007 C.Y.
LESS TOPSOIL PLACED ON CUT SLOPES (BORROW SITE)	0 C.Y.
LESS TOPSOIL PLACED IN SWM FACILITIES	0 C.Y.
LESS TOPSOIL PLACED OUTSIDE OF CROSS SECTION TEMPLATE FOR HAUL ROAD	0 C.Y.
=SUBTOTAL EXCESS (+) TOPSOIL OR TOPSOIL NEED (-)	1,211 C.Y.
LESS CULTIVATED SOIL UNSUITABLE FOR EMBANKMENT	0 C.Y.
=TOTAL EXCESS (+) TOPSOIL OR TOPSOIL NEED (-)	1,211 C.Y.

PROPOSAL QUANTITIES

ITEM NO. 202000 EXCAVATION AND EMBANKMENT	SEE EW-01
ITEM NO. 203000 CHANNEL EXCAVATION	SEE EW-01
ITEM NO. 207000 EXCAVATION AND BACKFILL FOR STRUCTURES	SEE EW-01
ITEM NO. 208000 EXCAVATION AND BACKFILL FOR PIPE TRENCHES	SEE EW-01
ITEM NO. 209001 BORROW, TYPE A	SEE EW-01
ITEM NO. 209002 BORROW, TYPE B	SEE EW-01
ITEM NO. 209003 BORROW, TYPE C	SEE EW-01
ITEM NO. 209004 BORROW, TYPE D	SEE EW-01
ITEM NO. 209006 BORROW, TYPE F	SEE EW-01
ITEM NO. 212000 UNDERCUT EXCAVATION	SEE EW-01
ITEM NO. 732002 TOPSOIL, 6" DEPTH	SEE EW-01
ITEM NO. 733002 TOPSOILING (6" DEPTH)***	SEE EW-01

UNOFFICIAL WEBSITE COPY

EARTHWORK SUMMARY – MEDIAN

EXCAVATION - ALIGNMENT

FROM CROSS SECTIONS

PLUS EXCAVATION FROM US 301 NORTHBOUND WEST OF SR 1	0 C.Y.
PLUS EXCAVATION FROM US 301 NORTHBOUND EAST OF SR 1	0 C.Y.
PLUS EXCAVATION FROM RAMP Q	0 C.Y.
PLUS EXCAVATION FROM RAMP R	0 C.Y.
PLUS EXCAVATION FROM SR 1 NORTHBOUND	0 C.Y.
PLUS EXCAVATION FROM SR 1 SOUTHBOUND	0 C.Y.
PLUS EXCAVATION FROM US 13	0 C.Y.
PLUS EXCAVATION FROM SR1 MEDIAN	1,429 C.Y.
SUBTOTAL - EXCAVATION FROM CROSS SECTIONS	1,429 C.Y.
PLUS EXCAVATION FROM VILLAGE OF SCOTT RUN EAST BORROW SITE	
BORROW TYPE A EXCAVATED MATERIAL	0 C.Y.
BORROW TYPE C EXCAVATED MATERIAL	0 C.Y.
BORROW TYPE D EXCAVATED MATERIAL	0 C.Y.
BORROW TYPE F EXCAVATED MATERIAL	0 C.Y.
TOPSOIL REMOVED (VILLAGE OF SCOTT RUN EAST SITE)	0 C.Y.
SUBTOTAL EXCAVATION FROM VILLAGE OF SCOTT RUN EAST BORROW SITE	0 C.Y.
SUBTOTAL - EXCAVATION FROM CROSS SECTIONS AND BORROW SITES	1,429 C.Y.
PLUS TRANSITION SLAB EXCAVATION PAID UNDER ITEM NO. 202000	0 C.Y.
PLUS TOPSOIL REMOVED UNDER FILL	58 C.Y.
PLUS TOPSOIL PLACED IN CUT:	83 C.Y.
PLUS TOPSOIL REMOVED OUTSIDE OF CROSS SECTION TEMPLATE FOR HAUL ROAD	0 C.Y.
PLUS BITUMINOUS PAVEMENT REMOVED UNDER FILL	73 C.Y.
LESS ROOTMAT REMOVED IN CUT	0 C.Y.
LESS REMOVAL OF EXISTING PCC PAVEMENT	0 C.Y.
LESS ROCK EXCAVATION	0 C.Y.
PLUS SWM EXCAVATION	0 C.Y.
=TOTAL ITEM 202000-EXCAVATION AND EMBANKMENT	1,643 C.Y.

STORMWATER MANAGEMENT POND EXCAVATION

FROM GRID ANALYSIS:	
SWM POND NO.	0 C.Y.
SUBTOTAL - EXCAVATION FROM GRID ANALYSIS	0 C.Y.
PLUS TOPSOIL REMOVED UNDER FILL	0 C.Y.
PLUS TOPSOIL PLACED IN CUT SECTIONS	0 C.Y.
LESS ROOTMAT REMOVED IN CUT	0 C.Y.
LESS BACKFILL REQUIRED FOR ROOTMAT REMOVAL	0 C.Y.
LESS ROCK EXCAVATION	0 C.Y.
=TOTAL STORMWATER MANAGEMENT POND	0 C.Y.

EXCAVATION AVAILABLE FOR EMBANKMENT

TOTAL EXCAVATION AND EMBANKMENT QUANTITY (ITEM 202000)	1,643 C.Y.
LESS MATERIAL REQUIRED FOR SWM EMBANKMENT	0 C.Y.
PLUS EXCAVATION AND BACKFILLING FOR STRUCTURES	956 C.Y.
PLUS EXCAVATION INCIDENTAL TO STRUCTURAL ITEMS	0 C.Y.
PLUS EXCAVATION AND BACKFILLING FOR PIPE TRENCHES	0 C.Y.
PLUS CHANNEL EXCAVATION	0 C.Y.
PLUS EXCAVATION FROM LATERAL OR LONGITUDINAL DITCHES	0 C.Y.
PLUS EXCAVATION FROM INSTALLATION OF UNDERDRAINS	78 C.Y.
PLUS MATERIAL HAULED FROM WEST OF SR 1	384 C.Y.
LESS TOPSOIL REMOVED IN CUT AND FILL	391 C.Y.
LESS TOPSOIL REMOVED OUTSIDE OF CROSS SECTION TEMPLATE FOR HAUL ROAD	0 C.Y.
LESS TOPSOIL REMOVED FROM STORM WATER MANAGEMENT PONDS	0 C.Y.
LESS TOPSOIL REMOVED FROM BORROW SITES	0 C.Y.
LESS UNSUITABLE EXCAVATION	0 C.Y.
LESS UNSUITABLE MATERIAL REMOVED FROM SWM FACILITY	0 C.Y.
LESS MATERIAL USED FOR BORROW TYPE A**	256 C.Y.
LESS MATERIAL USED FOR BORROW TYPE D**	128 C.Y.
LESS MATERIAL USED FOR BORROW TYPE B	0 C.Y.
LESS MATERIAL USED FOR BORROW TYPE C**	0 C.Y.
=TOTAL EXCAVATION AVAILABLE FOR BORROW, TYPE F	2,286 C.Y.

**NOTE:SOIL TEST RESULTS IN THE VICINITY OF THE RAMP Q DIVERSION DITCH INDICATE THE PRESENCE OF MATERIALS SUITED FOR BORROW, TYPES A, C, AND D

BORROW, TYPE A CAPPING REQUIRED

BORROW, TYPE A FOR CAPPING	213 C.Y.
LESS TOPSOIL PLACED ON FILL SLOPES	0 C.Y.
=SUBTOTAL BORROW, TYPE A CAPPING REQUIRED	213 C.Y.
PLUS CAPPING REQUIRED X ADJUSTMENT FACTOR (0.20)	43 C.Y.
=SUBTOTAL ADJUSTED BORROW, TYPE A REQUIRED	256 C.Y.
LESS EXCAVATION AVAILABLE FOR BORROW, TYPE A	256 C.Y.
=TOTAL ADJUSTED BORROW, TYPE A REQUIRED	0 C.Y.

BORROW, TYPE C REQUIRED

TEST HOLE EXCAVATION BACKFILL REQUIRED	0 C.Y.
PIPE/UTILITY BACKFILL REQUIRED	0 C.Y.
TYPE C BACKFILL FOR STRUCTURES	0 C.Y.
=SUBTOTAL BORROW, TYPE C REQUIRED	0 C.Y.
PLUS ADJUSTMENT FACTOR	0 C.Y.
=SUBTOTAL ADJUSTED BORROW, TYPE C REQUIRED	0 C.Y.
LESS EXCAVATION AVAILABLE FOR BORROW, TYPE C	0 C.Y.
=TOTAL ADJUSTED BORROW, TYPE C REQUIRED	0 C.Y.

BORROW, TYPE D REQUIRED

BORROW, TYPE D FOR SOIL CEMENT BASE COURSE	107 C.Y.
PLUS BORROW, TYPE D REQUIRED X ADJUSTMENT FACTOR (0.20)	21 C.Y.
=SUBTOTAL ADJUSTED BORROW, TYPE D REQUIRED	128 C.Y.
LESS EXCAVATION AVAILABLE FOR BORROW, TYPE D	128 C.Y.
=TOTAL ADJUSTED BORROW, TYPE D REQUIRED	0 C.Y.

BORROW, TYPE B REQUIRED

BACKFILL FOR UNSTABLE SUBGRADES AFTER ROOTMAT REMOVED UNDER FILL	0 C.Y.
PLUS BACKFILL X ADJUSTMENT FACTOR (0.20)	0 C.Y.
=SUBTOTAL ADJUSTED BORROW, TYPE B REQUIRED	0 C.Y.
LESS EXCAVATION AVAILABLE FOR BORROW, TYPE B	0 C.Y.
=TOTAL ADJUSTED BORROW, TYPE B REQUIRED	0 C.Y.

EMBANKMENT AND BORROW, TYPE F REQUIRED

EMBANKMENT REQUIRED BELOW CAPPING	55 C.Y.
PLUS TOPSOIL REMOVED UNDER FILL	58 C.Y.
PLUS ROOTMAT REMOVED UNDER FILL NOT BACKFILLED WITH BORROW, TYPE B	0 C.Y.
PLUS UNDERCUT MATERIAL REMOVED UNDER FILL	0 C.Y.
PLUS PCC AND BITUMINOUS PAVEMENT REMOVED UNDER FILL	73 C.Y.
PLUS EMBANKMENT FOR PIPE BACKFILL (TYPE F)	0 C.Y.
PLUS EMBANKMENT FOR STRUCTURES	0 C.Y.
LESS TOPSOIL PLACED ON FILL SLOPES	43 C.Y.
LESS MSE WALL OR OTHER RETAINING WALL & BACKFILL	0 C.Y.
LESS BORROW TYPE B PLACED ABOVE ORIGINAL GROUND	0 C.Y.
=SUBTOTAL EMBANKMENT REQUIRED BELOW CAPPING	143 C.Y.
PLUS EMBANKMENT REQUIRED X ADJUSTMENT FACTOR (0.20)	29 C.Y.
=SUBTOTAL ADJUSTED EMBANKMENT REQUIRED	172 C.Y.
LESS TOTAL EXCAVATION AVAILABLE FOR BORROW, TYPE F	2,286 C.Y.
SURPLUS TYPE F BORROW	2,114 C.Y.
THEREFORE, TOTAL ADJUSTED BORROW, TYPE F REQUIRED	0 C.Y.

NOTE: SURPLUS TYPE F TO BE HAULED TO THE EAST SIDE OF SR1

TOPSOIL SUMMARY

TOPSOIL SALVAGED FROM CUT AND FILL	391 C.Y.
PLUS TOPSOIL REMOVED OUTSIDE OF CROSS SECTION TEMPLATE FOR HAUL ROAD	0 C.Y.
PLUS TOPSOIL FROM STORMWATER MANAGEMENT POND	0 C.Y.
PLUS TOPSOIL FROM BORROW SITES	0 C.Y.
=SUBTOTAL TOPSOIL AVAILABLE	391 C.Y.
LESS TOPSOIL PLACED ON FILL SLOPES	43 C.Y.
LESS TOPSOIL PLACED ON CUT SLOPES	83 C.Y.
LESS TOPSOIL PLACED ON CUT SLOPES (BORROW SITE)	0 C.Y.
LESS TOPSOIL PLACED IN SWM FACILITIES	0 C.Y.
LESS TOPSOIL PLACED OUTSIDE OF CROSS SECTION TEMPLATE FOR HAUL ROAD	0 C.Y.
=SUBTOTAL EXCESS (+) TOPSOIL OR TOPSOIL NEED (-)	265 C.Y.
LESS CULTIVATED SOIL UNSUITABLE FOR EMBANKMENT	0 C.Y.
=TOTAL EXCESS (+) TOPSOIL OR TOPSOIL NEED (-)	265 C.Y.

PROPOSAL QUANTITIES

ITEM NO. 202000 EXCAVATION AND EMBANKMENT	SEE EW-01
ITEM NO. 203000 CHANNEL EXCAVATION	SEE EW-01
ITEM NO. 207000 EXCAVATION AND BACKFILL FOR STRUCTURES	SEE EW-01
ITEM NO. 208000 EXCAVATION AND BACKFILL FOR PIPE TRENCHES	SEE EW-01
ITEM NO. 209001 BORROW, TYPE A	SEE EW-01
ITEM NO. 209002 BORROW, TYPE B	SEE EW-01
ITEM NO. 209003 BORROW, TYPE C	SEE EW-01
ITEM NO. 209004 BORROW, TYPE D	SEE EW-01
ITEM NO. 209006 BORROW, TYPE F	SEE EW-01
ITEM NO. 212000 UNDERCUT EXCAVATION	SEE EW-01
ITEM NO. 732002 TOPSOIL, 6" DEPTH	SEE EW-01
ITEM NO. 733002 TOPSOILING (6" DEPTH)***	SEE EW-01

UNOFFICIAL WEBSITE COPY

**CUT SLOPE RATIO CHART	
DEPTH OF CUT	SLOPE RATIO
0'-5'	4:1
>5'-10'	3:1
>10'	2:1

OR AS SHOWN IN CONTRACT DOCUMENTS

*FILL SLOPE RATIO CHART	
HEIGHT OF EMBANKMENT	SLOPE RATIO
0'-5'	6:1
>5'-10'	4:1
>10'-15'	3:1
>15'	2:1 WITH GUARDRAIL

OR AS SHOWN IN CONTRACT DOCUMENTS

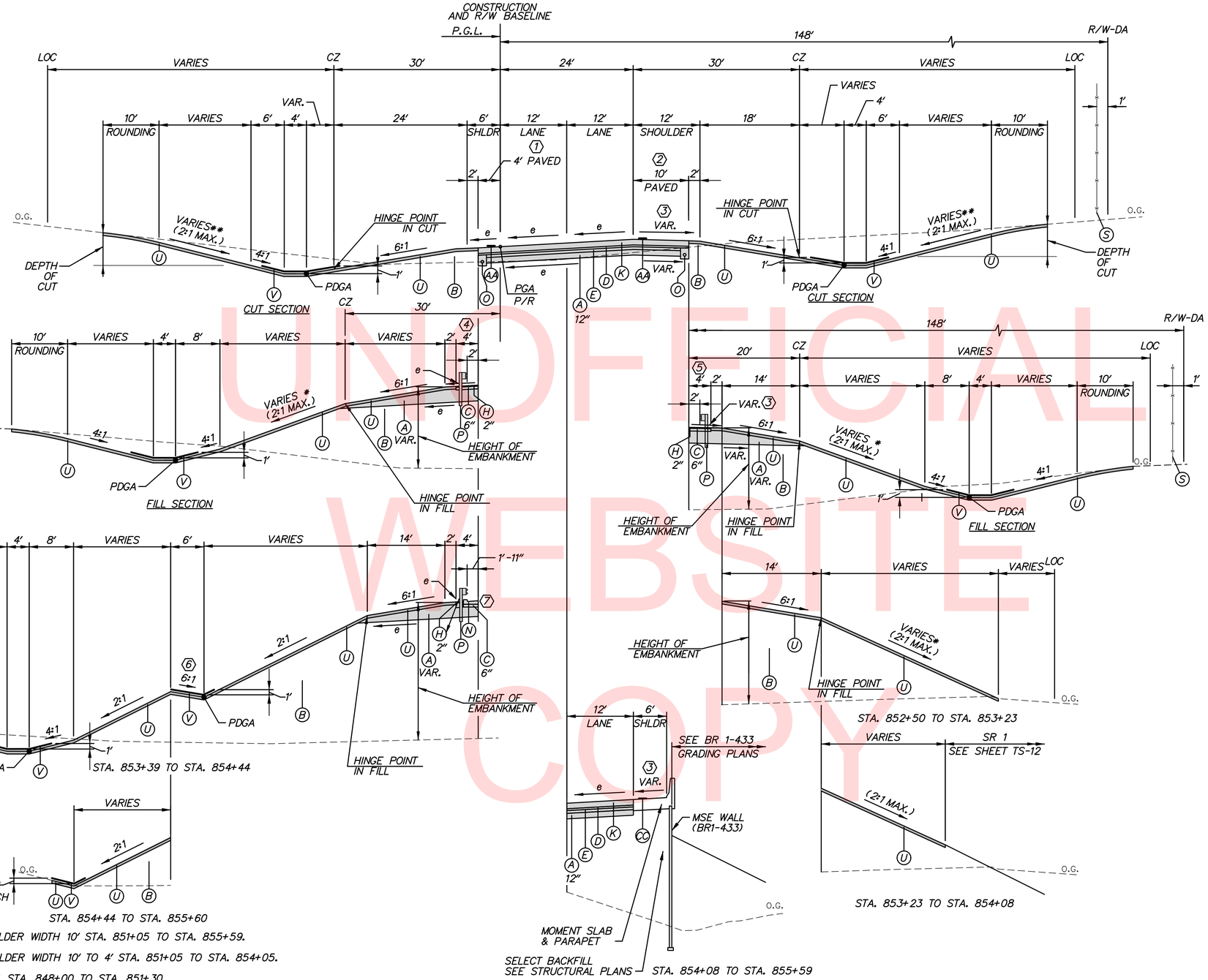

US 301 NB RAMP SUPERELEVATED SECTION

STATION 848+00 TO STATION 855+59 ($e_{max.}$=5.6%)

STA. 855+59 TO STA. 862+78 - SEE BRIDGE PLANS

(1) HOLD PAVED SHOULDER WIDTH 10' STA. 851+05 TO STA. 855+59.

(2) VARY PAVED SHOULDER WIDTH 10' TO 4' STA. 851+05 TO STA. 854+05.

(3) HOLD SLOPE -2.4% STA. 848+00 TO STA. 851+30.
TRANSITION SLOPE -2.4% TO +5.6% STA. 851+30 TO STA. 854+52.
HOLD SLOPE +5.6% STA. 854+52 TO STA. 855+59.

(4) LIMITS OF GUARDRAIL: STA. 852+87 TO STA. 855+59.
MAINTENANCE PAVING WIDTH VARIES 2' TO 6.04' STA. 852+45 TO STA. 852+88.
MAINTENANCE PAVING WIDTH VARIES 6.04' TO 4' STA. 852+88 TO STA. 853+39.

(5) LIMITS OF GUARDRAIL: STA. 850+19 TO STA. 854+08.
MAINTENANCE PAVING WIDTH VARIES 2' TO 6.07' STA. 849+81 TO STA. 850+19.
MAINTENANCE PAVING WIDTH VARIES 6.07' TO 4' STA. 850+19 TO STA. 850+70.

(6) BENCH SLOPE VARIES -2:1 TO +6:1 STA. 853+40 TO STA. 853+90.

(7) LIMITS OF CURB: STA. 853+39 TO STA. 855+60.

LEGEND

- (A) ITEM 209001 - BORROW, TYPE A
- (B) ITEM 209006 - BORROW, TYPE F
- (C) ITEM 302007 - GRADED AGGREGATE BASE COURSE, TYPE B
- (D) ITEM 304501 - PERMEABLE TREATED BASE, 4"
- (E) ITEM 304502 - SOIL CEMENT BASE COURSE, 6"
- (G) ITEM 401813 - WMA, SUPERPAVE, TYPE B, 160 GYRATIONS, PG 70-22 (2 LIFTS)
- (H) ITEM 401801 - WMA, SUPERPAVE, TYPE C, 160 GYRATIONS, PG 64-22 (CARBONATE STONE)
- (I) ITEM 401819 - WMA, SUPERPAVE, BITUMINOUS CONCRETE BASE COURSE, 160 GYRATIONS, PG 64-22
- (J) ITEM 401824 - WMA, SUPERPAVE, TYPE C, 160 GYRATIONS, PG 64-22 WEDGE
- (K) ITEM 501006 - PORTLAND CEMENT CONCRETE PAVEMENT, 12"
- (L) ITEM 732002 - TOPSOILING, 6" DEPTH
  ITEM 734551 - NATIVE GRASS SEEDING: NO MOW MIX
- (N) ITEM 701016 - PCC CURB AND GUTTER TYPE 1-4
- (O) ITEM 715001 - PERFORATED PIPE UNDERDRAINS, 6"
- (P) ITEM 720050 - GALVANIZED STEEL BEAM GUARDRAIL, TYPE 1-31
- (Q) ITEM 720052 - GALVANIZED STEEL BEAM GUARDRAIL, TYPE 3-31
- (R) ITEM 720626 - CONCRETE SINGLE FACE BARRIER, TYPE 1
  ITEM 720626 - CONCRETE SINGLE FACE BARRIER, TYPE 1 (MODIFIED)
  ITEM 720627 - CONCRETE SINGLE FACE BARRIER, TYPE 2
- (S) ITEM 727000 - RIGHT OF WAY FENCE
- (T) ITEM 705002 - P.C.C. SIDEWALK, 6"
- (U) ITEM 732002 - TOPSOILING, 6" DEPTH
  ITEM 734013 - PERMANENT GRASS SEEDING, DRY GROUND
- (V) ITEM 732002 - TOPSOILING, 6" DEPTH
  ITEM 734013 - PERMANENT GRASS SEEDING, DRY GROUND
  ITEM 735535 - SOIL RETENTION BLANKET MULCH, TYPE 5
- (W) ITEM 760003 - PAVEMENT MILLING, HOT-MIX, VARIABLE DEPTH
- (X) ITEM 760507 - PROFILE MILLING, HOT-MIX
- (Y) ITEM 712005 - RIPRAP, R-4
- (Z) ITEM 720629 - BIFURCATED CONCRETE MEDIAN BARRIER (MODIFIED)
- (AA) ITEM 760017 - RUMBLE STRIPS, CONCRETE
- (BB) ITEM 760012 - RUMBLE STRIPS, BIKE FRIENDLY, HOT-MIX
- (CC) ITEM 760015 - RUMBLE STRIPS, CONCRETE SHALLOW DEPTH
- (DD) ITEM 760016 - RUMBLE STRIPS, HOT-MIX

TYPICAL SECTION NOTES:

1. THE MAXIMUM ALGEBRAIC DIFFERENCE ON THE HIGH SIDE BETWEEN THE TRAVELED WAY SLOPE AND THE ACCEL/DECEL LANES SHALL NOT EXCEED 4%. THE MAXIMUM ALGEBRAIC DIFFERENCE BETWEEN THE TRAVELED WAY SLOPE AND THE SHOULDER SLOPE SHALL NOT EXCEED 8%.
2. SHOULDER SLOPE ON THE LOW SIDE SHALL BE THE SAME AS THE TRAVELED WAY SLOPE WHEN SUPERELEVATION IS GREATER THAN 4%.
3. P.G.L. - PROFILE GRADE LINE
   PGA - POINT OF GRADE APPLICATION
   PDGA - POINT OF DITCH GRADE APPLICATION
   P/R - POINT OF ROTATION
   O.G. - ORIGINAL GROUND
4. EXISTING SR 1 ROADWAY PAVEMENT SECTION
   12" PCC PAVEMENT
   4" PERMEABLE ASPHALT TREATED BASE
   6" SOIL CEMENT TREATED BASE
   14" BORROW TYPE A
5. EXISTING SR 1 SHOULDER ADJACENT SECTION
   2" HOT MIX, HOT LAID BITUMINOUS CONCRETE PAVEMENT, TYPE C
   10"+/- BITUMINOUS CONCRETE BASE COURSE
   4" PERMEABLE ASPHALT TREATED BASE
   6" SOIL CEMENT TREATED BASE
   14" BORROW TYPE A
6. FOR BENCHING OF EXISTING SLOPES WHERE PROPOSED WIDENING OCCURS, SEE BENCHING DETAIL, SHEET DT-01.
7. SEE GRADES AND GEOMETRICS SHEETS FOR SUPERELEVATED CROSS SLOPE TRANSITIONS.
8. SEE SHEET TS-20 FOR UNDERDRAIN DETAIL.
   SEE CONSTRUCTION PLANS FOR PLACEMENT LOCATIONS
9. THE MAXIMUM LIFTS FOR THE INDIVIDUAL PAVING MATERIALS ARE AS FOLLOWS:
   SUPERPAVE, TYPE C WMA - 2"
   SUPERPAVE, TYPE B WMA - 3", PLACE IN EQUAL LIFTS WHEN THICKNESS EXCEED 3"
   SUPERPAVE BIT. CONC. BASE COURSE - 4"
   GRADED AGGREGATE BASE COURSE - 8"
10. SEE SHEET DT-01 FOR RUMBLE STRIP LOCATIONS.
11. SEE SHEET DT-01 FOR SAFETY EDGE DETAILS. THESE DETAILS SHALL BEAPPLIED AT ALL INSTANCES WHERE THE EDGE OF PROPOSED PAVEMENT MEETS THE 6" TOPSOIL

TS-01

UNOFFICIAL WEBSITE COPY

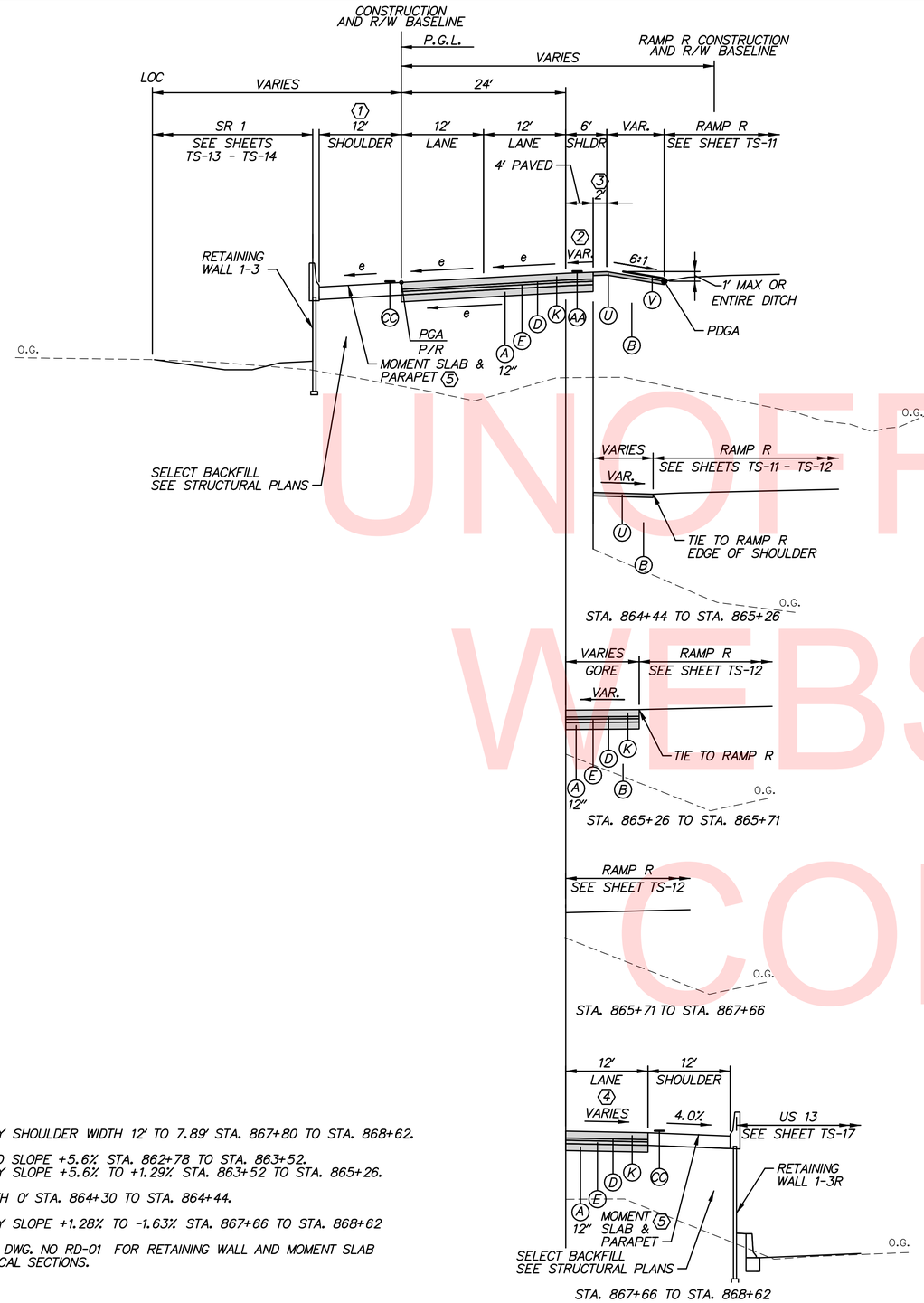

1. VARY SHOULDER WIDTH 12' TO 7.89' STA. 867+80 TO STA. 868+62.
2. HOLD SLOPE +5.6% STA. 862+78 TO STA. 863+52.
   VARY SLOPE +5.6% TO +1.29% STA. 863+52 TO STA. 865+26.
3. WIDTH 0' STA. 864+30 TO STA. 864+44.
4. VARY SLOPE +1.28% TO -1.63% STA. 867+66 TO STA. 868+62
5. SEE DWG. NO RD-01 FOR RETAINING WALL AND MOMENT SLAB TYPICAL SECTIONS.

US 301 NB RAMP SUPERELEVATED SECTION
STATION 862+78 TO STATION 868+62 ($e_{max.}$=5.6%)

LEGEND

- (A) ITEM 209001 - BORROW, TYPE A
- (B) ITEM 209006 - BORROW, TYPE F
- (C) ITEM 302007 - GRADED AGGREGATE BASE COURSE, TYPE B
- (D) ITEM 304501 - PERMEABLE TREATED BASE, 4"
- (E) ITEM 304502 - SOIL CEMENT BASE COURSE, 6"
- (G) ITEM 401813 - WMA, SUPERPAVE, TYPE B, 160 GYRATIONS, PG 70-22 (2 LIFTS)
- (H) ITEM 401801 - WMA, SUPERPAVE, TYPE C, 160 GYRATIONS, PG 64-22 (CARBONATE STONE)
- (I) ITEM 401819 - WMA, SUPERPAVE, BITUMINOUS CONCRETE BASE COURSE, 160 GYRATIONS, PG 64-22
- (J) ITEM 401824 - WMA, SUPERPAVE, TYPE C, 160 GYRATIONS, PG 64-22 WEDGE
- (K) ITEM 501006 - PORTLAND CEMENT CONCRETE PAVEMENT, 12"
- (L) ITEM 732002 - TOPSOILING, 6" DEPTH
  ITEM 734551 - NATIVE GRASS SEEDING: NO MOW MIX
- (N) ITEM 701016 - PCC CURB AND GUTTER TYPE 1-4
- (O) ITEM 715001 - PERFORATED PIPE UNDERDRAINS, 6"
- (P) ITEM 720050 - GALVANIZED STEEL BEAM GUARDRAIL, TYPE 1-31
- (Q) ITEM 720052 - GALVANIZED STEEL BEAM GUARDRAIL, TYPE 3-31
- (R) ITEM 720626 - CONCRETE SINGLE FACE BARRIER, TYPE 1
  ITEM 720626 - CONCRETE SINGLE FACE BARRIER, TYPE 1 (MODIFIED)
  ITEM 720627 - CONCRETE SINGLE FACE BARRIER, TYPE 2
- (S) ITEM 727000 - RIGHT OF WAY FENCE
- (T) ITEM 705002 - P.C.C. SIDEWALK, 6"
- (U) ITEM 732002 - TOPSOILING, 6" DEPTH
  ITEM 734013 - PERMANENT GRASS SEEDING, DRY GROUND
- (V) ITEM 732002 - TOPSOILING, 6" DEPTH
  ITEM 734013 - PERMANENT GRASS SEEDING, DRY GROUND
  ITEM 735535 - SOIL RETENTION BLANKET MULCH, TYPE 5
- (W) ITEM 760003 - PAVEMENT MILLING, HOT-MIX, VARIABLE DEPTH
- (X) ITEM 760507 - PROFILE MILLING, HOT-MIX
- (Y) ITEM 712005 - RIPRAP, R-4
- (Z) ITEM 720629 - BIFURCATED CONCRETE MEDIAN BARRIER (MODIFIED)
- (AA) ITEM 760017 - RUMBLE STRIPS, CONCRETE
- (BB) ITEM 760012 - RUMBLE STRIPS, BIKE FRIENDLY, HOT-MIX
- (CC) ITEM 760015 - RUMBLE STRIPS, CONCRETE SHALLOW DEPTH
- (DD) ITEM 760016 - RUMBLE STRIPS, HOT-MIX

TYPICAL SECTION NOTES:

1. THE MAXIMUM ALGEBRAIC DIFFERENCE ON THE HIGH SIDE BETWEEN THE TRAVELED WAY SLOPE AND THE ACCEL/DECEL LANES SHALL NOT EXCEED 4%. THE MAXIMUM ALGEBRAIC DIFFERENCE BETWEEN THE TRAVELED WAY SLOPE AND THE SHOULDER SLOPE SHALL NOT EXCEED 8%.
2. SHOULDER SLOPE ON THE LOW SIDE SHALL BE THE SAME AS THE TRAVELED WAY SLOPE WHEN SUPERELEVATION IS GREATER THAN 4%.
3. P.G.L. - PROFILE GRADE LINE
   PGA - POINT OF GRADE APPLICATION
   PDGA - POINT OF DITCH GRADE APPLICATION
   P/R - POINT OF ROTATION
   O.G. - ORIGINAL GROUND
4. EXISTING SR 1 ROADWAY PAVEMENT SECTION
   12" PCC PAVEMENT
   4" PERMEABLE ASPHALT TREATED BASE
   6" SOIL CEMENT TREATED BASE
   14" BORROW TYPE A
5. EXISTING SR 1 SHOULDER ADJACENT SECTION
   2" HOT MIX, HOT LAID BITUMINOUS CONCRETE PAVEMENT, TYPE C
   10"+/- BITUMINOUS CONCRETE BASE COURSE
   4" PERMEABLE ASPHALT TREATED BASE
   6" SOIL CEMENT TREATED BASE
   14" BORROW TYPE A
6. FOR BENCHING OF EXISTING SLOPES WHERE PROPOSED WIDENING OCCURS, SEE BENCHING DETAIL, SHEET DT-01.
7. SEE GRADES AND GEOMETRICS SHEETS FOR SUPERELEVATED CROSS SLOPE TRANSITIONS.
8. SEE SHEET TS-20 FOR UNDERDRAIN DETAIL.
   SEE CONSTRUCTION PLANS FOR PLACEMENT LOCATIONS
9. THE MAXIMUM LIFTS FOR THE INDIVIDUAL PAVING MATERIALS ARE AS FOLLOWS:
   SUPERPAVE, TYPE C WMA - 2"
   SUPERPAVE, TYPE B WMA - 3", PLACE IN EQUAL LIFTS WHEN THICKNESS EXCEED 3"
   SUPERPAVE BIT. CONC. BASE COURSE - 4"
   GRADED AGGREGATE BASE COURSE - 8"
10. SEE SHEET DT-01 FOR RUMBLE STRIP LOCATIONS.
11. SEE SHEET DT-01 FOR SAFETY EDGE DETAILS. THESE DETAILS SHALL BEAPPLIED AT ALL INSTANCES WHERE THE EDGE OF PROPOSED PAVEMENT MEETS THE 6" TOPSOIL.

UNOFFICIAL WEBSITE COPY

DELAWARE DEPARTMENT OF TRANSPORTATION	ADDENDUMS / REVISIONS	NOT TO SCALE	US 301 & SR 1 INTERCHANGE	CONTRACT T200911302	BRIDGE NO.	TYPICAL SECTIONS	TS-02
				COUNTY NEW CASTLE	DESIGNED BY: S.E.S.		SHEET NO. 13
					CHECKED BY: B.R.T.		TOTAL SHTS. 491

n:\31653-000\contract tb\cadd\TS002U301_1B.dgn 2/6/2013 3:52:52 PM

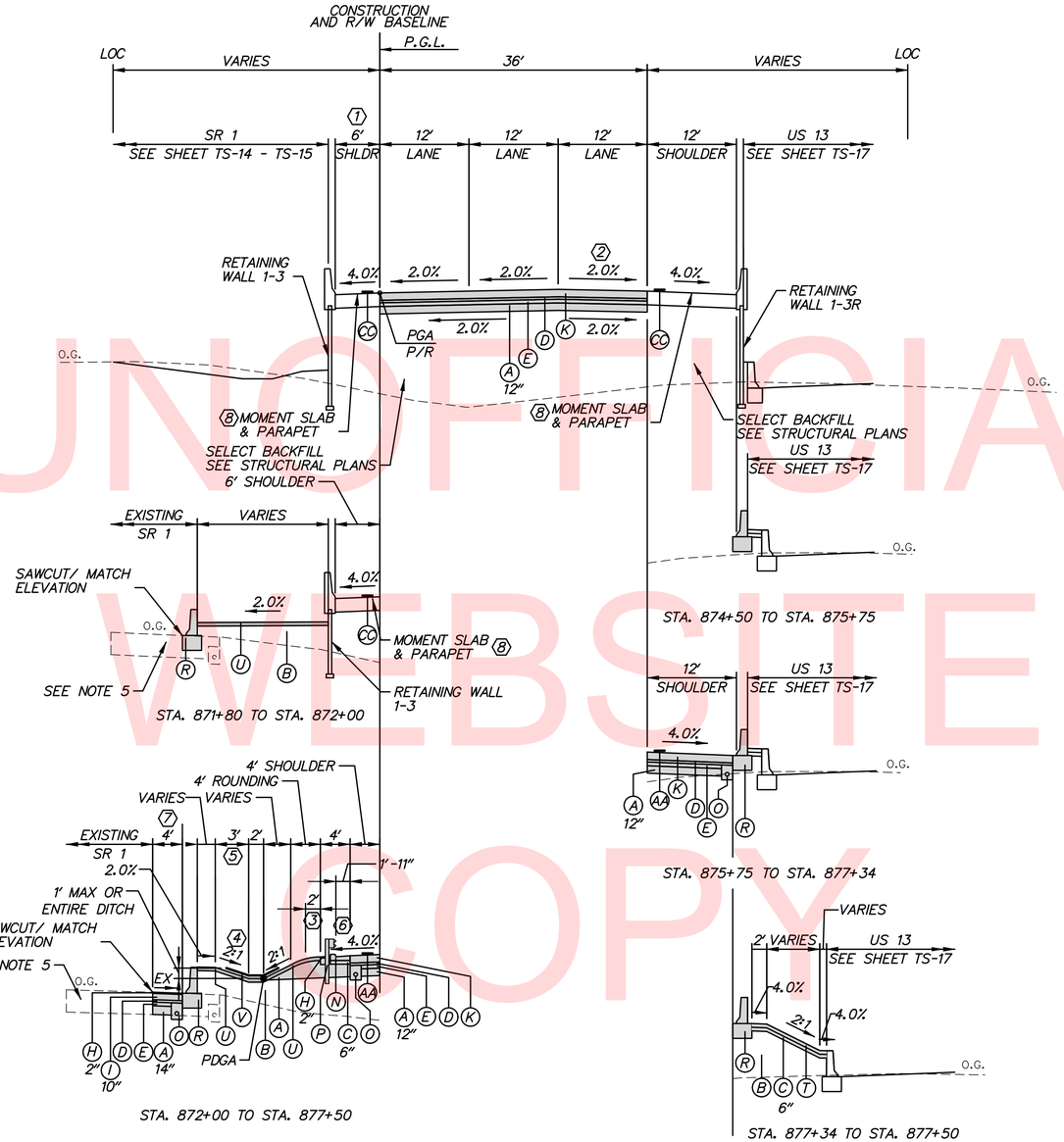

UNOFFICIAL WEBSITE COPY

1. VARY SHOULDER WIDTH 7.89' TO 6' STA. 868+62 TO STA. 869+00
2. TRANSITION SLOPE -1.63% TO -2.0% STA. 868+62 TO STA. 868+74
3. VARY WIDTH 2' TO 6' STA. 873+50 TO STA. 874+00
   HOLD WIDTH 6' STA. 874+00 TO STA. 874+50
   VARY WIDTH 6' TO 2' STA. 874+50 TO STA. 875+00
4. TRANSITION SLOPE 4:1 TO 3:1 STA. 872+00 TO STA. 872+50
   TRANSITION SLOPE 3:1 TO 2:1 STA. 873+00 TO STA. 873+50
5. VARY WIDTH 3.33' TO 4.5' STA. 872+00 TO 872+50
   VARY WIDTH 4.5' TO 3' STA. 873+00 TO STA. 873+50
6. LIMITS OF CURB: STA. 872+00 TO STA. 872+21.
7. WIDTH 0' STA. 872+00 TO STA. 874+96.
8. SEE DWG. NO RD-01 FOR RETAINING WALL AND MOMENT SLAB TYPICAL SECTIONS

US 301 NB RAMP NORMAL SECTION

STATION 868+62 TO STATION 877+50 ($e_{max.}$=2.0%)

LEGEND

- (A) ITEM 209001 - BORROW, TYPE A
- (B) ITEM 209006 - BORROW, TYPE F
- (C) ITEM 302007 - GRADED AGGREGATE BASE COURSE, TYPE B
- (D) ITEM 304501 - PERMEABLE TREATED BASE, 4"
- (E) ITEM 304502 - SOIL CEMENT BASE COURSE, 6"
- (G) ITEM 401813 - WMA, SUPERPAVE, TYPE B, 160 GYRATIONS, PG 70-22 (2 LIFTS)
- (H) ITEM 401801 - WMA, SUPERPAVE, TYPE C, 160 GYRATIONS, PG 64-22 (CARBONATE STONE)
- (I) ITEM 401819 - WMA, SUPERPAVE, BITUMINOUS CONCRETE BASE COURSE, 160 GYRATIONS, PG 64-22
- (J) ITEM 401824 - WMA, SUPERPAVE, TYPE C, 160 GYRATIONS, PG 64-22 WEDGE
- (K) ITEM 501006 - PORTLAND CEMENT CONCRETE PAVEMENT, 12"
- (L) ITEM 732002 - TOPSOILING, 6" DEPTH
  ITEM 734551 - NATIVE GRASS SEEDING: NO MOW MIX
- (N) ITEM 701016 - PCC CURB AND GUTTER TYPE 1-4
- (O) ITEM 715001 - PERFORATED PIPE UNDERDRAINS, 6"
- (P) ITEM 720050 - GALVANIZED STEEL BEAM GUARDRAIL, TYPE 1-31
- (Q) ITEM 720052 - GALVANIZED STEEL BEAM GUARDRAIL, TYPE 3-31
- (R) ITEM 720626 - CONCRETE SINGLE FACE BARRIER, TYPE 1
  ITEM 720626 - CONCRETE SINGLE FACE BARRIER, TYPE 1 (MODIFIED)
  ITEM 720627 - CONCRETE SINGLE FACE BARRIER, TYPE 2
- (S) ITEM 727000 - RIGHT OF WAY FENCE
- (T) ITEM 705002 - P.C.C. SIDEWALK, 6"
- (U) ITEM 732002 - TOPSOILING, 6" DEPTH
  ITEM 734013 - PERMANENT GRASS SEEDING, DRY GROUND
- (V) ITEM 732002 - TOPSOILING, 6" DEPTH
  ITEM 734013 - PERMANENT GRASS SEEDING, DRY GROUND
  ITEM 735535 - SOIL RETENTION BLANKET MULCH, TYPE 5
- (W) ITEM 760003 - PAVEMENT MILLING, HOT-MIX, VARIABLE DEPTH
- (X) ITEM 760507 - PROFILE MILLING, HOT-MIX
- (Y) ITEM 712005 - RIPRAP, R-4
- (Z) ITEM 720629 - BIFURCATED CONCRETE MEDIAN BARRIER (MODIFIED)
- (AA) ITEM 760017 - RUMBLE STRIPS, CONCRETE
- (BB) ITEM 760012 - RUMBLE STRIPS, BIKE FRIENDLY, HOT-MIX
- (CC) ITEM 760015 - RUMBLE STRIPS, CONCRETE SHALLOW DEPTH
- (DD) ITEM 760016 - RUMBLE STRIPS, HOT-MIX

TYPICAL SECTION NOTES:

1. THE MAXIMUM ALGEBRAIC DIFFERENCE ON THE HIGH SIDE BETWEEN THE TRAVELED WAY SLOPE AND THE ACCEL/DECEL LANES SHALL NOT EXCEED 4%. THE MAXIMUM ALGEBRAIC DIFFERENCE BETWEEN THE TRAVELED WAY SLOPE AND THE SHOULDER SLOPE SHALL NOT EXCEED 8%.
2. SHOULDER SLOPE ON THE LOW SIDE SHALL BE THE SAME AS THE TRAVELED WAY SLOPE WHEN SUPERELEVATION IS GREATER THAN 4%.
3. P.G.L. - PROFILE GRADE LINE
   PGA - POINT OF GRADE APPLICATION
   PDGA - POINT OF DITCH GRADE APPLICATION
   P/R - POINT OF ROTATION
   O.G. - ORIGINAL GROUND
4. EXISTING SR 1 ROADWAY PAVEMENT SECTION
   12" PCC PAVEMENT
   4" PERMEABLE ASPHALT TREATED BASE
   6" SOIL CEMENT TREATED BASE
   14" BORROW TYPE A
5. EXISTING SR 1 SHOULDER ADJACENT SECTION
   2" HOT MIX, HOT LAID BITUMINOUS CONCRETE PAVEMENT, TYPE C
   10"+/- BITUMINOUS CONCRETE BASE COURSE
   4" PERMEABLE ASPHALT TREATED BASE
   6" SOIL CEMENT TREATED BASE
   14" BORROW TYPE A
6. FOR BENCHING OF EXISTING SLOPES WHERE PROPOSED WIDENING OCCURS, SEE BENCHING DETAIL, SHEET DT-01.
7. SEE GRADES AND GEOMETRICS SHEETS FOR SUPERELEVATED CROSS SLOPE TRANSITIONS.
8. SEE SHEET TS-20 FOR UNDERDRAIN DETAIL.
   SEE CONSTRUCTION PLANS FOR PLACEMENT LOCATIONS
9. THE MAXIMUM LIFTS FOR THE INDIVIDUAL PAVING MATERIALS ARE AS FOLLOWS:
   SUPERPAVE, TYPE C WMA - 2"
   SUPERPAVE, TYPE B WMA - 3", PLACE IN EQUAL LIFTS WHEN THICKNESS EXCEED 3"
   SUPERPAVE BIT. CONC. BASE COURSE - 4"
   GRADED AGGREGATE BASE COURSE - 8"
10. SEE SHEET DT-01 FOR RUMBLE STRIP LOCATIONS.
11. SEE SHEET DT-01 FOR SAFETY EDGE DETAILS. THESE DETAILS SHALL BEAPPLIED AT ALL INSTANCES WHERE THE EDGE OF PROPOSED PAVEMENT MEETS THE 6" TOPSOIL.

TS-03

DELAWARE DEPARTMENT OF TRANSPORTATION	ADDENDUMS / REVISIONS	NOT TO SCALE	US 301 & SR 1 INTERCHANGE	CONTRACT T200911302	BRIDGE NO.	TYPICAL SECTIONS	SHEET NO. 14
				COUNTY NEW CASTLE	DESIGNED BY: S.E.S.		TOTAL SHTS. 491
					CHECKED BY: B.R.T.		

n:\31653-000\contract tb\cadd\TS003U301_1B.dgn 2/6/2013 3:53:02 PM

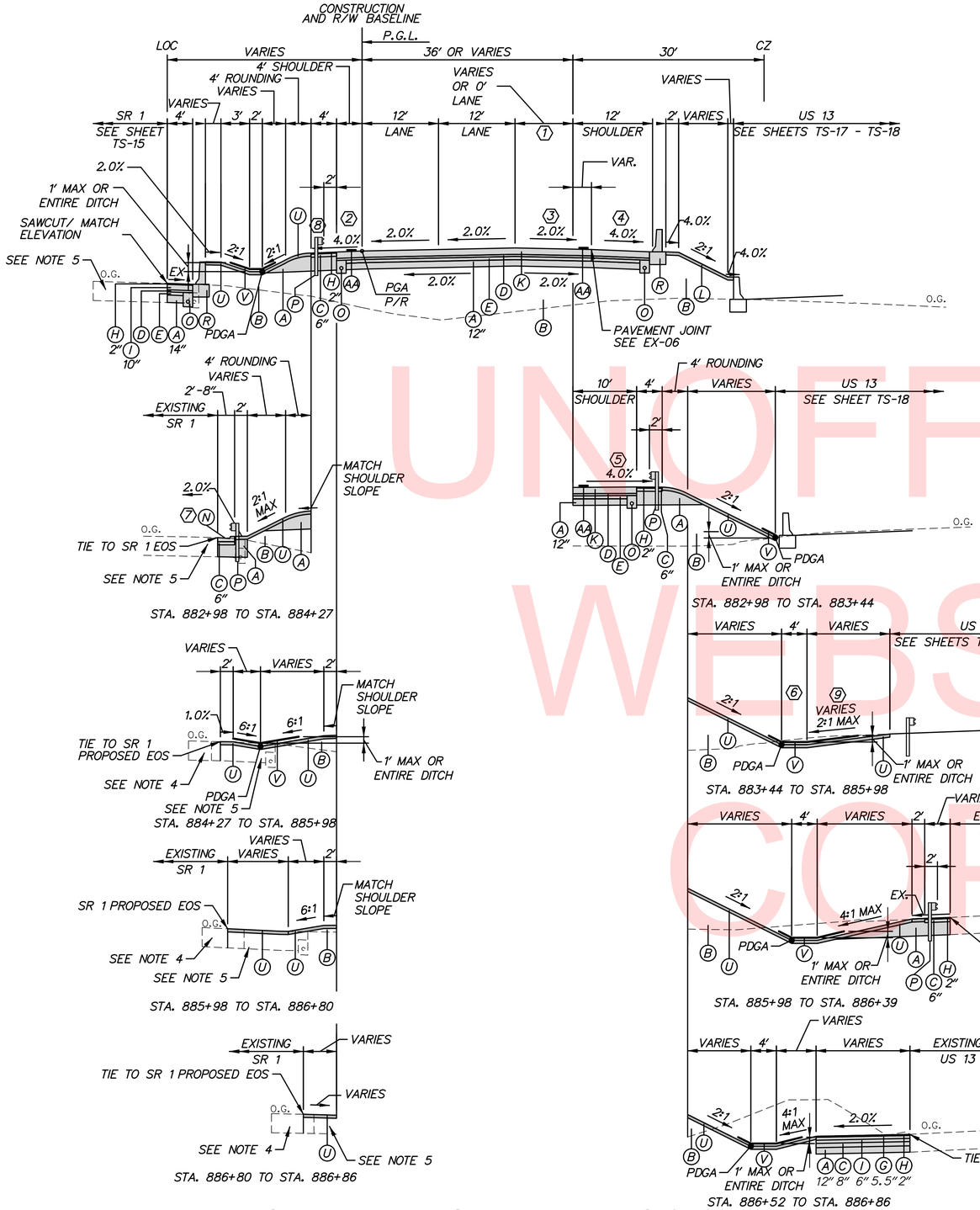

1. LANE WIDTH VARIES 12' TO 0' STA. 877+50 TO STA. 880+50. HOLD 0' WIDTH STA. 880+50 TO STA. 886+86.
2. TRANSITION SLOPE -4.0% TO -2.0% STA. 880+18 TO STA. 880+98. HOLD SLOPE -2.0% STA. 880+98 TO STA. 882+98. TRANSITION SLOPE -2.0% TO -4.0% STA. 882+98 TO STA. 883+77. TRANSITION SLOPE -4.0% TO +0.69% STA. 884+96 TO STA. 886+86.
3. TRANSITION SLOPE -2.0% TO +0.26% STA. 879+87 TO STA. 880+50.
4. TRANSITION SLOPE -4.0% TO -2.0% STA. 879+57 TO STA. 879+87. TRANSITION SLOPE -2.0% TO +2.0% STA. 879+97 TO STA. 880+98. HOLD +2.0% SLOPE STA. 880+98 TO STA. 882+98.
5. TRANSITION SLOPE +2.0% TO -4.0% STA. 882+98 TO STA. 885+38.
6. HOLD 0' WIDTH STA. 883+44 TO STA. 885+65. VARY WIDTH 0' TO 4' STA. 885+65 TO STA. 885+90.
7. CURB AND GUTTER LIMITS: STA. 882+94 TO STA. 884+14.
8. GUARDRAIL AND MAINTENANCE PAVEMENT LIMITS: STA. 882+94 TO STA. 884+20.
9. 4:1 MAX STA. 885+05 TO STA. 885+98.

LEGEND

- (A) ITEM 209001 - BORROW, TYPE A
- (B) ITEM 209006 - BORROW, TYPE F
- (C) ITEM 302007 - GRADED AGGREGATE BASE COURSE, TYPE B
- (D) ITEM 304501 - PERMEABLE TREATED BASE, 4"
- (E) ITEM 304502 - SOIL CEMENT BASE COURSE, 6"
- (G) ITEM 401813 - WMA, SUPERPAVE, TYPE B, 160 GYRATIONS, PG 70-22 (2 LIFTS)
- (H) ITEM 401801 - WMA, SUPERPAVE, TYPE C, 160 GYRATIONS, PG 64-22 (CARBONATE STONE)
- (I) ITEM 401819 - WMA, SUPERPAVE, BITUMINOUS CONCRETE BASE COURSE, 160 GYRATIONS, PG 64-22
- (J) ITEM 401824 - WMA, SUPERPAVE, TYPE C, 160 GYRATIONS, PG 64-22 WEDGE
- (K) ITEM 501006 - PORTLAND CEMENT CONCRETE PAVEMENT, 12"
- (L) ITEM 732002 - TOPSOILING, 6" DEPTH
  ITEM 734551 - NATIVE GRASS SEEDING: NO MOW MIX
- (N) ITEM 701016 - PCC CURB AND GUTTER TYPE 1-4
- (O) ITEM 715001 - PERFORATED PIPE UNDERDRAINS, 6"
- (P) ITEM 720050 - GALVANIZED STEEL BEAM GUARDRAIL, TYPE 1-31
- (Q) ITEM 720052 - GALVANIZED STEEL BEAM GUARDRAIL, TYPE 3-31
- (R) ITEM 720626 - CONCRETE SINGLE FACE BARRIER, TYPE 1
  ITEM 720626 - CONCRETE SINGLE FACE BARRIER, TYPE 1 (MODIFIED)
  ITEM 720627 - CONCRETE SINGLE FACE BARRIER, TYPE 2
- (S) ITEM 727000 - RIGHT OF WAY FENCE
- (T) ITEM 705002 - P.C.C. SIDEWALK, 6"
- (U) ITEM 732002 - TOPSOILING, 6" DEPTH
  ITEM 734013 - PERMANENT GRASS SEEDING, DRY GROUND
- (V) ITEM 732002 - TOPSOILING, 6" DEPTH
  ITEM 734013 - PERMANENT GRASS SEEDING, DRY GROUND
  ITEM 735535 - SOIL RETENTION BLANKET MULCH, TYPE 5
- (W) ITEM 760003 - PAVEMENT MILLING, HOT-MIX, VARIABLE DEPTH
- (X) ITEM 760507 - PROFILE MILLING, HOT-MIX
- (Y) ITEM 712005 - RIPRAP, R-4
- (Z) ITEM 720629 - BIFURCATED CONCRETE MEDIAN BARRIER (MODIFIED)
- (AA) ITEM 760017 - RUMBLE STRIPS, CONCRETE
- (BB) ITEM 760012 - RUMBLE STRIPS, BIKE FRIENDLY, HOT-MIX
- (CC) ITEM 760015 - RUMBLE STRIPS, CONCRETE SHALLOW DEPTH
- (DD) ITEM 760016 - RUMBLE STRIPS, HOT-MIX

TYPICAL SECTION NOTES:

1. THE MAXIMUM ALGEBRAIC DIFFERENCE ON THE HIGH SIDE BETWEEN THE TRAVELED WAY SLOPE AND THE ACCEL/DECEL LANES SHALL NOT EXCEED 4%. THE MAXIMUM ALGEBRAIC DIFFERENCE BETWEEN THE TRAVELED WAY SLOPE AND THE SHOULDER SLOPE SHALL NOT EXCEED 8%.
2. SHOULDER SLOPE ON THE LOW SIDE SHALL BE THE SAME AS THE TRAVELED WAY SLOPE WHEN SUPERELEVATION IS GREATER THAN 4%.
3. P.G.L. - PROFILE GRADE LINE
   PGA - POINT OF GRADE APPLICATION
   PDGA - POINT OF DITCH GRADE APPLICATION
   P/R - POINT OF ROTATION
   O.G. - ORIGINAL GROUND
4. EXISTING SR 1 ROADWAY PAVEMENT SECTION
   12" PCC PAVEMENT
   4" PERMEABLE ASPHALT TREATED BASE
   6" SOIL CEMENT TREATED BASE
   14" BORROW TYPE A
5. EXISTING SR 1 SHOULDER ADJACENT SECTION
   2" HOT MIX, HOT LAID BITUMINOUS CONCRETE PAVEMENT, TYPE C
   10"+/- BITUMINOUS CONCRETE BASE COURSE
   4" PERMEABLE ASPHALT TREATED BASE
   6" SOIL CEMENT TREATED BASE
   14" BORROW TYPE A
6. FOR BENCHING OF EXISTING SLOPES WHERE PROPOSED WIDENING OCCURS, SEE BENCHING DETAIL, SHEET DT-01.
7. SEE GRADES AND GEOMETRICS SHEETS FOR SUPERELEVATED CROSS SLOPE TRANSITIONS.
8. SEE SHEET TS-20 FOR UNDERDRAIN DETAIL. SEE CONSTRUCTION PLANS FOR PLACEMENT LOCATIONS
9. THE MAXIMUM LIFTS FOR THE INDIVIDUAL PAVING MATERIALS ARE AS FOLLOWS:
   SUPERPAVE, TYPE C WMA - 2"
   SUPERPAVE, TYPE B WMA - 3", PLACE IN EQUAL LIFTS WHEN THICKNESS EXCEED 3"
   SUPERPAVE BIT. CONC. BASE COURSE - 4"
   GRADED AGGREGATE BASE COURSE - 8"
10. SEE SHEET DT-01 FOR RUMBLE STRIP LOCATIONS.
11. SEE SHEET DT-01 FOR SAFETY EDGE DETAILS. THESE DETAILS SHALL BEAPPLIED AT ALL INSTANCES WHERE THE EDGE OF PROPOSED PAVEMENT MEETS THE 6" TOPSOIL.

US 301 NB RAMP SUPERELEVATED SECTION

STATION 877+50 TO STATION 886+86 ($e_{max.}$=2.0%)

STA. 880+98 TO STA. 882+98 - SEE BRIDGE PLANS

UNOFFICIAL WEBSITE COPY

DELAWARE DEPARTMENT OF TRANSPORTATION	ADDENDUMS / REVISIONS	NOT TO SCALE	US 301 & SR 1 INTERCHANGE	CONTRACT T200911302	BRIDGE NO.	TYPICAL SECTIONS
				COUNTY NEW CASTLE	DESIGNED BY: S.E.S.	SHEET NO. 15
					CHECKED BY: B.R.T.	TOTAL SHTS. 491

TS-04

n:\31653-000\contract tb\cadd\TS004U301_1B.dgn 2/6/2013 3:53:10 PM

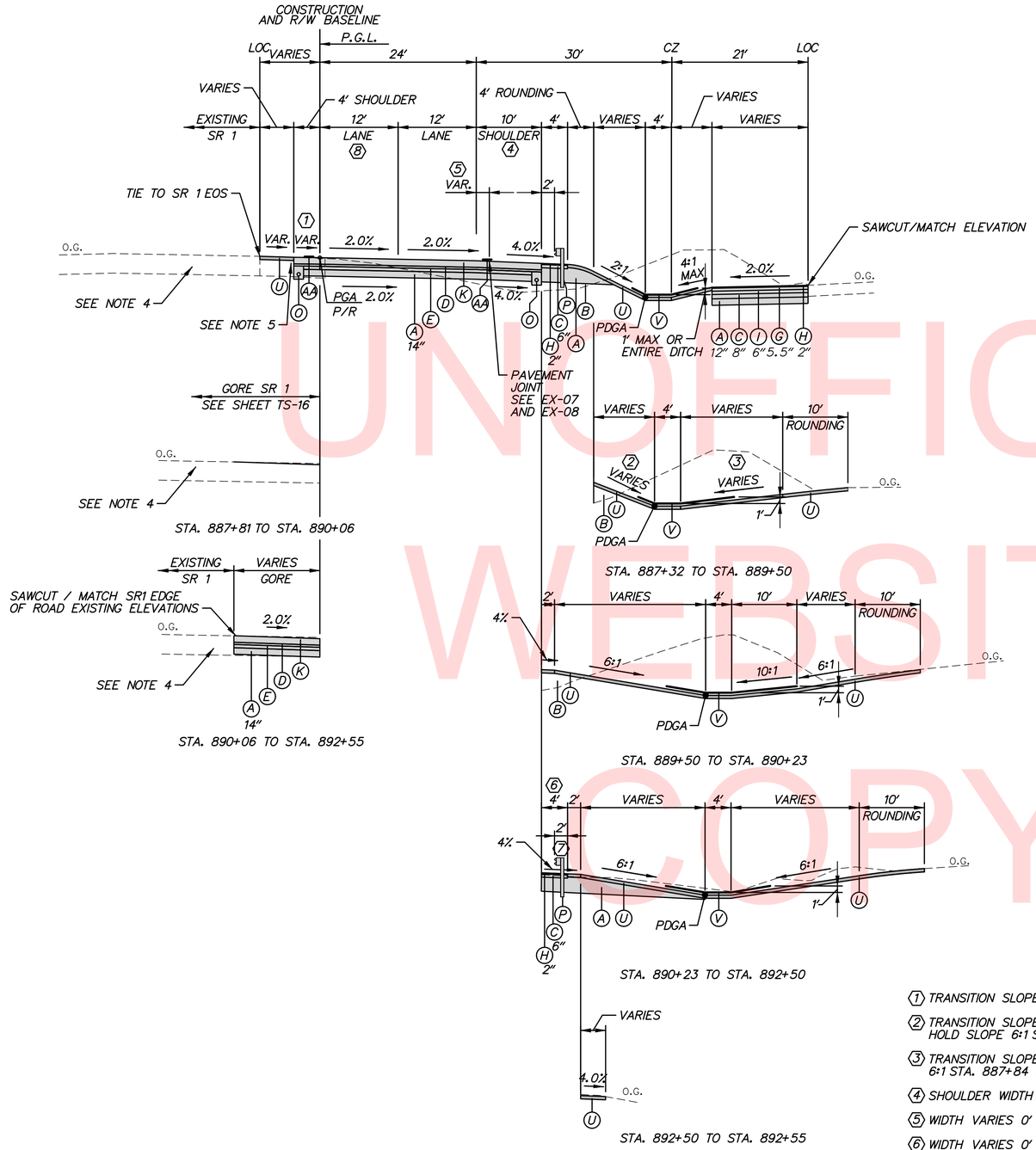

US 301 NB RAMP NORMAL SECTION
STATION 886+86 TO STATION 892+55

(1) TRANSITION SLOPE +0.69% TO +3.02% STA. 886+86 TO STA. 887+67.

(2) TRANSITION SLOPE 2:1 TO 6:1 STA. 887+32 TO STA. 887+84. HOLD SLOPE 6:1 STA. 887+87 TO STA. 890+50.

(3) TRANSITION SLOPE 6.23% TO 6:1 STA. 887+32 TO STA. 887+84. SLOPE 6:1 STA. 887+84 TO STA. 889+50.

(4) SHOULDER WIDTH VARIES 10' TO 12' STA. 887+25 TO STA. 892+55.

(5) WIDTH VARIES 0' TO 2' STA. 887+25 TO STA. 892+55.

(6) WIDTH VARIES 0' TO 6.05' STA. 890+43 TO STA. 890+84. WIDTH VARIES 6.05' TO 4' STA. 890+84 TO STA. 891+36.

(7) LIMITS OF GUARDRAIL: STA. 890+84 TO STA. 892+55.

(8) WIDTH VARIES 12' TO 14' STA. 887+25 TO STA. 892+55.

LEGEND

- (A) ITEM 209001 - BORROW, TYPE A
- (B) ITEM 209006 - BORROW, TYPE F
- (C) ITEM 302007 - GRADED AGGREGATE BASE COURSE, TYPE B
- (D) ITEM 304501 - PERMEABLE TREATED BASE, 4"
- (E) ITEM 304502 - SOIL CEMENT BASE COURSE, 6"
- (G) ITEM 401813 - WMA, SUPERPAVE, TYPE B, 160 GYRATIONS, PG 70-22 (2 LIFTS)
- (H) ITEM 401801 - WMA, SUPERPAVE, TYPE C, 160 GYRATIONS, PG 64-22 (CARBONATE STONE)
- (I) ITEM 401819 - WMA, SUPERPAVE, BITUMINOUS CONCRETE BASE COURSE, 160 GYRATIONS, PG 64-22
- (J) ITEM 401824 - WMA, SUPERPAVE, TYPE C, 160 GYRATIONS, PG 64-22 WEDGE
- (K) ITEM 501006 - PORTLAND CEMENT CONCRETE PAVEMENT, 12"
- (L) ITEM 732002 - TOPSOILING, 6" DEPTH
  ITEM 734551 - NATIVE GRASS SEEDING: NO MOW MIX
- (N) ITEM 701016 - PCC CURB AND GUTTER TYPE 1-4
- (O) ITEM 715001 - PERFORATED PIPE UNDERDRAINS, 6"
- (P) ITEM 720050 - GALVANIZED STEEL BEAM GUARDRAIL, TYPE 1-31
- (Q) ITEM 720052 - GALVANIZED STEEL BEAM GUARDRAIL, TYPE 3-31
- (R) ITEM 720626 - CONCRETE SINGLE FACE BARRIER, TYPE 1
  ITEM 720626 - CONCRETE SINGLE FACE BARRIER, TYPE 1 (MODIFIED)
  ITEM 720627 - CONCRETE SINGLE FACE BARRIER, TYPE 2
- (S) ITEM 727000 - RIGHT OF WAY FENCE
- (T) ITEM 705002 - P.C.C. SIDEWALK, 6"
- (U) ITEM 732002 - TOPSOILING, 6" DEPTH
  ITEM 734013 - PERMANENT GRASS SEEDING, DRY GROUND
- (V) ITEM 732002 - TOPSOILING, 6" DEPTH
  ITEM 734013 - PERMANENT GRASS SEEDING, DRY GROUND
  ITEM 735535 - SOIL RETENTION BLANKET MULCH, TYPE 5
- (W) ITEM 760003 - PAVEMENT MILLING, HOT-MIX, VARIABLE DEPTH
- (X) ITEM 760507 - PROFILE MILLING, HOT-MIX
- (Y) ITEM 712005 - RIPRAP, R-4
- (Z) ITEM 720629 - BIFURCATED CONCRETE MEDIAN BARRIER (MODIFIED)
- (AA) ITEM 760017 - RUMBLE STRIPS, CONCRETE
- (BB) ITEM 760012 - RUMBLE STRIPS, BIKE FRIENDLY, HOT-MIX
- (CC) ITEM 760015 - RUMBLE STRIPS, CONCRETE SHALLOW DEPTH
- (DD) ITEM 760016 - RUMBLE STRIPS, HOT-MIX

TYPICAL SECTION NOTES:

1. THE MAXIMUM ALGEBRAIC DIFFERENCE ON THE HIGH SIDE BETWEEN THE TRAVELED WAY SLOPE AND THE ACCEL/DECEL LANES SHALL NOT EXCEED 4%. THE MAXIMUM ALGEBRAIC DIFFERENCE BETWEEN THE TRAVELED WAY SLOPE AND THE SHOULDER SLOPE SHALL NOT EXCEED 8%.
2. SHOULDER SLOPE ON THE LOW SIDE SHALL BE THE SAME AS THE TRAVELED WAY SLOPE WHEN SUPERELEVATION IS GREATER THAN 4%.
3. P.G.L. - PROFILE GRADE LINE
   PGA - POINT OF GRADE APPLICATION
   PDGA - POINT OF DITCH GRADE APPLICATION
   P/R - POINT OF ROTATION
   O.G. - ORIGINAL GROUND
4. EXISTING SR 1 ROADWAY PAVEMENT SECTION
   12" PCC PAVEMENT
   4" PERMEABLE ASPHALT TREATED BASE
   6" SOIL CEMENT TREATED BASE
   14" BORROW TYPE A
5. EXISTING SR 1 SHOULDER ADJACENT SECTION
   2" HOT MIX, HOT LAID BITUMINOUS CONCRETE PAVEMENT, TYPE C
   10"+/- BITUMINOUS CONCRETE BASE COURSE
   4" PERMEABLE ASPHALT TREATED BASE
   6" SOIL CEMENT TREATED BASE
   14" BORROW TYPE A
6. FOR BENCHING OF EXISTING SLOPES WHERE PROPOSED WIDENING OCCURS, SEE BENCHING DETAIL, SHEET DT-01.
7. SEE GRADES AND GEOMETRICS SHEETS FOR SUPERELEVATED CROSS SLOPE TRANSITIONS.
8. SEE SHEET TS-20 FOR UNDERDRAIN DETAIL. SEE CONSTRUCTION PLANS FOR PLACEMENT LOCATIONS
9. THE MAXIMUM LIFTS FOR THE INDIVIDUAL PAVING MATERIALS ARE AS FOLLOWS:
   SUPERPAVE, TYPE C WMA - 2"
   SUPERPAVE, TYPE B WMA - 3", PLACE IN EQUAL LIFTS WHEN THICKNESS EXCEED 3"
   SUPERPAVE BIT. CONC. BASE COURSE - 4"
   GRADED AGGREGATE BASE COURSE - 8"
10. SEE SHEET DT-01 FOR RUMBLE STRIP LOCATIONS.
11. SEE SHEET DT-01 FOR SAFETY EDGE DETAILS. THESE DETAILS SHALL BEAPPLIED AT ALL INSTANCES WHERE THE EDGE OF PROPOSED PAVEMENT MEETS THE 6" TOPSOIL.

TS-05

UNOFFICIAL WEBSITE COPY

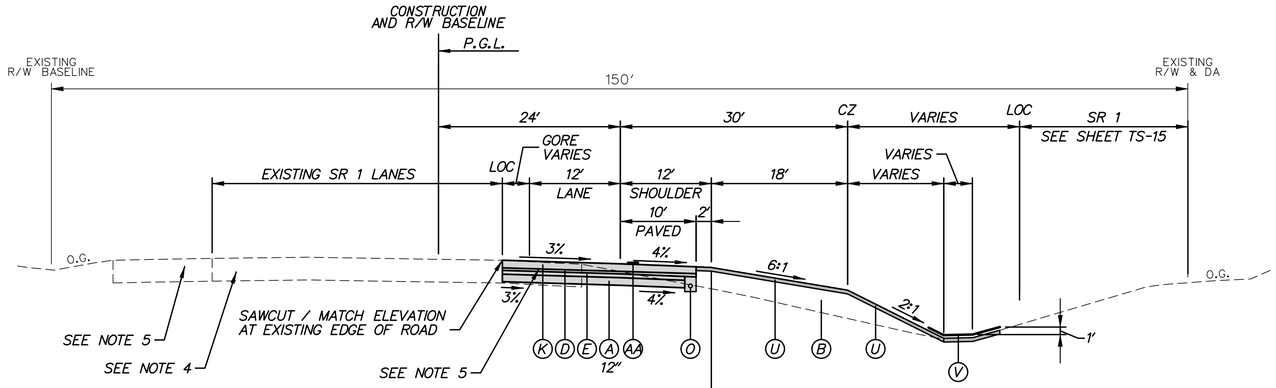

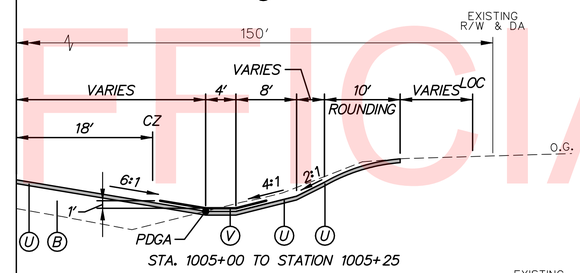

STA. 1005+00 TO STATION 1005+25

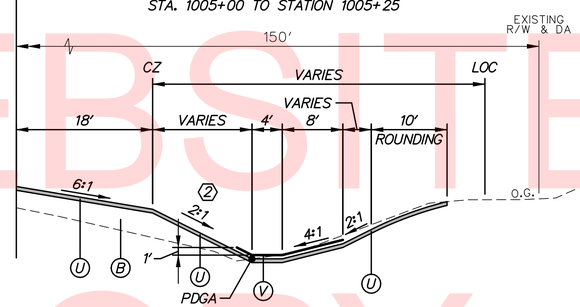

STA. 1002+96 TO STATION 1005+00

1 TRANSITION FROM 2:1 SLOPE AT STA. 1000+50 TO 6:1 SLOPE AT STA. 1000+70. HOLD 6:1 SLOPE FROM STA. 1000+70 TO STA. 1000+87.

2 TRANSITION FROM 2:1 SLOPE AT STA. 1004+80 TO 6:1 SLOPE AT STA. 1005+00.

RAMP Q (US 301 SB) NORMAL SECTION
STATION 1000+87 TO STATION 1005+25

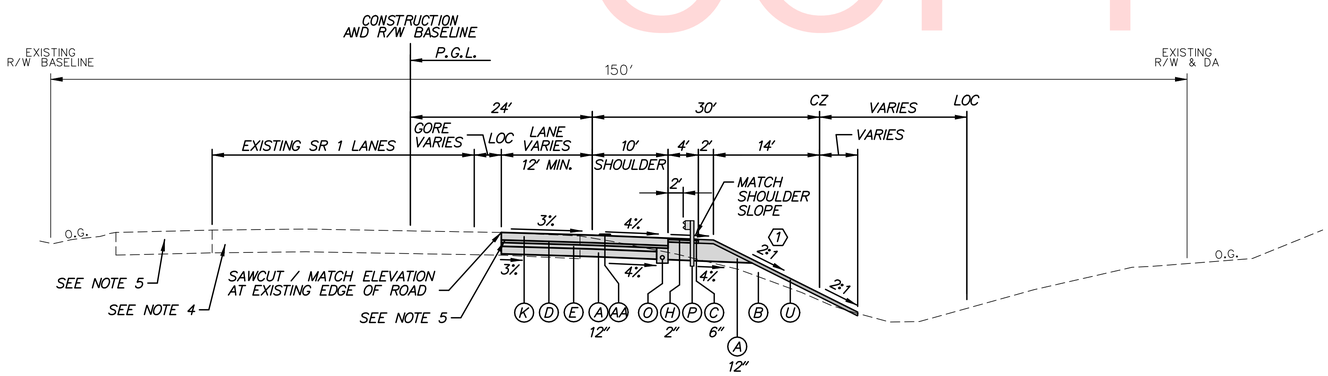

RAMP Q (US 301 SB) NORMAL SECTION
STATION 1000+07 TO STATION 1000+87

LEGEND

- (A) ITEM 209001 - BORROW, TYPE A
- (B) ITEM 209006 - BORROW, TYPE F
- (C) ITEM 302007 - GRADED AGGREGATE BASE COURSE, TYPE B
- (D) ITEM 304501 - PERMEABLE TREATED BASE, 4"
- (E) ITEM 304502 - SOIL CEMENT BASE COURSE, 6"
- (G) ITEM 401813 - WMA, SUPERPAVE, TYPE B, 160 GYRATIONS, PG 70-22 (2 LIFTS)
- (H) ITEM 401801 - WMA, SUPERPAVE, TYPE C, 160 GYRATIONS, PG 64-22 (CARBONATE STONE)
- (I) ITEM 401819 - WMA, SUPERPAVE, BITUMINOUS CONCRETE BASE COURSE, 160 GYRATIONS, PG 64-22
- (J) ITEM 401824 - WMA, SUPERPAVE, TYPE C, 160 GYRATIONS, PG 64-22 WEDGE
- (K) ITEM 501006 - PORTLAND CEMENT CONCRETE PAVEMENT, 12"
- (L) ITEM 732002 - TOPSOILING, 6" DEPTH
  ITEM 734551 - NATIVE GRASS SEEDING: NO MOW MIX
- (N) ITEM 701016 - PCC CURB AND GUTTER TYPE 1-4
- (O) ITEM 715001 - PERFORATED PIPE UNDERDRAINS, 6"
- (P) ITEM 720050 - GALVANIZED STEEL BEAM GUARDRAIL, TYPE 1-31
- (Q) ITEM 720052 - GALVANIZED STEEL BEAM GUARDRAIL, TYPE 3-31
- (R) ITEM 720626 - CONCRETE SINGLE FACE BARRIER, TYPE 1
  ITEM 720626 - CONCRETE SINGLE FACE BARRIER, TYPE 1 (MODIFIED)
  ITEM 720627 - CONCRETE SINGLE FACE BARRIER, TYPE 2
- (S) ITEM 727000 - RIGHT OF WAY FENCE
- (T) ITEM 705002 - P.C.C. SIDEWALK, 6"
- (U) ITEM 732002 - TOPSOILING, 6" DEPTH
  ITEM 734013 - PERMANENT GRASS SEEDING, DRY GROUND
- (V) ITEM 732002 - TOPSOILING, 6" DEPTH
  ITEM 734013 - PERMANENT GRASS SEEDING, DRY GROUND
  ITEM 735535 - SOIL RETENTION BLANKET MULCH, TYPE 5
- (W) ITEM 760003 - PAVEMENT MILLING, HOT-MIX, VARIABLE DEPTH
- (X) ITEM 760507 - PROFILE MILLING, HOT-MIX
- (Y) ITEM 712005 - RIPRAP, R-4
- (Z) ITEM 720629 - BIFURCATED CONCRETE MEDIAN BARRIER (MODIFIED)
- (AA) ITEM 760017 - RUMBLE STRIPS, CONCRETE
- (BB) ITEM 760012 - RUMBLE STRIPS, BIKE FRIENDLY, HOT-MIX
- (CC) ITEM 760015 - RUMBLE STRIPS, CONCRETE SHALLOW DEPTH
- (DD) ITEM 760016 - RUMBLE STRIPS, HOT-MIX

TYPICAL SECTION NOTES:

1. THE MAXIMUM ALGEBRAIC DIFFERENCE ON THE HIGH SIDE BETWEEN THE TRAVELED WAY SLOPE AND THE ACCEL/DECEL LANES SHALL NOT EXCEED 4%. THE MAXIMUM ALGEBRAIC DIFFERENCE BETWEEN THE TRAVELED WAY SLOPE AND THE SHOULDER SLOPE SHALL NOT EXCEED 8%.
2. SHOULDER SLOPE ON THE LOW SIDE SHALL BE THE SAME AS THE TRAVELED WAY SLOPE WHEN SUPERELEVATION IS GREATER THAN 4%.
3. P.G.L. - PROFILE GRADE LINE
   PGA - POINT OF GRADE APPLICATION
   PDGA - POINT OF DITCH GRADE APPLICATION
   P/R - POINT OF ROTATION
   O.G. - ORIGINAL GROUND
4. EXISTING SR 1 ROADWAY PAVEMENT SECTION
   12" PCC PAVEMENT
   4" PERMEABLE ASPHALT TREATED BASE
   6" SOIL CEMENT TREATED BASE
   14" BORROW TYPE A
5. EXISTING SR 1 SHOULDER ADJACENT SECTION
   2" HOT MIX, HOT LAID BITUMINOUS CONCRETE PAVEMENT, TYPE C
   10"+/- BITUMINOUS CONCRETE BASE COURSE
   4" PERMEABLE ASPHALT TREATED BASE
   6" SOIL CEMENT TREATED BASE
   14" BORROW TYPE A
6. FOR BENCHING OF EXISTING SLOPES WHERE PROPOSED WIDENING OCCURS, SEE BENCHING DETAIL, SHEET DT-01.
7. SEE GRADES AND GEOMETRICS SHEETS FOR SUPERELEVATED CROSS SLOPE TRANSITIONS.
8. SEE SHEET TS-20 FOR UNDERDRAIN DETAIL.
   SEE CONSTRUCTION PLANS FOR PLACEMENT LOCATIONS
9. THE MAXIMUM LIFTS FOR THE INDIVIDUAL PAVING MATERIALS ARE AS FOLLOWS:
   SUPERPAVE, TYPE C WMA - 2"
   SUPERPAVE, TYPE B WMA - 3", PLACE IN EQUAL LIFTS WHEN THICKNESS EXCEED 3"
   SUPERPAVE BIT. CONC. BASE COURSE - 4"
   GRADED AGGREGATE BASE COURSE - 8"
10. SEE SHEET DT-01 FOR RUMBLE STRIP LOCATIONS.
11. SEE SHEET DT-01 FOR SAFETY EDGE DETAILS. THESE DETAILS SHALL BEAPPLIED AT ALL INSTANCES WHERE THE EDGE OF PROPOSED PAVEMENT MEETS THE 6" TOPSOIL.

TS-06

UNOFFICIAL WEBSITE COPY

n:\36653-000\contract tb\cadd\TS006U301_1B.dgn
2/6/2015 3:53:27 PM

DELAWARE DEPARTMENT OF TRANSPORTATION	ADDENDUMS / REVISIONS	NOT TO SCALE	US 301 & SR 1 INTERCHANGE	CONTRACT T200911302	BRIDGE NO.	TYPICAL SECTIONS	SHEET NO. 17
				COUNTY NEW CASTLE	DESIGNED BY: J.A.D.		TOTAL SHTS. 491
					CHECKED BY: B.R.T.		

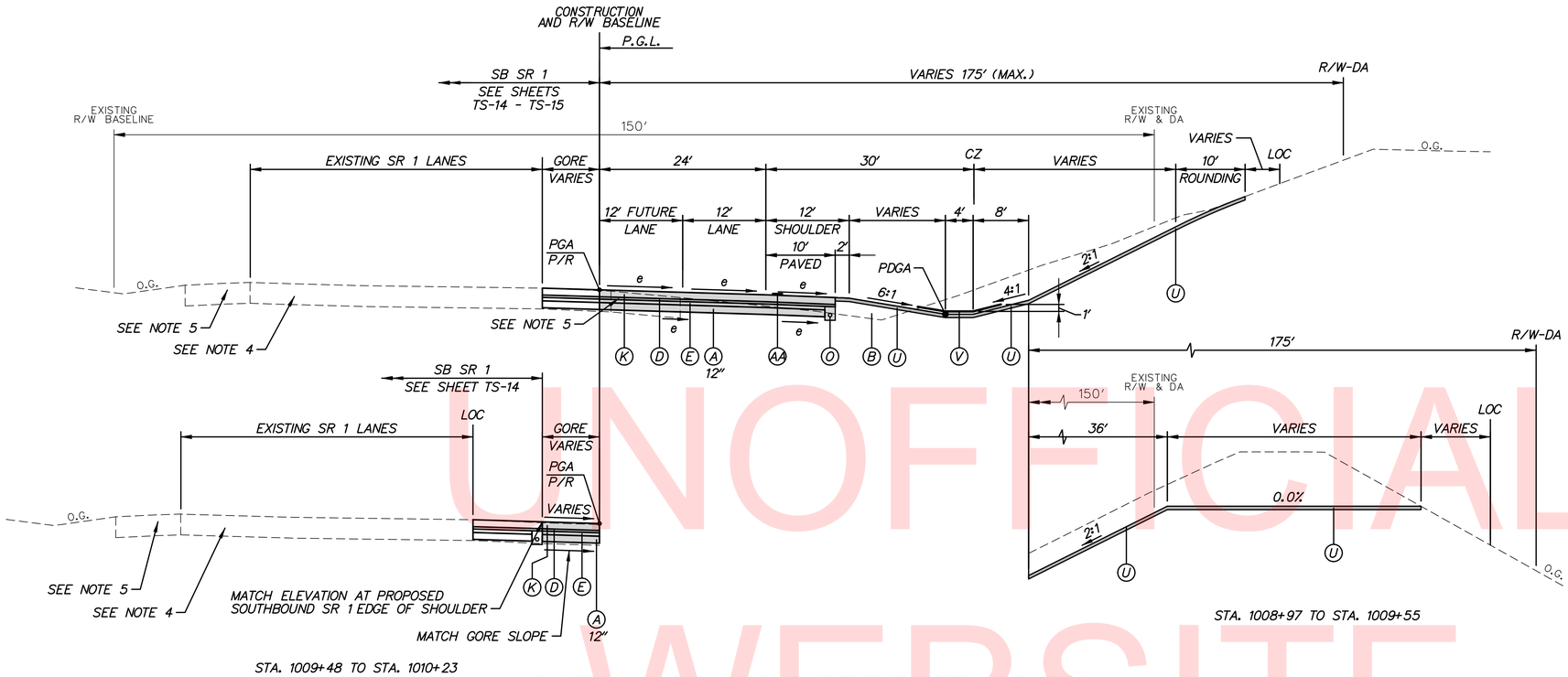

RAMP Q (US 301 SB) SUPERELEVATED SECTION
STATION 1008+97 TO STATION 1010+23

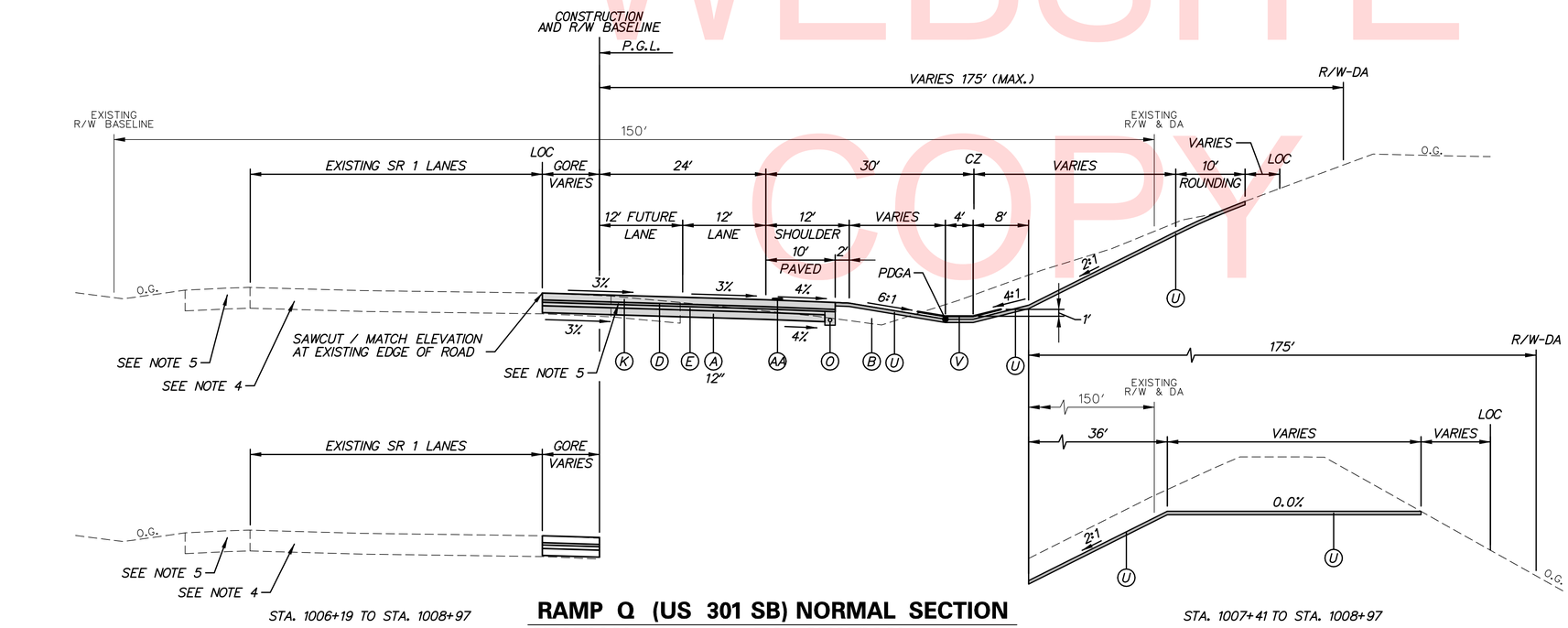

RAMP Q (US 301 SB) NORMAL SECTION
STATION 1005+25 TO STATION 1008+97

LEGEND

- (A) ITEM 209001 - BORROW, TYPE A
- (B) ITEM 209006 - BORROW, TYPE F
- (C) ITEM 302007 - GRADED AGGREGATE BASE COURSE, TYPE B
- (D) ITEM 304501 - PERMEABLE TREATED BASE, 4"
- (E) ITEM 304502 - SOIL CEMENT BASE COURSE, 6"
- (G) ITEM 401813 - WMA, SUPERPAVE, TYPE B, 160 GYRATIONS, PG 70-22 (2 LIFTS)
- (H) ITEM 401801 - WMA, SUPERPAVE, TYPE C, 160 GYRATIONS, PG 64-22 (CARBONATE STONE)
- (I) ITEM 401819 - WMA, SUPERPAVE, BITUMINOUS CONCRETE BASE COURSE, 160 GYRATIONS, PG 64-22
- (J) ITEM 401824 - WMA, SUPERPAVE, TYPE C, 160 GYRATIONS, PG 64-22 WEDGE
- (K) ITEM 501006 - PORTLAND CEMENT CONCRETE PAVEMENT, 12"
- (L) ITEM 732002 - TOPSOILING, 6" DEPTH
  ITEM 734551 - NATIVE GRASS SEEDING: NO MOW MIX
- (N) ITEM 701016 - PCC CURB AND GUTTER TYPE 1-4
- (O) ITEM 715001 - PERFORATED PIPE UNDERDRAINS, 6"
- (P) ITEM 720050 - GALVANIZED STEEL BEAM GUARDRAIL, TYPE 1-31
- (Q) ITEM 720052 - GALVANIZED STEEL BEAM GUARDRAIL, TYPE 3-31
- (R) ITEM 720626 - CONCRETE SINGLE FACE BARRIER, TYPE 1
  ITEM 720626 - CONCRETE SINGLE FACE BARRIER, TYPE 1 (MODIFIED)
  ITEM 720627 - CONCRETE SINGLE FACE BARRIER, TYPE 2
- (S) ITEM 727000 - RIGHT OF WAY FENCE
- (T) ITEM 705002 - P.C.C. SIDEWALK, 6"
- (U) ITEM 732002 - TOPSOILING, 6" DEPTH
  ITEM 734013 - PERMANENT GRASS SEEDING, DRY GROUND
- (V) ITEM 732002 - TOPSOILING, 6" DEPTH
  ITEM 734013 - PERMANENT GRASS SEEDING, DRY GROUND
  ITEM 735535 - SOIL RETENTION BLANKET MULCH, TYPE 5
- (W) ITEM 760003 - PAVEMENT MILLING, HOT-MIX, VARIABLE DEPTH
- (X) ITEM 760507 - PROFILE MILLING, HOT-MIX
- (Y) ITEM 712005 - RIPRAP, R-4
- (Z) ITEM 720629 - BIFURCATED CONCRETE MEDIAN BARRIER (MODIFIED)
- (AA) ITEM 760017 - RUMBLE STRIPS, CONCRETE
- (BB) ITEM 760012 - RUMBLE STRIPS, BIKE FRIENDLY, HOT-MIX
- (CC) ITEM 760015 - RUMBLE STRIPS, CONCRETE SHALLOW DEPTH
- (DD) ITEM 760016 - RUMBLE STRIPS, HOT-MIX

TYPICAL SECTION NOTES:

1. THE MAXIMUM ALGEBRAIC DIFFERENCE ON THE HIGH SIDE BETWEEN THE TRAVELED WAY SLOPE AND THE ACCEL/DECEL LANES SHALL NOT EXCEED 4%. THE MAXIMUM ALGEBRAIC DIFFERENCE BETWEEN THE TRAVELED WAY SLOPE AND THE SHOULDER SLOPE SHALL NOT EXCEED 8%.
2. SHOULDER SLOPE ON THE LOW SIDE SHALL BE THE SAME AS THE TRAVELED WAY SLOPE WHEN SUPERELEVATION IS GREATER THAN 4%.
3. P.G.L. - PROFILE GRADE LINE
   PGA - POINT OF GRADE APPLICATION
   PDGA - POINT OF DITCH GRADE APPLICATION
   P/R - POINT OF ROTATION
   O.G. - ORIGINAL GROUND
4. EXISTING SR 1 ROADWAY PAVEMENT SECTION
   12" PCC PAVEMENT
   4" PERMEABLE ASPHALT TREATED BASE
   6" SOIL CEMENT TREATED BASE
   14" BORROW TYPE A
5. EXISTING SR 1 SHOULDER ADJACENT SECTION
   2" HOT MIX, HOT LAID BITUMINOUS CONCRETE PAVEMENT, TYPE C
   10"+/- BITUMINOUS CONCRETE BASE COURSE
   4" PERMEABLE ASPHALT TREATED BASE
   6" SOIL CEMENT TREATED BASE
   14" BORROW TYPE A
6. FOR BENCHING OF EXISTING SLOPES WHERE PROPOSED WIDENING OCCURS, SEE BENCHING DETAIL, SHEET DT-01.
7. SEE GRADES AND GEOMETRICS SHEETS FOR SUPERELEVATED CROSS SLOPE TRANSITIONS.
8. SEE SHEET TS-20 FOR UNDERDRAIN DETAIL.
   SEE CONSTRUCTION PLANS FOR PLACEMENT LOCATIONS
9. THE MAXIMUM LIFTS FOR THE INDIVIDUAL PAVING MATERIALS ARE AS FOLLOWS:
   SUPERPAVE, TYPE C WMA - 2"
   SUPERPAVE, TYPE B WMA - 3", PLACE IN EQUAL LIFTS WHEN THICKNESS EXCEED 3"
   SUPERPAVE BIT. CONC. BASE COURSE - 4"
   GRADED AGGREGATE BASE COURSE - 8"
10. SEE SHEET DT-01 FOR RUMBLE STRIP LOCATIONS.
11. SEE SHEET DT-01 FOR SAFETY EDGE DETAILS. THESE DETAILS SHALL BEAPPLIED AT ALL INSTANCES WHERE THE EDGE OF PROPOSED PAVEMENT MEETS THE 6" TOPSOIL.

TS-07

UNOFFICIAL WEBSITE COPY

DELAWARE DEPARTMENT OF TRANSPORTATION	ADDENDUMS / REVISIONS	NOT TO SCALE	US 301 & SR 1 INTERCHANGE	CONTRACT T200911302	BRIDGE NO.	TYPICAL SECTIONS
				COUNTY NEW CASTLE	DESIGNED BY: J.A.D.	SHEET NO. 18
					CHECKED BY: B.R.T.	TOTAL SHTS. 491

p:\31653-000\contract tb\cadd\TS007U301_1B.dgn 2/6/2013 3:53:38 PM

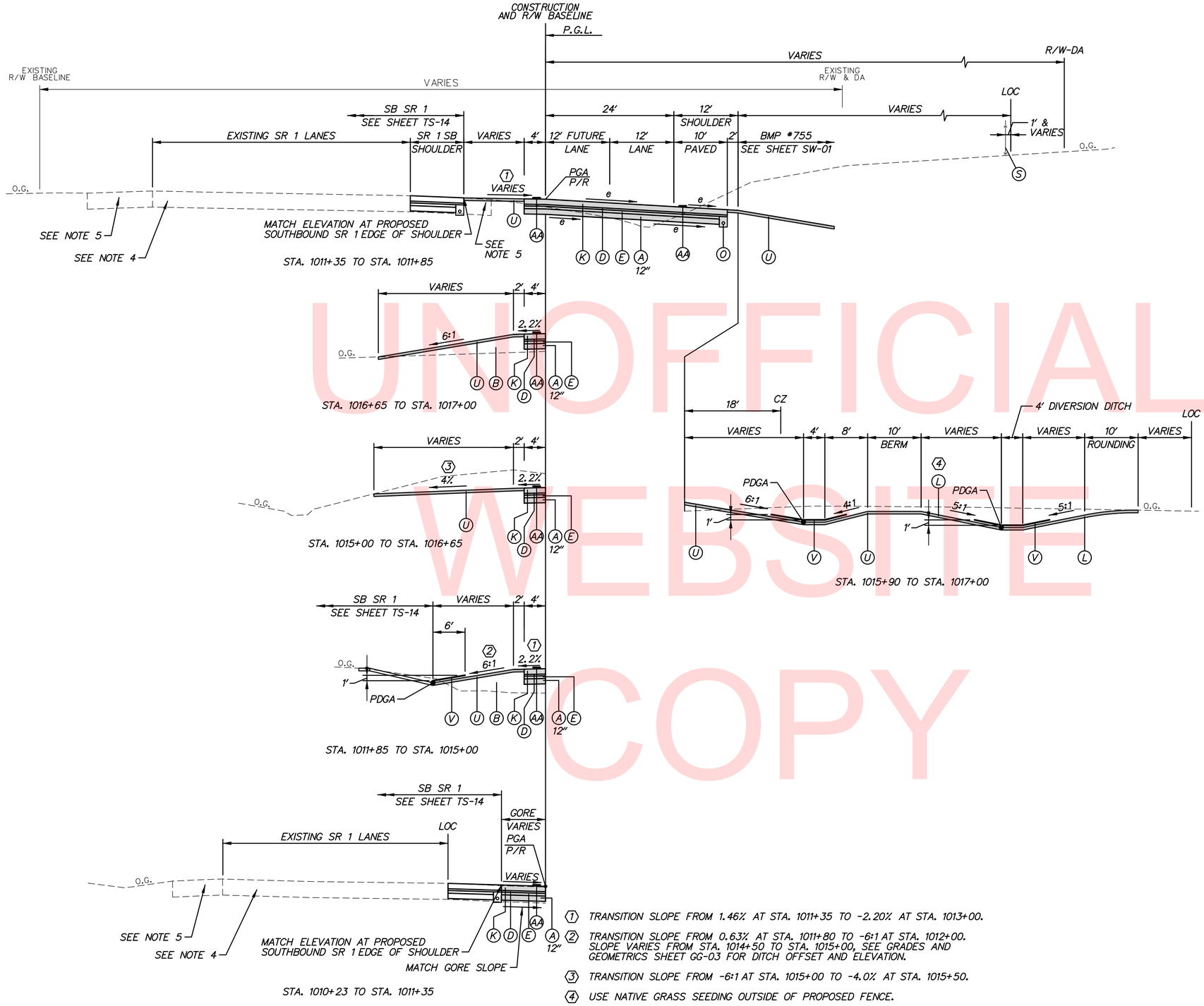

1. TRANSITION SLOPE FROM 1.46% AT STA. 1011+35 TO -2.20% AT STA. 1013+00.
2. TRANSITION SLOPE FROM 0.63% AT STA. 1011+80 TO -6:1 AT STA. 1012+00. SLOPE VARIES FROM STA. 1014+50 TO STA. 1015+00, SEE GRADES AND GEOMETRICS SHEET GG-03 FOR DITCH OFFSET AND ELEVATION.
3. TRANSITION SLOPE FROM -6:1 AT STA. 1015+00 TO -4.0% AT STA. 1015+50.
4. USE NATIVE GRASS SEEDING OUTSIDE OF PROPOSED FENCE.

RAMP Q (US 301 SB) SUPERELEVATED SECTION
STATION 1010+23 TO STATION 1017+00 (e_{max}=5.8%)

LEGEND

- (A) ITEM 209001 - BORROW, TYPE A
- (B) ITEM 209006 - BORROW, TYPE F
- (C) ITEM 302007 - GRADED AGGREGATE BASE COURSE, TYPE B
- (D) ITEM 304501 - PERMEABLE TREATED BASE, 4"
- (E) ITEM 304502 - SOIL CEMENT BASE COURSE, 6"
- (G) ITEM 401813 - WMA, SUPERPAVE, TYPE B, 160 GYRATIONS, PG 70-22 (2 LIFTS)
- (H) ITEM 401801 - WMA, SUPERPAVE, TYPE C, 160 GYRATIONS, PG 64-22 (CARBONATE STONE)
- (I) ITEM 401819 - WMA, SUPERPAVE, BITUMINOUS CONCRETE BASE COURSE, 160 GYRATIONS, PG 64-22
- (J) ITEM 401824 - WMA, SUPERPAVE, TYPE C, 160 GYRATIONS, PG 64-22 WEDGE
- (K) ITEM 501006 - PORTLAND CEMENT CONCRETE PAVEMENT, 12"
- (L) ITEM 732002 - TOPSOILING, 6" DEPTH
  ITEM 734551 - NATIVE GRASS SEEDING: NO MOW MIX
- (N) ITEM 701016 - PCC CURB AND GUTTER TYPE 1-4
- (O) ITEM 715001 - PERFORATED PIPE UNDERDRAINS, 6"
- (P) ITEM 720050 - GALVANIZED STEEL BEAM GUARDRAIL, TYPE 1-31
- (Q) ITEM 720052 - GALVANIZED STEEL BEAM GUARDRAIL, TYPE 3-31
- (R) ITEM 720626 - CONCRETE SINGLE FACE BARRIER, TYPE 1
  ITEM 720626 - CONCRETE SINGLE FACE BARRIER, TYPE 1 (MODIFIED)
  ITEM 720627 - CONCRETE SINGLE FACE BARRIER, TYPE 2
- (S) ITEM 727000 - RIGHT OF WAY FENCE
- (T) ITEM 705002 - P.C.C. SIDEWALK, 6"
- (U) ITEM 732002 - TOPSOILING, 6" DEPTH
  ITEM 734013 - PERMANENT GRASS SEEDING, DRY GROUND
- (V) ITEM 732002 - TOPSOILING, 6" DEPTH
  ITEM 734013 - PERMANENT GRASS SEEDING, DRY GROUND
  ITEM 735535 - SOIL RETENTION BLANKET MULCH, TYPE 5
- (W) ITEM 760003 - PAVEMENT MILLING, HOT-MIX, VARIABLE DEPTH
- (X) ITEM 760507 - PROFILE MILLING, HOT-MIX
- (Y) ITEM 712005 - RIPRAP, R-4
- (Z) ITEM 720629 - BIFURCATED CONCRETE MEDIAN BARRIER (MODIFIED)
- (AA) ITEM 760017 - RUMBLE STRIPS, CONCRETE
- (BB) ITEM 760012 - RUMBLE STRIPS, BIKE FRIENDLY, HOT-MIX
- (CC) ITEM 760015 - RUMBLE STRIPS, CONCRETE SHALLOW DEPTH
- (DD) ITEM 760016 - RUMBLE STRIPS, HOT-MIX

TYPICAL SECTION NOTES:

1. THE MAXIMUM ALGEBRAIC DIFFERENCE ON THE HIGH SIDE BETWEEN THE TRAVELED WAY SLOPE AND THE ACCEL/DECEL LANES SHALL NOT EXCEED 4%. THE MAXIMUM ALGEBRAIC DIFFERENCE BETWEEN THE TRAVELED WAY SLOPE AND THE SHOULDER SLOPE SHALL NOT EXCEED 8%.
2. SHOULDER SLOPE ON THE LOW SIDE SHALL BE THE SAME AS THE TRAVELED WAY SLOPE WHEN SUPERELEVATION IS GREATER THAN 4%.
3. P.G.L. - PROFILE GRADE LINE
   PGA - POINT OF GRADE APPLICATION
   PDGA - POINT OF DITCH GRADE APPLICATION
   P/R - POINT OF ROTATION
   O.G. - ORIGINAL GROUND
4. EXISTING SR 1 ROADWAY PAVEMENT SECTION
   12" PCC PAVEMENT
   4" PERMEABLE ASPHALT TREATED BASE
   6" SOIL CEMENT TREATED BASE
   14" BORROW TYPE A
5. EXISTING SR 1 SHOULDER ADJACENT SECTION
   2" HOT MIX, HOT LAID BITUMINOUS CONCRETE PAVEMENT, TYPE C
   10"+/- BITUMINOUS CONCRETE BASE COURSE
   4" PERMEABLE ASPHALT TREATED BASE
   6" SOIL CEMENT TREATED BASE
   14" BORROW TYPE A
6. FOR BENCHING OF EXISTING SLOPES WHERE PROPOSED WIDENING OCCURS, SEE BENCHING DETAIL, SHEET DT-01.
7. SEE GRADES AND GEOMETRICS SHEETS FOR SUPERELEVATED CROSS SLOPE TRANSITIONS.
8. SEE SHEET TS-20 FOR UNDERDRAIN DETAIL.
   SEE CONSTRUCTION PLANS FOR PLACEMENT LOCATIONS
9. THE MAXIMUM LIFTS FOR THE INDIVIDUAL PAVING MATERIALS ARE AS FOLLOWS:
   SUPERPAVE, TYPE C WMA - 2"
   SUPERPAVE, TYPE B WMA - 3", PLACE IN EQUAL LIFTS WHEN THICKNESS EXCEED 3"
   SUPERPAVE BIT. CONC. BASE COURSE - 4"
   GRADED AGGREGATE BASE COURSE - 8"
10. SEE SHEET DT-01 FOR RUMBLE STRIP LOCATIONS.
11. SEE SHEET DT-01 FOR SAFETY EDGE DETAILS. THESE DETAILS SHALL BEAPPLIED AT ALL INSTANCES WHERE THE EDGE OF PROPOSED PAVEMENT MEETS THE 6" TOPSOIL.

TS-08

UNOFFICIAL WEBSITE COPY

DELAWARE DEPARTMENT OF TRANSPORTATION	ADDENDUMS / REVISIONS	NOT TO SCALE	US 301 & SR 1 INTERCHANGE	CONTRACT T200911302	BRIDGE NO.	TYPICAL SECTIONS	SHEET NO. 19
				COUNTY NEW CASTLE	DESIGNED BY: J.A.D.		TOTAL SHTS. 491
					CHECKED BY: B.R.T.		

n:\3653-000\contract tb\cadd\TS008U301_1B.dgn 2/6/2013 3:53:44 PM

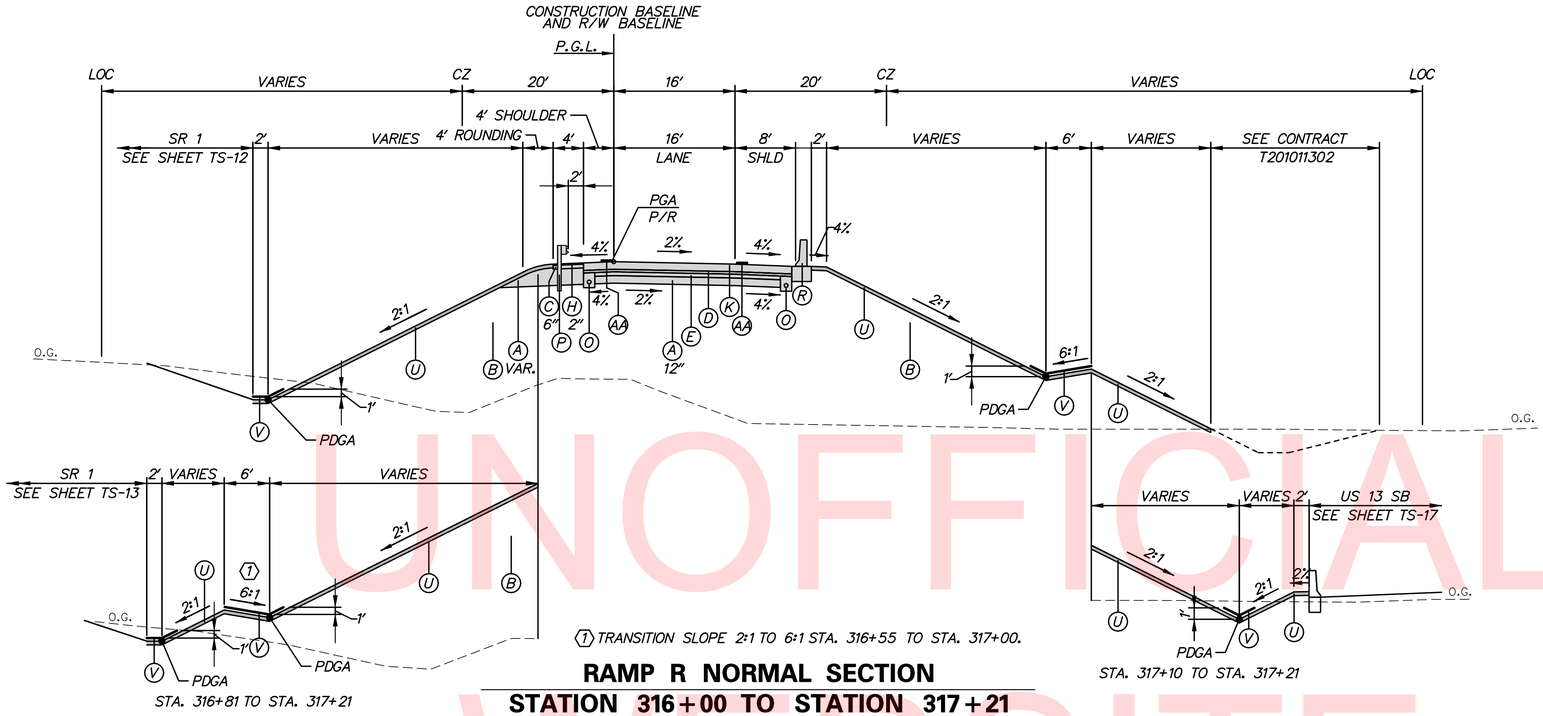

TRANSITION SLOPE 2:1 TO 6:1 STA. 316+55 TO STA. 317+00.

RAMP R NORMAL SECTION

STATION 316+00 TO STATION 317+21

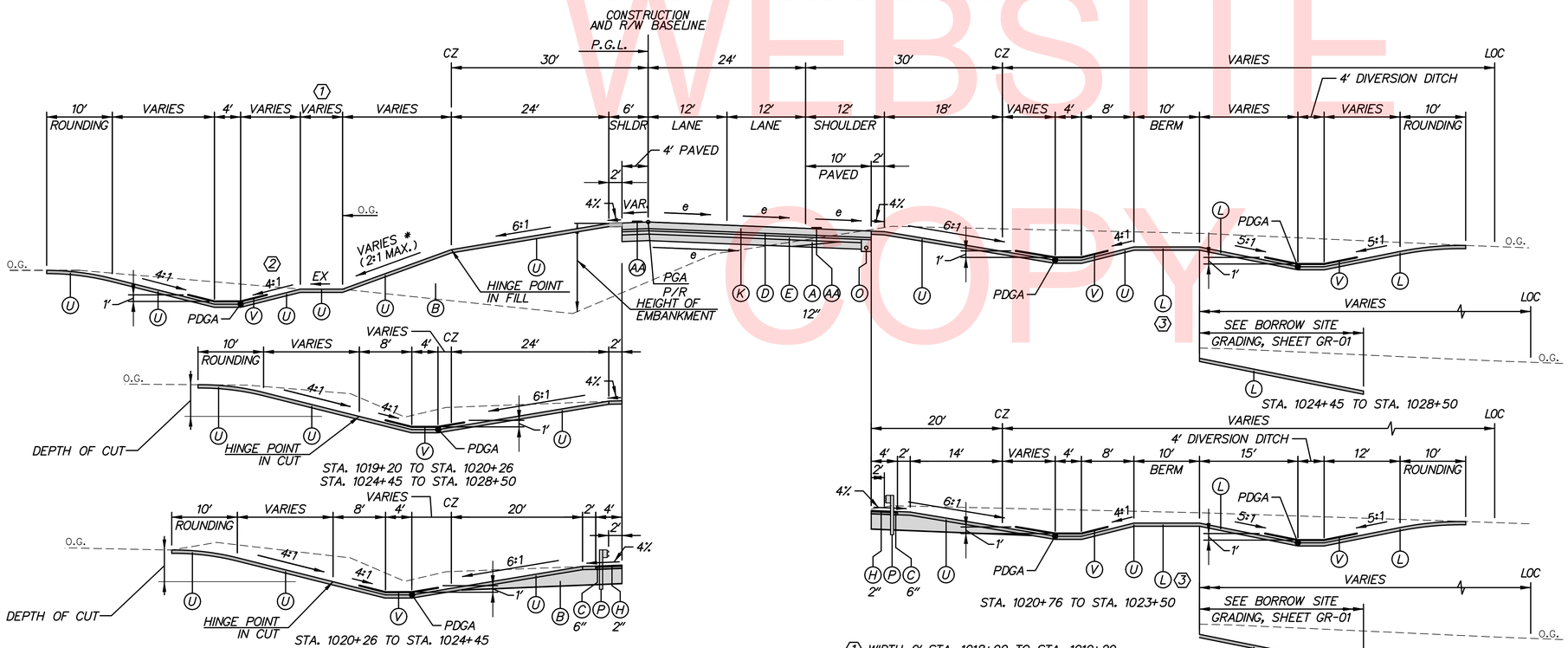

RAMP Q (US 301 SB) SUPERELEVATED SECTION

STATION 1017+00 TO STATION 1028+50 (e_{max} = 5.8%)

1. WIDTH 0' STA. 1018+00 TO STA. 1019+20.
2. TRANSITION SLOPE 4:1 TO 6:1 STA. 1019+00 TO STA. 1019+20.
3. USE NATIVE GRASS SEEDING OUTSIDE OF PROPOSED FENCE.

LEGEND

- (A) ITEM 209001 - BORROW, TYPE A
- (B) ITEM 209006 - BORROW, TYPE F
- (C) ITEM 302007 - GRADED AGGREGATE BASE COURSE, TYPE B
- (D) ITEM 304501 - PERMEABLE TREATED BASE, 4"
- (E) ITEM 304502 - SOIL CEMENT BASE COURSE, 6"
- (G) ITEM 401813 - WMA, SUPERPAVE, TYPE B, 160 GYRATIONS, PG 70-22 (2 LIFTS)
- (H) ITEM 401801 - WMA, SUPERPAVE, TYPE C, 160 GYRATIONS, PG 64-22 (CARBONATE STONE)
- (I) ITEM 401819 - WMA, SUPERPAVE, BITUMINOUS CONCRETE BASE COURSE, 160 GYRATIONS, PG 64-22
- (J) ITEM 401824 - WMA, SUPERPAVE, TYPE C, 160 GYRATIONS, PG 64-22 WEDGE
- (K) ITEM 501006 - PORTLAND CEMENT CONCRETE PAVEMENT, 12"
- (L) ITEM 732002 - TOPSOILING, 6" DEPTH
  ITEM 734551 - NATIVE GRASS SEEDING: NO MOW MIX
- (N) ITEM 701016 - PCC CURB AND GUTTER TYPE 1-4
- (O) ITEM 715001 - PERFORATED PIPE UNDERDRAINS, 6"
- (P) ITEM 720050 - GALVANIZED STEEL BEAM GUARDRAIL, TYPE 1-31
- (Q) ITEM 720052 - GALVANIZED STEEL BEAM GUARDRAIL, TYPE 3-31
- (R) ITEM 720626 - CONCRETE SINGLE FACE BARRIER, TYPE 1
  ITEM 720626 - CONCRETE SINGLE FACE BARRIER, TYPE 1 (MODIFIED)
  ITEM 720627 - CONCRETE SINGLE FACE BARRIER, TYPE 2
- (S) ITEM 727000 - RIGHT OF WAY FENCE
- (T) ITEM 705002 - P.C.C. SIDEWALK, 6"
- (U) ITEM 732002 - TOPSOILING, 6" DEPTH
  ITEM 734013 - PERMANENT GRASS SEEDING, DRY GROUND
- (V) ITEM 732002 - TOPSOILING, 6" DEPTH
  ITEM 734013 - PERMANENT GRASS SEEDING, DRY GROUND
  ITEM 735535 - SOIL RETENTION BLANKET MULCH, TYPE 5
- (W) ITEM 760003 - PAVEMENT MILLING, HOT-MIX, VARIABLE DEPTH
- (X) ITEM 760507 - PROFILE MILLING, HOT-MIX
- (Y) ITEM 712005 - RIPRAP, R-4
- (Z) ITEM 720629 - BIFURCATED CONCRETE MEDIAN BARRIER (MODIFIED)
- (AA) ITEM 760017 - RUMBLE STRIPS, CONCRETE
- (BB) ITEM 760012 - RUMBLE STRIPS, BIKE FRIENDLY, HOT-MIX
- (CC) ITEM 760015 - RUMBLE STRIPS, CONCRETE SHALLOW DEPTH
- (DD) ITEM 760016 - RUMBLE STRIPS, HOT-MIX

TYPICAL SECTION NOTES:

1. THE MAXIMUM ALGEBRAIC DIFFERENCE ON THE HIGH SIDE BETWEEN THE TRAVELED WAY SLOPE AND THE ACCEL/DECEL LANES SHALL NOT EXCEED 4%. THE MAXIMUM ALGEBRAIC DIFFERENCE BETWEEN THE TRAVELED WAY SLOPE AND THE SHOULDER SLOPE SHALL NOT EXCEED 8%.
2. SHOULDER SLOPE ON THE LOW SIDE SHALL BE THE SAME AS THE TRAVELED WAY SLOPE WHEN SUPERELEVATION IS GREATER THAN 4%.
3. P.G.L. - PROFILE GRADE LINE
   PGA - POINT OF GRADE APPLICATION
   PDGA - POINT OF DITCH GRADE APPLICATION
   P/R - POINT OF ROTATION
   O.G. - ORIGINAL GROUND
4. EXISTING SR 1 ROADWAY PAVEMENT SECTION
   12" PCC PAVEMENT
   4" PERMEABLE ASPHALT TREATED BASE
   6" SOIL CEMENT TREATED BASE
   14" BORROW TYPE A
5. EXISTING SR 1 SHOULDER ADJACENT SECTION
   2" HOT MIX, HOT LAID BITUMINOUS CONCRETE PAVEMENT, TYPE C
   10"+/- BITUMINOUS CONCRETE BASE COURSE
   4" PERMEABLE ASPHALT TREATED BASE
   6" SOIL CEMENT TREATED BASE
   14" BORROW TYPE A
6. FOR BENCHING OF EXISTING SLOPES WHERE PROPOSED WIDENING OCCURS, SEE BENCHING DETAIL, SHEET DT-01.
7. SEE GRADES AND GEOMETRICS SHEETS FOR SUPERELEVATED CROSS SLOPE TRANSITIONS.
8. SEE SHEET TS-20 FOR UNDERDRAIN DETAIL.
   SEE CONSTRUCTION PLANS FOR PLACEMENT LOCATIONS
9. THE MAXIMUM LIFTS FOR THE INDIVIDUAL PAVING MATERIALS ARE AS FOLLOWS:
   SUPERPAVE, TYPE C WMA - 2"
   SUPERPAVE, TYPE B WMA - 3", PLACE IN EQUAL LIFTS WHEN THICKNESS EXCEED 3"
   SUPERPAVE BIT. CONC. BASE COURSE - 4"
   GRADED AGGREGATE BASE COURSE - 8"
10. SEE SHEET DT-01 FOR RUMBLE STRIP LOCATIONS.
11. SEE SHEET DT-01 FOR SAFETY EDGE DETAILS. THESE DETAILS SHALL BEAPPLIED AT ALL INSTANCES WHERE THE EDGE OF PROPOSED PAVEMENT MEETS THE 6" TOPSOIL.

TS-09

UNOFFICIAL WEBSITE COPY

DELAWARE DEPARTMENT OF TRANSPORTATION

ADDENDUMS / REVISIONS

NOT TO SCALE

US 301 & SR 1 INTERCHANGE

CONTRACT	BRIDGE NO.	TYPICAL SECTIONS	SHEET NO.
T200911302	DESIGNED BY: J.A.D.		20
COUNTY			TOTAL SHTS.
NEW CASTLE	CHECKED BY: B.R.T.		491

n:\3653-000\contract tb\cadd\TS0090301_TB.dgn
2/6/2013 3:52:59 PM

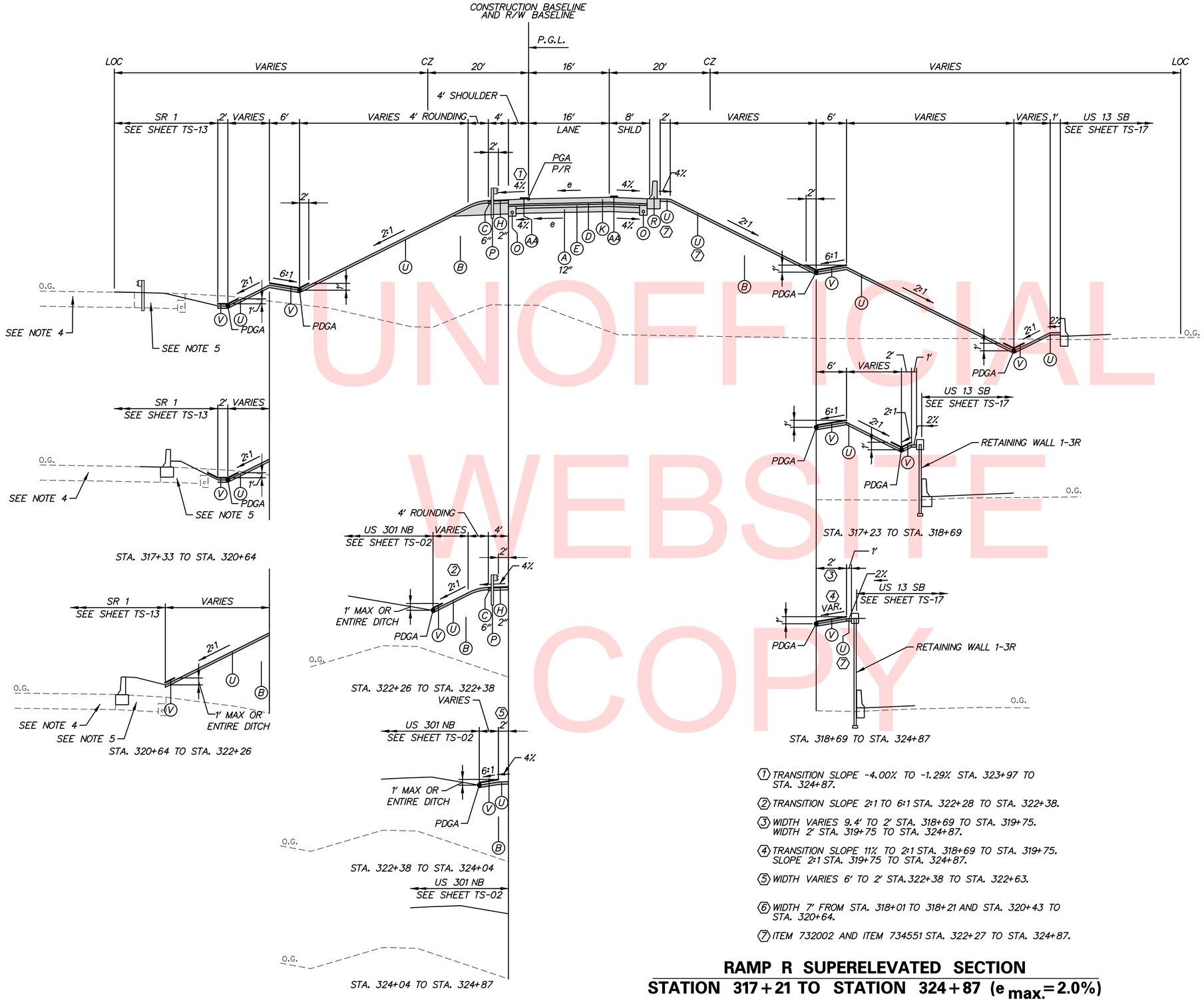

UNOFFICIAL WEBSITE COPY

LEGEND

- (A) ITEM 209001 - BORROW, TYPE A
- (B) ITEM 209006 - BORROW, TYPE F
- (C) ITEM 302007 - GRADED AGGREGATE BASE COURSE, TYPE B
- (D) ITEM 304501 - PERMEABLE TREATED BASE, 4"
- (E) ITEM 304502 - SOIL CEMENT BASE COURSE, 6"
- (G) ITEM 401813 - WMA, SUPERPAVE, TYPE B, 160 GYRATIONS, PG 70-22 (2 LIFTS)
- (H) ITEM 401801 - WMA, SUPERPAVE, TYPE C, 160 GYRATIONS, PG 64-22 (CARBONATE STONE)
- (I) ITEM 401819 - WMA, SUPERPAVE, BITUMINOUS CONCRETE BASE COURSE, 160 GYRATIONS, PG 64-22
- (J) ITEM 401824 - WMA, SUPERPAVE, TYPE C, 160 GYRATIONS, PG 64-22 WEDGE
- (K) ITEM 501006 - PORTLAND CEMENT CONCRETE PAVEMENT, 12"
- (L) ITEM 732002 - TOPSOILING, 6" DEPTH
  ITEM 734551 - NATIVE GRASS SEEDING: NO MOW MIX
- (N) ITEM 701016 - PCC CURB AND GUTTER TYPE 1-4
- (O) ITEM 715001 - PERFORATED PIPE UNDERDRAINS, 6"
- (P) ITEM 720050 - GALVANIZED STEEL BEAM GUARDRAIL, TYPE 1-31
- (Q) ITEM 720052 - GALVANIZED STEEL BEAM GUARDRAIL, TYPE 3-31
- (R) ITEM 720626 - CONCRETE SINGLE FACE BARRIER, TYPE 1
  ITEM 720626 - CONCRETE SINGLE FACE BARRIER, TYPE 1 (MODIFIED)
  ITEM 720627 - CONCRETE SINGLE FACE BARRIER, TYPE 2
- (S) ITEM 727000 - RIGHT OF WAY FENCE
- (T) ITEM 705002 - P.C.C. SIDEWALK, 6"
- (U) ITEM 732002 - TOPSOILING, 6" DEPTH
  ITEM 734013 - PERMANENT GRASS SEEDING, DRY GROUND
- (V) ITEM 732002 - TOPSOILING, 6" DEPTH
  ITEM 734013 - PERMANENT GRASS SEEDING, DRY GROUND
  ITEM 735535 - SOIL RETENTION BLANKET MULCH, TYPE 5
- (W) ITEM 760003 - PAVEMENT MILLING, HOT-MIX, VARIABLE DEPTH
- (X) ITEM 760507 - PROFILE MILLING, HOT-MIX
- (Y) ITEM 712005 - RIPRAP, R-4
- (Z) ITEM 720629 - BIFURCATED CONCRETE MEDIAN BARRIER (MODIFIED)
- (AA) ITEM 760017 - RUMBLE STRIPS, CONCRETE
- (BB) ITEM 760012 - RUMBLE STRIPS, BIKE FRIENDLY, HOT-MIX
- (CC) ITEM 760015 - RUMBLE STRIPS, CONCRETE SHALLOW DEPTH
- (DD) ITEM 760016 - RUMBLE STRIPS, HOT-MIX

TYPICAL SECTION NOTES:

1. THE MAXIMUM ALGEBRAIC DIFFERENCE ON THE HIGH SIDE BETWEEN THE TRAVELED WAY SLOPE AND THE ACCEL/DECEL LANES SHALL NOT EXCEED 4%. THE MAXIMUM ALGEBRAIC DIFFERENCE BETWEEN THE TRAVELED WAY SLOPE AND THE SHOULDER SLOPE SHALL NOT EXCEED 8%.
2. SHOULDER SLOPE ON THE LOW SIDE SHALL BE THE SAME AS THE TRAVELED WAY SLOPE WHEN SUPERELEVATION IS GREATER THAN 4%.
3. P.G.L. - PROFILE GRADE LINE
   PGA - POINT OF GRADE APPLICATION
   PDGA - POINT OF DITCH GRADE APPLICATION
   P/R - POINT OF ROTATION
   O.G. - ORIGINAL GROUND
4. EXISTING SR 1 ROADWAY PAVEMENT SECTION
   12" PCC PAVEMENT
   4" PERMEABLE ASPHALT TREATED BASE
   6" SOIL CEMENT TREATED BASE
   14" BORROW TYPE A
5. EXISTING SR 1 SHOULDER ADJACENT SECTION
   2" HOT MIX, HOT LAID BITUMINOUS CONCRETE PAVEMENT, TYPE C
   10"+/- BITUMINOUS CONCRETE BASE COURSE
   4" PERMEABLE ASPHALT TREATED BASE
   6" SOIL CEMENT TREATED BASE
   14" BORROW TYPE A
6. FOR BENCHING OF EXISTING SLOPES WHERE PROPOSED WIDENING OCCURS, SEE BENCHING DETAIL, SHEET DT-01.
7. SEE GRADES AND GEOMETRICS SHEETS FOR SUPERELEVATED CROSS SLOPE TRANSITIONS.
8. SEE SHEET TS-20 FOR UNDERDRAIN DETAIL.
   SEE CONSTRUCTION PLANS FOR PLACEMENT LOCATIONS
9. THE MAXIMUM LIFTS FOR THE INDIVIDUAL PAVING MATERIALS ARE AS FOLLOWS:
   SUPERPAVE, TYPE C WMA - 2"
   SUPERPAVE, TYPE B WMA - 3", PLACE IN EQUAL LIFTS WHEN THICKNESS EXCEED 3"
   SUPERPAVE BIT. CONC. BASE COURSE - 4"
   GRADED AGGREGATE BASE COURSE - 8"
10. SEE SHEET DT-01 FOR RUMBLE STRIP LOCATIONS.
11. SEE SHEET DT-01 FOR SAFETY EDGE DETAILS. THESE DETAILS SHALL BEAPPLIED AT ALL INSTANCES WHERE THE EDGE OF PROPOSED PAVEMENT MEETS THE 6" TOPSOIL.

(1) TRANSITION SLOPE -4.00% TO -1.29% STA. 323+97 TO STA. 324+87.

(2) TRANSITION SLOPE 2:1 TO 6:1 STA. 322+28 TO STA. 322+38.

(3) WIDTH VARIES 9.4' TO 2' STA. 318+69 TO STA. 319+75.
WIDTH 2' STA. 319+75 TO STA. 324+87.

(4) TRANSITION SLOPE 11% TO 2:1 STA. 318+69 TO STA. 319+75.
SLOPE 2:1 STA. 319+75 TO STA. 324+87.

(5) WIDTH VARIES 6' TO 2' STA. 322+38 TO STA. 322+63.

(6) WIDTH 7' FROM STA. 318+01 TO 318+21 AND STA. 320+43 TO STA. 320+64.

(7) ITEM 732002 AND ITEM 734551 STA. 322+27 TO STA. 324+87.

RAMP R SUPERELEVATED SECTION

STATION 317+21 TO STATION 324+87 ($e_{max.}$=2.0%)

TS-10

DELAWARE DEPARTMENT OF TRANSPORTATION	ADDENDUMS / REVISIONS	NOT TO SCALE	US 301 & SR 1 INTERCHANGE	CONTRACT T200911302 / COUNTY NEW CASTLE	BRIDGE NO. / DESIGNED BY: S.E.S. / CHECKED BY: B.R.T.
TYPICAL SECTIONS	SHEET NO. 21 / TOTAL SHTS. 491				

p:\31653-000\contract 1b\cadd\TS010U301_1B.dgn
2/6/2013 3:54:12 PM

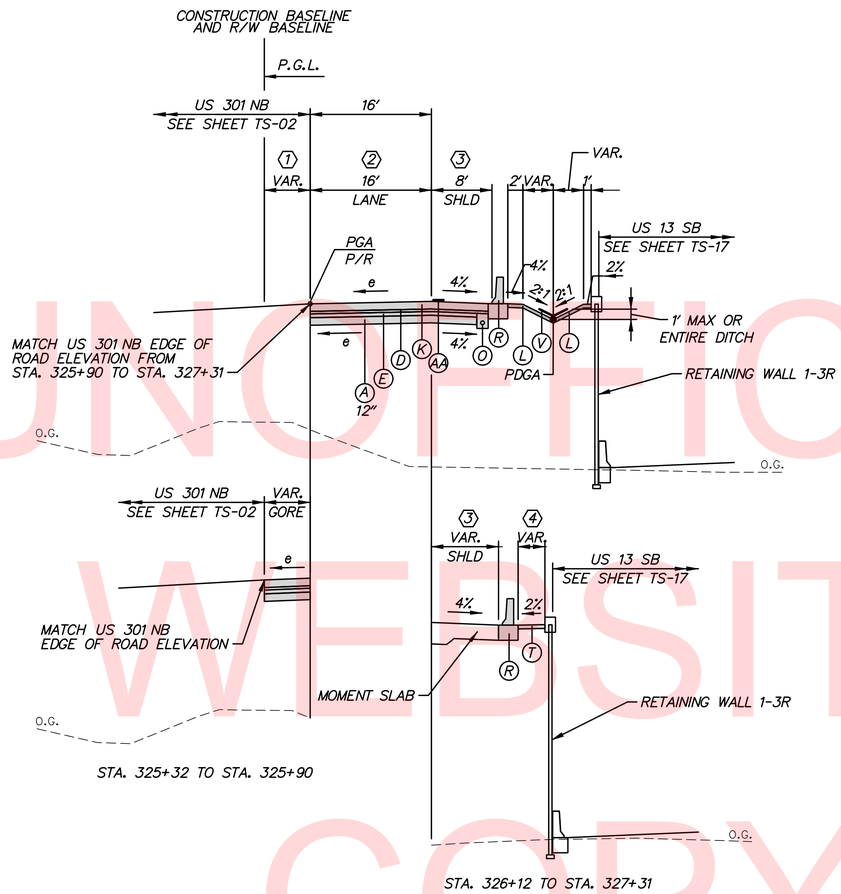

RAMP R SUPERELEVATED SECTION

STATION 324+87 TO STATION 327+31 ($e_{max.}$=2.0%)

(1) WIDTH 0' STA. 324+87 TO STA. 325+90.
WIDTH VARIES 0' TO 4' STA. 325+90 TO STA. 327+31.

(2) WIDTH VARIES 16' TO 12' STA. 325+90 TO STA. 327+31.

(3) WIDTH VARIES 8' TO 12' STA. 325+99 TO STA. 327+28.
WIDTH 12' STA. 325+28 TO STA. 327+31.

(4) WIDTH VARIES 4.90' TO 0' STA. 326+12 TO STA. 327+31.

LEGEND

- (A) ITEM 209001 - BORROW, TYPE A
- (B) ITEM 209006 - BORROW, TYPE F
- (C) ITEM 302007 - GRADED AGGREGATE BASE COURSE, TYPE B
- (D) ITEM 304501 - PERMEABLE TREATED BASE, 4"
- (E) ITEM 304502 - SOIL CEMENT BASE COURSE, 6"
- (G) ITEM 401813 - WMA, SUPERPAVE, TYPE B, 160 GYRATIONS, PG 70-22 (2 LIFTS)
- (H) ITEM 401801 - WMA, SUPERPAVE, TYPE C, 160 GYRATIONS, PG 64-22 (CARBONATE STONE)
- (I) ITEM 401819 - WMA, SUPERPAVE, BITUMINOUS CONCRETE BASE COURSE, 160 GYRATIONS, PG 64-22
- (J) ITEM 401824 - WMA, SUPERPAVE, TYPE C, 160 GYRATIONS, PG 64-22 WEDGE
- (K) ITEM 501006 - PORTLAND CEMENT CONCRETE PAVEMENT, 12"
- (L) ITEM 732002 - TOPSOILING, 6" DEPTH
  ITEM 734551 - NATIVE GRASS SEEDING: NO MOW MIX
- (N) ITEM 701016 - PCC CURB AND GUTTER TYPE 1-4
- (O) ITEM 715001 - PERFORATED PIPE UNDERDRAINS, 6"
- (P) ITEM 720050 - GALVANIZED STEEL BEAM GUARDRAIL, TYPE 1-31
- (Q) ITEM 720052 - GALVANIZED STEEL BEAM GUARDRAIL, TYPE 3-31
- (R) ITEM 720626 - CONCRETE SINGLE FACE BARRIER, TYPE 1
  ITEM 720626 - CONCRETE SINGLE FACE BARRIER, TYPE 1 (MODIFIED)
  ITEM 720627 - CONCRETE SINGLE FACE BARRIER, TYPE 2
- (S) ITEM 727000 - RIGHT OF WAY FENCE
- (T) ITEM 705002 - P.C.C. SIDEWALK, 6"
- (U) ITEM 732002 - TOPSOILING, 6" DEPTH
  ITEM 734013 - PERMANENT GRASS SEEDING, DRY GROUND
- (V) ITEM 732002 - TOPSOILING, 6" DEPTH
  ITEM 734013 - PERMANENT GRASS SEEDING, DRY GROUND
  ITEM 735535 - SOIL RETENTION BLANKET MULCH, TYPE 5
- (W) ITEM 760003 - PAVEMENT MILLING, HOT-MIX, VARIABLE DEPTH
- (X) ITEM 760507 - PROFILE MILLING, HOT-MIX
- (Y) ITEM 712005 - RIPRAP, R-4
- (Z) ITEM 720629 - BIFURCATED CONCRETE MEDIAN BARRIER (MODIFIED)
- (AA) ITEM 760017 - RUMBLE STRIPS, CONCRETE
- (BB) ITEM 760012 - RUMBLE STRIPS, BIKE FRIENDLY, HOT-MIX
- (CC) ITEM 760015 - RUMBLE STRIPS, CONCRETE SHALLOW DEPTH
- (DD) ITEM 760016 - RUMBLE STRIPS, HOT-MIX

TYPICAL SECTION NOTES:

1. THE MAXIMUM ALGEBRAIC DIFFERENCE ON THE HIGH SIDE BETWEEN THE TRAVELED WAY SLOPE AND THE ACCEL/DECEL LANES SHALL NOT EXCEED 4%. THE MAXIMUM ALGEBRAIC DIFFERENCE BETWEEN THE TRAVELED WAY SLOPE AND THE SHOULDER SLOPE SHALL NOT EXCEED 8%.
2. SHOULDER SLOPE ON THE LOW SIDE SHALL BE THE SAME AS THE TRAVELED WAY SLOPE WHEN SUPERELEVATION IS GREATER THAN 4%.
3. P.G.L. - PROFILE GRADE LINE
   PGA - POINT OF GRADE APPLICATION
   PDGA - POINT OF DITCH GRADE APPLICATION
   P/R - POINT OF ROTATION
   O.G. - ORIGINAL GROUND
4. EXISTING SR 1 ROADWAY PAVEMENT SECTION
   12" PCC PAVEMENT
   4" PERMEABLE ASPHALT TREATED BASE
   6" SOIL CEMENT TREATED BASE
   14" BORROW TYPE A
5. EXISTING SR 1 SHOULDER ADJACENT SECTION
   2" HOT MIX, HOT LAID BITUMINOUS CONCRETE PAVEMENT, TYPE C
   10"+/- BITUMINOUS CONCRETE BASE COURSE
   4" PERMEABLE ASPHALT TREATED BASE
   6" SOIL CEMENT TREATED BASE
   14" BORROW TYPE A
6. FOR BENCHING OF EXISTING SLOPES WHERE PROPOSED WIDENING OCCURS, SEE BENCHING DETAIL, SHEET DT-01.
7. SEE GRADES AND GEOMETRICS SHEETS FOR SUPERELEVATED CROSS SLOPE TRANSITIONS.
8. SEE SHEET TS-20 FOR UNDERDRAIN DETAIL.
   SEE CONSTRUCTION PLANS FOR PLACEMENT LOCATIONS
9. THE MAXIMUM LIFTS FOR THE INDIVIDUAL PAVING MATERIALS ARE AS FOLLOWS:
   SUPERPAVE, TYPE C WMA - 2"
   SUPERPAVE, TYPE B WMA - 3", PLACE IN EQUAL LIFTS WHEN THICKNESS EXCEED 3"
   SUPERPAVE BIT. CONC. BASE COURSE - 4"
   GRADED AGGREGATE BASE COURSE - 8"
10. SEE SHEET DT-01 FOR RUMBLE STRIP LOCATIONS.
11. SEE SHEET DT-01 FOR SAFETY EDGE DETAILS. THESE DETAILS SHALL BEAPPLIED AT ALL INSTANCES WHERE THE EDGE OF PROPOSED PAVEMENT MEETS THE 6" TOPSOIL.

TS-11

UNOFFICIAL WEBSITE COPY

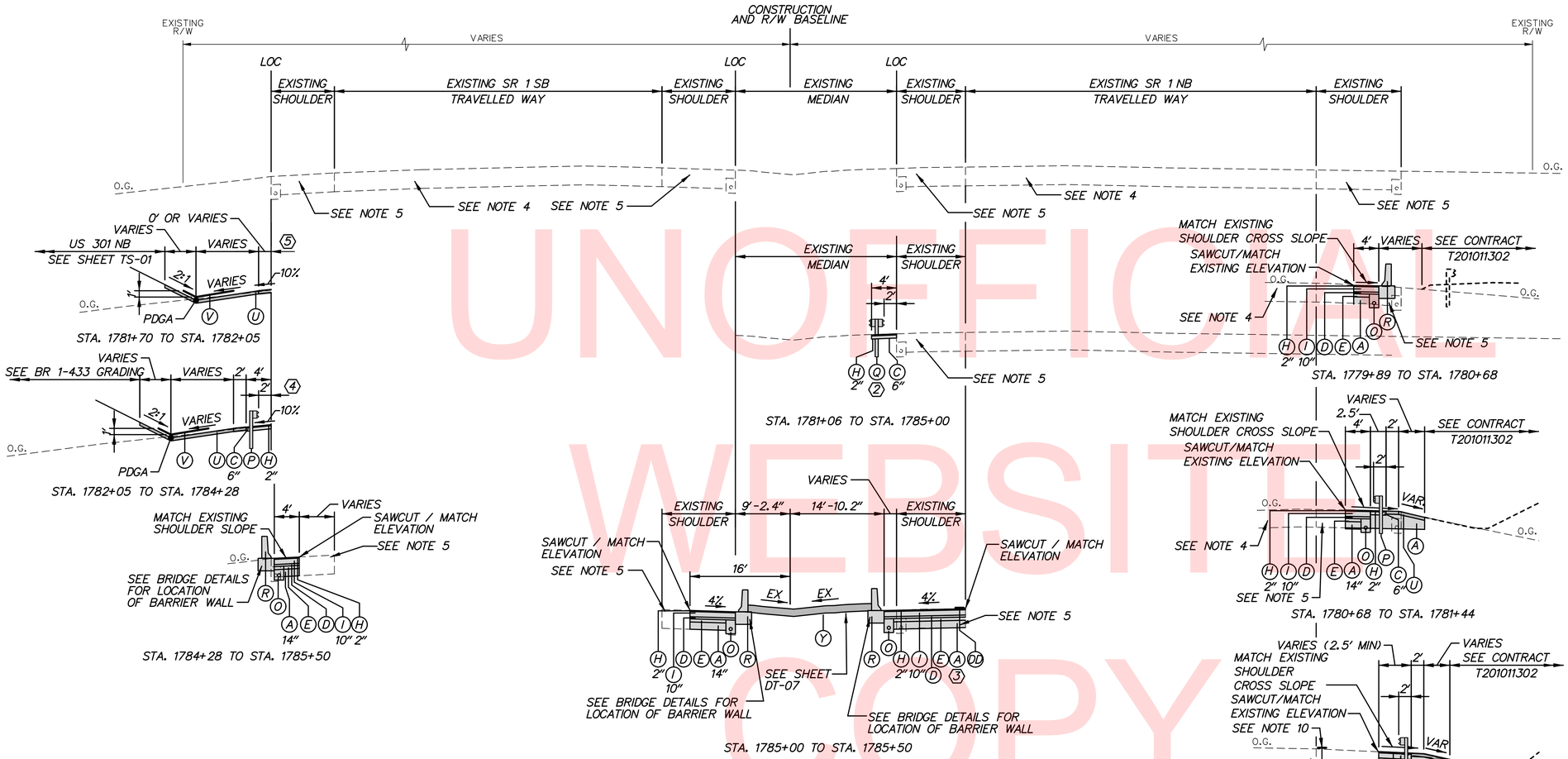

SR 1 NORMAL SECTION

STATION 1779+89 TO STATION 1785+50

(1) DEPTH 10" STA. 1782+03 TO STA. 1783+94.

(2) GALVANIZED STEEL BEAM GUARDRAIL, TYPE 1 STA. 1784+50 TO STA. 1785+00.

(3) BOTTOM SLOPE OF TYPE A SHALL MATCH ADJACENT ROADWAY SLOPE.

(4) WIDTH VARIES 2' TO 0' STA. 1783+86 TO STA. 1784+17. WIDTH 0' STA. 1784+17 TO STA. 1784+28.

(5) WIDTH 0' STA. 1781+70 TO STA. 1781+95. VARY WIDTH 0' TO 6' STA. 1781+95 TO STA. 1782+05.

LEGEND

- (A) ITEM 209001 - BORROW, TYPE A
- (B) ITEM 209006 - BORROW, TYPE F
- (C) ITEM 302007 - GRADED AGGREGATE BASE COURSE, TYPE B
- (D) ITEM 304501 - PERMEABLE TREATED BASE, 4"
- (E) ITEM 304502 - SOIL CEMENT BASE COURSE, 6"
- (G) ITEM 401813 - WMA, SUPERPAVE, TYPE B, 160 GYRATIONS, PG 70-22 (2 LIFTS)
- (H) ITEM 401801 - WMA, SUPERPAVE, TYPE C, 160 GYRATIONS, PG 64-22 (CARBONATE STONE)
- (I) ITEM 401819 - WMA, SUPERPAVE, BITUMINOUS CONCRETE BASE COURSE, 160 GYRATIONS, PG 64-22
- (J) ITEM 401824 - WMA, SUPERPAVE, TYPE C, 160 GYRATIONS, PG 64-22 WEDGE
- (K) ITEM 501006 - PORTLAND CEMENT CONCRETE PAVEMENT, 12"
- (L) ITEM 732002 - TOPSOILING, 6" DEPTH
  ITEM 734551 - NATIVE GRASS SEEDING: NO MOW MIX
- (N) ITEM 701016 - PCC CURB AND GUTTER TYPE 1-4
- (O) ITEM 715001 - PERFORATED PIPE UNDERDRAINS, 6"
- (P) ITEM 720050 - GALVANIZED STEEL BEAM GUARDRAIL, TYPE 1-31
- (Q) ITEM 720052 - GALVANIZED STEEL BEAM GUARDRAIL, TYPE 3-31
- (R) ITEM 720626 - CONCRETE SINGLE FACE BARRIER, TYPE 1
  ITEM 720626 - CONCRETE SINGLE FACE BARRIER, TYPE 1 (MODIFIED)
  ITEM 720627 - CONCRETE SINGLE FACE BARRIER, TYPE 2
- (S) ITEM 727000 - RIGHT OF WAY FENCE
- (T) ITEM 705002 - P.C.C. SIDEWALK, 6"
- (U) ITEM 732002 - TOPSOILING, 6" DEPTH
  ITEM 734013 - PERMANENT GRASS SEEDING, DRY GROUND
- (V) ITEM 732002 - TOPSOILING, 6" DEPTH
  ITEM 734013 - PERMANENT GRASS SEEDING, DRY GROUND
  ITEM 735535 - SOIL RETENTION BLANKET MULCH, TYPE 5
- (W) ITEM 760003 - PAVEMENT MILLING, HOT-MIX, VARIABLE DEPTH
- (X) ITEM 760507 - PROFILE MILLING, HOT-MIX
- (Y) ITEM 712005 - RIPRAP, R-4
- (Z) ITEM 720629 - BIFURCATED CONCRETE MEDIAN BARRIER (MODIFIED)
- (AA) ITEM 760017 - RUMBLE STRIPS, CONCRETE
- (BB) ITEM 760012 - RUMBLE STRIPS, BIKE FRIENDLY, HOT-MIX
- (CC) ITEM 760015 - RUMBLE STRIPS, CONCRETE SHALLOW DEPTH
- (DD) ITEM 760016 - RUMBLE STRIPS, HOT-MIX

TYPICAL SECTION NOTES:

1. THE MAXIMUM ALGEBRAIC DIFFERENCE ON THE HIGH SIDE BETWEEN THE TRAVELED WAY SLOPE AND THE ACCEL/DECEL LANES SHALL NOT EXCEED 4%. THE MAXIMUM ALGEBRAIC DIFFERENCE BETWEEN THE TRAVELED WAY SLOPE AND THE SHOULDER SLOPE SHALL NOT EXCEED 8%.
2. SHOULDER SLOPE ON THE LOW SIDE SHALL BE THE SAME AS THE TRAVELED WAY SLOPE WHEN SUPERELEVATION IS GREATER THAN 4%.
3. P.G.L. - PROFILE GRADE LINE
   PGA - POINT OF GRADE APPLICATION
   PDGA - POINT OF DITCH GRADE APPLICATION
   P/R - POINT OF ROTATION
   O.G. - ORIGINAL GROUND
4. EXISTING SR 1 ROADWAY PAVEMENT SECTION
   12" PCC PAVEMENT
   4" PERMEABLE ASPHALT TREATED BASE
   6" SOIL CEMENT TREATED BASE
   14" BORROW TYPE A
5. EXISTING SR 1 SHOULDER ADJACENT SECTION
   2" HOT MIX, HOT LAID BITUMINOUS CONCRETE PAVEMENT, TYPE C
   10"+/- BITUMINOUS CONCRETE BASE COURSE
   4" PERMEABLE ASPHALT TREATED BASE
   6" SOIL CEMENT TREATED BASE
   14" BORROW TYPE A
6. FOR BENCHING OF EXISTING SLOPES WHERE PROPOSED WIDENING OCCURS, SEE BENCHING DETAIL, SHEET DT-01.
7. SEE GRADES AND GEOMETRICS SHEETS FOR SUPERELEVATED CROSS SLOPE TRANSITIONS.
8. SEE SHEET TS-20 FOR UNDERDRAIN DETAIL. SEE CONSTRUCTION PLANS FOR PLACEMENT LOCATIONS
9. THE MAXIMUM LIFTS FOR THE INDIVIDUAL PAVING MATERIALS ARE AS FOLLOWS:
   SUPERPAVE, TYPE C WMA - 2"
   SUPERPAVE, TYPE B WMA - 3", PLACE IN EQUAL LIFTS WHEN THICKNESS EXCEED 3"
   SUPERPAVE BIT. CONC. BASE COURSE - 4"
   GRADED AGGREGATE BASE COURSE - 8"
10. SEE SHEET DT-01 FOR RUMBLE STRIP LOCATIONS.
11. SEE SHEET DT-01 FOR SAFETY EDGE DETAILS. THESE DETAILS SHALL BEAPPLIED AT ALL INSTANCES WHERE THE EDGE OF PROPOSED PAVEMENT MEETS THE 6" TOPSOIL.

UNOFFICIAL WEBSITE COPY

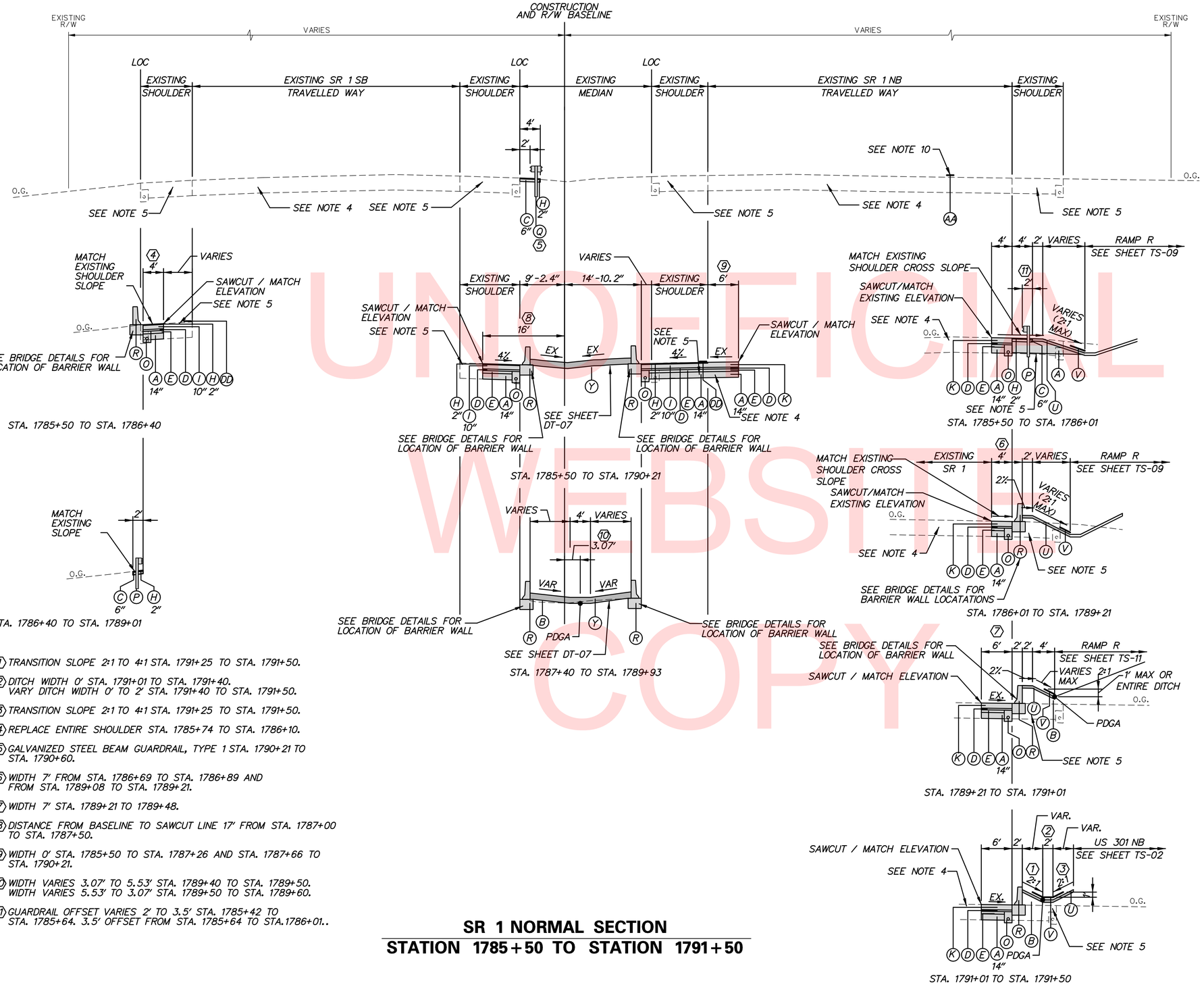

(1) TRANSITION SLOPE 2:1 TO 4:1 STA. 1791+25 TO STA. 1791+50.

(2) DITCH WIDTH 0' STA. 1791+01 TO STA. 1791+40.
VARY DITCH WIDTH 0' TO 2' STA. 1791+40 TO STA. 1791+50.

(3) TRANSITION SLOPE 2:1 TO 4:1 STA. 1791+25 TO STA. 1791+50.

(4) REPLACE ENTIRE SHOULDER STA. 1785+74 TO STA. 1786+10.

(5) GALVANIZED STEEL BEAM GUARDRAIL, TYPE 1 STA. 1790+21 TO STA. 1790+60.

(6) WIDTH 7' FROM STA. 1786+69 TO STA. 1786+89 AND FROM STA. 1789+08 TO STA. 1789+21.

(7) WIDTH 7' STA. 1789+21 TO 1789+48.

(8) DISTANCE FROM BASELINE TO SAWCUT LINE 17' FROM STA. 1787+00 TO STA. 1787+50.

(9) WIDTH 0' STA. 1785+50 TO STA. 1787+26 AND STA. 1787+66 TO STA. 1790+21.

(10) WIDTH VARIES 3.07' TO 5.53' STA. 1789+40 TO STA. 1789+50.
WIDTH VARIES 5.53' TO 3.07' STA. 1789+50 TO STA. 1789+60.

(11) GUARDRAIL OFFSET VARIES 2' TO 3.5' STA. 1785+42 TO STA. 1785+64. 3.5' OFFSET FROM STA. 1785+64 TO STA.1786+01..

SR 1 NORMAL SECTION
STATION 1785+50 TO STATION 1791+50

LEGEND

- (A) ITEM 209001 - BORROW, TYPE A
- (B) ITEM 209006 - BORROW, TYPE F
- (C) ITEM 302007 - GRADED AGGREGATE BASE COURSE, TYPE B
- (D) ITEM 304501 - PERMEABLE TREATED BASE, 4"
- (E) ITEM 304502 - SOIL CEMENT BASE COURSE, 6"
- (G) ITEM 401813 - WMA, SUPERPAVE, TYPE B, 160 GYRATIONS, PG 70-22 (2 LIFTS)
- (H) ITEM 401801 - WMA, SUPERPAVE, TYPE C, 160 GYRATIONS, PG 64-22 (CARBONATE STONE)
- (I) ITEM 401819 - WMA, SUPERPAVE, BITUMINOUS CONCRETE BASE COURSE, 160 GYRATIONS, PG 64-22
- (J) ITEM 401824 - WMA, SUPERPAVE, TYPE C, 160 GYRATIONS, PG 64-22 WEDGE
- (K) ITEM 501006 - PORTLAND CEMENT CONCRETE PAVEMENT, 12"
- (L) ITEM 732002 - TOPSOILING, 6" DEPTH
  ITEM 734551 - NATIVE GRASS SEEDING: NO MOW MIX
- (N) ITEM 701016 - PCC CURB AND GUTTER TYPE 1-4
- (O) ITEM 715001 - PERFORATED PIPE UNDERDRAINS, 6"
- (P) ITEM 720050 - GALVANIZED STEEL BEAM GUARDRAIL, TYPE 1-31
- (Q) ITEM 720052 - GALVANIZED STEEL BEAM GUARDRAIL, TYPE 3-31
- (R) ITEM 720626 - CONCRETE SINGLE FACE BARRIER, TYPE 1
  ITEM 720626 - CONCRETE SINGLE FACE BARRIER, TYPE 1 (MODIFIED)
  ITEM 720627 - CONCRETE SINGLE FACE BARRIER, TYPE 2
- (S) ITEM 727000 - RIGHT OF WAY FENCE
- (T) ITEM 705002 - P.C.C. SIDEWALK, 6"
- (U) ITEM 732002 - TOPSOILING, 6" DEPTH
  ITEM 734013 - PERMANENT GRASS SEEDING, DRY GROUND
- (V) ITEM 732002 - TOPSOILING, 6" DEPTH
  ITEM 734013 - PERMANENT GRASS SEEDING, DRY GROUND
  ITEM 735535 - SOIL RETENTION BLANKET MULCH, TYPE 5
- (W) ITEM 760003 - PAVEMENT MILLING, HOT-MIX, VARIABLE DEPTH
- (X) ITEM 760507 - PROFILE MILLING, HOT-MIX
- (Y) ITEM 712005 - RIPRAP, R-4
- (Z) ITEM 720629 - BIFURCATED CONCRETE MEDIAN BARRIER (MODIFIED)
- (AA) ITEM 760017 - RUMBLE STRIPS, CONCRETE
- (BB) ITEM 760012 - RUMBLE STRIPS, BIKE FRIENDLY, HOT-MIX
- (CC) ITEM 760015 - RUMBLE STRIPS, CONCRETE SHALLOW DEPTH
- (DD) ITEM 760016 - RUMBLE STRIPS, HOT-MIX

TYPICAL SECTION NOTES:

1. THE MAXIMUM ALGEBRAIC DIFFERENCE ON THE HIGH SIDE BETWEEN THE TRAVELED WAY SLOPE AND THE ACCEL/DECEL LANES SHALL NOT EXCEED 4%. THE MAXIMUM ALGEBRAIC DIFFERENCE BETWEEN THE TRAVELED WAY SLOPE AND THE SHOULDER SLOPE SHALL NOT EXCEED 8%.
2. SHOULDER SLOPE ON THE LOW SIDE SHALL BE THE SAME AS THE TRAVELED WAY SLOPE WHEN SUPERELEVATION IS GREATER THAN 4%.
3. P.G.L. - PROFILE GRADE LINE
   PGA - POINT OF GRADE APPLICATION
   PDGA - POINT OF DITCH GRADE APPLICATION
   P/R - POINT OF ROTATION
   O.G. - ORIGINAL GROUND
4. EXISTING SR 1 ROADWAY PAVEMENT SECTION
   12" PCC PAVEMENT
   4" PERMEABLE ASPHALT TREATED BASE
   6" SOIL CEMENT TREATED BASE
   14" BORROW TYPE A
5. EXISTING SR 1 SHOULDER ADJACENT SECTION
   2" HOT MIX, HOT LAID BITUMINOUS CONCRETE PAVEMENT, TYPE C
   10"+/- BITUMINOUS CONCRETE BASE COURSE
   4" PERMEABLE ASPHALT TREATED BASE
   6" SOIL CEMENT TREATED BASE
   14" BORROW TYPE A
6. FOR BENCHING OF EXISTING SLOPES WHERE PROPOSED WIDENING OCCURS, SEE BENCHING DETAIL, SHEET DT-01.
7. SEE GRADES AND GEOMETRICS SHEETS FOR SUPERELEVATED CROSS SLOPE TRANSITIONS.
8. SEE SHEET TS-20 FOR UNDERDRAIN DETAIL.
   SEE CONSTRUCTION PLANS FOR PLACEMENT LOCATIONS
9. THE MAXIMUM LIFTS FOR THE INDIVIDUAL PAVING MATERIALS ARE AS FOLLOWS:
   SUPERPAVE, TYPE C WMA - 2"
   SUPERPAVE, TYPE B WMA - 3", PLACE IN EQUAL LIFTS WHEN THICKNESS EXCEED 3"
   SUPERPAVE BIT. CONC. BASE COURSE - 4"
   GRADED AGGREGATE BASE COURSE - 8"
10. SEE SHEET DT-01 FOR RUMBLE STRIP LOCATIONS.
11. SEE SHEET DT-01 FOR SAFETY EDGE DETAILS. THESE DETAILS SHALL BEAPPLIED AT ALL INSTANCES WHERE THE EDGE OF PROPOSED PAVEMENT MEETS THE 6" TOPSOIL.

UNOFFICIAL WEBSITE COPY

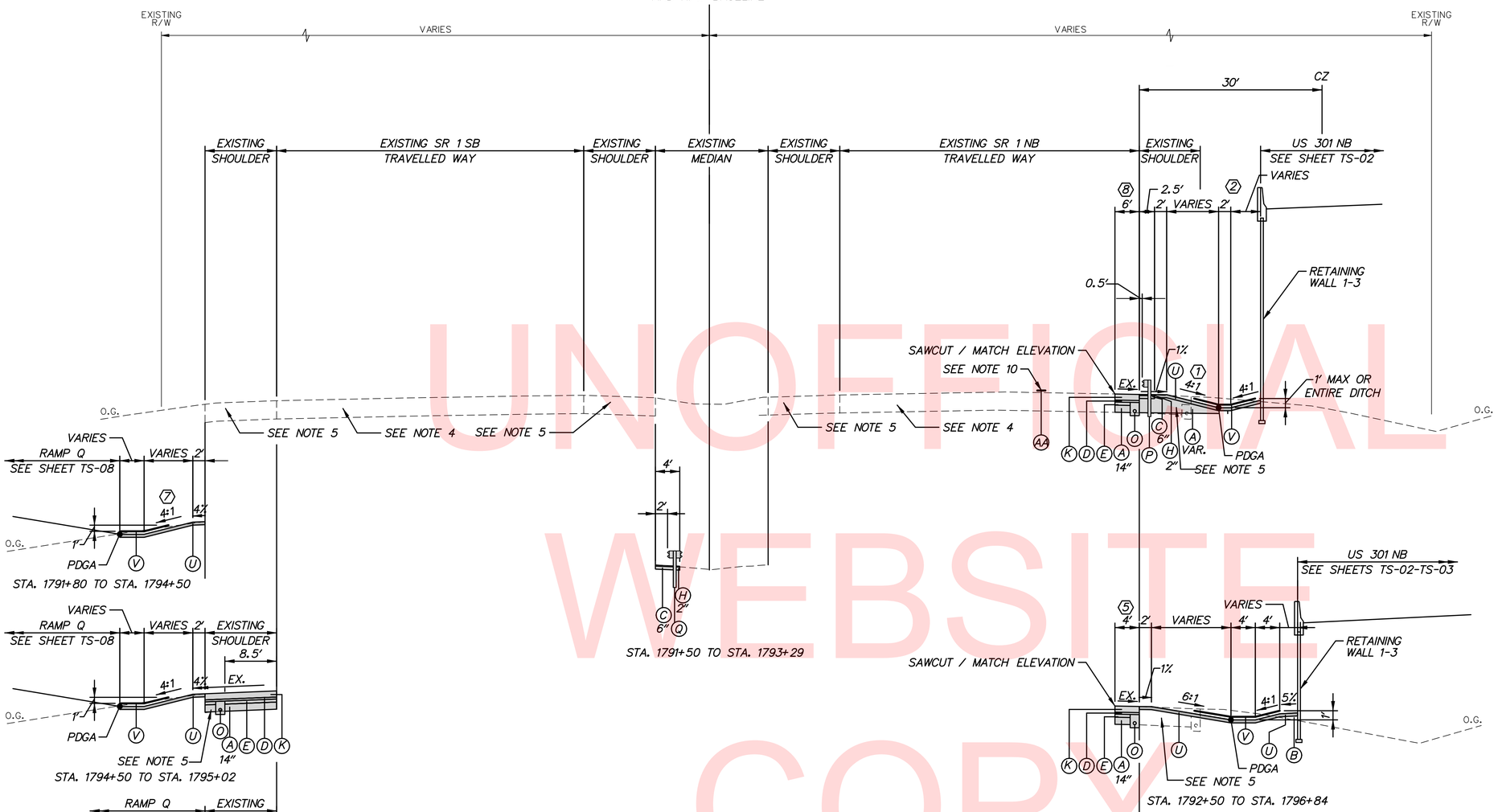

LEGEND

- (A) ITEM 209001 - BORROW, TYPE A
- (B) ITEM 209006 - BORROW, TYPE F
- (C) ITEM 302007 - GRADED AGGREGATE BASE COURSE, TYPE B
- (D) ITEM 304501 - PERMEABLE TREATED BASE, 4"
- (E) ITEM 304502 - SOIL CEMENT BASE COURSE, 6"
- (G) ITEM 401813 - WMA, SUPERPAVE, TYPE B, 160 GYRATIONS, PG 70-22 (2 LIFTS)
- (H) ITEM 401801 - WMA, SUPERPAVE, TYPE C, 160 GYRATIONS, PG 64-22 (CARBONATE STONE)
- (I) ITEM 401819 - WMA, SUPERPAVE, BITUMINOUS CONCRETE BASE COURSE, 160 GYRATIONS, PG 64-22
- (J) ITEM 401824 - WMA, SUPERPAVE, TYPE C, 160 GYRATIONS, PG 64-22 WEDGE
- (K) ITEM 501006 - PORTLAND CEMENT CONCRETE PAVEMENT, 12"
- (L) ITEM 732002 - TOPSOILING, 6" DEPTH
  ITEM 734551 - NATIVE GRASS SEEDING: NO MOW MIX
- (N) ITEM 701016 - PCC CURB AND GUTTER TYPE 1-4
- (O) ITEM 715001 - PERFORATED PIPE UNDERDRAINS, 6"
- (P) ITEM 720050 - GALVANIZED STEEL BEAM GUARDRAIL, TYPE 1-31
- (Q) ITEM 720052 - GALVANIZED STEEL BEAM GUARDRAIL, TYPE 3-31
- (R) ITEM 720626 - CONCRETE SINGLE FACE BARRIER, TYPE 1
  ITEM 720626 - CONCRETE SINGLE FACE BARRIER, TYPE 1 (MODIFIED)
  ITEM 720627 - CONCRETE SINGLE FACE BARRIER, TYPE 2
- (S) ITEM 727000 - RIGHT OF WAY FENCE
- (T) ITEM 705002 - P.C.C. SIDEWALK, 6"
- (U) ITEM 732002 - TOPSOILING, 6" DEPTH
  ITEM 734013 - PERMANENT GRASS SEEDING, DRY GROUND
- (V) ITEM 732002 - TOPSOILING, 6" DEPTH
  ITEM 734013 - PERMANENT GRASS SEEDING, DRY GROUND
  ITEM 735535 - SOIL RETENTION BLANKET MULCH, TYPE 5
- (W) ITEM 760003 - PAVEMENT MILLING, HOT-MIX, VARIABLE DEPTH
- (X) ITEM 760507 - PROFILE MILLING, HOT-MIX
- (Y) ITEM 712005 - RIPRAP, R-4
- (Z) ITEM 720629 - BIFURCATED CONCRETE MEDIAN BARRIER (MODIFIED)
- (AA) ITEM 760017 - RUMBLE STRIPS, CONCRETE
- (BB) ITEM 760012 - RUMBLE STRIPS, BIKE FRIENDLY, HOT-MIX
- (CC) ITEM 760015 - RUMBLE STRIPS, CONCRETE SHALLOW DEPTH
- (DD) ITEM 760016 - RUMBLE STRIPS, HOT-MIX

TYPICAL SECTION NOTES:

1. THE MAXIMUM ALGEBRAIC DIFFERENCE ON THE HIGH SIDE BETWEEN THE TRAVELED WAY SLOPE AND THE ACCEL/DECEL LANES SHALL NOT EXCEED 4%. THE MAXIMUM ALGEBRAIC DIFFERENCE BETWEEN THE TRAVELED WAY SLOPE AND THE SHOULDER SLOPE SHALL NOT EXCEED 8%.
2. SHOULDER SLOPE ON THE LOW SIDE SHALL BE THE SAME AS THE TRAVELED WAY SLOPE WHEN SUPERELEVATION IS GREATER THAN 4%.
3. P.G.L. - PROFILE GRADE LINE
   PGA - POINT OF GRADE APPLICATION
   PDGA - POINT OF DITCH GRADE APPLICATION
   P/R - POINT OF ROTATION
   O.G. - ORIGINAL GROUND
4. EXISTING SR 1 ROADWAY PAVEMENT SECTION
   12" PCC PAVEMENT
   4" PERMEABLE ASPHALT TREATED BASE
   6" SOIL CEMENT TREATED BASE
   14" BORROW TYPE A
5. EXISTING SR 1 SHOULDER ADJACENT SECTION
   2" HOT MIX, HOT LAID BITUMINOUS CONCRETE PAVEMENT, TYPE C
   10"+/- BITUMINOUS CONCRETE BASE COURSE
   4" PERMEABLE ASPHALT TREATED BASE
   6" SOIL CEMENT TREATED BASE
   14" BORROW TYPE A
6. FOR BENCHING OF EXISTING SLOPES WHERE PROPOSED WIDENING OCCURS, SEE BENCHING DETAIL, SHEET DT-01.
7. SEE GRADES AND GEOMETRICS SHEETS FOR SUPERELEVATED CROSS SLOPE TRANSITIONS.
8. SEE SHEET TS-20 FOR UNDERDRAIN DETAIL.
   SEE CONSTRUCTION PLANS FOR PLACEMENT LOCATIONS
9. THE MAXIMUM LIFTS FOR THE INDIVIDUAL PAVING MATERIALS ARE AS FOLLOWS:
   SUPERPAVE, TYPE C WMA - 2"
   SUPERPAVE, TYPE B WMA - 3", PLACE IN EQUAL LIFTS WHEN THICKNESS EXCEED 3"
   SUPERPAVE BIT. CONC. BASE COURSE - 4"
   GRADED AGGREGATE BASE COURSE - 8"
10. SEE SHEET DT-01 FOR RUMBLE STRIP LOCATIONS.
11. SEE SHEET DT-01 FOR SAFETY EDGE DETAILS. THESE DETAILS SHALL BEAPPLIED AT ALL INSTANCES WHERE THE EDGE OF PROPOSED PAVEMENT MEETS THE 6" TOPSOIL.

(1) TRANSITION SLOPE 4:1 TO 6:1 STA. 1792+00 TO STA. 1792+50

(2) VARY DITCH WIDTH 2' TO 4' STA. 1792+15 TO STA. 1792+40

(3) TRANSITION SLOPE 6:1 TO 4:1 STA. 1798+30 TO STA. 1798+80
HOLD 4:1 SLOPE STA. 1798+80 TO STA. 1799+95

(4) LIMITS OF GUARDRAIL: STA. 1797+38 TO STA. 1799+95.
MAINTENANCE PAVING WIDTH VARIES 0' TO 5.40' STA. 1796+84 TO STA. 1797+38.
MAINTENANCE PAVING WIDTH VARIES 5.40' TO 4' STA. 1797+38 TO STA. 1797+89.

(5) WIDTH 0' STA. 1794+35 TO STA. 1796+55.

(6) TRANSITION SLOPE EX. TO 3.0% STA. 1795+02 TO STA. 1795+44.

(7) TRANSITION SLOPE EX. TO 4:1 STA. 1791+00 TO STA. 1792+00.

(8) WIDTH 4' STA. 1791+86 TO STA. 1792+50.

SR 1 NORMAL SECTION
STATION 1791+50 TO STATION 1799+95

UNOFFICIAL WEBSITE COPY

DELAWARE DEPARTMENT OF TRANSPORTATION	ADDENDUMS / REVISIONS	NOT TO SCALE	US 301 & SR 1 INTERCHANGE	CONTRACT T200911302 / COUNTY NEW CASTLE	BRIDGE NO. / DESIGNED BY: S.E.S. / CHECKED BY: B.R.T.
TYPICAL SECTIONS	TS-14	SHEET NO. 25	TOTAL SHTS. 491		

n:\33653-000\contract_tb\cadd\TS014U301_1B.dgn 2/6/2015 3:54:43 PM

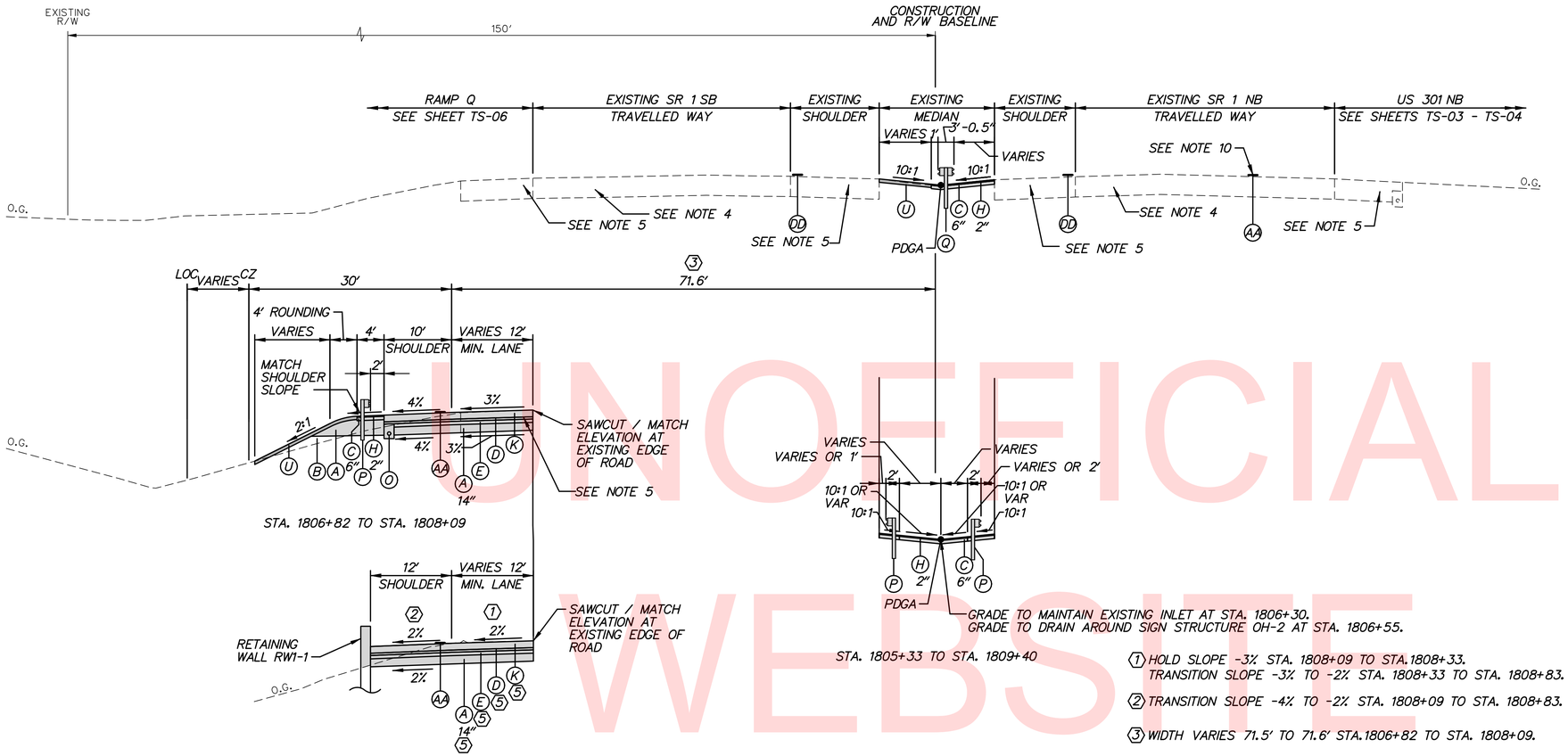

SR 1 NORMAL SECTION

STATION 1804+81 TO STATION 1809+43

STA. 1809+43 LT TO STA. 1811+02 LT - SEE BRIDGE PLANS

1. HOLD SLOPE -3% STA. 1808+09 TO STA. 1808+33.
   TRANSITION SLOPE -3% TO -2% STA. 1808+33 TO STA. 1808+83.
2. TRANSITION SLOPE -4% TO -2% STA. 1808+09 TO STA. 1808+83.
3. WIDTH VARIES 71.5' TO 71.6' STA. 1806+82 TO STA. 1808+09.
4. WIDTH 0' STA. 1800+70 TO STA. 1804+81.
5. SEE TRANSITION SLAB SHEET DT-19 FOR PAVEMENT DEPTHS, STA. 1808+83 TO STA. 1809+43.

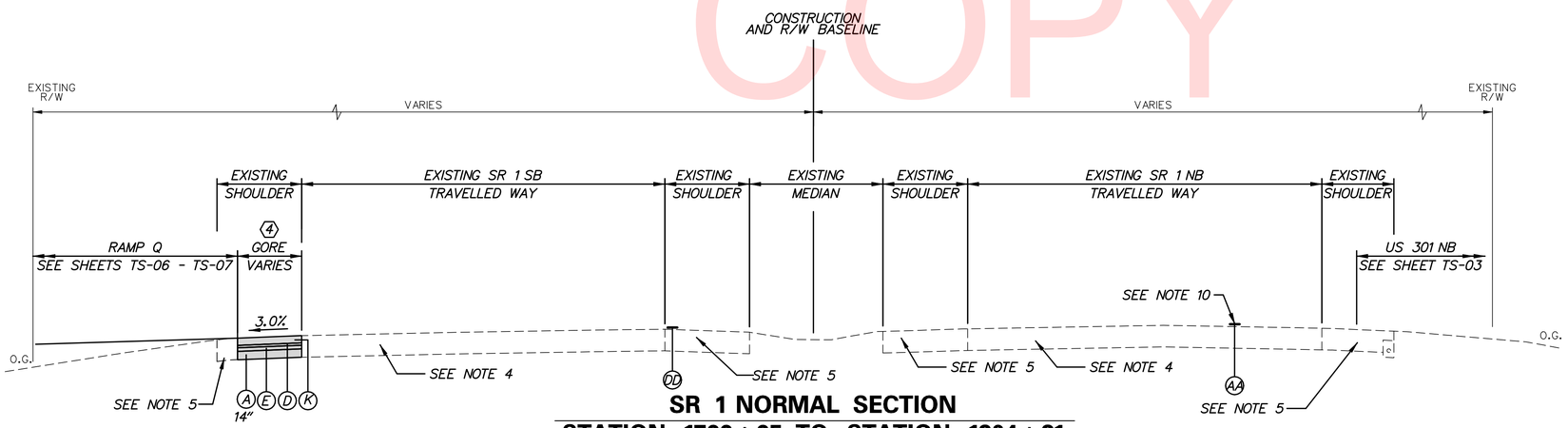

SR 1 NORMAL SECTION

STATION 1799+95 TO STATION 1804+81

LEGEND

- (A) ITEM 209001 - BORROW, TYPE A
- (B) ITEM 209006 - BORROW, TYPE F
- (C) ITEM 302007 - GRADED AGGREGATE BASE COURSE, TYPE B
- (D) ITEM 304501 - PERMEABLE TREATED BASE, 4"
- (E) ITEM 304502 - SOIL CEMENT BASE COURSE, 6"
- (G) ITEM 401813 - WMA, SUPERPAVE, TYPE B, 160 GYRATIONS, PG 70-22 (2 LIFTS)
- (H) ITEM 401801 - WMA, SUPERPAVE, TYPE C, 160 GYRATIONS, PG 64-22 (CARBONATE STONE)
- (I) ITEM 401819 - WMA, SUPERPAVE, BITUMINOUS CONCRETE BASE COURSE, 160 GYRATIONS, PG 64-22
- (J) ITEM 401824 - WMA, SUPERPAVE, TYPE C, 160 GYRATIONS, PG 64-22 WEDGE
- (K) ITEM 501006 - PORTLAND CEMENT CONCRETE PAVEMENT, 12"
- (L) ITEM 732002 - TOPSOILING, 6" DEPTH
  ITEM 734551 - NATIVE GRASS SEEDING: NO MOW MIX
- (N) ITEM 701016 - PCC CURB AND GUTTER TYPE 1-4
- (O) ITEM 715001 - PERFORATED PIPE UNDERDRAINS, 6"
- (P) ITEM 720050 - GALVANIZED STEEL BEAM GUARDRAIL, TYPE 1-31
- (Q) ITEM 720052 - GALVANIZED STEEL BEAM GUARDRAIL, TYPE 3-31
- (R) ITEM 720626 - CONCRETE SINGLE FACE BARRIER, TYPE 1
  ITEM 720626 - CONCRETE SINGLE FACE BARRIER, TYPE 1 (MODIFIED)
  ITEM 720627 - CONCRETE SINGLE FACE BARRIER, TYPE 2
- (S) ITEM 727000 - RIGHT OF WAY FENCE
- (T) ITEM 705002 - P.C.C. SIDEWALK, 6"
- (U) ITEM 732002 - TOPSOILING, 6" DEPTH
  ITEM 734013 - PERMANENT GRASS SEEDING, DRY GROUND
- (V) ITEM 732002 - TOPSOILING, 6" DEPTH
  ITEM 734013 - PERMANENT GRASS SEEDING, DRY GROUND
  ITEM 735535 - SOIL RETENTION BLANKET MULCH, TYPE 5
- (W) ITEM 760003 - PAVEMENT MILLING, HOT-MIX, VARIABLE DEPTH
- (X) ITEM 760507 - PROFILE MILLING, HOT-MIX
- (Y) ITEM 712005 - RIPRAP, R-4
- (Z) ITEM 720629 - BIFURCATED CONCRETE MEDIAN BARRIER (MODIFIED)
- (AA) ITEM 760017 - RUMBLE STRIPS, CONCRETE
- (BB) ITEM 760012 - RUMBLE STRIPS, BIKE FRIENDLY, HOT-MIX
- (CC) ITEM 760015 - RUMBLE STRIPS, CONCRETE SHALLOW DEPTH
- (DD) ITEM 760016 - RUMBLE STRIPS, HOT-MIX

TYPICAL SECTION NOTES:

1. THE MAXIMUM ALGEBRAIC DIFFERENCE ON THE HIGH SIDE BETWEEN THE TRAVELED WAY SLOPE AND THE ACCEL/DECEL LANES SHALL NOT EXCEED 4%. THE MAXIMUM ALGEBRAIC DIFFERENCE BETWEEN THE TRAVELED WAY SLOPE AND THE SHOULDER SLOPE SHALL NOT EXCEED 8%.
2. SHOULDER SLOPE ON THE LOW SIDE SHALL BE THE SAME AS THE TRAVELED WAY SLOPE WHEN SUPERELEVATION IS GREATER THAN 4%.
3. P.G.L. - PROFILE GRADE LINE
   PGA - POINT OF GRADE APPLICATION
   PDGA - POINT OF DITCH GRADE APPLICATION
   P/R - POINT OF ROTATION
   O.G. - ORIGINAL GROUND
4. EXISTING SR 1 ROADWAY PAVEMENT SECTION
   12" PCC PAVEMENT
   4" PERMEABLE ASPHALT TREATED BASE
   6" SOIL CEMENT TREATED BASE
   14" BORROW TYPE A
5. EXISTING SR 1 SHOULDER ADJACENT SECTION
   2" HOT MIX, HOT LAID BITUMINOUS CONCRETE PAVEMENT, TYPE C
   10"+/- BITUMINOUS CONCRETE BASE COURSE
   4" PERMEABLE ASPHALT TREATED BASE
   6" SOIL CEMENT TREATED BASE
   14" BORROW TYPE A
6. FOR BENCHING OF EXISTING SLOPES WHERE PROPOSED WIDENING OCCURS, SEE BENCHING DETAIL, SHEET DT-01.
7. SEE GRADES AND GEOMETRICS SHEETS FOR SUPERELEVATED CROSS SLOPE TRANSITIONS.
8. SEE SHEET TS-20 FOR UNDERDRAIN DETAIL.
   SEE CONSTRUCTION PLANS FOR PLACEMENT LOCATIONS
9. THE MAXIMUM LIFTS FOR THE INDIVIDUAL PAVING MATERIALS ARE AS FOLLOWS:
   SUPERPAVE, TYPE C WMA - 2"
   SUPERPAVE, TYPE B WMA - 3", PLACE IN EQUAL LIFTS WHEN THICKNESS EXCEED 3"
   SUPERPAVE BIT. CONC. BASE COURSE - 4"
   GRADED AGGREGATE BASE COURSE - 8"
10. SEE SHEET DT-01 FOR RUMBLE STRIP LOCATIONS.
11. SEE SHEET DT-01 FOR SAFETY EDGE DETAILS. THESE DETAILS SHALL BEAPPLIED AT ALL INSTANCES WHERE THE EDGE OF PROPOSED PAVEMENT MEETS THE 6" TOPSOIL.

UNOFFICIAL WEBSITE COPY

DELAWARE DEPARTMENT OF TRANSPORTATION	ADDENDUMS / REVISIONS	NOT TO SCALE	US 301 & SR 1 INTERCHANGE	CONTRACT T200911302	BRIDGE NO.	TYPICAL SECTIONS	TS-15
				COUNTY NEW CASTLE	DESIGNED BY: J.A.D.		SHEET NO. 26
					CHECKED BY: B.R.T.		TOTAL SHTS. 491

p:\31653-000\contract tb\cadd\TS015U301_1B.dgn 2/6/2013 3:54:50 PM

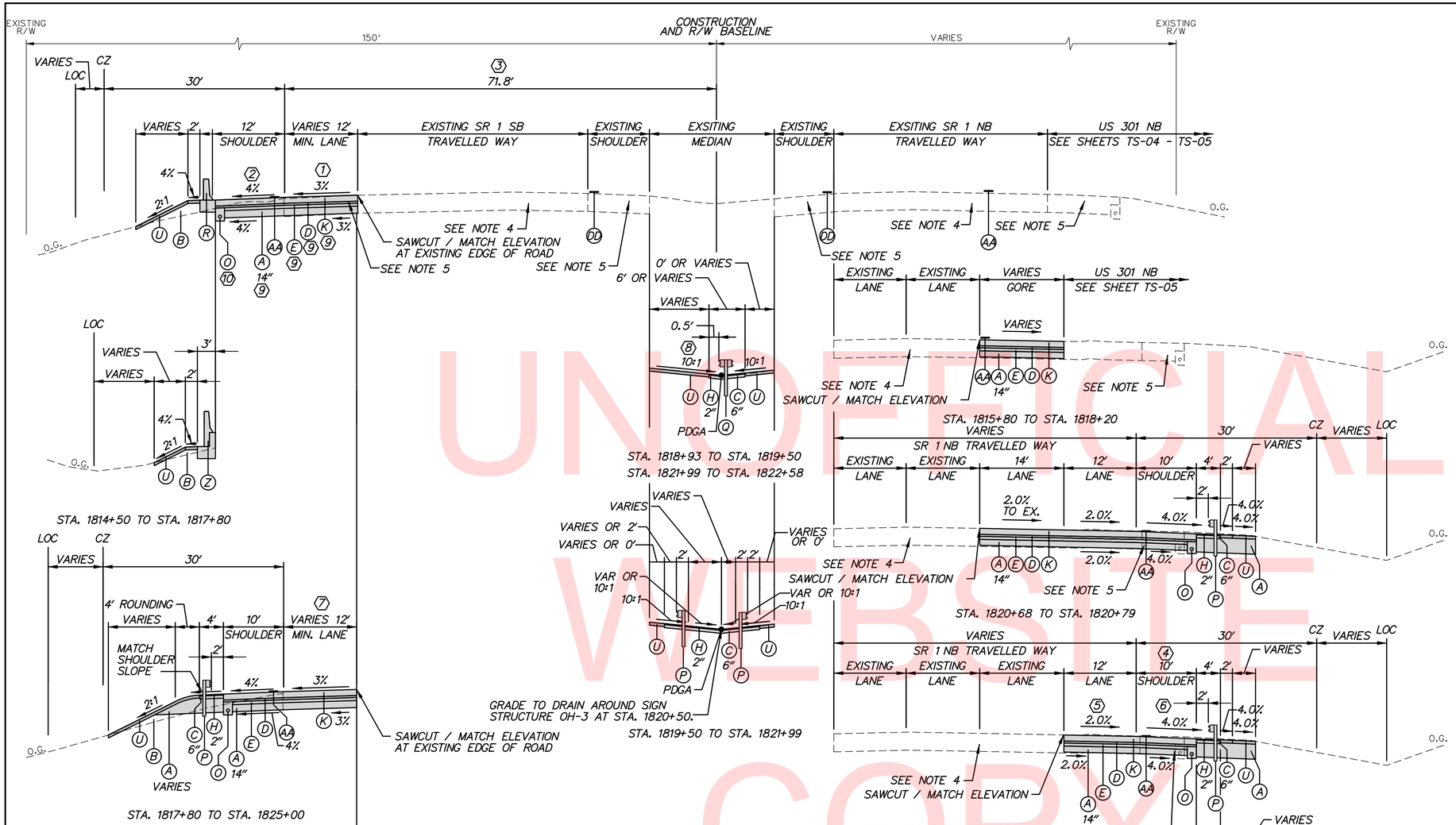

1. HOLD SLOPE -2% STA. 1811+02 TO STA. 1811+59.
   TRANSITION SLOPE -2% TO -3% STA. 1811+59 TO STA. 1812+09.
2. HOLD SLOPE -2% STA. 1811+02 TO STA. 1811+59.
   TRANSITION SLOPE -2% TO -4% STA. 1811+59 TO STA. 1812+59.
3. WIDTH VARIES 71.6' TO 71.8' STA. 1811+20 TO STA. 1811+59.
4. VARY WIDTH FROM 10' TO MATCH EX SHOULDER WIDTH STA. 1824+69 TO STA. 1824+99
5. MATCH EXISTING LANE CROSS SLOPE STA. 1821+55 TO STA. 1824+99
6. TRANSITION SLOPE FROM 4.0% TO MATCH EXIST CROSS SLOPE STA. 1824+75 TO STA. 1824+99
7. TRANSITION WIDTH FROM 12.25' AT STA. 1821+90 TO 0.0' AT STA. 1824+90. HOLD 0.0' FROM STA. 1824+90 TO STA. 1825+00.
8. SLOPE VARIES FROM EX. TO 10:1 STA. 1818+93 TO 1819+43.
9. SEE TRANSITION SLAB SHEET DT-19 FOR PAVEMENT DEPTHS, STA. 1811+02 TO STA. 1811+59.
10. UNDERDRAIN NOT PRESENT STA. 1811+02 TO STA. 1811+59.

SR 1 NORMAL SECTION
STATION 1811+02 TO STATION 1827+07

LEGEND

- (A) ITEM 209001 - BORROW, TYPE A
- (B) ITEM 209006 - BORROW, TYPE F
- (C) ITEM 302007 - GRADED AGGREGATE BASE COURSE, TYPE B
- (D) ITEM 304501 - PERMEABLE TREATED BASE, 4"
- (E) ITEM 304502 - SOIL CEMENT BASE COURSE, 6"
- (G) ITEM 401813 - WMA, SUPERPAVE, TYPE B, 160 GYRATIONS, PG 70-22 (2 LIFTS)
- (H) ITEM 401801 - WMA, SUPERPAVE, TYPE C, 160 GYRATIONS, PG 64-22 (CARBONATE STONE)
- (I) ITEM 401819 - WMA, SUPERPAVE, BITUMINOUS CONCRETE BASE COURSE, 160 GYRATIONS, PG 64-22
- (J) ITEM 401824 - WMA, SUPERPAVE, TYPE C, 160 GYRATIONS, PG 64-22 WEDGE
- (K) ITEM 501006 - PORTLAND CEMENT CONCRETE PAVEMENT, 12"
- (L) ITEM 732002 - TOPSOILING, 6" DEPTH
  ITEM 734551 - NATIVE GRASS SEEDING: NO MOW MIX
- (N) ITEM 701016 - PCC CURB AND GUTTER TYPE 1-4
- (O) ITEM 715001 - PERFORATED PIPE UNDERDRAINS, 6"
- (P) ITEM 720050 - GALVANIZED STEEL BEAM GUARDRAIL, TYPE 1-31
- (Q) ITEM 720052 - GALVANIZED STEEL BEAM GUARDRAIL, TYPE 3-31
- (R) ITEM 720626 - CONCRETE SINGLE FACE BARRIER, TYPE 1
  ITEM 720626 - CONCRETE SINGLE FACE BARRIER, TYPE 1 (MODIFIED)
  ITEM 720627 - CONCRETE SINGLE FACE BARRIER, TYPE 2
- (S) ITEM 727000 - RIGHT OF WAY FENCE
- (T) ITEM 705002 - P.C.C. SIDEWALK, 6"
- (U) ITEM 732002 - TOPSOILING, 6" DEPTH
  ITEM 734013 - PERMANENT GRASS SEEDING, DRY GROUND
- (V) ITEM 732002 - TOPSOILING, 6" DEPTH
  ITEM 734013 - PERMANENT GRASS SEEDING, DRY GROUND
  ITEM 735535 - SOIL RETENTION BLANKET MULCH, TYPE 5
- (W) ITEM 760003 - PAVEMENT MILLING, HOT-MIX, VARIABLE DEPTH
- (X) ITEM 760507 - PROFILE MILLING, HOT-MIX
- (Y) ITEM 712005 - RIPRAP, R-4
- (Z) ITEM 720629 - BIFURCATED CONCRETE MEDIAN BARRIER (MODIFIED)
- (AA) ITEM 760017 - RUMBLE STRIPS, CONCRETE
- (BB) ITEM 760012 - RUMBLE STRIPS, BIKE FRIENDLY, HOT-MIX
- (CC) ITEM 760015 - RUMBLE STRIPS, CONCRETE SHALLOW DEPTH
- (DD) ITEM 760016 - RUMBLE STRIPS, HOT-MIX

TYPICAL SECTION NOTES:

1. THE MAXIMUM ALGEBRAIC DIFFERENCE ON THE HIGH SIDE BETWEEN THE TRAVELED WAY SLOPE AND THE ACCEL/DECEL LANES SHALL NOT EXCEED 4%. THE MAXIMUM ALGEBRAIC DIFFERENCE BETWEEN THE TRAVELED WAY SLOPE AND THE SHOULDER SLOPE SHALL NOT EXCEED 8%.
2. SHOULDER SLOPE ON THE LOW SIDE SHALL BE THE SAME AS THE TRAVELED WAY SLOPE WHEN SUPERELEVATION IS GREATER THAN 4%.
3. P.G.L. - PROFILE GRADE LINE
   PGA - POINT OF GRADE APPLICATION
   PDGA - POINT OF DITCH GRADE APPLICATION
   P/R - POINT OF ROTATION
   O.G. - ORIGINAL GROUND
4. EXISTING SR 1 ROADWAY PAVEMENT SECTION
   12" PCC PAVEMENT
   4" PERMEABLE ASPHALT TREATED BASE
   6" SOIL CEMENT TREATED BASE
   14" BORROW TYPE A
5. EXISTING SR 1 SHOULDER ADJACENT SECTION
   2" HOT MIX, HOT LAID BITUMINOUS CONCRETE PAVEMENT, TYPE C
   10"+/- BITUMINOUS CONCRETE BASE COURSE
   4" PERMEABLE ASPHALT TREATED BASE
   6" SOIL CEMENT TREATED BASE
   14" BORROW TYPE A
6. FOR BENCHING OF EXISTING SLOPES WHERE PROPOSED WIDENING OCCURS, SEE BENCHING DETAIL, SHEET DT-01.
7. SEE GRADES AND GEOMETRICS SHEETS FOR SUPERELEVATED CROSS SLOPE TRANSITIONS.
8. SEE SHEET TS-20 FOR UNDERDRAIN DETAIL.
   SEE CONSTRUCTION PLANS FOR PLACEMENT LOCATIONS
9. THE MAXIMUM LIFTS FOR THE INDIVIDUAL PAVING MATERIALS ARE AS FOLLOWS:
   SUPERPAVE, TYPE C WMA - 2"
   SUPERPAVE, TYPE B WMA - 3", PLACE IN EQUAL LIFTS WHEN THICKNESS EXCEED 3"
   SUPERPAVE BIT. CONC. BASE COURSE - 4"
   GRADED AGGREGATE BASE COURSE - 8"
10. SEE SHEET DT-01 FOR RUMBLE STRIP LOCATIONS.
11. SEE SHEET DT-01 FOR SAFETY EDGE DETAILS. THESE DETAILS SHALL BEAPPLIED AT ALL INSTANCES WHERE THE EDGE OF PROPOSED PAVEMENT MEETS THE 6" TOPSOIL.

TS-16

UNOFFICIAL WEBSITE COPY

DELAWARE DEPARTMENT OF TRANSPORTATION	ADDENDUMS / REVISIONS	NOT TO SCALE	US 301 & SR 1 INTERCHANGE	CONTRACT T200911302	BRIDGE NO.	TYPICAL SECTIONS
				COUNTY NEW CASTLE	DESIGNED BY: J.A.D.	SHEET NO. 27
					CHECKED BY: B.R.T.	TOTAL SHTS. 491

n:\3653-000\contract tb\cadd\TS016U301_18.dgn 2/6/2013 3:55:05 PM

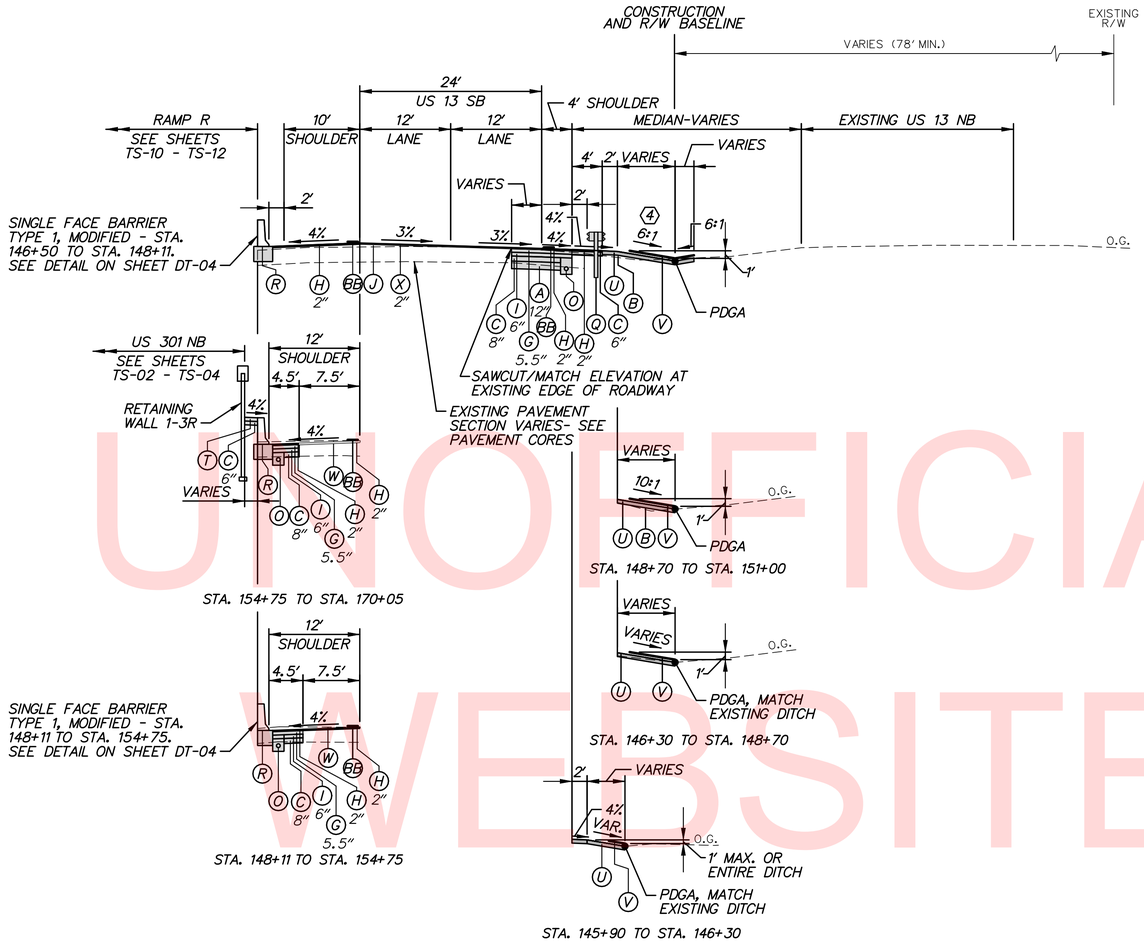

US 13 SB – NORMAL SECTION
STATION 145+90 TO STATION 170+05

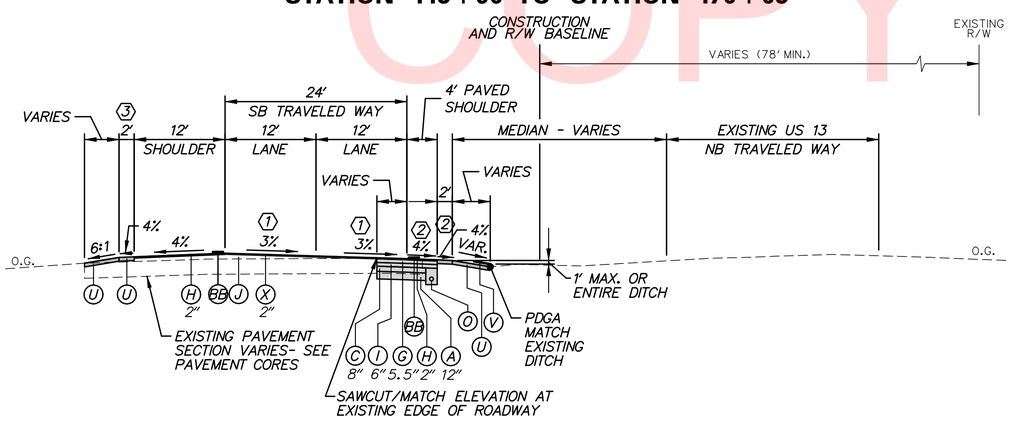

US 13 SB – NORMAL SECTION
STATION 144+67 TO STATION 145+90

1. TRANSITION SLOPE FROM EXISTING TO 3% STA. 144+66.60 TO STA. 145+86.23.
2. TRANSITION SLOPE FROM EXISTING TO 4% STA. 144+66.60 TO STA. 145+26.59.
3. TRANSITION WIDTH FROM 0' TO 2' FROM STA. 144+66.60 TO STA. 144+85.00.
4. HOLD -10:1 SLOPE FROM STA. 151+00.00 TO STA. 151+65.00, TRANSITION SLOPE FROM -10:1 TO -6:1 STA. 151+65.00 TO STA. 151+85.00.

LEGEND

- (A) ITEM 209001 - BORROW, TYPE A
- (B) ITEM 209006 - BORROW, TYPE F
- (C) ITEM 302007 - GRADED AGGREGATE BASE COURSE, TYPE B
- (D) ITEM 304501 - PERMEABLE TREATED BASE, 4"
- (E) ITEM 304502 - SOIL CEMENT BASE COURSE, 6"
- (G) ITEM 401813 - WMA, SUPERPAVE, TYPE B, 160 GYRATIONS, PG 70-22 (2 LIFTS)
- (H) ITEM 401801 - WMA, SUPERPAVE, TYPE C, 160 GYRATIONS, PG 64-22 (CARBONATE STONE)
- (I) ITEM 401819 - WMA, SUPERPAVE, BITUMINOUS CONCRETE BASE COURSE, 160 GYRATIONS, PG 64-22
- (J) ITEM 401824 - WMA, SUPERPAVE, TYPE C, 160 GYRATIONS, PG 64-22 WEDGE
- (K) ITEM 501006 - PORTLAND CEMENT CONCRETE PAVEMENT, 12"
- (L) ITEM 732002 - TOPSOILING, 6" DEPTH
  ITEM 734551 - NATIVE GRASS SEEDING: NO MOW MIX
- (N) ITEM 701016 - PCC CURB AND GUTTER TYPE 1-4
- (O) ITEM 715001 - PERFORATED PIPE UNDERDRAINS, 6"
- (P) ITEM 720050 - GALVANIZED STEEL BEAM GUARDRAIL, TYPE 1-31
- (Q) ITEM 720052 - GALVANIZED STEEL BEAM GUARDRAIL, TYPE 3-31
- (R) ITEM 720626 - CONCRETE SINGLE FACE BARRIER, TYPE 1
  ITEM 720626 - CONCRETE SINGLE FACE BARRIER, TYPE 1 (MODIFIED)
  ITEM 720627 - CONCRETE SINGLE FACE BARRIER, TYPE 2
- (S) ITEM 727000 - RIGHT OF WAY FENCE
- (T) ITEM 705002 - P.C.C. SIDEWALK, 6"
- (U) ITEM 732002 - TOPSOILING, 6" DEPTH
  ITEM 734013 - PERMANENT GRASS SEEDING, DRY GROUND
- (V) ITEM 732002 - TOPSOILING, 6" DEPTH
  ITEM 734013 - PERMANENT GRASS SEEDING, DRY GROUND
  ITEM 735535 - SOIL RETENTION BLANKET MULCH, TYPE 5
- (W) ITEM 760003 - PAVEMENT MILLING, HOT-MIX, VARIABLE DEPTH
- (X) ITEM 760507 - PROFILE MILLING, HOT-MIX
- (Y) ITEM 712005 - RIPRAP, R-4
- (Z) ITEM 720629 - BIFURCATED CONCRETE MEDIAN BARRIER (MODIFIED)
- (AA) ITEM 760017 - RUMBLE STRIPS, CONCRETE
- (BB) ITEM 760012 - RUMBLE STRIPS, BIKE FRIENDLY, HOT-MIX
- (CC) ITEM 760015 - RUMBLE STRIPS, CONCRETE SHALLOW DEPTH
- (DD) ITEM 760016 - RUMBLE STRIPS, HOT-MIX

TYPICAL SECTION NOTES:

1. THE MAXIMUM ALGEBRAIC DIFFERENCE ON THE HIGH SIDE BETWEEN THE TRAVELED WAY SLOPE AND THE ACCEL/DECEL LANES SHALL NOT EXCEED 4%. THE MAXIMUM ALGEBRAIC DIFFERENCE BETWEEN THE TRAVELED WAY SLOPE AND THE SHOULDER SLOPE SHALL NOT EXCEED 8%.
2. SHOULDER SLOPE ON THE LOW SIDE SHALL BE THE SAME AS THE TRAVELED WAY SLOPE WHEN SUPERELEVATION IS GREATER THAN 4%.
3. P.G.L. - PROFILE GRADE LINE
   PGA - POINT OF GRADE APPLICATION
   PDGA - POINT OF DITCH GRADE APPLICATION
   P/R - POINT OF ROTATION
   O.G. - ORIGINAL GROUND
4. EXISTING SR 1 ROADWAY PAVEMENT SECTION
   12" PCC PAVEMENT
   4" PERMEABLE ASPHALT TREATED BASE
   6" SOIL CEMENT TREATED BASE
   14" BORROW TYPE A
5. EXISTING SR 1 SHOULDER ADJACENT SECTION
   2" HOT MIX, HOT LAID BITUMINOUS CONCRETE PAVEMENT, TYPE C
   10"+/- BITUMINOUS CONCRETE BASE COURSE
   4" PERMEABLE ASPHALT TREATED BASE
   6" SOIL CEMENT TREATED BASE
   14" BORROW TYPE A
6. FOR BENCHING OF EXISTING SLOPES WHERE PROPOSED WIDENING OCCURS, SEE BENCHING DETAIL, SHEET DT-01.
7. SEE GRADES AND GEOMETRICS SHEETS FOR SUPERELEVATED CROSS SLOPE TRANSITIONS.
8. SEE SHEET TS-20 FOR UNDERDRAIN DETAIL.
   SEE CONSTRUCTION PLANS FOR PLACEMENT LOCATIONS
9. THE MAXIMUM LIFTS FOR THE INDIVIDUAL PAVING MATERIALS ARE AS FOLLOWS:
   SUPERPAVE, TYPE C WMA - 2"
   SUPERPAVE, TYPE B WMA - 3", PLACE IN EQUAL LIFTS WHEN THICKNESS EXCEED 3"
   SUPERPAVE BIT. CONC. BASE COURSE - 4"
   GRADED AGGREGATE BASE COURSE - 8"
10. SEE SHEET DT-01 FOR RUMBLE STRIP LOCATIONS.
11. SEE SHEET DT-01 FOR SAFETY EDGE DETAILS. THESE DETAILS SHALL BEAPPLIED AT ALL INSTANCES WHERE THE EDGE OF PROPOSED PAVEMENT MEETS THE 6" TOPSOIL.

TS-17

UNOFFICIAL WEBSITE COPY

DELAWARE DEPARTMENT OF TRANSPORTATION	ADDENDUMS / REVISIONS	NOT TO SCALE	US 301 & SR 1 INTERCHANGE	CONTRACT T200911302	BRIDGE NO.	TYPICAL SECTIONS
				COUNTY NEW CASTLE	DESIGNED BY: J.A.D.	SHEET NO. 28
					CHECKED BY: B.R.T.	TOTAL SHTS. 491

n:\31653-000\contract_tb\cadd\TS017U301_TB.dgn 2/6/2013 3:35:17 PM

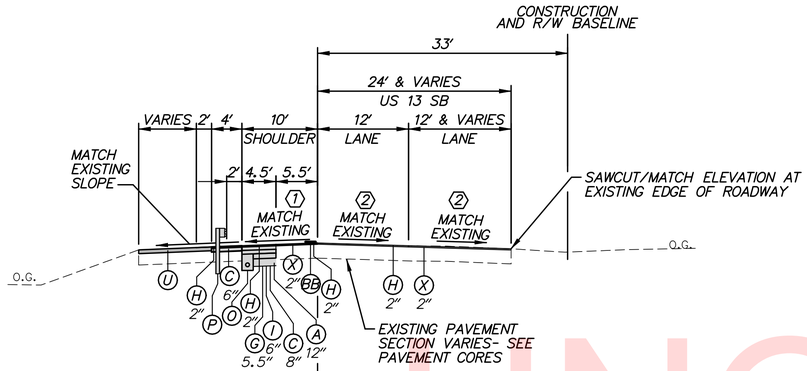

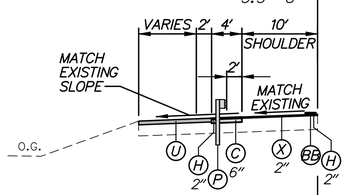

STA. 171+08 TO STA. 171+29

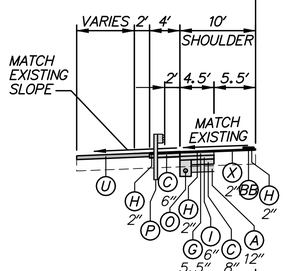

STATION 171+29 TO STATION 171+82

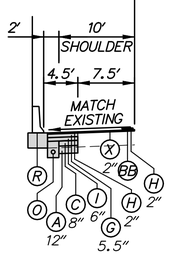

STATION 171+82 TO STATION 172+45

(1) TRANSITION SLOPE FROM -4% AT STA. 170+44 TO MATCH EXISTING SLOPE AT STA. 171+08

(2) TRANSITION SLOPE FROM 3% AT STA. 170+44 TO MATCH EXISTING SLOPE AT STA. 171+07

US 13 SB – NORMAL SECTION
STATION 170+44 TO STATION 172+45

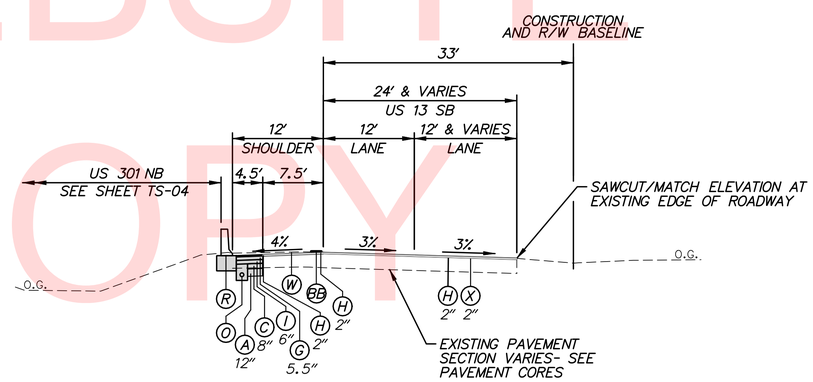

US 13 SB – NORMAL SECTION
STATION 170+05 TO STATION 170+44

LEGEND

- (A) ITEM 209001 - BORROW, TYPE A
- (B) ITEM 209006 - BORROW, TYPE F
- (C) ITEM 302007 - GRADED AGGREGATE BASE COURSE, TYPE B
- (D) ITEM 304501 - PERMEABLE TREATED BASE, 4"
- (E) ITEM 304502 - SOIL CEMENT BASE COURSE, 6"
- (G) ITEM 401813 - WMA, SUPERPAVE, TYPE B, 160 GYRATIONS, PG 70-22 (2 LIFTS)
- (H) ITEM 401801 - WMA, SUPERPAVE, TYPE C, 160 GYRATIONS, PG 64-22 (CARBONATE STONE)
- (I) ITEM 401819 - WMA, SUPERPAVE, BITUMINOUS CONCRETE BASE COURSE, 160 GYRATIONS, PG 64-22
- (J) ITEM 401824 - WMA, SUPERPAVE, TYPE C, 160 GYRATIONS, PG 64-22 WEDGE
- (K) ITEM 501006 - PORTLAND CEMENT CONCRETE PAVEMENT, 12"
- (L) ITEM 732002 - TOPSOILING, 6" DEPTH
  ITEM 734551 - NATIVE GRASS SEEDING: NO MOW MIX
- (N) ITEM 701016 - PCC CURB AND GUTTER TYPE 1-4
- (O) ITEM 715001 - PERFORATED PIPE UNDERDRAINS, 6"
- (P) ITEM 720050 - GALVANIZED STEEL BEAM GUARDRAIL, TYPE 1-31
- (Q) ITEM 720052 - GALVANIZED STEEL BEAM GUARDRAIL, TYPE 3-31
- (R) ITEM 720626 - CONCRETE SINGLE FACE BARRIER, TYPE 1
  ITEM 720626 - CONCRETE SINGLE FACE BARRIER, TYPE 1 (MODIFIED)
  ITEM 720627 - CONCRETE SINGLE FACE BARRIER, TYPE 2
- (S) ITEM 727000 - RIGHT OF WAY FENCE
- (T) ITEM 705002 - P.C.C. SIDEWALK, 6"
- (U) ITEM 732002 - TOPSOILING, 6" DEPTH
  ITEM 734013 - PERMANENT GRASS SEEDING, DRY GROUND
- (V) ITEM 732002 - TOPSOILING, 6" DEPTH
  ITEM 734013 - PERMANENT GRASS SEEDING, DRY GROUND
  ITEM 735535 - SOIL RETENTION BLANKET MULCH, TYPE 5
- (W) ITEM 760003 - PAVEMENT MILLING, HOT-MIX, VARIABLE DEPTH
- (X) ITEM 760507 - PROFILE MILLING, HOT-MIX
- (Y) ITEM 712005 - RIPRAP, R-4
- (Z) ITEM 720629 - BIFURCATED CONCRETE MEDIAN BARRIER (MODIFIED)
- (AA) ITEM 760017 - RUMBLE STRIPS, CONCRETE
- (BB) ITEM 760012 - RUMBLE STRIPS, BIKE FRIENDLY, HOT-MIX
- (CC) ITEM 760015 - RUMBLE STRIPS, CONCRETE SHALLOW DEPTH
- (DD) ITEM 760016 - RUMBLE STRIPS, HOT-MIX

TYPICAL SECTION NOTES:

1. THE MAXIMUM ALGEBRAIC DIFFERENCE ON THE HIGH SIDE BETWEEN THE TRAVELED WAY SLOPE AND THE ACCEL/DECEL LANES SHALL NOT EXCEED 4%. THE MAXIMUM ALGEBRAIC DIFFERENCE BETWEEN THE TRAVELED WAY SLOPE AND THE SHOULDER SLOPE SHALL NOT EXCEED 8%.
2. SHOULDER SLOPE ON THE LOW SIDE SHALL BE THE SAME AS THE TRAVELED WAY SLOPE WHEN SUPERELEVATION IS GREATER THAN 4%.
3. P.G.L. - PROFILE GRADE LINE
   PGA - POINT OF GRADE APPLICATION
   PDGA - POINT OF DITCH GRADE APPLICATION
   P/R - POINT OF ROTATION
   O.G. - ORIGINAL GROUND
4. EXISTING SR 1 ROADWAY PAVEMENT SECTION
   12" PCC PAVEMENT
   4" PERMEABLE ASPHALT TREATED BASE
   6" SOIL CEMENT TREATED BASE
   14" BORROW TYPE A
5. EXISTING SR 1 SHOULDER ADJACENT SECTION
   2" HOT MIX, HOT LAID BITUMINOUS CONCRETE PAVEMENT, TYPE C
   10"+/- BITUMINOUS CONCRETE BASE COURSE
   4" PERMEABLE ASPHALT TREATED BASE
   6" SOIL CEMENT TREATED BASE
   14" BORROW TYPE A
6. FOR BENCHING OF EXISTING SLOPES WHERE PROPOSED WIDENING OCCURS, SEE BENCHING DETAIL, SHEET DT-01.
7. SEE GRADES AND GEOMETRICS SHEETS FOR SUPERELEVATED CROSS SLOPE TRANSITIONS.
8. SEE SHEET TS-20 FOR UNDERDRAIN DETAIL. SEE CONSTRUCTION PLANS FOR PLACEMENT LOCATIONS
9. THE MAXIMUM LIFTS FOR THE INDIVIDUAL PAVING MATERIALS ARE AS FOLLOWS:
   SUPERPAVE, TYPE C WMA - 2"
   SUPERPAVE, TYPE B WMA - 3", PLACE IN EQUAL LIFTS WHEN THICKNESS EXCEED 3"
   SUPERPAVE BIT. CONC. BASE COURSE - 4"
   GRADED AGGREGATE BASE COURSE - 8"
10. SEE SHEET DT-01 FOR RUMBLE STRIP LOCATIONS.
11. SEE SHEET DT-01 FOR SAFETY EDGE DETAILS. THESE DETAILS SHALL BEAPPLIED AT ALL INSTANCES WHERE THE EDGE OF PROPOSED PAVEMENT MEETS THE 6" TOPSOIL.

UNOFFICIAL WEBSITE COPY

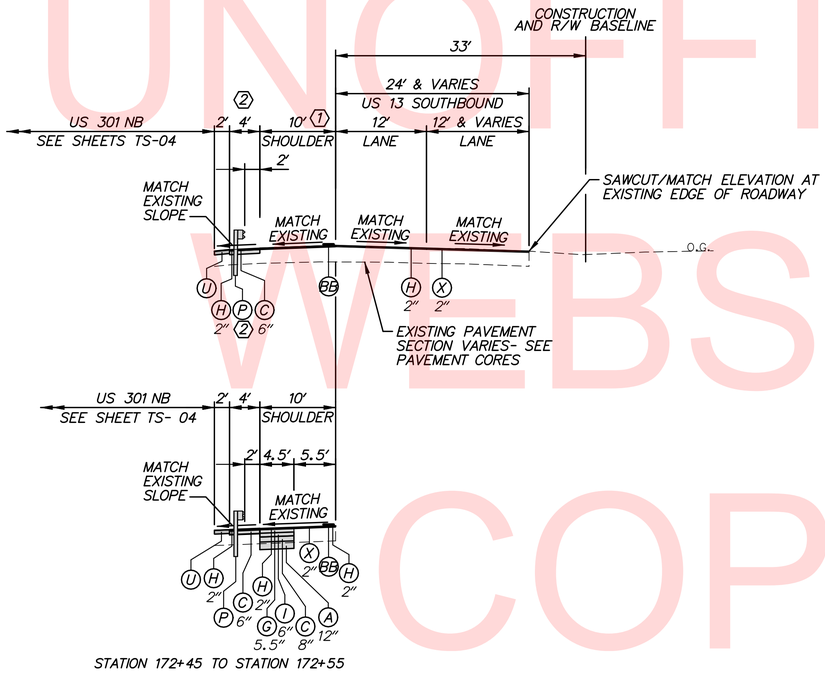

STATION 172+45 TO STATION 172+55

① TRANSITION WIDTH FROM 10' AT STA. 173+49 TO 20' AT STA. 175+02

② GUARDRAIL TERMINATES AT STA. 175+41. SEE US 301 NB SECTIONS FOR STA. 175+41 TO STA. 175+75

US 13 SB – NORMAL SECTION
STATION 172+45 TO STATION 175+75

LEGEND

- (A) ITEM 209001 - BORROW, TYPE A
- (B) ITEM 209006 - BORROW, TYPE F
- (C) ITEM 302007 - GRADED AGGREGATE BASE COURSE, TYPE B
- (D) ITEM 304501 - PERMEABLE TREATED BASE, 4"
- (E) ITEM 304502 - SOIL CEMENT BASE COURSE, 6"
- (G) ITEM 401813 - WMA, SUPERPAVE, TYPE B, 160 GYRATIONS, PG 70-22 (2 LIFTS)
- (H) ITEM 401801 - WMA, SUPERPAVE, TYPE C, 160 GYRATIONS, PG 64-22 (CARBONATE STONE)
- (I) ITEM 401819 - WMA, SUPERPAVE, BITUMINOUS CONCRETE BASE COURSE, 160 GYRATIONS, PG 64-22
- (J) ITEM 401824 - WMA, SUPERPAVE, TYPE C, 160 GYRATIONS, PG 64-22 WEDGE
- (K) ITEM 501006 - PORTLAND CEMENT CONCRETE PAVEMENT, 12"
- (L) ITEM 732002 - TOPSOILING, 6" DEPTH
  ITEM 734551 - NATIVE GRASS SEEDING: NO MOW MIX
- (N) ITEM 701016 - PCC CURB AND GUTTER TYPE 1-4
- (O) ITEM 715001 - PERFORATED PIPE UNDERDRAINS, 6"
- (P) ITEM 720050 - GALVANIZED STEEL BEAM GUARDRAIL, TYPE 1-31
- (Q) ITEM 720052 - GALVANIZED STEEL BEAM GUARDRAIL, TYPE 3-31
- (R) ITEM 720626 - CONCRETE SINGLE FACE BARRIER, TYPE 1
  ITEM 720626 - CONCRETE SINGLE FACE BARRIER, TYPE 1 (MODIFIED)
  ITEM 720627 - CONCRETE SINGLE FACE BARRIER, TYPE 2
- (S) ITEM 727000 - RIGHT OF WAY FENCE
- (T) ITEM 705002 - P.C.C. SIDEWALK, 6"
- (U) ITEM 732002 - TOPSOILING, 6" DEPTH
  ITEM 734013 - PERMANENT GRASS SEEDING, DRY GROUND
- (V) ITEM 732002 - TOPSOILING, 6" DEPTH
  ITEM 734013 - PERMANENT GRASS SEEDING, DRY GROUND
  ITEM 735535 - SOIL RETENTION BLANKET MULCH, TYPE 5
- (W) ITEM 760003 - PAVEMENT MILLING, HOT-MIX, VARIABLE DEPTH
- (X) ITEM 760507 - PROFILE MILLING, HOT-MIX
- (Y) ITEM 712005 - RIPRAP, R-4
- (Z) ITEM 720629 - BIFURCATED CONCRETE MEDIAN BARRIER (MODIFIED)
- (AA) ITEM 760017 - RUMBLE STRIPS, CONCRETE
- (BB) ITEM 760012 - RUMBLE STRIPS, BIKE FRIENDLY, HOT-MIX
- (CC) ITEM 760015 - RUMBLE STRIPS, CONCRETE SHALLOW DEPTH
- (DD) ITEM 760016 - RUMBLE STRIPS, HOT-MIX

TYPICAL SECTION NOTES:

1. THE MAXIMUM ALGEBRAIC DIFFERENCE ON THE HIGH SIDE BETWEEN THE TRAVELED WAY SLOPE AND THE ACCEL/DECEL LANES SHALL NOT EXCEED 4%. THE MAXIMUM ALGEBRAIC DIFFERENCE BETWEEN THE TRAVELED WAY SLOPE AND THE SHOULDER SLOPE SHALL NOT EXCEED 8%.
2. SHOULDER SLOPE ON THE LOW SIDE SHALL BE THE SAME AS THE TRAVELED WAY SLOPE WHEN SUPERELEVATION IS GREATER THAN 4%.
3. P.G.L. - PROFILE GRADE LINE
   PGA - POINT OF GRADE APPLICATION
   PDGA - POINT OF DITCH GRADE APPLICATION
   P/R - POINT OF ROTATION
   O.G. - ORIGINAL GROUND
4. EXISTING SR 1 ROADWAY PAVEMENT SECTION
   12" PCC PAVEMENT
   4" PERMEABLE ASPHALT TREATED BASE
   6" SOIL CEMENT TREATED BASE
   14" BORROW TYPE A
5. EXISTING SR 1 SHOULDER ADJACENT SECTION
   2" HOT MIX, HOT LAID BITUMINOUS CONCRETE PAVEMENT, TYPE C
   10"+/- BITUMINOUS CONCRETE BASE COURSE
   4" PERMEABLE ASPHALT TREATED BASE
   6" SOIL CEMENT TREATED BASE
   14" BORROW TYPE A
6. FOR BENCHING OF EXISTING SLOPES WHERE PROPOSED WIDENING OCCURS, SEE BENCHING DETAIL, SHEET DT-01.
7. SEE GRADES AND GEOMETRICS SHEETS FOR SUPERELEVATED CROSS SLOPE TRANSITIONS.
8. SEE SHEET TS-20 FOR UNDERDRAIN DETAIL.
   SEE CONSTRUCTION PLANS FOR PLACEMENT LOCATIONS
9. THE MAXIMUM LIFTS FOR THE INDIVIDUAL PAVING MATERIALS ARE AS FOLLOWS:
   SUPERPAVE, TYPE C WMA - 2"
   SUPERPAVE, TYPE B WMA - 3", PLACE IN EQUAL LIFTS WHEN THICKNESS EXCEED 3"
   SUPERPAVE BIT. CONC. BASE COURSE - 4"
   GRADED AGGREGATE BASE COURSE - 8"
10. SEE SHEET DT-01 FOR RUMBLE STRIP LOCATIONS.
11. SEE SHEET DT-01 FOR SAFETY EDGE DETAILS. THESE DETAILS SHALL BEAPPLIED AT ALL INSTANCES WHERE THE EDGE OF PROPOSED PAVEMENT MEETS THE 6" TOPSOIL.

TS-19

UNOFFICIAL WEBSITE COPY

LEGEND

- (A) ITEM 209001 - BORROW, TYPE A
- (B) ITEM 209006 - BORROW, TYPE F
- (C) ITEM 302007 - GRADED AGGREGATE BASE COURSE, TYPE B
- (D) ITEM 304501 - PERMEABLE TREATED BASE, 4"
- (E) ITEM 304502 - SOIL CEMENT BASE COURSE, 6"
- (G) ITEM 401813 - WMA, SUPERPAVE, TYPE B, 160 GYRATIONS, PG 70-22 (2 LIFTS)
- (H) ITEM 401801 - WMA, SUPERPAVE, TYPE C, 160 GYRATIONS, PG 64-22 (CARBONATE STONE)
- (I) ITEM 401819 - WMA, SUPERPAVE, BITUMINOUS CONCRETE BASE COURSE, 160 GYRATIONS, PG 64-22
- (J) ITEM 401824 - WMA, SUPERPAVE, TYPE C, 160 GYRATIONS, PG 64-22 WEDGE
- (K) ITEM 501006 - PORTLAND CEMENT CONCRETE PAVEMENT, 12"
- (L) ITEM 732002 - TOPSOILING, 6" DEPTH
  ITEM 734551 - NATIVE GRASS SEEDING: NO MOW MIX
- (N) ITEM 701016 - PCC CURB AND GUTTER TYPE 1-4
- (O) ITEM 715001 - PERFORATED PIPE UNDERDRAINS, 6"
- (P) ITEM 720050 - GALVANIZED STEEL BEAM GUARDRAIL, TYPE 1-31
- (Q) ITEM 720052 - GALVANIZED STEEL BEAM GUARDRAIL, TYPE 3-31
- (R) ITEM 720626 - CONCRETE SINGLE FACE BARRIER, TYPE 1
  ITEM 720626 - CONCRETE SINGLE FACE BARRIER, TYPE 1 (MODIFIED)
  ITEM 720627 - CONCRETE SINGLE FACE BARRIER, TYPE 2
- (S) ITEM 727000 - RIGHT OF WAY FENCE
- (T) ITEM 705002 - P.C.C. SIDEWALK, 6"
- (U) ITEM 732002 - TOPSOILING, 6" DEPTH
  ITEM 734013 - PERMANENT GRASS SEEDING, DRY GROUND
- (V) ITEM 732002 - TOPSOILING, 6" DEPTH
  ITEM 734013 - PERMANENT GRASS SEEDING, DRY GROUND
  ITEM 735535 - SOIL RETENTION BLANKET MULCH, TYPE 5
- (W) ITEM 760003 - PAVEMENT MILLING, HOT-MIX, VARIABLE DEPTH
- (X) ITEM 760507 - PROFILE MILLING, HOT-MIX
- (Y) ITEM 712005 - RIPRAP, R-4
- (Z) ITEM 720629 - BIFURCATED CONCRETE MEDIAN BARRIER (MODIFIED)
- (AA) ITEM 760017 - RUMBLE STRIPS, CONCRETE
- (BB) ITEM 760012 - RUMBLE STRIPS, BIKE FRIENDLY, HOT-MIX
- (CC) ITEM 760015 - RUMBLE STRIPS, CONCRETE SHALLOW DEPTH
- (DD) ITEM 760016 - RUMBLE STRIPS, HOT-MIX

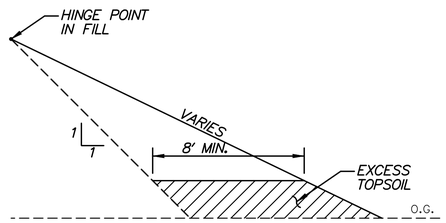

NOTES:
1. EXCESS TOPSOIL SHALL BE PLACED IN LIFTS CONCURRENTLY WITH THE CONSTRUCTION OF THE REST OF THE EMBANKMENT AND SHALL BE PLACED AND COMPACTED IN ACCORDANCE WITH SECTION 202 OF THE STANDARD SPECIFICATIONS WITH ALL COSTS INCIDENTAL TO ITEM 202000.

USE OF EXCESS TOPSOIL IN OUTER PORTIONS OF EMBANKMENT
NOT TO SCALE

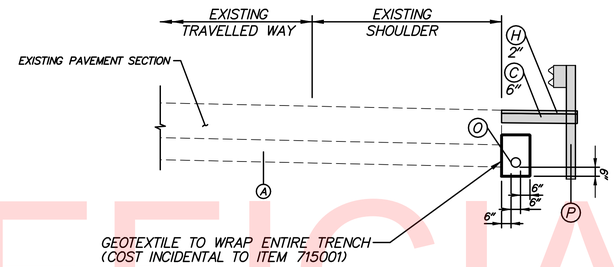

EXISTING PAVEMENT WITH GUARDRAIL UNDERDRAIN DETAIL
NOT TO SCALE

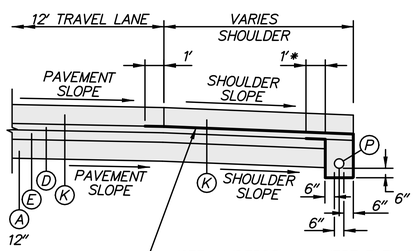

GEOTEXTILE CONTINUE TO 1'-0" UNDER TRAVELLED WAY PAVING (COST INCIDENTAL TO ITEM 715001)

NOTE: UNDERDRAIN INVERT ELEVATION SHALL BE SET AT THE EXTENDED SLOPE OF THE BOTTOM OF THE BORROW, TYPE A.

* WHEN UNDERDRAIN IS NOT PRESENT, DIMENSION IS 2'

PCC PAVEMENT UNDERDRAIN DETAIL
NOT TO SCALE

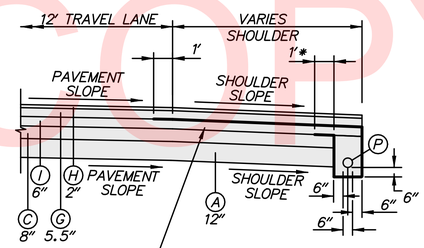

GEOTEXTILE CONTINUE TO 1'-0" UNDER TRAVELLED WAY PAVING (COST INCIDENTAL TO ITEM 715001)

NOTE: UNDERDRAIN INVERT ELEVATION SHALL BE SET AT THE EXTENDED SLOPE OF THE BOTTOM OF THE BORROW, TYPE A.

* WHEN UNDERDRAIN IS NOT PRESENT, DIMENSION IS 2'

WARM MIX ASPHALT PAVEMENT UNDERDRAIN DETAIL
NOT TO SCALE

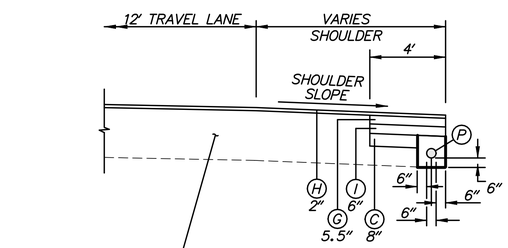

NOTE: TOP OF UNDERDRAIN ELEVATION SHALL BE SET AT THE EXTENDED SLOPE OF THE BOTTOM OF THE GRADED AGGREGATE BASE COURSE.

WARM MIX ASPHALT PAVEMENT WITHOUT BORROW TYPE A UNDERDRAIN DETAIL
NOT TO SCALE

UNOFFICIAL WEBSITE COPY

DELAWARE DEPARTMENT OF TRANSPORTATION	ADDENDUMS / REVISIONS	NOT TO SCALE	US 301 & SR 1 INTERCHANGE	CONTRACT T200911302	BRIDGE NO.	TYPICAL SECTIONS	TS-20
				COUNTY NEW CASTLE	DESIGNED BY: J.A.D.		SHEET NO. 31
					CHECKED BY: B.R.T.		TOTAL SHTS. 491

n:\31653-000\contract tb\cadd\TS020U301_1B.dgn
2/6/2013 3:55:59 PM

HORIZONTAL / VERTICAL CONTROL DATA

POINT	STATION	OFFSET	NORTHING	EASTING	ELEVATION
63	1784+62.52	107.88' LT.	556854.7204	590193.3789	34.15'
64	1800+19.50	78.87' LT.	558390.8221	590377.2921	24.42'
363	151+54.64	1.03' LT.	557434.3376	590641.7036	20.43'
364	158+62.00	68.21' LT.	558142.1516	590579.4495	23.41'

CONSTRUCTION ALIGNMENT CONTROL

POINT	STATION	OFFSET	NORTHING	EASTING
11004	141+15.02	0.00'	556394.7416	590635.5070
	145+00.00	0.00'	556779.7080	590638.1849
	150+00.00	0.00'	557279.6959	590641.6629
	155+00.00	0.00'	557779.6838	590645.1409
11005	159+26.77	0.00'	558206.4399	590648.1094
11003	161+01.38	0.67' LT	558381.0534	590649.3241
11007	162+76.00	0.00'	558555.6282	590653.1991
	165+00.00	0.00'	558779.5778	590658.1702
11021	311+00.00	0.00'	556326.2742	590400.6166
	315+00.00	0.00'	556722.5031	590455.4134
11017	318+31.09	0.00'	557050.4700	590500.7698
11012	322+80.44	13.95' RT	557495.5845	590562.3272
11019	327+28.64	0.00'	557944.8957	590568.2953
11013	329+66.55	0.00'	558182.7883	590571.4552
11030	842+48.05	0.00'	556117.4301	589068.3509
11035	847+07.08	0.00'	556309.7394	589485.1561

SEE SHEET HV-04 FOR CURVE DATA

CONSTRUCTION ALIGNMENT CONTROL

POINT	STATION	OFFSET	NORTHING	EASTING
11031	858+61.08	333.47' RT	556793.2018	590532.9974
11037	867+66.25	0.00'	557947.0963	590548.3230
	870+00.00	0.00'	558180.8221	590551.4273
	875+00.00	0.00'	558680.7780	590558.0675
11051	1004+94.76	11.52' LT	558563.9695	590414.6154
11056	1009+81.26	0.00'	558079.7851	590360.2533
11052	1023+68.13	364.01' LT	556701.5748	590205.5139
11058	1035+06.96	0.00'	556120.5512	588946.2206
11059	1038+95.42	0.00'	555957.8063	588593.4922
100835	1779+00.00	0.00'	556282.6514	590221.7631
	1780+00.00	0.00'	556381.6744	590235.7077
	1785+00.00	0.00'	556876.7892	590305.4311
100837	1788+25.60	0.00'	557199.2097	590350.8353
11071	1795+26.46	21.20' RT	557893.2162	590448.5671
100839	1802+25.60	0.00'	558593.9445	590461.8473

SEE SHEET HV-04 FOR CURVE DATA

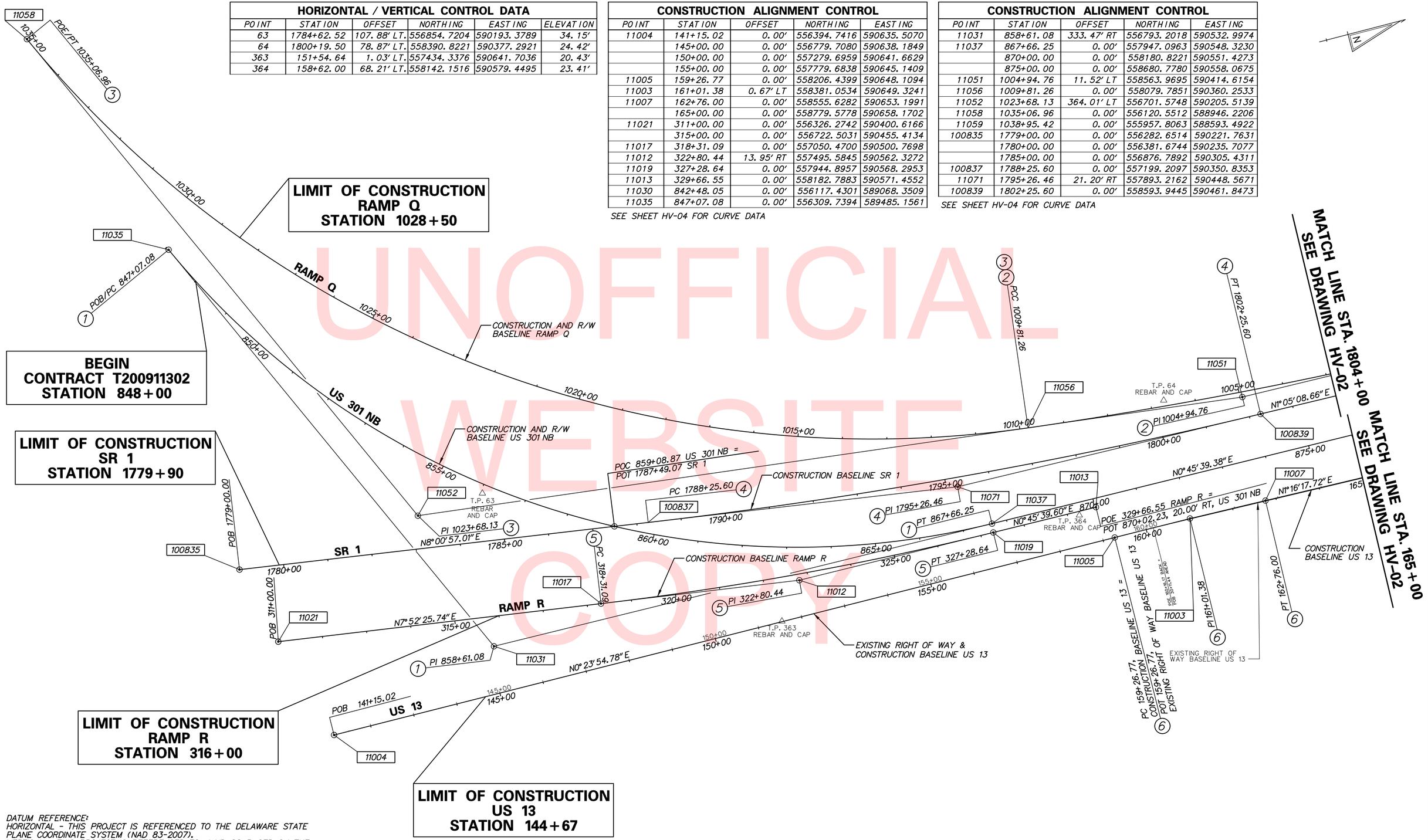

DATUM REFERENCE:
HORIZONTAL - THIS PROJECT IS REFERENCED TO THE DELAWARE STATE PLANE COORDINATE SYSTEM (NAD 83-2007).
VERTICAL - THIS PROJECT IS REFERENCED TO NAVD 88 BASED ON THE FOLLOWING STATE OF DELAWARE BENCHMARK

POINT	ELEV.
JU1066	64.03

UNOFFICIAL WEBSITE COPY

DELAWARE DEPARTMENT OF TRANSPORTATION

ADDENDUMS / REVISIONS

SCALE 0 100 200 300 FEET

US 301 & SR 1 INTERCHANGE

CONTRACT	BRIDGE NO.
T200911302	DESIGNED BY: K.A.H.
COUNTY	CHECKED BY: B.R.T.
NEW CASTLE	

HORIZONTAL AND VERTICAL CONTROL

HV-01

SHEET NO. 32

TOTAL SHTS. 491

n:\31653-000\contract tb\cadd\HV001U301_tB.dgn 2/6/2013 3:56:22 PM

HORIZONTAL / VERTICAL CONTROL DATA					
POINT	STATION	OFFSET	NORTHING	EASTING	ELEVATION
65	1824+77.58	78.66' LT.	560847.0084	590425.8688	36.48

CONSTRUCTION ALIGNMENT CONTROL				
POINT	STATION	OFFSET	NORTHING	EASTING
	165+00.00	0.00'	558779.5778	590658.1702
	170+00.00	0.00'	559279.4547	590669.2659
	175+00.00	0.00'	559779.3316	590680.3617
	180+00.00	0.00'	560279.2085	590691.4575
	185+00.00	0.00'	560779.0853	590702.5533
11008	186+50.00	0.00'	560929.0484	590705.8821
	880+00.00	0.00'	559180.7339	590564.7078
11038	880+67.33	0.00'	559248.0586	590565.6019
11032	883+12.74	3.74' RT	559493.4484	590568.8611
11040	885+58.00	0.00'	559738.5818	590557.1848
11041	887+24.78	0.00'	559905.1706	590549.2498
11033	889+89.87	4.36' LT	560169.9637	590536.6371
11034	892+54.78	0.00'	560435.0133	590541.4508
11054	1000+07.54	0.00'	559051.1235	590423.0297
	1805+00.00	0.00'	558868.2944	590467.0468
	1810+00.00	0.00'	559368.2047	590476.5211
	1815+00.00	0.00'	559868.1149	590485.9954
	1820+00.00	0.00'	560368.0251	590495.4697
	1825+00.00	0.00'	560867.9354	590504.9440
100852	1825+16.81	0.00'	560884.7432	590505.2625

SEE SHEET HV-04 FOR CURVE DATA

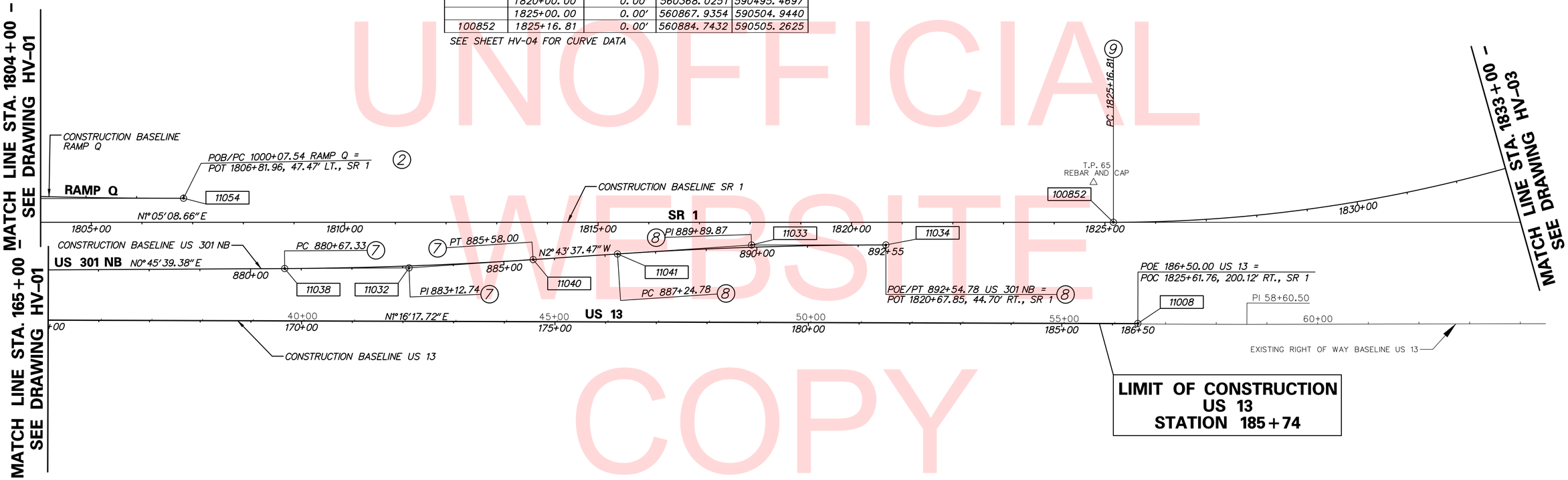

UNOFFICIAL WEBSITE COPY

n:\3653-000\contract tb\cadd\HV0020U301_1B.dgn
2/6/2013 3:56:32 PM

DELAWARE DEPARTMENT OF TRANSPORTATION

ADDENDUMS / REVISIONS

SCALE 0 100 200 300 FEET

US 301 & SR 1 INTERCHANGE

CONTRACT	BRIDGE NO.
T200911302	DESIGNED BY: K.A.H.
COUNTY	
NEW CASTLE	CHECKED BY: B.R.T.

HORIZONTAL AND VERTICAL CONTROL

HV-02

SHEET NO. 33

TOTAL SHTS. 491

HORIZONTAL / VERTICAL CONTROL DATA

POINT	STATION	OFFSET	NORTHING	EASTING	ELEVATION
66	1833+66.12	162.66' LT.	561679.3175	590239.7350	62.47'

CONSTRUCTION ALIGNMENT CONTROL

POINT	STATION	OFFSET	NORTHING	EASTING
101528	162+00.00	0.00'	566597.1557	587207.0603
101530	164+81.22	0.00'	566828.3429	587046.9450
	175+56.40	195.12' LT	567712.2344	586434.7805
101532	185+38.37	0.00'	568780.6344	586555.3271
101529	190+00.00	0.00'	569239.3515	586607.0837
11072	1834+41.87	145.65' RT	561809.6410	590522.7912
100854	1843+06.38	0.00'	562570.1249	589996.0962
	1845+00.00	0.00'	562876.2441	590964.7372
	1850+00.00	0.00'	563287.2880	590680.0569
100855	1850+06.38	0.00'	563145.5864	589597.5438

SEE SHEET HV-04 FOR CURVE DATA

CIRCULAR CURVE NO. 10 SR 1

	STATION	NORTHING	EASTING
PC (101530)	164+81.22	566828.3429	587046.9450
PI ( )	175+56.40	567712.2344	586434.7805
CC (101531)		568459.4409	589402.0534
PT (101532)	185+38.37	568780.6344	586555.3271
Radius:	2864.7890		
Design Speed(mph):	70.0000		
Superelevation:	N/A		
Delta:	41° 08' 34.9994" Right		
Degree of Curvature(Arc):	1° 59' 59.9999"		
Length:	2057.1528		
Tangent:	1075.1790		
Chord:	2013.2387		
Middle Ordinate:	182.6754		
External:	195.1172		
Tangent Direction:	N 34° 42' 20.3410" W		
Radial Direction:	N 55° 17' 39.6590" E		
Chord Direction:	N 14° 08' 02.8351" W		
Radial Direction:	S 83° 33' 45.3416" E		
Tangent Direction:	N 6° 26' 14.6584" E		

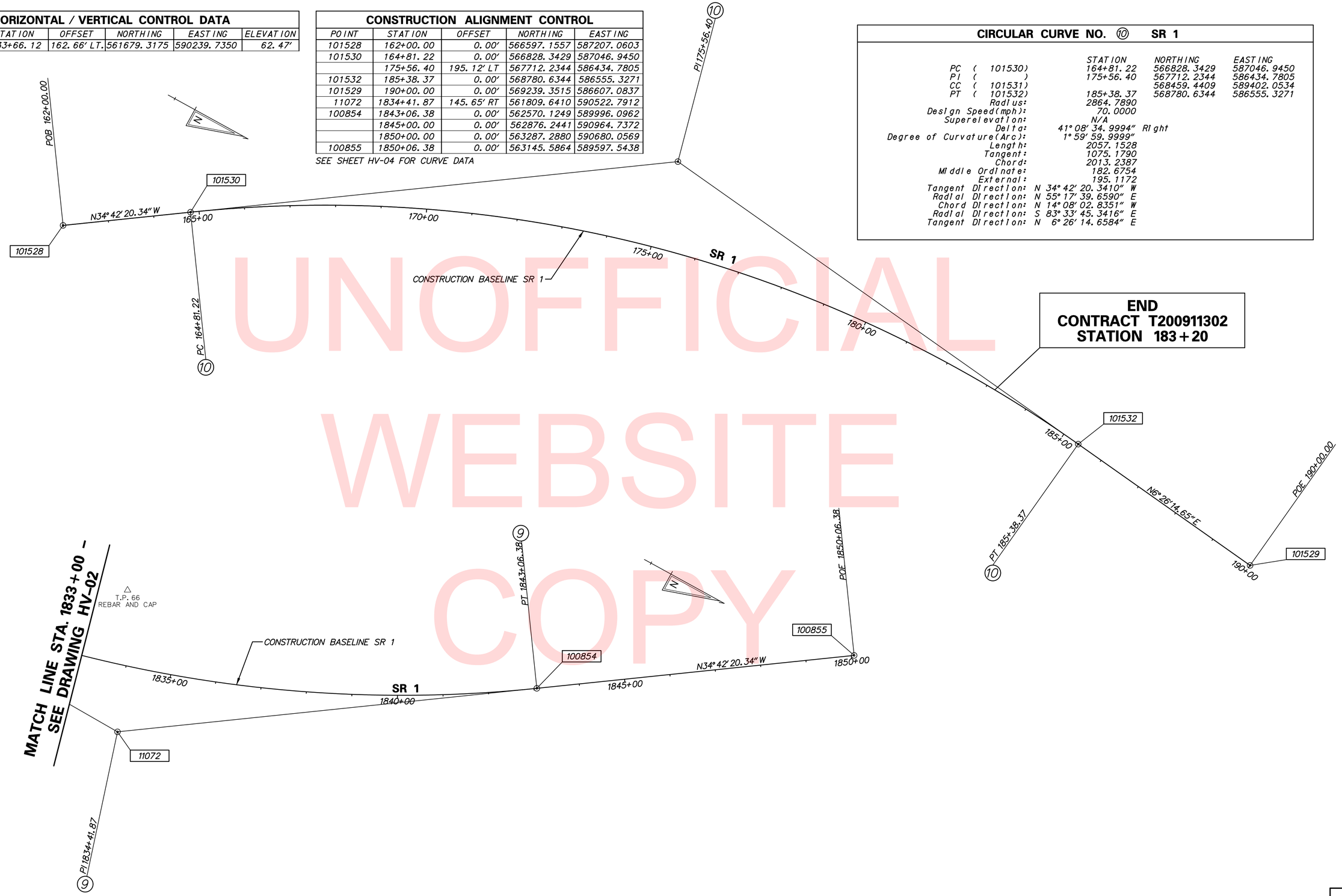

UNOFFICIAL WEBSITE COPY

n:\31653-000\contract_tb\cadd\HV003J301_1B.dgn
2/6/2013 3:56:43 PM

DELAWARE DEPARTMENT OF TRANSPORTATION	ADDENDUMS / REVISIONS	SCALE 0 100 200 300 FEET	US 301 & SR 1 INTERCHANGE	CONTRACT T200911302	BRIDGE NO.	HORIZONTAL AND VERTICAL CONTROL	HV-03
				COUNTY NEW CASTLE	DESIGNED BY: K.A.H.		SHEET NO. 34
					CHECKED BY: B.R.T.		TOTAL SHTS. 491

CIRCULAR CURVE NO. ① – US 301 NB

	STATION	NORTHING	EASTING
PC (11035)	847+07.08	556309.7394	589485.1561
PI (11031)	858+61.08	556793.2018	590532.9974
CC (11036)		557971.3996	588718.4844
PT (11037)	867+66.25	557947.0963	590548.3230

Radius: 1830.0000
Design Speed(mph): 60.0000
Superelevation: 5.6000%
Delta: 64° 28′ 15.5392″ Left
Degree of Curvature(Arc): 3° 07′ 51.3009″
Length: 2059.1726
Tangent: 1153.9962
Chord: 1952.2453
Middle Ordinate: 282.0709
External: 333.4711
Tangent Direction: N 65° 13′ 54.9145″ E
Radial Direction: S 24° 46′ 05.0855″ E
Chord Direction: N 32° 59′ 47.1449″ E
Radial Direction: S 89° 14′ 20.6248″ E
Tangent Direction: N 0° 45′ 39.3752″ E

CIRCULAR CURVE NO. ② – RAMP Q

	STATION	NORTHING	EASTING
PC (11054)	1000+07.54	559051.1235	590423.0297
PI (11051)	1004+94.76	558563.9695	590414.6154
CC (11055)		559229.0031	580124.5658
PCC (11056)	1009+81.26	558079.7851	590360.2533

Radius: 10300.0000
Design Speed(mph): 70.0000
Superelevation: -3.0000%
Delta: 5° 24′ 59.5822″ Right
Degree of Curvature(Arc): 0° 33′ 22.5709″
Length: 973.7274
Tangent: 487.2266
Chord: 973.3649
Middle Ordinate: 11.5045
External: 11.5173
Tangent Direction: S 0° 59′ 22.3423″ W
Radial Direction: N 89° 00′ 37.6577″ W
Chord Direction: S 3° 41′ 52.1334″ W
Radial Direction: N 83° 35′ 38.0755″ W
Tangent Direction: S 6° 24′ 21.9245″ W

CIRCULAR CURVE NO. ③ – RAMP Q

	STATION	NORTHING	EASTING
PCC (11056)	1009+81.26	558079.7851	590360.2533
PI (11052)	1023+68.13	556701.5748	590205.5139
CC (11057)		558354.2586	587915.6134
PT (11058)	1035+06.96	556120.5512	588946.2206

Radius: 2460.0000
Design Speed(mph): 70.0000
Superelevation: -5.8000%
Delta: 58° 49′ 33.0402″ Right
Degree of Curvature(Arc): 2° 19′ 44.7482″
Length: 2525.6935
Tangent: 1386.8698
Chord: 2416.2131
Middle Ordinate: 317.0864
External: 364.0057
Tangent Direction: S 6° 24′ 21.9290″ W
Radial Direction: N 83° 35′ 38.0710″ W
Chord Direction: S 35° 49′ 08.4491″ W
Radial Direction: N 24° 46′ 05.0308″ W
Tangent Direction: S 65° 13′ 54.9692″ W

CIRCULAR CURVE NO. ④ – SR 1

	STATION	NORTHING	EASTING
PC (100837)	1788+25.60	557199.2097	590350.8353
PI (11071)	1795+26.46	557893.2162	590448.5671
CC (100838)		558813.2694	578889.1895
PT (100839)	1802+25.60	558593.9445	590461.8473

Radius: 11574.7359
Design Speed(mph): 70.0000
Superelevation: 1.7000%
Delta: 6° 55′ 48.3463″ Left
Degree of Curvature(Arc): 0° 29′ 42.0260″
Length: 1399.9990
Tangent: 700.8541
Chord: 1399.1457
Middle Ordinate: 21.1603
External: 21.1991
Tangent Direction: N 8° 00′ 57.0067″ E
Radial Direction: S 81° 59′ 02.9933″ E
Chord Direction: N 4° 33′ 02.8336″ E
Radial Direction: S 88° 54′ 51.3396″ E
Tangent Direction: N 1° 05′ 08.6604″ E

CIRCULAR CURVE NO. ⑤ – RAMP R

	STATION	NORTHING	EASTING
PC (11017)	318+31.09	557050.4700	590500.7698
PI (11012)	322+80.44	557495.5845	590562.3272
CC (11018)		558040.9214	583338.9330
PT (11019)	327+28.64	557944.8957	590568.2953

Radius: 7230.0000
Design Speed(mph): 50.0000
Superelevation: -2.0000%
Delta: 7° 06′ 46.1448″ Left
Degree of Curvature(Arc): 0° 47′ 32.9019″
Length: 897.5473
Tangent: 449.3509
Chord: 896.9711
Middle Ordinate: 13.9235
External: 13.9503
Tangent Direction: N 7° 52′ 25.7439″ E
Radial Direction: S 82° 07′ 34.2561″ E
Chord Direction: N 4° 19′ 02.6715″ E
Radial Direction: S 89° 14′ 20.4010″ E
Tangent Direction: N 0° 45′ 39.5990″ E

CIRCULAR CURVE NO. ⑥ – US 13

	STATION	NORTHING	EASTING
PC (11005)	159+26.77	558206.4399	590648.1094
PI (11003)	161+01.38	558381.0534	590649.3241
CC (11006)		558047.0147	613566.7550
PT (11007)	162+76.00	558555.6282	590653.1991

Radius: 22919.2000
Design Speed(mph): 65.0000
Superelevation: NORMAL
Delta: 0° 52′ 22.9377″ Right
Degree of Curvature(Arc): 0° 14′ 59.9651″
Length: 349.2288
Tangent: 174.6178
Chord: 349.2255
Middle Ordinate: 0.6652
External: 0.6652
Tangent Direction: N 0° 23′ 54.7825″ E
Radial Direction: S 89° 36′ 05.2175″ E
Chord Direction: N 0° 50′ 06.2514″ E
Radial Direction: S 88° 43′ 42.2797″ E
Tangent Direction: N 1° 16′ 17.7203″ E

CIRCULAR CURVE NO. ⑦ – US 301 NB

	STATION	NORTHING	EASTING
PC (11038)	880+67.33	559248.0586	590565.6019
PI (11032)	883+12.74	559493.4484	590568.8611
CC (11039)		559355.0993	582506.3127
PT (11040)	885+58.00	559738.5818	590557.1848

Radius: 8060.0000
Design Speed(mph): 60.0000
Superelevation: 2.0000%
Delta: 3° 29′ 16.8478″ Left
Degree of Curvature(Arc): 0° 42′ 39.1167″
Length: 490.6712
Tangent: 245.4114
Chord: 490.5954
Middle Ordinate: 3.7336
External: 3.7353
Tangent Direction: N 0° 45′ 39.3752″ E
Radial Direction: S 89° 14′ 20.6248″ E
Chord Direction: N 0° 58′ 59.0486″ W
Radial Direction: N 87° 16′ 22.5275″ E
Tangent Direction: N 2° 43′ 37.4725″ W

CIRCULAR CURVE NO. ⑧ – US 301 NB

	STATION	NORTHING	EASTING
PC (11041)	887+24.78	559905.1706	590549.2498
PI (11033)	889+89.87	560169.9637	590536.6371
CC (11042)		560288.6531	598600.1219
PT (11034)	892+54.78	560435.0133	590541.4508

Radius: 8060.0000
Design Speed(mph): 60.0000
Superelevation: NORMAL
Delta: 3° 46′ 03.2062″ Right
Degree of Curvature(Arc): 0° 42′ 39.1167″
Length: 529.9956
Tangent: 265.0933
Chord: 529.9001
Middle Ordinate: 4.3559
External: 4.3583
Tangent Direction: N 2° 43′ 37.4725″ W
Radial Direction: N 87° 16′ 22.5275″ E
Chord Direction: N 0° 50′ 35.8694″ W
Radial Direction: S 88° 57′ 34.2663″ E
Tangent Direction: N 1° 02′ 25.7337″ E

CIRCULAR CURVE NO. ⑨ – SR 1

	STATION	NORTHING	EASTING
PC (100852)	1825+16.81	560884.7432	590505.2625
PI (11072)	1834+41.87	561809.6410	590522.7912
CC (100853)		560939.0269	587640.9879
PT (100854)	1843+06.38	562570.1249	589996.0962

Radius: 2864.7890
Design Speed(mph): 70.0000
Superelevation: 5.5000%
Delta: 35° 47′ 29.0019″ Left
Degree of Curvature(Arc): 2° 00′ 00.0000″
Length: 1789.5695
Tangent: 925.0639
Chord: 1760.6140
Middle Ordinate: 138.6057
External: 145.6527
Tangent Direction: N 1° 05′ 08.6598″ E
Radial Direction: S 88° 54′ 51.3402″ E
Chord Direction: N 16° 48′ 35.8396″ W
Radial Direction: N 55° 17′ 39.6579″ E
Tangent Direction: N 34° 42′ 20.3421″ W

SEE SHEET HV-02 FOR CURVE 10 DATA

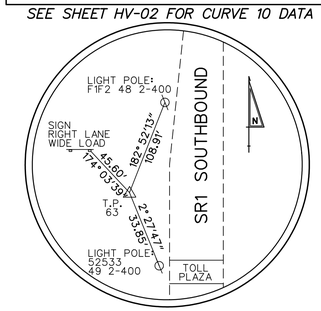

TRAVERSE POINT #63
REBAR AND CAP

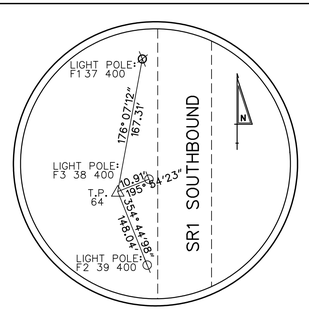

TRAVERSE POINT #64
REBAR AND CAP

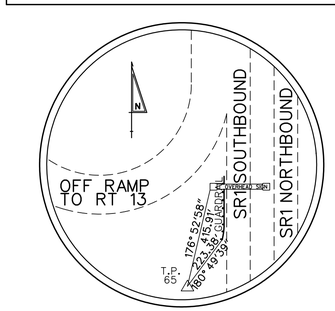

TRAVERSE POINT #65
REBAR AND CAP

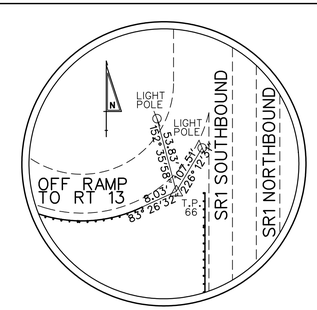

TRAVERSE POINT #66
REBAR AND CAP

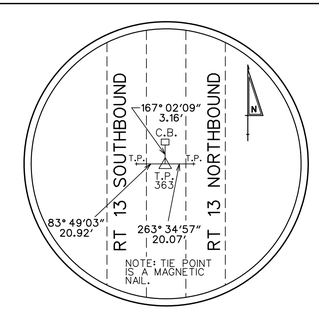

TRAVERSE POINT #363
REBAR AND CAP

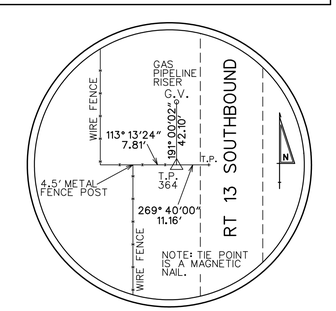

TRAVERSE POINT #364
REBAR AND CAP

UNOFFICIAL WEBSITE COPY

DELAWARE DEPARTMENT OF TRANSPORTATION

ADDENDUMS / REVISIONS

NOT TO SCALE

US 301 & SR 1 INTERCHANGE

CONTRACT	BRIDGE NO.
T200911302	DESIGNED BY: K.A.H.
COUNTY	CHECKED BY: B.R.T.
NEW CASTLE	

HORIZONTAL AND VERTICAL CONTROL

HV-04

SHEET NO. 35
TOTAL SHTS. 491

n:\31653-000\contract_tb\cadd\HV\0041301_1B.dgn 2/6/2013 3:56:49 PM

ENDWALL SCHEDULE				
NO.	SIZE/TYPE	STATION	OFFSET	INVERT
401	48" RCP	853+23.28	121.11	30.00

SEE SHEET GR-01 FOR LOC

MANHOLE SCHEDULE					
NO.	STATION	OFFSET	SIZE	T.G. EL.	INV. EL.
415	853+42.54	-46.48	48"x48"	53.62	43.02

FLARED END SECTION SCHEDULE			
NO.	SIZE / TYPE	SLOPE	SAFETY GRATE
401	18" RCP	0.0092	NO
402	18" RCP	0.0316	NO
410	18" RCP	0.0092	YES

UNDERDRAIN OUTLETS		
NO.	LENGTH	DIS. EL.
001	22.92	42.93
002	22.13	50.11
003	47.81	47.71
004	26.87	50.46
005	52.35	47.72

SEE BORROW SITE GRADING, SHEET GR-01

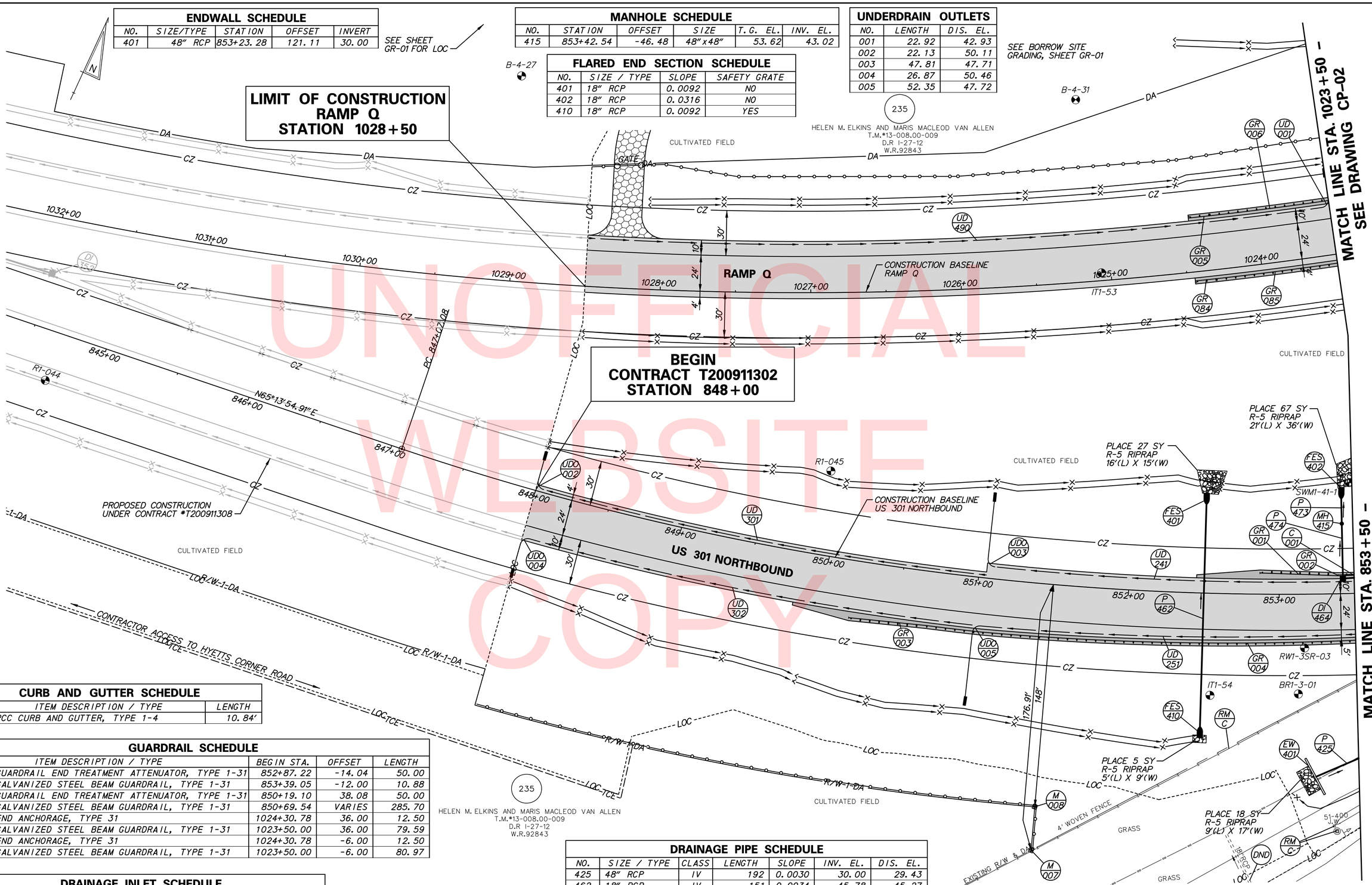

CURB AND GUTTER SCHEDULE		
NO.	ITEM DESCRIPTION / TYPE	LENGTH
001	PCC CURB AND GUTTER, TYPE 1-4	10.84'

GUARDRAIL SCHEDULE				
NO.	ITEM DESCRIPTION / TYPE	BEGIN STA.	OFFSET	LENGTH
001	GUARDRAIL END TREATMENT ATTENUATOR, TYPE 1-31	852+87.22	-14.04	50.00
002	GALVANIZED STEEL BEAM GUARDRAIL, TYPE 1-31	853+39.05	-12.00	10.88
003	GUARDRAIL END TREATMENT ATTENUATOR, TYPE 1-31	850+19.10	38.08	50.00
004	GALVANIZED STEEL BEAM GUARDRAIL, TYPE 1-31	850+69.54	VARIES	285.70
005	END ANCHORAGE, TYPE 31	1024+30.78	36.00	12.50
006	GALVANIZED STEEL BEAM GUARDRAIL, TYPE 1-31	1023+50.00	36.00	79.59
084	END ANCHORAGE, TYPE 31	1024+30.78	-6.00	12.50
085	GALVANIZED STEEL BEAM GUARDRAIL, TYPE 1-31	1023+50.00	-6.00	80.97

DRAINAGE INLET SCHEDULE						
NO.	STATION	OFFSET	BOX SIZE	GRATE	T.G. EL.	INV. EL.
464	853+42.53	-12.00	48"x30"	2	64.63	54.13

DRAINAGE PIPE SCHEDULE						
NO.	SIZE / TYPE	CLASS	LENGTH	SLOPE	INV. EL.	DIS. EL.
425	48" RCP	IV	192	0.0030	30.00	29.43
462	18" RCP	IV	151	0.0034	45.78	45.27
473	18" RCP	IV	16	0.0100	43.02	42.86
474	18" RCP	IV	33	0.0996	54.13	50.90

UNOFFICIAL WEBSITE COPY

N:\33653-000\CONTRACT 1B\CADD\CP001\J301_1B.dgn
2/16/2016 3:29:21 PM

DELAWARE
DEPARTMENT OF TRANSPORTATION

ADDENDUMS / REVISIONS

SCALE
0 30 60 90
FEET

US 301 &
SR 1 INTERCHANGE

CONTRACT	BRIDGE NO.	BR1-433
T200911302	DESIGNED BY:	J.A.D.
COUNTY		
NEW CASTLE	CHECKED BY:	B.R.T.

CONSTRUCTION PLAN

CP-01

SHEET NO.
36
TOTAL SHTS.
491

GUARDRAIL SCHEDULE

NO.	ITEM DESCRIPTION / TYPE	BEGIN STA.	OFFSET	LENGTH
007	GALVANIZED STEEL BEAM GUARDRAIL, TYPE 1-31	853+50.00	-12.00	189.12
008	GUARDRAIL TO BARRIER CONN., APPROACH TYPE 1-31	855+40.37	-12.00	19.75
009	GALVANIZED STEEL BEAM GUARDRAIL, TYPE 1-31	853+50.00	VARIES	39.30
010	GUARDRAIL TO BARRIER CONN., APPROACH TYPE 1-31	853+88.64	30.391	19.75
011	GALVANIZED STEEL BEAM GUARDRAIL, TYPE 1-31	1021+89.75	36.00	157.91
012	GUARDRAIL END TREATMENT ATTENUATOR, TYPE 1-31	1021+37.50	36.00	50.00
013	END ANCHORAGE, TYPE 31	1782+05.82	-137.00	12.50
014	GALVANIZED STEEL BEAM GUARDRAIL, TYPE 1-31	1782+19.33	-135.19	200.00
015	GUARDRAIL TO BARRIER CONN., EXIT TYPE 31	1784+17.31	-107.16	11.50
086	GALVANIZED STEEL BEAM GUARDRAIL, TYPE 1-31	1021+19.04	-6.00	231.53
087	GUARDRAIL END TREATMENT ATTENUATOR, TYPE 1-31	1020+67.72	-6.00	50.00

BARRIER SCHEDULE

NO.	ITEM DESCRIPTION / TYPE	BEGIN STA.	OFFSET	LENGTH
201	CONCRETE SINGLE FACE BARRIER, TYPE 2	1784+28.73	-105.82	118.10
202	BARRIER WALL 1	1785+46.26	-94.25	121.00

DRAINAGE INLET SCHEDULE

NO.	STATION	OFFSET	BOX SIZE	GRATE	T.G. EL.	INV. EL.
450	855+45.23	-12.00	48"x30"	2	69.37	63.75

DRAINAGE PIPE SCHEDULE

NO.	SIZE / TYPE	CLASS	LENGTH	SLOPE	INV. EL.	DIS. EL.
402	18" RCP	IV	31	0.0993	37.95	34.88
409	18" RCP	IV	198	0.0239	63.75	59.01
450	48" RCP	IV	150	0.0030	29.23	28.78
466	48" RCP	IV	242	0.0030	28.58	27.85

CURB AND GUTTER SCHEDULE

NO.	ITEM DESCRIPTION / TYPE	LENGTH
002	PCC CURB AND GUTTER, TYPE 1-4	209.10'

MANHOLE SCHEDULE

NO.	STATION	OFFSET	SIZE	T.G. EL.	INV. EL.
*403	854+97.37	55.06	66"x66"	40.50	29.23
421	854+96.60	-99.70	66"x66"	37.59	28.58

*MANHOLE SHALL BE CAST IN PLACE TO CONNECT TO EXISTING PIPES AS SHOWN & IN ACCORDANCE WITH STANDARD D-5

ENDWALL SCHEDULE

NO.	SIZE/TYPE	STATION	OFFSET	INVERT
402	48" RCP	837+53.83	-91.09	27.85

FLARED END SECTION SCHEDULE

NO.	SIZE / TYPE	SLOPE	SAFETY GRATE
403	18" RCP	0.0993	YES

UNDERDRAIN OUTLETS

NO.	LENGTH	DIS. EL.
006	40.40	28.23

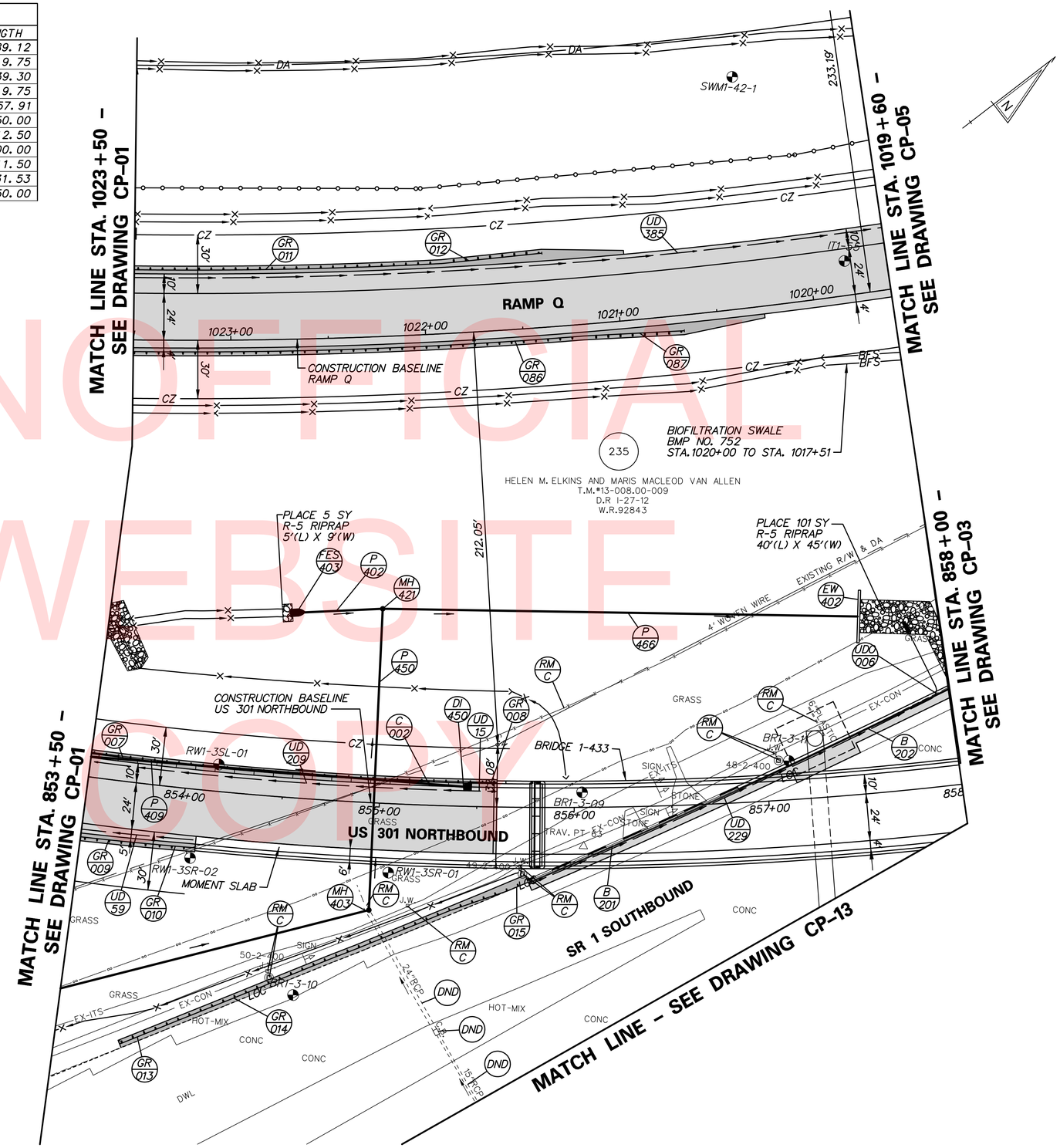

UNOFFICIAL WEBSITE COPY

DELAWARE DEPARTMENT OF TRANSPORTATION

ADDENDUMS / REVISIONS

SCALE 0 30 60 90 FEET

US 301 & SR 1 INTERCHANGE

CONTRACT	BRIDGE NO. BR1-433
T200911302	DESIGNED BY: J.A.D.
COUNTY	
NEW CASTLE	CHECKED BY: B.R.T.

CONSTRUCTION PLAN

CP-02
SHEET NO. 37
TOTAL SHTS. 491

r:\34653-000\contract_tb\cadd\CP002U301_TB.dgn
5/30/2013 11:54:45 AM

NOTES:
1. SEE SHEET CP-04 FOR CONSTRUCTION SCHEDULES.
2. TIE-IN PROPOSED UNDERDRAIN WITH EXISTING UNDERDRAIN.

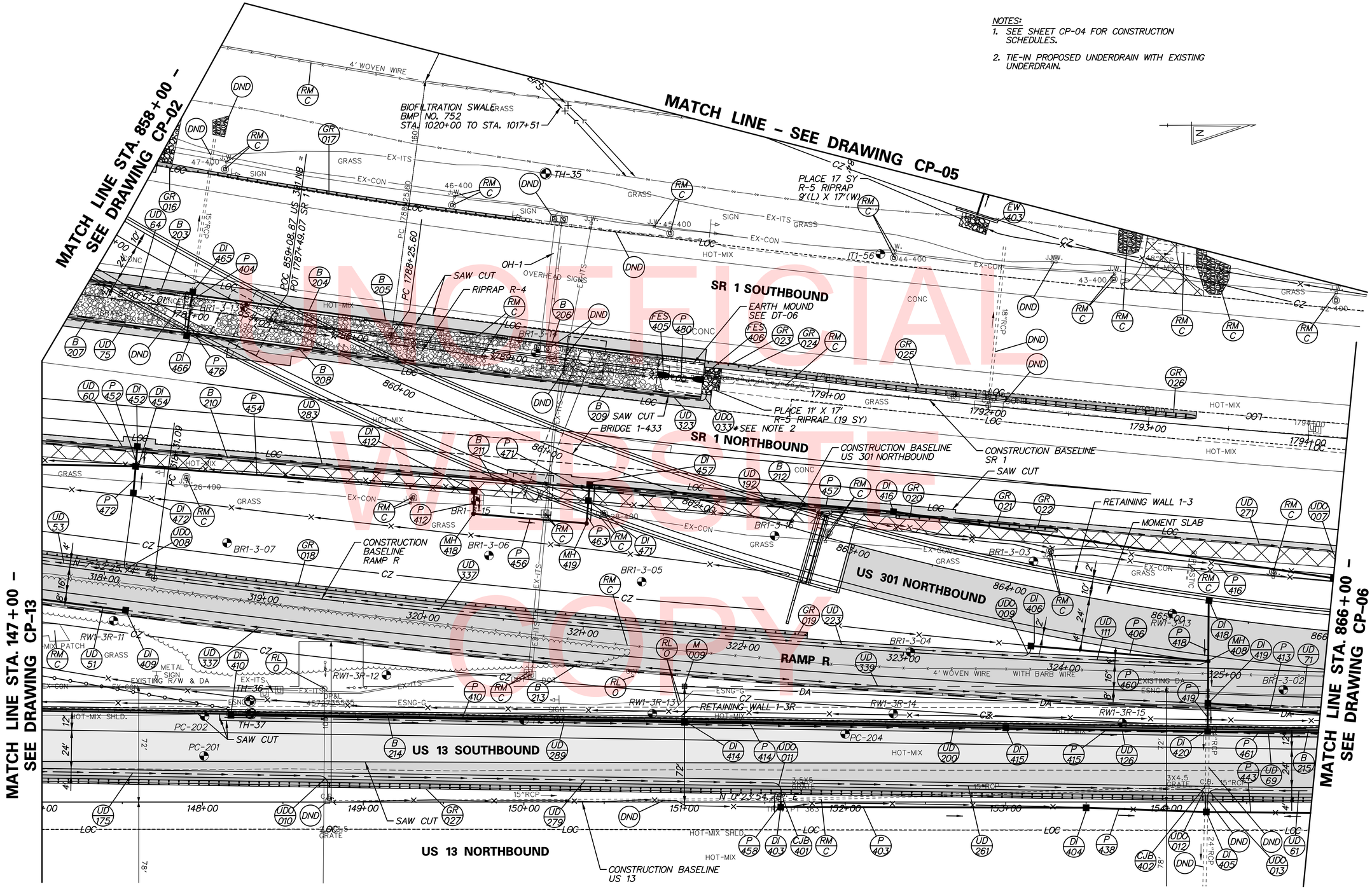

UNOFFICIAL WEBSITE COPY

DELAWARE DEPARTMENT OF TRANSPORTATION	ADDENDUMS / REVISIONS	SCALE 0 30 60 90 FEET	US 301 & SR 1 INTERCHANGE	CONTRACT T200911302	BRIDGE NO. BR1-433, RW1-3 & RW1-3R	CONSTRUCTION PLAN
				COUNTY NEW CASTLE	DESIGNED BY: J.A.D.	
					CHECKED BY: B.R.T.	

CP-03

SHEET NO. 38

TOTAL SHTS. 491

n:\31653-000\contract tb\cadd\CP003U301_1B.dgn
5/30/2013 11:54:52 AM

DRAINAGE PIPE SCHEDULE

NO.	SIZE / TYPE	CLASS	LENGTH	SLOPE	INV. EL.	DIS. EL.
403	18" RCP	IV	188	0.0056	17.09	16.04
404	15" RCP	IV	8	0.0057	29.26	29.22
406	18" RCP	IV	108	0.0404	56.51	52.16
410	18" RCP	IV	279	0.0070	19.85	17.91
412	24" RCP	IV	11	0.0030	26.28	26.25
413	12" RCP	IV	119	0.0050	51.21	50.62
414	18" RCP	IV	197	0.0036	17.91	17.20
415	18" RCP	IV	122	0.0040	17.20	16.71
416	24" RCP	IV	275	0.0030	24.62	23.80
418	18" RCP	IV	34	0.0095	52.48	52.16
*419	20" DIP	-	-	-	-	-
438	18" RCP	IV	73	0.0030	15.94	15.72
443	15" RCP	IV	73	0.0075	16.89	16.35
452	18" RCP	IV	9	0.0036	27.34	27.31
454	24" RCP	IV	209	0.0030	27.11	26.49
456	24" RCP	IV	67	0.0030	26.15	25.95
457	24" RCP	IV	183	0.0030	25.30	24.75
458	18" RCP	IV	2	0.0176	17.12	17.09
460	18" RCP	IV	25	0.0084	51.96	51.76
461	18" RCP	IV	118	0.0030	17.06	16.71
463	24" RCP	IV	11	0.0030	25.75	25.72
471	24" RCP	IV	6	0.0036	25.52	25.50
472	18" RCP	IV	13	0.0034	27.35	27.31
476	15" RCP	IV	15	0.0061	29.35	29.26
480	15" RCP	IV	17	0.0030	31.50	31.45

*SEE SPECIAL DETAIL FOR INLET DI-419, SEE SHEET DT-17

DRAINAGE INLET SCHEDULE

NO.	STATION	OFFSET	BOX SIZE	GRATE	T.G. EL.	INV. EL.
403	151+59.95	3.13	48"x30"	2	20.66	17.09
404	153+50.00	-3.56	34"x18"	2	20.09	15.94
*405	154+24.83	6.19	48"x30"	2	19.87	15.60
406	323+78.95	-8.54	34"x24"	2	61.57	56.51
409	318+16.06	23.98	*** 48"x30"	2	58.47	52.12
410	148+17.63	-55.11	*** 48"x30"	1	24.41	19.85
412	320+23.67	-78.02	48"x48"	2	34.53	26.28
414	151+00.01	-50.77	*** 48"x30"	1	22.27	17.91
415	153+00.02	-47.69	*** 48"x30"	1	21.61	17.20
416	1791+46.57	73.65	*** 72"x48"	2	31.75	24.62
418	865+23.89	-12.00	*** 72"x48"	2	56.63	52.48
**419	324+90.56	23.99	*** 34"x24"	2	58.54	16.71
*420	154+25.68	-45.76	*** 48"x30"	1	21.57	16.71
452	1786+78.10	91.32	*** 72"x48"	2	34.06	27.34
454	318+10.65	-67.62	48"x30"	2	33.57	27.11
457	1789+59.50	78.71	*** 72"x48"	2	33.02	25.30
*465	1786+99.40	-8.70	*** 34"x24"	2	34.10	29.20
466	1786+99.38	14.84	*** 34"x24"	2	34.14	29.35
471	320+95.74	-78.31	48"x48"	2	34.47	25.52
472	318+11.29	-51.07	48"x30"	2	38.74	27.35

* DRAINAGE INLET SHALL BE CAST IN PLACE TO CONNECT TO EXISTING PIPE AS SHOWN AND SHALL BE IN ACCORDANCE WITH STANDARD D-5
**SEE SPECIAL DETAIL, SHEET DT-17
***USE MODIFIED TOP SLAB AND UNIT, SEE DT-09 - DT-12

ROADWAY CORE SCHEDULE

NO.	STATION	OFFSET	DESCRIPTION
PC-201	148+00.85	28.72' LT.	7.25" HMA, 8" PCC
PC-202	148+01.21	58.41' LT.	11.25" HMA
PC-204	152+00.00	28.12' LT.	13.75" HMA, 8" PCC

ENDWALL SCHEDULE

NO.	SIZE/TYPE	STATION	OFFSET	INVERT
403	48" RCP	1015+00.00	-30.79	25.20

GUARDRAIL SCHEDULE

NO.	ITEM DESCRIPTION / TYPE	BEGIN STA.	OFFSET	LENGTH
016	GUARDRAIL TO BARRIER CONN., APPROACH TYPE 1-31	1786+66.96	-85.77	19.75
017	GALVANIZED STEEL BEAM GUARDRAIL, TYPE 1-31	1786+86.68	-84.75	215.63
018	GALVANIZED STEEL BEAM GUARDRAIL, TYPE 1-31	317+59.90	-6.00	465.10
019	END ANCHORAGE, TYPE 31	322+25.33	-6.00	12.50
020	GUARDRAIL TO BARRIER CONN., EXIT TYPE 31	1791+50.00	73.57	11.50
021	GALVANIZED STEEL BEAM GUARDRAIL, TYPE 1-31	1791+61.43	73.33	75.00
022	END ANCHORAGE, TYPE 31	1792+35.95	72.20	12.50
023	GUARDRAIL TO BARRIER CONN., APPROACH TYPE 1-31	1790+21.41	-8.69	19.75
024	GALVANIZED STEEL BEAM GUARDRAIL, TYPE 1-31	1790+41.16	-8.57	18.75
025	GALVANIZED STEEL BEAM GUARDRAIL, TYPE 3-31	1790+59.86	-5.84	218.75
026	GUARDRAIL END TREATMENT ATTENUATOR, TYPE 3-31	1792+78.73	-5.24	50.00
027	GALVANIZED STEEL BEAM GUARDRAIL, TYPE 3-31	147+00.00	-14.92	790.61

MANHOLE SCHEDULE

NO.	STATION	OFFSET	SIZE	T.G. EL.	INV. EL.
408	324+89.77	-4.23	48"X48"	58.51	51.96
418	320+24.69	-63.07	48"X48"	41.30	26.15
419	320+95.99	-64.10	48"X48"	41.56	25.75

FLARED END SECTION SCHEDULE

NO.	SIZE / TYPE	SLOPE	SAFETY GRATE
405	15" RCP	0.0062	NO
406	15" RCP	0.0030	NO

BARRIER SCHEDULE

NO.	ITEM DESCRIPTION / TYPE	BEGIN STA.	OFFSET	LENGTH
203	CONCRETE SINGLE FACE BARRIER, TYPE 1	1786+34.57	-8.70	55.34
204	BARRIER WALL III	1786+89.91	-8.70	117.67
205	CONCRETE SINGLE FACE BARRIER, TYPE 1	1788+07.57	-8.70	92.71
206	BARRIER WALL IV	1789+00.34	-8.70	120.99
207	CONCRETE SINGLE FACE BARRIER, TYPE 1	1786+24.57	14.85	35.71
208	BARRIER WALL V	1786+60.28	14.85	117.67
209	CONCRETE SINGLE FACE BARRIER, TYPE 1	1787+77.94	14.85	243.74
210	CONCRETE SINGLE FACE BARRIER, TYPE 2	1786+18.74	94.81	235.78
211	BARRIER WALL VI	1788+54.06	83.09	117.67
212	CONCRETE SINGLE FACE BARRIER, TYPE 2	1789+70.82	78.30	180.42
213	CONCRETE SINGLE FACE BARRIER, TYPE 1	317+63.84	24.00	799.15
214	CONCRETE SINGLE FACE BARRIER, MODIFIED TYPE 1	147+00.00	-56.92	775.09
*215	CONCRETE SINGLE FACE BARRIER, TYPE 2	154+75.00	-45.00	19.76

* PCC SIDEWALK TO BE PLACED BETWEEN BACK OF BARRIER AND FACE OF RETAINING WALL 1-3R. SEE TS-17 FOR MATERIALS AND DEPTHS.

CONVERT TO JUNCTION BOX SCHEDULE

NO.	STATION	OFFSET	T.C. EL.	INV. EL.
401	151+59.96	-2.01	21.13	17.12
402	154+25.22	-9.16	21.20	16.12

UTILITY TEST HOLE SCHEDULE

NO.	UTILITY	STATION	OFFSET	GRND EL.	COVER	O.D. & MATERIAL
TH-35	EX-ITS	1789+08.23	112.59' LT	27.03	0.94	4" BLACK PLASTIC CONDUIT
TH-36	ESNG-G	148+29.43	62.98' LT	23.80	3.23	10" COATED METAL PIPE
TH-37	ESNG-G	148+29.90	55.20' LT	23.88	2.73	16" WRAPPED METAL PIPE

UNDERDRAIN OUTLETS

NO.	LENGTH	DIS. EL.
007	21.32	27.23
008	48.81	36.85
009	6.30	59.19
010	16.63	20.84
011	14.80	18.93
012	13.78	17.83
013	13.79	17.83
033	10.00	--

UNOFFICIAL WEBSITE COPY

DRAINAGE PIPE SCHEDULE						
NO.	SIZE / TYPE	CLASS	LENGTH	SLOPE	INV. EL.	DIS. EL.
417	48" RCP	IV	20	0.1030	25.20	23.16
464	48" RCP	IV	223	0.0078	22.96	21.23
465	2' x 4' RCB	*	60	0.0031	21.23	21.05
483	2' x 4' RCB	*	60	0.0031	21.23	21.05

* SEE CONTRACT SPECIAL PROVISIONS.

MANHOLE SCHEDULE					
NO.	STATION	OFFSET	SIZE	T.S. EL.	INV. EL.
412	1015+00.17	-8.25	66"x66"	29.39	22.96
*414	1012+65.26	-5.84	132"X66"	28.18	21.23

* SEE SPECIAL DETAIL, SHEET DT-15.

ENDWALL SCHEDULE				
NO.	SIZE/TYPE	STATION	OFFSET	INVERT
*404	2-48"x24" RCP	1012+76.40	61.00	21.05

* SEE SPECIAL DETAIL, SHEET DT-14

UNDERDRAIN OUTLETS		
NO.	LENGTH	DIS. EL.
014	20.57	32.71
015	21.26	24.19

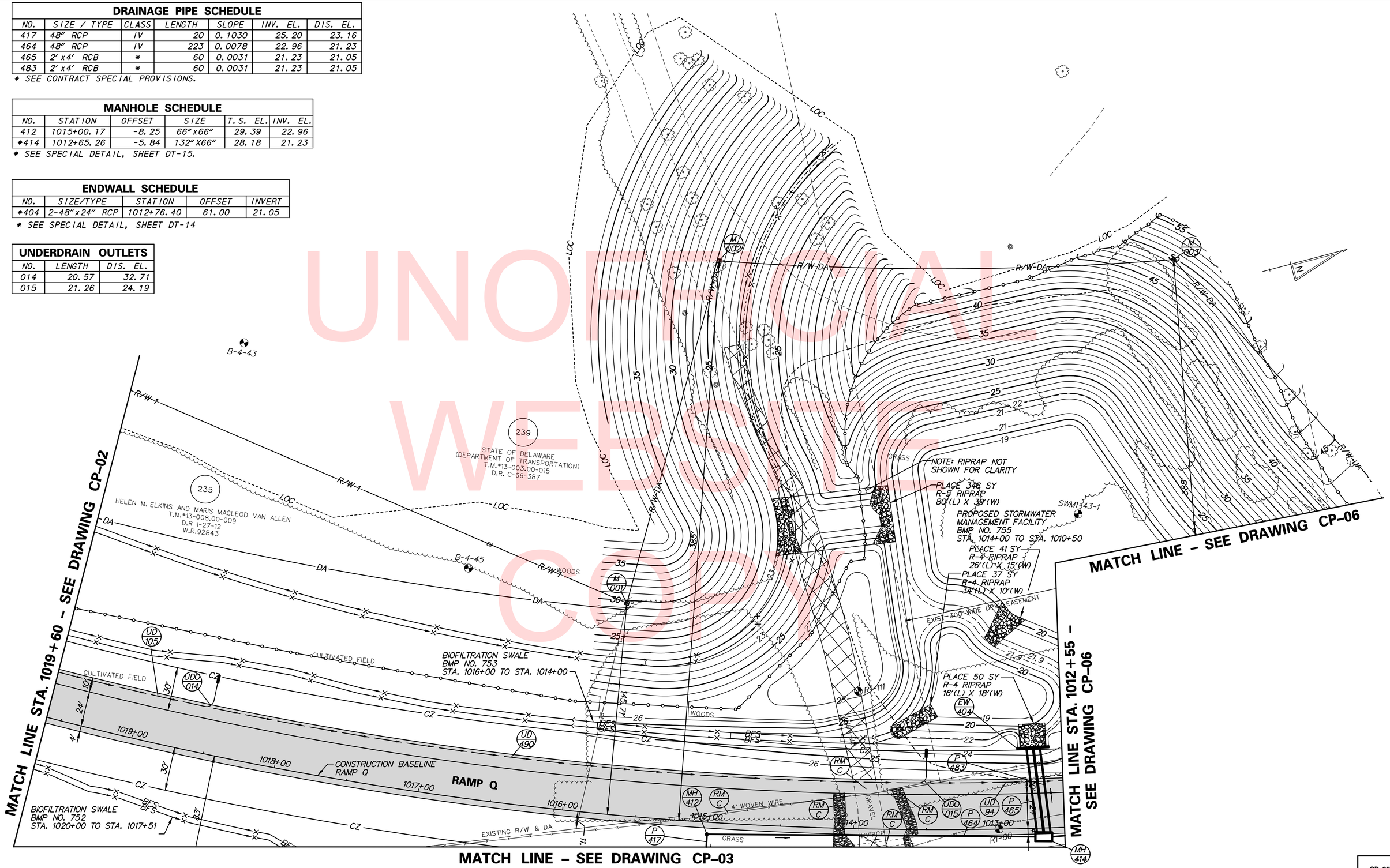

UNOFFICIAL WEBSITE COPY

DELAWARE
DEPARTMENT OF TRANSPORTATION

ADDENDUMS / REVISIONS

SCALE
0 30 60 90
FEET

US 301 &
SR 1 INTERCHANGE

CONTRACT	BRIDGE NO.
T200911302	DESIGNED BY: J.A.D.
COUNTY	
NEW CASTLE	CHECKED BY: B.R.T.

CONSTRUCTION PLAN

CP-05
SHEET NO.
40
TOTAL SHTS.
491

r:\31653-000\contract_tb\cadd\CP005U301_TB.dgn
5/30/2013 11:35:05 AM

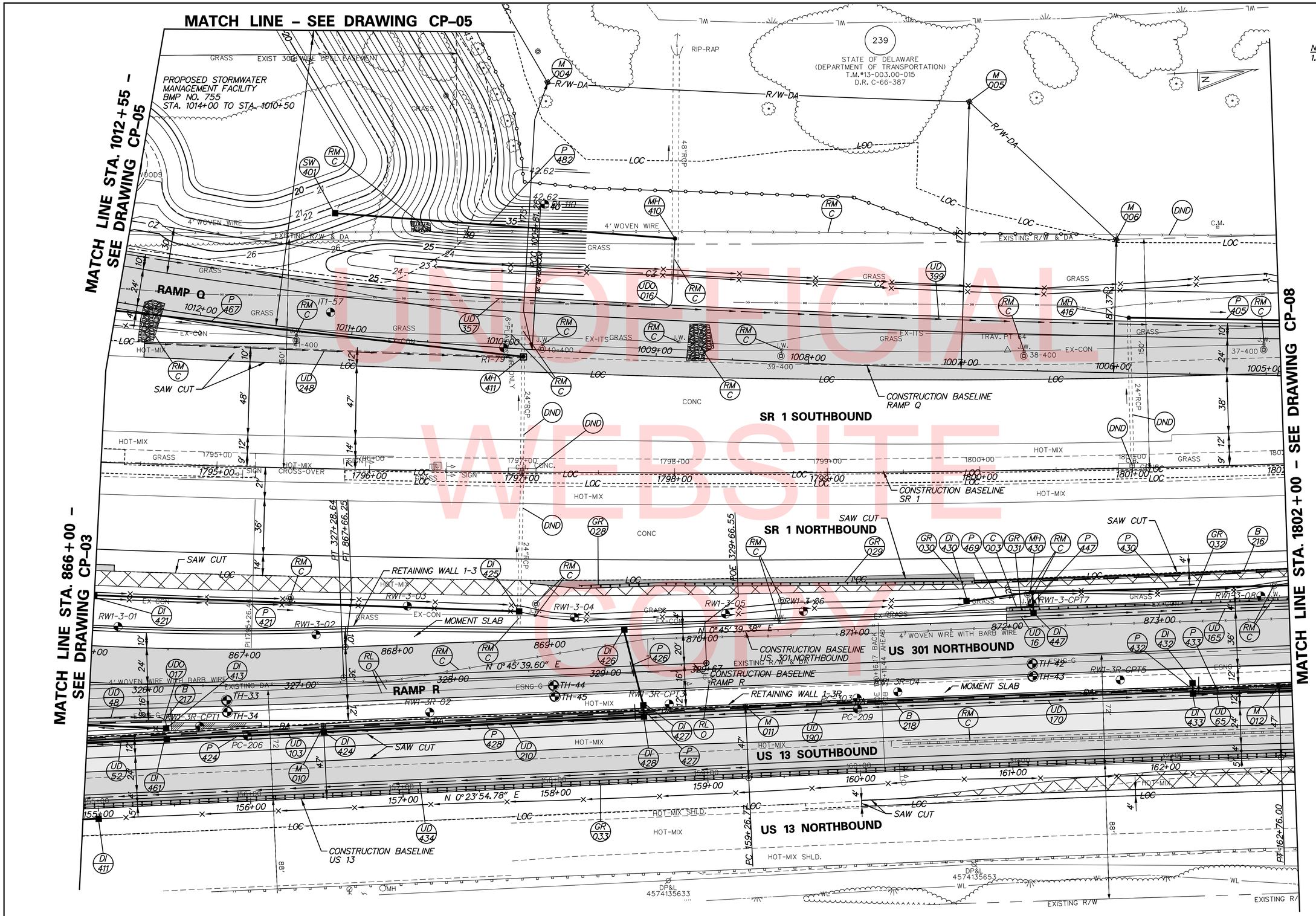

NOTES:
1. SEE SHEET CP-07 FOR CONSTRUCTION SCHEDULES

DELAWARE DEPARTMENT OF TRANSPORTATION

ADDENDUMS / REVISIONS

SCALE 0 30 60 90 FEET

US 301 & SR 1 INTERCHANGE

CONTRACT	BRIDGE NO. RW1-3 & RW1-3R
T200911302	DESIGNED BY: J.A.D.
COUNTY	CHECKED BY: B.R.T.
NEW CASTLE	

CONSTRUCTION PLAN

CP-06
SHEET NO. 41
TOTAL SHTS. 491

n:\31653-000\contract tb\cadd\CP006U301_1B.dgn
5/30/2013 11:59:12 AM

DRAINAGE INLET SCHEDULE

NO.	STATION	OFFSET	BOX SIZE	GRATE	T.G. EL.	INV. EL.
411	155+00.00	-6.90	34"x18"	2	20.09	16.89
413	326+11.54	29.52	34"x24"	2	53.78	51.21
421	866+00.00	-33.09	34"x24"	2	28.73	23.70
424	156+50.01	-45.00	**** 48"x30"	1	22.52	17.36
*425	868+80.96	-18.72	48"x48"	2	27.00	22.87
426	869+49.36	-6.00	**** 72"x48"	2	41.98	37.87
**427	329+24.19	28.00	**** 34"x24"	2	41.69	17.96
428	158+60.00	-45.00	**** 48"x30"	1	23.72	17.98
430	871+74.13	-14.96	34"x24"	2	25.22	21.73
***432	873+20.04	48.00	**** 34"x24"	2	29.14	18.06
433	162+19.69	-45.00	**** 48"x30"	1	23.63	17.83
447	872+17.75	-6.00	34"x24"	2	32.59	26.33
461	155+46.96	-45.00	**** 48"x30"	1	21.92	17.06

* DRAINAGE INLET SHALL BE CAST IN PLACE TO CONNECT TO EXISTING PIPE AS SHOWN AND SHALL BE IN ACCORDANCE WITH STANDARD D-5

** SEE SPECIAL DETAIL, SHEET DT-17

***ANY DRAINAGE INLET OR MANHOLE WITH A STRUCTURE DEPTH EXCEEDING THE MAXIMUM DEPTH PROVIDED IN THE DELDOT STANDARD CONSTRUCTION DETAILS WILL REQUIRE THE CONTRACTOR TO SUBMIT SHOP DRAWINGS IN ACCORDANCE WITH SECTION 105.04 OF THE STANDARD SPECIFICATIONS. COST FOR THESE STRUCTURES WILL BE INCIDENTAL TO THE RESPECTIVE STANDARD ITEM AS SPECIFIED ON THE CONSTRUCTION PLANS.

****USE MODIFIED TOP SLAB AND UNIT, SEE DT-09 - DT-12

DRAINAGE PIPE SCHEDULE

NO.	SIZE / TYPE	CLASS	LENGTH	SLOPE	INV. EL.	DIS. EL.
405	24" RCP	IV	158	0.0030	17.23	16.76
421	24" RCP	IV	276	0.0030	23.70	22.87
424	18" RCP	IV	100	0.0030	17.36	17.06
426	18" RCP	IV	48	0.0090	37.87	37.42
*427	20" DIP	-	-	-	-	-
428	18" RCP	IV	206	0.0030	17.98	17.36
430	18" RCP	IV	280	0.0052	21.32	19.88
432	15" RCP	IV	4	0.0098	18.06	18.03
433	18" RCP	IV	276	0.0081	17.83	15.59
447	18" RCP	IV	10	0.0124	26.33	26.21
467	24" RCP	IV	276	0.0030	22.07	21.23
469	18" RCP	IV	41	0.0052	21.73	21.52
482	48" RCP	IV	219	0.0043	19.28	18.35

* SEE SPECIAL DETAIL FOR INLET DI-427, SHEET DT-19

ROADWAY CORE SCHEDULE

NO.	STATION	OFFSET	DESCRIPTION
PC-206	156+00.00	42.59' LT	15.5" HMA, 8" PCC
PC-209	160+00.00	41.79' LT	16.5" HMA, 8" PCC

UNDERDRAIN OUTLETS

NO.	LENGTH	DIS. EL.
016	46.20	20.00
017	7.05	51.38

MANHOLE SCHEDULE

NO.	STATION	OFFSET	SIZE	T.G. EL.	INV. EL.
*410	1008+91.44	77.71	66"X66"	30.71	18.29
*411	1009+86.88	-5.01	48"X48"	27.01	22.07
*416	1005+90.74	36.24	48"X48"	23.67	17.23
430	872+17.46	-17.82	48"X48"	28.99	21.32

* MANHOLE SHALL BE CAST IN PLACE TO CONNECT TO EXISTING PIPE AS SHOWN AND SHALL BE IN ACCORDANCE WITH STANDARD D-5

BARRIER SCHEDULE

NO.	ITEM DESCRIPTION / TYPE	BEGIN STA.	OFFSET	LENGTH
216	CONCRETE SINGLE FACE BARRIER, TYPE 2	1799+95.21	72.00	205.72
217	CONCRETE SINGLE FACE BARRIER, TYPE 1	325+60.57	24.00	54.63
*218	CONCRETE SINGLE FACE BARRIER, TYPE 1	154+94.76	-45.00	790.37

* PCC SIDEWALK TO BE PLACED BETWEEN BACK OF BARRIER AND FACE OF RETAINING WALL 1-3R. SEE TS-17 FOR MATERIALS AND DEPTHS.

GUARDRAIL SCHEDULE

NO.	ITEM DESCRIPTION / TYPE	BEGIN STA.	OFFSET	LENGTH
028	GUARDRAIL END TREATMENT ATTENUATOR, TYPE 1-31	1797+38.11	74.06	50.00
029	GALVANIZED STEEL BEAM GUARDRAIL, TYPE 1-31	1797+89.24	72.00	187.50
030	GUARDRAIL TO BARRIER CONN., APPROACH TYPE 1-31	1799+75.58	72.00	19.75
031	GUARDRAIL TO BARRIER CONN., EXIT TYPE 31	872+00.00	-6.00	11.50
032	GALVANIZED STEEL BEAM GUARDRAIL, TYPE 1-31	872+11.50	-6.00	173.80
033	GALVANIZED STEEL BEAM GUARDRAIL, TYPE 3-31	154+90.66	-3.00	794.04

STORMWATER MANAGEMENT OUTLET STRUCTURE

NO.	STATION	OFFSET	BOX SIZE	T.S. EL.	INV. EL.
401	1010+88.13	79.94' RT	SEE DETAIL, SHEET SW-04	25.25	19.28

CURB AND GUTTER SCHEDULE

NO.	ITEM DESCRIPTION / TYPE	LENGTH
003	PCC CURB AND GUTTER, TYPE 1-4	21.17'

UTILITY TEST HOLE SCHEDULE

NO.	UTILITY	STATION	OFFSET	GRND EL.	COVER	O.D. & MATERIAL
TH-33	ESNG-G	866+88.52	33.50' RT	21.55	3.71	10" COATED METAL PIPE
TH-34	ESNG-G	866+88.96	41.07' RT	22.04	4.36	16" COATED METAL PIPE
TH-42	ESNG-G	872+15.66	29.06' RT	23.09	3.26	16" WRAPPED METAL PIPE
TH-43	ESNG-G	872+15.66	37.29' RT	24.07	4.44	10" COATED METAL PIPE
TH-44	ESNG-G	869+01.52	30.64' RT	22.97	3.63	16" COATED METAL PIPE
TH-45	ESNG-G	869+02.19	37.91' RT	23.19	4.57	16" COATED METAL PIPE

UNOFFICIAL WEBSITE COPY

NOTES:
1. SEE SHEET CP-09 FOR CONSTRUCTION SCHEDULES
2. CONNECT ROADWAY UNDERDRAIN OUTLET TO WINGWALL DRAINAGE SYSTEM. SEE DWG BR1-2 WW-01 FOR DETAIL.
3. UNDERDRAIN DOES NOT ALLOW FOLLOW ROADWAY GRADE. SLOPE UNDERDRAIN AT 0.3% TOWARDS UNDERDRAIN OUTLET.

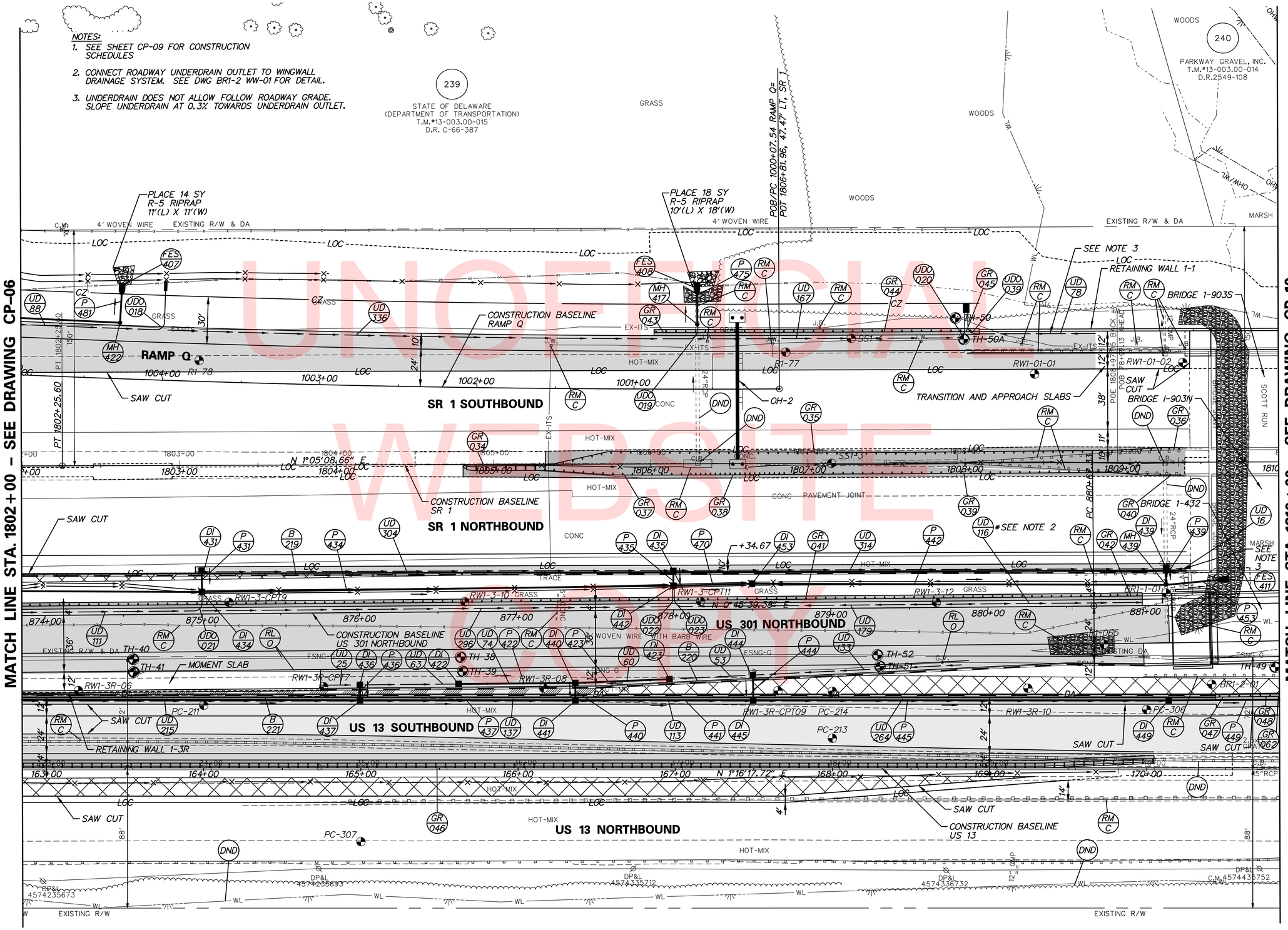

UNOFFICIAL WEBSITE COPY

DELAWARE DEPARTMENT OF TRANSPORTATION	ADDENDUMS / REVISIONS	SCALE 0 30 60 90 FEET	US 301 & SR 1 INTERCHANGE	CONTRACT T200911302 · COUNTY NEW CASTLE · BRIDGE NO. BR1-903N, BR1-903S, BR1-432, RW1-1 & RW1-3R · DESIGNED BY: J.A.D. · CHECKED BY: B.R.T. · CONSTRUCTION PLAN · CP-08 · SHEET NO. 43 · TOTAL SHTS. 491

N:\31653-000\CONTRACT 1B\CADD\CP008U301_1B.dgn 2/17/2015 10:31:18 AM

DRAINAGE INLET SCHEDULE

NO.	STATION	OFFSET	BOX SIZE	GRATE	T.G. EL.	INV. EL.
422	876+62.77	48.00	** 34"x24"	2	23.00	17.90
423	877+96.93	46.12	** 34"x24"	2	23.00	17.90
431	874+99.93	-25.56	** 34"x24"	2	24.00	20.00
434	875+00.00	-14.01	48"x30"	2	23.18	19.68
435	878+00.02	-23.86	** 34"x24"	2	21.49	17.42
436	876+00.00	48.00	** 34"x24"	2	23.40	17.02
437	164+99.46	-45.00	** 48"x30"	1	21.13	15.39
*439	881+13.66	-21.95	** 72"x48"	2	19.65	13.93
440	877+37.01	48.00	** 34"x24"	2	22.80	15.59
441	166+36.49	-45.00	** 48"x30"	1	19.08	13.53
442	878+00.02	-15.28	48"x30"	2	20.65	17.15
444	878+50.16	43.99	** 34"x24"	2	23.21	13.17
445	167+49.65	-45.00	** 48"x30"	1	16.61	11.15
449	170+13.97	-44.99	** 48"x30"	1	12.45	7.05
453	878+50.00	-16.14	34"x24"	2	20.36	16.47

* DRAINAGE INLET SHALL BE CAST IN PLACE TO CONNECT TO EXISTING PIPE AS SHOWN AND SHALL BE IN ACCORDANCE WITH STANDARD D-5
**USE MODIFIED TOP SLAB AND UNIT, SEE DT-09 - DT-12

MANHOLE SCHEDULE

NO.	STATION	OFFSET	SIZE	GRATE	T.G. EL.
*417	1000+59.77	41.14	48"X48"	20.72	11.40
422	1004+28.39	35.63	48"X48"	23.17	16.13
*439	881+13.68	-13.30	48"X48"	21.68	13.64

* MANHOLE SHALL BE CAST IN PLACE TO CONNECT TO EXISTING PIPE AS SHOWN AND SHALL BE IN ACCORDANCE WITH STANDARD D-5

FLARED END SECTION SCHEDULE

NO.	SIZE / TYPE	SLOPE	SAFETY GRATE
407	24" RCP	0.0100	NO
408	24" RCP	0.0030	NO
411	24" RCP	0.0575	NO

GUARDRAIL SCHEDULE

NO.	ITEM DESCRIPTION / TYPE	BEGIN STA.	OFFSET	LENGTH
034	END TREATMENT ATTENUATOR, TYPE 3-31	1804+83.02	2.38	50.00
035*	GALVANIZED STEEL BEAM GUARDRAIL, TYPE 1-31	1805+33.02	0.88	396.55
036	GUARDRAIL TO BARRIER CONN., EXIT TYPE 27	1809+28.56	-9.36	11.50
037	GALVANIZED STEEL BEAM GUARDRAIL, TYPE 1-31	1805+33.02	3.88	92.38
038	GALVANIZED STEEL BEAM GUARDRAIL, TYPE 2-31	1806+25.28	7.10	60.00
039*	GALVANIZED STEEL BEAM GUARDRAIL, TYPE 1-31	1806+85.28	6.94	235.06
040	GUARDRAIL TO BARRIER CONN.,APPROACH TYPE 1-27	1809+20.26	8.53	19.75
041	GALVANIZED STEEL BEAM GUARDRAIL, TYPE 1-31	873+85.27	-6.00	693.18
042	GUARDRAIL TO BARRIER CONN.,APPROACH TYPE 1-31	880+78.47	-6.16	19.75
043	END ANCHORAGE, TYPE 31	1806+04.01	-83.64	12.50
044	GALVANIZED STEEL BEAM GUARDRAIL, TYPE 1-31	1806+16.51	-83.57	181.25
045	GUARDRAIL TO BARRIER CONN., EXIT TYPE 31	1807+97.76	-83.57	11.50
046	GALVANIZED STEEL BEAM GUARDRAIL, TYPE 3-31	162+84.58	-3.00	720.09
047	GUARDRAIL TO BARRIER CONN.,APPROACH TYPE 1-31	170+43.88	-45.00	19.75
048	GALVANIZED STEEL BEAM GUARDRAIL, TYPE 1-31	170+64.05	-45.27	20.40
062	GUARDRAIL OVER CULVERTS, TYPE 3-31	170+82.80	-45.53	1.79

*INCLUDES GUARDRAIL TYPE 1-27 TO TYPE 1-31 TRANSITION SECTION PER STANDARD DETAIL B-7 TO BE MEASURED FOR PAYMENT UNDER ITEM 720050 GALVANIZED STEEL BEAM GUARDRAIL TYPE 1-31.

UNDERDRAIN OUTLETS

NO.	LENGTH	DIS. EL.
018	31.26	15.51
019	9.64	18.96
020	22.32	18.03
021	11.83	21.67
022	13.11	19.14
023	13.10	19.14
039	19.81	18.03

DRAINAGE PIPE SCHEDULE

NO.	SIZE / TYPE	CLASS	LENGTH	SLOPE	INV. EL.	DIS. EL.
422	18" RCP	IV	72	0.0100	17.90	17.19
423	18" RCP	IV	58	0.0124	17.90	17.19
431	18" RCP	IV	10	0.0121	20.00	19.88
434	18" RCP	IV	298	0.0078	19.68	17.35
435	18" RCP	IV	7	0.0113	17.42	17.35
436	15" RCP	IV	6	0.0100	17.02	16.96
437	18" RCP	IV	134	0.0125	15.39	13.73
439	24" RCP	IV	7	0.0100	13.93	13.86
440	18" RCP	IV	7	0.0081	15.59	15.53
441	18" RCP	IV	110	0.0200	13.53	11.35
442	18" RCP	IV	261	0.0100	16.47	13.86
444	18" RCP	IV	13	0.0044	13.17	13.12
445	18" RCP	IV	261	0.0150	11.15	7.25
*449	18" RCP	IV	95	0.0539	7.05	1.93
453	24" RCP	IV	23	0.0575	13.64	12.34
470	18" RCP	IV	48	0.0100	17.15	16.67
475	24" RCP	IV	19	0.0030	11.40	11.35
481	24" RCP	IV	18	0.0100	16.13	15.93

* FOR CONNECTION TO CULVERT, SEE DT-18

ROADWAY CORE SCHEDULE

NO.	STATION	OFFSET	DESCRIPTION
PC-211	164+00.00	39.77' LT.	16" HMA, BROKEN UP PCC
PC-213	168+00.00	18.85' LT.	15.75" HMA
PC-214	168+00.00	48.71' LT.	17.75" HMA

BARRIER SCHEDULE

NO.	ITEM DESCRIPTION / TYPE	BEGIN STA.	OFFSET	LENGTH
219	CONCRETE SINGLE FACE BARRIER, TYPE 2	1802+00.00	69.00	740.56
220	CONCRETE SINGLE FACE BARRIER, TYPE 1	875+75.00	48.00	524.25
*221	CONCRETE SINGLE FACE BARRIER, TYPE 2	162+84.44	-45.00	759.48

* PCC SIDEWALK TO BE PLACED BETWEEN BACK OF BARRIER AND FACE OF RETAINING WALL 1-3R. SEE TS-17 FOR MATERIALS, DEPTHS, AND LIMITS.

UTILITY TEST HOLE SCHEDULE

NO.	UTILITY	STATION	OFFSET	GRND EL.	COVER	O.D. & MATERIAL
TH-38	ESNG-G	876+64.31	28.97' RT	18.28	3.69	16" COATED METAL PIPE
TH-39	ESNG-G	876+65.55	38.05' RT	19.29	3.11	10" COATED METAL PIPE
TH-40	ESNG-G	874+55.98	28.40' RT	20.67	3.45	16" COATED METAL PIPE
TH-41	ESNG-G	874+56.17	36.55' RT	21.69	3.14	10" COATED METAL PIPE
TH-49	ESNG-G	881+81.81	40.72' RT	10.99	10.93	10" COATED METAL PIPE
TH-50	EX-ITS	1807+94.12	92.25' LT	15.19	-0.06	4" BLACK PLASTIC CONDUIT
TH-50A	EX-ITS	1807+99.39	78.71' LT	18.75	1.79	3" METAL PIPE
TH-51	ESNG-G	879+30.97	37.18' RT	14.03	2.67	10" COATED METAL PIPE
TH-52	ESNG-G	879+29.48	29.90' RT	13.10	6.80	16" COATED METAL PIPE

UNOFFICIAL WEB COPY

GUARDRAIL SCHEDULE

NO.	ITEM DESCRIPTION / TYPE	BEGIN STA.	OFFSET	LENGTH
049	GUARDRAIL TO BARRIER CONN., APPROACH TYPE 1-31	1817+79.55	-83.56	19.75
050	GUARDRAIL TO BARRIER CONN., EXIT TYPE 31	882+97.23	36.77	11.50
051	GALVANIZED STEEL BEAM GUARDRAIL, TYPE 1-31	883+08.69	36.90	462.50
052	END ANCHORAGE, TYPE 31	887+70.25	36.18	12.50
053	GUARDRAIL TO BARRIER CONN., EXIT TYPE 31	1811+02.88	68.84	11.50
054*	GALVANIZED STEEL BEAM GUARDRAIL, TYPE 1-31	1811+14.38	68.84	112.50
055	END ANCHORAGE, TYPE 31	1812+26.66	62.31	12.50
056	GUARDRAIL TO BARRIER CONN., EXIT TYPE 31	882+97.72	-6.02	11.50
057	GALVANIZED STEEL BEAM GUARDRAIL, TYPE 1-31	883+09.22	-5.88	100.00
058	END ANCHORAGE, TYPE 31	884+09.29	-6.00	12.50
059	GUARDRAIL TO BARRIER CONN., APPROACH TYPE 1-31	172+45.15	-45.95	19.75
060	GALVANIZED STEEL BEAM GUARDRAIL, TYPE 1-31	172+64.90	-45.95	225.00
061	GUARDRAIL END TREATMENT ATTENUATOR, TYPE 1-31	174+89.59	-55.40	50.00
063	GUARDRAIL TO BARRIER CONN., EXIT TYPE 31	171+70.29	-45.98	11.50
082	GUARDRAIL OVER CULVERT, TYPE 3-31	170+84.42	-45.55	73.21
083	GALVANIZED STEEL BEAM GUARDRAIL, TYPE 1-31	171+57.80	-45.94	12.5

*INCLUDES GUARDRAIL TYPE 1-27 TO TYPE 1-31 TRANSITION SECTION PER STANDARD DETAIL B-7 TO BE MEASURED FOR PAYMENT UNDER ITEM 720050 GALVANIZED STEEL BEAM GUARDRAIL TYPE 1-31.

BARRIER SCHEDULE

NO.	ITEM DESCRIPTION / TYPE	BEGIN STA.	OFFSET	LENGTH
222	CONCRETE SINGLE FACE BARRIER, TYPE 2	171+81.79	-46.00	63.36
223	CONCRETE SINGLE FACE BARRIER, TYPE 1	1811+02.60	-83.58	61.85
*224	CONCRETE SINGLE FACE BARRIER, TYPE 1	1811+64.44	-83.75	285.56
*225	BIFURCATED CONC MEDIAN BARRIER (MOD.)	1814+50.00	-83.75	329.55

*SLOTTED DRAIN THROUGH BARRIER, SEE DT-05.

DRAINAGE PIPE SCHEDULE

NO.	SIZE / TYPE	CLASS	LENGTH	SLOPE	INV. EL.	DIS. EL.
401	18" RCP	IV	92	0.0403	13.52	9.84
407	24" RCP	IV	215	0.0044	4.51	3.57
411	24" RCP	IV	30	0.0030	4.80	4.71
420	24" RCP	IV	26	0.0639	6.68	5.03
*429	24" RCP	IV	113	0.0049	3.35	2.80
478	18" RCP	IV	19	0.0200	12.11	11.73

* FOR CONNECTION TO CULVERT, SEE DT-18

ROADWAY CORE SCHEDULE

NO.	STATION	OFFSET	DESCRIPTION
PC-218	174+50.00	27.95' LT.	15" HMA, 8" PCC
PC-219	174+50.00	41.91' LT.	13.25" HMA, 8.25" PCC

240

PARKWAY GRAVEL, INC.
T.M.#13-003.00-014
D.R.2549-108

FLARED END SECTION SCHEDULE

NO.	SIZE / TYPE	SLOPE	SAFETY GRATE
409	18" RCP	0.0200	NO

DRAINAGE INLET SCHEDULE

NO.	STATION	OFFSET	BOX SIZE	GRATE	T.G. EL.	INV. EL.
401	885+00.00	-14.63	2 - 72"x24"	2	16.83	13.52
402	174+60.00	-67.30	34"x18"	2	10.30	4.51
407	885+89.98	56.34	48"x48"	2	10.08	4.80
429	172+43.24	-45.99	*48"x48"	1	11.61	3.35
473	1811+64.44	-83.75	*34"x24"	2	17.83	12.11

*USE MODIFIED TOP SLAB AND UNIT, SEE DT-09 - DT-12

UNDERDRAIN OUTLETS

NO.	LENGTH	DIS. EL.
024	14.60	12.75
025	14.60	12.75
026	18.66	14.19
*027	2.73	14.56
028	6.80	14.87
029	21.78	11.19
030	21.78	11.19

*OUTFALL EXISTING UNDERDRAIN TO MANHOLE. EXISTING UNDERDRAIN TO REMAIN FROM STA. 1811+00 TO STA. 814+04.

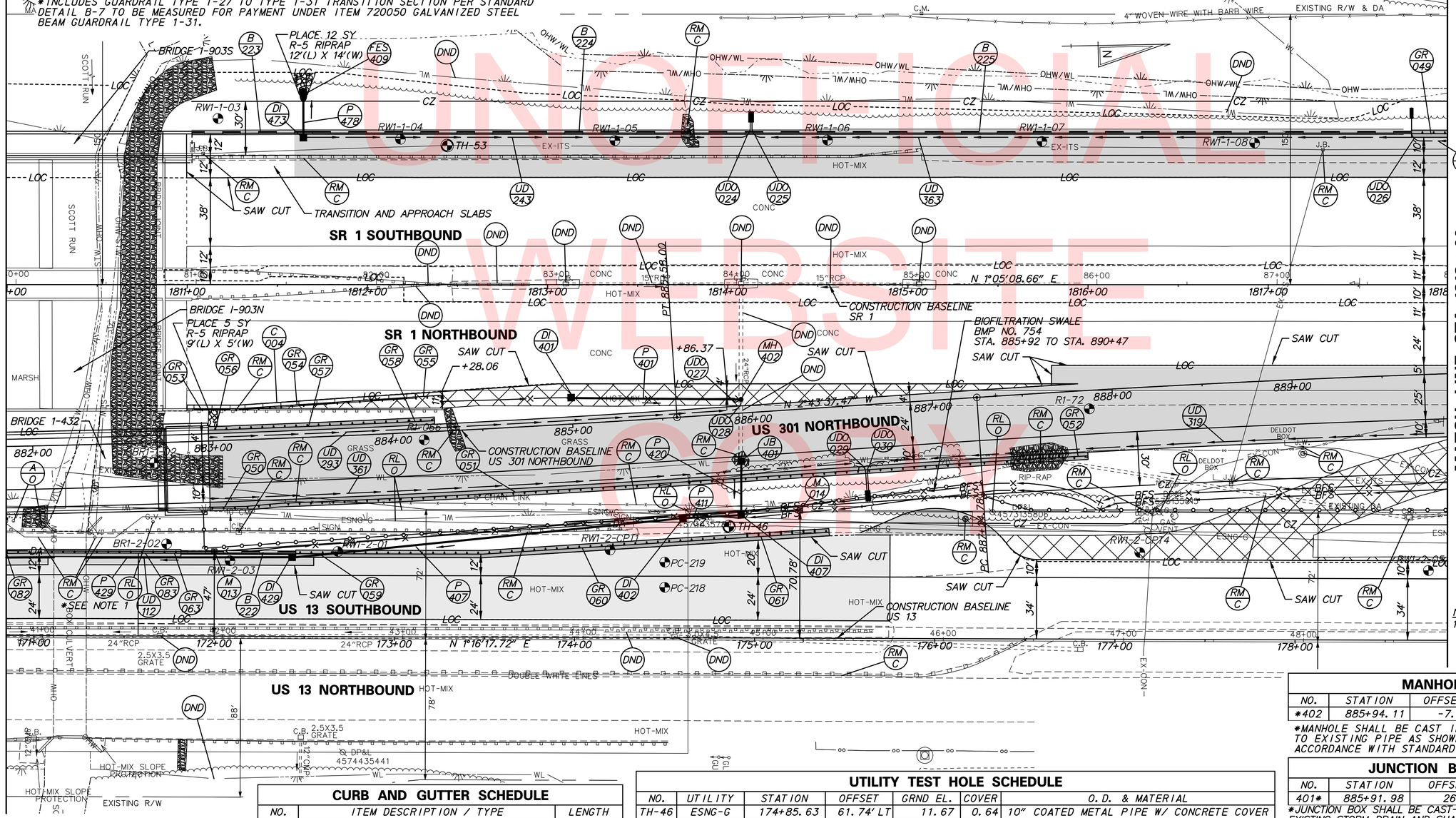

NOTES:
1. SEE SHEET DT-13 FOR EXISTING GAS LINE REMOVAL DETAILS

MANHOLE SCHEDULE

NO.	STATION	OFFSET	SIZE	T.G. EL.	INV. EL.
*402	885+94.11	-7.58	48"x48"	17.43	9.64

*MANHOLE SHALL BE CAST IN PLACE TO CONNECT TO EXISTING PIPE AS SHOWN AND SHALL BE IN ACCORDANCE WITH STANDARD D-5

JUNCTION BOX SCHEDULE

NO.	STATION	OFFSET	T.C. EL.	INV. EL.
401*	885+91.98	26.60	17.76	6.68

*JUNCTION BOX SHALL BE CAST-IN-PLACE TO CONNECT TO EXISTING STORM DRAIN AND SHALL BE IN ACCORDANCE WITH STANDARD D-5

CURB AND GUTTER SCHEDULE

NO.	ITEM DESCRIPTION / TYPE	LENGTH
004	PCC CURB AND GUTTER, TYPE 1-4	126.84

UTILITY TEST HOLE SCHEDULE

NO.	UTILITY	STATION	OFFSET	GRND EL.	COVER	O.D. & MATERIAL
TH-46	ESNG-G	174+85.63	61.74' LT	11.67	0.64	10" COATED METAL PIPE W/ CONCRETE COVER
TH-53	EX-ITS	1812+44.28	77.17' LT	16.78	1.51	4" BLACK PLASTIC CONDUIT

UNOFFICIAL WEBSITE COPY

DELAWARE DEPARTMENT OF TRANSPORTATION

ADDENDUMS / REVISIONS

SCALE 0 30 60 90 FEET

US 301 & SR 1 INTERCHANGE

CONTRACT	BRIDGE NO.	BR1-903N, BR1-903S, BR1-432 & RW1-1
T200911302	DESIGNED BY: J.A.D.	
COUNTY		
NEW CASTLE	CHECKED BY: B.R.T.	

CONSTRUCTION PLAN

CP-10

SHEET NO. 45

TOTAL SHTS. 491

N:\38653-000\CONTRACT\B\CADD\CP010U301_1B.dgn
2/17/2015 10:44:14 AM

GUARDRAIL SCHEDULE

NO.	ITEM DESCRIPTION / TYPE	BEGIN STA.	OFFSET	LENGTH
064	GALVANIZED STEEL BEAM GUARDRAIL, TYPE 1-31	1818+00.00	-83.57	798.93
065	END TREATMENT ATTENUATOR, TYPE 3-31	1818+99.68	4.76	50.00
066	GALVANIZED STEEL BEAM GUARDRAIL, TYPE 1-31	1819+49.68	3.26	250.56
067	END TREATMENT ATTENUATOR, TYPE 3-31	1821+99.28	2.00	50.00
068	GALVANIZED STEEL BEAM GUARDRAIL, TYPE 1-31	1819+49.68	6.26	249.80
069	GUARDRAIL END TREATMENT ATTENUATOR, TYPE 2-31	1818+99.30	86.05	50.00
070	GALVANIZED STEEL BEAM GUARDRAIL, TYPE 1-31	1819+49.30	83.22	550.00

UTILITY TEST HOLE SCHEDULE

NO.	UTILITY	STATION	OFFSET	GRND EL.	COVER	O.D. & MATERIAL
TH-54	ESNG-G	184+89.84	53.83' LT	31.05	4.72	16" COATED METAL PIPE
TH-55	ESNG-G	184+78.18	58.32' LT	30.92	3.66	10" COATED METAL PIPE W/ CONCRETE COVER
TH-57	ESNG-G	179+29.49	60.00' LT	20.37	3.00	10" COATED METAL PIPE
TH-58	EX-ITS	1819+28.75	75.84' LT	21.95	1.02	3" BLACK PLASTIC CONDUIT
TH-59	EX-ITS	1825+14.61	77.53' LT	37.47	2.45	4" BLACK PLASTIC CONDUIT

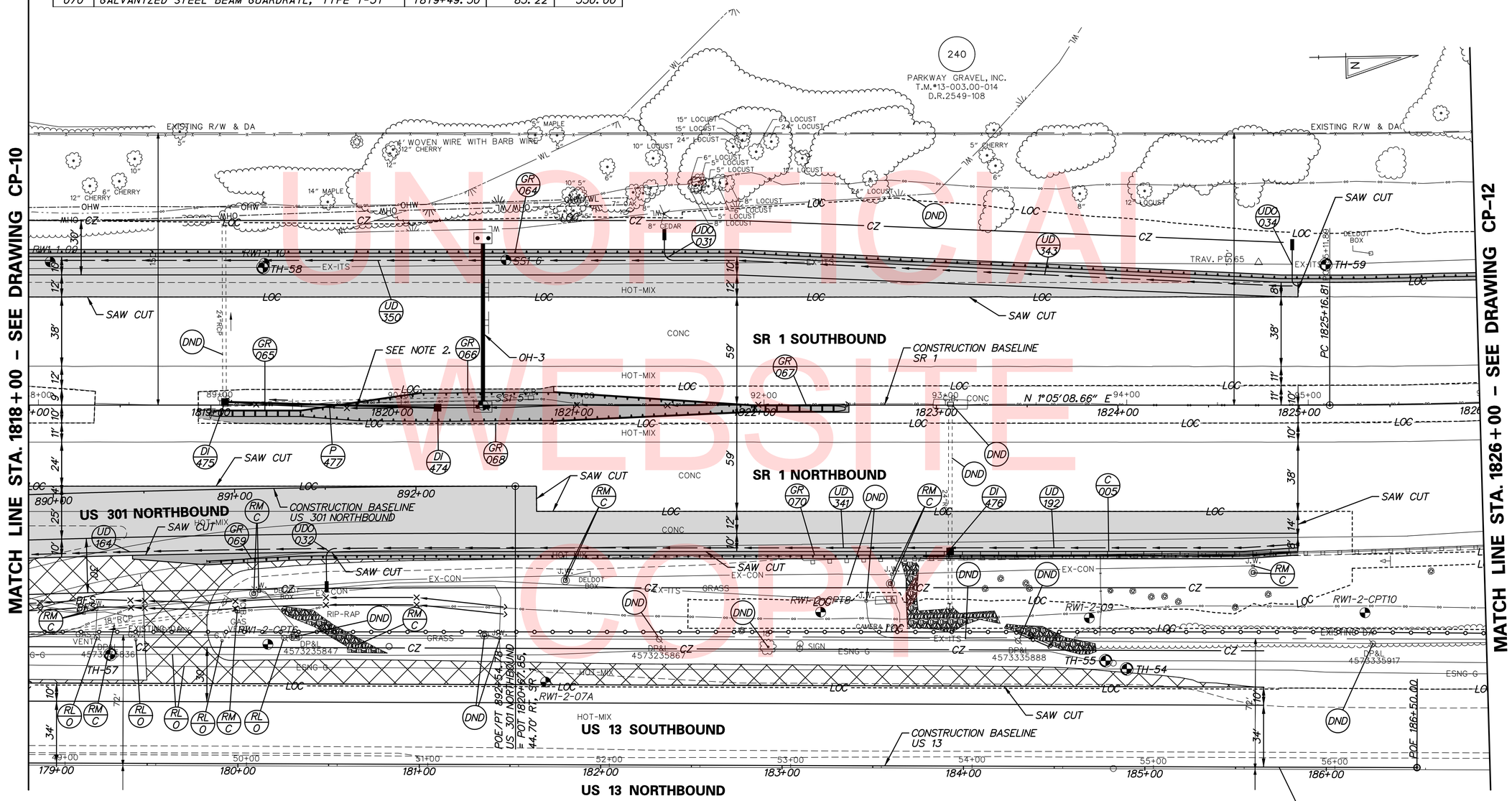

DRAINAGE INLET SCHEDULE

NO.	STATION	OFFSET	BOX SIZE	GRATE	T.G. EL.	INV. EL.
474	1820+25.00	1.44	34"x24"	2	23.91	20.62
*475	1819+07.76	-1.69	34"x24"	2	21.97	15.08
*476	1823+07.54	80.65	34"x24"	2	34.02	25.32

*DRAINAGE INLET SHALL BE CAST IN PLACE TO CONNECT TO EXISTING PIPE AS SHOWN AND SHALL BE IN ACCORDANCE WITH STANDARD D-5

CURB AND GUTTER SCHEDULE

NO.	ITEM DESCRIPTION / TYPE	LENGTH
005	PCC CURB AND GUTTER, TYPE 1-4	206.45

DRAINAGE PIPE SCHEDULE

NO.	SIZE / TYPE	CLASS	LENGTH	SLOPE	INV. EL.	DIS. EL.
477	18" RCP	IV	116	0.0167	20.62	18.69

UNDERDRAIN OUTLETS

NO.	LENGTH	DIS. EL.
031	17.55	23.53
032	21.40	20.53
034	21.41	34.51

NOTES:

1. CONTRACTOR SHALL TAKE CARE NOT TO DAMAGE ITMS CONDUITS INSTALLED IN PHASE 1. CONTRACTOR SHALL TEST PIT AS NECESSARY PRIOR TO ANY WORK IN THIS AREA. CONTRACTOR SHALL SUPPORT AND PROTECT THESE CONDUITS DURING W-BEAM AND STORM DRAIN INSTALLATION.

UNOFFICIAL WEBSITE COPY

DELAWARE DEPARTMENT OF TRANSPORTATION

ADDENDUMS / REVISIONS

SCALE 0 30 60 90 FEET

US 301 & SR 1 INTERCHANGE

CONTRACT	BRIDGE NO.
T200911302	DESIGNED BY: J.A.D.
COUNTY	
NEW CASTLE	CHECKED BY: B.R.T.

CONSTRUCTION PLAN

CP-11
SHEET NO. 46
TOTAL SHTS. 491

r:\31653-000\contract tb\cadd\CP011U301_1B.dgn 5/30/2013 11:56:00 AM

GUARDRAIL SCHEDULE				
NO.	ITEM DESCRIPTION / TYPE	BEGIN STA.	OFFSET	LENGTH
071	GALVANIZED STEEL BEAM GUARDRAIL, TYPE 1-31	1826+00.00	-69.89	104.05

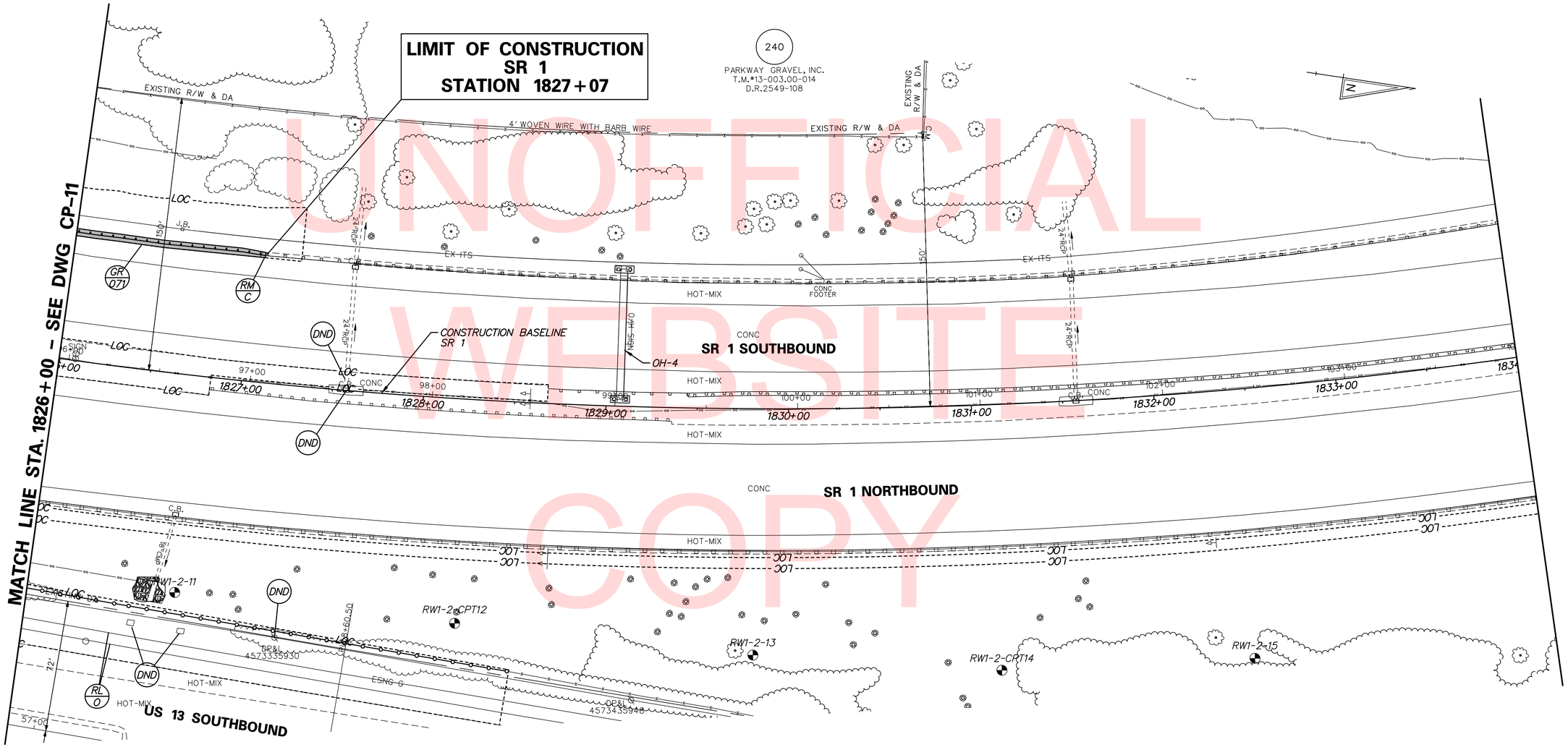

UNOFFICIAL WEBSITE COPY

SEE FIELD OFFICE, STOCKPILE, AND STAGING AREA, SEE SHEET GR-02

DELAWARE DEPARTMENT OF TRANSPORTATION	ADDENDUMS / REVISIONS	SCALE 0 30 60 90 FEET	US 301 & SR 1 INTERCHANGE	CONTRACT T200911302	BRIDGE NO.	CONSTRUCTION PLAN	CP-12
				COUNTY NEW CASTLE	DESIGNED BY: J.A.D.		SHEET NO. 47
					CHECKED BY: B.R.T.		TOTAL SHTS. 491

pw:\31653-000\contract_tb\cadd\CP012U301_1B.dgn
5/30/2013 11:56:08 AM

UNDERDRAIN OUTLETS		
NO.	LENGTH	DIS. EL.
036	20.98	30.67
037	19.55	29.61
038	40.17	31.86

DRAINAGE INLET SCHEDULE						
NO.	STATION	OFFSET	BOX SIZE	GRATE	T.G. EL.	INV. EL.
408	316+50.05	-49.32	48"x30"	2	31.11	27.79
479	1784+98.31	0.30	34"x24"	2	33.95	31.15
583	315+00.58	-33.64	34"x24"	2	32.16	28.84

DRAINAGE PIPE SCHEDULE						
NO.	SIZE / TYPE	CLASS	LENGTH	SLOPE	INV. EL.	DIS. EL.
408	18" RCP	IV	160	0.0030	27.79	27.31
459	18" RCP	IV	154	0.0468	52.12	44.91
*479	15" RCP	IV	146	0.0029	31.15	30.72
583	18" RCP	IV	148	0.0057	28.84	27.99

*PIPE SHALL CONNECT TO EXISTING INLET AS SHOWN

GUARDRAIL SCHEDULE				
NO.	ITEM DESCRIPTION / TYPE	BEGIN STA.	OFFSET	LENGTH
072	GUARDRAIL TO BARRIER CONN., APPROACH TYPE 1-31	1784+81.56	14.85	19.75
073	GALVANIZED STEEL BEAM GUARDRAIL, TYPE 1-31	1784+50.31	15.14	31.25
074	GALVANIZED STEEL BEAM GUARDRAIL, TYPE 3-31	1781+56.56	14.33	293.75
075	GUARDRAIL END TREATMENT ATTENUATOR, TYPE 3-31	1781+16.56	14.38	50.00
076	GALVANIZED STEEL BEAM GUARDRAIL, TYPE 1-31	316+00.00	-6.00	159.90
077	GUARDRAIL END TREATMENT ATTENUATOR, TYPE 3-31	146+29.95	-16.00	50.00
078	GALVANIZED STEEL BEAM GUARDRAIL, TYPE 3-31	146+79.95	-15.23	20.03
079	GUARDRAIL TO BARRIER CONN., EXIT TYPE 31	1780+68.09	153.06	11.50
080	GALVANIZED STEEL BEAM GUARDRAIL, TYPE 1-31	1780+79.52	151.76	505.19
081	GUARDRAIL TO BARRIER CONN., APPROACH TYPE 31	1785+81.56	97.89	19.75

NOTES:
1. TIE-IN PROPOSED UNDERDRAIN WITH EXISTING UNDERDRAIN.

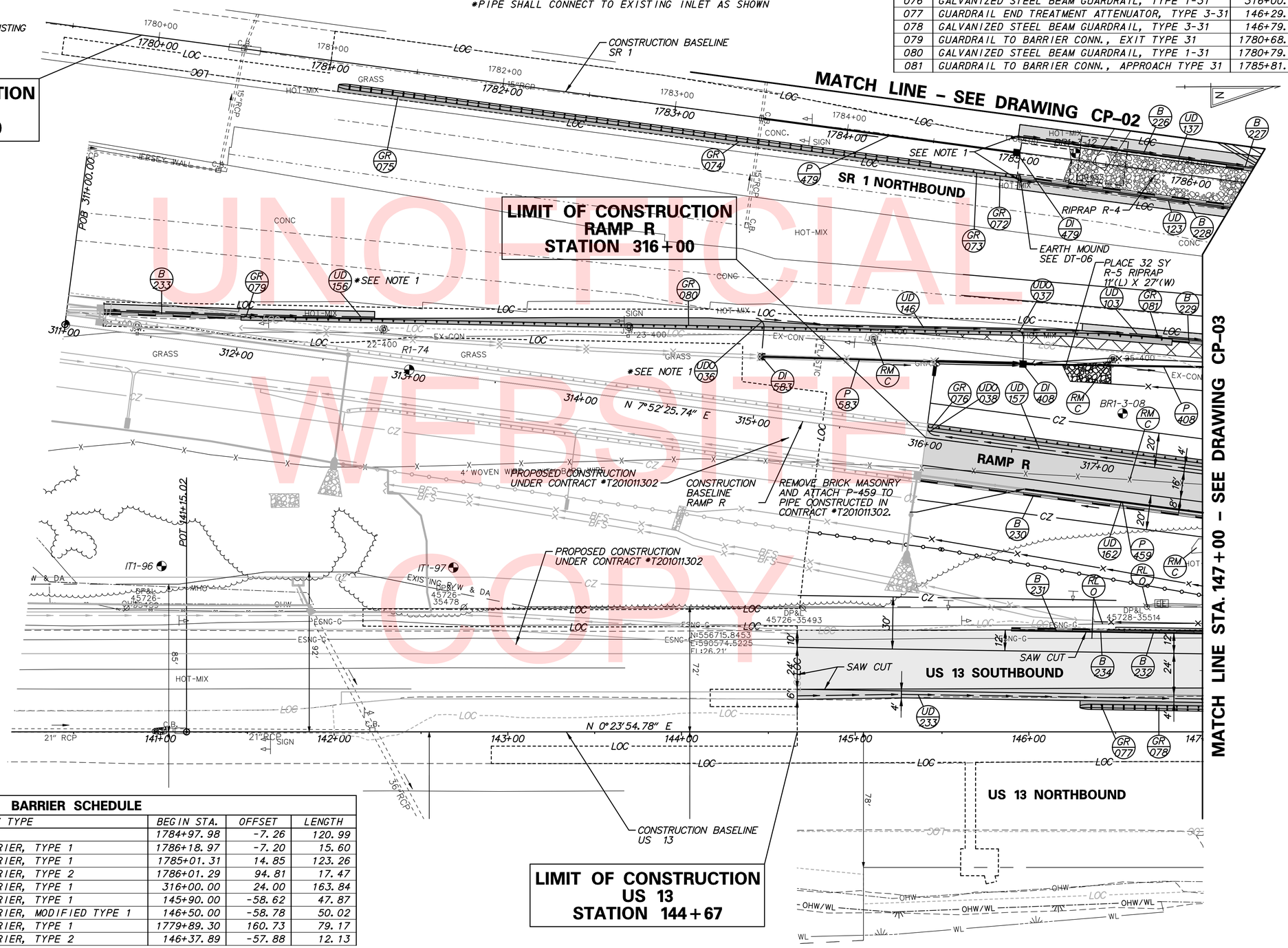

BARRIER SCHEDULE				
NO.	ITEM DESCRIPTION / TYPE	BEGIN STA.	OFFSET	LENGTH
226	BARRIER WALL II	1784+97.98	-7.26	120.99
227	CONCRETE SINGLE FACE BARRIER, TYPE 1	1786+18.97	-7.20	15.60
228	CONCRETE SINGLE FACE BARRIER, TYPE 1	1785+01.31	14.85	123.26
229	CONCRETE SINGLE FACE BARRIER, TYPE 2	1786+01.29	94.81	17.47
230	CONCRETE SINGLE FACE BARRIER, TYPE 1	316+00.00	24.00	163.84
231	CONCRETE SINGLE FACE BARRIER, TYPE 1	145+90.00	-58.62	47.87
232	CONCRETE SINGLE FACE BARRIER, MODIFIED TYPE 1	146+50.00	-58.78	50.02
233	CONCRETE SINGLE FACE BARRIER, TYPE 1	1779+89.30	160.73	79.17
234	CONCRETE SINGLE FACE BARRIER, TYPE 2	146+37.89	-57.88	12.13

UNOFFICIAL WEBSITE COPY

DELAWARE DEPARTMENT OF TRANSPORTATION

ADDENDUMS / REVISIONS

SCALE 0 30 60 90 FEET

US 301 & SR 1 INTERCHANGE

CONTRACT	BRIDGE NO. RW1-3R
T200911302	DESIGNED BY: J.A.D.
COUNTY	CHECKED BY: B.R.T.
NEW CASTLE	

CONSTRUCTION PLAN

CP-13
SHEET NO. 48
TOTAL SHTS. 491

p:\31653_000\contract tb\cadd\CP013U301_1B.dgn 5/30/2013 11:56:13 AM

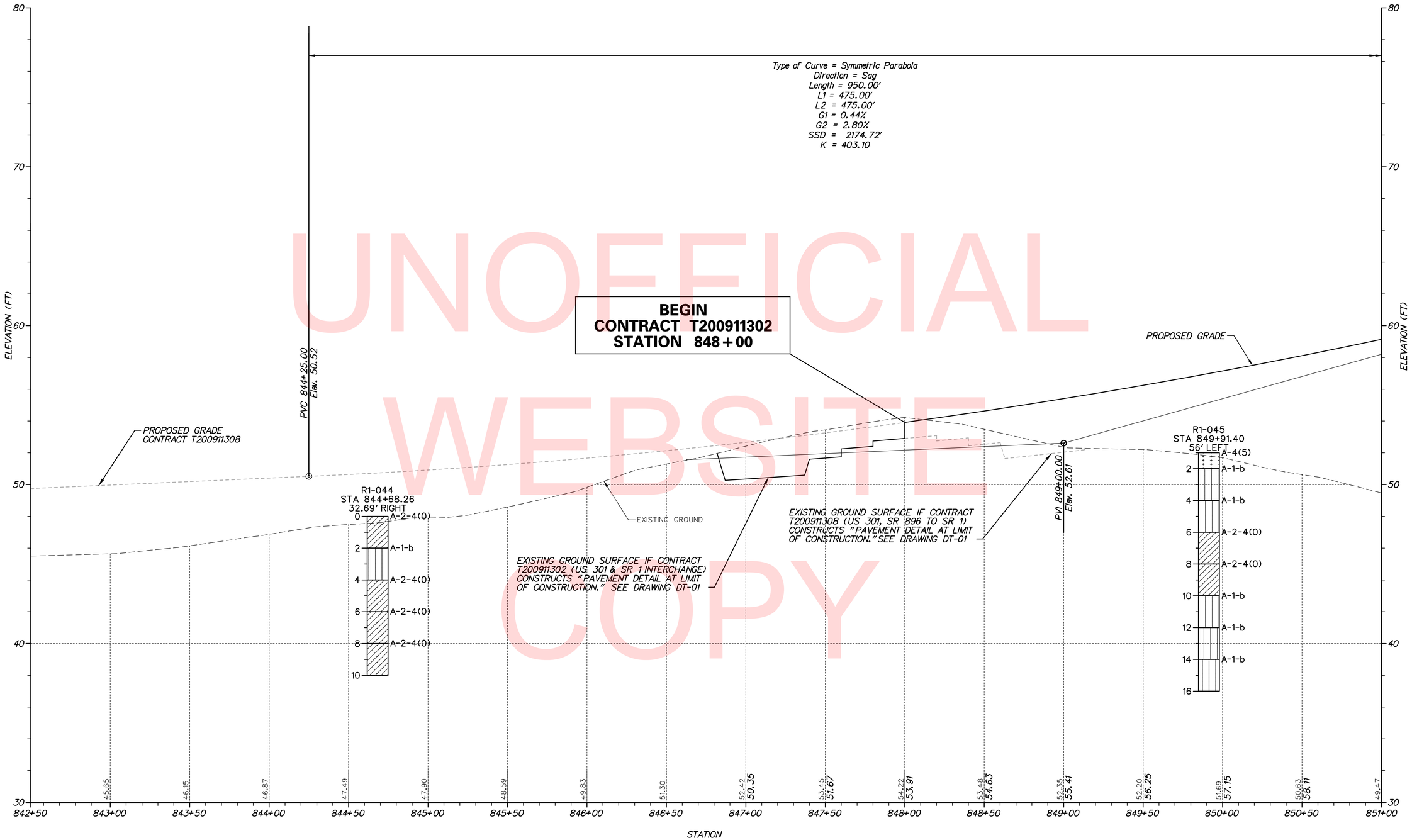

UNOFFICIAL WEBSITE COPY

US 301 – NORTHBOUND

NOTE:
BORINGS ARE PROVIDED FOR INFORMATIONAL PURPOSES ONLY.
MATERIALS ENCOUNTERED MAY NOTCORRESPOND TO BORING DATA PROVIDED HEREIN.

VERTICAL SCALE FEET 0 3 6 9

PF-01

n:\31653-000\contract tb\cadd\PF001U301_TB.dgn
2/6/2013 3:56:59 PM

DELAWARE DEPARTMENT OF TRANSPORTATION

ADDENDUMS / REVISIONS

SCALE 0 30 60 90 FEET

US 301 & SR 1 INTERCHANGE

CONTRACT	BRIDGE NO.	
T200911302	DESIGNED BY: S.E.S.	
COUNTY		
NEW CASTLE	CHECKED BY: B.R.T.	

PROFILES

SHEET NO. 49
TOTAL SHTS. 491

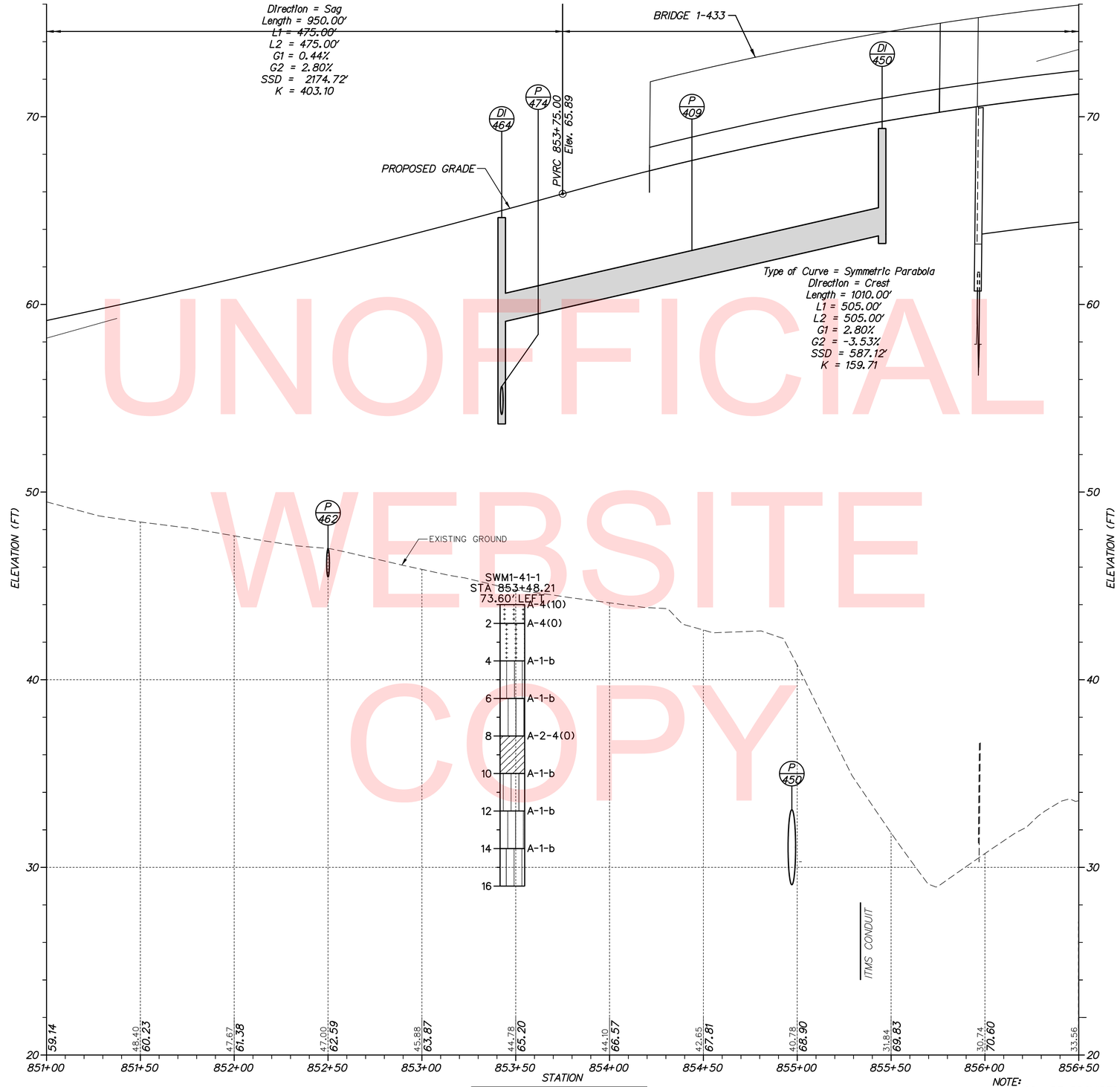

UNOFFICIAL WEBSITE COPY

US 301 – NORTHBOUND

NOTE:
BORINGS ARE PROVIDED FOR INFORMATIONAL PURPOSES ONLY.
MATERIALS ENCOUNTERED MAY NOT CORRESPOND TO BORING DATA PROVIDED HEREIN.

VERTICAL SCALE FEET 0 3 6 9

PF-02

r:\31653-000\contract_tb\cadd\PF002U301_1B.dgn
2/6/2013 3:57:07 PM

DELAWARE DEPARTMENT OF TRANSPORTATION	ADDENDUMS / REVISIONS	SCALE 0 30 60 90 FEET	US 301 & SR 1 INTERCHANGE	CONTRACT T200911302	BRIDGE NO.	PROFILES
				COUNTY NEW CASTLE	DESIGNED BY: S.E.S.	SHEET NO. 50
					CHECKED BY: B.R.T.	TOTAL SHTS. 491

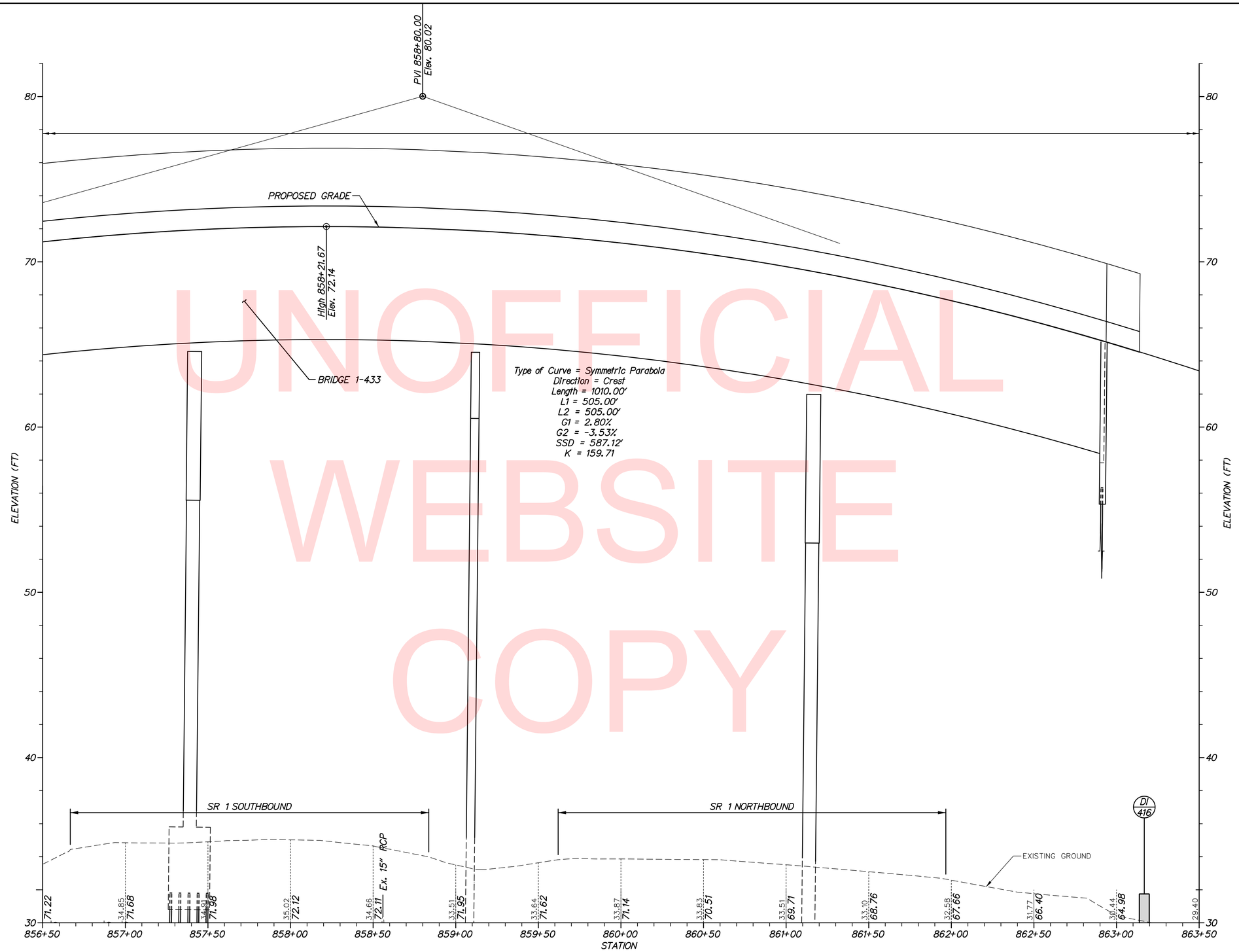

UNOFFICIAL WEBSITE COPY

US 301 – NORTHBOUND

VERTICAL SCALE FEET 0 3 6 9

PF-03

DELAWARE DEPARTMENT OF TRANSPORTATION

ADDENDUMS / REVISIONS

SCALE 0 30 60 90 FEET

US 301 & SR 1 INTERCHANGE

CONTRACT	BRIDGE NO.
T200911302	DESIGNED BY: S.E.S.
COUNTY	CHECKED BY: B.R.T.
NEW CASTLE	

PROFILES

SHEET NO. 51

TOTAL SHTS. 491

n:\31653-000\contract tb\cadd\PF003U301_tB.dgn
2/6/2013 3:57:13 PM

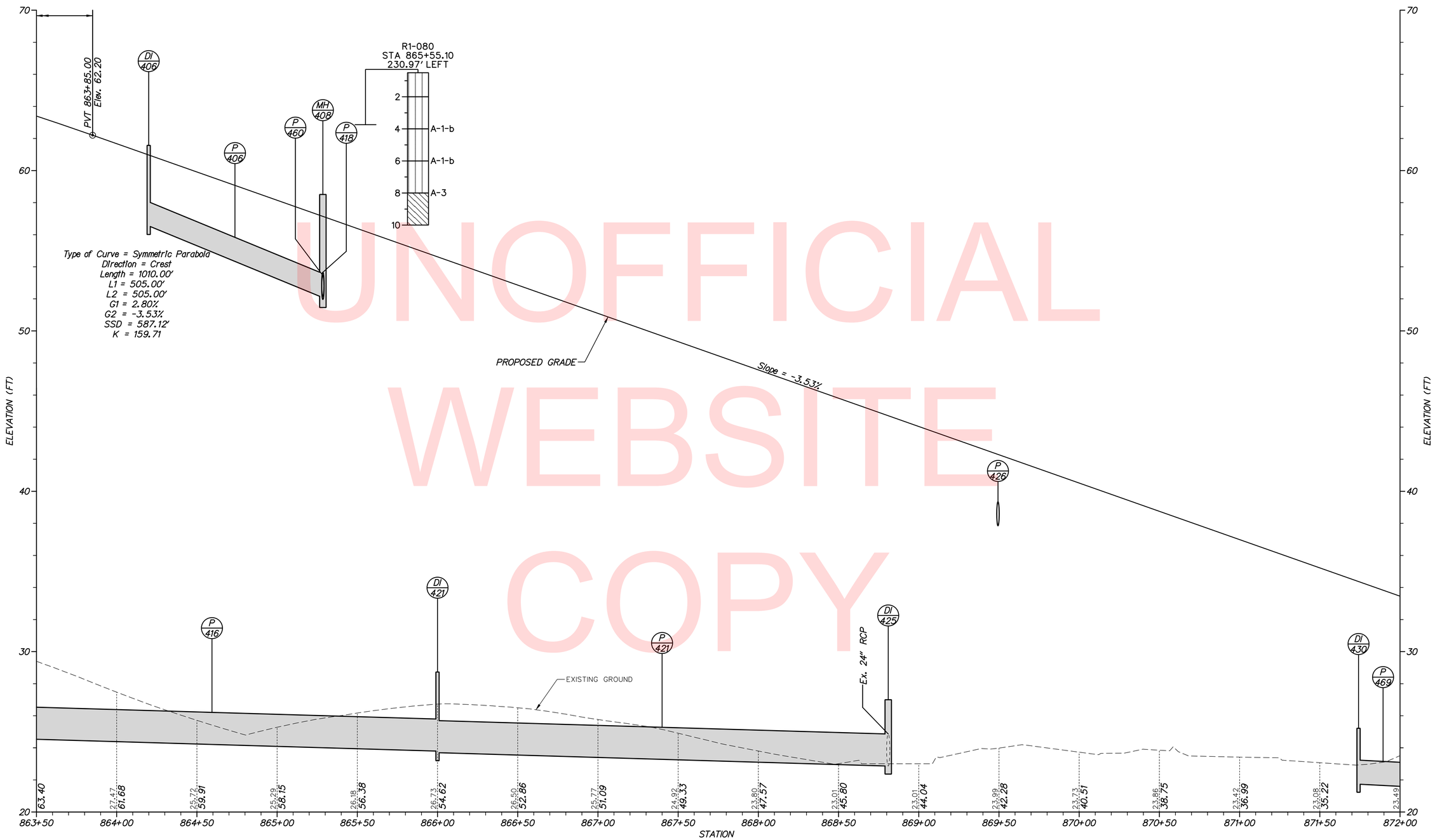

UNOFFICIAL WEBSITE COPY

US 301 – NORTHBOUND

VERTICAL SCALE FEET 0 3 6 9

NOTE:
BORINGS ARE PROVIDED FOR INFORMATIONAL PURPOSES ONLY.
MATERIALS ENCOUNTERED MAY NOTCORRESPOND TO BORING DATA PROVIDED HEREIN.

PF-04

DELAWARE DEPARTMENT OF TRANSPORTATION

ADDENDUMS / REVISIONS

SCALE 0 30 60 90 FEET

US 301 & SR 1 INTERCHANGE

CONTRACT	BRIDGE NO.
T200911302	DESIGNED BY: S.E.S.
COUNTY	
NEW CASTLE	CHECKED BY: B.R.T.

PROFILES

SHEET NO. 52
TOTAL SHTS. 491

n:\31653-000\contract_tb\cadd\PF004U301_TB.dgn
2/6/2013 3:57:28 PM

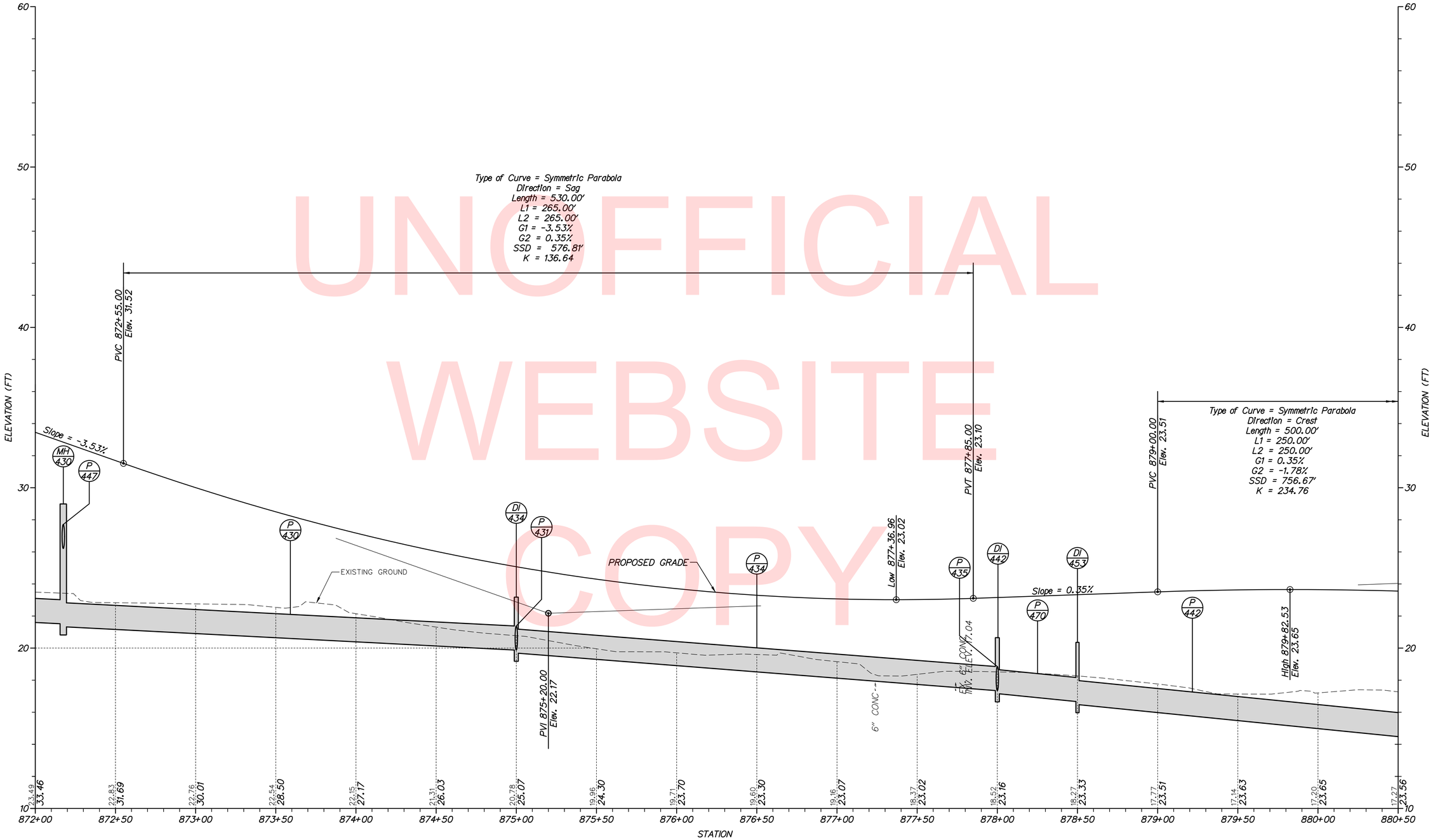

UNOFFICIAL WEBSITE COPY

US 301 – NORTHBOUND

PF-05

DELAWARE DEPARTMENT OF TRANSPORTATION	ADDENDUMS / REVISIONS	SCALE 0 30 60 90 FEET	**US 301 & SR 1 INTERCHANGE**	CONTRACT T200911302	BRIDGE NO.	**PROFILES**
				COUNTY NEW CASTLE	DESIGNED BY: S.E.S.	SHEET NO. 53
					CHECKED BY: B.R.T.	TOTAL SHTS. 491

r:\31653-000\contract_tb\cadd\PF005U301_1B.dgn
2/6/2013 3:57:44 PM

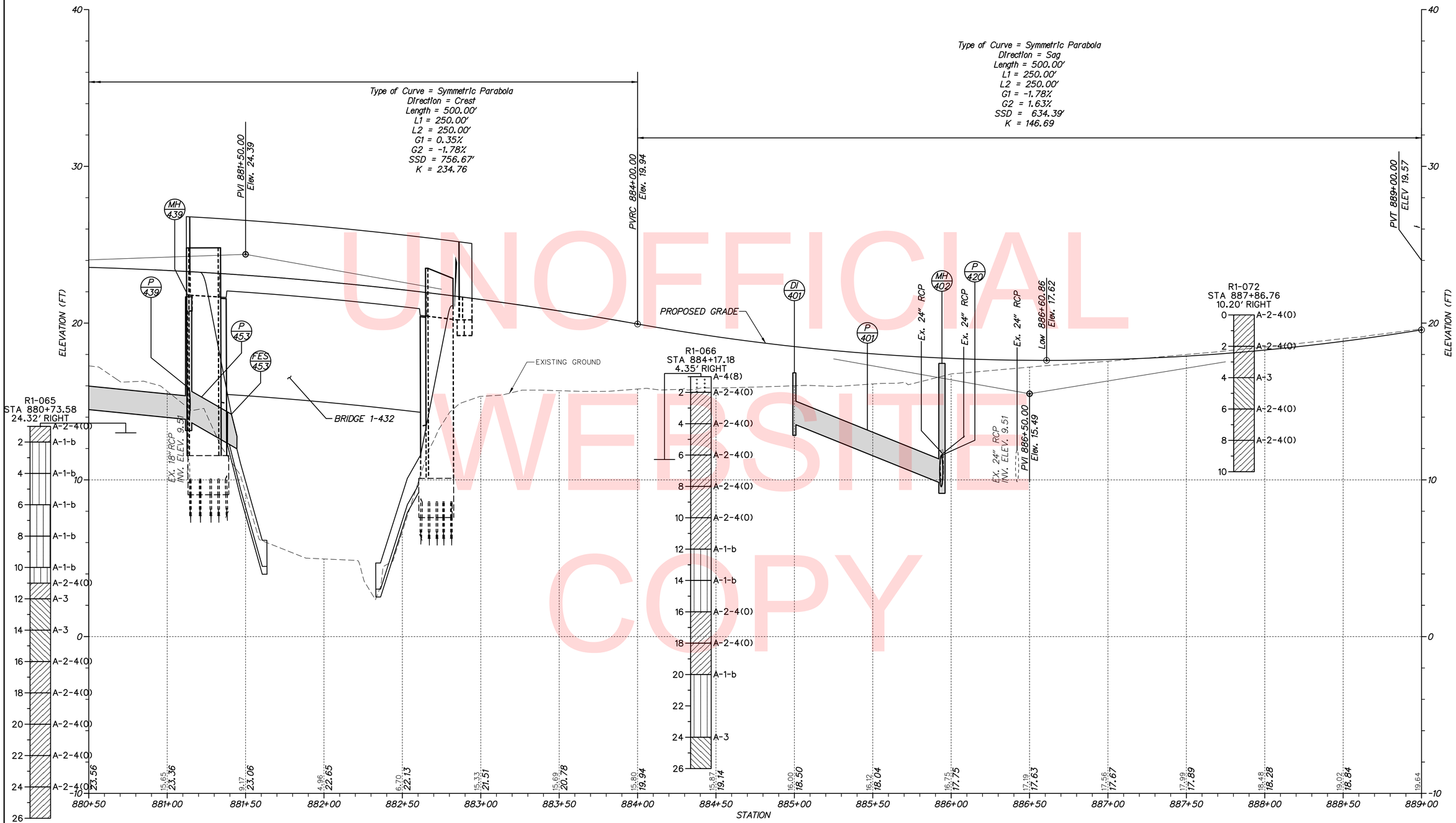

UNOFFICIAL WEBSITE COPY

US 301 – NORTHBOUND

NOTE:
ROADWAY BORINGS ARE FOR INFORMATIONAL PURPOSES ONLY

NOTE:
BORINGS ARE PROVIDED FOR INFORMATIONAL PURPOSES ONLY.
MATERIALS ENCOUNTERED MAY NOTCORRESPOND TO BORING DATA PROVIDED HEREIN.

VERTICAL SCALE FEET 0 3 6 9

PF-06

r:\31653-000\contract tb\cadd\PF006U301_1B.dgn
2/6/2013 3:57:52 PM

DELAWARE DEPARTMENT OF TRANSPORTATION

ADDENDUMS / REVISIONS

SCALE 0 30 60 90 FEET

US 301 & SR 1 INTERCHANGE

CONTRACT	BRIDGE NO.
T200911302	DESIGNED BY: S.E.S.
COUNTY	
NEW CASTLE	CHECKED BY: B.R.T.

PROFILES

SHEET NO. 54
TOTAL SHTS. 491

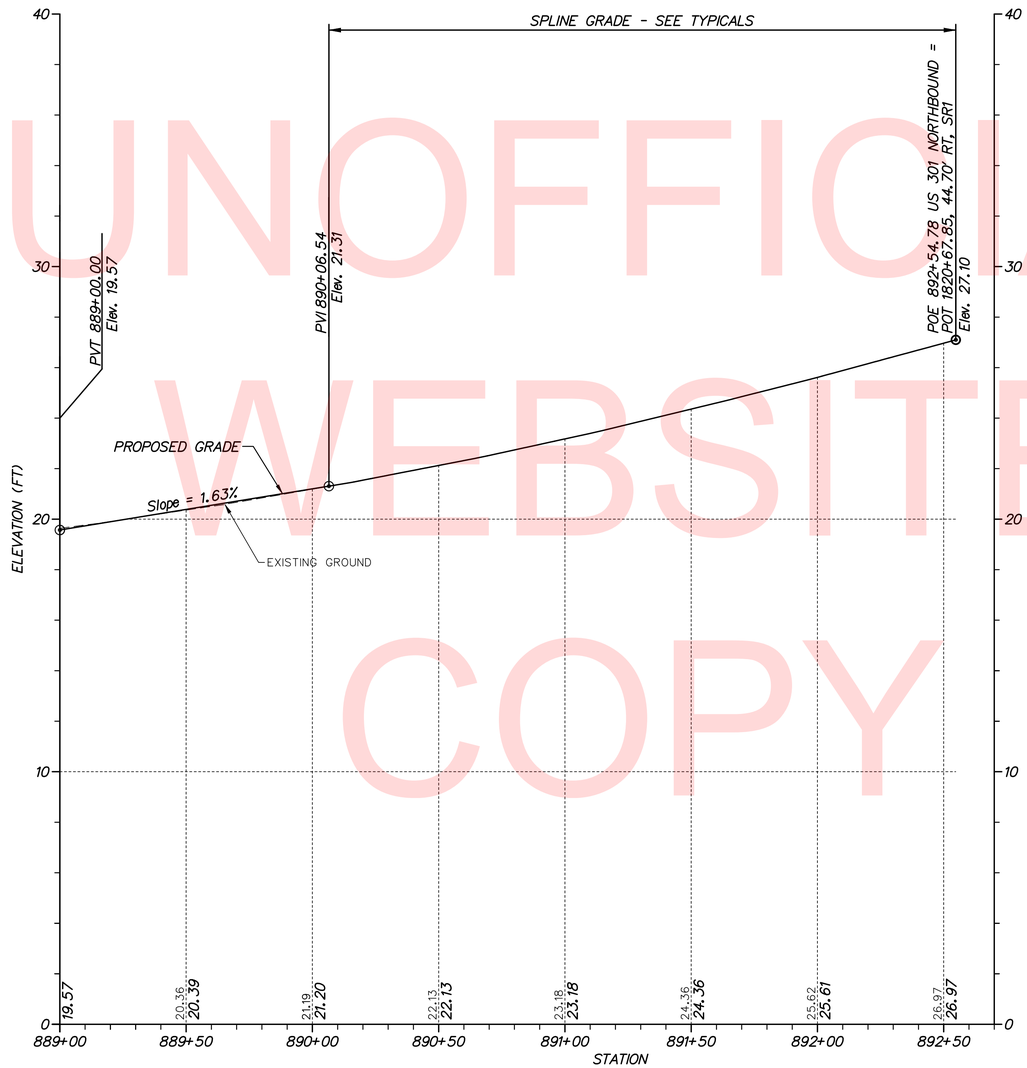

US 301 – NORTHBOUND

UNOFFICIAL WEBSITE COPY

VERTICAL SCALE FEET 9 6 3 0

PF-07

n:\31653-000\contract 1b\cadd\PF007U301_1B.dgn
2/6/2013 3:57:58 PM

DELAWARE DEPARTMENT OF TRANSPORTATION

ADDENDUMS / REVISIONS

SCALE 0 30 60 90 FEET

US 301 & SR 1 INTERCHANGE

CONTRACT	BRIDGE NO.	
T200911302	DESIGNED BY: S.E.S.	
COUNTY		
NEW CASTLE	CHECKED BY: B.R.T.	

PROFILES

SHEET NO.
55
TOTAL SHTS.
491

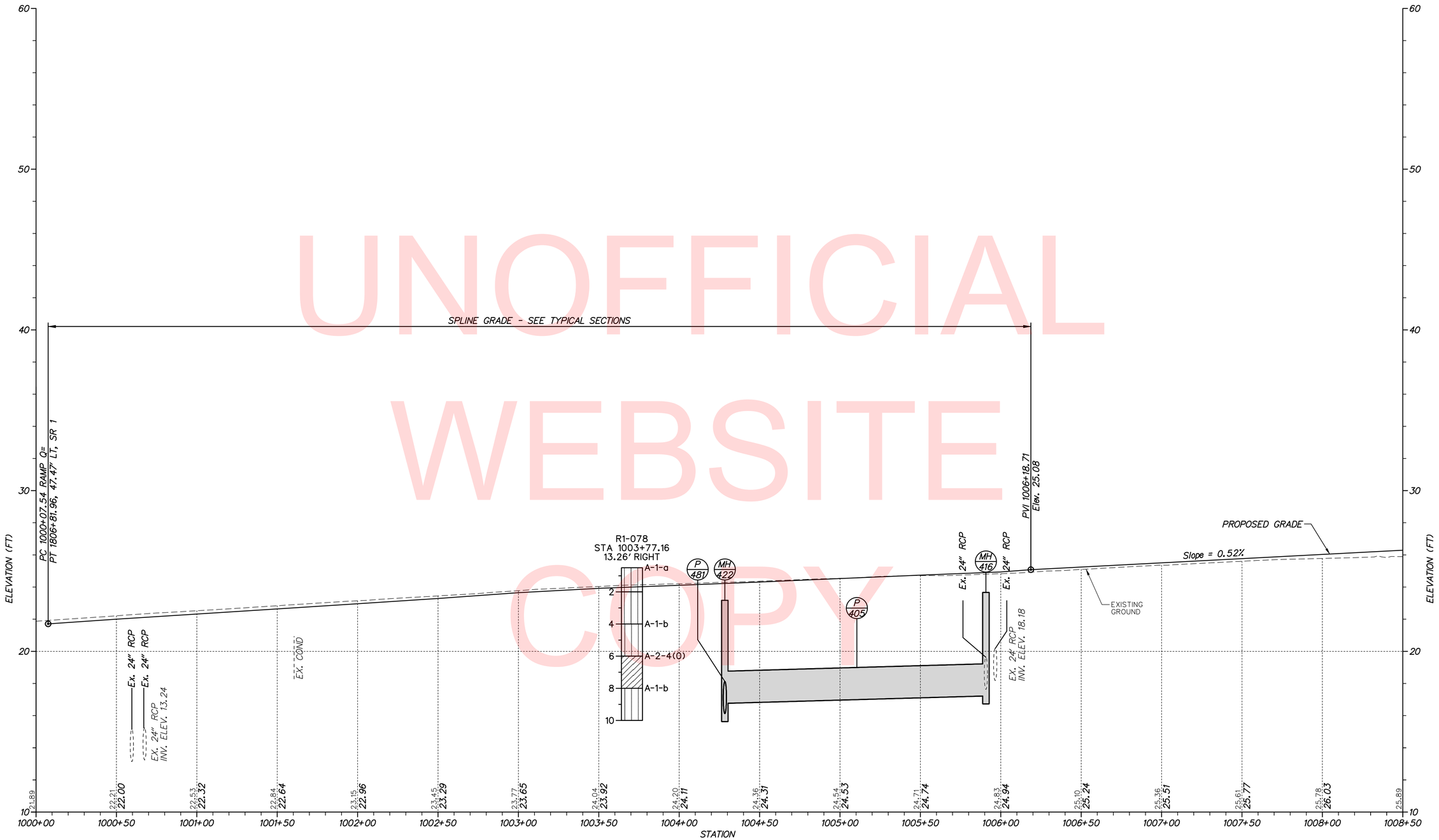

RAMP Q

UNOFFICIAL WEBSITE COPY

VERTICAL SCALE FEET 0 3 6 9

NOTE:
BORINGS ARE PROVIDED FOR INFORMATIONAL PURPOSES ONLY.
MATERIALS ENCOUNTERED MAY NOTCORRESPOND TO BORING DATA PROVIDED HEREIN.

PF-08

n:\31653-000\contract_tb\cadd\PF008U301_1B.dgn
2/6/2013 3:56:06 PM

DELAWARE DEPARTMENT OF TRANSPORTATION	ADDENDUMS / REVISIONS	SCALE 0 30 60 90 FEET	US 301 & SR 1 INTERCHANGE	CONTRACT T200911302	BRIDGE NO.	PROFILES	SHEET NO. 56
				COUNTY NEW CASTLE	DESIGNED BY: J.A.D.		TOTAL SHTS. 491
					CHECKED BY: B.R.T.		

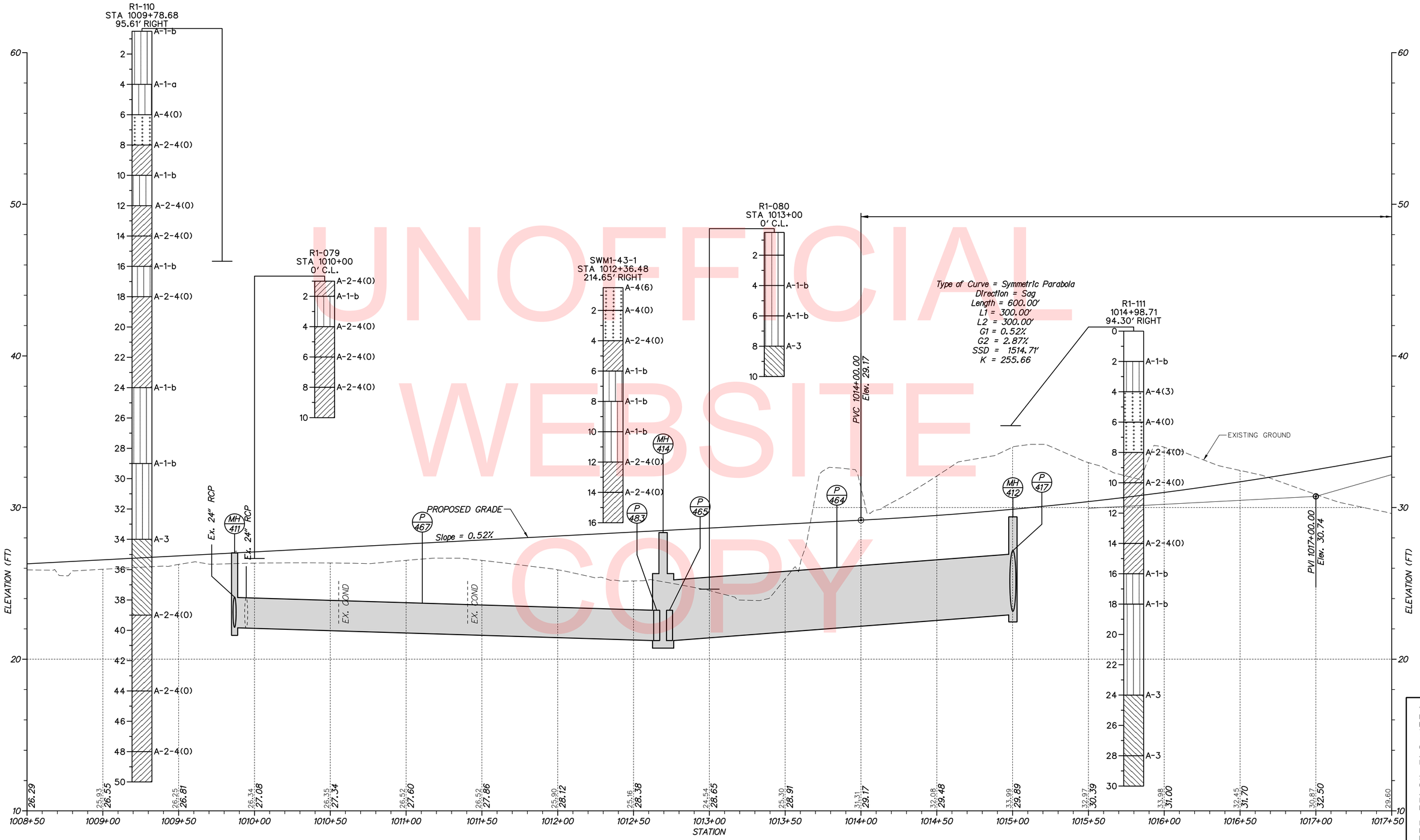

RAMP Q

NOTE:
BORINGS ARE PROVIDED FOR INFORMATIONAL PURPOSES ONLY.
MATERIALS ENCOUNTERED MAY NOTCORRESPOND TO BORING DATA PROVIDED HEREIN.

PF-09

UNOFFICIAL WEBSITE COPY

n:\31653-000\contract tb\cadd\PF0091301_1B.dgn
2/6/2013 3:58:12 PM

DELAWARE DEPARTMENT OF TRANSPORTATION

ADDENDUMS / REVISIONS

SCALE 0 30 60 90 FEET

US 301 & SR 1 INTERCHANGE

CONTRACT	BRIDGE NO.
T200911302	DESIGNED BY: J.A.D.
COUNTY	
NEW CASTLE	CHECKED BY: B.R.T.

PROFILES

SHEET NO. 57
TOTAL SHTS. 491

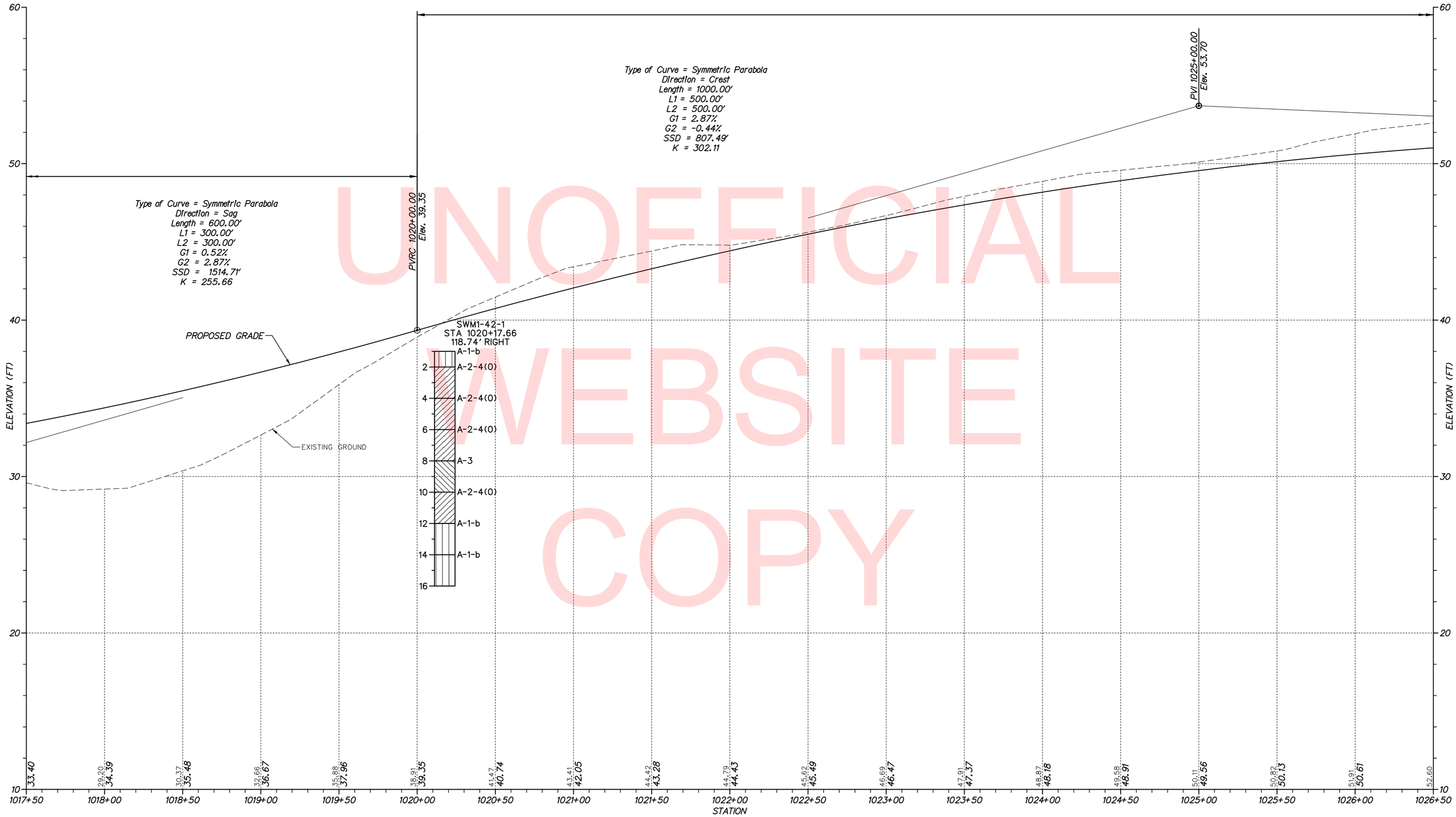

UNOFFICIAL WEBSITE COPY

RAMP Q

NOTE:
BORINGS ARE PROVIDED FOR INFORMATIONAL PURPOSES ONLY.
MATERIALS ENCOUNTERED MAY NOTCORRESPOND TO BORING DATA PROVIDED HEREIN.

PF-10

DELAWARE DEPARTMENT OF TRANSPORTATION	ADDENDUMS / REVISIONS	SCALE 0 30 60 90 FEET	US 301 & SR 1 INTERCHANGE	CONTRACT T200911302 / COUNTY NEW CASTLE	BRIDGE NO. / DESIGNED BY: J.A.D. / CHECKED BY: B.R.T.	PROFILES	SHEET NO. 58 / TOTAL SHTS. 491

n:\31653-000\contract tb\cadd\PF010U301_1B.dgn
2/6/2013 3:58:18 PM

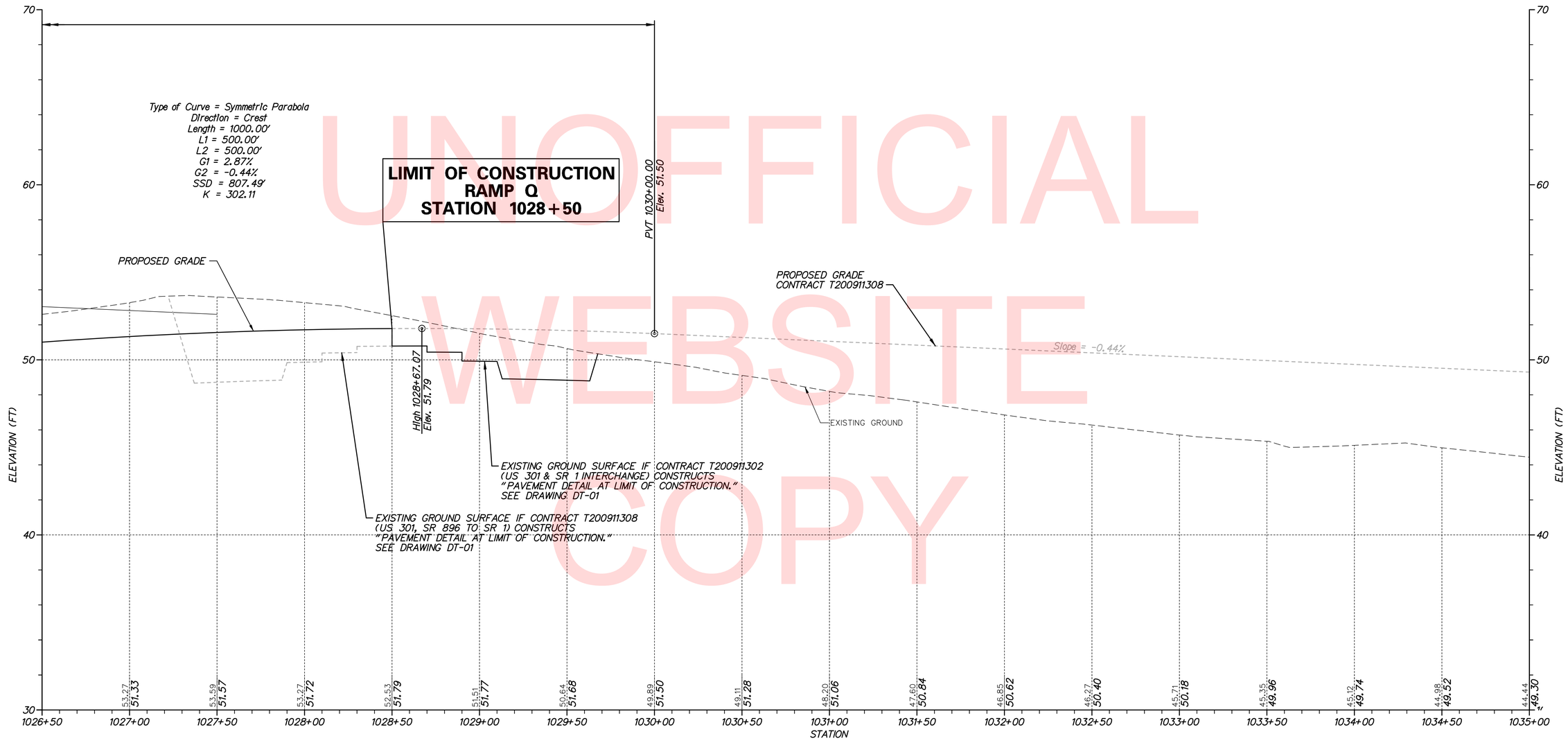

RAMP Q

UNOFFICIAL WEBSITE COPY

VERTICAL SCALE FEET 9 6 3 0

PF-11

n:\31653-000\contract th\cadd\PF011U301_1B.dgn
2/6/2013 3:58:29 PM

DELAWARE DEPARTMENT OF TRANSPORTATION

ADDENDUMS / REVISIONS

SCALE 0 30 60 90 FEET

US 301 & SR 1 INTERCHANGE

CONTRACT	BRIDGE NO.
T200911302	DESIGNED BY: J.A.D.
COUNTY	CHECKED BY: B.R.T.
NEW CASTLE	

PROFILES

SHEET NO.
59
TOTAL SHTS.
491

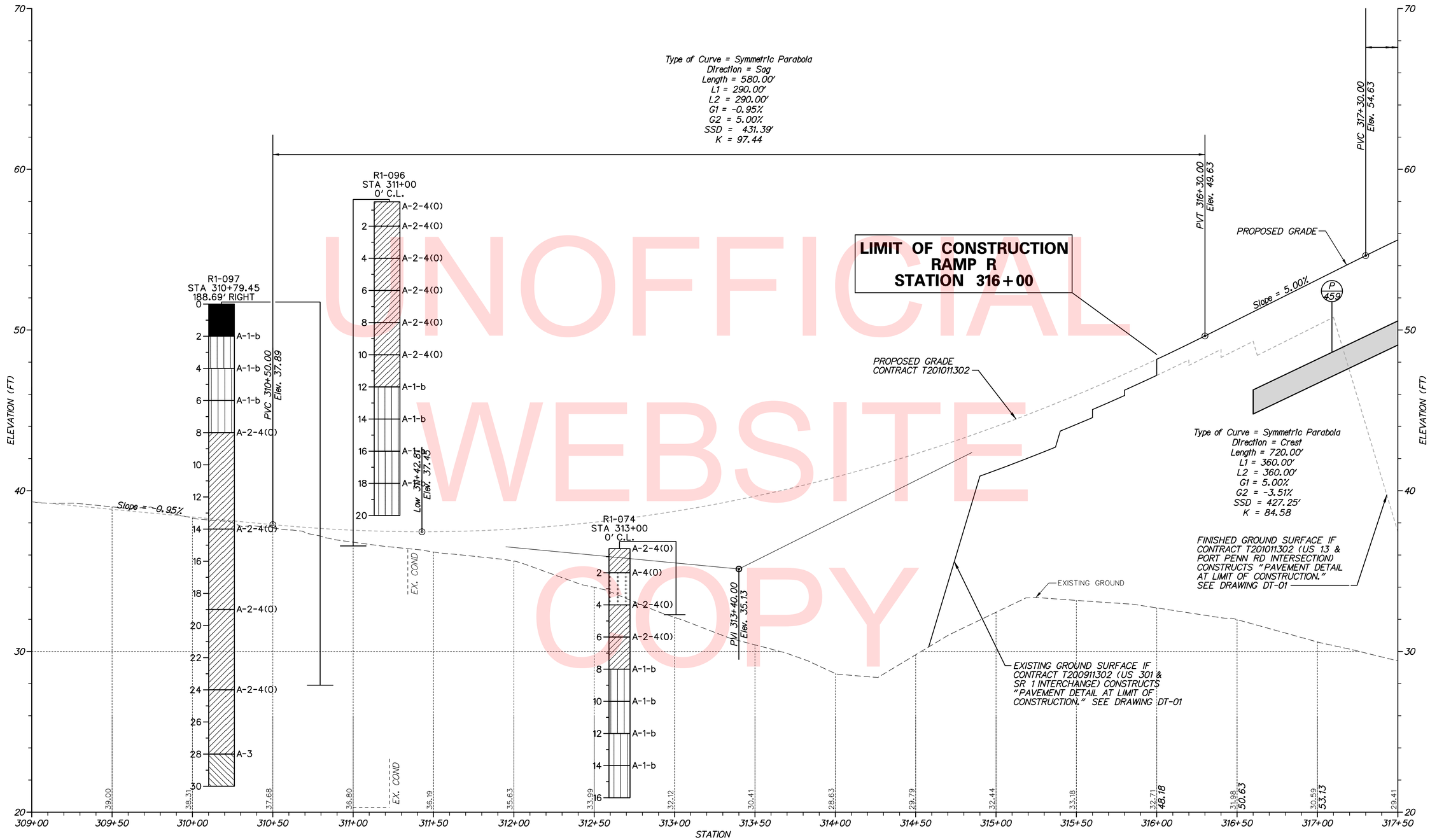

UNOFFICIAL WEBSITE COPY

VERTICAL SCALE FEET 0 3 6 9

NOTE:
BORINGS ARE PROVIDED FOR INFORMATIONAL PURPOSES ONLY.
MATERIALS ENCOUNTERED MAY NOTCORRESPOND TO BORING DATA PROVIDED HEREIN.

PF-12

DELAWARE DEPARTMENT OF TRANSPORTATION

ADDENDUMS / REVISIONS

SCALE 0 30 60 90 FEET

US 301 & SR 1 INTERCHANGE

CONTRACT	BRIDGE NO.
T200911302	DESIGNED BY: S.E.S.
COUNTY	
NEW CASTLE	CHECKED BY: B.R.T.

PROFILES

SHEET NO. 60
TOTAL SHTS. 491

r:\31653-000\contract_tb\cadd\PF012U301_1B.dgn
2/6/2013 3:58:38 PM

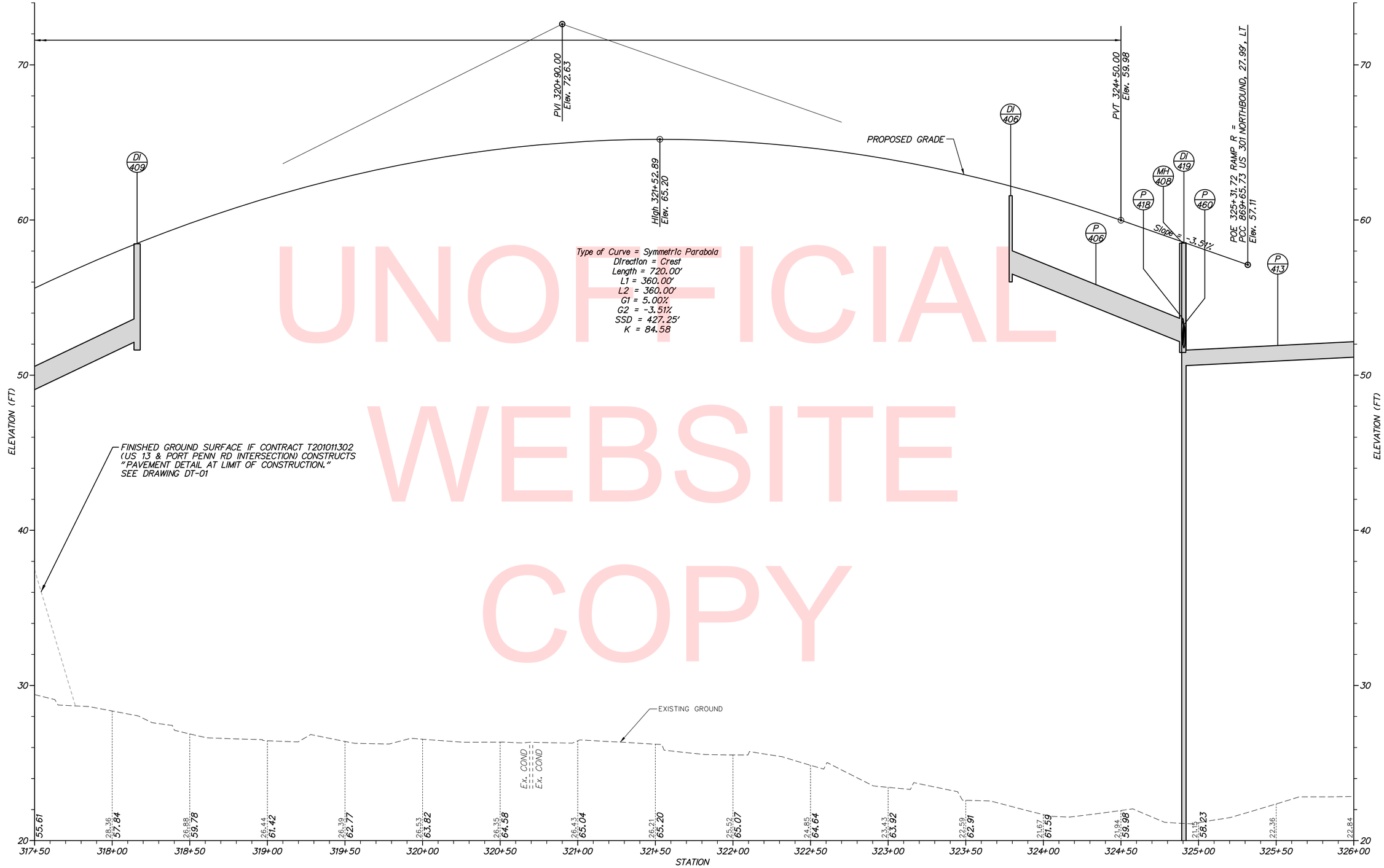

RAMP R

VERTICAL SCALE FEET 9 6 3 0

PF-13

UNOFFICIAL WEBSITE COPY

n:\31653-000\contract tb\cadd\PF013U301_1B.dgn
2/6/2013 3:58:45 PM

DELAWARE DEPARTMENT OF TRANSPORTATION	ADDENDUMS / REVISIONS	SCALE 0 30 60 90 FEET	US 301 & SR 1 INTERCHANGE	CONTRACT T200911302	BRIDGE NO.	PROFILES
				COUNTY NEW CASTLE	DESIGNED BY: S.E.S.	
					CHECKED BY: B.R.T.	

SHEET NO. 61
TOTAL SHTS. 491

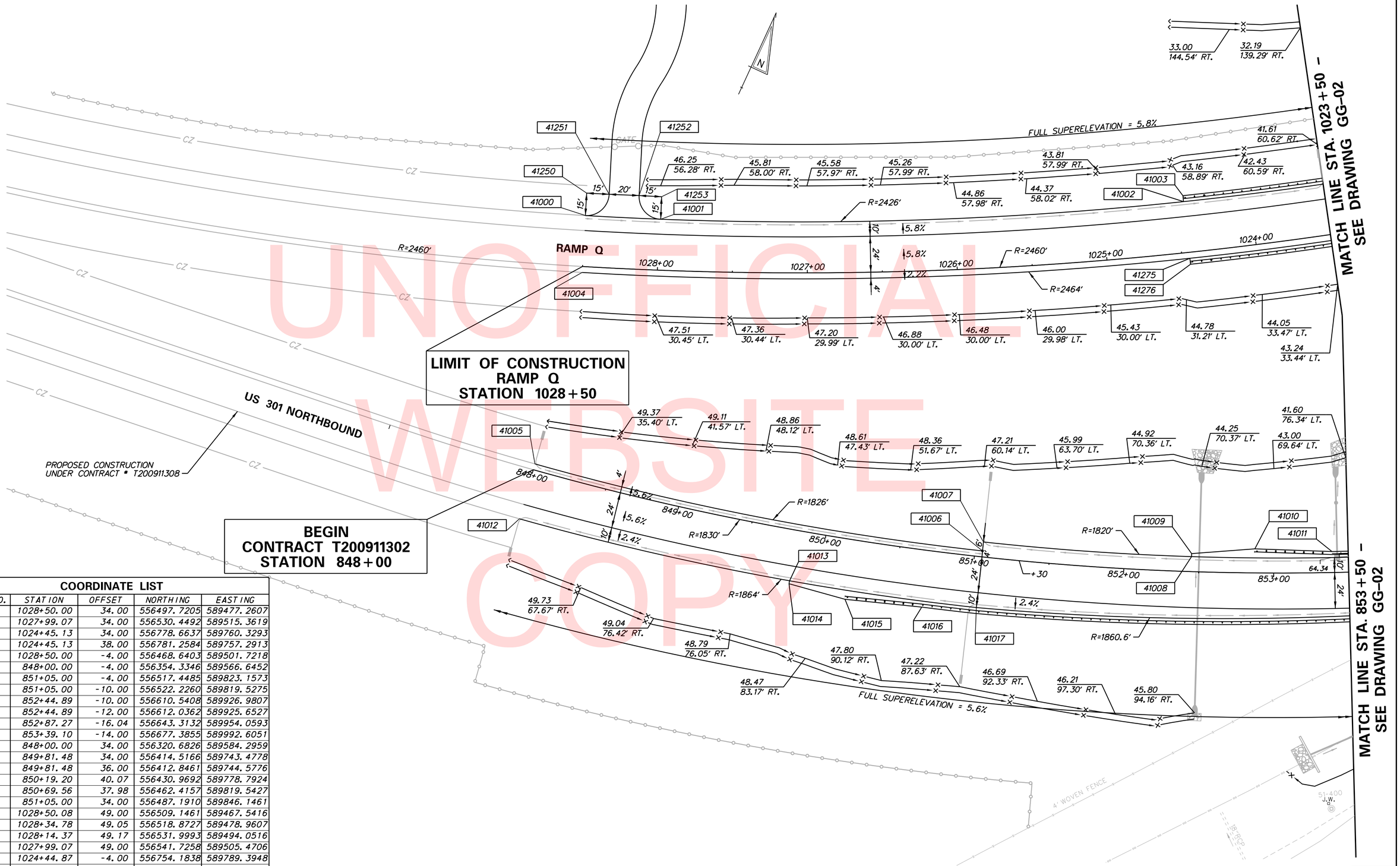

UNOFFICIAL WEBSITE COPY

COORDINATE LIST

POINT NO.	STATION	OFFSET	NORTHING	EASTING
41000	1028+50.00	34.00	556497.7205	589477.2607
41001	1027+99.07	34.00	556530.4492	589515.3619
41002	1024+45.13	34.00	556778.6637	589760.3293
41003	1024+45.13	38.00	556781.2584	589757.2913
41004	1028+50.00	-4.00	556468.6403	589501.7218
41005	848+00.00	-4.00	556354.3346	589566.6452
41006	851+05.00	-4.00	556517.4485	589823.1573
41007	851+05.00	-10.00	556522.2260	589819.5275
41008	852+44.89	-10.00	556610.5408	589926.9807
41009	852+44.89	-12.00	556612.0362	589925.6527
41010	852+87.27	-16.04	556643.3132	589954.0593
41011	853+39.10	-14.00	556677.3855	589992.6051
41012	848+00.00	34.00	556320.6826	589584.2959
41013	849+81.48	34.00	556414.5166	589743.4778
41014	849+81.48	36.00	556412.8461	589744.5776
41015	850+19.20	40.07	556430.9692	589778.7924
41016	850+69.56	37.98	556462.4157	589819.5427
41017	851+05.00	34.00	556487.1910	589846.1461
41250	1028+50.08	49.00	556509.1461	589467.5416
41251	1028+34.78	49.05	556518.8727	589478.9607
41252	1028+14.37	49.17	556531.9993	589494.0516
41253	1027+99.07	49.00	556541.7258	589505.4706
41275	1024+44.87	-4.00	556754.1838	589789.3948
41276	1024+44.87	-8.00	556751.5863	589792.4366

N:\31653-000\Contract 1B\CADD\GG001U301_1B.dgn
12/22/2015 3:54:51 PM

DELAWARE
DEPARTMENT OF TRANSPORTATION

ADDENDUMS / REVISIONS

SCALE
0 30 60 90
FEET

US 301 &
SR 1 INTERCHANGE

CONTRACT	BRIDGE NO.	BR1-433
T200911302	DESIGNED BY: J.A.D.	
COUNTY		
NEW CASTLE	CHECKED BY: B.R.T.	

GRADES & GEOMETRICS

GG-01

SHEET NO.
62
TOTAL SHTS.
491

COORDINATE LIST				
POINT NO.	STATION	OFFSET	NORTHING	EASTING
41018	1021+89.80	38.00	556980.5389	589910.3510
41019	1021+37.56	40.04	557024.3265	589937.3637
41020	1020+94.92	36.00	557057.4098	589963.5292
41021	1020+94.92	34.00	557056.3398	589965.2189
41022	855+60.25	-14.00	556840.4192	590139.3079
41023	855+60.25	-10.00	556837.9281	590142.4375
41024	854+05.00	28.00	556695.2468	590068.8910
41025	854+08.07	28.00	556697.5168	590071.0327
41026	854+08.07	31.98	556694.7830	590073.9297
41027	1784+28.68	-105.32	556820.8487	590191.1952
41028	1784+28.22	-101.34	556819.8459	590195.0675
41029	1785+74.38	-87.47	556962.6366	590229.1918
41030	1785+73.97	-82.09	556961.4847	590234.4612
41031	1786+09.88	-79.57	556996.6958	590241.9591
41032	1786+10.29	-84.91	556997.8399	590236.7253
41239	1782+05.04	-135.15	556603.5545	590130.4658
41240	1782+05.59	-139.12	556604.6560	590126.6205
41241	1784+29.19	-109.79	556821.9769	590186.8389
41277	1021+19.04	-8.00	557013.4892	589987.6562
41278	1020+67.82	-10.05	557055.8370	590016.8597
41279	1020+25.84	-6.00	557093.9522	590035.2322
41280	1020+25.84	-4.00	557094.9744	590033.5131

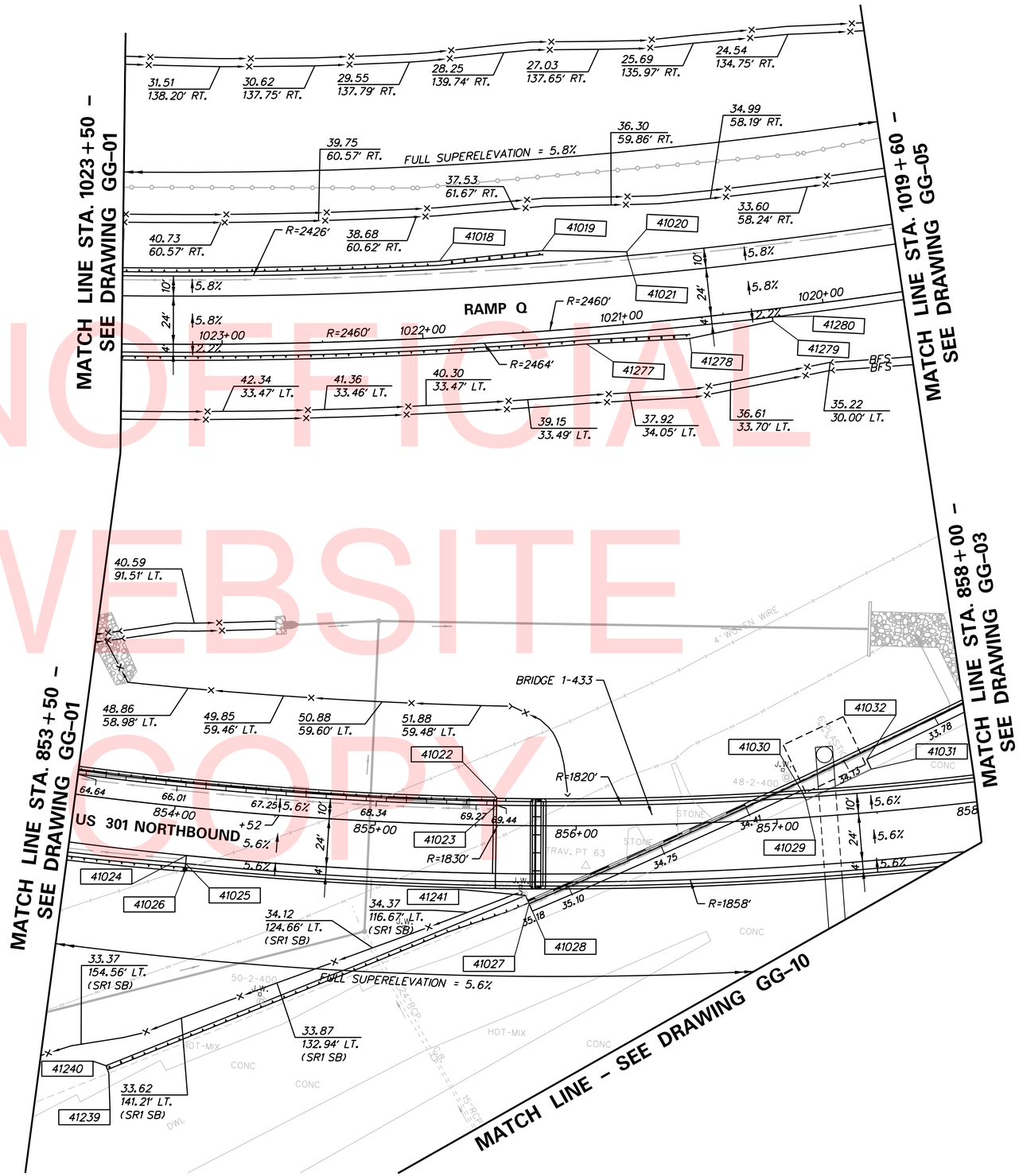

UNOFFICIAL WEBSITE COPY

N:\31553-000\Contract 1B\CADD\GG002U301_1B.dgn
12/22/2015 3:41:55 PM

DELAWARE DEPARTMENT OF TRANSPORTATION	ADDENDUMS / REVISIONS	SCALE 0 30 60 90 FEET	US 301 & SR 1 INTERCHANGE	CONTRACT T200911302	BRIDGE NO. BR1-433	GRADES & GEOMETRICS	GG-02
				COUNTY NEW CASTLE	DESIGNED BY: J.A.D.		SHEET NO. 63
					CHECKED BY: B.R.T.		TOTAL SHTS. 491

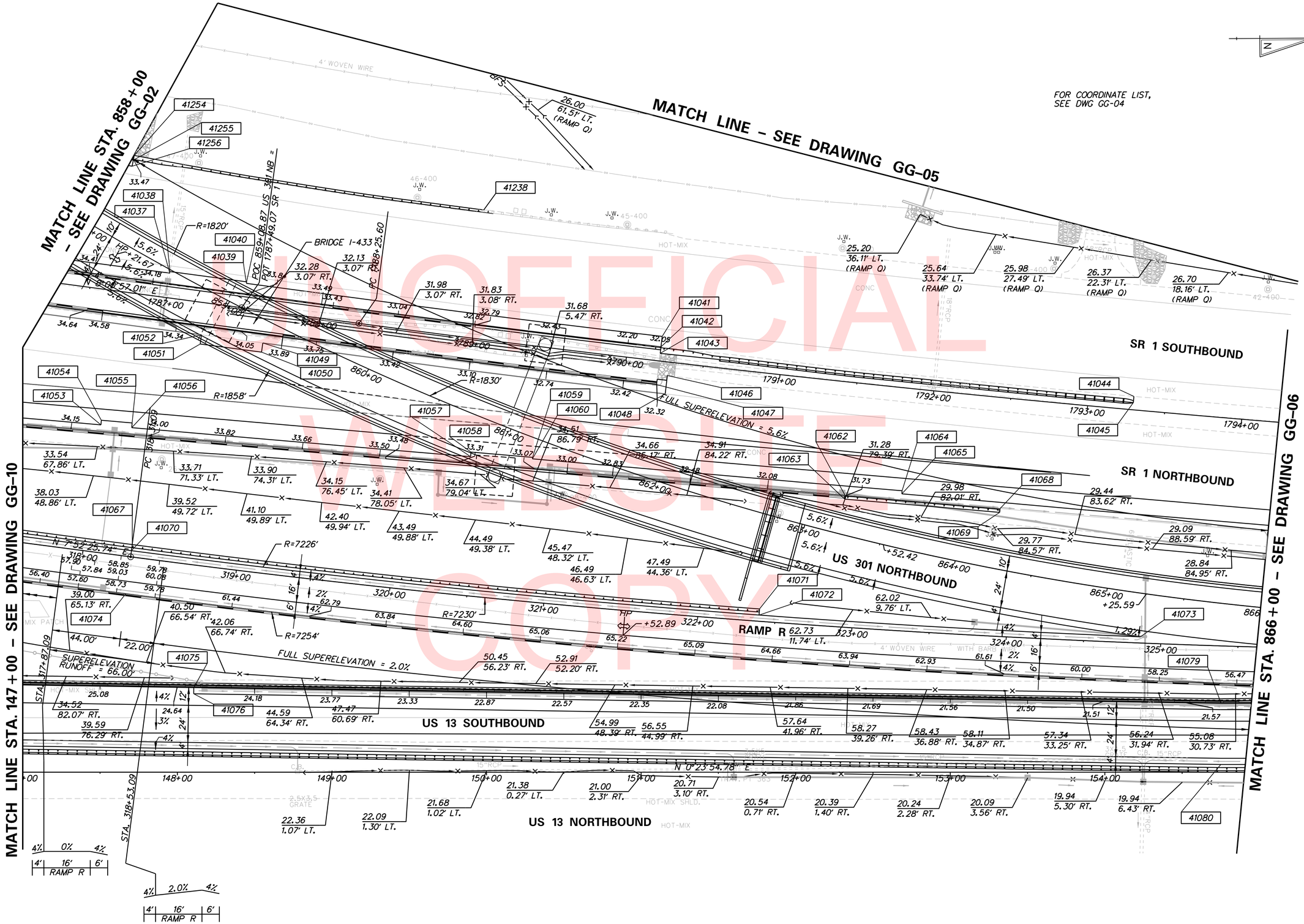

UNOFFICIAL WEBSITE COPY

N:\31653-000\Contract 1B\CADD\GG003U301_1B.dgn
12/22/2015 3:49:08 PM

DELAWARE DEPARTMENT OF TRANSPORTATION

ADDENDUMS / REVISIONS	

SCALE 0 30 60 90 FEET

US 301 & SR 1 INTERCHANGE

CONTRACT	BRIDGE NO.	BR1–433, RW1–3 & RW1–3R
T200911302	DESIGNED BY:	S.E.S.
COUNTY	CHECKED BY:	B.R.T.
NEW CASTLE		

GRADES & GEOMETRICS

GG–03
SHEET NO.
64
TOTAL SHTS.
491

COORDINATE LIST

POINT NO.	STATION	OFFSET	NORTHING	EASTING
•41037	1787+00.00	-16.00	557077.0662	590317.4768
•41038	1787+00.00	-17.00	557077.2057	590316.4866
•41039	1787+50.00	-16.00	557126.5777	590324.4492
•41040	1787+50.00	-17.00	557126.7171	590323.4589
•41041	1790+21.44	-16.00	557395.3178	590360.6232
•41042	1790+21.43	-9.19	557394.4710	590367.3757
•41043	1790+21.42	-4.95	557393.9422	590371.5917
•41044	1793+29.27	-8.70	557700.1677	590401.5437
•41045	1793+29.27	-4.70	557699.7829	590405.5252
•41046	1790+27.67	8.73	557398.4766	590385.9323
•41047	1790+21.43	15.35	557391.4639	590391.7354
•41048	1790+27.67	20.68	557397.0142	590397.7950
•41049	1787+65.60	20.80	557136.8918	590363.0629
•41050	1787+65.60	26.80	557136.0590	590369.0048
•41051	1787+25.60	26.82	557096.4462	590363.4526
•41052	1787+25.60	20.82	557097.2790	590357.5106
•41053	1786+68.86	87.20	557031.8408	590415.3264
•41054	1786+68.72	84.20	557032.1185	590412.3393
•41055	1786+88.70	83.33	557052.0257	590414.2653
•41056	1786+88.84	86.33	557051.7479	590417.2536
•41057	1789+08.05	76.16	557270.8118	590437.5272
•41058	1789+07.93	73.17	557271.0887	590434.5483
•41059	1789+47.65	71.63	557310.9170	590438.2507
•41060	1789+47.69	72.58	557310.8288	590439.1995
•41062	1791+49.99	73.07	557512.8615	590464.1796
•41063	1791+50.04	75.57	557512.6354	590466.6693
•41064	1791+86.18	66.35	557549.7897	590461.5088
•41065	1791+86.21	68.35	557549.6046	590463.4997
•41068	1792+50.00	71.58	557613.0751	590473.5004
•41069	1792+50.02	74.06	557612.8423	590475.9644
•41070	318+31.09	-4.00	557051.0200	590496.8078
•41071	322+39.49	-8.00	557457.0278	590537.2924
•41072	322+39.49	-4.00	557456.7045	590541.2777
•41073	324+86.75	-4.00	557703.3155	590557.0422
•41074	318+31.09	24.00	557047.1842	590524.5438
•41075	148+10.65	-54.72	557090.7313	590585.6264
•41076	148+10.59	-50.72	557090.6419	590589.6254
•41079	154+75.00	-45.00	557754.9974	590599.9681
•41080	154+75.00	-5.00	557754.7192	590639.9671
•41238	1788+96.40	-83.18	557280.4446	590278.0532
•41254	1786+67.12	-88.35	557054.5992	590241.2444
•41255	1786+66.93	-85.27	557053.9782	590244.2710
•41256	1786+66.68	-81.28	557053.1743	590248.1893

UNOFFICIAL WEBSITE COPY

N:\3653-000\Contract 1B\CADD\GG004U301_1B.dgn
12/22/2015 3:49:59 PM

GG-04

DELAWARE DEPARTMENT OF TRANSPORTATION

ADDENDUMS / REVISIONS

NOT TO SCALE

US 301 & SR 1 INTERCHANGE

CONTRACT T200911302
COUNTY NEW CASTLE
BRIDGE NO.
DESIGNED BY: S.E.S.
CHECKED BY: B.R.T.

GRADES & GEOMETRICS

SHEET NO. 65
TOTAL SHTS. 491

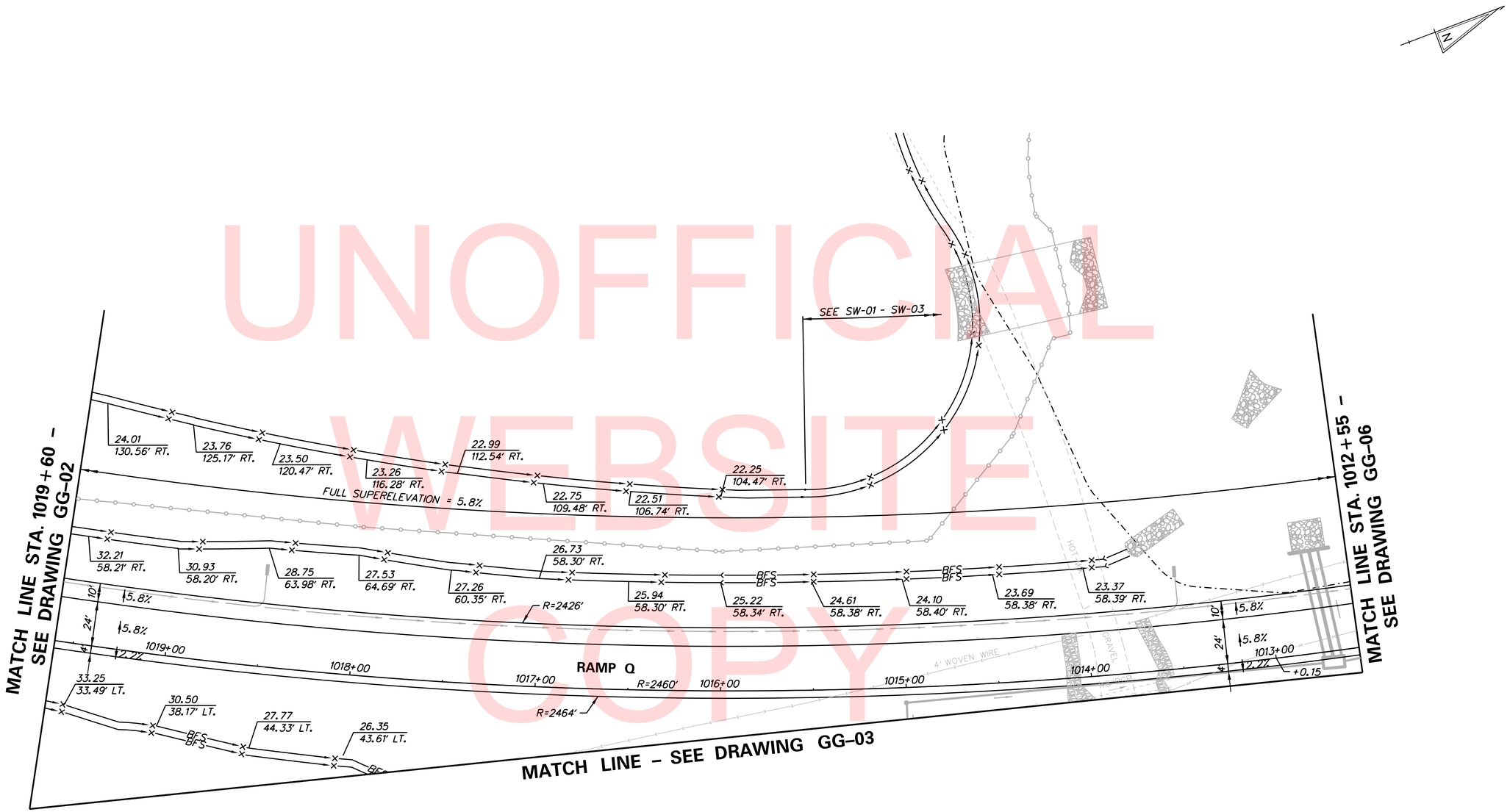

UNOFFICIAL WEBSITE COPY

N:\31653-000\Contract 1B\CADD\GG005U301_1B.dgn
12/22/2015 3:54:50 PM

DELAWARE DEPARTMENT OF TRANSPORTATION	ADDENDUMS / REVISIONS	SCALE 0 30 60 90 FEET	US 301 & SR 1 INTERCHANGE	CONTRACT T200911302	BRIDGE NO.	GRADES & GEOMETRICS	GG-05
				COUNTY NEW CASTLE	DESIGNED BY: J.A.D.		SHEET NO. 66
					CHECKED BY: B.R.T.		TOTAL SHTS. 491

COORDINATE LIST				
POINT NO.	STATION	OFFSET	NORTHING	EASTING
41081	1009+81.26	34.00	558083.5787	590326.4656
41082	1012+28.21	-4.00	557835.3358	590324.3506
41083	1011+35.42	-6.65	557926.0738	590344.8110
41084	1794+49.90	-69.81	557825.4500	590351.6343
41085	1794+49.90	-79.81	557826.3087	590341.6704
41086	1794+56.87	-79.72	557833.1974	590342.3511
41087	1795+49.96	-81.30	557925.4615	590348.2848
41088	1794+34.98	67.00	557798.7577	590486.6396
41089	1794+34.98	71.00	557798.4082	590490.6243
41090	1797+06.18	73.00	558070.3555	590513.2128
41091	1797+38.19	76.06	558102.3190	590518.2732
41092	1797+89.28	74.00	558153.7719	590519.2416
41093	1799+17.45	68.00	558282.8621	590519.8373
41094	1799+17.45	70.00	558282.7710	590521.8352
41095	1799+95.21	70.00	558360.9362	590525.1368
41096	1799+95.21	72.00	558360.8585	590527.1338

COORDINATE LIST				
POINT NO.	STATION	OFFSET	NORTHING	EASTING
41097	1799+95.21	74.00	558360.7808	590529.1338
41098	1800+00.00	72.00	558365.6731	590527.3215
41099	867+66.25	-10.00	557947.2291	590538.3239
41100	867+80.00	-10.00	557960.9743	590538.5065
41101	869+00.00	-4.00	558080.8840	590546.0996
41102	872+00.00	-8.00	558380.9107	590546.0841
41103	872+00.00	-4.00	558380.8575	590550.0837
41104	866+37.19	47.50	557814.2330	590589.3903
41105	867+64.29	48.16	557944.4449	590596.4483
41106	159+26.77	-45.00	558206.7529	590603.1105
41107	162+76.00	-45.00	558556.6268	590608.2102
41108	159+26.77	-5.00	558206.4746	590643.1096
41109	162+76.00	-5.00	558555.7392	590648.2004
41110	160+00.00	18.00	558279.4881	590666.7349
41111	162+76.00	18.00	558555.2288	590671.1947
41271	1797+06.18	71.00	558070.4803	590511.2140

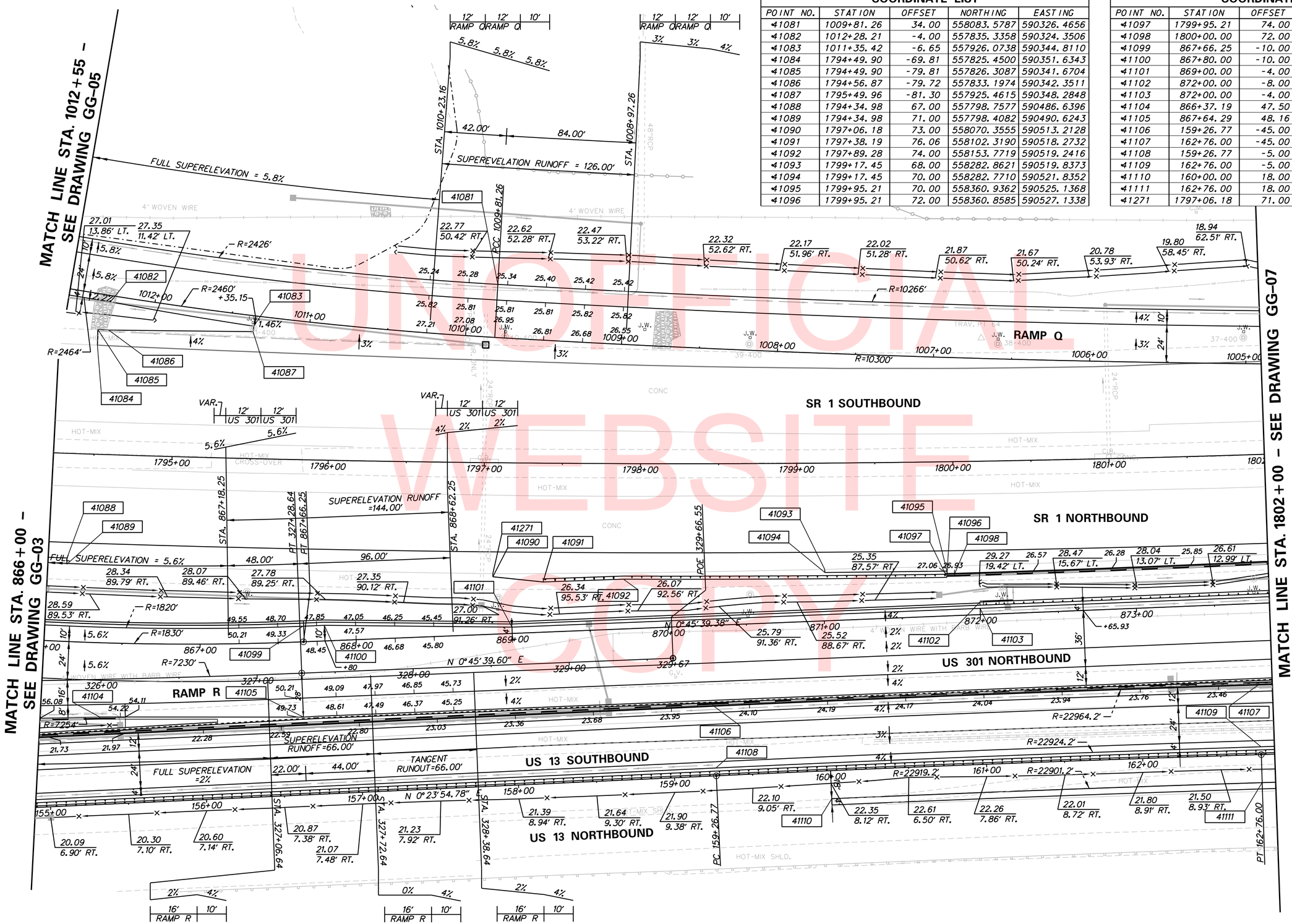

UNOFFICIAL WEBSITE COPY

N:\31653-000\Contract 1B\CADD\GG006U301_1B.dgn
12/22/2015 4:02:56 PM

DELAWARE DEPARTMENT OF TRANSPORTATION	ADDENDUMS / REVISIONS	SCALE 0 30 60 90 FEET	US 301 & SR 1 INTERCHANGE	CONTRACT T200911302	BRIDGE NO. RW1-3 & RW1-3R	GRADES & GEOMETRICS
				COUNTY NEW CASTLE	DESIGNED BY: S.E.S.	
					CHECKED BY: B.R.T.	

GG-06
SHEET NO. 67
TOTAL SHTS. 491

COORDINATE LIST				
POINT NO.	STATION	OFFSET	NORTHING	EASTING
41112	1000+87.36	34.00	558972.1672	590387.3525
41113	1000+87.36	38.00	558972.2672	590383.3538
41114	1000+07.54	34.00	559051.7107	590389.0348
41115	1808+09.26	-81.58	559179.0459	590391.3382
41116	1808+09.26	-85.58	559179.1183	590387.3389
41117	1809+43.14	-69.00	559312.6589	590406.4543
41118	1809+42.95	-59.56	559312.2932	590415.8874
41119	1804+80.54	7.72	558848.6959	590474.4000
41120	1804+80.54	0.74	558848.8282	590467.4191
41121	1804+88.77	-0.12	558857.0652	590466.7172
41122	1805+33.04	-0.12	558901.3314	590467.5562
41123	1805+33.04	-8.28	558901.4860	590459.3970

COORDINATE LIST				
POINT NO.	STATION	OFFSET	NORTHING	EASTING
41124	1802+25.60	69.00	558592.6370	590530.8349
41125	1803+10.02	68.44	558677.0542	590531.8780
41126	1803+10.00	64.50	558677.1065	590527.9350
41127	1809+40.40	69.00	559307.3120	590544.3794
41128	880+67.33	-4.00	559248.1118	590561.6023
41129	880+98.24	-4.00	559279.0039	590561.9533
41130	874+50.00	48.00	558630.1449	590605.3993
41131	877+50.00	48.00	558930.1185	590609.3834
41132	880+50.00	36.00	559230.2514	590601.3686
41133	880+98.85	37.01	559279.2330	590602.9697
41134	170+44.27	-47.00	559324.7581	590623.2600
41135	170+44.30	-44.50	559324.7307	590625.7600

COORDINATE LIST				
POINT NO.	STATION	OFFSET	NORTHING	EASTING
41136	170+44.33	-43.00	559324.7254	590627.2602
41137	169+33.04	-5.00	559212.6193	590662.7812
41138	170+04.61	-7.86	559284.2417	590661.5072
41139	170+04.61	-3.86	559284.1528	590665.5094
41140	167+70.00	18.00	559049.1119	590682.1575
41141	169+22.65	6.01	559201.9872	590673.5591
41231	880+76.54	-8.03	559257.3620	590557.6860
41232	880+78.42	-8.16	559259.2436	590557.5856
41233	880+98.26	-8.10	559279.0585	590557.8489
41257	1806+49.92	9.12	559018.0130	590479.0058
41273	170+44.30	-40.50	559324.6419	590629.7590
41274	170+44.30	-38.50	559324.5975	590631.7585

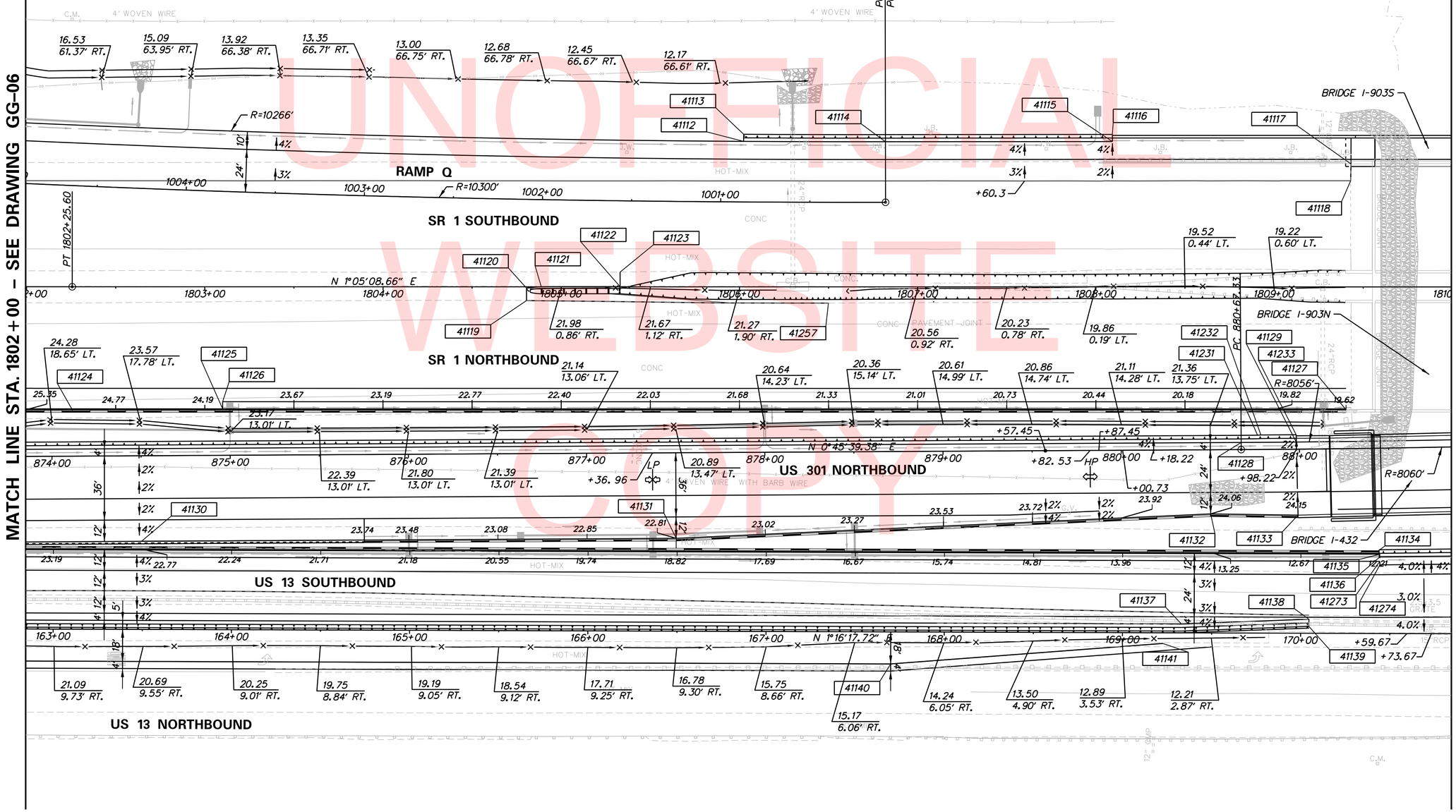

UNOFFICIAL WEBSITE COPY

DELAWARE DEPARTMENT OF TRANSPORTATION

ADDENDUMS / REVISIONS

SCALE 0 30 60 90 FEET

US 301 & SR 1 INTERCHANGE

CONTRACT	BRIDGE NO.	BR1-903N, BR1-903S, BR1-432, RW1-1 & RW1-3R
T200911302	DESIGNED BY: S.E.S.	
COUNTY		
NEW CASTLE	CHECKED BY: B.R.T.	

GRADES & GEOMETRICS

GG-07

SHEET NO. 68

TOTAL SHTS. 491

N:\3653-000\Contract 18\CADD\GG0070301_18.dgn
12/22/2015 4:04:19 PM

COORDINATE LIST				
POINT NO.	STATION	OFFSET	NORTHING	EASTING
41142	1811+02.44	-83.58	559472.2118	590394.8939
41143	1811+19.79	-83.58	559489.5531	590395.2226
41144	1811+59.49	-83.75	559529.2530	590395.8082
41145	1810+99.60	-67.61	559469.0655	590410.8142
41146	1810+99.69	-59.22	559468.9946	590419.2012
41147	1817+79.55	-85.75	560149.2372	590405.5578
41148	1817+79.55	-83.75	560149.1995	590407.5575
41149	1817+79.54	-81.75	560149.1579	590409.5570
41150	1810+99.91	66.83	559466.8282	590545.2359
41151	1811+28.53	66.85	559495.4484	590545.7914
41152	1813+06.23	55.00	559673.3363	590537.3138
41153	1815+79.76	55.00	559946.8181	590542.4968
41154	1815+79.76	44.74	559947.0125	590532.2369
41155	882+97.74	-8.02	559478.3386	590557.3485
41156	882+97.70	-4.00	559478.3553	590561.3698
41157	883+09.19	-7.89	559489.7719	590557.3009
41158	883+11.31	-8.00	559491.8910	590557.1507
41159	885+58.03	-4.00	559738.4210	590553.1879

COORDINATE LIST				
POINT NO.	STATION	OFFSET	NORTHING	EASTING
41160	887+24.78	-4.00	559904.9803	590545.2543
41161	887+81.09	-4.00	559961.2607	590542.7706
41162	882+97.28	34.00	559478.5136	590599.3718
41163	882+97.22	38.77	559478.5335	590604.1397
41164	885+58.03	34.00	559740.2292	590591.1449
41165	887+24.74	34.00	559906.7467	590583.2133
41166	887+84.47	34.23	559966.1774	590580.8284
41167	887+84.46	38.23	559966.3249	590584.8256
41168	171+28.81	-43.91	559409.2069	590628.2272
41169	171+28.82	-39.41	559409.1135	590632.7262
41170	171+81.79	-48.00	559462.2647	590625.3157
41171	171+81.79	-46.00	559462.2238	590627.3153
41172	171+81.80	-44.00	559462.1830	590629.3148
41173	172+45.15	-47.95	559525.6090	590626.7690
41174	172+45.15	-45.95	559525.5646	590628.7685
41175	172+45.15	-43.95	559525.5203	590630.7680
41176	172+55.14	-39.43	559535.4089	590635.5071
41177	172+55.14	-43.94	559535.5068	590630.9994

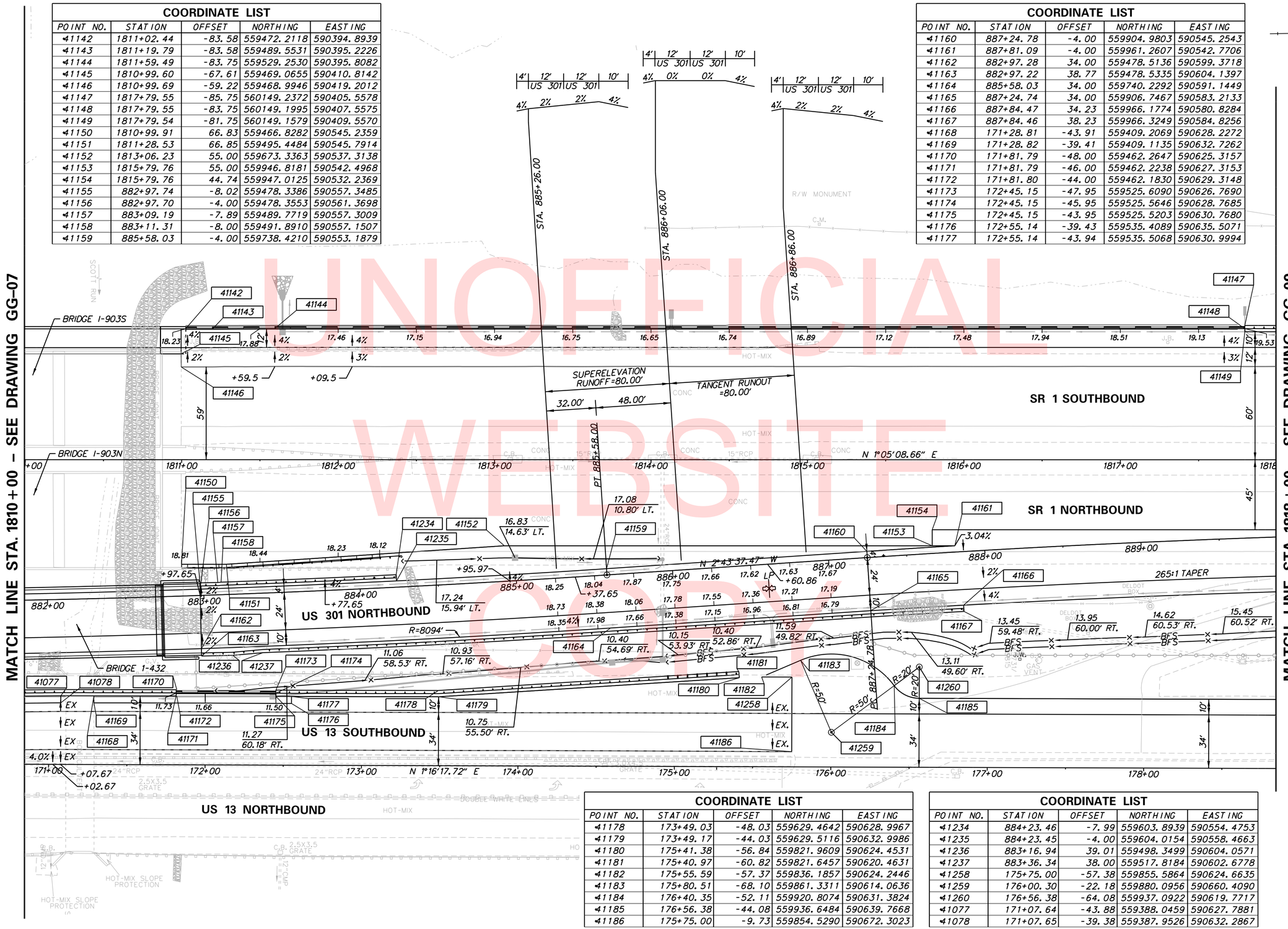

UNOFFICIAL WEBSITE COPY

COORDINATE LIST				
POINT NO.	STATION	OFFSET	NORTHING	EASTING
41178	173+49.03	-48.03	559629.4642	590628.9967
41179	173+49.17	-44.03	559629.5116	590632.9986
41180	175+41.38	-56.84	559821.9609	590624.4531
41181	175+40.97	-60.82	559821.6457	590620.4631
41182	175+55.59	-57.37	559836.1857	590624.2446
41183	175+80.51	-68.10	559861.3311	590614.0636
41184	176+40.35	-52.11	559920.8074	590631.3824
41185	176+56.38	-44.08	559936.6484	590639.7668
41186	175+75.00	-9.73	559854.5290	590672.3023

COORDINATE LIST				
POINT NO.	STATION	OFFSET	NORTHING	EASTING
41234	884+23.46	-7.99	559603.8939	590554.4753
41235	884+23.45	-4.00	559604.0154	590558.4663
41236	883+16.94	39.01	559498.3499	590604.0571
41237	883+36.34	38.00	559517.8184	590602.6778
41258	175+75.00	-57.38	559855.5864	590624.6635
41259	176+00.30	-22.18	559880.0956	590660.4090
41260	176+56.38	-64.08	559937.0922	590619.7717
41077	171+07.64	-43.88	559388.0459	590627.7881
41078	171+07.65	-39.38	559387.9526	590632.2867

N:\31653-000\Contract 1B\CADD\GG008U301_1B.dgn
12/22/2016 4:06:08 PM

DELAWARE DEPARTMENT OF TRANSPORTATION

ADDENDUMS / REVISIONS

SCALE 0 30 60 90 FEET

US 301 & SR 1 INTERCHANGE

CONTRACT	BRIDGE NO.	BR1-903N, BR1-903S, BR1-432 & RW1-1
T200911302	DESIGNED BY: S.E.S.	
COUNTY		
NEW CASTLE	CHECKED BY: B.R.T.	

GRADES & GEOMETRICS

GG-08

SHEET NO. 69

TOTAL SHTS. 491

COORDINATE LIST				
POINT NO.	STATION	OFFSET	NORTHING	EASTING
41187	1821+90.00	-81.75	560559.5401	590417.3346
41188	1824+90.00	-67.72	560859.2204	590437.0430
41189	1824+99.31	-59.67	560868.3794	590445.2754
41190	1824+99.31	-67.71	560868.5318	590437.2341
41191	1825+40.60	-67.71	560909.2515	590437.9064
41192	1818+93.08	2.76	560261.0737	590496.2063
41193	1819+49.65	2.76	560317.6276	590497.2781
41194	1820+15.92	-7.01	560384.0722	590488.7665
41195	1820+15.93	-8.50	560384.1118	590487.2726
41196	1820+89.02	-10.28	560457.2243	590486.8826
41197	1820+89.02	-7.42	560457.1704	590489.7357

COORDINATE LIST				
POINT NO.	STATION	OFFSET	NORTHING	EASTING
41198	1821+99.29	-0.07	560567.2845	590499.1753
41199	1822+51.75	-0.07	560619.7306	590500.1693
41200	1822+51.75	3.93	560619.6548	590504.1686
41201	1821+99.29	3.93	560567.2036	590503.1745
41202	1820+88.84	9.03	560456.6820	590506.1799
41203	1820+88.84	10.53	560456.6450	590507.6802
41204	1820+79.46	44.69	560446.6283	590541.6618
41205	1820+79.56	58.55	560446.4632	590555.5197
41206	890+42.77	37.20	560223.3169	590577.5881
41207	890+83.99	41.41	560264.3662	590581.5670
41208	891+35.68	39.55	560315.7897	590579.7186

COORDINATE LIST				
POINT NO.	STATION	OFFSET	NORTHING	EASTING
41209	892+54.69	36.00	560434.2765	590577.4432
41210	1824+69.11	80.61	560835.5216	590584.9536
41211	1824+99.22	58.60	560866.0500	590563.5211
41212	1824+99.11	78.61	560865.5538	590583.5198
41213	1824+99.37	82.60	560865.7446	590587.5152
41214	185+65.35	-44.08	560845.3971	590659.9383
41261	1827+06.22	-68.29	561070.8837	590434.3761
41262	1827+06.19	-71.23	561070.7095	590431.4394
41263	1826+93.02	-72.22	561057.8430	590431.0314
41272	890+42.77	35.20	560223.3082	590575.5881

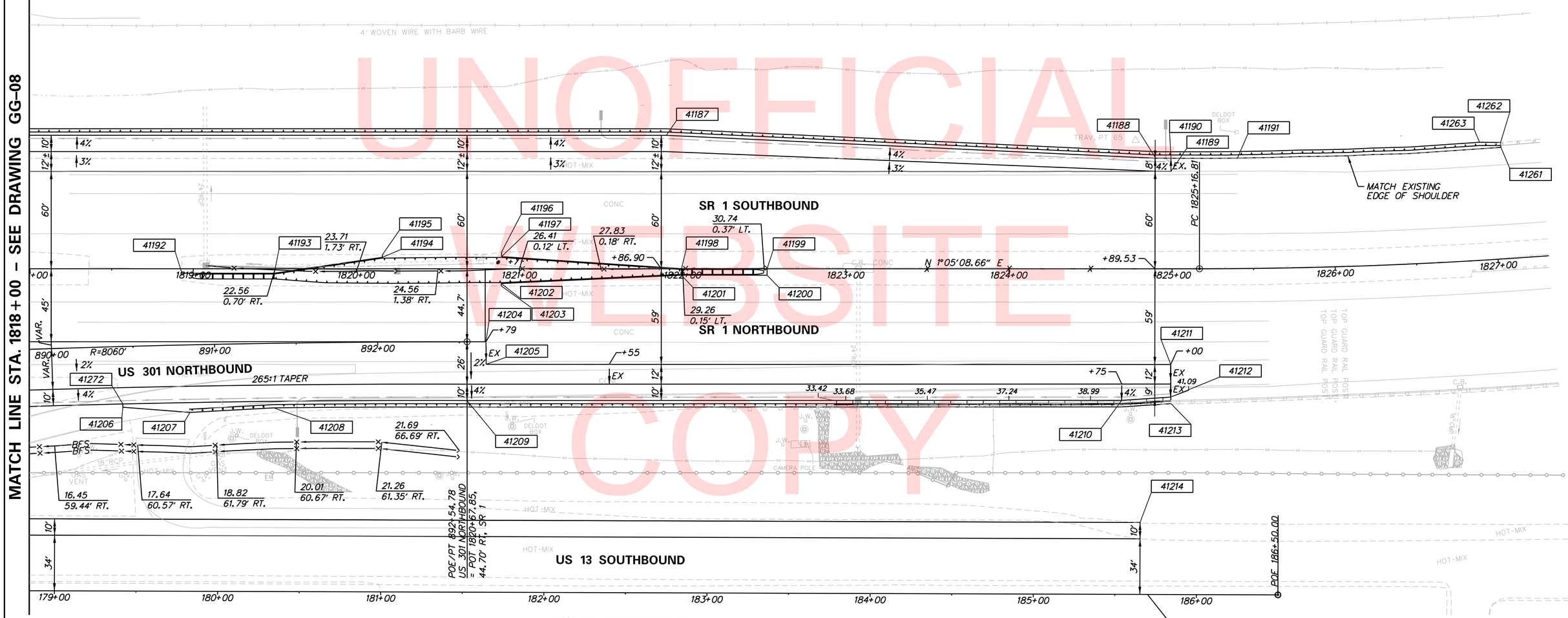

UNOFFICIAL WEBSITE COPY

N:\31553-000\Contract\BK\CADD\GG009U301_1B.dgn
12/22/2015 4:07:24 PM

DELAWARE DEPARTMENT OF TRANSPORTATION	ADDENDUMS / REVISIONS	SCALE 0 30 60 90 FEET	US 301 & SR 1 INTERCHANGE	CONTRACT T200911302	BRIDGE NO.	GRADES & GEOMETRICS	GG-09
				COUNTY NEW CASTLE	DESIGNED BY: S.E.S.		SHEET NO. 70
					CHECKED BY: B.R.T.		TOTAL SHTS. 491

COORDINATE LIST				
POINT NO.	STATION	OFFSET	NORTHING	EASTING
41033	1784+97.98	-16.00	556877.0168	590289.3053
41034	1784+97.98	-9.20	556876.0685	590296.0389
41035	1785+01.31	13.06	556876.2646	590318.5504
41036	1785+01.31	15.35	556875.9459	590320.8138
41215	1781+06.08	17.29	556484.3110	590267.6236
41216	1781+06.09	13.29	556484.8751	590263.6636
41217	1784+77.06	73.90	556843.7658	590375.4082
41218	1785+42.02	97.07	556904.8617	590407.4162
41219	1785+49.18	96.85	556911.9862	590408.1973
41220	1785+48.99	92.77	556912.3648	590404.1247
41221	1786+01.46	98.31	556963.5525	590416.9251
41222	316+00.00	-4.00	556822.1082	590465.1503
41223	316+00.00	24.00	556818.2725	590492.8863
41224	144+66.60	-58.47	556746.7111	590579.4883
41225	145+86.42	-58.67	556866.5318	590580.1170
41226	144+66.60	-24.51	556746.4750	590613.4392
41227	144+66.60	-18.73	556746.4347	590619.2222
41228	145+26.59	-19.59	556806.4322	590618.7794
41229	146+29.53	-18.01	556909.3580	590621.0791
41230	146+29.47	-14.01	556909.2687	590625.0781
41264	1783+94.25	113.90	556756.1850	590403.4735
41265	1783+35.50	117.97	556697.4449	590399.3080
41266	1782+03.40	135.78	556564.1517	590398.5244
41268	1780+68.04	152.56	556427.7801	590396.2650
41269	1779+89.25	160.23	556348.6837	590392.8716
41270	1780+68.32	155.04	556427.7057	590398.7639
41281	1779+88.86	156.25	556348.8551	590388.8753
41282	1781+43.97	139.89	556504.7260	590394.3041
41283	1781+44.42	143.86	556504.6199	590398.3027

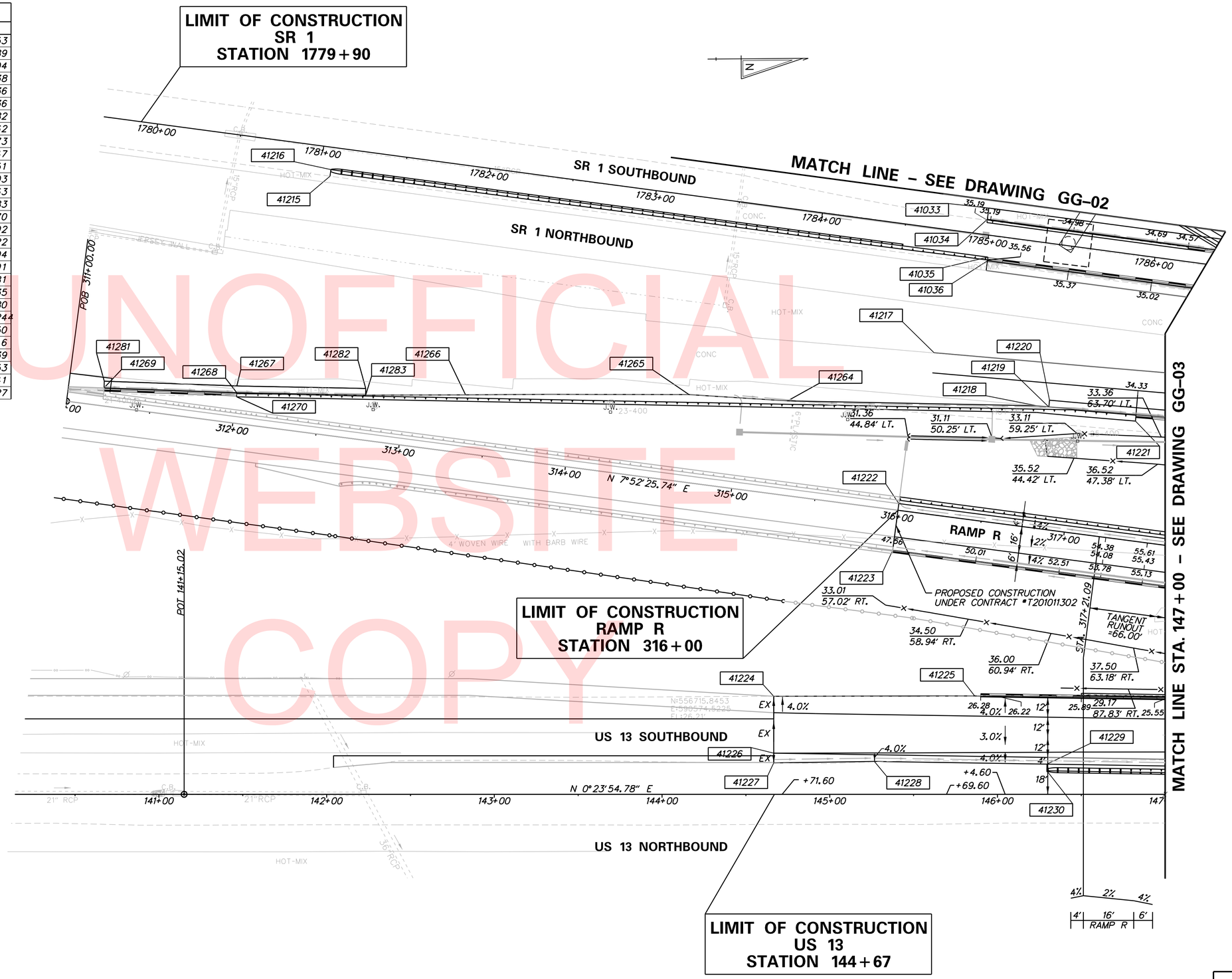

UNOFFICIAL WEBSITE COPY

N:\31653-000\Contract 1B\CADD\GG010U301_1B.dgn
12/22/2015 4:11:52 PM

DELAWARE DEPARTMENT OF TRANSPORTATION	ADDENDUMS / REVISIONS	SCALE 0 30 60 90 FEET	US 301 & SR 1 INTERCHANGE	CONTRACT T200911302	BRIDGE NO. RW1-3R	GRADES & GEOMETRICS	GG-10
				COUNTY NEW CASTLE	DESIGNED BY: S.E.S.		SHEET NO. 71
					CHECKED BY: B.R.T.		TOTAL SHTS. 491

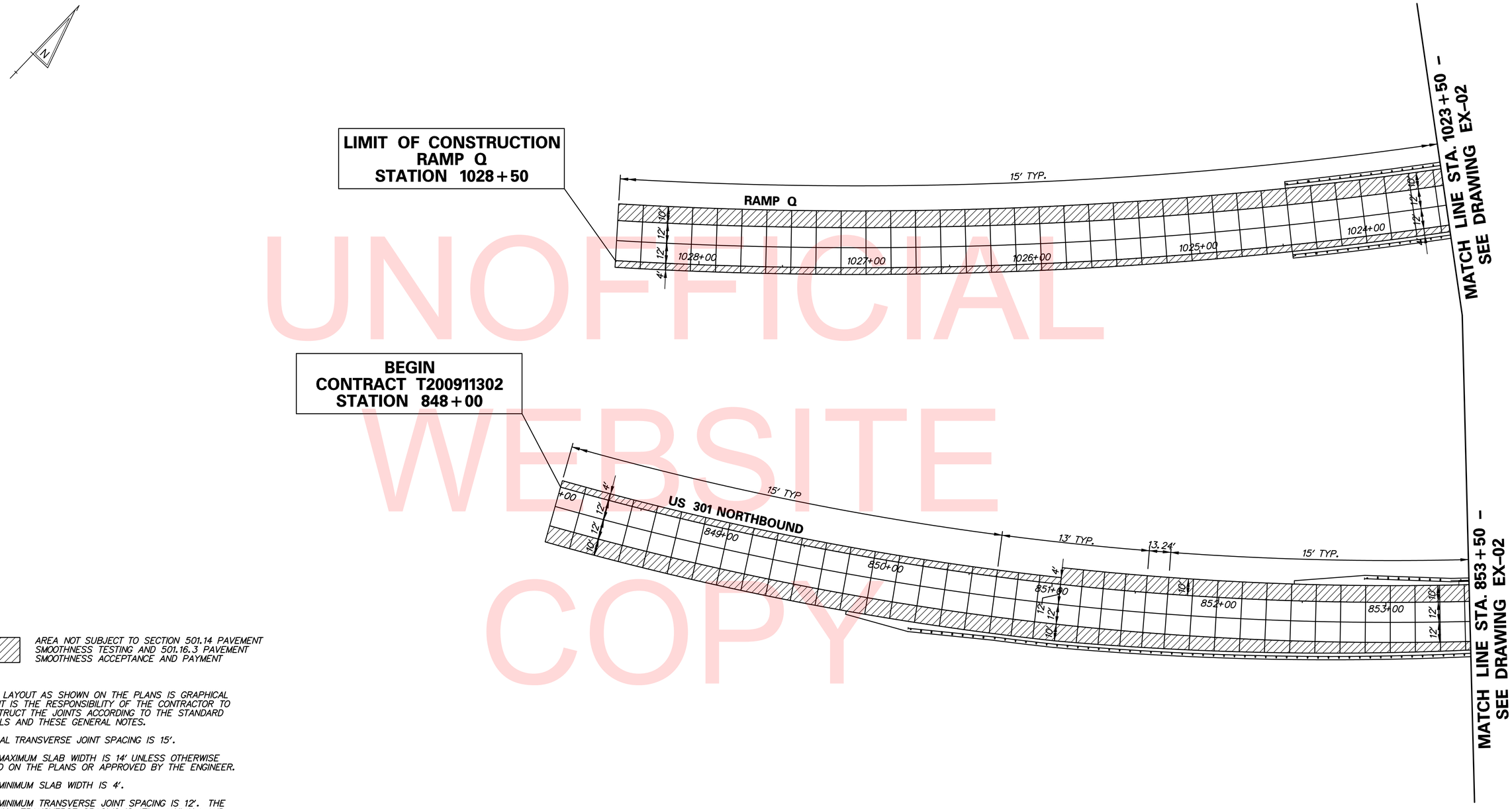

UNOFFICIAL WEBSITE COPY

AREA NOT SUBJECT TO SECTION 501.14 PAVEMENT SMOOTHNESS TESTING AND 501.16.3 PAVEMENT SMOOTHNESS ACCEPTANCE AND PAYMENT

NOTES:

1. JOINT LAYOUT AS SHOWN ON THE PLANS IS GRAPHICAL AND IT IS THE RESPONSIBILITY OF THE CONTRACTOR TO CONSTRUCT THE JOINTS ACCORDING TO THE STANDARD DETAILS AND THESE GENERAL NOTES.
2. TYPICAL TRANSVERSE JOINT SPACING IS 15'.
3. THE MAXIMUM SLAB WIDTH IS 14' UNLESS OTHERWISE NOTED ON THE PLANS OR APPROVED BY THE ENGINEER.
4. THE MINIMUM SLAB WIDTH IS 4'.
5. THE MINIMUM TRANSVERSE JOINT SPACING IS 12'. THE MAXIMUM TRANSVERSE SPACING IS 17'. MAXIMUM AND MINIMUM SPACING ON CURVES SHALL BE MEASURED ALONG THE LONGEST CHORD. THE MAXIMUM AND MINIMUM SPACING FOR CURVES ON THE US 301 MAINLINE SHOULD BE CALCULATED FOR FUTURE LANE EXPANSION INTO THE MEDIAN WHERE APPLICABLE.
6. PAVEMENT CROSS SLOPES AND TRANSITION LENGTHS SHALL BE ADJUSTED AS NEEDED PER LOCATION AND TO MEET DESIGN CRITERIA.
7. IN CURVED SECTIONS, SLAB DIMENSIONS ARE PROVIDED ALONG THE OUTER RADIUS OF THE THROUGH TRAVEL LANES.

N:\31653-000\CONTRACT 1B\CADD\EX001\U301_1B.dgn
12/18/2015 7:05:42 AM

DELAWARE DEPARTMENT OF TRANSPORTATION	ADDENDUMS / REVISIONS	SCALE 0 30 60 90 FEET	US 301 & SR 1 INTERCHANGE	CONTRACT T200911302	BRIDGE NO.	PAVEMENT JOINT LAYOUT	EX-01
				COUNTY NEW CASTLE	DESIGNED BY: NSP		SHEET NO. 72
					CHECKED BY: BRT		TOTAL SHTS. 491

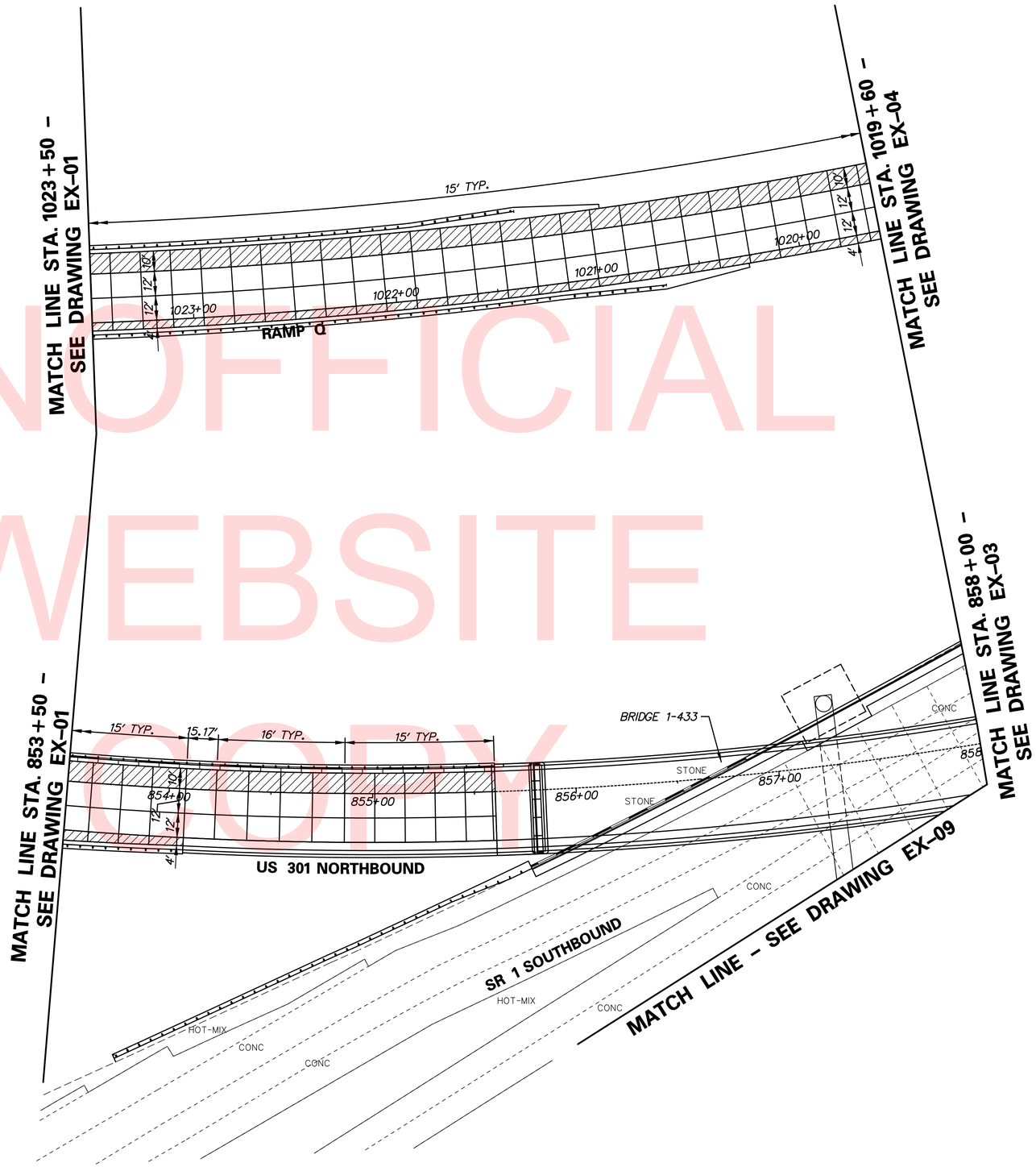

AREA NOT SUBJECT TO SECTION 501.14 PAVEMENT SMOOTHNESS TESTING AND 501.16.3 PAVEMENT SMOOTHNESS ACCEPTANCE AND PAYMENT

NOTES:

1. JOINT LAYOUT AS SHOWN ON THE PLANS IS GRAPHICAL AND IT IS THE RESPONSIBILITY OF THE CONTRACTOR TO CONSTRUCT THE JOINTS ACCORDING TO THE STANDARD DETAILS AND THESE GENERAL NOTES.
2. TYPICAL TRANSVERSE JOINT SPACING IS 15'.
3. THE MAXIMUM SLAB WIDTH IS 14' UNLESS OTHERWISE NOTED ON THE PLANS OR APPROVED BY THE ENGINEER.
4. THE MINIMUM SLAB WIDTH IS 4'.
5. THE MINIMUM TRANSVERSE JOINT SPACING IS 12'. THE MAXIMUM TRANSVERSE SPACING IS 17'. MAXIMUM AND MINIMUM SPACING ON CURVES SHALL BE MEASURED ALONG THE LONGEST CHORD. THE MAXIMUM AND MINIMUM SPACING FOR CURVES ON THE US 301 MAINLINE SHOULD BE CALCULATED FOR FUTURE LANE EXPANSION INTO THE MEDIAN WHERE APPLICABLE.
6. PAVEMENT CROSS SLOPES AND TRANSITION LENGTHS SHALL BE ADJUSTED AS NEEDED PER LOCATION AND TO MEET DESIGN CRITERIA.
7. IN CURVED SECTIONS, SLAB DIMENSIONS ARE PROVIDED ALONG THE OUTER RADIUS OF THE THROUGH TRAVEL LANES.

UNOFFICIAL WEBSITE COPY

N:\31653-000\CONTRACT 1B\CADD\EX002U301_1B.dgn
12/18/2015 7:06:32 AM

DELAWARE DEPARTMENT OF TRANSPORTATION	ADDENDUMS / REVISIONS	SCALE 0 30 60 90 FEET	US 301 & SR 1 INTERCHANGE	CONTRACT T200911302	BRIDGE NO.	PAVEMENT JOINT LAYOUT	EX-02
				COUNTY NEW CASTLE	DESIGNED BY: NSP		SHEET NO. 73
					CHECKED BY: BRT		TOTAL SHTS. 491

AREA NOT SUBJECT TO SECTION 501.14 PAVEMENT SMOOTHNESS TESTING AND 501.16.3 PAVEMENT SMOOTHNESS ACCEPTANCE AND PAYMENT

JOINTS PERPENDICULAR TO US 301 NB BASELINE

JOINTS PERPENDICULAR TO RAMP R BASELINE

NOTES:

1. JOINT LAYOUT AS SHOWN ON THE PLANS IS GRAPHICAL AND IT IS THE RESPONSIBILITY OF THE CONTRACTOR TO CONSTRUCT THE JOINTS ACCORDING TO THE STANDARD DETAILS AND THESE GENERAL NOTES.
2. TYPICAL TRANSVERSE JOINT SPACING IS 15'.
3. THE MAXIMUM SLAB WIDTH IS 14' UNLESS OTHERWISE NOTED ON THE PLANS OR APPROVED BY THE ENGINEER.
4. THE MINIMUM SLAB WIDTH IS 4'.
5. THE MINIMUM TRANSVERSE JOINT SPACING IS 12'. THE MAXIMUM TRANSVERSE SPACING IS 17'. MAXIMUM AND MINIMUM SPACING ON CURVES SHALL BE MEASURED ALONG THE LONGEST CHORD. THE MAXIMUM AND MINIMUM SPACING FOR CURVES ON THE US 301 MAINLINE SHOULD BE CALCULATED FOR FUTURE LANE EXPANSION INTO THE MEDIAN WHERE APPLICABLE.
6. PAVEMENT CROSS SLOPES AND TRANSITION LENGTHS SHALL BE ADJUSTED AS NEEDED PER LOCATION AND TO MEET DESIGN CRITERIA.
7. IN CURVED SECTIONS, SLAB DIMENSIONS ARE PROVIDED ALONG THE OUTER RADIUS OF THE THROUGH TRAVEL LANES.
8. NO P.C.C. PAVEMENT CONSTRUCTION ON US 13.

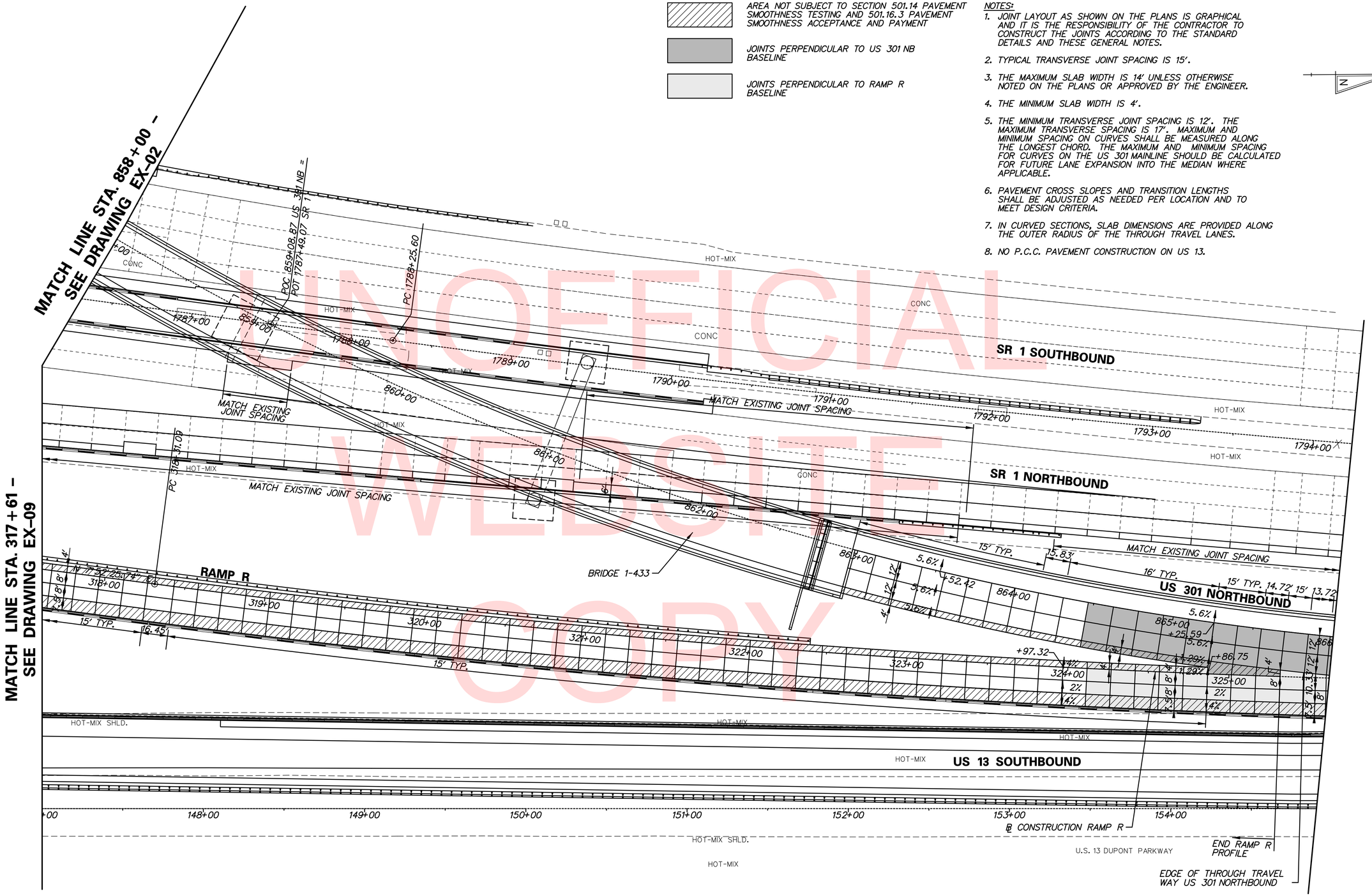

UNOFFICIAL WEBSITE COPY

N:\31653-000\CONTRACT 1B\CADD\EX003J301_1B.dgn
12/18/2015 7:10:37 AM

DELAWARE DEPARTMENT OF TRANSPORTATION	ADDENDUMS / REVISIONS	SCALE 0 30 60 90 FEET	US 301 & SR 1 INTERCHANGE	CONTRACT T200911302	BRIDGE NO.	PAVEMENT JOINT LAYOUT	EX-03
				COUNTY NEW CASTLE	DESIGNED BY: NSP		SHEET NO. 74
					CHECKED BY: BRT		TOTAL SHTS. 491

AREA NOT SUBJECT TO SECTION 501.14 PAVEMENT SMOOTHNESS TESTING AND 501.16.3 PAVEMENT SMOOTHNESS ACCEPTANCE AND PAYMENT

NOTES:

1. JOINT LAYOUT AS SHOWN ON THE PLANS IS GRAPHICAL AND IT IS THE RESPONSIBILITY OF THE CONTRACTOR TO CONSTRUCT THE JOINTS ACCORDING TO THE STANDARD DETAILS AND THESE GENERAL NOTES.
2. TYPICAL TRANSVERSE JOINT SPACING IS 15'.
3. THE MAXIMUM SLAB WIDTH IS 14' UNLESS OTHERWISE NOTED ON THE PLANS OR APPROVED BY THE ENGINEER.
4. THE MINIMUM SLAB WIDTH IS 4'.
5. THE MINIMUM TRANSVERSE JOINT SPACING IS 12'. THE MAXIMUM TRANSVERSE SPACING IS 17'. MAXIMUM AND MINIMUM SPACING ON CURVES SHALL BE MEASURED ALONG THE LONGEST CHORD. THE MAXIMUM AND MINIMUM SPACING FOR CURVES ON THE US 301 MAINLINE SHOULD BE CALCULATED FOR FUTURE LANE EXPANSION INTO THE MEDIAN WHERE APPLICABLE.
6. PAVEMENT CROSS SLOPES AND TRANSITION LENGTHS SHALL BE ADJUSTED AS NEEDED PER LOCATION AND TO MEET DESIGN CRITERIA.
7. IN CURVED SECTIONS, SLAB DIMENSIONS ARE PROVIDED ALONG THE OUTER RADIUS OF THE THROUGH TRAVEL LANES.

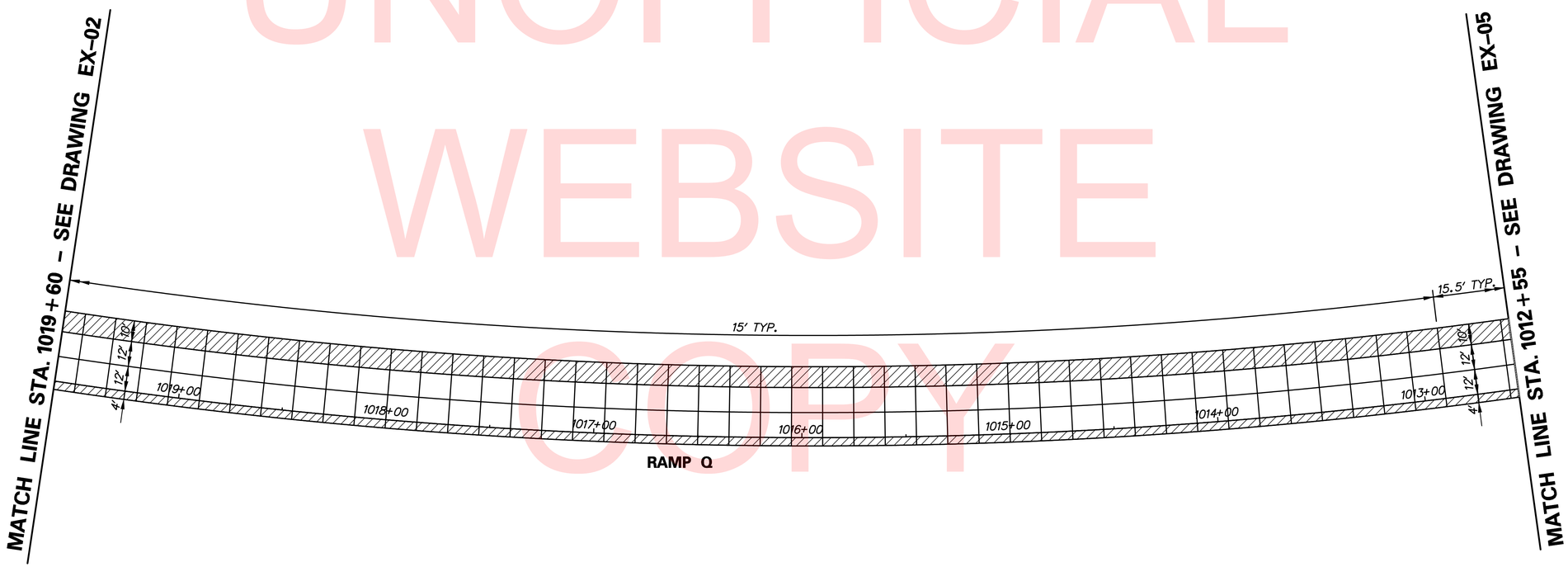

UNOFFICIAL WEBSITE COPY

N:\31653-000\CONTRACT 1B\CADD\EX0041301_1B.dgn
12/18/2015 7:11:32 AM

DELAWARE DEPARTMENT OF TRANSPORTATION	ADDENDUMS / REVISIONS	SCALE 0 30 60 90 FEET	US 301 & SR 1 INTERCHANGE	CONTRACT T200911302 / COUNTY NEW CASTLE	BRIDGE NO. / DESIGNED BY: NSP / CHECKED BY: BRT	PAVEMENT JOINT LAYOUT

EX-04	
SHEET NO.	75
TOTAL SHTS.	491

COORDINATE LIST

POINT NO.	STATION	OFFSET	NORTHING	EASTING	ELEVATION
80000	1795+49.96	-81.30	557925.4615	590348.2848	27.83′
80001	1795+49.96	-78.40	557925.2344	590351.1715	28.02′
80002	1795+69.98	-78.08	557945.0329	590353.1651	27.87′
80003	1795+91.04	-77.71	557965.8770	590354.9475	27.78′
80004	1796+10.08	-77.37	557984.7057	590356.6603	27.66′
80005	1796+30.00	-77.01	558004.4228	590358.4302	27.55′
80006	1796+52.99	-76.55	558026.9728	590360.4496	27.41′
80007	1796+74.80	-76.10	558048.7628	590362.3839	27.29′
80008	1796+99.03	-75.65	558072.7448	590364.4026	27.12′
80009	1797+19.05	-75.16	558092.5685	590366.1610	27.00′
80010	1797+39.05	-74.65	558112.3656	590367.8996	26.92′

AREA NOT SUBJECT TO SECTION 501.14 PAVEMENT SMOOTHNESS TESTING AND 501.16.3 PAVEMENT SMOOTHNESS ACCEPTANCE AND PAYMENT

JOINTS PERPENDICULAR TO RAMP Q OR RAMP R BASELINE

JOINTS PERPENDICULAR TO SR 1 OR US 301 NORTHBOUND BASELINE

NOTES:

1. JOINT LAYOUT AS SHOWN ON THE PLANS IS GRAPHICAL AND IT IS THE RESPONSIBILITY OF THE CONTRACTOR TO CONSTRUCT THE JOINTS ACCORDING TO THE STANDARD DETAILS AND THESE GENERAL NOTES.
2. TYPICAL TRANSVERSE JOINT SPACING IS 15′.
3. THE MAXIMUM SLAB WIDTH IS 14′ UNLESS OTHERWISE NOTED ON THE PLANS OR APPROVED BY THE ENGINEER.
4. THE MINIMUM SLAB WIDTH IS 4′.
5. THE MINIMUM TRANSVERSE JOINT SPACING IS 12′. THE MAXIMUM TRANSVERSE SPACING IS 17′. MAXIMUM AND MINIMUM SPACING ON CURVES SHALL BE MEASURED ALONG THE LONGEST CHORD. THE MAXIMUM AND MINIMUM SPACING FOR CURVES ON THE US 301 MAINLINE SHOULD BE CALCULATED FOR FUTURE LANE EXPANSION INTO THE MEDIAN WHERE APPLICABLE.
6. PAVEMENT CROSS SLOPES AND TRANSITION LENGTHS SHALL BE ADJUSTED AS NEEDED PER LOCATION AND TO MEET DESIGN CRITERIA.
7. IN CURVED SECTIONS, SLAB DIMENSIONS ARE PROVIDED ALONG THE OUTER RADIUS OF THE THROUGH TRAVEL LANES.
8. NO P.C.C. PAVEMENT CONSTRUCTION ON US 13.

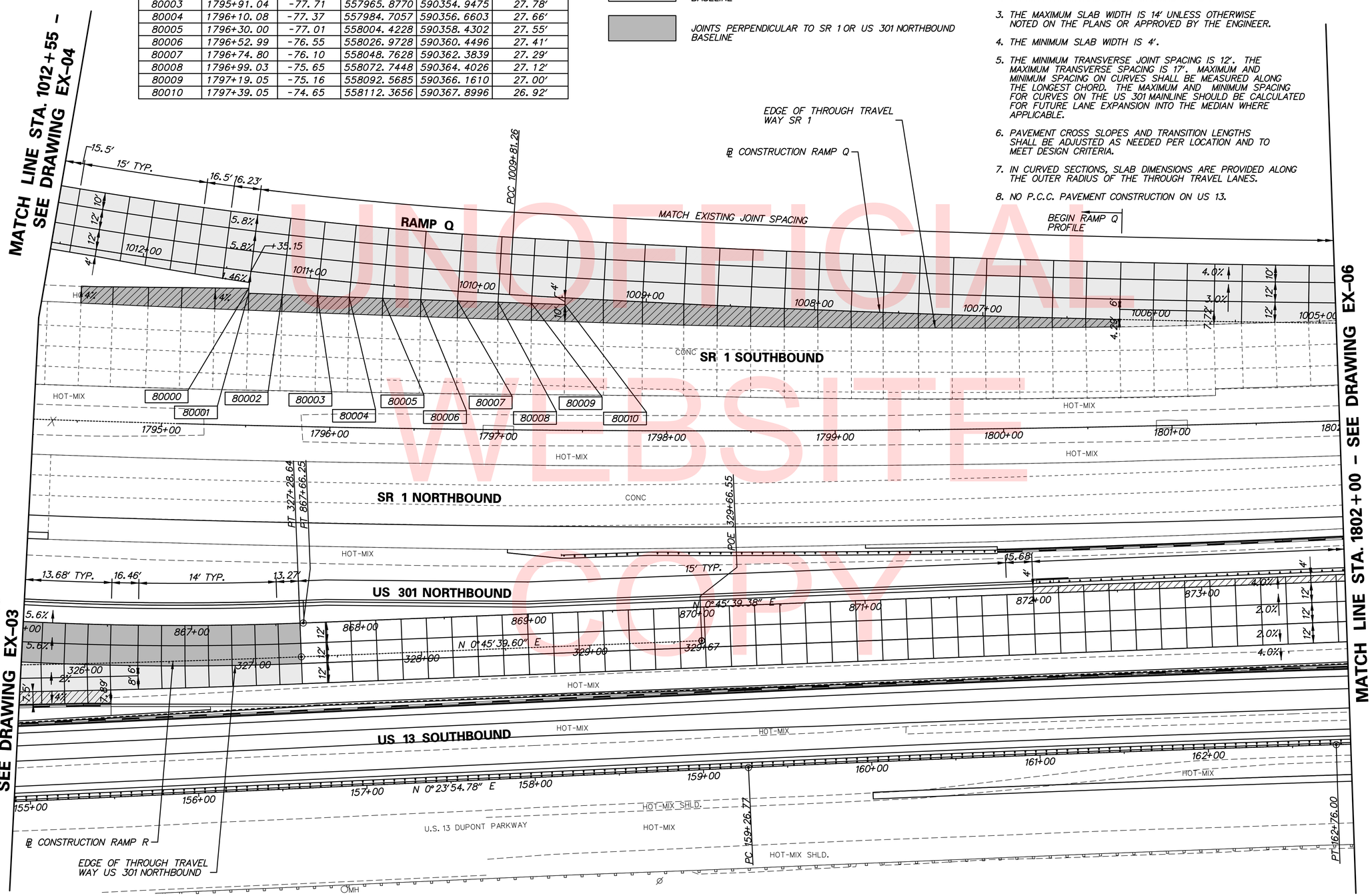

UNOFFICIAL WEBSITE COPY

N:\31653-000\CONTRACT 1B\CADD\EX005U301_1B.dgn
12/18/2015 7:12:17 AM

DELAWARE DEPARTMENT OF TRANSPORTATION	ADDENDUMS / REVISIONS	SCALE 0 30 60 90 FEET	US 301 & SR 1 INTERCHANGE	CONTRACT T200911302 / COUNTY NEW CASTLE	BRIDGE NO. / DESIGNED BY: NSP / CHECKED BY: BRT

PAVEMENT JOINT LAYOUT

EX-05

SHEET NO. 76

TOTAL SHTS. 491

AREA NOT SUBJECT TO SECTION 501.14 PAVEMENT SMOOTHNESS TESTING AND 501.16.3 PAVEMENT SMOOTHNESS ACCEPTANCE AND PAYMENT

NOTES:

1. JOINT LAYOUT AS SHOWN ON THE PLANS IS GRAPHICAL AND IT IS THE RESPONSIBILITY OF THE CONTRACTOR TO CONSTRUCT THE JOINTS ACCORDING TO THE STANDARD DETAILS AND THESE GENERAL NOTES.
2. TYPICAL TRANSVERSE JOINT SPACING IS 15'.
3. THE MAXIMUM SLAB WIDTH IS 14' UNLESS OTHERWISE NOTED ON THE PLANS OR APPROVED BY THE ENGINEER.
4. THE MINIMUM SLAB WIDTH IS 4'.
5. THE MINIMUM TRANSVERSE JOINT SPACING IS 12'. THE MAXIMUM TRANSVERSE SPACING IS 17'. MAXIMUM AND MINIMUM SPACING ON CURVES SHALL BE MEASURED ALONG THE LONGEST CHORD. THE MAXIMUM AND MINIMUM SPACING FOR CURVES ON THE US 301 MAINLINE SHOULD BE CALCULATED FOR FUTURE LANE EXPANSION INTO THE MEDIAN WHERE APPLICABLE.
6. PAVEMENT CROSS SLOPES AND TRANSITION LENGTHS SHALL BE ADJUSTED AS NEEDED PER LOCATION AND TO MEET DESIGN CRITERIA.
7. IN CURVED SECTIONS, SLAB DIMENSIONS ARE PROVIDED ALONG THE OUTER RADIUS OF THE THROUGH TRAVEL LANES.
8. NO P.C.C. PAVEMENT CONSTRUCTION ON US 13.

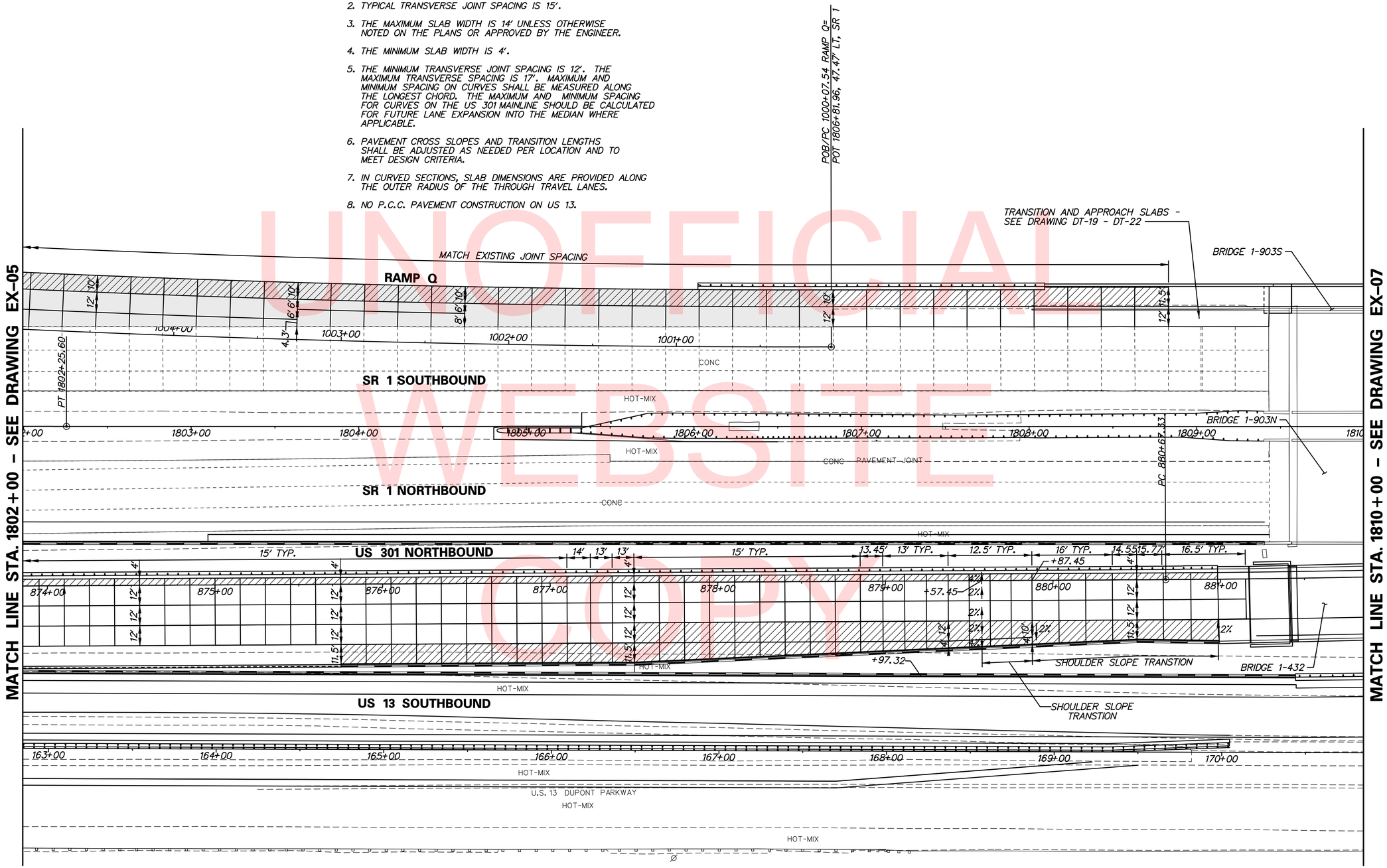

UNOFFICIAL WEBSITE COPY

N:\31653-000\CONTRACT 18\CADD\EX006U301_18.dgn
12/18/2015 9:13:40 AM

DELAWARE DEPARTMENT OF TRANSPORTATION	ADDENDUMS / REVISIONS	SCALE 0 30 60 90 FEET	US 301 & SR 1 INTERCHANGE	CONTRACT T200911302	BRIDGE NO.	PAVEMENT JOINT LAYOUT	EX-06
				COUNTY NEW CASTLE	DESIGNED BY: NSP		SHEET NO. 77
					CHECKED BY: BRT		TOTAL SHTS. 491

AREA NOT SUBJECT TO SECTION 501.14 PAVEMENT SMOOTHNESS TESTING AND 501.16.3 PAVEMENT SMOOTHNESS ACCEPTANCE AND PAYMENT

JOINTS PERPENDICULAR TO US 301 NORTHBOUND BASELINE

JOINTS PERPENDICULAR TO SR 1 BASELINE

NOTES:

1. JOINT LAYOUT AS SHOWN ON THE PLANS IS GRAPHICAL AND IT IS THE RESPONSIBILITY OF THE CONTRACTOR TO CONSTRUCT THE JOINTS ACCORDING TO THE STANDARD DETAILS AND THESE GENERAL NOTES.
2. TYPICAL TRANSVERSE JOINT SPACING IS 15'.
3. THE MAXIMUM SLAB WIDTH IS 14' UNLESS OTHERWISE NOTED ON THE PLANS OR APPROVED BY THE ENGINEER.
4. THE MINIMUM SLAB WIDTH IS 4'.
5. THE MINIMUM TRANSVERSE JOINT SPACING IS 12'. THE MAXIMUM TRANSVERSE SPACING IS 17'. MAXIMUM AND MINIMUM SPACING ON CURVES SHALL BE MEASURED ALONG THE LONGEST CHORD. THE MAXIMUM AND MINIMUM SPACING FOR CURVES ON THE US 301 MAINLINE SHOULD BE CALCULATED FOR FUTURE LANE EXPANSION INTO THE MEDIAN WHERE APPLICABLE.
6. PAVEMENT CROSS SLOPES AND TRANSITION LENGTHS SHALL BE ADJUSTED AS NEEDED PER LOCATION AND TO MEET DESIGN CRITERIA.
7. IN CURVED SECTIONS, SLAB DIMENSIONS ARE PROVIDED ALONG THE OUTER RADIUS OF THE THROUGH TRAVEL LANES.
8. NO P.C.C. PAVEMENT CONSTRUCTION ON US 13.

COORDINATE LIST

POINT NO.	STATION	OFFSET	NORTHING	EASTING	ELEVATION
80015	1815+79.76	55.00	559946.8181	590542.4968	18.26'
80016	1815+94.20	53.73	559961.3402	590538.5050	18.40'
80017	1815+94.20	55.00	559961.2607	590542.7706	18.26'
80018	1815+79.76	50.73	559976.3358	590538.7846	18.49'

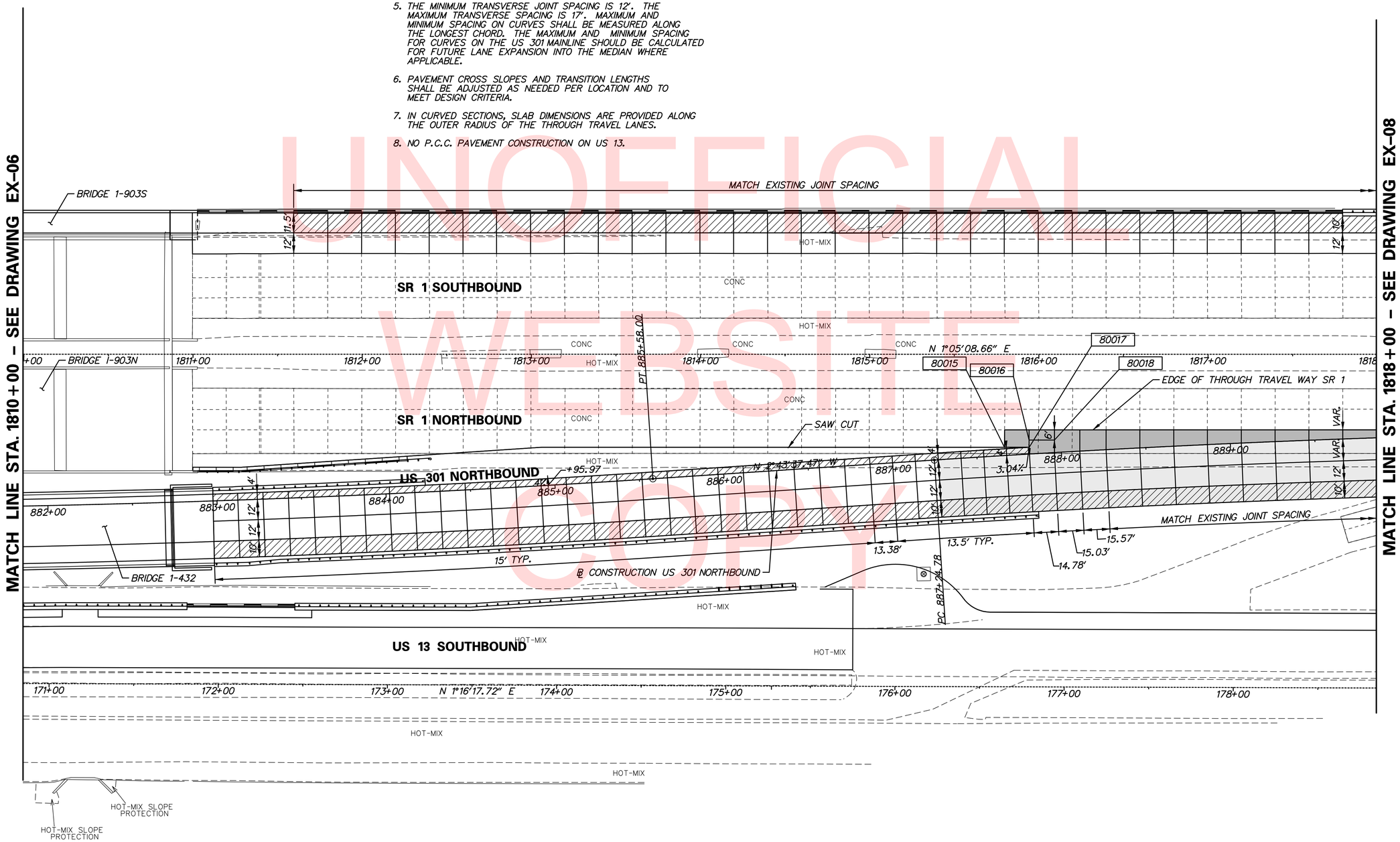

UNOFFICIAL WEBSITE COPY

N:\31653-000\CONTRACT 18\CADD\EX007U301_1B.dgn
12/18/2015 7:15:36 AM

DELAWARE DEPARTMENT OF TRANSPORTATION

ADDENDUMS / REVISIONS

SCALE 0 30 60 90 FEET

US 301 & SR 1 INTERCHANGE

CONTRACT	BRIDGE NO.
T200911302	DESIGNED BY: NSP
COUNTY	CHECKED BY: BRT
NEW CASTLE	

PAVEMENT JOINT LAYOUT

EX-07

SHEET NO. 78

TOTAL SHTS. 491

AREA NOT SUBJECT TO SECTION 501.14 PAVEMENT SMOOTHNESS TESTING AND 501.16.3 PAVEMENT SMOOTHNESS ACCEPTANCE AND PAYMENT

JOINTS PERPENDICULAR TO US 301 NORTHBOUND BASELINE

JOINTS PERPENDICULAR TO SR 1 BASELINE

NOTES:

1. JOINT LAYOUT AS SHOWN ON THE PLANS IS GRAPHICAL AND IT IS THE RESPONSIBILITY OF THE CONTRACTOR TO CONSTRUCT THE JOINTS ACCORDING TO THE STANDARD DETAILS AND THESE GENERAL NOTES.
2. TYPICAL TRANSVERSE JOINT SPACING IS 15'.
3. THE MAXIMUM SLAB WIDTH IS 14' UNLESS OTHERWISE NOTED ON THE PLANS OR APPROVED BY THE ENGINEER.
4. THE MINIMUM SLAB WIDTH IS 4'.
5. THE MINIMUM TRANSVERSE JOINT SPACING IS 12'. THE MAXIMUM TRANSVERSE SPACING IS 17'. MAXIMUM AND MINIMUM SPACING ON CURVES SHALL BE MEASURED ALONG THE LONGEST CHORD. THE MAXIMUM AND MINIMUM SPACING FOR CURVES ON THE US 301 MAINLINE SHOULD BE CALCULATED FOR FUTURE LANE EXPANSION INTO THE MEDIAN WHERE APPLICABLE.
6. PAVEMENT CROSS SLOPES AND TRANSITION LENGTHS SHALL BE ADJUSTED AS NEEDED PER LOCATION AND TO MEET DESIGN CRITERIA.
7. IN CURVED SECTIONS, SLAB DIMENSIONS ARE PROVIDED ALONG THE OUTER RADIUS OF THE THROUGH TRAVEL LANES.
8. NO P.C.C. PAVEMENT CONSTRUCTION ON US 13.

UNOFFICIAL WEBSITE COPY

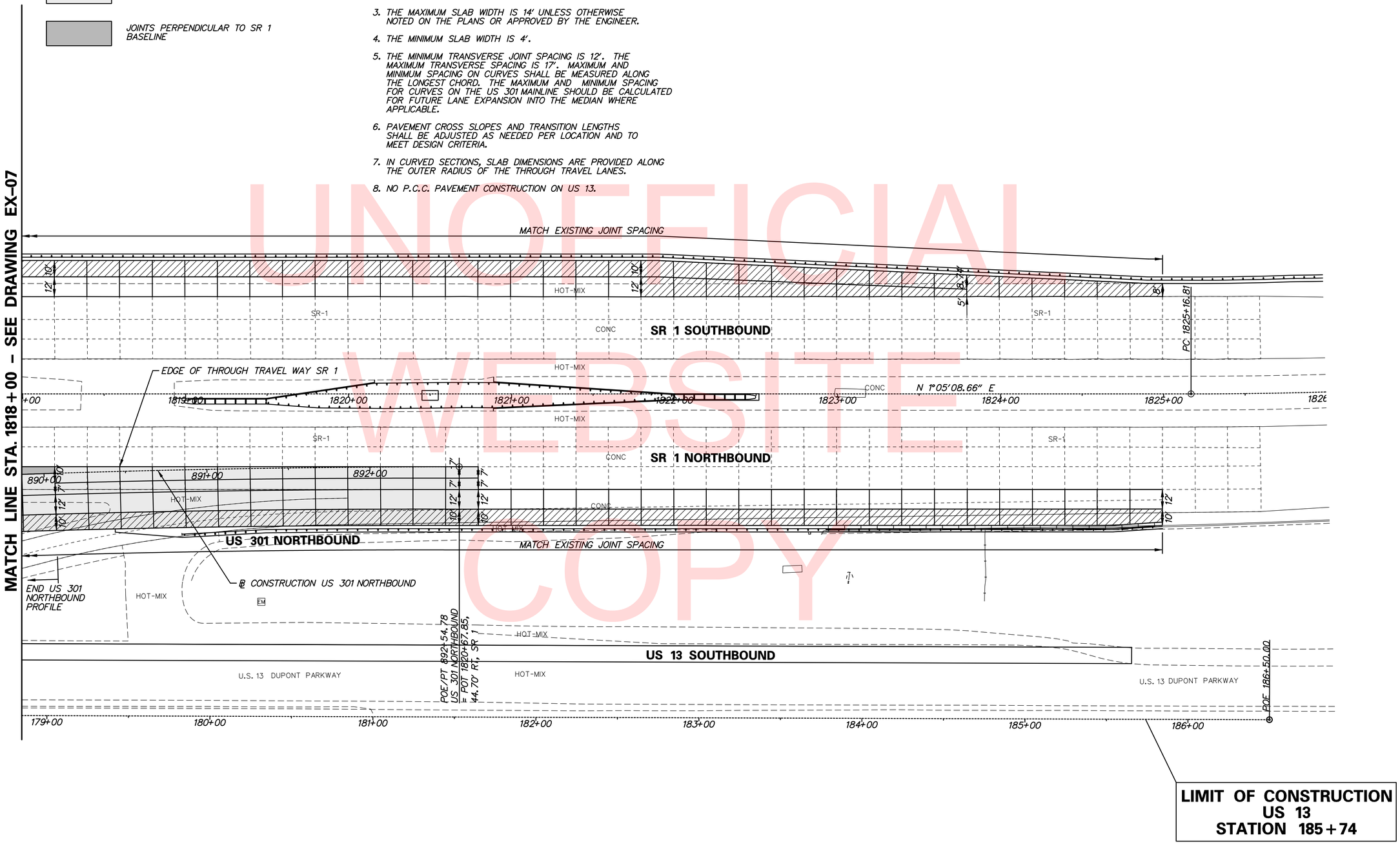

DELAWARE DEPARTMENT OF TRANSPORTATION	ADDENDUMS / REVISIONS	SCALE 0 30 60 90 FEET	US 301 & SR 1 INTERCHANGE	CONTRACT T200911302	BRIDGE NO.	PAVEMENT JOINT LAYOUT	EX-08
				COUNTY NEW CASTLE	DESIGNED BY: NSP		SHEET NO. 79
					CHECKED BY: BRT		TOTAL SHTS. 491

N:\31653-000\CONTRACT 18\CADD\EX008U301_18.dgn
12/18/2015 7:16:56 AM

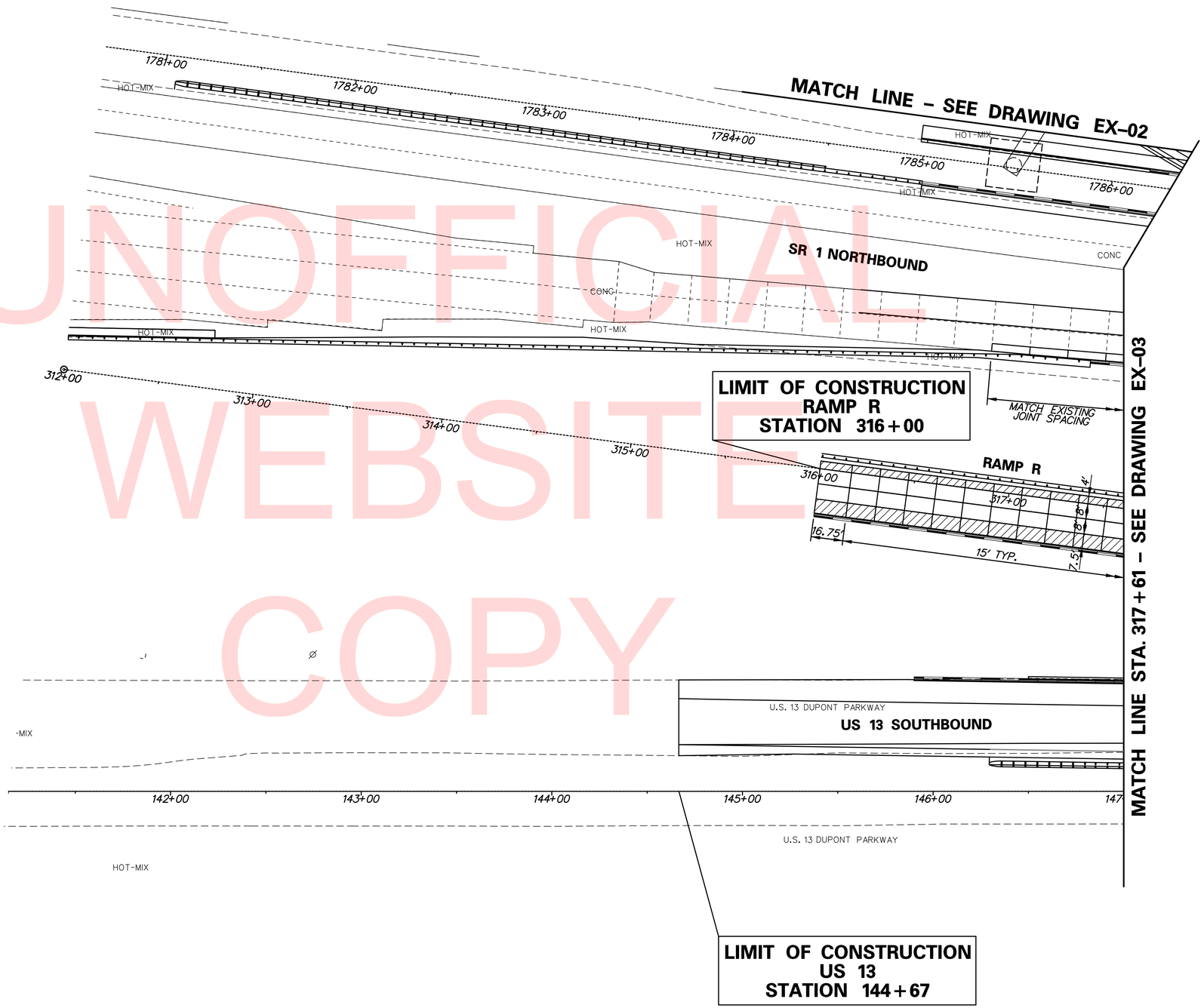

AREA NOT SUBJECT TO SECTION 501.14 PAVEMENT SMOOTHNESS TESTING AND 501.16.3 PAVEMENT SMOOTHNESS ACCEPTANCE AND PAYMENT

NOTES:

1. JOINT LAYOUT AS SHOWN ON THE PLANS IS GRAPHICAL AND IT IS THE RESPONSIBILITY OF THE CONTRACTOR TO CONSTRUCT THE JOINTS ACCORDING TO THE STANDARD DETAILS AND THESE GENERAL NOTES.
2. TYPICAL TRANSVERSE JOINT SPACING IS 15'.
3. THE MAXIMUM SLAB WIDTH IS 14' UNLESS OTHERWISE NOTED ON THE PLANS OR APPROVED BY THE ENGINEER.
4. THE MINIMUM SLAB WIDTH IS 4'.
5. THE MINIMUM TRANSVERSE JOINT SPACING IS 12'. THE MAXIMUM TRANSVERSE SPACING IS 17'. MAXIMUM AND MINIMUM SPACING ON CURVES SHALL BE MEASURED ALONG THE LONGEST CHORD. THE MAXIMUM AND MINIMUM SPACING FOR CURVES ON THE US 301 MAINLINE SHOULD BE CALCULATED FOR FUTURE LANE EXPANSION INTO THE MEDIAN WHERE APPLICABLE.
6. PAVEMENT CROSS SLOPES AND TRANSITION LENGTHS SHALL BE ADJUSTED AS NEEDED PER LOCATION AND TO MEET DESIGN CRITERIA.
7. IN CURVED SECTIONS, SLAB DIMENSIONS ARE PROVIDED ALONG THE OUTER RADIUS OF THE THROUGH TRAVEL LANES.
8. NO P.C.C. PAVEMENT CONSTRUCTION ON US 13.

UNOFFICIAL WEBSITE COPY

N:\31653-000\CONTRACT 1B\CADD\EX009U301_1B.dgn
12/18/2015 7:17:46 AM

DELAWARE DEPARTMENT OF TRANSPORTATION	ADDENDUMS / REVISIONS	SCALE 0 30 60 90 FEET	US 301 & SR 1 INTERCHANGE	CONTRACT T200911302 / COUNTY NEW CASTLE	BRIDGE NO. / DESIGNED BY: NSP / CHECKED BY: BRT	PAVEMENT JOINT LAYOUT

EX–09
SHEET NO. 80
TOTAL SHTS. 491

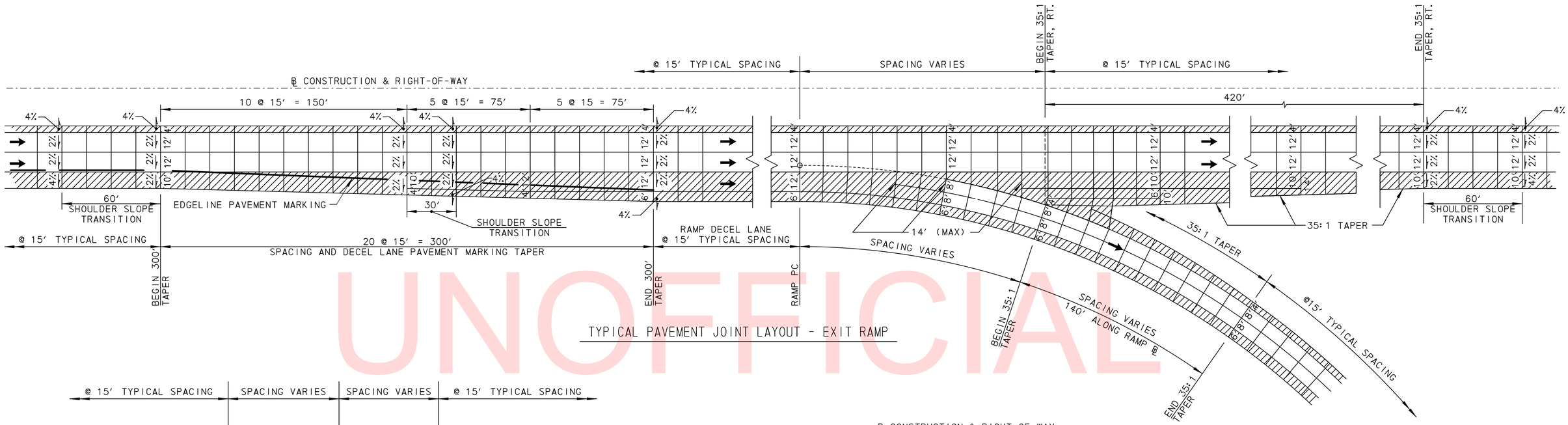

TYPICAL PAVEMENT JOINT LAYOUT - EXIT RAMP

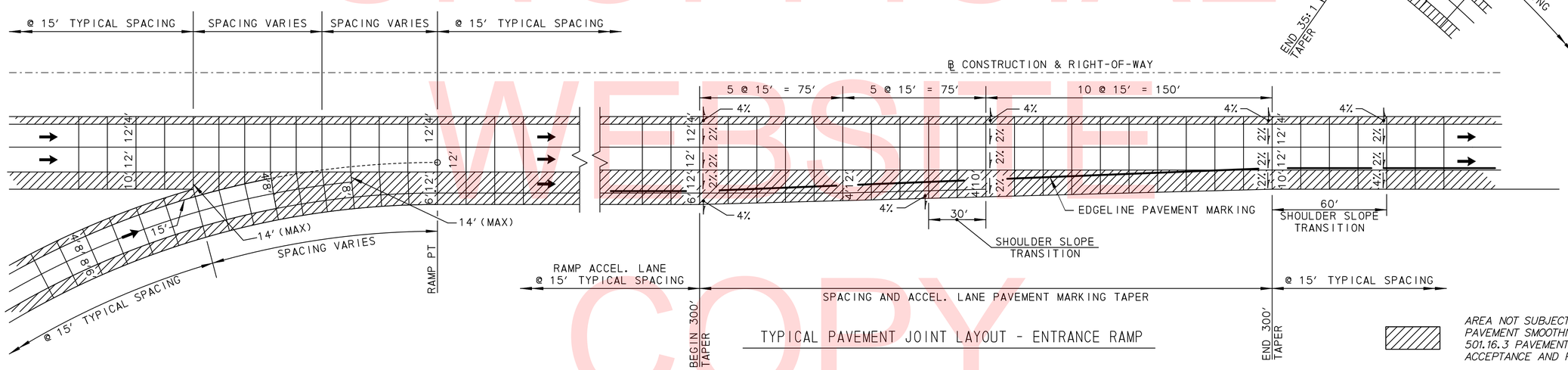

TYPICAL PAVEMENT JOINT LAYOUT - ENTRANCE RAMP

AREA NOT SUBJECT TO SECTION 501.14 PAVEMENT SMOOTHNESS TESTING AND 501.16.3 PAVEMENT SMOOTHNESS ACCEPTANCE AND PAYMENT.

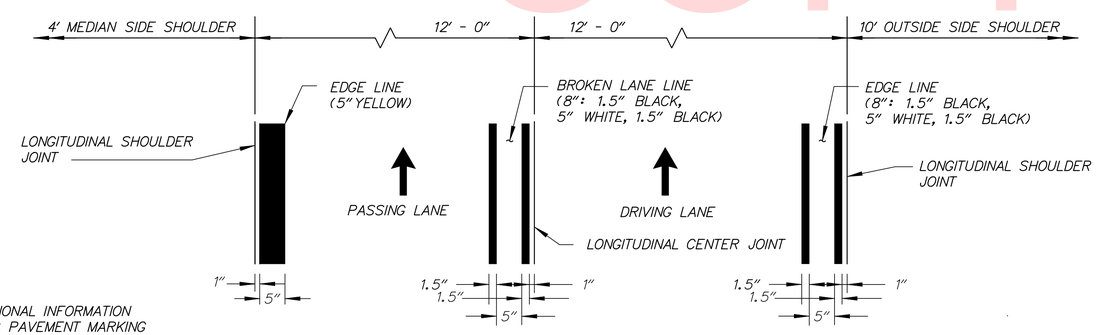

NOTE:

FOR ADDITIONAL INFORMATION REGARDING PAVEMENT MARKING AND RECESSED PAVEMENT MARKER LAYOUT SEE THE DELAWARE MUTCD.

TYPICAL MAINLINE PAVEMENT MARKING LAYOUT

NTS

GENERAL NOTES

1. JOINT LAYOUT AS SHOWN ON THE PLANS IS GRAPHICAL AND IT IS THE RESPONSIBILITY OF THE CONTRACTOR TO CONSTRUCT THE JOINTS ACCORDING TO THE STANDARD DETAILS AND THESE GENERAL NOTES.
2. TYPICAL TRANSVERSE JOINT SPACING IS 15′.
3. THE MAXIMUM SLAB WIDTH IS 14′ UNLESS OTHERWISE NOTED ON THE PLANS OR APPROVED BY THE ENGINEER.
4. THE MINIMUM SLAB WIDTH IS 4′.
5. THE MINIMUM TRANSVERSE JOINT SPACING IS 12′. THE MAXIMUM TRANSVERSE SPACING IS 17′. SPACING ON CURVES SHALL BE MEASURED ALONG THE LONGEST CHORD. THE MAXIMUM AND MINIMUM SPACING FOR CURVES ON THE US 301 MAINLINE SHOULD BE CALCULATED FOR FUTURE LANE EXPANSION INTO THE MEDIAN WHERE APPLICABLE.
6. PAVEMENT CROSS SLOPES AND TRANSITION LENGTHS SHALL BE ADJUSTED AS NEEDED PER LOCATION AND TO MEET DESIGN CRITERIA.

UNOFFICIAL WEBSITE COPY

N:\31653-000\CONTRACT 1B\CADD\EX010U301_1B.dgn
12/18/2015 7:20:11 AM

DELAWARE DEPARTMENT OF TRANSPORTATION	ADDENDUMS / REVISIONS	SCALE 0 30 60 90 FEET	US 301 & SR 1 INTERCHANGE	CONTRACT T200911302	BRIDGE NO.	PAVEMENT JOINT LAYOUT DETAILS SEPTEMBER 24, 2014
				COUNTY NEW CASTLE	DESIGNED BY: SKS	SHEET NO. X
					CHECKED BY: AKM	TOTAL SHTS. 491

EARTH DIKE SCHEDULE

NO.	BEGIN STA.	END STA.	OFFSET	LENGTH	TYPE
003	1025+69	1024+45	785.94	374′	A-1
004	1023+86	1024+35	230.31	151′	A-1

SEDIMENT TRAP SCHEDULE

NO.	D. AREA	LENGTH	WIDTH	DEPTH	OUT. TYPE	WEIR EL.	CLEAN EL.	WEIR LENGTH	EMBANK. EL.
001	7.57 AC	150′	40′	4.00	RIPRAP	46.00	44.13	10′	49.00
002	7.57 AC	150′	40′	4.00	RIPRAP	34.00	32.13	10′	37.00

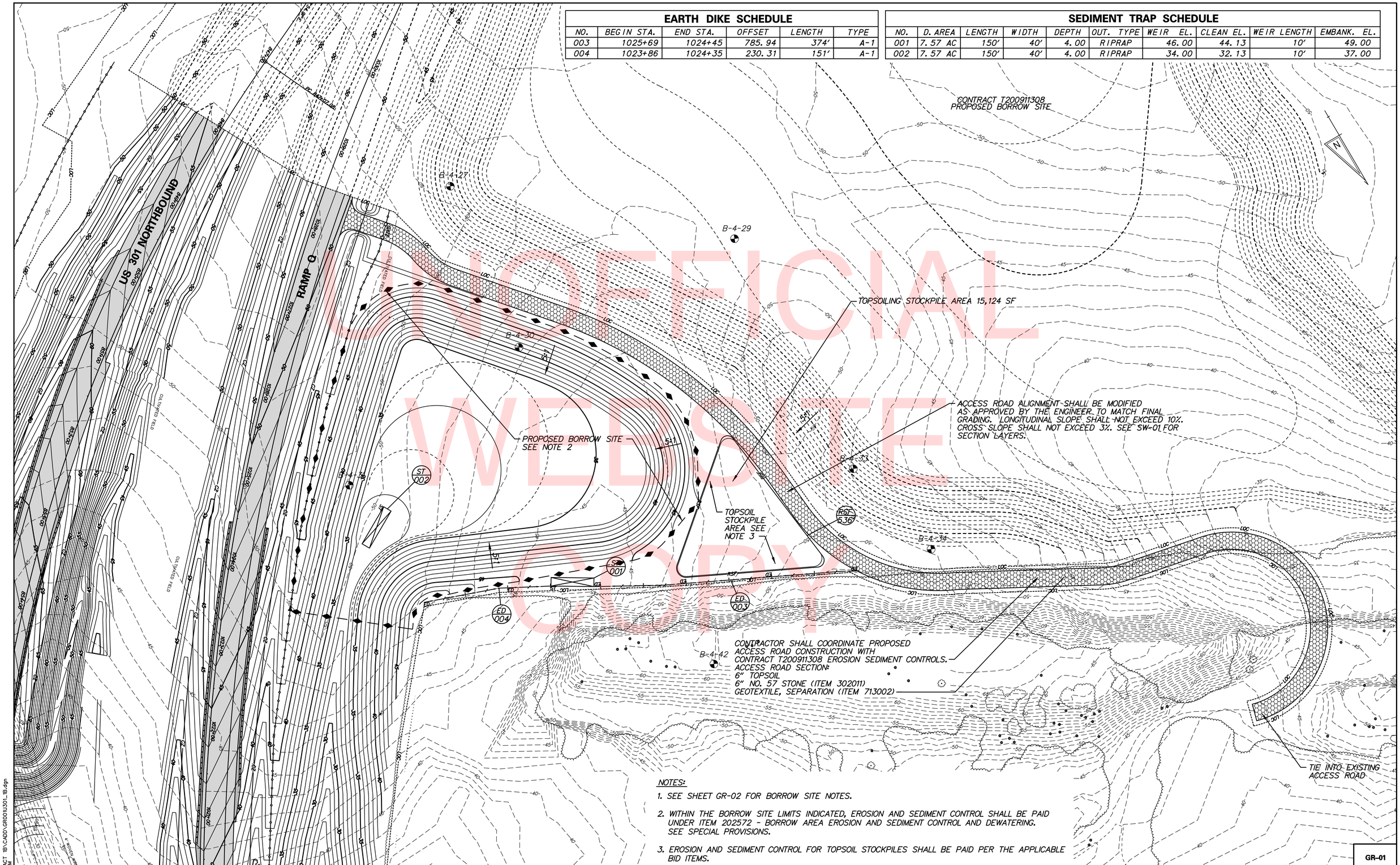

UNOFFICIAL WEBSITE COPY

NOTES:

1. SEE SHEET GR-02 FOR BORROW SITE NOTES.
2. WITHIN THE BORROW SITE LIMITS INDICATED, EROSION AND SEDIMENT CONTROL SHALL BE PAID UNDER ITEM 202572 - BORROW AREA EROSION AND SEDIMENT CONTROL AND DEWATERING. SEE SPECIAL PROVISIONS.
3. EROSION AND SEDIMENT CONTROL FOR TOPSOIL STOCKPILES SHALL BE PAID PER THE APPLICABLE BID ITEMS.

N:\36553-000\CONTRACT 1B\CADD\GR001U301_1B.dgn
2/25/2015 2:19:38 PM

DELAWARE DEPARTMENT OF TRANSPORTATION	ADDENDUMS / REVISIONS	SCALE 0 50 100 150 FEET	US 301 & SR 1 INTERCHANGE	CONTRACT T200911302	BRIDGE NO.	VILLAGE OF SCOTT RUN EAST BORROW SITE GRADING PLAN	GR-01
				COUNTY NEW CASTLE	DESIGNED BY: KAH		SHEET NO. 82
					CHECKED BY: BRT		TOTAL SHTS. 491

SEDIMENT TRAP SCHEDULE

NO.	D. AREA	LENGTH	WIDTH	DEPTH	OUT. TYPE	WEIR EL.	CLEAN EL.	WEIR LENGTH	EMBANK. EL.
010	10.47 AC	145'	60'	4.0	RIPRAP	36.00	34.00	14'	39.00

EARTH DIKE SCHEDULE

NO.	BEGIN STA.	END STA.	OFFSET	LENGTH	TYPE
007	1829+90	1831+26	666.17	358'	A-2
008	1835+70	1831+59	1042.00	558'	A-1

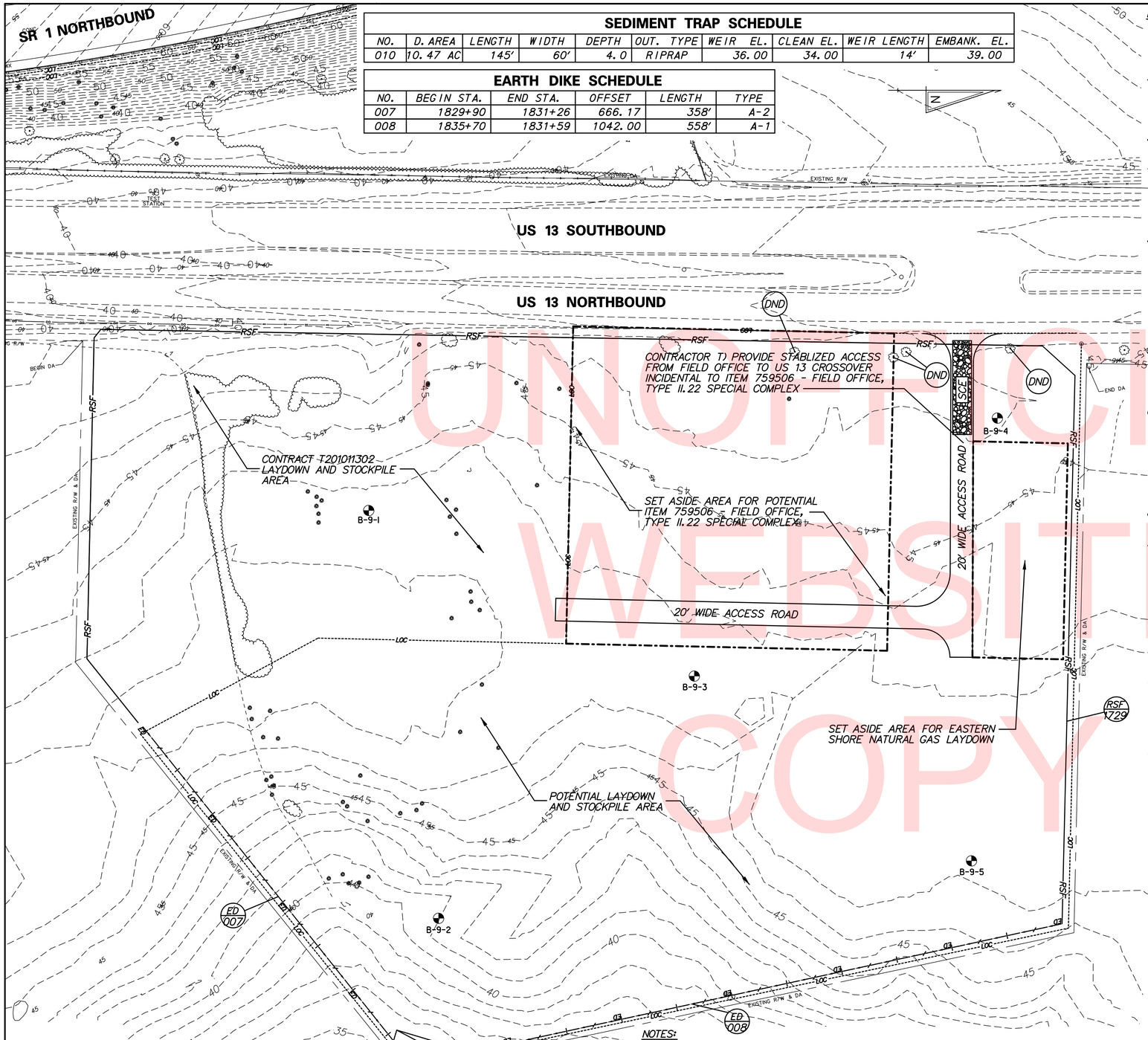

NOTES:

1. ALL AREAS ON THIS PLAN DISTURBED BY THE CONTRACTOR SHALL BE RESTORED TO ORIGINAL GRADES AND CONDITIONS UPON COMPLETION OF THE CONTRACT. TOPSOIL STRIPPING AND TOPSOILING AREAS ON THIS PLAN SHALL BE INCIDENTAL TO THE CONTRACT. SEEDING DISTURBED AREAS ON THIS PLAN SHALL BE MEASURED AND PAID UNDER ITEM 734013 - PERMANENT GRASS SEEDING, DRY GROUND.
2. CONSTRUCTION AND MAINTAINANCE OF STABILIZED CONSTRUCTION ENTRANCE AND ACCESS ROAD TO LAYDOWN AND STOCKPILE AREAS SHALL BE INCIDENTAL TO THE CONTRACT.

BORROW SITE NOTES (SEE GR_01):

1. THE LIMITS OF GRADING FOR THE BORROW SITES AS SHOWN ON GR-01 SHALL BE CONSIDERED THE MAXIMUM LIMITS OF FINAL GRADING FOR THE BORROW SITE. SHOULD LESS BORROW MATERIAL BE REQUIRED, THE SITE SHALL BE EXCAVATED TO A SHALLOWER ELEVATION OR THE LIMITS OF GRADING SHALL BE REDUCED. THE CONTRACTOR SHALL SUBMIT A REVISED FINAL GRADING PLAN TO THE ENGINEER FOR APPROVAL.
2. EXCAVATION OR DEWATERING SHALL NOT AFFECT THE LOCAL GROUND WATER TABLE. THE BOTTOM LIMIT OF EXCAVATION OR ANY OTHER WORK CANNOT EXCEED 12" BELOW THE FINAL GRADING SHOWN ON GR-01, OR ELEVATION 27, WHICHEVER IS LESS, IN ACCORDANCE WITH STIPULATIONS CONTAINED IN THE PROJECT'S BIOLOGICAL ASSESSMENT, PERMITS, AND RECORD OF DECISION. TRENCHING FOR CONSTRUCTION OF UTILITIES OR PIPES INCLUDED IN THE CONTRACT DOCUMENTS IS EXCLUDED FROM THIS REQUIREMENT. TRENCHING OR OTHER METHODS FOR DEWATERING THE BORROW SITES IS INCLUDED IN THIS REQUIREMENT.
3. NO EXCAVATION IS TO OCCUR WITHIN 50 FEET OF ANY WOODS LINE OR PROPERTY LINE, EXCEPT AS SHOWN ON GR-01. HEDGEROWS AND OLD FIELDS ARE NOT CONSIDERED TO BE WOODS LINES.
4. EXISTING BORROW SITE TOPSOIL AND AGRICULTURAL SOIL SHALL BE STRIPPED, STOCKPILED, AND QUARANTINED FOR RE-USE ON THE BORROW SITE. AGRICULTURAL SOIL IS DEFINED AS THE TOP 9-INCHES OF SOIL OBTAINED FROM AN ACTIVE FARM FIELD OR RECENTLY ABANDONED FARM FIELD (LESS THAN 2 YEARS FALLOW OR ABANDONED). AGRICULTURAL SOILS SHALL BE TREATED AS TOPSOIL AS DESCRIBED IN SECTION 202. THE SOURCE OF THE AGRICULTURAL SOIL MUST HAVE BEEN IN CROP. NO TOPSOIL OR AGRICULTURAL SOIL REMOVED FROM THE BORROW SITE SHALL BE PLACED IN ANOTHER LOCATION. ALL OF THE TOPSOIL AND AGRICULTURAL SOIL SHALL BE RE-USED ON THE SITE.
5. FINAL INTERNAL BORROW SITE SIDE SLOPE GRADES SHALL BE A MAXIMUM OF 5:1. WITH THE APPROVAL OF THE ENGINEER, SLOPES MAY BE OVEREXCAVATED TO 3:1 AND BACKFILLED WITH TOPSOIL, AGRICULTURAL SOIL, ROOTMAT, OR UNSUITABLE SOILS TO CREATE A FINAL SLOPE OF 5:1. OVEREXCAVATED SLOPES SHALL ALSO INCLUDE A BENCH AS APPROVED BY THE ENGINEER TO PREVENT SLIPPAGE OF MATERIALS SUBSEQUENTLY PLACED. UNSUITABLE SOIL IS DEFINED AS A-4, A-5, A-6, OR A-7 SOILS, AASHTO CLASSIFICATION. AGRICULTURAL SOIL, ROOTMAT AND UNSUITABLE SOILS MAY BE IMPORTED TO THE BORROW SITE FROM WITHIN THE CONTRACT LIMITS AND PLACED ABOVE THE MAXIMUM EXCAVATION LIMITS AS DEFINED IN NOTE 2. UNSUITABLE SOILS AND ROOTMAT SHALL BE BURIED A MINIMUM OF 18 INCHES BELOW FINAL GRADE WITH THE 18 INCHES CONSISTING OF TOPSOIL OR AGRICULTURAL SOILS. UNSUITABLE SOILS AND ROOTMAT SHALL BE PLACED SUCH THAT INTERNAL SLOPES AND GRADING WITHIN THE BORROW SITES SHALL BE CONTINUOUS SMOOTH LINES AND GRADES REPRESENTING A NATURALIZED CONDITION AND SHALL NOT APPEAR DISTURBED, MOUNDED, OR PILED, AS SOLELY DETERMINED BY THE ENGINEER. MATERIALS PLACED IN THESE OVER-EXCAVATED AREAS SHALL BE APPROVED BY THE ENGINEER AND COMPACTED AS DIRECTED BY THE ENGINEER. TOPOGRAPHIC SURVEY ON THE FINAL OVEREXCAVATED SLOPES FOR MEASUREMENT OF FINAL EXCAVATED QUANTITIES SHALL BE PERFORMED BEFORE PLACING ANY UNSUITABLE MATERIALS OR ROOTMAT. TOPOGRAPHIC SURVEY ON THE FINAL SLOPES OF THE UNSUITABLE MATERIALS OR ROOTMAT PLACED SHALL BE PERFORMED PRIOR TO PLACING ANY TOPSOIL OR AGRICULTURAL SOIL TO ENSURE THAT THESE MATERIALS ARE BURIED A MINIMUM OF 18" BELOW FINAL GRADES. THE CONTRACTOR SHALL SUBMIT A REVISED GRADING PLAN TO THE ENGINEER FOR APPROVAL.
6. TRASH, CONSTRUCTION DEBRIS, PILE CUTOFFS, ASPHALT MILLINGS, ROCKS AND STONES AND OTHER CONSTRUCTION WASTE GENERATED ON THE CONTRACT SHALL NOT BE BURIED IN THE BORROW SITE OR THE SIDE SLOPES OF THE BORROW SITE. WITH PERMISSION AND UNDER THE DIRECTION OF THE ENGINEER, TREE STUMPS AND LARGE SECTIONS OF TREE TRUNKS CAN BE PLACED ON THE FINAL SOIL SURFACE. THE MINIMUM DISTANCE BETWEEN THE PLACED STUMPS/TRUNKS SHALL BE 35 FEET. STUMPS AND TRUNKS SHALL NOT BE PLACED IN PILES. TREE STUMP PLACEMENT IS OPTIONAL AND NOT MANDATORY.
7. UNDER FINAL CONDITIONS THE BORROW SITE SHALL BE GRADED TO DRAIN. WATER SHOULD NOT STAND ON THE FOLLOWING RAIN EVENTS BUT SHALL BE CONVEYED VIA STABLE CHANNELS, SWALES, OR STABLE OVERLAND FLOW TO ADJACENT WETLANDS AND FORESTED AREAS. THE CONTRACTOR SHALL NOT CHANGE THE BORROW SITE OUTFALL LOCATION.
8. FOLLOWING EXTRACTION OF BORROW, AND PRIOR TO SECTION 733 - TOPSOILING, SUBSOILS SHALL BE TILLED AS SPECIFIED IN SPECIAL PROVISION 202555 - SUBSOIL TILLAGE, THROUGHOUT THE EXTENT OF THE BORROW SITE.
9. A MINIMUM OF 6 INCHES OF TOPSOIL SHALL BE PLACED OVER ALL EXCAVATED AND DISTURBED AREAS IN CONFORMANCE WITH SECTION 733 - TOPSOILING. LOCAL AGRICULTURAL SOILS GENERATED WITHIN THE CONTRACT LIMITS SHALL BE CONSIDERED ACCEPTABLE TOPSOIL MATERIAL. WITH THE PERMISSION OF THE ENGINEER, THE TOPSOILING DEPTH MAY EXCEED THE MINIMUM 6-INCH DEPTH, BUT THE FINAL ELEVATION AT ANY LOCATION SHALL NOT EXCEED THE ORIGINAL GROUND ELEVATION AT THE START OF THE PROJECT. FOLLOWING THE FINAL TOPSOILING, INTERNAL SLOPES AND GRADING WITHIN THE BORROW SITE SHALL BE CONTINUOUS SMOOTH LINES AND GRADES REPRESENTING A NATURALIZED CONDITION AND SHALL NOT APPEAR DISTURBED, MOUNDED, OR PILED, AS SOLELY DETERMINED BY THE ENGINEER. NO INTERNAL GRADE SHALL EXCEED 5:1.
10. AT THE CONCLUSION OF ALL GRADING AND TOPSOIL PLACEMENT OPERATIONS, ALL DISTURBED AREAS SHALL BE SEEDED WITH ITEM 734551 - NATIVE GRASS SEEDING - NO MOW MIX. TIMING FOR THE SEEDING OPERATIONS SHALL BE PER THE SPECIFICATION, SEPTEMBER 1ST TO NOVEMBER 15TH. SEED SHALL BE DISCED INTO THE SOIL A MINIMUM OF 6 INCHES DEEP IN THREE PASSES WITH EACH PASS 90 DEGREES TO THE PREVIOUS PASS. THE COST OF DISCING SHALL BE INCIDENTAL TO ITEM 734551 * NATIVE GRASS SEEDING: NO MOW MIX.
11. SOILS MEETING GRADATION REQUIREMENTS FOR BORROW TYPES A, C, D, AND F ARE AVAILABLE IN THE BORROW SOURCES FOR THIS PROJECT. THE CONTRACTOR IS RESPONSIBLE FOR IDENTIFYING THE LOCATION OF QUALIFYING MATERIALS AND SORTING AND STOCKPILING THESE MATERIALS AS NEEDED TO COMPLETE THE WORK. NO COMPENSATION WILL BE PROVIDED FOR ACTIVITIES ASSOCIATED WITH ACQUISITION OF THESE MATERIALS FROM OFF-SITE DUE TO A FAILURE TO USE MATERIAL AVAILABLE ON-SITE. GEOTECHNICAL DATA WILL BE PROVIDED BY THE DEPARTMENT TO ASSIT IN THE LOCATION OF BORROW TYPES, BUT IT IS THE RESPONSIBILITY OF THE CONTRACTOR TO VERIFY THE GRADATION OF THE MATERIALS.
12. MEASUREMENT AND PAYMENT:
    - A. ALL EXCAVATION INCLUDING STRIPPING AND STOCKPILING OF TOPSOIL AND AGRICULTURAL SOILS SHALL BE CALCULATED AND PAID FOR UNDER ITEM 202000, EXCAVATION AND EMBANKMENT. DOUBLE HANDLING FOR STOCKPILING AND SORTING OF MATERIAL TYPES FOR USE ON THE PROJECT SHALL NOT BE MEASURED BUT SHALL BE INCIDENTAL TO ITEM 202000. MATERIALS OTHER THAN TOPSOIL, AGRICULTURAL SOILS OR UNSUITABLE MATERIALS EXCAVATED FROM THE BORROW SITES AND NOT USED ELSEWHERE FOR THE CONSTRUCTION OF THE PROJECT SHALL BE INCORPORATED BACK INTO THE BORROW SITE. STOCKPILES OF THE UNUSED MATERIALS SHALL BE MEASURED BY THE ENGINEER BEFORE THE CONTRACTOR MOVES THE MATERIAL BACK INTO THE BORROW SITE AND THE ENGINEER SHALL MEASURE THE FINAL GROUND AT THE STOCKPILE AFTER THE MATERIALS HAVE BEEN REMOVED. THE MEASURED QUANTITY OF THE STOCKPILES SHALL BE DEDUCTED FROM THE FINAL QUANTITY PAID UNDER ITEM 202000. THE UNUSED MATERIALS SHALL BE INCORPORATED INTO THE BORROW SITE IN ACCORDANCE WITH THESE PROJECT NOTES AND AS DIRECTED BY THE ENGINEER.
    - B. CLEARING AND GRUBBING OF THE BORROW SITE SHALL BE INCIDENTAL TO ITEM 201000. PLACEMENT OF STUMPS AND TREE TRUNKS, IF ELECTED AND APPROVED, SHALL BE INCIDENTAL TO ITEM 201000.
    - C. EROSION AND SEDIMENT CONTROL MEASURES SHALL BE PAID FOR UNDER ITEM 202572 - BORROW AREA EROSION AND SEDIMENT CONTROL AND DEWATERING.
    - D. PLACEMENT OF UNSUITABLE SOILS OR ROOTMAT SHALL BE INCIDENTAL TO THE ITEMS FOR THEIR REMOVAL.
    - E. SUBSOIL TILLAGE SHALL BE MEASURED AND PAID UNDER ITEM 202555.
    - F. TOPSOILING SHALL BE PAID UNDER ITEM 733002 UNDER SPECIFICATION SECTION 733. THE SURFACE OF THE FINAL TOPSOIL AREA SHALL BE MEASURED ONCE FOR PAYMENT AND PAID UNDER THE SPECIFIED ITEM REGARDLESS OF THE ACTUAL DEPTH PLACED. THE CONTRACTOR SHALL MEET ALL TOPSOILING REQUIREMENTS WITH TOPSOIL OR AGRICULTURALSOILS REMOVED FROM THE BORROW SITE. TOPSOIL REMOVED FROM ELSEWHERE WITHIN THE CONTRACT LIMITS THAT IS IN EXCESS OF THE TOPSOILING NEEDED FOR THE PROJECT MAY BE DISPOSED OF AT THE BORROW SITE WITH THE PERMISSION OF THE ENGINEER. ANY OTHER TOPSOIL NEEDED AT THE BORROW SITE DUE TO THE CONTRACTOR'S OPERATIONS, SUCH AS BURYING UNSUITABLE MATERIALS, SHALL BE PROVIDED BY THE CONTRACTOR AT NO EXPENSE TO THE DEPARTMENT.
    - G. NATIVE GRASS SEEDING SHALL BE MEASURED AND PAID UNDER ITEM 734551.
13. MONITORING WELLS SHALL BE ABANDONED BY A WELL DRILLER LICENSED IN DELAWARE IN ACCORDANCE WITH THE PROVISIONS IN ITEM 211521 - ABANDONMENT OF WELLS. PHYSICAL REMOVAL AND DISPOSAL OF THE ABANDONED WELLS ENCOUNTERED DURING EXCAVATION SHALL INCIDENTAL TO ITEM 202000- EXCAVATION AND EMBANKMENT.
14. SEDIMENT REMOVED FROM SEDIMENT CONTROL DEVICES SHALL BE TREATED PER NOTE 5 ABOVE.

UNOFFICIAL WEBSITE COPY

N:\31653-000\Contract T$\CADD\GR002U301_1B.dgn
12/3/2015 10:05:39 AM

DELAWARE DEPARTMENT OF TRANSPORTATION	ADDENDUMS / REVISIONS	SCALE 0 50 100 150 FEET	US 301 & SR 1 INTERCHANGE	CONTRACT T200911302	BRIDGE NO.	ST. GEORGES LAYDOWN AREA/ BORROW SITE NOTES	GR-02
				COUNTY NEW CASTLE	DESIGNED BY: NSP		SHEET NO. 83
					CHECKED BY: BRT		TOTAL SHTS. 491

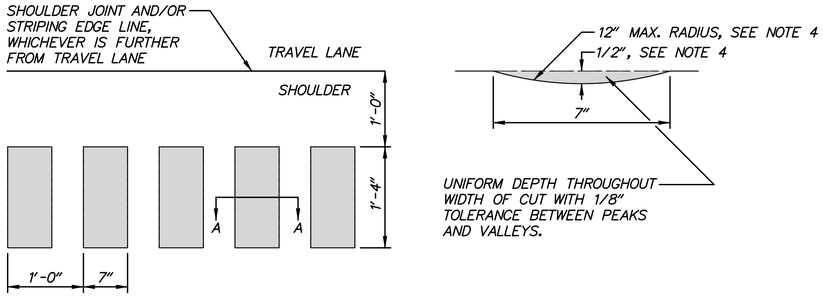

PLAN

SECTION A-A

EDGELINE RUMBLE STRIPS DETAIL

NOT TO SCALE

NOTES:

1. ALL WORK REQUIRED TO COMPLETE THE INSTALLATION OF ROADWAY EDGELINE RUMBLE STRIPS SHALL BE INCIDENTAL TO ITEM 760016 - RUMBLE STRIPS, HOT MIX AND/OR ITEM 760017 - RUMBLE STRIPS, CONCRETE.

2. RUMBLE STRIPS END 50' PRIOR TO PHYSICAL GORE.

3. ROADWAY EDGELINE RUMBLE STRIPS SHALL BE INSTALLED ALONG SHOULDERS, AS PER THIS DETAIL, AT THE FOLLOWING STATIONS:

STATION 854+05 TO STATION 855+59 LT., US 301 NB	STATION 848+00 TO STATION 854+05 LT. & RT., US 301 NB
STATION 872+00 TO STATION 875+75 LT., US 301 NB	STATION 875+75 TO STATION 881+20 LT. & RT., US 301 NB
STATION 862+98 TO STATION 864+72 RT., US 301 NB	STATION 882+94 TO STATION 887+78 LT. & RT., US 301 NB
STATION 887+78 TO STATION 892+55 RT., US 301 NB	STATION 1010+95 TO STATION 1028+50 LT. & RT., RAMP Q
STATION 1000+08 TO STATION 1010+95 RT., RAMP Q	STATION 316+00 TO STATION 324+73 LT. & RT., RAMP R
STATION 324+73 TO STATION 326+15 RT., RAMP R	STATION 1783+67 TO STATION 1805+50 RT., SR 1
STATION 1785+74 TO STATION 1786+10 LT., SR 1	STATION 1785+01 TO STATION 1790+28 RT., SR 1 (MEDIAN)
STATION 1801+25 TO STATION 1809+43 LT., SR 1 (MEDIAN)	STATION 1808+75 TO STATION 1809+43 RT., SR 1 (MEDIAN)
STATION 1806+82 TO STATION 1808+83 LT., SR 1	STATION 1811+00 TO STATION 1831+25 RT., SR 1 (MEDIAN)
STATION 1811+00 TO STATION 1833+75 LT., SR 1 (MEDIAN)	STATION 1811+00 TO STATION 1815+94 RT., SR 1
STATION 1811+60 TO STATION 1820+68 LT., SR 1	STATION 1820+68 TO STATION 1825+00 LT. & RT., SR 1

4. EDGELINE RUMBLE STRIPS SHALL ALSO BE INSTALLED ALONG THE SHOULDERS OF THE BR1-433 MOMENT SLABS, APPROACH SLABS AND DECK SLAB AND RW1-3 AND RW1-3R MOMENT SLABS. RUMBLE STRIPS IN THESE LOCATIONS SHALL HAVE A 16" MAX. RADIUS AND A 3/8" MAXIMUM DEPTH. ALL WORK REQUIRED TO COMPLETE THE INSTALLATION OF EDGELINE RUMBLE STRIPS AT THESE LOCATIONS SHALL BE INCIDENTAL TO ITEM 760015 - RUMBLE STRIPS, CONCRETE, SHALLOW DEPTH, BRIDGE AND RETAINING WALL PAYMENT ITEMS.

5. EDGELINE RUMBLE STRIPS SHALL ALSO BE INSTALLED ALONG THE INSIDE AND OUTSIDE SHOULDERS OF US 13 AND HAVE A 3/8" MAXIMUM DEPTH AND BE MEASURED LONGITUDDINALL PER LINEAR FOOT, MIUS THE 12' OPENING EVERY 40'.
RUMBLE STRIPS SHALL BE INSTALLED IN ACCORDANCE WITH ITEM 760012 - RUMBLE STRIPS, BIKE-FRIENDLY, HOT-MIX AT THE FOLLOWING LOCATIONS:

STATION 144+67 TO STATION 170+05 RT., US 13 INSIDE SHOULDER
STATION 144+67 TO STATION 175+02 RT., US 13 OUTSIDE SHOULDER

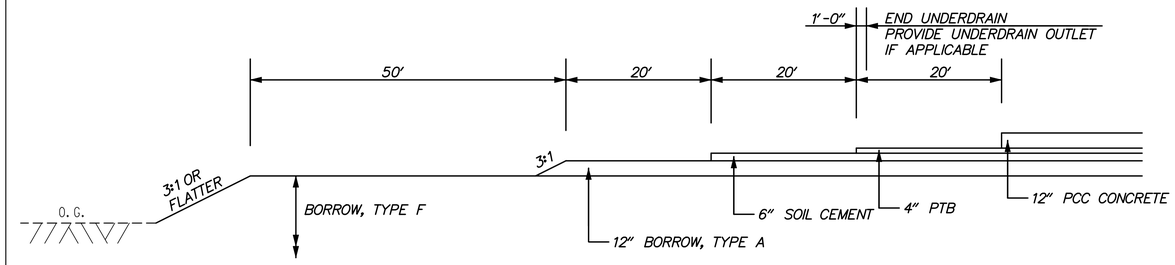

NOTES:

1. THIS DETAIL SHALL APPLY TO PAVEMENT CONSTRUCTED BY THE FIRST CONTRACTOR TO PERFORM WORK IN THIS AREA. SELECTION OF WHICH CONTRACT WILL CONSTRUCT THIS DETAIL WILL BE BASED UPON FIELD CONDITIONS AND WILL BE AT THE DIRECTION OF THE ENGINEER. PAYMENT SHALL BE MADE UNDER THE APPLICABLE CONTRACT PAY ITEMS.

2. THE FIRST CONTRACTOR SHALL COVER THE EXPOSED PERMEABLE TREATED BASE COURSE AND SOIL CEMENT BASE COURSE, INCLUDING SIDES AND ENDS, WITH POLYETHYLENE SHEETING, PROPERLY ANCHORED AND LAPPED AT LEAST 18". NO CONSTRUCTION TRAFFIC OF ANY KIND SHALL BE PERMITTED TO TRAVERSE OVER THE PTB OR SOIL CEMENT AT ANY TIME, EITHER COVERED OR UNCOVERED WITH POLYETHYLENE, EXCEPT FOR NECESSARY EQUIPMENT UTILIZED DURING PAVING OPERATIONS. ALL COSTS FOR FURNISHING, INSTALLING AND MAINTAINING THE POLYETHYLENE SHALL BE INCIDENTAL TO THE UNIT PRICE BID FOR THE PTB AND SOIL CEMENT BASE COURSE PAY ITEMS.

3. THE SECOND CONTRACTOR TO PERFORM OPERATIONS IN THIS AREA SHALL REMOVE AND PROPERLY DISPOSE OF THE POLYETHYLENE AND ANCHORING IMMEDIATELY PRIOR TO BEGINNING PAVEMENT OPERATIONS WITH ALL COSTS INCIDENTAL TO THE UNIT PRICE BID FOR THE PTB AND SOIL CEMENT BASE COURSE PAY ITEMS.

NOTES:

4. THE SECOND CONTRACTOR SHALL ALSO SAW CUT THE ENDS OF THE PTB AND SOIL CEMENT BASE COURSE A MINIMUM OF 6" FROM THE END FINISHED BY THE FIRST CONTRACTOR OR AS DIRECTED BY THE ENGINEER. COSTS FOR SAWCUTTING THE PTB SHALL BE MEASURED FOR PAYMENT UNDER ITEM 762001 SAWCUTTING, HOT MIX. COSTS FOR SAWCUTTING THE SOIL CEMENT BASE COURSE SHALL BE MEASURED FOR PAYMENT UNDER ITEM 762002 SAWCUTTING, CONCRETE, FULL DEPTH.

5. THE FIRST CONTRACTOR SHALL CONSTRUCT AND MAINTAIN EDGE BERMS AND TEMPORARY SLOPE DRAINS ALONG THE TOP OF ALL SIDE AND END SLOPES PER THE INCREMENTAL STABILIZATION DETAILS (STANDARD NO. E-1).

6. THE SECOND CONTRACTOR SHALL REMOVE THE EDGE BERMS AND TEMPORARY SLOPE DRAINS WITH ALL COSTS INCIDENTAL TO ITEM 202000.

PAVEMENT DETAIL AT LIMIT OF CONSTRUCTION

NOT TO SCALE

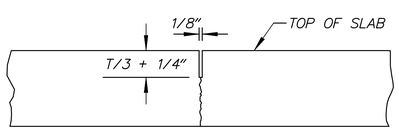

T = PAVEMENT THICKNESS IN INCHES

LONGITUDINAL AND TRANSVERSE SAW-CUT JOINT DETAIL

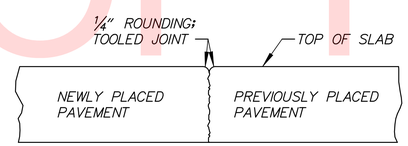

LONGITUDINAL AND TRANSVERSE CONSTRUCTION JOINT DETAIL

NOTES:

1. THESE JOINT DETAILS SHALL BE APPLIED IN LIEU OF THE SEALANT RESERVOIR AND SEALANT DETAILS IN THE STANDARD CONSTRUCTION DETAILS.

2. NO JOINT SEALANT IS REQUIRED TO BE PLACED IN THE PAVEMENT JOINTS, UNLESS SPECIFICALLY NOTED OTHERWISE ON THE PLANS.

3. DOWEL AND TIE BARS NOT SHOWN. SEE STANDARD CONSTRUCTION DETAILS FOR DOWEL AND TIE BAR REQUIREMENTS.

PCC PAVEMENT JOINT DETAILS

NOT TO SCALE

UNOFFICIAL WEBSITE COPY

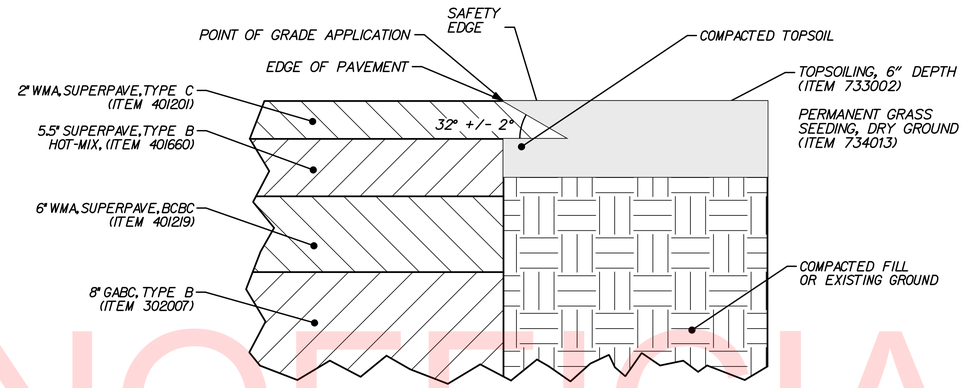

NOTE:

1. FOR ADDITIONAL INFORMATION, SEE ITEM 401572 SAFETY EDGE FOR ROADWAY PAVEMENT.
2. THE SAFETY EDGE SHALL NOT BE CONSTRUCTED ADJACENT TO OTHER PAVEMENTS, CURB, CURB & GUTTER, CONCRETE SAFETY BARRIER OR MAINTENANCE PAVEMENT UNDER GUARDRAIL. THE CONTRACTOR SHALL STAKE OUT THE LIMITS OF THE AREAS NOT TO RECIEVE THE SAFETY EDGE FOR APPROVAL BY TH ENGINEER PRIOR TO BEGINNING PAVEMENT OPERATIONS.
3. IN BITUMINOUS CONCRETE PAVEMENT SECTIONS, PRIOR TO THE CONSTRUCTION OF THE SAFETY EDGE IN OVERLAY SECTIONS AND MILL/OVERLAY SECTIONS, THE EXISTING TOPSOIL OR IN-SITU MATERIAL AT THE EDGE OF PAVEMENT SHALL BE COMPACTED SO THAT IT IS LEVEL WITH THE BOTTOM OF THE FINAL SURFACE LAYER PRIOR TO PLACING THE FINAL SURFACE OVERLAY. AFTER THE FINAL SURFACE OVERLAY IS PACED, TOPSOIL SHALL BE PLACED TO THE TOP OF THE FINAL SURFACE OVERLAY.
4. IN BITUMINOUS CONCRETE PAVEMENT SECTIONS WHERE FULL DEPTH TOPSOIL IS PROPOSED TO BE PLACED ADJACENT TO THE EDGE OF PAVEMENT, THE TOPSOIL SHALL BE PLACED AND COMPACTED ALONG THE PAVEMENT EDGE TO THAT IS IT LEVEL WITH THE BOTTOM OF THE FINAL SURFACE LAYER PRIOR TO PACING THE FINAL SURFACE OVERAY. AFTER THE FINAL SURFACE OVERLAY IS PLACED, THE TOPSOIL SHALL BE PLACED TO THE TOP OF THE FINAL SURFACE OVERLAY. ALL COSTS FOR PLACING AND COMPACTING THE TOPSOIL SHALL BE INCLUDED IN THE PRICE OF THE TOPSOIL ITEM,

SAFETY EDGE - BITUMINOUS PAVEMENT AND OVERLAYS

NOT TO SCALE

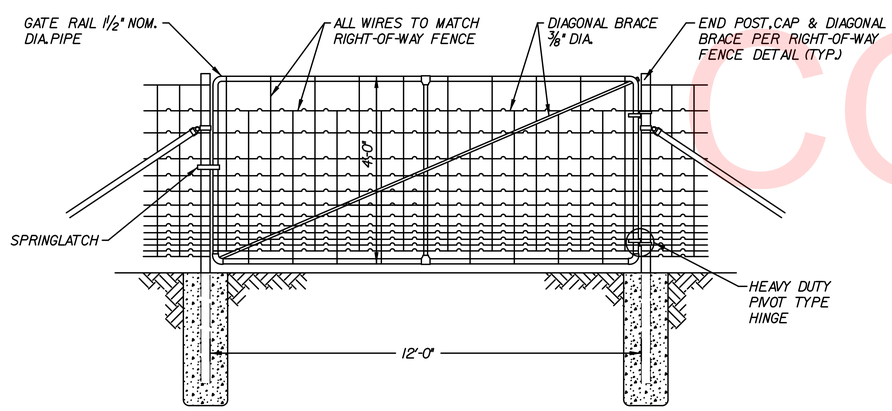

ITEM 727001 - RIGHT-OF-WAY FENCE GATE

NOT TO SCALE

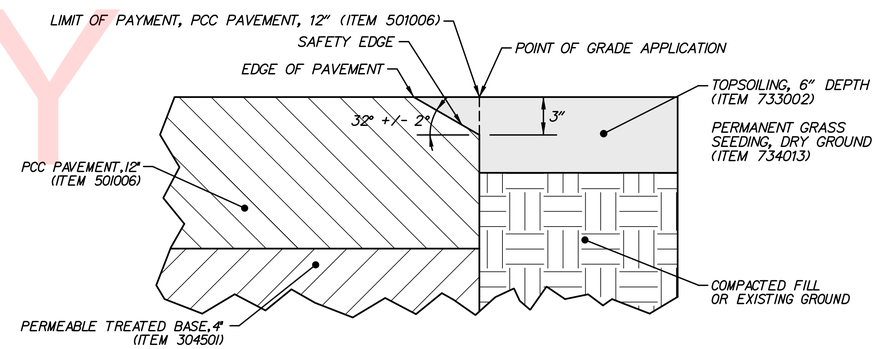

NOTE:

1. FOR ADDITIONAL INFORMATION, SEE ITEM 401572 SAFETY EDGE FOR ROADWAY PAVEMENT.
2. THE SAFETY EDGE SHALL NOT BE CONSTRUCTED ADJACENT TO OTHER PAVEMENTS, CURB, CURB & GUTTER, CONCRETE SAFETY BARRIER OR MAINTENANCE PAVEMENT UNDER GUARDRAIL. THE CONTRACTOR SHALL STAKE OUT THE LIMITS OF THE AREAS NOT TO RECIEVE THE SAFETY EDGE FOR APPROVAL BY THE ENGINEER PRIOR TO BEGINNING PAVEMENT OPERATIONS.

SAFETY EDGE - CONCRETE PAVEMENT

NOT TO SCALE

UNOFFICIAL WEBSITE COPY

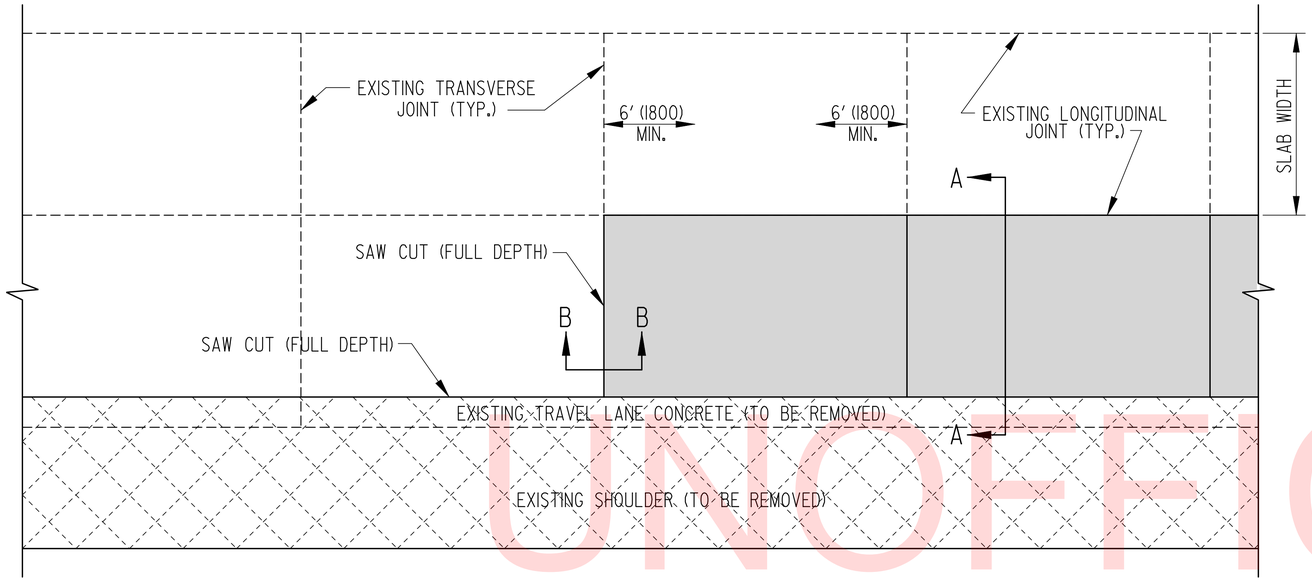

PLAN

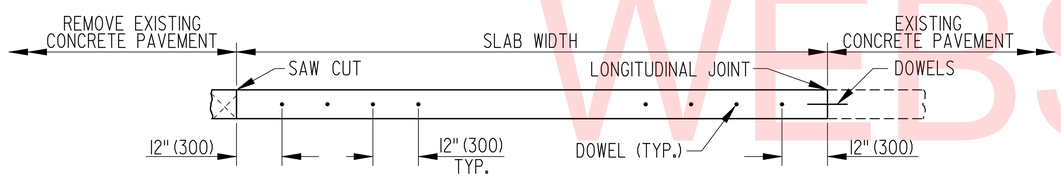

SECTION A-A

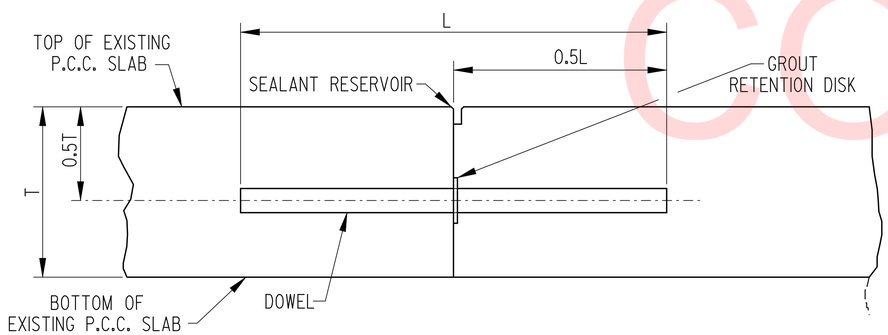

SECTION B-B

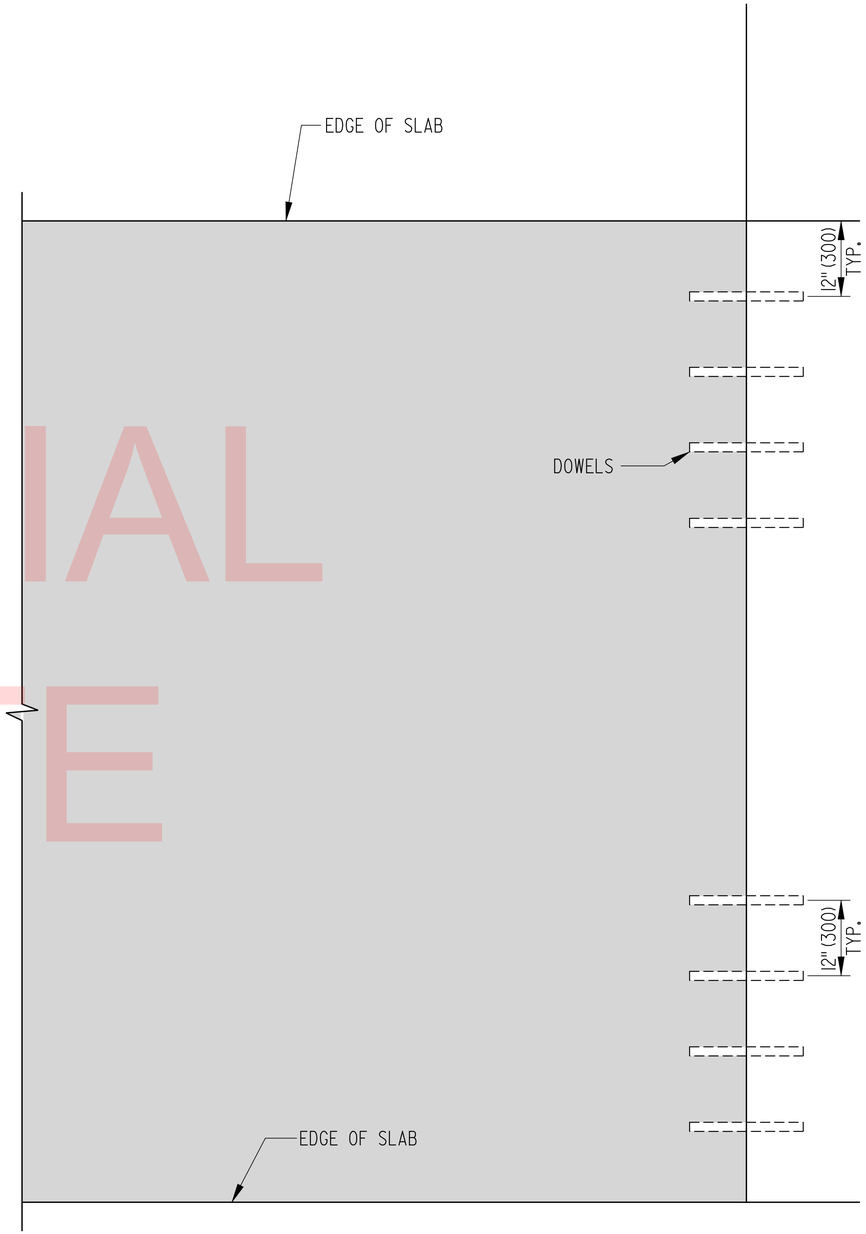

SLAB PLAN (WITH DOWEL AND TIE LOCATIONS)

FULL DEPTH CONCRETE PAVEMENT ADJACENT TO EXISTING PAVEMENT

NOTES:

1. PROPOSED LOCATIONS FOR TRANSVERSE JOINTS SHALL EXACTLY MATCH THE ALIGNMENT OF THE FINAL (EXISTING OR RELOCATED) TRANSVERSE JOINTS IN ALL IMMEDIATELY ADJACENT LANES.WHEN NOT ALIGNED WITH THE FINAL EXPECTED TRANSVERSE JOINT LOCATIONS IN THE IMMEDIATELY ADJACENT LANES, PROPOSED LOCATIONS FOR TRANSVERSE JOINTS SHALL BE OFFSET A MINIMUM OF 2' (600) FROM THE AFFORMENTIONED JOINTS.
2. THE LONGITUDINAL JOINT ALIGNMENT SHALL BE STRAIGHT AND CONTINUOUS.
3. SEE PAVEMENT JOINT LAYOUT SHEETS FOR DIMENSIONS AND LOCATIONS.

UNOFFICIAL WEBSITE COPY

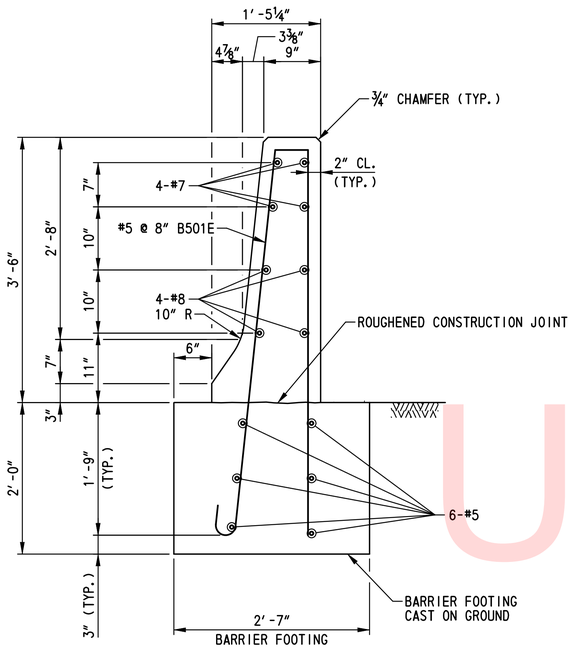

CONCRETE SINGLE FACE BARRIER TYPE 1

SCALE: 1″=1′-0″

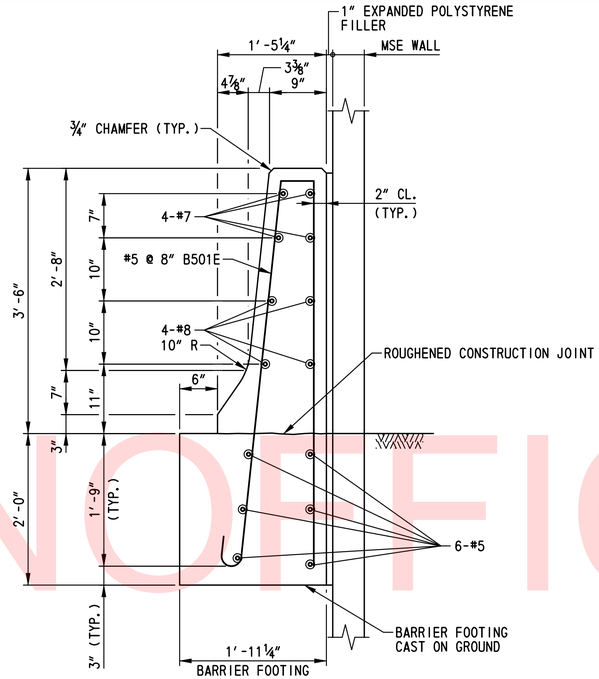

CONCRETE SINGLE FACE BARRIER TYPE 1 (MODIFIED)

SCALE: 1″=1′-0″

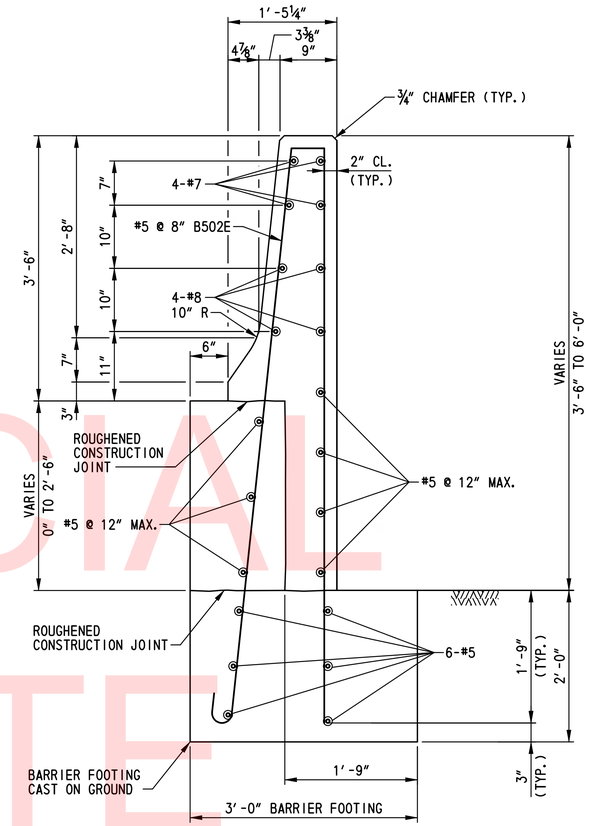

BIFURCATED CONCRETE MEDIAN BARRIER (MODIFIED)

SCALE: 1″=1′-0″

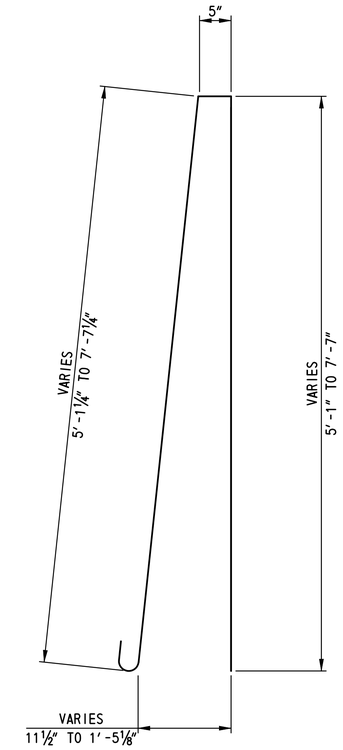

B502E

SCALE: 1″=1′-0″

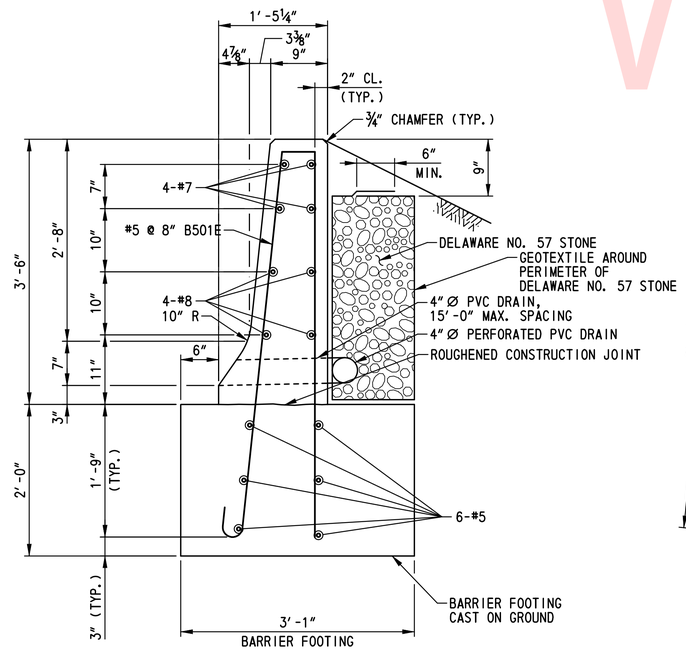

CONCRETE SINGLE FACE BARRIER TYPE 2

SCALE: 1″=1′-0″

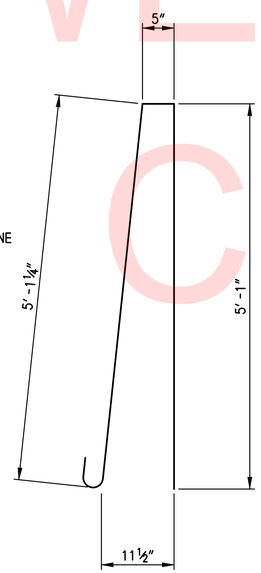

B501E

SCALE: 1″=1′-0″

CONCRETE BARRIER NOTES:

1. CONCRETE SINGLE FACE BARRIER TYPE 1, CONCRETE SINGLE FACE BARRIER TYPE 1 (MODIFIED), CONCRETE SINGLE FACE BARRIER TYPE 2 AND BIFURCATED CONCRETE MEDIAN BARRIER (MODIFIED) MEET TL-4 LOADING CRITERIA AS SPECIFIED IN NCHRP REPORT 350.

2. THE BARRIER AND FOOTING SHALL BE CAST SEPARATELY USING THE FIXED FORM OR THE SLIP FORM CONSTRUCTION METHOD. ALL CONCRETE SHALL BE CLASS A PORTLAND CEMENT CONCRETE (f′c = 4,500 PSI AT 28 DAYS) AND SHALL BE CONTINUOUSLY PLACED WHEN USING FIXED FORM CONSTRUCTION. ALL CONCRETE SHALL BE CLASS B PORTLAND CEMENT CONCRETE (f′c = 3,000 PSI AT 28 DAYS) WHEN USING THE SLIP FORMING CONSTRUCTION METHOD. WHEN USING THE SLIP FORMING CONSTRUCTION METHOD, THE SLIP FORMING MACHINE SHALL BE SUPPORTED OFF OF THE THE CONCRETE SOIL CEMENT BASE COURSE REQUIRED FOR THE ADJACENT ROADWAY.

3. ALL REINFORCING STEEL SHALL MEET THE REQUIREMENTS OF AASHTO M 31 (ASTM A 615), GRADE 60 AND SHALL BE IN CONFORMANCE WITH THE CURRENT EDITION OF THE AASHTO LRFD BRIDGE DESIGN SPECIFICATIONS AND ALL BARS SHALL BE TIED TOGETHER.

4. ALL REINFORCING STEEL SHALL BE PROTECTED WITH FUSION-BONDED EPOXY CONFORMING AASHTO M 284 (ASTM A 775).

5. WHEN THE BARRIER IS CONSTRUCTED USING THE SLIP FORM METHOD, DIAGONAL NO. 5 BARS ARE REQUIRED. SEE DIAGONAL BAR DETAIL ON DWG. NO. DT-05.

6. SPACING OF BARRIER CONTROL JOINTS SHALL BE A MAXIMUM OF 10 FEET REGARDLESS OF CONSTRUCTION METHOD, SEE DETAIL THIS SHEET. SPACING OF FOOTING CONTROL JOINTS SHALL BE A MAXIMUM OF 10 FEET AND ALIGN WITH THE CONTROL JOINTS IN THE BARRIER.

7. THE CONTRACTOR HAS THE OPTION TO CONSTRUCT THE FOOTING AND BARRIER AFTER CONSTRUCTION OF THE PAVEMENT. THE FOOTING FORMS, IF USED, SHALL BE REMOVED IF THE BARRIER AND FOOTING ARE CONSTRUCTED BEFORE THE PAVEMENT.

8. THE FOOTING REAR VERTICAL WALL SHALL BE FORMED OR THE CONCRETE PLACED AGAINST THE VERTICAL EARTH SIDE IF APPROVED BY THE ENGINEER. NO ADDITIONAL COMPENSATION FOR ADDITIONAL CONCRETE WILL BE PAID IF THE CONCRETE IS PLACED AGAINST THE EARTH.

9. AT LOCATIONS WHERE CONCRETE SINGLE FACE BARRIER TYPE 2 IS REQUIRED ADJACENT TO CONCRETE SINGLE FACE BARRIER TYPE 1 (MODIFIED), THE BARRIER FOOTING WIDTH OF THE CONCRETE SINGLE FACE BARRIER TYPE 2 SHALL VARY. THE FOOTING WIDTH SHALL VARY FROM 1′-11¼″ ADJACENT TO THE CONCRETE SINGLE FACE BARRIER TYPE 1 (MODIFIED) TO 3′-1″ WHEN THERE IS SUFFICIENT ROOM IN FRONT OF THE MSE WALL.

10. THE CONTRACTOR SHALL ATTACH THE YELLOW AND/OR WHITE REFLECTORS TO THE BARRIERS AS SHOWN IN THE DETAIL ON DWG. NO. DT-05. PAYMENT FOR THE REFLECTORS SHALL BE IN ACCORDANCE WITH ITEM NOS. 720544 AND 720545 AS APPROPRIATE.

11. PRIOR TO PLACING BARRIER CONCRETE ADJACENT TO EXISTING CONCRETE PAVEMENT, OR PRIOR TO PLACING CONCRETE PAVEMENT ADJACENT TO EXISTING BARRIER CONCRETE, AN APPROVED BOND BREAKER SHALL BE APPLIED TO THE EXISTING CONCRETE VERTICAL FACE. THIS LONGITUDINAL JOINT AT THE INTERFACE BETWEEN THE CONCRETE PAVEMENT AND THE BARRIER CONCRETE SHALL NOT BE SEALED. VERTICAL CRACKS IN THE EXISTING CONCRETE FACE SHALL BE COVERED OR SEALED AS APPROVED BY THE ENGINEER TO PREVENT INTRUSION OF THE NEW CONCRETE INTO THE EXISTING CONCRETE. ALL WORK SHALL BE INCIDENTAL TO THE APPROPRIATE BARRIER ITEM.

12. EXPANDED POLYSTYRENE SHALL CONFORM TO ASTM C 578, EXCEPT THAT THE MAXIMUM ALLOWABLE WATER ABSORPTION SHALL BE 2%.

13. COST OF THE CONCRETE SINGLE FACE BARRIER TYPE 1 (MODIFIED) SHALL BE PAID FOR UNDER CONCRETE SINGLE FACE BARRIER TYPE 1 (720626). COST OF THE CONCRETE SINGLE FACE BARRIER TYPE 1 AND TYPE 1 (MODIFIED) CONCRETE FOOTING, REINFORCING STEEL, EXPANDED POLYSTYRENE FILLER AND EXCAVATION SHALL BE INCIDENTAL TO THE CONTRACT UNIT PRICE PER LINEAR FOOT FOR CONCRETE SINGLE FACE BARRIER TYPE 1 (720627).

14. COST OF THE CONCRETE SINGLE FACE BARRIER TYPE 2 CONCRETE FOOTING, REINFORCING STEEL, PVC DRAIN PIPE, PERFORATED PVC DRAIN PIPE, GEOTEXTILE, DELAWARE NO. 57 STONE AND EXCAVATION SHALL BE INCIDENTAL TO THE CONTRACT UNIT PRICE PER LINEAR FOOT FOR CONCRETE SINGLE FACE BARRIER TYPE 2 (720627).

15. COST OF THE BIFURCATED CONCRETE MEDIAN BARRIER (MODIFIED) SHALL BE PAID FOR UNDER BIFURCATED CONCRETE MEDIAN BARRIER (720629). COST OF THE BIFURCATED CONCRETE MEDIAN BARRIER FOOTING, REINFORCING STEEL AND EXCAVATION SHALL BE INCIDENTAL TO THE CONTRACT UNIT PRICE PER LINEAR FOOT FOR BIFURCATED CONCRETE MEDIAN BARRIER (720629).

UNOFFICIAL WEBSITE COPY

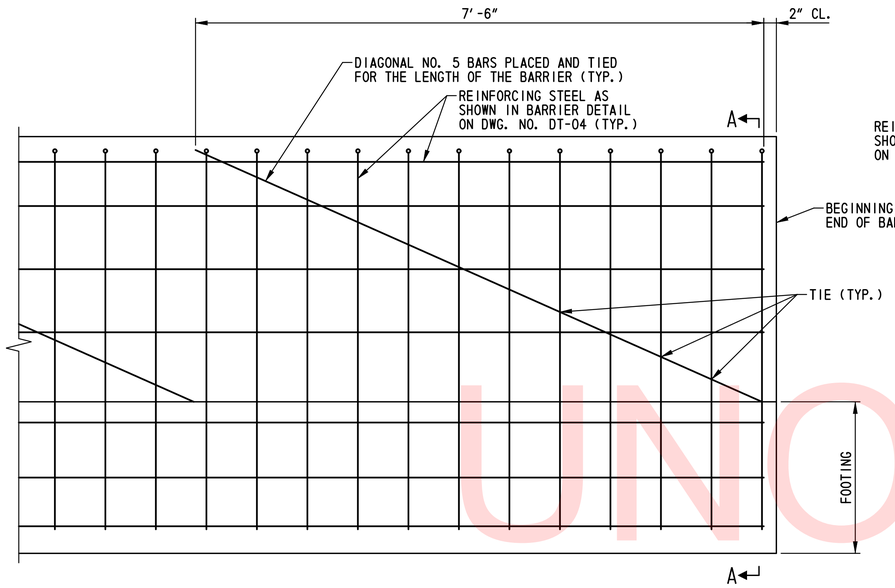

ELEVATION

NOTE:
FOR ADDITIONAL INFORMATION ON DIAGONAL NO. 5 BARS, SEE CONCRETE BARIER NOTE 5 ON DWG. NO. DT-04.

DIAGONAL BAR DETAIL
SCALE: 1"=1'-0"

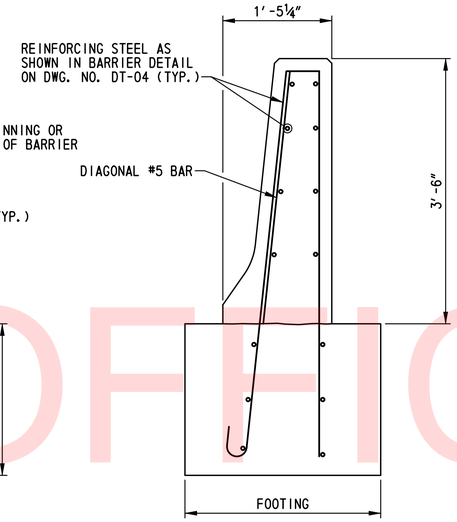

SECTION A-A CONCRETE
SINGLE FACE BARRIER TYPE 1

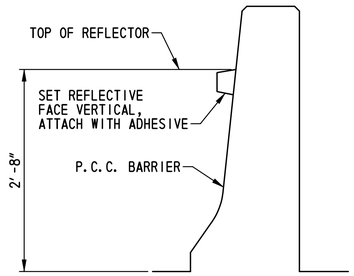

REFLECTOR DETAIL
SCALE: 1"=1'-0"

REFLECTOR DETAIL NOTES:

1. COLOR OF REFLECTOR ON TRAFFIC SIDE SHALL MATCH ADJACENT LANE LINE COLOR. BACK SIDE OF ALL REFLECTORS SHALL BE RED.
2. THE SPACING OF REFLECTORS ON PERMANENT P.C.C. BARRIER SHALL BE COORDINATED WITH THE DELINEATORS AT THE APPROACHES TO THE BARRIER SUCH THAT THE SPACING OF DELINEATORS/REFLECTORS DOES NOT EXCEED 100 FT.
3. ALL COST SHALL BE INCLUDED IN ITEM 720544 - REFLECTORS, WHITE, CONCRETE AND 720545 - REFLECTORS, YELLOW, CONCRETE.

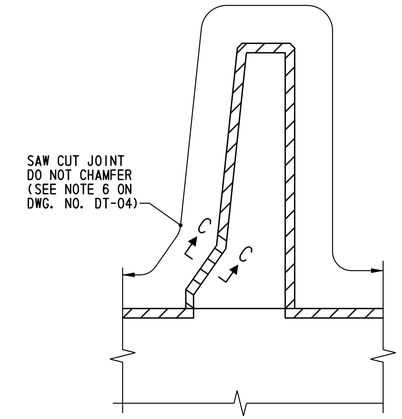

BARRIER CONTROL JOINT DETAIL
SCALE: 1"=1'-0"

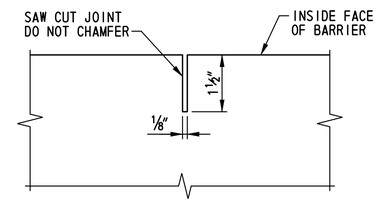

SECTION C-C
SCALE: 6"=1'-0"

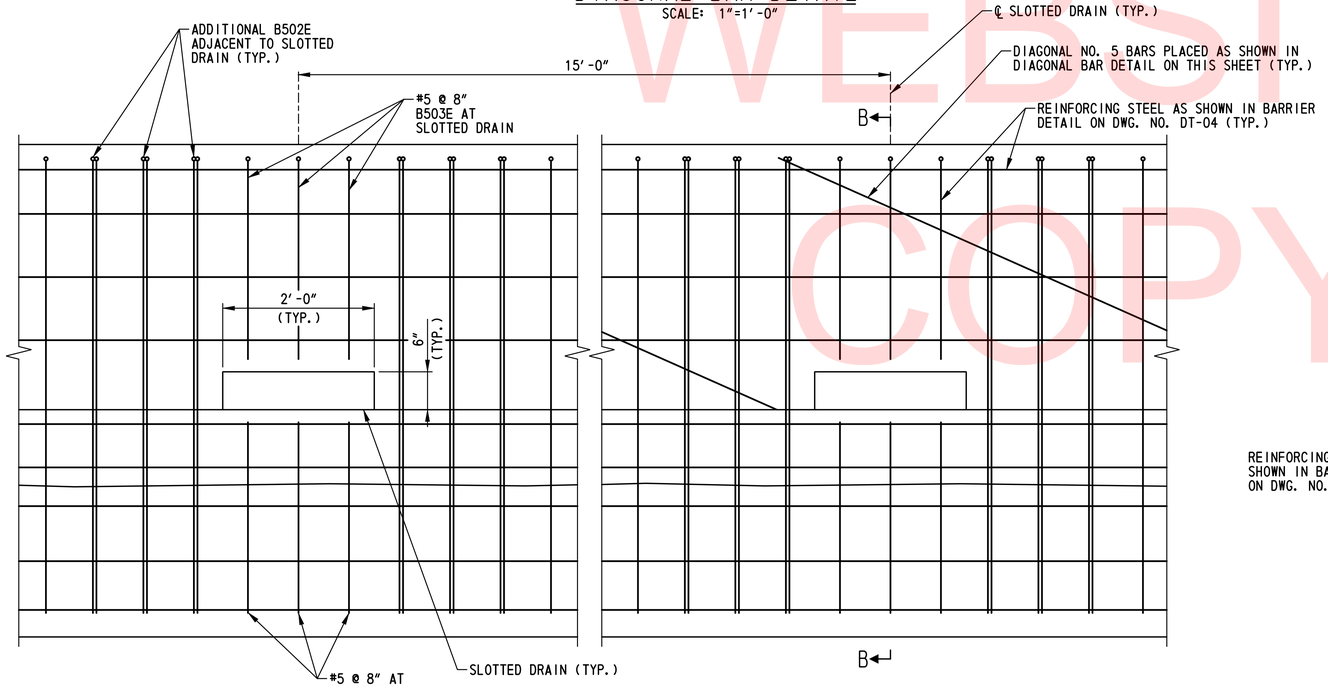

ELEVATION

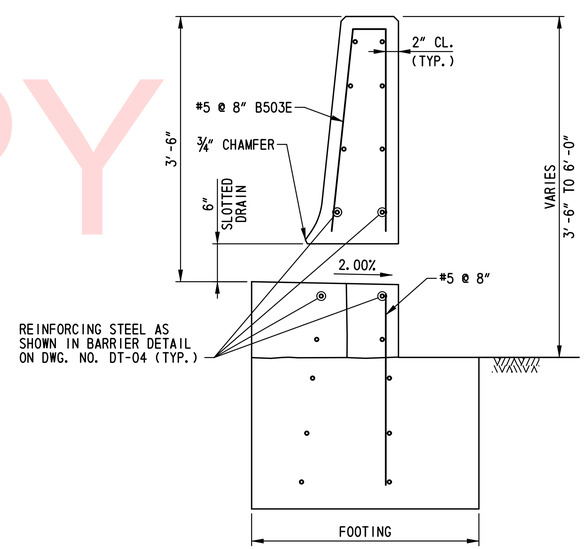

SECTION B-B

SLOTTED BARRIER DETAIL
SCALE: 1"=1'-0"

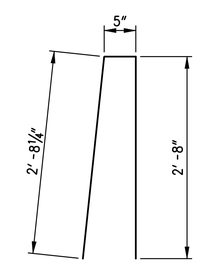

B503E
SCALE: 1"=1'-0"

NOTES:

1. DIAGONAL BAR DETAIL AND BARRIER CONTROL JOINT DETAIL SHOWN FOR CONCRETE SINGLE FACE BARRIERS. DIAGONAL BAR DETAIL FOR BIFURCATED CONCRETE MEDIAN BARRIER (MODIFIED) SIMILAR.
2. SLOTTED BARRIER DETAIL SHOWN FOR BIFURCATED CONCRETE MEDIAN BARRIER. SLOTTED BARRIER DETAIL FOR CONCRETE SINGLE FACE BARRIERS SIMILAR.
3. SLOTTED BARRIER SHALL BE FORMED BY PLACING BLOCKS IN THE BARRIER WALL PRIOR TO CONCRETE PLACEMNT. CONCRETE SHALL CURE SUFFICIENTLY TO RETAIN FROM BEFORE BLOCKS ARE REMOVED.
4. ALL WORK ASSOCIATED WITH SLOTTED DRAINS SHALL BE INCIDENTAL TO THE PERTINENT CONCRETE BARRIER PAYMENT ITEM.
5. FOR CONCRETE BARRIER NOTES, SEE DWG. NO. DT-04.

UNOFFICIAL WEBSITE COPY

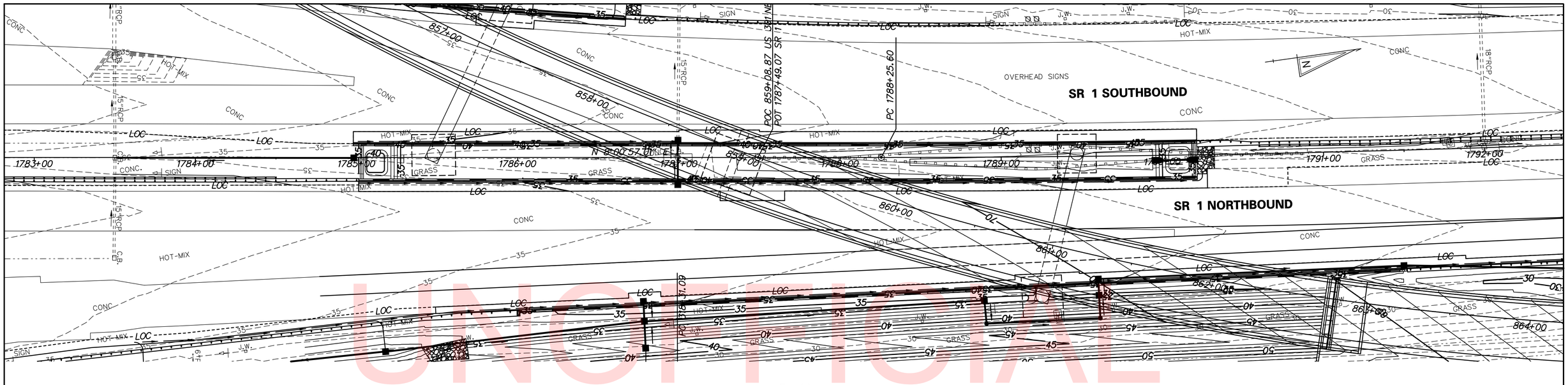

PLAN

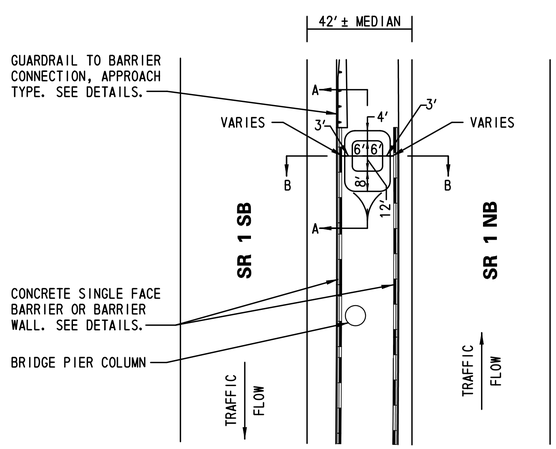

NOTES:
1. SEE PLAN SHEETS FOR LENGTH AND APPLICATION OF GUARDRAIL, CONCRETE SINGLE FACE BARRIER AND BARRIER WALLS.

BRIDGE PIER PROTECTION SYSTEM
MAINLINE BRIDGE PIER AND
MEDIAN OPENING PROTECTION PLAN
NOT TO SCALE

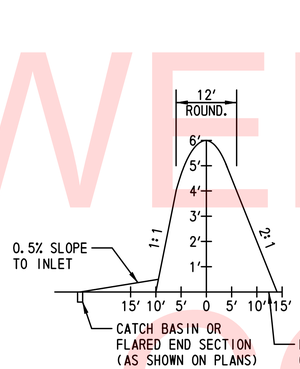

SECTION A-A
NOT TO SCALE

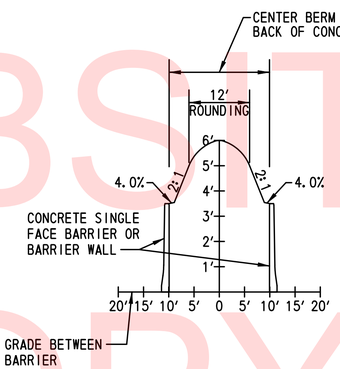

SECTION B-B
NOT TO SCALE

NOTES:
1. DISTANCE BETWEEN THE BACK OF BARRIER AND THE TOE OF SLOPE FOR THE EARTH MOUND SHALL NOT EXCEED FOUR (4) FEET.
2. SEE PLAN SHEETS FOR THE LOCATIONS OF EARTH MOUNDS AT BRIDGE PIER APPROACHES ALONG SR 1.
3. EARTH MOUND SHALL BE CONSTRUCTED OF MATERIALS MEETING THE REQUIREMENTS OF BORROW, TYPE F AND COMPACTED IN ACCORDANCE WITH SECTION 202.
4. STABILIZE MOUND SURFACE WITH TOPSOIL, SEED AND MULCH PER ROADWAY TYPICAL SECTIONS.

EARTH MOUND DETAILS AT
BRIDGE PIER APPROACHES
NOT TO SCALE

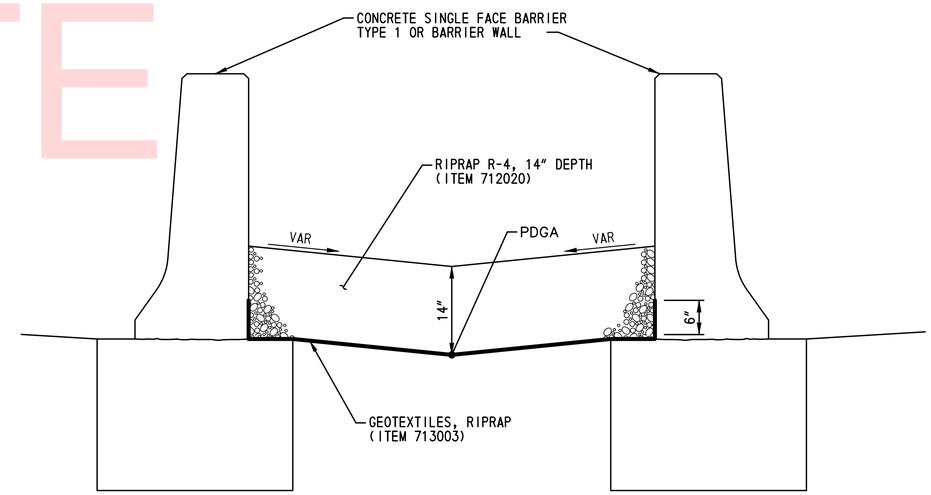

NOTES:
1. SEE SHEETS TS-13, GG-03, AND GG-10 FOR APPLICATION.

RIPRAP R-4 MEDIAN TREATMENT
NOT TO SCALE

MEDAIN PIER PROTECTION
BRIDGE BR1-3

UNOFFICIAL WEBSITE COPY

n:\31653-000\contract_1b\cadd\DT006U301_1B.dgn
2/8/2015 12:13:25 PM

DELAWARE DEPARTMENT OF TRANSPORTATION	ADDENDUMS / REVISIONS	SCALE 0 30 60 90 FEET	US 301 & SR 1 INTERCHANGE	CONTRACT T200911302	BRIDGE NO.	CONSTRUCTION DETAILS	DT-06
				COUNTY NEW CASTLE	DESIGNED BY: KAH		SHEET NO. 89
					CHECKED BY: BRT		TOTAL SHTS. 491

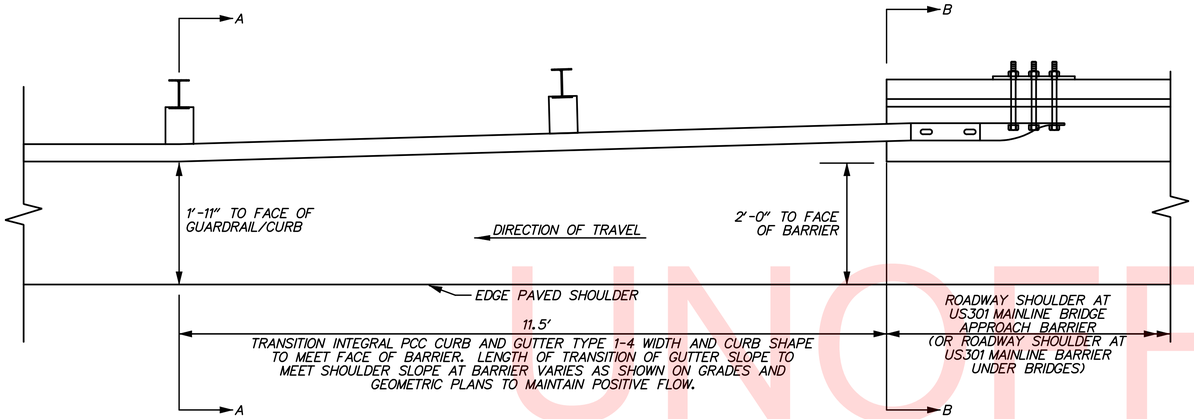

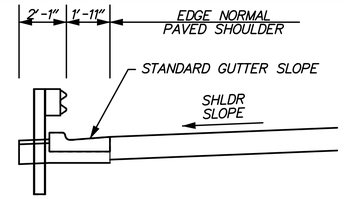

SECTION A-A

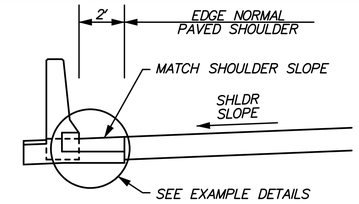

SECTION B-B

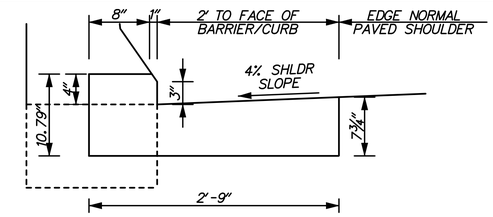

BARRIER/CURB DETAIL (4%)

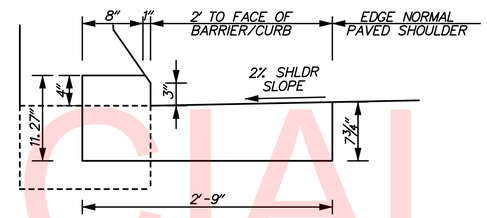

BARRIER/CURB DETAIL (2%)

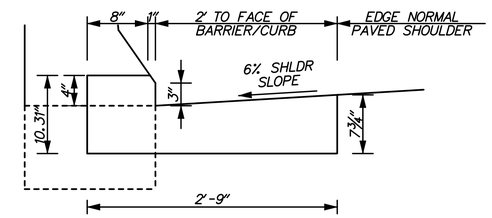

BARRIER/CURB DETAIL (6%)

NOTES:
1. PLACE PREFORMED EXPANSION JOINT MATERIAL BETWEEN END OF CURB AND BARRIER PER SECTION 701.01.
2. TRANSITION LIMITS TO BE MEASURED FOR PAYMENT UNDER ITEM 701016 WITH ALL COSTS FOR TRANSITION INCLUDED IN ITEM 701016.

CURB TRANSITION DETAILS AT GUARDRAIL TO BARRIER CONNECTION (EXIT TYPE)

US 13 SOUTHBOUND OUTSIDE SHOULDER:	STA. 171+70.29 TO STA. 171+81.79
US 301 NORTHBOUND LEFT SHOULDER:	STA. 872+00.00 TO STA. 872+11.50
US 301 NORTHBOUND RIGHT SHOULDER:	STA. 882+97.23 TO STA. 883+16.98
US 301 NORTHBOUND LEFT SHOULDER:	STA. 882+97.72 TO STA. 883+09.22
SR 1 SOUTHBOUND OUTSIDE SHOULDER:	STA. 1784+17.31 TO STA. 1784+28.81
SR 1 NORTHBOUND OUTSIDE SHOULDER:	STA. 1785+89.80 TO STA. 1786+01.30
SR 1 NORTHBOUND OUTSIDE SHOULDER:	STA. 1791+50.00 TO STA. 1791+61.50
SR 1 SOUTHBOUND OUTSIDE SHOULDER:	STA. 1807+97.76 TO STA. 1808+09.26
SR 1 SOUTHBOUND INSIDE SHOULDER:	STA. 1809+28.56 TO STA. 1809+40.06
SR 1 NORTHBOUND OUTSIDE SHOULDER:	STA. 1811+02.88 TO STA. 1811+14.38

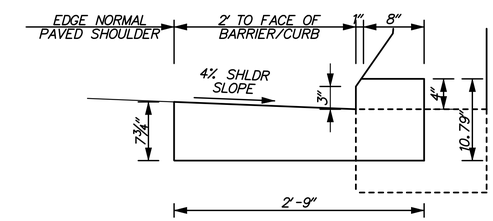

BARRIER/CURB DETAIL (4%)

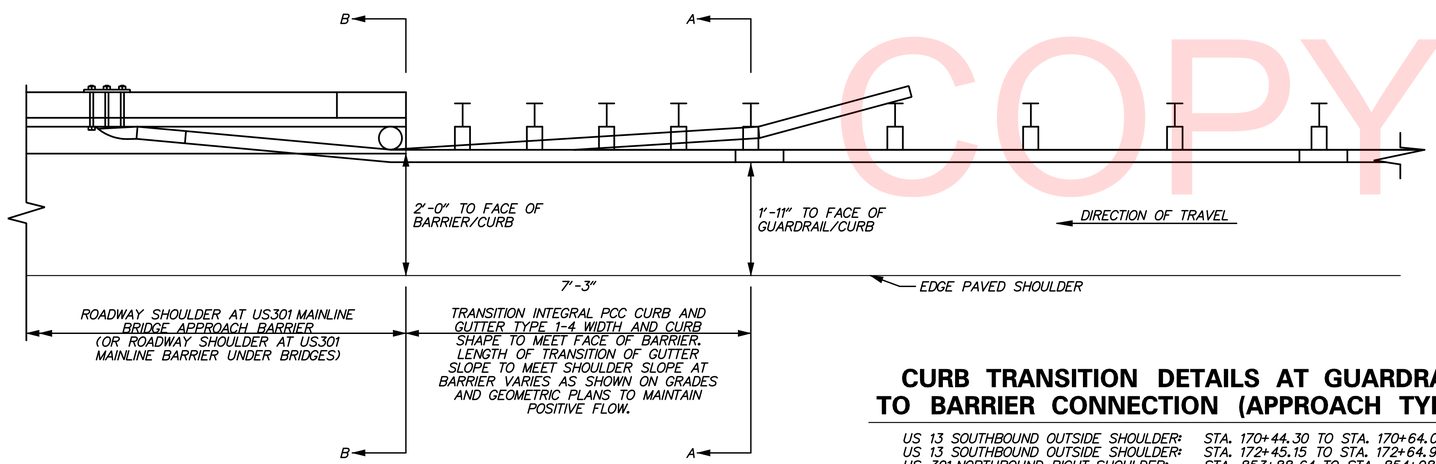

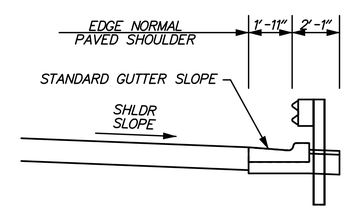

SECTION A-A

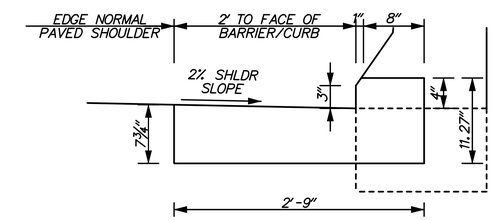

BARRIER/CURB DETAIL (2%)

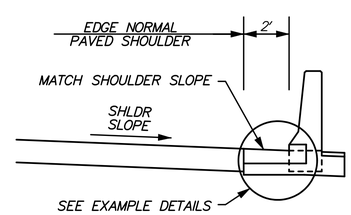

SECTION B-B

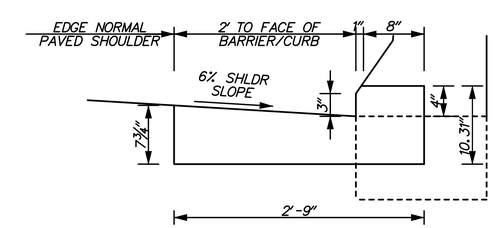

BARRIER/CURB DETAIL (6%)

NOTES:
1. PLACE PREFORMED EXPANSION JOINT MATERIAL BETWEEN END OF CURB AND BARRIER PER SECTION 701.03.
2. TRANSITION LIMITS TO BE MEASURED FOR PAYMENT UNDER ITEM 701016 WITH ALL COSTS FOR TRANSITION INCLUDED IN ITEM 701016.

CURB TRANSITION DETAILS AT GUARDRAIL TO BARRIER CONNECTION (APPROACH TYPE 1)

US 13 SOUTHBOUND OUTSIDE SHOULDER:	STA. 170+44.30 TO STA. 170+64.05
US 13 SOUTHBOUND OUTSIDE SHOULDER:	STA. 172+45.15 TO STA. 172+64.90
US 301 NORTHBOUND RIGHT SHOULDER:	STA. 853+88.64 TO STA. 854+08.39
US 301 NORTHBOUND LEFT SHOULDER:	STA. 855+40.37 TO STA. 855+60.12
US 301 NORTHBOUND LEFT SHOULDER:	STA. 880+78.47 TO STA. 880+98.22
SR 1 NORTHBOUND OUTSIDE SHOULDER:	STA. 1780+68.09 TO STA. 1780+87.84
SR 1 NORTHBOUND INSIDE SHOULDER:	STA. 1784+81.56 TO STA. 1785+01.31
SR 1 SOUTHBOUND OUTSIDE SHOULDER:	STA. 1786+66.96 TO STA. 1786+86.71
SR 1 SOUTHBOUND INSIDE SHOULDER:	STA. 1790+21.41 TO STA. 1790+41.16
SR 1 NORTHBOUND OUTSIDE SHOULDER:	STA. 1799+75.58 TO STA. 1799+95.33
SR 1 NORTHBOUND INSIDE SHOULDER:	STA. 1809+23.38 TO STA. 1809+43.13
SR 1 SOUTHBOUND OUTSIDE SHOULDER:	STA. 1817+79.55 TO STA. 1817+99.30

UNOFFICIAL WEBSITE COPY

REINFORCED CONCRETE FLARED END SECTION
12″ - 33″ DIAMETER

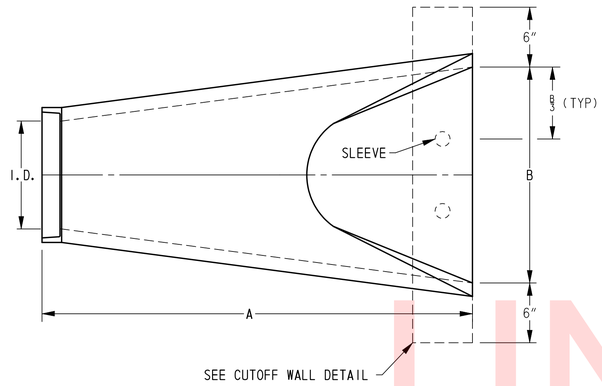

PLAN VIEW

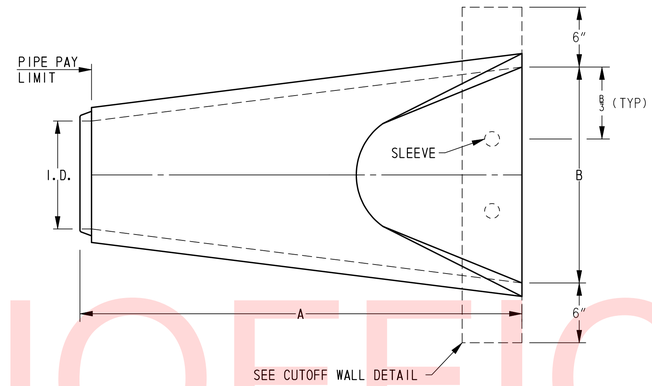

PLAN VIEW

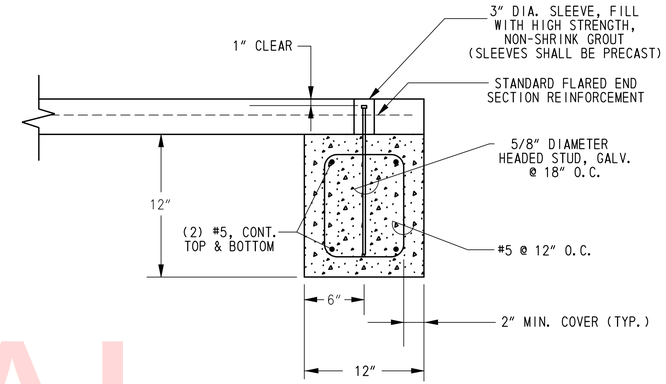

CUTOFF WALL DETAIL
N. T. S.

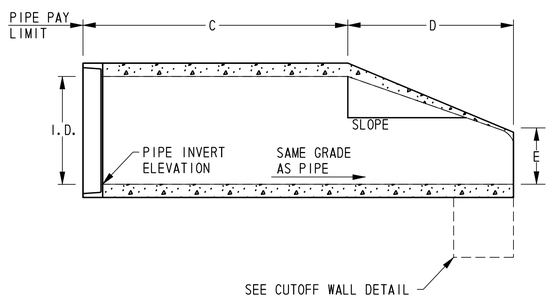

SIDE VIEW

FLARED END SECTION - OUTLET
N. T. S.

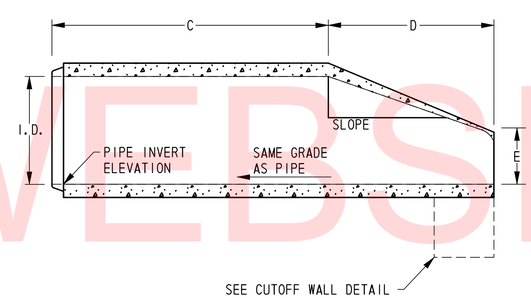

SIDE VIEW

FLARED END SECTION - INLET
N. T. S.

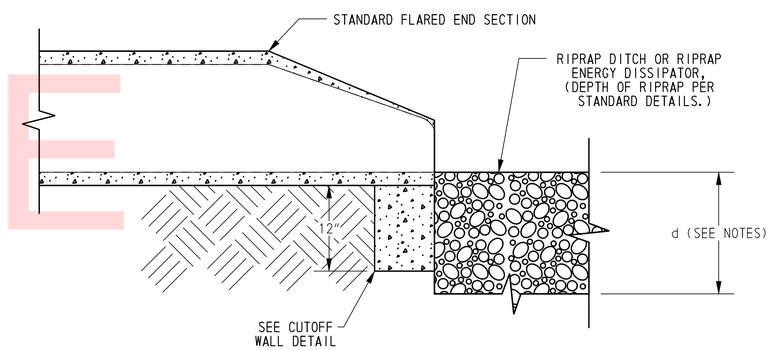

SIDE VIEW WITH OUTLET PROTECTION
N. T. S.

PIPE I.D.	SLOPE	WALL	A (INCHES)	B (INCHES)	C (INCHES)	D (INCHES)	E (INCHES)
12	3:1	2	69	24	48	21	5
15	3:1	2 1/4	73	30	46	27	6
18	3:1	2 1/2	73	36	46	27	9
21	3:1	2 3/4	74	42	38	36	9
24	3:1	3	72 1/2	48	29	43 1/2	9 1/2
27	3:1	3 1/4	75	54	25 1/2	49 1/2	10 1/2
30	3:1	3 1/2	73 3/4	60	19 3/4	54	12
33	3:1	3 3/4	81	66	26	55	14

NOTES:

1. FLARED END SECTIONS SHALL BE MANUFACTURED TO ASTM C-76 AND AASHTO M-170 WITH CLASS III REINFORCEMENT.
2. FLARED END SECTIONS SHALL BE BEDDED IN ACCORDANCE WITH DELDOT STANDARD SPECIFICATION 612, REINFORCED CONCRETE PIPE.
3. FLARED END SECTIONS 27 INCHES AND LARGER SHALL INCLUDE A 12 INCH WIDE CUTOFF WALL CONSTRUCTED AS SHOWN. CUTOFF WALL MAY BE CAST-IN-PLACE OR PRECAST CLASS B CONCRETE. ALL COSTS FOR THE CUTOFF WALL SHALL BE INCIDENTAL TO THE FLARED END SECTION.
4. DEPTH OF RIPRAP (d) PER STANDARD DETAILS.

UNOFFICIAL WEBSITE COPY

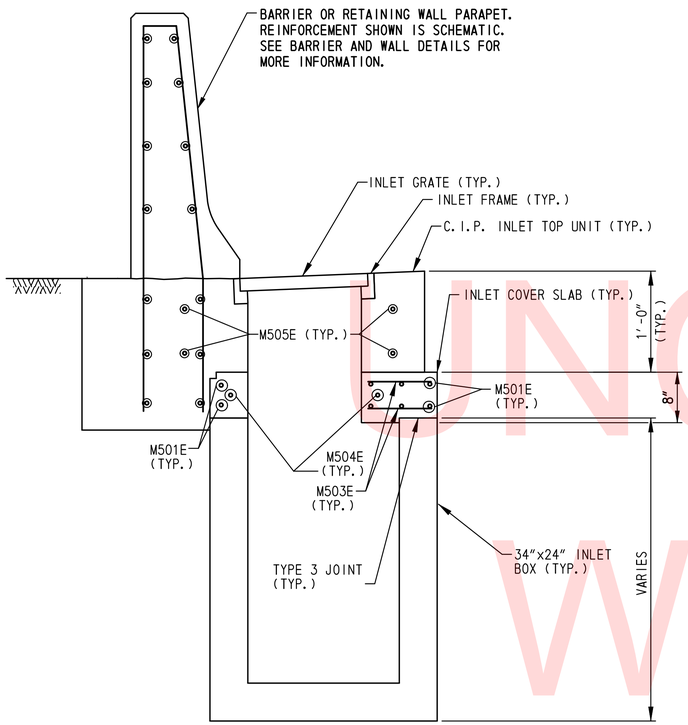

34"X 24"DRAINAGE INLET ASSEMBLY

SCALE: 1"=1'-0"

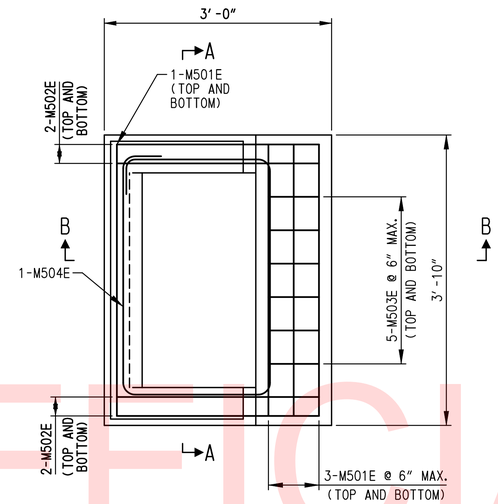

INLET COVER SLAB DETAIL

SCALE: 1"=1'-0"

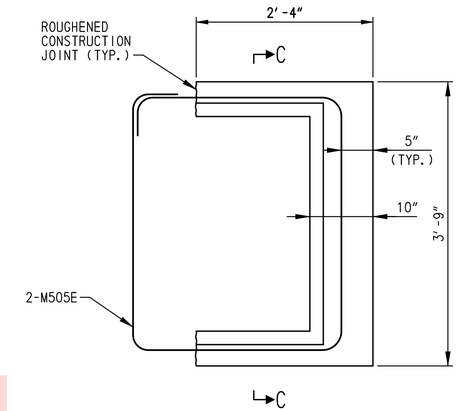

INLET TOP UNIT DETAIL

SCALE: 1"=1'-0"

NOTES:

1. PAYMENT FOR DRAINAGE INLETS INCLUDING BOXES, GRATES, TOP UNITS, COVER SLABS, MODIFICATIONS TO CONCRETE BARRIER, JOINT SEALANT AND ALL WORK ASSOCIATED WITH DRAINAGE INLET ASSEMBLIES WILL BE MADE UNDER ITEM NO. 708051 - DRAINAGE INLET, 34"X24".
2. FOR DRAINAGE INLET ASSEMBLY LOCATIONS SEE CONSTRUCTION PLANS.
3. SEE STANDARD NO. D-4 FOR INLET BOX DETAILS. SEE STANDARD NO. D-5 FOR GRATE, FRAME, AND JOINT DETAILS.
4. MINIMUM REINFORCEMENT COVER SHALL BE 1½".
5. HOT POURED JOINT SEALANT SHALL BE USED TO FILL THE GAP BETWEEN THE DRAINAGE INLET FRAMES.

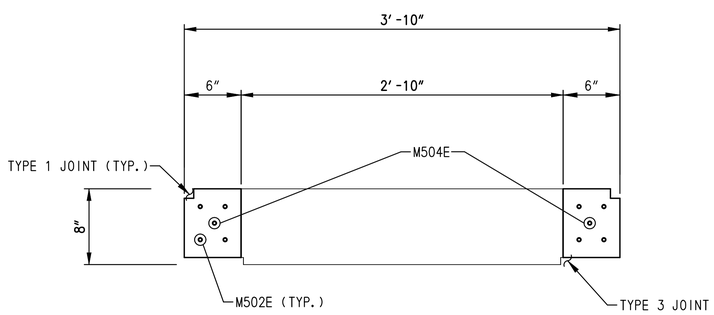

SECTION A-A

SCALE: 1½"=1'-0"

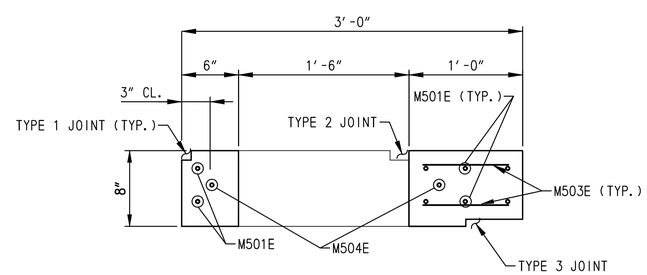

SECTION B-B

SCALE: 1½"=1'-0"

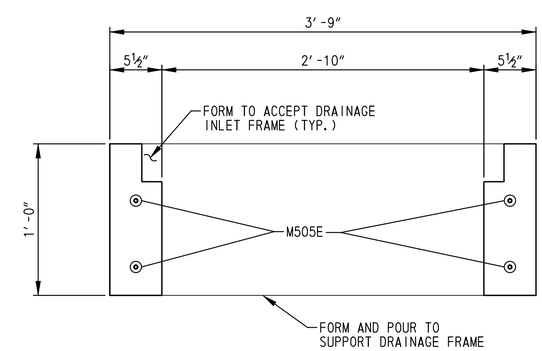

SECTION C-C

SCALE: 1½"=1'-0"

UNOFFICIAL WEBSITE COPY

N:\31653-000\CONTRACT 18\CADD\DT009U301_1B.dgn
5/31/2013 7:42:20 AM

DELAWARE DEPARTMENT OF TRANSPORTATION	ADDENDUMS / REVISIONS	SCALE: AS SHOWN	US 301 & SR 1 INTERCHANGE	CONTRACT T200911302	BRIDGE NO.	CONSTRUCTION DETAILS
				COUNTY NEW CASTLE	DESIGNED BY: K.M.K.	
					CHECKED BY: B.K.B.	

DT-09
SHEET NO. 92
TOTAL SHTS. 491

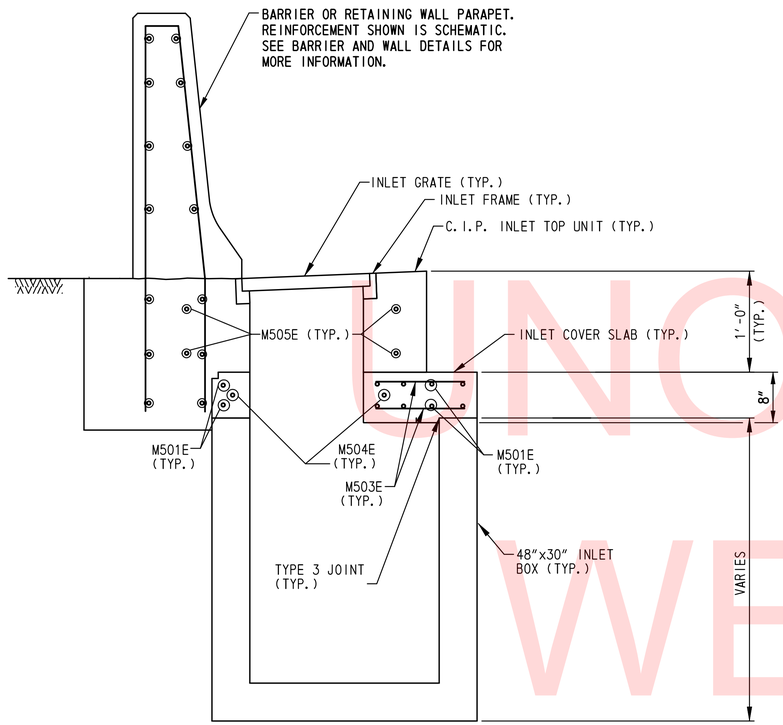

48"X30" DRAINAGE INLET ASSEMBLY

SCALE: 1"=1'-0"

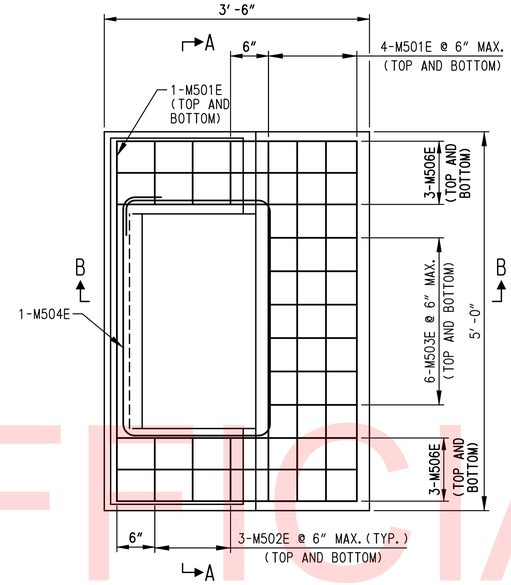

INLET COVER SLAB DETAIL

SCALE: 1"=1'-0"

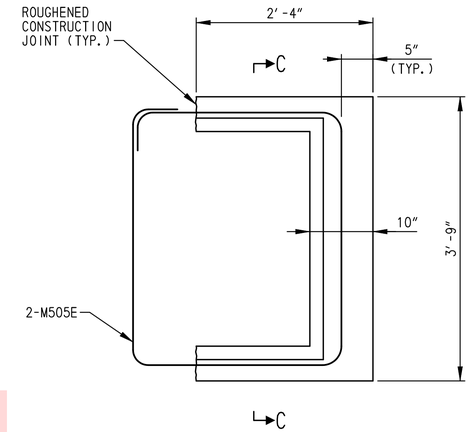

INLET TOP UNIT DETAIL

SCALE: 1"=1'-0"

NOTES:

1. PAYMENT FOR DRAINAGE INLETS INCLUDING BOXES, GRATES, TOP UNITS, COVER SLABS, MODIFICATIONS TO CONCRETE MEDIAN BARRIER, JOINT SEALANT AND ALL WORK ASSOCIATED WITH DRAINAGE INLET ASSEMBLIES WILL BE MADE UNDER ITEM NO. 708052 - DRAINAGE INLET, 48"X48".
2. FOR DRAINAGE INLET ASSEMBLY LOCATIONS SEE CONSTRUCTION PLANS.
3. SEE STANDARD NO. D-4 FOR INLET BOX DETAILS. SEE STANDARD NO. D-5 FOR GRATE, FRAME, AND JOINT DETAILS.
4. MINIMUM REINFORCEMENT COVER SHALL BE 1½".
5. HOT POURED JOINT SEALANT SHALL BE USED TO FILL THE GAP BETWEEN THE DRAINAGE INLET FRAMES.

UNOFFICIAL WEBSITE COPY

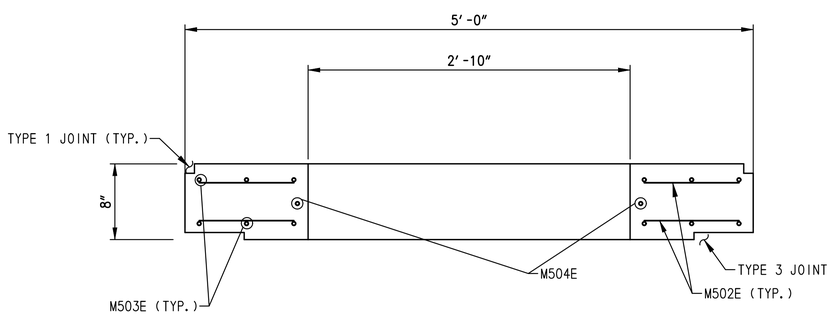

SECTION A-A

SCALE: 1½"=1'-0"

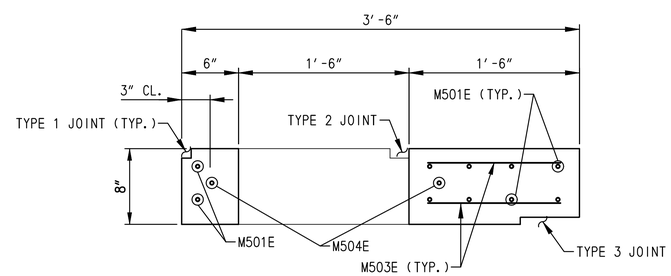

SECTION B-B

SCALE: 1½"=1'-0"

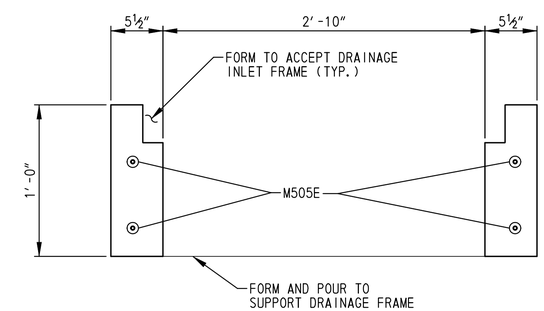

SECTION C-C

SCALE: 1½"=1'-0"

DELAWARE DEPARTMENT OF TRANSPORTATION	ADDENDUMS / REVISIONS	SCALE: AS SHOWN	US 301 & SR 1 INTERCHANGE	CONTRACT T200911302 / COUNTY NEW CASTLE	BRIDGE NO. / DESIGNED BY: K.M.K. / CHECKED BY: B.K.B.	CONSTRUCTION DETAILS

DT-10
SHEET NO. 93
TOTAL SHTS. 491

n:\31653-000\contract 18\cadd\DT010U301_18.dgn 5/31/2013 7:42:27 AM

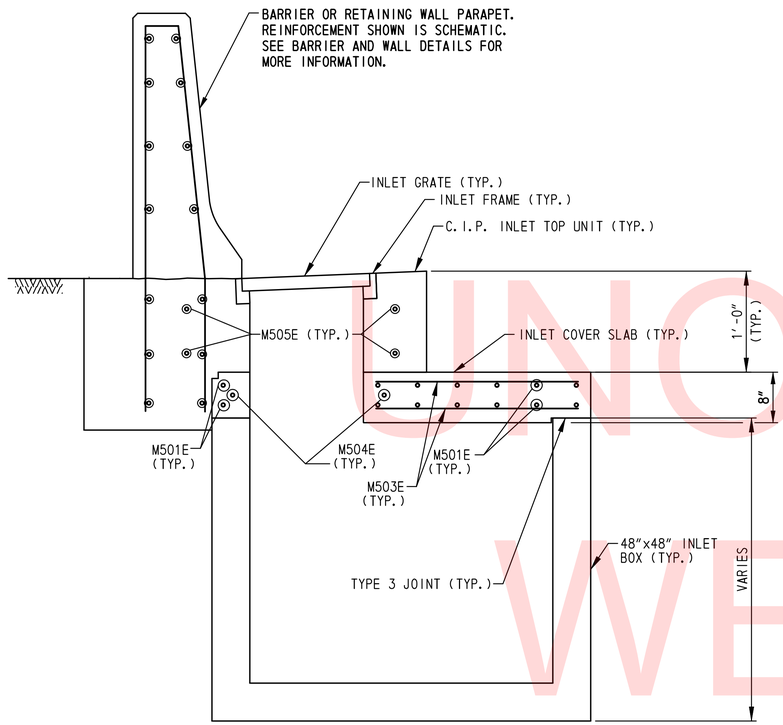

48"X48" DRAINAGE INLET ASSEMBLY

SCALE: 1"=1'-0"

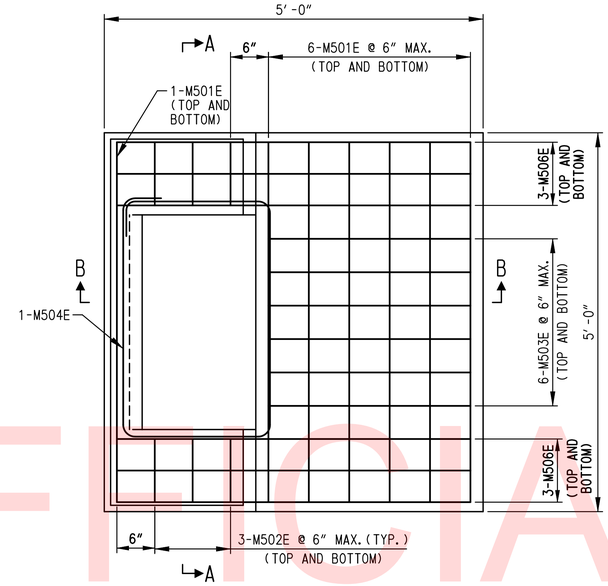

INLET COVER SLAB DETAIL

SCALE: 1"=1'-0"

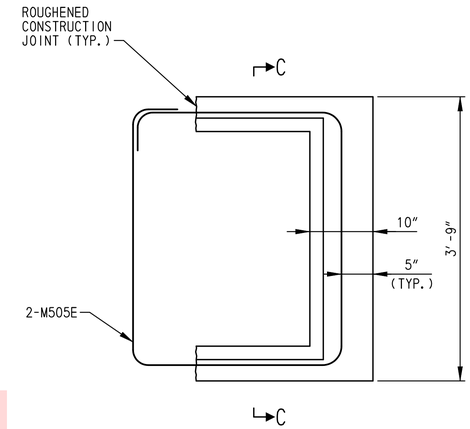

INLET TOP UNIT DETAIL

SCALE: 1"=1'-0"

NOTES:

1. PAYMENT FOR DRAINAGE INLETS INCLUDING BOXES, GRATES, TOP UNITS, COVER SLABS, MODIFICATIONS TO CONCRETE MEDIAN BARRIER, JOINT SEALANT AND ALL WORK ASSOCIATED WITH DRAINAGE INLET ASSEMBLIES WILL BE MADE UNDER ITEM NO. 708053 - DRAINAGE INLET, 48"X48".
2. FOR DRAINAGE INLET ASSEMBLY LOCATIONS SEE CONSTRUCTION PLANS.
3. SEE STANDARD NO. D-4 FOR INLET BOX DETAILS. SEE STANDARD NO. D-5 FOR GRATE, FRAME, AND JOINT DETAILS.
4. MINIMUM REINFORCEMENT COVER SHALL BE 1½".
5. HOT POURED JOINT SEALANT SHALL BE USED TO FILL THE GAP BETWEEN THE DRAINAGE INLET FRAMES.

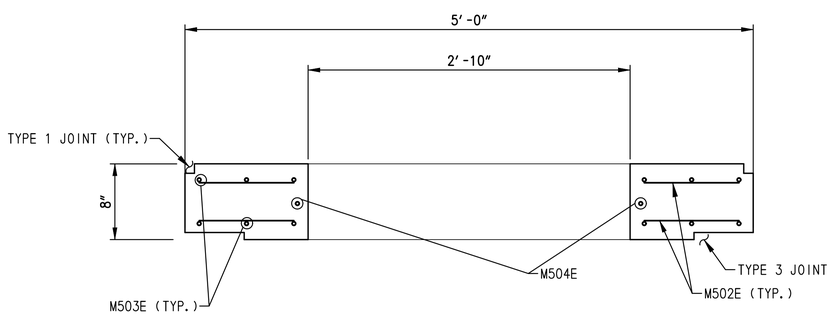

SECTION A-A

SCALE: 1½"=1'-0"

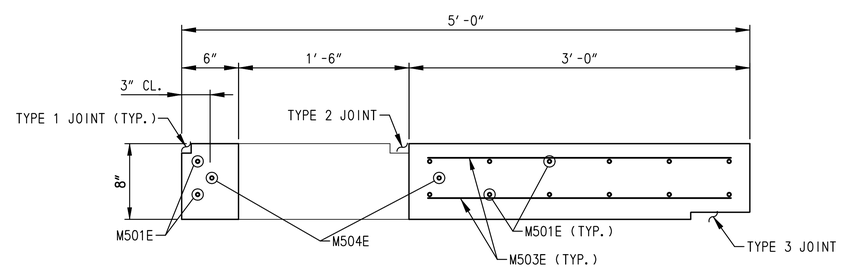

SECTION B-B

SCALE: 1½"=1'-0"

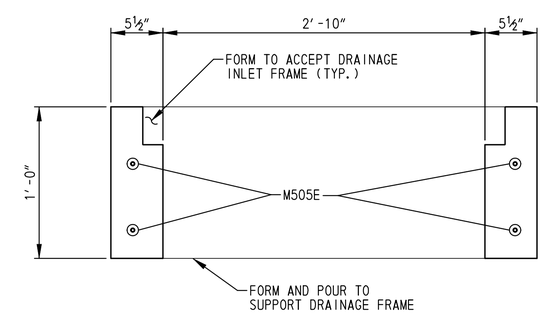

SECTION C-C

SCALE: 1½"=1'-0"

UNOFFICIAL WEBSITE COPY

DELAWARE DEPARTMENT OF TRANSPORTATION	ADDENDUMS / REVISIONS	SCALE: AS SHOWN	US 301 & SR 1 INTERCHANGE	CONTRACT T200911302 / COUNTY NEW CASTLE	BRIDGE NO. / DESIGNED BY: K.M.K. / CHECKED BY: B.K.B.	CONSTRUCTION DETAILS

DT-11
SHEET NO. 94
TOTAL SHTS. 491

n:\31653-000\contract tb\cadd\DT011U301_IB.dgn 5/31/2013 7:42:27 AM

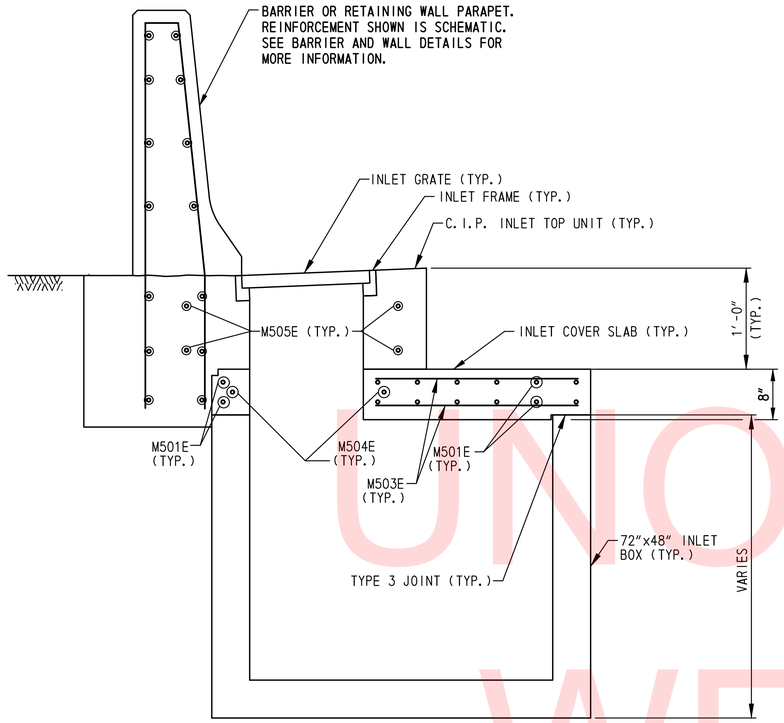

72"X48" DRAINAGE INLET ASSEMBLY

SCALE: 1"=1'-0"

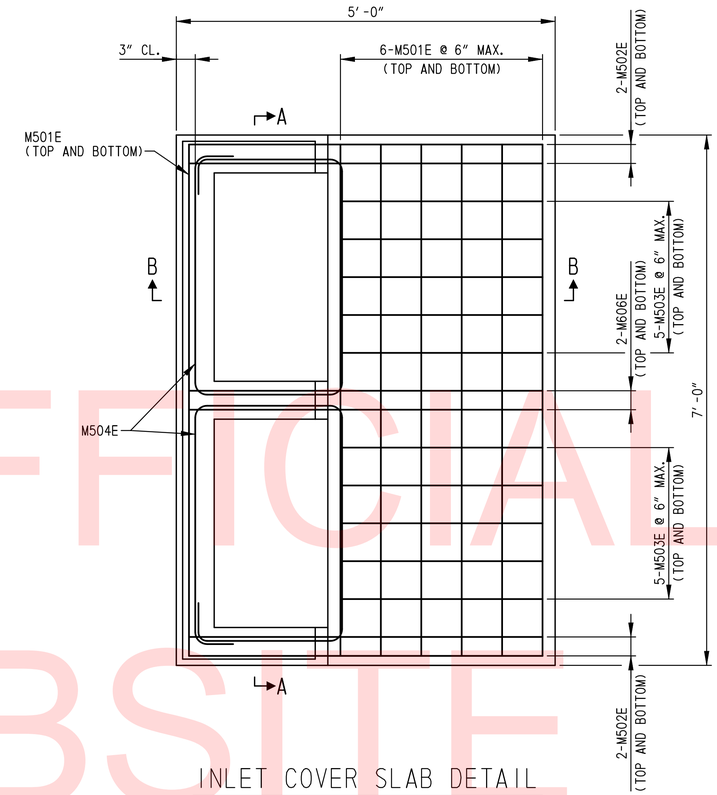

INLET COVER SLAB DETAIL

SCALE: 1"=1'-0"

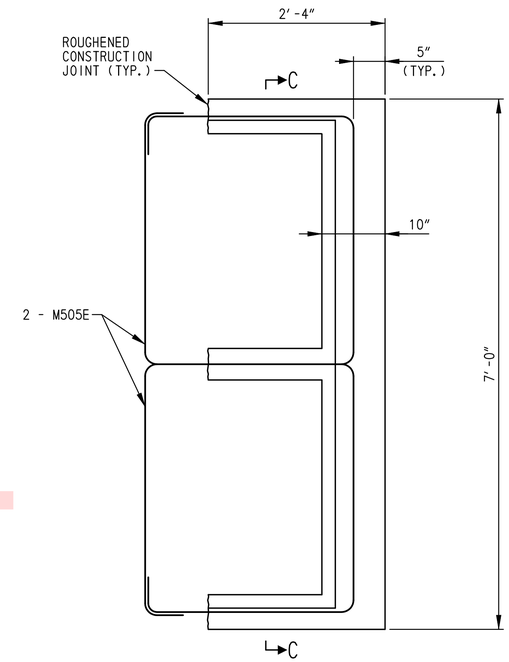

INLET TOP UNIT DETAIL

SCALE: 1"=1'-0"

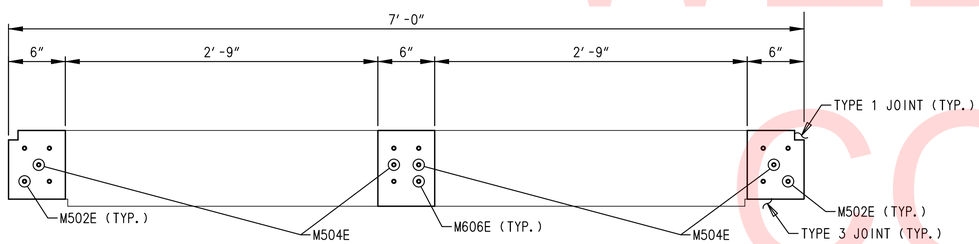

SECTION A-A

SCALE: 1½"=1'-0"

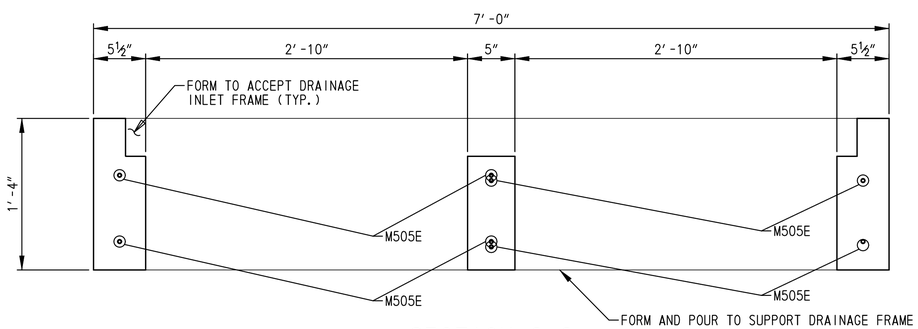

SECTION C-C

SCALE: 1½"=1'-0"

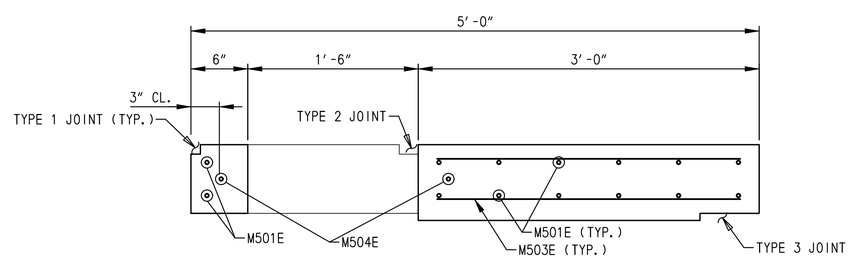

SECTION B-B

SCALE: 1½"=1'-0"

NOTES:

1. PAYMENT FOR DRAINAGE INLETS INCLUDING BOXES, GRATES, TOP UNITS, COVER SLABS, MODIFICATIONS TO CONCRETE MEDIAN BARRIER, JOINT SEALANT AND ALL WORK ASSOCIATED WITH DRAINAGE INLET ASSEMBLIES WILL BE MADE UNDER ITEM NO. 708058 - DRAINAGE INLET, 72"X48".
2. FOR DRAINAGE INLET ASSEMBLY LOCATIONS SEE CONSTRUCTION PLANS.
3. SEE STANDARD NO. D-4 FOR INLET BOX DETAILS. SEE STANDARD NO. D-5 FOR GRATE, FRAME, AND JOINT DETAILS.
4. MINIMUM REINFORCEMENT COVER SHALL BE 1½".
5. HOT POURED JOINT SEALANT SHALL BE USED TO FILL THE GAP BETWEEN THE DRAINAGE INLET FRAMES.

UNOFFICIAL WEBSITE COPY

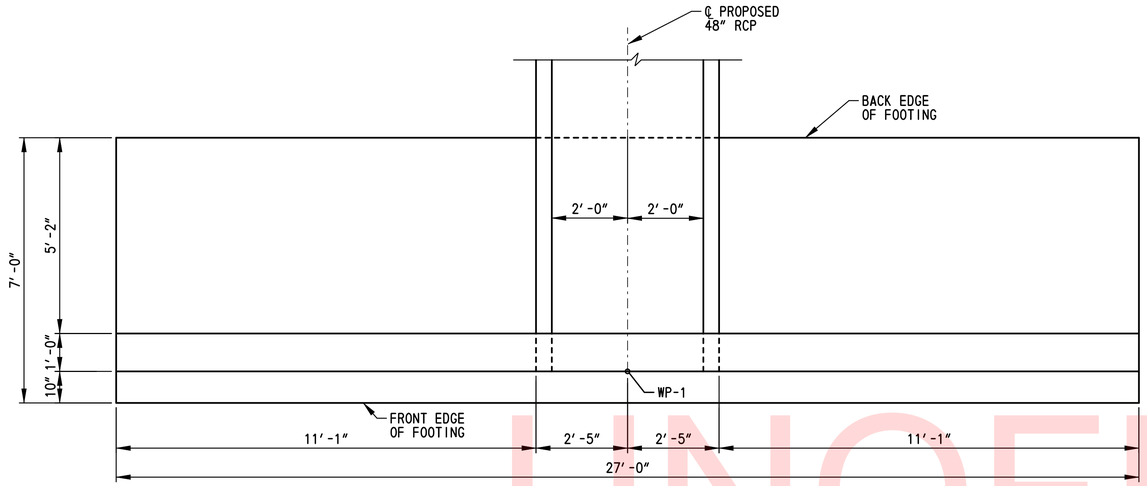

ENDWALL NO. 401 – NO. 403 – PLAN

SCALE: 1/2"=1'-0"

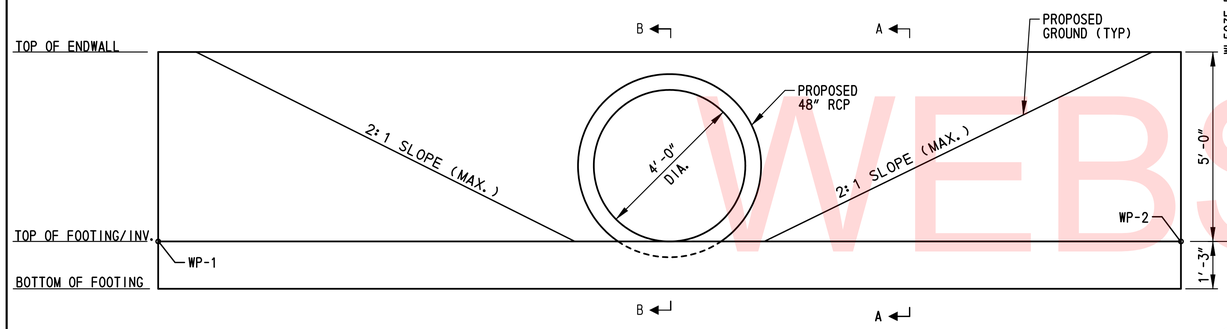

ENDWALL NO. 401 – NO. 403 – ELEVATION

SCALE: 1/2"=1'-0"

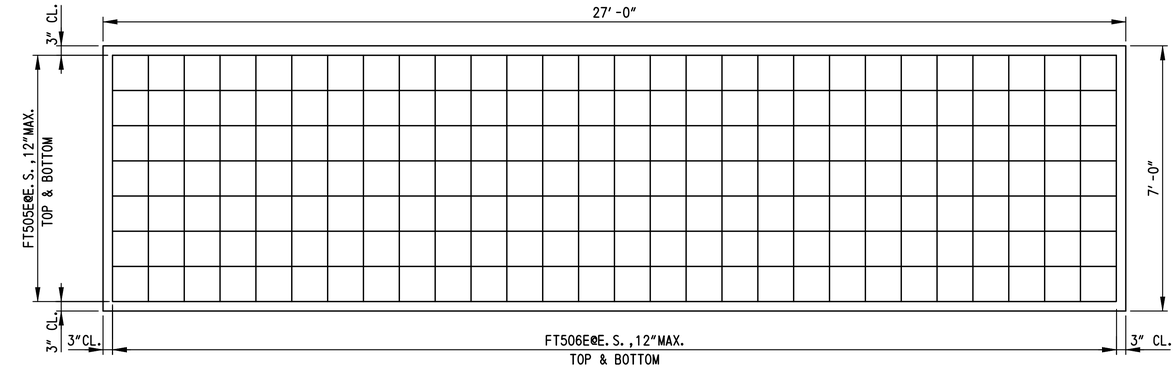

ENDWALL NO. 401 – NO.403 – FOOTING REINFORCEMENT PLAN

SCALE: 1/2"=1'-0"

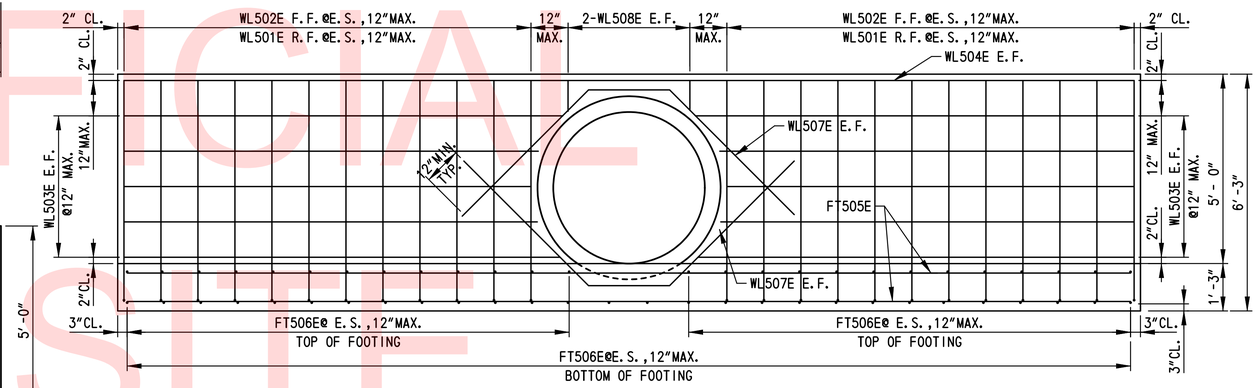

ENDWALL NO. 401 – NO.403 – REINFORCEMENT ELEVATION

SCALE: 1/2"=1'-0"

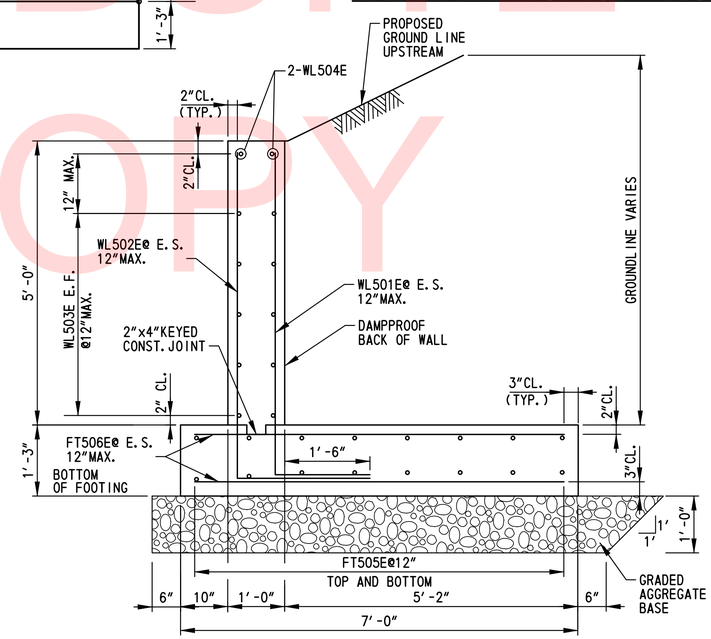

SECTION A–A

SCALE: 3/4"=1'-0"

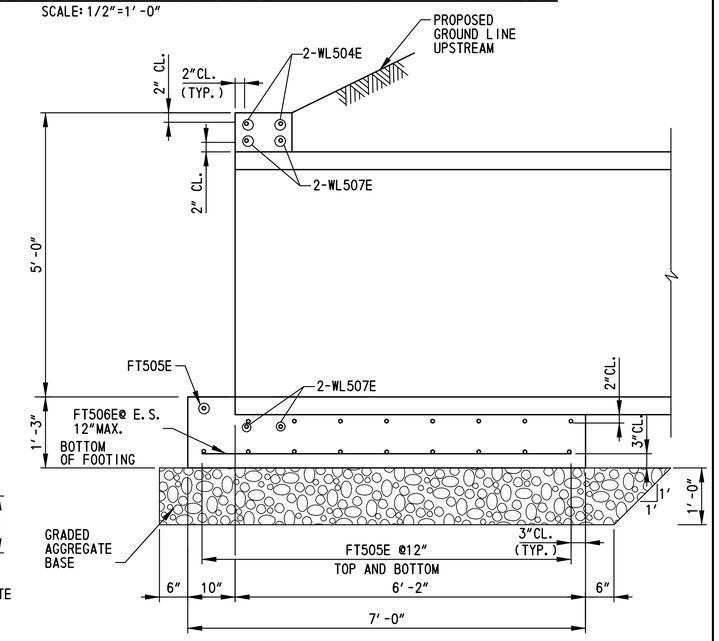

SECTION B–B

SCALE: 3/4"=1'-0"

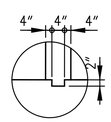

CONSTRUCTION KEY DETAIL

SCALE: 1"=1'-0"

WORKING POINT LOCATION			
ENDWALL NO.	WP	NORTHING	EASTING
EW/401	WP-1	556572.58	590061.73
	WP-2	556564.56	590087.37
EW/402	WP-1	557030.50	590196.92
	WP-2	557047.57	590176.00
EW/403	WP-1	557551.25	590274.69
	WP-2	557576.86	590283.25

ENDWALL NO. 401 - NO. 403 NOTES:

1. MAXIMUM FACTORED BEARING RESISTANCE FOR THE ENDWALL IS 2 KSF.
2. KEYS ARE NOMINAL SIZE.
3. CONCRETE SHALL BE CLASS A, 4500 PSI.
4. REBAR REINFORCEMENT SHALL BE DEFORMED BARS AS SHOWN AND SHALL CONFORM TO ASTM A 615, GRADE 60.
5. RIPRAP IN FRONT OF WALL NOT SHOWN FOR CLARITY.
6. ENDWALL NO. 401 TO NO. 404 SHALL BE CAST-IN-PLACE. NO PRECAST ALTERNATIVE WILL BE ALLOWED.
7. E.F. = EACH FACE
   F.F. = FRONT FACE
   R.F. = RARE FACE
   E.S. = EQUAL SPACING.
8. SEE REINFORCING BAR LIST ON DRAWING DT-15.
9. THE COST OF THE GRADED AGGREGATE BEDDING SHALL BE INCIDENTAL TO THE CONTRACT UNIT COST FOR THE ENDWALL (ITEM 617515).

UNOFFICIAL WEBSITE COPY

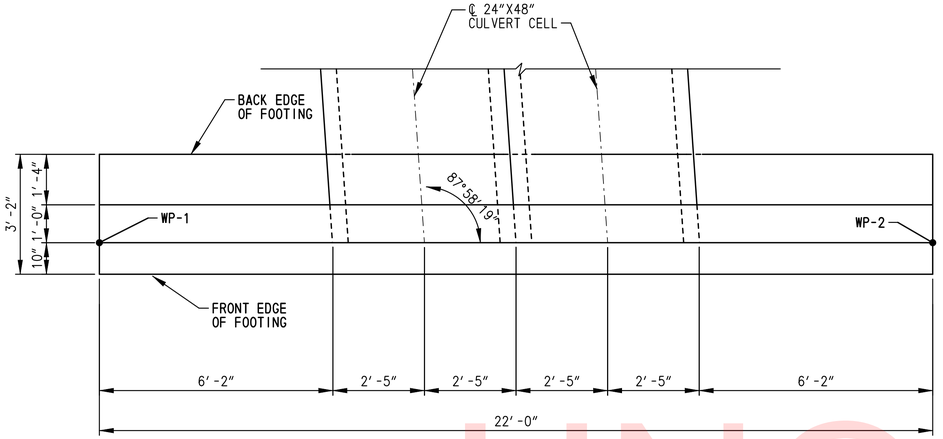

ENDWALL NO. 201 – NO. 206 – PLAN

SCALE: 1/2"=1'-0"

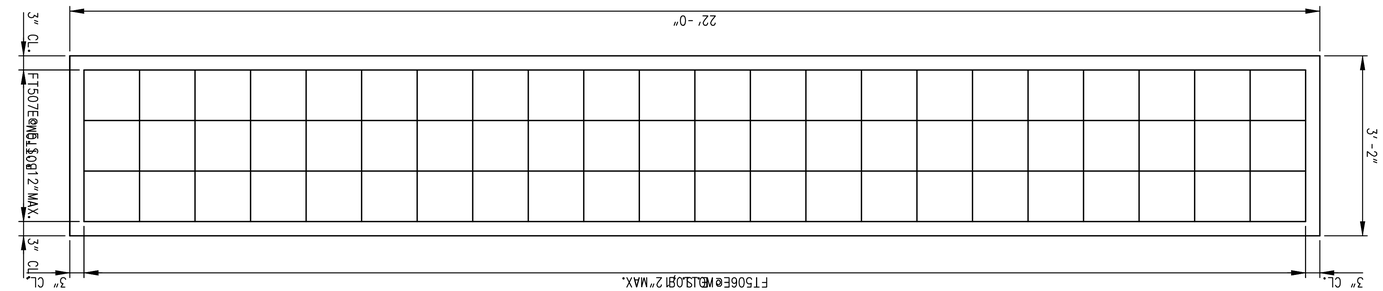

ENDWALL NO. 201 – NO. 206 – FOOTING REINFORCEMENT PLAN

SCALE: ¾"=1'-0"

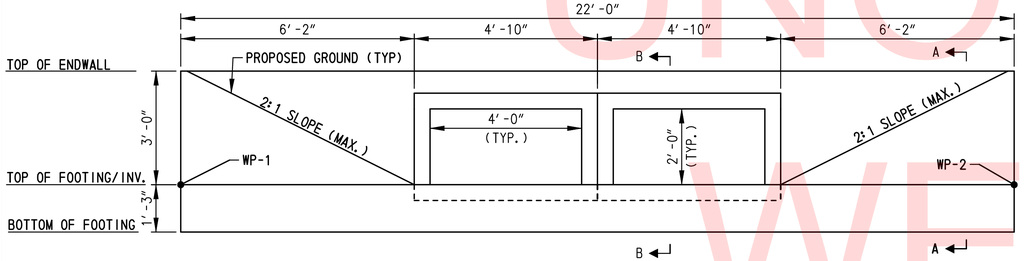

ENDWALL NO. 201 – NO.206 – ELEVATION

SCALE: 1/2"=1'-0"

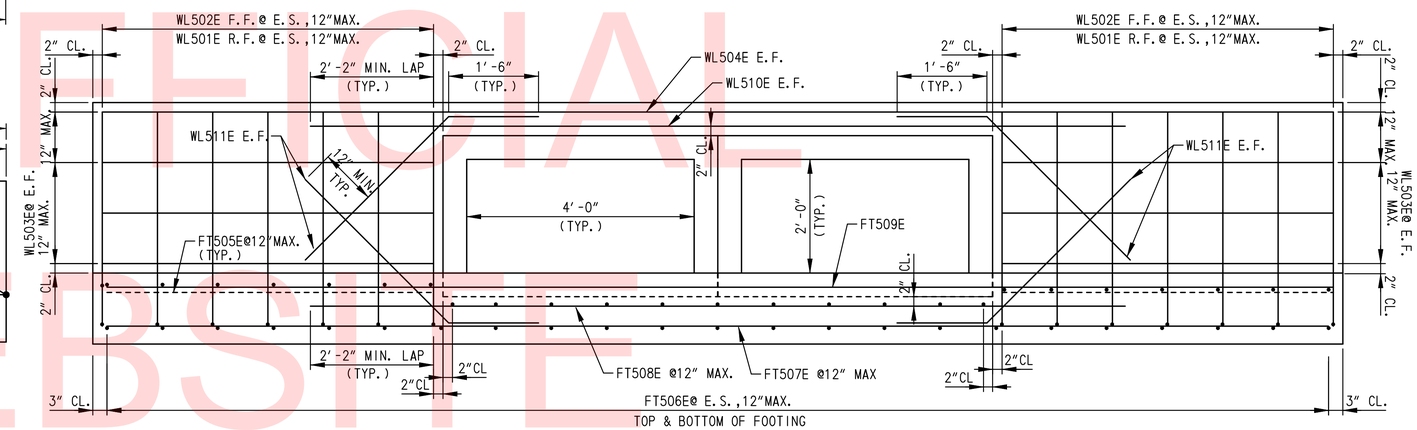

ENDWALL NO. 201 – NO. 206 – REINFORCEMENT ELEVATION

SCALE: ¾"=1'-0"

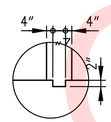

CONSTRUCTION KEY DETAIL

SCALE: 1"=1'-0"

WORKING POINT LOCATION			
ENDWALL NO.	WP	NORTHING	EASTING
EW/404	WP-1	557817.39	590258.48
	WP-2	557788.98	590252.66

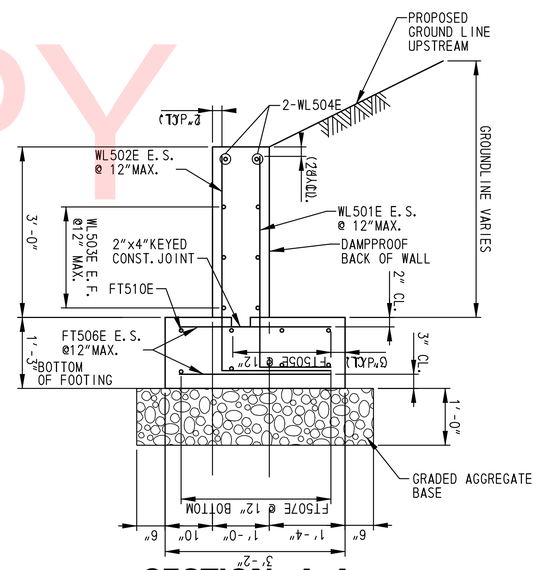

SECTION A–A

SCALE: ¾"=1'-0"

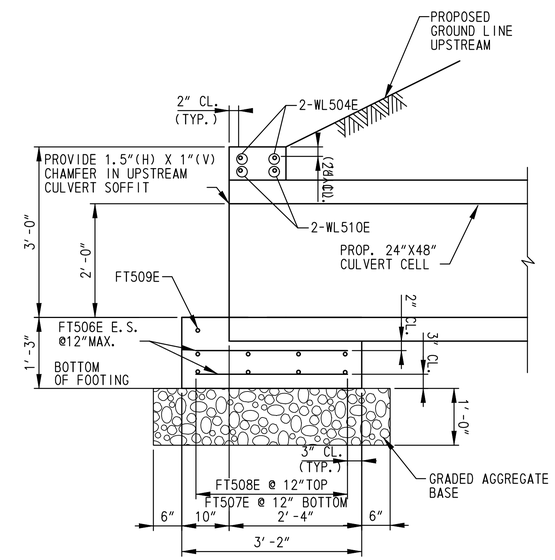

SECTION B–B

SCALE: ¾"=1'-0"

ENDWALL NO. 201 - NO. 206 NOTES:

1. MAXIMUM FACTORED BEARING RESISTANCE FOR THE ENDWALL IS 2 KSF.
2. KEYS ARE NOMINAL SIZE.
3. CONCRETE SHALL BE CLASS A, 4500 PSI.
4. RIPRAP IN FRONT OF WALL NOT SHOWN FOR CLARITY.
5. ENDWALL NO.203 SHALL BE CAST-IN-PLACE. NO PRECAST ALTERNATIVE WILL BE ALLOWED.
6. E.F. = EACH FACE
   F.F. = FRONT FACE
   R.F. = RARE FACE
   E.S. = EQUAL SPACING.
7. SEE REINFORCING BAR LIST ON DRAWING DT-09.
8. THE COST OF THE GRADED AGGREGATE BEDDING SHALL BE INCIDENTAL TO THE CONTRACT UNIT COST FOR THE ENDWALL (ITEM 617515).

UNOFFICIAL WEBSITE COPY

① ANY MARK NUMBER WITH SUFFIX 'E' DENOTES EPOXY COATED REINFORCING STEEL.

② ALL MARK 'LOCATION PREFIXES' SHALL CONSIST OF TWO LETTERS AND ARE AS FOLLOWS: AB = ABUTMENT, AS = APPROACH SLAB, BC = BOX CULVERT, BW = BACKWALL, CL = COLUMN, DK = DECK, DL = DOWEL, FT = FOOTING, HW = HEADWALL, MS = MISC. BARS, PA = PARAPET, PR = PIER, SC = SHEETPILE CAP, SL = SLAB, TW = TOEWALL, WL = WALL (UNIQUE LOCATION), WW = WINGWALL

SPECIFICATIONS					BENDING DIMENSIONS (FEET-INCHES /QUARTER INCH)										
QTY.	SIZE	LENGTH	MARK	TYPE	A	B	C	D	E	F/R	G	H	J	K	O
34X24 INLET SLAB															
6	5	3-7⁰	MS501E	STR		3-7⁰									
8	5	2-9⁰	MS502E	STR		2-9⁰									
1	5	10-8⁰	MS504E	T2	0-6⁰	1-9⁰	3-1⁰	1-9⁰	3-1⁰		0-6⁰				
2	5	13-2⁰	MS505E	T2	0-6⁰	2-9⁰	3-4⁰	2-9⁰	3-4⁰		0-6⁰				
48X30 INLET SLAB															
10	5	4-9⁰	MS501E	STR		4-9⁰									
12	5	0-10⁰	MS502E	STR		0-10⁰									
12	5	1-3⁰	MS503E	STR		1-3⁰									
1	5	10-8⁰	MS504E	T2	0-6⁰	1-9⁰	3-1⁰	1-9⁰	3-1⁰		0-6⁰				
2	5	13-2⁰	MS505E	T2	0-6⁰	2-9⁰	3-4⁰	2-9⁰	3-4⁰		0-6⁰				
48X48 INLET SLAB															
14	5	4-9⁰	MS501E	STR		4-9⁰									
12	5	0-10⁰	MS502E	STR		0-10⁰									
12	5	2-8⁰	MS503E	STR		2-8⁰									
1	5	10-8⁰	MS504E	T2	0-6⁰	1-9⁰	3-1⁰	1-9⁰	3-1⁰		0-6⁰				
2	5	13-2⁰	MS505E	T2	0-6⁰	2-9⁰	3-4⁰	2-9⁰	3-4⁰		0-6⁰				
72X48 INLET SLAB															
14	5	6-9⁰	MS501E	STR		6-9⁰									
8	5	3-9⁰	MS502E	STR		3-9⁰									
20	5	2-8⁰	MS503E	STR		2-8⁰									
2	5	10-9⁰	MS504E	T2	0-6⁰	1-10⁰	3-0⁰	1-10⁰	3-0⁰		0-6⁰				
4	5	13-0⁰	MS505E	T2	0-6⁰	2-9⁰	3-3¹	2-9⁰	3-3¹		0-6⁰				
4	6	3-9⁰	MS606E	STR		3-9⁰									
ENDWALL NO. 401															
24	5	7-6⁰	WL501E	17		6-0⁰	1-6⁰								
24	5	8-2⁰	WL502E	17		6-0⁰	2-2⁰								
4X5	5	10-9⁰	WL503E	STR		10-9⁰									
		T0				T0									
		11-7⁰				11-7⁰									
2	5	26-8⁰	WL504E	STR		26-8⁰									
16	5	26-6⁰	FT505E	STR		26-6⁰									
58	5	6-6⁰	FT506E	STR		6-6⁰									
4	5	11-6³	WL507E	14		4-8²	2-1³	4-8²				3-4⁰			8-9³
4	5	0-9³	WL508E	STR		0-9³									
ENDWALL NO. 402															
24	5	7-6⁰	WL501E	17		6-0⁰	1-6⁰								
24	5	8-2⁰	WL502E	17		6-0⁰	2-2⁰								
4X5	5	10-9⁰	WL503E	STR		10-9⁰									
		T0				T0									
		11-7⁰				11-7⁰									
2	5	26-8⁰	WL504E	STR		26-8⁰									
16	5	26-6⁰	FT505E	STR		26-6⁰									
58	5	6-6⁰	FT506E	STR		6-6⁰									
4	5	11-6³	WL507E	14		4-8²	2-1³	4-8²				3-4⁰			8-9³
4	5	0-9³	WL508E	STR		0-9³									
ENDWALL NO. 403															
24	5	7-6⁰	WL501E	17		6-0⁰	1-6⁰								
24	5	8-2⁰	WL502E	17		6-0⁰	2-2⁰								
4X5	5	10-9⁰	WL503E	STR		10-9⁰									
		T0				T0									
		11-7⁰				11-7⁰									
2	5	26-8⁰	WL504E	STR		26-8⁰									
16	5	26-6⁰	FT505E	STR		26-6⁰									
58	5	6-6⁰	FT506E	STR		6-6⁰									
4	5	11-6³	WL507E	14		4-8²	2-1³	4-8²				3-4⁰			8-9³
4	5	0-9³	WL508E	STR		0-9³									
ENDWALL NO. 404															
23	5	6-0⁰	WL501E	17		3-10⁰	2-2⁰								
23	5	6-8⁰	WL502E	17		3-10⁰	2-10⁰								
12	5	7-5¹	WL503E	STR		7-5¹									
6	5	3-3³	WL504E	STR		3-3³									
2X5	5	7-1²	FT505E	STR		7-1²									
		T0				T0									
		7-4²				7-4²									
60	5	4-6⁰	FT506E	STR		4-6⁰									
6	5	26-6⁰	FT507E	STR		26-6⁰									
6	5	17-8¹	FT508E	STR		17-8¹									
1	5	28-6⁰	FT509E	STR		28-6⁰									
8	5	11-5³	WL510E	14		3-3⁰	4-11³	3-3⁰				2-3²			9-6³

SPECIFICATIONS					BENDING DIMENSIONS (FEET-INCHES /QUARTER INCH)										
QTY.	SIZE	LENGTH	MARK	TYPE	A	B	C	D	E	F/R	G	H	J	K	O

ASTM STANDARD ENGLISH REINFORCING BARS				RECOMMENDED END HOOKS, APPLICABLE TO ALL GRADES				STIRRUP AND TIE HOOKS, APPLICABLE TO ALL GRADES			
NOMINAL DIMENSIONS					180° HOOKS		90° HOOKS		90° HOOK	135° HOOK	
BAR SIZE	DIAMETER (INCHES)	AREA (INCHES²)	WEIGHT (LBS./FT.)	D	A OR G	J	A OR G	D	A OR G	A OR G	A OR G
3	0.375	0.110	0.376	2¼"	5"	3"	6"	1½"	4"	4"	2½"
4	0.500	0.200	0.668	3"	6"	4"	8"	2"	4½"	4½"	3"
5	0.625	0.310	1.043	3¾"	7"	5"	10"	2½"	6"	5½"	3¾"
6	0.750	0.440	1.502	4½"	8"	6"	1-0"	4½"	1-0"	8"	4½"
7	0.875	0.600	2.044	5¼"	10"	7"	1-2"	5¼"	1-2"	9"	5¼"
8	1.000	0.790	2.670	6"	11"	8"	1-4"	6"	1-4"	10½"	6"
9	1.128	1.000	3.400	9½"	1-3"	11¾"	1-7"				
10	1.270	1.270	4.303	10¾"	1-5"	1-1¼"	1-10"				
11	1.410	1.560	5.313	1-0"	1-7"	1-2¾"	2-0"				
14	1.693	2.250	7.650	1-6¼"	2-3"	1-9¾"	2-7"				
18	2.257	4.000	13.600	2-0"	3-0"	2-4½"	3-5"				

NOTES:

1. FIGURES SHOWN IN CIRCLES REPRESENT BAR BEND TYPES.
2. STANDARD BAR BENDS INCLUDE ONLY THOSE TYPES BELOW, INDICATED AS SUCH.
3. ALL DIMENSIONS OUT-TO-OUT, EXCEPT "A" AND "G" ON STD. 180° AND 135° HOOKS.
4. "J" DIMENSIONS ON 180° HOOKS TO BE SHOWN ONLY WHERE NECESSARY TO RESTRICT HOOK SIZE, OTHERWISE STANDARD 'ACI' HOOKS ARE TO BE USED.
5. WHERE "J" IS NOT SHOWN, "J" WILL BE KEPT EQUAL TO OR LESS THAN "H" ON TYPES 3, 5 AND 22. WHERE "J" CAN EXCEED "H", IT SHALL BE SHOWN.
6. "H" DIMENSIONS OF STIRRUPS TO BE SHOWN AS NEEDED TO FIT WITHIN THE CONCRETE.
7. UNLESS OTHERWISE NOTED, DIAMETER "D" IS THE SAME FOR ALL BENDS AND HOOKS ON A BAR (EXCEPT FOR BEND TYPES 11 AND 13).
8. WHERE SLOPE DIFFERS FROM 45° OFFSET, "H" AND "K" MUST BE SHOWN.
9. WHERE BARS ARE TO BE BENT MORE ACCURATELY THAN STANDARD BENDING TOLERANCES, BENDING DIMENSIONS REQUIRING CLOSER FABRICATION SHOULD HAVE LIMITS INDICATED.
10. FOR RECOMMENDED DIAMETER "D", OF BENDS, HOOKS, ETC., REFER TO TABLE ABOVE, 'CRSI' OR 'ACI' TABLES WHERE APPLICABLE AND REQUIRED.
11. TYPE S1-S6, S11, T1-T3 AND T6-T9 APPLICABLE TO BAR SIZES #3 THROUGH #8.

STANDARD BAR BENDS

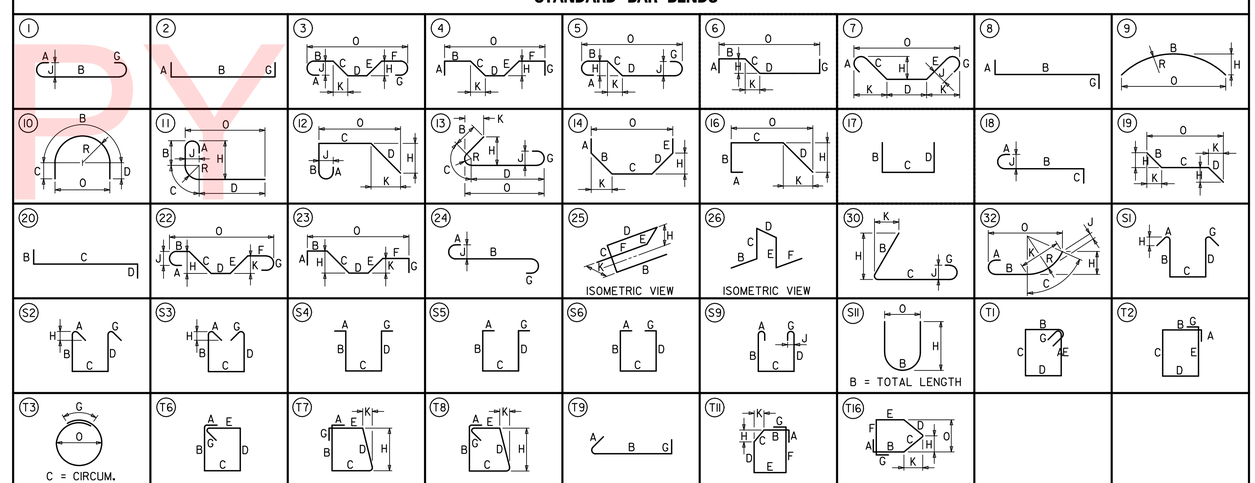

SPECIAL BAR BENDS

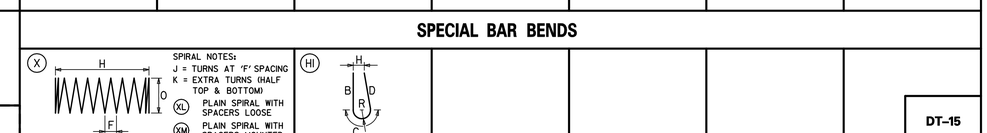

STIRRUP AND TIE HOOKS

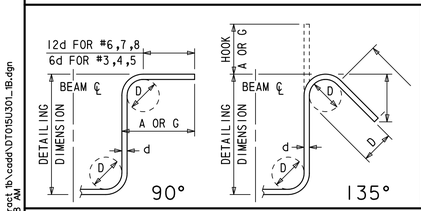

180° AND 90° END HOOKS

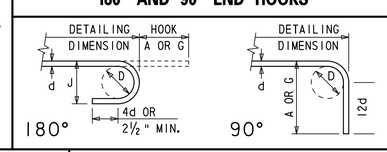

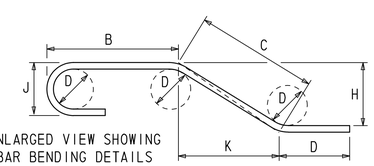

ENLARGED VIEW SHOWING BAR BENDING DETAILS

DELAWARE DEPARTMENT OF TRANSPORTATION

ADDENDUMS / REVISIONS

NOT TO SCALE

US 301 & SR 1 INTERCHANGE

CONTRACT	BRIDGE NO.	CONSTRUCTION DETAILS	SHEET NO.
T200911302			98
COUNTY	DESIGNED BY: HQ		TOTAL SHTS.
NEW CASTLE	CHECKED BY: JW		491

DT-15

UNOFFICIAL WEBSITE COPY

n:\31653-000\contract tb\cadd\DT015U301_TB.dgn 5/31/2013 7:42:38 AM

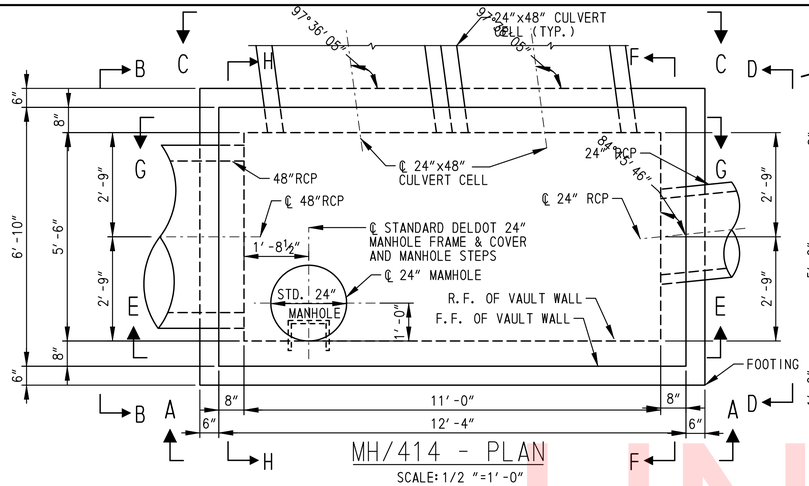

MH/414 - PLAN

SCALE: 1/2 "=1'-0"

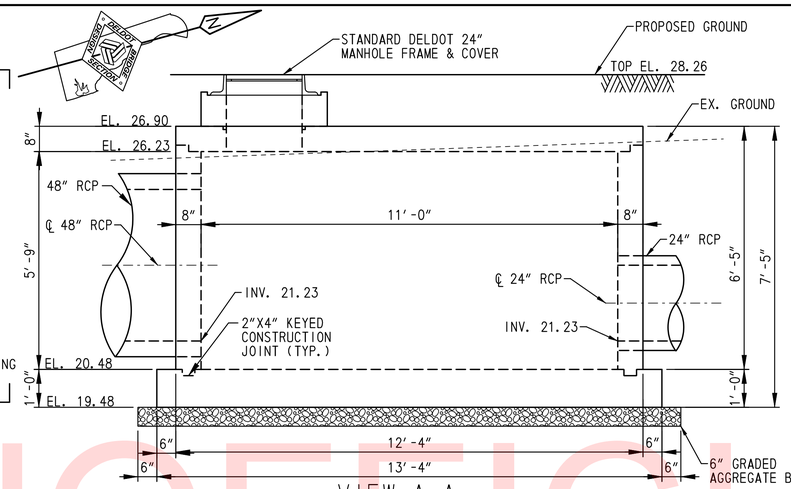

VIEW A-A

SCALE: 1/2 "=1'-0"

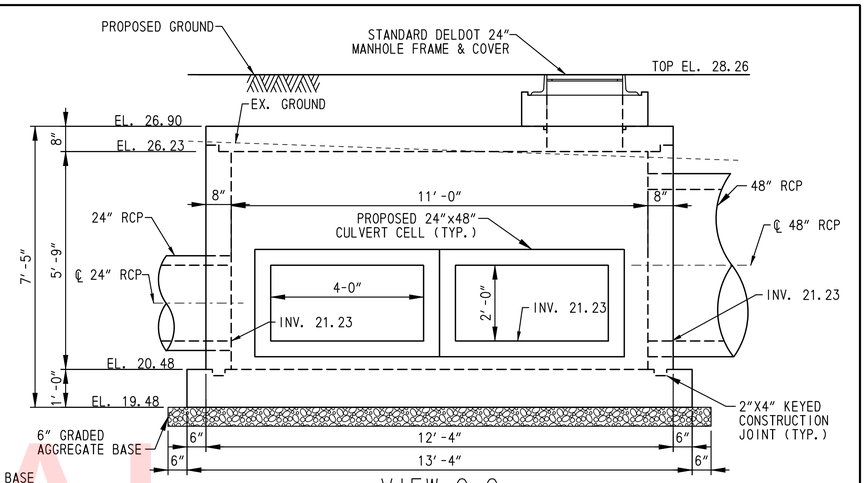

VIEW C-C

SCALE: 1/2 "=1'-0"

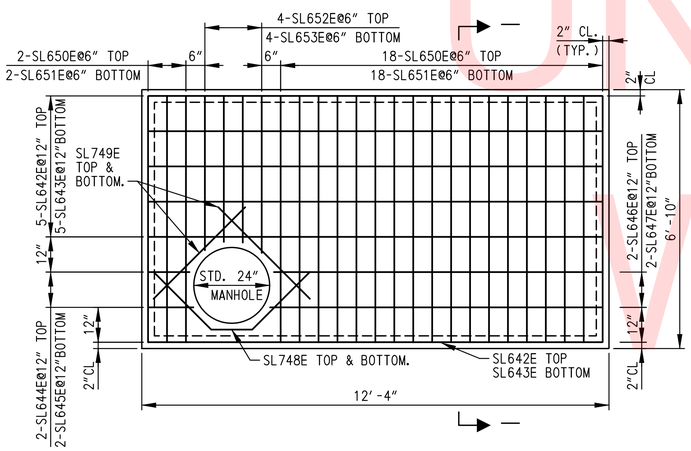

TOP SLAB - REINFORCEMENT PLAN

SCALE: 1/2 "=1'-0"

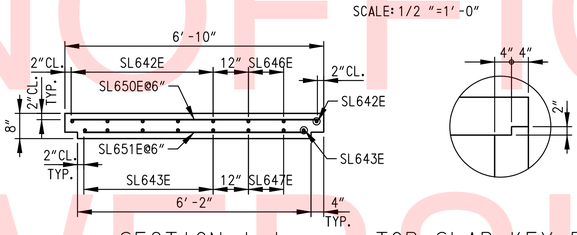

SECTION I-I

SCALE: 1/2 "=1'-0"

TOP SLAB KEY DETAIL

SCALE: 1/2 "=1'-0"

NOTES:

1. E.F. = EACH FACE
   F.F. = FRONT FACE
   R.F. = REAR FACE
2. MANHOLE STEPS NOT SHOWN IN SECTION VIEWS FOR CLARITY, SEE STANDARD CONSTRUCTION DETAILS FOR MANHOLE STEP DETAILS.
3. TOP SLAB NOT SHOWN IN SECTIONS E-E THROUGH H-H FOR CLARITY.
4. TOP SLAB SHALL BE PRECAST. A WATERSTOP SHALL BE PLACED BETWEEN THE PRECAST TOP SLAB AND THE CAST-IN-PLACE RISER STRUCTURE.
5. PAYMENT FOR EXCAVATION, CONCRETE, REINFORCING STEEL, HOOD, WATERSTOP, AND ALL WORK ASSOCIATED WITH CONSTRUCTION OF STORMWATER MANAGEMENT VAULT STRUCTURE WILL BE MADE UNDER ITEM 272000 - POND OUTLET STRUCTURE, CONCRETE NO. 1.
6. THE COST OF THE GRADED AGGREGATE BEDDING SHALL BE INCIDENTAL TO THE CONTRACT UNIT COST FOR THE ENDWALL (ITEM 617515).

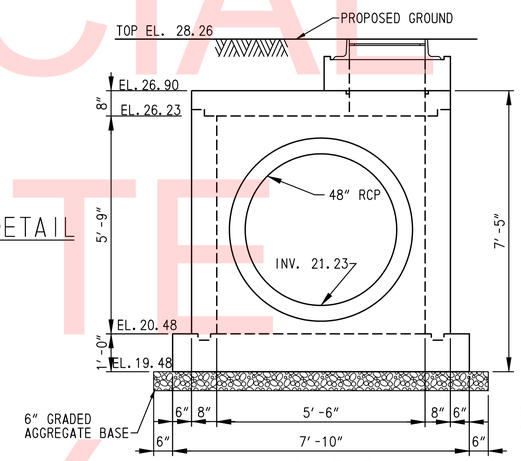

VIEW B-B

SCALE: 1/2 "=1'-0"

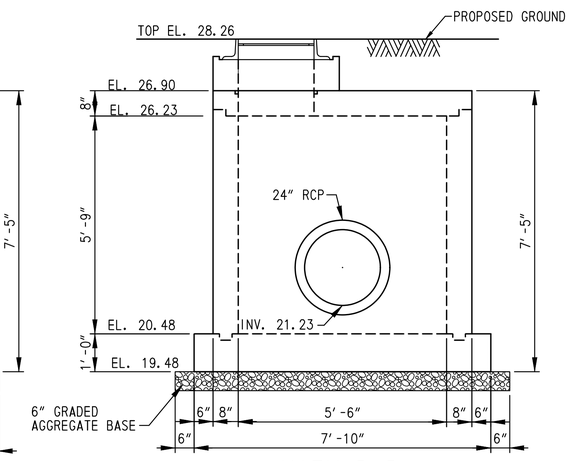

VIEW D-D

SCALE: 1/2 "=1'-0"

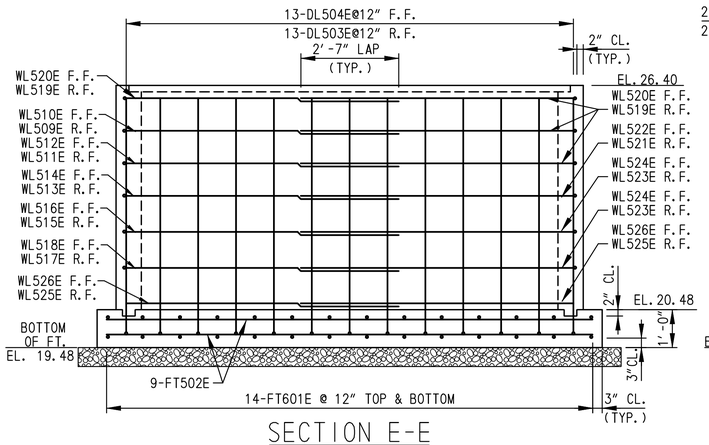

SECTION E-E

SCALE: 1/2 "=1'-0"

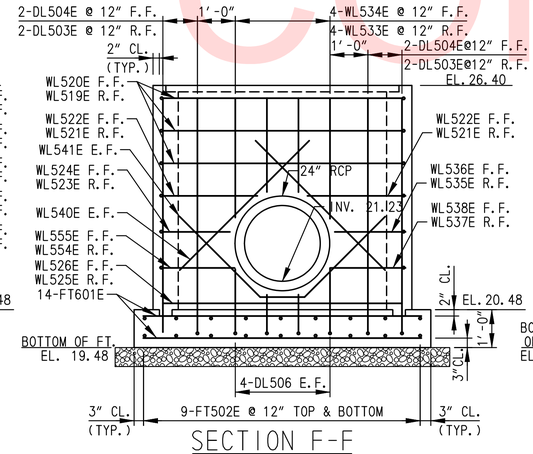

SECTION F-F

SCALE: 1/2 "=1'-0"

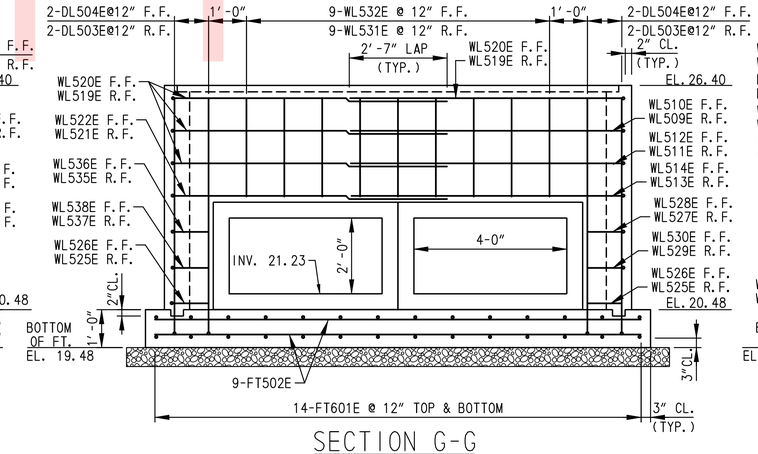

SECTION G-G

SCALE: 1/2 "=1'-0"

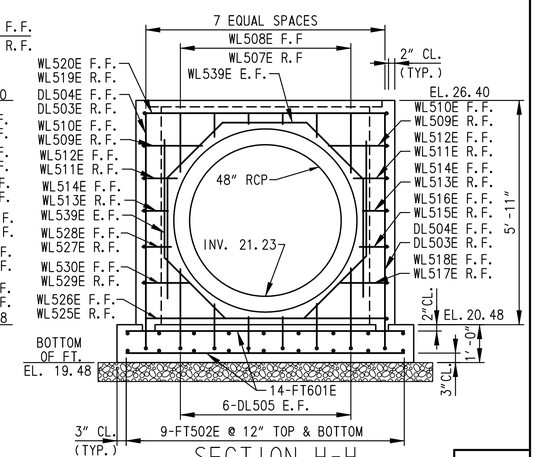

SECTION H-H

SCALE: 1/2 "=1'-0"

UNOFFICIAL WEBSITE COPY

DELAWARE DEPARTMENT OF TRANSPORTATION	ADDENDUMS / REVISIONS	US 301 & SR 1 INTERCHANGE	CONTRACT T200911302	BRIDGE NO.	CONSTRUCTION DETAILS	DT-16
			COUNTY NEW CASTLE	DESIGNED BY: JP		SHEET NO. 99
				CHECKED BY: HQ		TOTAL SHTS. 491

pr\31653-000\contract_tb\cadd\DT016U301_1B.dgn 5/31/2013 7:42:42 AM

① ANY MARK NUMBER WITH SUFFIX 'E' DENOTES EPOXY COATED REINFORCING STEEL.

② ALL MARK 'LOCATION PREFIXES' SHALL CONSIST OF TWO LETTERS AND ARE AS FOLLOWS: AB = ABUTMENT, AS = APPROACH SLAB, BC = BOX CULVERT, BW = BACKWALL, CL = COLUMN, DK = DECK, DL = DOWEL, FT = FOOTING, HW = HEADWALL, MS = MISC. BARS, PA = PARAPET, PR = PIER, SC = SHEETPILE CAP, SL = SLAB, TW = TOEWALL, WL = WALL (UNIQUE LOCATION), WW = WINGWALL

SPECIFICATIONS					BENDING DIMENSIONS (FEET-INCHES /QUARTER INCH)										
QTY.	SIZE	LENGTH	MARK	TYPE	A	B	C	D	E	F/R	G	H	J	K	O
28	6	12-10 0	FT601E	STR		12-10 0									
18	5	7-4 0	FT502E	STR		7-4 0									
23	5	7-2 0	DL503E	2		6-4 0					0-10 0				
23	5	7-4 0	DL504E	2		6-6 0					0-10 0				
4X3	5	1-9 2	DL505E	2		0-11 2					0-10 0				
		T0			T0	T0					T0				
		3-0 2				2-2 2					0-10 0				
4X2	5	1-11 3	DL506E	2		1-1 3					0-10 0				
		T0			T0	T0					T0				
		2-7 3				1-9 3					0-10 0				
4X3	5	0-3 2	WL507E	STR		0-3 2									
		T0				T0									
		1-6 3				1-6 3									
4X3	5	0-5 2	WL508E	STR		0-5 2									
		T0				T0									
		1-8 3				1-8 3									
2	5	8-2 2	WL509E	17		1-3 0	6-11 2								
2	5	8-10 2	WL510E	17		1-7 0	7-3 2								
2	5	7-6 2	WL511E	17		0-7 0	6-11 2								
2	5	8-2 2	WL512E	17		0-11 0	7-3 2								
2	5	7-3 2	WL513E	17		0-4 0	6-11 2								
2	5	7-11 2	WL514E	17		0-8 0	7-3 2								
1	5	7-4 2	WL515E	17		0-5 0	6-11 2								
1	5	8-0 2	WL516E	17		0-9 0	7-3 2								
1	5	7-10 2	WL517E	17		0-11 0	6-11 2								
1	5	8-6 2	WL518E	17		1-3 0	7-3 2								
4	5	19-9 0	WL519E	17		6-11 2	5-10 0	6-11 2							
4	5	21-1 0	WL520E	17		7-3 2	6-6 0	7-3 2							
2	5	9-2 2	WL521E	17		6-11 2	2-3 0								
2	5	9-10 2	WL522E	17		7-3 2	2-7 0								
1	5	8-5 3	WL523E	17		6-11 2	1-6 1								
1	5	9-1 3	WL524E	17		7-3 2	1-10 1								
2	5	13-5 2	WL525E	17		6-11 2	5-10 0	0-8 0							
2	5	14-9 2	WL526E	17		7-3 2	6-6 0	1-0 0							
1	5	1-1 0	WL527E	17			0-8 0	0-5 0							
1	5	1-9 0	WL528E	17			1-0 0	0-9 0							
1	5	1-7 0	WL529E	17			0-8 0	0-11 0							
1	5	2-3 0	WL530E	17			1-0 0	1-3 0							
9	5	2-7 0	WL531E	STR		2-7 0									
9	5	2-9 0	WL532E	STR		2-9 0									

SPECIFICATIONS					BENDING DIMENSIONS (FEET-INCHES /QUARTER INCH)										
QTY.	SIZE	LENGTH	MARK	TYPE	A	B	C	D	E	F/R	G	H	J	K	O
2X2	5	2-5 2	WL533E	STR		2-5 2									
		T0				T0									
		3-1 3				3-1 3									
2X2	5	2-7 2	WL534E	STR		2-7 2									
		T0				T0									
		3-3 3				3-3 3									
1	5	2-2 2	WL535E	17		1-6 2	0-8 0								
1	5	2-10 2	WL536E	17		1-10 2	1-0 0								
1	5	2-4 0	WL537E	17		1-8 0	0-8 0								
1	5	3-0 0	WL538E	17		2-0 0	1-0 0								
4	5	12-6 0	WL539E	14	3-2 2	1-11 1	2-2 2	1-11 1	3-2 2			1-4 2		1-4 2	4-11 2
4	5	4-10 0	WL540E	STR		4-10 0									
2	5	7-2 0	WL541E	14		3-0 0	1-2 0	3-0 0				2-1 2		2-1 2	5-5 0
6	6	12-0 0	SL642E	STR		12-0 0									
6	6	11-4 0	SL643E	STR		11-4 0									
1X2	6	1-1 0	SL644E	STR		1-1 0									
		T0				T0									
		1-2 1				1-2 1									
1X2	6	0-9 0	SL645E	STR		0-9 0									
		T0				T0									
		0-10 1				0-10 1									
1X2	6	8-8 0	SL646E	STR		8-8 0									
		T0				T0									
		8-9 1				8-9 1									
1X2	6	8-4 0	SL647E	STR		8-4 0									
		T0				T0									
		8-5 1				8-5 1									
2	7	5-8 0	SL748E	14		2-3 2	1-1 0	2-3 2				1-7 2		1-7 2	4-4 0
4	7	3-5 0	SL749E	STR		3-5 0									
18	6	6-6 0	SL650E	STR		6-6 0									
18	6	5-10 0	SL651E	STR		5-10 0									
2X2	6	3-10 1	SL652E	STR		3-10 1									
		T0				T0									
		4-0 3				4-0 3									
2X2	6	3-6 1	SL653E	STR		3-6 1									
		T0				T0									
		3-8 3				3-8 3									
1	5	1-8 0	WL554E	STR		1-8 0									
1	5	2-0 0	WL555E	STR		2-0 0									

SPECIFICATIONS					BENDING DIMENSIONS (FEET-INCHES /QUARTER INCH)										
QTY.	SIZE	LENGTH	MARK	TYPE	A	B	C	D	E	F/R	G	H	J	K	O

UNOFFICIAL WEBSITE COPY

ASTM STANDARD ENGLISH REINFORCING BARS				RECOMMENDED END HOOKS, APPLICABLE TO ALL GRADES				STIRRUP AND TIE HOOKS, APPLICABLE TO ALL GRADES			
NOMINAL DIMENSIONS					180° HOOKS		90° HOOKS		90° HOOK	135° HOOK	
BAR SIZE	DIAMETER (INCHES)	AREA (INCHES²)	WEIGHT (LBS./FT.)	D	A OR G	J	A OR G	D	A OR G	A OR G	A OR G
3	0.375	0.110	0.376	2¼"	5"	3"	6"	1½"	4"	4"	2½"
4	0.500	0.200	0.668	3"	6"	4"	8"	2"	4½"	4½"	3"
5	0.625	0.310	1.043	3¾"	7"	5"	10"	2½"	6"	5½"	3¾"
6	0.750	0.440	1.502	4½"	8"	6"	1-0"	4½"	1-0"	8"	4½"
7	0.875	0.600	2.044	5¼"	10"	7"	1-2"	5¼"	1-2"	9"	5¼"
8	1.000	0.790	2.670	6"	11"	8"	1-4"	6"	1-4"	10½"	6"
9	1.128	1.000	3.400	9½"	1-3"	11¾"	1-7"				
10	1.270	1.270	4.303	10¾"	1-5"	1-1¼"	1-10"				
11	1.410	1.560	5.313	1-0"	1-7"	1-2¾"	2-0"				
14	1.693	2.250	7.650	1-6¼"	2-3"	1-9¾"	2-7"				
18	2.257	4.000	13.600	2-0"	3-0"	2-4½"	3-5"				

NOTES:

1. FIGURES SHOWN IN CIRCLES REPRESENT BAR BEND TYPES.
2. STANDARD BAR BENDS INCLUDE ONLY THOSE TYPES BELOW, INDICATED AS SUCH.
3. ALL DIMENSIONS OUT-TO-OUT, EXCEPT "A" AND "G" ON STD. 180° AND 135° HOOKS.
4. "J" DIMENSIONS ON 180° HOOKS TO BE SHOWN ONLY WHERE NECESSARY TO RESTRICT HOOK SIZE, OTHERWISE STANDARD 'ACI' HOOKS ARE TO BE USED.
5. WHERE "J" IS NOT SHOWN, "J" WILL BE KEPT EQUAL TO OR LESS THAN "H" ON TYPES 3, 5 AND 22. WHERE "J" CAN EXCEED "H", IT SHALL BE SHOWN.
6. "H" DIMENSIONS OF STIRRUPS TO BE SHOWN AS NEEDED TO FIT WITHIN THE CONCRETE.
7. UNLESS OTHERWISE NOTED, DIAMETER "D" IS THE SAME FOR ALL BENDS AND HOOKS ON A BAR (EXCEPT FOR BEND TYPES 11 AND 13).
8. WHERE SLOPE DIFFERS FROM 45° OFFSET, "H" AND "K" MUST BE SHOWN.
9. WHERE BARS ARE TO BE BENT MORE ACCURATELY THAN STANDARD BENDING TOLERANCES, BENDING DIMENSIONS REQUIRING CLOSER FABRICATION SHOULD HAVE LIMITS INDICATED.
10. FOR RECOMMENDED DIAMETER "D", OF BENDS, HOOKS, ETC., REFER TO TABLE ABOVE, 'CRSI' OR 'ACI' TABLES WHERE APPLICABLE AND REQUIRED.
11. TYPE S1-S6, S11, T1-T3 AND T6-T9 APPLICABLE TO BAR SIZES #3 THROUGH #8.

STANDARD BAR BENDS

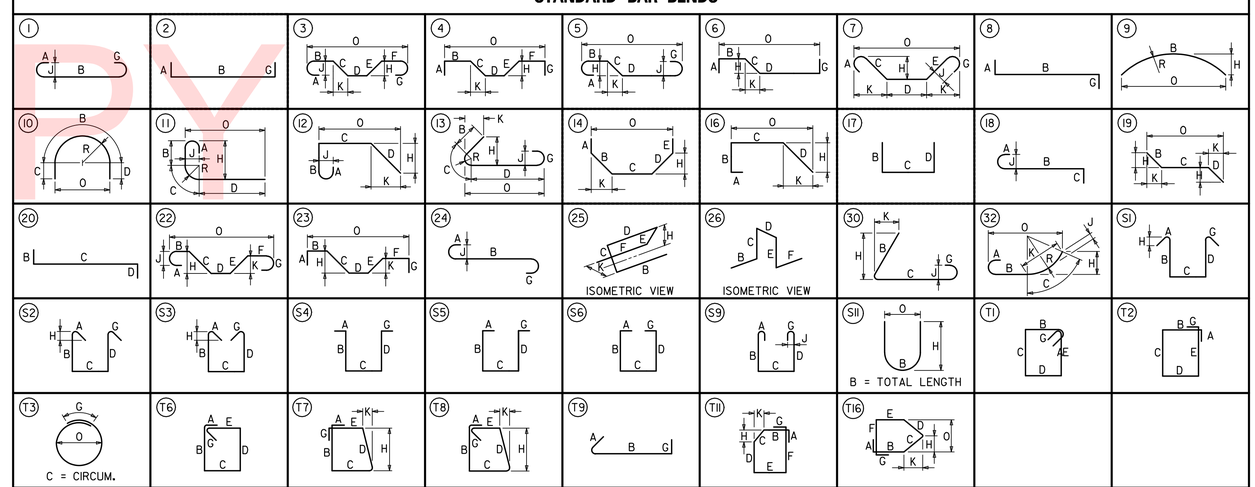

SPECIAL BAR BENDS

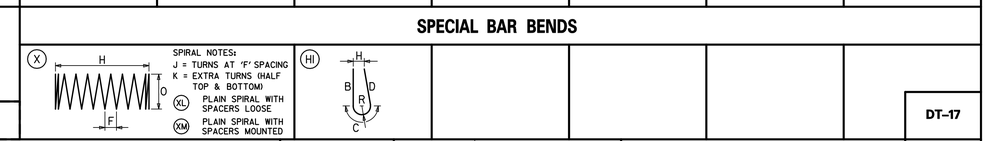

STIRRUP AND TIE HOOKS

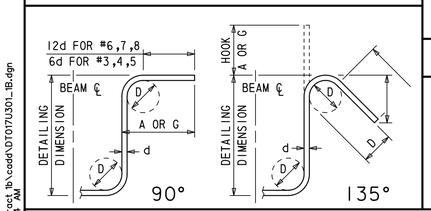

180° AND 90° END HOOKS

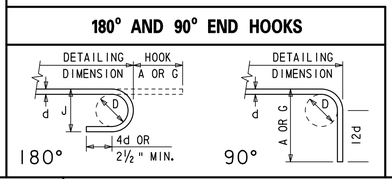

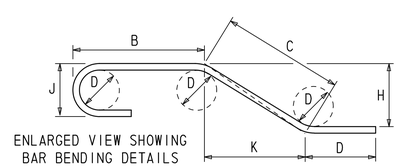

ENLARGED VIEW SHOWING BAR BENDING DETAILS

ADDENDUMS / REVISIONS

DELAWARE DEPARTMENT OF TRANSPORTATION

US 301 & SR 1 INTERCHANGE

CONTRACT	BRIDGE NO.	CONSTRUCTION DETAILS	SHEET NO.
T200911302	DESIGNED BY: HQ		100
COUNTY	CHECKED BY: JW		TOTAL SHTS.
NEW CASTLE			491

DT-17

p:\31653-000\contract 1b\cadd\DT017U301_1B.dgn
5/31/2013 7:42:44 AM

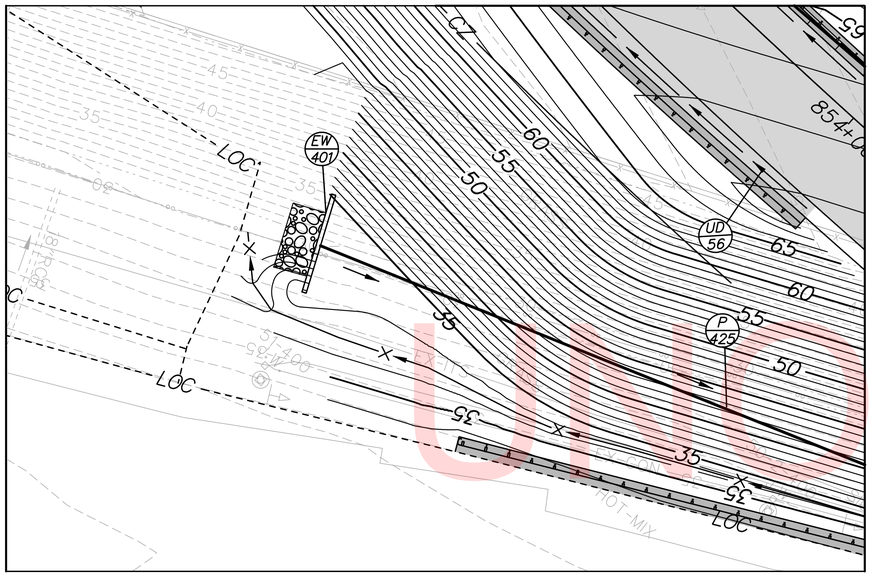

PLAN – EW/401

SCALE
0 20 40 60
FEET

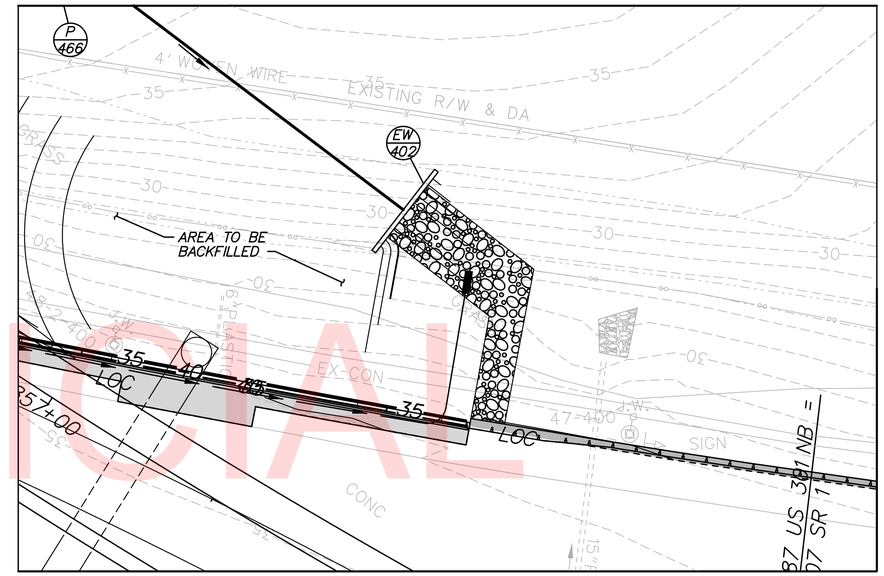

PLAN – EW/402

SCALE
0 20 40 60
FEET

AREA TO BE
BACKFILLED

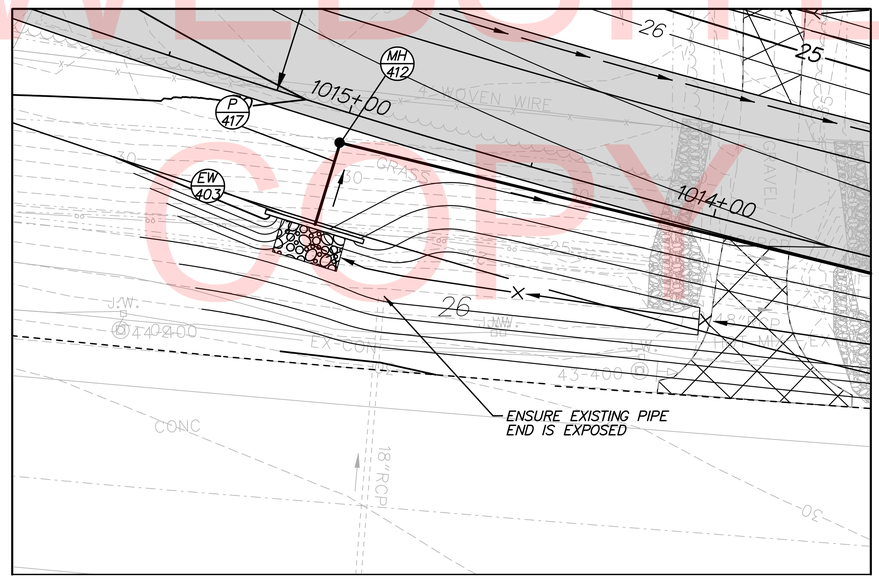

PLAN – EW/403

SCALE
0 20 40 60
FEET

UNOFFICIAL WEBSITE COPY

DELAWARE DEPARTMENT OF TRANSPORTATION	ADDENDUMS / REVISIONS	SCALE: AS SHOWN	US 301 & SR 1 INTERCHANGE	CONTRACT T200911302	BRIDGE NO.	CONSTRUCTION DETAILS	DT-18
				COUNTY NEW CASTLE	DESIGNED BY: DKE		SHEET NO. 101
					CHECKED BY: JDC		TOTAL SHTS. 491

p:\31653-000\contract 1b\cadd\DT018U301_1B.dgn
5/31/2013 7:43:11 AM

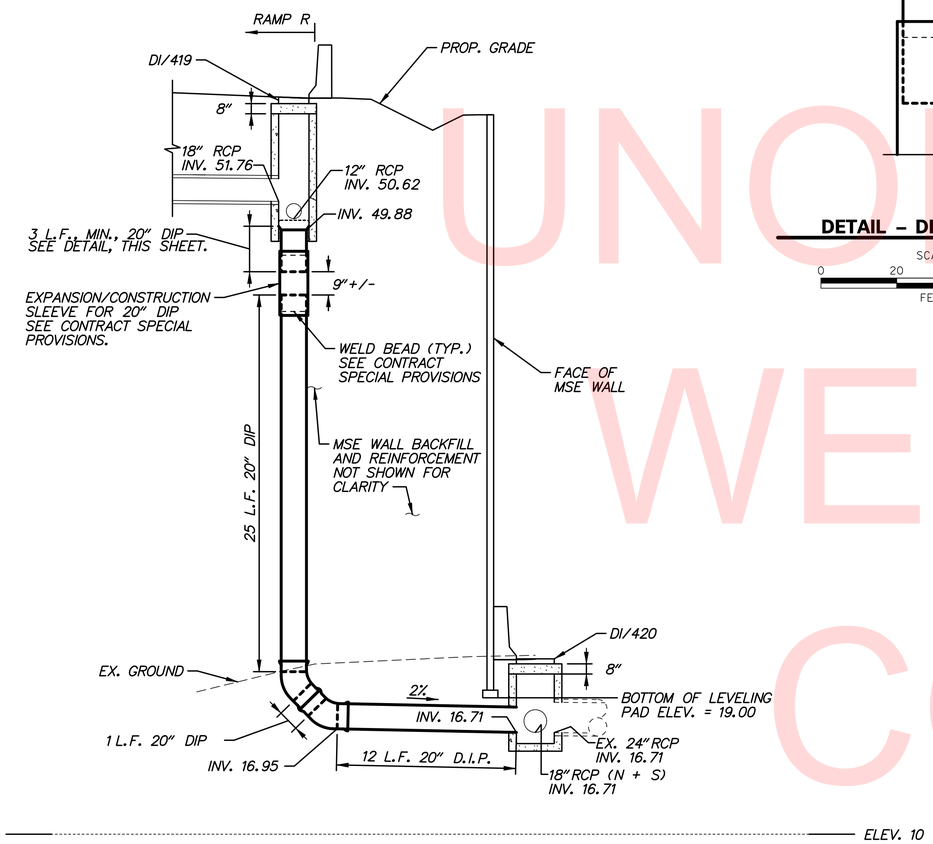

SECTION – DRAINAGE INLET DI/419

SCALE
0 5 10 15
FEET

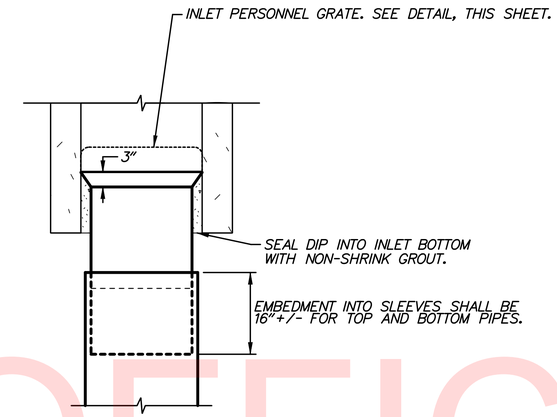

DETAIL – DIP CONNECTION

SCALE
0 20 40 60
FEET

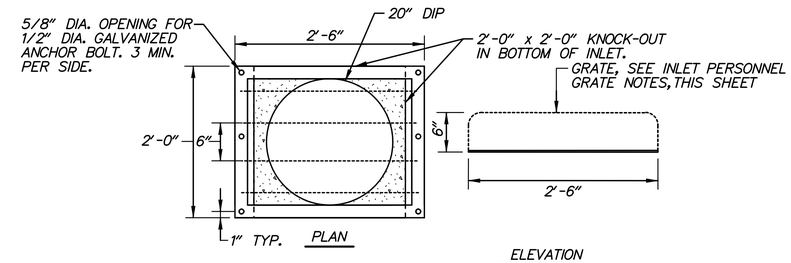

INLET PERSONNEL GRATE

1. INLET PERSONNEL GRATE SHALL BE PLACED AS NOTED.
2. INLET PERSONNEL GRATE SHALL BE CONSTRUCTED OF 2" WIDE STEEL BAR FRAME AND NO. 4 STEEL REBAR AS SHOWN. NO REBAR SHALL BE WELDED TO 2" STEEL BAR FRAME.
3. INLET PERSONNEL GRATE FRAME SHALL BE GALVANIZED PER A123.
4. INLET PERSONNEL GRATE COST SHALL BE INCIDENTAL TO CONTRACT UNIT COST FOR INLETS DI/419 AND DI/427.

INLET PERSONNEL GRATE

SCALE
0 1 2 3
FEET

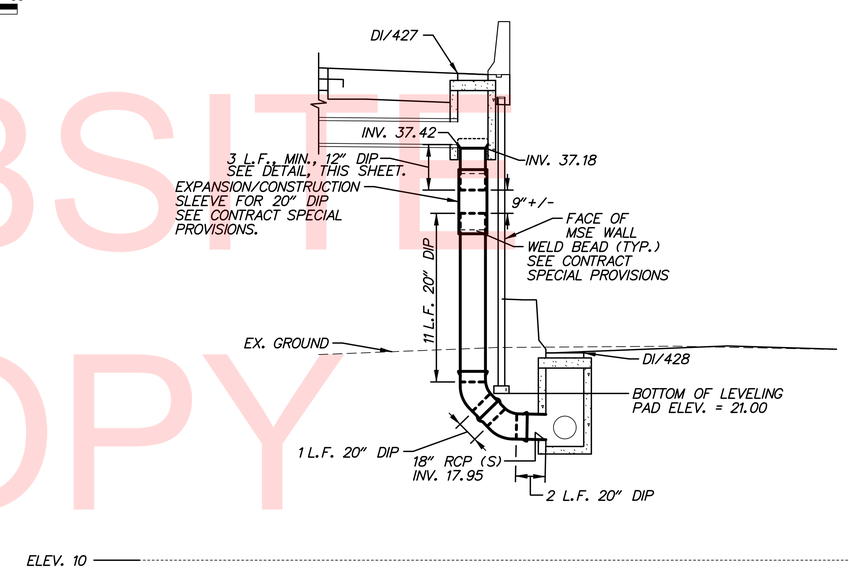

SECTION – DRAINAGE INLET DI/427

SCALE
0 5 10 15
FEET

UNOFFICIAL WEBSITE COPY

n:\31653-000\contract th\cadd\DT019U301_18.dgn
5/31/2013 7:43:28 AM

DT-19

DELAWARE DEPARTMENT OF TRANSPORTATION	ADDENDUMS / REVISIONS	SCALE: AS SHOWN	US 301 & SR 1 INTERCHANGE	CONTRACT T200911302	BRIDGE NO.	CONSTRUCTION DETAILS	SHEET NO. 102
				COUNTY NEW CASTLE	DESIGNED BY: DKE		TOTAL SHTS. 491
					CHECKED BY: JDC		

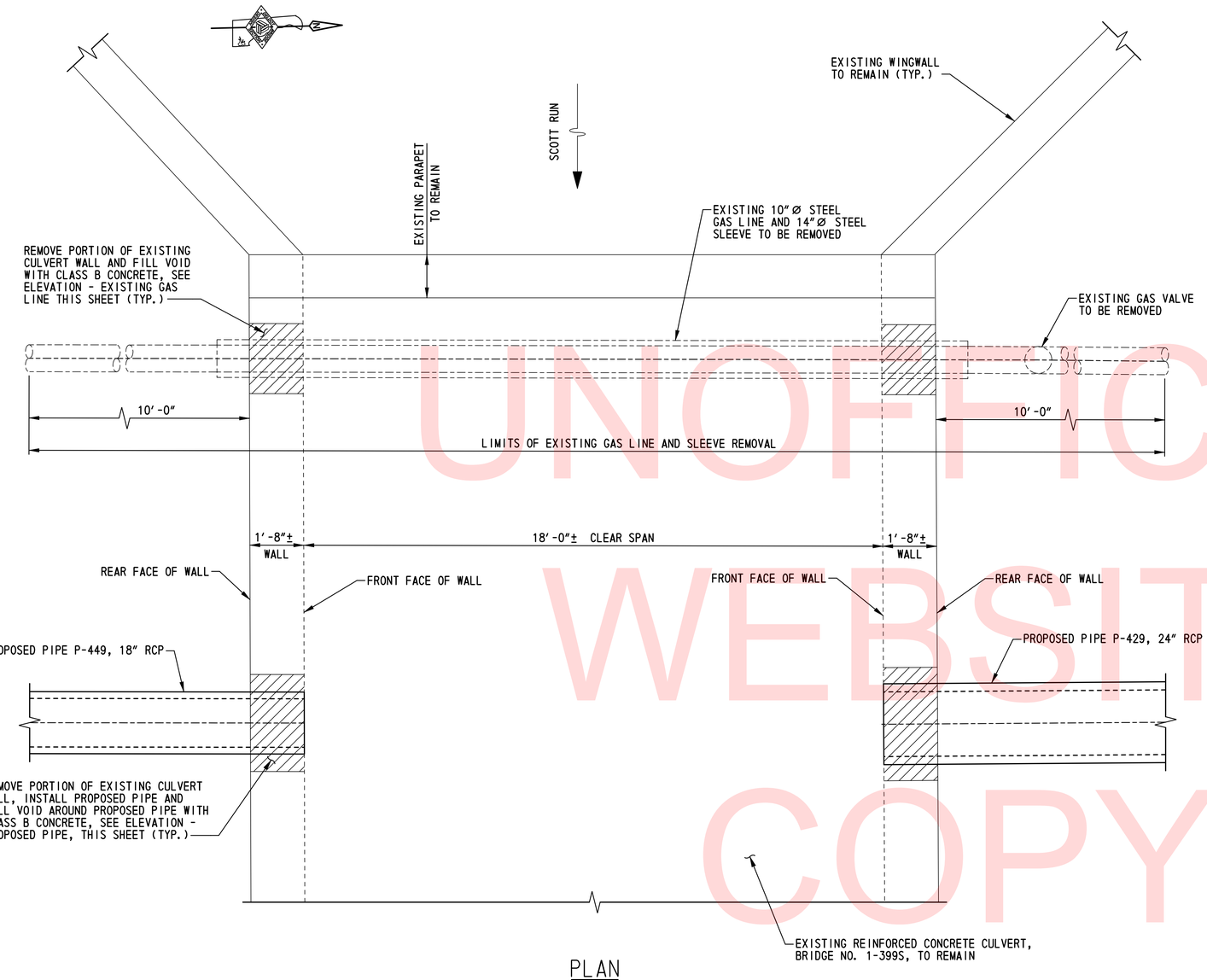

PLAN
SCALE: ½"=1'-0"

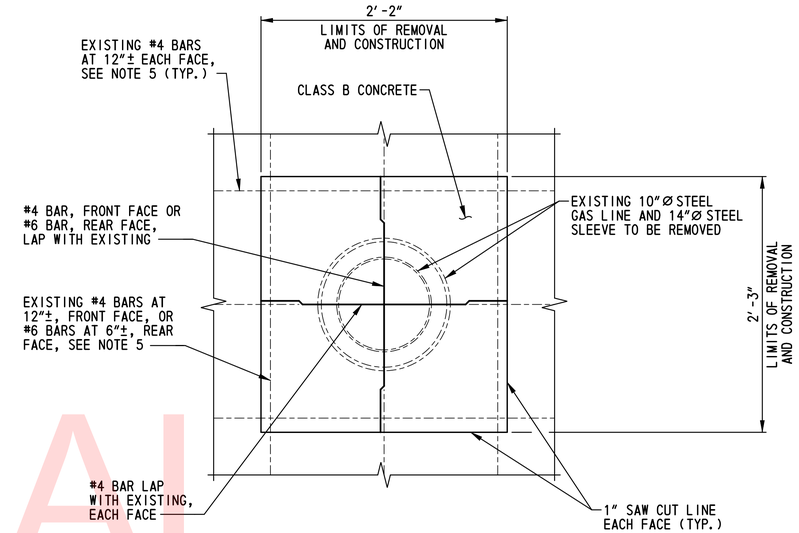

ELEVATION - EXISTING GAS LINE
SCALE: 1½"=1'-0"

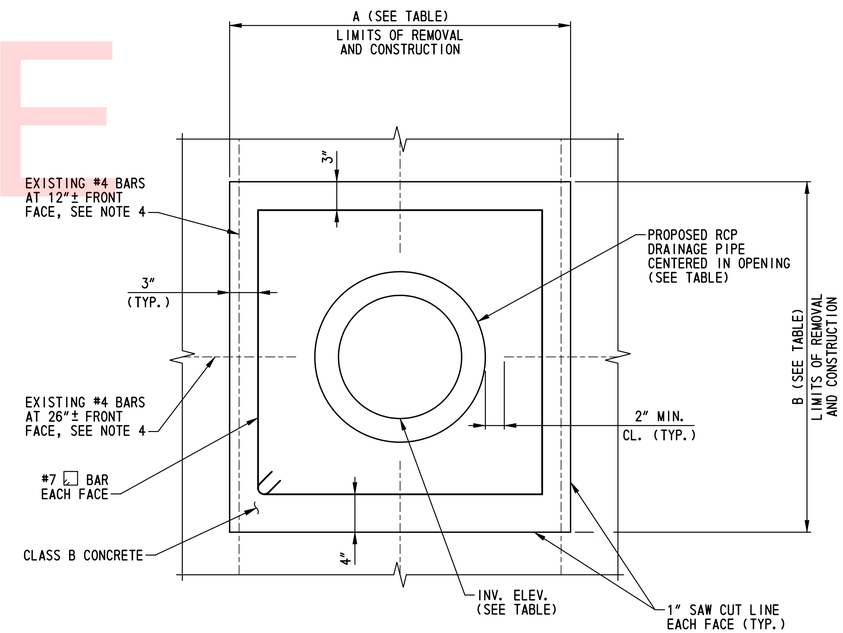

ELEVATION - PROPOSED PIPE
SCALE: 1½"=1'-0"

PIPE	DIA.	A	B	INV. ELEV*
P-429	24"	3'-6"	3'-7"	2.80
P-449	18"	3'-0"	3'-1"	1.93

* DOWNSTREAM, AT FRONT FACE OF WALL

NOTES:

1. REMOVAL OF EXISTING GAS LINE AND SLEEVE, REMOVAL OF EXISTING GAS VALVE, SAW CUTTING, REMOVAL OF EXISTING CONCRETE, CUTTING AND CLEANING EXISTING BAR REINFORCEMENT, BACKFILLING, EPOXY BONDING COMPOUND, CLASS B CONCRETE AND BAR REINFORCEMENT SHALL BE INCIDENTAL TO ITEM 211000 - REMOVAL OF STRUCTURES AND OBSTRUCTIONS.
2. EXISTING GAS LINE TO BE RELOCATED, ABANDONED AND PURGED BY OTHERS.
3. EXISTING REINFORCEMENT LAYOUT DETAILS FROM ORIGINAL PLANS. CONTRACTOR SHALL VERIFY ALL DIMENSIONS IN THE FIELD. CONTRACTOR IS RESPONSIBLE TO ADJUST DETAILS AS REQUIRED TO ACCOUNT FOR VARYING FIELD CONDITIONS.
4. CUT EXISTING REINFORCEMENT AS NEEDED TO INSTALL PROPOSED PIPE AND PROVIDE MINIMUM CLEAR DISTANCE. ALL EXPOSED REINFORCEMENT TO REMAIN AND INCORPORATED INTO PROPOSED CONSTRUCTION SHALL BE BLAST CLEANED.
5. CLEAN ALL EXPOSED EXISTING REINFORCEMENT BEFORE LAPPING WITH NEW BARS OF EQUAL SIZE AS REQUIRED.
6. BAR REINFORCEMENT SHALL CONFORM TO AASHTO M31, GRADE 60.
7. CLEAN AND APPLY EPOXY BONDING COMPOUND TO ALL REMOVAL SURFACES PRIOR TO PLACING CONCRETE.

UNOFFICIAL WEBSITE COPY

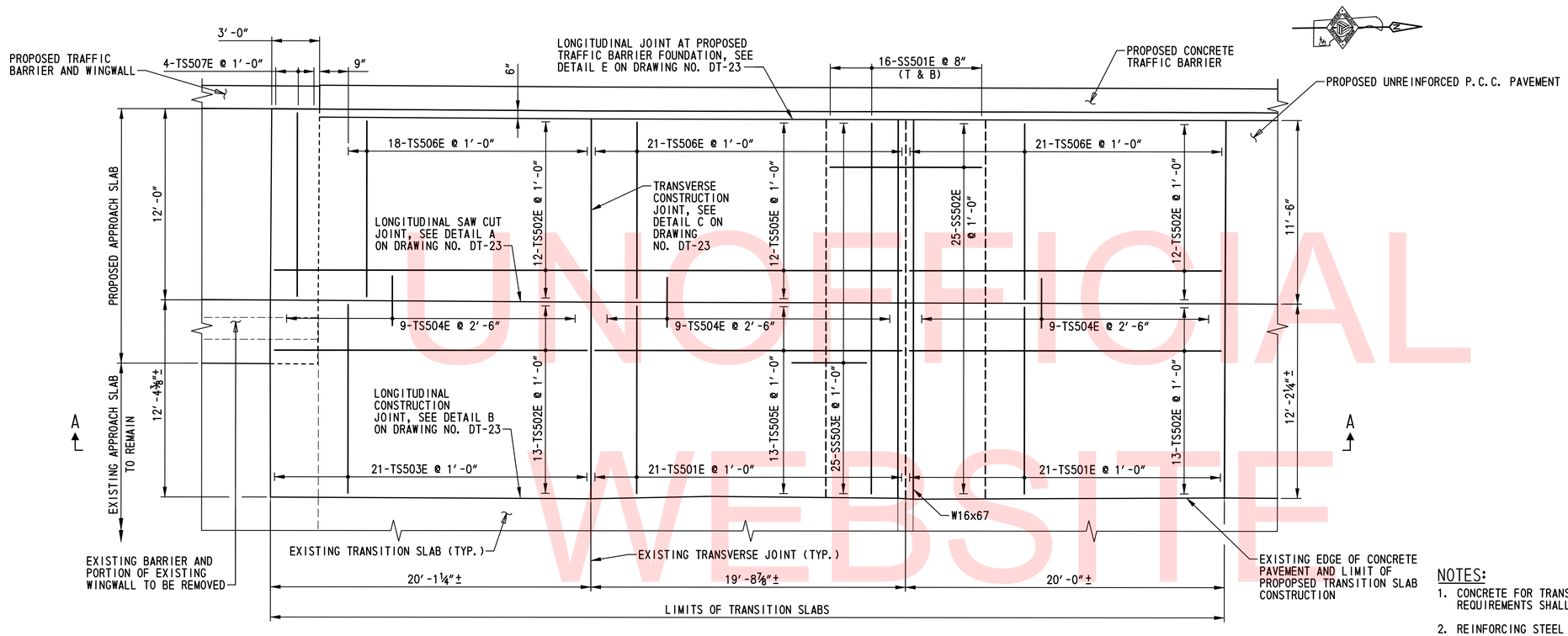

NORTH TRANSITION SLABS PLAN

SCALE: ¼"=1'-0"

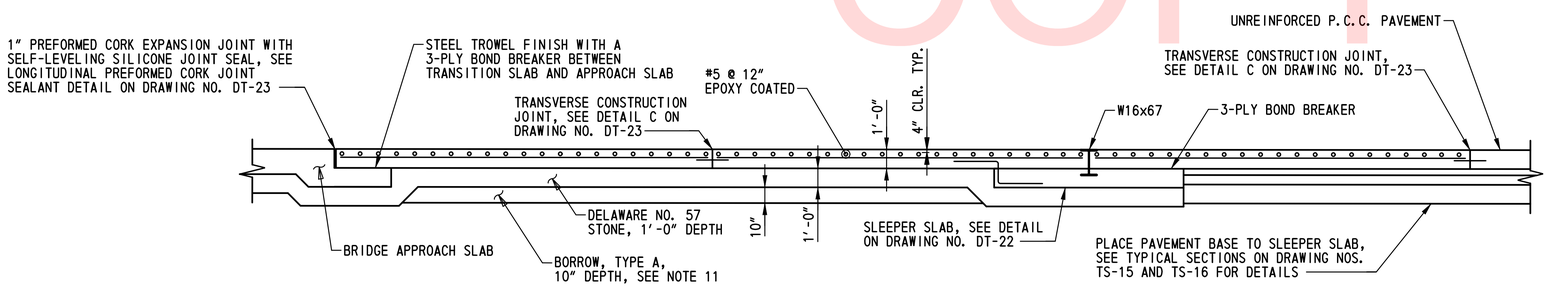

SECTION A-A

SCALE: ¼"=1'-0"

NOTES:

1. CONCRETE FOR TRANSITION SLABS SHALL BE CLASS A (F'C = 4.5 KSI). MIX REQUIREMENTS SHALL CONFORM TO SECTION 812 OF THE STANDARD SPECIFICATIONS.
2. REINFORCING STEEL SHALL CONFORM TO AASHTO M31, GRADE 60, AND BE EPOXY COATED. REINFORCING STEEL SHALL HAVE A CLEAR COVER OF 3" UNLESS OTHERWISE SPECIFIED.
3. TRANSITION SLAB, SLEEPER SLAB, STEEL W SECTION, EXPANSION MATERIAL, SAW CUT JOINTS AND INCIDENTALS NECESSARY TO COMPLETE THE WORK SHALL BE INCLUDED FOR PAYMENT UNDER PRICE BID FOR ITEM 602009 PORTLAND CEMENT CONCRETE MASONRY, APPROACH SLAB, CLASS A.
4. REINFORCEMENT BARS SHALL BE PAID FOR UNDER ITEM 604000 BAR REINFORCEMENT, EPOXY COATED. SMOOTH STEEL DOWELS IN TRANSVERSE CONSTRUCTION JOINTS SHALL BE PAID FOR UNDER ITEM 602009 PORTLAND CEMENT CONCRETE MASONRY, APPROACH SLAB, CLASS A.
5. BARS TS504E SHALL BE LOCATED 1'-0" FROM ALL TRANSVERSE JOINTS. DOWEL BARS USED ALONG TRANSVERSE CONSTRUCTION JOINTS SHALL BE LOCATED 6" FROM ALL LONGITUDINAL JOINTS.
6. ALL DIMENSIONS AFFECTED BY THE GEOMETRICS, AND/OR LOCATION OF THE EXISTING STRUCTURE SHALL BE CHECKED IN THE FIELD BY THE CONTRACTOR BEFORE ANY CONSTRUCTION IS STARTED AND BEFORE ANY REINFORCING STEEL, ETC. IS ORDERED OR FABRICATED. IF THE GEOMETRICS DIFFER FROM THAT SHOWN ON THE PLANS, THE ENGINEER SHALL BE CONTACTED FOR EVALUATION. IT SHALL BE THE RESPONSIBILITY OF THE CONTRACTOR TO SUPPLY THE ENGINEER WITH ALL DIMENSIONS REQUIRED TO CHECK DETAIL DRAWINGS.
7. EMBEDED W16x67 SECTION SHALL BE ASTM A36 STEEL AND THE ENTIRE BEAM SHALL BE FUSION BONDED EPOXY COATED AFTER FABRICATION TO THICKNESS OF 12 MILS + 2 MILS.
8. JOINTS REQUIRED TO HAVE A SELF-LEVELING SILICONE JOINT SEAL SHALL USE DOW-CORNING 890-SL SELF LEVELING SILICONE JOINT SEALANT OR AN APPROVED EQUAL BY THE ENGINEER.
9. ALL JOINTS THAT ARE TO BE SEALED SHALL BE FREE OF CRACKED AND SPALLED CONCRETE AND SHALL BE FREE OF ALL FOREIGN MATTER, PREVIOUS SEAL MATERIAL, CURING COMPOUNDS, OILS, DUST, AND DIRT.
10. PROPOSED TRANSVERSE JOINTS SHALL BE ALIGNED WITH THE EXISTING TRANSVERSE JOINTS.
11. BORROW, TYPE A SHALL BE OBTAINED FROM BORROW SOURCES AND PAID UNDER ITEM 202000 - EXCAVATION AND EMBANKMENT.

UNOFFICIAL WEBSITE COPY

N:\31653-000\Contract 1B\CADD\DT021U301_1B.dgn
2/26/2013 7:16:37 AM

DELAWARE DEPARTMENT OF TRANSPORTATION	ADDENDUMS / REVISIONS	SCALE: AS SHOWN	US 301 & SR 1 INTERCHANGE	CONTRACT T200911302	BRIDGE NO.	TRANSITION SLAB DETAILS – 1
				COUNTY NEW CASTLE	DESIGNED BY: M.P.U.	
					CHECKED BY: P.S.D.	

DT-21

SHEET NO. 104

TOTAL SHTS. 491

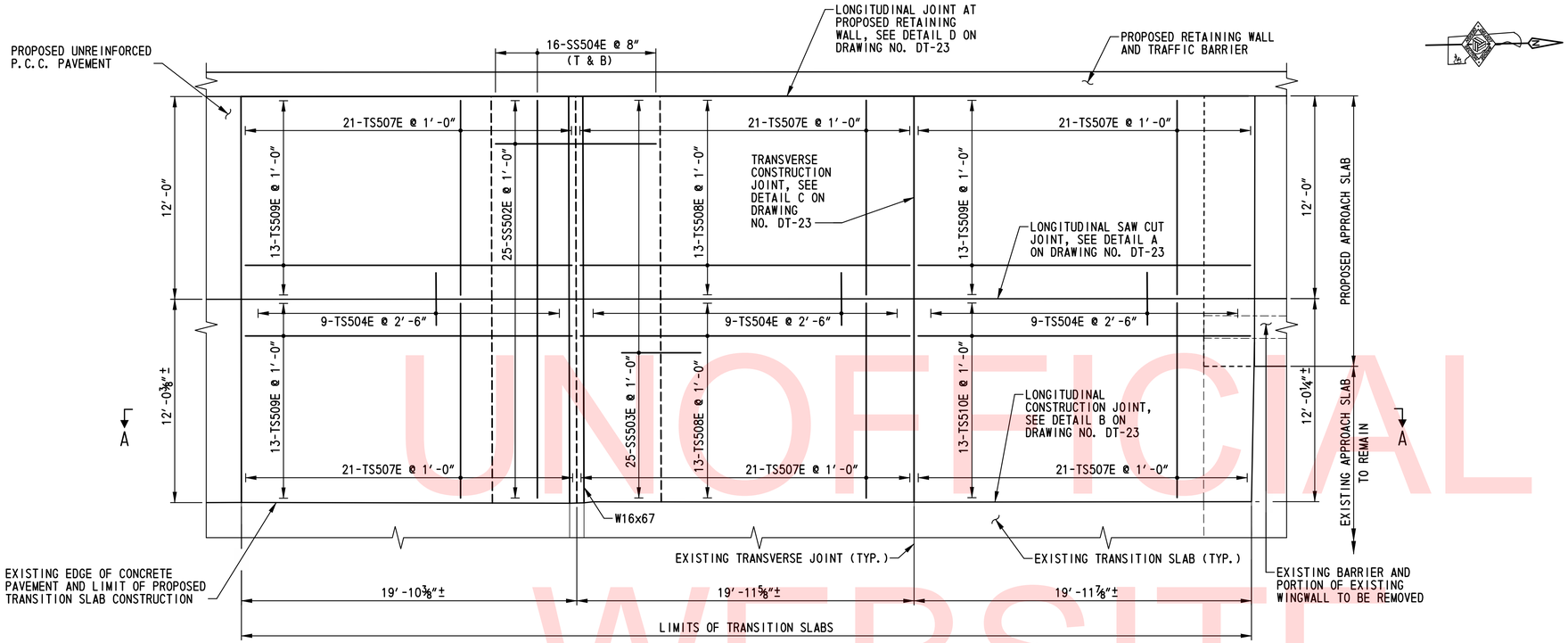

SOUTH TRANSITION SLABS PLAN

SCALE: 1/4 ″=1′-0″

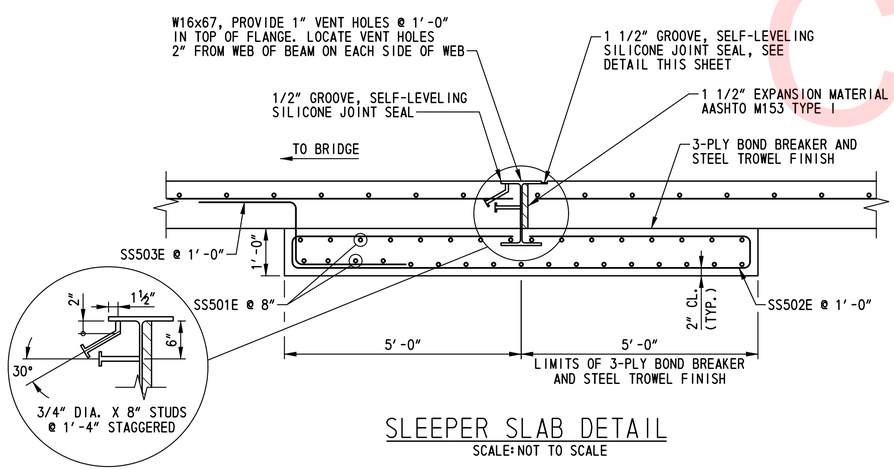

SLEEPER SLAB DETAIL

SCALE: NOT TO SCALE

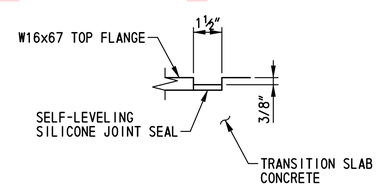

JOINT DETAIL

SCALE: NOT TO SCALE

NOTE:
SEE NOTES ON DRAWING DT-21.

UNOFFICIAL WEBSITE COPY

N:\3653-000\Contract 1B\CADD\DT022U301_1B.dgn
2/5/2013 1:17:48 AM

DELAWARE DEPARTMENT OF TRANSPORTATION	ADDENDUMS / REVISIONS	SCALE: AS SHOWN	US 301 & SR 1 INTERCHANGE	CONTRACT T200911302	BRIDGE NO.	TRANSITION SLAB DETAILS – 2	DT-22
				COUNTY NEW CASTLE	DESIGNED BY: M.P.U.		SHEET NO. 105
					CHECKED BY: P.S.D.		TOTAL SHTS. 491

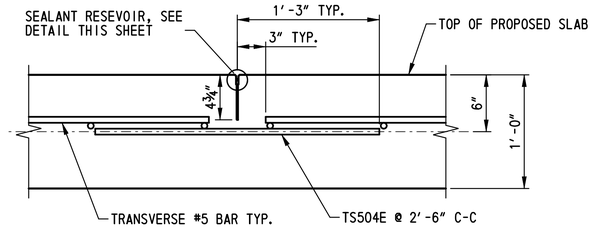

DETAIL A - LONGITUDINAL SAW CUT JOINT
SCALE: 1½"=1'-0"

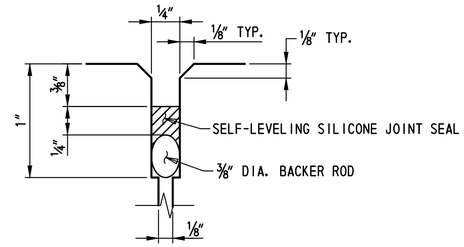

SEALANT DETAIL
LONGITUDINAL SAW CUT JOINT
SCALE: NOT TO SCALE

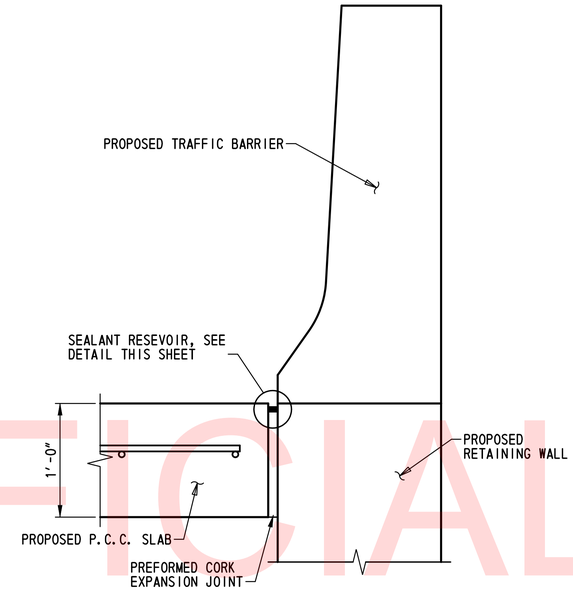

DETAIL D
LONGITUDINAL JOINT AT RETAINING WALL
SCALE: 1½"=1'-0"

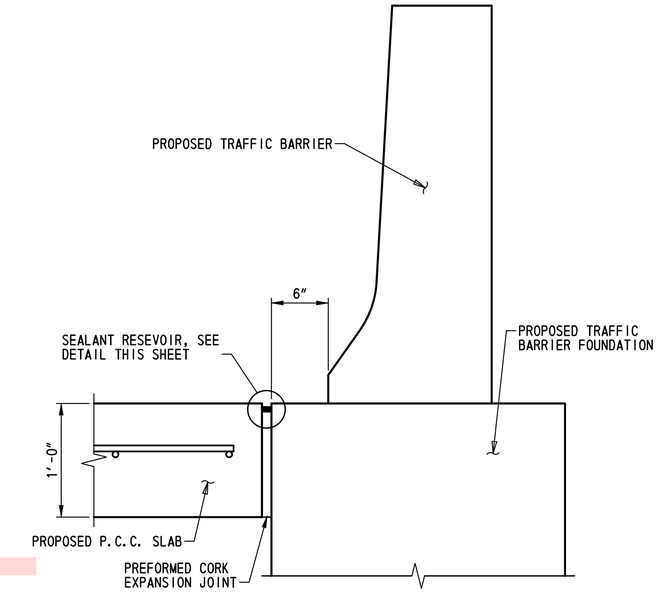

DETAIL E
LONGITUDINAL JOINT AT TRAFFIC BARRIER
SCALE: 1½"=1'-0"

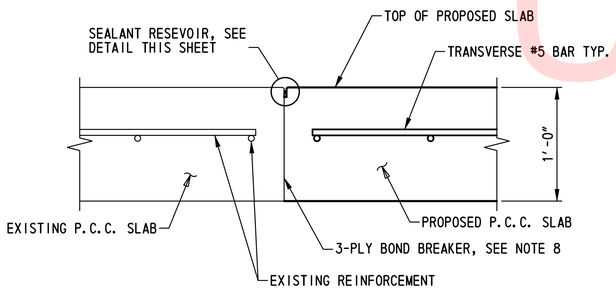

DETAIL B - LONGITUDINAL CONSTRUCTION JOINT
SCALE: 1½"=1'-0"

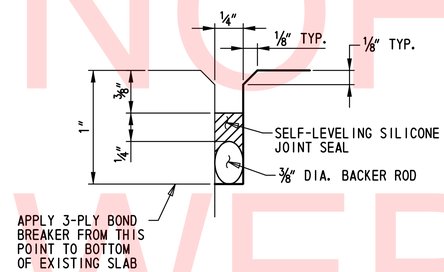

SEALANT DETAIL
LONGITUDINAL CONSTRUCTION JOINT
SCALE: NOT TO SCALE

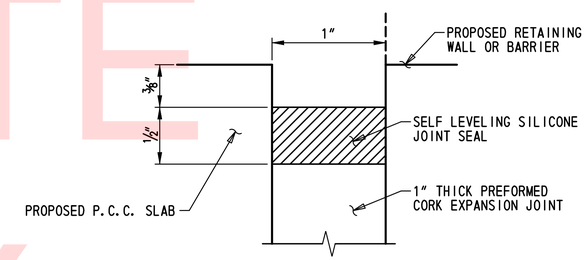

SEALANT DETAIL
LONGITUDINAL PREFORMED CORK JOINT
SCALE: NOT TO SCALE

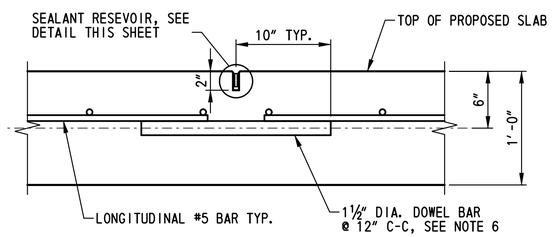

DETAIL C - TRANSVERSE CONSTRUCTION JOINT
SCALE: 1½"=1'-0"

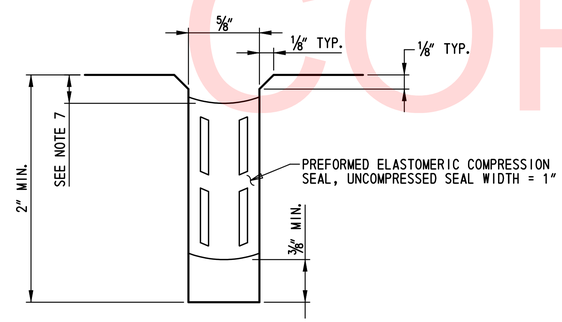

SEALANT DETAIL
TRANSVERSE CONSTRUCTION JOINT
SCALE: NOT TO SCALE

NOTES:

1. TOLERANCE ON ALL JOINT SEALANT DETAIL DIMENSIONS SHOWN WITHOUT RANGES SHALL BE PLUS¼", MINUS 0".
2. AS DIMENSIONED, THE WIDTH OF THE TRANSVERSE SEALANT RESEVOIR IS APPLICABLE WHEN THE PAVEMENT IS BETWEEN 60°F (16°C) AND 80°F (27°C). WHEN THE TEMPERATURE IS BELOW 60°F (16°C) THE SEALANT RESEVOIR SHALL BE CUT⅛" WIDER. WHEN THE TEMPERATURE IS ABOVE 80°F (27°C) THE SEALANT RESEVOIR SHALL BE CUT ⅛" NARROWER.
3. TRANSVERSE JOINT MATERIAL SHALL BE PLACED BEFORE LONGITUDINAL JOINT MATERIAL; THE TRANSVERSE JOINT MATERIAL SHALL BE CONTINUOUS FOR THE FULL WIDTH OF ALL ADJACENT P.C.C. PAVEMENT SLABS.
4. THE TOP EDGES OF THE COMPRESSION SEAL SHALL BE IN FULL CONTACT WITH THE SLAB SIDES.
5. LONGITUDINAL JOINT MATERIAL SHALL BE PLACED WITHOUT GAPS WHENEVER INTERRUPED BY THE TRANSVERSE JOINT MATERIAL.
6. TO HOLD DOWELS IN THE REQUIRED POSITION A DOWEL SUPPORT BASKET SHALL BE USED. DOWEL SUPPORT BASKET DETAILS CAN BE FOUND ON DELDOT STANDARD NO. P-1.
7. TRANSVERSE COMPRESSION JOINT SEAL SHALL BE RECESSED3/16" TO5/16" BELOW THE TOP OF THE SLAB.
8. ALL JOINTS WHERE PROPOSED P.C.C. SLAB CONCRETE WILL BE AGAINST EXISTING P.C.C. CONCRETE SHALL HAVE A 3-PLY BOND BREAKER APPLIED TO THE EXISTING P.C.C. SLAB FOR THE FULL HEIGHT AND FULL LENGTH OF THE JOINT PRIOR TO PLACING THE PROPOSED CONCRETE.

DT-23

UNOFFICIAL WEBSITE COPY

N:\31653-000\Contract 1B\CADD\DT023U301_1B.dgn
2/5/2013 7:18:44 AM

DELAWARE DEPARTMENT OF TRANSPORTATION	ADDENDUMS / REVISIONS	SCALE: AS SHOWN	US 301 & SR 1 INTERCHANGE	CONTRACT T200911302 / COUNTY NEW CASTLE	BRIDGE NO. / DESIGNED BY: M.P.U. / CHECKED BY: P.S.D.
TRANSITION SLAB DETAILS - 3	SHEET NO. 106 / TOTAL SHTS. 491				

① ANY MARK NUMBER WITH SUFFIX 'E' DENOTES EPOXY COATED REINFORCING STEEL.

② ALL MARK 'LOCATION PREFIXES' SHALL CONSIST OF TWO LETTERS AND ARE AS FOLLOWS: AB = ABUTMENT, AS = APPROACH SLAB, BC = BOX CULVERT, BW = BACKWALL, CL = COLUMN, DK = DECK, DL = DOWEL, FT = FOOTING, HW = HEADWALL, MS = MISC. BARS, PA = PARAPET, PR = PIER, SC = SHEETPILE CAP, SL = SLAB, TW = TOEWALL, WL = WALL (UNIQUE LOCATION), WW = WINGWALL

SPECIFICATIONS					BENDING DIMENSIONS (FEET-INCHES /QUARTER INCH)										
QTY.	SIZE	LENGTH	MARK	TYPE	A	B	C	D	E	F/R	G	H	J	K	O
TRANSITION SLABS NORTH															
42	5	11-08 1	TS501E	STR		11-08 1									
50	5	19-06 0	TS502E	STR		19-06 0									
21	5	11-10 0	TS503E	STR		11-10 0									
27	5	2-06 0	TS504E	STR		2-06 0									
25	5	19-03 0	TS505E	STR		19-03 0									
60	5	11-00 0	TS506E	STR		11-00 0									
4	5	11-06 0	TS507E	STR		11-06 0									
SLEEPER SLAB NORTH															
32	5	23-02 3	SS501E	STR		23-02 3									
25	5	20-02 0	SS502E	STR	4-07 0	0-08 0	9-08 0	0-08 0			4-07 0				
25	5	6-00 0	SS503E	STR		2-04 0	1-04 0	2-04 0							
TRANSITION SLABS SOUTH															
27	5	2-06 0	TS504E	STR		2-06 0									
126	5	11-06 0	TS507E	STR		11-06 0									
26	5	19-05 3	TS508E	STR		19-05 3									
39	5	19-03 2	TS509E	STR		19-03 2									
13	5	19-04 3	TS510E	STR		19-04 3									
SLEEPER SLAB SOUTH															
32	5	23-06 1	SS504E	STR		23-06 1									
25	5	20-02 0	SS502E	S6	4-07 0	0-08 0	9-08 0	0-08 0			4-07 0				
25	5	6-00 0	SS503E	20		2-04 0	1-04 0	2-04 0							

SPECIFICATIONS					BENDING DIMENSIONS (FEET-INCHES /QUARTER INCH)										
QTY.	SIZE	LENGTH	MARK	TYPE	A	B	C	D	E	F/R	G	H	J	K	O

SPECIFICATIONS					BENDING DIMENSIONS (FEET-INCHES /QUARTER INCH)										
QTY.	SIZE	LENGTH	MARK	TYPE	A	B	C	D	E	F/R	G	H	J	K	O

UNOFFICIAL WEBSITE COPY

ASTM STANDARD ENGLISH REINFORCING BARS

BAR SIZE	NOMINAL DIMENSIONS: DIAMETER (INCHES)	AREA (INCHES²)	WEIGHT (LBS./FT.)	RECOMMENDED END HOOKS, APPLICABLE TO ALL GRADES: 180° HOOKS D	180° HOOKS A OR G	180° HOOKS J	90° HOOKS A OR G	STIRRUP AND TIE HOOKS, APPLICABLE TO ALL GRADES: 90° HOOK D	90° HOOK A OR G	135° HOOK A OR G	135° HOOK A OR G
3	0.375	0.110	0.376	2¼"	5"	3"	6"	1½"	4"	4"	2½"
4	0.500	0.200	0.668	3"	6"	4"	8"	2"	4½"	4½"	3"
5	0.625	0.310	1.043	3¾"	7"	5"	10"	2½"	6"	5½"	3¾"
6	0.750	0.440	1.502	4½"	8"	6"	1-0"	4½"	1-0"	8"	4½"
7	0.875	0.600	2.044	5¼"	10"	7"	1-2"	5¼"	1-2"	9"	5¼"
8	1.000	0.790	2.670	6"	11"	8"	1-4"	6"	1-4"	10½"	6"
9	1.128	1.000	3.400	9½"	1-3"	11¾"	1-7"				
10	1.270	1.270	4.303	10¾"	1-5"	1-1¼"	1-10"				
11	1.410	1.560	5.313	1-0"	1-7"	1-2¾"	2-0"				
14	1.693	2.250	7.650	1-6¼"	2-3"	1-9¾"	2-7"				
18	2.257	4.000	13.600	2-0"	3-0"	2-4½"	3-5"				

NOTES:

1. FIGURES SHOWN IN CIRCLES REPRESENT BAR BEND TYPES.
2. STANDARD BAR BENDS INCLUDE ONLY THOSE TYPES BELOW, INDICATED AS SUCH.
3. ALL DIMENSIONS OUT-TO-OUT, EXCEPT "A" AND "G" ON STD. 180° AND 135° HOOKS.
4. "J" DIMENSIONS ON 180° HOOKS TO BE SHOWN ONLY WHERE NECESSARY TO RESTRICT HOOK SIZE, OTHERWISE STANDARD 'ACI' HOOKS ARE TO BE USED.
5. WHERE "J" IS NOT SHOWN, "J" WILL BE KEPT EQUAL TO OR LESS THAN "H" ON TYPES 3, 5 AND 22. WHERE "J" CAN EXCEED "H", IT SHALL BE SHOWN.
6. "H" DIMENSIONS OF STIRRUPS TO BE SHOWN AS NEEDED TO FIT WITHIN THE CONCRETE.
7. UNLESS OTHERWISE NOTED, DIAMETER "D" IS THE SAME FOR ALL BENDS AND HOOKS ON A BAR (EXCEPT FOR BEND TYPES 11 AND 13).
8. WHERE SLOPE DIFFERS FROM 45° OFFSET, "H" AND "K" MUST BE SHOWN.
9. WHERE BARS ARE TO BE BENT MORE ACCURATELY THAN STANDARD BENDING TOLERANCES, BENDING DIMENSIONS REQUIRING CLOSER FABRICATION SHOULD HAVE LIMITS INDICATED.
10. FOR RECOMMENDED DIAMETER "D", OF BENDS, HOOKS, ETC., REFER TO TABLE ABOVE, 'CRSI' OR 'ACI' TABLES WHERE APPLICABLE AND REQUIRED.
11. TYPE S1-S6, S11, T1-T3 AND T6-T9 APPLICABLE TO BAR SIZES #3 THROUGH #8.

STANDARD BAR BENDS

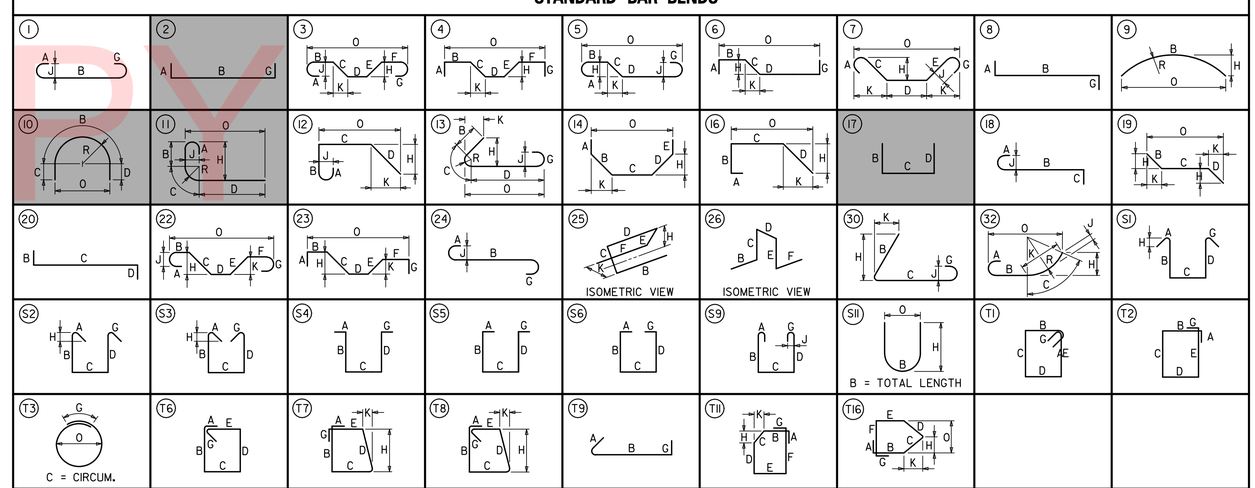

SPECIAL BAR BENDS

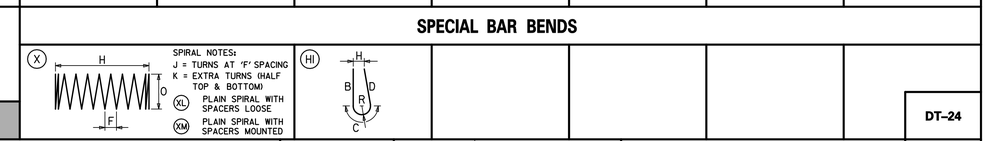

STIRRUP AND TIE HOOKS

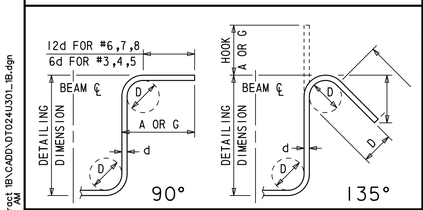

180° AND 90° END HOOKS

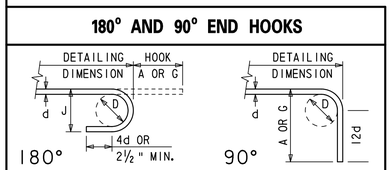

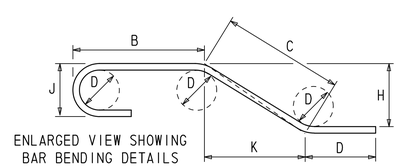

ENLARGED VIEW SHOWING BAR BENDING DETAILS

N:\31653-000\Contract T8\CADD\DT024U301_T8.dgn 2/5/2013 7:19:32 AM

DELAWARE DEPARTMENT OF TRANSPORTATION

ADDENDUMS / REVISIONS

NOT TO SCALE

US 301 & SR 1 INTERCHANGE

CONTRACT	BRIDGE NO.
T200911302	DESIGNED BY: M.P.U.
COUNTY	CHECKED BY: P.S.D.
NEW CASTLE	

TRANSITION SLAB DETAILS – 4

DT-24

SHEET NO. 107

TOTAL SHTS. 491

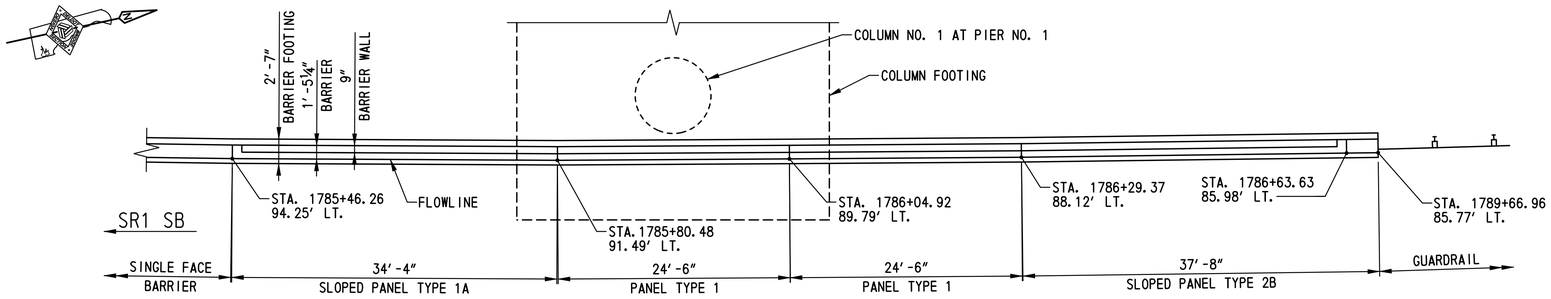

BARRIER WALL I - PLAN

SCALE: ⅛"=1'-0"

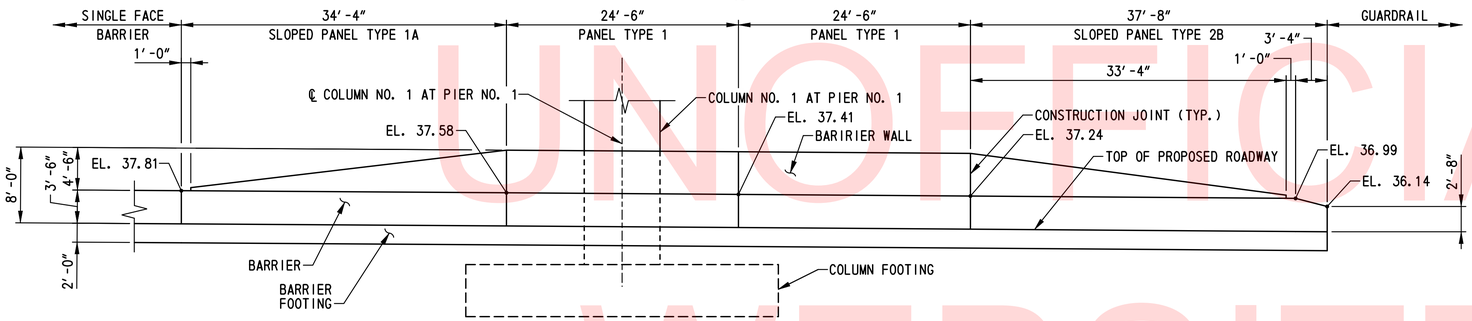

BARRIER WALL I - ELEVATION

SCALE: ⅛"=1'-0"

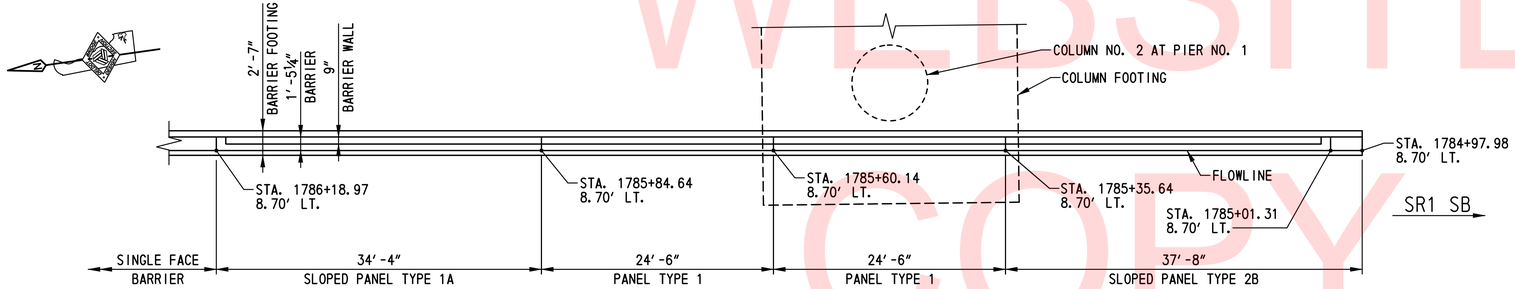

BARRIER WALL II - PLAN

SCALE: ⅛"=1'-0"

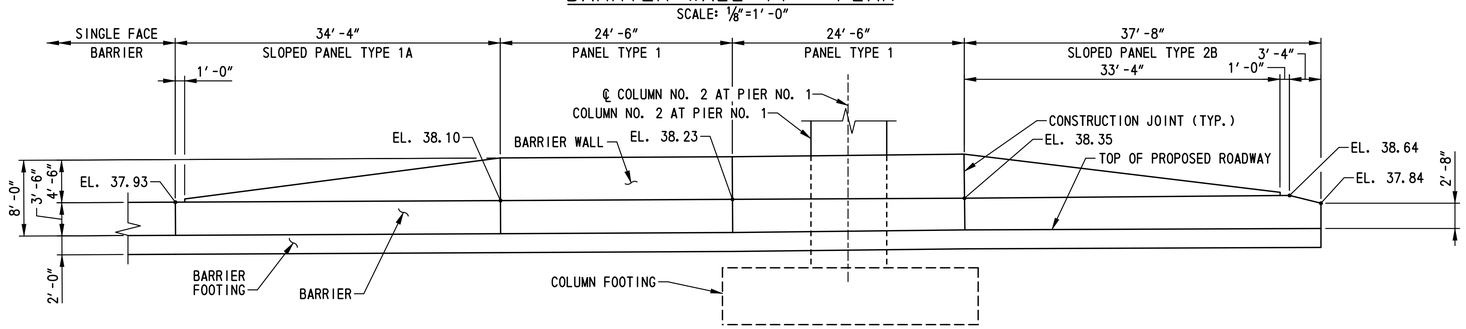

BARRIER WALL II - ELEVATION

SCALE: ⅛"=1'-0"

BARRIER WALL NOTES:

1. PAYMENT FOR CONSTRUCTION OF BARRIER, BARRIER FOOTING AND BARRIER WALL WILL BE MADE UNDER ITEM NO. 602001 - PORTLAND CEMENT CONCRETE MASONRY, CLASS A. PAYMENT FOR EXCAVATION WILL BE INCIDENTAL TO THIS ITEM.
2. PAYMENT FOR EPOXY COATED REINFORCEMENT WILL BE MADE UNDER ITEM NO. 604000 - BAR REINFORCEMENT, EPOXY COATED.
3. PANEL DIMENSIONS MEASURED ALONG FLOWLINE OF BARRIER.
4. THE FOOTING REAR VERTICAL WALL SHALL BE FORMED OR THE CONCRETE PLACED AGAINST THE VERTICAL EARTH SIDE IF APPROVED BY THE ENGINEER. NO ADDITIONAL COMPENSATION FOR ADDITIONAL CONCRETE WILL BE PAID IF THE CONCRETE IS PLACED AGAINST THE EARTH.
5. THE CONTRACTOR SHALL ATTACH THE YELLOW AND/OR WHITE REFLECTORS TO THE BARRIERS AS SHOWN IN THE DETAIL ON DWG. NO. DT-05. PAYMENT FOR THE REFLECTORS SHALL BE IN ACCORDANCE WITH ITEM NOS. 720544 AND 720545 AS APPROPRIATE.
6. FOR PIER LOCATION, SEE DWG. NOS. BR1-3 PE-01 AND BR1-3 PE-02.
7. FOR BARRIER WALL DETAILS, SEE DWG. NOS. DT-28 THRU DT-31.
8. PIER FOOTING PILES NOT SHOWN FOR CLARITY.
9. PRIOR TO PLACING BARRIER WALL CONCRETE ADJACENT TO EXISTING CONCRETE PAVEMENT, OR PRIOR TO PLACING CONCRETE PAVEMENT ADJACENT TO EXISTING BARRIER CONCRETE, AN APPROVED BOND BREAKER SHALL BE APPLIED TO THE EXISTING CONCRETE VERTICAL FACE. THIS LONGITUDINAL JOINT AT THE INTERFACE BETWEEN THE CONCRETE PAVEMENT AND THE BARRIER WALL CONCRETE SHALL NOT BE SEALED. VERTICAL CRACKS IN THE EXISTING CONCRETE FACE SHALL BE COVERED OR SEALED AS APPROVED BY THE ENGINEER TO PREVENT INTRUSION OF THE NEW CONCRETE INTO THE EXISTING CONCRETE. ALL WORK SHALL BE INCIDENTAL TO ITEM NO. 602001 - PORTLAND CEMENT CONCRETE MASONRY, CLASS A.

UNOFFICIAL WEBSITE COPY

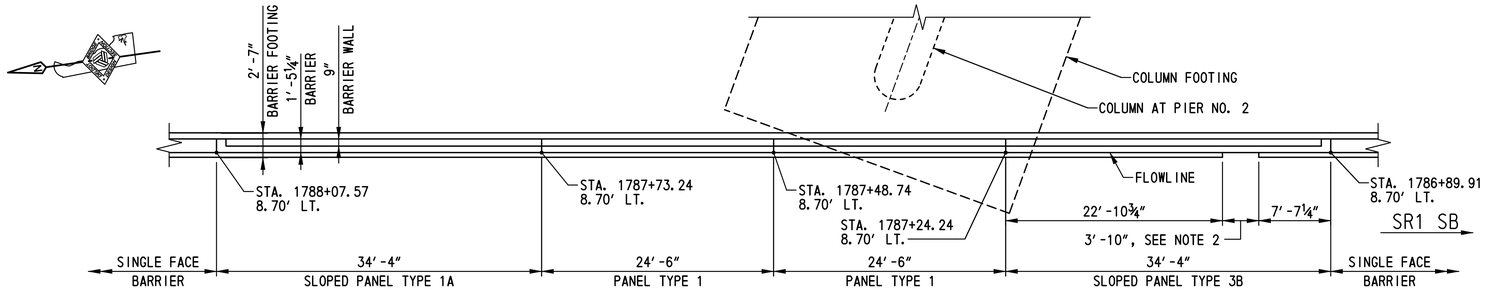

BARRIER WALL III - PLAN

SCALE: ⅛"=1'-0"

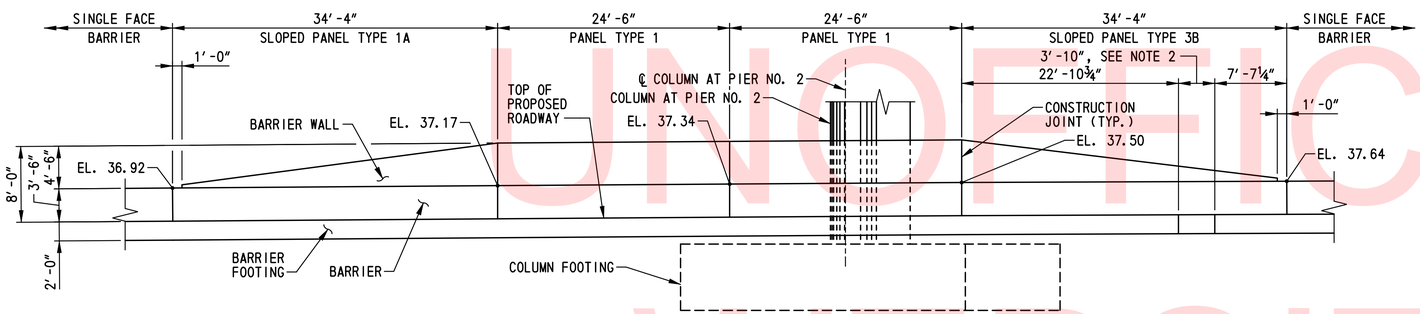

BARRIER WALL III - ELEVATION

SCALE: ⅛"=1'-0"

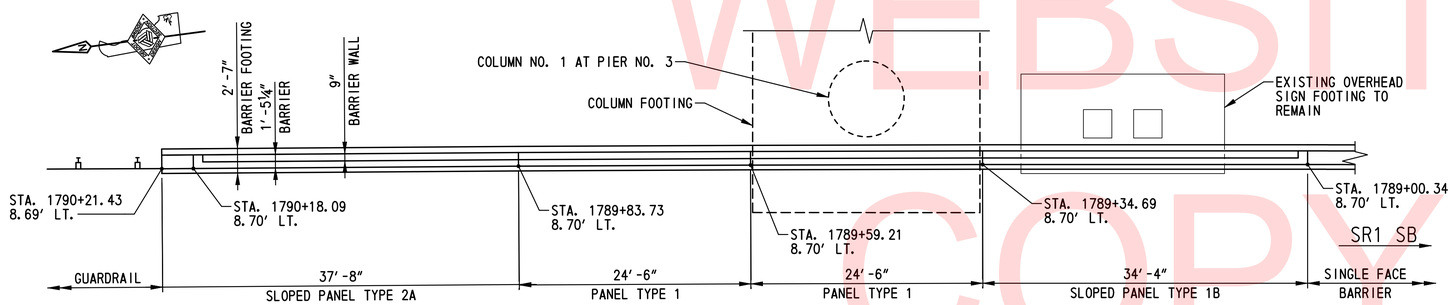

BARRIER WALL IV - PLAN

SCALE: ⅛"=1'-0"

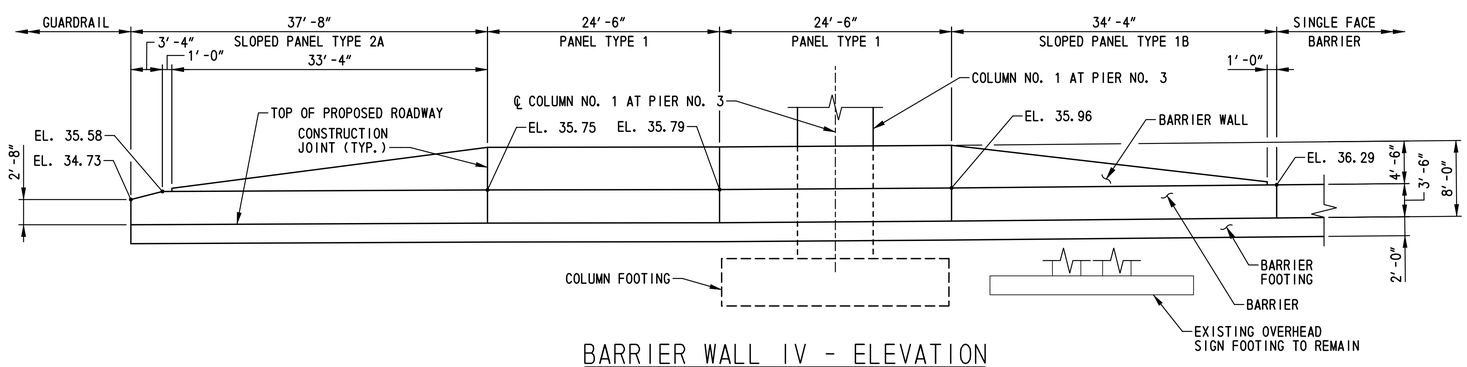

BARRIER WALL IV - ELEVATION

SCALE: ⅛"=1'-0"

NOTES:

1. FOR BARRIER WALL NOTES, SEE DWG. NO. DT-25.
2. DRAINAGE INLET LOCATION. DRAINAGE INLET NOT SHOWN FOR CLARITY. FOR DRAINAGE INLET ASSEMBLY DETAILS, SEE DWG. NOS. DT-09 THRU DT-12.

UNOFFICIAL WEBSITE COPY

N:\31653-000\Contract 1B\CADD\DT026U301_1B.dgn
2/5/2013 7:20:56 AM

DELAWARE DEPARTMENT OF TRANSPORTATION	ADDENDUMS / REVISIONS	SCALE: AS SHOWN	US 301 & SR 1 INTERCHANGE	CONTRACT T200911302 / COUNTY NEW CASTLE	BRIDGE NO. / DESIGNED BY: K.M.L. / CHECKED BY: B.K.B.
BARRIER WALLS III AND IV PLAN AND ELEVATION	DT-26	SHEET NO. 109	TOTAL SHTS. 491		

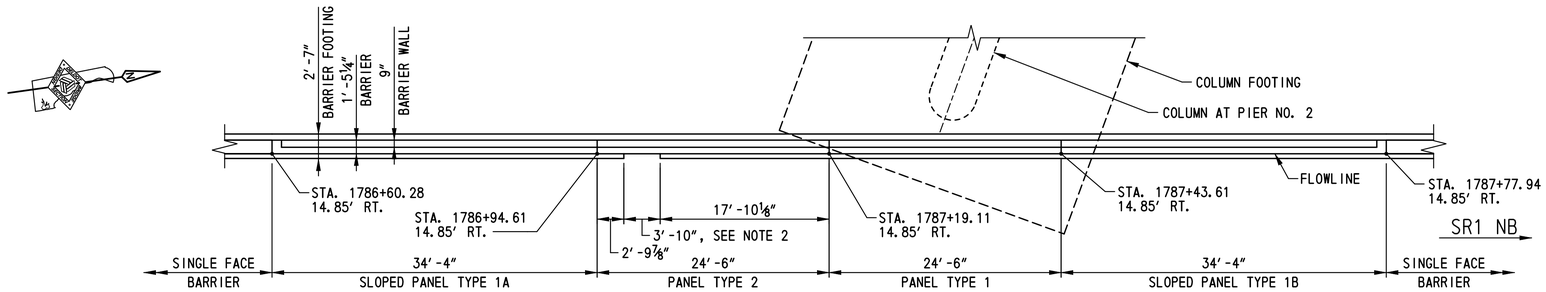

BARRIER WALL V - PLAN

SCALE: ⅛"=1'-0"

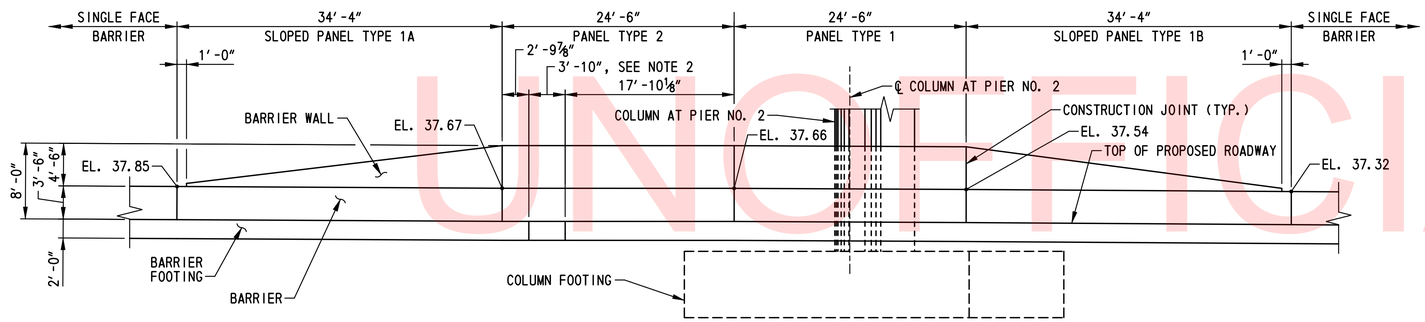

BARRIER WALL V - ELEVATION

SCALE: ⅛"=1'-0"

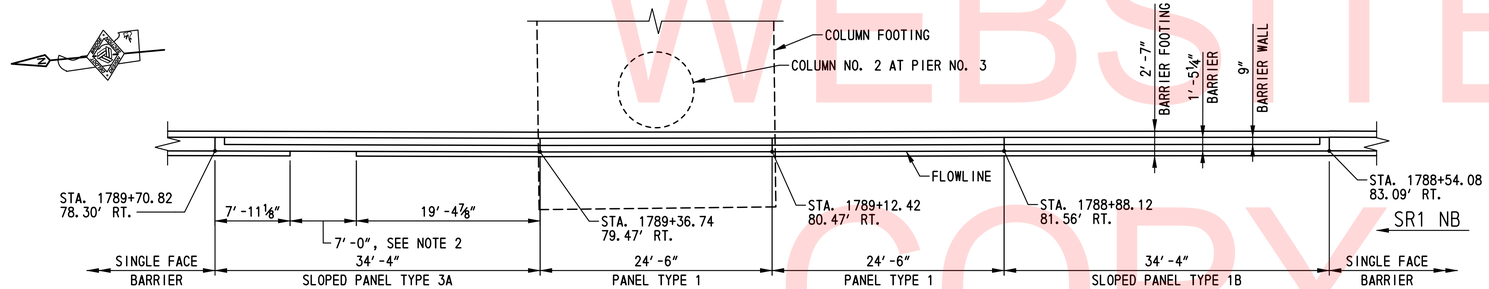

BARRIER WALL VI - PLAN

SCALE: ⅛"=1'-0"

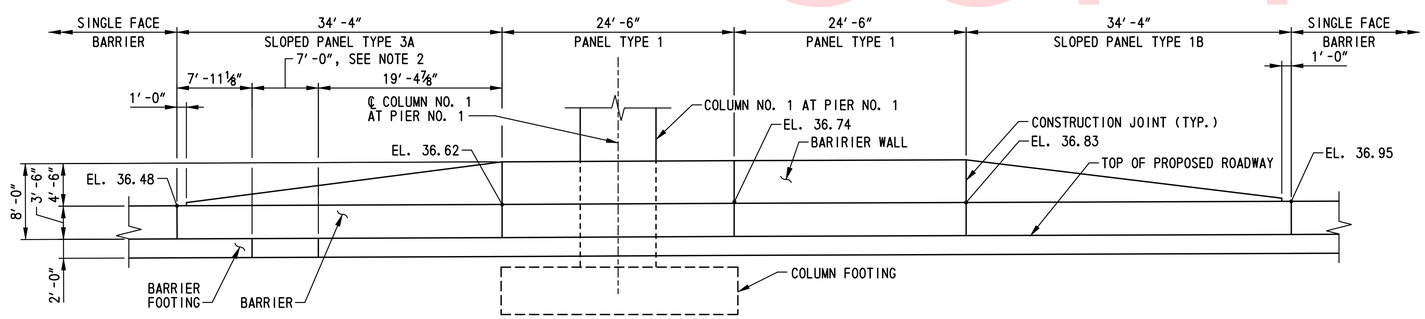

BARRIER WALL VI - ELEVATION

SCALE: ⅛"=1'-0"

NOTES:

1. FOR BARRIER WALL NOTES, SEE DWG. NO. DT-25.
2. DRAINAGE INLET LOCATION. DRAINAGE INLET NOT SHOWN FOR CLARITY. FOR DRAINAGE INLET ASSEMBLY DETAILS, SEE DWG. NOS. DT-09 THRU DT-12.

UNOFFICIAL WEBSITE COPY

N:\3653-000\Contract 1B\CADD\DT0270301_1B.dgn
AM 9/23/2020

DELAWARE DEPARTMENT OF TRANSPORTATION	ADDENDUMS / REVISIONS	SCALE: AS SHOWN	US 301 & SR 1 INTERCHANGE	CONTRACT T200911302	BRIDGE NO.	BARRIER WALLS V AND VI PLAN AND ELEVATION	DT-27
				COUNTY NEW CASTLE	DESIGNED BY: K.M.L.		SHEET NO. 110
					CHECKED BY: B.K.B.		TOTAL SHTS. 491

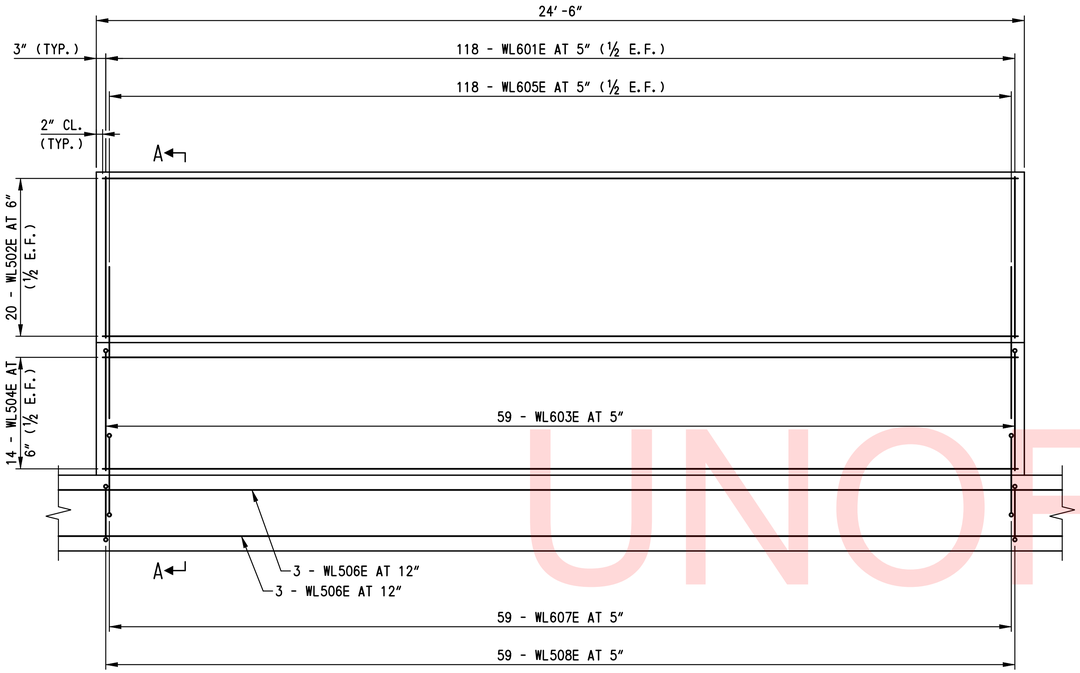

PANEL TYPE 1 ELEVATION

SCALE: ½"=1'-0"

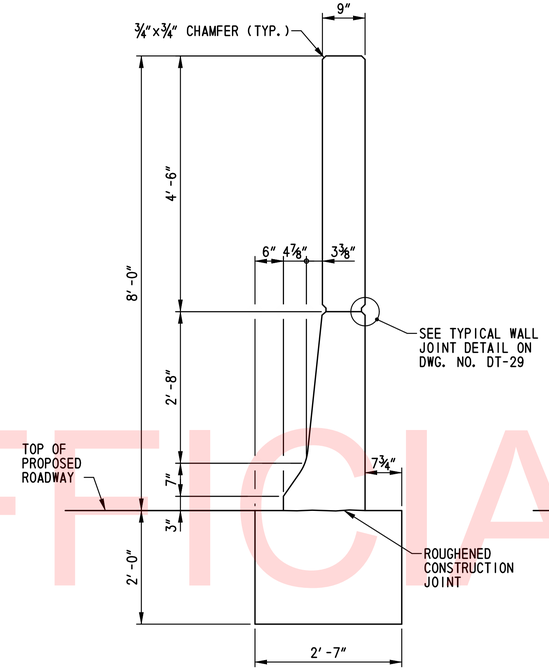

TYPICAL SECTION A-A

SCALE: ¾"=1'-0"

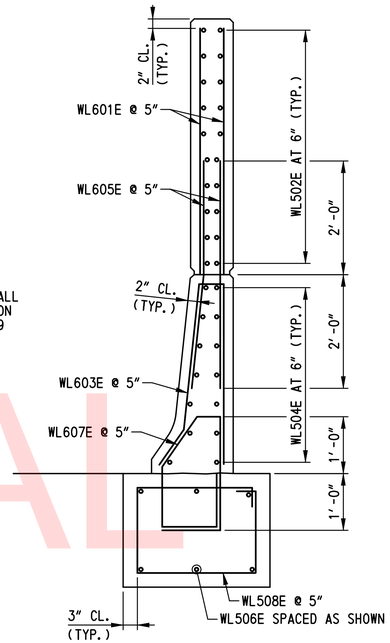

TYPICAL SECTION A-A - REINFORCEMENT

SCALE: ¾"=1'-0"

NOTES:

1. FOR BARRIER WALL NOTES, SE DWG. NO. DT-25.
2. FOR LOCATIONS OF PANEL TYPES 1 AND 2, SEE DWG. NOS. DT-25 THRU DT-27.
3. DRAINAGE INLET LOCATION. DRAINAGE INLET NOT SHOWN FOR CLARITY. FOR DRAINAGE INLET ASSEMBLY DETAILS, SEE DWG. NOS. DT-09 THRU DT-12.

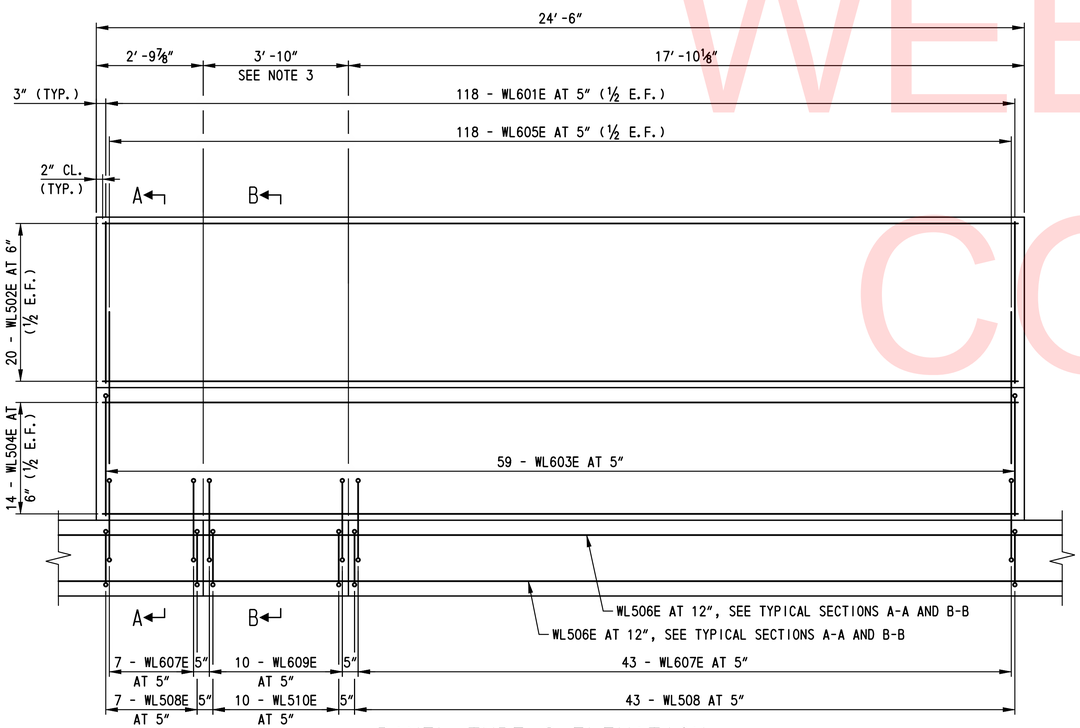

PANEL TYPE 2 ELEVATION

SCALE: ½"=1'-0"

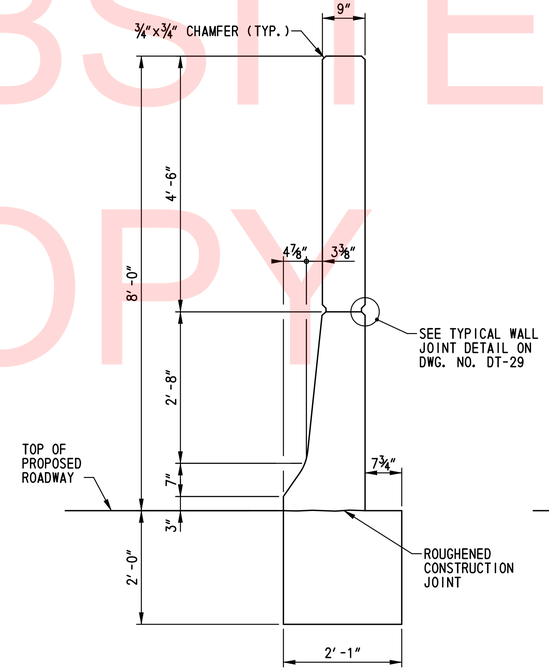

TYPICAL SECTION B-B

SCALE: ¾"=1'-0"

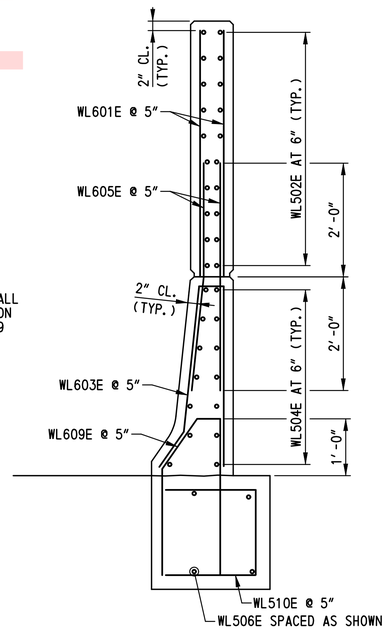

TYPICAL SECTION B-B - REINFORCEMENT

SCALE: ¾"=1'-0"

UNOFFICIAL WEBSITE COPY

N:\31653-000\Contract 1B\CADD\DT028U301_1B.dgn
2/5/2013 7:22:10 AM

DELAWARE DEPARTMENT OF TRANSPORTATION	ADDENDUMS / REVISIONS	SCALE: AS SHOWN	US 301 & SR 1 INTERCHANGE	CONTRACT T200911302 / COUNTY NEW CASTLE	BRIDGE NO. / DESIGNED BY: K.M.L. / CHECKED BY: B.K.B.
BARRIER WALL DETAILS – 1	DT-28	SHEET NO. 111	TOTAL SHTS. 491		

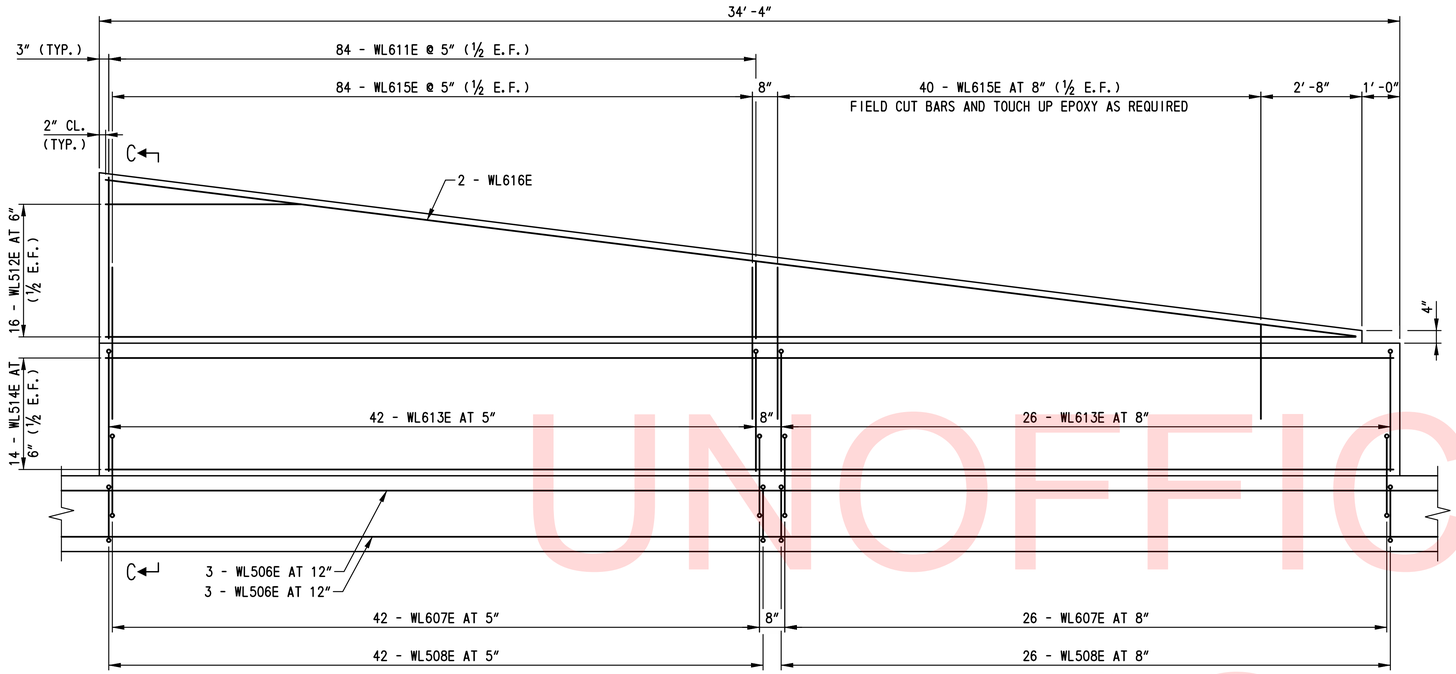

SLOPED PANEL TYPE 1A AND 1B ELEVATION

SCALE: ½″=1′-0″

NOTE:
SLOPED PANEL TYPE 1B SHOWN,
SLOPED PANEL TYPE 1A SIMILAR.

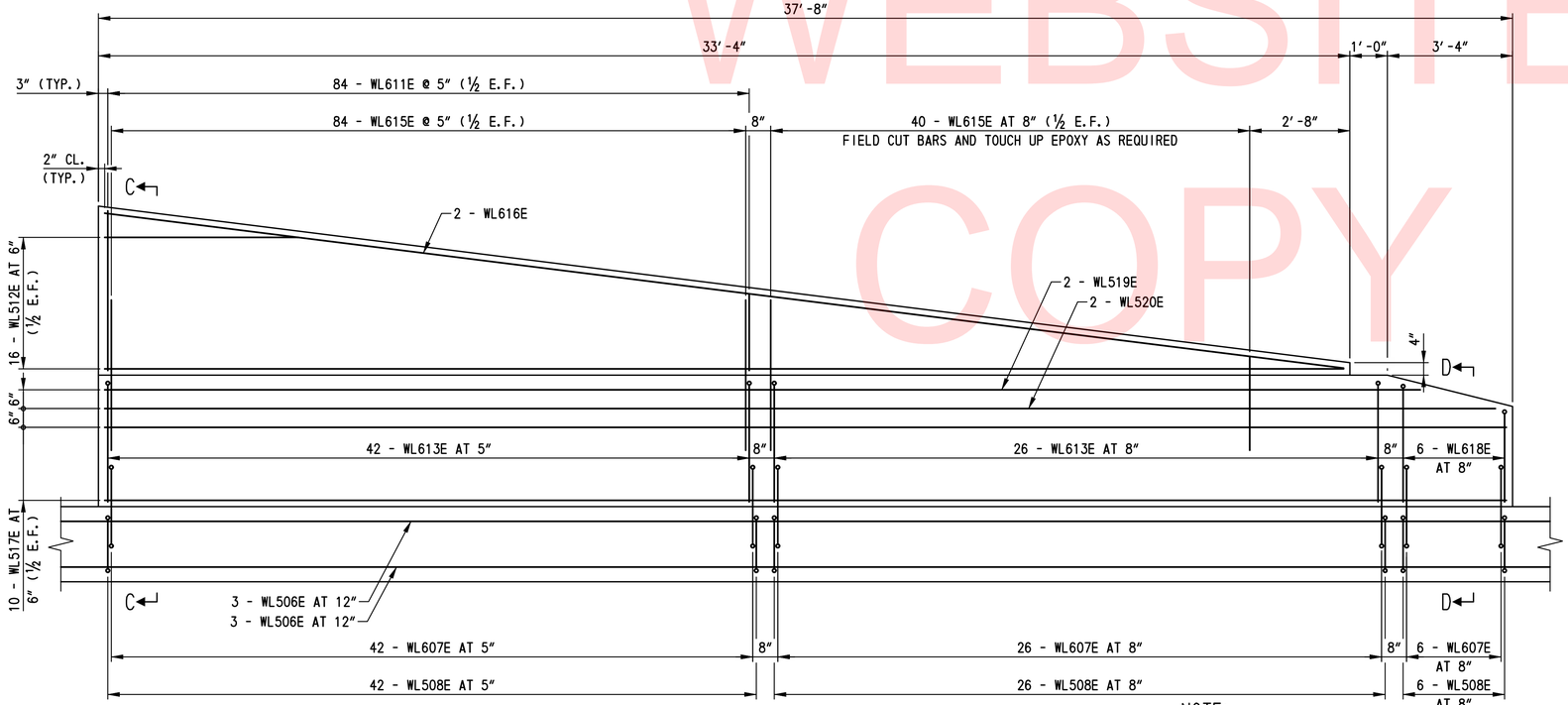

SLOPED PANEL TYPE 2A AND 2B ELEVATION

SCALE: ½″=1′-0″

NOTE:
SLOPED PANEL TYPE 2B SHOWN,
SLOPED PANEL TYPE 2A SIMILAR.

NOTES:

1. FOR BARRIER WALL NOTES, SE DWG. NO. DT-25.
2. FOR LOCATIONS OF SLOPED PANEL TYPES 1A, 1B, 2A AND 2B, SEE DWG. NOS. DT-25 THRU DT-27.
3. FOR TYPICAL SECTIONS C-C AND D-D, SEE DWG. NO. DT-31.

UNOFFICIAL WEBSITE COPY

N:\31653-000\Contract 18\CADD\DT029U301_1B.dgn
2/5/2013 7:22:42 AM

DELAWARE DEPARTMENT OF TRANSPORTATION	ADDENDUMS / REVISIONS	SCALE: AS SHOWN	US 301 & SR 1 INTERCHANGE	CONTRACT T200911302	BRIDGE NO.	BARRIER WALL DETAILS – 2
				COUNTY NEW CASTLE	DESIGNED BY: K.M.L.	
					CHECKED BY: B.K.B.	

DT–29
SHEET NO. 112
TOTAL SHTS. 491

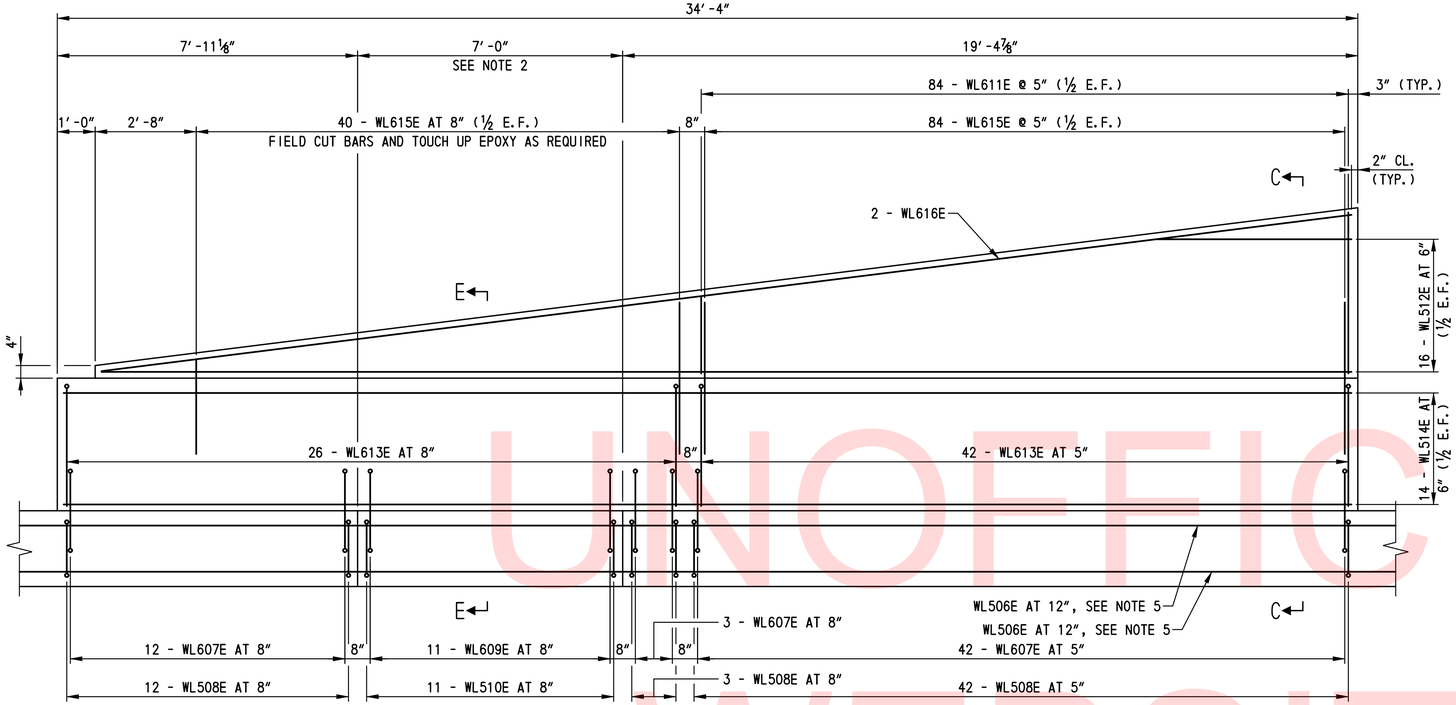

SLOPED PANEL TYPE 3A ELEVATION

SCALE: ½″=1′-0″

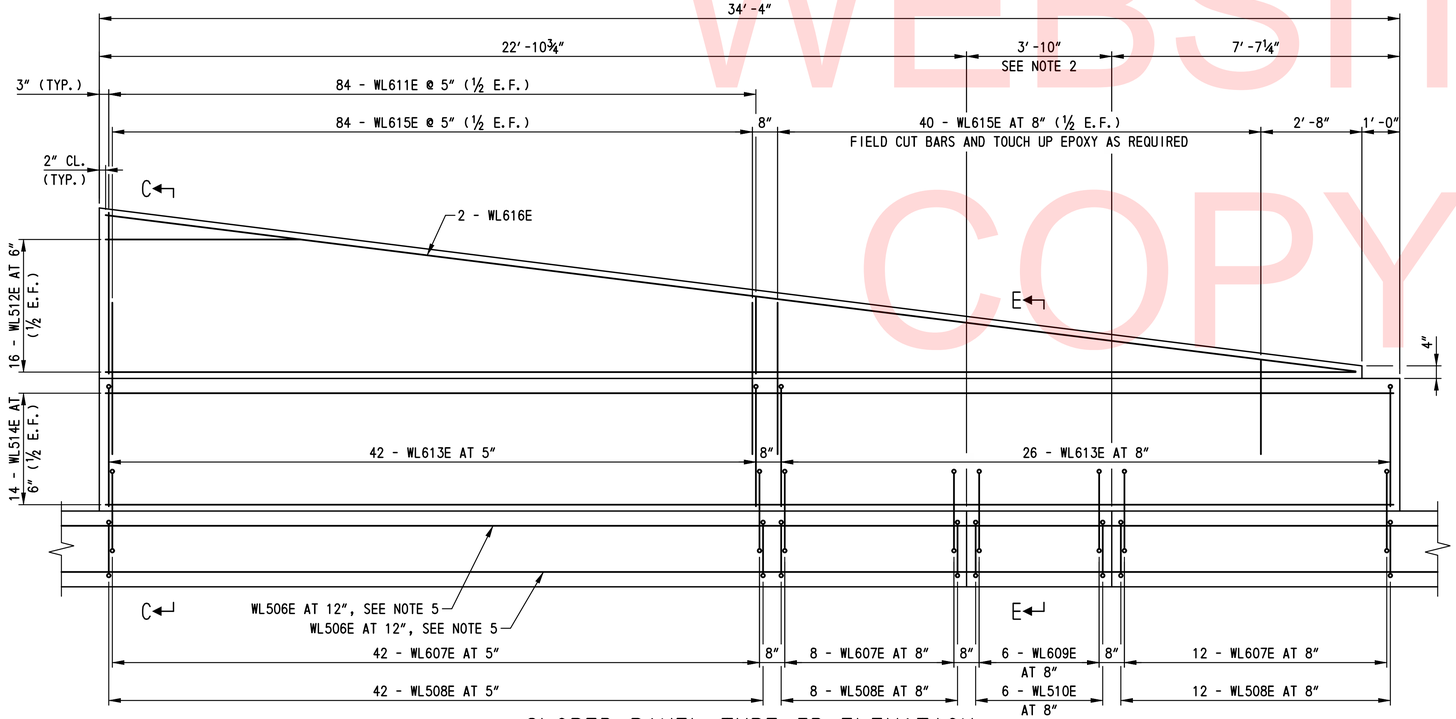

SLOPED PANEL TYPE 3B ELEVATION

SCALE: ½″=1′-0″

NOTES:

1. FOR BARRIER WALL NOTES, SE DWG. NO. DT-25.
2. DRAINAGE INLET LOCATION. DRAINAGE INLET NOT SHOWN FOR CLARITY. FOR DRAINAGE INLET ASSEMBLY DETAILS, SEE DWG. NOS. DT-09 THRU DT-12.
3. FOR LOCATIONS OF SLOPED PANEL TYPES 3A AND 3B, SEE DWG. NOS. DT-25 THRU DT-27.
4. FOR TYPICAL SECTIONS C-C AND E-E, SEE DWG. NO. DT-31.
5. FOR ADDITIONAL INFORMATION ON FOOTING REINFORCEMENT, SEE TYPICAL SECTIONS C-C AND E-E ON DWG. NO. DT-31.

UNOFFICIAL WEBSITE COPY

N:\31653-000\Contract 1B\CADD\DT030U301_1B.dgn
2/5/2013 7:23:16 AM

DELAWARE DEPARTMENT OF TRANSPORTATION	ADDENDUMS / REVISIONS	SCALE: AS SHOWN	US 301 & SR 1 INTERCHANGE	CONTRACT T200911302	BRIDGE NO.	BARRIER WALL DETAILS – 3
				COUNTY NEW CASTLE	DESIGNED BY: K.M.L.	
					CHECKED BY: B.K.B.	

DT-30
SHEET NO. 113
TOTAL SHTS. 491

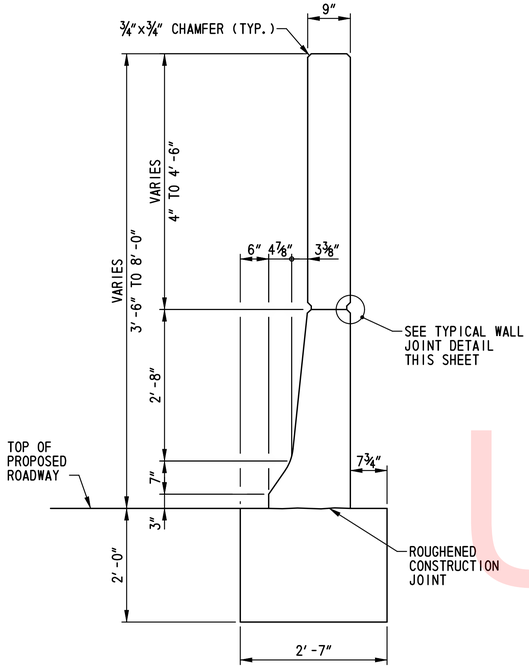

TYPICAL SECTION C-C

SCALE: 3/4"=1'-0"

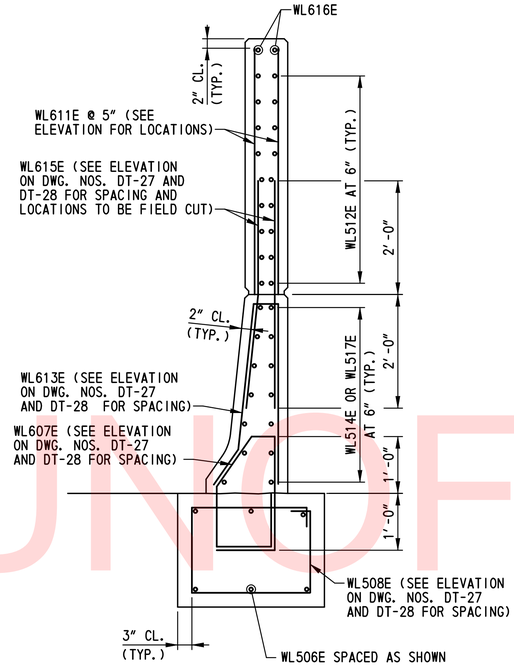

TYPICAL SECTION C-C - REINFORCEMENT

SCALE: 3/4"=1'-0"

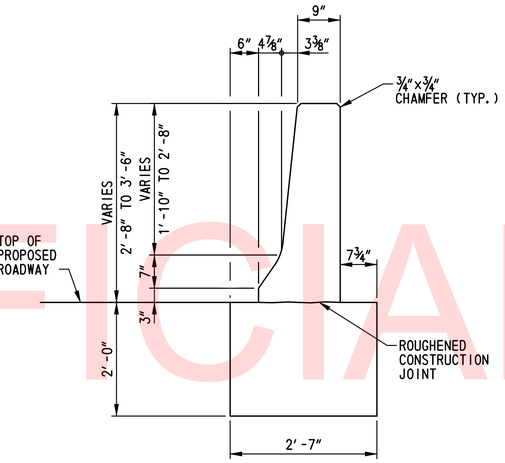

TYPICAL SECTION D-D

SCALE: 3/4"=1'-0"

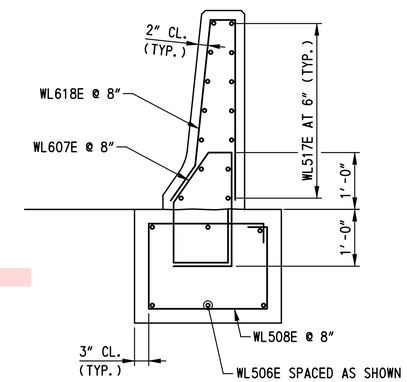

TYPICAL SECTION D-D - REINFORCEMENT

SCALE: 3/4"=1'-0"

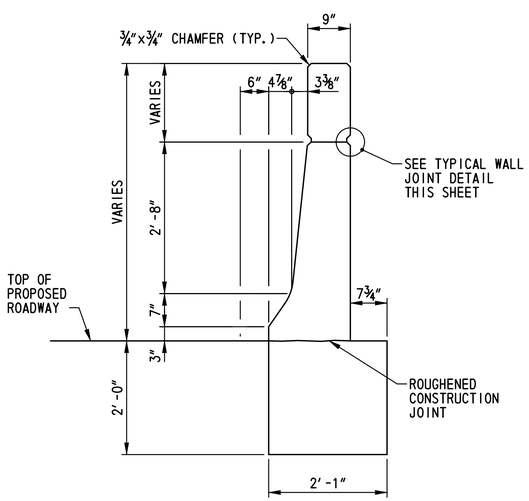

TYPICAL SECTION E-E

SCALE: 3/4"=1'-0"

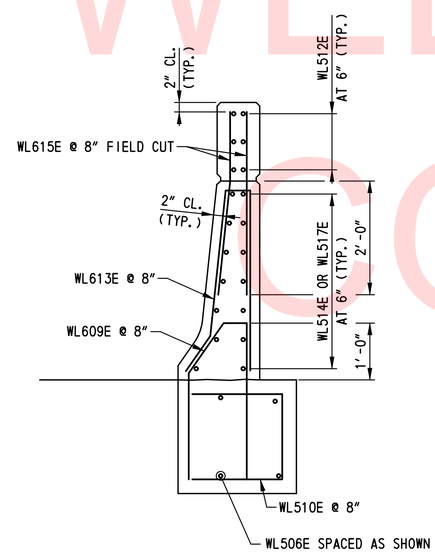

TYPICAL SECTION E-E - REINFORCEMENT

SCALE: 3/4"=1'-0"

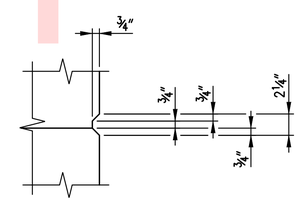

TYPICAL WALL JOINT DETAIL

SCALE: 1 1/2"=1'-0"

NOTES:

1. FOR BARRIER WALL NOTES, SEE DWG. NO. DT-25.
2. FOR LOCATIONS OF TYPICAL SECTIONS C-C, D-D AND E-E, SEE DWG. NOS. DT-25 THRU DT-27.

UNOFFICIAL WEBSITE COPY

N:\31653-000\Contract 1B\CADD\DT031U301_1B.dgn
2/5/2013 7:24:43 AM

DELAWARE DEPARTMENT OF TRANSPORTATION	ADDENDUMS / REVISIONS	SCALE: AS SHOWN	US 301 & SR 1 INTERCHANGE	CONTRACT T200911302	BRIDGE NO.	BARRIER WALL DETAILS – 4	DT-31
				COUNTY NEW CASTLE	DESIGNED BY: K.M.L.		SHEET NO. 114
					CHECKED BY: B.K.B.		TOTAL SHTS. 491

UNOFFICIAL WEBSITE COPY

(1) ANY MARK NUMBER WITH SUFFIX 'E' DENOTES EPOXY COATED REINFORCING STEEL.

(2) ALL MARK 'LOCATION PREFIXES' SHALL CONSIST OF TWO LETTERS AND ARE AS FOLLOWS: AB = ABUTMENT, AS = APPROACH SLAB, BC = BOX CULVERT, BW = BACKWALL, CL = COLUMN, DK = DECK, DL = DOWEL, FT = FOOTING, HW = HEADWALL, MS = MISC. BARS, PA = PARAPET, PR = PIER, SC = SHEETPILE CAP, SL = SLAB, TW = TOEWALL, WL = WALL (UNIQUE LOCATION), WW = WINGWALL

SPECIFICATIONS					BENDING DIMENSIONS (FEET-INCHES /QUARTER INCH)										
QTY.	SIZE	LENGTH	MARK	TYPE	A	B	C	D	E	F/R	G	H	J	K	O
BARRIER WALL I															
236	6	4-04 0	WL601E	STR		4-04 0									
40	5	24-02 0	WL502E	STR		24-02 0									
118	6	6-10 3	WL603E	T15		3-02 0	0-05 1	2-07 0	0-08 2			0-07 0	0-03 1	2-06 3	1-01 1
28	5	24-02 0	WL504E	STR		24-02 0									
236	6	4-00 0	WL605E	STR		4-00 0									
18	5	60-00 0	WL506E	STR		60-00 0									
260	6	7-09 3	WL607E	F	1-00 0	0-06 2	0-11 3	1-02 1	1-01 1	2-00 0	1-00 0	0-09 3		0-06 3	
260	5	8-02 0	WL508E	T2	0-06 0	2-01 0	1-06 0	2-01 0	1-06 0		0-06 0				
168*	6	2-00 0	WL611E	STR		2-00 0									
		TO				TO									
		4-01 2				4-01 2									
			*2 SETS OF 84												
32*	5	5-01 3	WL512E	STR		5-01 3									
		TO				TO									
		33-00 0				33-00 0									
			*2 SETS OF 16												
136	6	6-10 3	WL613E	T15		3-02 0	0-05 1	2-07 0	0-08 2			0-07 0	0-03 1	2-06 3	1-01 1
14	5	34-00 0	WL514E	STR		34-00 0									
248	6	4-00 0	WL615E	STR		4-00 0									
4	6	33-03 0	WL616E	STR		33-03 0									
10	5	37-04 0	WL517E	STR		37-04 0									
6*	6	5-03 2	WL618E	T15		2-04 0	0-06 1	1-08 3	0-08 2			0-07 0	0-02 1	1-08 3	1-01 1
		TO				TO	TO	TO					TO	TO	
		6-10 3				3-02 0	0-05 1	2-07 0					0-03 1	2-06 3	
2	5	34-08 2	WL519E	STR		34-08 2									
2	5	36-08 2	WL520E	STR		36-08 2									

SPECIFICATIONS					BENDING DIMENSIONS (FEET-INCHES /QUARTER INCH)										
QTY.	SIZE	LENGTH	MARK	TYPE	A	B	C	D	E	F/R	G	H	J	K	O
BARRIER WALL II															
236	6	4-04 0	WL601E	STR		4-04 0									
40	5	24-02 0	WL502E	STR		24-02 0									
118	6	6-10 3	WL603E	T15		3-02 0	0-05 1	2-07 0	0-08 2			0-07 0	0-03 1	2-06 3	1-01 1
28	5	24-02 0	WL504E	STR		24-02 0									
236	6	4-00 0	WL605E	STR		4-00 0									
18	5	60-00 0	WL506E	STR		60-00 0									
260	6	7-09 3	WL607E	F	1-00 0	0-06 2	0-11 3	1-02 1	1-01 1	2-00 0	1-00 0	0-09 3		0-06 3	
260	5	8-02 0	WL508E	T2	0-06 0	2-01 0	1-06 0	2-01 0	1-06 0		0-06 0				
168*	6	2-00 0	WL611E	STR		2-00 0									
		TO				TO									
		4-01 2				4-01 2									
			*2 SETS OF 84												
32*	5	5-01 3	WL512E	STR		5-01 3									
		TO				TO									
		33-00 0				33-00 0									
			*2 SETS OF 16												
136	6	6-10 3	WL613E	T15		3-02 0	0-05 1	2-07 0	0-08 2			0-07 0	0-03 1	2-06 3	1-01 1
14	5	34-00 0	WL514E	STR		34-00 0									
248	6	4-00 0	WL615E	STR		4-00 0									
4	6	33-03 0	WL616E	STR		33-03 0									
10	5	37-04 0	WL517E	STR		37-04 0									
6*	6	5-03 2	WL618E	T15		2-04 0	0-06 1	1-08 3	0-08 2			0-07 0	0-02 1	1-08 3	1-01 1
		TO				TO	TO	TO					TO	TO	
		6-10 3				3-02 0	0-05 1	2-07 0					0-03 1	2-06 3	
2	5	34-08 2	WL519E	STR		34-08 2									
2	5	36-08 2	WL520E	STR		36-08 2									

SPECIFICATIONS					BENDING DIMENSIONS (FEET-INCHES /QUARTER INCH)										
QTY.	SIZE	LENGTH	MARK	TYPE	A	B	C	D	E	F/R	G	H	J	K	O
BARRIER WALL III															
236	6	4-04 0	WL601E	STR		4-04 0									
40	5	24-02 0	WL502E	STR		24-02 0									
118	6	6-10 3	WL603E	T15		3-02 0	0-05 1	2-07 0	0-08 2			0-07 0	0-03 1	2-06 3	1-01 1
28	5	24-02 0	WL504E	STR		24-02 0									
236	6	4-00 0	WL605E	STR		4-00 0									
18	5	60-00 0	WL506E	STR		60-00 0									
248	6	7-09 3	WL607E	F	1-00 0	0-06 2	0-11 3	1-02 1	1-01 1	2-00 0	1-00 0	0-09 3		0-06 3	
248	5	8-02 0	WL508E	T2	0-06 0	2-01 0	1-06 0	2-01 0	1-06 0		0-06 0				
6	6	6-02 2	WL609E	F		0-06 2	0-11 3	1-11 1		2-09 0		0-09 3		0-06 3	
6	5	4-08 0	WL510E	17		1-07 0	1-06 0	1-07 0							
168*	6	2-00 0	WL611E	STR		2-00 0									
		TO				TO									
		4-01 2				4-01 2									
			*2 SETS OF 84												
32*	5	5-01 3	WL512E	STR		5-01 3									
		TO				TO									
		33-00 0				33-00 0									
			*2 SETS OF 16												
136	6	6-10 3	WL613E	T15		3-02 0	0-05 1	2-07 0	0-08 2			0-07 0	0-03 1	2-06 3	1-01 1
28	5	34-00 0	WL514E	STR		34-00 0									
248	6	4-00 0	WL615E	STR		4-00 0									
4	6	33-03 0	WL616E	STR		33-03 0									

ASTM STANDARD ENGLISH REINFORCING BARS				RECOMMENDED END HOOKS, APPLICABLE TO ALL GRADES				STIRRUP AND TIE HOOKS, APPLICABLE TO ALL GRADES			
	NOMINAL DIMENSIONS				180° HOOKS		90° HOOKS		90° HOOK	135° HOOK	
BAR SIZE	DIAMETER (INCHES)	AREA (INCHES²)	WEIGHT (LBS./FT.)	D	A OR G	J	A OR G	D	A OR G	A OR G	H
3	0.375	0.110	0.376	2¼″	5″	3″	6″	1½″	4″	4″	2½″
4	0.500	0.200	0.668	3″	6″	4″	8″	2″	4½″	4½″	3″
5	0.625	0.310	1.043	3¾″	7″	5″	10″	2½″	6″	5½″	3¾″
6	0.750	0.440	1.502	4½″	8″	6″	1-0″	4½″	1-0″	8″	4½″
7	0.875	0.600	2.044	5¼″	10″	7″	1-2″	5¼″	1-2″	9″	5¼″
8	1.000	0.790	2.670	6″	11″	8″	1-4″	6″	1-4″	10½″	6″
9	1.128	1.000	3.400	9½″	1-3″	11¾″	1-7″				
10	1.270	1.270	4.303	10¾″	1-5″	1-1¼″	1-10″				
11	1.410	1.560	5.313	1-0″	1-7″	1-2¾″	2-0″				
14	1.693	2.250	7.650	1-6¼″	2-3″	1-9¾″	2-7″				
18	2.257	4.000	13.600	2-0″	3-0″	2-4½″	3-5″				

NOTES:

1. FIGURES SHOWN IN CIRCLES REPRESENT BAR BEND TYPES.
2. STANDARD BAR BENDS INCLUDE ONLY THOSE TYPES BELOW, INDICATED AS SUCH.
3. ALL DIMENSIONS OUT-TO-OUT, EXCEPT "A" AND "G" ON STD. 180° AND 135° HOOKS.
4. "J" DIMENSIONS ON 180° HOOKS TO BE SHOWN ONLY WHERE NECESSARY TO RESTRICT HOOK SIZE, OTHERWISE STANDARD 'ACI' HOOKS ARE TO BE USED.
5. WHERE "J" IS NOT SHOWN, "J" WILL BE KEPT EQUAL TO OR LESS THAN "H" ON TYPES 3, 5 AND 22. WHERE "J" CAN EXCEED "H", IT SHALL BE SHOWN.
6. "H" DIMENSIONS OF STIRRUPS TO BE SHOWN AS NEEDED TO FIT WITHIN THE CONCRETE.
7. UNLESS OTHERWISE NOTED, DIAMETER "D" IS THE SAME FOR ALL BENDS AND HOOKS ON A BAR (EXCEPT FOR BEND TYPES 11 AND 13).
8. WHERE SLOPE DIFFERS FROM 45° OFFSET, "H" AND "K" MUST BE SHOWN.
9. WHERE BARS ARE TO BE BENT MORE ACCURATELY THAN STANDARD BENDING TOLERANCES, BENDING DIMENSIONS REQUIRING CLOSER FABRICATION SHOULD HAVE LIMITS INDICATED.
10. FOR RECOMMENDED DIAMETER "D", OF BENDS, HOOKS, ETC., REFER TO TABLE ABOVE, 'CRSI' OR 'ACI' TABLES WHERE APPLICABLE AND REQUIRED.
11. TYPE S1-S6, S11, T1-T3 AND T6-T9 APPLICABLE TO BAR SIZES #3 THROUGH #8.

STANDARD BAR BENDS

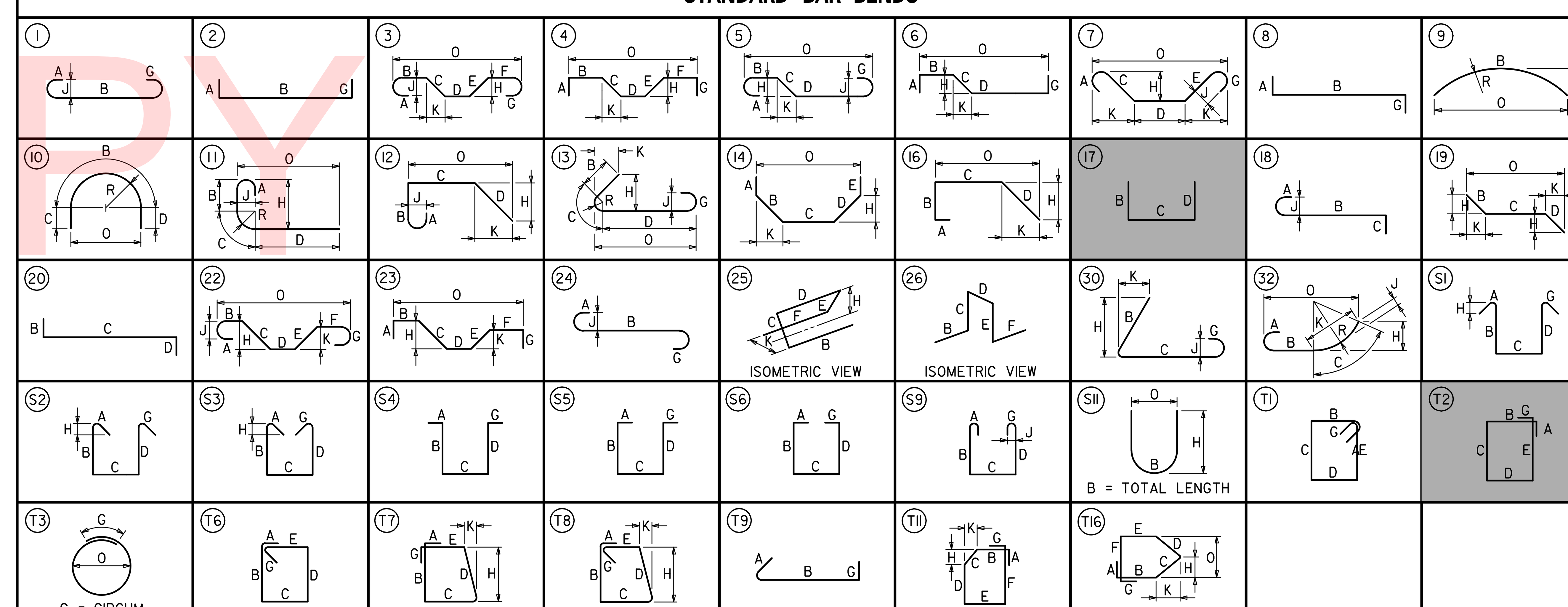

SPECIAL BAR BENDS

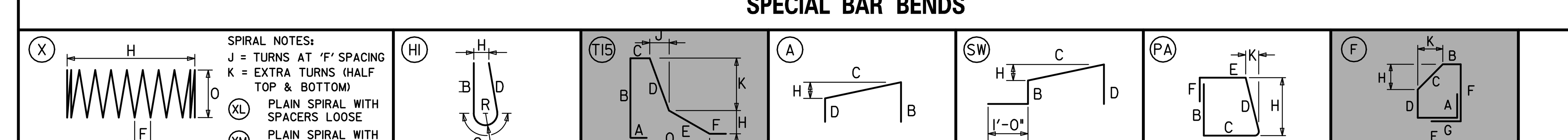

STIRRUP AND TIE HOOKS

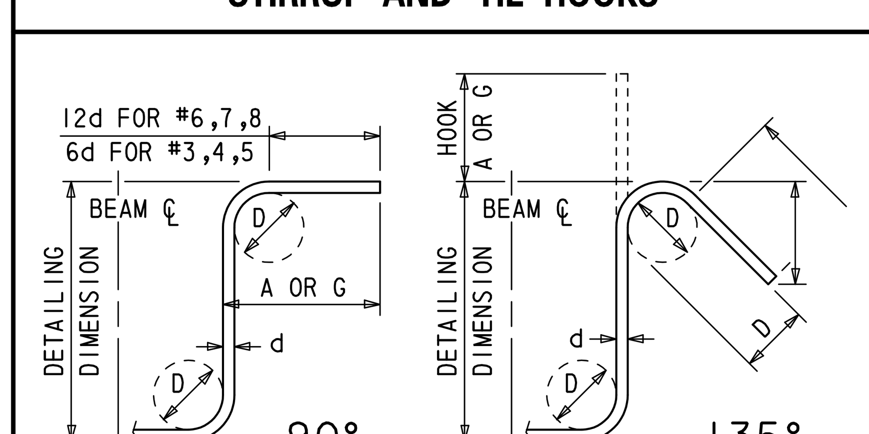

180° AND 90° END HOOKS

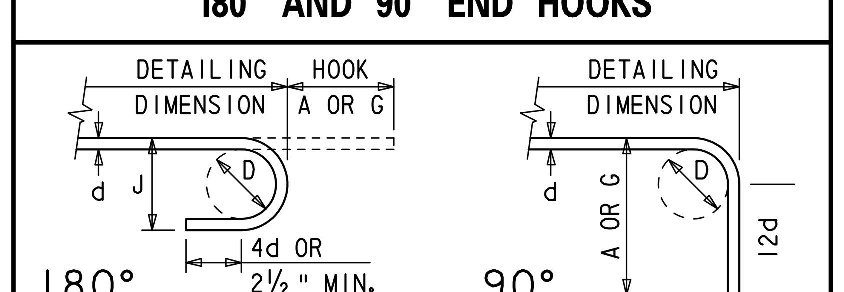

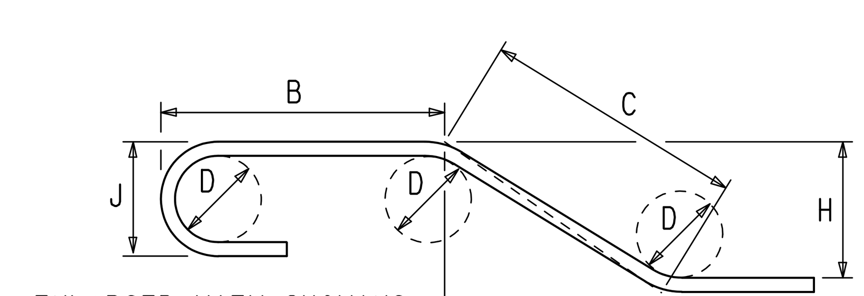

ENLARGED VIEW SHOWING BAR BENDING DETAILS

DT-32

DELAWARE DEPARTMENT OF TRANSPORTATION

ADDENDUMS / REVISIONS

NOT TO SCALE

US 301 & SR 1 INTERCHANGE

CONTRACT	BRIDGE NO.
T200911302	DESIGNED BY: W.T.R.
COUNTY	
NEW CASTLE	CHECKED BY: B.K.B.

BARRIER WALL I, II, AND III REINFORCEMENT LIST

SHEET NO.
115
TOTAL SHTS.
491

N:\31653-000\Contract 1B\CADD\DT032U301_1B.dgn
2/5/2013 7:25:18 AM

① ANY MARK NUMBER WITH SUFFIX 'E' DENOTES EPOXY COATED REINFORCING STEEL.

② ALL MARK 'LOCATION PREFIXES' SHALL CONSIST OF TWO LETTERS AND ARE AS FOLLOWS: AB = ABUTMENT, AS = APPROACH SLAB, BC = BOX CULVERT, BW = BACKWALL, CL = COLUMN, DK = DECK, DL = DOWEL, FT = FOOTING, HW = HEADWALL, MS = MISC. BARS, PA = PARAPET, PR = PIER, SC = SHEETPILE CAP, SL = SLAB, TW = TOEWALL, WL = WALL (UNIQUE LOCATION), WW = WINGWALL

SPECIFICATIONS					BENDING DIMENSIONS (FEET-INCHES /QUARTER INCH)											
QTY.	SIZE	LENGTH	MARK	TYPE	A	B	C	D	E	F/R	G	H	J	K	O
BARRIER WALL IV															
236	6	4-04 0	WL601E	STR		4-04 0									
40	5	24-02 0	WL502E	STR		24-02 0									
118	6	6-10 3	WL603E	T15		3-02 0	0-05 1	2-07 0	0-08 2			0-07 0	0-03 1	2-06 3	1-01 1
28	5	24-02 0	WL504E	STR		24-02 0									
236	6	4-00 0	WL605E	STR		4-00 0									
18	5	60-00 0	WL506E	STR		60-00 0									
260	6	7-09 3	WL607E	F	1-00 0	0-06 2	0-11 3	1-02 1	1-01 1	2-00 0	1-00 0	0-09 3		0-06 3	
260	5	8-02 0	WL508E	T2	0-06 0	2-01 0	1-06 0	2-01 0	1-06 0		0-06 0				
168*	6	2-00 0	WL611E	STR		2-00 0									
		T0				T0									
		4-01 2				4-01 2									
			*2 SETS OF	84											
32*	5	5-01 3	WL512E	STR		5-01 3									
		T0				T0									
		33-00 0				33-00 0									
			*2 SETS OF	16											
136	6	6-10 3	WL613E	T15		3-02 0	0-05 1	2-07 0	0-08 2			0-07 0	0-03 1	2-06 3	1-01 1
14	5	34-00 0	WL514E	STR		34-00 0									
248	6	4-00 0	WL615E	STR		4-00 0									
4	6	33-03 0	WL616E	STR		33-03 0									
6*	6	5-03 2	WL618E	T15		2-04 0	0-06 1	1-08 3	0-08 2			0-07 0	0-02 1	1-08 3	1-01 1
		T0				T0	T0	T0					T0	T0	
		6-10 3				3-02 0	0-05 1	2-07 0					0-03 1	2-06 3	
2	5	34-08 2	WL519E	STR		34-08 2									
2	5	36-08 2	WL520E	STR		36-08 2									

SPECIFICATIONS					BENDING DIMENSIONS (FEET-INCHES /QUARTER INCH)											
QTY.	SIZE	LENGTH	MARK	TYPE	A	B	C	D	E	F/R	G	H	J	K	O
BARRIER WALL V															
236	6	4-04 0	WL601E	STR		4-04 0									
40	5	24-02 0	WL502E	STR		24-02 0									
118	6	6-10 3	WL603E	T15		3-02 0	0-05 1	2-07 0	0-08 2			0-07 0	0-03 1	2-06 3	1-01 1
28	5	24-02 0	WL504E	STR		24-02 0									
236	6	4-00 0	WL605E	STR		4-00 0									
18	5	60-00 0	WL506E	STR		60-00 0									
245	6	7-09 3	WL607E	F	1-00 0	0-06 2	0-11 3	1-02 1	1-01 1	2-00 0	1-00 0	0-09 3		0-06 3	
245	5	8-02 0	WL508E	T2	0-06 0	2-01 0	1-06 0	2-01 0	1-06 0		0-06 0				
10	6	6-02 2	WL609E	F		0-06 2	0-11 3	1-11 1		2-09 0		0-09 3		0-06 3	
10	5	4-08 0	WL510E	17		1-07 0	1-06 0	1-07 0							
168*	6	2-00 0	WL611E	STR		2-00 0									
		T0				T0									
		4-01 2				4-01 2									
			*2 SETS OF	84											
32*	5	5-01 3	WL512E	STR		5-01 3									
		T0				T0									
		33-00 0				33-00 0									
			*2 SETS OF	16											
136	6	6-10 3	WL613E	T15		3-02 0	0-05 1	2-07 0	0-08 2			0-07 0	0-03 1	2-06 3	1-01 1
28	5	34-00 0	WL514E	STR		34-00 0									
248	6	4-00 0	WL615E	STR		4-00 0									
4	6	33-03 0	WL616E	STR		33-03 0									

SPECIFICATIONS					BENDING DIMENSIONS (FEET-INCHES /QUARTER INCH)											
QTY.	SIZE	LENGTH	MARK	TYPE	A	B	C	D	E	F/R	G	H	J	K	O
BARRIER WALL VI															
236	6	4-04 0	WL601E	STR		4-04 0									
40	5	24-02 0	WL502E	STR		24-02 0									
118	6	6-10 3	WL603E	T15		3-02 0	0-05 1	2-07 0	0-08 2			0-07 0	0-03 1	2-06 3	1-01 1
28	5	24-02 0	WL504E	STR		24-02 0									
236	6	4-00 0	WL605E	STR		4-00 0									
18	5	60-00 0	WL506E	STR		60-00 0									
243	6	7-09 3	WL607E	F	1-00 0	0-06 2	0-11 3	1-02 1	1-01 1	2-00 0	1-00 0	0-09 3		0-06 3	
243	5	8-02 0	WL508E	T2	0-06 0	2-01 0	1-06 0	2-01 0	1-06 0		0-06 0				
11	6	6-02 2	WL609E	F		0-06 2	0-11 3	1-11 1		2-09 0		0-09 3		0-06 3	
11	5	4-08 0	WL510E	17		1-07 0	1-06 0	1-07 0							
168*	6	2-00 0	WL611E	STR		2-00 0									
		T0				T0									
		4-01 2				4-01 2									
			*2 SETS OF	84											
32*	5	5-01 3	WL512E	STR		5-01 3									
		T0				T0									
		33-00 0				33-00 0									
			*2 SETS OF	16											
136	6	6-10 3	WL613E	T15		3-02 0	0-05 1	2-07 0	0-08 2			0-07 0	0-03 1	2-06 3	1-01 1
28	5	34-00 0	WL514E	STR		34-00 0									
248	6	4-00 0	WL615E	STR		4-00 0									
4	6	33-03 0	WL616E	STR		33-03 0									

UNOFFICIAL WEBSITE COPY

ASTM STANDARD ENGLISH REINFORCING BARS				RECOMMENDED END HOOKS, APPLICABLE TO ALL GRADES				STIRRUP AND TIE HOOKS, APPLICABLE TO ALL GRADES			
	NOMINAL DIMENSIONS				180° HOOKS		90° HOOKS		90° HOOK	135° HOOK	
BAR SIZE	DIAMETER (INCHES)	AREA (INCHES²)	WEIGHT (LBS./FT.)	D	A OR G	J	A OR G	D	A OR G	A OR G	H
3	0.375	0.110	0.376	2¼"	5"	3"	6"	1½"	4"	4"	2½"
4	0.500	0.200	0.668	3"	6"	4"	8"	2"	4½"	4½"	3"
5	0.625	0.310	1.043	3¾"	7"	5"	10"	2½"	6"	5½"	3¾"
6	0.750	0.440	1.502	4½"	8"	6"	1-0"	4½"	1-0"	8"	4½"
7	0.875	0.600	2.044	5¼"	10"	7"	1-2"	5¼"	1-2"	9"	5¼"
8	1.000	0.790	2.670	6"	11"	8"	1-4"	6"	1-4"	10½"	6"
9	1.128	1.000	3.400	9½"	1-3"	11¾"	1-7"				
10	1.270	1.270	4.303	10¾"	1-5"	1-1¼"	1-10"				
11	1.410	1.560	5.313	1-0"	1-7"	1-2¾"	2-0"				
14	1.693	2.250	7.650	1-6¼"	2-3"	1-9¾"	2-7"				
18	2.257	4.000	13.600	2-0"	3-0"	2-4½"	3-5"				

NOTES:

1. FIGURES SHOWN IN CIRCLES REPRESENT BAR BEND TYPES.
2. STANDARD BAR BENDS INCLUDE ONLY THOSE TYPES BELOW, INDICATED AS SUCH.
3. ALL DIMENSIONS OUT-TO-OUT, EXCEPT "A" AND "G" ON STD. 180° AND 135° HOOKS.
4. "J" DIMENSIONS ON 180° HOOKS TO BE SHOWN ONLY WHERE NECESSARY TO RESTRICT HOOK SIZE, OTHERWISE STANDARD 'ACI' HOOKS ARE TO BE USED.
5. WHERE "J" IS NOT SHOWN, "J" WILL BE KEPT EQUAL TO OR LESS THAN "H" ON TYPES 3, 5 AND 22. WHERE "J" CAN EXCEED "H", IT SHALL BE SHOWN.
6. "H" DIMENSIONS OF STIRRUPS TO BE SHOWN AS NEEDED TO FIT WITHIN THE CONCRETE.
7. UNLESS OTHERWISE NOTED, DIAMETER "D" IS THE SAME FOR ALL BENDS AND HOOKS ON A BAR (EXCEPT FOR BEND TYPES 11 AND 13).
8. WHERE SLOPE DIFFERS FROM 45° OFFSET, "H" AND "K" MUST BE SHOWN.
9. WHERE BARS ARE TO BE BENT MORE ACCURATELY THAN STANDARD BENDING TOLERANCES, BENDING DIMENSIONS REQUIRING CLOSER FABRICATION SHOULD HAVE LIMITS INDICATED.
10. FOR RECOMMENDED DIAMETER "D", OF BENDS, HOOKS, ETC., REFER TO TABLE ABOVE, 'CRSI' OR 'ACI' TABLES WHERE APPLICABLE AND REQUIRED.
11. TYPE S1-S6, S11, T1-T3 AND T6-T9 APPLICABLE TO BAR SIZES #3 THROUGH #8.

STANDARD BAR BENDS

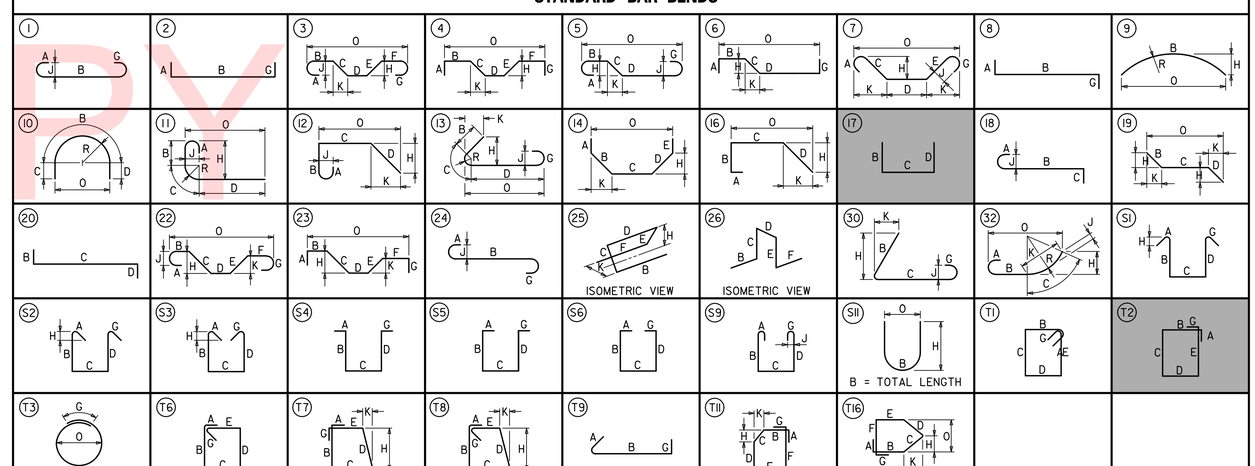

SPECIAL BAR BENDS

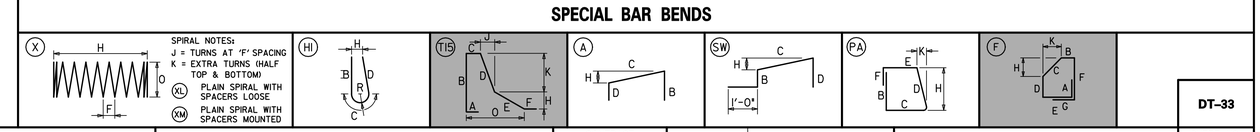

STIRRUP AND TIE HOOKS

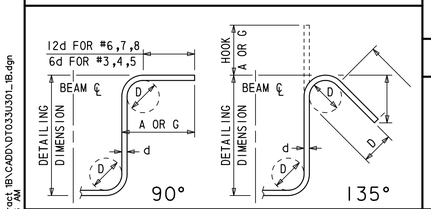

180° AND 90° END HOOKS

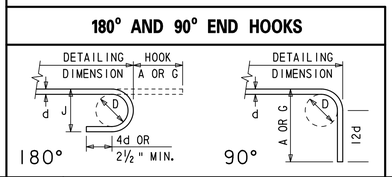

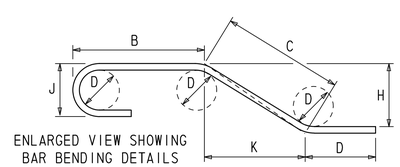

ENLARGED VIEW SHOWING BAR BENDING DETAILS

N:\31653-000\Contract 1B\CADD\DT033U301_1B.dgn
2/5/2013 7:25:48 AM

DELAWARE DEPARTMENT OF TRANSPORTATION

ADDENDUMS / REVISIONS

NOT TO SCALE

US 301 & SR 1 INTERCHANGE

CONTRACT	BRIDGE NO.
T200911302	DESIGNED BY: W.T.R.
COUNTY	CHECKED BY: B.K.B.
NEW CASTLE	

BARRIER WALL IV, V, AND VI REINFORCEMENT LIST

DT-33

SHEET NO.
116
TOTAL SHTS.
491

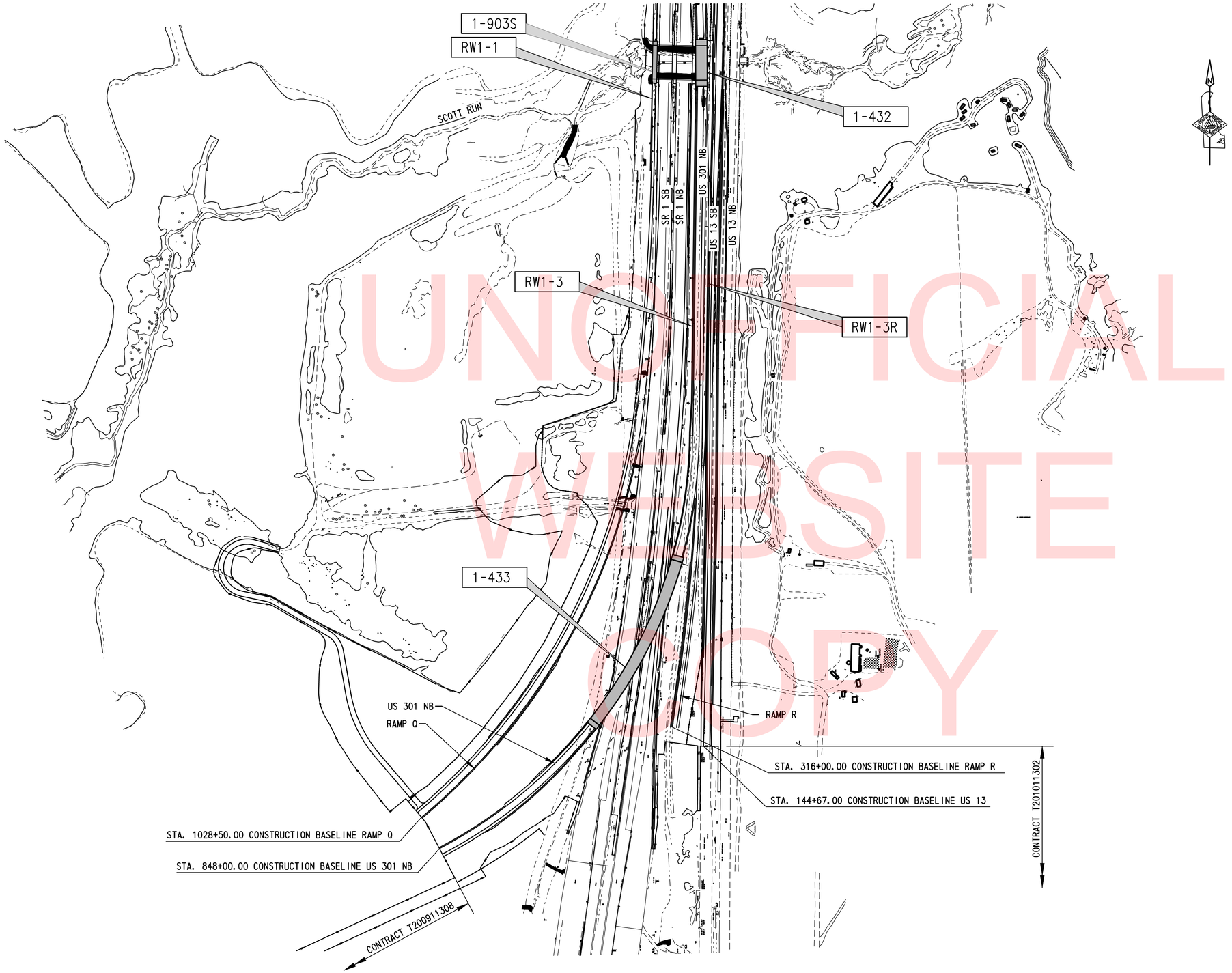

UNOFFICIAL WEBSITE COPY

STRUCTURE LOCATION PLAN - CONTRACT T200911302

SCALE: 1" = 200'-0"

N:\31653-000\Contract 1B\CADD\S0041301_1B.dgn
2/5/2013 7:26:58 AM

DELAWARE DEPARTMENT OF TRANSPORTATION	ADDENDUMS / REVISIONS	200 100 0 200 400 SCALE: 1" = 200'	US 301 & SR 1 INTERCHANGE	CONTRACT T200911302	BRIDGE NO.	STRUCTURE LOCATION PLAN	IS-04
				COUNTY NEW CASTLE	DESIGNED BY: W.R.A.		SHEET NO. 117
					CHECKED BY: P.S.D.		TOTAL SHTS. 491

PROJECT NOTES:

1. LOCATION
PROPOSED WIDENING OF EXISTING BRIDGE NO. 1-903S CARRYING SOUTHBOUND SR1 OVER SCOTT RUN IN NEW CASTLE COUNTY, DELAWARE.

2. ELEVATIONS
VERTICAL DATUM IS REFERENCED TO NAVD 88.

3. DESIGN CRITERIA
4TH ED. AASHTO LRFD BRIDGE DESIGN SPECIFICATIONS INCLUDING 2008 AND 2009 INTERIM PROVISIONS. DELDOT BRIDGE DESIGN MANUAL, MAY 2005, LATEST REVISIONS JANUARY 2008.

4. LOADING
HL-93 AND DELAWARE LEGAL LOAD FOR LIVE LOAD.
15 PSF FOR STAY-IN-PLACE DECK FORMS (EXCEPT DECK OVERHANG).
25 PSF FOR FUTURE WEARING SURFACE.
40 PCF EQUIVALENT FLUID EARTH PRESSURE.

5. CONCRETE
ALL CONCRETE PROPERTIES SHALL BE IN ACCORDANCE WITH SECTION 812 OF THE DELAWARE DEPARTMENT OF TRANSPORTATION STANDARD SPECIFICATIONS.

CLASS A - FOOTINGS, ABUTMENTS, STEMS, BACKWALLS, WINGWALLS, PIER BENT CAP, FILL FOR STEEL PIPE PILES, SUPERSTRUCTURE DIAPHPRAGMS AND PARAPETS (f'c = 4,500 PSI).

CLASS D - CONCRETE DECK SLAB, APPROACH SLABS (f'c = 4,500 PSI).

ALL EXPOSED EDGES SHALL BE CHAMFERED ¾" UNLESS NOTED OTHERWISE.

6. REINFORCING STEEL
ALL REINFORCING STEEL SHALL BE AASHTO M31 (ASTM A615), GRADE 60 AND UNLESS SPECIFIED OTHERWISE ON THE PLANS SHALL BE PROTECTED WITH FUSION BONDED EPOXY, CONFORMING TO AASHTO M284 (ASTM A775) AND DENOTED WITH A SUFFIX 'E' IN THE BAR MARKS.

MINIMUM CONCRETE COVER FOR REINFORCING STEEL SHALL BE:

FOUNDATION ELEMENTS: 3"
DECK SLABS: 2½" TOP OF SLAB (INCLUDES ½" INTEGRAL WEARING SURFACE)
1" BOTTOM OF SLAB WHEN STAY-IN-PLACE FORMS ARE USED
PIER CAPS: 2" CLEAR TO STIRRUPS
2" CLEAR TO MAIN STEEL AT ENDS

7. PRESTRESSED REINFORCED CONCRETE MEMBERS
PRESTRESSED CONCRETE DESIGN: DESIGN CONSISTENT WITH 4TH ED. AASHTO LRFD, WITH 2008 AND 2009 INTERIM PROVISIONS. THE PRECAST CONCRETE BEAMS ARE DESIGNED AS NONCOMPOSITE SIMPLE SPANS FOR ALL DEAD LOADS EXCEPT THE PARAPET AND FUTURE WEARING SURFACE. THE PRECAST BEAMS ARE DESIGNED AS COMPOSITE SIMPLE SPANS FOR LIVE LOADS AS WELL AS THE PARAPET AND FUTURE WEARING SURFACE DEAD LOADS. REINFORCING STEEL DESIGN: fs = 24,000 PSI(NONPRETENSIONING STEEL). THE MINIMUM AGE OF PRECAST GIRDERS FOR PLACEMENT OF THE PIER DIAPHRAGM AND DECK SLAB CLOSURE POUR AT THE PIER SHALL BE 90 DAYS.

PRESTRESSED CONCRETE: THE MINIMUM COMPRESSIVE STRENGTH FOR PRECAST CONCRETE AT THE AGE OF 28 DAYS SHALL BE f'c = 5,000 PSI. THE MINIMUM COMPRESSIVE STRENGTH AT THE TRANSFER OF PRESTRESS SHALL BE f'ci = 4,500 PSI.

PRETENSIONING STEEL: PRETENSIONING STEEL SHALL CONSIST OF 0.5 INCH DIAMETER 7-WIRE LOW-RELAXATION STRANDS CONFORMING TO THE REQUIREMENTS OF M203 GRADE 270. EACH 0.5 INCH STRAND SHALL BE PRETENSIONED TO 30,980 LBS (0.75 f's). AFTER ESTIMATED LOSSES OF 29,640 PSI, THE FINAL EFFECTIVE PRESTRESS FORCE PER STRAND IS 26,450 LBS. CAMBER GROWTH IN PRETENSIONED BEAMS BETWEEN THE TIME OF STRESSING AND THE TIME OF SLAB PLACEMENT IS ASSUMED TO BE 80% FOR CAMBER CALCULATIONS.

8. FOUNDATIONS
ALL PROPOSED SUBSTRUCTURE UNITS WILL BE SUPPORTED ON OPEN END STEEL PIPE PILES AS INDICATED ON THE PILE PLAN SHEETS.

PILES SHALL BE ASTM A252, GRADE 3 WITH A MINIMUM YIELD STRENGTH OF 45,000 PSI

16" DIAMETER PIPE PILES SHALL HAVE A WALL THICKNESS OF 0.500 IN. COAT PIER BENT PILES WITH COAL TAR EPOXY AS INDICATED ON DWG. NO. PL-03.

ONCE INSTALLED, ALL PILES SHALL BE FILLED WITH CLASS A CONCRETE TO THE MINIMUM ELEVATIONS SHOWN.

9. CONSTRUCTION JOINTS
KEYED CONSTRUCTION JOINTS SHALL BE 2" X 4" OR AS NOTED. ALL EXPOSED CONSTRUCTION JOINT EDGES SHALL HAVE A ¾" V-NOTCH UNLESS NOTED OTHERWISE.

10. EXISTING STRUCTURE
ALL DIMENSIONS AND STATIONS SHOWN ARE APPROXIMATE. ALL DIMENSIONS AFFECTED BY THE GEOMETRICS, AND/OR LOCATION OF EXISTING STRUCTURES SHALL BE CHECKED IN THE FIELD BY THE CONTRACTOR BEFORE ANY CONSTRUCTION IS DONE AND BEFORE ANY MATERIAL IS ORDERED OR FABRICATED. IF THE GEOMETRICS DIFFER SIGNIFICANTLY FROM THAT SHOWN ON THE PLANS, THE ENGINEER SHALL BE CONTACTED FOR EVALUATION. IT SHALL BE THE RESPONSIBILITY OF THE CONTRACTOR TO SUPPLY THE ENGINEER WITH ALL FIELD DIMENSIONS REQUIRED TO CHECK DETAIL DRAWINGS.

ANY DAMAGE INCURRED TO EXISTING STRUCTURES TO REMAIN RESULTING FROM THE CONTRACTOR'S OPERATIONS SHALL BE REPAIRED ALL AT CONTRACTOR'S EXPENSE TO THE SATISFACTION OF THE ENGINEER.

11. MISCELLANEOUS
ALL AREAS DISTURBED BY THE CONTRACTOR'S OPERATIONS SHALL BE GRADED BACK TO THE ORIGINAL EXISTING GRADE, TOP SOILED, SEEDED AND MULCHED. PAYMENT SHALL BE INCIDENTAL TO THE CONTRACT. AS DIRECTED BY THE ENGINEER, ALL AREAS DISTURBED BY THE CONTRACTOR'S OPERATION RESULTING FROM UNAUTHORIZED ACTIVITIES OUTSIDE THE LIMIT OF CONSTRUCTION SHALL BE TOP SOILED,SEEDED, AND MULCHED AT THE CONTRACTOR'S EXPENSE.

12. SLOPE PROTECTION
EXISTING RIPRAP SHALL BE REMOVED AND REPLACED AT THE ABUTMENT EXTENSIONS TO THE LIMITS SHOWN ON THE PLANS. REMOVAL AND REPLACEMENT SHALL BE INCIDENTAL TO ITEM 207000 - STRUCTURE EXCAVATION AND BACKFILL FOR STRUCTURES.

13. STABILIZING STRUCTURAL EXCAVATIONS
IN LIEU OF A 2:1 SLOPE, THE CONTRACTOR MAY USE SHORING FOR EXCAVATIONS EXCEEDING 5 FEET IN HEIGHT. THE COST OF THE SHORING SHALL BE INCIDENTAL TO ITEM 207000 - EXCAVATION AND BACKFILL FOR STRUCTURES.

FOR ALL EXCAVATIONS REQUIRING TEMPORARY EXCAVATION SUPPORT, THE CONTRACTOR SHALL SUBMIT WORKING DRAWINGS AND CALCULATIONS FOR DESIGN OF THE TEMPORARY EXCAVATION SUPPORT SYSTEMS, SIGNED AND SEALED BY A PROFESSIONAL ENGINEER LICENSED TO PRACTICE IN DELAWARE. THE CONTRACTOR SHALL BE ENTIRELY RESPONSIBLE FOR THE DESIGN AND ADEQUACY OF THE TEMPORARY EXCAVATION SUPPORT SYSTEMS. METHODS OF DEWATERING EXCAVATIONS SHALL CONFORM TO THOSE SHOWN ON THE MAINTENANCE OF STREAMFLOW PLANS ON DWG. NOS. MS 1/2-1 AND MS 1/2-2.

THE FOLLOWING EARTH PRESSURE PARAMETERS ARE RECOMMENDED FOR USE IN DESIGNING TEMPORARY EXCAVATION SUPPORT SYSTEMS:

SOIL UNIT WT = 120 PCF
SOIL BUOYANT UNIT WT = 58 PCF
PHI = 30 DEG
c = 0 PSF
Ka = 0.333

14. HYDRAULIC DATA
DRAINAGE AREA = 3.72 SQ. MI.
25-YR FLOOD ELEVATION = 12.68
DESIGN FREQUENCY = 50 YEARS
DESIGN DISCHARGE = 1586 CFS
DESIGN HEADWATER ELEVATION = 13.24
DESIGN VELOCITY = 1.15 FPS
FLOW AREA OF PROPOSED OPENING = 1358 SF

NOTE: HYDRAULIC ANALYSIS CONDUCTED WITH EXISTING US 13 BOX CULVERT IN-PLACE, AS WORSE CASE SCENARIO.

NOTE: PEAK FLOWRATES WERE COMPUTED IN THE TR-20 HYDROLOGIC ANALYSES FOR SCOTT RUN (2011). SEE REPORT TITLED, "HYDROLOGIC AND HYDRAULIC ANALYSES OF SCOTT RUN WATERSHED AND PROPOSED BRIDGES 1-1, 1-2, 1-4 NB & SB, 1-6, AND 1-7 NB & SB FOR US 301 EXTENSION," DATED MAY 2011.

15. SCOUR DATA
BRIDGE BR1-903S HAS BEEN ANALYZED FOR THE EFFECTS OF SCOUR IN ACCORDANCE WITH FHWA HEC-18, 'EVALUATING SCOUR AT BRIDGES', AND HEC-23,'BRIDGE SCOUR AND STREAM INSTABILITY COUNTERMEASURES.' SCOUR COUNTERMEASURES HAVE BEEN DESIGNED FOR THE WORSE CASE OF THE OVERTOPPING FLOOD OR THE 500-YR FLOOD EVENT.

NOTE: SCOUR ANALYSES CONDUCTED WITH REMOVAL OF EXISTING US 13 BOX CULVERT, AS WORSE CASE SCENARIO.

DESIGN STORM EVENT = 100 YEAR FLOOD
DESIGN STORM DISCHARGE = 1887 CFS
DESIGN STORM HEADWATER ELEVATION = 11.08 FT
DESIGN STORM VELOCITY, CHANNEL = 1.90 FPS
DESIGN STORM DEPTH OF FLOW = 5.71 FT

CHECK STORM EVENT = 500 YEAR FLOOD
CHECK STORM DISCHARGE = 2568 CFS
CHECK STORM HEADWATER ELEVATION = 12.09 FT
CHECK STORM VELOCITY, CHANNEL = 2.18 FPS
CHECK STORM DEPTH OF FLOW = 6.73 FT

16. LOAD RATINGS
LOAD RATINGS FOR WIDENED BRIDGE NO. 1-903S WILL NOT BE GOVERNED BY THE PROPOSED CONSTRUCTION. EXISTING GIRDERS WILL CONTINUE TO GOVERN THE RATINGS.

17. UTILITIES
BEFORE BEGINNING WORK, THE CONTRACTOR SHALL GIVE NOTIFICATION BY TELEPHONE BY CALLING "MISS UTILITY" AT 1-800-282-8555 A MINIMUM OF 2 WORKING DAYS PRIOR TO START OF WORK. VERIFY AND LOCATE ALL UTILITIES PRIOR TO STARTING WORK.

COORDINATE THE REQUIREMENTS FOR PROTECTION OF ANY UTILITY WITH THE UTILITY OWNER PRIOR TO STARTING WORK.

CONDUCT OPERATIONS IN A MANNER WHICH ENSURES THAT THE UTILITIES WILL NOT BE DISTURBED OR ENDANGERED. ANY DAMAGE INCURRED TO THESE UTILITIES OR ANY OTHER UTILITIES, SHOWN OR NOT SHOWN ON THE PLANS, DUE TO THE CONTRACTOR'S OPERATIONS SHALL BE REPAIRED AT THE CONTRACTOR'S EXPENSE TO THE SATISFACTION OF THE APPROPRIATE UTILITY COMPANY. THE DEPARTMENT DOES NOT ASSUME RESPONSIBILITY FOR REIMBURSEMENT, PARTICIPATION IN DESIGN AND/OR REVISIONS, OR LIABILITY FOR ACCURACY OF TYPE, SIZE AND LOCATION OF ANY UTILITY.

THE CONTRACTOR IS RESPONSIBLE FOR TEMPORARILY SUPPORTING, PROTECTING, OR RELOCATING ANY UTILITIES DURING CONSTRUCTION. WHERE NECESSARY, THE COST FOR THIS WORK WILL BE INCIDENTAL TO THE CONTRACT.

18. STAGING AREAS
PROPER EROSION AND SEDIMENT CONTROL MEASURES AS DETERMINED BY THE ENGINEER SHALL BE INSTALLED IN ALL STAGING AREAS.

ALL AREAS USED BY THE CONTRACTOR FOR STAGING OPERATIONS SHALL BE FULLY RESTORED BY THE CONTRACTOR UPON COMPLETION OF THE PROJECT. IF THE STAGING AREA IS PAVED, IT SHALL BE RESTORED TO ITS ORIGINAL CONDITION. IF THE STAGING AREA IS UNPAVED, IT SHALL BE RE-GRADED, TOP SOILED, SEEDED AND MULCHED IN ACCORDANCE WITH DELAWARE STANDARD SPECIFICATION SECTIONS 732, 734 AND 735, FOR TOP SOIL, SEED, AND MULCH, RESPECTIVELY, TO THE SATISFACTION OF THE ENGINEER. THE SEED SHALL ADHERE TO THE SPECIFICATIONS OF SECTION 734 FOR PERMANENT GRASS SEEDING-DRY GROUND. ALL COSTS ASSOCIATED WITH RESTORATION OF THE STAGING AREA SHALL BE AT THE CONTRACTOR'S EXPENSE. IF THE ENGINEER DETERMINES THAT A SATISFACTORY STAND OF GRASS DOES NOT EXIST AT THE TIME OF FINAL INSPECTION, ALL COSTS ASSOCIATED WITH REESTABLISHING A SATISFACTORY STAND OF GRASS SHALL ALSO BE AT THE CONTRACTOR'S EXPENSE.

19. TEMPORARY PROTECTIVE SHIELD
THE CONTRACTOR SHALL INSTALL A TEMPORARY PROTECTIVE SHIELD DURING BRIDGE DEMOLITION AND CONSTRUCTION. THE TEMPORARY PROTECTIVE SHIELD SHALL COVER 5 FEET MINIMUM BEYOND ALL SIDES OF FULL DEPTH CONCRETE REMOVAL AND THE FULL WIDTH AND SPAN, BETWEEN ABUTMENT BEARING CENTERLINES, OF THE PROPOSED BRIDGE WIDENING.

BRIDGE NO. 1-903S INDEX OF SHEETS

SHEET NO.	DWG. NO.	TABLE OF CONTENTS
118	PN-01	PROJECT NOTES
119	QS-01	QUANTITY SUMMARY
120	PE-01	GENERAL PLAN AND ELEVATION
121	CS-01	SEQUENCE OF CONSTRUCTION - 1
122	CS-02	SEQUENCE OF CONSTRUCTION - 2
123	CS-03	SEQUENCE OF CONSTRUCTION - 3
124	CS-04	SEQUENCE OF CONSTRUCTION - 4
125	CS-05	SEQUENCE OF CONSTRUCTION - 5
126	FT-01	GEOMETRIC FOOTING LAYOUT PLAN
127	PL-01	SOUTH ABUTMENT PILE PLAN LAYOUT
128	PL-02	NORTH ABUTMENT PILE PLAN LAYOUT
129	PL-03	PIER BENT PILE PLAN LAYOUT AND STEEL PIPE PILE DETAILS
130	AB-01	SOUTH ABUTMENT PLAN AND ELEVATION
131	AB-02	NORTH ABUTMENT PLAN AND ELEVATION
132	AB-03	ABUTMENT TYPICAL SECTION & REINFORCEMENT DETAILS
133	WW-01	WING WALL ELEVATIONS & SECTIONS
134	PR-01	PIER BENT PLAN & ELEVATION
135	PR-02	PIER BENT REINFORCEMENT DETAILS
136	BR-01	ABUTMENT REINFORCEMENT BAR LIST
137	BR-02	PIER BENT REINFORCEMENT BAR LIST
138	TS-01	SUPERSTRUCTURE TYPICAL SECTION
139	FR-01	FRAMING PLAN
140	BM-01	PRESTRESSED GIRDER DETAILS
141	DK-01	DECK SLAB PLAN & CROSS SECTION
142	DK-02	DIAPHRAGM DETAILS - 1
143	DK-03	DIAPHRAGM DETAILS - 2
144	DK-04	DECK SLAB EXPANSION JOINT DETAILS - 1
145	DK-05	DECK SLAB EXPANSION JOINT DETAILS - 2
146	FD-01	FINISHED BRIDGE DECK ELEVATIONS
147	AS-01	APPROACH SLAB AND PARAPET CONDUIT DETAILS
148	BR-03	SUPERSTRUCTURE REINFORCEMENT BAR LIST
149	BO-01	BORING PROFILE

UNOFFICIAL WEBSITE COPY

UNOFFICIAL WEBSITE COPY

ITEM NO.	ITEM DESCRIPTION	UNITS	QUANTITY
202000	EXCAVATION AND EMBANKMENT	CY	50
202508	WETLAND ACCESS ROAD, TYPE II	LS	1
207000	EXCAVATION AND BACKFILL FOR STRUCTURES	CY	100
302012	DELAWARE NO. 57 STONE	TON	25
601502	TEMPORARY PROTECTIVE SHIELD	LS	1
602003	PORTLAND CEMENT CONCRETE MASONRY, ABUTMENT FOOTING, CLASS A	CY	37
602007	PORTLAND CEMENT CONCRETE MASONRY, PIER ABOVE FOOTING, CLASS A	CY	16
602013	PORTLAND CEMENT CONCRETE MASONRY, SUPERSTRUCTURE, CLASS D	CY	62
602014	PORTLAND CEMENT CONCRETE MASONRY, APPROACH SLAB, CLASS D	CY	28
602015	PORTLAND CEMENT CONCRETE MASONRY, ABUTMENT ABOVE FOOTING, CLASS A	CY	19
602017	PORTLAND CEMENT CONCRETE MASONRY, PARAPET, CLASS A	CY	22
602019	PORTLAND CEMENT CONCRETE MASONRY, SUPERSTRUCTURE, CLASS A	CY	10
602579	DRILLING HOLES AND INSTALLING DOWELS	EACH	182
602580	PARTIAL REMOVAL OF P.C.C. MASONRY	CY	35
603000	BAR REINFORCEMENT	LB	2,460
604000	BAR REINFORCEMENT, EPOXY COATED	LB	35,960
605511	PREFABRICATED EXPANSION JOINT SYSTEM, 3"	LF	35
605659	STRIP SEAL EXPANSION JOINT, 3"	LF	135
618558	STEEL PIPE PILES, 16" DIAMETER	LF	678
618559	STEEL PIPE TEST PILES, 16" DIAMETER	LF	215
618560	INSTALL STEEL PIPE PILES, 16" DIAMETER	LF	678
618561	INSTALL STEEL PIPE TEST PILES, 16" DIAMETER	LF	215
619501	PRODUCTION PILE RESTRIKE	EACH	3
619502	TEST PILE RESTRIKE	EACH	1
619519	DYNAMIC PILE TESTING BY CONTRACTOR	EACH	8
619539	SIGNAL MATCHING ANALYSIS BY CONTRACTOR	EACH	8
623001	PRESTRESSED REINFORCED CONCRETE MEMBERS, I-BEAMS	LS	1
712006	RIPRAP, R-5	SY	5
713003	GEOTEXTILES, RIPRAP	SY	10

NOTES:

1. ITEM 202000 IS REPRESENTED UNDER TYPE C MATERIAL REQUIRED, "TYPE C BACKFILL FOR STRUCTURES"; SEE DRAWING EW-02.

2. ITEM 207000 IS REPRESENTED ON DRAWING EW-02 UNDER EXCAVATION AVAILABLE FOR EMBANKMENT, "PLUS EXCAVATION AND BACKFILLING FOR STRUCTURES."

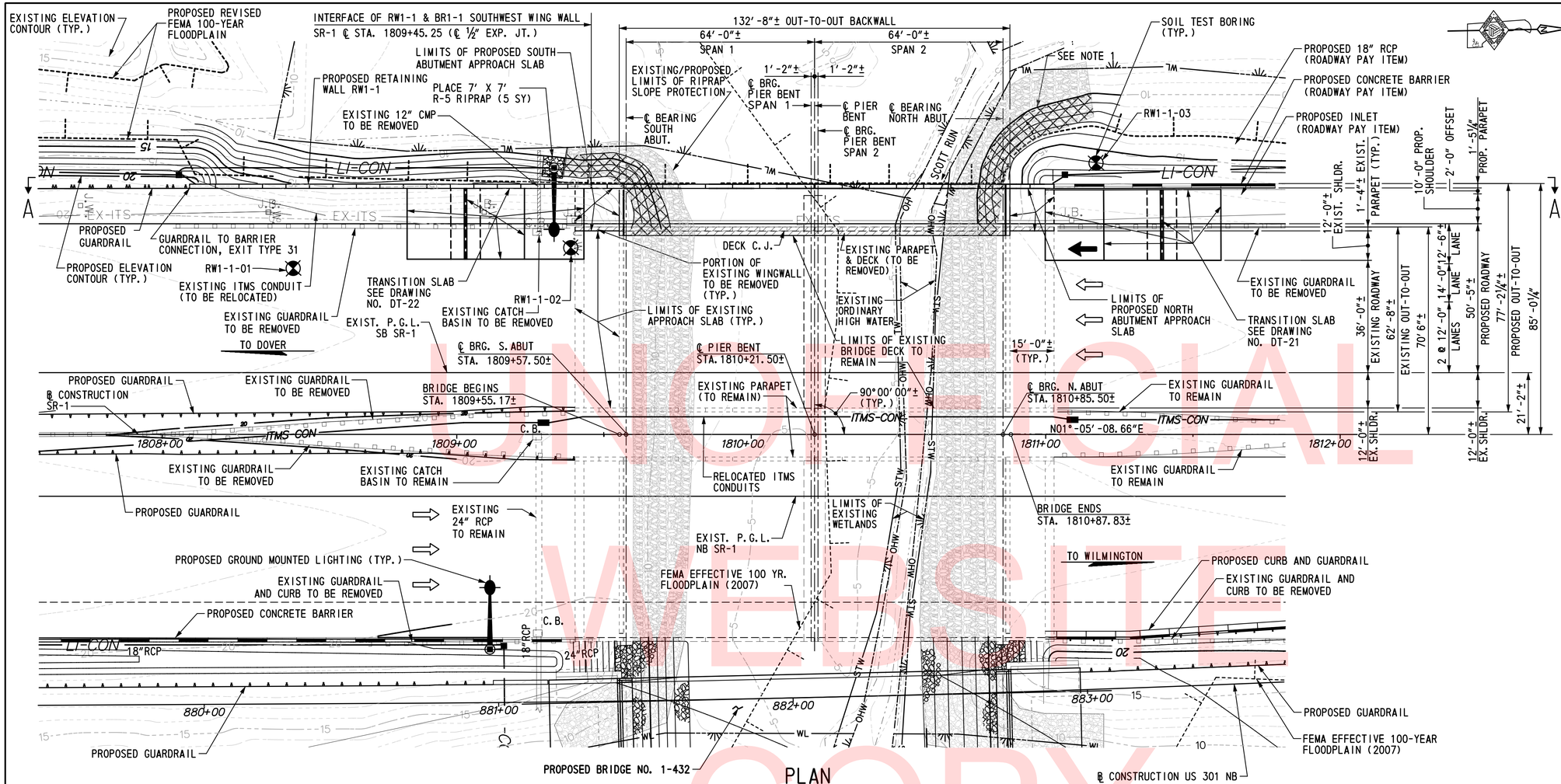

PLAN

SCALE: 1"=20'-0"

LEGEND

(SA)	SOUTH ABUTMENT
(NA)	NORTH ABUTMENT
(NF)	NEAR FACE
(FF)	FAR FACE
(EF)	EACH FACE
(T)	TOP
(B)	BOTTOM
(SAS)	SOUTH APPROACH SLAB
(NAS)	NORTH APPROACH SLAB
C.J.	CONSTRUCTION JOINT
U.N.O.	UNLESS NOTED OTHERWISE
- - - -	EXISTING STRUCTURE
———	PROPOSED STRUCTURE
(G1)	EXISTING GIRDER DESIGNATION
(G18)	PROPOSED GIRDER DESIGNATION
	PORTIONS OF EXISTING STRUCTURE TO BE REMOVED
	EXISTING RIP RAP REMOVAL AND REPLACEMENT AREAS

TEST BORINGS		
BORING	SR 1 ℄ STA.	OFFSET
RW1-1-01	1808+44.38	56.38' LT
RW1-1-02	1809+38.72	63.43' LT
RW1-1-03	1811+17.07	92.16' LT

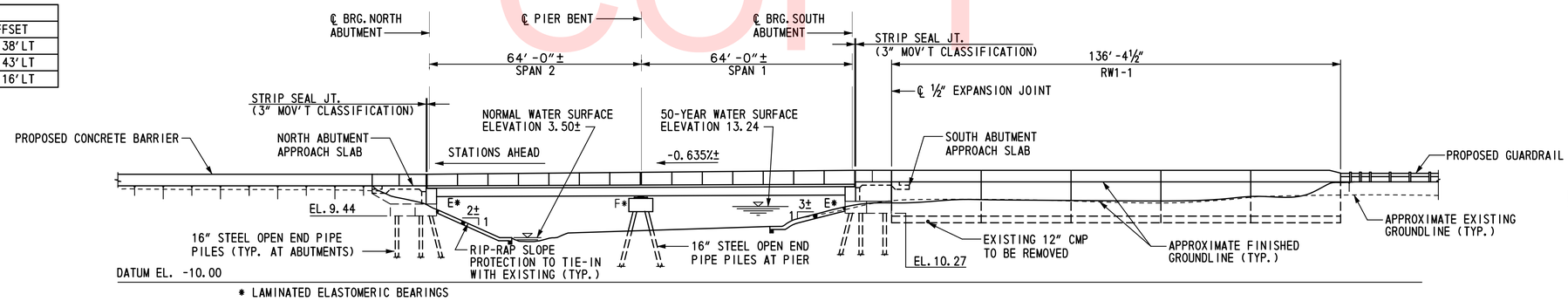

VIEW A-A: WEST ELEVATION

SCALE: 1"=20'-0"

NOTES:

1. EXISTING RIP RAP TO BE REMOVED AND REPLACED AT BOTH ABUTMENT EXTENSIONS, REFER TO PROJECT NOTE 12 ON DWG. NO. BR1-1 PN-01.
2. WETLAND ACCESS ROAD AND FOR MAINTENANCE OF STREAM FLOW PLANS, SEE DWG. NOS. MS-01 AND MS-02.
3. REMOVAL OF PORTIONS OF EXISTING CONCRETE PARAPET AND DECK SLAB WILL BE PAID UNDER ITEM 602580 - PARTIAL REMOVAL OF P.C.C MASONRY.

UNOFFICIAL WEBSITE COPY

C:\Projects\2008\PE1-ED0836 (DelDOT US 301_*1445)\1. Bridges\Drawings\Final_PS&E\BR1-1\PE01_br1-1.dgn
10/22/2015 7:24:41 AM

DELAWARE DEPARTMENT OF TRANSPORTATION	ADDENDUMS / REVISIONS	SCALE: AS NOTED	US 301 & SR 1 INTERCHANGE	CONTRACT T200911302	BRIDGE NO. 1-903S	GENERAL PLAN & ELEVATION
				COUNTY NEW CASTLE	DESIGNED BY: MED	
					CHECKED BY: KEE	

BR1-1 PE-01

SHEET NO. 120

TOTAL SHTS. 491

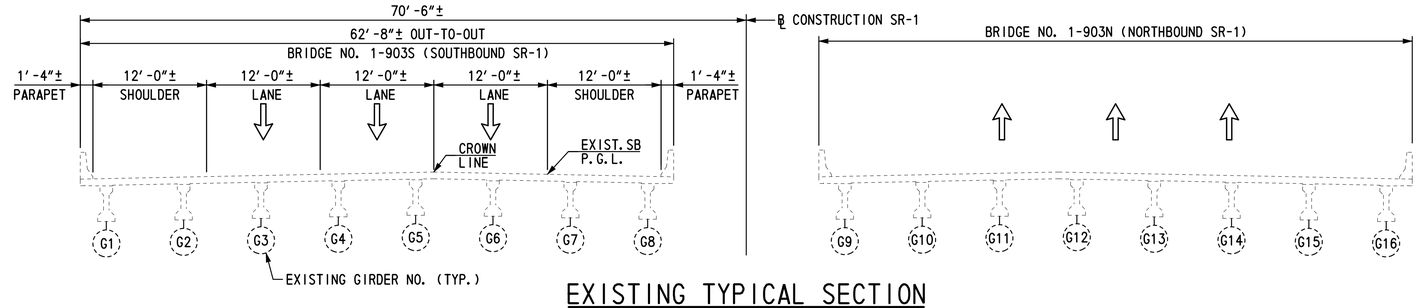

EXISTING TYPICAL SECTION

SCALE: 1/8"=1'-0"

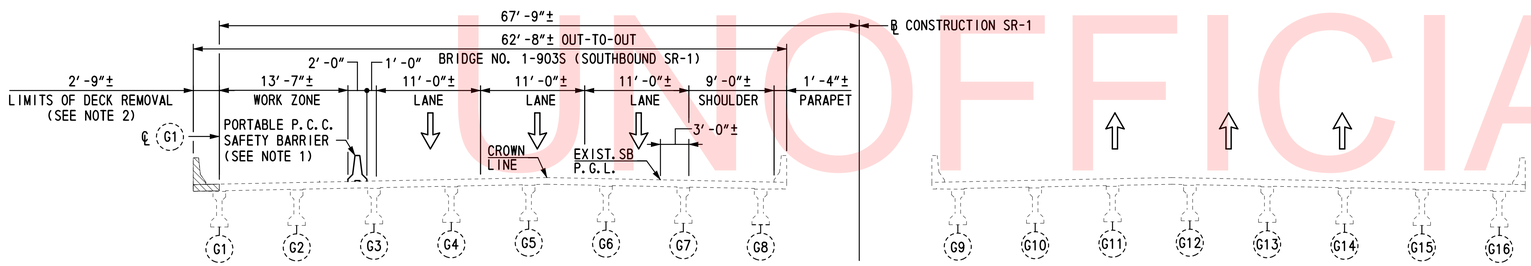

STAGE I REMOVAL TYPICAL SECTION

SCALE: 1/8"=1'-0"

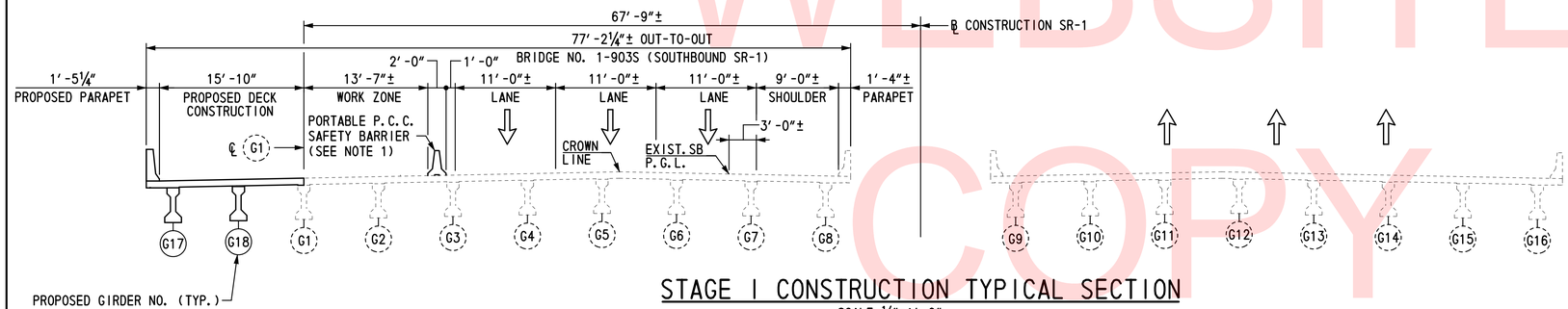

STAGE I CONSTRUCTION TYPICAL SECTION

SCALE: 1/8"=1'-0"

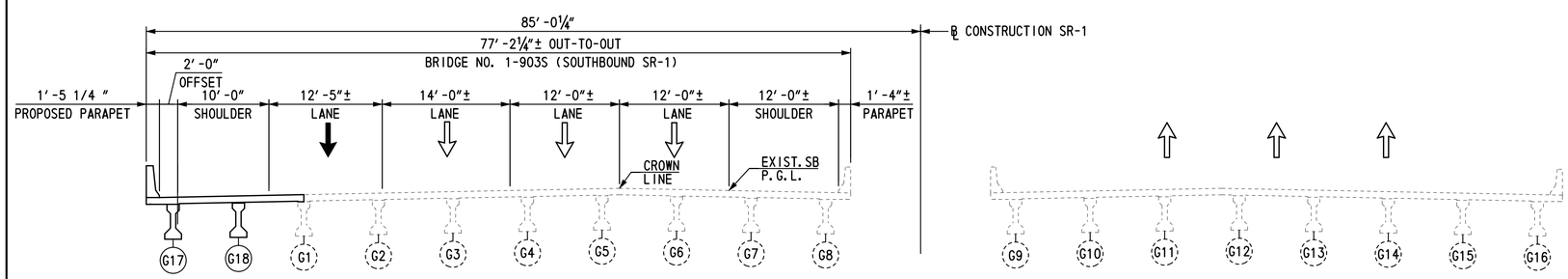

FINAL CONDITION TYPICAL SECTION

SCALE: 1/8"=1'-0"

NOTES:

1. PORTABLE P.C.C. SAFETY BARRIER TO BE ATTACHED TO EXISTING BRIDGE DECK.
2. PORTIONS OF EXISTING DECK TRANSVERSE REINFORCING TO REMAIN AND SHALL BE SPLICED TO PROPOSED DECK RECONSTRUCTION REINFORCING STEEL. SEE DWG. NO. DK-01 FOR DETAILS.
3. FOR TRAFFIC CONTROL REQUIREMENTS, SEE CONSTRUCTION PHASING, M.O.T., AND EROSION CONTROL PLANS.
4. INSTALL TEMPORARY PROTECTIVE SHIELD DURING BRIDGE DEMOLITION AND CONSTRUCTION. SEE PROJECT NOTE 19 FOR ADDITIONAL INFORMATION.

REFERENCES:

1. PROJECT NOTES, SEE DWG. NO. PN-01.
2. FOR LEGEND, SEE DWG. NO. PE-01.

UNOFFICIAL WEBSITE COPY

BR1-1
CS-01

DELAWARE DEPARTMENT OF TRANSPORTATION	ADDENDUMS / REVISIONS	SCALE: AS NOTED	US 301 & SR 1 INTERCHANGE	CONTRACT T200911302	BRIDGE NO. 1-903S	SEQUENCE OF CONSTRUCTION – 1	SHEET NO. 121
				COUNTY NEW CASTLE	DESIGNED BY: MED		TOTAL SHTS. 491
					CHECKED BY: SSD		

\\sglent\S\Projects\2008\PEI-ED0836 (DelDOT US 301_*1445)\7. Transportation\1. Bridges\Drawings\Final_PS&E\BR1-1\CS01_br1-1.dgn
2/22/2013 3:37:52 PM

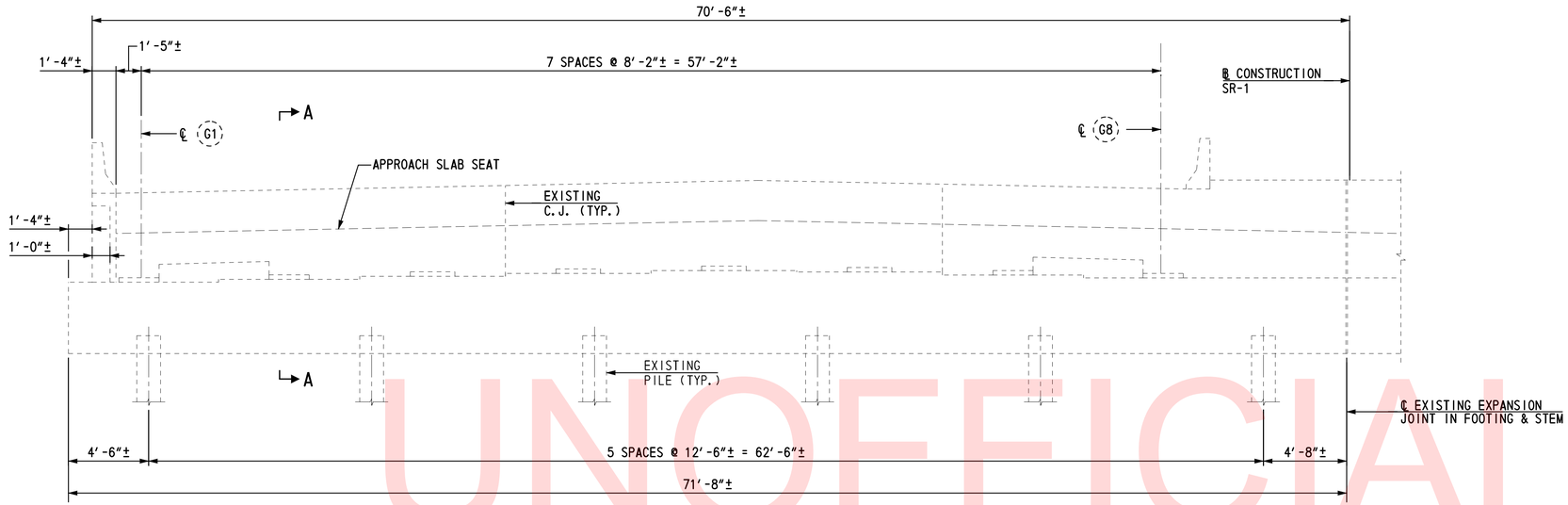

EXISTING ABUTMENT ELEVATION

SCALE: ¼"=1'-0"

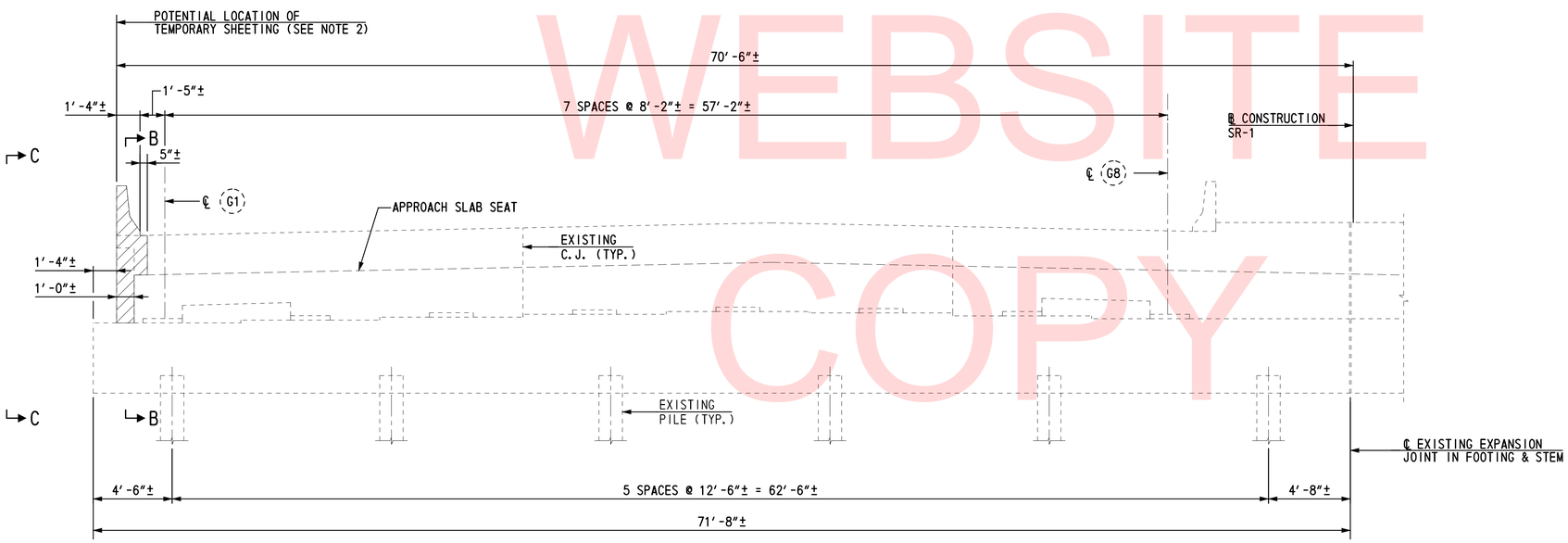

STAGE I ABUTMENT REMOVAL ELEVATION

SCALE: ¼"=1'-0"

NOTES:

1. SOUTHBOUND ROADWAY, NORTH ABUTMENT SHOWN; SOUTHBOUND ROADWAY, SOUTH ABUTMENT OPPOSITE HAND AND SIMILAR.
2. IF SHEETING IS REQUIRED REFER TO PROJECT NOTE 13 ON DWG. NO. PN-01.
3. FOR SECTIONS A-A, B-B & VIEW C-C, SEE DWG. NO. CS-04.
4. REMOVAL OF PORTIONS OF EXISTING CONCRETE PARAPET, WINGWALL, BACKWALL AND CHEEKWALL WILL BE PAID UNDER ITEM 602580 - PARTIAL REMOVAL OF P.C.C. MASONRY.
5. COAT CUT ENDS OF EXISTING REINFORCEMENT BARS WITH AN APPROVED EPOXY PAINT. COST SHALL BE INCIDENTAL TO ITEM 602580 - PARTIAL REMOVAL OF P.C.C. MASONRY.

REFERENCES:

1. FOR PROJECT NOTES, SEE DWG. NO. PN-01.
2. FOR LEGEND, SEE DWG. NO. PE-01.

UNOFFICIAL WEBSITE COPY

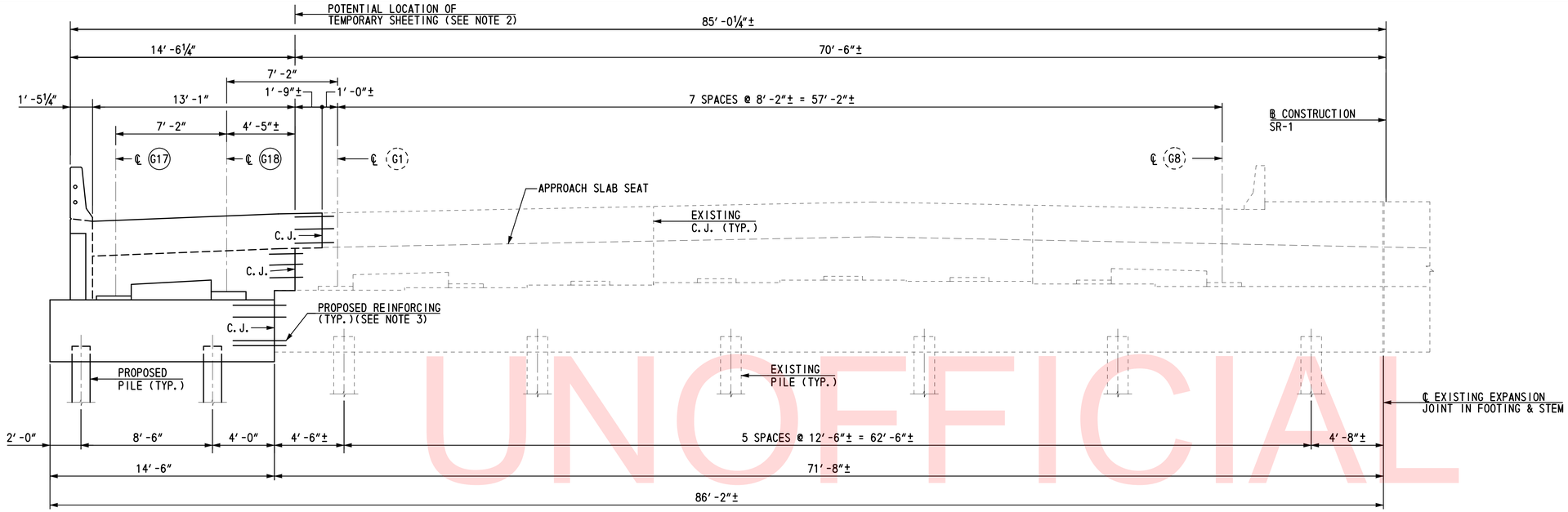

STAGE I ABUTMENT CONSTRUCTION ELEVATION

SCALE: ¼″=1′-0″

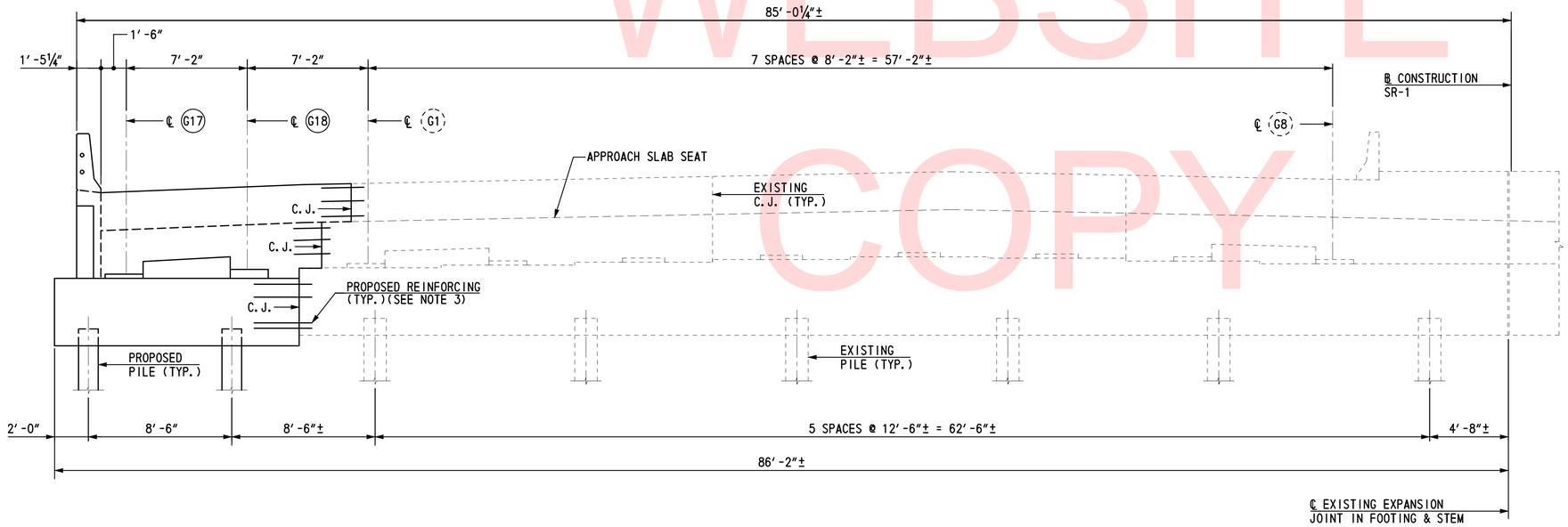

FINAL CONDITION ABUTMENT ELEVATION

SCALE: ¼″=1′-0″

NOTES:

1. SOUTHBOUND ROADWAY, NORTH ABUTMENT SHOWN; SOUTHBOUND ROADWAY, SOUTH ABUTMENT OPPOSITE HAND AND SIMILAR.
2. IF SHEETING IS REQUIRED REFER TO PROJECT NOTE 13 ON DWG. NO. PN-01.
3. PROPOSED REINFORCING FOR ABUTMENTS SHALL BE DRILLED AND GROUTED INTO EXISTING STRUCTURE. SEE DWG. NO. AB-03 FOR ABUTMENT REINFORCEMENT DETAILS.
4. DRILLING HOLES AND INSTALLING REINFORCING BAR DOWELS WILL BE PAID UNDER ITEM 602579 - DRILLING HOLES AND INSTALLING DOWELS. DOWEL BARS WILL BE PAID UNDER ITEM 604000 - BAR REINFORCEMENT, EPOXY COATED.

REFERENCES:

1. FOR PROJECT NOTES, SEE DWG. NO. PN-01.
2. FOR LEGEND, SEE DWG. NO. PE-01.

UNOFFICIAL WEBSITE COPY

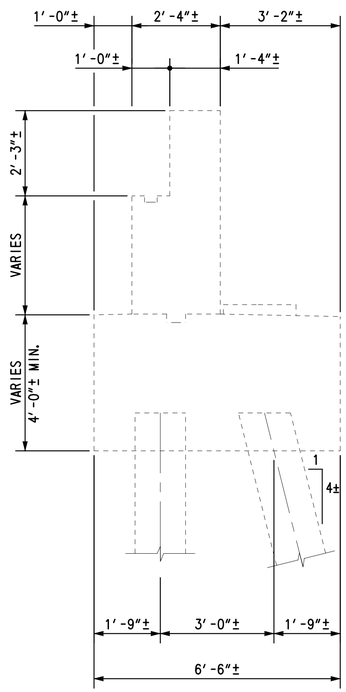

NOTE: APPROACH SLAB NOT SHOWN FOR CLARITY.

SECTION A-A

SCALE: ½″=1′-0″

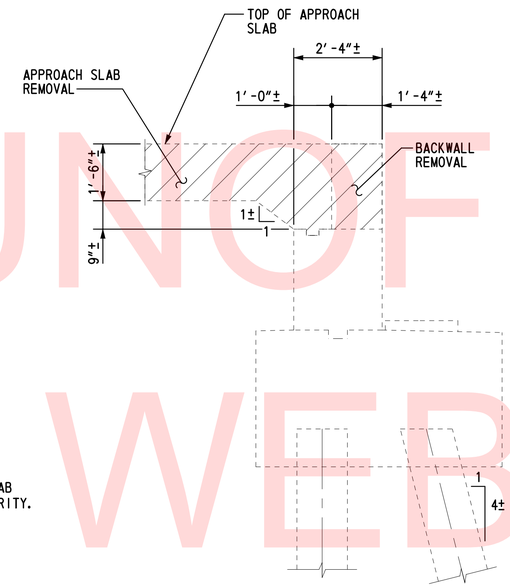

NOTE: CHEEK WALL AND ROADWAY BARRIER NOT SHOWN FOR CLARITY.

SECTION B-B

SCALE: ½″=1′-0″

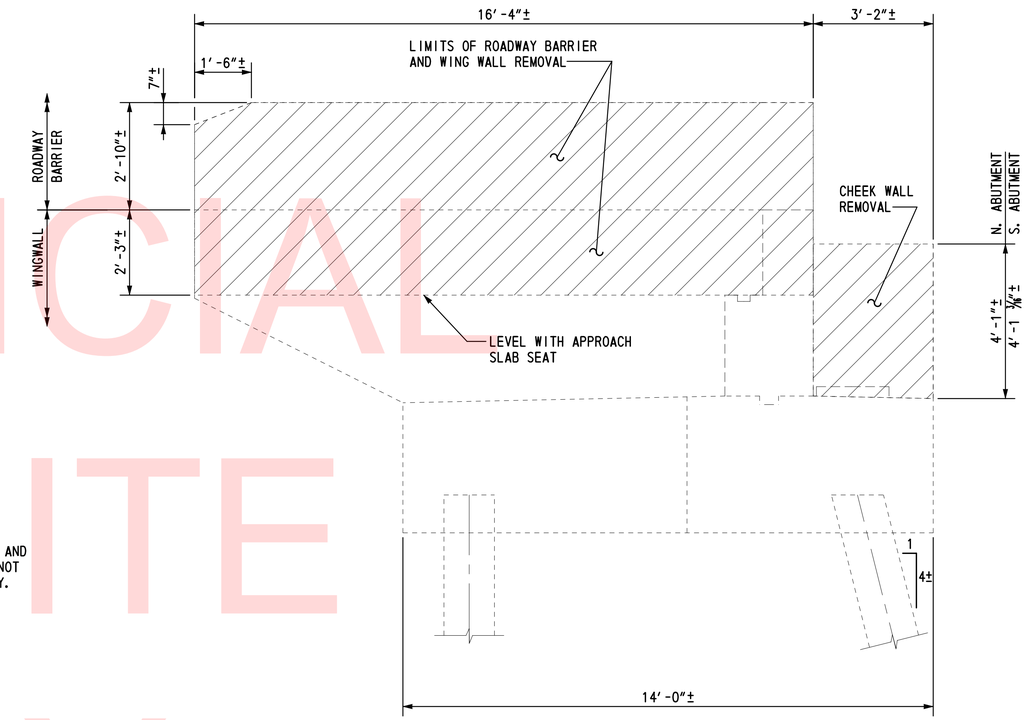

VIEW C-C

SCALE: ½″=1′-0″

NOTES:

1. REMOVAL OF PORTIONS OF EXISTING CONCRETE PARAPET, WINGWALL, BACKWALL, CHEEKWALL AND APPROACH SLAB WILL BE PAID UNDER ITEM 602580 - PARTIAL REMOVAL OF P.C.C. MASONRY.

REFERENCES:

1. FOR PROJECT NOTES, SEE DWG. NO. PN-01.
2. FOR LEGEND, SEE DWG. NO. PE-01.
3. FOR LOCATION OF SECTIONS A-A, B-B AND VIEW C-C, SEE DWG. NO. CS-02.

UNOFFICIAL WEBSITE COPY

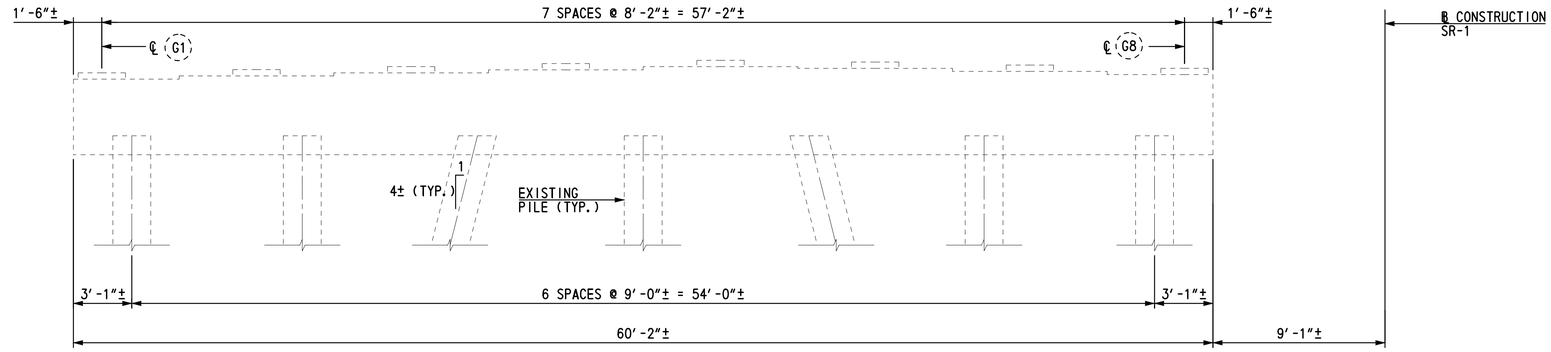

EXISTING PIER ELEVATION

SCALE: 1/4"=1'-0"

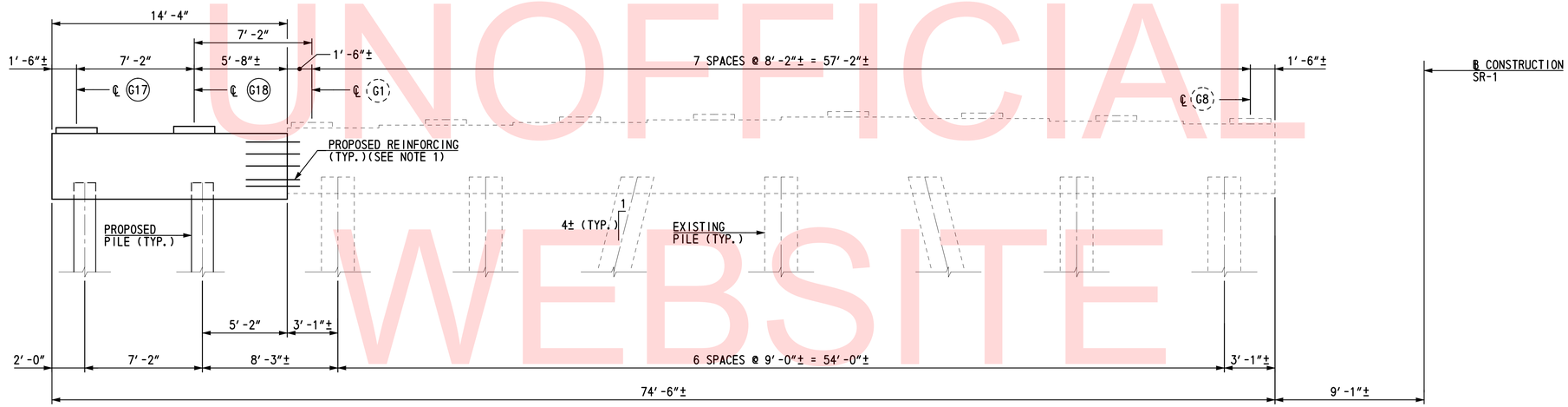

STAGE I PIER CONSTRUCTION ELEVATION

SCALE: 1/4"=1'-0"

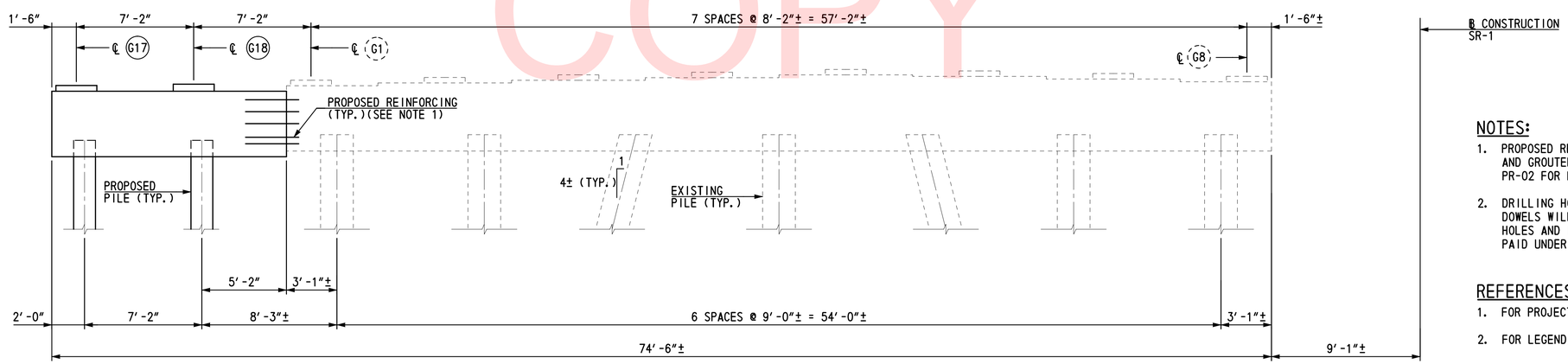

FINAL CONDITION PIER ELEVATION

SCALE: 1/4"=1'-0"

NOTES:

1. PROPOSED REINFORCING FOR PIER CAP SHALL BE DRILLED AND GROUTED INTO EXISTING STRUCTURE. SEE DWG. NO. PR-02 FOR PIER BENT REINFORCEMENT DETAILS.
2. DRILLING HOLES AND INSTALLING REINFOCING BAR DOWELS WILL BE PAID UNDER ITEM 602579 - DRILLING HOLES AND INSTALLING DOWELS. DOWEL BARS WILL BE PAID UNDER ITEM 603000 - BAR REINFORCEMENT.

REFERENCES:

1. FOR PROJECT NOTES, SEE DWG. NO. PN-01.
2. FOR LEGEND, SEE DWG. NO. PE-01.

UNOFFICIAL WEBSITE COPY

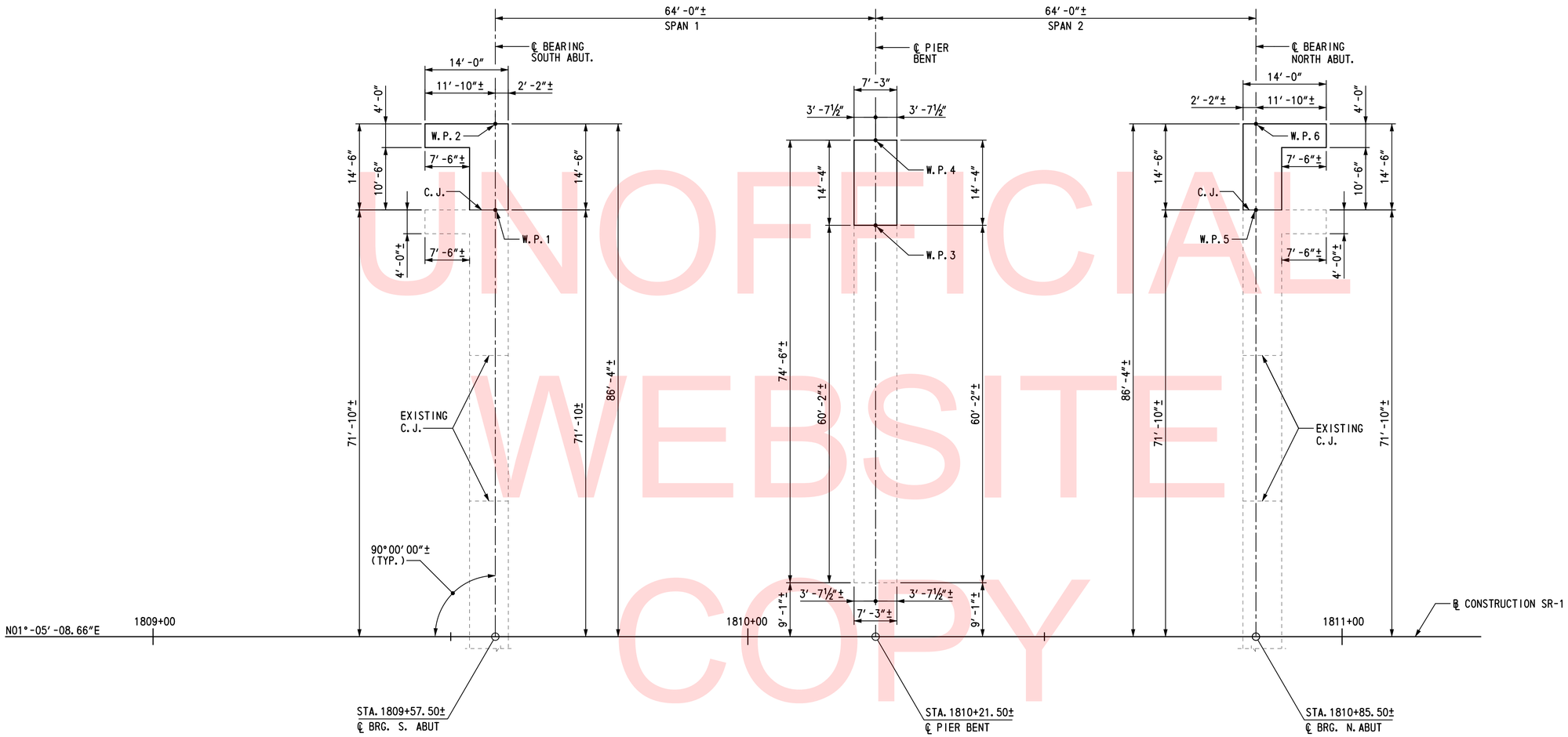

UNOFFICIAL WEBSITE COPY

PLAN

SCALE: 1″=10′-0″

WORKING POINT	℄ SR 1 STA.	OFFSET	NORTHING	EASTING
W.P. 1	1809+57.50±	71.83± FT LT	559327.07±	590403.90±
W.P. 2	1809+57.50±	86.33± FT LT	559327.34±	590389.40±
W.P. 3	1810+21.50±	69.25± FT LT	559391.00±	590407.69±
W.P. 4	1810+21.50±	83.58± FT LT	559391.27±	590393.36±
W.P. 5	1810+85.50±	71.83± FT LT	559455.05±	590406.32±
W.P. 6	1810+85.50±	86.33± FT LT	559455.32±	590391.82±

REFERENCES:

1. FOR PROJECT NOTES, SEE DWG. NO. PN-01.
2. FOR LEGEND, SEE DWG. NO. PE-01.
3. FOR SOUTH ABUTMENT PILE PLAN LAYOUT, SEE DWG. NO. PL-01.
4. FOR SOUTH ABUTMENT PLAN AND ELEVATION, SEE DWG. NO. AB-01.
5. FOR NORTH ABUTMENT PILE PLAN LAYOUT, SEE DWG. NO. PL-02.
6. FOR NORTH ABUTMENT PLAN AND ELEVATION, SEE DWG. NO. AB-02.
7. FOR PIER PILE PLAN LAYOUT, SEE DWG. NO. PL-03.
8. FOR PIER PIER BENT PLAN AND ELEVATION, SEE DWG. NO. PR-01.

BR1-1
FT-01

DELAWARE DEPARTMENT OF TRANSPORTATION

ADDENDUMS / REVISIONS

SCALE: AS NOTED

US 301 & SR 1 INTERCHANGE

CONTRACT	BRIDGE NO.	1-903S
T200911302	DESIGNED BY:	KMG
COUNTY		
NEW CASTLE	CHECKED BY:	MED

GEOMETRIC FOOTING LAYOUT PLAN

SHEET NO. 126
TOTAL SHTS. 491

\\tsdient\S\Projects\2008\PEI-ED0836 (DelDOT US 301_*1445)\7. Transportation\1. Bridges\Drawings\Final_PS&E\BR1-1\FT01_br1-1.dgn
2/27/2013 3:56:08 PM

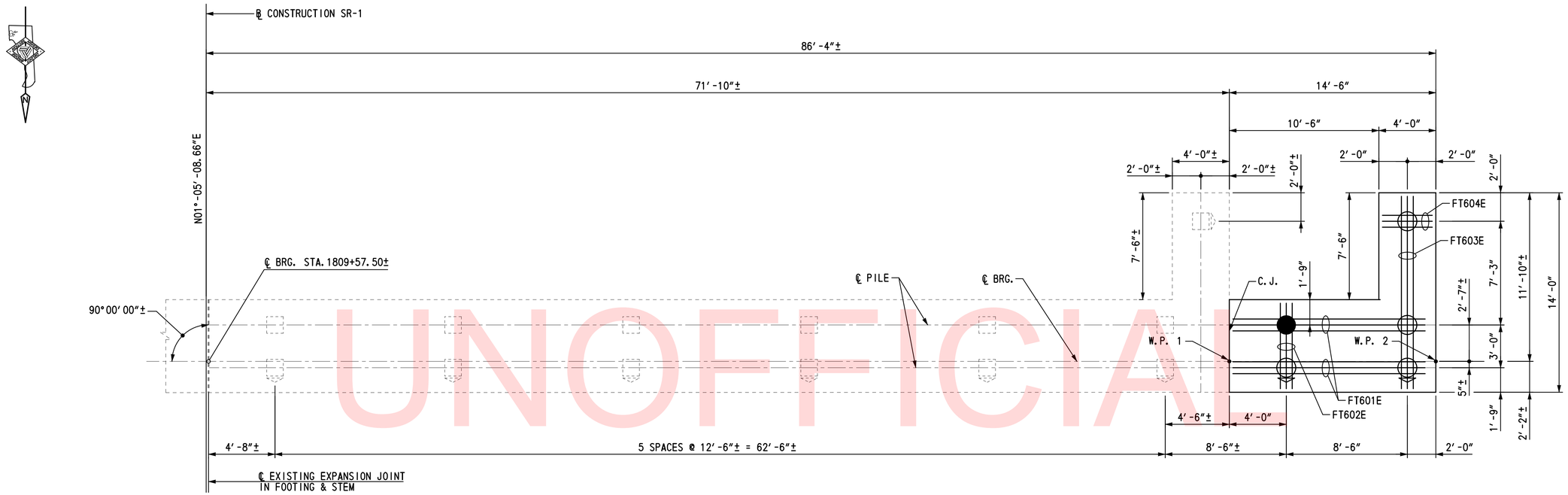

PLAN

SCALE: ¼″=1′-0″

UNOFFICIAL WEBSITE COPY

STEEL PIPE PILE NOTES:

1. THE FACTORED RESISTANCE OF THE 16 INCH DIAMETER STEEL PIPE (0.50 INCH WALL THICKNESS) PILES IS 120 TONS. PILES SHALL BE DRIVEN AND TESTED IN CONFORMANCE WITH THE SPECIAL PROVISIONS FOR DYNAMIC PILE TESTING TO A NOMINAL PILE DRIVING RESISTANCE OF 210 TONS.

2. PILES SHALL BE DRIVEN TO THE DRIVING CRITERIA DEVELOPED FROM DYNAMIC PILE TESTING AND AS SPECIFIED BY THE ENGINEER TO ACHIEVE A NOMINAL PILE DRIVING RESISTANCE OF 210 TONS AND TO THE SPECIFIED MINIMUM TIP ELEVATION. PILES MEETING THE AFOREMENTIONED CRITERIA WILL BE CONSIDERED SATISFACTORY.

3. THE CONTRACTOR SHALL BE RESPONSIBLE FOR SUBMITTING A WAVE EQUATION ANALYSIS AND ALL OTHER INCIDENTALS IN ACCORDANCE WITH THE SPECIAL PROVISIONS. THE WAVE EQUATION ANALYSIS AND DYNAMIC PILE TESTING MUST BE SIGNED AND SEALED BY A REGISTERED PROFESSIONAL ENGINEER LICENSED IN THE STATE OF DELAWARE IN ACCORDANCE WITH THE SPECIAL PROVISIONS. UPON COMPLETION OF THE DYNAMIC PILE TESTING, THE CONTRACTOR SHALL SUBMIT A SIGNAL MATCHING ANALYSIS TO THE ENGINEER FOR REVIEW AND APPROVAL IN ACCORDANCE WITH THE SPECIAL PROVISIONS.

4. ALL TEST PILES SHALL BE 10 FEET LONGER THAN THE PILE LENGTH COMPUTED FROM THE PILE TIP DATA TABLE. PILE LENGTHS FOR ORDERING PURPOSES SHALL BE DETERMINED BY THE TEST PILES. DYNAMIC PILE TESTING AND SIGNAL MATCHING ANALYSIS SHALL BE COMPLETED BY THE CONTRACTOR IN ACCORDANCE WITH THE SPECIAL PROVISIONS. TEST AND PRODUCTION PILE RESTRIKES WILL BE PAID FOR AS FOLLOWS:

   A. ALL TEST PILES WILL BE RESTRUCK AFTER A WAITING PEROID OF AT LEAST 48 HOURS. TEST PILE RESTRIKES SHALL BE INCIDENTAL TO THE INITIAL INSTALLATION OF THE PILE PROVIDED THEY ARE REQUESTED WITHIN FIVE WORKING DAYS FROM THE COMPLETION OF THE INITIAL DRIVE. IF RESTRIKES ARE REQUESTED AFTER FIVE WORKING DAYS FROM THE COMPLETION OF THE INITIAL DRIVE, THEN THE TEST PILE RESTRIKE SHALL BE PAID FOR IN ACCORDANCE WITH THE SPECIAL PROVISIONS.

   B. IF DIRECTED BY THE ENGINEER TO RESTRIKE A PRODUCTION PILE, THE RESTRIKE OF THE PRODUCTION PILE SHALL BE PAID SEPARATELY UNDER ITEM NO. 619501 - PRODUCTION PILE RESTRIKE.

5. THE DEPARTMENT RESERVES THE RIGHT TO PERFORM DYNAMIC PILE TESTING OF RESTRIKES.

6. ALL PILES ARE TO BE DRIVEN OPEN ENDED.

7. PRIOR TO INSERTION OF THE STEEL REINFORCEMENT CAGE AND PLACEMENT OF THE FILL CONCRETE, ALL DIRT, WATER AND LOOSE MATERIAL SHLL BE REMOVED FROM THE INTERIOR SURFACE OF EACH PIPE PILE FROM THE TOP OF THE PILE TO THE BOTTOM OF CONCRETE FILL ELEVATION SHOWN ON THE PLANS, ALLOWING THE PILE FILL CONCRETE TO BE PLACED WITHOUT CONTAMINATION.

8. ALL DEWATERING, CLEANOUT, REINFORCEMENT AND CLASS A FILL CONCRETE REQUIRED TO CONSTRUCT THE STEEL PIPE PILES AS SHOWN ON THE PLANS AND AS SPECIFIED IN THE CONTRACT DOCUMENTS WILL BE INCIDENTAL TO ITEM 618560 - INSTALL STEEL PIPE PILES, 16″ DIAMETER AND ITEM 618561 - INSTALL STEEL PIPE TEST PILES, 16″ DIAMETER.

9. CLASS A CONCRETE PILE FILL SHALL BE PLACED IN ONE POUR WITH ABUTMENT FOOTING CONCRETE.

10. FOR ADDITIONAL PIPE PILE CONCRETE FILL AND REINFORCEMENT DETAILS, SEE DWG. NO. PL-03.

PILE LEGEND:

- INDICATES EXISTING PLUMB PILES
- INDICATES EXISTING BATTERED PILES BATTERED 4:1 IN DIRECTION OF ARROW
- INDICATES PROPOSED PLUMB PILES
- INDICATES PROPOSED BATTERED PILES BATTERED 4:1 IN DIRECTION OF ARROW
- INDICATES TEST PILES

REFERENCES:

1. FOR PROJECT NOTES, SEE DWG. NO. PN-01.
2. FOR LEGEND, SEE DWG. NO. PE-01.
3. FOR GEOMETRIC FOOTING LAYOUT PLAN, SEE DWG. NO. FT-01.
4. FOR REINFORCEMENT DETAILS, SEE DWG. NO. AB-03.

PILE DRIVING INFORMATION	
PILE SIZE AND TYPE:	16″ DIA. STEEL OPEN END
ACTUAL BEARING OBTAINED:	
HAMMER TYPE:	
PILE HAMMER ENERGY:	30,000 TO 70,000 FT-LBS
SPECIAL DRIVING CONDITIONS AND COMMENTS:	

PILE TIP DATA				
	DESIGN DATA		ACTUAL FIELD DATA	
SUBSTRUCTURE UNIT	MINIMUM TIP ELEVATION	ESTIMATED TIP ELEVATION	AVERAGE ACTUAL MINIMUM TIP ELEVATION	AVERAGE ACTUAL MAXIMUM TIP ELEVATION
SOUTH ABUT.	-35.00	-45.00		

BR1-1
PL-01

DELAWARE DEPARTMENT OF TRANSPORTATION

ADDENDUMS / REVISIONS

SCALE: AS NOTED

US 301 & SR 1 INTERCHANGE

CONTRACT	BRIDGE NO.	1-903S
T200911302	DESIGNED BY:	RTC
COUNTY		
NEW CASTLE	CHECKED BY:	FPH

SOUTH ABUTMENT PILE PLAN LAYOUT

SHEET NO. 127
TOTAL SHTS. 491

C:\Projects\2008\PFI-E00836 (DelDOT US 301_*1445)\1.Bridges\Drawings\Final_PS&E\BR1-1\PL01_br1-1.dgn
10/22/2015 7:30:46 AM

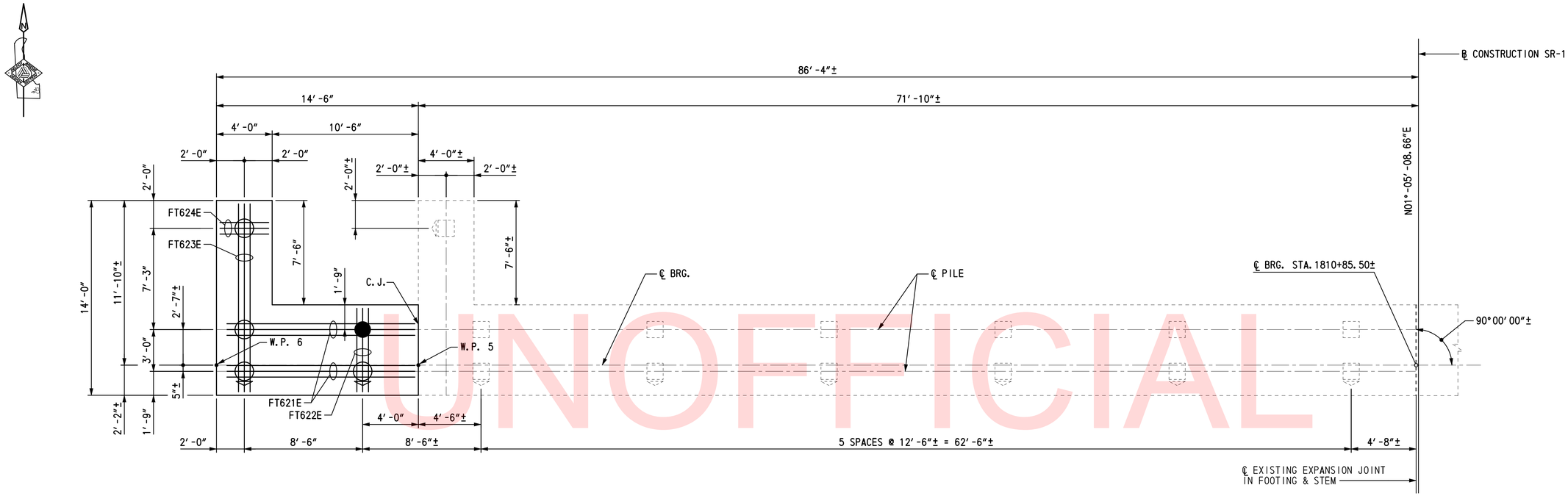

PLAN

SCALE: ¼″=1′-0″

UNOFFICIAL WEBSITE COPY

STEEL PIPE PILE NOTES:

1. THE FACTORED RESISTANCE OF THE 16 INCH DIAMETER STEEL PIPE (0.50 INCH WALL THICKNESS) PILES IS 120 TONS. PILES SHALL BE DRIVEN AND TESTED IN CONFORMANCE WITH THE SPECIAL PROVISIONS FOR DYNAMIC PILE TESTING TO A NOMINAL PILE DRIVING RESISTANCE OF 210 TONS.

2. PILES SHALL BE DRIVEN TO THE DRIVING CRITERIA DEVELOPED FROM DYNAMIC PILE TESTING AND AS SPECIFIED BY THE ENGINEER TO ACHIEVE A NOMINAL PILE DRIVING RESISTANCE OF 210 TONS AND TO THE SPECIFIED MINIMUM TIP ELEVATION. PILES MEETING THE AFOREMENTIONED CRITERIA WILL BE CONSIDERED SATISFACTORY.

3. THE CONTRACTOR SHALL BE RESPONSIBLE FOR SUBMITTING A WAVE EQUATION ANALYSIS AND ALL OTHER INCIDENTALS IN ACCORDANCE WITH THE SPECIAL PROVISIONS. THE WAVE EQUATION ANALYSIS AND DYNAMIC PILE TESTING MUST BE SIGNED AND SEALED BY A REGISTERED PROFESSIONAL ENGINEER LICENSED IN THE STATE OF DELAWARE IN ACCORDANCE WITH THE SPECIAL PROVISIONS. UPON COMPLETION OF THE DYNAMIC PILE TESTING, THE CONTRACTOR SHALL SUBMIT A SIGNAL MATCHING ANALYSIS TO THE ENGINEER FOR REVIEW AND APPROVAL IN ACCORDANCE WITH THE SPECIAL PROVISIONS.

4. ALL TEST PILES SHALL BE 10 FEET LONGER THAN THE PILE LENGTH COMPUTED FROM THE PILE TIP DATA TABLE. PILE LENGTHS FOR ORDERING PURPOSES SHALL BE DETERMINED BY THE TEST PILES. DYNAMIC PILE TESTING AND SIGNAL MATCHING ANALYSIS SHALL BE COMPLETED BY THE CONTRACTOR IN ACCORDANCE WITH THE SPECIAL PROVISIONS. TEST AND PRODUCTION PILE RESTRIKES WILL BE PAID FOR AS FOLLOWS:

   A. ALL TEST PILES WILL BE RESTRUCK AFTER A WAITING PEROID OF AT LEAST 48 HOURS. TEST PILE RESTRIKES SHALL BE INCIDENTAL TO THE INITIAL INSTALLATION OF THE PILE PROVIDED THEY ARE REQUESTED WITHIN FIVE WORKING DAYS FROM THE COMPLETION OF THE INITIAL DRIVE. IF RESTRIKES ARE REQUESTED AFTER FIVE WORKING DAYS FROM THE COMPLETION OF THE INITIAL DRIVE, THEN THE TEST PILE RESTRIKE SHALL BE PAID FOR IN ACCORDANCE WITH THE SPECIAL PROVISIONS.

   B. IF DIRECTED BY THE ENGINEER TO RESTRIKE A PRODUCTION PILE, THE RESTRIKE OF THE PRODUCTION PILE SHALL BE PAID SEPARATELY UNDER ITEM NO. 619501 - PRODUCTION PILE RESTRIKE.

5. THE DEPARTMENT RESERVES THE RIGHT TO PERFORM DYNAMIC PILE TESTING OF RESTRIKES.

6. ALL PILES ARE TO BE DRIVEN OPEN ENDED.

7. PRIOR TO INSERTION OF THE STEEL REINFORCEMENT CAGE AND PLACEMENT OF THE FILL CONCRETE, ALL DIRT, WATER AND LOOSE MATERIAL SHLL BE REMOVED FROM THE INTERIOR SURFACE OF EACH PIPE PILE FROM THE TOP OF THE PILE TO THE BOTTOM OF CONCRETE FILL ELEVATION SHOWN ON THE PLANS, ALLOWING THE PILE FILL CONCRETE TO BE PLACED WITHOUT CONTAMINATION.

8. ALL DEWATERING, CLEANOUT, REINFORCEMENT AND CLASS A FILL CONCRETE REQUIRED TO CONSTRUCT THE STEEL PIPE PILES AS SHOWN ON THE PLANS AND AS SPECIFIED IN THE CONTRACT DOCUMENTS WILL BE INCIDENTAL TO ITEM 618560 - INSTALL STEEL PIPE PILES, 16″ DIAMETER AND ITEM 618561 - INSTALL STEEL PIPE TEST PILES, 16″ DIAMETER.

9. CLASS A CONCRETE PILE FILL SHALL BE PLACED IN ONE POUR WITH ABUTMENT FOOTING CONCRETE.

10. FOR ADDITIONAL PIPE PILE CONCRETE FILL AND REINFORCEMENT DETAILS, SEE DWG. NO. PL-03.

PILE LEGEND:

- INDICATES EXISTING PLUMB PILES
- INDICATES EXISTING BATTERED PILES BATTERED 4:1 IN DIRECTION OF ARROW
- INDICATES PROPOSED PLUMB PILES
- INDICATES PROPOSED BATTERED PILES BATTERED 4:1 IN DIRECTION OF ARROW
- INDICATES TEST PILES

REFERENCES:

1. FOR PROJECT NOTES, SEE DWG. NO. PN-01.
2. FOR LEGEND, SEE DWG. NO. PE-01.
3. FOR GEOMETRIC FOOTING LAYOUT PLAN, SEE DWG. NO. FT-01.
4. FOR REINFORCEMENT DETAILS, SEE DWG. NO. AB-03.

PILE DRIVING INFORMATION
PILE SIZE AND TYPE: 16″ DIA. STEEL OPEN END
ACTUAL BEARING OBTAINED:
HAMMER TYPE:
PILE HAMMER ENERGY: 30,000 TO 70,000 FT-LBS
SPECIAL DRIVING CONDITIONS AND COMMENTS:

PILE TIP DATA				
	DESIGN DATA		ACTUAL FIELD DATA	
SUBSTRUCTURE UNIT	MINIMUM TIP ELEVATION	ESTIMATED TIP ELEVATION	AVERAGE ACTUAL MINIMUM TIP ELEVATION	AVERAGE ACTUAL MAXIMUM TIP ELEVATION
NORTH ABUT.	-35.00	-47.00		

BR1-1
PL-02

DELAWARE DEPARTMENT OF TRANSPORTATION

ADDENDUMS / REVISIONS

SCALE: AS NOTED

US 301 & SR 1 INTERCHANGE

CONTRACT	BRIDGE NO.	1-903S
T200911302	DESIGNED BY:	RTC
COUNTY		
NEW CASTLE	CHECKED BY:	FPH

NORTH ABUTMENT PILE PLAN LAYOUT

SHEET NO. 128
TOTAL SHTS. 491

C:\Projects\2008\PFI-E00836 (DelDOT US 301_*1445)\1.Bridges\Drawings\Final_PS&E\BR1-1\PL02_br1-1.dgn
10/22/2015 7:44:46 AM

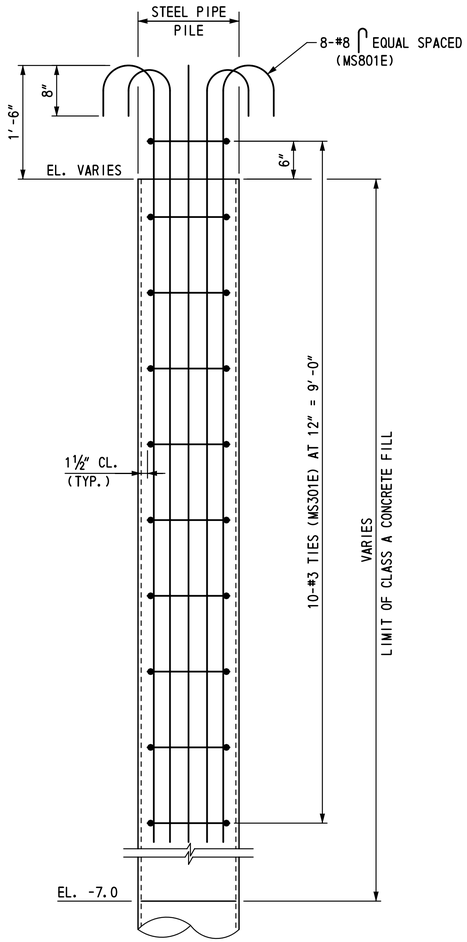

STEEL PIPE PILE ELEVATION

SCALE: 1"=1'-0"

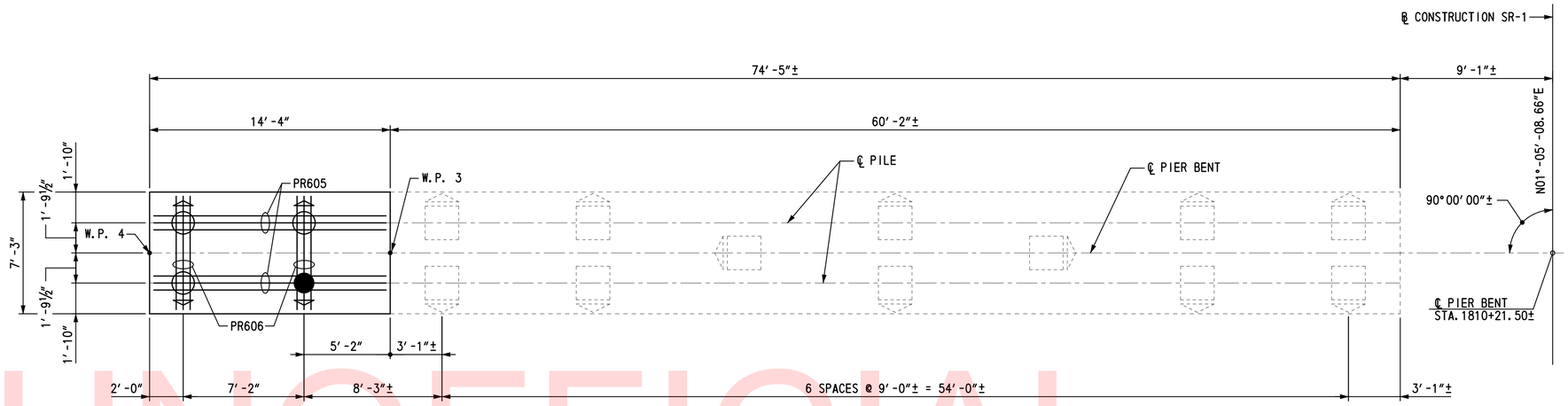

PILE LAYOUT PLAN

SCALE: ¼"=1'-0"

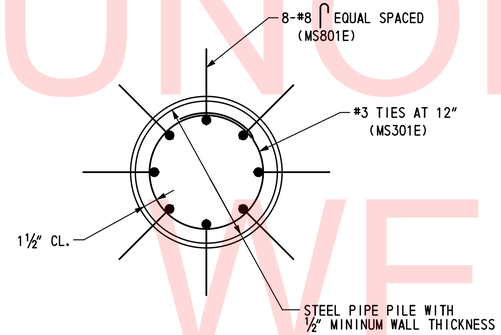

STEEL PIPE PILE PLAN

SCALE: 1½"=1'-0"

SPECIFICATIONS					BENDING DIMENSIONS (FEET-INCHES)			
QTY. *	SIZE	LENGTH	MARK	TYPE	A / C	B	G	O / J
10	4	10'-5"	MS301E	T3	9'-5"	--	12"	1'-0"
8	8	11'-2"	MS801E	1	0'-11"	10'-3"	--	0'-8"

BAR BENDS

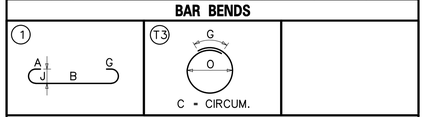

* EA. PILE
NOTE: ALL BAR DIMENSIONS ARE MEASURED OUT TO OUT

STEEL PIPE PILE NOTES:

1. THE FACTORED RESISTANCE OF THE 16 INCH DIAMETER STEEL PIPE (0.50 INCH WALL THICKNESS) PILES IS 120 TONS. PILES SHALL BE DRIVEN AND TESTED IN CONFORMANCE WITH THE SPECIAL PROVISIONS FOR DYNAMIC PILE TESTING TO A NOMINAL PILE DRIVING RESISTANCE OF 210 TONS.
2. PILES SHALL BE DRIVEN TO THE DRIVING CRITERIA DEVELOPED FROM DYNAMIC PILE TESTING AND AS SPECIFIED BY THE ENGINEER TO ACHIEVE A NOMINAL PILE DRIVING RESISTANCE OF 210 TONS AND TO THE SPECIFIED MINIMUM TIP ELEVATION. PILES MEETING THE AFOREMENTIONED CRITERIA WILL BE CONSIDERED SATISFACTORY.
3. THE CONTRACTOR SHALL BE RESPONSIBLE FOR SUBMITTING A WAVE EQUATION ANALYSIS AND ALL OTHER INCIDENTALS IN ACCORDANCE WITH THE SPECIAL PROVISIONS. THE WAVE EQUATION ANALYSIS AND DYNAMIC PILE TESTING MUST BE SIGNED AND SEALED BY A REGISTERED PROFESSIONAL ENGINEER LICENSED IN THE STATE OF DELAWARE IN ACCORDANCE WITH THE SPECIAL PROVISIONS. UPON COMPLETION OF THE DYNAMIC PILE TESTING, THE CONTRACTOR SHALL SUBMIT A SIGNAL MATCHING ANALYSIS TO THE ENGINEER FOR REVIEW AND APPROVAL IN ACCORDANCE WITH THE SPECIAL PROVISIONS.
4. ALL TEST PILES SHALL BE 10 FEET LONGER THAN THE PILE LENGTH COMPUTED FROM THE PILE TIP DATA TABLE. PILE LENGTHS FOR ORDERING PURPOSES SHALL BE DETERMINED BY THE TEST PILES. DYNAMIC PILE TESTING AND SIGNAL MATCHING ANALYSIS SHALL BE COMPLETED BY THE CONTRACTOR IN ACCORDANCE WITH THE SPECIAL PROVISIONS. TEST AND PRODUCTION PILE RESTRIKES WILL BE PAID FOR AS FOLLOWS:
   - A. ALL TEST PILES WILL BE RESTRUCK AFTER A WAITING PEROID OF AT LEAST 48 HOURS. TEST PILE RESTRIKES SHALL BE INCIDENTAL TO THE INITIAL INSTALLATION OF THE PILE PROVIDED THEY ARE REQUESTED WITHIN FIVE WORKING DAYS FROM THE COMPLETION OF THE INITIAL DRIVE. IF RESTRIKES ARE REQUESTED AFTER FIVE WORKING DAYS FROM THE COMPLETION OF THE INITIAL DRIVE, THEN THE TEST PILE RESTRIKE SHALL BE PAID FOR IN ACCORDANCE WITH THE SPECIAL PROVISIONS.
   - B. IF DIRECTED BY THE ENGINEER TO RESTRIKE A PRODUCTION PILE, THE RESTRIKE OF THE PRODUCTION PILE SHALL BE PAID SEPARATELY UNDER ITEM NO. 619501 - PRODUCTION PILE RESTRIKE.
5. THE DEPARTMENT RESERVES THE RIGHT TO PERFORM DYNAMIC PILE TESTING OF RESTRIKES.
6. ALL PILES ARE TO BE DRIVEN OPEN ENDED.
7. PRIOR TO INSERTION OF THE STEEL REINFORCEMENT CAGE AND PLACEMENT OF THE FILL CONCRETE, ALL DIRT, WATER AND LOOSE MATERIAL SHLL BE REMOVED FROM THE INTERIOR SURFACE OF EACH PIPE PILE FROM THE TOP OF THE PILE TO THE BOTTOM OF CONCRETE FILL ELEVATION SHOWN ON THIS SHEET, ALLOWING THE PILE FILL CONCRETE TO BE PLACED WITHOUT CONTAMINATION.
8. ALL DEWATERING, CLEANOUT, REINFORCEMENT AND CLASS A FILL CONCRETE REQUIRED TO CONSTRUCT THE STEEL PIPE PILES AS SHOWN ON THE PLANS AND AS SPECIFIED IN THE CONTRACT DOCUMENTS WILL BE INCIDENTAL TO ITEM 618560 - INSTALL STEEL PIPE PILES, 16" DIAMETER AND ITEM 618651 - INSTALL OF STEEL PIPE TEST PILES, 16" DIAMETER.
9. CLASS A CONCRETE PILE FILL SHALL BE PLACED IN ONE POUR WITH PIER BENT CAP CONCRETE.
10. ALL MILD STEEL REINFORCEMENT IN STEEL PIPE PILES SHALL BE EPOXY COATED, AND BAR MARKS ARE DENOTED WITH THE SUFFIX 'E'.
11. THE CONTRACTOR SHALL APPLY A PROTECTIVE COATING TO THE PIER BENT PILES CONSISTING OF COAL TAR EPOXY, AS SPECIFIED IN THE CONTRACT DOCUMENTS. THE PROTECTIVE COATING SHALL EXTEND FROM THE TOP OF EACH PILE CUT-OFF ELEVATION FOR A LENGTH OF NOT LESS THAN 20 FEET.

PILE LEGEND:

- INDICATES EXISTING BATTERED PILES BATTERED 4:1 IN DIRECTION OF ARROW
- INDICATES PROPOSED PLUMB PILES
- INDICATES PROPOSED BATTERED PILES BATTERED 4:1 IN DIRECTION OF ARROW
- INDICATES TEST PILES

REFERENCES:

1. FOR PROJECT NOTES, SEE DWG. NO. PN-01.
2. FOR LEGEND, SEE DWG. NO. PE-01.
3. FOR GEOMETRIC FOOTING LAYOUT PLAN, SEE DWG. NO. FT-01.
4. FOR REINFORCEMENT DETAILS, SEE DWG. NO. PR-02.

PILE TIP DATA				
	DESIGN DATA		ACTUAL FIELD DATA	
SUBSTRUCTURE UNIT	MINIMUM TIP ELEVATION	ESTIMATED TIP ELEVATION	AVERAGE ACTUAL MINIMUM TIP ELEVATION	AVERAGE ACTUAL MAXIMUM TIP ELEVATION
PIER	-35.00	-57.00		

PILE DRIVING INFORMATION
PILE SIZE AND TYPE: 16" DIA. STEEL OPEN END
ACTUAL BEARING OBTAINED:
HAMMER TYPE:
PILE HAMMER ENERGY: 30,000 TO 70,000 FT-LBS
SPECIAL DRIVING CONDITIONS AND COMMENTS:

UNOFFICIAL WEBSITE COPY

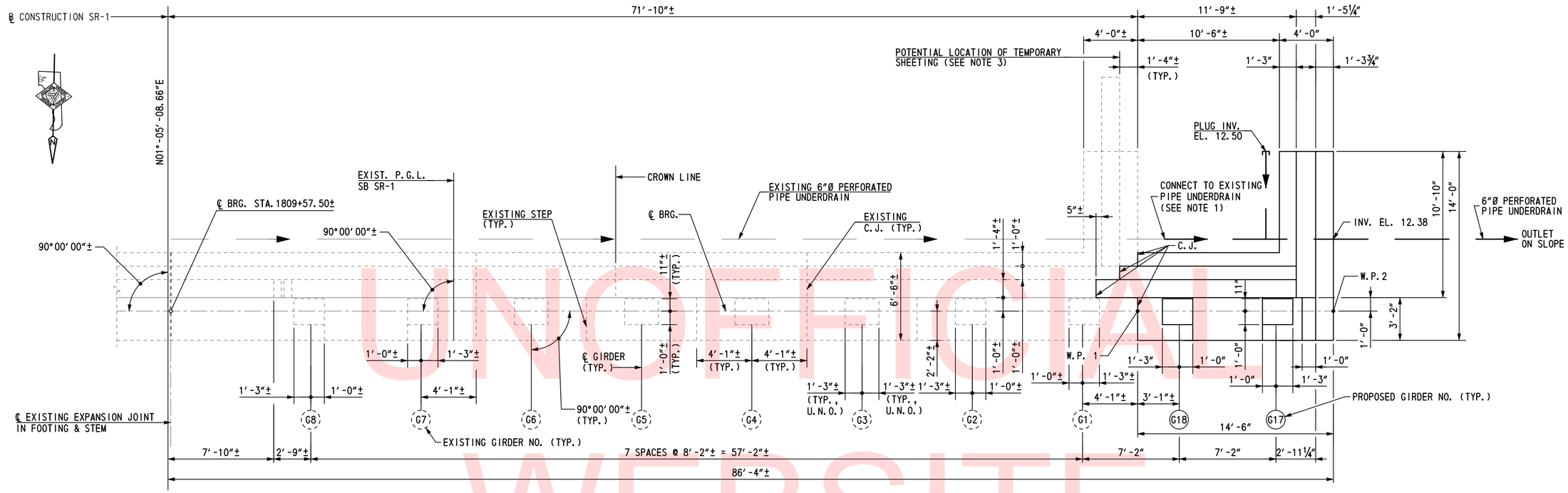

PLAN

SCALE: ¼″=1′-0″

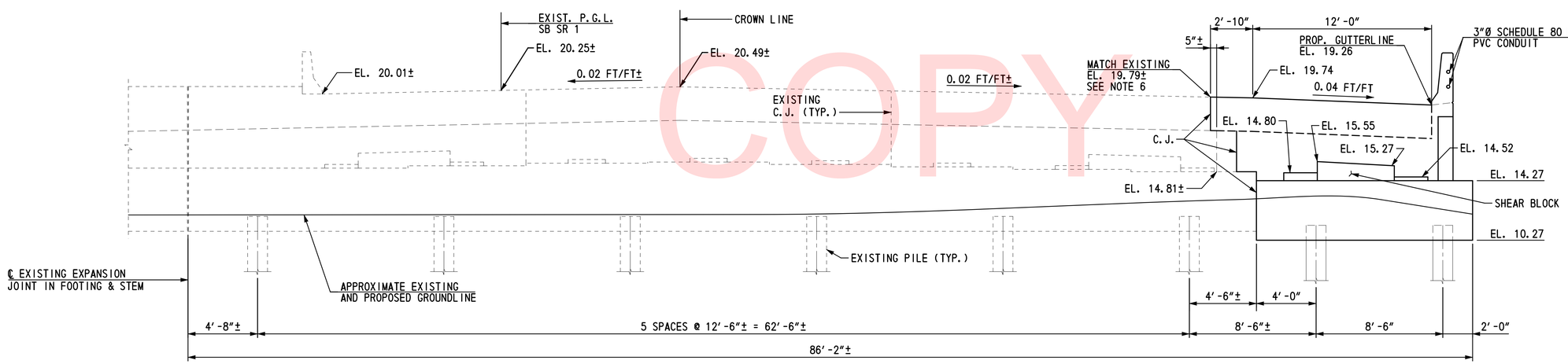

ELEVATION

SCALE: ¼″=1′-0″

NOTES:

1. 6″Ø PERFORATED UNDERDRAIN TO BE SLOPED ⅛″/FT (TYP.).
2. PAYMENT FOR 6″Ø PERFORATED UNDERDRAIN IS INCIDENTAL TO ITEM 602003 - PORTLAND CEMENT CONCRETE MASONRY, ABUTMENT FOOTING, CLASS A.
3. CONTRACTOR SHALL USE CARE WHEN EXCAVATING AROUND WINGWALL NOT TO DAMAGE LENGTH OF EXISTING 6″Ø PIPE UNDERDRAIN TO MAKE CONNECTION WITH THE NEW PIPE UNDERDRAIN. ELEVATION OF INVERT MAY BE ADJUSTED TO MAINTAIN ⅛″/FT SLOPE.
4. IF SHEETING IS REQUIRED REFER TO PROJECT NOTE 13 ON BR1-1 DWG. NO. PN-01.
5. SHEAR BLOCK TO BE POURED AFTER PRESTRESSED BEAMS HAVE BEEN PLACED.
6. EXISTING ELEVATION SHOWN AT LONGITUDINAL CONSTRUCTION JOINT (SAWCUT LINE) IS BASED ON LIMITED SURVEY DATA. CONTRACTOR SHALL VERIFY AND ADJUST PROPOSED CONSTRUCTION AS REQUIRED, SEE PROJECT NOTE 10 ON BR1-1 DWG. NO. PN-01.

REFERENCES:

1. FOR PROJECT NOTES, SEE DWG. NO. PN-01.
2. FOR LEGEND, SEE DWG. NO. PE-01.
3. FOR GEOMETRIC FOOTING LAYOUT PLAN, SEE DWG. NO. FT-01.
4. FOR REINFORCEMENT DETAILS, SEE DWG. NO. AB-03.

UNOFFICIAL WEBSITE COPY

DELAWARE DEPARTMENT OF TRANSPORTATION	ADDENDUMS / REVISIONS	SCALE: AS NOTED	US 301 & SR 1 INTERCHANGE	CONTRACT T200911302	BRIDGE NO. 1-903S	SOUTH ABUTMENT PLAN AND ELEVATION	BR1-1 AB-01
				COUNTY NEW CASTLE	DESIGNED BY: RTC		SHEET NO. 130
					CHECKED BY: FPH		TOTAL SHTS. 491

C:\Projects\2008\PFI-ED0836 (DelDOT US 301_#1445)\1.Bridges\Drawings\Final_PS&E\BR1-1\AB01_br1-1.dgn
10/22/2015 7:57:20 AM

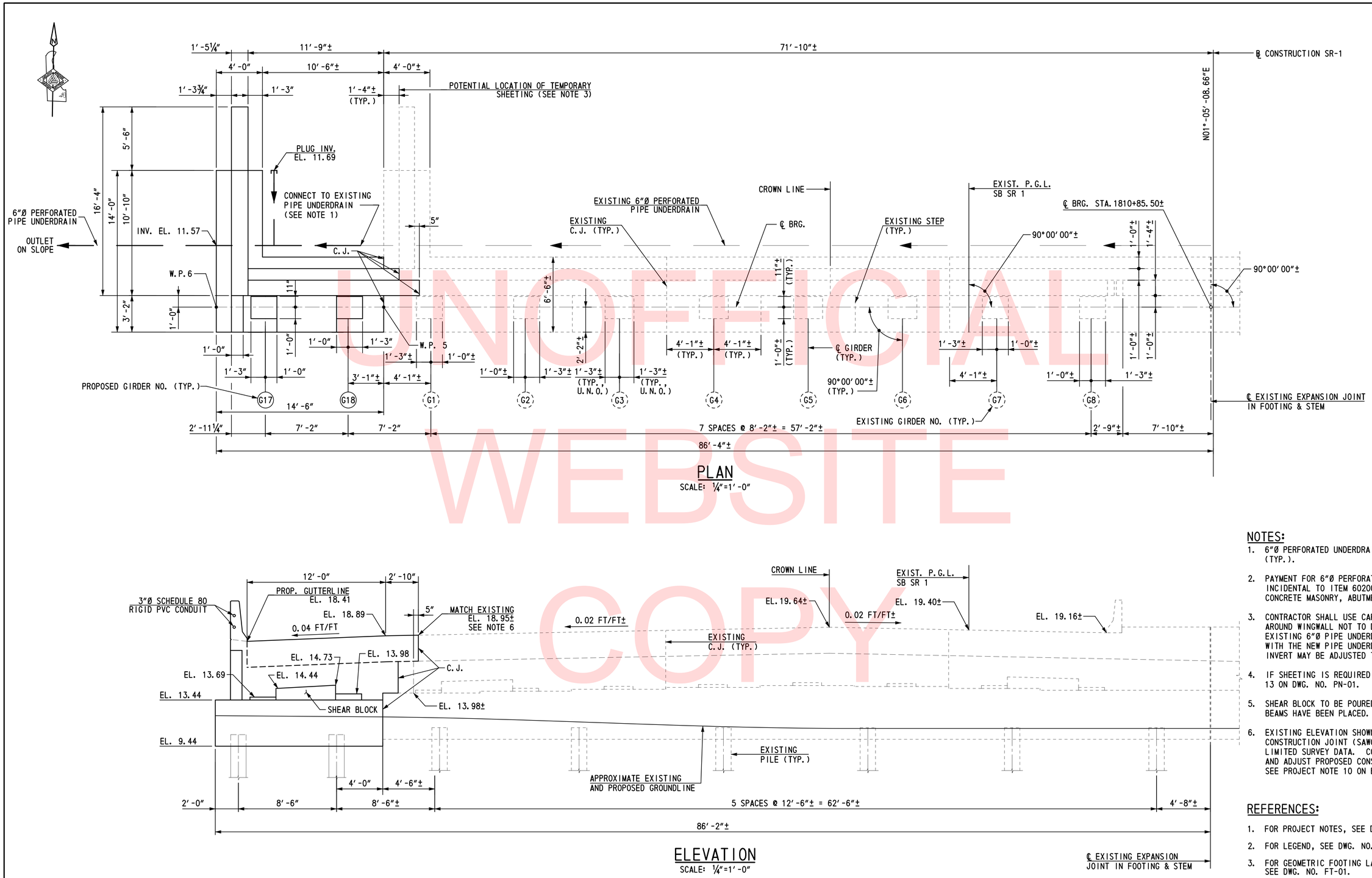

UNOFFICIAL WEBSITE COPY

NOTES:

1. 6"Ø PERFORATED UNDERDRAIN TO BE SLOPED ⅛"/FT (TYP.).
2. PAYMENT FOR 6"Ø PERFORATED UNDERDRAIN IS INCIDENTAL TO ITEM 602003 - PORTLAND CEMENT CONCRETE MASONRY, ABUTMENT FOOTING, CLASS A.
3. CONTRACTOR SHALL USE CARE WHEN EXCAVATING AROUND WINGWALL NOT TO DAMAGE LENGTH OF EXISTING 6"Ø PIPE UNDERDRAIN TO MAKE CONNECTION WITH THE NEW PIPE UNDERDRAIN. ELEVATION OF INVERT MAY BE ADJUSTED TO MAINTAIN ⅛"/FT SLOPE.
4. IF SHEETING IS REQUIRED REFER TO PROJECT NOTE 13 ON DWG. NO. PN-01.
5. SHEAR BLOCK TO BE POURED AFTER PRESTRESSED BEAMS HAVE BEEN PLACED.
6. EXISTING ELEVATION SHOWN AT LONGITUDINAL CONSTRUCTION JOINT (SAWCUT LINE) IS BASED ON LIMITED SURVEY DATA. CONTRACTOR SHALL VERIFY AND ADJUST PROPOSED CONSTRUCTION AS REQUIRED, SEE PROJECT NOTE 10 ON BR1-1 DWG. NO. PN-01.

REFERENCES:

1. FOR PROJECT NOTES, SEE DWG. NO. PN-01.
2. FOR LEGEND, SEE DWG. NO. PE-01.
3. FOR GEOMETRIC FOOTING LAYOUT PLAN, SEE DWG. NO. FT-01.
4. FOR REINFORCEMENT DETAILS, SEE DWG. NO. AB-03.

BR1-1
AB-02

DELAWARE DEPARTMENT OF TRANSPORTATION	ADDENDUMS / REVISIONS	SCALE: AS NOTED	US 301 & SR 1 INTERCHANGE	CONTRACT T200911302	BRIDGE NO. 1-903S	NORTH ABUTMENT PLAN AND ELEVATION	SHEET NO. 131
				COUNTY NEW CASTLE	DESIGNED BY: RTC		TOTAL SHTS. 491
					CHECKED BY: FPH		

C:\Projects\2008\PEI-ED0836 (DelDOT US 301_#1445)\1.Bridges\Drawings\Final_PS&E\BR1-1\AB02_br1-1.dgn
10/22/2015 8:18:02 AM

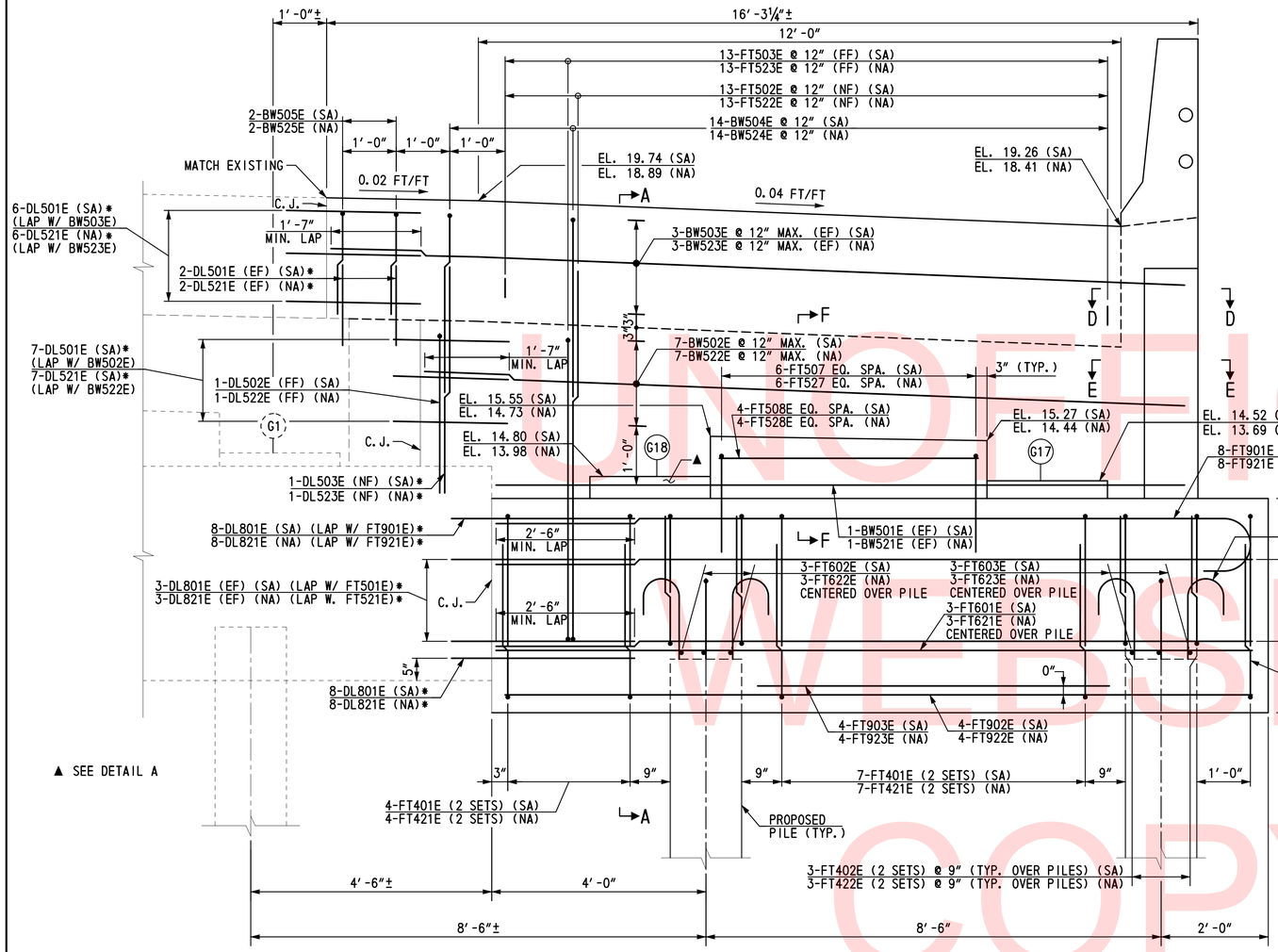

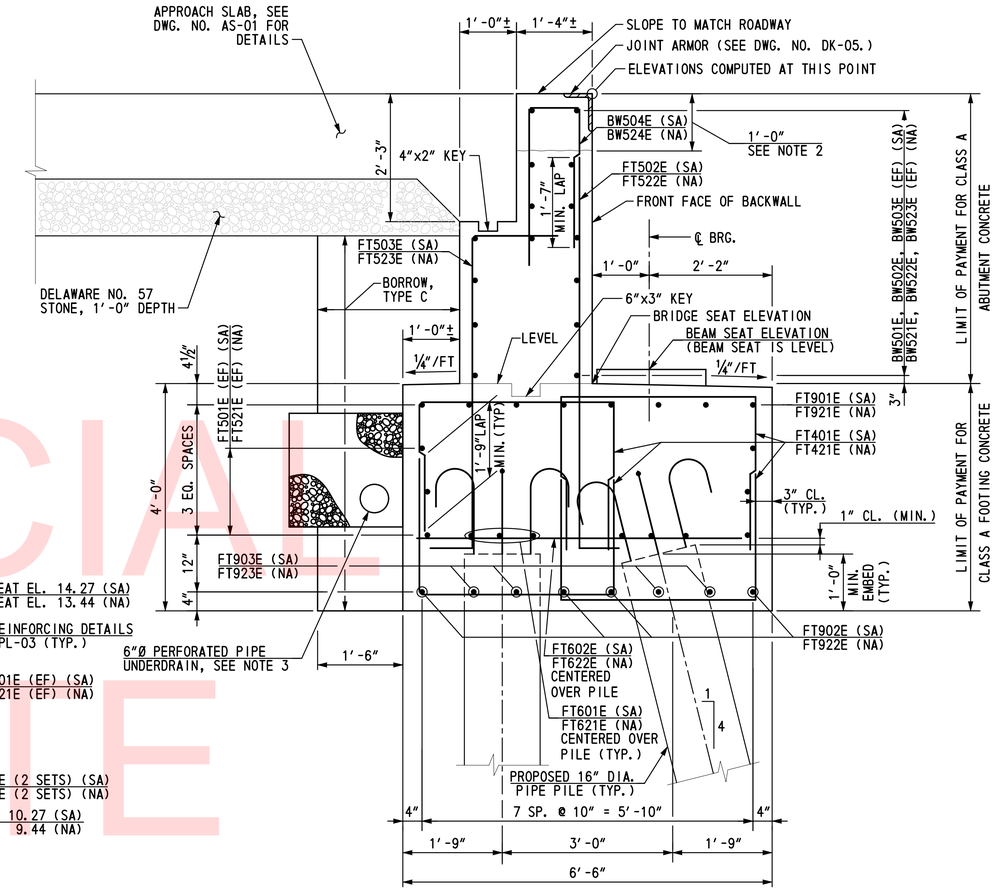

SECTION A-A

SCALE: ¾″=1′-0″

* PLACE DOWELS IN PREDRILLED HOLES USING AN APPROVED EPOXY ADHESIVE ANCHORING SYSTEM OR EPOXY GROUT. FOR #5 BARS USE 6″ DEEP DRILLED HOLES AND FOR #8 BARS, USE 9″ DEEP DRILLED HOLES. HOLE DIAMETERS SHALL BE PER MANUFACTURER'S RECOMMENDATION. LAP DOWELS WITH ABUTMENT REINFORCEMENT WHERE INDICATED.

SOUTH ABUTMENT ELEVATION

(NORTH ABUTMENT ELEVATION SIMILAR)

SCALE: ¾″=1′-0″

REFERENCES:

1. FOR PROJECT NOTES, SEE DWG. NO. PN-01.
2. FOR LAYOUT OF WORKING POINTS, SEE DWG. NO. FT-01.
3. FOR ABUTMENT PLAN & ELEVATION, SEE DWG. NOS. AB-01 & AB-02.
4. FOR SECTION D-D, SEE DWG. NO. WW-01.
5. FOR SECTION E-E, SEE DWG. NO. WW-01.
6. FOR DECK JOINT DETAILS, SEE DWG. NOS. DK-04 & DK-05.
7. FOR REINFORCEMENT BAR LIST, SEE DWG. NO. BR-01.
8. FOR LEGEND, SEE DWG. NO. PE-01.

NOTES:

1. BORROW, TYPE C SHALL BE OBTAINED FROM BORROW SOURCES AND PAID UNDER ITEM 202000 - EXCAVATION AND EMBANKMENT.
2. TOP PORTION OF BACK WALL SHALL NOT BE PLACED UNTIL ENTIRE BRIDGE DECK SLAB IS COMPLETELY IN PLACE.
3. COST OF PVC PIPE UNDERDRAIN, DELAWARE NO. 57 STONE, GEOTEXTILE FILTER FABRIC WILL BE INCIDENTAL TO ITEM 602003 - PORTLAND CEMENT CONCRETE MASONRY, ABUTMENT FOOTING, CLASS A.
4. 2′x2′ BLOCK OF DELAWARE NO. 57 STONE SHALL HAVE GEOTEXTILE FILTER FABRIC ALL AROUND. FABRIC SHALL CONFORM TO AASHTO M 288, CLASS 2.
5. PERFORATED AND NON-PERFORATED PVC PIPE UNDERDRAIN SHALL CONFORM TO ASTM F758, TYPE PS 28.

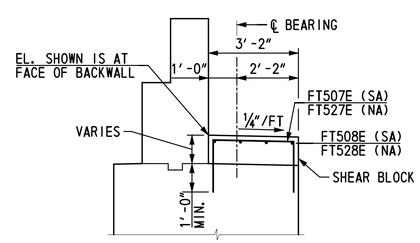

SECTION F-F

SCALE: ⅜″=1′-0″

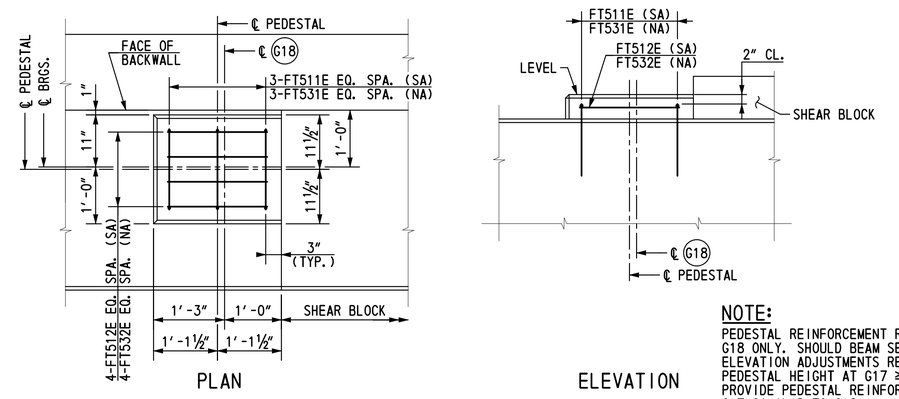

DETAIL A: PEDESTAL REINFORCEMENT

(SOUTH ABUTMENT SHOWN, NORTH ABUTMENT OPPOSITE HAND)

SCALE: ¾″=1′-0″

NOTE:

PEDESTAL REINFORCEMENT REQUIRED AT G18 ONLY. SHOULD BEAM SEAT ELEVATION ADJUSTMENTS RESULT IN PEDESTAL HEIGHT AT G17 ≥ 4″, PROVIDE PEDESTAL REINFORCEMENT AT G17 SIMILAR TO G18.

UNOFFICIAL WEBSITE COPY

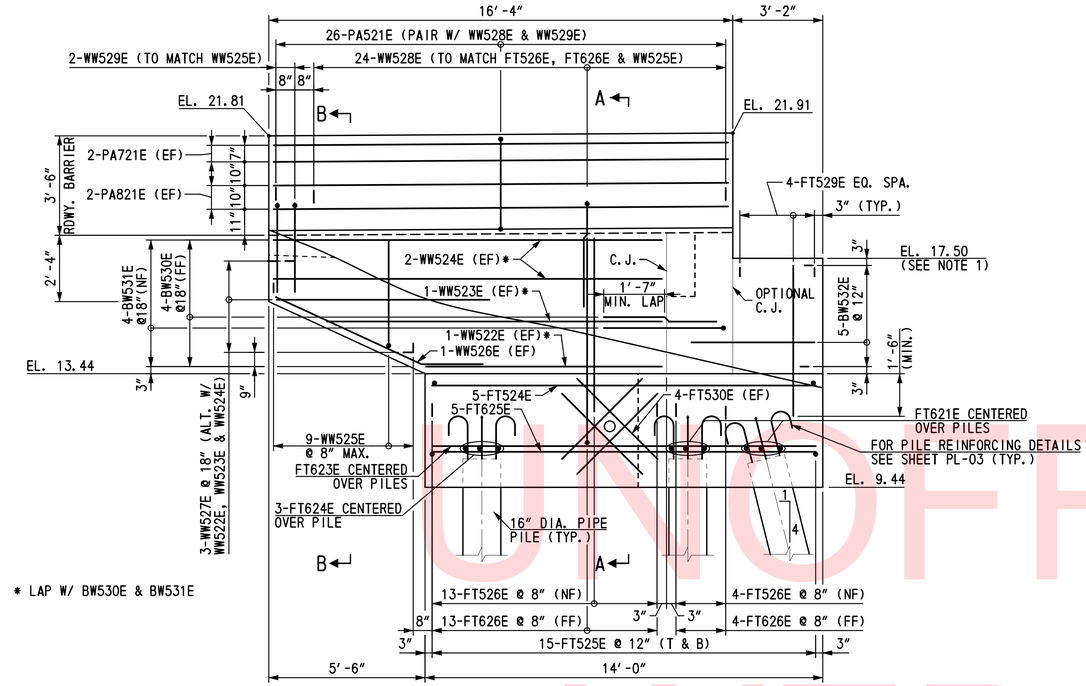

NORTHWEST WINGWALL ELEVATION

SCALE: 3/8" = 1'-0"

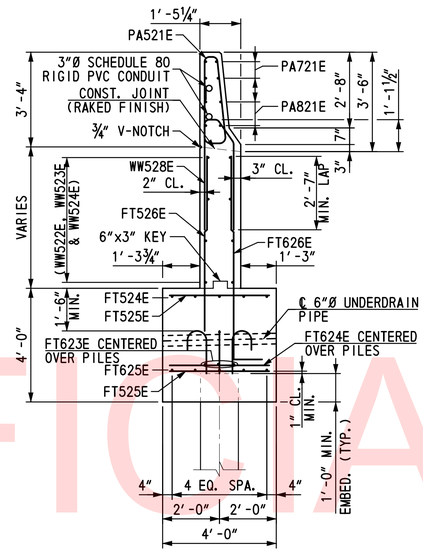

SECTION A-A

SCALE: 3/8" = 1'-0"

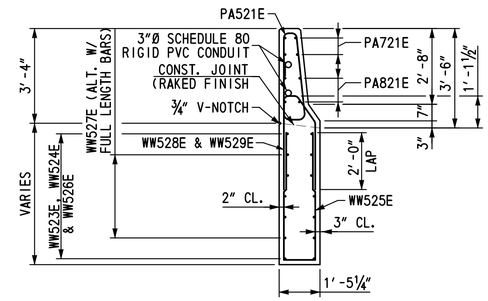

SECTION B-B

SCALE: 3/8" = 1'-0"

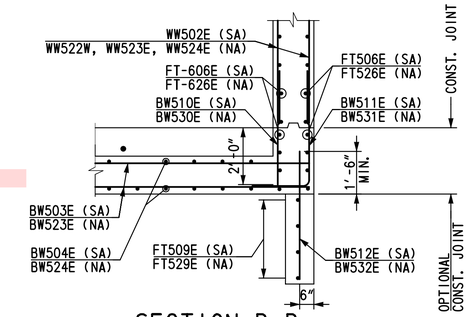

SECTION D-D

SCALE: 3/8" = 1'-0"

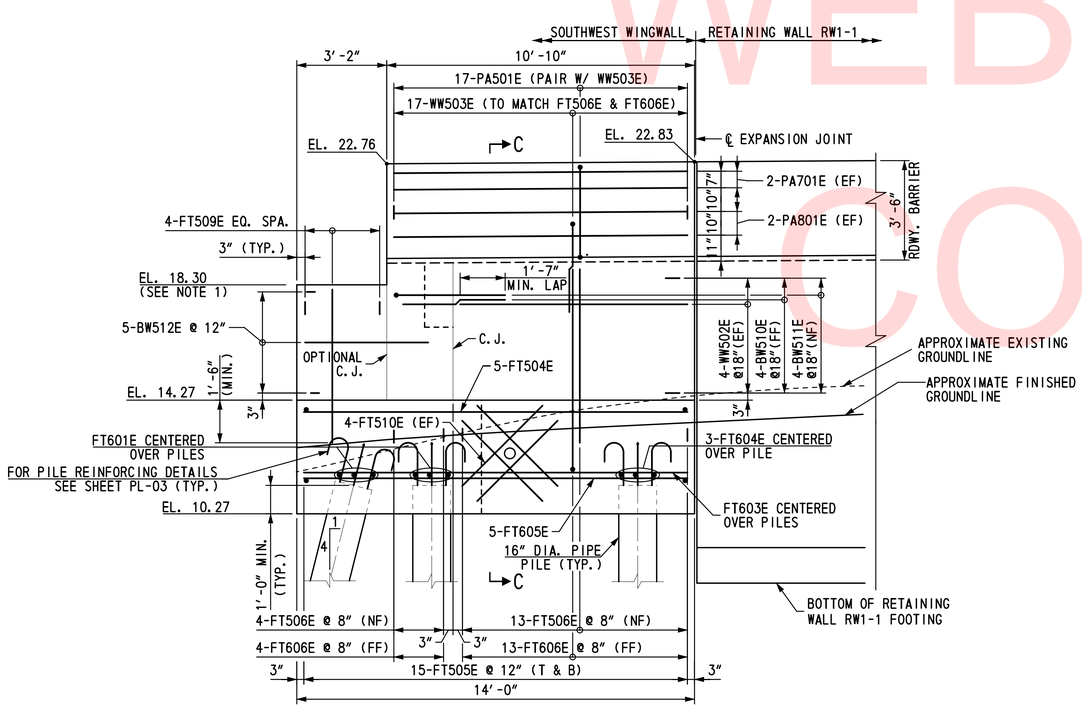

SOUTHWEST WINGWALL ELEVATION

SCALE: 3/8" = 1'-0"

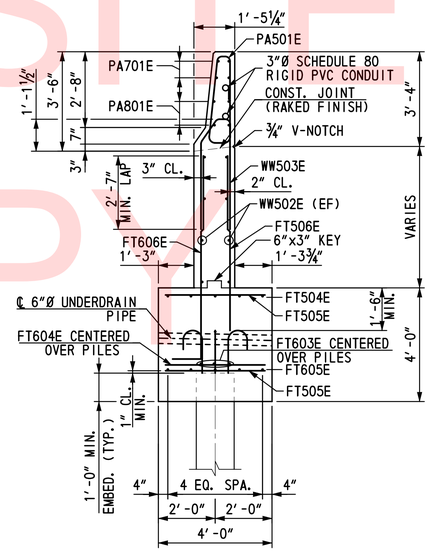

SECTION C-C

SCALE: 3/8" = 1'-0"

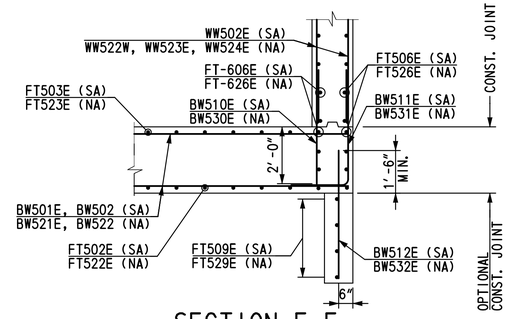

SECTION E-E

SCALE: 3/8" = 1'-0"

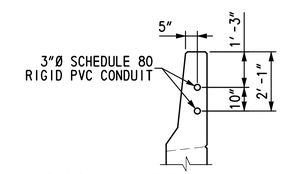

PARAPET CONDUIT DETAIL

SCALE: 3/8" = 1'-0"

NOTES:

1. TOP OF CHEEKWALL ELEVATION TO BE SET TO PROVIDE 1" NOMINAL CLEAR BELOW BOTTOM OF DECK ELEVATION.

REFERENCES:

1. FOR PROJECT NOTES, SEE DWG. NO. PN-01.
2. FOR LOCATION OF SECTION D-D & E-E, SEE DWG. NO. AB-03.
3. FOR LEGEND, SEE DWG. NO. PE-01.
4. FOR WINGWALL TO APPROACH SLAB CONNECTION, SEE DWG. NO. AS-01.
5. FOR RETAINING WALL, SEE STRUCTURE NO. RW1-1, DWG. NO. PE-01.
6. FOR REINFORCEMENT BAR LIST, SEE DWG. BR-01.

BR1-1
WW-01

UNOFFICIAL WEBSITE COPY

\\tsrigint\S\Projects\2008\PE-ED0836 (DelDOT US 301_*1445)\7. Transportation\1. Bridges\Drawings\Final_PS&E\BR1-1\WW01_br1-1.dgn
2/27/2013 3:45:05 PM

DELAWARE DEPARTMENT OF TRANSPORTATION	ADDENDUMS / REVISIONS	SCALE: AS NOTED	US 301 & SR 1 INTERCHANGE	CONTRACT T200911302	BRIDGE NO. 1-903S	WING WALL ELEVATIONS & SECTIONS	SHEET NO. 133
				COUNTY NEW CASTLE	DESIGNED BY: RTC		TOTAL SHTS. 491
					CHECKED BY: FPH		

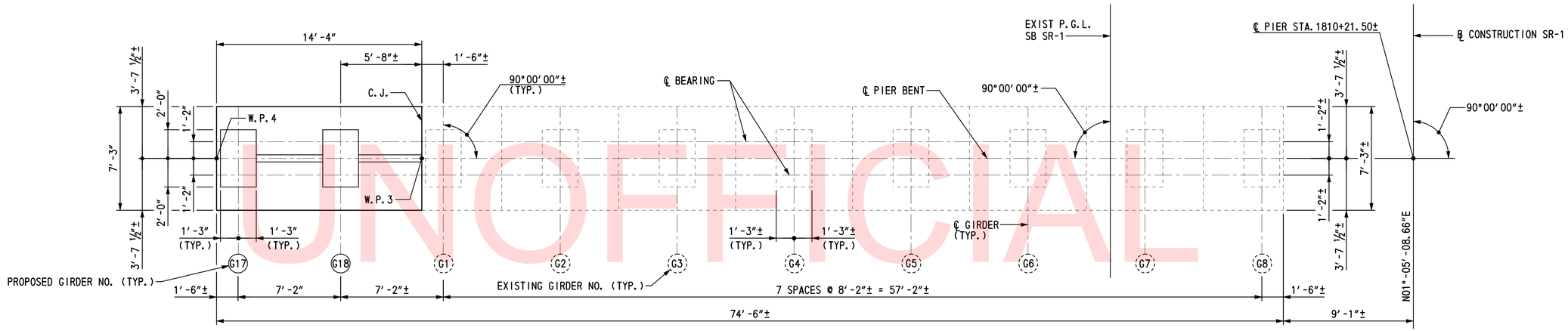

PLAN

SCALE: 1/4″=1′-0″

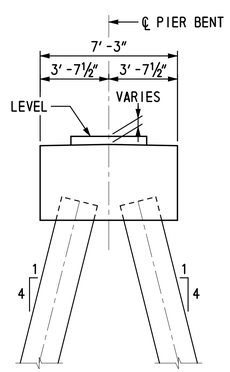

END ELEVATION

SCALE: 1/4″=1′-0″

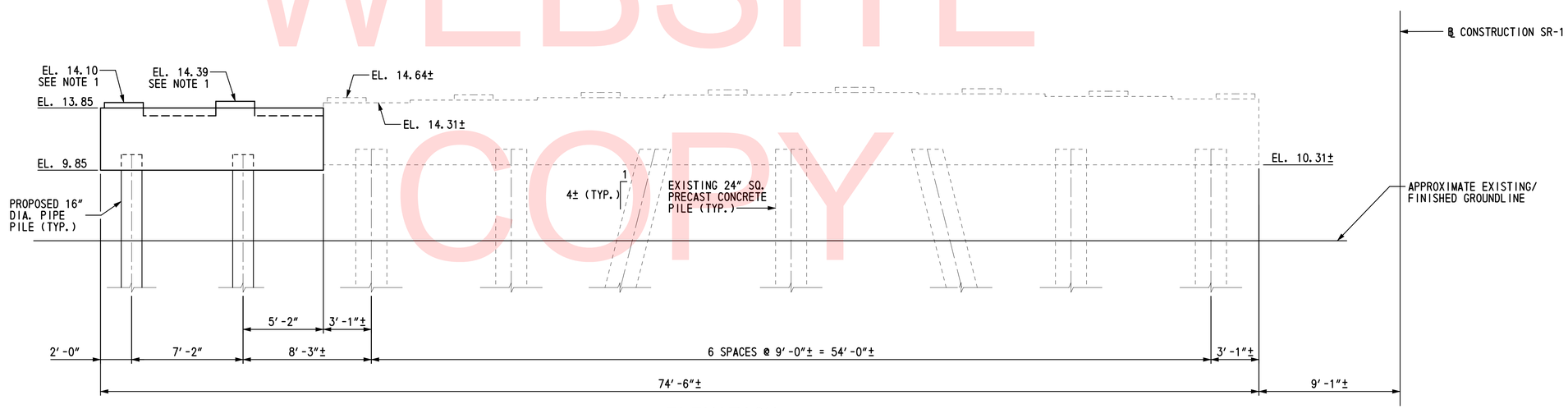

ELEVATION

SCALE: 1/4″=1′-0″

UNOFFICIAL WEBSITE COPY

NOTES:

1. CONTRACTOR SHALL VERIFY EXISTING ELEVATIONS ALONG (SAW CUT LINE) LONGITUDINAL CONSTRUCTION JOINT AND ADJUST PROPOSED CONSTRUCTION ELEVATIONS AS REQUIRED. SEE FINISHED DECK ELEVATIONS ON DWG. NO. FD-01 AND PROJECT NOTE 10 ON BRI-1 DWG. NO. PN-01.

REFERENCES:

1. FOR PROJECT NOTES, SEE DWG. NO. PN-01.
2. FOR LEGEND, SEE DWG. NO. PE-01.
3. USE THIS DWG. IN CONJUNCTION WITH DWG. NO. PR-02.
4. FOR PIER PILE PLAN LAYOUT, SEE DWG. NO. PL-03.
5. FOR PIER REINFORCEMENT, SEE DWG. NO. PR-02.

BR1-1
PR-01

DELAWARE DEPARTMENT OF TRANSPORTATION	ADDENDUMS / REVISIONS	SCALE: AS NOTED	US 301 & SR 1 INTERCHANGE	CONTRACT T200911302	BRIDGE NO. 1-903S	PIER BENT PLAN & ELEVATION	SHEET NO. 134
				COUNTY NEW CASTLE	DESIGNED BY: MED		TOTAL SHTS. 491
					CHECKED BY: SSD		

\\tsclient\S\Projects\2008\PEI-ED0838 (DelDOT US 301_#1445)\7. Transportation\1. Bridges\Drawings\Final_PS&E\BR1-1\PR01_br1-1.dgn
2/27/2013 3:46:12 PM

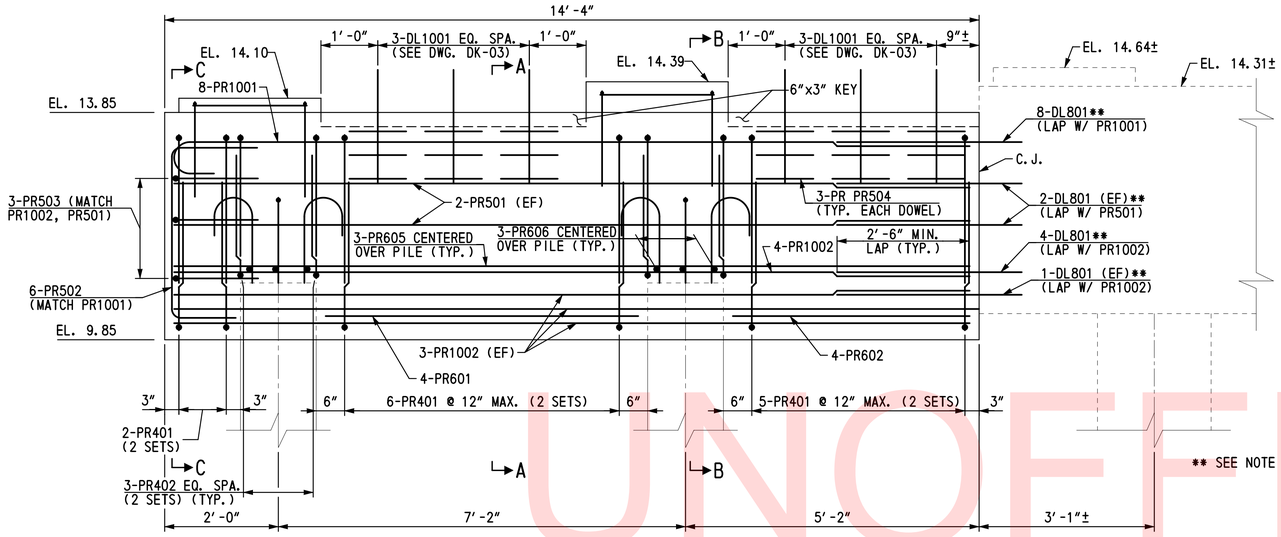

PIER BENT ELEVATION
3/4" = 1'-0"

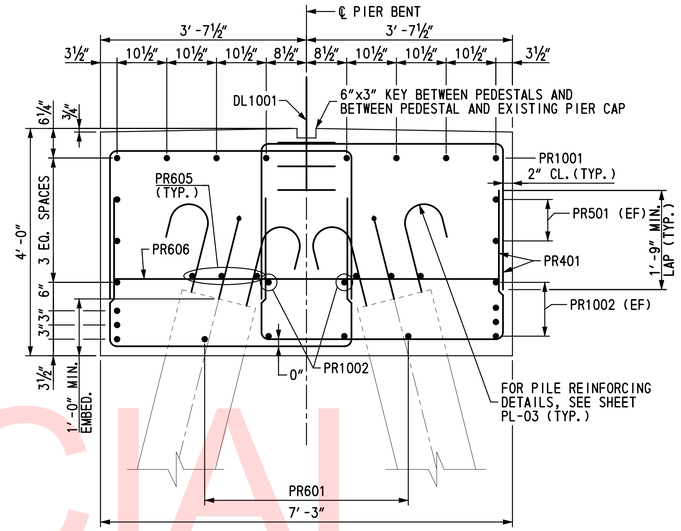

SECTION A-A
3/4" = 1'-0"

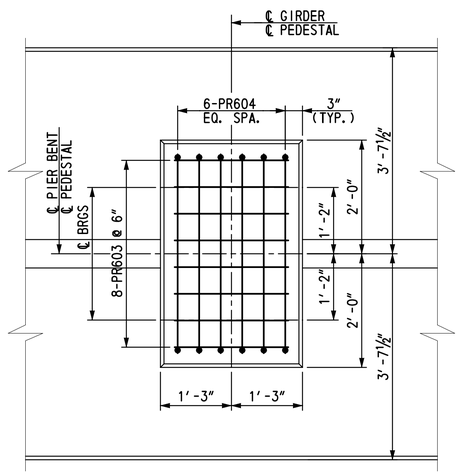

PLAN

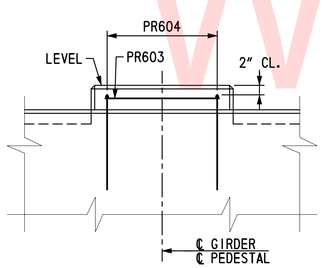

ELEVATION

PIER BENT PEDESTAL REINFORCEMENT
3/4" = 1'-0"

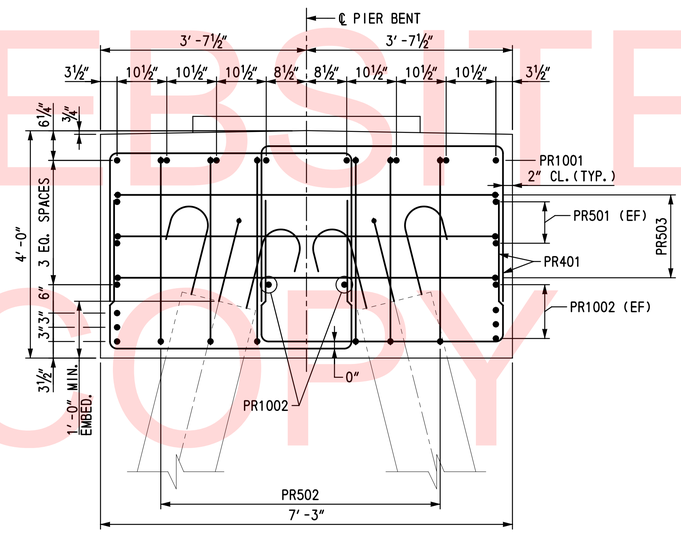

SECTION C-C
3/4" = 1'-0"

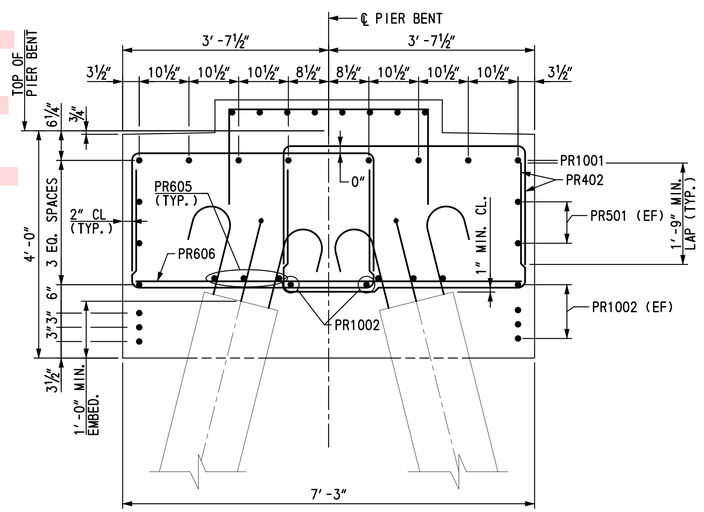

SECTION B-B
3/4" = 1'-0"

REFERENCES:

1. FOR PROJECT NOTES, SEE DWG. NO. PN-01.
2. FOR LEGEND, SEE DWG. NO. PE-01.
3. USE THIS DWG IN CONJUNCTION WITH DWG. NO. PR-01.
4. FOR REINFORCEMENT BAR LIST, SEE DWG. BR-02.
5. FOR DOWEL DETAIL SEE DWG. NO. DK-03.

NOTES:

1. PLACE EACH DL801 IN A 9" DEEP PREDRILLED HOLE USING AN APPROVED EPOXY ADHESIVE ANCHORING SYSTEM OR EPOXY GROUT. HOLE DIAMETER SHALL BE PER MANUFACTURER'S RECOMMENDATION.
2. PEDESTAL TO BE POURED MONOLITHIC WITH CAP.
3. FOR ADDITIONAL PIPE PILE CONCRETE FILL AND REINFORCEMENT DETAILS, SEE DWG. NO. PL-03.

UNOFFICIAL WEBSITE COPY

(1) ANY MARK NUMBER WITH SUFFIX 'E' DENOTES EPOXY COATED REINFORCING STEEL.

(2) ALL MARK 'LOCATION PREFIXES' SHALL CONSIST OF TWO LETTERS AND ARE AS FOLLOWS: AB = ABUTMENT, AS = APPROACH SLAB, BC = BOX CULVERT, BW = BACKWALL, CL = COLUMN, DK = DECK, DL = DOWEL, FT = FOOTING, HW = HEADWALL, MS = MISC. BARS, PA = PARAPET, PR = PIER, SC = SHEETPILE CAP, SL = SLAB, TW = TOEWALL, WL = WALL (UNIQUE LOCATION), WW = WINGWALL

SPECIFICATIONS					BENDING DIMENSIONS (FEET-INCHES /QUARTER INCH)										
QTY.	SIZE	LENGTH	MARK	TYPE	A	B	C	D	E	F/R	G	H	J	K	O
SOUTH ABUTMENT FOOTING															
48	4	8-100	FT401E	17		2-80	3-60	2-80							
24	4	7-100	FT402E	17		2-20	3-60	2-20							
6	5	14-00	FT501E	STR		14-00									
13	5	7-10	FT502E	2	0-100	6-30									
13	5	7-80	FT503E	20		1-00	5-20	1-60							
5	5	13-60	FT504E	STR		13-60									
30	5	3-60	FT505E	STR		3-60									
17	5	6-60	FT506E	STR		6-60									
6	5	7-00	FT507E	17		2-20	2-80	2-20							
4	5	4-100	FT508E	STR		4-100									
4	5	5-50	FT509E	STR		5-50									
8	5	4-00	FT510E	STR		4-00									
3	5	4-30	FT511E	17		1-50	1-50	1-50							
4	5	1-90	FT512E	STR		1-90									
6	6	14-00	FT601E	STR		14-00									
3	6	6-00	FT602E	STR		6-00									
3	6	13-60	FT603E	STR		13-60									
3	6	3-60	FT604E	STR		3-60									
5	6	13-60	FT605E	STR		13-60									
17	6	8-70	FT606E	2	1-00	7-70									
8	9	15-30	FT901E	1	1-30	14-00							0-113		
4	9	14-00	FT902E	STR		14-00									
4	9	6-100	FT903E	STR		6-100									
22	8	3-60	DL801E	STR		3-60									
SOUTH ABUTMENT STEM															
2	5	12-100	BW501E	STR		12-100									
7	5	14-40	BW502E	STR		14-40									
6	5	16-00	BW503E	STR		16-00									
14	5	7-40	BW504E	17		3-00	1-00	3-40							
2	5	4-80	BW505E	17		1-100	1-00	1-100							
4	5	3-90	BW510E	STR		3-90									
4	5	6-10	BW511E	17		2-00	4-10								
5	5	4-40	BW512E	STR		4-40									
17	5	2-40	DL501E	STR		2-40									
1	5	4-60	DL502E	20		1-60	3-00								
1	5	4-60	DL503E	STR		4-60									
NORTH ABUTMENT FOOTING															
48	4	8-100	FT421E	17		2-80	3-60	2-80							
24	4	7-100	FT422E	17		2-20	3-60	2-20							
6	5	14-00	FT521E	STR		14-00									
13	5	7-10	FT522E	2	0-100	6-30									
13	5	7-80	FT523E	20		1-00	5-20	1-60							
5	5	13-60	FT524E	STR		13-60									
30	5	3-60	FT525E	STR		3-60									
17	5	6-60	FT526E	STR		6-60									
6	5	7-00	FT527E	17		2-20	2-80	2-20							
4	5	4-100	FT528E	STR		4-100									
4	5	5-50	FT529E	STR		5-50									
8	5	4-00	FT530E	STR		4-00									
3	5	4-30	FT531E	17		1-50	1-50	1-50							
4	5	1-90	FT532E	STR		1-90									
6	6	14-00	FT621E	STR		14-00									
3	6	6-00	FT622E	STR		6-00									
3	6	13-60	FT623E	STR		13-60									
3	6	3-60	FT624E	STR		3-60									
5	6	13-60	FT625E	STR		13-60									
17	6	8-60	FT626E	2	1-00	7-60									
8	9	15-30	FT921E	1	1-30	14-00							0-113		
4	9	14-00	FT922E	STR		14-00									
4	9	6-100	FT923E	STR		6-100									
22	8	3-60	DL821E	STR		3-60									
NORTH ABUTMENT STEM															
2	5	12-100	BW521E	STR		12-100									
7	5	14-40	BW522E	STR		14-40									
6	5	16-00	BW523E	STR		16-00									
14	5	7-40	BW524E	17		3-00	1-00	3-40							
2	5	4-80	BW525E	17		1-100	1-00	1-100							
4	5	3-90	BW530E	STR		3-90									
4	5	6-10	BW531E	17		2-00	4-10								
5	5	4-40	BW532E	STR		4-40									
17	5	2-40	DL521E	STR		2-40									
1	5	4-60	DL522E	20		1-60	3-00								
1	5	4-60	DL523E	STR		4-60									
SOUTHWEST WINGWALL															
8	5	8-20	WW502E	STR		8-20									
17	5	8-51	WW503E	T15		3-110	0-50	0-113	3-12			3-12	0-63	0-92	
SOUTHWEST WINGWALL PARAPET															
17	5	7-80	PA501E	PA		1-90	0-90	3-00	0-50	1-90		3-00		0-40	
4	7	10-60	PA701E	STR		10-60									
4	8	10-60	PA801E	STR		10-60									
NORTHWEST WINGWALL															
2	5	8-40	WW522E	STR		8-40									
2	5	11-90	WW523E	STR		11-90									
4	5	13-80	WW524E	STR		13-80									
1X9	5	5-20	WW525E	17		2-10	1-00	2-10							
		T0				T0	T0	T0							
		9-100				4-50	1-00	4-50							
2	5	7-100	WW526E	16			2-00	5-100				2-51		5-32	7-32
6	5	7-60	WW527E	STR		7-60									
24	5	8-51	WW528E	T15		3-110	0-50	0-113	3-12			3-12	0-63	0-92	
2	5	6-111	WW529E	T15		3-20	0-50	0-113	2-42			2-42	0-63	0-92	
NORTHWEST WINGWALL PARAPET															
26	5	7-80	PA521E	PA		1-90	0-90	3-00	0-50	1-90		3-00		0-40	
4	7	16-00	PA721E	STR		16-00									
4	8	16-00	PA821E	STR		16-00									

UNOFFICIAL WEBSITE COPY

ASTM STANDARD ENGLISH REINFORCING BARS

BAR SIZE	NOMINAL DIMENSIONS: DIAMETER (INCHES)	AREA (INCHES²)	WEIGHT (LBS./FT.)
3	0.375	0.110	0.376
4	0.500	0.200	0.668
5	0.625	0.310	1.043
6	0.750	0.440	1.502
7	0.875	0.600	2.044
8	1.000	0.790	2.670
9	1.128	1.000	3.400
10	1.270	1.270	4.303
11	1.410	1.560	5.313
14	1.693	2.250	7.650
18	2.257	4.000	13.600

RECOMMENDED END HOOKS, APPLICABLE TO ALL GRADES

	180° HOOKS		90° HOOKS
D	A OR G	J	A OR G
2¼"	5"	3"	6"
3"	6"	4"	8"
3¾"	7"	5"	10"
4½"	8"	6"	1-0"
5¼"	10"	7"	1-2"
6"	11"	8"	1-4"
9½"	1-3"	11¾"	1-7"
10¾"	1-5"	1-1¼"	1-10"
1-0"	1-7"	1-2¾"	2-0"
1-6¼"	2-3"	1-9¾"	2-7"
2-0"	3-0"	2-4½"	3-5"

STIRRUP AND TIE HOOKS, APPLICABLE TO ALL GRADES

	90° HOOK	135° HOOK	
D	A OR G	A OR G	A OR G
1½"	4"	4"	2½"
2"	4½"	4½"	3"
5½"	6"	5½"	3¾"
5¼"	1-2"	9"	5¼"
6"	1-4"	10½"	6"

NOTES:

1. FIGURES SHOWN IN CIRCLES REPRESENT BAR BEND TYPES.
2. STANDARD BAR BENDS INCLUDE ONLY THOSE TYPES BELOW, INDICATED AS SUCH.
3. ALL DIMENSIONS OUT-TO-OUT, EXCEPT "A" AND "G" ON STD. 180° AND 135° HOOKS.
4. "J" DIMENSIONS ON 180° HOOKS TO BE SHOWN ONLY WHERE NECESSARY TO RESTRICT HOOK SIZE, OTHERWISE STANDARD 'ACI' HOOKS ARE TO BE USED.
5. WHERE "J" IS NOT SHOWN, "J" WILL BE KEPT EQUAL TO OR LESS THAN "H" ON TYPES 3, 5 AND 22. WHERE "J" CAN EXCEED "H", IT SHALL BE SHOWN.
6. "H" DIMENSIONS OF STIRRUPS TO BE SHOWN AS NEEDED TO FIT WITHIN THE CONCRETE.
7. UNLESS OTHERWISE NOTED, DIAMETER "D" IS THE SAME FOR ALL BENDS AND HOOKS ON A BAR (EXCEPT FOR BEND TYPES 11 AND 13).
8. WHERE SLOPE DIFFERS FROM 45° OFFSET, "H" AND "K" MUST BE SHOWN.
9. WHERE BARS ARE TO BE BENT MORE ACCURATELY THAN STANDARD BENDING TOLERANCES, BENDING DIMENSIONS REQUIRING CLOSER FABRICATION SHOULD HAVE LIMITS INDICATED.
10. FOR RECOMMENDED DIAMETER "D", OF BENDS, HOOKS, ETC., REFER TO TABLE ABOVE, 'CRSI' OR 'ACI' TABLES WHERE APPLICABLE AND REQUIRED.
11. TYPE S1-S6, S11, T1-T3 AND T6-T9 APPLICABLE TO BAR SIZES #3 THROUGH #8.

STANDARD BAR BENDS

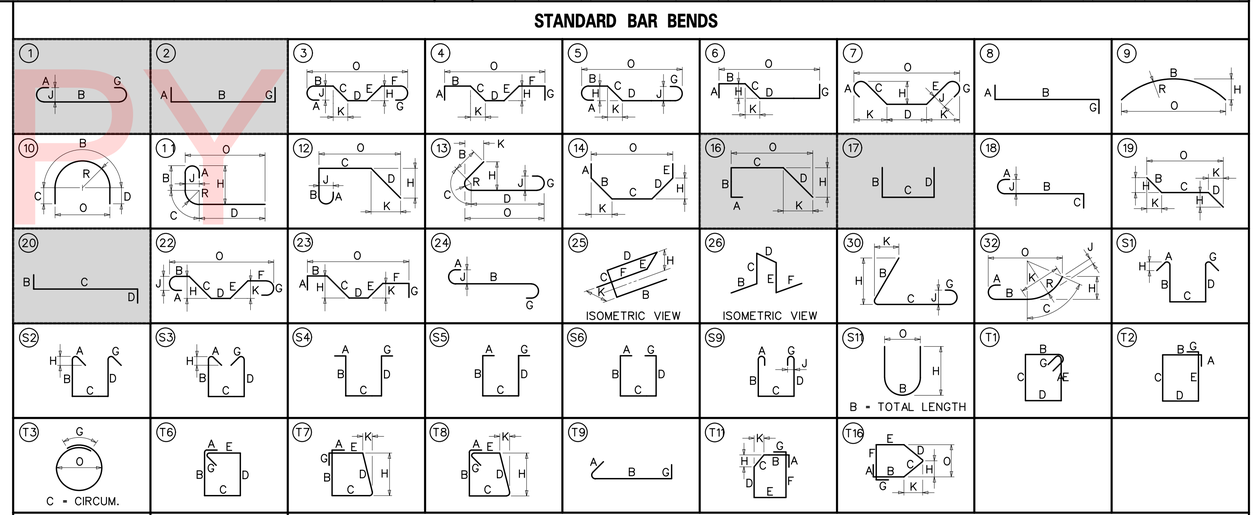

SPECIAL BAR BENDS

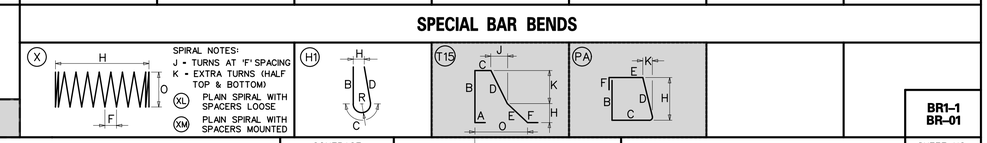

STIRRUP AND TIE HOOKS

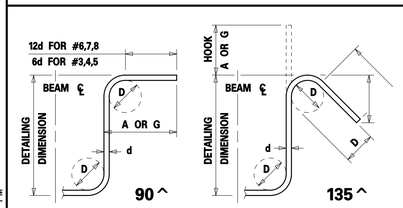

180° AND 90° END HOOKS

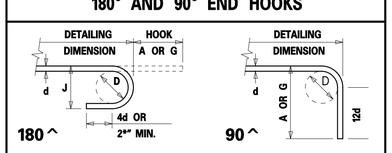

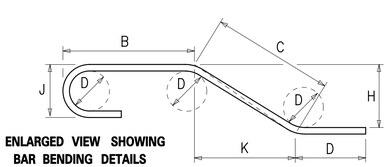

DELAWARE DEPARTMENT OF TRANSPORTATION

ADDENDUMS / REVISIONS

US 301 & SR 1 INTERCHANGE

CONTRACT	BRIDGE NO.	1-903S
T200911302	DESIGNED BY:	RTC
COUNTY	CHECKED BY:	FPH
NEW CASTLE		

ABUTMENT REINFORCEMENT BAR LIST

BR1-1
BR-01

SHEET NO. 136
TOTAL SHTS. 491

\\tsclient\S\Projects\2008\PEI-ED0836 (DelDOT US 301_*1445)\7. Transportation\1. Bridges\Drawings\Final_PS&E\BR1-1\BR01_br1-1.dgn
2/27/2013 3:48:23 PM

(1) ANY MARK NUMBER WITH SUFFIX 'E' DENOTES EPOXY COATED REINFORCING STEEL.

(2) ALL MARK 'LOCATION PREFIXES' SHALL CONSIST OF TWO LETTERS AND ARE AS FOLLOWS: AB = ABUTMENT, AS = APPROACH SLAB, BC = BOX CULVERT, BW = BACKWALL, CL = COLUMN, DK = DECK, DL = DOWEL, FT = FOOTING, HW = HEADWALL, MS = MISC. BARS, PA = PARAPET, PR = PIER, SC = SHEETPILE CAP, SL = SLAB, TW = TOEWALL, WL = WALL (UNIQUE LOCATION), WW = WINGWALL

SPECIFICATIONS					BENDING DIMENSIONS (FEET-INCHES /QUARTER INCH)										
QTY.	SIZE	LENGTH	MARK	TYPE	A	B	C	D	E	F/R	G	H	J	K	O
PIER BENT															
52	4	9-60	PR401	17		2-72	4-30	2-72							
24	4	8-50	PR402	17		2-10	4-30	2-10							
4	5	14-00	PR501	STR		14-00									
6	5	5-82	PR502	17		1-60	3-22	1-00							
3	5	9-90	PR503	17		1-60	6-90	1-60							
36	5	2-60	PR504	17		0-100	0-100	0-100							
4	6	5-60	PR601	STR		5-60									
4	6	4-20	PR602	STR		4-20									
16	6	2-00	PR603	STR		2-00									
12	6	8-00	PR604	17		1-110	3-60	1-110							
6	6	13-100	PR605	STR		13-100									
6	6	6-90	PR606	STR		6-90									
8	10	15-50	PR1001	1	1-50	14-00							1-11		
10	10	14-00	PR1002	STR		14-00									
18	8	3-60	DL801	STR		3-60									
6	10	2-00	DL1001*	STR		2-00									

* PLAIN DOWEL

SPECIFICATIONS					BENDING DIMENSIONS (FEET-INCHES /QUARTER INCH)										
QTY.	SIZE	LENGTH	MARK	TYPE	A	B	C	D	E	F/R	G	H	J	K	O

SPECIFICATIONS					BENDING DIMENSIONS (FEET-INCHES /QUARTER INCH)										
QTY.	SIZE	LENGTH	MARK	TYPE	A	B	C	D	E	F/R	G	H	J	K	O

UNOFFICIAL WEBSITE
COPY

ASTM STANDARD ENGLISH REINFORCING BARS

NOMINAL DIMENSIONS				RECOMMENDED END HOOKS, APPLICABLE TO ALL GRADES				STIRRUP AND TIE HOOKS, APPLICABLE TO ALL GRADES			
					180° HOOKS		90° HOOKS		90° HOOK	135° HOOK	
BAR SIZE	DIAMETER (INCHES)	AREA (INCHES²)	WEIGHT (LBS./FT.)	D	A OR G	J	A OR G	D	A OR G	A OR G	A OR G
3	0.375	0.110	0.376	2¼"	5"	3"	6"	1½"	4"	4"	2½"
4	0.500	0.200	0.668	3"	6"	4"	8"	2"	4½"	4½"	3"
5	0.625	0.310	1.043	3¾"	7"	5"	10"	2½"	6"	5½"	3¾"
6	0.750	0.440	1.502	4½"	8"	6"	1-0"	4½"	1-0"	8"	4½"
7	0.875	0.600	2.044	5¼"	10"	7"	1-2"	5¼"	1-2"	9"	5¼"
8	1.000	0.790	2.670	6"	11"	8"	1-4"	6"	1-4"	10½"	6"
9	1.128	1.000	3.400	9½"	1-3"	11¾"	1-7"				
10	1.270	1.270	4.303	10¾"	1-5"	1-1¼"	1-10"				
11	1.410	1.560	5.313	1-0"	1-7"	1-2¾"	2-0"				
14	1.693	2.250	7.650	1-6¼"	2-3"	1-9¾"	2-7"				
18	2.257	4.000	13.600	2-0"	3-0"	2-4½"	3-5"				

NOTES:

1. FIGURES SHOWN IN CIRCLES REPRESENT BAR BEND TYPES.
2. STANDARD BAR BENDS INCLUDE ONLY THOSE TYPES BELOW, INDICATED AS SUCH.
3. ALL DIMENSIONS OUT-TO-OUT, EXCEPT "A" AND "G" ON STD. 180° AND 135° HOOKS.
4. "J" DIMENSIONS ON 180° HOOKS TO BE SHOWN ONLY WHERE NECESSARY TO RESTRICT HOOK SIZE, OTHERWISE STANDARD 'ACI' HOOKS ARE TO BE USED.
5. WHERE "J" IS NOT SHOWN, "J" WILL BE KEPT EQUAL TO OR LESS THAN "H" ON TYPES 3, 5 AND 22. WHERE "J" CAN EXCEED "H", IT SHALL BE SHOWN.
6. "H" DIMENSIONS OF STIRRUPS TO BE SHOWN AS NEEDED TO FIT WITHIN THE CONCRETE.
7. UNLESS OTHERWISE NOTED, DIAMETER "D" IS THE SAME FOR ALL BENDS AND HOOKS ON A BAR (EXCEPT FOR BEND TYPES 11 AND 13).
8. WHERE SLOPE DIFFERS FROM 45° OFFSET, "H" AND "K" MUST BE SHOWN.
9. WHERE BARS ARE TO BE BENT MORE ACCURATELY THAN STANDARD BENDING TOLERANCES, BENDING DIMENSIONS REQUIRING CLOSER FABRICATION SHOULD HAVE LIMITS INDICATED.
10. FOR RECOMMENDED DIAMETER "D", OF BENDS, HOOKS, ETC., REFER TO TABLE ABOVE, 'CRSI' OR 'ACI' TABLES WHERE APPLICABLE AND REQUIRED.
11. TYPE S1-S6, S11, T1-T3 AND T6-T9 APPLICABLE TO BAR SIZES #3 THROUGH #8.

STANDARD BAR BENDS

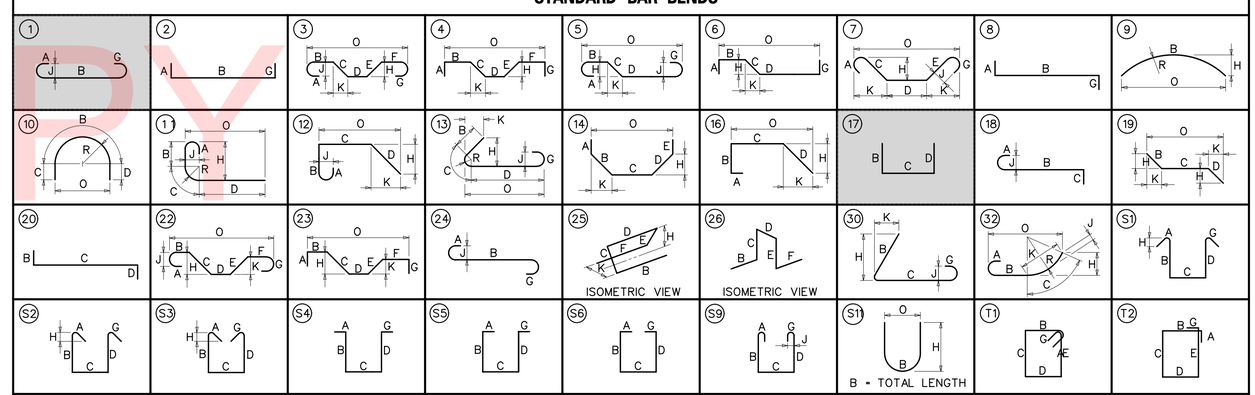

SPECIAL BAR BENDS

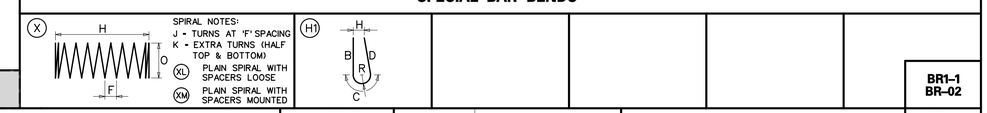

STIRRUP AND TIE HOOKS

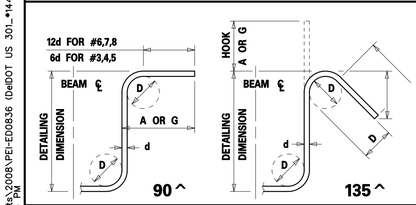

180° AND 90° END HOOKS

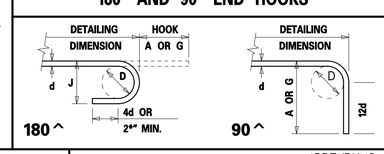

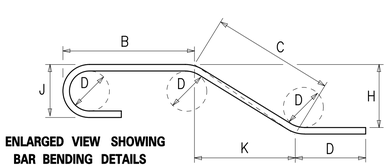

ENLARGED VIEW SHOWING BAR BENDING DETAILS

DELAWARE DEPARTMENT OF TRANSPORTATION

ADDENDUMS / REVISIONS

US 301 & SR 1 INTERCHANGE

CONTRACT	BRIDGE NO.	1-903S
T200911302	DESIGNED BY:	RTC
COUNTY	CHECKED BY:	FPH
NEW CASTLE		

PIER BENT REINFORCEMENT BAR LIST

BR1-1 BR-02

SHEET NO. 137

TOTAL SHTS. 491

\\tedient\S\Projects\2008\PE-ED0836 (DelDOT US 301_*1445)\7. Transportation\1. Bridges\Drawings\Final_PS&E\BR1-1\BR02_br1-1.dgn
2/27/2013 3:50:05 PM

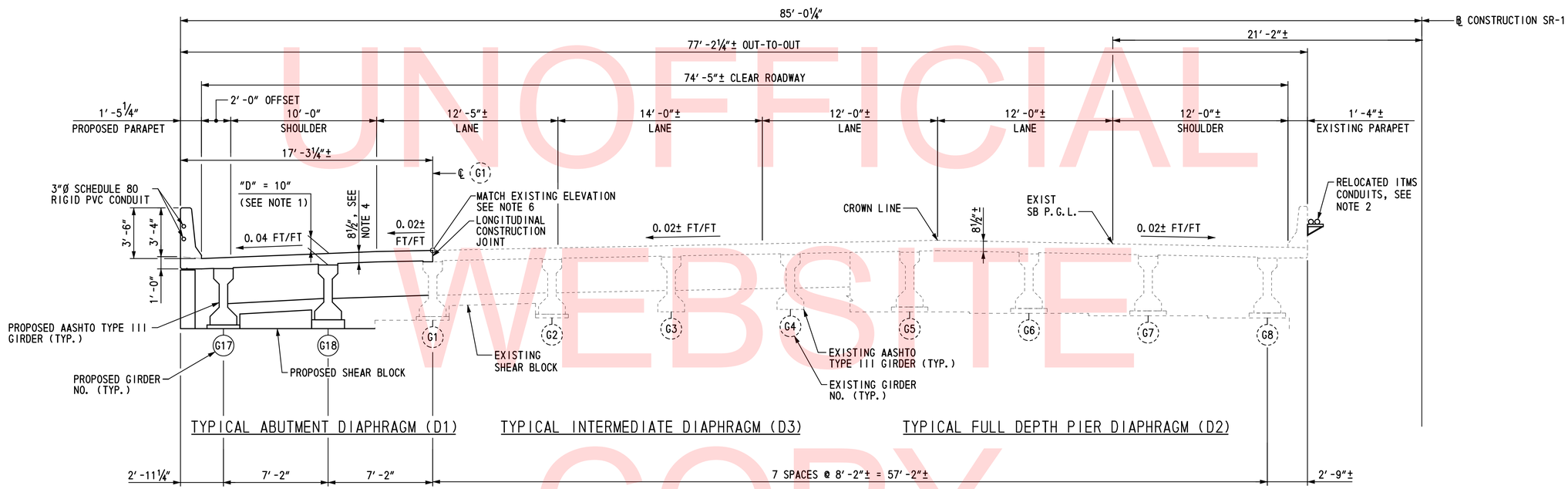

TYPICAL SECTION

SCALE: ¼"=1'-0"

UNOFFICIAL WEBSITE COPY

NOTES:

1. "D" MEASURED FROM TOP OF DECK TO TOP OF BEAM AT CENTERLINE OF GIRDER AT CENTERLINE OF BEARING (TYP.).
2. FOR PROPOSED ITMS CONDUIT REQUIREMENTS, SEE ITMS PATHWAY RELOCATION PLANS ON DWG. NOS. SS-04 AND SS-05. COST FOR INSTALLATION OF CONDUIT SUPPORTS ON EXISTING BRIDGE PARAPET SHALL BE INCIDENTAL TO ITEM 745546 - INSTALLATION OF CONDUIT ON STRUCTURE.
3. EXISTING INTERMEDIATE AND PIER DIAPHRAGMS SHOWN. PROPOSED DIAPHRAGMS ARE SIMILAR.
4. DECK SLAB THICKNESS INCLUDES ½" INTEGRAL WEARING SURFACE.
5. PARAPET SHALL NOT BE SLIP FORMED.
6. FOR EXISTING TOP OF DECK ELEVATIONS ALONG CENTERLINE G1 LONGITUDINAL SAWCUT JOINT, SEE DWG. NO. FD-01.
7. REFLECTORS SHALL BE INSTALLED ALONG PARAPET (ROADWAY PAY ITEM). FOR DETAILS, SEE DWG. NO. DT-05.

REFERENCES:

1. FOR PROJECT NOTES, SEE DWG. NO. PN-01.
2. FOR LEGEND, SEE DWG. NO. PE-01.
3. FOR FRAMING PLAN, SEE DWG. NO. FR-01.
4. FOR PRESTRESSED BEAM DETAILS, SEE DWG. NO. BM-01.
5. FOR DIAPHRAGM DETAILS, SEE DWG. NOS. DK-02 & DK-03.
6. FOR PARAPET CONDUIT DETAIL, SEE DWG. NO. WW-01.

BR1-1
TS-01

DELAWARE DEPARTMENT OF TRANSPORTATION	ADDENDUMS / REVISIONS	SCALE: AS NOTED	US 301 & SR 1 INTERCHANGE	CONTRACT T200911302	BRIDGE NO. 1-903S	SUPERSTRUCTURE TYPICAL SECTION	SHEET NO. 138
				COUNTY NEW CASTLE	DESIGNED BY: MED		TOTAL SHTS. 491
					CHECKED BY: SSD		

\\tsdgent\S\Projects\2008\PE\ED0836 (DelDOT US 301_*1445)\7. Transportation\1. Bridges\Drawings\Final_PS&E\BR1-1\TS01_br1-1.dgn
2/27/2013 3:53:49 PM

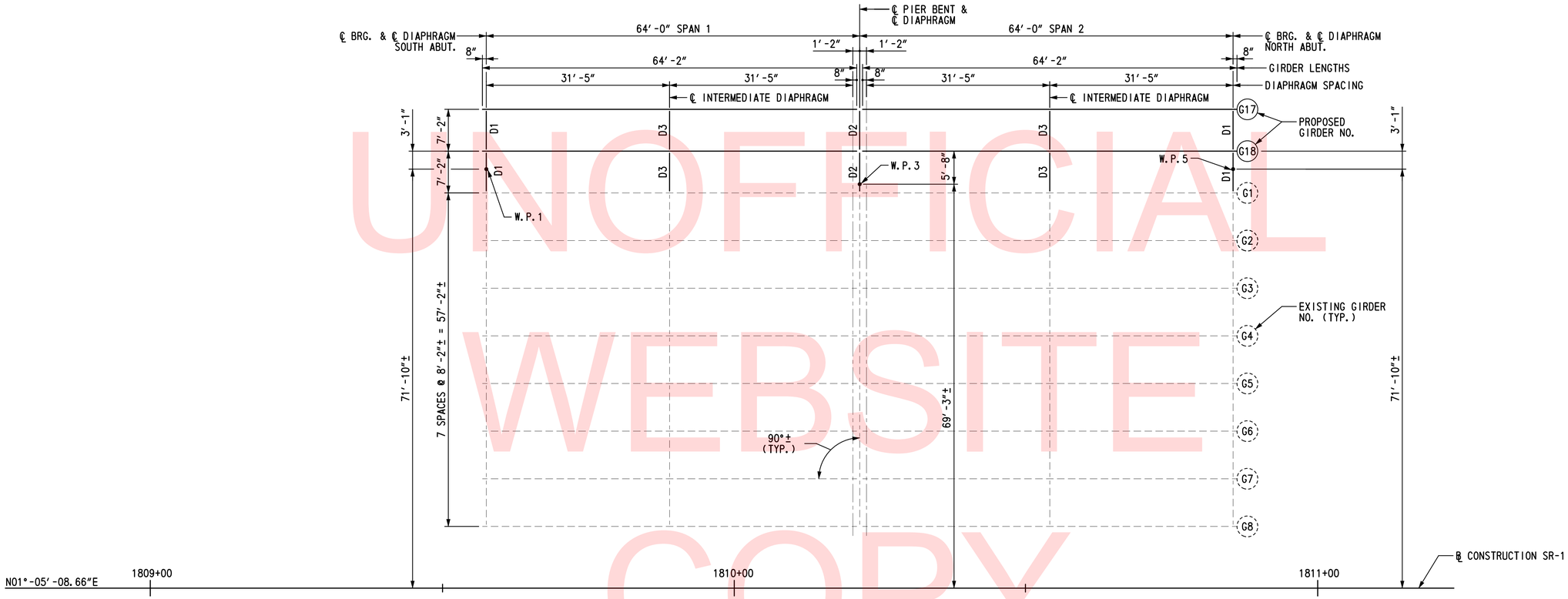

FRAMING PLAN

SCALE: 1″=10′-0″

UNOFFICIAL WEBSITE COPY

REFERENCES:

1. FOR WORKING POINT LAYOUT, SEE DWG. NO. FT-01.
2. FOR DECK CROSS SECTION, SEE DWG. NO. TS-01.
3. FOR PRESTRESSED BEAM DETAILS, SEE DWG. NO. BM-01.
4. FOR DIAPHRAGM DETAILS, SEE DWG. NOS. DK-02 & DK-03.

\\sglent\S\Projects\2008\PEI-ED0836 (DelDOT US 301_*1445)\7. Transportation\1. Bridges\Drawings\Final_PS&E\BR1-1\FR01_br1-1.dgn
2/27/2013 3:54:54 PM

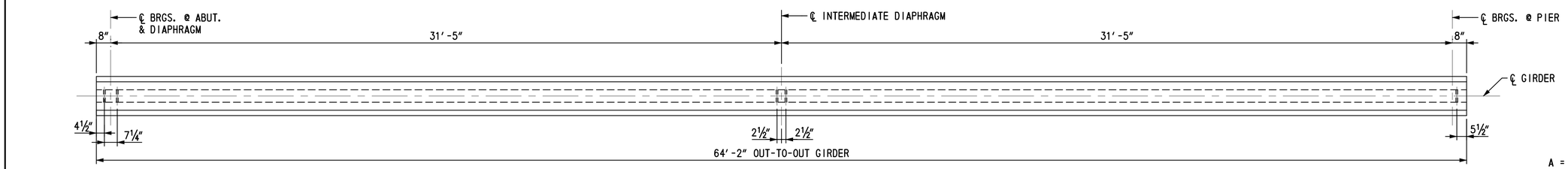

* 4-1″Ø HOLES FOR DIAPHRAGM REINF. (THREADED INSERTS ON INSIDE FACE OF FASCIA GIRDERS ONLY)

PLAN

SCALE: ⅜″=1′-0″

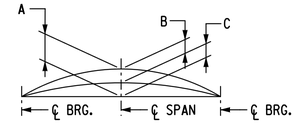

CAMBER DIAGRAM

NOT TO SCALE

A = ESTIMATED PRESTRESS CAMBER LESS DEFLECTION DUE TO DEAD LOAD OF BEAM TIMES CREEP FACTOR.
B = DEFLECTION DUE TO DEAD LOAD OF SLAB, PARAPETS, SIP FORMS AND FUTURE PAVING ALLOWANCES.
C = A-B = FINAL CAMBER (NET)

CAMBER TABLE			
BEAMS	A	B	C
G17	1.49	0.54	0.95
G18	1.49	0.63	0.86

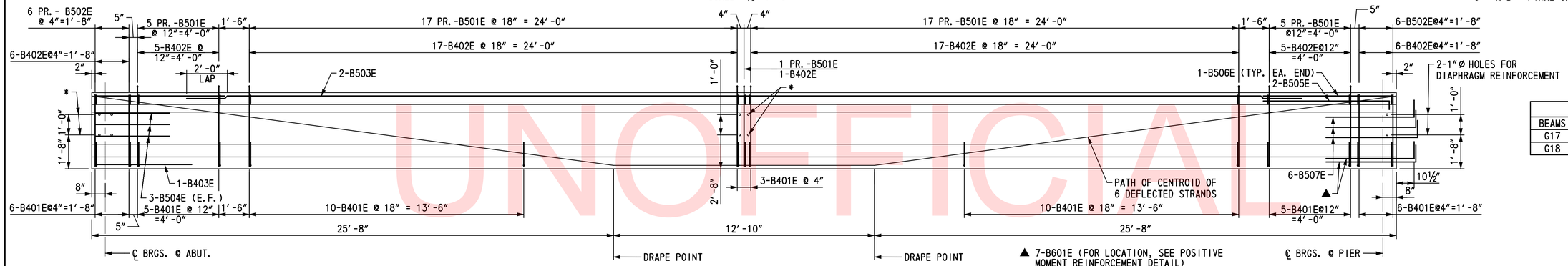

ELEVATION

SCALE: ⅜″=1′-0″

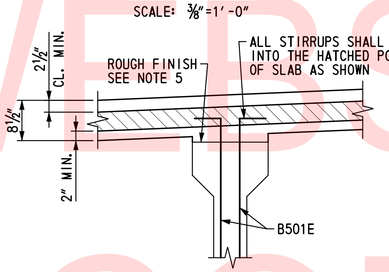

GIRDER FINISH DETAIL

SCALE: ¾″=1′-0″

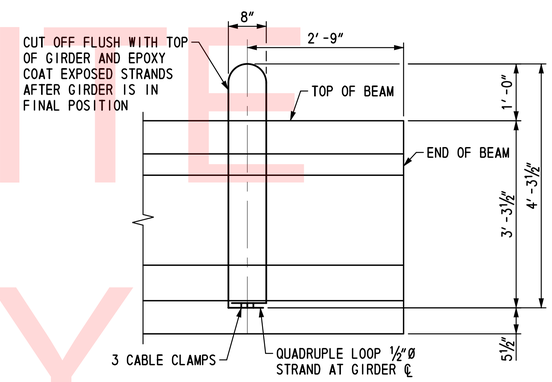

GIRDER LIFTING DETAIL

SCALE: ¾″=1′-0″

NOTE:
AT THE CONTRACTOR'S OPTION, ALTERNATE LIFTING DETAILS WILL BY CONSIDERED SUBJECT TO THE APPROVAL OF THE ENGINEER. NO ADDITIONAL COMPENSATION WILL BE ALLOWED TO THE CONTRACTOR FOR ALTERNATIVE LIFTING DEVICES.

SPECIFICATIONS					BENDING DIMENSIONS (FEET-INCHES)			
QTY. *	SIZE	LENGTH	MARK	TYPE	A	B	C	D
43	4	4′-6″	B401E	1	0′-9″	0′-9″	0′-4⅜″	1′-8″
55	4	3′-2″	B402E	1	0′-5⅜″	0′-5⅜″	0′-4⅞″	1′-1″
1	4	10′-11″	B403E	3	4′-9″	1′-5″		
92	5	5′-5″	B501E	4	4′-0½″	0′-6″	0′-10½″	
18	5	4′-9″	B502E	4	3′-6″	0′-4½″	0′-10½″	
2	5	55′-0″	B503E	STR.				
6	5	3′-8″	B504E	STR.				
2	5	7′-4″	B505E	6	6′-6″	0′-10″		
2	5	14′-0″	B506E	3	6′-6″	1′-0″		
6	5	5′-2″	B507E	6	4′-4″	0′-10″		
7	6	5′-4″	B601E	6	4′-4″	1′-0″		

BAR BENDS

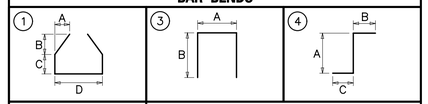

* EA. GIRDER
NOTE: ALL BAR DIMENSIONS ARE MEASURED OUT TO OUT

● DENOTES LOCATION OF POSITIVE MOMENT REINFORCEMENT AT ONE END OF GIRDER
○ DENOTES LOCATION OF POSITIVE MOMENT REINFORCEMENT AT END OF ADJOINING GIRDER

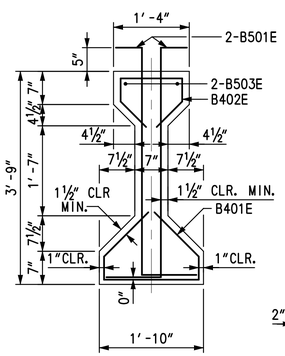

TYPICAL SECTION

SCALE: ¾″=1′-0″

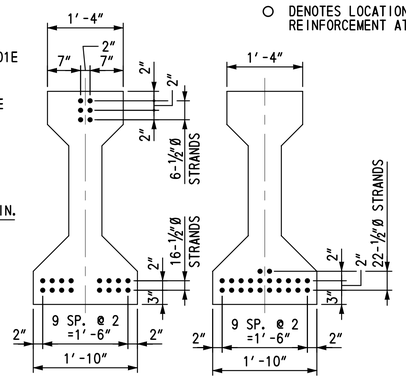

END MIDSPAN

STRAND LOCATIONS

SCALE: ¾″=1′-0″

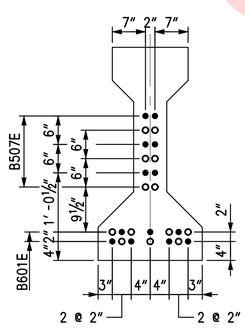

POSITIVE MOMENT REINFORCEMENT

SCALE: ¾″=1′-0″

NOTES:

1. GIRDERS ARE AASHTO TYPE III AND MATCH EXISTING BRIDGE GIRDERS.
   CONCRETE STRENGTH:
   f′c = 5,000 PSI @ 28 DAYS
   f′ci = 4,500 PSI @ STRAND RELEASE
   EXTREME FIBER IN COMPRESSION:
   3,000 PSI MAX.
   2,700 PSI @ RELEASE MAX.
2. PRESTRESSING STEEL:
   ALL STRAND 1/2″ DIAMETER, SEVEN WIRE STRAND, 0.153 SQ. IN. NOMINAL AREA, GRADE 270, LOW RELAXATION STRANDS IN ACCORDANCE WITH ASTM DESIGNATION A416.

   INITIAL PULL PER STRAND: 30,980 LBS.

   ANY CHANGE IN THE SYSTEM OF PRESTRESSING SHALL BE ACCOMPANIED BY COMPLETE CALCULATIONS FOR APPROVAL BY THE ENGINEER.
3. REINFORCEMENT BARS SHALL CONFORM TO ASTM A615, GRADE 60. ALL MILD STEEL REINFORCEMENT IN GIRDERS SHALL BE EPOXY COATED.
4. ENDS OF PRESTRESSED BEAMS AT ROADWAY JOINTS TO BY VERTICAL. ALL OTHER ENDS TO BE NORMAL TO PROFILE GRADE.
5. TOP SURFACE OF ALL BEAMS SHALL BE "ROUGH" FINISHED TO A FULL AMPLITUDE OF ¼″ AND SCRUBBED TRANSVERSELY WITH A COARSE WIRE BRUSH TO REMOVE ALL LAITANCE AND TO PRODUCE A ROUGHENED SURFACE FOR BONDING.
6. THREADED INSERTS SHALL HAVE A MINIMUM ULTIMATE PULLOUT CAPACITY OF 11,900 LBS EACH. BARS TO HAVE THREADS CUT TO MATCH THREADS OF INSERTS.
7. METAL INSERTS SHALL BE PROVIDED ALONG THE TOP FLANGE OF PRESTRESSED CONCRETE BEAMS TO SUPPORT S.I.P. FORMS. SIZE, SPACING AND LOCATION OF INSERTS AS REQUIRED BY S.I.P. FORMS MANUFACTURER.
8. ANY MARK NUMBER WITH SUFFIX 'E' DENOTES EPOXY COATED REINFORCING STEEL.
9. GIRDER LENGTH IN CASTING BED SHALL BE DETERMINED AND DEPICTED IN SHOP DRAWINGS TO COMPENSATE FOR GRADE AND SHORTENING DUE TO PRESTRESS EFFECT.
10. NO CLEAR COVER LESS THAN AS SHOWN ON THESE PLANS WILL BE ACCEPTED.

REFERENCES:

1. FOR GENERAL NOTES, SEE DWG. NO. PN-01.
2. FOR FRAMING PLAN, SEE DWG. NO. FR-01.
3. FOR BEARING DETAILS, SEE DWG. NO. BB-01.
4. FOR S.I.P. FORM DETAILS, SEE DWG. NO. DK-05.

UNOFFICIAL WEBSITE COPY

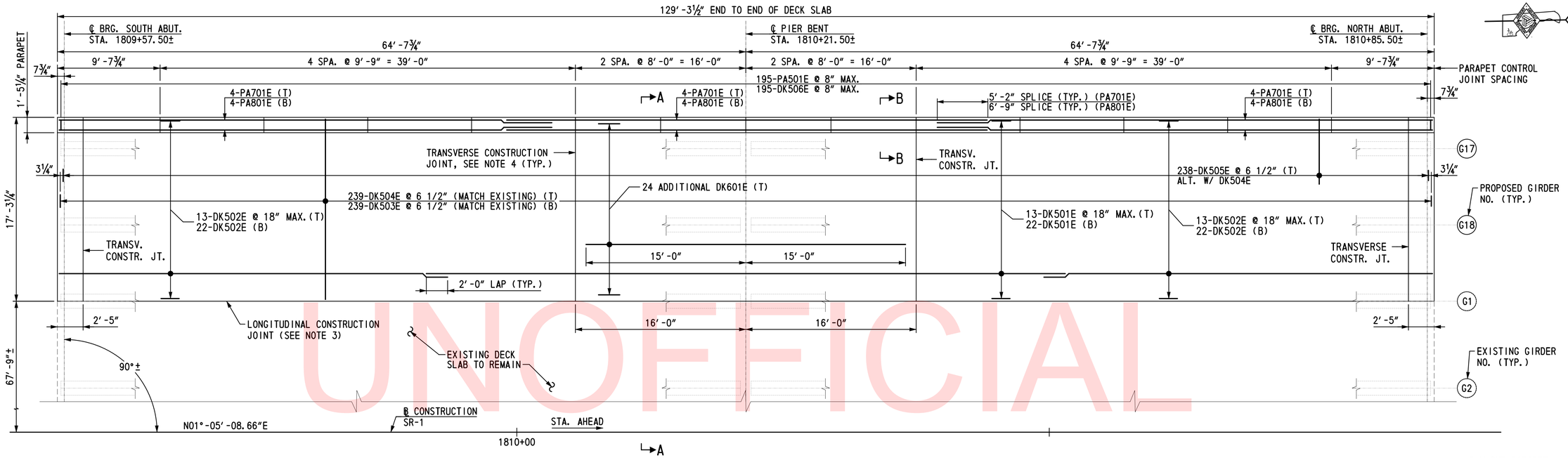

DECK PLAN

SCALE: 1"=5'-0"

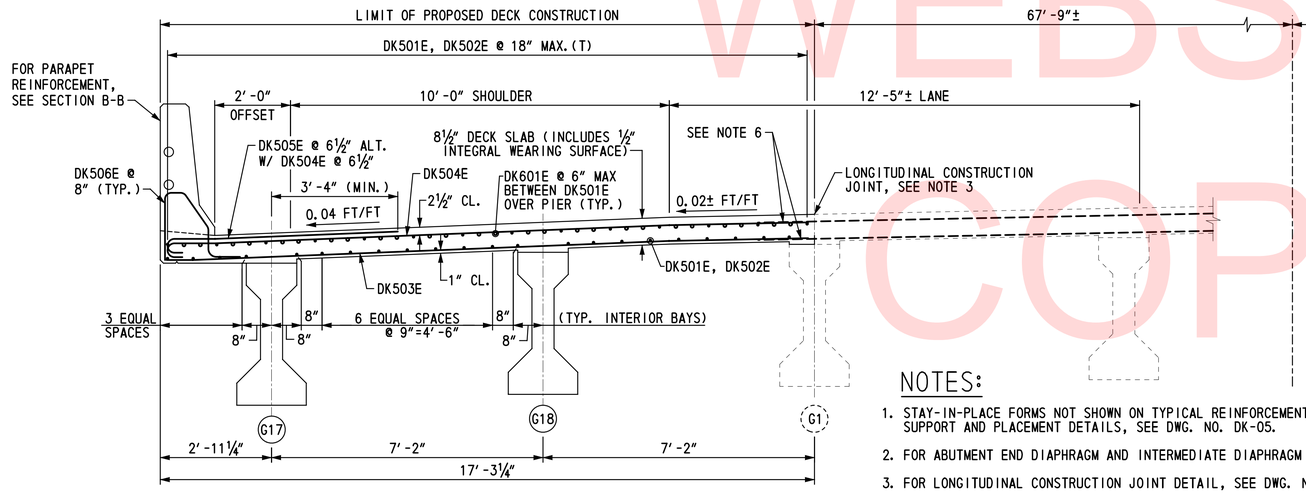

SECTION A-A

SCALE: ½"=1'-0"

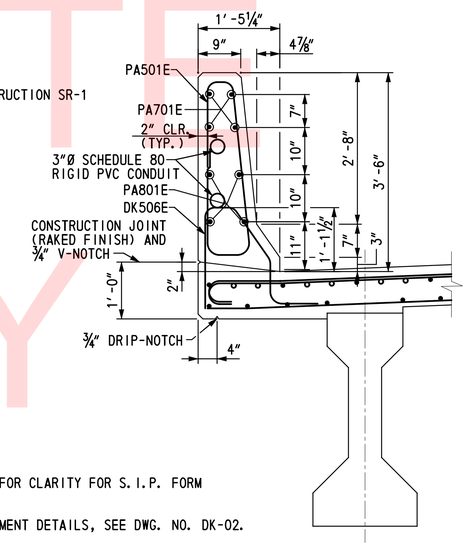

SECTION B-B

SCALE: ¾"=1'-0"

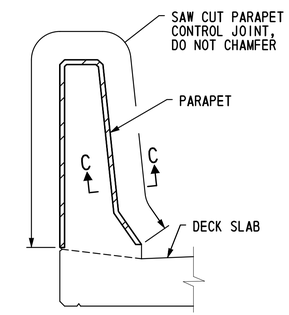

PARAPET CONTROL JOINT DETAIL

SCALE: ¾"=1'-0"

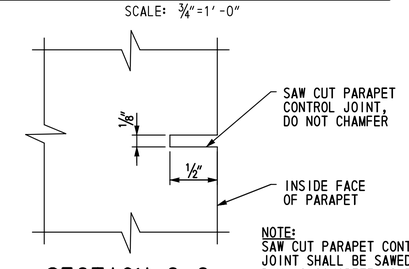

SECTION C-C

NOT TO SCALE

NOTE:
SAW CUT PARAPET CONTROL JOINT SHALL BE SAWED SAME DAY AS CONCRETE IS POURED

NOTES:

1. STAY-IN-PLACE FORMS NOT SHOWN ON TYPICAL REINFORCEMENT SECTION FOR CLARITY FOR S.I.P. FORM SUPPORT AND PLACEMENT DETAILS, SEE DWG. NO. DK-05.
2. FOR ABUTMENT END DIAPHRAGM AND INTERMEDIATE DIAPHRAGM REINFORCEMENT DETAILS, SEE DWG. NO. DK-02.
3. FOR LONGITUDINAL CONSTRUCTION JOINT DETAIL, SEE DWG. NO. FD-01.
4. FOR TRANSVERSE CONSTRUCTION JOINT DETAIL, SEE DWG. NO. FD-01.
5. FOR PIER DIAPHRAGM REINFORCEMENT DETAILS, SEE DWG. NO. DK-03.
6. RETAIN EXISTING TRANSVERSE DECK REINFORCEMENT BARS, 12" MINIMUM FOR TOP MAT AND 6" MINIMUM FOR BOTTOM. ABRASIVE BLAST CLEAN EXISTING REINFORCEMENT TO A SSPC-SP6. PAINT ENDS OF EXISTING REINFORCEMENT BARS WITH AN APPROVED EPOXY PAINT. SPLICE NEW REINFORCEMENT (DK503E & DK504E) TO EXISTING USING AN APPROVED MECHANICAL SPLICE SYSTEM. MODIFY DK503E & DK504E LENGTHS AS REQUIRED TO ACCOMMODATE SPLICE. COST OF MECHANICAL SPLICES SHALL BE INCIDENTAL TO ITEM 604000 - BAR REINFORCEMENT, EPOXY COATED.
7. SHOULD EXISTING TRANSVERSE DECK REINFORCEMENT BARS BE DAMAGED OR CUT AND CAN NOT BE USED TO SPLICE WITH PROPOSED REINFORCEMENT BAR, CONTRACTOR SHALL DRILL AND EPOXY ADHESIVE AN EPOXY COATED DOWEL BAR INTO EXISTING DECK SLAB. WORK SHALL BE PERFORMED IN CONFORMANCE WITH ITEM 602579 - DRILLING HOLES AND INSTALLING DOWELS. NO ADDITIONAL COMPENSATION WILL BE ALLOWED FOR DRILLING AND INSTALLING DOWEL BARS.

UNOFFICIAL WEBSITE COPY

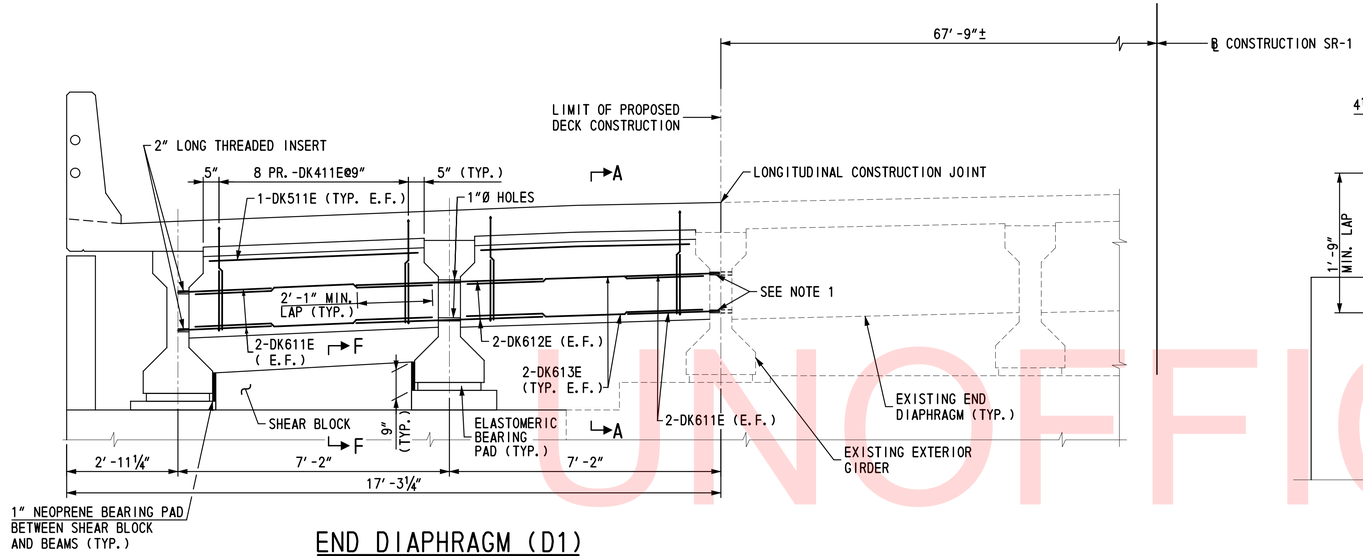

END DIAPHRAGM (D1)

SCALE: ½"=1'-0"

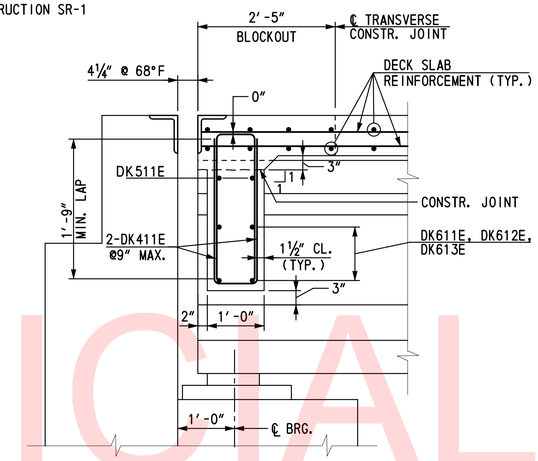

SECTION A-A

SCALE: ¾"=1'-0"

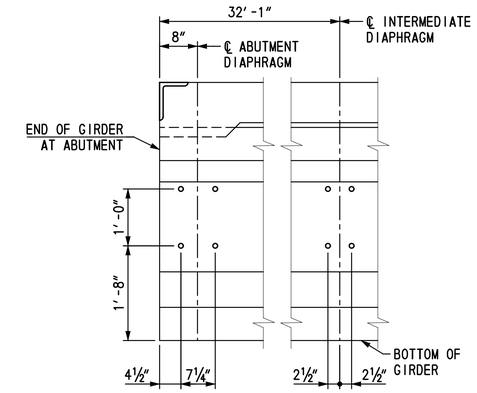

EXISTING GIRDER FACE AT DIAPHRAGM DETAIL

SCALE: ¾"=1'-0"

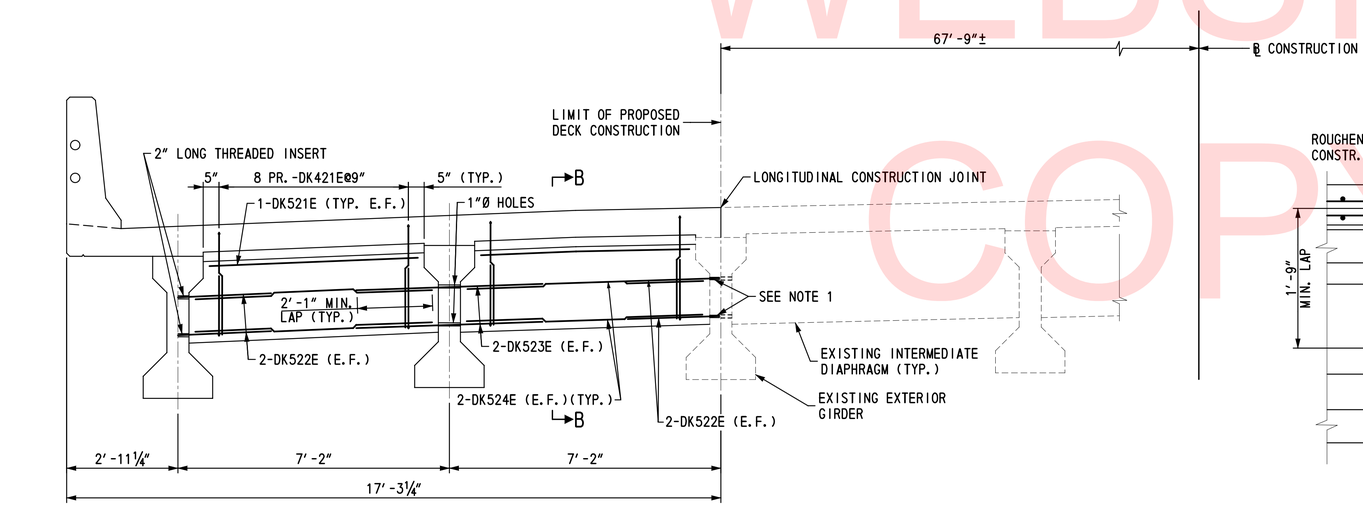

INTERMEDIATE DIAPHRAGM (D3)

SCALE: ½"=1'-0"

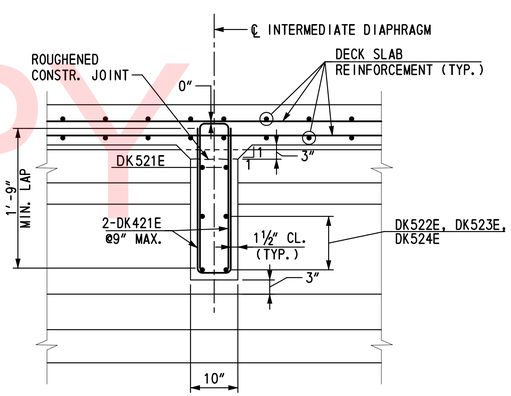

SECTION B-B

SCALE: ¾"=1'-0"

NOTES:

1. PLACE EACH DK522E (D3) IN A ¾"Ø×3" DEEP DRILLED HOLE AND EACH DK611E (D1) IN A ⅞"Ø×3" DEEP DRILLED HOLE INTO WEB OF EXISTING FASCIA GIRDER, ⓖ1, USING AN APPROVED EPOXY ADHESIVE ANCHORING SYSTEM. SEE EXISTING GIRDER FACE AT DIAPHRAGM DETAIL FOR DRILLED HOLE LOCATIONS. DRILLING HOLES AND INSTALLING REINFORCING BAR DOWELS WILL BE PAID UNDER ITEM 602579 - DRILLING HOLES AND INSTALLING DOWELS. DOWEL BARS WILL BE PAID UNDER ITEM 604000 - BAR REINFORCEMENT, EPOXY COATED.

REFERENCES:

1. FOR PROJECT NOTES, SEE DWG. NO. PN-01.
2. FOR LEGEND, SEE DWG. NO. PE-01.
3. FOR FRAMING PLAN, SEE DWG. NO. FR-01.
4. FOR PRESTRESSED BEAM DETAILS, SEE DWG. NO. BM-01.
5. FOR SECTION F-F, SEE DWG. NO. AB-03.

UNOFFICIAL WEBSITE COPY

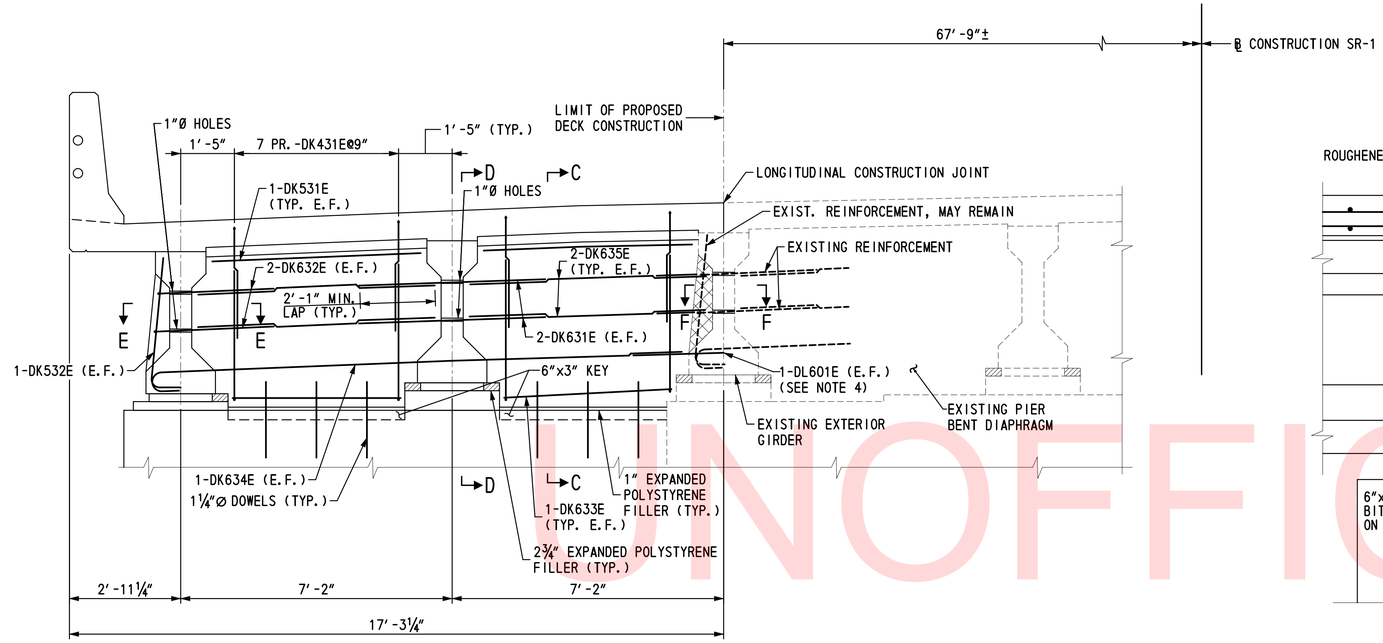

PIER BENT DIAPHRAGM (D2)

SCALE: ½"=1'-0"

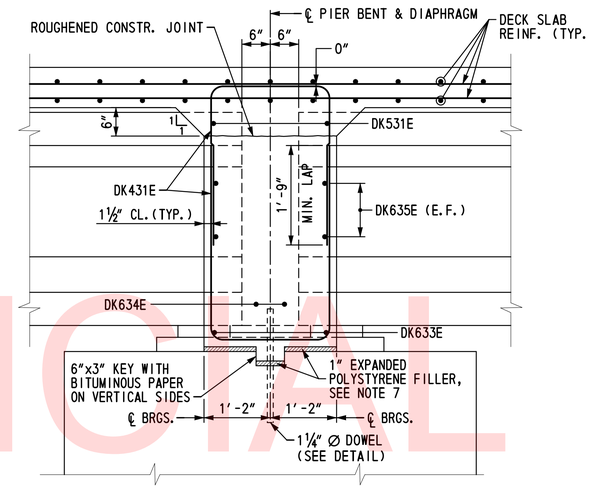

SECTION C-C

SCALE: ¾"=1'-0"

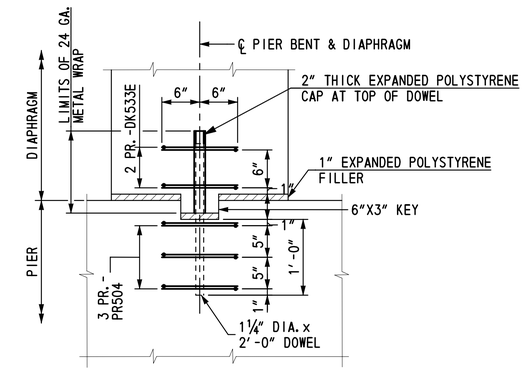

DOWEL DETAIL

SCALE: 1"=1'-0"

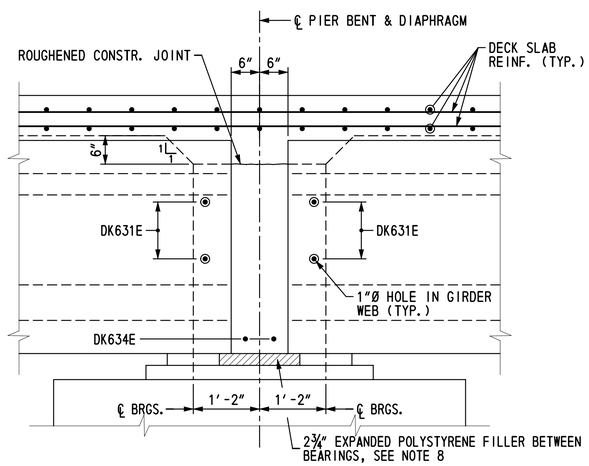

SECTION D-D

SCALE: ¾"=1'-0"

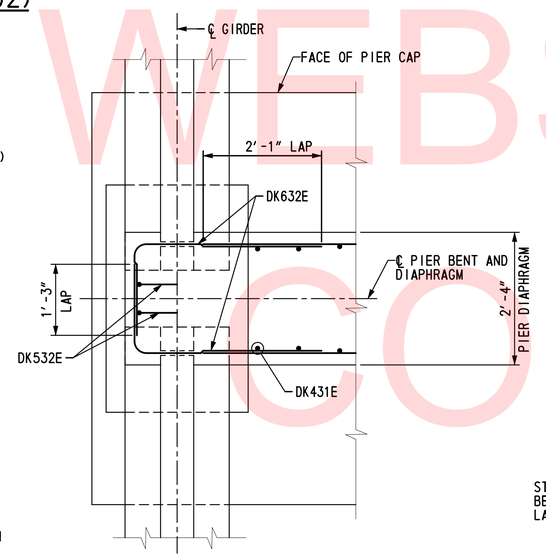

SECTION E-E

SCALE: ¾"=1'-0"

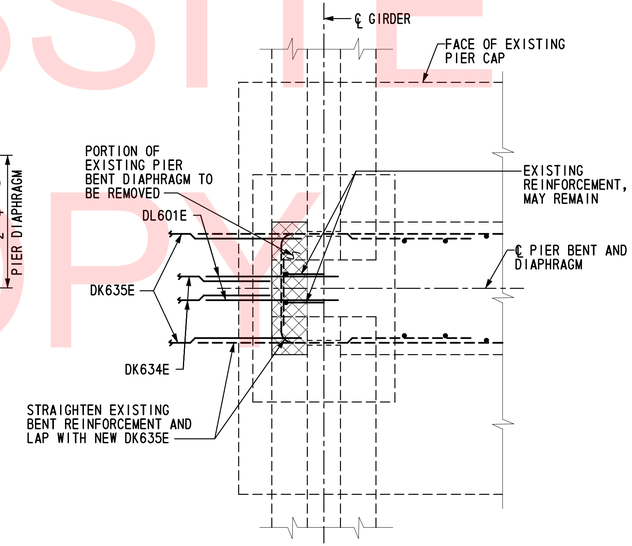

SECTION F-F

SCALE: ¾"=1'-0"

NOTES:

1. CAREFULLY REMOVE FASCIA PORTION OF THE EXISTING PIER BENT DIAPHRAGM TO THE APPROXIMATE LIMITS INDICATED.
2. EXPOSE EXISTING REINFORCEMENT EXERCISING CAUTION NOT TO DAMAGE OR CUT BARS.
3. CLEAN ALL EXISTING REINFORCEMENT BARS TO BE RETAINED WITH A WIRE BRUSH OR SAND BLAST, STRAIGHTEN WHERE INDICATED AND COAT WITH AN APPROVED EPOXY PAINT FOR EPOXY COATED EXISTING REINFORCEMENT OR NEAT CEMENT FOR NON-EPOXY COATED EXISTING REINFORCEMENT.
4. PLACE EACH DL601E IN A 1"Ø x 1'-2" DEEP DRILLED HOLE AND FILL WITH AN APPROVED EPOXY ADHESIVE ANCHORING SYSTEM OR EPOXY GROUT. OFFSET HOLES TO AVOID EXISTING REINFORCEMENT. DRILLING HOLES AND INSTALLING REINFORCING BAR DOWELS WILL BE PAID UNDER ITEM 602579 - DRILLING HOLES AND INSTALLING DOWELS. DOWEL BARS WILL BE PAID UNDER ITEM 604000 - BAR REINFORCEMENT, EPOXY COATED.
5. APPLY AN APPROVED EPOXY BONDING COMPOUND TO THE EXISTING CONCRETE SURFACES AGAINST WHICH NEW CONCRETE WILL BE CAST. COST SHALL BE INCIDENTAL TO ITEM 60219 - PORTLAND CEMENT CONCRETE MASONRY, SUPERSTRUCTURE, CLASS A.
6. PRIOR TO APPLICATION OF BONDING COMPOUND, SANDBLAST OR WATERBLAST EXISTING CONCRETE SURFACES TO REMOVE ALL LAITANCE.
7. EXPANDED POLYSTYRENE SHALL CONFORM TO ASTM C 578, EXCEPT THAT THE MAXIMUM ALLOWABLE WATER ABSORPTION SHALL BE 2%. COST SHALL BE INCIDENTAL TO ITEM 602019 - PORTLAND CEMENT CONCRETE MASONRY, SUPERSTRUCTURE, CLASS A.
8. FOR ADDITIONAL DETAILS, SEE PIER DIAPHRAGM BEARING MATERIAL PLACEMENT DETAIL ON DWG. NO. DK-05.
9. POSITIVE MOMENT REINFORCEMENT AT GIRDER ENDS NOT SHOWN FOR CLARITY.

REFERENCES:

1. FOR PROJECT NOTES, SEE DWG. NO. PN-01.
2. FOR LEGEND, SEE DWG. NO. PE-01.
3. FOR FRAMING PLAN, SEE DWG. NO. FR-01.
4. FOR PRESTRESSED BEAM DETAILS, SEE DWG. NO. BM-01.
5. FOR DECK SLAB PLAN AND DETAILS, SEE DWG. NO. DK-01.
6. FOR PIER BENT DETAILS, SEE DWG. NOS. PR-01 & PR-02.

UNOFFICIAL WEBSITE COPY

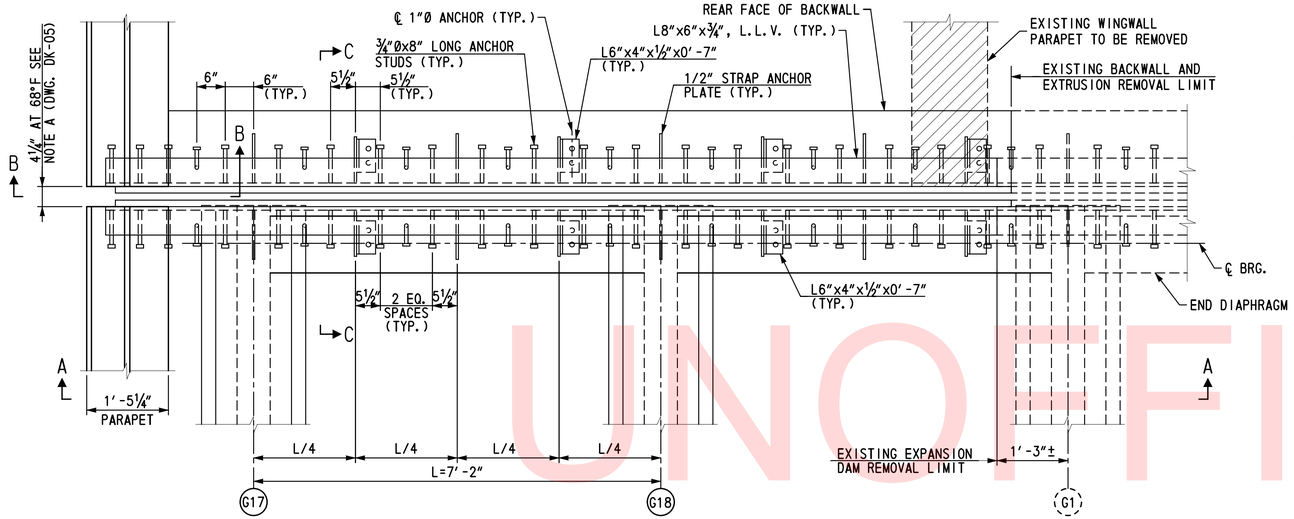

JOINT PLAN

SCALE: ¾"=1'-0"

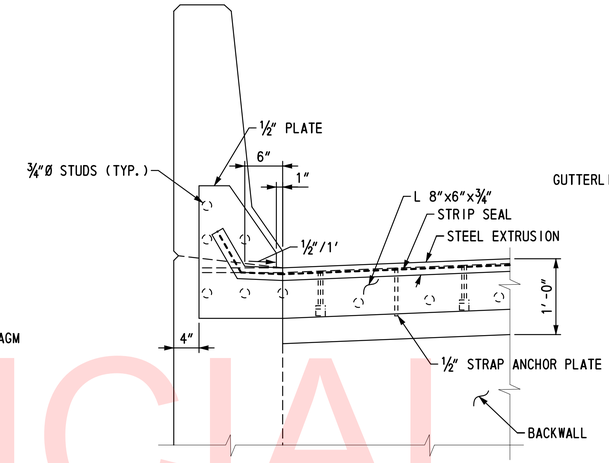

SECTION B-B

SCALE: 1"=1'-0"

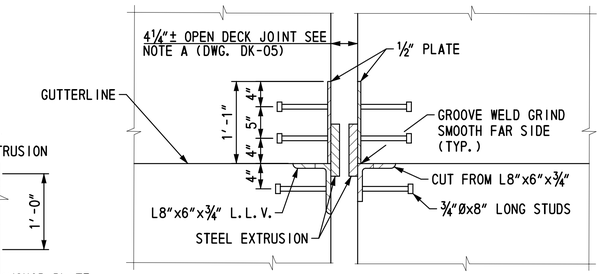

SECTION THRU PARAPET

SCALE: 1"=1'-0"

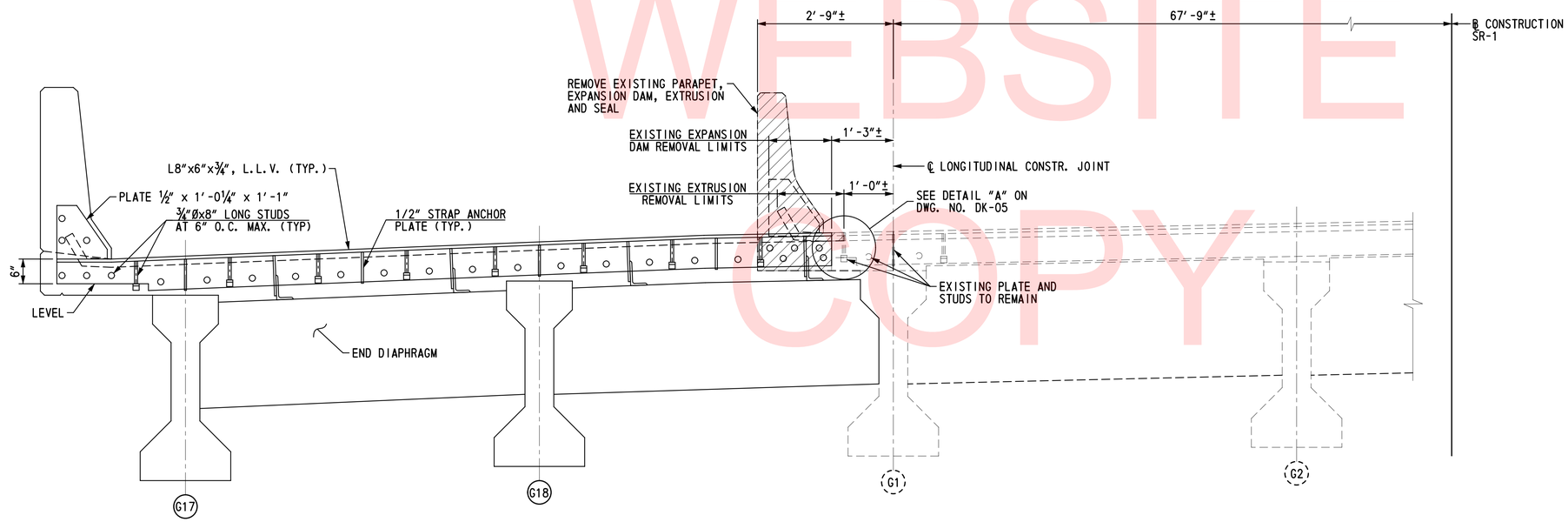

SECTION A-A

SCALE: ¾"=1'-0"

EXPANSION JOINT NOTES:

1. STEEL FOR DECK JOINTS SHALL BE AASHTO M270, GR. 36 (ASTM A36).
2. STEEL EXTRUSIONS TO BE AASHTO M270, GR. 36 (ASTM A36).
3. NEOPRENE EXTRUSIONS TO MEET D-2628-81 MODIFIED. (RECOVERY TESTS EXCLUDED).
4. LUBRICANT-ADHESIVE FOR USE IN INSTALLING AND BONDING NEOPRENE SEAL ELEMENTS TO STEEL JOINT COMPONENTS SHALL BE A ONE-QUART MOISTURE-CURING POLYURETHANE AND HYDROCARBON SOLVENT MIXTURE HAVING THE FOLLOWING PHYSICAL PROPERTIES:

AVERAGE WEIGHT, POUNDS PER GALLON	8± 10%
SOLIDS CONTENT	65%
ADHESIVE SHALL REMAIN LIQUID FROM	5°F TO 120°F
FILM STRENGTH AS PER ASTM D-412	2000 psi
ELONGATION	250%

5. THE EXPANSION JOINT SHALL BE CAPABLE OF SEALING THE DECK TO PREVENT MOISTURE AND OTHER CONTAMINANTS FROM DESCENDING THROUGH THE JOINT.
6. THE ENTIRE EXPANSION DAM SHALL BE PAINTED WITH 3-COAT UREATHANE PAINT SYSTEM AFTER FABRICATION, IN ACCORDANCE WITH SPECIAL PROVISIONS.
7. HOLES SHALL BE PLACED IN THE RIB PLATES AND STRAP ANCHOR PLATES FOR BAR REINFORCEMENT. IF THIS IS DONE IN THE FIELD AN APPROVED EPOXY BONDED PAINT SHALL BE USED TO TOUCH UP THE HOLES.
8. REMOVE EXISTING EXPANSION JOINT ARMORING, CONNECTION PLATES AND EXTRUSION TO THE LIMITS SHOWN. TAKE CARE TO INSURE THAT THE PARTS OF THE STRUCTURE TO REMAIN ARE NOT DAMAGED. REPLACE ANY DAMAGED STRUCTURAL MEMBERS AT THE CONTRACTOR'S EXPENSE. CUT EDGES TO BE GROUND SMOOTH AND EXPOSED EDGES BEVELED FOR FIELD SPLICE WELD.
9. REMOVE ENTIRE EXISTING NEOPRENE STRIP SEAL AND REPLACE WITH NEW CONTINUOUS NEOPRENE STRIP SEAL IN THE FIELD FOR ENTIRE WIDTH OF WIDENED STRUCTURE. SPLICING OF STRIP SEAL IS NOT PERMITTED. THE NEW SEAL SHALL BE COMPATIBLE WITH THE EXISTING EXTRUSION.
10. THE JOINT OPENING WIDTH SHOWN IS BASED ON AN AMBIENT TEMPERATURE OF 68°F. INCLUDE A TABLE ON THE SHOP DRAWINGS SHOWING THE INSTALLATION OPENING WIDTH FOR A PRACTICAL RANGE OF INSTALLATION TEMPERATURES (10° INCREMENTS). ADJUST OPENING WIDTH TO MATCH EXISTING AT TIME OF INSTALLATION.
11. FIELD SPLICES IN EXTRUSIONS AND ANGLES SHALL BE FULL PENETRATION BUTT WELDS. AFTER SPLICING, GRIND SMOOTH ALL EXPOSED SURFACES, REMOVE ALL BURRS AND LAITANCE, AND COAT WITH AN APPROVED ZINC-RICH PAINT.
12. CONSTRUCT EXPANSION DAM TO MATCH ROADWAY GRADE AND CROSS SLOPE.
13. THE SEALS FURNISHED WITH THE RETAINERS MUST BE COMPATIBLE WITH THE RETAINER AND PROVIDE A WATERTIGHT JOINT.
14. GRIND ALL STEEL EDGES EXPOSED TO TRAFFIC OR PEDESTRIANS TO 3/16" MIN. RADIUS.

REFERENCES:

1. FOR PROJECT NOTES, SEE DWG. NO. PN-01.
2. FOR LEGEND, SEE DWG. NO. PE-01.
3. FOR DECK SLAB PLAN AND DETAILS, SEE DWG. NO. DK-01.
4. FOR SECTION C-C, SEE DWG. NO. DK-05.
5. FOR DETAIL "A", SEE DWG. NO. DK-05.

UNOFFICIAL WEBSITE COPY

BR1-1
DK-04

DELAWARE DEPARTMENT OF TRANSPORTATION	ADDENDUMS / REVISIONS	SCALE: AS NOTED	US 301 & SR 1 INTERCHANGE	CONTRACT T200911302 / COUNTY NEW CASTLE	BRIDGE NO. 1-903S / DESIGNED BY: RTC / CHECKED BY: FPH
DECK SLAB EXPANSION JOINT DETAILS - 1	SHEET NO. 144 / TOTAL SHTS. 491				

\\tcdient\S\Projects\2008\PEI-ED0836 (DelDOT US 301_*1445)\7. Transportation\1. Bridges\Drawings\Final_PS&E\BR1-1\DK04_br1-1.dgn
2/22/2013 3:59:46 PM

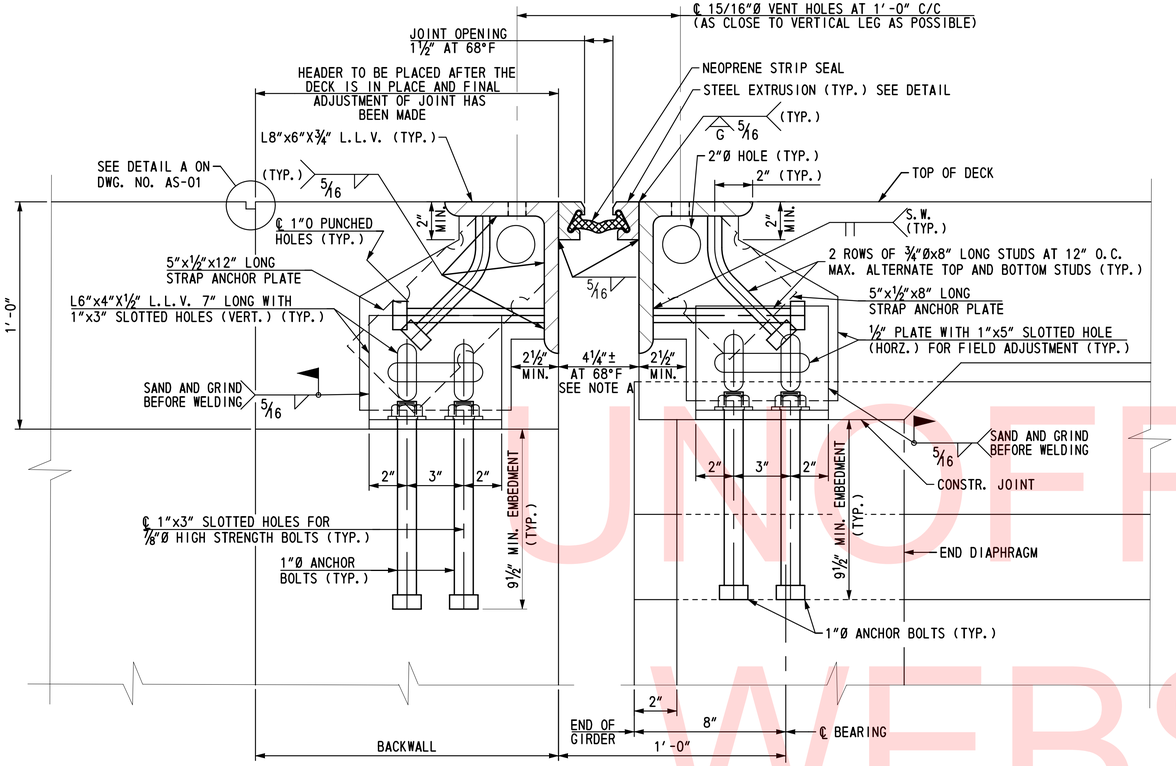

SECTION C-C

SCALE: 3"=1'-0"

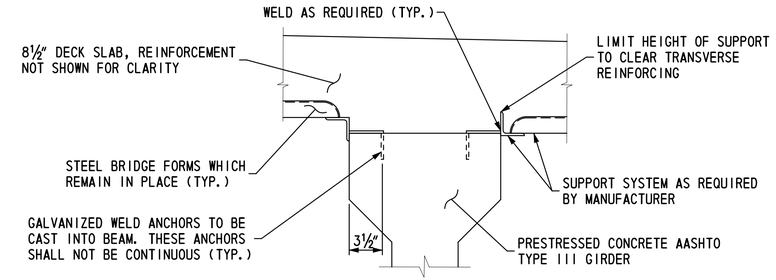

STAY-IN-PLACE FORM SUPPORT DETAIL

SCALE: 1½"=1'-0"

STAY-IN-PLACE FORM NOTES:

1. STAY-IN-PLACE FORMS SHALL CONFORM TO SECTION 602.03.
2. STAY-IN-PLACE FORMS SHALL BE VERTICALLY ADJUSTED TO ATTAIN FINISHED LINES AND GRADES REQUIRED ON THE PLANS.
3. ANY PERMANENTLY EXPOSED FORM METAL WHERE THE GALVANIZED COATING HAS BEEN DAMAGED SHALL BE THOROUGHLY CLEANED, WIRE BRUSHED, AND PAINTED WITH TWO COATS OF ZINC-OXIDE DUST PRIMER, FEDERAL SPECIFICATION TT-P-641D, TYPE 11, NO COLOR ADDED, TO THE SATISFACTION OF THE ENGINEER. MINOR HEAT DISCOLORATION IN AREAS OF WELDS NEED NOT BE TOUCHED UP.

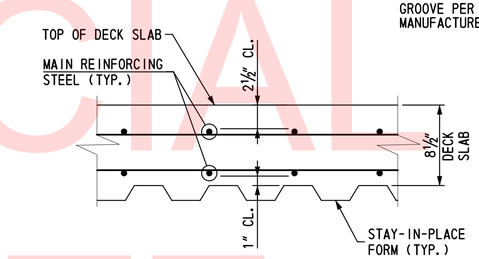

STAY-IN-PLACE FORM PLACEMENT SECTION

SCALE: 1½"=1'-0"

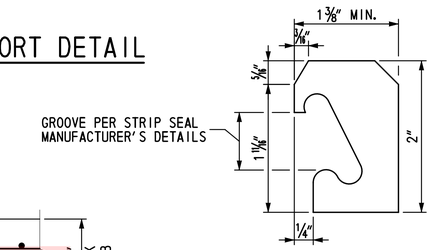

STEEL EXTRUSION

NOT TO SCALE

NOTE A

THE CONTRACTOR SHALL ADJUST THE OPEN DECK JOINT AS REQUIRED BY THE WIDTH OF THE STEEL EXTRUSION USED SO AS TO PROVIDE A 1½" JOINT OPENING AT 68°F.

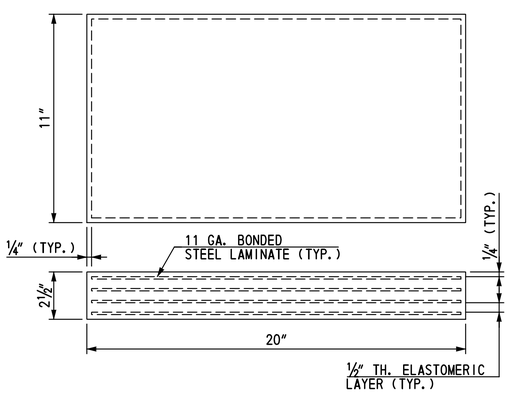

LAMINATED BEARING PADS

SCALE: 3"=1'-0"

BEARING NOTES:

1. ALL ELASTOMERIC BEARING PADS SHALL BE VIRGIN CHLOROPRENE IN ACCORDANCE WITH SECTION 623.06 OF THE STANDARD SPECIFICATIONS. (60 DUROMETER HARDNESS). SHIMS SHALL BE 11 GAGE MILD STEEL CONFORMING TO ASTM A36.
2. ELASTOMERIC BEARING PADS SHALL BE ATTACHED TO THE BOTTOM OF THE BEAM AND TOP OF THE CONCRETE BEARING PEDESTAL WITH AN APPROVED EPOXY ADHESIVE.

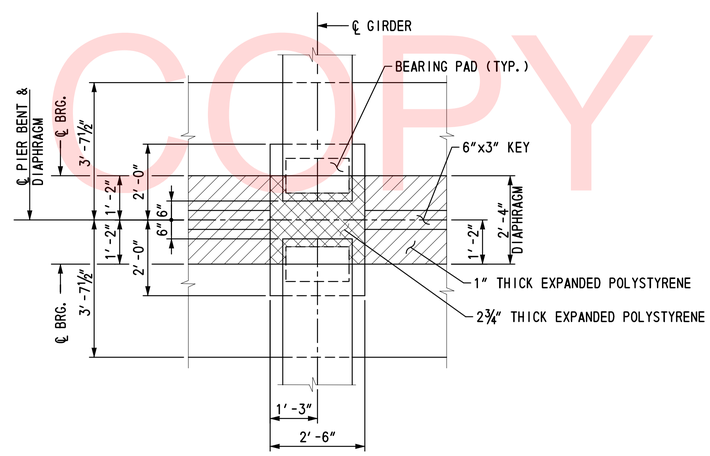

PIER DIAPHRAGM BEARING MATERIAL PLACEMENT AT PIER

SCALE: ½"=1'-0"

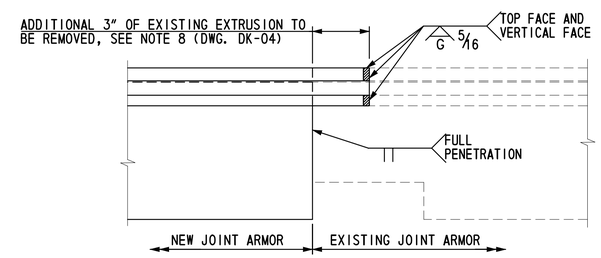

DETAIL "A"

SCALE=3"=1'-0"

REFERENCES:

1. FOR PROJECT NOTES, SEE DWG. NO. PN-01.
2. FOR LEGEND, SEE DWG. NO. PE-01.
3. FOR DECK SLAB PLAN AND DETAILS, SEE DWG. NO. DK-01.
4. FOR LOCATION OF SECTION C-C, SEE DWG. NO. DK-04.

UNOFFICIAL WEBSITE COPY

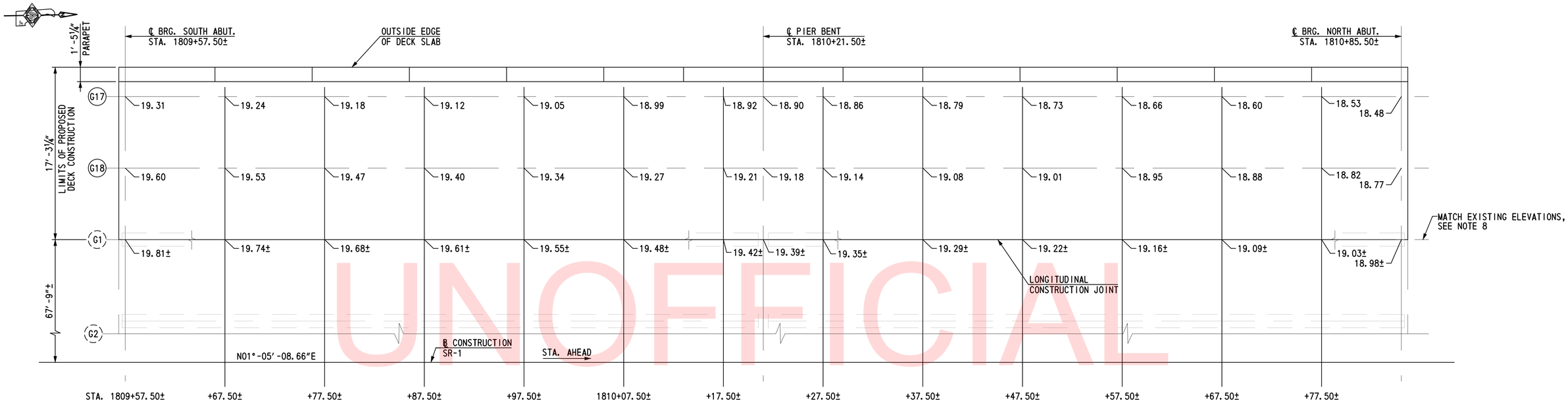

TOP OF DECK ELEVATIONS

SCALE: 1"=5'-0"

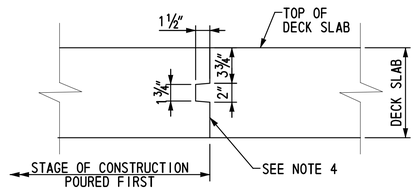

TRANSVERSE DECK SLAB CONSTRUCTION JOINT DETAIL

SCALE: 1½"=1'-0"

BRIDGE DECK FINISH NOTES

1. BRIDGE DECK SURFACES SHALL BE IN ACCORDANCE WITH SPECIFICATIONS FOR ROAD AND BRIDGE CONSTRUCTION, AUG 2001, SECTION 602.20C.

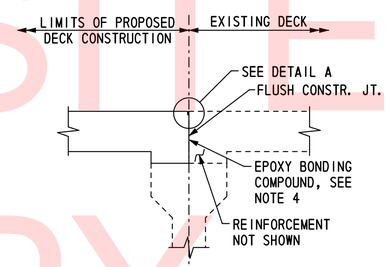

LONGITUDINAL CONSTRUCTION JOINT DETAIL

SCALE: ¾"=1'-0"

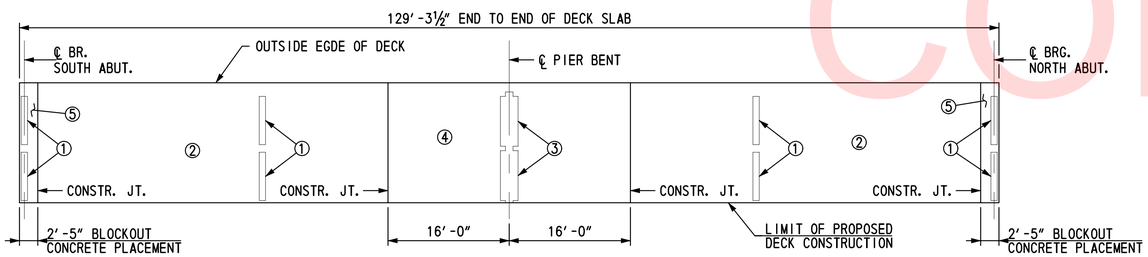

DECK SLAB POURING SEQUENCE

SCALE: 1"=10'-0"

① INDICATES INTERMEDIATE OR ABUTMENT END DIAPHRAGM POUR

② INDICATES DECK SLAB POUR (POSITIVE MOMENT REGIONS)

③ INDICATES PIER CONTINUITY DIAPHRAGM POUR (SEE NOTE 3)

④ INDICATES DECK SLAB POUR AT PIER (NEGATIVE MOMENT REGION) (SEE NOTE 3)

⑤ INDICATES DECK SLAB CLOSURE POUR

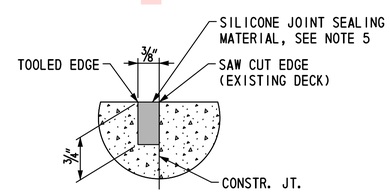

DETAIL A

NOT TO SCALE

REFERENCES:

1. FOR PROJECT NOTES, SEE DWG. NO. PN-01.
2. FOR LEGEND, SEE DWG. NO. PE-01.
3. FOR FRAMING PLAN, SEE DWG. NO. FR-01.
4. FOR PRESTRESSED BEAM DETAILS, SEE DWG. NO. BM-01.
5. FOR DECK SLAB PLAN AND DETAILS, SEE DWG. NO. DK-01.
6. FOR EXPANSION JOINT DETAILS, SEE DWG. NOS. DK-04 & DK-05.

NOTES:

1. THE CONTRACTOR SHALL FOLLOW THE POURING SEQUENCE SHOWN ON THESE PLANS. NO OTHER ALTERNATE POURING SEQUENCE WILL BE ALLOWED FOR THIS PROJECT.
2. POURING SEQUENCE
   THE CONTRACTOR MUST START BY PLACING THE SECTIONS INDICATED AS POUR 1. THE CONTRACTOR MAY PLACE A POUR 2 SECTION AS SOON AS ALL POUR 1 SECTIONS BENEATH IT HAVE BEEN IN PLACE A MINIMUM OF 40 HOURS. THE CONTRACTOR MAY PLACE THE POUR 3 SECTION AS SOON AS ALL POUR 2 SECTIONS HAVE BEEN IN PLACE A MINIMUM OF 40 HOURS. THE CONTRACTOR MAY PLACE THE POUR 4 SECTION AFTER THE POUR 3 SECTION HAS BEEN IN PLACE A MINIMUM OF 40 HOURS. THE CONTRACTOR MAY PLACE THE POUR 5 SECTIONS AS SOON AS THE POUR 4 SECTION HAS BEEN IN PLACE A MINIMUM OF 40 HOURS.
3. THE PIER DIAPHRAGM AND DECK SLAB POUR AT PIER SHALL NOT BE POURED UNTIL THE BEAMS ARE A MINIMUM OF 90 DAYS OLD FROM THE TIME OF RELEASE.
4. THE ENTIRE FACE OF CONSTRUCTION JOINT SHALL BE COATED WITH AN APPROVED EPOXY BONDING COMPOUND. COST SHALL BE INCIDENTAL TO ITEM 602013 - PORTLAND CEMENT CONCRETE MASONRY, SUPERSTRUCTURE, CLASS D.
5. SEAL GROOVE WITH AN APPROVED COLD-APPLIED SILICONE SEALER. GROOVE SHALL BE CLEAN, AIR-BLOWN AND FREE OF MOISTURE. COST SHALL BE INCIDENTAL TO ITEM 602013 - PORTLAND CEMENT CONCRETE MASONRY, SUPERSTRUCTURE, CLASS D.
6. FOR DECK SLAB REINFORCEMENT, SEE DWG. NO. DK-01.
7. FOR ADDITIONAL REINFORCEMENT IN THE DIAPHRAGMS, SEE DWG. NOS. DK-02 THRU DK-03.
8. EXISTING ELEVATIONS SHOWN ALONG LONGITUDINAL CONSTRUCTION JOINT (SAWCUT LINE) ARE BASED ON LIMITED SURVEY DATA. CONTRACTOR SHALL VERIFY AND ADJUST PROPOSED CONSTRUCTION AS REQUIRED, SEE PROJECT NOTE 10 ON DWG. NO. PN-01. FOR PROPOSED DECK CROSS SLOPES AND DECK SLAB DETAILS, SEE TYPICAL SECTION ON DWG. NO. TS-01.

UNOFFICIAL WEBSITE COPY

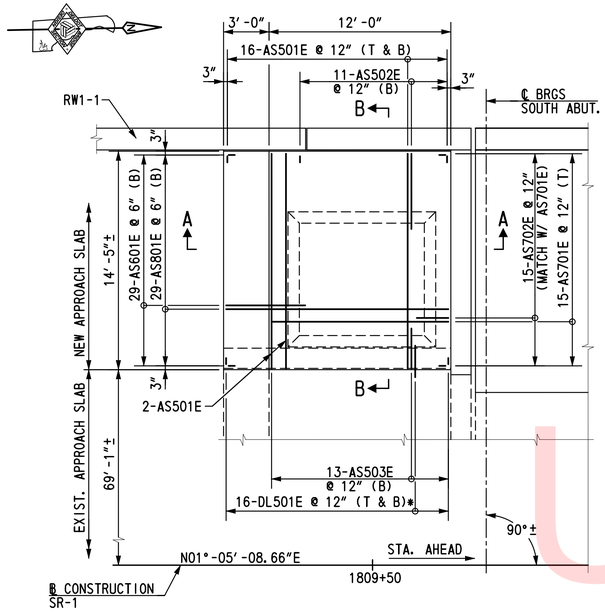

SOUTH ABUTMENT APPROACH SLAB PLAN

SCALE: 1" = 5'-0"

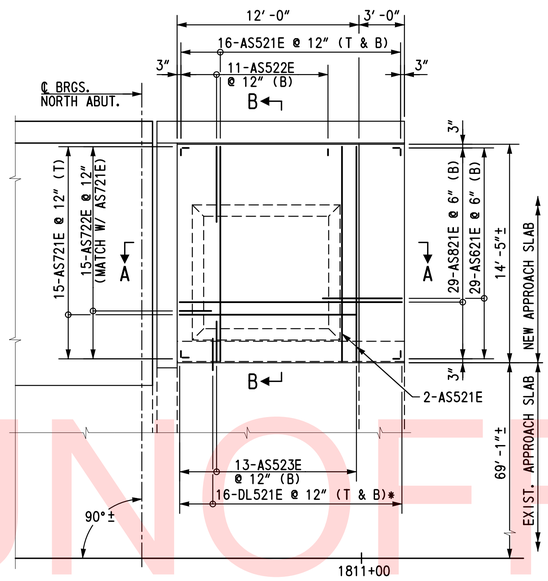

NORTH ABUTMENT APPROACH SLAB PLAN

SCALE: 1" = 5'-0"

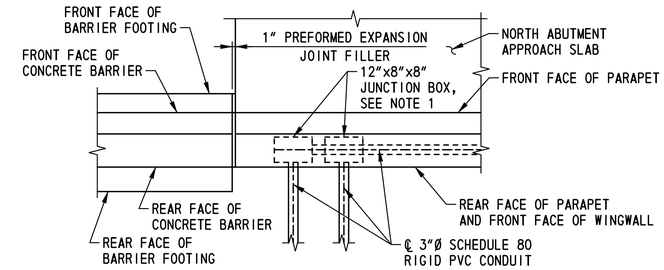

PLAN - WEST PARAPET AT NORTH WINGWALL

SCALE: 1/2" = 1'-0"

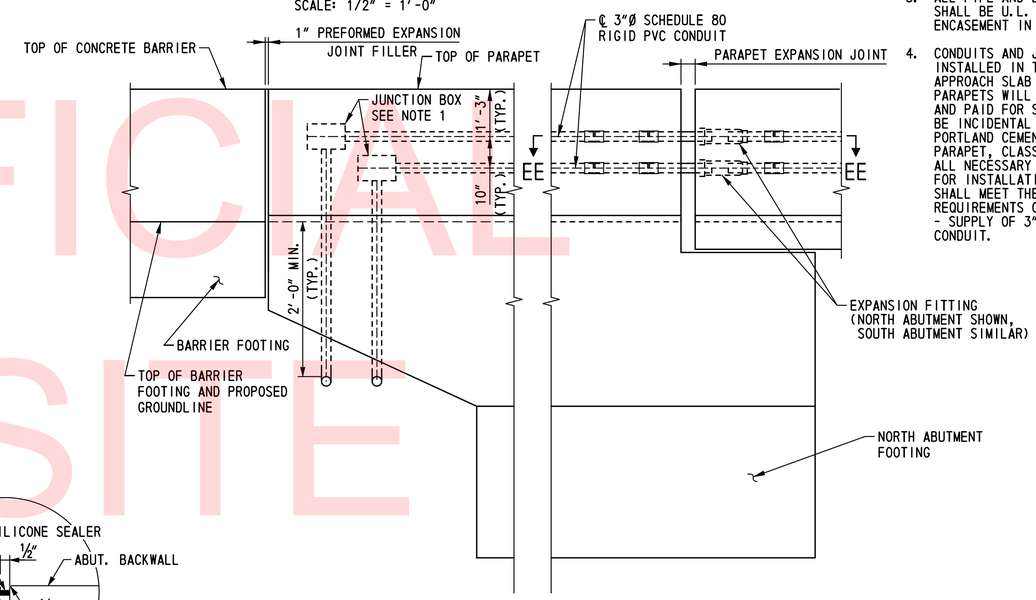

ELEVATION - WEST PARAPET AT NORTH WINGWALL

SCALE: 1/2" = 1'-0"

CONDUIT NOTES:

1. ALL JUNCTION BOXES SHALL BE 12" LONG x 8" HIGH x 8" DEEP NEMA 4X STAINLESS STEEL JUNCTION BOXES WITH COVERS MOUNTED IN THE FRONT FACE OF THE PARAPET.
2. EXPANSION FITTINGS FOR USE WITH RIGID GALVANIZED STEEL CONDUIT SHALL CONSIST OF A MALLEABLE IRON HEAD AND STEEL SLEEVE WHICH SHALL BE HOT-DIPPED GALVANIZED AND ASSEMBLED WITH A WATERTIGHT PACKING GLAND, AN INSULATED BUSHING, PRESSURE RING AND GASKET AND A TINNED-COPPER BOND TO ASSURE CONTINUITY OF GROUND. THE FITTING SHALL PROVIDE 3" OF MOVEMENT.
3. ALL PIPE AND EXPANSION FITTINGS SHALL BE U.L. APPROVED FOR ENCASEMENT IN CONCRETE.
4. CONDUITS AND JUNCTION BOXES INSTALLED IN THE BRIDGE, APPROACH SLAB AND MOMENT SLAB PARAPETS WILL NOT BE MEASURED AND PAID FOR SEPARATELY BUT WILL BE INCIDENTAL TO ITEM 602017 - PORTLAND CEMENT CONCRETE MASONRY, PARAPET, CLASS A. CONDUITS AND ALL NECESSARY FITTINGS SUPPLIED FOR INSTALLATION IN PARAPETS SHALL MEET THE MATERIAL REQUIREMENTS OF ITEM NO. 745522 - SUPPLY OF 3" SCHEDULE 80 PVC CONDUIT.

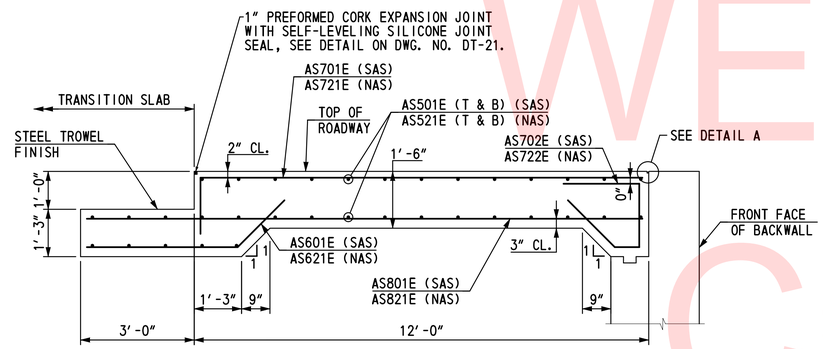

SECTION A-A

SCALE: 1/2" = 1'-0"

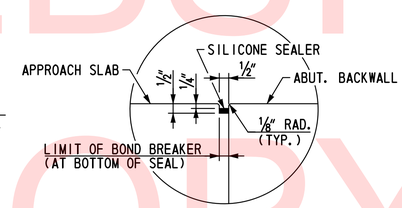

DETAIL A

SCALE: 3" = 1'-0"

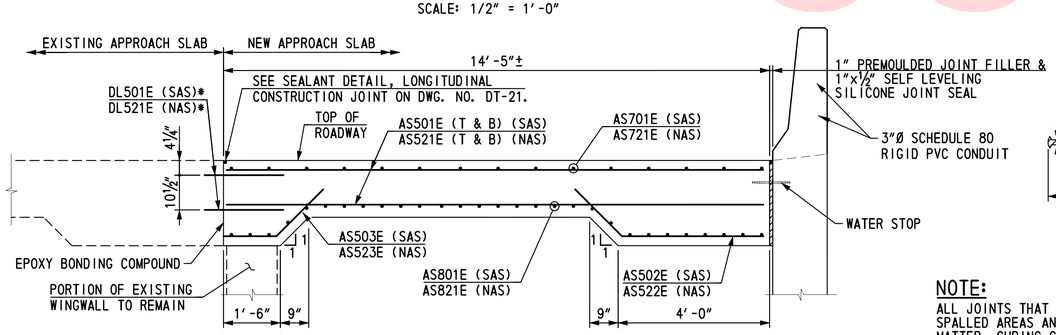

SECTION B-B

SCALE: 1/2" = 1'-0"

* PLACE DOWELS IN ¾"Ø x 6" DEEP PREDRILLED HOLES USING AN APPROVED EPOXY GROUT. LAP DOWELS WITH APPROACH SLAB REINFORCEMENT WHERE INDICATED. DRILLING HOLES AND INSTALLING REINFORCING BAR DOWELS WILL BE PAID UNDER ITEM 602579 - DRILLING HOLES AND INSTALLING DOWELS. DOWEL BARS WILL BE PAID UNDER ITEM 604000 - BAR REINFOCEMENT, EPOXY COATED.

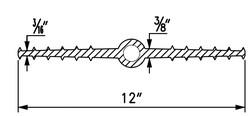

PVC WATER STOP

NTS

NOTE:

ALL JOINTS THAT ARE TO BE SEALED SHALL BE FREE OF CRACKED AND SPALLED AREAS AND THEIR FACES SHALL BE FREE OF ALL FOREIGN MATTER, CURING COMPOUNDS, OILS, GREASES AND DIRT. ALL FACES MUST BE SANDBLASTED OR BRUSHED WITH A MECHANICAL ROTARY WIRE BRUSH. JUST PRIOR TO SEALING, THE JOINT SHALL BE BLOWN OUT WITH OIL-FREE COMPRESSED AIR.

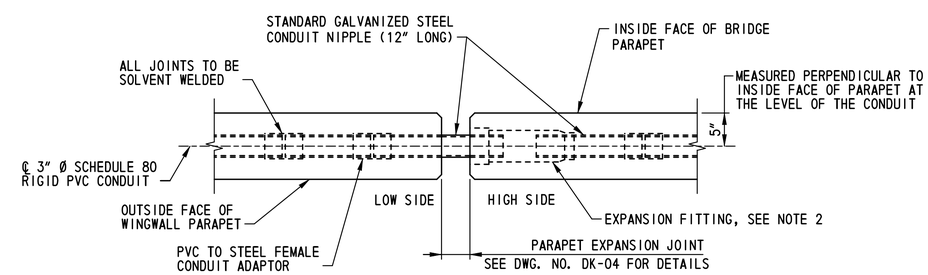

SECTION EE-EE

SCALE: 1" = 1'-0"

REFERENCES:

1. FOR PROJECT NOTES, SEE DWG. NO. PN-01.
2. FOR REINFORCEMENT BAR LIST, SEE DWG. NO. BR-03.
3. FOR LEGEND, SEE DWG. NO. PE-01.
4. FOR TRANSITION SLAB DETAILS, SEE DWG. NOS. DT-21 THRU DT-24.

BR1-1
AS-01

UNOFFICIAL WEBSITE COPY

① ANY MARK NUMBER WITH SUFFIX 'E' DENOTES EPOXY COATED REINFORCING STEEL.

② ALL MARK 'LOCATION PREFIXES' SHALL CONSIST OF TWO LETTERS AND ARE AS FOLLOWS: AB = ABUTMENT, AS = APPROACH SLAB, BC = BOX CULVERT, BW = BACKWALL, CL = COLUMN, DK = DECK, DL = DOWEL, FT = FOOTING, HW = HEADWALL, MS = MISC. BARS, PA = PARAPET, PR = PIER, SC = SHEETPILE CAP, SL = SLAB, TW = TOEWALL, WL = WALL (UNIQUE LOCATION), WW = WINGWALL

SPECIFICATIONS					BENDING DIMENSIONS (FEET-INCHES /QUARTER INCH)										
QTY.	SIZE	LENGTH	MARK	TYPE	A	B	C	D	E	F/R	G	H	J	K	O
DECK															
36	5	60-00	DK501E	STR		60-00									
70	5	36-70	DK502E	STR		36-70									
239	5	16-11⅛	DK503E	STR		16-11⅛									
239	5	17-60	DK504E	1	0-70	16-11⅛							0-50		
238	5	6-100	DK505E	1	0-70	6-30							0-50		
195	5	5-61	DK506E	T15		1-90	0-50	1-12	0-83	1-60		0-83	0-73		
24	6	30-00	DK601E	STR		30-00									
END DIAPHRAGM															
64	4	5-30	DK411E	17		2-30	0-90	2-30							
8	5	5-60	DK511E	STR		5-60									
16	6	2-60	DK611E	DW		2-60									
8	6	5-10	DK612E	STR		5-10									
16	6	6-30	DK613E	STR		6-30									
INTERMEDIATE DIAPHRAGM															
64	4	5-10	DK421E	17		2-30	0-70	2-30							
8	5	5-60	DK521E	STR		5-60									
16	5	2-60	DK522E	DW		2-60									
8	5	5-10	DK523E	STR		5-10									
16	5	6-30	DK524E	STR		6-30									

SPECIFICATIONS					BENDING DIMENSIONS (FEET-INCHES /QUARTER INCH)										
QTY.	SIZE	LENGTH	MARK	TYPE	A	B	C	D	E	F/R	G	H	J	K	O
PIER DIAPHRAGM															
28	4	8-50	DK431E	17		3-20	2-10	3-20							
4	5	5-60	DK531E	STR		5-60									
2	5	5-42	DK532E	T8			1-00	3-90				3-83		0-42	
32	5	2-60	DK533E	17		0-100	0-100	0-100							
4	6	5-10	DK631E	STR		5-10									
4	6	5-20	DK632E	17			3-60	1-80							
4	6	4-40	DK633E	STR		4-40									
2	6	14-80	DK634E	1	0-80	14-00							0-60		
8	6	6-60	DK635E	STR		6-60									
2	6	3-60	DL601E	STR		3-60									
PARAPET															
195	5	7-80	PA501E	PA		1-90	0-90	3-00	0-50	1-90		3-00		0-40	
12	7	46-80	PA701E	STR		46-80									
12	8	47-80	PA801E	STR		47-80									
SOUTH APPROACH SLAB															
34	5	14-10	AS501E	STR		14-10									
11	5	5-33	AS502E	16			3-70	1-83				1-23		1-23	4-93
13	5	2-11⅓	AS503E	16			1-30	1-83				1-23		1-23	2-53
29	6	5-63	AS601E	16			3-100	1-83				1-23		1-23	5-03
15	7	13-40	AS701E	17		1-100	11-60								
15	7	6-23	AS702E	16	2-00	1-100	0-80	1-83				1-23		1-23	1-103
29	8	14-60	AS801E	STR		14-60									
32	5	2-30	DL501E	STR		2-30									

SPECIFICATIONS					BENDING DIMENSIONS (FEET-INCHES /QUARTER INCH)										
QTY.	SIZE	LENGTH	MARK	TYPE	A	B	C	D	E	F/R	G	H	J	K	O
NORTH APPROACH SLAB															
34	5	14-10	AS521E	STR		14-10									
11	5	5-33	AS522E	16			3-70	1-83				1-23		1-23	4-93
13	5	2-11⅓	AS523E	16			1-30	1-83				1-23		1-23	2-53
29	6	5-63	AS621E	16			3-100	1-83				1-23		1-23	5-03
15	7	13-40	AS721E	17		1-100	11-60								
15	7	6-23	AS722E	16	2-00	1-100	0-80	1-83				1-23		1-23	1-103
29	8	14-60	AS821E	STR		14-60									
32	5	2-30	DL521E	STR		2-30									

UNOFFICIAL WEBSITE COPY

ASTM STANDARD ENGLISH REINFORCING BARS

	NOMINAL DIMENSIONS			RECOMMENDED END HOOKS, APPLICABLE TO ALL GRADES				STIRRUP AND TIE HOOKS, APPLICABLE TO ALL GRADES			
					180° HOOKS		90° HOOKS		90° HOOK	135° HOOK	
BAR SIZE	DIAMETER (INCHES)	AREA (INCHES²)	WEIGHT (LBS./FT.)	D	A OR G	J	A OR G	D	A OR G	A OR G	A OR G
3	0.375	0.110	0.376	2¼"	5"	3"	6"	1½"	4"	4"	2½"
4	0.500	0.200	0.668	3"	6"	4"	8"	2"	4½"	4½"	3"
5	0.625	0.310	1.043	3¾"	7"	5"	10"	2½"	6"	5½"	3¾"
6	0.750	0.440	1.502	4½"	8"	6"	1-0"	4½"	1-0"	8"	4½"
7	0.875	0.600	2.044	5¼"	10"	7"	1-2"	5¼"	1-2"	9"	5¼"
8	1.000	0.790	2.670	6"	11"	8"	1-4"	6"	1-4"	10½"	6"
9	1.128	1.000	3.400	9½"	1-3"	11¾"	1-7"				
10	1.270	1.270	4.303	10¾"	1-5"	1-1¼"	1-10"				
11	1.410	1.560	5.313	1-0"	1-7"	1-2¾"	2-0"				
14	1.693	2.250	7.650	1-6¼"	2-3"	1-9¾"	2-7"				
18	2.257	4.000	13.600	2-0"	3-0"	2-4½"	3-5"				

NOTES:

1. FIGURES SHOWN IN CIRCLES REPRESENT BAR BEND TYPES.
2. STANDARD BAR BENDS INCLUDE ONLY THOSE TYPES BELOW, INDICATED AS SUCH.
3. ALL DIMENSIONS OUT-TO-OUT, EXCEPT "A" AND "G" ON STD. 180° AND 135° HOOKS.
4. "J" DIMENSIONS ON 180° HOOKS TO BE SHOWN ONLY WHERE NECESSARY TO RESTRICT HOOK SIZE, OTHERWISE STANDARD 'ACI' HOOKS ARE TO BE USED.
5. WHERE "J" IS NOT SHOWN, "J" WILL BE KEPT EQUAL TO OR LESS THAN "H" ON TYPES 3, 5 AND 22. WHERE "J" CAN EXCEED "H", IT SHALL BE SHOWN.
6. "H" DIMENSIONS OF STIRRUPS TO BE SHOWN AS NEEDED TO FIT WITHIN THE CONCRETE.
7. UNLESS OTHERWISE NOTED, DIAMETER "D" IS THE SAME FOR ALL BENDS AND HOOKS ON A BAR (EXCEPT FOR BEND TYPES 11 AND 13).
8. WHERE SLOPE DIFFERS FROM 45° OFFSET, "H" AND "K" MUST BE SHOWN.
9. WHERE BARS ARE TO BE BENT MORE ACCURATELY THAN STANDARD BENDING TOLERANCES, BENDING DIMENSIONS REQUIRING CLOSER FABRICATION SHOULD HAVE LIMITS INDICATED.
10. FOR RECOMMENDED DIAMETER "D", OF BENDS, HOOKS, ETC., REFER TO TABLE ABOVE, 'CRSI' OR 'ACI' TABLES WHERE APPLICABLE AND REQUIRED.
11. TYPE S1-S6, S11, T1-T3 AND T6-T9 APPLICABLE TO BAR SIZES #3 THROUGH #8.

STANDARD BAR BENDS

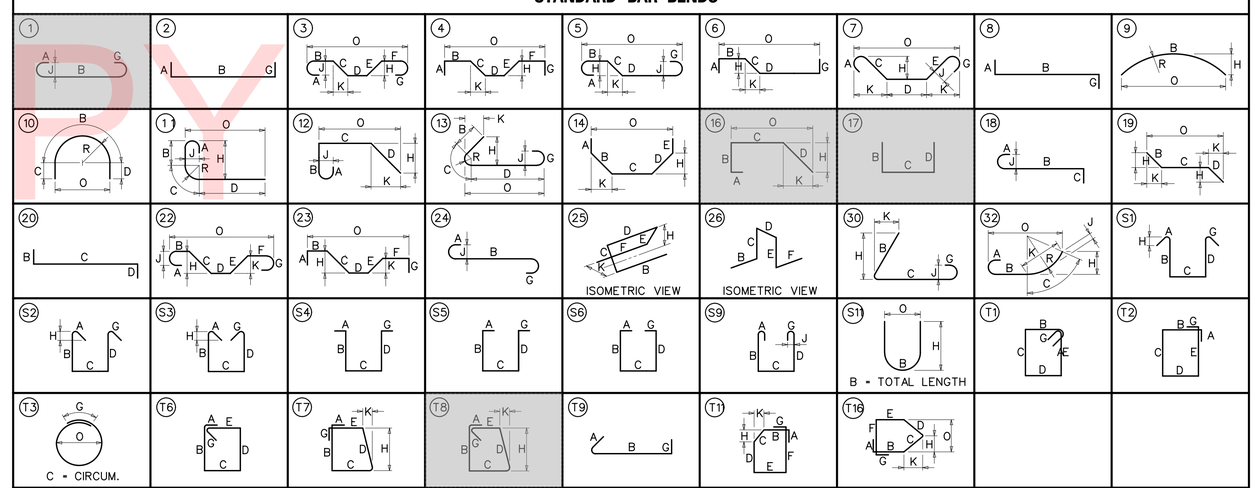

SPECIAL BAR BENDS

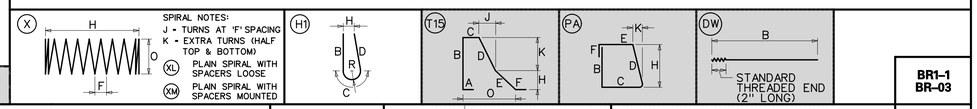

STIRRUP AND TIE HOOKS

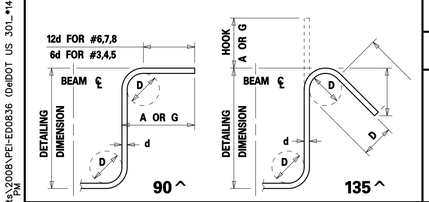

180° AND 90° END HOOKS

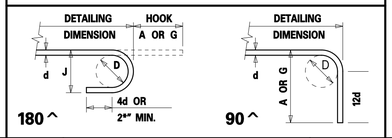

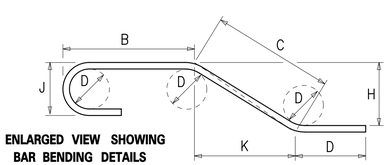

ENLARGED VIEW SHOWING BAR BENDING DETAILS

DELAWARE DEPARTMENT OF TRANSPORTATION

ADDENDUMS / REVISIONS

US 301 & SR 1 INTERCHANGE

CONTRACT	BRIDGE NO.	1-903S
T200911302	DESIGNED BY:	RTC
COUNTY	CHECKED BY:	FPH
NEW CASTLE		

SUPERSTRUCTURE REINFORCEMENT BAR LIST

BR1-1 BR-03

SHEET NO. 148 / TOTAL SHTS. 491

\\tsclient\S\Projects\2008\PEI-E00836 (DelDOT US 301_#1445)\7. Transportation\1. Bridges\Drawings\Final_PS&E\BR1-1\BR03_br1-1.dgn 2/27/2013 3:52:06 PM

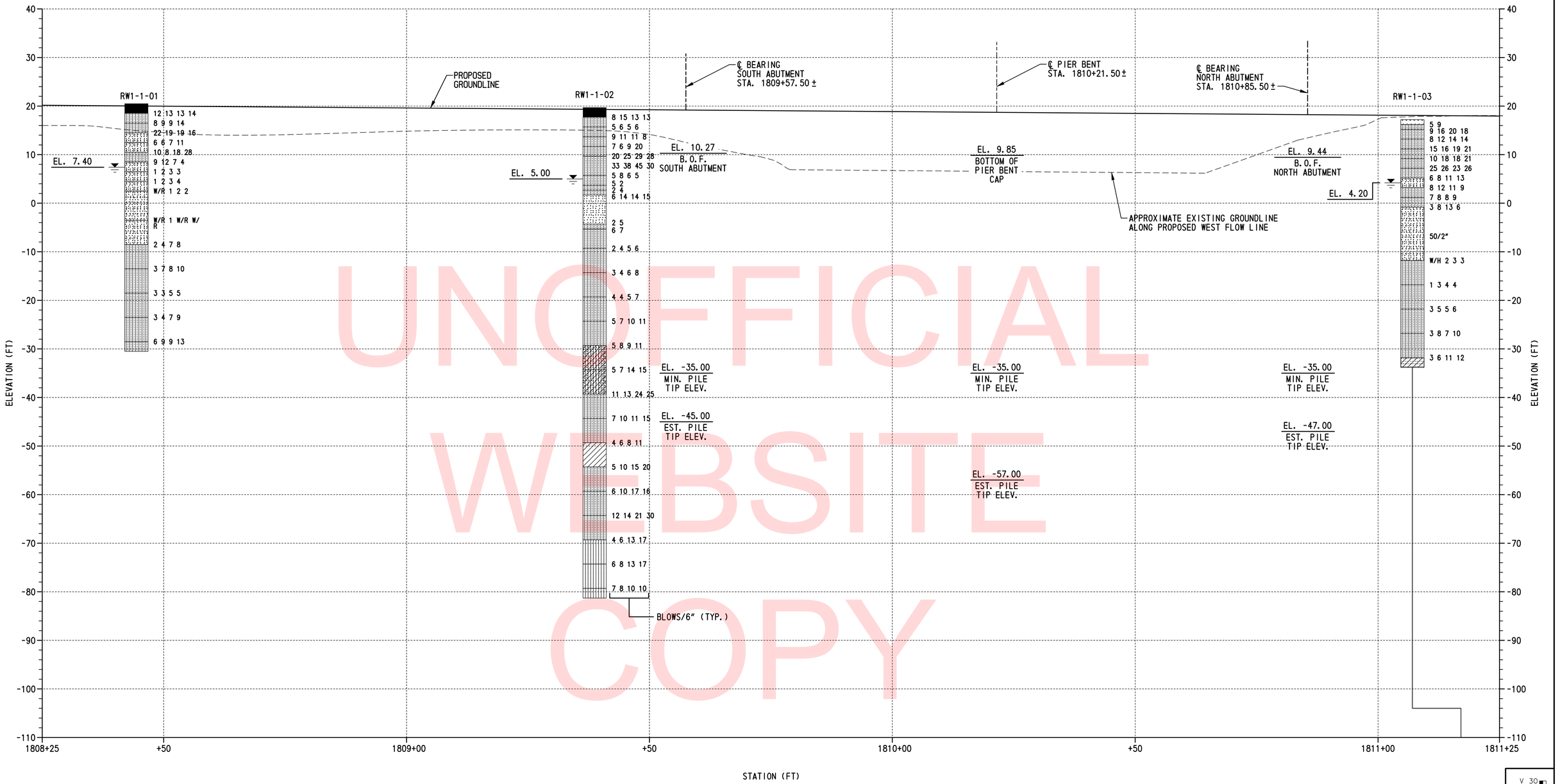

UNOFFICIAL WEBSITE COPY

BORING PROFILE

SCALE: 1"=10'-0"

LEGEND:

- SILTY SAND
- CLAYEY SAND
- LOW PLASTICITY CLAY
- SILTY LOW PLASTICITY CLAY
- POORLY GRADED SAND
- POORLY GRADED SAND WITH SILT
- POORLY GRADED CLAYEY SILTY SAND
- SILT
- PAVING
- TOP SOIL
- WATER TABLE AT BORING COMPLETION

W/R = WEIGHT OF ROD
W/H = WEIGHT OF HAMMER

TEST BORINGS				
BORING DESIGNATION	STATION	OFFSET	NORTHING	EASTING
RW1-1-01	1808+44.38	56.38' LT.	559213.6770	590417.1980
RW1-1-02	1809+38.72	63.43' LT.	559308.1330	590411.9460
RW1-1-03	1811+17.07	92.16' LT.	559487.0000	590386.6000

NOTES:

1. FOR BORING LOCATIONS, SEE DWG. NO. PE-01.
2. BORING RW1-1-03 IS SHOWN OFFSET AS INDICATED FOR CLARITY.
3. RESULTS CONDUCTED ON SAMPLES RECOVERED ARE REPORTED ON THE BORING LOGS. LOGS AND LABORATORY TESTING ARE INCLUDED AS PART OF THE CONTRACT DOCUMENTS, SEE CD.

VERTICAL SCALE FEET 0 10 20 30

BR1-1
BO-01

N:\31653-000\CONTRACT 18\CADD\Bridge\Br_No1\B001_br1-1.dgn
2/6/2013 11:14:31 AM

DELAWARE DEPARTMENT OF TRANSPORTATION

ADDENDUMS / REVISIONS

SCALE 0 10 20 30 FEET

US 301 & SR 1 INTERCHANGE

CONTRACT T200911302
COUNTY NEW CASTLE
BRIDGE NO. 1-903S
DESIGNED BY: W.R.A.
CHECKED BY: P.S.D.

BORING PROFILE

SHEET NO. 149
TOTAL SHTS. 491

PROJECT NOTES:

1. LOCATION
   PROPOSED NEW STRUCTURE CARRYING US 301 NB OVER SCOTT RUN IN NEW CASTLE COUNTY, DELAWARE.

2. ELEVATIONS
   VERTICAL DATUM IS REFERENCED TO NAVD 88.

3. DESIGN CRITERIA
   2007 AASHTO LRFD BRIDGE DESIGN SPECIFICATIONS, INCLUDING 2008 AND 2009 INTERIM PROVISIONS AND THE 2005 DELDOT BRIDGE DESIGN MANUAL, INCLUDING LATEST REVISIONS.

   PROVIDE MATERIAL AND PERFORM WORK IN ACCORDANCE WITH THE DELDOT STANDARD SPECIFICATIONS AND STANDARD CONSTRUCTION DETAILS AND THE CONTRACT SPECIAL PROVISIONS.

4. LOADING
   HL-93 AND DELAWARE LEGAL LOADS FOR LIVE LOAD WITH PROVISIONS FOR FUTURE 2" WEARING SURFACE AND 15 LBS/FT^2 FOR THE USE OF STEEL BRIDGE DECK FORMS WHICH REMAIN IN PLACE.

5. CONCRETE
   ALL CONCRETE PROPERTIES SHALL BE IN ACCORDANCE WITH SECTION 812 OF THE DELAWARE DEPARTMENT OF TRANSPORTATION STANDARD SPECIFICATIONS.

   CLASS A - FOOTINGS, ABUTMENTS, STEMS, BACKWALLS, WINGWALLS, DIAPHRAGMS AND PARAPETS (f'c = 4,500 PSI).

   CLASS D - CONCRETE DECK SLAB, APPROACH SLAB, MOMENT SLAB AND SLEEPER SLAB (f'c = 4,500 PSI).

   ALL EXPOSED EDGES SHALL BE CHAMFERED ¾" UNLESS NOTED OTHERWISE.

6. REINFORCING STEEL
   ALL REINFORCING STEEL SHALL BE AASHTO M 31 (ASTM A 615), GRADE 60 AND UNLESS NOTED OTHERWISE ON THE PLANS SHALL BE PROTECTED WITH FUSION BONDED EPOXY, CONFORMING TO AASHTO M 284 (ASTM A 775) AND DENOTED WITH A SUFFIX "E" IN THE BAR MARKS. EPOXY COATED REINFORCING STEEL SHALL BE USED IN THE FOLLOWING LOCATIONS:

   APPROACH SLABS
   MOMENT SLABS
   DECK SLAB
   PARAPETS
   ABUTMENT BACKWALLS AND BEARING PEDESTALS

   ALL REINFORCING STEEL HAS BEEN DETAILED FOR A MAXIMUM LENGTH OF 60 FT.

   ALL SPLICES, NOT SHOWN, SHALL BE LAPPED AS PER THE AASHTO LRFD BRIDGE DESIGN SPECIFICATIONS.

   MINIMUM CONCRETE COVER FOR REINFORCING STEEL SHALL BE:

   FOUNDATION ELEMENTS: 3"
   DECK SLABS: 2½" TOP OF SLAB (INCLUDES ½" INTEGRAL WEARING SURFACE)
   1" BOTTOM OF SLAB WHEN STAY-IN-PLACE FORMS ARE USED

7. PRESTRESSED REINFORCED CONCRETE MEMBERS
   PRESTRESSED CONCRETE DESIGN: DESIGN CONSISTENT WITH 2007 AASHTO LRFD, WITH 2008 AND 2009 INTERIMS. THE PRECAST CONCRETE BEAMS ARE DESIGNED AS NONCOMPOSITE SIMPLE SPAN FOR ALL DEAD LOADS EXCEPT THE PARAPET AND FUTURE WEARING SURFACE. THE PRECAST BEAMS ARE DESIGNED AS COMPOSITE SIMPLE SPAN FOR LIVE LOADS AS WELL AS THE PARAPET AND FUTURE WEARING SURFACE DEAD LOADS. REINFORCING STEEL DESIGN: fs = 24,000 PSI (NONPRETENSIONING STEEL).

   PRESTRESSED CONCRETE: THE MINIMUM COMPRESSIVE STRENGTH FOR PRECAST CONCRETE AT THE AGE OF 28 DAYS SHALL BE f'c = 8,000 PSI. THE MINIMUM COMPRESSIVE STRENGTH AT THE TRANSFER OF PRESTRESS SHALL BE f'ci = 6,400 PSI.

   PRETENSIONING STEEL: PRETENSIONING STEEL SHALL CONSIST OF ½" DIAMETER 7-WIRE LOW RELAXATION STRANDS CONFORMING TO THE REQUIREMENTS OF M 203 GRADE 270. EACH ½" STRAND SHALL BE PRETENSIONED TO 30,980 LBS (0.75 f's). AFTER ESTIMATED LOSSES OF 25,720 PSI, THE FINAL EFFECTIVE PRESTRESS FORCE PER STRAND IS 27,040 LBS. CAMBER GROWTH IN PRETENSIONED BEAMS BETWEEN THE TIME OF STRESSING AND THE TIME OF SLAB PLACEMENT IS ASSUMED TO BE 60% FOR CAMBER CALCULATIONS.

8. ELASTOMERIC BEARINGS
   ELASTOMERIC BEARINGS SHALL CONFORM TO AASHTO M 251. ELASTOMER SHALL BE 60 DUROMETER. SHIMS SHALL BE 11 GAGE MILD STEEL CONFORMING TO ASTM A 36. FOR ADDITIONAL REQUIREMENTS FOR THE ELASTOMERIC BEARINGS, SEE DWG. NOS. BB-01 AND BB-02. ELASTOMERIC BEARINGS SHALL BE INCIDENTAL TO ITEM 623003 - PRESTRESSED REINFORCED CONCRETE MEMBERS, BULB TBEAM.

9. STEEL H-PILES
   STEEL H-PILES SHALL BE AASHTO M 270 (ASTM A 709), GRADE 50.

10. FOUNDATION REQUIREMENTS
    FOR FOUNDATION REQUIREMENTS, SEE DWG. NO. PL-01. DELDOT STANDARD SPECIFICATION 619.11(A)(6) SHALL BE MODIFIED BY REFERENCE TO SPECIAL PROVISIONS 619519 AND 619539.

11. TRAFFIC CONTROL REQUIREMENTS
    FOR TRAFFIC CONTROL REQUIREMENTS SEE CONSTRUCTION PHASING, M.O.T., AND EROSION CONTROL PLANS.

12. RIPRAP
    RIPRAP SHALL CONFORM WITH THE REQUIREMENTS OF SECTION 712 OF THE DELAWARE DEPARTMENT OF TRANSPORTATION STANDARD SPECIFICATIONS. GEOTEXTILE SHALL CONFORM TO SECTION 713 OF THE DELAWARE DEPARTMENT OF TRANSPORTATION STANDARD SPECIFICATIONS.

13. CONSTRUCTION JOINTS
    KEYED CONSTRUCTION JOINTS SHALL BE 2" X 4" UNLESS NOTED OTHERWISE. ALL EXPOSED CONSTRUCTION JOINT EDGES SHALL HAVE A ¾" V-NOTCH UNLESS NOTED OTHERWISE.

14. MISCELLANEOUS
    ALL AREAS DISTURBED BY THE CONTRACTOR'S OPERATIONS SHALL BE GRADED BACK TO THE ORIGINAL EXISTING GRADE, TOP SOILED, SEEDED AND MULCHED. PAYMENT SHALL BE INCIDENTAL TO THE CONTRACT. AS DIRECTED BY THE ENGINEER, ALL AREAS DISTURBED BY THE CONTRACTOR'S OPERATION RESULTING FROM UNAUTHORIZED ACTIVITIES OUTSIDE THE LIMIT OF CONSTRUCTION SHALL BE TOP SOILED, SEEDED, AND MULCHED AT THE CONTRACTOR'S EXPENSE.

15. STABILIZING STRUCTURAL EXCAVATIONS
    IN LIEU OF A 2:1 SLOPE, THE CONTRACTOR MAY USE SHORING FOR EXCAVATIONS EXCEEDING 5 FEET IN HEIGHT. THE COST OF THE SHORING SHALL BE INCIDENTAL TO ITEM 207000 - EXCAVATION AND BACKFILL FOR STRUCTURES.

16. HYDRAULIC DATA
    DRAINAGE AREA = 3.72 SQ. MI.
    25-YR FLOOD ELEVATION = 12.68
    DESIGN FREQUENCY = 50 YEARS
    DESIGN DISCHARGE = 1586 CFS
    DESIGN HEADWATER ELEVATION = 13.24 FT
    DESIGN VELOCITY, CHANNEL = 1.15 FPS
    FLOW AREA OF PROPOSED OPENING = 1118 SF

    NOTE: HYDRAULIC ANALYSES CONDUCTED WITH EXISTING US 13 BOX CULVERT IN-PLACE, AS WORSE CASE SCENARIO.

    NOTE: SEE REPORT TITLED, "HYDROLOGIC AND HYDRAULIC ANALYSES OF SCOTT RUN WATERSHED AND PROPOSED BRIDGES 1-1, 1-2, 1-4 NB & SB, 1-6,AND 1-7 NB & SB FOR US 301 EXTENSION," DATED MAY 2011.

17. SCOUR DATA
    BRIDGE BR1-2 HAS BEEN ANALYZED FOR THE EFFECTS OF SCOUR IN ACCORDANCE WITH FHWA HEC-18 - 'EVALUATING SCOUR AT BRIDGES' AND HEC-23 -'BRIDGE SCOUR AND STREAM INSTABILITY COUNTERMEASURES.' SCOUR COUNTERMEASURES HAVE BEEN DESIGNED FOR THE WORSE CASE OF THE OVERTOPPING FLOOD OR THE 500-YR FLOOD EVENT.

    NOTE: SCOUR ANALYSES CONDUCTED WITH REMOVAL OF EXISTING US 13 BOX CULVERT, AS WORSE CASE SCENARIO.

    DESIGN STORM EVENT = 100 YEAR FLOOD
    DESIGN STORM DISCHARGE = 1887 CFS
    DESIGN STORM HEADWATER ELEVATION. = 11.08 FT
    DESIGN STORM VELOCITY, CHANNEL = 1.90 FPS
    DESIGN STORM DEPTH OF FLOW = 5.71 FT

    CHECK STORM EVENT = 500 YEAR FLOOD
    CHECK STORM DISCHARGE = 2568 CFS
    CHECK STORM HEADWATER ELEVATION = 12.09 FT
    CHECK STORM VELOCITY, CHANNEL = 2.18 FPS
    CHECK STORM DEPTH OF FLOW = 6.73 FT

18. LOAD RATINGS
    FOR LOAD AND RESISTANCE FACTOR RATING, SEE BRIDGE NO. 1-432 LOAD RATING SUMMARY BELOW.

LOAD RATING SUMMARY

DESIGN VEHICLE	RATING FACTOR	RATING WEIGHT (TON)	CONTROLLING MEMBER	CONTROLLING POINT	LOAD EFFECT
HL-93 TRUCK (INVENTORY)	1.75	N/A	INTERIOR GIRDER	104	LONG. REINF.
HL-93 TANDEM (INVENTORY)	2.13	N/A	INTERIOR GIRDER	105	LONG. REINF.
HL-93 TRUCK TRAIN (INVENTORY)	N/A	N/A	N/A	N/A	N/A
HS-20 (INVENTORY)	2.41	86.60	INTERIOR GIRDER	104	LONG. REINF.
HL-93 TRUCK (OPERATING)	2.24	N/A	INTERIOR GIRDER	104	LONG. REINF.
HL-93 TANDEM (OPERATING)	2.76	N/A	INTERIOR GIRDER	105	LONG. REINF.
HL-93 TRUCK TRAIN (OPERATING)	N/A	N/A	N/A	N/A	N/A
HS-20 (OPERATING)	3.08	111.00	INTERIOR GIRDER	104	LONG. REINF.
DE S220 & LEGAL-LANE (LEGAL)	4.12	82.32	INTERIOR GIRDER	105	CONCRETE STRESS
DE S335 & LEGAL-LANE (LEGAL)	2.32	81.13	INTERIOR GIRDER	105	CONCRETE STRESS
DE S437 & LEGAL-LANE (LEGAL)	2.21	80.85	INTERIOR GIRDER	105	CONCRETE STRESS
DE S330 & LEGAL-LANE (LEGAL)	3.01	90.37	INTERIOR GIRDER	105	CONCRETE STRESS
DE S435 & LEGAL-LANE (LEGAL)	2.62	91.59	INTERIOR GIRDER	105	CONCRETE STRESS
DE S540 & LEGAL-LANE (LEGAL)	2.30	92.16	INTERIOR GIRDER	105	CONCRETE STRESS

NOTE: LOAD RATING INCLUDES FUTURE WEARING SURFACE AS NOTED IN THE PLANS.

BRIDGE NO. 1-432 INDEX OF SHEETS

SHEET NO.	DWG. NO.	TABLE OF CONTENTS
150	PN-01	PROJECT NOTES
151	QS-01	QUANTITY SUMMARY
152	TS-01	SUPERSTRUCTURE TYPICAL SECTION
153	PE-01	GENERAL PLAN AND ELEVATION
154	GR-01	GRADING PLAN
155	FT-01	GEOMETRIC AND FOOTING LAYOUT PLAN
156	PL-01	PILE LAYOUT PLAN
157	AB-01	ABUTMENT A PLAN AND ELEVATION
158	AB-02	ABUTMENT A TYPICAL SECTION
159	AB-03	ABUTMENT A REINFORCEMENT ELEVATION
160	AB-04	ABUTMENT A REINFORCEMENT TYPICAL SECTION
161	AB-05	ABUTMENT A FOOTING REINFORCEMENT PLAN
162	AB-06	ABUTMENT A REINFORCEMENT DETAILS
163	WW-01	WINGWALL I AND II ELEVATIONS
164	WW-02	WINGWALL TYPICAL SECTIONS
165	WW-03	WINGWALL I AND II REINFORCEMENT ELEVATIONS
166	WW-04	WINGWALL I AND II REINFORCEMENT TYPICAL SECTIONS
167	AB-07	ABUTMENT B PLAN AND ELEVATION
168	AB-08	ABUTMENT B TYPICAL SECTION
169	AB-09	ABUTMENT B REINFORCEMENT ELEVATION
170	AB-10	ABUTMENT B REINFORCEMENT TYPICAL SECTION
171	AB-11	ABUTMENT B FOOTING REINFORCEMENT PLAN
172	AB-12	ABUTMENT B REINFORCEMENT DETAILS
173	WW-05	WINGWALL III AND IV ELEVATIONS
174	WW-06	WINGWALL III AND IV REINFORCEMENT ELEVATIONS
175	WW-07	WINGWALL III AND IV REINFORCEMENT TYPICAL SECTIONS
176	RB-01	ABUTMENT A REINFORCEMENT LIST
177	RB-02	ABUTMENT B REINFORCEMENT LIST
178	BB-01	ABUTMENT A EXPANSION BEARING DETAILS
179	BB-02	ABUTMENT B FIXED BEARING DETAILS
180	BM-01	PCEF BULB-TEE BEAM DETAILS - 1
181	BM-02	PCEF BULB-TEE BEAM DETAILS - 2
182	DT-01	ABUTMENT DIAPHRAGM DETAILS
183	DT-02	INTERMEDIATE DIAPHRAGM DETAILS
184	FR-01	FRAMING PLAN
185	DK-01	DECK SLAB POURING SEQUENCE
186	DK-02	DECK SLAB AND PARAPET REINFORCEMENT
187	DK-03	DECK SLAB AND PARAPET REINFORCEMENT DETAILS
188	RB-03	SUPERSTRUCTURE REINFORCEMENT LIST
189	FD-01	FINISHED BRIDGE DECK ELEVATIONS
190	EX-01	ARMORED STRIP SEAL JOINT DETAILS
191	AS-01	APPROACH SLAB A PLAN
192	AS-02	APPROACH SLAB A REINFORCEMENT PLAN
193	AS-03	APPROACH SLAB B PLAN
194	AS-04	APPROACH SLAB B REINFORCEMENT PLAN
195	AS-05	MOMENT AND SLEEPER SLAB A PLAN
196	AS-06	MOMENT AND SLEEPER SLAB A REINFORCEMENT PLAN
197	AS-07	APPROACH AND SLEEPER SLAB A REINFORCEMENT DETAILS
198	AS-08	APPROACH SLAB B REINFORCEMENT DETAILS
199	AS-09	MOMENT SLAB REINFORCEMENT DETAILS
200	AS-10	APPROACH SLAB AND MOMENT SLAB PARAPET CONDUIT DETAILS
201	RB-04	APPROACH SLAB AND MOMENT SLAB REINFORCEMENT LIST
202	BO-01	BORING PROFILE

19. UTILITIES
    BEFORE BEGINNING WORK, THE CONTRACTOR SHALL GIVE NOTIFICATION BY TELEPHONE BY CALLING "MISS UTILITY" AT 1-800-282-8555 A MINIMUM OF TWO WORKING DAYS PRIOR TO START OF WORK. VERIFY AND LOCATE ALL UTILITIES PRIOR TO STARTING WORK.

    COORDINATE THE REQUIREMENTS FOR PROTECTION OF ANY UTILITY WITH THE UTILITY OWNER PRIOR TO STARTING WORK.

    CONDUCT OPERATIONS IN A MANNER WHICH ENSURES THAT THE UTILITIES WILL NOT BE DISTURBED OR ENDANGERED. ANY DAMAGE INCURRED TO THESE UTILITIES OR ANY OTHER UTILITIES, SHOWN OR NOT SHOWN ON THE PLANS, DUE TO THE CONTRACTOR'S OPERATIONS SHALL BE REPAIRED AT THE CONTRACTOR'S EXPENSE TO THE SATISFACTION OF THE APPROPRIATE UTILITY COMPANY. THE DEPARTMENT DOES NOT ASSUME RESPONSIBILITY FOR REIMBURSEMENT, PARTICIPATION IN DESIGN AND/OR REVISIONS, OR LIABILITY FOR ACCURACY OF TYPE, SIZE AND LOCATION OF ANY UTILITY.

    THE CONTRACTOR IS RESPONSIBLE FOR TEMPORARILY SUPPORTING, PROTECTING, OR RELOCATING ANY UTILITIES DURING CONSTRUCTION. WHERE NECESSARY, THE COST FOR THIS WORK WILL BE INCIDENTAL TO THE CONTRACT.

20. TEMPORARY PROTECTIVE SHIELD
    THE CONTRACTOR SHALL INSTALL A TEMPORARY PROTECTIVE SHIELD DURING BRIDGE CONSTRUCTION. THE TEMPORARY PROTECTIVE SHIELD SHALL COVER THE FULL WIDTH AND SPAN, BETWEEN BEARING CENTERLINES, OF THE BRIDGE. SEE SPECIAL PROVISIONS FOR ADDITIONAL REQUIREMENTS.

UNOFFICIAL WEBSITE COPY

ITEM NO.	ITEM NAME	UNITS	QUANTITY
202000	Excavation and Embankment	C.Y.	600
207000	Excavation and Backfill for Structures	C.Y.	265
211000	Removal of Structures and Obstructions	L.S.	1
302011	Delaware No. 3 Stone	Ton	137
302012	Delaware No. 57 Stone	Ton	152
601502	Temporary Protective Shield	L.S.	1
602003	Portland Cement Concrete Masonry, Abutment Footing, Class A	C.Y.	227
602013	Portland Cement Concrete Masonry, Superstructure, Class D	C.Y.	172
602014	Portland Cement Concrete Masonry, Approach Slab, Class D	C.Y.	131
602015	Portland Cement Concrete Masonry, Abutment Above Footing, Class A	C.Y.	162
602017	Portland Cement Concrete Masonry, Parapet, Class A	C.Y.	54
602018	Portland Cement Concrete Masonry, Class D	C.Y.	33
602019	Portland Cement Concrete Masonry, Superstructure, Class A	C.Y.	21
603000	Bar Reinforcement	LBS	32,600
604000	Bar Reinforcement, Epoxy Coated	LBS	99,600
605511	Prefabricated Expansion Joint System, 3"	L.F.	46
618062	Steel H Piles, HP 14x73	L.F.	6,370
618065	Steel H Test Piles, HP 14x73	L.F.	402
619042	Install Steel H Piles, HP 14x73	L.F.	6,370
619045	Install Steel H Test Piles, HP 14x73	L.F.	402
619501	Production Pile Restrike	Each	5
619502	Test Pile Restrike	EA.DY.	1
619519	Dynamic Pile Testing by Contractor	Each	12
619539	Signal Matching Analysis by Contractor	Each	12
623003	Prestressed Reinforced Concrete Members, Bulb Tbeam	L.S.	1
712022	Riprap, R-6	Ton	980
713003	Geotextiles, Riprap	S.Y.	614

UNOFFICIAL WEBSITE COPY

NOTES:

1. ITEM 202000 IS REPRESENTED ON DRAWING EW-03 AS FOLLOWS:
   - o 55 CY UNDER TYPE F MATERIAL REQUIRED, "PLUS EMBANKMENT FOR STRUCTURES"; AND
   - o 545 CY UNDER TYPE C MATERIAL REQUIRED, "TYPE C BACKFILL FOR STRUCTURES".
2. ITEM 207000 IS REPRESENTED ON DRAWING EW-03 UNDER EXCAVATION AVAILABLE FOR EMBANKMENT, "PLUS EXCAVATION AND BACKFILLING FOR STRUCTURES."

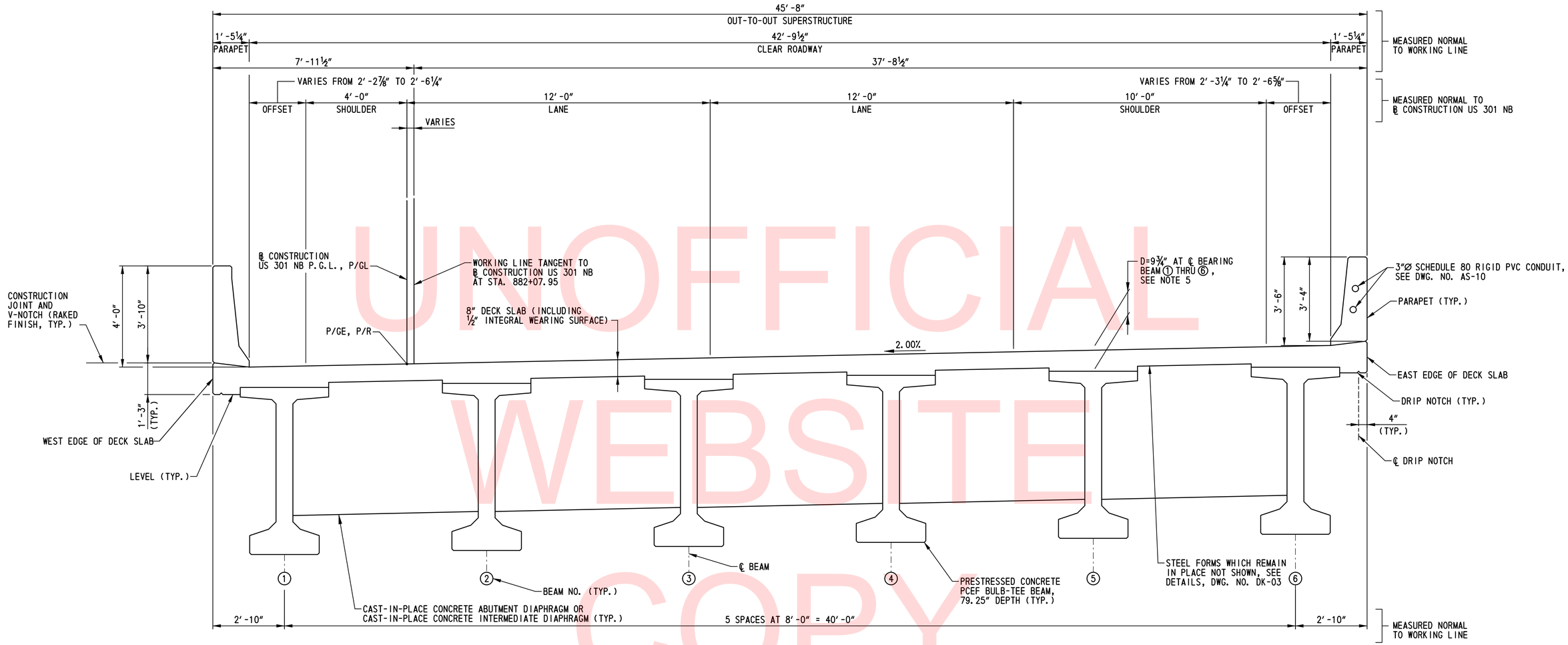

UNOFFICIAL WEBSITE COPY

SUPERSTRUCTURE TYPICAL SECTION

SCALE: ½″=1′-0″

NOTES:

1. TYPICAL SECTION SHOWN LOOKING STATIONS AHEAD.
2. FOR DECK SLAB AND PARAPET REINFORCEMENT DETAILS, SEE DWG. NOS. DK-01 THRU DK-03.
3. FOR DIAPHRAGM LOCATIONS, SEE DWG. NO. FR-01.
4. FOR ABUTMENT DIAPHRAGM DETAILS, SEE DWG. NO. DT-01. FOR INTERMEDIATE DIAPHRAGM DETAILS, SEE DWG. NO. DT-02.
5. HAUNCH DEPTH VARIES ALONG SPAN TO COMPENSATE FOR VARIATION IN CAMBER AND ROADWAY PROFILE. HAUNCH DIMENSIONS SHOWN ARE MEASURED FROM THE TOP OF THE DECK SLAB TO THE TOP OF THE BEAM AT ℄ BEARING. FOR ADDITIONAL INFORMATION, SEE CAMBER NOTES ON DWG. NOS. BM-02.
6. PARAPETS SHALL NOT BE SLIP FORMED.
7. REFLECTORS SHALL BE INSTALLED ALONG EACH PARAPET (ROADWAY PAY ITEM). SEE DWG. NO. DT-05 FOR DETAILS.

BR1-2
TS-01

DELAWARE DEPARTMENT OF TRANSPORTATION

ADDENDUMS / REVISIONS

SCALE: AS SHOWN

US 301 & SR 1 INTERCHANGE

CONTRACT	BRIDGE NO.	1-432
T200911302	DESIGNED BY: A.J.F.	
COUNTY		
NEW CASTLE	CHECKED BY: P.S.D.	

SUPERSTRUCTURE TYPICAL SECTION

SHEET NO. 152
TOTAL SHTS. 491

N:\31653-000\CONTRACT 1B\CADD\Bridge\Br_No2\TS01_br1-2.dgn
2/6/2015 2:14:27 PM

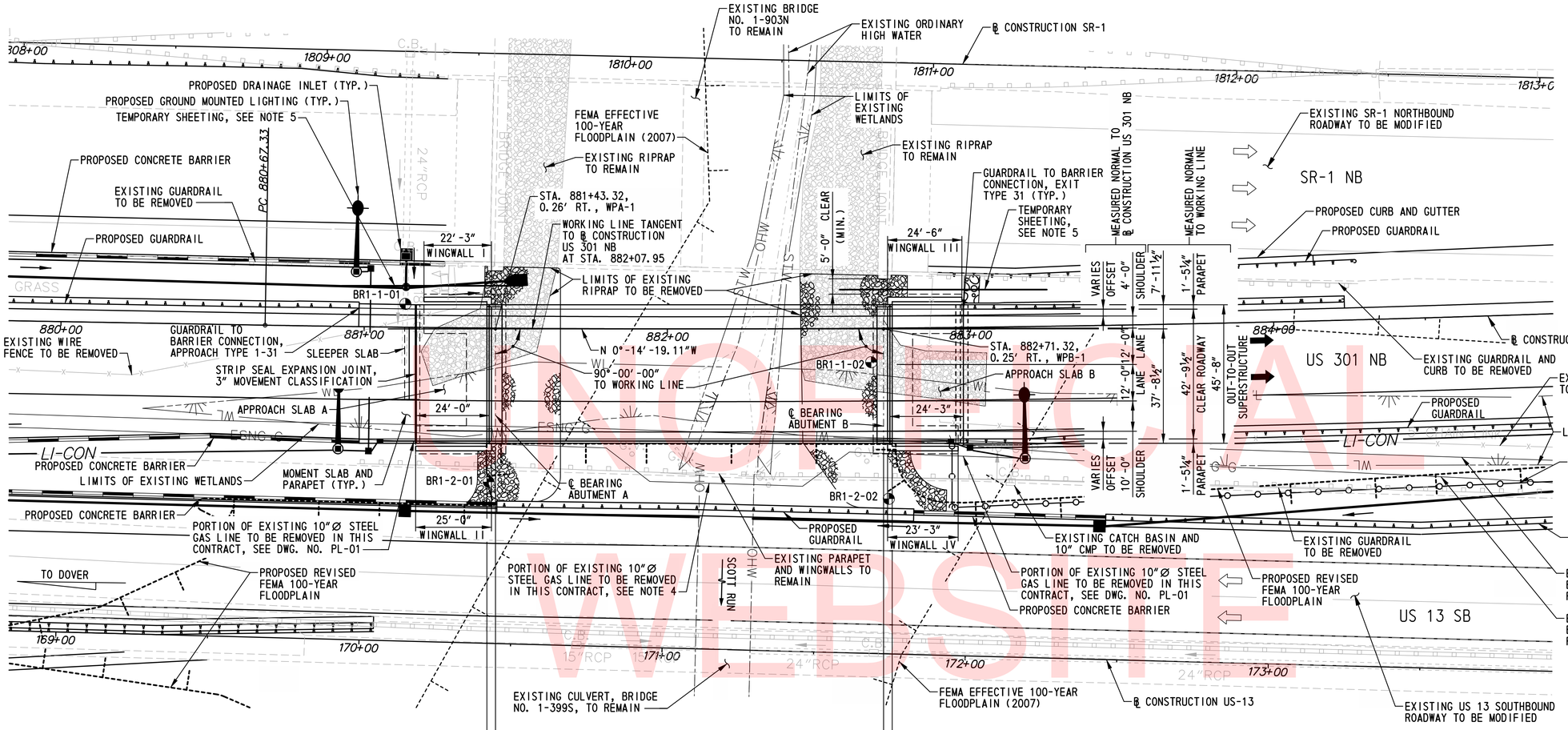

PLAN

SCALE: 1"=20'-0"

TEST BORINGS		
BORING DESIGNATION	STATION	OFFSET
BR1-1-01	881+13.52	7.68' LT.
BR1-1-02	882+67.15	11.22' RT.
BR1-2-01	881+41.48	50.75' RT.
BR1-2-02	882+72.59	56.29' RT.

CURVE DATA

Δ = 3°-29'-16.85"
Dc = 0°-42'-39.12"
R = 8060'
T = 245.41'
L = 490.67'
E = 3.74'
PC STA. 880+67.33
PI STA. 883+12.74
PT STA. 885+58.00

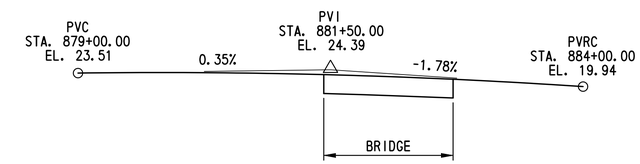

VERTICAL CURVE

SCALE: NOT TO SCALE

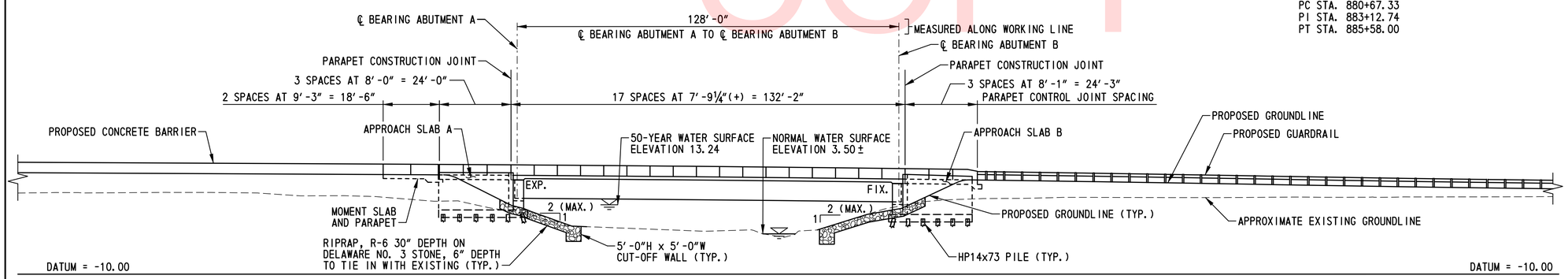

ELEVATION

SCALE: 1"=20'-0"

NOTES:

1. STEEL REINFORCED ELASTOMERIC BEARINGS SHALL BE PROVIDED AT ABUTMENTS. SEE DWG. NOS. BB-01 AND BB-02 FOR DETAILS.
2. FOR PROPOSED GRADING, SEE DWG. NO. GR-01.
3. FOR MAINTENANCE OF STREAM FLOW PLANS, SEE DWG. NOS. MS-01 AND MS-02.
4. REMOVE EXISTING GAS LINE AND STEEL CASING FROM INSIDE OF EXISTING US 13 CULVERT, BRIDGE NO. 1-399S. SEE DWG. NO. DT-20 FOR DETAILS.
5. TEMPORARY SHEETING SHALL BE INCIDENTAL TO ITEM 207000 - EXCAVATION AND BACKFILLING FOR STRUCTURES. THE TEMPORARY SHEETING SHALL BE DESIGNED AND INSTALLED TO AVOID INTERFERENCE WITH THE PROPOSED WINGWALL PILES AND THE EXISTING BRIDGE NO. 1-903N BATTERED WINGWALL PILES. PROVIDE WORKING DRAWINGS DEPICTING THE NECESSARY SHEETING DETAILS IN CONFORMANCE WITH SECTION 105.04 OF THE STANDARD SPECIFICATIONS.

UNOFFICIAL WEBSITE COPY

N:\3653-000\Contract 1B\CADD\Bridge\Br_No2\PE01_br1-2.dgn
2/5/2013 7:36:06 AM

DELAWARE DEPARTMENT OF TRANSPORTATION	ADDENDUMS / REVISIONS	SCALE: AS SHOWN	US 301 & SR 1 INTERCHANGE	CONTRACT T200911302 / COUNTY NEW CASTLE	BRIDGE NO. 1-432 / DESIGNED BY: A.J.F. / CHECKED BY: P.S.D.	GENERAL PLAN AND ELEVATION

BR1-2 PE-01

SHEET NO. 153
TOTAL SHTS. 491

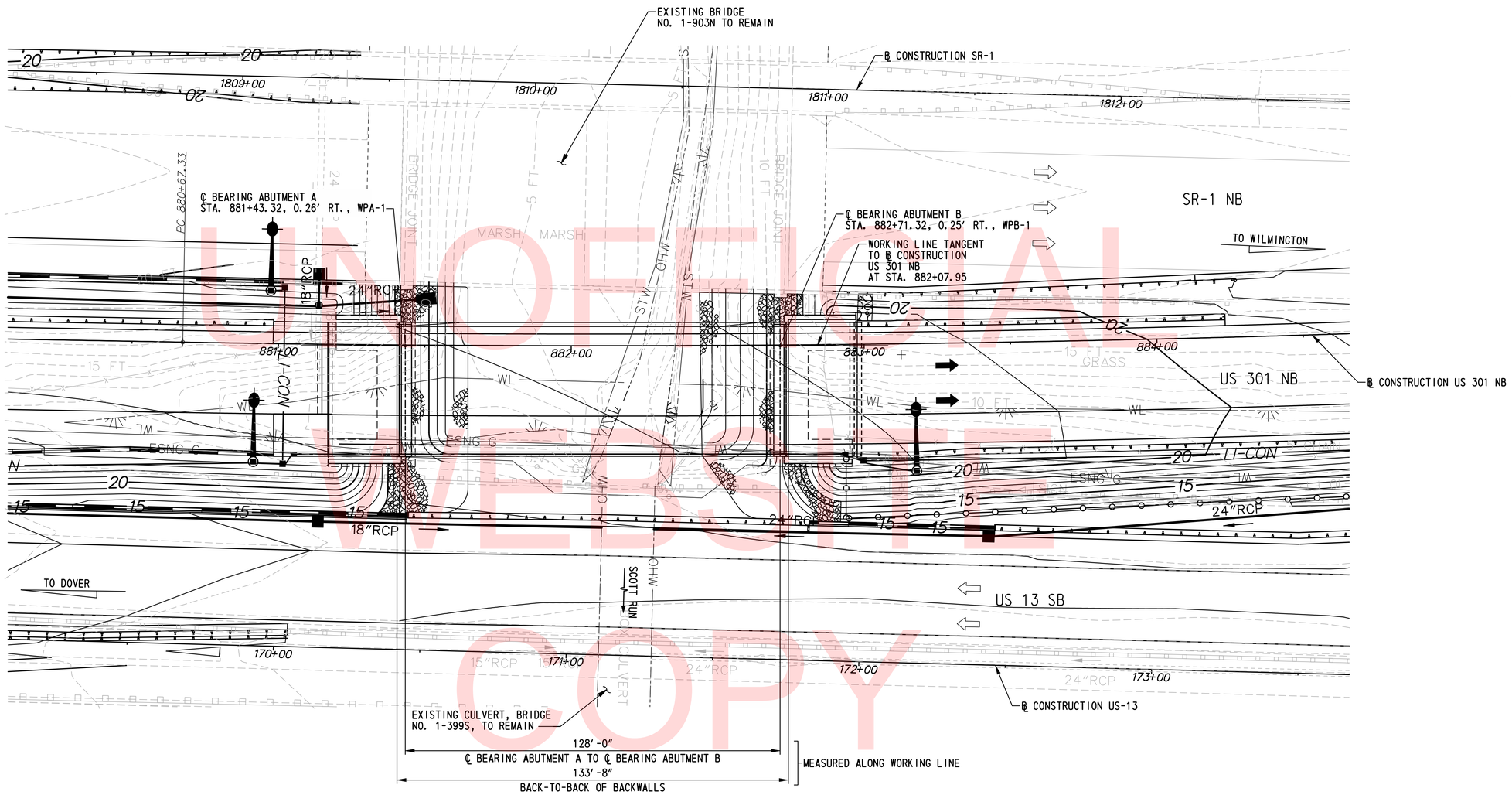

UNOFFICIAL WEBSITE COPY

GRADING PLAN

SCALE: 1"=20'-0"

NOTE:

1. FOR ADDITIONAL INFORMATION, SEE DWG. NO. PE-01.

N:\31653-000\Contract 1B\CADD\Bridge\Br_No2\GR01_BR1-2.dgn
2/5/2013 7:37:51 AM

DELAWARE DEPARTMENT OF TRANSPORTATION	ADDENDUMS / REVISIONS	SCALE: AS SHOWN	US 301 & SR 1 INTERCHANGE	CONTRACT T200911302	BRIDGE NO. 1-432	GRADING PLAN	BR1-2 GR-01
				COUNTY NEW CASTLE	DESIGNED BY: A.J.F.		SHEET NO. 154
					CHECKED BY: P.S.D.		TOTAL SHTS. 491

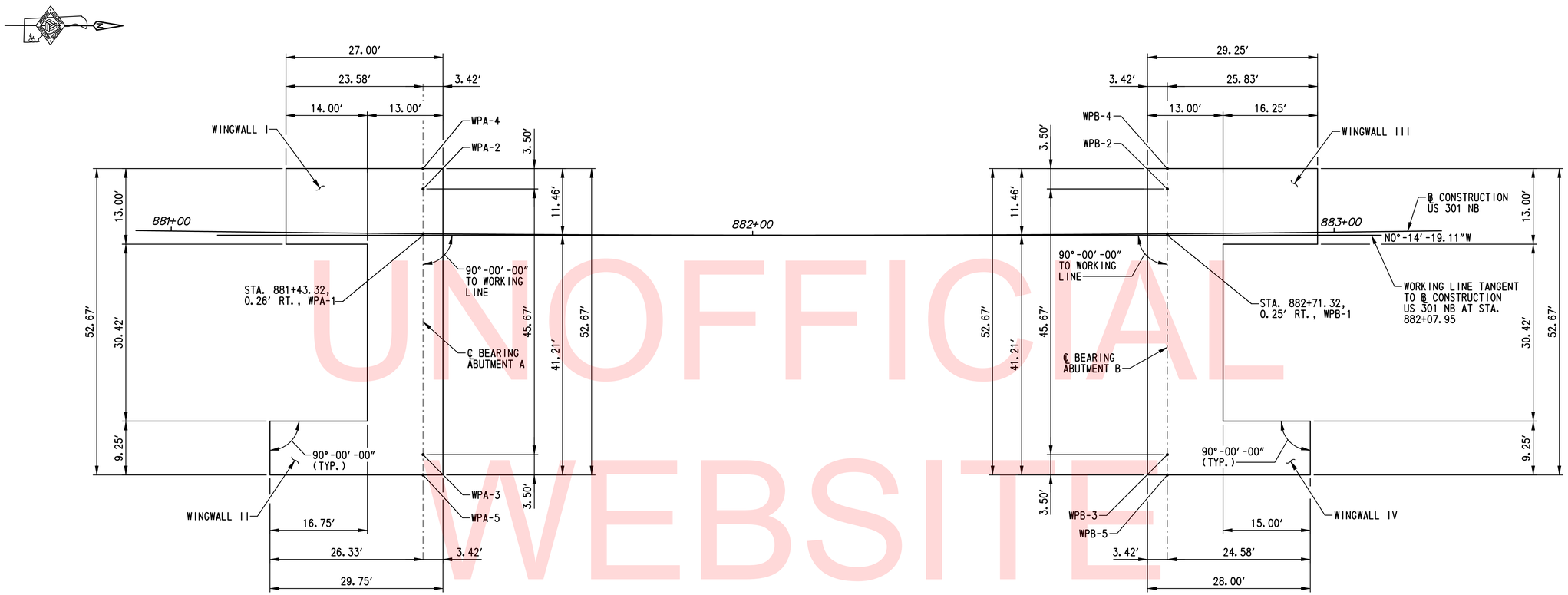

GEOMETRIC AND FOOTING LAYOUT PLAN

SCALE: 1″=10′-0″

CURVE DATA

△= 3°-29′-16.85″
Dc = 0°-42′-39.12″
R = 8060′
T = 245.41′
L = 490.67′
E = 3.74′
PC STA. 880+67.33
PI STA. 883+12.74
PT STA. 885+58.00

NOTE:

1. FOR PILE LAYOUT PLANS, SEE DWG. NO. PL-01.

WORKING POINT COORDINATES

WORKING POINT	COORDINATES	
	NORTHING	EASTING
WPA-1	559324.0421	590566.5120
WPA-2	559324.0089	590558.5538
WPA-3	559324.1991	590604.2200
WPA-4	559323.9944	590555.0538
WPA-5	559324.2137	590607.7200
WPB-1	559452.0410	590565.9789
WPB-2	559452.0078	590558.0207
WPB-3	559452.1980	590603.6869
WPB-4	559451.9933	590554.5207
WPB-5	559452.2126	590607.1868

UNOFFICIAL WEBSITE COPY

N:\31653-000\Contract 1B\CADD\Bridge\Br_Nc2\FT01_br1-2.dgn
2/5/2013 7:38:38 AM

DELAWARE DEPARTMENT OF TRANSPORTATION

ADDENDUMS / REVISIONS

SCALE: AS SHOWN

US 301 & SR 1 INTERCHANGE

CONTRACT T200911302
COUNTY NEW CASTLE
BRIDGE NO. 1-432
DESIGNED BY: A.J.F.
CHECKED BY: P.S.D.

GEOMETRIC AND FOOTING LAYOUT PLAN

BR1-2 FT-01
SHEET NO. 155
TOTAL SHTS. 491

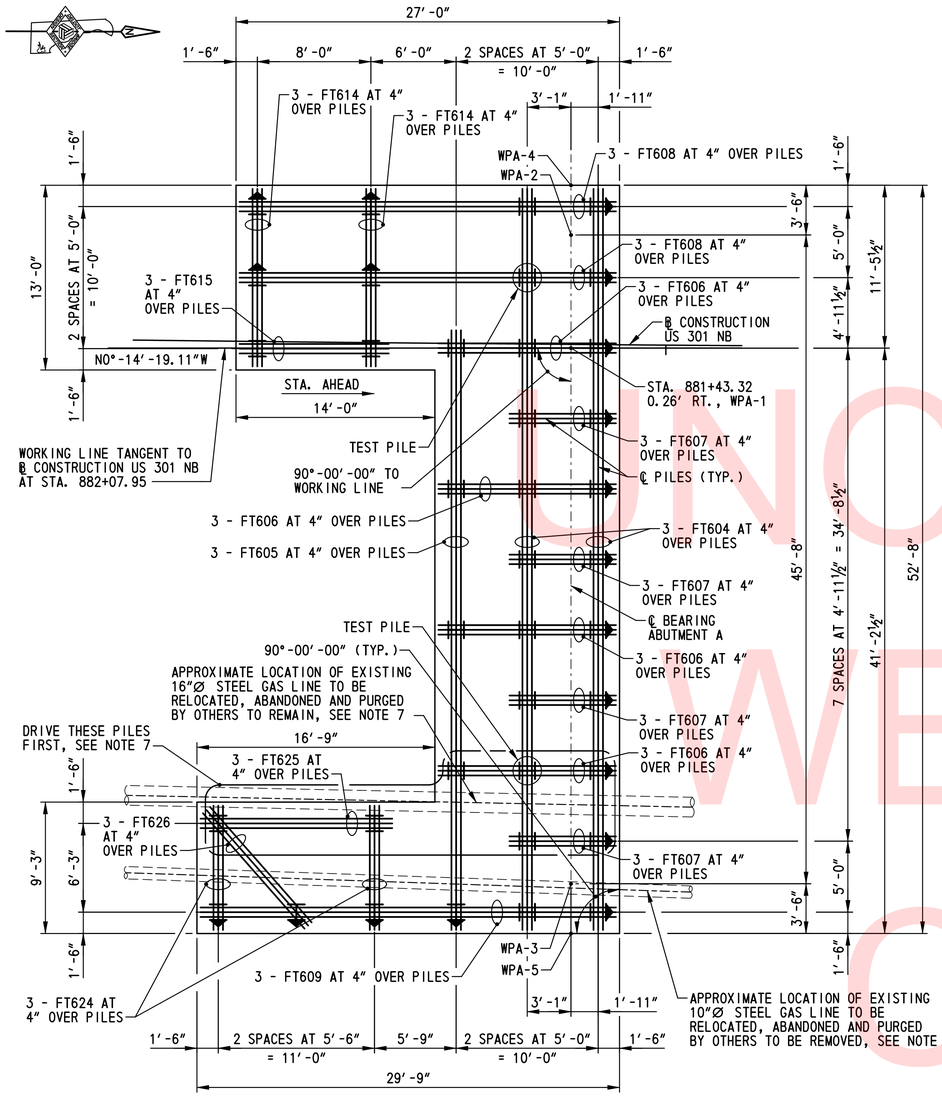

ABUTMENT A

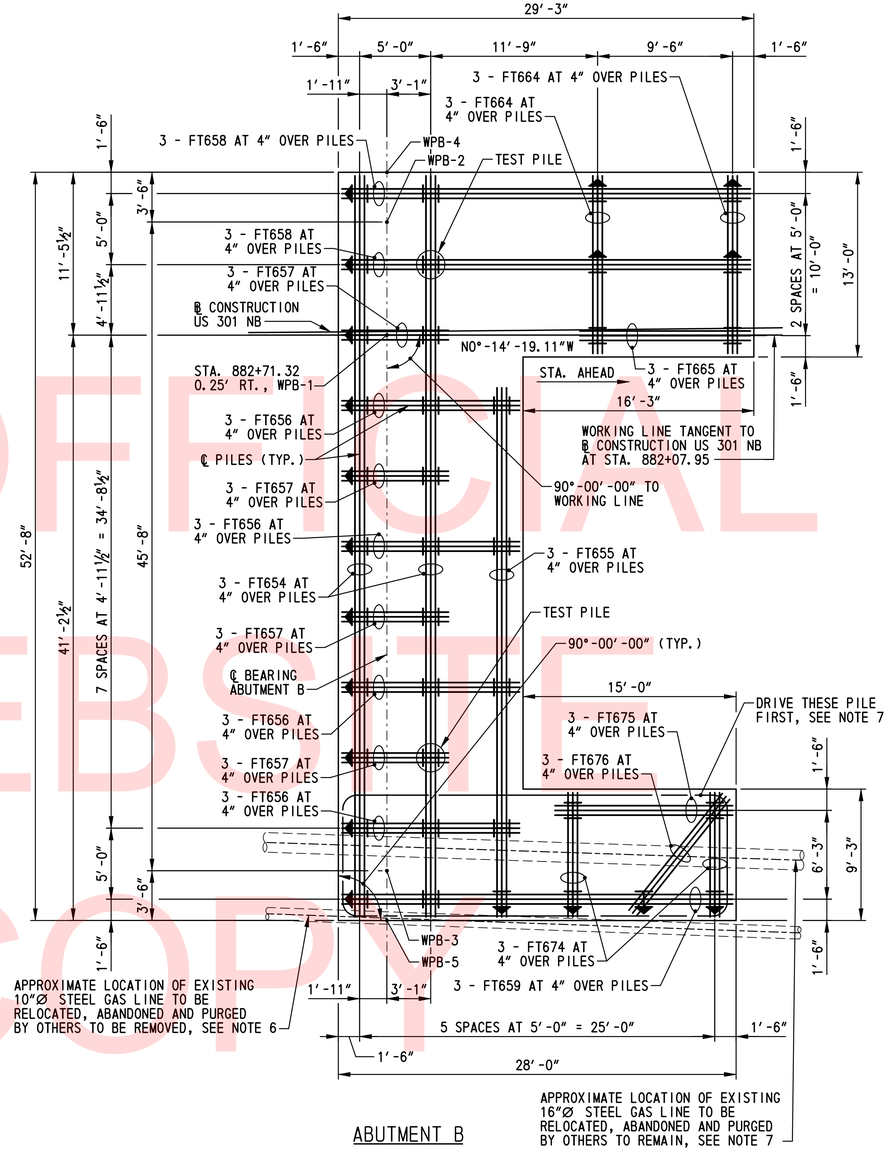

ABUTMENT B

PILE LAYOUT PLAN

SCALE: 1/16"=1'-0"

PILE LEGEND:

1. I DENOTES PLUMB HP 14x73 PILE AND ORIENTATION OF PILE STRONG AXIS.
2. DENOTES 3:12 BATTERED PILE AND DIRECTION OF BATTER
3. (I) DENOTES HP 14x73 TEST PILE AND LOCATION OF DYNAMIC PILE TESTING.

PILE NOTES:

1. THE FACTORED RESISTANCE OF THE HP 14x73 STEEL PILING IS 125 TONS. PILES SHALL BE DRIVEN AND TESTED IN CONFORMANCE WITH THE SPECIAL PROVISIONS FOR DYNAMIC PILE TESTING TO A NOMINAL PILE DRIVING RESISTANCE OF 235 TONS.
2. PILES SHALL BE DRIVEN TO THE DRIVING CRITERIA DEVELOPED FROM DYNAMIC PILE TESTING AND AS SPECIFIED BY THE ENGINEER TO ACHIEVE A NOMINAL PILE DRIVING RESISTANCE OF 235 TONS AND TO THE SPECIFIED MINIMUM TIP ELEVATION. PILES MEETING THE AFOREMENTIONED CRITERIA WILL BE CONSIDERED SATISFACTORY.
3. THE CONTRACTOR SHALL BE RESPONSIBLE FOR SUBMITTING A WAVE EQUATION ANALYSIS AND ALL OTHER INCIDENTALS IN ACCORDANCE WITH THE SPECIAL PROVISIONS. THE WAVE EQUATION ANALYSIS AND DYNAMIC PILE TESTING MUST BE SIGNED AND SEALED BY A REGISTERED PROFESSIONAL ENGINEER LICENSED IN THE STATE OF DELAWARE IN ACCORDANCE WITH THE SPECIAL PROVISIONS. UPON COMPLETION OF THE DYNAMIC PILE TESTING, THE CONTRACTOR SHALL SUBMIT A SIGNAL MATCHING ANALYSIS TO THE ENGINEER FOR REVIEW AND APPROVAL IN ACCORDANCE WITH THE SPECIAL PROVISIONS.
4. ALL TEST PILES SHALL BE 10 FEET LONGER THAN THE PILE LENGTH COMPUTED FROM THE PILE TIP DATA TABLE. PILE LENGTHS FOR ORDERING PURPOSES SHALL BE DETERMINED BY THE TEST PILES. DYNAMIC PILE TESTING AND SIGNAL MATCHING ANALYSIS SHALL BE COMPLETED BY THE CONTRACTOR IN ACCORDANCE WITH THE SPECIAL PROVISIONS. TEST AND PRODUCTION PILE RESTRIKES WILL BE PAID FOR AS FOLLOWS:
   A. ALL TEST PILES WILL BE RESTRUCK AFTER A WAITING PERIOD OF AT LEAST 48 HOURS. TEST PILE RESTRIKES SHALL BE INCIDENTAL TO THE INITIAL INSTALLATION OF THE PILE PROVIDED THEY ARE REQUESTED WITHIN FIVE WORKING DAYS FROM THE COMPLETION OF THE INITIAL DRIVE. IF RESTRIKES ARE REQUESTED AFTER FIVE WORKING DAYS FROM THE COMPLETION OF THE INITIAL DRIVE, THEN THE TEST PILE RESTRIKE SHALL BE PAID FOR IN ACCORDANCE WITH THE SPECIAL PROVISIONS.
   B. IF DIRECTED BY THE ENGINEER TO RESTRIKE A PRODUCTION PILE, THE RESTRIKE OF THE PRODUCTION PILE SHALL BE PAID SEPARATELY UNDER ITEM NO. 619501 - PRODUCTION PILE RESTRIKE.
5. THE DEPARTMENT RESERVES THE RIGHT TO PERFORM DYNAMIC PILE TESTING OF RESTRIKES.
6. PORTION OF EXISTING 10" DIAMETER STEEL GAS LINE SHALL BE REMOVED TO WITHIN 5 FEET MINIMUM OF THE PROPOSED ABUTMENT FOOTING PRIOR TO PILE INSTALLATION. COST OF EXISTING GAS LINE REMOVAL SHALL BE PAID UNDER TO ITEM 211000 - REMOVAL OF STRUCTURES AND OBSTRUCTIONS.
7. THE EXISTING 16" DIAMETER STEEL GAS LINE IS LOCATED APPROXIMATELY 32 FEET BELOW THE TOP OF PILE AT ABUTMENT A AND 40 FEET BELOW THE TOP OF PILE AT ABUTMENT B. IF PILE DRIVING REFUSAL IS ENCOUNTERED ON THE EXISTING GAS LINE, THE PILE SHALL BE EXTRACTED AND REPLACED IN A REVISED LOCATION DETERMINED AT THE DISCRETION OF THE ENGINEER. PILE DRIVING REFUSAL IS DEFINED AS GREATER THAN 10 BLOWS PER INCH. THE PILES ADJACENT TO THE EXISTING 16" DIAMETER GAS LINE SHALL BE DRIVEN BEFORE ANY OF THE OTHER PRODUCTION PILES AT THE ABUTMENT. THE COST OF PILE EXTRACTION SHALL BE INCIDENTAL TO THE PILE INSTALLATION ITEM.

PILE TIP DATA

	DESIGN DATA		ACTUAL FIELD DATA	
SUBSTRUCTURE UNIT	ESTIMATED TIP ELEVATION	MINIMUM TIP ELEVATION	AVERAGE ACTUAL MINIMUM TIP ELEVATION	AVERAGE ACTUAL MAXIMUM TIP ELEVATION
ABUTMENT A	-74.0	-32.0		
ABUTMENT B	-74.0	-32.0		

ABUTMENT A PILE DRIVING INFORMATION

PILE SIZE AND TYPE: HP 14x73

ACTUAL BEARING OBTAINED:

HAMMER TYPE:

PILE HAMMER ENERGY: 50,000 LB-FT TO 90,000 LB-FT

SPECIAL DRIVING CONDITIONS AND COMMENTS:

ABUTMENT B PILE DRIVING INFORMATION

PILE SIZE AND TYPE: HP 14x73

ACTUAL BEARING OBTAINED:

HAMMER TYPE:

PILE HAMMER ENERGY: 50,000 LB-FT TO 90,000 LB-FT

SPECIAL DRIVING CONDITIONS AND COMMENTS:

UNOFFICIAL WEBSITE COPY

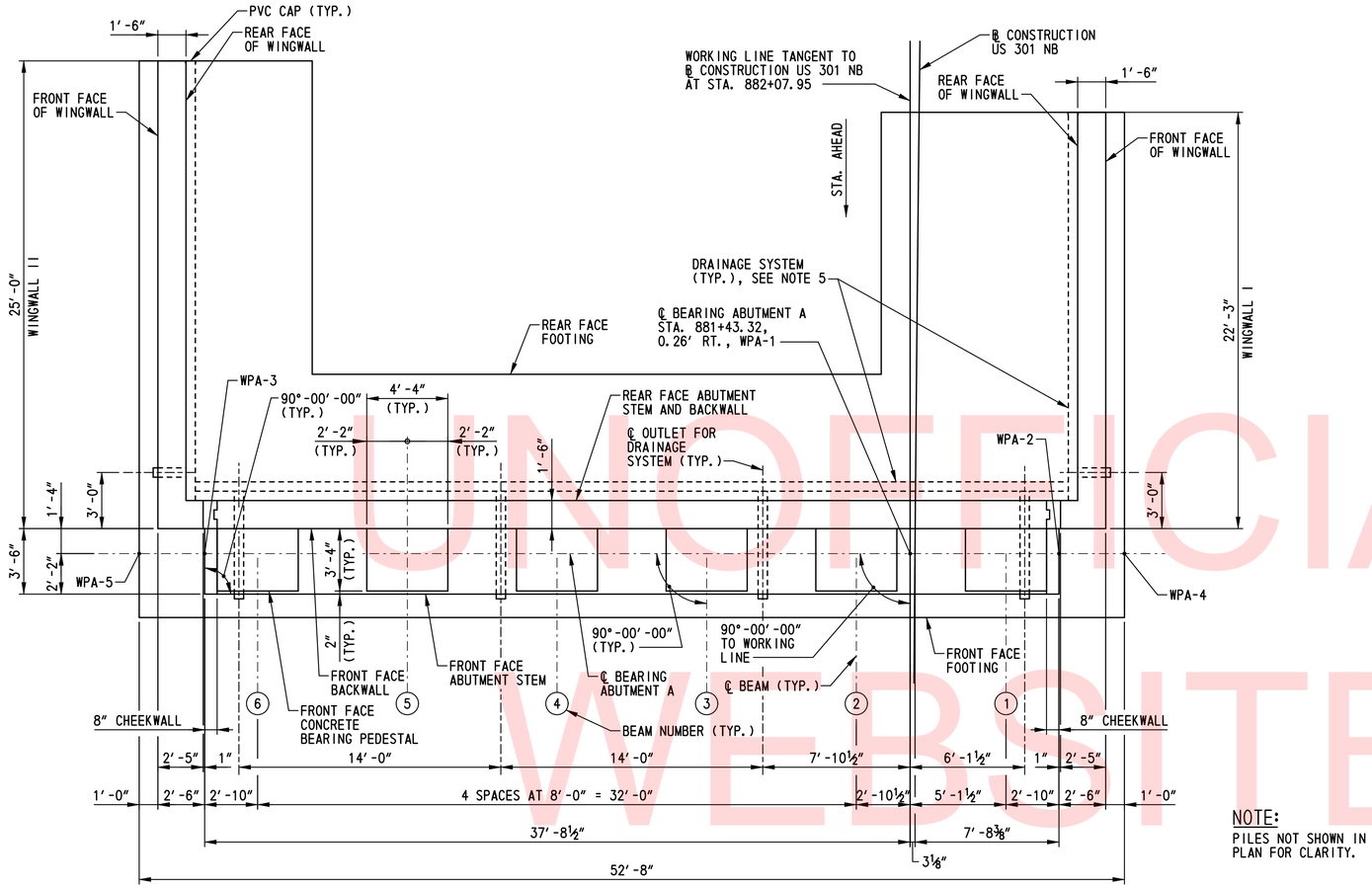

PLAN

SCALE: ¼″=1′-0″

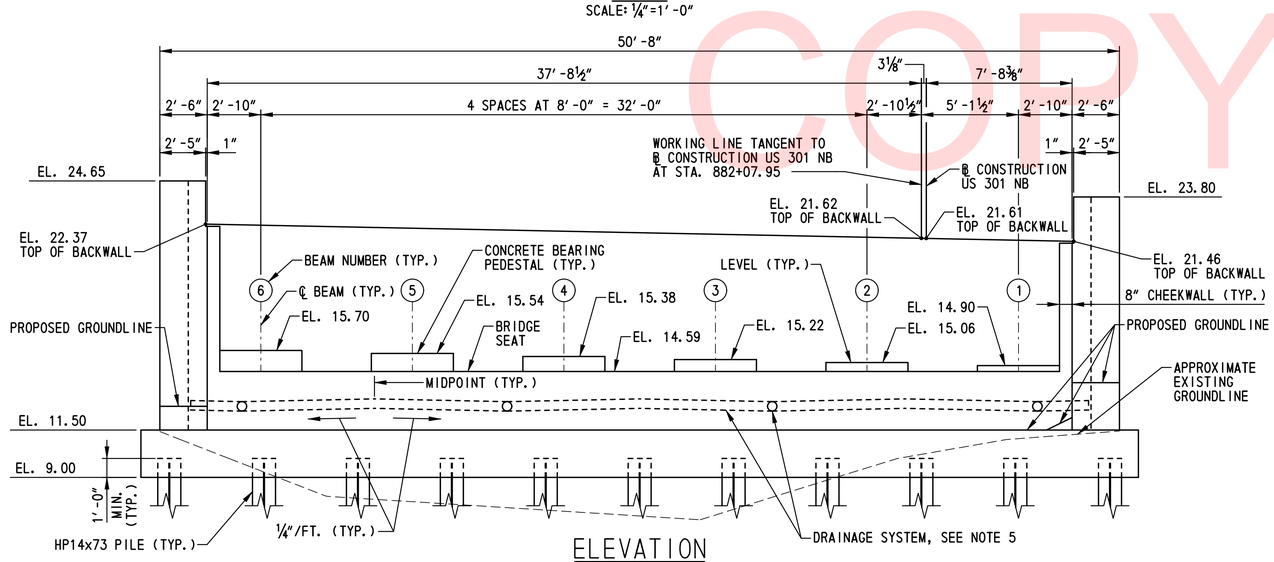

ELEVATION

SCALE: ¼″=1′-0″

NOTE:
PILES NOT SHOWN IN PLAN FOR CLARITY.

NOTES:
1. FOR PILE LAYOUT, SEE DWG. NO. PL-01.
2. FOR ABUTMENT A TYPICAL SECTION, SEE DWG. NO. AB-02.
3. FOR WINGWALL ELEVATIONS, SEE DWG. NO. WW-01.
4. FOR WINGWALL TYPICAL SECTIONS, SEE DWG. NO. WW-02.
5. FOR DRAINAGE SYSTEM DETAILS, SEE DWG. NO. AB-02.

UNOFFICIAL WEBSITE COPY

N:\31653-000\Contract 1B\CADD\Bridge\Br_No2\AB01_br1-2.dgn
2/5/2013 7:55:27 AM

DELAWARE DEPARTMENT OF TRANSPORTATION	ADDENDUMS / REVISIONS	SCALE: AS SHOWN	US 301 & SR 1 INTERCHANGE	CONTRACT T200911302	BRIDGE NO. 1-432	ABUTMENT A PLAN AND ELEVATION	BR1-6 AB-01
				COUNTY NEW CASTLE	DESIGNED BY: A.J.F.		SHEET NO. 157
					CHECKED BY: P.S.D.		TOTAL SHTS. 491

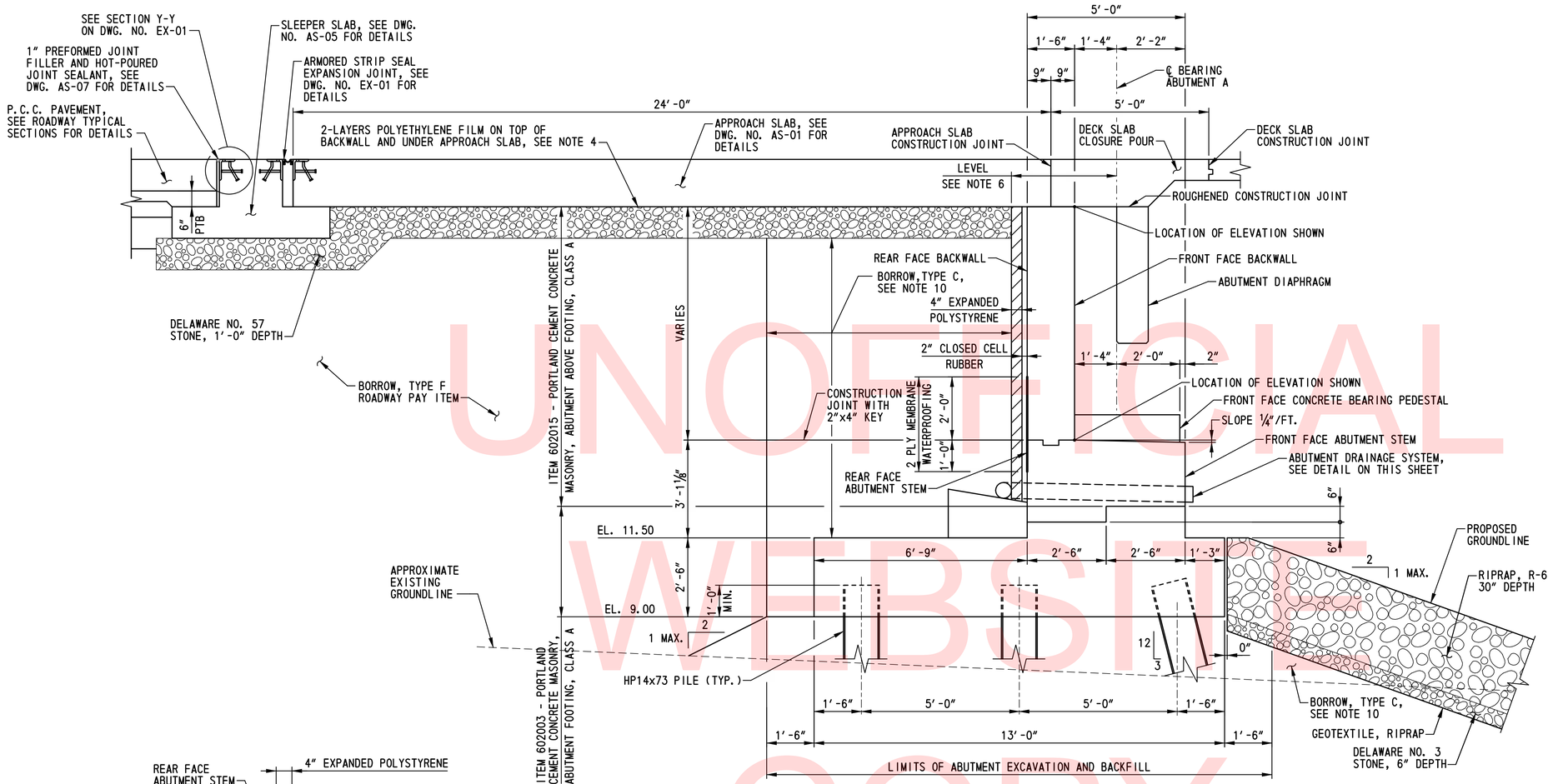

ABUTMENT A TYPICAL SECTION

SCALE: ½"=1'-0"

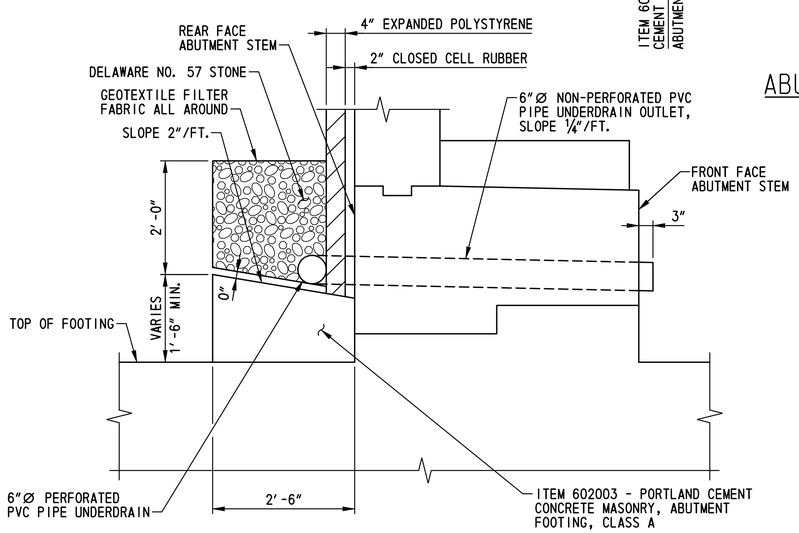

ABUTMENT DRAINAGE SYSTEM DETAIL

SCALE: ¾"=1'-0"

SEQUENCE OF CONSTRUCTION

1. DRIVE STEEL H-PILES AND POUR THE ABUTMENT TO THE REQUIRED BRIDGE SEAT ELEVATION. POUR CONCRETE BEARING PEDESTALS AND BACKWALL.
2. SET BEAMS ON THE BEARINGS AND ANCHOR TO THE ABUTMENTS VIA ANCHOR BOLTS.
3. AFFIX THE WATERPROOFING MEMBRANE, CLOSED CELL RUBBER AND EXPANDED POLYSTYRENE PER MANUFACTURER'S RECOMMENDATIONS TO THE REAR FACE OF THE ABUTMENT STEM AND BACKWALL. PLACE BORROW, TYPE C AND DELAWARE NO. 57 STONE AS SHOWN.
4. POUR SLEEPER SLAB AND PLACE TWO LAYERS OF POLYETHYLENE FILM ON THE PREPARED SUBGRADE AS SHOWN.
5. POUR THE BRIDGE DECK SLAB AND APPROACH SLAB. SEE DECK SLAB POURING SEQUENCE ON DWG. NO. DK-01 FOR DETAILS.

NOTES:

1. FOR PILE LAYOUT, SEE DWG. NO. PL-01.
2. FOR ABUTMENT A PLAN AND ELEVATION, SEE DWG. NO. AB-01.
3. SLEEPER SLABS SHALL BE CAREFULLY POURED AFTER COMPACTION OF THE ABUTMENT EMBANKMENT MATERIAL IN CONFORMANCE WITH SECTION 202 - EXCAVATION AND EMBANKMENT. SLEEPER SLABS SHALL BE FOUNDED ON UNDISTURBED COMPACTED MATERIAL. NO LOOSE BACKFILL WILL BE ALLOWED.
4. THE TOP SURFACE OF THE DELAWARE NO. 57 STONE SHALL BE ACCURATELY CONTROLLED TO FOLLOW AND BE PARALLEL TO THE PROPOSED APPROACH SLAB GRADE AND CROSS SLOPE. TWO LAYERS OF WHITE OPAQUE POLYETHYLENE FILM SHALL BE PLACED ON THE FINISHED SUBGRADE FOR THE FULL WIDTH AND LENGTH OF THE APPROACH SLAB PRIOR TO PLACING ANY REINFORCEMENT. THE WHITE OPAQUE POLYETHYLENE FILM SHALL BE PLACED WITH 2'-0" MINIMUM LAPS AND SHALL EXTEND TO THE FRONT FACE OF BACKWALL. COST SHALL BE INCIDENTAL TO ITEM 602014 - PORTLAND CEMENT CONCRETE MASONRY, APPROACH SLAB, CLASS D.
5. TOP OF BACKWALL SHALL BE STEEL TROWEL FINISHED. TWO LAYERS OF WHITE POLYETHYLENE FILM SHALL BE PLACED ON TOP OF THE BACKWALLS PRIOR TO PLACEMENT OF THE APPROACH AND DECK SLAB REINFORCEMENT. THE FILM SHALL BE FASTENED TO THE FRONT FACE OF THE BACKWALL AND LAPPED 2'-0" MINIMUM WITH THE FILM PLACED ON THE FINISHED SUBGRADE FOR THE APPROACH SLAB. COST SHALL BE INCIDENTAL TO ITEM 602014 - APPROACH SLAB, CLASS D.
6. TOP OF BACKWALL SHALL BE LEVEL PARALLEL TO THE WORKING LINE.
7. WHITE OPAQUE POLYETHYLENE FILM SHALL CONFORM TO ASTM C 171.
8. CLOSED CELL RUBBER SHALL CONFORM TO ASTM D 1056, TYPE 2, CLASS B, GRADE 3. COST SHALL BE INCIDENTAL TO ITEM 602015 - PORTLAND CEMENT CONCRETE MASONRY, ABUTMENT ABOVE FOOTING, CLASS A.
9. EXPANDED POLYSTYRENE SHALL CONFORM TO ASTM C 578, TYPE IV. COST SHALL BE INCIDENTAL TO ITEM 602015 - PORTLAND CEMENT CONCRETE MASONRY, ABUTMENT ABOVE FOOTING, CLASS A.
10. BORROW, TYPE C SHALL BE OBTAINED FROM BORROW SOURCES AND PAID UNDER ITEM 202000 - EXCAVATION AND EMBANKMENT.
11. MEMBRANE WATERPROOFING SHALL BE INCIDENTAL TO ITEM 602015 - PORTLAND CEMENT CONCRETE MASONRY, ABUTMENT ABOVE FOOTING, CLASS A. SEE SPECIAL PROVISION ITEM 602616 FOR ADDITIONAL REQUIREMENTS.

DRAINAGE SYSTEM NOTES:

1. COST OF PVC PIPE UNDERDRAIN, DELAWARE NO. 57 STONE, GEOTEXTILE FILTER FABRIC, BAR REINFORCEMENT, AND THREADED COUPLERS SHALL BE INCIDENTAL TO ITEM 602015 - PORTLAND CEMENT CONCRETE MASONRY, ABUTMENT ABOVE FOOTING, CLASS A.
2. PERFORATED AND NON-PERFORATED PVC PIPE UNDERDRAIN SHALL CONFORM TO ASTM F75B, TYPE PS 28.
3. GEOTEXTILE FILTER FABRIC SHALL CONFORM TO AASHTO M 288, CLASS 2.

UNOFFICIAL WEBSITE COPY

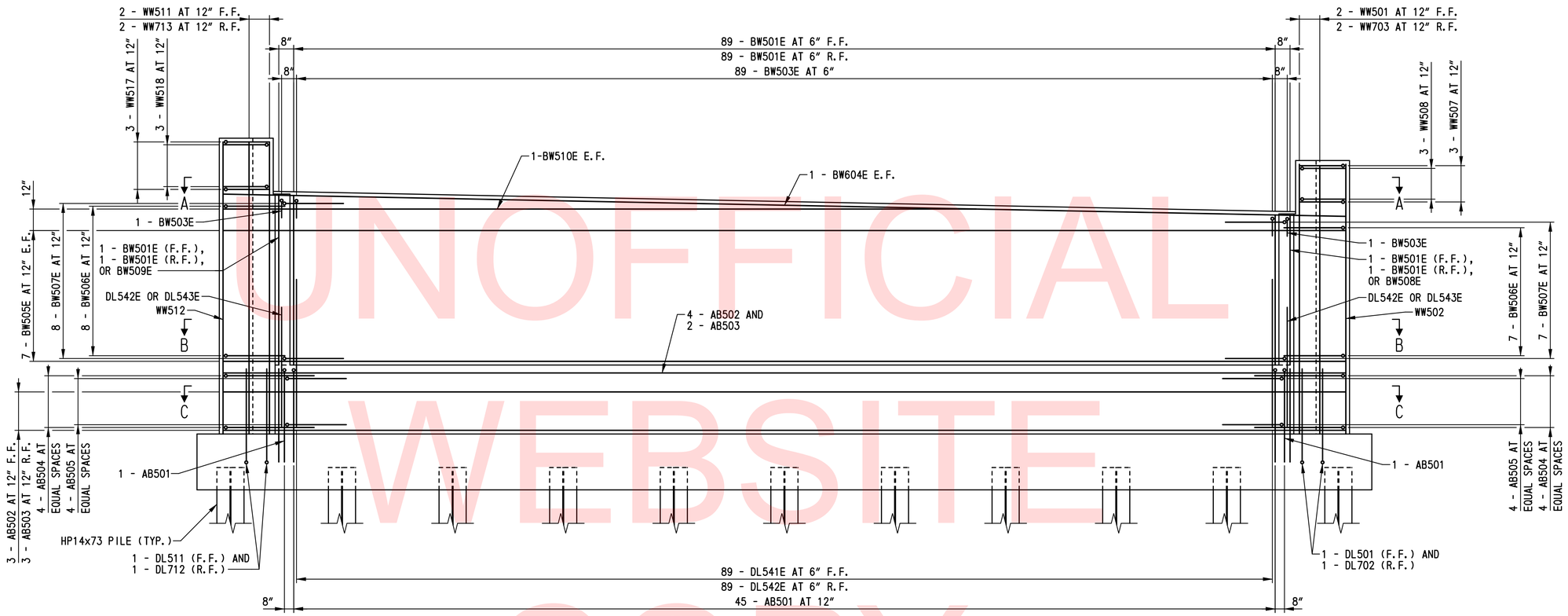

ABUTMENT A REINFORCEMENT ELEVATION

SCALE: 3/8"=1'-0"

UNOFFICIAL WEBSITE COPY

NOTES:

1. CONCRETE BEARING PEDESTALS NOT SHOWN FOR CLARITY. FOR REINFORCEMENT IN CONCRETE BEARING PEDESTALS SEE DWG. NO. AB-06.
2. FOR ADDITIONAL REINFORCEMENT DETAILS, SEE DWG. NOS. AB-04 TO AB-06.
3. REINFORCING STEEL IN FOOTING NOT SHOWN FOR CLARITY. FOR ADDITIONAL INFORMATION, SEE DWG. NOS. AB-05 AND PL-01.
4. F.F. = FRONT FACE
   R.F. = REAR FACE
   E.F. = EACH FACE

BR1-2
AB-03

DELAWARE DEPARTMENT OF TRANSPORTATION	ADDENDUMS / REVISIONS	SCALE: AS SHOWN	US 301 & SR 1 INTERCHANGE	CONTRACT T200911302	BRIDGE NO. 1-432	ABUTMENT A REINFORCEMENT ELEVATION	SHEET NO. 159
				COUNTY NEW CASTLE	DESIGNED BY: A.J.F.		TOTAL SHTS. 491
					CHECKED BY: P.S.D.		

N:\31653-000\Contract 1B\CADD\Bridge\Br_No2\AB03_br1-2.dgn
2/5/2013 8:10:18 AM

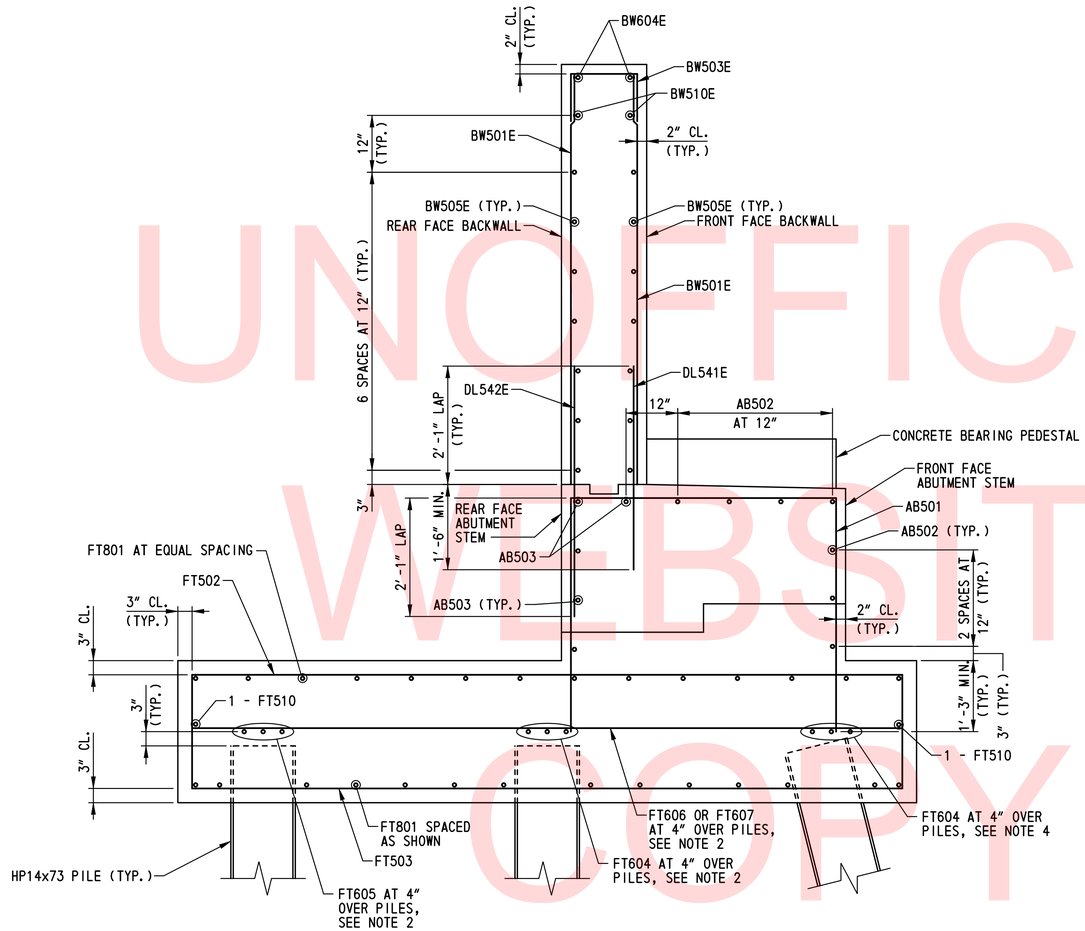

ABUTMENT A REINFORCEMENT TYPICAL SECTION

SCALE: ¾"=1'-0"

NOTES:

1. CONCRETE BEARING PEDESTAL REINFORCEMENT NOT SHOWN FOR CLARITY. FOR ADDITIONAL INFORMATION, SEE DWG. NO. AB-06.
2. FOR PILE LAYOUT AND REINFORCEMENT OVER PILES, SEE DWG. NO. PL-01.
3. FOR ADDITIONAL FOOTING REINFORCEMENT DETAILS, SEE DWG. NO. AB-05.
4. FOR ADDITIONAL REINFORCEMENT DETAILS, SEE DWG. NOS. AB-03, AB-05 AND AB-06.

UNOFFICIAL WEBSITE COPY

N:\33653-000\Contract 1B\CADD\Bridge\Br_Nc2\AB04_br1-2.dgn
2/5/2013 8:10:42 AM

DELAWARE DEPARTMENT OF TRANSPORTATION	ADDENDUMS / REVISIONS	SCALE: AS SHOWN	US 301 & SR 1 INTERCHANGE	CONTRACT T200911302	BRIDGE NO. 1-432	ABUTMENT A REINFORCEMENT TYPICAL SECTION	BR1-2 AB-04
				COUNTY NEW CASTLE	DESIGNED BY: A.J.F.		SHEET NO. 160
					CHECKED BY: P.S.D.		TOTAL SHTS. 491

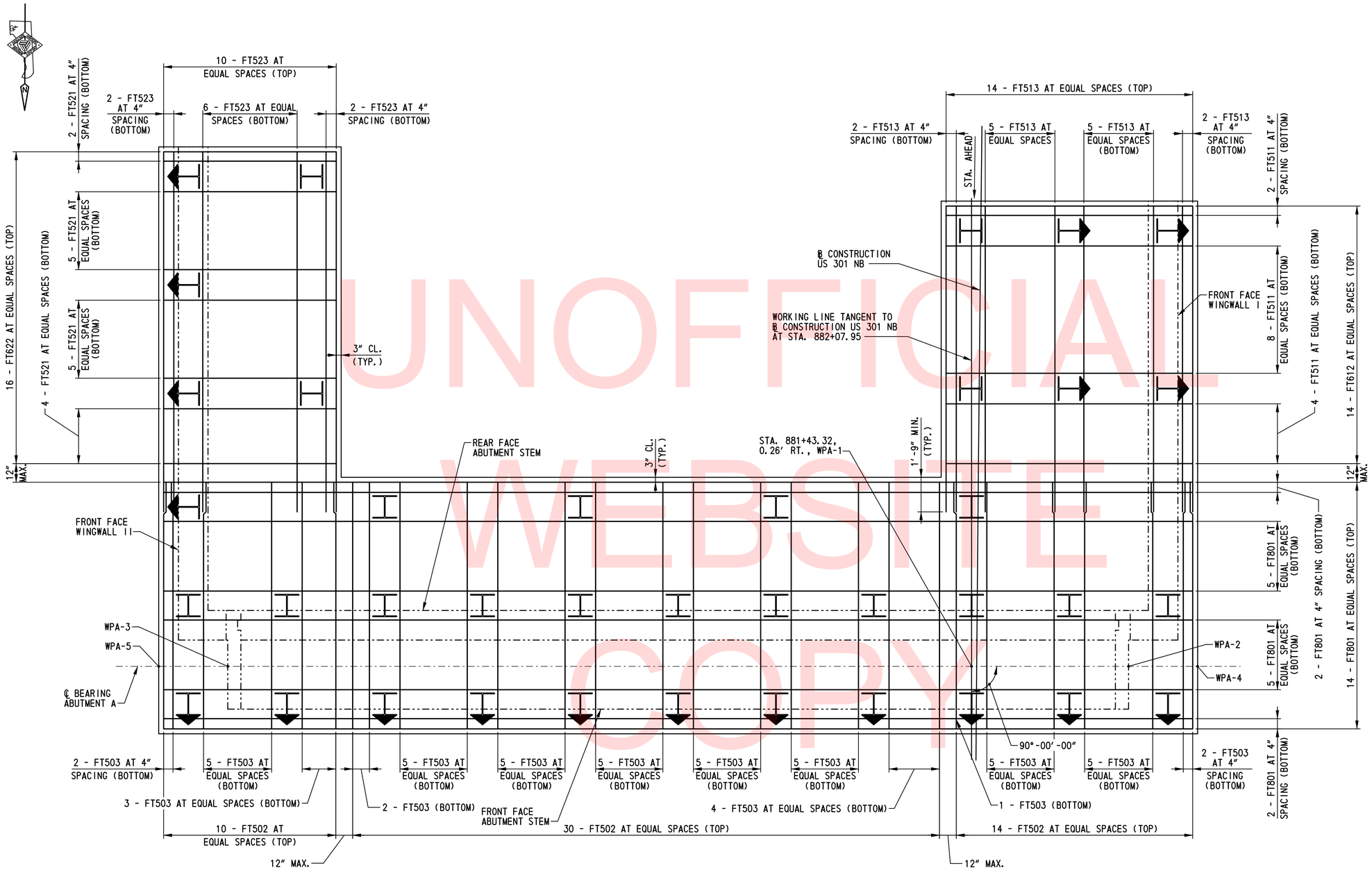

ABUTMENT A FOOTING REINFORCEMENT PLAN

SCALE: 3/8"=1'-0"

NOTES:

1. REINFORCEMENT OVER PILES NOT SHOWN FOR CLARITY. SEE DRAWING NO. PL-01 FOR ADDITIONAL INFORMATION.
2. SEE ABUTMENT REINFORCEMENT TYPICAL SECTION ON DWG. NO. AB-04 AND WINGWALL REINFORCEMENT TYPICAL SECTIONS ON DWG. NO. WW-04 FOR ADDITIONAL INFORMATION.
3. ALL REINFORCEMENT SHALL HAVE 1½" MINIMUM CLEAR TO PILES.

UNOFFICIAL WEBSITE COPY

N:\31653-000\Contract 1B\CADD\Bridge\Br_No2\AB05_br1-2.dgn
2/5/2013 8:11:15 AM

DELAWARE DEPARTMENT OF TRANSPORTATION	ADDENDUMS / REVISIONS	SCALE: AS SHOWN	US 301 & SR 1 INTERCHANGE	CONTRACT T200911302	BRIDGE NO. 1-432	ABUTMENT A FOOTING REINFORCEMENT PLAN	BR1-2 AB-05
				COUNTY NEW CASTLE	DESIGNED BY: A.J.F.		SHEET NO. 161
					CHECKED BY: P.S.D.		TOTAL SHTS. 491

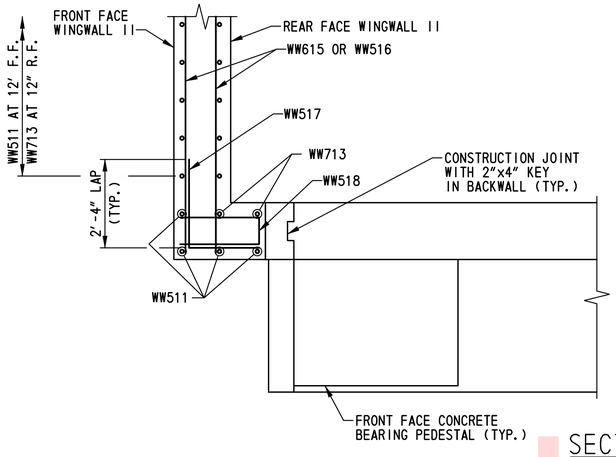

SECTION A-A
SCALE: ½"=1'-0"

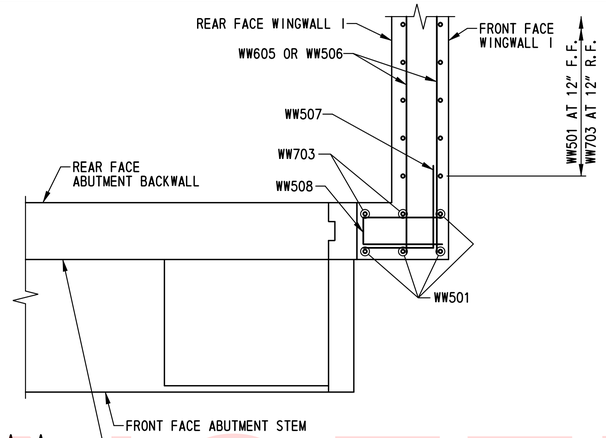

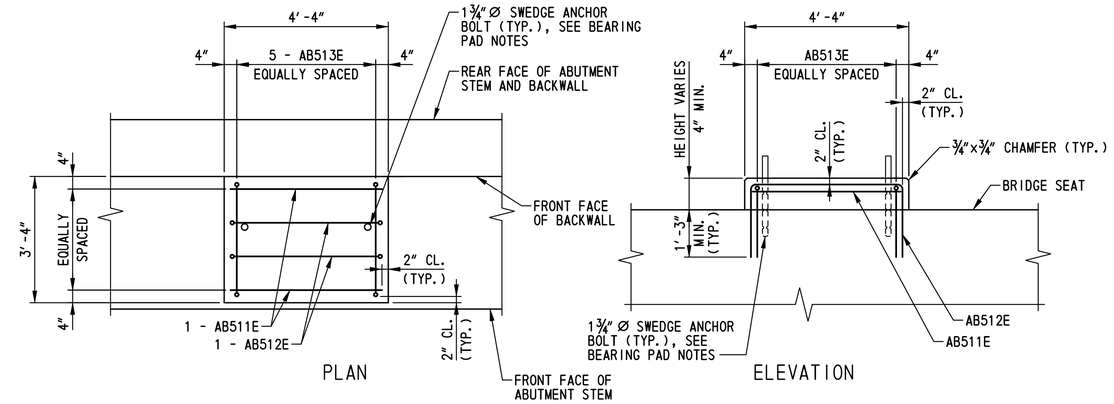

ABUTMENT A CONCRETE BEARING PEDESTAL DETAILS
SCALE: ½"=1'-0"

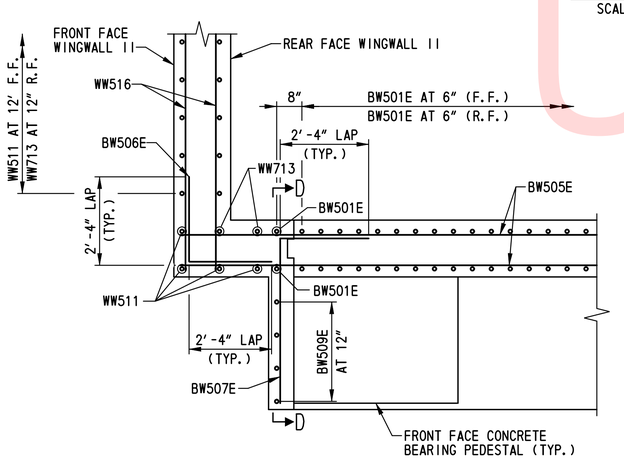

SECTION B-B
SCALE: ½"=1'-0"

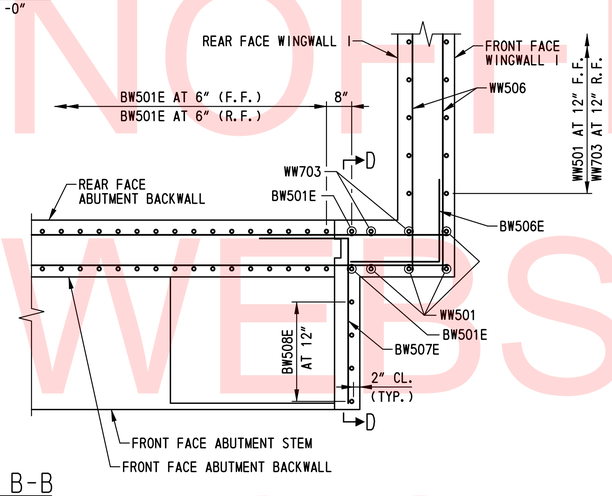

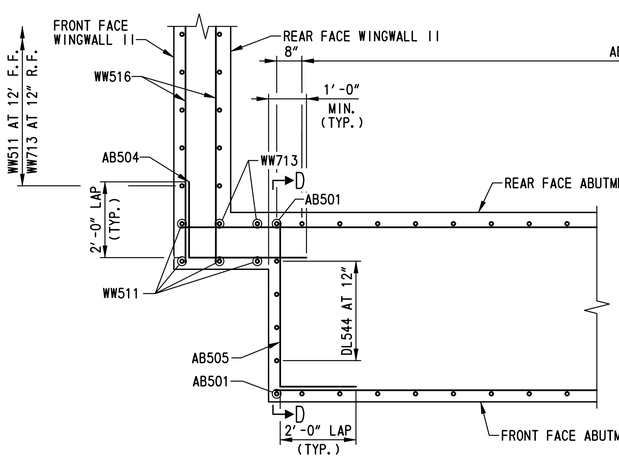

SECTION C-C
SCALE: ½"=1'-0"

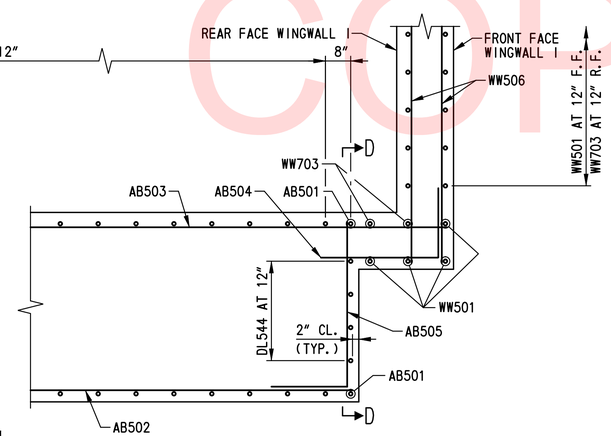

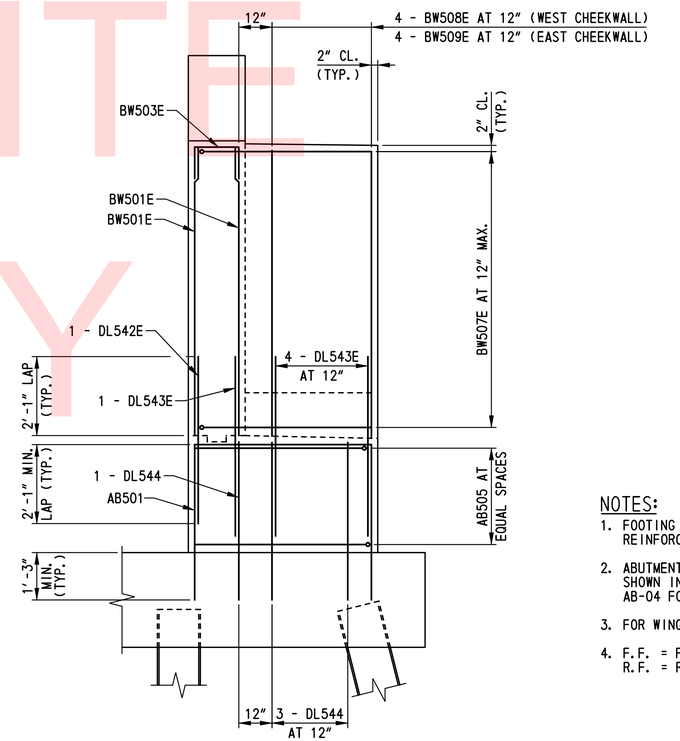

SECTION D-D
SCALE: ½"=1'-0"

BEARING PAD NOTES:

1. FOR ANCHOR BOLT DIMENSIONS AND LOCATION, SEE DWG. NO. BB-01.
2. ANCHOR BOLTS SHALL BE CAST IN PLACE. A TEMPORARY CASTING TEMPLATE SHALL BE USED TO ENSURE THE ANCHOR BOLTS ARE PROPERLY ALIGNED AND PLUMB. THE TEMPLATE SHALL BE REMOVED AFTER CONCRETE HAS SET.
3. SPACE REINFORCING STEEL AS NECESSARY TO CLEAR ANCHOR BOLTS.

NOTES:

1. FOOTING REINFORCEMENT NOT SHOWN FOR CLARITY. FOR FOOTING REINFORCEMENT, SEE DWG. NOS. AB-05 AND PL-01.
2. ABUTMENT STEM AND BACKWALL LONGITUDINAL REINFORCEMENT NOT SHOWN IN SECTION D-D FOR CLARITY. SEE DWG. NOS. AB-03 AND AB-04 FOR LONGITUDINAL REINFORCEMENT.
3. FOR WINGWALL REINFORCEMENT, SEE DWG. NOS. WW-03 AND WW-04.
4. F.F. = FRONT FACE
   R.F. = REAR FACE

UNOFFICIAL WEBSITE COPY

N:\31653-000\Contract 1B\CADD\Bridge\Br_No2\AB06_br1-2.dgn
2/5/2013 8:14:10 AM

DELAWARE DEPARTMENT OF TRANSPORTATION	ADDENDUMS / REVISIONS	SCALE: AS SHOWN	US 301 & SR 1 INTERCHANGE	CONTRACT T200911302	BRIDGE NO. 1-432	ABUTMENT A REINFORCEMENT DETAILS	BR1-2 AB-06
				COUNTY NEW CASTLE	DESIGNED BY: A.J.F.		SHEET NO. 162
					CHECKED BY: P.S.D.		TOTAL SHTS. 491

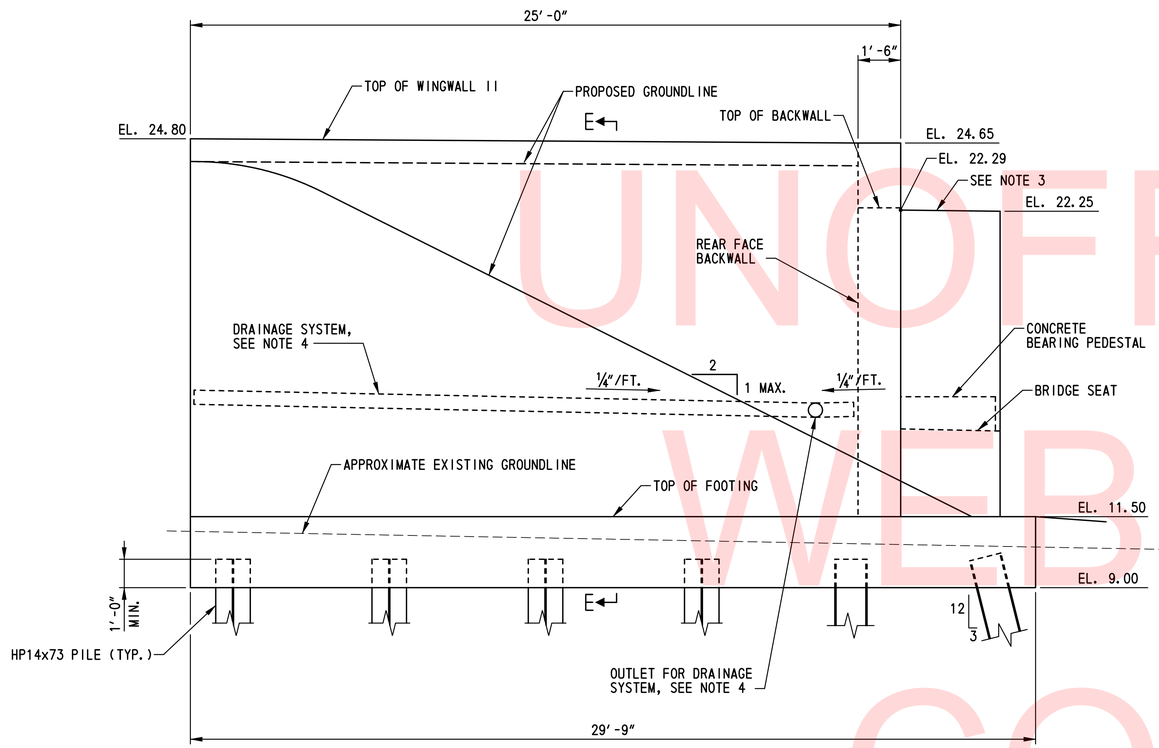

WINGWALL II ELEVATION

SCALE: ⅜″=1′-0″

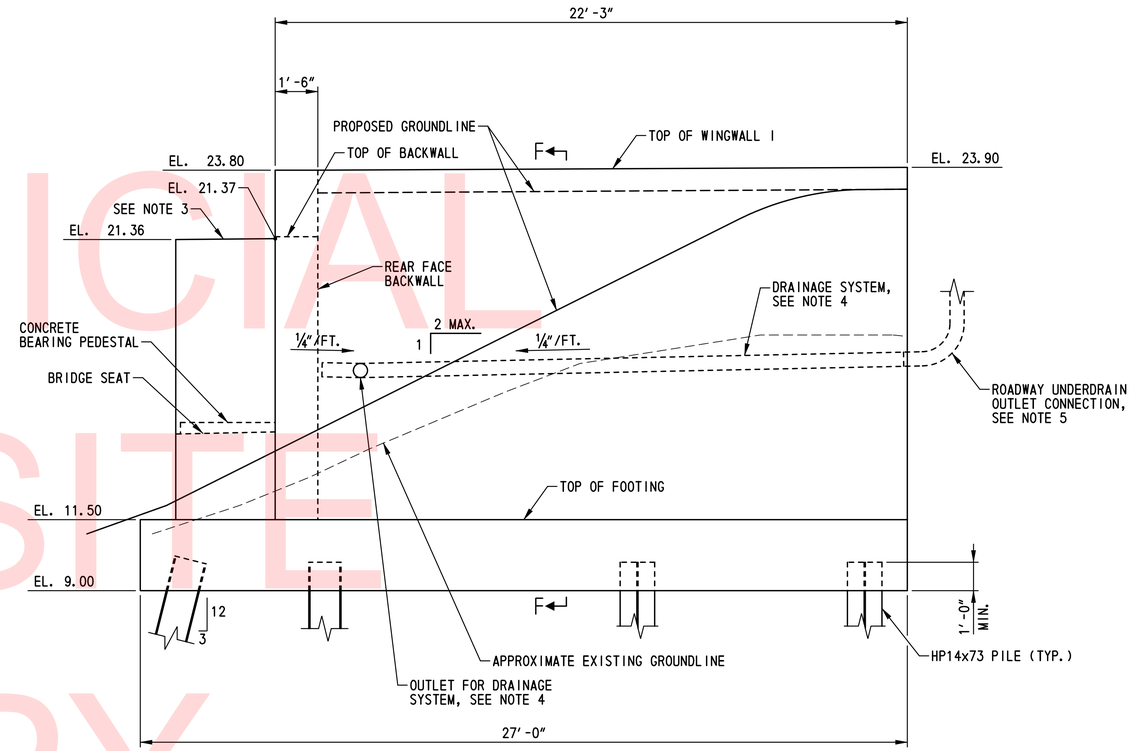

WINGWALL I ELEVATION

SCALE: ⅜″=1′-0″

UNOFFICIAL WEBSITE COPY

NOTES:

1. FOR TYPICAL SECTIONS E-E AND F-F, SEE DRAWING NO. WW-02.
2. FOR WINGWALL I AND II REINFORCEMENT ELEVATIONS, SEE DWG. NOS. WW-03.
3. TOP OF CHEEKWALL TO BE 1″ BELOW BOTTOM OF SUPERSTRUCTURE.
4. FOR DRAINAGE SYSTEM DETAILS, SEE DWG. NO. WW-02.
5. CONNECT ROADWAY UNDERDRAIN OUTLET TO WINGWALL DRAINAGE SYSTEM. COST OF UNDERDRAIN OUTLET CONNECTION SHALL BE INCIDENTAL TO ITEM 715001 - PERFORATED PIPE UNDERDRAINS, 6″. SEE DWG. NO. CP-08 FOR ADDITIONAL INFORMATION.

BR1-2
WW-01

DELAWARE DEPARTMENT OF TRANSPORTATION

ADDENDUMS / REVISIONS

SCALE: AS SHOWN

US 301 & SR 1 INTERCHANGE

CONTRACT	BRIDGE NO.	1-432
T200911302	DESIGNED BY: A.J.F.	
COUNTY		
NEW CASTLE	CHECKED BY: P.S.D.	

WINGWALL I AND II ELEVATIONS

SHEET NO. 163

TOTAL SHTS. 491

N:\36653-000\Contract 1B\CADD\Bridge\Br_No2\WW01_br1-2.dgn
2/5/2013 8:14:56 AM

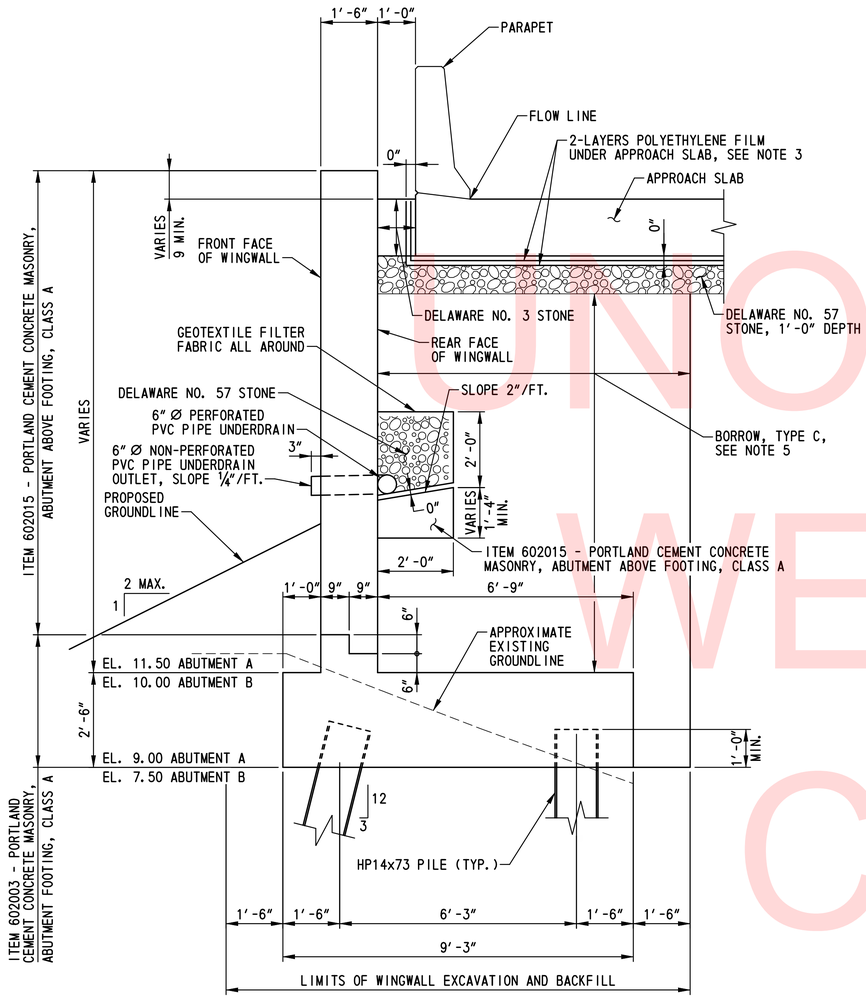

SECTION E-E
SCALE: ½″=1′-0″

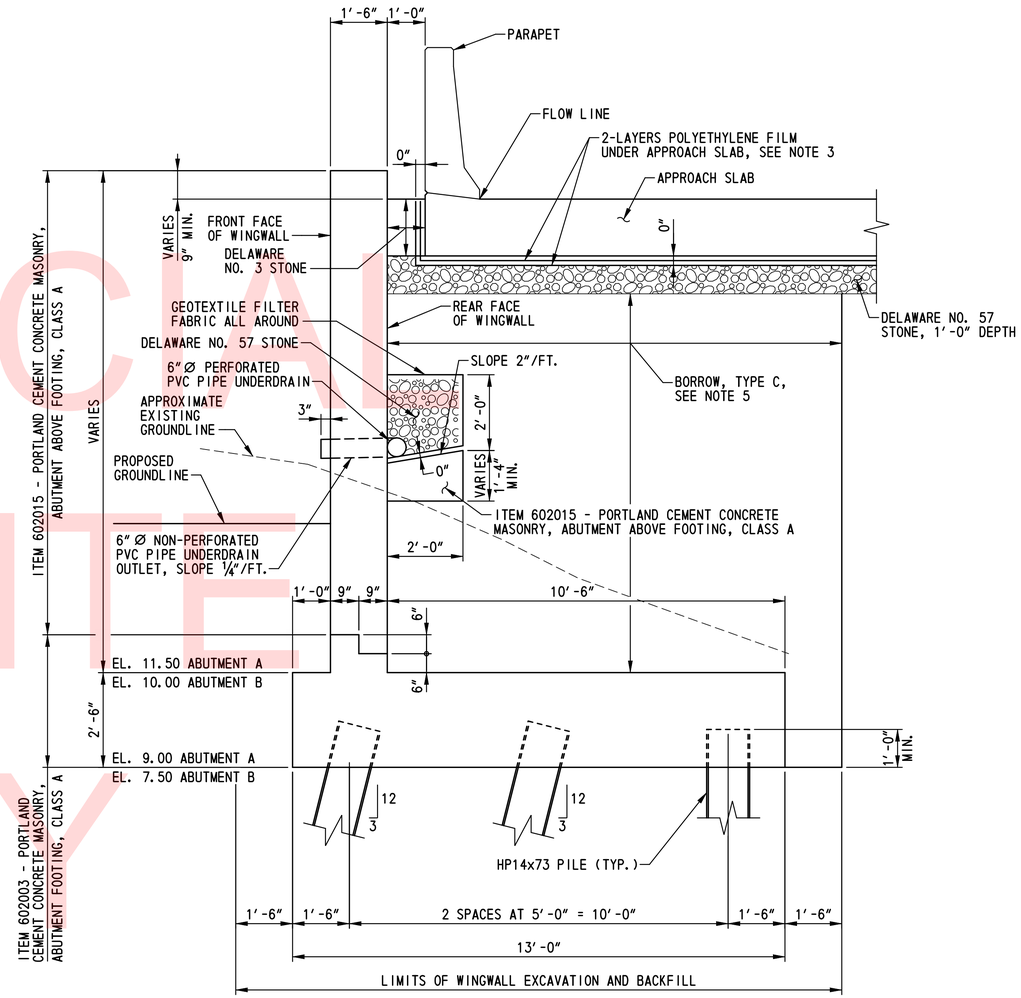

SECTION F-F
SCALE: ½″=1′-0″

NOTES:

1. FOR PILE LAYOUT, SEE DWG. NO. PL-01.
2. FOR WINGWALLS I AND II ELEVATION, SEE DWG. NO. WW-01.
   FOR WINGWALLS III AND IV ELEVATION, SEE DWG. NO. WW-05.
3. POLYETHYLENE FILM REQUIRED AT APPROACH SLAB A ONLY.
   FOR POLYETHYLENE FILM DETAILS, SEE DWG. NO. AB-02.
4. FOR ADDITIONAL DRAINAGE SYSTEM INFORMATION, SEE DWG. NO. AB-02.
5. BORROW, TYPE C SHALL BE OBTAINED FROM BORROW SOURCES AND PAID UNDER ITEM 202000 - EXCAVATION AND EMBANKMENT.

UNOFFICIAL WEBSITE COPY

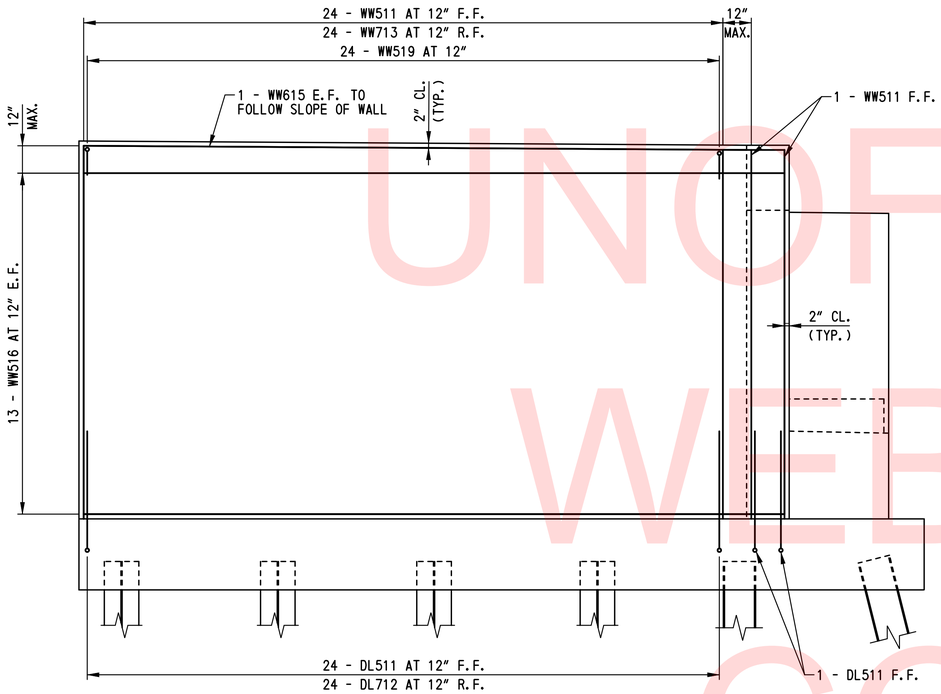

WINGWALL II REINFORCEMENT ELEVATION

SCALE: 3/8"=1'-0"

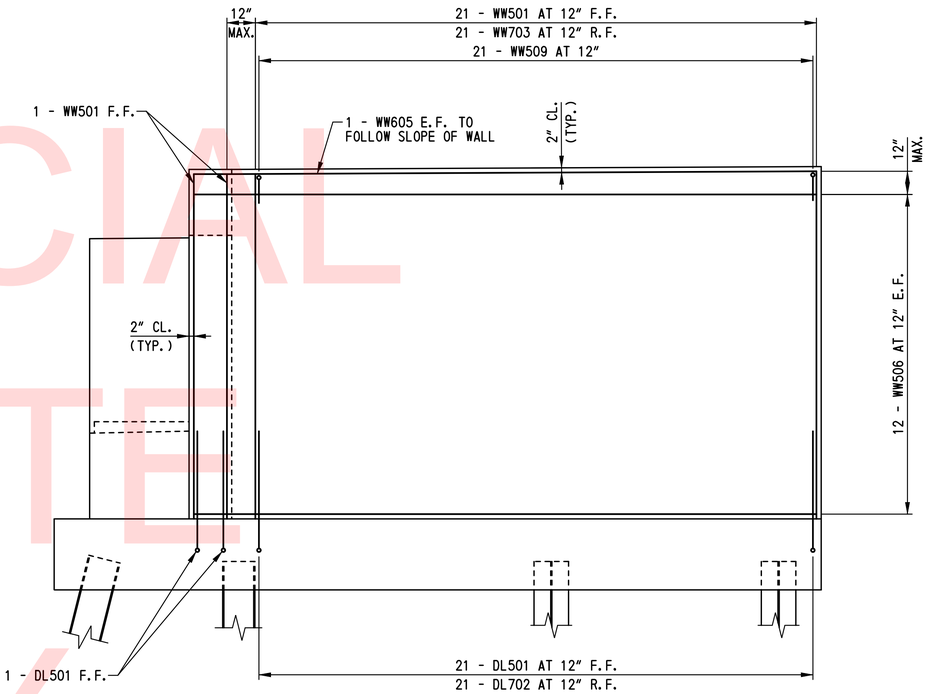

WINGWALL I REINFORCEMENT ELEVATION

SCALE: 3/8"=1'-0"

NOTES:

1. REINFORCING STEEL IN FOOTING NOT SHOWN FOR CLARITY. FOR ADDITIONAL INFORMATION, SEE DWG. NOS. AB-05 AND PL-01.
2. FOR ADDITIONAL REINFORCEMENT DETAILS, SEE DWG. NOS. AB-03 AND AB-06.
3. FOR WINGWALL REINFORCEMENT TYPICAL SECTIONS, SEE DWG. NO. WW-04.
4. F.F. = FRONT FACE
   R.F. = REAR FACE
   E.F. = EACH FACE

UNOFFICIAL WEBSITE COPY

N:\31653-000\Contract 1B\CADD\Bridge\Br_No2\WW03_br1-2.dgn
2/5/2013 8:15:49 AM

DELAWARE DEPARTMENT OF TRANSPORTATION	ADDENDUMS / REVISIONS	SCALE: AS SHOWN	US 301 & SR 1 INTERCHANGE	CONTRACT T200911302	BRIDGE NO. 1-432	WINGWALLS I & II REINFORCEMENT ELEVATIONS	BR1-2 WW-03
				COUNTY NEW CASTLE	DESIGNED BY: A.J.F.		SHEET NO. 165
					CHECKED BY: P.S.D.		TOTAL SHTS. 491

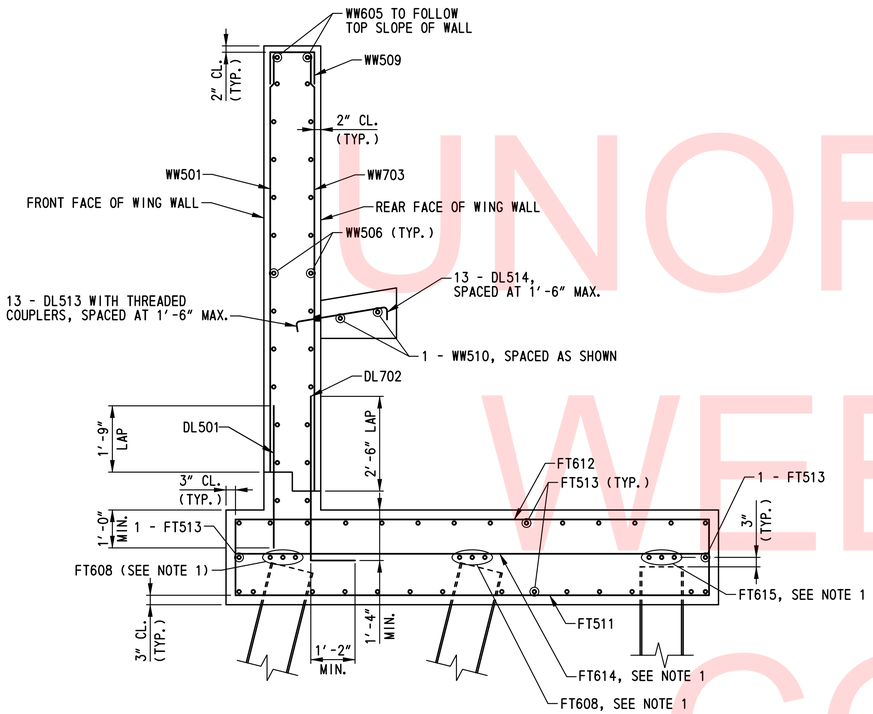

WINGWALL I REINFORCEMENT TYPICAL SECTION

SCALE: ½"=1'-0"

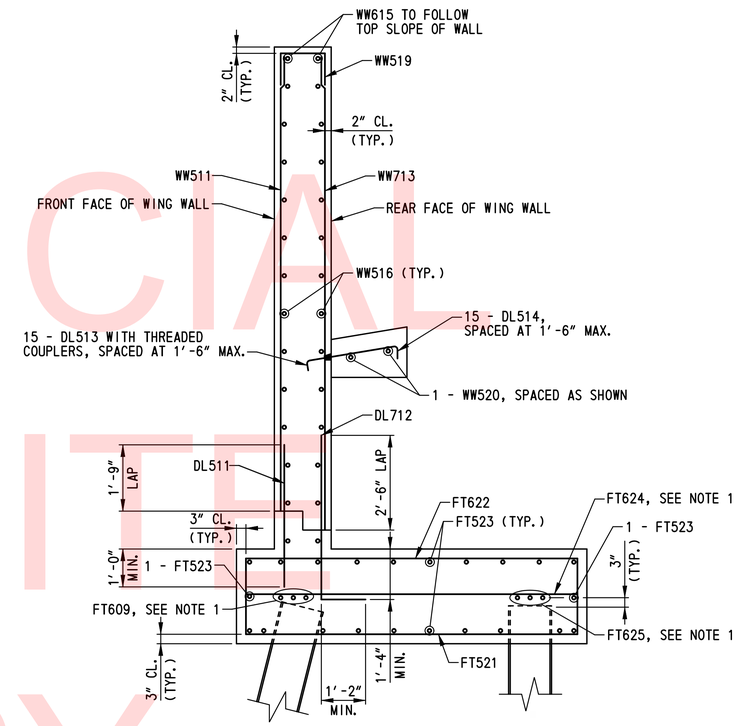

WINGWALL II REINFORCEMENT TYPICAL SECTION

SCALE: ½"=1'-0"

UNOFFICIAL WEBSITE COPY

NOTES:

1. FOR PILE LAYOUT AND REINFORCEMENT PLAN OVER PILES, SEE DWG. NO. PL-01.
2. FOR ADDITIONAL FOOTING REINFORCEMENT DETAILS, SEE DWG. NO. AB-05.
3. FOR WINGWALL I AND II REINFORCEMENT ELEVATIONS, SEE DWG. NO. WW-03.

N:\31653-000\Contract 1B\CADD\Bridge\Br_No2\WW04_br1-2.dgn
2/5/2013 8:16:19 AM

DELAWARE DEPARTMENT OF TRANSPORTATION	ADDENDUMS / REVISIONS	SCALE: AS SHOWN	US 301 & SR 1 INTERCHANGE	CONTRACT T200911302	BRIDGE NO. 1-432	WINGWALLS I & II REINFORCEMENT TYPICAL SECTIONS	BR1-2 WW-04
				COUNTY NEW CASTLE	DESIGNED BY: A.J.F.		SHEET NO. 166
					CHECKED BY: P.S.D.		TOTAL SHTS. 491

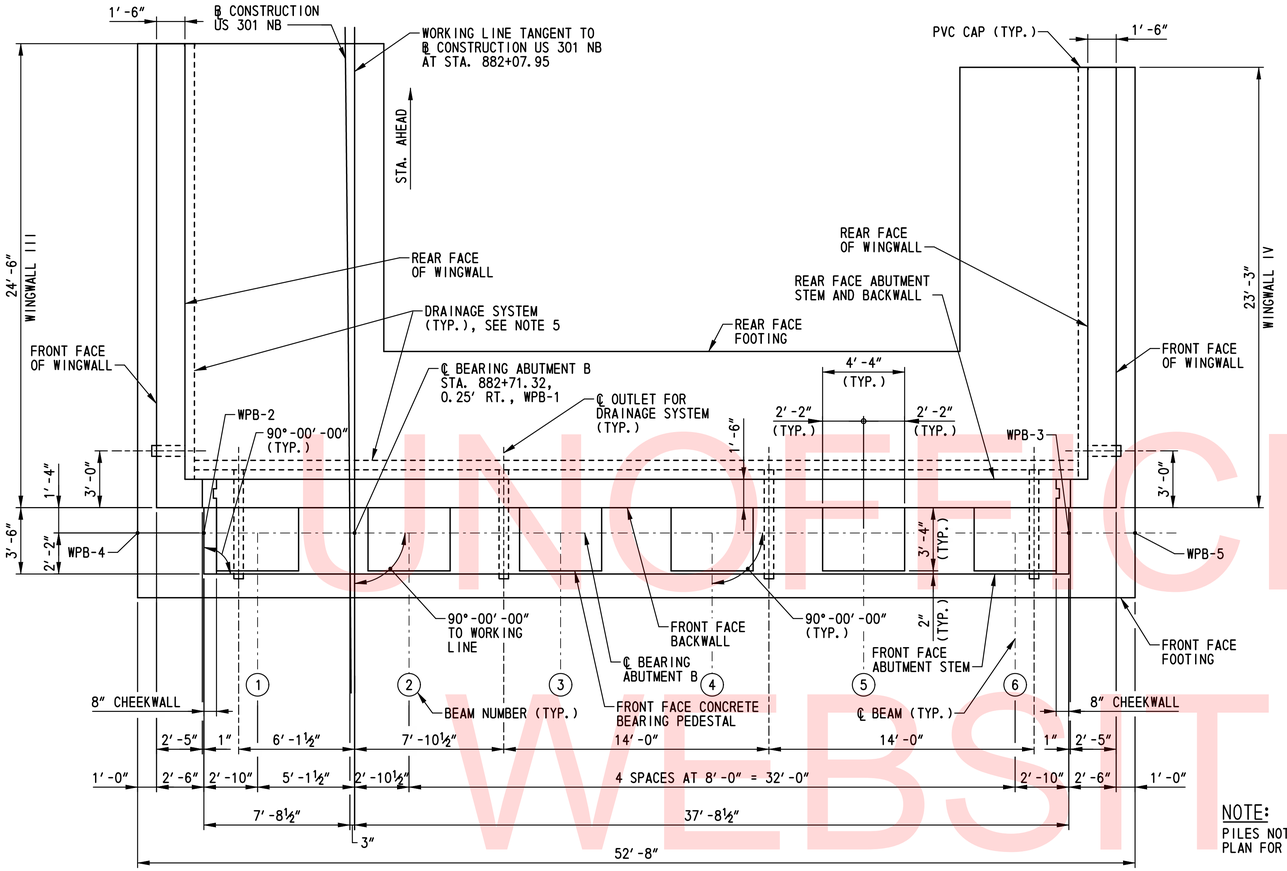

PLAN

SCALE: ¼"=1'-0"

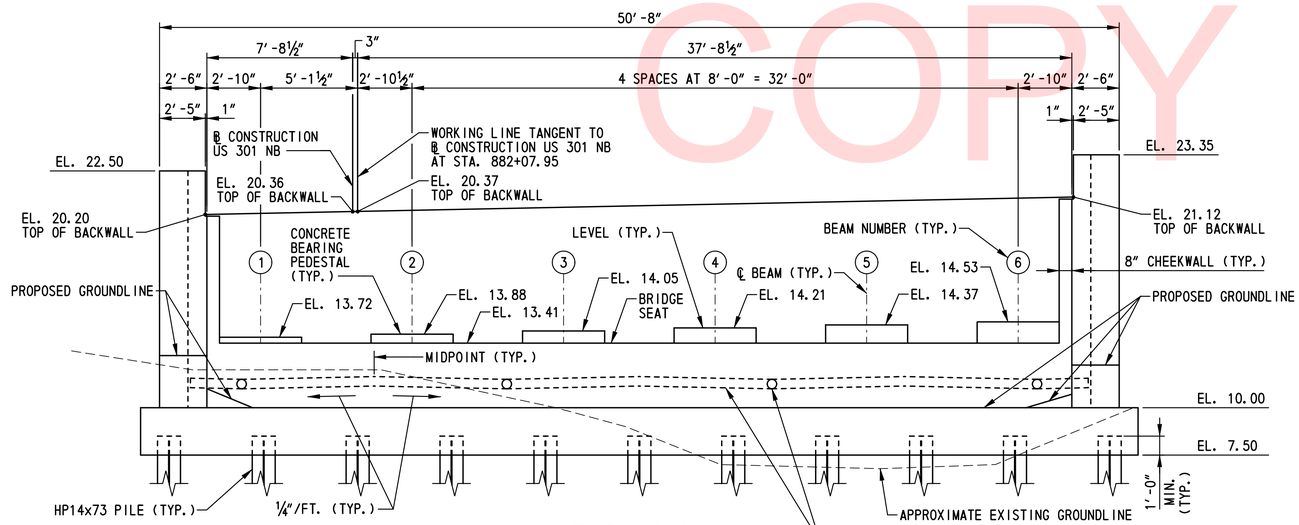

ELEVATION

SCALE: ¼"=1'-0"

NOTE:
PILES NOT SHOWN IN PLAN FOR CLARITY.

NOTES:

1. FOR PILE LAYOUT, SEE DWG. NO. PL-01.
2. FOR ABUTMENT B TYPICAL SECTION, SEE DWG. NO. AB-08.
3. FOR WINGWALL ELEVATIONS, SEE DWG. NO. WW-05.
4. FOR WINGWALL TYPICAL SECTIONS, SEE DWG. NO. WW-02.
5. FOR DRAINAGE SYSTEM DETAILS, SEE DWG. NO. AB-02.

UNOFFICIAL WEBSITE COPY

N:\31653-000\CONTRACT TB\CADD\Bridge\Br_No2\AB07_br1-2.dgn
2/6/2013 2:32:02 PM

DELAWARE DEPARTMENT OF TRANSPORTATION	ADDENDUMS / REVISIONS	SCALE: AS SHOWN	US 301 & SR 1 INTERCHANGE	CONTRACT T200911302	BRIDGE NO. 1-432	ABUTMENT B PLAN AND ELEVATION	BR1-2 AB-07
				COUNTY NEW CASTLE	DESIGNED BY: A.J.F.		SHEET NO. 167
					CHECKED BY: P.S.D.		TOTAL SHTS. 491

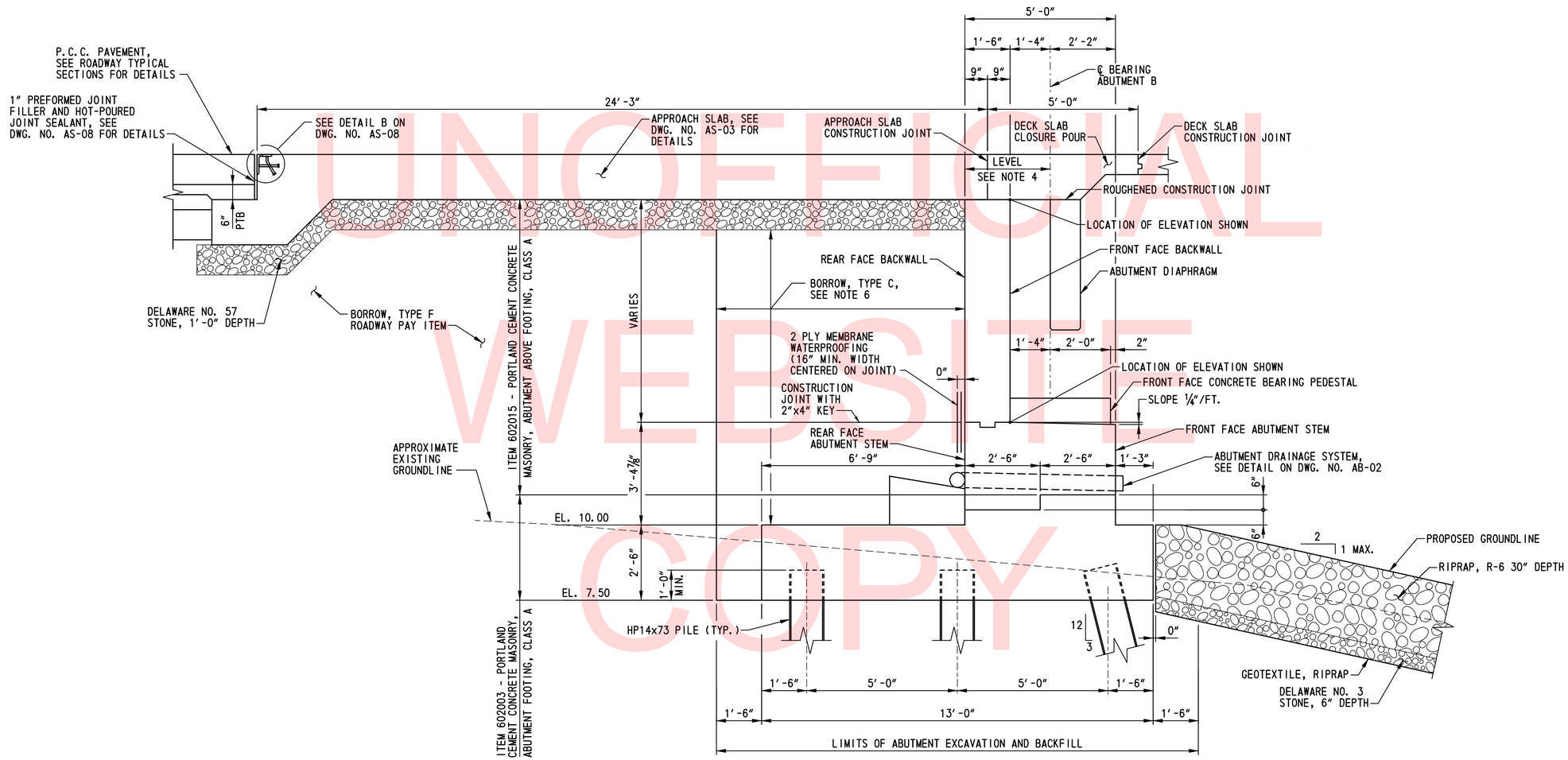

ABUTMENT B TYPICAL SECTION

SCALE: 1/2"=1'-0"

NOTES:

1. FOR PILE LAYOUT, SEE DWG. NO. PL-01.
2. FOR ABUTMENT B PLAN AND ELEVATION, SEE DWG. NO. AB-07.
3. FOR SEQUENCE OF CONSTRUCTION, SEE DWG. NO. AB-02.
4. TOP OF BACKWALL SHALL BE LEVEL PARALLEL TO THE WORKING LINE.
5. FOR 2-PLY MEMBRANE WATERPROOFING REQUIREMENTS, SEE DWG. NO. AB-02.
6. BORROW, TYPE C SHALL BE OBTAINED FROM BORROW SOURCES AND PAID UNDER ITEM 202000 - EXCAVATION AND EMBANKMENT.

UNOFFICIAL WEBSITE COPY

N:\31653-000\CONTRACT 1B\CADD\Bridge\Br_No2\AB08_br1-2.dgn
2/6/2013 2:33:00 PM

DELAWARE DEPARTMENT OF TRANSPORTATION	ADDENDUMS / REVISIONS	SCALE: AS SHOWN	US 301 & SR 1 INTERCHANGE	CONTRACT T200911302	BRIDGE NO. 1-432	ABUTMENT B TYPICAL SECTION	BR1-2 AB-08
				COUNTY NEW CASTLE	DESIGNED BY: A.J.F.		SHEET NO. 168
					CHECKED BY: P.S.D.		TOTAL SHTS. 491

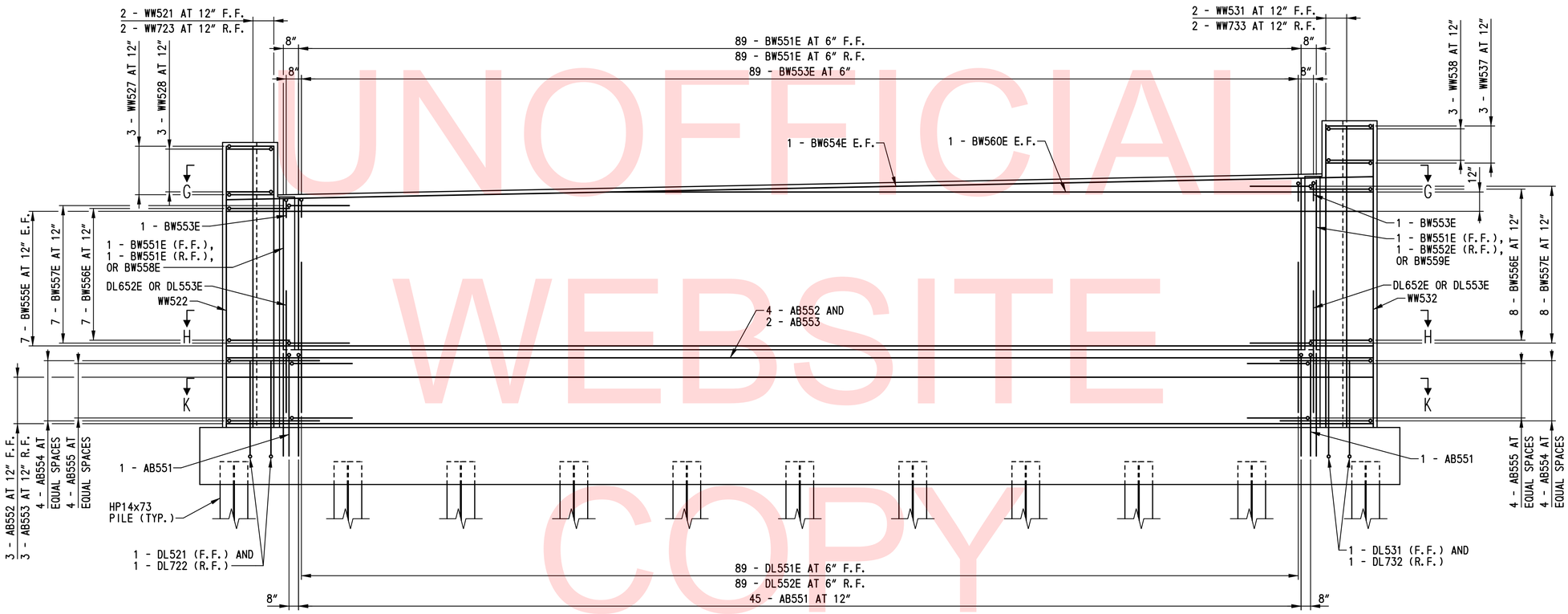

UNOFFICIAL WEBSITE COPY

ABUTMENT B REINFORCEMENT ELEVATION

SCALE: 3/8"=1'-0"

NOTES:

1. CONCRETE BEARING PEDESTALS NOT SHOWN FOR CLARITY. FOR REINFORCEMENT IN CONCRETE BEARING PEDESTALS SEE DWG. NO. AB-12.
2. FOR ADDITIONAL REINFORCEMENT DETAILS, SEE DWG. NOS. AB-10 TO AB-12.
3. REINFORCING STEEL IN FOOTING NOT SHOWN FOR CLARITY. FOR ADDITIONAL INFORMATION, SEE DWG. NOS. AB-11 AND PL-01.
4. F.F. = FRONT FACE
   R.F. = REAR FACE
   E.F. = EACH FACE

BR1-2
AB-09

DELAWARE DEPARTMENT OF TRANSPORTATION	ADDENDUMS / REVISIONS	SCALE: AS SHOWN	US 301 & SR 1 INTERCHANGE	CONTRACT T200911302	BRIDGE NO. 1-432	ABUTMENT B REINFORCEMENT ELEVATION	SHEET NO. 169
				COUNTY NEW CASTLE	DESIGNED BY: A.J.F.		TOTAL SHTS. 491
					CHECKED BY: P.S.D.		

N:\31653-000\CONTRACT T$\CADD\Bridge\Br_No2\AB09_br1-2.dgn
2/6/2013 2:33:35 PM

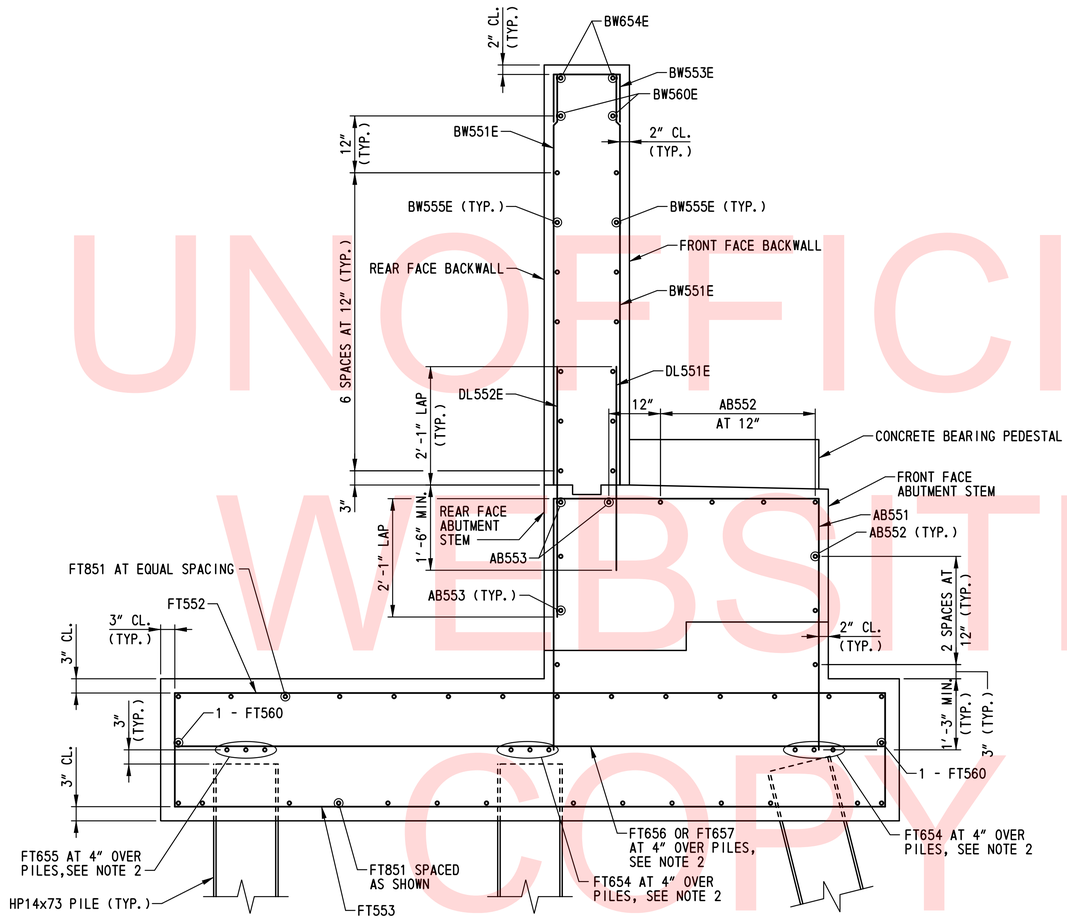

UNOFFICIAL WEBSITE COPY

ABUTMENT B REINFORCEMENT TYPICAL SECTION

SCALE: 3/4"=1'-0"

NOTES:

1. CONCRETE BEARING PEDESTAL REINFORCEMENT NOT SHOWN FOR CLARITY. FOR ADDITIONAL INFORMATION, SEE DWG. NO. AB-12.
2. FOR PILE LAYOUT AND REINFORCEMENT OVER PILES, SEE DWG. NO. PL-01.
3. FOR ADDITIONAL FOOTING REINFORCEMENT DETAILS, SEE DWG. NO. AB-11.
4. FOR ADDITIONAL REINFORCEMENT DETAILS, SEE DWG. NOS. AB-09, AB-11 AND AB-12.

N:\31653-000\CONTRACT 1B\CADD\Bridge\Br_No2\AB10_br1-2.dgn
2/6/2015 2:34:33 PM

DELAWARE DEPARTMENT OF TRANSPORTATION	ADDENDUMS / REVISIONS	SCALE: AS SHOWN	US 301 & SR 1 INTERCHANGE	CONTRACT T200911302	BRIDGE NO. 1-432	ABUTMENT B REINFORCEMENT TYPICAL SECTION	BR1-2 AB-10
				COUNTY NEW CASTLE	DESIGNED BY: A.J.F.		SHEET NO. 170
					CHECKED BY: P.S.D.		TOTAL SHTS. 491

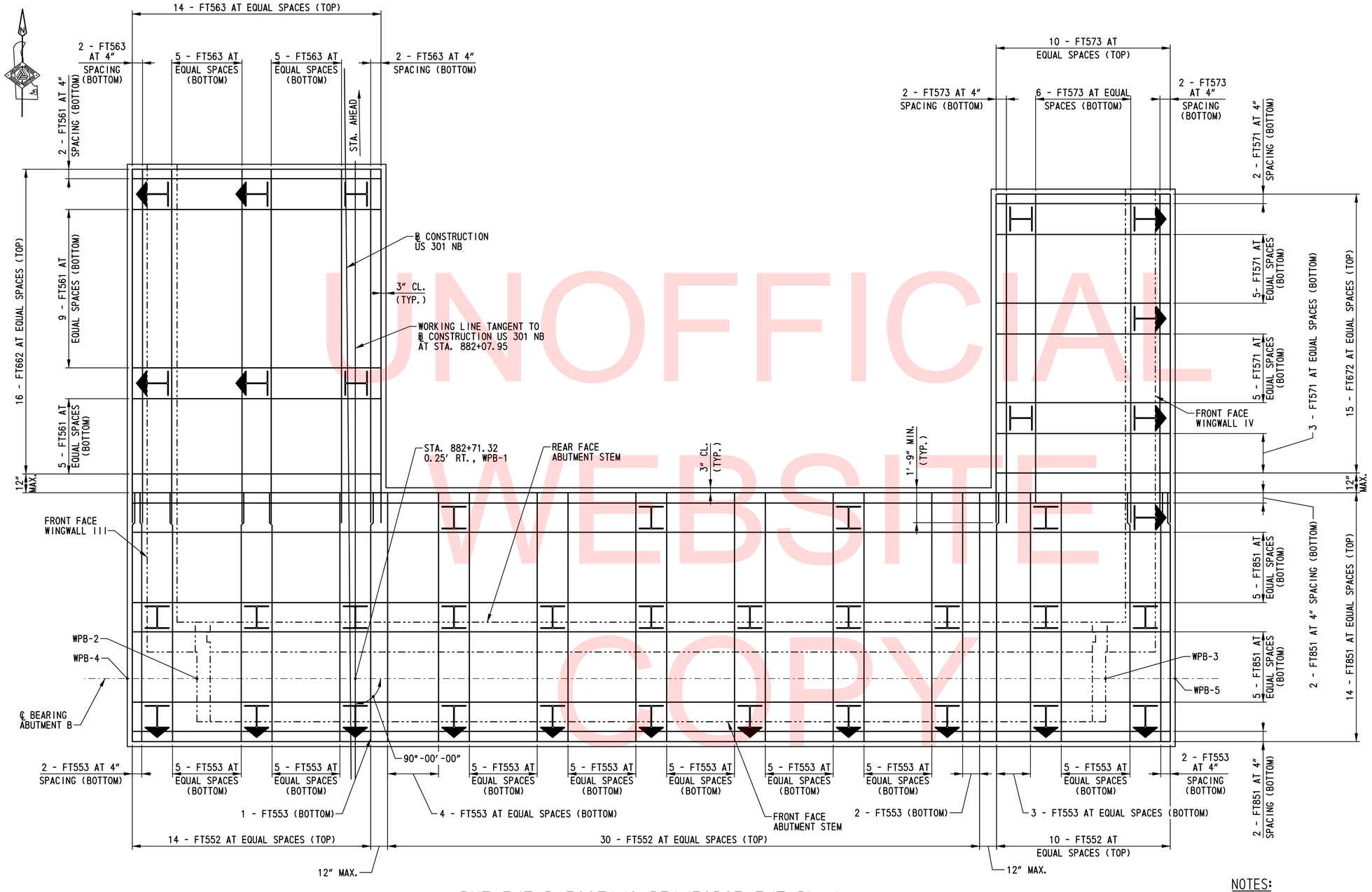

ABUTMENT B FOOTING REINFORCEMENT PLAN

SCALE: 3/8"=1'-0"

NOTES:

1. REINFORCEMENT OVER PILES NOT SHOWN FOR CLARITY. SEE DRAWING NO. PL-01 FOR ADDITIONAL INFORMATION.
2. SEE ABUTMENT REINFORCEMENT TYPICAL SECTION ON DWG. NO. AB-10 AND WINGWALL REINFORCEMENT TYPICAL SECTIONS ON DWG. NO. WW-07 FOR ADDITIONAL INFORMATION.
3. ALL REINFORCEMENT SHALL HAVE 1½" MINIMUM CLEAR TO PILES.

UNOFFICIAL WEBSITE COPY

N:\31653-000\Contract 1B\CADD\Bridge\Br_No2\AB11_br1-2.dgn
2/5/2015 8:20:15 AM

DELAWARE DEPARTMENT OF TRANSPORTATION	ADDENDUMS / REVISIONS	SCALE: AS SHOWN	US 301 & SR 1 INTERCHANGE	CONTRACT T200911302	BRIDGE NO. 1-432	ABUTMENT B FOOTING REINFORCEMENT PLAN	BR1-2 AB-11
				COUNTY NEW CASTLE	DESIGNED BY: A.J.F.		SHEET NO. 171
					CHECKED BY: P.S.D.		TOTAL SHTS. 491

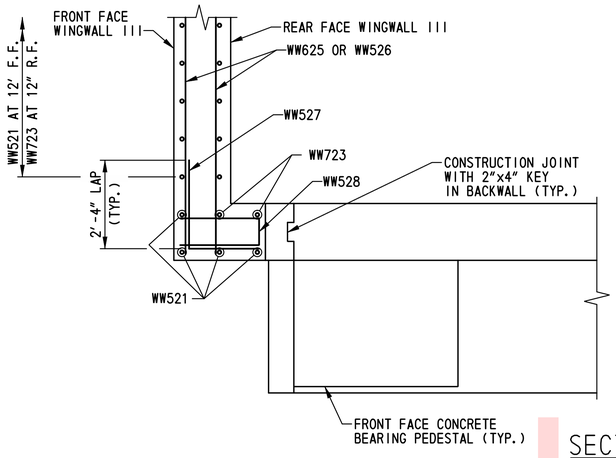

SECTION G-G
SCALE: ½"=1'-0"

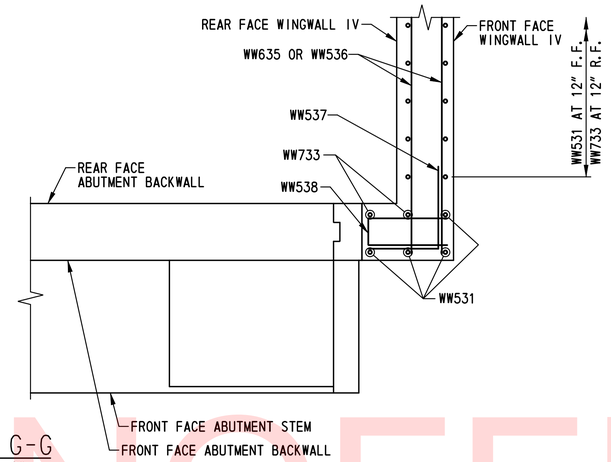

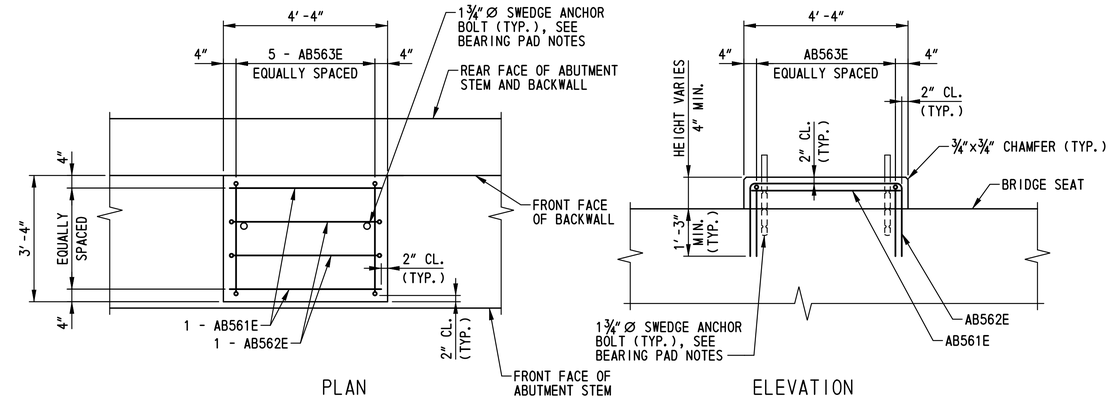

ABUTMENT B CONCRETE BEARING PEDESTAL DETAILS
SCALE: ½"=1'-0"

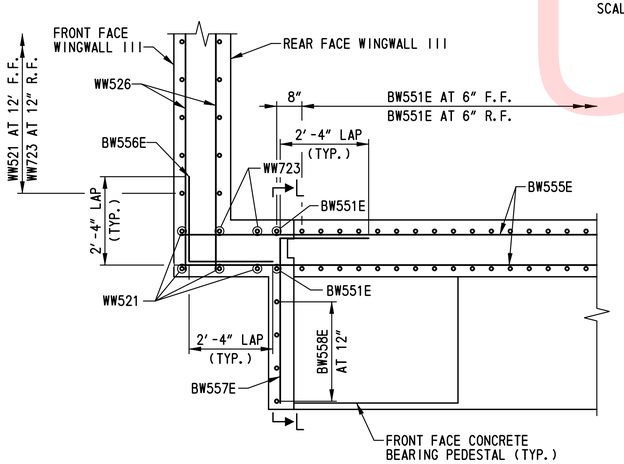

SECTION H-H
SCALE: ½"=1'-0"

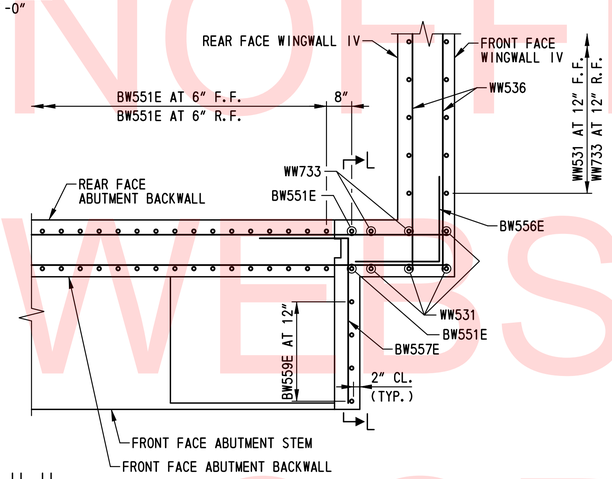

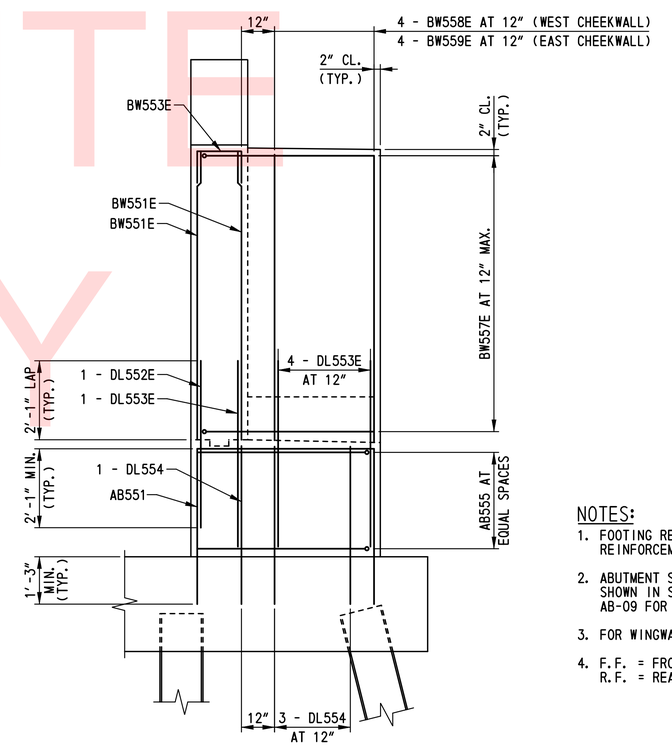

SECTION L-L
SCALE: ½"=1'-0"

BEARING PAD NOTES:

1. FOR ANCHOR BOLT DIMENSIONS AND LOCATION, SEE DWG. NO. BB-02.
2. ANCHOR BOLTS SHALL BE CAST IN PLACE. A TEMPORARY CASTING TEMPLATE SHALL BE USED TO ENSURE THE ANCHOR BOLTS ARE PROPERLY ALIGNED AND PLUMB. THE TEMPLATE SHALL BE REMOVED AFTER CONCRETE HAS SET.
3. SPACE REINFORCING STEEL AS NECESSARY TO CLEAR ANCHOR BOLTS.

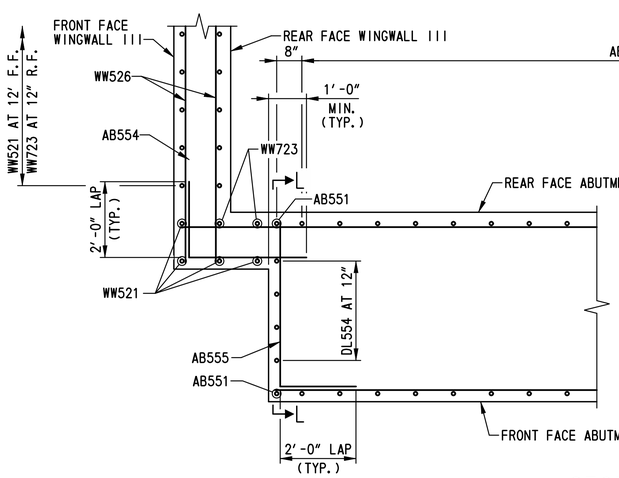

SECTION K-K
SCALE: ½"=1'-0"

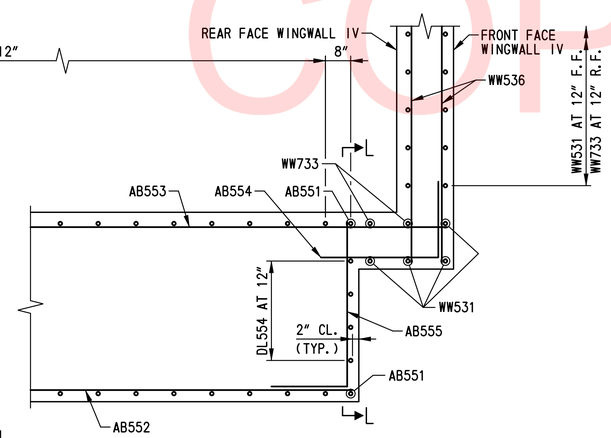

NOTES:

1. FOOTING REINFORCEMENT NOT SHOWN FOR CLARITY. FOR FOOTING REINFORCEMENT, SEE DWG. NOS. AB-10 AND PL-01.
2. ABUTMENT STEM AND BACKWALL LONGITUDINAL REINFORCEMENT NOT SHOWN IN SECTION L-L FOR CLARITY. SEE DWG. NOS. AB-08 AND AB-09 FOR LONGITUDINAL REINFORCEMENT.
3. FOR WINGWALL REINFORCEMENT, SEE DWG. NOS. WW-06 AND WW-07.
4. F.F. = FRONT FACE
   R.F. = REAR FACE

UNOFFICIAL WEBSITE COPY

N:\31653-000\Contract 1B\CADD\Bridge\Br_Ng2\AB12_br1-2.dgn
2/5/2013 8:20:59 AM

DELAWARE DEPARTMENT OF TRANSPORTATION	ADDENDUMS / REVISIONS	SCALE: AS SHOWN	US 301 & SR 1 INTERCHANGE	CONTRACT T200911302	BRIDGE NO. 1-432	ABUTMENT B REINFORCEMENT DETAILS	BR1-2 AB-12
				COUNTY NEW CASTLE	DESIGNED BY: A.J.F.		SHEET NO. 172
					CHECKED BY: P.S.D.		TOTAL SHTS. 491

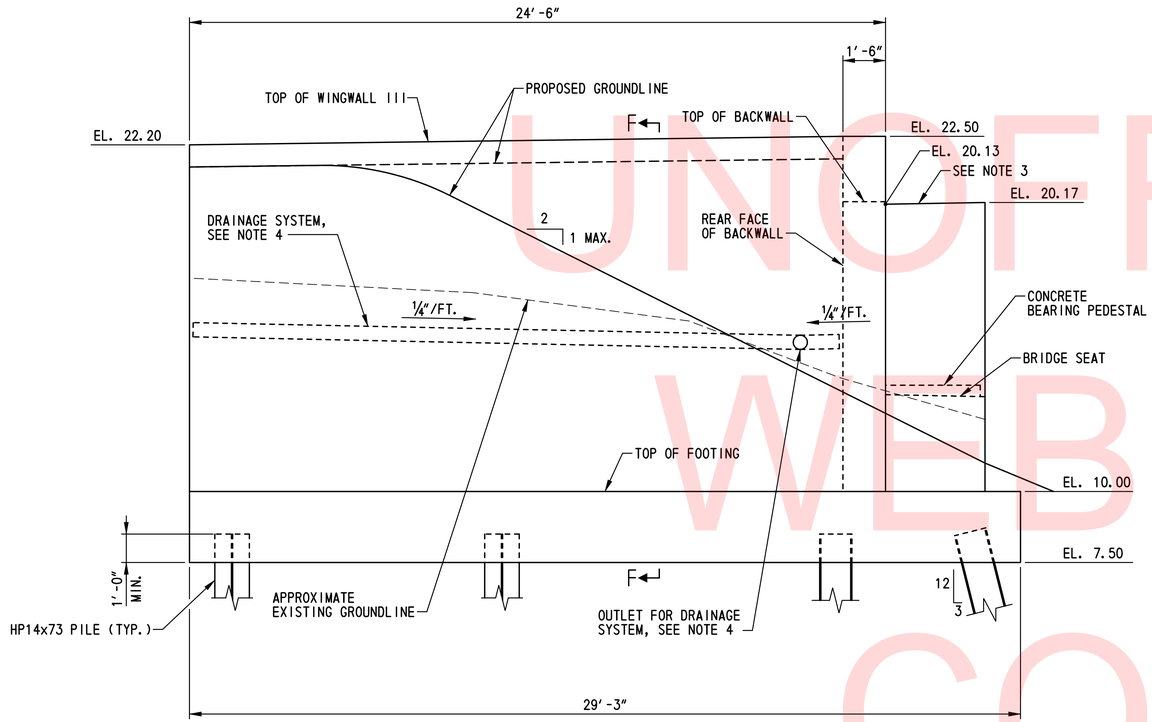

WINGWALL III ELEVATION

SCALE: ⅜″=1′-0″

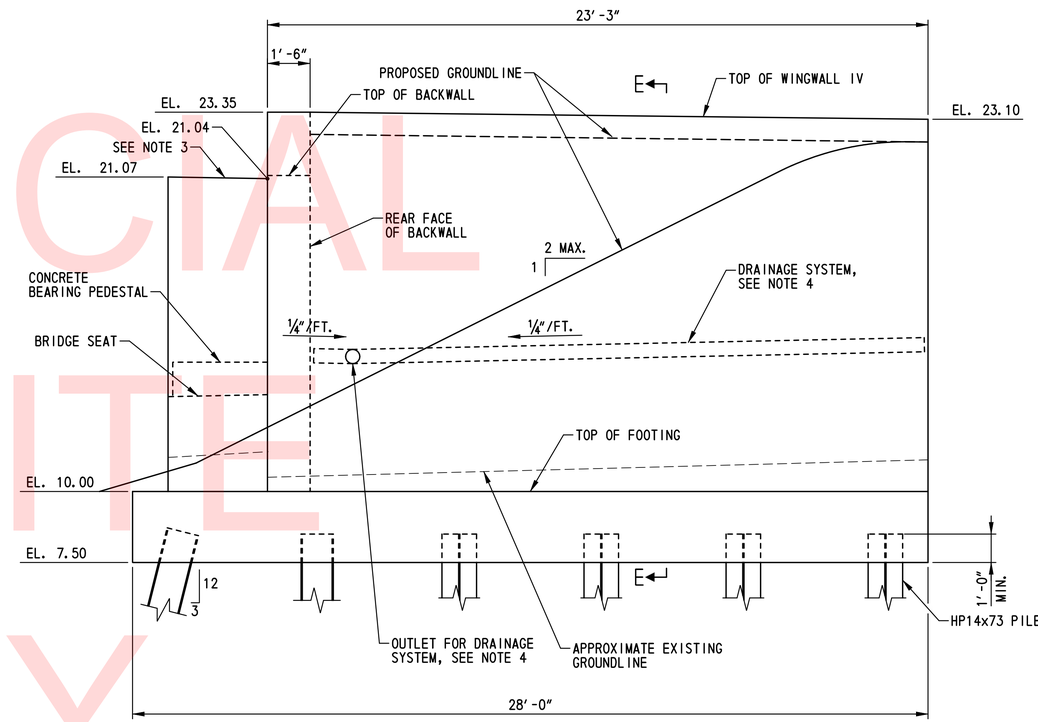

WINGWALL IV ELEVATION

SCALE: ⅜″=1′-0″

NOTES:

1. FOR TYPICAL SECTIONS E-E AND F-F, SEE DRAWING NO. WW-02.
2. FOR WINGWALL III AND IV REINFORCEMENT ELEVATIONS, SEE DWG. NOS. WW-06.
3. TOP OF CHEEKWALL TO BE 1″ BELOW BOTTOM OF SUPERSTRUCTURE.
4. FOR DRAINAGE SYSTEM DETAILS, SEE DWG. NO. WW-02.

UNOFFICIAL WEBSITE COPY

N:\33653-000\Contract 1B\CADD\Bridge\Br_No2\WW05_br1-2.dgn
2/5/2013 8:21:37 AM

DELAWARE DEPARTMENT OF TRANSPORTATION	ADDENDUMS / REVISIONS	SCALE: AS SHOWN	US 301 & SR 1 INTERCHANGE	CONTRACT T200911302	BRIDGE NO. 1-432	WINGWALL III AND IV ELEVATIONS	BR1-2 WW-05
				COUNTY NEW CASTLE	DESIGNED BY: A.J.F.		SHEET NO. 173
					CHECKED BY: P.S.D.		TOTAL SHTS. 491

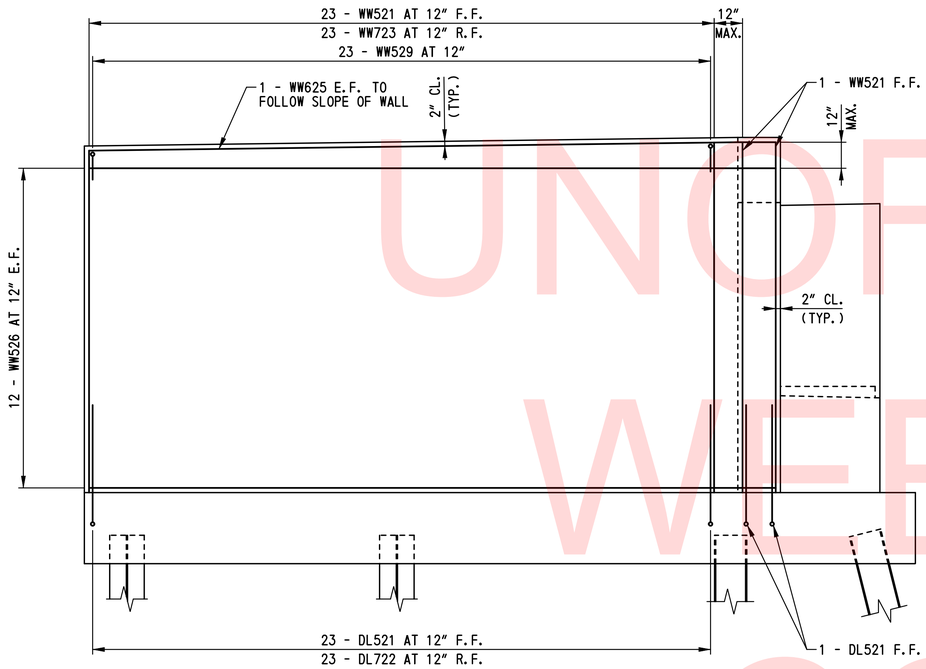

WINGWALL III REINFORCEMENT ELEVATION

SCALE: 3/8"=1'-0"

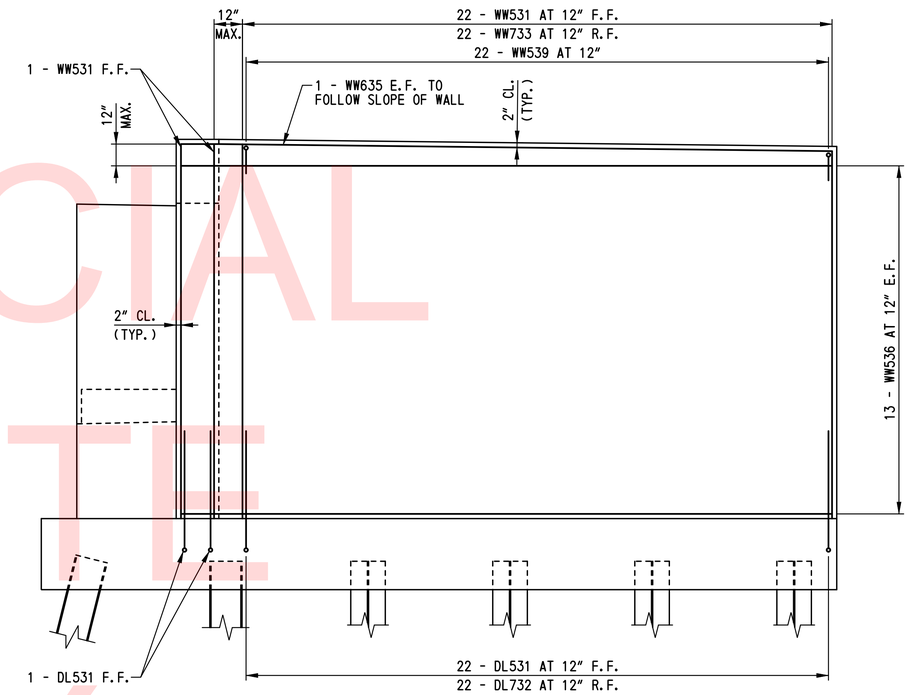

WINGWALL IV REINFORCEMENT ELEVATION

SCALE: 3/8"=1'-0"

NOTES:

1. REINFORCING STEEL IN FOOTING NOT SHOWN FOR CLARITY. FOR ADDITIONAL INFORMATION, SEE DWG. NOS. AB-11 AND PL-01.
2. FOR ADDITIONAL REINFORCEMENT DETAILS, SEE DWG. NOS. AB-09 AND AB-12.
3. FOR WINGWALL TYPICAL REINFORCEMENT SECTIONS, SEE DWG. NO. WW-07.
4. F.F. = FRONT FACE
   R.F. = REAR FACE
   E.F. = EACH FACE

UNOFFICIAL WEBSITE COPY

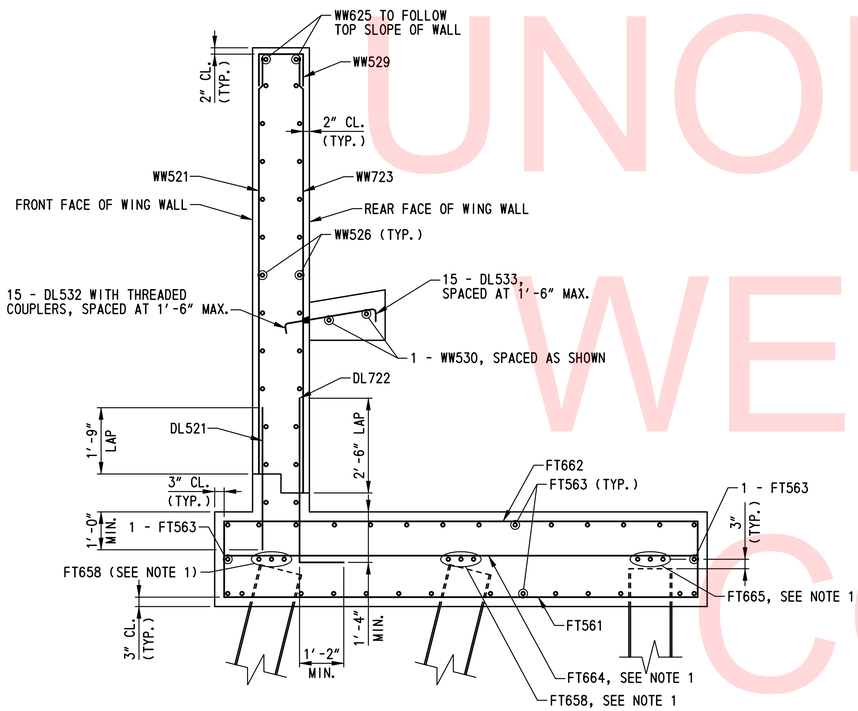

WINGWALL III REINFORCEMENT TYPICAL SECTION

SCALE: ½"=1'-0"

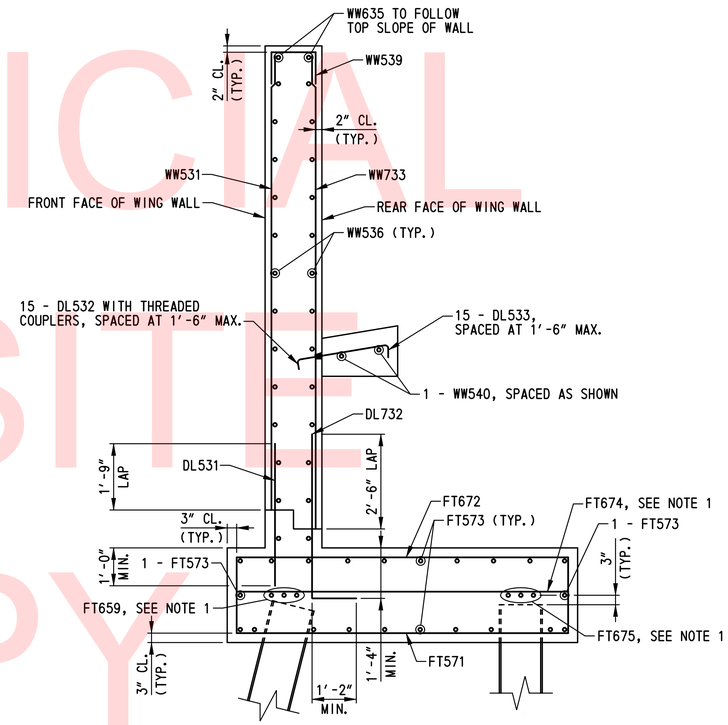

WINGWALL IV REINFORCEMENT TYPICAL SECTION

SCALE: ½"=1'-0"

UNOFFICIAL WEBSITE COPY

NOTES:

1. FOR PILE LAYOUT AND REINFORCEMENT PLAN OVER PILES, SEE DWG. NO. PL-01.
2. FOR ADDITIONAL FOOTING REINFORCEMENT DETAILS, SEE DWG. NO. AB-11.
3. FOR WINGWALL III AND IV REINFORCEMENT ELEVATIONS, SEE DWG. NO. WW-06.

N:\31653-000\Contract 1B\CADD\Bridge\Br_No2\WW07_br1-2.dgn
2/5/2013 8:22:29 AM

DELAWARE DEPARTMENT OF TRANSPORTATION	ADDENDUMS / REVISIONS	SCALE: AS SHOWN	US 301 & SR 1 INTERCHANGE	CONTRACT T200911302	BRIDGE NO. 1-432	WINGWALLS III & IV REINFORCEMENT TYPICAL SECTIONS	BR1-2 WW-07
				COUNTY NEW CASTLE	DESIGNED BY: A.J.F.		SHEET NO. 175
					CHECKED BY: P.S.D.		TOTAL SHTS. 491

① ANY MARK NUMBER WITH SUFFIX 'E' DENOTES EPOXY COATED REINFORCING STEEL.

② ALL MARK 'LOCATION PREFIXES' SHALL CONSIST OF TWO LETTERS AND ARE AS FOLLOWS: AB = ABUTMENT, AS = APPROACH SLAB, BC = BOX CULVERT, BW = BACKWALL, CL = COLUMN, DK = DECK, DL = DOWEL, FT = FOOTING, HW = HEADWALL, MS = MISC. BARS, PA = PARAPET, PR = PIER, SC = SHEETPILE CAP, SL = SLAB, TW = TOEWALL, WL = WALL (UNIQUE LOCATION), WW = WINGWALL

SPECIFICATIONS					BENDING DIMENSIONS (FEET-INCHES /QUARTER INCH)										
QTY.	SIZE	LENGTH	MARK	TYPE	A	B	C	D	E	F/R	G	H	J	K	O
FOOTING A															
28	8	52-02 0	FT801	STR		52-02 0									
54	5	12-06 0	FT502	STR		12-06 0									
54	5	16-06 0	FT503	17		2-00 0	12-06 0	2-00 0							
6	6	52-02 0	FT604	STR		52-02 0									
3	6	42-03 0	FT605	STR		42-03 0									
12	6	12-06 0	FT606	STR		12-06 0									
12	6	7-06 0	FT607	STR		7-06 0									
6	6	26-06 0	FT608	STR		26-06 0									
3	6	29-03 0	FT609	STR		29-03 0									
2	5	52-02 0	FT510	STR		52-02 0									
14	5	16-06 0	FT511	17		2-00 0	12-06 0	2-00 0							
14	6	12-06 0	FT612	STR		12-06 0									
30	5	15-06 0	FT513	STR		15-06 0									
6	6	12-06 0	FT614	STR		12-06 0									
3	6	9-06 0	FT615	STR		9-06 0									
16	5	12-09 0	FT521	17		2-00 0	8-09 0	2-00 0							
16	6	8-09 0	FT622	STR		8-09 0									
22	5	18-03 0	FT523	STR		18-03 0									
6	6	8-09 0	FT624	STR		8-09 0									
3	6	13-06 0	FT625	STR		13-06 0									
3	6	10-10 0	FT626	STR		10-10 0									
25	5	3-10 0	DL501	STR		3-10 0									
23	7	5-07 0	DL702	2	1-02 0	4-05 0									
28	5	3-10 0	DL511	STR		3-10 0									
26	7	5-07 0	DL712	2	1-02 0	4-05 0									
8	5	4-02 0	DL544	STR		4-02 0									

SPECIFICATIONS					BENDING DIMENSIONS (FEET-INCHES /QUARTER INCH)										
QTY.	SIZE	LENGTH	MARK	TYPE	A	B	C	D	E	F/R	G	H	J	K	O
ABUTMENT A															
47	5	12-11 0	AB501	17		4-01 2	4-08 0	4-01 2							
7	5	45-04 0	AB502	STR		45-04 0									
5	5	50-04 0	AB503	STR		50-04 0									
8	5	4-04 0	AB504	17		2-00 0	2-04 0								
8	5	6-07 1	AB505	17		2-00 0	4-07 1								
12	5	4-00 0	AB511E	STR		4-00 0									
12	5	8-05 0	AB512E	17		2-02 2	4-00 0	2-02 2							
30	5	7-04 0	AB513E	17		2-02 0	3-00 0	2-02 0							
89	5	3-07 0	DL541E	STR		3-07 0									
91	5	4-05 0	DL542E	STR		4-05 0									
10	5	4-05 0	DL543E	STR		4-05 0									
8	5	4-02 0	DL544	STR		4-02 0									
ABUTMENT A (BACKWALL)															
182	5	6-08 0	BW501E	STR		6-08 0									
		T0				T0									
		7-07 0				7-07 0									
			*2 SETS OF 91												
91	5	2-10 0	BW503E	2	0-10 0	1-02 0	0-10 0								
2	6	50-04 0	BW604E	STR		50-04 0									
14	5	50-04 0	BW505E	STR		50-04 0									
15	5	4-08 0	BW506E	17		2-04 0	2-04 0								
15	5	6-11 1	BW507E	17		2-04 0	4-07 1								
4	5	6-07 2	BW508E	STR		6-07 2									
4	5	7-06 2	BW509E	STR		7-06 2									
2	5	19-02 0	BW510E	STR		19-02 0									

SPECIFICATIONS					BENDING DIMENSIONS (FEET-INCHES /QUARTER INCH)										
QTY.	SIZE	LENGTH	MARK	TYPE	A	B	C	D	E	F/R	G	H	J	K	O
WINGWALL I															
25	5	11-01 2	WW501	STR		11-01 2									
23	7	11-07 2	WW703	STR		11-07 2									
2	6	21-11 0	WW605	STR		21-11 0									
24	5	21-11 0	WW506	STR		21-11 0									
3	5	4-04 1	WW507	17		2-00 1	2-04 0								
3	5	5-02 2	WW508	17		2-01 0	1-00 2	2-01 0							
21	5	2-10 0	WW509	2		0-10 0	1-02 0	0-10 0							
2	5	20-05 0	WW510	STR		20-05 0									
13	5	1-10 0	DL513	DR		1-00 0	0-10 0								
13	5	2-04 0	DL514	DR		1-06 0	0-10 0								
WINGWALL II															
28	5	11-11 2	WW511	STR		11-11 2									
26	7	12-05 2	WW713	STR		12-05 2									
2	6	24-08 0	WW615	STR		24-08 0									
26	5	24-08 0	WW516	STR		24-08 0									
3	5	4-04 1	WW517	17		2-00 1	2-04 0								
3	5	5-02 2	WW518	17		2-01 0	1-00 2	2-01 0							
24	5	2-10 0	WW519	2		0-10 0	1-02 0	0-10 0							
2	5	23-02 0	WW520	STR		23-02 0									
15	5	1-10 0	DL513	DR		1-00 0	0-10 0								
15	5	2-04 0	DL514	DR		1-06 0	0-10 0								

UNOFFICIAL WEBSITE COPY

ASTM STANDARD ENGLISH REINFORCING BARS				RECOMMENDED END HOOKS, APPLICABLE TO ALL GRADES				STIRRUP AND TIE HOOKS, APPLICABLE TO ALL GRADES			
	NOMINAL DIMENSIONS				180° HOOKS		90° HOOKS		90° HOOK	135° HOOK	
BAR SIZE	DIAMETER (INCHES)	AREA (INCHES²)	WEIGHT (LBS./FT.)	D	A OR G	J	A OR G	D	A OR G	A OR G	H
3	0.375	0.110	0.376	2¼"	5"	3"	6"	1½"	4"	4"	2½"
4	0.500	0.200	0.668	3"	6"	4"	8"	2"	4½"	4½"	3"
5	0.625	0.310	1.043	3¾"	7"	5"	10"	2½"	6"	5½"	3¾"
6	0.750	0.440	1.502	4½"	8"	6"	1-0"	4½"	1-0"	8"	4½"
7	0.875	0.600	2.044	5¼"	10"	7"	1-2"	5¼"	1-2"	9"	5¼"
8	1.000	0.790	2.670	6"	11"	8"	1-4"	6"	1-4"	10½"	6"
9	1.128	1.000	3.400	9½"	1-3"	11¾"	1-7"				
10	1.270	1.270	4.303	10¾"	1-5"	1-1¼"	1-10"				
11	1.410	1.560	5.313	1-0"	1-7"	1-2¾"	2-0"				
14	1.693	2.250	7.650	1-6¼"	2-3"	1-9¾"	2-7"				
18	2.257	4.000	13.600	2-0"	3-0"	2-4½"	3-5"				

NOTES:

1. FIGURES SHOWN IN CIRCLES REPRESENT BAR BEND TYPES.
2. STANDARD BAR BENDS INCLUDE ONLY THOSE TYPES BELOW, INDICATED AS SUCH.
3. ALL DIMENSIONS OUT-TO-OUT, EXCEPT "A" AND "G" ON STD. 180° AND 135° HOOKS.
4. "J" DIMENSIONS ON 180° HOOKS TO BE SHOWN ONLY WHERE NECESSARY TO RESTRICT HOOK SIZE, OTHERWISE STANDARD 'ACI' HOOKS ARE TO BE USED.
5. WHERE "J" IS NOT SHOWN, "J" WILL BE KEPT EQUAL TO OR LESS THAN "H" ON TYPES 3, 5 AND 22. WHERE "J" CAN EXCEED "H", IT SHALL BE SHOWN.
6. "H" DIMENSIONS OF STIRRUPS TO BE SHOWN AS NEEDED TO FIT WITHIN THE CONCRETE.
7. UNLESS OTHERWISE NOTED, DIAMETER "D" IS THE SAME FOR ALL BENDS AND HOOKS ON A BAR (EXCEPT FOR BEND TYPES 11 AND 13).
8. WHERE SLOPE DIFFERS FROM 45° OFFSET, "H" AND "K" MUST BE SHOWN.
9. WHERE BARS ARE TO BE BENT MORE ACCURATELY THAN STANDARD BENDING TOLERANCES, BENDING DIMENSIONS REQUIRING CLOSER FABRICATION SHOULD HAVE LIMITS INDICATED.
10. FOR RECOMMENDED DIAMETER "D", OF BENDS, HOOKS, ETC., REFER TO TABLE ABOVE, 'CRSI' OR 'ACI' TABLES WHERE APPLICABLE AND REQUIRED.
11. TYPE S1-S6, S11, T1-T3 AND T6-T9 APPLICABLE TO BAR SIZES #3 THROUGH #8.

STANDARD BAR BENDS

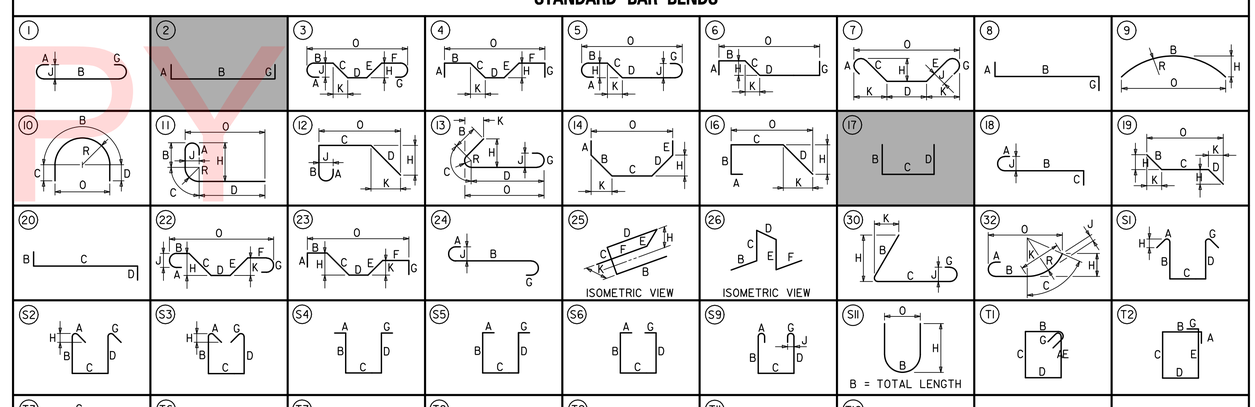

SPECIAL BAR BENDS

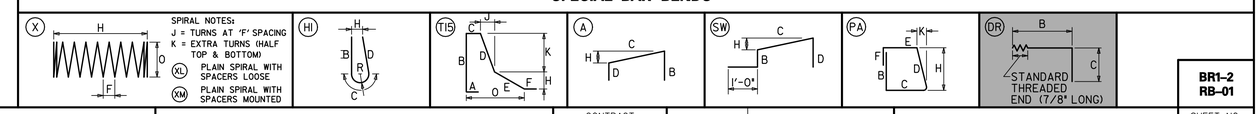

STIRRUP AND TIE HOOKS

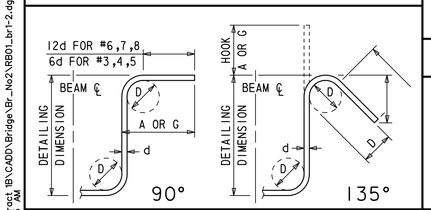

180° AND 90° END HOOKS

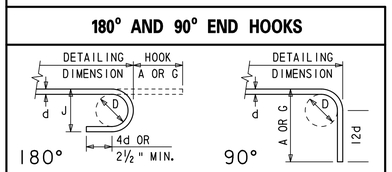

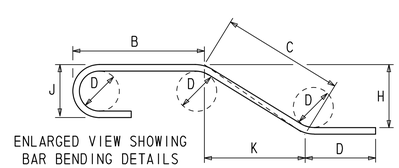

ENLARGED VIEW SHOWING BAR BENDING DETAILS

N:\31653-000\Contract 1B\CADD\Bridge\Br_Nc2\RB01_br1-2.dgn 2/5/2013 8:23:05 AM

DELAWARE DEPARTMENT OF TRANSPORTATION

ADDENDUMS / REVISIONS

NOT TO SCALE

US 301 & SR 1 INTERCHANGE

CONTRACT	BRIDGE NO.	1-432
T200911302	DESIGNED BY: A.J.F.	
COUNTY		
NEW CASTLE	CHECKED BY: P.S.D.	

ABUTMENT A REINFORCEMENT LIST

BR1-2
RB-01

SHEET NO. 176
TOTAL SHTS. 491

① ANY MARK NUMBER WITH SUFFIX 'E' DENOTES EPOXY COATED REINFORCING STEEL.

② ALL MARK 'LOCATION PREFIXES' SHALL CONSIST OF TWO LETTERS AND ARE AS FOLLOWS: AB = ABUTMENT, AS = APPROACH SLAB, BC = BOX CULVERT, BW = BACKWALL, CL = COLUMN, DK = DECK, DL = DOWEL, FT = FOOTING, HW = HEADWALL, MS = MISC. BARS, PA = PARAPET, PR = PIER, SC = SHEETPILE CAP, SL = SLAB, TW = TOEWALL, WL = WALL (UNIQUE LOCATION), WW = WINGWALL

SPECIFICATIONS					BENDING DIMENSIONS (FEET-INCHES /QUARTER INCH)										
QTY.	SIZE	LENGTH	MARK	TYPE	A	B	C	D	E	F/R	G	H	J	K	O
FOOTING B															
28	8	52-02 0	FT851	STR		52-02 0									
54	5	12-06 0	FT552	STR		12-06 0									
54	5	16-06 0	FT553	17		2-00 0	12-06 0	2-00 0							
6	6	52-02 0	FT654	STR		52-02 0									
3	6	37-03 0	FT655	STR		37-03 0									
12	6	12-06 0	FT656	STR		12-06 0									
12	6	7-06 0	FT657	STR		7-06 0									
6	6	28-09 0	FT658	STR		28-09 0									
3	6	27-06 0	FT659	STR		27-06 0									
2	5	52-02 0	FT560	STR		52-02 0									
16	5	16-06 0	FT561	17		2-00 0	12-06 0	2-00 0							
16	6	12-06 0	FT662	STR		12-06 0									
30	5	17-09 0	FT563	STR		17-09 0									
6	6	12-06 0	FT664	STR		12-06 0									
3	6	12-00 0	FT665	STR		12-00 0									
15	5	12-09 0	FT571	17		2-00 0	8-09 0	2-00 0							
15	6	8-09 0	FT672	STR		8-09 0									
22	5	16-06 0	FT573	STR		16-06 0									
6	6	8-09 0	FT674	STR		8-09 0									
3	6	12-06 0	FT675	STR		12-06 0									
3	6	10-06 0	FT676	STR		10-06 0									
27	5	4-01 0	DL521	STR		4-01 0									
25	7	5-10 0	DL722	2	1-02 0	4-08 0									
26	5	4-01 0	DL531	STR		4-01 0									
24	7	5-10 0	DL732	2	1-02 0	4-08 0									
8	5	4-06 0	DL554	STR		4-06 0									

SPECIFICATIONS					BENDING DIMENSIONS (FEET-INCHES /QUARTER INCH)										
QTY.	SIZE	LENGTH	MARK	TYPE	A	B	C	D	E	F/R	G	H	J	K	O
ABUTMENT B															
47	5	13-07 0	AB551	17		4-05 2	4-08 0	4-05 2							
7	5	45-04 0	AB552	STR		45-04 0									
5	5	50-04 0	AB553	STR		50-04 0									
8	5	5-04 0	AB554	17		2-00 0	3-04 0								
8	5	6-07 1	AB555	17		2-00 0	4-07 1								
12	5	4-00 0	AB561E	STR		4-00 0									
12	5	8-06 0	AB562E	17		2-03 0	4-00 0	2-03 0							
30	5	7-05 0	AB563E	17		2-02 2	3-00 0	2-02 2							
89	5	3-07 0	DL551E	STR		3-07 0									
91	5	4-05 0	DL552E	STR		4-05 0									
10	5	4-05 0	DL553E	STR		4-05 0									
ABUTMENT B (BACKWALL)															
182	5	6-07 0	BW551E	STR		6-07 0									
		T0				T0									
		7-06 0				7-06 0									
			*2 SETS OF 91												
91	5	2-10 0	BW553E	2	0-10 0	1-02 0	0-10 0								
2	6	50-04 0	BW654E	STR		50-04 0									
14	5	50-04 0	BW555E	STR		50-04 0									
15	5	5-02 0	BW556E	17		2-04 0	2-10 0								
15	5	6-11 1	BW557E	17		2-04 0	4-07 1								
4	5	6-06 0	BW558E	STR		6-06 0									
4	5	7-05 0	BW559E	STR		7-05 0									
2	5	19-05 0	BW560E	STR		19-05 0									

SPECIFICATIONS					BENDING DIMENSIONS (FEET-INCHES /QUARTER INCH)										
QTY.	SIZE	LENGTH	MARK	TYPE	A	B	C	D	E	F/R	G	H	J	K	O
WINGWALL III															
27	5	11-00 0	WW521	STR		11-00 0									
25	7	11-06 0	WW723	STR		11-06 0									
2	6	24-02 0	WW625	STR		24-02 0									
24	5	24-02 0	WW526	STR		24-02 0									
3	5	4-04 1	WW527	17		2-00 1	2-04 0								
3	5	5-02 2	WW528	17		2-01 0	1-00 2	2-01 0							
23	5	2-10 0	WW529	2		0-10 0	1-02 0	0-10 0							
2	5	22-06 0	WW530	STR		22-06 0									
15	5	1-10 0	DL533	DR		1-00 0	0-10 0								
15	5	2-04 0	DL534	DR		1-06 0	0-10 0								
WINGWALL IV															
26	5	11-11 0	WW531	STR		11-11 0									
24	7	12-05 0	WW733	STR		12-05 0									
2	6	22-11 0	WW635	STR		22-11 0									
26	5	22-11 0	WW536	STR		22-11 0									
3	5	4-04 1	WW537	17		2-00 1	2-04 0								
3	5	5-02 2	WW538	17		2-01 0	1-00 2	2-01 0							
22	5	2-10 0	WW539	2		0-10 0	1-02 0	0-10 0							
2	5	21-03 0	WW540	STR		21-03 0									
15	5	1-10 0	DL533	DR		1-00 0	0-10 0								
15	5	2-04 0	DL534	DR		1-06 0	0-10 0								

UNOFFICIAL WEBSITE COPY

ASTM STANDARD ENGLISH REINFORCING BARS

NOMINAL DIMENSIONS			
BAR SIZE	DIAMETER (INCHES)	AREA (INCHES²)	WEIGHT (LBS./FT.)
3	0.375	0.110	0.376
4	0.500	0.200	0.668
5	0.625	0.310	1.043
6	0.750	0.440	1.502
7	0.875	0.600	2.044
8	1.000	0.790	2.670
9	1.128	1.000	3.400
10	1.270	1.270	4.303
11	1.410	1.560	5.313
14	1.693	2.250	7.650
18	2.257	4.000	13.600

RECOMMENDED END HOOKS, APPLICABLE TO ALL GRADES

	180° HOOKS		90° HOOKS
D	A OR G	J	A OR G
2¼"	5"	3"	6"
3"	6"	4"	8"
3¾"	7"	5"	10"
4½"	8"	6"	1-0"
5¼"	10"	7"	1-2"
6"	11"	8"	1-4"
9½"	1-3"	11¾"	1-7"
10¾"	1-5"	11¼"	1-10"
1-0"	1-7"	1-2¾"	2-0"
1-6¼"	2-3"	1-9¾"	2-7"
2-0"	3-0"	2-4½"	3-5"

STIRRUP AND TIE HOOKS, APPLICABLE TO ALL GRADES

	90° HOOK	135° HOOK	
D	A OR G	A OR G	H
1½"	4"	4"	2½"
2"	4½"	4½"	3"
2½"	6"	5½"	3¾"
4½"	1-0"	8"	4½"
5¼"	1-2"	9"	5¼"
6"	1-4"	10½"	6"

NOTES:

1. FIGURES SHOWN IN CIRCLES REPRESENT BAR BEND TYPES.
2. STANDARD BAR BENDS INCLUDE ONLY THOSE TYPES BELOW, INDICATED AS SUCH.
3. ALL DIMENSIONS OUT-TO-OUT, EXCEPT "A" AND "G" ON STD. 180° AND 135° HOOKS.
4. "J" DIMENSIONS ON 180° HOOKS TO BE SHOWN ONLY WHERE NECESSARY TO RESTRICT HOOK SIZE, OTHERWISE STANDARD 'ACI' HOOKS ARE TO BE USED.
5. WHERE "J" IS NOT SHOWN, "J" WILL BE KEPT EQUAL TO OR LESS THAN "H" ON TYPES 3, 5 AND 22. WHERE "J" CAN EXCEED "H", IT SHALL BE SHOWN.
6. "H" DIMENSIONS OF STIRRUPS TO BE SHOWN AS NEEDED TO FIT WITHIN THE CONCRETE.
7. UNLESS OTHERWISE NOTED, DIAMETER "D" IS THE SAME FOR ALL BENDS AND HOOKS ON A BAR (EXCEPT FOR BEND TYPES 11 AND 13).
8. WHERE SLOPE DIFFERS FROM 45° OFFSET, "H" AND "K" MUST BE SHOWN.
9. WHERE BARS ARE TO BE BENT MORE ACCURATELY THAN STANDARD BENDING TOLERANCES, BENDING DIMENSIONS REQUIRING CLOSER FABRICATION SHOULD HAVE LIMITS INDICATED.
10. FOR RECOMMENDED DIAMETER "D", OF BENDS, HOOKS, ETC., REFER TO TABLE ABOVE, 'CRSI' OR 'ACI' TABLES WHERE APPLICABLE AND REQUIRED.
11. TYPE S1-S6, S11, T1-T3 AND T6-T9 APPLICABLE TO BAR SIZES #3 THROUGH #8.

STIRRUP AND TIE HOOKS

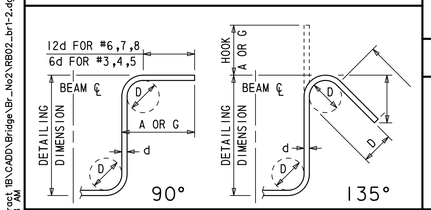

180° AND 90° END HOOKS

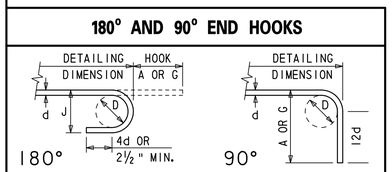

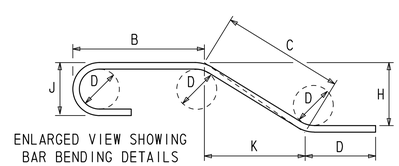

STANDARD BAR BENDS

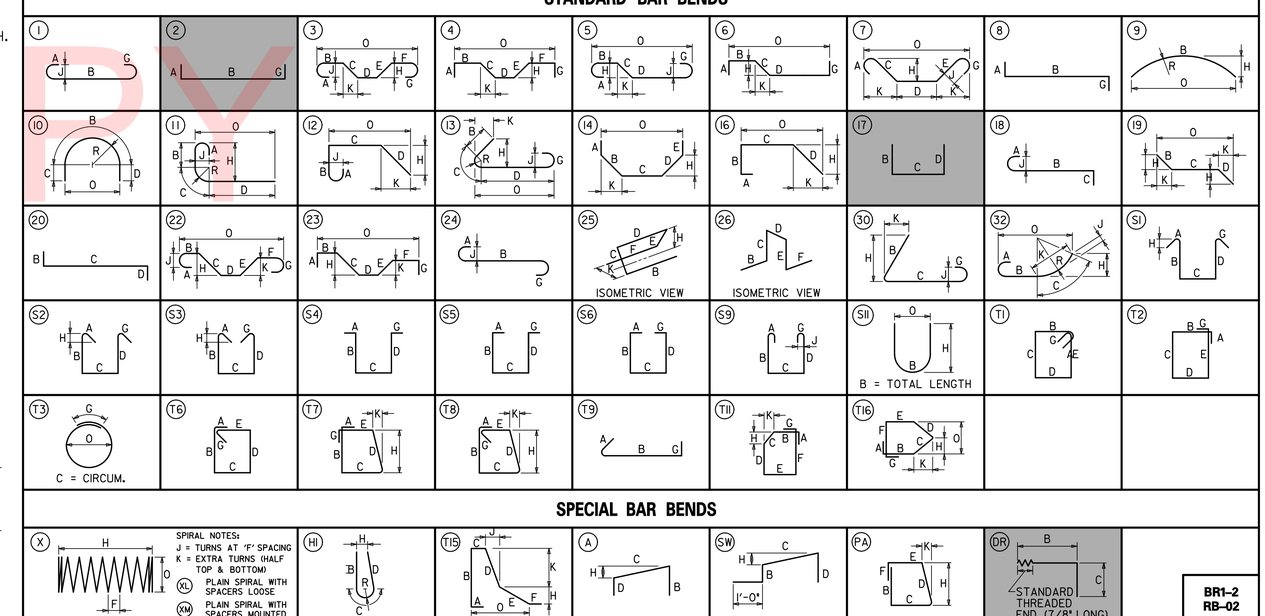

SPECIAL BAR BENDS

N:\31653-000\Contract 1B\CADD\Bridge\Br_No2\RB02_br1-2.dgn
2/5/2013 8:23:28 AM

DELAWARE DEPARTMENT OF TRANSPORTATION

ADDENDUMS / REVISIONS

NOT TO SCALE

US 301 & SR 1 INTERCHANGE

CONTRACT	BRIDGE NO.	1-432
T200911302	DESIGNED BY: A.J.F.	
COUNTY		
NEW CASTLE	CHECKED BY: P.S.D.	

ABUTMENT B REINFORCEMENT LIST

BR1-2
RB-02

SHEET NO. 177
TOTAL SHTS. 491

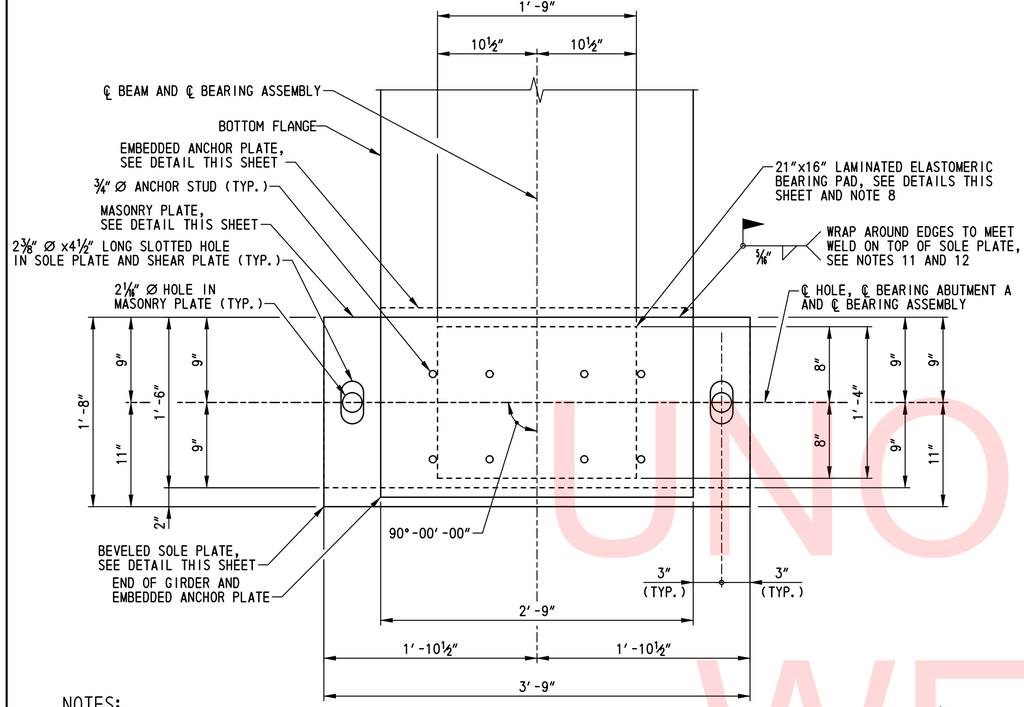

NOTES:

1. ANCHOR BOLTS, NUTS AND PLATE WASHERS NOT SHOWN FOR CLARITY.
2. CONCRETE BEARING PAD NOT SHOWN FOR CLARITY.

EXPANSION BEARING PLAN
SCALE: 1½″=1′-0″

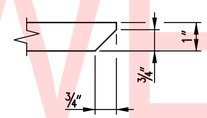

SECTION P-P
NOT TO SCALE

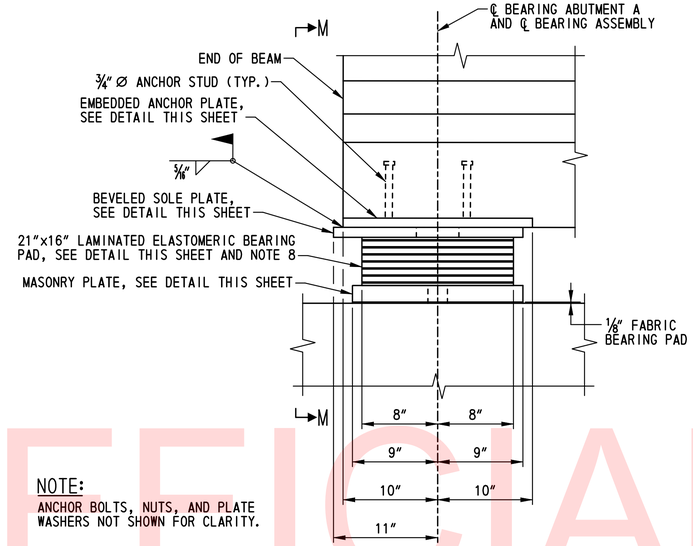

NOTE:
ANCHOR BOLTS, NUTS, AND PLATE WASHERS NOT SHOWN FOR CLARITY.

EXPANSION BEARING ELEVATION
SCALE: 1½″=1′-0″

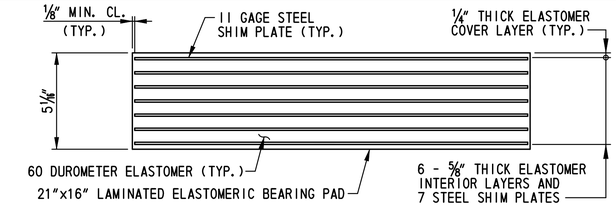

LAMINATED ELASTOMERIC BEARING PAD DETAIL
SCALE: 3″=1′-0″

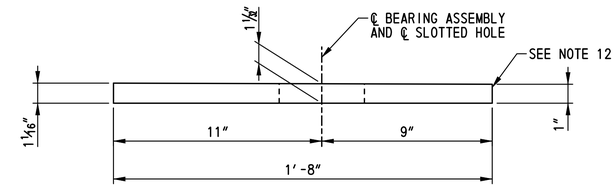

SECTION N-N
SCALE: 3″=1′-0″

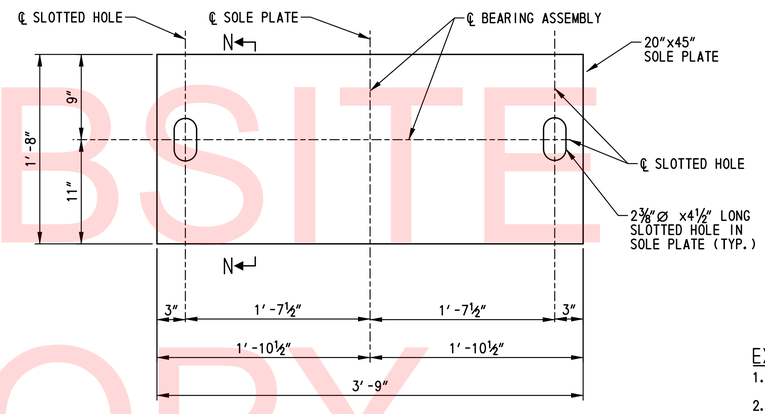

SOLE PLATE
SCALE: 1½″=1′-0″

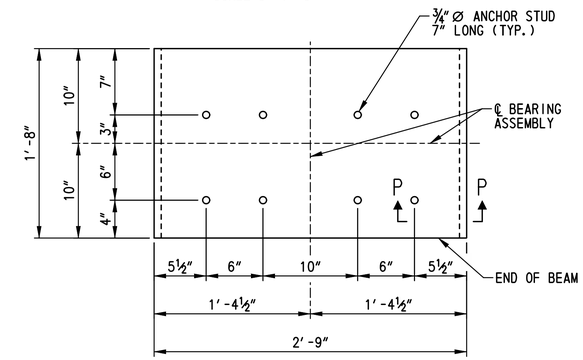

EMBEDDED ANCHOR PLATE
SCALE: 1½″=1′-0″

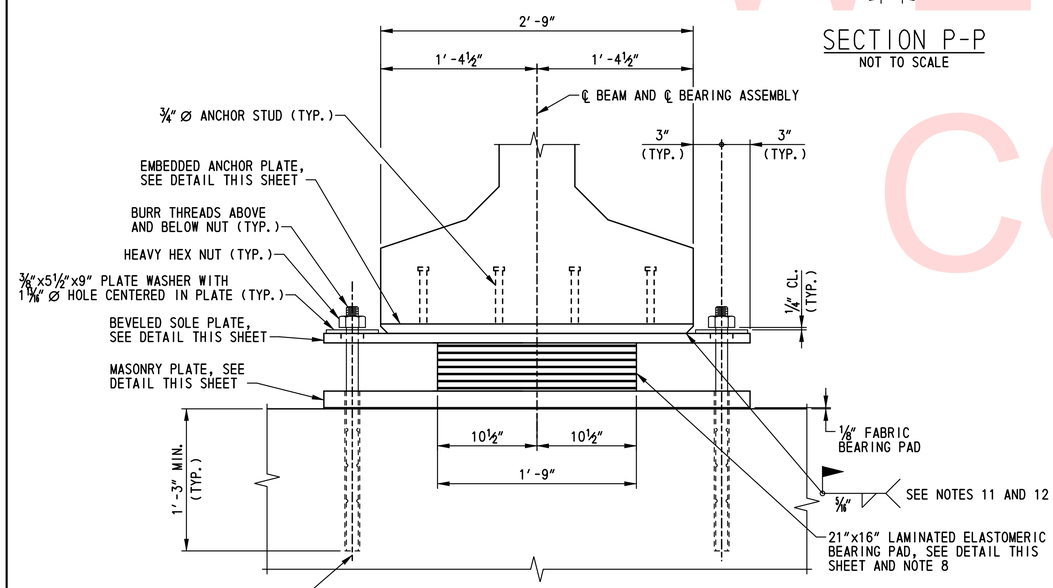

VIEW M-M
SCALE: 1½″=1′-0″

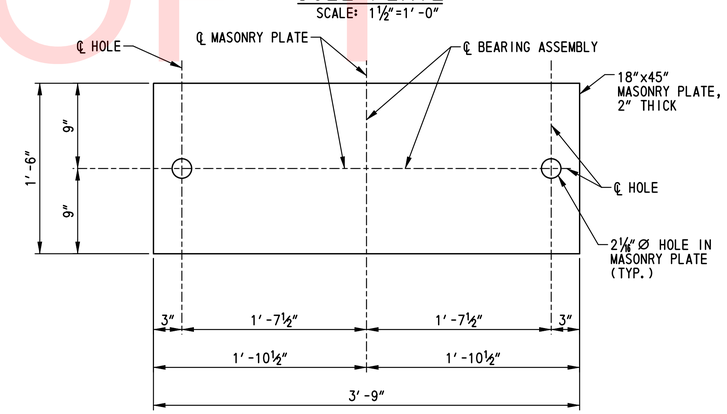

MASONRY PLATE
SCALE: 1½″=1′-0″

EXPANSION BEARING NOTES:

1. BEARING ASSEMBLIES SHALL BE PLACED PERPENDICULAR TO THE CENTERLINE OF BEAM.
2. ANCHOR PLATES, SHEAR PLATES, SOLE PLATES AND MASONRY PLATES TO BE UNPAINTED A 709, GRADE 36 GALVANIZED STEEL. PLATES SHALL BE HOT-DIPPED GALVANIZED AFTER FABRICATION.
3. FILL HOLES AROUND ANCHOR BOLTS WITH NONHARDENING CAULKING COMPOUND OR ELASTIC JOINT SEALER.
4. 1000 RMS FINISH ALL OVER.
5. ALL PLATE WASHERS SHALL BE UNPAINTED A 709, GRADE 36 GALVANIZED STEEL. ALL NUTS SHALL BE UNPAINTED A 563 GALVANIZED STEEL.
6. ALL ANCHOR STUDS SHALL CONFORM TO ASTM A 108, GRADE 1015, 1018, OR 1020, HOT-DIP GALVANIZED IN CONFORMANCE WITH ASTM A 153.
7. ALL ANCHOR BOLTS SHALL BE ASTM F 1554 GRADE 105 STEEL, HOT-DIP GALVANIZED IN CONFORMANCE WITH ASTM A 153.
8. ELASTOMERIC BEARINGS SHALL CONFORM TO AASHTO M 251. THE ELASTOMER SHALL BE 60 DUROMETER. THE SHIMS SHALL BE 11 GAGE MILD STEEL CONFORMING TO ASTM A 36.
9. THE SOLE PLATE AND MASONRY PLATE SHALL BE FACTORY VULCANIZED TO THE LAMINATED ELASTOMERIC BEARING PAD. THE BEARINGS ARE TO BE SHIPPED ASSEMBLED AS UNITS.
10. BEARING MAXIMUM DESIGN LOAD: 256 KIPS.
11. THE TEMPERATURE OF THE STEEL ADJACENT TO THE ELASTOMER SHALL BE KEPT BELOW 250 DEGREES (F) DURING FIELD WELDING. TEMPERATURE CRAYONS OR OTHER HEAT INDICATING DEVICES SHALL BE PROVIDED FOR WELDING INSPECTION. TOUCH-UP SOLE PLATE PAINT SYSTEM AFTER WELDING.
12. THINNER END OF BEVELED SOLE PLATE SHALL BE MARKED TO ENSURE PROPER INSTALLATION IN FIELD. THINNER END SHALL BE PLACED STATIONS AHEAD.

UNOFFICIAL WEBSITE COPY

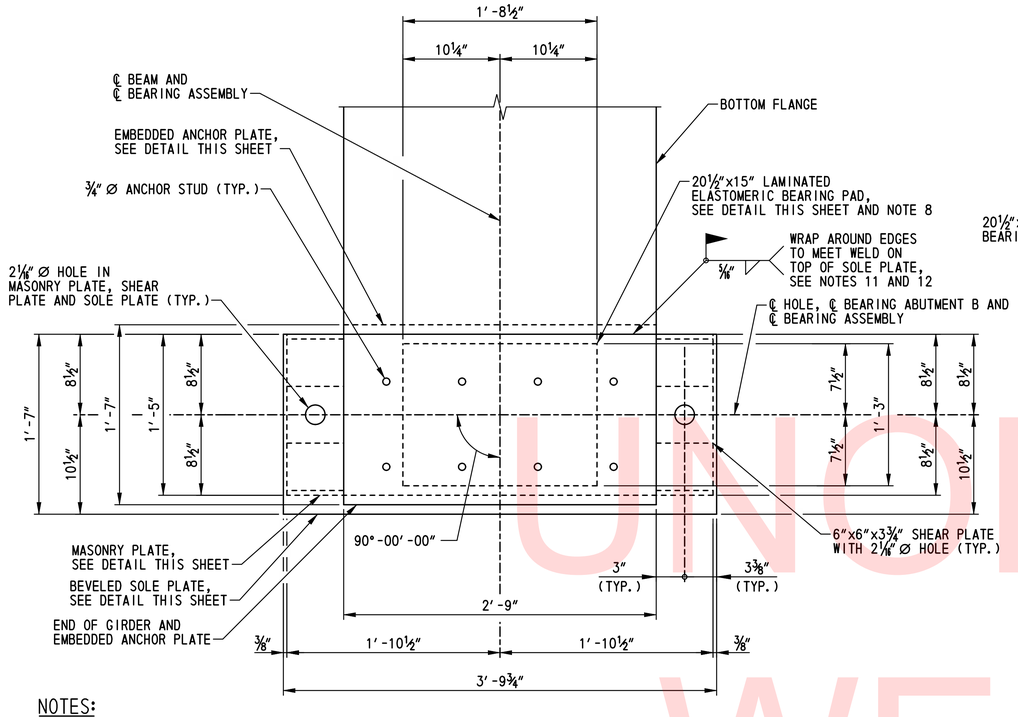

NOTES:

1. ANCHOR BOLTS, NUTS AND PLATE WASHERS NOT SHOWN FOR CLARITY.
2. CONCRETE BEARING PAD NOT SHOWN FOR CLARITY.

FIXED BEARING PLAN
SCALE: 1½"=1'-0"

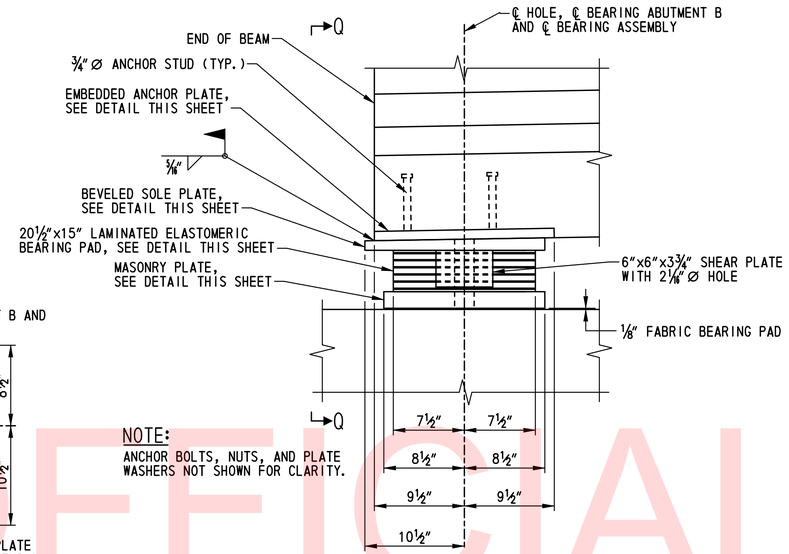

NOTE:
ANCHOR BOLTS, NUTS, AND PLATE WASHERS NOT SHOWN FOR CLARITY.

FIXED BEARING ELEVATION
SCALE: 1½"=1'-0"

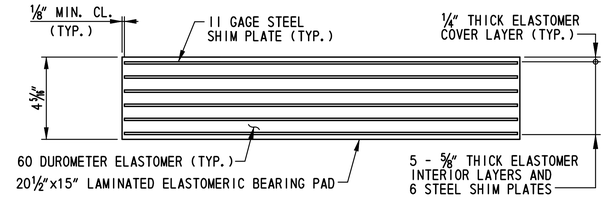

LAMINATED ELASTOMERIC BEARING PAD DETAIL
SCALE: 3"=1'-0"

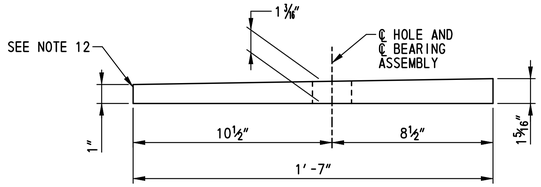

SECTION R-R
SCALE: 3"=1'-0"

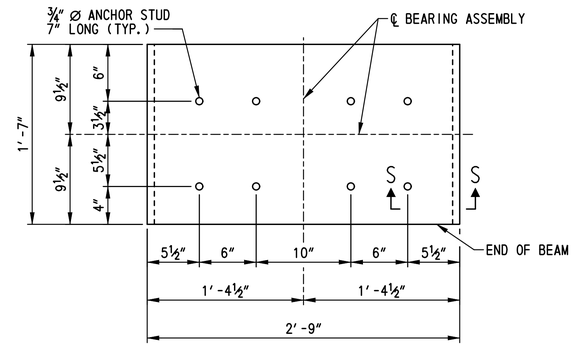

EMBEDDED ANCHOR PLATE
SCALE: 1½"=1'-0"

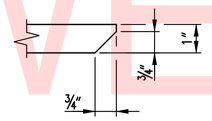

SECTION S-S
NOT TO SCALE

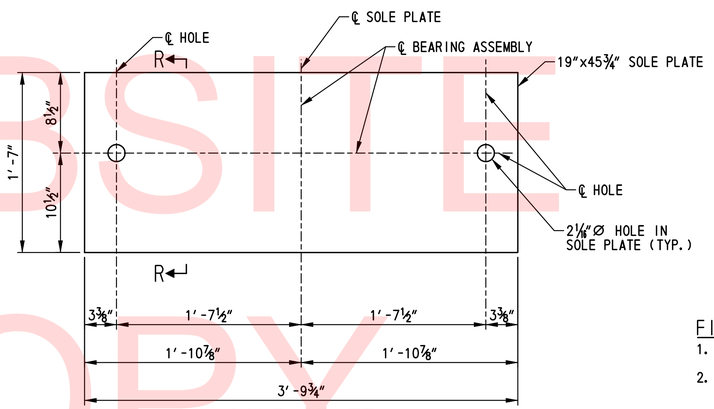

SOLE PLATE
SCALE: 1½"=1'-0"

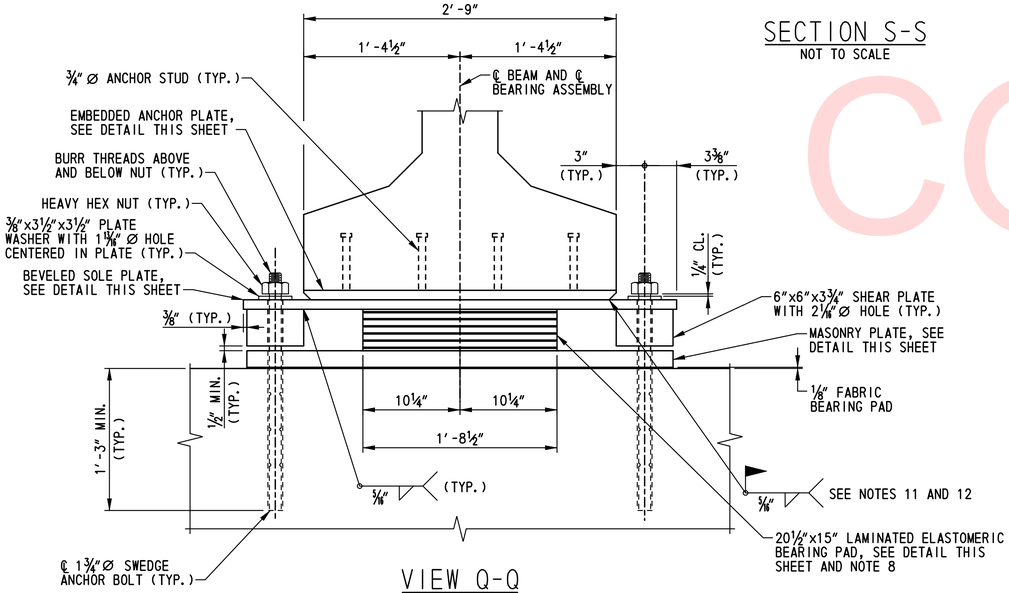

VIEW Q-Q
SCALE: 1½"=1'-0"

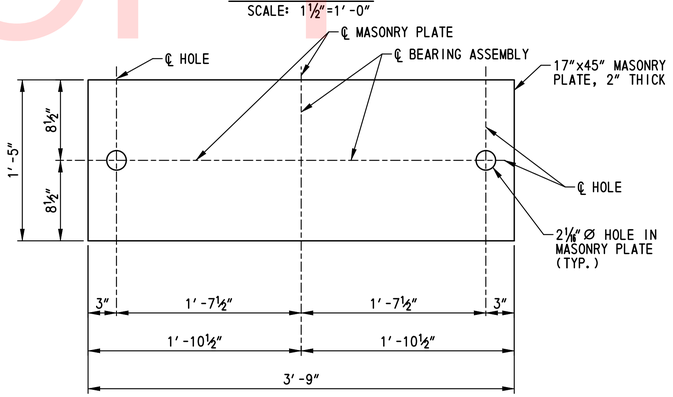

MASONRY PLATE
SCALE: 1½"=1'-0"

FIXED BEARING NOTES:

1. BEARING ASSEMBLIES SHALL BE PLACED PERPENDICULAR TO THE CENTERLINE OF BEAM.
2. ANCHOR PLATES, SHEAR PLATES, SOLE PLATES AND MASONRY PLATES TO BE UNPAINTED A 709, GRADE 36 GALVANIZED STEEL. PLATES SHALL BE HOT-DIPPED GALVANIZED AFTER FABRICATION.
3. FILL HOLES AROUND ANCHOR BOLTS WITH NONHARDENING CAULKING COMPOUND OR ELASTIC JOINT SEALER.
4. 1000 RMS FINISH ALL OVER.
5. ALL PLATE WASHERS SHALL BE UNPAINTED A 709, GRADE 36 GALVANIZED STEEL. ALL NUTS SHALL BE UNPAINTED A 563 GALVANIZED STEEL.
6. ALL ANCHOR STUDS SHALL CONFORM TO ASTM A 108, GRADE 1015, 1018, OR 1020, HOT-DIP GALVANIZED IN CONFORMANCE WITH ASTM A 153.
7. ALL ANCHOR BOLTS SHALL BE ASTM F 1554 GRADE 105 STEEL, HOT-DIP GALVANIZED IN CONFORMANCE WITH ASTM A 153.
8. ELASTOMERIC BEARINGS SHALL CONFORM TO AASHTO M 251. THE ELASTOMER SHALL BE 60 DUROMETER. THE SHIMS SHALL BE 11 GAGE MILD STEEL CONFORMING TO ASTM A 36.
9. THE SOLE PLATE AND MASONRY PLATE SHALL BE FACTORY VULCANIZED TO THE LAMINATED ELASTOMERIC BEARING PAD. THE BEARINGS ARE TO BE SHIPPED ASSEMBLED AS UNITS.
10. BEARING MAXIMUM DESIGN LOAD: 256 KIPS.
11. THE TEMPERATURE OF THE STEEL ADJACENT TO THE ELASTOMER SHALL BE KEPT BELOW 250 DEGREES (F) DURING FIELD WELDING. TEMPERATURE CRAYONS OR OTHER HEAT INDICATING DEVICES SHALL BE PROVIDED FOR WELDING INSPECTION. TOUCH-UP SOLE PLATE PAINT SYSTEM AFTER WELDING.
12. THINNER END OF BEVELED SOLE PLATE SHALL BE MARKED TO ENSURE PROPER INSTALLATION IN FIELD. THINNER END SHALL BE PLACED STATIONS AHEAD.

UNOFFICIAL WEBSITE COPY

DELAWARE DEPARTMENT OF TRANSPORTATION	ADDENDUMS / REVISIONS	SCALE: AS SHOWN	US 301 & SR 1 INTERCHANGE	CONTRACT T200911302 / COUNTY NEW CASTLE	BRIDGE NO. 1-432 / DESIGNED BY: A.J.F. / CHECKED BY: P.S.D.	ABUTMENT B FIXED BEARING DETAILS

BR1-2
BB-02

SHEET NO. 179
TOTAL SHTS. 491

N:\31653-000\Contract 1B\CADD\Bridge\Br_No2\BB02_br1-2.dgn
12/8/2015 4:00:59 PM

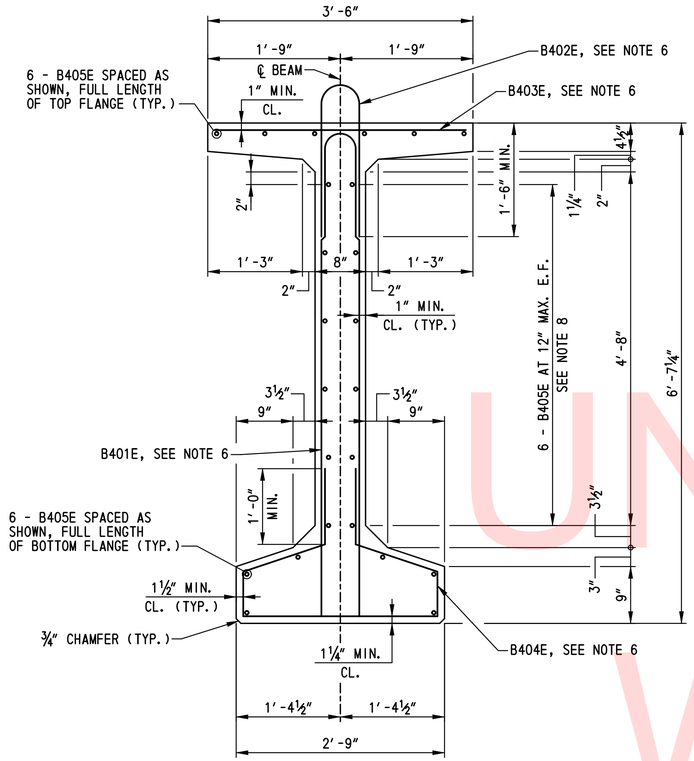

TYPICAL SECTION
SCALE: 1″=1′-0″

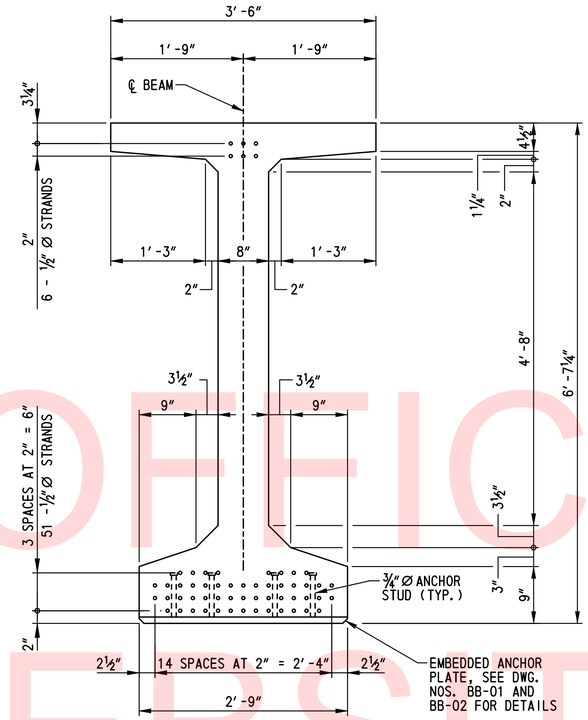

SECTION AT END OF BEAM
SCALE: 1″=1′-0″

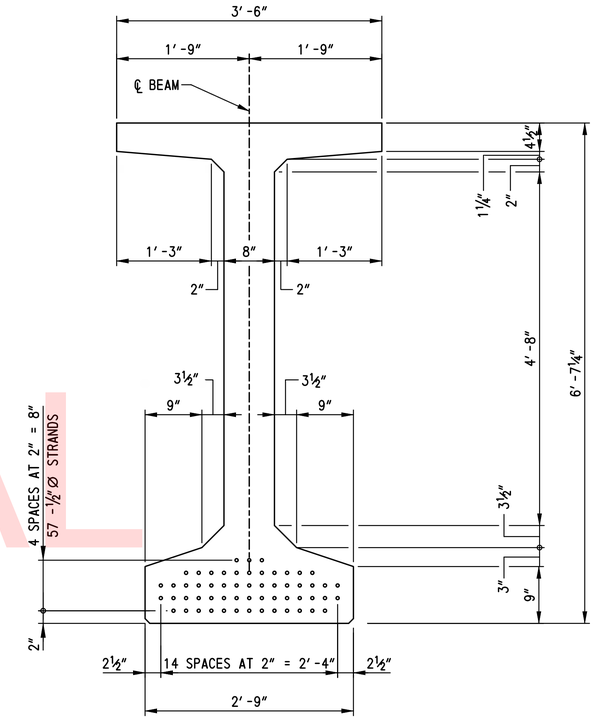

SECTION AT MIDSPAN
SCALE: 1″=1′-0″

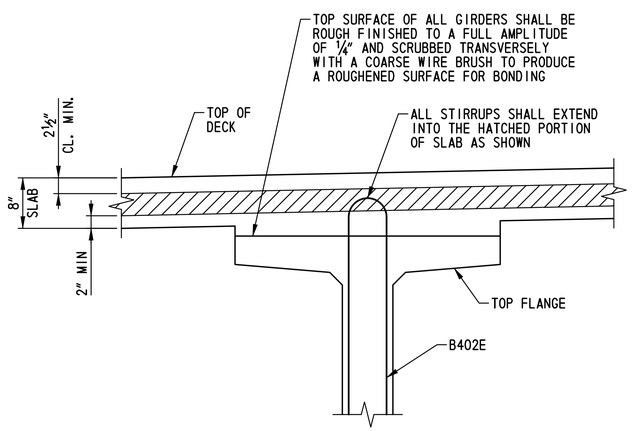

BEAM FINISH DETAIL
SCALE: 1″=1′-0″

NOTES:

1. LIFTING DETAIL TYPICAL AT BOTH ENDS OF ALL BEAMS PLACED AT BEAM CENTERLINE.
2. AT THE CONTRACTOR'S OPTION, ALTERNATE LIFTING DETAILS WILL BY CONSIDERED SUBJECT TO THE APPROVAL OF THE ENGINEER. NO ADDITIONAL COMPENSATION WILL BE ALLOWED TO THE CONTRACTOR FOR ALTERNATIVE LIFTING DEVICES.
3. PRESTRESSING STEEL AND MILD REINFORCEMENT NOT SHOWN FOR CLARITY.

SPECIFICATIONS					BENDING DIMENSIONS (FEET-INCHES / 1/4 INCH)				
QTY.	SIZE	LENGTH	MARK	TYPE	A	B	C	D	E
159	4	13-01 2	B401E	1	0-06 0	6-05 0	13-01 2		
159	4	4-03 2	B402E	1	0-06 0	2-00 0	4-03 2		
131	4	3-03 0	B403E	STR		3-03 0			
159	4	7-09 0	B404E	3	1-00 0	1-00 0	0-04 0	0-06 3	2-06 0
24	4	129-03 2	B405E*	STR		129-03 2			
4	6	4-00 0	B606E	2	2-00 0	2-00 0			

STANDARD BAR BENDS

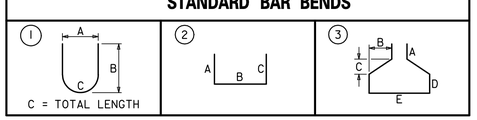

QUANTITY SHOWN FOR EACH BEAM
* OVERALL LENGTH SHOWN, LAP SPLICE AS REQUIRED, SEE NOTE 8

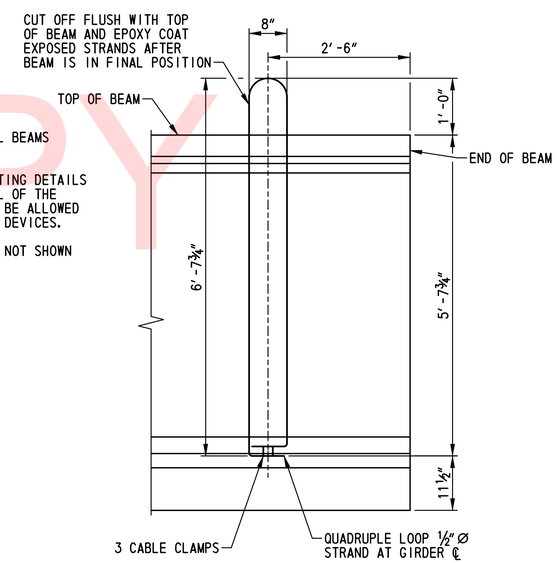

BEAM LIFTING DETAIL
SCALE: ¾″=1′-0″

BEAM NOTES:

1. BEAMS ARE 33/79.25″ PCEF BULB-TEE BEAMS. THE BEAMS HAVE BEEN DESIGNED USING A DRAPED STRAND PATTERN AS SHOWN. THE FABRICATOR MAY ELECT TO USE ALTERNATE STRAND PATTERNS, DEBONDING OF STRANDS, OR ADDITIONAL STRANDS. THE FABRICATOR SHALL SUBMIT SHOP DRAWINGS FOR REVIEW AND ACCEPTANCE SHOWING THE ALTERNATE PATTERN ALONG WITH STRESS CALCULATIONS DOCUMENTING THE CHANGE. CALCULATIONS SHALL BE SIGNED AND SEALED BY A REGISTERED PROFESSIONAL ENGINEER IN THE STATE OF DELAWARE.
2. THE MINIMUM CONCRETE COMPRESSIVE STRENGTH AT TIME OF INITIAL PRESTRESS SHALL BE 6,400 PSI. THE MINIMUM CONCRETE COMPRESSIVE STRENGTH AT 28 DAYS SHALL BE 8,000 PSI. THE ALLOWABLE CONCRETE TENSION AT TRANSFER SHALL BE 0.2 KSI AND AT 28 DAYS SHALL BE $6\sqrt{f'c}$.
3. PRESTRESSING STEEL SHALL BE HIGH STRENGTH UNCOATED 7-WIRE LOW RELAXATION STRAND WITH A NOMINAL DIAMETER OF ½″ AND SHALL CONFORM TO M 203, GRADE 270. THE INITIAL PRESTRESSING FORCE APPLIED TO EACH STRAND SHALL BE 30,980 LBS. MINIMUM COVER FOR ANY STRAND SHALL BE 1½″.
4. MILD STEEL REINFORCEMENT SHALL MEET THE REQUIREMENTS FOR REINFORCING STEEL IN THE PROJECT NOTES, DWG. NO. PN-01. ALL MILD STEEL REINFORCEMENT SHALL BE EPOXY COATED. MILD STEEL REINFORCEMENT SHALL BE INCIDENTAL TO ITEM 623003 - PRESTRESSED REINFORCED CONCRETE MEMBERS, BULB TBEAM.
5. NO CLEAR COVER LESS THAN AS SHOWN ON THESE PLANS WILL BE ACCEPTED.
6. SEE BEAM ELEVATION DWG. NO. BM-02 FOR MILD STEEL REINFORCEMENT SPACING.
7. TOPS OF ALL BEAMS SHALL HAVE A ROUGHENED SURFACE FOR BONDING. SEE BEAM FINISH DETAIL THIS SHEET.
8. PROVIDE LONGITUDINAL REINFORCEMENT ALONG FULL LENGTH OF WEB. OMIT LONGITUDINAL BARS IN BEAM WEB AT STRAND DRAPE LOCATIONS TO MAINTAIN CLEARANCE.
9. FOR STAY-IN-PLACE FORM SUPPORT DETAILS, SEE DWG. NO. DK-03.

UNOFFICIAL WEBSITE COPY

N:\31653-000\Contract 1B\CADD\Bridge\Br_Nr2\BM01_br1-2.dgn
2/5/2013 8:25:03 AM

DELAWARE DEPARTMENT OF TRANSPORTATION	ADDENDUMS / REVISIONS	SCALE: AS SHOWN	US 301 & SR 1 INTERCHANGE	CONTRACT T200911302 / COUNTY NEW CASTLE	BRIDGE NO. 1-432 / DESIGNED BY: A.J.F. / CHECKED BY: P.S.D.	PCEF BULB-TEE BEAM DETAILS – 1

BR1-2
BM-01

SHEET NO. 180
TOTAL SHTS. 491

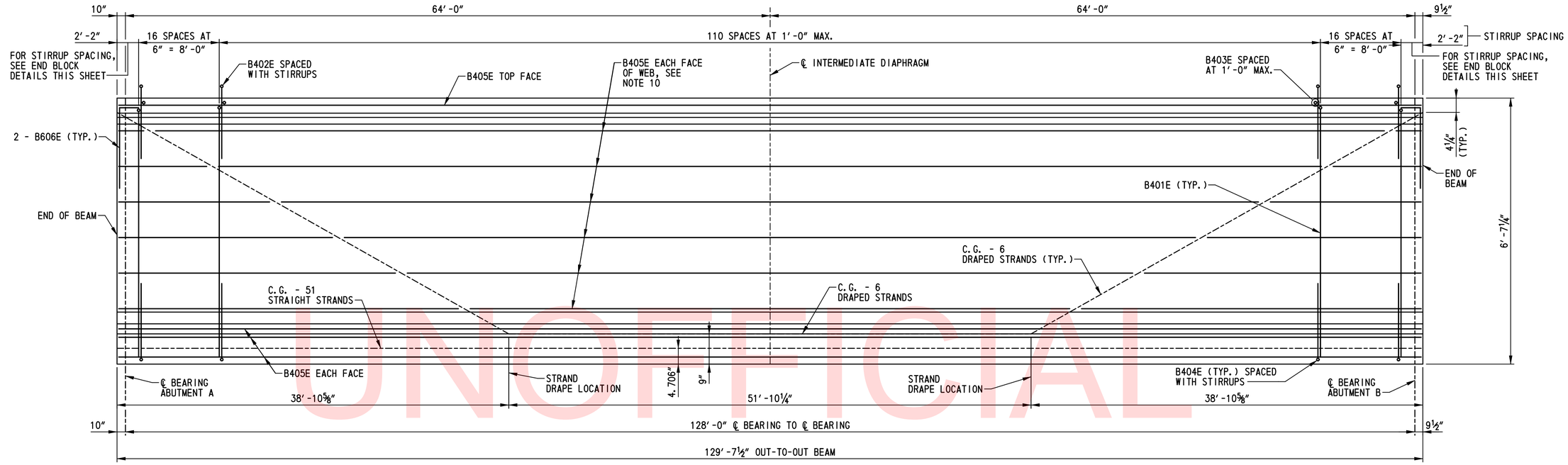

BEAM ELEVATION

HORIZONTAL SCALE: ⅛"=1'-0"
VERTICAL SCALE: ¾"=1'-0"

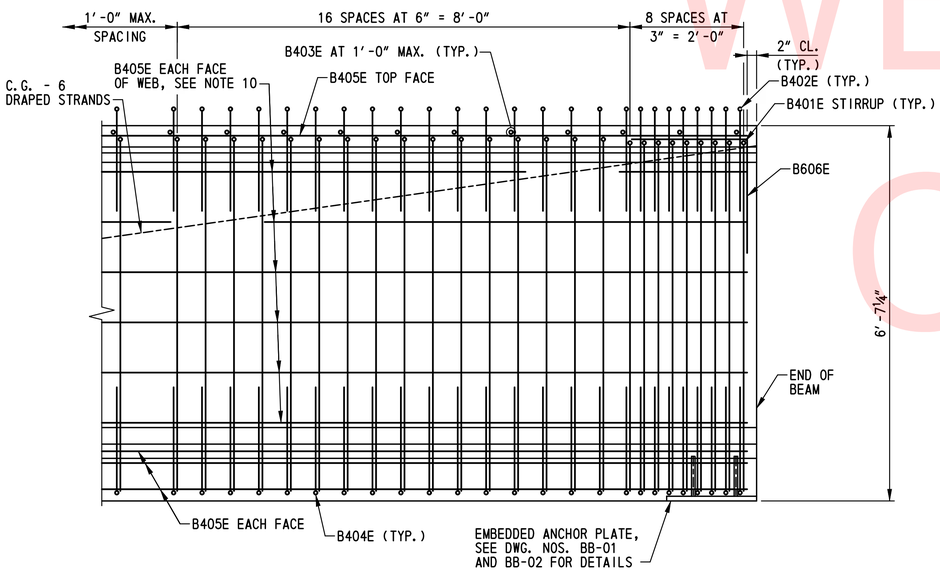

END BLOCK DETAIL

SCALE: ¾"=1'-0"

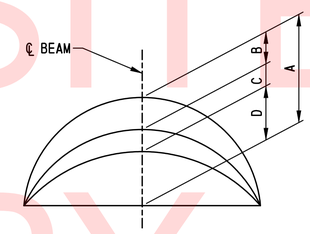

CAMBER DIAGRAM

SCALE: NOT TO SCALE

CAMBER TABLE				
BEAM	A	B	C	D
EXTERIOR	5 7/16"	2 11/16"	1¼"	1½"
INTERIOR	5 7/16"	2 11/16"	1 7/16"	1⅜"

CAMBER NOTES:

1. CAMBER AND DEFLECTIONS ARE SHOWN IN INCHES.
2. A = ESTIMATED CAMBER DUE TO PRESTRESS.
   B = DEFLECTION DUE TO WEIGHT OF BEAM.
   C = DEFLECTION DUE TO WEIGHT OF CONCRETE DECK SLAB, HAUNCH, DIAPHRAGMS, STEEL BRIDGE DECK FORMS AND CONCRETE PARAPETS.
   D = NET CAMBER AT ERECTION.
3. THE TABLE CAMBERS AND DEFLECTIONS ARE THEORETICAL VALUES AND MAY VARY WITH ACTUAL CONCRETE STRENGTH (AGE), PRESTRESSING CONDITIONS, LONG-TERM DEFLECTION MULTIPLIERS, AND PRESTRESS LOSSES. THE ESTIMATED CAMBER DUE TO PRESTRESS AND DEFLECTION DUE TO WEIGHT OF GIRDER ARE BASED UPON A CREEP FACTOR EQUAL TO 1.6 AND PRESTRESS LOSS EQUAL TO 10%.
4. THE THICKNESS OF THE CONCRETE HAUNCH SHALL BE VARIED TO COMPENSATE FOR ANY DIFFERENCE IN GIRDER CAMBER.

NOTES:

1. FOR BEAM NOTES AND BEAM REINFORCEMENT DETAILS, SEE DWG. NO. BM-01.
2. ALL DIMENSIONS MEASURED ALONG CENTERLINE OF BEAM.
3. SEE ABUTMENT DIAPHRAGM DETAILS ON DWG. NO. DT-01 FOR ADDITIONAL INFORMATION.
4. SEE INTERMEDIATE DIAPHRAGM DETAILS ON DWG. NO. DT-02 FOR ADDITIONAL INFORMATION.
5. BEAM LENGTH IN CASTING BED SHALL BE DETERMINED AND DEPICTED IN SHOP DRAWINGS TO COMPENSATE FOR GRADE AND SHORTENING DUE TO PRESTRESS EFFECT.
6. THE FABRICATOR SHALL SHOW ANY MODIFICATIONS TO REINFORCEMENT SPLICE AND BENDING DETAILS ON SHOP DRAWINGS.
7. THE FABRICATOR SHALL SHOW THE FOLLOWING DATA ON THE SHOP DRAWINGS:
   1) THE SIZE AND LOCATION OF THE TEMPORARY STORAGE SUPPORTS.
   2) THE TYPE AND LOCATION OF THE BRACING AND TEMPORARY SUPPORTS USED FOR THE TRANSPORTATION AND ERECTION OF THE BEAMS.
8. END ZONE REINFORCEMENT MAY BE INCREASED BY FABRICATOR TO REFLECT FABRICATOR'S EXPERIENCE AND/OR TO CONTROL CRACKING.
9. THE FABRICATOR SHALL CHECK STABILITY FOR HANDLING AND TRANSPORTING OF THE MEMBERS.
10. PROVIDE LONGITUDINAL REINFORCEMENT ALONG FULL LENGTH OF WEB. OMIT LONGITUDINAL BARS IN BEAM WEB AT STRAND DRAPE LOCATIONS TO MAINTAIN CLEARANCE.
11. FOR PERMANENT STEEL BRIDGE DECK FORM DETAILS, SEE DWG. NO. DK-03.

UNOFFICIAL WEBSITE COPY

N:\31653-000\Contract 1B\CADD\Bridge\Br_No2\BM02_br1-2.dgn
2/5/2015 8:25:26 AM

DELAWARE DEPARTMENT OF TRANSPORTATION	ADDENDUMS / REVISIONS	SCALE: AS SHOWN	US 301 & SR 1 INTERCHANGE	CONTRACT T200911302	BRIDGE NO. 1-432	PCEF BULB-TEE BEAM DETAILS - 2	BR1-2 BM-02
				COUNTY NEW CASTLE	DESIGNED BY: A.J.F.		SHEET NO. 181
					CHECKED BY: P.S.D.		TOTAL SHTS. 491

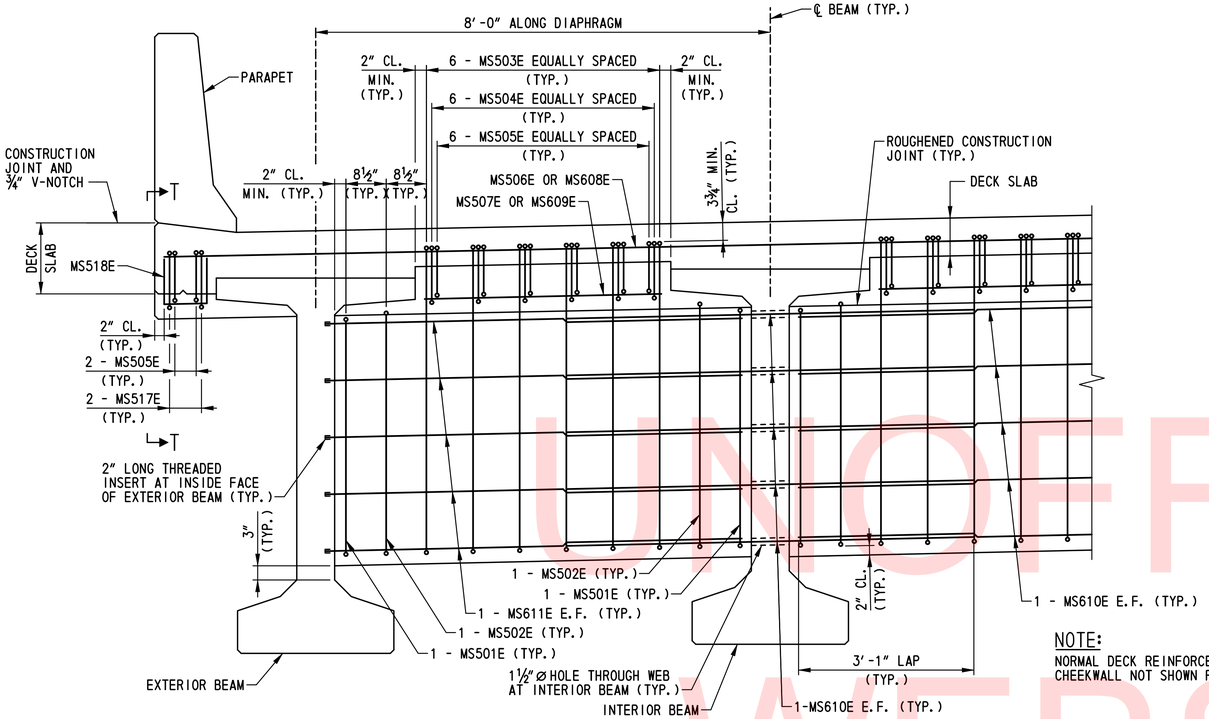

ABUTMENT DIAPHRAGM ELEVATION

SCALE: ¾″=1′-0″

NOTE:

NORMAL DECK REINFORCEMENT AND ABUTMENT CHEEKWALL NOT SHOWN FOR CLARITY.

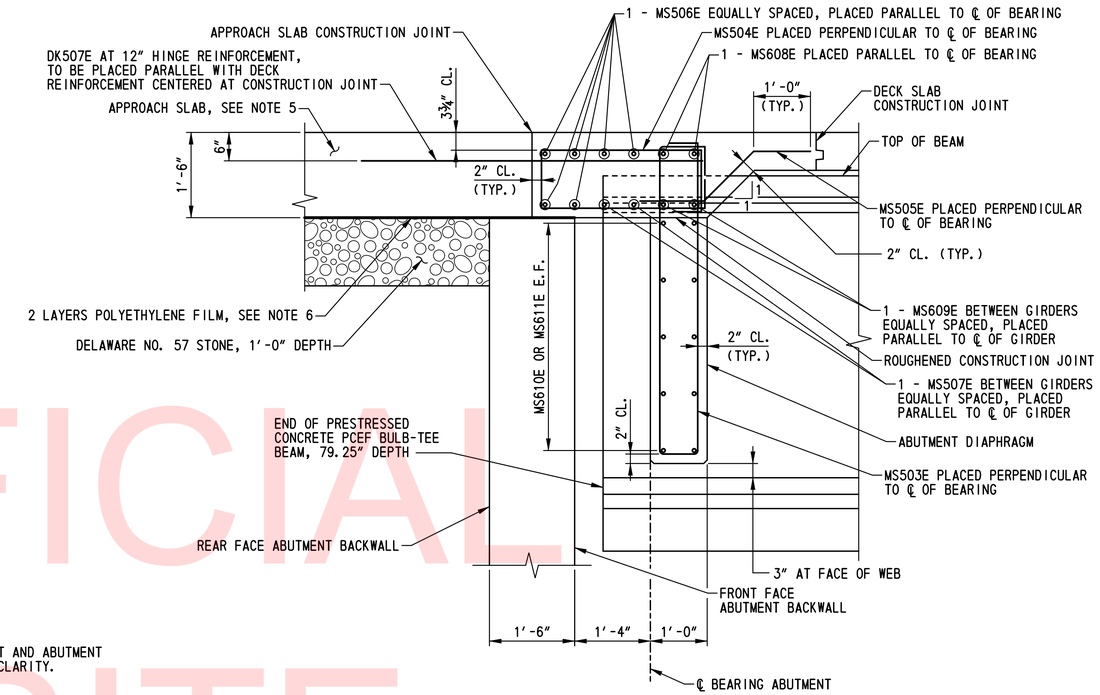

ABUTMENT DIAPHRAGM SECTION

SCALE: ¾″=1′-0″

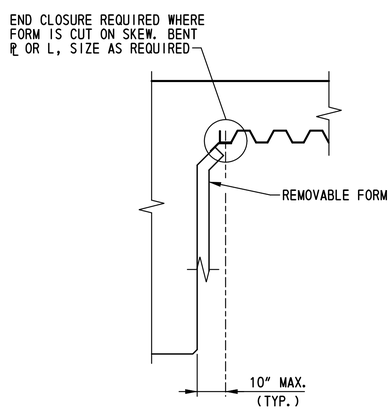

STEEL FORMS AT ABUTMENT DIAPHRAGM

NOT TO SCALE

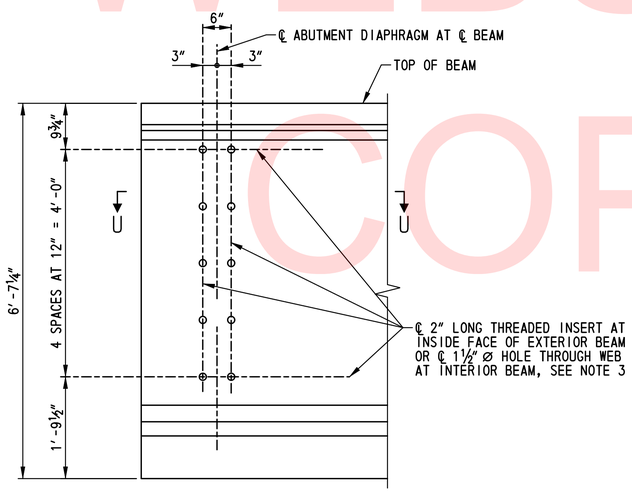

ELEVATION

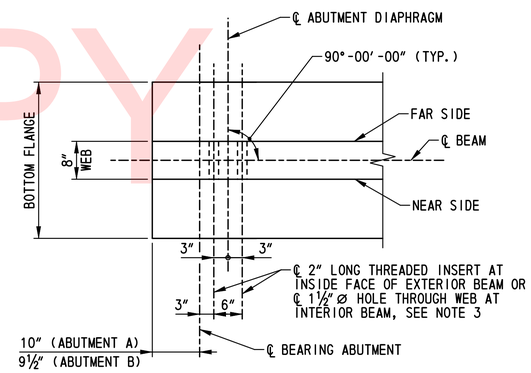

SECTION U-U

BEAM FACE AT ABUTMENT DIAPHRAGM DETAIL

SCALE: ¾″=1′-0″

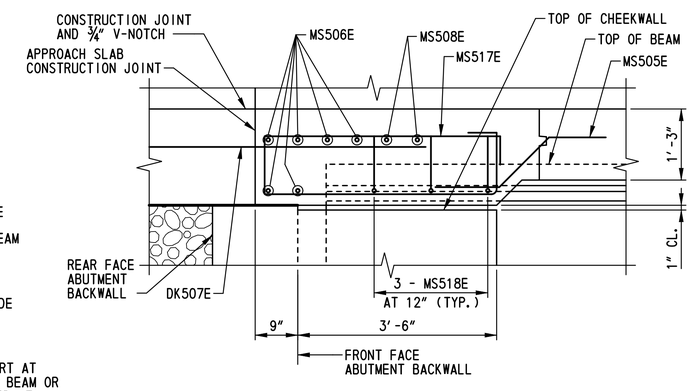

VIEW T-T

SCALE: ¾″=1′-0″

NOTES:

1. ABUTMENT DIAPHRAGMS SHOWN LOOKING STATIONS AHEAD.
2. FOR LOCATION OF ABUTMENT DIAPHRAGMS, SEE FRAMING PLAN ON DWG. NO. FR-01.
3. THE 2″ LONG THREADED INSERTS SHALL BE USED FOR THE EXTERIOR BEAMS ONLY. ONLY 1½″ø HOLES SHALL BE USED FOR THE INTERIOR BEAMS. THREADED INSERTS AND HOLES SHALL BE CAST-IN-PLACE AND PLACED AT THE DIAPHRAGM ANGLE SHOWN ON THE PLANS.
4. ALL REINFORCEMENT SHALL BE EPOXY COATED.
5. APPROACH SLAB AND NOMINAL DECK SLAB REINFORCEMENT NOT SHOWN FOR CLARITY.
6. FOR POLYETHYLENE FILM INFORMATION, SEE DWG. NO. AB-02.

UNOFFICIAL WEBSITE COPY

N:\3653-000\Contract 1B\CADD\Bridge\Br_Nc2\DT01_br1-2.dgn
2/5/2013 8:39:00 AM

DELAWARE DEPARTMENT OF TRANSPORTATION	ADDENDUMS / REVISIONS	SCALE: AS SHOWN	US 301 & SR 1 INTERCHANGE	CONTRACT T200911302	BRIDGE NO. 1-432	ABUTMENT DIAPHRAGM DETAILS
				COUNTY NEW CASTLE	DESIGNED BY: A.J.F.	
					CHECKED BY: P.S.D.	

BR1-2 DT-01

SHEET NO. 182

TOTAL SHTS. 491

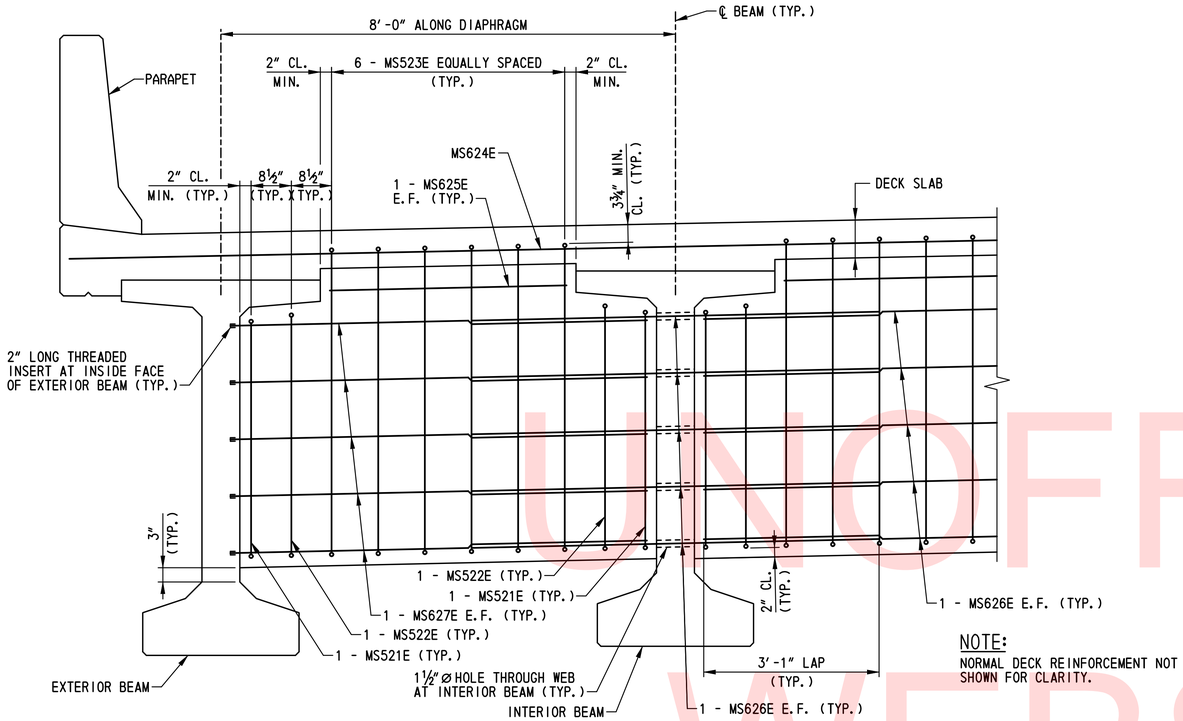

NOTE:
NORMAL DECK REINFORCEMENT NOT SHOWN FOR CLARITY.

INTERMEDIATE DIAPHRAGM ELEVATION

SCALE: ¾″=1′-0″

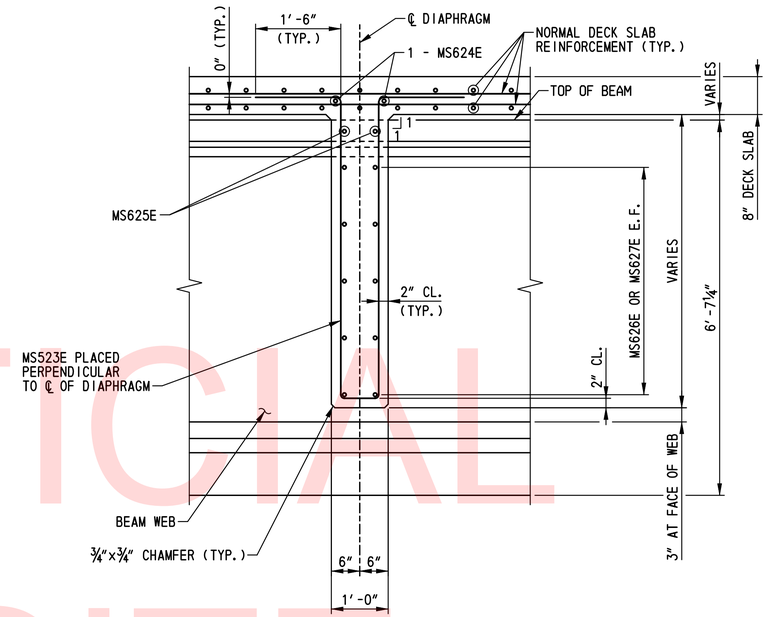

INTERMEDIATE DIAPHRAGM SECTION

SCALE: ¾″=1′-0″

UNOFFICIAL WEBSITE COPY

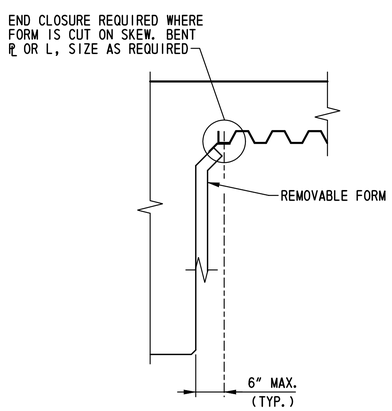

STEEL FORMS AT INTERMEDIATE DIAPHRAGM

NOT TO SCALE

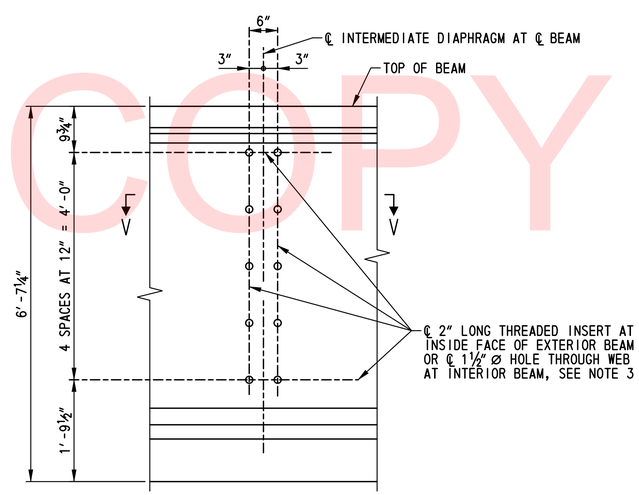

ELEVATION

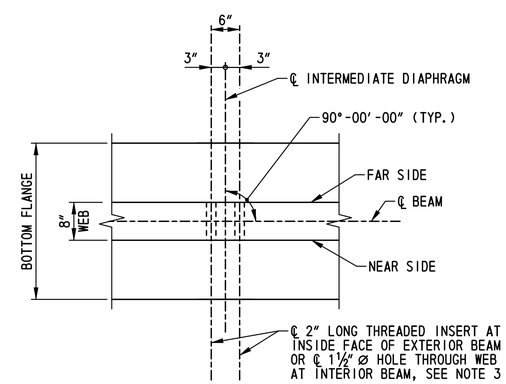

SECTION V-V

BEAM FACE AT INTERMEDIATE DIAPHRAGM DETAIL

SCALE: ¾″=1′-0″

NOTES:

1. INTERMEDIATE DIAPHRAGMS SHOWN LOOKING STATIONS AHEAD.
2. FOR LOCATION OF INTERMEDIATE DIAPHRAGMS, SEE FRAMING PLAN ON DWG. NO. FR-01.
3. THE 2″ LONG THREADED INSERTS SHALL BE USED FOR THE EXTERIOR BEAMS ONLY. ONLY 1½″ ø HOLES SHALL BE USED FOR THE INTERIOR BEAMS. THREADED INSERTS AND HOLES SHALL BE CAST-IN-PLACE AND PLACED AT THE DIAPHRAGM ANGLE SHOWN ON THE PLANS.
4. ALL REINFORCEMENT SHALL BE EPOXY COATED.

BR1-2
DT-02

N:\31653-000\Contract 1B\CADD\Bridge\Br_Nc2\DT02_br1-2.dgn
2/5/2013 8:27:46 AM

DELAWARE DEPARTMENT OF TRANSPORTATION	ADDENDUMS / REVISIONS	SCALE: AS SHOWN	US 301 & SR 1 INTERCHANGE	CONTRACT T200911302	BRIDGE NO. 1-432	INTERMEDIATE DIAPHRAGM DETAILS	SHEET NO. 183
				COUNTY NEW CASTLE	DESIGNED BY: A.J.F.		TOTAL SHTS. 491
					CHECKED BY: P.S.D.		

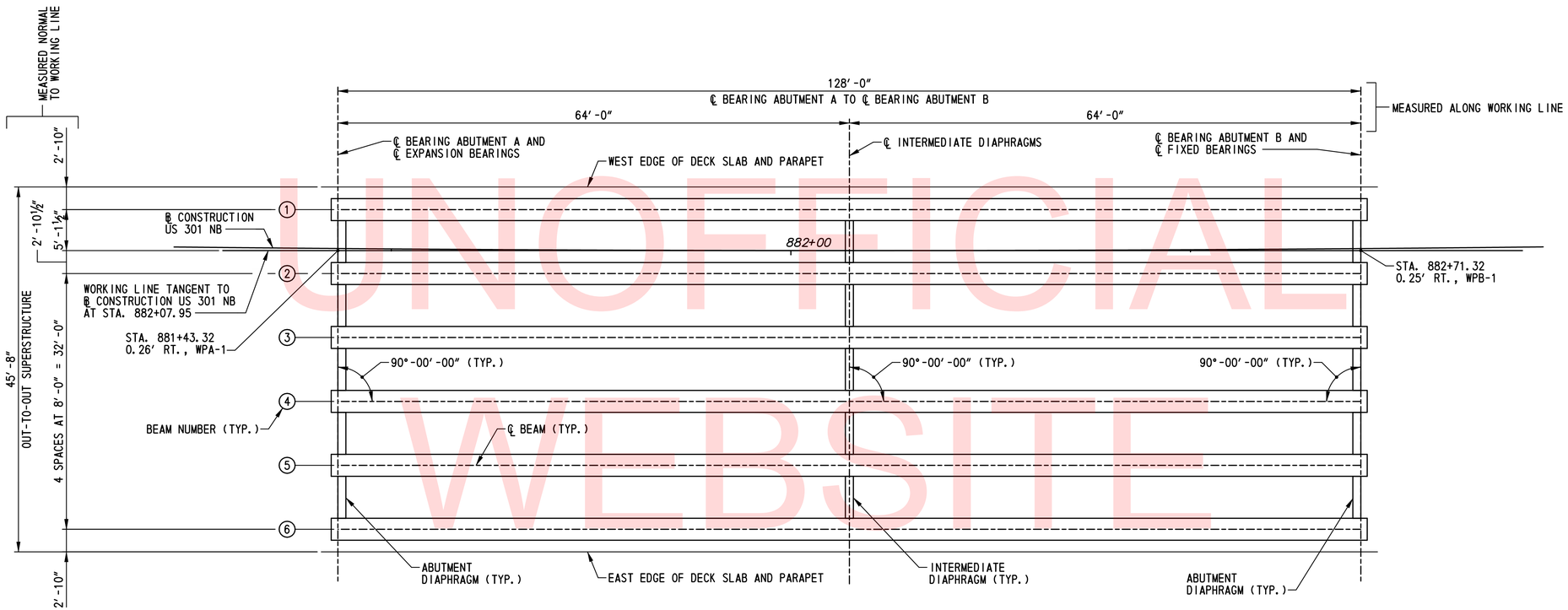

FRAMING PLAN

SCALE: ⅛″=1′-0″

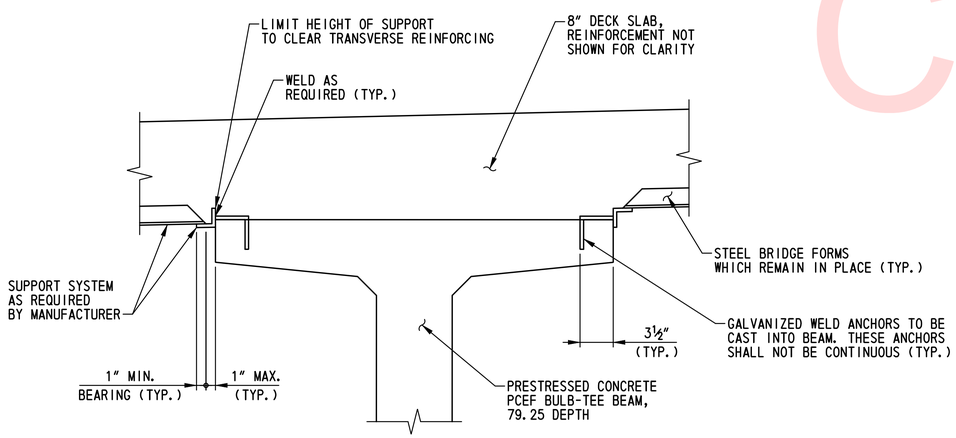

S. I. P. FORM SUPPORT DETAIL

SCALE: 1½″=1′-0″

NOTES:

1. ABUTMENT DIAPHRAGMS ARE PARALLEL TO THE ℄ BEARINGS. FOR ABUTMENT DIAPHRAGM DETAILS, SEE DWG. NO. DT-01.
2. FOR INTERMEDIATE DIAPHRAGM DETAILS, SEE DWG. NO. DT-02.
3. FOR STAY-IN-PLACE FORM NOTES, SEE DWG. NO. DK-03.

UNOFFICIAL WEBSITE COPY

N:\31653-000\CONTRACT 1B\CADD\Bridge\Br_No2\FR01_br1-2.dgn
2/5/2015 12:07:10 PM

DELAWARE DEPARTMENT OF TRANSPORTATION	ADDENDUMS / REVISIONS	SCALE: AS SHOWN	US 301 & SR 1 INTERCHANGE	CONTRACT T200911302	BRIDGE NO. 1-432	FRAMING PLAN	BR1-2 FR-01
				COUNTY NEW CASTLE	DESIGNED BY: A.J.F.		SHEET NO. 184
					CHECKED BY: P.S.D.		TOTAL SHTS. 491

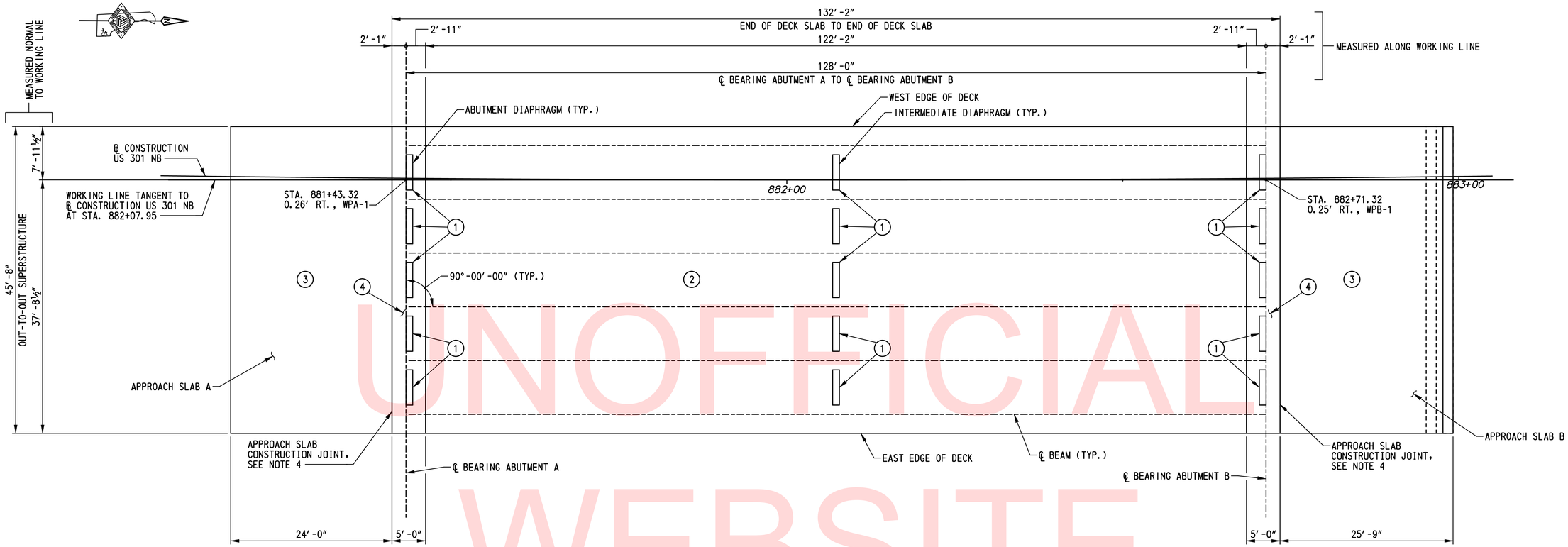

DECK SLAB POURING SEQUENCE PLAN

SCALE: ⅛"=1'-0"

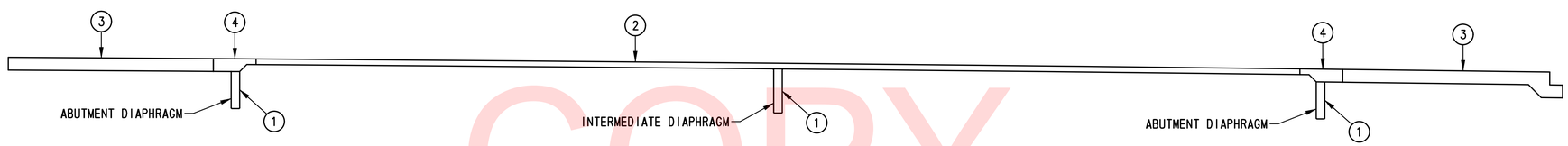

DECK SLAB POURING SEQUENCE ELEVATION

SCALE: ⅛"=1'-0"

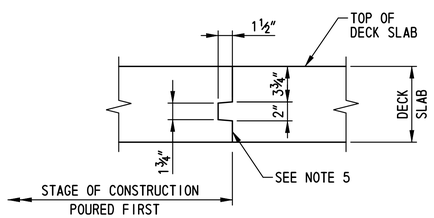

DECK SLAB CONSTRUCTION JOINT DETAIL

SCALE: 1½"=1'-0"

(1) INDICATES INTERMEDIATE OR ABUTMENT DIAPHRAGM POUR

(2) INDICATES DECK SLAB POUR

(3) INDICATES APPROACH SLAB POUR

(4) INDICATES DECK SLAB CLOSURE POUR

NOTES:

1. THE CONTRACTOR SHALL FOLLOW THE POURING SEQUENCE SHOWN ON THESE PLANS. NO OTHER ALTERNATE POURING SEQUENCE WILL BE ALLOWED FOR THIS PROJECT.
2. FOR SEQUENCE OF CONSTRUCTION, SEE DWG. NO. AB-02.
3. POURING SEQUENCE
   THE CONTRACTOR MUST START BY PLACING THE SECTIONS INDICATED AS POUR 1. THE CONTRACTOR MAY PLACE THE POUR 2 SECTION AS SOON AS ALL POUR 1 SECTIONS BENEATH IT HAVE BEEN IN PLACE A MINIMUM OF 40 HOURS. THE CONTRACTOR MAY PLACE THE POUR 3 SECTIONS AS SOON AS THE POUR 2 SECTIONS HAVE BEEN PLACED. THE CONTRACTOR MAY PLACE THE POUR 4 SECTIONS AS SOON AS THE POUR 3 SECTIONS HAVE BEEN IN PLACE A MINIMUM OF 40 HOURS. THE POUR 4 SECTIONS SHALL BE PLACED STARTING AT THE BRIDGE DECK AND WORKING TOWARD THE APPROACH SLAB.
4. MAKE A 3" DEEP SAW CUT AT THE APPROACH SLAB CONSTRUCTION JOINT NO LATER THAN 36 HOURS AFTER PLACEMENT OF POUR 4 SECTIONS. SEAL THIS SAW CUT WITH AN APPROVED COLD APPLIED SILICONE SEALANT PLACED IN A CLEAN AIR-BLOWN NOTCH FREE OF MOISTURE. COST SHALL BE INCIDENTAL TO ITEM 602014 - PORTLAND CEMENT CONCRETE MASONRY, APPROACH SLAB, CLASS D.
5. THE ENTIRE FACE OF CONSTRUCTION JOINT SHALL BE COATED WITH AN APPROVED EPOXY BONDING COMPOUND. COST SHALL BE INCIDENTAL TO ITEM 602013 - PORLAND CEMENT CONCRETE MASONRY, SUPERSTRUCTURE, CLASS D.
6. FOR FINISHED BRIDGE DECK ELEVATIONS, SEE DWG. NO. FD-01.
7. FOR DECK SLAB REINFORCEMENT, SEE DWG. NOS. DK-02 AND DK-03.
8. FOR ADDITIONAL DECK SLAB REINFORCEMENT IN THE DIAPHRAGMS, SEE DWG. NOS. DT-01 AND DT-02.

BR1-2
DK-01

UNOFFICIAL WEBSITE COPY

N:\3653-000\Contract 1B\CADD\Bridge\Br_No2\DK01_BR1-2.dgn
12/8/2015 4:03:59 PM

DELAWARE DEPARTMENT OF TRANSPORTATION	ADDENDUMS / REVISIONS	SCALE: AS SHOWN	US 301 & SR 1 INTERCHANGE	CONTRACT T200911302	BRIDGE NO. 1-432	DECK SLAB POURING SEQUENCE	SHEET NO. 185
				COUNTY NEW CASTLE	DESIGNED BY: A.J.F.		TOTAL SHTS. 491
					CHECKED BY: P.S.D.		

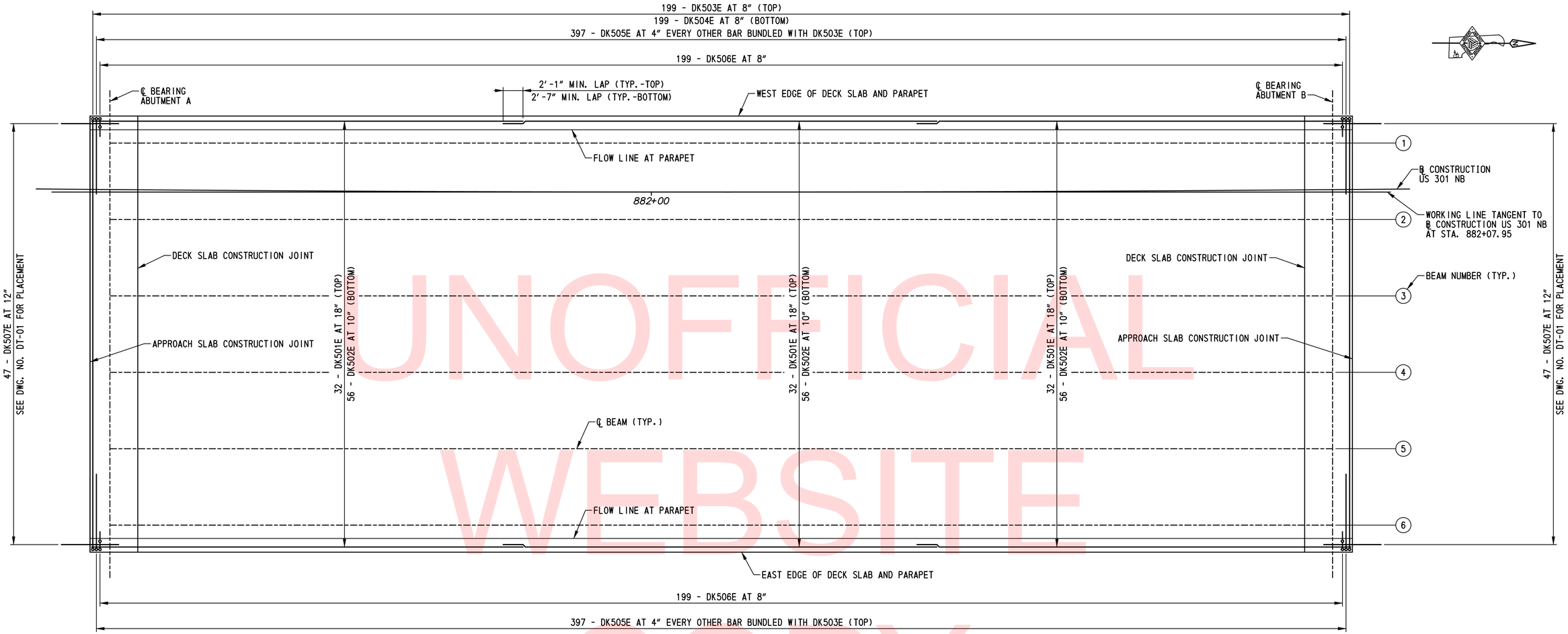

DECK SLAB REINFORCEMENT PLAN

SCALE: 3/16"=1'-0"

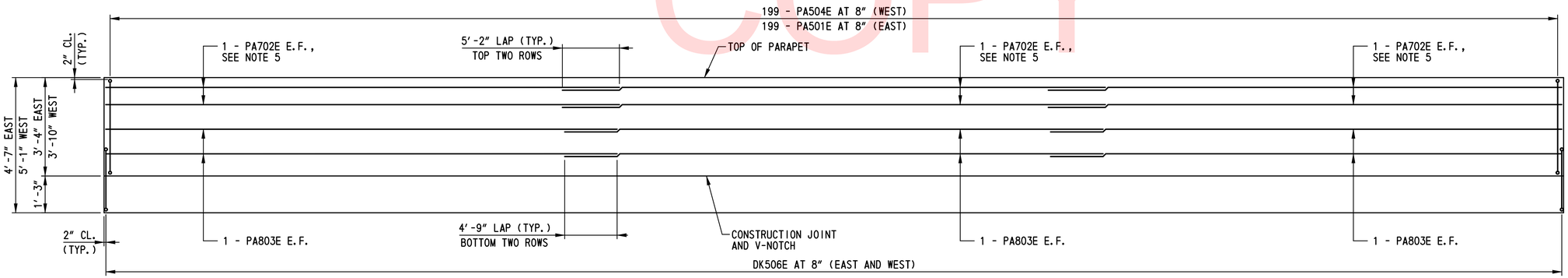

PARAPET REINFORCEMENT ELEVATION

HORIZONTAL SCALE: 3/16"=1'-0"
VERTICAL SCALE: 1/2"=1'-0"

NOTES:

1. FOR ADDITIONAL INFORMATION ON PLACEMENT OF DK505E AND DK506E AND ADDITIONAL DECK SLAB AND PARAPET REINFORCEMENT DETAILS, SEE DECK SLAB TYPICAL REINFORCEMENT SECTION ON DWG. NO. DK-03.
2. FOR ADDITIONAL DECK SLAB REINFORCEMENT IN ABUTMENT DIAPHRAGM, SEE DWG. NO. DT-01.
3. FOR ADDITIONAL DECK SLAB REINFORCEMENT IN INTERMEDIATE DIAPHRAGM, SEE DWG. NO. DT-02.
4. FOR DECK SLAB CONSTRUCTION JOINT LOCATIONS AND DECK SLAB POURING SEQUENCE, SEE DWG. NO. DK-01.
5. A TOTAL OF SIX (6) ADDITIONAL PA702E BARS ARE REQUIRED IN THE TOP PORTION OF THE WEST PARAPET. SEE WEST PARAPET REINFORCEMENT SECTION ON DWG. NO. DK-03.

NOTE:

EAST PARAPET SHOWN LOOKING WEST, WEST PARAPET SIMILAR LOOKING EAST OPPOSITE HAND.

UNOFFICIAL WEBSITE COPY

DELAWARE DEPARTMENT OF TRANSPORTATION	ADDENDUMS / REVISIONS	SCALE: AS SHOWN	US 301 & SR 1 INTERCHANGE	CONTRACT T200911302	BRIDGE NO. 1-432	DECK SLAB AND PARAPET REINFORCEMENT	BR1-2 DK-02
				COUNTY NEW CASTLE	DESIGNED BY: A.J.F.		SHEET NO. 186
					CHECKED BY: P.S.D.		TOTAL SHTS. 491

N:\31653-000\CONTRACT 1B\CADD\Bridge\Br_No2\DK02_br1-2.dgn
2/6/2015 2:41:47 PM

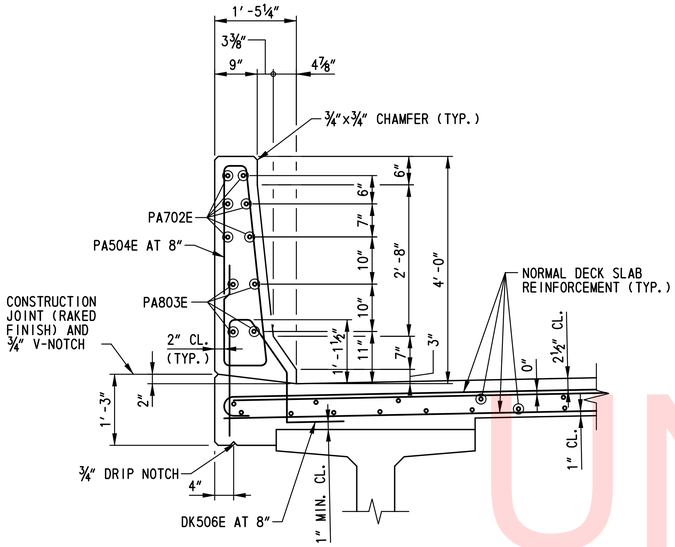

WEST PARAPET REINFORCEMENT SECTION

SCALE: ¾"=1'-0"

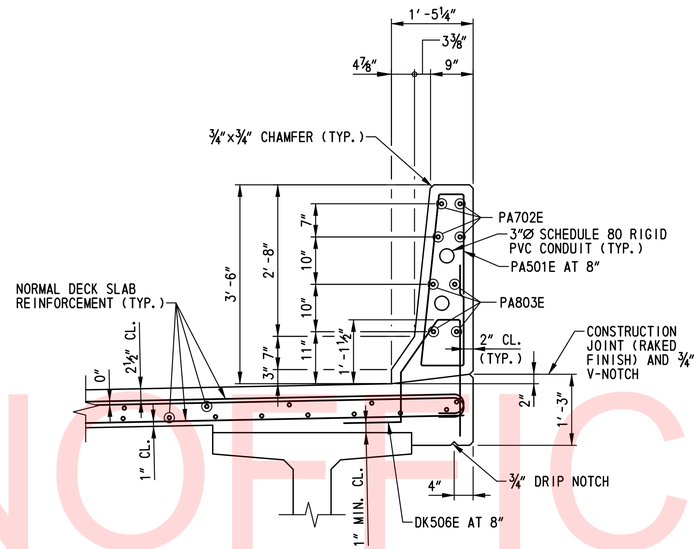

EAST PARAPET REINFORCEMENT SECTION

SCALE: ¾"=1'-0"

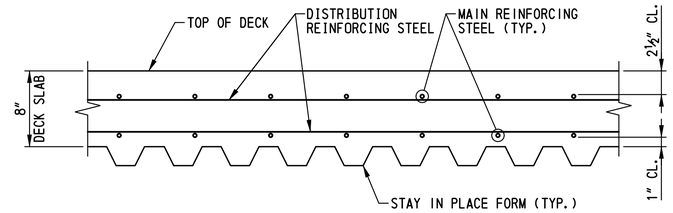

S.I.P. FORM PLACEMENT SECTION

SCALE: 1½"=1'-0"

STAY-IN-PLACE FORM NOTES:

1. STAY-IN-PLACE FORMS SHALL CONFORM TO SECTION 602.03.
2. STAY-IN-PLACE FORMS SHALL BE VERTICALLY ADJUSTED TO ATTAIN FINISHED LINES AND GRADES REQUIRED ON THE PLANS.
3. ANY PERMANENTLY EXPOSED FORM METAL WHERE THE GALVANIZED COATING HAS BEEN DAMAGED SHALL BE THOROUGHLY CLEANED, WIRE BRUSHED, AND PAINTED WITH TWO COATS OF ZINC-OXIDE DUST PRIMER, FEDERAL SPECIFICATION TT-P-641D, TYPE II, NO COLOR ADDED, TO THE SATISFACTION OF THE ENGINEER. MINOR HEAT DISCOLORATION IN AREAS OF WELDS NEED NOT BE TOUCHED UP.
4. FOR STAY-IN-PLACE FORM SUPPORT DETAILS, SEE DWG. NO. FR-01.

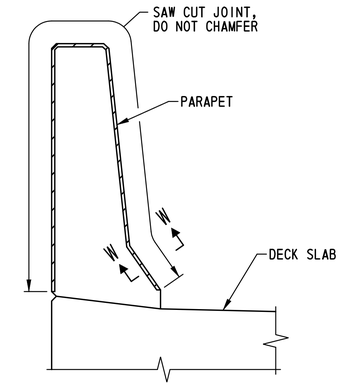

PARAPET CONTROL JOINT DETAIL

SCALE: 1"=1'-0"

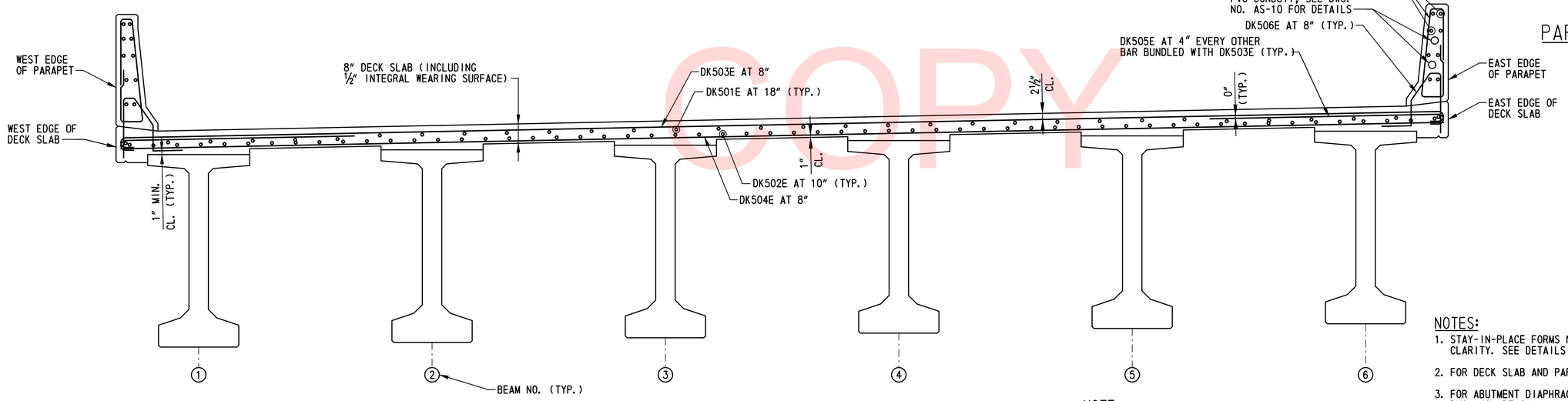

TYPICAL SECTION

SCALE: ½"=1'-0"

NOTE:

TYPICAL SECTION SHOWN LOOKING STATION AHEAD.

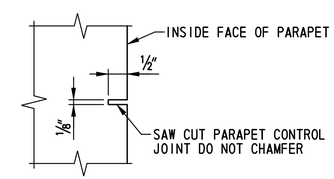

NOTE:

SAW CUT PARAPET CONTROL JOINT SHALL BE SAWED SAME DAY AS CONCRETE IS POURED.

SECTION W-W

SCALE: 6"=1'-0"

NOTES:

1. STAY-IN-PLACE FORMS NOT SHOWN ON TYPICAL REINFORCEMENT SECTION FOR CLARITY. SEE DETAILS THIS SHEET AND DWG. NO. FR-01.
2. FOR DECK SLAB AND PARAPET REINFORCEMENT PLANS, SEE DWG. NO. DK-02.
3. FOR ABUTMENT DIAPHRAGM AND END HAUNCH REINFORCEMENT DETAILS, SEE DWG. NO. DT-01.
4. FOR INTERMEDIATE DIAPHRAGM REINFORCEMENT DETAILS, SEE DWG. NO. DT-02.
5. FOR PARAPET CONTROL JOINT LOCATIONS, SEE DWG. NO. PE-01. SAW CUTTING SHALL BE INCIDENTAL TO ITEM 602017 - PORTLAND CEMENT CONCRETE MASONRY, PARAPET, CLASS A.

UNOFFICIAL WEBSITE COPY

N:\36653-000\CONTRACT 1B\CADD\Bridge\Br_No2\DK03_br1-2.dgn
2/5/2015 2:39:15 PM

DELAWARE DEPARTMENT OF TRANSPORTATION	ADDENDUMS / REVISIONS	SCALE: AS SHOWN	US 301 & SR 1 INTERCHANGE	CONTRACT T200911302	BRIDGE NO. 1-432	DECK SLAB AND PARAPET REINFORCEMENT DETAILS	BR1-2 DK-03
				COUNTY NEW CASTLE	DESIGNED BY: A.J.F.		SHEET NO. 187
					CHECKED BY: P.S.D.		TOTAL SHTS. 491

① ANY MARK NUMBER WITH SUFFIX 'E' DENOTES EPOXY COATED REINFORCING STEEL.

② ALL MARK 'LOCATION PREFIXES' SHALL CONSIST OF TWO LETTERS AND ARE AS FOLLOWS: AB = ABUTMENT, AS = APPROACH SLAB, BC = BOX CULVERT, BW = BACKWALL, CL = COLUMN, DK = DECK, DL = DOWEL, FT = FOOTING, HW = HEADWALL, MS = MISC. BARS, PA = PARAPET, PR = PIER, SC = SHEETPILE CAP, SL = SLAB, TW = TOEWALL, WL = WALL (UNIQUE LOCATION), WW = WINGWALL

SPECIFICATIONS					BENDING DIMENSIONS (FEET-INCHES /QUARTER INCH)										
QTY.	SIZE	LENGTH	MARK	TYPE	A	B	C	D	E	F/R	G	H	J	K	O
DECK SLAB															
96	5	45-06 0	DK501E	STR		45-06 0									
168	5	45-10 0	DK502E	STR		45-10 0									
199	5	46-06 0	DK503E	1	0-07 0	45-04 0					0-07 0		0-05 0		
199	5	45-04 0	DK504E	STR		45-04 0									
794	5	8-07 0	DK505E	1	0-07 0	8-00 0							0-05 0		
398	5	5-06 0	DK506E	T15		2-00 0	0-05 2	1-01 2	0-11 0		1-00 0		0-07 3	0-11 0	
94	5	6-00 0	DK507E	STR		6-00 0									
199	5	9-03 1	PA501E	PA		2-06 2	0-09 0	3-00 1	0-05 0	2-06 2		3-00 0		0-04 0	
30	7	47-06 0	PA702E	STR		47-06 0									
24	8	47-03 0	PA803E	STR		47-03 0									
199	5	10-02 3	PA504E	PA		2-09 2	0-09 0	3-06 1	0-04 2	2-09 2		3-06 0		0-04 2	
ABUTMENT DIAPHRAGMS															
20	5	10-08 0	MS501E	T2	0-06 0	0-08 0	4-02 0	0-08 0	4-02 0		0-06 0				
20	5	10-11 0	MS502E	T2	0-06 0	0-08 0	4-03 2	0-08 0	4-03 2		0-06 0				
60	5	13-01 0	MS503E	T2	0-06 0	0-08 0	5-04 2	0-08 0	5-04 2		0-06 0				
60	5	8-06 2	MS504E	T2	0-06 0	1-00 1	2-09 0	1-00 1	2-09 0		0-06 0				
68	5	3-02 3	MS505E	6		1-00 0	1-02 3	1-00 0				0-10 2		0-10 2	2-10 2
12	5	45-04 0	MS506E	STR		45-04 0									
20	5	4-02 0	MS507E	STR		4-02 0									
4	6	45-04 0	MS608E	STR		45-04 0									
20	6	4-02 0	MS609E	STR		4-02 0									
140	6	7-02 0	MS610E	STR		7-02 0									
40	6	7-02 0	MS611E	DW		7-02 0									
8	5	10-11 2	MS517E	T1	0-05 2	4-00 0	1-00 1	4-00 0	1-00 1		0-05 2				
12	5	2-04 0	MS518E	2		0-10 0	0-08 0	0-10 0							
INTERMEDIATE DIAPHRAGMS															
10	5	10-08 0	MS521E	T2	0-06 0	0-08 0	4-02 0	0-08 0	4-02 0		0-06 0	0-03 3			
10	5	10-11 0	MS522E	T2	0-06 0	0-08 0	4-03 2	0-08 0	4-03 2		0-06 0	0-03 3			
30	5	14-03 2	MS523E	S4	1-06 0	5-03 3	0-08 0	5-03 3			1-06 0				
2	6	45-04 0	MS624E	STR		45-04 0									
10	6	4-02 0	MS625E	STR		4-02 0									
70	6	7-02 0	MS626E	STR		7-02 0									
20	6	7-02 0	MS627E	DW		7-02 0									

SPECIFICATIONS					BENDING DIMENSIONS (FEET-INCHES /QUARTER INCH)										
QTY.	SIZE	LENGTH	MARK	TYPE	A	B	C	D	E	F/R	G	H	J	K	O

SPECIFICATIONS					BENDING DIMENSIONS (FEET-INCHES /QUARTER INCH)										
QTY.	SIZE	LENGTH	MARK	TYPE	A	B	C	D	E	F/R	G	H	J	K	O

UNOFFICIAL WEBSITE COPY

ASTM STANDARD ENGLISH REINFORCING BARS

BAR SIZE	NOMINAL DIMENSIONS: DIAMETER (INCHES)	AREA (INCHES²)	WEIGHT (LBS./FT.)	RECOMMENDED END HOOKS, APPLICABLE TO ALL GRADES: 180° HOOKS D	180° HOOKS A OR G	180° HOOKS J	90° HOOKS A OR G	STIRRUP AND TIE HOOKS, APPLICABLE TO ALL GRADES: 90° HOOK D	90° HOOK A OR G	135° HOOK A OR G	135° HOOK H
3	0.375	0.110	0.376	2¼"	5"	3"	6"	1½"	4"	4"	2½"
4	0.500	0.200	0.668	3"	6"	4"	8"	2"	4½"	4½"	3"
5	0.625	0.310	1.043	3¾"	7"	5"	10"	2½"	6"	5½"	3¾"
6	0.750	0.440	1.502	4½"	8"	6"	1-0"	4½"	1-0"	8"	4½"
7	0.875	0.600	2.044	5¼"	10"	7"	1-2"	5¼"	1-2"	9"	5¼"
8	1.000	0.790	2.670	6"	11"	8"	1-4"	6"	1-4"	10½"	6"
9	1.128	1.000	3.400	9½"	1-3"	11¾"	1-7"				
10	1.270	1.270	4.303	10¾"	1-5"	1-1¼"	1-10"				
11	1.410	1.560	5.313	1-0"	1-7"	1-2¾"	2-0"				
14	1.693	2.250	7.650	1-6¼"	2-3"	1-9¾"	2-7"				
18	2.257	4.000	13.600	2-0"	3-0"	2-4½"	3-5"				

NOTES:

1. FIGURES SHOWN IN CIRCLES REPRESENT BAR BEND TYPES.
2. STANDARD BAR BENDS INCLUDE ONLY THOSE TYPES BELOW, INDICATED AS SUCH.
3. ALL DIMENSIONS OUT-TO-OUT, EXCEPT "A" AND "G" ON STD. 180° AND 135° HOOKS.
4. "J" DIMENSIONS ON 180° HOOKS TO BE SHOWN ONLY WHERE NECESSARY TO RESTRICT HOOK SIZE, OTHERWISE STANDARD 'ACI' HOOKS ARE TO BE USED.
5. WHERE "J" IS NOT SHOWN, "J" WILL BE KEPT EQUAL TO OR LESS THAN "H" ON TYPES 3, 5 AND 22. WHERE "J" CAN EXCEED "H", IT SHALL BE SHOWN.
6. "H" DIMENSIONS OF STIRRUPS TO BE SHOWN AS NEEDED TO FIT WITHIN THE CONCRETE.
7. UNLESS OTHERWISE NOTED, DIAMETER "D" IS THE SAME FOR ALL BENDS AND HOOKS ON A BAR (EXCEPT FOR BEND TYPES 11 AND 13).
8. WHERE SLOPE DIFFERS FROM 45° OFFSET, "H" AND "K" MUST BE SHOWN.
9. WHERE BARS ARE TO BE BENT MORE ACCURATELY THAN STANDARD BENDING TOLERANCES, BENDING DIMENSIONS REQUIRING CLOSER FABRICATION SHOULD HAVE LIMITS INDICATED.
10. FOR RECOMMENDED DIAMETER "D", OF BENDS, HOOKS, ETC., REFER TO TABLE ABOVE, 'CRSI' OR 'ACI' TABLES WHERE APPLICABLE AND REQUIRED.
11. TYPE S1-S6, S11, T1-T3 AND T6-T9 APPLICABLE TO BAR SIZES #3 THROUGH #8.

STANDARD BAR BENDS

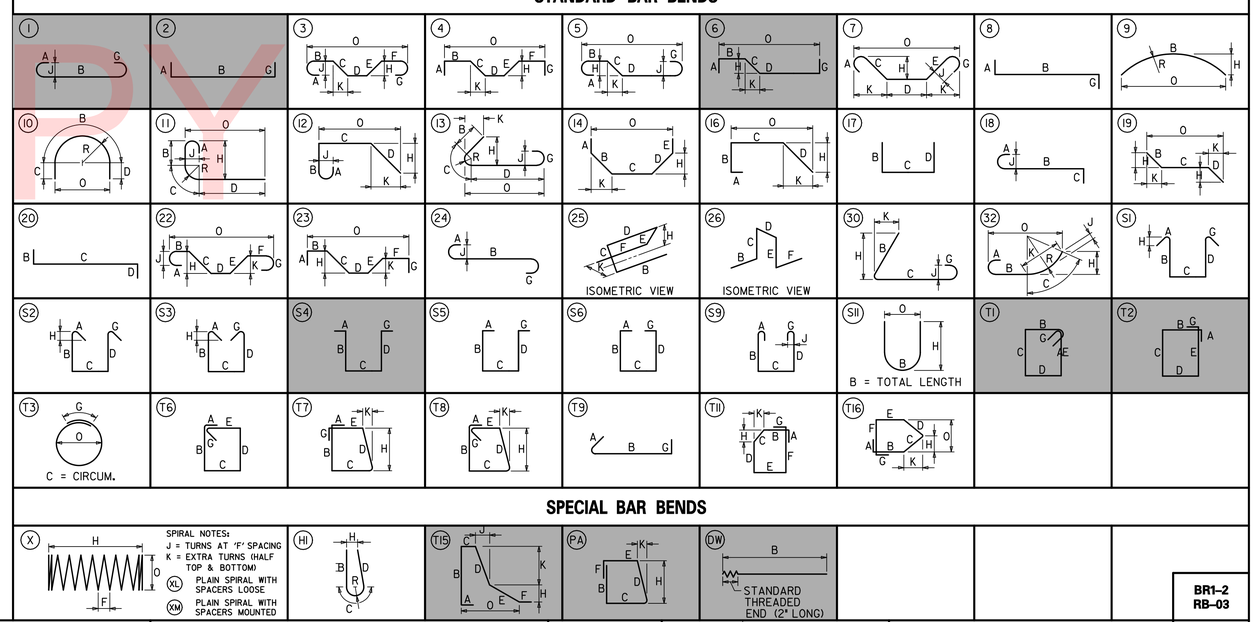

SPECIAL BAR BENDS

STIRRUP AND TIE HOOKS

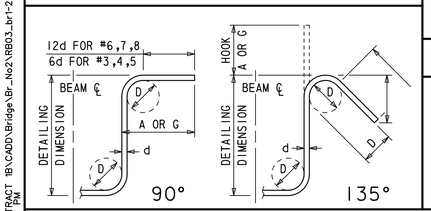

180° AND 90° END HOOKS

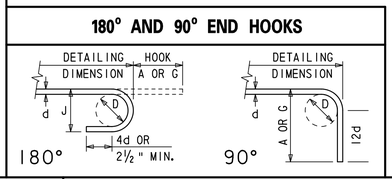

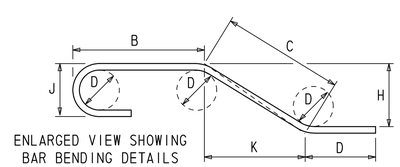

ENLARGED VIEW SHOWING BAR BENDING DETAILS

ADDENDUMS / REVISIONS

NOT TO SCALE

DELAWARE DEPARTMENT OF TRANSPORTATION	US 301 & SR 1 INTERCHANGE	CONTRACT T200911302 / COUNTY NEW CASTLE	BRIDGE NO. 1-432 / DESIGNED BY: A.J.F. / CHECKED BY: P.S.D.

SUPERSTRUCTURE REINFORCEMENT LIST

BR1-2 RB-03

SHEET NO. 188 / TOTAL SHTS. 491

N:\31653-000\CONTRACT 1B\CADD\Bridge\Br_No2\RB03_br1-2.dgn 2/9/2015 3:15:33 PM

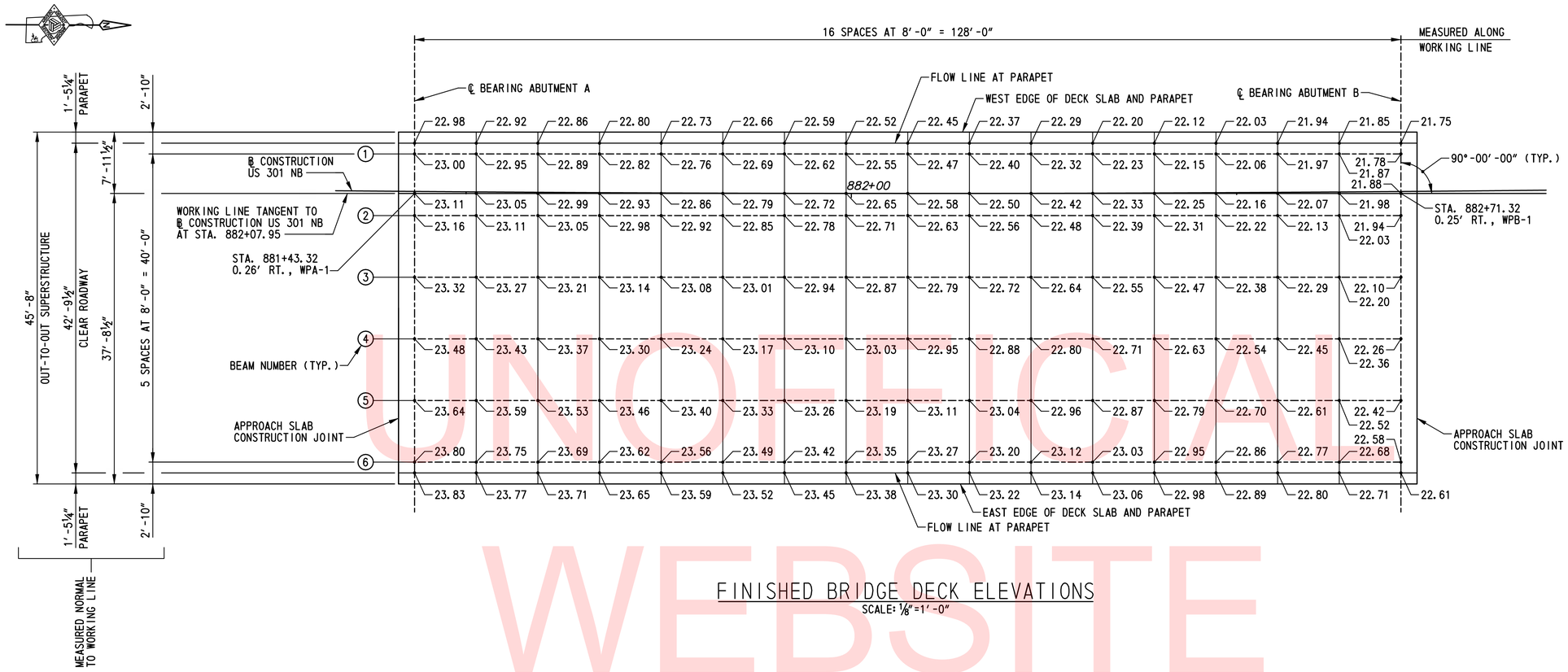

FINISHED BRIDGE DECK ELEVATIONS

SCALE: ⅛"=1'-0"

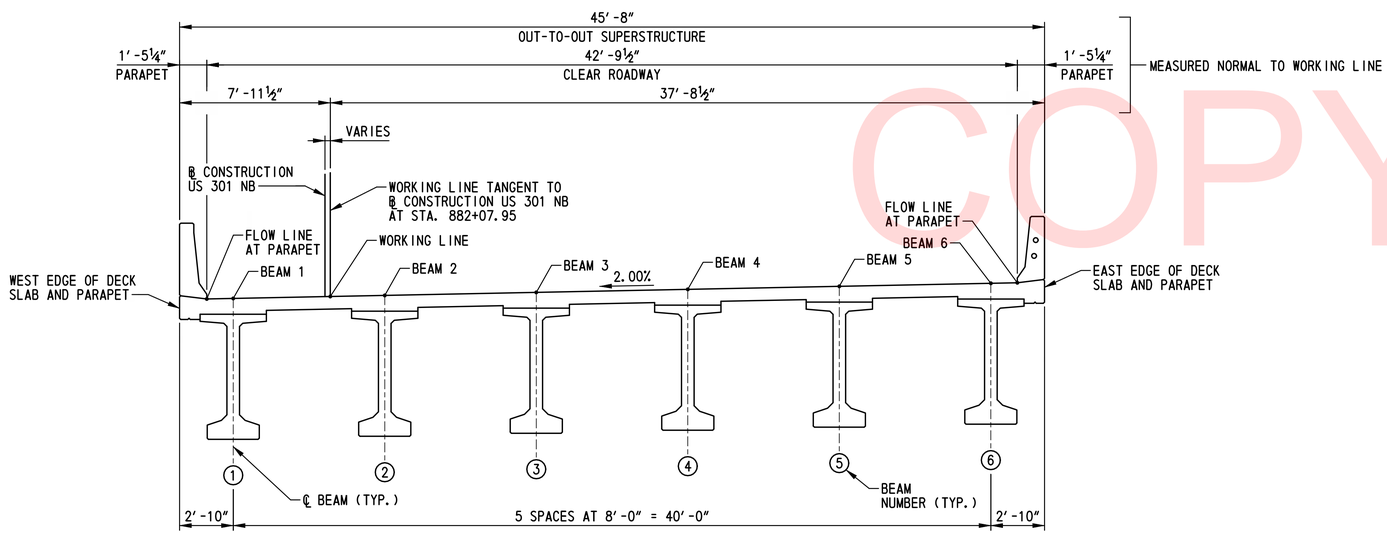

LOCATIONS OF FINISHED BRIDGE DECK ELEVATIONS

SCALE: ¼"=1'-0"

NOTES:

1. FINISHED BRIDGE DECK ELEVATIONS SHOWN ARE TOP OF PROPOSED CONCRETE DECK SLAB.
2. FOR VERTICAL CURVE DATA, SEE DWG. NO. PE-01.
3. FOR FRAMING PLAN, SEE DWG. NO. FR-01.

UNOFFICIAL WEBSITE COPY

DELAWARE DEPARTMENT OF TRANSPORTATION	ADDENDUMS / REVISIONS	SCALE: AS SHOWN	US 301 & SR 1 INTERCHANGE	CONTRACT T200911302	BRIDGE NO. 1-432	FINISHED BRIDGE DECK ELEVATIONS	BR1-2 FD-01	SHEET NO. 189
				COUNTY NEW CASTLE	DESIGNED BY: A.J.F.			TOTAL SHTS. 491
					CHECKED BY: P.S.D.			

N:\31653-000\CONTRACT 1B\CADD\Bridge\Br_No2\FD01_br1-2.dgn 2/9/2015 3:16:46 PM

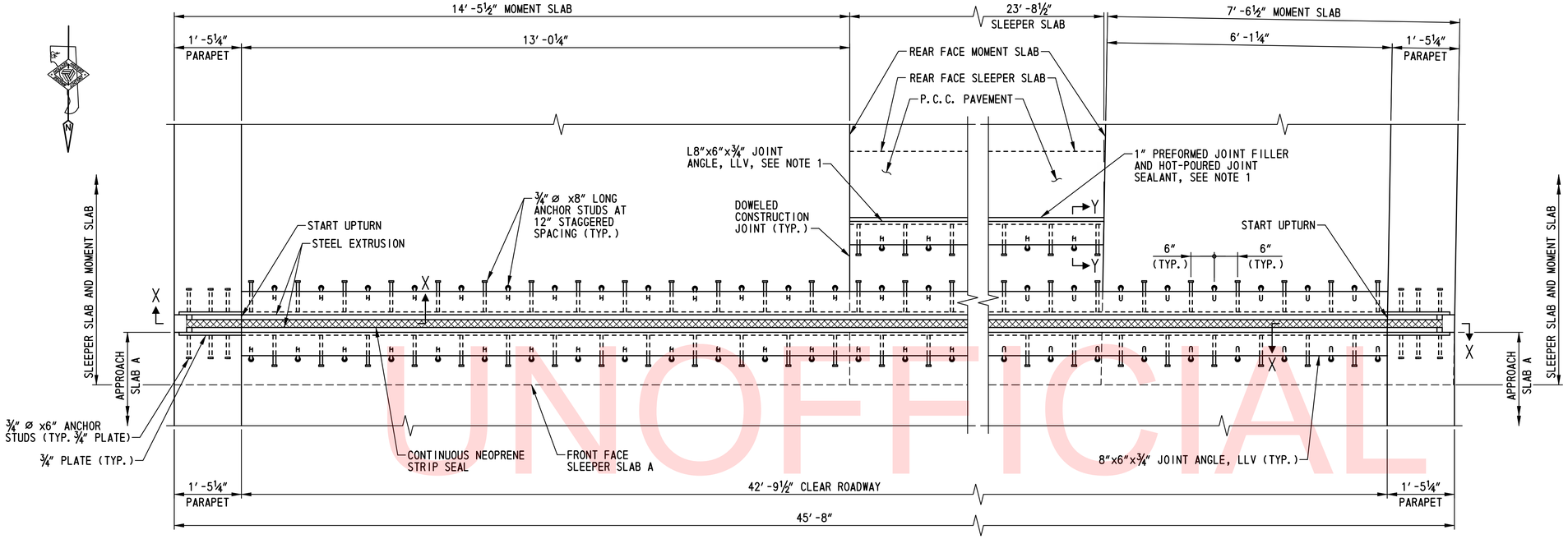

ARMORED STRIP SEAL JOINT PLAN

SCALE: ¾"=1'-0"

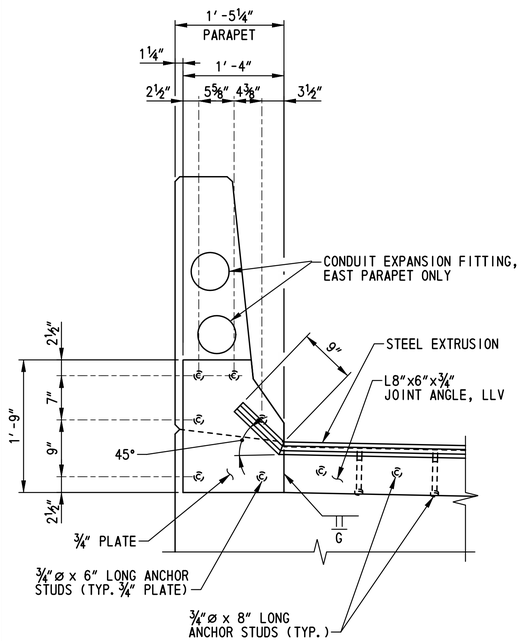

SECTION X-X

SCALE: 1"=1'-0"

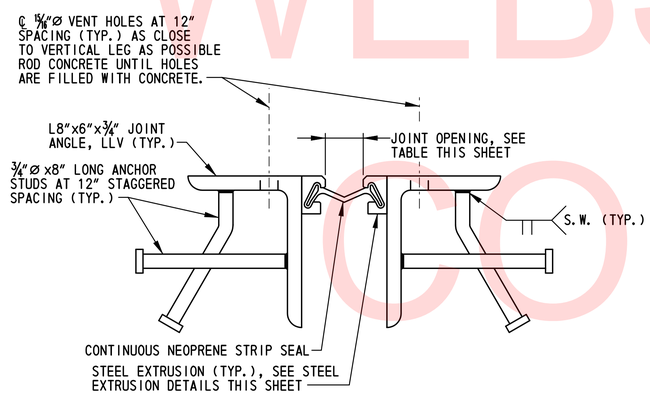

ARMORED STRIP SEAL JOINT ASSEMBLY DETAIL

SCALE: 3"=1'-0"

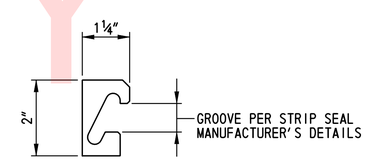

STEEL EXTRUSION DETAIL

NOT TO SCALE

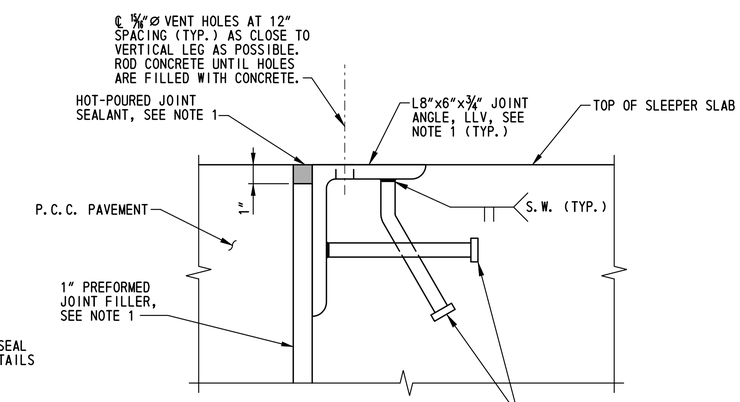

SECTION Y-Y

SCALE: 3"=1'-0"

JOINT OPENING TABLE

LOCATION	TEMPERATURE (°F)										
	0	10	20	30	40	50	60	70	80	90	100
APPROACH SLAB A	2 11/16"	2 9/16"	2 7/16"	2 5/16"	2¼"	2⅛"	2"	1 7/8"	1¾"	1 11/16"	1 5/16"

NOTE: JOINT OPENINGS SHOWN ARE MEASURED NORMAL TO JOINT.

NOTES:

1. PAYMENT FOR PREFORMED JOINT FILLER, HOT-POURED JOINT SEALANT AND JOINT ANGLES AT APPROACH PAVEMENT EDGE OF SLEEPER SLAB SHALL BE INCIDENTAL TO ITEM 602018 - PORTLAND CEMENT CONCRETE MASONRY, CLASS D.
2. FOR APPROACH SLAB AND SLEEPER SLAB TYPICAL SECTIONS, SEE DWG. NO. AS-07.

UNOFFICIAL WEBSITE COPY

N:\31653-000\CONTRACT 18\CADD\Bridge\Br_No2\EX01_br1-2.dgn
2/5/2015 2:41:08 PM

DELAWARE DEPARTMENT OF TRANSPORTATION	ADDENDUMS / REVISIONS	SCALE: AS SHOWN	US 301 & SR 1 INTERCHANGE	CONTRACT T200911302 / COUNTY NEW CASTLE	BRIDGE NO. 1-432 / DESIGNED BY: A.J.F. / CHECKED BY: P.S.D.	ARMORED STRIP SEAL JOINT DETAILS

BR1-2 EX-01

SHEET NO. 190

TOTAL SHTS. 491

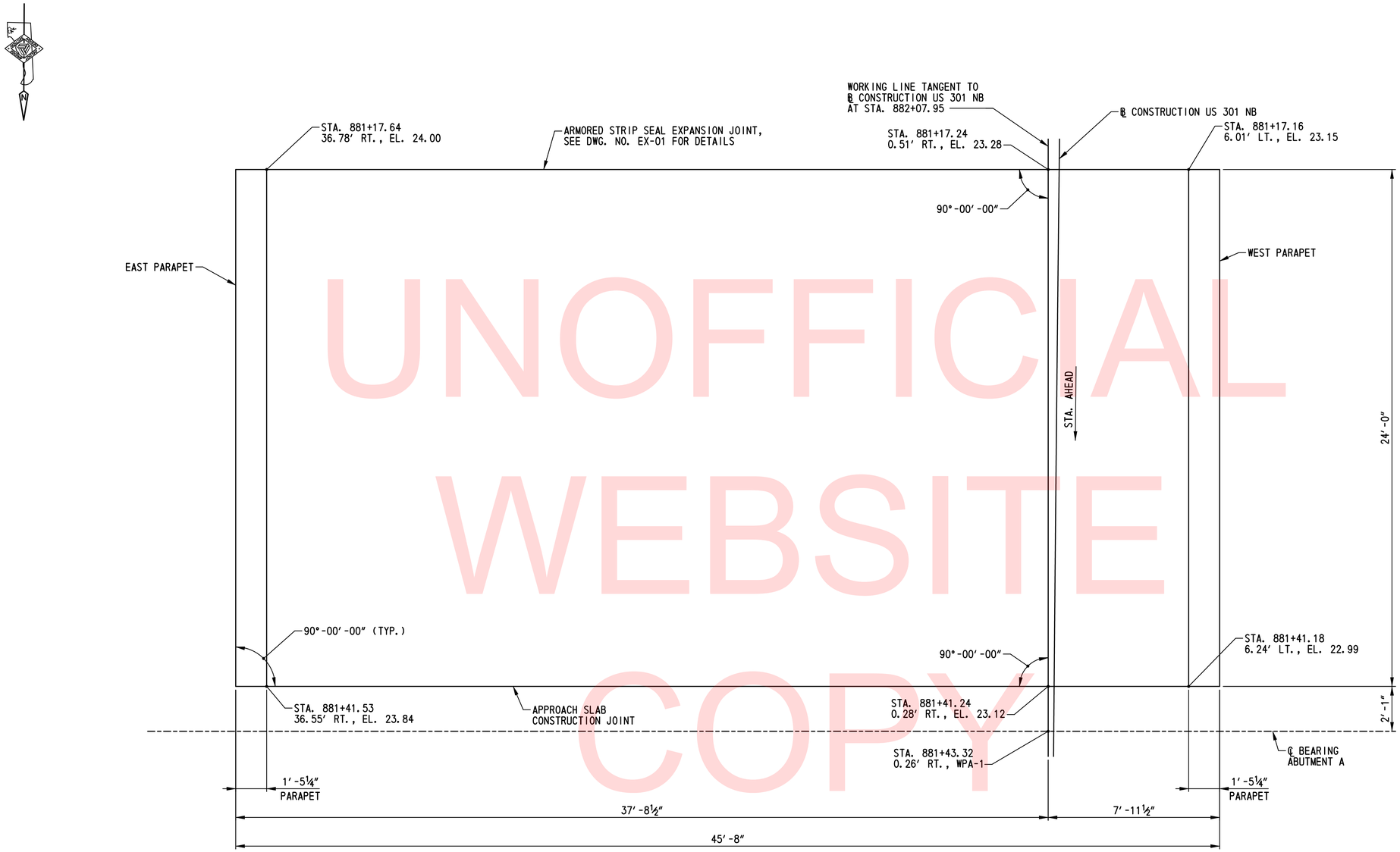

APPROACH SLAB A PLAN

SCALE: ⅜″=1′-0″

NOTE:
FOR APPROACH SLAB A REINFORCING PLAN, SEE DWG. NO. AS-02.

UNOFFICIAL WEBSITE COPY

N:\31653-000\Contract 1B\CADD\Bridge\Br_No2\AS01_br1-2.dgn
2/5/2013 8:35:31 AM

DELAWARE DEPARTMENT OF TRANSPORTATION	ADDENDUMS / REVISIONS	SCALE: AS SHOWN	US 301 & SR 1 INTERCHANGE	CONTRACT T200911302	BRIDGE NO. 1–432	APPROACH SLAB A PLAN	BR1–2 AS–01
				COUNTY NEW CASTLE	DESIGNED BY: A.J.F.		SHEET NO. 191
					CHECKED BY: P.S.D.		TOTAL SHTS. 491

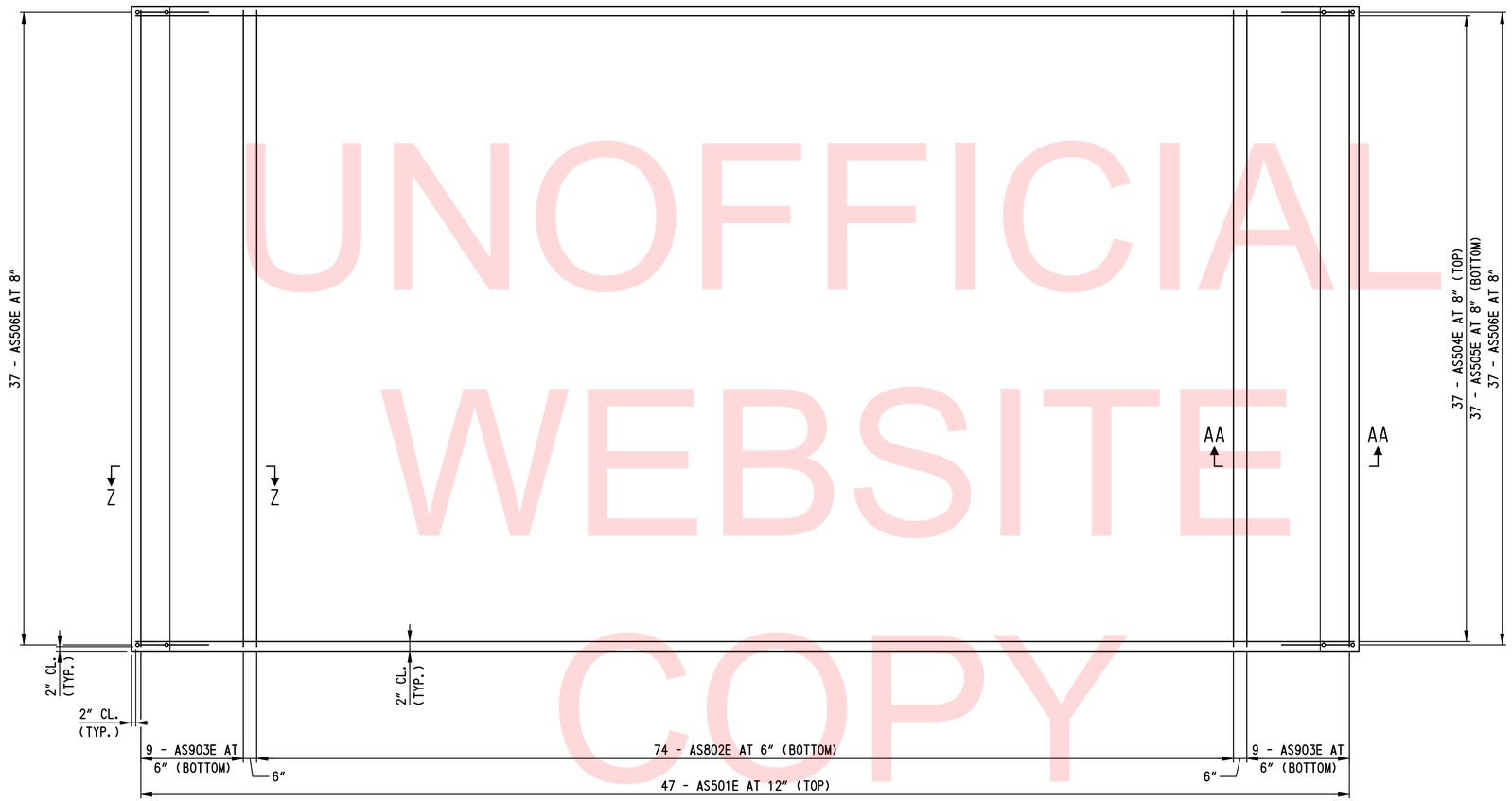

UNOFFICIAL WEBSITE COPY

APPROACH SLAB A REINFORCEMENT PLAN

SCALE: 3/8"=1'-0"

NOTES:

1. FOR APPROACH SLAB TYPICAL SECTION, SECTION Z-Z, AND SECTION AA-AA, SEE DWG. NO. AS-07.
2. FOR ADDENDUMS / REVISIONS DETAILS, SEE DWG. NO. AS-07.

N:\31653-000\CONTRACT 1B\CADD\Bridge\Br_No2\AS02_br1-2.dgn
2/5/2015 2:44:11 PM

DELAWARE DEPARTMENT OF TRANSPORTATION	ADDENDUMS / REVISIONS	SCALE: AS SHOWN	US 301 & SR 1 INTERCHANGE	CONTRACT T200911302	BRIDGE NO. 1-432	APPROACH SLAB A REINFORCEMENT PLAN	BR1-2 AS-02
				COUNTY NEW CASTLE	DESIGNED BY: A.J.F.		SHEET NO. 192
					CHECKED BY: P.S.D.		TOTAL SHTS. 491

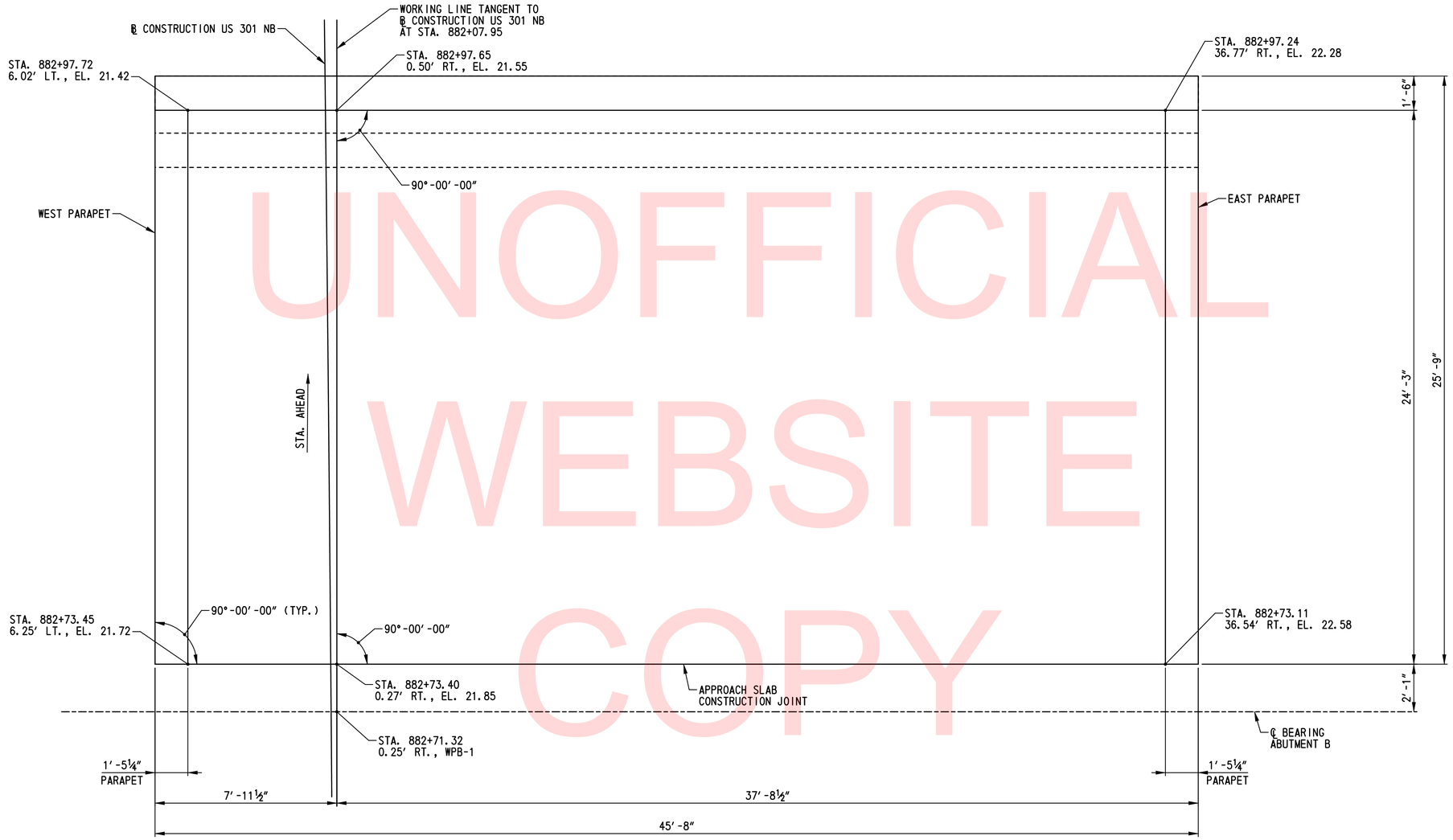

APPROACH SLAB B PLAN

SCALE: ⅜″=1′-0″

NOTE:
FOR APPROACH SLAB B REINFORCING PLAN, SEE DWG. NO. AS-04.

UNOFFICIAL WEBSITE COPY

N:\31653-000\CONTRACT 18\CADD\Bridge\Br_No2\AS03_br1-2.dgn
2/9/2015 3:18:57 PM

DELAWARE DEPARTMENT OF TRANSPORTATION	ADDENDUMS / REVISIONS	SCALE: AS SHOWN	US 301 & SR 1 INTERCHANGE	CONTRACT T200911302	BRIDGE NO. 1-432	APPROACH SLAB B PLAN	BR1-2 AS-03
				COUNTY NEW CASTLE	DESIGNED BY: A.J.F.		SHEET NO. 193
					CHECKED BY: P.S.D.		TOTAL SHTS. 491

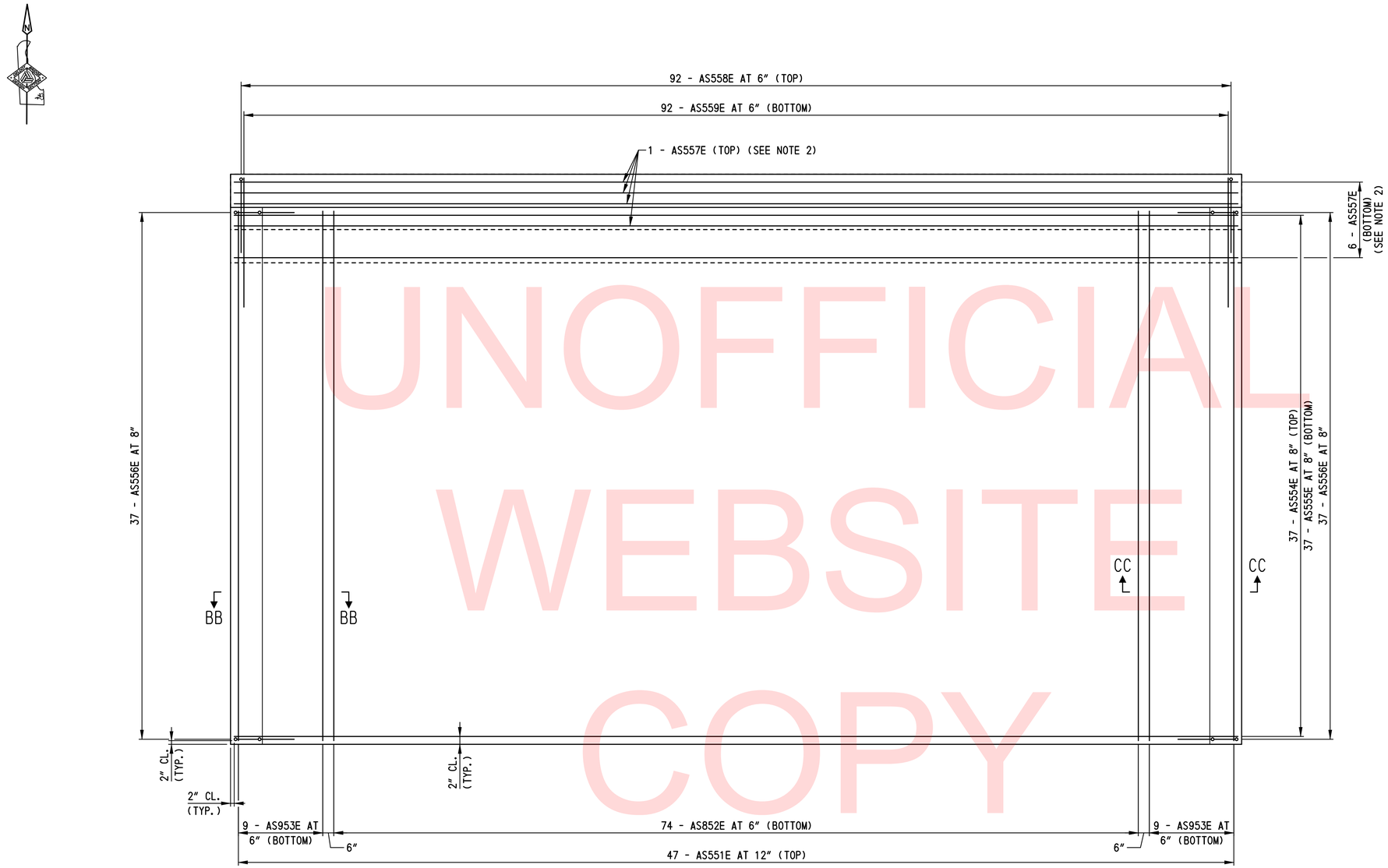

APPROACH SLAB B REINFORCEMENT PLAN

SCALE: 3/8"=1'-0"

UNOFFICIAL WEBSITE COPY

NOTES:

1. FOR APPROACH SLAB TYPICAL SECTION, SECTION BB-BB AND SECTION CC-CC, SEE DWG. NO. AS-08.
2. FOR ADDITIONAL REINFORCEMENT DETAILS, SEE DWG. NO. AS-08.

N:\31653-000\CONTRACT 1B\CADD\Bridge\Br_No2\AS04_br1-2.dgn
2/5/2015 2:49:50 PM

DELAWARE DEPARTMENT OF TRANSPORTATION	ADDENDUMS / REVISIONS	SCALE: AS SHOWN	US 301 & SR 1 INTERCHANGE	CONTRACT T200911302	BRIDGE NO. 1-432	APPROACH SLAB B REINFORCEMENT PLAN	BR1-2 AS-04
				COUNTY NEW CASTLE	DESIGNED BY: A.J.F.		SHEET NO. 194
					CHECKED BY: P.S.D.		TOTAL SHTS. 491

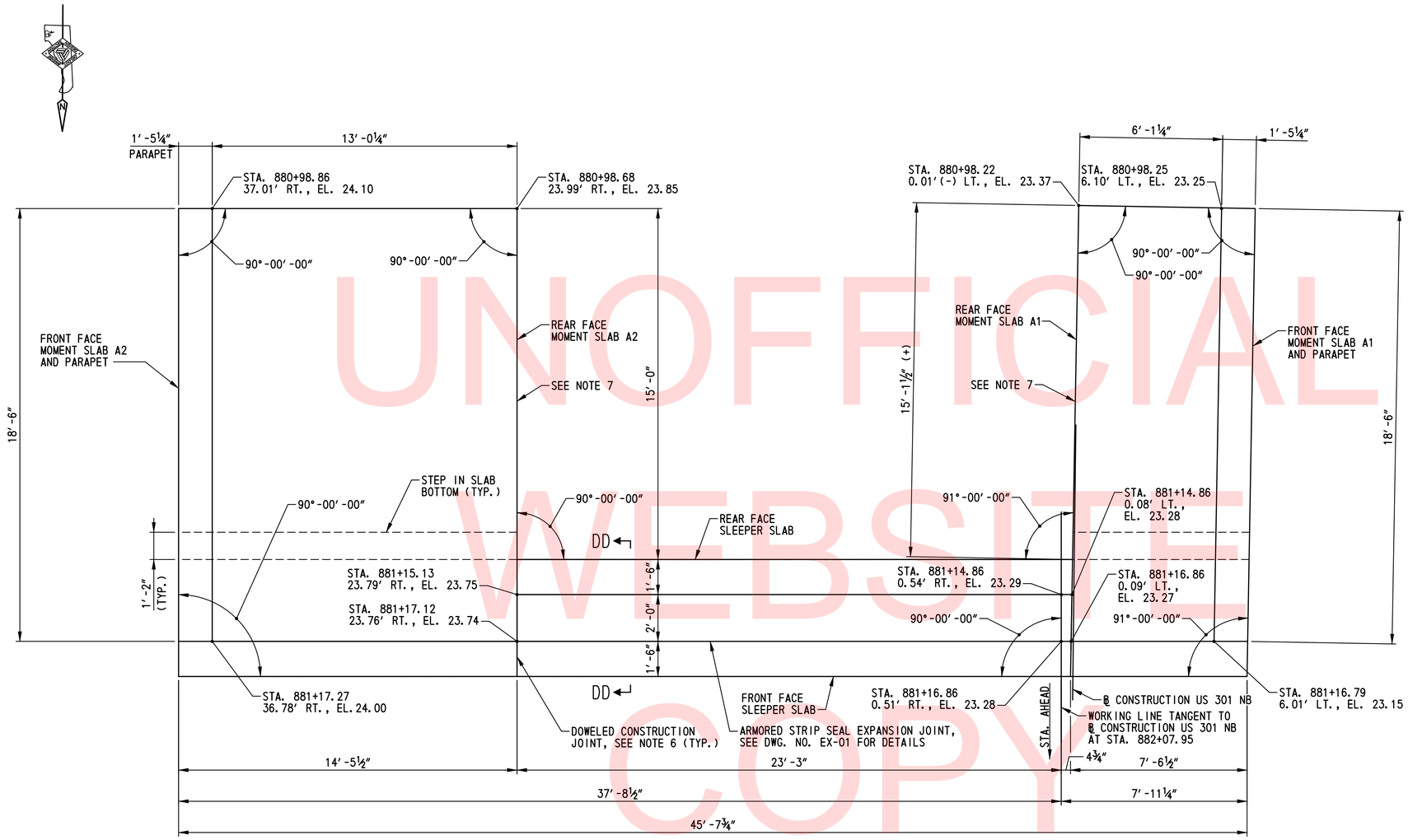

MOMENT AND SLEEPER SLAB A PLAN

SCALE: ⅜″=1′-0″

NOTES:

1. PAYMENT FOR CONSTRUCTION OF MOMENT SLABS AND SLEEPER SLABS WILL BE MADE UNDER ITEM 602018- PORTLAND CEMENT CONCRETE MASONRY CLASS D. PAYMENT FOR PREFORMED JOINT FILLER, DOWEL BARS AND METAL EXPANSION SLEEVES SHALL BE INCIDENTAL TO THIS ITEM.
2. FOR MOMENT SLAB TYPICAL SECTIONS, SEE DWG. NO. AS-09.
3. FOR SLEEPER SLAB TYPICAL SECTION, SEE DWG. NO AS-07.
4. FOR REINFORCEMENT PLAN, SEE DWG. NO. AS-06.
5. FOR ADDITIONAL REINFORCEMENT DETAILS, SEE DWG. NO. AS-09.
6. DOWEL BARS SHALL CONFORM TO SECTION 824.02(G). SEE SECTION DD-DD ON DWG. NO. AS-07.
7. PRIOR TO PLACING MOMENT SLAB CONCRETE ADJACENT TO EXISTING CONCRETE PAVEMENT, OR PRIOR TO PLACING CONCRETE PAVEMENT ADJACENT TO EXISTING MOMENT SLAB CONCRETE, AN APPROVED BOND BREAKER SHALL BE APPLIED TO THE EXISTING CONCRETE VERTICAL FACE. THIS LONGITUDINAL JOINT AT THE INTERFACE BETWEEN THE CONCRETE PAVEMENT AND THE MOMENT SLAB CONCRETE SHALL NOT BE SEALED. VERTICAL CRACKS IN THE EXISTING CONCRETE FACE SHALL BE COVERED OR SEALED AS APPROVED BY THE ENGINEER TO PREVENT INTRUSION OF THE NEW CONCRETE INTO THE EXISTING CONCRETE. ALL WORK SHALL BE INCIDENTAL TO ITEM NO. 602014 - PORTLAND CEMENT CONCRETE MASONRY, CLASS D.

UNOFFICIAL WEBSITE COPY

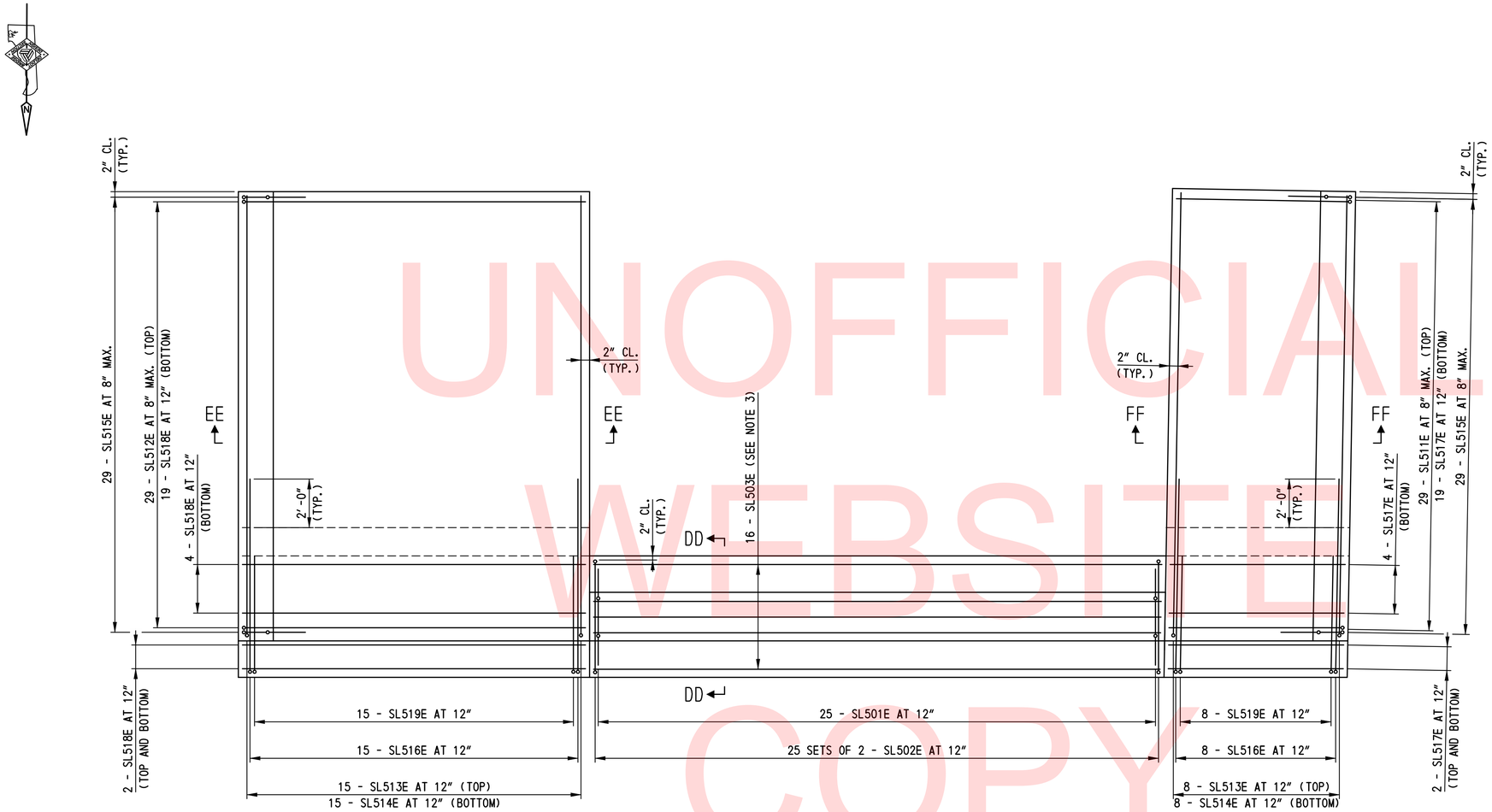

UNOFFICIAL WEBSITE COPY

MOMENT AND SLEEPER SLAB A REINFORCEMENT PLAN

SCALE: 3/8"=1'-0"

NOTES:

1. FOR MOMENT AND SLEEPER SLAB A PLAN, SEE DWG. NO. AS-05.
2. FOR SECTION DD-DD, SEE DWG. NO. AS-07. FOR SECTIONS EE-EE AND FF-FF, SEE DWG. NO. AS-09.
3. FOR SLEEPER SLAB TYPICAL SECTION, SEE DWG. NO AS-07.
4. FOR ADDITIONAL REINFORCEMENT DETAILS, SEE DWG. NO. AS-09.

N:\31653-000\CONTRACT 1B\CADD\Bridge\Br_No2\AS06_br1-2.dgn
2/5/2015 2:59:47 PM

DELAWARE DEPARTMENT OF TRANSPORTATION	ADDENDUMS / REVISIONS	SCALE: AS SHOWN	US 301 & SR 1 INTERCHANGE	CONTRACT T200911302	BRIDGE NO. 1-432	MOMENT AND SLEEPER SLAB A REINFORCEMENT PLAN	BR1-2 AS-06
				COUNTY NEW CASTLE	DESIGNED BY: A.J.F.		SHEET NO. 196
					CHECKED BY: P.S.D.		TOTAL SHTS. 491

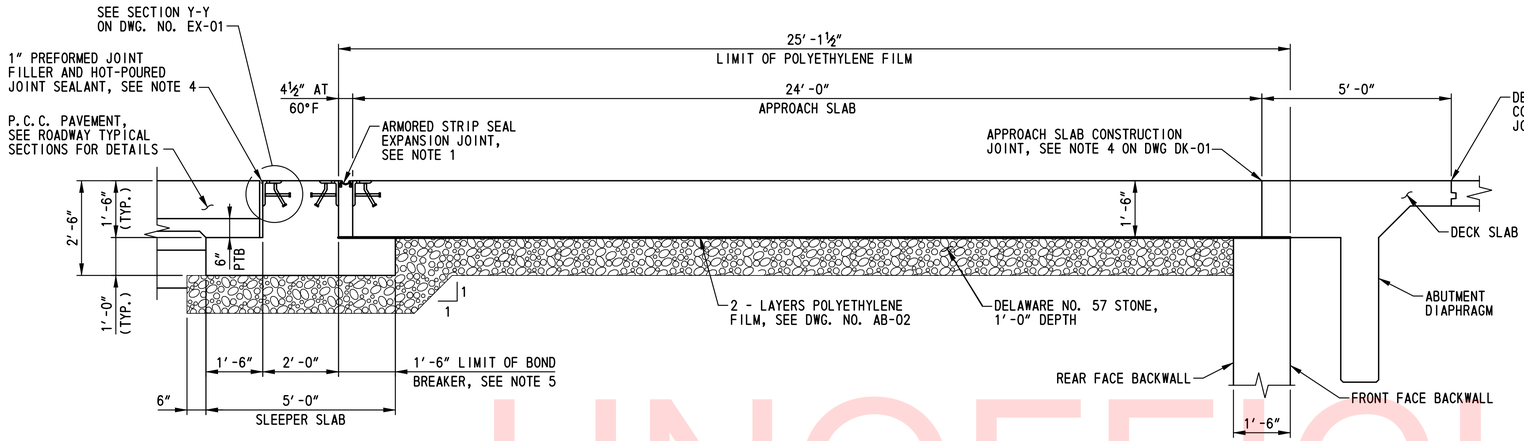

APPROACH SLAB A AND SLEEPER SLAB A TYPICAL SECTION

SCALE: ½"=1'-0"

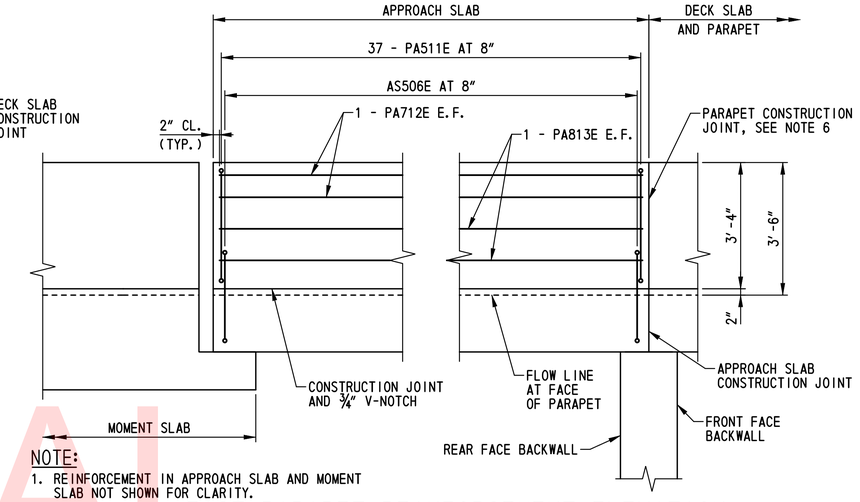

NOTE:

1. REINFORCEMENT IN APPROACH SLAB AND MOMENT SLAB NOT SHOWN FOR CLARITY.

EAST PARAPET REINFORCEMENT ELEVATION

SCALE: ½"=1'-0"

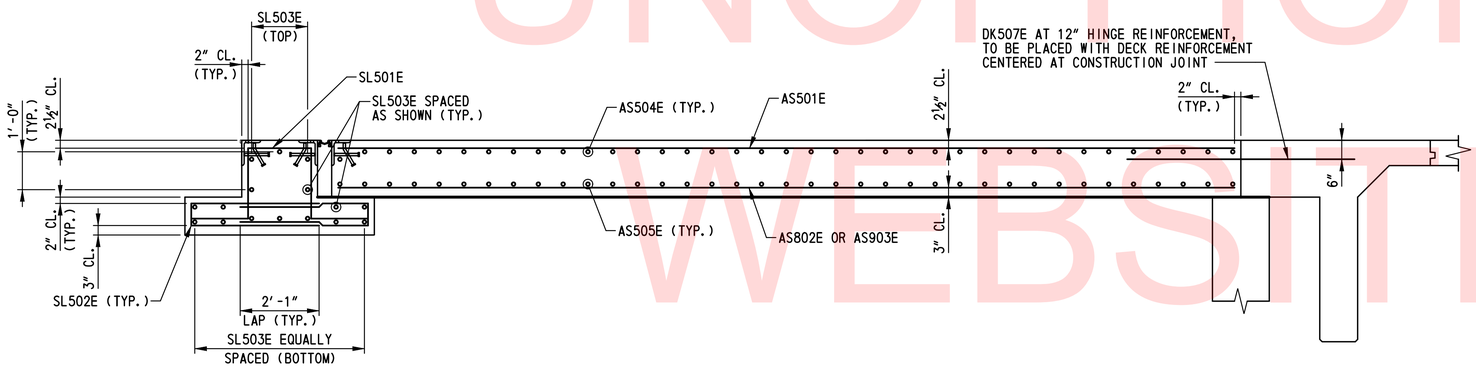

APPROACH SLAB A AND SLEEPER SLAB A TYPICAL REINFORCEMENT SECTION

SCALE: ½"=1'-0"

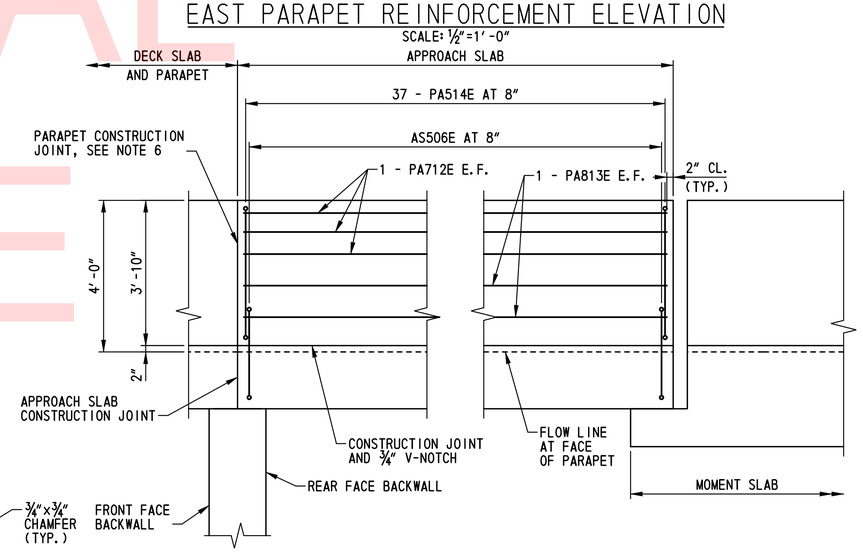

WEST PARAPET REINFORCEMENT ELEVATION

SCALE: ½"=1'-0"

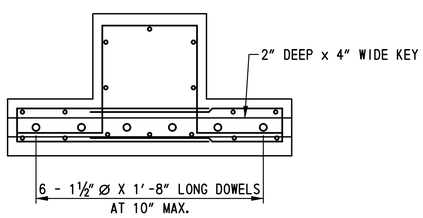

SECTION DD-DD

SCALE: ¾"=1'-0"

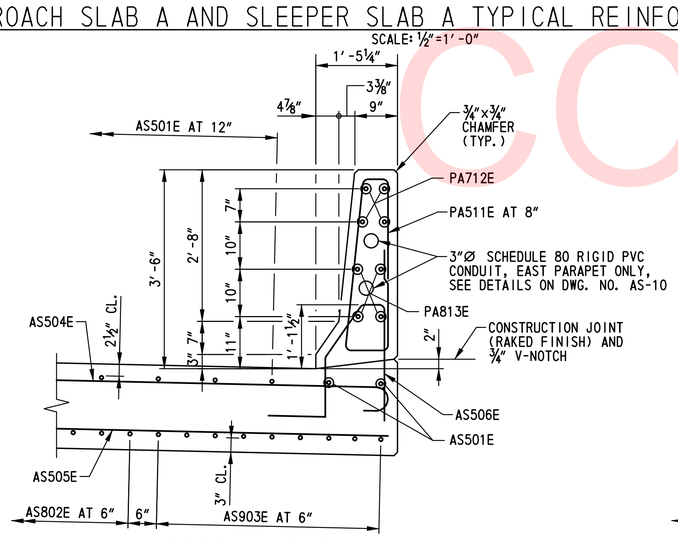

SECTION Z-Z

SCALE: ¾"=1'-0"

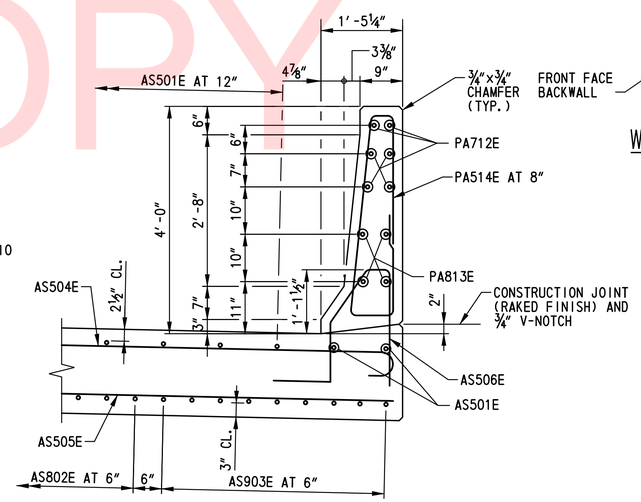

SECTION AA-AA

SCALE: ¾"=1'-0"

NOTES:

1. FOR ARMORED STRIP SEAL EXPANSION JOINT DETAILS, SEE DWG. NO. EX-01.
2. FOR ADDITIONAL APPROACH SLAB A REINFORCEMENT DETAILS, SEE DWG. NO. AS-02.
3. FOR ADDITIONAL SLEEPER SLAB A REINFORCEMENT DETAILS, SEE DWG. NO. AS-06.
4. PAYMENT FOR INSTALLATION OF 1" PREFORMED JOINT FILLER, HOT-POURED JOINT SEALANT, AND JOINT ANGLES AND STUDS AT APPROACH PAVEMENT EDGE OF SLEEPER SLAB WILL BE INCIDENTAL TO ITEM NO. 602018 - PORTLAND CEMENT CONCRETE MASONRY, CLASS D.
5. STEEL TROWEL FINISH SLEEPER SLAB AND APPLY 30 MIL. NOMINAL THICKNESS OF ASPHALT BOND BREAKER. TOP OF SLEEPER SLAB SHALL FOLLOW CROSS SLOPE AND GRADE OF PROPOSED APPROACH SLAB. COST SHALL BE INCIDENTAL TO ITEM 602018 - PORTLAND CEMENT CONCRETE MASONRY, CLASS D.
6. AN APPROVED BOND BREAKER SHALL BE PLACED ON THE SURFACES OF THE PARAPET CONSTRUCTION JOINT. COST SHALL BE INCIDENTAL TO ITEM 602017 - PORTLAND CEMENT CONCRETE MASONRY, PARAPET, CLASS A.
7. FOR PARAPET CONTROL JOINT LOCATIONS, SEE DWG. NO. PE-01. FOR PARAPET CONTROL JOINT DETAILS, SEE DWG. NO. DK-03.
8. REFLECTORS SHALL BE INSTALLED ALONG THE PARAPETS (ROADWAY PAY ITEM). SEE DWG. NO. DT-05 FOR DETAILS.

BR1-2
AS-07

UNOFFICIAL WEBSITE COPY

N:\31653-000\CONTRACT 1B\CADD\Bridge\Br_No2\AS07_br1-2.dgn
12/11/2015 2:24:02 PM

DELAWARE DEPARTMENT OF TRANSPORTATION	ADDENDUMS / REVISIONS	SCALE: AS SHOWN	US 301 & SR 1 INTERCHANGE	CONTRACT T200911302	BRIDGE NO. 1-432	APPROACH AND SLEEPER SLAB A REINFORCEMENT DETAILS
				COUNTY NEW CASTLE	DESIGNED BY: A.J.F.	SHEET NO. 197
					CHECKED BY: P.S.D.	TOTAL SHTS. 491

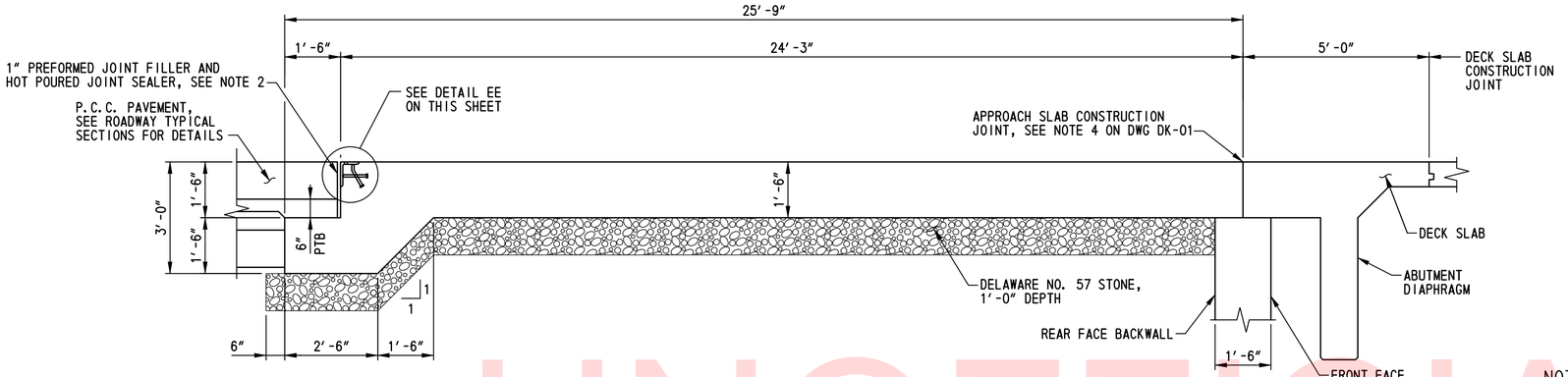

APPROACH SLAB B TYPICAL SECTION

SCALE: ½"=1'-0"

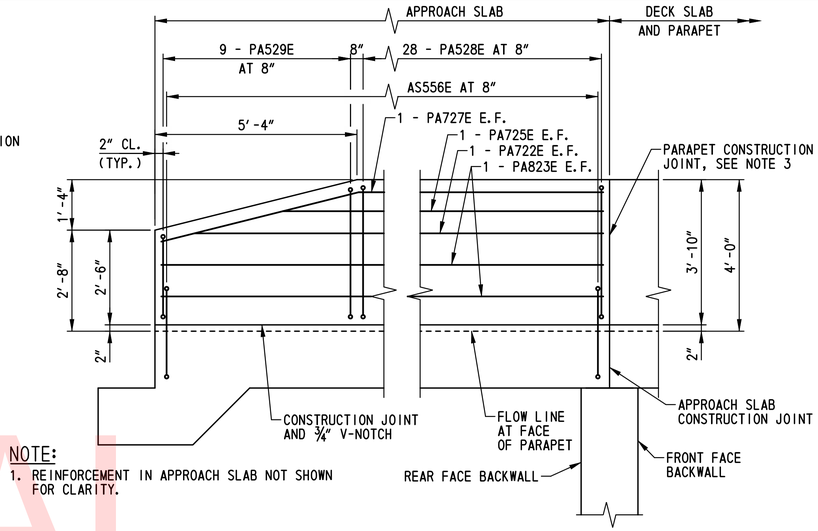

NOTE:

1. REINFORCEMENT IN APPROACH SLAB NOT SHOWN FOR CLARITY.

WEST PARAPET REINFORCEMENT ELEVATION

SCALE: ½"=1'-0"

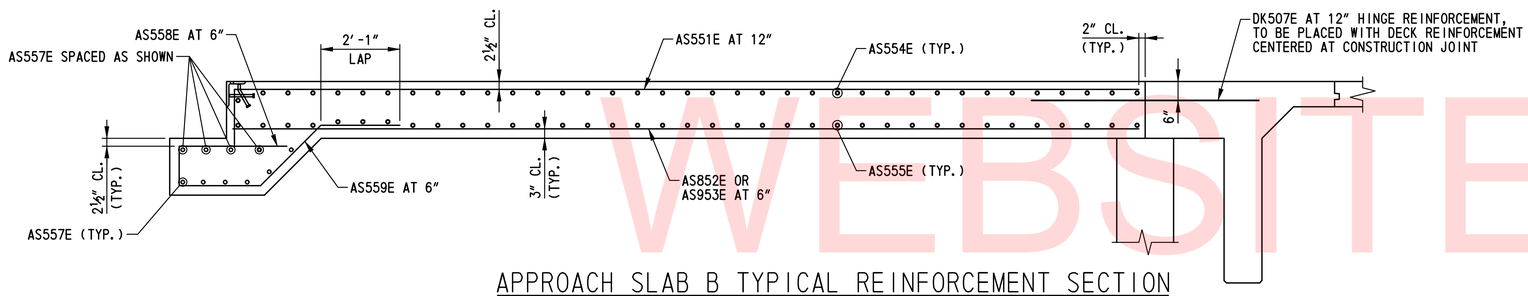

APPROACH SLAB B TYPICAL REINFORCEMENT SECTION

SCALE: ½"=1'-0"

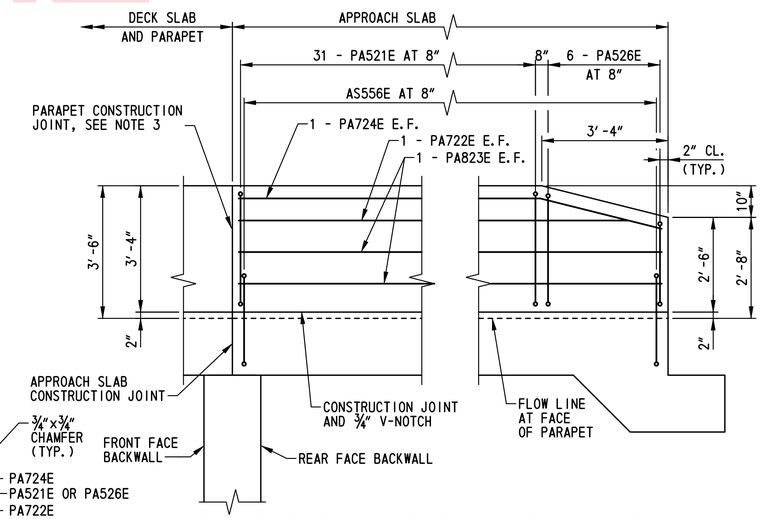

EAST PARAPET REINFORCEMENT ELEVATION

SCALE: ½"=1'-0"

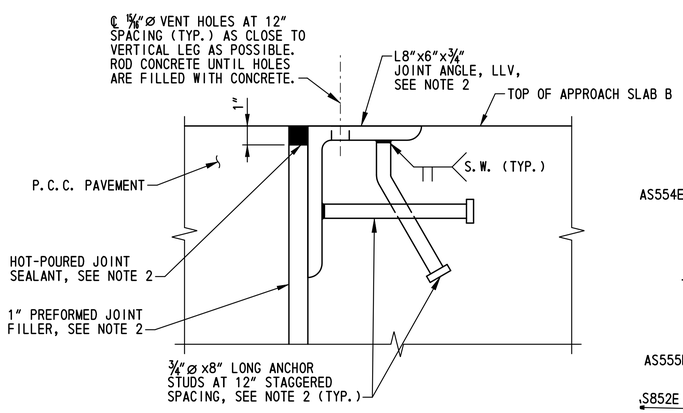

DETAIL EE

SCALE: 3"=1'-0"

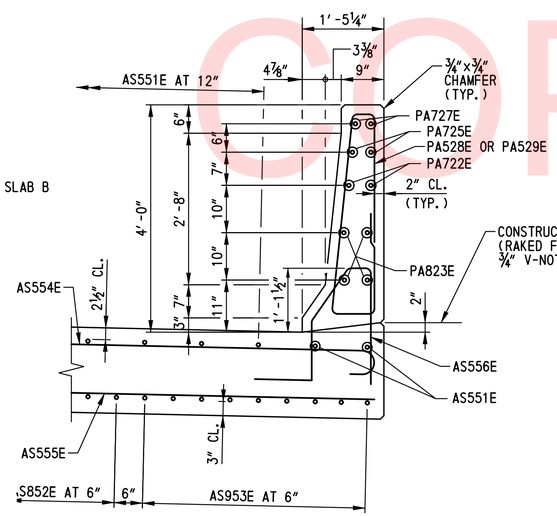

SECTION BB-BB

SCALE: ¾"=1'-0"

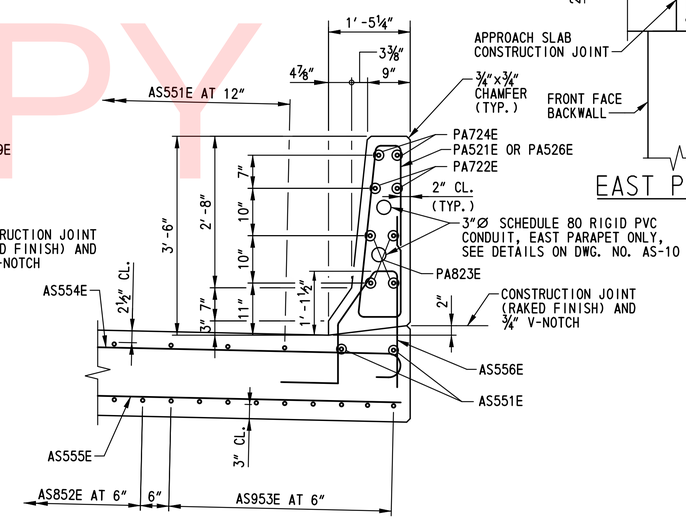

SECTION CC-CC

SCALE: ¾"=1'-0"

NOTES:

1. FOR ADDITIONAL APPROACH SLAB B REINFORCEMENT DETAILS, SEE DWG. NO. AS-04.
2. PAYMENT FOR INSTALLATION OF 1" PREFORMED JOINT FILLER, HOT POURED JOINT SEALANT, AND JOINT ANGLES AND STUDS AT APPROACH PAVEMENT EDGE OF APPROACH SLAB WILL BE INCIDENTAL TO ITEM NO. 602014 - PORTLAND CEMENT CONCRETE MASONRY, APPROACH SLAB, CLASS D.
3. AN APPROVED BOND BREAKER SHALL BE PLACED ON THE SURFACES OF THE PARAPET CONSTRUCTION JOINT. COST SHALL BE INCIDENTAL TO ITEM 602017 - PORTLAND CEMENT CONCRETE MASONRY, PARAPET, CLASS A.
4. FOR PARAPET CONTROL JOINT LOCATIONS, SEE DWG. NO. PE-01. FOR PARAPET CONTROL JOINT DETAILS, SEE DWG. NO. DK-03.
5. REFLECTORS SHALL BE INSTALLED ALONG THE PARAPETS (ROADWAY PAY ITEM). SEE DWG. NO. DT-05 FOR DETAILS.

UNOFFICIAL WEBSITE COPY

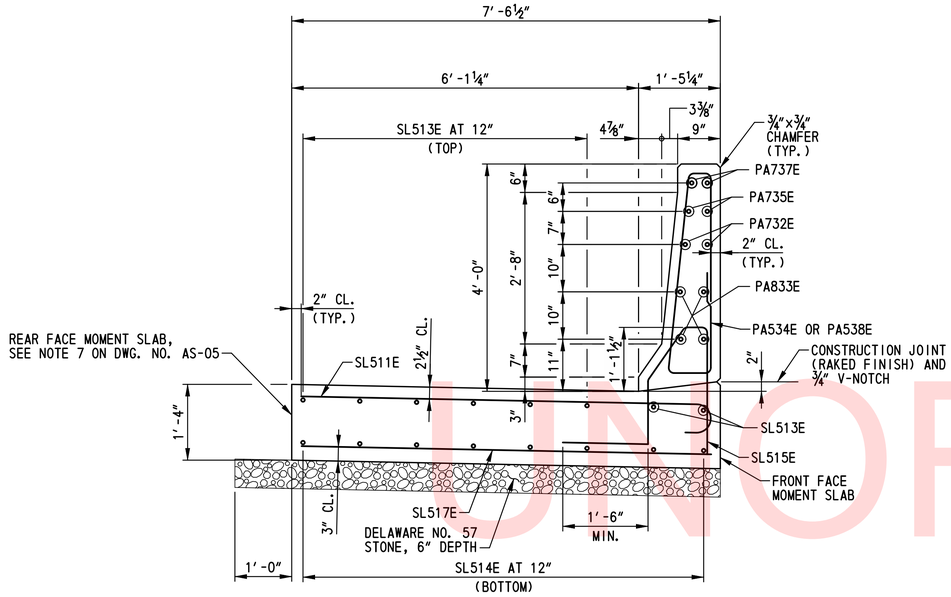

SECTION FF-FF
SCALE: ¾"=1'-0"

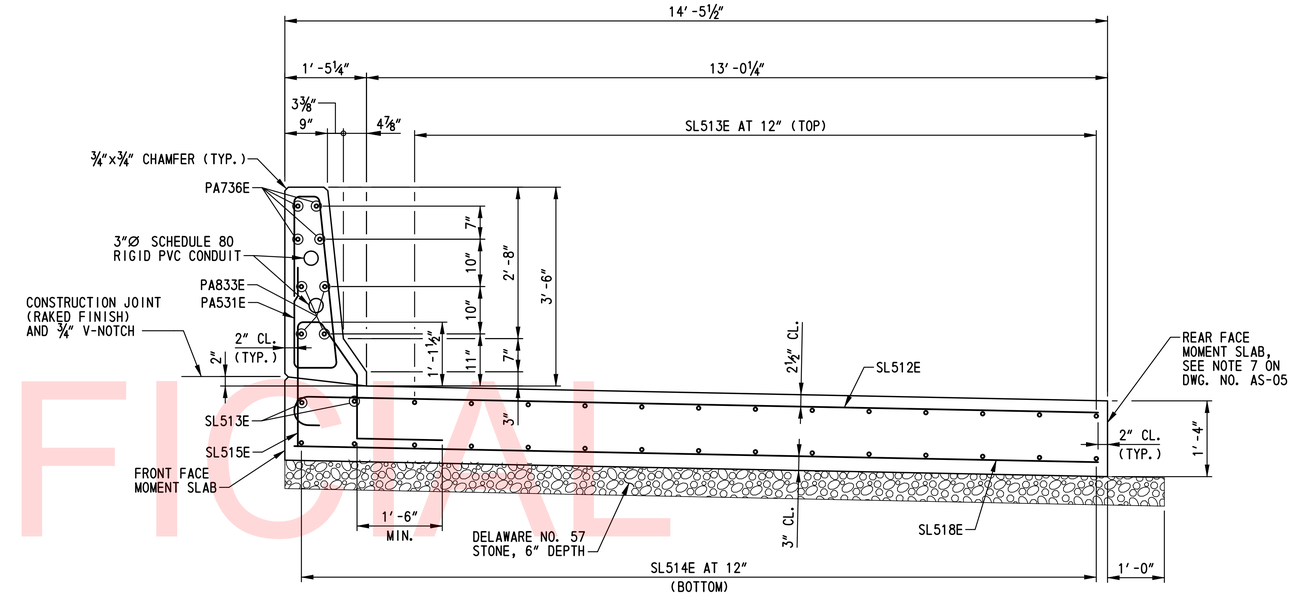

SECTION EE-EE
SCALE: ¾"=1'-0"

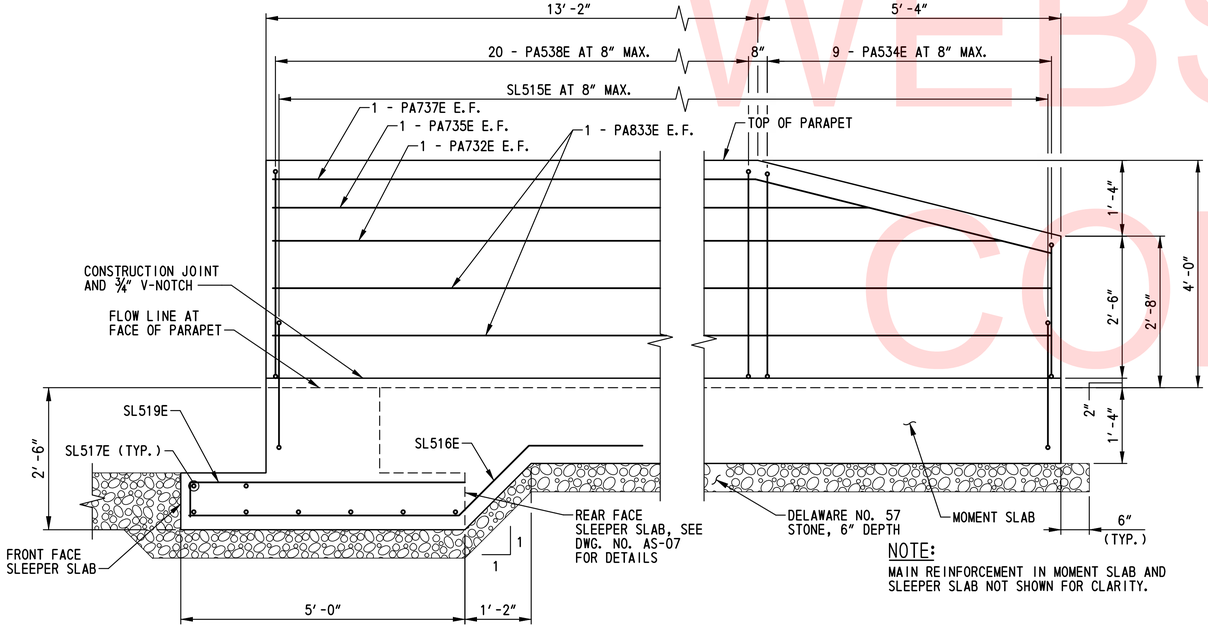

NOTE:
MAIN REINFORCEMENT IN MOMENT SLAB AND SLEEPER SLAB NOT SHOWN FOR CLARITY.

MOMENT SLAB A1 PARAPET REINFORCEMENT ELEVATION
SCALE: ¾"=1'-0"

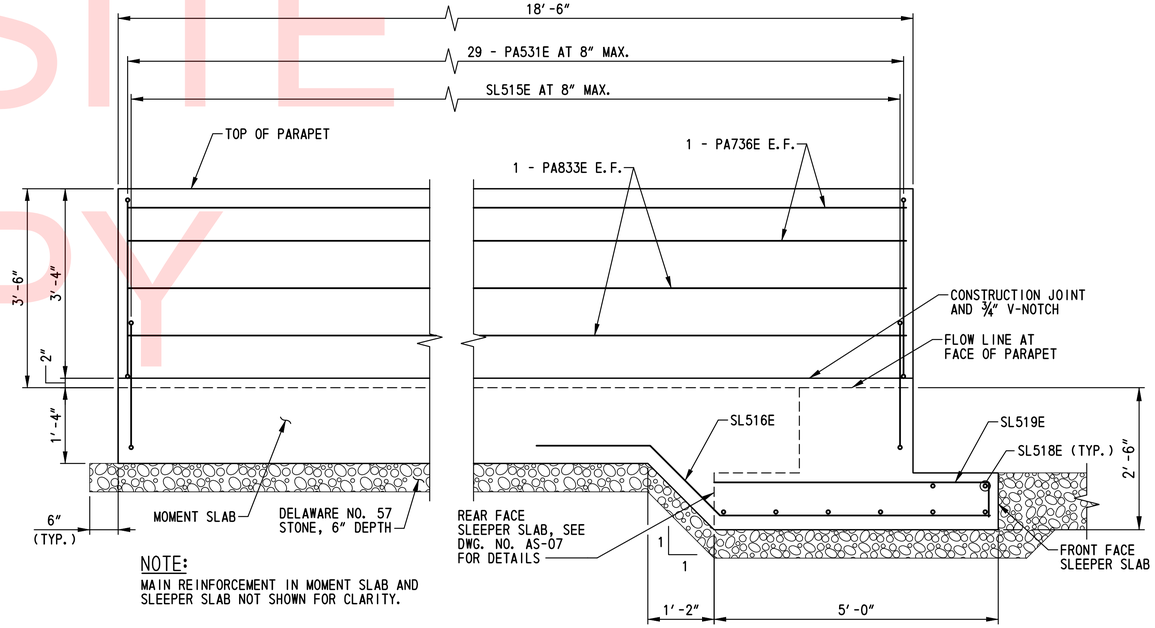

NOTE:
MAIN REINFORCEMENT IN MOMENT SLAB AND SLEEPER SLAB NOT SHOWN FOR CLARITY.

MOMENT SLAB A2 PARAPET REINFORCEMENT ELEVATION
SCALE: ¾"=1'-0"

NOTES:

1. FOR PARAPET CONTROL JOINT LOCATIONS, SEE DWG. NO. PE-01. FOR PARAPET CONTROL JOINT DETAILS, SEE DWG. NO. DK-03.
2. FOR LOCATIONS OF SECTIONS EE-EE AND FF-FF, SEE DWG. NO. AS-06.
3. REFLECTORS SHALL BE INSTALLED ALONG THE PARAPETS (ROADWAY PAY ITEM). SEE DWG. NO. DT-05 FOR DETAILS.

UNOFFICIAL WEBSITE COPY

N:\33653-000\CONTRACT 1B\CADD\Bridge\Br_No2\AS09_br1-2.dgn
12/11/2015 2:18:46 PM

DELAWARE DEPARTMENT OF TRANSPORTATION	ADDENDUMS / REVISIONS	SCALE: AS SHOWN	US 301 & SR 1 INTERCHANGE	CONTRACT T200911302	BRIDGE NO. 1-432	MOMENT SLAB REINFORCEMENT DETAILS	BR1-2 AS-09
				COUNTY NEW CASTLE	DESIGNED BY: A.J.F.		SHEET NO. 199
					CHECKED BY: P.S.D.		TOTAL SHTS. 491

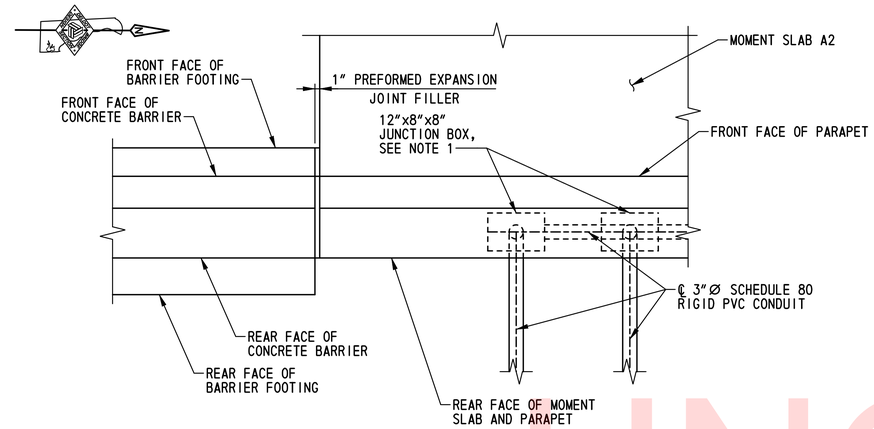

PLAN - EAST PARAPET AT MOMENT SLAB A2

SCALE: ¾"=1'-0"

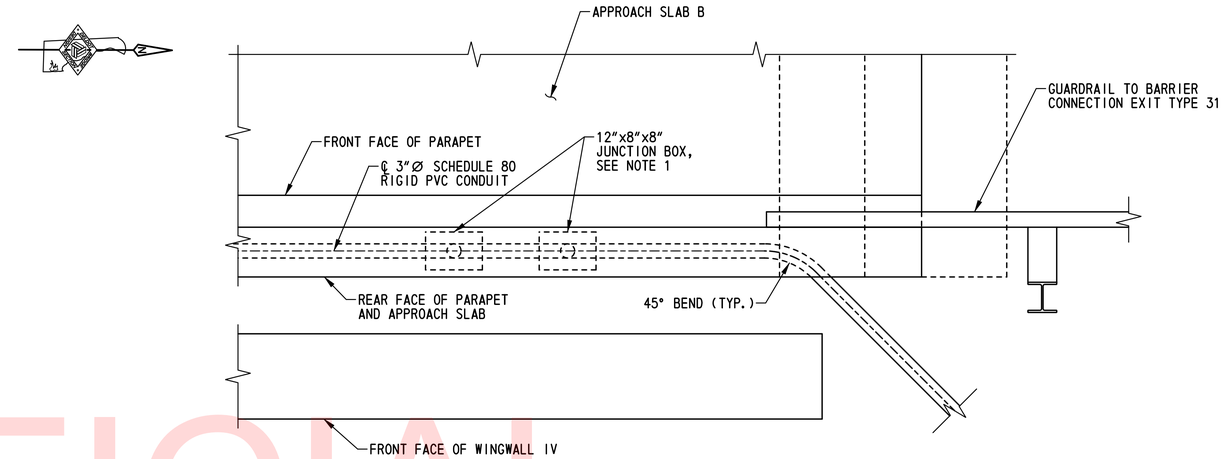

PLAN - EAST PARAPET AT APPROACH SLAB B

SCALE: ¾"=1'-0"

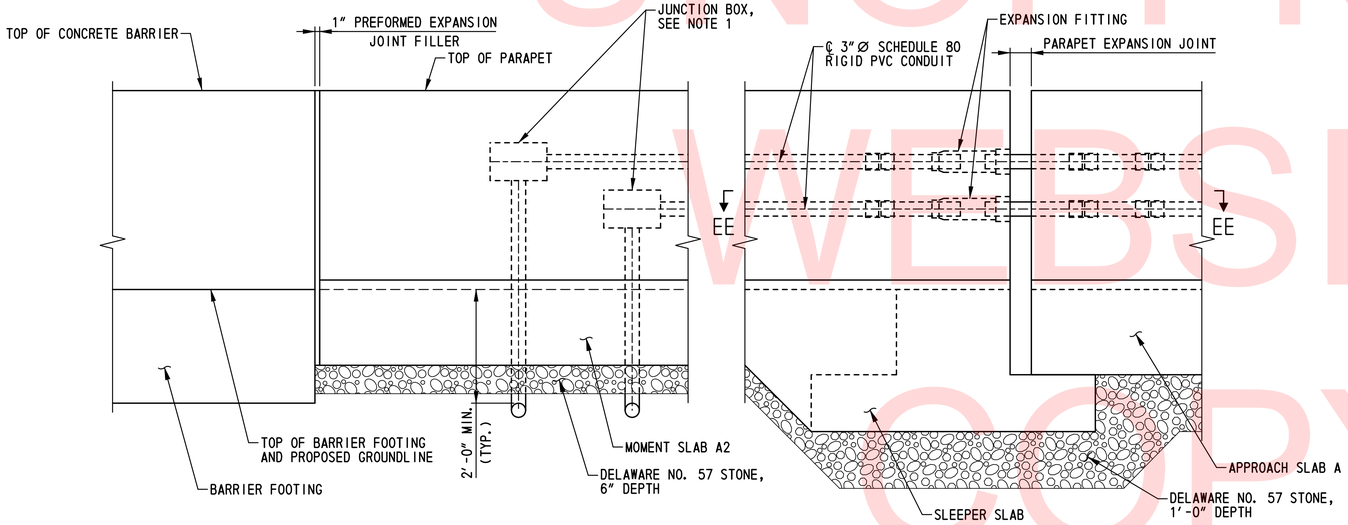

ELEVATION - EAST PARAPET AT MOMENT SLAB A2

SCALE: ¾"=1'-0"

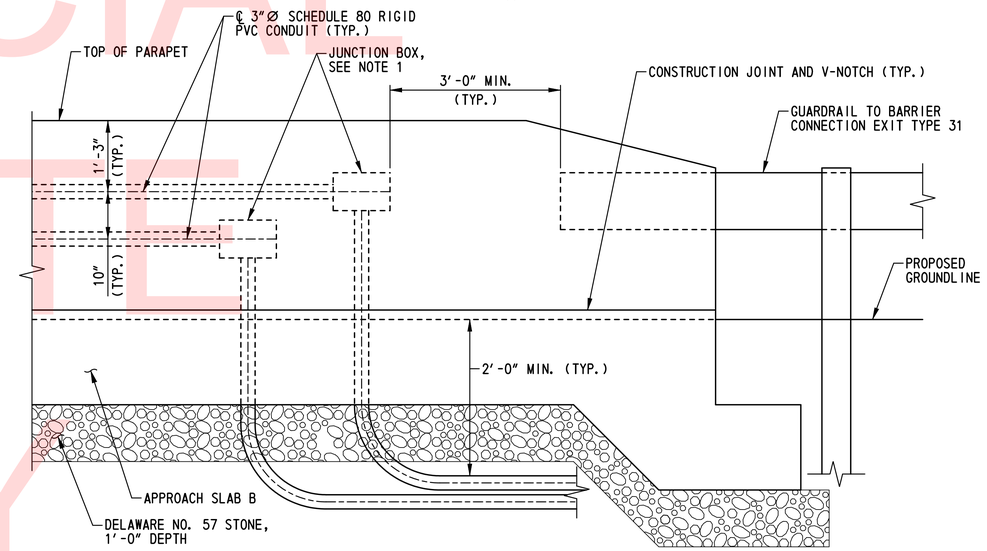

ELEVATION - EAST PARAPET AT APPROACH SLAB B

SCALE: ¾"=1'-0"

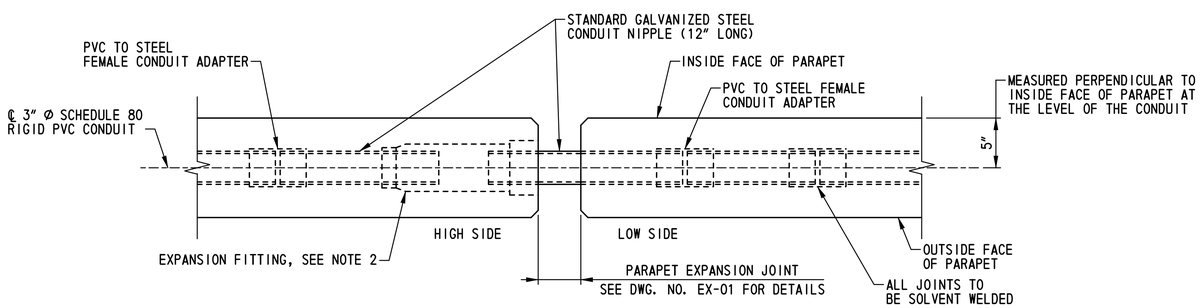

SECTION EE-EE

SCALE: 1½"=1'-0"

NOTES:

1. ALL JUNCTION BOXES SHALL BE 12" LONG x 8" HIGH x 8" DEEP NEMA 4X STAINLESS STEEL JUNCTION BOXES WITH COVERS MOUNTED IN THE FRONT FACE OF THE PARAPET.
2. EXPANSION FITTINGS FOR USE WITH RIGID GALVANIZED STEEL CONDUIT SHALL CONSIST OF A MALLEABLE IRON HEAD AND STEEL SLEEVE WHICH SHALL BE HOT-DIPPED GALVANIZED AND ASSEMBLED WITH A WATERTIGHT PACKING GLAND, AN INSULATED BUSHING, PRESSURE RING AND GASKET AND A TINNED-COPPER BOND TO ASSURE CONTINUITY OF GROUND. THE FITTING SHALL PROVIDE 4" OF MOVEMENT.
3. ALL PIPE AND EXPANSION FITTINGS SHALL BE U.L. APPROVED FOR ENCASEMENT IN CONCRETE.
4. CONDUITS AND JUNCTION BOXES INSTALLED IN THE BRIDGE, APPROACH SLAB AND MOMENT SLAB PARAPETS WILL NOT BE MEASURED AND PAID FOR SEPARATELY BUT WILL BE INCIDENTAL TO ITEM 602017 - PORTLAND CEMENT CONCRETE MASONRY, PARAPET, CLASS A. CONDUITS AND ALL NECESSARY FITTINGS SUPPLIED FOR INSTALLATION IN PARAPETS SHALL MEET THE MATERIAL REQUIREMENTS OF ITEM NO. 745522 - SUPPLY OF 3" SCHEDULE 80 PVC CONDUIT.

UNOFFICIAL WEBSITE COPY

N:\31653-000\Contract 1B\CADD\Bridge\Br_No2\AS10_br1-2.dgn
2/5/2013 9:21:31 AM

DELAWARE DEPARTMENT OF TRANSPORTATION	ADDENDUMS / REVISIONS	SCALE: AS SHOWN	US 301 & SR 1 INTERCHANGE	CONTRACT T200911302 / COUNTY NEW CASTLE	BRIDGE NO. 1-432 / DESIGNED BY: A.J.F. / CHECKED BY: P.S.D.	APPROACH SLAB AND MOMENT SLAB PARAPET CONDUIT DETAILS

BR1-2
AS-10

SHEET NO. 200
TOTAL SHTS. 491

① ANY MARK NUMBER WITH SUFFIX 'E' DENOTES EPOXY COATED REINFORCING STEEL.

② ALL MARK 'LOCATION PREFIXES' SHALL CONSIST OF TWO LETTERS AND ARE AS FOLLOWS: AB = ABUTMENT, AS = APPROACH SLAB, BC = BOX CULVERT, BW = BACKWALL, CL = COLUMN, DK = DECK, DL = DOWEL, FT = FOOTING, HW = HEADWALL, MS = MISC. BARS, PA = PARAPET, PR = PIER, SC = SHEETPILE CAP, SL = SLAB, TW = TOEWALL, WL = WALL (UNIQUE LOCATION), WW = WINGWALL

SPECIFICATIONS					BENDING DIMENSIONS (FEET-INCHES /QUARTER INCH)											
QTY.	SIZE	LENGTH	MARK	TYPE	A	B	C	D	E	F/R	G	H	J	K	O
APPROACH SLAB A															
47	5	23-08 0	AS501E	STR		23-08 0									
74	8	23-08 0	AS802E	STR		23-08 0									
18	9	23-08 0	AS903E	STR		23-08 0									
37	5	46-06 0	AS504E	1	0-07 0	45-04 0					0-07 0		0-05 0		
37	5	45-04 0	AS505E	STR		45-04 0									
74	5	5-07 1	AS506E	T15		2-00 1	0-05 2	1-01 2	1-00 0	1-00 0			0-07 3	0-11 0	1-01 1
37	5	9-03 1	PA511E	PA		2-06 2	0-09 0	3-00 1	0-05 0	2-06 2		3-00 0		0-04 0	
10	7	23-08 0	PA712E	STR		23-08 0									
8	8	23-08 0	PA813E	STR		23-08 0									
37	5	10-02 3	PA514E	PA		2-09 2	0-09 0	3-06 1	0-04 2	2-09 2		3-06 0		0-04 2	
APPROACH SLAB B															
47	5	25-05 0	AS551E	2	1-06 0	23-11 0									
74	8	23-11 0	AS852E	STR		23-11 0									
18	9	23-11 0	AS953E	STR		23-11 0									
37	5	46-06 0	AS554E	1	0-07 0	45-04 0					0-07 0		0-05 0		
37	5	45-04 0	AS555E	STR		45-04 0									
74	5	5-07 1	AS556E	T15		2-00 1	0-05 2	1-01 2	1-00 0	1-00 0			0-07 3	0-11 0	1-01 1
10	5	45-04 0	AS557E	STR		45-04 0									
92	5	4-03 2	AS558E	2	1-00 2	3-03 0									
92	5	6-05 0	AS559E	6		2-01 0	2-01 2	2-02 2				1-06 0		1-06 0	5-09 2
31	5	9-03 1	PA521E	PA		2-06 2	0-09 0	3-00 1	0-05 0	2-06 2		3-00 0		0-04 0	
4	7	23-11 0	PA722E	STR		23-11 0									
8	8	23-11 0	PA823E	STR		23-11 0									
2	7	23-11 2	PA724E	3		20-08 2	3-03 0					0-09 2		3-01 3	23-10 1
2	7	20-08 2	PA725E	STR		20-08 2									
6*	5	7-09 1	PA526E	PA		2-01 3	0-09 0	2-02 3	0-06 0	2-01 3		2-02 2		0-03 0	
		T0				T0		T0	T0	T0		T0		T0	
		9-02 1				2-06 1		2-11 3	0-05 0	2-06 1		2-11 2		0-04 0	
			*1 SET OF 6												
2	7	24-00 0	PA727E	3		18-08 2	5-03 2					1-03 2		5-01 3	23-10 1
28	5	10-02 3	PA528E	PA		2-09 2	0-09 0	3-06 1	0-04 2	2-09 2		3-06 0		0-04 2	
9*	5	7-09 1	PA529E	PA		2-01 3	0-09 0	2-02 3	0-06 0	2-01 3		2-02 2		0-03 0	
		T0				T0		T0	T0	T0		T0		T0	
		10-02 1				2-09 2		3-05 3	0-04 2	2-09 2		3-05 2		0-04 2	
			*1 SET OF 9												

SPECIFICATIONS					BENDING DIMENSIONS (FEET-INCHES /QUARTER INCH)											
QTY.	SIZE	LENGTH	MARK	TYPE	A	B	C	D	E	F/R	G	H	J	K	O
MOMENT SLAB A															
25	5	8-06 2	SL501E	S4	1-06 0	1-11 1	1-08 0	1-11 1			1-06 0				
50	5	7-04 0	SL502E	17		3-04 2	0-07 0	3-04 2							
16	5	23-04 0	SL503E	STR		23-04 0									
29	5	7-09 2	SL511E	1	0-07 0	7-02 2							0-05 0		
29	5	14-08 2	SL512E	1	0-07 0	14-01 2							0-05 0		
23	5	20-02 0	SL513E	17		2-00 0	18-02 0								
23	5	18-02 0	SL514E	STR		18-02 0									
58	5	6-01 1	SL515E	T15		2-00 1	0-05 2	1-01 2	1-00 0	1-06 0			0-07 3	0-11 0	1-01 1
23	5	8-05 3	SL516E	3		2-00 0	1-08 3	4-09 0				1-02 3		1-02 3	
27	5	7-02 2	SL517E	STR		7-02 2									
27	5	14-01 2	SL518E	STR		14-01 2									
23	5	5-05 0	SL519E	17		0-07 0	4-10 0								
29	5	9-02 3	PA531E	PA		2-06 1	0-09 0	3-00 1	0-05 0	2-06 1		3-00 0		0-04 0	
2	7	17-03 2	PA732E	STR		17-03 2									
8	8	18-02 0	PA833E	STR		18-02 0									
9*	5	7-09 1	PA534E	PA		2-01 3	0-09 0	2-02 3	0-06 0	2-01 3		2-02 2		0-03 0	
		T0				T0		T0	T0	T0		T0		T0	
		10-02 1				2-09 2		3-05 3	0-04 2	2-09 2		3-05 2		0-04 2	
			*1 SET OF 9												
2	7	15-00 0	PA735E	STR		15-00 0									
4	7	18-02 0	PA736E	STR		18-02 0									
2	7	18-03 2	PA737E	3		13-00 0	5-03 2					1-03 2		5-01 3	18-01 3
20	5	10-02 3	PA538E	PA		2-09 2	0-09 0	3-06 1	0-04 2	2-09 2		3-06 0		0-04 2	

SPECIFICATIONS					BENDING DIMENSIONS (FEET-INCHES /QUARTER INCH)										
QTY.	SIZE	LENGTH	MARK	TYPE	A	B	C	D	E	F/R	G	H	J	K	O

UNOFFICIAL WEBSITE COPY

ASTM STANDARD ENGLISH REINFORCING BARS				RECOMMENDED END HOOKS, APPLICABLE TO ALL GRADES				STIRRUP AND TIE HOOKS, APPLICABLE TO ALL GRADES			
	NOMINAL DIMENSIONS				180° HOOKS		90° HOOKS		90° HOOK	135° HOOK	
BAR SIZE	DIAMETER (INCHES)	AREA (INCHES²)	WEIGHT (LBS./FT.)	D	A OR G	J	A OR G	D	A OR G	A OR G	H
3	0.375	0.110	0.376	2¼"	5"	3"	6"	1½"	4"	4"	2½"
4	0.500	0.200	0.668	3"	6"	4"	8"	2"	4½"	4½"	3"
5	0.625	0.310	1.043	3¾"	7"	5"	10"	2½"	6"	5½"	3¾"
6	0.750	0.440	1.502	4½"	8"	6"	1-0"	4½"	1-0"	8"	4½"
7	0.875	0.600	2.044	5¼"	10"	7"	1-2"	5¼"	1-2"	9"	5¼"
8	1.000	0.790	2.670	6"	11"	8"	1-4"	6"	1-4"	10½"	6"
9	1.128	1.000	3.400	9½"	1-3"	11¾"	1-7"				
10	1.270	1.270	4.303	10¾"	1-5"	1-1¼"	1-10"				
11	1.410	1.560	5.313	1-0"	1-7"	1-2¾"	2-0"				
14	1.693	2.250	7.650	1-6¼"	2-3"	1-9¾"	2-7"				
18	2.257	4.000	13.600	2-0"	3-0"	2-4½"	3-5"				

NOTES:

1. FIGURES SHOWN IN CIRCLES REPRESENT BAR BEND TYPES.
2. STANDARD BAR BENDS INCLUDE ONLY THOSE TYPES BELOW, INDICATED AS SUCH.
3. ALL DIMENSIONS OUT-TO-OUT, EXCEPT "A" AND "G" ON STD. 180° AND 135° HOOKS.
4. "J" DIMENSIONS ON 180° HOOKS TO BE SHOWN ONLY WHERE NECESSARY TO RESTRICT HOOK SIZE, OTHERWISE STANDARD 'ACI' HOOKS ARE TO BE USED.
5. WHERE "J" IS NOT SHOWN, "J" WILL BE KEPT EQUAL TO OR LESS THAN "H" ON TYPES 3, 5 AND 22. WHERE "J" CAN EXCEED "H", IT SHALL BE SHOWN.
6. "H" DIMENSIONS OF STIRRUPS TO BE SHOWN AS NEEDED TO FIT WITHIN THE CONCRETE.
7. UNLESS OTHERWISE NOTED, DIAMETER "D" IS THE SAME FOR ALL BENDS AND HOOKS ON A BAR (EXCEPT FOR BEND TYPES 11 AND 13).
8. WHERE SLOPE DIFFERS FROM 45° OFFSET, "H" AND "K" MUST BE SHOWN.
9. WHERE BARS ARE TO BE BENT MORE ACCURATELY THAN STANDARD BENDING TOLERANCES, BENDING DIMENSIONS REQUIRING CLOSER FABRICATION SHOULD HAVE LIMITS INDICATED.
10. FOR RECOMMENDED DIAMETER "D", OF BENDS, HOOKS, ETC., REFER TO TABLE ABOVE, 'CRSI' OR 'ACI' TABLES WHERE APPLICABLE AND REQUIRED.
11. TYPE S1-S6, S11, T1-T3 AND T6-T9 APPLICABLE TO BAR SIZES #3 THROUGH #8.

STANDARD BAR BENDS

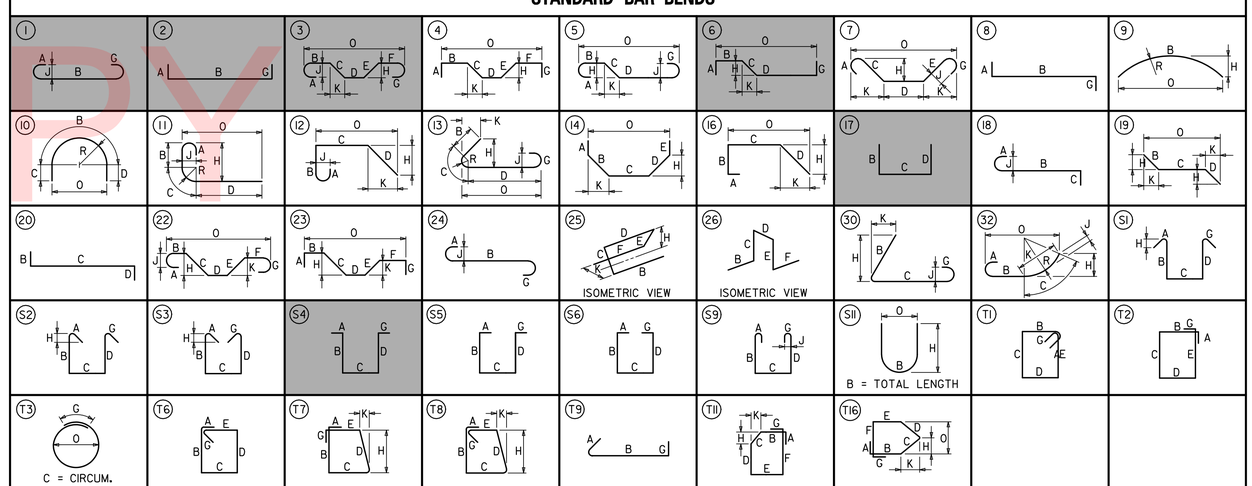

SPECIAL BAR BENDS

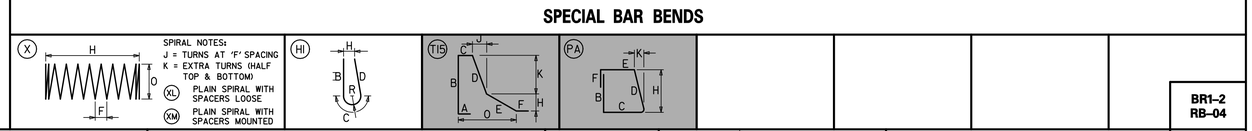

STIRRUP AND TIE HOOKS

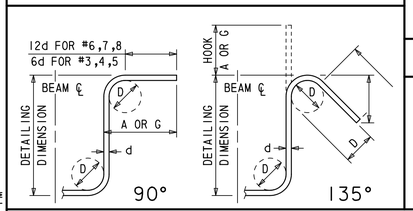

180° AND 90° END HOOKS

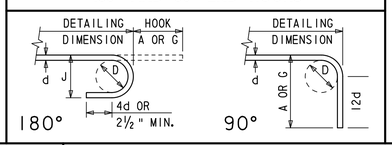

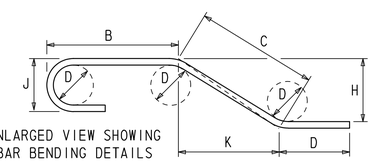

ENLARGED VIEW SHOWING BAR BENDING DETAILS

DELAWARE DEPARTMENT OF TRANSPORTATION	ADDENDUMS / REVISIONS	NOT TO SCALE	US 301 & SR 1 INTERCHANGE	CONTRACT T200911302	BRIDGE NO. 1-432
				COUNTY NEW CASTLE	DESIGNED BY: A.J.F.
					CHECKED BY: P.S.D.

APPROACH SLAB AND MOMENT SLAB REINFORCEMENT LIST

BR1-2 RB-04

SHEET NO. 201

TOTAL SHTS. 491

N:\31653-000\CONTRACT 1B\CADD\Bridge\Br_No2\RB04_br1-2.dgn 2/9/2015 5:12:24 PM

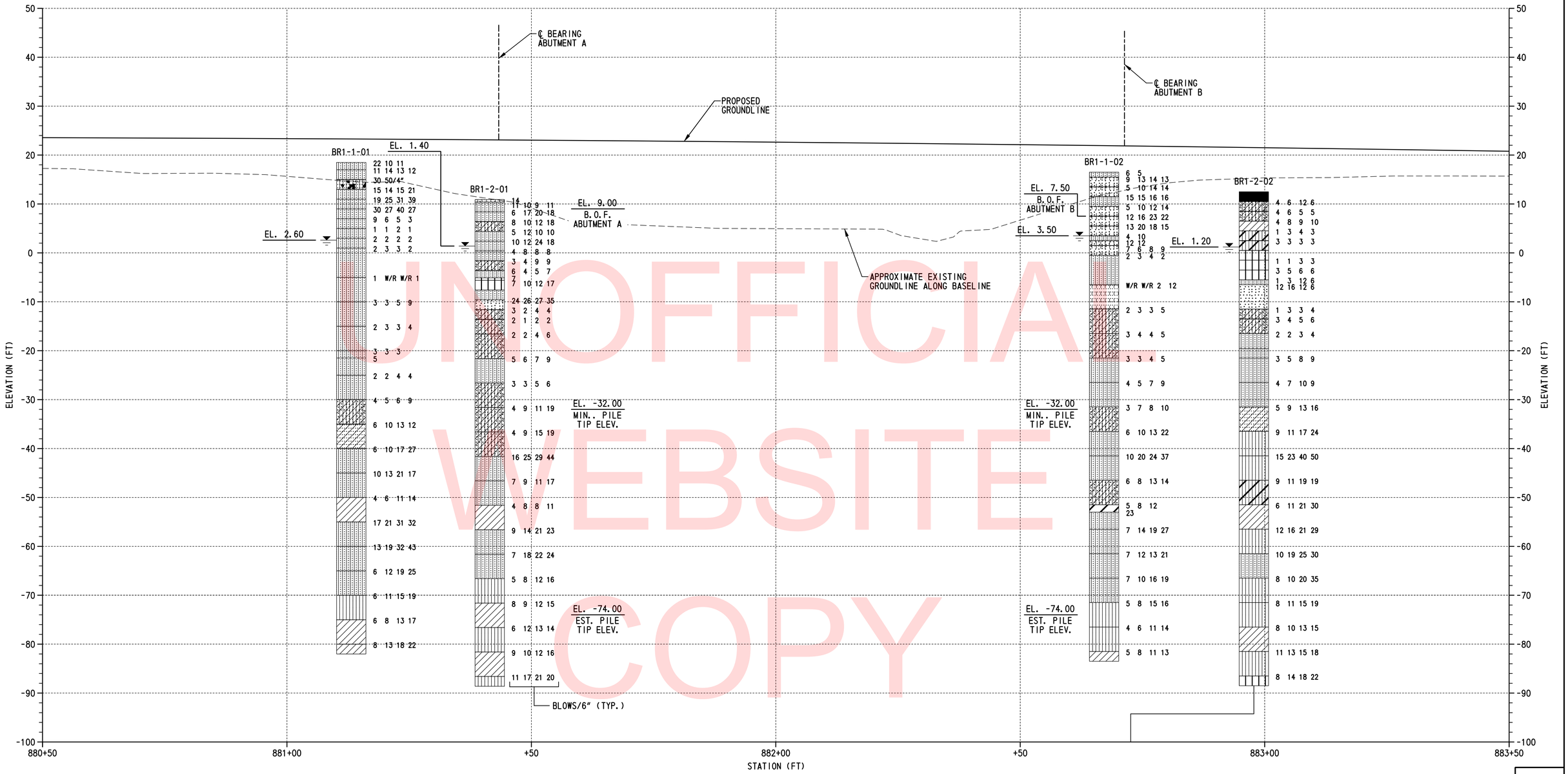

BORING PROFILE

SCALE: 1"=10'-0"

UNOFFICIAL WEBSITE COPY

LEGEND:

- POORLY GRADED SAND WITH SILT
- SILTY SAND
- POORLY GRADED CLAYEY SILTY SAND
- ELASTIC SILT
- POORLY GRADED SAND
- LOW PLASTICITY CLAY
- SILTY LOW PLASTICITY CLAY
- CLAYEY SAND
- SILT
- PAVING
- WATER TABLE AT BORING COMPLETION

W/R = WEIGHT OF ROD

TEST BORINGS				
BORING DESIGNATION	STATION	OFFSET	NORTHING	EASTING
BR1-1-01	881+13.52	7.68' LT.	559294.3000	590558.4000
BR1-2-01	881+41.48	50.75' RT.	559322.0000	590617.0000
BR1-1-02	882+67.15	11.22' RT.	559448.0000	590577.0000
BR1-2-02	BB2+72.59	56.29' RT.	559454.0000	590622.0000

NOTES:

1. FOR BORING LOCATIONS, SEE DWG. NO. PE-01.
2. BORING BR1-2-02 SHOWN OFFSET AS INDICATED FOR CLARITY.
3. RESULTS CONDUCTED ON SAMPLES RECOVERED ARE REPORTED ON THE BORING LOGS. LOGS AND LABORATORY TESTING ARE INCLUDED AS PART OF THE CONTRACT DOCUMENTS, SEE CD.

VERTICAL SCALE FEET 0 10 20 30

BR1-2
BO-01

N:\31653-000\Contract 1B\CADD\Bridge\Br_No2\B001_br1-2.dgn
2/5/2013 9:22:02 AM

DELAWARE DEPARTMENT OF TRANSPORTATION

ADDENDUMS / REVISIONS

SCALE 0 10 20 30 FEET

US 301 & SR 1 INTERCHANGE

CONTRACT	BRIDGE NO.	1-432
T200911302	DESIGNED BY: A.J.F.	
COUNTY		
NEW CASTLE	CHECKED BY: P.S.D.	

BORING PROFILE

SHEET NO. 202
TOTAL SHTS. 491

PROJECT NOTES:

1. LOCATION
   PROPOSED NEW STRUCTURE CARRYING US 301 NB OVER SR 1 IN NEW CASTLE COUNTY, DELAWARE.

2. ELEVATIONS
   VERTICAL DATUM IS REFERENCED TO NAVD 88.

3. DESIGN CRITERIA AND SPECIFICATIONS
   2007 AASHTO LRFD BRIDGE DESIGN SPECIFICATIONS, INCLUDING 2008 AND 2009 INTERIM PROVISIONS AND THE 2005 DELDOT BRIDGE DESIGN MANUAL. PROVIDE MATERIAL AND PERFORM WORK IN ACCORDANCE WITH THE DELDOT STANDARD SPECIFICATIONS AND STANDARD CONSTRUCTION DETAILS AND THE CONTRACT SPECIAL PROVISIONS.

4. LOADING
   HL-93 AND DELAWARE LEGAL LOADS FOR LIVE LOAD WITH PROVISIONS FOR FUTURE 2" WEARING SURFACE AND 15 LBS/FT^2 FOR THE USE OF STEEL BRIDGE DECK FORMS WHICH REMAIN IN PLACE.

5. CONCRETE
   ALL CONCRETE PROPERTIES SHALL BE IN ACCORDANCE WITH SECTION 812 OF THE DELAWARE DEPARTMENT OF TRANSPORTATION STANDARD SPECIFICATIONS.

   CLASS A - ABUTMENTS, STEMS, BACKWALLS, WINGWALLS, PIER (EXCEPT POST TENSIONED CONCRETE CAPS), AND PARAPET (f'c = 4,500 PSI).

   CLASS B - PIER FOOTINGS NOT EXPOSED (f'c = 3,000 PSI).

   CLASS D - CONCRETE DECK SLAB, MOMENT SLAB AND APPROACH SLAB (f'c = 4,500 PSI).

   ALL EXPOSED EDGES SHALL BE CHAMFERED ¾" UNLESS NOTED OTHERWISE.

6. REINFORCING STEEL
   ALL REINFORCING STEEL SHALL BE AASHTO M 31 (ASTM A 615), GRADE 60. FUSION BONDED EPOXY COATED REINFORCING STEEL SHALL CONFORM TO AASHTO M 284 (ASTM A 775).

   EPOXY COATED REINFORCING STEEL SHALL BE USED IN THE FOLLOWING LOCATIONS:

   APPROACH SLABS
   MOMENT SLAB
   DECK SLAB
   PARAPETS
   ABUTMENTS

   ALL REINFORCING STEEL HAS BEEN DETAILED FOR A MAXIMUM LENGTH OF 60 FT.

   ALL SPLICES, NOT SHOWN, SHALL BE LAPPED AS PER THE AASHTO LRFD BRIDGE DESIGN SPECIFICATIONS.

   MINIMUM CONCRETE COVER FOR REINFORCING STEEL UNLESS NOTED OTHERWISE SHALL BE:

   FOUNDATION ELEMENTS: 3"
   DECK SLABS: 2½" TOP OF SLAB (INCLUDES ½" INTEGRAL WEARING SURFACE)
   1" BOTTOM OF SLAB WHEN STAY-IN-PLACE FORMS ARE USED
   COLUMNS: 2" TO TIES
   PIER CAPS: 2" TO STIRRUPS
   2" TO MAIN STEEL AT ENDS

7. STRUCTURAL STEEL
   ALL STRUCTURAL STEEL SHALL BE AASHTO M 270 (ASTM A 709), GRADE 50W (UNLESS NOTED OTHERWISE) AND GRADE HPS 70W (AS NOTED ON DWG. NO. BM-02) INCLUDING THE ADDITIONAL REQUIREMENTS FOR CHARPY V-NOTCH TESTING OF AASHTO M 270 FOR PRIMARY LOAD CARRYING MEMBERS UNDER TENSILE STRESS.

   TEN (10) FEET AT THE ENDS OF EACH GIRDER AND THE END CROSS FRAMES SHALL BE PAINTED WITH A URETHANE PAINT SYSTEM IN ACCORDANCE WITH SPECIAL PROVISION ITEM 605537 - URETHANE PAINT SYSTEM, NEW STEEL. THE FINAL COLOR SHALL BE FEDERAL STANDARD COLOR NO. 10076 (BROWN) OF FEDERAL STANDARD NO. 595B. THE COST OF PAINTING SHALL BE INCIDENTAL TO ITEM 605002 - STEEL STRUCTURES.

8. POST TENSIONED CONCRETE
   THE MINIMUM COMPRESSIVE STRENGTH FOR THE POST TENSIONED PIER CAP CONCRETE AT TRANSFER SHALL BE 6,000 PSI. THE MINIMUM COMPRESSIVE STRENGTH FOR THE POST TENSIONED CONCRETE PIER CAP AT 28 DAYS SHALL BE 8,000 PSI.

9. POST TENSIONING STEEL
   ALL POST TENSIONING STRAND TENDONS SHALL CONSIST OF 0.6 INCH DIAMETER SEVEN WIRE UNCOATED LOW RELAXATION STRANDS CONFORMING TO AASHTO M 203 (ASTM A 416), GRADE 270, AREA = 0.217 SQ. IN.

   THE LIMITING STRESS FOR THE POST TENSIONING STEEL SHALL BE:

   JACKING STRESS = 202.5 KSI
   PRIOR TO SEATING = 218.7 KSI
   AT ANCHORAGE IMMEDIATELY AFTER ANCHOR SET = 189.0 KSI
   ELSEWHERE ALONG LENGTH OF MEMBER AWAY FROM ANCHORAGES IMMEDIATELY AFTER ANCHOR SET = 199.8 KSI
   AT SERVICE LIMIT STATE AFTER LOSSES = 194.4 KSI

   OTHER PARAMETERS:

   APPARENT MODULUS OF ELASTICITY = 28.5 KSI
   APPARENT YIELD STRESS = 243.0 KSI
   FRICTION COEFFICIENT = 0.25
   WOBBLE FRICTION COEFFICIENT = 0.0002/FT.
   ANCHOR SET = .375"

10. SPHERICAL BEARINGS
    FOR REQUIREMENTS OF THE SPHERICAL BEARINGS, SEE DWG. NO. BB-01 THRU BB-16.

11. STEEL H-PILES
    STEEL H-PILES SHALL BE AASHTO M270 (ASTM A 709), GRADE 50.

12. MSE WALLS
    FOR MSE WALL NOTES, SEE DWG. NO. AB-02.

13. FOUNDATION REQUIREMENTS
    FOR FOUNDATION REQUIREMENTS, SEE DWG. NOS. PL-01 THRU PL-03. DELDOT STANDARD SPECIFICATION 619.11(A)(6) SHALL BE MODIFIED BY REFERENCE TO SPECIAL PROVISIONS 619519 AND 619539.

14. TRAFFIC CONTROL REQUIREMENTS
    PROVIDE A MINIMUM TEMPORARY VERTICAL CLEARANCE OF 16'-6" AT ALL TIMES DURING CONSTRUCITON UNLESS NOTED OTHERWISE IN THE CONTRACT PLANS AND SPECIFICATIONS.

    DO NOT PICK OR LIFT OBJECTS OVER LANES AND/OR SHOULDERS OPEN TO TRAFFIC.

    DO NOT PERFORM ANY WORK DIRECTLY OVER OPEN LANES OF TRAFFIC WITHOUT ADEQUATE SHIEDLING OR WORK PLATFORMS, LANE CLOSURES OR DETOURS IN ACCORDANCE WITH THE CONTRACT PLANS AND SPECIFICATIONS.

    INSTALL SIP FORMS, ADDITIONAL PROTECTIVE SHIELD SYSTEM, WORK PLATFORMS AND/OR OVERHANG FALSEWORK BEFORE BEGINNING ANY CONSTRUCTION OPERATIONS OVER TRAFFIC.

    IF THE CONTRACTOR DETERMINES THAT ADDITIONAL PROTECTIVE SHIELDING OR WORK PLATFORMS ARE NEEDED FOR PROTECTING TRAFFIC WHILE WORKING OVER TRAVELWAYS HAVE THE DRAWINGS AND DESIGN CALCULATIONS PREPARED, SIGNED AND SEALED BY A DELAWARE REGISTERED PROFESSIONAL ENGINEER. THE APPROVAL OF THE ENGINEER WILL NOT RELIEVE THE CONTRACTOR OF THE RESPONSIBILITY FOR THE SAFETY OF THE METHOD OR EQUIPMENT. BASED ON CONTRACTOR MEANS AND METHODS DETERMINE AND CLEARLY DEFINE ALL DEAD AND LIVE LOADS FOR THIS SYSTEM, WHICH, AT A MINIMUM SHALL BE INSTALLED BETWEEN BEAMS OR GIRDERS OVER ANY TRAVEL WAY OR SHOULDER AREA WHERE TRAFFIC IS MAINTAINED. NO SEPARATE PAYMENT WILL BE MADE FOR ADDITIONAL PROTECTIVE SHIELDING OR WORK PLATFORMS UNLESS NOTED OTHERWISE IN THE CONTRACT PLANS AND SPECIFICATIONS.

    ALL FORMWORK INCLUDING STAY-IN-PLACE FORMS SHALL BE MORTAR TIGHT.

    WHILE PLACING DECK, DECK OVERHANG AND PARAPET CONCRETE OVER LANES OPEN TO TRAFFIC, NO CLOSURE OR DETOURS WILL BE ALLOWED DURING THESE OPERATONS.

    THE MAINTENANCE OF TRAFFIC REQUIRED FOR THE INSTALLATION OF THESE ITEMS WILL BE PAID UNDER THE MAINTENANCE OF TRAFFIC UNIT BID ITEMS. CONTRACTOR SHALL ADHERE TO THE TRAFFIC CONTROL PLAN, DELAWARE MUTCD, AND TRAFFIC LANE CLOSURE AND WORK RESTRICTIONS PROVIDED IN THE CONTRACT DOCUMENTS.

    FOR ADDITIONAL TRAFFIC CONTROL REQUIREMENTS, SEE DWG. NOS. CS-103, CS-104, CS-202, CS-203, CS-301 AND CS-302.

15. CONSTRUCTION JOINTS
    KEYED CONSTRUCTION JOINTS SHALL BE 2"x4" OR UNLESS NOTED OTHERWISE. ALL EXPOSED CONSTRUCTION JOINT EDGES SHALL HAVE A ¾" V-NOTCH UNLESS NOTED OTHERWISE.

16. MISCELLANEOUS
    ALL AREAS DISTURBED BY THE CONTRACTOR'S OPERATIONS SHALL BE GRADED BACK TO THE ORIGINAL EXISTING GRADE, TOP SOILED, SEEDED AND MULCHED. PAYMENT SHALL BE INCIDENTAL TO THE CONTRACT. AS DIRECTED BY THE ENGINEER, ALL AREAS DISTURBED BY THE CONTRACTOR'S OPERATION RESULTING FROM UNAUTHORIZED ACTIVITIES OUTSIDE THE LIMIT OF CONSTRUCTION SHALL BE TOP SOILED, SEEDED, AND MULCHED AT THE CONTRACTOR'S EXPENSE.

17. STABILIZING STRUCTURAL EXCAVATIONS
    IN LIEU OF A 2:1 SLOPE, THE CONTRACTOR MAY USE SHORING FOR EXCAVATIONS EXCEEDING 5 FEET IN HEIGHT. THE COST OF THE SHORING SHALL BE INCIDENTAL TO ITEM 207000 - EXCAVATION AND BACKFILL FOR STRUCTURES.

18. LOAD RATINGS
    FOR LOAD AND RESISTANCE FACTOR RATING, SEE BRIDGE NO. 1-433 LOAD RATING SUMMARY ON THIS SHEET.

19. UTILITIES
    BEFORE BEGINNING WORK, THE CONTRACTOR SHALL GIVE NOTIFICATION BY TELEPHONE BY CALLING "MISS UTILITY" AT 1-800-282-8555 A MINIMUM OF 2 WORKING DAYS PRIOR TO START OF WORK. VERIFY AND LOCATE ALL UTILITIES PRIOR TO STARTING WORK.

    COORDINATE THE REQUIREMENTS FOR PROTECTION OF ANY UTILITY WITH THE UTILITY OWNER PRIOR TO STARTING WORK.

    CONDUCT OPERATIONS IN A MANNER WHICH ENSURES THAT THE UTILITIES WILL NOT BE DISTURBED OR ENDANGERED. ANY DAMAGE INCURRED TO THESE UTILITIES OR ANY OTHER UTILITIES, SHOWN OR NOT SHOWN ON THE PLANS, DUE TO THE CONTRACTOR'S OPERATIONS SHALL BE REPAIRED AT THE CONTRACTOR'S EXPENSE TO THE SATISFACTION OF THE APPROPRIATE UTILITY COMPANY. THE DEPARTMENT DOES NOT ASSUME RESPONSIBILITY FOR REIMBURSEMENT, PARTICIPATION IN DESIGN AND/OR REVISIONS, OR LIABILITY FOR ACCURACY OF TYPE, SIZE AND LOCATION OF ANY UTILITY.

    THE CONTRACTOR IS RESPONSIBLE FOR TEMPORARILY SUPPORTING, PROTECTING, OR RELOCATING ANY UTILITIES DURING CONSTRUCTION. WHERE NECESSARY, THE COST FOR THIS WORK WILL BE INCIDENTAL TO THE CONTRACT.

BRIDGE NO. 1-433 INDEX OF SHEETS

SHEET NO.	DWG. NO.	TABLE OF CONTENTS	SHEET NO.	DWG. NO.	TABLE OF CONTENTS
203	PN-01	PROJECT NOTES	248	BB-03	PIER 1 FIXED BEARING DETAILS - 1
204	QS-01	QUANTITY SUMMARY	249	BB-04	PIER 1 FIXED BEARING DETAILS - 2
205	TS-01	SUPERSTRUCTURE TYPICAL SECTION	250	BB-05	PIER 1 GUIDED EXPANSION BEARING DETAILS - 1
206	PE-01	GENERAL PLAN AND ELEVATION - 1	251	BB-06	PIER 1 GUIDED EXPANSION BEARING DETAILS - 2
207	PE-02	GENERAL PLAN AND ELEVATION - 2	252	BB-07	PIER 1 GUIDED EXPANSION BEARING DETAILS - 3
208	GR-01	GRADING PLAN	253	BB-08	PIER 3 GUIDED EXPANSION BEARING DETAILS - 1
209	FT-01	GEOMETRIC AND FOOTING LAYOUT PLAN - 1	254	BB-09	PIER 3 GUIDED EXPANSION BEARING DETAILS - 2
210	FT-02	GEOMETRIC AND FOOTING LAYOUT PLAN - 2	255	BB-10	PIER 3 GUIDED EXPANSION BEARING DETAILS - 3
211	PL-01	PILE LAYOUT PLAN - 1	256	BB-11	PIER 3 FIXED BEARING DETAILS - 1
212	PL-02	PILE LAYOUT PLAN - 2	257	BB-12	PIER 3 FIXED BEARING DETAILS - 2
213	PL-03	PILE LAYOUT PLAN - 3	258	BB-13	GUIDED EXPANSION BEARING DETAILS - 1
214	AB-01	ABUTMENT A PLAN AND ELEVATION	259	BB-14	GUIDED EXPANSION BEARING DETAILS - 2
215	AB-02	MSE WALL AT ABUTMENT A	260	BB-15	NON-GUIDED EXPANSION BEARING DETAILS
216	AB-03	ABUTMENT B PLAN AND ELEVATION	261	BB-16	FIXED BEARING DETAILS
217	AB-04	MSE WALL AT ABUTMENT B	262	BM-01	GIRDER ERECTION SEQUENCE
218	AB-05	ABUTMENT AND MSE WALL SECTIONS - 1	263	BM-02	GIRDER ELEVATION
219	AB-06	ABUTMENT AND MSE WALL SECTIONS - 2	264	BM-03	STRUCTURAL STEEL DETAILS - 1
220	AB-07	ABUTMENT A REINFORCEMENT DETAILS - 1	265	BM-04	STRUCTURAL STEEL DETAILS - 2
221	AB-08	ABUTMENT A REINFORCEMENT DETAILS - 2	266	BM-05	SPLICE DETAILS - 1
222	AB-09	ABUTMENT A REINFORCEMENT DETAILS - 3	267	BM-06	SPLICE DETAILS - 2
223	AB-10	ABUTMENT B REINFORCEMENT DETAILS - 1	268	BM-07	SPLICE DETAILS - 3
224	AB-11	ABUTMENT B REINFORCEMENT DETAILS - 2	269	BM-08	SPLICE DETAILS - 4
225	AB-12	ABUTMENT B REINFORCEMENT DETAILS - 3	270	CT-01	CAMBER DIAGRAM - 1
226	PR-01	PIER 1 AND 3 CONSTRUCTION SEQUENCE	271	CT-02	CAMBER DIAGRAM - 2
227	PR-02	PIER 1 PLAN AND ELEVATION	272	FR-01	FRAMING PLAN
228	PR-03	PIER 1 SIDE ELEVATION	273	PS-01	DECK SLAB POURING SEQUENCE
229	PR-04	PIER 1 REINFORCEMENT DETAILS - 1	274	SD-01	SUPERSTRUCTURE DETAILS
230	PR-05	PIER 1 REINFORCEMENT DETAILS - 2	275	DK-01	DECK SLAB AND PARAPET REINFORCEMENT - 1
231	PR-06	PIER 1 REINFORCEMENT DETAILS - 3	276	DK-02	DECK SLAB AND PARAPET REINFORCEMENT - 2
232	PR-07	PIER 1 REINFORCEMENT DETAILS - 4	277	DK-03	DECK SLAB AND PARAPET REINFORCEMENT - 3
233	PR-08	PIER 1 REINFORCEMENT DETAILS - 5	278	DK-04	DECK SLAB AND PARAPET REINFORCEMENT DETAILS
234	PR-09	PIER 2 PLAN AND ELEVATIONS	279	RB-03	SUPERSTRUCTURE REINFORCEMENT LIST
235	PR-10	PIER 2 REINFORCEMENT DETAILS - 1	280	RE-01	FINISHED ROADWAY ELEVATIONS - 1
236	PR-11	PIER 2 REINFORCEMENT DETAILS - 2	281	RE-02	FINISHED ROADWAY ELEVATIONS - 2
237	PR-12	PIER 3 PLAN AND ELEVATION	282	EX-01	ARMORED STRIP SEAL JOINT DETAIL
238	PR-13	PIER 3 SIDE ELEVATIONS	283	AS-01	APPROACH SLAB A DETAILS - 1
239	PR-14	PIER 3 REINFORCEMENT DETAILS - 1	284	AS-02	APPROACH SLAB A DETAILS - 2
240	PR-15	PIER 3 REINFORCEMENT DETAILS - 2	285	AS-03	APPROACH SLAB B DETAILS - 1
241	PR-16	PIER 3 REINFORCEMENT DETAILS - 3	286	AS-04	APPROACH SLAB B DETAILS - 2
242	PR-17	PIER 3 REINFORCEMENT DETAILS - 4	287	AS-05	APPROACH SLAB DETAILS
243	PR-18	PIER 3 REINFORCEMENT DETAILS - 5	288	MS-01	MOMENT SLAB AND PARAPET REINFORCEMENT - 1
244	RB-01	ABUTMENT REINFORCEMENT LIST	289	MS-02	MOMENT SLAB AND PARAPET REINFORCEMENT - 2
245	RB-02	PIER REINFORCEMENT LIST	290	RB-04	APPROACH SLAB AND MOMENT SLAB REINF. LIST
246	BB-01	BEARING NOTES	291	BO-01	BORING PROFILE - 1
247	BB-02	BEARING SCHEDULE	292	BO-02	BORING PROFILE - 2

LOAD RATING SUMMARY

DESIGN VEHICLE	RATING FACTOR	RATING WEIGHT (TON)	CONTROLLING MEMBER	CONTROLLING POINT	LOAD EFFECT
HL-93 TRUCK (INVENTORY)	1.02	N/A	SPAN 4/GIRDER 5	306	FLEXURE
HL-93 TANDEM (INVENTORY)	1.21	N/A	SPAN 4/GIRDER 5	306	FLEXURE
HL-93 TRUCK TRAIN (INVENTORY)	1.17	N/A	PIER 2/GIRDER 1	200	FLEXURE
HS-20 (INVENTORY)	1.08	38.88	SPAN 4/GIRDER 4	306	FLEXURE
HL-93 TRUCK (OPERATING)	1.32	N/A	SPAN 4/GIRDER 5	306	FLEXURE
HL-93 TANDEM (OPERATING)	1.57	N/A	SPAN 4/GIRDER 5	306	FLEXURE
HL-93 TRUCK TRAIN (OPERATING)	1.52	N/A	PIER 2/GIRDER 1	200	FLEXURE
HS-20 (OPERATING)	1.40	50.40	SPAN 4/GIRDER 4	306	FLEXURE
DE S220 & LEGAL-LANE (LEGAL)	1.27	25.40	SPAN 4/GIRDER 4	306	FLEXURE
DE S335 & LEGAL-LANE (LEGAL)	1.08	37.80	SPAN 4/GIRDER 4	306	FLEXURE
DE S437 & LEGAL-LANE (LEGAL)	1.07	39.20	SPAN 4/GIRDER 4	306	FLEXURE
DE S330 & LEGAL-LANE (LEGAL)	1.18	35.40	SPAN 4/GIRDER 4	306	FLEXURE
DE S435 & LEGAL-LANE (LEGAL)	1.13	39.55	SPAN 4/GIRDER 4	306	FLEXURE
DE S540 & LEGAL-LANE (LEGAL)	1.08	43.20	SPAN 4/GIRDER 4	306	FLEXURE

NOTE: LOAD RATING INCLUDES FUTURE WEARING SURFACE AS NOTED IN THE PLANS.

UNOFFICIAL WEBSITE COPY

ITEM NO.	ITEM NAME	UNITS	QUANTITY
202000	Excavation and Embankment	CY	1,898
202505	Settlement Platform	EACH	4
202518	Settlement Monument	EACH	4
207000	Excavation and Backfill for Structures	CY	1,495
302011	Delaware No. 3 Stone	TON	8
302012	Delaware No. 57 Stone	TON	87
602003	Portland Cement Concrete Masonry, Abutment Footing, Class A	CY	67
602006	Portland Cement Concrete Masonry, Pier Footing, Class B	CY	795
602007	Portland Cement Concrete Masonry, Pier Above Footing, Class A	CY	318
602013	Portland Cement Concrete Masonry, Superstructure, Class D	CY	983
602014	Portland Cement Concrete Masonry, Approach Slab, Class D	CY	158
602015	Portland Cement Concrete Masonry, Abutment Above Footing, Class A	CY	48
602017	Portland Cement Concrete Masonry, Parapet, Class A	CY	210
602772	Mechanically Stabilized Earth Walls	LS	1
602777	Portland Cement Concrete Masonry, Post Tensioned Pier Cap, 8000 psi	CY	655
603000	Bar Reinforcement	LB	223,700
604000	Bar Reinforcement, Epoxy Coated	LB	385,385
605002	Steel Structures	LS	1
605512	Prefabricated Expansion Joint System 4"	LF	104
605587	High-Load Multi-Rotational Bearings	EACH	33
605606	Temporary Bridge Support System	LS	1
605691	High Performance Steel	LS	1
618062	Steel H Piles, HP 14x73	LF	7,498
618065	Steel H Test Piles, HP 14x73	LF	995
619042	Install Steel H Piles, HP 14x73	LF	7,498
619045	Install Steel H Test Piles, HP 14x73	LF	995
619501	Production Pile Restrike	EACH	3
619502	Test Pile Restrike	EADY	3
619519	Dynamic Pile Testing by Contractor	EACH	30
619539	Signal Matching Analysis by Contractor	EACH	30
623514	Post-Tensioning Strand System	LB	75,695
760015	Rumble Strips, Concrete, Shallow Depth	LF	1,637

UNOFFICIAL WEBSITE COPY

NOTES:

1. ITEM 202000 IS REPRESENTED AS FOLLOWS:
   - o ON DRAWING EW-02: 1246 CY UNDER TYPE C MATERIAL REQUIRED, "TYPE C BACKFILL FOR STRUCTURES"; AND
   - o ON DRAWING EW-03: 652 CY UNDER TYPE C MATERIAL REQUIRED, "TYPE C BACKFILL FOR STRUCTURES".

2. ITEM 207000 IS REPRESENTED AS FOLLOWS:
   - o ON DRAWING EW-02: 324 CY UNDER EXCAVATION AVAILABLE FOR EMBANKMENT, "PLUS EXCAVATION AND BACKFILLING FOR STRUCTURES"; AND
   - o ON DRAWING EW-03: 215 CY UNDER EXCAVATION AVAILABLE FOR EMBANKMENT, "PLUS EXCAVATION AND BACKFILLING FOR STRUCTURES"; AND
   - o ON DRAWING EW-03: 956 CY UNDER EXCAVATION AVAILABLE FOR EMBANKMENT, "PLUS EXCAVATION AND BACKFILLING FOR STRUCTURES".

3. THE ESTIMATED QUANTITY OF ITEM 605002 - STEEL STRUCTURES IS 1,157,000 LB.
   THE ESTIMATED QUANTITY OF ITEM 605691 - HIGH PERFORMANCE STEEL IS 235,500 LB.

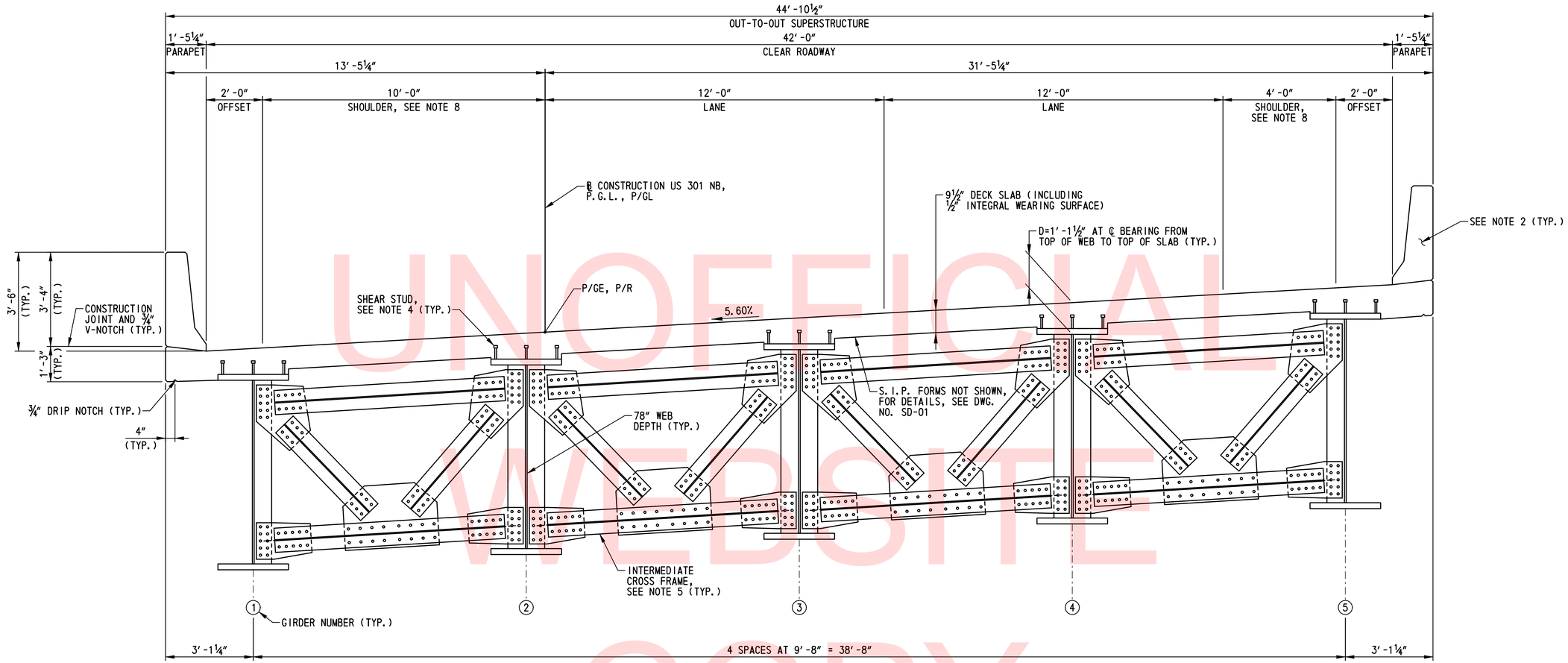

SUPERSTRUCTURE TYPICAL SECTION

SCALE: ½″=1′-0″

UNOFFICIAL WEBSITE COPY

NOTES:

1. ALL DIMENSIONS SHOWN MEASURED RADIAL TO THE ℄ CONSTRUCTION US 301 NB.
2. PARAPETS SHALL NOT BE SLIP FORMED. FOR PARAPET AND PARAPET REINFORCEMENT DETAILS, SEE DWG. NOS. DK-01 THRU DK-04.
3. FOR DECK SLAB REINFORCEMENT DETAILS, SEE DWG. NOS. DK-01 THRU DK-04.
4. FOR SHEAR STUD DETAILS AND SPACING, SEE DWG. NOS. SD-01 AND BM-02.
5. FOR CONNECTION PLATE AND CROSS FRAME DETAILS (INTERMEDIATE, PIER AND ABUTMENT) AND SPACING, SEE DWG. NOS. BM-03 AND FR-01.
6. FOR GIRDER ELEVATION, SEE DWG. NO. BM-02.
7. FOR SUPERSTRUCTURE DETAILS, SEE DWG. NO. SD-01.
8. RUMBLE STRIPS SHALL BE LOCATED IN THE DECK SLAB, APPROACH SLABS AND MOMENT SLABS AT EACH SHOULDER. FOR RUMBLE STRIP DETAILS, SEE DWG. NO. DT-01. RUMBLE STRIPS SHALL BE PAID UNDER ITEM 760015 - RUMBLE STRIPS, CONCRETE, SHALLOW DEPTH. RUMBLE STRIPS SHALL BE COATED WITH A HIGH MOLECULAR WEIGHT METHACRYLATE SEALER. SEE SPECIAL PROVISION ITEM 602501. THE SEALER SHALL BE APPLIED IN ACCORDANCE WITH THE MANUFACTURER'S RECOMMENDATIONS IN A 1′-8″ WIDE STRIP, CENTERED ON THE RUMBLE STRIPS, FOR THE FULL LENGTH OF DECK SLAB, APPROACH SLABS AND MOMENT SLABS. COST OF THE HIGH MOLECULAR WEIGHT METHACRYLATE SEALER SHALL BE INCIDENTAL TO ITEM 760015 - RUMBLE STRIPS, CONCRETE, SHALLOW DEPTH.
9. REFLECTORS SHALL BE INSTALLED ALONG EACH PARAPET (ROADWAY PAY ITEM). SEE DWG. NO. DT-05 FOR DETAILS.

BR1-3
TS-01

DELAWARE DEPARTMENT OF TRANSPORTATION	ADDENDUMS / REVISIONS	SCALE: AS SHOWN	US 301 & SR 1 INTERCHANGE	CONTRACT T200911302	BRIDGE NO. 1-433	SUPERSTRUCTURE TYPICAL SECTION	SHEET NO. 205
				COUNTY NEW CASTLE	DESIGNED BY: B.K.B.		TOTAL SHTS. 491
					CHECKED BY: W.A.G.		

N:\31653-000\CONTRACT 1B\CADD\Bridge\Br_No433\TS01_br1-433.dgn
12/11/2015 11:46:33 AM

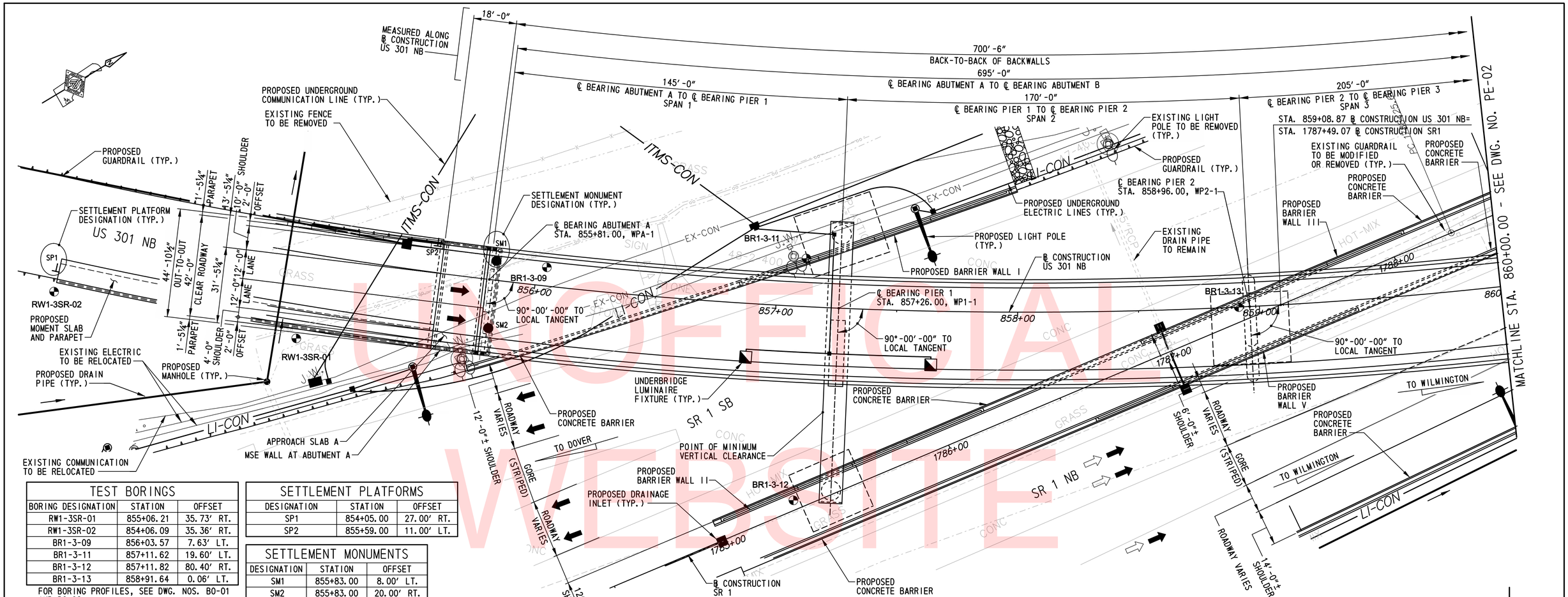

PLAN
SCALE: 1″=20′-0″

TEST BORINGS		
BORING DESIGNATION	STATION	OFFSET
RW1-3SR-01	855+06.21	35.73′ RT.
RW1-3SR-02	854+06.09	35.36′ RT.
BR1-3-09	856+03.57	7.63′ LT.
BR1-3-11	857+11.62	19.60′ LT.
BR1-3-12	857+11.82	80.40′ RT.
BR1-3-13	858+91.64	0.06′ LT.

FOR BORING PROFILES, SEE DWG. NOS. BO-01 AND BO-02.

SETTLEMENT PLATFORMS		
DESIGNATION	STATION	OFFSET
SP1	854+05.00	27.00′ RT.
SP2	855+59.00	11.00′ LT.

SETTLEMENT MONUMENTS		
DESIGNATION	STATION	OFFSET
SM1	855+83.00	8.00′ LT.
SM2	855+83.00	20.00′ RT.

FOR SETTLEMENT MONUMENT AND SETTLEMENT PLATFORM DETAILS, SEE DWG. NO. FT-01.
FOR SETTLEMENT MONITORING REQUIREMENTS, SEE THE SPECIAL PROVISIONS.

NOTES:

1. FOR NOTES AND ADDITIONAL INFORMATION, SEE DWG. NO. PE-02.
2. FOR VERTICAL AND HORIZONTAL CURVE DATA, SEE DWG. NO. PE-02.

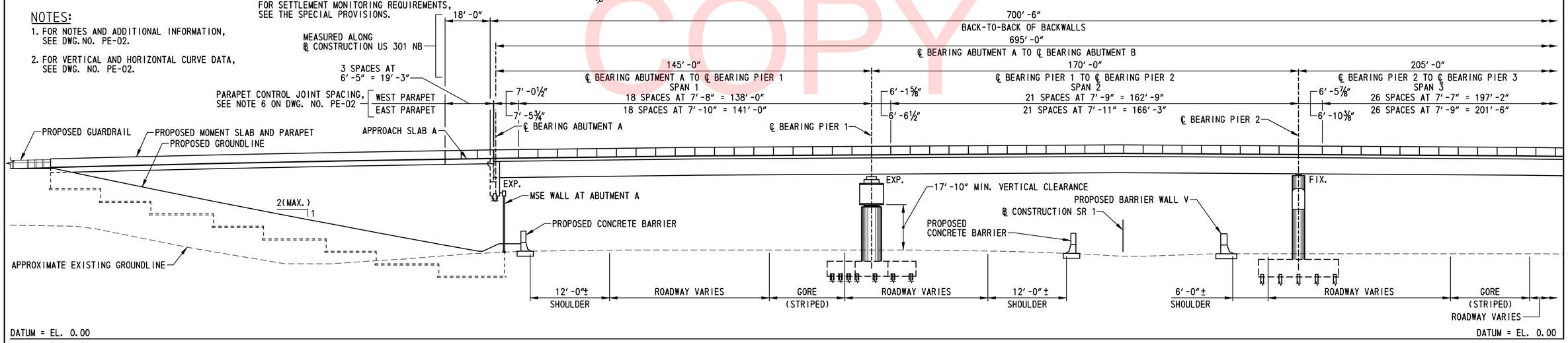

ELEVATION
SCALE: 1″-20′-0″

UNOFFICIAL WEBSITE COPY

N:\33653-000\CONTRACT 1B\CADD\Bridge\Br_No433\PE01_br1-433.dgn
12/14/2015 4:53:49 PM

DELAWARE DEPARTMENT OF TRANSPORTATION	ADDENDUMS / REVISIONS	SCALE: AS SHOWN	US 301 & SR 1 INTERCHANGE	CONTRACT T200911302	BRIDGE NO. 1-433	GENERAL PLAN AND ELEVATION – 1	BR1-3 PE-01
				COUNTY NEW CASTLE	DESIGNED BY: B.K.B.		SHEET NO. 206
					CHECKED BY: S.E.K.		TOTAL SHTS. 491

SETTLEMENT MONUMENTS		
DESIGNATION	STATION	OFFSET
SM3	862+74.00	8.00' LT.
SM4	862+74.00	20.00' RT.

SETTLEMENT PLATFORMS		
DESIGNATION	STATION	OFFSET
SP3	863+00.00	11.00' LT.
SP4	863+00.00	27.00' RT.

FOR SETTLEMENT MONUMENT AND SETTLEMENT PLATFORM DETAILS, SEE DWG. NO. FT-01.
FOR SETTLEMENT MONITORING REQUIREMENTS, SEE THE SPECIAL PROVISIONS.

TEST BORINGS		
BORING DESIGNATION	STATION	OFFSET
BR1-3-03	864+11.46	15.50' LT.
BR1-3-04	863+49.72	56.44' RT.
BR1-3-05	861+81.70	60.00' RT.
BR1-3-06	860+90.43	77.06' RT.
BR1-3-14	860+70.48	50.68' LT.
BR1-3-15	860+70.87	49.32' RT.
BR1-3-16	862+50.82	7.56' RT.

FOR BORING PROFILES, SEE DWG. NOS. BO-01 AND BO-02.

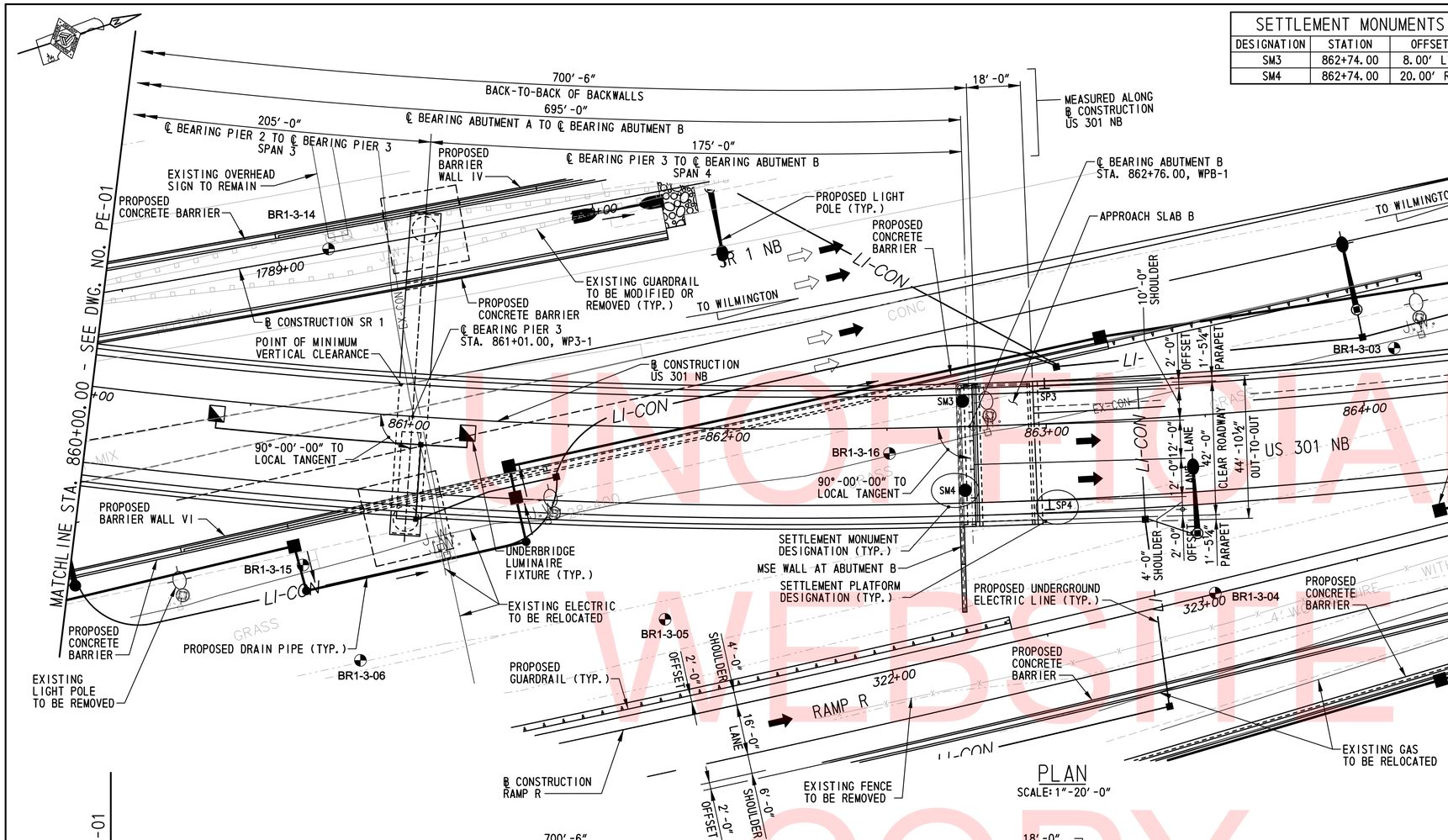

PLAN
SCALE: 1"-20'-0"

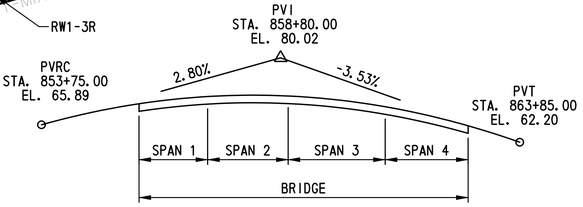

VERTICAL CURVE DATA
US 301 NB

HORIZONTAL CURVE DATA

US 301 NB	SR 1
P.I. STA. 858+61.08	P.I. STA. 1795+26.46
Δ= 64°-28'-15.54"	Δ= 6°-55'-48.34"
Dc = 3°-07'-51.30"	Dc = 0°-29'-42.03"
R = 1830.00'	R = 11574.74'
T = 1154.00'	T = 700.85'
L = 2059.17'	L = 1400.00'
E = 333.47'	E = 21.20'
P.C. STA. 847+07.08	P.C. STA. 1788+25.60
P.T. STA. 867+66.25	P.T. STA. 1802+25.60

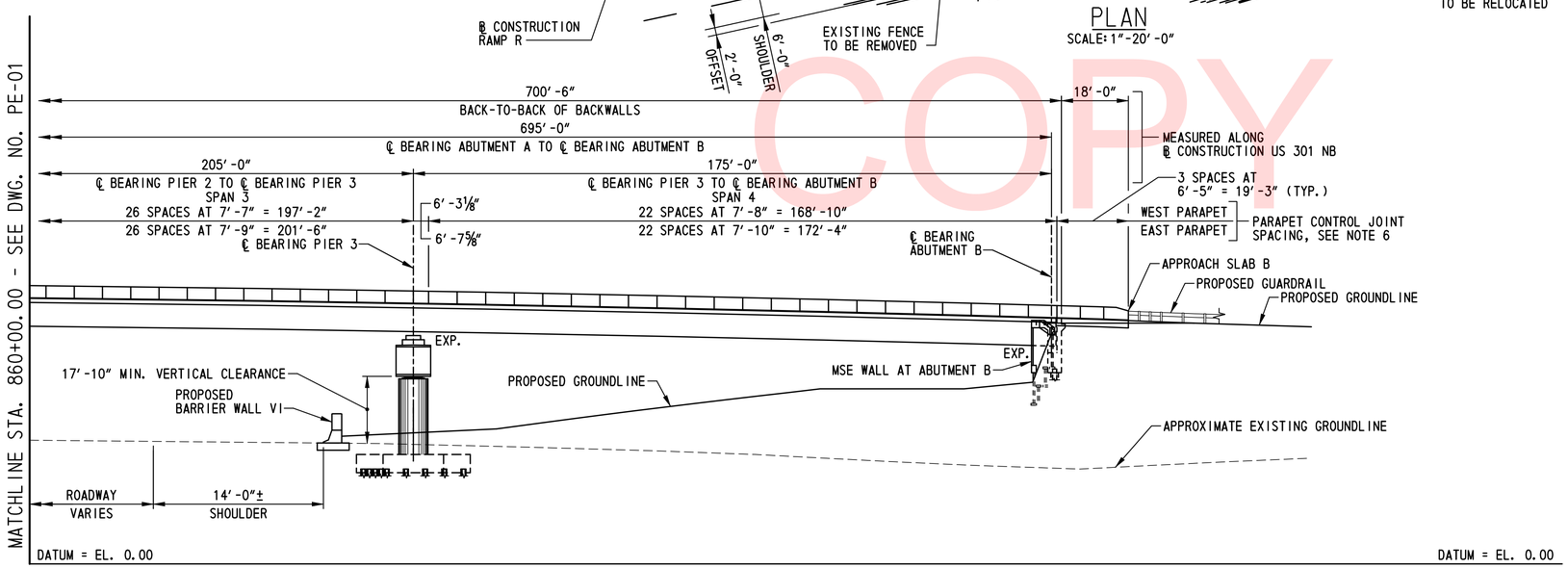

ELEVATION
SCALE: 1"-20'-0"

NOTES:

1. FOR MSE WALL AT ABUTMENT A AND B DEVELOPED ELEVATIONS, SEE DWG. NOS. AB-02 AND AB-04.
2. EXISTING AND PROPOSED CONTOURS NOT SHOWN IN PLAN FOR CLARITY. FOR EXISTING AND PROPOSED CONTOURS, SEE DWG. NO. GR-01.
3. FOR DRAIN INLET, DRAIN PIPE AND MANHOLE INFORMATION, SEE DWG. NOS. CP-02 AND CP-03.
4. FOR UNDERPASS LUMINAIRE FIXTURE AND LIGHTING POLE INFORMATION, SEE DWG. NOS. LI-01, LI-02, LI-13, LI-14, LI-16 AND LI-17.
5. FOR CONCRETE BARRIER AND BARRIER WALL INFORMATION, SEE DWG. NOS. DT-04, DT-05 AND DT-23 THRU DT-31.
6. PARAPET CONTROL JOINT SPACING MEASURED ALONG FRONT FACE OF PARAPET. FOR PARAPET CONTROL JOINT DETAILS, SEE DWG. NO. SD-01. REFLECTORS SHALL BE INSTALLED ALONG EACH PARAPET. SEE DWG. NO. DT-05 FOR DETAILS.

UNOFFICIAL WEBSITE COPY

N:\31653-000\CONTRACT 18\CADD\Bridge\Br_No433\PE02_br1-433.dgn
12/11/2015 11:42:49 AM

DELAWARE DEPARTMENT OF TRANSPORTATION	ADDENDUMS / REVISIONS	SCALE: AS SHOWN	US 301 & SR 1 INTERCHANGE	CONTRACT T200911302	BRIDGE NO. 1-433	GENERAL PLAN AND ELEVATION - 2	BR1-3 PE-02
				COUNTY NEW CASTLE	DESIGNED BY: B.K.B.		SHEET NO. 207
					CHECKED BY: S.E.K.		TOTAL SHTS. 491

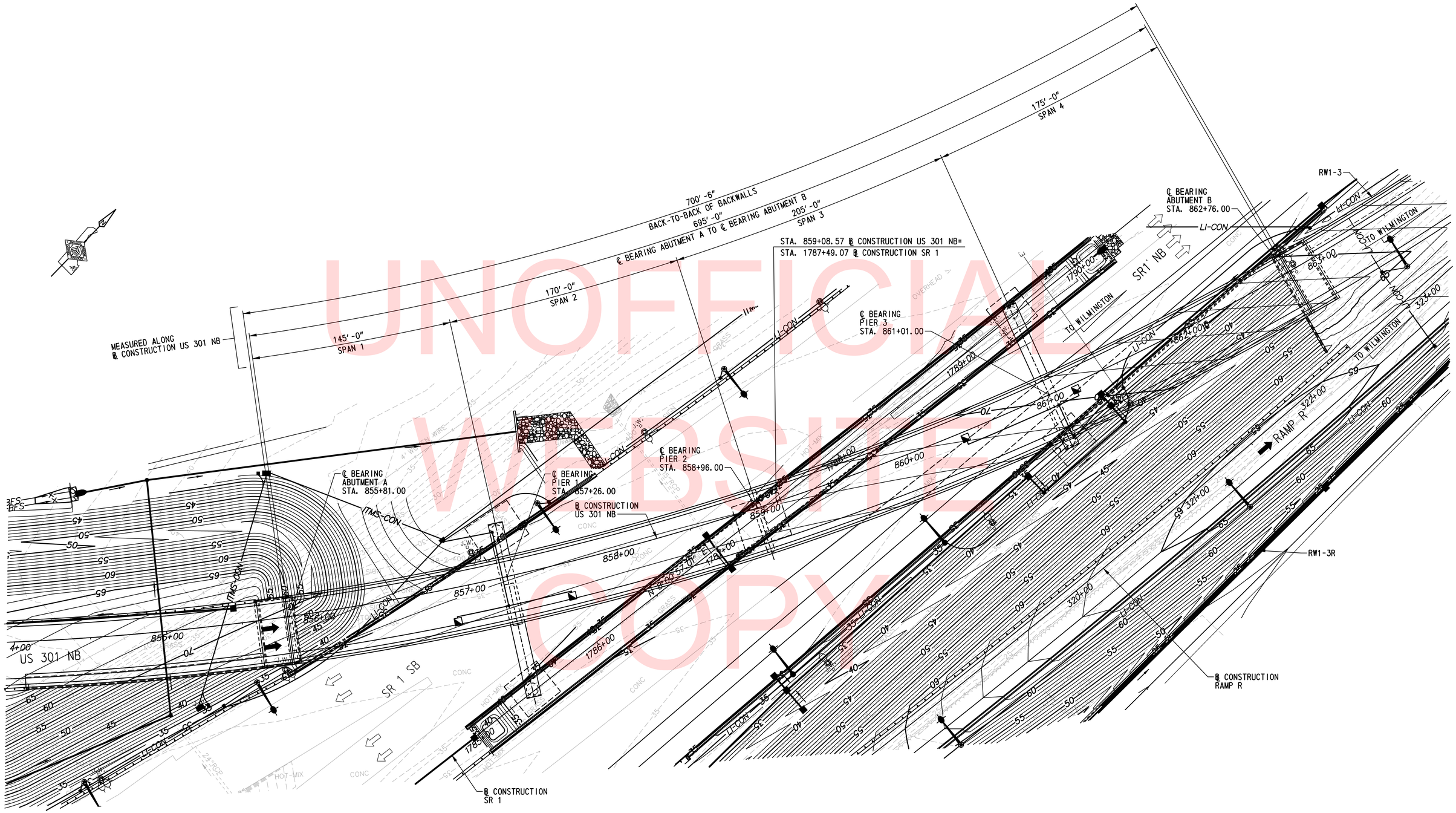

UNOFFICIAL WEBSITE COPY

PLAN

SCALE: 1"=30'-0"

NOTE:

FOR ADDITIONAL INFORMATION, SEE DWG. NOS. PE-01 AND PE-02.

N:\31653-000\CONTRACT 1B\CADD\Bridge\Br_No433\GR01_br1-433.dgn
4/15/2013 4:27:57 PM

DELAWARE DEPARTMENT OF TRANSPORTATION	ADDENDUMS / REVISIONS	SCALE 0 30 60 90 FEET	US 301 & SR 1 INTERCHANGE	CONTRACT T200911302	BRIDGE NO. 1-433	GRADING PLAN	BR1-3 GR-01
				COUNTY NEW CASTLE	DESIGNED BY: B.K.B.		SHEET NO. 208
					CHECKED BY: W.A.G.		TOTAL SHTS. 491

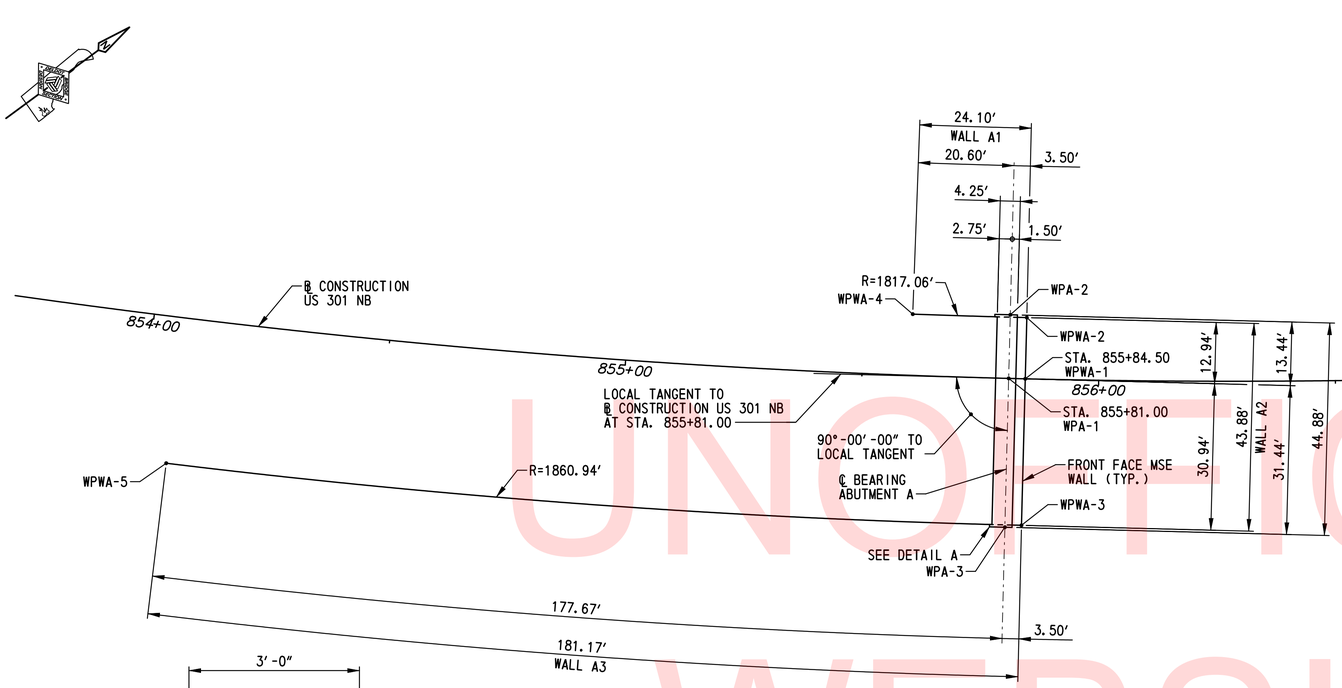

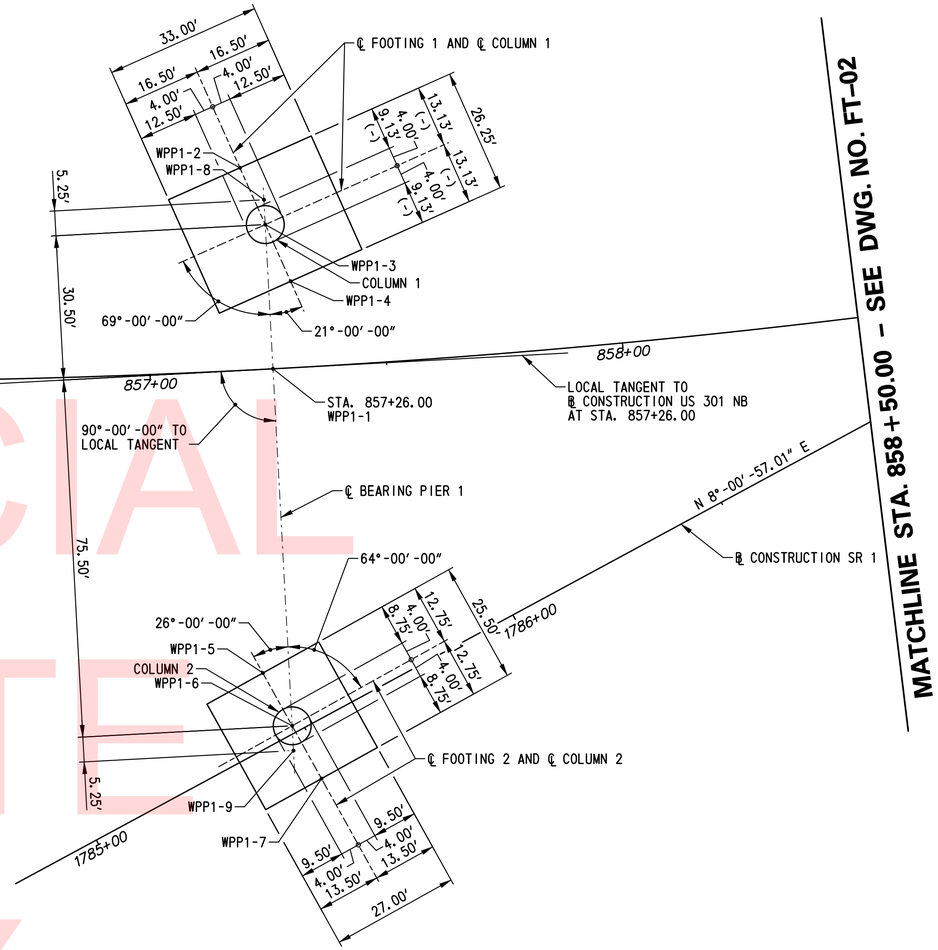

MATCHLINE STA. 858+50.00 – SEE DWG. NO. FT-02

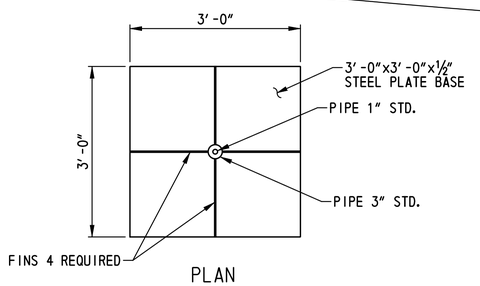

PLAN

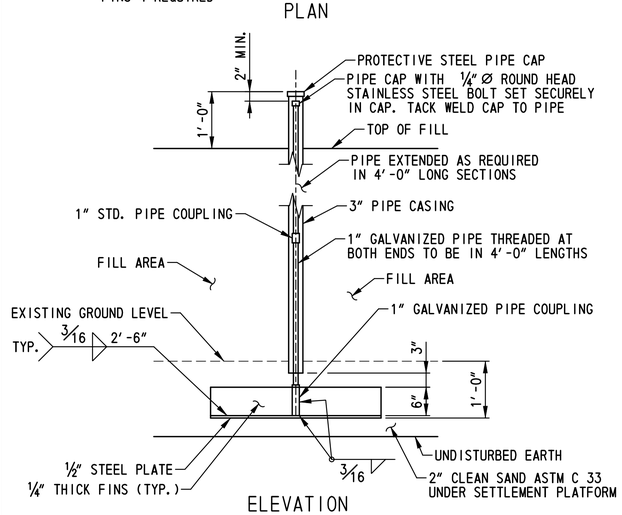

ELEVATION

SETTLEMENT PLATFORM DETAILS

SCALE: ¾″=1′-0″

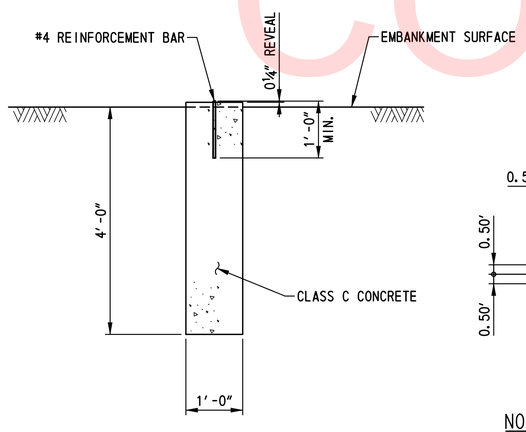

SETTLEMENT MONUMENT DETAIL

SCALE: ¾″=1′-0″

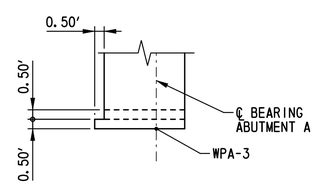

DETAIL A

SCALE: ¼″=1′-0″

NOTE:

DETAIL A SHOWN AT EAST END OF ABUTMENT A. WEST END OF ABUTMENT A SIMILAR.

GEOMETRIC AND FOOTING LAYOUT PLAN

SCALE: 1/16″=1′-0″

WORKING POINT COORDINATES

WORKING POINT	COORDINATES	
	NORTHING	EASTING
WPA-1	556848.0077	590163.0919
WPA-2	556856.2576	590152.4832
WPA-3	556828.7094	590187.9083
WPWA-1	556850.7727	590165.2378
WPWA-2	556858.7147	590155.0249
WPWA-3	556831.7809	590189.6600
WPWA-4	556839.7575	590140.1392
WPWA-5	556694.1745	590071.9187
WPP1-1	556965.8760	590247.4783
WPP1-2	556985.4376	590209.1729
WPP1-3	556982.6348	590221.9951
WPP1-4	556979.8319	590234.8173
WPP1-5	556926.0181	590297.9140
WPP1-6	556924.3913	590310.5598
WPP1-7	556922.7645	590323.2056
WPP1-8	556985.5195	590217.6086
WPP1-9	556921.5066	590314.9462

HORIZONTAL CURVE DATA

US 301 NB

P.I. STA. 858+61.08
△ = 64°-28′-15.54″
Dc = 3°-07′-51.30″
R = 1830.00′
T = 1154.00′
L = 2059.17′
E = 333.47′
P.C. STA. 847+07.08
P.T. STA. 867+66.25

NOTES:

1. FOR PILE LAYOUT PLANS, SEE DWG. NOS. PL-01 THRU PL-03.
2. THE FRONT FACE OF MSE WALLS A1 AND A3 ARE CONCENTRIC TO THE ℄ CONSTRUCTION US 301 NB.

UNOFFICIAL WEBSITE COPY

N:\3853-000\CONTRACT 1B\CADD\Bridge\Br_No433\FT01_br1-433.dgn
12/10/2015 10:11:04 AM

DELAWARE DEPARTMENT OF TRANSPORTATION	ADDENDUMS / REVISIONS	SCALE: AS SHOWN	US 301 & SR 1 INTERCHANGE	CONTRACT T200911302 / COUNTY NEW CASTLE	BRIDGE NO. 1-433 / DESIGNED BY: B.K.B. / CHECKED BY: S.E.K.

GEOMETRIC AND FOOTING LAYOUT PLAN – 1

BR1-3 FT-01 | SHEET NO. 209 | TOTAL SHTS. 491

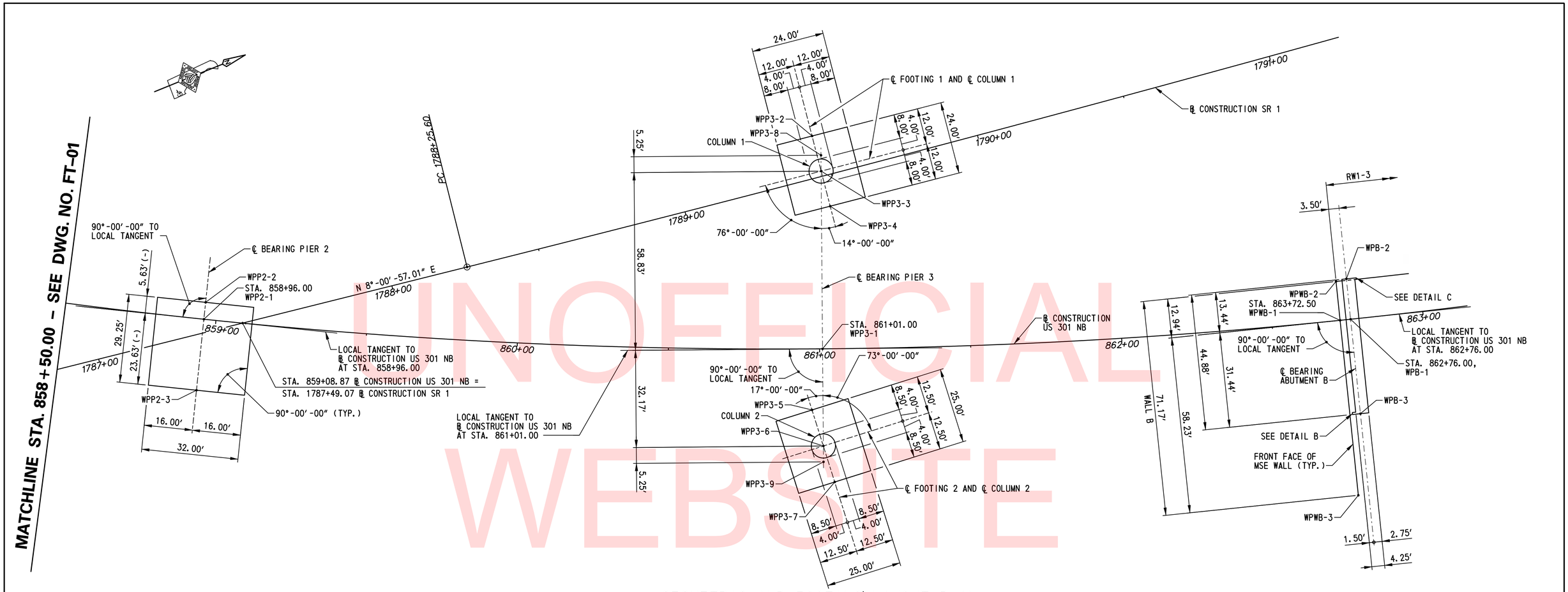

GEOMETRIC AND FOOTING LAYOUT PLAN
SCALE: 1/4″=1′-0″

UNOFFICIAL WEBSITE COPY

WORKING POINT COORDINATES		
WORKING POINT	COORDINATES	
	NORTHING	EASTING
WPP2-1	557112.0451	590334.1607
WPP2-2	557114.6865	590329.1945
WPP2-3	557100.9509	590355.0189
WPP3-1	557298.0442	590420.0991
WPP3-2	557321.2770	590353.4984
WPP3-3	557319.6921	590365.3933
WPP3-4	557318.1072	590377.2881
WPP3-5	557287.2085	590437.5492
WPP3-6	557286.2083	590450.0091
WPP3-7	557285.2081	590462.4690
WPP3-8	557321.6239	590360.5116
WPP3-9	557284.2766	590454.8908
WPB-1	557463.5955	590476.6184
WPB-2	557467.3246	590463.7072
WPB-3	557454.8723	590506.8200
WPWB-1	557460.2339	590475.6439
WPWB-2	557463.8239	590463.2145
WPWB-3	557444.0760	590531.5864

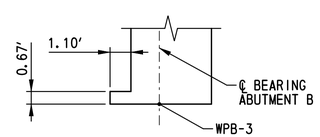

DETAIL B
SCALE: 1/4″=1′-0″

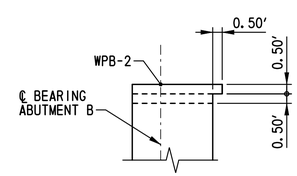

DETAIL C
SCALE: 1/4″=1′-0″

HORIZONTAL CURVE DATA

US 301 NB	SR 1
P.I. STA. 858+61.08	P.I. STA. 1795+26.46
△ = 64°-28′-15.54″	△ = 6°-55′-48.35″
Dc = 3°-07′-51.30″	Dc = 0°-29′-42.03″
R = 1830.00′	R = 11574.74′
T = 1154.00′	T = 700.85′
L = 2059.17′	L = 1400.00′
E = 333.47′	E = 21.20′
P.C. STA. 847+07.08	P.C. STA. 1788+25.60
P.T. STA. 867+66.25	P.T. STA. 1802+25.60

NOTE:
FOR PILE LAYOUT PLANS, SEE DWG. NOS. PL-01 THRU PL-03.

N:\31653-000\CONTRACT 1B\CADD\Bridge\Br_No433\FT02_br1-433.dgn
3/25/2013 12:13:13 PM

DELAWARE DEPARTMENT OF TRANSPORTATION

ADDENDUMS / REVISIONS

SCALE: AS SHOWN

US 301 & SR 1 INTERCHANGE

CONTRACT	BRIDGE NO.	1–433
T200911302	DESIGNED BY:	B.K.B.
COUNTY	CHECKED BY:	S.E.K.
NEW CASTLE		

GEOMETRIC AND FOOTING LAYOUT PLAN – 2

BR1–3
FT–02

SHEET NO. 210
TOTAL SHTS. 491

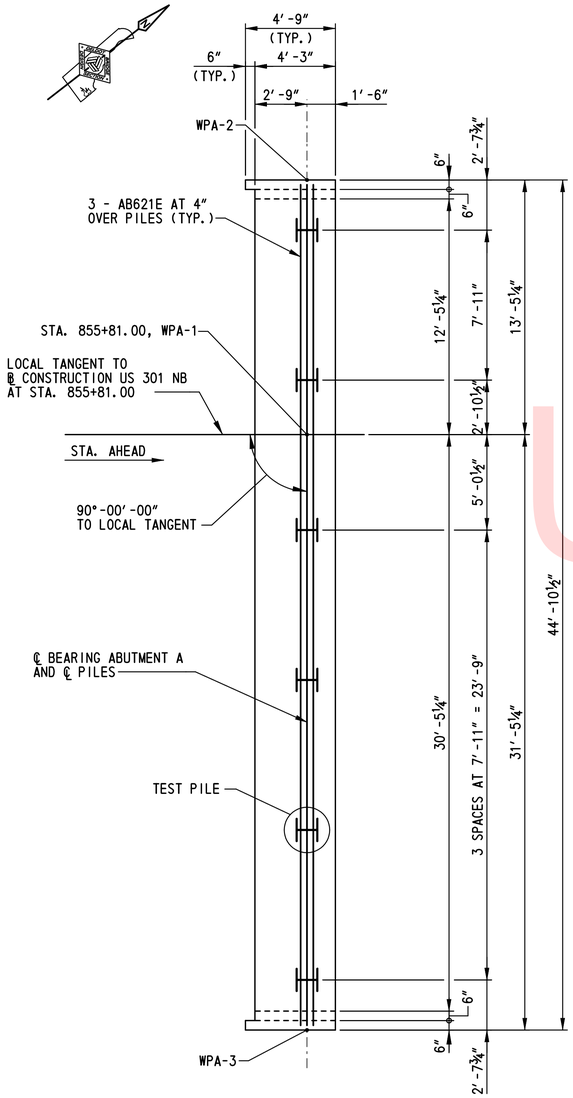

ABUTMENT A

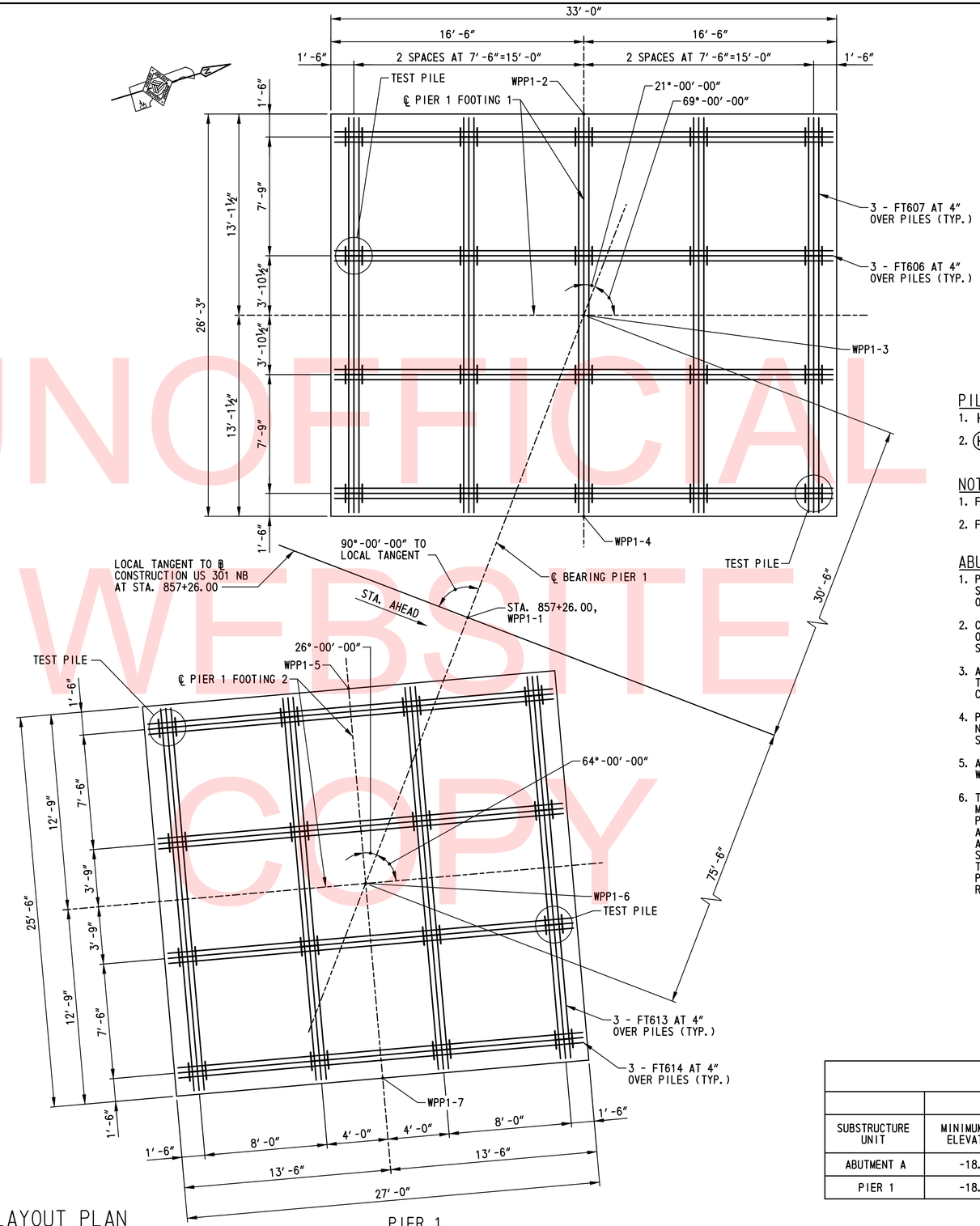

PIER 1

PILE LAYOUT PLAN

SCALE: ¼″=1′-0″

ABUTMENT A PILE DRIVING INFORMATION
PILE SIZE AND TYPE: HP 14x73
ACTUAL BEARING OBTAINED:
HAMMER TYPE:
PILE HAMMER ENERGY: 50,000 LB-FT TO 90,000 LB-FT
SPECIAL DRIVING CONDITIONS AND COMMENTS:

PIER 1 PILE DRIVING INFORMATION
PILE SIZE AND TYPE: HP 14x73
ACTUAL BEARING OBTAINED:
HAMMER TYPE:
PILE HAMMER ENERGY: 50,000 LB-FT TO 90,000 LB-FT
SPECIAL DRIVING CONDITIONS AND COMMENTS:

PILE LEGEND:

1. H DENOTES PLUMB HP 14x73 STEEL PILE.
2. (H) DENOTES LOCATION OF PLUMB HP 14x73 STEEL PILE, DYNAMIC PILE TESTING AND SIGNAL MATCHING ANALYSIS.

NOTES:

1. FOR PILE NOTES, SEE DWG. NO. PL-03.
2. FOR ABUTMENT PILE CASING DETAILS, SEE DWG. NO. PL-03.

ABUTMENT PILE INSTALLATION SEQUENCE OF CONSTRUCTION:

1. PILE CASING SHALL BE INSTALLED DURING INSTALLATION OF THE MSE WALL SELECT BACKFILL AND REINFORCEMENT TO THE ELEVATION OF THE BOTTOM OF THE ABUTMENT STEM.
2. CONSTRUCT MSE WALLS, INCLUDING WIRE FACED MSE WALLS AT REAR FACES OF ABUTMENT STEMS AND BACKWALLS TO THE REQUIRED ELEVATIONS. A SETTLEMENT WAITING PERIOD OF 60 DAYS IS REQUIRED AFTER THIS CONSTRUCTION.
3. AFTER COMPLETION OF THE SETTLEMENT WAITING PERIOD AS DETERMINED BY THE ENGINEER BASED ON THE INSTRUMENTATION, THE PILES SHALL BE SET AND CENTERED IN THE CASING.
4. PILES SHALL BE INSTALLED TO THE MINIMUM TIP ELEVATION AND REQUIRED NOMINAL RESISTANCE SPECIFIED. FOR PILE RESTRIKE REQUIREMENTS, SEE SPECIAL PROVISIONS.
5. AFTER PILE INSTALLATION/DRIVING IS COMPLETE, THE CASING SHALL BE FILLED WITH SAND.
6. TEST PILES MAY BE DRIVEN PRIOR TO PLACING EMBANKMENT AND SURCHARGE MATERIAL. RESTRIKES OF THESE TEST PILES SHALL BE PERFORMED PRIOR TO PLACING EMBANKMENT IN ACCORDANCE WITH ITEM 619502-TEST PILE RESTRIKE. AFTER THE EMBANKMENT HAS BEEN PLACED, SETTLEMENT HAS BEEN ACHIEVED AND THE SUBSTRUCTURE HAS BEEN RELEASED BY THE ENGINEER, THE TEST PILE SHALL BE ACTING AS A PRODUCTION PILE AND IT SHALL BE RE-STRUCK PRIOR TO PLACING ANY OTHER PRODUCTION PILES WITH PAYMENT UNDER ITEM 619501 - PRODUCTION PILE RESTRIKE. ONCE THE TEST PILE HAS BEEN ACCEPTED, THE REMAINING PRODUCTION PILES MAY BE INSTALLED.

PILE TIP DATA

	DESIGN DATA		ACTUAL FIELD DATA	
SUBSTRUCTURE UNIT	MINIMUM TIP ELEVATION	ESTIMATED TIP ELEVATION	AVERAGE ACTUAL MINIMUM TIP ELEVATION	AVERAGE ACTUAL MAXIMUM TIP ELEVATION
ABUTMENT A	-18.0	-41.0		
PIER 1	-18.0	-46.0		

BR1-3
PL-01

DELAWARE
DEPARTMENT OF TRANSPORTATION

ADDENDUMS / REVISIONS

SCALE: AS SHOWN

US 301 &
SR 1 INTERCHANGE

CONTRACT	BRIDGE NO. 1-433
T200911302	DESIGNED BY: W.T.R.,L.F.E.
COUNTY	
NEW CASTLE	CHECKED BY: B.K.B.

PILE LAYOUT PLAN – 1

SHEET NO. 211
TOTAL SHTS. 491

N:\31653-000\Contract 1B\CADD\Bridge\Br_No433\PL01_br1-433.dgn
2/5/2015 9:28:04 AM

UNOFFICIAL WEBSITE COPY

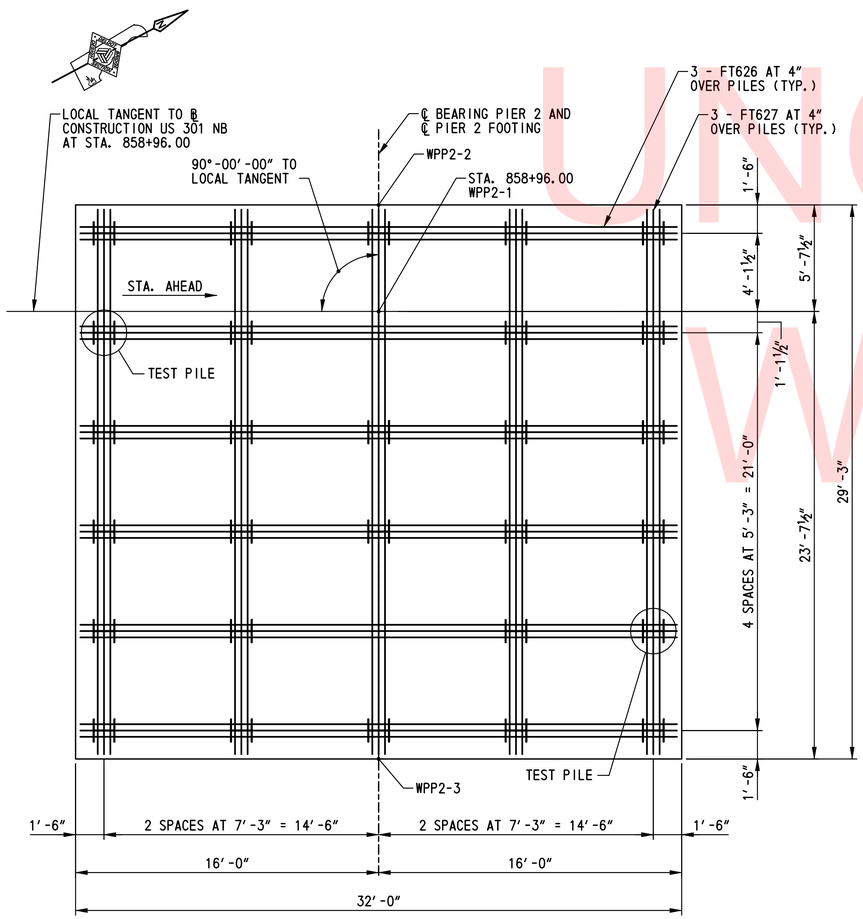

PIER 2

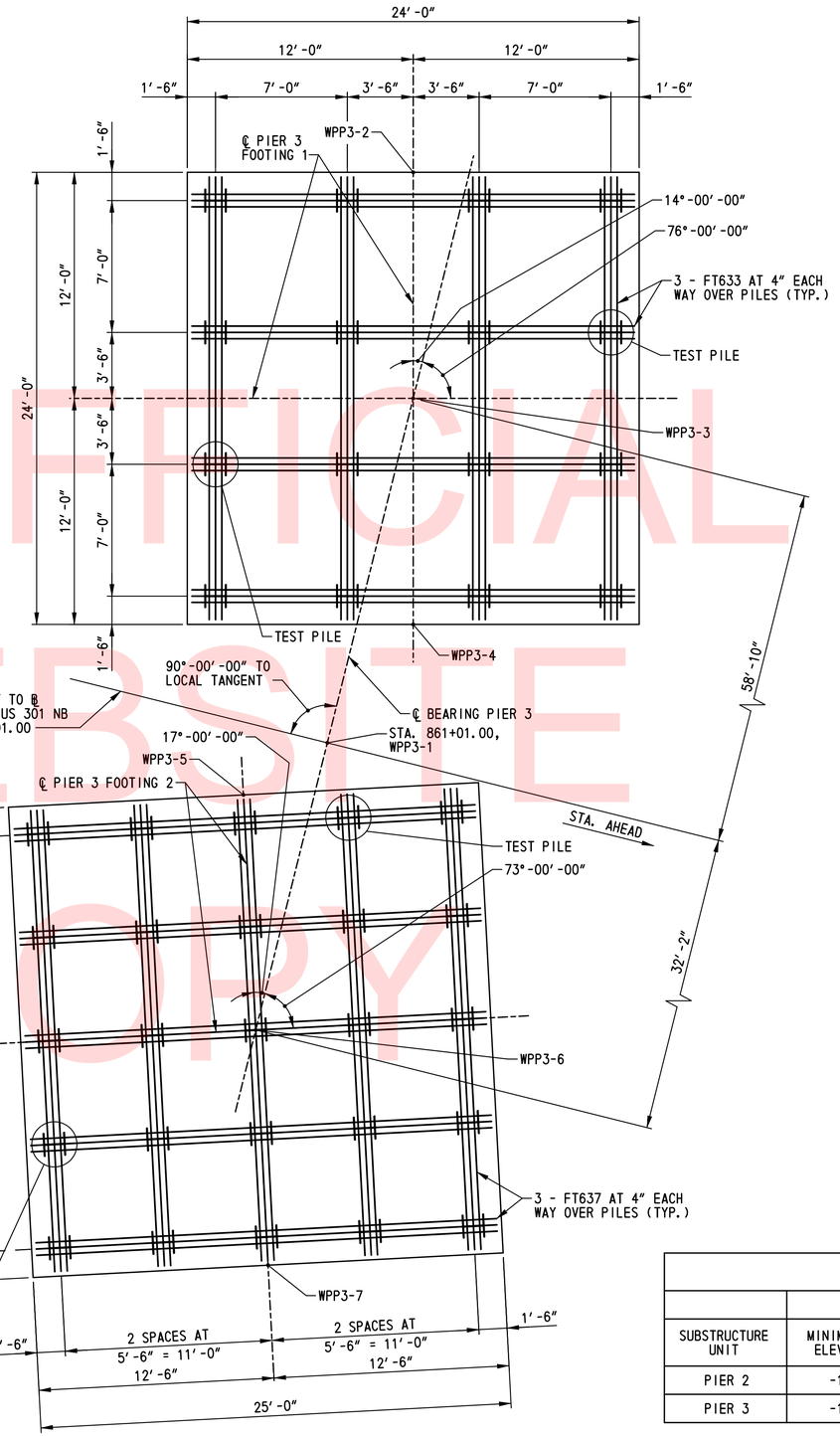

PIER 3

PILE LAYOUT PLAN

SCALE: ¼"=1'-0"

PIER 2 PILE DRIVING INFORMATION
PILE SIZE AND TYPE: HP 14x73
ACTUAL BEARING OBTAINED:
HAMMER TYPE:
PILE HAMMER ENERGY: 50,000 LB-FT TO 90,000 LB-FT
SPECIAL DRIVING CONDITIONS AND COMMENTS:

PIER 3 PILE DRIVING INFORMATION
PILE SIZE AND TYPE: HP 14x73
ACTUAL BEARING OBTAINED:
HAMMER TYPE:
PILE HAMMER ENERGY: 50,000 LB-FT TO 90,000 LB-FT
SPECIAL DRIVING CONDITIONS AND COMMENTS:

PILE LEGEND:

1. H DENOTES PLUMB HP 14x73 STEEL PILE.
2. (H) DENOTES LOCATION OF PLUMB HP 14x73 STEEL PILE, DYNAMIC PILE TESTING AND SIGNAL MATCHING ANALYSIS.

NOTE:

1. FOR PILE NOTES, SEE DWG. NO. PL-03.

PILE TIP DATA

	DESIGN DATA		ACTUAL FIELD DATA	
SUBSTRUCTURE UNIT	MINIMUM TIP ELEVATION	ESTIMATED TIP ELEVATION	AVERAGE ACTUAL MINIMUM TIP ELEVATION	AVERAGE ACTUAL MAXIMUM TIP ELEVATION
PIER 2	-18.0	-37.0		
PIER 3	-18.0	-42.0		

UNOFFICIAL WEBSITE COPY

N:\31653-000\Contract 1B\CADD\Bridge\Br_No433\PL02_br1-433.dgn
2/5/2013 9:28:36 AM

DELAWARE DEPARTMENT OF TRANSPORTATION

ADDENDUMS / REVISIONS

SCALE: AS SHOWN

US 301 & SR 1 INTERCHANGE

CONTRACT	BRIDGE NO. 1-433
T200911302	DESIGNED BY: W.T.R./L.F.E.
COUNTY	
NEW CASTLE	CHECKED BY: B.K.B.

PILE LAYOUT PLAN – 2

BR1-3 PL-02

SHEET NO. 212

TOTAL SHTS. 491

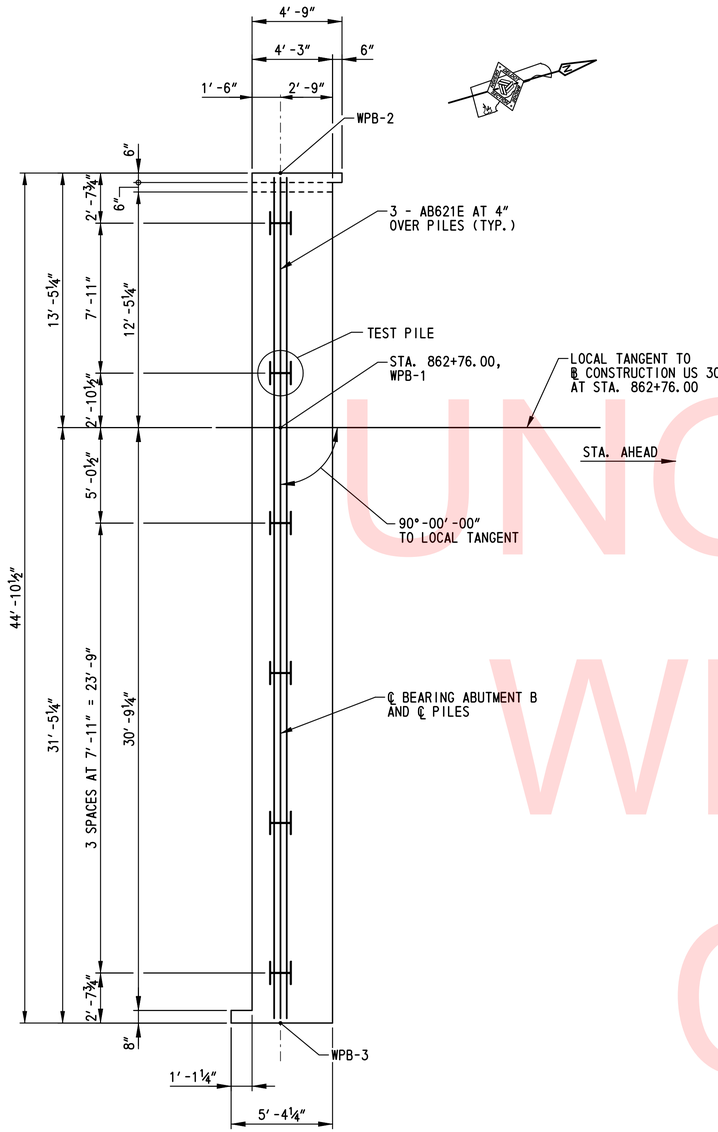

ABUTMENT B

PILE LAYOUT PLAN

SCALE: ¼"=1'-0"

PILE RESISTANCE		
SUBSTRUCTURE UNIT	FACTORED RESISTANCE (TONS)	NOMINAL RESISTANCE (TONS)
ABUTMENT A	145	225
PIER 1	160	250
PIER 2	145	225
PIER 3	145	225
ABUTMENT B	160	250

ABUTMENT B PILE DRIVING INFORMATION
PILE SIZE AND TYPE: HP 14x73
ACTUAL BEARING OBTAINED:
HAMMER TYPE:
PILE HAMMER ENERGY: 50,000 LB-FT TO 90,000 LB-FT
SPECIAL DRIVING CONDITIONS AND COMMENTS:

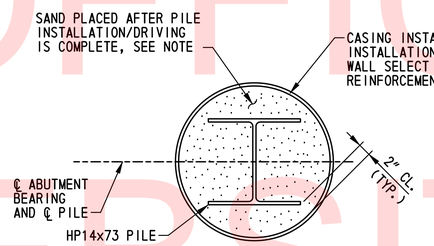

ABUTMENT PILE CASING DETAIL

SCALE: 1"=1'-0"

NOTE:

PAYMENT FOR INSTALLATION OF CASING AND SAND ABOVE THE BOTTOM OF MSE WALL ELEVATION AT THE FRONT OF THE ABUTMENTS WILL BE INCIDENTAL TO ITEM NO. 602772 - MECHANICALLY STABILIZED EARTH WALLS. FOR INSTALLATION AND MATERIAL REQUIREMENTS OF SAND/CASING SEE THE SPECIAL PROVISIONS.

PILE LEGEND:

1. H DENOTES PLUMB HP 14x73 STEEL PILE.
2. (H) DENOTES LOCATION OF PLUMB HP 14x73 STEEL PILE, DYNAMIC PILE TESTING AND SIGNAL MATCHING ANALYSIS.

PILE NOTES:

1. THE FACTORED RESISTANCES OF THE HP14x73 STEEL PILING ARE SHOWN IN THE TABLE ON THIS SHEET. PILES SHALL BE DRIVEN AND TESTED IN CONFORMANCE WITH THE SPECIAL PROVISION FOR DYNAMIC PILE TESTING TO THE NOMINAL RESISTANCES SHOWN IN THE TABLE ON THIS SHEET.
2. PILES SHALL BE DRIVEN TO THE DRIVING CRITERIA DEVELOPED FROM DYNAMIC PILE TESTING AND AS SPECIFIED BY THE ENGINEER TO ACHIEVE THE NOMINAL RESISTANCES SHOWN IN THE TABLE ON THIS SHEET AND TO THE SPECIFIED MINIMUM TIP ELEVATION. PILES MEETING THE AFOREMENTIONED CRITERIA WILL BE CONSIDERED SATISFACTORY.
3. THE CONTRACTOR SHALL BE RESPONSIBLE FOR SUBMITTING A WAVE EQUATION ANALYSIS AND ALL OTHER INCIDENTALS IN ACCORDANCE WITH THE SPECIAL PROVISIONS. THE WAVE EQUATION ANALYSIS AND DYNAMIC PILE TESTING MUST BE SIGNED AND SEALED BY A PROFESSIONAL ENGINEER LICENSED IN THE STATE OF DELAWARE IN ACCORDANCE WITH THE SPECIAL PROVISIONS. UPON COMPLETION OF THE DYNAMIC PILE TESTING THE CONTRACTOR SHALL SUBMIT A SIGNAL MATCHING ANALYSIS TO THE ENGINEER FOR REVIEW AND APPROVAL IN ACCORDANCE WITH THE SPECIAL PROVISIONS.
4. ALL TEST PILES SHALL BE 10 FEET LONGER THAN THE PILE LENGTH COMPUTED FROM THE PILE TIP DATA TABLE. PILE LENGTHS FOR ORDERING PURPOSES SHALL BE DETERMINED BY THE TEST PILES. DYNAMIC PILE TESTING AND SIGNAL MATCHING ANALYSIS SHALL BE COMPLETED BY THE CONTRACTOR IN ACCORDANCE WITH THE SPECIAL PROVISIONS. TEST AND PRODUCTION PILE RESTRIKES WILL BE PAID FOR AS FOLLOWS:
   A. ALL TEST PILES WILL BE RESTRUCK AFTER A WAITING PERIOD OF AT LEAST 48 HOURS. TEST PILE RESTRIKES SHALL BE INCIDENTAL TO THE INITIAL INSTALLATION OF THE PILE PROVIDED THEY ARE REQUESTED WITHIN FIVE WORKING DAYS FROM THE COMPLETION OF THE INITIAL DRIVE. IF RESTRIKES ARE REQUESTED AFTER FIVE WORKING DAYS FROM THE COMPLETION OF THE INITIAL DRIVE THEN THE TEST PILE RESTRIKE SHALL BE PAID FOR IN ACCORDANCE WITH THE SPECIAL PROVISIONS.
   B. IF DIRECTED BY THE ENGINEER TO RESTRIKE A PRODUCTION PILE, THE RESTRIKE OF THE PRODUCTION PILE SHALL BE PAID SEPARATELY UNDER ITEM NO. 619501 - PRODUCTION PILE RESTRIKE.

   THE DEPARTMENT RESERVES THE RIGHT TO PERFORM DYNAMIC PILE TESTING OF RESTRIKES.
5. SEE DWG. NOS. PE-01 AND PE-02 FOR SETTLEMENT PLATFORM AND MONUMENT LOCATIONS. READINGS ON THE SETTLEMENT PLATFORMS SHALL BE MADE AFTER THE INITIAL INSTALLATION OF THE RISER AND CASING PIPES AND INSTALLATION RECORD SHEETS ARE APPROVED BY THE ENGINEER AND PRIOR TO FILL PLACEMENT. DURING FILL PLACEMENT, READINGS ON ALL SETTLEMENT PLATFORMS SHALL BE TAKEN AT A MINIMUM OF 3 CALENDAR DAY INTERVALS. AFTER COMPLETION OF THE FILL AND SURCHARGE PLACEMENT, INSTALL SETTLEMENT MONUMENTS IF INDICATED ON THE BRIDGE PLANS AND TAKE INITIAL READINGS. READINGS ON ALL SETTLEMENT MONITORING DEVICES SHALL THEN BE TAKEN AT A MINIMUM OF 3 CALENDAR DAY INTERVALS. IF THE SETTLEMENT HAS CEASED ON ALL MONITORED SETTLEMENT MONITORING DEVICES IN THE VICINITY OF THE SUBSTRUCTURE UNIT BY CALENDAR DAY 6, THAT IS THREE READINGS, AFTER THE COMPLETION OF THE FILL, SURCHARGE AND SETTLEMENT MONUMENT PLACEMENT, THE SUBSTRUCTURE WILL BE RELEASED BY THE ENGINEER FOR REMOVAL OF THE SURCHARGE AND INSTALLATION OF PRODUCTION PILES WITHIN THREE WORKING DAYS OF RECEIPT OF SETTLEMENT MONITORING RESULTS. AFTER COMPLETION OF THE ABUTMENT AND MSE WALL PANEL PLACEMENT, THE CONTRACTOR SHALL ESTABLISH REFERENCE POINTS TO MONITOR SETTLEMENT ON TOP OF THE ABUTMENT SEAT AND EITHER ON TOP OF THE MSE WALL PANELS OR ON TOP OF THE MSE WALL LEVELING PAD AT POINTS WITHIN FIVE FEET OF ALL ENDS AND CORNERS AND AT THE CENTER OF BRIDGES AND THE CENTERLINE OF US301. AFTER THE CONCRETE ABUTMENTS HAVE BEEN CONSTRUCTED AND THE MSE WALL PANELS HAVE BEEN PLACED, READINGS ON ALL SETTLEMENT MONITORING DEVICES AND REFERENCE POINTS SHALL CONTINUE TO BE TAKEN AT A MINIMUM OF 30-DAY INTERVALS FOR THE NEXT 6 MONTHS OR AS DIRECTED BY THE ENGINEER. SEE SPECIAL PROVISIONS FOR ADDITIONAL SETTLEMENT MONITORING REQUIREMENTS.

ABUTMENT PILE INSTALLATION SEQUENCE OF CONSTRUCTION:

1. PILE CASING SHALL BE INSTALLED DURING INSTALLATION OF THE MSE WALL SELECT BACKFILL AND REINFORCEMENT TO THE ELEVATION OF THE BOTTOM OF THE ABUTMENT STEM.
2. CONSTRUCT MSE WALLS, INCLUDING TEMPORARY SUPPORT OF EMBANKMENT AT REAR FACES OF ABUTMENT STEMS AND BACKWALLS TO THE REQUIRED ELEVATIONS. A SETTLEMENT WAITING PERIOD OF 60 DAYS IS REQUIRED AFTER THIS CONSTRUCTION.
3. AFTER COMPLETION OF THE SETTLEMENT WAITING PERIOD AS DETERMINED BY THE ENGINEER BASED ON THE INSTRUMENTATION, THE PILES SHALL BE SET AND CENTERED IN THE CASING.
4. PILES SHALL BE INSTALLED TO THE MINIMUM TIP ELEVATION AND REQUIRED NOMINAL RESISTANCE SPECIFIED. FOR PILE RESTRIKE REQUIREMENTS, SEE SPECIAL PROVISIONS.
5. AFTER PILE INSTALLATION/DRIVING IS COMPLETE, THE CASING SHALL BE FILLED WITH SAND.
6. TEST PILES MAY BE DRIVEN PRIOR TO PLACING EMBANKMENT AND SURCHARGE MATERIAL. RESTRIKES OF THESE TEST PILES SHALL BE PERFORMED PRIOR TO PLACING EMBANKMENT IN ACCORDANCE WITH ITEM 619502-TEST PILE RESTRIKE. AFTER THE EMBANKMENT HAS BEEN PLACED, SETTLEMENT HAS BEEN ACHIEVED AND THE SUBSTRUCTURE HAS BEEN RELEASED BY THE ENGINEER, THE TEST PILE SHALL BE ACTING AS A PRODUCTION PILE AND IT SHALL BE RE-STRUCK PRIOR TO PLACING ANY OTHER PRODUCTION PILES WITH PAYMENT UNDER ITEM 619501 - PRODUCTION PILE RESTRIKE. ONCE THE TEST PILE HAS BEEN ACCEPTED, THE REMAINING PRODUCTION PILES MAY BE INSTALLED.

PILE TIP DATA				
	DESIGN DATA		ACTUAL FIELD DATA	
SUBSTRUCTURE UNIT	MINIMUM TIP ELEVATION	ESTIMATED TIP ELEVATION	AVERAGE ACTUAL MINIMUM TIP ELEVATION	AVERAGE ACTUAL MAXIMUM TIP ELEVATION
ABUTMENT B	-18.0	-41.0		

BR1-3
PL-03

UNOFFICIAL WEBSITE COPY

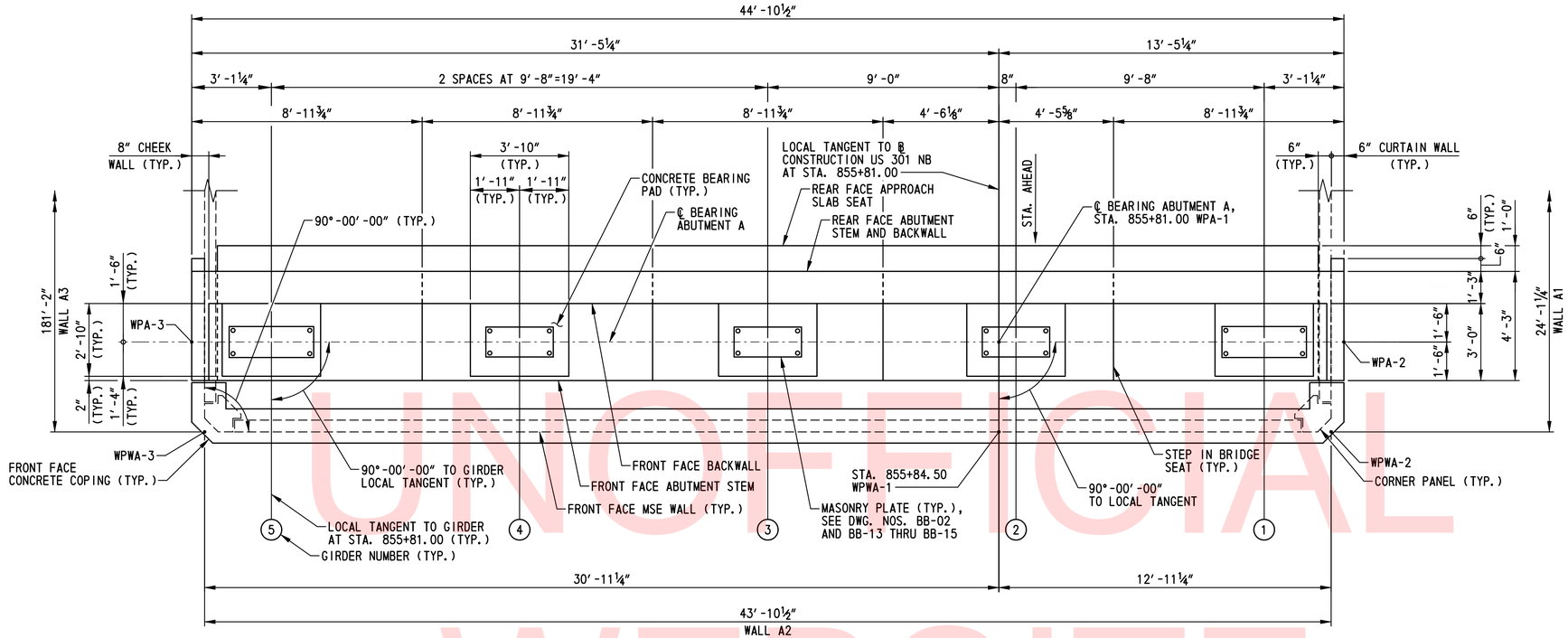

PLAN

SCALE: ⅜″=1′-0″

PLAN NOTE:

DIMENSIONS SHOWN FOR MSE WALL ARE MEASURED WORKING POINT TO WORKING POINT ALONG FRONT FACE OF MSE WALL.

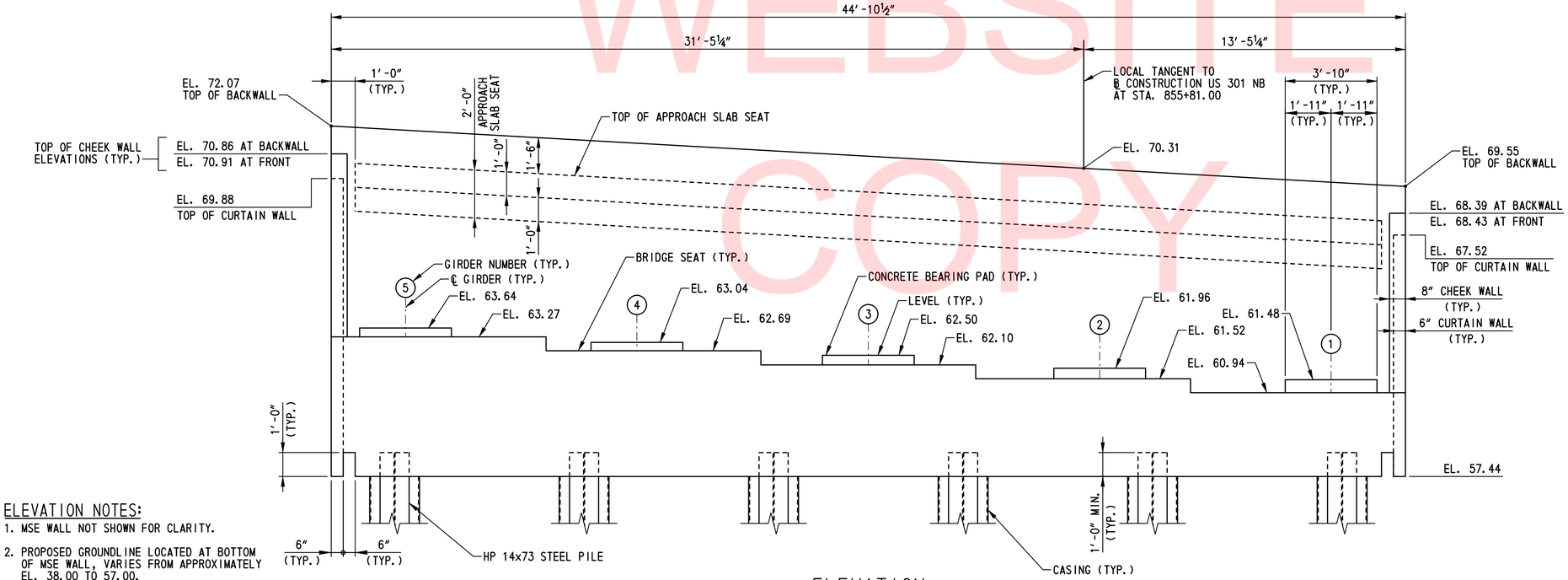

ELEVATION

SCALE: ⅜″=1′-0″

ELEVATION NOTES:

1. MSE WALL NOT SHOWN FOR CLARITY.
2. PROPOSED GROUNDLINE LOCATED AT BOTTOM OF MSE WALL, VARIES FROM APPROXIMATELY EL. 38.00 TO 57.00.
3. APPROXIMATE EXISTING GROUNDLINE LOCATED AT BOTTOM OF MSE WALL, VARIES FROM APPROXIMATELY EL. 29.00 TO 35.00.

NOTES:

1. FOR PILE LAYOUT PLAN, SEE DWG. NO. PL-01.
2. FOR MSE WALL DEVELOPED ELEVATION, SEE DWG. NO. AB-02.
3. FOR ABUTMENT A REINFORCEMENT DETAILS, SEE DWG. NOS. AB-07 THRU AB-09.
4. FOR ABUTMENT AND MSE WALL SECTIONS, SEE DWG. NOS. AB-05 AND AB-06.
5. MEMBRANE WATERPROOFING SHALL BE INCIDENTAL TO ITEM 602015 - PORTLAND CEMENT CONCRETE MASONRY, ABUTMENT ABOVE FOOTING, CLASS A. SEE SPECIAL PROVISION ITEM 602616 FOR ADDITIONAL REQUIREMENTS.

UNOFFICIAL WEBSITE COPY

DELAWARE DEPARTMENT OF TRANSPORTATION	ADDENDUMS / REVISIONS	SCALE: AS SHOWN	US 301 & SR 1 INTERCHANGE	CONTRACT T200911302	BRIDGE NO. 1–433	ABUTMENT A PLAN AND ELEVATION	BR1–3 AB–01
				COUNTY NEW CASTLE	DESIGNED BY: B.K.B.		SHEET NO. 214
					CHECKED BY: W.A.G.		TOTAL SHTS. 491

N:\31653-000\CONTRACT 1B\CADD\Bridge\Br_No433\AB01_br1-433.dgn
12/14/2015 4:35:14 PM

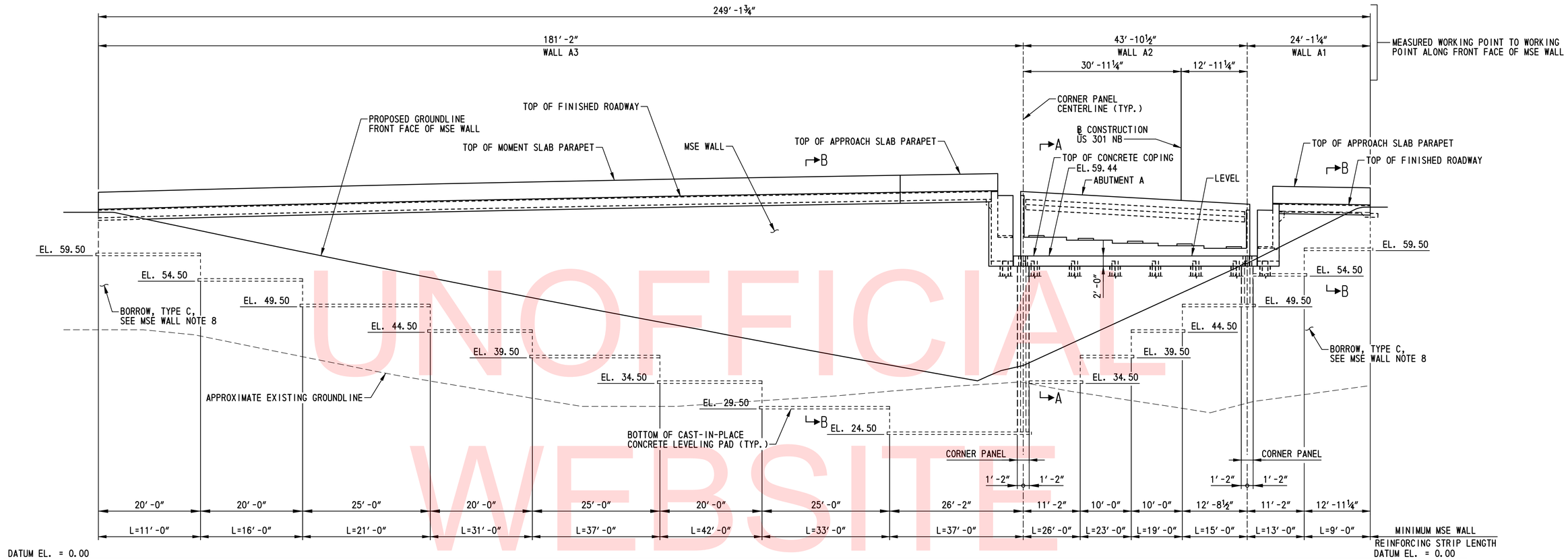

DEVELOPED ELEVATION

SCALE: 1″=10′-0″

MSE WALL NOTES:

1. DESIGN CRITERIA
   SEE SPECIAL PROVISION FOR ITEM 602772.

2. CONCRETE
   ALL CONCRETE PROPERTIES SHALL BE IN ACCORDANCE WITH SECTION 812 OF THE DELAWARE DEPARTMENT OF TRANSPORTATION STANDARD SPECIFICATIONS.

   CLASS A - MSE WALL PANELS AND MSE WALL COPING (f′c = 4,500 PSI).

   CLASS B - MSE WALL LEVELING PADS (f′c = 3,000 PSI).

   ALL EXPOSED EDGES SHALL BE CHAMFERED ¾″ UNLESS NOTED OTHERWISE.

3. REINFORCING STEEL
   ALL REINFORCING STEEL SHALL BE AASHTO M 31 (ASTM A 615), GRADE 60 AND SHALL BE PROTECTED WITH FUSION BONDED EPOXY, CONFORMING TO AASHTO M 284 (ASTM A 775).

   MINIMUM CONCRETE COVER FOR REINFORCING STEEL SHALL BE 2″ UNLESS NOTED OTHERWISE.

4. ARCHITECTURAL FINISH
   THE COMPONENTS OF THE MSE WALLS SHALL HAVE THE ARCHITECTURAL TREATMENT AS SPECIFIED IN THE SPECIAL PROVISION FOR ITEM 602772.

5. REINFORCING STRIPS
   REINFORCING STRIPS SHALL BE LOCATED TO CLEAR THE PILE CASING WITH 2″ MINIMUM CLEARANCE AND A MAXIMUM 15 DEGREE SKEW.

6. COPING
   THE MSE WALL COPING SHALL BE A PRECAST CONCRETE COPING INSTALLED IN CONFORMANCE WITH THE PROPRIETARY WALL MANUFACTURER'S RECOMMENDATIONS. FOR LOCATIONS ALONG THE MSE WALL WHERE A PRECAST CONCRETE COPING CANNOT BE UTILIZED A CAST-IN-PLACE CONCRETE COPING INSTALLED IN CONFORMANCE WITH THE PROPRIETARY MSE WALL MANUFACTURER'S RECOMMENDATION MAY BE UTILIZED.

7. LEVELING PAD
   THE LEVELING PAD STEPS MAY BE LOCATED AT THE DISCRETION OF THE PROPRIETARY WALL MANUFACTURER PROVIDED THAT THE MINIMUM EMBEDMENT IS MAINTAINED IN ACCORDANCE WITH THE SPECIFIED DESIGN CRITERIA. ANY CHANGES TO THE STEP LOCATIONS SHALL BE SUBMITTED TO THE ENGINEER FOR APPROVAL.

8. BACKFILL AND FOUNDATION SOILS
   MSE WALL BACKFILL SHALL CONSIST OF SELECT BACKFILL AND MEET THE REQUIREMENTS PROVIDED IN THE SPECIAL PROVISIONS. FOR ADDITIONAL REQUIREMENTS OF MSE WALL BACKFILL AND FOUNDATION SOILS, SEE THE SOIL PROPERTIES TABLE ON THIS SHEET. THE VERTICAL LIMIT OF BORROW, TYPE C SHALL BE FROM THE EXISTING GROUNDLINE TO THE BOTTOM OF THE LEVELING PAD. THE HORIZONTAL LIMIT OF BORROW, TYPE C SHALL BE FROM 4′-0″ IN FRONT OF THE MSE WALL TO 1′-0″ BEHIND THE END OF THE MSE WALL REINFORCEMENT. PAYMENT FOR BORROW, TYPE C WILL BE MADE UNDER ITEM NO. 202000 - EXCAVATION AND EMBANKMENT.

9. INTERNAL STABILITY
   THE INTERNAL STABILITY OF THE MSE WALL SHALL BE DESIGNED BY THE PROPRIETARY WALL MANUFACTURER USING THE SOIL PROPERTIES PROVIDED AT EACH MSE WALL LOCATION. THE INTERNAL STABILITY CALCULATIONS SHALL BE SIGNED AND SEALED BY A PROFESSIONAL ENGINEER LICENSED IN THE STATE OF DELAWARE AS INDICATED IN THE PROJECT SPECIFICATIONS.

10. QUARANTINE PERIOD
    ALLOW A MINIMUM OF 60 DAYS QUARANTINE PERIOD FOR SETTLEMENT MONITORING. BEGIN THE QUARANTINE PERIOD WHEN THE FULL HEIGHT OF THE MSE WALL IS ACHIEVED, THE APPROACH EMBANKMENTS ARE AT THEIR FINAL ROADWAY SUBGRADE ELEVATION AND THE SETTLEMENT PLATFORMS ARE COMPLETELY CONSTRUCTED. THE ENGINEER WILL DETERMINE THE DURATION OF THE QUARANTINE PERIOD BASED ON THE SETTLEMENT READINGS. THE ENGINEER WILL NOTIFY THE CONTRACTOR, IN WRITING, WHEN THE QUARANTINE PERIOD CAN BE LIFTED BASED ON THE RESULTS OF THE SETTLEMENT READINGS.

11. SETTLEMENT REQUIREMENTS
    THE CONTRACTOR AND MSE WALL MANUFACTURER SHALL DESIGN AND CONSTRUCT THE FINAL WALL FACING SUCH THAT THE FINAL WALL FACING IS AT THE REQUIRED ELEVATIONS AFTER SETTLEMENT IS ACHIEVED. THE ANTICIPATED SETTLEMENT IS 4 INCHES AT THE FACE OF WALL.

12. SERVICE LIFE
    ALL MSE WALL COMPONENTS SHALL BE DESIGNED FOR A MINIMUM SERVICE LIFE OF 100 YEARS.

13. WALL SYSTEM
    ONLY ONE MSE WALL SYSTEM SHALL BE USED ON THIS PROJECT.

14. TEMPORARY SUPPORT OF EMBANKMENT
    TEMPORARY SUPPORT OF EMBANKMENT IS REQUIRED AT THE REAR FACE OF BOTH ABUTMENT STEMS AND BACKWALLS TO ALLOW THE UNDERLYING SOILS TO PRECONSOLIDATE UNDER THE FINAL REQUIRED SOIL PRESSURE PRIOR TO PILE INSTALLATION. THE LIMITS OF THE TEMPORARY SUPPORT OF EMBANKMENT SHALL BE THE FULL ABUTMENT HEIGHT OVER THE FULL ABUTMENT LENGTH. THE TEMPORARY SUPPORT OF EMBANKMENT SHALL BE DESIGNED BY THE MSE WALL DESIGNER TO RESIST THE FULL HORIZONTAL EARTH PRESSURE AND HORIZONTAL SOIL PRESSURE DUE TO SURCHARGE OF SOIL AND THE CONTRACTOR'S EQUIPMENT AND MATERIALS. ALL MSE WALL REINFORCING STRIPS SHALL BE DESIGNED FOR A MINIMUM SERVICE LIFE OF 100 YEARS. THE DESIGN OF THE TEMPORARY SUPPORT OF EMBANKMENT SHALL BE COMPATIBLE WITH THE ABUTMENT ANCHORS SHOWN ON DWG. NOS. AB-05 AND AB-06. PAYMENT FOR CONSTRUCTION OF THE TEMPORARY SUPPORT OF EMBANKMENT WILL BE MADE UNDER ITEM 602772 - MECHANICALLY STABILIZED EARTH WALLS. SEE THE SPECIAL PROVISIONS FOR ADDITIONAL INFORMATION AND REQUIREMENTS.

SOIL PROPERTIES TABLE

SOIL TYPE	UNIT WEIGHT (PCF)	DRAINED ANGLE OF FRICTION (DEGREES)	UNDRAINED SHEAR STRENGTH (PSF)
SELECT BACKFILL	125	34 (MIN.)	0
FOUNDATION SOIL (BORROW, TYPE C)	120	32	0
FOUNDATION SOIL (ABUTMENT A)	120	30	0
FOUNDATION SOIL (ABUTMENT B)	120	30	0

NOTES:

1. FOR SECTIONS A-A AND B-B, SEE DWG. NO. AB-06.
2. FOR ABUTMENT A PLAN AND ELEVATION, SEE DWG. NO. AB-01.
3. FOR ADDITIONAL INFORMATION ON MSE WALL, SEE DWG. NO. FT-01.

UNOFFICIAL WEBSITE
COPY

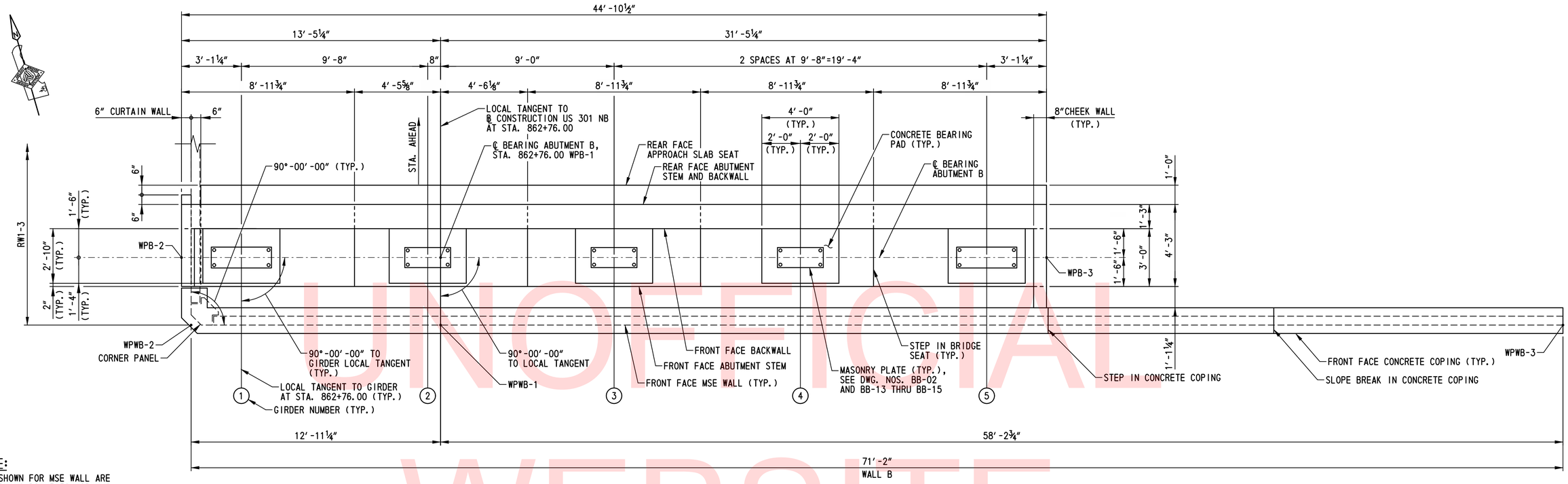

PLAN

SCALE: ⅜″=1′-0″

PLAN NOTE:

DIMENSIONS SHOWN FOR MSE WALL ARE MEASURED WORKING POINT TO WORKING POINT ALONG FRONT FACE OF MSE WALL.

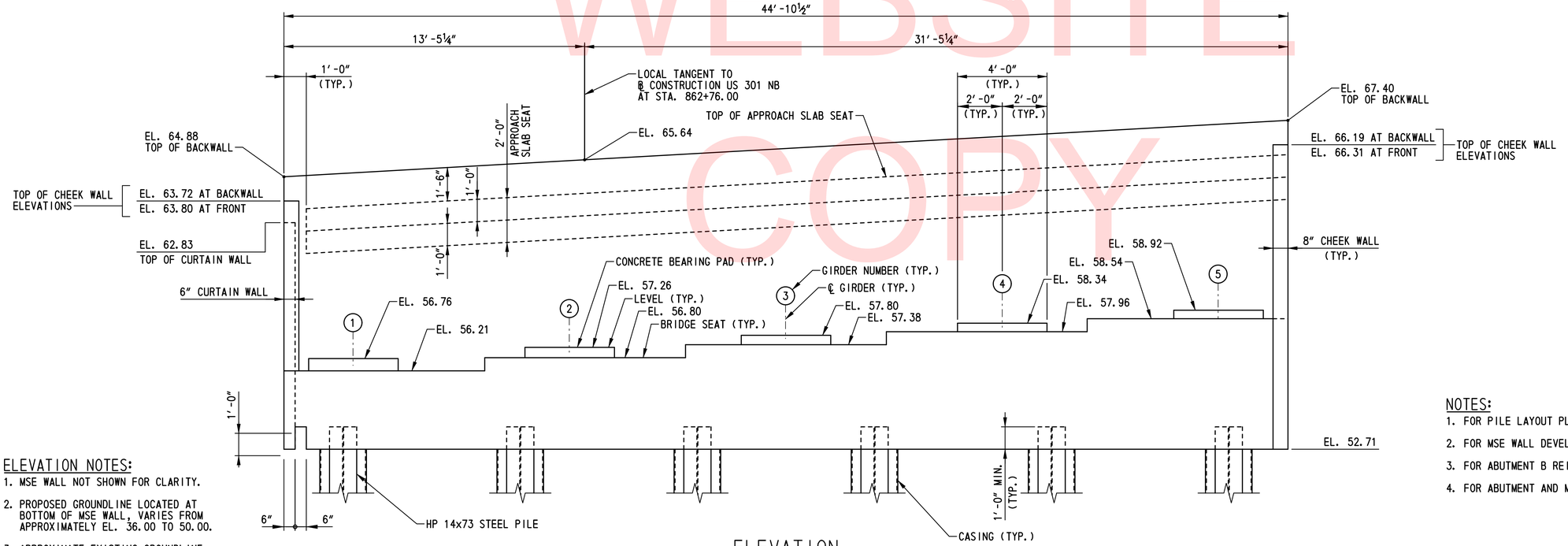

ELEVATION

SCALE: ⅜″=1′-0″

ELEVATION NOTES:

1. MSE WALL NOT SHOWN FOR CLARITY.
2. PROPOSED GROUNDLINE LOCATED AT BOTTOM OF MSE WALL, VARIES FROM APPROXIMATELY EL. 36.00 TO 50.00.
3. APPROXIMATE EXISTING GROUNDLINE LOCATED AT BOTTOM OF MSE WALL, VARIES FROM APPROXIMATELY EL. 26.00 TO 32.00.

NOTES:

1. FOR PILE LAYOUT PLAN, SEE DWG. NO. PL-03.
2. FOR MSE WALL DEVELOPED ELEVATION, SEE DWG. NO. AB-04.
3. FOR ABUTMENT B REINFORCEMENT DETAILS, SEE DWG. NOS. AB-10 THRU AB-12.
4. FOR ABUTMENT AND MSE WALL SECTIONS, SEE DWG. NOS. AB-05 AND AB-06.

UNOFFICIAL WEBSITE COPY

N:\3653-000\Contract 18\CADD\Bridge\Br_No433\4803_br1-433.dgn
2/5/2013 9:32:33 AM

DELAWARE DEPARTMENT OF TRANSPORTATION	ADDENDUMS / REVISIONS	SCALE: AS SHOWN	US 301 & SR 1 INTERCHANGE	CONTRACT T200911302	BRIDGE NO. 1–433	ABUTMENT B PLAN AND ELEVATION	BR1–3 AB–03
				COUNTY NEW CASTLE	DESIGNED BY: B.K.B.		SHEET NO. 216
					CHECKED BY: W.A.G.		TOTAL SHTS. 491

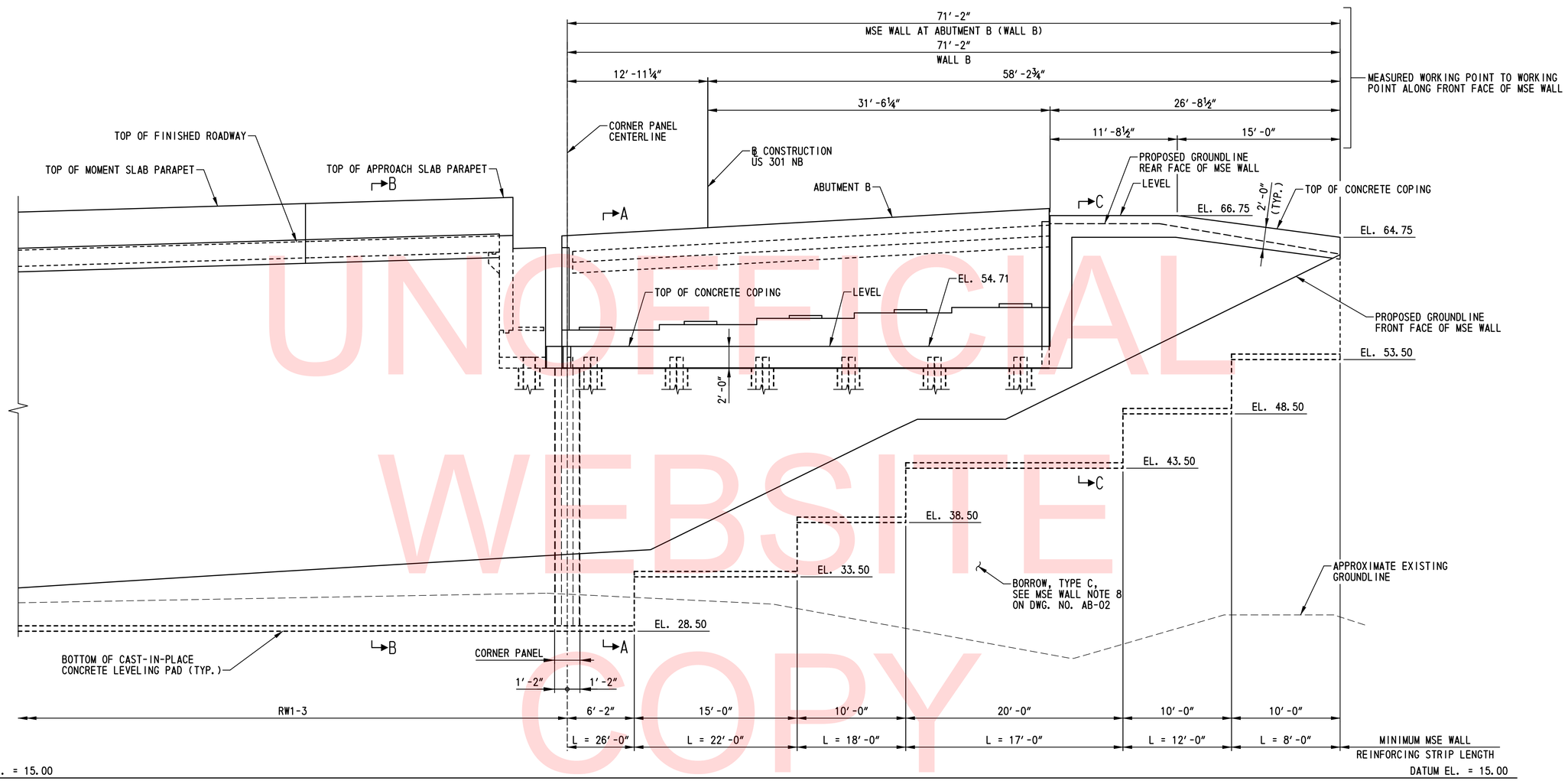

UNOFFICIAL WEBSITE COPY

DEVELOPED ELEVATION

SCALE: 3/16"=1'-0"

NOTES:

1. FOR SECTIONS A-A, B-B AND C-C, SEE DWG. NO. AB-06.
2. FOR ABUTMENT B PLAN AND ELEVATION, SEE DWG. NO. AB-03.
3. FOR ADDITIONAL INFORMATION ON MSE WALL, SEE DWG. NO. FT-02.
4. FOR MSE WALL NOTES AND SOIL PROPERTIES, SEE DWG. NO. AB-02.

N:\31653-000\Contract 1B\CADD\Bridge\Br_No433\AB04_brt-433.dgn
2/5/2013 9:35:32 AM

DELAWARE DEPARTMENT OF TRANSPORTATION	ADDENDUMS / REVISIONS	SCALE: AS SHOWN	US 301 & SR 1 INTERCHANGE	CONTRACT T200911302	BRIDGE NO. 1-433	MSE WALL AT ABUTMENT B	BR1-3 AB-04
				COUNTY NEW CASTLE	DESIGNED BY: B.K.B.		SHEET NO. 217
					CHECKED BY: W.A.G.		TOTAL SHTS. 491

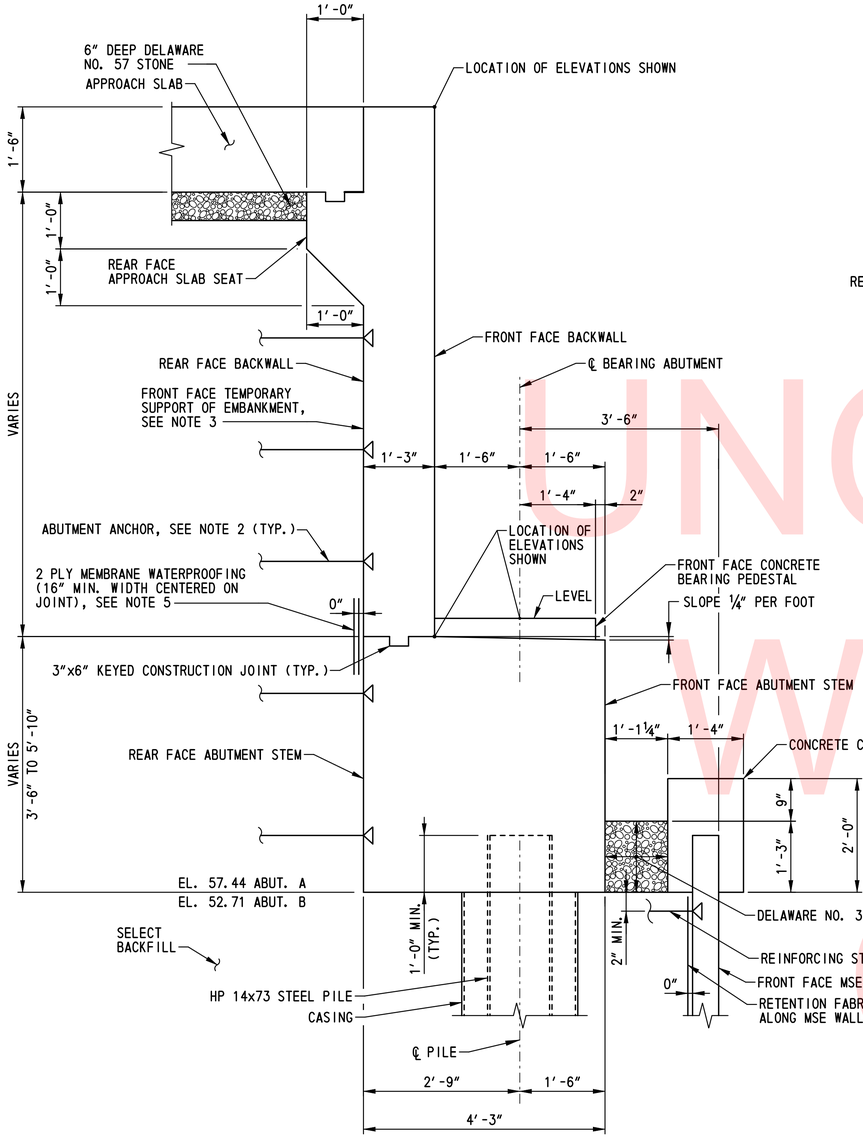

TYPICAL ABUTMENT SECTION

SCALE: ¾″=1′-0″

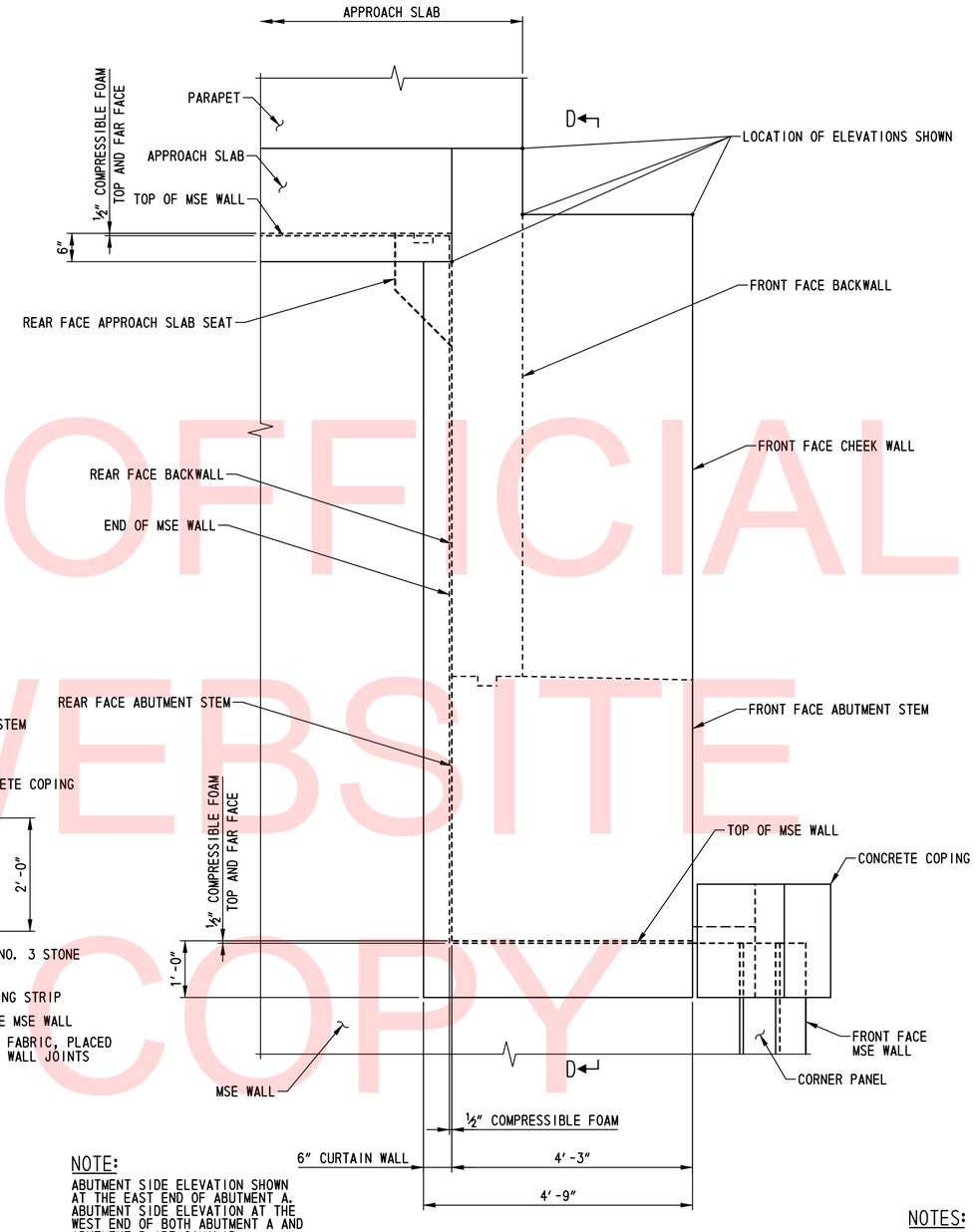

NOTE:

ABUTMENT SIDE ELEVATION SHOWN AT THE EAST END OF ABUTMENT A. ABUTMENT SIDE ELEVATION AT THE WEST END OF BOTH ABUTMENT A AND ABUTMENT B ARE SIMILAR.

ABUTMENT SIDE ELEVATION

SCALE: ¾″=1′-0″

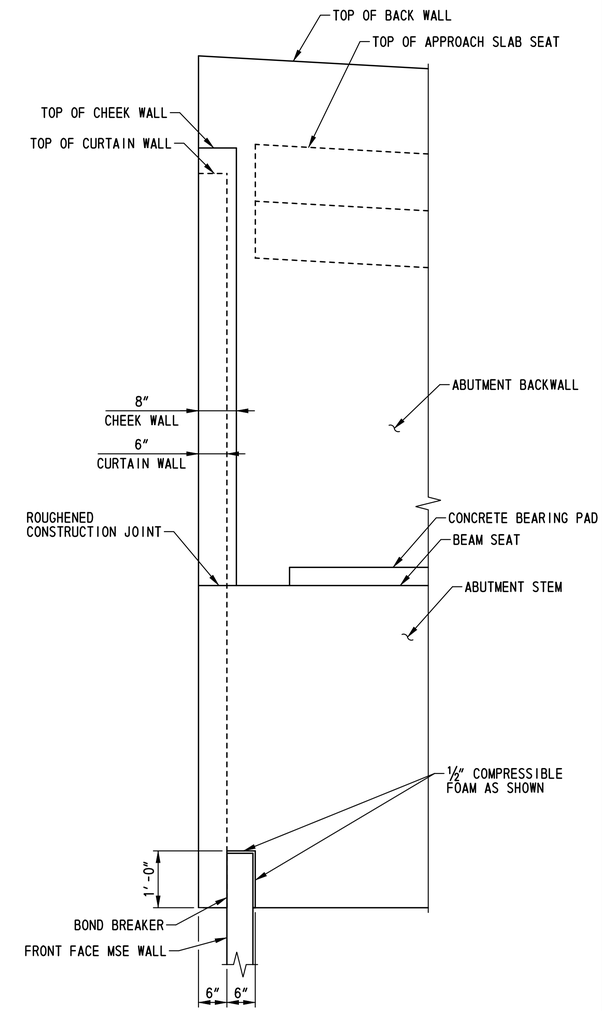

SECTION D-D

SCALE: ¾″=1′-0″

NOTES:

1. FOR PILE LAYOUT PLANS, SEE DWG. NOS. PL-01 AND PL-03.
2. PROVIDE ABUTMENT ANCHORS IN SELECT BACKFILL. SEE ABUTMENT ANCHOR DETAIL ON DWG. NO. AB-06. ABUTMENT ANCHORS SHALL BE DESIGNED FOR A MINIMUM FACTORED HORIZONTAL FORCE OF 1.90 KIPS PER FOOT OF ABUTMENT WIDTH AT ABUTMENT A AND 2.20 KIPS PER FOOT OF ABUTMENT WIDTH AT ABUTMENT B. THE POINT OF APPLICATION OF FORCES SHALL BE AT THE CENTER OF BEARINGS. DESIGN OF THE ABUTMENT ANCHORS SHALL BE COMPATIBLE WITH THE TEMPORARY SUPPORT OF EMBANKMENT DESIGN. PAYMENT FOR ABUTMENT ANCHORS WILL BE INCIDENTAL TO ITEM NO. 602772 - MECHANICALLY STABILIZED EARTH WALLS.
3. FOR TEMPORARY SUPPORT OF EMBANKMENT INFORMATION, SEE MSE WALL NOTE 14 ON DWG. NO. AB-02.
4. FOR MSE WALL NOTES AND SOIL PROPERTIES, SEE DWG. NO. AB-02.
5. MEMBRANE WATERPROOFING SHALL BE INCIDENTAL TO ITEM 602015 - PORTLAND CEMENT CONCRETE MASONRY, ABUTMENT ABOVE FOOTING, CLASS A. SEE SPECIAL PROVISION ITEM 602616 FOR ADDITIONAL REQUIREMENTS.

UNOFFICIAL WEBSITE COPY

DELAWARE DEPARTMENT OF TRANSPORTATION	ADDENDUMS / REVISIONS	SCALE: AS SHOWN	US 301 & SR 1 INTERCHANGE	CONTRACT T200911302	BRIDGE NO. 1-433	ABUTMENT AND MSE WALL SECTIONS – 1	BR1-3 AB-05
				COUNTY NEW CASTLE	DESIGNED BY: B.K.B.		SHEET NO. 218
					CHECKED BY: W.A.G.		TOTAL SHTS. 491

N:\31653-000\CONTRACT 18\CADD\Bridge\Br_No433\AB05_br1-433.dgn
12/11/2015 9:47:27 AM

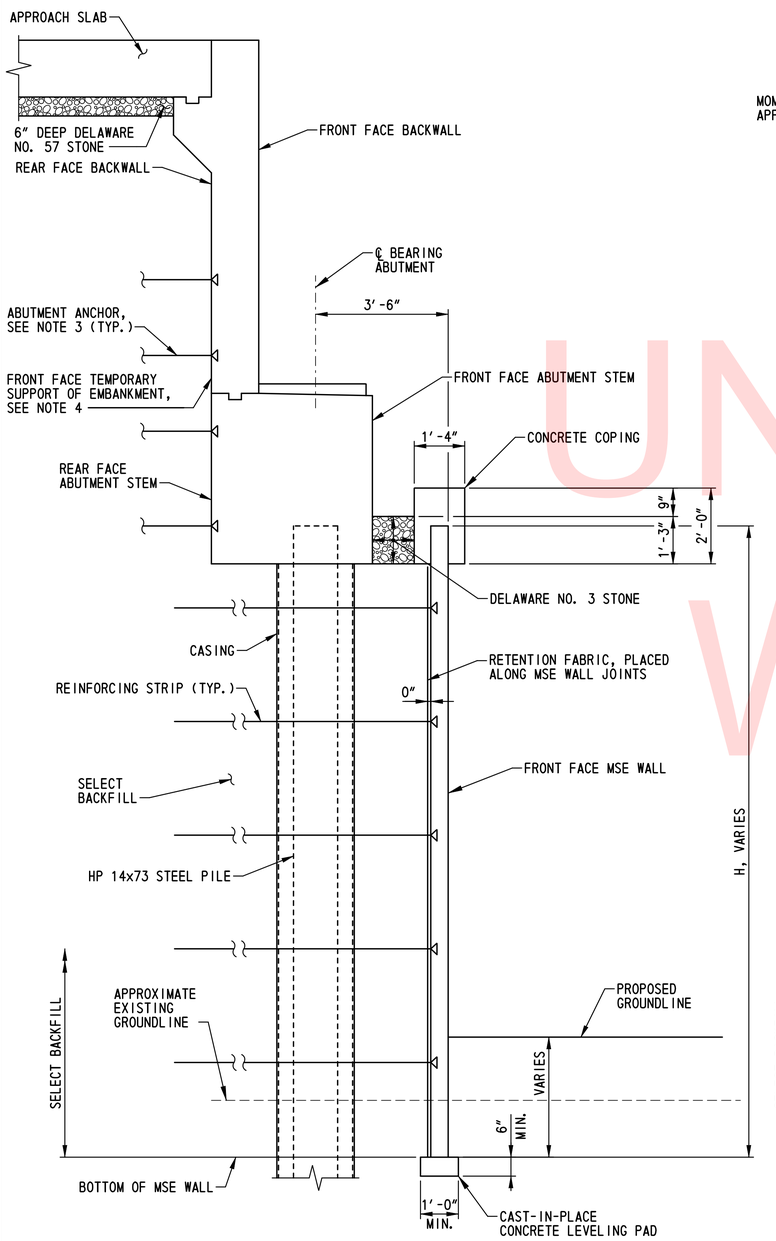

SECTION A-A
SCALE: ½"=1'-0"

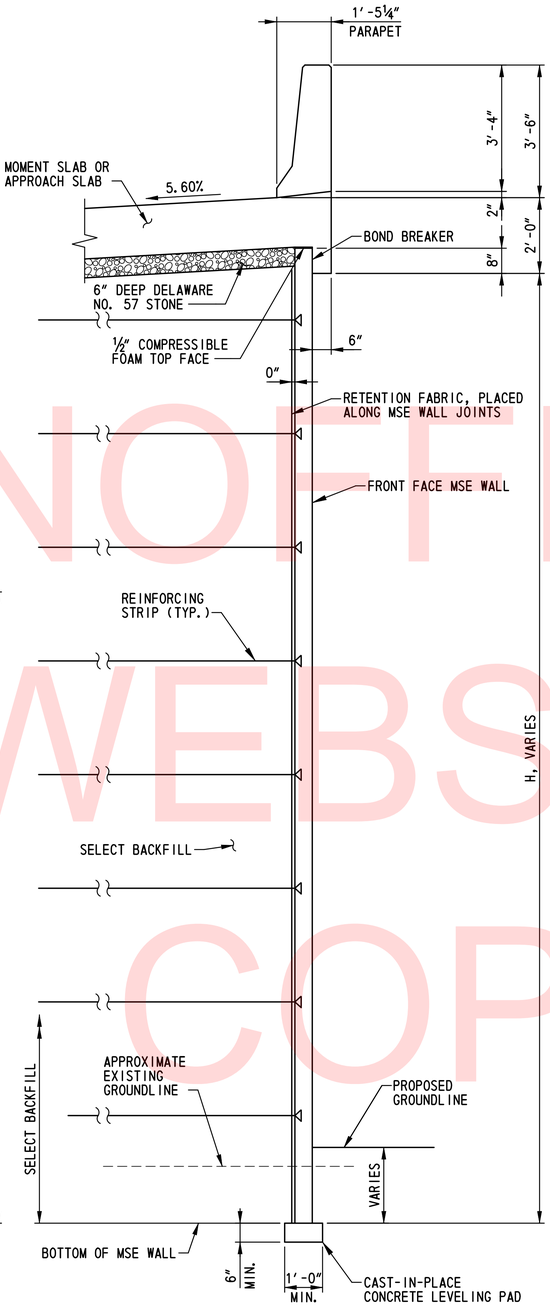

SECTION B-B
SCALE: ½"=1'-0"

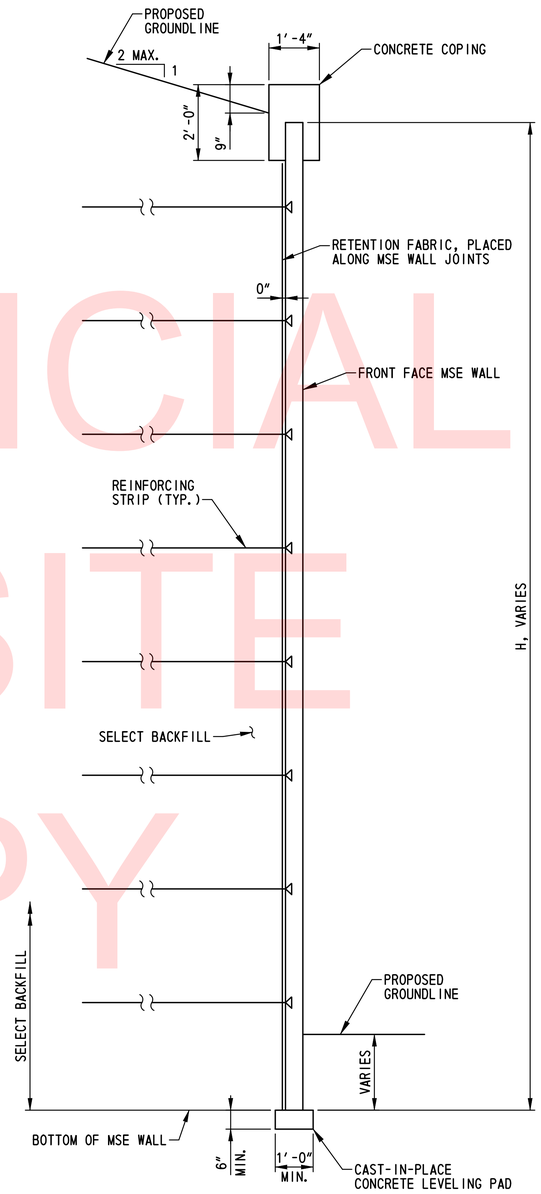

SECTION C-C
SCALE: ½"=1'-0"

ABUTMENT ANCHOR NOTES:

1. THE ABUTMENT ANCHOR SHOWN CONSISTING OF A TIE STRIP ATTACHED TO A REINFORCING STRIP MAY BE MODIFIED PER THE MSE WALL MANUFACTURER'S RECOMMENDATIONS. ANY CHANGES TO THE ABUTMENT ANCHOR DETAIL SHOWN SHALL BE SUBMITTED TO THE ENGINEER FOR APPROVAL.
2. THE ATTACHMENT OF THE ABUTMENT ANCHOR TO THE TEMPORARY SUPPORT OF EMBANKMENT LOCATED AT THE REAR FACE OF THE ABUTMENT STEMS AND BACKWALLS IS NOT SHOWN. THIS ATTACHMENT SHALL BE MADE PER THE MSE WALL MANUFACTURER'S RECOMMENDATIONS AND A DETAIL SUBMITTED TO THE ENGINEER FOR APPROVAL.

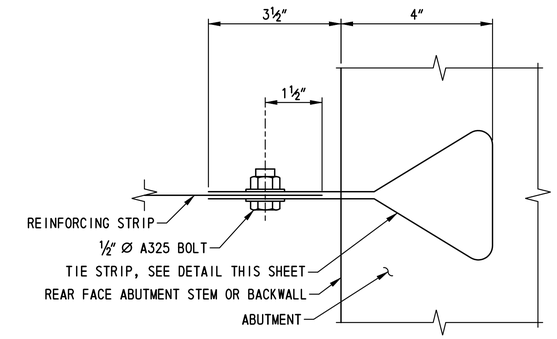

ABUTMENT ANCHOR DETAIL
NOT TO SCALE

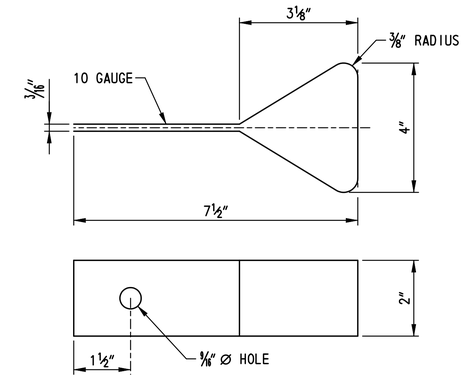

TIE STRIP DETAIL
NOT TO SCALE

NOTES:

1. FOR LOCATION OF SECTIONS A-A, B-B AND C-C, SEE DWG. NOS. AB-02 AND AB-04.
2. FOR PILE LAYOUT PLANS, SEE DWG. NOS. PL-01 AND PL-03.
3. PROVIDE ABUTMENT ANCHORS IN SELECT BACKFILL. SEE ABUTMENT ANCHOR DETAIL ON THIS SHEET. ABUTMENT ANCHORS SHALL BE DESIGNED FOR A MINIMUM FACTORED HORIZONTAL FORCE OF 1.90 KIPS PER FOOT OF ABUTMENT WIDTH AT ABUTMENT A AND 2.20 KIPS PER FOOT OF ABUTMENT WIDTH AT ABUTMENT B. THE POINT OF APPLICATION OF FORCES SHALL BE AT THE CENTER OF BEARINGS. DESIGN OF THE ABUTMENT ANCHORS SHALL BE COMPATIBLE WITH THE TEMPORARY SUPPORT OF EMBANKMENT DESIGN. PAYMENT FOR ABUTMENT ANCHORS WILL BE INCIDENTAL TO ITEM NO. 602772 - MECHANICALLY STABILIZED EARTH WALLS.
4. FOR TEMPORARY SUPPORT OF EMBANKMENT INFORMATION, SEE MSE WALL NOTE 14 ON DWG. NO. AB-02.
5. FOR MSE WALL NOTES AND SOIL PROPERTIES, SEE DWG. NO. AB-02.

UNOFFICIAL WEBSITE COPY

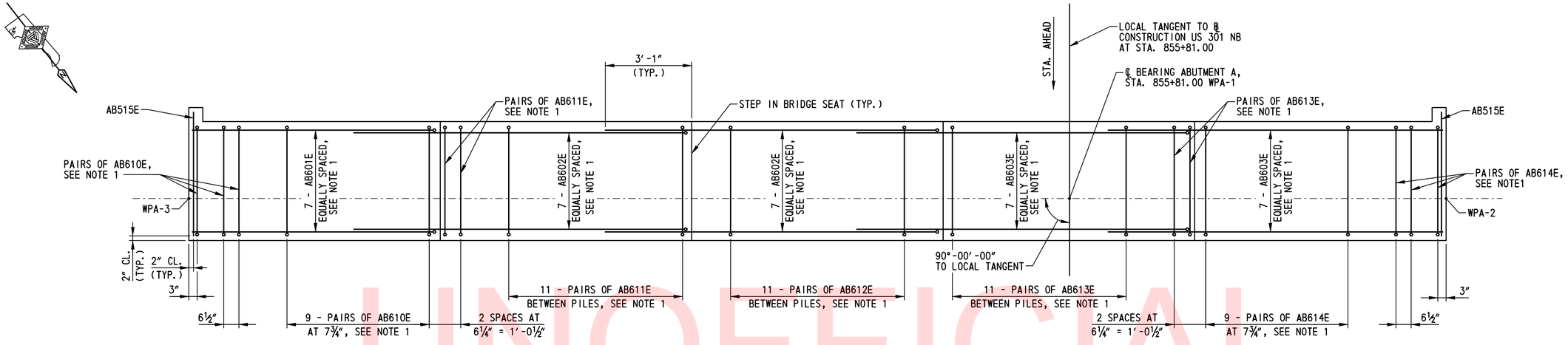

ABUTMENT A STEM TOP MAT REINFORCEMENT PLAN

SCALE: ½″=1′-0″

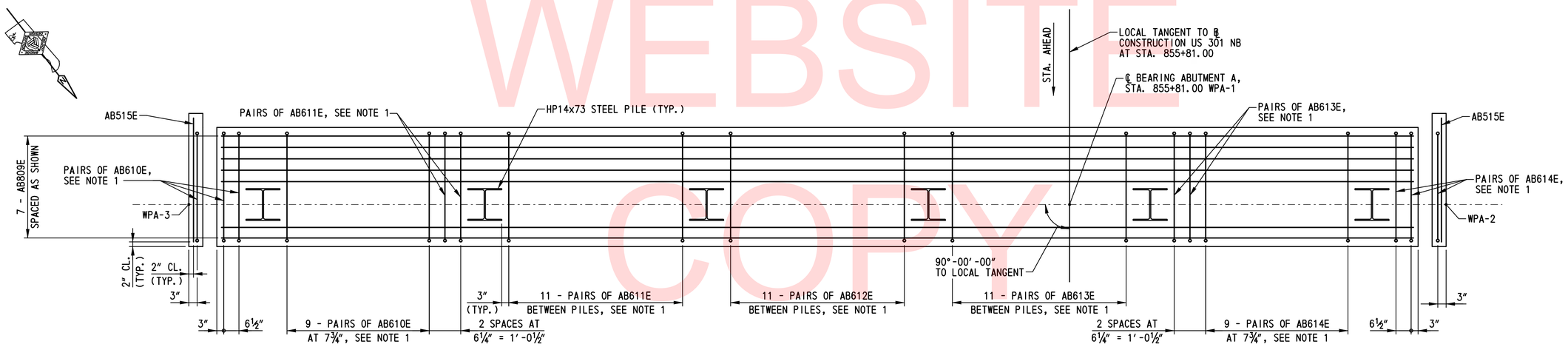

ABUTMENT A STEM BOTTOM MAT REINFORCEMENT PLAN

SCALE: ½″=1′-0″

NOTES:

1. SPACE REINFORCING STEEL AS NECESSARY TO CLEAR ANCHOR BOLTS. FOR ADDITIONAL INFORMATION, SEE DWG. NOS. BB-14, BB-15 AND AB-09.
2. FOR ADDITIONAL REINFORCEMENT DETAILS, SEE DWG. NOS. AB-08 AND AB-09.
3. REINFORCING STEEL OVER PILES NOT SHOWN FOR CLARITY. FOR ADDITIONAL INFORMATION, SEE DWG. NO. PL-01.

UNOFFICIAL WEBSITE COPY

DELAWARE DEPARTMENT OF TRANSPORTATION	ADDENDUMS / REVISIONS	SCALE: AS SHOWN	US 301 & SR 1 INTERCHANGE	CONTRACT T200911302	BRIDGE NO. 1-433	ABUTMENT A REINFORCEMENT DETAILS – 1	BR1-3 AB-07
				COUNTY NEW CASTLE	DESIGNED BY: B.K.B.		SHEET NO. 220
					CHECKED BY: W.A.G.		TOTAL SHTS. 491

N:\31653-000\Contract 1B\CADD\Bridge\Br_No433\AB07_br1-433.dgn 2/5/2015 9:36:48 AM

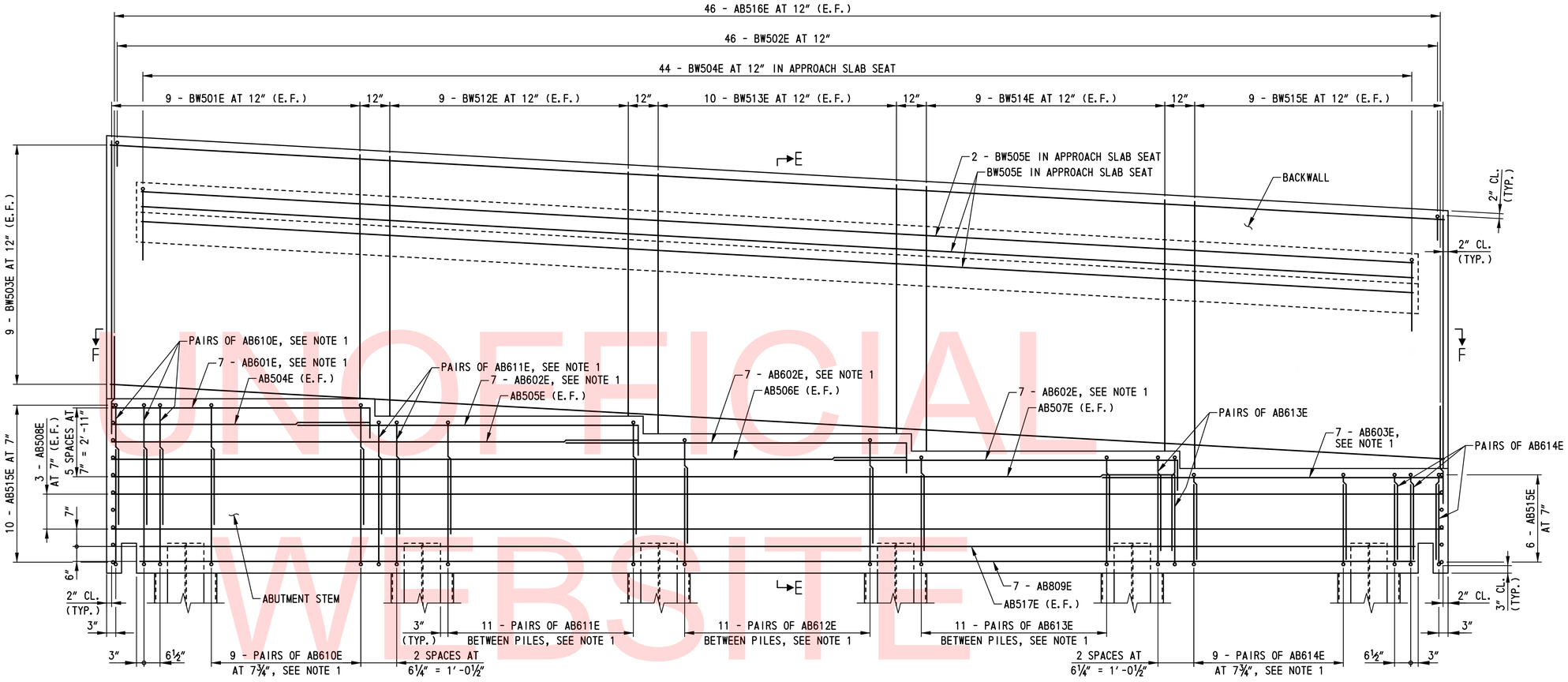

ABUTMENT A REINFORCEMENT ELEVATION

SCALE: ½"=1'-0"

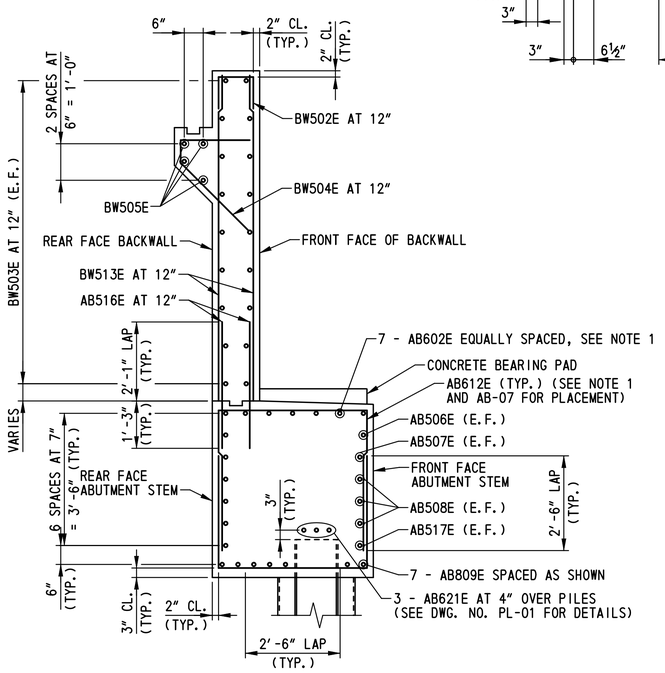

SECTION E-E

SCALE: ½"=1'-0"

NOTES:

1. SPACE REINFORCING STEEL AS NECESSARY TO CLEAR ANCHOR BOLTS. FOR ADDITIONAL INFORMATION, SEE DWG. NOS. BB-14, BB-15 AND AB-09.
2. FOR ADDITIONAL REINFORCEMENT DETAILS, SEE DWG. NOS. AB-07 AND AB-09.
3. REINFORCING STEEL OVER PILES NOT SHOWN FOR CLARITY. FOR ADDITIONAL INFORMATION, SEE DWG. NO. PL-01.
4. FOR SECTION F-F, SEE DWG. NO. AB-09.
5. CHEEK WALLS, CURTAIN WALLS AND CONCRETE BEARING PADS NOT SHOWN IN ELEVATION FOR CLARITY. FOR REINFORCEMENT IN CHEEK WALLS, CURTAIN WALLS AND CONCRETE BEARING PADS, SEE DWG. NO. AB-09.

UNOFFICIAL WEBSITE COPY

BR1-3
AB-08

DELAWARE DEPARTMENT OF TRANSPORTATION

ADDENDUMS / REVISIONS

SCALE: AS SHOWN

US 301 & SR 1 INTERCHANGE

CONTRACT	BRIDGE NO.	1-433
T200911302	DESIGNED BY: B.K.B.	
COUNTY		
NEW CASTLE	CHECKED BY: W.A.G.	

ABUTMENT A REINFORCEMENT DETAILS - 2

SHEET NO. 221
TOTAL SHTS. 491

N:\31653-000\Contract 1B\CADD\Bridge\Br_No433\4808_br1-433.dgn
2/5/2013 9:37:11 AM

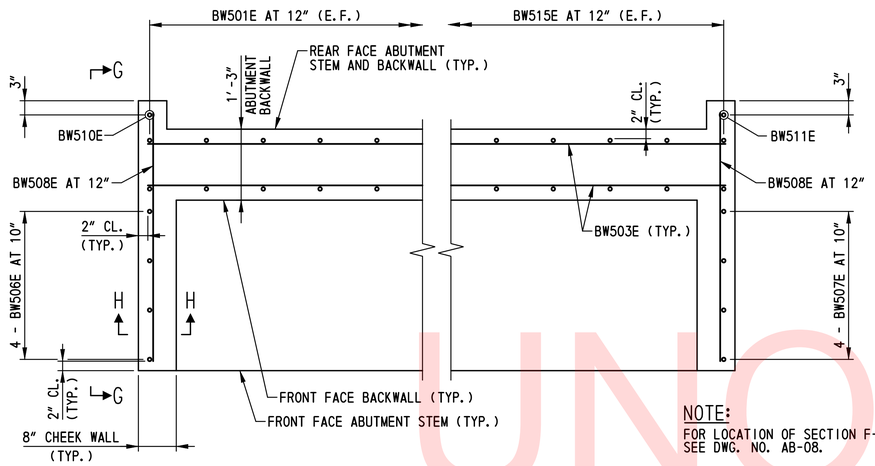

NOTE:
FOR LOCATION OF SECTION F-F, SEE DWG. NO. AB-08.

SECTION F-F
SCALE: ¾"=1'-0"

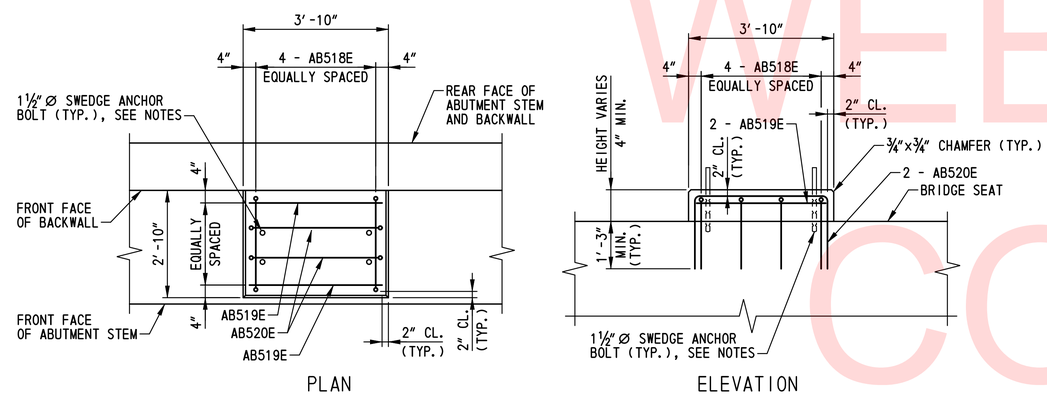

ABUTMENT A CONCRETE BEARING PAD DETAILS
SCALE: ½"=1'-0"

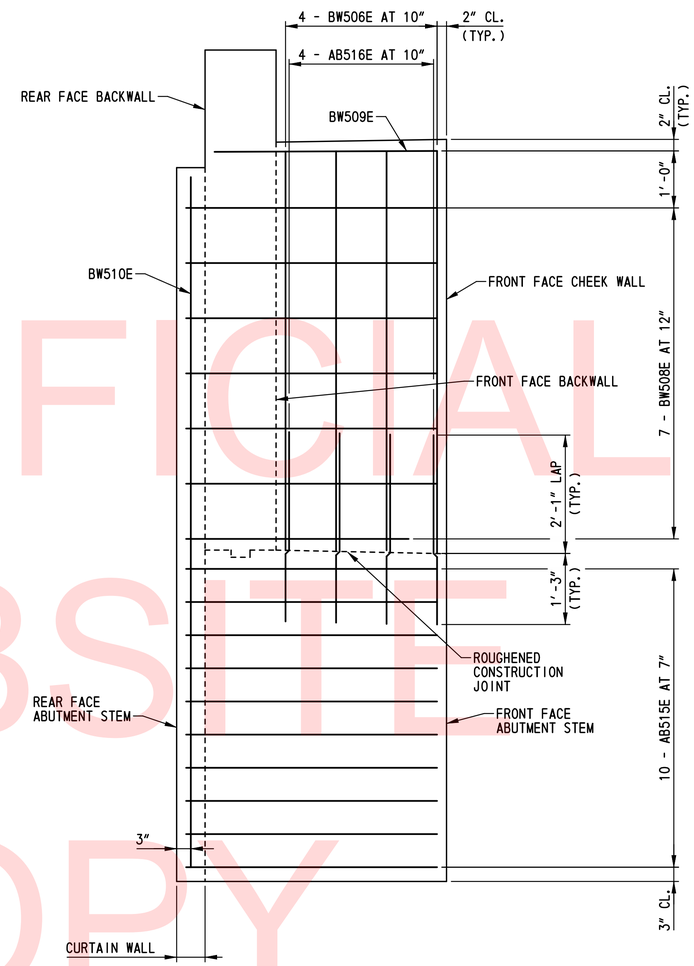

VIEW G-G
SCALE: ¾"=1'-0"

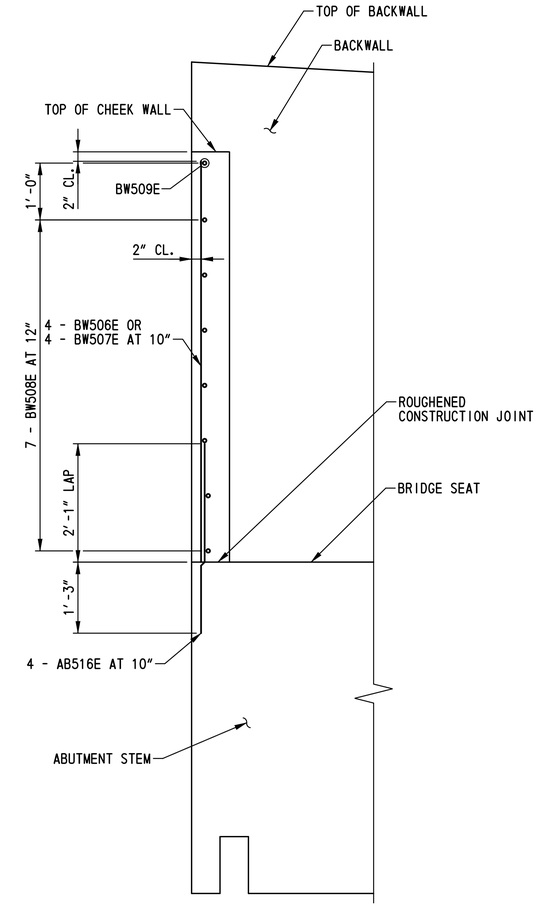

SECTION H-H
SCALE: ¾"=1'-0"

NOTES:

1. FOR ANCHOR BOLT DETAIL, DIMENSIONS AND LOCATIONS, SEE DWG. NOS. BB-01, BB-02 AND BB-13 THRU BB-15.
2. ANCHOR BOLTS SHALL BE CAST IN PLACE. A TEMPORARY CASTING TEMPLATE SHALL BE USED TO ENSURE THE ANCHOR BOLTS ARE PROPERLY ALIGNED AND PLUMB. THE TEMPLATE SHALL BE REMOVED AFTER THE CONCRETE HAS SET.
3. SPACE REINFORCING STEEL AS NECESSARY TO CLEAR ANCHOR BOLTS.
4. REINFORCEMENT IN ABUTMENT STEM AND BACKWALL NOT SHOWN IN VIEW G-G AND SECTION H-H FOR CLARITY.
5. EAST CHEEK WALL SHOWN IN VIEW G-G AND SECTION H-H, WEST CHEEK WALL SIMILAR.

UNOFFICIAL WEBSITE COPY

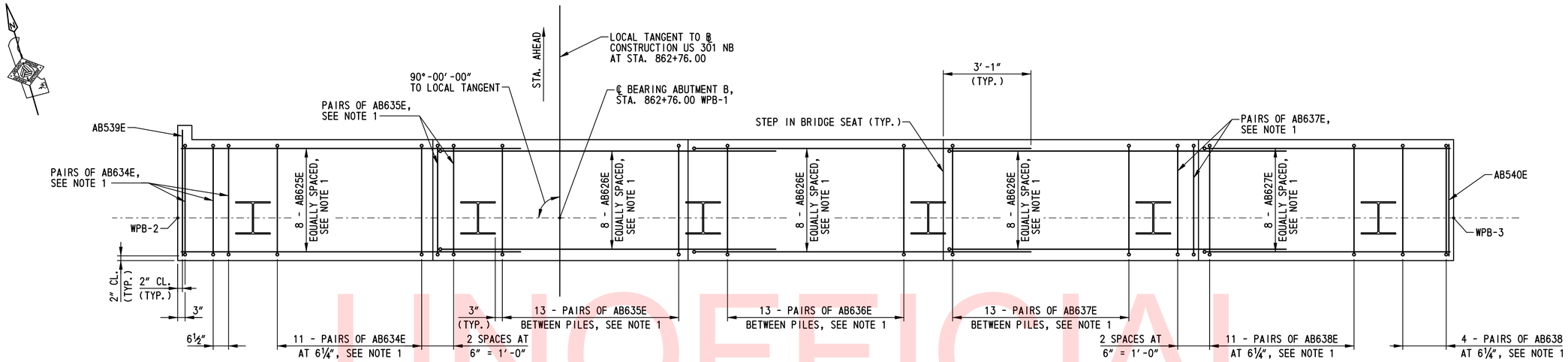

ABUTMENT B STEM TOP MAT REINFORCEMENT PLAN

SCALE: ½″=1′-0″

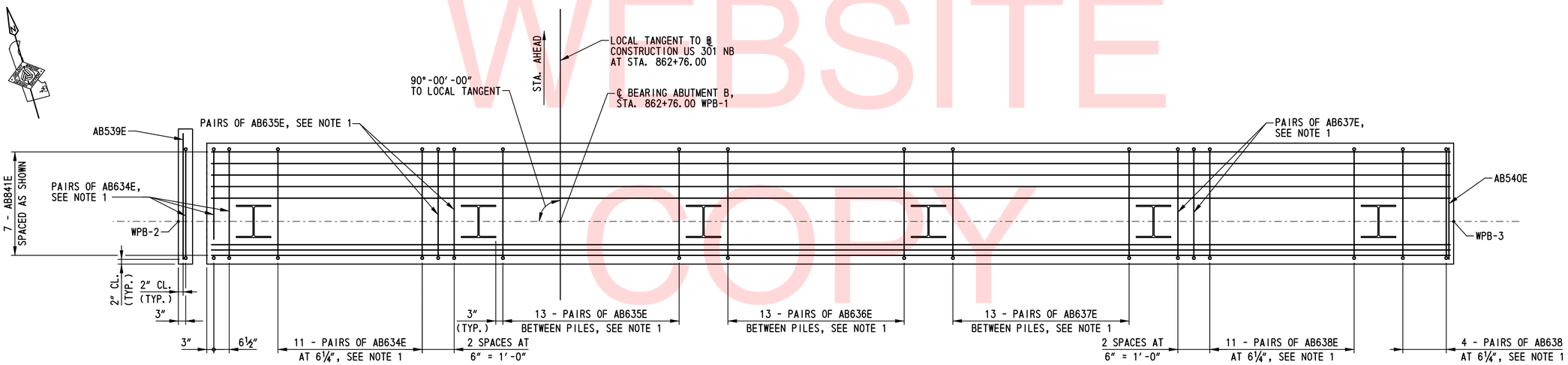

ABUTMENT B STEM BOTTOM MAT REINFORCEMENT PLAN

SCALE: ½″=1′-0″

NOTES:

1. SPACE REINFORCING STEEL AS NECESSARY TO CLEAR ANCHOR BOLTS. FOR ADDITIONAL INFORMATION, SEE DWG. NOS. BB-14, BB-15 AND AB-11.
2. FOR ADDITIONAL REINFORCEMENT DETAILS, SEE DWG. NOS. AB-11 AND AB-12.
3. REINFORCING STEEL OVER PILES NOT SHOWN FOR CLARITY. FOR ADDITIONAL INFORMATION, SEE DWG. NO. PL-03.

BR1-3
AB-10

DELAWARE DEPARTMENT OF TRANSPORTATION	ADDENDUMS / REVISIONS	SCALE: AS SHOWN	US 301 & SR 1 INTERCHANGE	CONTRACT T200911302	BRIDGE NO. 1-433	ABUTMENT B REINFORCEMENT DETAILS - 1
				COUNTY NEW CASTLE	DESIGNED BY: B.K.B.	SHEET NO. 223
					CHECKED BY: W.A.G.	TOTAL SHTS. 491

N:\31653-000\Contract 1B\CADD\Bridge\Br_No433\AB10_br1-433.dgn
2/5/2013 9:36:07 AM

UNOFFICIAL WEBSITE COPY

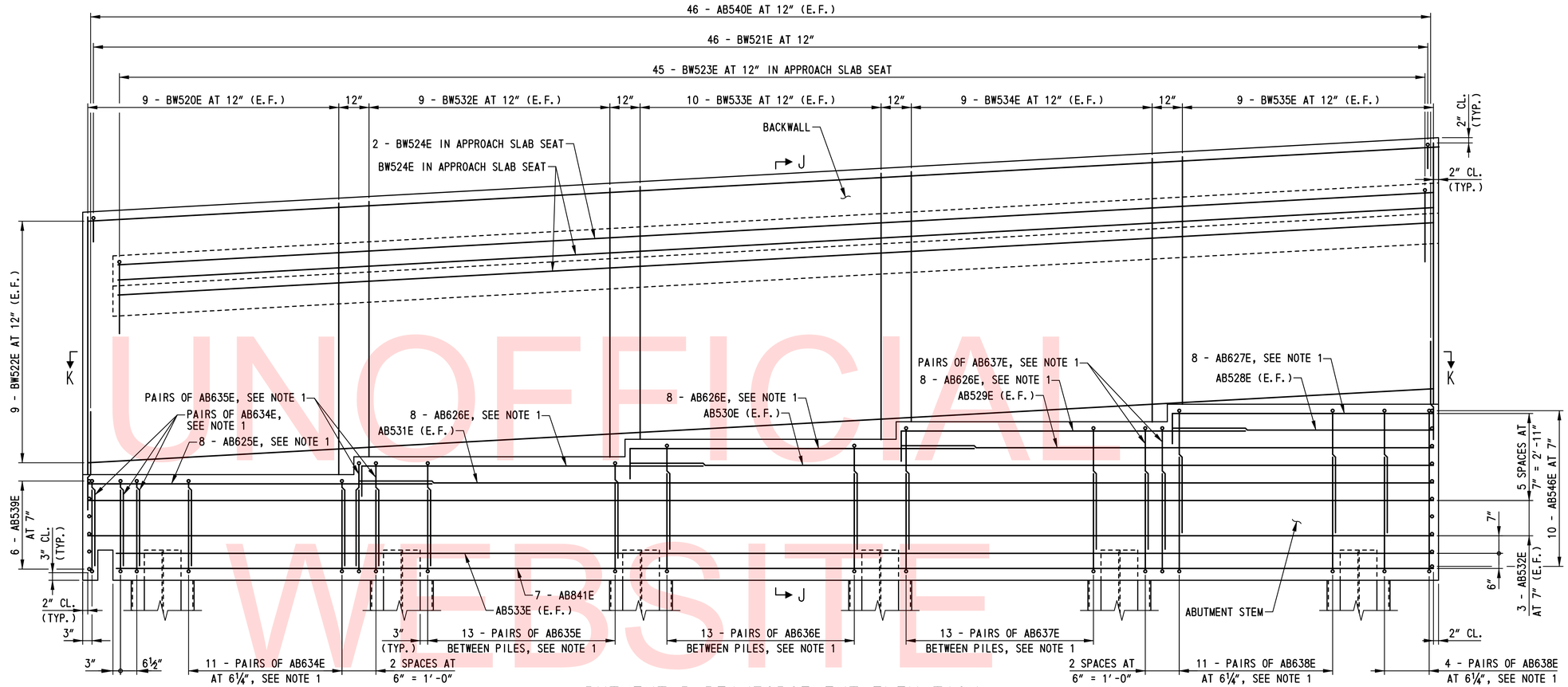

ABUTMENT B REINFORCEMENT ELEVATION

SCALE: ½"=1'-0"

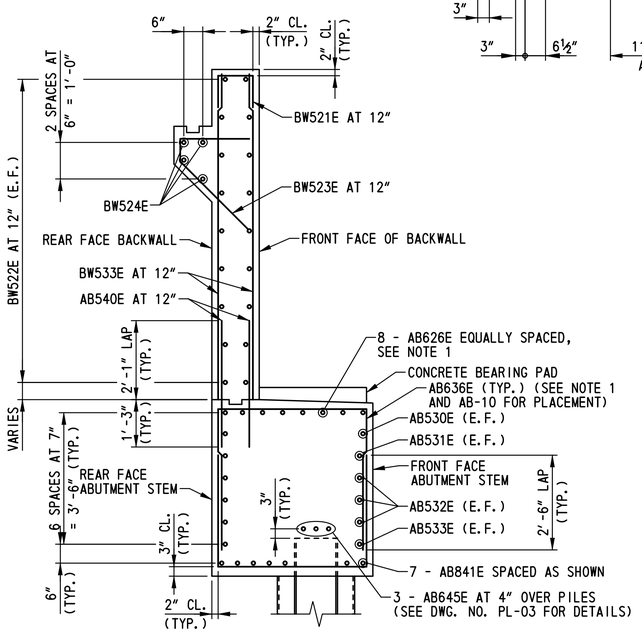

SECTION J-J

SCALE: ½"=1'-0"

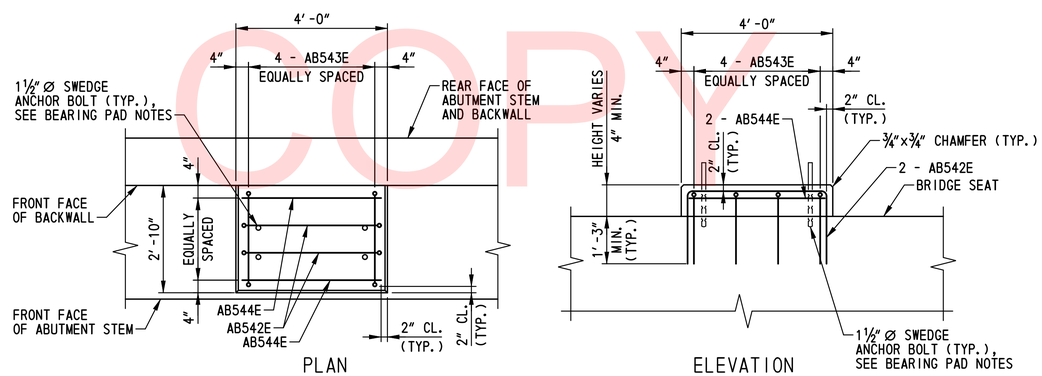

ABUTMENT B CONCRETE BEARING PAD DETAILS

SCALE: ½"=1'-0"

BEARING PAD NOTES:

1. FOR ANCHOR BOLT DETAIL, DIMENSIONS AND LOCATIONS, SEE DWG. NOS. BB-01, BB-02 AND BB-13 THRU BB-15.
2. ANCHOR BOLTS SHALL BE CAST IN PLACE. A TEMPORARY CASTING TEMPLATE SHALL BE USED TO ENSURE THE ANCHOR BOLTS ARE PROPERLY ALIGNED AND PLUMB. THE TEMPLATE SHALL BE REMOVED AFTER THE CONCRETE HAS SET.
3. SPACE REINFORCING STEEL AS NECESSARY TO CLEAR ANCHOR BOLTS.

NOTES:

1. SPACE REINFORCING STEEL AS NECESSARY TO CLEAR ANCHOR BOLTS. FOR ADDITIONAL INFORMATION, SEE DWG. NOS. BB-13 THRU BB-15 AND ABUTMENT B CONCRETE BEARING PAD DETAILS ON THIS DRAWING.
2. FOR ADDITIONAL REINFORCEMENT DETAILS, SEE DWG. NOS. AB-10 AND AB-12.
3. REINFORCING STEEL OVER PILES NOT SHOWN FOR CLARITY. FOR ADDITIONAL INFORMATION, SEE DWG. NO. PL-03.
4. FOR SECTION K-K, SEE DWG. NO. AB-12.
5. CHEEK WALLS, CURTAIN WALLS AND CONCRETE BEARING PADS NOT SHOWN FOR CLARITY IN ELEVATION. FOR REINFORCEMENT IN CHEEK WALLS AND CURTAIN WALLS, SEE DWG. NO. AB-12. FOR REINFORCEMENT IN CONCRETE BEARING PADS, SEE DETAIL ON THIS SHEET.

UNOFFICIAL WEBSITE COPY

N:\33653-000\Contract 1B\CADD\Bridge\Br_No433\AB11_br1-433.dgn
2/5/2013 9:38:32 AM

DELAWARE DEPARTMENT OF TRANSPORTATION	ADDENDUMS / REVISIONS	SCALE: AS SHOWN	US 301 & SR 1 INTERCHANGE	CONTRACT T200911302	BRIDGE NO. 1-433	ABUTMENT B REINFORCEMENT DETAILS – 2	BR1-3 AB-11
				COUNTY NEW CASTLE	DESIGNED BY: B.K.B.		SHEET NO. 224
					CHECKED BY: W.A.G.		TOTAL SHTS. 491

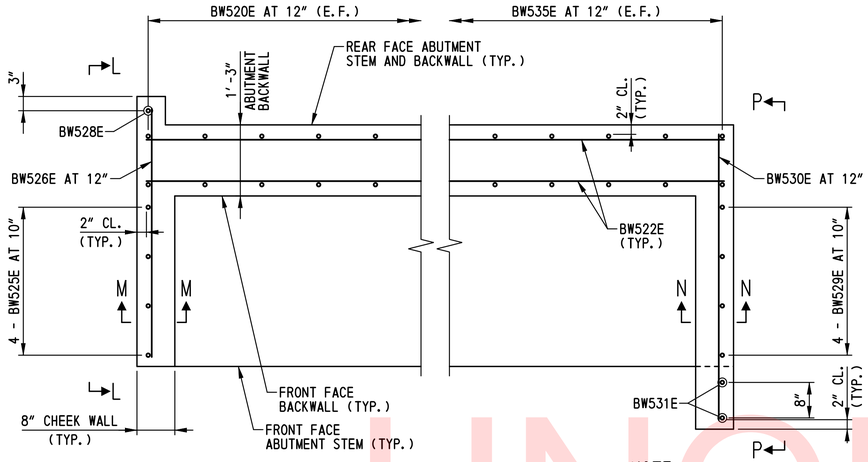

SECTION K-K

SCALE: ¾"=1'-0"

NOTE:
FOR LOCATION OF SECTION K-K, SEE DWG. NO. AB-11.

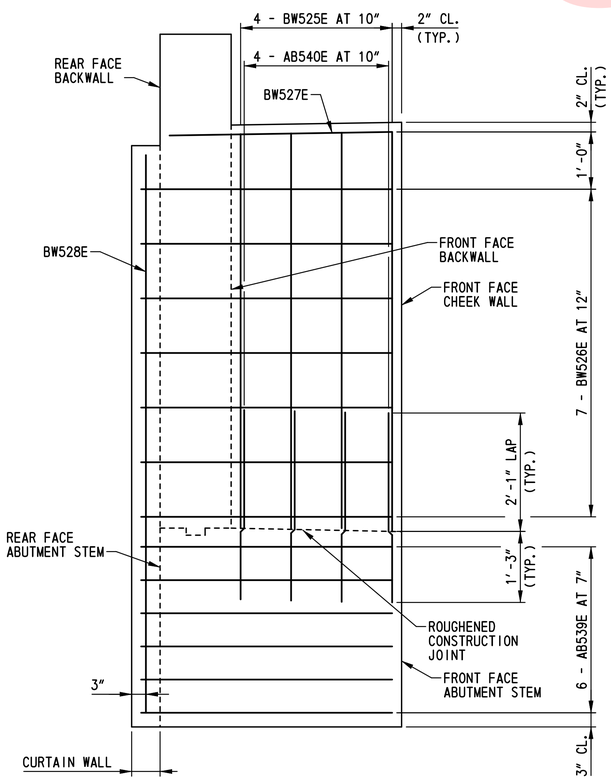

NOTE:
REINFORCEMENT IN ABUTMENT STEM AND BACKWALL NOT SHOWN FOR CLARITY.

VIEW L-L

SCALE: ¾"=1'-0"

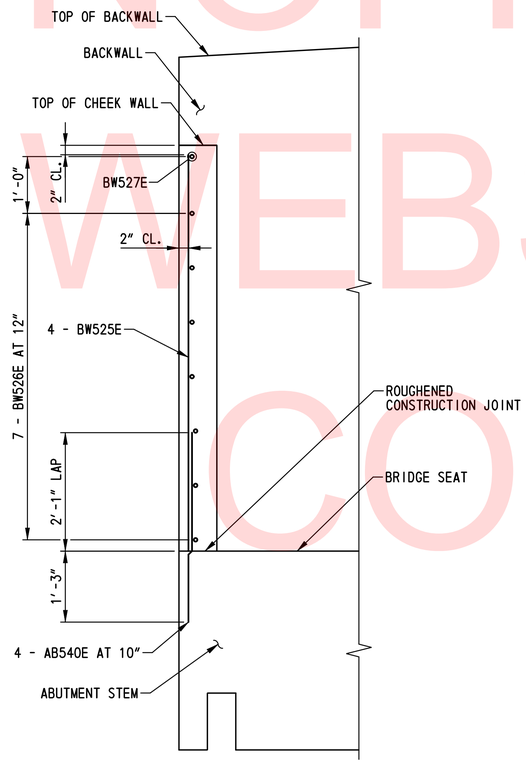

SECTION M-M

SCALE: ¾"=1'-0"

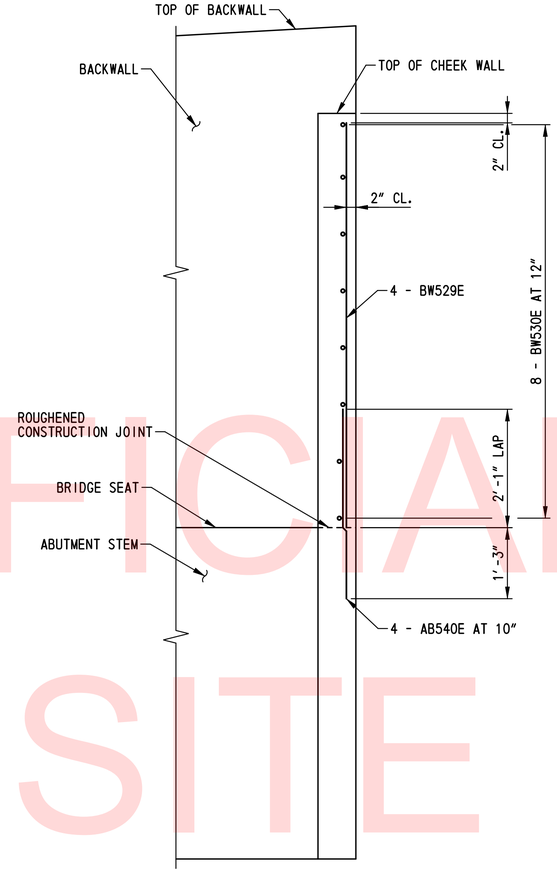

SECTION N-N

SCALE: ¾"=1'-0"

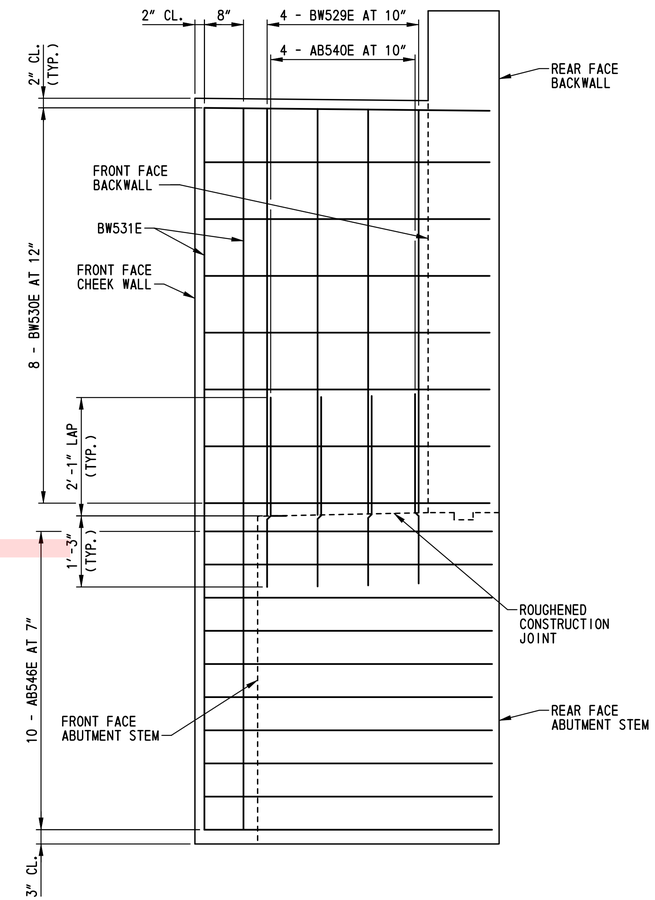

NOTE:
REINFORCEMENT IN ABUTMENT STEM AND BACKWALL NOT SHOWN FOR CLARITY.

VIEW P-P

SCALE: ¾"=1'-0"

UNOFFICIAL WEBSITE COPY

N:\31653-000\Contract 1B\CADD\Bridge\Br_No433\AB12_br1-433.dgn
2/5/2013 9:36:58 AM

DELAWARE DEPARTMENT OF TRANSPORTATION	ADDENDUMS / REVISIONS	SCALE: AS SHOWN	US 301 & SR 1 INTERCHANGE	CONTRACT T200911302	BRIDGE NO. 1–433	ABUTMENT B REINFORCEMENT DETAILS – 3
				COUNTY NEW CASTLE	DESIGNED BY: B.K.B.	
					CHECKED BY: W.A.G.	

BR1–3
AB–12

SHEET NO. 225
TOTAL SHTS. 491

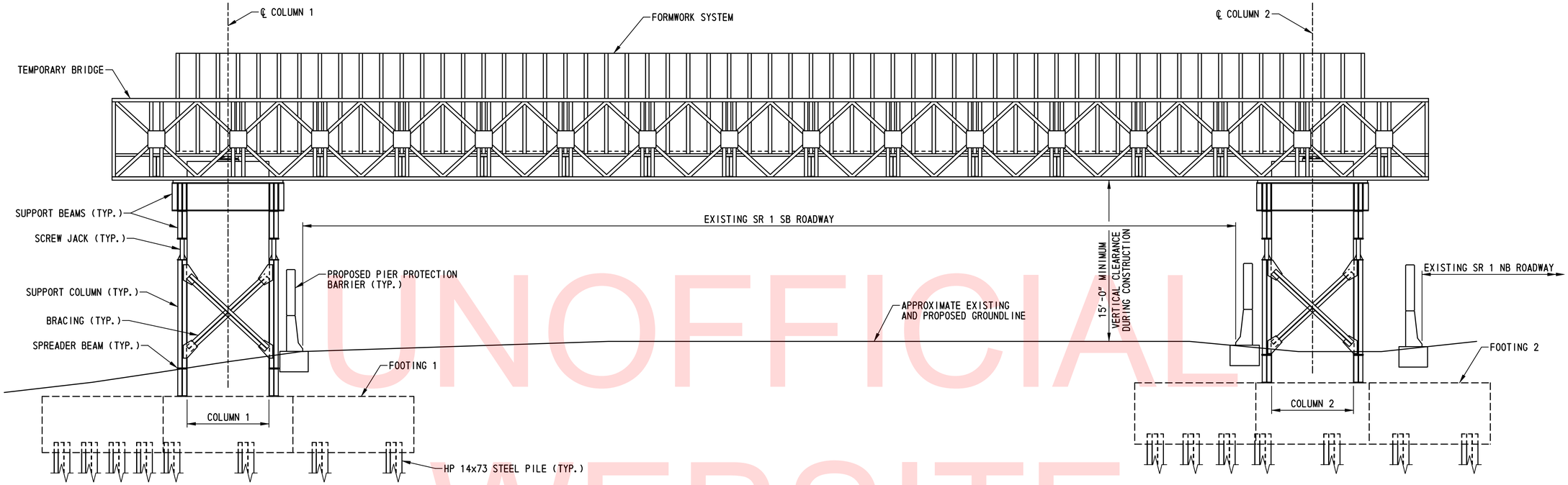

ELEVATION
SCALE: 1/16"=1'-0"

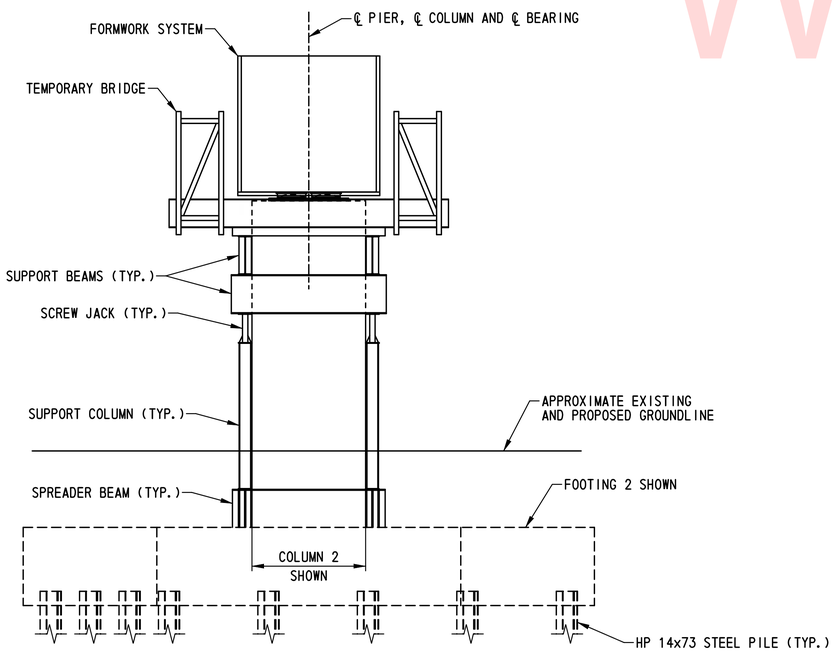

SIDE ELEVATION
SCALE: 1/16"=1'-0"

NOTE TO CONTRACTOR:

THE SUGGESTED PIER CONSTRUCTION SEQUENCE SHOWN IS ONLY ONE FEASIBLE METHOD FOR A PIER WITH A CAST IN PLACE POST TENSIONED CONCRETE PIER CAP. THE CONTRACTOR MAY PROPOSE THE USE OF A PRECAST POST TENSIONED CONCRETE PIER CAP. SEE THE SPECIAL PROVISIONS FOR ADDITIONAL INFORMATION ON THE PRECAST POST TENSIONED CONCRETE PIER CAP ALTERNATIVE. THE CONTRACTOR IS RESPONSIBLE FOR THE ENTIRE CONSTRUCTION OF THE BRIDGE. THE CONTRACTOR SHALL SUBMIT DRAWINGS SEALED BY A PROFESSIONAL ENGINEER REGISTERED IN THE STATE OF DELAWARE, ILLUSTRATING FULLY THE PROPOSED METHOD OF PIER CONSTRUCTION INCLUDING TEMPORARY BRIDGE SUPPORT SYSTEM FOR SUPPORT OF BOTH THE PIER 1 AND PIER 3 POST TENSIONED PIER CAPS DURING CONSTRUCTION. THE DRAWINGS SHALL SHOW DETAILS OF ALL TEMPORARY SHORING, FALSEWORK, BRACING, GUYS, DEAD-MEN, LIFTING DEVICES, HOLD-DOWN DEVICES ETC., AND ATTACHMENTS TO THE PROPOSED BRIDGE MEMBERS. THE DRAWINGS SHALL ALSO INCLUDE THE SEQUENCE OF CONSTRUCTION, LOCATION OF CRANES, CRANE CAPACITIES, LOCATION OF LIFTING POINTS ON THE VARIOUS MEMBERS OF THE TEMPORARY BRIDGE SUPPORT SYSTEM INCLUDING THE TEMPORARY BRIDGE, FORMWORK SYSTEM AND REINFORCING STEEL CAGE AND WEIGHT OF MEMBERS. THE DRAWINGS SHALL BE COMPLETE IN DETAIL FOR ALL ANTICIPATED STAGES AND CONDITIONS DURING CONSTRUCTION. CALCULATIONS SEALED BY A PROFESSIONAL ENGINEER REGISTERED IN THE STATE OF DELAWARE ARE REQUIRED TO DEMONSTRATE THAT ALLOWABLE STRESSES ARE NOT EXCEEDED AND THAT MEMBER CAPACITIES AND FINAL GEOMETRY WILL BE CORRECT. THE MINIMUM VERTICAL CLEARANCE FROM SR 1 NB OR SR 1 SB SHALL BE NO LESS THAN 15'-0" DURING THE CONSTRUCTION OF THE PIER. AT NO TIME SHALL ACTIVE TRAFFIC ON SR 1 NB OR SR 1 SB BE LOCATED UNDER THE TEMPORARY BRIDGE SUPPORT SYSTEM INCLUDING THE TEMPORARY BRIDGE, FORMWORK AND REINFORCING STEEL CAGE WHILE BEING HELD OR LIFTED BY CRANES DURING THE CONSTRUCTION SEQUENCE. PAYMENT FOR CONSTRUCTION OF TEMPORARY BRIDGE SUPPORT SYSTEM WILL BE MADE UNDER ITEM NO. 605606 - TEMPORARY BRIDGE SUPPORT SYSTEM. SEE THE SPECIAL PROVISIONS FOR ADDITIONAL INFORMATION. MAINTENANCE OF TRAFFIC REQUIREMENTS DURING PIER CONSTRUCTION TO BE REFERENCED IN FUTURE SUBMISSIONS.

SUGGESTED PIER 1 AND 3 CONSTRUCTION SEQUENCE:

1. CONSTRUCT FOOTINGS AND COLUMNS.
2. PLACE POST TENSIONED PIER CAP BEARINGS INTO PLACE.
3. INSTALL SPREADER BEAMS ON FOOTINGS.
4. INSTALL SUPPORT COLUMNS AND SCREW JACKS.
5. INSTALL BRACING.
6. INSTALL SUPPORT BEAMS.
7. LIFT TEMPORARY SUPPORT BRIDGE INTO PLACE.
8. ASSEMBLE POST TENSIONED PIER CAP FORMWORK.
9. LIFT POST TENSIONED PIER CAP FORMWORK INTO PLACE.
10. ASSEMBLE POST TENSIONED PIER CAP REINFORCING STEEL INCLUDING POST TENSIONING SYSTEM.
11. LIFT POST TENSIONED PIER CAP REINFORCING STEEL INTO PLACE INCLUDING POST TENSIONING SYSTEM.
12. POUR POST TENSIONED PIER CAP CONCRETE.
13. PERFORM STAGE 1 POST TENSIONING STRESSING WHEN CONCRETE HAS ATTAINED A MINIMUM COMPRESSIVE STRENGTH OF 6,000 PSI AND PRIOR TO REMOVAL OF FALSEWORK. SEE DWG. NOS. PR-07 AND PR-17 FOR DETAILED POST TENSIONING STRESSING SEQUENCE REQUIREMENTS.
14. REMOVE POST TENSIONED PIER CAP FORMWORK.
15. REMOVE TEMPORARY SUPPORT BRIDGE.
16. REMOVE SUPPORT BEAMS, SCREW JACKS, SUPPORT COLUMNS, BRACING AND SPREADER BEAMS.
17. PERFORM STAGE 2 POST TENSIONING STRESSING AFTER THE STEEL SUPERSTRUCTURE HAS BEEN ERECTED AND BEFORE APPLYING ANY VEHICULAR LIVE LOAD ON THE BRIDGE WHEN CONCRETE HAS ATTAINED A MINIMUM COMPRESSIVE STRENGTH OF 8,000 PSI. SEE DWG. NOS. PR-07 AND PR-17 FOR DETAILED POST TENSION STRESSING SEQUENCE REQUIREMENTS.

BR1-3
PR-01

UNOFFICIAL WEBSITE COPY

N:\33653-000\Contract 1B\CADD\Bridge\Br_No433\PR01_br1-433.dgn
2/5/2013 9:39:30 AM

DELAWARE DEPARTMENT OF TRANSPORTATION	ADDENDUMS / REVISIONS	SCALE: AS SHOWN	US 301 & SR 1 INTERCHANGE	CONTRACT T200911302	BRIDGE NO. 1-433	PIER 1 AND 3 CONSTRUCTION SEQUENCE	SHEET NO. 226
				COUNTY NEW CASTLE	DESIGNED BY: B.K.B., L.F.E.		TOTAL SHTS. 491
					CHECKED BY: W.A.G.		

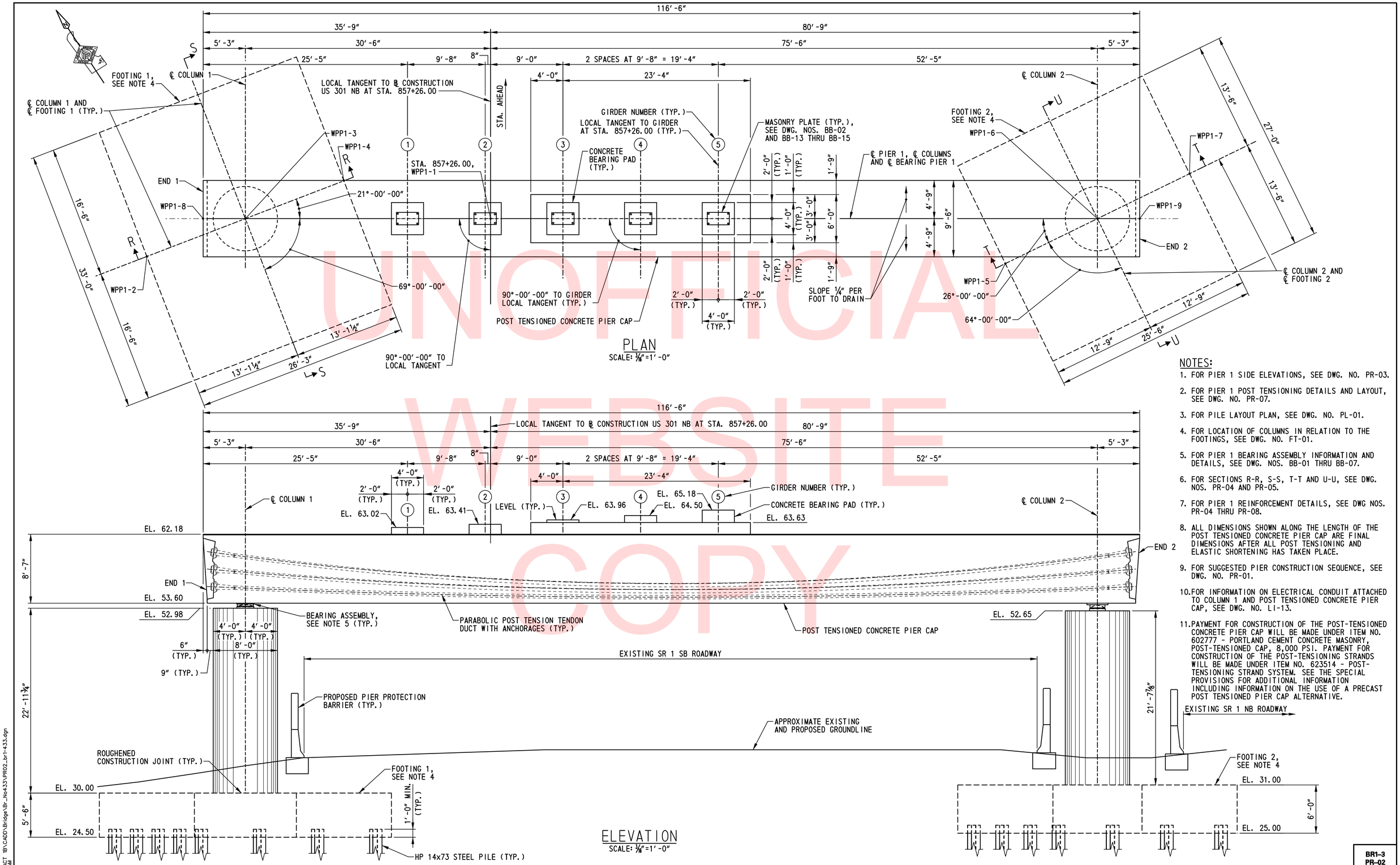

NOTES:

1. FOR PIER 1 SIDE ELEVATIONS, SEE DWG. NO. PR-03.
2. FOR PIER 1 POST TENSIONING DETAILS AND LAYOUT, SEE DWG. NO. PR-07.
3. FOR PILE LAYOUT PLAN, SEE DWG. NO. PL-01.
4. FOR LOCATION OF COLUMNS IN RELATION TO THE FOOTINGS, SEE DWG. NO. FT-01.
5. FOR PIER 1 BEARING ASSEMBLY INFORMATION AND DETAILS, SEE DWG. NOS. BB-01 THRU BB-07.
6. FOR SECTIONS R-R, S-S, T-T AND U-U, SEE DWG. NOS. PR-04 AND PR-05.
7. FOR PIER 1 REINFORCEMENT DETAILS, SEE DWG NOS. PR-04 THRU PR-08.
8. ALL DIMENSIONS SHOWN ALONG THE LENGTH OF THE POST TENSIONED CONCRETE PIER CAP ARE FINAL DIMENSIONS AFTER ALL POST TENSIONING AND ELASTIC SHORTENING HAS TAKEN PLACE.
9. FOR SUGGESTED PIER CONSTRUCTION SEQUENCE, SEE DWG. NO. PR-01.
10. FOR INFORMATION ON ELECTRICAL CONDUIT ATTACHED TO COLUMN 1 AND POST TENSIONED CONCRETE PIER CAP, SEE DWG. NO. LI-13.
11. PAYMENT FOR CONSTRUCTION OF THE POST-TENSIONED CONCRETE PIER CAP WILL BE MADE UNDER ITEM NO. 602777 - PORTLAND CEMENT CONCRETE MASONRY, POST-TENSIONED CAP, 8,000 PSI. PAYMENT FOR CONSTRUCTION OF THE POST-TENSIONING STRANDS WILL BE MADE UNDER ITEM NO. 623514 - POST-TENSIONING STRAND SYSTEM. SEE THE SPECIAL PROVISIONS FOR ADDITIONAL INFORMATION INCLUDING INFORMATION ON THE USE OF A PRECAST POST TENSIONED PIER CAP ALTERNATIVE.

UNOFFICIAL WEBSITE COPY

N:\31653-000\CONTRACT 1B\CADD\Bridge\Br_No433\PR02_br1-433.dgn
5/8/2013 10:12:06 AM

DELAWARE DEPARTMENT OF TRANSPORTATION	ADDENDUMS / REVISIONS	SCALE: AS SHOWN	US 301 & SR 1 INTERCHANGE	CONTRACT T200911302 / COUNTY NEW CASTLE	BRIDGE NO. 1-433 / DESIGNED BY: W.T.R., L.F.E. / CHECKED BY: W.A.G.	PIER 1 PLAN AND ELEVATION	BR1-3 PR-02 / SHEET NO. 227 / TOTAL SHTS. 491

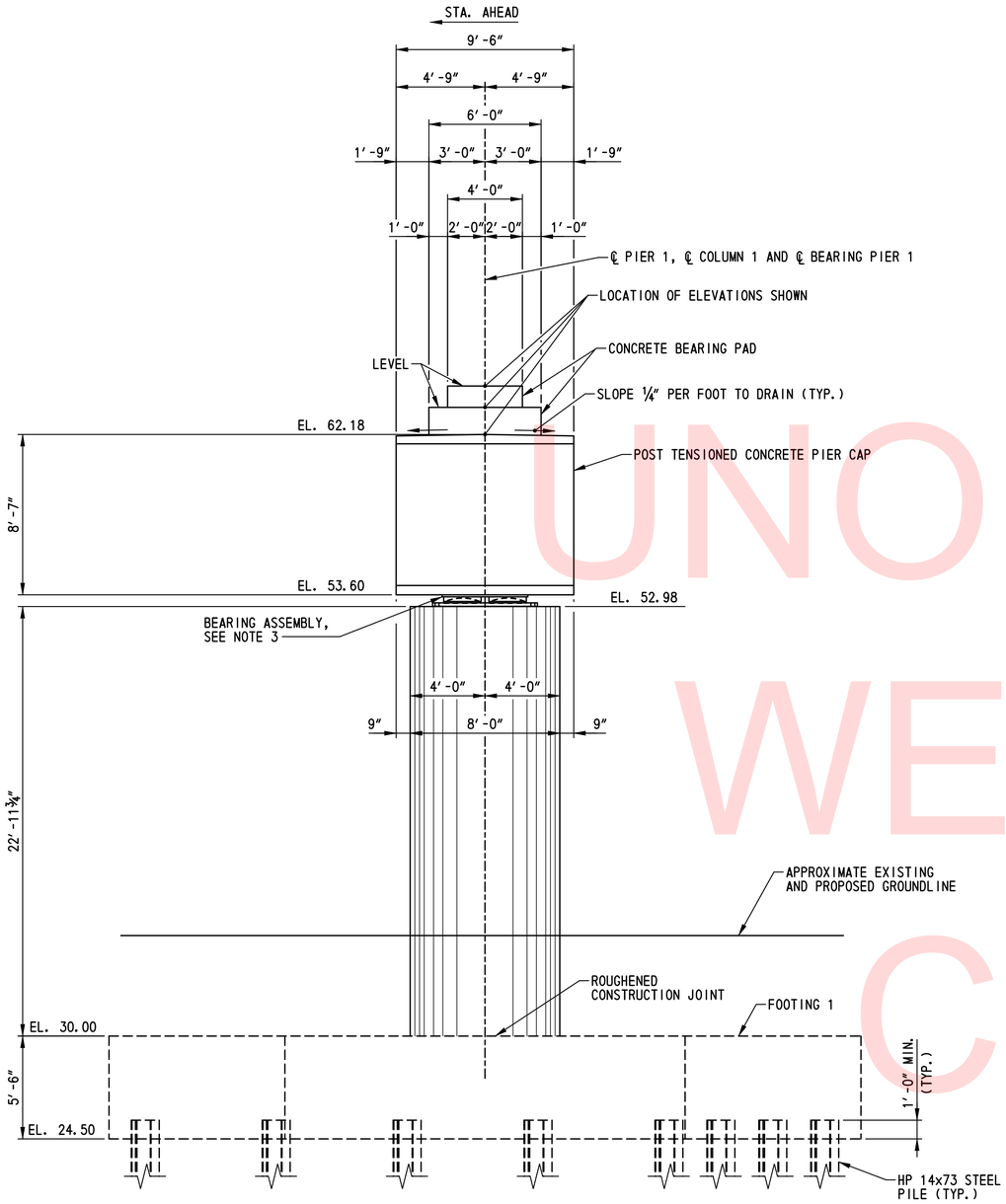

SIDE ELEVATION - COLUMN 1, FOOTING 1

SCALE: ¼"=1'-0"

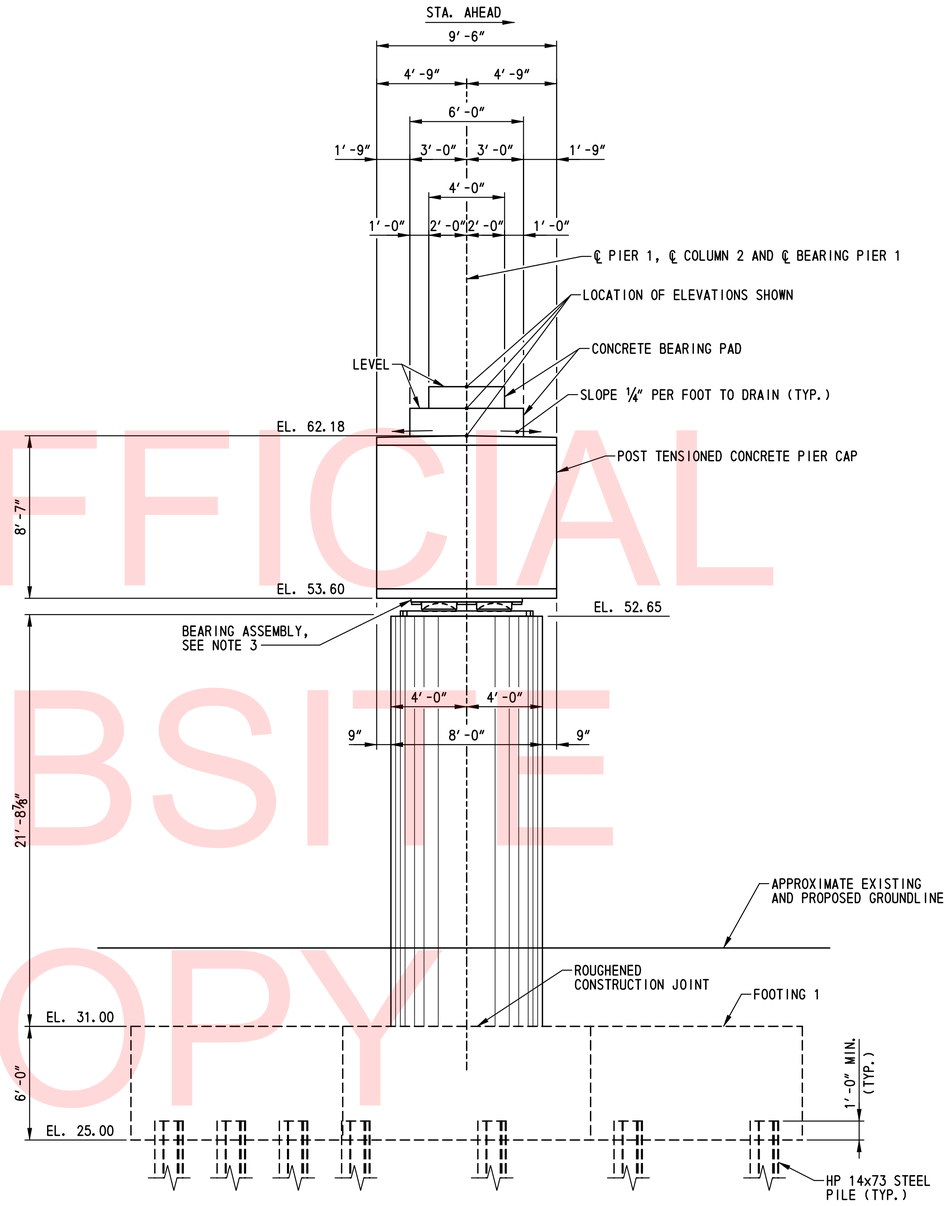

SIDE ELEVATION - COLUMN 2, FOOTING 2

SCALE: ¼"=1'-0"

NOTES:

1. FOR PLAN AND ELEVATION, SEE DWG. NO. PR-02.
2. FOR PILE LAYOUT PLAN, SEE DWG. NO. PL-01.
3. FOR PIER 1 BEARING ASSEMBLY INFORMATION AND DETAILS, SEE DWG. NOS. BB-01 THRU BB-07.
4. FOR PIER 1 REINFORCEMENT DETAILS, SEE DWG. PR-04 THRU PR-08.
5. FOR SUGGESTED PIER CONSTRUCTION SEQUENCE, SEE DWG. NO. PR-01.
6. PAYMENT FOR CONSTRUCTION OF THE POST-TENSIONED CONCRETE PIER CAP WILL BE MADE UNDER ITEM NO. 602777 - PORTLAND CEMENT CONCRETE MASONRY, POST-TENSIONED CAP, 8,000 PSI. PAYMENT FOR CONSTRUCTION OF THE POST-TENSIONING STRANDS WILL BE MADE UNDER ITEM NO. 623514 - POST-TENSIONING STRAND SYSTEM. SEE THE SPECIAL PROVISIONS FOR ADDITIONAL INFORMATION INCLUDING INFORMATION ON THE USE OF A PRECAST POST TENSIONED PIER CAP ALTERNATIVE.

BR1-3
PR-03

UNOFFICIAL WEBSITE COPY

N:\31653-000\CONTRACT 1B\CADD\Bridge\Br_No433\PR03_br1-433.dgn
5/8/2013 10:12:51 AM

DELAWARE DEPARTMENT OF TRANSPORTATION	ADDENDUMS / REVISIONS	SCALE: AS SHOWN	US 301 & SR 1 INTERCHANGE	CONTRACT T200911302	BRIDGE NO. 1-433	PIER 1 SIDE ELEVATION	SHEET NO. 228
				COUNTY NEW CASTLE	DESIGNED BY: W.T.R., L.F.E.		TOTAL SHTS. 491
					CHECKED BY: W.A.G.		

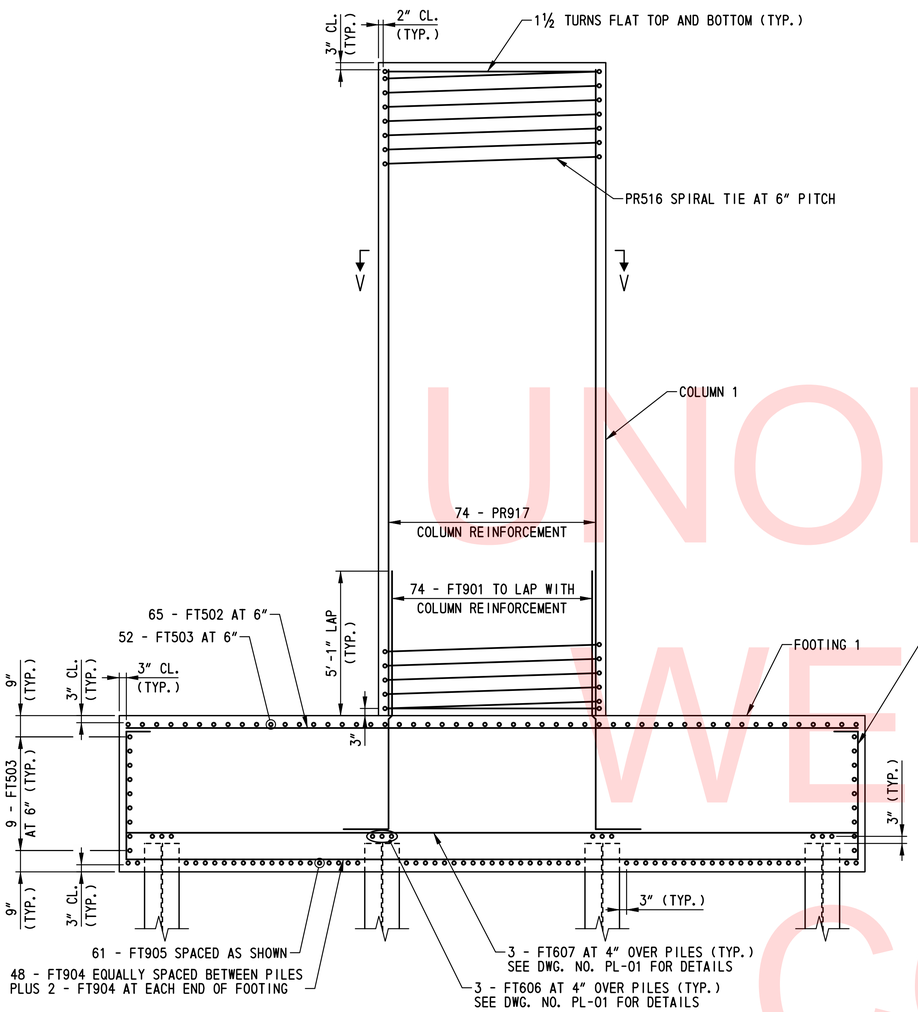

SECTION R-R
SCALE: ⅜"=1'-0"

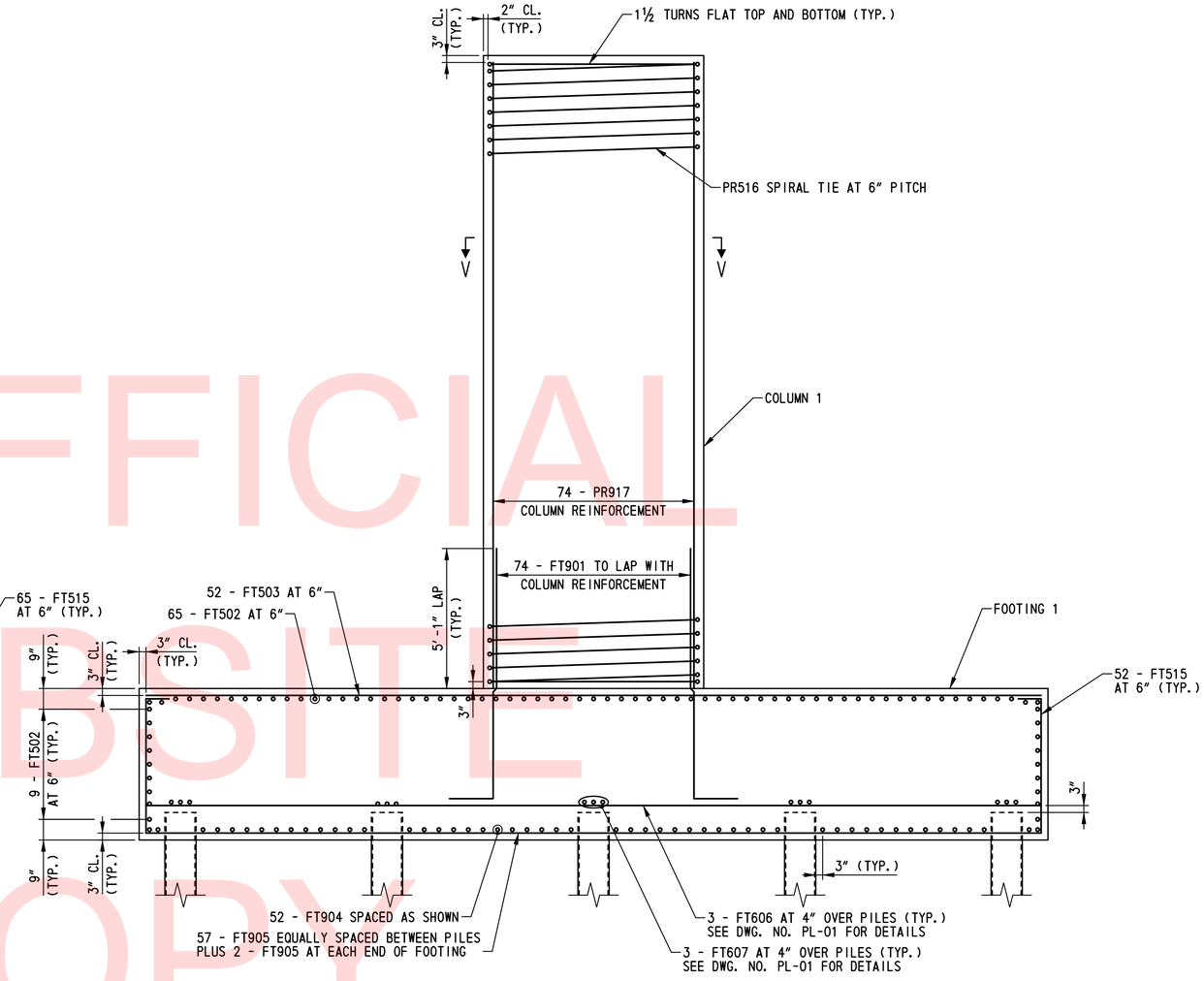

SECTION S-S
SCALE: ⅜"=1'-0"

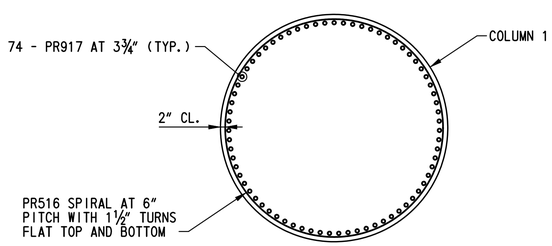

SECTION V-V
SCALE: ⅜"=1'-0"

NOTES:

1. FOR LOCATION OF SECTIONS R-R AND S-S, SEE DWG. NO. PR-02.
2. FOR ADDITIONAL REINFORCEMENT DETAILS, SEE DWG. NOS. PR-05 THRU PR-08.

UNOFFICIAL WEBSITE COPY

N:\33653-000\Contract 1B\CADD\Bridge\Br_No433\PR04_br1-433.dgn
2/5/2013 9:40:46 AM

DELAWARE DEPARTMENT OF TRANSPORTATION	ADDENDUMS / REVISIONS	SCALE: AS SHOWN	US 301 & SR 1 INTERCHANGE	CONTRACT T200911302	BRIDGE NO. 1-433	PIER 1 REINFORCEMENT DETAILS - 1
				COUNTY NEW CASTLE	DESIGNED BY: B.K.B.	
					CHECKED BY: W.A.G.	

BR1-3
PR-04

SHEET NO.
229
TOTAL SHTS.
491

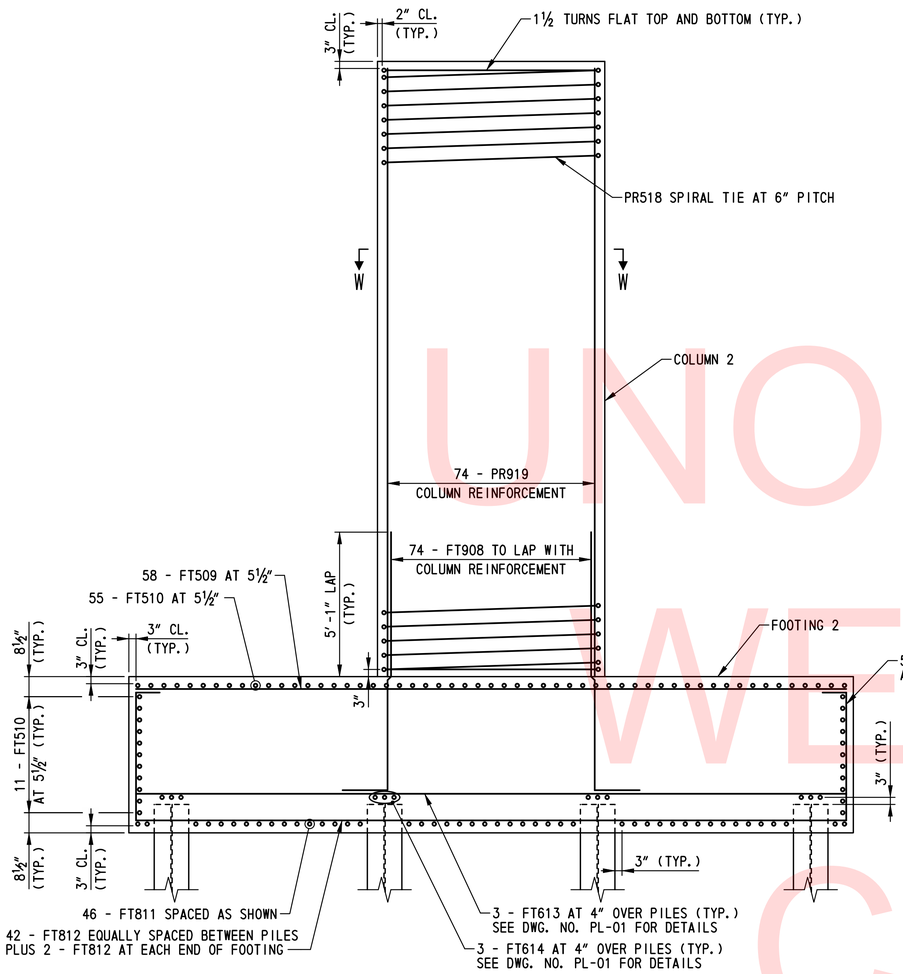

SECTION T-T
SCALE: ⅜"=1'-0"

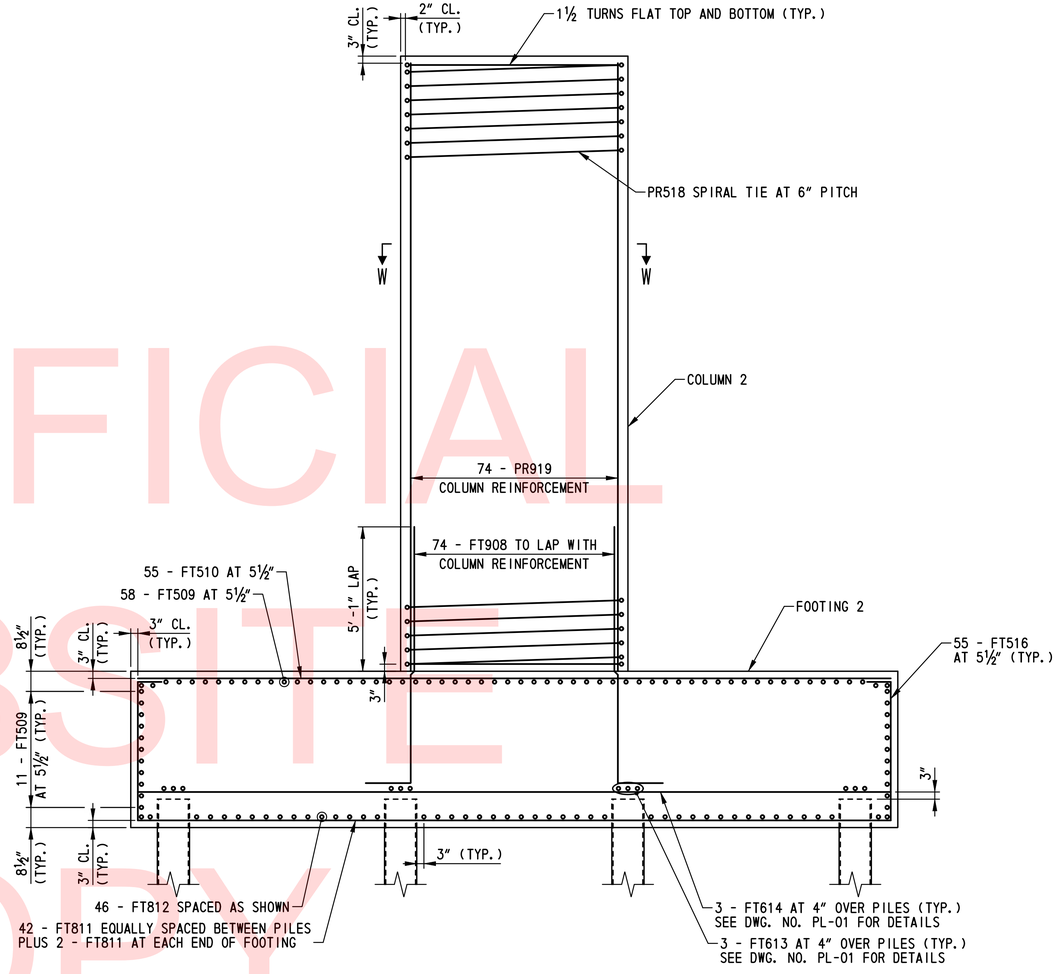

SECTION U-U
SCALE: ⅜"=1'-0"

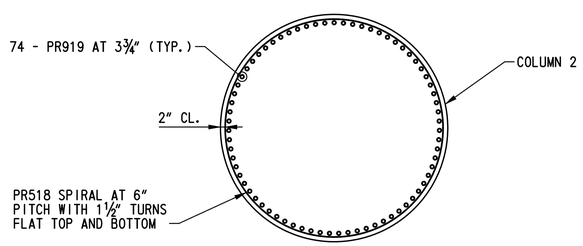

SECTION W-W
SCALE: ⅜"=1'-0"

NOTES:

1. FOR LOCATION OF SECTIONS T-T AND U-U, SEE DWG. NO. PR-02.
2. FOR ADDITIONAL REINFORCEMENT DETAILS, SEE DWG. NOS. PR-04, PR-06 THRU PR-08.

UNOFFICIAL WEBSITE COPY

N:\33653-000\Contract 1B\CADD\Bridge\Br_No433\PR05_br1-433.dgn
2/5/2013 9:41:10 AM

DELAWARE DEPARTMENT OF TRANSPORTATION	ADDENDUMS / REVISIONS	SCALE: AS SHOWN	US 301 & SR 1 INTERCHANGE	CONTRACT T200911302	BRIDGE NO. 1-433	PIER 1 REINFORCEMENT DETAILS – 2	BR1-3 PR-05
				COUNTY NEW CASTLE	DESIGNED BY: B.K.B.		SHEET NO. 230
					CHECKED BY: W.A.G.		TOTAL SHTS. 491

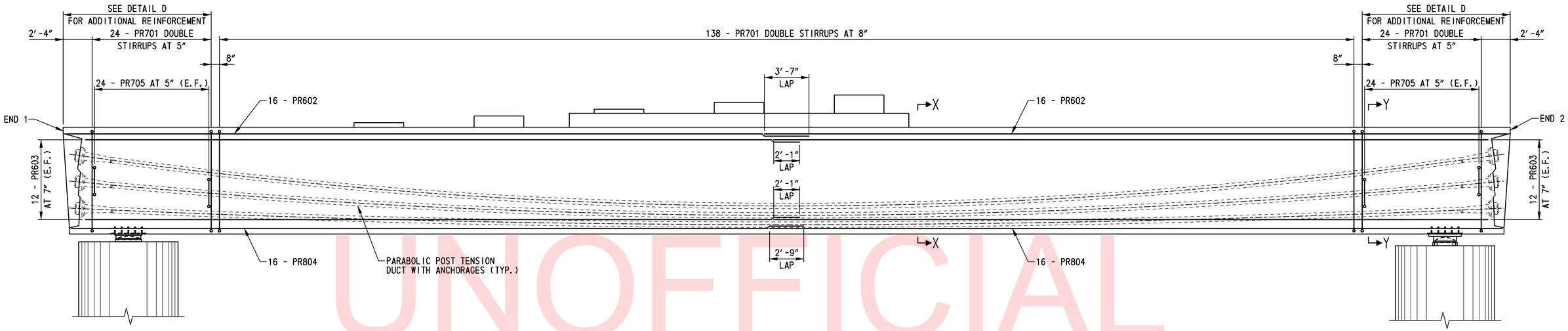

PIER CAP REINFORCEMENT ELEVATION

SCALE: 1/4"=1'-0"

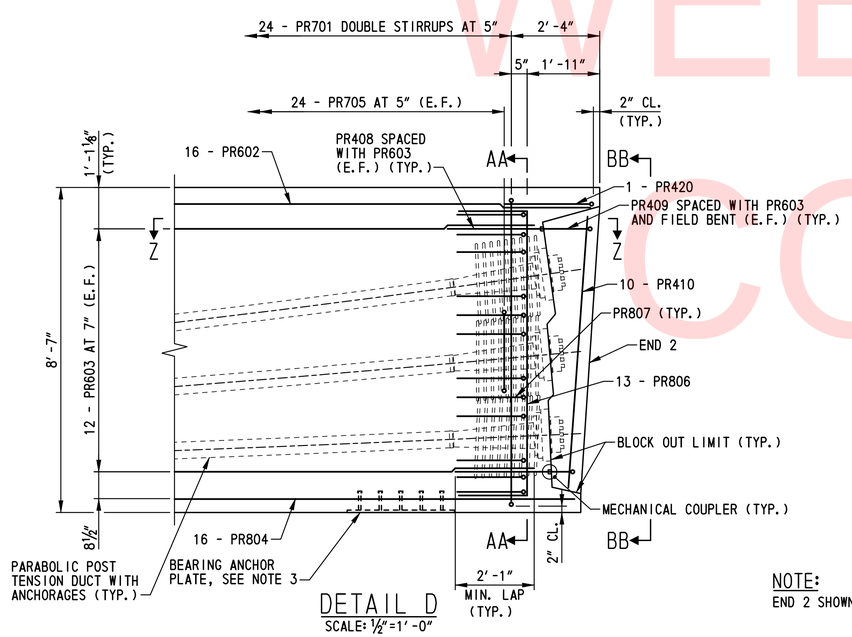

DETAIL D

SCALE: 1/2"=1'-0"

NOTE:

END 2 SHOWN; END 1 SIMILAR.

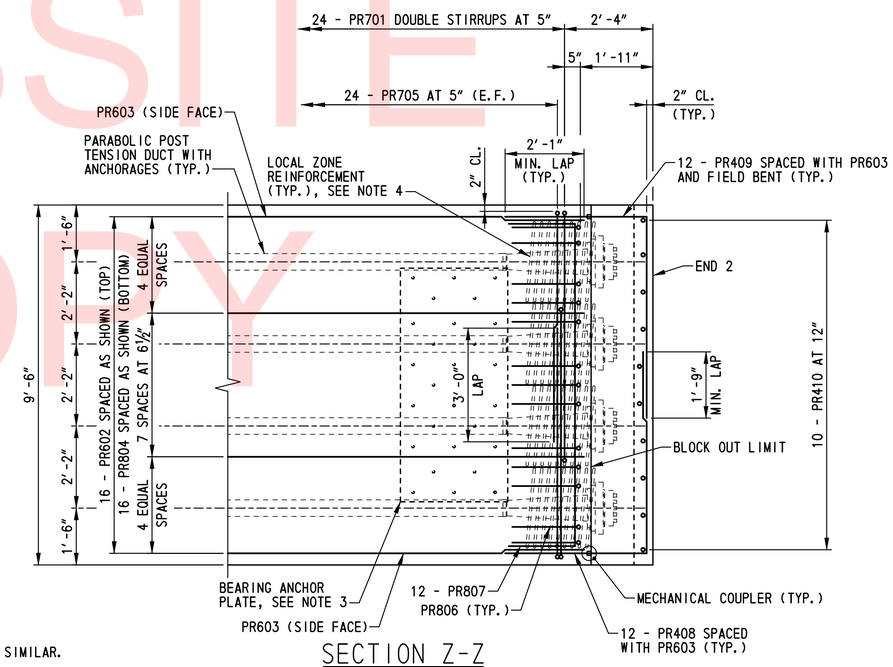

SECTION Z-Z

SCALE: 1/2"=1'-0"

NOTES:

1. FOR SECTIONS X-X, Y-Y AND AA-AA AND VIEW BB-BB, SEE DWG. NO. PR-07.
2. FOR ADDITIONAL REINFORCEMENT DETAILS, SEE DWG. NOS. PR-04, PR-05, PR-07 AND PR-08.
3. THE BEARING ANCHOR PLATE IS A COMPONENT OF THE BEARING ASSEMBLY. THE POST TENSIONED CONCRETE PIER CAP SHALL BE CONSTRUCTED AROUND THE BEARING ANCHOR PLATE. FOR SUGGESTED PIER CONSTRUCTION SEQUENCE, SEE DWG. NO. PR-01. FOR PIER 1 BEARING ASSEMBLY INFORMATION AND DETAILS, SEE DWG. NOS. BB-01 THRU BB-07.
4. LOCAL ZONE REINFORCEMENT SHALL BE DESIGNED BY POST TENSIONING SYSTEM SUPPLIER. ALL WORK SHALL BE INCIDENTAL TO ITEM 623514 - POST-TENSIONING STRAND SYSTEM.
5. FOR POST-TENSIONING SYSTEM DETAILS INCLUDING DUCT TYPE, MATERIALS AND OTHER COMPONENTS, SEE SPECIAL PROVISION ITEM 623514 - POST-TENSIONING STRAND SYSTEM.

UNOFFICIAL WEBSITE COPY

N:\31653-000\CONTRACT IB\CADD\Bridge\Br_No433\PR06_br1-433.dgn
5/7/2013 3:47:06 PM

DELAWARE DEPARTMENT OF TRANSPORTATION	ADDENDUMS / REVISIONS	SCALE: AS SHOWN	US 301 & SR 1 INTERCHANGE	CONTRACT T200911302	BRIDGE NO. 1-433	PIER 1 REINFORCEMENT DETAILS - 3	BR1-3 PR-06
				COUNTY NEW CASTLE	DESIGNED BY: W.T.R., L.F.E.		SHEET NO. 231
					CHECKED BY: W.A.G.		TOTAL SHTS. 491

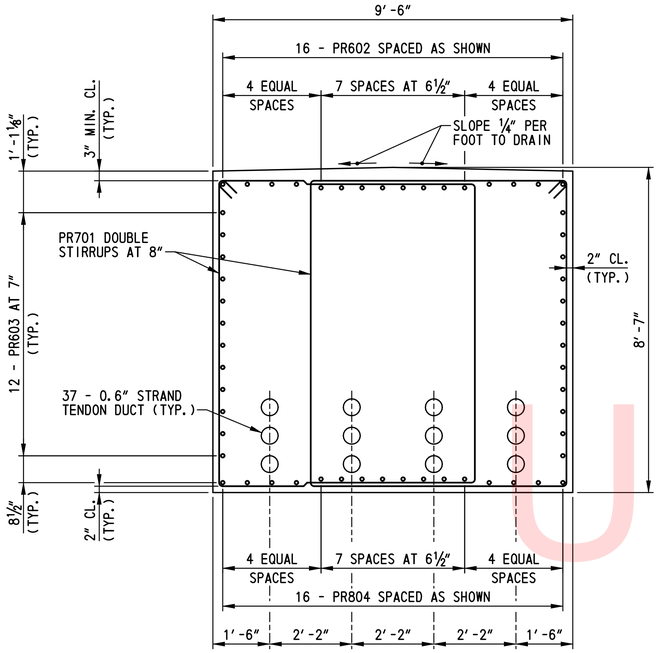

SECTION X-X
SCALE: ½"=1'-0"

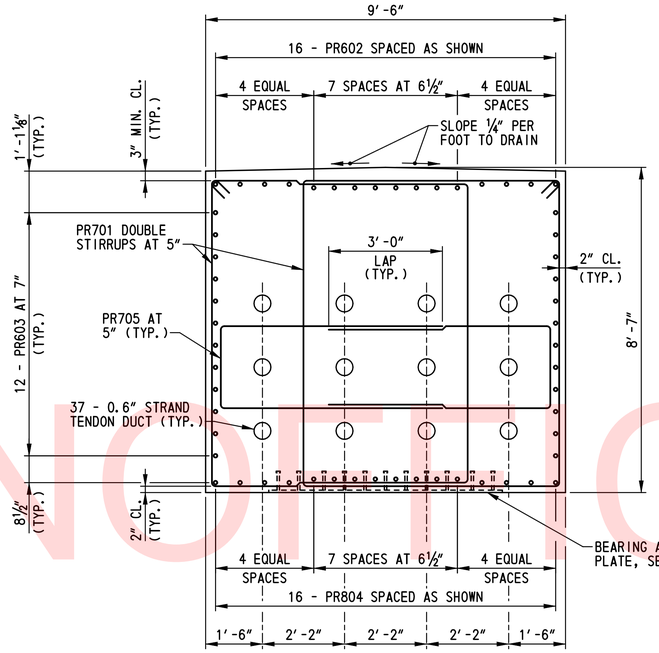

SECTION Y-Y
SCALE: ½"=1'-0"

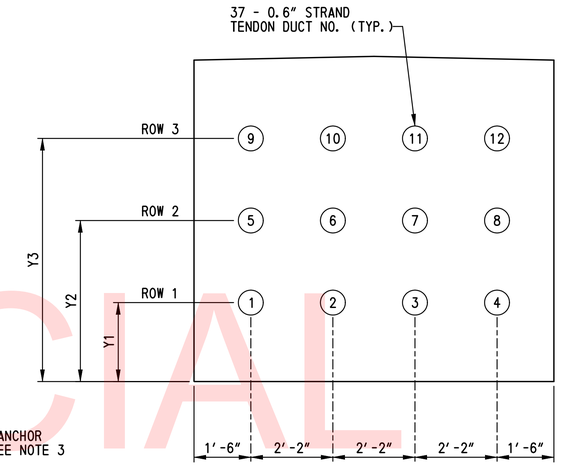

TENDON DUCT LAYOUT
SCALE: ½"=1'-0"

TENDON STRESSING SEQUENCE:

1. STAGE 1 POST TENSIONING STRESSING WHEN CONCRETE HAS ATTAINED A MINIMUM COMPRESSIVE STRENGTH OF 6,000 PSI AND PRIOR TO REMOVAL OF FALSEWORK SHALL BE COMPLETED IN THE FOLLOWING ORDER:

   A. TENDONS 1 AND 3 SIMULTANEOUSLY (END 1 STRESSED)
   B. TENDONS 2 AND 4 SIMULTANEOUSLY (END 1 STRESSED)
   C. TENDONS 5 AND 7 SIMULTANEOUSLY (END 2 STRESSED)
   D. TENDONS 6 AND 8 SIMULTANEOUSLY (END 2 STRESSED)
   E. TENDONS 9 AND 11 SIMULTANEOUSLY (END 1 STRESSED)
   F. TENDONS 10 AND 12 SIMULTANEOUSLY (END 1 STRESSED)

2. STAGE 2 POST TENSIONING STRESSING AFTER THE STEEL SUPERSTRUCTURE HAS BEEN ERECTED AND BEFORE APPLYING ANY LIVE LOAD ON THE BRIDGE WHEN CONCRETE HAS ATTAINED A MINIMUM COMPRESSIVE STRENGTH OF 8,000 PSI SHALL BE COMPLETED IN THE FOLLOWING ORDER:

   A. TENDONS 9 AND 11 SIMULTANEOUSLY (END 1 STRESSED)
   B. TENDONS 10 AND 12 SIMULTANEOUSLY (END 1 STRESSED)

NOTES:

1. FOR ADDITIONAL REINFORCEMENT DETAILS, SEE DWG. NOS. PR-04 THRU PR-06 AND PR-08.
2. FOR LOCATION OF SECTIONS X-X, Y-Y AND AA-AA AND VIEW BB-BB, SEE DWG. NO. PR-06.
3. THE BEARING ANCHOR PLATE IS A COMPONENT OF THE BEARING ASSEMBLY. THE POST TENSIONED CONCRETE PIER CAP SHALL BE CONSTRUCTED AROUND THE BEARING ANCHOR PLATE. FOR SUGGESTED PIER CONSTRUCTION SEQUENCE, SEE DWG. NO. PR-01. FOR PIER 1 BEARING ASSEMBLY INFORMATION AND DETAILS, SEE DWG. NOS. BB-01 THRU BB-07.
4. LOCAL ZONE REINFORCEMENT SHALL BE DESIGNED BY POST TENSIONING SYSTEM SUPPLIER. ALL WORK SHALL BE INCIDENTAL TO ITEM 623514 - POST-TENSIONING STRAND SYSTEM.

TENDON DUCT LAYOUT

LOCATION	Y1	Y2	Y3
END	2'-1"	4'-3"	6'-5"
QUARTERSPAN	1'-11"	2'-2¼"	3'-3½"
MIDSPAN	9"	1'-6"	2'-3"

TENDON DUCT SCHEDULE

TENDON	STRAND DIAMETER	NUMBER OF STRAND PER TENDON	JACKING FORCE PER TENDON		POST TENSION STAGE
			END 1	END 2	
1 THRU 4	0.6"	37	1626 K	-	1
5 THRU 8	0.6"	37	-	1626 K	1
9 THRU 12	0.6"	37	976 K	-	1
9 THRU 12	0.6"	37	1626 K	-	2

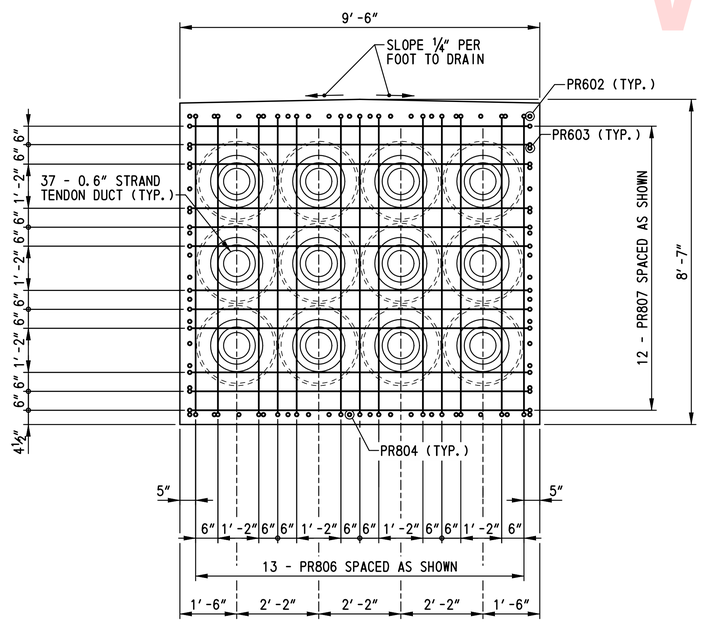

SECTION AA-AA
SCALE: ½"=1'-0"

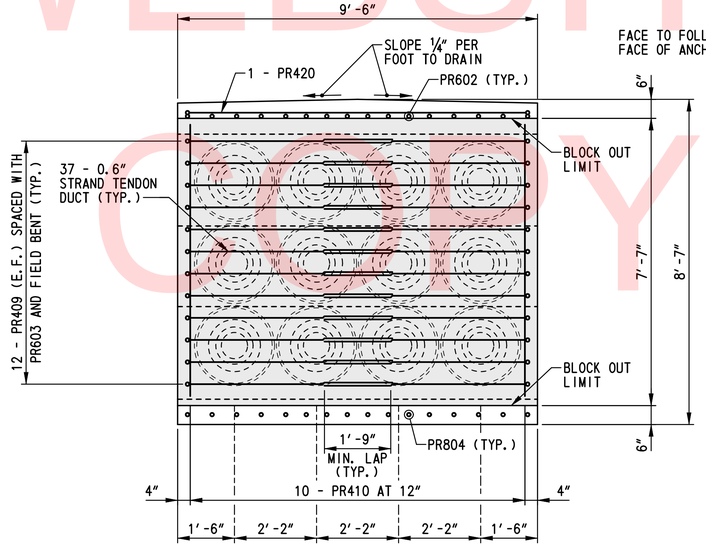

VIEW BB-BB
SCALE: ½"=1'-0"

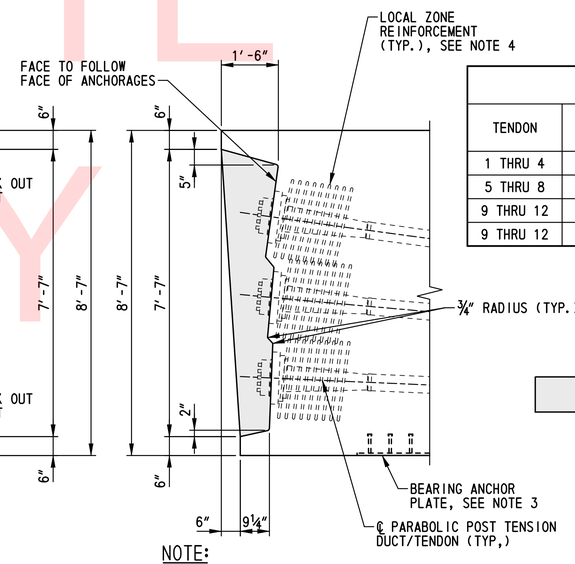

NOTE:
DIMENSIONS SHOWN ARE MEASURED ALONG ℄ PIER CAP.

BLOCK OUT DETAIL
SCALE: ½"=1'-0"

AREA SHOWN TO BE BLOCKED OUT, FILLED WITH NONSHRINK GROUT AND COATED WITH METHACRYLATE SEALER AFTER COMPLETION OF STAGE 2 POST TENSIONING.
THE CONTRACTOR SHALL SUBMIT THE NONSHRINK GROUT MIX DESIGN TO THE ENGINEER FOR APPROVAL. GROUT SHALL BE PUMPED BY MEANS OF INJECTION PIPES FROM THE BOTTOM OF THE BLOCK OUT. NONSHRINK GROUT SHALL BE INCIDENTAL TO ITEM 623514 - POST-TENSIONING STRAND SYSTEM. METHACRYLATE SEALER SHALL BE INCIDENTAL TO ITEM 602777 - PORTLAND CEMENT CONCRETE MASONRY, POST TENSIONED PIER CAP, 8,000 PSI. SEE SPECIAL PROVISIONS.

UNOFFICIAL WEBSITE COPY

N:\31653-000\CONTRACT 1B\CADD\Bridge\Br_No433\PR07_br1-433.dgn
5/8/2013 11:57:37 AM

DELAWARE DEPARTMENT OF TRANSPORTATION	ADDENDUMS / REVISIONS	SCALE: AS SHOWN	US 301 & SR 1 INTERCHANGE	CONTRACT T200911302	BRIDGE NO. 1-433	PIER 1 REINFORCEMENT DETAILS - 4	BR1-3 PR-07
				COUNTY NEW CASTLE	DESIGNED BY: W.T.R., L.F.E.		SHEET NO. 232
					CHECKED BY: W.A.G.		TOTAL SHTS. 491

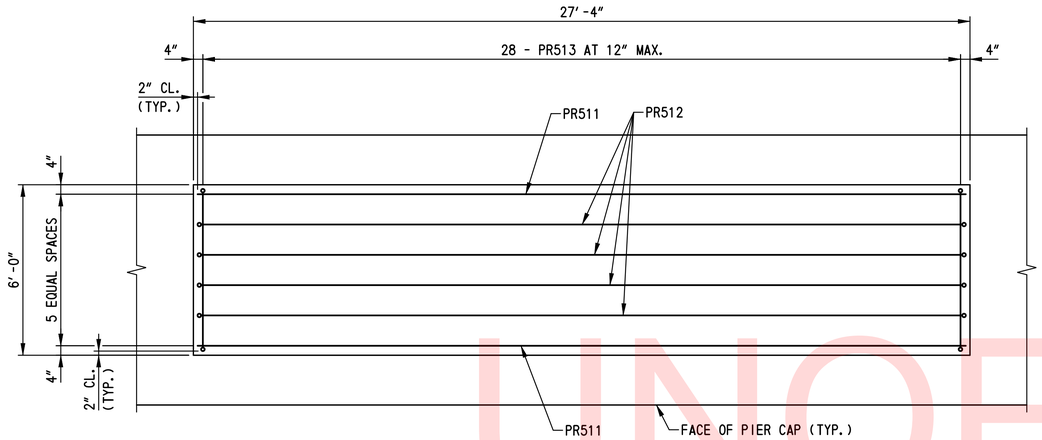

PLAN

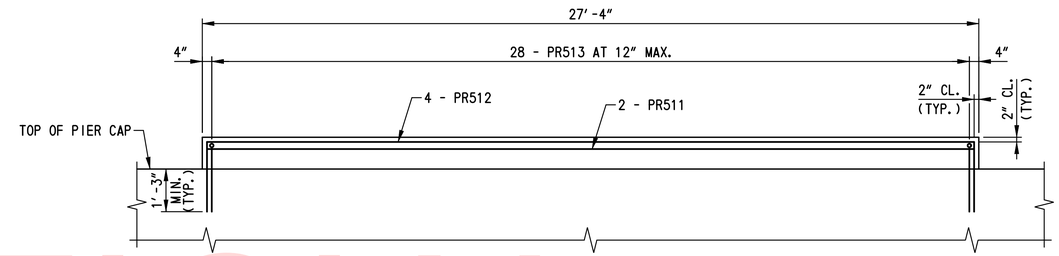

ELEVATION

NOTE:

ANCHOR BOLTS AND SMALLER CONCRETE BEARING PADS NOT SHOWN FOR CLARITY. SEE CONCRETE BEARING PAD REINFORCEMENT DETAILS - 2 AND NOTES FOR ADDITIONAL INFORMATION.

CONCRETE BEARING PAD REINFORCEMENT DETAILS - 1

SCALE: 3/8"=1'-0"

UNOFFICIAL WEBSITE COPY

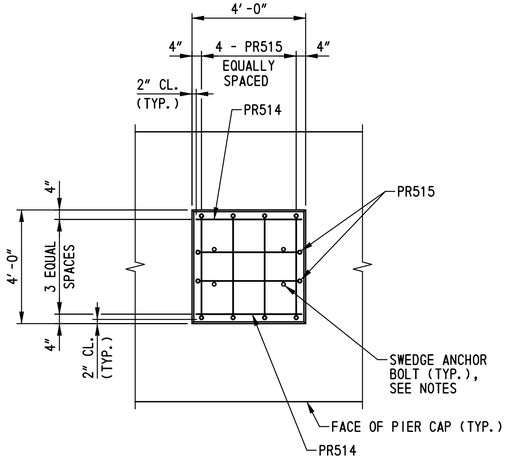

PLAN

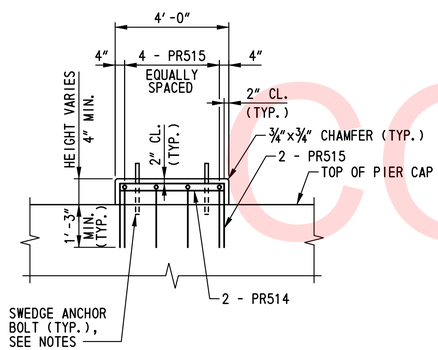

ELEVATION

CONCRETE BEARING PAD REINFORCEMENT DETAILS - 2

SCALE: 3/8"=1'-0"

NOTES:

1. FOR ANCHOR BOLT DETAIL, DIMENSIONS AND LOCATIONS, SEE DWG. NOS. BB-01, BB-02 AND BB-13 THRU BB-15.
2. ANCHOR BOLTS SHALL BE CAST IN PLACE. A TEMPORARY CASTING TEMPLATE SHALL BE USED TO ENSURE THE ANCHOR BOLTS ARE PROPERLY ALIGNED AND PLUMB. THE TEMPLATE SHALL BE REMOVED AFTER THE CONCRETE HAS SET.
3. SPACE REINFORCING STEEL AS NECESSARY TO CLEAR ANCHOR BOLTS.
4. FOR ADDITIONAL REINFORCEMENT DETAILS, SEE DWG. NOS. PR-03 THRU PR-07.

N:\31653-000\Contract 1B\CADD\Bridge\Br_No433\PR08_br1-433.dgn
2/5/2013 9:42:18 AM

DELAWARE DEPARTMENT OF TRANSPORTATION	ADDENDUMS / REVISIONS	SCALE: AS SHOWN	US 301 & SR 1 INTERCHANGE	CONTRACT T200911302	BRIDGE NO. 1-433	PIER 1 REINFORCEMENT DETAILS - 5	BR1-3 PR-08
				COUNTY NEW CASTLE	DESIGNED BY: B.K.B.		SHEET NO. 233
					CHECKED BY: W.A.G.		TOTAL SHTS. 491

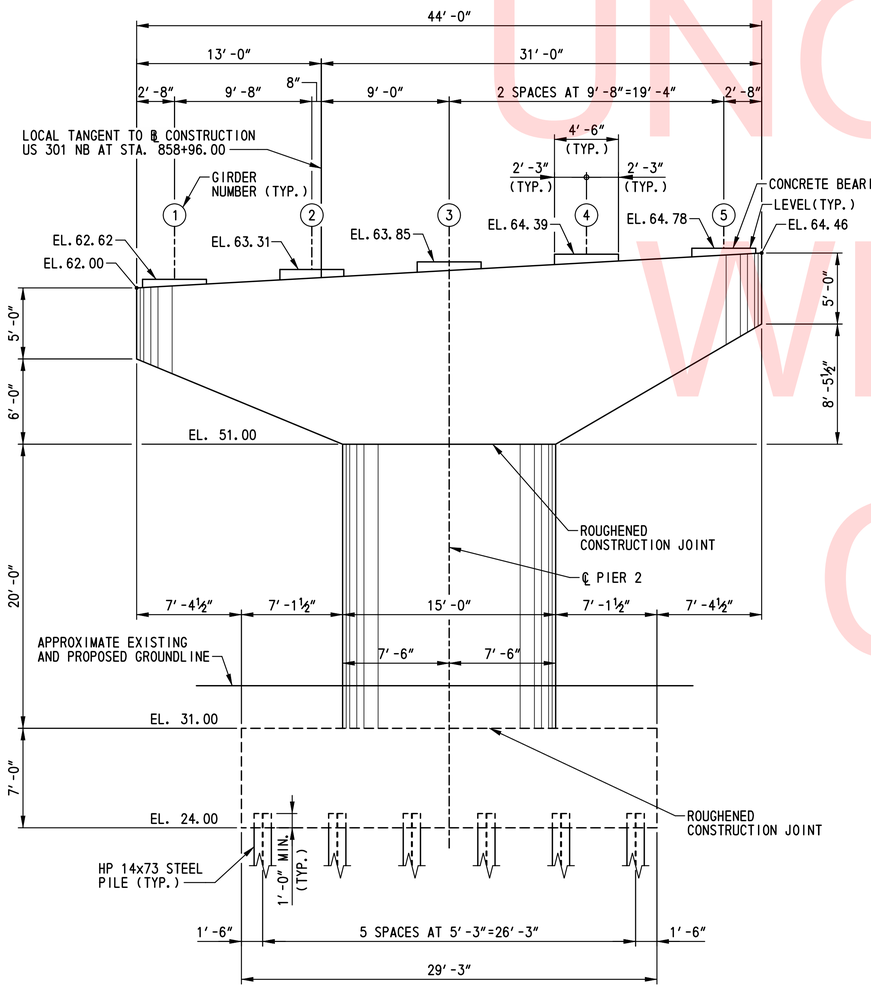

ELEVATION
SCALE: 3/16″=1′-0″

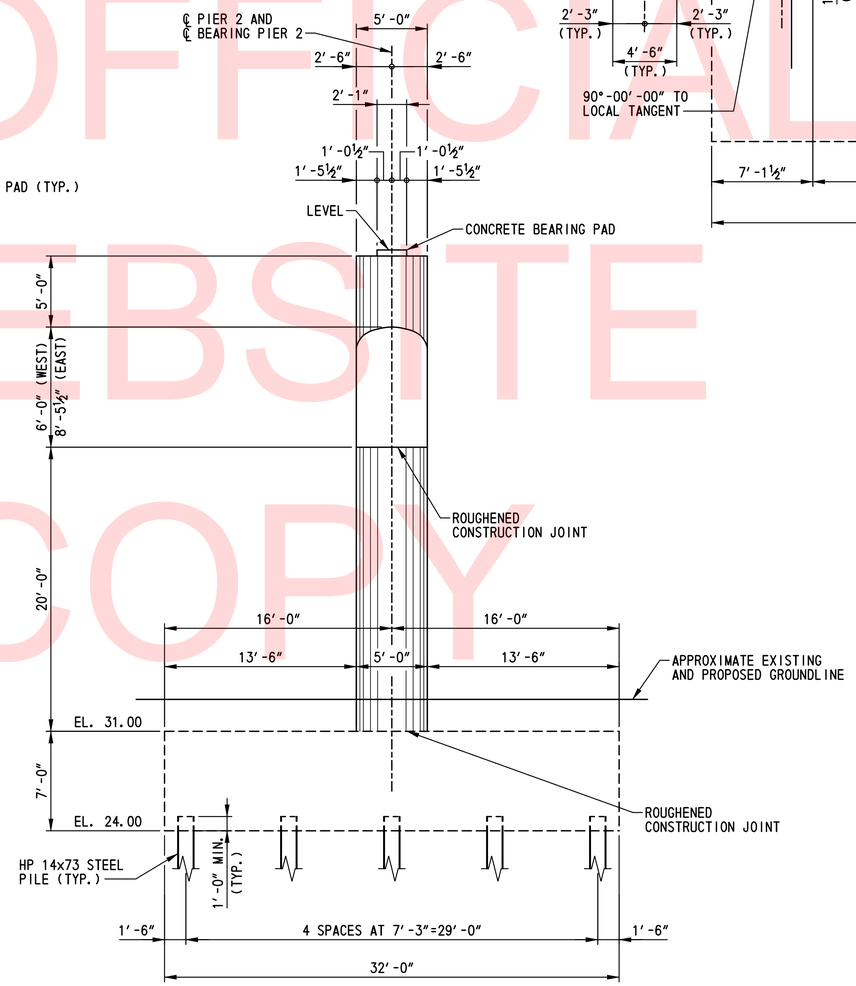

SIDE ELEVATION
SCALE: 3/16″=1′-0″

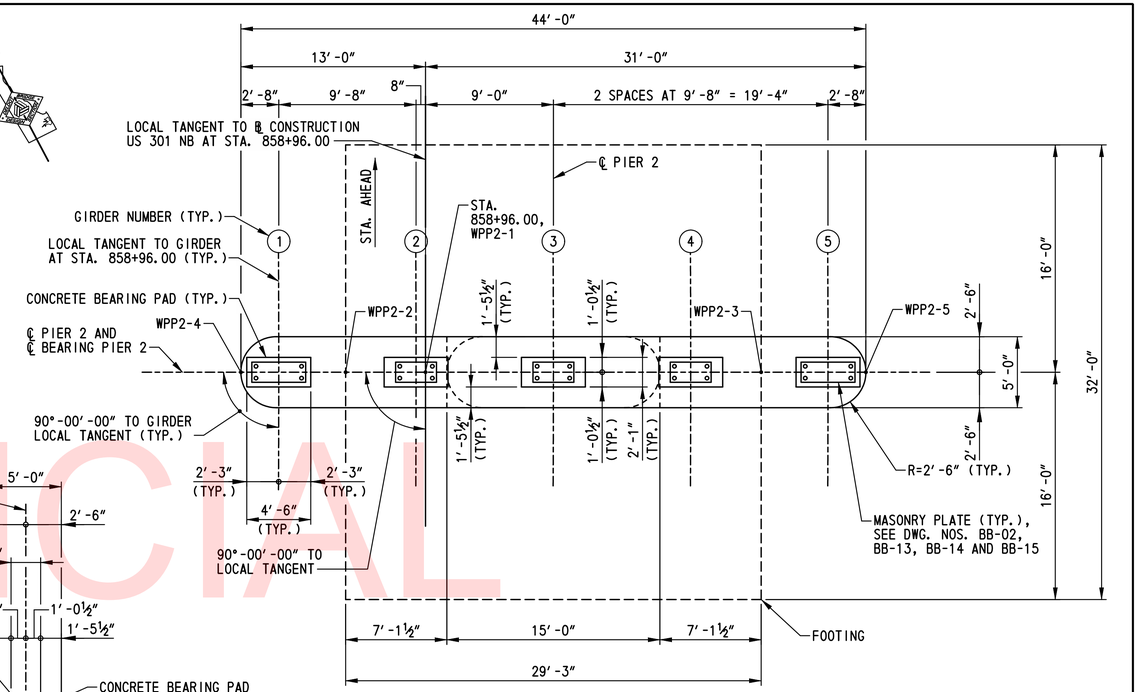

PLAN
SCALE: 3/16″=1′-0″

NOTES:
1. FOR PILE LAYOUT PLAN, SEE DWG. NO. PL-02.
2. FOR PIER 2 REINFORCEMENT DETAILS, SEE DWG. NOS. PR-10 AND PR-11.

UNOFFICIAL WEBSITE COPY

N:\31653-000\Contract 1B\CADD\Bridge\Br_No433\PR09_br1-433.dgn
2/5/2013 9:42:42 AM

DELAWARE DEPARTMENT OF TRANSPORTATION	ADDENDUMS / REVISIONS	SCALE: AS SHOWN	US 301 & SR 1 INTERCHANGE	CONTRACT T200911302	BRIDGE NO. 1-433	PIER 2 PLAN AND ELEVATIONS	BR1-3 PR-09
				COUNTY NEW CASTLE	DESIGNED BY: B.K.B.		SHEET NO. 234
					CHECKED BY: X.X.X.		TOTAL SHTS. 491

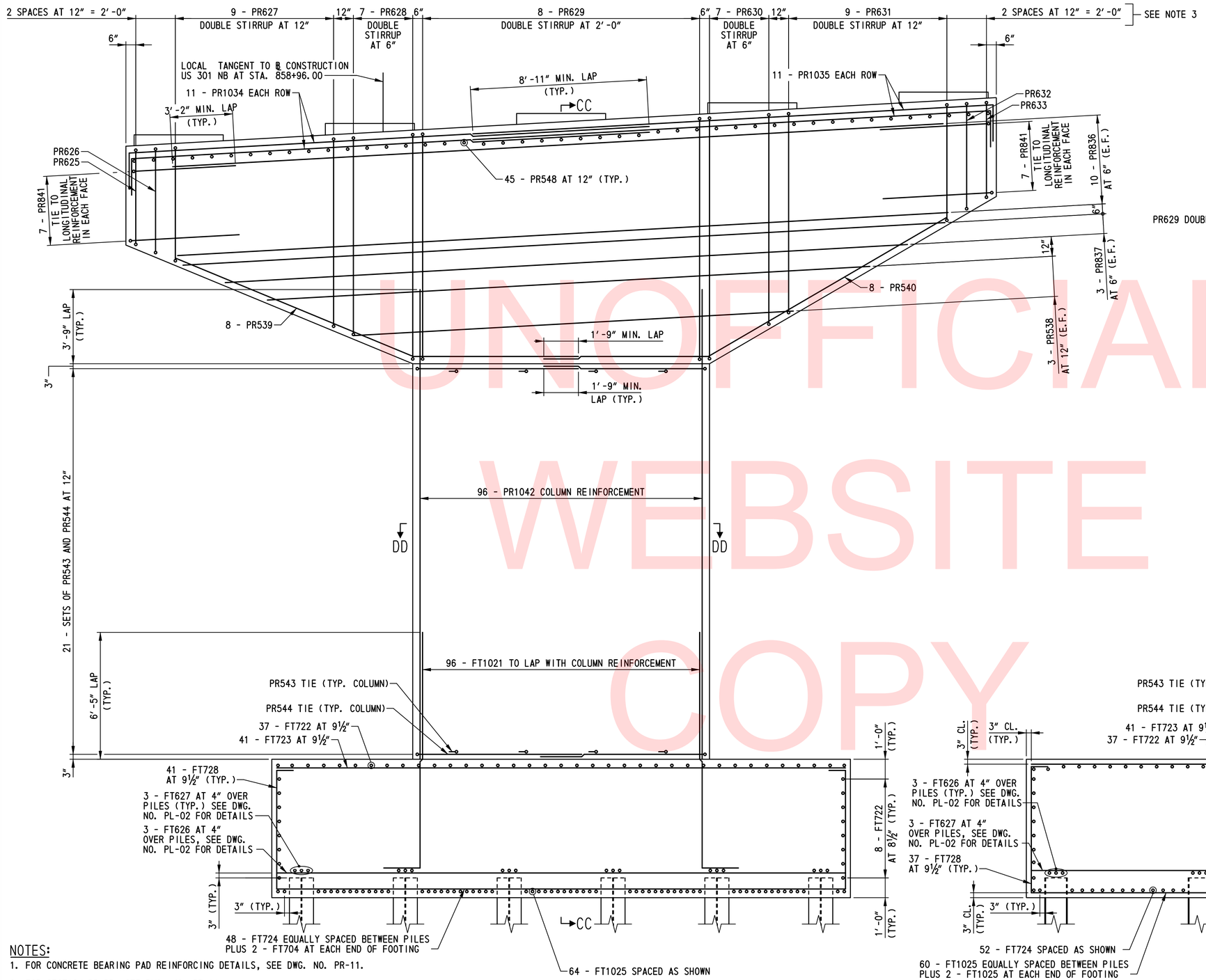

ELEVATION
SCALE: ⅜"=1'-0"

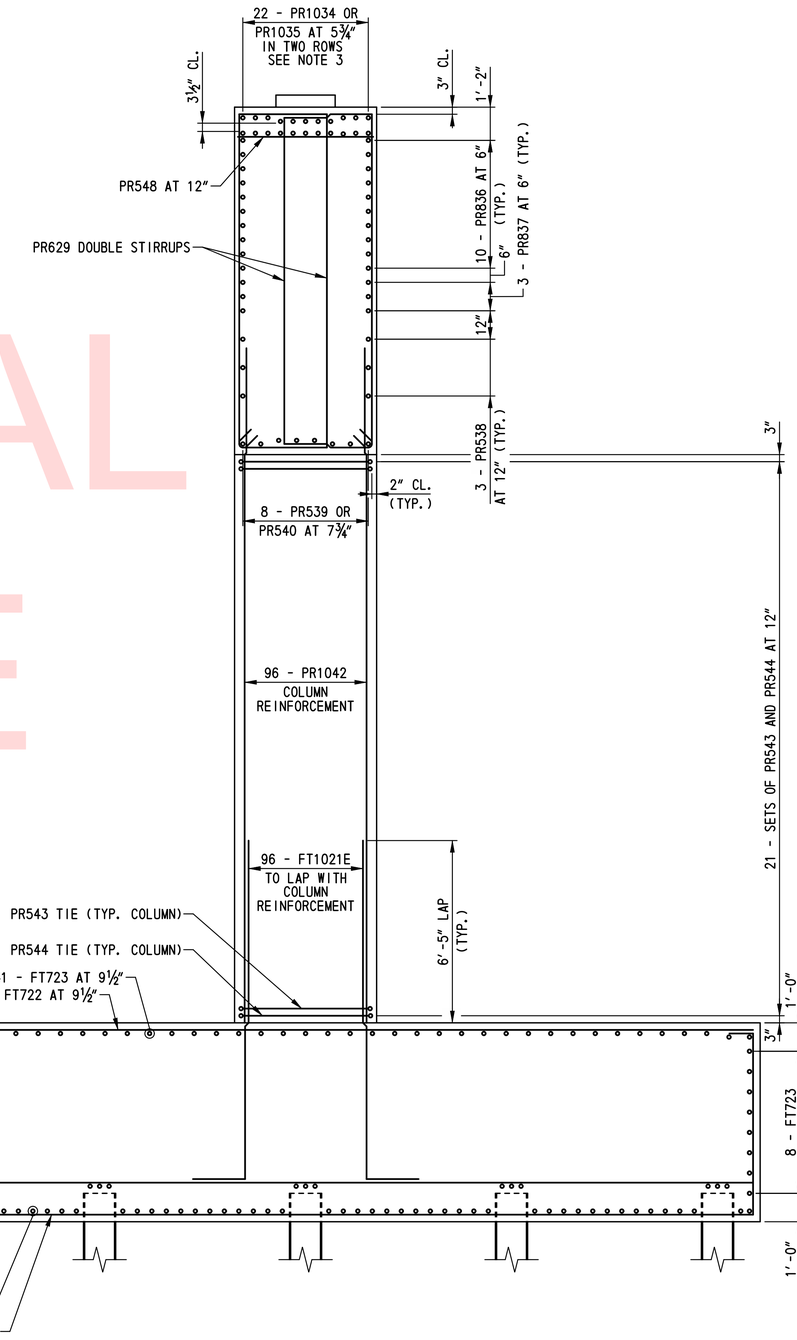

SECTION CC-CC
SCALE: ⅜"=1'-0"

NOTES:

1. FOR CONCRETE BEARING PAD REINFORCING DETAILS, SEE DWG. NO. PR-11.
2. FOR SECTION DD-DD, SEE DWG. NO. PR-11.
3. SPACE REINFORCING STEEL AS NECESSARY TO CLEAR ANCHOR BOLTS. FOR ADDITIONAL INFORMATION, SEE DWG. NOS. PR-11, BB-01, BB-02, BB-13, BB-14 AND BB-16.
4. ALTERNATE 90 DEGREE AND 135 DEGREE HOOK OF PR543 IN EACH LAYER OF COLUMN.

UNOFFICIAL WEBSITE COPY

DELAWARE DEPARTMENT OF TRANSPORTATION	ADDENDUMS / REVISIONS	SCALE: AS SHOWN	US 301 & SR 1 INTERCHANGE	CONTRACT T200911302	BRIDGE NO. 1-433	PIER 2 REINFORCEMENT DETAILS – 1
				COUNTY NEW CASTLE	DESIGNED BY: B.K.B.	
					CHECKED BY: W.A.G.	

BR1-3
PR-10

SHEET NO. 235
TOTAL SHTS. 491

N:\31653-000\Contract IB\CADD\Bridge\Br_No433\PR10_br1-433.dgn
2/5/2015 9:43:10 AM

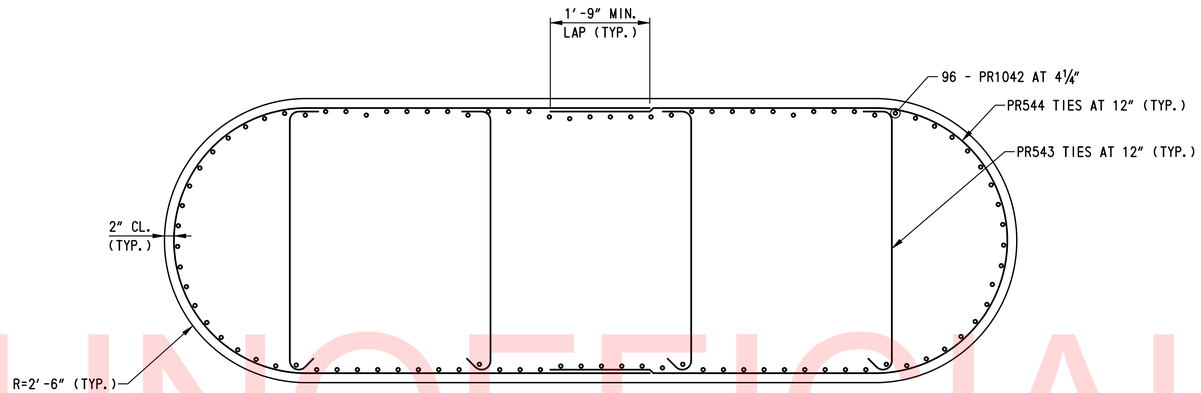

NOTES:

1. ALTERNATE 90 DEGREE AND 135 DEGREE HOOK OF PR543 TIES IN EACH LAYER.
2. FOR LOCATION OF SECTION DD-DD, SEE DWG. NO. PR-10.

SECTION DD-DD

SCALE: ¾"=1'-0"

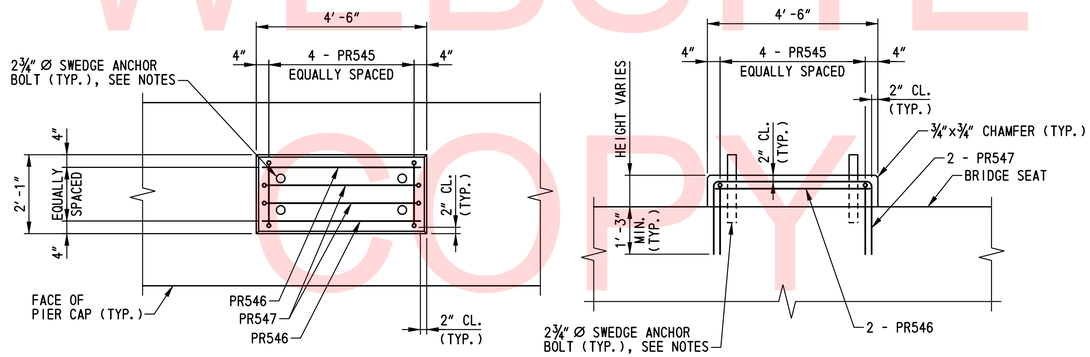

PLAN ELEVATION

CONCRETE BEARING PAD DETAILS

SCALE: ½"=1'-0"

NOTES:

1. FOR ANCHOR BOLT DETAIL, DIMENSIONS AND LOCATIONS, SEE DWG. NOS. BB-01, BB-02, BB-13, BB-14 AND BB-16.
2. ANCHOR BOLTS SHALL BE CAST IN PLACE. A TEMPORARY CASTING TEMPLATE SHALL BE USED TO ENSURE THE ANCHOR BOLTS ARE PROPERLY ALIGNED AND PLUMB. THE TEMPLATE SHALL BE REMOVED AFTER THE CONCRETE HAS SET.
3. SPACE REINFORCING STEEL AS NECESSARY TO CLEAR ANCHOR BOLTS.

NOTE:

FOR ADDITIONAL REINFORCEMENT DETAILS, SEE DWG. NO. PR-10.

UNOFFICIAL WEBSITE COPY

N:\31653-000\Contract 1B\CADD\Bridge\Br_No433\PR11_br1-433.dgn
2/5/2013 9:43:32 AM

DELAWARE DEPARTMENT OF TRANSPORTATION	ADDENDUMS / REVISIONS	SCALE: AS SHOWN	US 301 & SR 1 INTERCHANGE	CONTRACT T200911302	BRIDGE NO. 1-433	PIER 2 REINFORCEMENT DETAILS – 2	BR1-3 PR-11
				COUNTY NEW CASTLE	DESIGNED BY: B.K.B.		SHEET NO. 236
					CHECKED BY: W.A.G.		TOTAL SHTS. 491

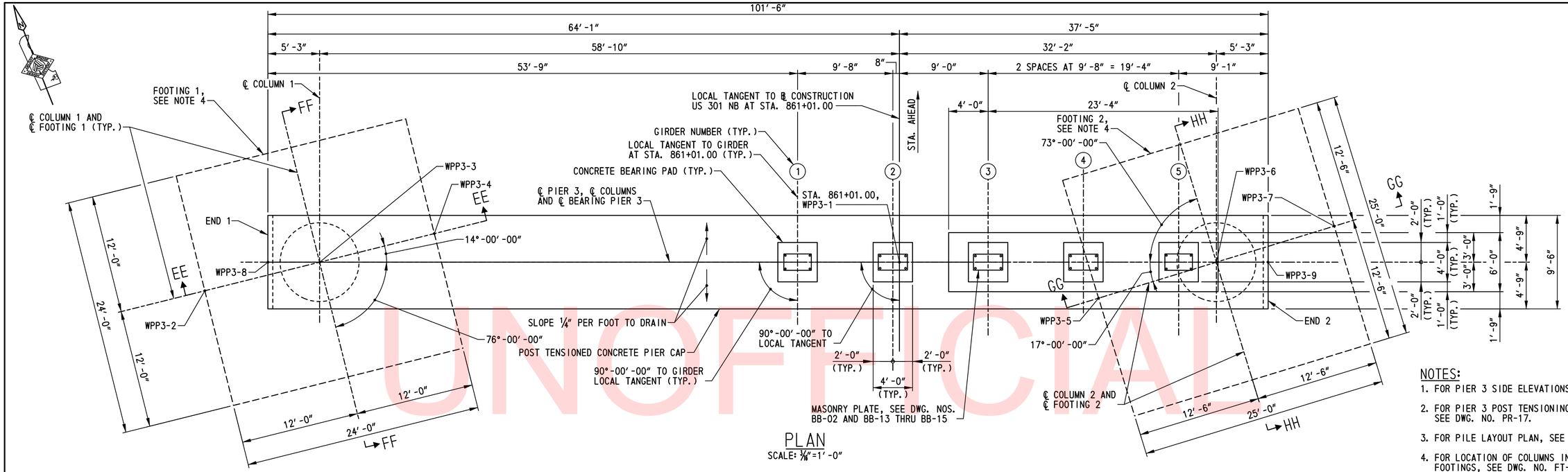

PLAN
SCALE: 3/16″=1′-0″

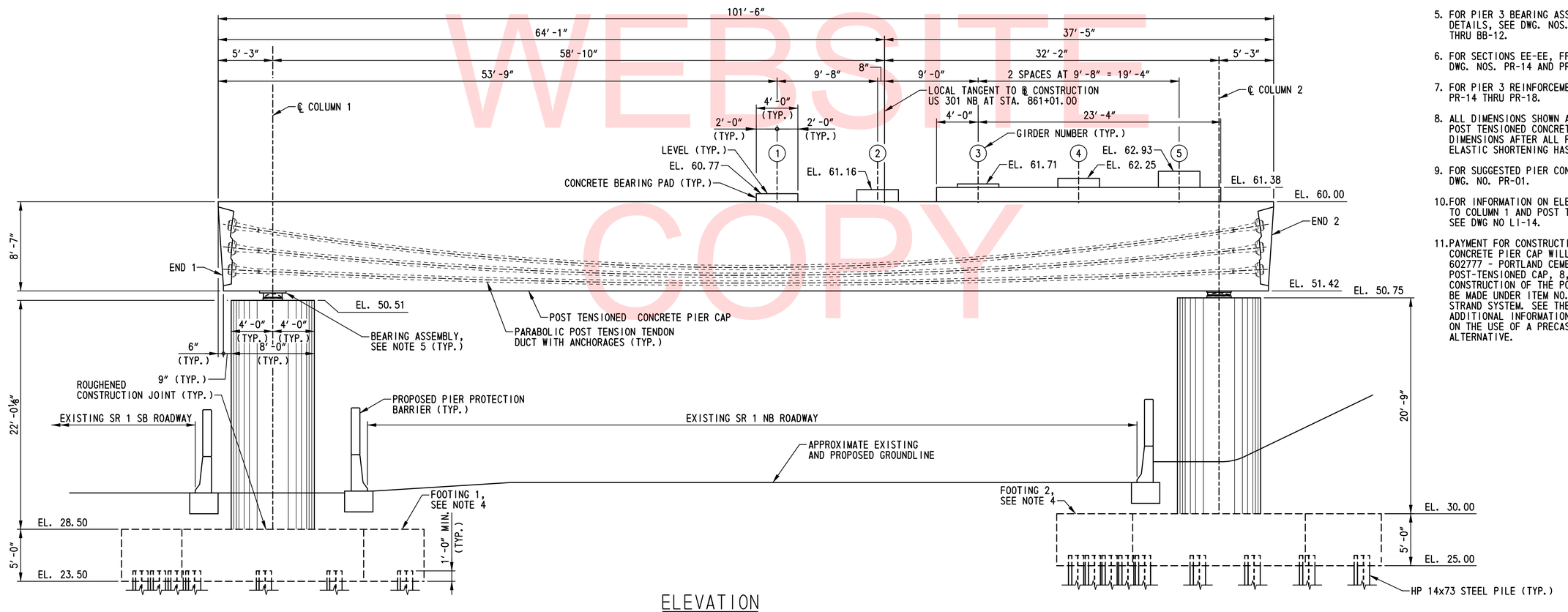

ELEVATION
SCALE: 3/16″=1′-0″

NOTES:

1. FOR PIER 3 SIDE ELEVATIONS, SEE DWG. NO. PR-13.
2. FOR PIER 3 POST TENSIONING DETAILS AND LAYOUT, SEE DWG. NO. PR-17.
3. FOR PILE LAYOUT PLAN, SEE DWG. NO. PL-02.
4. FOR LOCATION OF COLUMNS IN RELATION TO THE FOOTINGS, SEE DWG. NO. FT-02.
5. FOR PIER 3 BEARING ASSEMBLY INFORMATION AND DETAILS, SEE DWG. NOS. BB-01, BB-02 AND BB-08 THRU BB-12.
6. FOR SECTIONS EE-EE, FF-FF, GG-GG AND HH-HH, SEE DWG. NOS. PR-14 AND PR-15.
7. FOR PIER 3 REINFORCEMENT DETAILS, SEE DWG NOS. PR-14 THRU PR-18.
8. ALL DIMENSIONS SHOWN ALONG THE LENGTH OF THE POST TENSIONED CONCRETE PIER CAP ARE FINAL DIMENSIONS AFTER ALL POST TENSIONING AND ELASTIC SHORTENING HAS TAKEN PLACE.
9. FOR SUGGESTED PIER CONSTRUCTION SEQUENCE, SEE DWG. NO. PR-01.
10. FOR INFORMATION ON ELECTRICAL CONDUIT ATTACHED TO COLUMN 1 AND POST TENSIONED CONCRETE PIER CAP, SEE DWG NO LI-14.
11. PAYMENT FOR CONSTRUCTION OF THE POST-TENSIONED CONCRETE PIER CAP WILL BE MADE UNDER ITEM NO. 602777 - PORTLAND CEMENT CONCRETE MASONRY, POST-TENSIONED CAP, 8,000 PSI. PAYMENT FOR CONSTRUCTION OF THE POST-TENSIONING STRANDS WILL BE MADE UNDER ITEM NO. 623514 - POST-TENSIONING STRAND SYSTEM. SEE THE SPECIAL PROVISIONS FOR ADDITIONAL INFORMATION INCLUDING INFORMATION ON THE USE OF A PRECAST POST TENSIONED PIER CAP ALTERNATIVE.

UNOFFICIAL WEBSITE COPY

N:\31653-000\CONTRACT 1B\CADD\Bridge\Br_No433\PR12_br1-433.dgn
5/8/2013 10:14:12 AM

DELAWARE DEPARTMENT OF TRANSPORTATION	ADDENDUMS / REVISIONS	SCALE: AS SHOWN	US 301 & SR 1 INTERCHANGE	CONTRACT T200911302	BRIDGE NO. 1-433	PIER 3 PLAN AND ELEVATION	BR1-3 PR-12
				COUNTY NEW CASTLE	DESIGNED BY: W.T.R., L.F.E.		SHEET NO. 237
					CHECKED BY: W.A.G.		TOTAL SHTS. 491

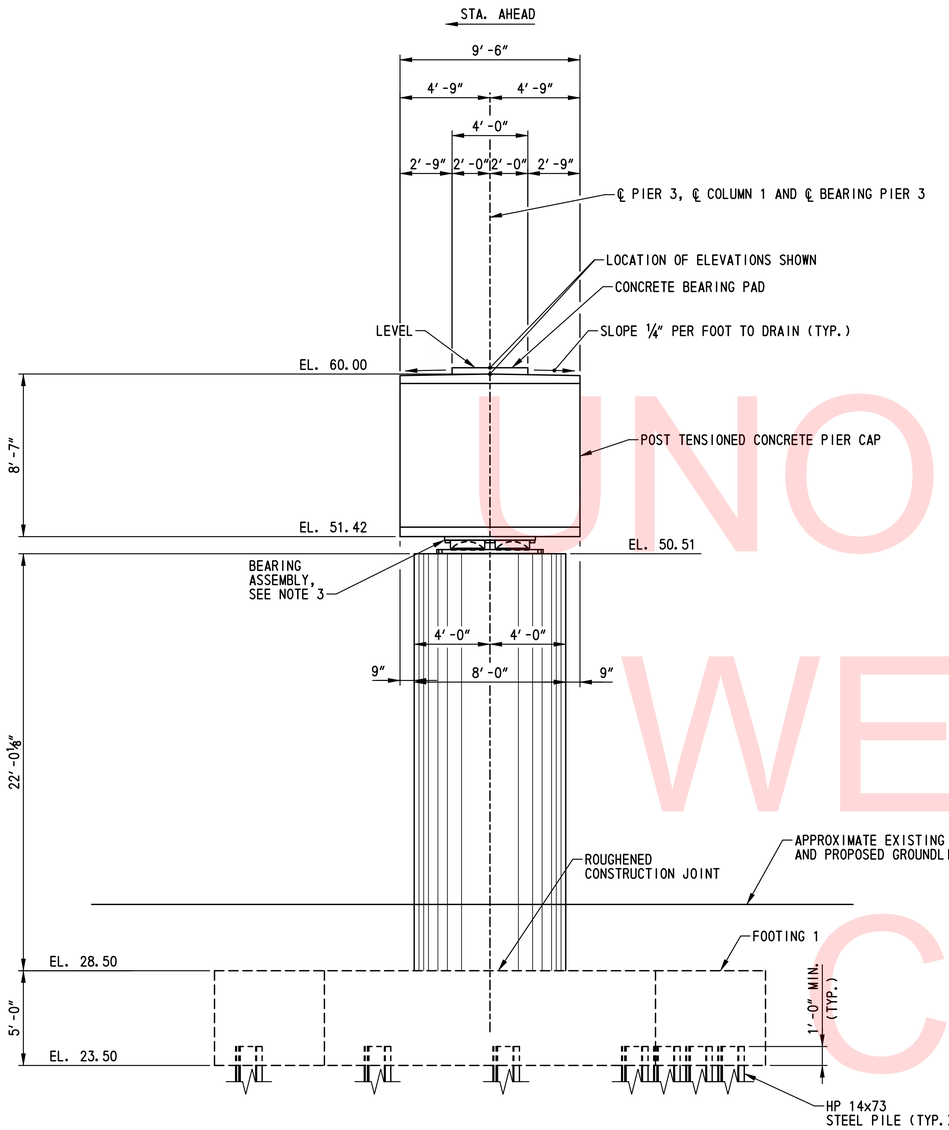

SIDE ELEVATION - COLUMN 1, FOOTING 1

SCALE: ¼″=1′-0″

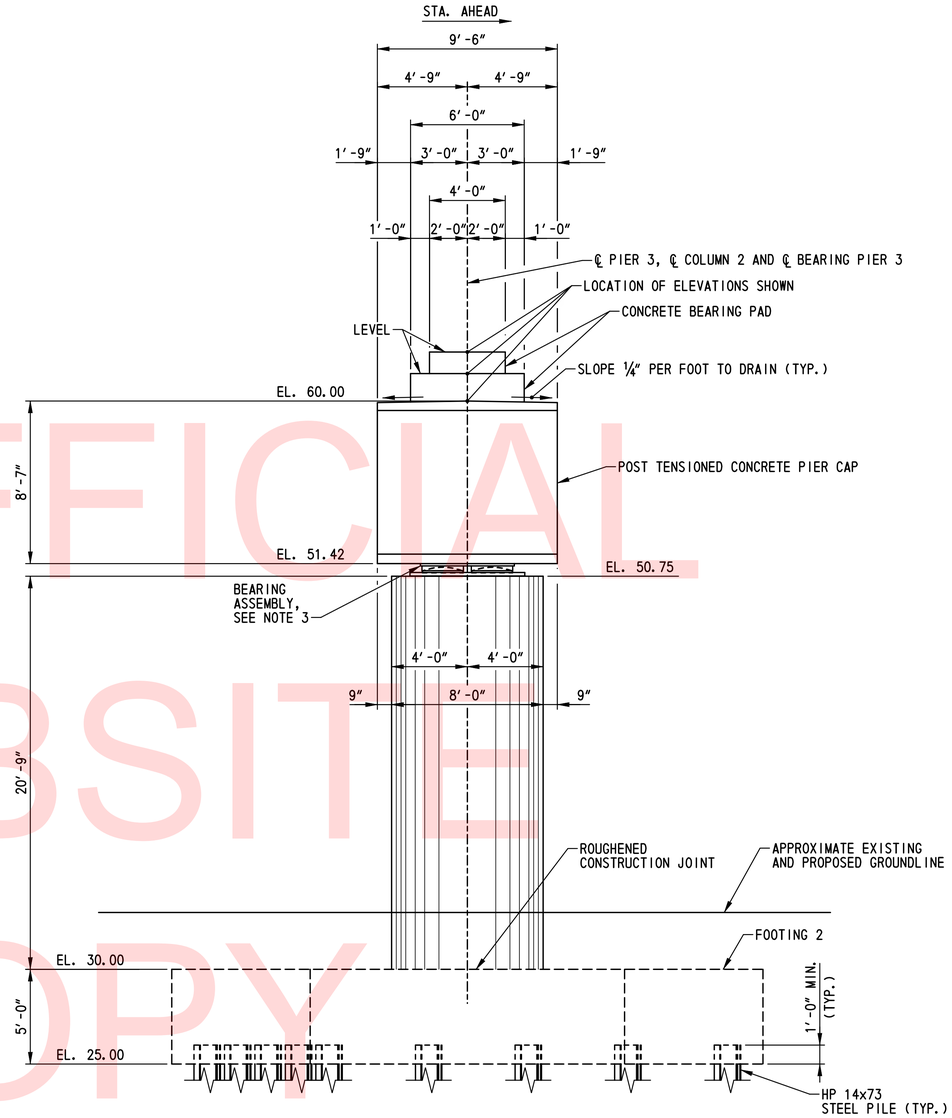

SIDE ELEVATION - COLUMN 2, FOOTING 2

SCALE: ¼″=1′-0″

NOTES:

1. FOR PLAN AND ELEVATION, SEE DWG. NO. PR-12.
2. FOR PILE LAYOUT PLAN, SEE DWG. NO. PL-02.
3. FOR PIER 3 BEARING ASSEMBLY INFORMATION AND DETAILS, SEE DWG. NOS. BB-01, BB-02 AND BB-08 THRU BB-12.
4. FOR PIER 3 REINFORCEMENT DETAILS, SEE DWG. NO. PR-14 THRU PR-18.
5. FOR SUGGESTED CONSTRUCTION SEQUENCE, SEE DWG. NO. PR-01.
6. PAYMENT FOR CONSTRUCTION OF THE POST-TENSIONED CONCRETE PIER CAP WILL BE MADE UNDER ITEM NO. 602777 - PORTLAND CEMENT CONCRETE MASONRY, POST-TENSIONED CAP, 8,000 PSI. PAYMENT FOR CONSTRUCTION OF THE POST-TENSIONING STRANDS WILL BE MADE UNDER ITEM NO. 623514 - POST-TENSIONING STRAND SYSTEM. SEE THE SPECIAL PROVISIONS FOR ADDITIONAL INFORMATION INCLUDING INFORMATION ON THE USE OF A PRECAST POST TENSIONED PIER CAP ALTERNATIVE.

UNOFFICIAL WEBSITE COPY

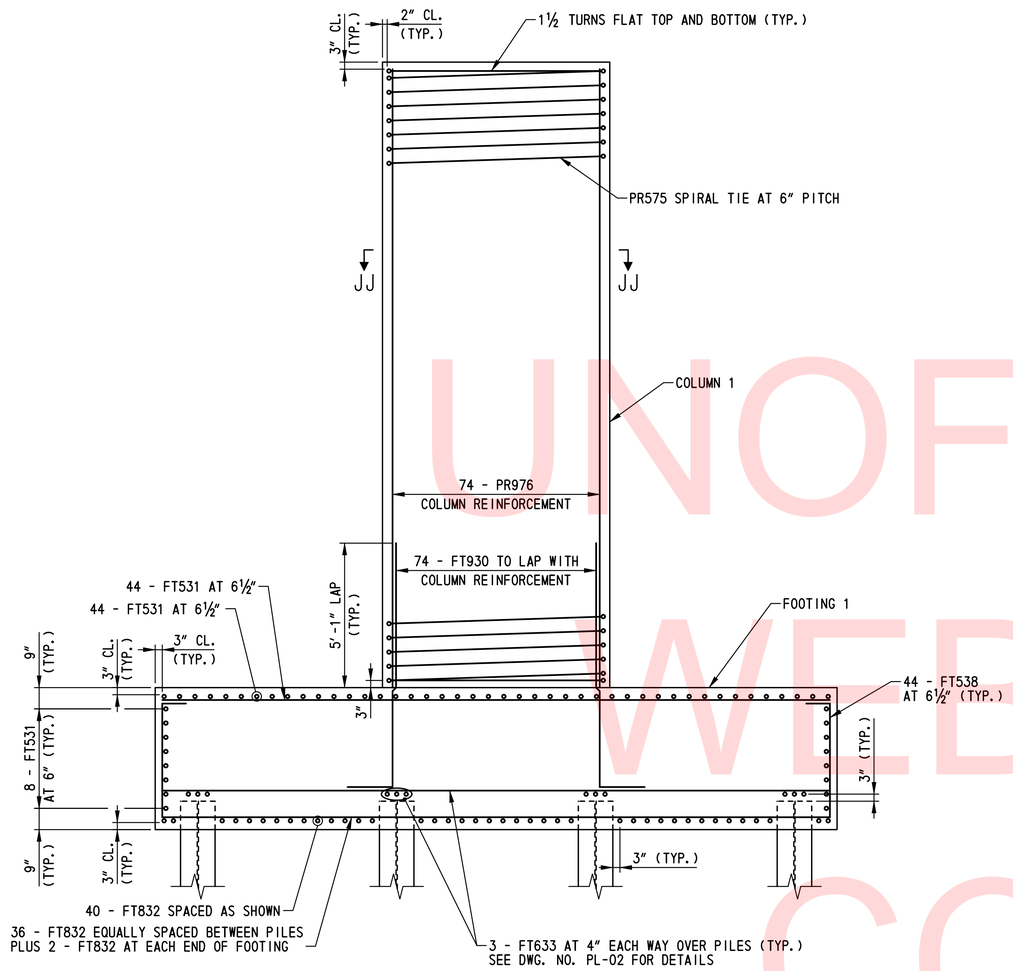

SECTION EE-EE

SCALE: ⅜"=1'-0"

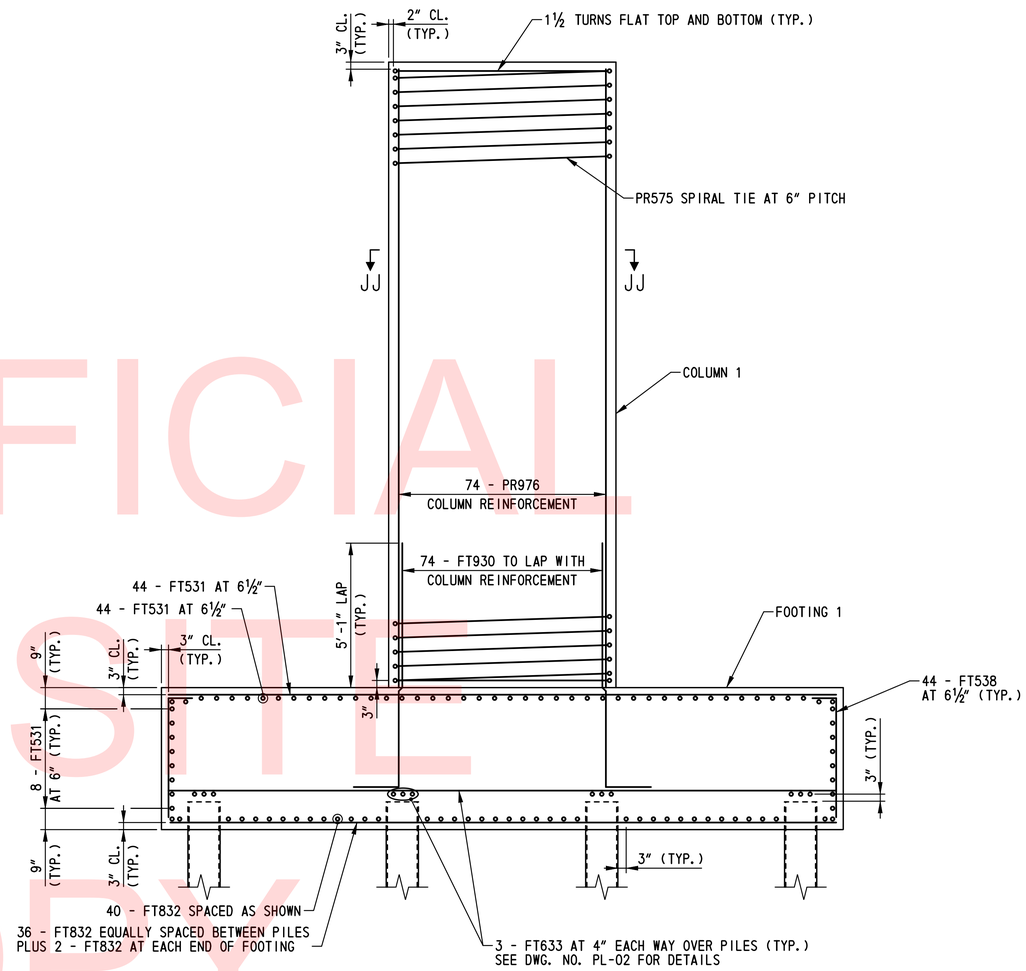

SECTION FF-FF

SCALE: ⅜"=1'-0"

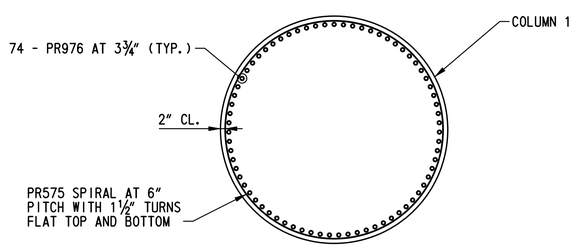

SECTION JJ-JJ

SCALE: ⅜"=1'-0"

NOTES:

1. FOR LOCATION OF SECTIONS EE-EE AND FF-FF, SEE DWG. NO. PR-12.
2. FOR ADDITIONAL REINFORCEMENT DETAILS, SEE DWG. NO. PR-15 THRU PR-18.

UNOFFICIAL WEBSITE COPY

N:\31653-000\Contract 1B\CADD\Bridge\Br_No433\PR14_br1-433.dgn
2/5/2013 9:44:49 AM

DELAWARE DEPARTMENT OF TRANSPORTATION	ADDENDUMS / REVISIONS	SCALE: AS SHOWN	US 301 & SR 1 INTERCHANGE	CONTRACT T200911302	BRIDGE NO. 1–433	PIER 3 REINFORCEMENT DETAILS – 1	BR1–3 PR–14
				COUNTY NEW CASTLE	DESIGNED BY: B.K.B.		SHEET NO. 239
					CHECKED BY: W.A.G.		TOTAL SHTS. 491

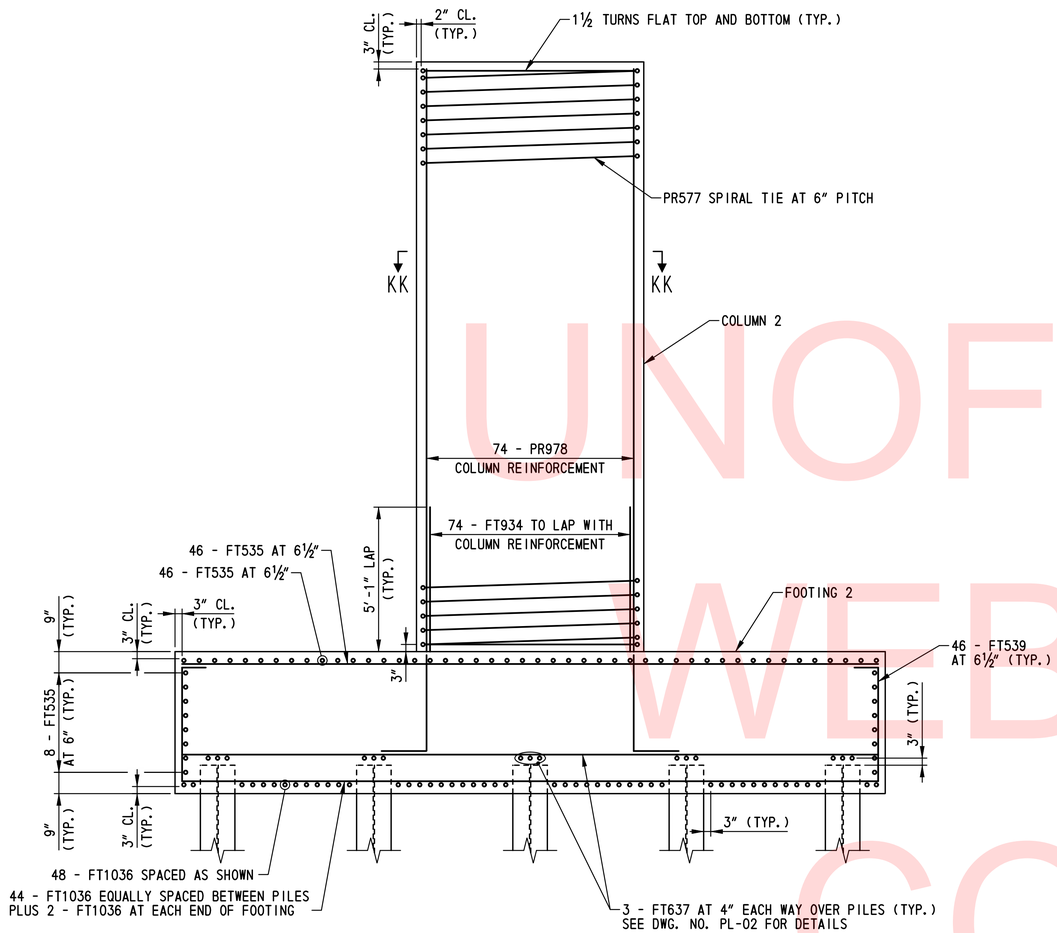

SECTION GG-GG
SCALE: ⅜"=1'-0"

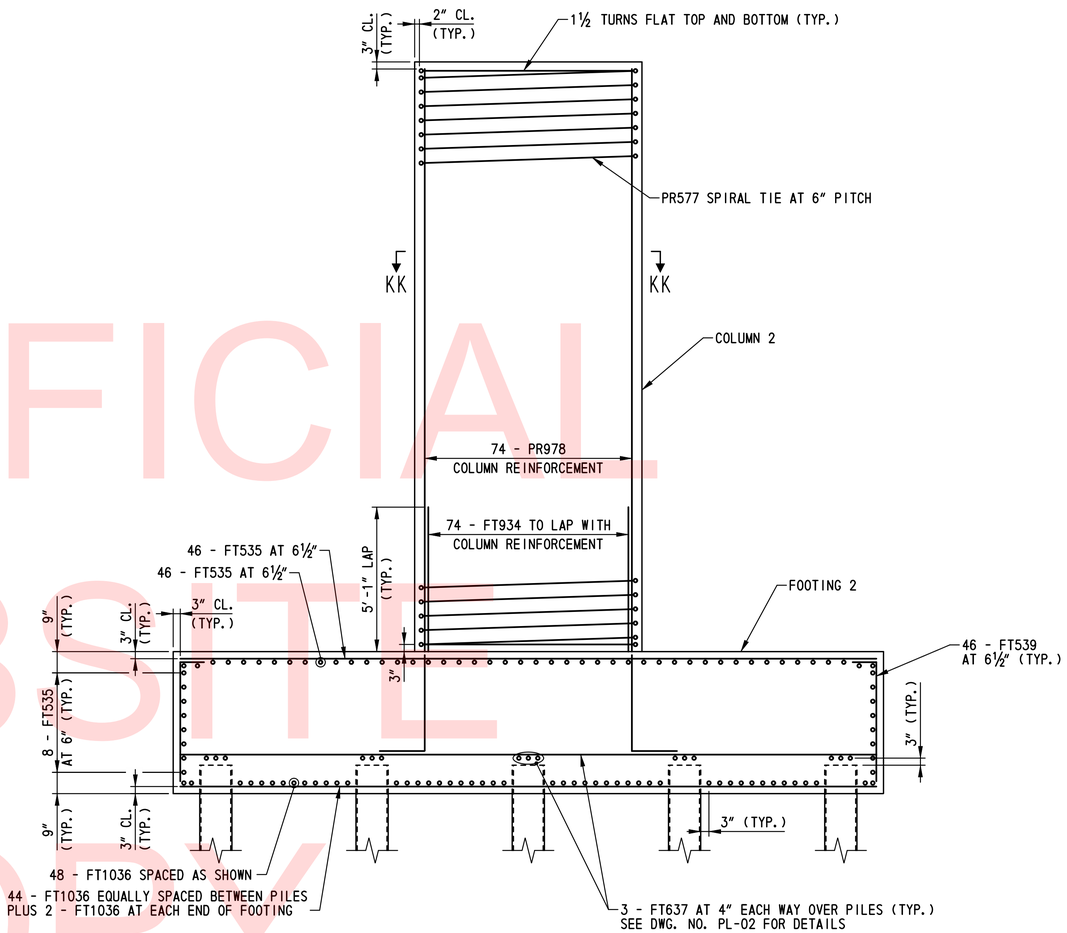

SECTION HH-HH
SCALE: ⅜"=1'-0"

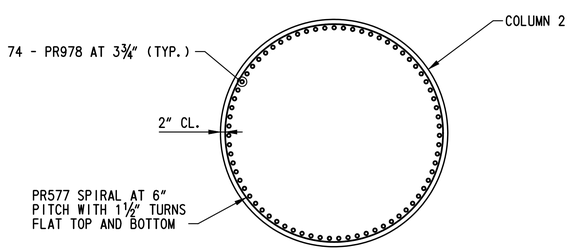

SECTION KK-KK
SCALE: ⅜"=1'-0"

NOTES:

1. FOR LOCATION OF SECTIONS GG-GG AND HH-HH, SEE DWG. NO. PR-12.
2. FOR ADDITIONAL REINFORCEMENT DETAILS, SEE DWG. NOS. PR-14, PR-16 AND PR-18.

UNOFFICIAL WEBSITE COPY

N:\3653-000\Contract 18\CADD\Bridge\Br_No433\PR15_br1-433.dgn
2/5/2013 9:45:19 AM

DELAWARE DEPARTMENT OF TRANSPORTATION	ADDENDUMS / REVISIONS	SCALE: AS SHOWN	US 301 & SR 1 INTERCHANGE	CONTRACT T200911302	BRIDGE NO. 1-433	PIER 3 REINFORCEMENT DETAILS – 2	BR1-3 PR-15
				COUNTY NEW CASTLE	DESIGNED BY: B.K.B.		SHEET NO. 240
					CHECKED BY: W.A.G.		TOTAL SHTS. 491

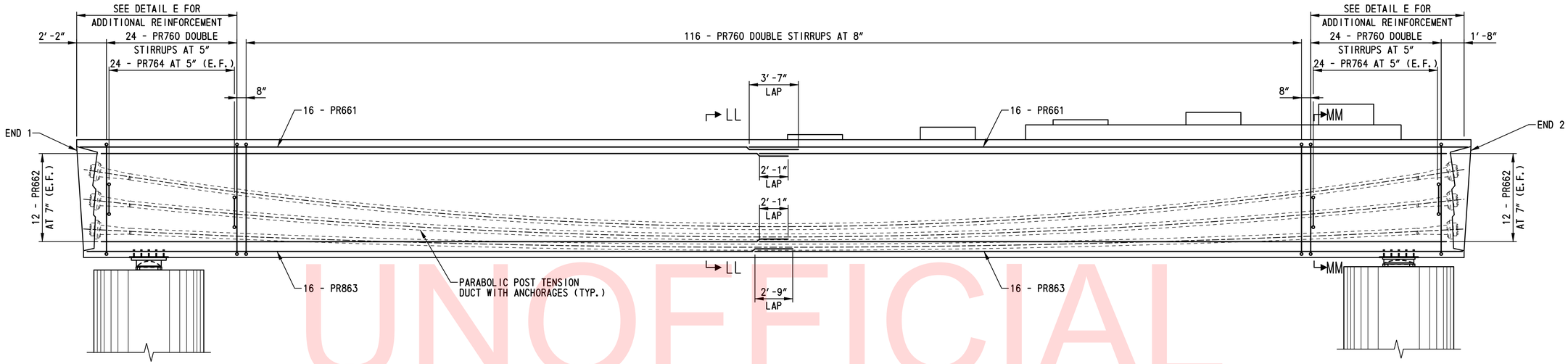

PIER CAP REINFORCEMENT ELEVATION

SCALE: ¼"=1'-0"

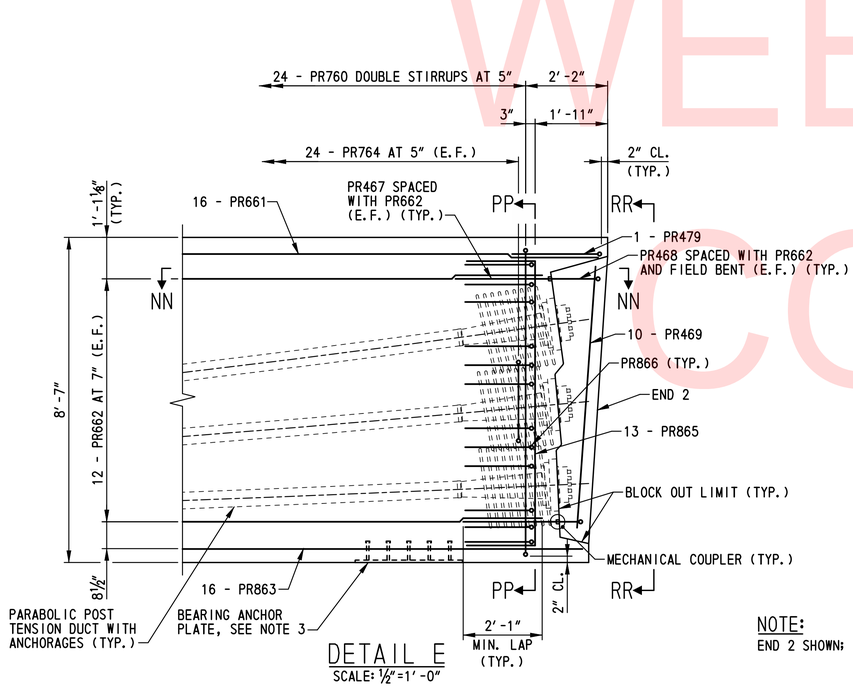

DETAIL E

SCALE: ½"=1'-0"

NOTE:

END 2 SHOWN; END 1 SIMILAR.

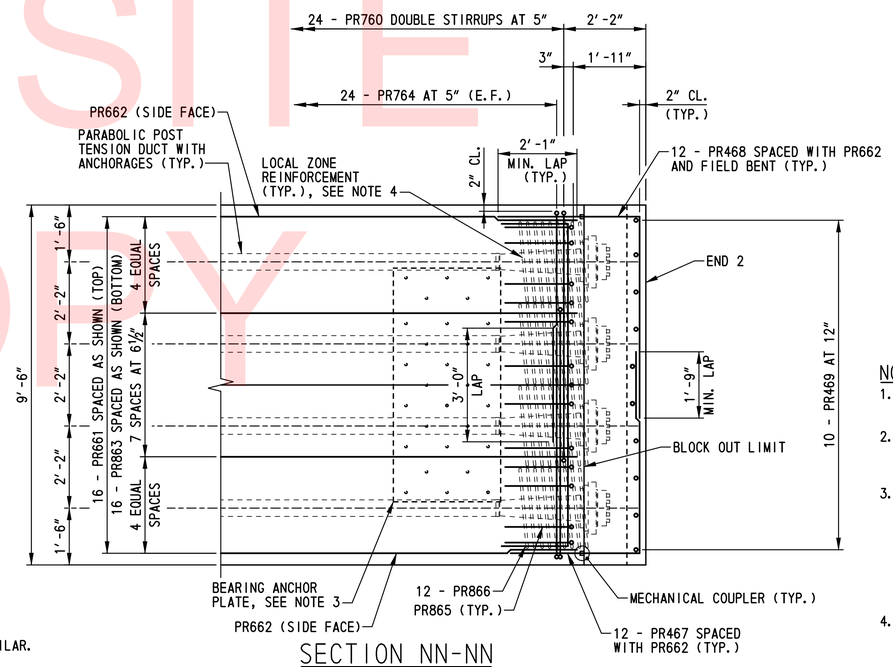

SECTION NN-NN

SCALE: ½"=1'-0"

NOTES:

1. FOR SECTIONS LL-LL, MM-MM AND PP-PP AND VIEW RR-RR, SEE DWG. NO. PR-17.
2. FOR ADDITIONAL REINFORCEMENT DETAILS, SEE DWG. NOS. PR-14, PR-15, PR-17 AND PR-18.
3. THE BEARING ANCHOR PLATE IS A COMPONENT OF THE BEARING ASSEMBLY. THE POST TENSIONED CONCRETE PIER CAP SHALL BE CONSTRUCTED AROUND THE BEARING ANCHOR PLATE. FOR SUGGESTED PIER CONSTRUCTION SEQUENCE, SEE DWG. NO. PR-01. FOR PIER 3 BEARING ASSEMBLY INFORMATION AND DETAILS, SEE DWG. NOS. BB-01, BB-02 AND BB-08 THRU BB-12.
4. LOCAL ZONE REINFORCEMENT SHALL BE DESIGNED BY POST TENSIONING SYSTEM SUPPLIER. ALL WORK SHALL BE INCIDENTAL TO ITEM 623514 - POST-TENSIONING STRAND SYSTEM.
5. FOR POST-TENSIONING SYSTEM DETAILS INCLUDING DUCT TYPE, MATERIALS AND OTHER COMPONENTS, SEE SPECIAL PROVISION ITEM 623514 - POST-TENSIONING STRAND SYSTEM.

UNOFFICIAL WEBSITE COPY

N:\31653-000\CONTRACT IB\CADD\Bridge\Br_No433\PR16_br1-433.dgn
5/7/2013 3:55:51 PM

DELAWARE DEPARTMENT OF TRANSPORTATION	ADDENDUMS / REVISIONS	SCALE: AS SHOWN	US 301 & SR 1 INTERCHANGE	CONTRACT T200911302	BRIDGE NO. 1-433	PIER 3 REINFORCEMENT DETAILS - 3	BR1-3 PR-16
				COUNTY NEW CASTLE	DESIGNED BY: B.K.B., L.F.E.		SHEET NO. 241
					CHECKED BY: W.A.G.		TOTAL SHTS. 491

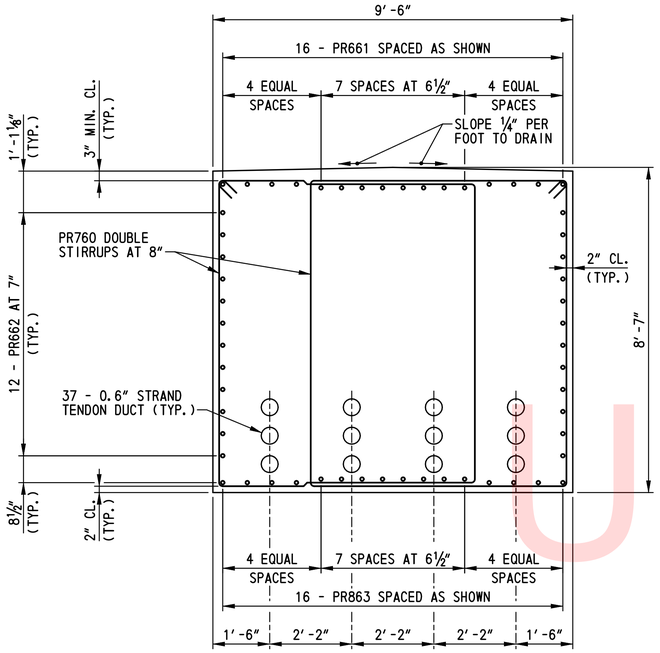

SECTION LL-LL
SCALE: ½"=1'-0"

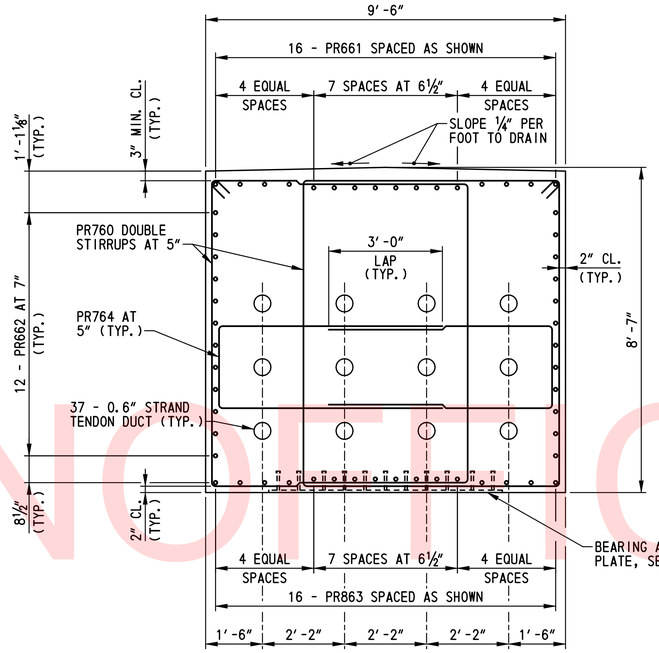

SECTION MM-MM
SCALE: 1/2 "=1'-0"

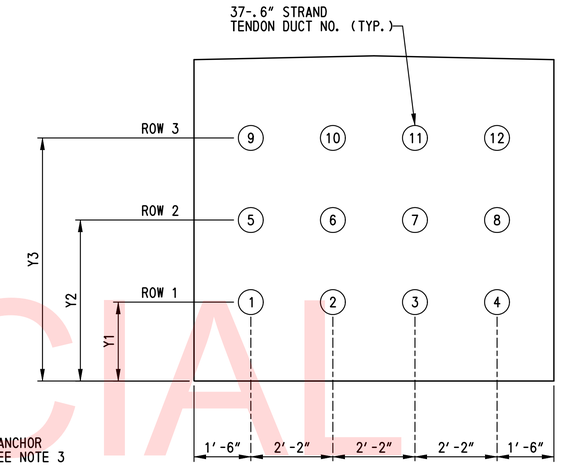

DUCT/TENDON LAYOUT
SCALE: ½"=1'-0"

TENDON STRESSING SEQUENCE:

1. STAGE 1 POST TENSIONING STRESSING WHEN CONCRETE HAS ATTAINED A MINIMUM COMPRESSIVE STRENGTH OF 6,000 PSI AND PRIOR TO REMOVAL OF FALSEWORK SHALL BE COMPLETED IN THE FOLLOWING ORDER:

   A. TENDONS 1 AND 3 SIMULTANEOUSLY (END 1 STRESSED)
   B. TENDONS 2 AND 4 SIMULTANEOUSLY (END 1 STRESSED)
   C. TENDONS 5 AND 7 SIMULTANEOUSLY (END 2 STRESSED)
   D. TENDONS 6 AND 8 SIMULTANEOUSLY (END 2 STRESSED)
   E. TENDONS 9 AND 11 SIMULTANEOUSLY (END 1 STRESSED)
   F. TENDONS 10 AND 12 SIMULTANEOUSLY (END 1 STRESSED)

2. STAGE 2 POST TENSIONING STRESSING AFTER THE STEEL SUPERSTRUCTURE HAS BEEN ERECTED AND BEFORE APPLYING ANY LIVE LOAD ON THE BRIDGE WHEN CONCRETE HAS ATTAINED A MINIMUM COMPRESSIVE STRENGTH OF 8,000 PSI SHALL BE COMPLETED IN THE FOLLOWING ORDER:

   A. TENDONS 9 AND 11 SIMULTANEOUSLY (END 1 STRESSED)
   B. TENDONS 10 AND 12 SIMULTANEOUSLY (END 1 STRESSED)

NOTES:

1. FOR ADDITIONAL REINFORCEMENT DETAILS, SEE DWG. NOS. PR-14 THRU PR-16 AND PR-18.
2. FOR LOCATION OF SECTIONS LL-LL, MM-MM AND PP-PP AND VIEW RR-RR, SEE DWG. NO. PR-16.
3. THE BEARING ANCHOR PLATE IS A COMPONENT OF THE BEARING ASSEMBLY. THE POST TENSIONED CONCRETE PIER CAP SHALL BE CONSTRUCTED AROUND THE BEARING ANCHOR PLATE. FOR SUGGESTED PIER CONSTRUCTION SEQUENCE, SEE DWG. NO. PR-01. FOR PIER 3 BEARING ASSEMBLY INFORMATION AND DETAILS, SEE DWG. NOS. BB-01, BB-02 AND BB-08 THRU BB-12.
4. LOCAL ZONE REINFORCEMENT SHALL BE DESIGNED BY POST TENSIONING SYSTEM SUPPLIER. ALL WORK SHALL BE INCIDENTAL TO ITEM 623514 - POST-TENSIONING STRAND SYSTEM.

TENDON DUCT LAYOUT

LOCATION	Y1	Y2	Y3
END	2'-1"	4'-3"	6'-5"
QUARTERSPAN	1'-11"	2'-2¼"	3'-3½"
MIDSPAN	9"	1'-6"	2'-3"

TENDON DUCT SCHEDULE

TENDON	STRAND DIAMETER	NUMBER OF STRAND PER TENDON	JACKING FORCE PER TENDON		POST TENSION STAGE
			END 1	END 2	
1 THRU 4	0.6"	37	1626 K	-	1
5 THRU 8	0.6"	37	-	1626 K	1
9 THRU 12	0.6"	37	976 K	-	1
9 THRU 12	0.6"	37	1626 K	-	2

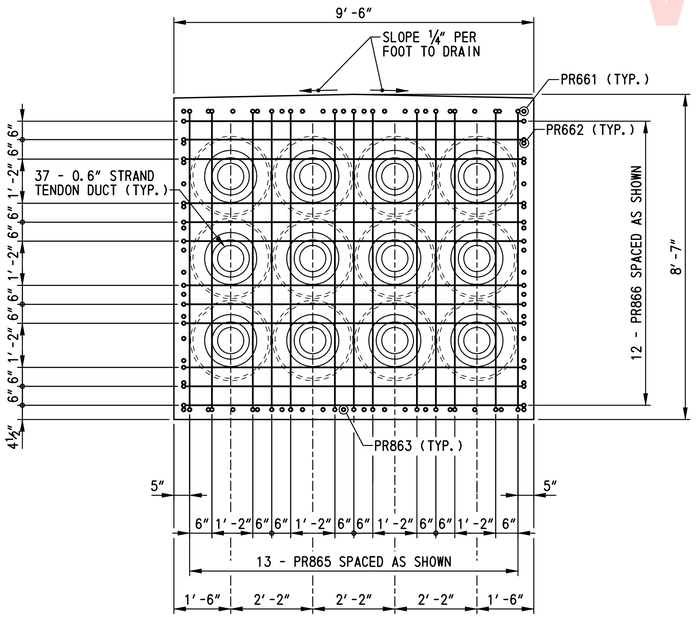

SECTION PP-PP
SCALE: ½"=1'-0"

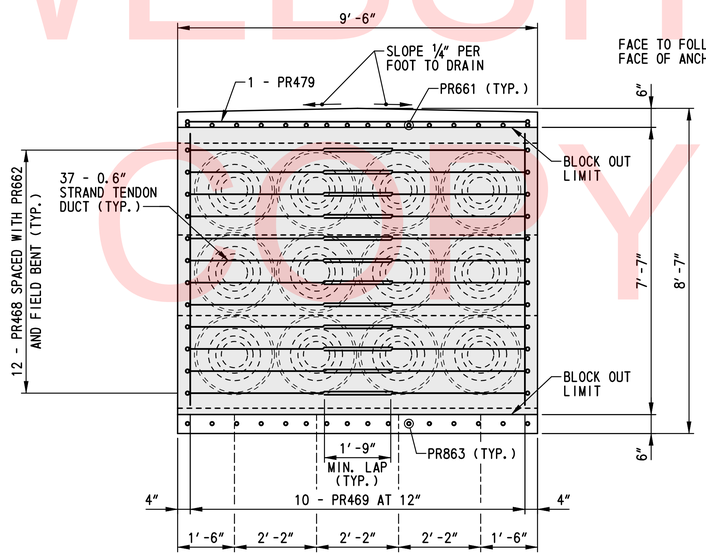

VIEW RR-RR
SCALE: ½"=1'-0"

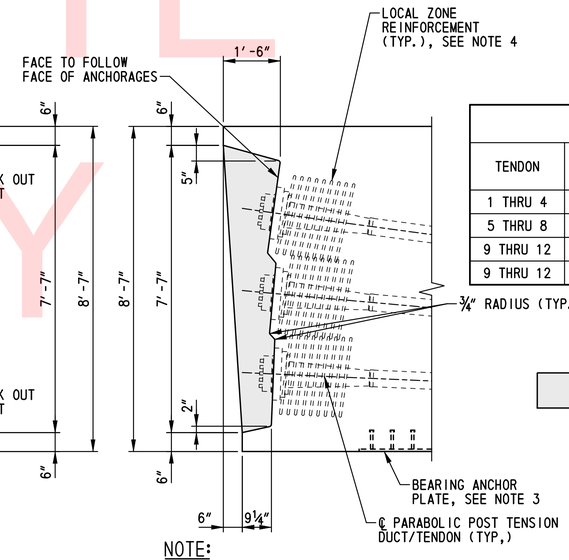

NOTE:
DIMENSIONS SHOWN ARE MEASURED ALONG ℄ PIER CAP.

BLOCK OUT DETAIL
SCALE: ½"=1'-0"

AREA SHOWN TO BE BLOCKED OUT, FILLED WITH NONSHRINK GROUT AND COATED WITH METHACRYLATE SEALER AFTER COMPLETION OF STAGE 2 POST TENSIONING.
THE CONTRACTOR SHALL SUBMIT THE NONSHRINK GROUT MIX DESIGN TO THE ENGINEER FOR APPROVAL. GROUT SHALL BE PUMPED BY MEANS OF INJECTION PIPES FROM THE BOTTOM OF THE BLOCK OUT. NONSHRINK GROUT SHALL BE INCIDENTAL TO ITEM 623514 - POST-TENSIONING STRAND SYSTEM. METHACRYLATE SEALER SHALL BE INCIDENTAL TO ITEM 602777 - PORTLAND CEMENT CONCRETE MASONRY, POST TENSIONED PIER CAP, 8,000 PSI. SEE SPECIAL PROVISIONS.

UNOFFICIAL WEBSITE COPY

N:\31653-000\CONTRACT 1B\CADD\Bridge\Br_No433\PR17_br1-433.dgn
5/8/2013 12:00:30 PM

DELAWARE DEPARTMENT OF TRANSPORTATION	ADDENDUMS / REVISIONS	SCALE: AS SHOWN	US 301 & SR 1 INTERCHANGE	CONTRACT T200911302	BRIDGE NO. 1-433	PIER 3 REINFORCEMENT DETAILS - 4	BR1-3 PR-17
				COUNTY NEW CASTLE	DESIGNED BY: W.T.R., L.F.E.		SHEET NO. 242
					CHECKED BY: W.A.G.		TOTAL SHTS. 491

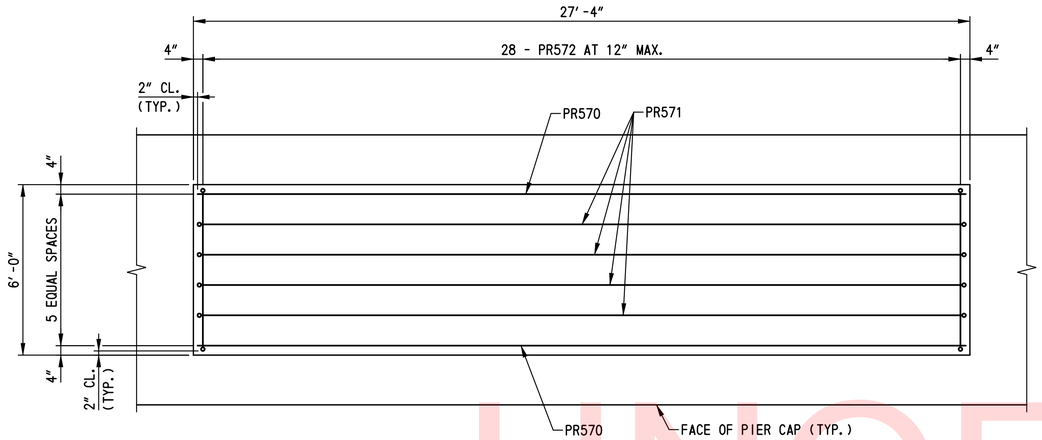

PLAN

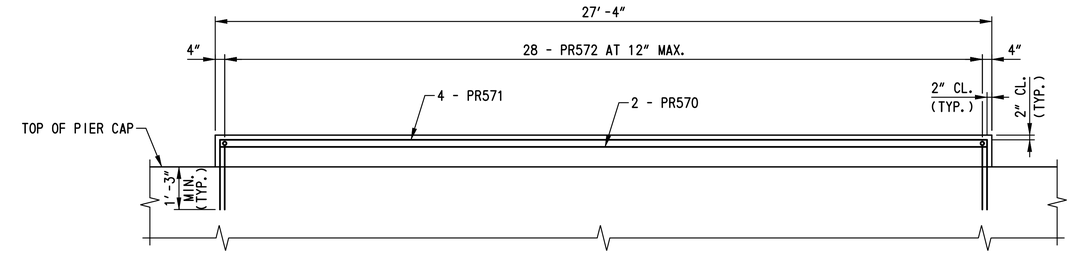

ELEVATION

NOTE:

ANCHOR BOLTS AND SMALLER CONCRETE BEARING PADS NOT SHOWN FOR CLARITY. SEE CONCRETE BEARING PAD REINFORCEMENT DETAILS - 2 AND NOTES FOR ADDITIONAL INFORMATION.

CONCRETE BEARING PAD REINFORCEMENT DETAILS - 1

SCALE: 3/8"=1'-0"

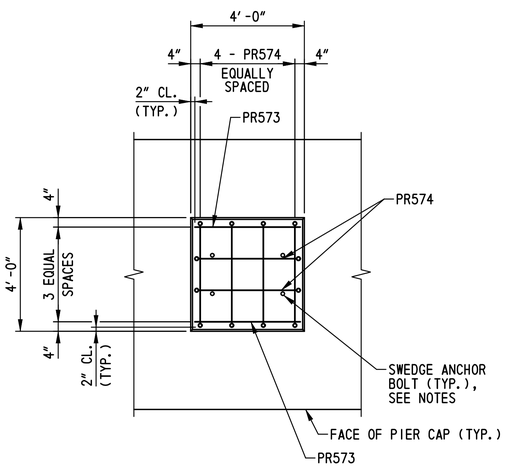

PLAN

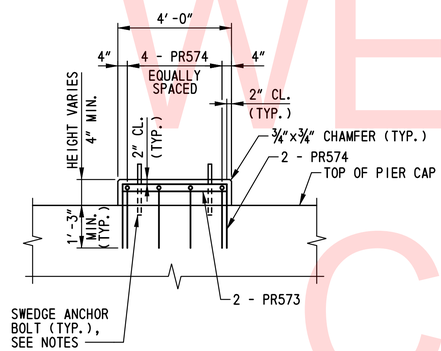

ELEVATION

CONCRETE BEARING PAD REINFORCEMENT DETAILS - 2

SCALE: 3/8"=1'-0"

NOTES:

1. FOR ANCHOR BOLT DETAIL DIMENSIONS AND LOCATIONS, SEE DWG. NOS. BB-01, BB-02 AND BB-13 THRU BB-15.
2. ANCHOR BOLTS SHALL BE CAST IN PLACE. A TEMPORARY CASTING TEMPLATE SHALL BE USED TO ENSURE THE ANCHOR BOLTS ARE PROPERLY ALIGNED AND PLUMB. THE TEMPLATE SHALL BE REMOVED AFTER THE CONCRETE HAS SET.
3. SPACE REINFORCING STEEL AS NECESSARY TO CLEAR ANCHOR BOLTS.
4. FOR ADDITIONAL REINFORCEMENT DETAILS, SEE DWG. NOS. PR-13 THRU PR-17.

UNOFFICIAL WEBSITE COPY

N:\33653-000\Contract 19\CADD\Bridge\Br_No433\PR18_br1-433.dgn
2/5/2013 9:47:13 AM

DELAWARE DEPARTMENT OF TRANSPORTATION	ADDENDUMS / REVISIONS	SCALE: AS SHOWN	US 301 & SR 1 INTERCHANGE	CONTRACT T200911302	BRIDGE NO. 1-433	PIER 3 REINFORCEMENT DETAILS - 5	BR1-3 PR-18
				COUNTY NEW CASTLE	DESIGNED BY: B.K.B.		SHEET NO. 243
					CHECKED BY: W.A.G.		TOTAL SHTS. 491

① ANY MARK NUMBER WITH SUFFIX 'E' DENOTES EPOXY COATED REINFORCING STEEL.

② ALL MARK 'LOCATION PREFIXES' SHALL CONSIST OF TWO LETTERS AND ARE AS FOLLOWS: AB = ABUTMENT, AS = APPROACH SLAB, BC = BOX CULVERT, BW = BACKWALL, CL = COLUMN, DK = DECK, DL = DOWEL, FT = FOOTING, HW = HEADWALL, MS = MISC. BARS, PA = PARAPET, PR = PIER, SC = SHEETPILE CAP, SL = SLAB, TW = TOEWALL, WL = WALL (UNIQUE LOCATION), WW = WINGWALL

SPECIFICATIONS					BENDING DIMENSIONS (FEET-INCHES /QUARTER INCH)										
QTY.	SIZE	LENGTH	MARK	TYPE	A	B	C	D	E	F/R	G	H	J	K	O
ABUTMENT A															
7	6	9-07 3	AB601E	2	1-00 0	8-07 3									
21	6	12-04 3	AB602E	2	1-00 0	11-04 3									
7	6	11-04 3	AB603E	STR		11-04 3									
2	5	8-07 3	AB504E	STR		8-07 3									
2	5	17-07 2	AB505E	STR		17-07 2									
2	5	26-07 0	AB506E	STR		26-07 0									
2	5	35-07 0	AB507E	STR		35-07 0									
6	5	44-06 2	AB508E	STR		44-06 2									
7	8	42-06 2	AB809E	STR		42-06 2									
24	6	11-09 0	AB610E	17		3-11 0	3-11 0	3-11 0							
26	6	11-02 2	AB611E	17		3-07 3	3-11 0	3-07 3							
22	6	10-07 0	AB612E	17		3-04 0	3-11 0	3-04 0							
26	6	10-00 0	AB613E	17		3-00 2	3-11 0	3-00 2							
24	6	9-05 2	AB614E	17		2-09 1	3-11 0	2-09 1							
16	5	4-05 0	AB515E	STR		4-05 0									
100	5	3-04 0	AB516E	STR		3-04 0									
2	5	42-06 2	AB517E	STR		42-06 2									
20	5	5-09 0	AB518E	17		1-07 2	2-06 0	1-07 2							
10	5	3-06 0	AB519E	STR		3-06 0									
10	5	6-09 0	AB520E	17		1-07 2	3-06 0	1-07 2							
3	6	44-06 2	AB621E	STR		44-06 2									
18*	5	8-02 1	BW501E	STR		8-02 1									
		T0				T0									
		8-07 2				8-07 2									
			*2 SETS OF 9												
46	5	2-07 0	BW502E	2	0-10 0	0-11 0					0-10 0				
18	5	44-07 1	BW503E	STR		44-07 1									
44	5	5-01 0	BW504E	12		1-11 0	0-08 0	2-06 0				1-09 1		1-09 1	2-05 1
4	5	42-07 1	BW505E	STR		42-07 1									
4	5	7-05 0	BW506E	STR		7-05 0									
4	5	7-03 1	BW507E	STR		7-03 1									
14	5	4-05 0	BW508E	STR		4-05 0									
2	5	3-11 0	BW509E	STR		3-11 0									
1	5	12-00 1	BW510E	STR		12-00 1									
1	5	9-08 0	BW511E	STR		9-08 0									
18*	5	8-03 1	BW512E	STR		8-03 1									
		T0				T0									
		8-08 2				8-08 2									

SPECIFICATIONS					BENDING DIMENSIONS (FEET-INCHES /QUARTER INCH)										
QTY.	SIZE	LENGTH	MARK	TYPE	A	B	C	D	E	F/R	G	H	J	K	O
			*2 SETS OF 9												
20*	5	8-03 2	BW513E	STR		8-03 2									
		T0				T0									
		8-09 2				8-09 2									
			*2 SETS OF 10												
18*	5	8-04 2	BW514E	STR		8-04 2									
		T0				T0									
		8-10 0				8-10 0									
			*2 SETS OF 9												
18*	5	8-05 2	BW515E	STR		8-05 2									
		T0				T0									
		8-10 3				8-10 3									
			*2 SETS OF 9												
ABUTMENT B															
8	6	11-04 3	AB625E	STR		11-04 3									
24	6	12-04 3	AB626E	2	1-00 0	11-04 3									
8	6	9-07 3	AB627E	2	1-00 0	8-07 3									
2	5	8-07 3	AB528E	STR		8-07 3									
2	5	17-07 2	AB529E	STR		17-07 2									
2	5	26-07 0	AB530E	STR		26-07 0									
2	5	35-07 0	AB531E	STR		35-07 0									
6	5	44-06 2	AB532E	STR		44-06 2									
2	5	43-06 2	AB533E	STR		43-06 2									
28	6	9-05 2	AB634E	17		2-09 1	3-11 0	2-09 1							
30	6	10-00 2	AB635E	17		3-00 3	3-11 0	3-00 3							
26	6	10-07 2	AB636E	17		3-04 1	3-11 0	3-04 1							
30	6	11-02 2	AB637E	17		3-07 3	3-11 0	3-07 3							
30	6	11-09 0	AB638E	17		3-11 0	3-11 0	3-11 0							
6	5	4-05 0	AB539E	STR		4-05 0									
100	5	3-04 0	AB540E	STR		3-04 0									
7	8	43-06 2	AB841E	STR		43-06 2									
10	5	6-11 0	AB542E	17		1-07 2	3-08 0	1-07 2							
20	5	5-09 0	AB543E	17		1-07 2	2-06 0	1-07 2							
10	5	3-08 0	AB544E	STR		3-08 0									
3	6	44-06 2	AB645E	STR		44-06 2									
10	5	5-00 1	AB546E	STR		5-00 1									
18*	5	8-06 1	BW520E	STR		8-06 1									
		T0				T0									

SPECIFICATIONS					BENDING DIMENSIONS (FEET-INCHES /QUARTER INCH)										
QTY.	SIZE	LENGTH	MARK	TYPE	A	B	C	D	E	F/R	G	H	J	K	O
		8-11 2				8-11 2									
			*2 SETS OF 9												
46	5	2-07 0	BW521E	2	0-10 0	0-11 0					0-10 0				
18	5	44-07 1	BW522E	STR		44-07 1									
45	5	5-01 0	BW523E	12		1-11 0	0-08 0	2-06 0				1-09 1		1-09 1	2-05 1
4	5	43-07 1	BW524E	STR		43-07 1									
4	5	7-04 0	BW525E	STR		7-04 0									
7	5	4-05 0	BW526E	STR		4-05 0									
1	5	3-11 0	BW527E	STR		3-11 0									
1	5	9-08 2	BW528E	STR		9-08 2									
4	5	7-05 3	BW529E	STR		7-05 3									
8	5	5-00 1	BW530E	STR		5-00 1									
2	5	13-01 0	BW531E	STR		13-01 0									
18*	5	8-05 1	BW532E	STR		8-05 1									
		T0				T0									
		8-10 2				8-10 2									
			*2 SETS OF 9												
20*	5	8-04 1	BW533E	STR		8-04 1									
		T0				T0									
		8-10 1				8-10 1									
			*2 SETS OF 10												
18*	5	8-03 3	BW534E	STR		8-03 3									
		T0				T0									
		8-09 1				8-09 1									
			*2 SETS OF 9												
18*	5	8-03 0	BW535E	STR		8-03 0									
		T0				T0									
		8-08 1				8-08 1									
			*2 SETS OF 9												

ASTM STANDARD ENGLISH REINFORCING BARS				RECOMMENDED END HOOKS, APPLICABLE TO ALL GRADES				STIRRUP AND TIE HOOKS, APPLICABLE TO ALL GRADES			
NOMINAL DIMENSIONS				180° HOOKS			90° HOOKS	90° HOOK		135° HOOK	
BAR SIZE	DIAMETER (INCHES)	AREA (INCHES²)	WEIGHT (LBS./FT.)	D	A OR G	J	A OR G	D	A OR G	A OR G	H
3	0.375	0.110	0.376	2¼"	5"	3"	6"	1½"	4"	4"	2½"
4	0.500	0.200	0.668	3"	6"	4"	8"	2"	4½"	4½"	3"
5	0.625	0.310	1.043	3¾"	7"	5"	10"	2½"	6"	5½"	3¾"
6	0.750	0.440	1.502	4½"	8"	6"	1-0"	4½"	1-0"	8"	4½"
7	0.875	0.600	2.044	5¼"	10"	7"	1-2"	5¼"	1-2"	9"	5¼"
8	1.000	0.790	2.670	6"	11"	8"	1-4"	6"	1-4"	10½"	6"
9	1.128	1.000	3.400	9½"	1-3"	11¾"	1-7"				
10	1.270	1.270	4.303	10¾"	1-5"	1-1¼"	1-10"				
11	1.410	1.560	5.313	1-0"	1-7"	1-2¾"	2-0"				
14	1.693	2.250	7.650	1-6¼"	2-3"	1-9¾"	2-7"				
18	2.257	4.000	13.600	2-0"	3-0"	2-4½"	3-5"				

NOTES:

1. FIGURES SHOWN IN CIRCLES REPRESENT BAR BEND TYPES.
2. STANDARD BAR BENDS INCLUDE ONLY THOSE TYPES BELOW, INDICATED AS SUCH.
3. ALL DIMENSIONS OUT-TO-OUT, EXCEPT "A" AND "G" ON STD. 180° AND 135° HOOKS.
4. "J" DIMENSIONS ON 180° HOOKS TO BE SHOWN ONLY WHERE NECESSARY TO RESTRICT HOOK SIZE, OTHERWISE STANDARD 'ACI' HOOKS ARE TO BE USED.
5. WHERE "J" IS NOT SHOWN, "J" WILL BE KEPT EQUAL TO OR LESS THAN "H" ON TYPES 3, 5 AND 22. WHERE "J" CAN EXCEED "H", IT SHALL BE SHOWN.
6. "H" DIMENSIONS OF STIRRUPS TO BE SHOWN AS NEEDED TO FIT WITHIN THE CONCRETE.
7. UNLESS OTHERWISE NOTED, DIAMETER "D" IS THE SAME FOR ALL BENDS AND HOOKS ON A BAR (EXCEPT FOR BEND TYPES 11 AND 13).
8. WHERE SLOPE DIFFERS FROM 45° OFFSET, "H" AND "K" MUST BE SHOWN.
9. WHERE BARS ARE TO BE BENT MORE ACCURATELY THAN STANDARD BENDING TOLERANCES, BENDING DIMENSIONS REQUIRING CLOSER FABRICATION SHOULD HAVE LIMITS INDICATED.
10. FOR RECOMMENDED DIAMETER "D", OF BENDS, HOOKS, ETC., REFER TO TABLE ABOVE, 'CRSI' OR 'ACI' TABLES WHERE APPLICABLE AND REQUIRED.
11. TYPE S1-S6, S11, T1-T3 AND T6-T9 APPLICABLE TO BAR SIZES #3 THROUGH #8.

STANDARD BAR BENDS

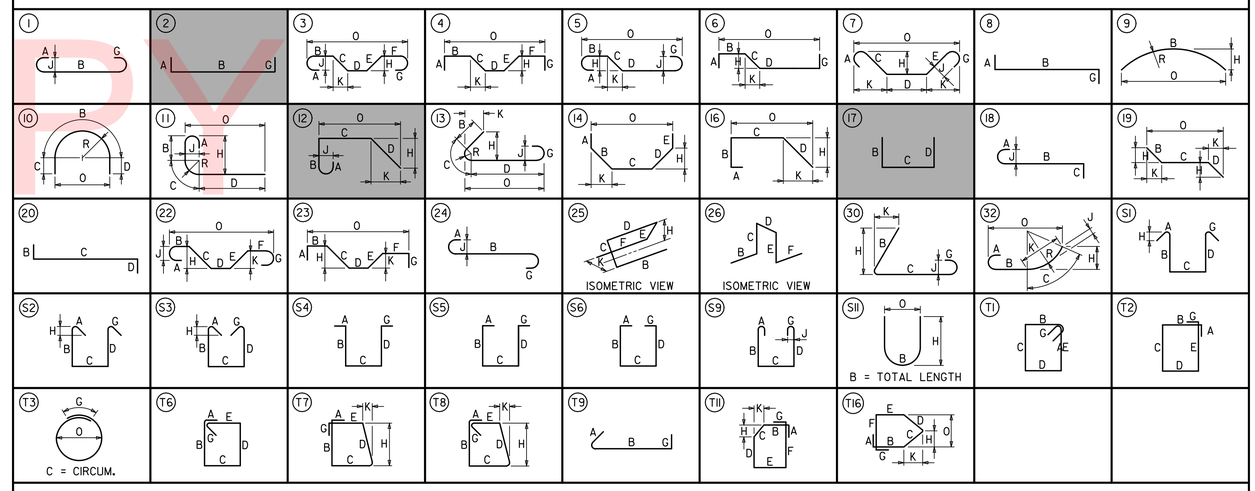

SPECIAL BAR BENDS

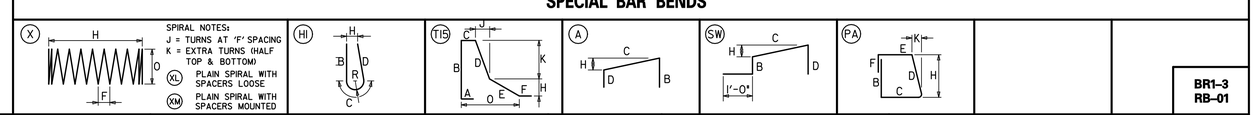

STIRRUP AND TIE HOOKS

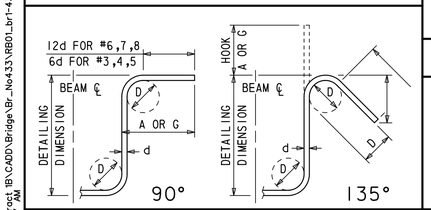

180° AND 90° END HOOKS

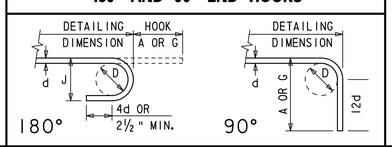

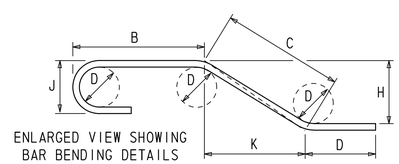

ENLARGED VIEW SHOWING BAR BENDING DETAILS

UNOFFICIAL WEBSITE COPY

N:\31653-000\Contract 1B\CADD\Bridge\Br_No433\RB01_br1-433.dgn 2/5/2013 9:48:37 AM

DELAWARE DEPARTMENT OF TRANSPORTATION

ADDENDUMS / REVISIONS

NOT TO SCALE

US 301 & SR 1 INTERCHANGE

CONTRACT	BRIDGE NO.	1-433
T200911302	DESIGNED BY: W.T.R.	
COUNTY		
NEW CASTLE	CHECKED BY: B.K.B.	

ABUTMENT REINFORCEMENT LIST

BR1-3 RB-01

SHEET NO. 244

TOTAL SHTS. 491

① ANY MARK NUMBER WITH SUFFIX 'E' DENOTES EPOXY COATED REINFORCING STEEL.

② ALL MARK 'LOCATION PREFIXES' SHALL CONSIST OF TWO LETTERS AND ARE AS FOLLOWS: AB = ABUTMENT, AS = APPROACH SLAB, BC = BOX CULVERT, BW = BACKWALL, CL = COLUMN, DK = DECK, DL = DOWEL, FT = FOOTING, HW = HEADWALL, MS = MISC. BARS, PA = PARAPET, PR = PIER, SC = SHEETPILE CAP, SL = SLAB, TW = TOEWALL, WL = WALL (UNIQUE LOCATION), WW = WINGWALL

SPECIFICATIONS					BENDING DIMENSIONS (FEET-INCHES /QUARTER INCH)											
QTY.	SIZE	LENGTH	MARK	TYPE	A	B	C	D	E	F/R	G	H	J	K	O
PIER 1															
372	7	31-02 0	PR701	T1	0-09 0	6-09 0	8-01 0	6-09 0	8-01 0		0-09 0				
32	6	59-10 2	PR602	STR		59-10 2									
48	6	57-07 3	PR603	STR		57-07 3									
32	8	58-11 0	PR804	STR		58-11 0									
96	7	13-09 0	PR705	17		6-01 0	1-07 0	6-01 0							
26	8	10-07 0	PR806	2	1-04 0	7-11 0					1-04 0				
24	8	11-08 1	PR807	2	1-04 0	9-00 1					1-04 0				
48	4	2-06 0	PR408	STR		2-06 0									
48	4	6-09 0	PR409	STR		6-09 0									
20	4	7-02 0	PR410	STR		7-02 0									
2	5	27-00 0	PR511	STR		27-00 0									
4	5	32-01 0	PR512	17		2-06 2	27-00 0	2-06 2							
28	5	10-07 0	PR513	17		2-05 3	5-08 0	2-05 3							
10	5	3-08 0	PR514	STR		3-08 0									
30	5	8-11 0	PR515	17		2-07 2	3-08 0	2-07 2							
1	5		PR516	XL						0-06 0		22-00 0	44	3	7-06 0
74	9	22-08 3	PR917	STR		22-08 3									
1	5		PR518	XL						0-06 0		21-02 0	43	3	7-06 0
74	9	21-04 3	PR919	STR		21-04 3									
2	4	10-06 0	PR420	2	0-08 0	9-02 0					0-08 0				
74	9	10-10 0	FT901	2	1-07 0	9-03 0									
83	5	25-09 0	FT502	STR		25-09 0									
70	5	32-06 0	FT503	STR		32-06 0									
52	9	25-09 0	FT904	STR		25-09 0									
61	9	32-06 0	FT905	STR		32-06 0									
12	6	32-06 0	FT606	STR		32-06 0									
15	6	25-09 0	FT607	STR		25-09 0									
74	9	11-04 0	FT908	2	1-07 0	9-09 0									
80	5	25-00 0	FT509	STR		25-00 0									
77	5	26-06 0	FT510	STR		26-06 0									
46	8	26-06 0	FT811	STR		26-06 0									
46	8	25-00 0	FT812	STR		25-00 0									
12	6	25-00 0	FT613	STR		25-00 0									
12	6	26-06 0	FT614	STR		26-06 0									
234	5	5-09 1	FT515	2	0-10 0	4-11 1									
226	5	6-03 1	FT516	2	0-10 0	5-05 1									
PIER 2															
1	6	15-09 0	PR625	T1	0-08 0	2-04 3	4-09 3	2-04 3	4-09 3		0-08 0				
1	6	20-03 2	PR626	T1	0-08 0	4-02 2	5-03 1	4-02 2	5-03 1		0-08 0				
18	6	19-00 0	PR627	T1	0-08 0	3-01 0	5-09 0	3-01 0	5-09 0		0-08 0				
		T0					T0		T0						
		26-06 0					9-06 0		9-06 0						
14	6	27-05 2	PR628	T1	0-08 0	3-01 0	9-11 3	3-01 0	9-11 3		0-08 0				
		T0					T0		T0						
		30-03 0					11-04 2		11-04 2						
16	6	30-04 0	PR629	T1	0-08 0	3-01 0	11-05 0	3-01 0	11-05 0		0-08 0				
		T0					T0		T0						
		31-11 0					12-02 2		12-02 2						
14	6	28-09 0	PR630	T1	0-08 0	3-01 0	10-07 2	3-01 0	10-07 2		0-08 0				
		T0					T0		T0						
		31-11 0					12-02 2		12-02 2						
18	6	19-03 0	PR631	T1	0-08 0	3-01 0	5-10 2	3-01 0	5-10 2		0-08 0				
		T0					T0		T0						
		27-08 2					10-01 1		10-01 1						
1	6	20-05 2	PR632	T1	0-08 0	4-02 2	5-04 1	4-02 2	5-04 1		0-08 0				
1	6	15-09 2	PR633	T1	0-08 0	2-04 3	4-10 0	2-04 3	4-10 0		0-08 0				
22	10	28-02 0	PR1034	3		26-04 0	1-10 0					1-10 0		0-01 1	26-05 1
22	10	28-02 0	PR1035	30		1-10 0	26-04 0					1-10 0		0-01 1	
20	8	39-00 3	PR836	STR		39-00 3									
6*	8	34-06 2	PR837	STR		34-06 2									
		T0				T0									
		38-07 0				38-07 0									
			*2 SETS OF 3												
6*	5	22-05 0	PR538	STR		22-05 0									
		T0				T0									
		30-06 0				30-06 0									
			*2 SETS OF 3												
8	5	21-04 1	PR539	3		13-00 0	8-04 1					3-02 1		7-08 2	20-04 2
8	5	22-03 1	PR540	3		13-11 0	8-04 1					4-02 2		7-02 2	20-04 2
14	8	15-07 3	PR841	10		7-01 2	3-02 0	3-02 0		2-02 1					4-06 2
96	10	23-09 0	PR1042	STR		23-09 0									
84	5	5-07 2	PR543	T9	0-05 2	4-08 0					0-06 0				
42	5	21-04 1	PR544	10		7-04 0	5-10 2	5-10 2		2-03 1					4-08 0
20	5	5-05 0	PR545	17		1-10 0	1-09 0	1-10 0							
10	5	4-02 0	PR546	STR		4-02 0									
10	5	7-10 0	PR547	17		1-10 0	4-02 0	1-10 0							
45	5	4-08 0	PR548	STR		4-08 0									
96	10	13-11 0	FT1021	2	1-10 0	12-01 0									
53	7	31-06 0	FT722	STR		31-06 0									
57	7	28-09 0	FT723	STR		28-09 0									
52	7	28-09 0	FT724	STR		28-09 0									
64	10	31-06 0	FT1025	STR		31-06 0									
18	6	28-09 0	FT626	STR		28-09 0									
15	6	31-06 0	FT627	STR		31-06 0									
156	7	7-03 0	FT728	2	0-10 0	6-05 0									
PIER 3															
328	7	31-02 0	PR760	T1	0-09 0	6-09 0	8-01 0	6-09 0	8-01 0		0-09 0				
32	6	52-04 2	PR661	STR		52-04 2									
48	6	50-01 2	PR662	STR		50-01 2									
32	8	51-05 2	PR863	STR		51-05 2									
96	7	13-09 0	PR764	17		6-01 0	1-07 0	6-01 0							
26	8	10-07 0	PR865	2	1-04 0	7-11 0					1-04 0				
24	8	11-08 1	PR866	2	1-04 0	9-00 1					1-04 0				
48	4	2-06 0	PR467	STR		2-06 0									
48	4	6-09 0	PR468	STR		6-09 0									
20	4	7-02 0	PR469	STR		7-02 0									
2	5	27-00 0	PR570	STR		27-00 0									
4	5	32-00 0	PR571	17		2-06 0	27-00 0	2-06 0							
28	5	10-06 0	PR572	17		2-05 0	5-08 0	2-05 0							
10	5	3-08 0	PR573	STR		3-08 0									
30	5	8-11 0	PR574	17		2-07 2	3-08 0	2-07 2							
1	5		PR575	XL						0-06 0		21-06 0	43	3	7-06 0
74	9	21-09 0	PR976	STR		21-09 0									
1	5		PR577	XL						0-06 0		20-03 0	41	3	7-06 0
74	9	20-06 0	PR978	STR		20-06 0									
2	4	10-06 0	PR479	2	0-08 0	9-02 0					0-08 0				
74	9	10-04 0	FT930	2	1-07 0	8-09 0									
120	5	23-06 0	FT531	STR		23-06 0									
80	8	23-06 0	FT832	STR		23-06 0									
24	6	23-06 0	FT633	STR		23-06 0									
74	9	10-04 0	FT934	2	1-07 0	8-09 0									
124	5	24-06 0	FT535	STR		24-06 0									
96	10	24-06 0	FT1036	STR		24-06 0									
30	6	24-06 0	FT637	STR		24-06 0									
176	5	5-03 1	FT538	2	0-10 0	4-05 1									
184	5	5-03 1	FT539	2	0-10 0	4-05 1									

ASTM STANDARD ENGLISH REINFORCING BARS				RECOMMENDED END HOOKS, APPLICABLE TO ALL GRADES				STIRRUP AND TIE HOOKS, APPLICABLE TO ALL GRADES			
	NOMINAL DIMENSIONS				180° HOOKS		90° HOOKS		90° HOOK	135° HOOK	
BAR SIZE	DIAMETER (INCHES)	AREA (INCHES²)	WEIGHT (LBS./FT.)	D	A OR G	J	A OR G	D	A OR G	A OR G	H
3	0.375	0.110	0.376	2¼″	5″	3″	6″	1½″	4″	4″	2½″
4	0.500	0.200	0.668	3″	6″	4″	8″	2″	4½″	4½″	3″
5	0.625	0.310	1.043	3¾″	7″	5″	10″	2½″	6″	5½″	3¾″
6	0.750	0.440	1.502	4½″	8″	6″	1-0″	4½″	1-0″	8″	4½″
7	0.875	0.600	2.044	5¼″	10″	7″	1-2″	5¼″	1-2″	9″	5¼″
8	1.000	0.790	2.670	6″	11″	8″	1-4″	6″	1-4″	10½″	6″
9	1.128	1.000	3.400	9½″	1-3″	11¾″	1-7″				
10	1.270	1.270	4.303	10¾″	1-5″	1-1¼″	1-10″				
11	1.410	1.560	5.313	1-0″	1-7″	1-2¾″	2-0″				
14	1.693	2.250	7.650	1-6¼″	2-3″	1-9¾″	2-7″				
18	2.257	4.000	13.600	2-0″	3-0″	2-4½″	3-5″				

NOTES:

1. FIGURES SHOWN IN CIRCLES REPRESENT BAR BEND TYPES.
2. STANDARD BAR BENDS INCLUDE ONLY THOSE TYPES BELOW, INDICATED AS SUCH.
3. ALL DIMENSIONS OUT-TO-OUT, EXCEPT "A" AND "G" ON STD. 180° AND 135° HOOKS.
4. "J" DIMENSIONS ON 180° HOOKS TO BE SHOWN ONLY WHERE NECESSARY TO RESTRICT HOOK SIZE, OTHERWISE STANDARD 'ACI' HOOKS ARE TO BE USED.
5. WHERE "J" IS NOT SHOWN, "J" WILL BE KEPT EQUAL TO OR LESS THAN "H" ON TYPES 3, 5 AND 22. WHERE "J" CAN EXCEED "H", IT SHALL BE SHOWN.
6. "H" DIMENSIONS OF STIRRUPS TO BE SHOWN AS NEEDED TO FIT WITHIN THE CONCRETE.
7. UNLESS OTHERWISE NOTED, DIAMETER "D" IS THE SAME FOR ALL BENDS AND HOOKS ON A BAR (EXCEPT FOR BEND TYPES 11 AND 13).
8. WHERE SLOPE DIFFERS FROM 45° OFFSET, "H" AND "K" MUST BE SHOWN.
9. WHERE BARS ARE TO BE BENT MORE ACCURATELY THAN STANDARD BENDING TOLERANCES, BENDING DIMENSIONS REQUIRING CLOSER FABRICATION SHOULD HAVE LIMITS INDICATED.
10. FOR RECOMMENDED DIAMETER "D", OF BENDS, HOOKS, ETC., REFER TO TABLE ABOVE, 'CRSI' OR 'ACI' TABLES WHERE APPLICABLE AND REQUIRED.
11. TYPE S1-S6, S11, T1-T3 AND T6-T9 APPLICABLE TO BAR SIZES #3 THROUGH #8.

STANDARD BAR BENDS

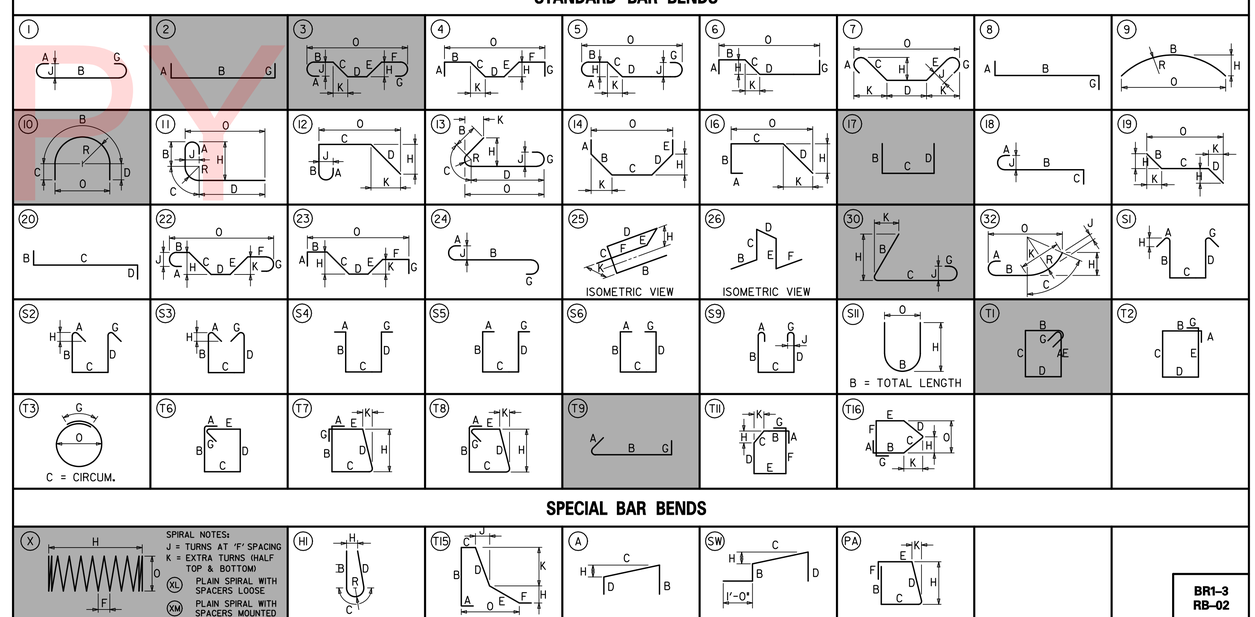

SPECIAL BAR BENDS

STIRRUP AND TIE HOOKS

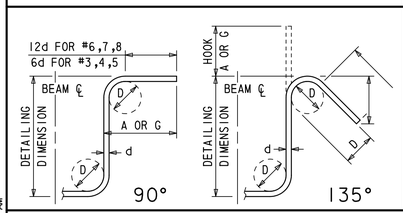

180° AND 90° END HOOKS

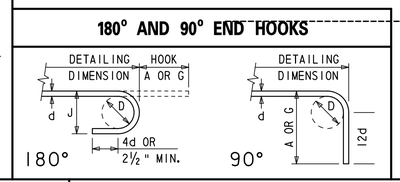

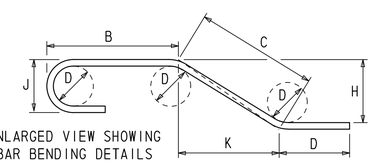

UNOFFICIAL WEBSITE COPY

DELAWARE DEPARTMENT OF TRANSPORTATION

ADDENDUMS / REVISIONS

NOT TO SCALE

US 301 & SR 1 INTERCHANGE

CONTRACT	BRIDGE NO.	1-433
T200911302	DESIGNED BY: W.T.R.	
COUNTY		
NEW CASTLE	CHECKED BY: B.K.B.	

PIER REINFORCEMENT LIST

BR1-3 RB-02

SHEET NO.
245
TOTAL SHTS.
491

N:\31653-000\CONTRACT 1B\CADD\Bridge\Br_No433\RB02_br1-433.dgn 4/16/2013 11:25:11 AM

HIGH LOAD MULTI-ROTATIONAL BEARING NOTES

INSTALLATION NOTES:

1. CONTRACTOR IS RESPONSIBLE FOR ANY DISCREPANCY IN THE BEARING ELEVATIONS.
2. CONDUCT HANDLING AND INSTALLATION OF HIGH LOAD MULTI-ROTATIONAL BEARINGS IN SUCH A MANNER AS TO PROTECT THE BEARINGS. IN ADDITION, PARTICULAR ATTENTION IS TO BE GIVEN TO PROTECTING ALL SLIDING SURFACES OF BEARINGS AND ANY PROTECTIVE COATINGS ON BEARINGS. HIGH LOAD MULTI-ROTATIONAL BEARINGS ARE TO BE SUPPLIED WITH REQUIRED PROTECTIVE COATINGS AS NOTED IN SHOP NOTES. BEARINGS MAY NOT BE DISASSEMBLED FOR ANY FURTHER COATING APPLICATION OR COATING TOUCH-UP AT JOB SITE.
3. USE EDGE PROTECTORS OR NYLON SLINGS WHEN HANDLING HIGH LOAD MULTI-ROTATIONAL BEARINGS IN ORDER TO PROTECT THE PROTECTIVE COATINGS ON THE BEARINGS. TO AVOID DAMAGING PROTECTIVE COATING ON BEARINGS, DO NOT POSITION HIGH LOAD MULTI-ROTATIONAL BEARINGS BY MEANS OF STRIKING.
4. IN THE EVENT OF DAMAGE TO PROTECTIVE COATINGS, MAKE REPAIRS AS QUICKLY AS POSSIBLE IN ORDER TO AVOID MOISTURE INDUCED COATING FAILURE. PROPERLY PREPARE STEEL SURFACES IN AREA OF DAMAGED COATINGS BY REMOVING ALL LOOSE COATINGS AND RUST AND BY PROVIDING REQUIRED STEEL PROFILE FOR COATING ADHERENCE. PERFORM RECOATING WITHIN 8 HOURS OF STEEL PREPARATION.
5. PROTECT THE PURE WOVEN PTFE FIBER PADS AND STAINLESS STEEL SURFACES FROM DIRT, DEBRIS, WELD SPATTER, BLASTING SAND/GRIT, GRINDING PARTICLES, PAINT, PAINT OVERSPRAY, AND ANY OTHER FOREIGN MATTER. AVOID EXPOSURE OF PTFE FIBER PADS TO DIRECT SUNLIGHT TO PREVENT ULTRA-VIOLET RAY DAMAGE TO PTFE FIBER PADS.
6. BLOCK GIRDERS AT EXPANSION BEARINGS DURING ERECTION IN ORDER TO: (A) PROTECT THE BEARINGS FROM IMPACT AND/OR ECCENTRIC LOADS, (B) STABILIZE THE GIRDER, AND (C) INSURE PROPER BRIDGE/GIRDER ALIGNMENT.
7. REMOVE BANDING WHICH SECURES BEARING AS A UNIT ONLY AFTER BEARING IS SET IN PLACE AND PRIOR TO POSITIONING SOLE PLATE FOR GIRDER INSTALLATION. THESE BEARINGS MAY NOT BE DISASSEMBLED AT THE JOB SITE UNDER ANY CIRCUMSTANCES WITHOUT THE APPROVAL OF THE ENGINEER AND THE APPROVAL OR PRESENCE OF THE MANUFACTURER'S REPRESENTATIVE.
8. WHEN WELDING THE SOLE PLATE TO GIRDER FLANGE, ENSURE THAT SURFACES CONTACTING THE PTFE SURFACES DO NOT EXCEED 250°F, TO AVOID DAMAGING THE PTFE.

SHOP NOTES:

1. WOVEN FABRIC POLYTETRAFLUOROETHYLENE (PTFE) SHALL BE MADE FROM ORIENTED MULTI-FILAMENT PTFE FIBERS. PTFE RESIN SHALL BE 100 PERCENT PURE NEW MATERIAL AND SHALL COMPLY WITH D 4894 OR D 4895. TENSILE STRENGTH SHALL BE AT LEAST 24,000 PSI ELONGATION AT BREAK SHALL BE 75% USING THE D 2256 TEST METHOD. NO RECLAIMED MATERIAL SHALL BE USED. FINISHED PTFE SHALL BE RESISTANT TO ACIDS, ALKALIS AND PETROLEUM PRODUCTS, STABLE AT TEMPERATURES FROM -360°F TO +500°F, NON-FLAMMABLE, AND NON-ABSORBING OF WATER.
2. THE PTFE FIBER PAD THAT MATES WITH THE STAINLESS STEEL CONVEX PLATE SHALL COVER THE ENTIRE SPHERICAL PORTION OF THE CONCAVE PLATE. THE PTFE FIBER PAD THAT MATES WITH THE BEVELED SOLE PLATE SHALL COVER THE ENTIRE SURFACE OF THE TOP OF THE CONCAVE PLATE.
3. STAINLESS STEEL SHEETS ARE TO BE WELDED TO THE SOLE PLATES AND GUIDE BARS USING THE TUNGSTEN INERT GAS (TIG) PROCESS. STAINLESS STEEL SHEETS ARE TO BE WELDED AROUND THE ENTIRE PERIPHERY OF THE STAINLESS STEEL SHEET.
4. SHOP PAINT ALL STEEL SURFACES EXPOSED TO THE ATMOSPHERE IN ACCORDANCE WITH SECTION 826 EXCEPT STAINLESS STEEL SURFACES AND SURFACES TO BE WELDED. MASK CONTACT SURFACES AS REQUIRED. TOPCOAT COLOR SHALL BE STANDARD COLOR NO. 10076 (BROWN) OF FEDERAL STANDARD 595B. PAINTING SHALL BE INCIDENTAL TO ITEM 605587 - HIGH-LOAD MULTI-ROTATIONAL BEARINGS.
5. BEARINGS ARE TO BE MARKED FOR IDENTIFICATION AND ORIENTATION. BEARINGS SHALL HAVE MATCH MARKS INDICATING NORMAL POSITION OF THE BEARING AT 60°F.
6. BEARINGS ARE TO BE SECURED AS AN ENTIRE UNIT AND WRAPPED IN PLASTIC TO PROTECT THE BEARINGS FROM MOISTURE AND DUST.
7. ALL WELDING SHALL BE IN CONFORMANCE WITH SECTION 826.
8. ALL BEARINGS SHALL BE TESTED IN CONFORMANCE WITH SECTION 18.1.5, 2004 AASHTO LRFD BRIDGE CONSTRUCTION SPECIFICATIONS INCLUDING 2006, 2007, 2008 AND 2009 INTERIMS.

UNOFFICIAL WEBSITE COPY

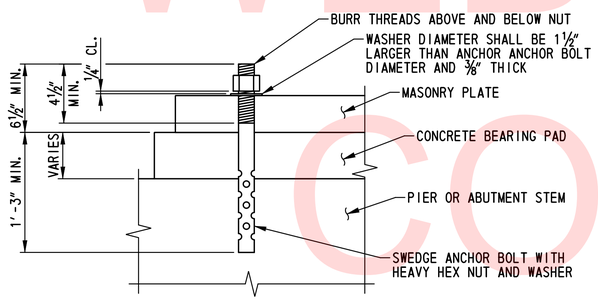

ANCHOR BOLT DETAIL

SCALE: 1"=1'-0"

HIGH LOAD MULTI-ROTATIONAL BEARING MATERIALS	
COMPONENT	SPECIFICATIONS
MASONRY, CONCAVE, AND SOLE PLATES	A 709, GRADE 50 STRUCTURAL STEEL < 4" THICK A 572, GRADE 42 STRUCTURAL STEEL > 4" THICK
CONVEX PLATES	A 167 OR A 264, 16 MICRO-INCHES RMS FINISH OR LESS
STAINLESS STEEL SHEETS	10 GAGE, CONFORMING TO A 167 OR A 264, TYPE 304, #8 MIRROR FINISH
PTFE SURFACE	WOVEN FABRIC MADE FROM PURE PTFE SEE BEARING NOTES FOR ADDITIONAL INFORMATION
GUIDE BARS	A 709, GRADE 50 STRUCTURAL STEEL
CAP SCREWS	A 574
ANCHOR PLATE	A 709, GALVANIZED GRADE 50 STRUCTURAL STEEL

NOTES:

1. ANCHOR BOLTS FOR THE PIER 1 AND PIER 3 BEARINGS WHICH CONNECT THE POST TENSIONED PIER CAP TO THE COLUMNS SHALL BE UNPAINTED ASTM F 1554, GRADE 105 GALVANIZED STEEL.
2. ANCHOR BOLTS FOR BEARINGS WHICH CONNECT THE SUPERSTRUCTURE TO THE SUBSTRUCTURE SHALL BE UNPAINTED ASTM F 1554, GRADE 55 GALVANIZED STEEL.
3. PLATE WASHERS SHALL BE UNPAINTED ASTM A 709, GRADE 36 GALVANIZED STEEL.
4. NUTS SHALL BE UNPAINTED ASTM A 563 GALVANIZED STEEL.
5. ANCHOR BOLTS SHALL BE CAST IN PLACE. A TEMPORARY CASTING TEMPLATE SHALL BE USED TO ENSURE THE ANCHOR BOLTS ARE PROPERLY ALIGNED AND PLUMB. THE TEMPLATE SHALL BE REMOVED AFTER THE CONCRETE HAS SET.

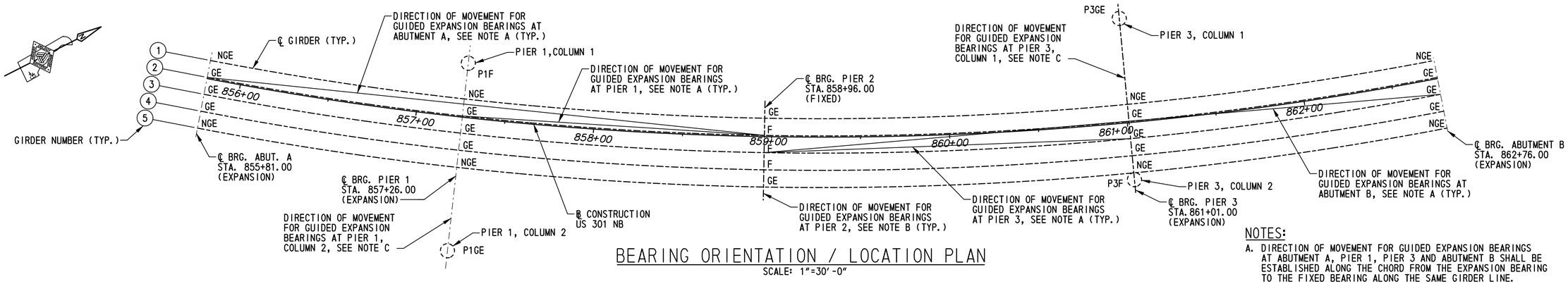

BEARING ORIENTATION / LOCATION PLAN

SCALE: 1"=30'-0"

HIGH LOAD MULTI-ROTATIONAL BEARING SCHEDULE

BEARING LOCATION			ABUTMENT A ② ③ ④	PIER 1 ② ③ ④	PIER 2 ① ⑤	PIER 3 ② ③ ④	ABUTMENT B ② ③ ④	ABUTMENT A ① ⑤	PIER 1 ① ⑤	PIER 3 ① ⑤	ABUTMENT B ① ⑤	PIER 2 ② ③ ④	PIER 1 COLUMN 1	PIER 1 COLUMN 2	PIER 3 COLUMN 1	PIER 3 COLUMN 2
BEARING TYPE		QUANTITY	GE 3	GE 3	GE 2	GE 3	GE 3	NGE 2	NGE 2	NGE 2	NGE 2	FIXED 3	P1F 1	P1GE 1	P3GE 1	P3F 1
AASHTO STRENGTH I	VERTICAL DESIGN LOAD	DL	150 K	464 K	491 K	591 K	179 K	165 K	444 K	583 K	197 K	508 K	1151 K	866 K	752 K	1479 K
		LL	158 K MAX. -14 K MIN.	303 K MAX. -36 K MIN.	331 K MAX. -64 K MIN.	332 K MAX. -21 K MIN.	162 K MAX. -18 K MIN.	169 K MAX. -35 K MIN.	307 K MAX. -55 K MIN.	341 K MAX. -51 K MIN.	184 K MAX. -39 K MIN.	325 K MAX. -37 K MIN.	415 K MAX. 0 K MIN.	256 K MAX. 0 K MIN.	202 K MAX. 0 K MIN.	547 K MAX. 0 K MIN.
		MISC.	N/A	N/A	N/A	N/A	N/A	N/A	N/A	N/A	N/A	N/A	95 K	219 K	391 K	72 K
	HORIZONTAL DESIGN LOAD	TRANSVERSE	13 K	13 K	47 K	13 K	13 K	16 K	42 K	55 K	19 K	13 K	154 K	132 K	93 K	151 K
		LONGITUDINAL	15 K	44 K	54 K	57 K	17 K	16 K	42 K	55 K	19 K	54 K	63 K	38 K	33 K	97 K
AASHTO STRENGTH II	VERTICAL DESIGN LOAD	DL	150 K	464 K	491 K	600 K	179 K	165 K	444 K	583 K	197 K	508 K	1151 K	866 K	752 K	1479 K
		LL	122 K MAX. -11 K MIN.	234 K MAX. -28 K MIN.	255 K MAX. -49 K MIN.	256 K MAX. -16 K MIN.	125 K MAX. -14 K MIN.	130 K MAX. -27 K MIN.	237 K MAX. -42 K MIN.	263 K MAX. -39 K MIN.	142 K MAX. -30 K MIN.	251 K MAX. -29 K MIN.	320 K MAX. 0 K MIN.	198 K MAX. 0 K MIN.	156 K MAX. 0 K MIN.	422 K MAX. 0 K MIN.
		MISC.	N/A	N/A	N/A	N/A	N/A	N/A	N/A	N/A	N/A	N/A	82 K	190 K	343 K	63 K
	HORIZONTAL DESIGN LOAD	TRANSVERSE	10 K	10 K	47 K	10 K	10 K	16 K	42 K	55 K	19 K	10 K	150 K	128 K	89 K	146 K
		LONGITUDINAL	15 K	44 K	49 K	57 K	17 K	16 K	42 K	55 K	19 K	49 K	55 K	33 K	29 K	85 K
AASHTO STRENGTH III	VERTICAL DESIGN LOAD	DL	150 K	464 K	491 K	600 K	179 K	165 K	444 K	583 K	197 K	508 K	1151 K	866 K	752 K	1479 K
		LL	0 0	0 0	0 0	0 0	0 0	0 0	0 0	0 0	0 0	0 0	0 0	0 0	0 0	0 0
		MISC.	N/A	N/A	N/A	N/A	N/A	N/A	N/A	N/A	N/A	N/A	103 K	249 K	432 K	85 K
	HORIZONTAL DESIGN LOAD	TRANSVERSE	21 K	0	47 K	55 K	26 K	16 K	42 K	55 K	19 K	55 K	183 K	161 K	122 K	179 K
		LONGITUDINAL	15 K	44 K	77 K	57 K	17 K	16 K	42 K	55 K	19 K	76 K	83 K	55 K	47 K	119 K
AASHTO STRENGTH IV	VERTICAL DESIGN LOAD	DL	176 K	546 K	578 K	705 K	211 K	194 K	522 K	686 K	231 K	598 K	1363 K	1030 K	894 K	1749 K
		LL	0 0	0 0	0 0	0 0	0 0	0 0	0 0	0 0	0 0	0 0	0 0	0 0	0 0	0 0
		MISC.	N/A	N/A	N/A	N/A	N/A	N/A	N/A	N/A	N/A	N/A	82 K	190 K	343 K	63 K
	HORIZONTAL DESIGN LOAD	TRANSVERSE	0	0	47 K	0	0	16 K	42 K	55 K	19 K	0	150 K	128 K	89 K	146 K
		LONGITUDINAL	15 K	44 K	31 K	57 K	17 K	16 K	42 K	55 K	19 K	31 K	55 K	33 K	29 K	146 K
AASHTO STRENGTH V	VERTICAL DESIGN LOAD	DL	150 K	464 K	491 K	600 K	179 K	165 K	444 K	583 K	197 K	508 K	1151 K	866 K	752 K	1479 K
		LL	122 K MAX. -11 K MIN.	174 K MAX. -21 K MIN.	255 K MAX. -49 K MIN.	256 K MAX. -16 K MIN.	125 K MAX. -14 K MIN.	130 K MAX. -27 K MIN.	237 K MAX. -42 K MIN.	263 K MAX. -39 K MIN.	142 K MAX. -30 K MIN.	251 K MAX. -29 K MIN.	320 K MAX. 0 K MIN.	198 K MAX. 0 K MIN.	156 K MAX. 0 K MIN.	422 K MAX. 0 K MIN.
		MISC.	N/A	N/A	N/A	N/A	N/A	N/A	N/A	N/A	N/A	N/A	101 K	236 K	417 K	78 K
	HORIZONTAL DESIGN LOAD	TRANSVERSE	19 K	23 K	47 K	33 K	21 K	16 K	42 K	55 K	19 K	32 K	160 K	138 K	99 K	156 K
		LONGITUDINAL	15 K	44 K	68 K	57 K	17 K	16 K	42 K	55 K	19 K	67 K	71 K	44 K	38 K	106 K
AASHTO SERVICE I	VERTICAL DESIGN LOAD	DL	118 K	364 K	385 K	470 K	141 K	129 K	348 K	458 K	154 K	399 K	909 K	686 K	596 K	1166 K
		LL	90 K MAX. -8 K MIN.	174 K MAX. -21 K MIN.	189 K MAX. -37 K MIN.	190 K MAX. -12 K MIN.	93 K MAX. -10 K MIN.	97 K MAX. -20 K MIN.	176 K MAX. -32 K MIN.	195 K MAX. -29 K MIN.	105 K MAX. -23 K MIN.	186 K MAX. -21 K MIN.	237 K MAX. 0 K MIN.	147 K MAX. 0 K MIN.	115 K MAX. 0 K MIN.	313 K MAX. 0 K MIN.
		MISC.	N/A	N/A	N/A	N/A	N/A	N/A	N/A	N/A	N/A	N/A	179 K	416 K	744 K	138 K
	HORIZONTAL DESIGN LOAD	TRANSVERSE	15 K	23 K	47 K	26 K	16 K	16 K	42 K	55 K	19 K	26 K	159 K	136 K	98 K	155 K
		LONGITUDINAL	15 K	44 K	60 K	57 K	17 K	16 K	42 K	55 K	19 K	59 K	122 K	75 K	65 K	186 K
SEISMIC	HORIZONTAL DESIGN LOAD		41 K	113 K	123 K	142 K	47 K	41 K	113 K	142 K	47 K	123 K	257 K	190 K	164 K	331 K
THERMAL MOVEMENT (MAXIMUM ONE WAY LONGITUDINAL MOVEMENT, NOT INCLUDING 1" CONSTRUCTION TOLERANCE)			1.5"	0.8"	N/A	1.0"	1.8"	1.5"	0.9"	1.0"	1.8"	N/A	N/A	1.2"	1.1"	N/A

NOTES:

A. DIRECTION OF MOVEMENT FOR GUIDED EXPANSION BEARINGS AT ABUTMENT A, PIER 1, PIER 3 AND ABUTMENT B SHALL BE ESTABLISHED ALONG THE CHORD FROM THE EXPANSION BEARING TO THE FIXED BEARING ALONG THE SAME GIRDER LINE.

B. DIRECTION OF MOVEMENT FOR GUIDED EXPANSION BEARINGS AT PIER 2 SHALL BE ESTABLISHED ALONG THE CENTER LINE OF BEARING AT PIER 2.

C. DIRECTION OF MOVEMENT FOR GUIDED EXPANSION BEARINGS AT PIER 1, COLUMN 2 AND PIER 3, COLUMN 1 SHALL BE ESTABLISHED ALONG THE CENTERLINE OF BEARING AT PIER 1 AND 3, RESPECTIVELY.

BEARING SCHEDULE NOTES:

1. THE MAXIMUM ALLOWABLE BEARING PRESSURE ON THE PTFE FIBER PAD IS 3,500 PSI.
2. THE MAXIMUM ALLOWABLE COEFFICIENT OF FRICTION IS 0.045. THIS VALUE IS BASED ON THE MAXIMUM ALLOWABLE BEARING PRESSURE FOR THE PTFE FIBER PAD.
3. THE MAXIMUM ALLOWABLE BEARING PRESSURE ON CONCRETE IS 1,050 PSI.
4. THE MINIMUM GUIDE BAR CLEARANCE EACH SIDE IS 1/16".
5. FRICTIONAL RESISTANCE OF THE BEARINGS SLIDING SURFACES HAS NOT BEEN INCLUDED IN THE SPECIFIED HORIZONTAL LOADS.
6. FIXED AND EXPANSION BEARINGS HAVE BEEN DESIGNED TO PROVIDE A MINIMUM HORIZONTAL LOAD CAPACITY GREATER THAN OR EQUAL TO THE LARGER OF THE SEISMIC DESIGN LOAD OR THE RESULTANT OF THE TRANSVERSE AND LONGITUDINAL LOADS.
7. TRANSVERSE INDICATES THE DIRECTION PERPENDICULAR TO THE BASELINE OF CONSTRUCTION. LONGITUDINAL INDICATES THE DIRECTION TANGENT TO THE BASE LINE OF CONSTRUCTION.
8. EXPANSION BEARINGS HAVE BEEN DESIGNED WITH A 1" CONSTRUCTION TOLERANCE FOR THE EXPANSION OF THE BEARING. THIS TOLERANCE IS IN ADDITION TO THE THERMAL MOVEMENT INDICATED IN THE BEARING SCHEDULE.
9. FIXED AND EXPANSION BEARINGS HAVE BEEN DESIGNED FOR A MINIMUM ROTATION OF 0.02 RADIANS WHICH INCLUDES A CONSTRUCTION TOLERANCE OF 0.01 RADIANS.
10. SEISMIC AND THE RESULTANT OF LONGITUDINAL AND TRANSVERSE LOADS ARE NOT TO BE APPLIED SIMULTANEOUSLY.
11. MISC. LOADS ARE THE FACTORED VERTICAL LOADS FROM THE MOMENT DUE TO THE SPACING BETWEEN THE BEARINGS LOCATED ON THE PIER COLUMNS.

BEARING SCHEDULE LEGEND:

(X) = GIRDER NUMBER

P1F = PIER 1, COLUMN 1 FIXED, SEE DWG. NOS. BB-03 AND BB-04 FOR DETAILS.

P1GE = PIER 1, COLUMN 2 GUIDED EXPANSION, SEE DWG. NOS. BB-05 THRU BB-07 FOR DETAILS.

P3GE = PIER 3, COLUMN 1 GUIDED EXPANSION, SEE DWG. NOS. BB-08 THRU BB-10 FOR DETAILS.

P3F = PIER 3, COLUMN 2 FIXED, SEE DWG. NOS. BB-11 AND BB-12 FOR DETAILS.

GE = GUIDED EXPANSION, SEE DWG. NOS. BB-13 AND BB-14 FOR DETAILS.

NGE = NON-GUIDED EXPANSION, SEE DWG. NO. BB-15 FOR DETAILS.

F = FIXED, SEE DWG. NO. BB-16 FOR DETAILS.

DL = DEAD LOAD

LL = LIVE LOAD

W = WIND ON STRUCTURE

WL = WIND ON LIVE LOAD

K = KIPS

N/A = NOT APPLICABLE

UNOFFICIAL WEBSITE COPY

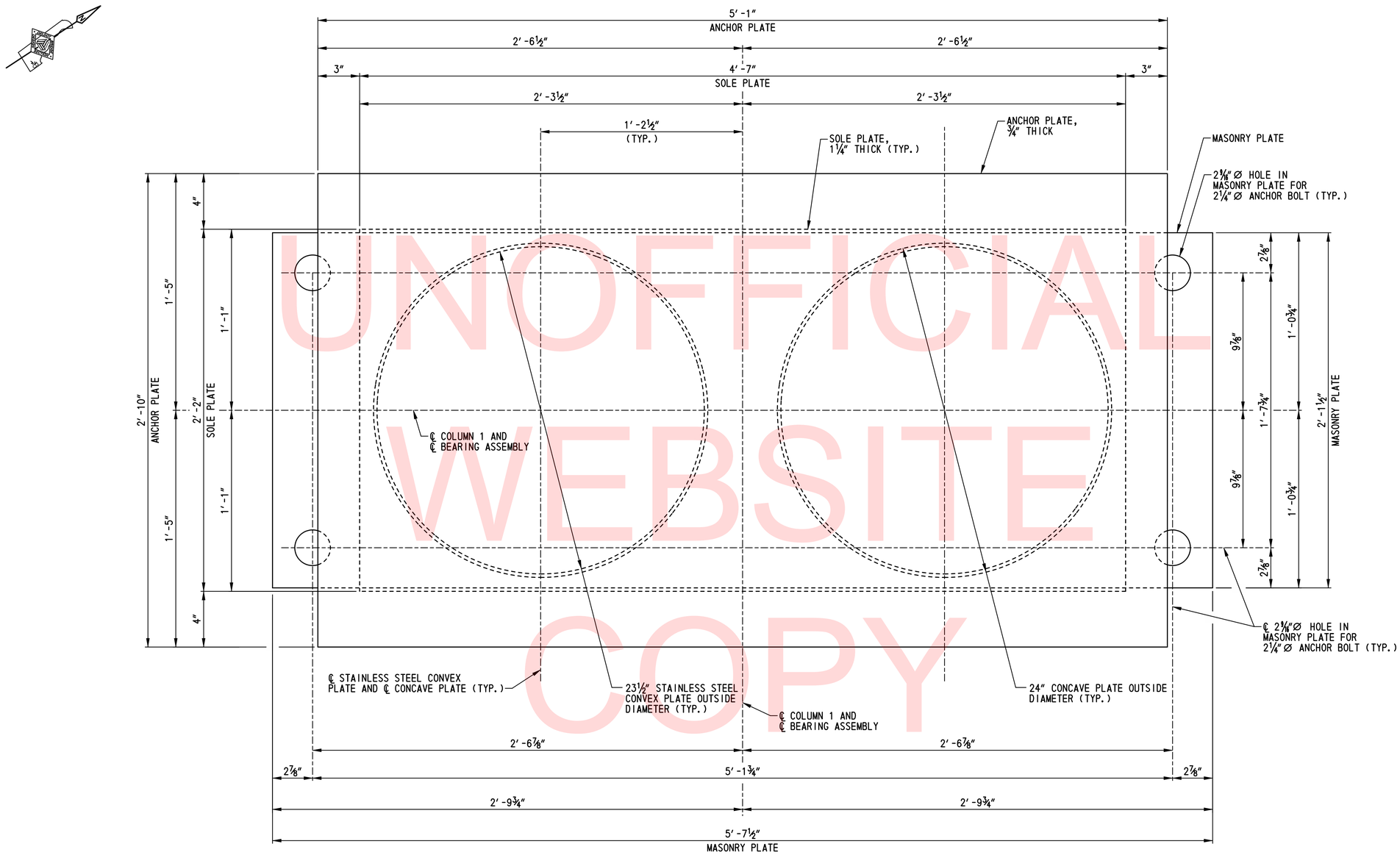

UNOFFICIAL WEBSITE COPY

FIXED BEARING PLAN

SCALE: 3″=1′-0″

NOTES:

1. FOR ADDITIONAL INFORMATION AND MATERIAL SPECIFICATIONS, SEE DWG. NO. BB-01.
2. ANCHOR BOLTS, NUTS AND PLATE WASHERS NOT SHOWN FOR CLARITY. FOR ANCHOR BOLT DETAIL, SEE DWG. NO. BB-01.
3. ANCHOR STUDS AND POST TENSIONED CONCRETE PIER CAP NOT SHOWN FOR CLARITY. FOR ANCHOR PLATE PLAN, SEE DWG. NO. BB-04.

N:\31653-000\Contract 1B\CADD\Bridge\Br_No433\BB03_br1-433.dgn
2/5/2013 10:12:06 AM

DELAWARE DEPARTMENT OF TRANSPORTATION	ADDENDUMS / REVISIONS	SCALE: AS SHOWN	US 301 & SR 1 INTERCHANGE	CONTRACT T200911302	BRIDGE NO. 1-433	PIER 1 FIXED BEARING DETAILS – 1	BR1-3 BB-03
				COUNTY NEW CASTLE	DESIGNED BY: W.T.R.		SHEET NO. 248
					CHECKED BY: B.K.B.		TOTAL SHTS. 491

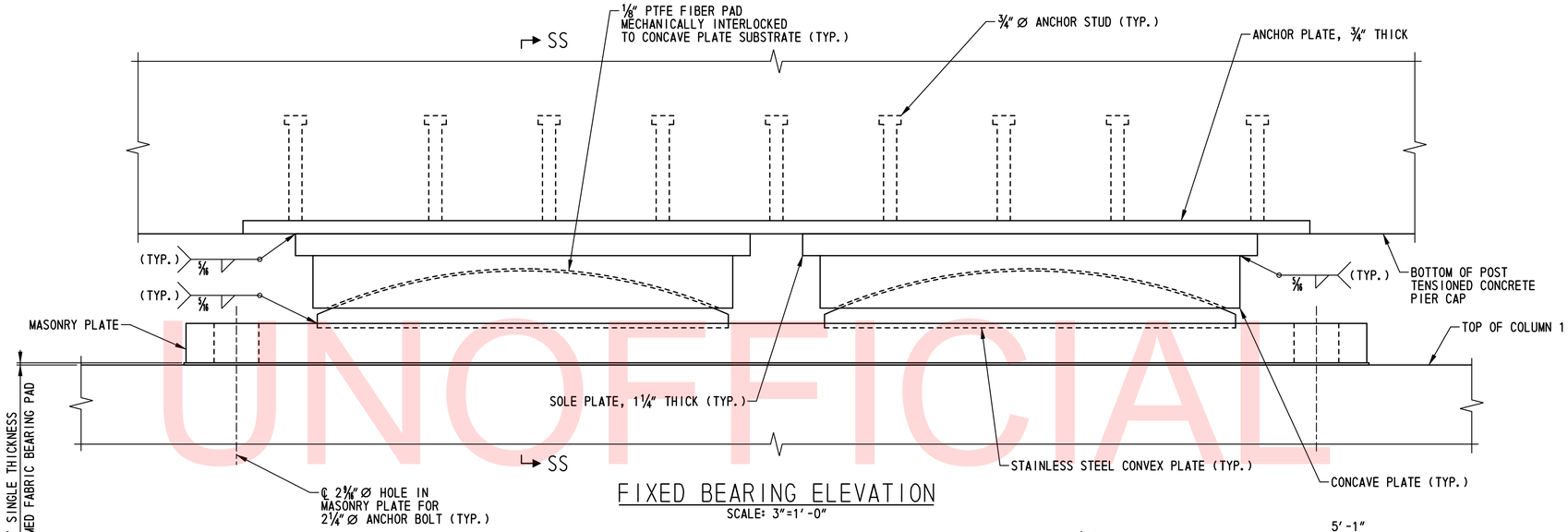

FIXED BEARING ELEVATION

SCALE: 3"=1'-0"

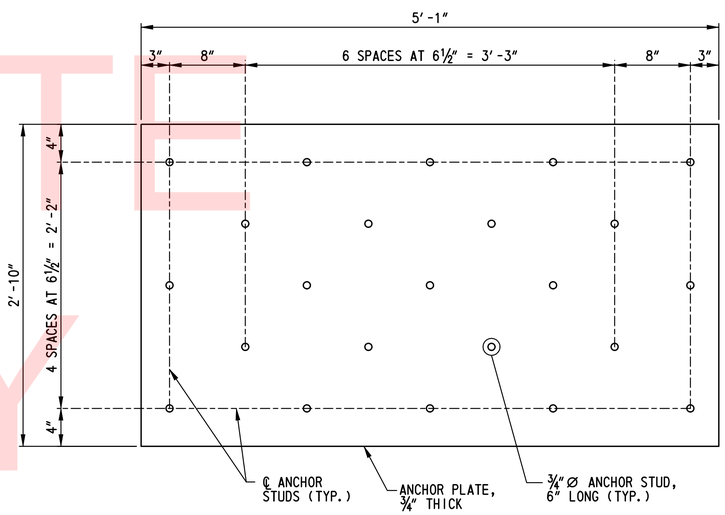

ANCHOR PLATE PLAN

SCALE: 1/4"=1'-0"

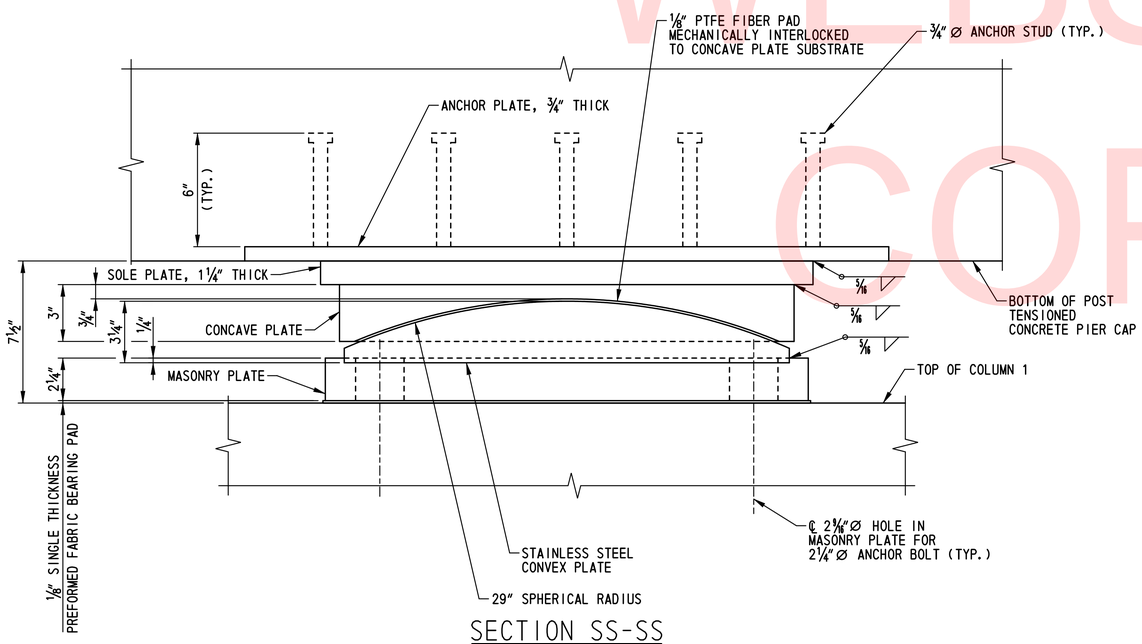

SECTION SS-SS

SCALE: 3"=1'-0"

NOTES:

1. FOR ADDITIONAL INFORMATION AND MATERIAL SPECIFICATIONS, SEE DWG. NO. BB-01.
2. ANCHOR BOLTS, NUTS AND PLATE WASHERS NOT SHOWN FOR CLARITY. FOR ANCHOR BOLT DETAIL, SEE DWG. NO. BB-01.

UNOFFICIAL WEBSITE COPY

N:\31653-000\Contract 1B\CADD\Bridge\Br_No433\BB04_br1-433.dgn
2/5/2013 10:12:37 AM

DELAWARE DEPARTMENT OF TRANSPORTATION	ADDENDUMS / REVISIONS	SCALE: AS SHOWN	US 301 & SR 1 INTERCHANGE	CONTRACT T200911302 / COUNTY NEW CASTLE	BRIDGE NO. 1-433 / DESIGNED BY: W.T.R. / CHECKED BY: B.K.B.	PIER 1 FIXED BEARING DETAILS - 2

BR1-3
BB-04

SHEET NO. 249

TOTAL SHTS. 491

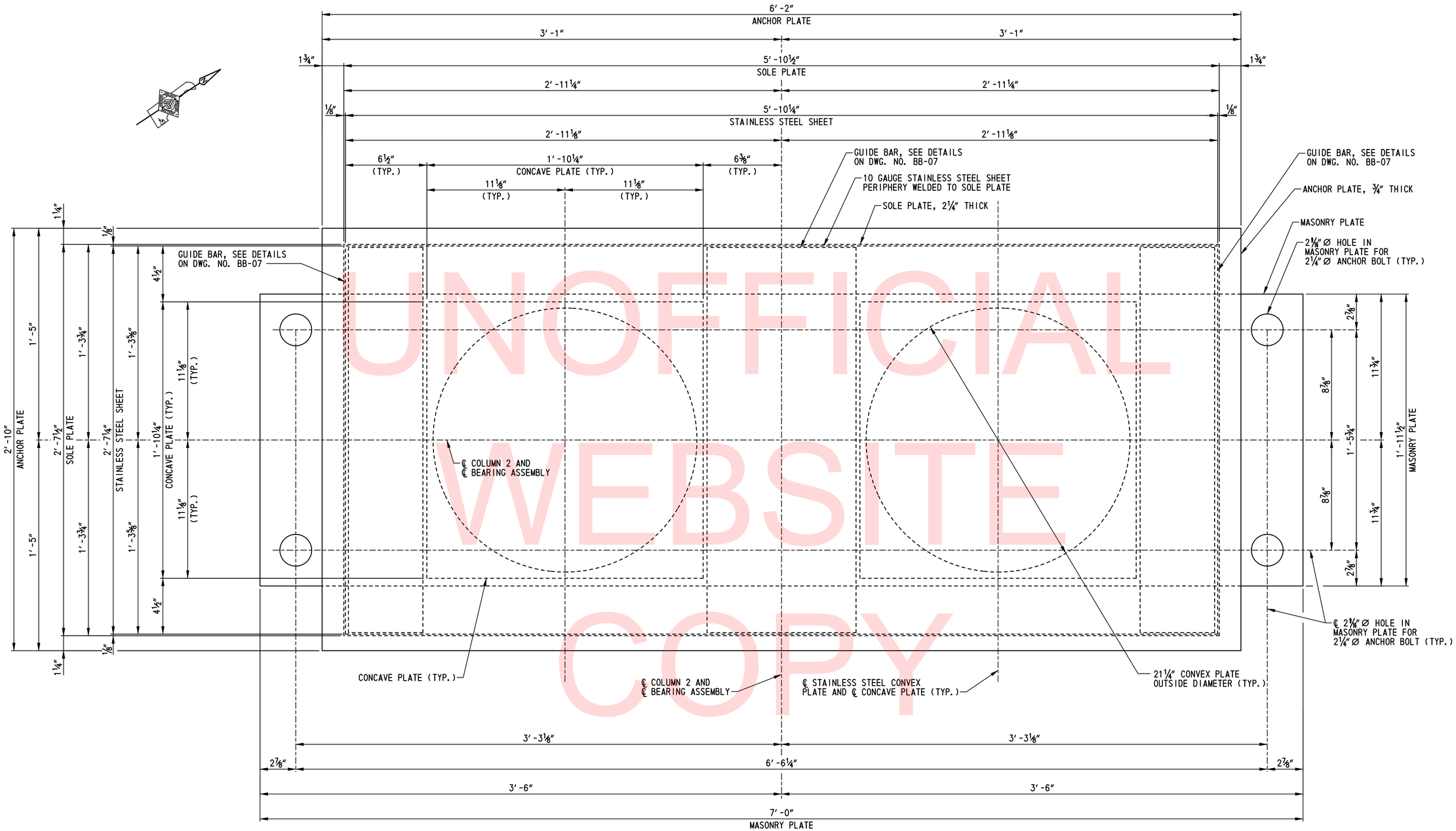

UNOFFICIAL WEBSITE COPY

GUIDED BEARING PLAN

SCALE: 3″=1′-0″

NOTES:

1. FOR ADDITIONAL INFORMATION AND MATERIAL SPECIFICATIONS, SEE DWG. NO. BB-01.
2. CAP SCREWS NOT SHOWN FOR CLARITY.
3. ANCHOR BOLTS, NUTS AND PLATE WASHERS NOT SHOWN FOR CLARITY. FOR ANCHOR BOLT DETAIL, SEE DWG. NO. BB-01.
4. ANCHOR STUDS AND POST TENSIONED CONCRETE PIER CAP NOT SHOWN FOR CLARITY. FOR ANCHOR PLATE PLAN, SEE DWG. NO. BB-06.

BR1-3
BB-05

DELAWARE DEPARTMENT OF TRANSPORTATION	ADDENDUMS / REVISIONS	SCALE: AS SHOWN	US 301 & SR 1 INTERCHANGE	CONTRACT T200911302	BRIDGE NO. 1-433	PIER 1 GUIDED EXPANSION BEARING DETAILS – 1	SHEET NO. 250
				COUNTY NEW CASTLE	DESIGNED BY: W.T.R.		TOTAL SHTS. 491
					CHECKED BY: B.K.B.		

N:\31653-000\Contract 1B\CADD\Bridge\Br_No433\BB05_br1-433.dgn
2/5/2013 10:19:07 AM

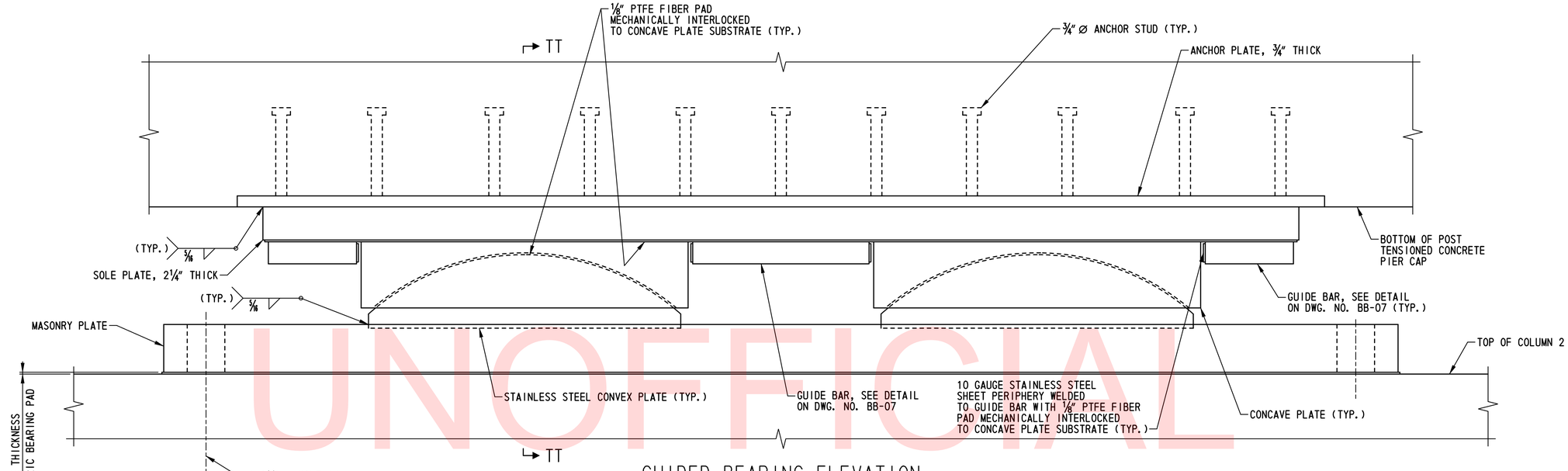

GUIDED BEARING ELEVATION

SCALE: 3"=1'-0"

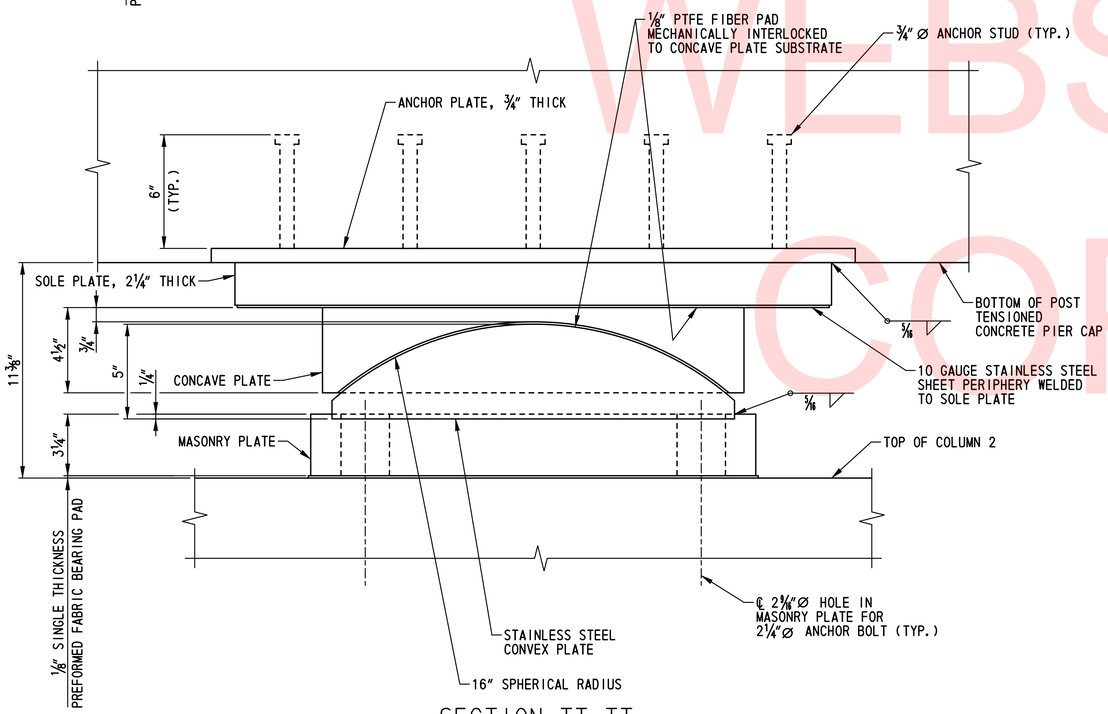

SECTION TT-TT

SCALE: 3"=1'-0"

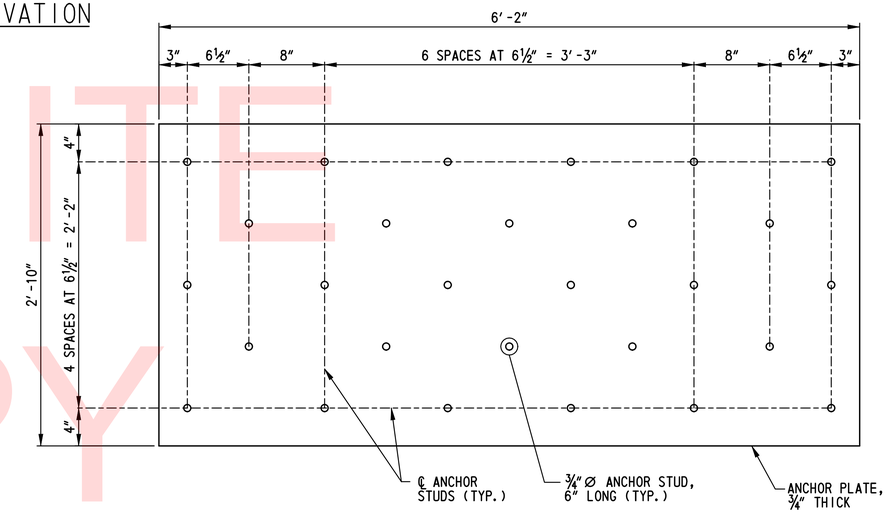

ANCHOR PLATE PLAN

SCALE: 1/4"=1'-0"

NOTES:

1. FOR ADDITIONAL INFORMATION AND MATERIAL SPECIFICATIONS, SEE DWG. NO. BB-01.
2. CAP SCREWS NOT SHOWN FOR CLARITY.
3. ANCHOR BOLTS, NUTS AND PLATE WASHERS NOT SHOWN FOR CLARITY. FOR ANCHOR BOLT DETAIL, SEE DWG. NO. BB-01.

UNOFFICIAL WEBSITE COPY

N:\31653-000\CONTRACT 1B\CADD\Bridge\Br_No433\BB06_br1-433.dgn
12/11/2015 10:29:33 AM

DELAWARE DEPARTMENT OF TRANSPORTATION	ADDENDUMS / REVISIONS	SCALE: AS SHOWN	US 301 & SR 1 INTERCHANGE	CONTRACT T200911302	BRIDGE NO. 1–433	PIER 1 GUIDED EXPANSION BEARING DETAILS – 2	BR1–3 BB–06
				COUNTY NEW CASTLE	DESIGNED BY: W.T.R.		SHEET NO. 251
					CHECKED BY: B.K.B.		TOTAL SHTS. 491

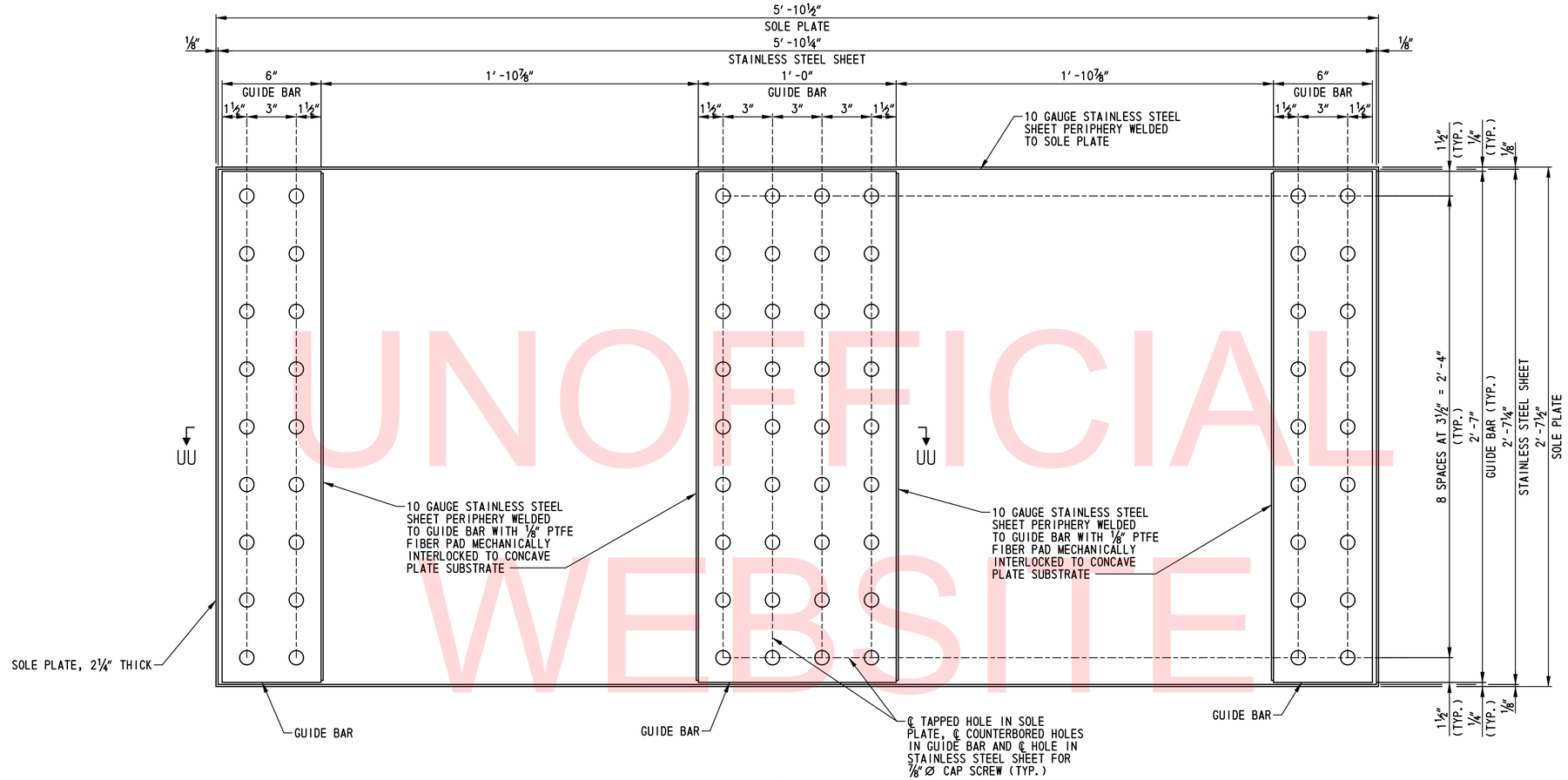

GUIDE BAR DETAILS

SCALE: 3"=1'-0"

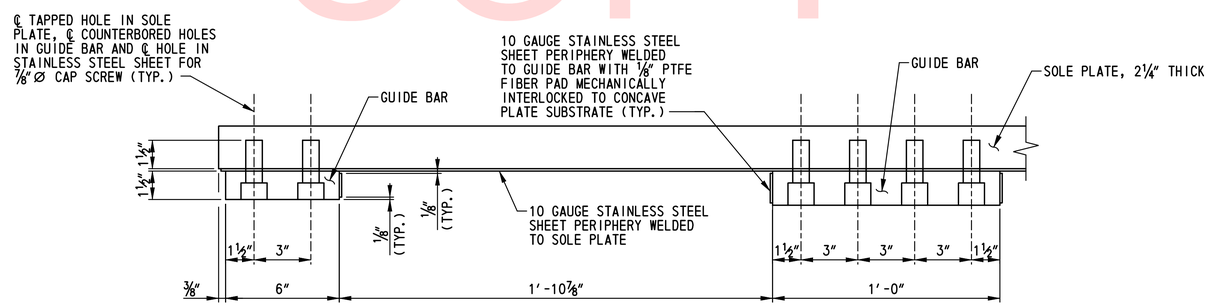

SECTION UU-UU

SCALE: 3"=1'-0"

NOTE:
FOR ADDITIONAL INFORMATION AND MATERIAL SPECIFICATIONS, SEE DWG. NO. BB-01.

UNOFFICIAL WEBSITE COPY

DELAWARE DEPARTMENT OF TRANSPORTATION	ADDENDUMS / REVISIONS	SCALE: AS SHOWN	US 301 & SR 1 INTERCHANGE	CONTRACT T200911302	BRIDGE NO. 1-433	PIER 1 GUIDED EXPANSION BEARING DETAILS – 3	BR1-3 BB-07
				COUNTY NEW CASTLE	DESIGNED BY: W.T.R.		SHEET NO. 252
					CHECKED BY: B.K.B.		TOTAL SHTS. 491

N:\31653-000\CONTRACT 1B\CADD\Bridge\Br_No433\BB07_br1-433.dgn
12/14/2015 5:02:29 PM

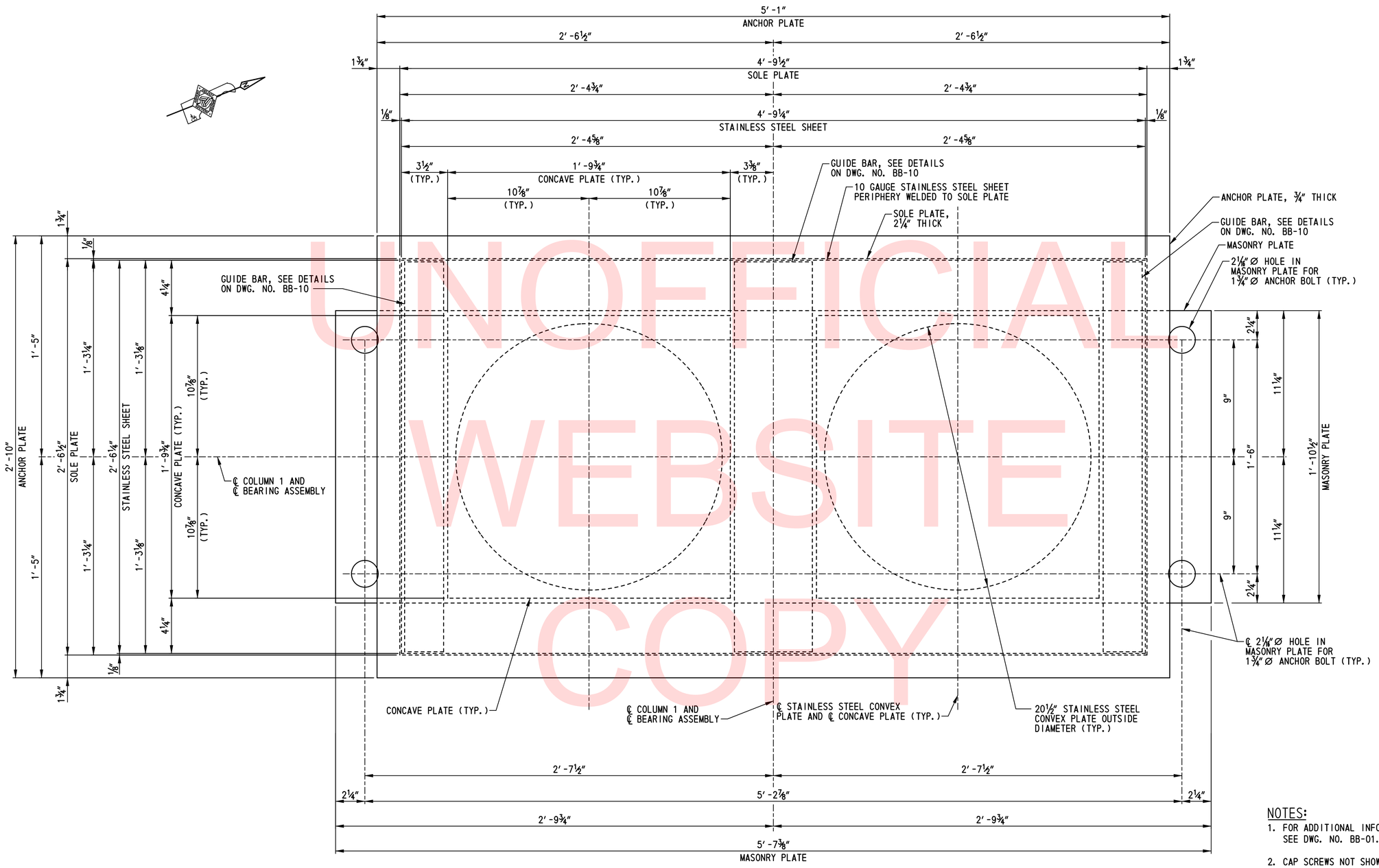

GUIDED BEARING PLAN

SCALE: 3"=1'-0"

NOTES:

1. FOR ADDITIONAL INFORMATION AND MATERIAL SPECIFICATIONS, SEE DWG. NO. BB-01.
2. CAP SCREWS NOT SHOWN FOR CLARITY.
3. ANCHOR BOLTS, NUTS AND PLATE WASHERS NOT SHOWN FOR CLARITY. FOR ANCHOR BOLT DETAIL, SEE DWG. NO. BB-01.
4. ANCHOR STUDS AND POST TENSIONED CONCRETE PIER CAP NOT SHOWN FOR CLARITY. FOR ANCHOR PLATE PLAN, SEE DWG. NO. BB-09.

UNOFFICIAL WEBSITE COPY

N:\31653-000\Contract 1B\CADD\Bridge\Br_No433\BB08_br1-433.dgn
2/5/2013 10:14:48 AM

DELAWARE DEPARTMENT OF TRANSPORTATION	ADDENDUMS / REVISIONS	SCALE: AS SHOWN	US 301 & SR 1 INTERCHANGE	CONTRACT T200911302	BRIDGE NO. 1-433	PIER 3 GUIDED EXPANSION BEARING DETAILS – 1	BR1-3 BB-08
				COUNTY NEW CASTLE	DESIGNED BY: W.T.R.		SHEET NO. 253
					CHECKED BY: B.K.B.		TOTAL SHTS. 491

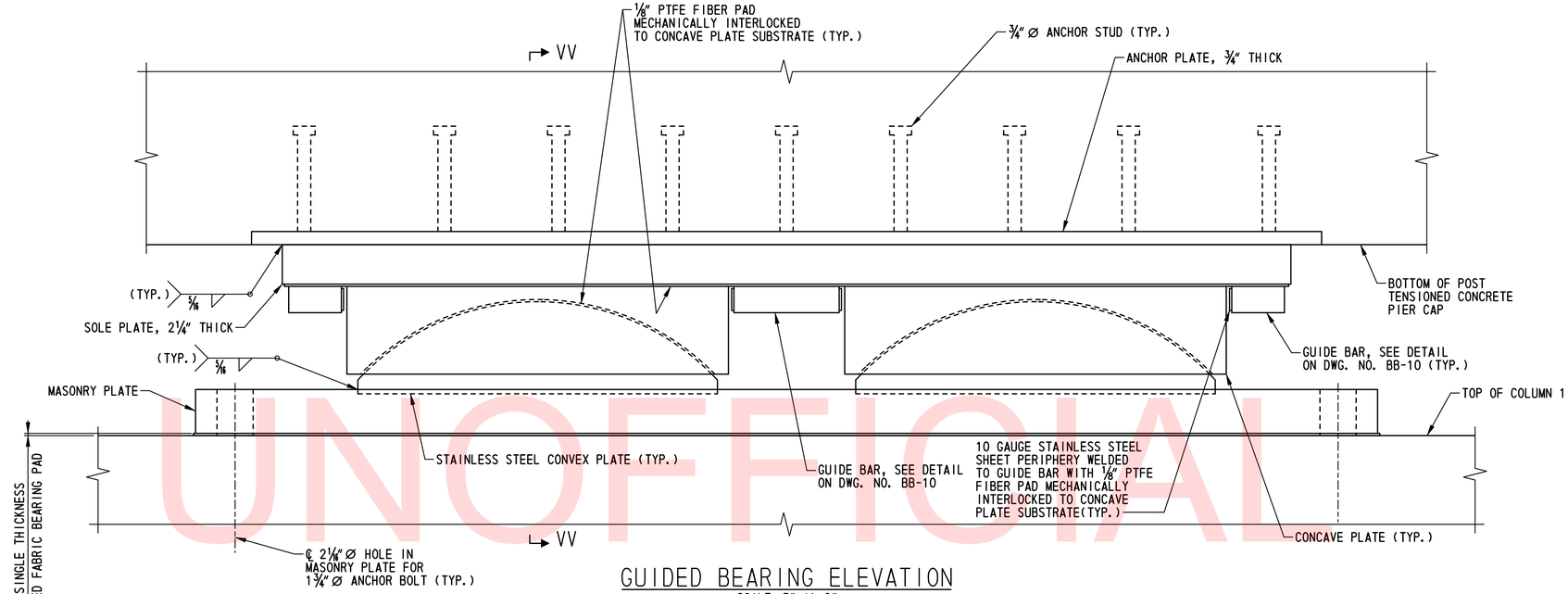

GUIDED BEARING ELEVATION

SCALE: 3"=1'-0"

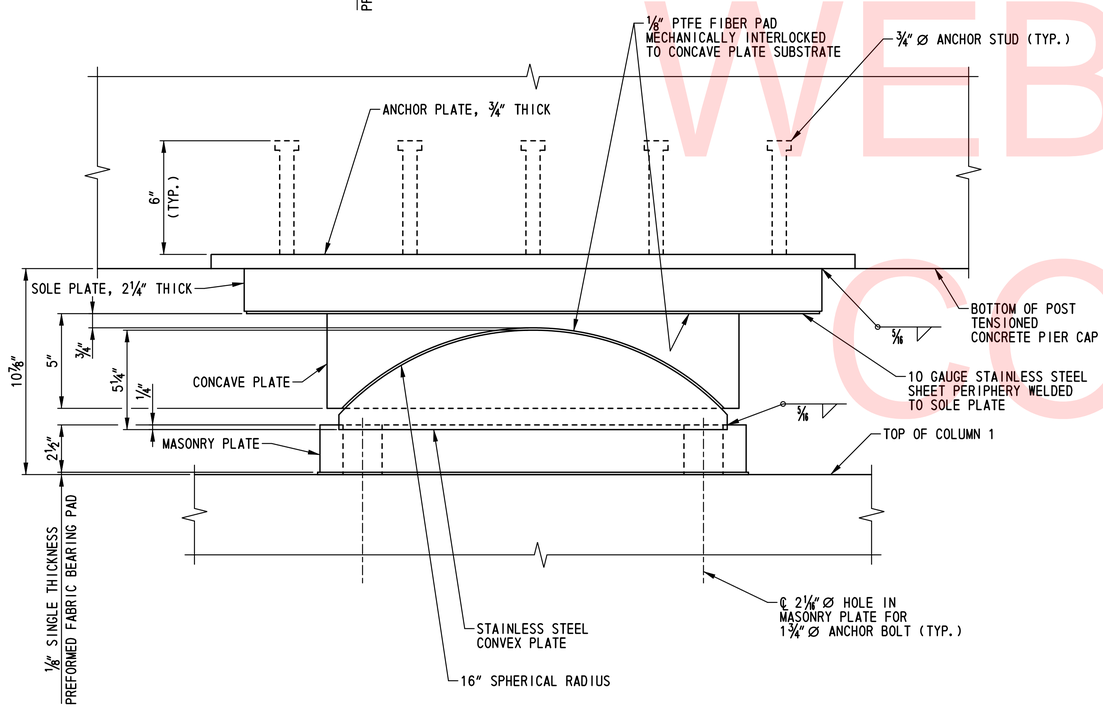

SECTION VV-VV

SCALE: 3"=1'-0"

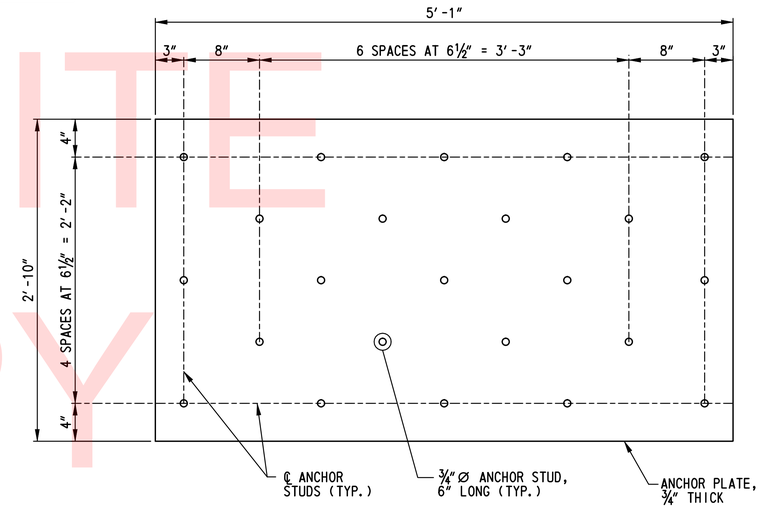

ANCHOR PLATE PLAN

SCALE: ¼"=1'-0"

NOTES:

1. FOR ADDITIONAL INFORMATION AND MATERIAL SPECIFICATIONS, SEE DWG. NO. BB-01.
2. CAP SCREWS NOT SHOWN FOR CLARITY.
3. ANCHOR BOLTS, NUTS AND PLATE WASHERS NOT SHOWN FOR CLARITY. FOR ANCHOR BOLT DETAIL, SEE DWG. NO. BB-01.

UNOFFICIAL WEBSITE COPY

N:\33653-000\CONTRACT 1B\CADD\Bridge\Br_No433\BB09_br1-433.dgn
12/14/2015 4:59:29 PM

DELAWARE DEPARTMENT OF TRANSPORTATION	ADDENDUMS / REVISIONS	SCALE: AS SHOWN	US 301 & SR 1 INTERCHANGE	CONTRACT T200911302	BRIDGE NO. 1-433	PIER 3 GUIDED EXPANSION BEARING DETAILS - 2	BR1-3 BB-09
				COUNTY NEW CASTLE	DESIGNED BY: W.T.R.		SHEET NO. 254
					CHECKED BY: B.K.B.		TOTAL SHTS. 491

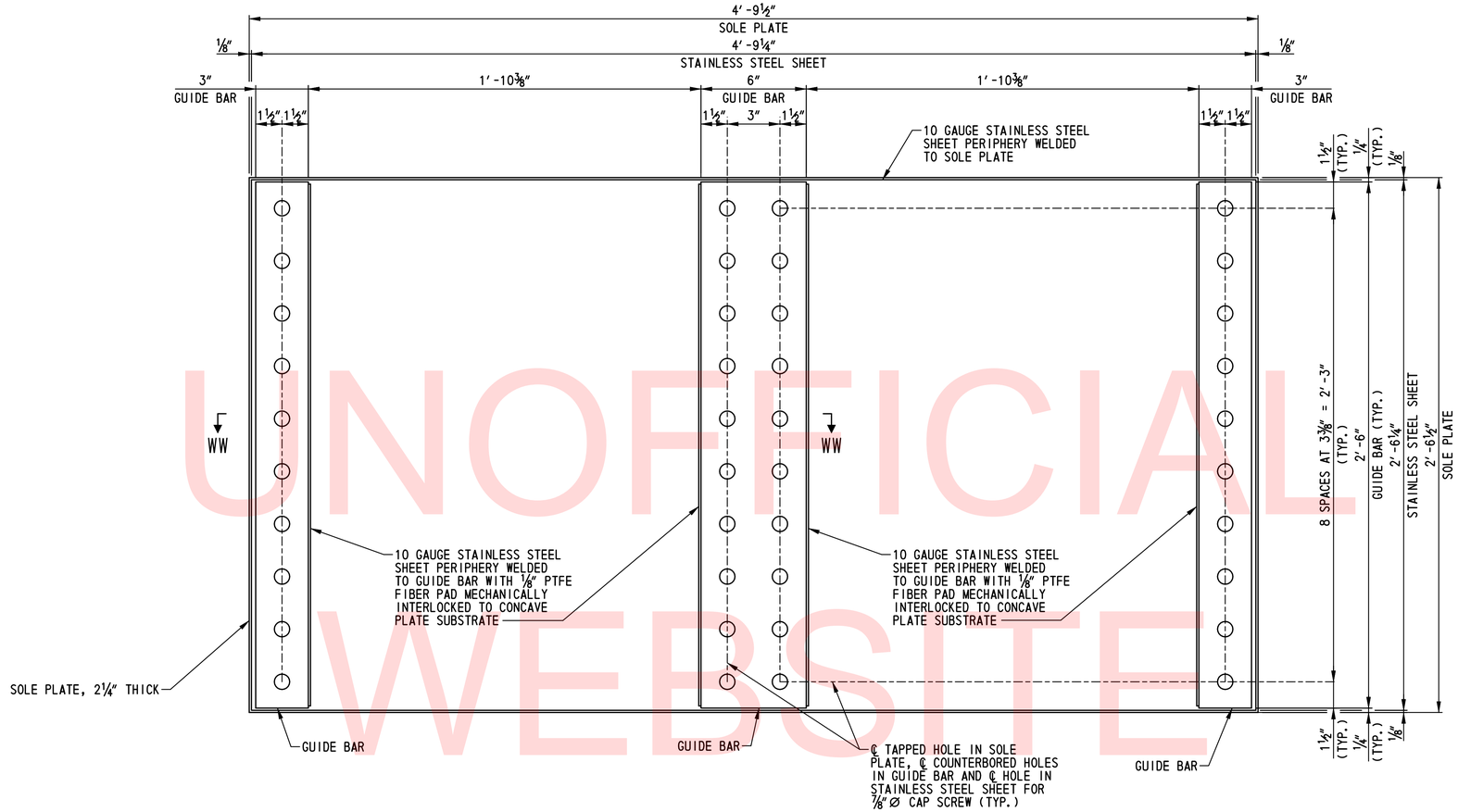

GUIDE BAR DETAILS
SCALE: 3"=1'-0"

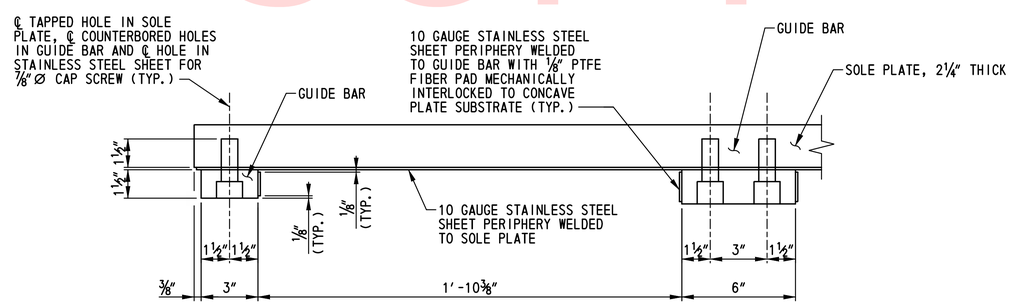

SECTION WW-WW
SCALE: 3"=1'-0"

NOTE:
FOR ADDITIONAL INFORMATION AND MATERIAL SPECIFICATIONS, SEE DWG. NO. BB-01.

UNOFFICIAL WEBSITE COPY

N:\31653-000\CONTRACT 1B\CADD\Bridge\Br_No433\BB10_br1-433.dgn
12/14/2015 5:01:14 PM

DELAWARE DEPARTMENT OF TRANSPORTATION	ADDENDUMS / REVISIONS	SCALE: AS SHOWN	US 301 & SR 1 INTERCHANGE	CONTRACT T200911302	BRIDGE NO. 1-433	PIER 3 GUIDED EXPANSION BEARING DETAILS – 3	BR1-3 BB-10
				COUNTY NEW CASTLE	DESIGNED BY: W.T.R.		SHEET NO. 255
					CHECKED BY: B.K.B.		TOTAL SHTS. 491

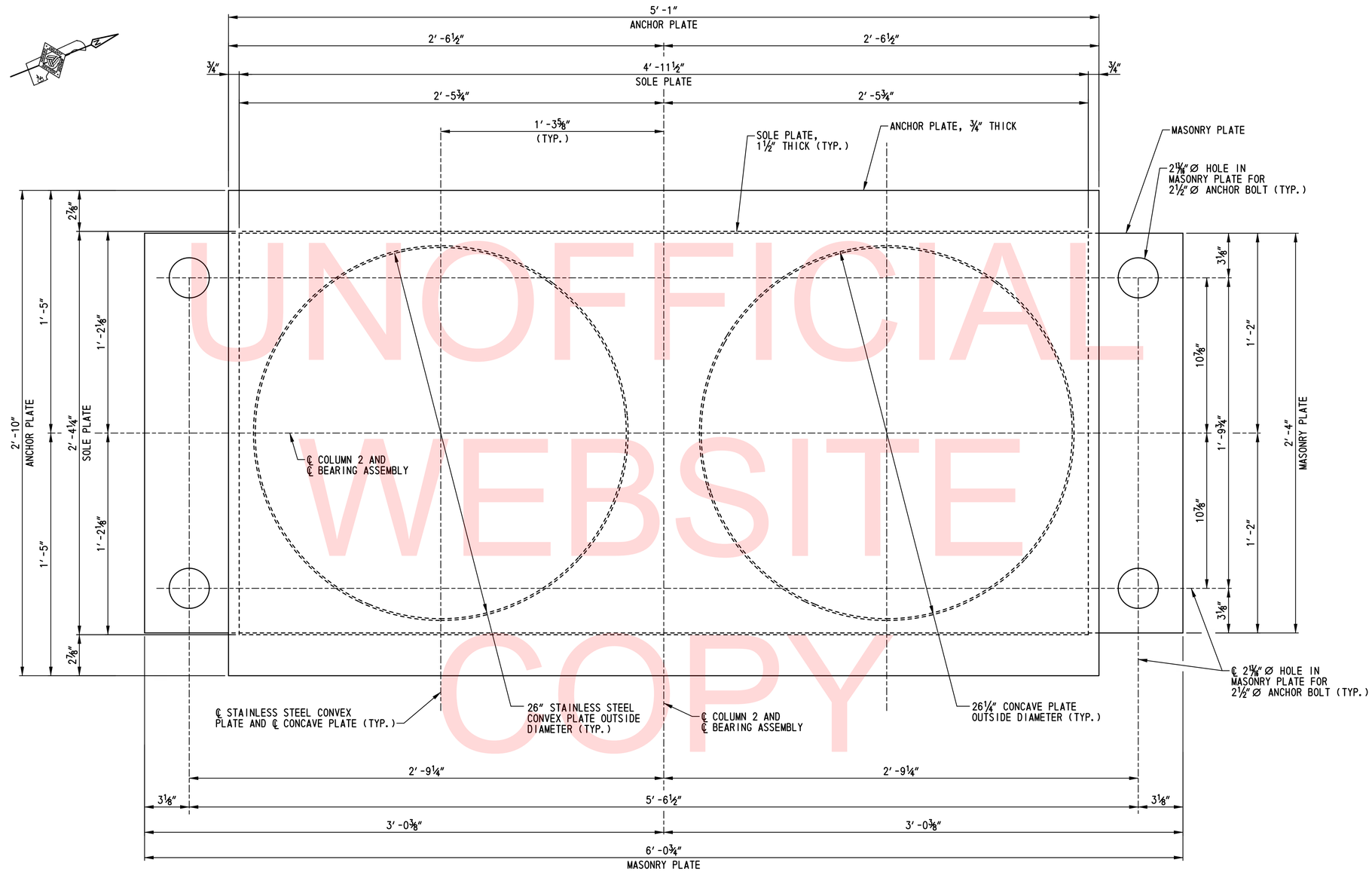

UNOFFICIAL WEBSITE COPY

FIXED BEARING PLAN

SCALE: 3″=1′-0″

NOTES:

1. FOR ADDITIONAL INFORMATION AND MATERIAL SPECIFICATIONS, SEE DWG. NO. BB-01.
2. ANCHOR BOLTS, NUTS AND PLATE WASHERS NOT SHOWN FOR CLARITY. FOR ANCHOR BOLT DETAIL, SEE DWG. NO. BB-01.
3. ANCHOR STUDS AND POST TENSIONED CONCRETE PIER CAP NOT SHOWN FOR CLARITY. FOR ANCHOR PLATE PLAN, SEE DWG. NO. BB-12.

N:\31653-000\Contract 1B\CADD\Bridge\Br_No433\BB11_br1-433.dgn
2/5/2013 10:19:59 AM

DELAWARE DEPARTMENT OF TRANSPORTATION	ADDENDUMS / REVISIONS	SCALE: AS SHOWN	US 301 & SR 1 INTERCHANGE	CONTRACT T200911302	BRIDGE NO. 1–433	PIER 3 FIXED BEARING DETAILS – 1	BR1–3 BB–11
				COUNTY NEW CASTLE	DESIGNED BY: W.T.R.		SHEET NO. 256
					CHECKED BY: B.K.B.		TOTAL SHTS. 491

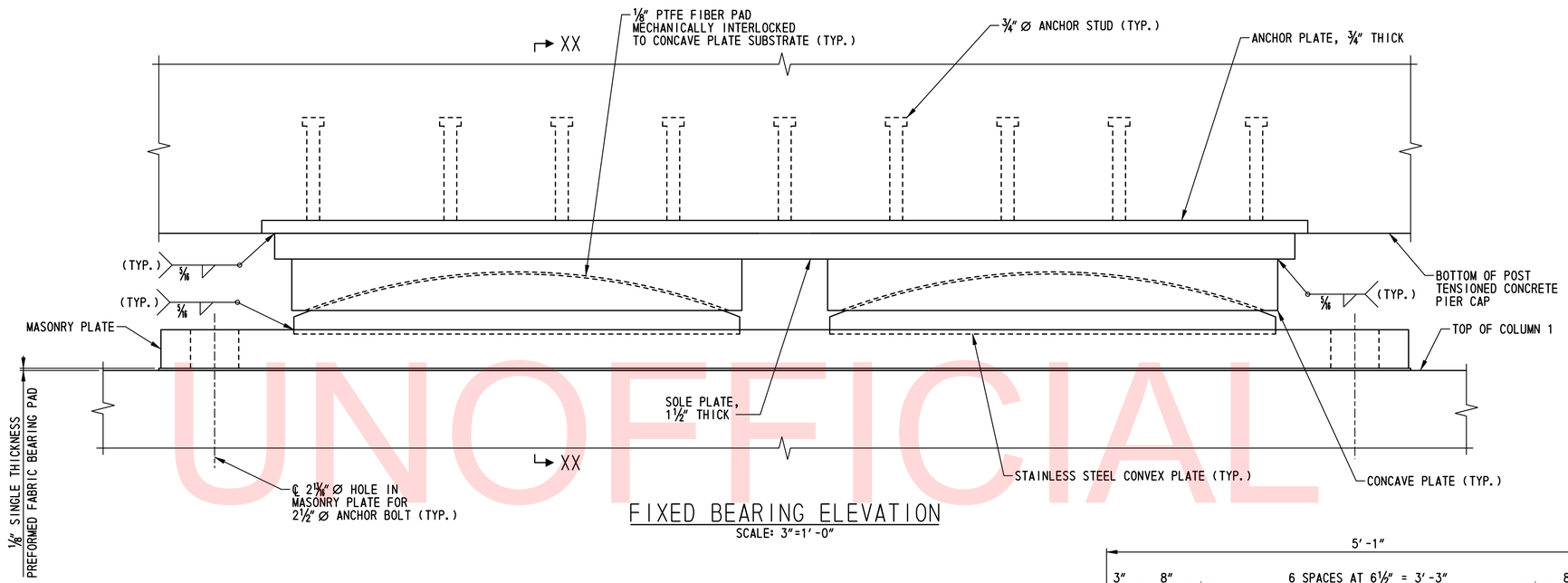

FIXED BEARING ELEVATION

SCALE: 3"=1'-0"

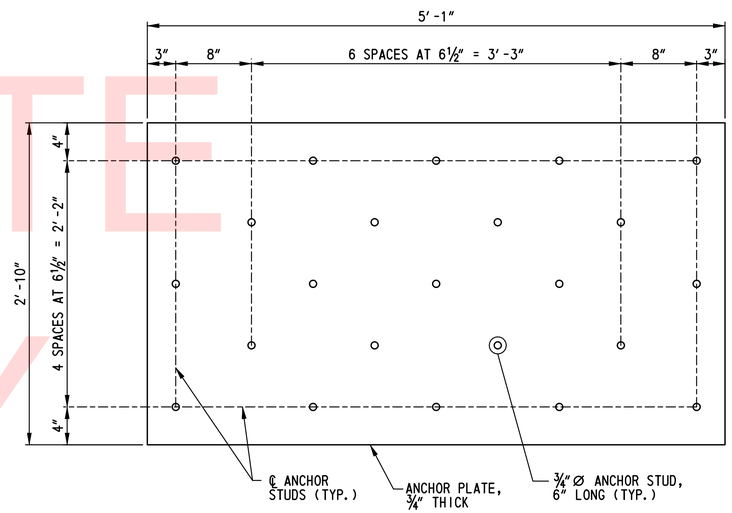

ANCHOR PLATE PLAN

SCALE: 1/4"=1'-0"

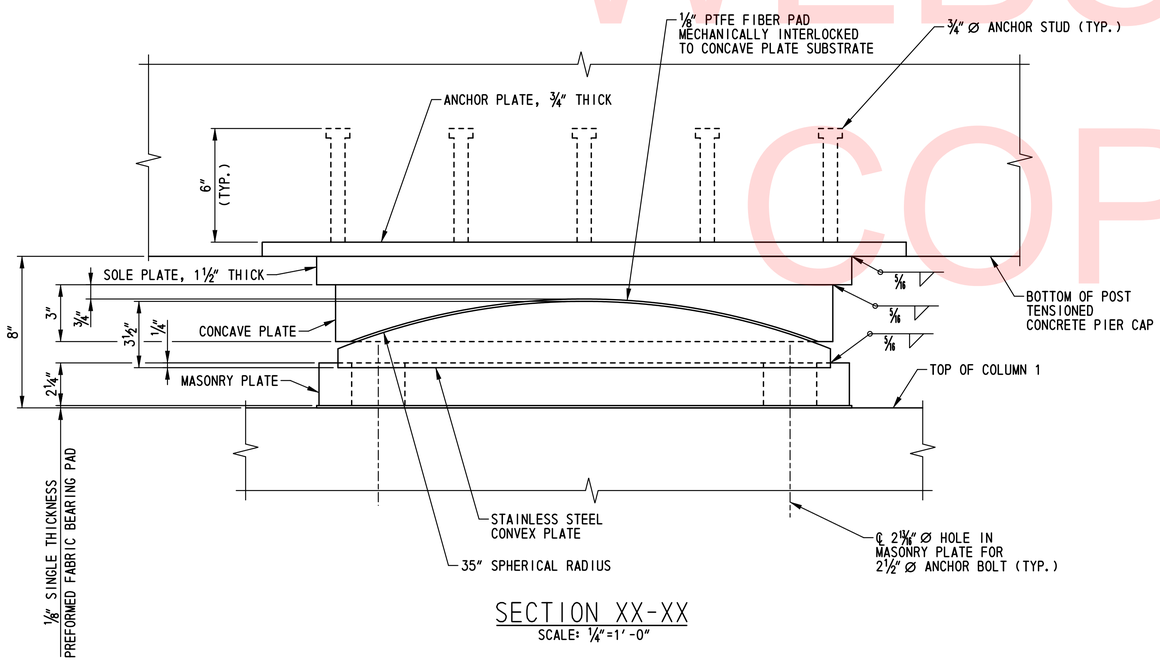

SECTION XX-XX

SCALE: 1/4"=1'-0"

NOTES:

1. FOR ADDITIONAL INFORMATION AND MATERIAL SPECIFICATIONS, SEE DWG. NO. BB-01.
2. ANCHOR BOLTS, NUTS AND PLATE WASHERS NOT SHOWN FOR CLARITY. FOR ANCHOR BOLT DETAIL, SEE DWG. NO. BB-01.

UNOFFICIAL WEBSITE COPY

N:\31653-000\Contract 1B\CADD\Bridge\Br_No433\BB12_br1-433.dgn
2/5/2013 10:12:29 AM

DELAWARE DEPARTMENT OF TRANSPORTATION	ADDENDUMS / REVISIONS	SCALE: AS SHOWN	US 301 & SR 1 INTERCHANGE	CONTRACT T200911302	BRIDGE NO. 1-433	PIER 3 FIXED BEARING DETAILS – 2	BR1-3 BB-12
				COUNTY NEW CASTLE	DESIGNED BY: W.T.R.		SHEET NO. 257
					CHECKED BY: B.K.B.		TOTAL SHTS. 491

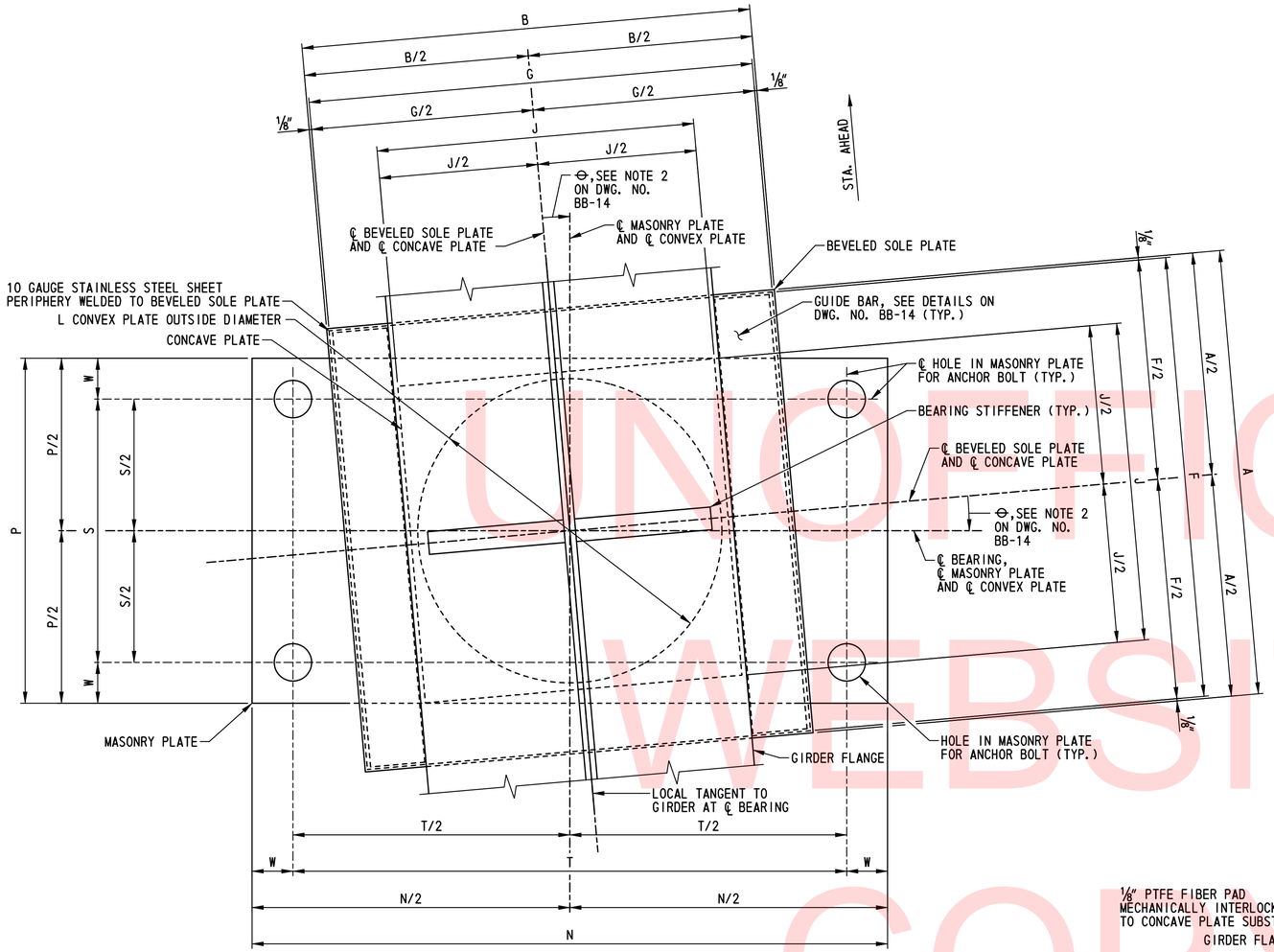

GUIDED EXPANSION BEARING PLAN

SCALE: 3"=1'-0"

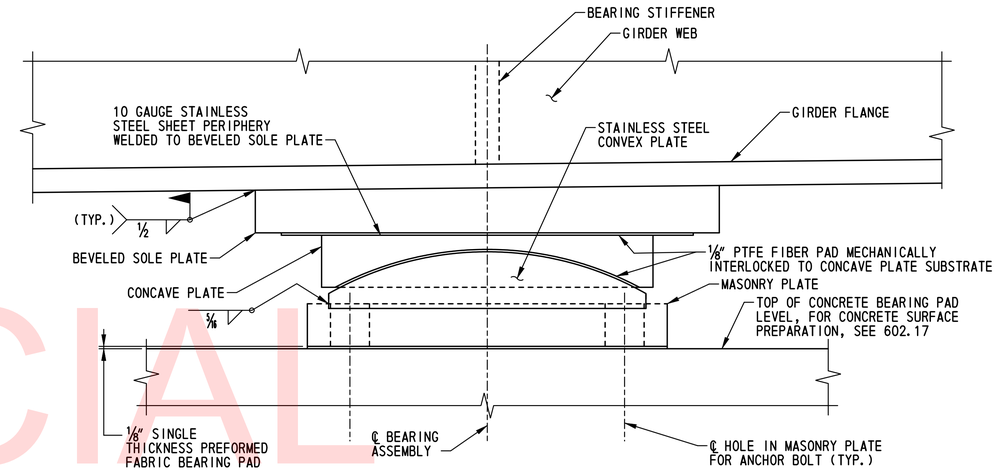

SECTION YY-YY

SCALE: 3"=1'-0"

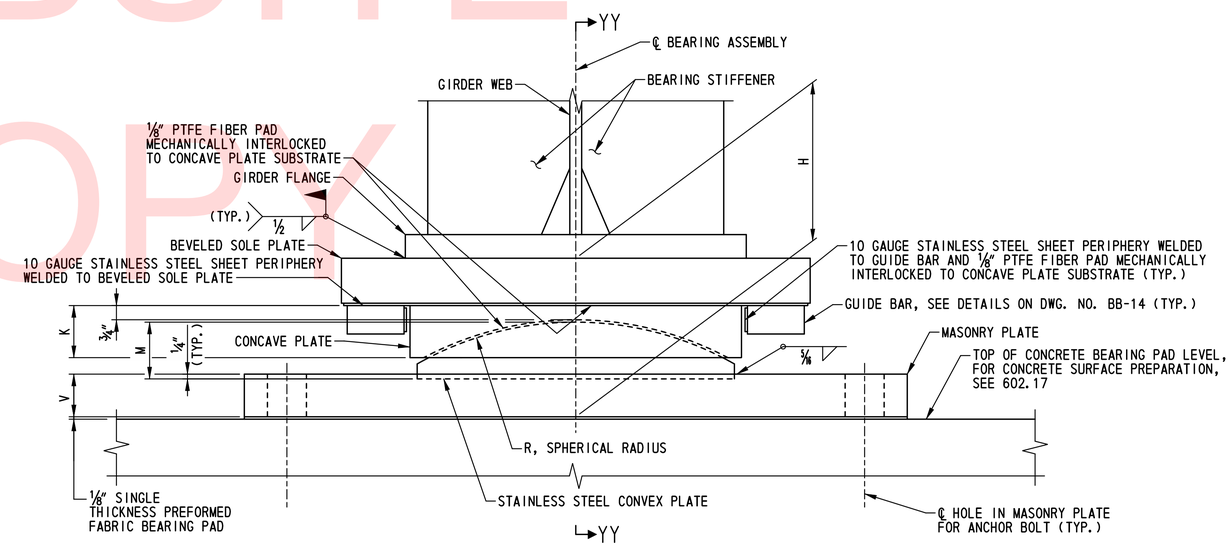

GUIDED EXPANSION BEARING ELEVATION

SCALE: 3"=1'-0"

NOTE:

FOR GUIDED EXPANSION BEARING NOTES, SEE DWG. NO. BB-14.

UNOFFICIAL WEBSITE COPY

N:\31653-000\CONTRACT 1B\CADD\Bridge\Br_No433\BB13_br1-433.dgn
12/14/2015 5:04:02 PM

DELAWARE DEPARTMENT OF TRANSPORTATION	ADDENDUMS / REVISIONS	SCALE: AS SHOWN	US 301 & SR 1 INTERCHANGE	CONTRACT T200911302	BRIDGE NO. 1-433	GUIDED EXPANSION BEARING DETAILS – 1	BR1-3 BB-13	SHEET NO. 258
				COUNTY NEW CASTLE	DESIGNED BY: W.T.R.			TOTAL SHTS. 491
					CHECKED BY: B.K.B.			

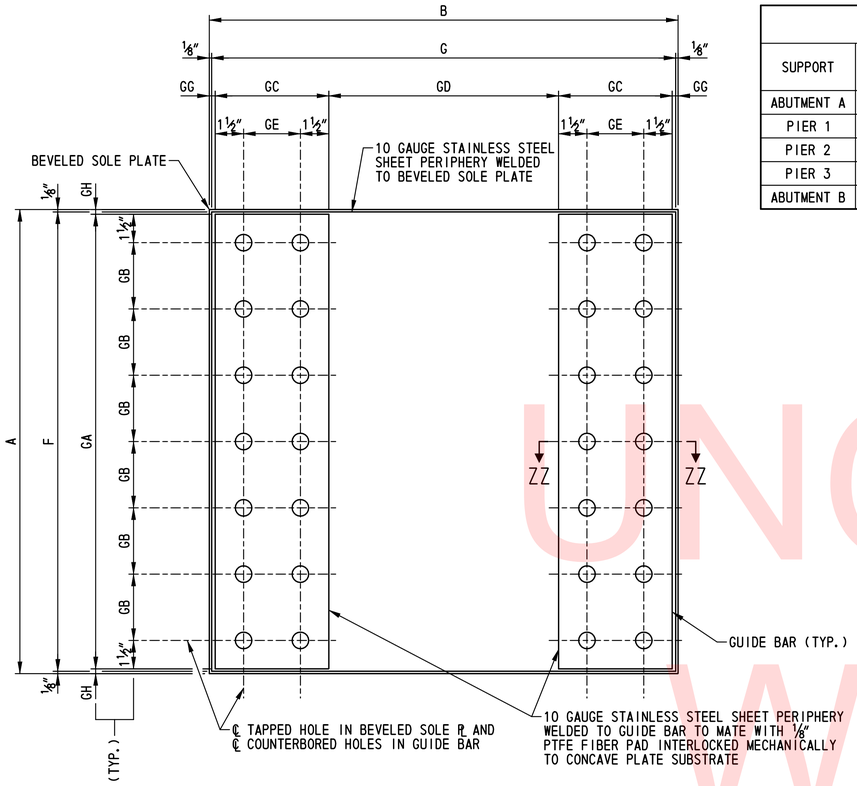

GUIDE BAR DETAILS

SCALE: 3"=1'-0"

GUIDED EXPANSION BEARINGS - LINEAR DIMENSIONS (INCHES)

SUPPORT	GIRDER	BEVELED SOLE PLATE							GUIDE BARS								CONCAVE PLATE & CONVEX PLATE					MASONRY PLATE						BEARING HEIGHT	ANCHOR BOLTS		
		A	B	C	D	E	F	G	GA	GB	GC	GD	GE	GF	GG	GH	J	K	L	M	R	N	P	S	T	V	W	H	QTY.	BOLT ∅	HOLE ∅
ABUTMENT A	②③④	19¼	19¾	2¼	2 7/16	2⅝	19	19½	18¾	5¼	3	12⅛	0	1½	13/16	¼	11½	2¼	10¼	2½	9	28½	12½	8¾	24¾	1¾	1⅞	7 7/16	4	1½	1 13/16
PIER 1	②③④	24½	23½	2¼	2⅜	2½	24¼	23¼	24	3½	3	16⅞	0	1½	⅝	¼	16¼	2½	15¼	2¾	16	33½	17½	13	29	2¼	2¼	8⅛	4	1¾	2 1/16
PIER 2	①⑤	31	29½	2½	2⅜	2¼	30¾	29¼	30	3	6	16⅞	3	1½	⅝	½	16¼	5½	14¾	5¾	8	45½	17	10	38½	3¼	3½	12⅛	4	2¾	3 1/16
PIER 3	②③④	27½	25¼	2¾	2½	2¼	27¼	25	27	3	3	18⅝	0	1½	⅝	¼	18	2¾	17¼	3	18	35½	19½	15	31	2¼	2¼	8½	4	1¾	2 1/16
ABUTMENT B	②③④	21½	22½	2⅞	2 9/16	2¼	21¼	22¼	21	6	3	13⅝	0	1½	1 1/16	¼	13	2½	11¾	2¾	10	31½	14	10¼	27¾	1¾	1⅞	7 15/16	4	1½	1 13/16

GUIDED EXPANSION BEARINGS - ANGULAR DIMENSIONS

SUPPORT	GIRDER	⊖
ABUTMENT A	②③④	4°-55'-48"
PIER 1	②③④	2°-36'-47"
PIER 2	①⑤	90°-00'-00"
PIER 3	②③④	-3°-12'-32"
ABUTMENT B	②③④	-5°-56'-56"

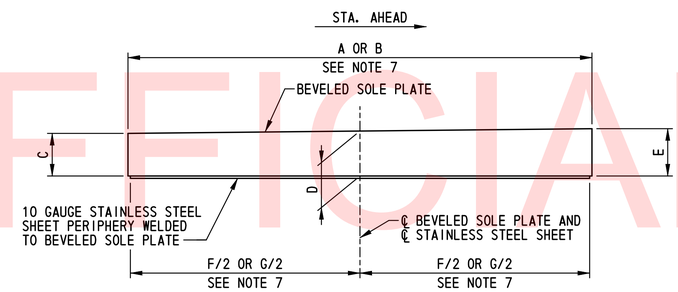

BEVELED SOLE PLATE DETAIL

SCALE: 3"=1'-0"

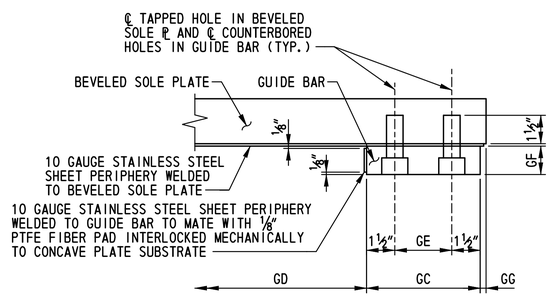

SECTION ZZ-ZZ

SCALE: 3"=1'-0"

NOTES:

1. FOR ADDITIONAL INFORMATION AND MATERIAL SPECIFICATIONS, SEE DWG. NO. BB-01.
2. FOR ⊖, SEE ANGULAR DIMENSIONS TABLE ON THIS SHEET. ANGULAR DIMENSIONS ARE MEASURED POSITIVE IN THE CLOCKWISE DIRECTION AS SHOWN.
3. FOR DIMENSIONS A, B, C, D, E, F, G, H, J, K, L, M, N, P, R, S, T, V, W, GA, GB, GC, GD, GE, GF, GG AND GH. SEE LINEAR DIMENSIONS TABLE ON THIS SHEET.
4. BEARING HEIGHT H IS MEASURED FROM THE TOP OF THE CONCRETE BEARING PAD TO THE TOP OF THE BEVELED SOLE PLATE AT THE CENTER LINE OF BEARING.
5. CAP SCREW NOT SHOWN IN GUIDED EXPANSION BEARING PLAN, GUIDED EXPANSION BEARING ELEVATION AND SECTION YY-YY FOR CLARITY.
6. ANCHOR BOLTS, NUTS AND PLATE WASHERS NOT SHOWN FOR CLARITY. FOR ANCHOR BOLT DETAIL, SEE DWG. NO. BB-01.
7. FOR ANGLE ⊖ LESS THAN OR EQUAL TO 45°-00'-00", USE DIMENSIONS A AND F. FOR ANGLE ⊖ GREATER THAN 45°-00'-00", USE DIMENSIONS B AND G.
8. MATCH MARK ORIENTATION OF SOLE PLATE TO INSURE PROPER INSTALLATION IN THE FIELD, SEE SHOP NOTE 5 ON DWG. NO. BB-01.

UNOFFICIAL WEBSITE COPY

N:\33653-000\Contract 1B\CADD\Bridge\Br_No433\BB14_br1-433.dgn
2/5/2013 10:21:16 AM

DELAWARE DEPARTMENT OF TRANSPORTATION	ADDENDUMS / REVISIONS	SCALE: AS SHOWN	US 301 & SR 1 INTERCHANGE	CONTRACT T200911302	BRIDGE NO. 1-433	GUIDED EXPANSION BEARING DETAILS - 2	BR1-3 BB-14	SHEET NO. 259
				COUNTY NEW CASTLE	DESIGNED BY: W.T.R.			TOTAL SHTS. 491
					CHECKED BY: B.K.B.			

NON-GUIDED EXPANSION BEARINGS - LINEAR DIMENSIONS (INCHES)																					
SUPPORT	GIRDER	BEVELED SOLE PLATE						CONCAVE PLATE & CONVEX PLATE					MASONRY PLATE					BEARING HEIGHT	ANCHOR BOLTS		
		A	B	C	D	E	F	G	J	K	L	R	M	N	P	S	T	H	QTY.	BOLT Ø	HOLE Ø
ABUTMENT A	①⑤	18¾	26	1	1 3/16	1⅜	18½	11¾	2	10¾	2¼	11	37½	13	9¼	33¾	2¼	6 11/16	4	1½	1 13/16
PIER 1	①⑤	22¾	22	1	1⅛	1¼	21¾	17	2	16¼	2¼	24	33	18½	14¾	29¼	2	6⅜	4	1½	1 13/16
PIER 3	①⑤	24¼	22½	1¾	1½	1¼	22¼	18¼	2	17¾	2¼	28	33½	20	16¼	29¾	2	6¾	4	1½	1 13/16
ABUTMENT B	①⑤	21¼	28	1⅝	1 5/16	1	21	13½	2½	12½	2¾	11	39½	14½	10¾	35¾	2¼	7 5/16	4	1½	1 13/16

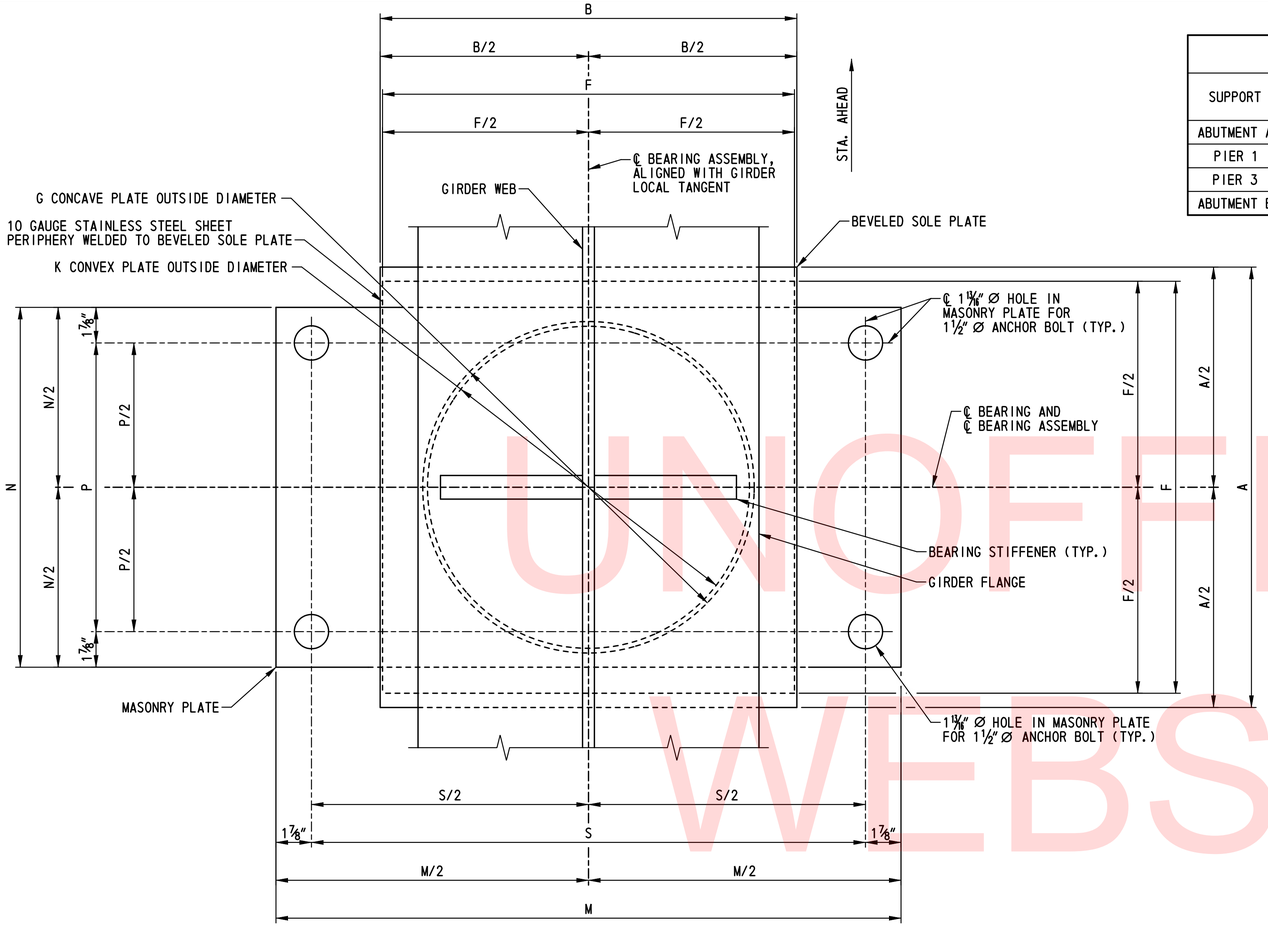

NON-GUIDED EXPANSION BEARING PLAN

SCALE: 3"=1'-0"

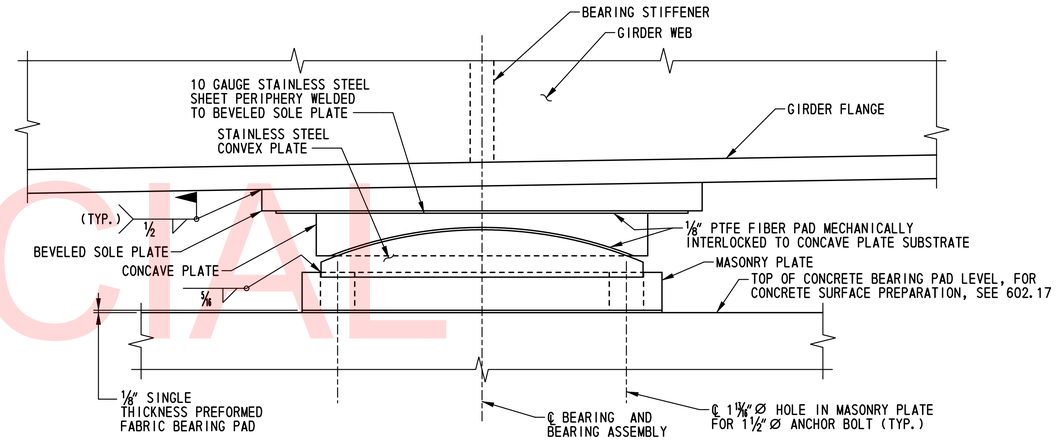

SECTION AB-AB

SCALE: 3"=1'-0"

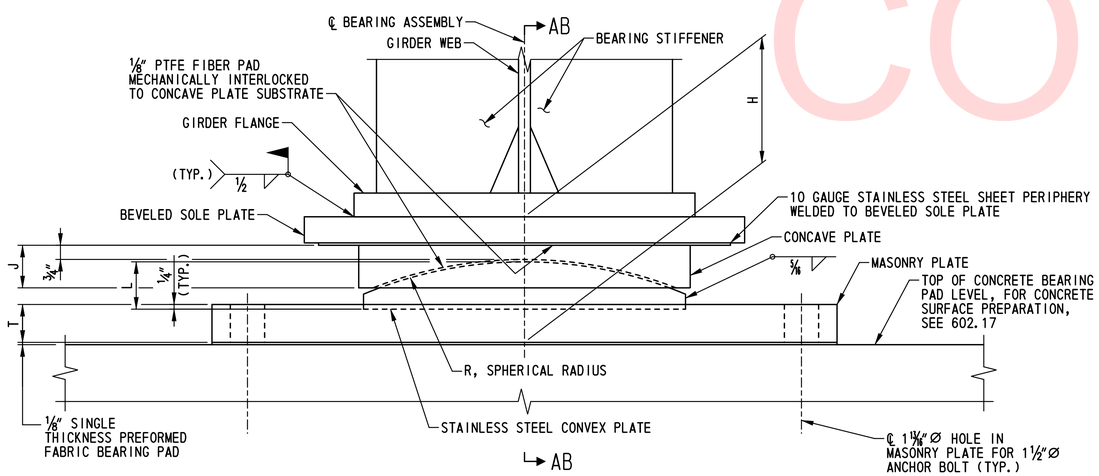

NON-GUIDED EXPANSION BEARING ELEVATION

SCALE: 3"=1'-0"

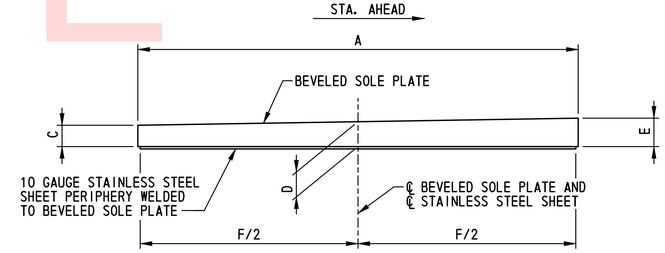

BEVELED SOLE PLATE DETAIL

SCALE: 3"=1'-0"

NOTES:

1. FOR ADDITIONAL INFORMATION AND MATERIAL SPECIFICATIONS, SEE DWG. NO. BB-01.
2. BEARING HEIGHT H IS MEASURED FROM THE TOP OF THE CONCRETE BEARING PAD TO THE TOP OF THE BEVELED SOLE PLATE AT THE CENTER LINE OF BEARING.
3. ANCHOR BOLTS, NUTS AND PLATE WASHERS NOT SHOWN FOR CLARITY. FOR ANCHOR BOLT DETAIL, SEE DWG. NO. BB-01.
4. MATCH MARK ORIENTATION OF SOLE PLATE TO INSURE PROPER INSTALLATION IN THE FIELD, SEE SHOP NOTE 5 ON DWG. NO. BB-01.

UNOFFICIAL WEBSITE COPY

N:\31653-000\CONTRACT 1B\CADD\Bridge\Br_No433\BB15_br1-433.dgn
12/14/2015 5:05:06 PM

DELAWARE DEPARTMENT OF TRANSPORTATION	ADDENDUMS / REVISIONS	SCALE: AS SHOWN	US 301 & SR 1 INTERCHANGE	CONTRACT T200911302	BRIDGE NO. 1-433	NON-GUIDED EXPANSION BEARING DETAILS	BR1-3 BB-15 SHEET NO. 260
				COUNTY NEW CASTLE	DESIGNED BY: W.T.R. CHECKED BY: B.K.B.		TOTAL SHTS. 491

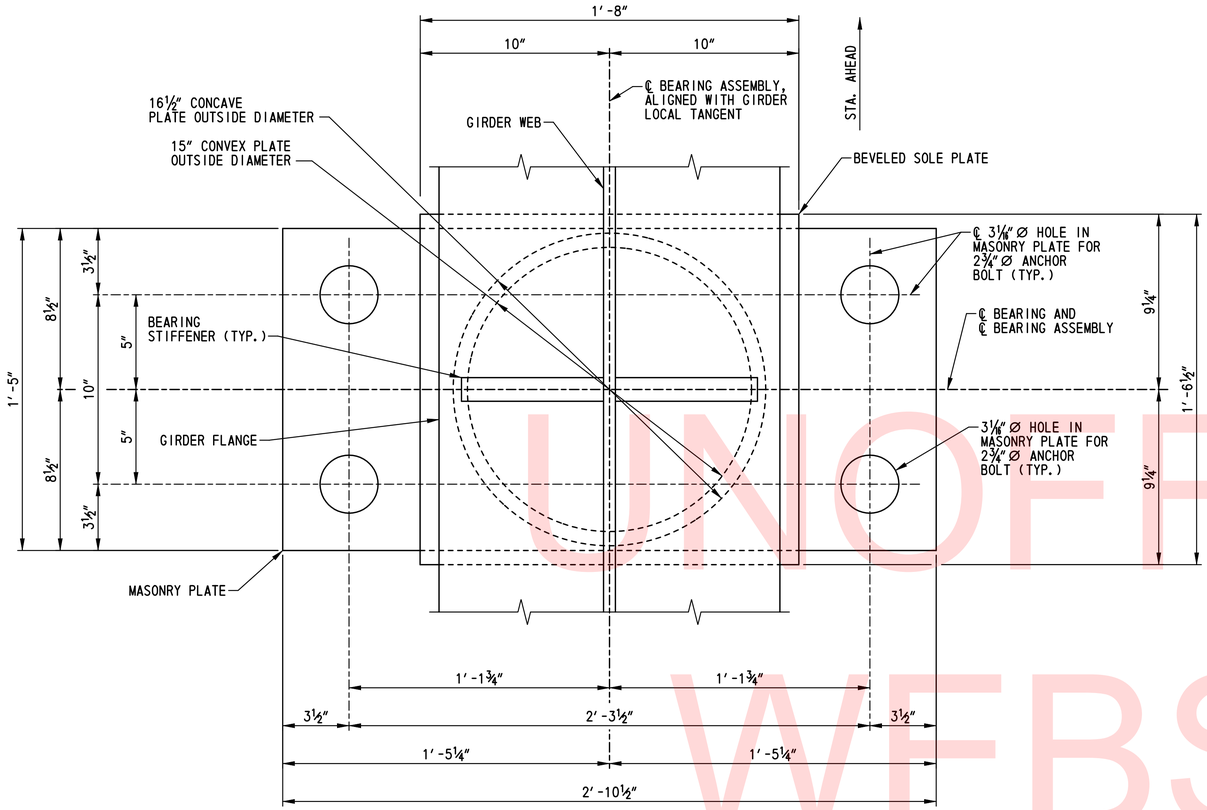

FIXED BEARING PLAN
SCALE: 3″=1′-0″

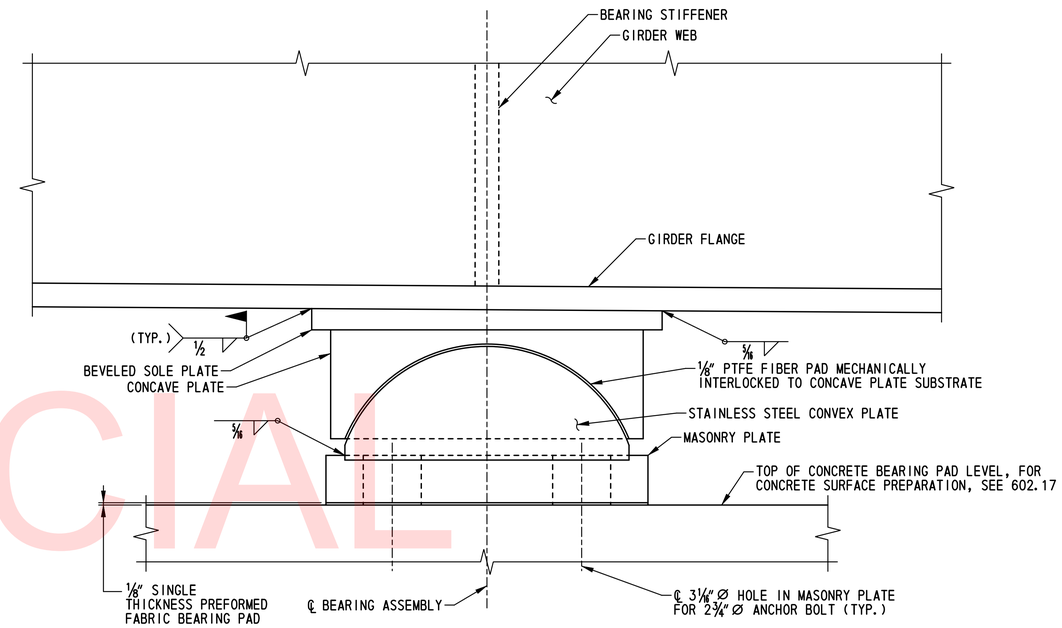

SECTION AC-AC
SCALE: 3″=1′-0″

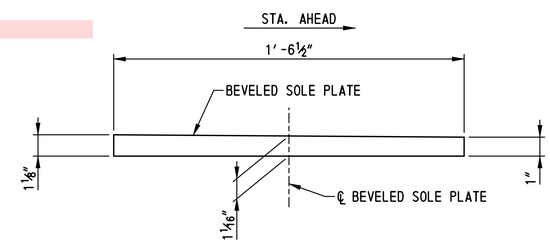

BEVELED SOLE PLATE DETAIL
SCALE: 3″=1′-0″

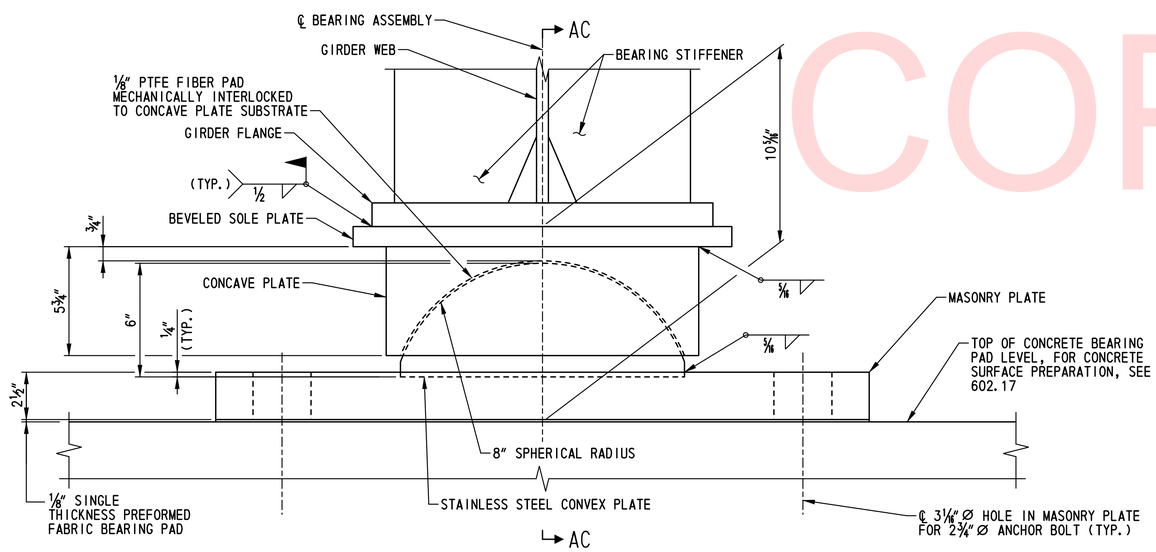

FIXED BEARING ELEVATION
SCALE: 3″=1′-0″

NOTES:

1. FOR ADDITIONAL INFORMATION AND MATERIAL SPECIFICATIONS, SEE DWG. NO. BB-01.
2. BEARING HEIGHT SHOWN IS MEASURED FROM THE TOP OF THE CONCRETE BEARING PAD TO THE TOP OF THE BEVELED SOLE PLATE AT THE CENTER LINE OF BEARING.
3. ANCHOR BOLTS, NUTS AND PLATE WASHERS NOT SHOWN FOR CLARITY. FOR ANCHOR BOLT DETAIL, SEE DWG. NO. BB-01.
4. MATCH MARK ORIENTATION OF SOLE PLATE TO ENSURE PROPER INSTALLATION IN THE FIELD, SEE SHOP NOTE 5 DWG. NO. BB-01.

UNOFFICIAL WEBSITE COPY

N:\31653-000\Contract_IB\CADD\Bridge\Br_No433\BB16_br1-433.dgn
2/5/2013 10:25:37 AM

DELAWARE DEPARTMENT OF TRANSPORTATION	ADDENDUMS / REVISIONS	SCALE: AS SHOWN	US 301 & SR 1 INTERCHANGE	CONTRACT T200911302	BRIDGE NO. 1–433	FIXED BEARING DETAILS	BR1–3 BB–16
				COUNTY NEW CASTLE	DESIGNED BY: W.T.R.		SHEET NO. 261
					CHECKED BY: B.K.B.		TOTAL SHTS. 491

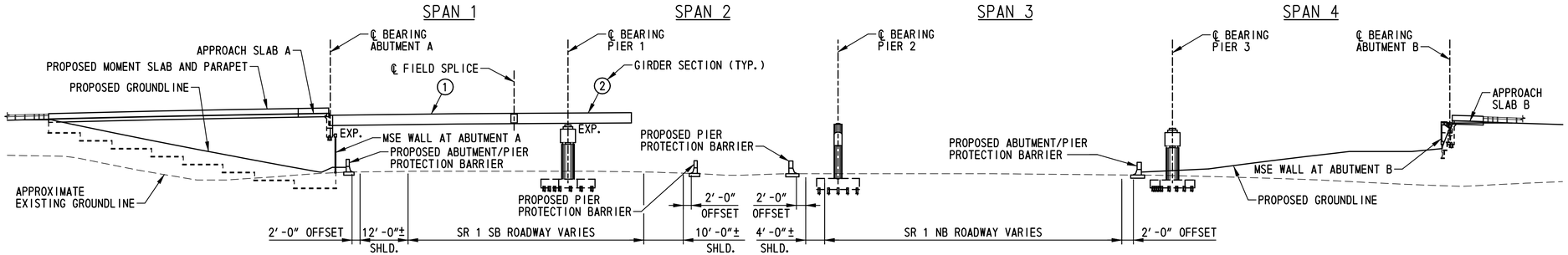

ELEVATION - ERECTION STAGE 1

SCALE: 1"=40'-0"

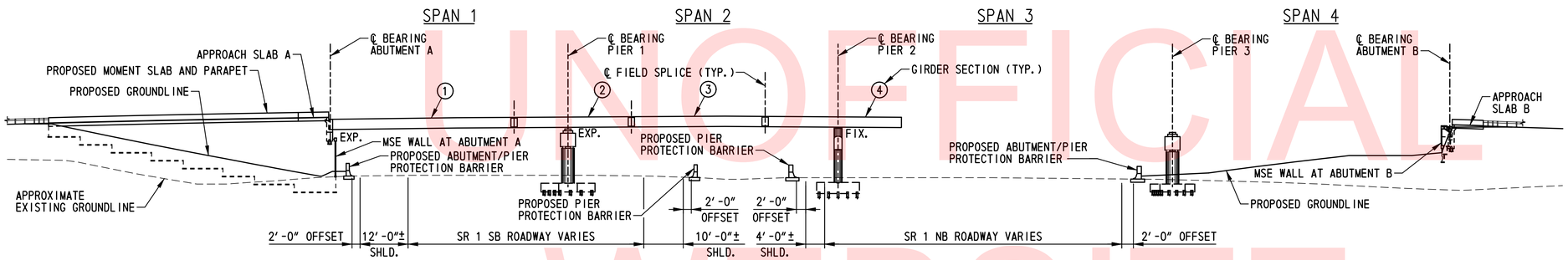

ELEVATION - ERECTION STAGE 2

SCALE: 1"=40'-0"

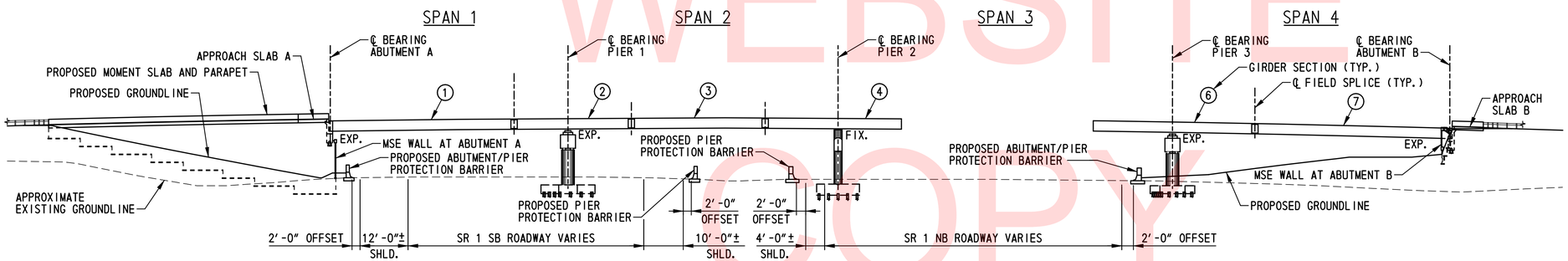

ELEVATION - ERECTION STAGE 3

SCALE: 1"=40'-0"

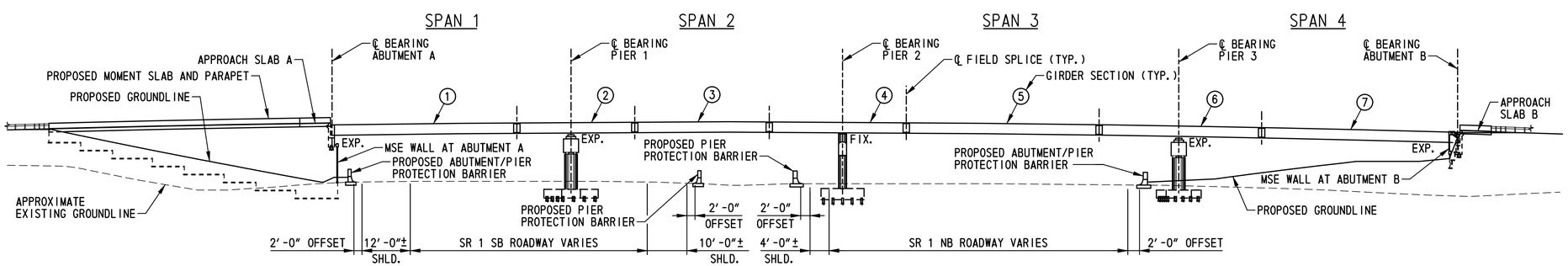

ELEVATION - ERECTION STAGE 4

SCALE: 1"=40'-0"

SUGGESTED ERECTION SEQUENCE NOTES:

STAGE 1:

1. LIFT GIRDER SECTION 1 INTO PLACE. GIRDER SECTION 1 TO BE SUPPORTED AT ONE END BY ABUTMENT A AND HELD BY A CRANE AT THE OTHER END.
2. LIFT GIRDER SECTION 2 INTO PLACE. GIRDER SECTION 2 TO BE SUPPORTED AT ONE END BY PIER 1 AND HELD BY A CRANE AT THE OTHER END.
3. MAKE FIELD SPLICE CONNECTION BETWEEN GIRDER SECTION 1 AND GIRDER SECTION 2.
4. TIE DOWN AND STABILIZE GIRDER SECTION 1 AND GIRDER SECTION 2 AS NECESSARY.
5. GIRDER SECTION 1 AND GIRDER SECTION 2 FOR THE FIRST GIRDER INSTALLED SHALL BE HELD BY A CRANE UNTIL THE CROSS FRAMES BETWEEN THE FIRST AND SECOND GIRDERS ARE INSTALLED.
6. REPEAT STEPS 1 THRU 3 FOR ALL GIRDERS, INSTALLING THE CROSS FRAMES AFTER SPLICING EACH REMAINING GIRDER.

STAGE 2:

1. LIFT GIRDER SECTION 3 INTO PLACE. GIRDER SECTION 3 TO BE HELD BY A CRANE.
2. MAKE FIELD SPLICE CONNECTION BETWEEN GIRDER SECTION 3 AND GIRDER SECTION 2.
3. LIFT GIRDER SECTION 4 INTO PLACE. GIRDER SECTION 4 TO BE SUPPORTED AT ONE END BY PIER 2 AND HELD BY A CRANE AT THE OTHER END.
4. MAKE FIELD SPLICE CONNECTION BETWEEN GIRDER SECTION 4 AND GIRDER SECTION 3.
5. TIE DOWN AND STABILIZE GIRDER SECTION 3 AND GIRDER SECTION 4 AS NECESSARY.
6. GIRDER SECTION 3 AND GIRDER SECTION 4 FOR THE FIRST GIRDER INSTALLED SHALL BE HELD BY A CRANE UNTIL THE CROSS FRAMES BETWEEN THE FIRST AND SECOND GIRDERS ARE INSTALLED.
7. REPEAT STEPS 1 THRU 4 FOR ALL GIRDERS, INSTALLING THE CROSS FRAMES AFTER SPLICING EACH REMAINING GIRDER.

STAGE 3:

1. LIFT GIRDER SECTION 7 INTO PLACE. GIRDER SECTION 7 TO BE SUPPORTED AT ONE END BY ABUTMENT B AND HELD BY A CRANE AT THE OTHER END.
2. LIFT GIRDER SECTION 6 INTO PLACE. GIRDER SECTION 6 TO BE SUPPORTED AT ONE END BY PIER 3 AND HELD BY A CRANE AT THE OTHER END.
3. MAKE FIELD SPLICE CONNECTION BETWEEN GIRDER SECTION 6 AND GIRDER SECTION 7.
4. TIE DOWN AND STABILIZE GIRDER SECTION 6 AND GIRDER SECTION 7 AS NECESSARY.
5. GIRDER SECTION 6 AND GIRDER SECTION 7 FOR THE FIRST GIRDER INSTALLED SHALL BE HELD BY A CRANE UNTIL THE CROSS FRAMES BETWEEN THE FIRST AND SECOND GIRDERS ARE INSTALLED.
6. REPEAT STEPS 1 THRU 3 FOR ALL GIRDERS, INSTALLING THE CROSS FRAMES AFTER SPLICING EACH REMAINING GIRDER.

STAGE 4:

1. LIFT GIRDER SECTION 5 INTO PLACE. GIRDER SECTION 5 TO BE HELD BY A CRANE.
2. MAKE FIELD SPLICE CONNECTION BETWEEN GIRDER SECTION 4 AND GIRDER SECTION 5.
3. MAKE FIELD SPLICE CONNECTION BETWEEN GIRDER SECTION 5 AND GIRDER SECTION 6.
4. TIE DOWN AND STABILIZE GIRDER SECTION 5 AS NECESSARY.
5. REPEAT STEPS 1 THRU 3 FOR ALL GIRDERS, INSTALLING THE CROSS FRAMES AFTER SPLICING EACH REMAINING GIRDER.

NOTE TO CONTRACTOR:

THE ERECTION SEQUENCE SHOWN IS ONLY A SUGGESTED METHOD. THE CONTRACTOR IS RESPONSIBLE FOR THE ENTIRE ERECTION OF THE BRIDGE. THE CONTRACTOR SHALL SUBMIT DRAWINGS SEALED BY A PROFESSIONAL ENGINEER REGISTERED IN THE STATE OF DELAWARE, ILLUSTRATING FULLY THE PROPOSED METHOD OF ERECTION. THE DRAWINGS SHALL SHOW DETAILS OF ALL TEMPORARY SHORING, FALSEWORK, BRACING, GUYS, DEAD-MEN, LIFTING DEVICES, HOLD-DOWN DEVICES AND ATTACHMENTS TO THE BRIDGE MEMBERS. THE DRAWINGS SHALL ALSO INCLUDE THE SEQUENCE OF ERECTION, LOCATION OF CRANES, CRANE CAPACITIES, LOCATION OF LIFTING POINTS ON THE BRIDGE MEMBER AND WEIGHT OF MEMBERS. THE PLAN AND DRAWING SHALL BE COMPLETE IN DETAIL FOR ALL ANTICIPATED STAGES AND CONDITIONS DURING ERECTION. CALCULATIONS SEALED BY A PROFESSIONAL ENGINEER REGISTERED IN THE STATE OF DELAWARE ARE REQUIRED TO DEMONSTRATE THAT ALLOWABLE STRESSES ARE NOT EXCEEDED AND THAT MEMBER CAPACITIES AND FINAL GEOMETRY WILL BE CORRECT. AT NO TIME SHALL ACTIVE TRAFFIC ON SR 1 NB OR SB BE LOCATED UNDER GIRDERS BEING HELD OR LIFTED BY CRANES DURING THE ERECTION SEQUENCE. MAINTENANCE OF TRAFFIC REQUIREMENTS DURING GIRDER ERECTION TO BE REFERENCED IN FUTURE SUBMISSIONS.

UNOFFICIAL WEBSITE COPY

DELAWARE DEPARTMENT OF TRANSPORTATION	ADDENDUMS / REVISIONS	SCALE: AS SHOWN	US 301 & SR 1 INTERCHANGE	CONTRACT T200911302	BRIDGE NO. 1-433	GIRDER ERECTION SEQUENCE	BR1-3 BM-01
				COUNTY NEW CASTLE	DESIGNED BY: B.K.B.		SHEET NO. 262
					CHECKED BY: S.E.K.		TOTAL SHTS. 491

N:\33653-000\Contract 1B\CADD\Bridge\Br_No433\BM01_br1-433.dgn
2/5/2013 10:28:09 AM

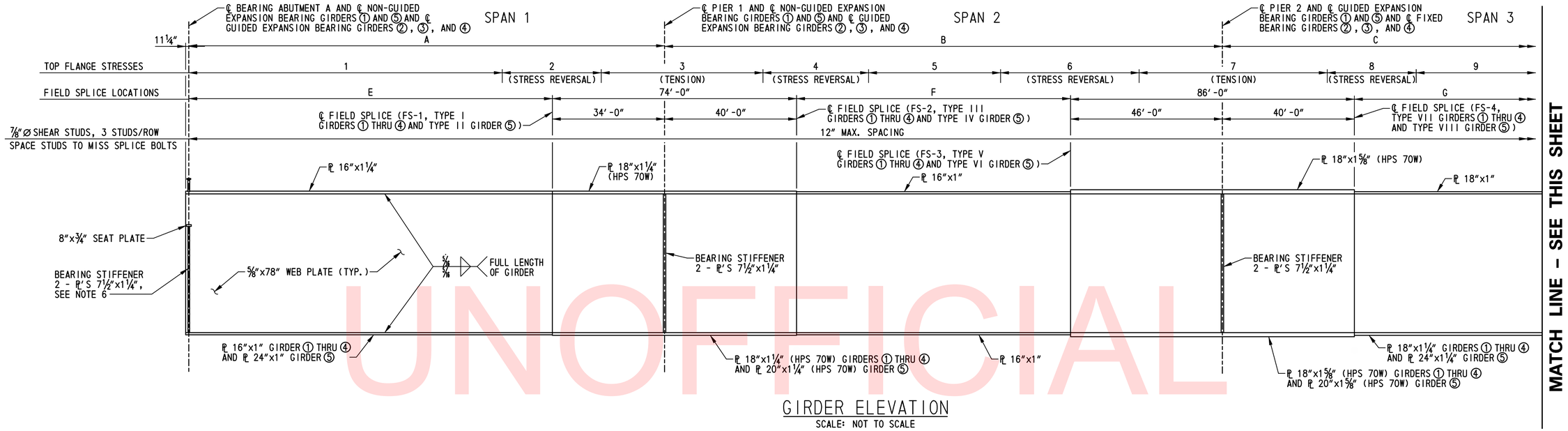

GIRDER ELEVATION

SCALE: NOT TO SCALE

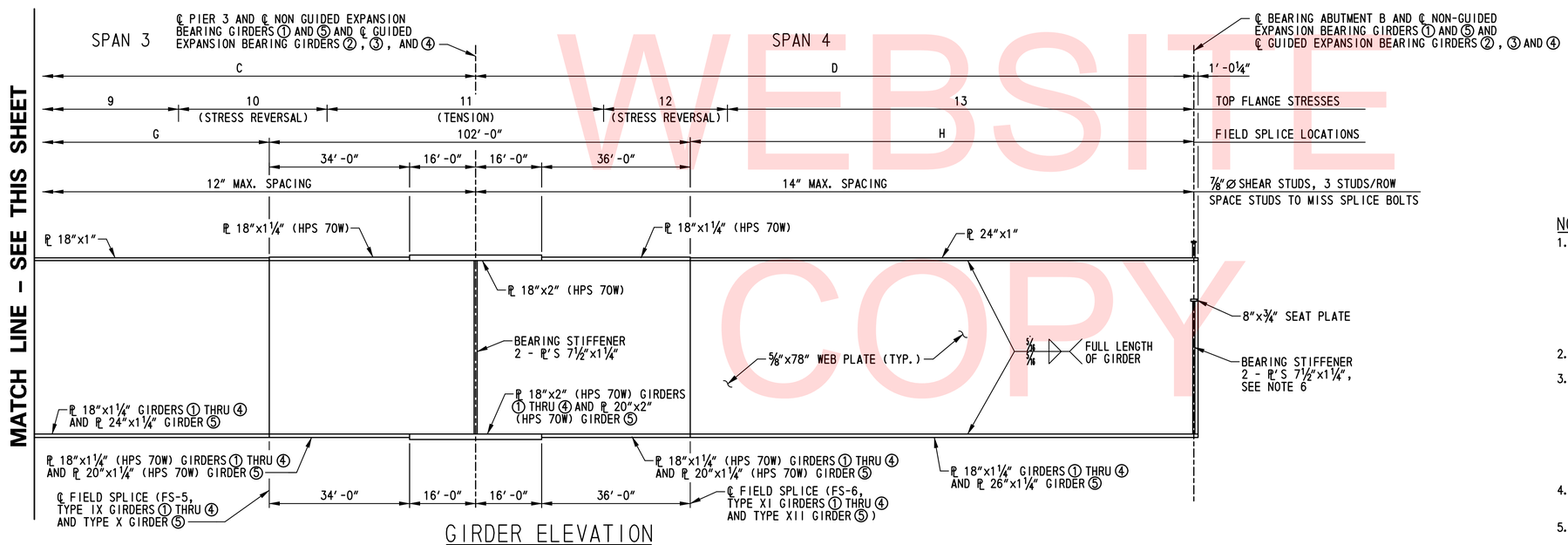

GIRDER ELEVATION

SCALE: NOT TO SCALE

GIRDER ELEVATION SCHEDULE

GIRDER	A	B	C	D	E	F	G	H	1	2	3	4	5	6	7	8	9	10	11	12	13	RADIUS
①	144'-2⅛"	169'-0½"	203'-10⅛"	174'-0⅛"	110'-2⅛"	83'-0½"	113'-10⅛"	122'-0⅛"	91'-0⅜"	30'-5⅜"	48'-6½"	38'-1¾"	23'-7⅝"	52'-3¼"	56'-8¾"	29'-10½"	77'-11"	34'-4½"	66'-0⅛"	33'-10¼"	108'-2¾"	1819.67
②	144'-11⅜"	169'-11¼"	204'-11⅛"	174'-11¼"	110'-11⅜"	83'-11¼"	114'-11⅛"	122'-11¼"	95'-4¾"	26'-8"	49'-4¾"	32'-1⅜"	36'-11⅞"	44'-0"	58'-5½"	25'-11½"	86'-8⅞"	28'-11¼"	68'-0⅝"	29'-3¼"	112'-9⅛"	1829.33
③	145'-8½"	170'-10"	206'-0⅛"	175'-10⅜"	111'-8½"	84'-10"	116'-0⅛"	123'-10⅜"	97'-6⅜"	24'-4⅞"	51'-0¾"	29'-9"	41'-1¼"	41'-5¾"	60'-1⅝"	23'-11⅝"	90'-5⅛"	26'-4½"	70'-0⅝"	27'-2¾"	114'-10⅝"	1839.00
④	146'-5¾"	171'-8¾"	207'-1⅛"	176'-9⅜"	112'-5¾"	85'-8¾"	117'-1⅛"	124'-9⅜"	95'-11⅛"	27'-6⅝"	50'-0⅝"	35'-3⅞"	27'-11⅝"	50'-7½"	59'-0⅛"	26'-9½"	85'-4⅜"	30'-8⅞"	69'-1⅛"	30'-11"	112'-8⅞"	1848.67
⑤	147'-3"	172'-7⅝"	208'-2⅛"	177'-8½"	113'-3"	86'-7⅝"	118'-2⅛"	125'-8½"	92'-4⅜"	33'-6⅞"	48'-2⅝"	0"	115'-5½"	0"	57'-3⅞"	31'-7⅞"	77'-3⅛"	36'-10½"	67'-5¾"	36'-2⅜"	109'-4¼"	1858.33

NOTES:

1. THE ENTIRE STRUCTURAL STEEL SUPERSTRUCTURE SHALL BE PREASSEMBLED IN THE FABRICATION SHOP WITH THE SPECIFIED BOLT DIAMETERS REQUIRED FOR CONSTRUCTION. AFTER THE STRUCTURAL STEEL SUPERSTRUCTURE HAS BEEN PREASSEMBLED PRIOR TO DISASSEMBLING, DELDOT OR THEIR AUTHORIZED REPRESENTIVES SHALL APPROVE THE PREASSEMBLED STRUCTURAL STEEL. NO STRUCTURAL STEEL SHALL BE DELIVERED TO THE PROJECT SITE UNTIL DELDOT OR THEIR AUTHORIZED REPRESENTIVES HAVE PROVIDED APPROVAL TO THE CONTRACTOR IN WRITING.
2. THE GIRDERS ARE REQUIRED TO BE PLUMB UNDER FULL DEAD LOAD.
3. ALL STRUCTURAL STEEL SHALL BE AASHTO M 270 (ASTM A 709), GRADE 50W EXCEPT AS SHOWN FOR THE TOP AND BOTTOM FLANGES BETWEEN FIELD SPLICES. THE STRUCTURAL STEEL IN THESE REGIONS SHALL BE AASHTO M 270 (ASTM A 709), GRADE HPS 70W. PAYMENT FOR AASHTO M 270 (ASTM A 709), GRADE 50W STRUCTURAL STEEL WILL BE MADE UNDER ITEM NO. 605002 - STEEL STRUCTURES. PAYMENT FOR AASHTO M 270 (ASTM A 709), GRADE HPS 70W STRUCTURAL STEEL WILL BE MADE UNDER ITEM NO. 605691 - HIGH PERFORMANCE STEEL.
4. THERE SHALL BE NO FIELD WELDING TO THE TOP FLANGE, EXCEPT FOR SHEAR STUDS, IN THE TENSION AND STRESS REVERSAL REGIONS.
5. CROSS FRAME CONNECTION PLATE SPACING NOT SHOWN. FOR LOCATION OF CROSS FRAME CONNECTION PLATES, SEE DWG. NO. FR-01.
6. EXTEND EXTERIOR BEARING STIFFENER OF FASCIA GIRDERS AT ABUTMENTS TO TOP FLANGE AND WELD.
7. FOR BEARING STIFFENER AND CONNECTION PLATE DETAILS, SEE DWG. NO. BM-03.
8. FOR SHOP FLANGE SPLICE DETAILS, SEE DWG. NO. BM-08.
9. FOR FIELD SPLICE DETAILS, SEE DWG. NOS. BM-05 THRU BM-08.
10. FOR SHEAR STUD DETAILS, SEE DWG. NO. SD-01.

BR1-3
BM-02

DELAWARE DEPARTMENT OF TRANSPORTATION

ADDENDUMS / REVISIONS

SCALE: AS SHOWN

US 301 & SR 1 INTERCHANGE

CONTRACT	BRIDGE NO.	1-433
T200911302	DESIGNED BY: W.T.R.	
COUNTY		
NEW CASTLE	CHECKED BY: B.K.B.	

GIRDER ELEVATION

SHEET NO. 263
TOTAL SHTS. 491

N:\3953-000\CONTRACT 1B\CADD\Bridge\Br_No433\BM02_br1-433.dgn
12/18/2015 11:18:16 AM

UNOFFICIAL WEBSITE COPY

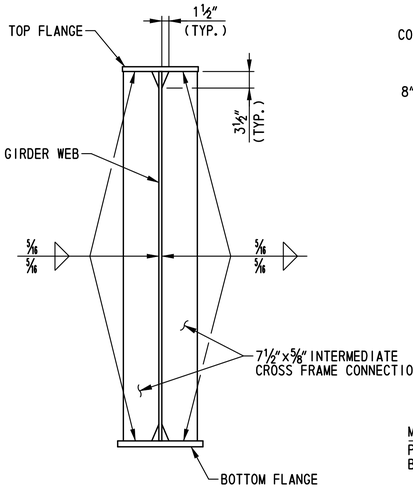

INTERMEDIATE CROSS FRAME CONNECTION PLATES

SCALE: ¾"=1'-0"

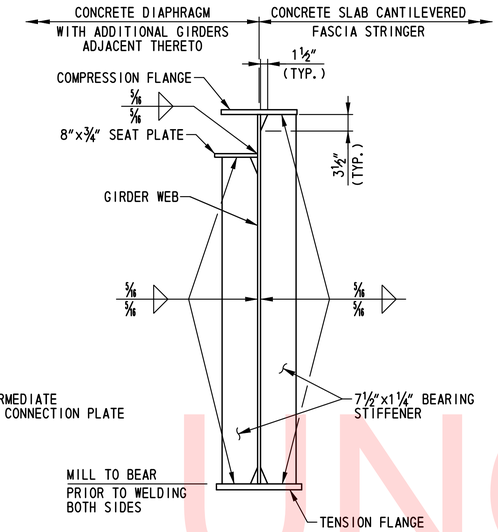

ABUTMENT BEARING STIFFENERS

SCALE: ¾"=1'-0"

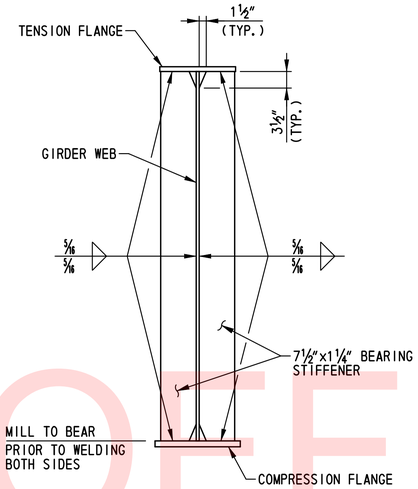

PIER BEARING STIFFENERS

SCALE: ¾"=1'-0"

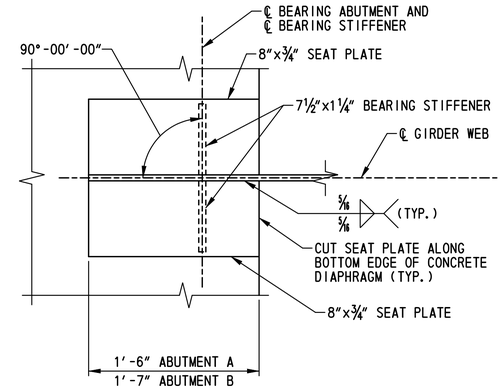

SEAT PLATE DETAIL

SCALE: 1½"=1'-0"

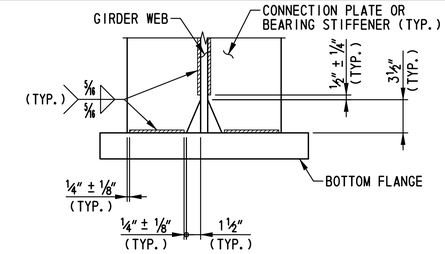

WELD TERMINATION DETAIL

SCALE: 1½"=1'-0"

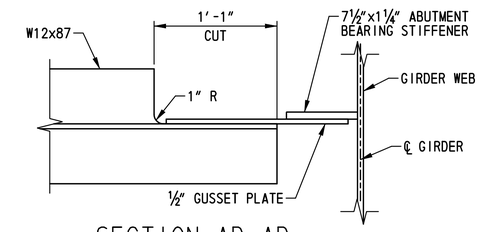

SECTION AD-AD

SCALE: 1½"=1'-0"

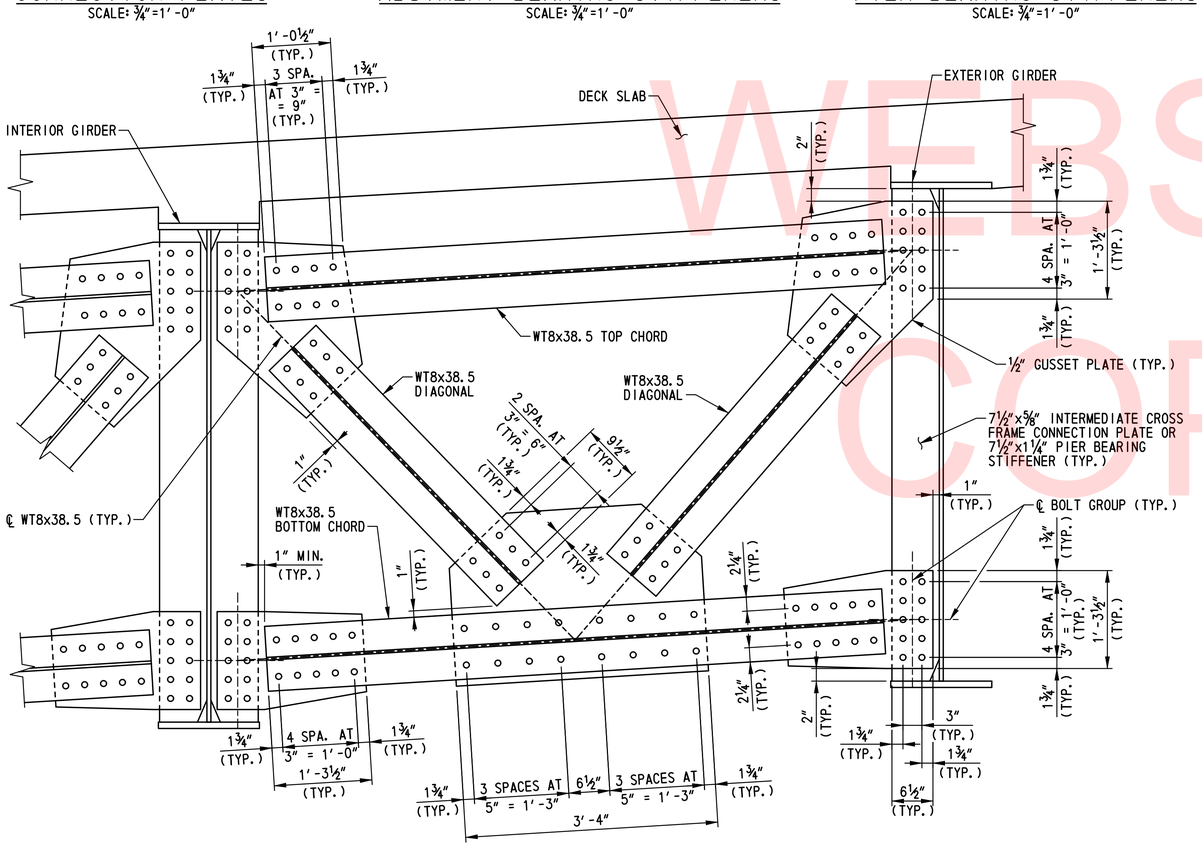

PIER AND INTERMEDIATE CROSS FRAME DETAIL

SCALE: 1"=1'-0"

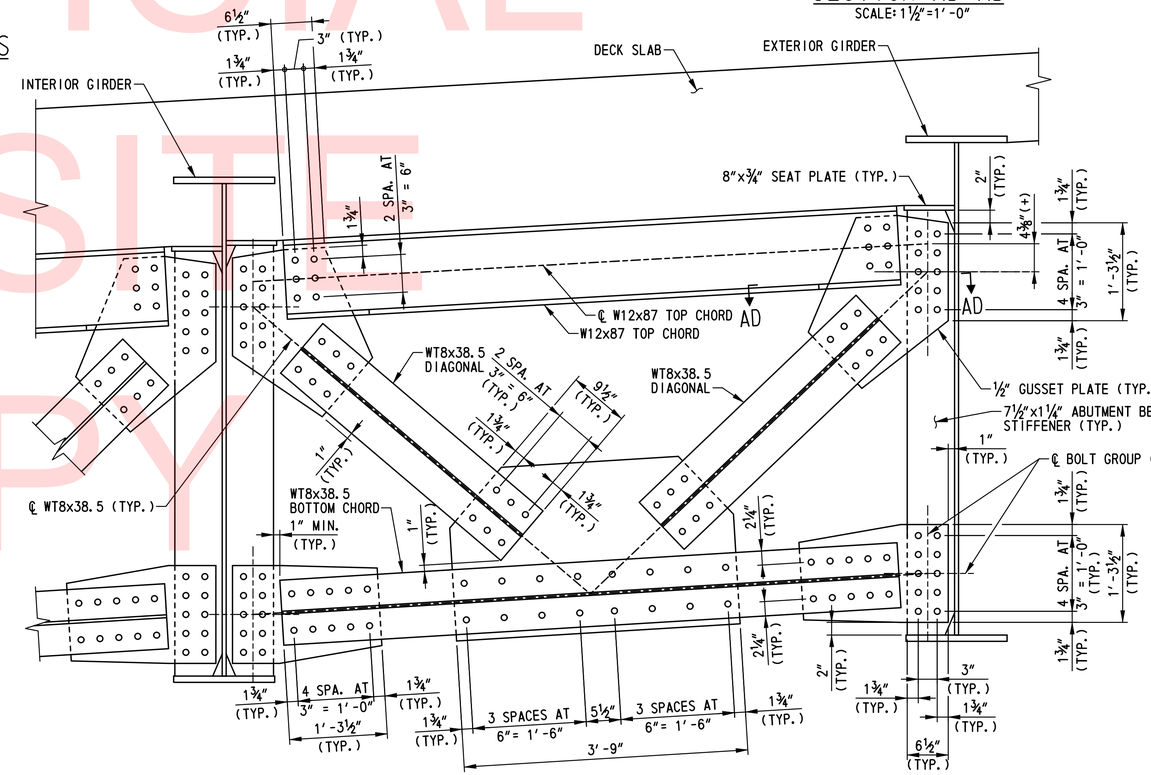

ABUTMENT CROSS FRAME DETAIL

SCALE: 1"=1'-0"

NOTES:

1. FOR CROSS FRAME LOCATIONS, SEE DWG. NO. FR-01.
2. CROSS FRAME CONNECTIONS DESIGNED AS A SLIP CRITICAL CONNECTION WITH CLASS A SURFACE CONDITIONS.
3. ALL BOLTS TO BE ⅞"Ø HIGH STRENGTH BOLTS CONFORMING TO A 490, TYPE 3. ALL BOLT HOLES SHALL BE 15/16"Ø . ALL BOLTS SHALL BE FABRICATED WITH THREADS THAT ARE EXCLUDED FROM THE SHEAR PLANE.
4. THE MINIMUM ACCEPTABLE EDGE DISTANCE FOR ANY HOLE SHALL BE 1½".
5. BOLTS NOT SHOWN IN CROSS FRAMES.
6. THE GIRDERS ARE REQUIRED TO BE PLUMB UNDER FULL DEAD LOAD.

UNOFFICIAL WEBSITE COPY

N:\31653-000\Contract 1B\CADD\Bridge\Br_No433\BM03_br1-433.dgn
2/5/2013 10:28:57 AM

DELAWARE DEPARTMENT OF TRANSPORTATION	ADDENDUMS / REVISIONS	SCALE: AS SHOWN	US 301 & SR 1 INTERCHANGE	CONTRACT T200911302	BRIDGE NO. 1-433	STRUCTURAL STEEL DETAILS – 1	BR1-3 BM-03
				COUNTY NEW CASTLE	DESIGNED BY: W.T.R.		SHEET NO. 264
					CHECKED BY: B.K.B.		TOTAL SHTS. 491

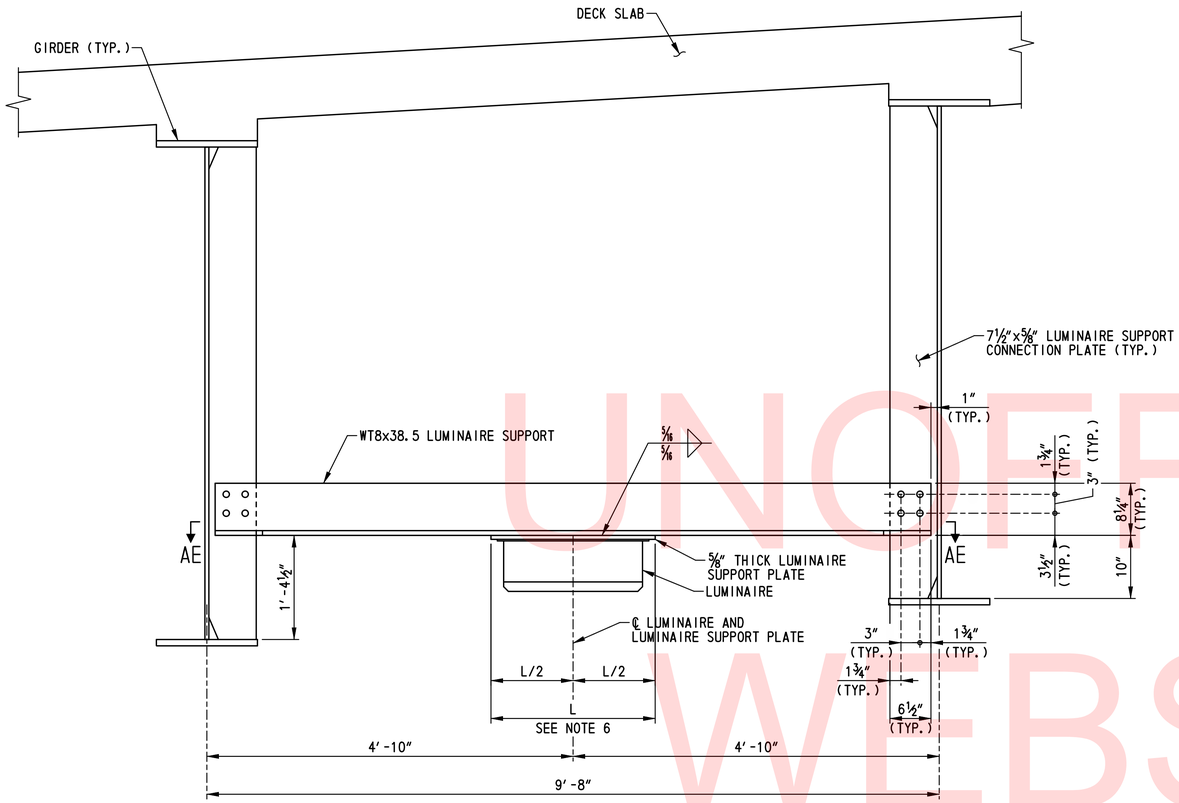

LUMINAIRE SUPPORT DETAIL
SCALE: 1"=1'-0"

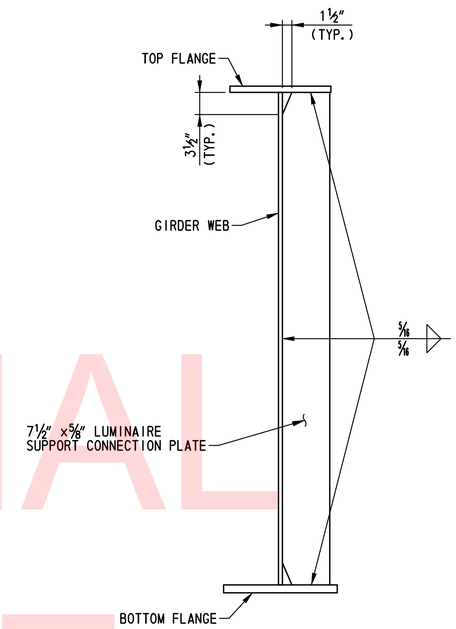

LUMINAIRE SUPPORT CONNECTION PLATE
SCALE: 1"=1'-0"

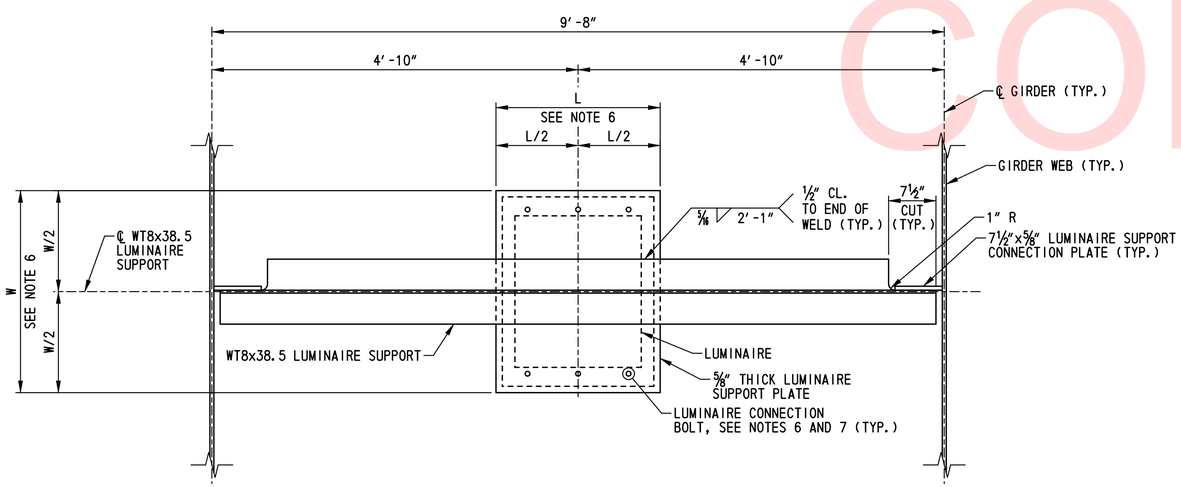

SECTION AE-AE
SCALE: 1"=1'-0"

NOTES:

1. FOR LUMINAIRE SUPPORT LOCATIONS, SEE DWG. NO. FR-01.
2. ALL BOLTS TO BE ⅞"Ø HIGH STRENGTH BOLTS CONFORMING TO A 490, TYPE 3. ALL BOLT HOLES SHALL BE ⅞" Ø. ALL BOLTS SHALL BE FABRICATED WITH THREADS THAT ARE EXCLUDED FROM THE SHEAR PLANE.
3. THE MINIMUM ACCEPTABLE EDGE DISTANCE FOR ANY HOLE SHALL BE 1½".
4. BOLTS NOT SHOWN IN LUMINAIRE SUPPORT CONNECTION PLATE.
5. FOR CONNECTION PLATE WELD TERMINATION DETAIL, SEE DWG. NO. BM-03.
6. FOR ADDITIONAL INFORMATION ON SUPPORT PLATE LUMINAIRE, ASSOCIATED ELECTRICAL CONDUIT AND INSTALLATION, SEE DWG. NOS. LI-13 AND LI-14.
7. LUMINAIRE CONNECTION TO LUMINAIRE SUPPORT PLATE SHALL BE A BOLTED CONNECTION IN CONFORMANCE WITH THE MANUFACTURER'S RECOMMENDATIONS.
8. LUMINAIRE BOLTED CONNECTION NOT SHOWN.

UNOFFICIAL WEBSITE COPY

DELAWARE DEPARTMENT OF TRANSPORTATION	ADDENDUMS / REVISIONS	SCALE: AS SHOWN	US 301 & SR 1 INTERCHANGE	CONTRACT T200911302	BRIDGE NO. 1-433	STRUCTURAL STEEL DETAILS – 2	BR1-3 BM-04
				COUNTY NEW CASTLE	DESIGNED BY: W.T.R.		SHEET NO. 265
					CHECKED BY: B.K.B.		TOTAL SHTS. 491

N:\31653-000\Contract_IB\CADD\Bridge\Br_No433\BM04_Br1-433.dgn
2/5/2013 10:27:22 AM

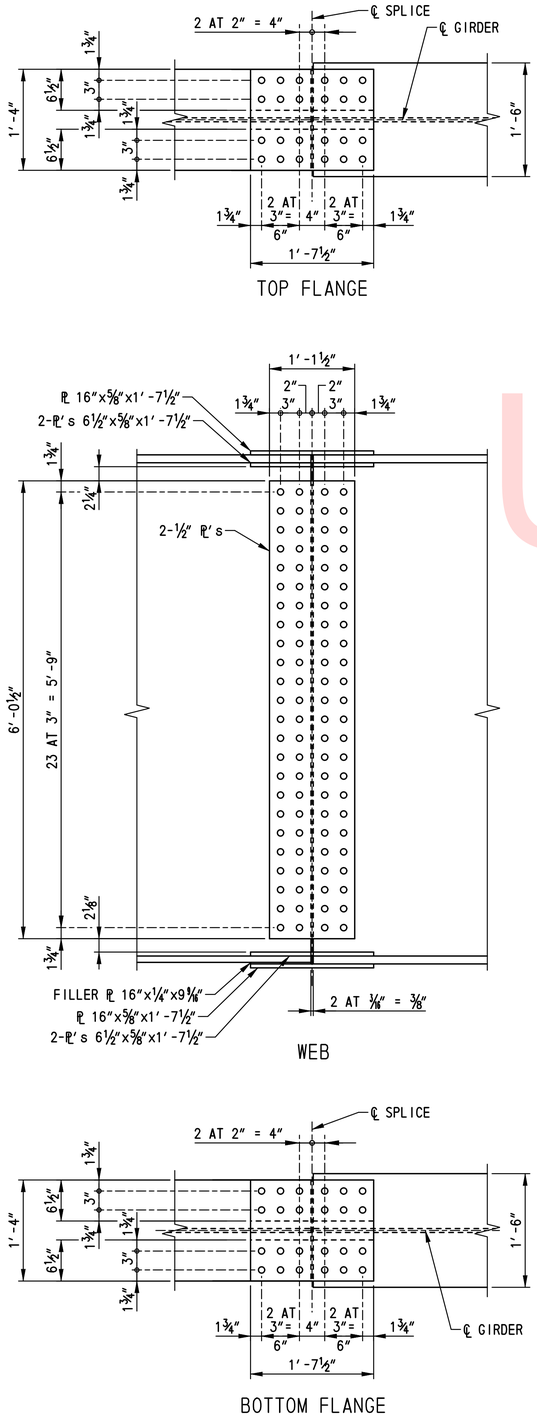

FIELD SPLICE DETAIL - TYPE I

SCALE: 1"=1'-0"

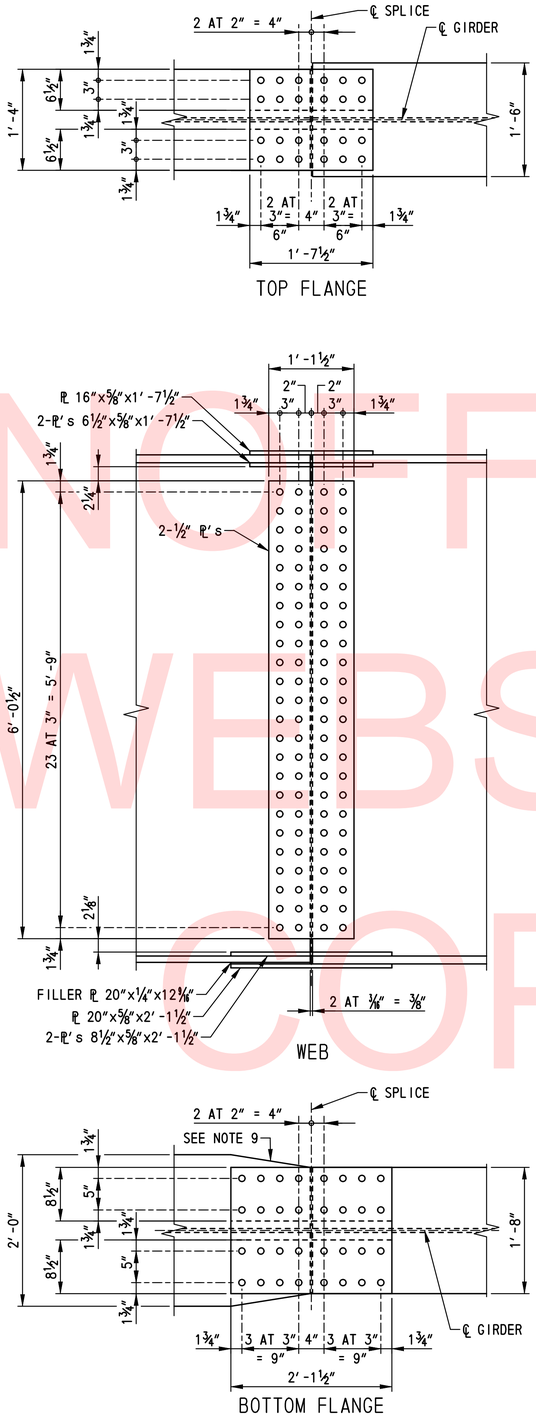

FIELD SPLICE DETAIL - TYPE II

SCALE: 1"=1'-0"

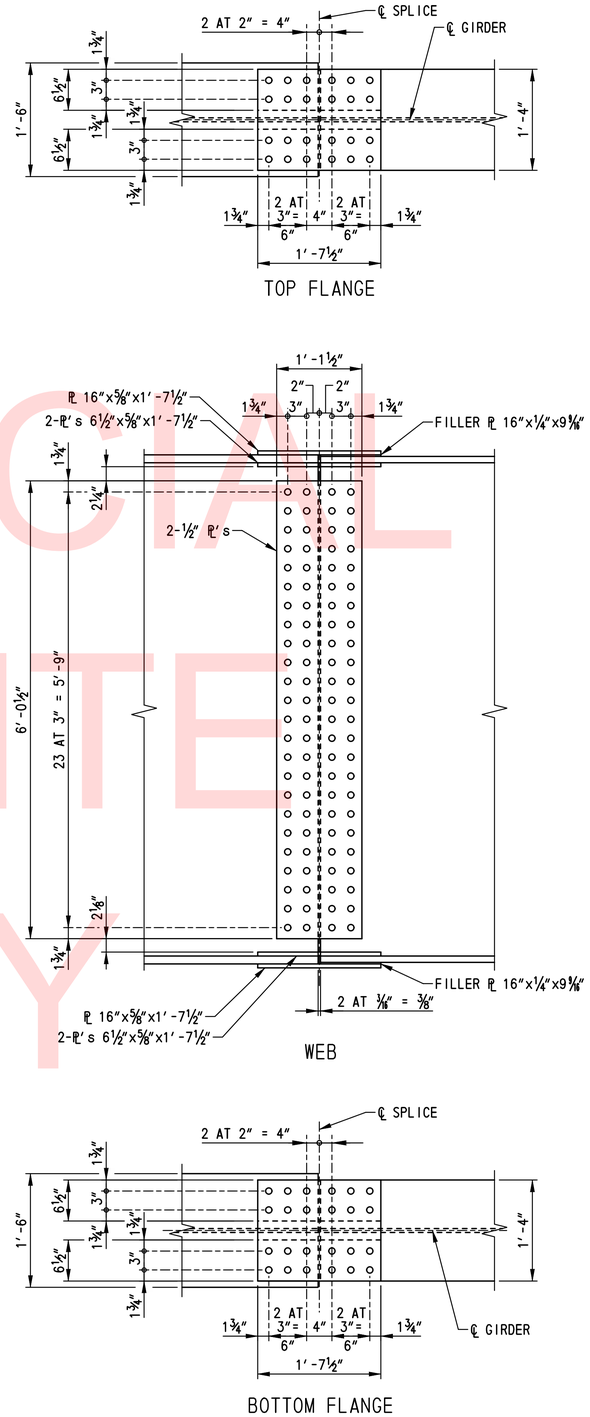

FIELD SPLICE DETAIL - TYPE III

SCALE: 1"=1'-0"

FIELD SPLICE LOCATION BY TYPE		
TYPE	LOCATION	
	GIRDER	SPLICE DESIGNATION
I	①THRU④	FS-1
II	⑤	FS-1
III	①THRU④	FS-2

SPLICE NOTES:

1. FOR LOCATIONS OF FIELD SPLICES, SEE DWG. NOS. BM-02 AND FR-01.
2. FIELD SPLICES DESIGNED AS A SLIP CRITICAL CONNECTION WITH CLASS A SURFACE CONDITIONS.
3. ALL BOLTS TO BE ⅞" ø HIGH STRENGTH BOLTS CONFORMING TO A 490, TYPE 3. ALL BOLT HOLES SHALL BE 15/16" ø. ALL BOLTS SHALL BE FABRICATED WITH THREADS THAT ARE EXCLUDED FROM THE SHEAR PLANE.
4. THE MINIMUM ACCEPTABLE EDGE DISTANCE FOR ANY HOLE SHALL BE 1½".
5. BOLT HEADS SHALL BE ON THE EXTERIOR FACE OF THE EXTERIOR GIRDERS AND THE BOTTOM OF THE BOTTOM FLANGES.
6. BOLTS NOT SHOWN IN SPLICE.
7. SPACE SHEAR STUDS TO MISS TOP FLANGE SPLICE BOLTS.
8. ON EACH SIDE OF THE ℄ SPLICE A MINIMUM OF 50 PERCENT OF THE WEB, TOP FLANGE, AND BOTTOM FLANGE SPLICE BOLTS SHALL BE IN PLACE BEFORE THE GIRDER IS LEFT UNSUPPORTED.
9. WHEN FLANGE IS LARGER THAN ADJACENT FLANGE BY MORE THAN 2", THE LARGER FLANGE SHALL BE TAPERED TO SMALLER FLANGE WIDTH IN A DISTANCE OF ½ LENGTH OF SPLICE PLATE (BOTTOM FLANGE ONLY).
10. FIELD SPLICES SHALL BE COMPLETELY SHOP ASSEMBLED AND MATCH MARKED AFTER ALL SHOP WELDING HAS BEEN COMPLETED. CONTACT SURFACES SHALL BE FREE OF ALL OIL AND DIRT.

UNOFFICIAL WEBSITE COPY

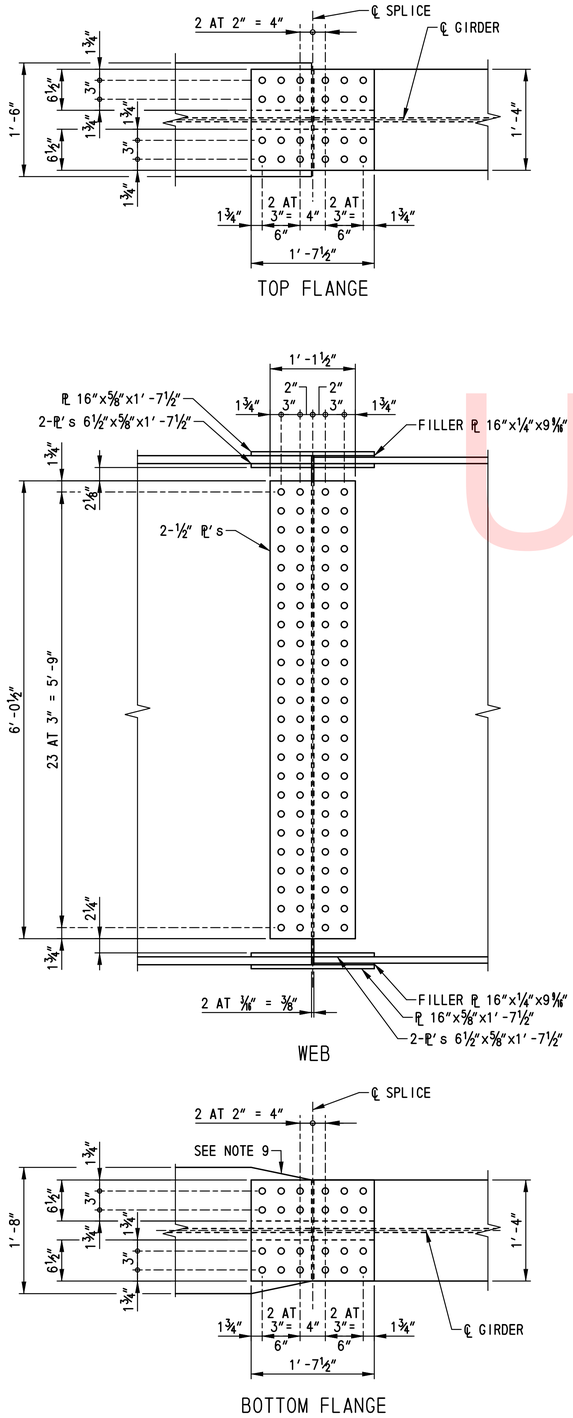

FIELD SPLICE DETAIL - TYPE IV

SCALE: 1"=1'-0"

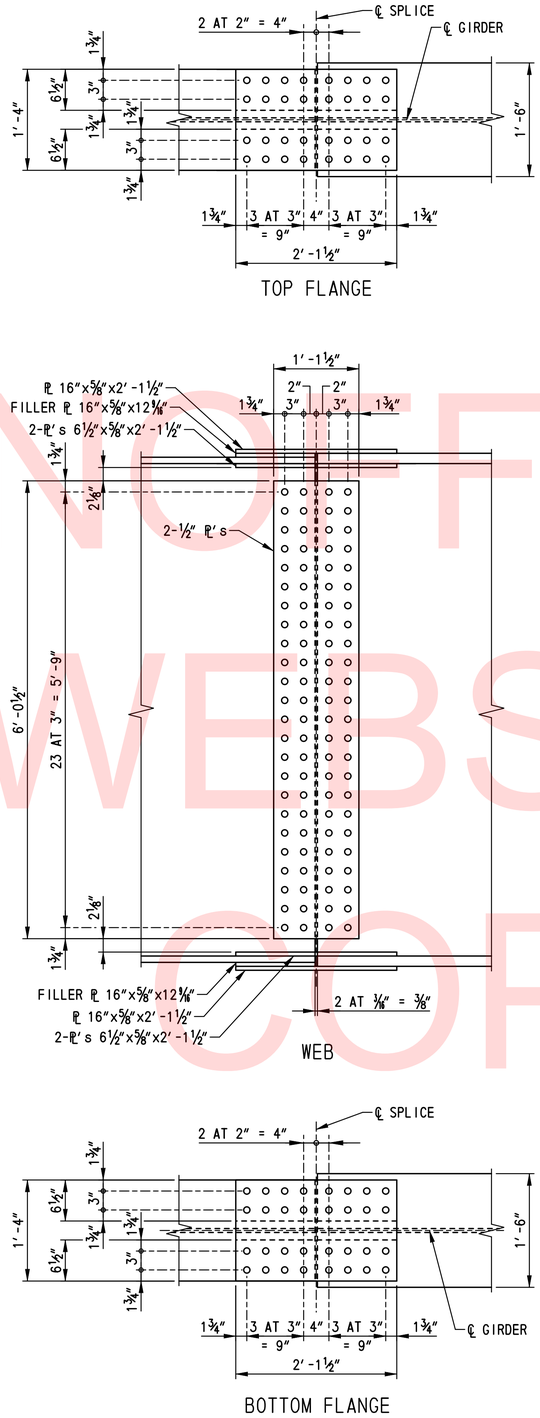

FIELD SPLICE DETAIL - TYPE V

SCALE: 1"=1'-0"

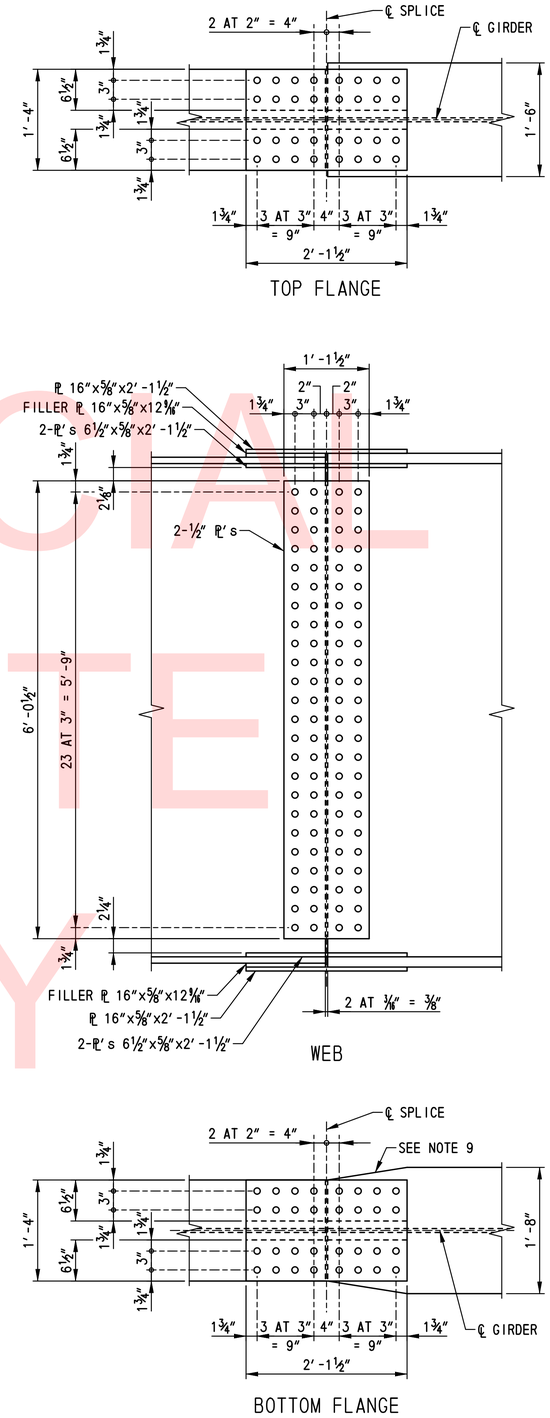

FIELD SPLICE DETAIL - TYPE VI

SCALE: 1"=1'-0"

FIELD SPLICE LOCATION BY TYPE		
TYPE	LOCATION	
	GIRDER	SPLICE DESIGNATION
IV	5	FS-2
V	1 THRU 4	FS-3
VI	5	FS-3

SPLICE NOTES:

1. FOR LOCATIONS OF FIELD SPLICES, SEE DWG. NOS. BM-02 AND FR-01.
2. FIELD SPLICES DESIGNED AS A SLIP CRITICAL CONNECTION WITH CLASS A SURFACE CONDITIONS.
3. ALL BOLTS TO BE ⅞" ø HIGH STRENGTH BOLTS CONFORMING TO A 490, TYPE 3. ALL BOLT HOLES SHALL BE 15/16" ø. ALL BOLTS SHALL BE FABRICATED WITH THREADS THAT ARE EXCLUDED FROM THE SHEAR PLANE.
4. THE MINIMUM ACCEPTABLE EDGE DISTANCE FOR ANY HOLE SHALL BE 1½".
5. BOLT HEADS SHALL BE ON THE EXTERIOR FACE OF THE EXTERIOR GIRDERS AND THE BOTTOM OF THE BOTTOM FLANGES.
6. BOLTS NOT SHOWN IN SPLICE.
7. SPACE SHEAR STUDS TO MISS TOP FLANGE SPLICE BOLTS.
8. ON EACH SIDE OF THE ℄ SPLICE A MINIMUM OF 50 PERCENT OF THE WEB, TOP FLANGE, AND BOTTOM FLANGE SPLICE BOLTS SHALL BE IN PLACE BEFORE THE GIRDER IS LEFT UNSUPPORTED.
9. WHEN FLANGE IS LARGER THAN ADJACENT FLANGE BY MORE THAN 2", THE LARGER FLANGE SHALL BE TAPERED TO SMALLER FLANGE WIDTH IN A DISTANCE OF ½ LENGTH OF SPLICE PLATE (BOTTOM FLANGE ONLY).
10. FIELD SPLICES SHALL BE COMPLETELY SHOP ASSEMBLED AND MATCH MARKED AFTER ALL SHOP WELDING HAS BEEN COMPLETED. CONTACT SURFACES SHALL BE FREE OF ALL OIL AND DIRT.

UNOFFICIAL WEBSITE COPY

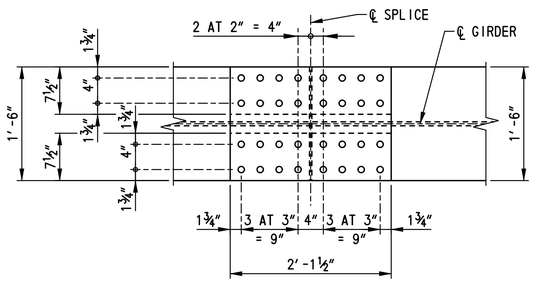

TOP FLANGE

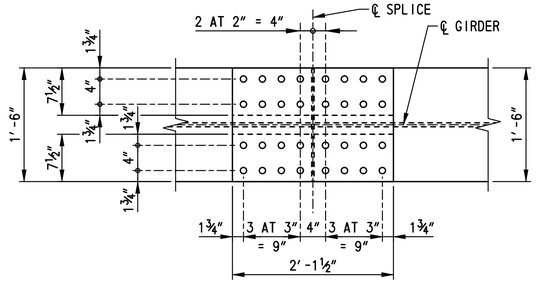

TOP FLANGE

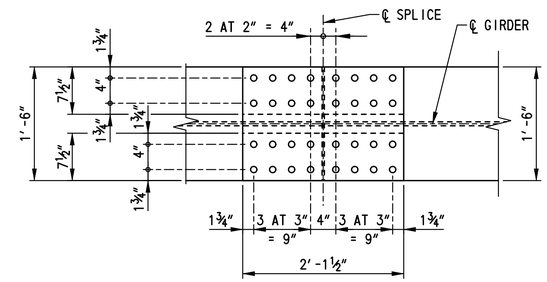

TOP FLANGE

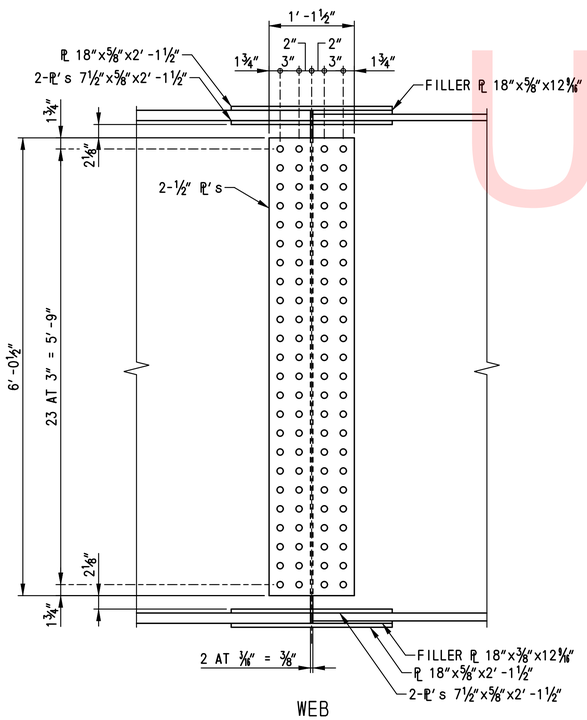

WEB

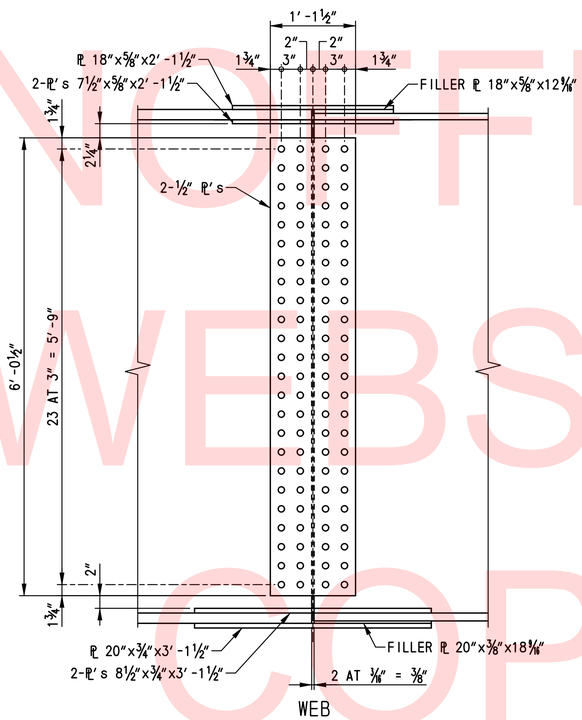

WEB

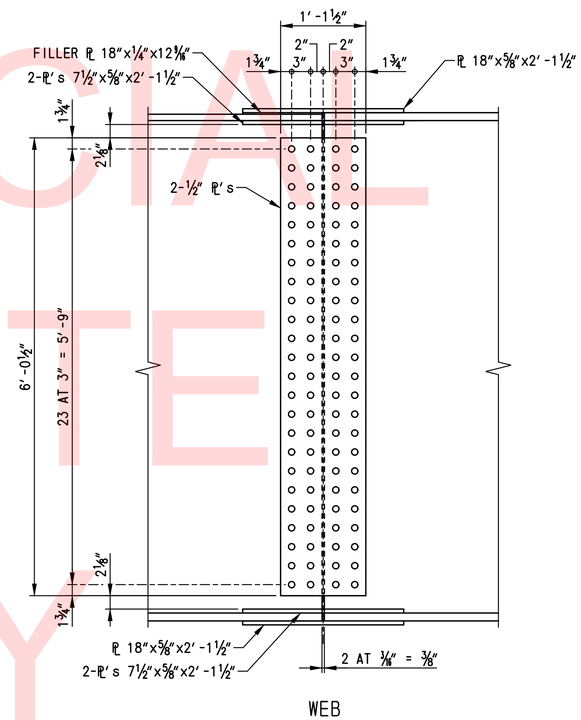

WEB

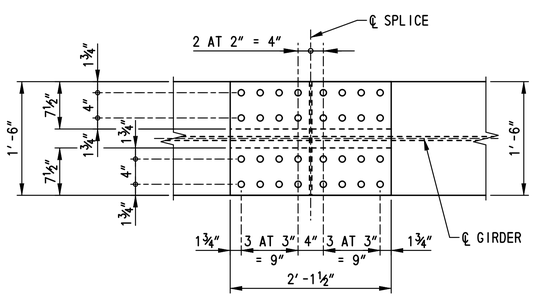

BOTTOM FLANGE

FIELD SPLICE DETAIL - TYPE VII

SCALE: 1"=1'-0"

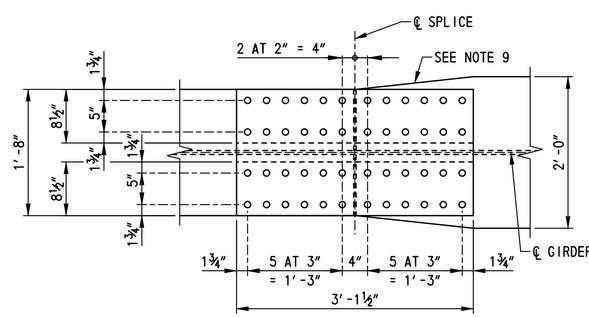

BOTTOM FLANGE

FIELD SPLICE DETAIL - TYPE VIII

SCALE: 1"=1'-0"

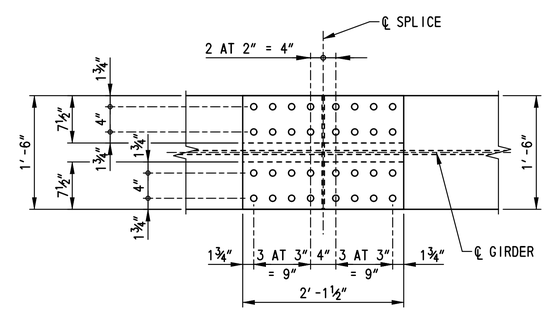

BOTTOM FLANGE

FIELD SPLICE DETAIL - TYPE IX

SCALE: 1"=1'-0"

FIELD SPLICE LOCATION BY TYPE		
TYPE	LOCATION	
	GIRDER	SPLICE DESIGNATION
VII	1 THRU 4	FS-4
VIII	5	FS-4
IX	1 THRU 4	FS-5

SPLICE NOTES:

1. FOR LOCATIONS OF FIELD SPLICES, SEE DWG. NOS. BM-02 AND FR-01.
2. FIELD SPLICES DESIGNED AS A SLIP CRITICAL CONNECTION WITH CLASS A SURFACE CONDITIONS.
3. ALL BOLTS TO BE ⅞" ø HIGH STRENGTH BOLTS CONFORMING TO A 490, TYPE 3. ALL BOLT HOLES SHALL BE 15/16" ø. ALL BOLTS SHALL BE FABRICATED WITH THREADS THAT ARE EXCLUDED FROM THE SHEAR PLANE.
4. THE MINIMUM ACCEPTABLE EDGE DISTANCE FOR ANY HOLE SHALL BE 1½".
5. BOLT HEADS SHALL BE ON THE EXTERIOR FACE OF THE EXTERIOR GIRDERS AND THE BOTTOM OF THE BOTTOM FLANGES.
6. BOLTS NOT SHOWN IN SPLICE.
7. SPACE SHEAR STUDS TO MISS TOP FLANGE SPLICE BOLTS.
8. ON EACH SIDE OF THE ℄ SPLICE A MINIMUM OF 50 PERCENT OF THE WEB, TOP FLANGE, AND BOTTOM FLANGE SPLICE BOLTS SHALL BE IN PLACE BEFORE THE GIRDER IS LEFT UNSUPPORTED.
9. WHEN FLANGE IS LARGER THAN ADJACENT FLANGE BY MORE THAN 2", THE LARGER FLANGE SHALL BE TAPERED TO SMALLER FLANGE WIDTH IN A DISTANCE OF ½ LENGTH OF SPLICE PLATE (BOTTOM FLANGE ONLY).
10. FIELD SPLICES SHALL BE COMPLETELY SHOP ASSEMBLED AND MATCH MARKED AFTER ALL SHOP WELDING HAS BEEN COMPLETED. CONTACT SURFACES SHALL BE FREE OF ALL OIL AND DIRT.

UNOFFICIAL WEBSITE COPY

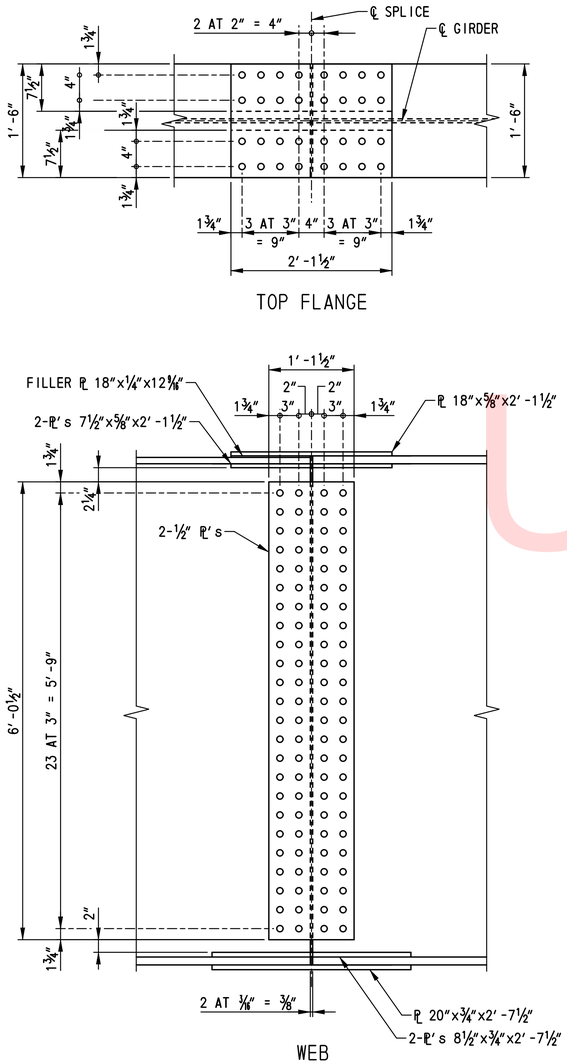

FIELD SPLICE DETAIL - TYPE X

SCALE: 1"=1'-0"

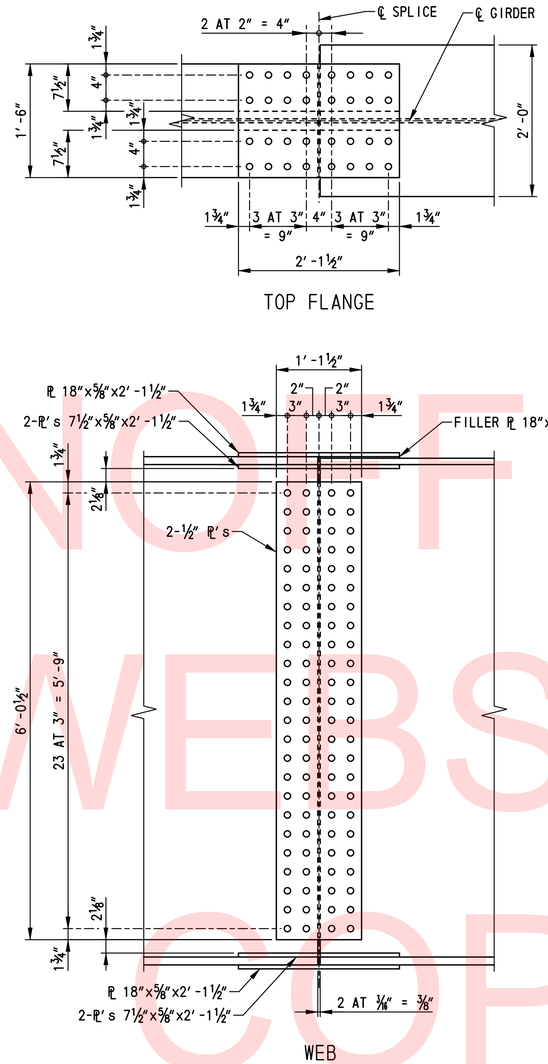

FIELD SPLICE DETAIL - TYPE XI

SCALE: 1"=1'-0"

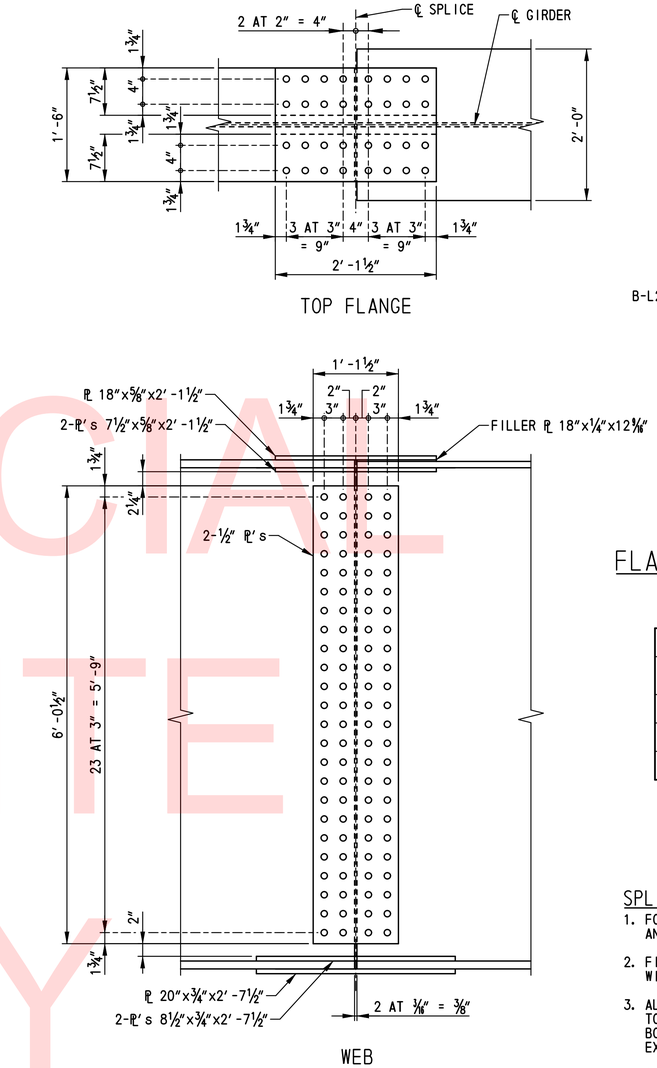

FIELD SPLICE DETAIL - TYPE XII

SCALE: 1"=1'-0"

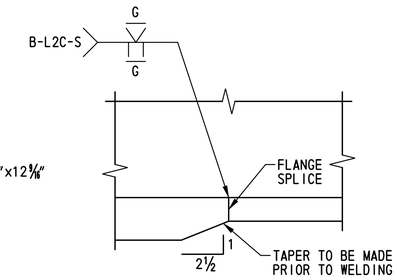

FLANGE TRANSITION SHOP SPLICE

SCALE: 3"=1'-0"

FIELD SPLICE LOCATION BY TYPE		
TYPE	LOCATION	
	GIRDER	SPLICE DESIGNATION
X	5	FS-5
XI	1 THRU 4	FS-6
XII	5	FS-6

SPLICE NOTES:

1. FOR LOCATIONS OF FIELD SPLICES, SEE DWG. NOS. BM-02 AND FR-01.
2. FIELD SPLICES DESIGNED AS A SLIP CRITICAL CONNECTION WITH CLASS A SURFACE CONDITIONS.
3. ALL BOLTS TO BE ⅞" ø HIGH STRENGTH BOLTS CONFORMING TO A 490, TYPE 3. ALL BOLT HOLES SHALL BE 15/16" ø . ALL BOLTS SHALL BE FABRICATED WITH THREADS THAT ARE EXCLUDED FROM THE SHEAR PLANE.
4. THE MINIMUM ACCEPTABLE EDGE DISTANCE FOR ANY HOLE SHALL BE 1½".
5. BOLT HEADS SHALL BE ON THE EXTERIOR FACE OF THE EXTERIOR GIRDERS AND THE BOTTOM OF THE BOTTOM FLANGES.
6. BOLTS NOT SHOWN IN SPLICE.
7. SPACE SHEAR STUDS TO MISS TOP FLANGE SPLICE BOLTS.
8. ON EACH SIDE OF THE ℄ SPLICE A MINIMUM OF 50 PERCENT OF THE WEB, TOP FLANGE, AND BOTTOM FLANGE SPLICE BOLTS SHALL BE IN PLACE BEFORE THE GIRDER IS LEFT UNSUPPORTED.
9. WHEN FLANGE IS LARGER THAN ADJACENT FLANGE BY MORE THAN 2", THE LARGER FLANGE SHALL BE TAPERED TO SMALLER FLANGE WIDTH IN A DISTANCE OF ½ LENGTH OF SPLICE PLATE (BOTTOM FLANGE ONLY).
10. FIELD SPLICES SHALL BE COMPLETELY SHOP ASSEMBLED AND MATCH MARKED AFTER ALL SHOP WELDING HAS BEEN COMPLETED. CONTACT SURFACES SHALL BE FREE OF ALL OIL AND DIRT.
11. BUTT WELDS OF FLANGE SPLICE PLATES TO BE GROUND FLUSH PRIOR TO ATTACHING WEB PLATES.

UNOFFICIAL WEBSITE COPY

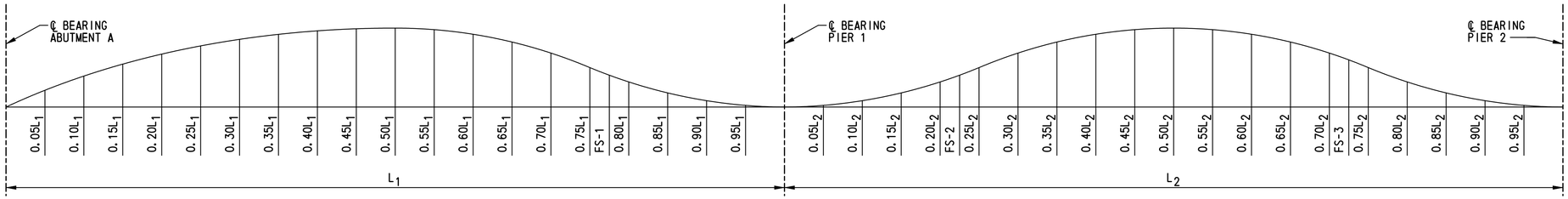

DEFLECTION AND TOTAL CAMBERS (IN.)

LOCATION		℄ BRG. ABUT. A	0.05L1	0.10L1	0.15L1	0.20L1	0.25L1	0.30L1	0.35L1	0.40L1	0.45L1	0.50L1	0.55L1	0.60L1	0.65L1	0.70L1	0.75L1	FS-1	0.80L1	0.85L1	0.90L1	0.95L1	℄ BRG. PIER 1	0.05L2	0.10L2	0.15L2	0.20L2	FS-2	0.25L2	0.30L2	0.35L2	0.40L2	0.45L2	0.50L2	0.55L2	0.60L2	0.65L2	0.70L2	FS-3	0.75L2	0.80L2	0.85L2	0.90L2	0.95L2	℄ BRG. PIER 2
GIRDER 1	DLS	0	1/8	1/4	5/16	7/16	1/2	9/16	9/16	5/8	5/8	5/8	9/16	1/2	7/16	3/8	5/16	5/16	1/4	1/8	1/16	1/16	0	0	0	1/16	1/16	1/8	1/8	3/16	3/16	1/4	1/4	1/4	5/16	1/4	1/4	3/16	1/8	1/8	1/8	0	0	0	0
	DLC	0	7/16	7/8	1 1/4	1 9/16	1 7/8	2 1/8	2 1/4	2 3/8	2 3/8	2 5/16	2 3/16	2 1/16	1 13/16	1 9/16	1 1/4	1 3/16	15/16	5/8	3/8	3/16	0	-1/16	0	1/8	1/4	3/8	3/8	5/16	11/16	13/16	7/8	15/16	7/8	11/16	5/8	1/2	3/8	5/16	1/8	0	-1/16	-1/16	0
	SDL	0	1/16	3/16	1/4	5/16	3/8	3/8	7/16	7/16	7/16	7/16	7/16	3/8	5/16	5/16	1/4	3/16	3/16	1/8	1/16	0	0	0	0	1/16	1/16	1/8	1/8	1/8	3/16	3/16	3/16	3/16	3/16	3/16	3/16	1/8	1/8	1/8	1/16	1/16	0	0	0	0
	TD&C	0	5/8	1 3/16	1 15/16	2 5/16	2 3/4	3 1/16	3 1/4	3 7/16	3 7/16	3 3/8	3 3/16	2 15/16	2 9/16	2 1/4	1 11/16	1 11/16	1 3/8	7/8	1/2	1/4	0	-1/16	0	1/4	3/8	5/8	5/8	7/8	1 1/8	1 1/4	1 3/16	1 7/16	1 5/16	1 1/4	15/16	3/4	5/8	1/2	1/4	0	-1/16	-1/16	0
	VCO	0	3/16	11/16	1	1 1/4	1 7/16	1 5/8	1 3/4	1 15/16	2	1 15/16	1 15/16	1 7/8	1 15/16	1 5/8	1 9/16	1 1/2	1 1/4	1 1/16	3/4	7/16	0	1/2	1 1/16	1 1/16	1 3/4	1 15/16	2 1/16	2 3/16	2 1/2	2 11/16	2 11/16	2 3/4	2 11/16	2 5/8	2 7/16	2 1/4	2 1/8	2 1/16	1 3/4	1 7/16	1	7/16	0
	TRC	0	15/16	2	2 11/16	3 3/16	4 3/16	4 11/16	5	5 3/8	5 7/16	5 5/16	5 1/8	4 13/16	4 3/8	3 7/8	3 3/8	3 3/16	2 5/8	1 15/16	1 1/4	11/16	0	7/16	1 1/16	1 11/16	2 1/8	2 3/16	2 11/16	3 1/16	3 5/8	3 15/16	4	4 3/16	4	3 7/8	3 3/8	3	2 3/4	2 3/16	2	1 7/16	15/16	3/8	0

LOCATION		℄ BRG. ABUT. A	0.05L1	0.10L1	0.15L1	0.20L1	0.25L1	0.30L1	0.35L1	0.40L1	0.45L1	0.50L1	0.55L1	0.60L1	0.65L1	0.70L1	0.75L1	FS-1	0.80L1	0.85L1	0.90L1	0.95L1	℄ BRG. PIER 1	0.05L2	0.10L2	0.15L2	0.20L2	FS-2	0.25L2	0.30L2	0.35L2	0.40L2	0.45L2	0.50L2	0.55L2	0.60L2	0.65L2	0.70L2	FS-3	0.75L2	0.80L2	0.85L2	0.90L2	0.95L2	℄ BRG. PIER 2
GIRDER 2	DLS	0	1/8	1/4	3/8	7/16	1/2	9/16	5/8	11/16	11/16	5/8	5/8	9/16	1/2	7/16	3/8	5/16	1/4	3/16	1/8	1/16	0	0	0	1/16	1/16	1/8	1/8	3/16	3/16	1/4	1/4	1/4	1/4	1/4	3/16	1/8	1/8	1/8	1/16	0	0	0	0
	DLC	0	1/2	15/16	1 5/16	1 11/16	2	2 1/4	2 7/16	2 1/2	2 9/16	2 1/2	2 3/8	2 3/16	1 15/16	1 11/16	1 9/16	1 3/8	1	11/16	7/16	3/16	0	-1/16	-1/16	1/16	1/4	3/8	7/16	9/16	3/4	7/8	15/16	15/16	7/8	11/16	11/16	1/2	3/8	5/16	1/8	0	-1/16	-1/16	0
	SDL	0	1/16	3/16	1/4	5/16	3/8	7/16	7/16	7/16	7/16	7/16	7/16	3/8	3/8	5/16	1/4	1/4	3/16	1/8	1/16	0	0	0	0	1/16	1/16	1/16	1/8	1/8	3/16	3/16	3/16	3/16	3/16	3/16	3/16	1/8	1/8	1/16	1/16	1/16	0	0	0
	TD&C	0	11/16	1 3/8	1 15/16	2 7/16	2 7/8	3 1/4	3 1/2	3 5/8	3 11/16	3 9/16	3 7/16	3 1/8	2 13/16	2 7/16	2 1/16	1 15/16	1 7/16	1	5/8	1/4	0	-1/16	-1/16	3/16	3/8	9/16	11/16	7/8	1 1/8	1 3/16	1 3/8	1 3/8	1 3/16	1 1/4	1	3/4	9/16	7/16	1/4	0	-1/16	-1/16	0
	VCO	0	3/8	11/16	15/16	1 1/4	1 7/16	1 9/16	1 3/4	1 7/8	1 15/16	2	1 7/8	1 13/16	1 3/4	1 11/16	1 5/8	1 1/2	1 1/4	15/16	5/8	5/16	0	7/16	15/16	1 3/8	1 5/8	1 7/8	1 15/16	2 1/4	2 7/16	2 9/16	2 5/8	2 11/16	2 5/8	2 9/16	2 3/8	2 3/16	2 1/16	2	1 11/16	1 3/8	1	9/16	0
	TRC	0	1 1/16	2 1/16	2 7/8	3 11/16	4 5/16	4 13/16	5 1/4	5 1/2	5 5/8	5 9/16	5 5/16	4 15/16	4 9/16	4 1/8	3 13/16	3 7/16	2 11/16	1 15/16	1 1/4	9/16	0	3/8	7/8	1 9/16	2	2 1/16	2 5/8	3 1/8	3 9/16	3 7/8	4	4 1/16	3 15/16	3 13/16	3 3/8	2 15/16	2 5/8	2 1/16	1 15/16	1 3/8	15/16	1/2	0

LOCATION		℄ BRG. ABUT. A	0.05L1	0.10L1	0.15L1	0.20L1	0.25L1	0.30L1	0.35L1	0.40L1	0.45L1	0.50L1	0.55L1	0.60L1	0.65L1	0.70L1	0.75L1	FS-1	0.80L1	0.85L1	0.90L1	0.95L1	℄ BRG. PIER 1	0.05L2	0.10L2	0.15L2	0.20L2	FS-2	0.25L2	0.30L2	0.35L2	0.40L2	0.45L2	0.50L2	0.55L2	0.60L2	0.65L2	0.70L2	FS-3	0.75L2	0.80L2	0.85L2	0.90L2	0.95L2	℄ BRG. PIER 2
GIRDER 3	DLS	0	1/8	1/4	3/8	1/2	9/16	5/8	11/16	11/16	11/16	11/16	5/8	5/8	9/16	7/16	3/8	5/16	1/4	3/16	1/8	1/16	0	0	0	0	1/16	1/8	1/8	3/16	3/16	1/4	1/4	1/4	1/4	3/16	3/16	1/8	1/16	1/16	0	0	-1/16	0	0
	DLC	0	1/2	1	1 3/8	1 3/4	2 1/8	2 3/8	2 9/16	2 5/8	2 11/16	2 5/8	2 1/2	2 5/16	2 1/16	1 3/4	1 7/16	1 3/16	1 1/16	3/4	7/16	3/16	0	-1/16	-1/16	1/16	1/4	5/16	3/8	9/16	3/4	7/8	15/16	15/16	7/8	11/16	11/16	1/2	3/8	5/16	1/8	-1/16	-1/8	-1/8	0
	SDL	0	1/8	3/16	1/4	5/16	3/8	7/16	7/16	1/2	1/2	1/2	7/16	7/16	3/8	5/16	1/4	1/4	3/16	1/8	1/16	0	0	0	0	0	1/16	1/16	1/8	1/8	3/16	3/16	3/16	3/16	3/16	3/16	3/16	1/8	1/8	1/16	1/16	0	0	0	0	0
	TD&C	0	3/4	1 7/16	2	2 9/16	3 1/16	3 7/16	3 11/16	3 13/16	3 7/8	3 9/16	3 9/16	3 3/8	3	2 1/2	2 1/16	1 7/8	1 1/2	1 1/16	5/8	1/4	0	-1/16	-1/16	1/16	3/8	1/2	5/8	7/8	1 1/8	15/16	1 3/8	1 3/8	1 3/16	1 3/16	1	3/4	1/2	7/16	1/8	-1/16	-3/16	-1/8	0
	VCO	0	3/8	11/16	15/16	1 1/4	1 7/16	1 11/16	1 3/4	1 7/8	1 15/16	2	1 7/8	1 13/16	1 3/4	1 11/16	1 1/2	1 3/8	1 1/4	15/16	5/8	5/16	0	9/16	15/16	1 3/8	1 5/8	1 7/8	1 15/16	2 1/4	2 7/16	2 9/16	2 5/8	2 11/16	2 5/8	2 9/16	2 1/2	2 5/16	2 1/8	2	1 11/16	1 3/8	1	9/16	0
	TRC	0	1 1/8	2 1/8	2 15/16	3 13/16	4 1/2	5 1/8	5 7/16	5 11/16	5 13/16	5 13/16	5 7/16	5 3/16	4 3/4	4 3/16	3 13/16	3 1/4	2 3/4	2	1 1/4	9/16	0	1/2	7/8	1 7/16	2	2 3/8	2 9/16	3 1/8	3 9/16	3 7/8	4	4 1/16	3 15/16	3 3/4	3 1/2	3 1/16	2 5/8	2 7/16	1 11/16	1 5/16	15/16	7/16	0

LOCATION		℄ BRG. ABUT. A	0.05L1	0.10L1	0.15L1	0.20L1	0.25L1	0.30L1	0.35L1	0.40L1	0.45L1	0.50L1	0.55L1	0.60L1	0.65L1	0.70L1	0.75L1	FS-1	0.80L1	0.85L1	0.90L1	0.95L1	℄ BRG. PIER 1	0.05L2	0.10L2	0.15L2	0.20L2	FS-2	0.25L2	0.30L2	0.35L2	0.40L2	0.45L2	0.50L2	0.55L2	0.60L2	0.65L2	0.70L2	FS-3	0.75L2	0.80L2	0.85L2	0.90L2	0.95L2	℄ BRG. PIER 2
GIRDER 4	DLS	0	1/8	1/4	3/8	1/2	9/16	11/16	11/16	3/4	3/4	3/4	11/16	5/8	9/16	1/2	3/8	3/8	5/16	3/16	1/8	1/16	0	0	0	0	1/16	1/16	1/8	1/8	3/16	3/16	1/4	1/4	3/16	3/16	1/8	1/8	1/16	1/16	0	0	-1/16	-1/16	0
	DLC	0	1/2	1	1 7/16	1 13/16	2 3/16	2 7/16	2 5/8	2 3/4	2 3/4	2 11/16	2 9/16	2 3/8	2 1/8	1 13/16	1 1/2	1 3/8	1 1/8	3/4	7/16	3/16	0	-1/16	-1/16	1/16	3/16	5/16	3/8	9/16	11/16	13/16	7/8	15/16	7/8	3/4	5/8	7/16	5/16	1/4	1/16	-1/16	-1/8	-1/8	0
	SDL	0	1/8	3/16	1/4	5/16	3/8	7/16	1/2	1/2	1/2	1/2	7/16	7/16	3/8	5/16	1/4	1/4	3/16	1/8	1/16	0	0	0	0	0	1/16	1/16	1/8	1/8	3/16	3/16	3/16	3/16	3/16	3/16	3/16	1/8	1/8	1/16	1/16	0	0	0	0	0
	TD&C	0	3/4	1 7/16	2 1/16	2 5/8	3 1/8	3 7/16	3 9/16	4	4	3 15/16	3 11/16	3 7/16	3 1/16	2 5/8	2 1/8	2	1 5/8	1 1/16	5/8	1/4	0	-1/16	-1/16	1/16	3/16	7/16	5/8	13/16	1 1/16	1 3/16	1 3/16	1 3/16	1 1/4	1 1/8	7/8	11/16	7/16	3/8	1/16	-1/16	-3/16	-3/16	0
	VCO	0	3/8	11/16	15/16	1 1/4	1 1/2	1 11/16	1 7/8	1 7/8	1 15/16	2	1 7/8	1 13/16	1 3/4	1 11/16	1 1/2	1 3/8	1 1/4	15/16	5/8	5/16	0	9/16	15/16	1 3/8	1 3/4	2	2 1/16	2 1/4	2 7/16	2 9/16	2 5/8	2 11/16	2 5/8	2 9/16	2 1/2	2 5/16	2 1/8	2	1 11/16	1 3/8	1	9/16	0
	TRC	0	1 1/8	2 1/8	3	3 7/8	4 5/8	5 1/4	5 11/16	5 7/8	5 15/16	5 15/16	5 9/16	5 3/8	4 13/16	4 5/16	3 5/8	3 3/8	2 7/8	2	1 1/4	9/16	0	1/2	7/8	1 7/16	2 1/16	2 7/16	2 11/16	3 1/16	3 1/2	3 3/4	3 15/16	4 1/16	3 7/8	3 11/16	3 3/8	3	2 9/16	2 3/8	1 3/4	1 5/16	11/16	3/8	0

LOCATION		℄ BRG. ABUT. A	0.05L1	0.10L1	0.15L1	0.20L1	0.25L1	0.30L1	0.35L1	0.40L1	0.45L1	0.50L1	0.55L1	0.60L1	0.65L1	0.70L1	0.75L1	FS-1	0.80L1	0.85L1	0.90L1	0.95L1	℄ BRG. PIER 1	0.05L2	0.10L2	0.15L2	0.20L2	FS-2	0.25L2	0.30L2	0.35L2	0.40L2	0.45L2	0.50L2	0.55L2	0.60L2	0.65L2	0.70L2	FS-3	0.75L2	0.80L2	0.85L2	0.90L2	0.95L2	℄ BRG. PIER 2
GIRDER 5	DLS	0	1/8	5/16	7/16	1/2	5/8	11/16	3/4	3/4	13/16	3/4	3/4	11/16	5/8	1/2	7/16	3/8	5/16	3/16	1/8	1/16	0	0	0	0	1/16	1/16	1/16	1/8	3/16	3/16	3/16	3/16	3/16	3/16	1/8	1/16	1/16	0	0	-1/16	-1/16	-1/16	0
	DLC	0	9/16	1 1/16	1 1/2	1 7/8	2 1/4	2 1/2	2 11/16	2 13/16	2 13/16	2 13/16	2 5/8	2 7/16	2 3/16	1 7/8	1 9/16	1 3/8	1 3/16	13/16	1/2	3/16	0	-1/16	-1/16	0	1/8	1/4	5/16	1/2	5/8	3/4	7/8	7/8	13/16	3/4	9/16	7/16	1/4	3/16	1/16	-1/8	-3/16	-1/8	0
	SDL	0	1/8	3/16	1/4	3/8	7/16	7/16	1/2	1/2	1/2	1/2	1/2	7/16	3/8	5/16	1/4	1/4	3/16	1/8	1/16	1/16	0	0	0	0	1/16	1/16	1/8	1/8	3/16	3/16	3/16	3/16	3/16	3/16	1/8	1/8	1/16	1/16	0	0	0	0	0
	TD&C	0	13/16	1 9/16	2 3/16	2 3/4	3 5/16	3 5/8	3 15/16	4 1/16	4 1/8	4 1/16	3 7/8	3 9/16	3 3/16	2 11/16	2 1/4	2	1 11/16	1 1/8	11/16	5/16	0	-1/16	-1/16	0	1/4	3/8	1/2	3/4	1	1 1/8	1 1/4	1 1/4	1 3/16	1 1/8	13/16	5/8	3/8	1/4	1/16	-3/16	-1/4	-3/16	0
	VCO	0	3/8	11/16	1 1/16	1 1/4	1 1/2	1 11/16	1 7/8	1 7/8	1 15/16	2	2	1 15/16	1 3/4	1 11/16	1 1/2	1 3/8	1 1/4	15/16	3/4	5/16	0	9/16	15/16	1 3/8	1 3/4	1 15/16	2 1/16	2 1/4	2 7/16	2 9/16	2 5/8	2 11/16	2 3/4	2 9/16	2 1/2	2 5/16	2 1/8	2	1 11/16	1 3/8	1	9/16	0
	TRC	0	1 3/16	2 1/4	3 1/4	4	4 13/16	5 3/16	5 13/16	5 15/16	6 1/16	6 1/16	5 7/8	5 1/2	4 15/16	4 3/8	3 3/4	3 3/8	2 15/16	2 1/16	1 7/16	5/8	0	1/2	7/8	1 3/8	2	2 5/16	2 9/16	3	3 7/16	3 11/16	3 7/8	3 15/16	3 15/16	3 11/16	3 5/16	2 15/16	2 1/2	2 1/4	1 3/4	1 1/16	3/4	3/8	0

NOTES:

1. ALL GIRDERS OF ALL SPANS SHALL BE CAMBERED FOR DEAD LOAD DEFLECTION TO THE DIMENSIONS SHOWN ON THIS PLAN. THE CAMBER TOLERANCE IS NOTHING UNDER TO 3/4 INCH OVER.
2. CAMBERS ARE SHOWN IN INCHES.
3. POSITIVE DEFLECTIONS ARE MEASURED IN THE DOWNWARD DIRECTION. POSITIVE VERTICAL CURVE ORDINATE AND POSITIVE CAMBER ARE MEASURED IN THE UPWARD DIRECTION.

LEGEND:

DLS - DENOTES DEFLECTION DUE TO STRUCTURAL STEEL

DLC - DENOTES DEFLECTION DUE TO CONCRETE SLAB

SDL - DENOTES DEFLECTION DUE TO PARAPET AND FUTURE WEARING SURFACE

TD&C - DENOTES TOTAL DEAD LOAD DEFLECTION AND CAMBER

VCO - DENOTES CAMBER FOR VERTICAL CURVE ORDINATE DUE TO ROADWAY PROFILE

TRC - TOTAL REQUIRED CAMBER = TD&C + VCO

UNOFFICIAL WEB SITE COPY

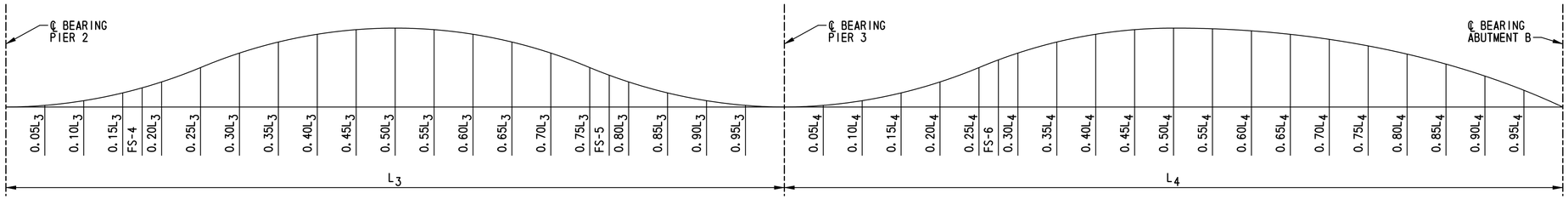

DEFLECTION AND TOTAL CAMBERS (IN.)

LOCATION		℄ BRG. PIER 2	0.05L3	0.10L3	0.15L3	FS-4	0.20L3	0.25L3	0.30L3	0.35L3	0.40L3	0.45L3	0.50L3	0.55L3	0.60L3	0.65L3	0.70L3	0.75L3	FS-5	0.80L3	0.85L3	0.90L3	0.95L3	℄ BRG. PIER 3	0.05L4	0.10L4	0.15L4	0.20L4	0.25L4	FS-6	0.30L4	0.35L4	0.40L4	0.45L4	0.50L4	0.55L4	0.60L4	0.65L4	0.70L4	0.75L4	0.80L4	0.85L4	0.90L4	0.95L4	℄ BRG. ABUT. B
GIRDER 1	DLS	0	1/16	3/16	5/16	7/16	1/2	5/8	3/4	7/8	15/16	1	1	15/16	7/8	3/4	5/8	1/2	1/2	3/8	3/16	1/16	0	0	1/16	1/8	3/16	5/16	7/16	9/16	9/16	11/16	13/16	15/16	1	1	1 1/16	1	15/16	7/8	3/4	9/16	3/8	3/16	0
	DLC	0	5/16	11/16	1 3/16	1 11/16	1 11/16	2 3/16	2 11/16	3 1/16	3 3/8	3 1/2	3 1/2	3 3/8	3 1/8	2 13/16	2 5/16	1 13/16	1 3/4	1 1/4	13/16	3/8	1/8	0	1/16	1/4	9/16	15/16	1 3/8	1 13/16	1 13/16	2 1/4	2 5/8	2 15/16	3 3/16	3 5/16	3 5/16	3 1/4	3 1/16	2 3/4	2 5/16	1 7/8	1 1/4	11/16	0
	SDL	0	1/16	1/8	1/4	5/16	3/8	7/16	9/16	5/8	11/16	11/16	11/16	11/16	5/8	9/16	1/2	3/8	3/8	1/4	3/16	1/16	0	0	0	1/16	1/8	3/16	5/16	3/8	3/8	1/2	9/16	5/8	11/16	11/16	11/16	11/16	5/8	9/16	1/2	3/8	1/4	1/8	0
	TD&C	0	7/16	1	1 3/4	2 7/16	2 9/16	3 1/4	4	4 9/16	5	5 3/16	5 3/16	5	4 5/8	4 1/8	3 7/16	2 11/16	2 5/8	1 7/8	1 3/16	1/2	1/8	0	1/8	1/16	7/8	1 7/16	2 1/8	2 3/4	2 3/4	3 7/16	4	4 1/2	4 7/8	5	5 1/16	4 15/16	4 5/8	4 3/16	3 9/16	2 13/16	1 7/8	1	0
	VCO	0	3/4	1 3/8	1 15/16	2 7/16	2 7/16	3	3 1/4	3 1/16	3 9/16	3 7/8	3 7/8	3 9/16	3 3/4	3 1/8	3 1/4	2 9/16	2 7/8	2 1/2	2 1/16	1 3/8	1/16	0	1/2	1	1 1/2	1 7/8	2 1/8	2 3/8	2 3/8	2 5/8	2 3/4	2 7/8	2 7/8	2 3/4	2 13/16	2 9/16	2 1/16	2 1/16	1 7/8	1 3/8	1 1/16	7/16	0
	TRC	0	1 3/16	2 3/8	3 11/16	4 7/8	5	6 1/4	7 1/4	8 1/8	8 13/16	9 1/16	9 1/16	8 13/16	8 3/8	7 11/16	6 11/16	5 5/8	5 1/2	4 3/8	3 1/4	1 7/8	13/16	0	5/8	1 7/16	2 3/8	3 5/16	4 1/4	5 1/8	5 1/8	6 1/16	6 3/4	7 3/8	7 3/4	7 3/4	7 7/8	7 1/2	7 1/16	6 5/16	5 7/16	4 3/16	2 15/16	1 7/16	0

LOCATION		℄ BRG. PIER 2	0.05L3	0.10L3	0.15L3	FS-4	0.20L3	0.25L3	0.30L3	0.35L3	0.40L3	0.45L3	0.50L3	0.55L3	0.60L3	0.65L3	0.70L3	0.75L3	FS-5	0.80L3	0.85L3	0.90L3	0.95L3	℄ BRG. PIER 3	0.05L4	0.10L4	0.15L4	0.20L4	0.25L4	FS-6	0.30L4	0.35L4	0.40L4	0.45L4	0.50L4	0.55L4	0.60L4	0.65L4	0.70L4	0.75L4	0.80L4	0.85L4	0.90L4	0.95L4	℄ BRG. ABUT. B
GIRDER 2	DLS	0	1/16	3/16	3/8	1/2	1/2	11/16	13/16	15/16	1	1 1/16	1 1/16	1	15/16	13/16	11/16	1/2	1/2	3/8	1/4	1/8	0	0	1/16	1/8	3/16	5/16	1/2	5/8	5/8	3/4	7/8	1	1 1/16	1 1/8	1 1/8	1 1/16	1	15/16	3/4	5/8	7/16	1/4	0
	DLC	0	5/16	3/4	1 1/4	1 3/4	1 13/16	2 3/8	2 7/8	3 1/4	3 13/16	3 11/16	3 3/4	3 5/8	3 5/16	2 15/16	2 1/16	1 15/16	1 7/8	1 5/16	13/16	3/8	1/8	0	1/16	5/16	5/8	1	1 1/2	1 15/16	1 15/16	2 3/8	2 13/16	3 1/8	3 3/8	3 1/2	3 9/16	3 7/16	3 1/4	2 15/16	2 1/2	2	1 3/8	11/16	0
	SDL	0	1/16	1/8	1/4	3/8	3/8	1/2	9/16	5/8	11/16	3/4	3/4	3/4	11/16	9/16	1/2	3/8	3/8	1/4	3/16	1/16	0	0	0	1/16	1/8	1/4	5/16	7/16	7/16	1/2	5/8	11/16	11/16	3/4	3/4	3/4	11/16	5/8	1/2	7/16	5/16	1/8	0
	TD&C	0	7/16	1 1/16	1 7/8	2 5/8	2 11/16	3 9/16	4 1/4	4 13/16	5 1/4	5 1/2	5 9/16	5 3/8	4 15/16	4 5/16	3 5/8	2 13/16	2 3/4	1 15/16	1 1/4	9/16	1/8	0	1/8	1/2	15/16	1 11/16	2 5/16	3	3	3 5/8	4 3/16	4 13/16	5 1/16	5 3/8	5 7/16	5 1/4	4 15/16	4 1/2	3 3/4	3 1/16	2 1/8	1 1/16	0
	VCO	0	3/4	1 3/8	2 1/16	2 1/2	2 9/16	3	3 1/4	3 9/16	3 13/16	3 7/8	3 7/8	3 9/16	3 3/4	3 3/8	3 3/8	2 15/16	2 7/8	2 1/2	2 1/16	1 3/8	1/16	0	1/2	1	1 1/2	1 7/8	2 1/8	2 5/16	2 3/8	2 5/8	2 3/4	2 7/8	2 7/8	2 7/8	2 13/16	2 9/16	2 1/16	2 1/16	1 7/8	1 3/8	1 1/16	5/16	0
	TRC	0	1 3/16	2 7/16	3 15/16	5 1/8	5 1/4	6 9/16	7 1/2	8 3/8	9 1/16	9 3/8	9 7/16	9 3/16	8 11/16	7 7/8	7	5 3/4	5 5/8	4 7/16	3 5/16	1 15/16	15/16	0	5/8	1 1/2	2 7/16	3 1/16	4 7/16	5 5/16	5 3/8	6 1/4	7 1/16	7 11/16	8	8 1/4	8 1/4	7 13/16	7 3/8	6 5/8	5 5/8	4 7/16	3 3/16	1 5/8	0

LOCATION		℄ BRG. PIER 2	0.05L3	0.10L3	0.15L3	FS-4	0.20L3	0.25L3	0.30L3	0.35L3	0.40L3	0.45L3	0.50L3	0.55L3	0.60L3	0.65L3	0.70L3	0.75L3	FS-5	0.80L3	0.85L3	0.90L3	0.95L3	℄ BRG. PIER 3	0.05L4	0.10L4	0.15L4	0.20L4	0.25L4	FS-6	0.30L4	0.35L4	0.40L4	0.45L4	0.50L4	0.55L4	0.60L4	0.65L4	0.70L4	0.75L4	0.80L4	0.85L4	0.90L4	0.95L4	℄ BRG. ABUT. B
GIRDER 3	DLS	0	1/8	1/4	3/8	9/16	9/16	11/16	7/8	1	1 1/16	1 1/8	1 1/8	1 1/16	1	7/8	11/16	9/16	1/2	3/8	1/4	1/8	0	0	1/16	1/8	1/4	3/8	1/2	5/8	11/16	13/16	15/16	1 1/16	1 1/8	1 3/16	1 3/16	1 1/8	1 1/16	15/16	13/16	5/8	7/16	1/4	0
	DLC	0	5/16	3/4	1 3/8	1 7/8	1 15/16	2 1/2	3	3 7/16	3 3/4	3 7/8	3 15/16	3 3/4	3 1/2	3 1/16	2 13/16	2	1 15/16	1 3/8	7/8	3/8	1/8	0	1/8	5/16	5/8	1 1/16	1 13/16	2	2 1/16	2 9/16	3	3 5/16	3 9/16	3 11/16	3 3/4	3 5/8	3 7/16	3 1/16	2 5/8	2 1/16	1 7/16	3/4	0
	SDL	0	1/16	1/8	1/4	3/8	3/8	1/2	5/8	11/16	3/4	3/4	3/4	3/4	11/16	5/8	1/2	3/8	3/8	1/4	3/16	1/16	0	0	0	1/16	1/8	1/4	5/16	7/16	7/16	1/2	5/8	11/16	3/4	3/4	3/4	3/4	11/16	5/8	9/16	7/16	5/16	1/8	0
	TD&C	0	1/2	1 1/8	2	2 13/16	2 7/8	3 11/16	4 1/2	5 1/8	5 9/16	5 3/4	5 13/16	5 9/16	5 7/16	4 9/16	3 3/4	2 13/16	2 13/16	2	1 3/16	9/16	1/8	0	3/16	1/2	1	1 11/16	2 3/8	3 1/16	3 3/16	3 7/8	4 9/16	5 1/16	5 7/16	5 9/16	5 11/16	5 1/2	5 3/16	4 5/8	4	3 1/8	2 3/16	1 1/8	0
	VCO	0	3/4	1 3/8	2 1/16	2 1/2	2 9/16	3	3 3/8	3 5/8	3 13/16	3 7/8	3 7/8	3 9/16	3 3/4	3 9/16	3 3/8	2 15/16	2 7/8	2 1/2	2 1/16	1 1/2	15/16	0	5/8	1	1 1/2	1 7/8	2 1/4	2 7/16	2 1/2	2 5/8	2 3/4	2 7/8	2 7/8	2 7/8	2 13/16	2 11/16	2 1/16	2 1/4	1 7/8	1 1/2	1 1/16	9/16	0
	TRC	0	1 1/4	2 1/2	4 1/16	5 5/16	5 7/16	6 11/16	7 7/8	8 3/4	9 3/8	9 5/8	9 11/16	9 1/2	8 15/16	8 1/8	7 1/8	5 7/8	5 11/16	4 1/2	3 3/8	2 1/16	15/16	0	13/16	1 1/2	2 1/2	3 13/16	4 5/8	5 1/2	5 11/16	6 1/2	7 3/16	7 15/16	8 5/16	8 1/2	8 1/2	8 3/16	7 5/8	6 7/8	5 7/8	4 5/8	3 1/4	1 11/16	0

LOCATION		℄ BRG. PIER 2	0.05L3	0.10L3	0.15L3	FS-4	0.20L3	0.25L3	0.30L3	0.35L3	0.40L3	0.45L3	0.50L3	0.55L3	0.60L3	0.65L3	0.70L3	0.75L3	FS-5	0.80L3	0.85L3	0.90L3	0.95L3	℄ BRG. PIER 3	0.05L4	0.10L4	0.15L4	0.20L4	0.25L4	FS-6	0.30L4	0.35L4	0.40L4	0.45L4	0.50L4	0.55L4	0.60L4	0.65L4	0.70L4	0.75L4	0.80L4	0.85L4	0.90L4	0.95L4	℄ BRG. ABUT. B
GIRDER 4	DLS	0	1/8	1/4	7/16	9/16	9/16	3/4	15/16	1 1/16	1 1/8	1 3/16	1 3/16	1 1/8	1 1/16	15/16	3/4	9/16	9/16	3/8	1/4	1/8	0	0	1/16	1/8	1/4	3/8	9/16	11/16	11/16	7/8	1	1 1/8	1 3/16	1 1/4	1 1/4	1 3/16	1 1/8	1	7/8	11/16	1/2	1/4	0
	DLC	0	3/8	13/16	1 7/16	1 15/16	2	2 9/16	3 1/16	3 9/16	3 7/8	4 1/16	4 1/16	3 15/16	3 5/8	3 3/16	2 5/8	2 1/16	1 15/16	1 7/16	7/8	3/8	1/8	0	1/8	5/16	11/16	1 1/8	1 5/8	2 1/8	2 3/16	2 5/8	3 1/8	3 7/16	3 3/4	3 7/8	3 7/8	3 11/16	3 9/16	3 3/16	2 3/4	2 1/16	1 1/2	3/4	0
	SDL	0	1/16	3/16	1/4	3/8	3/8	1/2	5/8	11/16	3/4	13/16	13/16	3/4	3/4	5/8	1/2	7/16	3/8	5/16	3/16	1/16	0	0	0	1/16	1/8	1/4	5/16	7/16	7/16	9/16	5/8	11/16	3/4	13/16	13/16	3/4	3/4	5/8	9/16	7/16	5/16	3/16	0
	TD&C	0	9/16	1 1/4	2 1/8	2 7/8	2 15/16	3 13/16	4 11/16	5 5/16	5 3/4	6 1/16	6 1/16	5 13/16	5 7/16	4 3/4	3 7/8	3 1/16	2 7/8	2 1/8	1 5/16	9/16	1/8	0	3/16	1/2	1 1/16	1 3/4	2 1/2	3 1/4	3 5/16	4 1/16	4 3/4	5 1/4	5 11/16	5 15/16	5 9/16	5 3/4	5 1/16	4 13/16	4 3/16	3 5/16	2 5/16	1 3/16	0
	VCO	0	3/4	1 3/8	2 1/16	2 1/2	2 9/16	3	3 3/8	3 5/8	3 13/16	4	4	3 15/16	3 7/8	3 11/16	3 3/8	3	2 15/16	2 9/16	2 1/16	1 1/2	15/16	0	5/8	1 1/8	1 1/2	1 7/8	2 1/4	2 7/16	2 1/2	2 5/8	2 3/4	2 7/8	2 7/8	2 7/8	2 13/16	2 11/16	2 1/16	2 1/4	1 7/8	1 1/2	1 1/16	9/16	0
	TRC	0	1 5/16	2 5/8	4 3/16	5 3/8	5 1/2	6 13/16	8 1/16	8 15/16	9 9/16	10 1/16	10 1/16	9 3/4	9 5/16	8 7/16	7 1/4	6 1/16	5 11/16	4 11/16	3 3/8	2 1/16	15/16	0	13/16	1 5/8	2 9/16	3 5/8	4 3/4	5 11/16	5 13/16	6 11/16	7 1/2	8 1/8	8 9/16	8 13/16	8 3/4	8 1/16	7 7/8	7 1/16	6 1/16	4 15/16	3 3/8	1 3/4	0

LOCATION		℄ BRG. PIER 2	0.05L3	0.10L3	0.15L3	FS-4	0.20L3	0.25L3	0.30L3	0.35L3	0.40L3	0.45L3	0.50L3	0.55L3	0.60L3	0.65L3	0.70L3	0.75L3	FS-5	0.80L3	0.85L3	0.90L3	0.95L3	℄ BRG. PIER 3	0.05L4	0.10L4	0.15L4	0.20L4	0.25L4	FS-6	0.30L4	0.35L4	0.40L4	0.45L4	0.50L4	0.55L4	0.60L4	0.65L4	0.70L4	0.75L4	0.80L4	0.85L4	0.90L4	0.95L4	℄ BRG. ABUT. B
GIRDER 5	DLS	0	1/8	1/4	7/16	5/8	5/8	13/16	1	1 1/8	1 3/16	1 1/4	1 1/4	1 3/16	1 1/16	15/16	3/4	5/8	9/16	3/8	1/4	1/8	0	0	1/16	1/8	1/4	7/16	9/16	3/4	3/4	15/16	1 1/16	1 3/16	1 1/4	1 3/16	1 5/16	1 1/4	1 3/16	1 1/16	15/16	3/4	1/2	1/4	0
	DLC	0	3/8	7/8	1 7/16	2	2 1/16	2 11/16	3 1/4	3 11/16	4	4 3/16	4 3/16	4 1/16	3 11/16	3 1/4	2 11/16	2 1/8	2	1 7/16	7/8	3/8	1/8	0	1/8	3/8	11/16	1 3/16	1 11/16	2 3/16	2 1/4	2 3/4	3 1/4	3 9/16	3 7/8	4	4 1/16	3 15/16	3 11/16	3 3/16	2 13/16	2 1/4	1 9/16	13/16	0
	SDL	0	1/16	3/16	5/16	3/8	7/16	9/16	5/8	3/4	13/16	13/16	13/16	13/16	3/4	11/16	9/16	7/16	3/8	5/16	3/16	1/16	0	0	0	1/16	1/8	1/4	3/8	7/16	1/2	9/16	11/16	3/4	13/16	13/16	13/16	13/16	3/4	11/16	9/16	7/16	5/16	3/16	0
	TD&C	0	9/16	1 5/16	2 3/16	3	3 1/8	4 1/16	4 7/8	5 5/16	6	6 1/4	6 1/4	6 1/16	5 1/2	4 7/8	4	3 3/16	2 15/16	2 1/8	1 5/16	9/16	1/8	0	3/16	9/16	1 1/16	1 7/8	2 5/8	3 3/8	3 1/2	4 1/4	5	5 1/2	5 5/16	6 1/8	6 3/16	6	5 5/8	5 1/16	4 5/16	3 3/16	2 3/8	1 1/4	0
	VCO	0	3/4	1 3/8	2 1/16	2 1/2	2 9/16	3	3 3/8	3 5/8	3 13/16	4	4	3 15/16	3 7/8	3 11/16	3 3/8	3	2 15/16	2 9/16	2 1/16	1 1/2	15/16	0	5/8	1 1/8	1 1/2	1 7/8	2 1/4	2 7/16	2 1/2	2 5/8	2 7/8	2 7/8	2 7/8	2 7/8	2 13/16	2 11/16	2 1/16	2 1/4	1 7/8	1 1/2	1 1/16	9/16	0
	TRC	0	1 5/16	2 11/16	4 1/4	5 1/2	5 11/16	7 1/16	8 1/4	9 3/16	9 13/16	10 1/4	10 1/4	10	9 3/8	8 3/16	7 3/8	6 3/16	5 7/8	4 11/16	3 3/8	2 1/16	15/16	0	13/16	1 11/16	2 9/16	3 3/4	4 7/8	5 13/16	6	6 7/8	7 7/8	8 3/8	8 13/16	9	9	8 11/16	8 1/16	7 5/16	6 3/16	4 15/16	3 7/16	1 13/16	0

NOTES:

1. ALL GIRDERS OF ALL SPANS SHALL BE CAMBERED FOR DEAD LOAD DEFLECTION TO THE DIMENSIONS SHOWN ON THIS PLAN. THE CAMBER TOLERANCE IS NOTHING UNDER TO 3/4 INCH OVER.
2. CAMBERS ARE SHOWN IN INCHES.
3. POSITIVE DEFLECTIONS ARE MEASURED IN THE DOWNWARD DIRECTION. POSITIVE VERTICAL CURVE ORDINATE AND POSITIVE CAMBER ARE MEASURED IN THE UPWARD DIRECTION.

LEGEND:

DLS - DENOTES DEFLECTION DUE TO STRUCTURAL STEEL

DLC - DENOTES DEFLECTION DUE TO CONCRETE SLAB

SDL - DENOTES DEFLECTION DUE TO PARAPET AND FUTURE WEARING SURFACE

TD&C - DENOTES TOTAL DEAD LOAD DEFLECTION AND CAMBER

VCO - DENOTES CAMBER FOR VERTICAL CURVE ORDINATE DUE TO ROADWAY PROFILE

TRC - TOTAL REQUIRED CAMBER = TD&C + VCO

UNOFFICIAL WEBSITE COPY

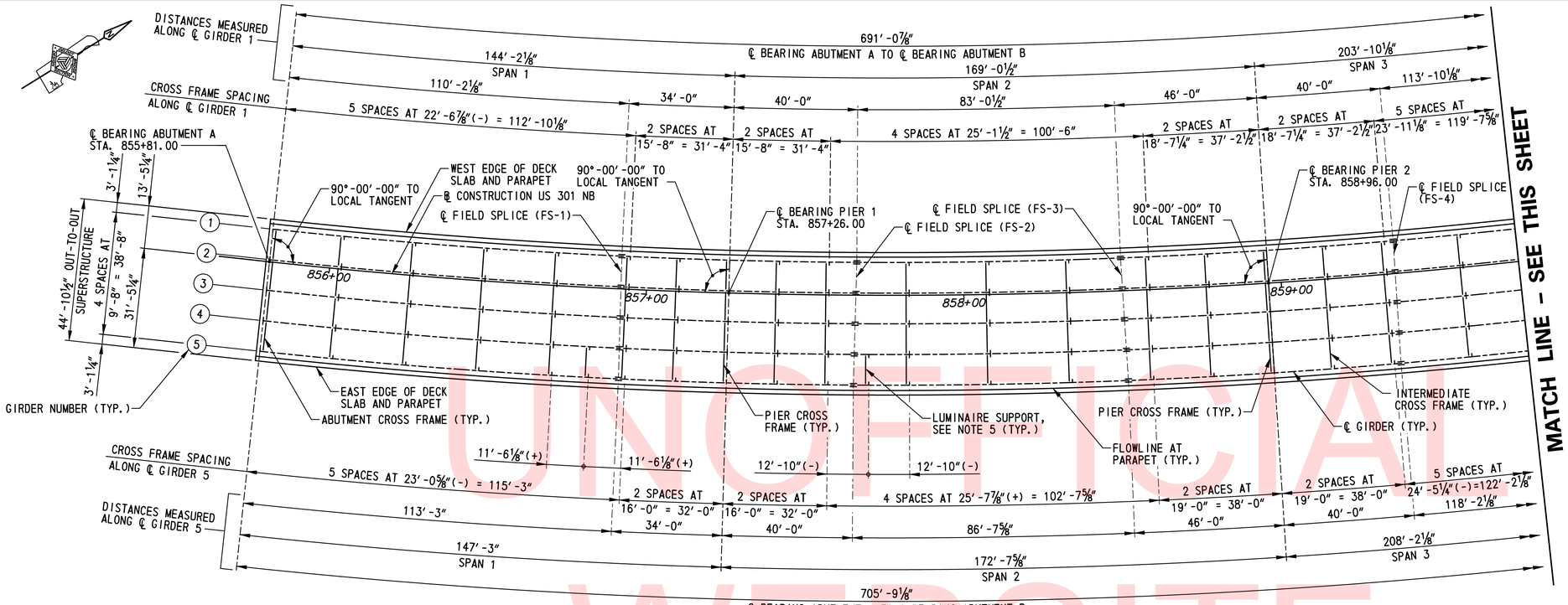

FRAMING PLAN

SCALE: 1″=20′-0″

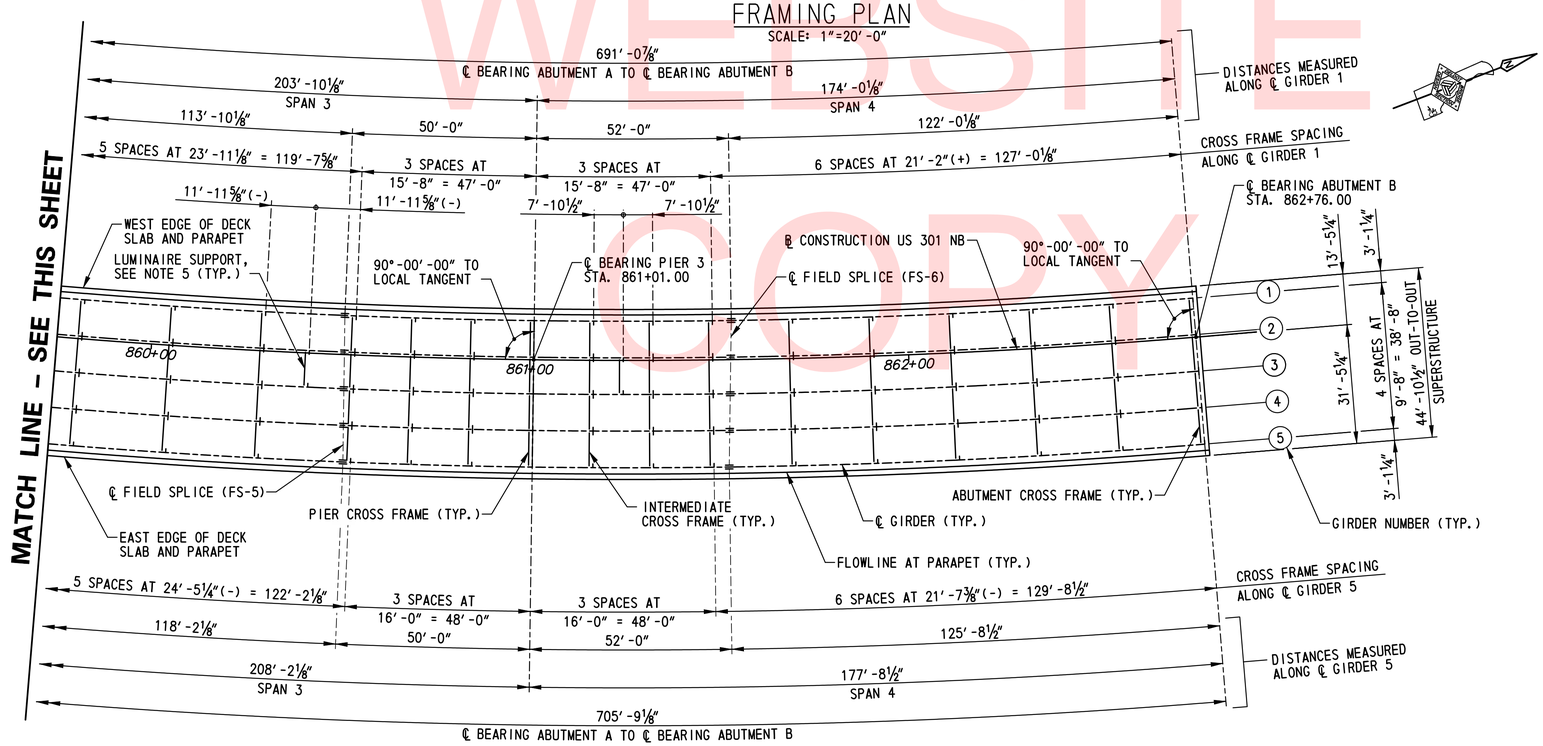

FRAMING PLAN

SCALE: 1″=20′-0″

GIRDER RADII TABLE	
GIRDER NUMBER	RADIUS
①	1819.67
②	1829.33
③	1839.00
④	1848.67
⑤	1858.33

NOTES:

1. ALL GIRDERS ARE CONCENTRIC TO THE ℄ CONSTRUCTION.
2. INTERMEDIATE, ABUTMENT AND PIER CROSS FRAMES AND LUMINAIRE SUPPORTS ARE RADIAL TO THE ℄ CONSTRUCTION US 301 NB.
3. FOR CROSS FRAME DETAILS, SEE DWG. NO. BM-03.
4. FOR FIELD SPLICE DETAILS, SEE DWG. NOS. BM-05 THRU BM-08.
5. LUMINAIRE SUPPORT SPACING AT LUMINAIRES LOCATED BETWEEN GIRDERS 4 AND 5 IS MEASURED ALONG GIRDER 5. LUMINAIRE SUPPORT SPACING LOCATED BETWEEN GIRDERS 2 AND 3 IS MEASURED ALONG GIRDER 2. FOR LUMINAIRE SUPPORT DETAILS, SEE DWG. NO. BM-04. FOR ADDITIONAL INFORMATION ON LUMINAIRE AND ASSOCIATED ELECTRICAL CONDUIT, SEE DWG. NOS. LI-13 AND LI-14.

UNOFFICIAL WEBSITE COPY

N:\31653-000\Contract-18\CADD\Bridge\Br_No433\FR01_br1-433.dgn
2/5/2013 10:59:23 AM

DELAWARE DEPARTMENT OF TRANSPORTATION	ADDENDUMS / REVISIONS	SCALE 0 20 40 60 FEET	US 301 & SR 1 INTERCHANGE	CONTRACT T200911302	BRIDGE NO. 1–433	FRAMING PLAN	BR1–3 FR–01
				COUNTY NEW CASTLE	DESIGNED BY: A.D.D.		SHEET NO. 272
					CHECKED BY: B.K.B.		TOTAL SHTS. 491

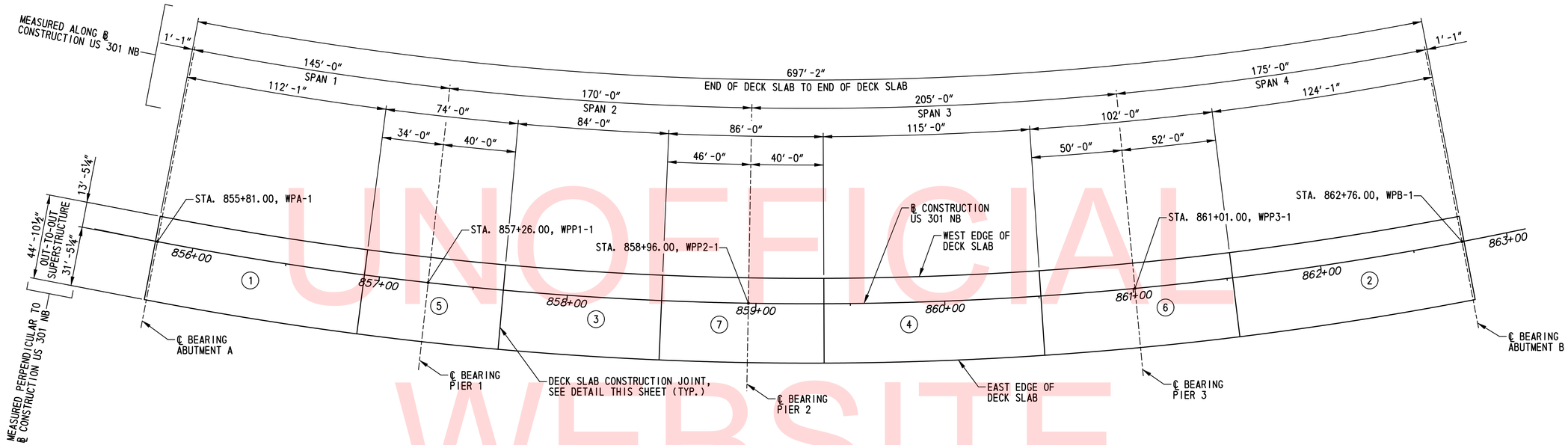

DECK SLAB POURING SEQUENCE PLAN

SCALE: 1"=30'-0"

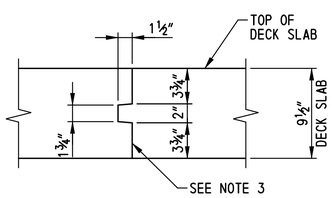

DECK SLAB CONSTRUCTION JOINT DETAIL

SCALE: 1½"=1'-0"

NOTES:

1. THE POURING SEQUENCE FOR THE DECK SLAB SHALL BE MADE IN THE NUMBERED ORDER INDICATED. THERE MUST BE AT LEAST FORTY (40) HOURS BETWEEN THE COMPLETION OF ONE NUMBERED POUR AND THE START OF THE NEXT NUMBERED POUR EXCEPT THAT THERE MAY BE SIXTEEN (16) HOURS BETWEEN POURS NUMBERED 5, 6 AND 7. THE CONTRACTOR MAY REVERSE THE ORDER OF POURS NUMBERED 1 AND 2 AND 3 AND 4. THE CONTRACTOR MAY COMPLETE IN ANY ORDER POURS NUMBERED 5, 6 AND 7.
2. THE CONTRACTOR SHALL FOLLOW THE POURING SEQUENCE SHOWN ON THESE PLANS. NO OTHER ALTERNATE POURING SEQUENCE WILL BE ALLOWED FOR THIS PROJECT.
3. ENTIRE FACE OF CONSTRUCTION JOINT SHALL BE COATED WITH AN APPROVED EPOXY BONDING COMPOUND.
4. FOR FINISHED ROADWAY ELEVATIONS, SEE DWG. NOS. RE-01 AND RE-02.
5. FOR DECK SLAB REINFORCEMENT, SEE DWG. NOS. DK-01 THRU DK-04.

UNOFFICIAL WEBSITE COPY

DELAWARE DEPARTMENT OF TRANSPORTATION	ADDENDUMS / REVISIONS	SCALE: AS SHOWN	US 301 & SR 1 INTERCHANGE	CONTRACT T200911302	BRIDGE NO. 1-433	DECK SLAB POURING SEQUENCE	BR1-3 PS-01
				COUNTY NEW CASTLE	DESIGNED BY: W.T.R.		SHEET NO. 273
					CHECKED BY: B.K.B.		TOTAL SHTS. 491

N:\31653-000\Contract 1B\CADD\Bridge\Br_No433\PS01_br1-433.dgn
2/5/2013 11:02:15 AM

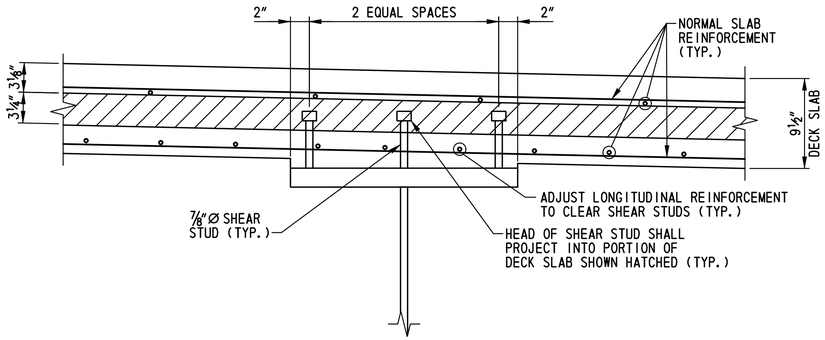

SHEAR STUD DETAIL

SCALE: 1½"=1'-0"

NOTES:

1. S.I.P. FORMS NOT SHOWN FOR CLARITY.
2. FOR LONGITUDINAL SPACING OF SHEAR STUDS SEE DWG. NO. BM-01.

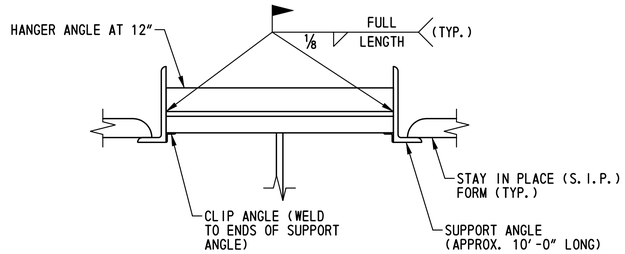

TENSION FLANGE S.I.P. FORM ATTACHMENT DETAIL

SCALE: 1½"=1'-0"

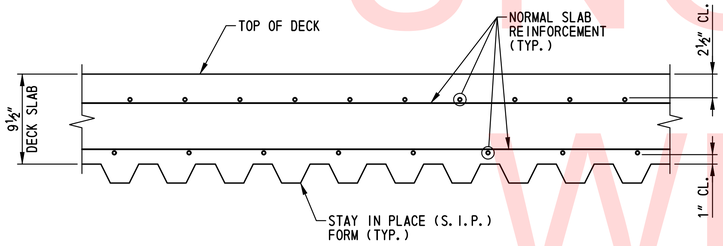

S.I.P. FORM PLACEMENT DETAIL

SCALE: 1½"=1'-0"

STAY IN PLACE FORM NOTES:

1. STAY IN PLACE FORMS SHALL CONFORM TO 602.03.
2. NO WELDING OF STAY IN PLACE FORMS TO TENSION FLANGES IS PERMITTED.
3. STAY IN PLACE FORMS SHALL BE VERTICALLY ADJUSTED TO ATTAIN FINISHED LINES AND GRADES REQUIRED ON THE PLANS.
4. ANY PERMANENTLY EXPOSED FORM METAL WHERE THE GALVANIZED COATING HAS BEEN DAMAGED SHALL BE THOROUGHLY CLEANED, WIRE BRUSHED, AND PAINTED WITH TWO COATS OF ZINC-OXIDE DUST PRIMER, FEDERAL SPECIFICATION TT-P-641D, TYPE II, NO COLOR ADDED, TO THE SATISFACTION OF THE ENGINEER. MINOR HEAT DISCOLORATION IN AREAS OF WELDS NEED NOT BE TOUCHED UP.

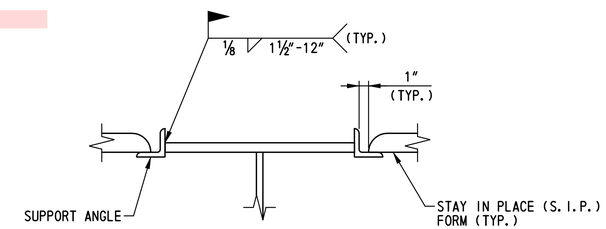

COMPRESSION FLANGE S.I.P. FORM ATTACHMENT DETAIL

SCALE: 1½"=1'-0"

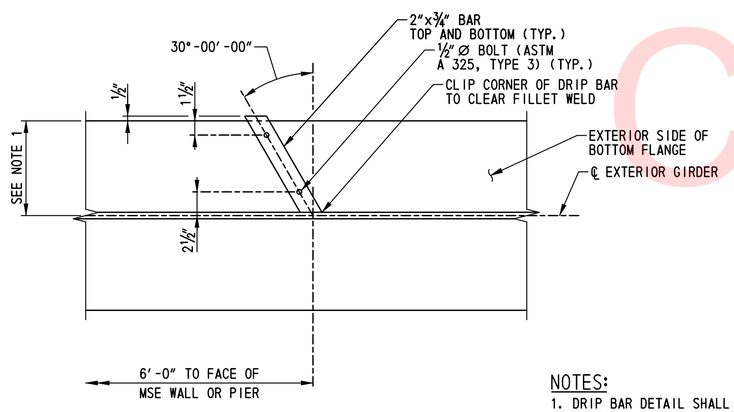

DRIP BAR DETAIL

SCALE: 1½"=1'-0"

NOTES:

1. DRIP BAR DETAIL SHALL BE PLACED ON BOTTOM FLANGE. PROVIDE DRIP BAR FOR EXTERIOR FACE OF GIRDER NOS. 1 AND 5 ONLY.
2. DRIP BARS ARE PLACED ADJACENT TO SUPPORTS TO PREVENT WATER FLOW ONTO SUPPORT.
3. DRIP BARS SHALL BE CAULKED AGAINST FLANGE, WEB AND FILLET WELD WITH AN APPROVED NONHARDENING CAULKING COMPOUND.

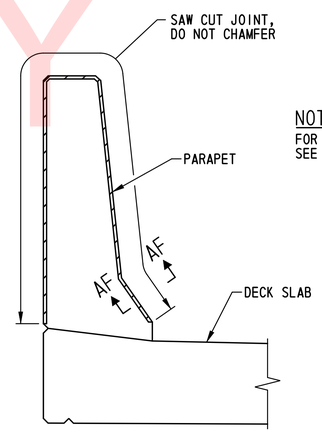

PARAPET CONTROL JOINT DETAIL

SCALE: 1"=1'-0"

NOTE:

FOR PARAPET CONTROL JOINT LOCATIONS, SEE DWG. NOS. PE-01 AND PE-02.

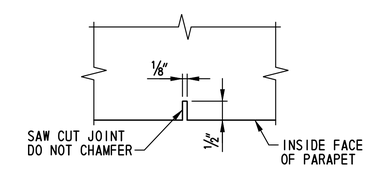

SECTION AF-AF

NOT TO SCALE

UNOFFICIAL WEBSITE COPY

N:\31653-000\Contract 1B\CADD\Bridge\Br_No433\S001_br1-433.dgn
2/5/2013 11:02:50 AM

DELAWARE DEPARTMENT OF TRANSPORTATION	ADDENDUMS / REVISIONS	SCALE: AS SHOWN	US 301 & SR 1 INTERCHANGE	CONTRACT T200911302	BRIDGE NO. 1-433	SUPERSTRUCTURE DETAILS	BR1-3 SD-01
				COUNTY NEW CASTLE	DESIGNED BY: W.T.R.		SHEET NO. 274
					CHECKED BY: B.K.B.		TOTAL SHTS. 491

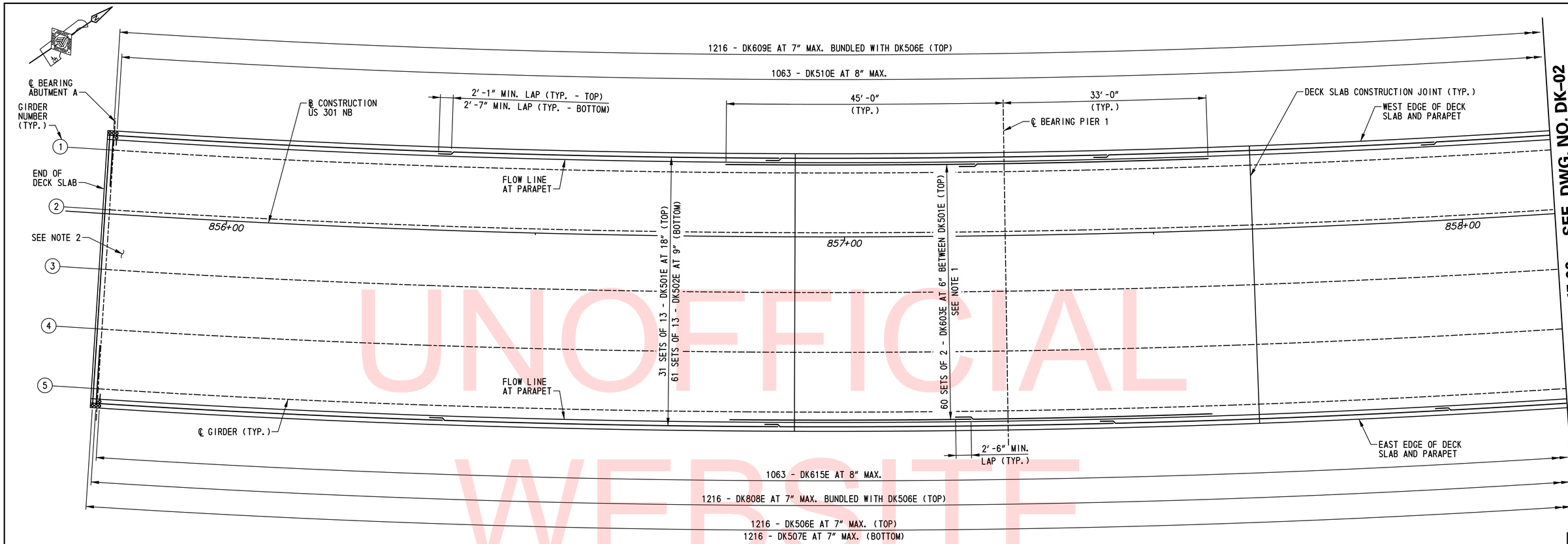

DECK SLAB REINFORCEMENT PLAN

SCALE: 1/8"=1'-0"

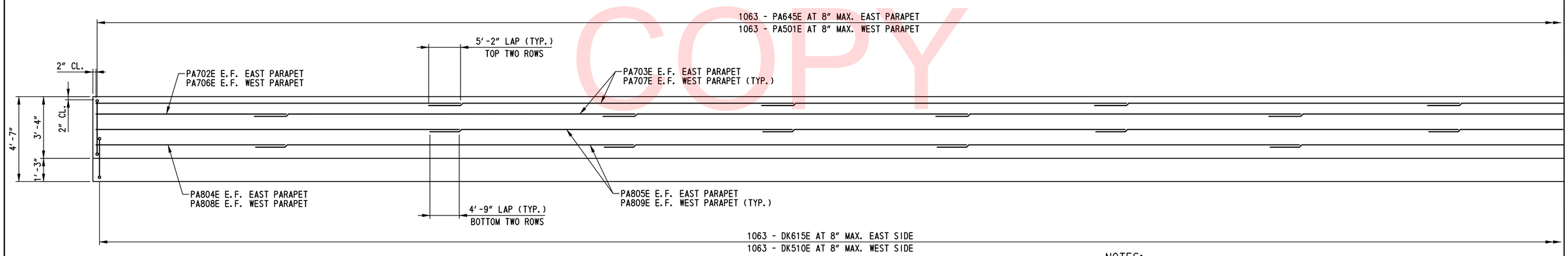

NOTE:

EAST PARAPET SHOWN LOOKING WEST.
WEST PARAPET SIMILAR LOOKING EAST.

PARAPET REINFORCEMENT ELEVATION

HORIZONTAL SCALE: 1/8"=1'-0"
VERTICAL SCALE: 3/8"=1'-0"

NOTES:

1. FOR ADDITIONAL INFORMATION ON PLACEMENT OF S501E AND S603E, SEE DECK SLAB TYPICAL REINFORCEMENT SECTION ON DWG. NO. DK-04.
2. FOR ADDITIONAL REINFORCEMENT IN END HAUNCH, SEE DWG. NO. DK-04.
3. FOR ADDITIONAL DECK SLAB AND PARAPET REINFORCEMENT DETAILS, SEE DWG. NO. DK-04.
4. FOR DECK SLAB CONSTRUCTION JOINT LOCATIONS AND DECK SLAB POURING SEQUENCE, SEE DWG. NO. PS-01.
5. PARAPET CONTROL JOINTS NOT SHOWN FOR CLARITY. FOR PARAPET CONTROL JOINT LOCATIONS, SEE DWG. NOS. PE-01 AND PE-02. FOR PARAPET CONTROL JOINT DETAILS, SEE DWG. NO. SD-01.

MATCH LINE STA. 858+15.00 – SEE DWG. NO. DK-02

MATCH LINE STA. 858+15.00 – SEE DWG. NO. DK-02

BR1-3
DK-01

UNOFFICIAL WEBSITE COPY

N:\31653-000\Contract 1B\CADD\Bridge\Br_No433\DK01_br1-433.dgn
2/5/2013 11:05:16 AM

DELAWARE DEPARTMENT OF TRANSPORTATION	ADDENDUMS / REVISIONS	SCALE: AS NOTED	US 301 & SR 1 INTERCHANGE	CONTRACT T200911302	BRIDGE NO. 1-433	DECK SLAB AND PARAPET REINFORCEMENT – 1
				COUNTY NEW CASTLE	DESIGNED BY: B.K.B.	SHEET NO. 275
					CHECKED BY: W.A.G.	TOTAL SHTS. 491

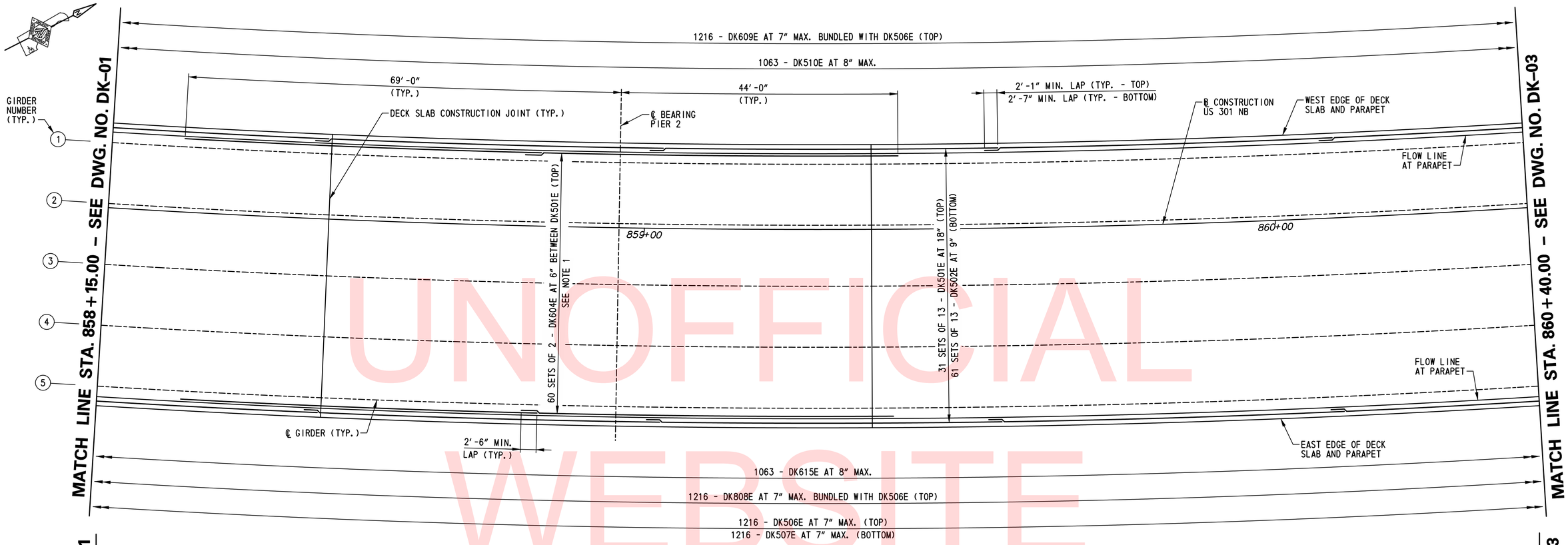

DECK SLAB REINFORCEMENT PLAN
SCALE: 1/8"=1'-0"

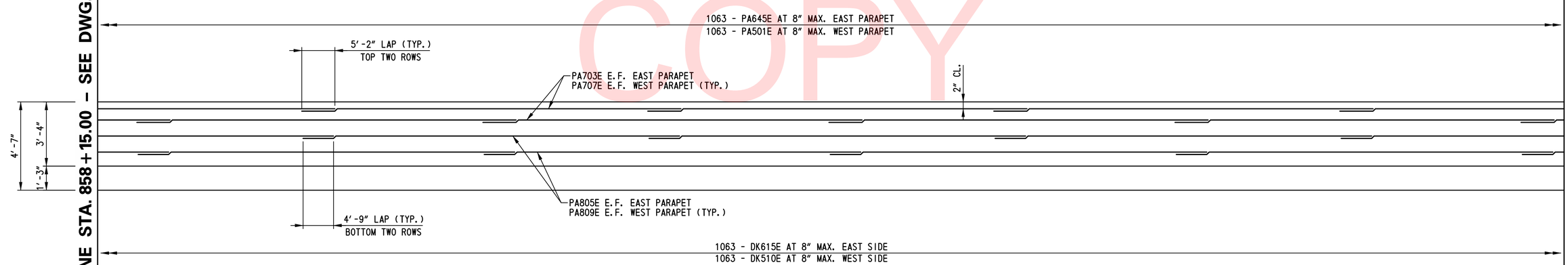

NOTE:
EAST PARAPET SHOWN LOOKING WEST.
WEST PARAPET SIMILAR LOOKING EAST.

PARAPET REINFORCEMENT ELEVATION
HORIZONTAL SCALE: 1/8"=1'-0"
VERTICAL SCALE: 3/8"=1'-0"

NOTES:
1. FOR ADDITIONAL INFORMATION ON PLACEMENT OF S501E AND S604E, SEE DECK SLAB TYPICAL REINFORCEMENT SECTION ON DWG. NO. DK-04.
2. FOR ADDITIONAL DECK SLAB AND PARAPET REINFORCEMENT DETAILS, SEE DWG. NO. DK-04.
3. FOR DECK SLAB CONSTRUCTION JOINT LOCATIONS AND DECK SLAB POURING SEQUENCE, SEE DWG. NO. PS-01.
4. PARAPET CONTROL JOINTS NOT SHOWN FOR CLARITY. FOR PARAPET CONTROL JOINT LOCATIONS, SEE DWG. NOS. PE-01 AND PE-02. FOR PARAPET CONTROL JOINT DETAILS, SEE DWG. NO. SD-01.

UNOFFICIAL WEBSITE COPY

N:\31653-000\Contract 1B\CADD\Bridge\Br_No433\DK02_br1-433.dgn
2/5/2013 1:10:7:57 AM

DELAWARE DEPARTMENT OF TRANSPORTATION	ADDENDUMS / REVISIONS	SCALE: AS NOTED	US 301 & SR 1 INTERCHANGE	CONTRACT T200911302	BRIDGE NO. 1-433	DECK SLAB AND PARAPET REINFORCEMENT - 2
				COUNTY NEW CASTLE	DESIGNED BY: B.K.B.	
					CHECKED BY: W.A.G.	

BR1-3
DK-02

SHEET NO. 276
TOTAL SHTS. 491

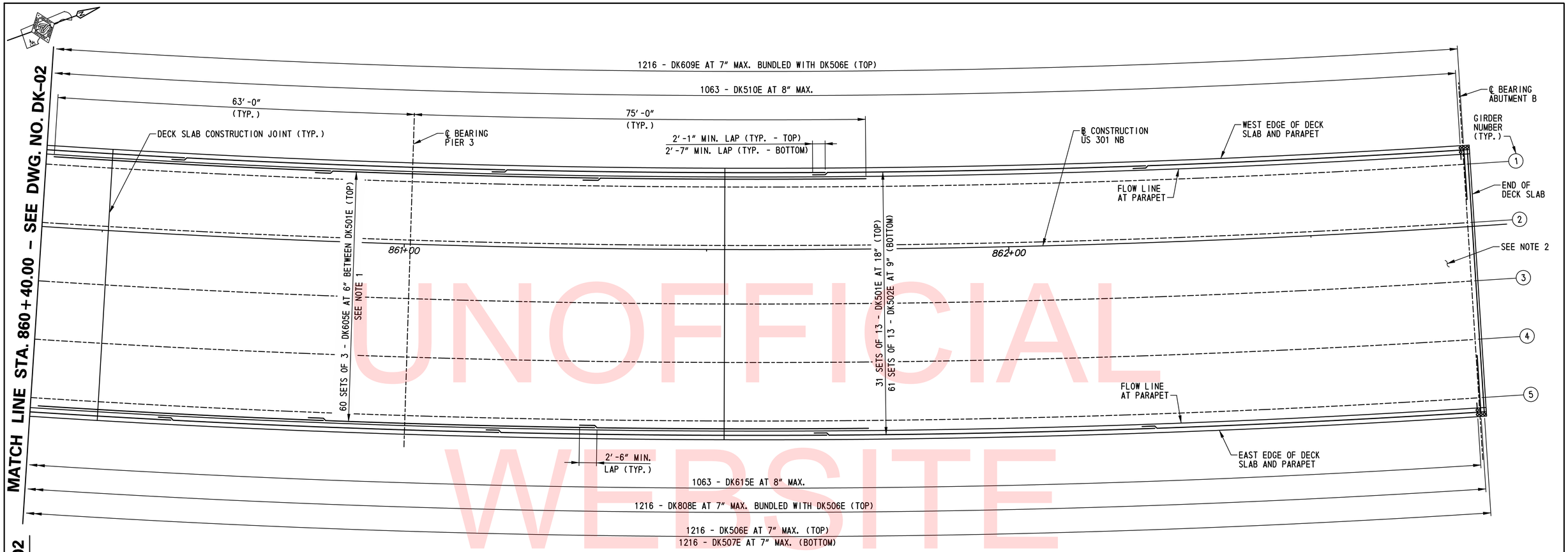

DECK SLAB REINFORCEMENT PLAN

SCALE: 1/8"=1'-0"

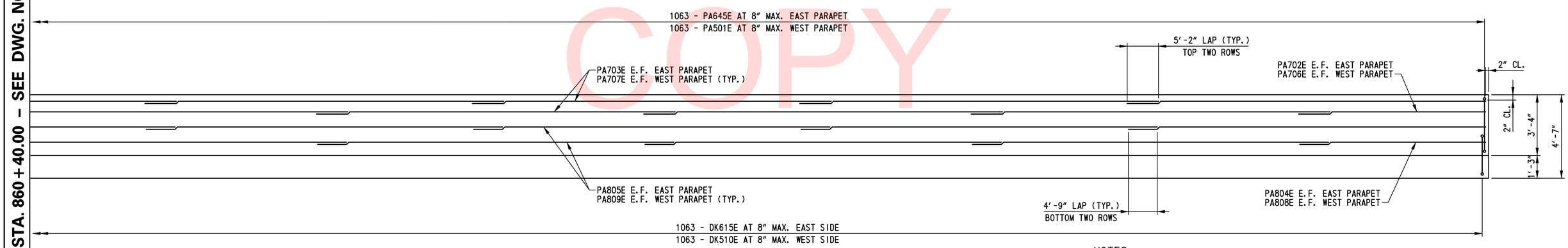

NOTE:
EAST PARAPET SHOWN LOOKING WEST.
WEST PARAPET SIMILAR LOOKING EAST.

PARAPET REINFORCEMENT ELEVATION

HORIZONTAL SCALE: 1/8"=1'-0"
VERTICAL SCALE: 3/8"=1'-0"

NOTES:

1. FOR ADDITIONAL INFORMATION ON PLACEMENT OF S501E AND S605E, SEE DECK SLAB TYPICAL REINFORCEMENT SECTION ON DWG. NO. DK-04.
2. FOR ADDITIONAL REINFORCEMENT IN END HAUNCH, SEE DWG. NO. DK-04.
3. FOR ADDITIONAL DECK SLAB AND PARAPET REINFORCEMENT DETAILS, SEE DWG. NO. DK-04.
4. FOR DECK SLAB CONSTRUCTION JOINT LOCATIONS AND DECK SLAB POURING SEQUENCE, SEE DWG. NO. PS-01.
5. PARAPET CONTROL JOINTS NOT SHOWN FOR CLARITY. FOR PARAPET CONTROL JOINT LOCATIONS, SEE DWG. NOS. PE-01 AND PE-02. FOR PARAPET CONTROL JOINT DETAILS, SEE DWG. NO. SD-01.

BR1-3
DK-03

UNOFFICIAL WEBSITE COPY

N:\31653-000\Contract 1B\CADD\Bridge\Br_No433\DK03_br1-433.dgn
2/5/2013 11:08:22 AM

DELAWARE DEPARTMENT OF TRANSPORTATION

ADDENDUMS / REVISIONS

SCALE: AS SHOWN

US 301 & SR 1 INTERCHANGE

CONTRACT	BRIDGE NO.	1-433
T200911302	DESIGNED BY: B.K.B.	
COUNTY		
NEW CASTLE	CHECKED BY: W.A.G.	

DECK SLAB AND PARAPET REINFORCEMENT - 3

SHEET NO. 277
TOTAL SHTS. 491

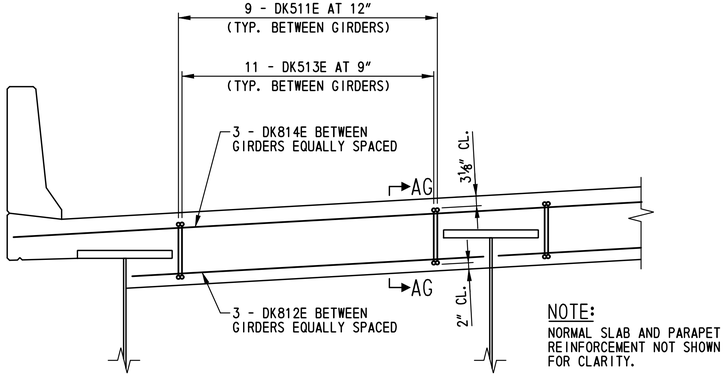

NOTE:
NORMAL SLAB AND PARAPET REINFORCEMENT NOT SHOWN FOR CLARITY.

CONCRETE END HAUNCH TYPICAL REINFORCEMENT SECTION

SCALE: ½"=1'-0"

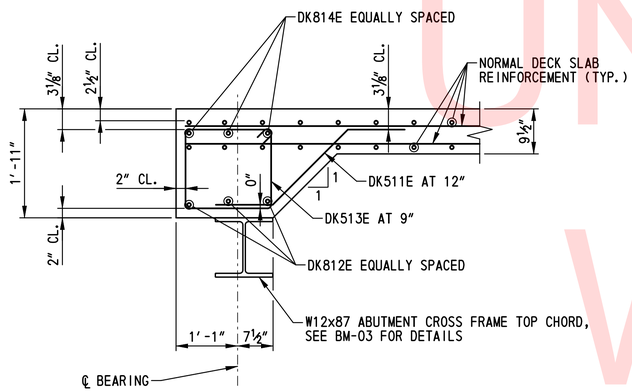

SECTION AG-AG

SCALE: ¾"=1'-0"

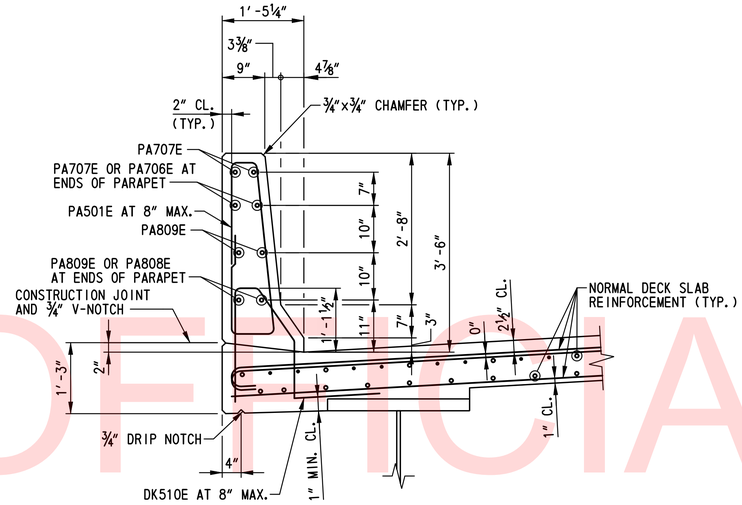

WEST PARAPET TYPICAL REINFORCEMENT SECTION

SCALE: ¾"=1'-0"

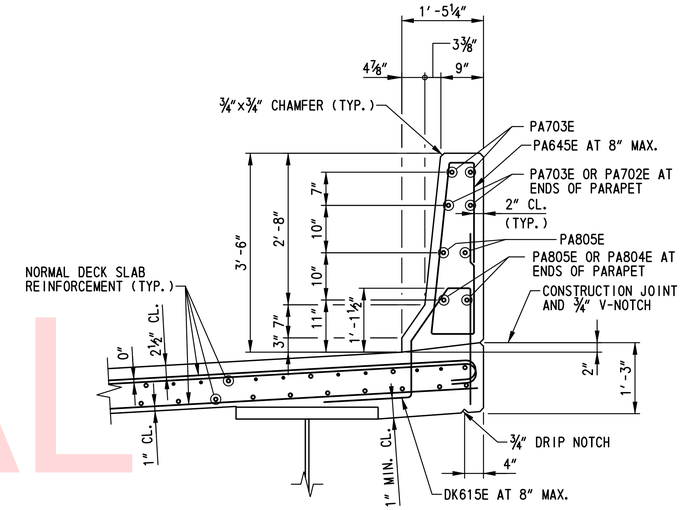

EAST PARAPET TYPICAL REINFORCEMENT SECTION

SCALE: ¾"=1'-0"

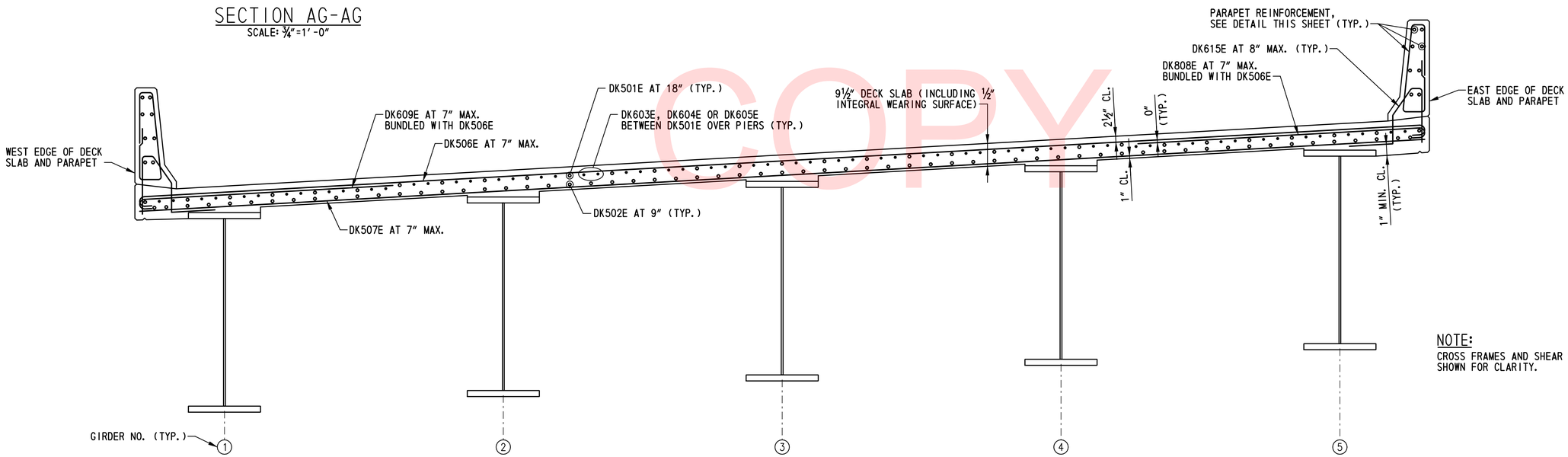

NOTE:
CROSS FRAMES AND SHEAR STUDS NOT SHOWN FOR CLARITY.

DECK SLAB TYPICAL REINFORCEMENT SECTION

SCALE: ½"=1'-0"

UNOFFICIAL WEBSITE COPY

N:\31653-000\Contract 1B\CADD\Bridge\Br_No433\DK04_br1-433.dgn
2/5/2013 11:09:21 AM

DELAWARE DEPARTMENT OF TRANSPORTATION	ADDENDUMS / REVISIONS	SCALE: AS SHOWN	US 301 & SR 1 INTERCHANGE	CONTRACT T200911302	BRIDGE NO. 1-433	DECK SLAB AND PARAPET REINFORCEMENT DETAILS	BR1-3 DK-04
				COUNTY NEW CASTLE	DESIGNED BY: B.K.B.		SHEET NO. 278
					CHECKED BY: W.A.G.		TOTAL SHTS. 491

① ANY MARK NUMBER WITH SUFFIX 'E' DENOTES EPOXY COATED REINFORCING STEEL.

② ALL MARK 'LOCATION PREFIXES' SHALL CONSIST OF TWO LETTERS AND ARE AS FOLLOWS: AB = ABUTMENT, AS = APPROACH SLAB, BC = BOX CULVERT, BW = BACKWALL, CL = COLUMN, DK = DECK, DL = DOWEL, FT = FOOTING, HW = HEADWALL, MS = MISC. BARS, PA = PARAPET, PR = PIER, SC = SHEETPILE CAP, SL = SLAB, TW = TOEWALL, WL = WALL (UNIQUE LOCATION), WW = WINGWALL

SPECIFICATIONS					BENDING DIMENSIONS (FEET-INCHES /QUARTER INCH)										
QTY.	SIZE	LENGTH	MARK	TYPE	A	B	C	D	E	F/R	G	H	J	K	O
DECK SLAB															
403	5	56-05 1/1	DK501E	STR		56-05 1/1									
793	5	56-10 3/3	DK502E	STR		56-10 3/3									
120	6	40-03 0/0	DK603E	STR		40-03 0/0									
120	6	57-09 0/0	DK604E	STR		57-09 0/0									
180	6	47-08 0/0	DK605E	STR		47-08 0/0									
1216	5	45-08 2/2	DK506E	1	0-07 0/0	44-06 2/2					0-07 0/0		0-05 0/0		
1216	5	44-06 2/2	DK507E	STR		44-06 2/2									
1216	8	10-10 1/1	DK808E	1	0-11 0/0	9-11 1/1							0-08 0/0		
1216	6	9-05 1/1	DK609E	1	0-08 0/0	8-09 1/1							0-06 0/0		
1063	5	5-06 2/2	DK510E	T15		2-00 0/0	0-05 1/1	1-01 1/1	1-00 0/0	1-00 0/0		1-00 0/0	0-07 1/1	0-11 0/0	1-00 2/2
72	5	3-11 0/0	DK511E	6		1-00 0/0	1-11 0/0	1-00 0/0				1-04 1/1		1-04 1/1	3-04 1/1
24	8	9-04 0/0	DK812E	STR		9-04 0/0									
88	5	6-11 2/2	DK513E	T1	0-05 2/2	1-06 2/2	1-05 3/3	1-06 2/2	1-05 3/3		0-05 2/2				
6	8	44-06 2/2	DK814E	STR		44-06 2/2									
1063	6	5-06 2/2	DK615E	T15		2-00 0/0	0-05 1/1	1-01 1/1	1-00 0/0	1-00 0/0		1-00 0/0	0-07 1/1	0-11 0/0	1-00 2/2
1063	5	9-03 1/1	PA501E	PA		2-06 2/2	0-09 0/0	3-00 1/1	0-05 0/0	2-06 2/2		3-00 0/0		0-04 0/0	
4	7	32-02 3/3	PA702E	STR		32-02 3/3									
50	7	59-03 2/2	PA703E	STR		59-03 2/2									
4	8	31-10 0/0	PA804E	STR		31-10 0/0									
50	8	58-10 3/3	PA805E	STR		58-10 3/3									
4	7	31-07 0/0	PA706E	STR		31-07 0/0									
50	7	58-00 0/0	PA707E	STR		58-00 0/0									
4	8	31-02 1/1	PA808E	STR		31-02 1/1									
50	8	57-07 2/2	PA809E	STR		57-07 2/2									
1063	6	9-08 1/1	PA645E	PA		2-09 0/0	0-09 0/0	3-00 1/1	0-05 0/0	2-09 0/0		3-00 0/0		0-04 0/0	

SPECIFICATIONS					BENDING DIMENSIONS (FEET-INCHES /QUARTER INCH)										
QTY.	SIZE	LENGTH	MARK	TYPE	A	B	C	D	E	F/R	G	H	J	K	O

SPECIFICATIONS					BENDING DIMENSIONS (FEET-INCHES /QUARTER INCH)										
QTY.	SIZE	LENGTH	MARK	TYPE	A	B	C	D	E	F/R	G	H	J	K	O

UNOFFICIAL WEBSITE COPY

ASTM STANDARD ENGLISH REINFORCING BARS				RECOMMENDED END HOOKS, APPLICABLE TO ALL GRADES				STIRRUP AND TIE HOOKS, APPLICABLE TO ALL GRADES			
	NOMINAL DIMENSIONS				180° HOOKS		90° HOOKS		90° HOOK	135° HOOK	
BAR SIZE	DIAMETER (INCHES)	AREA (INCHES²)	WEIGHT (LBS./FT.)	D	A OR G	J	A OR G	D	A OR G	A OR G	H
3	0.375	0.110	0.376	2¼"	5"	3"	6"	1½"	4"	4"	2½"
4	0.500	0.200	0.668	3"	6"	4"	8"	2"	4½"	4½"	3"
5	0.625	0.310	1.043	3¾"	7"	5"	10"	2½"	6"	5½"	3¾"
6	0.750	0.440	1.502	4½"	8"	6"	1-0"	4½"	1-0"	8"	4½"
7	0.875	0.600	2.044	5¼"	10"	7"	1-2"	5¼"	1-2"	9"	5¼"
8	1.000	0.790	2.670	6"	11"	8"	1-4"	6"	1-4"	10½"	6"
9	1.128	1.000	3.400	9½"	1-3"	11¾"	1-7"				
10	1.270	1.270	4.303	10¾"	1-5"	1-1¼"	1-10"				
11	1.410	1.560	5.313	1-0"	1-7"	1-2¾"	2-0"				
14	1.693	2.250	7.650	1-6¼"	2-3"	1-9¾"	2-7"				
18	2.257	4.000	13.600	2-0"	3-0"	2-4½"	3-5"				

NOTES:

1. FIGURES SHOWN IN CIRCLES REPRESENT BAR BEND TYPES.
2. STANDARD BAR BENDS INCLUDE ONLY THOSE TYPES BELOW, INDICATED AS SUCH.
3. ALL DIMENSIONS OUT-TO-OUT, EXCEPT "A" AND "G" ON STD. 180° AND 135° HOOKS.
4. "J" DIMENSIONS ON 180° HOOKS TO BE SHOWN ONLY WHERE NECESSARY TO RESTRICT HOOK SIZE, OTHERWISE STANDARD 'ACI' HOOKS ARE TO BE USED.
5. WHERE "J" IS NOT SHOWN, "J" WILL BE KEPT EQUAL TO OR LESS THAN "H" ON TYPES 3, 5 AND 22. WHERE "J" CAN EXCEED "H", IT SHALL BE SHOWN.
6. "H" DIMENSIONS OF STIRRUPS TO BE SHOWN AS NEEDED TO FIT WITHIN THE CONCRETE.
7. UNLESS OTHERWISE NOTED, DIAMETER "D" IS THE SAME FOR ALL BENDS AND HOOKS ON A BAR (EXCEPT FOR BEND TYPES 11 AND 13).
8. WHERE SLOPE DIFFERS FROM 45° OFFSET, "H" AND "K" MUST BE SHOWN.
9. WHERE BARS ARE TO BE BENT MORE ACCURATELY THAN STANDARD BENDING TOLERANCES, BENDING DIMENSIONS REQUIRING CLOSER FABRICATION SHOULD HAVE LIMITS INDICATED.
10. FOR RECOMMENDED DIAMETER "D", OF BENDS, HOOKS, ETC., REFER TO TABLE ABOVE, 'CRSI' OR 'ACI' TABLES WHERE APPLICABLE AND REQUIRED.
11. TYPE S1-S6, S11, T1-T3 AND T6-T9 APPLICABLE TO BAR SIZES #3 THROUGH #8.

STANDARD BAR BENDS

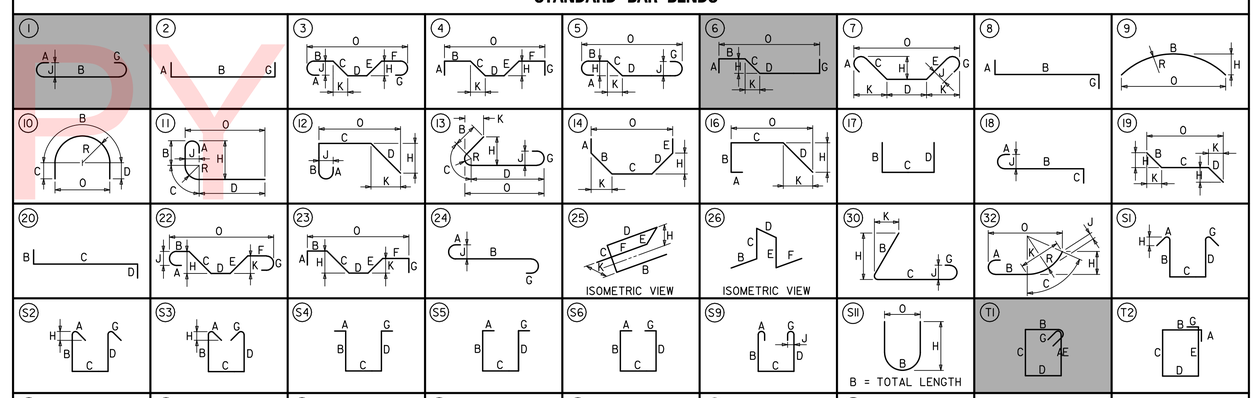

SPECIAL BAR BENDS

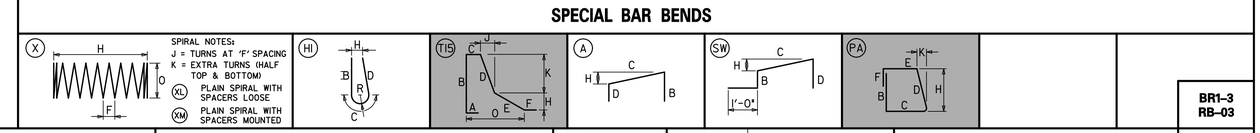

STIRRUP AND TIE HOOKS

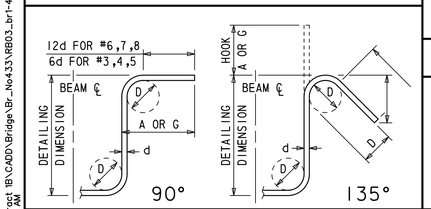

180° AND 90° END HOOKS

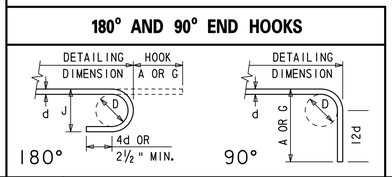

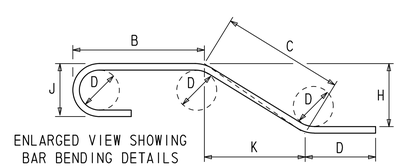

ADDENDUMS / REVISIONS	

NOT TO SCALE

US 301 & SR 1 INTERCHANGE

CONTRACT	BRIDGE NO. 1-433
T200911302	DESIGNED BY: W.T.R.
COUNTY	CHECKED BY: B.K.B.
NEW CASTLE	

SUPERSTRUCTURE REINFORCEMENT LIST

BR1-3
RB-03

SHEET NO. 279
TOTAL SHTS. 491

DELAWARE DEPARTMENT OF TRANSPORTATION

N:\3653-000\Contract TB\CADD\Bridge\Br_No433\RB03_br1-433.dgn
2/5/2013 11:10:10 AM

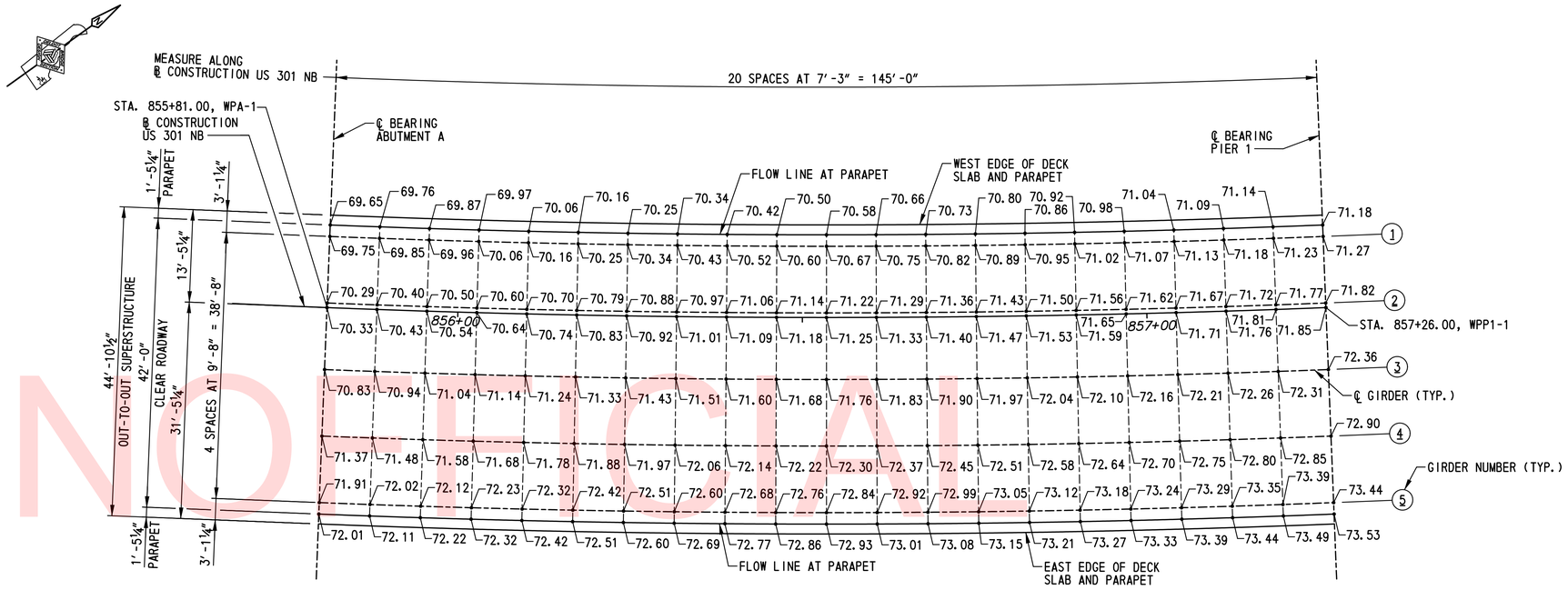

NOTES:

1. FINISHED ROADWAY ELEVATIONS SHOWN ARE TOP OF PROPOSED CONCRETE DECK SLAB.
2. FOR VERTICAL CURVE DATA, SEE DWG. NO. PE-02.
3. ALL LINES OF ELEVATIONS SHOWN ARE RADIAL TO ℄ CONSTRUCTION.

FINISHED ROADWAY ELEVATIONS - SPAN 1

SCALE: 1"=10'-0"

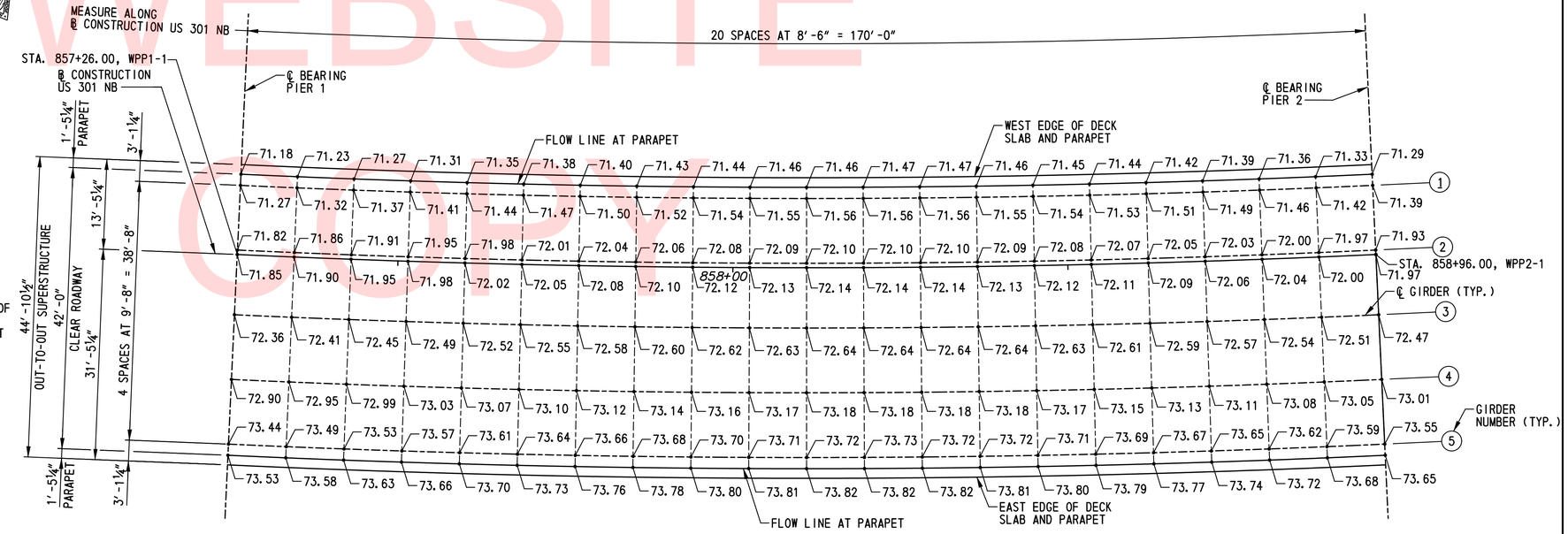

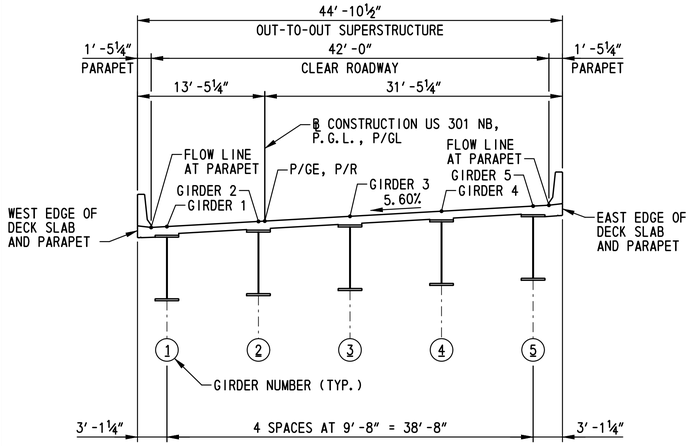

LOCATION OF FINISHED ROADWAY ELEVATIONS

SCALE: ⅛"=1'-0"

NOTE:

ALL DIMENSIONS SHOWN MEASURED RADIAL TO ℄ CONSTRUCTION US 301 NB.

FINISHED ROADWAY ELEVATIONS - SPAN 2

SCALE: 1"=10'-0"

UNOFFICIAL WEBSITE COPY

N:\3653-000\Contract 1B\CADD\Bridge\Br_No433\RE01_br1-433.dgn
2/5/2013 11:10:59 AM

DELAWARE DEPARTMENT OF TRANSPORTATION	ADDENDUMS / REVISIONS	SCALE: AS SHOWN	US 301 & SR 1 INTERCHANGE	CONTRACT T200911302	BRIDGE NO. 1-433	FINISHED ROADWAY ELEVATIONS – 1	BR1-3 RE-01
				COUNTY NEW CASTLE	DESIGNED BY: B.K.B.		SHEET NO. 280
					CHECKED BY: W.A.G.		TOTAL SHTS. 491

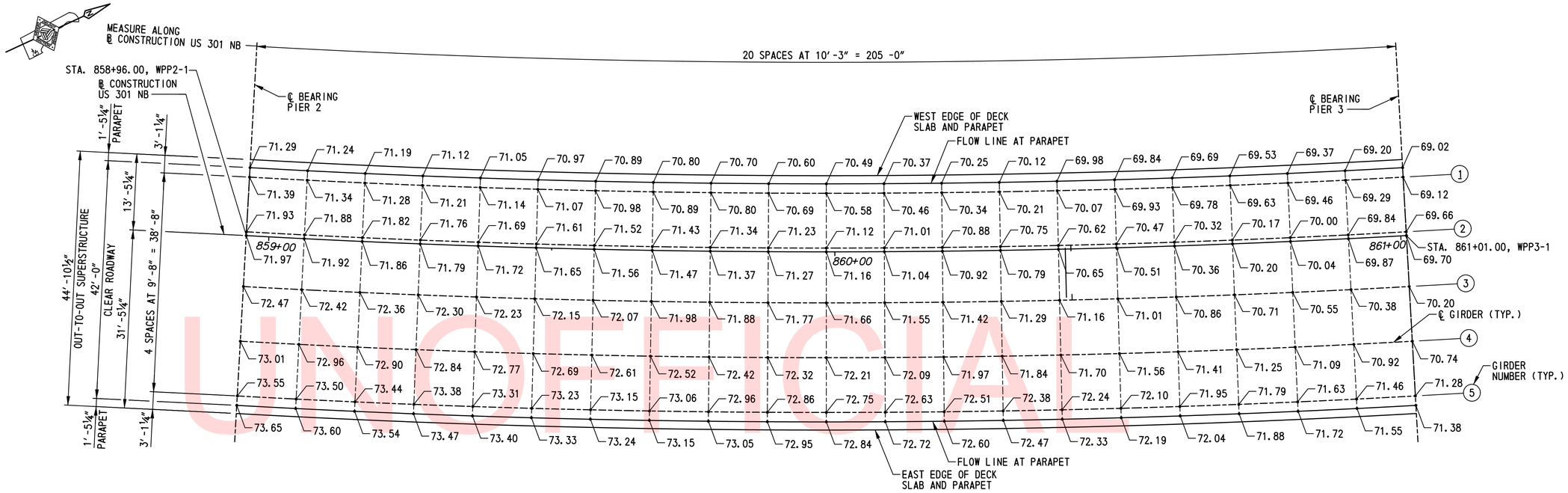

FINISHED ROADWAY ELEVATIONS - SPAN 3

SCALE: 1"=10'-0"

NOTES:

1. FINISHED ROADWAY ELEVATIONS SHOWN ARE TOP OF PROPOSED CONCRETE DECK SLAB.
2. FOR VERTICAL CURVE DATA, SEE DWG. NO. PE-02.
3. ALL LINES OF ELEVATIONS SHOWN ARE RADIAL TO ℄ CONSTRUCTION.

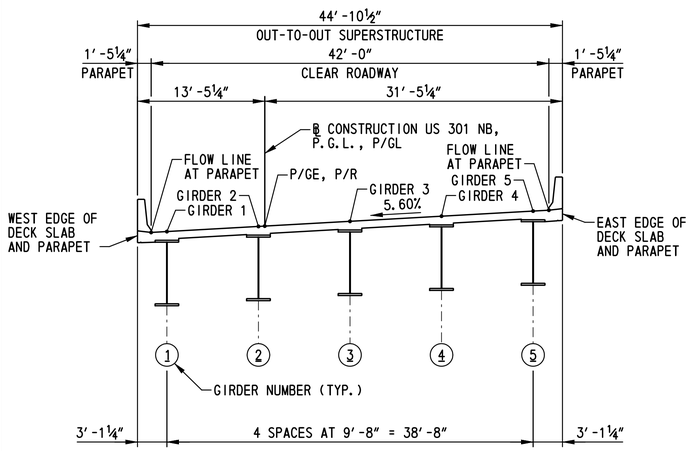

LOCATION OF FINISHED ROADWAY ELEVATIONS

SCALE: ⅛"=1'-0"

NOTE:

ALL DIMENSIONS SHOWN MEASURED RADIAL TO ℄ CONSTRUCTION US 301 NB.

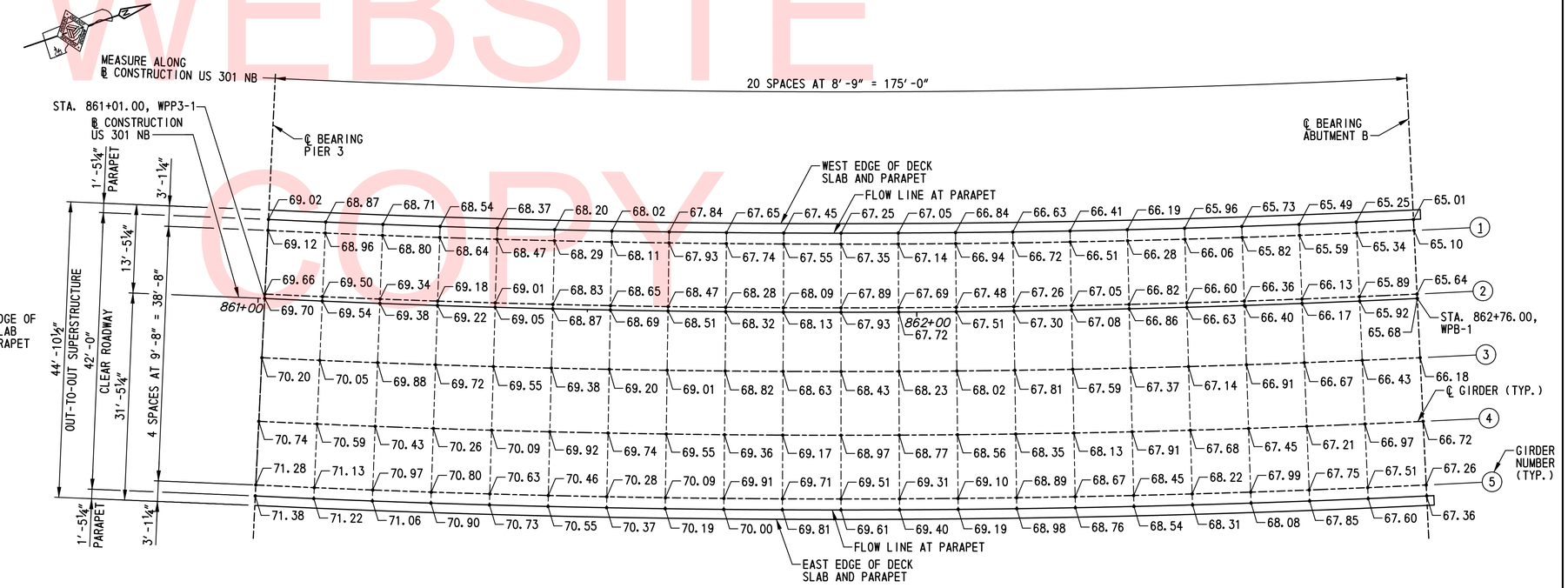

FINISHED ROADWAY ELEVATIONS - SPAN 4

SCALE: 1"=10'-0"

UNOFFICIAL WEBSITE COPY

N:\31653-000\Contract 1B\CADD\Bridge\Br_No433\RE02_br1-433.dgn
2/5/2013 11:11:36 AM

DELAWARE DEPARTMENT OF TRANSPORTATION	ADDENDUMS / REVISIONS	SCALE: AS SHOWN	US 301 & SR 1 INTERCHANGE	CONTRACT T200911302	BRIDGE NO. 1-433	FINISHED ROADWAY ELEVATIONS – 2	BR1-3 RE-02
				COUNTY NEW CASTLE	DESIGNED BY: B.K.B.		SHEET NO. 281
					CHECKED BY: W.A.G.		TOTAL SHTS. 491

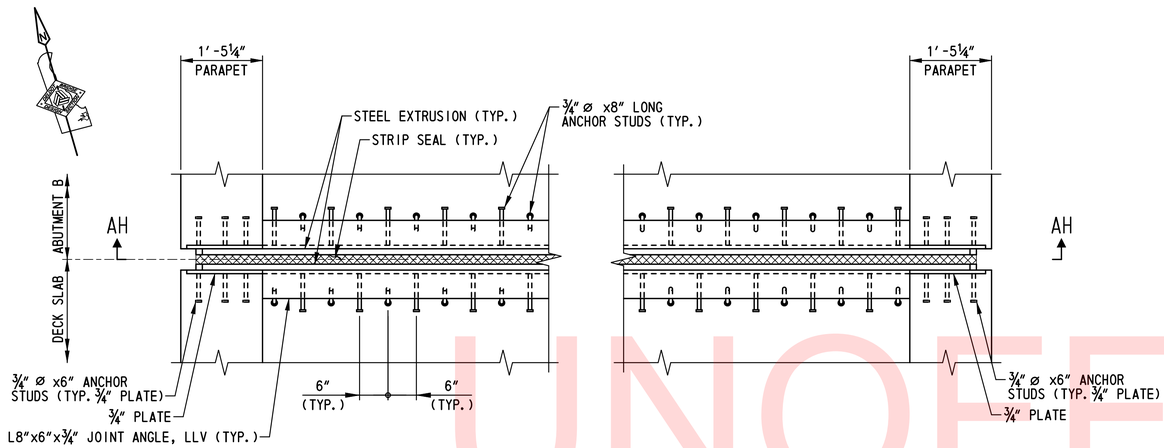

ARMORED STRIP SEAL JOINT PLAN

SCALE: ¾"=1'-0"

NOTE:
JOINT AT APPROACH SLAB B SHOWN.
JOINT AT APPROACH SLAB A SIMILAR.

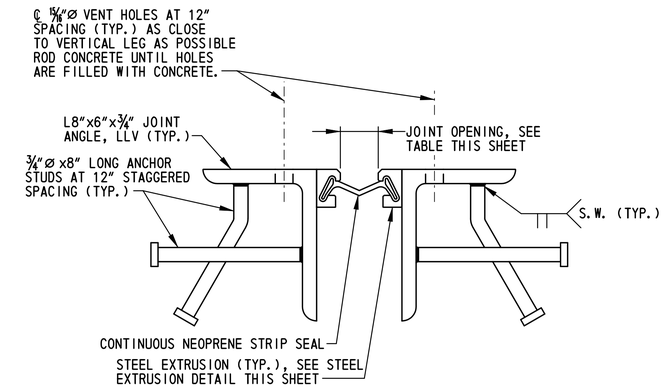

ARMORED STRIP SEAL JOINT ASSEMBLY DETAIL

SCALE: 3"=1'-0"

JOINT OPENING TABLE

LOCATION	TEMPERATURE (°F)												
	0	10	20	30	40	50	60	70	80	90	100	110	120
ABUTMENT A	4"	3¾"	3½"	3¼"	3"	2¾"	2½"	2¼"	2"	1¾"	1½"	1¼"	1"
ABUTMENT B	4⅜"	4⅛"	3¾"	3⅞"	3⅛"	2⅝"	2½"	2⅜"	1⅞"	1⅝"	1¼"	⅝"	⅝"

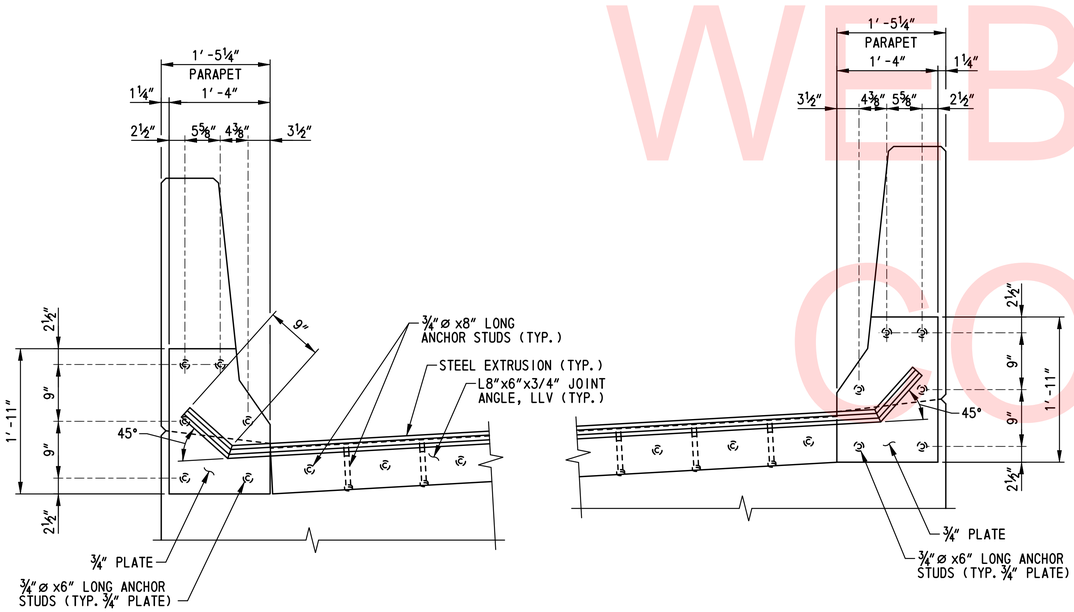

SECTION AH-AH

SCALE: 1"=1'-0"

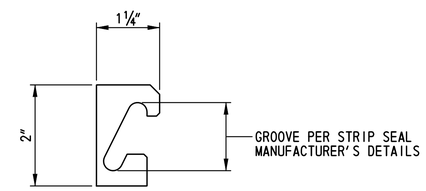

STEEL EXTRUSION DETAIL

NOT TO SCALE

NOTE:
PAYMENT FOR CONSTRUCTION OF THE ARMORED STRIP SEAL JOINT WILL BE MADE UNDER ITEM NO. 605512 - PREFABRICATED EXPANSION JOINT SYSTEM 4". SEE THE SPECIAL PROVISIONS FOR ADDITIONAL INFORMATION AND REQUIREMENTS.

UNOFFICIAL WEBSITE COPY

N:\31653-000\Contract 1B\CADD\Bridge\Br_No433\EX01_br1-433.dgn
2/5/2015 11:12:14 AM

DELAWARE DEPARTMENT OF TRANSPORTATION	ADDENDUMS / REVISIONS	SCALE: AS SHOWN	US 301 & SR 1 INTERCHANGE	CONTRACT T200911302	BRIDGE NO. 1-433	ARMORED STRIP SEAL JOINT DETAIL	BR1-3 EX-01
				COUNTY NEW CASTLE	DESIGNED BY: B.K.B.		SHEET NO. 282
					CHECKED BY: W.A.G.		TOTAL SHTS. 491

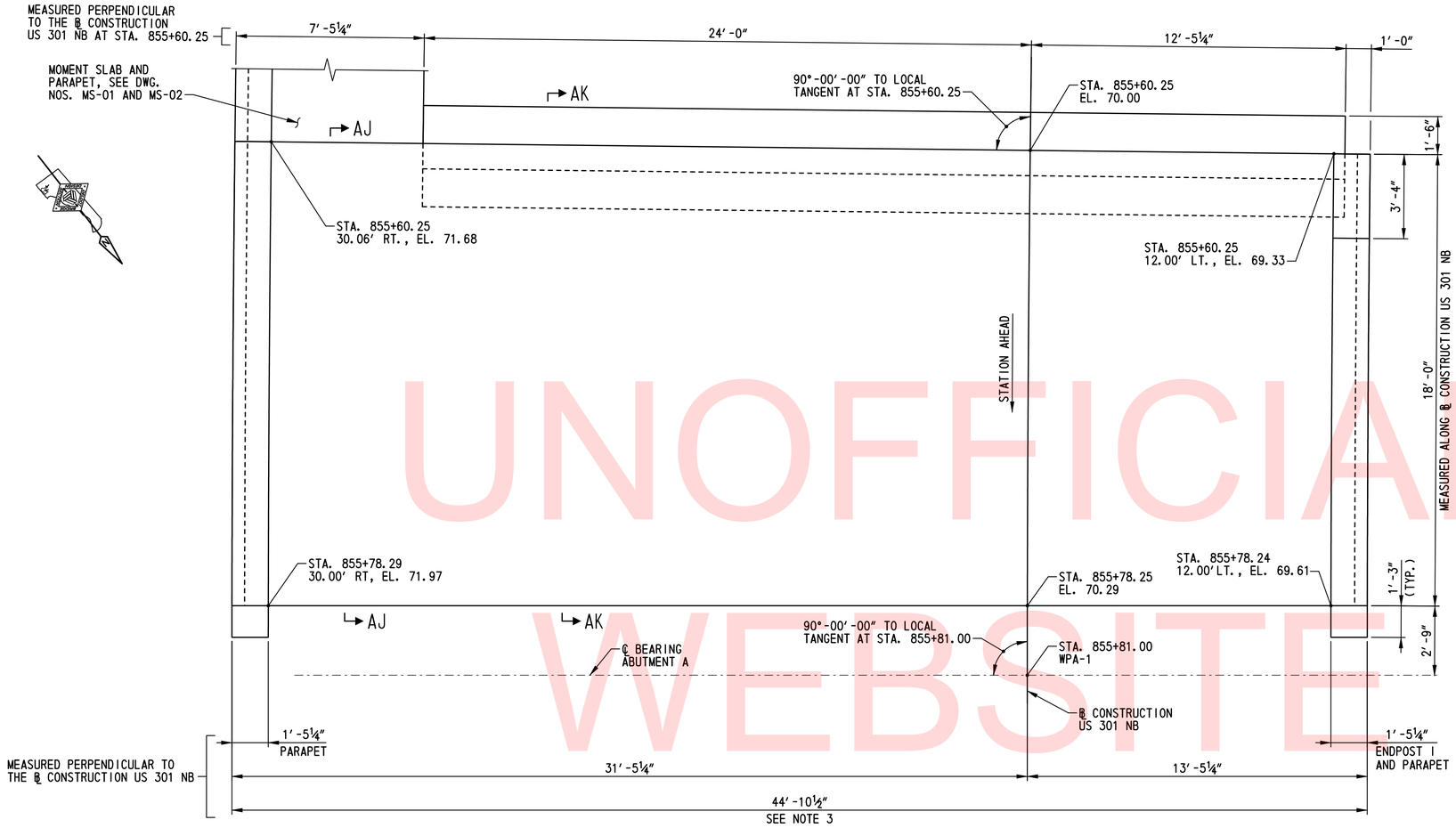

APPROACH SLAB A PLAN

SCALE: ⅜″=1′-0″

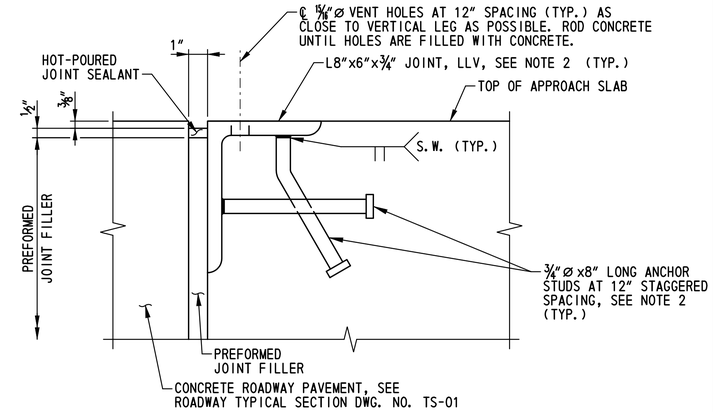

DETAIL F

SCALE: 3″=1′-0″

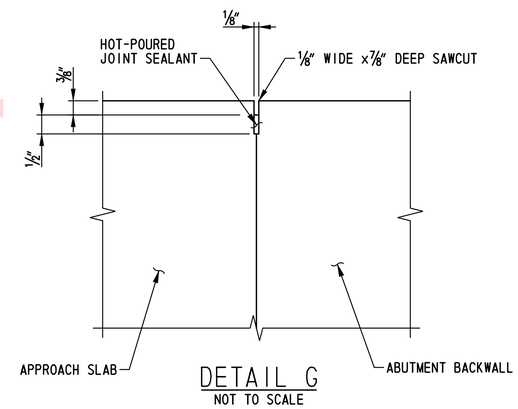

DETAIL G

NOT TO SCALE

NOTES:

1. FOR APPROACH SLAB A REINFORCEMENT, SEE DWG. NOS. AS-02 AND AS-05.
2. PAYMENT FOR INSTALLATION OF PREFORMED JOINT FILLER, HOT-POURED JOINT SEALANT, ANGLES AND STUDS AT APPROACH PAVEMENT EDGE OF APPROACH SLAB AND HOT-POURED JOINT SEALANT BETWEEN APPROACH SLAB AND DECK SLAB SHALL BE INCIDENTAL TO ITEM NO. 602014 - PORTLAND CEMENT CONCRETE MASONRY, APPROACH SLAB, CLASS D.
3. RUMBLE STRIPS SHALL BE LOCATED IN THE APPROACH SLAB AT EACH SHOULDER. FOR LANE AND SHOULDER CONFIGURATION AND ADDITIONAL REQUIREMENTS, SEE DWG. NO. TS-01. FOR RUMBLE STRIP DETAIL, SEE DWG. NO. DT-01. RUMBLE STRIPS SHALL BE PAID UNDER ITEM 760015 - RUMBLE STRIPS, CONCRETE, SHALLOW DEPTH.

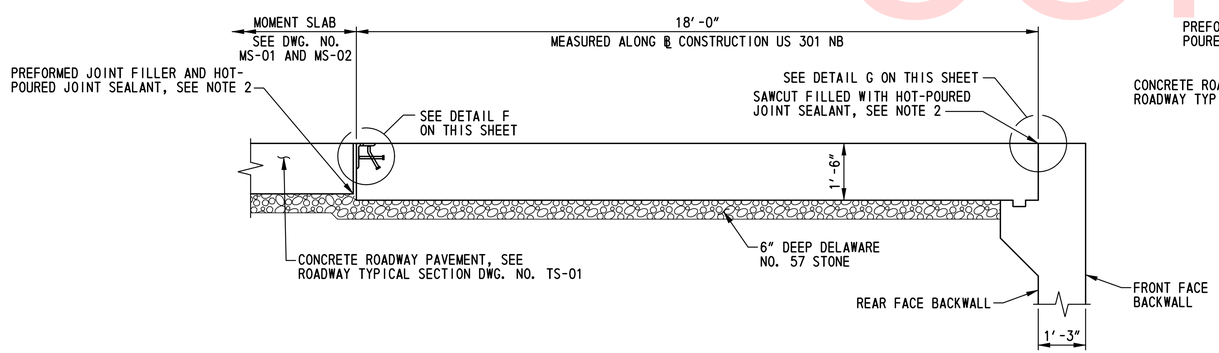

APPROACH SLAB A TYPICAL SECTION AJ-AJ

SCALE: ½″=1′-0″

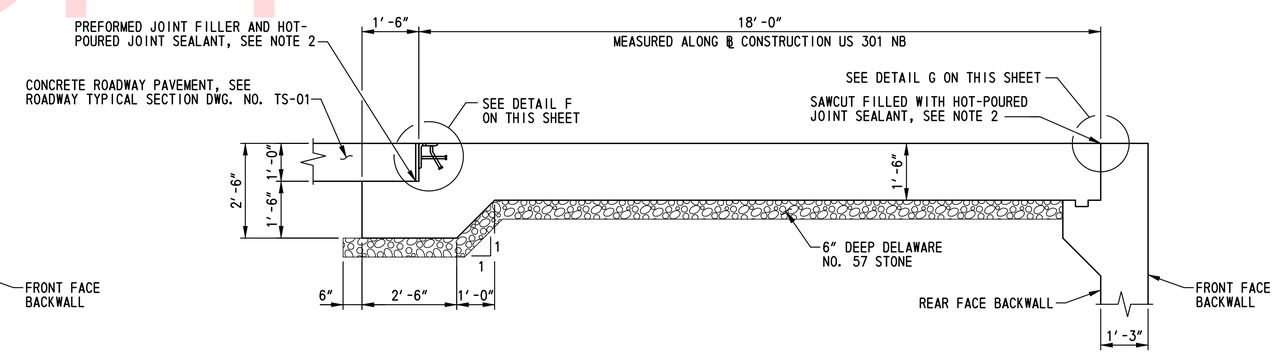

APPROACH SLAB A TYPICAL SECTION AK-AK

SCALE: ½″=1′-0″

UNOFFICIAL WEBSITE COPY

N:\31653-000\CONTRACT 18\CADD\Bridge\Br_No433\AS01_br1-433.dgn
12/14/2015 5:07:15 PM

DELAWARE DEPARTMENT OF TRANSPORTATION	ADDENDUMS / REVISIONS	SCALE: AS SHOWN	US 301 & SR 1 INTERCHANGE	CONTRACT T200911302	BRIDGE NO. 1–433	APPROACH SLAB A DETAILS – 1	BR1–3 AS–01
				COUNTY NEW CASTLE	DESIGNED BY: W.T.R.		SHEET NO. 283
					CHECKED BY: B.K.B.		TOTAL SHTS. 491

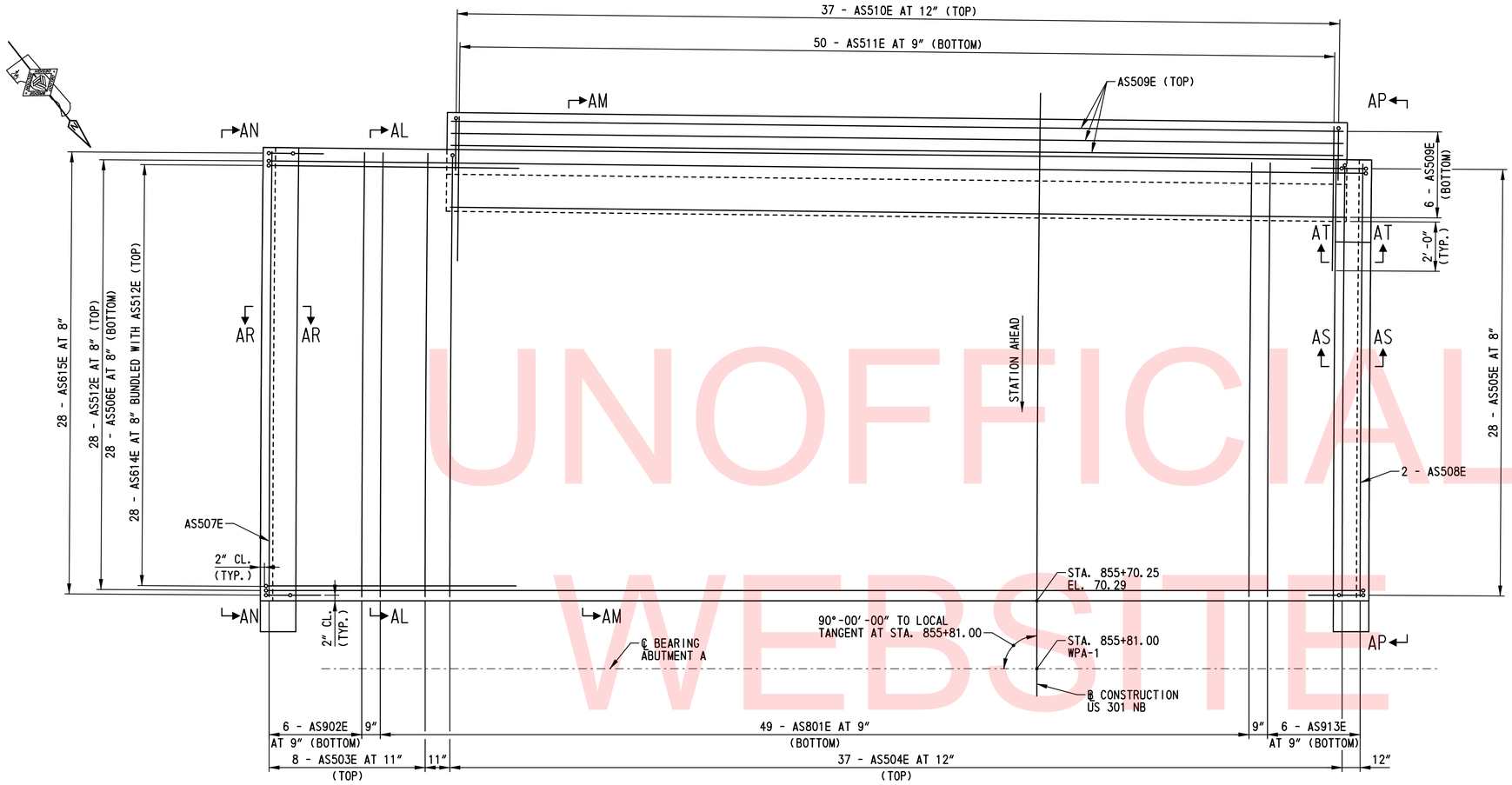

APPROACH SLAB A REINFORCEMENT PLAN

SCALE: ⅜"=1'-0"

NOTE:
FOR VIEWS AN-AN AND AP-AP AND SECTIONS AR-AR, AS-AS AND AT-AT, SEE DWG. NO. AS-05.

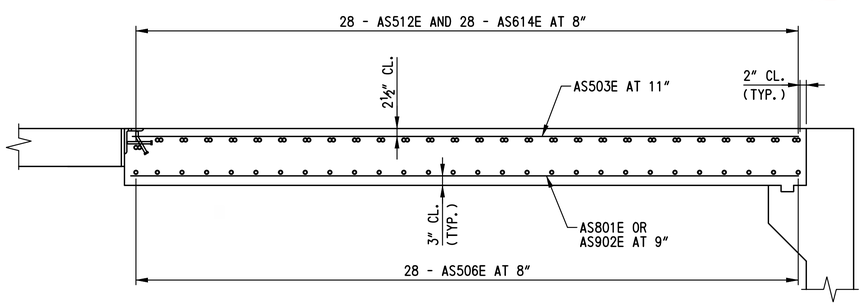

APPROACH SLAB A TYPICAL REINFORCEMENT SECTION AL-AL

SCALE: ½"=1'-0"

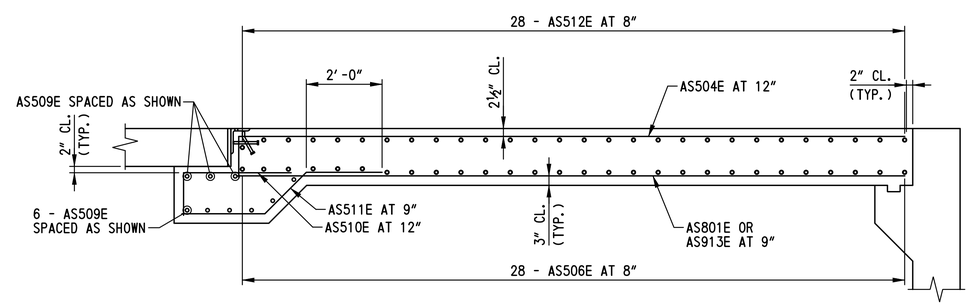

APPROACH SLAB A TYPICAL REINFORCEMENT SECTION AM-AM

SCALE: ½"=1'-0"

UNOFFICIAL WEBSITE COPY

N:\31653-000\Contract 1B\CADD\Bridge\Br_No433\AS02_br1-433.dgn
2/5/2013 11:13:46 AM

DELAWARE DEPARTMENT OF TRANSPORTATION	ADDENDUMS / REVISIONS	SCALE: AS SHOWN	US 301 & SR 1 INTERCHANGE	CONTRACT T200911302	BRIDGE NO. 1-433	APPROACH SLAB A DETAILS – 2	BR1-3 AS-02
				COUNTY NEW CASTLE	DESIGNED BY: W.T.R.		SHEET NO. 284
					CHECKED BY: B.K.B.		TOTAL SHTS. 491

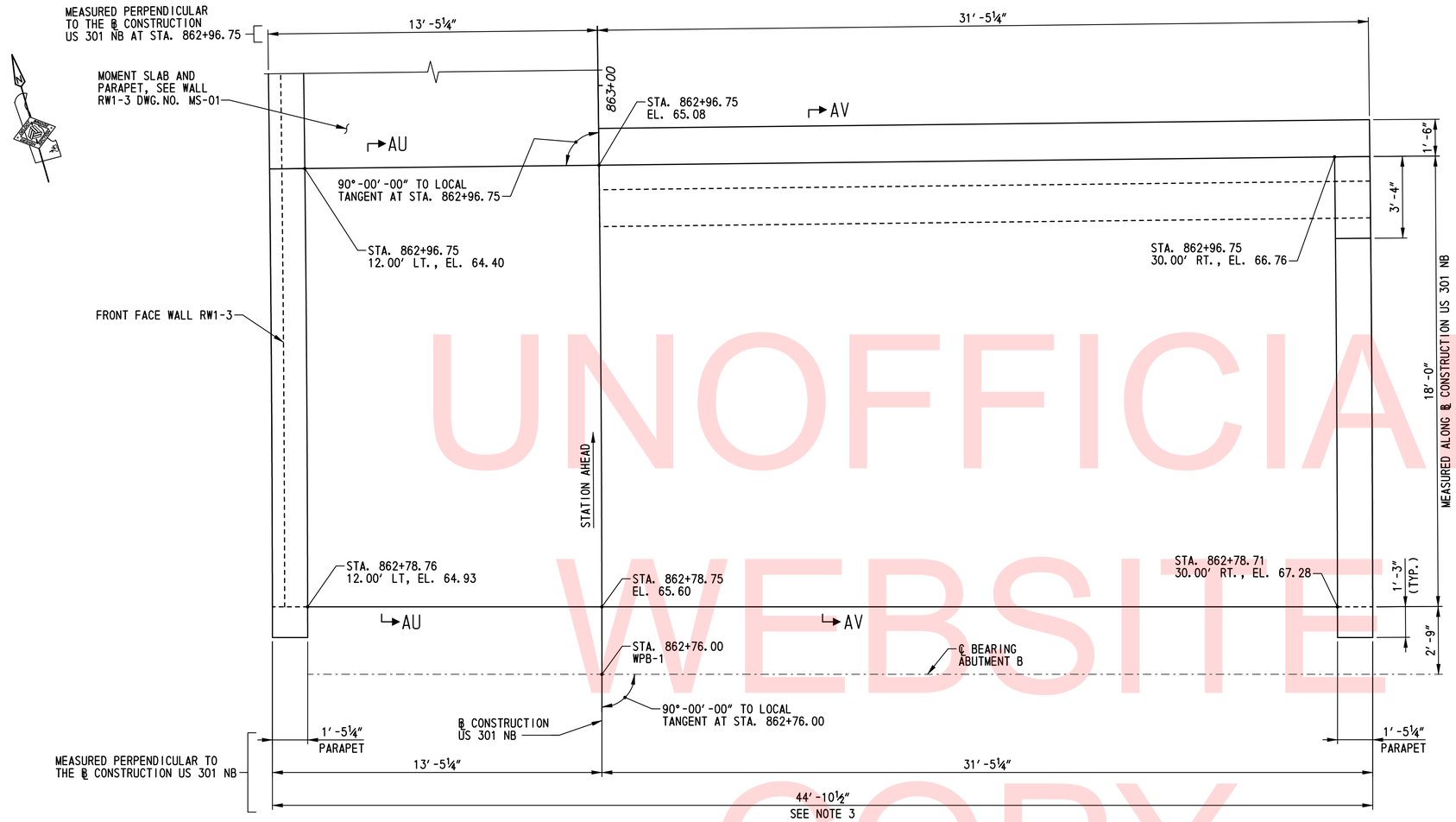

APPROACH SLAB B PLAN

SCALE: ⅜″=1′-0″

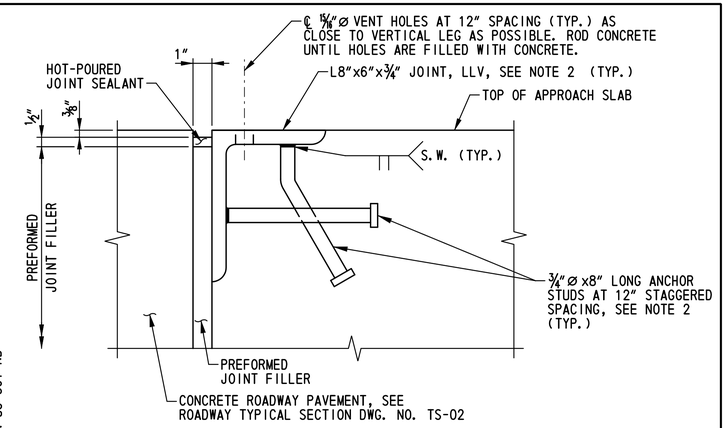

DETAIL H

SCALE: 3″=1′-0″

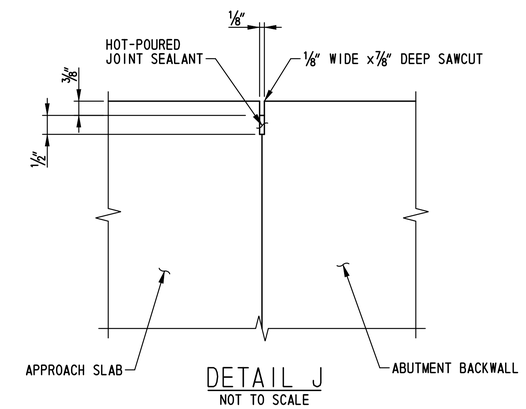

DETAIL J

NOT TO SCALE

NOTES:

1. FOR APPROACH SLAB A REINFORCEMENT, SEE DWG. NOS. AS-02 AND AS-05.
2. PAYMENT FOR INSTALLATION OF PREFORMED JOINT FILLER, HOT-POURED JOINT SEALANT, ANGLES AND STUDS AT APPROACH PAVEMENT EDGE OF APPROACH SLAB AND HOT-POURED JOINT SEALANT BETWEEN APPROACH SLAB AND DECK SLAB SHALL BE INCIDENTAL TO ITEM NO. 602014 - PORTLAND CEMENT CONCRETE MASONRY, APPROACH SLAB, CLASS D.
3. RUMBLE STRIPS SHALL BE LOCATED IN THE APPROACH SLAB AT EACH SHOULDER. FOR LANE AND SHOULDER CONFIGURATION AND ADDITIONAL REQUIREMENTS, SEE DWG. NO. TS-01. FOR RUMBLE STRIP DETAIL, SEE DWG. NO. DT-01. RUMBLE STRIPS SHALL BE PAID UNDER ITEM 760015 - RUMBLE STRIPS, CONCRETE, SHALLOW DEPTH.

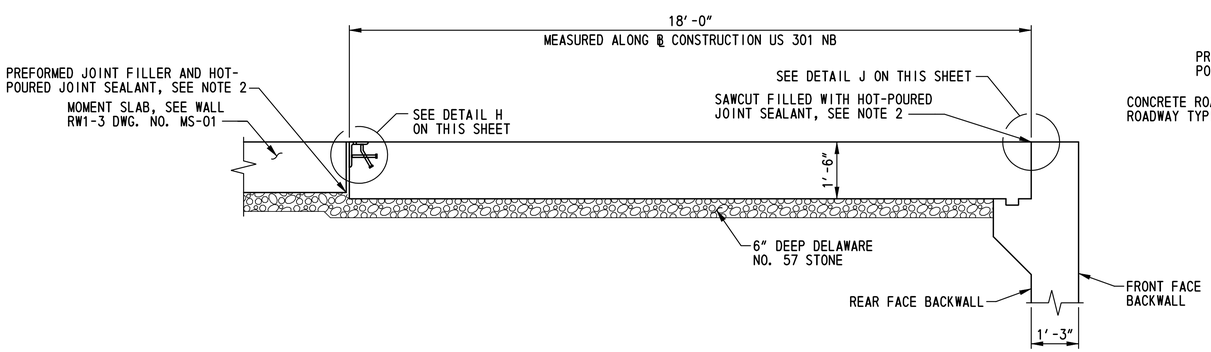

APPROACH SLAB B TYPICAL SECTION AU-AU

SCALE: ½″=1′-0″

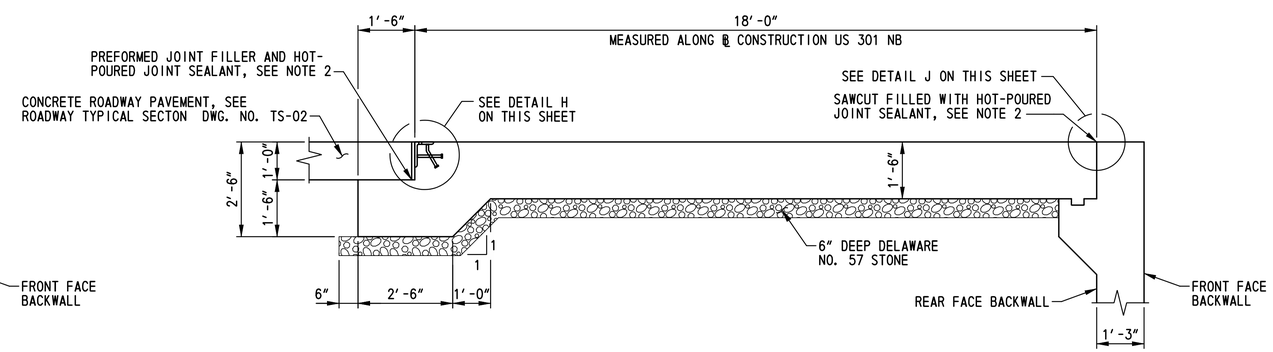

APPROACH SLAB B TYPICAL SECTION AV-AV

SCALE: ½″=1′-0″

UNOFFICIAL WEBSITE COPY

N:\31653-000\CONTRACT 1B\CADD\Bridge\Br_No433\AS03_br1-433.dgn
12/14/2015 5:08:47 PM

DELAWARE DEPARTMENT OF TRANSPORTATION	ADDENDUMS / REVISIONS	SCALE: AS SHOWN	US 301 & SR 1 INTERCHANGE	CONTRACT T200911302	BRIDGE NO. 1-433	APPROACH SLAB B DETAILS – 1	BR1-3 AS-03
				COUNTY NEW CASTLE	DESIGNED BY: W.T.R.		SHEET NO. 285
					CHECKED BY: B.K.B.		TOTAL SHTS. 491

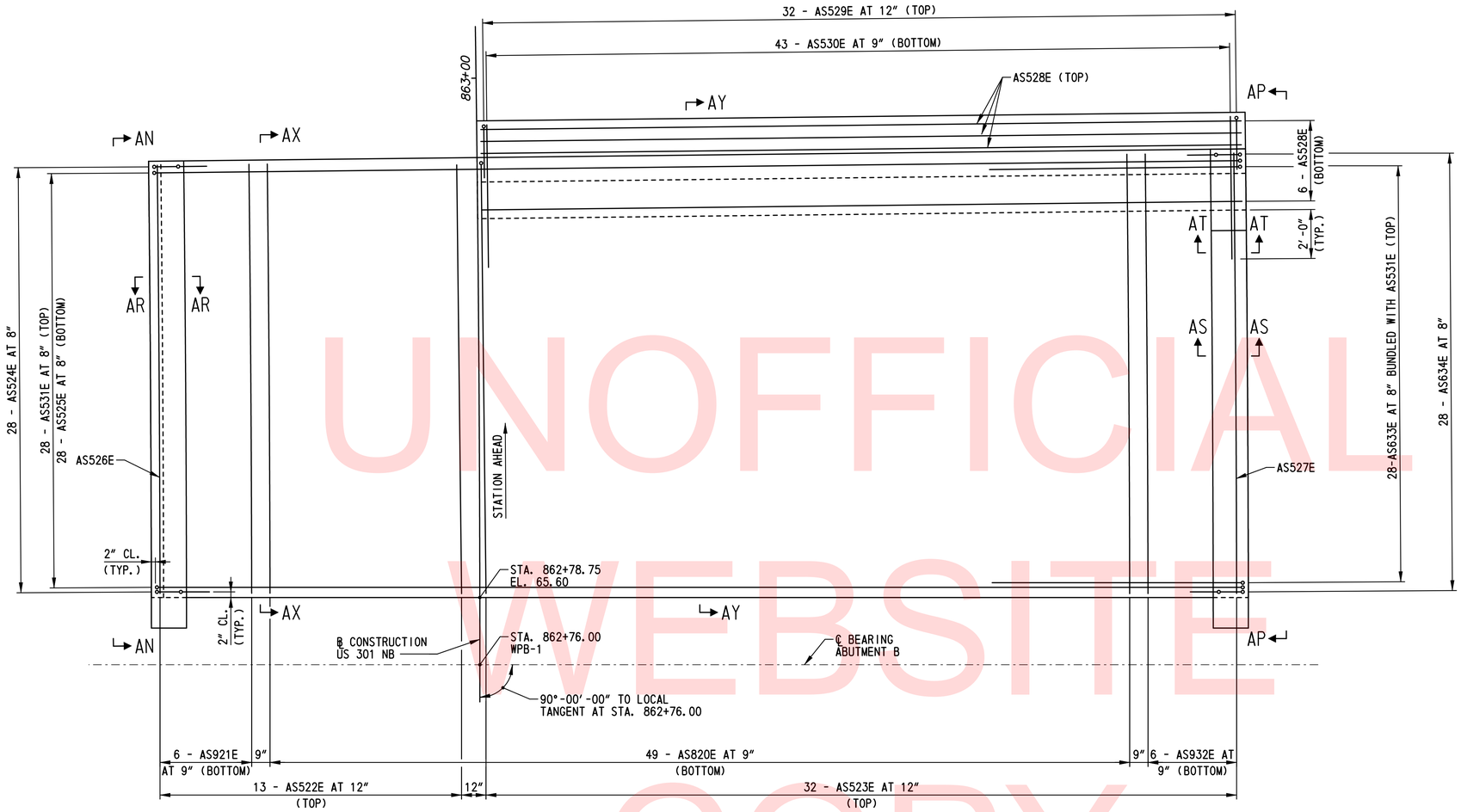

APPROACH SLAB B REINFORCEMENT PLAN

SCALE: 3/8"=1'-0"

NOTE:
FOR VIEWS AN-AN AND AP-AP AND SECTIONS AR-AR, AS-AS AND AT-AT, SEE DWG. NO. AS-05.

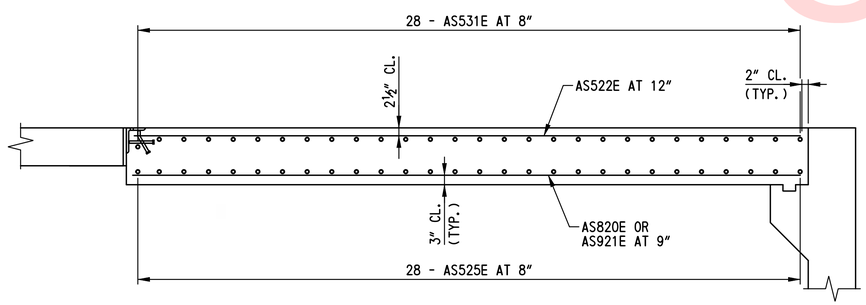

APPROACH SLAB B TYPICAL REINFORCEMENT SECTION AX-AX

SCALE: 1/2"=1'-0"

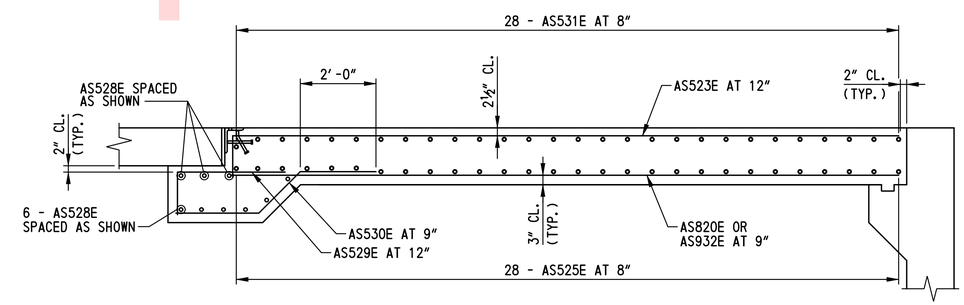

APPROACH SLAB B TYPICAL REINFORCEMENT SECTION AY-AY

SCALE: 1/2"=1'-0"

UNOFFICIAL WEBSITE COPY

N:\31653-000\Contract 1B\CADD\Bridge\Br_No433\AS04_br1-433.dgn
2/5/2013 11:15:19 AM

DELAWARE DEPARTMENT OF TRANSPORTATION	ADDENDUMS / REVISIONS	SCALE: AS SHOWN	US 301 & SR 1 INTERCHANGE	CONTRACT T200911302	BRIDGE NO. 1-433	APPROACH SLAB B DETAILS – 2	BR1-3 AS-04
				COUNTY NEW CASTLE	DESIGNED BY: W.T.R.		SHEET NO. 286
					CHECKED BY: B.K.B.		TOTAL SHTS. 491

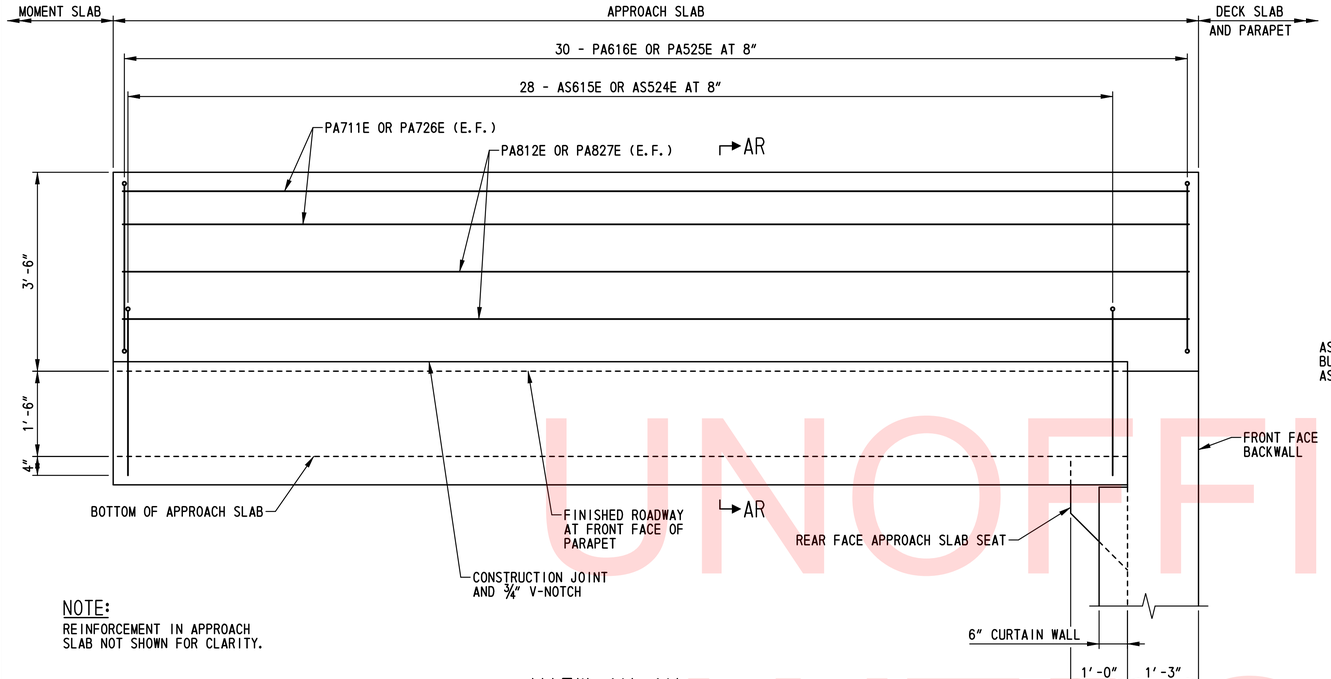

NOTE:
REINFORCEMENT IN APPROACH SLAB NOT SHOWN FOR CLARITY.

VIEW AN-AN
SCALE: ¾"=1'-0"

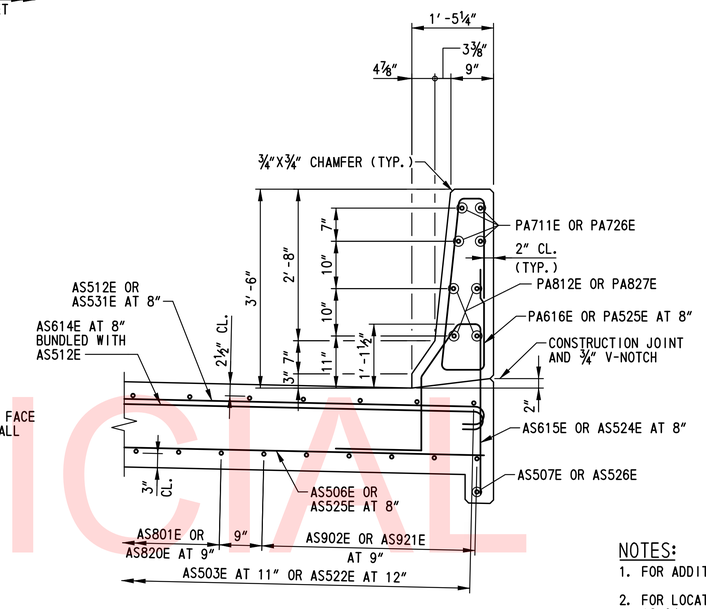

SECTION AR-AR
SCALE: ¾"=1'-0"

NOTES:
1. FOR ADDITIONAL REINFORCEMENT DETAILS, SEE DWG. AS-02 AND AS-04.
2. FOR LOCATION OF VIEWS AN-AN AND AP-AP, SEE DWG. NOS. AS-02 AND AS-04.
3. FOR PARAPET CONTROL JOINT LOCATIONS, SEE DWG. NO. PE-01. FOR PARAPET CONTROL JOINT DETAILS, SEE DWG. NO. SD-01.
4. REFLECTORS SHALL BE INSTALLED ALONG THE PARAPETS (ROADWAY PAY ITEM). SEE DWG. NO. DT-05 FOR DETAILS.

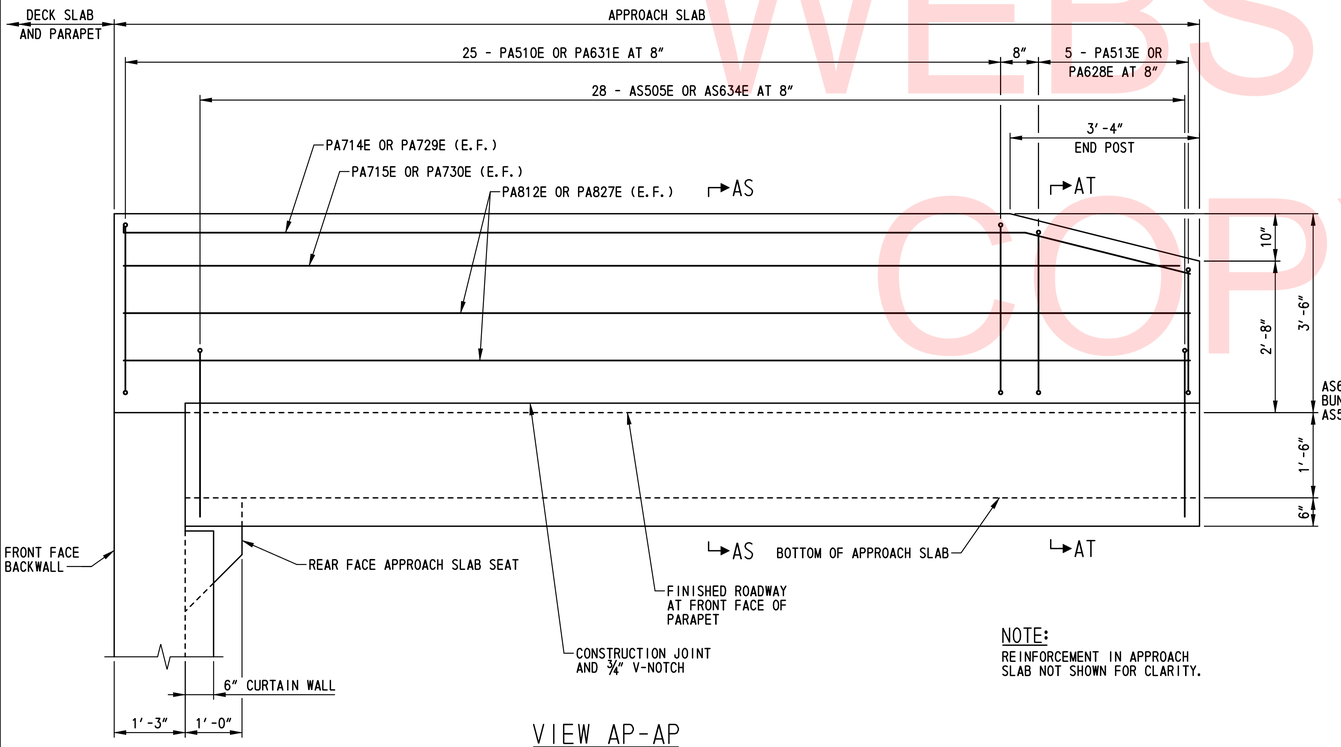

NOTE:
REINFORCEMENT IN APPROACH SLAB NOT SHOWN FOR CLARITY.

VIEW AP-AP
SCALE: ¾"=1'-0"

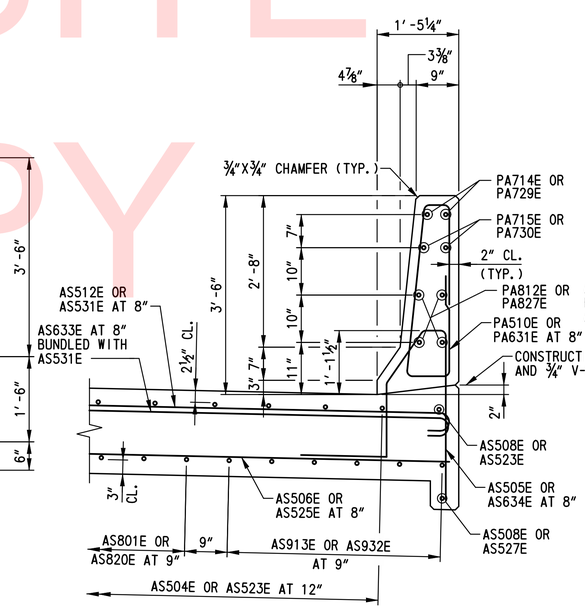

SECTION AS-AS
SCALE: ¾"=1'-0"

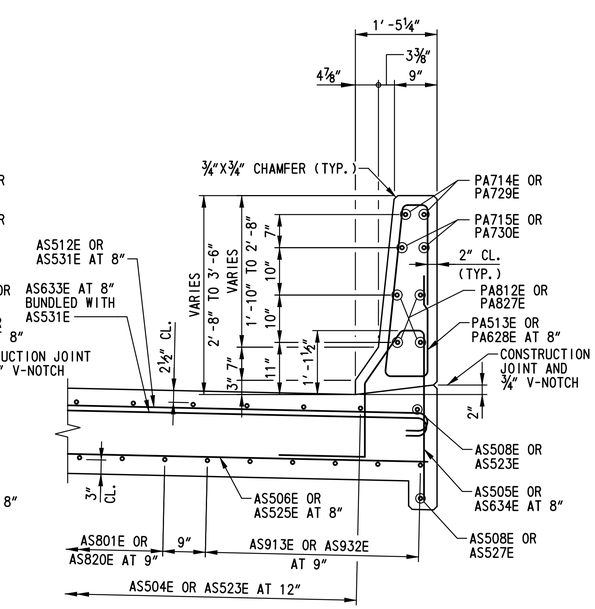

SECTION AT-AT
SCALE: ¾"=1'-0"

UNOFFICIAL WEBSITE COPY

N:\31653-000\CONTRACT 18\CADD\Bridge\Br_No433\AS05_br1-433.dgn
12/11/2015 11:47:47 PM

DELAWARE DEPARTMENT OF TRANSPORTATION	ADDENDUMS / REVISIONS	SCALE: AS SHOWN	US 301 & SR 1 INTERCHANGE	CONTRACT T200911302	BRIDGE NO. 1-433	APPROACH SLAB DETAILS	BR1-3 AS-05
				COUNTY NEW CASTLE	DESIGNED BY: W.T.R.		SHEET NO. 287
					CHECKED BY: B.K.B.		TOTAL SHTS. 491

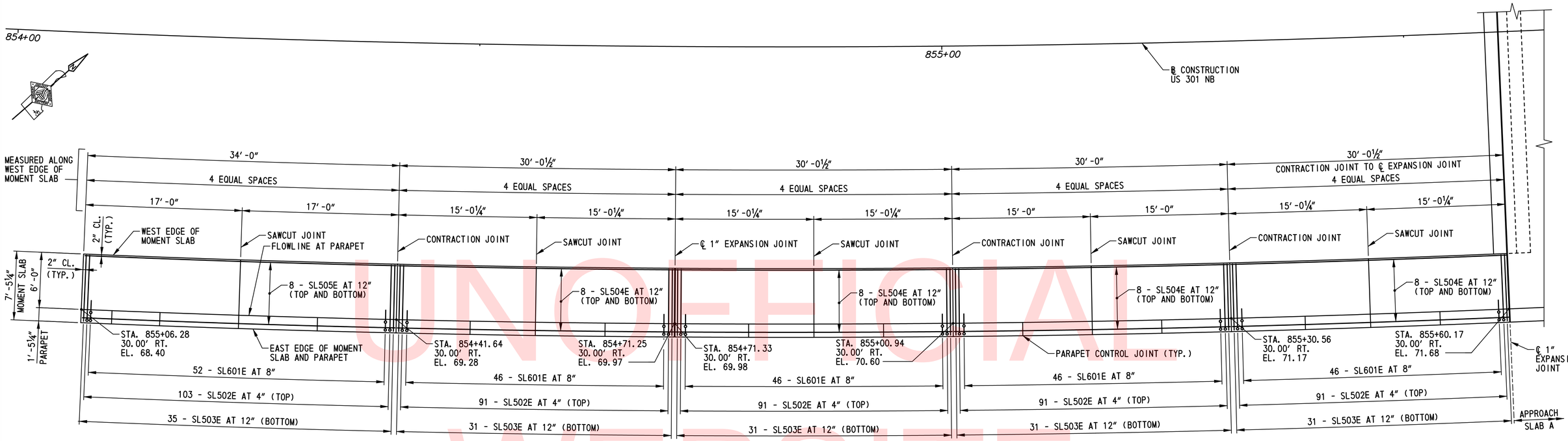

MOMENT SLAB REINFORCEMENT PLAN

SCALE: 1/16″=1′-0″

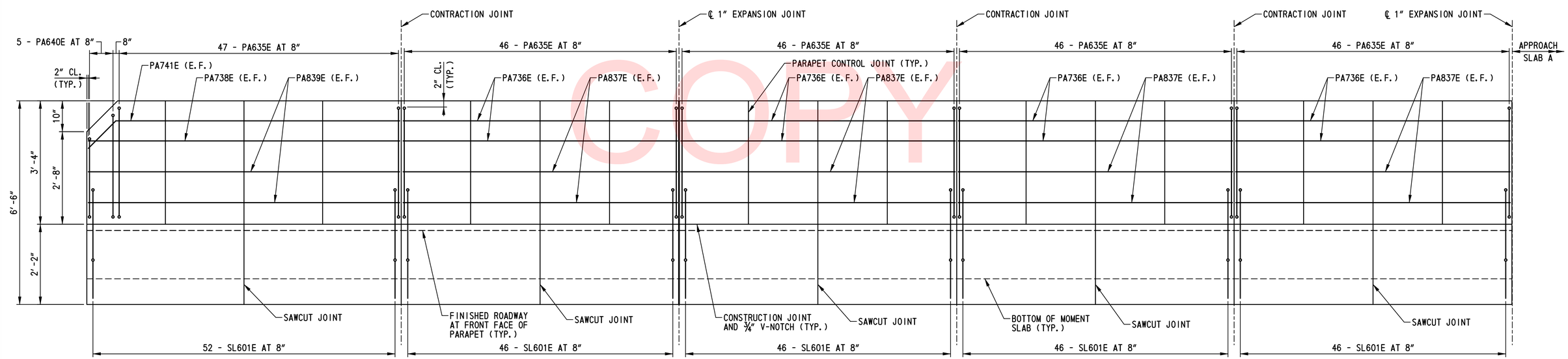

MOMENT SLAB PARAPET REINFORCEMENT ELEVATION

HORIZONTAL SCALE: 3/16″=1′-0″
VERTICAL SCALE: ¾″=1′-0″

NOTE:
FOR ADDITIONAL INFORMATION ON MOMENT SLABS INCLUDING TYPICAL SECTION, REINFORCEMENT, DETAILS AND NOTES, SEE DWG NO. MS-02.

UNOFFICIAL WEBSITE COPY

N:\31653-000\Contract 1B\CADD\Bridge\Br_No433\MS01_br1-433.dgn
2/5/2013 11:16:19 AM

DELAWARE DEPARTMENT OF TRANSPORTATION	ADDENDUMS / REVISIONS	SCALE: AS SHOWN	US 301 & SR 1 INTERCHANGE	CONTRACT T200911302 / COUNTY NEW CASTLE	BRIDGE NO. 1-433 / DESIGNED BY: B.K.B. / CHECKED BY: W.A.G.	MOMENT SLAB AND PARAPET REINFORCEMENT – 1

BR1-3
MS-01

SHEET NO. 288
TOTAL SHTS. 491

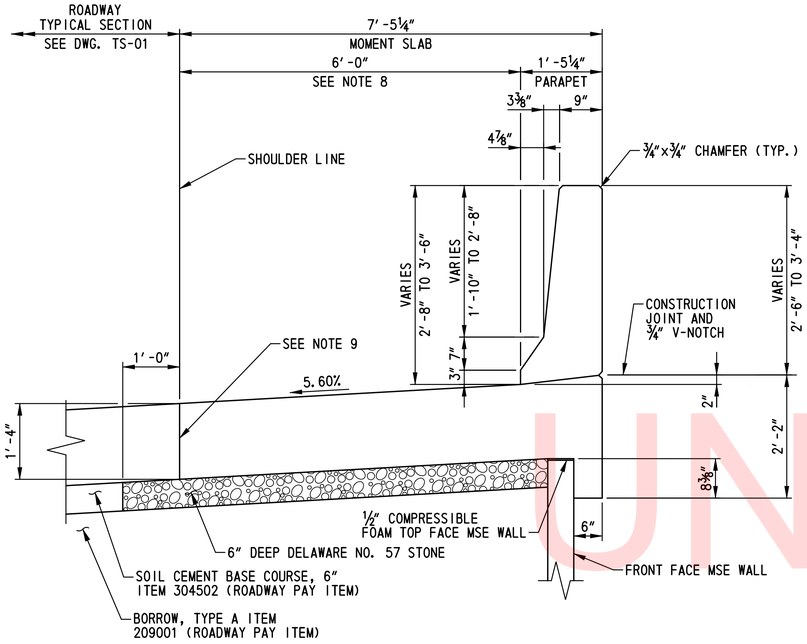

MOMENT SLAB TYPICAL SECTION

SCALE: ¾″=1′-0″

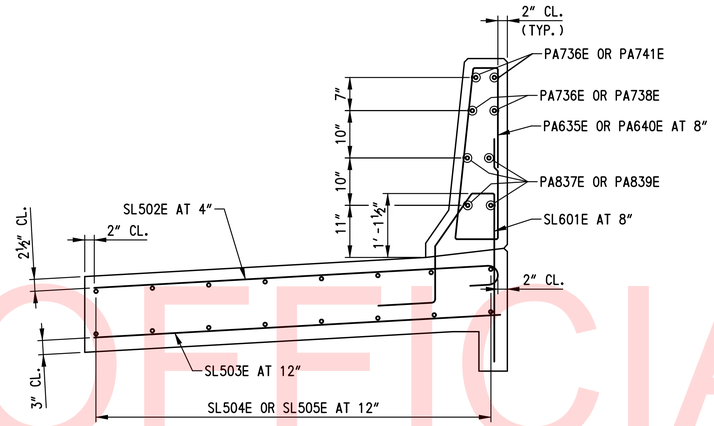

MOMENT SLAB REINFORCEMENT TYPICAL SECTION

SCALE: ¾″=1′-0″

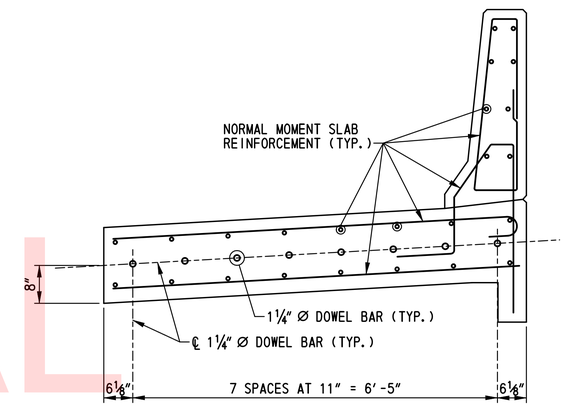

MOMENT SLAB JOINT TYPICAL SECTION

SCALE: ¾″=1′-0″

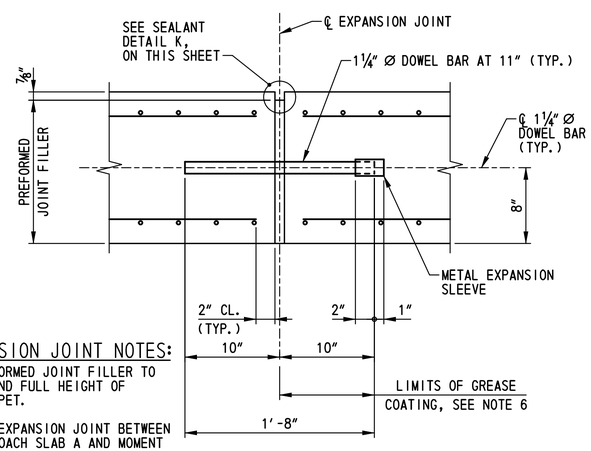

EXPANSION JOINT SECTION

SCALE: 1½″=1′-0″

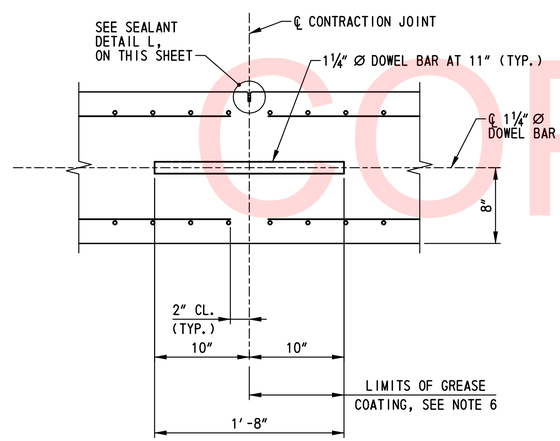

TYPICAL CONTRACTION JOINT SECTION

SCALE: 1½″=1′-0″

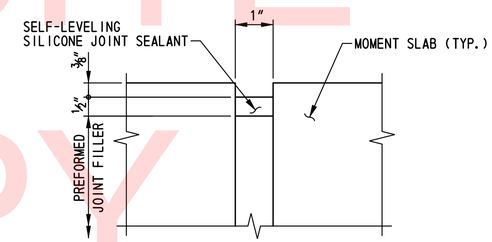

SEALANT DETAIL K

NOT TO SCALE

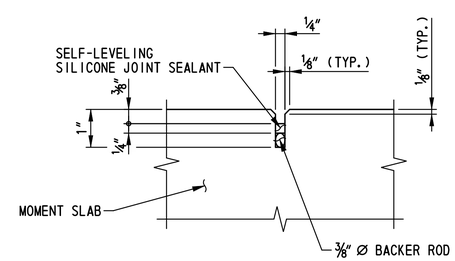

SEALANT DETAIL L

NOT TO SCALE

NOTES:

1. TOLERANCE ON ALL JOINT SEALANT DETAILS DIMENSIONS SHOWN WITHOUT RANGES SHALL BE PLUS ⅛″, MINUS 0″.
2. PAYMENT FOR CONSTRUCTION OF MOMENT SLAB WILL BE MADE UNDER ITEM NO. 602014 - PORTLAND CEMENT CONCRETE MASONRY, APPROACH SLAB, CLASS D. PAYMENT FOR THE PREFORMED CORK JOINT FILLER, SILICONE SEALER, DOWEL BARS AND METAL EXPANSION SLEEVES SHALL BE INCIDENTAL TO THIS ITEM.
3. DOWEL BARS SHALL CONFORM TO 824.02(G).
4. DOWELS SHALL BE ASSEMBLED IN A RIGID FRAMEWORK, SEE STANDARD P-1. THE EXPANSION JOINT FRAME WORK SHALL PROVIDE ADEQUATE SUPPORT TO MAINTAIN THE PREFORMED JOINT FILLER IN PROPER HORIZONTAL AND VERTICAL ALIGNMENT.
5. ANCHOR PINS SHALL BE USED TO SECURE THE FORMWORK ALONG THE SUBGRADE.
6. THE FREE MOVING OR UNANCHORED END OF ALL DOWEL BARS IN BOTH CONTRACTION AND EXPANSION JOINTS SHALL BE COATED AFTER INSTALLATION OF THE DEVICE UPON THE SUBGRADE AND IMMEDIATELY PRIOR TO THE POURING OF THE CONCRETE WITH GRAPHITE GREASE APPLIED WITH A GLOVED HAND. THIS SAME END OF ALL EXPANSION JOINT DOWELS SHALL BE CAPPED WITH A SNUG FITTING, CLOSED END METAL EXPANSION SLEEVE TEMPORARILY SECURED TO THE BAR SO AS TO PROVIDE A 1″ LONG OPEN SOCKET BEYOND THE BAR END AND TO LAP BACK 2″ ON THE BAR AT THE TIME OF INSTALLATION.
7. THE SILICONE SEALANT SHALL BE ABLE TO ADHERE TO CONCRETE SUBSTRATES AND CONFORM TO FOLLOWING CRITERIA AFTER 21 DAYS AT 77° F:

ELONGATION, MINIMUM (PERCENT)	1400
JOINT MODULUS, AT 50 PERCENT ELONGATION, MAXIMUM (PSI)	7
JOINT MODULUS, AT 100 PERCENT ELONGATION, MAXIMUM (PSI)	8
JOINT MODULUS, AT 150 PERCENT ELONGATION, MAXIMUM (PSI)	9
ADHESION TO CONCRETE, MINIMUM ELONGATION, (PERCENT)	+600
ADHESION TO ASPHALT, MINIMUM ELONGATION, (PERCENT)	+600
JOINT MOVEMENT CAPABILITY, +100/-50, 10 CYCLES	NO FAILURE

8. RUMBLE STRIPS SHALL BE LOCATED IN THE MOMENT SLAB ADJACENT TO THE SHOULDER LINE. SEE DWG. NO. TS-01 FOR ADDITIONAL REQUIREMENTS. FOR RUMBLE STRIP DETAIL, SEE DWG. NO. DT-01.
9. PRIOR TO PLACING MOMENT SLAB CONCRETE ADJACENT TO EXISTING CONCRETE PAVEMENT, OR PRIOR TO PLACING CONCRETE PAVEMENT ADJACENT TO EXISTING MOMENT SLAB CONCRETE, AN APPROVED BOND BREAKER SHALL BE APPLIED TO THE EXISTING CONCRETE VERTICAL FACE. THIS LONGITUDINAL JOINT AT THE INTERFACE BETWEEN THE CONCRETE PAVEMENT AND THE MOMENT SLAB CONCRETE SHALL NOT BE SEALED. VERTICAL CRACKS IN THE EXISTING CONCRETE FACE SHALL BE COVERED OR SEALED AS APPROVED BY THE ENGINEER TO PREVENT INTRUSION OF THE NEW CONCRETE INTO THE EXISTING CONCRETE. ALL WORK SHALL BE INCIDENTAL TO ITEM NO. 602014 - PORTLAND CEMENT CONCRETE MASONRY, APPROACH SLAB, CLASS D.
10. REFLECTORS SHALL BE INSTALLED ALONG THE PARAPET (ROADWAY PAY ITEM). SEE DWG. NO. DT-05 FOR DETAILS.

EXPANSION JOINT NOTES:

1. PREFORMED JOINT FILLER TO EXTEND FULL HEIGHT OF PARAPET.
2. FOR EXPANSION JOINT BETWEEN APPROACH SLAB A AND MOMENT SLAB, SEE DETAIL F ON DWG. NO. AS-01.

UNOFFICIAL WEBSITE COPY

N:\31653-000\CONTRACT 18\CADD\Bridge\Br_No433\MS02_br1-433.dgn
12/14/2015 5:10:37 PM

DELAWARE DEPARTMENT OF TRANSPORTATION	ADDENDUMS / REVISIONS	SCALE: AS SHOWN	US 301 & SR 1 INTERCHANGE	CONTRACT T200911302	BRIDGE NO. 1-433	MOMENT SLAB AND PARAPET REINFORCEMENT – 2	BR1-3 MS-02
				COUNTY NEW CASTLE	DESIGNED BY: B.K.B.		SHEET NO. 289
					CHECKED BY: W.A.G.		TOTAL SHTS. 491

① ANY MARK NUMBER WITH SUFFIX 'E' DENOTES EPOXY COATED REINFORCING STEEL.

② ALL MARK 'LOCATION PREFIXES' SHALL CONSIST OF TWO LETTERS AND ARE AS FOLLOWS: AB = ABUTMENT, AS = APPROACH SLAB, BC = BOX CULVERT, BW = BACKWALL, CL = COLUMN, DK = DECK, DL = DOWEL, FT = FOOTING, HW = HEADWALL, MS = MISC. BARS, PA = PARAPET, PR = PIER, SC = SHEETPILE CAP, SL = SLAB, TW = TOEWALL, WL = WALL (UNIQUE LOCATION), WW = WINGWALL

SPECIFICATIONS					BENDING DIMENSIONS (FEET-INCHES /QUARTER INCH)										
QTY.	SIZE	LENGTH	MARK	TYPE	A	B	C	D	E	F / R	G	H	J	K	O
APPROACH SLAB A															
49	8	17-06 3	AS801E	STR		17-06 3									
		TO				TO									
		17-11 3				17-11 3									
6	9	17-11 3	AS902E	STR		17-11 3									
8	5	17-11 1	AS503E	STR		17-11 1									
		TO				TO									
		18-00 1				18-00 1									
37	5	19-00 1	AS504E	T15		1-06 0	17-06 1								
		TO					TO								
		19-05 1					17-11 1								
28	5	6-10 1	AS505E	T15		2-11 2	0-05 1	1-01 3	1-03 3	1-00 0		1-03 3	0-08 1	0-11 0	
28	5	44-06 2	AS506E	STR		44-06 2									
1	5	18-00 1	AS507E	STR		18-00 1									
2	5	17-06 1	AS508E	STR		17-06 1									
9	5	36-01 1	AS509E	STR		36-01 1									
37	5	3-07 0	AS510E	17		1-01 0	2-06 0								
50	5	5-07 0	AS511E	6		2-00 0	1-05 0	2-02 0				1-00 0		1-00 0	
28	5	45-08 2	AS512E	1	0-07 0	44-06 2					0-07 0		0-05 0		
6	9	17-06 1	AS913E	STR		17-06 1									
28	6	10-08 0	AS614E	1	0-08 0	10-00 0							0-06 0		
28	6	6-10 1	AS615E	T15		2-11 2	0-05 1	1-01 3	1-03 3	1-00 0		1-03 3	0-08 1	0-11 0	
25	5	9-03 1	PA510E	PA		2-06 2	0-09 0	3-00 1	0-05 0	2-06 2		3-00 0		0-04 0	
4	7	18-11 0	PA711E	STR		18-11 0									
8	8	18-11 0	PA812E	STR		18-11 0							0-06 0		
5	5	7-08 2	PA513E	PA		2-01 3	0-09 0	2-03 0	0-05 0	2-01 3		2-02 2		0-04 0	
		TO				TO		TO		TO		TO			
		9-00 1				2-05 3		2-10 3		2-05 3		2-10 2			
2	7	18-10 2	PA714E	6		15-06 3	3-03 3					0-09 2		3-02 2	
2	7	17-05 1	PA715E	STR		17-05 1									
30	6	9-03 1	PA616E	PA		2-06 2	0-09 0	3-00 1	0-05 0	2-06 2		3-00 0		0-04 0	

SPECIFICATIONS					BENDING DIMENSIONS (FEET-INCHES /QUARTER INCH)										
QTY.	SIZE	LENGTH	MARK	TYPE	A	B	C	D	E	F / R	G	H	J	K	O
APPROACH SLAB B															
49	8	17-06 3	AS820E	STR		17-06 3									
		TO				TO									
		17-11 3				17-11 3									
6	9	17-06 1	AS921E	STR		17-06 1									
13	5	17-08 1	AS522E	STR		17-08 1									
		TO				TO									
		17-09 3				17-09 3									
32	5	19-02 0	AS523E	17		1-06 0	17-08 0								
		TO					TO								
		19-06 1					18-00 1								
28	5	6-10 1	AS524E	T15		2-11 2	0-05 1	1-01 3	1-03 3	1-00 0		1-03 3	0-08 1	0-11 0	
28	5	44-06 2	AS525E	STR		44-06 2									
1	5	17-08 1	AS526E	STR		17-08 1									
1	5	18-00 1	AS527E	STR		18-00 1									
9	5	31-01 1	AS528E	STR		31-01 1									
33	5	3-07 0	AS529E	17		1-01 0	2-06 0								
43	5	5-07 0	AS530E	6		2-00 0	1-05 0	2-02 0				1-00 0		1-00 0	
28	5	45-08 2	AS531E	1	0-07 0	44-06 2					0-07 0		0-05 0		
6	9	17-11 3	AS932E	STR		17-11 3									
28	6	10-08 0	AS633E	1	0-08	10-00 0							0-06 0		
28	6	6-10 1	AS634E	T15		2-11 2	0-05 1	1-01 3	1-03 3	1-00 0		1-03 3	0-08 1	0-11 0	
30	5	9-03 1	PA525E	PA		2-06 2	0-09 0	3-00 1	0-05 0	2-06 2		3-00 0		0-04 0	
4	7	18-11 0	PA726E	STR		18-11 0									
8	8	18-11 0	PA827E	STR		18-11 0									
5	6	7-08 2	PA628E	PA		2-01 3	0-09 0	2-03 0	0-05 0	2-01 3		2-02 2		0-04 0	
		TO				TO		TO		TO		TO			
		9-00 1				2-05 3		2-10 3		2-05 3		2-10 2			
2	7	18-10 2	PA729E	6		15-06 3	3-03 3					0-09 2		3-02 2	
2	7	17-05 1	PA730E	STR		17-05 1									
25	6	9-03 1	PA631E	PA		2-06 2	0-09 0	3-00 1	0-05 0	2-06 2		3-00 0		0-04 0	

SPECIFICATIONS					BENDING DIMENSIONS (FEET-INCHES /QUARTER INCH)										
QTY.	SIZE	LENGTH	MARK	TYPE	A	B	C	D	E	F / R	G	H	J	K	O
MOMENT SLAB															
236	6	6-06 0	SL601E	T15		2-11 0	0-05 2	1-01 2	1-00 0	1-00 0			0-07 3	0-11 0	1-01 1
467	5	7-08 1	SL502E	1	0-07 0	7-01 1							0-05 0		
159	5	7-01 1	SL503E	STR		7-01 1									
64	5	29-08 0	SL504E	STR		29-08 0									
16	5	33-08 0	SL505E	STR		33-08 0									
231	6	9-03 1	PA635E	PA		2-06 2	0-09 0	3-00 1	0-05 0	2-06 2		3-00 0		0-04 0	
16	7	29-09 0	PA736E	STR		29-09 0									
16	8	29-09 0	PA837E	STR		29-09 0									
2	7	33-09 0	PA738E	STR		33-09 0									
4	8	33-09 0	PA839E	STR		33-09 0									
5	6	7-08 2	PA640E	PA		2-01 3	0-09 0	2-03 0	0-05 0	2-01 3		2-02 2		0-04 0	
		TO				TO		TO		TO		TO			
		9-00 1				2-05 3		2-10 3		2-05 3		2-10 2			
2	7	33-09 1	PA741E	6		30-05 2	3-03 3					0-09 2		3-02 2	

UNOFFICIAL WEBSITE COPY

ASTM STANDARD ENGLISH REINFORCING BARS				RECOMMENDED END HOOKS, APPLICABLE TO ALL GRADES				STIRRUP AND TIE HOOKS, APPLICABLE TO ALL GRADES			
	NOMINAL DIMENSIONS				180° HOOKS		90° HOOKS		90° HOOK	135° HOOK	
BAR SIZE	DIAMETER (INCHES)	AREA (INCHES²)	WEIGHT (LBS./FT.)	D	A OR G	J	A OR G	D	A OR G	A OR G	H
3	0.375	0.110	0.376	2¼″	5″	3″	6″	1½″	4″	4″	2½″
4	0.500	0.200	0.668	3″	6″	4″	8″	2″	4½″	4½″	3″
5	0.625	0.310	1.043	3¾″	7″	5″	10″	2½″	6″	5½″	3¾″
6	0.750	0.440	1.502	4½″	8″	6″	1-0″	4½″	1-0″	8″	4½″
7	0.875	0.600	2.044	5¼″	10″	7″	1-2″	5¼″	1-2″	9″	5¼″
8	1.000	0.790	2.670	6″	11″	8″	1-4″	6″	1-4″	10½″	6″
9	1.128	1.000	3.400	9½″	1-3″	11¾″	1-7″				
10	1.270	1.270	4.303	10¾″	1-5″	1-1¼″	1-10″				
11	1.410	1.560	5.313	1-0″	1-7″	1-2¾″	2-0″				
14	1.693	2.250	7.650	1-6¼″	2-3″	1-9¾″	2-7″				
18	2.257	4.000	13.600	2-0″	3-0″	2-4½″	3-5″				

NOTES:
1. FIGURES SHOWN IN CIRCLES REPRESENT BAR BEND TYPES.
2. STANDARD BAR BENDS INCLUDE ONLY THOSE TYPES BELOW, INDICATED AS SUCH.
3. ALL DIMENSIONS OUT-TO-OUT, EXCEPT "A" AND "G" ON STD. 180° AND 135° HOOKS.
4. "J" DIMENSIONS ON 180° HOOKS TO BE SHOWN ONLY WHERE NECESSARY TO RESTRICT HOOK SIZE, OTHERWISE STANDARD 'ACI' HOOKS ARE TO BE USED.
5. WHERE "J" IS NOT SHOWN, "J" WILL BE KEPT EQUAL TO OR LESS THAN "H" ON TYPES 3, 5 AND 22. WHERE "J" CAN EXCEED "H", IT SHALL BE SHOWN.
6. "H" DIMENSIONS OF STIRRUPS TO BE SHOWN AS NEEDED TO FIT WITHIN THE CONCRETE.
7. UNLESS OTHERWISE NOTED, DIAMETER "D" IS THE SAME FOR ALL BENDS AND HOOKS ON A BAR (EXCEPT FOR BEND TYPES 11 AND 13).
8. WHERE SLOPE DIFFERS FROM 45° OFFSET, "H" AND "K" MUST BE SHOWN.
9. WHERE BARS ARE TO BE BENT MORE ACCURATELY THAN STANDARD BENDING TOLERANCES, BENDING DIMENSIONS REQUIRING CLOSER FABRICATION SHOULD HAVE LIMITS INDICATED.
10. FOR RECOMMENDED DIAMETER "D", OF BENDS, HOOKS, ETC., REFER TO TABLE ABOVE, 'CRSI' OR 'ACI' TABLES WHERE APPLICABLE AND REQUIRED.
11. TYPE S1-S6, S11, T1-T3 AND T6-T9 APPLICABLE TO BAR SIZES #3 THROUGH #8.

STANDARD BAR BENDS

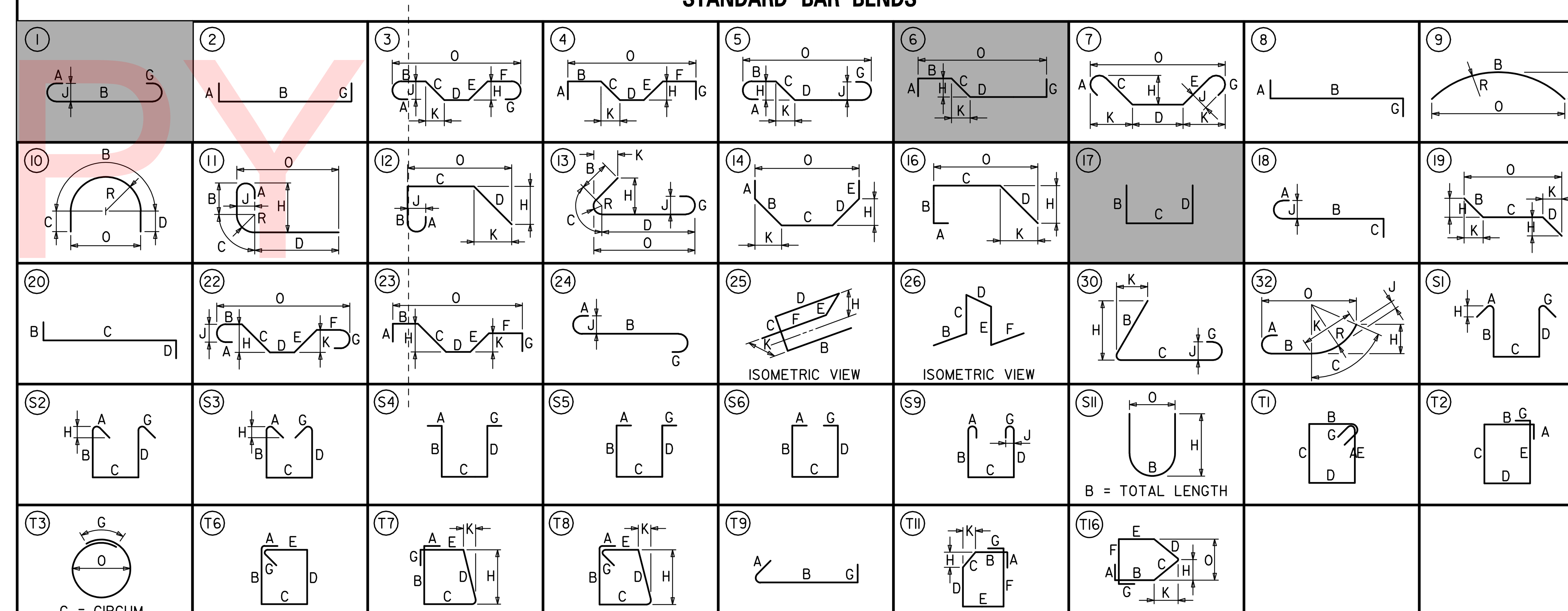

SPECIAL BAR BENDS

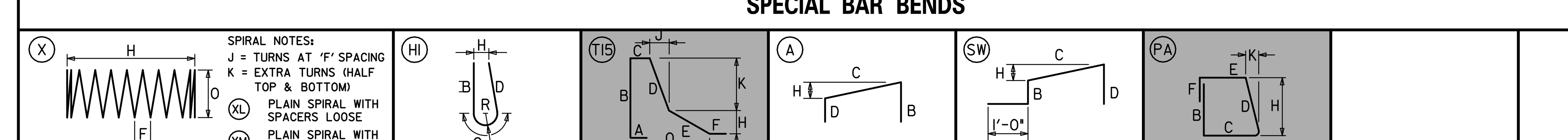

STIRRUP AND TIE HOOKS

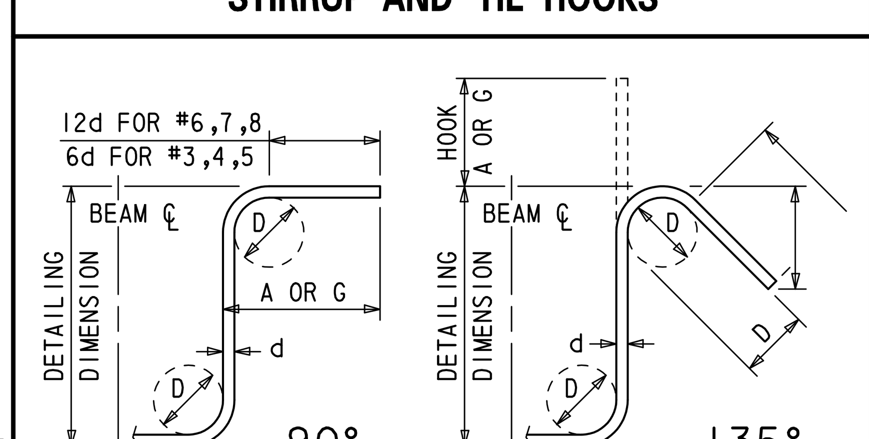

180° AND 90° END HOOKS

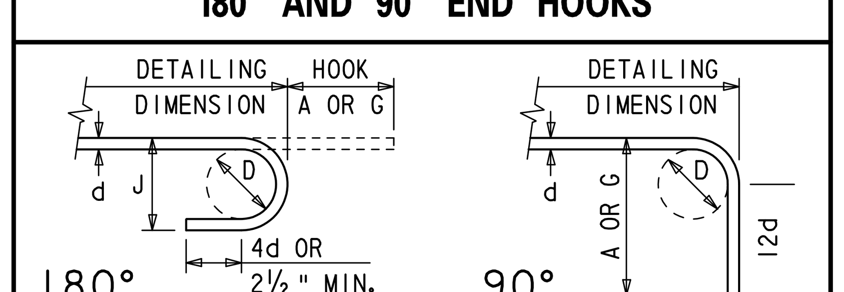

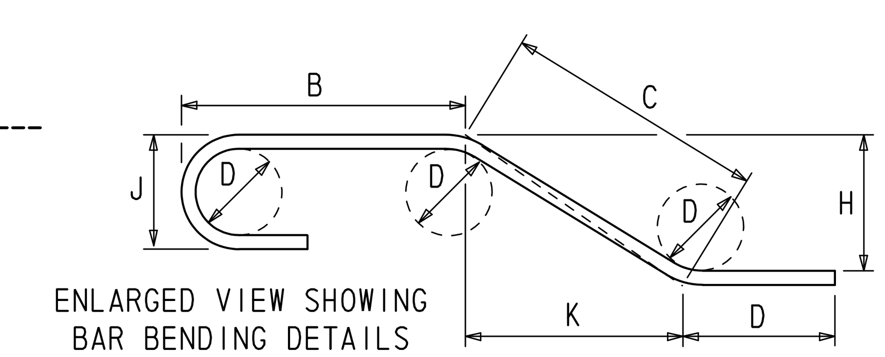

ENLARGED VIEW SHOWING BAR BENDING DETAILS

DELAWARE DEPARTMENT OF TRANSPORTATION	ADDENDUMS / REVISIONS	NOT TO SCALE	US 301 & SR 1 INTERCHANGE	CONTRACT T200911302	BRIDGE NO. 1–433	APPROACH SLAB AND MOMENT SLAB REINFORCEMENT LIST	BR1–3 RB–04
				COUNTY NEW CASTLE	DESIGNED BY: W.T.R.		SHEET NO. 290
					CHECKED BY: B.K.B.		TOTAL SHTS. 491

N:\31653-000\Contract 1B\CADD\Bridge\Br_No433\RB04_br1-433.dgn
2/5/2013 11:17:30 AM

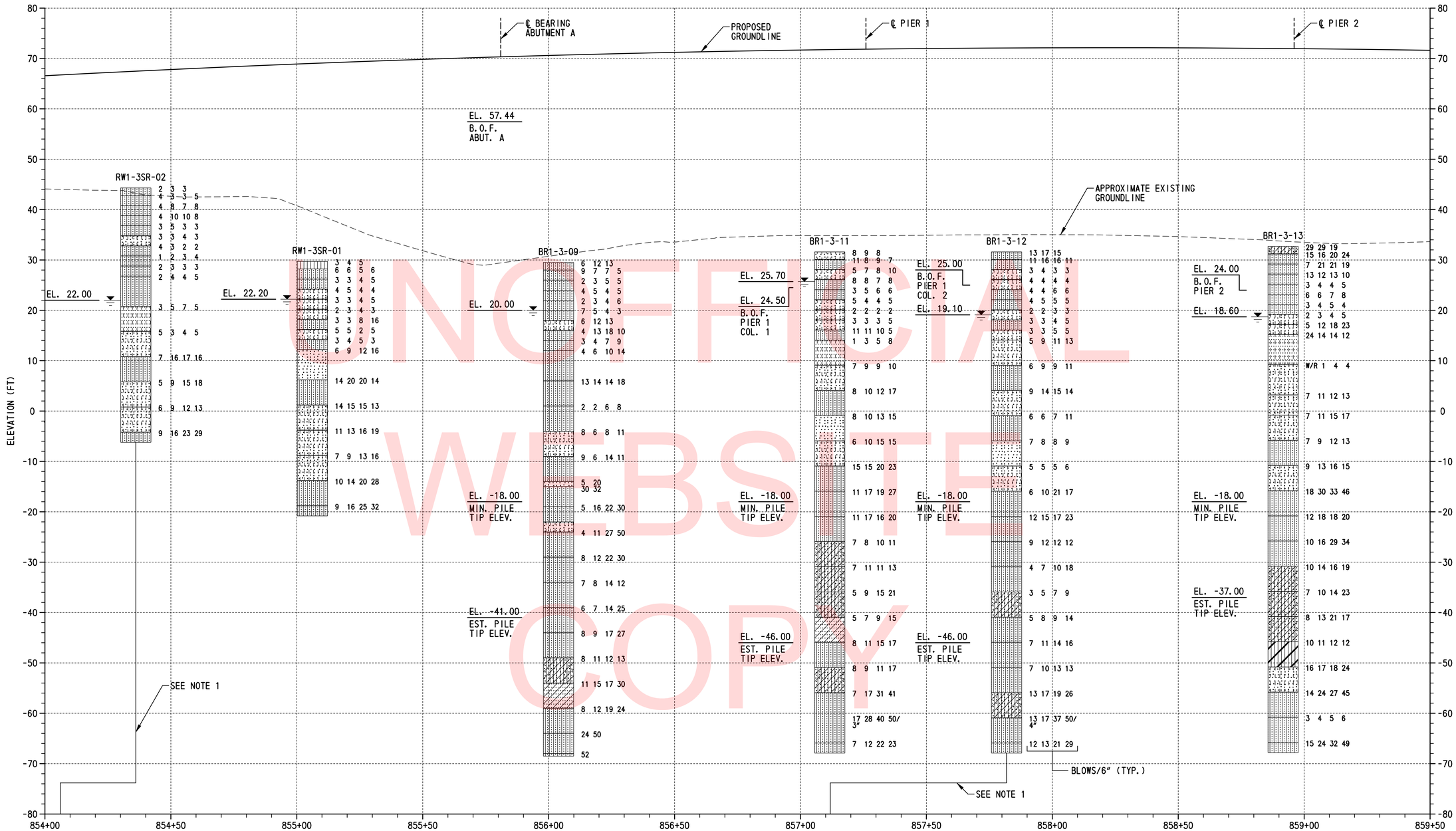

UNOFFICIAL WEBSITE COPY

STATION (FT)

BORING PROFILE

HORIZONTAL SCALE: 1"=20'-0"
VERTICAL SCALE: 1"=10'-0"

LEGEND:

- SILTY SAND
- CLAYEY SAND
- SILT
- WELL GRADED SAND WITH SILT
- POORLY GRADED CLAYEY SILTY SAND
- POORLY GRADED SAND
- POORLY GRADED SAND WITH SILT
- SILTY LOW PLASTICITY CLAY
- WATER TABLE AT BORING COMPLETION

TEST BORINGS

DESIGNATION	STATION	OFFSET	NORTHING	EASTING
RW1-3SR-01	855+06.21	35.73' RT.	556767	590143
RW1-3SR-02	854+06.09	35.36' RT.	556691	590075
BR1-3-09	856+03.57	7.63' LT.	556871	590171
BR1-3-11	857+11.62	19.60' LT.	556965	590223
BR1-3-12	857+11.82	80.40' RT.	556909	590306
BR1-3-13	858+91.64	0.06' LT.	557108	590332

NOTES:

1. BORINGS RW1-3SR-02 AND BR1-3-12 ARE SHOWN 15'-0" AND 35'-0" DOWNSTATION FROM ACTUAL BORING LOCATION.
2. FOR ADDITIONAL BORING INFORMATION, SEE DWG. NO. PE-01.

VERTICAL SCALE FEET 0 10 20 30

BR1-3
BO-01

N:\33653-000\CONTRACT 1B\CADD\Bridge\Br_No433\B001_br1-433.dgn
2/6/2013 11:55:32 AM

DELAWARE DEPARTMENT OF TRANSPORTATION	ADDENDUMS / REVISIONS	SCALE: AS SHOWN	US 301 & SR 1 INTERCHANGE	CONTRACT T200911302 / COUNTY NEW CASTLE	BRIDGE NO. BR1-433 / DESIGNED BY: B.K.B. / CHECKED BY: W.A.G.	BORING PROFILE – 1	SHEET NO. 291 / TOTAL SHTS. 491

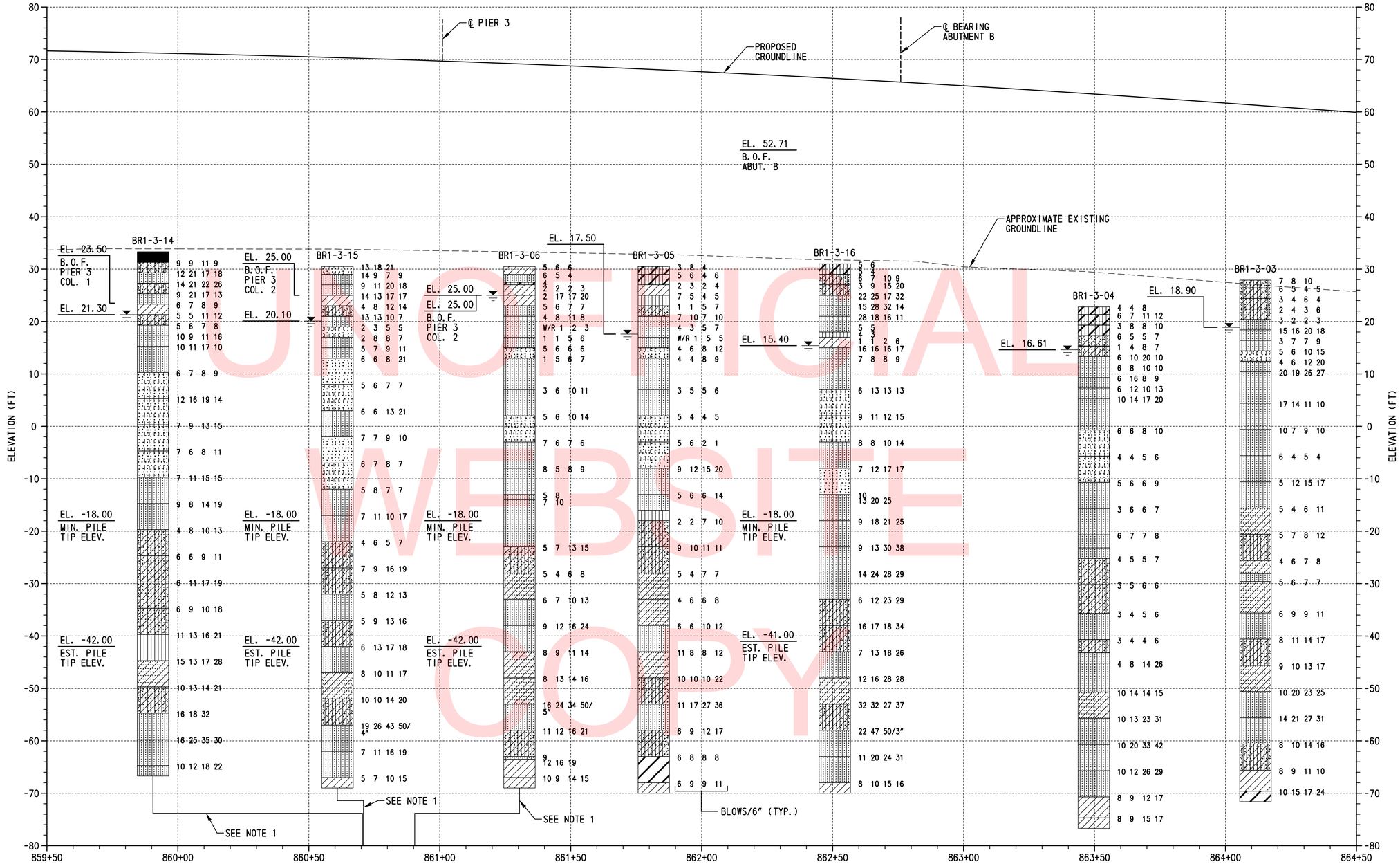

UNOFFICIAL WEBSITE COPY

LEGEND:

- LOW PLASTICITY CLAY
- SILTY SAND
- WELL GRADED SAND WITH SILT
- POORLY GRADED SAND WITH SILT
- CLAYEY SAND
- POORLY GRADED CLAYEY SILTY SAND
- SILTY LOW PLASTICITY CLAY
- SILT
- HIGH PLASTICITY CLAY
- POORLY GRADED SAND
- PAVING
- WATER TABLE AT BORING COMPLETION

STATION (FT)

BORING PROFILE

HORIZONTAL SCALE: 1"=20'-0"
VERTICAL SCALE: 1"=10'-0"

TEST BORINGS				
DESIGNATION	STATION	OFFSET	NORTHING	EASTING
BR1-3-03	864+11.46	15.50' LT.	557598	590494
BR1-3-04	863+49.72	56.44' RT.	557521	590550
BR1-3-05	861+81.70	60.00' RT.	557354	590505
BR1-3-06	860+90.43	77.06' RT.	557259	590488
BR1-3-14	860+70.48	50.68' LT.	557289	590362
BR1-3-15	860+70.87	49.32' RT.	557251	590454
BR1-3-16	862+50.82	7.56' RT.	557437	590477

NOTES:

1. BORINGS BR1-3-14 AND BR1-3-15 ARE SHOWN 40'-0" AND 5'-0" UPSTATION FROM ACTUAL BORING LOCATIONS. BORING BR1-3-06 IS SHOWN 20'-0" DOWNSTATION FROM ACTUAL BORING LOCATION.
2. FOR ADDITIONAL BORING INFORMATION, SEE DWG. NO. PE-02.

VERTICAL SCALE FEET 30 20 10 0

BR1-3
BO-02

N:\31653-000\CONTRACT 1B\CADD\Bridge\Br_No433\B002_br1-433.dgn
2/6/2013 11:57:38 AM

DELAWARE DEPARTMENT OF TRANSPORTATION

ADDENDUMS / REVISIONS

SCALE: AS SHOWN

US 301 & SR 1 INTERCHANGE

CONTRACT	BRIDGE NO.	BR1-433
T200911302	DESIGNED BY: B.K.B.	
COUNTY		
NEW CASTLE	CHECKED BY: W.A.G.	

BORING PROFILE – 2

SHEET NO.
292
TOTAL SHTS.
491

PROJECT NOTES:

1. LOCATION
   PROPOSED NEW STRUCTURE RETAINING SOUTHBOUND SR1 ADJACENT TO BRIDGE 1-903S IN NEW CASTLE COUNTY, DELAWARE.

2. ELEVATIONS
   VERTICAL DATUM IS REFERENCED TO NAVD 88.

3. DESIGN CRITERIA
   4TH ED. AASHTO LRFD BRIDGE DESIGN SPECIFICATIONS INCLUDING 2008 AND 2009 INTERIM PROVISIONS DELDOT BRIDGE DESIGN MANUAL, MAY 2005, LATEST REVIONS JANUARY 2008.

4. LOADING
   HL-93 AND DELAWARE LEGAL LOAD FOR LIVE LOAD.
   40 PCF EQUIVALENT FLUID EARTH PRESSURE.

5. CONCRETE
   ALL CONCRETE PROPERTIES SHALL BE IN ACCORDANCE WITH SECTION 812 OF THE DELAWARE DEPARTMENT OF TRANSPORTATION STANDARD SPECIFICATIONS.

   CLASS A - WALL STEM AND PARAPET
   (f'c = 4,500 PSI).

   CLASS B - RETAINING WALL FOOTING (f'c = 3,000 PSI).

   ALL EXPOSED EDGES SHALL BE CHAMFERED ¾" UNLESS NOTED OTHERWISE.

6. REINFORCING STEEL
   ALL REINFORCING STEEL SHALL BE AASHTO M31 (ASTM A615), GRADE 60 AND UNLESS SPECIFIED OTHERWISE ON THE PLANS SHALL BE PROTECTED WITH FUSION BONDED EPOXY, CONFORMING TO AASHTO M284 (ASTM A775) AND DENOTED WITH A SUFFIX 'E' IN THE BAR MARKS.

   MINIMUM CONCRETE COVER FOR REINFORCING STEEL SHALL BE:

   FOUNDATION ELEMENTS: 3"
   ELSEWHERE: 2" CLEAR TO MAIN STEEL
   2" CLEAR TO MAIN STEEL AT ENDS

7. CONSTRUCTION JOINTS
   KEYED CONSTRUCTION JOINTS SHALL BE 2" X 4" OR AS NOTED. ALL EXPOSED CONSTRUCTION JOINT EDGES SHALL HAVE A ¾" V-NOTCH UNLESS NOTED OTHERWISE.

8. EXISTING STRUCTURE
   ALL DIMENSIONS AND STATIONS SHOWN ARE APPROXIMATE. ALL DIMENSIONS AFFECTED BY THE GEOMETRICS, AND/OR LOCATION OF EXISTING STRUCTURES SHALL BE CHECKED IN THE FIELD BY THE CONTRACTOR, BEFORE ANY CONSTRUCTION IS DONE AND BEFORE ANY MATERIAL IS ORDERED OR FABRICATED. IF THE GEOMETRICS DIFFER FROM THAT SHOWN ON THE PLANS, THE ENGINEER SHALL BE CONTACTED FOR EVALUATION. IT SHALL BE THE RESPONSIBILITY OF THE CONTRACTOR TO SUPPLY THE ENGINEER WITH ALL FIELD DIMENSIONS REQUIRED TO CHECK DETAIL DRAWINGS.

   ANY DAMAGE INCURRED TO EXISTING STRUCTURES TO REMAIN RESULTING FROM THE CONTRACTOR'S OPERATIONS SHALL BE REPAIRED ALL AT CONTRACTOR'S EXPENSE TO THE SATISFACTION OF THE ENGINEER.

9. MISCELLANEOUS
   ALL AREAS DISTURBED BY THE CONTRACTOR'S OPERATIONS SHALL BE GRADED BACK TO THE ORIGINAL EXISTING GRADE, TOP SOILED, SEEDED AND MULCHED. PAYMENT SHALL BE INCIDENTAL TO THE CONTRACT. AS DIRECTED BY THE ENGINEER, ALL AREAS DISTURBED BY THE CONTRACTOR'S OPERATION RESULTING FROM UNAUTHORIZED ACTIVITIES OUTSIDE THE LIMIT OF CONSTRUCTION SHALL BE TOP SOILED, SEEDED, AND MULCHED AT THE CONTRACTOR'S EXPENSE.

10. STABILIZING STRUCTURAL EXCAVATIONS
    IN LIEU OF A 2:1 SLOPE, THE CONTRACTOR MAY USE SHORING FOR EXCAVATIONS EXCEEDING 5 FEET IN HEIGHT. THE COST OF THE SHORING SHALL BE INCIDENTAL TO ITEM 207000 - EXCAVATION AND BACKFILL FOR STRUCTURES.

    FOR ALL EXCAVATIONS REQUIRING TEMPORARY EXCAVATION SUPPORT, THE CONTRACTOR SHALL SUBMIT WORKING DRAWINGS AND CALCULATIONS FOR DESIGN OF THE TEMPORARY EXCAVATION SUPPORT SYSTEMS, SIGNED AND SEALED BY A PROFESSIONAL ENGINEER LICENSED TO PRACTICE IN DELAWARE. THE CONTRACTOR SHALL BE ENTIRELY RESPONSIBLE FOR THE DESIGN AND ADEQUACY OF THE TEMPORARY EXCAVATION SUPPORT SYSTEMS. METHODS OF DEWATERING EXCAVATIONS SHALL CONFORM TO THOSE SHOWN ON THE MAINTENANCE OF STREAM FLOW PLANS ON DWG. NOS. MS 1/2-1 AND MS 1/2-2.

    THE FOLLOWING EARTH PRESSURE PARAMETERS ARE RECOMMENDED FOR USE IN DESIGNING TEMPORARY EXCAVATION SUPPORT SYSTEMS:
    SOIL UNIT WT = 120 PCF
    SOIL BUOYANT UNIT WT = 58 PCF
    PHI = 30 DEG
    C = 0 PSF
    Ka = 0.333

11. FOUNDATION
    THE FACTORED BEARING RESISTANCE FOR RETAINING WALL FOOTING IS
    SERVICE LIMIT STATE = 2.1 KSF
    STRENGTH LIMIT STATE = 4.8 KSF

12. UTILITIES
    BEFORE BEGINNING WORK, THE CONTRACTOR SHALL GIVE NOTIFICATION BY TELEPHONE BY CALLING "MISS UTILITY" AT 1-800-282-8555 A MINIMUM OF 2 WORKING DAYS PRIOR TO START OF WORK. VERIFY AND LOCATE ALL UTILITIES PRIOR TO STARTING WORK.

    COORDINATE THE REQUIREMENTS FOR PROTECTION OF ANY UTILITY WITH THE UTILITY OWNER PRIOR TO STARTING WORK.

    CONDUCT OPERATIONS IN A MANNER WHICH ENSURES THAT THE UTILITIES WILL NOT BE DISTURBED OR ENDANGERED. ANY DAMAGE INCURRED TO THESE UTILITIES OR ANY OTHER UTILITIES, SHOWN OR NOT SHOWN ON THE PLANS, DUE TO THE CONTRACTOR'S OPERATIONS SHALL BE REPAIRED AT THE CONTRACTOR'S EXPENSE TO THE SATISFACTION OF THE APPROPRIATE UTILITY COMPANY. THE DEPARTMENT DOES NOT ASSUME RESPONSIBILITY FOR REIMBURSEMENT, PARTICIPATION IN DESIGN AND/OR REVISIONS, OR LIABILITY FOR ACCURACY OF TYPE, SIZE AND LOCATION OF ANY UTILITY.

    THE CONTRACTOR IS RESPONSIBLE FOR TEMPORARILY SUPPORTING, PROTECTING, OR RELOCATING ANY UTILITIES DURING CONSTRUCTION. WHERE NECESSARY, THE COST FOR THIS WORK WILL BE INCIDENTAL TO THE CONTRACT.

13. STAGING AREAS
    PROPER EROSION AND SEDIMENT CONTROL MEASURES AS DETERMINED BY THE ENGINEER SHALL BE INSTALLED IN ALL STAGING AREAS.

    ALL AREAS USED BY THE CONTRACTOR FOR STAGING OPERATIONS SHALL BE FULLY RESTORED BY THE CONTRACTOR UPON COMPLETION OF THE PROJECT. IF THE STAGING AREA IS PAVED, IT SHALL BE RESTORED TO ITS ORIGINAL CONDITION. IF THE STAGING AREA IS UNPAVED, IT SHALL BE RE-GRADED, TOP SOILED, SEEDED AND MULCHED IN ACCORDANCE WITH DELAWARE STANDARD SPECIFICATION SECTIONS 732, 734 AND 735, FOR TOP SOIL, SEED, AND MULCH, RESPECTIVELY, TO THE SATISFACTION OF THE ENGINEER. THE SEED SHALL ADHERE TO THE SPECIFICATIONS OF SECTION 734 FOR PERMANENT GRASS SEEDING-DRY GROUND. ALL COSTS ASSOCIATED WITH RESTORATION OF THE STAGING AREA SHALL BE AT THE CONTRACTOR'S EXPENSE. IF THE ENGINEER DETERMINES THAT A SATISFACTORY STAND OF GRASS DOES NOT EXIST AT THE TIME OF FINAL INSPECTION, ALL COSTS ASSOCIATED WITH REESTABLISHING A SATISFACTORY STAND OF GRASS SHALL ALSO BE AT THE CONTRACTOR'S EXPENSE.

RETAINING WALL RW1-1 INDEX OF SHEETS

SHEET NO.	DWG. NO.	TABLE OF CONTENTS
293	PN-01	PROJECT NOTES
294	PE-01	GENERAL PLAN AND ELEVATION - 1
295	GL-01	GEOMETRIC FOOTING LAYOUT PLAN
296	PE-02	FOOTING PLAN & WALL ELEVATION - 1
297	PE-03	FOOTING PLAN & WALL ELEVATION - 2
298	BR-01	REINFORCEMENT BAR LIST
299	BO-01	BORING PROFILE

QUANTITY SUMMARY

ITEM NO.	ITEM DESCRIPTION	UNITS	QUANTITY
202000	EXCAVATION AND EMBANKMENT	CY	385
207000	EXCAVATION AND BACKFILL FOR STRUCTURES	CY	850
602001	PORTLAND CEMENT CONCRETE MASONRY, CLASS A	CY	76
602002	PORTLAND CEMENT CONCRETE MASONRY, CLASS B	CY	58
602017	PORTLAND CEMENT CONCRETE MASONRY, PARAPET, CLASS A	CY	17
603000	BAR REINFORCEMENT	LB	5,340
604000	BAR REINFORCEMENT, EPOXY COATED	LB	13,600

NOTES:
1. ITEM 202000 IS REPRESENTED UNDER TYPE C MATERIAL REQUIRED, "TYPE C BACKFILL FOR STRUCTURES"; SEE DRAWING EW-02.

2. ITEM 207000 IS REPRESENTED ON DRAWING EW-02 UNDER EXCAVATION AVAILABLE FOR EMBANKMENT, "PLUS EXCAVATION AND BACKFILLING FOR STRUCTURES."

UNOFFICIAL WEBSITE COPY

S:\Projects\2008\PE\ED0836 (DelDOT US 301_*1445)\7. Transportation\1. Bridges\Drawings\Final_PS&E\RW1-1\PN01_rw1-1_Adv.dgn
10/20/2015 7:08:02 AM

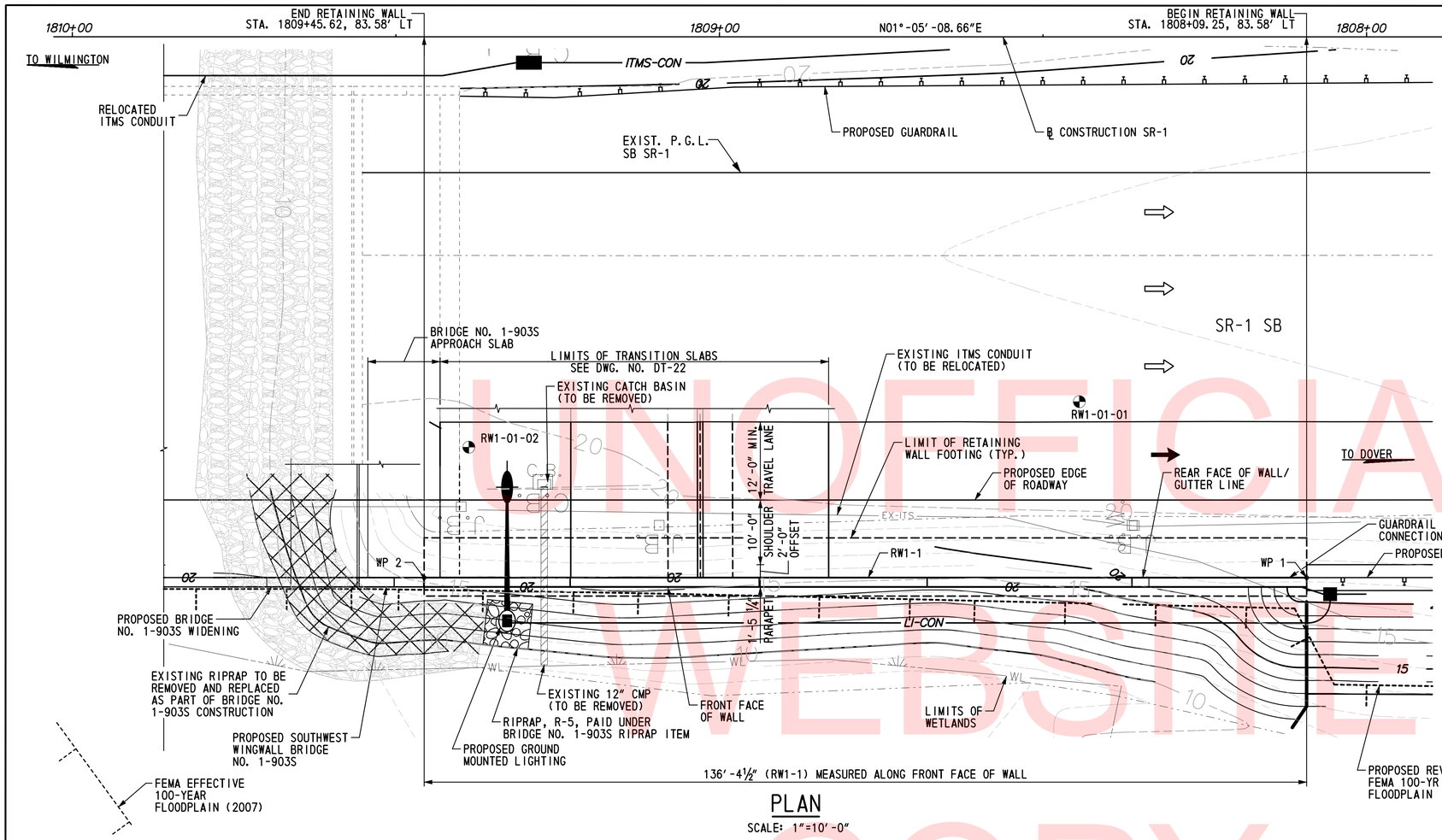

PLAN

SCALE: 1"=10'-0"

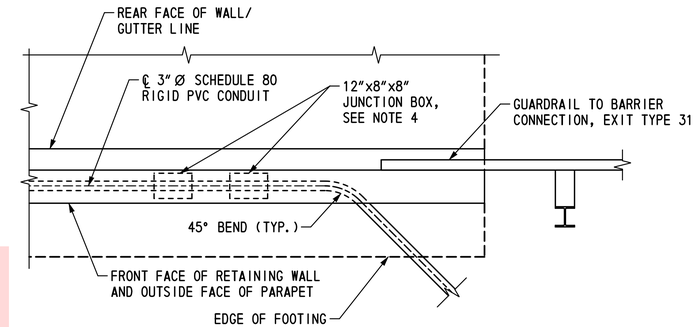

PLAN - PARAPET CONDUIT DETAIL

SCALE: 1/2" = 1'-0"

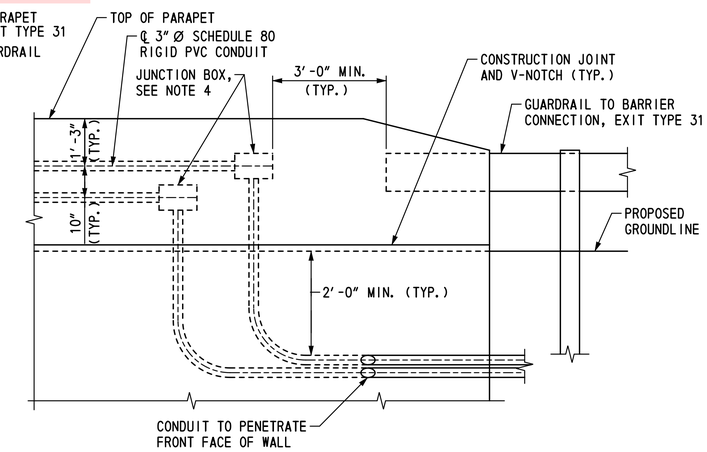

ELEVATION - PARAPET AT SOUTH END OF RW1-1

SCALE: 1/2"= 1'-0"

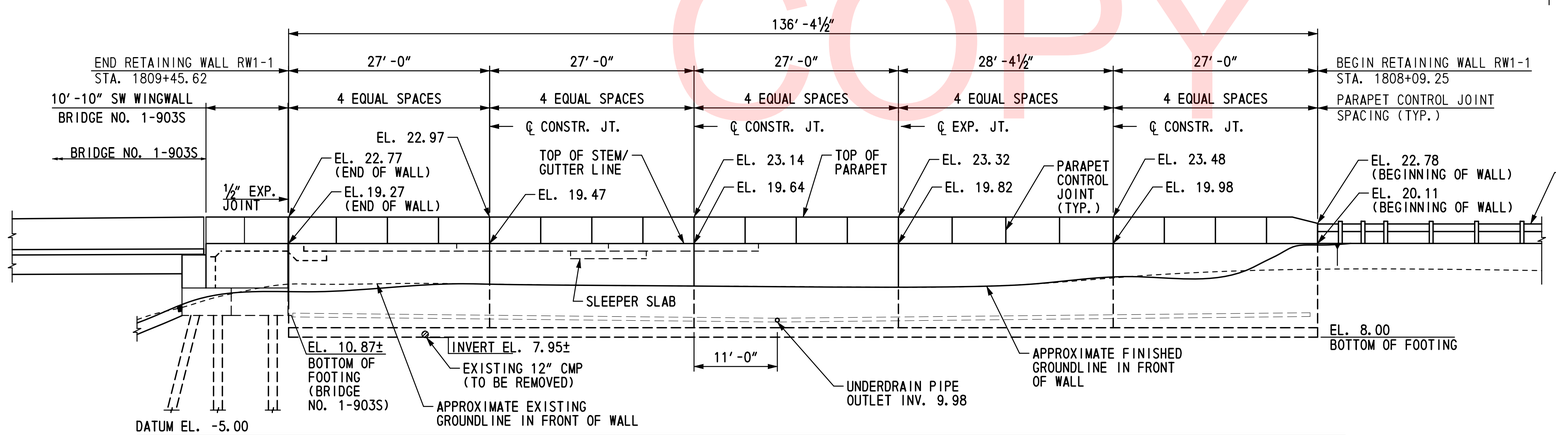

ELEVATION

SCALE: 1"=10'-0"

TEST BORINGS		
BORING	SR 1 ℄ STA.	OFFSET
RW1-1-01	1808+44.38	56.38' LT
RW1-1-02	1809+38.72	63.43' LT

NOTES:

1. ALL OFFSET DIMENSIONS ARE MEASURED TO THE REAR FACE OF THE WALL.
2. FOR WETLAND ACCESS ROAD AND FOR MAINTENANCE OF STREAM FLOW PLANS, SEE DWG. NOS. MS-01 AND MS-02.
3. FOR PARAPET CONTROL JOINT DETAIL, SEE DWG. NO. PE-03.
4. ALL JUNCTION BOXES SHALL BE 12" LONG x 8" HIGH x 8" DEEP NEMA 4X STAINLESS STEEL JUNCTION BOXES WITH COVERS MOUNTED IN THE ROADWAY FACE OF THE PARAPET.
5. CONDUITS AND JUNCTION BOXES INSTALLED IN THE RETAINING WALL PARAPET WILL NOT BE MEASURED AND PAID FOR SEPARATELY BUT WILL BE INCIDENTAL TO ITEM 602017 - PORTLAND CEMENT CONCRETE MASONRY, PARAPET, CLASS A. CONDUITS IN PARAPETS SHALL MEET THE MATERIAL REQUIREMENTS OF ITEM NO. 745522 - SUPPLY OF 3" SCHEDULE 80 PVC CONDUIT.

RW1-1
PE-01

UNOFFICIAL WEBSITE COPY

DELAWARE DEPARTMENT OF TRANSPORTATION

ADDENDUMS / REVISIONS

SCALE: AS NOTED

US 301 & SR 1 INTERCHANGE

CONTRACT	BRIDGE NO.	RW1-1
T200911302	DESIGNED BY:	MED
COUNTY		
NEW CASTLE	CHECKED BY:	KEE

GENERAL PLAN & ELEVATION

SHEET NO. 294
TOTAL SHTS. 491

C:\Projects\3008\PE\ED0836 (DelDOT US 301_#1445)\1. Bridges\Drawings\Final_PS&E\RW1-1\PE01_rw1-1.dgn
10/20/2015 5:40:35 PM

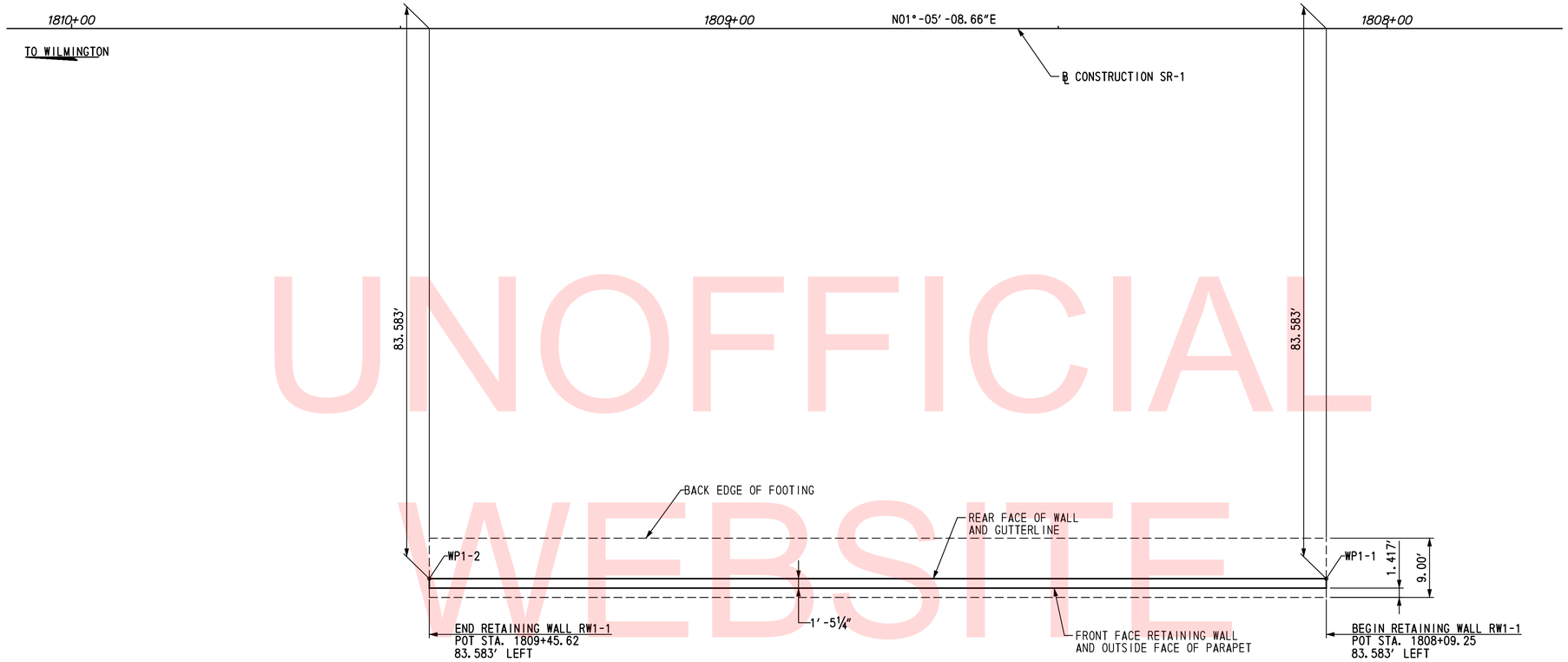

PLAN

SCALE: 1"=10'-0"

WORKING POINT	℄ CONSTR. SR 1 STA.	OFFSET	NORTHING	EASTING
W.P.1	1808+09.25	83.583' LT	559179.0727	590389.3384
W.P.2	1809+45.62	83.583' LT	559315.4232	590391.9225

UNOFFICIAL WEBSITE COPY

\\tsrlant\S\Projects\2008\PEI-ED0836 (DelDOT US 301_#1445)\7. Transportation\1. Bridges\Drawings\Final_PS&E\RW1-1\GL01_rw1-1.dgn
2/27/2013 10:59:09 AM

DELAWARE DEPARTMENT OF TRANSPORTATION

ADDENDUMS / REVISIONS

SCALE: AS NOTED

US 301 & SR 1 INTERCHANGE

CONTRACT	BRIDGE NO.	RW1-1
T200911302	DESIGNED BY:	MED
COUNTY		
NEW CASTLE	CHECKED BY:	KEE

GEOMETRIC FOOTING LAYOUT PLAN

RW1-1
GL-01

SHEET NO. 295

TOTAL SHTS. 491

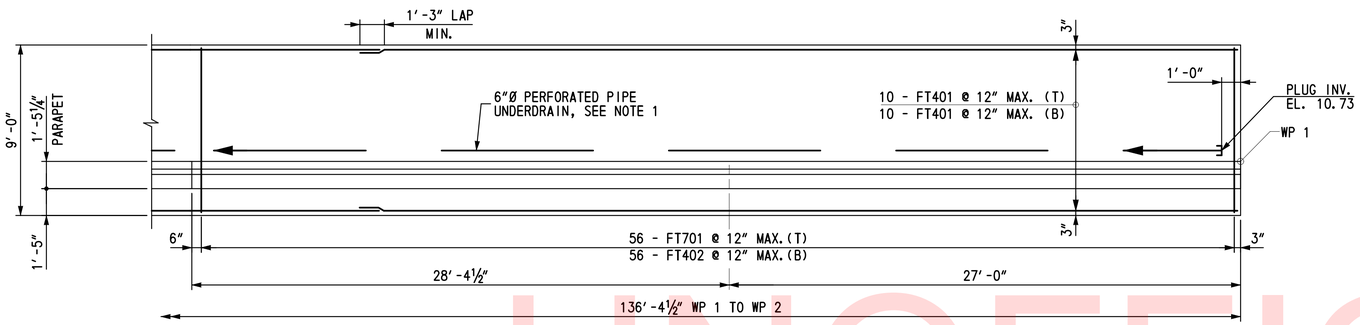

MATCH LINE A

FOOTING PLAN I

SCALE: ¼" = 1'-0"

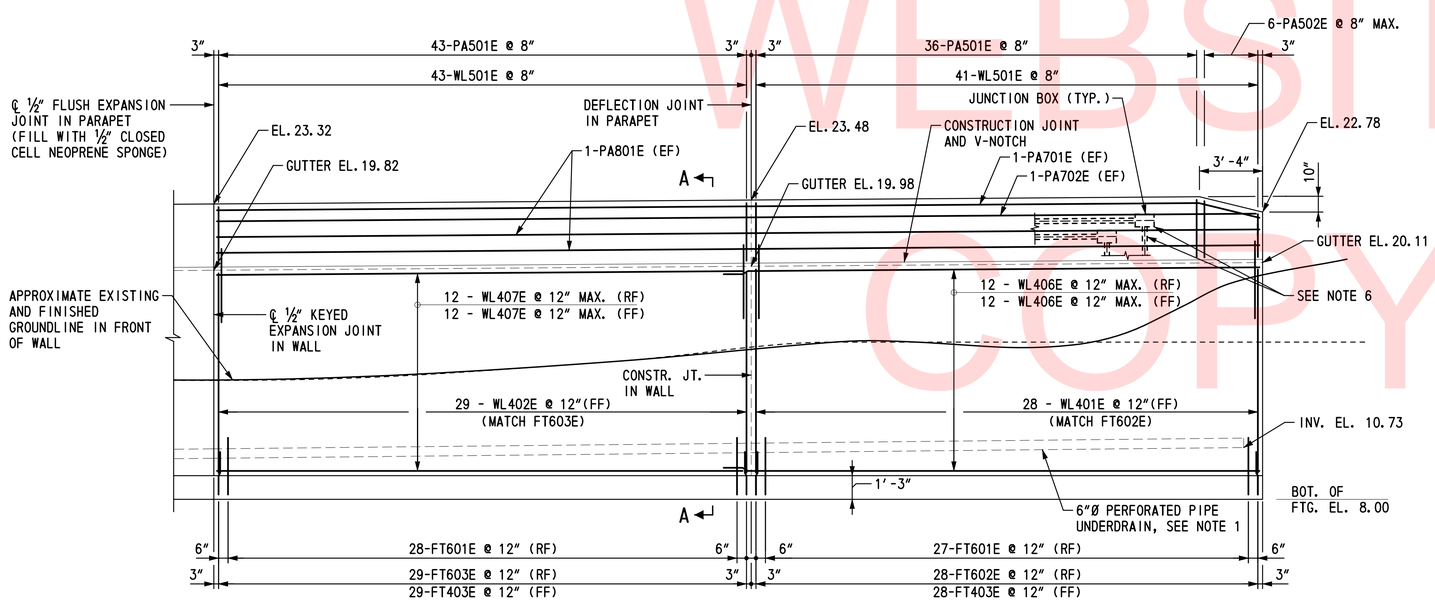

ELEVATION I

SCALE: ¼" = 1'-0"

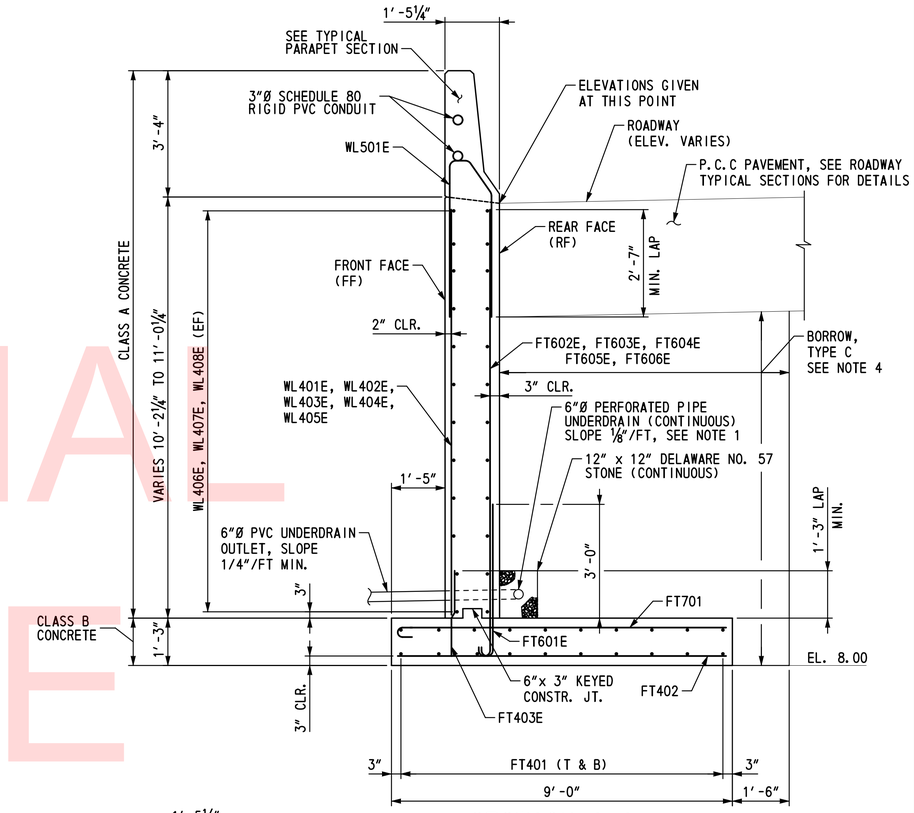

SECTION A-A

SCALE: ½" = 1'-0"

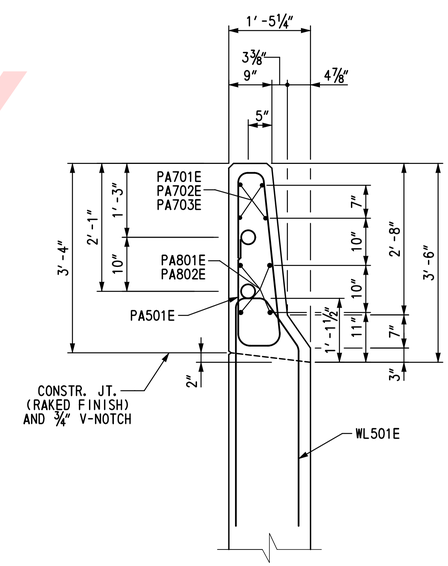

TYPICAL PARAPET SECTION

SCALE: ¾" = 1'-0"

NOTES:

1. COST OF PVC UNDERDRAIN, PVC UNDERDRAIN OUTLET, DELAWARE NO. 57 STONE AND GEOTEXTILE FABRIC SHALL BE INCIDENTAL TO ITEM 602001-PORTLAND CEMENT CONCRETE MASONRY, CLASS A.
2. GEOTEXTILE FILTER FABRIC SHALL CONFORM TO AASHTO M288, CLASS 2.
3. PERFORATED AND NON-PERFORATED PVC PIPE UNDERDRAIN SHALL CONFORM TO ASTM F758, TYPE PS 28.
4. BORROW, TYPE C SHALL BE OBTAINED FROM BORROW SOURCES AND PAID UNDER ITEM 202000-EXCAVATION AND EMBANKMENT.
5. REFLECTORS SHALL BE INSTALLED ALONG PARAPET (ROADWAY ITEM). FOR DETAILS, SEE DWG. NO. DT-05.
6. FOR ADDITIONAL CONDUIT AND JUNCTION BOX DETAILS, SEE DWG. NO. PE-01.

REFERENCES:

1. FOR PROJECT NOTES, SEE DWG. NO. PN-01.
2. FOR FOOTING PLAN & WALL ELEVATION II, SEE DWG. NO. PE-03.
3. FOR LEGEND, SEE DWG. NO. PE-01.
4. FOR GEOMETRIC LAYOUT, SEE DWG. NO. GL-01.
5. FOR REINFORCEMENT BAR LIST, SEE DWG. BR-01.

UNOFFICIAL WEBSITE COPY

C:\Projects\2008\PEI-ED0836 (DelDOT US 301_#1445)\1.Bridges\Drawings\Final_PS&E\RW1-1\PE02_rw1-1.dgn
10/22/2015 7:12:36 AM

DELAWARE DEPARTMENT OF TRANSPORTATION	ADDENDUMS / REVISIONS	SCALE: AS NOTED	US 301 & SR 1 INTERCHANGE	CONTRACT T200911302	BRIDGE NO. RW1-1	FOOTING PLAN & WALL ELEVATION I	RW1-1 PE-02
				COUNTY NEW CASTLE	DESIGNED BY: MED		SHEET NO. 296
					CHECKED BY: KEE		TOTAL SHTS. 491

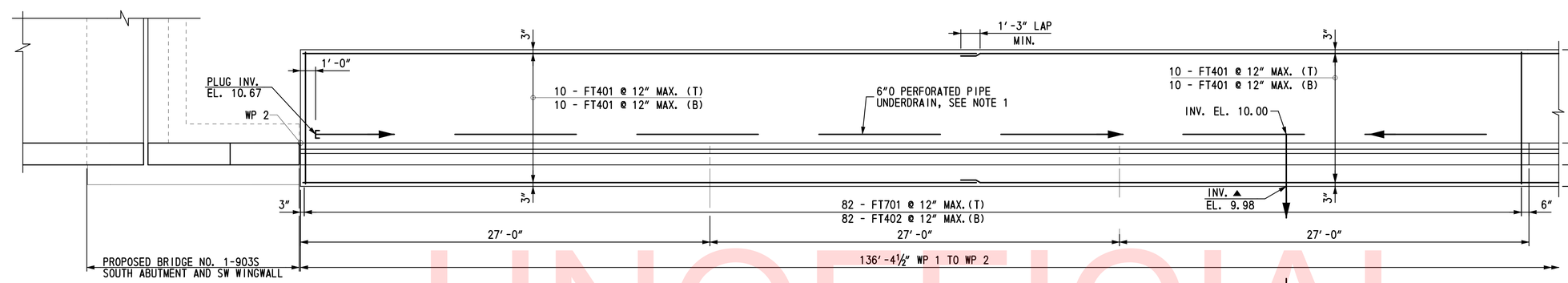

FOOTING PLAN II

SCALE: ¼" = 1'-0"

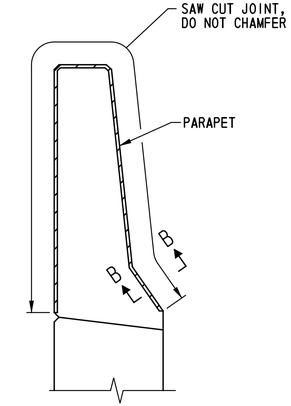

PAPAPET CONTROL JOINT DETAIL

SCALE: 1"=1'-0"

MATCH LINE A

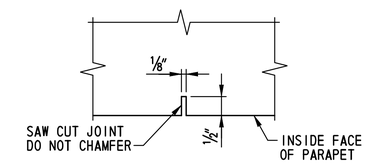

SECTION B-B

SCALE: 6"=1'-0"

NOTE:
SAW CUT CONTROL JOINT SHALL BE SAWED SAME DAY AS CONCRETE IS POURED.

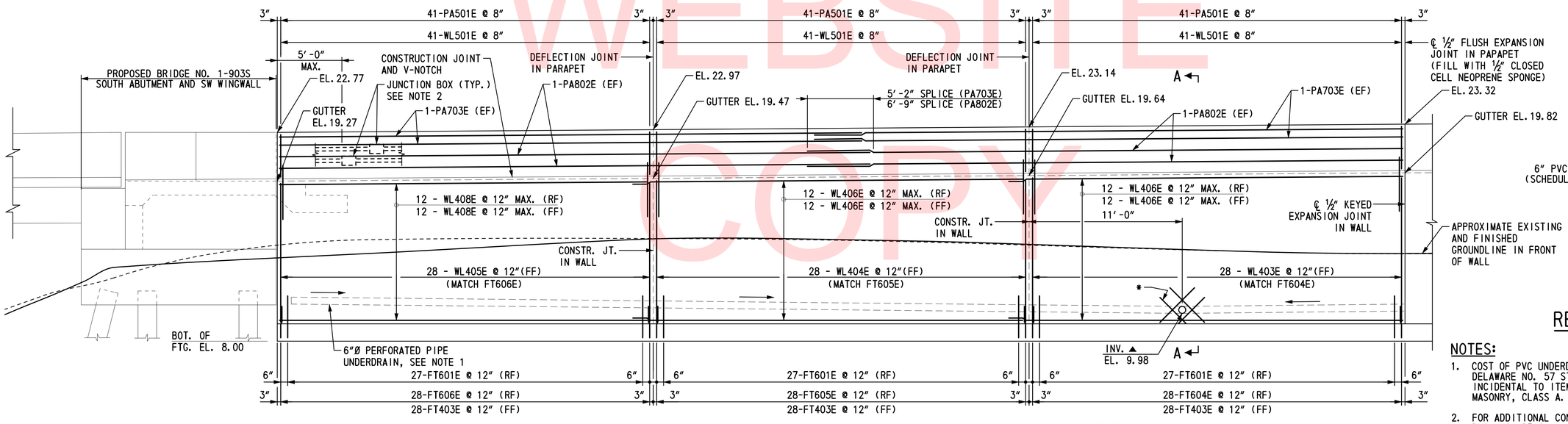

ELEVATION II

SCALE: ¼" = 1'-0"

▲ OUTLET UNDERDRAIN PIPE ON SLOPE (DAYLIGHT) IN FRONT OF RW1-1

* SEE UNDERDRAIN PIPE REINFORCEMENT DETAIL, THIS SHEET

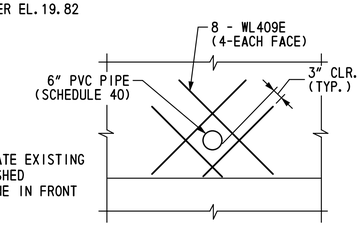

U-DRAIN PIPE REINFORCEMENT DETAIL

NOT TO SCALE

NOTES:

1. COST OF PVC UNDERDRAIN, PVC UNDERDRAIN OUTLET, DELAWARE NO. 57 STONE AND GEOTEXTILE FABRIC SHALL BE INCIDENTAL TO ITEM 602001-PORTLAND CEMENT CONCRETE MASONRY, CLASS A.
2. FOR ADDITIONAL CONDUIT AND JUNCTION BOX DETAILS, SEE DWG. NO. PE-01.

REFERENCES:

1. FOR PROJECT NOTES, SEE DWG. NO. PN-01.
2. FOR SECTION A-A, SEE DWG. NO. PE-02.
3. FOR LEGEND, SEE DWG. NO. PE-01.
4. FOR GEOMETRIC LAYOUT, SEE DWG. NO. GL-01.
5. FOR WINGWALL DETAILS, SEE STRUCTURE NO. BR1-1, DWG. NOS. PE-01, AB-01 AND WW-01.
6. FOR REINFORCEMENT BAR LIST, SEE DWG. BR-01.

RW1-1
PE-03

UNOFFICIAL WEBSITE COPY

\\Mojiant\S\Projects\2008\PE\ED0836 (DelDOT US 301_*1445)\7. Transportation\1. Bridges\Drawings\Final_PS&E\RW1-1\PE03_rw1-1.dgn
2/27/2013 11:10:43 AM

DELAWARE DEPARTMENT OF TRANSPORTATION	ADDENDUMS / REVISIONS	SCALE: AS NOTED	US 301 & SR 1 INTERCHANGE	CONTRACT T200911302	BRIDGE NO. RW1-1	FOOTING PLAN & WALL ELEVATION II	SHEET NO. 297
				COUNTY NEW CASTLE	DESIGNED BY: MED		TOTAL SHTS. 491
					CHECKED BY: KEE		

(1) ANY MARK NUMBER WITH SUFFIX 'E' DENOTES EPOXY COATED REINFORCING STEEL.

(2) ALL MARK 'LOCATION PREFIXES' SHALL CONSIST OF TWO LETTERS AND ARE AS FOLLOWS: AB = ABUTMENT, AS = APPROACH SLAB, BC = BOX CULVERT, BW = BACKWALL, CL = COLUMN, DK = DECK, DL = DOWEL, FT = FOOTING, HW = HEADWALL, MS = MISC. BARS, PA = PARAPET, PR = PIER, SC = SHEETPILE CAP, SL = SLAB, TW = TOEWALL, WL = WALL (UNIQUE LOCATION), WW = WINGWALL

SPECIFICATIONS					BENDING DIMENSIONS (FEET-INCHES /QUARTER INCH)										
QTY.	SIZE	LENGTH	MARK	TYPE	A	B	C	D	E	F/R	G	H	J	K	O
RETAINING WALL FOOTING															
60	4	46-40	FT401	STR		46-40									
138	4	8-80	FT402	STR		8-80									
141	4	2-60	FT403E	STR		2-60									
136	6	4-80	FT601E	1	0-80	4-00							0-60		
28	6	12-30	FT602E	1	0-80	11-70							0-60		
29	6	12-10	FT603E	1	0-80	11-50							0-60		
28	6	11-110	FT604E	1	0-80	11-30							0-60		
28	6	11-90	FT605E	1	0-80	11-10							0-60		
28	6	11-70	FT606E	1	0-80	10-110							0-60		
138	7	9-60	FT701	1	0-100	8-80							0-70		
RETAINING WALL STEM															
28	4	10-70	WL401E	STR		10-70									
29	4	10-50	WL402E	STR		10-50									
28	4	10-30	WL403E	STR		10-30									
28	4	10-10	WL404E	STR		10-10									
28	4	9-110	WL405E	STR		9-110									
72	4	28-60	WL406E	STR		28-60									
24	4	28-10	WL407E	STR		28-10									
24	4	26-90	WL408E	STR		26-90									
8	4	3-60	WL409E	STR		3-60									
207	5	8-111	WL501E	T15		4-20	0-50	0-113	3-42			3-42	0-63	0-92	
RETAINING WALL PARAPET															
207	5	9-23	PA501E	PA		2-61	0-90	3-01	0-50	2-61		3-00		0-40	
1X6	5	7-81	PA502E	PA		2-13	0-90	2-23	0-50	2-13		2-22		0-40	
		TO				TO	TO	TO	TO	TO		TO		TO	
		9-21				2-61	0-90	2-113	0-50	2-61		2-112		0-40	
2	7	55-13	PA701E	12			51-100	3-33				0-93		3-22	55-02
2	7	54-20	PA702E	STR		54-20									
8	7	43-00	PA703E	STR		43-00									
4	8	55-02	PA801E	STR		55-02									
8	8	43-90	PA802E	STR		43-90									

SPECIFICATIONS					BENDING DIMENSIONS (FEET-INCHES /QUARTER INCH)										
QTY.	SIZE	LENGTH	MARK	TYPE	A	B	C	D	E	F/R	G	H	J	K	O

SPECIFICATIONS					BENDING DIMENSIONS (FEET-INCHES /QUARTER INCH)										
QTY.	SIZE	LENGTH	MARK	TYPE	A	B	C	D	E	F/R	G	H	J	K	O

UNOFFICIAL WEBSITE

COPY

ASTM STANDARD ENGLISH REINFORCING BARS

BAR SIZE	NOMINAL DIMENSIONS: DIAMETER (INCHES)	AREA (INCHES²)	WEIGHT (LBS./FT.)	RECOMMENDED END HOOKS, APPLICABLE TO ALL GRADES: 180° HOOKS D	180° HOOKS A OR G	180° HOOKS J	90° HOOKS A OR G	STIRRUP AND TIE HOOKS, APPLICABLE TO ALL GRADES: 90° HOOK D	90° HOOK A OR G	135° HOOK A OR G	135° HOOK A OR G
3	0.375	0.110	0.376	2¼"	5"	3"	6"	1½"	4"	4"	2½"
4	0.500	0.200	0.668	3"	6"	4"	8"	2"	4½"	4½"	3"
5	0.625	0.310	1.043	3¾"	7"	5"	10"	2½"	6"	5½"	3¾"
6	0.750	0.440	1.502	4½"	8"	6"	1-0"	4½"	1-0"	8"	4½"
7	0.875	0.600	2.044	5¼"	10"	7"	1-2"	5¼"	1-2"	9"	5¼"
8	1.000	0.790	2.670	6"	11"	8"	1-4"	6"	1-4"	10½"	6"
9	1.128	1.000	3.400	9½"	1-3"	11¾"	1-7"				
10	1.270	1.270	4.303	10¾"	1-5"	1-1¼"	1-10"				
11	1.410	1.560	5.313	1-0"	1-7"	1-2¾"	2-0"				
14	1.693	2.250	7.650	1-6¼"	2-3"	1-9¾"	2-7"				
18	2.257	4.000	13.600	2-0"	3-0"	2-4½"	3-5"				

NOTES:

1. FIGURES SHOWN IN CIRCLES REPRESENT BAR BEND TYPES.
2. STANDARD BAR BENDS INCLUDE ONLY THOSE TYPES BELOW, INDICATED AS SUCH.
3. ALL DIMENSIONS OUT-TO-OUT, EXCEPT "A" AND "G" ON STD. 180° AND 135° HOOKS.
4. "J" DIMENSIONS ON 180° HOOKS TO BE SHOWN ONLY WHERE NECESSARY TO RESTRICT HOOK SIZE, OTHERWISE STANDARD 'ACI' HOOKS ARE TO BE USED.
5. WHERE "J" IS NOT SHOWN, "J" WILL BE KEPT EQUAL TO OR LESS THAN "H" ON TYPES 3, 5 AND 22. WHERE "J" CAN EXCEED "H", IT SHALL BE SHOWN.
6. "H" DIMENSIONS OF STIRRUPS TO BE SHOWN AS NEEDED TO FIT WITHIN THE CONCRETE.
7. UNLESS OTHERWISE NOTED, DIAMETER "D" IS THE SAME FOR ALL BENDS AND HOOKS ON A BAR (EXCEPT FOR BEND TYPES 11 AND 13).
8. WHERE SLOPE DIFFERS FROM 45° OFFSET, "H" AND "K" MUST BE SHOWN.
9. WHERE BARS ARE TO BE BENT MORE ACCURATELY THAN STANDARD BENDING TOLERANCES, BENDING DIMENSIONS REQUIRING CLOSER FABRICATION SHOULD HAVE LIMITS INDICATED.
10. FOR RECOMMENDED DIAMETER "D", OF BENDS, HOOKS, ETC., REFER TO TABLE ABOVE, 'CRSI' OR 'ACI' TABLES WHERE APPLICABLE AND REQUIRED.
11. TYPE S1-S6, S11, T1-T3 AND T6-T9 APPLICABLE TO BAR SIZES #3 THROUGH #8.

STANDARD BAR BENDS

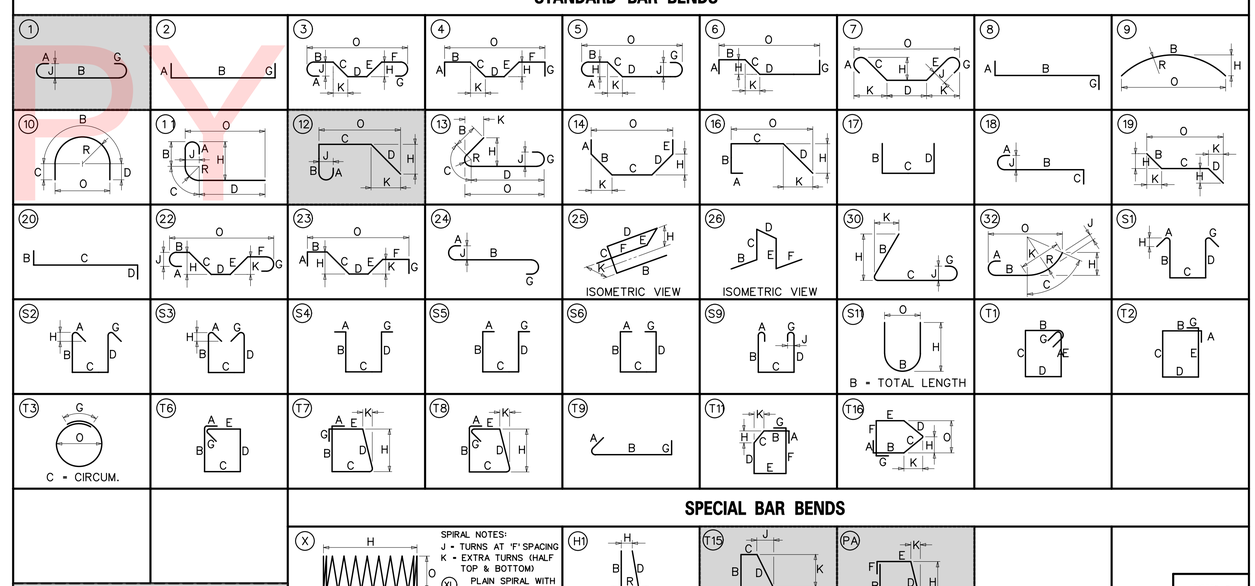

SPECIAL BAR BENDS

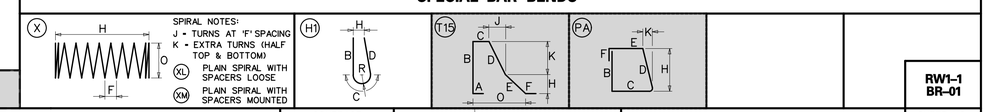

STIRRUP AND TIE HOOKS

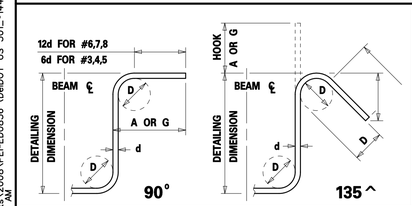

180° AND 90° END HOOKS

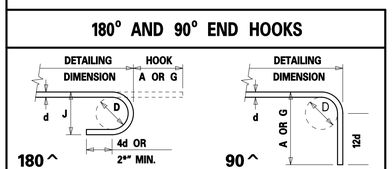

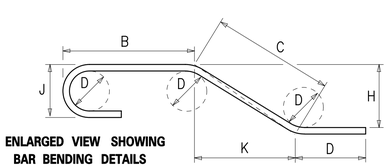

DELAWARE DEPARTMENT OF TRANSPORTATION

ADDENDUMS / REVISIONS

US 301 & SR 1 INTERCHANGE

CONTRACT	BRIDGE NO.	RW1-1
T200911302	DESIGNED BY:	MED
COUNTY	CHECKED BY:	KEE
NEW CASTLE		

RETAINING WALL REINFORCEMENT BAR LIST

RW1-1 BR-01

SHEET NO.	TOTAL SHTS.
298	491

\\tsdigest\S\Projects\2008\PE\ED0836 (DelDOT US 301_*1445)\7. Transportation\1. Bridges\Drawings\Final_PS&E\RW1-1\BR01_rw1-1.dgn
2/27/2013 11:12:28 AM

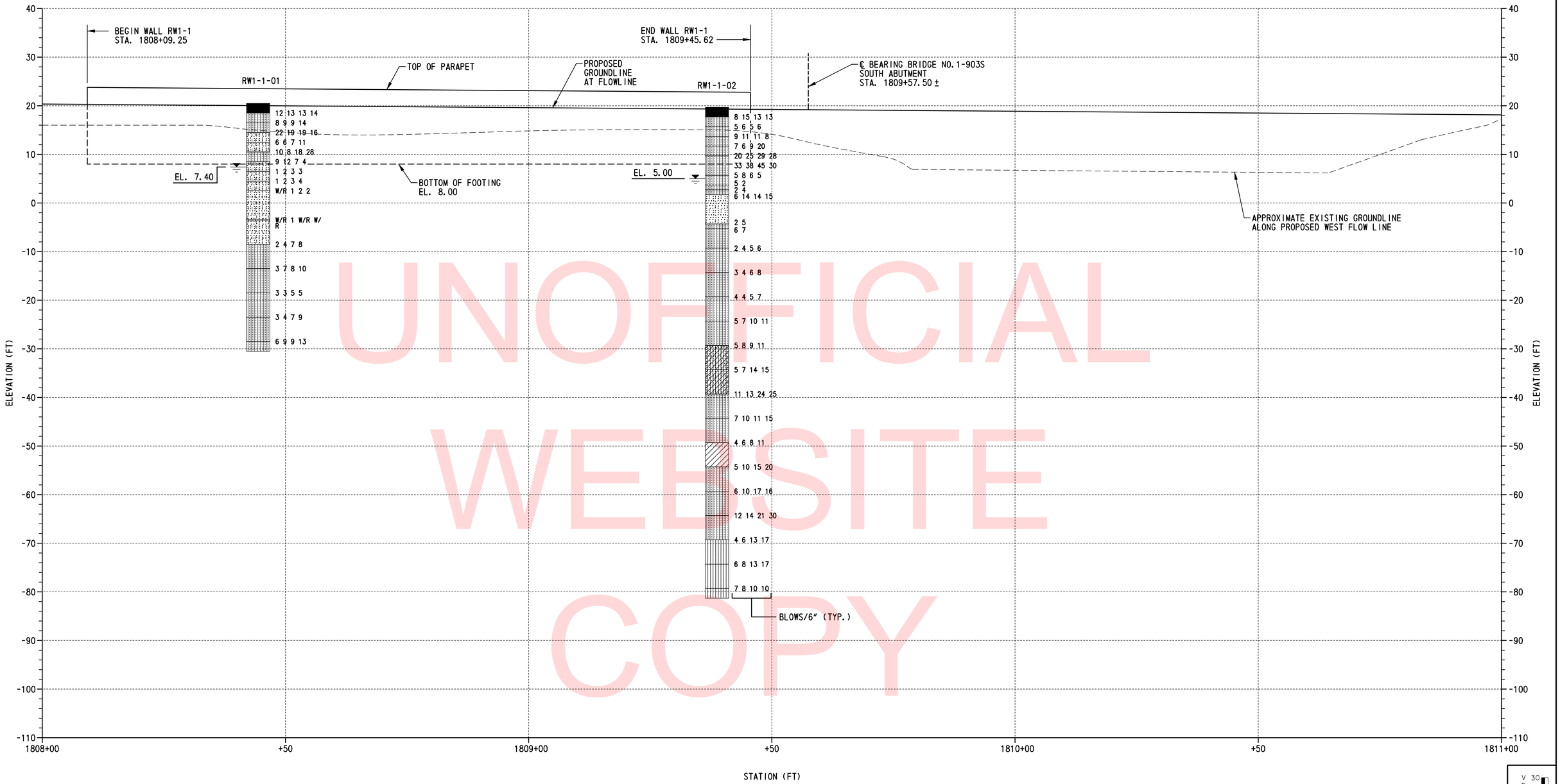

UNOFFICIAL WEBSITE COPY

BORING PROFILE

SCALE: 1"=10'-0"

LEGEND:

- SILTY SAND
- CLAYEY SAND
- LOW PLASTICITY CLAY
- SILTY LOW PLASTICITY CLAY
- POORLY GRADED SAND
- POORLY GRADED SAND WITH SILT
- POORLY GRADED CLAYEY SILTY SAND
- SILT
- PAVING
- TOP SOIL
- WATER TABLE AT BORING COMPLETION
- W/R = WEIGHT OF ROD

TEST BORINGS				
BORING DESIGNATION	STATION	OFFSET	NORTHING	EASTING
RW1-1-01	1808+44.38	56.38' LT.	559213.6770	590417.1980
RW1-1-02	1809+38.72	63.43' LT.	559308.1330	590411.9460

NOTES:

1. FOR BORING LOCATIONS, SEE DWG. NO. PE-01.
2. RESULTS CONDUCTED ON SAMPLES RECOVERED ARE REPORTED ON THE BORING LOGS. LOGS AND LABORATORY TESTING ARE INCLUDED AS PART OF THE CONTRACT DOCUMENTS, SEE CD.

VERTICAL SCALE FEET 0 10 20 30

RW1-1
BO-01

N:\33653-000\Contract 19\CADD\Bridge\RW\B001_RW1-1.dgn
2/5/2013 11:21:08 AM

DELAWARE DEPARTMENT OF TRANSPORTATION

ADDENDUMS / REVISIONS

SCALE 0 10 20 30 FEET

US 301 & SR 1 INTERCHANGE

CONTRACT	BRIDGE NO.	RW1-1
T200911302	DESIGNED BY: W.R.A.	
COUNTY		
NEW CASTLE	CHECKED BY: P.S.D.	

BORING PROFILE

SHEET NO. 299
TOTAL SHTS. 491

MSE WALL NOTES:

1. DESIGN CRITERIA
   SEE SPECIAL PROVISION FOR ITEM 602772.

2. CONCRETE
   ALL CONCRETE PROPERTIES SHALL BE IN ACCORDANCE WITH SECTION 812 OF THE DELAWARE DEPARTMENT OF TRANSPORTATION STANDARD SPECIFICATIONS.

   CLASS A - MSE WALL PANELS AND PARAPETS (f'c=4,500 PSI).

   CLASS B - MSE WALL LEVELING PAD (f'c=3,000 PSI).

   CLASS D - MOMENT SLABS (f'c=4,500 PSI).

   ALL EXPOSED EDGES OF CONCRETE SHALL BE CHAMFERED ¾", UNLESS NOTED OTHERWISE.

3. REINFORCING STEEL
   ALL REINFORCING STEEL SHALL BE AASHTO M31 (ASTM A615), GRADE 60 AND SHALL BE PROTECTED WITH FUSION BONDED EPOXY, CONFORMING TO AASHTO M 284 (ASTM A775).

4. MINIMUM CONCRETE COVER FOR REINFORCING STEEL SHALL BE 2" UNLESS NOTED OTHERWISE.

   THE MSE WALL MANUFACTURER MAY SUBSTITUTE ALTERNATE REINFORCING CONFIGURATIONS AND SUBMIT FOR APPROVAL.

5. ARCHITECTURAL FINISH
   COMPONENTS OF THE MSE WALL SHALL HAVE THE ARCHITECTURAL TREATMENT AS SPECIFIED IN THE SPECIAL PROVISION FOR ITEM 602772.

6. LEVELING PAD
   THE LEVELING PAD STEPS MAY BE RELOCATED AT THE DISCRETION OF THE PROPRIETARY WALL MANUFACTURER PROVIDED THAT THE MINIMUM EMBEDMENT IS MAINTAINED IN ACCORDANCE WITH THE SPECIFIED DESIGN CRITERIA. ANY CHANGES TO THE STEP LOCATIONS SHALL BE SUBMITTED TO THE ENGINEER FOR APPROVAL.

7. BACKFILL AND FOUNDATION SOILS
   MSE WALL BACKFILL SHALL CONSIST OF SELECT BACKFILL AND MEET THE REQUIREMENTS PROVIDED IN THE SPECIAL PROVISIONS. FOR ADDITIONAL REQUIREMENTS OF MSE WALL BACKFILL AND FOUNDATION SOILS, SEE SOIL PROPERTIES TABLE ON THIS SHEET.

8. INTERNAL STABILITY
   THE INTERNAL STABILITY OF THE MSE WALL SHALL BE DESIGNED BY THE PROPRIETARY WALL MANUFACTURER USING THE SOIL PROPERTIES PROVIDED AT EACH WALL LOCATION. THE INTERNAL STABILITY CALCULATIONS SHALL BE SIGNED AND SEALED BY A PROFESSIONAL ENGINEER LICENSED IN THE STATE OF DELEWARE AS INDICATED IN THE PROJECT SPECIFICATIONS.

9. QUARANTINE PERIOD
   SEE BRIDGE NO. 1-433 DWG. NO. AB-02 FOR QUARANTINE PERIOD AND SETTLEMENT MONITORING REQUIREMENTS ASSOCIATED WITH THIS STRUCTURE.

10. SETTLEMENT REQUIREMENTS
    THE CONTRACTOR AND MSE WALL MANUFACTURER SHALL DESIGN AND CONSTRUCT THE FINAL WALL FACING SUCH THAT THE THE FINAL WALL FACING IS AT THE REQUIRED ELEVATIONS AFTER SETTLEMENT IS ACHIEVED. THE ANTICIPATED SETTLEMENT IS 4 INCHES AT THE FACE OF THE WALL.

11. SERVICE LIFE
    ALL RETAINING WALL COMPONENTS SHALL BE DESIGNED FOR A MINIMUM SERVICE LIFE OF 100 YEARS.

12. WALL SYSTEM
    ONLY ONE WALL SYSTEM MAY BE USED ON THIS PROJECT.

13. TRAFFIC BARRIER JOINTS
    TRAFFIC BARRIER FOOTING / MOMENT SLABS SHALL HAVE CONSTRUCTION JOINTS TO COINCIDE WITH THE PARAPET AND ROADWAY PAVEMENT JOINTS.

14. EXPANSION AND CONTRACTION JOINTS
    THE LOCATION OF THE EXPANSION AND CONTRACTION JOINTS IN THE PARAPET / MOMENT SLAB SHOWN ON THE PLANS ARE LOCATED TO ALIGN WITH ROADWAY PAVEMENT JOINTS. ANY CHANGE TO THESE JOINT LOCATIONS SHALL BE SUBMITTED TO THE ENGINEER FOR APPROVAL.

15. COORDINATION
    CONTRACTOR AND PROPRIETARY WALL MANUFACTURER SHALL COORDINATE LOCATIONS OF DRAINAGE INLETS AND PIPES WITH LOCATIONS OF PROPRIETARY WALL TIE BACK SYSTEM AND MOMENT SLAB.

    PROPRIETARY MSE WALLS SHALL BE DESIGNED IN ACCORDANCE WITH THE FOLLOWING:

SOIL PROPERTIES

SOIL TYPE	UNIT WEIGHT (PCF)	DRAINED ANGLE OF FRICTION (DEGREES)	UNDRAINED SHEAR (PSF)
SELECT BACKFILL	125	34° (MIN.)	0
IN-SITU FOUNDATION SOIL	120	30°	0
RETAINED FILL	120	30°	0

RETAINING WALL RW1-3 INDEX OF SHEETS

SHEET NO.	DWG. NO.	TABLE OF CONTENTS
300	PN-01	PROJECT NOTES
301	GL-01	GEOMETRIC LAYOUT
302	PE-01	GENERAL PLAN AND ELEVATION - 1
303	PE-02	GENERAL PLAN AND ELEVATION - 2
304	PE-03	GENERAL PLAN AND ELEVATION - 3
305	PE-04	GENERAL PLAN AND ELEVATION - 4
306	RD-01	MSE WALL TYPICAL SECTIONS
307	MS-01	MOMENT SLAB PLAN - 1
308	MS-02	MOMENT SLAB PLAN - 2
309	MS-03	MOMENT SLAB PLAN - 3
310	MS-04	MOMENT SLAB PLAN - 4
311	MS-05	MOMENT SLAB PLAN - 5
312	MS-06	MOMENT SLAB PLAN - 6
313	MS-07	MOMENT SLAB PLAN - 7
314	MS-08	MOMENT SLAB REINFORCEMENT DETAILS - 1
315	MS-09	MOMENT SLAB REINFORCEMENT DETAILS - 2
316	MS-10	MOMENT SLAB REINFORCEMENT DETAILS - 3
317	MS-11	MOMENT SLAB REINFORCEMENT DETAILS - 4
318	MS-12	MOMENT SLAB REINFORCEMENT SECTION - 1
319	MS-13	MOMENT SLAB REINFORCEMENT SECTION - 2
320	MS-14	MOMENT SLAB MODIFICATION DETAILS - 1
321	MS-15	MOMENT SLAB MODIFICATION DETAILS - 2
322	BR-01	MOMENT SLAB REINFORCEMENT BAR LIST
323	BO-01	BORING PROFILE - 1
324	BO-02	BORING PROFILE - 2
325	BO-03	BORING PROFILE - 3
326	BO-04	BORING PROFILE - 4

QUANTITY SUMMARY

ITEM NO.	ITEM DESCRIPTION	UNITS	QUANTITY
302012	DELAWARE NO. 57 STONE	TON	300
602017	PORTLAND CEMENT CONCRETE MASONRY, PARAPET, CLASS A	CY	115
602018	PORTLAND CEMENT CONCRETE MASONRY, CLASS D	CY	500
602772	MECHANICALLY STABILIZED EARTH WALLS	LS	1
604000	BAR REINFORCEMENT, EPOXY COATED	LB	94,220
760015	RUMBLE STRIPS, CONCRETE, SHALLOW DEPTH	LF	904

UNOFFICIAL WEBSITE COPY

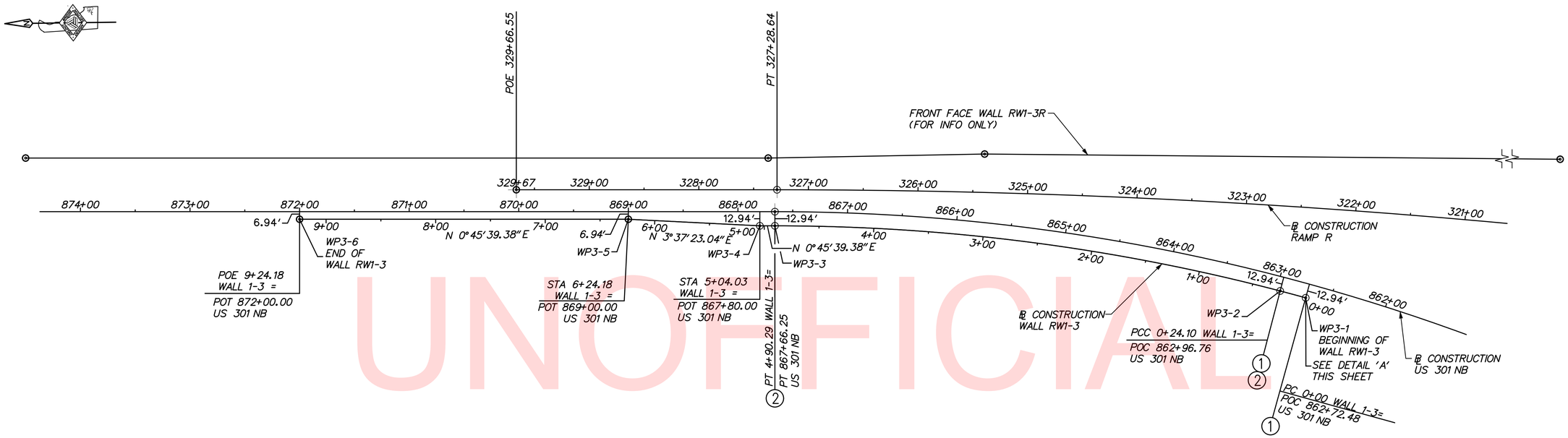

GEOMETRIC LAYOUT PLAN
SCALE: 1" = 50'-0"

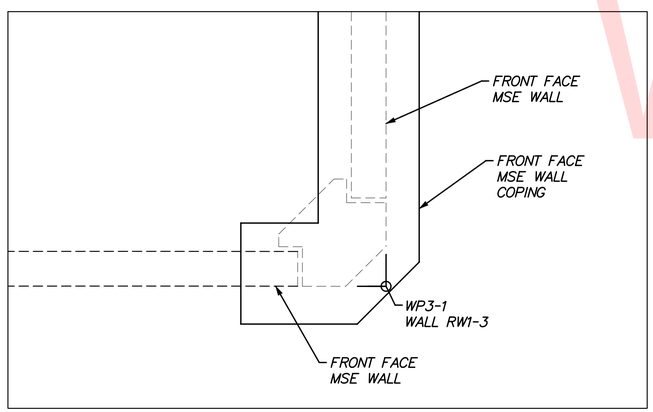

DETAIL 'A'
SCALE: 1" = 1'-0"

WORKING POINT COORDINATES			
WORKING POINT	BL CONSTRUCTION WALL RW1-3	COORDINATES	
		NORTHING	EASTING
WP3-1	STA. 0+00.00	557463.8239	590463.2145
WP3-2	STA. 0+24.10	557487.0131	590469.7942
WP3-3	STA. 4+90.29	557947.2681	590535.3867
WP3-4	STA. 5+04.03	557961.0133	590535.5692
WP3-5	STA. 6+24.18	558080.9230	590543.1623
WP3-6	STA. 9+24.18	558380.8966	590547.1465

CIRCULAR CURVE NO. 1 - BL CONSTRUCTION WALL RW1-3			
		NORTHING	EASTING
PC (WP3-1)	0+00.00	557463.8239	590463.2145
PI	0+12.05	557475.3967	590466.5812
CC		557971.3996	588718.4844
PCC (WP3-2)	0+24.10	557487.0131	590469.7942
RADIUS:	1817.0625		
DELTA:	0°45'36.2631" LEFT		
DEGREE OF CURVATURE (ARC):	3°09'11.5526"		
LENGTH:	24.1047		
TANGENT:	12.0526		
CHORD:	24.1046		
MIDDLE ORDINATE:	0.0400		
EXTERNAL:	0.0400		
TANGENT DIRECTION:	N 16°13'14.6407" E		
RADIAL DIRECTION:	S 73°46'45.3595" E		
CHORD DIRECTION:	N 15°50'26.5091" E		
RADIAL DIRECTION:	S 74°32'21.6226" E		
TANGENT DIRECTION:	N 15°27'38.3775" E		

CIRCULAR CURVE NO. 2 - BL CONSTRUCTION WALL RW1-3			
		NORTHING	EASTING
PC (WP3-2)	0+24.10	557487.0131	590469.7942
PI	2+58.48	557712.9103	590532.2740
CC		557971.3996	588718.4844
PCC (WP3-3)	4+90.29	557947.2681	590535.3867
RADIUS:	1817.0625		
DELTA:	14°41'59.0023" LEFT		
DEGREE OF CURVATURE (ARC):	3°09'11.5526"		
LENGTH:	466.1829		
TANGENT:	234.3785		
CHORD:	464.9054		
MIDDLE ORDINATE:	14.9299		
EXTERNAL:	15.0536		
TANGENT DIRECTION:	N 15°27'38.3775" E		
RADIAL DIRECTION:	S 74°32'21.6226" E		
CHORD DIRECTION:	N 8°06'38.8763" E		
RADIAL DIRECTION:	S 89°14'20.6247" E		
TANGENT DIRECTION:	N 0°45'39.3753" E		

NOTES:

1. THE BL CONSTRUCTION WALL RW1-3 IS ALONG FRONT FACE OF MSE WALL PANELS.
2. FOR WALL RW1-3 PLAN AND ELEVATIONS, SEE DWG. NOS. PE-01 THROUGH PE-04.
3. WALL 1-3 WORKING POINT OFFSETS ARE PERPENDICULAR TO BL CONSTRUCTION US 301 NB.
4. FOR ADDITIONAL BRIDGE 1-433 GEOMETRIC DETAILS, SEE DWG. NO. FT-02.

UNOFFICIAL WEBSITE COPY

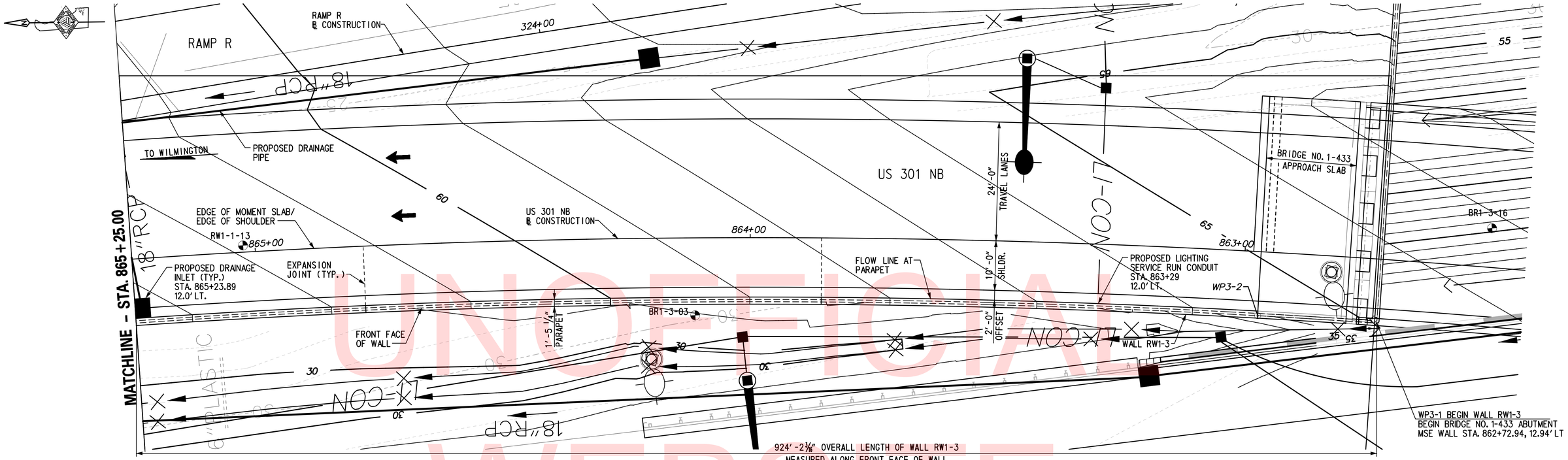

TEST BORINGS				
BORING DESIGNATION	STATION	OFFSET	NORTHING	EASTING
BR1-3-16	862+50.66	1.36' RT.	557437.0000	590477.0000
BR1-3-03	864+11.23	15.65' LT.	557598.0000	590494.0000
RW1-3-13	865+02.42	7.92' RT.	557684.2400	590527.1900

PLAN

SCALE: 1" = 10'-0"

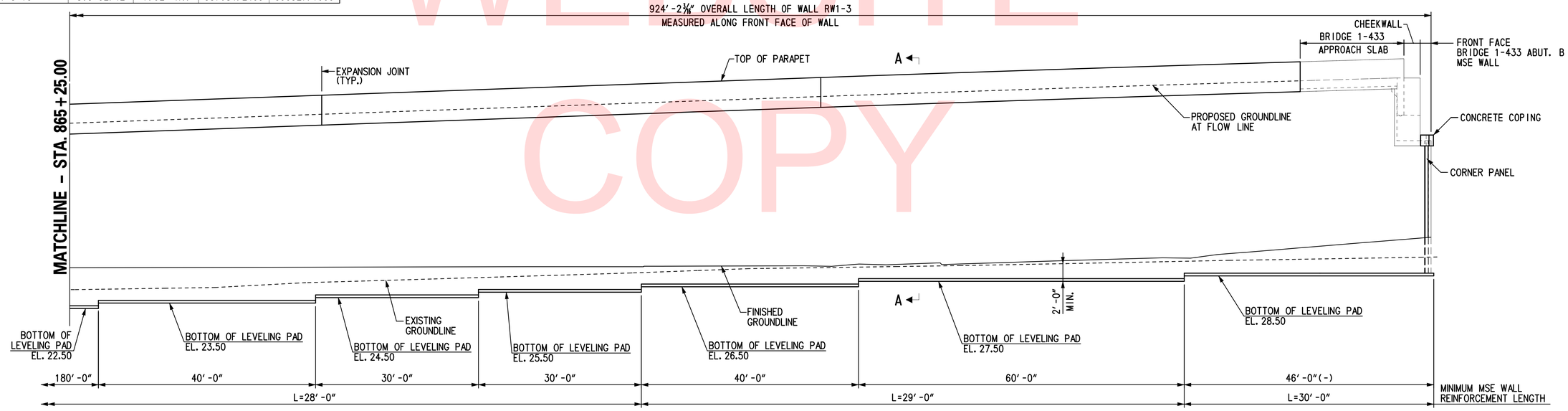

ELEVATION

SCALE: 1" = 10'-0"

NOTES:

1. FOR ADDITIONAL ABUTMENT INFORMATION AND DETAILS, SEE BRIDGE 1-433 DWG. NO. AB-05.
2. RW1-3 MOMENT SLAB EXPANSION JOINTS SHALL ALIGN WITH ADJACENT ROADWAY PAVEMENT JOINTS, SEE RDWY DWG. NOS. EX-01 THROUGH EX-10.
3. FOR WALL RW1-3 LAYOUT INFORMATION AND WORKING POINT DETAILS, SEE DWG. NO. GL-01.
4. FOR ADDITIONAL INFORMATION ON MOMENT SLABS INCLUDING TYPICAL SECTION, REINFORCEMENT DETAILS AND NOTES, SEE DWG. NOS. RD-01 AND MS-01 THROUGH MS-15.

REFERENCES:

1. FOR PROJECT NOTES, SEE DWG. NO. PN-01.
2. FOR GEOMETRIC LAYOUT, SEE DWG. NO. GL-01.
3. FOR SECTION A-A, SEE DWG. NO. RD-01.

UNOFFICIAL WEBSITE COPY

\\tetlan1\S\Projects\2008\PE-ED0836 (DelDOT US 301_#1445)\7. Transportation\1. Bridges\Drawings\Final_PS&E\RW1-3 & RW1-3R\RW1-3\PE01_rw1-3.dgn
2/27/2013 1:07:11 PM

DELAWARE DEPARTMENT OF TRANSPORTATION

ADDENDUMS / REVISIONS

SCALE: AS NOTED

US 301 & SR 1 INTERCHANGE

CONTRACT	BRIDGE NO.	RW1-3
T200911302	DESIGNED BY:	KGD
COUNTY		
NEW CASTLE	CHECKED BY:	KEE

GENERAL PLAN & ELEVATION - 1

RW1-3 PE-01

SHEET NO. 302

TOTAL SHTS. 491

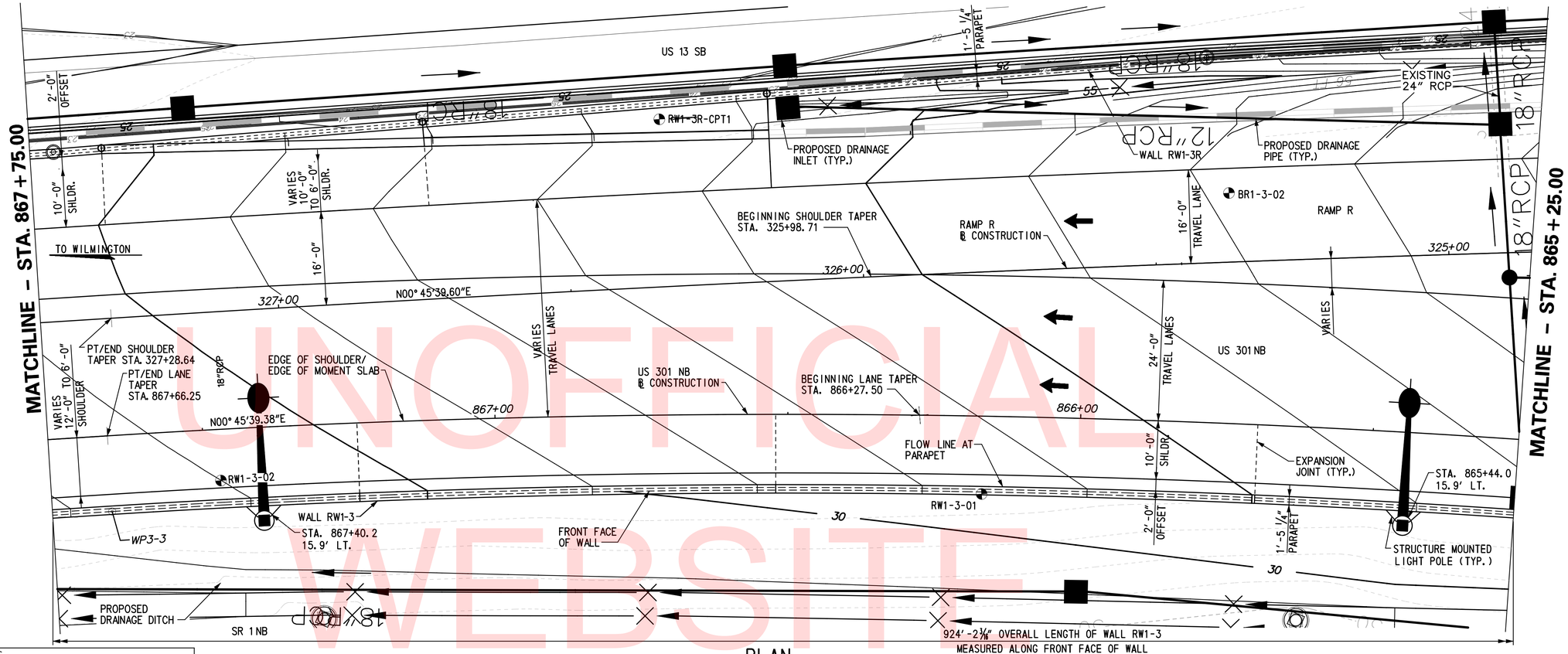

PLAN

SCALE: 1" = 10'-0"

TEST BORINGS				
BORING DESIGNATION	STATION	OFFSET	NORTHING	EASTING
BR1-3-02	865+76.26	39.32' RT.	557753.0000	590575.0000
RW1-3-01	866+16.64	13.29' LT.	557799.0000	590527.1900
RW1-3-02	867+47.29	8.74' LT.	557928.3400	590539.2330
RW1-3R-CPT1	869+71.36	50.50' RT.	557849.0000	590595.0000

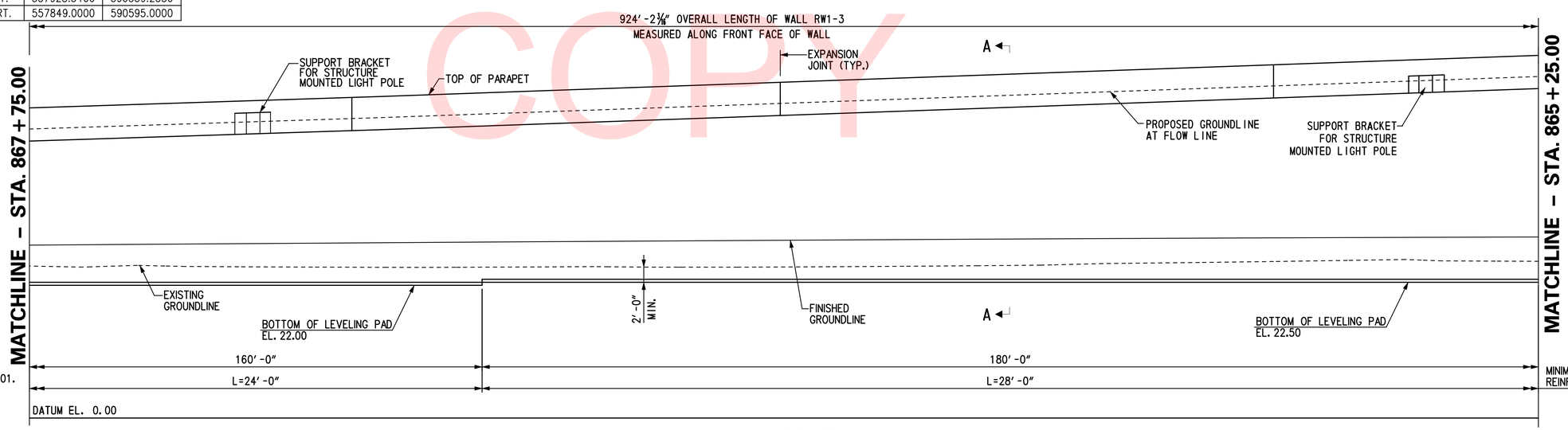

ELEVATION

SCALE: 1" = 10'-0"

REFERENCES:

1. FOR PROJECT NOTES, SEE DWG. NO. PN-01.
2. FOR GEOMETRIC LAYOUT, SEE DWG. NO. GL-01.
3. FOR SECTION A-A, SEE DWG. NO. RD-01.

NOTES:

1. FOR RW1-3 GEOMETRIC LAYOUT AND WORKING POINT DETAILS, SEE DWG. NO. GL-01.
2. RW1-3 MOMENT SLAB EXPANSION JOINTS SHALL ALIGN WITH ADJACENT ROADWAY PAVEMENT JOINTS, SEE RDWY DWG. NOS. EX-01 THROUGH EX-10.

UNOFFICIAL WEBSITE COPY

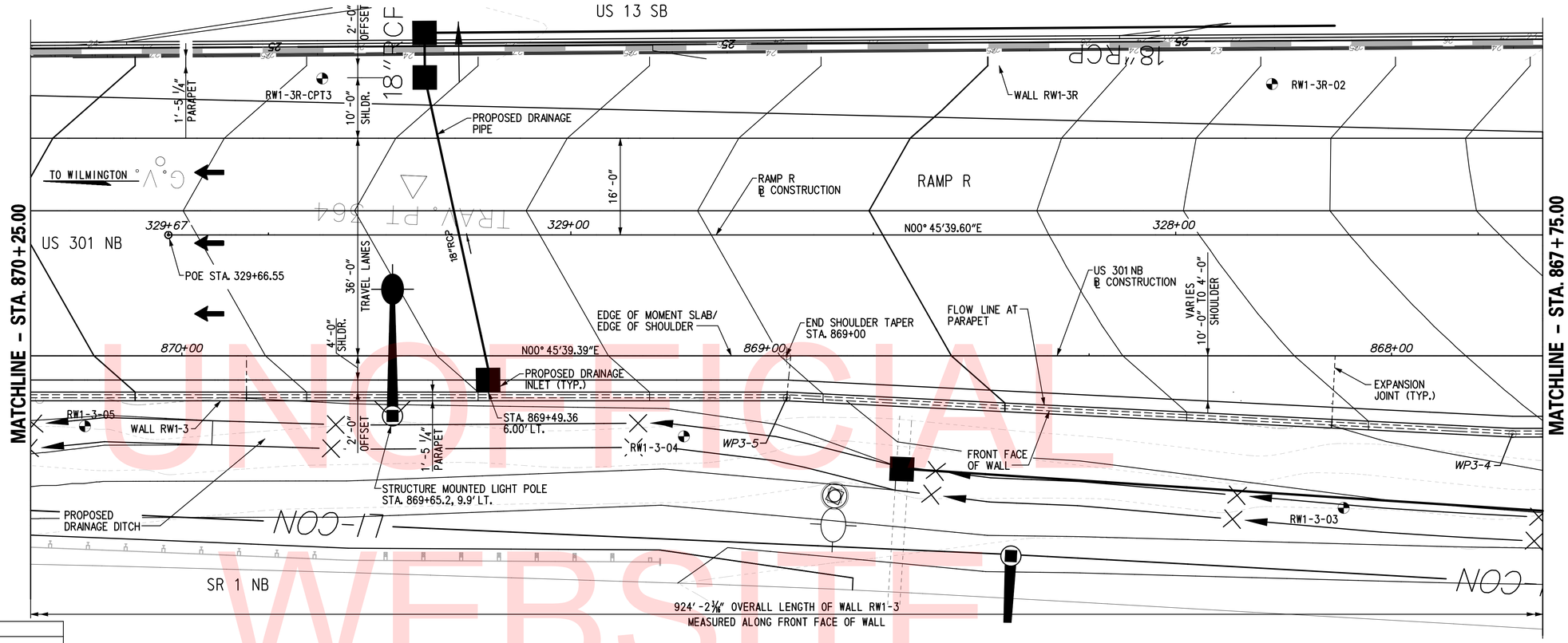

PLAN

SCALE: 1" = 10'-0"

TEST BORINGS				
BORING DESIGNATION	STATION	OFFSET	NORTHING	EASTING
BR1-3-03	868+07.72	25.16 LT.	557989.0900	590523.7200
RW1-3R-02	868+19.76	44.97 RT.	558000.0000	590594.0000
RW1-3-04	869+16.99	13.33' LT.	558098.0000	590537.0000
RW1-3-05	870+16.02	11.64' LT.	558197.0000	590540.0000
RW1-3R-CPT3	869+76.79	45.89' RT.	558157.0000	590597.0000

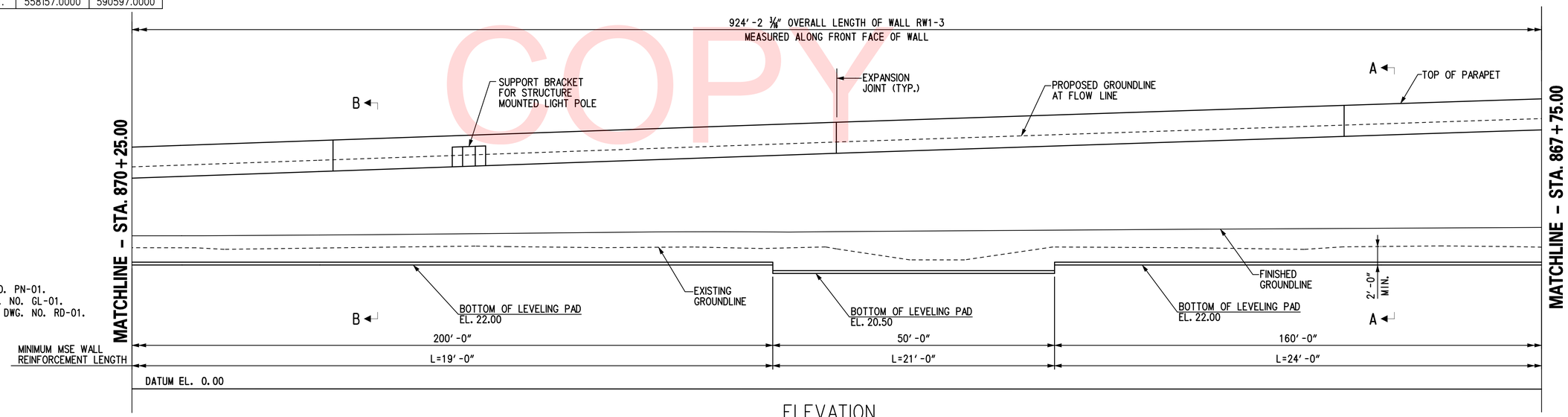

ELEVATION

SCALE: 1" = 10'-0"

REFERENCES:

1. FOR PROJECT NOTES, SEE DWG. NO. PN-01.
2. FOR GEOMETRIC LAYOUT, SEE DWG. NO. GL-01.
3. FOR SECTIONS A-A AND B-B, SEE DWG. NO. RD-01.

NOTES:

1. FOR RW1-3 GEOMETRIC LAYOUT AND WORKING POINT DETAILS, SEE DWG. NO. GL-01.
2. RW1-3 MOMENT SLAB EXPANSION JOINTS SHALL ALIGN WITH ADJACENT ROADWAY PAVEMENT JOINTS, SEE RDWY DWG. NOS. EX-01 THROUGH EX-10.

UNOFFICIAL WEBSITE COPY

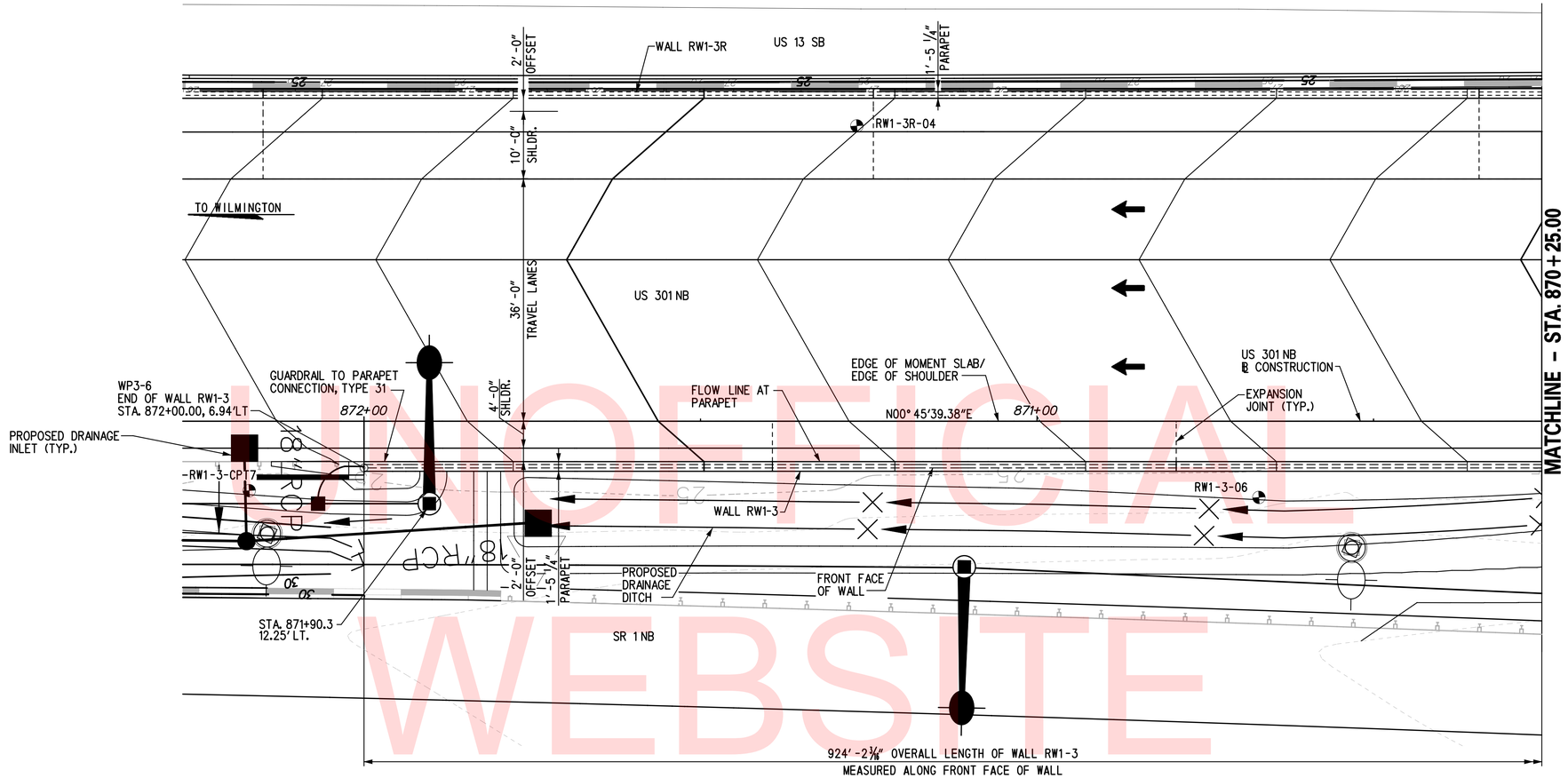

PLAN
SCALE: 1" = 10'-0"

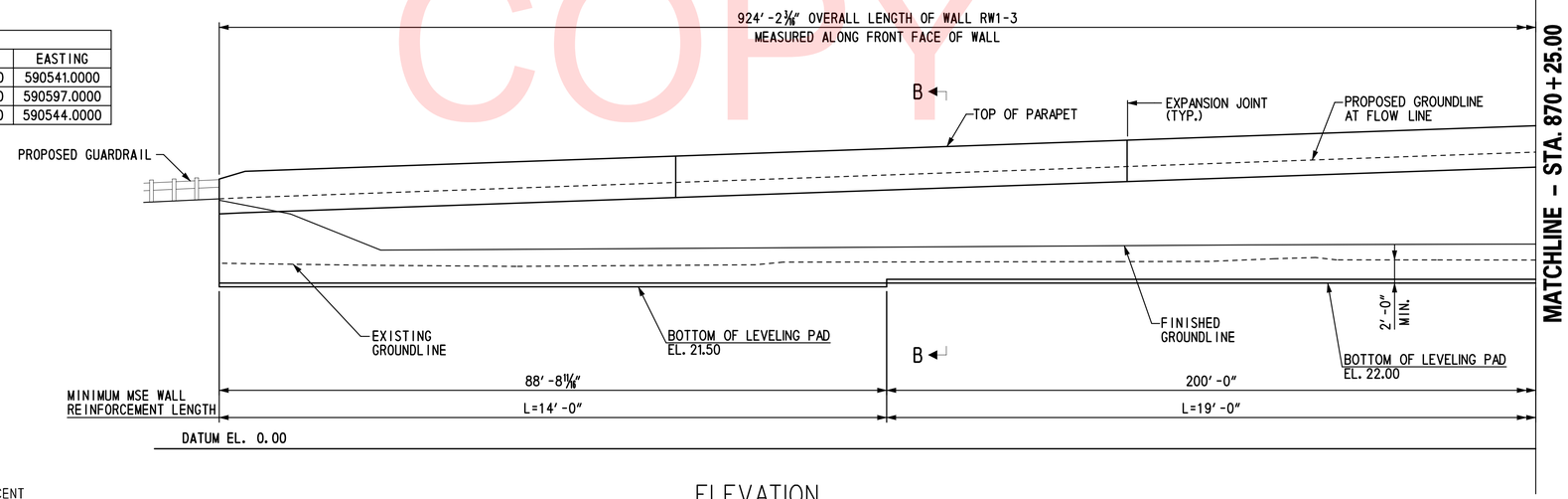

ELEVATION
SCALE: 1" = 10'-0"

TEST BORINGS				
BORING DESIGNATION	STATION	OFFSET	NORTHING	EASTING
RW1-3-06	870+67.03	11.32' LT.	558248.0000	590541.0000
RW1-3R-04	871+26.77	43.89' RT.	558307.0000	590597.0000
RW1-3-CPT7	872+17.06	10.31' LT.	558398.0000	590544.0000

REFERENCES:

1. FOR PROJECT NOTES, SEE DWG. NO. PN-01.
2. FOR GEOMETRIC LAYOUT, SEE DWG. NO. GL-01.
3. FOR SECTION B-B, SEE DWG. NO. RD-01.

NOTES:

1. FOR RW1-3 GEOMETRIC LAYOUT AND WORKING POINT DETAILS, SEE DWG. NO. GL-01.
2. FOR ADDITIONAL INFORMATION ON MOMENT SLABS INCLUDING TYPICAL SECTION, REINFORCEMENT, DETAILS AND NOTES, SEE DWG. NOS. RD-01, MS-01 THROUGH MS-15.
3. RW1-3 MOMENT SLAB EXPANSION JOINTS SHALL ALIGN WITH ADJACENT ROADWAY PAVEMENT JOINTS, SEE RDWY DWG. NOS. EX-01 THROUGH EX-10.

UNOFFICIAL WEBSITE COPY

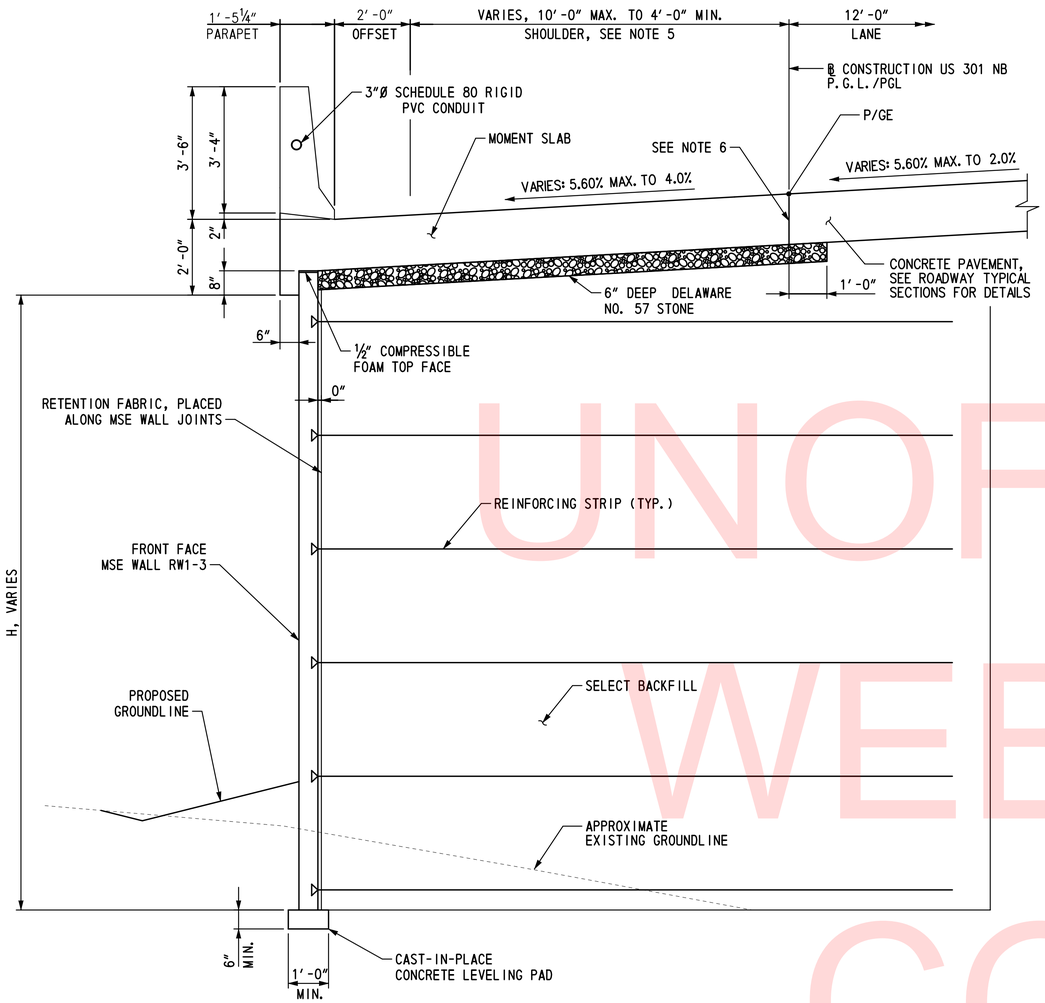

SECTION A-A

SCALE: ½"=1'-0"

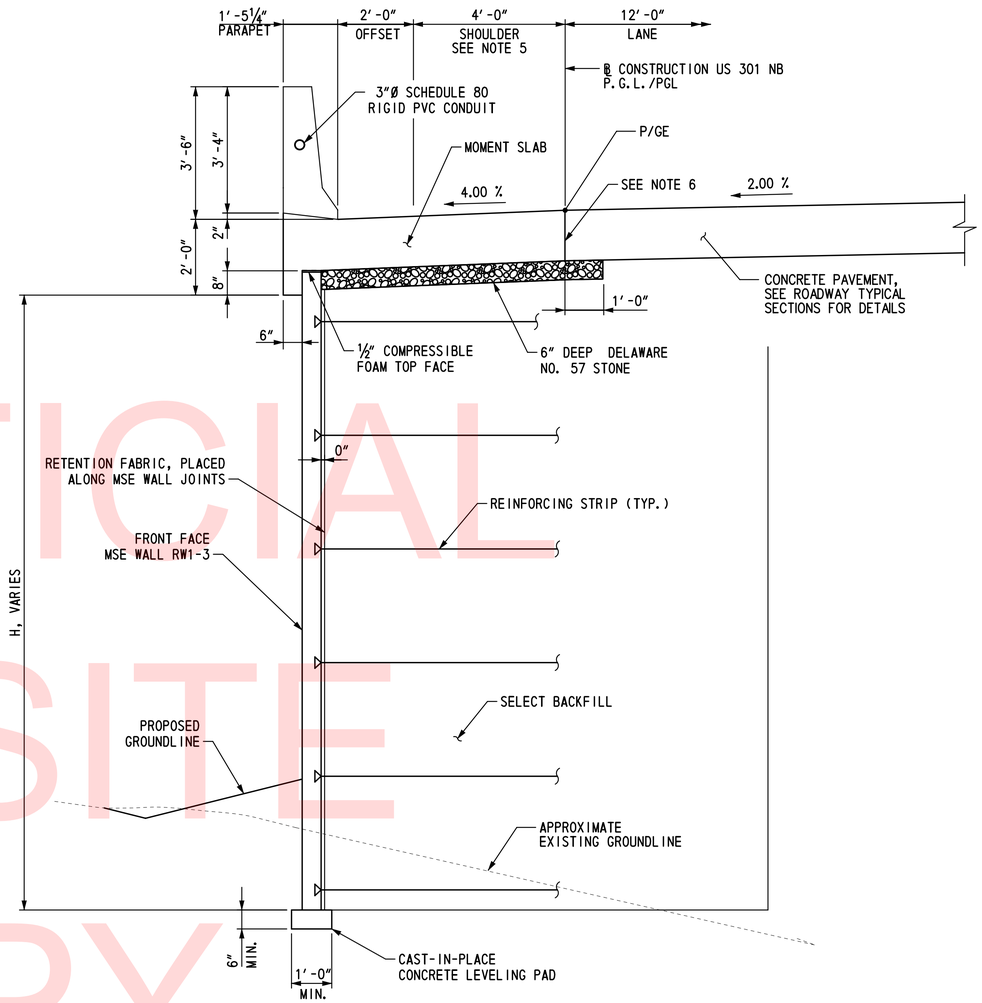

SECTION B-B

SCALE: ½"=1'-0"

UNOFFICIAL WEBSITE COPY

NOTES:

1. FOR LOCATION OF SECTIONS A-A AND B-B, SEE DWG. NOS. PE-01 THRU PE-04.
2. FOR MSE WALL NOTES AND SOIL PROPERTIES, SEE DWG. NO. PN-01.
3. FOR ROADWAY TYPICAL SECTIONS, SEE DWG. NOS. TS-02 AND TS-03.
4. PAYMENT FOR CONSTRUCTION OF MOMENT SLABS SHALL BE MADE UNDER ITEM 602018 - PORTLAND CEMENT MASONRY CLASS D. PAYMENT FOR PREFORMED JOINT FILLER, DOWEL BARS AND METAL EXPANSION SLEEVES SHALL BE INCIDENTAL TO THIS ITEM.
5. RUMBLE STRIPS SHALL BE LOCATED IN THE MOMENT SLAB ADJACENT TO THE SHOULDER. FOR RUMBLE STRIP DETAIL, SEE DWG. NO. DT-01. RUMBLE STRIPS SHALL BE PAID UNDER ITEM 760015, RUMBLE STRIPS, CONCRETE, SHALLOW DEPTH. RUMBLE STRIPS SHALL BE COATED WITH A HIGH MOLECULAR WEIGHT METHACRYLATE SEALER. SEE SPECIAL PROVISION ITEM 602501. THE SEALER SHALL BE APPLIED IN ACCORDANCE WITH THE MANUFACTURER'S RECOMMENDATIONS IN A 1'-8" WIDE STRIP, CENTERED ON THE RUMBLE STRIPS, CONTINUOUSLY FOR THE LENGTH OF RETAINING WALL RW1-3 MOMENT SLABS. COST OF HIGH MOLECULAR WEIGHT METHACRYLATE SEALER SHALL BE INCIDENTAL TO ITEM 760015, RUMBLE STRIPS, CONCRETE, SHALLOW DEPTH.
6. PRIOR TO PLACING MOMENT SLAB CONCRETE ADJACENT TO EXISTING CONCRETE PAVEMENT, OR PRIOR TO PLACING CONCRETE PAVEMENT ADJACENT TO EXISTING MOMENT SLAB CONCRETE, AN APPROVED BOND BREAKER SHALL BE APPLIED TO THE EXISTING CONCRETE VERTICAL FACE. THIS LONGITUDINAL JOINT AT THE INTERFACE BETWEEN THE CONCRETE PAVEMENT AND THE MOMENT SLAB CONCRETE SHALL NOT BE SEALED. VERTICAL CRACKS IN THE EXISTING CONCRETE FACE SHALL BE COVERED OR SEALED AS APPROVED BY THE ENGINEER TO PREVENT INTRUSION OF THE NEW CONCRETE INTO THE EXISTING CONCRETE. ALL WORK SHALL BE INCIDENTAL TO ITEM NO. 602018 - PORTLAND CEMENT CONCRETE MASONRY, CLASS D.
7. REFLECTORS SHALL BE INSTALLED ALONG PARAPET (ROADWAY ITEM). FOR DETAILS, SEE DWG. NO. DT-05.

C:\Projects\2008\PE\ED0836 (DelDOT US 301_*1445)\1. Bridges\Drawings\Final_PS&E\RW1-3 & RW1-3R\RW1-3\RD01_rw1-3.DGN
10/22/2015 9:39:10 PM

DELAWARE DEPARTMENT OF TRANSPORTATION	ADDENDUMS / REVISIONS	SCALE: AS NOTED	US 301 & SR 1 INTERCHANGE	CONTRACT T200911302	BRIDGE NO. RW1-3	MSE WALL TYPICAL SECTIONS	RW1-3 RD-01
				COUNTY NEW CASTLE	DESIGNED BY: KMG		SHEET NO. 306
					CHECKED BY: KEE		TOTAL SHTS. 491

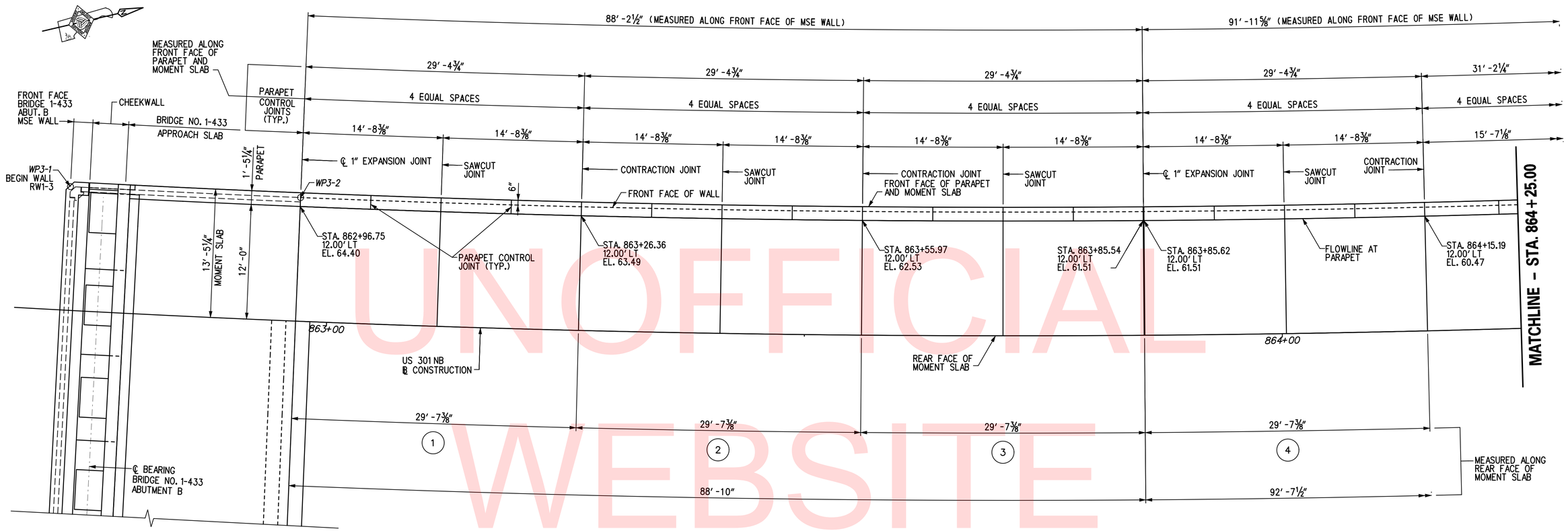

PLAN
SCALE: 3/16" = 1'-0"

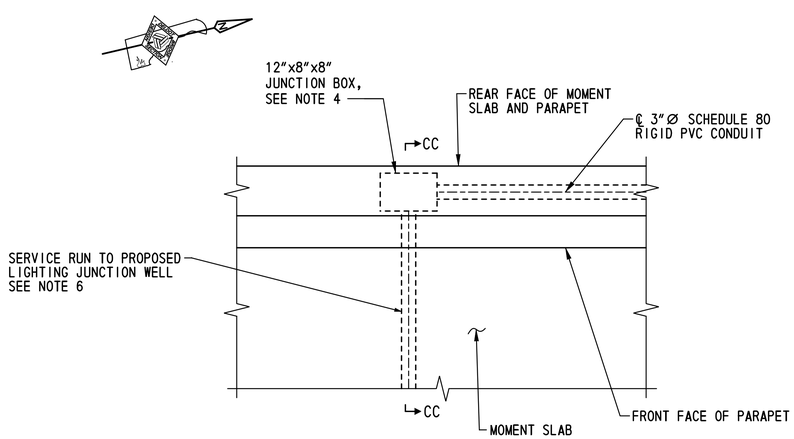

PLAN - PARAPET AT MOMENT SLAB PANEL NO. 2
SCALE: 3/4 "=1'-0"

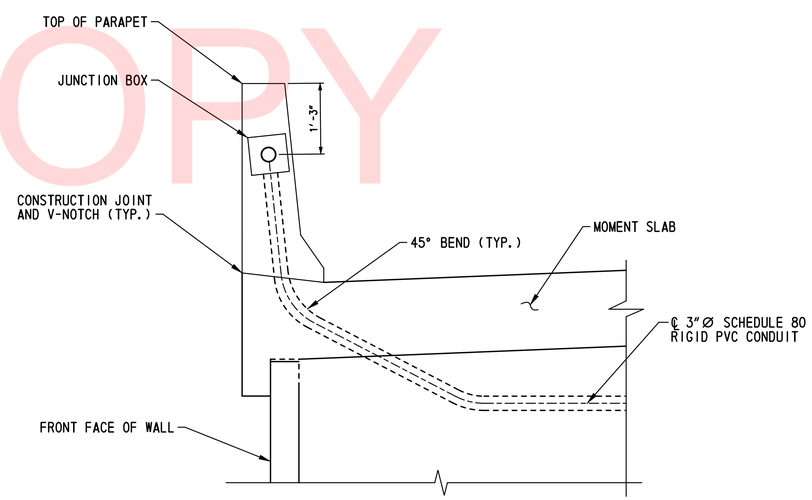

SECTION CC-CC
SCALE: 3/4 "=1'-0"

LEGEND:

(4) MOMENT SLAB I.D. DESIGNATION

NOTES:

1. FOR RW1-3 GEOMETRIC LAYOUT AND WORKING POINT DETAILS, SEE DWG. NO. GL-01.
2. FOR MOMENT SLAB TYPICAL SECTION, SEE DWG. NO. RD-01.
3. FOR REINFORCEMENT DETAILS, SEE DWG. NO. MS-08 TO MS-11.
4. ALL JUNCTION BOXES SHALL BE 12" LONG x 8" HIGH x 8" DEEP NEMA 4X STAINLESS STEEL JUNCTION BOXES WITH COVERS MOUNTED IN THE FRONT FACE OF THE PARAPET.
5. CONDUITS AND JUNCTION BOXES INSTALLED IN THE BRIDGE, APPROACH SLAB AND MOMENT SLAB PARAPETS WILL NOT BE MEASURED AND PAID OR SEPARATELY BUT WILL BE INCIDENTAL TO ITEM 602017 - PORTLAND CEMENT CONCRETE MASONRY, PARAPET, CLASS A. CONDUITS AND ALL NECESSARY FITTINGS SUPPLIED FOR INSTALLATION IN PARAPETS SHALL MEET THE MATERIAL REQUIREMENTS OF ITEM NO. 745522 - SUPPLY OF 3" SCHEDULE 80 PVC CONDUIT.
6. FOR ADDITIONAL CONDUIT SERVICE RUN AND LIGHTING DETAILS, SEE DWG. NOS. LI-02, LI-04 AND LI-15.

UNOFFICIAL WEBSITE COPY

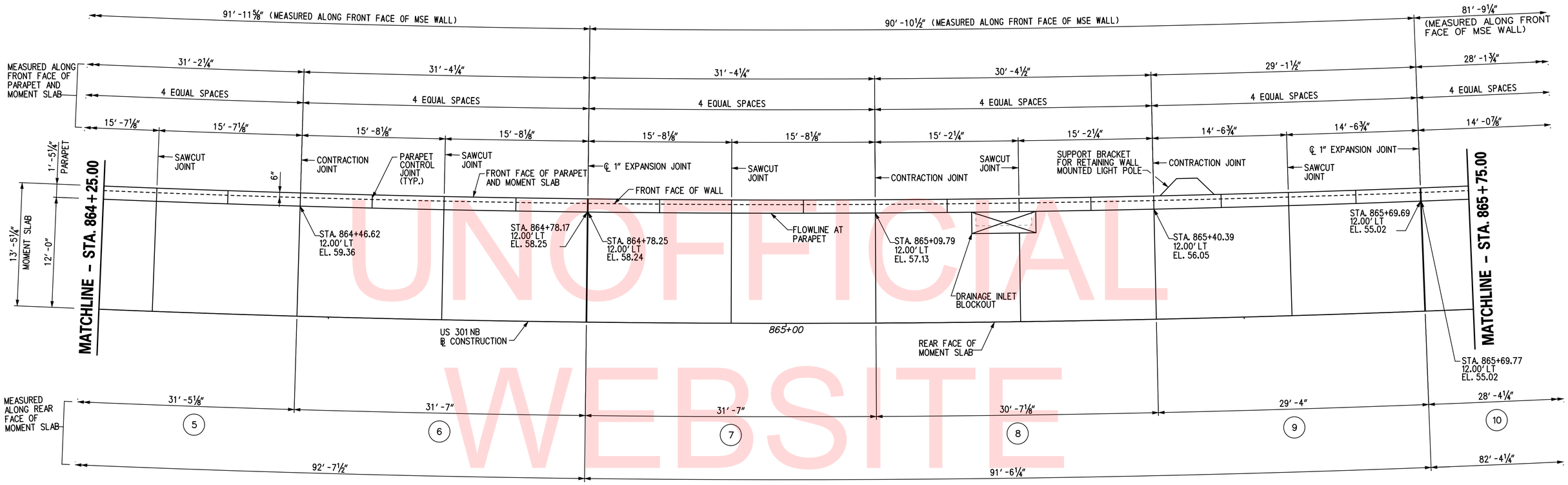

PLAN

SCALE: 3/16″ = 1′-0″

UNOFFICIAL WEBSITE COPY

LEGEND:

(5) MOMENT SLAB I.D. DESIGNATION

NOTES:

1. FOR RW1-3 GEOMETRIC LAYOUT AND WORKING POINT DETAILS, SEE DWG. NO. GL-01.
2. FOR MOMENT SLAB TYPICAL SECTION, SEE DWG. NO. RD-01.
3. FOR REINFORCEMENT DETAILS, SEE DWG. NO. MS-08 TO MS-11.

RW1-3
MS-02

DELAWARE DEPARTMENT OF TRANSPORTATION	ADDENDUMS / REVISIONS	SCALE: AS NOTED	US 301 & SR 1 INTERCHANGE	CONTRACT T200911302	BRIDGE NO. RW1-3	MOMENT SLAB PLAN – 2	SHEET NO. 308
				COUNTY NEW CASTLE	DESIGNED BY: TSD		TOTAL SHTS. 491
					CHECKED BY: KEE		

\\tsplan1\S\Projects\2008\PEI-ED0836 (DelDOT US 301_*1445)\7. Transportation\1. Bridges\Drawings\Final_PS&E\RW1-3 & RW1-3R\RW1-3\MS02_rw1-3.dgn
2/27/2013 1:19:27 PM

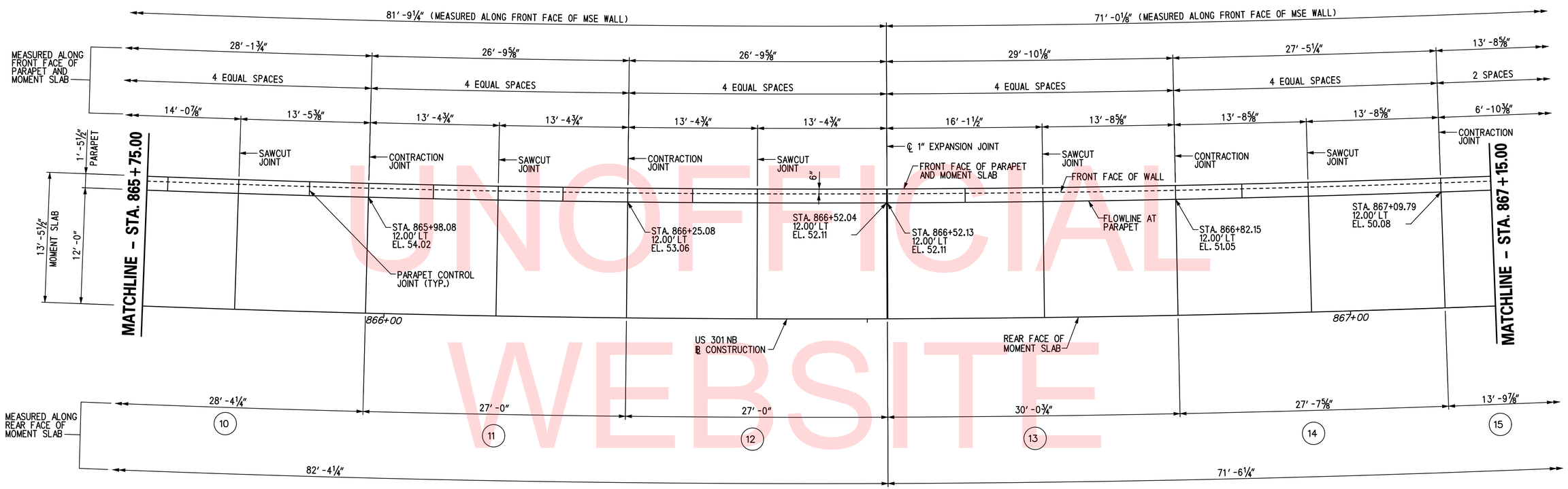

PLAN
SCALE: 3/16″ = 1′-0″

UNOFFICIAL WEBSITE COPY

LEGEND:

(4) MOMENT SLAB I.D. DESIGNATION

NOTES:

1. FOR RW1-3 GEOMETRIC LAYOUT AND WORKING POINT DETAILS, SEE DWG. NO. GL-01.
2. FOR MOMENT SLAB TYPICAL SECTION, SEE DWG. NO. RD-01.
3. FOR REINFORCEMENT DETAILS, SEE MS-08 TO MS-11.

RW1-3
MS-03

DELAWARE DEPARTMENT OF TRANSPORTATION	ADDENDUMS / REVISIONS	SCALE: AS NOTED	US 301 & SR 1 INTERCHANGE	CONTRACT T200911302	BRIDGE NO. RW1-3	MOMENT SLAB PLAN – 3	SHEET NO. 309
				COUNTY NEW CASTLE	DESIGNED BY: TSD		TOTAL SHTS. 491
					CHECKED BY: KEE		

\\tsclient\S\Projects\2008\PEI-ED0836 (DelDOT US 301_*1445)\7. Transportation\1. Bridges\Drawings\Final_PS&E\RW1-3 & RW1-3R\RW1-3\MS03_rw1-3.dgn
2/27/2013 1:17:02 PM

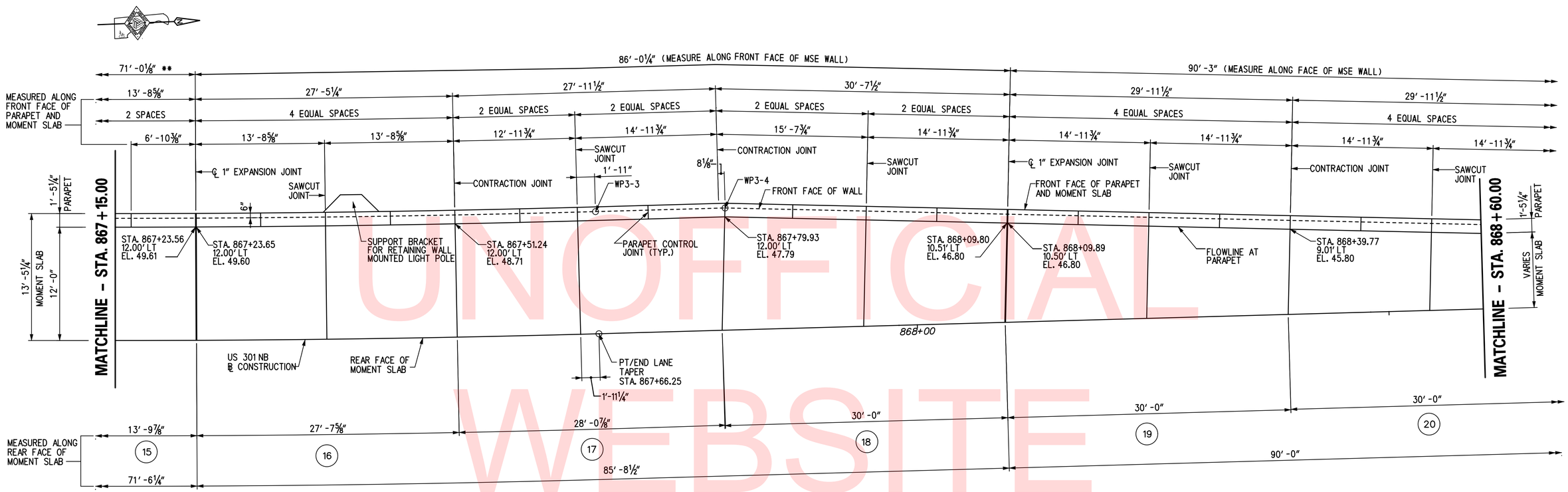

PLAN
SCALE: 3/16″ = 1′-0″

UNOFFICIAL WEBSITE COPY

LEGEND:

(15) MOMENT SLAB I.D. DESIGNATION

** MEASURED ALONG FRONT FACE OF MSE WALL

NOTES:

1. FOR RW1-3 GEOMETRIC LAYOUT AND WORKING POINT DETAILS, SEE DWG. NO. GL-01.
2. FOR MOMENT SLAB TYPICAL SECTION, SEE DWG. NO. RD-01.
3. FOR REINFORCEMENT DETAILS, SEE DWG. NO. MS-08 TO MS-11.

RW1-3
MS-04

DELAWARE DEPARTMENT OF TRANSPORTATION	ADDENDUMS / REVISIONS	SCALE: AS NOTED	US 301 & SR 1 INTERCHANGE	CONTRACT T200911302	BRIDGE NO. RW1-3	MOMENT SLAB PLAN – 4	SHEET NO. 310
				COUNTY NEW CASTLE	DESIGNED BY: TSD		TOTAL SHTS. 491
					CHECKED BY: KEE		

\\tcdient\S\Projects\2008\PEI-ED0836 (DelDOT US 301_*1445)\7. Transportation\1. Bridges\Drawings\Final_PS&E\RW1-3 & RW1-3R\RW1-3\MS04_rw1-3.dgn
2/22/2013 11:17:51 PM

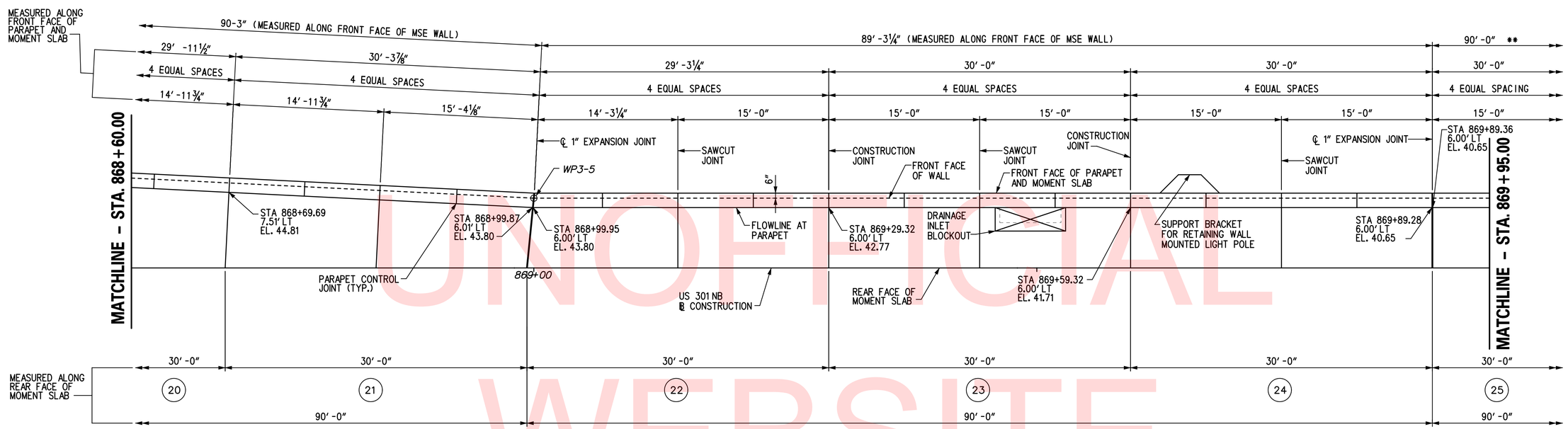

PLAN
SCALE: 3/16" = 1'-0"

UNOFFICIAL WEBSITE COPY

LEGEND:

(4) MOMENT SLAB I.D. DESIGNATION

** (MEASURED ALONG FRONT FACE OF MSE WALL)

NOTES:

1. FOR RW1-3 GEOMETRIC LAYOUT AND WORKING POINT DETAILS, SEE DWG. NO. GL-01.
2. FOR MOMENT SLAB TYPICAL SECTION, SEE DWG. NO. RD-01.
3. FOR REINFORCEMENT DETAILS, SEE DWG. NO. MS-08 TO MS-11.

RW1-3
MS-05

DELAWARE DEPARTMENT OF TRANSPORTATION	ADDENDUMS / REVISIONS	SCALE: AS NOTED	US 301 & SR 1 INTERCHANGE	CONTRACT T200911302	BRIDGE NO. RW1-3	MOMENT SLAB PLAN - 5	SHEET NO. 311
				COUNTY NEW CASTLE	DESIGNED BY: TSD		TOTAL SHTS. 491
					CHECKED BY: KEE		

\\tnetgent\S\Projects\2008\PE-ED0836 (DelDOT US 301_*1445)\7. Transportation\1. Bridges\Drawings\Final_PS&E\RW1-3 & RW1-3R\RW1-3\MS05_rw1-3.dgn
2/2/2013 1:29:31 PM

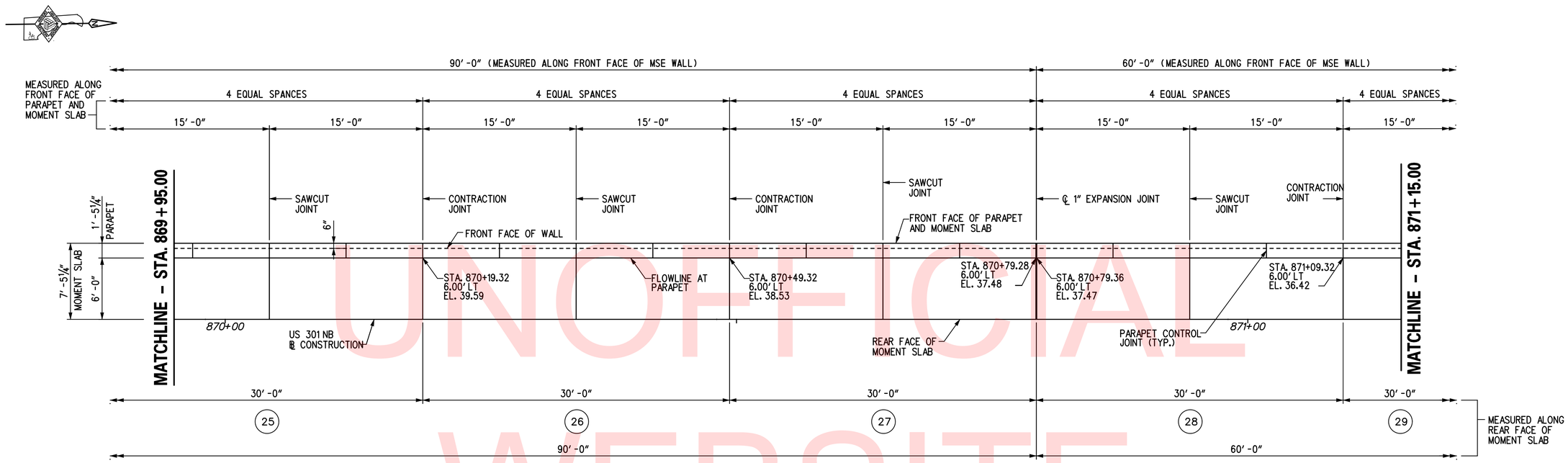

PLAN
SCALE: 3/16″ = 1′-0″

UNOFFICIAL WEBSITE COPY

LEGEND:

(25) MOMENT SLAB I.D. DESIGNATION

NOTES:

1. FOR RW1-3 GEOMETRIC LAYOUT AND WORKING POINT DETAILS, SEE DWG. NO. GL-01.
2. FOR MOMENT SLAB TYPICAL SECTION, SEE DWG. NO. RD-01.
3. FOR REINFORCEMENT DETAILS, SEE DWG. NO. MS-08 TO MS-11.

RW1-3
MS-06

DELAWARE DEPARTMENT OF TRANSPORTATION	ADDENDUMS / REVISIONS	SCALE: AS NOTED	US 301 & SR 1 INTERCHANGE	CONTRACT T200911302	BRIDGE NO. RW1-3	MOMENT SLAB PLAN – 6	SHEET NO. 312
				COUNTY NEW CASTLE	DESIGNED BY: TSD		TOTAL SHTS. 491
					CHECKED BY: KEE		

\\tnetjent\S\Projects\2008\PE\ED0836 (DelDOT US 301_*1445)\7. Transportation\1. Bridges\Drawings\Final_PS&E\RW1-3 & RW1-3R\RW1-3\MS06_rw1-3.dgn
2/2/2013 12:24:49 PM

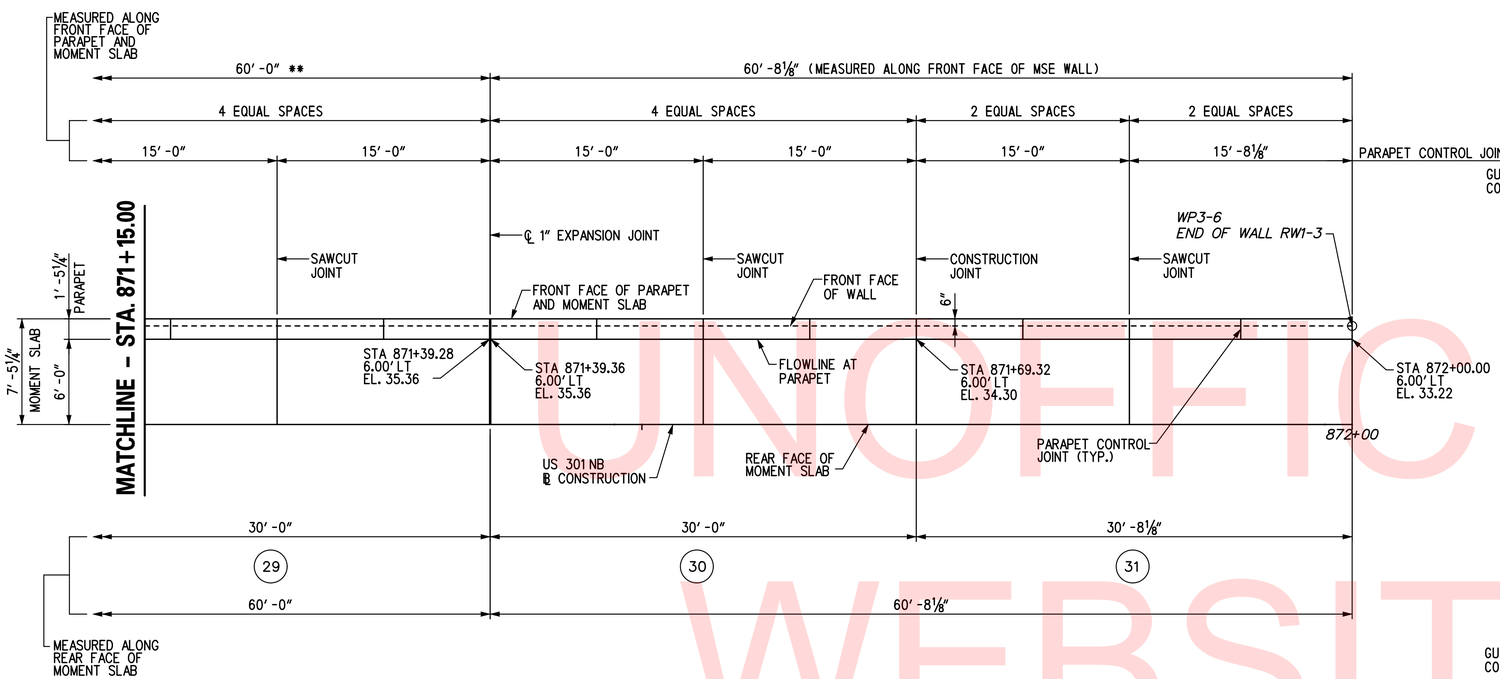

PLAN
SCALE: 3/16″ = 1′-0″

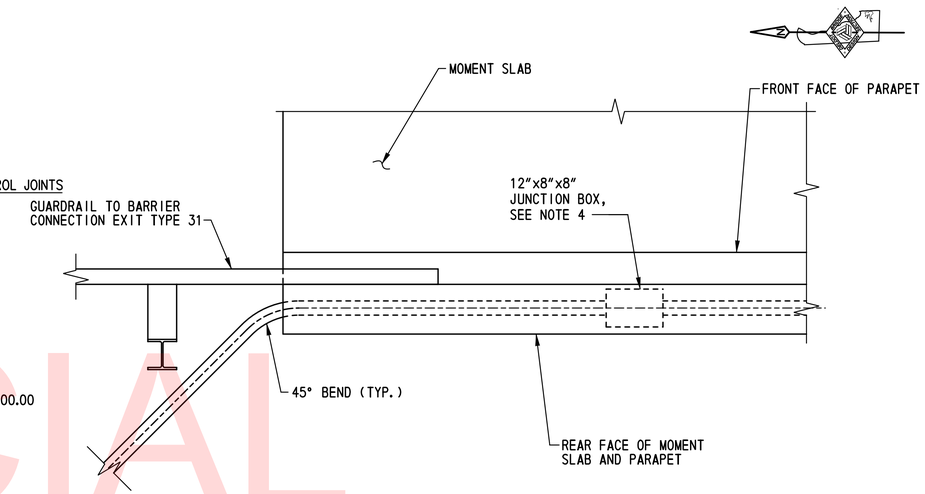

PLAN - PARAPET AT MOMENT SLAB PANEL NO. 31
SCALE: 3/4 ″=1′-0″

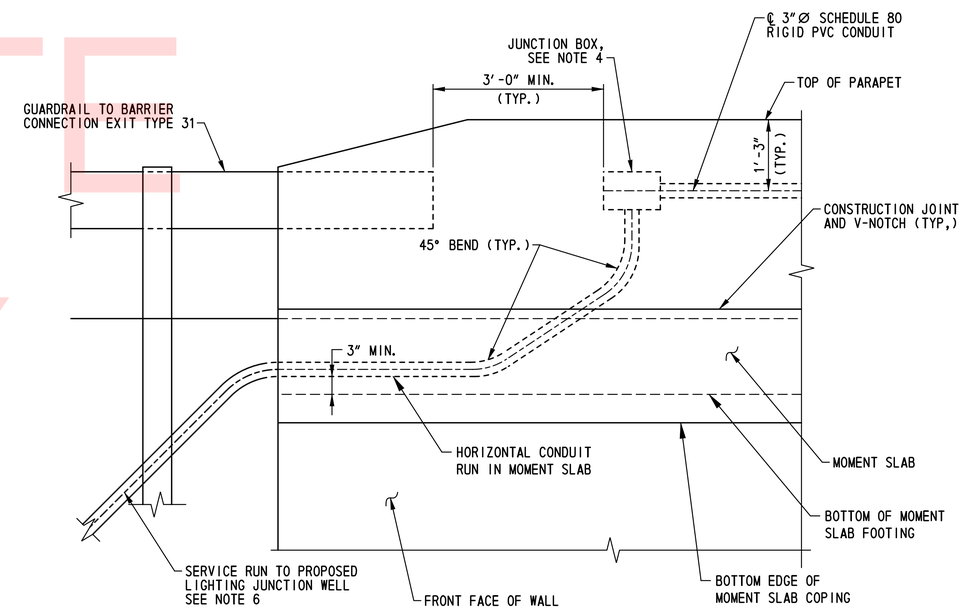

ELEVATION - PARAPET AT MOMENT SLAB PANEL NO. 31
SCALE: 3/4 ″=1′-0″

LEGEND:

(4) MOMENT SLAB I.D. DESIGNATION

** (MEASURED ALONG FRONT FACE OF MSE WALL)

NOTES:

1. FOR RW1-3 GEOMETRIC LAYOUT AND WORKING POINT DETAILS, SEE DWG. NO. GL-01.
2. FOR MOMENT SLAB TYPICAL SECTION, SEE DWG. NO. RD-01.
3. FOR REINFORCEMENT DETAILS, SEE DWG. NO. MS-08 TO MS-11.
4. ALL JUNCTION BOXES SHALL BE 12″ LONG x 8″ HIGH x 8″ DEEP NEMA 4X STAINLESS STEEL JUNCTION BOXES WITH COVERS MOUNTED IN THE FRONT FACE OF THE PARAPET.
5. CONDUITS AND JUNCTION BOXES INSTALLED IN THE BRIDGE, APPROACH SLAB AND MOMENT SLAB PARAPETS WILL NOT BE MEASURED AND PAID OR SEPARATELY BUT WILL BE INCIDENTAL TO ITEM 602017 - PORTLAND CEMENT CONCRETE MASONRY, PARAPET, CLASS A. CONDUITS AND ALL NECESSARY FITTINGS SUPPLIED FOR INSTALLATION IN PARAPETS SHALL MEET THE MATERIAL REQUIREMENTS OF ITEM NO. 745522 - SUPPLY OF 3″ SCHEDULE 80 PVC CONDUIT.
6. FOR ADDITIONAL CONDUIT SERVICE RUN AND LIGHTING DETAILS, SEE DWG. NOS. LI-04 AND LI-15.

UNOFFICIAL WEBSITE COPY

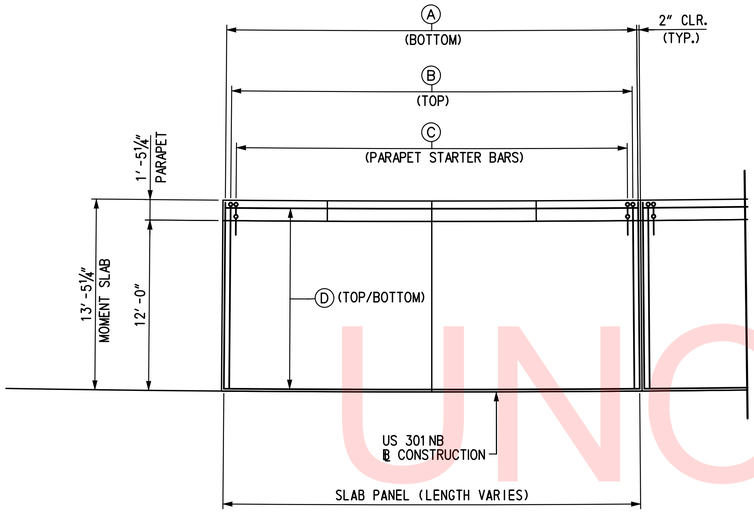

MOMENT SLAB REINFORCEMENT PLAN

(SLAB PANEL I.D. (1) TO (16))

SCALE: 3/16" = 1'-0"

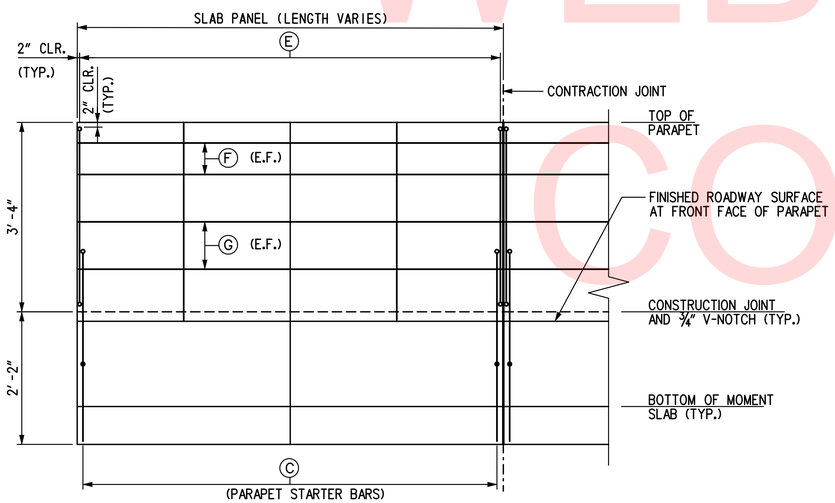

MOMENT SLAB PARAPET REINFORCEMENT ELEVATION

(SLAB PANEL I.D. (1) TO (16))

HORIZONTAL SCALE: 3/16" = 1'-0"
VERTICAL SCALE: ¾" = 1'-0"

REINFORCEMENT TABLE

SLAB PANEL I.D.	Ⓐ	Ⓑ	Ⓒ	Ⓓ	Ⓔ	Ⓕ	Ⓖ
(1) — (4)	30 - SL503E AT 12"	45 - SL502E AT 8"	45 - SL501E AT 8"	14 - SL504E AT 12"	45 - PA540E AT 8"	4 - PA740E	4 - PA840E
(5)	32 - SL503E AT 12"	47 - SL502E AT 8"	47 - SL501E AT 8"	14 - SL505E AT 12"	47 - PA540E AT 8"	4 - PA741E	4 - PA841E
(6) — (7)	32 - SL503E AT 12"	48 - SL502E AT 8"	48 - SL501E AT 8"	14 - SL506E AT 12"	48 - PA540E AT 8"	4 - PA742E	4 - PA842E
(8)	31 - SL503E AT 12"	91 - SL502E AT 4"	46 - SL501E AT 8"	14 - SL507E AT 12"	46 - PA540E AT 8"	4 - PA743E	4 - PA843E
(9)	30 - SL503E AT 12"	44 - SL502E AT 8"	44 - SL501E AT 8"	14 - SL508E AT 12"	44 - PA540E AT 8"	4 - PA744E	4 - PA844E
(10)	29 - SL503E AT 12"	43 - SL502E AT 8"	43 - SL501E AT 8"	14 - SL509E AT 12"	43 - PA540E AT 8"	4 - PA745E	4 - PA845E
(11) — (12)	27 - SL503E AT 12"	41 - SL502E AT 8"	41 - SL501E AT 8"	14 - SL510E AT 12"	41 - PA540E AT 8"	4 - PA746E	4 - PA846E
(13)	31 - SL503E AT 12"	45 - SL502E AT 8"	45 - SL501E AT 8"	14 - SL511E AT 12"	45 - PA540E AT 8"	4 - PA747E	4 - PA847E
(14) & (16)	28 - SL503E AT 12"	42 - SL502E AT 8"	42 - SL501E AT 8"	14 - SL512E AT 12"	42 - PA540E AT 8"	4 - PA748E	4 - PA848E
(15)	14 - SL503E AT 12"	21 - SL502E AT 8"	21 - SL501E AT 8"	14 - SL513E AT 12"	21 - PA540E AT 8"	4 - PA749E	4 - PA849E

LEGEND:

(4) MOMENT SLAB I.D. DESIGNATION

NOTES:

1. FOR RW1-3 GEOMETRIC LAYOUT AND WORKING POINT DETAILS, SEE DWG. NO. GL-01.
2. FOR MOMENT SLAB TYPICAL SECTION, SEE DWG. NO. RD-01.

UNOFFICIAL WEBSITE COPY

\\Mpdgent\S\Projects\2008\PE-ED0836 (DelDOT US 301_*1445)\7. Transportation\1. Bridges\Drawings\Final_PS&E\RW1-3 & RW1-3R\RW1-3\MS08_rw1-3.dgn
2/27/2013 12:42:26 PM

DELAWARE DEPARTMENT OF TRANSPORTATION	ADDENDUMS / REVISIONS	SCALE: AS NOTED	US 301 & SR 1 INTERCHANGE	CONTRACT T200911302	BRIDGE NO. RW1-3	MOMENT SLAB REINFORCEMENT DETAILS – 1	RW1-3 MS-08
				COUNTY NEW CASTLE	DESIGNED BY: RHM		SHEET NO. 314
					CHECKED BY: KEE		TOTAL SHTS. 491

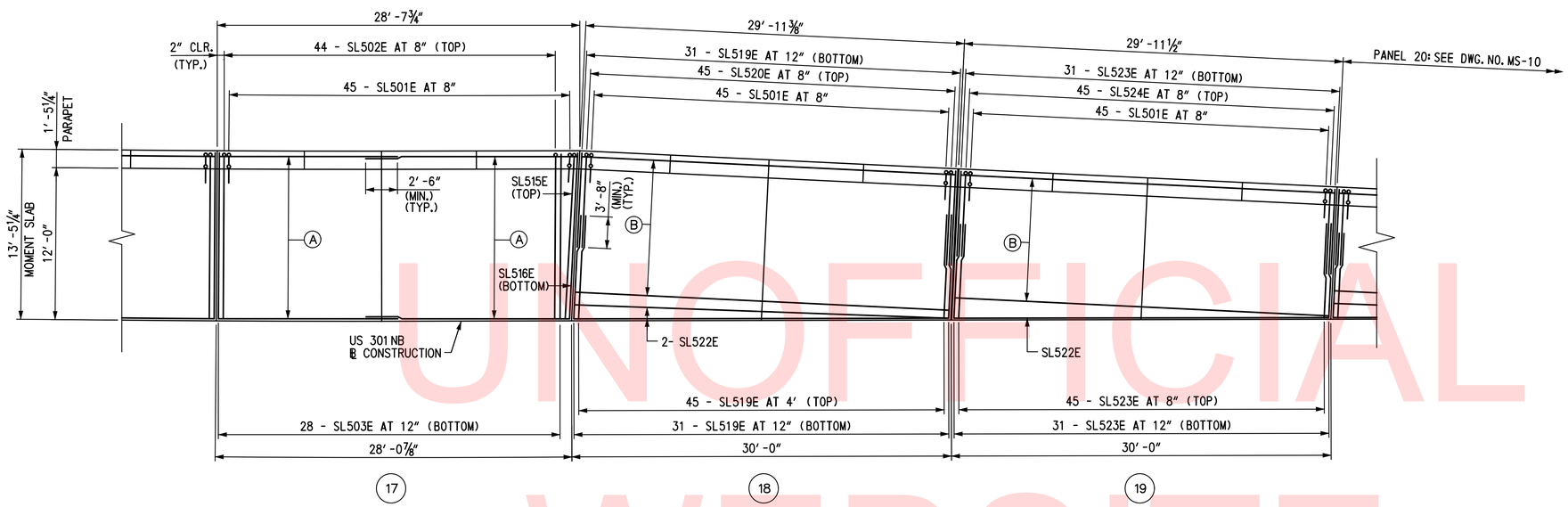

MOMENT SLAB REINFORCEMENT PLAN

SCALE: 3/16″ = 1′-0″

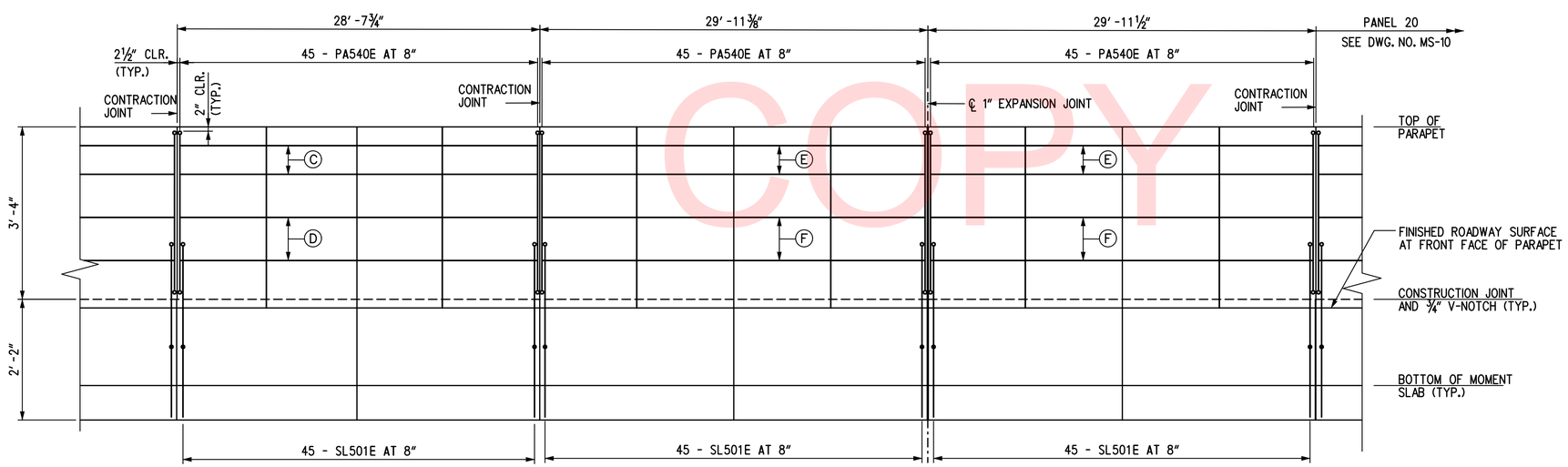

MOMENT SLAB PARAPET REINFORCEMENT ELEVATION

HORIZONTAL SCALE: ⅛″ = 1′-0″
VERTICAL SCALE: ¾″ = 1′-0″

LEGEND:

- (4) MOMENT SLAB I.D. DESIGNATION
- (A) 14 - SL514E AT 12″ (TOP/BOTTOM)
- (B) PANEL 18: 11 - SL521E AT 12″ (TOP/BOTTOM)
  PANEL 19: 10 - SL521E AT 12″ (TOP/BOTTOM)
- (C) 2 - PA750E (E.F.)
- (D) 2 - PA850E (E.F.)
- (E) 2 - PA751E (E.F.)
- (F) 2 - PA851E (E.F.)

NOTES:

1. FOR RW1-3 GEOMETRIC LAYOUT AND WORKING POINT DETAILS, SEE DWG. NO. GL-01.
2. FOR MOMENT SLAB TYPICAL SECTION, SEE DWG. NO. RD-01.

UNOFFICIAL WEBSITE COPY

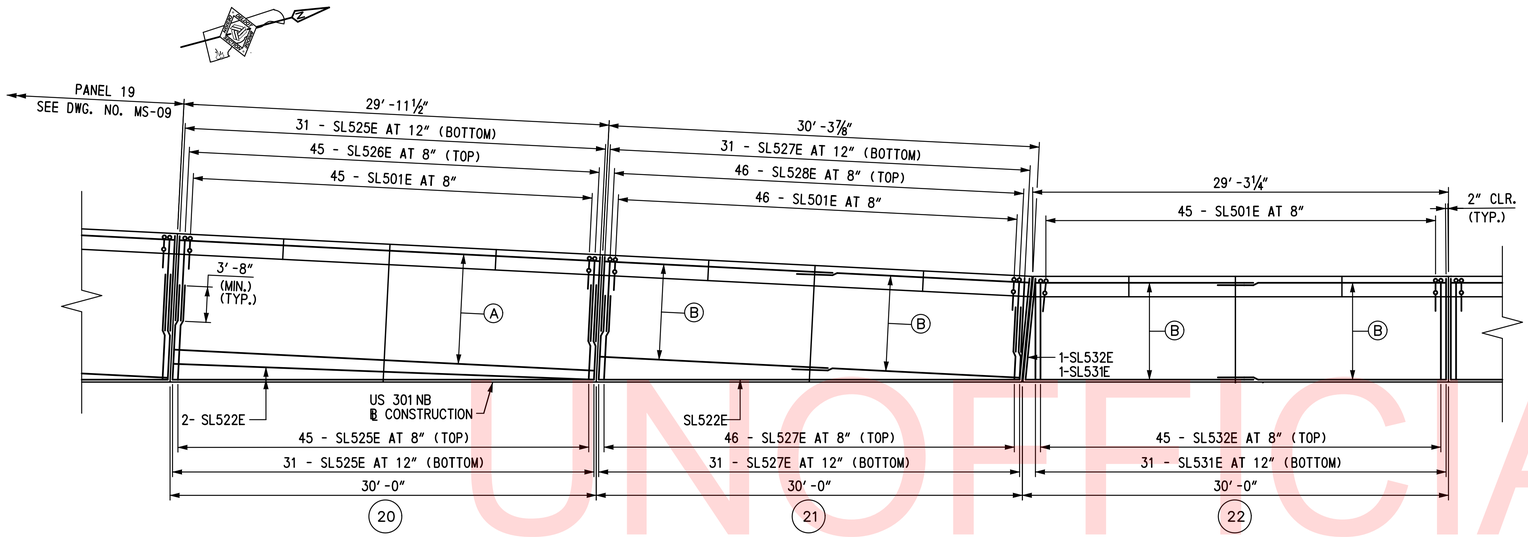

MOMENT SLAB REINFORCEMENT PLAN

SCALE: 3/16″ = 1′-0″

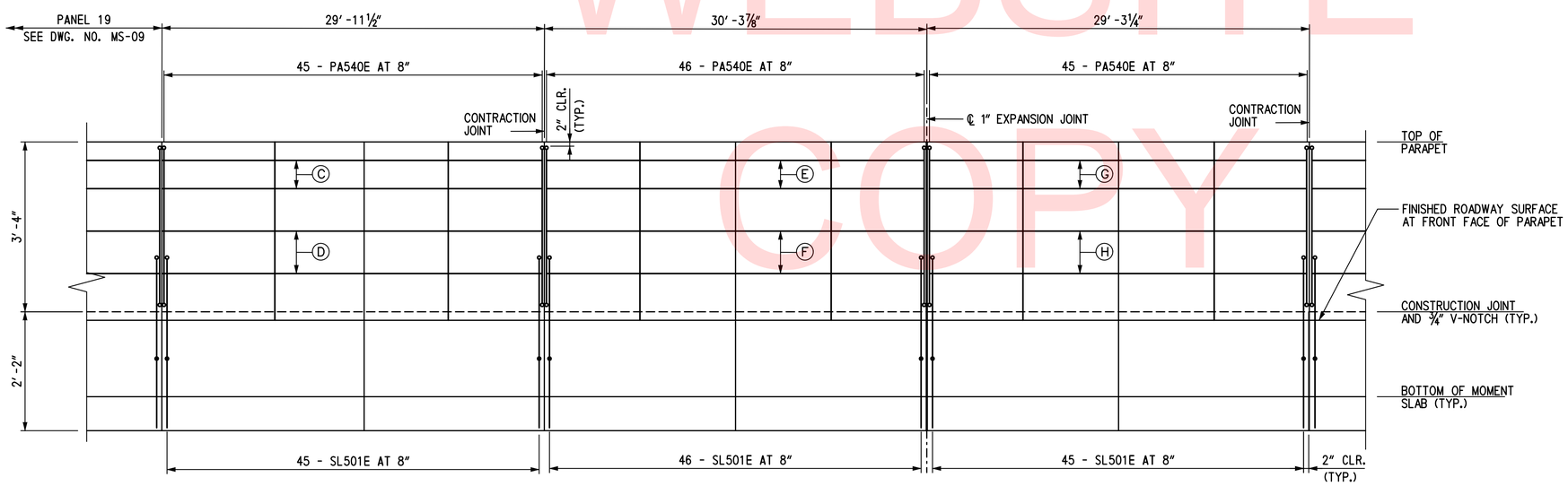

MOMENT SLAB PARAPET REINFORCEMENT ELEVATION

HORIZONTAL SCALE: ⅜″ = 1′-0″
VERTICAL SCALE: ¾″ = 1′-0″

LEGEND:

- (20) MOMENT SLAB I.D. DESIGNATION
- (A) 9 - SL521E AT 12″ (TOP/BOTTOM)
- (B) PANEL 21 : 9 - SL529E AT 12″ (TOP/BOTTOM)
  PANEL 22 : 8 - SL529E AT 12″ (TOP/BOTTOM)
- (C) 2 - PA751E (E.F.)
- (D) 2 - PA851E (E.F.)
- (E) 2 - PA752E (E.F.)
- (F) 2 - PA852E (E.F.)
- (G) 2 - PA755E (E.F.)
- (H) 2 - PA855E (E.F.)

NOTES:

1. FOR RW1-3 GEOMETRIC LAYOUT AND WORKING POINT DETAILS, SEE DWG. NO. GL-01.
2. FOR MOMENT SLAB TYPICAL SECTION, SEE DWG. NO. RD-01.

UNOFFICIAL WEBSITE COPY

\\tsdient\S\Projects\2008\PE-ED0836 (DelDOT US 301_*1445)\7. Transportation\1. Bridges\Drawings\Final_PS&E\RW1-3 & RW1-3R\RW1-3\MS10_rw1-3.dgn
2/27/2013 12:35:51 PM

DELAWARE DEPARTMENT OF TRANSPORTATION	ADDENDUMS / REVISIONS	SCALE: AS NOTED	US 301 & SR 1 INTERCHANGE	CONTRACT T200911302	BRIDGE NO. RW1-3	MOMENT SLAB REINFORCEMENT DETAILS – 3	RW1-3 MS-10
				COUNTY NEW CASTLE	DESIGNED BY: RHM		SHEET NO. 316
					CHECKED BY: KEE		TOTAL SHTS. 491

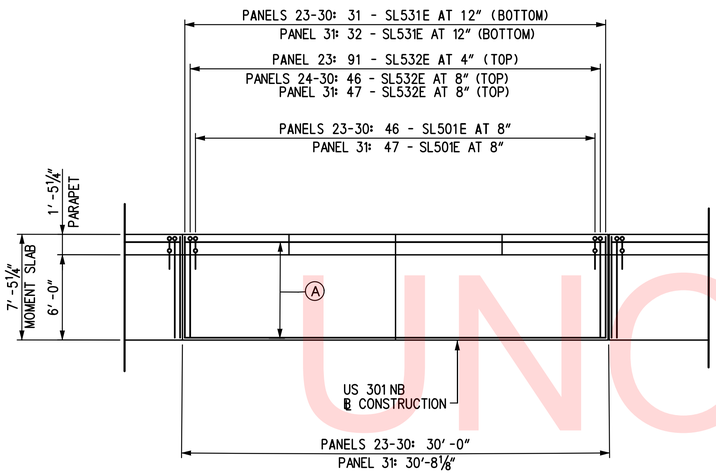

MOMENT SLAB REINFORCEMENT PLAN

(SLAB PANEL I.D. 23 TO 31)

SCALE: 3/16" = 1'-0"

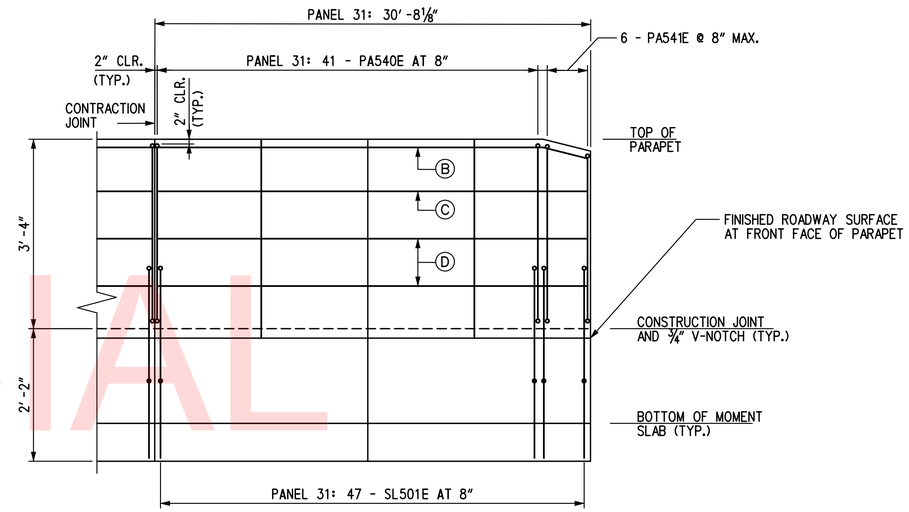

MOMENT SLAB PARAPET REINFORCEMENT ELEVATION

(SLAB PANEL I.D. 31)

SCALE: 3/16" = 1'-0"

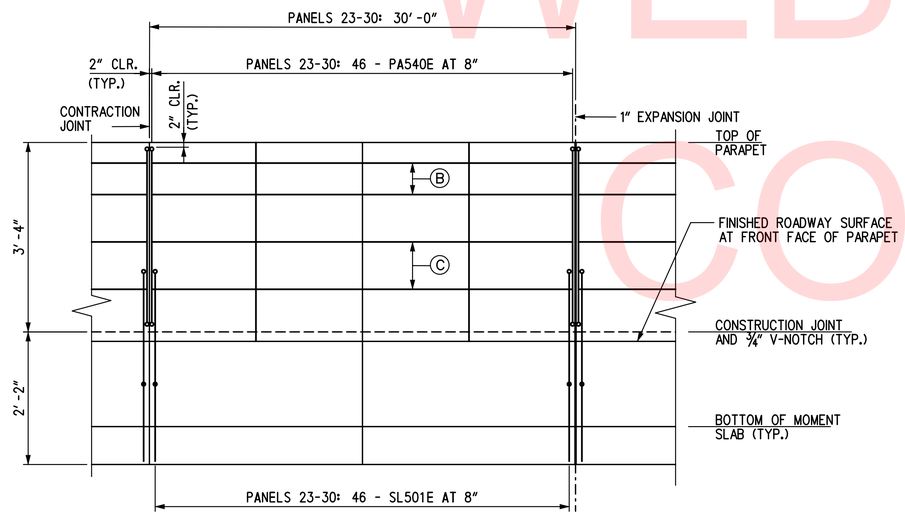

MOMENT SLAB PARAPET REINFORCEMENT ELEVATION

(SLAB PANEL I.D. 23 TO 30)

SCALE: 3/16" = 1'-0"

LEGEND:

23 MOMENT SLAB I.D. DESIGNATION

A PANELS 23-30: 8 - SL533E AT 12" (TOP/BOTTOM)
PANEL 31: 8 - SL534E AT 12" (TOP/BOTTOM)

B PANELS 23-30: 2 - PA753E (E.F.)
PANEL 31: 1 - PA754E (E.F.)

C PANELS 23-30: 2 - PA853E (E.F.)
PANEL 31: 1 - PA756E (E.F.)

D PANEL 31: 2 - PA854E (E.F.)

NOTES:

1. FOR RW1-3 GEOMETRIC LAYOUT AND WORKING POINT DETAILS, SEE DWG. NO. GL-01.
2. FOR MOMENT SLAB TYPICAL SECTION, SEE DWG. NO. RD-01.

UNOFFICIAL WEBSITE COPY

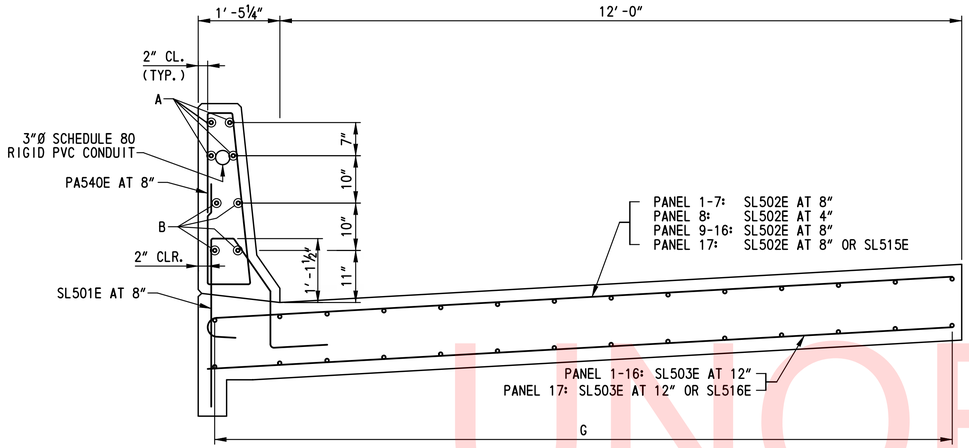

MOMENT SLAB REINFORCEMENT TYPICAL SECTION 1

(SLAB PANEL I.D. 1 TO 17)

SCALE: ¾″ = 1′-0″

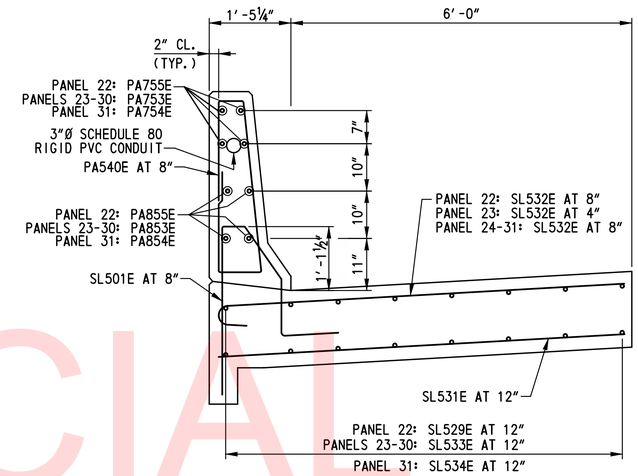

MOMENT SLAB REINFORCEMENT TYPICAL SECTION 3

(SLAB PANEL I.D. 22 TO 31)

SCALE: ¾″ = 1′-0″

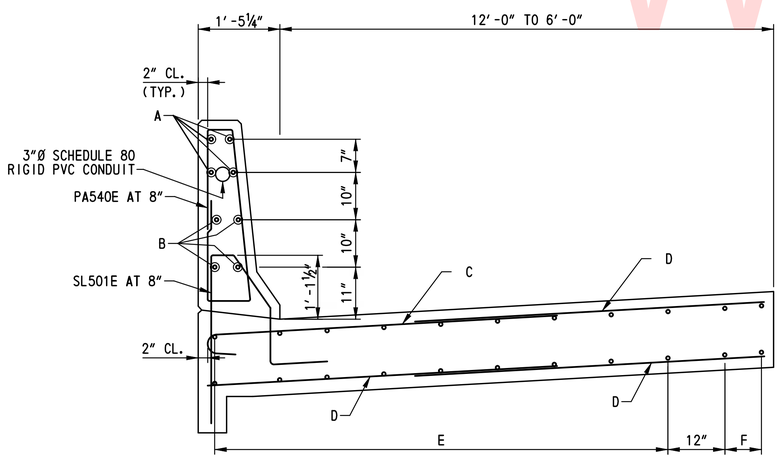

MOMENT SLAB REINFORCEMENT TYPICAL SECTION 2

(SLAB PANEL I.D. 18 TO 21)

SCALE: ¾″ = 1′-0″

LEGEND:

A- PANEL 1-4: PA740E
PANEL 5: PA741E
PANEL 6-7: PA742E
PANEL 8: PA743E
PANEL 9: PA744E
PANEL 10: PA745E
PANEL 11-12: PA746E
PANEL 13: PA747E
PANEL 14,16: PA748E
PANEL 15: PA749E
PANEL 17: PA750E
PANEL 18-20: PA751E
PANEL 22: PA752E

B- PANEL 1-4: PA840
PANEL 5: PA841
PANEL 6-7: PA842
PANEL 8: PA843
PANEL 9: PA844
PANEL 10: PA845
PANEL 11-12: PA846
PANEL 13: PA847
PANEL 14,16: PA848
PANEL 15: PA849
PANEL 17: PA850
PANEL 18-20: PA851E
PANEL 22: PA852E

C PANEL 18: SL520E
PANEL 19: SL524E
PANEL 20: SL526E
PANEL 21: SL528E

D PANEL 18: SL519E
PANEL 19: SL523E
PANEL 20: SL525E
PANEL 21: SL527E

E PANEL 18: SL521E
PANEL 19: SL521E
PANEL 20: SL521E
PANEL 21: SL529E

F PANEL 18: 2- SL522E
PANEL 19: 1- SL522E
PANEL 20: 2- SL522E
PANEL 21: 1- SL522E

G PANEL 1-4: SL504E
PANEL 5: SL505E
PANEL 6-7: SL506E
PANEL 8: SL507E
PANEL 9: SL508E
PANEL 10: SL509E
PANEL 11-12: SL510E
PANEL 13: SL511E
PANEL 14,16: SL512E
PANEL 15: SL513E
PANEL 17: SL514E

NOTES:

1. TOLERANCE ON ALL JOINT SEALANT DETAILS DIMENSIONS SHOWN WITHOUT RANGES SHALL BE PLUS 1/16″, MINUS 0″.
2. PAYMENT FOR CONSTRUCTION OF MOMENT SLAB WILL BE MADE UNDER ITEM NO. 602014 - PORTLAND CEMENT CONCRETE MASONRY, APPROACH SLAB, CLASS D. PAYMENT FOR THE PREFORMED CORK JOINT FILLER, SILICONE SEALER, DOWEL BARS AND METAL EXPANSION SLEEVES SHALL BE INCIDENTAL TO THIS ITEM.
3. DOWEL BARS SHALL CONFORM TO 824.02(G).
4. DOWELS SHALL BE ASSEMBLED IN A RIGID FRAMEWORK, SEE STANDARD P-1. THE EXPANSION JOINT FRAMEWORKSHALL PROVIDE ADEQUATE SUPPORT TO MAINTAIN THE PREFORMED JOINT FILLER IN PROPER HORIZONTAL AND VERTICAL ALIGNMENT.
5. ANCHOR PINS SHALL BE USED TO SECURE THE FORMWORK ALONG THE SUBGRADE.
6. THE FREE MOVING OR UNANCHORED END OF ALL DOWEL BARS IN BOTH CONTRACTION AND EXPANSION JOINTS SHALL BE COATED AFTER INSTALLATION OF THE DEVICE UPON THE SUBGRADE AND IMMEDIATELY PRIOR TO THE POURING OF THE CONCRETE WITH GRAPHITE GREASE APPLIED WITH A GLOVED HAND. THIS SAME END OF ALL EXPANSION JOINT DOWELS SHALL BE CAPPED WITH A SNUG FITTING, CLOSED END METAL EXPANSION SLEEVE TEMPORARILY SECURED TO THE BAR SO AS TO PROVIDE A 1″ LONG OPEN SOCKET BEYOND THE BAR END AND TO LAP BACK 2″ ON THE BAR AT THE TIME OF INSTALLATION.
7. THE SILICONE SEALANT SHALL BE ABLE TO ADHERE TO CONCRETE SUBSTRATES AND CONFORM TO FOLLOWING CRITERIA AFTER 21 DAYS AT 77° F:

ELONGATION, MINIMUM (PERCENT)	1400
JOINT MODULUS, AT 50 PERCENT ELONGATION, MAXIMUM (PSI)	7
JOINT MODULUS, AT 100 PERCENT ELONGATION, MAXIMUM (PSI)	8
JOINT MODULUS, AT 150 PERCENT ELONGATION, MAXIMUM (PSI)	9
ADHESION TO CONCRETE, MINIMUM ELONGATION, (PERCENT)	+600
ADHESION TO ASPHALT, MINIMUM ELONGATION, (PERCENT)	+600
JOINT MOVEMENT CAPABILITY, +100/-50, 10 CYCLES	NO FAILURE

8. RUMBLE STRIPS SHALL BE LOCATED IN THE MOMENT SLAB ADJACENT TO THE SHOULDER LINE. FOR RUMBLE STRIP DETAIL, SEE DWG. NO. DT-01. FOR ADDITIONAL REQUIREMENTS, SEE DWG. NO. RD-01.

UNOFFICIAL WEBSITE COPY

C:\Projects\2008\PEI-ED0836 (DelDOT US 301_#1425)\1.Bridges\Drawings\Final_PS&E\RW1-3 & RW1-3R\RW1-3\MS12_rw1-3.dgn
10/26/2015 10:29 AM

DELAWARE DEPARTMENT OF TRANSPORTATION

ADDENDUMS / REVISIONS

SCALE: AS NOTED

US 301 & SR 1 INTERCHANGE

CONTRACT	BRIDGE NO.	RW1-3
T200911302	DESIGNED BY:	RHM
COUNTY		
NEW CASTLE	CHECKED BY:	KEE

MOMENT SLAB REINFORCEMENT SECTION – 1

RW1-3
MS-12

SHEET NO. 318

TOTAL SHTS. 491

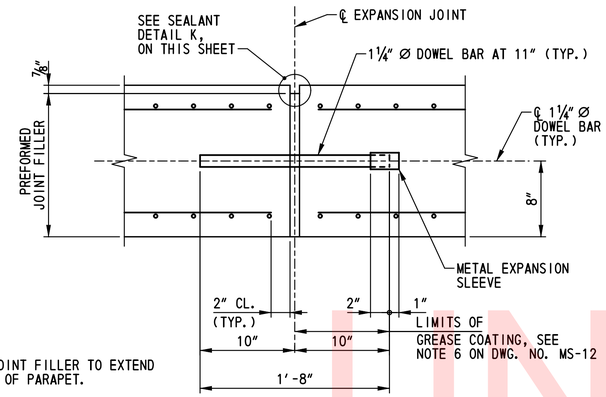

NOTES:

1. PREFORMED JOINT FILLER TO EXTEND FULL HEIGHT OF PARAPET.
2. FOR EXPANSION JOINT BETWEEN BRIDGE 1-433 APPROACH SLAB B AND MOMENT SLAB, SEE DETAIL H ON DWG. NO. AS-01.

EXPANSION JOINT SECTION

SCALE: 1½"=1'-0"

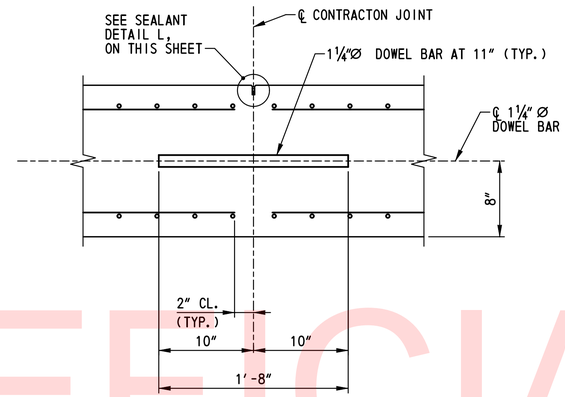

TYPICAL CONTRACTION JOINT SECTION

SCALE: 1½"=1'-0"

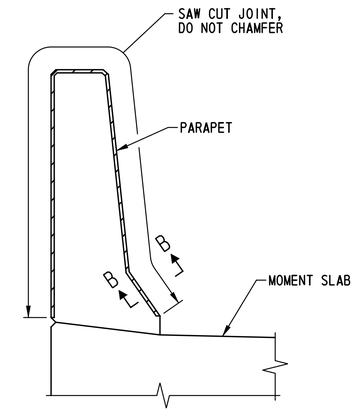

PARAPET CONTROL JOINT DETAIL

SCALE: 1"=1'-0"

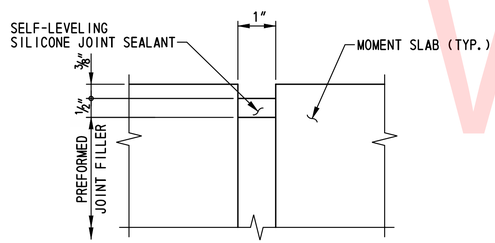

SEALANT DETAIL K

NOT TO SCALE

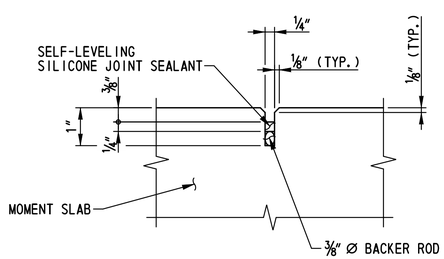

SEALANT DETAIL L

NOT TO SCALE

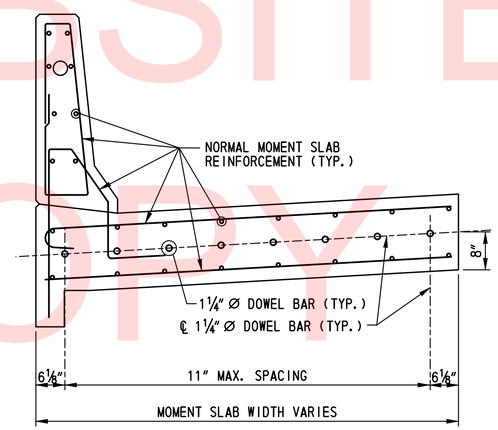

MOMENT SLAB JOINT TYPICAL SECTION

SCALE: 3/4"=1'-0"

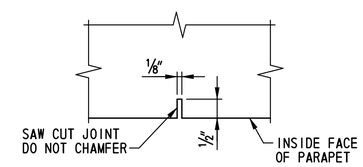

SECTION B-B

SCALE: 6"=1'-0"

NOTE:

SAW CUT CONTROL JOINT SHALL BE SAWED SAME DAY AS CONCRETE IS POURED.

NOTES:

1. SEE DWG. NO. MS-12 FOR MOMENT SLAB NOTES.
2. SEE DWG. NOS. MS-01 THROUGH MS-07 FOR MOMENT SLAB PLANS AND LOCATIONS OF PARAPET CONTROL JOINTS.

UNOFFICIAL WEBSITE COPY

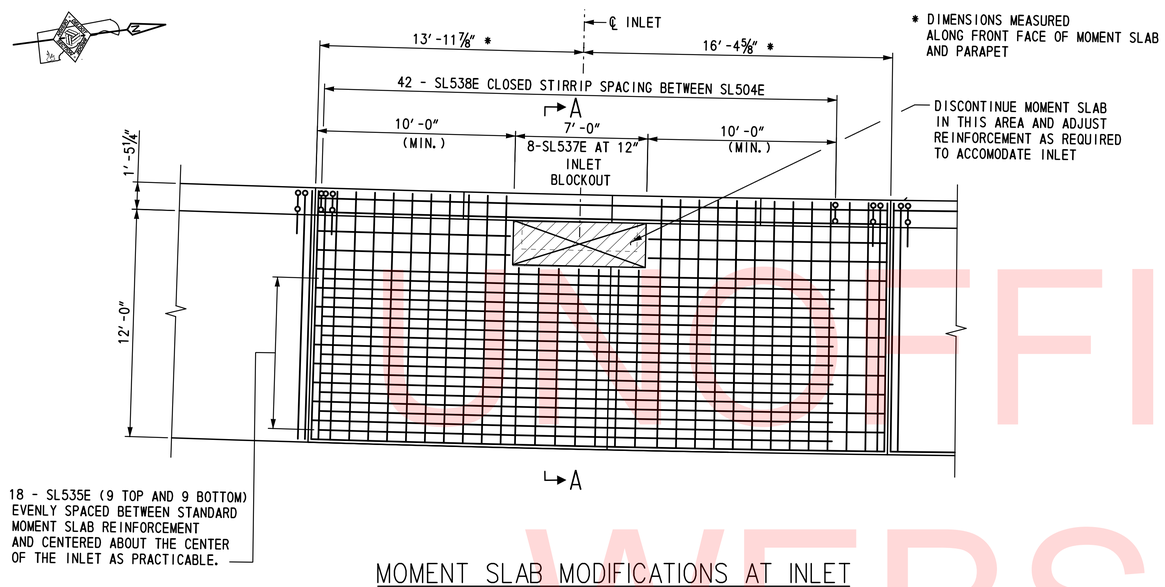

MOMENT SLAB MODIFICATIONS AT INLET

(SLAB PANEL I.D. 8)

SCALE: ¼″ = 1′-0″

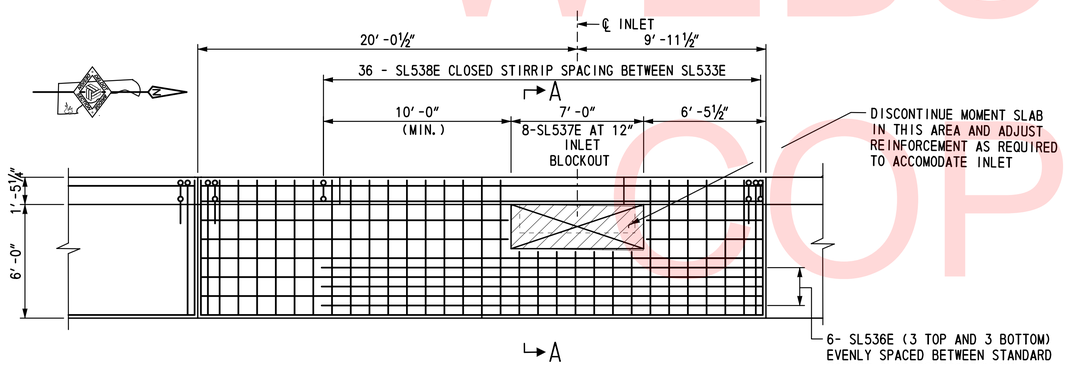

MOMENT SLAB MODIFICATIONS AT INLET

(SLAB PANEL I.D. 23)

SCALE: ¼″ = 1′-0″

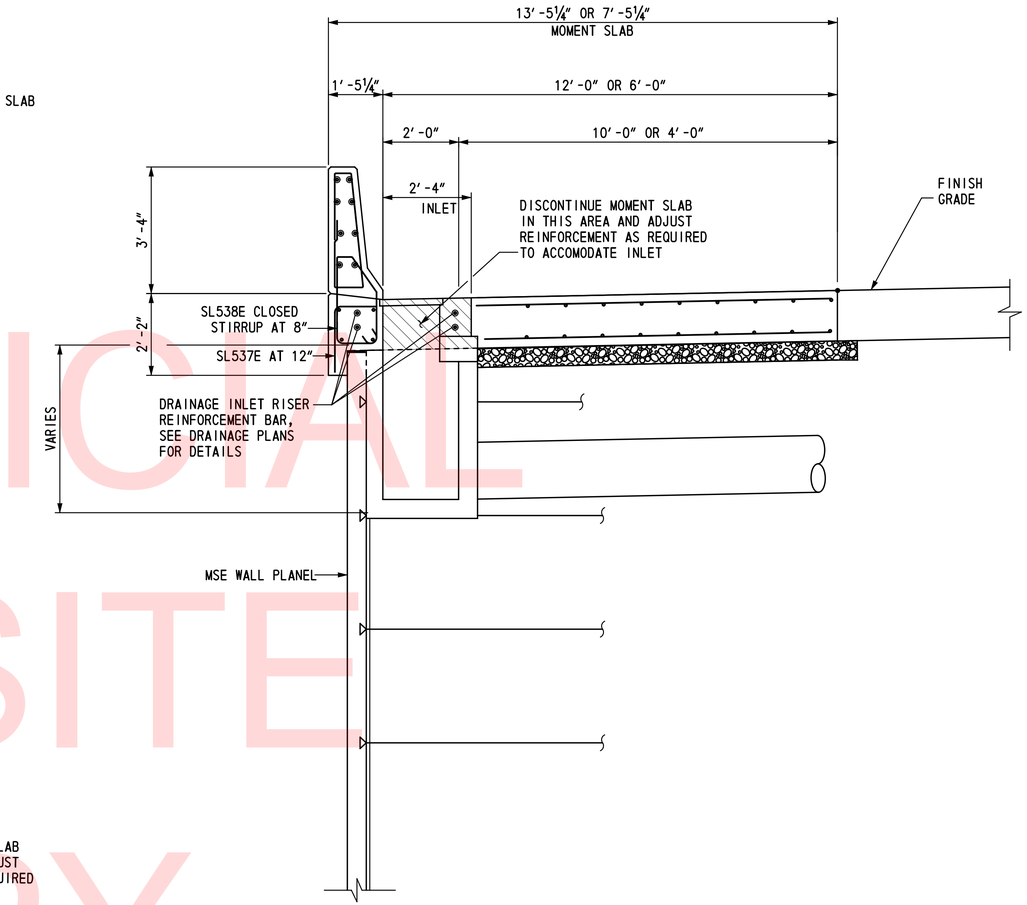

SECTION A-A

SCALE: ½″ = 1′-0″

NOTES:

1. FOR MOMENT SLAB PLAN, SEE DWG NOS. MS-01 TO MS-07.
2. FOR MOMENT SLAB TYPICAL SECTION DETAILS, SEE DWG. NO. RD-01.
3. FOR DRAINAGE INLET DETAILS, SEE DWG. NO. DT-12.

UNOFFICIAL WEBSITE COPY

\\tnetjent\S\Projects\2008\PE-ED0836 (DelDOT US 301_*1445)\7. Transportation\1. Bridges\Drawings\Final_PS&E\RW1-3 & RW1-3R\RW1-3\MS14_rw1-3.dgn
2/27/2013 1:28:54 PM

DELAWARE DEPARTMENT OF TRANSPORTATION	ADDENDUMS / REVISIONS	SCALE: AS NOTED	US 301 & SR 1 INTERCHANGE	CONTRACT T200911302	BRIDGE NO. RW1-3	MOMENT SLAB MODIFICATION DETAILS – 1	RW1-3 MS-14
				COUNTY NEW CASTLE	DESIGNED BY: TSD		SHEET NO. 320
					CHECKED BY: KEE		TOTAL SHTS. 491

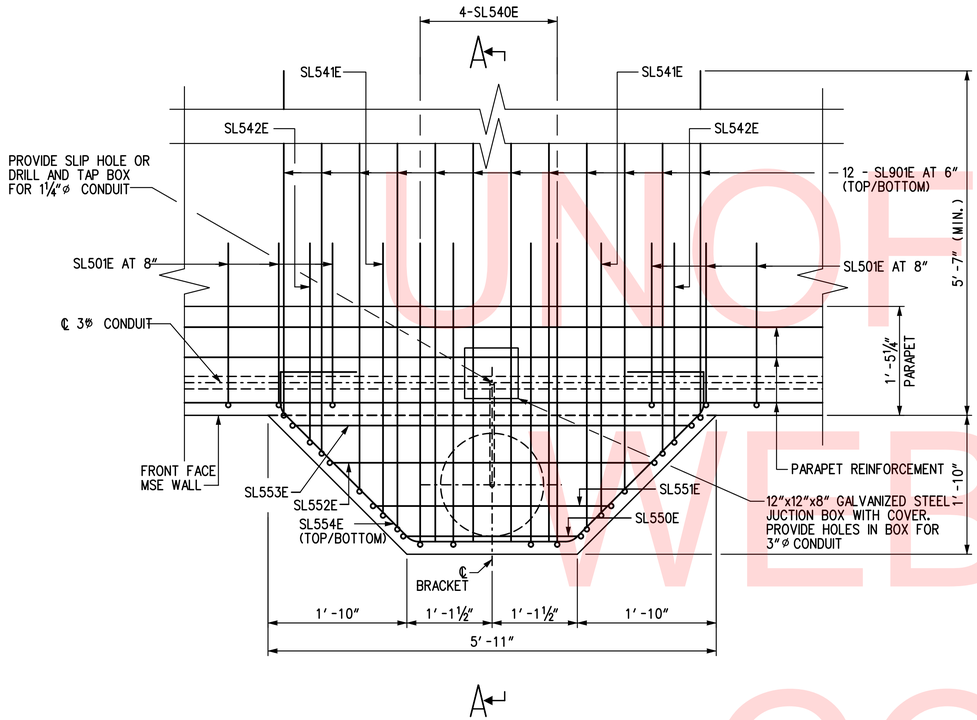

MOMENT SLAB MODIFICATION AT LIGHT POLE BRACKET

SCALE: 1" = 1'-0"

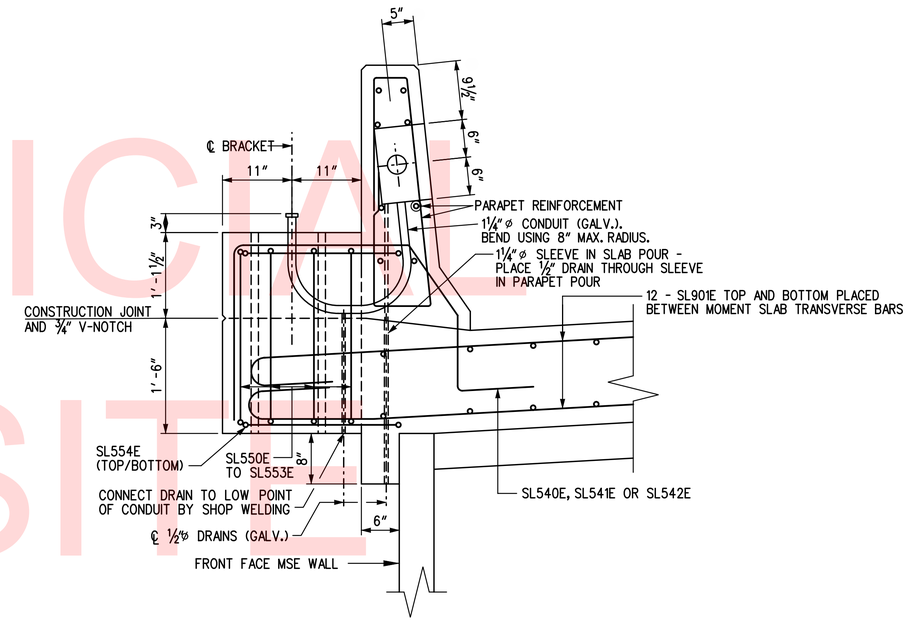

SECTION A-A

SCALE: 1" = 1'-0"

UNOFFICIAL WEBSITE COPY

NOTES:

1. FOR LIGHT POST LOCATION SEE LIGHTING PLANS, DWG. NOS. LI-02 AND LI-04.
2. FOR PARAPET AND MOMENT SLAB REINFORCEMENT DETAILS SEE DWG. NOS. MS-08 TO MS-11.
3. CONTRACTOR TO ASCERTAIN THE BOLT CIRCLE DIMENSION AND SIZE OF ANCHOR BOLTS THAT WILL BE USED PRIOR TO PLACING SLEEVES FOR ANCHOR BOLTS. ALL LIGHT POLES TO BE SET PLUMB AND LOCATED MIDWAY BETWEEN PARAPET CONTROL JOINTS USING LEVELING NUTS ON ANCHOR BOLTS. MAX. HEIGHT OF POLE IS 40'.

RW1-3
MS-15

DELAWARE DEPARTMENT OF TRANSPORTATION	ADDENDUMS / REVISIONS	SCALE: AS NOTED	US 301 & SR 1 INTERCHANGE	CONTRACT T200911302	BRIDGE NO. RW1-3	MOMENT SLAB MODIFICATION DETAILS – 2	SHEET NO. 321
				COUNTY NEW CASTLE	DESIGNED BY: TSD		TOTAL SHTS. 491
					CHECKED BY: KEE		

\\tsclient\S\Projects\2008\PEI-ED0836 (DelDOT US 301_#1445)\7. Transportation\1. Bridges\Drawings\Final_PS&E\RW1-3 & RW1-3R\RW1-3\MS15_rw1-3.dgn
2/27/2013 1:29:23 PM

(1) ANY MARK NUMBER WITH SUFFIX 'E' DENOTES EPOXY COATED REINFORCING STEEL.

(2) ALL MARK 'LOCATION PREFIXES' SHALL CONSIST OF TWO LETTERS AND ARE AS FOLLOWS: AB = ABUTMENT, AS = APPROACH SLAB, BC = BOX CULVERT, BW = BACKWALL, CL = COLUMN, DK = DECK, DL = DOWEL, FT = FOOTING, HW = HEADWALL, MS = MISC. BARS, PA = PARAPET, PR = PIER, SC = SHEETPILE CAP, SL = SLAB, TW = TOEWALL, WL = WALL (UNIQUE LOCATION), WW = WINGWALL

SPECIFICATIONS					BENDING DIMENSIONS (FEET-INCHES /QUARTER INCH)										
QTY.	SIZE	LENGTH	MARK	TYPE	A	B	C	D	E	F/R	G	H	J	K	O
MOMENT SLAB															
1374	5	6-60	SL501E	T15		2-110	0-52	1-12	1-00	1-00			0-73		1-11
777	5	14-30	SL502E	1	0-70	13-10					0-70		0-50		
489	5	13-10	SL503E	STR		13-10									
112	5	29-10	SL504E	STR		29-10									
28	5	30-100	SL505E	STR		30-100									
56	5	31-00	SL506E	STR		31-00									
28	5	30-20	SL507E	STR		30-20									
28	5	28-100	SL508E	STR		28-100									
28	5	27-110	SL509E	STR		27-110									
56	5	26-60	SL510E	STR		26-60									
28	5	29-60	SL511E	STR		29-60									
56	5	27-10	SL512E	STR		27-10									
28	5	13-50	SL513E	STR		13-50									
56	5	15-60	SL514E	STR		15-60									
1	5	14-40	SL515E	1	0-70	13-20					0-70		0-50		
1	5	13-20	SL516E	STR		13-20									
107	5	8-50	SL519E	STR		8-50									
45	5	9-00	SL520E	1	0-70	8-50							0-50		
60	5	29-70	SL521E	STR		29-70									
10	5	29-80	SL522E	STR		29-80									
107	5	7-80	SL523E	STR		7-80									
45	5	8-30	SL524E	1	0-70	7-80							0-50		
107	5	6-100	SL525E	STR		6-100									
45	5	7-50	SL526E	1	0-70	6-100							0-50		
108	5	6-20	SL527E	STR		6-20									
46	5	6-90	SL528E	1	0-70	6-20							0-50		
68	5	16-30	SL529E	STR		16-30									
312	5	7-10	SL531E	STR		7-10									
506	5	7-80	SL532E	1	0-70	7-10							0-50		
128	5	29-80	SL533E	STR		29-80									
16	5	30-40	SL534E	STR		30-40									
18	5	27-00	SL535E	STR		27-00									
6	5	23-30	SL536E	STR		23-30									
16	5	2-90	SL537E	17		1-10	1-80								
78	5	7-72	SL538E	T11	0-60	1-11	1-00	1-22	1-11	2-22	0-60	1-00			
12	5	7-80	SL540E	T15		2-30	2-32	1-12	1-00	1-00			0-73		3-111
6	5	7-30	SL541E	T15		2-30	1-102	1-12	1-00	1-00			0-73		3-61
6	5	6-40	SL542E	T15		2-30	0-112	1-12	1-00	1-00			0-73		2-71
3	5	10-20	SL550E	T2	0-60	2-32	2-32	2-32	2-32		0-60				

SPECIFICATIONS					BENDING DIMENSIONS (FEET-INCHES /QUARTER INCH)										
QTY.	SIZE	LENGTH	MARK	TYPE	A	B	C	D	E	F/R	G	H	J	K	O
3	5	11-92	SL551E	T2	0-60	3-11	2-32	3-11	2-32		0-60				
3	5	13-92	SL552E	T2	0-60	4-11	2-32	4-11	2-32		0-60				
3	5	15-92	SL552E	T2	0-60	5-11	2-32	5-11	2-32		0-60				
6	5	9-93	SL554E	C76	1-00	0-50	2-51	2-11	2-51	0-50	1-00	1-83		1-83	5-70
72	9	8-60	SL901E	1	1-30	7-30							0-113		
1368	5	9-31	PA540E	PA		2-62	0-90	3-01	0-50	2-62		3-00		0-40	
1X6	5	7-81	PA541E	PA		2-13	0-90	2-23	0-50	2-13		2-22		0-40	
		T0				T0	T0	T0	T0	T0		T0		T0	
		9-21				2-61	0-90	2-113	0-50	2-61		2-112		0-40	
16	7	29-10	PA740E	STR		29-10									
4	7	30-100	PA741E	STR		30-100									
8	7	31-00	PA742E	STR		31-00									
4	7	30-20	PA743E	STR		30-20									
4	7	28-100	PA744E	STR		28-100									
4	7	27-110	PA745E	STR		27-110									
8	7	26-60	PA746E	STR		26-60									
4	7	29-60	PA747E	STR		29-60									
8	7	27-10	PA748E	STR		27-10									
4	7	13-50	PA749E	STR		13-50									
4	7	28-30	PA750E	STR		28-30									
12	7	29-70	PA751E	STR		29-70									
4	7	29-110	PA752E	STR		29-110									
32	7	29-80	PA753E	STR		29-80									
2	7	30-51	PA754E	12			27-12	3-33				0-93		3-22	30-40
4	7	28-110	PA755E	STR		28-110									
2	7	29-52	PA756E	STR		29-52									
16	8	29-10	PA840E	STR		29-10									
4	8	30-100	PA841E	STR		30-100									
8	8	31-00	PA842E	STR		31-00									
4	8	30-20	PA843E	STR		30-20									
4	8	28-100	PA844E	STR		28-100									
4	8	27-110	PA845E	STR		27-110									
8	8	26-60	PA846E	STR		26-60									
4	8	29-60	PA847E	STR		29-60									
8	8	27-10	PA848E	STR		27-10									
4	8	13-50	PA849E	STR		13-50									

SPECIFICATIONS					BENDING DIMENSIONS (FEET-INCHES /QUARTER INCH)										
QTY.	SIZE	LENGTH	MARK	TYPE	A	B	C	D	E	F/R	G	H	J	K	O
4	8	28-30	PA850E	STR		28-30									
12	8	29-70	PA851E	STR		29-70									
4	8	29-110	PA852E	STR		29-110									
32	8	29-80	PA853E	STR		29-80									
4	8	30-40	PA854E	STR		30-40									
4	8	28-110	PA855E	STR		28-110									

UNOFFICIAL WEBSITE COPY

ASTM STANDARD ENGLISH REINFORCING BARS

NOMINAL DIMENSIONS				RECOMMENDED END HOOKS, APPLICABLE TO ALL GRADES				STIRRUP AND TIE HOOKS, APPLICABLE TO ALL GRADES			
					180° HOOKS		90° HOOKS		90° HOOK	135° HOOK	
BAR SIZE	DIAMETER (INCHES)	AREA (INCHES²)	WEIGHT (LBS./FT.)	D	A OR G	J	A OR G	D	A OR G	A OR G	A OR G
3	0.375	0.110	0.376	2¼"	5"	3"	6"	1½"	4"	4"	2½"
4	0.500	0.200	0.668	3"	6"	4"	8"	2"	4½"	4½"	3"
5	0.625	0.310	1.043	3¾"	7"	5"	10"	2½"	6"	5½"	3¾"
6	0.750	0.440	1.502	4½"	8"	6"	1-0"	4½"	1-0"	8"	4½"
7	0.875	0.600	2.044	5¼"	10"	7"	1-2"	5¼"	1-2"	9"	5¼"
8	1.000	0.790	2.670	6"	11"	8"	1-4"	6"	1-4"	10½"	6"
9	1.128	1.000	3.400	9½"	1-3"	11¾"	1-7"				
10	1.270	1.270	4.303	10¾"	1-5"	1-1¼"	1-10"				
11	1.410	1.560	5.313	1-0"	1-7"	1-2¾"	2-0"				
14	1.693	2.250	7.650	1-6¼"	2-3"	1-9¾"	2-7"				
18	2.257	4.000	13.600	2-0"	3-0"	2-4½"	3-5"				

NOTES:

1. FIGURES SHOWN IN CIRCLES REPRESENT BAR BEND TYPES.
2. STANDARD BAR BENDS INCLUDE ONLY THOSE TYPES BELOW, INDICATED AS SUCH.
3. ALL DIMENSIONS OUT-TO-OUT, EXCEPT "A" AND "G" ON STD. 180° AND 135° HOOKS.
4. "J" DIMENSIONS ON 180° HOOKS TO BE SHOWN ONLY WHERE NECESSARY TO RESTRICT HOOK SIZE, OTHERWISE STANDARD 'ACI' HOOKS ARE TO BE USED.
5. WHERE "J" IS NOT SHOWN, "J" WILL BE KEPT EQUAL TO OR LESS THAN "H" ON TYPES 3, 5 AND 22. WHERE "J" CAN EXCEED "H", IT SHALL BE SHOWN.
6. "H" DIMENSIONS OF STIRRUPS TO BE SHOWN AS NEEDED TO FIT WITHIN THE CONCRETE.
7. UNLESS OTHERWISE NOTED, DIAMETER "D" IS THE SAME FOR ALL BENDS AND HOOKS ON A BAR (EXCEPT FOR BEND TYPES 11 AND 13).
8. WHERE SLOPE DIFFERS FROM 45° OFFSET, "H" AND "K" MUST BE SHOWN.
9. WHERE BARS ARE TO BE BENT MORE ACCURATELY THAN STANDARD BENDING TOLERANCES, BENDING DIMENSIONS REQUIRING CLOSER FABRICATION SHOULD HAVE LIMITS INDICATED.
10. FOR RECOMMENDED DIAMETER "D", OF BENDS, HOOKS, ETC., REFER TO TABLE ABOVE, 'CRSI' OR 'ACI' TABLES WHERE APPLICABLE AND REQUIRED.
11. TYPE S1-S6, S11, T1-T3 AND T6-T9 APPLICABLE TO BAR SIZES #3 THROUGH #8.

STANDARD BAR BENDS

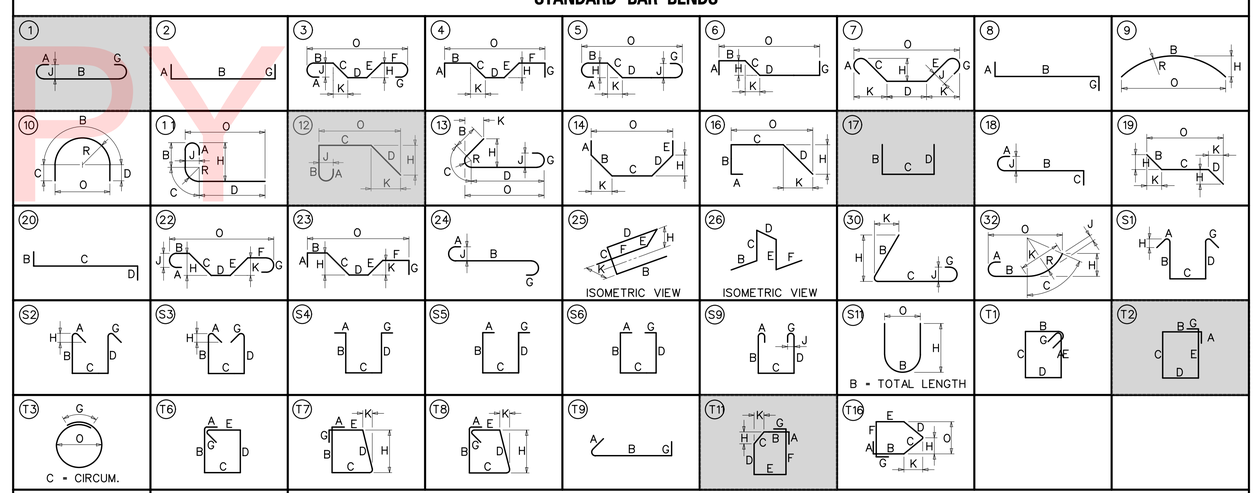

SPECIAL BAR BENDS

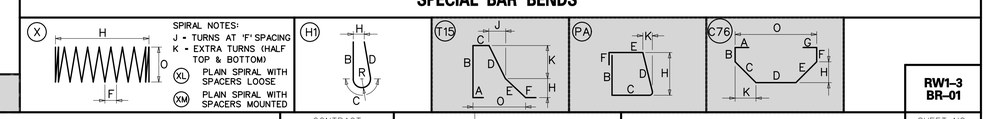

STIRRUP AND TIE HOOKS

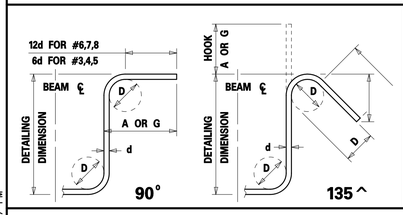

180° AND 90° END HOOKS

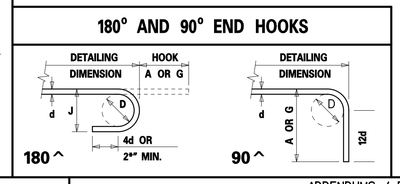

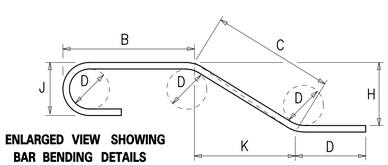

ENLARGED VIEW SHOWING BAR BENDING DETAILS

DELAWARE DEPARTMENT OF TRANSPORTATION

ADDENDUMS / REVISIONS

SCALE: AS NOTED

US 301 & SR 1 INTERCHANGE

CONTRACT	BRIDGE NO.	RW1-3
T200911302	DESIGNED BY:	KMG
COUNTY	CHECKED BY:	KEE
NEW CASTLE		

MOMENT SLAB REINFORCEMENT BAR LIST

RW1-3 BR-01

SHEET NO. 322

TOTAL SHTS. 491

\\teslient\S\Projects\2008\PEI-ED0836 (DelDOT US 301_#1445)\7. Transportation\1. Bridges\Drawings\Final_PS&E\RW1-3 & RW1-3R\RW1-3\BR01_rw1-3.dgn
2/27/2013 1:30:57 PM

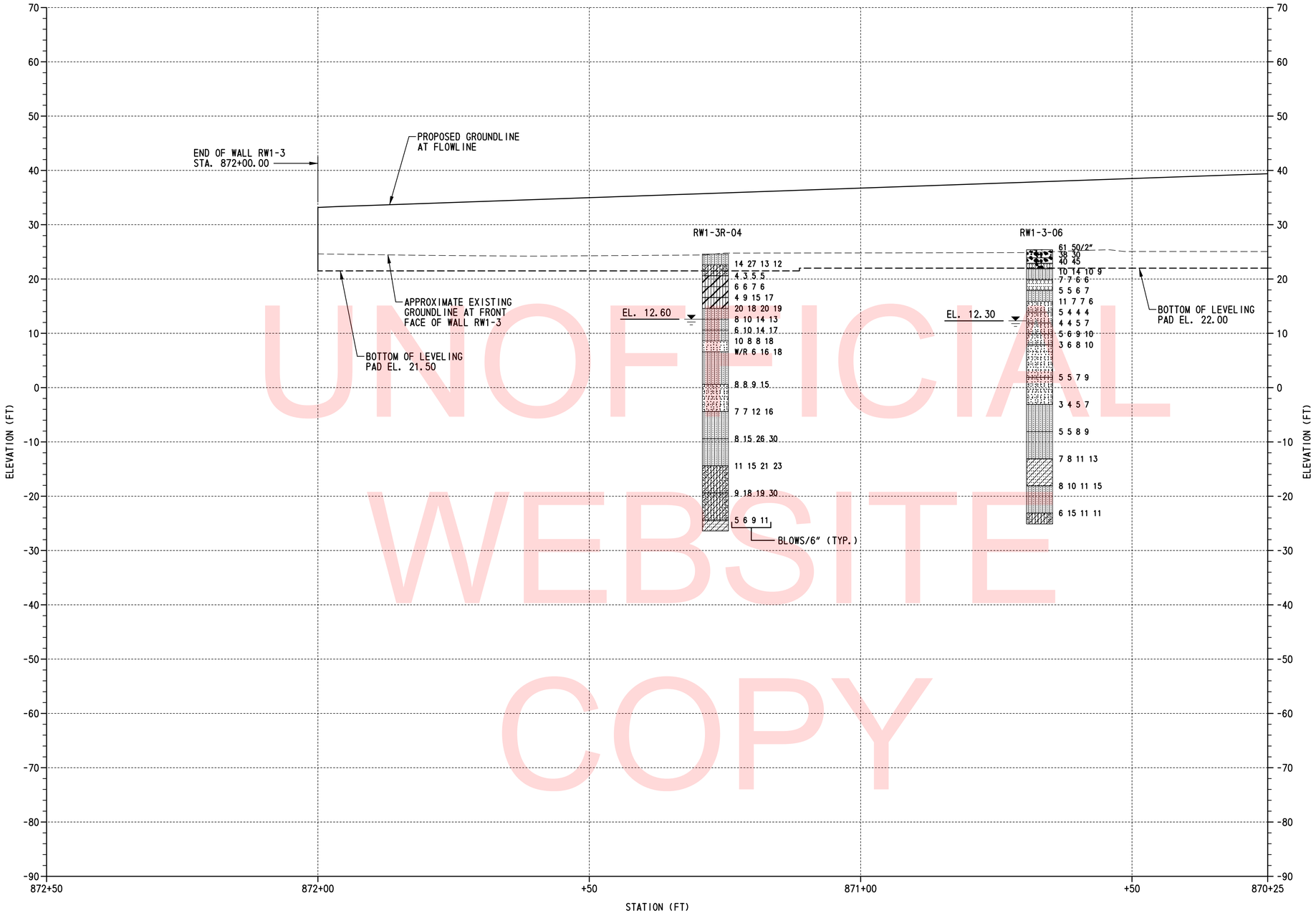

UNOFFICIAL WEBSITE COPY

BORING PROFILE

SCALE: 1"=10'-0"

LEGEND:

- POORLY GRADED CLAYEY SILTY SAND
- CLAYEY SAND
- SILTY LOW PLASTICITY CLAY
- POORLY GRADED SAND
- WELL GRADED SAND WITH SILT
- SILTY SAND
- LOW PLASTICITY CLAY
- POORLY GRADED GRAVEL
- WELL GRADED GRAVEL
- SILTY GRAVEL
- POORLY GRADED SAND WITH SILT
- HIGH PLASTICITY CLAY
- SILT
- POORLY GRADED GRAVEL WITH SILT
- WATER TABLE AT BORING COMPLETION

TEST BORINGS				
BORING DESIGNATION	STATION	OFFSET	NORTHING	EASTING
RW1-3-06	870+67.03	11.32' LT.	558248.0000	590541.0000
RW1-3R-04	871+26.77	43.89' RT.	558307.0000	590597.0000

NOTES:

1. FOR BORING LOCATIONS, SEE DWG. NO. PE-01.
2. RESULTS CONDUCTED ON SAMPLES RECOVERED ARE REPORTED ON THE BORING LOGS. LOGS, LABORATORY TESTING AND CPT DATA ARE INCLUDED AS PART OF THE CONTRACT DOCUMENTS, SEE CD.

VERTICAL SCALE FEET 0 10 20 30

RW1-3
BO-01

N:\33653-000\Contract 18\CADD\Bridge\RW\B001_RW1-3.dgn
2/5/2013 11:36:05 AM

DELAWARE DEPARTMENT OF TRANSPORTATION	ADDENDUMS / REVISIONS	SCALE 0 10 20 30 FEET	US 301 & SR 1 INTERCHANGE	CONTRACT T200911302	BRIDGE NO. RW1-3	BORING PROFILE – 1
				COUNTY NEW CASTLE	DESIGNED BY: W.R.A.	
					CHECKED BY: P.S.D.	

SHEET NO. 323
TOTAL SHTS. 491

UNOFFICIAL WEBSITE COPY

BORING PROFILE

SCALE: 1"=10'-0"

LEGEND:

- POORLY GRADED CLAYEY SILTY SAND
- CLAYEY SAND
- SILTY LOW PLASTICITY CLAY
- POORLY GRADED SAND
- WELL GRADED SAND WITH SILT
- SILTY SAND
- LOW PLASTICITY CLAY
- POORLY GRADED GRAVEL
- WELL GRADED GRAVEL
- SILTY GRAVEL
- POORLY GRADED SAND WITH SILT
- HIGH PLASTICITY CLAY
- SILT
- POORLY GRADED GRAVEL WITH SILT
- WATER TABLE AT BORING COMPLETION

TEST BORINGS				
BORING DESIGNATION	STATION	OFFSET	NORTHING	EASTING
BR1-3-03	868+07.72	25.16 LT.	557989.0900	590523.7200
RW1-3R-02	868+19.76	44.97 RT.	558000.0000	590594.0000
RW1-3-04	869+16.99	13.33' LT.	558098.0000	590537.0000
RW1-3-05	870+16.02	11.64' LT.	558197.0000	590540.0000

NOTES:

1. FOR BORING LOCATIONS, SEE DWG. NO. PE-02.
2. BORING BR1-3-03 IS SHOWN OFFSET AS INDICATED FOR CLARITY.
3. RESULTS CONDUCTED ON SAMPLES RECOVERED ARE REPORTED ON THE BORING LOGS. LOGS, LABORATORY TESTING AND CPT DATA ARE INCLUDED AS PART OF THE CONTRACT DOCUMENTS, SEE CD.

VERTICAL SCALE FEET 0 10 20 30

RW1-3
BO-02

N:\33653-000\Contract 1B\CADD\Bridge\RW\B002_RW1-3.dgn
2/5/2013 11:36:49 AM

DELAWARE DEPARTMENT OF TRANSPORTATION

ADDENDUMS / REVISIONS

SCALE 0 10 20 30 FEET

US 301 & SR 1 INTERCHANGE

CONTRACT T200911302
COUNTY NEW CASTLE
BRIDGE NO. RW1-3
DESIGNED BY: W.R.A.
CHECKED BY: P.S.D.

BORING PROFILE – 2

SHEET NO. 324
TOTAL SHTS. 491

UNOFFICIAL WEBSITE COPY

BORING PROFILE

SCALE: 1"=10'-0"

LEGEND:

- POORLY GRADED CLAYEY SILTY SAND
- CLAYEY SAND
- SILTY LOW PLASTICITY CLAY
- POORLY GRADED SAND
- WELL GRADED SAND WITH SILT
- SILTY SAND
- LOW PLASTICITY CLAY
- POORLY GRADED GRAVEL
- WELL GRADED GRAVEL
- SILTY GRAVEL
- POORLY GRADED SAND WITH SILT
- HIGH PLASTICITY CLAY
- SILT
- POORLY GRADED GRAVEL WITH SILT
- WATER TABLE AT BORING COMPLETION

TEST BORINGS				
BORING DESIGNATION	STATION	OFFSET	NORTHING	EASTING
BR1-3-02	865+76.26	39.32' RT.	557753.0000	590575.0000
RW1-3-01	866+16.64	13.29' LT.	557799.0000	590527.1900
RW1-3-02	867+47.29	8.74' LT.	557928.3400	590539.2330

NOTES:

1. FOR BORING LOCATIONS, SEE DWG. NO. PE-03.
2. RESULTS CONDUCTED ON SAMPLES RECOVERED ARE REPORTED ON THE BORING LOGS. LOGS, LABORATORY TESTING AND CPT DATA ARE INCLUDED AS PART OF THE CONTRACT DOCUMENTS, SEE CD.

VERTICAL SCALE FEET 0 10 20 30

RW1-3
BO-03

N:\31653-000\Contract 1B\CADD\Bridge\RW1B003_RW1-3.dgn
2/5/2015 11:37:29 AM

DELAWARE DEPARTMENT OF TRANSPORTATION	ADDENDUMS / REVISIONS	SCALE 0 10 20 30 FEET	US 301 & SR 1 INTERCHANGE	CONTRACT T200911302	BRIDGE NO. RW1-3	BORING PROFILE – 3	SHEET NO. 325
				COUNTY NEW CASTLE	DESIGNED BY: W.R.A.		TOTAL SHTS. 491
					CHECKED BY: P.S.D.		

UNOFFICIAL WEBSITE COPY

BORING PROFILE

SCALE: 1"=10'-0"

TEST BORINGS				
BORING DESIGNATION	STATION	OFFSET	NORTHING	EASTING
BR1-3-16	862+50.66	1.36' RT.	557437.0000	590477.0000
BR1-3-03	864+11.23	15.65' LT.	557598.0000	590494.0000
RW1-3-13	865+02.42	7.92' RT.	557684.2400	590527.1900

NOTES:

1. FOR BORING LOCATIONS, SEE DWG. NO. PE-04.
2. BORING BR1-3-16 IS SHOWN OFFSET AS INDICATED FOR CLARITY.
3. RESULTS CONDUCTED ON SAMPLES RECOVERED ARE REPORTED ON THE BORING LOGS. LOGS, LABORATORY TESTING AND CPT DATA ARE INCLUDED AS PART OF THE CONTRACT DOCUMENTS, SEE CD.

LEGEND:

- POORLY GRADED CLAYEY SILTY SAND
- CLAYEY SAND
- SILTY LOW PLASTICITY CLAY
- POORLY GRADED SAND
- WELL GRADED SAND WITH SILT
- SILTY SAND
- LOW PLASTICITY CLAY
- POORLY GRADED GRAVEL
- WELL GRADED GRAVEL
- WATER TABLE AT BORING COMPLETION
- POORLY GRADED SAND WITH SILT
- HIGH PLASTICITY CLAY
- SILT
- POORLY GRADED GRAVEL WITH SILT

VERTICAL SCALE FEET 0 10 20 30

RW1-3 BO-04

N:\31653-000\Contract 1B\CADD\Bridge\RW1BO04_RW1-3.dgn 2/5/2013 11:37:59 AM

DELAWARE DEPARTMENT OF TRANSPORTATION

ADDENDUMS / REVISIONS

SCALE 0 10 20 30 FEET

US 301 & SR 1 INTERCHANGE

CONTRACT	BRIDGE NO.	RW1-3
T200911302	DESIGNED BY: W.R.A.	
COUNTY		
NEW CASTLE	CHECKED BY: P.S.D.	

BORING PROFILE – 4

SHEET NO. 326

TOTAL SHTS. 491

MSE WALL NOTES:

1. DESIGN CRITERIA
   SEE SPECIAL PROVISION FOR ITEM 602772.

2. CONCRETE
   ALL CONCRETE PROPERTIES SHALL BE IN ACCORDANCE WITH SECTION 812 OF THE DELAWARE DEPARTMENT OF TRANSPORTATION STANDARD SPECIFICATIONS.

   CLASS A - MSE WALL PANELS AND PARAPETS (f'c=4,500 PSI).

   CLASS B - MSE WALL LEVELING PAD (f'c=3,000 PSI).

   CLASS D - MOMENT SLABS (f'c=4,500 PSI).

   ALL EXPOSED EDGES OF CONCRETE SHALL BE CHAMFERED ¾", UNLESS NOTED OTHERWISE.

3. REINFORCING STEEL
   ALL REINFORCING STEEL SHALL BE AASHTO M31 (ASTM A615), GRADE 60 AND SHALL BE PROTECTED WITH FUSION BONDED EPOXY, CONFORMING TO AASHTO M 284 (ASTM A775).

4. MINIMUM CONCRETE COVER FOR REINFORCING STEEL SHALL BE 2" UNLESS NOTED OTHERWISE.

   THE MSE WALL MANUFACTURER MAY SUBSTITUTE ALTERNATE REINFORCING CONFIGURATIONS AND SUBMIT FOR APPROVAL.

5. ARCHITECTURAL FINISH
   COMPONENTS OF THE MSE WALL SHALL HAVE THE ARCHITECTURAL TREATMENT AS SPECIFIED IN THE SPECIAL PROVISION FOR ITEM 602772.

6. LEVELING PAD
   THE LEVELING PAD STEPS MAY BE RELOCATED AT THE DISCRETION OF THE PROPRIETARY WALL MANUFACTURER PROVIDED THAT THE MINIMUM EMBEDMENT IS MAINTAINED IN ACCORDANCE WITH THE SPECIFIED DESIGN CRITERIA. ANY CHANGES TO THE STEP LOCATIONS SHALL BE SUBMITTED TO THE ENGINEER FOR APPROVAL.

7. BACKFILL AND FOUNDATION SOILS
   MSE WALL BACKFILL SHALL CONSIST OF SELECT BACKFILL AND MEET THE REQUIREMENTS PROVIDED IN THE SPECIAL PROVISIONS. FOR ADDITIONAL REQUIREMENTS OF MSE WALL BACKFILL AND FOUNDATION SOILS, SEE SOIL PROPERTIES TABLE ON THIS SHEET.

8. INTERNAL STABILITY
   THE INTERNAL STABILITY OF THE MSE WALL SHALL BE DESIGNED BY THE PROPRIETARY WALL MANUFACTURER USING THE SOIL PROPERTIES PROVIDED AT EACH WALL LOCATION. THE INTERNAL STABILITY CALCULATIONS SHALL BE SIGNED AND SEALED BY A PROFESSIONAL ENGINEER LICENSED IN THE STATE OF DELEWARE AS INDICATED IN THE PROJECT SPECIFICATIONS.

9. SETTLEMENT REQUIREMENTS
   THE CONTRACTOR AND MSE WALL MANUFACTURER SHALL DESIGN AND CONSTRUCT THE FINAL WALL FACING SUCH THAT THE THE FINAL WALL FACING IS AT THE REQUIRED ELEVATIONS AFTER SETTLEMENT IS ACHIEVED. THE ANTICIPATED SETTLEMENT IS 4 INCHES AT THE FACE OF THE WALL.

10. SERVICE LIFE
    ALL RETAINING WALL COMPONENTS SHALL BE DESIGNED FOR A MINIMUM SERVICE LIFE OF 100 YEARS.

11. WALL SYSTEM
    ONLY ONE WALL SYSTEM MAY BE USED ON THIS PROJECT.

12. TRAFFIC BARRIER JOINTS
    TRAFFIC BARRIER FOOTING / MOMENT SLABS SHALL HAVE CONSTRUCTION JOINTS TO COINCIDE WITH THE PARAPET AND ROADWAY PAVEMENT JOINTS.

13. EXPANSION AND CONTRACTION JOINTS
    THE LOCATION OF THE EXPANSION AND CONTRACTION JOINTS IN THE BARRIER / MOMENT SLAB SHOWN ON THE PLANS ARE LOCATED TO ALIGN WITH ROADWAY PAVEMENT JOINTS. ANY CHANGE TO THESE JOINT LOCATIONS SHALL BE SUBMITTED TO THE ENGINEER FOR APPROVAL.

14. COORDINATION
    CONTRACTOR AND PROPRIETARY WALL MANUFACTURER SHALL COORDINATE LOCATIONS OF DRAINAGE INLETS AND PIPES WITH LOCATIONS OF PROPRIETARY WALL TIE BACK SYSTEM AND MOMENT SLAB.

SOIL PROPERTIES

SOIL TYPE	UNIT WEIGHT (PCF)	DRAINED ANGLE OF FRICTION (DEGREES)	UNDRAINED SHEAR (PSF)
SELECT BACKFILL	125	34° (MIN.)	0
IN-SITU FOUNDATION SOIL	120	30°	0
RETAINED FILL	120	30°	0

QUANTITY SUMMARY

ITEM NO.	ITEM DESCRIPTION	UNITS	QUANTITY
302012	DELAWARE NO. 57 STONE	TON	380
602017	PORTLAND CEMENT CONCRETE MASONRY, PARAPET, CLASS A	CY	130
602018	PORTLAND CEMENT CONCRETE MASONRY, CLASS D	CY	610
604000	BAR REINFORCEMENT, EPOXY COATED	LB	103,410
602772	MECHANICALLY STABILIZED EARTH WALLS	LS	1
760015	RUMBLE STRIPS, CONCRETE, SHALLOW DEPTH	LF	930

RETAINING WALL RW1-3R INDEX OF SHEETS

SHEET NO.	DWG. NO.	TABLE OF CONTENTS
327	PN-01	PROJECT NOTES
328	GL-01	GEOMETRIC LAYOUT
329	PE-01	GENERAL PLAN AND ELEVATION - 1
330	PE-02	GENERAL PLAN AND ELEVATION - 2
331	PE-03	GENERAL PLAN AND ELEVATION - 3
332	PE-04	GENERAL PLAN AND ELEVATION - 4
333	PE-05	GENERAL PLAN AND ELEVATION - 5
334	PE-06	GENERAL PLAN AND ELEVATION - 6
335	PE-07	GENERAL PLAN AND ELEVATION - 7
336	RD-01	MSE WALL TYPICAL SECTION
337	MS-01	MOMENT SLAB PLAN - 1
338	MS-02	MOMENT SLAB PLAN - 2
339	MS-03	MOMENT SLAB PLAN - 3
340	MS-04	MOMENT SLAB PLAN - 4
341	MS-05	MOMENT SLAB PLAN - 5
342	MS-06	MOMENT SLAB PLAN - 6
343	MS-07	MOMENT SLAB PLAN - 7
344	MS-08	MOMENT SLAB REINFORCEMENT DETAILS - 1
345	MS-09	MOMENT SLAB REINFORCEMENT DETAILS - 2
346	MS-10	MOMENT SLAB REINFORCEMENT DETAILS - 3
347	MS-11	MOMENT SLAB REINFORCEMENT DETAILS - 4
348	MS-12	MOMENT SLAB REINFORCEMENT SECTION DETAILS - 1
349	MS-13	MOMENT SLAB REINFORCEMENT SECTION DETAILS - 2
350	MS-14	MOMENT SLAB MODIFICATION DETAILS - 1
351	MS-15	MSE WALL COPING DETAILS
352	BR-01	MOMENT SLAB REINFORCEMENT BAR LIST
353	BO-01	BORING PROFILE - 1
354	BO-02	BORING PROFILE - 2
355	BO-03	BORING PROFILE - 3
356	BO-04	BORING PROFILE - 4
357	BO-05	BORING PROFILE - 5
358	BO-06	BORING PROFILE - 6
359	BO-07	BORING PROFILE - 7

UNOFFICIAL WEBSITE COPY

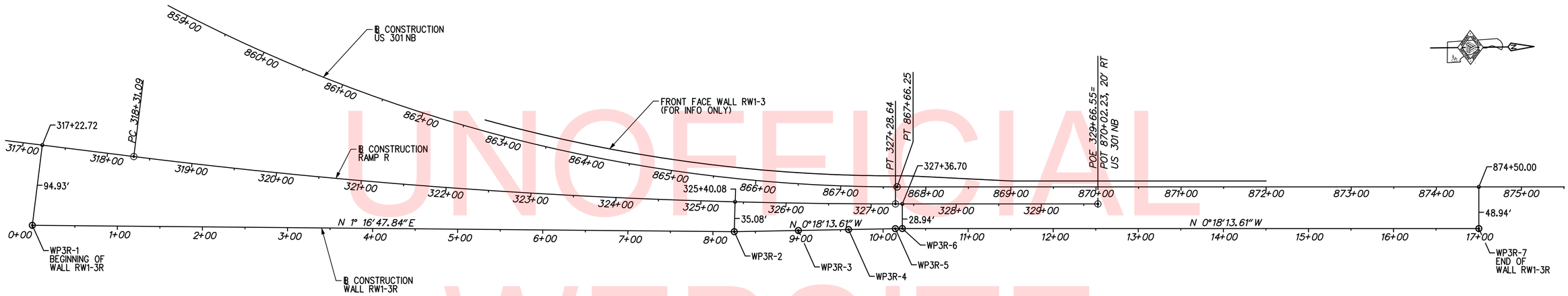

GEOMETRIC LAYOUT PLAN

SCALE: 1" = 60'-0"

WORKING POINT COORDINATES			
WORKING POINT	BL CONSTRUCTION WALL RW1-3R	COORDINATES	
		NORTHING	EASTING
WP3R-1	STA. 0+00.00	556930.1167	590579.9539
WP3R-2	STA. 8+25.12	557755.0259	590598.3850
WP3R-3	STA. 9+00.46	557830.3650	590597.9856
WP3R-4	STA. 9+59.46	557889.3642	590597.6727
WP3R-5	STA. 10+14.46	557944.3634	590597.3811
WP3R-6	STA. 10+22.66	557952.5728	590597.3376
WP3R-7	STA. 17+00.28	558630.1325	590606.3367

NOTES:

1. THE BL CONSTRUCTION WALL RW1-3R IS ALONG FRONT FACE OF MSE WALL PANELS.
2. FOR WALL RW1-3R PLAN AND ELEVATIONS, SEE DWG. NOS. PE-01 THROUGH PE-07.
3. WP3R-1 AND WP3R-6 OFFSETS ARE PERPENDICULAR TO BL CONSTRUCTION RAMP R.
4. WP3R-2 OFFSET IS RADIAL TO BL CONSTRUCTION RAMP R.
5. WP3R-7 OFFSET IS PERPENDICULAR TO BL CONSTRUCTION US 301NB.

UNOFFICIAL WEBSITE COPY

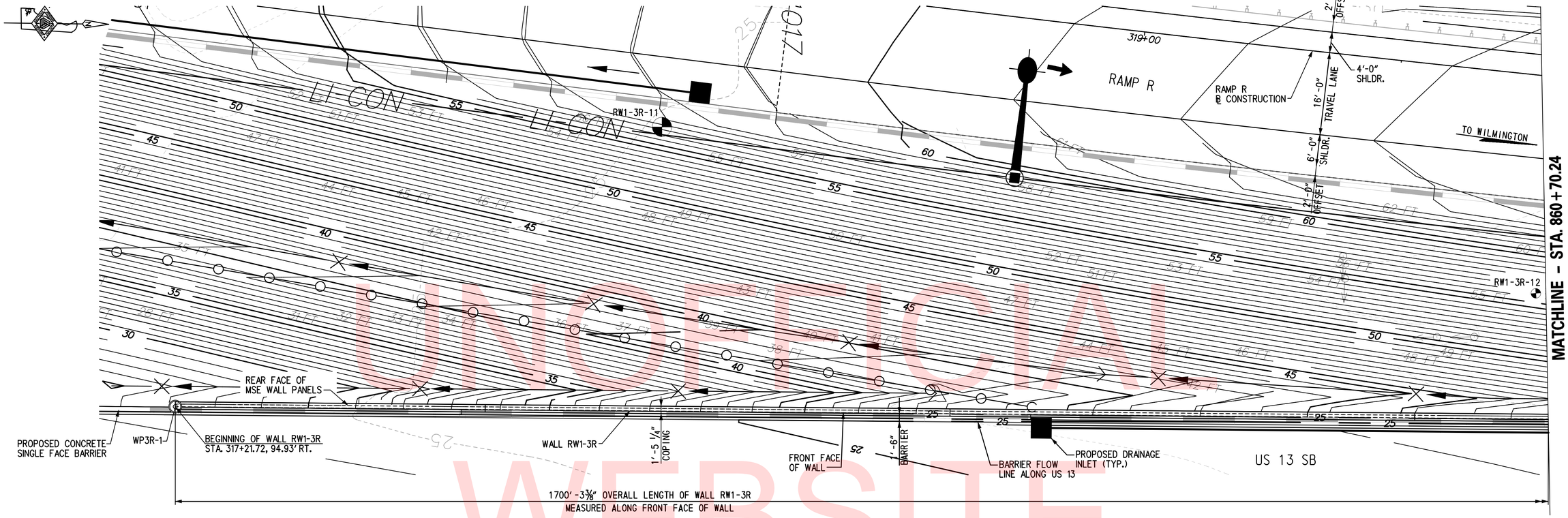

TEST BORINGS				
BORING DESIGNATION	STATION	OFFSET	NORTHING	EASTING
RW1-3R-11	318+09.61	29.55' RT.	557025.0600	590527.0500
RW1-3R-12	319+81.45	42.43' RT.	557194.6800	590561.9600

PLAN

SCALE: 1" = 10'-0"

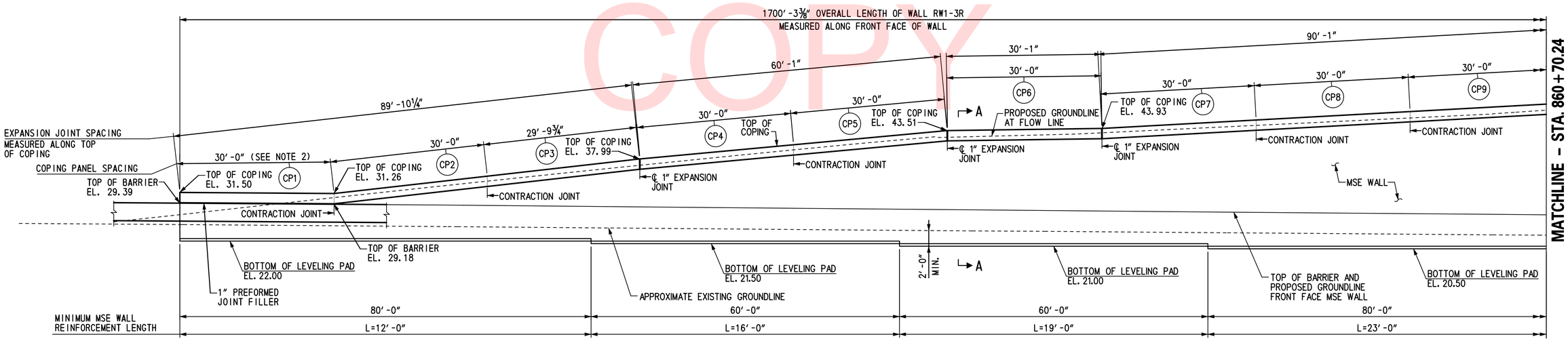

NOTES:

1. FOR RW1-3R GEOMETRIC LAYOUT INFORMATION AND WORKING POINT DETAILS, SEE DWG. NO. GL-01.
2. FOR DETAILS OF COPING INTERFACE WITH ROADWAY BARRIER, SEE DETAIL A ON DWG. NO. MS-15.
3. FOR SECTION A-A, SEE DWG. NO. RD-01.

ELEVATION

SCALE: 1" = 10'-0"

UNOFFICIAL WEBSITE COPY

\\tedient\S\Projects\2008\PE-ED0836 (DelDOT US 301_*1445)\7. Transportation\1. Bridges\Drawings\Final_PS&E\RW1-3 & RW1-3R\RW1-3R\PE01_RW1-3R.dgn
2/2/2013 1:48:29 PM

DELAWARE DEPARTMENT OF TRANSPORTATION	ADDENDUMS / REVISIONS	SCALE: AS NOTED	US 301 & SR 1 INTERCHANGE	CONTRACT T200911302 / COUNTY NEW CASTLE	BRIDGE NO. RW1-3R / DESIGNED BY: KGD / CHECKED BY: KEE	GENERAL PLAN & ELEVATION - 1

RW1-3R PE-01

SHEET NO. 329 / TOTAL SHTS. 491

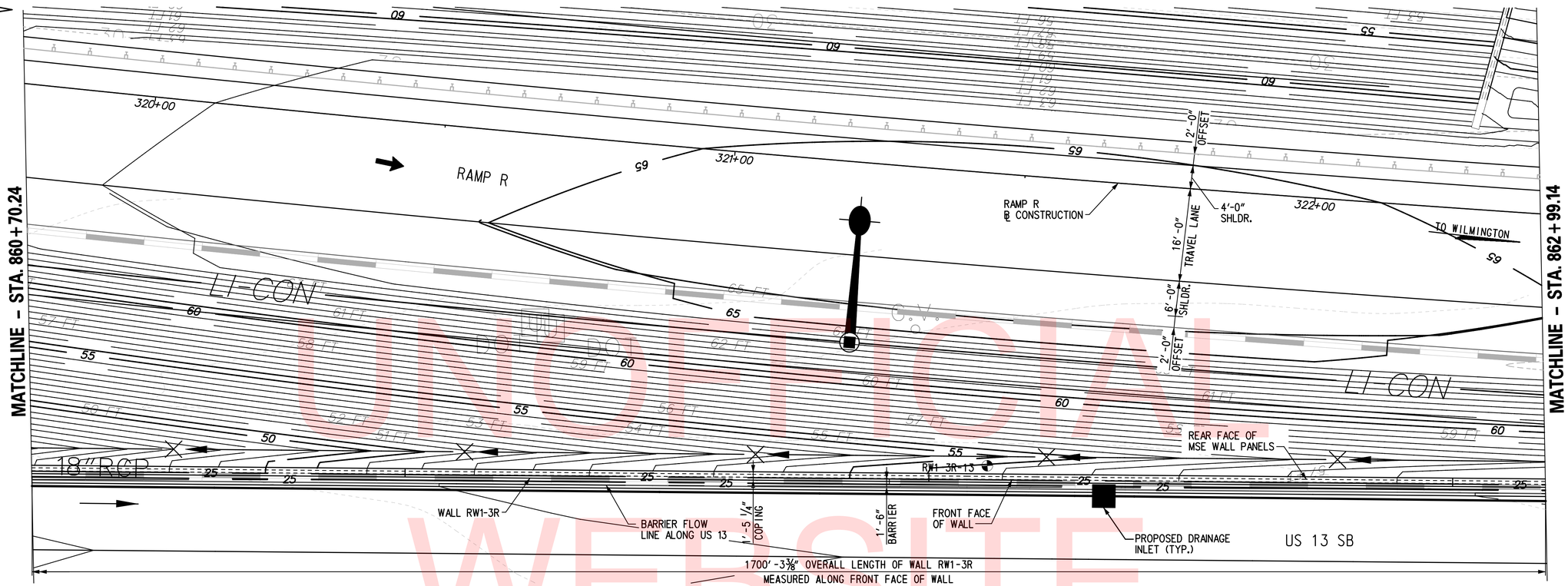

PLAN

SCALE: 1" = 10'-0"

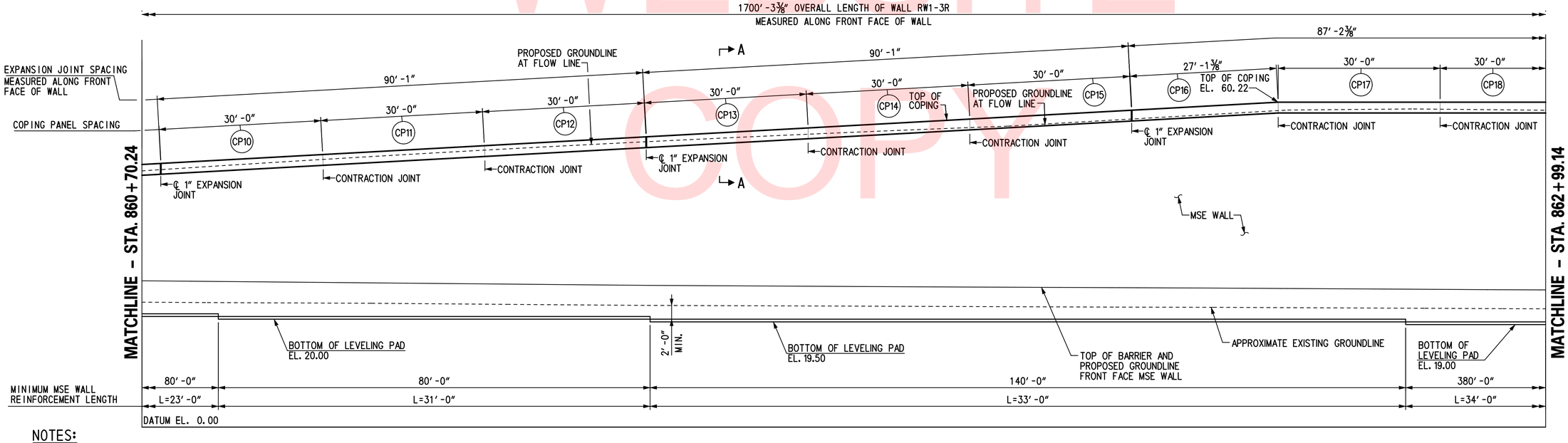

ELEVATION

SCALE: 1" = 10'-0"

NOTES:

1. FOR RW1-3R GEOMETRIC LAYOUT INFORMATION AND WORKING POINT DETAILS, SEE DWG. NO. GL-01.
2. FOR SECTION A-A, SEE DWG. NO. RD-01.

TEST BORINGS				
BORING DESIGNATION	STATION	OFFSET	NORTHING	EASTING
RW1-3R-13	321+47.52	50.19' RT.	557360.0765	590587.2207

RW1-3R
PE-02

DELAWARE DEPARTMENT OF TRANSPORTATION

ADDENDUMS / REVISIONS

SCALE: AS NOTED

US 301 & SR 1 INTERCHANGE

CONTRACT	BRIDGE NO.	RW1-3R
T200911302	DESIGNED BY:	KGD
COUNTY	CHECKED BY:	KEE
NEW CASTLE		

GENERAL PLAN & ELEVATION – 2

SHEET NO. 330
TOTAL SHTS. 491

UNOFFICIAL WEBSITE COPY

\\tsrjnet\S\Projects\2008\PE-ED0838 (DelDOT US 301_*1445)\7. Transportation\1. Bridges\Drawings\Final_PS&E\RW1-3 & RW1-3R\RW1-3R\PE02_RW1-3R.dgn
2/27/2013 1:50:15 PM

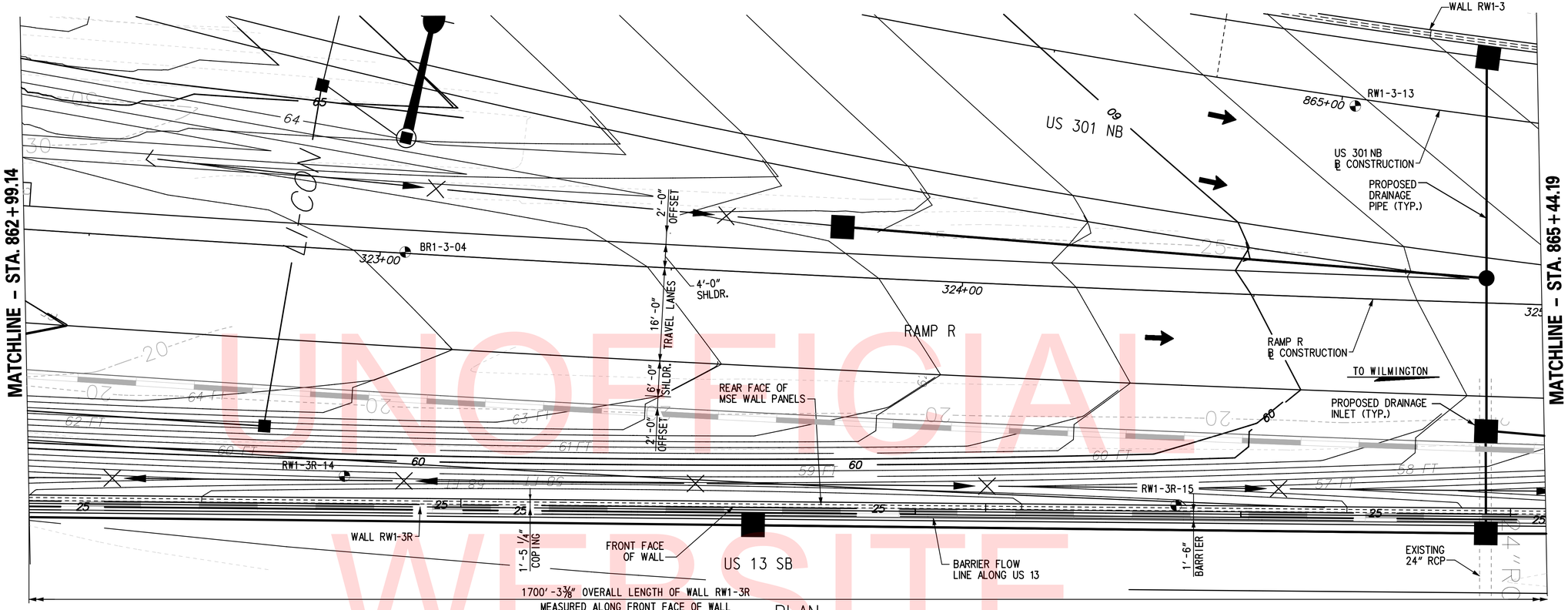

PLAN
SCALE: 1" = 10'-0"

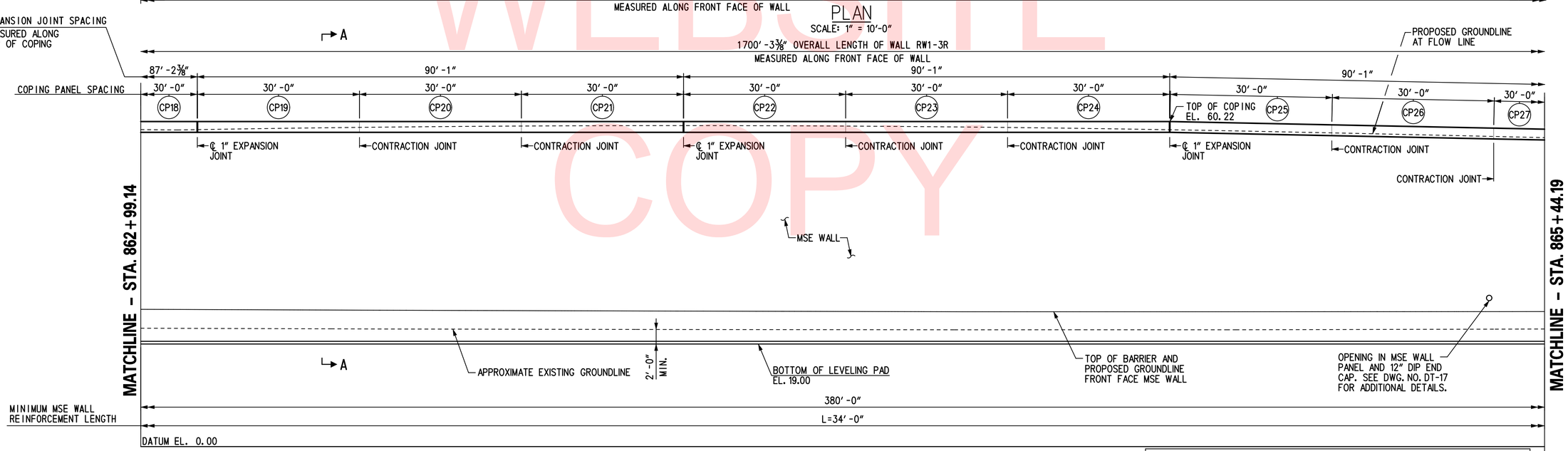

ELEVATION
SCALE: 1" = 10'-0"

NOTES:

1. FOR RW1-3R GEOMETRIC LAYOUT INFORMATION AND WORKING POINT DETAILS, SEE DWG. NO. GL-01.
2. FOR SECTION A-A, SEE DWG. NO. RD-01.

TEST BORINGS

BORING DESIGNATION	STATION	OFFSET	NORTHING	EASTING
RW1-3R-14	322+96.17	38.74' RT.	557510.0729	590588.2641
BR1-3-04	323+04.28	00.21' LT.	557521.0000	590550.0000
RW1-3R-15	325+38.12	36.64' LT.	557652.6000	590595.1900
RW1-3-13	324+66.21	32.90' LT.	557684.2400	590527.1900

UNOFFICIAL WEBSITE COPY

DELAWARE DEPARTMENT OF TRANSPORTATION

ADDENDUMS / REVISIONS

SCALE: AS NOTED

US 301 & SR 1 INTERCHANGE

CONTRACT	BRIDGE NO.	RW1-3R
T200911302	DESIGNED BY:	KGD
COUNTY		
NEW CASTLE	CHECKED BY:	KEE

GENERAL PLAN & ELEVATION - 3

RW1-3R PE-03

SHEET NO. 331

TOTAL SHTS. 491

C:\Projects\32008\PE\-ED0836 (DelDOT US 301_#1445)\1.Bridges\Drawings\Final_PS&E\RW1-3 & RW1-3R\RW1-3R\PE03_RW1-3R.dgn
10/26/2018 1:32:19 AM

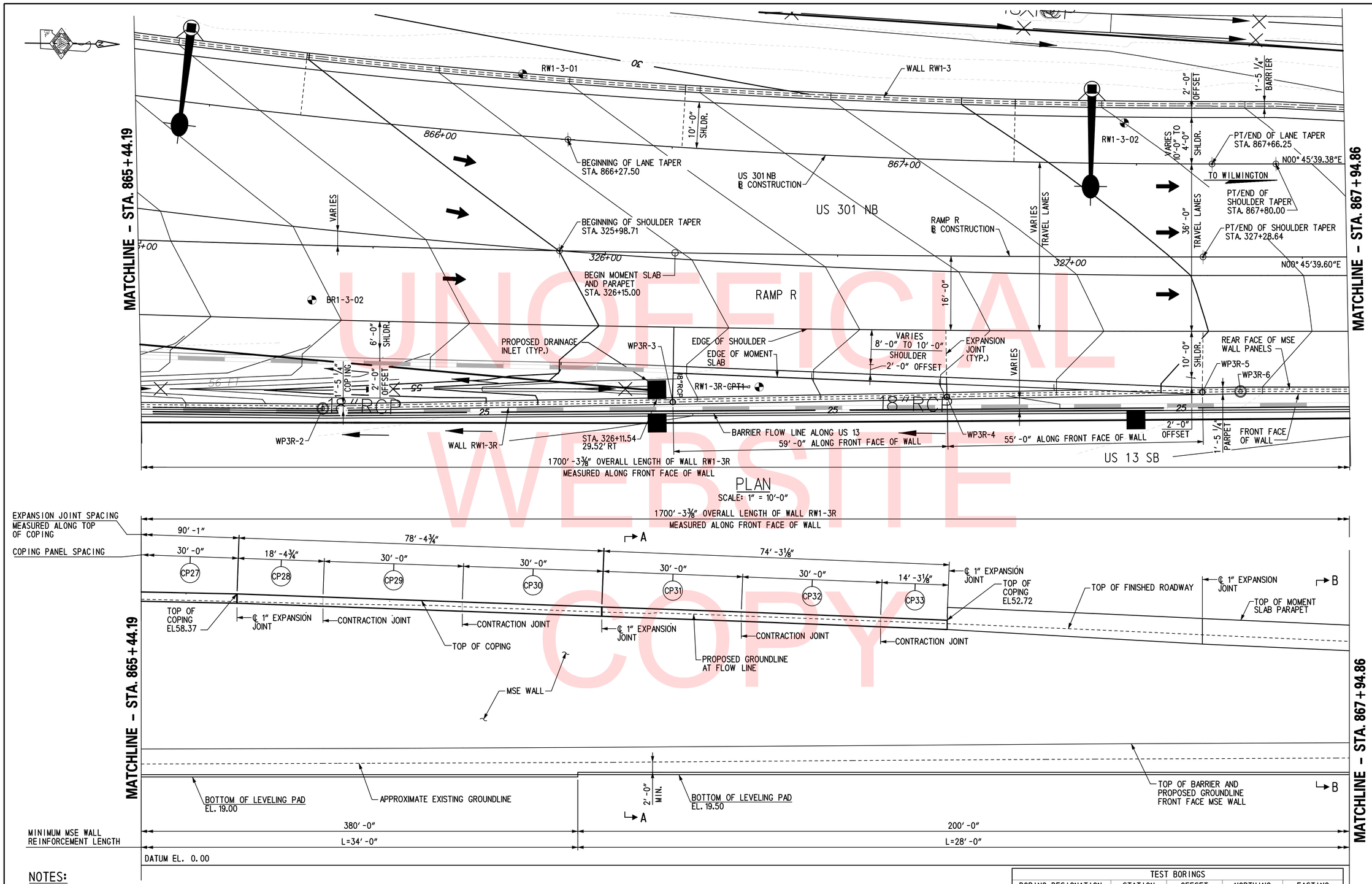

PLAN
SCALE: 1" = 10'-0"

ELEVATION
SCALE: 1" = 10'-0"

NOTES:

1. FOR RW1-3R GEOMETRIC LAYOUT INFORMATION AND WORKING POINT DETAILS, SEE DWG. NO. GL-01.
2. RW1-3R MOMENT SLAB EXPANSION JOINTS SHALL ALIGN WITH ADJACENT ROADWAY PAVEMENT JOINTS, SEE RDWY DWG. NOS. EX-01 THROUGH EX-10.
3. FOR SECTIONS A-A AND B-B, SEE DWG. NO. RD-01.

TEST BORINGS

BORING DESIGNATION	STATION	OFFSET	NORTHING	EASTING
BR1-3-02	325+37.14	11.79' RT.	557753.0000	590575.0000
RW1-3-01	325+81.42	37.86' LT.	557799.0000	590527.0000
RW1-3-02	327+11.63	28.82' LT.	557928.3400	590539.2330
RW1-3R-CPT1	326+33.48	28.60' RT.	557849.0000	590595.0000

UNOFFICIAL WEBSITE COPY

DELAWARE DEPARTMENT OF TRANSPORTATION

ADDENDUMS / REVISIONS

SCALE: AS NOTED

US 301 & SR 1 INTERCHANGE

CONTRACT	BRIDGE NO.	RW1-3R
T200911302	DESIGNED BY:	KGD
COUNTY		
NEW CASTLE	CHECKED BY:	KEE

GENERAL PLAN & ELEVATION – 4

RW1-3R
PE-04

SHEET NO. 332
TOTAL SHTS. 491

\\tsdfiant\S\Projects\2008\PE\ED0836 (DelDOT US 301_*1445)\7. Transportation\1. Bridges\Drawings\Final_PS&E\RW1-3 & RW1-3R\RW1-3R\PE04_RW1-3R.dgn
2/27/2013 2:02:52 PM

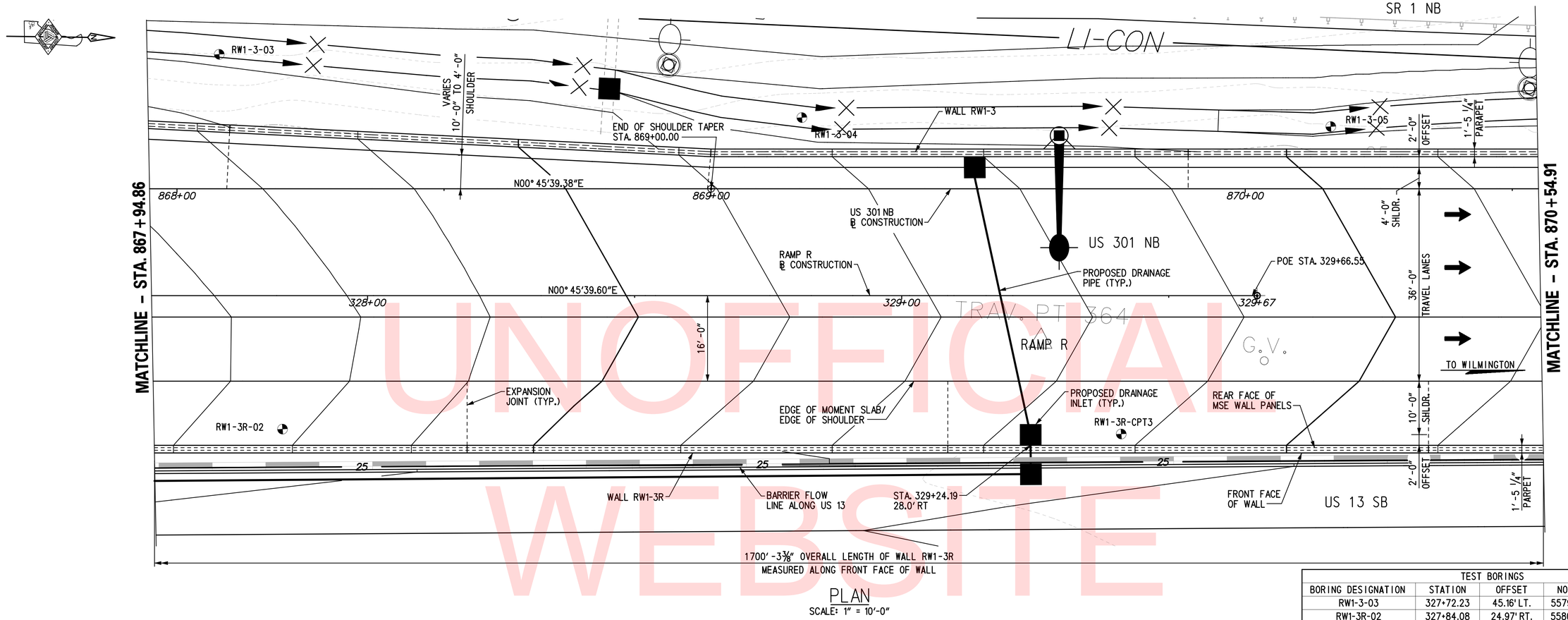

PLAN
SCALE: 1" = 10'-0"

TEST BORINGS				
BORING DESIGNATION	STATION	OFFSET	NORTHING	EASTING
RW1-3-03	327+72.23	45.16' LT.	557989.0900	590523.7200
RW1-3R-02	327+84.08	24.97' RT.	558000.0000	590594.0000
RW1-3-04	328+89.24	33.33' LT.	558098.0000	590537.0000
RW1-3-05	870+16.02	11.64' LT.	558197.0000	590540.0000
RW1-3R-CPT3	329+41.10	25.89' RT.	558157.0000	590597.0000

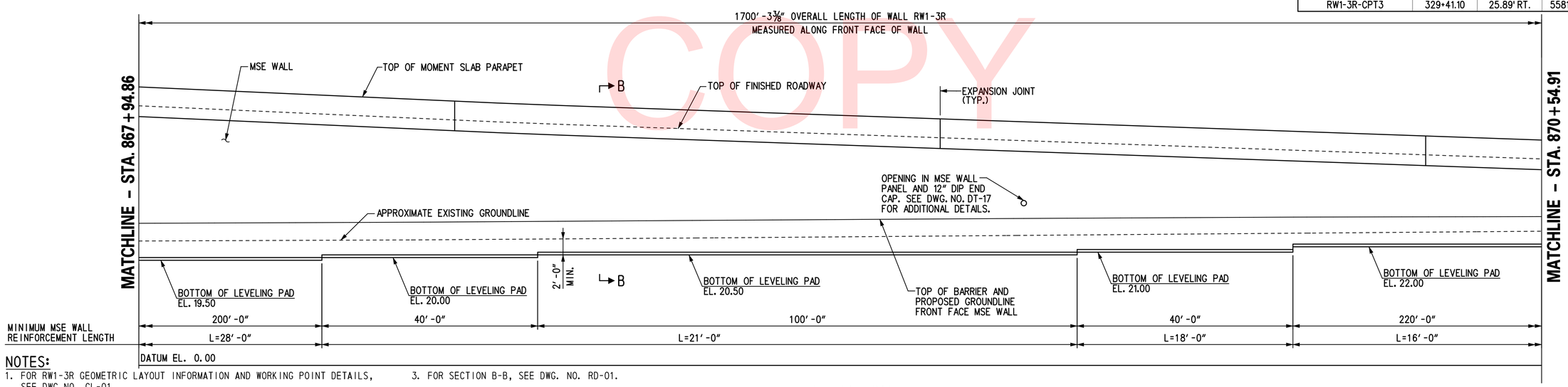

ELEVATION
SCALE: 1" = 10'-0"

NOTES:
1. FOR RW1-3R GEOMETRIC LAYOUT INFORMATION AND WORKING POINT DETAILS, SEE DWG. NO. GL-01.
2. RW1-3R MOMENT SLAB EXPANSION JOINTS SHALL ALIGN WITH ADJACENT ROADWAY PAVEMENT JOINTS, SEE RDWY DWG. NOS. EX-01 THROUGH EX-10.
3. FOR SECTION B-B, SEE DWG. NO. RD-01.

UNOFFICIAL WEBSITE COPY

\\tsdjent\S\Projects\2008\PE\ED0836 (DelDOT US 301_#1445)\7. Transportation\1. Bridges\Drawings\Final_PS&E\RW1-3 & RW1-3R\RW1-3R\PE05_RW1-3R.dgn
2/27/2013 2:09:51 PM

DELAWARE DEPARTMENT OF TRANSPORTATION

ADDENDUMS / REVISIONS

SCALE: AS NOTED

US 301 & SR 1 INTERCHANGE

CONTRACT	BRIDGE NO.	RW1-3R
T200911302	DESIGNED BY:	KGD
COUNTY	CHECKED BY:	KEE
NEW CASTLE		

GENERAL PLAN & ELEVATION - 5

RW1-3R PE-05

SHEET NO. 333

TOTAL SHTS. 491

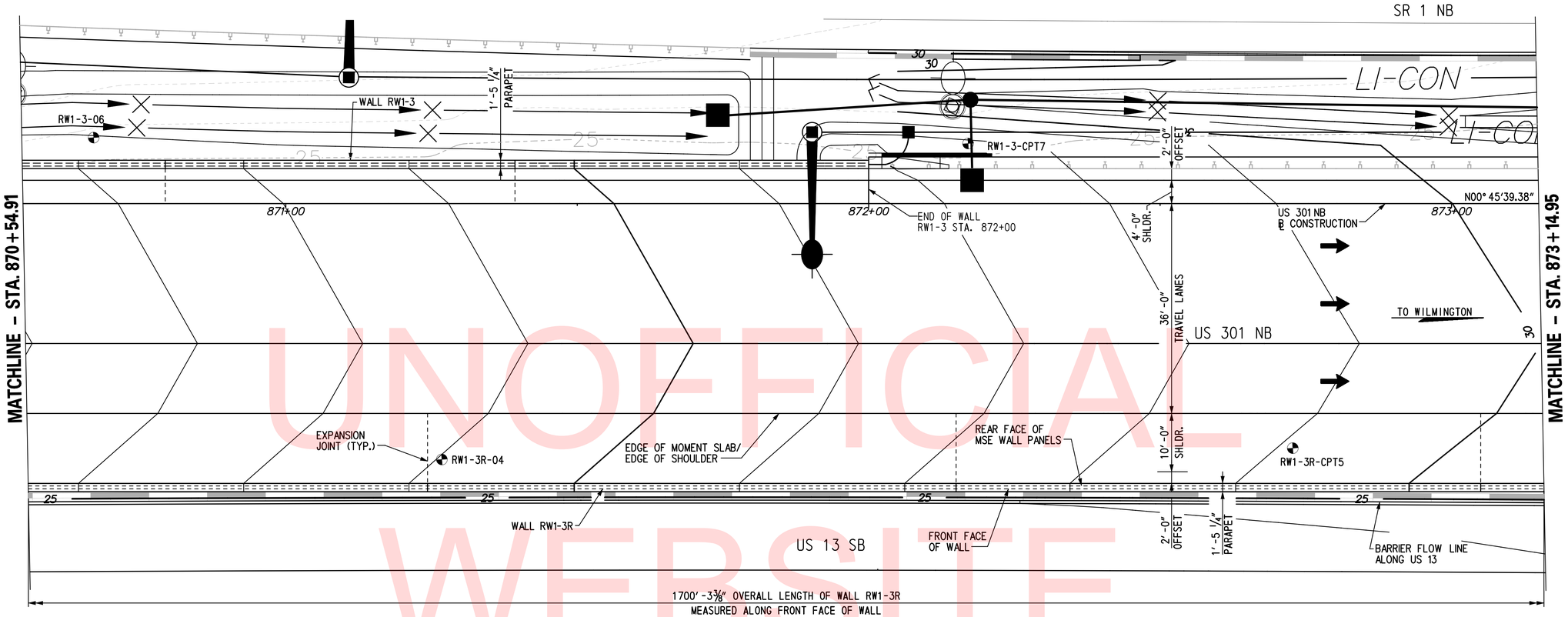

PLAN

SCALE: 1" = 10'-0"

TEST BORINGS				
BORING DESIGNATION	STATION	OFFSET	NORTHING	EASTING
RW1-3-06	870+67.03	11.32' LT.	558248.0000	590541.0000
RW1-3R-04	871+26.77	43.89' RT.	558307.0000	590597.0000
RW1-3R-CPT5	872+72.76	41.95' RT.	558453.0000	590597.0000
RW1-3-CPT7	872+17.06	10.31' LT.	558398.0000	590544.0000

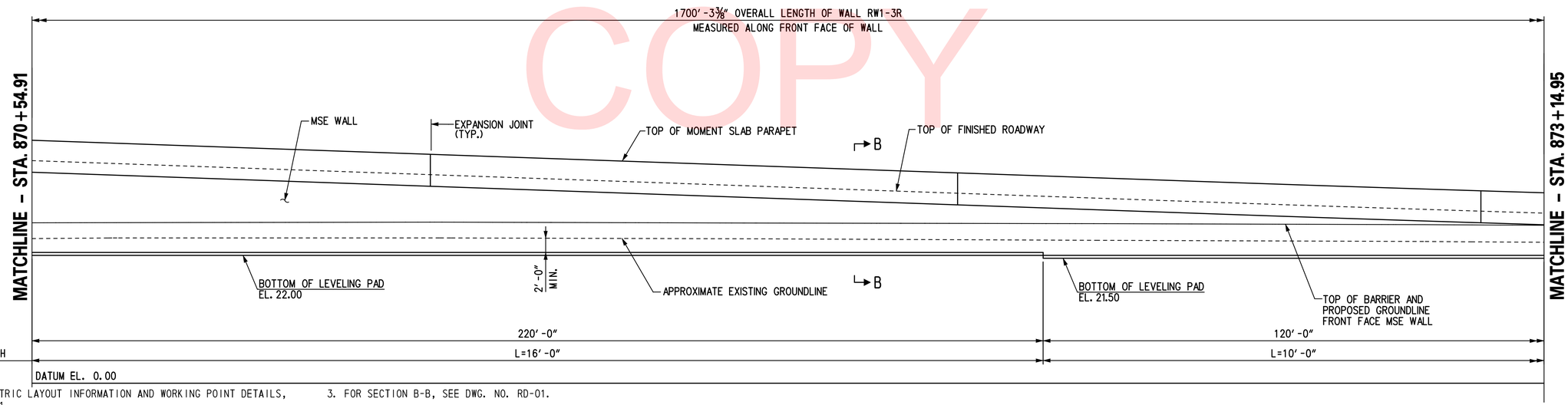

ELEVATION

SCALE: 1" = 10'-0"

NOTES:

1. FOR RW1-3R GEOMETRIC LAYOUT INFORMATION AND WORKING POINT DETAILS, SEE DWG. NO. GL-01.
2. RW1-3R MOMENT SLAB EXPANSION JOINTS SHALL ALIGN WITH ADJACENT ROADWAY PAVEMENT JOINTS, SEE RDWY DWG. NOS. EX-01 THROUGH EX-10.
3. FOR SECTION B-B, SEE DWG. NO. RD-01.

UNOFFICIAL WEBSITE COPY

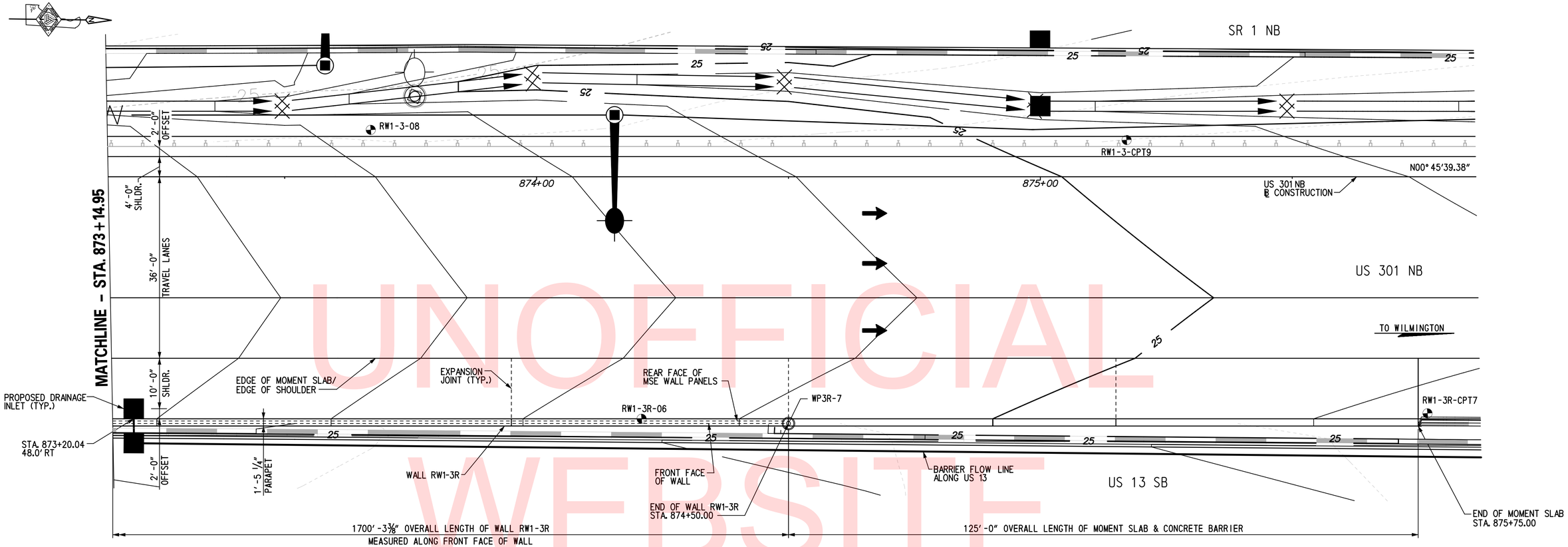

PLAN
SCALE: 1" = 10'-0"

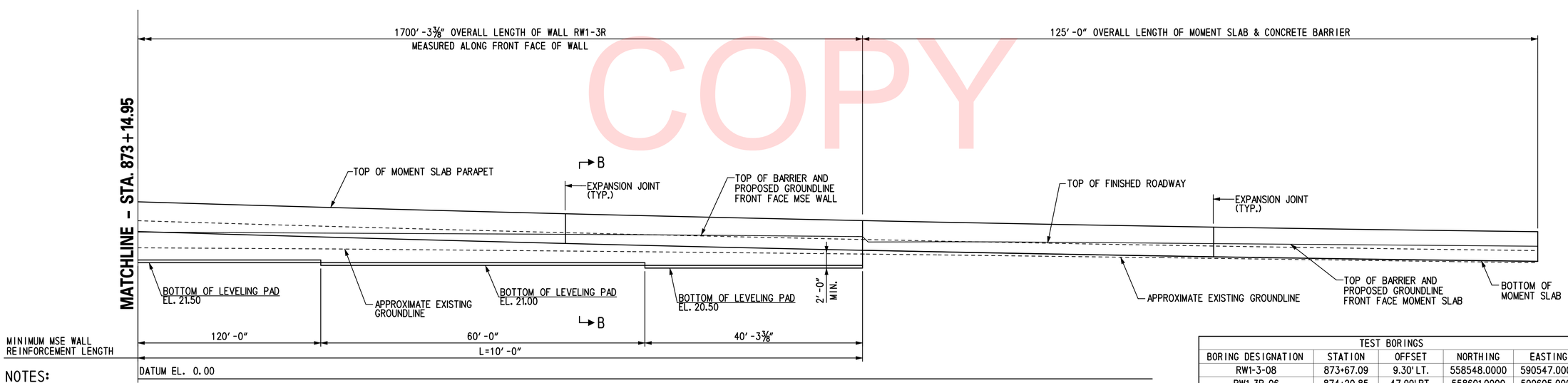

ELEVATION
SCALE: 1" = 10'-0"

TEST BORINGS				
BORING DESIGNATION	STATION	OFFSET	NORTHING	EASTING
RW1-3-08	873+67.09	9.30' LT.	558548.0000	590547.0000
RW1-3R-06	874+20.85	47.99' RT.	558601.0000	590605.0000
RW1-3R-CPT7	875+76.85	46.92' RT.	558757.0000	590606.0000
RW1-3-CPT9	875+17.13	7.30' LT.	558698.0000	590551.0000

NOTES:

1. FOR RW1-3R GEOMETRIC LAYOUT INFORMATION AND WORKING POINT DETAILS, SEE DWG. NO. GL-01.
2. RW1-3R MOMENT SLAB EXPANSION JOINTS SHALL ALIGN WITH ADJACENT ROADWAY PAVEMENT JOINTS, SEE RDWY DWG. NOS. EX-01 THROUGH EX-10.
3. FOR SECTION B-B, SEE DWG. NO. RD-01.

UNOFFICIAL WEBSITE COPY

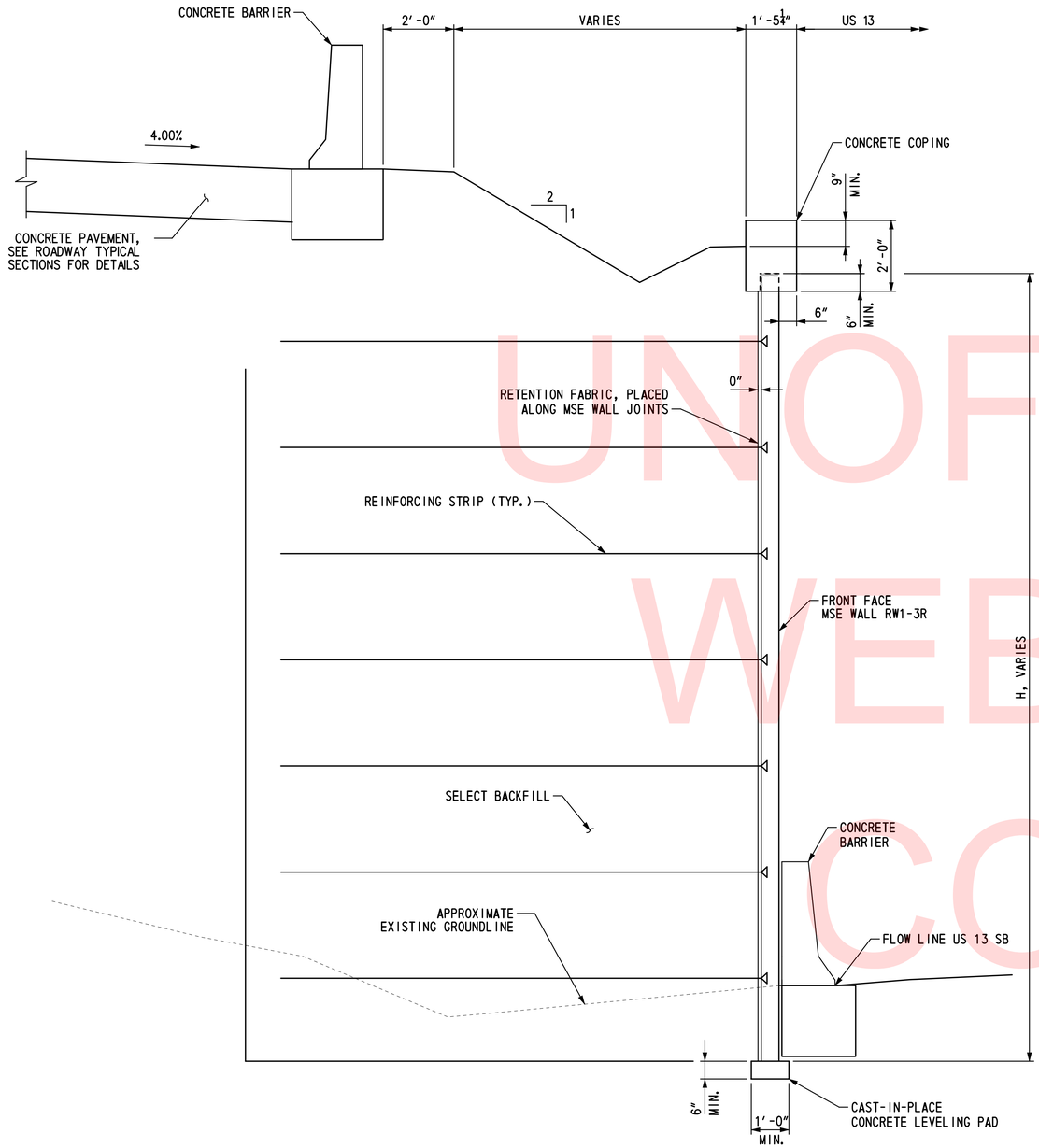

SECTION A-A

SCALE: ½"=1'-0"

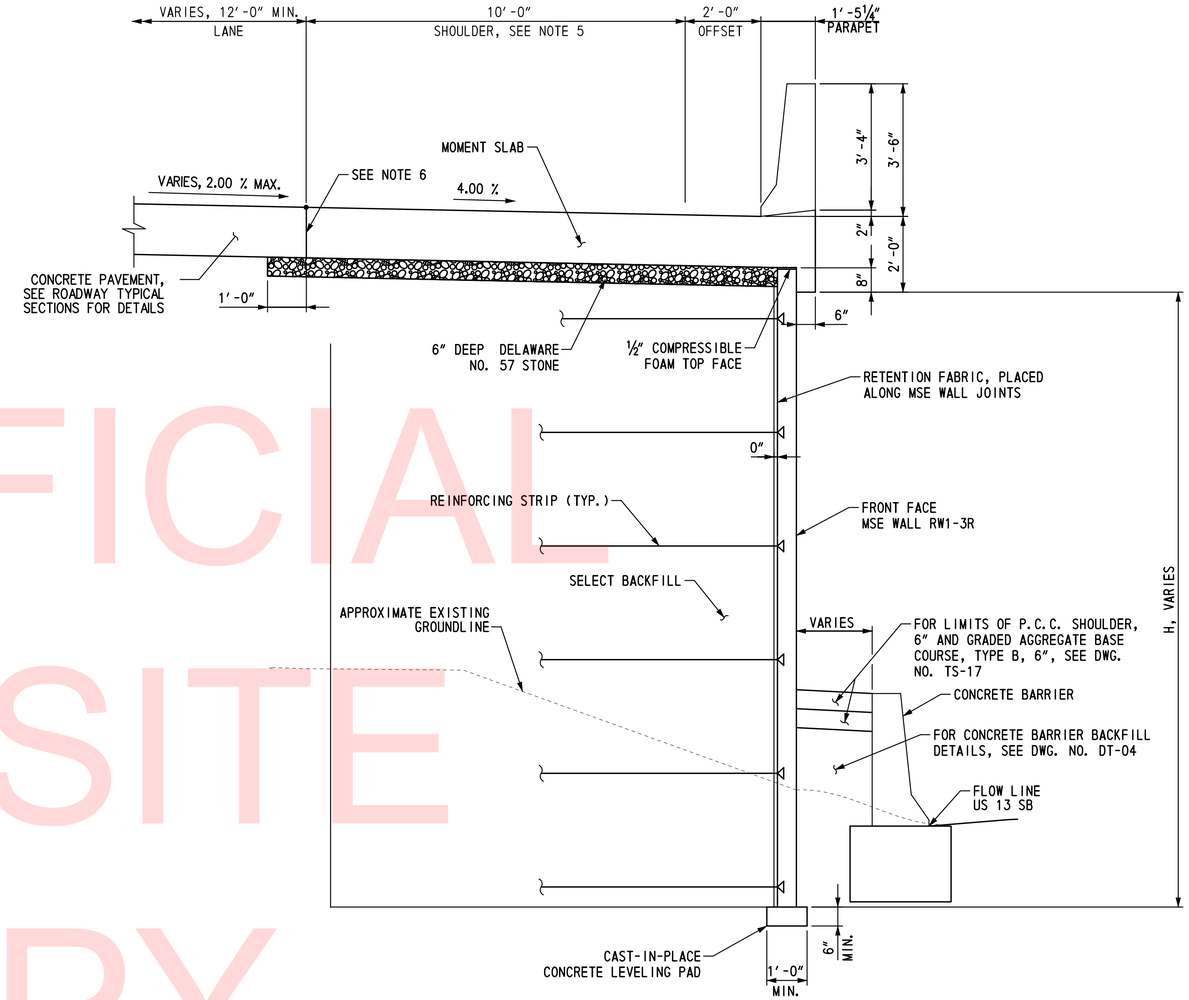

SECTION B-B

SCALE: ½"=1'-0"

NOTES:

1. FOR LOCATION OF SECTIONS A-A AND B-B, SEE DWG. NOS. PE-01 THRU PE-07.
2. FOR MSE WALL NOTES AND SOIL PROPERTIES, SEE DWG. NO. PN-01.
3. FOR ROADWAY TYPICAL SECTIONS, SEE DWG.NOS. TS-02, TS-03, TS-10 AND TS-11.
4. PAYMENT FOR CONSTRUCTION OF MOMENT SLABS BE MADE UNDERITEM 602018 - PORTLAND CEMENT MASONRY CLASS D. PAYMENT FOR PERFORMED JOINT FILLER, DOWEL BARS AND EXPANSION SLEEVES SHALL BE INCIDENTAL TO THIS ITEM.
5. RUMBLE STRIPS SHALL BE LOCATED IN THE MOMENT SLAB ADJACENT TO THE SHOULDER. FOR RUMBLE STRIP DETAIL, SEE DWG. NO. DT-01. RUMBLE STRIPS SHALL BE PAID UNDER ITEM 760015, RUMBLE STRIPS, CONCRETE, SHALLOW DEPTH. RUMBLE STRIPS SHALL BE COATED WITH A HIGH MOLECULAR WEIGHT METHACRYLATE SEALER. SEE SPECIAL PROVISION ITEM 602501. THE SEALER SHALL BE APPLIED IN ACCORDANCE WITH THE MANUFACTURER'S RECOMMENDATIONS IN A 1'-8" WIDE STRIP, CENTERED ON THE RUMBLE STRIPS, CONTINUOUSLY FOR THE LENGTH OF RETAINING WALL RW1-3R MOMENT SLABS. COST OF HIGH MOLECULAR WEIGHT METHACRYLATE SEALER SHALL BE INCIDENTAL TO ITEM 760015, RUMBLE STRIPS, CONCRETE, SHALLOW DEPTH.
6. PRIOR TO PLACING MOMENT SLAB CONCRETE ADJACENT TO EXISTING CONCRETEPAVEMENT, OR PRIOR TO PLACING CONCRETE PAVEMENT ADJACENT TO EXISTING MOMENT SLAB CONCRETE, AN APPROVED BOND BREAKER SHALL BE APPLIED TO THE EXISTING CONCRETE VERTICAL FACE. THIS LONGITUDINAL JOINT AT THE INTERFACE BETWEEN THE CONCRETE PAVEMENT AND THE MOMENT SLAB CONCRETE SHALL NOT BE SEALED. VERTICAL CRACKS IN THE EXISTING CONCRETE FACE SHALL BE COVERED OR SEALED AS APPROVED BY THE ENGINEER TO PREVENT INTRUSION OF THE NEW CONCRETE INTO THE EXISTING CONCRETE. ALL WORK SHALL BE INCIDENTAL TO ITEM NO. 602018 - PORTLAND CEMENT CONCRETE MASONRY, CLASS D.
7. REFLECTORS SHALL BE INSTALLED ALONG THE PARAPET (ROADWAY ITEM). FOR DETAILS, SEE DWG. NO. DT-05.

UNOFFICIAL WEBSITE COPY

C:\Projects\2008\PEL-E00836 (DelDOT US 301_*1445)\1_Bridges\Drawings\Final_PS&E\RW1-3 & RW1-3R\RW1-3R\RD01_RW1-3R.DGN
12/15/2015 3:50:14 PM

DELAWARE DEPARTMENT OF TRANSPORTATION	ADDENDUMS / REVISIONS	SCALE: AS NOTED	US 301 & SR 1 INTERCHANGE	CONTRACT T200911302	BRIDGE NO. RW1-3R	MSE WALL SECTIONS	RW1-3R RD-01
				COUNTY NEW CASTLE	DESIGNED BY: KMG		SHEET NO. 336
					CHECKED BY: KEE		TOTAL SHTS. 491

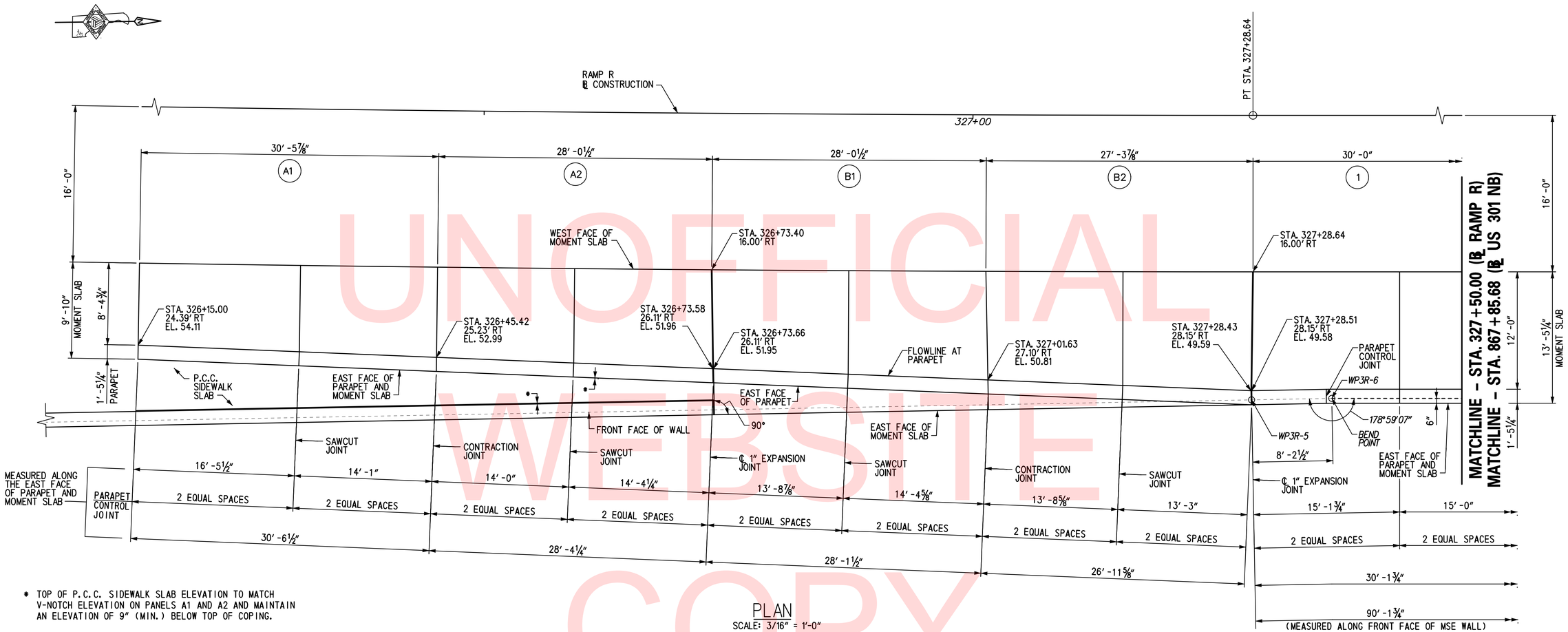

* TOP OF P.C.C. SIDEWALK SLAB ELEVATION TO MATCH V-NOTCH ELEVATION ON PANELS A1 AND A2 AND MAINTAIN AN ELEVATION OF 9″ (MIN.) BELOW TOP OF COPING.

PLAN
SCALE: 3/16″ = 1′-0″

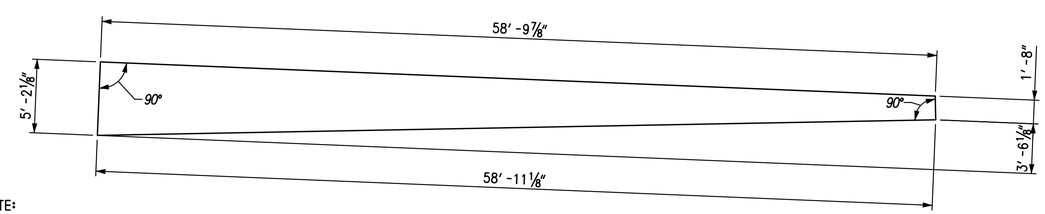

NOTE:

FOR P.C.C. SIDEWALK DETAILS AND PAYMENT SEE ROADWAY PLANS.

PLAN
(P.C.C. SIDEWALK SLAB)
SCALE: 3/16″ = 1′-0″

LEGEND:

(4) MOMENT SLAB PANEL I.D. DESIGNATION

NOTES:

1. FOR RW1-3R GEOMETRIC LAYOUT AND WORKING POINT DETAILS, SEE DWG. NO. GL-01.
2. FOR MOMENT SLAB TYPICAL SECTION, SEE DWG. NO. RD-01.
3. FOR REINFORCEMENT DETAILS, SEE DWG. NO. MS-08 TO MS-11.

UNOFFICIAL WEBSITE COPY

\\tcdient\S\Projects\2008\PEI-ED0836 (DelDOT US 301_*1445)\7. Transportation\1. Bridges\Drawings\Final_PS&E\RW1-3 & RW1-3R\RW1-3R\MS01_RW1-3R.dgn
2/22/2013 2:12:25 PM

DELAWARE DEPARTMENT OF TRANSPORTATION	ADDENDUMS / REVISIONS	SCALE: AS NOTED	US 301 & SR 1 INTERCHANGE	CONTRACT T200911302	BRIDGE NO. RW1-3R	MOMENT SLAB PLAN – 1	RW1-3R MS-01	SHEET NO. 337
				COUNTY NEW CASTLE	DESIGNED BY: TSD			TOTAL SHTS. 491
					CHECKED BY: KEE			

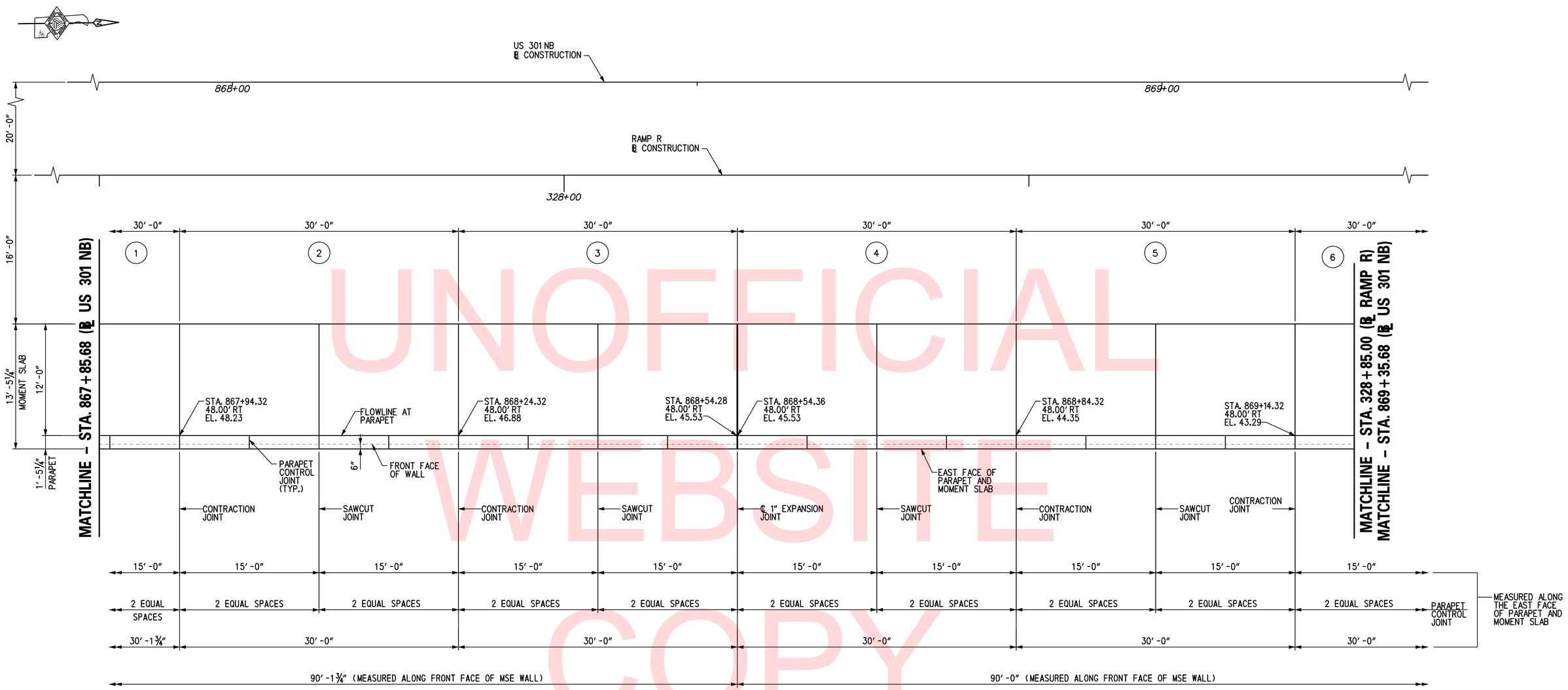

PLAN

SCALE: 3/16" = 1'-0"

UNOFFICIAL WEBSITE COPY

LEGEND:

(4) MOMENT SLAB PANEL I.D. DESIGNATION

NOTES:

1. FOR RW1-3R GEOMETRIC LAYOUT AND WORKING POINT DETAILS, SEE DWG. NO. GL-01.
2. FOR MOMENT SLAB TYPICAL SECTION, SEE DWG. NO. RD-01.
3. FOR REINFORCEMENT DETAILS, SEE DWG. NO. MS-08 TO MS-11.

RW1-3R
MS-02

DELAWARE DEPARTMENT OF TRANSPORTATION	ADDENDUMS / REVISIONS	SCALE: AS NOTED	US 301 & SR 1 INTERCHANGE	CONTRACT T200911302	BRIDGE NO. RW1-3R	MOMENT SLAB PLAN – 2	SHEET NO. 338
				COUNTY NEW CASTLE	DESIGNED BY: TSD		TOTAL SHTS. 491
					CHECKED BY: KEE		

\\tcdient\S\Projects\2008\PEI-ED0836 (DelDOT US 301_*1445)\7. Transportation\1. Bridges\Drawings\Final_PS&E\RW1-3 & RW1-3R\RW1-3R\MS02_RW1-3R.dgn
2/22/2013 2:13:14 PM

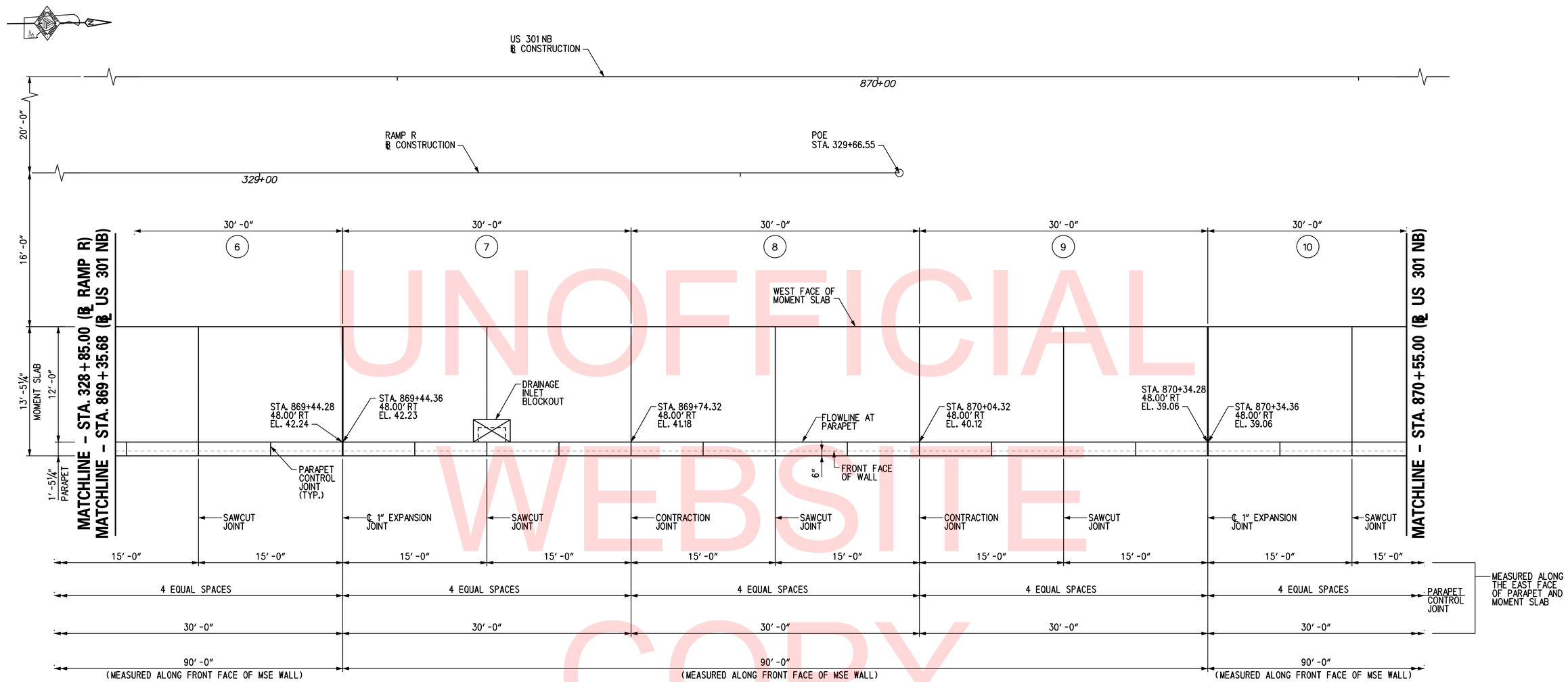

PLAN

SCALE: 3/16" = 1'-0"

UNOFFICIAL WEBSITE COPY

LEGEND:

(4) MOMENT SLAB PANEL I.D. DESIGNATION

NOTES:

1. FOR RW1-3R GEOMETRIC LAYOUT AND WORKING POINT DETAILS, SEE DWG. NO. GL-01.
2. FOR MOMENT SLAB TYPICAL SECTION, SEE DWG. NO. RD-01.
3. FOR REINFORCEMENT DETAILS, SEE DWG. NO. MS-08 TO MS-11..

DELAWARE DEPARTMENT OF TRANSPORTATION	ADDENDUMS / REVISIONS	SCALE: AS NOTED	US 301 & SR 1 INTERCHANGE	CONTRACT T200911302	BRIDGE NO. RW1-3R	MOMENT SLAB PLAN – 3	RW1-3R MS-03
				COUNTY NEW CASTLE	DESIGNED BY: TSD		SHEET NO. 339
					CHECKED BY: KEE		TOTAL SHTS. 491

\\tsplnt\S\Projects\2008\PEH-ED0836 (DelDOT US 301_#1445)\7. Transportation\1. Bridges\Drawings\Final_PS&E\RW1-3 & RW1-3R\RW1-3R\MS03_RW1-3R.dgn
2/27/2013 2:13:55 PM

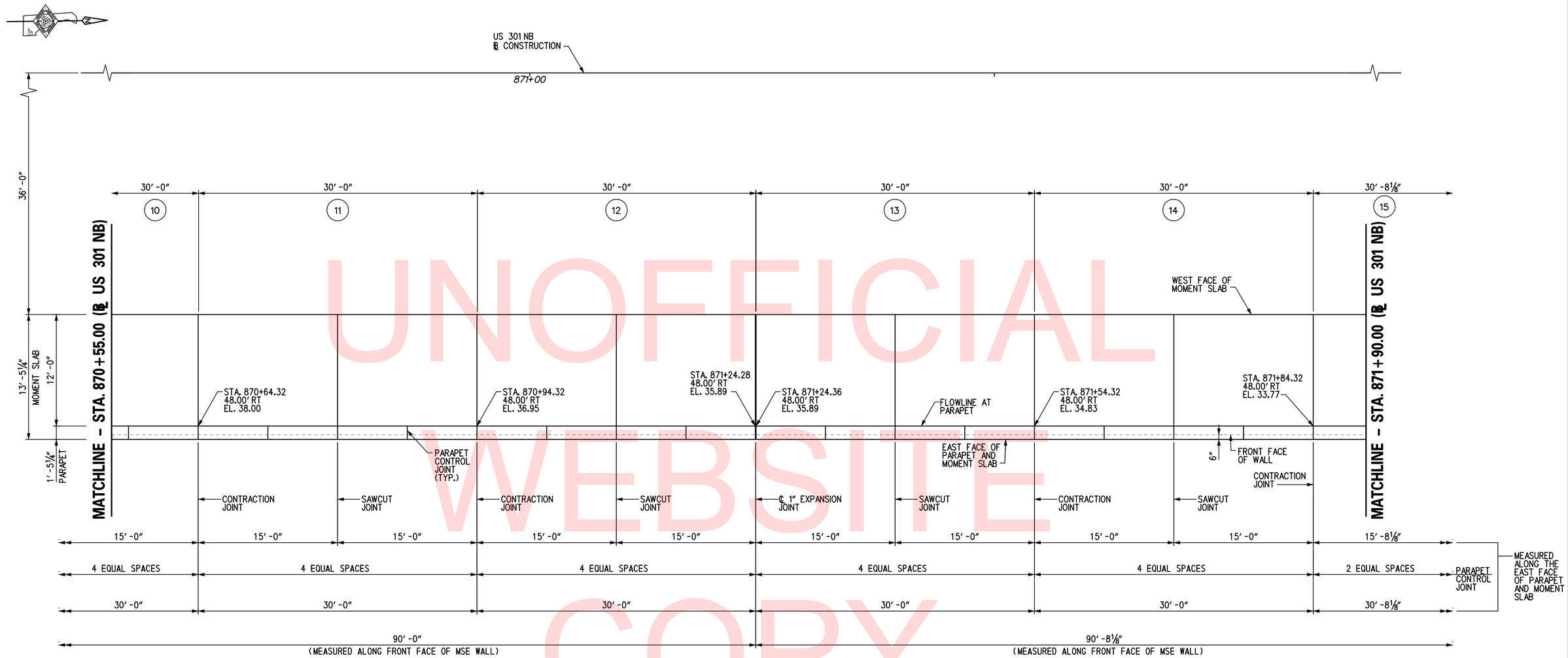

PLAN

SCALE: 3/16" = 1'-0"

UNOFFICIAL WEBSITE COPY

LEGEND:

(4) MOMENT SLAB PANEL I.D. DESIGNATION

NOTES:

1. FOR RW1-3R GEOMETRIC LAYOUT AND WORKING POINT DETAILS, SEE DWG. NO. GL-01.
2. FOR MOMENT SLAB TYPICAL SECTION, SEE DWG. NO. RD-01.
3. FOR REINFORCEMENT DETAILS, SEE DWG. NO. MS-08 TO MS-11.

RW1-3R
MS-04

DELAWARE DEPARTMENT OF TRANSPORTATION	ADDENDUMS / REVISIONS	SCALE: AS NOTED	US 301 & SR 1 INTERCHANGE	CONTRACT T200911302	BRIDGE NO. RW1-3R	MOMENT SLAB PLAN - 4	SHEET NO. 340
				COUNTY NEW CASTLE	DESIGNED BY: TSD		TOTAL SHTS. 491
					CHECKED BY: KEE		

\\tsplient\S\Projects\2008\PEI-ED0836 (DelDOT US 301_*1445)\7. Transportation\1. Bridges\Drawings\Final_PS&E\RW1-3 & RW1-3R\RW1-3R\MS04_RW1-3R.dgn
2/27/2013 2:14:44 PM

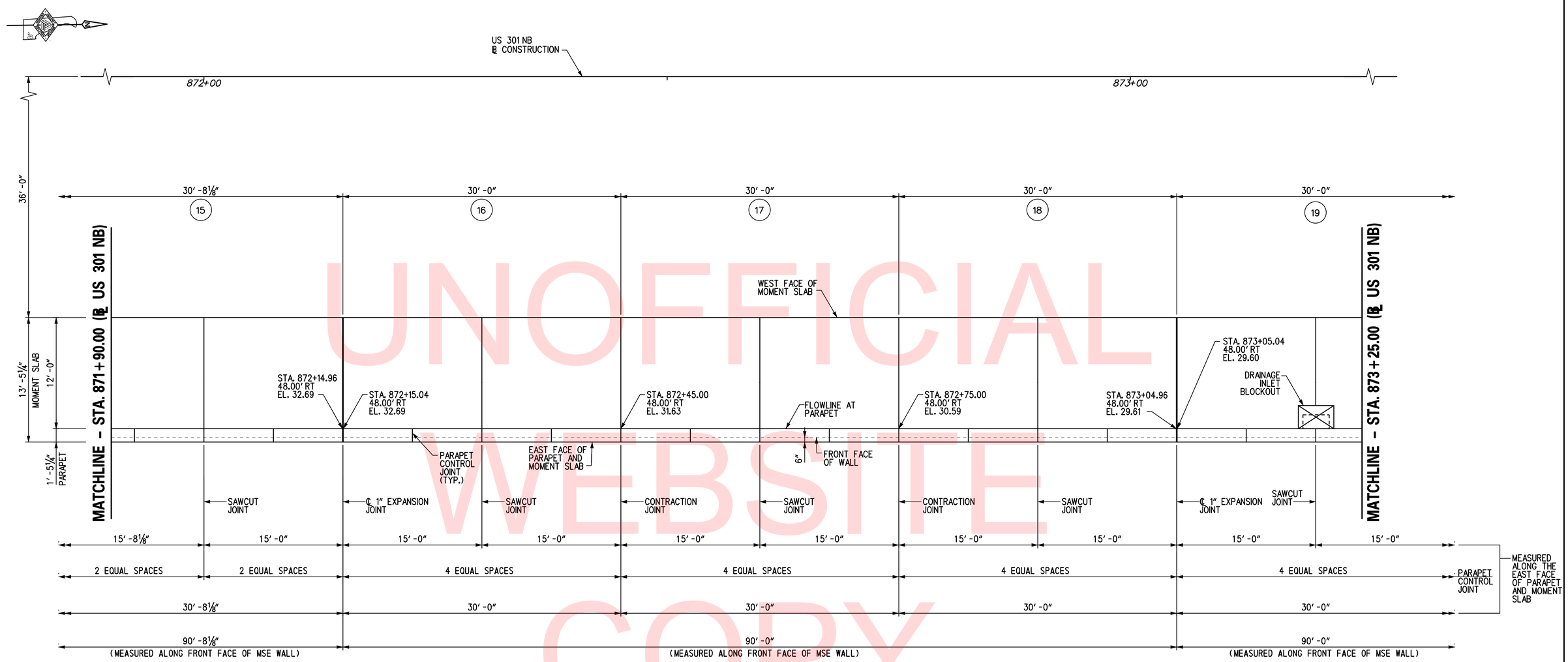

PLAN

SCALE: 3/16″ = 1′-0″

UNOFFICIAL WEBSITE COPY

LEGEND:

(4) MOMENT SLAB PANEL I.D. DESIGNATION

NOTES:

1. FOR RW1-3R GEOMETRIC LAYOUT AND WORKING POINT DETAILS, SEE DWG. NO. GL-01.
2. FOR MOMENT SLAB TYPICAL SECTION, SEE DWG. NO. RD-01.
3. FOR REINFORCEMENT DETAILS, SEE DWG. NO. MS-08 TO MS-11.

RW1-3R
MS-05

DELAWARE DEPARTMENT OF TRANSPORTATION	ADDENDUMS / REVISIONS	SCALE: AS NOTED	US 301 & SR 1 INTERCHANGE	CONTRACT T200911302	BRIDGE NO. RW1-3R	MOMENT SLAB PLAN – 5	SHEET NO. 341
				COUNTY NEW CASTLE	DESIGNED BY: TSD		TOTAL SHTS. 491
					CHECKED BY: KEE		

\\tsplant\S\Projects\2008\PEH-ED0836 (DelDOT US 301_*1445)\7. Transportation\1. Bridges\Drawings\Final_PS&E\RW1-3 & RW1-3R\RW1-3RWS05_RW1-3R.dgn
2/27/2013 2:15:42 PM

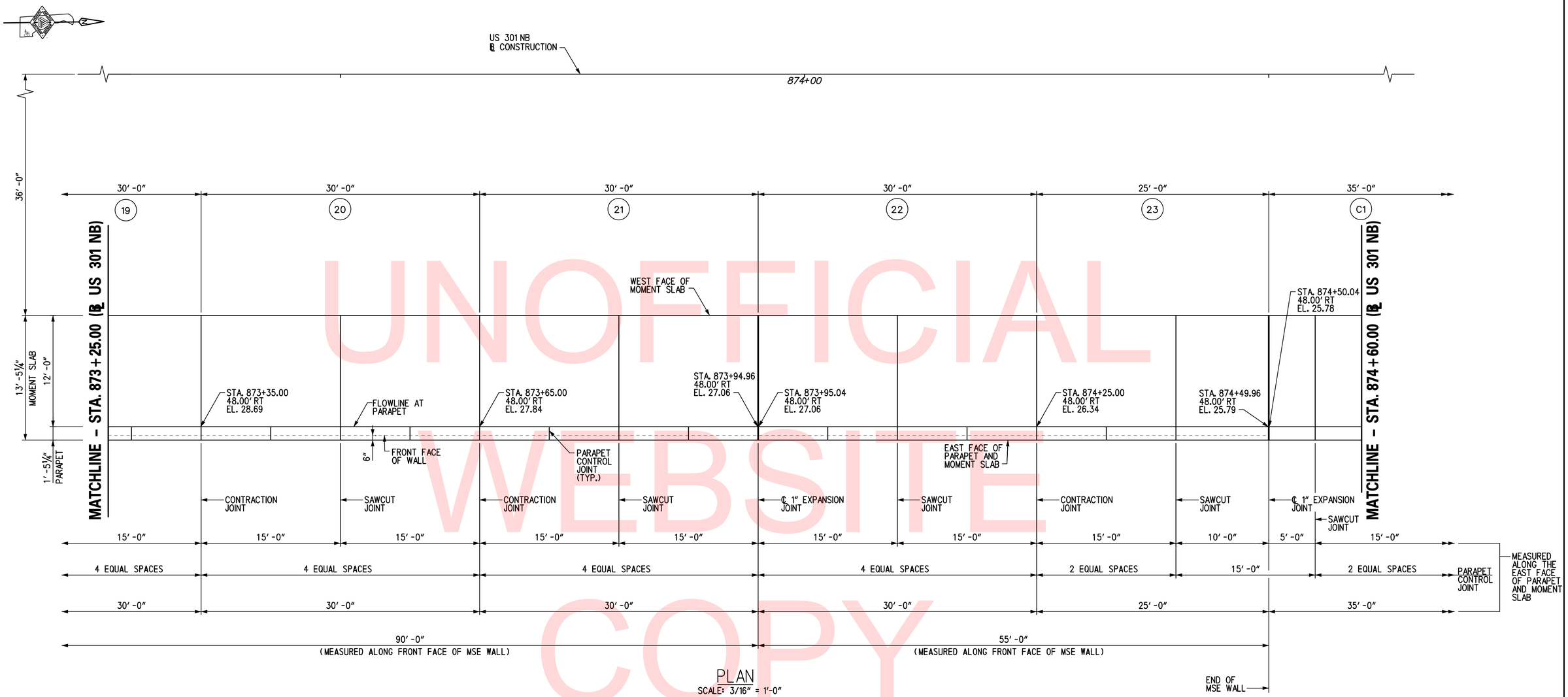

PLAN
SCALE: 3/16″ = 1′-0″

UNOFFICIAL WEBSITE COPY

LEGEND:

(4) MOMENT SLAB PANEL I.D. DESIGNATION

NOTES:

1. FOR RW1-3R GEOMETRIC LAYOUT AND WORKING POINT DETAILS, SEE DWG. NO. GL-01.
2. FOR MOMENT SLAB TYPICAL SECTION, SEE DWG. NO. RD-01.
3. FOR REINFORCEMENT DETAILS, SEE DWG. NO. MS-08 TO MS-11.

RW1-3R
MS-06

DELAWARE DEPARTMENT OF TRANSPORTATION	ADDENDUMS / REVISIONS	SCALE: AS NOTED	US 301 & SR 1 INTERCHANGE	CONTRACT T200911302	BRIDGE NO. RW1-3R	MOMENT SLAB PLAN – 6	SHEET NO. 342
				COUNTY NEW CASTLE	DESIGNED BY: TSD		TOTAL SHTS. 491
					CHECKED BY: KEE		

\\tsplan1\S\Projects\2008\PEH-ED0836 (DelDOT US 301_*1445)\7. Transportation\1. Bridges\Drawings\Final_PS&E\RW1-3 & RW1-3R\RW1-3R\MS06_RW1-3R.dgn
2/27/2013 2:16:54 PM

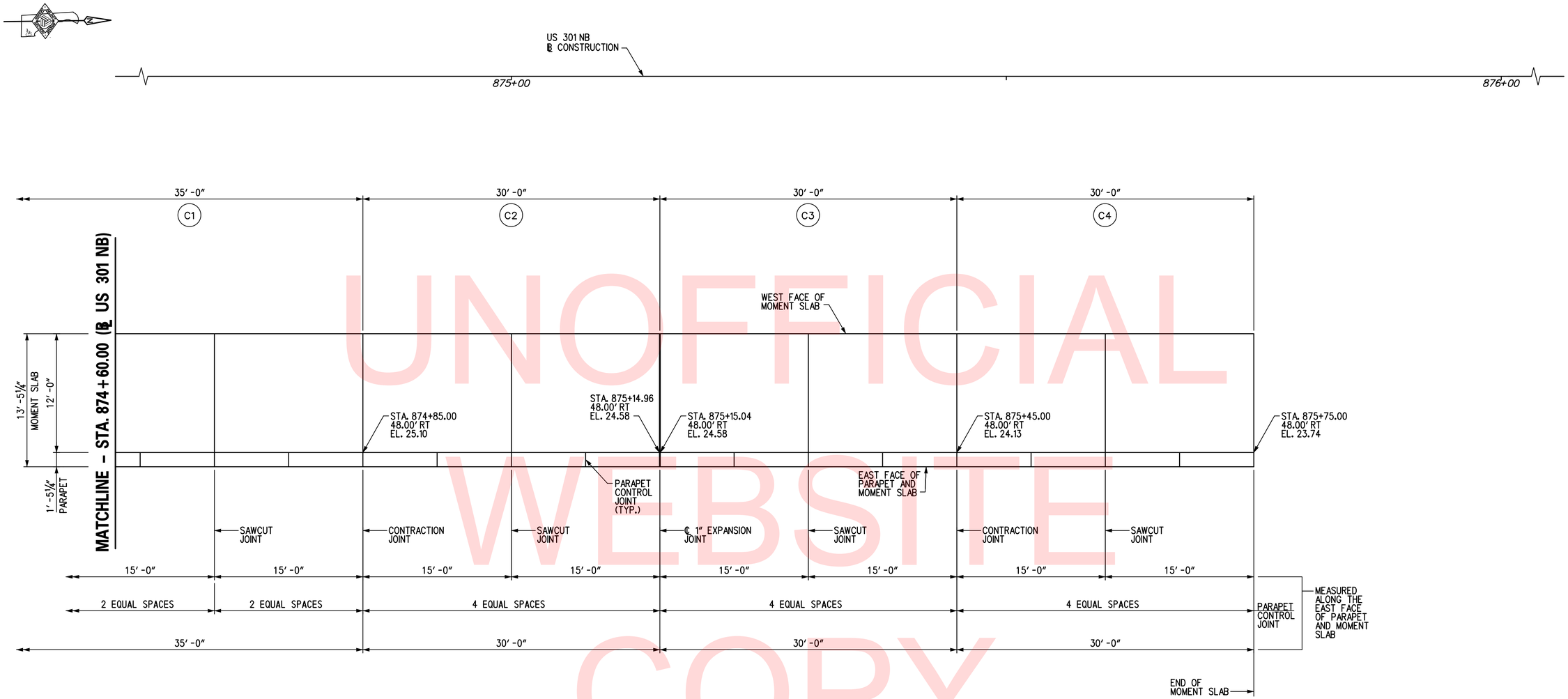

PLAN
SCALE: 3/16″ = 1′-0″

UNOFFICIAL WEBSITE COPY

LEGEND:

(C1) MOMENT SLAB PANEL I.D. DESIGNATION

NOTES:

1. FOR RW1-3R GEOMETRIC LAYOUT AND WORKING POINT DETAILS, SEE DWG. NO. GL-01.
2. FOR MOMENT SLAB TYPICAL SECTION, SEE DWG. NO. RD-01.
3. FOR REINFORCEMENT DETAILS, SEE DWG. NO. MS-08 TO MS-11.

RW1-3R
MS-07

DELAWARE DEPARTMENT OF TRANSPORTATION	ADDENDUMS / REVISIONS	SCALE: AS NOTED	US 301 & SR 1 INTERCHANGE	CONTRACT T200911302	BRIDGE NO. RW1-3R	MOMENT SLAB PLAN – 7	SHEET NO. 343
				COUNTY NEW CASTLE	DESIGNED BY: TSD		TOTAL SHTS. 491
					CHECKED BY: KEE		

\\tsclient\S\Projects\2008\PEH-ED0836 (DelDOT US 301_*1445)\7. Transportation\1. Bridges\Drawings\Final_PS&E\RW1-3 & RW1-3R\RW1-3RWS07_RW1-3R.dgn
2/27/2013 2:17:13 PM

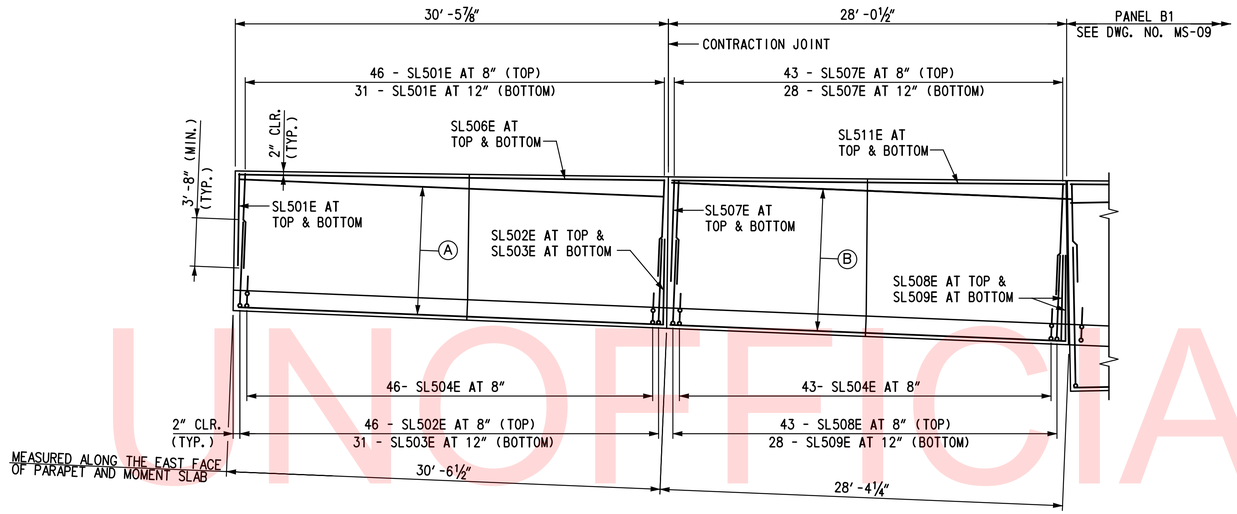

MOMENT SLAB REINFORCEMENT PLAN

(SLAB PANEL I.D. (A1) TO (A2))

SCALE: 3/16″ = 1′-0″

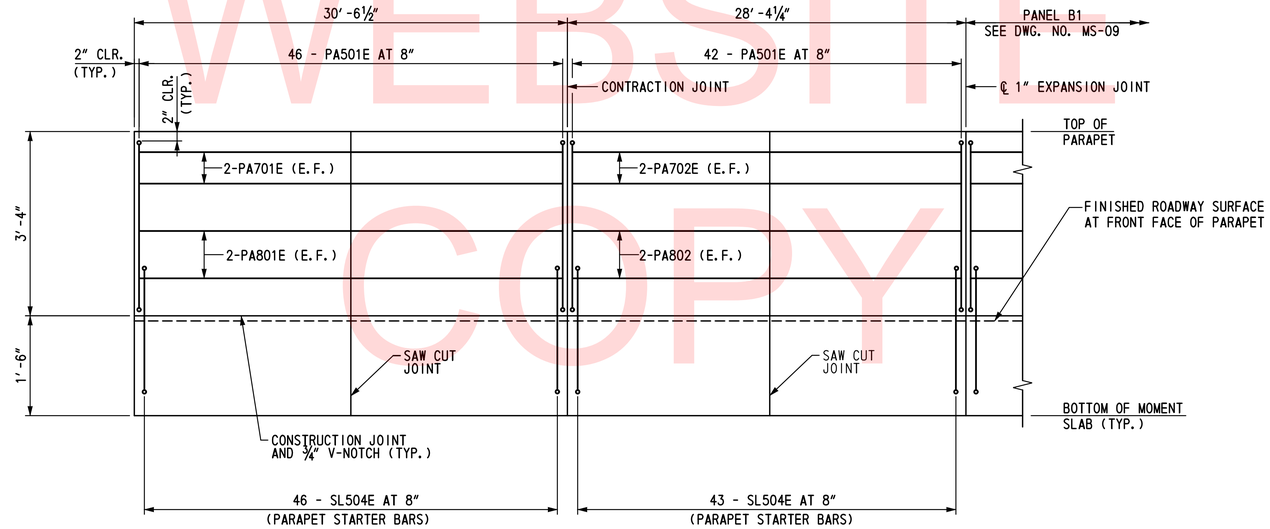

MOMENT SLAB PARAPET REINFORCEMENT ELEVATION

(SLAB PANEL I.D. (A1) TO (A2))

HORIZONTAL SCALE: 3/16″ = 1′-0″

VERTICAL SCALE: ¾″ = 1′-0″

LEGEND:

(4) MOMENT SLAB PANEL I.D. DESIGNATION

(A) 10 - SL505E AT 12″ TOP & BOTTOM

(B) 11 - SL510E AT 12″ TOP & BOTTOM

E.F. = EACH FACE

NOTES:

1. FOR MOMENT SLAB PLAN, SEE DWG NO. MS-01 TO MS-07.
2. FOR MOMENT SLAB TYPICAL SECTION DETAILS, SEE DWG. NO. MS-12, MS-13.

UNOFFICIAL WEBSITE COPY

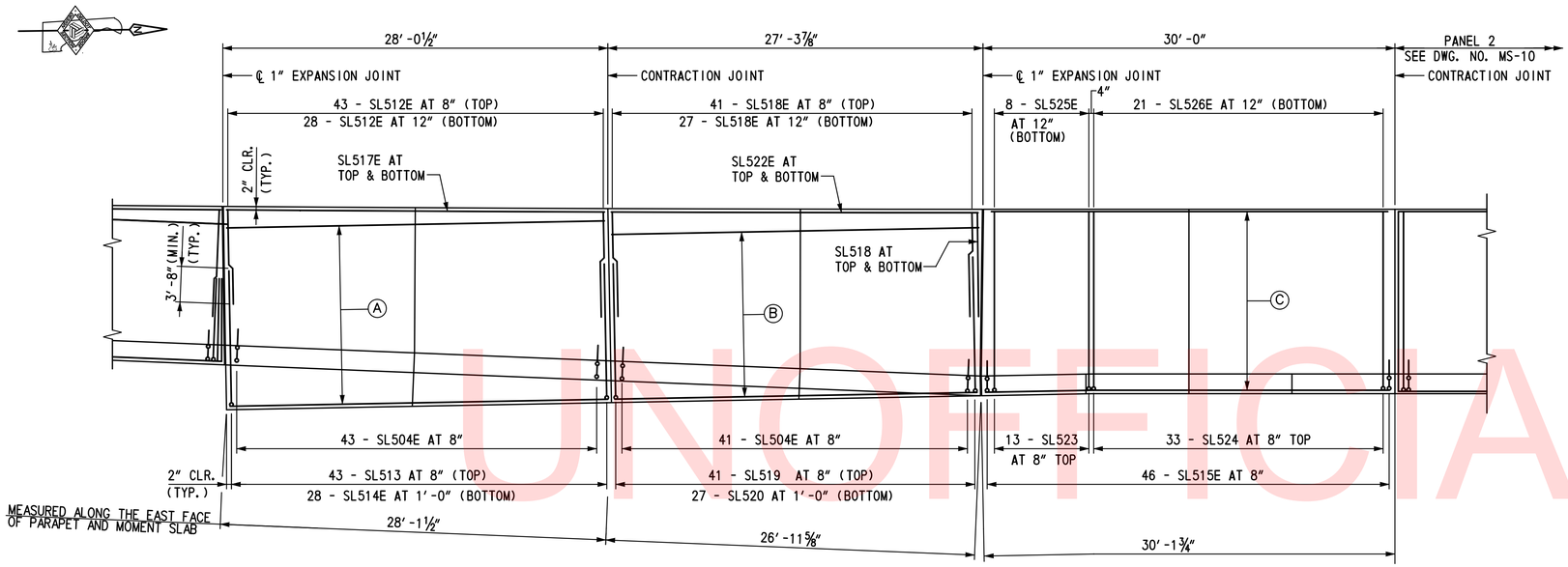

MOMENT SLAB REINFORCEMENT PLAN

(SLAB PANEL I.D. (B1) TO (B2) & (1))

SCALE: 3/16″ = 1′-0″

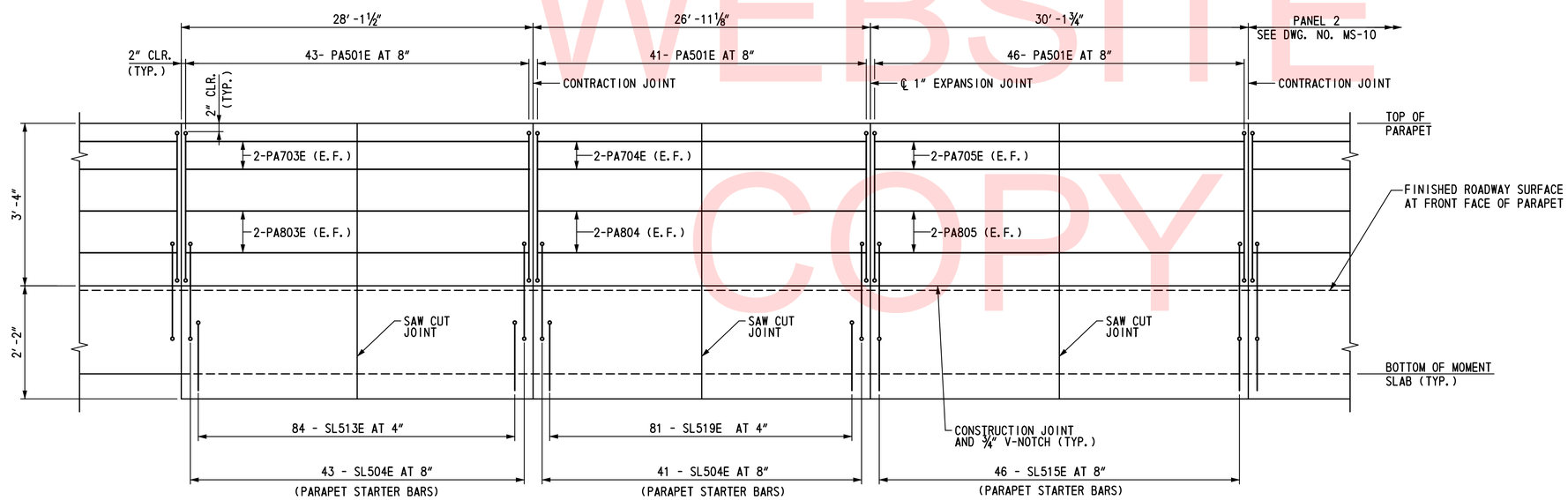

MOMENT SLAB PARAPET REINFORCEMENT ELEVATION

(SLAB PANEL I.D. (B1) TO (B2) & (1))

HORIZONTAL SCALE: 3/16″ = 1′-0″
VERTICAL SCALE: ¾″ = 1′-0″

LEGEND:

- (4) MOMENT SLAB PANEL I.D. DESIGNATION
- (A) 14- SL516E AT 12″ TOP & BOTTOM
- (B) 13- SL521E AT 12″ TOP & BOTTOM
- (C) 14- SL527E AT 12″ TOP & BOTTOM

E.F. = EACH FACE

NOTES:

1. FOR MOMENT SLAB PLAN, SEE DWG NO. MS-01 TO MS-07.
2. FOR MOMENT SLAB TYPICAL SECTION DETAILS, SEE DWG. NO. MS-12, MS-13.

UNOFFICIAL WEBSITE COPY

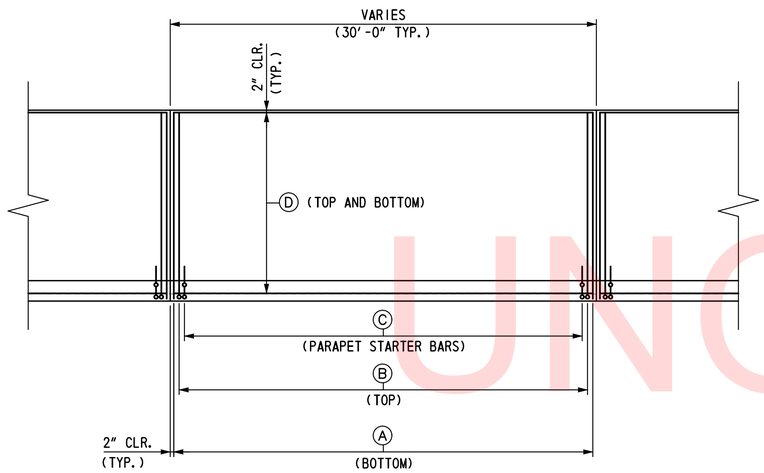

MOMENT SLAB REINFORCEMENT PLAN

(SLAB PANEL I.D. 2 TO 23)

SCALE: 3/16" = 1'-0"

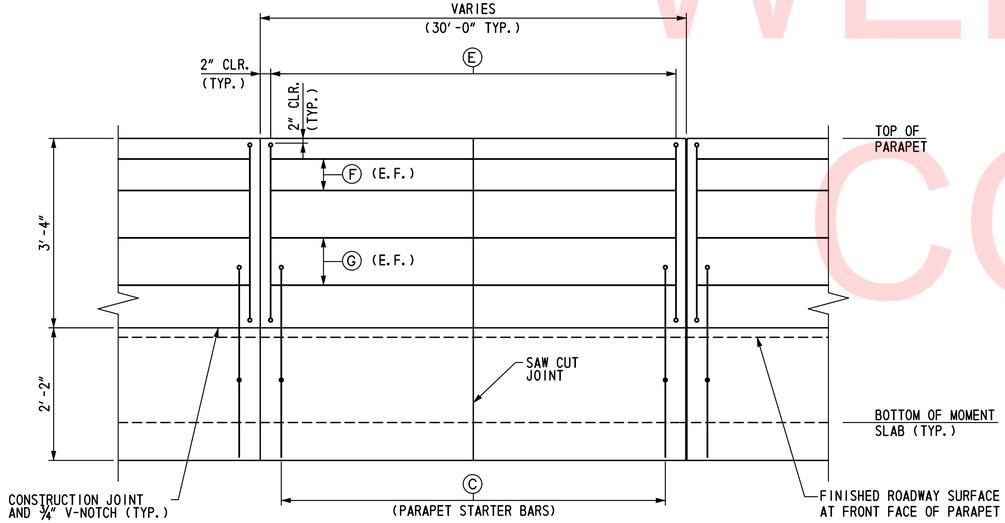

MOMENT SLAB PARAPET REINFORCEMENT ELEVATION

(SLAB PANEL I.D. 2 TO 23)

HORIZONTAL SCALE: 3/16" = 1'-0"

VERTICAL SCALE: 3/4" = 1'-0"

REINFORCEMENT TABLE

SLAB PANEL I.D.	Ⓐ	Ⓑ	Ⓒ	Ⓓ	Ⓔ	Ⓕ	Ⓖ
2 TO 6	31 - SL526E AT 12"	46 - SL524E AT 8"	46 - SL515E AT 8"	14 - SL527E AT 12"	46 - PA501E AT 8"	2 - PA706E	2 - PA806E
7	31 - SL526E AT 12"	91 - SL524E AT 4"	46 - SL515E AT 8"	14 - SL527E AT 12"	46 - PA501E AT 8"	2 - PA706E	2 - PA806E
8 TO 14	31 - SL526E AT 12"	46 - SL524E AT 8"	46 - SL515E AT 8"	14 - SL527E AT 12"	46 - PA501E AT 8"	2 - PA706E	2 - PA806E
15	32 - SL526E AT 12"	47 - SL524E AT 8"	47 - SL515E AT 8"	14 - SL529E AT 12"	47 - PA501E AT 8"	2 - PA707E	2 - PA807E
16 TO 18	31 - SL526E AT 12"	46 - SL524E AT 8"	46 - SL515E AT 8"	14 - SL527E AT 12"	46 - PA501E AT 8"	2 - PA706E	2 - PA806E
19	31 - SL526E AT 12"	91 - SL524E AT 4"	46 - SL515E AT 8"	14 - SL527E AT 12"	46 - PA501E AT 8"	2 - PA706E	2 - PA808E
20 TO 22	31 - SL526E AT 12"	46 - SL524E AT 8"	46 - SL515E AT 8"	14 - SL527E AT 12"	46 - PA501E AT 8"	2 - PA706E	2 - PA806E
23	25 - SL526E AT 12"	38 - SL524E AT 8"	38 - SL515E AT 8"	14 - SL530E AT 12"	38 - PA501E AT 8"	2 - PA708E	2 - PA808E

UNOFFICIAL WEBSITE COPY

LEGEND:

4 MOMENT SLAB I.D. DESIGNATION

NOTES:

1. FOR MOMENT SLAB PLAN, SEE DWG NO. MS-01 TO MS-07.
2. FOR MOMENT SLAB TYPICAL SECTION DETAILS, SEE DWG. NO. MS-12, MS-13.

REINFORCEMENT TABLE

SLAB PANEL I.D.	(A)	(B)	(C)	(D)	(E)	(F)	(G)
(C1)	36 - SL526E AT 12"	53 - SL524E AT 8"	53 - SL504E AT 8"	14 - SL528E AT 12"	53 - PA501E AT 8"	2 - PA709E	2 - PA809E
(C2) TO (C4)	31 - SL526E AT 12"	46 - SL524E AT 8"	46 - SL504E AT 8"	14 - SL527E AT 12"	46 - PA501E AT 8"	2 - PA706E	2 - PA806E

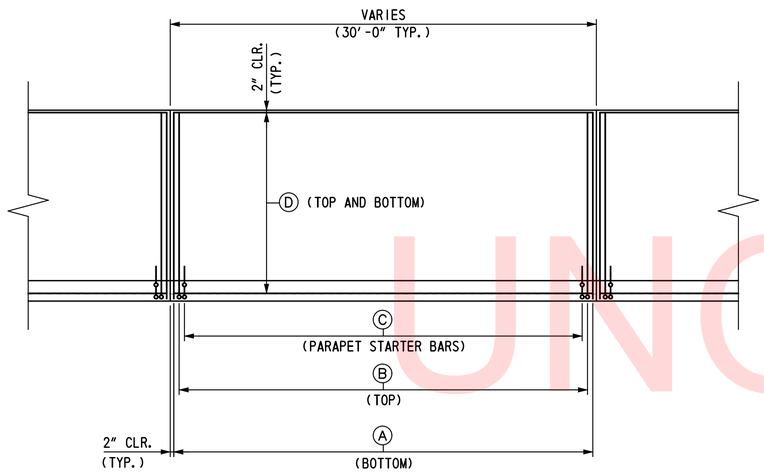

MOMENT SLAB REINFORCEMENT PLAN

(SLAB PANEL I.D. (C1) TO (C4))

SCALE: 3/16" = 1'-0"

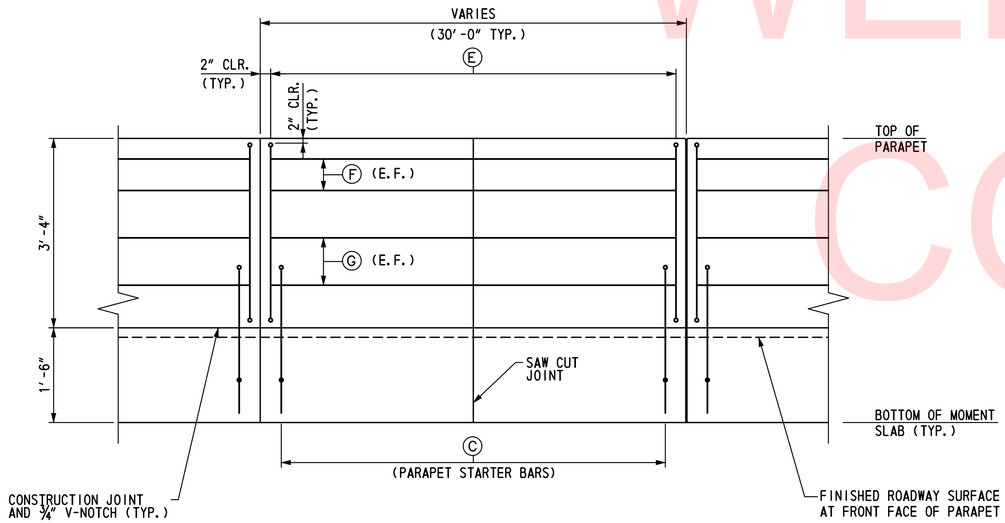

MOMENT SLAB PARAPET REINFORCEMENT ELEVATION

(SLAB PANEL I.D. (C1) TO (C4))

HORIZONTAL SCALE: 3/16" = 1'-0"
VERTICAL SCALE: 3/4" = 1'-0"

LEGEND:

(4) MOMENT SLAB I.D. DESIGNATION

NOTES:

1. FOR MOMENT SLAB PLAN, SEE DWG NO. MS-01 TO MS-07.
2. FOR MOMENT SLAB TYPICAL SECTION DETAILS, SEE DWG. NO. MS-12, MS-13.

UNOFFICIAL WEBSITE COPY

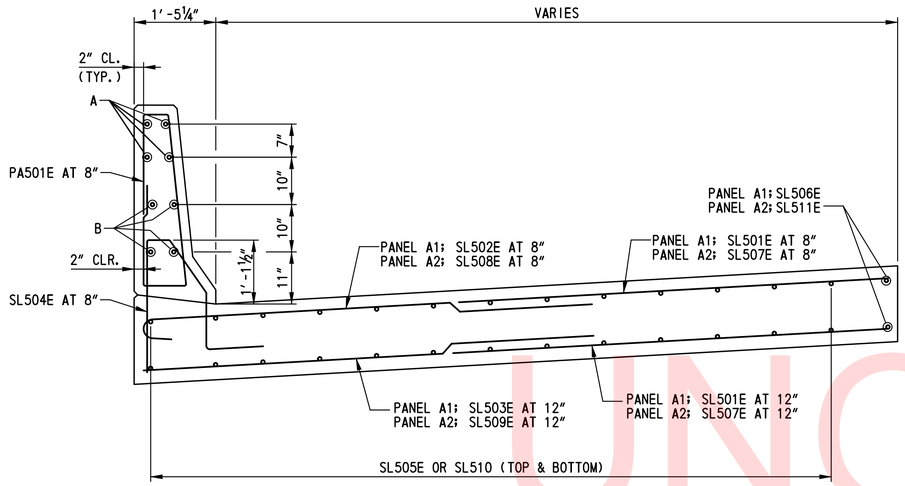

MOMENT SLAB REINFORCEMENT TYPICAL SECTION 1

(SLAB PANEL I.D. (A1) TO (A2))

SCALE: ¾″ = 1′-0″

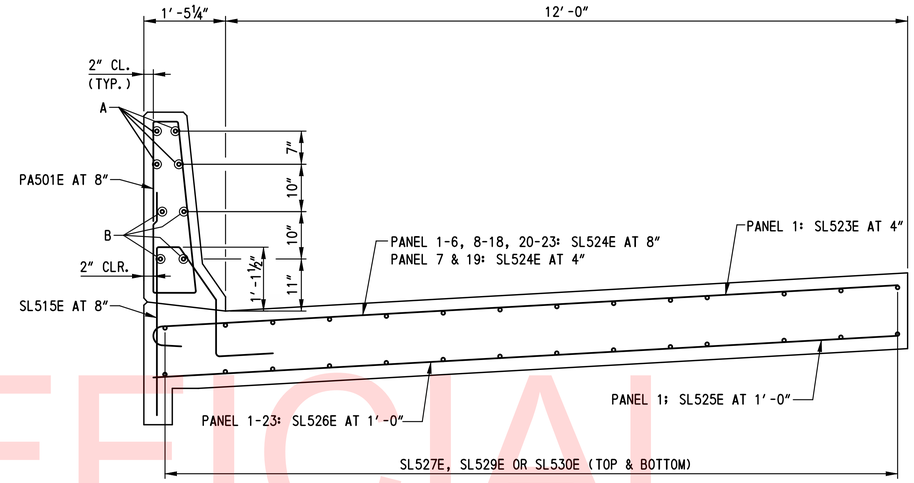

MOMENT SLAB REINFORCEMENT TYPICAL SECTION 3

(SLAB PANEL I.D. (1) TO (23))

SCALE: ¾″ = 1′-0″

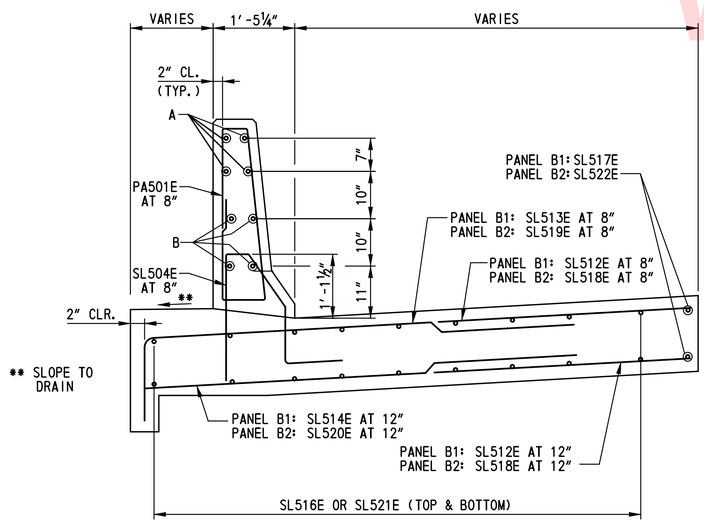

MOMENT SLAB REINFORCEMENT TYPICAL SECTION 2

(SLAB PANEL I.D. (B1) TO (B2))

SCALE: ¾″ = 1′-0″

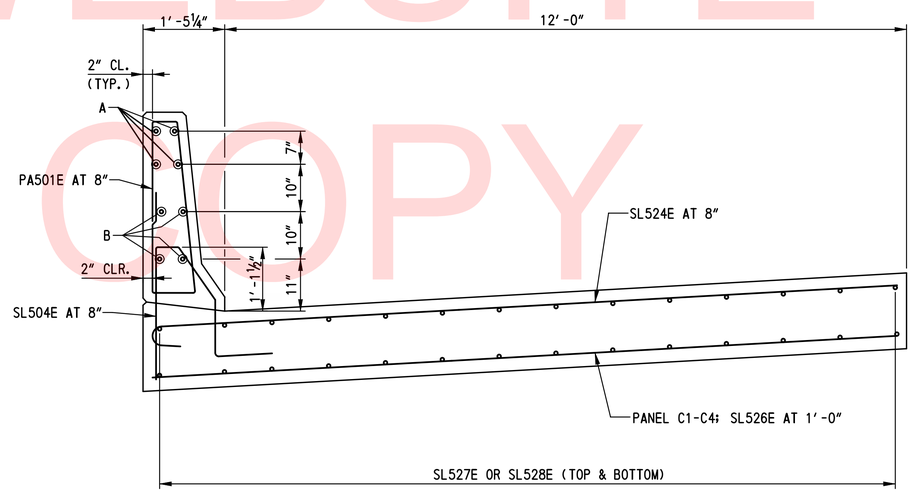

MOMENT SLAB REINFORCEMENT TYPICAL SECTION 4

(SLAB PANEL I.D. (C1) TO (C4))

SCALE: ¾″ = 1′-0″

LEGEND:

A- PANEL A1; PA701E
PANEL A2; PA702E
PANEL B1; PA703E
PANEL B2; PA704E
PANEL 1; PA705E
PANEL 2-14; PA706E
PANEL 15; PA707E
PANEL 16-22; PA706E
PANEL 23; PA708E
PANEL C1; PA709E
PANEL C2-C4; PA706E

B- PANEL A1; PA801E
PANEL A2; PA802E
PANEL B1; PA803E
PANEL B2; PA804E
PANEL 1; PA805E
PANEL 2-14; PA806E
PANEL 15; PA807E
PANEL 16-22; PA806E
PANEL 23; PA808E
PANEL C1; PA809E
PANEL C2-C4; PA806E

NOTES:

1. TOLERANCE ON ALL JOINT SEALANT DETAILS DIMENSIONS SHOWN WITHOUT RANGES SHALL BE PLUS 1/16″, MINUS 0″.
2. PAYMENT FOR CONSTRUCTION OF MOMENT SLAB WILL BE MADE UNDER ITEM NO. 602014 - PORTLAND CEMENT CONCRETE MASONRY, APPROACH SLAB, CLASS D. PAYMENT FOR THE PREFORMED CORK JOINT FILLER, SILICONE SEALER, DOWEL BARS AND METAL EXPANSION SLEEVES SHALL BE INCIDENTAL TO THIS ITEM.
3. DOWEL BARS SHALL CONFORM TO 824.02(G).
4. DOWELS SHALL BE ASSEMBLED IN A RIGID FRAMEWORK, SEE STANDARD P-1. THE EXPANSION JOINT FRAMEWORKSHALL PROVIDE ADEQUATE SUPPORT TO MAINTAIN THE PREFORMED JOINT FILLER IN PROPER HORIZONTAL AND VERTICAL ALIGNMENT.
5. ANCHOR PINS SHALL BE USED TO SECURE THE FORMWORK ALONG THE SUBGRADE.
6. THE FREE MOVING OR UNANCHORED END OF ALL DOWEL BARS IN BOTH CONTRACTION AND EXPANSION JOINTS SHALL BE COATED AFTER INSTALLATION OF THE DEVICE UPON THE SUBGRADE AND IMMEDIATELY PRIOR TO THE POURING OF THE CONCRETE WITH GRAPHITE GREASE APPLIED WITH A GLOVED HAND. THIS SAME END OF ALL EXPANSION JOINT DOWELS SHALL BE CAPPED WITH A SNUG FITTING, CLOSED END METAL EXPANSION SLEEVE TEMPORARILY SECURED TO THE BAR SO AS TO PROVIDE A 1″ LONG OPEN SOCKET BEYOND THE BAR END AND TO LAP BACK 2″ ON THE BAR AT THE TIME OF INSTALLATION.
7. THE SILICONE SEALANT SHALL BE ABLE TO ADHERE TO CONCRETE SUBSTRATES AND CONFORM TO FOLLOWING CRITERIA AFTER 21 DAYS AT 77° F:

ELONGATION, MINIMUM (PERCENT)	1400
JOINT MODULUS, AT 50 PERCENT ELONGATION, MAXIMUM (PSI)	7
JOINT MODULUS, AT 100 PERCENT ELONGATION, MAXIMUM (PSI)	8
JOINT MODULUS, AT 150 PERCENT ELONGATION, MAXIMUM (PSI)	9
ADHESION TO CONCRETE, MINIMUM ELONGATION, (PERCENT)	+600
ADHESION TO ASPHALT, MINIMUM ELONGATION, (PERCENT)	+600
JOINT MOVEMENT CAPABILITY, +100/-50, 10 CYCLES	NO FAILURE

8. RUMBLE STRIPS SHALL BE LOCATED IN THE MOMENT SLAB ADJACENT TO THE SHOULDER LINE. FOR RUMBLE STRIP DETAIL, SEE DWG. NO. DT-01. FOR ADDITIONAL REQUIREMENTS, SEE DWG. NO. RD-01.

UNOFFICIAL WEBSITE COPY

C:\Projects\2008\PEL-ED0836 (DelDOT US 301_*1445)\1. Bridges\Drawings\Final_PS&E\RW1-3 & RW1-3R\RW1-3R\MS12_RW1-3R.dgn
10/26/2015 1:56:49 AM

DELAWARE DEPARTMENT OF TRANSPORTATION	ADDENDUMS / REVISIONS	SCALE: AS NOTED	US 301 & SR 1 INTERCHANGE	CONTRACT T200911302	BRIDGE NO. RW1-3R	MOMENT SLAB REINFORCEMENT SECTION DETAILS – 1	RW1-3R MS-12
				COUNTY NEW CASTLE	DESIGNED BY: TSD		SHEET NO. 348
					CHECKED BY: KEE		TOTAL SHTS. 491

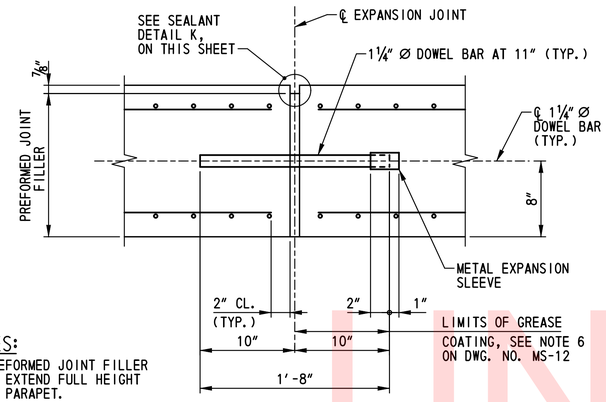

NOTES:

1. PREFORMED JOINT FILLER TO EXTEND FULL HEIGHT OF PARAPET.

EXPANSION JOINT SECTION

SCALE: 1½"=1'-0"

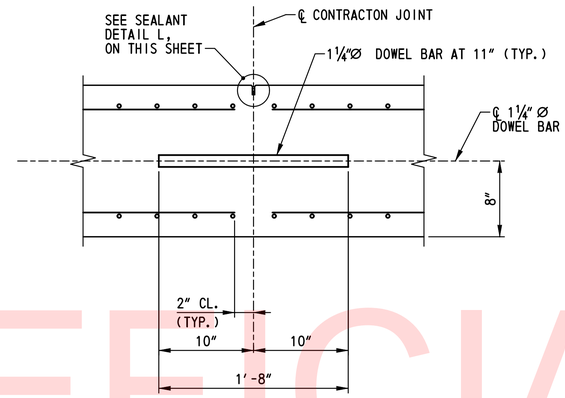

TYPICAL CONTRACTION JOINT SECTION

SCALE: 1½"=1'-0"

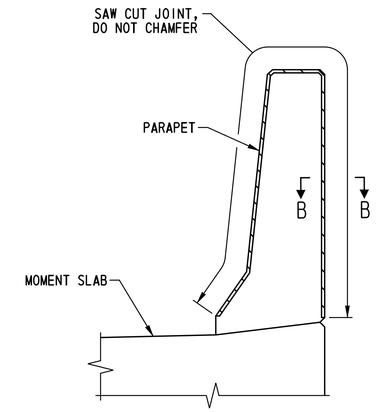

PARAPET CONTROL JOINT DETAIL

SCALE: 1"=1'-0"

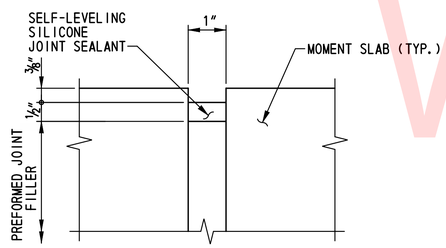

SEALANT DETAIL K

NOT TO SCALE

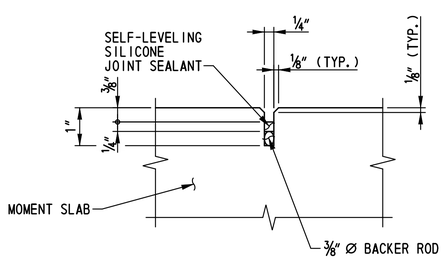

SEALANT DETAIL L

NOT TO SCALE

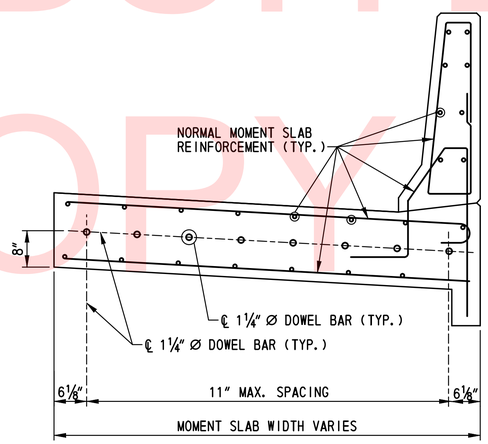

MOMENT SLAB JOINT TYPICAL SECTION

SCALE: ¾"=1'-0"

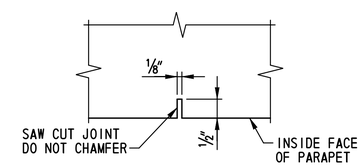

SECTION B-B

SCALE: 6"=1'-0"

NOTE:

SAW CUT CONTROL JOINT SHALL BE SAWED SAME DAY AS CONCRETE IS POURED.

NOTES:

1. SEE DWG. NO. MS-12 FOR MOMENT SLAB NOTES.
2. SEE DWG. NOS. MS-01 THROUGH MS-07 FOR MOMENT SLAB PLANS AND LOCATIONS OF PARAPET CONTROL JOINTS.

UNOFFICIAL WEBSITE COPY

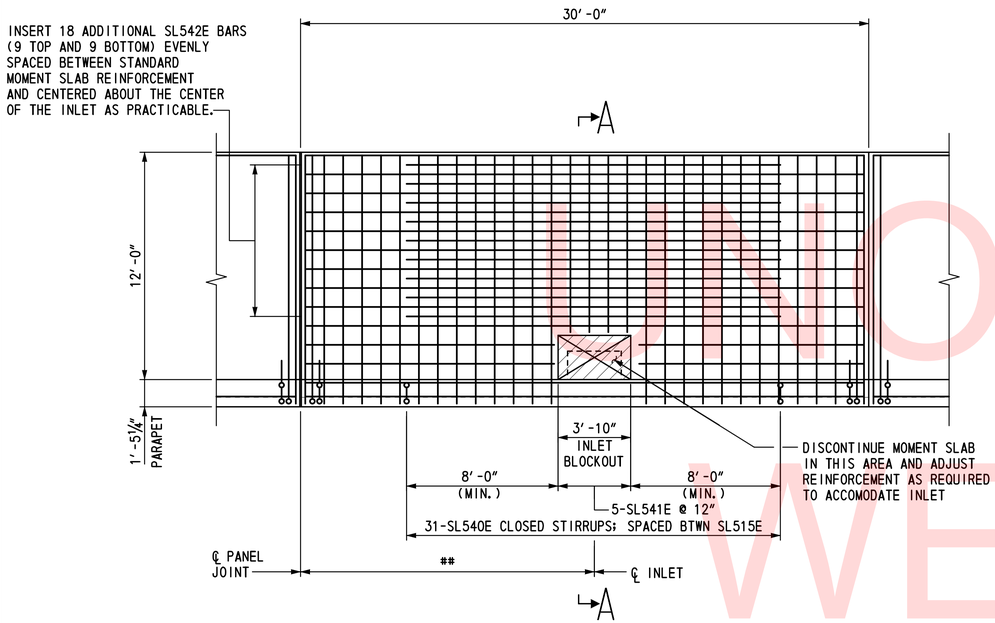

MOMENT SLAB MODIFICATIONS AT INLET

(SLAB PANEL I.D. 7 AND 19)

SCALE: ¼″ = 1′-0″

= 15′-6″+/- SLAB PANEL 7

15′-0″+/- SLAB PANEL 19

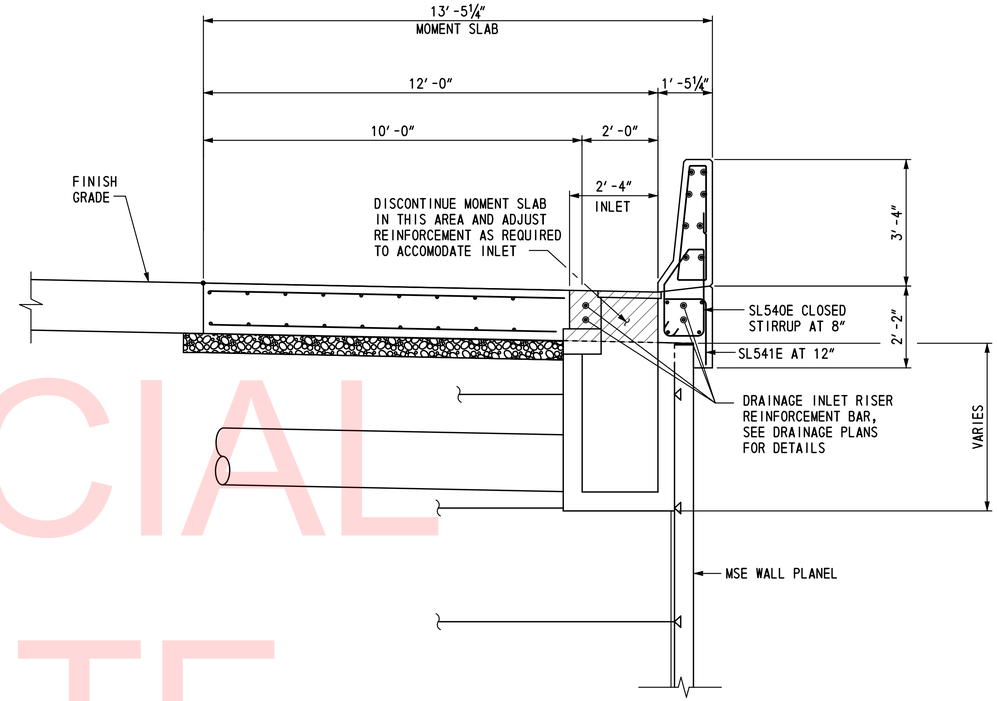

SECTION A-A

SCALE: ½″ = 1′-0″

NOTES:

1. FOR MOMENT SLAB PLAN, SEE DWG NO. MS-01 TO MS-07.
2. FOR MOMENT SLAB TYPICAL SECTION DETAILS, SEE DWG. NO. RD-01.
3. FOR DRAINAGE INLET ASSEMBLY DETAILS, SEE DWG. NOS. DT-09 AND DT-19.

UNOFFICIAL WEBSITE COPY

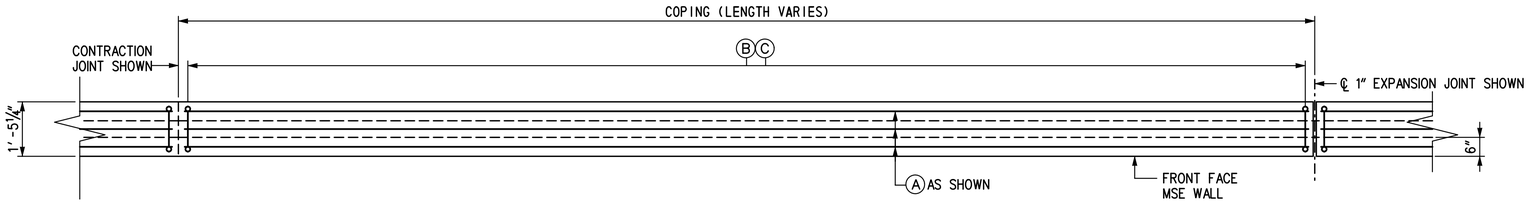

COPING PLAN

SCALE: ½" = 1'-0"

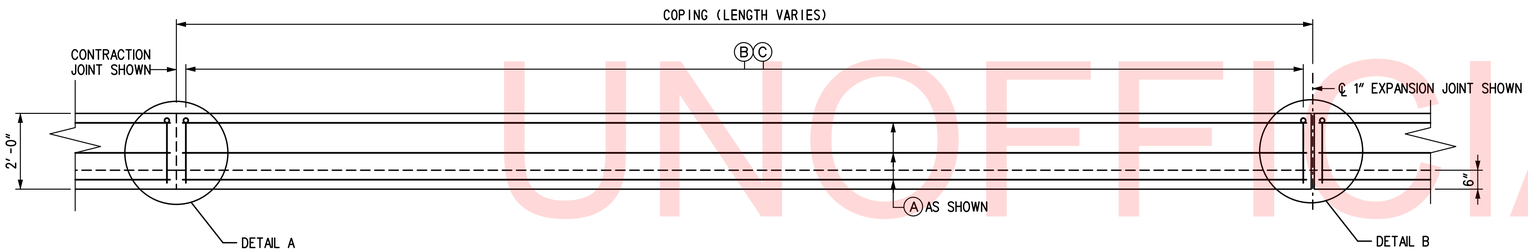

COPING ELEVATION

SCALE: ½" = 1'-0"

REINFORCEMENT TABLE

COPING I.D.	LENGTH	A	B	C
CP1, CP2, CP4 TO CP15 CP17 TO CP27 CP29 TO CP32	30'-0"	7 - MS501E	31 - MS506E AT 12"	21 - MS510E AT 18"
CP3	29'-9 ¾"	7 - MS502E	31 - MS506E AT 12"	21 - MS510E AT 18"
CP16	27'-1 ⅜"	7 - MS503E	28 - MS506E AT 12"	19 - MS510E AT 18"
CP28	18'-4 ¾"	7 - MS504E	19 - MS506E AT 12"	13 - MS510E AT 18"
CP33	14'-3 ⅛"	7 - MS505E	15 - ML506E AT 12"	11 - MS510E AT 18"

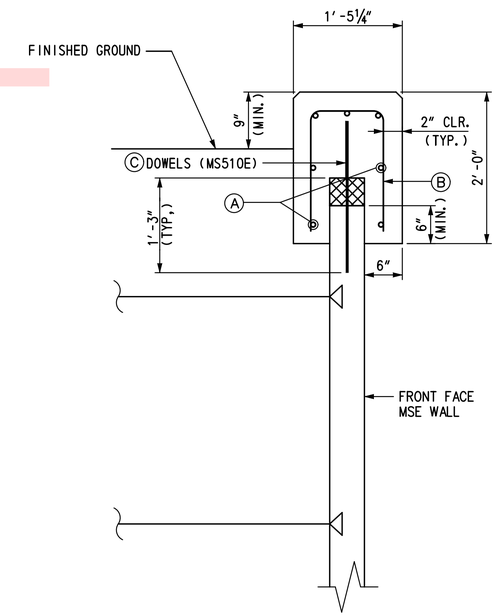

SECTION A-A

SCALE: 1" = 1'-0"

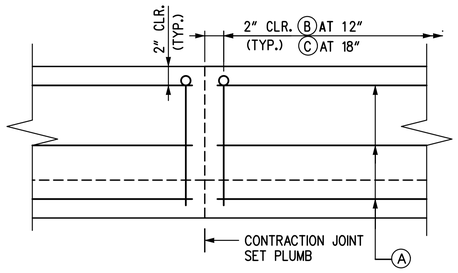

DETAIL A

SCALE: 1" = 1'-0"

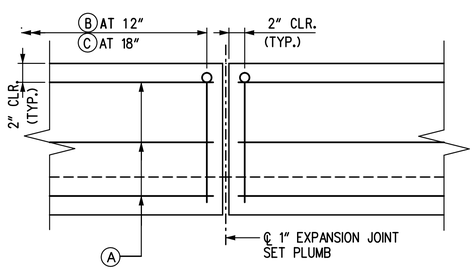

DETAIL B

SCALE: 1" = 1'-0"

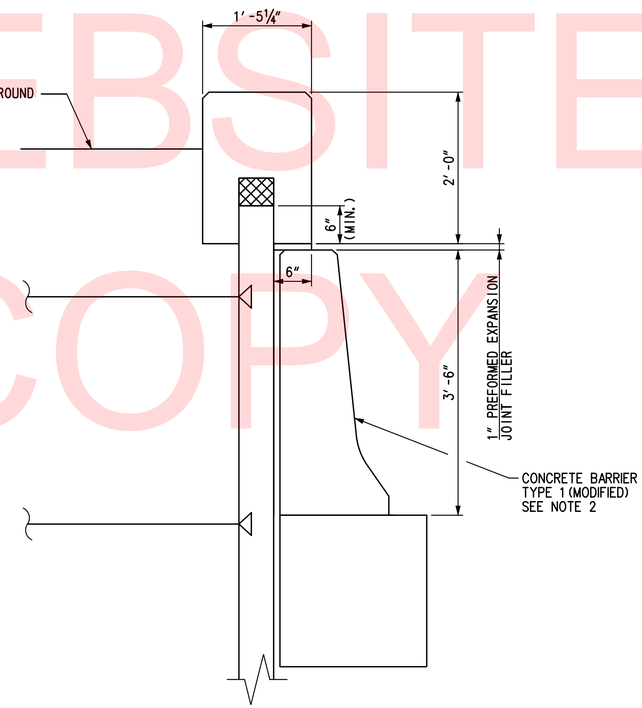

DETAIL A: (COPING CP1)

SCALE: 1" = 1'-0"

NOTES:

1. FOR COPING LOCATION SEE DWG. NO. MS-01 TO MS-07.
2. FOR ADDITIONAL BARRIER DETAILS, SEE DWG. NO. DT-04.

UNOFFICIAL WEBSITE COPY

\\tsdjent\S\Projects\2008\PEI-ED0836 (DelDOT US 301_#1445)\7. Transportation\1. Bridges\Drawings\Final_PS&E\RW1-3 & RW1-3R\RW1-3R\MS15_RW1-3R.dgn
2/22/2013 2:24:25 PM

DELAWARE DEPARTMENT OF TRANSPORTATION	ADDENDUMS / REVISIONS	SCALE: AS NOTED	US 301 & SR 1 INTERCHANGE	CONTRACT T200911302	BRIDGE NO. RW1-3R	MSE WALL COPING DETAILS	RW1-3R MS-15
				COUNTY NEW CASTLE	DESIGNED BY: TSD		SHEET NO. 351
					CHECKED BY: KEE		TOTAL SHTS. 491

(1) ANY MARK NUMBER WITH SUFFIX 'E' DENOTES EPOXY COATED REINFORCING STEEL.

(2) ALL MARK 'LOCATION PREFIXES' SHALL CONSIST OF TWO LETTERS AND ARE AS FOLLOWS: AB = ABUTMENT, AS = APPROACH SLAB, BC = BOX CULVERT, BW = BACKWALL, CL = COLUMN, DK = DECK, DL = DOWEL, FT = FOOTING, HW = HEADWALL, MS = MISC. BARS, PA = PARAPET, PR = PIER, SC = SHEETPILE CAP, SL = SLAB, TW = TOEWALL, WL = WALL (UNIQUE LOCATION), WW = WINGWALL

SPECIFICATIONS					BENDING DIMENSIONS (FEET-INCHES /QUARTER INCH)										
QTY.	SIZE	LENGTH	MARK	TYPE	A	B	C	D	E	F/R	G	H	J	K	O
MOMENT SLAB															
80	5	7-00	SL501E	STR		7-00									
46	5	7-70	SL502E	1	0-70	7-00							0-50		
32	5	7-00	SL503E	STR		7-00									
364	5	5-100	SL504E	T15		2-30	0-52	1-12	1-00	1-00			0-73		1-11
20	5	30-20	SL505E	STR		30-20									
2	5	30-20	SL506E	STR		30-20									
73	5	7-60	SL507E	STR	0-70	7-60							0-50		
45	5	8-10	SL508E	1	0-70	7-60							0-50		
29	5	7-60	SL509E	STR		7-60									
2	5	27-80	SL511E	STR		27-80									
22	5	27-110	SL510E	STR		27-110									
71	5	9-10	SL512E	STR		9-10									
43	5	10-90	SL513E	17		1-80	9-10								
28	5	9-10	SL514E	STR		9-10									
1051	5	6-60	SL515E	T15		2-110	0-52	1-12	1-00	1-00			0-73		1-11
28	5	27-80	SL516E	STR		27-80									
2	5	27-80	SL517E	STR		27-80									
68	5	8-90	SL518E	STR		8-90									
41	5	10-50	SL519E	17		1-80	8-90								
27	5	8-90	SL520E	STR		8-90									
26	5	26-80	SL521E	STR		26-80									
2	5	26-110	SL522E	STR		26-110									
13	5	13-100	SL523E	1	0-70	13-30							0-50		
1318	5	13-80	SL524E	1	0-70	13-10							0-50		
8	5	13-30	SL525E	STR		13-30									
827	5	13-10	SL526E	STR		13-10									
672	5	29-80	SL527E	STR		29-80									
28	5	34-80	SL528E	STR		34-80									
28	5	30-40	SL529E	STR		30-40									
28	5	24-80	SL530E	STR		24-80									
62	5	7-72	SL540E	T11	0-60	1-11	1-00	1-22	1-11	2-22	0-60	1-00			
10	5	2-90	SL541E	17		1-10	1-80								
36	5	20-00	SL542E	STR		20-00									

SPECIFICATIONS					BENDING DIMENSIONS (FEET-INCHES /QUARTER INCH)										
QTY.	SIZE	LENGTH	MARK	TYPE	A	B	C	D	E	F/R	G	H	J	K	O
1415	5	9-31	PA501E	PA		2-62	0-90	3-01	0-50	2-62		3-00		0-40	
4	7	30-20	PA701E	STR		30-20									
4	7	27-110	PA702E	STR		27-110									
4	7	27-100	PA703E	STR		27-100									
4	7	26-80	PA704E	STR		26-80									
4	7	27-90	PA705E	STR		27-90									
92	7	29-80	PA706E	STR		29-80									
4	7	30-40	PA707E	STR		30-40									
4	7	24-80	PA708E	STR		24-80									
4	7	34-80	PA709E	STR		34-80									
4	8	30-20	PA801E	STR		30-20									
4	8	27-110	PA802E	STR		27-110									
4	8	27-100	PA803E	STR		27-100									
4	8	26-80	PA804E	STR		26-80									
4	8	27-90	PA805E	STR		27-90									
92	8	29-80	PA806E	STR		29-80									
4	8	30-40	PA807E	STR		30-40									
4	8	24-80	PA808E	STR		24-80									
4	8	34-80	PA809E	STR		34-80									
203	5	29-80	MS501E	STR		29-80									
7	5	29-60	MS502E	STR		29-60									
7	5	26-92	MS503E	STR		26-92									
7	5	18-10	MS504E	STR		18-10									
7	5	13-110	MS505E	STR		13-110									
992	5	4-51	MS506E	17		1-80	1-11	1-80							
673	5	2-00	MS510E	STR		2-00									

SPECIFICATIONS					BENDING DIMENSIONS (FEET-INCHES /QUARTER INCH)										
QTY.	SIZE	LENGTH	MARK	TYPE	A	B	C	D	E	F/R	G	H	J	K	O

UNOFFICIAL WEBSITE
COPY

ASTM STANDARD ENGLISH REINFORCING BARS

BAR SIZE	NOMINAL DIMENSIONS: DIAMETER (INCHES)	AREA (INCHES²)	WEIGHT (LBS./FT.)	RECOMMENDED END HOOKS, APPLICABLE TO ALL GRADES: D	180° HOOKS: A OR G	180° HOOKS: J	90° HOOKS: A OR G	STIRRUP AND TIE HOOKS, APPLICABLE TO ALL GRADES: D	90° HOOK: A OR G	135° HOOK: A OR G	135° HOOK: A OR G
3	0.375	0.110	0.376	2¼"	5"	3"	6"	1½"	4"	4"	2½"
4	0.500	0.200	0.668	3"	6"	4"	8"	2"	4½"	4½"	3"
5	0.625	0.310	1.043	3¾"	7"	5"	10"	2½"	6"	5½"	3¾"
6	0.750	0.440	1.502	4½"	8"	6"	1-0"	4½"	1-0"	8"	4½"
7	0.875	0.600	2.044	5¼"	10"	7"	1-2"	5¼"	1-2"	9"	5¼"
8	1.000	0.790	2.670	6"	11"	8"	1-4"	6"	1-4"	10½"	6"
9	1.128	1.000	3.400	9½"	1-3"	11¾"	1-7"				
10	1.270	1.270	4.303	10¾"	1-5"	1-1¼"	1-10"				
11	1.410	1.560	5.313	1-0"	1-7"	1-2¾"	2-0"				
14	1.693	2.250	7.650	1-6¼"	2-3"	1-9¾"	2-7"				
18	2.257	4.000	13.600	2-0"	3-0"	2-4½"	3-5"				

NOTES:

1. FIGURES SHOWN IN CIRCLES REPRESENT BAR BEND TYPES.
2. STANDARD BAR BENDS INCLUDE ONLY THOSE TYPES BELOW, INDICATED AS SUCH.
3. ALL DIMENSIONS OUT-TO-OUT, EXCEPT "A" AND "G" ON STD. 180° AND 135° HOOKS.
4. "J" DIMENSIONS ON 180° HOOKS TO BE SHOWN ONLY WHERE NECESSARY TO RESTRICT HOOK SIZE, OTHERWISE STANDARD 'ACI' HOOKS ARE TO BE USED.
5. WHERE "J" IS NOT SHOWN, "J" WILL BE KEPT EQUAL TO OR LESS THAN "H" ON TYPES 3, 5 AND 22. WHERE "J" CAN EXCEED "H", IT SHALL BE SHOWN.
6. "H" DIMENSIONS OF STIRRUPS TO BE SHOWN AS NEEDED TO FIT WITHIN THE CONCRETE.
7. UNLESS OTHERWISE NOTED, DIAMETER "D" IS THE SAME FOR ALL BENDS AND HOOKS ON A BAR (EXCEPT FOR BEND TYPES 11 AND 13).
8. WHERE SLOPE DIFFERS FROM 45° OFFSET, "H" AND "K" MUST BE SHOWN.
9. WHERE BARS ARE TO BE BENT MORE ACCURATELY THAN STANDARD BENDING TOLERANCES, BENDING DIMENSIONS REQUIRING CLOSER FABRICATION SHOULD HAVE LIMITS INDICATED.
10. FOR RECOMMENDED DIAMETER "D", OF BENDS, HOOKS, ETC., REFER TO TABLE ABOVE, 'CRSI' OR 'ACI' TABLES WHERE APPLICABLE AND REQUIRED.
11. TYPE S1-S6, S11, T1-T3 AND T6-T9 APPLICABLE TO BAR SIZES #3 THROUGH #8.

STANDARD BAR BENDS

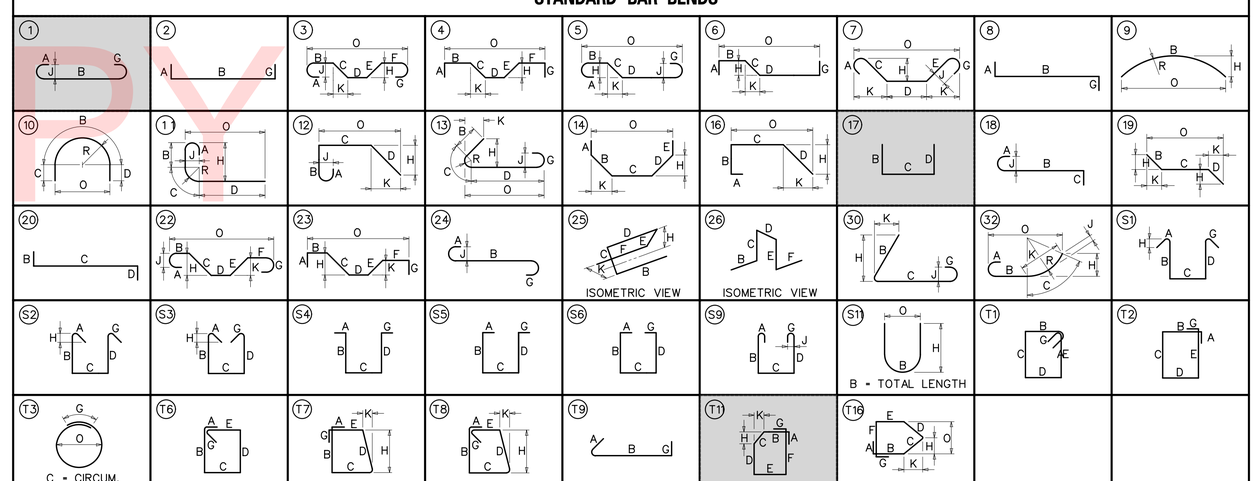

SPECIAL BAR BENDS

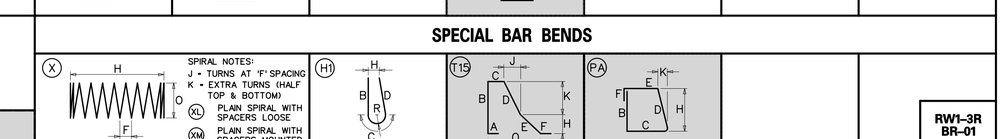

STIRRUP AND TIE HOOKS

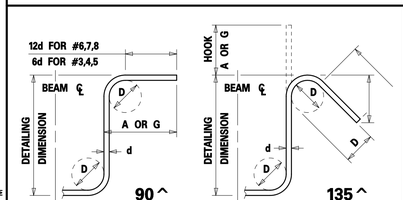

180° AND 90° END HOOKS

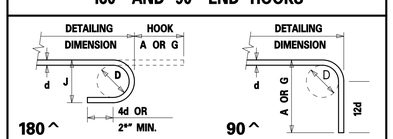

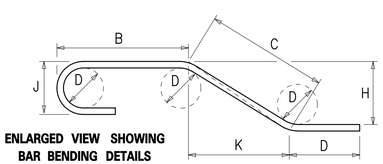

DELAWARE DEPARTMENT OF TRANSPORTATION

ADDENDUMS / REVISIONS

US 301 & SR 1 INTERCHANGE

CONTRACT	BRIDGE NO.	RW1-3R
T200911302	DESIGNED BY:	TSD
COUNTY	CHECKED BY:	KEE
NEW CASTLE		

MOMENT SLAB REINFORCEMENT BAR LIST

RW1-3R BR-01

SHEET NO. 352 / TOTAL SHTS. 491

\\tcplant\S\Project\2008\PEI-ED0836 (DelDOT US 301_*1445)\7. Transportation\1. Bridges\Drawings\Final_PS&E\RW1-3 & RW1-3R\RW1-3R\BR01_rw1-3R.dgn
2/22/2013 2:25:32 PM

UNOFFICIAL WEBSITE COPY

BORING PROFILE

SCALE: 1"=10'-0"

LEGEND:

- POORLY GRADED CLAYEY SILTY SAND
- CLAYEY SAND
- SILTY LOW PLASTICITY CLAY
- POORLY GRADED SAND
- SILTY SAND
- LOW PLASTICITY CLAY
- SILTY GRAVEL
- WATER TABLE AT BORING COMPLETION
- POORLY GRADED SAND WITH SILT
- SILT
- WELL GRADED SAND WITH SILT

TEST BORINGS				
BORING DESIGNATION	STATION	OFFSET	NORTHING	EASTING
RW1-3R-11	318+09.61	29.55' RT.	557025.0600	590527.0500
RW1-3R-12	319+81.45	42.43' RT.	557194.6800	590561.9600

NOTES:

1. FOR BORING LOCATIONS, SEE DWG. NO. PE-01.
2. BORING RW1-3R-12 IS SHOWN OFFSET AS INDICATED FOR CLARITY.
3. RESULTS CONDUCTED ON SAMPLES RECOVERED ARE REPORTED ON THE BORING LOGS. LOGS, LABORATORY TESTING AND CPT DATA ARE INCLUDED AS PART OF THE CONTRACT DOCUMENTS, SEE CD.

VERTICAL SCALE FEET 0 10 20 30

RW1-3R
BO-01

N:\31653-000\Contract 1B\CADD\Bridge\RW\B001_RW1-3R.dgn
2/5/2013 11:38:35 AM

DELAWARE DEPARTMENT OF TRANSPORTATION

ADDENDUMS / REVISIONS

SCALE 0 10 20 30 FEET

US 301 & SR 1 INTERCHANGE

CONTRACT	BRIDGE NO.	RW1-3R
T200911302	DESIGNED BY: W.R.A.	
COUNTY		
NEW CASTLE	CHECKED BY: P.S.D.	

BORING PROFILE – 1

SHEET NO. 353
TOTAL SHTS. 491

UNOFFICIAL WEBSITE COPY

BORING PROFILE

SCALE: 1"=10'-0"

LEGEND:

- POORLY GRADED CLAYEY SILTY SAND
- CLAYEY SAND
- SILTY LOW PLASTICITY CLAY
- POORLY GRADED SAND
- SILTY SAND
- LOW PLASTICITY CLAY
- SILTY GRAVEL
- WATER TABLE AT BORING COMPLETION
- POORLY GRADED SAND WITH SILT
- SILT
- WELL GRADED SAND WITH SILT

TEST BORINGS				
BORING DESIGNATION	STATION	OFFSET	NORTHING	EASTING
RW1-3R-13	321+47.52	50.19' RT.	557360.0765	590587.2207

NOTES:

1. FOR BORING LOCATION, SEE DWG. NO. PE-02.
2. RESULTS CONDUCTED ON SAMPLES RECOVERED ARE REPORTED ON THE BORING LOGS. LOGS, LABORATORY TESTING AND CPT DATA ARE INCLUDED AS PART OF THE CONTRACT DOCUMENTS, SEE CD.

VERTICAL SCALE FEET 0 10 20 30

RW1-3R
BO-02

N:\31653-000\Contract 1B\CADD\Bridge\RW\B002_RW1-3R.dgn
2/5/2013 11:39:07 AM

DELAWARE DEPARTMENT OF TRANSPORTATION

ADDENDUMS / REVISIONS

SCALE 0 10 20 30 FEET

US 301 & SR 1 INTERCHANGE

CONTRACT	BRIDGE NO.	RW1-3R
T200911302	DESIGNED BY: W.R.A.	
COUNTY		
NEW CASTLE	CHECKED BY: P.S.D.	

BORING PROFILE – 2

SHEET NO. 354
TOTAL SHTS. 491

UNOFFICIAL WEBSITE COPY

BORING PROFILE

SCALE: 1"=10'-0"

LEGEND:

- POORLY GRADED CLAYEY SILTY SAND
- CLAYEY SAND
- SILTY LOW PLASTICITY CLAY
- POORLY GRADED SAND
- WELL GRADED SAND WITH SILT
- SILTY SAND
- LOW PLASTICITY CLAY
- POORLY GRADED GRAVEL
- WELL GRADED GRAVEL
- SILTY GRAVEL
- POORLY GRADED SAND WITH SILT
- HIGH PLASTICITY CLAY
- SILT
- POORLY GRADED GRAVEL WITH SILT
- WATER TABLE AT BORING COMPLETION

TEST BORINGS				
BORING DESIGNATION	STATION	OFFSET	NORTHING	EASTING
RW1-3R-14	322+96.17	38.74' RT.	557510.0729	590588.2641
BR1-3-04	323+04.28	00.21' LT.	557521.0000	590550.0000
RW1-3R-15	325+38.12	36.64' LT.	557652.6000	590595.1900
RW1-3-13	324+66.21	32.90' LT.	557684.2400	590527.1900

NOTES:

1. FOR BORING LOCATIONS, SEE DWG. NO. PE-03.
2. BORING RW1-3R-14 IS SHOWN OFFSET AS INDICATED FOR CLARITY.
3. RESULTS CONDUCTED ON SAMPLES RECOVERED ARE REPORTED ON THE BORING LOGS. LOGS, LABORATORY TESTING AND CPT DATA ARE INCLUDED AS PART OF THE CONTRACT DOCUMENTS, SEE CD.

VERTICAL SCALE FEET: 30, 20, 10, 0

RW1-3R
BO-03

N:\31653-000\Contract 1B\CADD\Bridge\RW\B003_RW1-3R.dgn
2/5/2013 11:39:36 AM

DELAWARE DEPARTMENT OF TRANSPORTATION

ADDENDUMS / REVISIONS

SCALE: 0 10 20 30 FEET

US 301 & SR 1 INTERCHANGE

CONTRACT	BRIDGE NO.	RW1-3R
T200911302	DESIGNED BY: W.R.A.	
COUNTY		
NEW CASTLE	CHECKED BY: P.S.D.	

BORING PROFILE – 3

SHEET NO. 355
TOTAL SHTS. 491

UNOFFICIAL WEBSITE COPY

BORING PROFILE

SCALE: 1"=10'-0"

LEGEND:

- POORLY GRADED CLAYEY SILTY SAND
- CLAYEY SAND
- SILTY LOW PLASTICITY CLAY
- POORLY GRADED SAND
- WELL GRADED SAND WITH SILT
- SILTY SAND
- LOW PLASTICITY CLAY
- POORLY GRADED GRAVEL
- WELL GRADED GRAVEL
- SILTY GRAVEL
- POORLY GRADED SAND WITH SILT
- HIGH PLASTICITY CLAY
- SILT
- POORLY GRADED GRAVEL WITH SILT
- WATER TABLE AT BORING COMPLETION

TEST BORINGS				
BORING DESIGNATION	STATION	OFFSET	NORTHING	EASTING
BR1-3-02	325+37.14	11.79' RT.	557753.0000	590575.0000
RW1-3-01	325+81.42	37.86' LT.	557799.0000	590527.0000
RW1-3-02	327+11.63	28.82' LT.	557928.3400	590539.2330

NOTES:

1. FOR BORING LOCATIONS, SEE DWG. NO. PE-04.
2. RESULTS CONDUCTED ON SAMPLES RECOVERED ARE REPORTED ON THE BORING LOGS. LOGS, LABORATORY TESTING AND CPT DATA ARE INCLUDED AS PART OF THE CONTRACT DOCUMENTS, SEE CD.

VERTICAL SCALE FEET 0 10 20 30

RW1-3R
BO-04

N:\31653-000\Contract 1B\CADD\Bridge\RW\B004_RW1-3R.dgn
2/5/2013 11:40:02 AM

DELAWARE DEPARTMENT OF TRANSPORTATION

ADDENDUMS / REVISIONS

SCALE 0 10 20 30 FEET

US 301 & SR 1 INTERCHANGE

CONTRACT	BRIDGE NO.	RW1-3R
T200911302	DESIGNED BY: W.R.A.	
COUNTY		
NEW CASTLE	CHECKED BY: P.S.D.	

BORING PROFILE – 4

SHEET NO. 356
TOTAL SHTS. 491

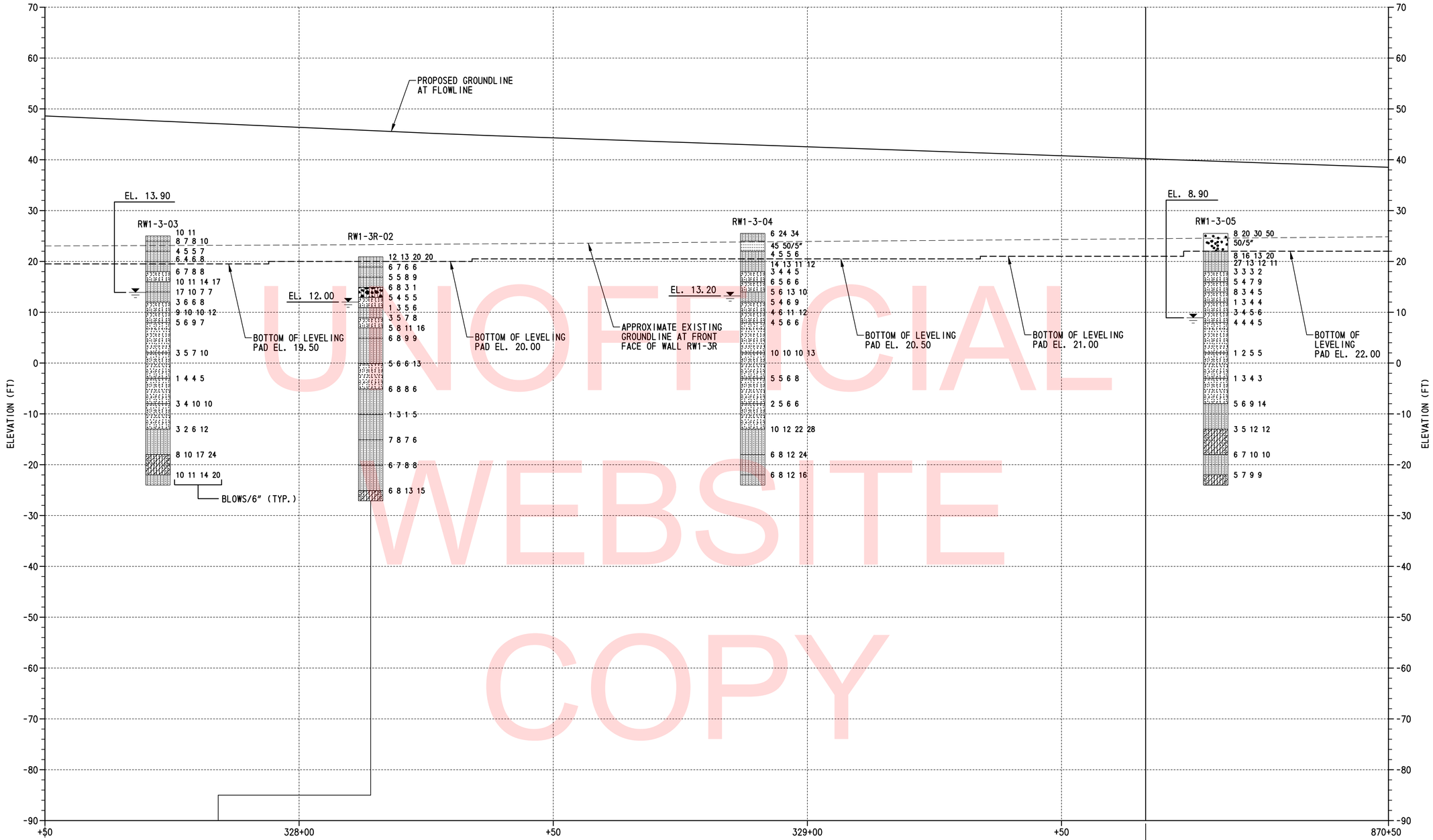

UNOFFICIAL WEBSITE COPY

BORING PROFILE

SCALE: 1"=10'-0"

LEGEND:

- POORLY GRADED CLAYEY SILTY SAND
- CLAYEY SAND
- SILTY LOW PLASTICITY CLAY
- POORLY GRADED SAND
- WELL GRADED SAND WITH SILT
- SILTY SAND
- LOW PLASTICITY CLAY
- POORLY GRADED GRAVEL
- WELL GRADED GRAVEL
- SILTY GRAVEL
- POORLY GRADED SAND WITH SILT
- HIGH PLASTICITY CLAY
- SILT
- POORLY GRADED GRAVEL WITH SILT
- WATER TABLE AT BORING COMPLETION

TEST BORINGS				
BORING DESIGNATION	STATION	OFFSET	NORTHING	EASTING
RW1-3-03	327+72.23	45.16' LT.	557989.0900	590523.7200
RW1-3R-02	327+84.08	24.97' RT.	558000.0000	590594.0000
RW1-3-04	328+89.24	33.33' LT.	558098.0000	590537.0000
RW1-3-05	870+16.02	11.64' LT.	558197.0000	590540.0000

NOTES:

1. FOR BORING LOCATIONS, SEE DWG. NO. PE-05.
2. BORING RW1-3R-02 IS SHOWN OFFSET AS INDICATED FOR CLARITY.
3. RESULTS CONDUCTED ON SAMPLES RECOVERED ARE REPORTED ON THE BORING LOGS. LOGS, LABORATORY TESTING AND CPT DATA ARE INCLUDED AS PART OF THE CONTRACT DOCUMENTS, SEE CD.

VERTICAL SCALE FEET 0 10 20 30

RW1-3R
BO-05

N:\36653-000\Contract 18\CADD\Bridge\RW\B005_RW1-3R.dgn
2/5/2013 11:40:29 AM

DELAWARE DEPARTMENT OF TRANSPORTATION

ADDENDUMS / REVISIONS

SCALE 0 10 20 30 FEET

US 301 & SR 1 INTERCHANGE

CONTRACT	BRIDGE NO.	RW1-3R
T200911302	DESIGNED BY: W.R.A.	
COUNTY		
NEW CASTLE	CHECKED BY: P.S.D.	

BORING PROFILE – 5

SHEET NO. 357
TOTAL SHTS. 491

UNOFFICIAL WEBSITE COPY

BORING PROFILE

SCALE: 1"=10'-0"

LEGEND:

- POORLY GRADED CLAYEY SILTY SAND
- CLAYEY SAND
- SILTY LOW PLASTICITY CLAY
- POORLY GRADED SAND
- WELL GRADED SAND WITH SILT
- SILTY SAND
- LOW PLASTICITY CLAY
- POORLY GRADED GRAVEL
- WELL GRADED GRAVEL
- SILTY GRAVEL
- POORLY GRADED SAND WITH SILT
- HIGH PLASTICITY CLAY
- SILT
- POORLY GRADED GRAVEL WITH SILT
- WATER TABLE AT BORING COMPLETION

TEST BORINGS				
BORING DESIGNATION	STATION	OFFSET	NORTHING	EASTING
RW1-3-06	870+67.03	11.32' LT.	558248.0000	590541.0000
RW1-3R-04	871+26.77	43.89' RT.	558307.0000	590597.0000

NOTES:

1. FOR BORING LOCATIONS, SEE DWG. NO. PE-06.
2. RESULTS CONDUCTED ON SAMPLES RECOVERED ARE REPORTED ON THE BORING LOGS. LOGS, LABORATORY TESTING AND CPT DATA ARE INCLUDED AS PART OF THE CONTRACT DOCUMENTS, SEE CD.

VERTICAL SCALE FEET 0 10 20 30

RW1-3R BO-06

N:\3653-000\Contract 18\CADD\Bridge\RW\B006_RW1-3R.dgn
2/5/2013 11:41:00 AM

DELAWARE DEPARTMENT OF TRANSPORTATION

ADDENDUMS / REVISIONS

SCALE 0 10 20 30 FEET

US 301 & SR 1 INTERCHANGE

CONTRACT	BRIDGE NO.	RW1-3R
T200911302	DESIGNED BY: W.R.A.	
COUNTY		
NEW CASTLE	CHECKED BY: P.S.D.	

BORING PROFILE – 6

SHEET NO. 358
TOTAL SHTS. 491

UNOFFICIAL WEBSITE COPY

BORING PROFILE

SCALE: 1"=10'-0"

WOR = WEIGHT OF ROD

TEST BORINGS				
BORING DESIGNATION	STATION	OFFSET	NORTHING	EASTING
RW1-3-08	873+67.09	9.30' LT.	558548.0000	590547.0000
RW1-3R-06	874+20.85	47.99' RT.	558601.0000	590605.0000

LEGEND:

- POORLY GRADED CLAYEY SILTY SAND
- CLAYEY SAND
- SILTY LOW PLASTICITY CLAY
- POORLY GRADED SAND
- WELL GRADED SAND WITH SILT
- SILTY SAND
- LOW PLASTICITY CLAY
- POORLY GRADED GRAVEL
- WELL GRADED GRAVEL
- SILTY GRAVEL
- POORLY GRADED SAND WITH SILT
- HIGH PLASTICITY CLAY
- SILT
- POORLY GRADED GRAVEL WITH SILT
- WATER TABLE AT BORING COMPLETION

NOTES:

1. FOR BORING LOCATIONS, SEE DWG. NO. PE-07.
2. RESULTS CONDUCTED ON SAMPLES RECOVERED ARE REPORTED ON THE BORING LOGS. LOGS, LABORATORY TESTING AND CPT DATA ARE INCLUDED AS PART OF THE CONTRACT DOCUMENTS, SEE CD.

VERTICAL SCALE FEET 0 10 20 30

RW1-3R
BO-07

N:\33653-000\Contract 18\CADD\Bridge\RW\B007_RW1-3R.dgn
2/5/2013 11:41:26 AM

DELAWARE DEPARTMENT OF TRANSPORTATION

ADDENDUMS / REVISIONS

SCALE 0 10 20 30 FEET

US 301 & SR 1 INTERCHANGE

CONTRACT	BRIDGE NO.	RW1-3R
T200911302	DESIGNED BY: W.R.A.	
COUNTY		
NEW CASTLE	CHECKED BY: P.S.D.	

BORING PROFILE – 7

SHEET NO. 359
TOTAL SHTS. 491

PORTABLE SEDIMENT TANK (PST)

PORTABLE SEDIMENT TANK (PST) SHALL BE USED FOR DEWATERING SEDIMENT LADEN RUNOFF AS NECESSARY. CONTRACTOR SHALL BE RESPONSIBLE FOR PROVIDING DEQUATE QUANTITY OF PSTS AND PUMPS AND STABLE OUTFALL FOR PUMPED DISCHARGE.

SUMP PIT (SP)

SUMP PITS SHALL BE USED FOR DEWATERING WORK AREA AS NECESSARY. CONTRACTOR SHALL BE RESPONSIBLE FOR LOCATING SUMP PITSAND PROVIDING ADEQUATE PUMPS AND STABLE OUTFALL FOR PUMPED DISCHARGE.

*ACCESS ROAD

TYPE	S. Y.
WETLAND ACCESS ROAD	733

*SEE CONTRACT SPECIAL PROVISIONS

STABILIZED CONSTRUCTION ENTRANCE (SCE)

NO.	STATION, OFFSET	TONS	REMARKS
1	1807+65, 71' LT.	60	℄ SR 1
2	879+40, 38' RT.	60	℄ US 301

SANDBAG DIVERSION (SBD)

NO.	STATION-OFFSET	L. F.	REMARKS
1	878+14, 24' RT.	14'	℄ US 301
2	881+13, 8' RT.	10'	℄ US 301

TYPE A-1, PERIMETER DIKE/SWALE (PDS)

NO.	STATION-OFFSET	L. F.	REMARKS
1	1807+29, 79' LT. TO 1808+27, 129' LT.	111	℄ SR 1

TEMPORARY PIPE (TP)

NO.	STATION-OFFSET	SIZE	L. F.	REMARKS
1	878+50, 24' RT. TO 881+77, 12' LT.	18" DIA., MIN.	350	℄ US 301
2	881+13, 8' RT. TO 881+74, 12' LT.	18" DIA., MIN.	96	℄ US 301
3	882+50, 25' LT. TO 884+21, 40' RT.	18" DIA., MIN.	222	℄ US 301

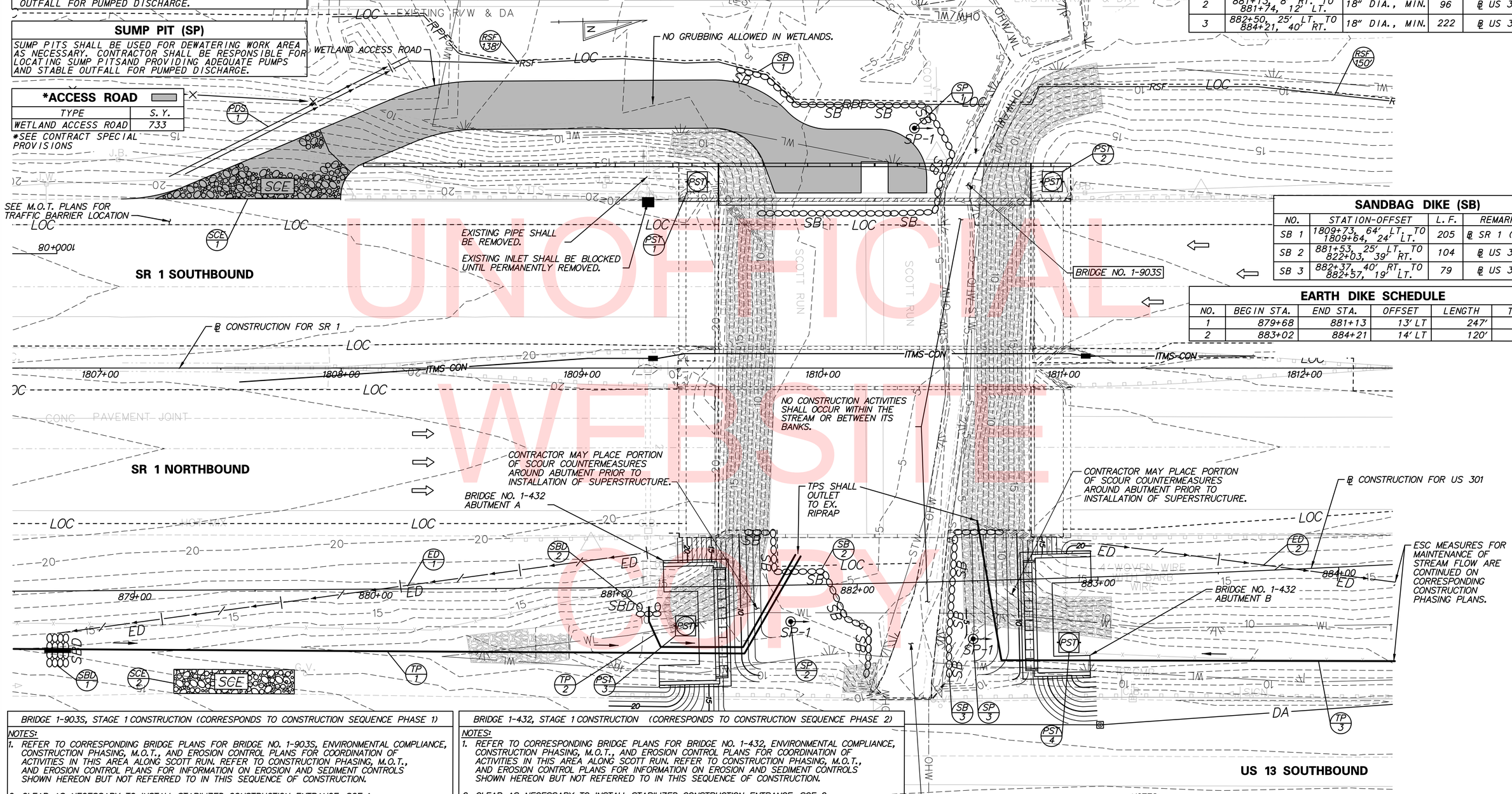

SANDBAG DIKE (SB)

NO.	STATION-OFFSET	L. F.	REMARKS
SB 1	1809+73, 64' LT. TO 1809+64, 24' LT.	205	℄ SR 1 (SBR)
SB 2	881+53, 25' LT. TO 822+03, 39' RT.	104	℄ US 301
SB 3	882+37, 40' RT. TO 882+57, 19' LT.	79	℄ US 301

EARTH DIKE SCHEDULE

NO.	BEGIN STA.	END STA.	OFFSET	LENGTH	TYPE
1	879+68	881+13	13' LT	247'	A-1
2	883+02	884+21	14' LT	120'	A-1

BRIDGE 1-903S, STAGE 1 CONSTRUCTION (CORRESPONDS TO CONSTRUCTION SEQUENCE PHASE 1)

NOTES:

1. REFER TO CORRESPONDING BRIDGE PLANS FOR BRIDGE NO. 1-903S, ENVIRONMENTAL COMPLIANCE, CONSTRUCTION PHASING, M.O.T., AND EROSION CONTROL PLANS FOR COORDINATION OF ACTIVITIES IN THIS AREA ALONG SCOTT RUN. REFER TO CONSTRUCTION PHASING, M.O.T., AND EROSION CONTROL PLANS FOR INFORMATION ON EROSION AND SEDIMENT CONTROLS SHOWN HEREON BUT NOT REFERRED TO IN THIS SEQUENCE OF CONSTRUCTION.
2. CLEAR AS NECESSARY TO INSTALL STABILIZED CONSTRUCTION ENTRANCE, SCE-1, PERIMETER DIKE/SWALE, PDS-1, REINFORCED SILT FENCE, SUMP PIT, SP-1, AND SANDBAG DIKE SB-1. CLEAR AND INSTALL WETLAND ACCESS ROAD PER CONTRACT SPECIAL PROVISIONS. BLOCK EXISTING INLET TO PREVENT PIPE OUTFLOW FROM ERODING WETLAND ACCESS ROAD.
3. PROCEED WITH CONSTRUCTION ON BRIDGE NO. 1-903S ABUTMENTS AND PIER AND RETAINING WALL RW 1-1. UTILIZE PSTS TO FILTER SEDIMENT-LADEN WATER IN WORK AREA.DISCHARGE TO A STABALIZED LOCATION DOWNSTREAM.THE CONTRACTOR IS ALERTED TO THE POSSIBILITY THAT EXISTING RIPRAP UNDER THE PROPOSED STRUCTURE MAY REQUIRE TEMPORARY REMOVAL AND SUBSEQUENT REPLACEMENT OF SAME IN ORDER TO CONSTRUCT THE SUBSTRUCTURES.
4. PROCEED WITH SUPERSTRUCTURE CONSTRUCTION PER BRIDGE 1-903S PLANS.

BRIDGE 1-432, STAGE 1 CONSTRUCTION (CORRESPONDS TO CONSTRUCTION SEQUENCE PHASE 2)

NOTES:

1. REFER TO CORRESPONDING BRIDGE PLANS FOR BRIDGE NO. 1-432, ENVIRONMENTAL COMPLIANCE, CONSTRUCTION PHASING, M.O.T., AND EROSION CONTROL PLANS FOR COORDINATION OF ACTIVITIES IN THIS AREA ALONG SCOTT RUN. REFER TO CONSTRUCTION PHASING, M.O.T., AND EROSION CONTROL PLANS FOR INFORMATION ON EROSION AND SEDIMENT CONTROLS SHOWN HEREON BUT NOT REFERRED TO IN THIS SEQUENCE OF CONSTRUCTION.
2. CLEAR AS NECESSARY TO INSTALL STABILIZED CONSTRUCTION ENTRANCE, SCE-2, EARTH DIKES, ED-1 AND ED-2, SUMP PITS, SP-2 AND SP-3, SANDBAG DIKES WITH TEMPORARY PIPES, AND SANDBAG DIKES, SB-2 AND SB-3. UTILIZE PSTS TO FILTER SEDIMENT-LADEN WATER IN WORK AREA. TPS AND PSTS SHALL DISCHARGE TO A STABLIZED OUTFALL.
3. PROCEED WITH CONSTRUCTION ON BRIDGE NO. 1-432 ABUTMENTS. THE CONTRACTOR IS ALERTED TO THE POSSIBILITY THAT EXISTING RIPRAP UNDER THE PROPOSED STRUCTURE MAY REQUIRE TEMPORARY REMOVAL AND SUBSEQUENT REPLACEMENT OF SAME IN ORDER TO CONSTRUCT THE SUBSTRUCTURES. FINAL GRADING AND PLACEMENT OF SCOUR COUNTERMEASURES MAY BE CONDUCTED PRIOR TO SUPERSTRUCTUE CONSTRUCTION.
4. PROCEED WITH SUPERSTRUCTURE CONSTRUCTION PER BRIDGE 1-432 PLANS.

NOTES:

1. THE CONTRACTOR MAY MODIFY THE SEQUENCE OF CONSTRUCTION FOR BRIDGE NOS. 1-930S AND 1-432, AS DESCRIBED, OR PROVIDE AN ALTERNATIVE, APPROACH WHICH MUST ALSO MEET THE ENVIRONMENTAL COMPLIANCE PERMITTING REQUIREMENTS, EROSION AND SEDIMENT CONTROL REQUIREMENTS, AND THE DESIGN REQUIREMENTS FOR THE PROPOSED STRUCTURES. THE CONTRACTOR SHALL PROVIDE ANY REVISED SEQUENCE OF CONSTRUCTION AND EROSION AND SEDIMENT CONTROL PLANS TO THE ENGINEER, AND THE EROSION AND SEDIMENT CONTROL INSPECTOR, FOR REVIEW AND APPROVAL PRIOR TO BEGINNING CONSTRUCTION ACTIVITIES.
2. EXISTING RIPRAP TO BE REMOVED AND REPLACED AT BOTH ABUTMENT EXTENSIONS. REFER TO PROJECT NOTE 12 ON DWG. BR 1-903S, PN-01.

UNOFFICIAL WEBSITE COPY

DELAWARE DEPARTMENT OF TRANSPORTATION

ADDENDUMS / REVISIONS

SCALE 0 20 40 60 FEET

US 301 & SR 1 INTERCHANGE

CONTRACT	BRIDGE NO.	1-903S & 1-432
T200911302	DESIGNED BY:	D.B.R.
COUNTY	CHECKED BY:	J.D.C.
NEW CASTLE		

MAINTENANCE OF STREAM FLOW PLAN STAGE 1

MS-01

SHEET NO. 360

TOTAL SHTS. 498

N:\33653-000\Contract B\CADD\Environmental\Maintenance of Streamflow\BR 1-1_BR 1-2\MS01U301_br1-1&2_1B.dgn
4/30/2012 4:35:26 PM

SAME DAY STABILIZATION NOTE

WHERE NOTED, AREAS SHALL BE STABILIZED WITHIN THE SAME WORKING DAY. NO AREA SHALL REMAIN UNSTABILIZED OVERNIGHT UNLESS DIRECTED TO AN APPROVED SEDIMENT CONTROL DEVICE.

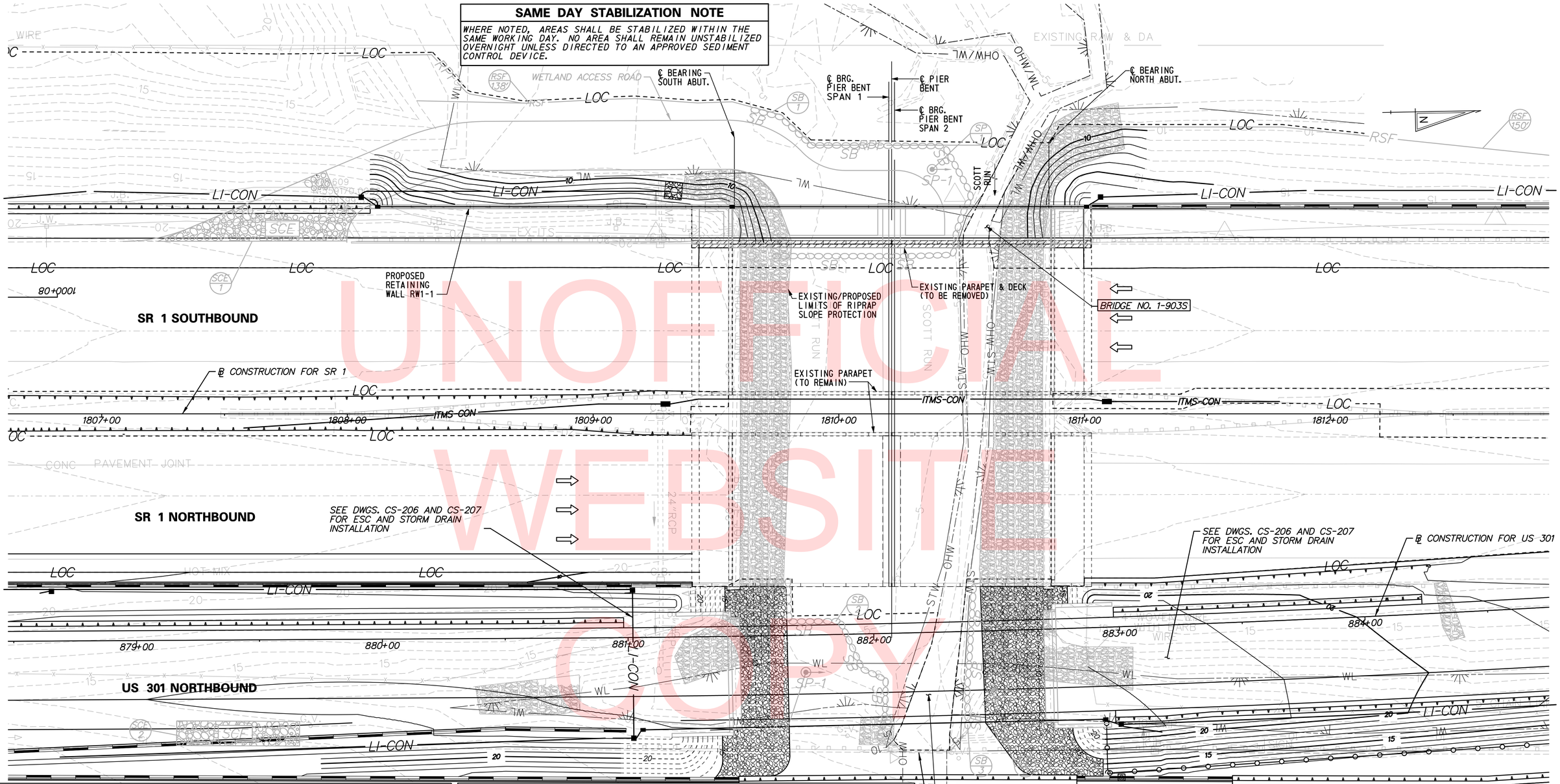

UNOFFICIAL WEBSITE COPY

BRIDGE 1-903S STAGE 2 CONSTRUCTION (CORRESPONDS TO CONSTRUCTION SEQUENCE PHASE 1)

NOTES:

1. REFER TO CORRESPONDING BRIDGE PLANS FOR BRIDGE NO. 1-930S, ENVIRONMENTAL COMPLIANCE, CONSTRUCTION PHASING, M.O.T., AND EROSION CONTROL PLANS FOR COORDINATION OF ACTIVITIES IN THIS AREA ALONG SCOTT RUN. REFER TO CONSTRUCTION PHASING, M.O.T., AND EROSION CONTROL PLANS FOR INFORMATION ON EROSION AND SEDIMENT CONTROLS SHOWN HEREON BUT NOT REFERRED TO IN THIS SEQUENCE OF CONSTRUCTION.
2. WITH THE APPROVAL OF ENGINEER AND ESC INSPECTOR PDS-1, PST-1 AND PST-2 MAY BE REMOVED. PROCEED WITH REMOVAL OF WETLAND ACCESS ROAD, FINAL GRADING AND PLACEMENT OF RIPRAP AT BRIDGE NO. 1-930S.
3. WITH THE APPROVAL OF ESC INSPECTOR AND ENGINEER, REMOVE SP-1, RSF, AND SANDBAG DIKES. STABILIZE ALL AREAS DISTURBED IN THE PROCESS PER NOTE THIS SHEET.

BRIDGE 1-432 STAGE 2 CONSTRUCTION (CORRESPONDS TO CONSTRUCTION SEQUENCE PHASE 2)

NOTES:

1. REFER TO CORRESPONDING BRIDGE PLANS FOR BRIDGE 1-432, ENVIRONMENTAL COMPLIANCE, CONSTRUCTION PHASING, M.O.T., AND EROSION CONTROL PLANS FOR COORDINATION OF ACTIVITIES IN THIS AREA ALONG SCOTT RUN. REFER TO CONSTRUCTION PHASING, M.O.T., AND EROSION CONTROL PLANS FOR INFORMATION ON EROSION AND SEDIMENT CONTROLS SHOWN HEREON BUT NOT REFERRED TO IN THIS SEQUENCE OF CONSTRUCTION.
2. EXCEPT WHERE NOTED, EROSION CONTROL DEVICES INSTALLED DURING STAGE 1B CONSTRUCTION SHALL REMAIN IN PLACE FOR THIS STAGE. SEE PHASE 2 EROSION AND SEDIMENT CONTROL PLANS FOR SEDIMENT TRAP AND STORM DRAIN INSTALLATION. UNDER DIRECTION OF ENGINEER AND ESC INSPECTOR ED-1 AND ED-2, SBD-1 AND SBD-2, TP-1, TP-2 AND TP-3, PST-3 AND PST-4 MAY BE REMOVED.
3. PROCEED WITH FINAL GRADING AT BRIDGE NO. 1-432 AND WHERE IT SHALL TIE INTO PROPOSED GRADING FOR US 301 ROADWAY CONSTRUCTION. SEDIMENT TRAPS SHALL REMAIN IN PLACE UNTIL COMPLETION OF ROADWAY IMPROVEMENTS, FINAL GRADING AND CONSTRUCTION ACTIVITIES ALONG US 301 AND US 13.
4. UPON COMPLETION OF GRADING ACTIVITIES AND UNDER DIRECTION OF ESC INSPECTOR AND ENGINEER, REMOVE ALL EROSION AND SEDIMENT CONTROL DEVICES. STABILIZE ALL AREAS DISTURBED IN THE PROCESS PER NOTE THIS SHEET.

NOTES:

1. THE CONTRACTOR MAY MODIFY THE SEQUENCE OF CONSTRUCTION FOR BRIDGE NOS. 1-930S AND 1-432, AS DESCRIBED, OR PROVIDE AN ALTERNATIVE, APPROACH WHICH MUST ALSO MEET THE ENVIRONMENTAL COMPLIANCE PERMITTING REQUIREMENTS, EROSION AND SEDIMENT CONTROL REQUIREMENTS, AND THE DESIGN REQUIREMENTS FOR THE PROPOSED STRUCTURES. THE CONTRACTOR SHALL PROVIDE ANY REVISED SEQUENCE OF CONSTRUCTION AND EROSION AND SEDIMENT CONTROL PLANS TO THE ENGINEER, AND THE EROSION AND SEDIMENT CONTROL INSPECTOR, FOR REVIEW AND APPROVAL PRIOR TO BEGINNING CONSTRUCTION ACTIVITIES.
2. EXISTING RIPRAP TO BE REMOVED AND REPLACED AT BOTH BRIDGE NO. 1-930S ABUTMENT EXTENSIONS. REFER TO PROJECT NOTE 12 ON DWG. BR 1-903S, PN-01.
3. SEE ADDITIONAL ENVIRONMENTAL GUIDELINES IN THE CONTRACT DOCUMENTS FOR FINAL STABILIZATION AND VEGETATIVE PLANTINGS REQUIRED WITHIN THE DISTURBED AREAS OF THE LOC.

MS-02

DELAWARE DEPARTMENT OF TRANSPORTATION

ADDENDUMS / REVISIONS

SCALE 0 20 40 60 FEET

US 301 & SR 1 INTERCHANGE

CONTRACT	BRIDGE NO.	1-903S & 1-432
T200911302	DESIGNED BY:	D.B.R.
COUNTY		
NEW CASTLE	CHECKED BY:	J.D.C.

MAINTENANCE OF STREAM FLOW PLAN STAGE 2

SHEET NO. 361
TOTAL SHTS. 491

n:\31653-000\contract tb\cadd\Environmental\Maintenance of Streamflow\BR 1-1_BR 1-2\MS02U301_br1-182_1B.dgn
5/30/2013 11:59:21 AM

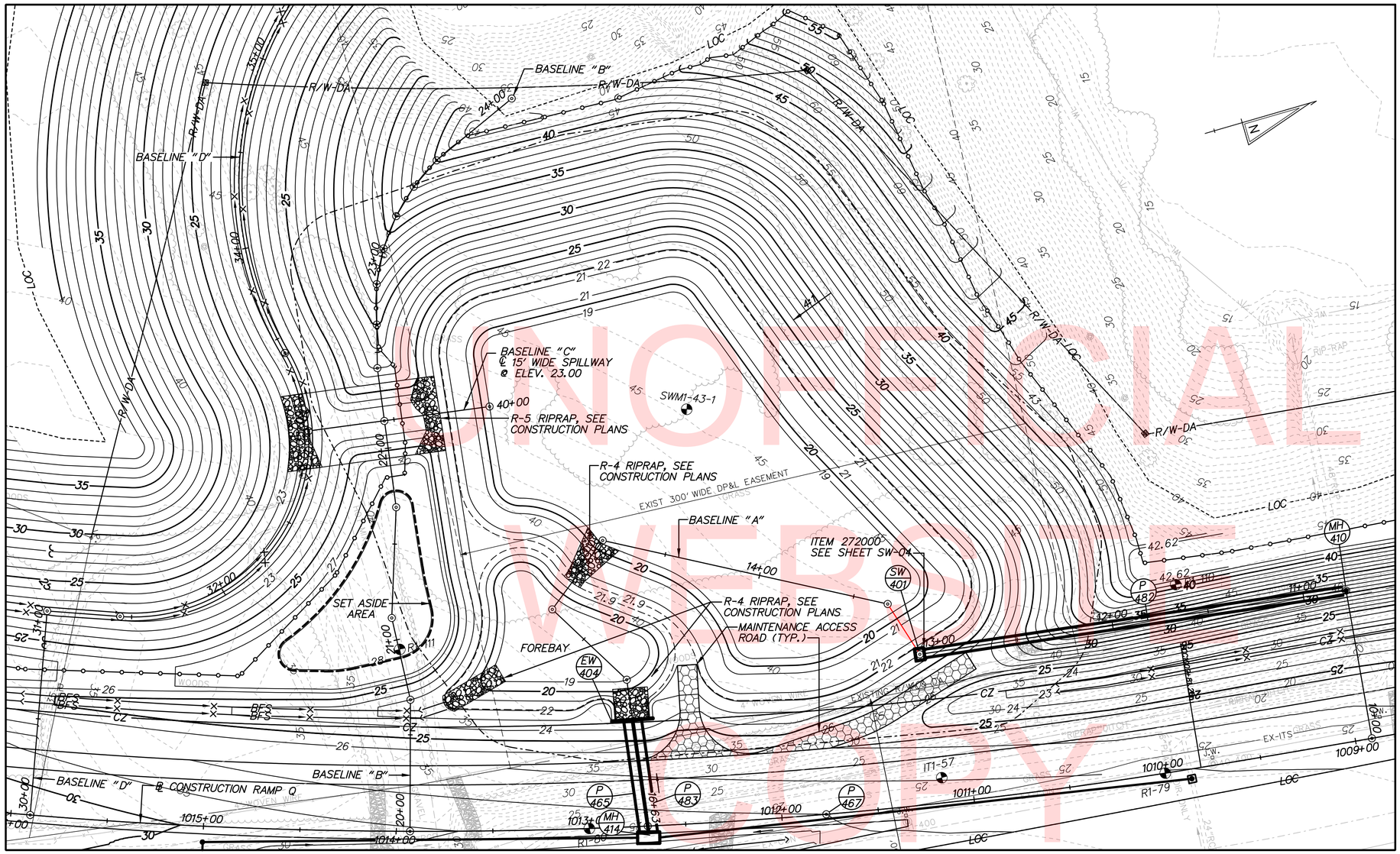

UNOFFICIAL WEBSITE COPY

POND CONSTRUCTION SEQUENCE AND NOTES:

THE STORMWATER MANAGEMENT POND SHALL FUNCTION AS A SEDIMENT BASIN DURING ROADWAY CONSTRUCTION AND SHALL BE CONSTRUCTED IN ACCORDANCE WITH THE FOLLOWING SECTIONS OF THE STANDARD SPECIFICATIONS:

SECTION 271 - STORMWATER MANAGEMENT POND
SECTION 272 - POND OUTLET STRUCTURE, CONCRETE

1. INSTALL STABILIZED CONSTRUCTION ENTRANCE PER CONSTRUCTION PHASING, MOT AND EROSION AND SEDIMENT CONTROL PLANS.
2. CLEAR AND GRUB FOR INSTALLATION OF PERIMETER EROSION AND SEDIMENT CONTROLS.
3. INSTALL PERIMETER SEDIMENT CONTROLS AS SHOWN ON THE CONSTRUCTION PHASING PLANS, MOT AND EROSION AND SEDIMENT CONTROL PLANS.
4. CLEAR AND GRUB REMAINING AREA FOR POND CONSTRUCTION.
5. CONSTRUCT PRINCIPAL SPILLWAY AND CONNECT DOWNSTREAM END TO EXISTING STORM DRAIN AS SHOWN. BULKHEAD PRINCIPAL SPILLWAY WITH BRICK MASONRY LEAVING OPENINGS FOR THE SKIMMER OUTLETS AT THE PIPE INVERT (ELEV. 19.28). INSTALL SKIMMER DEWATERING DEVICES AND VARY PVC PIPE LENGTHS TO ENSURE ALL SKIMMERS WILL FLOAT FREELY. DE-WATER FOUNDATION AS NEEDED IN ACCORDANCE WITH SECTION 111 AND USE SUMP PITS FOR PUMPING. LOCATION OF SUMP PITS TO BE DETERMINED IN FIELD.
6. EXCAVATE THE POND AND COMPLETE THE BASIN TO LINES, GRADES, AND DETAILS SHOWN IN THE CONSTRUCTION PLANS. OVEREXCAVATE THE BOTTOM OF THE POOL 3 FEET FOR SEDIMENT STORAGE. DURING EXCAVATION, THE CONTRACTOR SHALL SALVAGE AND STOCKPILE ANY SOILS CLASSIFIED AS CH, CL, CH, AND GM PER THE UNIFIED SOIL CLASSIFICATION SYSTEM TO BE USED TO CONSTRUCT EMBANKMENT. THE ABOVE CLASSIFIED SOILS MAY BE OBTAINED FROM ELSEWHERE WITHIN THE PROJECT LIMITS.
7. STABILIZE ALL BARE AREAS UP TO ELEV. 23.00, EXCLUDING THE POND BOTTOM, WITH WET SEED MIX AND ABOVE ELEV. 23.00 WITH DRY SEED MIX. PLACE 6" TOPSOIL ON THE LOWER BENCH (EL. 21') AND ABOVE.

MAINTENANCE OF POND AS A SEDIMENT BASIN

1. CONTRACTOR SHALL INSPECT THE BASIN IMMEDIATELY AFTER EVERY RAIN AND MAKE REPAIRS AS NEEDED.
2. CONTRACTOR SHALL CLEARLY MARK THE CLEANOUT ELEVATION, 22.21, ON A STAKE DRIVEN INTO THE GROUND AT A LOCATION CLEARLY VISIBLE FROM THE EMBANKMENT. SEDIMENT SHALL BE REMOVED WHEN CLEANOUT ELEVATION IS REACHED AND DISPOSED OF AT A LOCATION APPROVED BY THE ENGINEER.

CONVERSION TO PERMANENT STORMWATER MANAGEMENT POND

1. CONVERT THE BASIN INTO THE PERMANENT STORMWATER MANAGEMENT POND AFTER ALL AREAS DRAINING TO THE POND HAVE BEEN PERMANENTLY STABILIZED AND THE ENGINEER HAS APPROVED THE CONVERSION.
2. REMOVE EXCESS ACCUMULATED SEDIMENT ON THE POND BOTTOM AND BENCHES, IF ANY, TO THE SPECIFIED FINISHED LINES AND GRADES SHOWN IN THE PLAN AND DISPOSE SEDIMENT AT A LOCATION APPROVED BY THE ENGINEER. IF ELEVATION OF ACCUMULATED SEDIMENT IN POOL BOTTOMS IS BELOW THE PROPOSED FINISHED ELEVATION, ADDITIONAL FILL MATERIAL SHALL NOT BE PLACED IN POND.
3. PUMP DOWN STANDING WATER IN THE POND AS NECESSARY. REMOVE BRICK MASONRY FROM PRINCIPAL SPILLWAY AND CONSTRUCT POND OUTLET STRUCTURE PER PLANS. CONCURRENTLY, COMPLETE STABILIZATION OF ALL BARE AREAS, REMOVE EROSION AND SEDIMENT CONTROL MEASURES, AND REMOVE SKIMMER DEWATERING DEVICES.

PLAN - SWM BMP NO. 755, WET POND

SCALE: 1" = 30'

BMP NO. 755 - DESIGN SUMMARY				
DESIGN STORM	FACILITY INFLOW (CFS)	FACILITY DISCHARGE (CFS)	WATER SURFACE ELEVATION	STORAGE VOLUME (ACRE-FT)
PERM. POOL	N. A.	N. A.	22.00	2.65
1-YEAR	44.0	43.90	23.12	1.27
10-YEAR	121.7	121.0	23.41	1.63
100-YEAR	254.8	254.0	23.89	2.21

HAZARD CLASSIFICATION "A" AS PER POND CODE 378

DRAINAGE AREA TO FACILITY: 105.73 ACRES

MANAGEMENT PROVIDED BY FACILITY: WATER QUALITY CONTROL VIA EXTENDED DETENTION FOR 1-YEAR RESOURCE PROTECTION STORM. QUANTITY CONTROL FOR THE 10 AND 100-YEAR EVENTS WAIVED DUE TO TIDAL OUTFALL INTO SCOTT RUN.

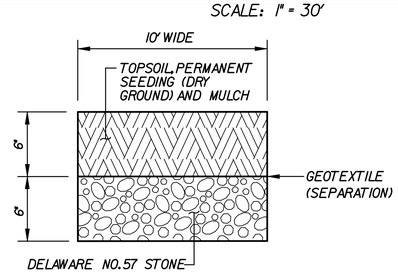

POND MAINTENANCE ACCESS ROAD TYPICAL SECTION

SCALE: NONE

GENERAL NOTES:

1. THE CONTRACTOR SHALL PROVIDE "AS-BUILT" DRAWINGS OF ALL STORMWATER MANAGEMENT FACILITIES, SUCH AS PONDS, BIOFILTRATION SWALES, BIO-RETENTION AREAS, ETC. THE "AS-BUILT" DRAWINGS SHALL SHOW THE ACTUAL FINISHED GROUND CONTOURS, OUTLET STRUCTURE DIMENSIONS AND ELEVATIONS, ETC., AS THEY EXIST AT THE COMPLETION OF THE PROJECT. THESE DRAWINGS SHALL BE SIGNED AND SEALED BY A PROFESSIONAL ENGINEER OR LAND SURVEYOR REGISTERED IN THE STATE OF DELAWARE. ALL "AS-BUILT" DRAWINGS SHALL BE SENT TO THE DELDOT STORMWATER ENGINEER. ALL COSTS FOR THIS WORK SHALL BE INCLUDED UNDER ITEM 763501 - CONSTRUCTION ENGINEERING.
2. STORMWATER MANAGEMENT PONDS SERVING AS TEMPORARY SEDIMENT BASINS DURING CONSTRUCTION SHALL HAVE SEDIMENT REMOVED AT TIMES DETERMINED BY THE ENGINEER AND AT THE CONCLUSION OF THE PROJECT AFTER ALL AREAS DRAINING TO THE POND HAVE BEEN VEGETATIVELY STABILIZED. COST FOR SEDIMENT REMOVAL SHALL BE PAID FOR UNDER ITEM 250000 - SEDIMENT REMOVAL. ACCESS SHALL BE MAINTAINED TO ALL SEDIMENT REMOVAL CONTROL DEVICES REQUIRING MAINTENANCE UNTIL CONSTRUCTION PHASING AND VEGETATIVE STABILIZATION ALLOW THE REMOVAL OF THOSE CONTROLS, WHICH ARE NO LONGER REQUIRED.

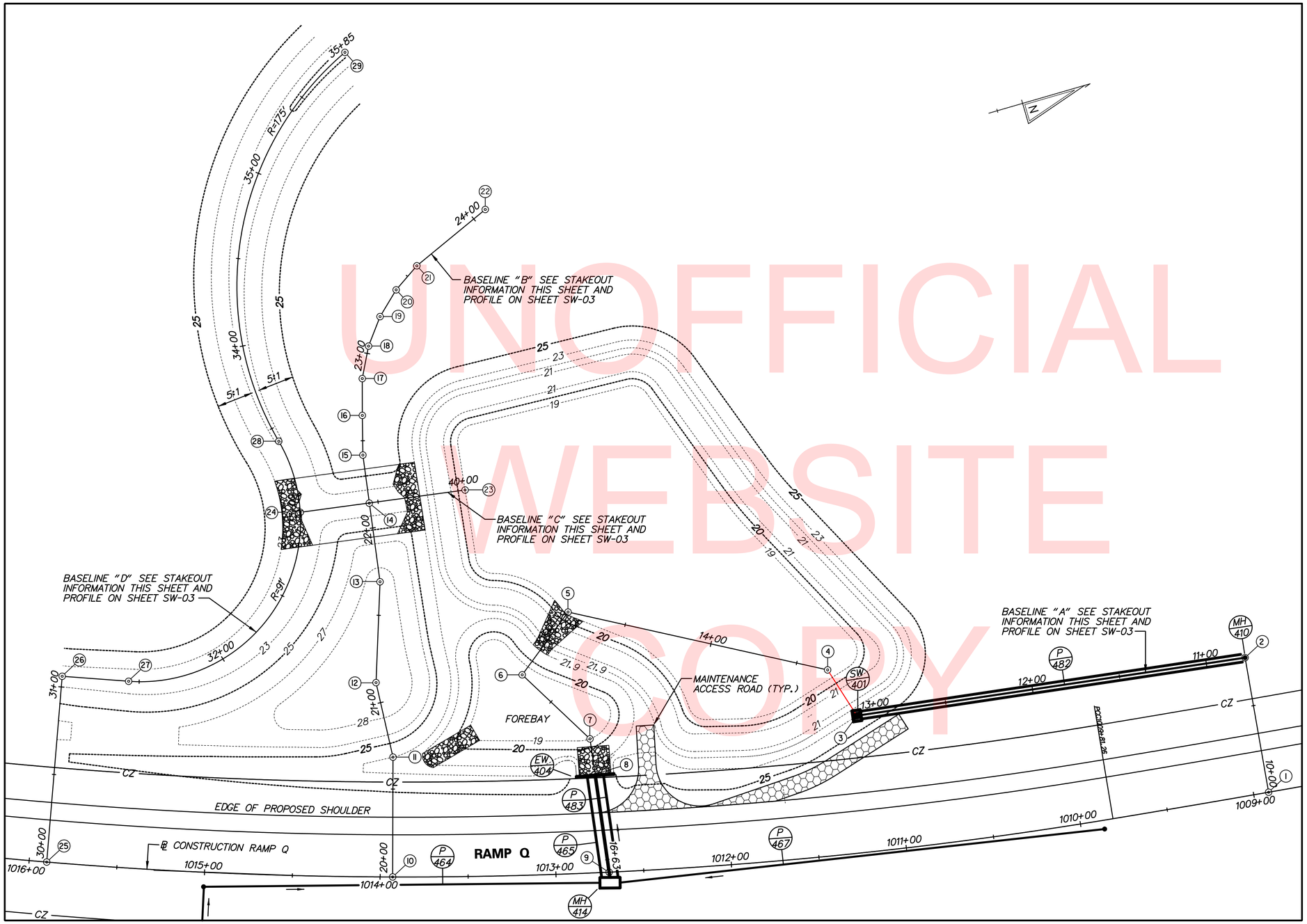

UNOFFICIAL WEBSITE COPY

BASELINE "A" STAKEOUT INFORMATION

POINT NO.	STATION	NORTHING	EASTING
1	POB STA.10+00.00	558169.09	590369.89
2	PI STA.10+77.71	558177.09	590292.59
3	PI STA.13+01.03	557955.60	590264.13
4	PI STA.13+31.96	557946.67	590234.51
5	PI STA.14+83.29	557813.55	590162.56
6	PI STA.15+27.51	557778.72	590189.81
7	PI STA.15+80.59	557805.89	590235.40
8	PI STA.16+00.94	557803.18	590255.57
9	PI STA.16+57.23	557795.69	590311.36

BASELINE "B" STAKEOUT INFORMATION

POINT NO.	STATION	NORTHING	EASTING
10	POB STA.20+00.00	557676.43	590280.39
11	PI STA.20+68.18	557695.21	590214.85
12	PI STA.21+11.67	557697.49	590171.41
13	PI STA.21+69.10	557715.31	590116.82
14	PI STA.22+14.26	557721.62	590072.11
15	PI STA.22+41.86	557725.59	590044.79
16	PI STA.22+64.43	557731.44	590022.99
17	PI STA.22+85.39	557737.13	590002.82
18	PI STA.23+04.22	557745.61	589986.01
19	PI STA.23+22.23	557756.48	589971.64
20	PI STA.23+40.00	557769.44	589959.48
21	PI STA.23+58.05	557784.50	589949.53
22	POE STA.24+08.48	557830.69	589929.31

BASELINE "C" STAKEOUT INFORMATION

POINT NO.	STATION	NORTHING	EASTING
23	POB STA.40+00.00	557776.11	590079.78
24	PI STA.40+94.64	557682.42	590066.41

BASELINE "D" STAKEOUT INFORMATION

POINT NO.	STATION	NORTHING	EASTING
25	POB STA.30+00.00	557489.37	590218.56
26	PI STA.31+06.09	557526.66	590119.24
27	PC STA.31+43.99	557562.25	590132.28
28	PRC STA.33+41.78	557681.69	590024.17
29	PT STA.35+85.48	557778.24	589821.52

STAKEOUT PLAN – SWM BMP NO. 755, WET POND

SCALE: 1" = 30'

N:\31653-000\CONTRACT 18\CADD\SW02-1004U301_18.dgn
5/30/2013 12:23:25 PM

DELAWARE DEPARTMENT OF TRANSPORTATION

ADDENDUMS / REVISIONS

SCALE 0 30 60 90 FEET

US 301 & SR 1 INTERCHANGE

CONTRACT	BRIDGE NO.
T200911302	DESIGNED BY: C.R.H.
COUNTY	CHECKED BY: D.L.H.
NEW CASTLE	

STORMWATER MANAGEMENT STAKEOUT PLAN BMP 755

SW-02

SHEET NO. 363

TOTAL SHTS. 491

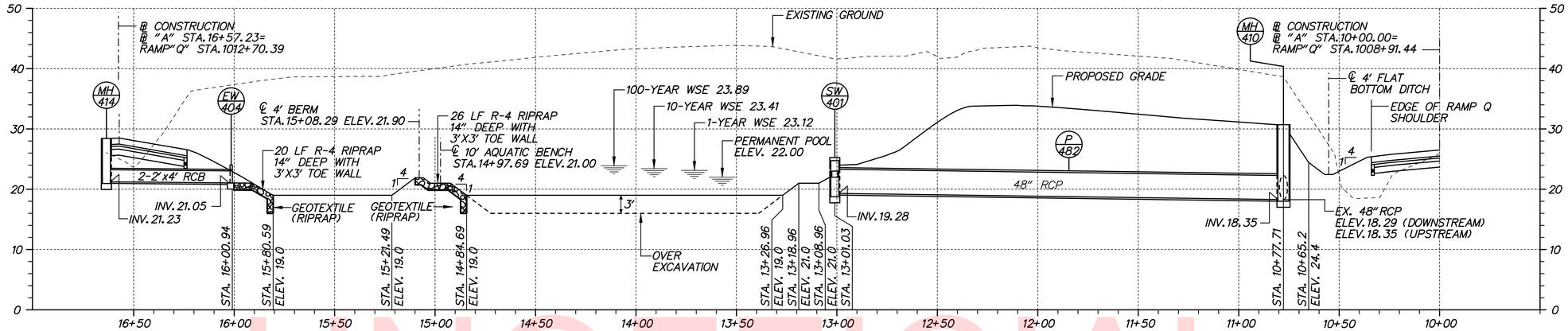

PROFILE – BMP 755 BASELINE "A"

SCALE: HORIZONTAL: 1" = 30'
VERTICAL: 1" = 10'

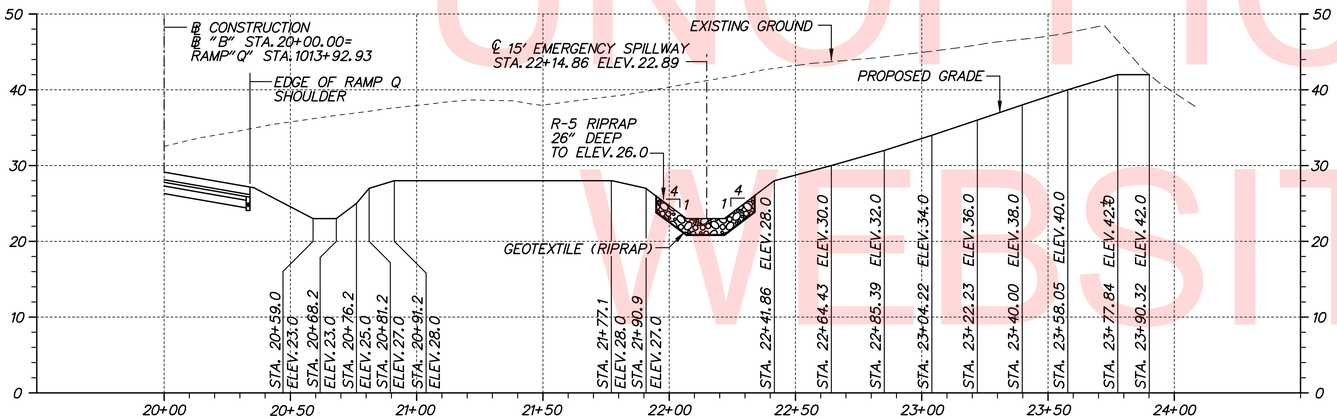

PROFILE – BMP 755 BASELINE "B"

SCALE: HORIZONTAL: 1" = 30'
VERTICAL: 1" = 10'

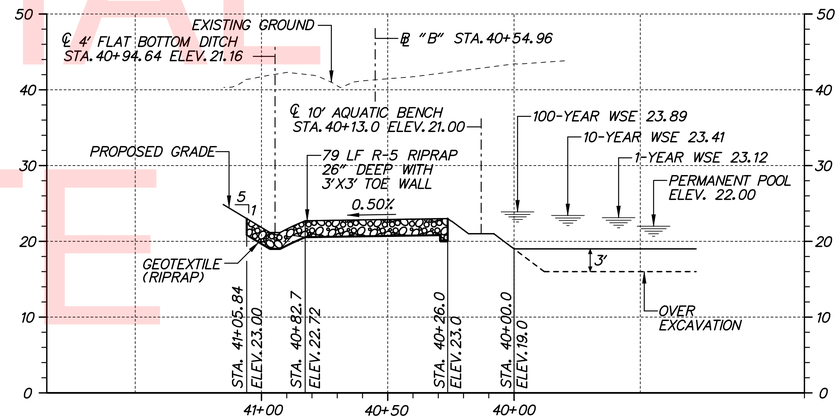

PROFILE – BMP 755 BASELINE "C"

SCALE: HORIZONTAL: 1" = 30'
VERTICAL: 1" = 10'

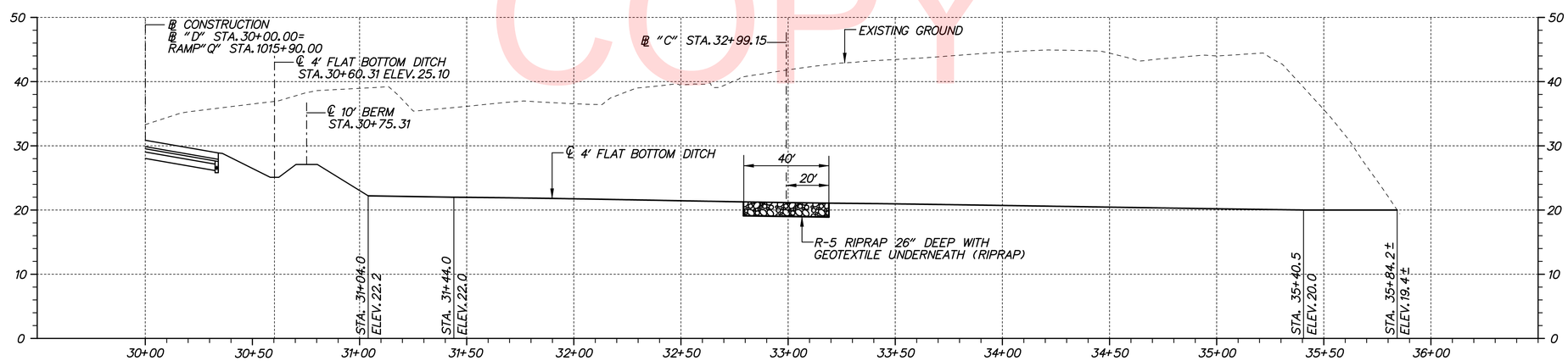

PROFILE – BMP 755 BASELINE "D"

SCALE: HORIZONTAL: 1" = 30'
VERTICAL: 1" = 10'

RIPRAP NOTES:

1. RIPRAP CUTOFF AND TOE WALLS SHALL BE MEASURED BELOW THE NORMAL RIPRAP PAD DEPTH AND PAID PER TON (ITEMS 712020 AND 712021).
2. THE 26" DEPTH FOR R-5 RIPRAP SHALL CONSIST OF 20" R-5 RIPRAP AND 6" OF DE NO. 57 STONE.

UNOFFICIAL WEBSITE COPY

N:\31653-000\CONTRACT 1B\CADD\SW03-0004U301_1B.dgn
12/4/2015 2:04:59 PM

DELAWARE DEPARTMENT OF TRANSPORTATION	ADDENDUMS / REVISIONS	SCALE 0 30 60 90 FEET	US 301 & SR 1 INTERCHANGE	CONTRACT T200911302 / COUNTY NEW CASTLE	BRIDGE NO. / DESIGNED BY: DLH / CHECKED BY: JDC	STORMWATER MANAGEMENT PROFILES BMP 755

SW-03

SHEET NO. 364
TOTAL SHTS. 491

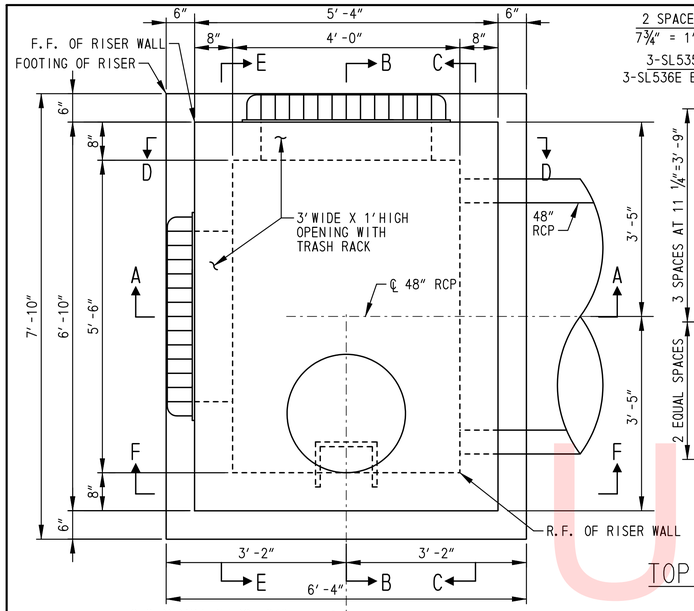

PLAN

SCALE: ¾"=1'-0"

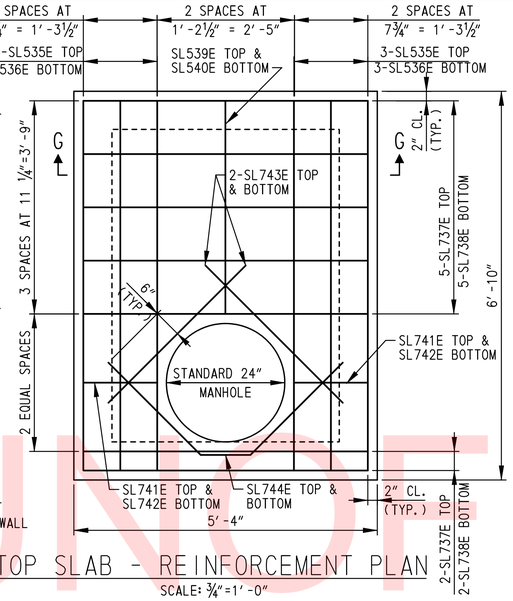

TOP SLAB - REINFORCEMENT PLAN

SCALE: ¾"=1'-0"

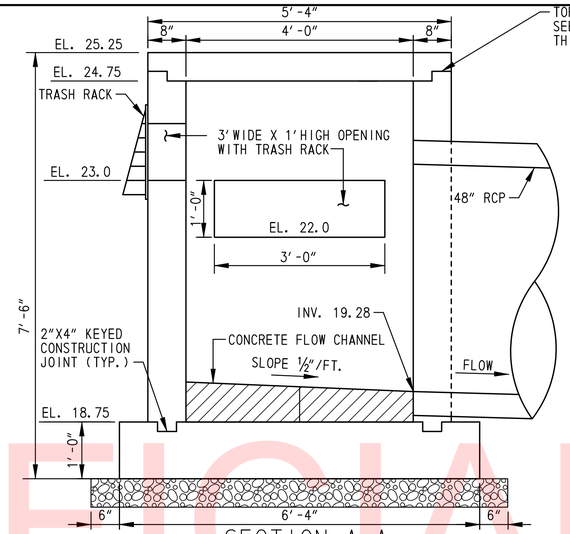

SECTION A-A

SCALE: ¾"=1'-0"

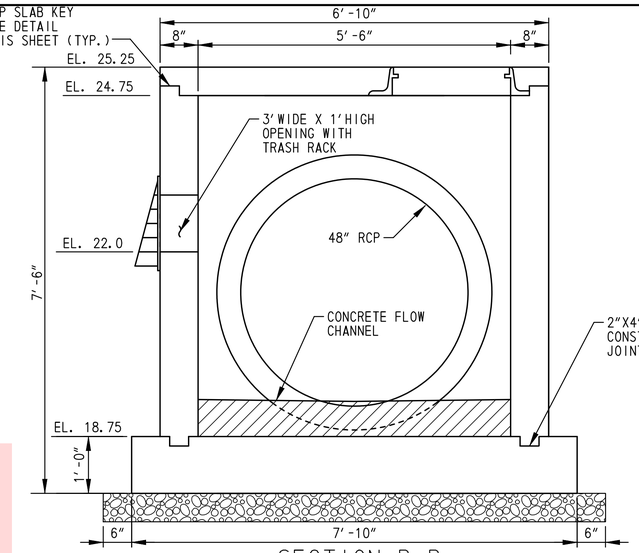

SECTION B-B

SCALE: ¾"=1'-0"

NOTES:

1. E.F. = EACH FACE; F.F. = FRONT FACE; R.F = REAR FACE
2. MANHOLE STEPS NOT SHOWN IN SECTION VIEWS FOR CLARITY, SEE STANDARD CONSTRUCTION DETAILS FOR MANHOLE STEP DETAILS.
3. REINFORCEMENT NOT SHOWN IN SECTIONS A-A AND B-B FOR CLARITY.
4. TOP SLAB NOT SHOWN IN SECTIONS C-C THROUGH F-F FOR CLARITY.
5. TOP SLAB SHALL BE PRECAST. A WATERSTOP SHALL BE PLACED BETWEEN THE PRECAST TOP SLAB AND THE CAST-IN-PLACE RISER STRUCTURE.
6. PAYMENT FOR EXCAVATION, CONCRETE, REINFORCING STEEL, HOOD, WATERSTOP, TRASH RACK, AND ALL WORK ASSOCIATED WITH CONSTRUCTION OF STORMWATER MANAGEMENT RISER STRUCTURE WILL BE MADE UNDER ITEM 272000 - POND OUTLET STRUCTURE, CONCRETE NO. 1.

TRASH RACK NOTES:

1. EXPANSION ANCHORS SHALL CONFORM TO ASTM A510 AND SHALL HAVE A MINIMUM EMBEDMENT DEPTH OF 4" UNLESS NOTED OTHERWISE.
2. EXPANSION ANCHORS SHALL BE ZINC PLATED IN CONFORMANCE WITH ASTM B633, TYPE III FE/ZN 5.
3. ALUMINUM ANGLES SHALL CONFORM TO ASTM B308 ALLOY 6061-T6. REMAINING ALUMINUM SHALL CONFORM TO ASTM B211 ALLOY 6061-T6.

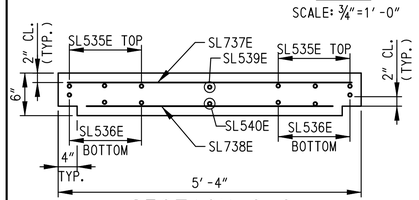

SECTION G-G

SCALE: ¾"=1'-0"

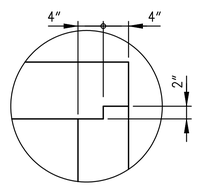

TOP SLAB KEY DETAIL

SCALE: 1"=1'-0"

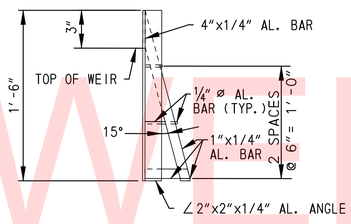

TRASH RACK 'D' - SIDE ELEVATION

N.T.S.

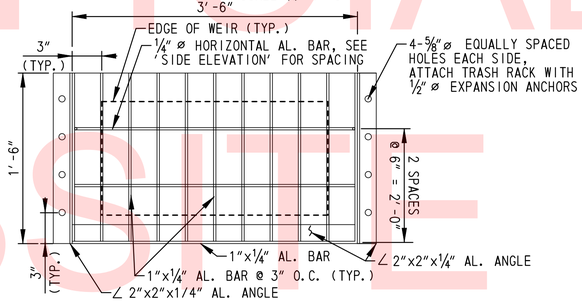

TRASH RACK 'D' - FRONT ELEVATION

N.T.S.

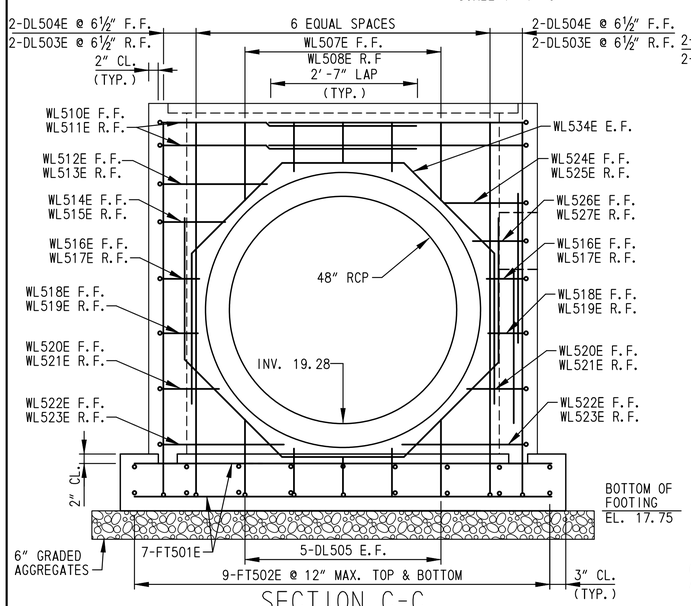

SECTION C-C

SCALE: ¾"=1'-0"

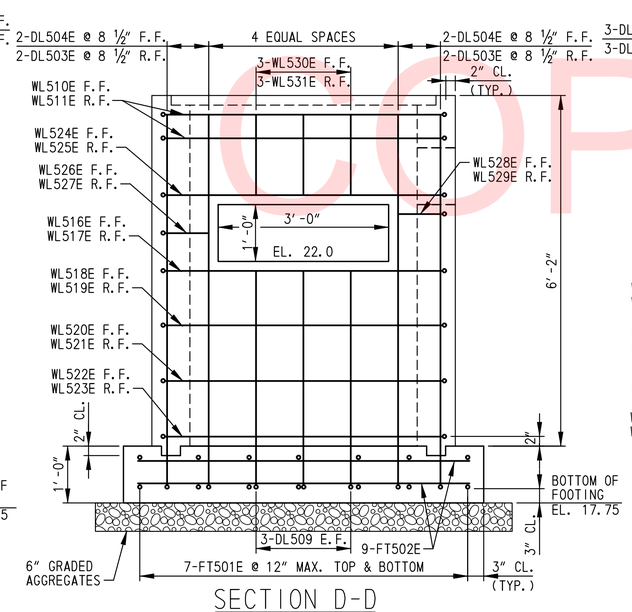

SECTION D-D

SCALE: ¾"=1'-0"

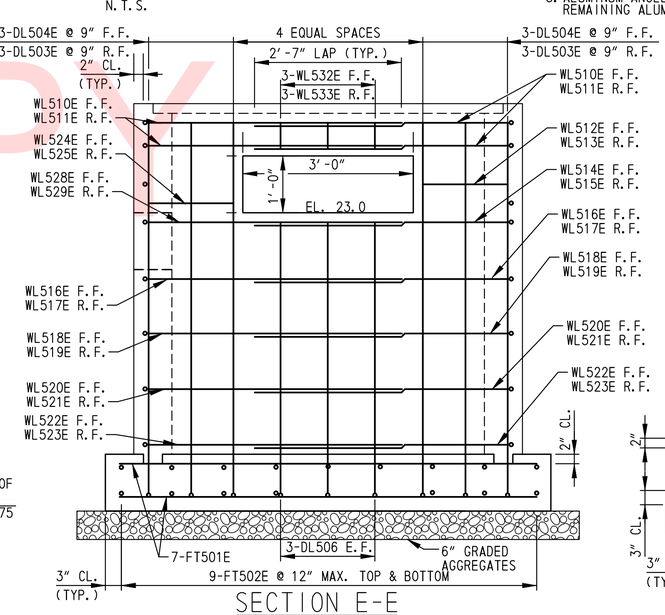

SECTION E-E

SCALE: ¾"=1'-0"

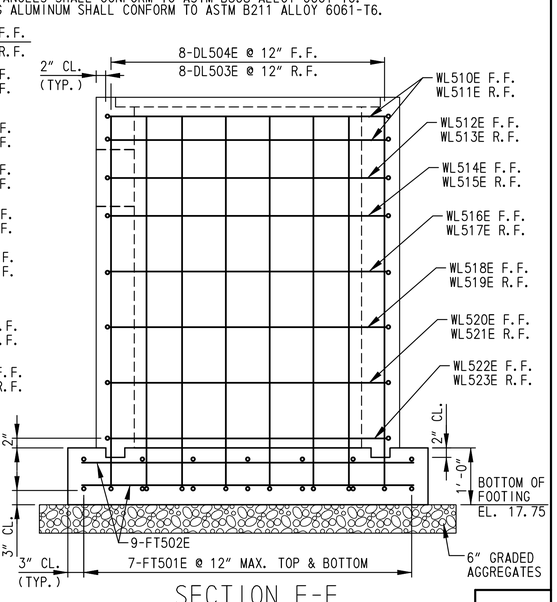

SECTION F-F

SCALE: ¾"=1'-0"

UNOFFICIAL WEBSITE COPY

N:\31653-000\CONTRACT 1B\CADD\SW04-10040J301_1B.dgn
1/4/2013 10:08:07 AM

DELAWARE DEPARTMENT OF TRANSPORTATION	ADDENDUMS / REVISIONS	NOT TO SCALE	US 301 & SR 1 INTERCHANGE	CONTRACT T200911302 / COUNTY NEW CASTLE	BRIDGE NO. / DESIGNED BY: HQ / CHECKED BY: JW
STORMWATER MANAGEMENT DETAILS BMP 755	SW-04	SHEET NO. 365	TOTAL SHTS. 498		

① ANY MARK NUMBER WITH SUFFIX 'E' DENOTES EPOXY COATED REINFORCING STEEL.

② ALL MARK 'LOCATION PREFIXES' SHALL CONSIST OF TWO LETTERS AND ARE AS FOLLOWS: AB = ABUTMENT, AS = APPROACH SLAB, BC = BOX CULVERT, BW = BACKWALL, CL = COLUMN, DK = DECK, DL = DOWEL, FT = FOOTING, HW = HEADWALL, MS = MISC. BARS, PA = PARAPET, PR = PIER, SC = SHEETPILE CAP, SL = SLAB, TW = TOEWALL, WL = WALL (UNIQUE LOCATION), WW = WINGWALL

SPECIFICATIONS					BENDING DIMENSIONS (FEET-INCHES /QUARTER INCH)										
QTY.	SIZE	LENGTH	MARK	TYPE	A	B	C	D	E	F/R	G	H	J	K	O
SWM BMP NO. 755 RISER STRUCTURE															
14	5	5-10	FT501E	STR		5-10									
18	5	7-4	FT502E	STR		7-4									
22	5	7-5	DL503E	2		6-7					0-10				
22	5	7-7	DL504E	2		6-9					0-10				
2X5	5	1-3	DL505E	STR		1-3									
		TO				TO									
		0-7				0-7									
6	5	4-10	DL506E	STR		4-10									
2X3	5	0-10	WL507E	STR		0-10									
		TO				TO									
		1-0				1-0									
2X3	5	0-8	WL508E	STR		0-8									
		TO				TO									
		0-10				0-10									
6	5	3-10	DL509E	STR		3-10									
4	5	14-1	WL510E	17		4-6	5-0	4-6							
4	5	12-9	WL511E	17		4-2	4-4	4-2							
1	5	8-6	WL512E	17		1-7	5-0	1-11							
1	5	7-2	WL513E	17		1-3	4-4	1-7							
1	5	10-8	WL514E	17		4-6	5-0	1-2							
1	5	9-2	WL515E	17		4-2	4-4	0-8							
2	5	10-5	WL516E	17		4-6	5-0	0-10							
2	5	9-1	WL517E	17		4-2	4-4	0-6							
2	5	10-2	WL518E	17		4-6	5-0	0-8							
2	5	8-10	WL519E	17		4-2	4-4	0-4							
2	5	10-7	WL520E	17		4-6	5-0	1-1							
2	5	9-3	WL521E	17		4-2	4-4	0-9							
2	5	11-9	WL522E	17		4-6	5-0	2-2							
2	5	10-5	WL523E	17		4-2	4-4	1-10							
1	5	11-0	WL524E	17		1-6	5-0	4-6							
1	5	9-10	WL525E	17		4-2	4-4	1-4							
1	5	1-9	WL526E	17		0-11	0-10								
1	5	1-1	WL527E	17		0-7	0-6								
1	5	2-5	WL528E	17		0-10	1-7								
1	5	1-9	WL529E	17		0-6	1-3								
3	5	1-7	WL530E	STR		1-7									
3	5	1-5	WL531E	STR		1-5									
3	5	0-7	WL532E	STR		0-7									
3	5	0-5	WL533E	STR		0-5									

SPECIFICATIONS					BENDING DIMENSIONS (FEET-INCHES /QUARTER INCH)										
QTY.	SIZE	LENGTH	MARK	TYPE	A	B	C	D	E	F/R	G	H	J	K	O
4	5	13-2	WL534E	14	3-4	2-1	2-1	2-1	3-4			1-6		1-6	5-2
6	5	6-6	SL535E	STR		6-6									
6	5	5-10	SL536E	STR		5-10									
7	7	5-0	SL737E	STR		5-0									
7	7	4-4	SL738E	STR		4-4									
1	5	3-9	SL539E	STR		3-9									
1	5	3-1	SL540E	STR		3-1									
2	7	1-3	SL741E	STR		1-3									
2	7	0-11	SL742E	STR		0-11									
4	7	3-5	SL743E	STR		3-5									
2	7	5-5	SL744E	14		2-3	0-10	2-3				1-7			4-1

SPECIFICATIONS					BENDING DIMENSIONS (FEET-INCHES /QUARTER INCH)										
QTY.	SIZE	LENGTH	MARK	TYPE	A	B	C	D	E	F/R	G	H	J	K	O

ASTM STANDARD ENGLISH REINFORCING BARS

BAR SIZE	NOMINAL DIMENSIONS: DIAMETER (INCHES)	NOMINAL DIMENSIONS: AREA (INCHES²)	NOMINAL DIMENSIONS: WEIGHT (LBS./FT.)	RECOMMENDED END HOOKS, APPLICABLE TO ALL GRADES: D	180° HOOKS: A OR G	180° HOOKS: J	90° HOOKS: A OR G	STIRRUP AND TIE HOOKS, APPLICABLE TO ALL GRADES: D	90° HOOK: A OR G	135° HOOK: A OR G	135° HOOK: A OR G
3	0.375	0.110	0.376	2¼"	5"	3"	6"	1½"	4"	4"	2½"
4	0.500	0.200	0.668	3"	6"	4"	8"	2"	4½"	4½"	3"
5	0.625	0.310	1.043	3¾"	7"	5"	10"	2½"	6"	5½"	3¾"
6	0.750	0.440	1.502	4½"	8"	6"	1-0"	4½"	1-0"	8"	4½"
7	0.875	0.600	2.044	5¼"	10"	7"	1-2"	5¼"	1-2"	9"	5¼"
8	1.000	0.790	2.670	6"	11"	8"	1-4"	6"	1-4"	10½"	6"
9	1.128	1.000	3.400	9½"	1-3"	11¾"	1-7"				
10	1.270	1.270	4.303	10¾"	1-5"	1-1¼"	1-10"				
11	1.410	1.560	5.313	1-0"	1-7"	1-2¾"	2-0"				
14	1.693	2.250	7.650	1-6¼"	2-3"	1-9¾"	2-7"				
18	2.257	4.000	13.600	2-0"	3-0"	2-4½"	3-5"				

NOTES:

1. FIGURES SHOWN IN CIRCLES REPRESENT BAR BEND TYPES.
2. STANDARD BAR BENDS INCLUDE ONLY THOSE TYPES BELOW, INDICATED AS SUCH.
3. ALL DIMENSIONS OUT-TO-OUT, EXCEPT "A" AND "G" ON STD. 180° AND 135° HOOKS.
4. "J" DIMENSIONS ON 180° HOOKS TO BE SHOWN ONLY WHERE NECESSARY TO RESTRICT HOOK SIZE, OTHERWISE STANDARD 'ACI' HOOKS ARE TO BE USED.
5. WHERE "J" IS NOT SHOWN, "J" WILL BE KEPT EQUAL TO OR LESS THAN "H" ON TYPES 3, 5 AND 22. WHERE "J" CAN EXCEED "H", IT SHALL BE SHOWN.
6. "H" DIMENSIONS OF STIRRUPS TO BE SHOWN AS NEEDED TO FIT WITHIN THE CONCRETE.
7. UNLESS OTHERWISE NOTED, DIAMETER "D" IS THE SAME FOR ALL BENDS AND HOOKS ON A BAR (EXCEPT FOR BEND TYPES 11 AND 13).
8. WHERE SLOPE DIFFERS FROM 45° OFFSET, "H" AND "K" MUST BE SHOWN.
9. WHERE BARS ARE TO BE BENT MORE ACCURATELY THAN STANDARD BENDING TOLERANCES, BENDING DIMENSIONS REQUIRING CLOSER FABRICATION SHOULD HAVE LIMITS INDICATED.
10. FOR RECOMMENDED DIAMETER "D", OF BENDS, HOOKS, ETC., REFER TO TABLE ABOVE, 'CRSI' OR 'ACI' TABLES WHERE APPLICABLE AND REQUIRED.
11. TYPE S1-S6, S11, T1-T3 AND T6-T9 APPLICABLE TO BAR SIZES #3 THROUGH #8.

STANDARD BAR BENDS

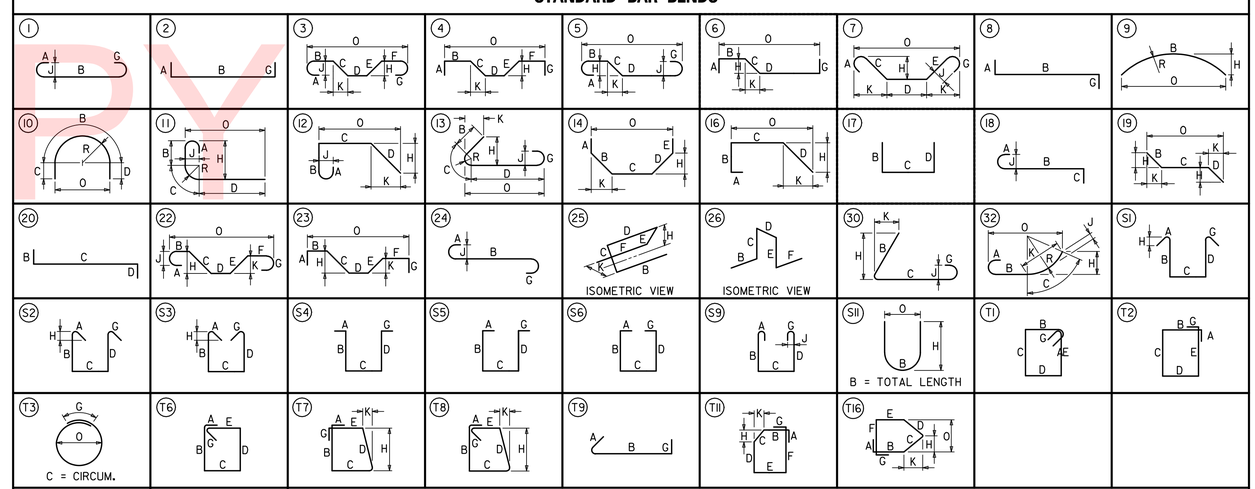

SPECIAL BAR BENDS

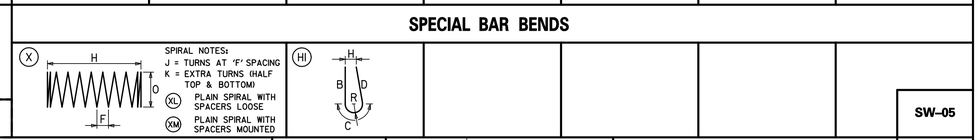

STIRRUP AND TIE HOOKS

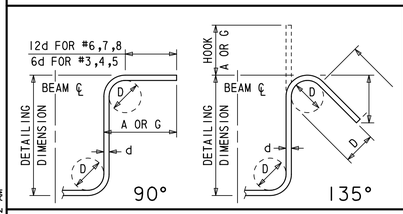

180° AND 90° END HOOKS

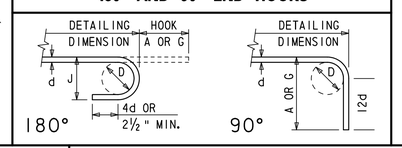

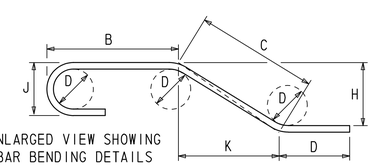

ENLARGED VIEW SHOWING BAR BENDING DETAILS

UNOFFICIAL WEBSITE COPY

DELAWARE DEPARTMENT OF TRANSPORTATION

ADDENDUMS / REVISIONS

NOT TO SCALE

US 301 & SR 1 INTERCHANGE

CONTRACT	BRIDGE NO.	
T200911302	DESIGNED BY: K.M.K.	
COUNTY		
NEW CASTLE	CHECKED BY: J.A.G.	

BMP NO. 755 RISER STRUCTURE BAR CHART

SW-05
SHEET NO. 366
TOTAL SHTS. 491

n:\31653_000\contract tb\cadd\SW05-1004U301_TB.dgn
5/30/2013 11:58:52 AM

PLAN SHEET INDEX CROSS REFERENCE					
CONSTRUCTION PLAN	N/A	43	45	46	48
ENVIRONMENTAL COMPLIANCE	EC-03 - 369	EC-04 - 370	EC-05 - 371	EC-06 - 372	EC-07 - 373

UNOFFICIAL WEBSITE COPY

EC-01

$DGNNAME$ $DATE$ $TIME$

DELAWARE DEPARTMENT OF TRANSPORTATION

ADDENDUMS / REVISIONS

SCALE 0 400 800 1200 FEET

US 301 & SR 1 INTERCHANGE

CONTRACT	BRIDGE NO.	
T200911302	DESIGNED BY:	REL
COUNTY	CHECKED BY:	LMM
NEW CASTLE		

ENVIRONMENTAL COMPLIANCE INDEX

SHEET NO. 367

TOTAL SHTS. 491

ENVIRONMENTAL COMPLIANCE NOTES

1. GENERAL NOTES:

A. THE PURPOSE OF THESE ENVIRONMENTAL COMPLIANCE SHEETS IS TO IDENTIFY THOSE ITEMS ASSOCIATED WITH ENVIRONMENTAL COMPLIANCE. IMPACT CALCULATIONS ARE FOR AGENCY REPORTING PURPOSES ONLY AND ARE NOT TO BE USED FOR BIDDING PURPOSES.

B. AN ENVIRONMENTAL MONITOR WILL BE RESPONSIBLE FOR REVIEWING ENVIRONMENTAL COMPLIANCE. CONTACT INFORMATION FOR THE PROJECT'S ENVIRONMENTAL MONITOR WILL BE PROVIDED AT THE PRE-CONSTRUCTION MEETINGS AND MAY ALSO BE OBTAINED BY CALLING THE DELDOT ENVIRONMENTAL STUDIES SECTION AT (302) 760-2264. THE PRESENCE OF THE DEPARTMENT'S ENVIRONMENTAL MONITOR DOES NOT ALLEVIATE OR NULLIFY ANY OF THE CONTRACTOR'S OBLIGATIONS TO FULLY COMPLY WITH ALL ENVIRONMENTAL PERMITS AND/OR REGULATIONS.

C. IF A DEPARTURE FROM THE APPROVED PLANS IS NECESSARY, THE CONTRACTOR SHALL CONTACT THE ENGINEER AND ENVIRONMENTAL MONITOR IMMEDIATELY. THE ENVIRONMENTAL MONITOR SHALL COORDINATE WITH THE APPROPRIATE RESOURCE AGENCIES INCLUDING BUT NOT LIMITED TO THE ARMY CORPS OF ENGINEERS (USACE), DELAWARE DEPARTMENT OF NATURAL RESOURCES AND ENVIRONMENTAL CONTROL (DNREC), STATE HISTORIC PRESERVATION OFFICE (SHPO), AND MARYLAND DEPARTMENT OF THE ENVIRONMENT (MDE). WORK SHALL NOT PROCEED UNTIL ALL THE NECESSARY APPROVALS, PERMITS OR MODIFICATIONS ARE OBTAINED. THIS RESOURCE AGENCY APPROVAL IS IN ADDITION TO ANY APPROVAL THAT NEEDS TO BE DERIVED FROM THE ENGINEER. THE ENVIRONMENTAL MONITOR CANNOT APPROVE ANY CHANGE INDEPENDENT FROM THE ENGINEER. APPROVAL MAY TAKE A SIGNIFICANT AMOUNT OF TIME TO COMPLETE AND ALL CHANGES MAY NOT BE APPROVED. THE CONTRACTOR SHALL HAVE NO CLAIM AGAINST THE DEPARTMENT FOR COSTS OR DELAYS ASSOCIATED WITH RESOURCE AGENCY APPROVAL OR REJECTION OF CHANGES OR DEVIATIONS FROM THESE PLANS.

D. USE OF THESE SHEETS DOES NOT ALLEVIATE THE CONTRACTOR'S RESPONSIBILITY TO COMPLY WITH ALL CONDITIONS SET FORTH IN THE ENVIRONMENTAL STATEMENT AND PERMITS.

E. THE IDENTIFIED PERMANENT AND TEMPORARY IMPACTS TO JURISDICTIONAL RESOURCES SHOWN ON THE ENVIRONMENTAL COMPLIANCE SHEETS ARE THE ONLY AUTHORIZED IMPACTS.

2. NATURAL AND CULTURAL RESOURCE ISSUES:

A. PERMIT REQUIREMENTS / APPROVALS*:
U.S. ARMY CORE OF ENGINEERS (USACE) - INDIVIDUAL PERMIT - APPROVED 01-07-2013, CENAP-OP-R-2006-6071-1, EXPIRATION 12-31-2023**
DELAWARE DEPARTMENT OF NATURAL RESOURCES AND ENVIRONMENTAL CONTROL (DNREC)
SUBAQUEOUS LAND PERMIT-APPROVED 11-08-2012, SP 145/12, EXPIRATION 11-08-2017**
DNREC WETLANDS PERMIT - PENDING**
DNREC - 401 WATER QUALITY CERTIFICATION - APPROVED 11-08-2012, WQ-147/12, EXPIRATION 11-08-2017**
DNREC - COASTAL ZONE CONSISTENCY-APPROVED 09-14-2007, MODIFICATION OF CONDITION 3 ON 04-04-2011, NO EXPIRATION.
NEW CASTLE COUNTY FLOODPLAIN APPROVAL - PENDING**
* THE PERMITS/APPROVALS LISTED ARE THOSE REQUIRED FOR THIS PROJECT. THE ENVIRONMENTAL STUDIES SECTION IS RESPONSIBLE FOR COORDINATING/OBTAINING THESE PERMITS/APPROVALS.

** THE CONTRACTOR MUST ENSURE THAT THESE PERMITS/APPROVALS ARE IN THEIR POSSESSION PRIOR TO THE BEGINNING OF CONSTRUCTION AND ENSURE THESE PERMITS/APPROVALS ARE DISPLAYED ON-SITE DURING THE ENTIRE CONSTRUCTION PERIOD.

B. CONSTRUCTION RESTRICTIONS:
ENDANGERED SPECIES: BOG TURTLES POTENTIALLY OCCUPY THE SCOTT RUN WATERSHED. PORTIONS OF WETLAND 29E ARE CONSIDERED POTENTIAL HABITAT FOR THE BOG TURTLE. THE CONTRACTOR SHALL NOT DISTURB OR ENCROACH ON WETLAND 29E EXCEPT AS SPECIFICALLY IDENTIFIED ON THESE EC SHEETS. WORK IN THE VICINITY OF WETLAND 29E IS SUBJECT TO THE FOLLOWING CONDITIONS IDENTIFIED IN THE PROJECT'S BIOLOGICAL ASSESSMENT.

1. A COMBINATION OF REINFORCED SILT FENCE AND SANDBAG DIKE SHALL COMPRISE THE BOG TURTLE EXCLUSIONARY SYSTEM INSTALLED TO PREVENT BOG TURTLES FROM ENTERING THE WORK AREA. FENCING SHALL CONSIST OF ITEM 251001 - REINFORCED SILT FENCING AND SANDBAG DIKE SHALL CONSIST OF ITEM 266000 - SANDBAG DIKES. FENCING SHALL BE INSTALLED BY HAND WITH MINIMAL DISTURBANCE TO THE WETLAND RESOURCE. THE EXCLUSIONARY SYSTEM SHALL BE INSTALLED AS SHOWN ON THE PLANS AND AS DIRECTED BY THE ENGINEER. THE EXCLUSIONARY SYSTEM INSTALLATION SHALL BE REVIEWED AND APPROVED BY THE ENGINEER IN CONSULTATION WITH DELDOT'S QUALIFIED BOG TURTLE SURVEYOR AND THE ENVIRONMENTAL MONITOR.

2. FOLLOWING EXCLUSIONARY SYSTEM INSTALLATION AND PRIOR TO ANY CONSTRUCTION ACTIVITIES, A PRE-CONSTRUCTION SURVEY OF THE EXCLUSION AREA WILL BE CONDUCTED BY DELDOT'S QUALIFIED BOG TURTLE SURVEYOR TO ENSURE NO BOG TURTLES ARE PRESENT IN THE WORK AREA.

3. EACH DAY, IN THE MORNING, PRIOR TO COMMENCEMENT OF WORK WITHIN THE EXCLUSION AREA, THE ENVIRONMENTAL MONITOR SHALL COMPLETE AN INSPECTION OF THE EXCLUSIONARY SYSTEM. PRIOR TO NIGHT WORK AND DURING 24 HOUR WORK PERIODS, THE ENVIRONMENTAL MONITOR SHALL ALSO COMPLETE AN INSPECTION OF THE EXCLUSIONARY SYSTEM IN THE LATE AFTERNOON. SHOULD THE EXCLUSIONARY SYSTEM BE DAMAGED OR BREACHED, THE SYSTEM SHALL BE REPAIRED AND THE EXCLUSION AREA SHALL BE RE-SURVEYED BY DELDOT'S QUALIFIED BOG TURTLE SURVEYOR PRIOR TO RESUMING CONSTRUCTION ACTIVITIES. ALL COSTS FOR THE FENCE DAMAGE OR BREACH SHALL BE AT THE CONTRACTOR'S EXPENSE.

FOR PROTECTION OF THE THREATENED NORTHERN LONG-EARED BAT (NLEB), THERE SHALL BE NO CLEARING TREES BETWEEN 12:01 AM ON APRIL 15 AND 11:59 PM ON AUGUST 31 WITHIN THE LIMITS OF THE "WOOD LINE" SYMBOL WITHIN AREAS OF THE PROJECT THAT HAVE BEEN IDENTIFIED AS POTENTIAL NLEB HABITAT.
FISHERIES - NONE

MIGRATORY BIRDS: APRIL 15 - AUGUST 1 (INCLUSIVE). EITHER BEGIN CONSTRUCTION ON THE UNDERSIDE OF THE SR 1 BRIDGES OVER SCOTT RUN PRIOR TO APRIL 15 (TO PREVENT BIRDS FROM NESTING) OR WAIT UNTIL AFTER AUGUST 1 (AFTER HATCHLINGS HAVE LEFT) TO BEGIN WORK ON THE UNDERSIDE. IF NEITHER OF THESE OPTIONS IS PRACTICABLE, THEN PRIOR TO APRIL 14, DETERRENT NETTING WITH 3/4" X 3/4" MAXIMUM OPENINGS (OR SIMILAR DEVICE) SHALL BE INSTALLED HORIZONTALLY UNDERNEATH THE STRUCTURE. THE NETTING SHOULD BE PULLED TAUT AND ATTACHED IN A WAY THAT BIRDS ARE UNABLE TO ENTER THE AREA BETWEEN THE NETTING AND THE STRUCTURE. NETTING SHALL BE PAID FOR UNDER ITEM 763623 - NETTING MIGRATORY BIRD EXCLUSION.

C. PROTECTION OF RESOURCES:
I. ITEM 727552 - RESOURCE PROTECTION FENCE (WITH ASSOCIATED SIGNAGE) SHALL BE USED ALONG THE LIMIT OF CONSTRUCTION (LOC) AND OTHER AREAS SHOWN ON THE PLANS WHERE WETLANDS, WATERS OR CULTURAL RESOURCES EXIST. RESOURCE PROTECTION FENCE SHALL BE INSTALLED IMMEDIATELY AFTER STAKEOUT OF LOC AND PRIOR TO INSTALLATION OF EROSION AND SEDIMENT CONTROLS. THE CONTRACTOR SHALL STAKEOUT THE LOCATION OF THE RESOURCE PROTECTION FENCE AND THE ENVIRONMENTAL MONITOR WILL BE RESPONSIBLE FOR CONFIRMING OR ADJUSTING THE FENCING LOCATIONS PRIOR TO CONSTRUCTION. IMPROPERLY PLACED FENCE SHALL BE RE-INSTALLED AT CONTRACTOR EXPENSE. ANY ADDITIONAL RESOURCE PROTECTION FENCE AS REQUESTED BY THE ENVIRONMENTAL MONITOR AND CONFIRMED BY THE ENGINEER SHALL BE PAID FOR AT THE CONTRACT UNIT PRICE. RESOURCE PROTECTION FENCE SIGNAGE SHALL BE PROVIDED BY DELDOT AND INSTALLED BY THE CONTRACTOR ALONG THE FENCE NO GREATER THAN 100 FEET APART AND WITH A MINIMUM OF 2 SIGNS PER CONTINUOUS FENCE RUN AS INDICATED IN THE SPECIAL PROVISIONS. RESOURCE PROTECTION FENCE SHALL BE PAID FOR UNDER ITEM 727552 - RESOURCE PROTECTION FENCE.

II. THE PURPOSE OF ITEM 727552 - RESOURCE PROTECTION FENCE IS TO PREVENT IMPACTS TO SENSITIVE RESOURCES DURING CONSTRUCTION. ACCESS INTO THESE AREAS IS STRICTLY PROHIBITED. THE CONTRACTOR IS RESPONSIBLE FOR ENSURING THAT ALL EMPLOYEES UNDERSTAND AND COMPLY WITH THE PURPOSE OF THE RESOURCE PROTECTION FENCE.

III. THE INSTALLATION OF THE RIGHT-OF-WAY FENCE AND RESOURCE PROTECTION FENCE ARE THE ONLY CONSTRUCTION ACTIVITIES THAT ARE AUTHORIZED TO OCCUR OUTSIDE OF THE LOC.

IV. RESOURCE PROTECTION FENCE SHALL BE INSTALLED BY HAND AS PER THE DETAILS AND SPECIFICATIONS OF ITEM 727552 - RESOURCE PROTECTION FENCE. THERE SHALL BE NO GRUBBING FOR THE INSTALLATION OF RESOURCE PROTECTION FENCE. RIGHT-OF-WAY FENCE SHALL BE INSTALLED BY HAND IN SENSITIVE AREAS, INCLUDING WETLANDS, FORESTS, AND CULTURAL RESOURCE AREAS PROTECTED BY RESOURCE PROTECTION FENCE. THERE SHALL BE NO GRUBBING FOR THE INSTALLATION OF RIGHT-OF-WAY FENCE IN SENSITIVE AREAS. WHERE CLEARING IS NECESSARY FOR FENCE INSTALLATION, VEGETATION SHALL BE CUT FLUSH WITH THE GROUND (I.E. NO DISTURBANCE OF THE ROOT MAT). ENVIRONMENTAL IMPACTS SHALL BE MINIMIZED DURING THE INSTALLATION OF THE RESOURCE PROTECTION FENCE AND RIGHT-OF-WAY FENCE AND THE REMOVAL OF THE RESOURCE PROTECTION FENCE. ACCESS AND INSTALLATION/REMOVAL OF RESOURCE PROTECTION FENCE AND INSTALLATION OF RIGHT-OF-WAY FENCE SHALL BE COORDINATED WITH THE ENVIRONMENTAL MONITOR.

D. STAGING, STOCKPILING AND DISPOSAL:
I. NO STOCKPILING OR STORAGE OF EQUIPMENT, MATERIALS, OR STRUCTURAL STEEL: NO STAGING AREA: AND NO INSTALLATION OF ANCILLARY FACILITIES SUCH AS CONCRETE OR ASPHALT PLANTS OR CONSTRUCTION TRAILERS SHALL BE PERMITTED ON ANY CULTURAL RESOURCE SITE OR WITHIN WETLANDS OR STREAMS OUTSIDE OF IDENTIFIED STORAGE AREAS APPROVED BY THE SHPO OR THE USACE. NO CONSTRUCTION MATERIALS, AGGREGATES, OR EARTH SHALL BE STOCKPILED OR STORED IN A MANNER THAT WOULD AFFECT WETLANDS OR STREAMS. STOCKPILES SHALL HAVE EROSION AND SEDIMENT CONTROLS APPROVED BY DELDOT.

II. ALL EXCESS EXCAVATED MATERIALS NOT USED IN HIGHWAY OR COMPENSATORY MITIGATION SITE CONSTRUCTION SHALL BE DISPOSED OF IN UPLAND, NON-WETLAND, NON-CULTURAL RESOURCE SITE(S). THE EXCAVATED MATERIAL SHALL BE PROPERLY CONTAINED AND STABILIZED TO PREVENT ITS ENTRY INTO ANY ADJACENT WETLANDS OR WATERWAYS. OUTSIDE OF ANY LOCATION DESIGNATED ON PLANS FOR DISPOSAL, NO DISPOSAL/WASTING OPERATION SHALL COMMENCE UNTIL WRITTEN APPROVAL OF THE DISPOSAL SITE(S) IS OBTAINED BY THE ENGINEER FROM THE USACE AND THE SHPO. THE CONTRACTOR SHALL SUBMIT THE PROPOSED DISPOSAL SITE LOCATION(S) TO THE ENGINEER. THE ENGINEER WILL SUBMIT THE PROPOSED DISPOSAL SITE INFORMATION TO THE SHPO AND USACE FOR APPROVAL. THE DEPARTMENT WILL NOT CONSIDER ANY DELAYS OR MONETARY CLAIMS OF ANY NATURE RESULTING FROM DELAYS IN APPROVAL OR REJECTION OF DISPOSAL SITES OR FROM THE CONTRACTOR'S FAILURE OR DIFFICULTY IN FINDING ACCEPTABLE DISPOSAL SITES TO MEET THE TIME FRAMES AND CAPACITIES REQUIRED. THE CONTRACTOR SHALL BE RESPONSIBLE FOR ALL PLANS, EROSION AND SEDIMENTATION CONTROL MEASURES, ETC. REQUIRED BY THE APPROPRIATE REGULATORY AGENCY FOR UTILIZING OFF-SITE SPOILS AREAS.

E. MINIMIZATION AND RESTORATION OF TEMPORARY IMPACTS:
ALL TEMPORARY IMPACTS SHOWN ON THESE SHEETS SHALL BE RESTORED AS SPECIFIED IN THE MISCELLANEOUS PROJECT NOTES TO PREDISTURBANCE GRADE AND CONDITION AND STABILIZED. THE AREA SHALL BE PLANTED AS SHOWN IN THE MOT SHEETS AND NOTED ON THESE EC SHEETS. STREAMS SHALL BE RESTORED TO PREDISTURBANCE PATTERN AND PROFILE.

F. CULTURAL RESOURCES:
IF ANY UNANTICIPATED DISCOVERIES OF ARCHAEOLOGICAL OR HUMAN REMAINS OCCUR DURING CONSTRUCTION, ALL WORK SHALL BE IMMEDIATELY SUSPENDED IN THE AREA OF THE DISCOVERY AND THE ENVIRONMENTAL MONITOR SHALL BE CONTACTED. THE ENVIRONMENTAL MONITOR WILL CONTACT DELDOT CULTURAL RESOURCES, SHPO AND USACE TO COMMENCE THE NECESSARY FEDERAL AND STATE COORDINATION. WORK SHALL NOT RESUME UNTIL APPROPRIATE RESOURCE AGENCY COORDINATION, INVESTIGATION AND/OR RECOVERY IS COMPLETE.

G. SOIL AND EARTH DISTURBANCE:
I. ITEM 251001 - REINFORCED SILT FENCE SHALL BE USED DUE TO THE HIGH PROBABILITY OF OVERBANK FLOODING IN THE FOLLOWING LOCATIONS:

SCOTT RUN FROM MAINLINE - STA 880+00 TO 889+00

II. THERE SHALL BE NO GRUBBING UNDER BRIDGES EXCEPT WHERE NECESSARY TO CONSTRUCT PROJECT COMPONENTS SUCH AS FOUNDATIONS, SLOPE PROTECTION AND UTILITIES. BRIDGE LOCATIONS ARE AS FOLLOWS:

SCOTT RUN - STA 883+00

PERMANENT WETLAND IMPACT AREA SCHEDULE

ID	IMPACT DESCRIPTION	AREA (SF)	AREA (AC)	VOLUME (CY)	JURISDICTION
4-W1	FILL	1,298.81	0.0298	N/A	USACE
4-W2	RIPRAP	408.16	0.0094	N/A	USACE
4-W3	SHADING	379.77	0.0087	N/A	USACE
5-W1	SHADING	10.41	0.0002	0.00	USACE/DNREC
5-W2	SHADING	19.77	0.0005	0.00	DNREC
5-W3	SHADING	27.95	0.0006	N/A	USACE
5-W4	SHADING	68.19	0.0016	0.00	DNREC
5-W5	SHADING	470.81	0.0108	N/A	USACE
5-W6	SHADING	87.16	0.0020	0.00	USACE/DNREC
5-W7	SHADING	73.75	0.0017	0.00	USACE/DNREC
5-W8	SHADING	180.78	0.0042	N/A	USACE
5-W9	SHADING	541.25	0.0124	N/A	USACE
5-W10	FILL	9,863.03	0.2264	N/A	USACE
5-W11	SHADING	106.89	0.0025	0.00	DNREC
5-W12	SHADING	52.89	0.0012	0.00	DNREC
5-W13	SHADING	29.95	0.0007	0.00	DNREC
5-W14	SHADING	17.04	0.0004	0.00	DNREC
6-W1	FILL	611.63	0.0140	N/A	USACE
TOTAL PERMANENT USACE IMPACTS		13,953.51	0.3203	N/A	USACE
TOTAL PERMANENT DNREC IMPACTS		466.05	0.0108	0.00	DNREC

TEMPORARY OPEN WATER IMPACT AREA SCHEDULE

ID	IMPACT DESCRIPTION	AREA (SF)	AREA (AC)	VOLUME (CY)	JURISDICTION
3-OT1	E&S AREA	747.95	0.0172	27.70	USACE/DNREC
TOTAL TEMPORARY USACE IMPACTS		747.95	0.0172	27.70	USACE
TOTAL TEMPORARY DNREC IMPACTS		747.95	0.0172	27.70	DNREC

PERMANENT OPEN WATER IMPACT AREA SCHEDULE

ID	IMPACT DESCRIPTION	AREA (SF)	AREA (AC)	VOLUME (CY)	JURISDICTION
5-01	SHADING	167.24	0.0038	N/A	DNREC
5-02	SHADING	661.25	0.0152	N/A	DNREC
TOTAL PERMANENT USACE IMPACTS		N/A	N/A	N/A	USACE
TOTAL PERMANENT DNREC IMPACTS		828.49	0.0190	N/A	DNREC

TEMPORARY WETLAND IMPACT AREA SCHEDULE

ID	IMPACT DESCRIPTION	AREA (SF)	AREA (AC)	VOLUME (CY)	JURISDICTION
3-WT1	E&S AREA	15,241.53	0.3499	N/A	USACE
4-WT1	E&S AREA	4,669.56	0.1072	N/A	USACE
5-WT1	E&S AREA	1,605.58	0.0369	N/A	USACE
5-WT2	TEMPORARY ACCESS	109.33	0.0025	N/A	USACE
TOTAL TEMPORARY USACE IMPACTS		21,626.00	0.4965	N/A	USACE
TOTAL TEMPORARY DNREC IMPACTS		N/A	N/A	N/A	DNREC

WETLANDS DELINEATED BY RUMMEL KLEPPER & KAHL, LLP. IN JUNE 2005 THROUGH MAY 2011 IN ACCORDANCE WITH THE 1987 USACE WETLAND DELINEATION MANUAL AND APPLICABLE REGIONAL SUPPLEMENTS.

PRELIMINARY JURISDICTIONAL DETERMINATION AUGUST 18, 2009. WETLAND IDENTIFIERS (ALPHANUMERIC LABELS) CORRESPOND TO THE US 301 WETLAND DELINEATION REPORT AND ARE CONSISTENT WITH THE JURISDICTIONAL DETERMINATION.

SHEET PREPARED BY: MCCORMICK TAYLOR, INC.
DATE: MARCH 10, 2010

SHEETS LAST UPDATED: DECEMBER 16, 2015

ALL IDENTIFIED WATER/WETLANDS ON THESE ENVIRONMENTAL COMPLIANCE SHEETS ARE USACE JURISDICTIONAL AND/OR DNREC JURISDICTIONAL.

DNREC STATE TIDAL MAP - 380 (REVISED DECEMBER 8, 2008).

UNOFFICIAL WEBSITE COPY

LEGEND

	PERMANENT IMPACT AREA
	TEMPORARY IMPACT AREA
OHW	ORDINARY HIGH WATER
OHW/WL	ORD. HIGH WATER / WETLAND
WL	WETLAND BOUNDARY
STW	STATE TIDAL WETLAND

XX — IMPACT AREA TYPE ID. (SEE BELOW)
?X — IMPACT AREA ID. AND/OR NUMBER

O = OPEN WATER IMPACT W = WETLAND IMPACT
T = TEMPORARY IMPACT

US 301 SOUTHBOUND (CONTRACT T200911308)

US 301 NORTHBOUND (CONTRACT T200911308)

UNOFFICIAL WEBSITE COPY

TEMPORARY OPEN WATER IMPACT AREA SCHEDULE

ID	IMPACT DESCRIPTION	AREA (SF)	AREA (AC)	VOLUME (CY)	JURISDICTION
3-OT1	E&S AREA	747.95	0.0172	27.70	USACE/DNREC
TOTAL USACE FOR THIS SHEET		747.95	0.0172	27.70	USACE
TOTAL DNREC FOR THIS SHEET		747.95	0.0172	27.70	DNREC

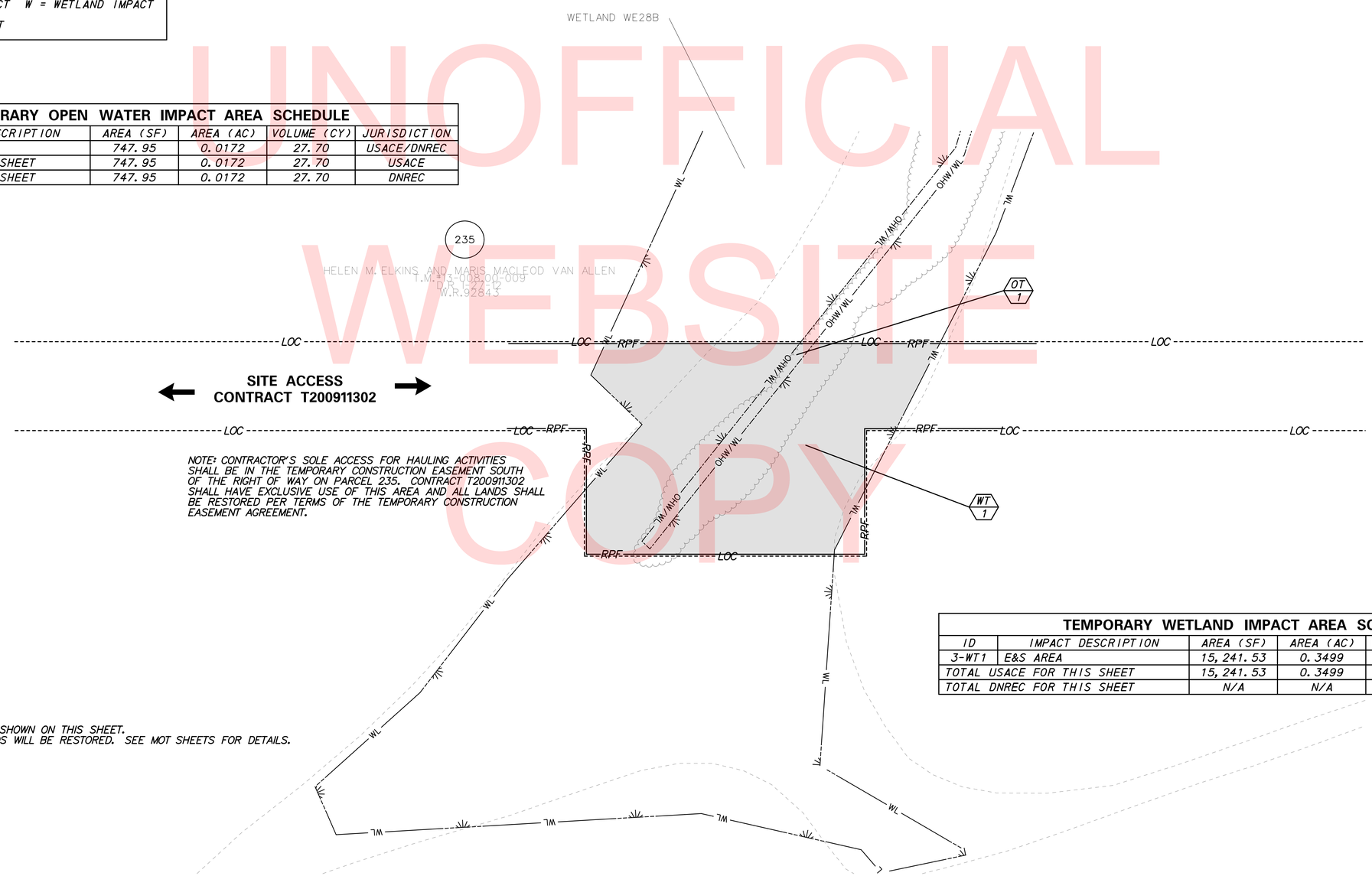

NOTE: CONTRACTOR'S SOLE ACCESS FOR HAULING ACTIVITIES SHALL BE IN THE TEMPORARY CONSTRUCTION EASEMENT SOUTH OF THE RIGHT OF WAY ON PARCEL 235. CONTRACT T200911302 SHALL HAVE EXCLUSIVE USE OF THIS AREA AND ALL LANDS SHALL BE RESTORED PER TERMS OF THE TEMPORARY CONSTRUCTION EASEMENT AGREEMENT.

TEMPORARY WETLAND IMPACT AREA SCHEDULE

ID	IMPACT DESCRIPTION	AREA (SF)	AREA (AC)	VOLUME (CY)	JURISDICTION
3-WT1	E&S AREA	15,241.53	0.3499	N/A	USACE
TOTAL USACE FOR THIS SHEET		15,241.53	0.3499	N/A	USACE
TOTAL DNREC FOR THIS SHEET		N/A	N/A	N/A	DNREC

NOTES:
1. NO GRUBBING TO THE WETLANDS SHOWN ON THIS SHEET.
2. TEMPORARY IMPACTS TO WETLANDS WILL BE RESTORED. SEE MOT SHEETS FOR DETAILS.

EC-03

$DGNNAME$ $DATE$$ $TIME$

DELAWARE DEPARTMENT OF TRANSPORTATION

ADDENDUMS / REVISIONS

SCALE 0 30 60 90 FEET

US 301 & SR 1 INTERCHANGE

CONTRACT	BRIDGE NO.	
T200911302	DESIGNED BY:	REL
COUNTY		
NEW CASTLE	CHECKED BY:	LMM

ENVIRONMENTAL COMPLIANCE PLAN

SHEET NO. 369
TOTAL SHTS. 491

LEGEND

	PERMANENT IMPACT AREA
	TEMPORARY IMPACT AREA
OHW	ORDINARY HIGH WATER
OHW/WL	ORD. HIGH WATER / WETLAND
WL	WETLAND BOUNDARY
STW	STATE TIDAL WETLAND

XX / ?X — IMPACT AREA TYPE ID. (SEE BELOW) / IMPACT AREA ID. AND/OR NUMBER

O = OPEN WATER IMPACT W = WETLAND IMPACT

T = TEMPORARY IMPACT

PERMANENT WETLAND IMPACT AREA SCHEDULE

ID	IMPACT DESCRIPTION	AREA (SF)	AREA (AC)	VOLUME (CY)	JURISDICTION
4-W1	FILL	1,298.81	0.0298	N/A	USACE
4-W2	RIPRAP	408.16	0.0094	N/A	USACE
4-W3 *2	SHADING	379.77	0.0087	N/A	USACE
TOTAL USACE FOR THIS SHEET		2,086.74	0.0479	N/A	USACE
TOTAL DNREC FOR THIS SHEET		N/A	N/A	N/A	DNREC

*2 CONTINUES ON EC-05 AS IMPACT 5-W5

TEMPORARY WETLAND IMPACT AREA SCHEDULE

ID	IMPACT DESCRIPTION	AREA (SF)	AREA (AC)	VOLUME (CY)	JURISDICTION
4-WT1 *1	E&S AREA	4,669.56	0.1072	N/A	USACE
TOTAL USACE FOR THIS SHEET		4,669.56	0.1072	N/A	USACE
TOTAL DNREC FOR THIS SHEET		N/A	N/A	N/A	DNREC

*1 CONTINUES ON EC-05 AS IMPACT 5-WT1

NOTES:
1. BOG TURTLE PROTECTION AREA. SEE EC NOTE 2B FOR RESTRICTIONS AND DETAILS.
2. DUE TO THE SENSITIVITY OF THIS AREA, REINFORCED SILT FENCE HAS BEEN USED IN PLACE OF RESOURCE PROTECTION FENCE.
3. NO GRUBBING TO THE WETLANDS SHOWN ON THIS SHEET.
4. TEMPORARY IMPACTS TO WETLAND WILL BE RESTORED. SEE MOT SHEETS DETAILS.

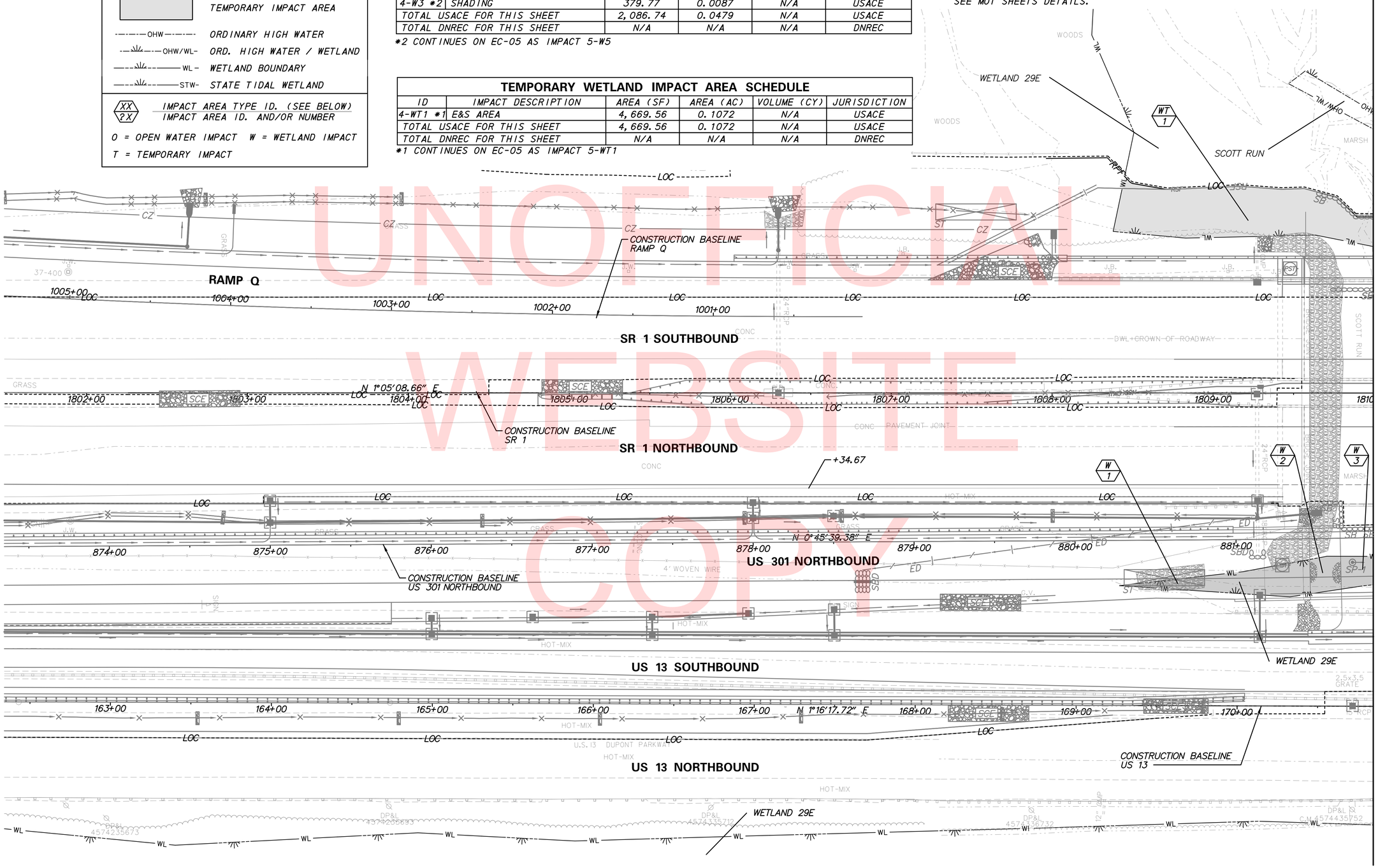

UNOFFICIAL WEBSITE COPY

DELAWARE DEPARTMENT OF TRANSPORTATION	ADDENDUMS / REVISIONS	SCALE 0 30 60 90 FEET	US 301 & SR 1 INTERCHANGE	CONTRACT T200911302 / COUNTY NEW CASTLE	BRIDGE NO. / DESIGNED BY: REL / CHECKED BY: LMM	ENVIRONMENTAL COMPLIANCE PLAN

EC-04

SHEET NO. 370

TOTAL SHTS. 491

$DGNNAME$ $DATE$ $TIME$

LEGEND

	PERMANENT IMPACT AREA
	TEMPORARY IMPACT AREA
OHW	ORDINARY HIGH WATER
OHW/WL	ORD. HIGH WATER / WETLAND
WL	WETLAND BOUNDARY
STW	STATE TIDAL WETLAND

XX / ?X — IMPACT AREA TYPE ID. (SEE BELOW) / IMPACT AREA ID. AND/OR NUMBER

O = OPEN WATER IMPACT W = WETLAND IMPACT

T = TEMPORARY IMPACT

PERMANENT WETLAND IMPACT AREA SCHEDULE

ID	IMPACT DESCRIPTION	AREA (SF)	AREA (AC)	VOLUME (CY)	JURISDICTION
5-W1	SHADING	10.41	0.0002	0.00	USACE/DNREC
5-W2	SHADING	19.77	0.0005	0.00	DNREC
5-W3	SHADING	27.95	0.0006	N/A	USACE
5-W4	SHADING	68.19	0.0016	0.00	DNREC
5-W5 *1	SHADING	470.81	0.0108	N/A	USACE
5-W6	SHADING	87.16	0.0020	0.00	USACE/DNREC
5-W7	SHADING	73.75	0.0017	0.00	USACE/DNREC
5-W8	SHADING	180.78	0.0042	N/A	USACE
5-W9	RIPRAP	541.25	0.0124	N/A	USACE
5-W10	FILL	9,863.03	0.2264	N/A	USACE
5-W11	SHADING	106.89	0.0025	0.00	DNREC
5-W12	SHADING	52.89	0.0012	0.00	DNREC
5-W13	SHADING	29.95	0.0007	0.00	DNREC
5-W14	SHADING	17.04	0.0004	0.00	DNREC
TOTAL USACE FOR THIS SHEET		11,255.15	0.2584	N/A	USACE
TOTAL DNREC FOR THIS SHEET		466.05	0.0108	0.00	DNREC

*1 CONTINUES FROM EC-04 AS IMPACT 4-W3

NOTES:
1. BOG TURTLE PROTECTION AREA. SEE EC NOTE 2B FOR RESTRICTIONS AND DETAILS.
2. DUE TO THE SENSITIVITY OF THIS AREA, REINFORCED SILT FENCE HAS BEEN USED IN PLACE OF RESOURCE PROTECTION FENCE.
3. NO GRUBBING TO THE WETLANDS SHOWN ON THIS SHEET.
4. TEMPORARY IMPACTS TO WETLAND WILL BE RESTORED. SEE MOT SHEETS FOR DETAILS.

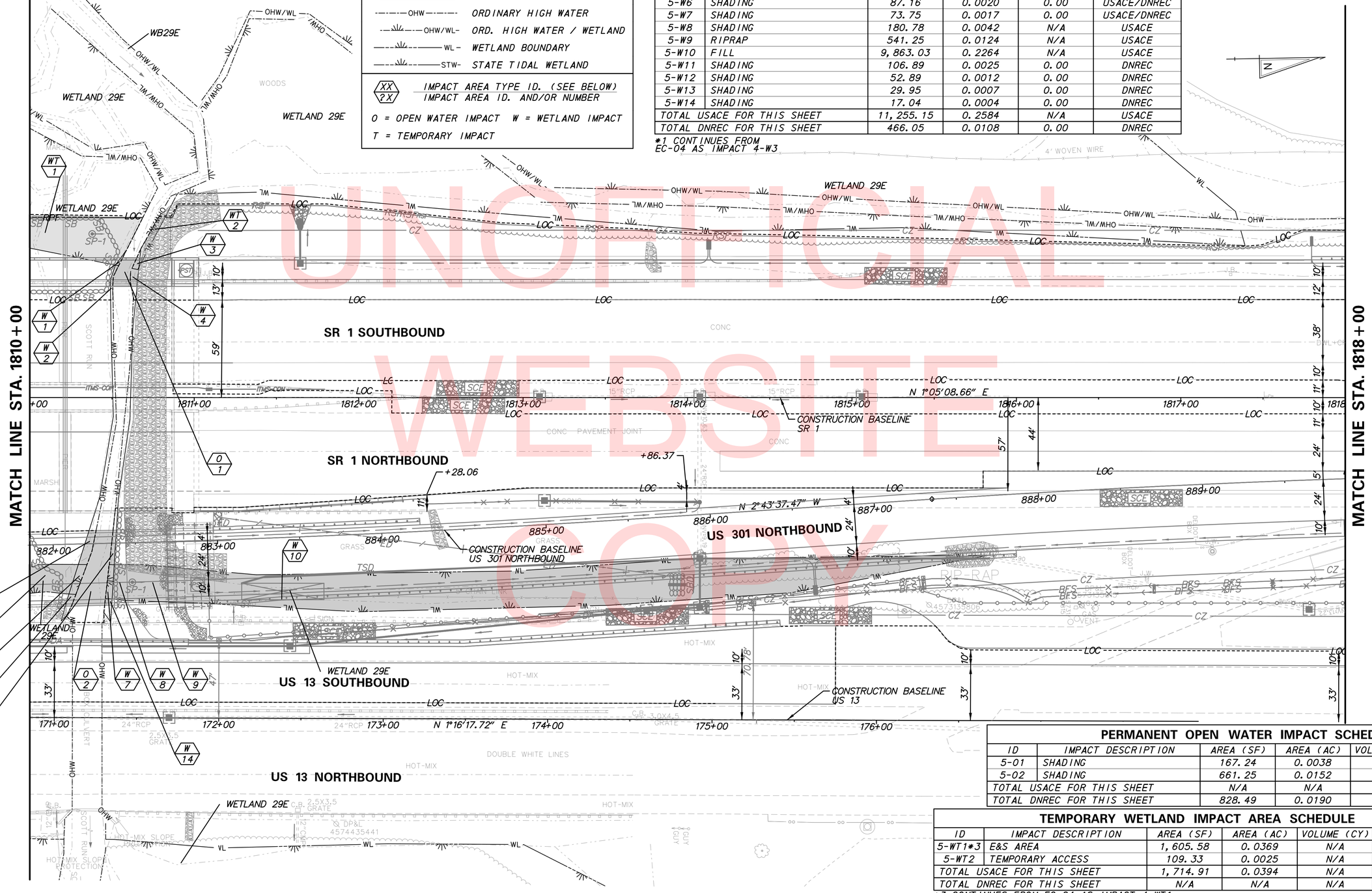

PERMANENT OPEN WATER IMPACT SCHEDULE

ID	IMPACT DESCRIPTION	AREA (SF)	AREA (AC)	VOLUME (CY)	JURISDICTION
5-01	SHADING	167.24	0.0038	N/A	DNREC
5-02	SHADING	661.25	0.0152	N/A	DNREC
TOTAL USACE FOR THIS SHEET		N/A	N/A	N/A	USACE
TOTAL DNREC FOR THIS SHEET		828.49	0.0190	N/A	DNREC

TEMPORARY WETLAND IMPACT AREA SCHEDULE

ID	IMPACT DESCRIPTION	AREA (SF)	AREA (AC)	VOLUME (CY)	JURISDICTION
5-WT1*3	E&S AREA	1,605.58	0.0369	N/A	USACE
5-WT2	TEMPORARY ACCESS	109.33	0.0025	N/A	USACE
TOTAL USACE FOR THIS SHEET		1,714.91	0.0394	N/A	USACE
TOTAL DNREC FOR THIS SHEET		N/A	N/A	N/A	DNREC

*3 CONTINUES FROM EC-04 AS IMPACT 4-WT1

UNOFFICIAL WEBSITE COPY

DELAWARE DEPARTMENT OF TRANSPORTATION

ADDENDUMS / REVISIONS

SCALE 0 30 60 90 FEET

US 301 & SR 1 INTERCHANGE

CONTRACT T200911302 | COUNTY NEW CASTLE | BRIDGE NO. | DESIGNED BY: REL | CHECKED BY: LMM

ENVIRONMENTAL COMPLIANCE PLAN

EC-05 | SHEET NO. 371 | TOTAL SHTS. 491

$DGNNAME$ $TIME$ $DATE$

LEGEND

- PERMANENT IMPACT AREA
- TEMPORARY IMPACT AREA
- OHW — ORDINARY HIGH WATER
- OHW/WL — ORD. HIGH WATER / WETLAND
- WL — WETLAND BOUNDARY
- STW — STATE TIDAL WETLAND
- XX / ?X — IMPACT AREA TYPE ID. (SEE BELOW) / IMPACT AREA ID. AND/OR NUMBER

O = OPEN WATER IMPACT W = WETLAND IMPACT

T = TEMPORARY IMPACT

PERMANENT WETLAND IMPACT AREA SCHEDULE

ID	IMPACT DESCRIPTION	AREA (SF)	AREA (AC)	VOLUME (CY)	JURISDICTION
6-W1	FILL	611.63	0.0140	N/A	USACE
TOTAL USACE FOR THIS SHEET		611.63	0.0140	N/A	USACE
TOTAL DNREC FOR THIS SHEET		N/A	N/A	N/A	DNREC

NOTES:
1. BOG TURTLE PROTECTION AREA. SEE EC NOTE 2B FOR RESTRICTIONS AND DETAILS.
2. DUE TO THE SENSITIVITY OF THIS AREA, REINFORCED SILT FENCE HAS BEEN USED IN PLACE OF RESOURCE PROTECTION FENCE.

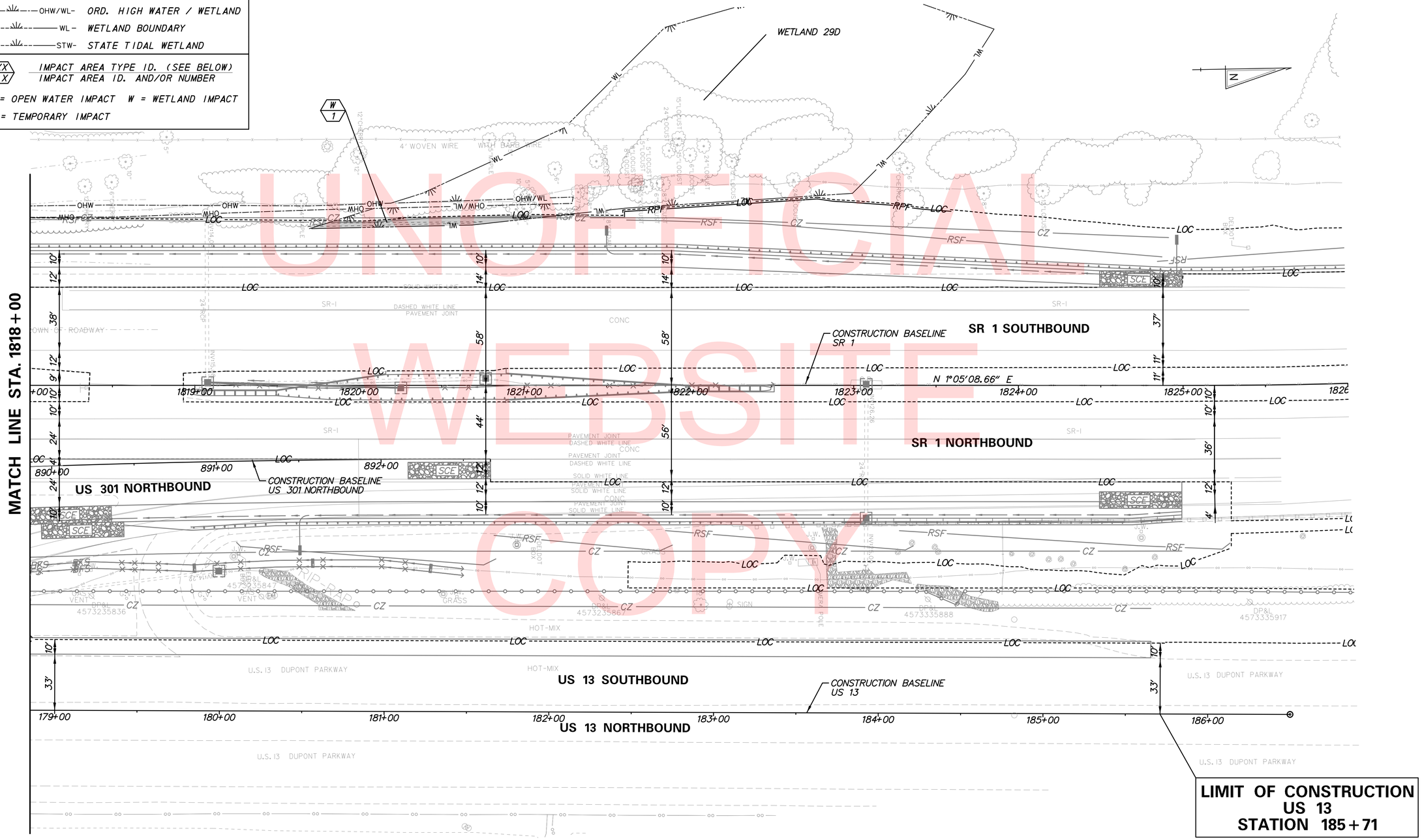

UNOFFICIAL WEBSITE COPY

EC-06

DELAWARE DEPARTMENT OF TRANSPORTATION

ADDENDUMS / REVISIONS

SCALE 0 30 60 90 FEET

US 301 & SR 1 INTERCHANGE

CONTRACT	BRIDGE NO.
T200911302	DESIGNED BY: REL
COUNTY	CHECKED BY: LMM
NEW CASTLE	

ENVIRONMENTAL COMPLIANCE PLAN

SHEET NO. 372

TOTAL SHTS. 491

$DGNNAME$ $DATE$ $TIME$

LEGEND

	PERMANENT IMPACT AREA
	TEMPORARY IMPACT AREA
OHW	ORDINARY HIGH WATER
OHW/WL	ORD. HIGH WATER / WETLAND
WL	WETLAND BOUNDARY
STW	STATE TIDAL WETLAND
XX / ?X	IMPACT AREA TYPE ID. (SEE BELOW) / IMPACT AREA ID. AND/OR NUMBER

O = OPEN WATER IMPACT W = WETLAND IMPACT

T = TEMPORARY IMPACT

NOTE: NO IMPACTS ON THIS SHEET.

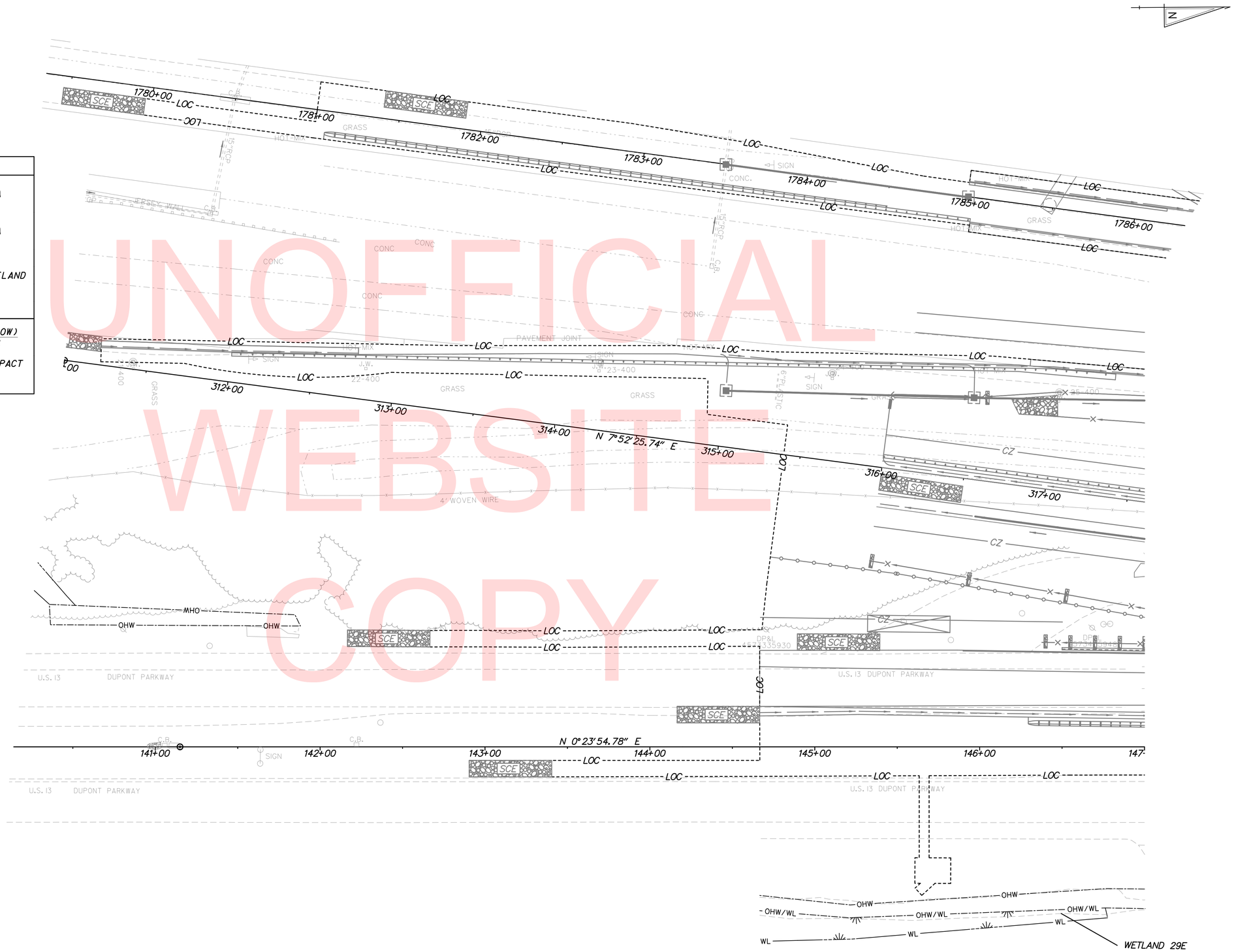

UNOFFICIAL WEBSITE COPY

DELAWARE DEPARTMENT OF TRANSPORTATION	ADDENDUMS / REVISIONS	SCALE 0 30 60 90 FEET	US 301 & SR 1 INTERCHANGE	CONTRACT T200911302 / COUNTY NEW CASTLE	BRIDGE NO. / DESIGNED BY: REL / CHECKED BY: LMM
ENVIRONMENTAL COMPLIANCE PLAN	EC-07	SHEET NO. 373	TOTAL SHTS. 491		

$DGNNAME$ $DATE$$ $TIME$

A. GENERAL NOTES

1. THE CONTRACTOR IS RESPONSIBLE FOR THE MAINTENANCE OF EXISTING PAVEMENT WITHIN THE PROJECT LIMITS FOR THE DURATION OF THE CONTRACT OR AS DIRECTED BY THE ENGINEER. THE COST OF ALL TEMPORARY ROADS, DETOURS AND PAVEMENT WIDENING SHALL BE PAID UNDER THE RESPECTIVE BID ITEMS AND NOT UNDER "HOT-MIX TRM" ITEM. UNIT COST OF "HOT-MIX TRM" ITEM SHALL INCLUDE REMOVAL OF SAME AFTER THE INTENDED USE. THE USE OF ITEM 402000 - HOT-MIX BITUMINOUS CONCRETE AND/OR COLD-LAID BITUMINOUS CONCRETE (TRM), SHALL BE USED ONLY AS DIRECTED BY THE ENGINEER OR AS INDICATED ON PLANS.

2. THE CONTRACTOR SHALL SUPPLY PORTABLE CHANGEABLE MESSAGE SIGNS UNDER ITEM 743004 - FURNISH AND MAINTAIN PORTABLE CHANGEABLE MESSAGE SIGN. THE CONTRACTOR MUST DESIGNATE A PERSON RESPONSIBLE FOR THESE MESSAGE BOARDS. RELOCATING THE MESSAGE BOARDS TO DIFFERENT LOCATIONS WILL BE INCIDENTAL TO ITEM 743004. IN ADDITION TO THE LOCATIONS DEPICTED ON THE TRAFFIC CONTROL PLANS, MESSAGE BOARDS SHALL BE POSTED ALONG SR 1 AND US 13 INFORMING MOTORISTS OF CHANGES IN TRAFFIC PATTERNS ASSOCIATED WITH EACH PHASE OF CONSTRUCTION. THE POMSs SHALL DISPLAY THE MESSAGE "NEW TRAFFIC PATTERN" (SCREEN 1) "USE CAUTION" (SCREEN 2). ALL LOCATIONS AND MESSAGES FOR THE MESSAGE BOARDS SHALL BE APPROVED BY THE DISTRICT SAFETY OFFICER.

3. TRUCK-MOUNTED ATTENUATORS, TYPE 2 (ITEM 743010) SHALL BE REQUIRED WHEN TRAFFIC IS PRESENT DURING THE FOLLOWING OPERATIONS:
   - TEMPORARY AND PERMANENT PAVEMENT MARKING INSTALLATION AND REMOVAL
   - PLACEMENT AND REMOVAL OF TEMPORARY CONCRETE TRAFFIC BARRIER
   - PLACEMENT AND REMOVAL OF TEMPORARY TRAFFIC CONTROL DEVICES FOR LANE CLOSURES
   - AS DIRECTED BY THE ENGINEER

4. FLOODLIGHTING NECESSARY FOR NIGHT WORK WILL BE PAID UNDER ITEM 743005 - FURNISH AND MAINTAIN PORTABLE LIGHT ASSEMBLY. FLOODLIGHTING SHALL ALSO BE USED, AS DIRECTED BY THE ENGINEER, TO ILLUMINATE OTHER LOCATIONS.

5. THIS PROJECT IS CONSIDERED A SIGNIFICANT PROJECT AS DEFINED BY DELDOT'S WORK ZONE SAFETY AND MOBILITY - PROCEDURES AND GUIDELINES. A TYPE "B" TRANSPORTATION MANAGEMENT PLAN (TMP) HAS BEEN PREPARED AND IS AVAILABLE FOR VIEWING BY CONTACTING DELDOT'S SAFETY PROGRAMS MANAGER AT 302-659-4073. ALL MONITORING REQUIREMENTS OF THE TMP SHALL BE CONDUCTED BY DELDOT FORCES.

6. END PROTECTION FOR THE LEADING END OF ALL P.C.C. SAFETY BARRIER SHALL BE A RE-DIRECTIVE NON-GATING PORTABLE IMPACT ATTENUATOR MEETING NCHRP REPORT 350 TEST LEVEL 3 (TL-3) CRITERIA OR HIGHER. ATTENUATORS ON SR 1 SHALL BE DESIGNED FOR A 70 MPH DESIGN SPEED AND ATTENUATORS ON US 13 SHALL BE DESIGNED FOR A 60 MPH DESIGN SPEED.

7. BARRIER PLACEMENT HAS BEEN SET TO PROVIDE A 3'-0" MINIMUM BARRIER DEFLECTION ZONE BUFFER TO ALLOW FOR POTENTIAL IMPACT DEFLECTION ON WORK ZONE SIDE UNLESS OTHERWISE NOTED. NO PERMANENT STORAGE OF EQUIPMENT AND MATERIALS SHALL BE ALLOWED WITHIN 3'-0" OF THE WORK ZONE SIDE OF THE TEMPORARY P.C.C. SAFETY BARRIER OR WITHIN THE BARRIER LENGTH OF NEED (SEE NOTE 19). TEMPORARY ENCROACHMENT WITHIN THIS 3'-0" BUFFER BY EQUIPMENT AND/OR WORKERS SHALL BE MINIMIZED TO THE MAXIMUM EXTENT POSSIBLE. IN SELECT AREAS LESS THAN 3'-0" BEHIND P.C.C. SAFETY BARRIER IS PROVIDED DUE TO SITE CONSTRAINTS AS SHOWN ON PLANS. IN ANY RUN OF P.C.C. SAFETY BARRIER WHERE LESS THAN 3'-0" BEHIND BARRIER IS PROVIDED THE CONTRACTOR SHALL PIN THE BARRIER TO MINIMIZE DEFLECTION. CONTRACTOR SHALL PROVIDE A PINNING METHOD THAT MEETS THE REQUIREMENTS OF NCHRP 350 FOR APPROVAL BY THE ENGINEER.

8. THE REFLECTIVE LENSES ONLY OF ANY EXISTING PLOWABLE RAISED PAVEMENT MARKERS IN CONFLICT WITH PROPOSED TEMPORARY STRIPING SHALL BE REMOVED. PAYMENT FOR REMOVAL OF THE REFLECTIVE LENSES WILL BE INCIDENTAL TO ITEM 743000 - MAINTENANCE OF TRAFFIC. REFER TO SIGNING, STRIPING AND CONDUIT PLANS FOR PERMANENT PLOWABLE RAISED PAVEMENT MARKER CONFIGURATION INCLUDING REPLACEMENT OF REFLECTIVE LENSES IN EXISTING PAVEMENT MARKER HOUSING.

9. TEMPORARY RAISED PAVEMENT MARKERS SHALL BE INSTALLED THROUGHOUT THE LIMITS OF PROPOSED TEMPORARY STRIPING AS PER FIGURES 3B-15A THROUGH 3B-15H OF THE DELAWARE MUTCD.

10. AT THE COMPLETION OF CONSTRUCTION THE CONTRACTOR SHALL FURNISH AND INSTALL TEMPORARY TRAFFIC CONTROL DEVICES TO REMAIN AS SHOWN ON DRAWINGS CS-401 - CS-407 (PHASE 4). THE TEMPORARY TRAFFIC CONTROL DEVICES SHALL REMAIN IN PLACE AND SERVE TO TEMPORARILY CLOSE THE NEW US 301 ROADWAY UNTIL ITS OFFICIAL OPENING. MAINTENANCE AND REMOVAL OF THE TEMPORARY TRAFFIC CONTROL DEVICES DURING THE INTERIM CLOSURE PERIOD AND UPON OPENING OF THE US 301 ROADWAY SHALL BE THE RESPONSIBILITY OF OTHERS (CONTRACT T200911303 CONTRACTOR). FURNISHING AND INSTALLATION OF THE TEMPORARY TRAFFIC CONTROL DEVICES TO REMAIN BY THE CONTRACT T200911302 CONTRACTOR WILL NOT BE MEASURED AND PAID FOR BUT WILL BE INCIDENTAL TO ITEM 743000 - MAINTENANCE OF TRAFFIC.

11. THE CONTRACTOR SHALL BE RESPONSIBLE FOR MAINTAINING TEMPORARY TRAFFIC CONTROL DEVICES FURNISHED AND INSTALLED TO REMAIN BY OTHERS (CONTRACT T201011302 CONTRACTOR) FOR CLOSURE OF THE NEWLY CONSTRUCTED RAMP R AT THE US 13 AND PORT PENN ROAD INTERSECTION. THE CONTRACT T200911302 CONTRACTOR SHALL BE RESPONSIBLE FOR REMOVAL OF THESE TEMPORARY TRAFFIC CONTROL DEVICES UPON OPENING OF RAMP R DURING CONSTRUCTION PHASE 3 OF THIS CONTRACT, AS DIRECTED BY THE ENGINEER. MAINTENANCE AND REMOVAL OF THE TEMPORARY TRAFFIC CONTROL DEVICES FURNISHED AND INSTALLED TO REMAIN BY OTHERS (CONTRACT T201011302 CONTRACTOR) FOR THE RAMP R CLOSURE WILL NOT BE MEASURED AND PAID FOR BUT WILL BE INCIDENTAL TO ITEM 743000 - MAINTENANCE OF TRAFFIC. SEE DWG. NOS. CS-312 AND CS-313.

12. ALL TEMPORARY SIGNS WILL BE PAID FOR UNDER ITEM 743024 - TEMPORARY WARNING SIGNS AND PLAQUES (EADY).

13. TEMPORARY ROADWAY LIGHTING SHALL BE PROVIDED IN LOCATIONS WHERE THE EXISTING ROADWAY LIGHTING IS IMPACTED BY CONSTRUCTION ACTIVITIES. THE TEMPORARY LIGHTING SHALL BE INSTALLED AND OPERATIONAL PRIOR TO ANY DISTURBANCE TO THE EXISTING ROADWAY LIGHTING AND SHALL REMAIN OPERATIONAL THROUGH ALL PHASES OF CONSTRUCTION UNTIL THE PERMANENT LIGHTING IS INSTALLED AND ACCEPTED BY THE ENGINEER.

14. THE SPACING OF THE FIRST FOUR CHANNELIZING DEVICES IN A SERIES USED FOR TAPER CHANNELIZATION SHOULD NOT EXCEED 25 FEET AND THE SPACING OF CHANNELIZING DEVICES USED FOR DOWNSTREAM TAPERS SHALL BE SPACED AT 20 FEET.

15. ROADWAY AND SHOULDER WORK SHALL BE PERFORMED IN A MANNER SO THAT POSITIVE DRAINAGE OF THE ROADWAY SURFACE IS MAINTAINED THROUGHOUT CONSTRUCTION. ALL WORK AND MATERIALS TO PROVIDE AND MAINTAIN THE DRAINAGE SHALL BE INCIDENTAL TO ITEM NO. 763500 - MAINTENANCE OF TRAFFIC.

16. W11-10 (48"x48") TRUCK WARNING SIGNS SHALL BE INSTALLED 500 FEET IN ADVANCE OF ALL ACTIVE STABILIZED CONSTRUCTION ENTRANCES (SCEs). THE CONTRACTOR SHALL COORDINATE THE PLACEMENT OF THE TRUCK WARNING SIGNS WITH OTHER SIGNING AS APPROVED BY THE ENGINEER. SCEs SHALL BE DELINEATED BY TYPE III BARRICADES AT ALL TIMES.

17. A BICYCLE DETOUR FOR US 13 BICYCLE TRAFFIC IS PROPOSED FOR THE DURATION OF CONSTRUCTION AS SHOWN ON DRAWING NO. DP-04. THE DETOUR ROUTE TRAVELS THROUGH THE WORK AREA OF CONTRACT NO. T200911308. THE CONTRACTOR SHALL COORDINATE WITH THE CONTRACT T200911308 CONTRACTOR TO ENSURE THAT THE DETOUR ROUTE IS MAINTAINED AT ALL TIMES. ALTHOUGH BICYCLE TRAFFIC ALONG US 13 WILL BE DETOURED, SPACE HAS BEEN PROVIDED FOR BICYCLES AS SHOWN ON THE PLANS IN THE EVENT THAT THE DETOUR IS DISREGARDED. THE CONTRACTOR SHALL MAINTAIN THIS SPACE FOR BIKES AT ALL TIMES.

18. WHEN THE PLANS SPECIFY THE USE OF TEMPORARY PAINT PAVEMENT MARKINGS ON SR 1 THE TEMPORARY PAINT PAVEMENT MARKINGS SHALL BE LATEX PAINT WITHOUT CONTRAST MARKINGS. THE PAVEMENT MARKINGS SHALL BE REMOVED BY HYDROBLASTING TO REDUCE PAVEMENT SCARRING ON SR 1. PAYMENT FOR USE OF LATEX PAINT PAVEMENT MARKINGS WILL BE MADE UNDER ITEM NOS. 748019 - TEMPORARY MARKINGS, PAINT 4", 748034 - TEMPORARY MARKINGS, PAINT, 10" AND 748026 TEMPORARY MARKINGS, PAINT SYMBOL/LEGEND ACCORDING TO THEIR USE INDICATED ON THE PLANS.

19. WHEN THE LEADING END OF THE BARRIER IS OPEN FOR CONSTRUCTION ACCESS AND WORK IS OCCURRING WITHIN THE BARRIER LENGTH OF NEED (730 FEET OF THE LEADING END OF THE BARRIER FOR SR 1 AND WITHIN 570 FEET FOR US 13), A TYPE 2 TRUCK MOUNTED ATTENUATOR SHALL BE PROVIDED AT THE LEADING END OF THE BARRIER TO PROTECT THE WORK AREA AND TO PREVENT ERRANT VEHICLES FROM TRAVELING BEHIND THE BARRIER.

20. TRAFFIC OFFICERS SHALL BE USED DURING LANE CLOSURES, DETOURS AND PHASE CHANGES, AS DIRECTED BY THE ENGINEER.

21. PROPOSED ADVANCE NOTIFICATION REQUIREMENTS: AT LEAST TEN (10) CALENDAR DAYS BEFORE A ROAD CLOSURE OR MAJOR CHANGE IN THE ROADWAY CONFIGURATION OR TRAVEL PATTERN, THE CONTRACTOR SHALL USE AN ADVANCE WARNING SIGN OR PORTABLE CHANGEABLE MESSAGE SIGN TO WARN MOTORISTS OF THE PENDING CHANGES. THIS SIGN SHALL REMAIN IN PLACE AT LEAST TEN (10) BUT NO MORE THAN FOURTEEN (14) CALENDAR DAYS BEFORE A MAJOR CHANGE IN THE ROADWAY CONFIGURATION OR TRAVEL PATTERN.

22. FOR TYPE 1 CLOSURES, THE CONTRACTOR SHALL MAKE PROVISIONS IN THE TEMPORARY TRAFFIC CONTROL PLAN FOR LOCAL TRAFFIC TO ACCESS PROPERTIES AND BUSINESSES AT ALL TIMES ON THE CLOSED ARTERIAL OR LOCAL STREET. TYPE 1 AND 2 CLOSURES WILL REQUIRE EXTENSIVE MEDIA AND STAKEHOLDER NOTIFICATION EFFORT AND COORDINATION AMONG VARIOUS LOCAL AND STATE AGENCIES.

23. THE CONTRACTOR IS REQUIRED TO SUBMIT REQUESTS FOR TRAFFIC RESTRICTIONS TO THE GEC AND DELDOT IN ACCORDANCE WITH THE ADVANCE NOTIFICATION TABLE:

24. FOR NIGHT-TIME CLOSURES OF ANY ROAD OR RAMP, PROVIDE ONE TRAFFIC OFFICER AT EACH CLOSURE POINT SHOWN IN THE APPLICABLE DETOUR PLANS. TRAFFIC OFFICER SHALL BE PLACED BEHIND THE CLOSURE BARRICADE WITH THE FRONT OF VEHICLE FACING APPROACHING TRAFFIC AND ALL EMERGENCY LIGHTS SHALL BE ACTIVATED. TRAFFIC OFFICER SHALL PROVIDE A REPORT TO THE CONTRACTOR AT THE END OF THE DAY'S ACTIVITY IDENTIFYING THE NUMBER OF VEHICLES THAT ATTEMPTED TO NOT FOLLOW THE DETOUR.

25. THE CONTRACTOR SHALL PROVIDE THREE TRAFFIC OFFICERS FOR A FOUR-HOUR PERIOD TWICE PER MONTH TO PERFORM SPEED ENFORCEMENT ALONG ROADWAYS WITHIN THE PROJECT LIMITS. AT THE END OF THE DAY'S ENFORCEMENT ACTIVITY, THE TRAFFIC OFFICERS SHALL PROVIDE A REPORT TO THE CONTRACTOR IDENTIFYING THE NUMBER OF VEHICLES STOPPED, NUMBER AND TYPE OF CITATIONS GIVEN AND THE RANGE OF SPEEDS OF THOSE VEHICLES STOPPED. ENFORCEMENT LOCATIONS WILL BE DETERMINED BY THE ENGINEER.

26. THE CONTRACTOR SHALL PROVIDE ONE TRAFFIC OFFICER FOR NIGHTTIME MOBILE PAVEMENT MARKING OPERATIONS ON SR 1 OR US 13.

27. THE CONTRACTOR SHALL PROVIDE ONE TRAFFIC OFFICER FOR MAJOR PHASE CHANGE TRAFFIC SWITCHES ON US 13 OR SR 1.

28. THE CONTRACTOR SHALL PROVIDE TWO TRAFFIC OFFICERS FOR ANY ROLLING ROAD BLOCK OPERATION IN ACCORDANCE WITH TA-35H.

29. SEE PROJECT DETOUR PLANS FOR ADDITIONAL TRAFFIC OFFICER REQUIREMENTS.

30. THE CONTRACTOR SHALL PROVIDE ONE TRAFFIC OFFICER FOR ANY OPERATION WHERE AN EXISTING SIGNALIZED INTERSECTION IS PLACED IN FLASH-MODE. THE TRAFFIC OFFICER IS THE ONLY INDIVIDUAL THAT CAN PLACE A TRAFFIC SIGNAL IN FLASH-MODE AND THE TRAFFIC OFFICER MUST STAY ON LOCATION UNTIL THE SIGNAL IS PLACED BACK IN STOP-AND-GO OPERATION IN ACCORDANCE WITH DELDOT'S TEMPORARY TRAFFIC CONTROL WITHIN INTERSECTIONS MEMORANDUM (WWW.MUTCD.DELDOT.GOV).

31. ADDITIONAL USAGE OF TRAFFIC OFFICERS OUTSIDE OF THE ABOVE REQUIREMENTS SHALL BE APPROVED BY THE ENGINEER IN CONSULTATION WITH THE TRAFFIC SAFETY SECTION.

Advance Notification

Type of Restriction	Minimum Advance Notice	Maximum Advance Notice
1*	30 Days	45 Days
2*, 3*, 4*	10 Days	14 Days

Type 1: Planned and acceptable closures of an arterial or local street, traffic switches, new ramp openings, or changed traffic patterns.
Type 2: A lane(s) closure that would have significant impact on traffic, such as temporarily stopping traffic completely (traffic drags), closing 2 or more lanes, closing an exit or entrance ramp at freeway interchanges, or flagging operations.
Type 3: A lane closure that would have minor or no impact on the flow of traffic, such as closing one lane on a three-lane freeway during off-peak hours.
Type 4: A lane closure that would close a shoulder (right or left)

B. WORK HOUR/LANE CLOSURE RESTRICTIONS

1. 15 MINUTE INTERMITTENT ROAD CLOSURES MAY BE USED FOR THE INSTALLATION OR REMOVAL OF OVERHEAD SIGN STRUCTURES. THESE ROAD CLOSURES SHALL OCCUR BETWEEN 12 AM (MIDNIGHT) AND 4 AM MONDAY THROUGH THURSDAY AND SHALL LAST NO LONGER THAN 15 MINUTES. TRAFFIC OFFICERS SHALL BE USED TO ASSIST IN THE CLOSURES. THE CONTRACTOR SHALL COORDINATE WITH DELDOT'S TRAFFIC SAFETY SECTION AND TRANSPORTATION MANAGEMENT CENTER PRIOR TO IMPLEMENTING INTERMITTENT ROAD CLOSURES. SEE DETAIL THIS SHEET.

2. THE TYPICAL APPLICATIONS FROM PART 6 OF THE DELAWARE MUTCD SHALL BE UTILIZED FOR CONSTRUCTION ACTIVITIES WHICH OCCUR OUTSIDE OF THE WORK AREAS ESTABLISHED ON THE CONSTRUCTION PHASING, MOT AND EROSION CONTROL PLANS, OR AS DIRECTED BY THE ENGINEER:

   A. TYPICAL APPLICATIONS 5A, 42 & 44 - ALL LIGHTING, SIGNING AND TEMPORARY SIGNING WORK IN THE MEDIAN AND ON OR OFF THE SHOULDER

   B. TYPICAL APPLICATIONS 33, 42 & 44 - INSTALLATION OF LIGHT POLES OVER TRAVEL LANES

   C. TYPICAL APPLICATIONS 33, 37, 42 & 44 - ALL OVERHEAD SIGNING WORK

   D. TYPICAL APPLICATIONS 35D & 35F - INSTALLATION OF ALL LANE LINE, CENTERLINE, AND EDGE LINE PAVEMENT MARKINGS

   F. TYPICAL APPLICATIONS 5A, 33, 42 & 44 - INSTALLATION OF ITMS EQUIPMENT

   G. TYPICAL APPLICATIONS 5A & 33 - PAVING & PATCHING

3. ALL WORK REQUIRING A SINGLE LANE CLOSURE ALONG SR 1 USING TYPICAL APPLICATION 33 SHALL BE PERMITTED DURING THE FOLLOWING HOURS:
   -MONDAY THROUGH THURSDAY FROM 9 AM - 3 PM
   -MONDAY THROUGH THURSDAY FROM 7 PM - 6 AM (THE FOLLOWING MORNING)

4. ALL WORK REQUIRING A DOUBLE LANE CLOSURE ALONG SR 1 USING TYPICAL APPLICATION 37 SHALL BE PERMITTED DURING THE FOLLOWING HOURS:
   -MONDAY THROUGH THURSDAY FROM 10 PM - 5 AM (THE FOLLOWING MORNING)

5. ALL WORK ALONG US 13 NORTHBOUND REQUIRING A SINGLE LANE CLOSURE USING TYPICAL APPLICATION 33 SHALL BE PERMITTED DURING THE FOLLOWING HOURS:
   -MONDAY THROUGH THURSDAY 9 AM - 3 PM
   -MONDAY THROUGH THURSDAY 6 PM - 6 AM (THE FOLLOWING MORNING)

6. ALL WORK ALONG US 13 SOUTHBOUND REQUIRING A SINGLE LANE CLOSURE USING TYPICAL APPLICATION 33 SHALL BE PERMITTED DURING THE FOLLOWING HOURS:
   -MONDAY THROUGH THURSDAY FROM 9 AM - 2 PM
   -MONDAY THROUGH THURSDAY FROM 8 PM - 6 AM (THE FOLLOWING MORNING)

7. CLOSURES AND DETOURS OF SR 1 SHALL BE PERMITTED FOR BRIDGE CONSTRUCTION ACTIVITIES ASSOCIATED WITH BR 1-433. WHEN ONLY ONE DIRECTION OF SR 1 IS CLOSED AND DETOURED AT A TIME THE DETOUR ROUTES SHALL FOLLOW DWG. NO. DP-01 FOR SR 1 SOUTHBOUND AND DP-02 FOR SR 1 NORTHBOUND. WHEN ERECTING GIRDERS FOR BR 1-433 WHICH SPAN BOTH DIRECTIONS OF SR 1, BOTH DIRECTIONS MAY BE CLOSED AND DETOURED SIMULTANEOUSLY AND THE DETOUR ROUTES SHALL FOLLOW DWG. NO. DP-01 FOR SR 1 SOUTHBOUND AND DP-03 FOR SR 1 NORTHBOUND. THESE SIMULTANEOUS DETOURS SHALL BE MINIMIZED TO THE MAXIMUM EXTENT POSSIBLE AND SHALL NOT OCCUR FOR ANY OTHER CONSTRUCTION ACTIVITIES. ALL SR 1 DETOURS SHALL BE PERMITTED MONDAY THROUGH THURSDAY FROM 9 PM - 5 AM (THE FOLLOWING MORNING) ONLY.

INTERMITTENT ROAD CLOSURE DETAIL

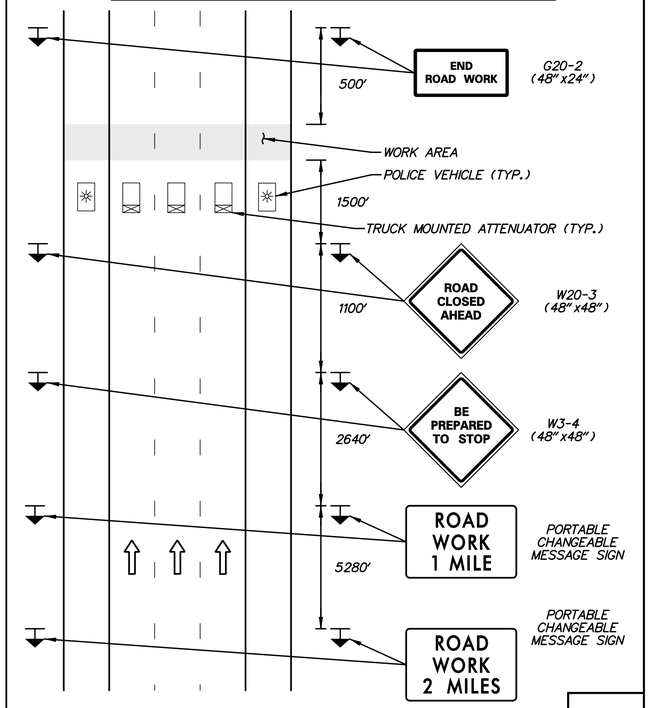

TCN-01

UNOFFICIAL WEBSITE COPY

N:\31653-000\CONTRACT 1B\CADD\Traffic\2015 - Updates\TCN001U301_1B.dgn
12/18/2015 8:10:10 AM

DELAWARE DEPARTMENT OF TRANSPORTATION	ADDENDUMS / REVISIONS	NOT TO SCALE	US 301 & SR 1 INTERCHANGE	CONTRACT T200911302 / COUNTY NEW CASTLE	BRIDGE NO. / DESIGNED BY: J.D.C. / CHECKED BY: J.M.M.
GENERAL TRAFFIC CONTROL NOTES	SHEET NO. 374 / TOTAL SHTS. 491				

PERMANENT WARNING SIGN LEGEND

ROAD WORK 1 MILE	ROAD WORK 1/2 MILE	ROAD WORK 1500 FT	ROAD WORK 1000 FT	ROAD WORK 500 FT	ROAD WORK AHEAD	END ROAD WORK	BEGIN HIGHER FINES ZONE	END HIGHER FINES ZONE
W20-1 (48" x48")	W20-1 (48" x48")	W20-1 (48" x48")	W20-1 (48" x48")	W20-1 (48" x48")	W20-1 (48" x48")	G20-2 (48" x24")	R2-10 (48" x60")	R2-11 (48" x60")
1	2	3	4	5	6	7	8	9

N

NOTES:

1. SEE INDIVIDUAL PHASING PLANS FOR PLACEMENT OF ADDITIONAL PERMANENT AND TEMPORARY WARNING SIGNS. LOCATION OF ALL PERMANENT WARNING SIGNS SHALL BE COORDINATED WITH THE ENGINEER.
2. ANY EXISTING SIGNS THAT CONFLICT WITH CONSTRUCTION WARNING SIGNS SHALL BE COVERED, AS DIRECTED BY THE ENGINEER.
3. ALL PERMANENT WARNING SIGNS SHALL BE POST MOUNTED ON NCHRP REPORT 350 APPROVED BREAKAWAY SUPPORTS UNLESS OTHERWISE NOTED ON THESE PLANS, AS DIRECTED BY THE ENGINEER, OR ONE OF THE FOLLOWING CONDITIONS APPLY:
   1) A UTILITY CONFLICT EXISTS THAT PREVENTS THE BREAKAWAY SUPPORTS FROM BEING DRIVEN INTO THE GROUND (ALL UTILITY CONFLICTS MUST BE VERIFIED BY THE INSPECTOR), OR
   2) MATERIAL OTHER THAN COMMON EARTH, SUCH AS CONCRETE, HOT MIX ASPHALT, BRICK, ETC. PREVENTS DRIVING THE POSTS AND SUPPORTS INTO THE GROUND.
4. ALL SIGNS ON SR 1 AND US 13 SHALL BE POSTED IN THE MEDIAN AND THE RIGHT EDGE OF ROADWAY.
5. CONTRACTOR SHALL FURNISH AND INSTALL TEMPORARY BRIDGE MOUNTED SIGN SUPPORTS FOR PERMANENT WARNING SIGNS INSTALLED ON BRIDGES. SIGNS INSTALLED ON RIGHT SIDE BRIDGE PARAPET SHALL HAVE A 2' OFFSET FROM FLOW LINE OF PARAPET TO LEFT EDGE OF SIGN. SIGNS INSTALLED ON BRIDGE MEDIAN BARRIER SHALL BE CENTERED ABOUT BARRIER. CONTRACTOR SHALL SUBMIT WORKING DRAWINGS OF BRIDGE MOUNTED SIGN SUPPORTS FOR APPROVAL BY THE ENGINEER.

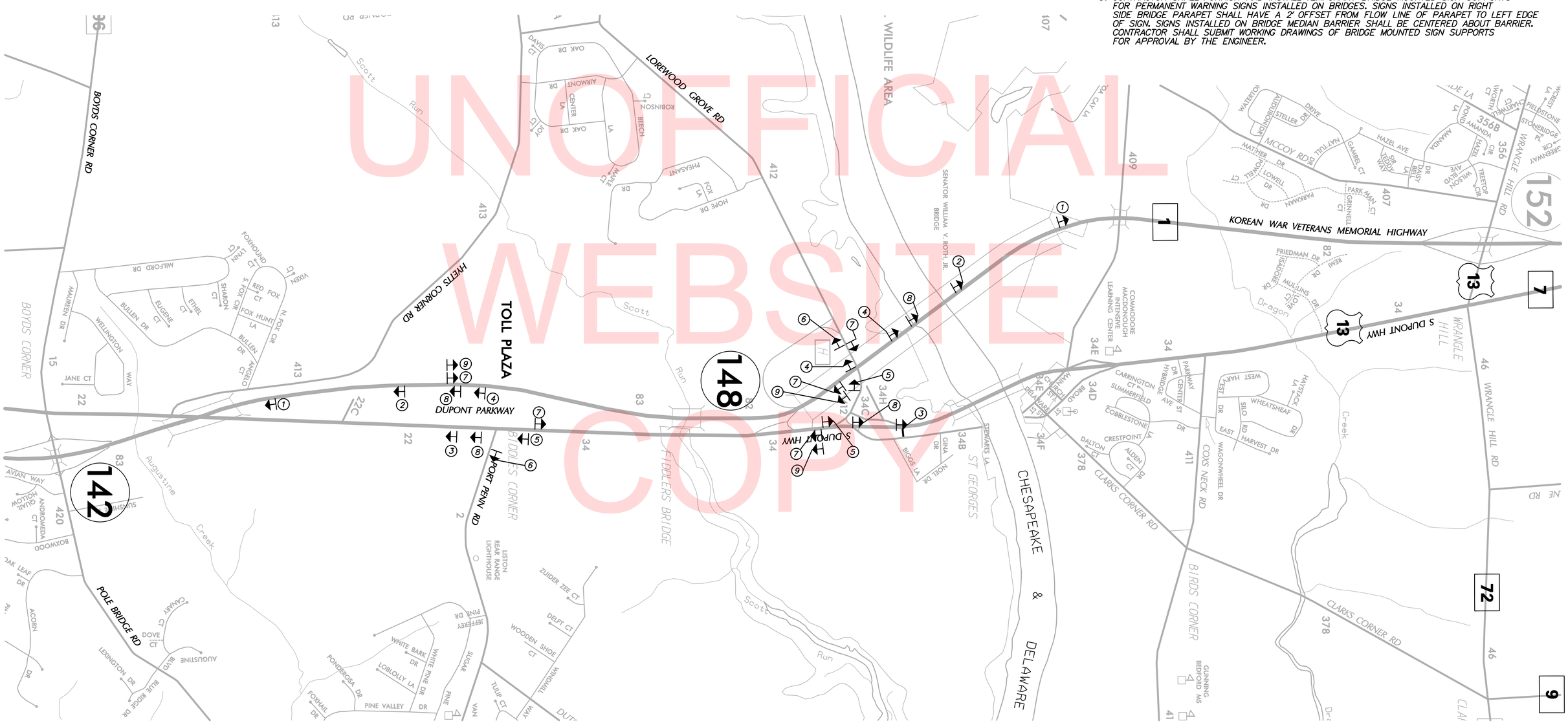

UNOFFICIAL WEBSITE COPY

DELAWARE DEPARTMENT OF TRANSPORTATION

ADDENDUMS / REVISIONS

SCALE 0 1000 2000 3000 FEET

US 301 & SR 1 INTERCHANGE

CONTRACT	BRIDGE NO.
T200911302	DESIGNED BY: J.D.C.
COUNTY	CHECKED BY: J.M.M.
NEW CASTLE	

PERMANENT WARNING SIGN LOCATION PLAN

CS-01
SHEET NO. 375
TOTAL SHTS. 491

n:\3653-000\contract tb\cadd\CS001U301_1B.dgn
12/18/2015 8:10:14 AM

CONSTRUCTION PHASING TYPICAL SECTIONS LEGEND

- PORTABLE P.C.C. SAFETY BARRIER (F SHAPE)
- EXISTING PAVEMENT MARKING
- TEMPORARY PAVEMENT MARKING
- PROPOSED CONSTRUCTION THIS PHASE
- TEMPORARY CONSTRUCTION
- TRAFFIC FLOW ARROW

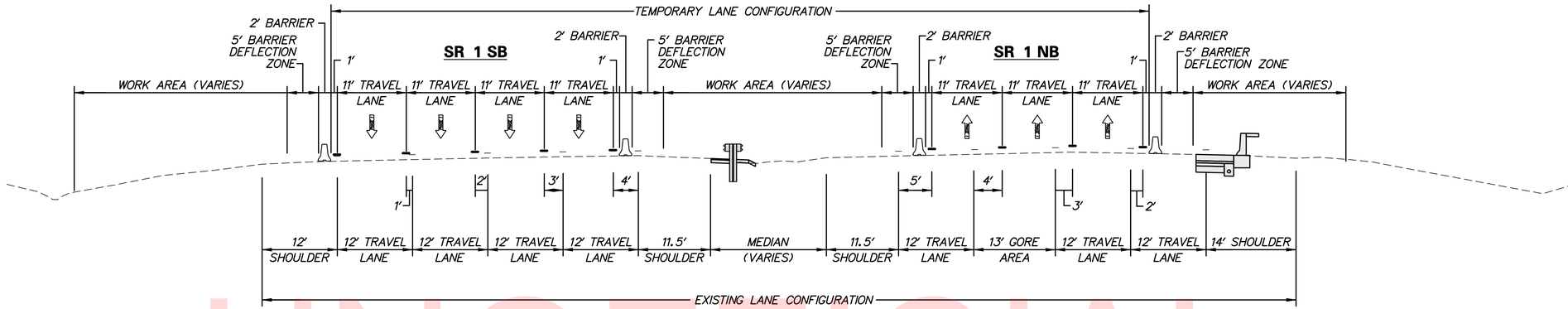

SECTION A'–A' – PHASES 1 AND 2 (SR 1 Sta. 1791+00)

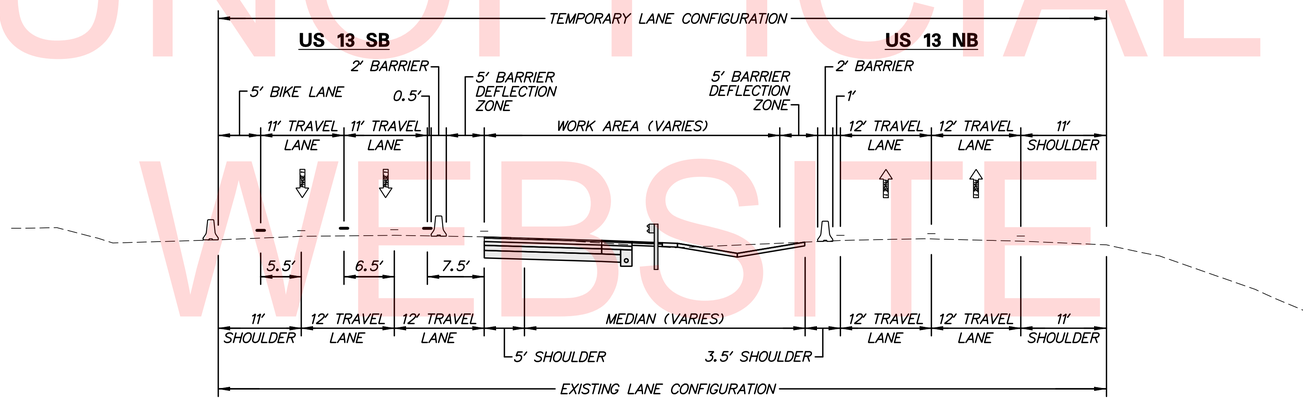

SECTION B'–B' – PHASE 1 (US 13 Sta. 158+00)

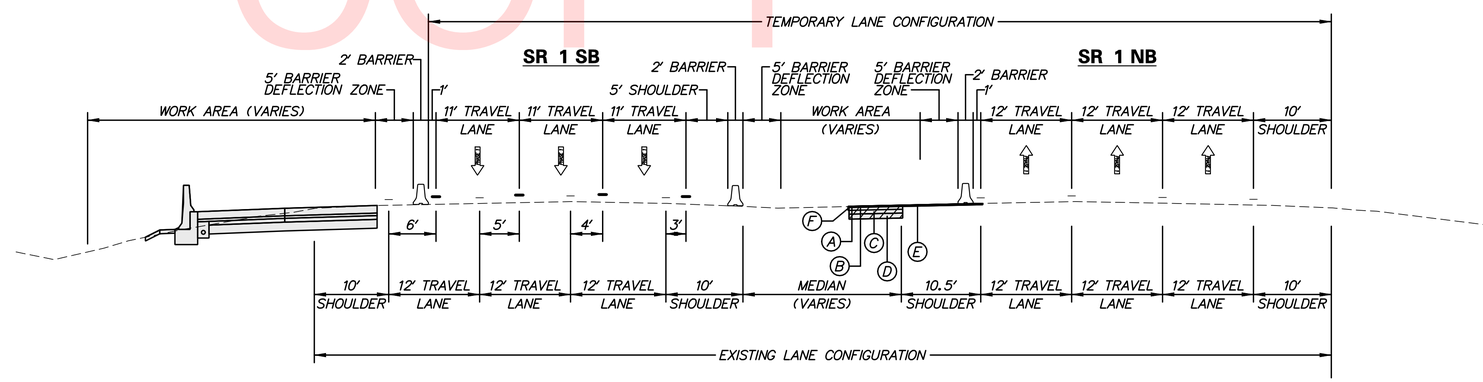

SECTION C'–C' – PHASE 1 (SR 1 Sta. 1817+00)

NOTES:

1. THE 4.5" SUPERPAVE, TYPE B HOT-MIX, 160 GYRATIONS, PG 70-22 LAYER SHALL BE PLACED IN TWO LIFTS, GREATER THAN 2.25" AND LESS THAN 3".

TEMPORARY PAVING LEGEND

- (A) ITEM 401708 - SUPERPAVE, TYPE C HOT-MIX, 160 GYRATIONS, PG 70-22,(NON-CARBONATE STONE), 2"
- (B) ITEM 401654 - SUPERPAVE, TYPE B HOT-MIX, 160 GYRATIONS, PG 70-22, 4.5"
- (C) ITEM 401663 - SUPERPAVE, BITUMINOUS CONCRETE BASE COURSE, 160 GYRATIONS, PG 64-22, 6"
- (D) ITEM 302007 - GRADED AGGREGATE BASE COURSE, TYPE B, 8"
- (E) ITEM 401708 - SUPERPAVE, TYPE C HOT-MIX, 160 GYRATIONS, PG 70-22,(NON-CARBONATE STONE) WEDGE, VARIABLE DEPTH
- (F) ITEM 732002 - TOPSOIL, 6" DEPTH
  ITEM 734013 - PERMANENT GRASS SEEDING, DRY GROUND
  ITEM 735534 - SOIL RETENTION BLANKET MULCH, TYPE 4, SLOPES FLATTER THAN 3:1

UNOFFICIAL WEBSITE COPY

n:\31653-000\contract tb\cadd\CS002U301_1B.dgn
12/18/2015 8:10:17 AM

DELAWARE DEPARTMENT OF TRANSPORTATION	ADDENDUMS / REVISIONS	NOT TO SCALE	US 301 & SR 1 INTERCHANGE	CONTRACT T200911302	BRIDGE NO.	CONSTRUCTION PHASING TYPICAL SECTIONS	CS-02
				COUNTY NEW CASTLE	DESIGNED BY: J.D.C.		SHEET NO. 376
					CHECKED BY: J.M.M.		TOTAL SHTS. 491

CONSTRUCTION PHASING TYPICAL SECTIONS LEGEND

- PORTABLE P.C.C. SAFETY BARRIER (F SHAPE)
- EXISTING PAVEMENT MARKING
- TEMPORARY PAVEMENT MARKING
- PROPOSED CONSTRUCTION THIS PHASE
- TEMPORARY CONSTRUCTION
- TRAFFIC FLOW ARROW

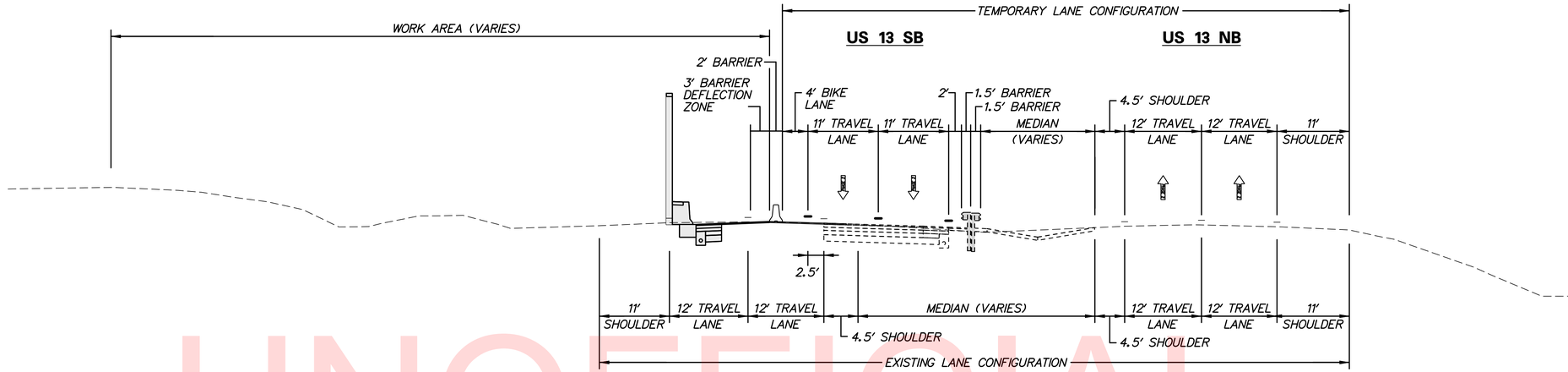

SECTION D'–D' – PHASE 2 (US 13 Sta. 158+00)

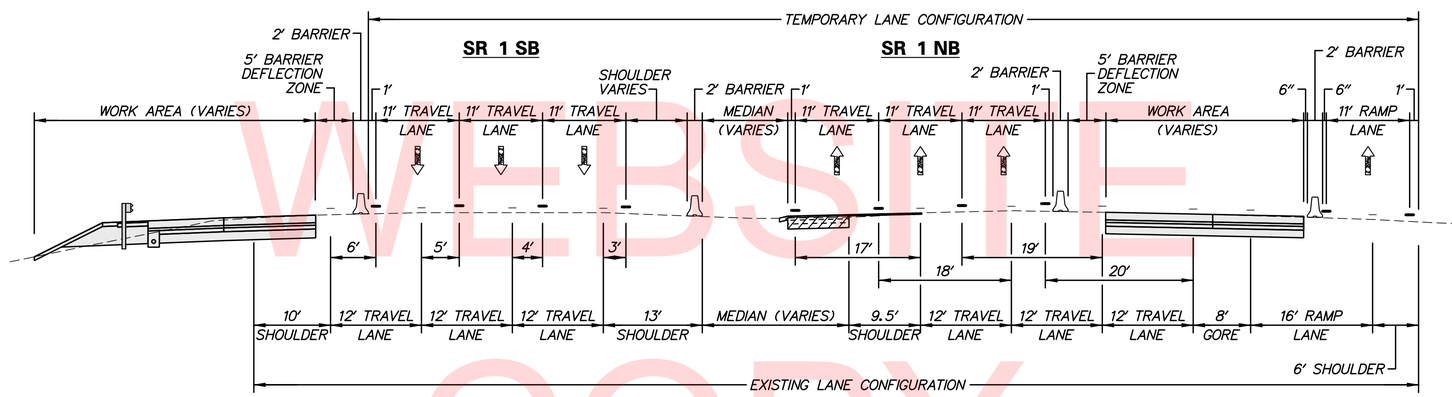

SECTION E'–E' – PHASE 2 (SR 1 Sta. 1820+00)

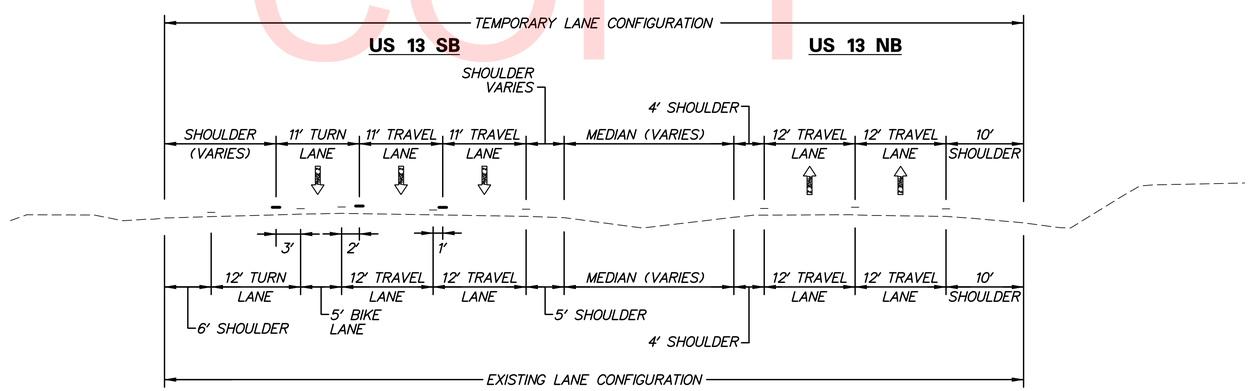

SECTION F'–F' – PHASES 2 AND 2A (US 13 Sta. 181+00)

UNOFFICIAL WEBSITE COPY

DELAWARE DEPARTMENT OF TRANSPORTATION	ADDENDUMS / REVISIONS	NOT TO SCALE	US 301 & SR 1 INTERCHANGE	CONTRACT T200911302 / COUNTY NEW CASTLE	BRIDGE NO. / DESIGNED BY: J.D.C. / CHECKED BY: J.M.M.	CONSTRUCTION PHASING TYPICAL SECTIONS

CS-03

SHEET NO. 377

TOTAL SHTS. 491

n:\31653-000\contract tb\cadd\CS003U301_tB.dgn
12/18/2015 8:10:18 AM

CONSTRUCTION PHASING TYPICAL SECTIONS LEGEND

- PORTABLE P.C.C. SAFETY BARRIER (F SHAPE)
- EXISTING PAVEMENT MARKING
- TEMPORARY PAVEMENT MARKING
- PROPOSED CONSTRUCTION THIS PHASE
- TEMPORARY CONSTRUCTION
- TRAFFIC FLOW ARROW

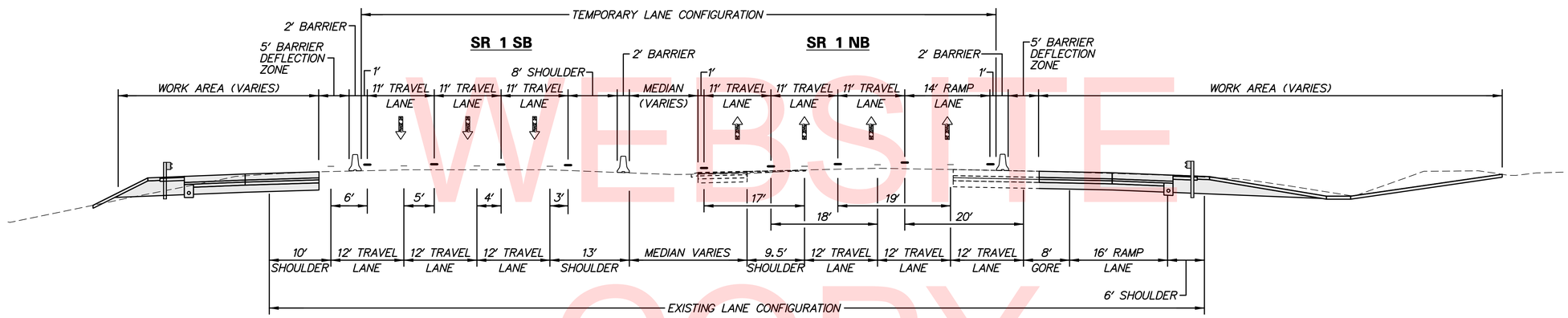

SECTION G'–G' – PHASE 2A (SR 1 Sta. 1820+00)

UNOFFICIAL WEBSITE COPY

n:\31653-000\contract tb\cadd\CS004U301_1B.dgn
12/18/2015 8:10:19 AM

DELAWARE DEPARTMENT OF TRANSPORTATION	ADDENDUMS / REVISIONS	NOT TO SCALE	US 301 & SR 1 INTERCHANGE	CONTRACT T200911302	BRIDGE NO.	CONSTRUCTION PHASING TYPICAL SECTIONS	CS-04
				COUNTY NEW CASTLE	DESIGNED BY: J.D.C.		SHEET NO. 378
					CHECKED BY: J.M.M.		TOTAL SHTS. 491

CONSTRUCTION PHASING TYPICAL SECTIONS LEGEND

- PORTABLE P.C.C. SAFETY BARRIER (F SHAPE)
- EXISTING PAVEMENT MARKING
- TEMPORARY PAVEMENT MARKING
- PROPOSED CONSTRUCTION THIS PHASE
- TEMPORARY CONSTRUCTION
- TRAFFIC FLOW ARROW

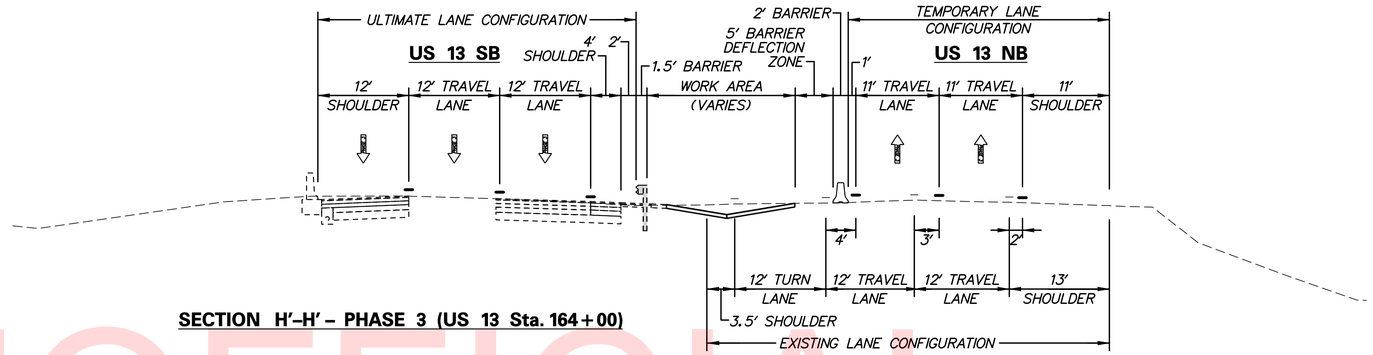

SECTION H'–H' – PHASE 3 (US 13 Sta. 164+00)

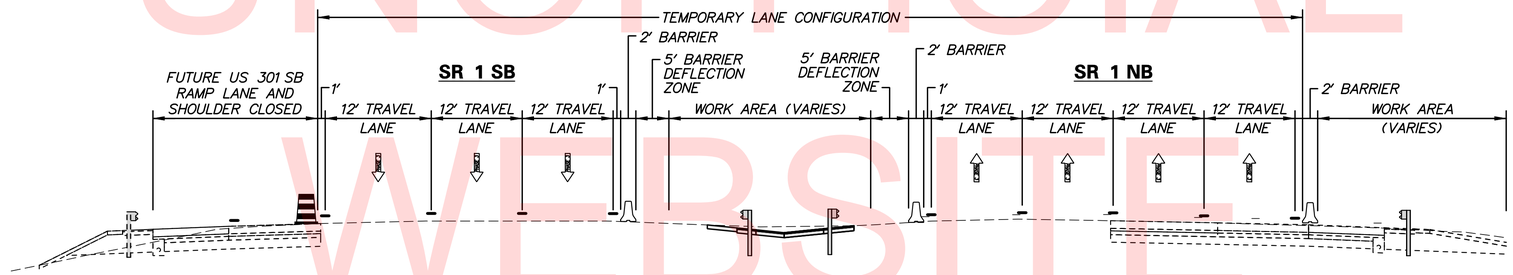

SECTION I'–I' – PHASE 3 (SR 1 Sta. 1820+00)

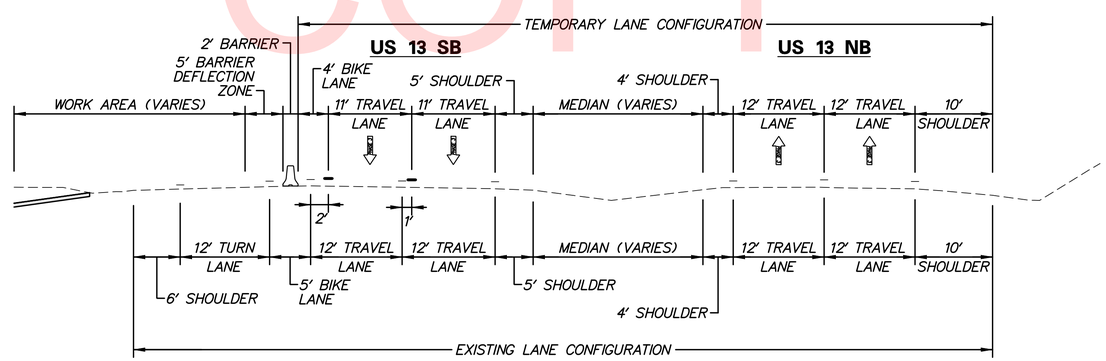

SECTION J'–J' – PHASE 3 (US 13 Sta. 181+00)

UNOFFICIAL WEBSITE COPY

DELAWARE DEPARTMENT OF TRANSPORTATION	ADDENDUMS / REVISIONS	NOT TO SCALE	US 301 & SR 1 INTERCHANGE	CONTRACT T200911302	BRIDGE NO.	CONSTRUCTION PHASING TYPICAL SECTIONS	CS-05
				COUNTY NEW CASTLE	DESIGNED BY: J.D.C.		SHEET NO. 379
					CHECKED BY: J.M.M.		TOTAL SHTS. 491

n:\31653-000\contract tb\cadd\CS005U301_TB.dgn 12/18/2015 8:10:19 AM

DETAIL: TEMPORARY STREAM CROSSING FOR HAUL ROAD

COST OF TEMPORARY CROSSING SHALL BE INCIDENTAL TO COST OF WETLAND ACCESS ROAD, TYPE II. WETLAND ACCESS ROAD, TYPE II AT THIS LOCATION SHALL BE PAID FOR AS SEPARATE ITEM NO. 202508.

TEMPORARY STREAM CROSSING - CONSTRUCTION NOTES

1. THE TEMPORARY CROSSING FOR HAUL ROAD ACTIVITIES SHALL BE CONSTRUCTED PER DETAIL AND NOTES. THE CONTRACTOR SHALL NOT ACCESS THE STREAM, IMPACT THE STREAM, NOR CHANGE THE STREAM PROFILE DURING CONSTRUCTION ACTIVITIES.
2. ABUTMENTS SHALL BE PLACED PARALLEL TO, AND ON, STABLE BANKS SUCH THAT THE BOTTOM OF THE STRUCTURE IS AT OR ABOVE MINIMUM TOP WIDTH ELEVATION PER CONTRACT SPECIAL PROVISIONS.
3. TEMPORARY ACCESS BRIDGE SHOULD BE CONSTRUCTED TO SPAN THE ENTIRE CHANNEL (OHW/WL). IF THE BANKFULL CHANNEL WIDTH EXCEEDS 8 FEET, THEN A FOOTING, PIER, OR OTHER SUPPORT MAY BE CONSTRUCTED WITHIN THE WATERWAY. NO SUPPORT WILL BE PERMITTED WITHIN THE CHANNEL FOR WATERWAYS LESS THAN 8 FEET WIDE. ONE ADDITIONAL BRIDGE SUPPORT WILL BE PERMITTED FOR EACH ADDITIONAL 8-FOOT WIDTH OF CHANNEL.
4. ALL DECKING MEMBERS SHOULD BE PLACED PERPENDICULARLY TO THE STRINGERS, BUTTED TIGHTLY, AND SECURELY FASTENED TO THE STRINGERS. DECKING MATERIALS MUST BE BUTTED TIGHTLY TO PREVENT ANY SOIL MATERIAL TRACKED ONTO THE BRIDGE FROM FALLING INTO THE WATERWAY.
5. ALTHOUGH RUN PLANKS ARE OPTIONAL, THEY MAY BE NECESSARY TO PROPERLY DISTRIBUTE LOADS. ONE RUN PLANK SHOULD BE PROVIDED FOR EACH TRACK OF THE EQUIPMENT WHEELS AND SHOULD BE SECURELY FASTENED TO THE LENGTH OF THE SPAN.
6. CURBS OR FENDERS MAY BE INSTALLED ALONG THE OUTER SIDES OF THE DECK TO PROVIDE ADDITIONAL SAFETY.
7. BRIDGE SHOULD BE SECURELY ANCHORED AT ONE END USING A STEEL CABLE OR CHAIN TO PREVENT THE BRIDGE FROM FLOATING DOWNSTREAM AND POSSIBLY CAUSING AN OBSTRUCTION TO THE FLOW. ANCHORING AT ONLY ONE END WILL PREVENT CHANNEL OBSTRUCTION IN THE EVENT THAT FLOOD WATERS FLOAT THE BRIDGE. ACCEPTABLE ANCHORS ARE LARGE TREES, BOULDERS, OR DRIVEN STEEL ANCHORS.
8. ALL AREAS DISTURBED DURING INSTALLATION SHALL BE STABILIZED WITHIN 14 CALENDAR DAYS OF REMOVAL.
9. INSPECTION AND MAINTENANCE SHALL BE PERFORMED ON A DAILY BASIS AND AFTER ALL STORM EVENTS TO ENSURE THAT THE STRUCTURE COMPLIES WITH ALL STANDARDS AND SPECIFICATIONS. THIS INCLUDES BRIDGE AND STREAMBANK STABILITY AND REMOVAL OF TRAPPED SEDIMENT AND DEBRIS WHICH SHALL BE DISPOSED OF IN A STABILIZED AREA OUTSIDE OF THE FLOODPLAIN.
10. REMOVAL OF THE TEMPORARY BRIDGE SHALL INCLUDE ALL BRIDGE MATERIALS AND STRUCTURES WITHIN 14 CALENDAR DAYS OF START OF DEMOLITION. AREAS DISTURBED IN THE PROCESS SHALL BE PERMANENTLY STABILIZED PER NOTE THIS SHEET AND PER ENVIRONMENTAL COMPLIANCE GUIDELINES OF THE CONTRACT DOCUMENTS.

NOTES:

1. REINFORCED SILT FENCE SHALL BE INSTALLED ALONG BOTH SIDES OF THE PROPOSED HAUL ROAD AND THE PROPOSED ACCESS ROAD IN 200-FOOT LENGTHS WITH THE DOWNSTREAM-MOST 10-FEET OF EACH LENGTH TURNED UP SLOPE TOWARD THE ROAD.
2. STABILIZED CONSTRUCTION ENTRANCES SHALL BE INSTALLED FOR INGRESS AND EGRESS AT HYETTS CORNER ROAD.
3. THE COST OF INSTALLATION AND MAINTENANCE ALL DEVICES FOR EROSION AND SEDIMENT CONTROL, MAINTENANCE OF STREAMFLOW, AND TEMPORARY CROSSING OF STREAM SHALL BE INCIDENTAL TO THE COST OF THE WETLAND ACCESS ROAD, TYPE II FOR HAUL ROAD.

UNOFFICIAL WEBSITE COPY

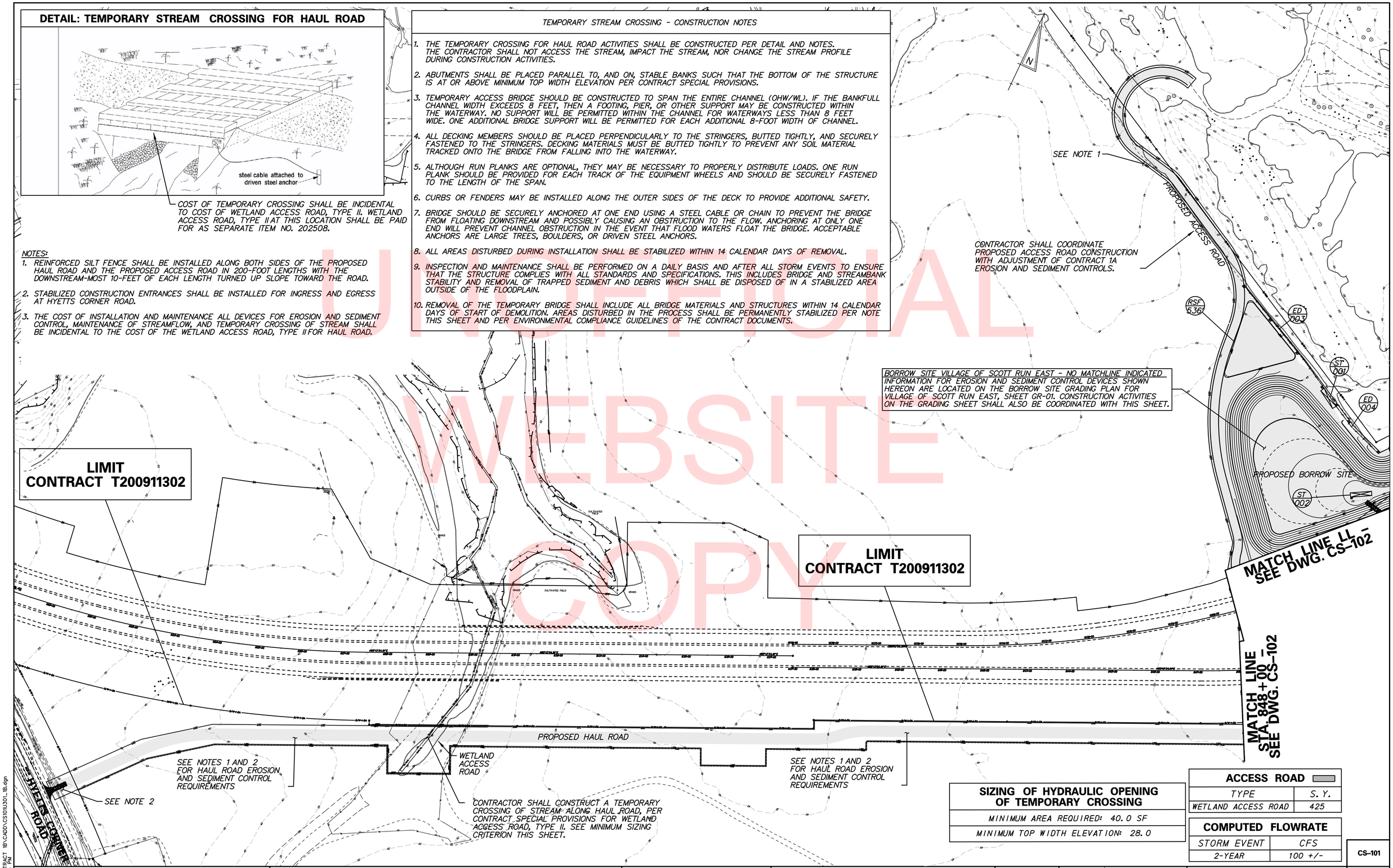

SIZING OF HYDRAULIC OPENING OF TEMPORARY CROSSING
MINIMUM AREA REQUIRED: 40.0 SF
MINIMUM TOP WIDTH ELEVATION: 28.0

ACCESS ROAD	
TYPE	S.Y.
WETLAND ACCESS ROAD	425

COMPUTED FLOWRATE	
STORM EVENT	CFS
2-YEAR	100 +/-

N:\31653-000\CONTRACT 1B\CADD\CS101\U301_1B.dgn
2/25/2015 2:21:03 PM

DELAWARE DEPARTMENT OF TRANSPORTATION

ADDENDUMS / REVISIONS

SCALE 0 100 200 300 FEET

US 301 & SR 1 INTERCHANGE

CONTRACT	BRIDGE NO.
T200911302	DESIGNED BY: J.D.C.
COUNTY	
NEW CASTLE	CHECKED BY: J.M.M.

CONSTRUCTION PHASING HAUL ROAD

CS-101
SHEET NO. 380
TOTAL SHTS. 491

CONSTRUCTION PHASING LEGEND

- TEMPORARY CONSTRUCTION
- PROPOSED CONSTRUCTION THIS PHASE
- EXISTING SIGN/PROPOSED TEMPORARY SIGN
- TYPE III BARRICADE
- PLASTIC DRUM
- TRAFFIC FLOW ARROW
- (A) 4" SOLID WHITE PAINT
- (B) 4" SOLID YELLOW PAINT
- (C) 4" BROKEN WHITE PAINT (10' LINE, 30' GAP)
- (D) 4" DOTTED WHITE PAINT (3' LINE, 9' GAP)
- (E) 10" SOLID WHITE PAINT
- (F) WHITE PAINT SYMBOL/LEGEND
- PORTABLE P.C.C. SAFETY BARRIER (F SHAPE)
- PORTABLE IMPACT ATTENUATOR
- ARROW PANEL
- (RM C) REMOVE EXISTING STRIPING BY CONTRACTOR

SEQUENCE OF CONSTRUCTION - PHASE I

1. CONSTRUCT FULL DEPTH PAVEMENT FOR US 301.
2. MAINTAIN HAUL ROAD.
3. STABILIZE ALL DISTRURBED AREAS.

NOTES:

1. PHASE 1 CONSTRUCTION: AREA DESIGNATED FOR BIOSWALE INSTALLATION SHALL BE ROUGH GRADED TO 1-FOOT ABOVE THE FINISHED GRADE ELEVATION AND TEMPORARILY STABILIZED. UPON FINAL STABILIZATION OF ALL CONTRIBUTING DRAINAGE AREAS GRADE BIOSWALE TO FINAL GRADE AND STABILIZE WITH WET SEED MIX.
2. CONTRACTOR SHALL BE RESPONSIBLE FOR THE DESIGN, INSTALLATION, AND MAINTENANCE OF PIPE CULVERTS, AS NECESSARY, TO ENSURE CONVEYANCE OF ALL PROPOSED DITCHES BENEATH HAUL ROAD.

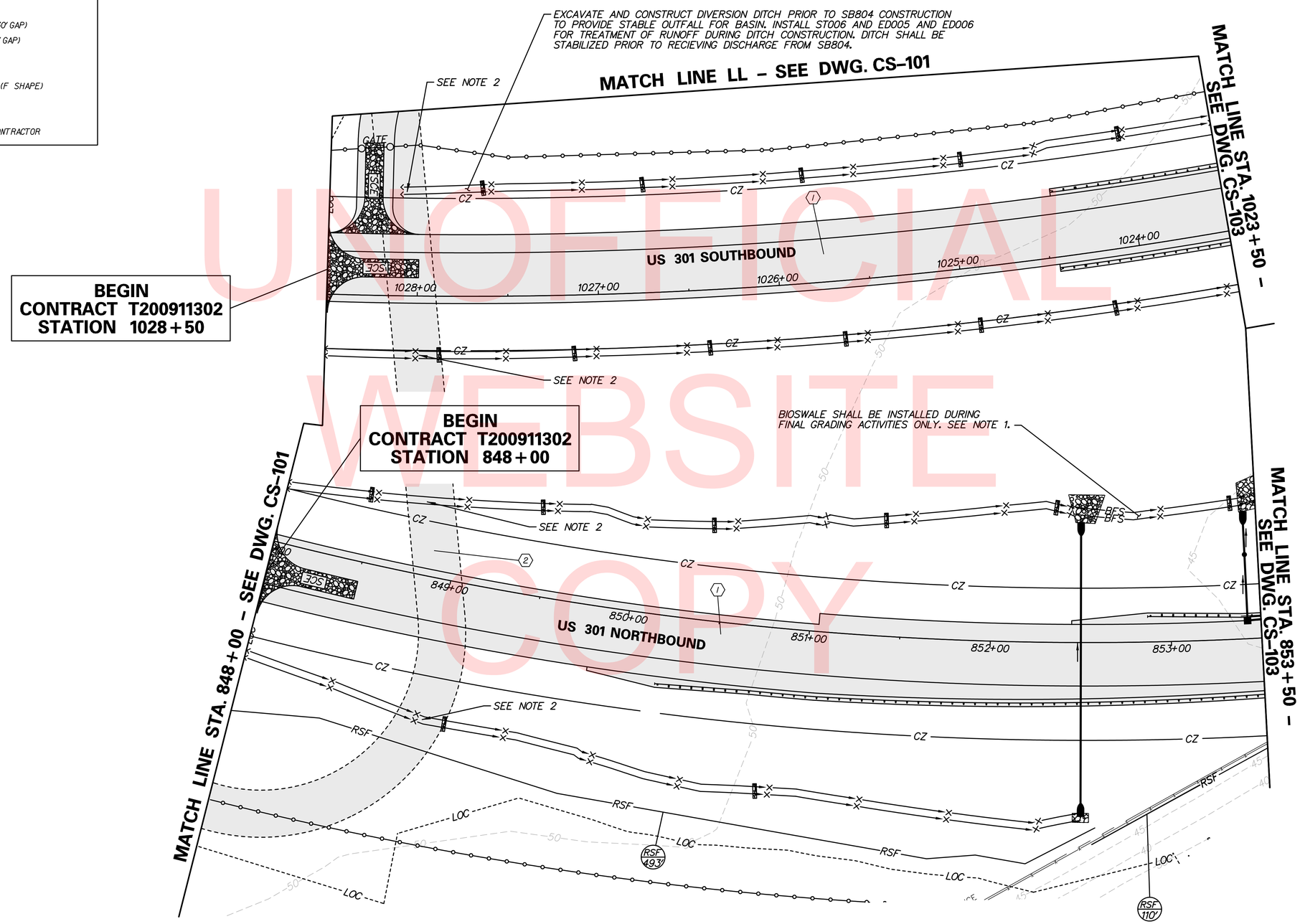

UNOFFICIAL WEBSITE COPY

DELAWARE DEPARTMENT OF TRANSPORTATION	ADDENDUMS / REVISIONS	SCALE 0 30 60 90 FEET	US 301 & SR 1 INTERCHANGE	CONTRACT T200911302	BRIDGE NO.	CONSTRUCTION PHASING, M.O.T., AND EROSION CONTROL PLAN – PHASE 1
				COUNTY NEW CASTLE	DESIGNED BY: J.D.C.	SHEET NO. 381
					CHECKED BY: J.M.M.	TOTAL SHTS. 491

CS-102

n:\31653-000\contract tb\cadd\CS102U301_1B.dgn
12/18/2015 8:10:35 AM

SEQUENCE OF CONSTRUCTION - PHASE I

1. PLACE ALL PERTINENT TEMPORARY TRAFFIC CONTROL DEVICES AS SHOWN ON THIS PLAN AND THE PERMANENT WARNING SIGN LOCATION PLAN. SHIFT SR1 SOUTHBOUND TRAFFIC TO DESIGNATED TRAVEL LANES.
2. RELOCATE ITMS COMMUNICATIONS LINE PRIOR TO BEGINNING ANY CONSTRUCTION ACTIVITIES WHICH WILL IMPACT EXISTING LINE. SEE SIGNING, STRIPING AND CONDUIT PLANS, DWG. NOS. SS-01 THROUGH SS-07.
3. CONSTRUCT FULL DEPTH PAVEMENT FOR US 301.
4. CONSTRUCT BRIDGE ABUTMENT, FOOTER, PIER, CONCRETE BARRIER AND GUARDRAIL.
5. DETOUR SR 1 SOUTHBOUND TRAFFIC AS SHOWN ON DETOUR PLANS DURING HOURS SPECIFIED ON DWG. NO. TCN-01 FOR BRIDGE GIRDER AND STRADDLE BENT CONSTRUCTION AND OTHER SELECT BRIDGE CONSTRUCTION ACTIVITIES OVER SR 1 SOUTHBOUND, AS DIRECTED BY THE ENGINEER.
6. STABILIZE ALL DISTRURBED AREAS.

NOTES:

1. *PHASE 1 CONSTRUCTION: AREA DESIGNATED FOR BIOSWALE INSTALLATION SHALL BE ROUGH GRADED TO 1-FOOT ABOVE THE FINISHED GRADE ELEVATION AND TEMPORARILY STABILIZED. UPON FINAL STABILIZATION OF ALL CONTRIBUTING DRAINAGE AREAS GRADE BIOSWALE TO FINAL GRADE AND STABILIZE WITH WET SEED MIX.*

EARTH DIKE SCHEDULE

NO.	BEGIN STA.	END STA.	OFFSET	LENGTH	TYPE
007	1020+02	1018+04	195.88	206'	B-3

MAINTAIN FLOW FROM SOUTH IN EXISTING DITCH DURING SB804 CONSTRUCTION. INSTALL RSF AT TOP OF BANK, EXISTING DITCH PER PLANS, PRIOR TO EXCAVATING FOR SB804. UPON COMPLETION OF SB804, RUNOFF FROM THE DITCH AND OTHER UPSTREAM AREAS MAY BE DIRECTED INTO THE BASIN VIA PROPOSED STORM DRAIN SYSTEMS OR DITCH. RSF MAY BE REMOVED UPON BASIN COMPLETION.

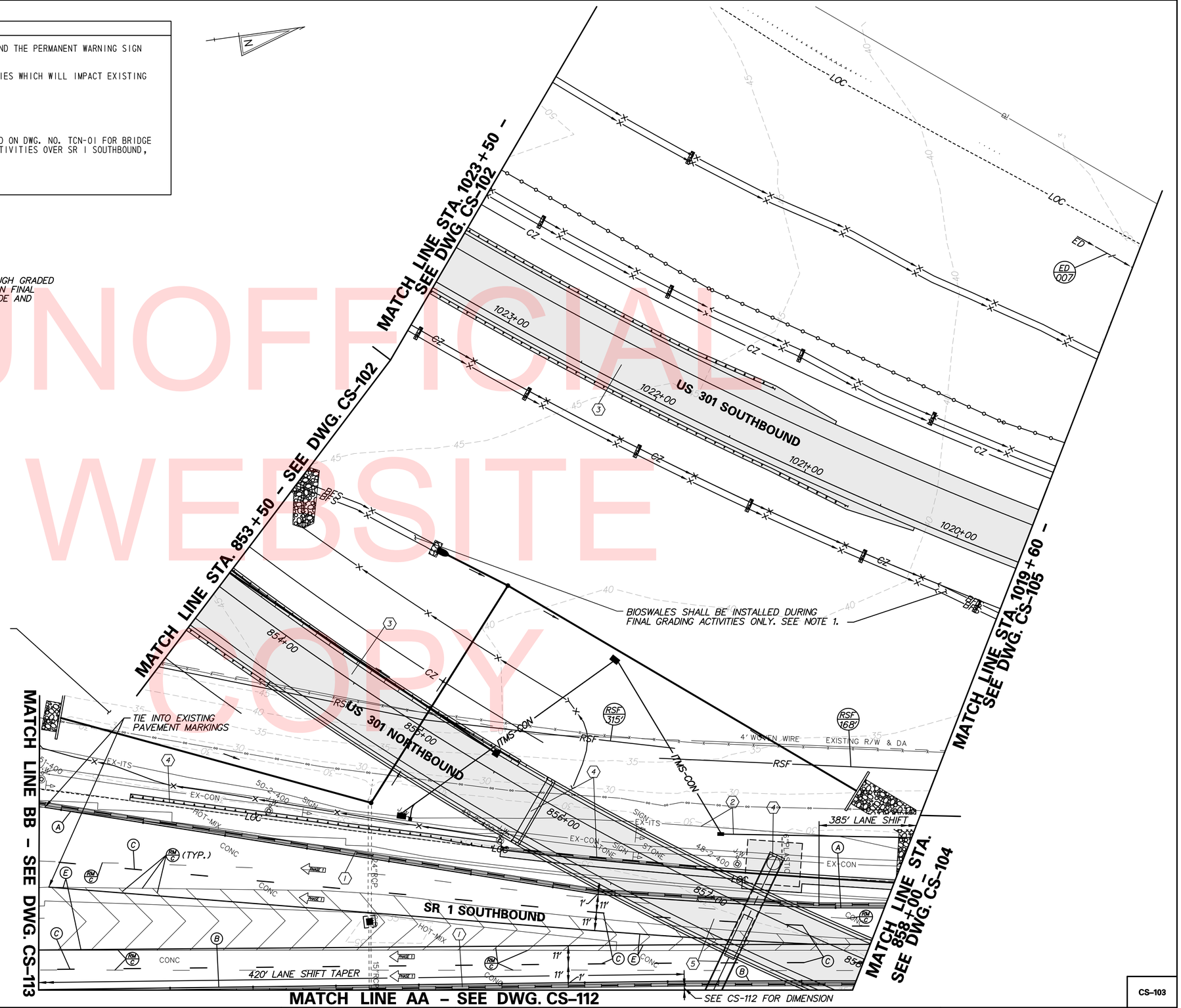

CONSTRUCTION PHASING LEGEND

- TEMPORARY CONSTRUCTION
- PROPOSED CONSTRUCTION THIS PHASE
- EXISTING SIGN/PROPOSED TEMPORARY SIGN
- TYPE III BARRICADE
- PLASTIC DRUM
- TRAFFIC FLOW ARROW
- (A) 4" SOLID WHITE PAINT
- (B) 4" SOLID YELLOW PAINT
- (C) 4" BROKEN WHITE PAINT (10' LINE, 30' GAP)
- (D) 4" DOTTED WHITE PAINT (3' LINE, 9' GAP)
- (E) 10" SOLID WHITE PAINT
- (F) WHITE PAINT SYMBOL/LEGEND
- PORTABLE P.C.C. SAFETY BARRIER (F SHAPE)
- PORTABLE IMPACT ATTENUATOR
- ARROW PANEL
- (RM C) REMOVE EXISTING STRIPING BY CONTRACTOR

UNOFFICIAL WEBSITE COPY

DELAWARE DEPARTMENT OF TRANSPORTATION

ADDENDUMS / REVISIONS

SCALE 0 30 60 90 FEET

US 301 & SR 1 INTERCHANGE

CONTRACT	BRIDGE NO.	BR1-433
T200911302	DESIGNED BY: J.D.C.	
COUNTY		
NEW CASTLE	CHECKED BY: J.M.M.	

CONSTRUCTION PHASING, M.O.T., AND EROSION CONTROL PLAN – PHASE 1

CS-103
SHEET NO. 382
TOTAL SHTS. 491

n:\31653-000\contract tb\cadd\CS103U301_1B.dgn
12/18/2015 8:10:38 AM

SEDIMENT TRAP SCHEDULE

NO.	D. AREA	LENGTH	WIDTH	DEPTH	OUT. TYPE	WEIR EL.	CLEAN EL.	WEIR LENGTH	EMBANK. EL.
003	2.87 AC	167′	10′	4.00′	STONE	31.00	26.00	11′	30.00
004	1.43 AC	153′	8′	3.00′	STONE	22.00	20.00	6′	23.00
005	0.95 AC	169′	8′	3.00′	STONE	22.00	20.00	4′	23.00

SEQUENCE OF CONSTRUCTION - PHASE I

1. PLACE ALL PERTINENT TEMPORARY TRAFFIC CONTROL DEVICES AS SHOWN ON THIS PLAN AND THE PERMANENT WARNING SIGN LOCATION PLAN. SHIFT SR 1 NORTHBOUND AND SOUTHBOUND TRAFFIC AND US 13 SOUTHBOUND TRAFFIC TO DESIGNATED TRAVEL LANES. MAINTAIN US 13 NORTHBOUND TRAFFIC ON EXISTING TRAVEL LANES. DETOUR US 13 BIKE TRAFFIC FOR THE DURATION OF CONSTRUCTION AS SHOWN ON DWG. NO. DP-04.
2. RELOCATE ITMS COMMUNICATIONS LINE PRIOR TO BEGINNING AND CONSTRUCTION ACTIVITIES WHICH WILL IMPACT EXISTING LINE. SEE SIGNING, STRIPING AND CONDUIT PLANS, DWG. NOS. SS-01 THROUGH SS-07.
3. CONSTRUCT FULL DEPTH PAVEMENT AND GUARD RAIL ALONG LEFT SIDE OF US 13 SOUTHBOUND.
4. CONSTRUCT BRIDGE ABUTMENT, FOOTERS AND PIERS.
5. CONSTRUCT CONCRETE BARRIER AND FULL DEPTH PAVEMENT ALONG SR 1.
6. BEGIN ROUGH GRADING FOR RAMP R AND US 301 NORTHBOUND.
7. DETOUR SR 1 NORTHBOUND AND SOUTHBOUND TRAFFIC AS SHOWN ON DETOUR PLANS DURING HOURS SPECIFIED ON DWG. NO. TCN-01 FOR BRIDGE GIRDER AND STRADDLE BENT CONSTRUCTION AND OTHER SELECT BRIDGE CONSTRUCTION ACTIVITIES OVER SR 1, AS DIRECTED BY THE ENGINEER.
8. STABILIZE ALL DISTRURBED AREAS.

CONSTRUCTION PHASING LEGEND

- TEMPORARY CONSTRUCTION
- PROPOSED CONSTRUCTION THIS PHASE
- EXISTING SIGN/PROPOSED TEMPORARY SIGN
- TYPE III BARRICADE
- PLASTIC DRUM
- TRAFFIC FLOW ARROW
- (A) 4" SOLID WHITE PAINT
- (B) 4" SOLID YELLOW PAINT
- (C) 4" BROKEN WHITE PAINT (10' LINE, 30' GAP)
- (D) 4" DOTTED WHITE PAINT (3' LINE, 9' GAP)
- (E) 10" SOLID WHITE PAINT
- (F) WHITE PAINT SYMBOL/LEGEND
- PORTABLE P.C.C. SAFETY BARRIER (F SHAPE)
- PORTABLE IMPACT ATTENUATOR
- ARROW PANEL
- (RM C) REMOVE EXISTING STRIPING BY CONTRACTOR

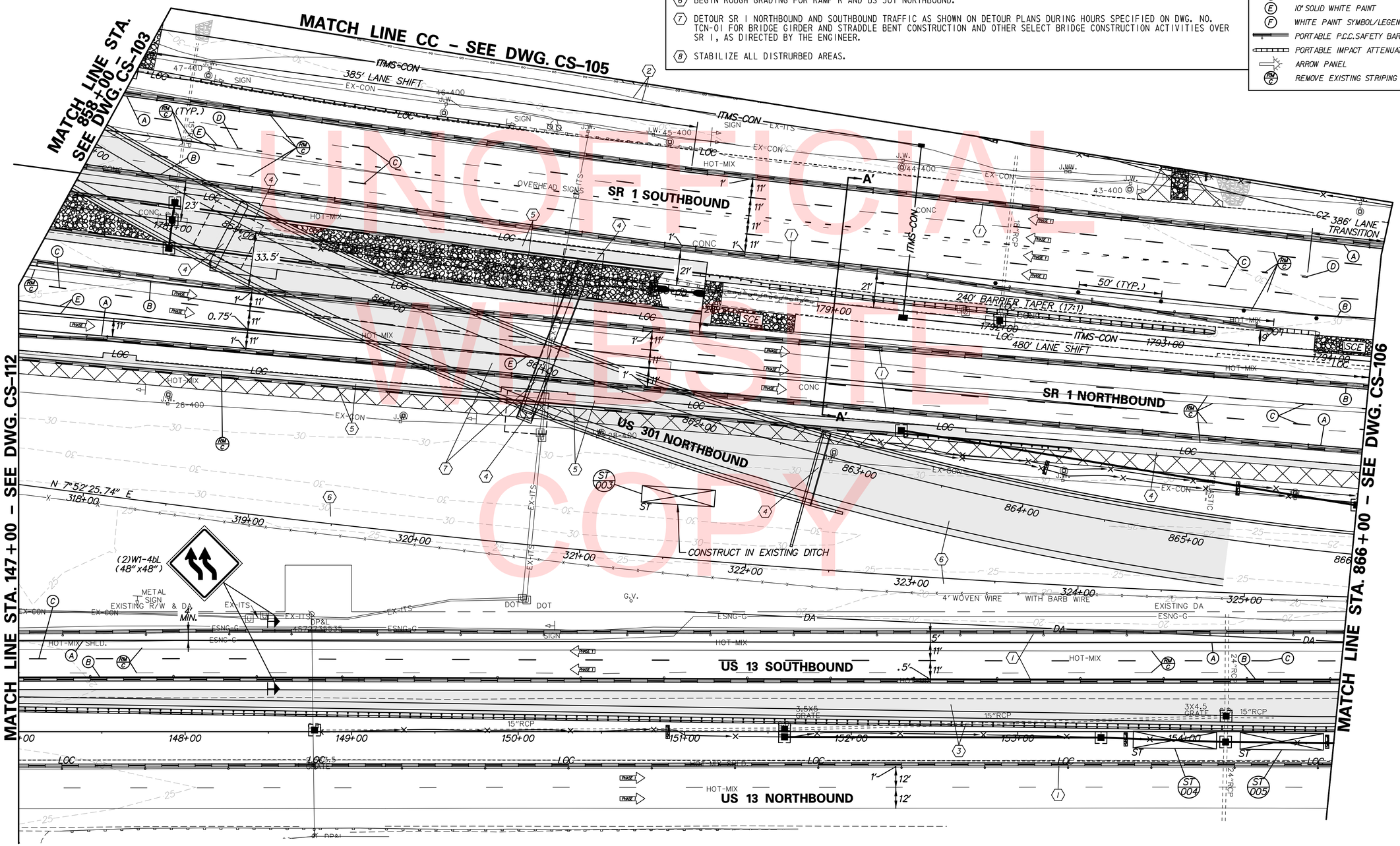

UNOFFICIAL WEBSITE COPY

DELAWARE DEPARTMENT OF TRANSPORTATION	ADDENDUMS / REVISIONS	SCALE 0 30 60 90 FEET	US 301 & SR 1 INTERCHANGE	CONTRACT T200911302	BRIDGE NO. BR1-433 & RW1-3	CONSTRUCTION PHASING, M.O.T., AND EROSION CONTROL PLAN – PHASE 1	CS-104
				COUNTY NEW CASTLE	DESIGNED BY: J.D.C.		SHEET NO. 383
					CHECKED BY: J.M.M.		TOTAL SHTS. 491

n:\31653_000\contract tb\cadd\CS104U301_1B.dgn
12/18/2015 8:10:42 AM

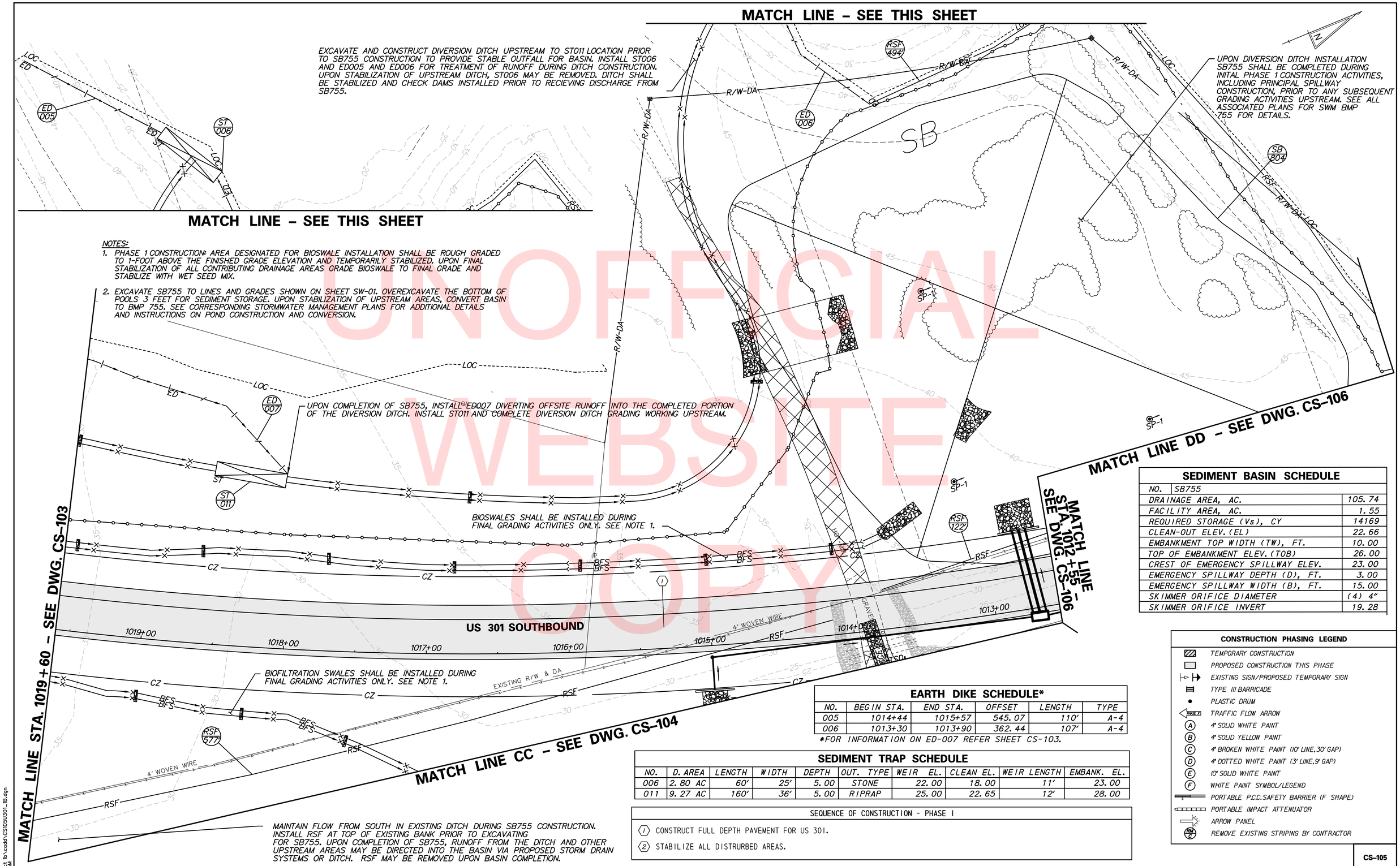

NOTES:

1. PHASE 1 CONSTRUCTION: AREA DESIGNATED FOR BIOSWALE INSTALLATION SHALL BE ROUGH GRADED TO 1-FOOT ABOVE THE FINISHED GRADE ELEVATION AND TEMPORARILY STABILIZED. UPON FINAL STABILIZATION OF ALL CONTRIBUTING DRAINAGE AREAS GRADE BIOSWALE TO FINAL GRADE AND STABILIZE WITH WET SEED MIX.
2. EXCAVATE SB755 TO LINES AND GRADES SHOWN ON SHEET SW-01. OVEREXCAVATE THE BOTTOM OF POOLS 3 FEET FOR SEDIMENT STORAGE. UPON STABILIZATION OF UPSTREAM AREAS, CONVERT BASIN TO BMP 755. SEE CORRESPONDING STORMWATER MANAGEMENT PLANS FOR ADDITIONAL DETAILS AND INSTRUCTIONS ON POND CONSTRUCTION AND CONVERSION.

UNOFFICIAL WEBSITE COPY

SEDIMENT BASIN SCHEDULE

NO.	SB755
DRAINAGE AREA, AC.	105.74
FACILITY AREA, AC.	1.55
REQUIRED STORAGE (Vs), CY	14169
CLEAN-OUT ELEV. (EL)	22.66
EMBANKMENT TOP WIDTH (TW), FT.	10.00
TOP OF EMBANKMENT ELEV. (TOB)	26.00
CREST OF EMERGENCY SPILLWAY ELEV.	23.00
EMERGENCY SPILLWAY DEPTH (D), FT.	3.00
EMERGENCY SPILLWAY WIDTH (B), FT.	15.00
SKIMMER ORIFICE DIAMETER	(4) 4"
SKIMMER ORIFICE INVERT	19.28

EARTH DIKE SCHEDULE*

NO.	BEGIN STA.	END STA.	OFFSET	LENGTH	TYPE
005	1014+44	1015+57	545.07	110'	A-4
006	1013+30	1013+90	362.44	107'	A-4

*FOR INFORMATION ON ED-007 REFER SHEET CS-103.

SEDIMENT TRAP SCHEDULE

NO.	D. AREA	LENGTH	WIDTH	DEPTH	OUT. TYPE	WEIR EL.	CLEAN EL.	WEIR LENGTH	EMBANK. EL.
006	2.80 AC	60'	25'	5.00	STONE	22.00	18.00	11'	23.00
011	9.27 AC	160'	36'	5.00	RIPRAP	25.00	22.65	12'	28.00

SEQUENCE OF CONSTRUCTION - PHASE I

1. CONSTRUCT FULL DEPTH PAVEMENT FOR US 301.
2. STABILIZE ALL DISTRURBED AREAS.

CONSTRUCTION PHASING LEGEND

- TEMPORARY CONSTRUCTION
- PROPOSED CONSTRUCTION THIS PHASE
- EXISTING SIGN/PROPOSED TEMPORARY SIGN
- TYPE III BARRICADE
- PLASTIC DRUM
- TRAFFIC FLOW ARROW
- (A) 4" SOLID WHITE PAINT
- (B) 4" SOLID YELLOW PAINT
- (C) 4" BROKEN WHITE PAINT (10' LINE, 30' GAP)
- (D) 4" DOTTED WHITE PAINT (3' LINE, 9' GAP)
- (E) 10" SOLID WHITE PAINT
- (F) WHITE PAINT SYMBOL/LEGEND
- PORTABLE P.C.C. SAFETY BARRIER (F SHAPE)
- PORTABLE IMPACT ATTENUATOR
- ARROW PANEL
- (RMC) REMOVE EXISTING STRIPING BY CONTRACTOR

CS-105

DELAWARE DEPARTMENT OF TRANSPORTATION

ADDENDUMS / REVISIONS

SCALE 0 30 60 90 FEET

US 301 & SR 1 INTERCHANGE

CONTRACT	BRIDGE NO.
T200911302	DESIGNED BY: J.D.C.
COUNTY	
NEW CASTLE	CHECKED BY: J.M.M.

CONSTRUCTION PHASING, M.O.T., AND EROSION CONTROL PLAN – PHASE 1

SHEET NO. 384 / TOTAL SHTS. 491

n:\31653-000\contract tb\cadd\CS105U301_1B.dgn 12/18/2015 8:10:46 AM

SEQUENCE OF CONSTRUCTION - PHASE I

1. USING TYPICAL APPLICATION 33, REMOVE EXISTING RUMBLE STRIPS ALONG THE LEFT SIDE OF SR 1 SOUTHBOUND FROM STA. 1801+25 TO STA. 1833+75 BY MILLING A 2" DEEP BY 4 FEET WIDE SECTION OF THE EXISTING SHOULDER PAVEMENT. REPLACE MILLED PAVEMENT WITH A 2" COURSE OF SUPERPAVE, TYPE C HOT-MIX, 160 GYRATIONS, PG 70-22, (NON-CARBONATE STONE) FOR TRAFFIC USE UNDER TEMPORARY LANE CONFIGURATION.
2. PLACE ALL PERTINENT TEMPORARY TRAFFIC CONTROL DEVICES AS SHOWN ON THIS PLAN AND THE PERMANENT WARNING SIGN LOCATION PLAN. SHIFT SR 1 NORTHBOUND AND SOUTHBOUND AND US 13 SOUTHBOUND TRAFFIC TO DESIGNATED TRAVEL LANES. MAINTAIN US 13 NORTHBOUND TRAFFIC ON EXISTING TRAVEL LANES. DETOUR US 13 BIKE TRAFFIC FOR DURATION OF CONSTRUCTION AS SHOWN ON DWG. NO. DP-04.
3. RELOCATE ITMS COMMUNICATIONS LINE PRIOR TO BEGINNING ANY CONSTRUCTION ACTIVITIES WHICH WILL IMPACT EXISTING LINE. SEE SIGNING, STRIPING AND CONDUIT PLANS, DWG. NOS. SS-01 THROUGH SS-07.
4. CONSTRUCT FULL DEPTH PAVEMENT AND GUARD RAIL ALONG LEFT SIDE OF US 13 SOUTHBOUND.
5. CONSTRUCT FULL DEPTH PAVEMENT ALONG RIGHT SIDE OF SR 1 SOUTHBOUND.
6. REMOVE EXISITNG PAVEMENT ALONG RIGHT SIDE OF SR 1 NORTHBOUND.
7. STABILIZE ALL DISTRURBED AREAS.

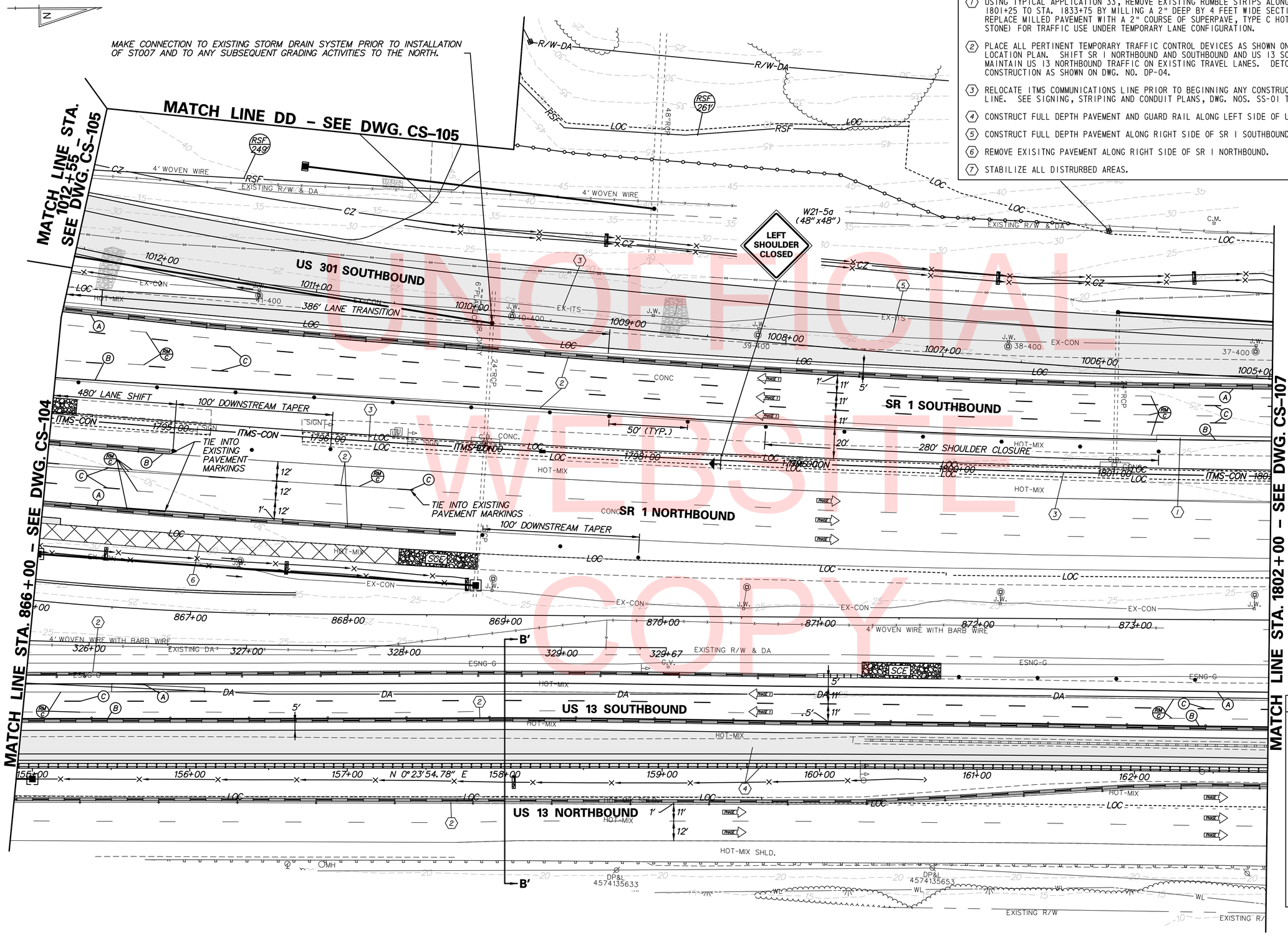

CONSTRUCTION PHASING LEGEND

- TEMPORARY CONSTRUCTION
- PROPOSED CONSTRUCTION THIS PHASE
- EXISTING SIGN/PROPOSED TEMPORARY SIGN
- TYPE III BARRICADE
- PLASTIC DRUM
- TRAFFIC FLOW ARROW
- (A) 4" SOLID WHITE PAINT
- (B) 4" SOLID YELLOW PAINT
- (C) 4" BROKEN WHITE PAINT (10' LINE, 30' GAP)
- (D) 4" DOTTED WHITE PAINT (3' LINE, 9' GAP)
- (E) 10" SOLID WHITE PAINT
- (F) WHITE PAINT SYMBOL/LEGEND
- PORTABLE P.C.C. SAFETY BARRIER (F SHAPE)
- PORTABLE IMPACT ATTENUATOR
- ARROW PANEL
- (RM/C) REMOVE EXISTING STRIPING BY CONTRACTOR

CS-106

UNOFFICIAL WEBSITE COPY

DELAWARE DEPARTMENT OF TRANSPORTATION

ADDENDUMS / REVISIONS

SCALE 0 30 60 90 FEET

US 301 & SR 1 INTERCHANGE

CONTRACT	BRIDGE NO.
T200911302	DESIGNED BY: J.D.C.
COUNTY	CHECKED BY: J.M.M.
NEW CASTLE	

CONSTRUCTION PHASING, M.O.T., AND EROSION CONTROL PLAN - PHASE 1

SHEET NO. 385

TOTAL SHTS. 491

r:\31653-000\contract tb\cadd\CS106U301_1B.dgn
12/18/2015 8:10:50 AM

CONSTRUCTION PHASING LEGEND

- TEMPORARY CONSTRUCTION
- PROPOSED CONSTRUCTION THIS PHASE
- EXISTING SIGN/PROPOSED TEMPORARY SIGN
- TYPE III BARRICADE
- PLASTIC DRUM
- TRAFFIC FLOW ARROW
- (A) 4" SOLID WHITE PAINT
- (B) 4" SOLID YELLOW PAINT
- (C) 4" BROKEN WHITE PAINT (10' LINE, 30' GAP)
- (D) 4" DOTTED WHITE PAINT (3' LINE, 9' GAP)
- (E) 10" SOLID WHITE PAINT
- (F) WHITE PAINT SYMBOL/LEGEND
- PORTABLE P.C.C. SAFETY BARRIER (F SHAPE)
- PORTABLE IMPACT ATTENUATOR
- ARROW PANEL
- (RM C) REMOVE EXISTING STRIPING BY CONTRACTOR

SEQUENCE OF CONSTRUCTION - PHASE I

1. USING TYPICAL APPLICATION 33, REMOVE EXISTING RUMBLE STRIPS ALONG THE LEFT SIDE OF SR 1 SOUTHBOUND FROM STA. 1801+25 TO STA. 1833+75 AND THE LEFT SIDE OF SR 1 NORTHBOUND FROM STA. 1808+75 TO STA. 1831+25 BY MILLING A 2" DEEP BY 4 FEET WIDE SECTION OF THE EXISTING SHOULDER PAVEMENT. REPLACE MILLED PAVEMENT WITH A 2" COURSE OF SUPERPAVE, TYPE C HOT-MIX, 160 GYRATIONS, PG 70-22, (NON-CARBONATE STONE) FOR TRAFFIC USE UNDER TEMPORARY LANE ONFIGURATION.
2. PLACE ALL PERTINENT TEMPORARY TRAFFIC CONTROL DEVICES AS SHOWN ON THIS PLAN AND THE PERMANENT WARNING SIGN LOCATION PLAN. SHIFT SR 1 SOUTHBOUND AND US 13 SOUTHBOUND TRAFFIC TO DESIGNATED TRAVEL LANES. MAINTAIN SR 1 NORTHBOUND AND US 13 NORTHBOUND TRAFFIC IN EXISTING TRAVEL LANES. DETOUR US 13 BIKE TRAFFIC FOR DURATION OF CONSTRUCTION AS SHOWN ON DWG. NO. DP-04.
3. RELOCATE ITMS COMMUNICATIONS LINE PRIOR TO BEGINNING ANY CONSTRUCTION ACTIVITIES WHICH WILL IMPACT EXISTING LINE. SEE SIGNING, STRIPING AND CONDUIT PLANS, DWG. NOS. SS-01 THROUGH SS-07.
4. CONSTRUCT FULL DEPTH PAVEMENT AND GUARD RAIL ALONG LEFT SIDE OF US 13 SOUTHBOUND.
5. CONSTRUCT FULL DEPTH PAVEMENT ALONG RIGHT SIDE OF SR 1 SOUTHBOUND.
6. CONSTRUCT BRIDGE WIDENING. MAINTAIN STREAM FLOW AND ACCESS AREA IN ACCORDANCE WITH MAINTENANCE OF STREAM FLOW PLANS
7. CONSTRUCT SIGN STRUCTURE OH-2 RIGHT SIDE FOUNDATION.
8. STABILIZE ALL DISTRURBED AREAS.

SEDIMENT TRAP SCHEDULE

NO.	D. AREA	LENGTH	WIDTH	DEPTH	OUT. TYPE	WEIR EL.	CLEAN EL.	WEIR LENGTH	EMBANK. EL.
007	5.93 AC	148'	25'	5.0'	RIPRAP	12.00	9.56	14'	14.50

SCOTT RUN MAINTENANCE OF STREAM FLOW:
ADDITIONAL EROSION AND SEDIMENT CONTROL DEVICES WITHIN THIS BOUNDARY ARE LOCATED ON THE MAINTENANCE OF STREAM FLOW SHEETS (MS-01 AND MS-02). CONSTRUCTION ACTIVITIES WITHIN THIS BOUNDARY SHALL ALSO BE COORDINATED WITH THE BRIDGE CONSTRUCTION PLANS FOR BRIDGES BR 1-903S AND BR 1-432.

1606 SF OF TEMPORARY IMPACTS TO WETLANDS TO BE RESTORED. SEE MISCELLANEOUS NOTES AND EC NOTES.

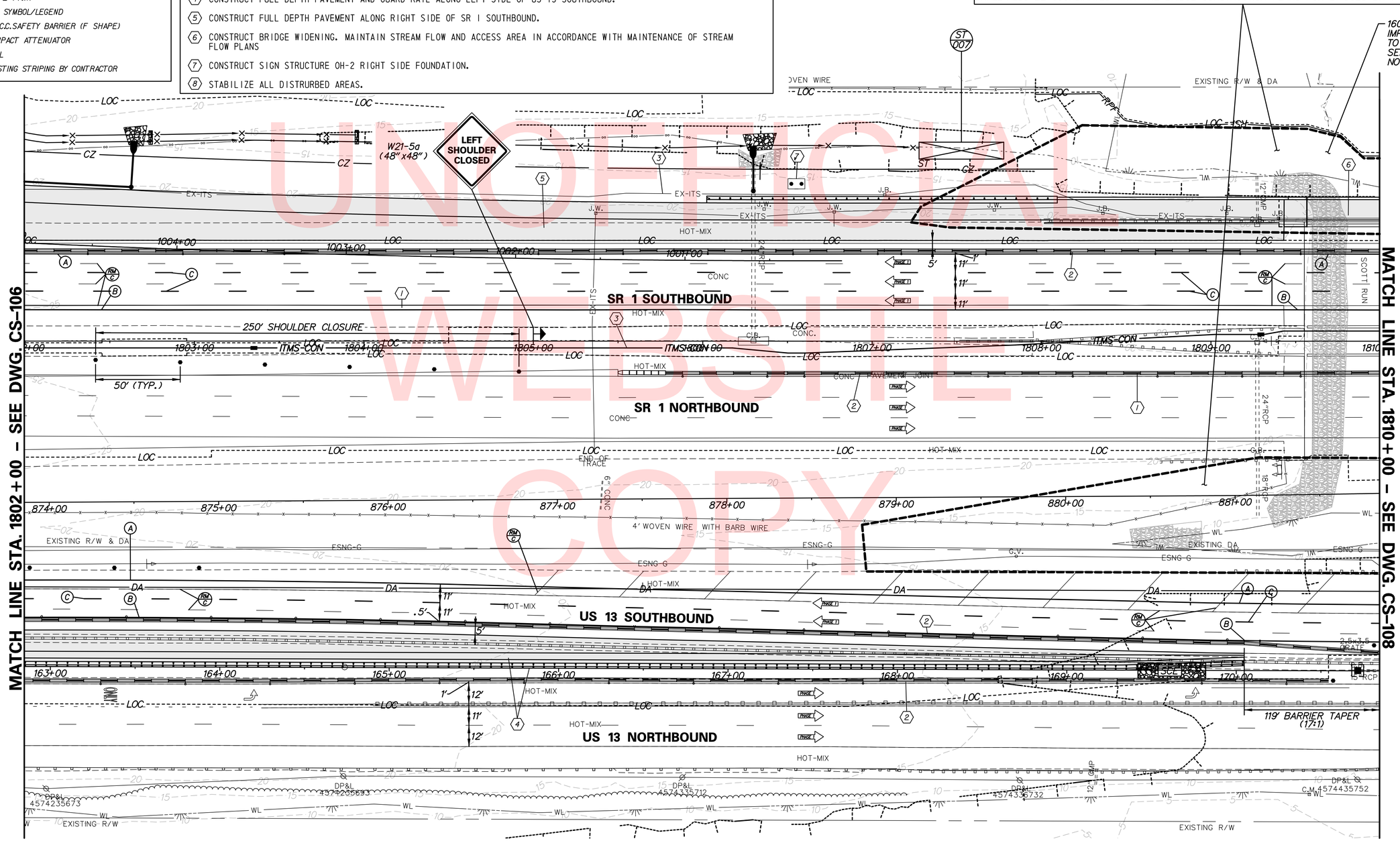

UNOFFICIAL WEBSITE COPY

DELAWARE DEPARTMENT OF TRANSPORTATION	ADDENDUMS / REVISIONS	SCALE 0 30 60 90 FEET	US 301 & SR 1 INTERCHANGE	CONTRACT T200911302	BRIDGE NO. BR1-903N, BR1-903S & RW1-1	CONSTRUCTION PHASING, M.O.T., AND EROSION CONTROL PLAN – PHASE 1	CS-107
				COUNTY NEW CASTLE	DESIGNED BY: J.D.C.		SHEET NO. 386
					CHECKED BY: J.M.M.		TOTAL SHTS. 491

r:\31653-000\contract tb\cadd\CS107U301_TB.dgn
12/18/2015 8:10:54 AM

CONSTRUCTION PHASING LEGEND

- TEMPORARY CONSTRUCTION
- PROPOSED CONSTRUCTION THIS PHASE
- EXISTING SIGN/PROPOSED TEMPORARY SIGN
- TYPE III BARRICADE
- PLASTIC DRUM
- TRAFFIC FLOW ARROW
- (A) 4" SOLID WHITE PAINT
- (B) 4" SOLID YELLOW PAINT
- (C) 4" BROKEN WHITE PAINT (10' LINE, 30' GAP)
- (D) 4" DOTTED WHITE PAINT (3' LINE, 9' GAP)
- (E) 10" SOLID WHITE PAINT
- (F) WHITE PAINT SYMBOL/LEGEND
- PORTABLE P.C.C. SAFETY BARRIER (F SHAPE)
- PORTABLE IMPACT ATTENUATOR
- ARROW PANEL
- (RM C) REMOVE EXISTING STRIPING BY CONTRACTOR

SEQUENCE OF CONSTRUCTION - PHASE I

1. USING TYPICAL APPLICATION 33, REMOVE EXISTING RUMBLE STRIPS ALONG THE LEFT SIDE OF SR 1 SOUTHBOUND FROM STA. 1801+25 TO STA. 1833+75 AND THE LEFT SIDE OF SR 1 NORTHBOUND FROM STA. 1808+75 TO STA. 1831+25 BY MILLING A 2" DEEP BY 4 FEET WIDE SECTION OF THE EXISTING SHOULDER PAVEMENT. REPLACE MILLED PAVEMENT WITH A 2" COURSE OF SUPERPAVE, TYPE C HOT-MIX, 160 GYRATIONS, PG 70-22, (NON-CARBONATE STONE) FOR TRAFFIC USE UNDER TEMPORARY LANE ONFIGURATION.
2. PLACE ALL PERTINENT TEMPORARY TRAFFIC CONTROL DEVICES AS SHOWN ON THIS PLAN AND THE PERMANENT WARNING SIGN LOCATION PLAN. SHIFT SR 1 SOUTHBOUND AND US 13 SOUTHBOUND TRAFFIC TO DESIGNATED TRAVEL LANES. MAINTAIN SR 1 NORTHBOUND AND US 13 NORTHBOUND TRAFFIC IN EXISTING TRAVEL LANES. DETOUR US 13 BIKE TRAFFIC FOR DURATION OF CONSTRUCTION AS SHOWN ON DWG. NO. DP-04.
3. RELOCATE ITMS COMMUNICATIONS LINE PRIOR TO BEGINNING ANY CONSTRUCTION ACTIVITIES WHICH WILL IMPACT EXISITNG LINE. SEE SIGNING, STRIPING AND CONDUIT PLANS, DWG. NOS. SS-01 THROUGH SS-07.
4. CONSTRUCT TEMPORARY PAVEMENT IN SR 1 MEDIAN.
5. CONSTRUCT FULL DEPTH PAVEMENT, CONCRETE BARRIER AND GUARD RAIL ALONG RIGHT SIDE OF SR 1 SOUTHBOUND.
6. CONSTRUCT BRIDGE WIDENING. MAINTAIN STREAM FLOW AND ACCESS AREA IN ACCORDANCE WITH MAINTENANCE OF STREAM FLOW PLANS.
7. STABILIZE ALL DISTRURBED AREAS.

NOTES:

1. ACCESS FROM US 13 NORTHBOUND TO THE BIDDLES CORNER TOLL PLAZA ADMINISTRATION BUILDING LOCATED AT THE INTERSECTION OF US 13 AND PORT PENN ROAD TO BE LIMITED BY PROPOSED CONSTRUCTION IN CONTRACT NO. T201011302. THE CONTRACTOR SHALL MAINTAIN THE U-TURN AREA TO PROVIDE ACCESS FROM US 13 SOUTHBOUND.

SCOTT RUN MAINTENANCE OF STREAM FLOW:
ADDITIONAL EROSION AND SEDIMENT CONTROL DEVICES WITHIN THIS BOUNDARY ARE LOCATED ON THE MAINTENANCE OF STREAM FLOW SHEETS (MS-01 AND MS-02). CONSTRUCTION ACTIVITIES WITHIN THIS BOUNDARY SHALL ALSO BE COORDINATED WITH THE BRIDGE CONSTRUCTION PLANS FOR BRIDGES BR 1-903S AND BR 1-432.

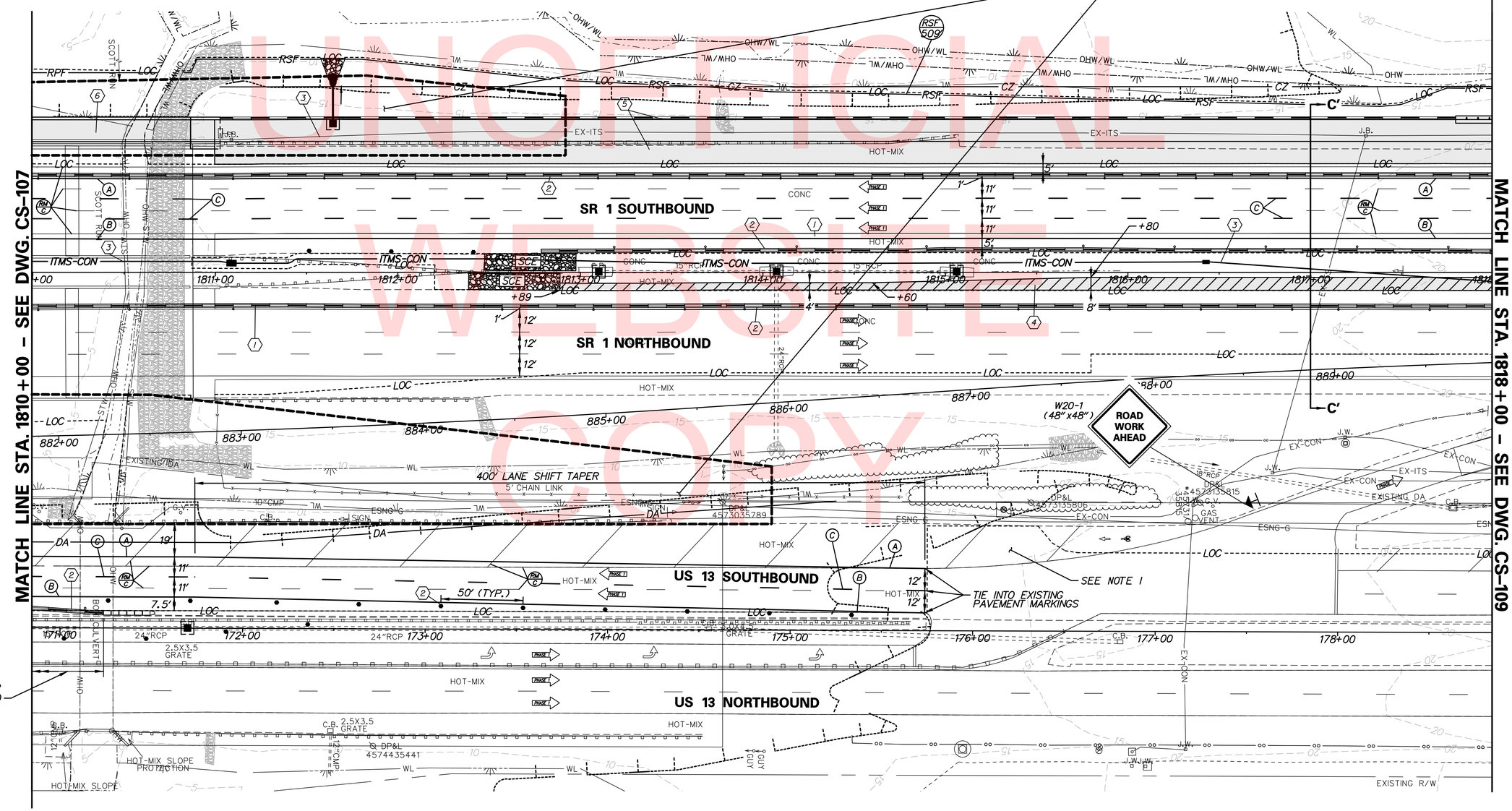

UNOFFICIAL WEBSITE COPY

DELAWARE DEPARTMENT OF TRANSPORTATION	ADDENDUMS / REVISIONS	SCALE 0 30 60 90 FEET	US 301 & SR 1 INTERCHANGE	CONTRACT T200911302 / COUNTY NEW CASTLE	BRIDGE NO. BR1-903N & BR1-903S / DESIGNED BY: J.D.C. / CHECKED BY: J.M.M.

CONSTRUCTION PHASING, M.O.T., AND EROSION CONTROL PLAN – PHASE 1

CS-108 | SHEET NO. 387 | TOTAL SHTS. 491

n:\31653-000\contract th\cadd\CS108U301_1B.dgn
12/18/2015 8:10:58 AM

CONSTRUCTION PHASING LEGEND

- TEMPORARY CONSTRUCTION
- PROPOSED CONSTRUCTION THIS PHASE
- EXISTING SIGN/PROPOSED TEMPORARY SIGN
- TYPE III BARRICADE
- PLASTIC DRUM
- TRAFFIC FLOW ARROW
- (A) 4" SOLID WHITE PAINT
- (B) 4" SOLID YELLOW PAINT
- (C) 4" BROKEN WHITE PAINT (10' LINE, 30' GAP)
- (D) 4" DOTTED WHITE PAINT (3' LINE, 9' GAP)
- (E) 10" SOLID WHITE PAINT
- (F) WHITE PAINT SYMBOL/LEGEND
- PORTABLE P.C.C. SAFETY BARRIER (F SHAPE)
- PORTABLE IMPACT ATTENUATOR
- ARROW PANEL
- (RM C) REMOVE EXISTING STRIPING BY CONTRACTOR

SEQUENCE OF CONSTRUCTION - PHASE 1

1. USING TYPICAL APPLICATION 33, REMOVE EXISTING RUMBLE STRIPS ALONG THE LEFT SIDE OF SR 1 SOUTHBOUND FROM STA. 1801+25 TO STA. 1833+75 AND THE LEFT SIDE OF SR 1 NORTHBOUND FROM STA. 1808+75 TO STA. 1831+25 BY MILLING A 2" DEEP BY 4 FEET WIDE SECTION OF THE EXISTING SHOULDER PAVEMENT. REPLACE MILLED PAVEMENT WITH A 2" COURSE OF SUPERPAVE, TYPE C HOT-MIX, 160 GYRATIONS, PG 70-22, (NON-CARBONATE STONE) FOR TRAFFIC USE UNDER TEMPORARY LANE ONFIGURATION.
2. PLACE ALL PERTINENT TEMPORARY TRAFFIC CONTROL DEVICES AS SHOWN ON THIS PLAN AND THE PERMANENT WARNING SIGN LOCATION PLAN. SHIFT SR 1 SOUTHBOUND TRAFFIC TO DESIGNATED TRAVEL LANES. MAINTAIN SR 1 NORTHBOUND AND US 13 TRAFFIC ON EXISTING TRAVEL LANES. DETOUR US 13 BIKE TRAFFIC FOR DURATION OF CONSTRUCTION AS SHOWN ON DWG. NO. DP-04.
3. RELOCATE ITMS COMMUNICATIONS LINE PRIOR TO BEGINNING ANY CONSTRUCTION ACTIVITIES WHICH WILL IMPACT EXISTING LINE. SEE SIGNING, STRIPING AND CONDUIT PLANS, SEE DWG. NOS. SS-01 THROUGH SS-07.
4. CONSTRUCT TEMPORARY PAVEMENT IN SR 1 MEDIAN.
5. CONSTRUCT FULL DEPTH PAVEMENT AND GUARD RAIL ALONG RIGHT SIDE OF SR 1 SOUTHBOUND.
6. CONSTRUCT SIGN STRUCTURE OH-3 RIGHT SIDE FOUNDATION.
7. STABILIZE ALL DISTRURBED AREAS.

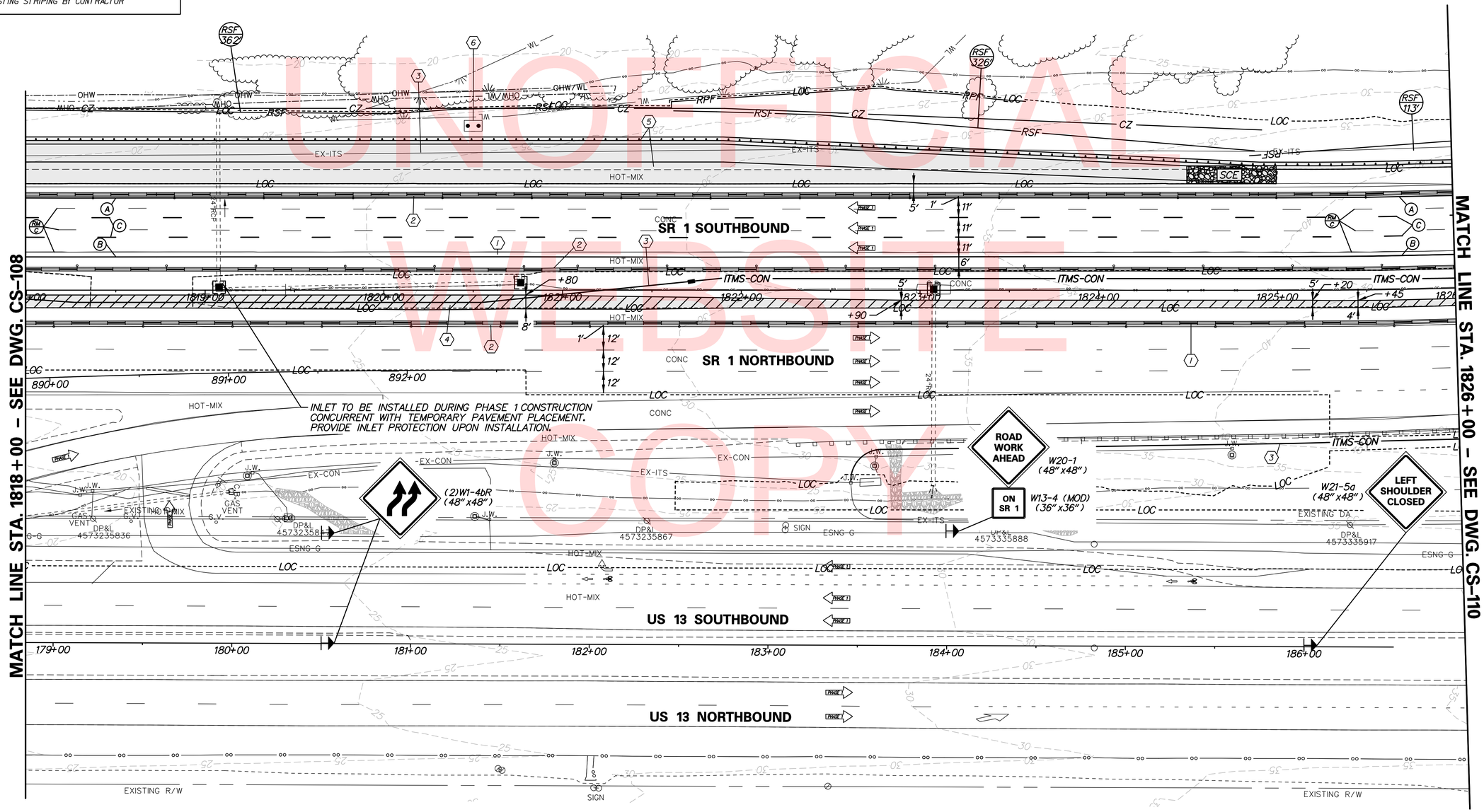

UNOFFICIAL WEBSITE COPY

DELAWARE DEPARTMENT OF TRANSPORTATION	ADDENDUMS / REVISIONS	SCALE 0 30 60 90 FEET	US 301 & SR 1 INTERCHANGE	CONTRACT T200911302	BRIDGE NO.	CONSTRUCTION PHASING, M.O.T., AND EROSION CONTROL PLAN - PHASE 1	CS-109
				COUNTY NEW CASTLE	DESIGNED BY: J.D.C.		SHEET NO. 388
					CHECKED BY: J.M.M.		TOTAL SHTS. 491

n:\31653-000\contract tb\cadd\CS109U301_TB.dgn
12/18/2015 8:11:03 AM

SEQUENCE OF CONSTRUCTION - PHASE I

1. USING TYPICAL APPLICATION 33, REMOVE EXISTING RUMBLE STRIPS ALONG THE LEFT SIDE OF SR 1 SOUTHBOUND FROM STA. 1801+25 TO STA. 1833+75 AND THE LEFT SIDE OF SR 1 NORTHBOUND FROM STA. 1808+75 TO STA. 1831+25 BY MILLING A 2" DEEP BY 4 FEET WIDE SECTION OF THE EXISTING SHOULDER PAVEMENT. REPLACE MILLED PAVEMENT WITH A 2" COURSE OF SUPERPAVE, TYPE C HOT-MIX, 160 GYRATIONS, PG 70-22, (NON-CARBONATE STONE) FOR TRAFFIC USE UNDER TEMPORARY LANE ONFIGURATION.
2. PLACE ALL PERTINENT TEMPORARY TRAFFIC CONTROL DEVICES AS SHOWN ON THIS PLAN AND THE PERMANENT WARNING SIGN LOCATION PLAN. SHIFT SR 1 SOUTHBOUND TRAFFIC TO DESIGNATED TRAVEL LANES. MAINTAIN SR 1 NORTHBOUND TRAFFIC IN EXISTING TRAVEL LANES. DETOUR US 13 BIKE TRAFFIC FOR DURATION OF CONSTRUCTION AS SHOWN ON DWG. NO. DP-04.
3. RELOCATE ITMS COMMUNICATIONS LINE PRIOR TO BEGINNING ANY CONSTRUCTION ACTIVITIES WHICH WILL IMPACT EXISTING LINE. SEE SIGNING, STRIPING AND CONDUIT PLANS, SEE DWG. NOS. SS-01 THROUGH SS-07.
4. CONSTRUCT TEMPORARY PAVEMENT IN SR 1 MEDIAN.
5. CONSTRUCT GUARD RAIL ALONG RIGHT SIDE OF SR 1 SOUTHBOUND.
6. STABILIZE ALL DISTRURBED AREAS.

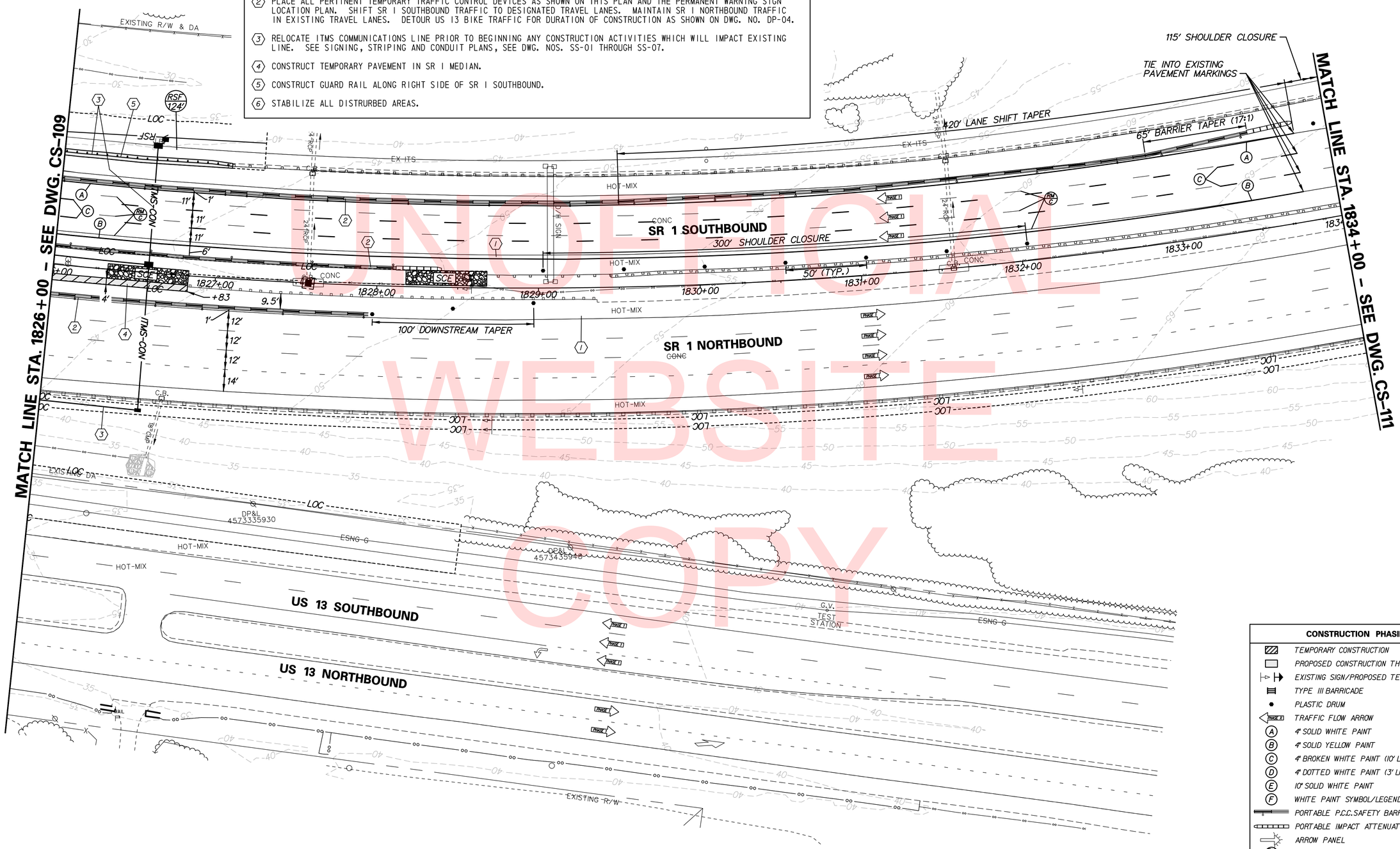

CONSTRUCTION PHASING LEGEND

- TEMPORARY CONSTRUCTION
- PROPOSED CONSTRUCTION THIS PHASE
- EXISTING SIGN/PROPOSED TEMPORARY SIGN
- TYPE III BARRICADE
- PLASTIC DRUM
- TRAFFIC FLOW ARROW
- (A) 4" SOLID WHITE PAINT
- (B) 4" SOLID YELLOW PAINT
- (C) 4" BROKEN WHITE PAINT (10' LINE, 30' GAP)
- (D) 4" DOTTED WHITE PAINT (3' LINE, 9' GAP)
- (E) 10" SOLID WHITE PAINT
- (F) WHITE PAINT SYMBOL/LEGEND
- PORTABLE P.C.C. SAFETY BARRIER (F SHAPE)
- PORTABLE IMPACT ATTENUATOR
- ARROW PANEL
- (RM C) REMOVE EXISTING STRIPING BY CONTRACTOR

CS-110

DELAWARE DEPARTMENT OF TRANSPORTATION

ADDENDUMS / REVISIONS

SCALE 0 30 60 90 FEET

US 301 & SR 1 INTERCHANGE

CONTRACT	BRIDGE NO.	CONSTRUCTION PHASING, M.O.T., AND EROSION CONTROL PLAN – PHASE 1	SHEET NO.
T200911302	DESIGNED BY: J.D.C.		389
COUNTY			TOTAL SHTS.
NEW CASTLE	CHECKED BY: J.M.M.		491

n:\31653-000\contract tb\cadd\CS110U301_1B.dgn
12/18/2015 8:11:06 AM

CONSTRUCTION PHASING LEGEND

- TEMPORARY CONSTRUCTION
- PROPOSED CONSTRUCTION THIS PHASE
- EXISTING SIGN/PROPOSED TEMPORARY SIGN
- TYPE III BARRICADE
- PLASTIC DRUM
- TRAFFIC FLOW ARROW
- (A) 4" SOLID WHITE PAINT
- (B) 4" SOLID YELLOW PAINT
- (C) 4" BROKEN WHITE PAINT (10' LINE, 30' GAP)
- (D) 4" DOTTED WHITE PAINT (3' LINE, 9' GAP)
- (E) 10" SOLID WHITE PAINT
- (F) WHITE PAINT SYMBOL/LEGEND
- PORTABLE P.C.C. SAFETY BARRIER (F SHAPE)
- PORTABLE IMPACT ATTENUATOR
- ARROW PANEL
- (RM C) REMOVE EXISTING STRIPING BY CONTRACTOR

SEQUENCE OF CONSTRUCTION - PHASE I

(1) PLACE ALL PERTINENT TEMPORARY TRAFFIC CONTROL DEVICES AS SHOWN ON THIS PLAN AND THE PERMANENT WARNING SIGN LOCATION PLAN. MAINTAIN SR 1 TRAFFIC ON EXISTING TRAVEL LANES.

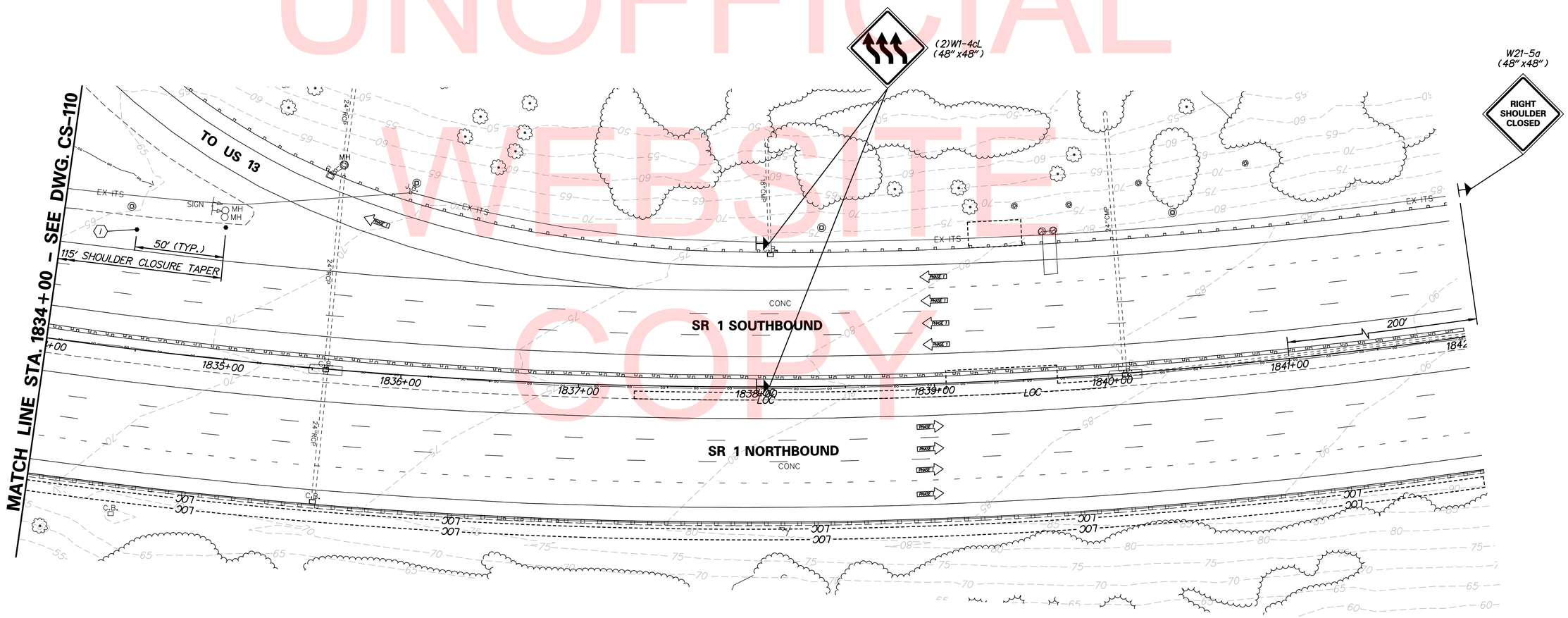

UNOFFICIAL WEBSITE COPY

DELAWARE DEPARTMENT OF TRANSPORTATION	ADDENDUMS / REVISIONS	SCALE 0 30 60 90 FEET	US 301 & SR 1 INTERCHANGE	CONTRACT T200911302	BRIDGE NO.	CONSTRUCTION PHASING, M.O.T., AND EROSION CONTROL PLAN – PHASE 1	CS-111
				COUNTY NEW CASTLE	DESIGNED BY: J.D.C.		SHEET NO. 390
					CHECKED BY: J.M.M.		TOTAL SHTS. 491

n:\31653-000\contract tb\cadd\CS111U301_1B.dgn
12/18/2015 8:11:09 AM

SEQUENCE OF CONSTRUCTION - PHASE I

1. PLACE ALL PERTINENT TEMPORARY TRAFFIC CONTROL DEVICES AS SHOWN ON THIS PLAN AND THE PERMANENT WARNING SIGN LOCATION PLAN. SHIFT SR 1 NORTHBOUND AND US 13 SOUTHBOUND TRAFFIC TO DESIGNATED TRAVEL LANES. MAINTAIN US 13 NORTHBOUND TRAFFIC ON EXISTING TRAVEL LANES. DETOUR US 13 BIKE TRAFFIC FOR DURATION OF CONSTRUCTION AS SHOWN ON DWG. NO. DP-04.
2. CONSTRUCT FULL DEPTH PAVEMENT AND GUARD RAIL ALONG LEFT SIDE OF US 13 SOUTHBOUND.
3. CONSTRUCT BRIDGE PIER, CONCRETE BARRIER, FULL DEPTH PAVEMENT AND GUARDRAIL.
4. BEGIN ROUGH GRADING FOR RAMP R.
5. CONSTRUCT GUARDRAIL AND PAVEMENT ON RIGHT SIDE OF SR 1 NORTHBOUND.
6. DETOUR SR 1 NORTHBOUND TRAFFIC AS SHOWN ON DETOUR PLANS DURING HOURS SPECIFIED ON DWG. NO. TCN-01 FOR BRIDGE GIRDER AND STRADDLE BENT CONSTRUCTION AND OTHER SELECT BRIDGE CONSTRUCTION ACTIVITIES OVER SR 1 NORTHBOUND, AS DIRECTED BY THE ENGINEER.
7. STABILIZE ALL DISTRURBED AREAS.

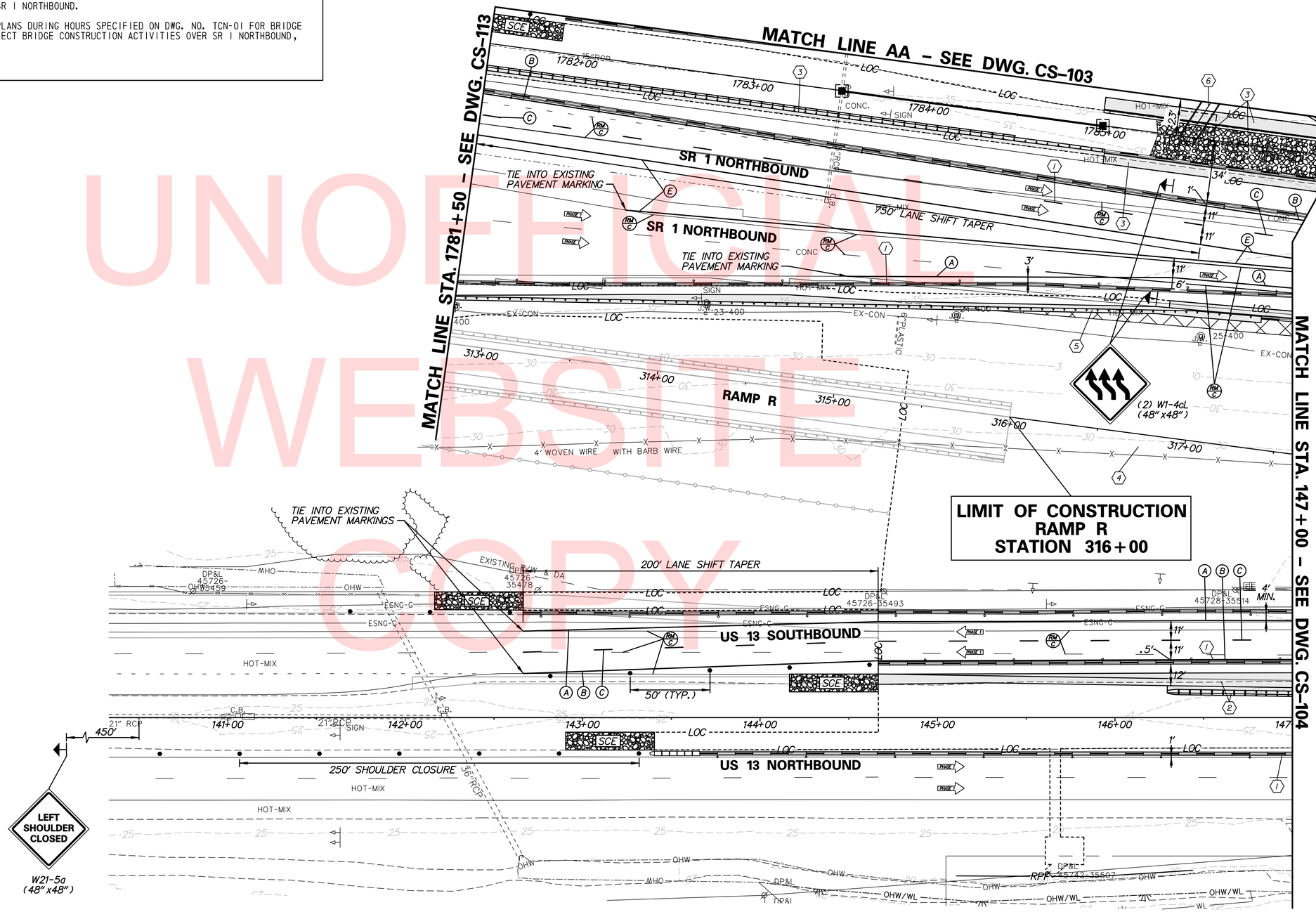

CONSTRUCTION PHASING LEGEND

- TEMPORARY CONSTRUCTION
- PROPOSED CONSTRUCTION THIS PHASE
- EXISTING SIGN/PROPOSED TEMPORARY SIGN
- TYPE III BARRICADE
- PLASTIC DRUM
- TRAFFIC FLOW ARROW
- (A) 4" SOLID WHITE PAINT
- (B) 4" SOLID YELLOW PAINT
- (C) 4" BROKEN WHITE PAINT (10' LINE, 30' GAP)
- (D) 4" DOTTED WHITE PAINT (3' LINE, 9' GAP)
- (E) 10" SOLID WHITE PAINT
- (F) WHITE PAINT SYMBOL/LEGEND
- PORTABLE P.C.C. SAFETY BARRIER (F SHAPE)
- PORTABLE IMPACT ATTENUATOR
- ARROW PANEL
- (RM C) REMOVE EXISTING STRIPING BY CONTRACTOR

UNOFFICIAL WEBSITE
COPY

DELAWARE DEPARTMENT OF TRANSPORTATION

ADDENDUMS / REVISIONS

SCALE 0 30 60 90 FEET

US 301 & SR 1 INTERCHANGE

CONTRACT	BRIDGE NO.	BR1-433
T200911302	DESIGNED BY: J.D.C.	
COUNTY		
NEW CASTLE	CHECKED BY: J.M.M.	

CONSTRUCTION PHASING, M.O.T., AND EROSION CONTROL PLAN - PHASE 1

CS-112
SHEET NO.
391
TOTAL SHTS.
491

n:\31653-000\contract th\cadd\CS112U301_1B.dgn
12/18/2015 8:11:12 AM

CONSTRUCTION PHASING LEGEND

- TEMPORARY CONSTRUCTION
- PROPOSED CONSTRUCTION THIS PHASE
- EXISTING SIGN/PROPOSED TEMPORARY SIGN
- TYPE III BARRICADE
- PLASTIC DRUM
- TRAFFIC FLOW ARROW
- (A) 4" SOLID WHITE PAINT
- (B) 4" SOLID YELLOW PAINT
- (C) 4" BROKEN WHITE PAINT (10' LINE, 30' GAP)
- (D) 4" DOTTED WHITE PAINT (3' LINE, 9' GAP)
- (E) 10" SOLID WHITE PAINT
- (F) WHITE PAINT SYMBOL/LEGEND
- PORTABLE P.C.C. SAFETY BARRIER (F SHAPE)
- PORTABLE IMPACT ATTENUATOR
- ARROW PANEL
- (RM C) REMOVE EXISTING STRIPING BY CONTRACTOR

SEQUENCE OF CONSTRUCTION - PHASE I

(1) PLACE ALL PERTINENT TEMPORARY TRAFFIC CONTROL DEVICES AS SHOWN ON THIS PLAN AND THE PERMANENT WARNING SIGN LOCATION PLAN. SHIFT SR 1 NORTHBOUND TRAFFIC TO DESIGNATED TRAVEL LANES. MAINTAIN SR 1 SOUTHBOUND TRAFFIC ON EXISTING TRAVEL LANES.

R4-9 (MOD) SIGN DETAIL

COLORS:
BLACK LEGEND ON WHITE BACKGROUND

BORDER:
R=3"
TH=1.25"
IN=0.75"

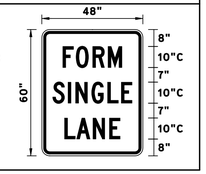

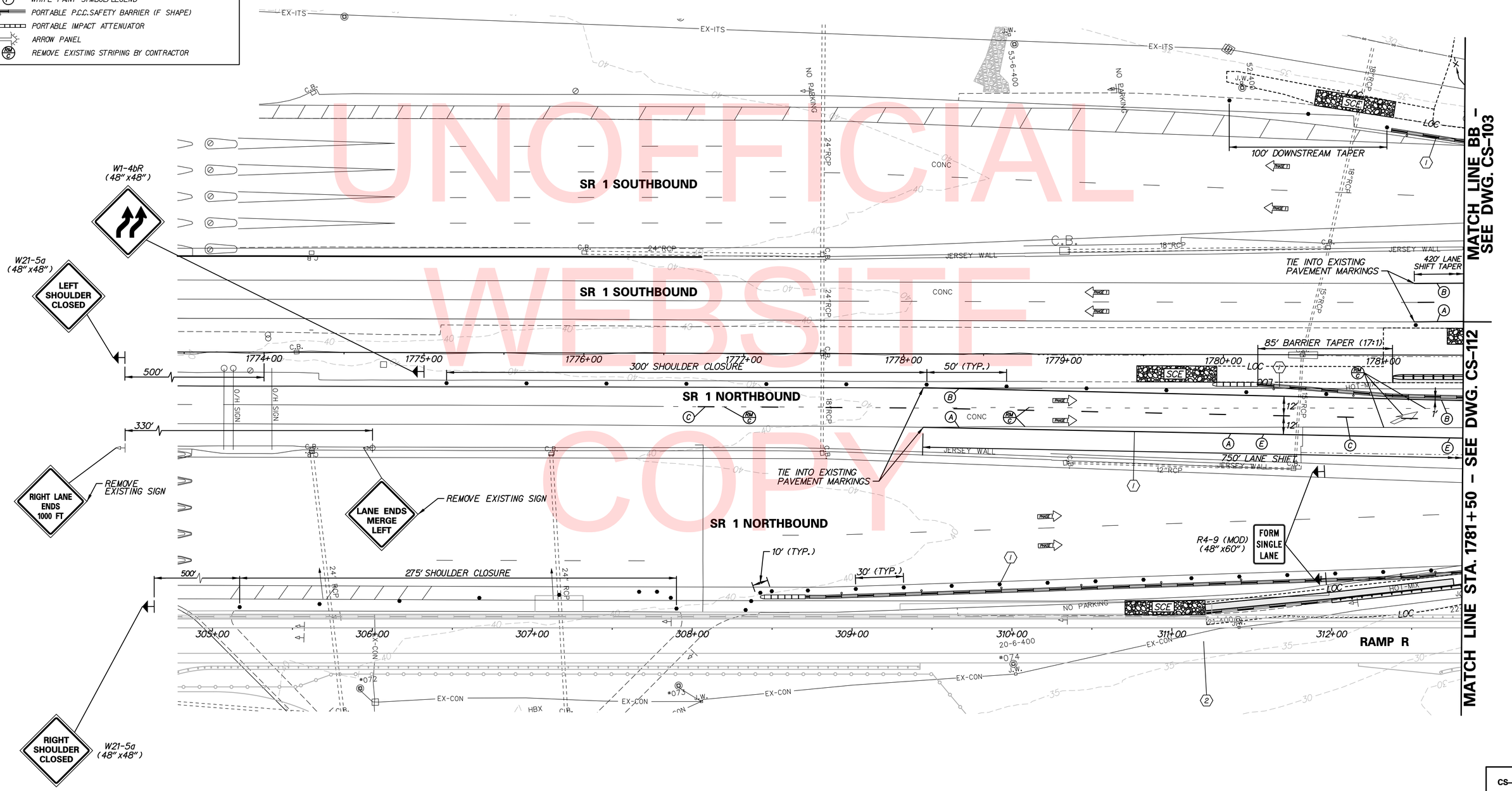

UNOFFICIAL WEBSITE COPY

DELAWARE DEPARTMENT OF TRANSPORTATION	ADDENDUMS / REVISIONS	SCALE 0 30 60 90 FEET	US 301 & SR 1 INTERCHANGE	CONTRACT T200911302	BRIDGE NO.	CONSTRUCTION PHASING, M.O.T., AND EROSION CONTROL PLAN – PHASE 1	CS-113
				COUNTY NEW CASTLE	DESIGNED BY: J.D.C.		SHEET NO. 392
					CHECKED BY: J.M.M.		TOTAL SHTS. 491

n:\31653-000\contract tb\cadd\CS113U301_1B.dgn
12/18/2015 8:11:16 AM

CONSTRUCTION PHASING LEGEND

- TEMPORARY CONSTRUCTION
- PROPOSED CONSTRUCTION THIS PHASE
- EXISTING SIGN/PROPOSED TEMPORARY SIGN
- TYPE III BARRICADE
- PLASTIC DRUM
- TRAFFIC FLOW ARROW
- (A) 4" SOLID WHITE PAINT
- (B) 4" SOLID YELLOW PAINT
- (C) 4" BROKEN WHITE PAINT (10' LINE, 30' GAP)
- (D) 4" DOTTED WHITE PAINT (3' LINE, 9' GAP)
- (E) 10" SOLID WHITE PAINT
- (F) WHITE PAINT SYMBOL/LEGEND
- PORTABLE P.C.C. SAFETY BARRIER (F SHAPE)
- PORTABLE IMPACT ATTENUATOR
- ARROW PANEL
- (RM C) REMOVE EXISTING STRIPING BY CONTRACTOR

SEQUENCE OF CONSTRUCTION - PHASE 2

(1) CONTINUE PHASE I CONSTRUCTION ACTIVITIES.

NOTES:

1. PHASE 2 CONSTRUCTION: AREA DESIGNATED FOR BIOSWALE INSTALLATION SHALL BE ROUGH GRADED TO 1-FOOT ABOVE THE FINISHED GRADE ELEVATION AND TEMPORARILY STABILIZED. UPON FINAL STABILIZATION OF ALL CONTRIBUTING DRAINAGE AREAS GRADE BIOSWALE TO FINAL GRADE AND STABILIZE WITH WET SEED MIX.
2. CONTRACTOR SHALL BE RESPONSIBLE FOR THE DESIGN, INSTALLATION, AND MAINTENANCE OF PIPE CULVERTS, AS NECESSARY, TO ENSURE CONVEYANCE OF ALL PROPOSED DITCHES BENEATH HAUL ROAD.

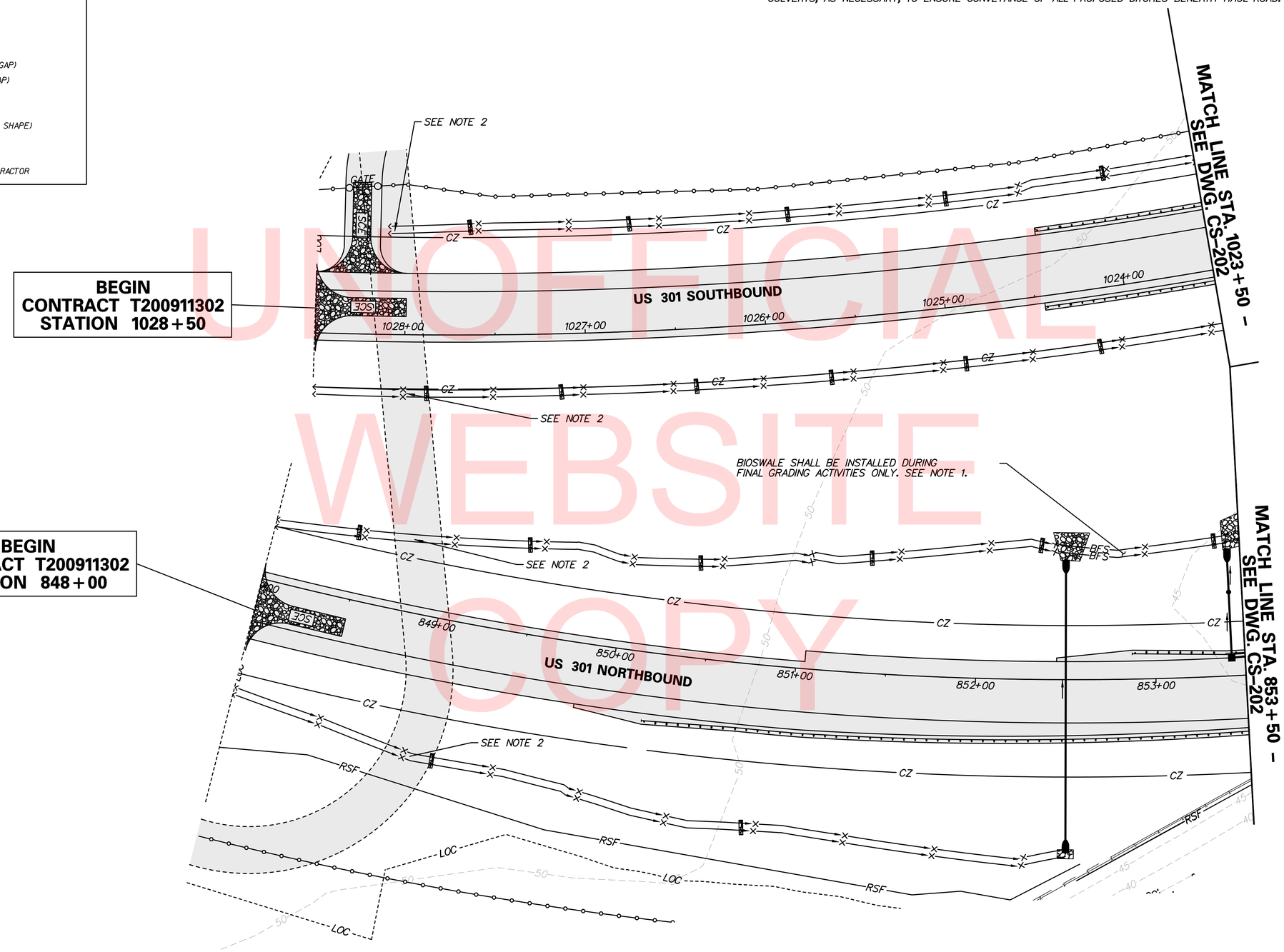

UNOFFICIAL WEBSITE COPY

DELAWARE DEPARTMENT OF TRANSPORTATION	ADDENDUMS / REVISIONS	SCALE 0 30 60 90 FEET	US 301 & SR 1 INTERCHANGE	CONTRACT T200911302	BRIDGE NO.	CONSTRUCTION PHASING, M.O.T., AND EROSION CONTROL PLAN – PHASE 2	CS-201
				COUNTY NEW CASTLE	DESIGNED BY: J.D.C.		SHEET NO. 393
					CHECKED BY: J.M.M.		TOTAL SHTS. 491

n:\31653-000\contract th\cadd\CS201\301_1B.dgn
12/18/2015 8:11:20 AM

CONSTRUCTION PHASING LEGEND

- TEMPORARY CONSTRUCTION
- PROPOSED CONSTRUCTION THIS PHASE
- EXISTING SIGN/PROPOSED TEMPORARY SIGN
- TYPE III BARRICADE
- PLASTIC DRUM
- TRAFFIC FLOW ARROW
- (A) 4" SOLID WHITE PAINT
- (B) 4" SOLID YELLOW PAINT
- (C) 4" BROKEN WHITE PAINT (10' LINE, 30' GAP)
- (D) 4" DOTTED WHITE PAINT (3' LINE, 9' GAP)
- (E) 10" SOLID WHITE PAINT
- (F) WHITE PAINT SYMBOL/LEGEND
- PORTABLE P.C.C. SAFETY BARRIER (F SHAPE)
- PORTABLE IMPACT ATTENUATOR
- ARROW PANEL
- (RM C) REMOVE EXISTING STRIPING BY CONTRACTOR

SEQUENCE OF CONSTRUCTION - PHASE 2
(I) MAINTAIN PHASE I TEMPORARY TRAFFIC CONTROL DEVICES AND CONTINUE PHASE I CONSTRUCTION ACTIVITIES

NOTES:

1. PHASE 2 CONSTRUCTION: AREA DESIGNATED FOR BIOSWALE INSTALLATION SHALL BE ROUGH GRADED TO 1-FOOT ABOVE THE FINISHED GRADE ELEVATION AND TEMPORARILY STABILIZED. UPON FINAL STABILIZATION OF ALL CONTRIBUTING DRAINAGE AREAS GRADE BIOSWALE TO FINAL GRADE AND STABILIZE WITH WET SEED MIX.

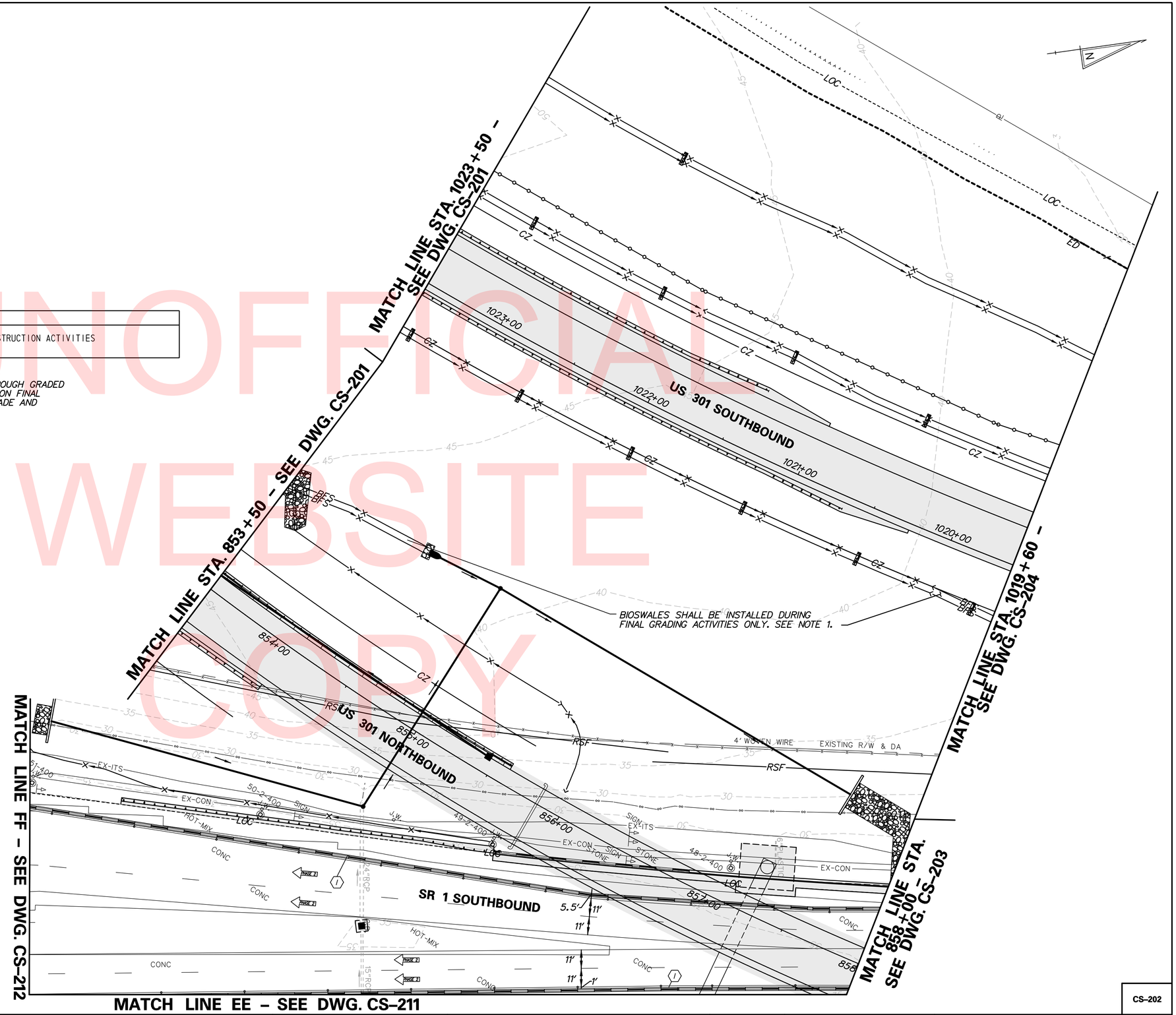

UNOFFICIAL WEBSITE COPY

DELAWARE DEPARTMENT OF TRANSPORTATION	ADDENDUMS / REVISIONS	SCALE 0 30 60 90 FEET	US 301 & SR 1 INTERCHANGE	CONTRACT T200911302 / COUNTY NEW CASTLE	BRIDGE NO. BR1-433 / DESIGNED BY: J.D.C. / CHECKED BY: J.M.M.	CONSTRUCTION PHASING, M.O.T., AND EROSION CONTROL PLAN – PHASE 2

CS-202
SHEET NO. 394
TOTAL SHTS. 491

r:\33653-000\contract tb\cadd\CS202U301_1B.dgn
12/18/2015 8:11:22 AM

SEQUENCE OF CONSTRUCTION - PHASE 2

1. UPON COMPLETION OF FULL DEPTH PAVEMENT CONSTRUCTION ALONG LEFT SIDE OF US 13 SOUTHBOUND PLACE PERTINENT TEMPORARY TRAFFIC CONTROL DEVICES AS SHOWN ON PLAN AND SHIFT US 13 SOUTHBOUND TRAFFIC TO DESIGNATED TRAVEL LANE.
2. MAINTAIN PHASE 1 TEMPORARY TRAFFIC CONTROL DEVICES ALONG SR 1 AND MAINTAIN TRAFFIC IN PHASE 1 TRAVEL LANES. CONTINUE PHASE 1 CONSTRUCTION ACTIVITIES ALONG SR 1, US 301 AND RAMP R.
3. COMPLETE GRADING FOR RAMP R AND CONSTRUCT FULL DEPTH PAVEMENT.
4. EXTEND CONSTRUCTION OF RETAINING WALL, FULL DEPTH PAVEMENT, CONCRETE BARRIER AND GUARD RAIL FOR RAMP R AND US 301 NORTHBOUND.
5. CONSTRUCT FULL DEPTH PAVEMENT, RETAINING WALL AND CONCRETE BARRIER ALONG RIGHT SIDE OF US 13 SOUTHBOUND.
6. STABILIZE ALL DISTRURBED AREAS.

CONSTRUCTION PHASING LEGEND

- TEMPORARY CONSTRUCTION
- PROPOSED CONSTRUCTION THIS PHASE
- EXISTING SIGN/PROPOSED TEMPORARY SIGN
- TYPE III BARRICADE
- PLASTIC DRUM
- TRAFFIC FLOW ARROW
- (A) 4" SOLID WHITE PAINT
- (B) 4" SOLID YELLOW PAINT
- (C) 4" BROKEN WHITE PAINT (10' LINE, 30' GAP)
- (D) 4" DOTTED WHITE PAINT (3' LINE, 9' GAP)
- (E) 10" SOLID WHITE PAINT
- (F) WHITE PAINT SYMBOL/LEGEND
- PORTABLE P.C.C. SAFETY BARRIER (F SHAPE)
- PORTABLE IMPACT ATTENUATOR
- ARROW PANEL
- (RM C) REMOVE EXISTING STRIPING BY CONTRACTOR

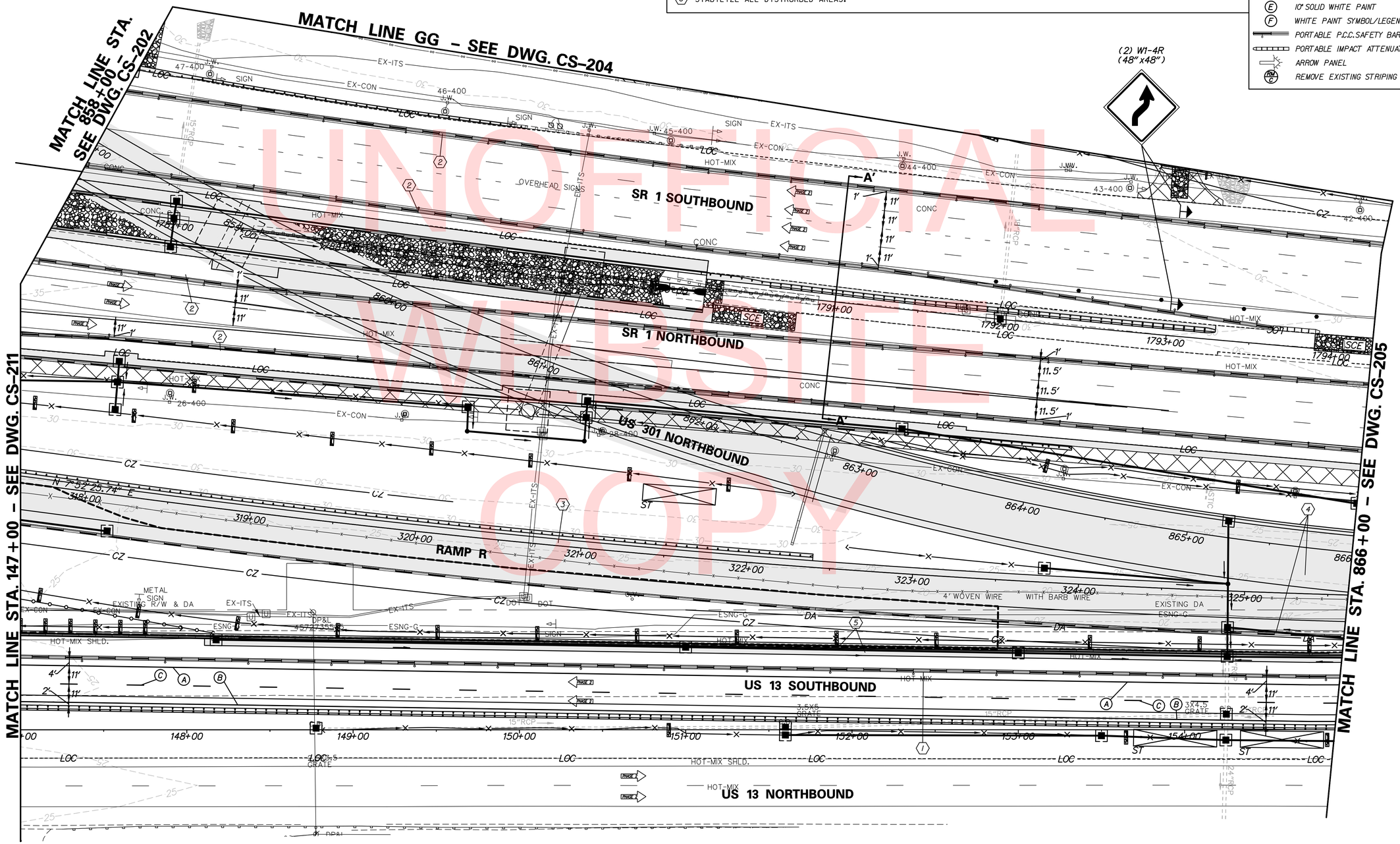

DELAWARE DEPARTMENT OF TRANSPORTATION	ADDENDUMS / REVISIONS	SCALE 0 30 60 90 FEET	US 301 & SR 1 INTERCHANGE	CONTRACT T200911302	BRIDGE NO. BR1-433, RW1-3 & RW1-3R	CONSTRUCTION PHASING, M.O.T., AND EROSION CONTROL PLAN - PHASE 2	CS-203
				COUNTY NEW CASTLE	DESIGNED BY: J.D.C.		SHEET NO. 395
					CHECKED BY: J.M.M.		TOTAL SHTS. 491

n:\31653-000\contract tb\cadd\CS203U301_TB.dgn
12/18/2015 8:11:26 AM

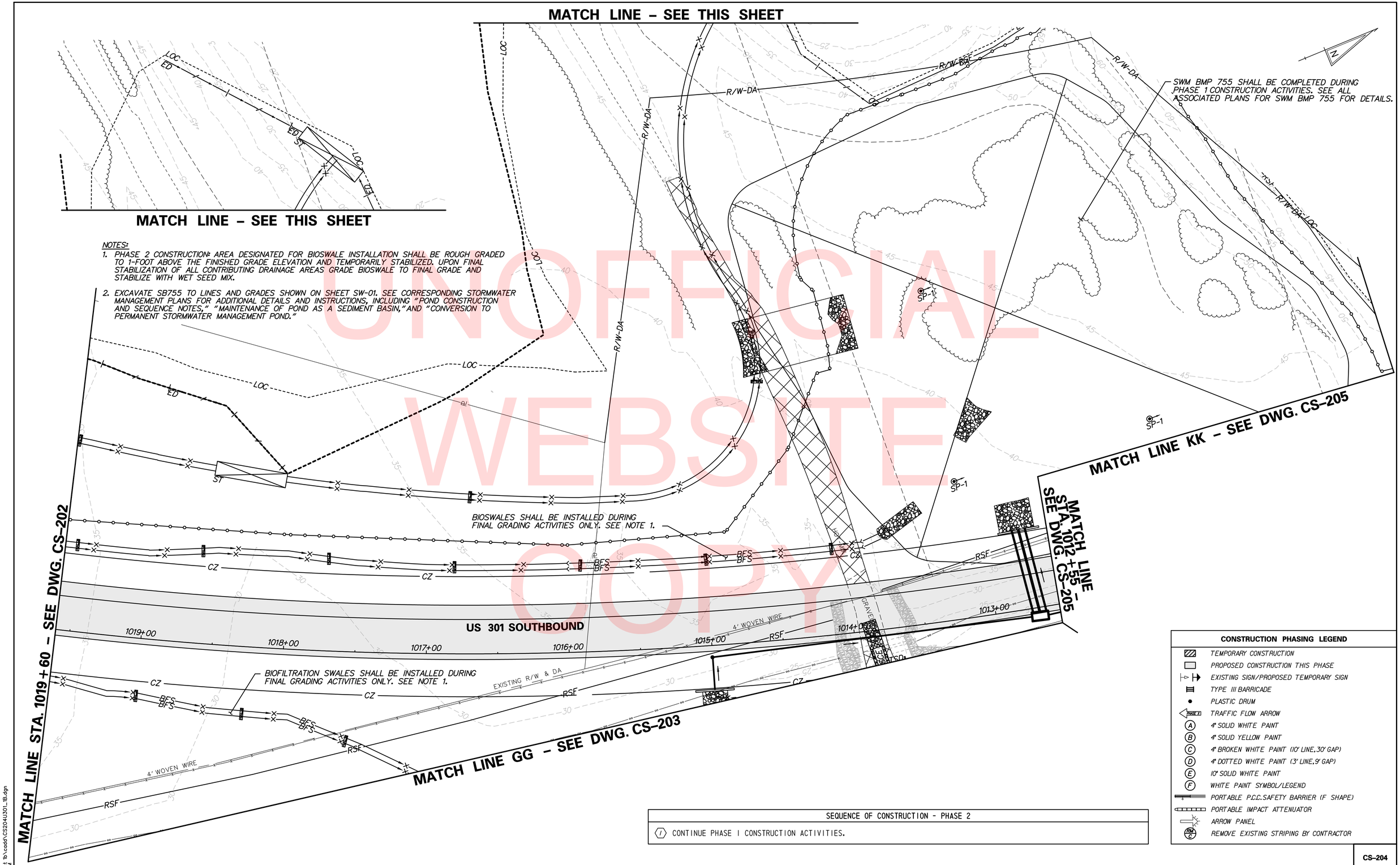

NOTES:

1. PHASE 2 CONSTRUCTION: AREA DESIGNATED FOR BIOSWALE INSTALLATION SHALL BE ROUGH GRADED TO 1-FOOT ABOVE THE FINISHED GRADE ELEVATION AND TEMPORARILY STABILIZED. UPON FINAL STABILIZATION OF ALL CONTRIBUTING DRAINAGE AREAS GRADE BIOSWALE TO FINAL GRADE AND STABILIZE WITH WET SEED MIX.
2. EXCAVATE SB755 TO LINES AND GRADES SHOWN ON SHEET SW-01. SEE CORRESPONDING STORMWATER MANAGEMENT PLANS FOR ADDITIONAL DETAILS AND INSTRUCTIONS, INCLUDING "POND CONSTRUCTION AND SEQUENCE NOTES," "MAINTENANCE OF POND AS A SEDIMENT BASIN," AND "CONVERSION TO PERMANENT STORMWATER MANAGEMENT POND."

UNOFFICIAL WEBSITE COPY

SEQUENCE OF CONSTRUCTION - PHASE 2
1 CONTINUE PHASE 1 CONSTRUCTION ACTIVITIES.

CONSTRUCTION PHASING LEGEND

- TEMPORARY CONSTRUCTION
- PROPOSED CONSTRUCTION THIS PHASE
- EXISTING SIGN/PROPOSED TEMPORARY SIGN
- TYPE III BARRICADE
- PLASTIC DRUM
- TRAFFIC FLOW ARROW
- (A) 4" SOLID WHITE PAINT
- (B) 4" SOLID YELLOW PAINT
- (C) 4" BROKEN WHITE PAINT (10' LINE, 30' GAP)
- (D) 4" DOTTED WHITE PAINT (3' LINE, 9' GAP)
- (E) 10" SOLID WHITE PAINT
- (F) WHITE PAINT SYMBOL/LEGEND
- PORTABLE P.C.C. SAFETY BARRIER (F SHAPE)
- PORTABLE IMPACT ATTENUATOR
- ARROW PANEL
- (RM C) REMOVE EXISTING STRIPING BY CONTRACTOR

CS-204

DELAWARE DEPARTMENT OF TRANSPORTATION

ADDENDUMS / REVISIONS	

SCALE 0 30 60 90 FEET

US 301 & SR 1 INTERCHANGE

CONTRACT	BRIDGE NO.	
T200911302	DESIGNED BY: J.D.C.	
COUNTY		
NEW CASTLE	CHECKED BY: J.M.M.	

CONSTRUCTION PHASING, M.O.T., AND EROSION CONTROL PLAN – PHASE 2

SHEET NO. 396

TOTAL SHTS. 491

r:\31653-000\contract tb\cadd\CS204U301_1B.dgn
12/18/2015 8:11:30 AM

SEQUENCE OF CONSTRUCTION - PHASE 2

1. UPON COMPLETION OF FULL DEPTH PAVEMENT CONSTRUCTION ALONG LEFT SIDE OF US 13 SOUTHBOUND PLACE PERTINENT TEMPORARY TRAFFIC CONTROL DEVICES AS SHOWN ON PLAN AND SHIFT US 13 SOUTHBOUND TRAFFIC TO DESIGNATED TRAVEL LANE.
2. MAINTAIN PHASE 1 TEMPORARY TRAFFIC CONTROL DEVICES ALONG SR 1 AND MAINTAIN TRAFFIC IN PHASE 1 TRAVEL LANES. CONTINUE PHASE 1 CONSTRUCTION ACTIVITIES ALONG SR 1.
3. PLACE PERTINENT TEMPORARY TRAFFIC CONTROL DEVICES ALONG SR 1.
4. CONSTRUCT RETAINING WALL, FULL DEPTH PAVEMENT, GUARD RAIL AND CONCRETE BARRIER FOR US 301 NORTHBOUND.
5. REMOVE EXISTING PAVEMENT AND INSTALL GUARD RAIL ALONG SR 1 NORTHBOUND.
6. CONSTRUCT FULL DEPTH PAVEMENT AND CONCRETE BARRIER ALONG RIGHT SIDE OF US 13 SOUTHBOUND.
7. STABILIZE ALL DISTRURBED AREAS.

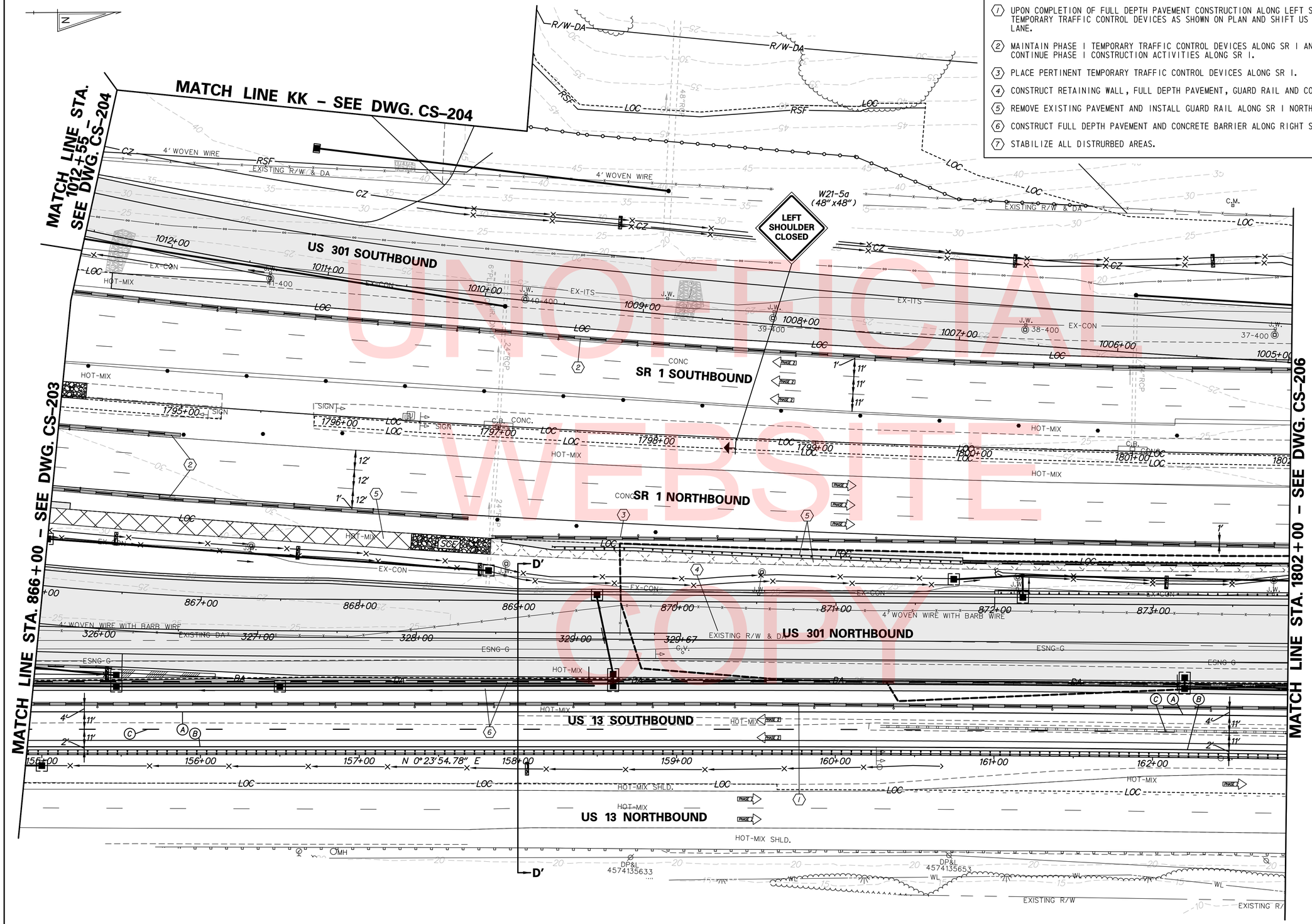

CONSTRUCTION PHASING LEGEND

- TEMPORARY CONSTRUCTION
- PROPOSED CONSTRUCTION THIS PHASE
- EXISTING SIGN/PROPOSED TEMPORARY SIGN
- TYPE III BARRICADE
- PLASTIC DRUM
- TRAFFIC FLOW ARROW
- (A) 4" SOLID WHITE PAINT
- (B) 4" SOLID YELLOW PAINT
- (C) 4" BROKEN WHITE PAINT (10' LINE, 30' GAP)
- (D) 4" DOTTED WHITE PAINT (3' LINE, 9' GAP)
- (E) 10" SOLID WHITE PAINT
- (F) WHITE PAINT SYMBOL/LEGEND
- PORTABLE P.C.C. SAFETY BARRIER (F SHAPE)
- PORTABLE IMPACT ATTENUATOR
- ARROW PANEL
- REMOVE EXISTING STRIPING BY CONTRACTOR

UNOFFICIAL WEBSITE COPY

DELAWARE DEPARTMENT OF TRANSPORTATION

ADDENDUMS / REVISIONS

SCALE 0 30 60 90 FEET

US 301 & SR 1 INTERCHANGE

CONTRACT	BRIDGE NO.	RW1-3 & RW1-3R
T200911302	DESIGNED BY: J.D.C.	
COUNTY		
NEW CASTLE	CHECKED BY: J.M.M.	

CONSTRUCTION PHASING, M.O.T., AND EROSION CONTROL PLAN – PHASE 2

SHEET NO.	TOTAL SHTS.
397	491

CS–205

n:\31653-000\contract tb\cadd\CS205U301_1B.dgn 12/18/2015 8:11:33 AM

CONSTRUCTION PHASING LEGEND

- TEMPORARY CONSTRUCTION
- PROPOSED CONSTRUCTION THIS PHASE
- EXISTING SIGN/PROPOSED TEMPORARY SIGN
- TYPE III BARRICADE
- PLASTIC DRUM
- TRAFFIC FLOW ARROW
- (A) 4" SOLID WHITE PAINT
- (B) 4" SOLID YELLOW PAINT
- (C) 4" BROKEN WHITE PAINT (10' LINE, 30' GAP)
- (D) 4" DOTTED WHITE PAINT (3' LINE, 9' GAP)
- (E) 10" SOLID WHITE PAINT
- (F) WHITE PAINT SYMBOL/LEGEND
- PORTABLE P.C.C. SAFETY BARRIER (F SHAPE)
- PORTABLE IMPACT ATTENUATOR
- ARROW PANEL
- (RM C) REMOVE EXISTING STRIPING BY CONTRACTOR

SEQUENCE OF CONSTRUCTION - PHASE 2

1. UPON COMPLETION OF FULL DEPTH PAVEMENT CONSTRUCTION ALONG LEFT SIDE OF US 13 SOUTHBOUND PLACE PERTINENT TEMPORARY TRAFFIC CONTROL DEVICES AS SHOWN ON PLAN AND SHIFT US 13 SOUTHBOUND TRAFFIC TO DESIGNATED TRAVEL LANE.
2. MAINTAIN PHASE 1 TEMPORARY TRAFFIC CONTROL DEVICES ALONG SR 1 SOUTHBOUND AND MAINTAIN TRAFFIC IN PHASE 1 TRAVEL LANES. CONTINUE PHASE 1 CONSTRUCTION ACTIVITIES ALONG SR 1.
3. REMOVE/RELOCATE TEMPORARY TRAFFIC CONTROL DEVICES ALONG LEFT SIDE OF SR 1 NORTHBOUND. PLACE PERTINENT TEMPORARY TRAFFIC CONTROL DEVICES ALONG RIGHT SIDE OF SR 1 NORTHBOUND AND SHIFT TRAFFIC TO DESIGNATED TRAVEL LANES.
4. CONSTRUCT RETAINING WALL, FULL DEPTH PAVEMENT, GUARD RAIL AND CONCRETE BARRIER FOR US 301 NORTHBOUND.
5. REMOVE EXISTING PAVEMENT AND CONSTRUCT FULL DEPTH PAVEMENT AND CONCRETE BARRIER ALONG RIGHT SIDE OF US 13 SOUTHBOUND.
6. REMOVE EXISTING PAVEMENT AND INSTALL CONCRETE BARRIER ALONG SR 1 NORTHBOUND.
7. CONSTRUCT BRIDGE 1-2. MAINTAIN STREAM FLOW AND ACCESS AREA IN ACCORDANCE WITH MAINTENANCE OF STREAM FLOW PLANS.
8. STABILIZE ALL DISTRURBED AREAS.

SEDIMENT TRAP SCHEDULE

NO.	D. AREA	LENGTH	WIDTH	DEPTH	OUT. TYPE	WEIR EL.	CLEAN EL.	WEIR LENGTH	EMBANK. EL.
008	2.70 AC	170'	16'	3.00	STONE	12.00	10.00	11'	13.00

SCOTT RUN MAINTENANCE OF STREAM FLOW:
ADDITIONAL EROSION AND SEDIMENT CONTROL DEVICES WITHIN THIS BOUNDARY ARE LOCATED ON THE MAINTENANCE OF STREAM FLOW SHEETS (MS 1/2-01 AND MS1/2-02). CONSTRUCTION ACTIVITIES WITHIN THIS BOUNDARY SHALL ALSO BE COORDINATED WITH THE BRIDGE CONSTRUCTION PLANS FOR BRIDGES BR 1-903S AND BR 1-432.

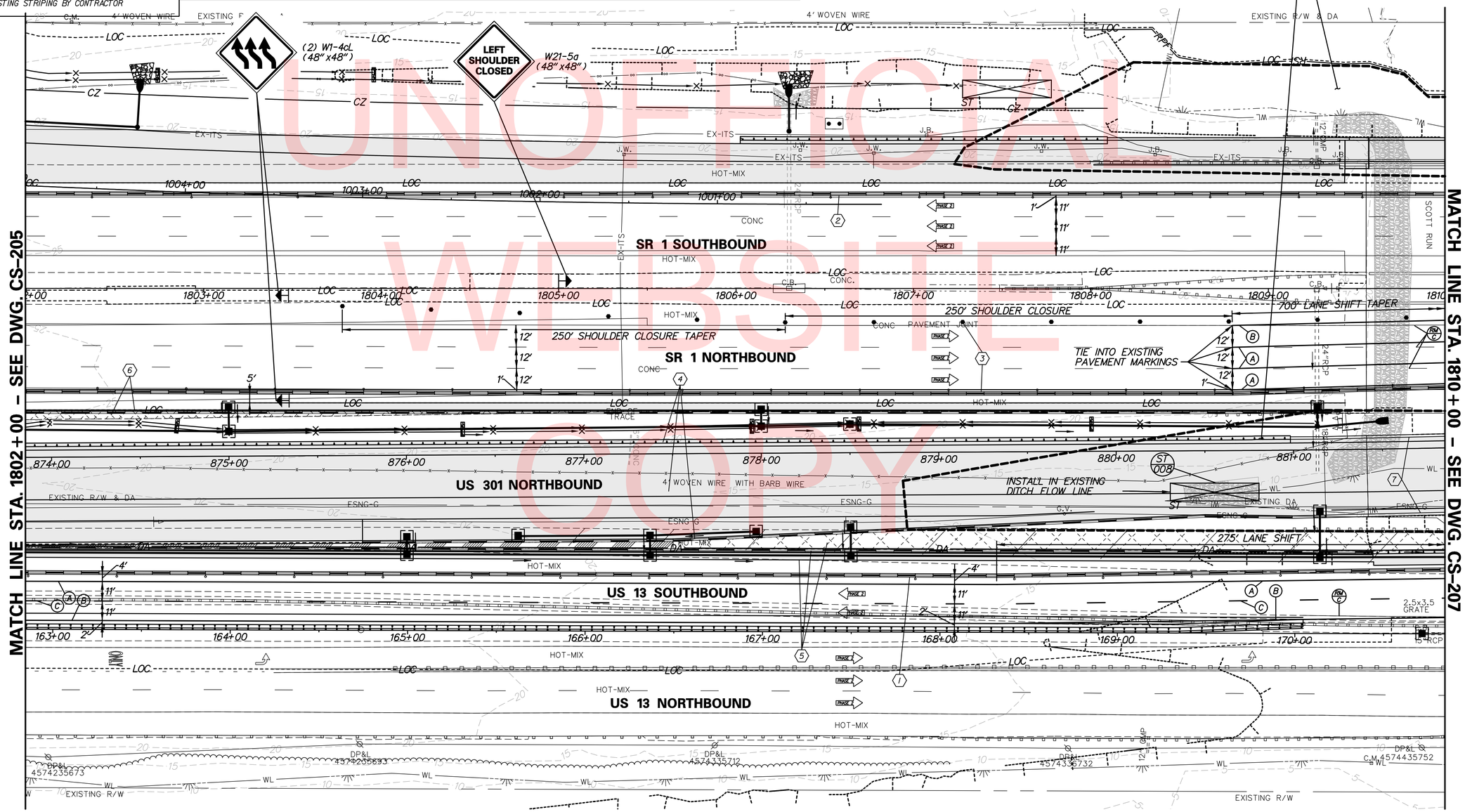

UNOFFICIAL WEBSITE COPY

DELAWARE DEPARTMENT OF TRANSPORTATION	ADDENDUMS / REVISIONS	SCALE 0 30 60 90 FEET	US 301 & SR 1 INTERCHANGE	CONTRACT T200911302	BRIDGE NO. BR1-903N, BR1-903S, BR1-432, RW1-1 & RW1-3R	CONSTRUCTION PHASING, M.O.T., AND EROSION CONTROL PLAN - PHASE 2	CS-206
				COUNTY NEW CASTLE	DESIGNED BY: J.D.C.		SHEET NO. 398
					CHECKED BY: J.M.M.		TOTAL SHTS. 491

r:\33653-000\contract tb\cadd\CS206U301_1B.dgn
12/18/2015 8:11:37 AM

CONSTRUCTION PHASING LEGEND

- TEMPORARY CONSTRUCTION
- PROPOSED CONSTRUCTION THIS PHASE
- EXISTING SIGN/PROPOSED TEMPORARY SIGN
- TYPE III BARRICADE
- PLASTIC DRUM
- TRAFFIC FLOW ARROW
- (A) 4" SOLID WHITE PAINT
- (B) 4" SOLID YELLOW PAINT
- (C) 4" BROKEN WHITE PAINT (10' LINE, 30' GAP)
- (D) 4" DOTTED WHITE PAINT (3' LINE, 9' GAP)
- (E) 10" SOLID WHITE PAINT
- (F) WHITE PAINT SYMBOL/LEGEND
- PORTABLE P.C.C. SAFETY BARRIER (F SHAPE)
- PORTABLE IMPACT ATTENUATOR
- ARROW PANEL
- (RM C) REMOVE EXISTING STRIPING BY CONTRACTOR

SEQUENCE OF CONSTRUCTION - PHASE 2

1. UPON COMPLETION OF FULL DEPTH PAVEMENT CONSTRUCTION ALONG LEFT SIDE OF US 13 SOUTHBOUND PLACE PERTINENT TEMPORARY TRAFFIC CONTROL DEVICES AS SHOWN ON PLAN AND SHIFT US 13 SOUTHBOUND TRAFFIC TO DESIGNATED TRAVEL LANE.
2. MAINTAIN PHASE 1 TEMPORARY TRAFFIC CONTROL DEVICES ALONG SR 1 SOUTHBOUND AND MAINTAIN TRAFFIC IN PHASE 1 TRAVEL LANES. CONTINUE PHASE 1 CONSTRUCTION ACTIVITIES ALONG SR 1.
3. REMOVE/RELOCATE TEMPORARY TRAFFIC CONTROL DEVICES ALONG LEFT SIDE OF SR 1 NORTHBOUND. PLACE PERTINENT TEMPORARY TRAFFIC CONTROL DEVICES ALONG SR 1 NORTHBOUND AND SHIFT TRAFFIC TO DESIGNATED TRAVEL LANES.
4. REMOVE EXISTING PAVEMENT AND CONSTRUCT FULL DEPTH PAVEMENT AND GUARD RAIL FOR SR 1 NORTHBOUND AND US 301 NORTHBOUND.
5. REMOVE EXISTING PAVEMENT AND CONSTRUCT FULL DEPTH PAVEMENT AND CONCRETE BARRIER ALONG RIGHT SIDE OF US 13 SOUTHBOUND.
6. INSTALL TEMPORARY PAVEMENT ALONG EXISTING US 13 'FREE' RAMP. REFER TO TEMPORARY PAVING SECTION FOR SR 1 MEDIAN ON DWG. NO. CS-02.
7. STABILIZE ALL DISTRURBED AREAS.

SEDIMENT TRAP SCHEDULE

NO.	D. AREA	LENGTH	WIDTH	DEPTH	OUT. TYPE	WEIR EL.	CLEAN EL.	WEIR LENGTH	EMBANK. EL.
009	0.88 AC	54'	15'	3.00	STONE	8.00	6.00	4'	9.00

NOTES:

1. ACCESS FROM US 13 NORTHBOUND TO THE BIDDLES CORNER TOLL PLAZA ADMINISTRATION BUILDING LOCATED AT THE INTERSECTION OF US 13 AND PORT PENN ROAD TO BE LIMITED BY PROPOSED CONSTRUCTION IN CONTRACT NO. T201011302. THE CONTRACTOR SHALL MAINTAIN THE U-TURN AREA TO PROVIDE ACCESS FROM US 13 SOUTHBOUND.
2. PHASE 2 CONSTRUCTION: AREA DESIGNATED FOR BIOSWALE INSTALLATION SHALL BE ROUGH GRADED TO 1-FOOT ABOVE THE FINISHED GRADE ELEVATION AND TEMPORARILY STABILIZED. UPON FINAL STABILIZATION OF ALL CONTRIBUTING DRAINAGE AREAS GRADE BIOSWALE TO FINAL GRADE AND STABILIZE WITH WET SEED MIX.

SCOTT RUN MAINTENANCE OF STREAM FLOW:
ADDITIONAL EROSION AND SEDIMENT CONTROL DEVICES WITHIN THIS BOUNDARY ARE LOCATED ON THE MAINTENANCE OF STREAM FLOW SHEETS (MS-01 AND MS-02). CONSTRUCTION ACTIVITIES WITHIN THIS BOUNDARY SHALL ALSO BE COORDINATED WITH THE BRIDGE CONSTRUCTION PLANS FOR BRIDGES BR 1-903S AND BR 1-432.

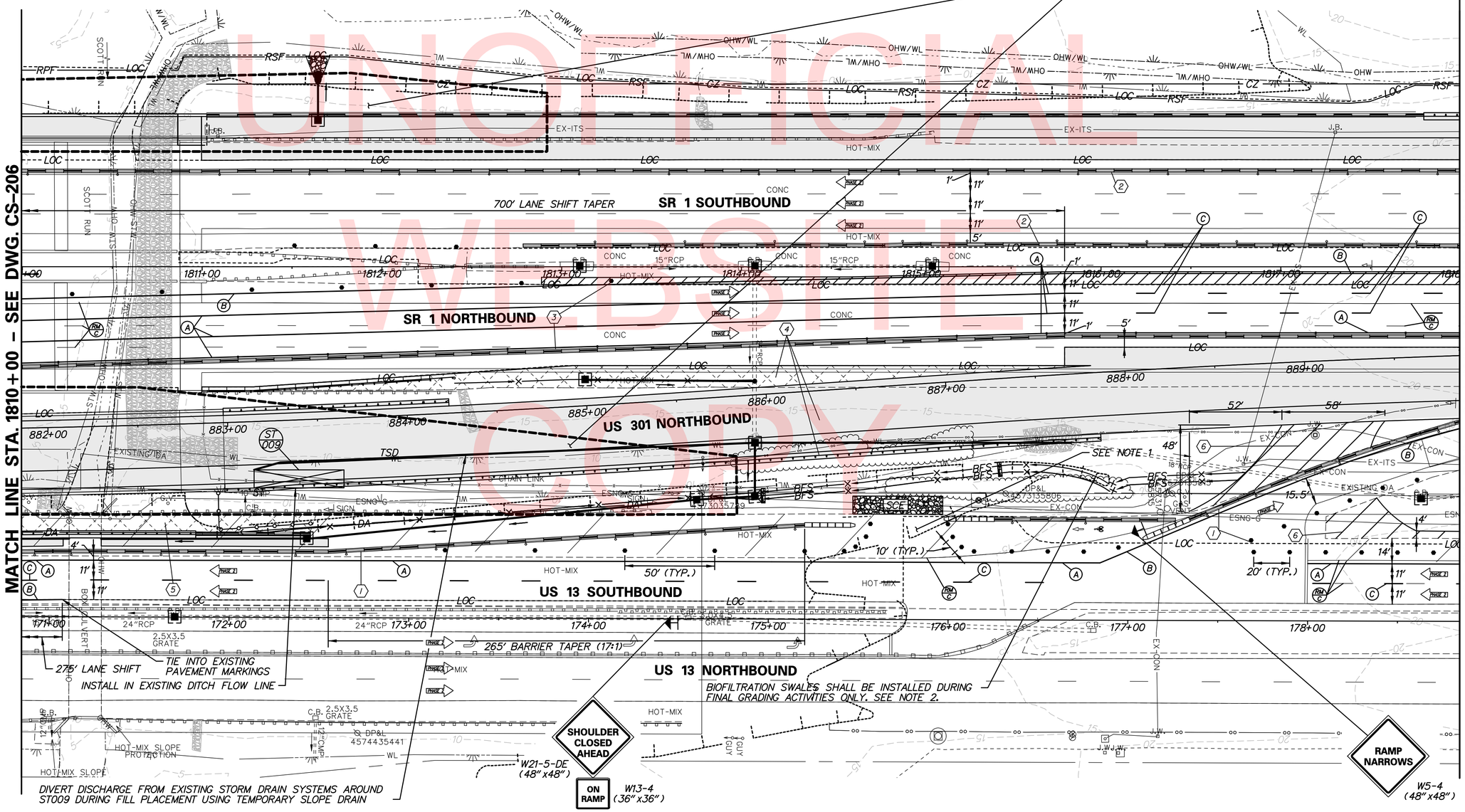

UNOFFICIAL WEBSITE COPY

DELAWARE DEPARTMENT OF TRANSPORTATION

ADDENDUMS / REVISIONS

SCALE 0 30 60 90 FEET

US 301 & SR 1 INTERCHANGE

CONTRACT	BRIDGE NO.	BR1-903N, BR1-903S & BR1-432
T200911302	DESIGNED BY:	J.D.C.
COUNTY	CHECKED BY:	J.M.M.
NEW CASTLE		

CONSTRUCTION PHASING, M.O.T., AND EROSION CONTROL PLAN – PHASE 2

CS-207
SHEET NO.
399
TOTAL SHTS.
491

n:\3653-000\contract 1b\cadd\CS207U301_1B.dgn
12/18/2015 8:11:42 AM

CONSTRUCTION PHASING LEGEND

- TEMPORARY CONSTRUCTION
- PROPOSED CONSTRUCTION THIS PHASE
- EXISTING SIGN/PROPOSED TEMPORARY SIGN
- TYPE III BARRICADE
- PLASTIC DRUM
- TRAFFIC FLOW ARROW
- (A) 4" SOLID WHITE PAINT
- (B) 4" SOLID YELLOW PAINT
- (C) 4" BROKEN WHITE PAINT (10' LINE, 30' GAP)
- (D) 4" DOTTED WHITE PAINT (3' LINE, 9' GAP)
- (E) 10" SOLID WHITE PAINT
- (F) WHITE PAINT SYMBOL/LEGEND
- PORTABLE P.C.C. SAFETY BARRIER (F SHAPE)
- PORTABLE IMPACT ATTENUATOR
- ARROW PANEL
- (RM C) REMOVE EXISTING STRIPING BY CONTRACTOR

SEQUENCE OF CONSTRUCTION - PHASE 2

1. UPON COMPLETION OF FULL DEPTH PAVEMENT CONSTRUCTION ALONG LEFT SIDE OF US 13 SOUTHBOUND PLACE PERTINENT TEMPORARY TRAFFIC CONTROL DEVICES AS SHOWN ON PLAN AND SHIFT US 13 SOUTHBOUND TRAFFIC TO DESIGNATED TRAVEL LANE.
2. MAINTAIN PHASE 1 TEMPORARY TRAFFIC CONTROL DEVICES ALONG SR 1 SOUTHBOUND AND MAINTAIN TRAFFIC IN PHASE 1 TRAVEL LANES. CONTINUE PHASE 1 CONSTRUCTION ACTIVITIES ALONG SR 1.
3. REMOVE/REPLACE TEMPORARY TRAFFIC CONTROL DEVICES ALONG LEFT SIDE OF SR 1 NORTHBOUND. PLACE PERTINENT TEMPORARY TRAFFIC CONTROL DEVICES ALONG SR 1 NORTHBOUND AND SHIFT TRAFFIC TO DESIGNATED TRAVEL LANES.
4. PLACE PERTINENT TEMPORARY TRAFFIC CONTROL DEVICES ALONG EXISTING US 13 'FREE' RAMP AND SHIFT TRAFFIC TO DESIGNATED TRAVEL LANE.
5. CONSTRUCT FULL DEPTH PAVEMENT FOR SR 1 NORTHBOUND AND US 301 NORTHBOUND.
6. STABILIZE ALL DISTRURBED AREAS.

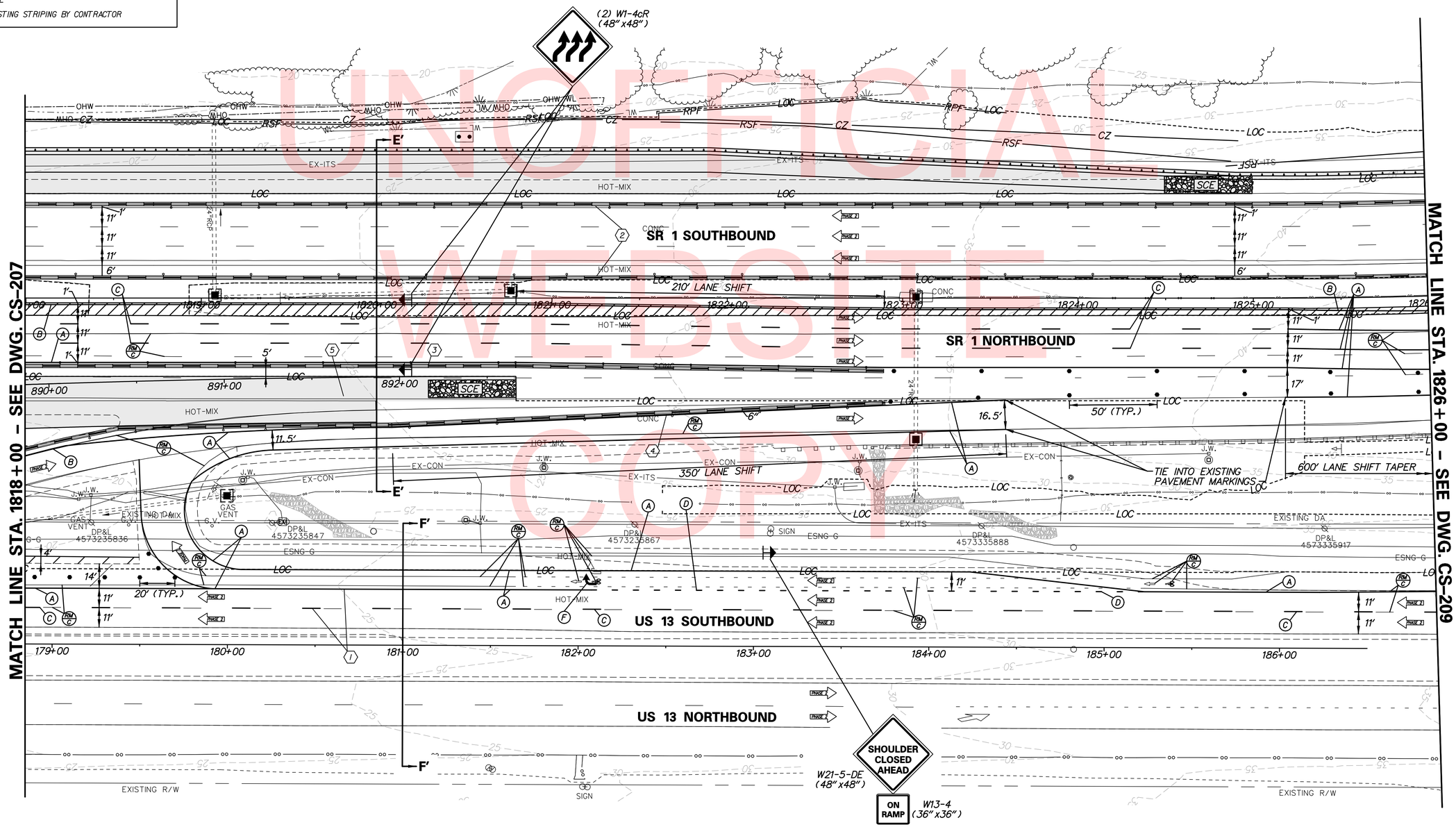

UNOFFICIAL WEBSITE COPY

DELAWARE DEPARTMENT OF TRANSPORTATION

ADDENDUMS / REVISIONS

SCALE 0 30 60 90 FEET

US 301 & SR 1 INTERCHANGE

CONTRACT	BRIDGE NO.
T200911302	DESIGNED BY: J.D.C.
COUNTY	
NEW CASTLE	CHECKED BY: J.M.M.

CONSTRUCTION PHASING, M.O.T., AND EROSION CONTROL PLAN – PHASE 2

CS-208
SHEET NO. 400
TOTAL SHTS. 491

n:\34653-000\contract tb\cadd\CS208U301_1B.dgn
12/18/2015 8:11:47 AM

SEQUENCE OF CONSTRUCTION - PHASE 2

1. UPON COMPLETION OF FULL DEPTH PAVEMENT CONSTRUCTION ALONG LEFT SIDE OF US 13 SOUTHBOUND PLACE PERTINENT TEMPORARY TRAFFIC CONTROL DEVICES AS SHOWN ON PLAN AND SHIFT US 13 SOUTHBOUND TRAFFIC TO DESIGNATED TRAVEL LANE.
2. MAINTAIN PHASE 1 TEMPORARY TRAFFIC CONTROL DEVICES ALONG SR 1 SOUTHBOUND AND MAINTAIN TRAFFIC IN PHASE 1 TRAVEL LANES. CONTINUE PHASE 1 CONSTRUCTION ACTIVITIES ALONG SR 1.
3. REMOVE/REPLACE TEMPORARY TRAFFIC CONTROL DEVICES ALONG LEFT SIDE OF SR 1 NORTHBOUND. PLACE PERTINENT TEMPORARY TRAFFIC CONTROL DEVICES ALONG SR 1 NORTHBOUND AND SHIFT TRAFFIC TO DESIGNATED TRAVEL LANES.

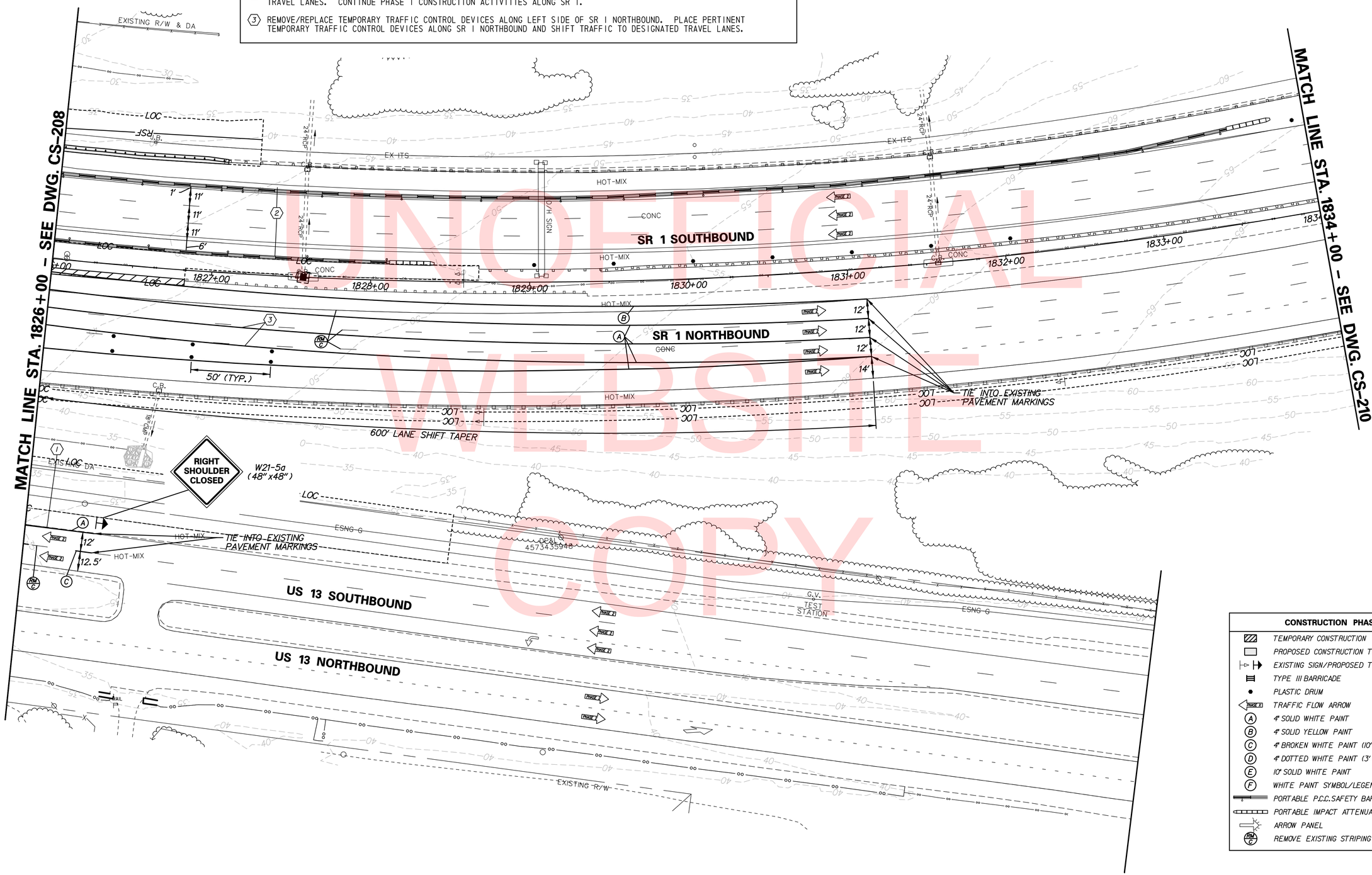

UNOFFICIAL WEBSITE COPY

CONSTRUCTION PHASING LEGEND

- TEMPORARY CONSTRUCTION
- PROPOSED CONSTRUCTION THIS PHASE
- EXISTING SIGN/PROPOSED TEMPORARY SIGN
- TYPE III BARRICADE
- PLASTIC DRUM
- TRAFFIC FLOW ARROW
- (A) 4" SOLID WHITE PAINT
- (B) 4" SOLID YELLOW PAINT
- (C) 4" BROKEN WHITE PAINT (10' LINE, 30' GAP)
- (D) 4" DOTTED WHITE PAINT (3' LINE, 9' GAP)
- (E) 10" SOLID WHITE PAINT
- (F) WHITE PAINT SYMBOL/LEGEND
- PORTABLE P.C.C. SAFETY BARRIER (F SHAPE)
- PORTABLE IMPACT ATTENUATOR
- ARROW PANEL
- (RM C) REMOVE EXISTING STRIPING BY CONTRACTOR

CS-209

DELAWARE DEPARTMENT OF TRANSPORTATION	ADDENDUMS / REVISIONS	SCALE 0 30 60 90 FEET	US 301 & SR 1 INTERCHANGE	CONTRACT T200911302	BRIDGE NO.	CONSTRUCTION PHASING, M.O.T., AND EROSION CONTROL PLAN – PHASE 2	SHEET NO. 401
				COUNTY NEW CASTLE	DESIGNED BY: J.D.C.		TOTAL SHTS. 491
					CHECKED BY: J.M.M.		

n:\31653_000\contract tb\cadd\CS209U301_1B.dgn
12/18/2015 8:11:51 AM

CONSTRUCTION PHASING LEGEND

- TEMPORARY CONSTRUCTION
- PROPOSED CONSTRUCTION THIS PHASE
- EXISTING SIGN/PROPOSED TEMPORARY SIGN
- TYPE III BARRICADE
- PLASTIC DRUM
- TRAFFIC FLOW ARROW
- (A) 4" SOLID WHITE PAINT
- (B) 4" SOLID YELLOW PAINT
- (C) 4" BROKEN WHITE PAINT (10' LINE, 30' GAP)
- (D) 4" DOTTED WHITE PAINT (3' LINE, 9' GAP)
- (E) 10" SOLID WHITE PAINT
- (F) WHITE PAINT SYMBOL/LEGEND
- PORTABLE P.C.C. SAFETY BARRIER (F SHAPE)
- PORTABLE IMPACT ATTENUATOR
- ARROW PANEL
- (RM C) REMOVE EXISTING STRIPING BY CONTRACTOR

SEQUENCE OF CONSTRUCTION - PHASE 2

(1) MAINTAIN PHASE I TEMPORARY TRAFFIC CONTROL DEVICES.

UNOFFICIAL WEBSITE COPY

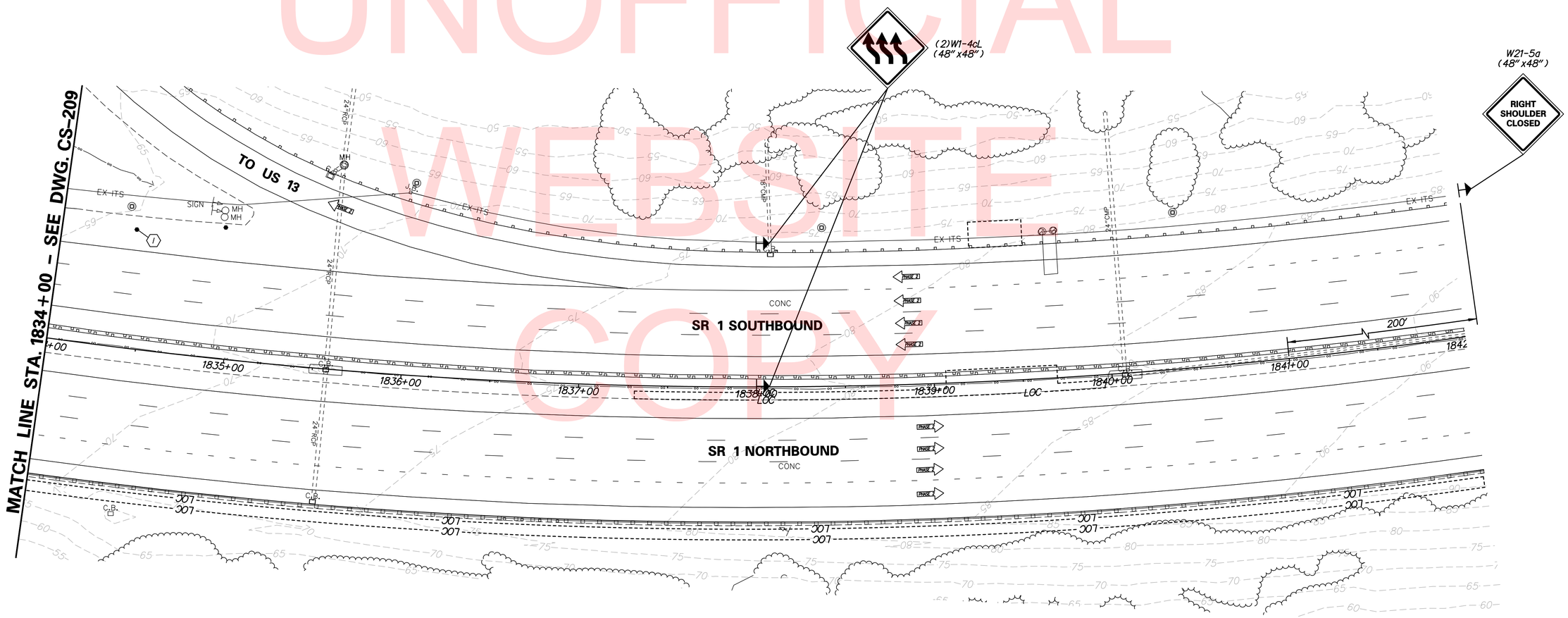

DELAWARE DEPARTMENT OF TRANSPORTATION	ADDENDUMS / REVISIONS	SCALE 0 30 60 90 FEET	US 301 & SR 1 INTERCHANGE	CONTRACT T200911302	BRIDGE NO.	CONSTRUCTION PHASING, M.O.T., AND EROSION CONTROL PLAN – PHASE 2	CS-210
				COUNTY NEW CASTLE	DESIGNED BY: J.D.C.		SHEET NO. 402
					CHECKED BY: J.M.M.		TOTAL SHTS. 491

r:\34653-000\contract tb\cadd\CS210U301_1B.dgn
12/18/2015 8:11:54 AM

SEQUENCE OF CONSTRUCTION - PHASE 2

1. UPON COMPLETION OF FULL DEPTH PAVEMENT CONSTRUCTION ALONG LEFT SIDE OF US 13 SOUTHBOUND PLACE PERTINENT TEMPORARY TRAFFIC CONTROL DEVICES AS SHOWN ON PLAN AND SHIFT US 13 SOUTHBOUND TRAFFIC TO DESIGNATED TRAVEL LANE.
2. MAINTAIN PHASE 1 TEMPORARY TRAFFIC CONTROL DEVICES ALONG SR 1 AND MAINTAIN TRAFFIC IN PHASE 1 TRAVEL LANES. CONTINUE PHASE 1 CONSTRUCTION ACTIVITIES ALONG SR 1 AND RAMP R.
3. COMPLETE GRADING FOR RAMP R AND CONSTRUCT FULL DEPTH PAVEMENT.
4. CONSTRUCT CONCRETE BARRIER AND RETAINING WALL ALONG RIGHT SIDE OF US 13 SOUTHBOUND.
5. STABILIZE ALL DISTURBED AREAS.

SEDIMENT TRAP SCHEDULE

NO.	D. AREA	LENGTH	WIDTH	DEPTH	OUT. TYPE	WEIR EL.	CLEAN EL.	WEIR LENGTH	EMBANK. EL.
012	1.02 AC	49'	20'	3.00'	STONE	27.00	25.00	4'	28.00

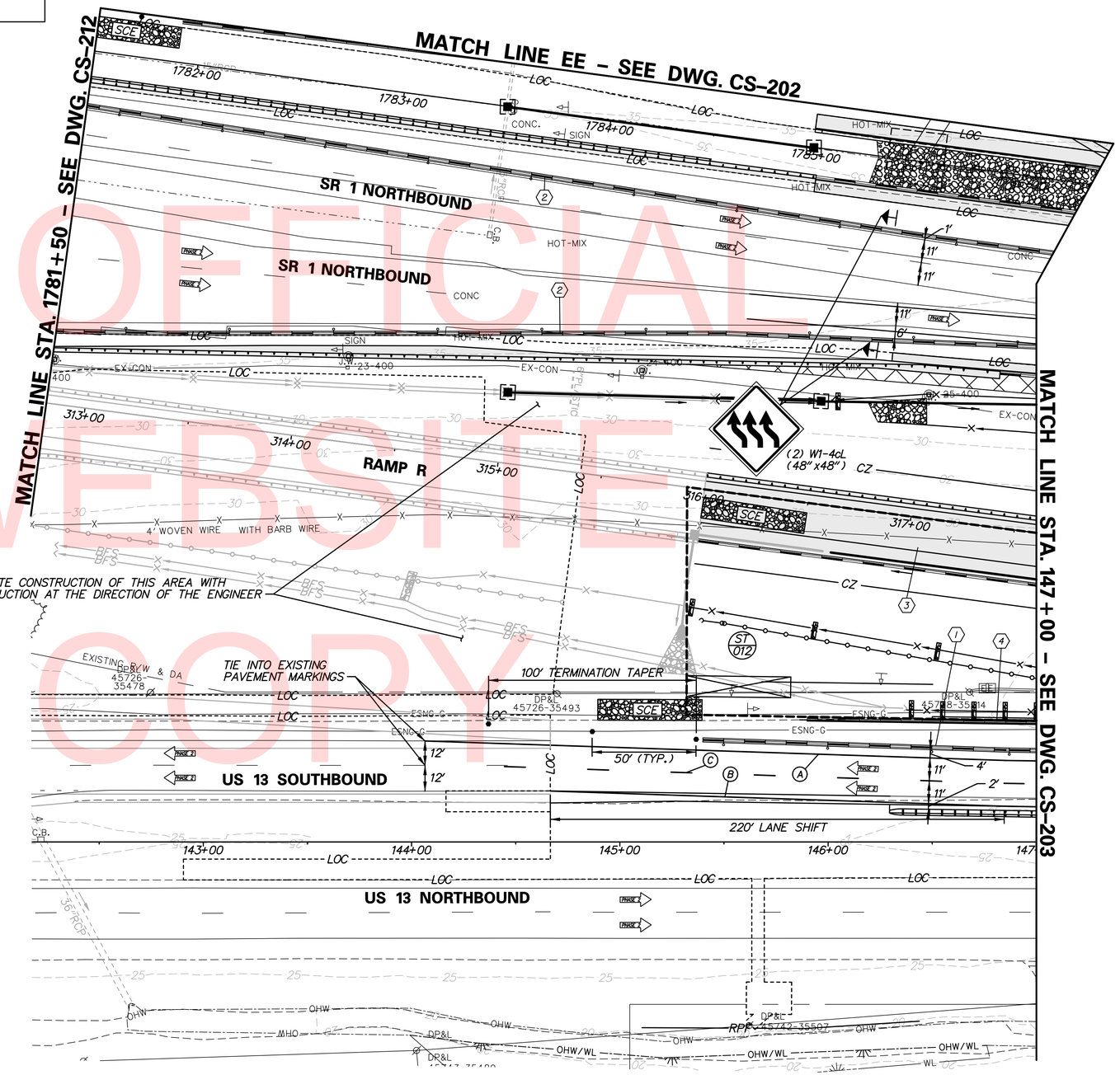

UNOFFICIAL WEBSITE COPY

CONSTRUCTION PHASING LEGEND

- TEMPORARY CONSTRUCTION
- PROPOSED CONSTRUCTION THIS PHASE
- EXISTING SIGN/PROPOSED TEMPORARY SIGN
- TYPE III BARRICADE
- PLASTIC DRUM
- TRAFFIC FLOW ARROW
- (A) 4" SOLID WHITE PAINT
- (B) 4" SOLID YELLOW PAINT
- (C) 4" BROKEN WHITE PAINT (10' LINE, 30' GAP)
- (D) 4" DOTTED WHITE PAINT (3' LINE, 9' GAP)
- (E) 10" SOLID WHITE PAINT
- (F) WHITE PAINT SYMBOL/LEGEND
- PORTABLE P.C.C. SAFETY BARRIER (F SHAPE)
- PORTABLE IMPACT ATTENUATOR
- ARROW PANEL
- (RM/C) REMOVE EXISTING STRIPING BY CONTRACTOR

n:\31653_000\contract tb\cadd\CS211U301_TB.dgn
12/18/2015 8:11:57 AM

DELAWARE DEPARTMENT OF TRANSPORTATION

ADDENDUMS / REVISIONS

SCALE 0 30 60 90 FEET

US 301 & SR 1 INTERCHANGE

CONTRACT	BRIDGE NO.	BR1-433 & RW1-3R
T200911302	DESIGNED BY: J.D.C.	
COUNTY	CHECKED BY: J.M.M.	
NEW CASTLE		

CONSTRUCTION PHASING, M.O.T., AND EROSION CONTROL PLAN - PHASE 2

CS-211

SHEET NO. 403

TOTAL SHTS. 491

CONSTRUCTION PHASING LEGEND

- TEMPORARY CONSTRUCTION
- PROPOSED CONSTRUCTION THIS PHASE
- EXISTING SIGN/PROPOSED TEMPORARY SIGN
- TYPE III BARRICADE
- PLASTIC DRUM
- TRAFFIC FLOW ARROW
- (A) 4" SOLID WHITE PAINT
- (B) 4" SOLID YELLOW PAINT
- (C) 4" BROKEN WHITE PAINT (10' LINE, 30' GAP)
- (D) 4" DOTTED WHITE PAINT (3' LINE, 9' GAP)
- (E) 10" SOLID WHITE PAINT
- (F) WHITE PAINT SYMBOL/LEGEND
- PORTABLE P.C.C. SAFETY BARRIER (F SHAPE)
- PORTABLE IMPACT ATTENUATOR
- ARROW PANEL
- (RM C) REMOVE EXISTING STRIPING BY CONTRACTOR

SEQUENCE OF CONSTRUCTION - PHASE 2

(1) MAINTAIN PHASE I TEMPORARY TRAFFIC CONTROL DEVICES ALONG SR 1 AND MAINTAIN TRAFFIC IN PHASE I TRAVEL LANES. CONTINUE PHASE I CONSTRUCTION ACTIVITIES ALONG SR 1 AND RAMP R.

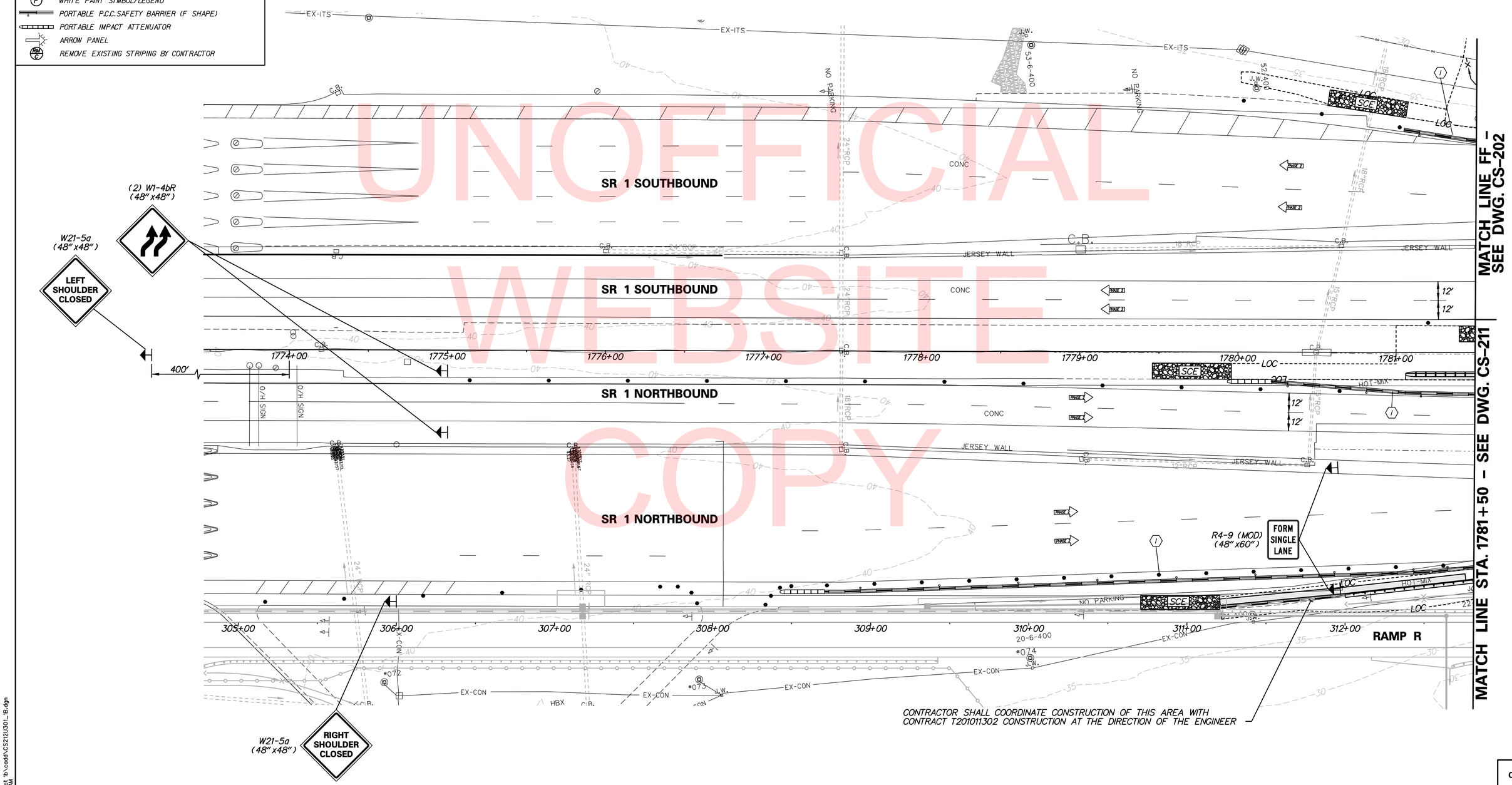

UNOFFICIAL WEBSITE COPY

DELAWARE DEPARTMENT OF TRANSPORTATION	ADDENDUMS / REVISIONS	SCALE 0 30 60 90 FEET	US 301 & SR 1 INTERCHANGE	CONTRACT T200911302	BRIDGE NO.	CONSTRUCTION PHASING, M.O.T., AND EROSION CONTROL PLAN – PHASE 2
				COUNTY NEW CASTLE	DESIGNED BY: J.D.C.	
					CHECKED BY: J.M.M.	

CS-212

SHEET NO. 404

TOTAL SHTS. 491

n:\31653-000\contract tb\cadd\CS212U301_1B.dgn
12/18/2015 8:12:00 AM

CONSTRUCTION PHASING LEGEND

- TEMPORARY CONSTRUCTION
- PROPOSED CONSTRUCTION THIS PHASE
- EXISTING SIGN/PROPOSED TEMPORARY SIGN
- TYPE III BARRICADE
- PLASTIC DRUM
- TRAFFIC FLOW ARROW
- (A) 4" SOLID WHITE PAINT
- (B) 4" SOLID YELLOW PAINT
- (C) 4" BROKEN WHITE PAINT (10' LINE, 30' GAP)
- (D) 4" DOTTED WHITE PAINT (3' LINE, 9' GAP)
- (E) 10" SOLID WHITE PAINT
- (F) WHITE PAINT SYMBOL/LEGEND
- PORTABLE P.C.C. SAFETY BARRIER (F SHAPE)
- PORTABLE IMPACT ATTENUATOR
- ARROW PANEL
- (RM C) REMOVE EXISTING STRIPING BY CONTRACTOR

SEQUENCE OF CONSTRUCTION - PHASE 2A

1. MAINTAIN PHASE 2 TEMPORARY TRAFFIC CONTROL DEVICES AND MAINTAIN SR 1 AND US 13 TRAFFIC IN PHASE 2 TRAVEL LANES.
2. INSTALL/RELOCATE TEMPORARY TRAFFIC CONTROL DEVICES ALONG US 13 'FREE' RAMP AND SR 1 AS SHOWN FOR PHASE 2A. SHIFT RAMP TRAFFIC TO TEMPORARY ROADWAY.
3. CONTINUE PHASE 1 AND 2 CONSTRUCTION ACTIVITIES NOT AFFECTED BY EXISTING US 13 'FREE' RAMP SHIFT.

NOTES:

1. ACCESS FROM US 13 NORTHBOUND TO THE BIDDLES CORNER TOLL PLAZA ADMINISTRATION BUILDING LOCATED AT THE INTERSECTION OF US 13 AND PORT PENN ROAD TO BE LIMITED BY PROPOSED CONSTRUCTION IN CONTRACT NO. T201011302. THE CONTRACTOR SHALL MAINTAIN THE U-TURN AREA TO PROVIDE ACCESS FROM US 13 SOUTHBOUND.
2. PHASE 2A CONSTRUCTION: AREA DESIGNATED FOR BIOSWALE INSTALLATION SHALL BE ROUGH GRADED TO 1-FOOT ABOVE THE FINISHED GRADE ELEVATION AND TEMPORARILY STABILIZED. UPON FINAL STABILIZATION OF ALL CONTRIBUTING DRAINAGE AREAS GRADE BIOSWALE TO FINAL GRADE AND STABILIZE WITH WET SEED MIX.

SCOTT RUN MAINTENANCE OF STREAM FLOW:
ADDITIONAL EROSION AND SEDIMENT CONTROL DEVICES WITHIN THIS BOUNDARY ARE LOCATED ON THE MAINTENANCE OF STREAM FLOW SHEETS (MS-01 AND MS-02). CONSTRUCTION ACTIVITIES WITHIN THIS BOUNDARY SHALL ALSO BE COORDINATED WITH THE BRIDGE CONSTRUCTION PLANS FOR BRIDGES BR 1-903S AND BR 1-432.

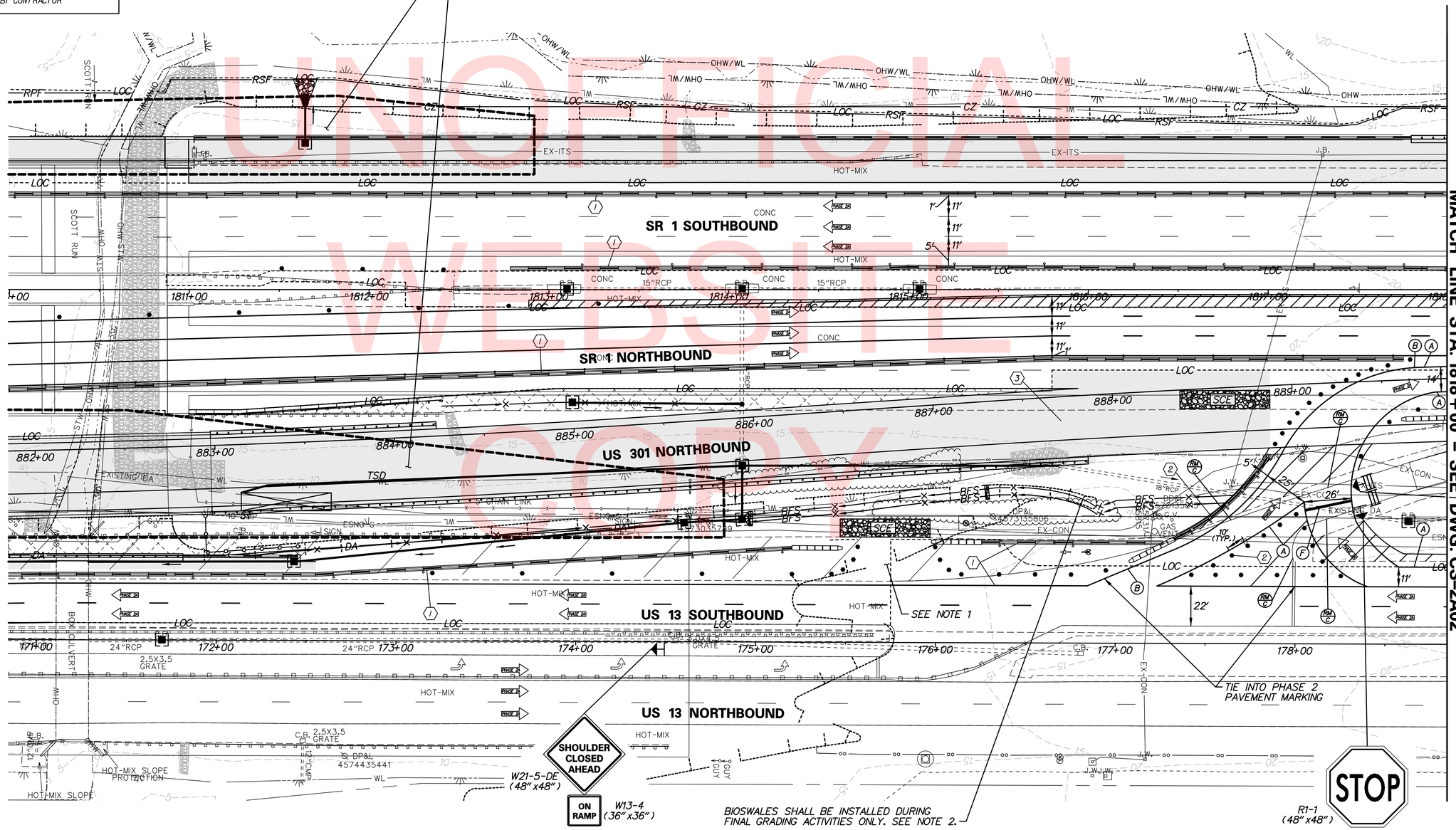

UNOFFICIAL WEBSITE COPY

DELAWARE DEPARTMENT OF TRANSPORTATION	ADDENDUMS / REVISIONS	SCALE 0 30 60 90 FEET	US 301 & SR 1 INTERCHANGE	CONTRACT T200911302	BRIDGE NO. BR1-903N, BR1-903S & BR1-432	CONSTRUCTION PHASING, M.O.T., AND EROSION CONTROL PLAN – PHASE 2A	CS-2A01
				COUNTY NEW CASTLE	DESIGNED BY: J.D.C.		SHEET NO. 405
					CHECKED BY: J.M.M.		TOTAL SHTS. 491

n:\31653-000\contract tb\cadd\CS2A01U301_1B.dgn
12/18/2015 8:12:03 AM

CONSTRUCTION PHASING LEGEND

- TEMPORARY CONSTRUCTION
- PROPOSED CONSTRUCTION THIS PHASE
- EXISTING SIGN/PROPOSED TEMPORARY SIGN
- TYPE III BARRICADE
- PLASTIC DRUM
- TRAFFIC FLOW ARROW
- (A) 4" SOLID WHITE PAINT
- (B) 4" SOLID YELLOW PAINT
- (C) 4" BROKEN WHITE PAINT (10' LINE, 30' GAP)
- (D) 4" DOTTED WHITE PAINT (3' LINE, 9' GAP)
- (E) 10" SOLID WHITE PAINT
- (F) WHITE PAINT SYMBOL/LEGEND
- PORTABLE P.C.C. SAFETY BARRIER (F SHAPE)
- PORTABLE IMPACT ATTENUATOR
- ARROW PANEL
- (RM C) REMOVE EXISTING STRIPING BY CONTRACTOR

SEQUENCE OF CONSTRUCTION - PHASE 2A

1. MAINTAIN PHASE 2 TEMPORARY TRAFFIC CONTROL DEVICES. MAINTAIN SR 1 AND US 13 TRAFFIC IN PHASE 2 TRAVEL LANES.
2. INSTALL/RELOCATE TEMPORARY TRAFFIC CONTROL DEVICES ALONG US 13 'FREE' RAMP AND SR 1 AS SHOWN FOR PHASE 2A. SHIFT RAMP TRAFFIC TO DESIGNATED TRAVEL LANE.
3. CONTINUE PHASE 1 AND 2 CONSTRUCTION ACTIVITIES NOT AFFECTED BY EXISTING US 13 'FREE' RAMP SHIFT.
4. CONSTRUCT FULL-DEPTH PAVEMENT ALONG SR 1 NORTHBOUND AND US 301 NORTHBOUND.
5. STABILIZE ALL DISTRURBED AREAS.

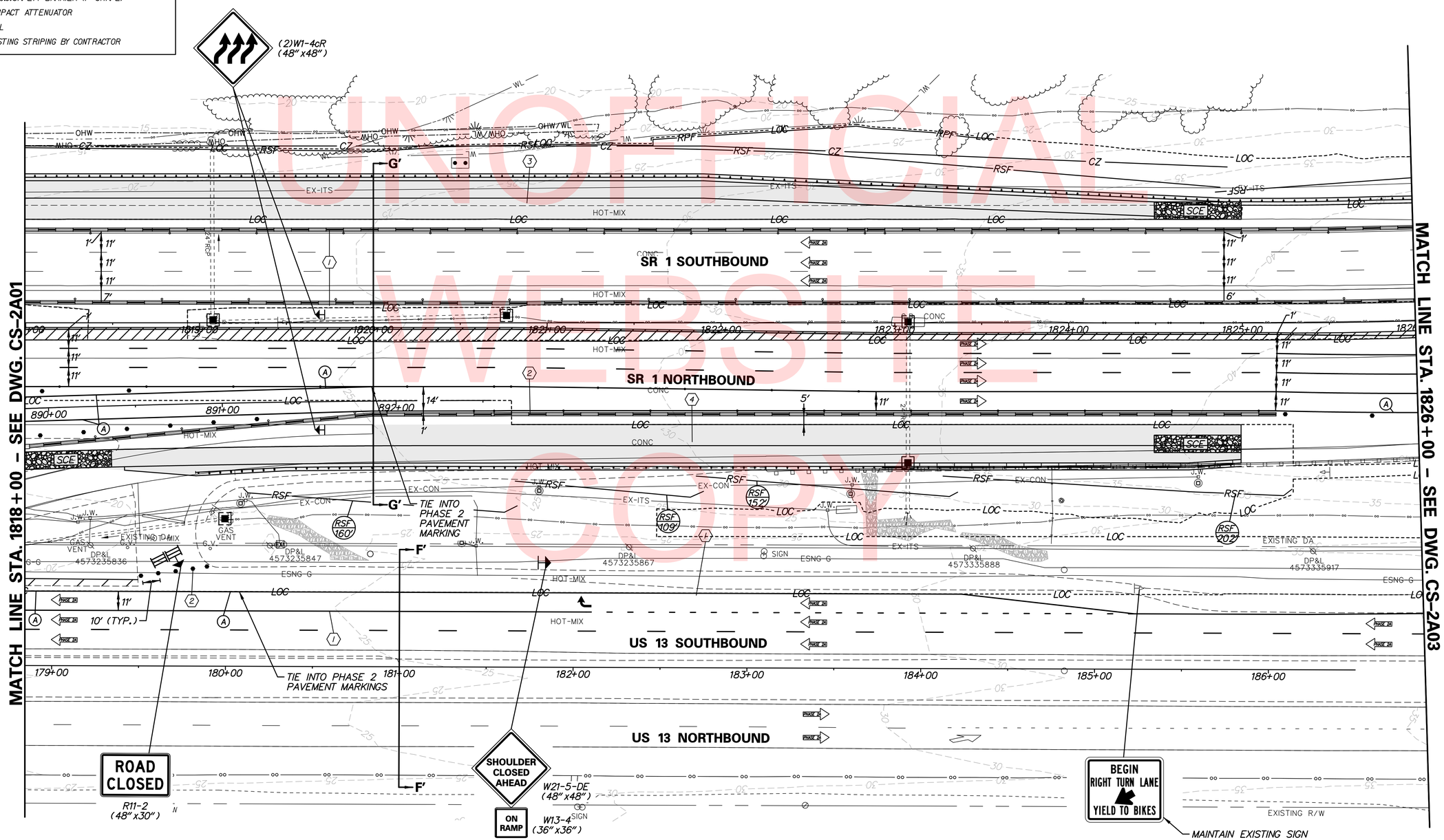

UNOFFICIAL WEBSITE COPY

DELAWARE DEPARTMENT OF TRANSPORTATION	ADDENDUMS / REVISIONS	SCALE 0 30 60 90 FEET	US 301 & SR 1 INTERCHANGE	CONTRACT T200911302	BRIDGE NO.	CONSTRUCTION PHASING, M.O.T., AND EROSION CONTROL PLAN - PHASE 2A	CS-2A02
				COUNTY NEW CASTLE	DESIGNED BY: J.D.C.		SHEET NO. 406
					CHECKED BY: J.M.M.		TOTAL SHTS. 491

n\33653-000\contract tb\cadd\CS2A02U301_1B.dgn
12/18/2015 8:12:08 AM

SEQUENCE OF CONSTRUCTION - PHASE 2A

1. MAINTAIN PHASE 2 TEMPORARY TRAFFIC CONTROL DEVICES AND MAINTAIN SR 1 AND US 13 TRAFFIC IN PHASE 2 TRAVEL LANES.
2. INSTALL/RELOCATE TEMPORARY TRAFFIC CONTROL DEVICES ALONG SR 1 AS SHOWN FOR PHASE 2A. SHIFT EXISTING US 13 'FREE' RAMP TRAFFIC TO DESIGNATED TRAVEL LANE.

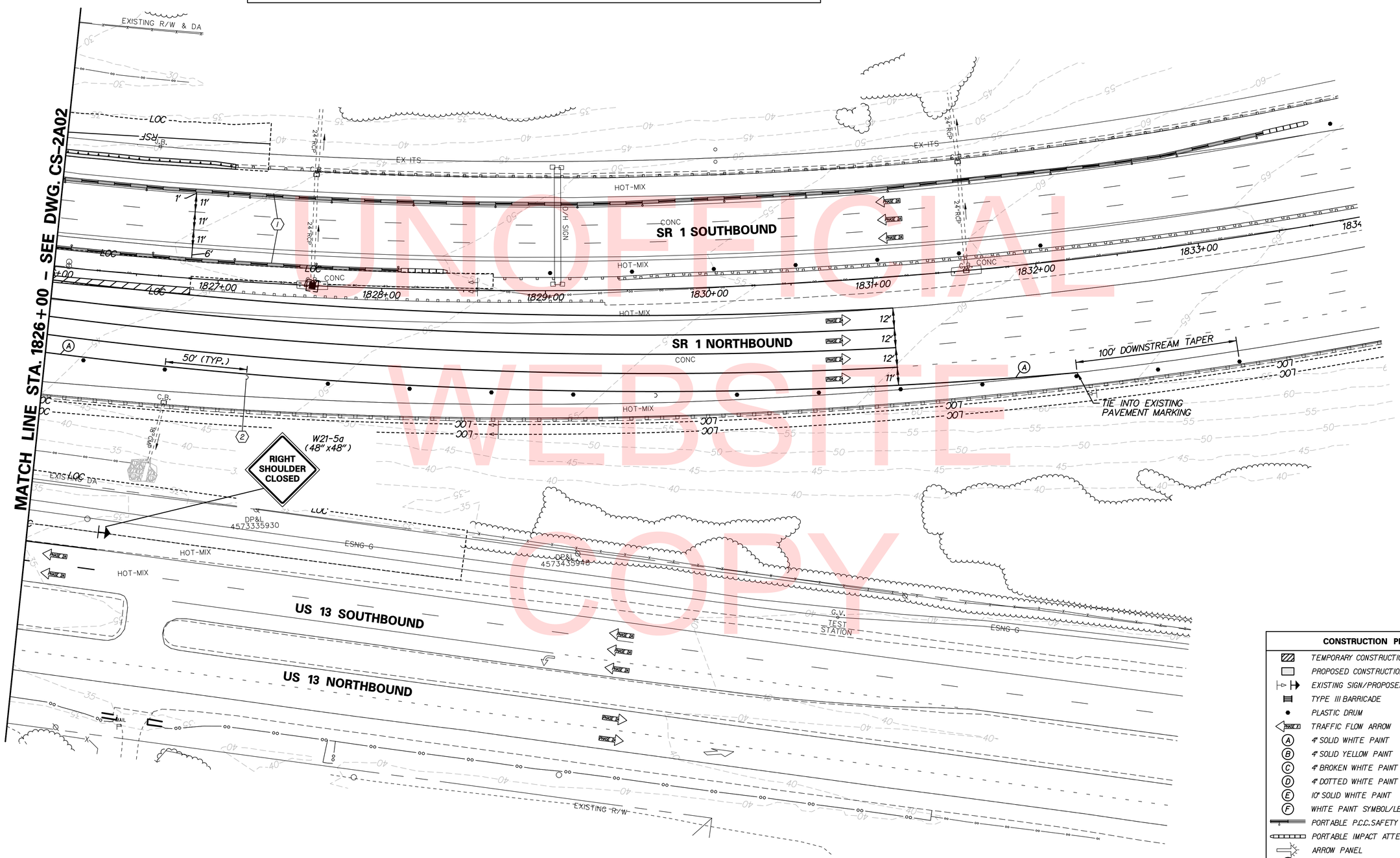

CONSTRUCTION PHASING LEGEND

- TEMPORARY CONSTRUCTION
- PROPOSED CONSTRUCTION THIS PHASE
- EXISTING SIGN/PROPOSED TEMPORARY SIGN
- TYPE III BARRICADE
- PLASTIC DRUM
- TRAFFIC FLOW ARROW
- (A) 4" SOLID WHITE PAINT
- (B) 4" SOLID YELLOW PAINT
- (C) 4" BROKEN WHITE PAINT (10' LINE, 30' GAP)
- (D) 4" DOTTED WHITE PAINT (3' LINE, 9' GAP)
- (E) 10" SOLID WHITE PAINT
- (F) WHITE PAINT SYMBOL/LEGEND
- PORTABLE P.C.C. SAFETY BARRIER (F SHAPE)
- PORTABLE IMPACT ATTENUATOR
- ARROW PANEL
- (RM C) REMOVE EXISTING STRIPING BY CONTRACTOR

CS-2A03

DELAWARE DEPARTMENT OF TRANSPORTATION

ADDENDUMS / REVISIONS

SCALE 0 30 60 90 FEET

US 301 & SR 1 INTERCHANGE

CONTRACT	BRIDGE NO.	CONSTRUCTION PHASING, M.O.T., AND EROSION CONTROL PLAN - PHASE 2A	SHEET NO.
T200911302	DESIGNED BY: J.D.C.		407
COUNTY			TOTAL SHTS.
NEW CASTLE	CHECKED BY: J.M.M.		491

UNOFFICIAL WEBSITE COPY

pt\33653-000\contract tb\cadd\CS2A03U301_1B.dgn 12/18/2015 8:12:12 AM

SEQUENCE OF CONSTRUCTION - PHASE 3

1. INSTALL PERMANENT PAVEMENT MARKINGS ALONG SR 1 AND RAMP R. REMOVE ALL TEMPORARY TRAFFIC CONTROL DEVICES INSTALLED BY OTHERS AS SHOWN ON DWG. NOS. CS-312 - CS-313 AND OPEN RAMP R.
2. UPON OPENING OF RAMP R, PLACE ALL PERTINENT TEMPORARY TRAFFIC CONTROL DEVICES AS SHOWN ON PLAN AND SHIFT US 13 SOUTHBOUND TRAFFIC TO DESIGNATED TRAVEL LANES. MAINTAIN US 13 NORTHBOUND TRAFFIC ON EXISTING TRAVEL LANES.
3. COMPLETE RESURFACING AND INSTALL PERMANENT PAVEMENT MARKINGS ON US 13.

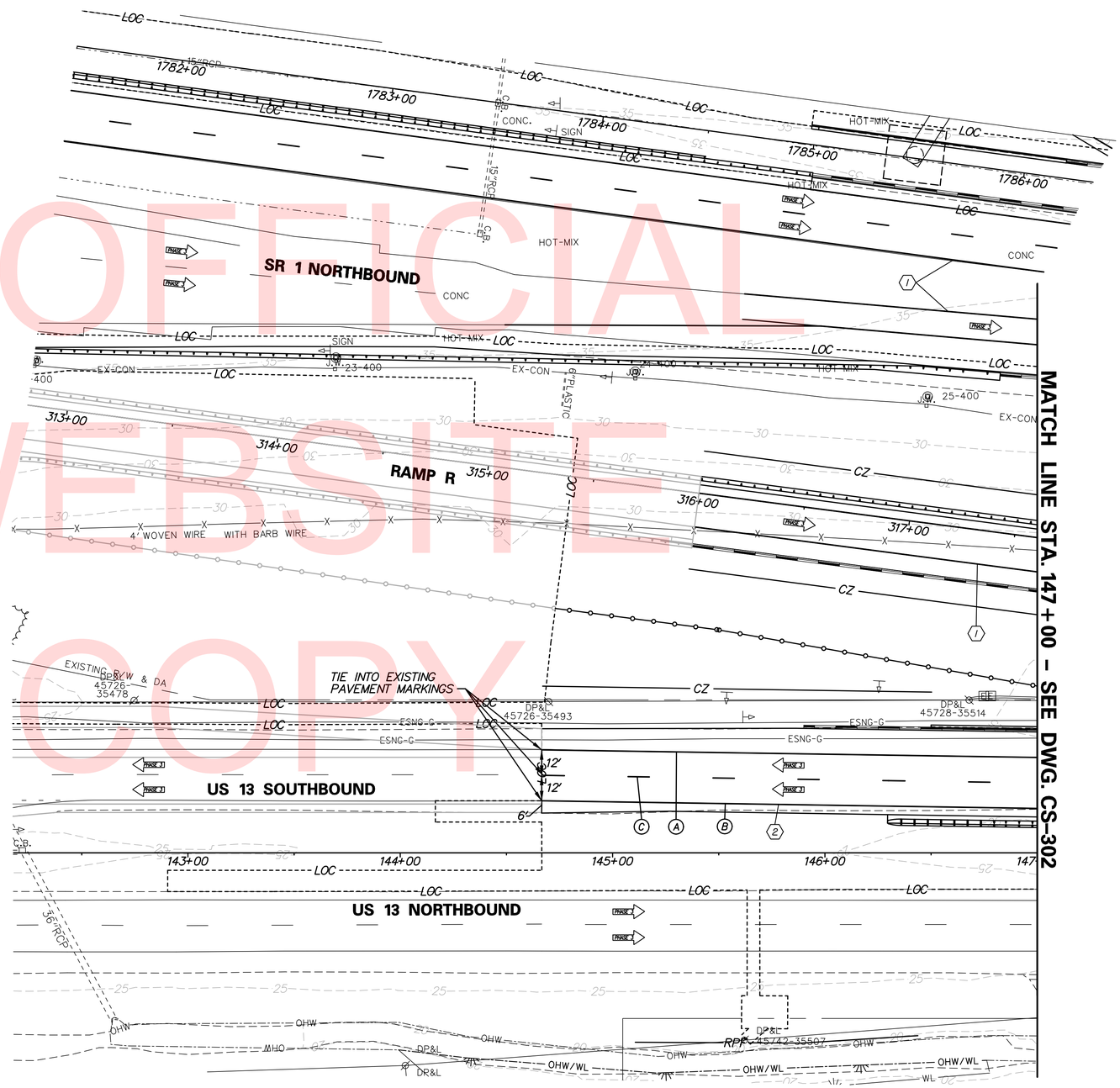

CONSTRUCTION PHASING LEGEND

- TEMPORARY CONSTRUCTION
- PROPOSED CONSTRUCTION THIS PHASE
- EXISTING SIGN/PROPOSED TEMPORARY SIGN
- TYPE III BARRICADE
- PLASTIC DRUM
- TRAFFIC FLOW ARROW
- (A) 4" SOLID WHITE PAINT
- (B) 4" SOLID YELLOW PAINT
- (C) 4" BROKEN WHITE PAINT (10' LINE, 30' GAP)
- (D) 4" DOTTED WHITE PAINT (3' LINE, 9' GAP)
- (E) 10" SOLID WHITE PAINT
- (F) WHITE PAINT SYMBOL/LEGEND
- PORTABLE P.C.C. SAFETY BARRIER (F SHAPE)
- PORTABLE IMPACT ATTENUATOR
- ARROW PANEL
- (RM C) REMOVE EXISTING STRIPING BY CONTRACTOR

UNOFFICIAL WEBSITE COPY

DELAWARE DEPARTMENT OF TRANSPORTATION

ADDENDUMS / REVISIONS

SCALE 0 30 60 90 FEET

US 301 & SR 1 INTERCHANGE

CONTRACT	BRIDGE NO. BR1-433 & RW1-3R
T200911302	DESIGNED BY: J.D.C.
COUNTY	
NEW CASTLE	CHECKED BY: J.M.M.

CONSTRUCTION PHASING, M.O.T., AND EROSION CONTROL PLAN – PHASE 3

CS-301
SHEET NO. 408
TOTAL SHTS. 491

r:\31653-000\contract tb\cadd\CS301\U301_1B.dgn
12/18/2015 8:12:15 AM

SEQUENCE OF CONSTRUCTION - PHASE 3

1. INSTALL PERMANENT PAVEMENT MARKINGS ALONG SR 1, US 301 AND RAMP R.
2. INSTALL TEMPORARY TRAFFIC CONTROL DEVICES ALONG RAMP R AND US 301 NORTHBOUND CLOSING ACCESS TO THE US 301 NORTHBOUND ROADWAY SOUTH OF STA. 865+00 (SEE DWG. NOS. CS-401 THROUGH CS-407 FOR DETAILS, DIMENSIONS AND SIGNING). REMOVE ALL TEMPORARY TRAFFIC CONTROL DEVICES INSTALLED BY OTHERS AS SHOWN ON DWG. NOS. CS-312 - CS-313 AND OPEN RAMP R.
3. UPON OPENING OF RAMP R, PLACE ALL PERTINENT TEMPORARY TRAFFIC CONTROL DEVICES ALONG US 13 SOUTHBOUND AND SHIFT TRAFFIC TO DESIGNATED TRAVEL LANES. MAINTAIN US 13 NORTHBOUND TRAFFIC ON EXISTING TRAVEL LANES.
4. COMPLETE RESURFACING AND INSTALL PERMANENT PAVEMENT MARKINGS ON US 13.

CONSTRUCTION PHASING LEGEND

- TEMPORARY CONSTRUCTION
- PROPOSED CONSTRUCTION THIS PHASE
- EXISTING SIGN/PROPOSED TEMPORARY SIGN
- TYPE III BARRICADE
- PLASTIC DRUM
- TRAFFIC FLOW ARROW
- (A) 4" SOLID WHITE PAINT
- (B) 4" SOLID YELLOW PAINT
- (C) 4" BROKEN WHITE PAINT (10' LINE, 30' GAP)
- (D) 4" DOTTED WHITE PAINT (3' LINE, 9' GAP)
- (E) 10" SOLID WHITE PAINT
- (F) WHITE PAINT SYMBOL/LEGEND
- PORTABLE P.C.C. SAFETY BARRIER (F SHAPE)
- PORTABLE IMPACT ATTENUATOR
- ARROW PANEL
- (RM C) REMOVE EXISTING STRIPING BY CONTRACTOR

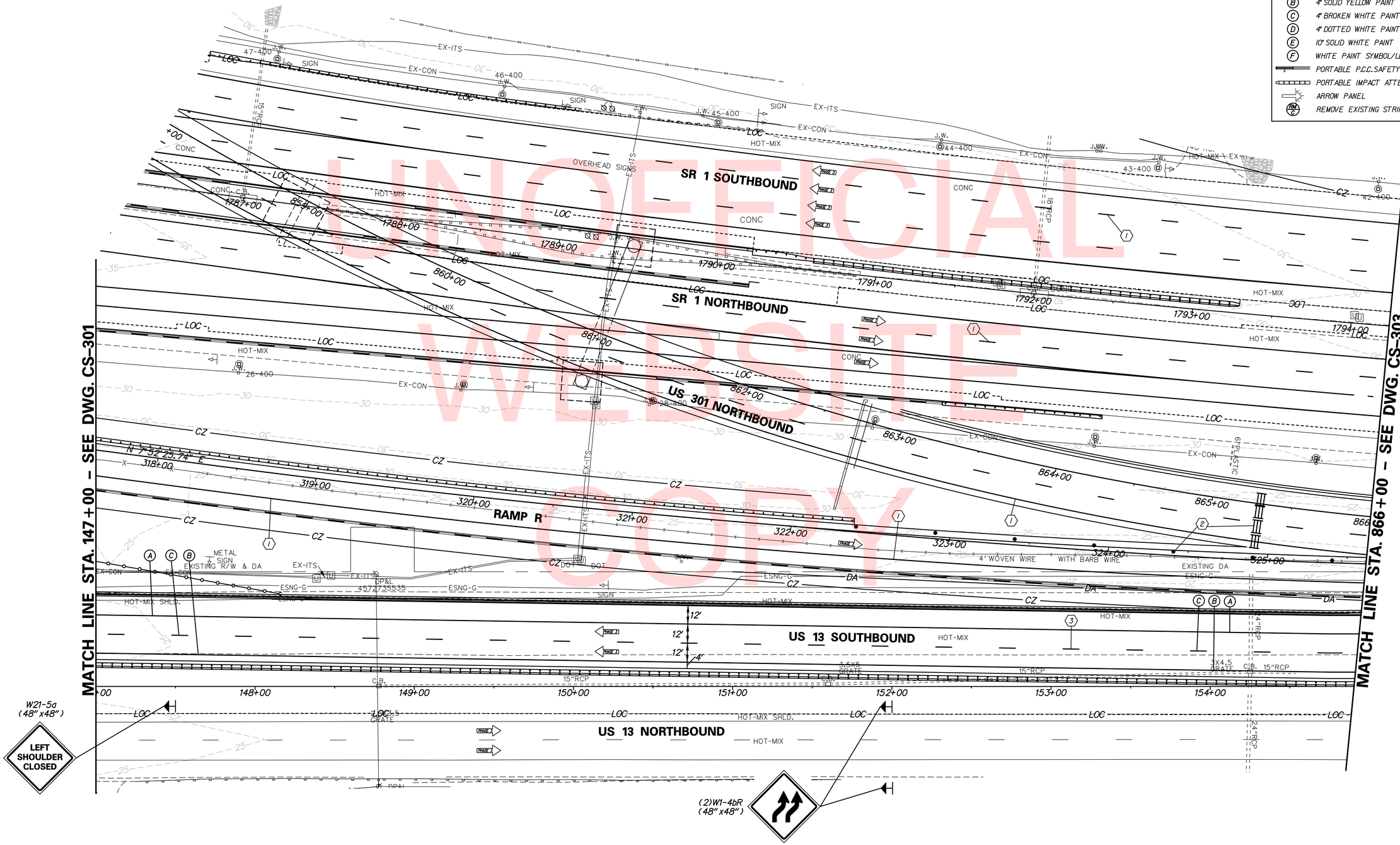

UNOFFICIAL WEBSITE COPY

DELAWARE DEPARTMENT OF TRANSPORTATION	ADDENDUMS / REVISIONS	SCALE 0 30 60 90 FEET	US 301 & SR 1 INTERCHANGE	CONTRACT T200911302 / COUNTY NEW CASTLE	BRIDGE NO. BR1-433, RW1-3 & RW1-3R / DESIGNED BY: J.D.C. / CHECKED BY: J.M.M.	CONSTRUCTION PHASING, M.O.T., AND EROSION CONTROL PLAN – PHASE 3

CS-302
SHEET NO. 409
TOTAL SHTS. 491

n:\31653-000\contract tb\cadd\CS302U301_1B.dgn 12/18/2015 8:12:18 AM

SEQUENCE OF CONSTRUCTION - PHASE 3

1. INSTALL PERMANENT PAVEMENT MARKINGS ALONG SR 1 AND US 301.
2. INSTALL TEMPORARY TRAFFIC CONTROL DEVICES ALONG US 301 NORTHBOUND CLOSING ACCESS TO THE US 301 NORTHBOUND ROADWAY SOUTH OF STA. 865+00 AND INSTALL TEMPORARY TRAFFIC CONTROL DEVICES ALONG SR 1 SOUTHBOUND CLOSING THE RAMP TO US 301 SOUTHBOUND (SEE DWG. NOS. CS-401 THROUGH CS-407 FOR DETAILS, DIMENSIONS AND SIGNING). REMOVE ALL TEMPORARY TRAFFIC CONTROL DEVICES INSTALLED BY OTHERS AS SHOWN ON DWG. NOS. CS-312 - CS-313 AND OPEN RAMP R.
3. UPON OPENING OF RAMP R, PLACE ALL PERTINENT TEMPORARY TRAFFIC CONTROL DEVICES ALONG US 13 AND SR 1. SHIFT US 13 TRAFFIC TO DESIGNATED TRAVEL LANES AND MAINTAIN SR 1 TRAFFIC IN EXISING TRAVEL LANES.
4. REMOVE EXISTING PAVEMENT ALONG THE US 13 MEDIAN.
5. COMPLETE RESURFACING AND INSTALL PERMANENT PAVEMENT MARKINGS ON US 13.
6. USING TYPICAL APPLICATION 33, INSTALL RUMBLE STRIPS PER EDGELINE RUMBLE STRIPS DETAIL ON DWG. NO. DT-01 ALONG LEFT SIDE OF SR 1 SOUTHBOUND FROM STA. 1801+25 TO STA. 1833+75.
7. STABILIZE ALL DISTURBED AREAS.

CONSTRUCTION PHASING LEGEND

- TEMPORARY CONSTRUCTION
- PROPOSED CONSTRUCTION THIS PHASE
- EXISTING SIGN/PROPOSED TEMPORARY SIGN
- TYPE III BARRICADE
- PLASTIC DRUM
- TRAFFIC FLOW ARROW
- (A) 4" SOLID WHITE PAINT
- (B) 4" SOLID YELLOW PAINT
- (C) 4" BROKEN WHITE PAINT (10' LINE, 30' GAP)
- (D) 4" DOTTED WHITE PAINT (3' LINE, 9' GAP)
- (E) 10" SOLID WHITE PAINT
- (F) WHITE PAINT SYMBOL/LEGEND
- PORTABLE P.C.C. SAFETY BARRIER (F SHAPE)
- PORTABLE IMPACT ATTENUATOR
- ARROW PANEL
- (RM C) REMOVE EXISTING STRIPING BY CONTRACTOR

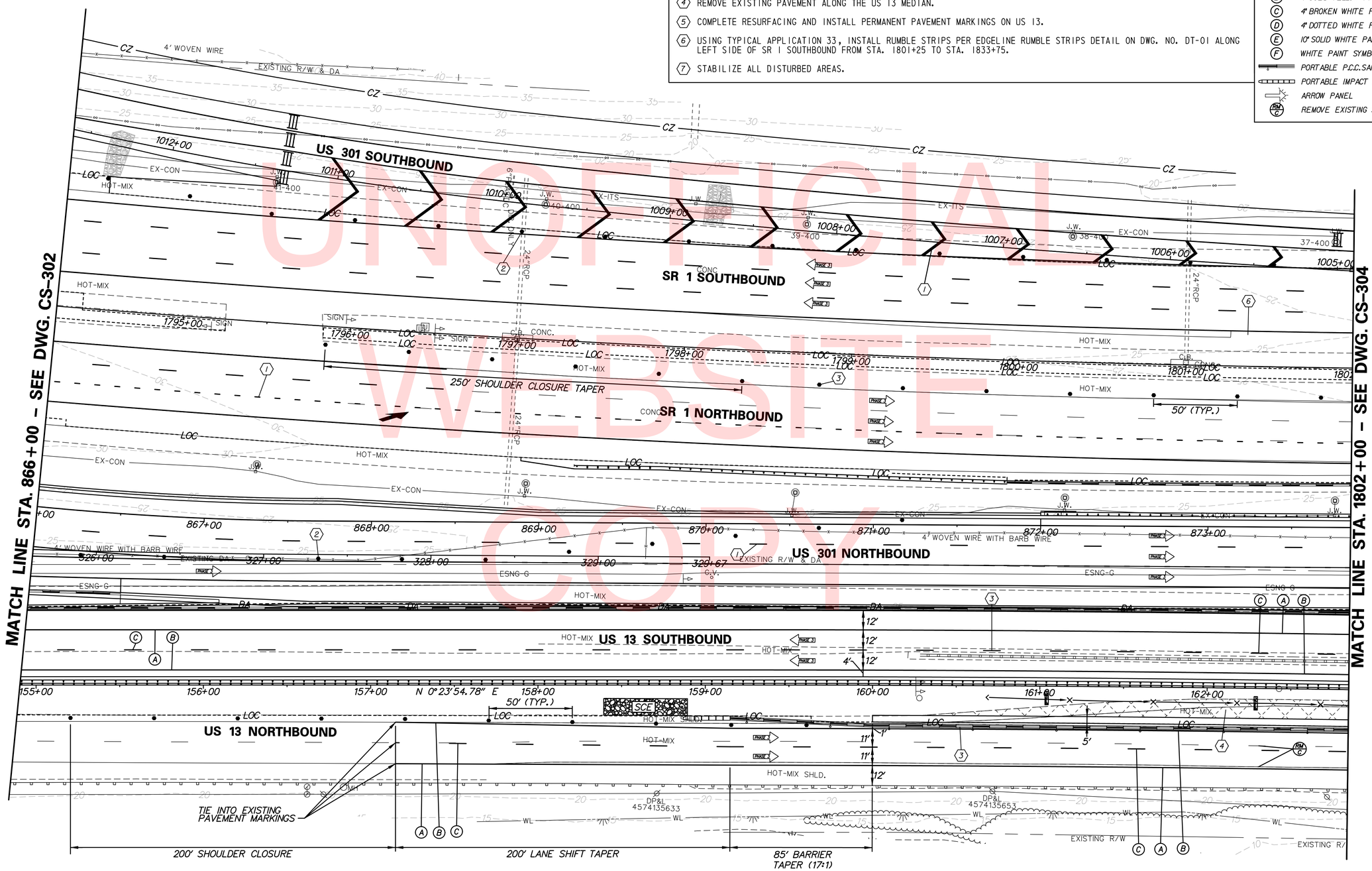

UNOFFICIAL WEBSITE COPY

DELAWARE DEPARTMENT OF TRANSPORTATION	ADDENDUMS / REVISIONS	SCALE 0 30 60 90 FEET	US 301 & SR 1 INTERCHANGE	CONTRACT T200911302 / COUNTY NEW CASTLE	BRIDGE NO. RW1-3 & RW1-3R / DESIGNED BY: J.D.C. / CHECKED BY: J.M.M.

CONSTRUCTION PHASING, M.O.T., AND EROSION CONTROL PLAN – PHASE 3

CS-303 | SHEET NO. 410 | TOTAL SHTS. 491

n:\33653-000\contract tb\cadd\CS303U301_1B.dgn 12/18/2015 8:13:21 AM

CONSTRUCTION PHASING LEGEND

- TEMPORARY CONSTRUCTION
- PROPOSED CONSTRUCTION THIS PHASE
- EXISTING SIGN/PROPOSED TEMPORARY SIGN
- TYPE III BARRICADE
- PLASTIC DRUM
- TRAFFIC FLOW ARROW
- (A) 4" SOLID WHITE PAINT
- (B) 4" SOLID YELLOW PAINT
- (C) 4" BROKEN WHITE PAINT (10' LINE, 30' GAP)
- (D) 4" DOTTED WHITE PAINT (3' LINE, 9' GAP)
- (E) 10" SOLID WHITE PAINT
- (F) WHITE PAINT SYMBOL/LEGEND
- PORTABLE P.C.C. SAFETY BARRIER (F SHAPE)
- PORTABLE IMPACT ATTENUATOR
- ARROW PANEL
- (RM C) REMOVE EXISTING STRIPING BY CONTRACTOR

SEQUENCE OF CONSTRUCTION - PHASE 3

1. INSTALL PERMANENT PAVEMENT MARKINGS ALONG SR 1 AND US 301.
2. INSTALL TEMPORARY TRAFFIC CONTROL DEVICES ALONG SR 1 SOUTHBOUND CLOSING THE RAMP TO US 301 SOUTHBOUND (SEE DWG. NOS. CS-401 THROUGH CS-407 FOR DETAILS, DIMENSIONS AND SIGNING). REMOVE ALL TEMPORARY TRAFFIC CONTROL DEVICES INSTALLED BY OTHERS AS SHOWN ON DWG. NOS. CS-312 - CS-313 AND OPEN RAMP R.
3. UPON OPENING OF RAMP R, PLACE ALL PERTINENT TEMPORARY TRAFFIC CONTROL DEVICES ALONG US 13, US 301 NORTHBOUND AND SR 1. SHIFT US 13 TRAFFIC TO DESIGNATED TRAVEL LANES AND MAINTAIN SR 1 TRAFFIC IN EXISTING TRAVEL LANES.
4. REMOVE EXISTING PAVEMENT ALONG THE US 13 MEDIAN.
5. USING TYPICAL APPLICATION 33, REMOVE EXISTING QUICK CURB.
6. COMPLETE RESURFACING AND INSTALL PERMANENT PAVEMENT MARKINGS ON US 13.
7. COMPLETE CONSTRUCTION OF SIGN STRUCTURE OH-2 AND INSTALL GUARDRAIL AND PAVING IN SR 1 MEDIAN.
8. USING TYPICAL APPLICATION 33, REMOVE TEMPORARY TRAFFIC BARRIER AND INSTALL RUMBLE STRIPS PER EDGELINE RUMBLE STRIPS DETAIL ON DWG. NO. DT-01 ALONG LEFT SIDE OF SR 1 SOUTHBOUND FROM STA. 1801+25 TO STA. 1833+75 AND ALONG LEFT SIDE OF SR 1 NORTHBOUND FROM STA. 1808+75 TO STA. 1831+25.
9. STABILIZE ALL DISTURBED AREAS.

UNOFFICIAL WEBSITE COPY

DELAWARE DEPARTMENT OF TRANSPORTATION	ADDENDUMS / REVISIONS	SCALE 0 30 60 90 FEET	US 301 & SR 1 INTERCHANGE	CONTRACT T200911302 / COUNTY NEW CASTLE	BRIDGE NO. BR1-903N, BR1-903S, BR1-432, RW1-1 & RW1-3R / DESIGNED BY: J.D.C. / CHECKED BY: J.M.M.

CONSTRUCTION PHASING, M.O.T., AND EROSION CONTROL PLAN - PHASE 3

CS-304

SHEET NO. 411

TOTAL SHTS. 491

n:\31653-000\contract tb\cadd\CS304U301_1B.dgn
12/18/2015 8:12:25 AM

CONSTRUCTION PHASING LEGEND

- TEMPORARY CONSTRUCTION
- PROPOSED CONSTRUCTION THIS PHASE
- EXISTING SIGN/PROPOSED TEMPORARY SIGN
- TYPE III BARRICADE
- PLASTIC DRUM
- TRAFFIC FLOW ARROW
- (A) 4" SOLID WHITE PAINT
- (B) 4" SOLID YELLOW PAINT
- (C) 4" BROKEN WHITE PAINT (10' LINE, 30' GAP)
- (D) 4" DOTTED WHITE PAINT (3' LINE, 9' GAP)
- (E) 10" SOLID WHITE PAINT
- (F) WHITE PAINT SYMBOL/LEGEND
- PORTABLE P.C.C. SAFETY BARRIER (F SHAPE)
- PORTABLE IMPACT ATTENUATOR
- ARROW PANEL
- (RM C) REMOVE EXISTING STRIPING BY CONTRACTOR

SEQUENCE OF CONSTRUCTION - PHASE 3

1. INSTALL PERMANENT PAVEMENT MARKINGS ALONG SR 1 AND US 301.
2. INSTALL TEMPORARY TRAFFIC CONTROL DEVICES ALONG SR 1 SOUTHBOUND CLOSING THE RAMP TO US 301 SOUTHBOUND (SEE DWG. NOS. CS-401 THROUGH CS-407 FOR DETAILS, DIMENSIONS AND SIGNING). REMOVE ALL TEMPORARY TRAFFIC CONTROL DEVICES INSTALLED BY OTHERS AS SHOWN ON DWG. NOS. CS-312 - CS-313 AND OPEN RAMP R.
3. UPON OPENING OF RAMP R, PLACE ALL PERTINENT TEMPORARY TRAFFIC CONTROL DEVICES ALONG SR 1, US 301 NORTHBOUND AND US 13. MAINTAIN SR 1 AND US 301 NORTHBOUND TRAFFIC IN EXISTING TRAVEL LANES AND SHIFT US 13 TRAFFIC TO DESIGNATED TRAVEL LANES.
4. REMOVE EXISTING AND TEMPORARY PAVEMENT DESIGNATED FOR REMOVAL BETWEEN SR 1 AND US 13 AND IN SR 1 MEDIAN. CONSTRUCT FULL DEPTH PAVEMENT FOR US 13 TURNAROUND.
5. USING TYPICAL APPLICATION 33, REMOVE EXISTING QUICK CURB.
6. REMOVE EXISTING TRAFFIC SIGNAL.
7. COMPLETE RESURFACING AND INSTALL PERMANENT PAVEMENT MARKINGS ON US 13.
8. USING TYPICAL APPLICATION 33, REMOVE TEMPORARY CONCRETE BARRIER AND INSTALL RUMBLE STRIPS PER EDGELINE RUMBLE STRIPS DETAIL ON DWG. NO. DT-01 ALONG LEFT SIDE OF SR 1 SOUTHBOUND FROM STA. 1801+25 TO STA. 1833+75 AND ALONG LEFT SIDE OF SR 1 NORTHBOUND FROM STA. 1808+75 TO STA. 1831+25.
9. STABILIZE ALL DISTURBED AREAS.

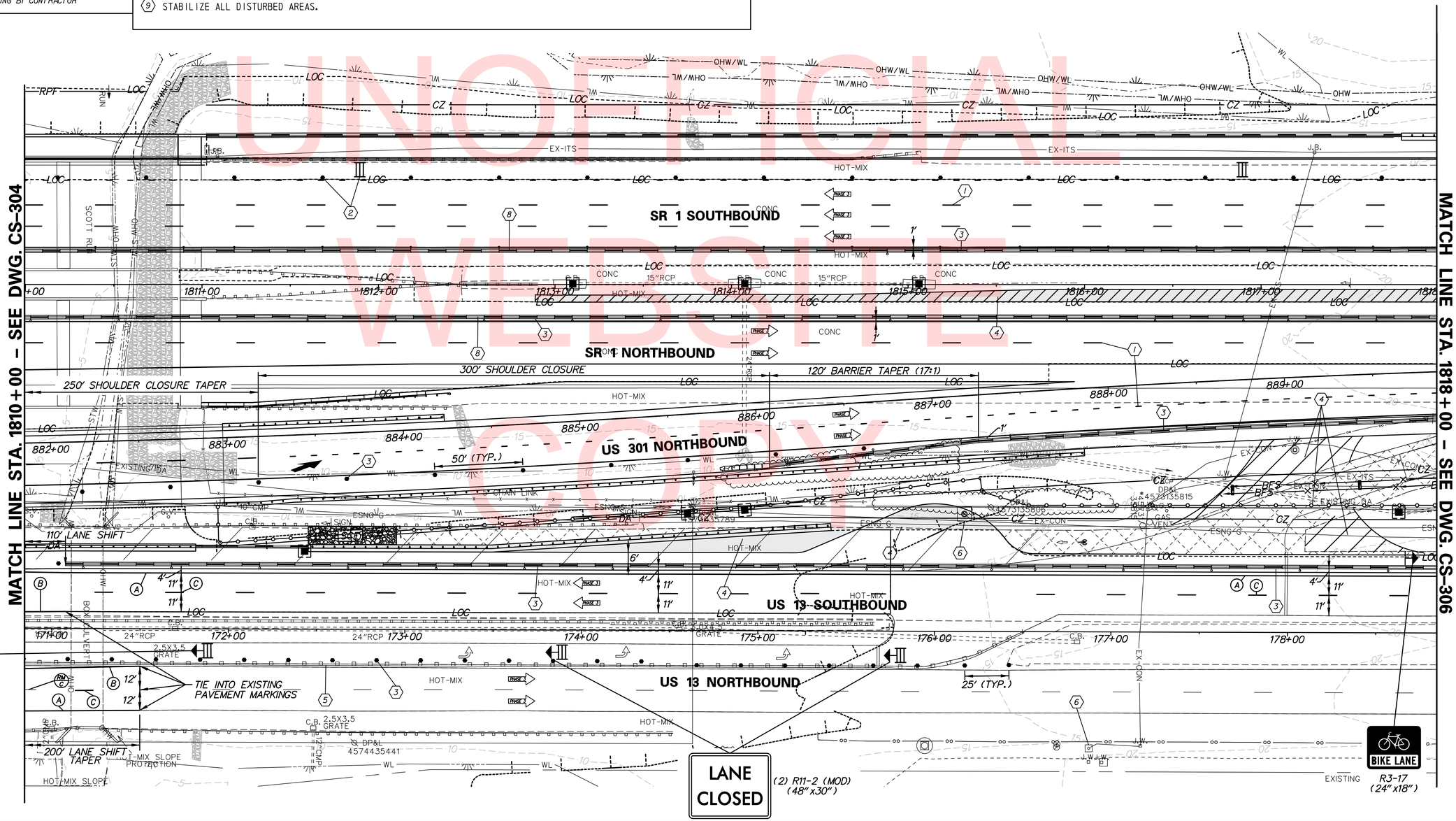

DELAWARE DEPARTMENT OF TRANSPORTATION

ADDENDUMS / REVISIONS

SCALE 0 30 60 90 FEET

US 301 & SR 1 INTERCHANGE

CONTRACT	BRIDGE NO.	BR1-903N, BR1-903S & BR1-432
T200911302	DESIGNED BY: J.D.C.	
COUNTY	CHECKED BY: J.M.M.	
NEW CASTLE		

CONSTRUCTION PHASING, M.O.T., AND EROSION CONTROL PLAN – PHASE 3

CS-305
SHEET NO. 412
TOTAL SHTS. 491

n:\31653-000\contract tb\cadd\CS305U301_1B.dgn
12/18/2015 8:12:30 AM

CONSTRUCTION PHASING LEGEND

- TEMPORARY CONSTRUCTION
- PROPOSED CONSTRUCTION THIS PHASE
- EXISTING SIGN/PROPOSED TEMPORARY SIGN
- TYPE III BARRICADE
- PLASTIC DRUM
- TRAFFIC FLOW ARROW
- (A) 4" SOLID WHITE PAINT
- (B) 4" SOLID YELLOW PAINT
- (C) 4" BROKEN WHITE PAINT (10' LINE, 30' GAP)
- (D) 4" DOTTED WHITE PAINT (3' LINE, 9' GAP)
- (E) 10" SOLID WHITE PAINT
- (F) WHITE PAINT SYMBOL/LEGEND
- PORTABLE P.C.C. SAFETY BARRIER (F SHAPE)
- PORTABLE IMPACT ATTENUATOR
- ARROW PANEL
- (RM C) REMOVE EXISTING STRIPING BY CONTRACTOR

SEQUENCE OF CONSTRUCTION - PHASE 3

1. INSTALL PERMANENT PAVEMENT MARKINGS ALONG SR 1.
2. INSTALL TEMPORARY TRAFFIC CONTROL DEVICES ALONG SR 1 SOUTHBOUND CLOSING THE RAMP TO US 301 SOUTHBOUND (SEE DWG. NOS. CS-401 THROUGH CS-407 FOR DETAILS, DIMENSIONS AND SIGNING). REMOVE ALL TEMPORARY TRAFFIC CONTROL DEVICES AS SHOWN ON DWG. NOS. CS-312 - CS-313 AND OPEN ALL LANES TO TRAFFIC.
3. UPON OPENING OF RAMP R, PLACE ALL PERTINENT TEMPORARY TRAFFIC CONTROL DEVICES ALONG SR 1 AND US 13. MAINTAIN SR 1 AND US 13 NORTHBOUND TRAFFIC IN EXISTING TRAVEL LANES AND SHIFT TRAFFIC US 13 SOUTHBOUND TRAFFIC TO DESIGNATED TRAVEL LANES.
4. REMOVE EXISTING AND TEMPORARY PAVEMENT DESIGNATED FOR REMOVAL BETWEEN SR 1 AND US 13 AND IN SR 1 MEDIAN.
5. COMPLETE CONSTRUCTION OF SIGN STRUCTURE OH-3 AND INSTALL GUARDRAIL AND PAVING IN SR 1 MEDIAN.
6. USING TYPICAL APPLICATION 33, REMOVE TEMPORARY CONCRETE BARRIER AND INSTALL RUMBLE STRIPS PER EDGELINE RUMBLE STRIPS DETAIL ON DWG. NO. DT-01 ALONG LEFT SIDE OF SR 1 SOUTHBOUND FROM STA. 1801+25 TO STA. 1833+75 AND ALONG LEFT SIDE OF SR 1 NORTHBOUND FROM STA. 1808+75 TO STA. 1831+25.
7. STABILIZE ALL DISTURBED AREAS.

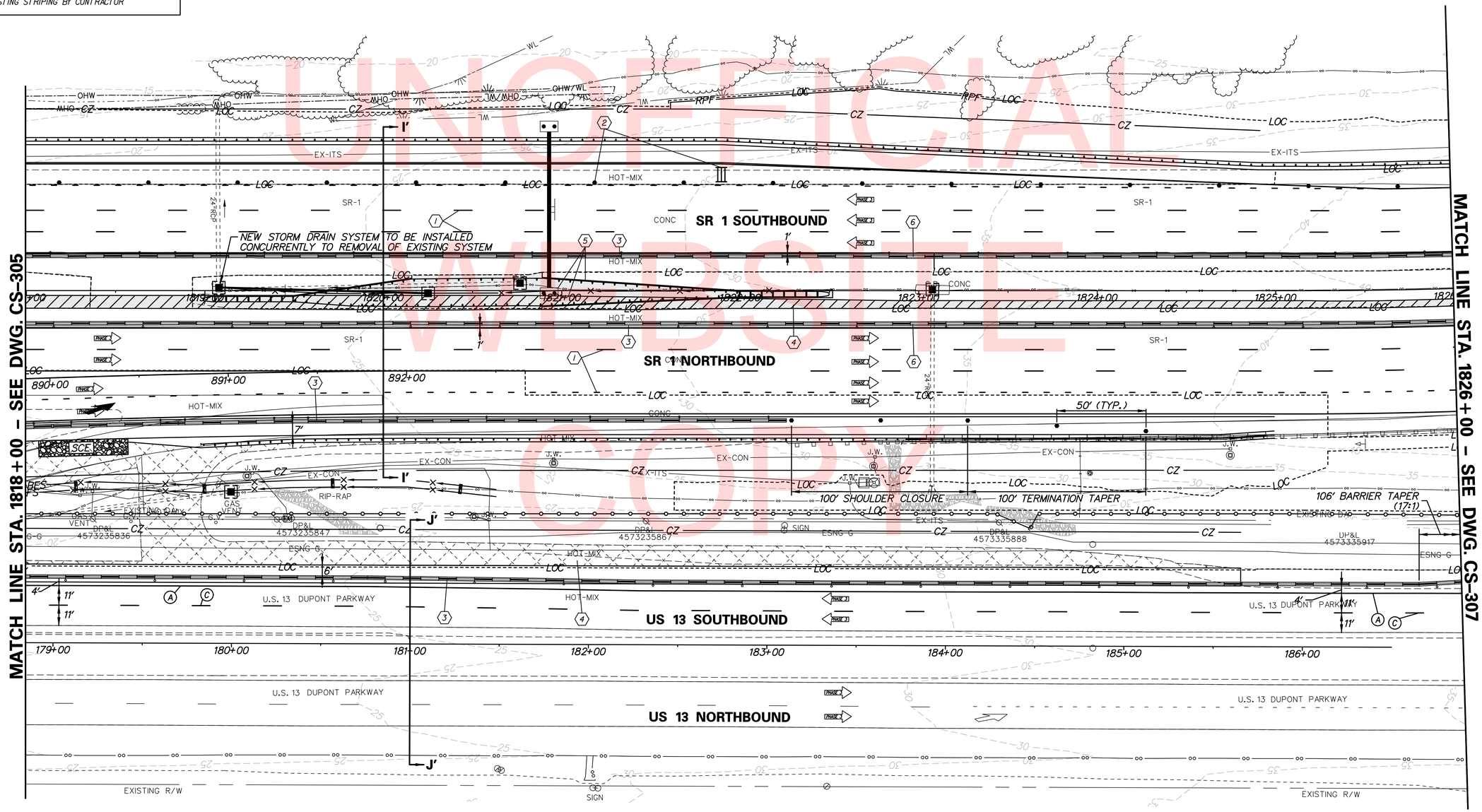

UNOFFICIAL WEBSITE COPY

DELAWARE DEPARTMENT OF TRANSPORTATION	ADDENDUMS / REVISIONS	SCALE 0 30 60 90 FEET	US 301 & SR 1 INTERCHANGE	CONTRACT T200911302 / COUNTY NEW CASTLE	BRIDGE NO. / DESIGNED BY: J.D.C. / CHECKED BY: J.M.M.	CONSTRUCTION PHASING, M.O.T., AND EROSION CONTROL PLAN – PHASE 3

CS-306

SHEET NO. 413

TOTAL SHTS. 491

n:\31653-000\contract tb\cadd\CS306U301_1B.dgn 12/18/2015 8:12:35 AM

SEQUENCE OF CONSTRUCTION - PHASE 3

1. INSTALL PERMANENT PAVEMENT MARKINGS ALONG SR 1.
2. INSTALL TEMPORARY TRAFFIC CONTROL DEVICES ALONG SR 1 SOUTHBOUND CLOSING THE RAMP TO US 301 SOUTHBOUND (SEE DWG. NOS. CS-401 THROUGH CS-407 FOR DETAILS, DIMENSIONS AND SIGNING). REMOVE ALL TEMPORARY TRAFFIC CONTROL DEVICES AS SHOWN ON DWG. NOS. CS-312 - CS-313 AND OPEN ALL LANES TO TRAFFIC.
3. UPON OPENING OF RAMP R, PLACE ALL PERTINENT TEMPORARY TRAFFIC CONTROL DEVICES ALONG SR 1 AND US 13. MAINTAIN SR 1 AND US 13 NORTHBOUND TRAFFIC IN EXISTING TRAVEL LANES AND SHIFT US 13 SOUTHBOUND TRAFFIC TO DESIGNATED TRAVEL LANES.
4. REMOVE TEMPORARY PAVEMENT IN SR 1 MEDIAN.
5. USING TYPICAL APPLICATION 33, REMOVE TEMPORARY CONCRETE TRAFFIC BARRIER AND INSTALL RUMBLE STRIPS PER EDGELINE RUMBLE STRIPS DETAIL ON DWG. NO. DT-01 ALONG LEFT SIDE OF SR 1 SOUTHBOUND FROM STA. 1801+25 TO STA. 1833+75 AND ALONG LEFT SIDE OF SR 1 NORTHBOUND FROM STA. 1808+75 TO STA. 1831+25.
6. STABILIZE ALL DISTURBED AREAS.

CONSTRUCTION PHASING LEGEND

- TEMPORARY CONSTRUCTION
- PROPOSED CONSTRUCTION THIS PHASE
- EXISTING SIGN/PROPOSED TEMPORARY SIGN
- TYPE III BARRICADE
- PLASTIC DRUM
- TRAFFIC FLOW ARROW
- (A) 4" SOLID WHITE PAINT
- (B) 4" SOLID YELLOW PAINT
- (C) 4" BROKEN WHITE PAINT (10' LINE, 30' GAP)
- (D) 4" DOTTED WHITE PAINT (3' LINE, 9' GAP)
- (E) 10" SOLID WHITE PAINT
- (F) WHITE PAINT SYMBOL/LEGEND
- PORTABLE P.C.C. SAFETY BARRIER (F SHAPE)
- PORTABLE IMPACT ATTENUATOR
- ARROW PANEL
- REMOVE EXISTING STRIPING BY CONTRACTOR

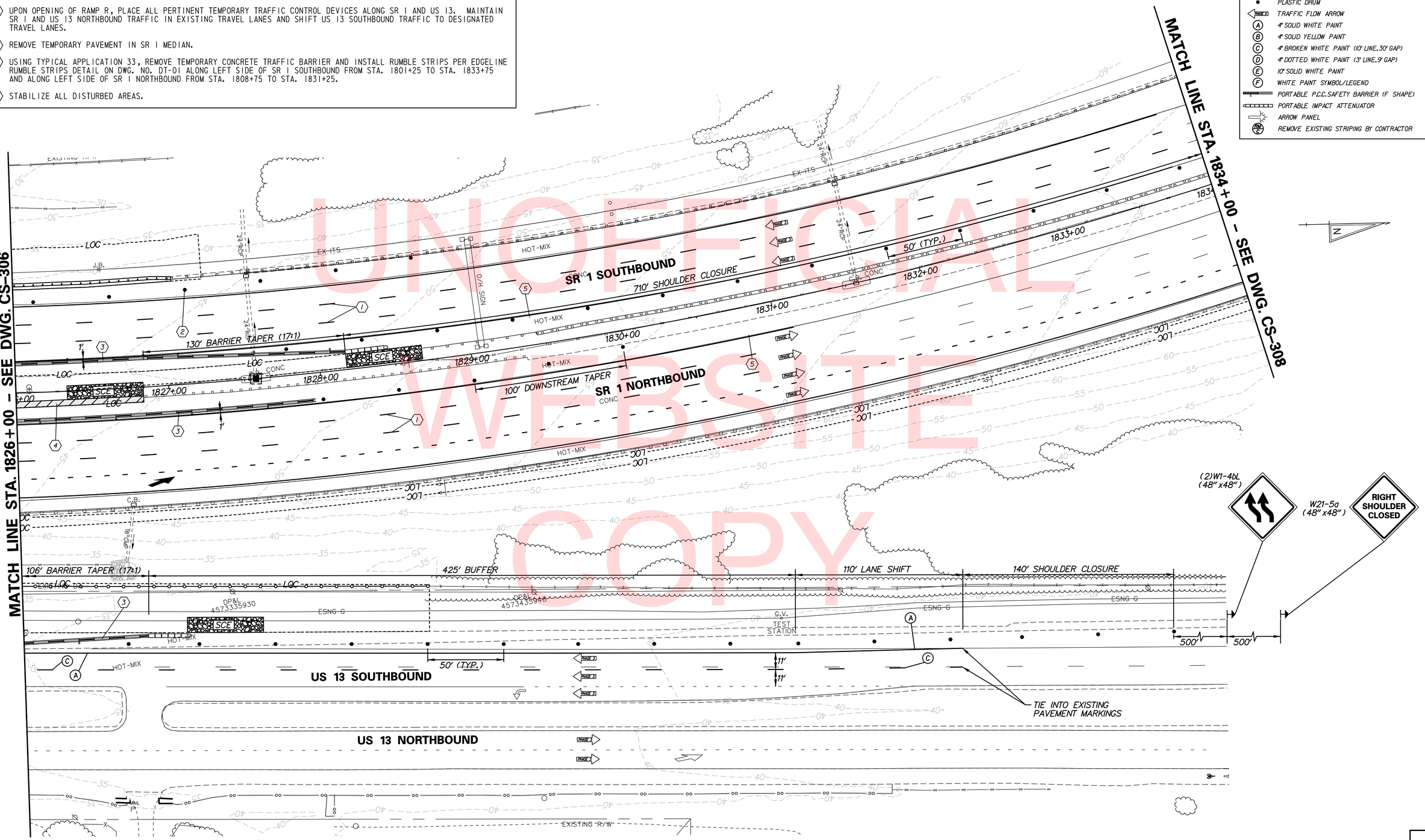

DELAWARE DEPARTMENT OF TRANSPORTATION	ADDENDUMS / REVISIONS	SCALE 0 30 60 90 FEET	US 301 & SR 1 INTERCHANGE	CONTRACT T200911302 / COUNTY NEW CASTLE	BRIDGE NO. / DESIGNED BY: J.D.C. / CHECKED BY: J.M.M.

CONSTRUCTION PHASING, M.O.T., AND EROSION CONTROL PLAN – PHASE 3

CS-307 | SHEET NO. 414 | TOTAL SHTS. 491

n\33653-000\contract tb\cadd\CS307U301_1B.dgn
12/18/2015 8:12:39 AM

CONSTRUCTION PHASING LEGEND

- TEMPORARY CONSTRUCTION
- PROPOSED CONSTRUCTION THIS PHASE
- EXISTING SIGN/PROPOSED TEMPORARY SIGN
- TYPE III BARRICADE
- PLASTIC DRUM
- TRAFFIC FLOW ARROW
- (A) 4" SOLID WHITE PAINT
- (B) 4" SOLID YELLOW PAINT
- (C) 4" BROKEN WHITE PAINT (10' LINE, 30' GAP)
- (D) 4" DOTTED WHITE PAINT (3' LINE, 9' GAP)
- (E) 10" SOLID WHITE PAINT
- (F) WHITE PAINT SYMBOL/LEGEND
- PORTABLE P.C.C. SAFETY BARRIER (F SHAPE)
- PORTABLE IMPACT ATTENUATOR
- ARROW PANEL
- (RM C) REMOVE EXISTING STRIPING BY CONTRACTOR

SEQUENCE OF CONSTRUCTION - PHASE 3

(1) REMOVE ALL TEMPORARY TRAFFIC CONTROL DEVICES AS SHOWN ON DWG. NOS. CS-312 - CS-313 AND OPEN ALL LANES TO TRAFFIC. PLACE ALL PERTINENT TEMPORARY TRAFFIC CONTROL DEVICES AS SHOWN ON THIS PLAN. MAINTAIN SR 1 TRAFFIC IN EXISTING TRAVEL LANES.

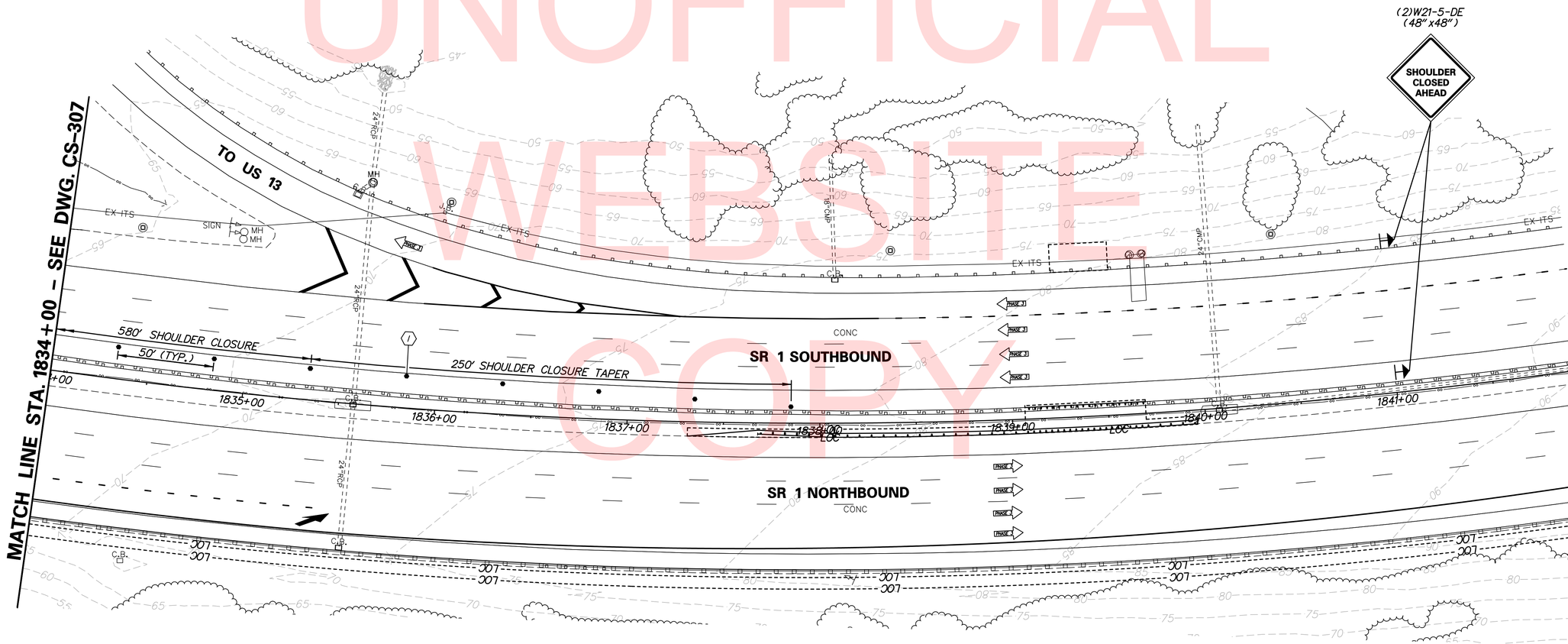

UNOFFICIAL WEBSITE COPY

DELAWARE DEPARTMENT OF TRANSPORTATION	ADDENDUMS / REVISIONS	SCALE 0 30 60 90 FEET	US 301 & SR 1 INTERCHANGE	CONTRACT T200911302	BRIDGE NO.	CONSTRUCTION PHASING, M.O.T., AND EROSION CONTROL PLAN - PHASE 3	CS-308 SHEET NO. 415
				COUNTY NEW CASTLE	DESIGNED BY: J.D.C. CHECKED BY: J.M.M.		TOTAL SHTS. 491

n\33653-000\contract tb\cadd\CS308U301_1B.dgn
12/18/2015 8:12:42 AM

CONSTRUCTION PHASING LEGEND

- TEMPORARY CONSTRUCTION
- PROPOSED CONSTRUCTION THIS PHASE
- EXISTING SIGN/PROPOSED TEMPORARY SIGN
- TYPE III BARRICADE
- PLASTIC DRUM
- TRAFFIC FLOW ARROW
- 4" SOLID WHITE TEMPORARY TAPE MARKINGS
- 4" DOTTED WHITE TEMPORARY TAPE MARKINGS (3' LINE, 9' GAP)
- PORTABLE P.C.C. SAFETY BARRIER (F SHAPE)
- PORTABLE IMPACT ATTENUATOR
- ARROW PANEL
- REMOVE EXISTING STRIPING BY CONTRACTOR

CONSTRUCTION PHASING TYPICAL SECTIONS LEGEND

- PORTABLE P.C.C. SAFETY BARRIER (F SHAPE)
- EXISTING PAVEMENT MARKING
- TEMPORARY PAVEMENT MARKING
- PROPOSED CONSTRUCTION THIS PHASE
- TEMPORARY CONSTRUCTION
- TRAFFIC FLOW ARROW

NOTES:

1. COORDINATE TEMPORARY WARNING SIGNS SHOWN ON PLAN WITH PERMANENT WARNING SIGNS SHOWN ON DWG. NO. CS-01.
2. THE CONTRACTOR SHALL FURNISH AND INSTALL A TEMPORARY BRIDGE MOUNTED SIGN SUPPORT FOR TEMPORARY WARNING SIGN INSTALLED ON BRIDGE. SIGNS INSTALLED ON RIGHT SIDE BRIDGE PARAPET SHALL HAVE A 2' OFFSET FROM FLOW LINE OF PARAPET TO LEFT EDGE OF SIGN. SIGNS INSTALLED ON BRIDGE MEDIAN BARRIER SHALL BE CENTERED ABOUT BARRIER. CONTRACTOR SHALL SUBMIT WORKING DRAWINGS OF BRIDGE MOUNTED SIGN SUPPORTS FOR APPROVAL BY THE ENGINEER.

SECTION K'-K'

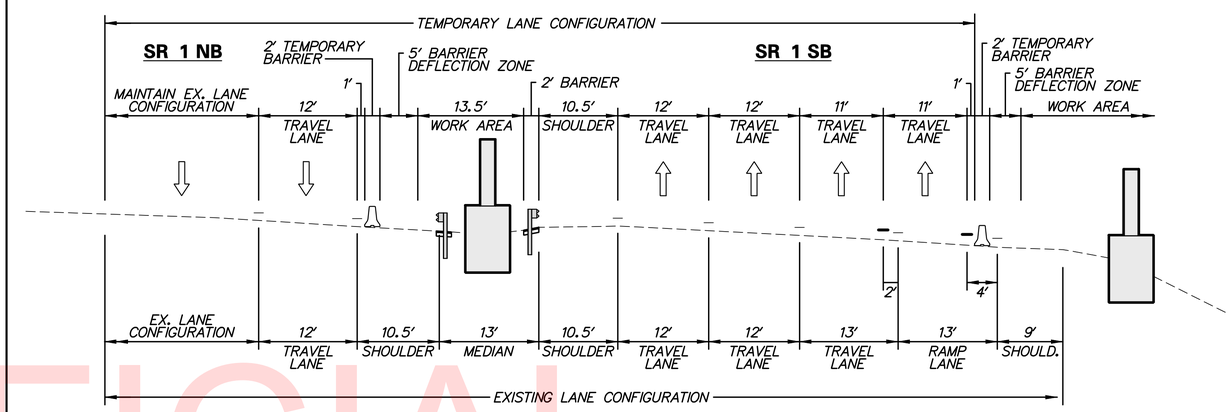

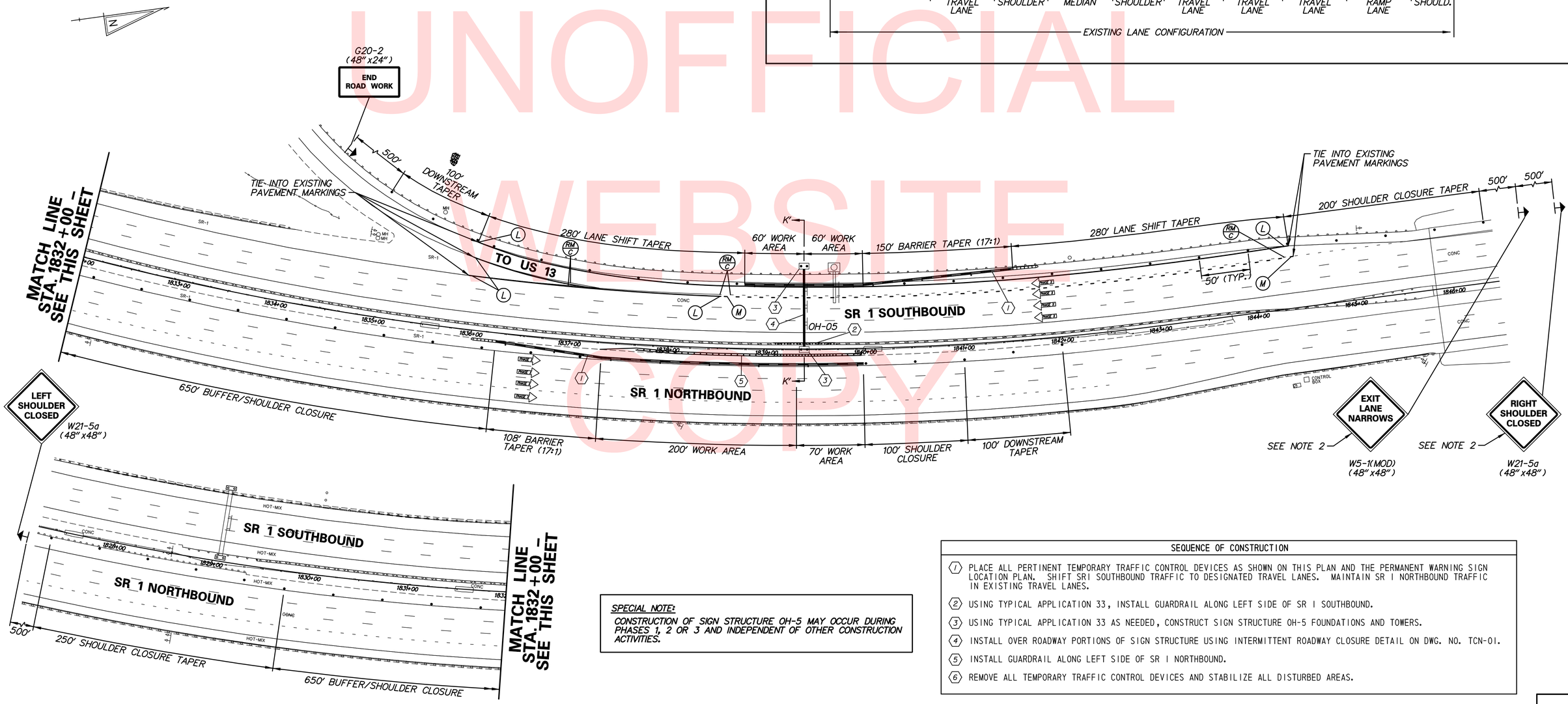

SPECIAL NOTE:

CONSTRUCTION OF SIGN STRUCTURE OH-5 MAY OCCUR DURING PHASES 1, 2 OR 3 AND INDEPENDENT OF OTHER CONSTRUCTION ACTIVITIES.

SEQUENCE OF CONSTRUCTION

1. PLACE ALL PERTINENT TEMPORARY TRAFFIC CONTROL DEVICES AS SHOWN ON THIS PLAN AND THE PERMANENT WARNING SIGN LOCATION PLAN. SHIFT SR1 SOUTHBOUND TRAFFIC TO DESIGNATED TRAVEL LANES. MAINTAIN SR 1 NORTHBOUND TRAFFIC IN EXISTING TRAVEL LANES.
2. USING TYPICAL APPLICATION 33, INSTALL GUARDRAIL ALONG LEFT SIDE OF SR 1 SOUTHBOUND.
3. USING TYPICAL APPLICATION 33 AS NEEDED, CONSTRUCT SIGN STRUCTURE OH-5 FOUNDATIONS AND TOWERS.
4. INSTALL OVER ROADWAY PORTIONS OF SIGN STRUCTURE USING INTERMITTENT ROADWAY CLOSURE DETAIL ON DWG. NO. TCN-01.
5. INSTALL GUARDRAIL ALONG LEFT SIDE OF SR 1 NORTHBOUND.
6. REMOVE ALL TEMPORARY TRAFFIC CONTROL DEVICES AND STABILIZE ALL DISTURBED AREAS.

UNOFFICIAL WEBSITE COPY

CONSTRUCTION PHASING LEGEND

- TEMPORARY CONSTRUCTION
- PROPOSED CONSTRUCTION THIS PHASE
- EXISTING SIGN/PROPOSED TEMPORARY SIGN
- TYPE III BARRICADE
- PLASTIC DRUM
- TRAFFIC FLOW ARROW
- (A) 4" SOLID WHITE PAINT
- (B) 4" SOLID YELLOW PAINT
- (C) 4" BROKEN WHITE PAINT (10' LINE, 30' GAP)
- (D) 4" DOTTED WHITE PAINT (3' LINE, 9' GAP)
- (E) 10" SOLID WHITE PAINT
- (F) WHITE PAINT SYMBOL/LEGEND
- PORTABLE P.C.C. SAFETY BARRIER (F SHAPE)
- PORTABLE IMPACT ATTENUATOR
- ARROW PANEL
- (RM/C) REMOVE EXISTING STRIPING BY CONTRACTOR

CONSTRUCTION PHASING TYPICAL SECTIONS LEGEND

- PORTABLE P.C.C. SAFETY BARRIER (F SHAPE)
- EXISTING PAVEMENT MARKING
- TEMPORARY PAVEMENT MARKING
- PROPOSED CONSTRUCTION THIS PHASE
- TEMPORARY CONSTRUCTION
- TRAFFIC FLOW ARROW

SEQUENCE OF CONSTRUCTION

1. PLACE ALL PERTINENT TEMPORARY TRAFFIC CONTROL DEVICES AS SHOWN ON THIS PLAN AND THE PERMANENT WARNING SIGN LOCATION PLAN. MAINTAIN SR 1 NORTHBOUND AND SOUTHBOUND TRAFFIC IN EXISTING TRAVEL LANES.
2. USING TYPICAL APPLICATION 33, CONSTRUCT SIGN STRUCTURE OH-6 FOUNDATIONS AND TOWERS.
3. INSTALL OVER ROADWAY PORTIONS OF SIGN STRUCTURE USING INTERMITTENT ROADWAY CLOSURE DETAIL ON DWG. NO. TCN-01.
4. INSTALL GUARDRAIL ALONG LEFT SIDE OF SR 1 NORTHBOUND AND SOUTHBOUND.
5. REMOVE ALL TEMPORARY TRAFFIC CONTROL DEVICES AND STABILIZE ALL DISTURBED AREAS.

SECTION L'-L'

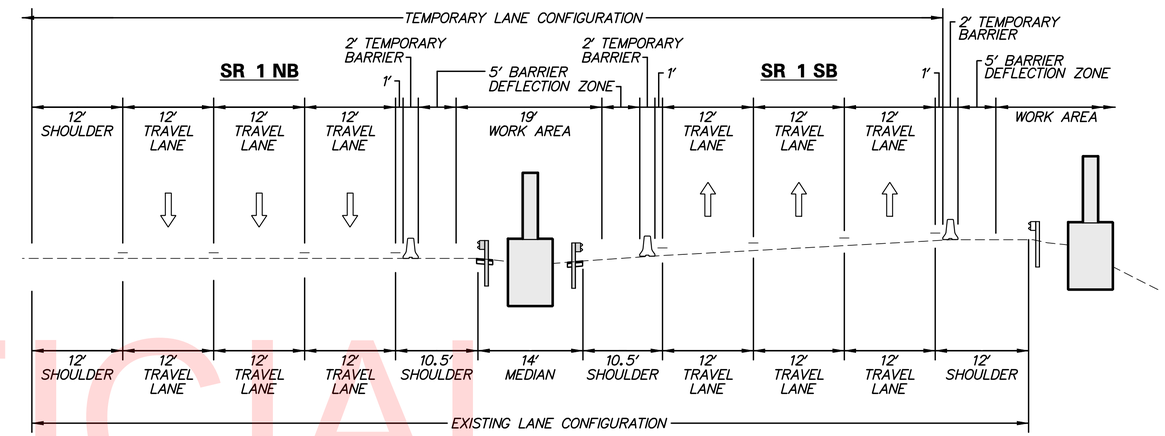

NOTES:

1. THE CONTRACTOR MAY ELECT TO COMBINE WORK AREAS FOR OH-6 AND DMS-1 (SEE DWG. NO. CS-311) BY EXTENDING THE SHOULDER CLOSURE WITH DRUMS BETWEEN THE WORK ZONES. TEMPORARY SIGNING AND TEMPORARY TRAFFIC CONTROL DEVICES SHALL BE COORDINATED BETWEEN THE WORK AREAS AS APPROVED BY THE ENGINEER.
2. COORDINATE TEMPORARY WARNING SIGNS SHOWN ON PLAN WITH PERMANENT WARNING SIGNS SHOWN ON DWG. NO. CS-01.
3. THE CONTRACTOR SHALL FURNISH AND INSTALL A TEMPORARY BRIDGE MOUNTED SIGN SUPPORT FOR TEMPORARY WARNING SIGN INSTALLED ON BRIDGE. SIGNS INSTALLED ON RIGHT SIDE BRIDGE PARAPET SHALL HAVE A 2' OFFSET FROM FLOW LINE OF PARAPET TO LEFT EDGE OF SIGN. SIGNS INSTALLED ON BRIDGE MEDIAN BARRIER SHALL BE CENTERED ABOUT BARRIER. CONTRACTOR SHALL SUBMIT WORKING DRAWINGS OF BRIDGE MOUNTED SIGN SUPPORTS FOR APPROVAL BY THE ENGINEER.

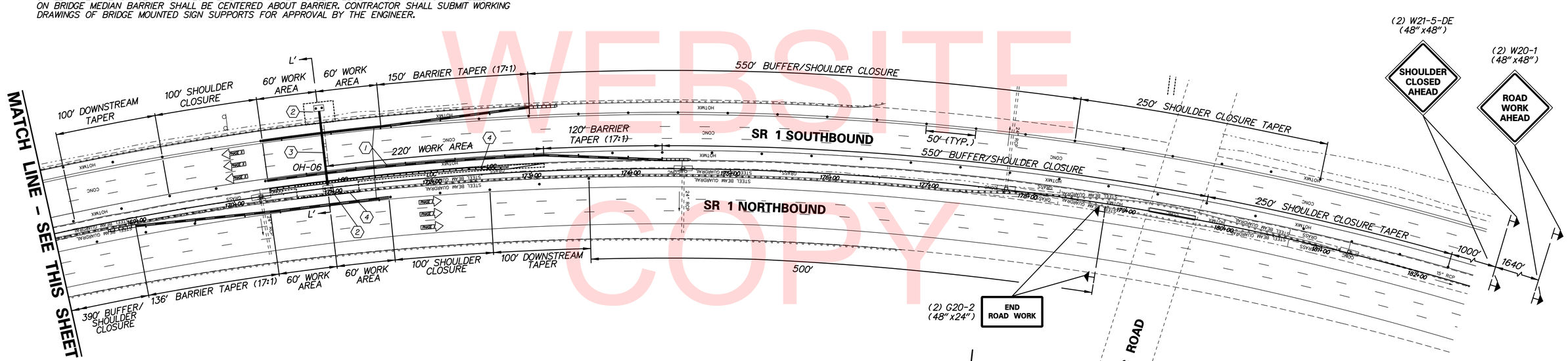

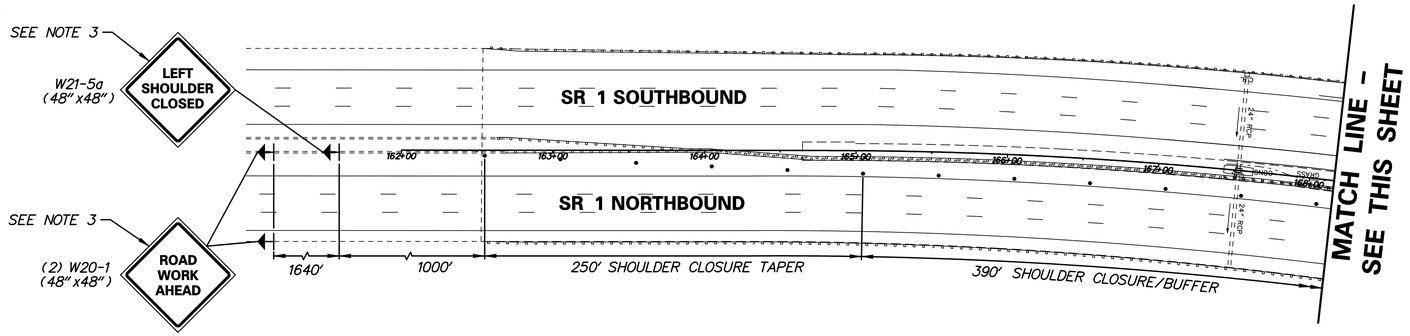

SPECIAL NOTE:

CONSTRUCTION OF SIGN STRUCTURE OH-6 MAY OCCUR DURING PHASES 1, 2 OR 3 AND INDEPENDENT OF OTHER CONSTRUCTION ACTIVITIES.

UNOFFICIAL WEBSITE COPY

DELAWARE DEPARTMENT OF TRANSPORTATION	ADDENDUMS / REVISIONS	SCALE 0 50 100 150 FEET	US 301 & SR 1 INTERCHANGE	CONTRACT T200911302 / COUNTY NEW CASTLE	BRIDGE NO. / DESIGNED BY: J.D.C. / CHECKED BY: J.M.M.
CONSTRUCTION PHASING, M.O.T., AND EROSION CONTROL PLAN – OH-06	CS-310	SHEET NO. 417	TOTAL SHTS. 491		

n:\31653_000\contract tb\cadd\CS310U301_1B.dgn 12/18/2015 8:12:48 AM

CONSTRUCTION PHASING LEGEND

- TEMPORARY CONSTRUCTION
- PROPOSED CONSTRUCTION THIS PHASE
- EXISTING SIGN/PROPOSED TEMPORARY SIGN
- TYPE III BARRICADE
- PLASTIC DRUM
- TRAFFIC FLOW ARROW
- (A) 4" SOLID WHITE PAINT
- (B) 4" SOLID YELLOW PAINT
- (C) 4" BROKEN WHITE PAINT (10' LINE, 30' GAP)
- (D) 4" DOTTED WHITE PAINT (3' LINE, 9' GAP)
- (E) 10" SOLID WHITE PAINT
- (F) WHITE PAINT SYMBOL/LEGEND
- PORTABLE P.C.C. SAFETY BARRIER (F SHAPE)
- PORTABLE IMPACT ATTENUATOR
- ARROW PANEL
- (RM/C) REMOVE EXISTING STRIPING BY CONTRACTOR

CONSTRUCTION PHASING TYPICAL SECTIONS LEGEND

- PORTABLE P.C.C. SAFETY BARRIER (F SHAPE)
- EXISTING PAVEMENT MARKING
- TEMPORARY PAVEMENT MARKING
- PROPOSED CONSTRUCTION THIS PHASE
- TEMPORARY CONSTRUCTION
- TRAFFIC FLOW ARROW

N

NOTES:

1. THE CONTRACTOR MAY ELECT TO COMBINE WORK AREAS FOR OH-6 AND DMS-1 (SEE DWG. NO. CS-310) BY EXTENDING THE SHOULDER CLOSURE WITH DRUMS BETWEEN THE WORK ZONES. TEMPORARY SIGNING AND TEMPORARY TRAFFIC CONTROL DEVICES SHALL BE COORDINATED BETWEEN THE WORK AREAS AS APPROVED BY THE ENGINEER.
2. COORDINATE TEMPORARY WARNING SIGNS SHOWN ON PLAN WITH PERMANENT WARNING SIGNS SHOWN ON DWG. NO. CS-01.
3. THE CONTRACTOR SHALL FURNISH AND INSTALL A TEMPORARY BRIDGE MOUNTED SIGN SUPPORT FOR TEMPORARY WARNING SIGN INSTALLED ON BRIDGE. SIGNS INSTALLED ON RIGHT SIDE BRIDGE PARAPET SHALL HAVE A 2' OFFSET FROM FLOW LINE OF PARAPET TO LEFT EDGE OF SIGN. SIGNS INSTALLED ON BRIDGE MEDIAN BARRIER SHALL BE CENTERED ABOUT BARRIER. CONTRACTOR SHALL SUBMIT WORKING DRAWINGS OF BRIDGE MOUNTED SIGN SUPPORTS FOR APPROVAL BY THE ENGINEER.

SECTION M'–M'

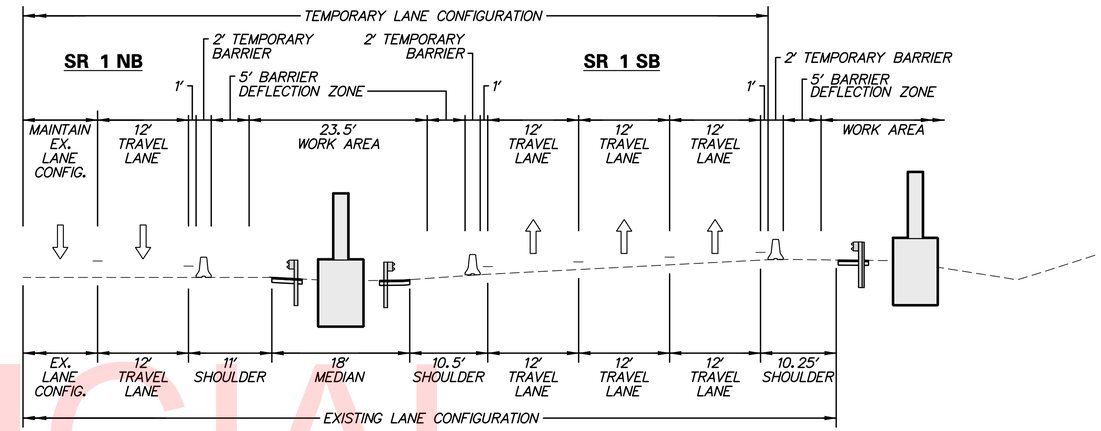

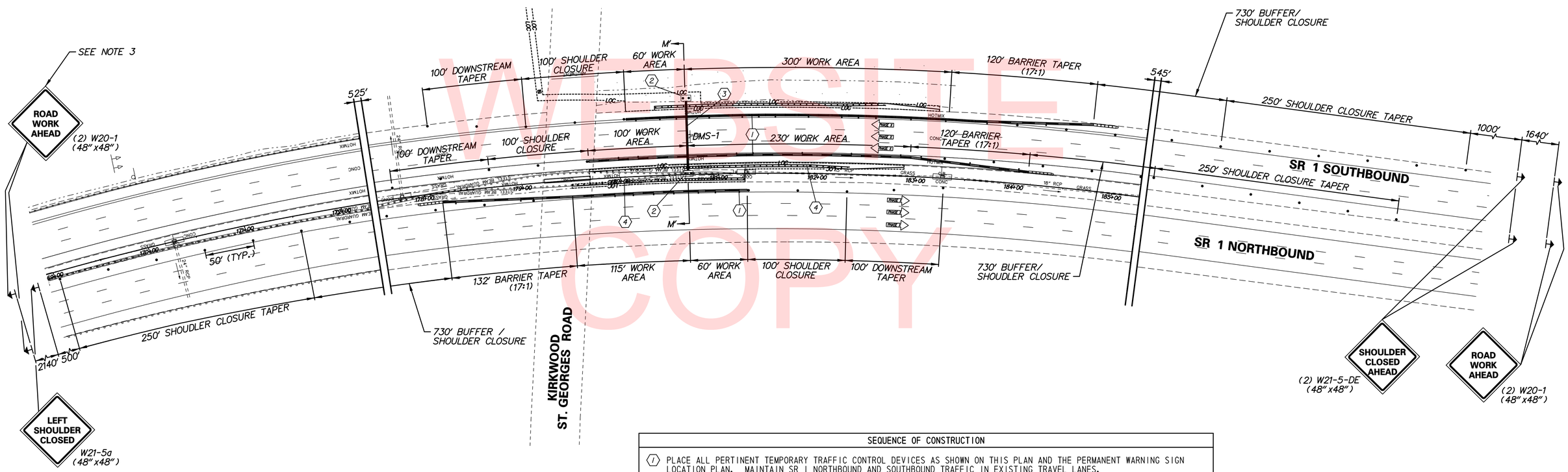

SPECIAL NOTE:

CONSTRUCTION OF SIGN STRUCTURE DMS-1 MAY OCCUR DURING PHASES 1, 2 OR 3 AND INDEPENDENT OF OTHER CONSTRUCTION ACTIVITIES.

SEQUENCE OF CONSTRUCTION

1. PLACE ALL PERTINENT TEMPORARY TRAFFIC CONTROL DEVICES AS SHOWN ON THIS PLAN AND THE PERMANENT WARNING SIGN LOCATION PLAN. MAINTAIN SR 1 NORTHBOUND AND SOUTHBOUND TRAFFIC IN EXISTING TRAVEL LANES.
2. CONSTRUCT SIGN STRUCTURE DMS-1 FOUNDATIONS AND TOWERS.
3. INSTALL OVER ROADWAY PORTIONS OF SIGN STRUCTURE USING INTERMITTENT ROADWAY CLOSURE DETAIL ON DWG. NO. TCN-01.
4. INSTALL GUARDRAIL ALONG SR 1.
5. REMOVE ALL TEMPORARY TRAFFIC CONTROL DEVICES AND STABILIZE ALL DISTURBED AREAS.

UNOFFICIAL WEBSITE COPY

SEQUENCE OF CONSTRUCTION

(1) THE CONTRACTOR T200911302 CONTRACTOR SHALL MAINTAIN THE TEMPORARY TRAFFIC CONTROL DEVICES AND SIGN COVERINGS SHOWN ON THIS PLAN INSTALLED BY THE CONTRACT T201011302 CONTRACTOR FOR THE TEMPORARY CLOSURE OF THE US 13 RAMP TO SR1 NORTHBOUND (RAMP R).

(2) THE CONTRACT T200911302 CONTRACTOR SHALL REMOVE ALL TEMPORARY TRAFFIC CONTROL DEVICES AND SIGN COVERINGS SHOWN ON THIS PLAN AND OPEN THE US 13 RAMP TO SR 1 NORTHBOUND (RAMP R) UPON STARTING CONSTRUCTION PHASE 3 OF THIS CONTRACT.

NOTES:

1. *CONTRACT T201011302 CONTRACTOR SHALL COVER SIGN WITH OPAQUE MATERIAL AFTER INSTALLATION OF SIGN AND LEAVE SIGN COVERED AT COMPLETION OF CONTRACT. CONTRACT T200911302 CONTRACTOR SHALL REMOVE SIGN COVERING UPON OPENING OF RAMP R IN THAT CONTRACT.*
2. *AT THE COMPLETION OF CONSTRUCTION THE CONTRACT T201011302 CONTRACTOR SHALL FURNISH AND INSTALL TEMPORARY TRAFFIC CONTROL DEVICES TO REMAIN AS SHOWN ON THIS PLAN. THE TEMPORARY TRAFFIC CONTROL DEVICES SHALL REMAIN IN PLACE AND SERVE TO TEMPORARILY CLOSE RAMP R UNTIL ITS OPENING BY THE CONTRACT T200911302 CONTRACTOR. MAINTENANCE AND REMOVAL OF THE TEMPORARY TRAFFIC CONTROL DEVICES DURING THE INTERIM CLOSURE PERIOD AND UPON OPENING OF RAMP R SHALL BE THE RESPONSIBILITY OF THE CONTRACT T200911302 CONTRACTOR.*
3. *PAYMENT FOR MAINTENANCE AND REMOVAL OF THE TEMPORARY TRAFFIC CONTROL DEVICES SHOWN ON THIS PLAN BY THE CONTRACT T200911302 CONTRACTOR WILL NOT BE MEASURED AND PAID FOR BUT WILL BE INCIDENTAL TO ITEM 763500 - MAINTENANCE OF TRAFFIC.*

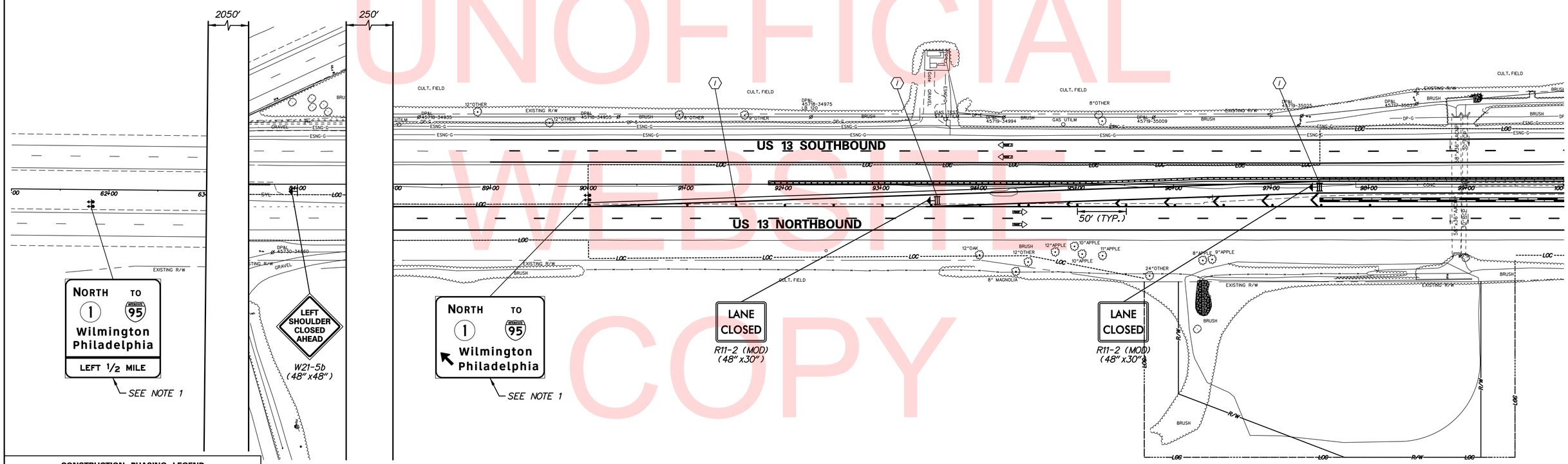

UNOFFICIAL WEBSITE COPY

CONSTRUCTION PHASING LEGEND

- PROPOSED CONSTRUCTION THIS PHASE
- TEMPORARY CONSTRUCTION
- EXISTING SIGN/PROPOSED TEMPORARY SIGN
- TYPE III BARRICADE
- PLASTIC DRUM
- TRAFFIC FLOW ARROW
- (A) 4" SOLID WHITE PAINT
- (B) 4" SOLID YELLOW PAINT
- (C) 4" BROKEN WHITE PAINT (10' LINE, 30' GAP)
- (D) 4" DOTTED WHITE PAINT (3' LINE, 9' GAP)
- (E) WHITE PAINT SYMBOL/LEGEND
- PORTABLE P.C.C. SAFETY BARRIER (F SHAPE)
- PORTABLE IMPACT ATTENUATOR
- ARROW PANEL
- (RM C) REMOVE EXISTING STRIPING BY CONTRACTOR

n:\31653-000\contract tb\cadd\CS312U301_TB.dgn
12/18/2015 8:13:04 AM

DELAWARE DEPARTMENT OF TRANSPORTATION

ADDENDUMS / REVISIONS

SCALE 0 50 100 150 FEET

US 301 & SR 1 INTERCHANGE

CONTRACT	BRIDGE NO.
T200911302	DESIGNED BY: J.D.C.
COUNTY	CHECKED BY: J.M.M.
NEW CASTLE	

CONSTRUCTION PHASING, M.O.T., AND EROSION CONTROL PLAN – PHASE 3

CS-312

SHEET NO.
419
TOTAL SHTS.
491

SEQUENCE OF CONSTRUCTION

1. THE CONTRACTOR T200911302 CONTRACTOR SHALL MAINTAIN THE TEMPORARY TRAFFIC CONTROL DEVICES AND SIGN COVERINGS SHOWN ON THIS PLAN INSTALLED BY THE CONTRACT T201011302 CONTRACTOR FOR THE TEMPORARY CLOSURE OF THE US 13 RAMP TO SR1 NORTHBOUND (RAMP R).

2. THE CONTRACT T200911302 CONTRACTOR SHALL REMOVE ALL TEMPORARY TRAFFIC CONTROL DEVICES AND SIGN COVERINGS SHOWN ON THIS PLAN AND OPEN THE US 13 RAMP TO SR 1 NORTHBOUND (RAMP R) UPON STARTING CONSTRUCTION PHASE 3 OF THIS CONTRACT.

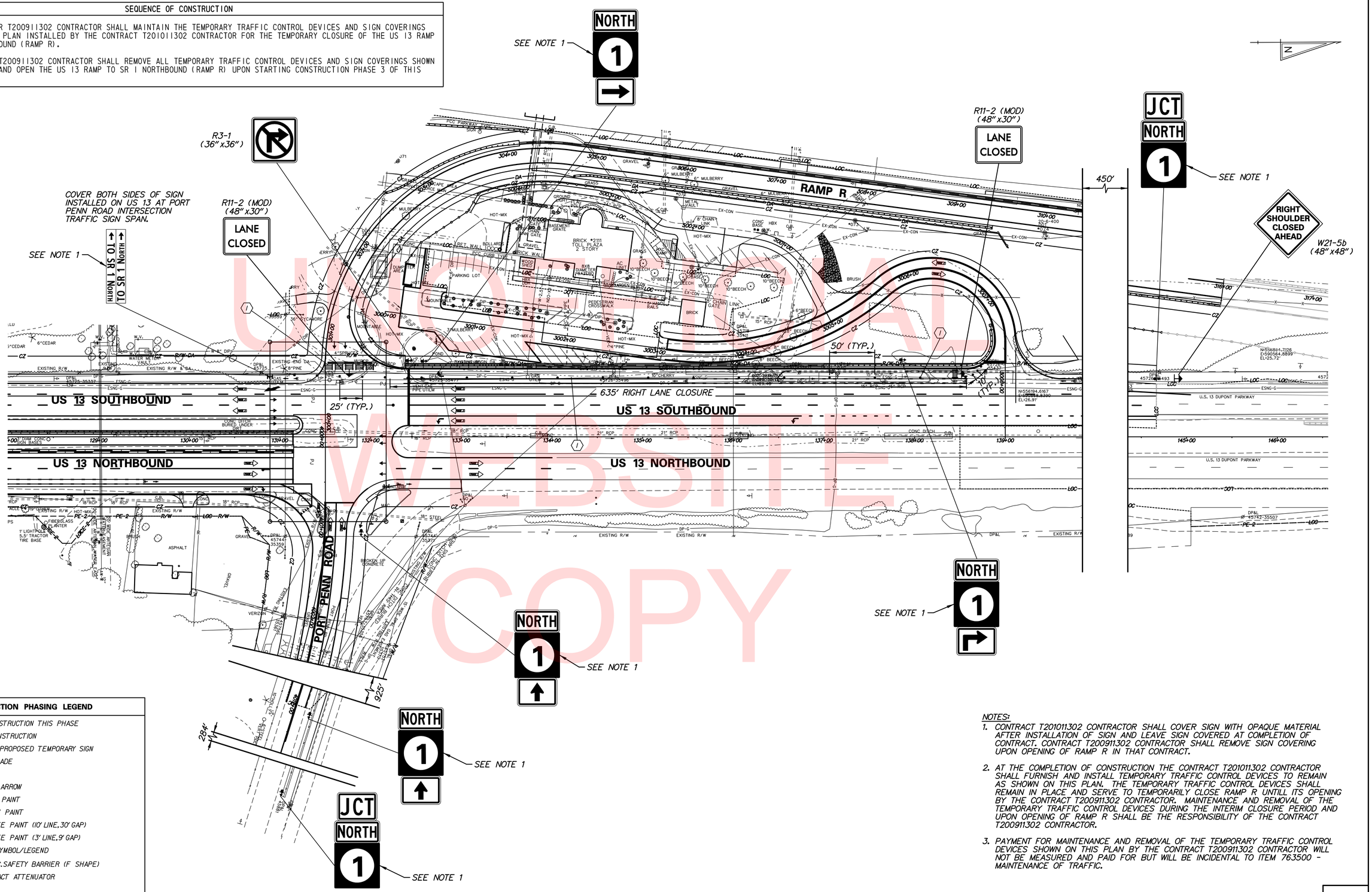

UNOFFICIAL WEBSITE COPY

CONSTRUCTION PHASING LEGEND

- PROPOSED CONSTRUCTION THIS PHASE
- TEMPORARY CONSTRUCTION
- EXISTING SIGN/PROPOSED TEMPORARY SIGN
- TYPE III BARRICADE
- PLASTIC DRUM
- TRAFFIC FLOW ARROW
- (A) 4" SOLID WHITE PAINT
- (B) 4" SOLID YELLOW PAINT
- (C) 4" BROKEN WHITE PAINT (10' LINE, 30' GAP)
- (D) 4" DOTTED WHITE PAINT (3' LINE, 9' GAP)
- (E) WHITE PAINT SYMBOL/LEGEND
- PORTABLE P.C.C. SAFETY BARRIER (F SHAPE)
- PORTABLE IMPACT ATTENUATOR
- ARROW PANEL
- (RM C) REMOVE EXISTING STRIPING BY CONTRACTOR

NOTES:

1. CONTRACT T201011302 CONTRACTOR SHALL COVER SIGN WITH OPAQUE MATERIAL AFTER INSTALLATION OF SIGN AND LEAVE SIGN COVERED AT COMPLETION OF CONTRACT. CONTRACT T200911302 CONTRACTOR SHALL REMOVE SIGN COVERING UPON OPENING OF RAMP R IN THAT CONTRACT.

2. AT THE COMPLETION OF CONSTRUCTION THE CONTRACT T201011302 CONTRACTOR SHALL FURNISH AND INSTALL TEMPORARY TRAFFIC CONTROL DEVICES TO REMAIN AS SHOWN ON THIS PLAN. THE TEMPORARY TRAFFIC CONTROL DEVICES SHALL REMAIN IN PLACE AND SERVE TO TEMPORARILY CLOSE RAMP R UNTILL ITS OPENING BY THE CONTRACT T200911302 CONTRACTOR. MAINTENANCE AND REMOVAL OF THE TEMPORARY TRAFFIC CONTROL DEVICES DURING THE INTERIM CLOSURE PERIOD AND UPON OPENING OF RAMP R SHALL BE THE RESPONSIBILITY OF THE CONTRACT T200911302 CONTRACTOR.

3. PAYMENT FOR MAINTENANCE AND REMOVAL OF THE TEMPORARY TRAFFIC CONTROL DEVICES SHOWN ON THIS PLAN BY THE CONTRACT T200911302 CONTRACTOR WILL NOT BE MEASURED AND PAID FOR BUT WILL BE INCIDENTAL TO ITEM 763500 - MAINTENANCE OF TRAFFIC.

CS-313

DELAWARE DEPARTMENT OF TRANSPORTATION

ADDENDUMS / REVISIONS

SCALE 0 50 100 150 FEET

US 301 & SR 1 INTERCHANGE

CONTRACT	BRIDGE NO.	
T200911302	DESIGNED BY: J.D.C.	
COUNTY		
NEW CASTLE	CHECKED BY: J.M.M.	

CONSTRUCTION PHASING, M.O.T., AND EROSION CONTROL PLAN - PHASE 3

SHEET NO.
420
TOTAL SHTS.
491

n:\33653-000\contract tb\cadd\CS313U301_1B.dgn
12/18/2015 8:13:08 AM

SEQUENCE OF CONSTRUCTION - PHASE 4

(1) UPON COMPLETION OF ALL CONSTRUCTION ACTIVITIES, REMOVE ALL PHASE 3 TEMPORAY TRAFFIC CONTROL DEVICES EXCEPT THOSE NEEDED FOR THE CLOSURE OF THE US 301 NORTHBOUND ROADWAY SOUTH OF STA. 865+00 AND THE SR 1 SOUTHBOUND RAMP TO US 301 AS SHOWN ON THIS PLAN. THE TEMPORARY TRAFFIC CONTROL DEVICES SHOWN ON THESE PHASE 4 DRAWINGS SHALL REMAIN UNTIL OPENING OF THE US 301 ROADWAY BY OTHERS (SEE NOTES 1 & 2).

NOTES:

1. *AT THE COMPLETION OF CONSTRUCTION THE CONTRACTOR SHALL FURNISH AND INSTALL TEMPORARY TRAFFIC CONTROL DEVICES TO REMAIN AS SHOWN ON DRAWINGS CS-401 THROUGH CS-407 (PHASE 4). THE TEMPORARY TRAFFIC CONTROL DEVICES SHALL REMAIN IN PLACE AND SERVE TO TEMPORARILY CLOSE THE NEW US 301 ROADWAY UNTIL ITS OFFICIAL OPENING. MAINTENANCE AND REMOVAL OF THE TEMPORARY TRAFFIC CONTROL DEVICES DURING THE INTERIM CLOSURE PERIOD AND UPON OPENING OF THE US 301 ROADWAY SHALL BE THE RESPONSIBILITY OF OTHERS (CONTRACT T200911303 CONTRACTOR).*

2. *PAYMENT FOR MAINTENANCE AND REMOVAL OF THE TEMPORARY TRAFFIC CONTROL DEVICES SHOWN ON THIS PLAN BY THE CONTRACT T200911303 CONTRACTOR WILL NOT BE MEASURED AND PAID FOR BUT WILL BE INCIDENTAL TO ITEM 763500 - MAINTENANCE OF TRAFFIC IN CONTRACT T200911303.*

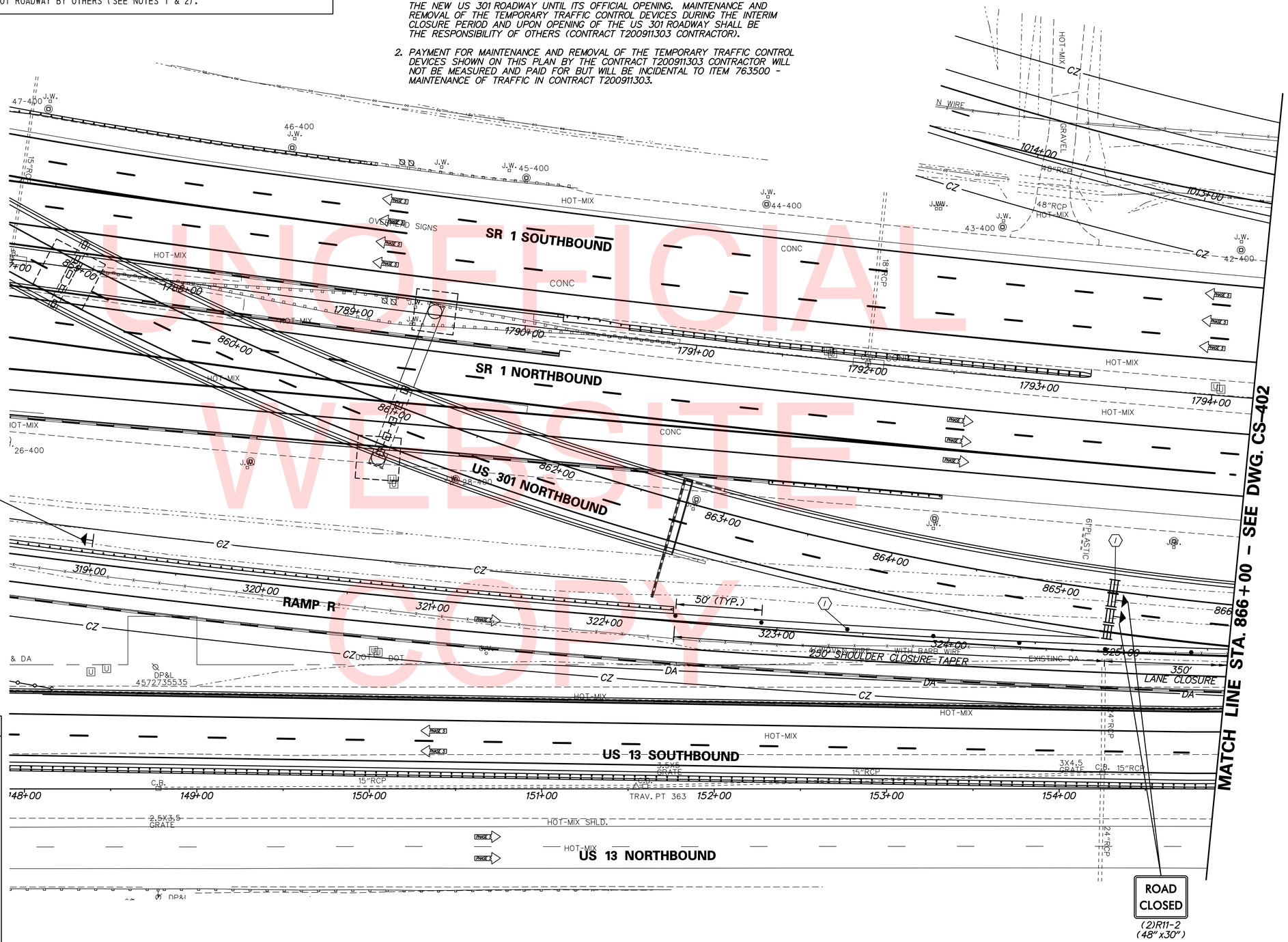

UNOFFICIAL WEBSITE COPY

CONSTRUCTION PHASING LEGEND

- TEMPORARY CONSTRUCTION
- PROPOSED CONSTRUCTION THIS PHASE
- EXISTING SIGN/PROPOSED TEMPORARY SIGN
- TYPE III BARRICADE
- PLASTIC DRUM
- TRAFFIC FLOW ARROW
- (A) 4" SOLID WHITE PAINT
- (B) 4" SOLID YELLOW PAINT
- (C) 4" BROKEN WHITE PAINT (10' LINE, 30' GAP)
- (D) 4" DOTTED WHITE PAINT (3' LINE, 9' GAP)
- (E) 10" SOLID WHITE PAINT
- (F) WHITE PAINT SYMBOL/LEGEND
- PORTABLE P.C.C. SAFETY BARRIER (F SHAPE)
- PORTABLE IMPACT ATTENUATOR
- ARROW PANEL
- (RM C) REMOVE EXISTING STRIPING BY CONTRACTOR

n:\31653-000\contract tb\cadd\CS401U301_1B.dgn
12/18/2015 8:13:12 AM

DELAWARE DEPARTMENT OF TRANSPORTATION

ADDENDUMS / REVISIONS

SCALE 0 30 60 90 FEET

US 301 & SR 1 INTERCHANGE

CONTRACT	BRIDGE NO.	BR1-433, RW1-3 & RW1-3R
T200911302	DESIGNED BY: J.D.C.	
COUNTY		
NEW CASTLE	CHECKED BY: J.M.M.	

CONSTRUCTION PHASING, M.O.T., AND EROSION CONTROL PLAN - PHASE 4

CS-401
SHEET NO.
421
TOTAL SHTS.
491

SEQUENCE OF CONSTRUCTION - PHASE 4

(1) UPON COMPLETION OF ALL CONSTRUCTION ACTIVITIES, REMOVE ALL PHASE 3 TEMPORAY TRAFFIC CONTROL DEVICES EXCEPT THOSE NEEDED FOR THE CLOSURE OF THE US 301 NORTHBOUND ROADWAY SOUTH OF STA. 865+00 AND THE SR 1 SOUTHBOUND RAMP TO US 301 AS SHOWN ON THIS PLAN. THE TEMPORARY TRAFFIC CONTROL DEVICES SHOWN ON THESE PHASE 4 DRAWINGS SHALL REMAIN UNTIL OPENING OF THE US 301 ROADWAY BY OTHERS (SEE NOTES 1, 2 & 3).

NOTES:

1. CONTRACT T200911302 CONTRACTOR SHALL COVER SIGN WITH OPAQUE MATERIAL AFTER INSTALLATION OF SIGN AND LEAVE SIGN COVERED AT COMPLETION OF CONTRACT. CONTRACT T200911303 CONTRACTOR SHALL REMOVE SIGN COVERING UPON OPENING OF US 301 ROADWAY.
2. AT THE COMPLETION OF CONSTRUCTION THE CONTRACTOR SHALL FURNISH AND INSTALL TEMPORARY TRAFFIC CONTROL DEVICES TO REMAIN AS SHOWN ON DRAWINGS CS-401 THROUGH CS-407 (PHASE 4). THE TEMPORARY TRAFFIC CONTROL DEVICES SHALL REMAIN IN PLACE AND SERVE TO TEMPORARILY CLOSE THE NEW US 301 ROADWAY UNTIL ITS OFFICIAL OPENING. MAINTENANCE AND REMOVAL OF THE TEMPORARY TRAFFIC CONTROL DEVICES DURING THE INTERIM CLOSURE PERIOD AND UPON OPENING OF THE US 301 ROADWAY SHALL BE THE RESPONSIBILITY OF OTHERS (CONTRACT T200911303 CONTRACTOR).
3. PAYMENT FOR MAINTENANCE AND REMOVAL OF THE TEMPORARY TRAFFIC CONTROL DEVICES SHOWN ON THIS PLAN BY THE CONTRACT T200911303 CONTRACTOR WILL NOT BE MEASURED AND PAID FOR BUT WILL BE INCIDENTAL TO ITEM 763500 - MAINTENANCE OF TRAFFIC IN CONTRACT T200911303.

CONSTRUCTION PHASING LEGEND

- TEMPORARY CONSTRUCTION
- PROPOSED CONSTRUCTION THIS PHASE
- EXISTING SIGN/PROPOSED TEMPORARY SIGN
- TYPE III BARRICADE
- PLASTIC DRUM
- TRAFFIC FLOW ARROW
- (A) 4" SOLID WHITE PAINT
- (B) 4" SOLID YELLOW PAINT
- (C) 4" BROKEN WHITE PAINT (10' LINE, 30' GAP)
- (D) 4" DOTTED WHITE PAINT (3' LINE, 9' GAP)
- (E) 10" SOLID WHITE PAINT
- (F) WHITE PAINT SYMBOL/LEGEND
- PORTABLE P.C.C. SAFETY BARRIER (F SHAPE)
- PORTABLE IMPACT ATTENUATOR
- ARROW PANEL
- (RM C) REMOVE EXISTING STRIPING BY CONTRACTOR

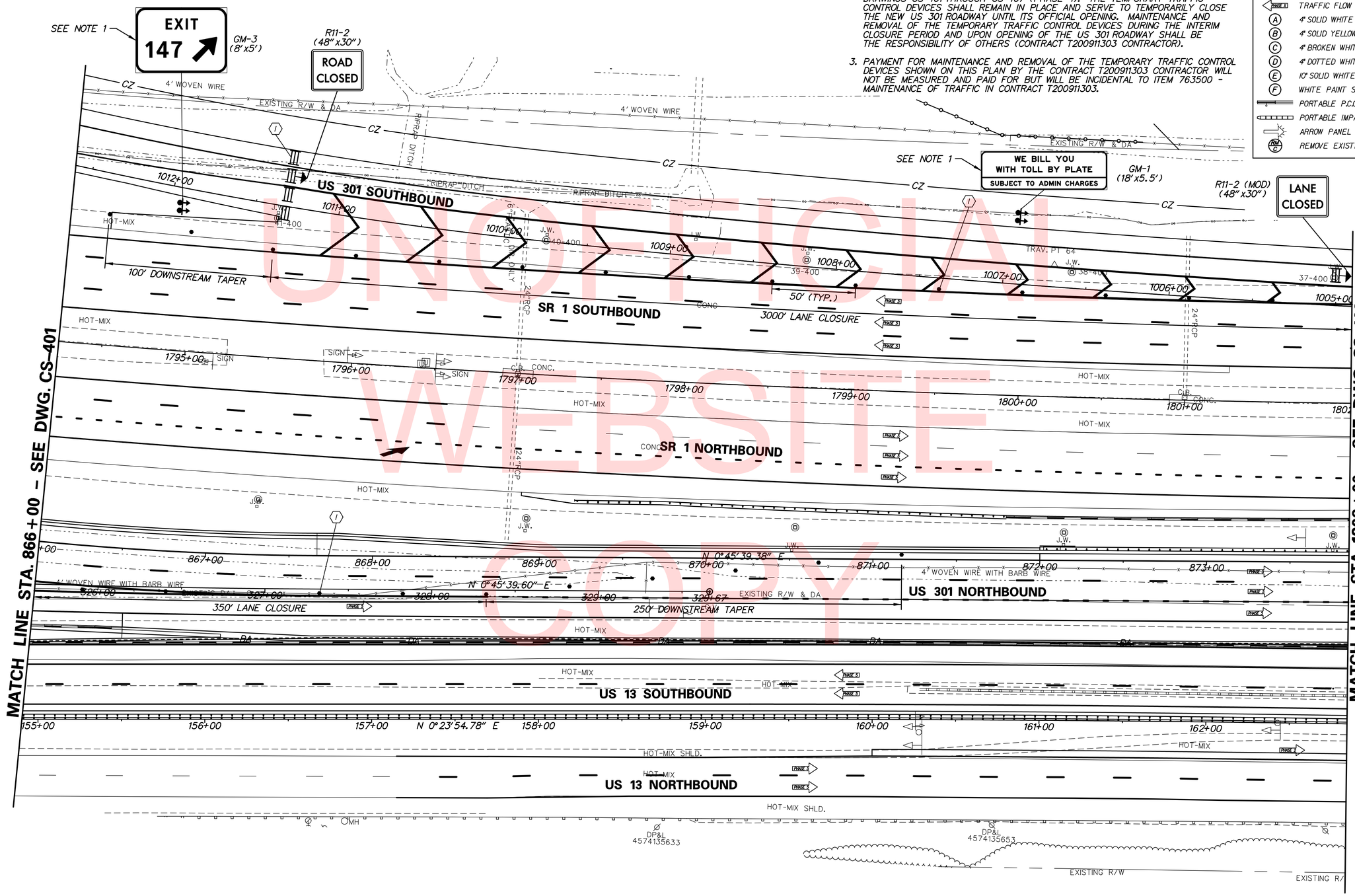

UNOFFICIAL WEBSITE COPY

n:\31653-000\contract th\cadd\traffic\AET\CS402U301_1B_AET.dgn
12/18/2015 8:13:15 AM

DELAWARE DEPARTMENT OF TRANSPORTATION	ADDENDUMS / REVISIONS	SCALE 0 30 60 90 FEET	US 301 & SR 1 INTERCHANGE	CONTRACT T200911302 / COUNTY NEW CASTLE	BRIDGE NO. RW1-3 & RW1-3R / DESIGNED BY: J.D.C. / CHECKED BY: J.M.M.

CONSTRUCTION PHASING, M.O.T., AND EROSION CONTROL PLAN - PHASE 4

CS-402 | SHEET NO. 422 | TOTAL SHTS. 491

NOTES:

1. CONTRACT T200911302 CONTRACTOR SHALL COVER SIGN WITH OPAQUE MATERIAL AFTER INSTALLATION OF SIGN AND LEAVE SIGN COVERED AT COMPLETION OF CONTRACT. CONTRACT T200911303 CONTRACTOR SHALL REMOVE SIGN COVERING UPON OPENING OF US 301 ROADWAY.

2. AT THE COMPLETION OF CONSTRUCTION THE CONTRACTOR SHALL FURNISH AND INSTALL TEMPORARY TRAFFIC CONTROL DEVICES TO REMAIN AS SHOWN ON DRAWINGS CS-401 THROUGH CS-407 (PHASE 4). THE TEMPORARY TRAFFIC CONTROL DEVICES SHALL REMAIN IN PLACE AND SERVE TO TEMPORARILY CLOSE THE NEW US 301 ROADWAY UNTIL ITS OFFICIAL OPENING. MAINTENANCE AND REMOVAL OF THE TEMPORARY TRAFFIC CONTROL DEVICES DURING THE INTERIM CLOSURE PERIOD AND UPON OPENING OF THE US 301 ROADWAY SHALL BE THE RESPONSIBILITY OF OTHERS (CONTRACT T200911303 CONTRACTOR).

3. PAYMENT FOR MAINTENANCE AND REMOVAL OF THE TEMPORARY TRAFFIC CONTROL DEVICES SHOWN ON THIS PLAN BY THE CONTRACT T200911303 CONTRACTOR WILL NOT BE MEASURED AND PAID FOR BUT WILL BE INCIDENTAL TO ITEM 763500 - MAINTENANCE OF TRAFFIC IN CONTRACT T200911303.

SEQUENCE OF CONSTRUCTION - PHASE 4

(1) UPON COMPLETION OF ALL CONSTRUCTION ACTIVITIES, REMOVE ALL PHASE 3 TEMPORAY TRAFFIC CONTROL DEVICES EXCEPT THOSE NEEDED FOR THE CLOSURE OF THE US 301 NORTHBOUND ROADWAY SOUTH OF STA. 865+00 AND THE SR 1 SOUTHBOUND RAMP TO US 301 AS SHOWN ON THIS PLAN. THE TEMPORARY TRAFFIC CONTROL DEVICES SHOWN ON THESE PHASE 4 DRAWINGS SHALL REMAIN UNTIL OPENING OF THE US 301 ROADWAY BY OTHERS (SEE NOTES 1, 2 & 3).

CONSTRUCTION PHASING LEGEND

- TEMPORARY CONSTRUCTION
- PROPOSED CONSTRUCTION THIS PHASE
- EXISTING SIGN/PROPOSED TEMPORARY SIGN
- TYPE III BARRICADE
- PLASTIC DRUM
- TRAFFIC FLOW ARROW
- (A) 4" SOLID WHITE PAINT
- (B) 4" SOLID YELLOW PAINT
- (C) 4" BROKEN WHITE PAINT (10' LINE, 30' GAP)
- (D) 4" DOTTED WHITE PAINT (3' LINE, 9' GAP)
- (E) 10" SOLID WHITE PAINT
- (F) WHITE PAINT SYMBOL/LEGEND
- PORTABLE P.C.C. SAFETY BARRIER (F SHAPE)
- PORTABLE IMPACT ATTENUATOR
- ARROW PANEL
- (RM C) REMOVE EXISTING STRIPING BY CONTRACTOR

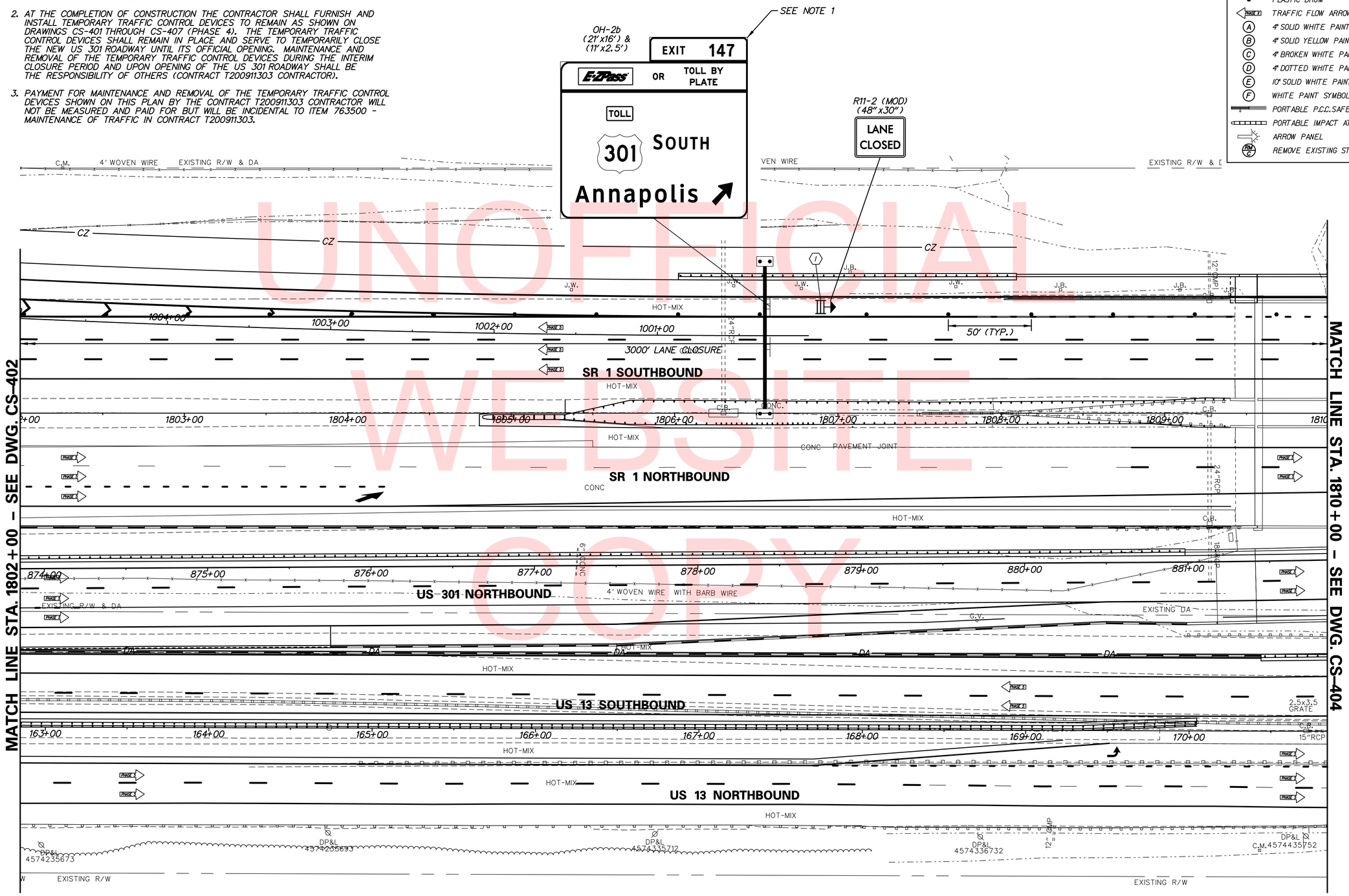

UNOFFICIAL WEBSITE COPY

DELAWARE DEPARTMENT OF TRANSPORTATION	ADDENDUMS / REVISIONS	SCALE 0 30 60 90 FEET	US 301 & SR 1 INTERCHANGE	CONTRACT T200911302 / COUNTY NEW CASTLE	BRIDGE NO. BR1-903N, BR1-903S, BR1-432 & RW1-3R / DESIGNED BY: J.D.C. / CHECKED BY: J.M.M.	CONSTRUCTION PHASING, M.O.T., AND EROSION CONTROL PLAN - PHASE 4	CS-403 / SHEET NO. 423 / TOTAL SHTS. 491

n:\31653-000\contract tb\cadd\traffic\JET\CS403U301_1B_JET.dgn
12/18/2015 8:13:18 AM

CONSTRUCTION PHASING LEGEND

- TEMPORARY CONSTRUCTION
- PROPOSED CONSTRUCTION THIS PHASE
- EXISTING SIGN/PROPOSED TEMPORARY SIGN
- TYPE III BARRICADE
- PLASTIC DRUM
- TRAFFIC FLOW ARROW
- (A) 4" SOLID WHITE PAINT
- (B) 4" SOLID YELLOW PAINT
- (C) 4" BROKEN WHITE PAINT (10' LINE, 30' GAP)
- (D) 4" DOTTED WHITE PAINT (3' LINE, 9' GAP)
- (E) 10" SOLID WHITE PAINT
- (F) WHITE PAINT SYMBOL/LEGEND
- PORTABLE P.C.C. SAFETY BARRIER (F SHAPE)
- PORTABLE IMPACT ATTENUATOR
- ARROW PANEL
- (RM C) REMOVE EXISTING STRIPING BY CONTRACTOR

SEQUENCE OF CONSTRUCTION - PHASE 4

(1) UPON COMPLETION OF ALL CONSTRUCTION ACTIVITIES, REMOVE ALL PHASE 3 TEMPORAY TRAFFIC CONTROL DEVICES EXCEPT THOSE NEEDED FOR THE CLOSURE OF THE US 301 NORTHBOUND ROADWAY SOUTH OF STA. 865+00 AND THE SR 1 SOUTHBOUND RAMP TO US 301 AS SHOWN ON THIS PLAN. THE TEMPORARY TRAFFIC CONTROL DEVICES SHOWN ON THESE PHASE 4 DRAWINGS SHALL REMAIN UNTIL OPENING OF THE US 301 ROADWAY BY OTHERS (SEE NOTES 1 & 2).

NOTES:

1. AT THE COMPLETION OF CONSTRUCTION THE CONTRACTOR SHALL FURNISH AND INSTALL TEMPORARY TRAFFIC CONTROL DEVICES TO REMAIN AS SHOWN ON DRAWINGS CS-401 THROUGH CS-407 (PHASE 4). THE TEMPORARY TRAFFIC CONTROL DEVICES SHALL REMAIN IN PLACE AND SERVE TO TEMPORARILY CLOSE THE NEW US 301 ROADWAY UNTIL ITS OFFICIAL OPENING. MAINTENANCE AND REMOVAL OF THE TEMPORARY TRAFFIC CONTROL DEVICES DURING THE INTERIM CLOSURE PERIOD AND UPON OPENING OF THE US 301 ROADWAY SHALL BE THE RESPONSIBILITY OF OTHERS (CONTRACT T200911303 CONTRACTOR).
2. PAYMENT FOR MAINTENANCE AND REMOVAL OF THE TEMPORARY TRAFFIC CONTROL DEVICES SHOWN ON THIS PLAN BY THE CONTRACT T200911303 CONTRACTOR WILL NOT BE MEASURED AND PAID FOR BUT WILL BE INCIDENTAL TO ITEM 763500 - MAINTENANCE OF TRAFFIC IN CONTRACT T200911303.

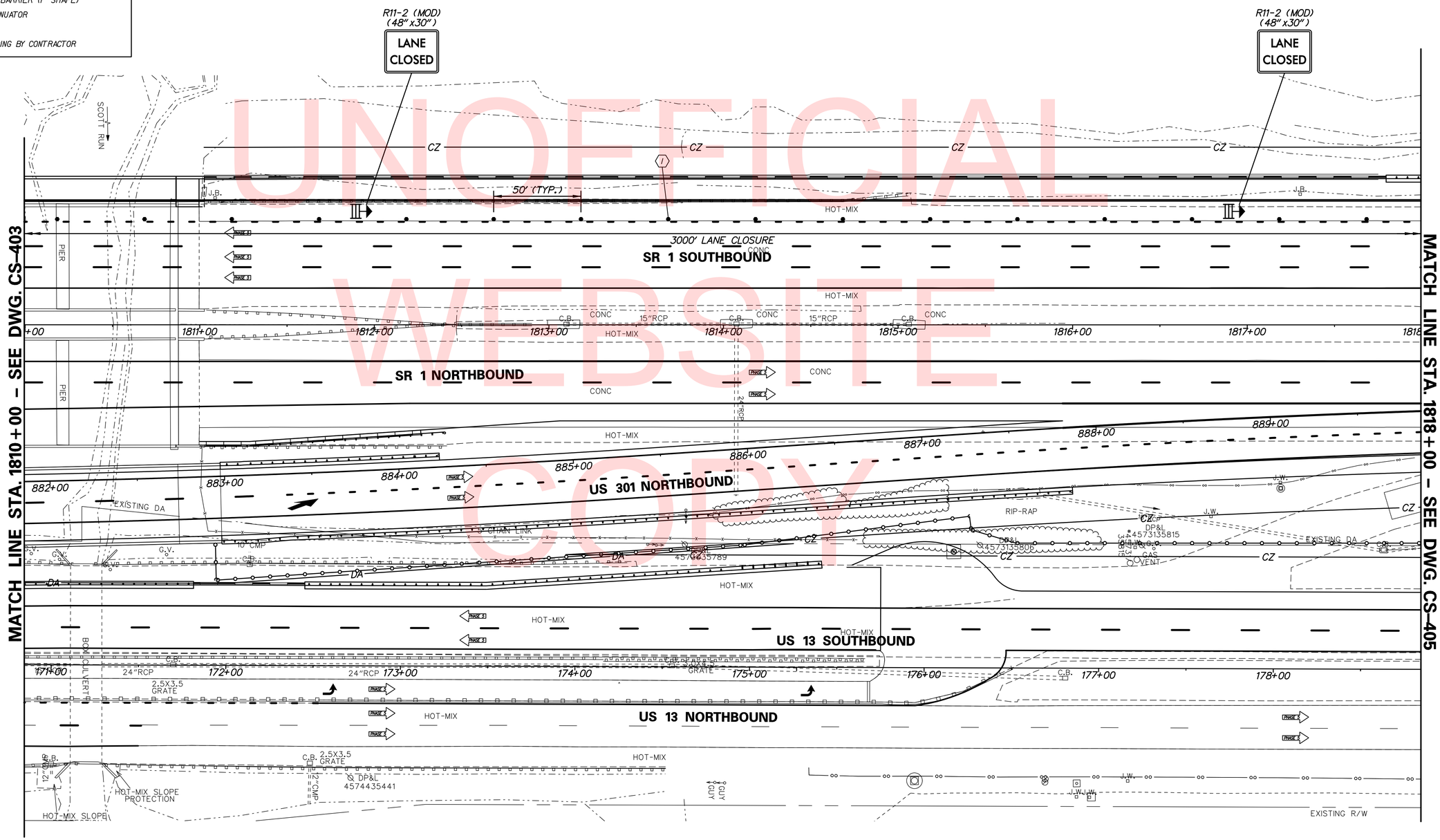

UNOFFICIAL WEBSITE COPY

n:\31653-000\contract tb\cadd\CS404U301_1B.dgn
12/18/2015 8:13:21 AM

DELAWARE DEPARTMENT OF TRANSPORTATION	ADDENDUMS / REVISIONS	SCALE 0 30 60 90 FEET	US 301 & SR 1 INTERCHANGE	CONTRACT T200911302	BRIDGE NO. BR1-903N, BR1-903S BR1-432 & RW1-1	CONSTRUCTION PHASING, M.O.T., AND EROSION CONTROL PLAN - PHASE 4	CS-404
				COUNTY NEW CASTLE	DESIGNED BY: J.D.C.		SHEET NO. 424
					CHECKED BY: J.M.M.		TOTAL SHTS. 491

CONSTRUCTION PHASING LEGEND

- TEMPORARY CONSTRUCTION
- PROPOSED CONSTRUCTION THIS PHASE
- EXISTING SIGN/PROPOSED TEMPORARY SIGN
- TYPE III BARRICADE
- PLASTIC DRUM
- TRAFFIC FLOW ARROW
- (A) 4" SOLID WHITE PAINT
- (B) 4" SOLID YELLOW PAINT
- (C) 4" BROKEN WHITE PAINT (10' LINE, 30' GAP)
- (D) 4" DOTTED WHITE PAINT (3' LINE, 9' GAP)
- (E) 10" SOLID WHITE PAINT
- (F) WHITE PAINT SYMBOL/LEGEND
- PORTABLE P.C.C. SAFETY BARRIER (F SHAPE)
- PORTABLE IMPACT ATTENUATOR
- ARROW PANEL
- (RM C) REMOVE EXISTING STRIPING BY CONTRACTOR

SEQUENCE OF CONSTRUCTION - PHASE 4

(1) UPON COMPLETION OF ALL CONSTRUCTION ACTIVITIES, REMOVE ALL PHASE 3 TEMPORAY TRAFFIC CONTROL DEVICES EXCEPT THOSE NEEDED FOR THE CLOSURE OF THE US 301 NORTHBOUND ROADWAY SOUTH OF STA. 865+00 AND THE SR 1 SOUTHBOUND RAMP TO US 301 AS SHOWN ON THIS PLAN. THE TEMPORARY TRAFFIC CONTROL DEVICES SHOWN ON THESE PHASE 4 DRAWINGS SHALL REMAIN UNTIL OPENING OF THE US 301 ROADWAY BY OTHERS (SEE NOTES 1, 2 & 3).

NOTES:

1. CONTRACT T200911302 CONTRACTOR SHALL COVER SIGN WITH OPAQUE MATERIAL AFTER INSTALLATION OF SIGN AND LEAVE SIGN COVERED AT COMPLETION OF CONTRACT. CONTRACT T200911303 CONTRACTOR SHALL REMOVE SIGN COVERING UPON OPENING OF US 301 ROADWAY.
2. AT THE COMPLETION OF CONSTRUCTION THE CONTRACTOR SHALL FURNISH AND INSTALL TEMPORARY TRAFFIC CONTROL DEVICES TO REMAIN AS SHOWN ON DRAWINGS CS-401 THROUGH CS-407 (PHASE 4). THE TEMPORARY TRAFFIC CONTROL DEVICES SHALL REMAIN IN PLACE AND SERVE TO TEMPORARILY CLOSE THE NEW US 301 ROADWAY UNTIL ITS OFFICIAL OPENING. MAINTENANCE AND REMOVAL OF THE TEMPORARY TRAFFIC CONTROL DEVICES DURING THE INTERIM CLOSURE PERIOD AND UPON OPENING OF THE US 301 ROADWAY SHALL BE THE RESPONSIBILITY OF OTHERS (CONTRACT T200911303 CONTRACTOR).
3. PAYMENT FOR MAINTENANCE AND REMOVAL OF THE TEMPORARY TRAFFIC CONTROL DEVICES SHOWN ON THIS PLAN BY THE CONTRACT T200911303 CONTRACTOR WILL NOT BE MEASURED AND PAID FOR BUT WILL BE INCIDENTAL TO ITEM 763500 - MAINTENANCE OF TRAFFIC IN CONTRACT T200911303.

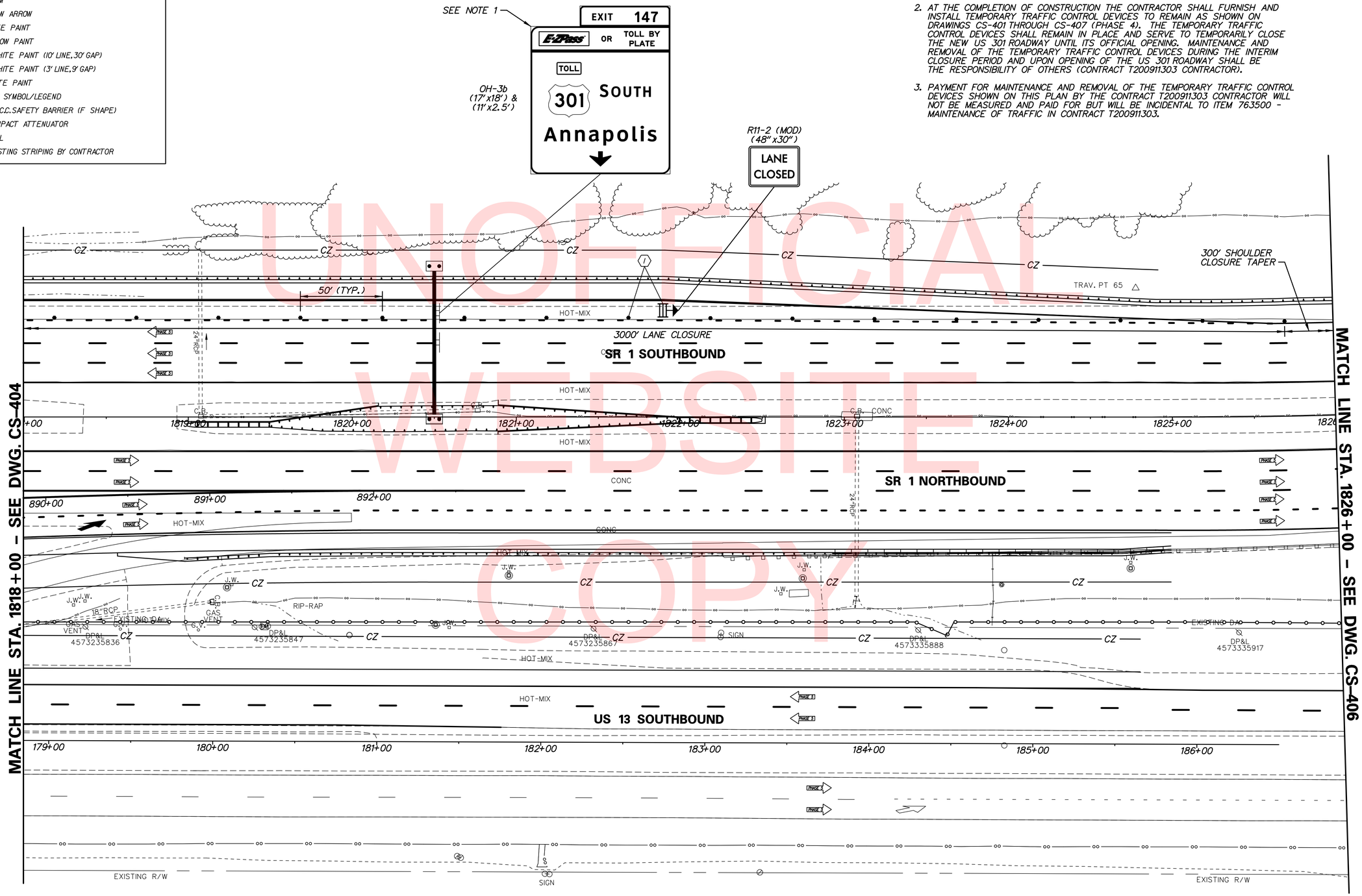

UNOFFICIAL WEBSITE COPY

n:\31653-000\contract 1b\cadd\traffic\AET\CS405U301_1B_AET.dgn
12/18/2015 8:13:24 AM

DELAWARE DEPARTMENT OF TRANSPORTATION	ADDENDUMS / REVISIONS	SCALE 0 30 60 90 FEET	US 301 & SR 1 INTERCHANGE	CONTRACT T200911302	BRIDGE NO.	CONSTRUCTION PHASING, M.O.T., AND EROSION CONTROL PLAN – PHASE 4	CS-405 SHEET NO. 425
				COUNTY NEW CASTLE	DESIGNED BY: J.D.C. CHECKED BY: J.M.M.		TOTAL SHTS. 491

SEQUENCE OF CONSTRUCTION - PHASE 4

(1) UPON COMPLETION OF ALL CONSTRUCTION ACTIVITIES, REMOVE ALL PHASE 3 TEMPORAY TRAFFIC CONTROL DEVICES EXCEPT THOSE NEEDED FOR THE CLOSURE OF THE US 301 NORTHBOUND ROADWAY SOUTH OF STA. 865+00 AND THE SR 1 SOUTHBOUND RAMP TO US 301 AS SHOWN ON THIS PLAN. THE TEMPORARY TRAFFIC CONTROL DEVICES SHOWN ON THESE PHASE 4 DRAWINGS SHALL REMAIN UNTIL OPENING OF THE US 301 ROADWAY BY OTHERS (SEE NOTES 1 & 2).

CONSTRUCTION PHASING LEGEND

- TEMPORARY CONSTRUCTION
- PROPOSED CONSTRUCTION THIS PHASE
- EXISTING SIGN/PROPOSED TEMPORARY SIGN
- TYPE III BARRICADE
- PLASTIC DRUM
- TRAFFIC FLOW ARROW
- (A) 4" SOLID WHITE PAINT
- (B) 4" SOLID YELLOW PAINT
- (C) 4" BROKEN WHITE PAINT (10' LINE, 30' GAP)
- (D) 4" DOTTED WHITE PAINT (3' LINE, 9' GAP)
- (E) 10" SOLID WHITE PAINT
- (F) WHITE PAINT SYMBOL/LEGEND
- PORTABLE P.C.C. SAFETY BARRIER (F SHAPE)
- PORTABLE IMPACT ATTENUATOR
- ARROW PANEL
- (RM C) REMOVE EXISTING STRIPING BY CONTRACTOR

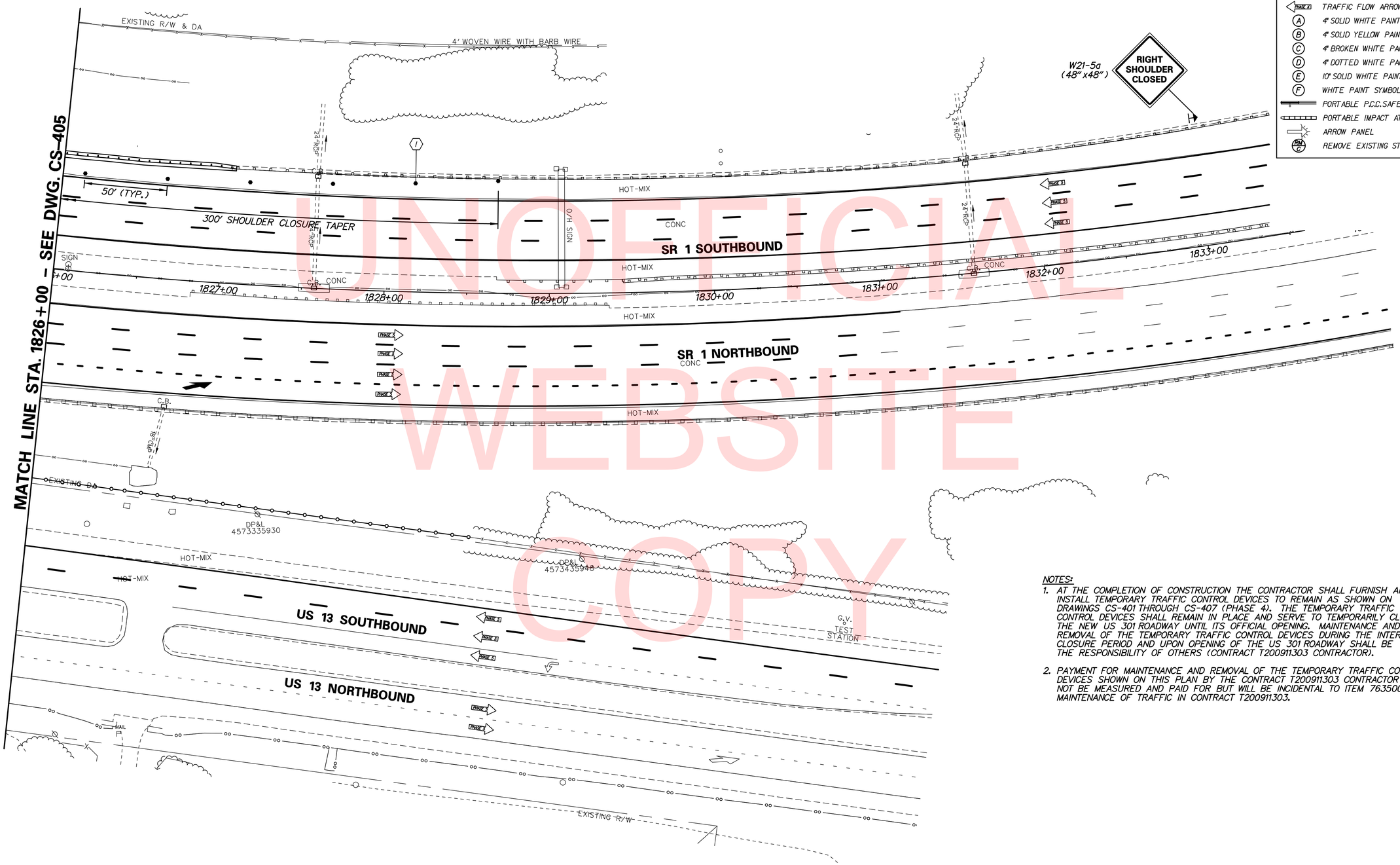

UNOFFICIAL WEBSITE COPY

NOTES:

1. AT THE COMPLETION OF CONSTRUCTION THE CONTRACTOR SHALL FURNISH AND INSTALL TEMPORARY TRAFFIC CONTROL DEVICES TO REMAIN AS SHOWN ON DRAWINGS CS-401 THROUGH CS-407 (PHASE 4). THE TEMPORARY TRAFFIC CONTROL DEVICES SHALL REMAIN IN PLACE AND SERVE TO TEMPORARILY CLOSE THE NEW US 301 ROADWAY UNTIL ITS OFFICIAL OPENING. MAINTENANCE AND REMOVAL OF THE TEMPORARY TRAFFIC CONTROL DEVICES DURING THE INTERIM CLOSURE PERIOD AND UPON OPENING OF THE US 301 ROADWAY SHALL BE THE RESPONSIBILITY OF OTHERS (CONTRACT T200911303 CONTRACTOR).

2. PAYMENT FOR MAINTENANCE AND REMOVAL OF THE TEMPORARY TRAFFIC CONTROL DEVICES SHOWN ON THIS PLAN BY THE CONTRACT T200911303 CONTRACTOR WILL NOT BE MEASURED AND PAID FOR BUT WILL BE INCIDENTAL TO ITEM 763500 - MAINTENANCE OF TRAFFIC IN CONTRACT T200911303.

DELAWARE DEPARTMENT OF TRANSPORTATION	ADDENDUMS / REVISIONS	SCALE 0 30 60 90 FEET	US 301 & SR 1 INTERCHANGE	CONTRACT T200911302	BRIDGE NO.	CONSTRUCTION PHASING, M.O.T., AND EROSION CONTROL PLAN - PHASE 4	CS-406
				COUNTY NEW CASTLE	DESIGNED BY: J.D.C.		SHEET NO. 426
					CHECKED BY: J.M.M.		TOTAL SHTS. 491

r:\31653-090\contract tb\cadd\CS406U301_TB.dgn
12/18/2015 8:13:26 AM

CONSTRUCTION PHASING LEGEND

- TEMPORARY CONSTRUCTION
- PROPOSED CONSTRUCTION THIS PHASE
- EXISTING SIGN/PROPOSED TEMPORARY SIGN
- TYPE III BARRICADE
- PLASTIC DRUM
- TRAFFIC FLOW ARROW
- (A) 4" SOLID WHITE PAINT
- (B) 4" SOLID YELLOW PAINT
- (C) 4" BROKEN WHITE PAINT (10' LINE, 30' GAP)
- (D) 4" DOTTED WHITE PAINT (3' LINE, 9' GAP)
- (E) 10" SOLID WHITE PAINT
- (F) WHITE PAINT SYMBOL/LEGEND
- PORTABLE P.C.C. SAFETY BARRIER (F SHAPE)
- PORTABLE IMPACT ATTENUATOR
- ARROW PANEL
- (RM C) REMOVE EXISTING STRIPING BY CONTRACTOR

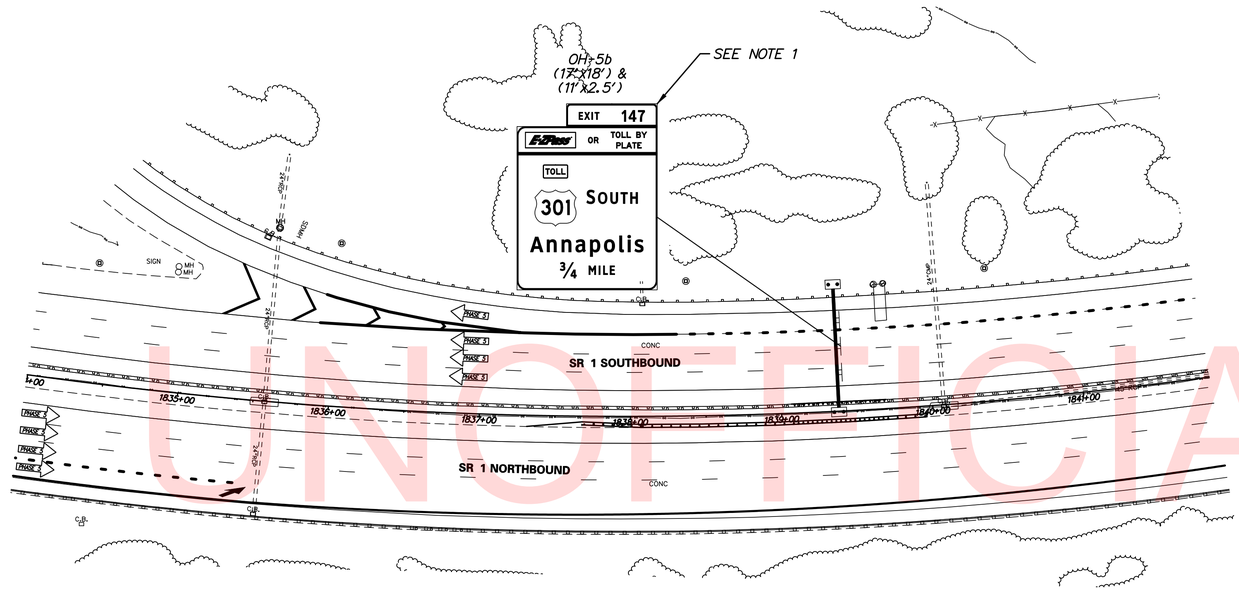

NOTES:

1. CONTRACT T200911302 CONTRACTOR SHALL COVER SIGN WITH OPAQUE MATERIAL AFTER INSTALLATION OF SIGN AND LEAVE SIGN COVERED AT COMPLETION OF CONTRACT. CONTRACT T200911303 CONTRACTOR SHALL REMOVE SIGN COVERING UPON OPENING OF US 301 ROADWAY.

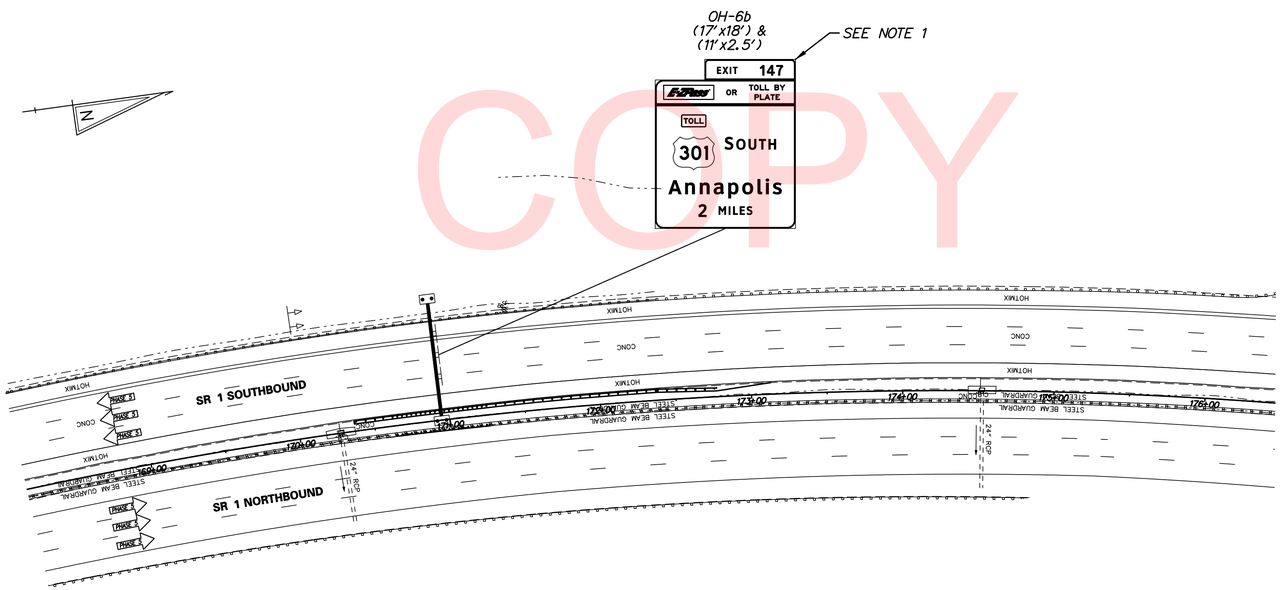

UNOFFICIAL WEBSITE COPY

n:\31653-000\contract th\cadd\traffic\AETYCS407U301_1B_AET.dgn
12/18/2015 8:13:32 AM

DELAWARE DEPARTMENT OF TRANSPORTATION	ADDENDUMS / REVISIONS	SCALE 0 50 100 150 FEET	US 301 & SR 1 INTERCHANGE	CONTRACT T200911302	BRIDGE NO.	CONSTRUCTION PHASING, M.O.T., AND EROSION CONTROL PLAN – PHASE 4	CS–407
				COUNTY NEW CASTLE	DESIGNED BY: J.D.C.		SHEET NO. 427
					CHECKED BY: J.M.M.		TOTAL SHTS. 491

CHANGEABLE MESSAGE BOARDS

CMS-1

PRIOR TO DETOUR
(10 DAYS PRIOR TO BEGINNING OF DETOUR)

SR 1 SB CLOSING XX/XX/XX	THROUGH XX/XX/XX 9PM–5AM

CMS-1

DURING DETOUR

SR 1 SB CLOSED	FOLLOW DETOUR

CMS-2

DURING DETOUR
(SEE NOTE 8)

NO TOLL	PROCEED WITH CAUTION

SPECIAL SIGNS

U

NOTES:

1. REDUCE SOUTHBOUND SR 1 TRAFFIC TO ONE TRAVEL LANE PRIOR TO EXIT 148 FOLLOWING DETAIL AS SHOWN ON PLAN.
2. SIGNS SHALL BE COMPLETELY COVERED OR REMOVED WHEN DETOUR IS NOT BEING IMPLEMENTED.
3. THE CONTRACTOR SHALL COORDINATE THIS DETOUR WITH THE ENGINEER AND OTHER US 301 CONTRACTORS. THIS DETOUR SHALL NOT BE PERMITTED AT THE SAME TIME AS DETOURS FOR SR 1, US 13, EXISTING US 301 OR SR 896 AS PROPOSED IN OTHER CONTRACTS FOR THE NEW US 301 ROADWAY.
4. THE "DETOUR" SIGNS ON SIGNS A THROUGH E UNDER LEGEND AND SIGN U UNDER SPECIAL SIGNS SHALL HAVE A RETROREFLECTIVE FLUORESCENT ORANGE BACKGROUND WITH BLACK LEGEND. THE CARDINAL DIRECTION, ROUTE SHIELD AND DIRECTIONAL ARROW SIGNS SHALL HAVE A WHITE BACKGROUND WITH BLACK LEGEND.
5. THE CONTRACTOR SHALL PROVIDE TRAFFIC OFFICERS AND PORTABLE LIGHT ASSEMBLIES AT THE FOLLOWING INTERSECTIONS DURING THE DETOUR, AS DIRECTED BY THE ENGINEER. THE CONTRACTOR SHALL ALSO COORDINATE WITH THE DELDOT TMC TO MAKE SIGNAL TIMING CHANGES AT THE FOLLOWING INTERSECTIONS, AS REQUIRED:
   -US 13 AND BOYDS CORNER ROAD
   -BOYDS CORNER ROAD AND SR 1 SOUTHBOUND RAMPS
   -US 13 AND SR 1 FREE RAMP
6. FOR HOURS OF DETOUR SEE DWG. NO. TCN-01.
7. ALL SIGNS SHALL BE DOUBLE POSTED IN THE MEDIAN AND RIGHT SIDE OF ROADWAY WHEN INSTALLED ALONG A MULTI-LANE ROADWAY.
8. THE CONTRACTOR SHALL COORDINATE THE HOURS OF THE BOYDS CORNER ROAD TO SR 1 SB TOLL SUSPENSION WITH THE ENGINEER AND DELDOT. CMS-2 SHALL ONLY BE DISPLAYED DURING HOURS THE TOLL IS SUSPENDED.

DOUBLE LANE CLOSURE PRIOR TO DETOUR

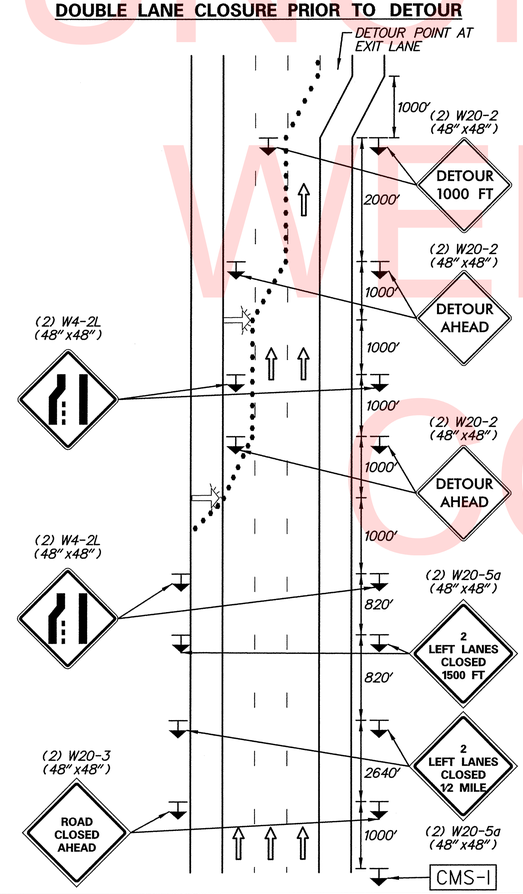

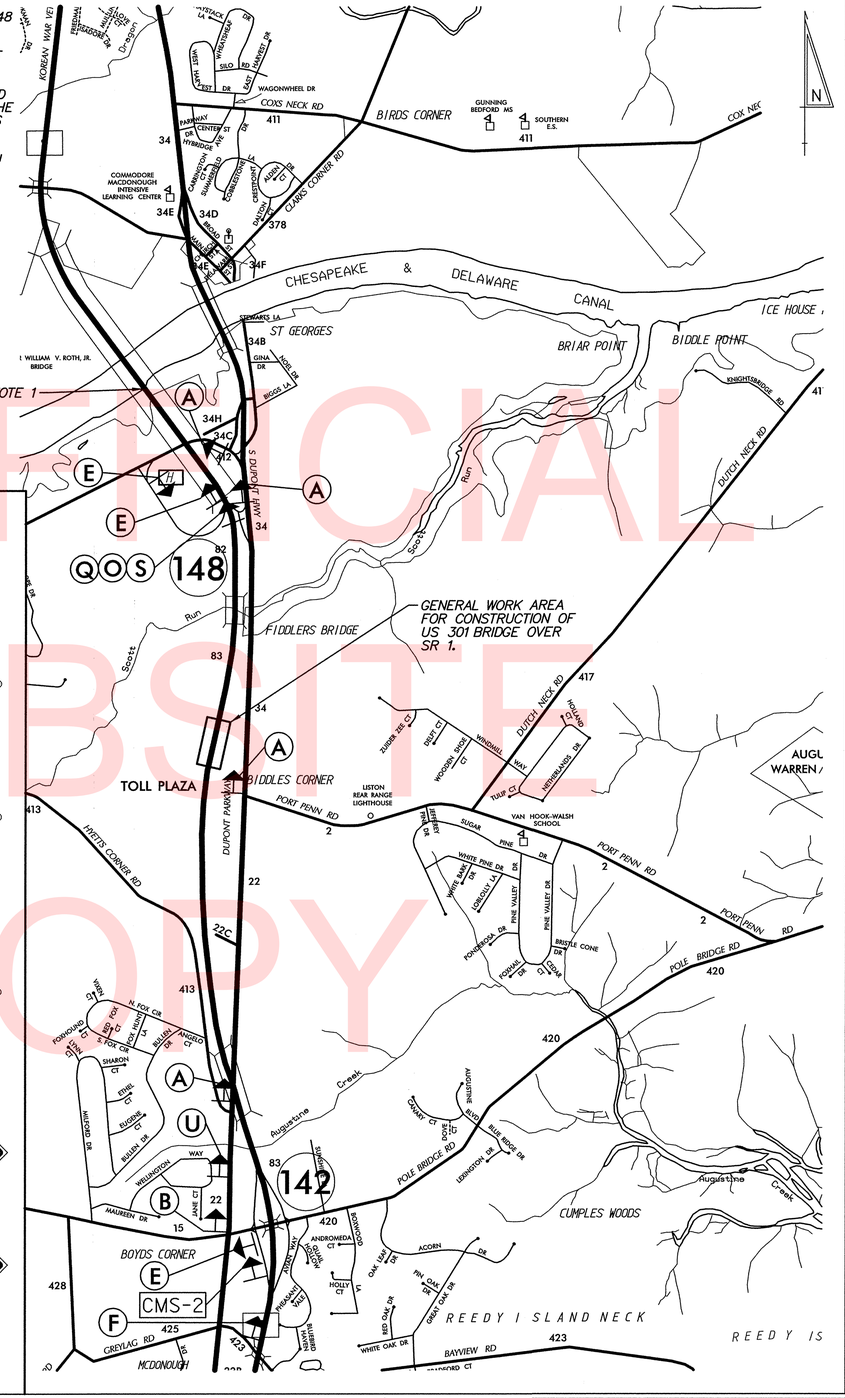

LEGEND

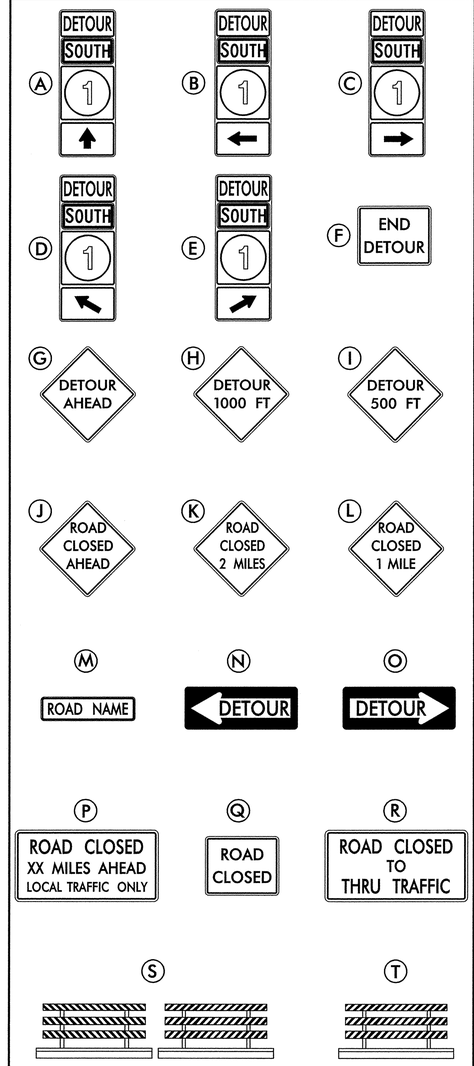

GENERAL NOTES

1. ALL DETOUR SIGNING, INCLUDING TRAILBLAZERS, ARE TO BE SUPPLIED AND MAINTAINED BY THE GENERAL CONTRACTOR IN COMPLIANCE WITH THE DELAWARE MANUAL ON UNIFORM TRAFFIC CONTROL DEVICES.
2. THE CONTRACTOR SHALL COMPLY WITH GUIDELINES FOR LIGHTS, BARRICADES, AND SIGNS PER THE LATEST VERSION OF THE DELAWARE MANUAL ON UNIFORM TRAFFIC CONTROL DEVICES, PART 6.
3. FIELD CONDITIONS MAY DICTATE CHANGES AT SOME TIME DURING THE LIFE OF THE CONTRACT. IN THE EVENT OF OMISSIONS OR CORRECTIONS, THE SIGNING PROVISIONS OF THE DELAWARE MANUAL ON UNIFORM TRAFFIC CONTROL DEVICES WILL PREVAIL.
4. WARNING SIGNS SHOULD BE MOUNTED ON BREAKAWAY POSTS AND HAVE RETROREFLECTIVE FLUORESCENT SHEETING.
5. 'S' BARRICADES SHALL COMPLETELY RUN THE FULL WIDTH OF ROADWAY.
6. BARRICADES SHALL BE A MINIMUM OF 6 FEET WIDE UNLESS DIRECTED BY THE ENGINEER.

UNOFFICIAL WEBSITE COPY

RECOMMENDED _____ DATE: _____

RECOMMENDED _____ DATE: _____

RECOMMENDED [signature] DATE: 3/13/15

APPROVED CHIEF SAFETY OFFICER [signature] DATE: 3/13/2015

APPROVED TRAFFIC ENGINEER [signature] DATE: 3/13/2015

DELAWARE DEPARTMENT OF TRANSPORTATION

ADDENDUM / REVISIONS

SCALE 0 1500 3000 4500 FEET

US 301 & SR 1 INTERCHANGE

CONTRACT	PERMIT NO.	
T200911302	DESIGNED BY: J.D.C.	
COUNTY		
NEW CASTLE	CHECKED BY: J.M.M.	

DP-01: SR 1 SOUTHBOUND

SHEET NO.
428
TOTAL SHTS.
491

n:\31653-000\Contract 1B\CADD\DP001U301_1B.dgn
3/18/2014 11:54:11 PM

CHANGEABLE MESSAGE BOARDS

CMS-1 — PRIOR TO DETOUR
(10 DAYS PRIOR TO BEGINNING OF DETOUR)

SR 1 NB CLOSING XX/XX/XX	THROUGH XX/XX/XX 9PM-5AM

CMS-1 — DURING DETOUR

SR 1 NB CLOSED	FOLLOW DETOUR

CMS-2 — DURING DETOUR
(SEE NOTE 5)

NO TOLL	PROCEED WITH CAUTION

SPECIAL SIGNS

U — DETOUR NORTH 1

V — RAMP CLOSED AHEAD

W — DETOUR NORTH 1

NOTES:

1. REDUCE SR 1 NORTHBOUND TRAFFIC TO ONE TRAVEL LANE PRIOR TO EXIT 142 FOLLOWING DETAIL AS SHOWN ON PLAN.
2. SIGNS SHALL BE COMPLETELY COVERED OR REMOVED WHEN DETOUR IS NOT BEING IMPLEMENTED.
3. CLOSE THE RIGHT LANE OF US 13 NORTHBOUND PRIOR TO THE SR 896 (BOYDS CORNER ROAD) INTERSECTION USING TYPICAL APPLICATION TA-33 TO ALLOW FREE FLOW RIGHT TURNS FROM SR 896 WESTBOUND INTO THE RIGHT LANE OF US 13 NORTHBOUND, NORTH OF SR 896.
4. THE CONTRACTOR SHALL COORDINATE THIS DETOUR WITH THE ENGINEER AND OTHER US 301 CONTRACTORS. THIS DETOUR SHALL NOT BE PERMITTED AT THE SAME TIME AS DETOURS FOR SR 1, US 13, EXISTING US 301 OR SR 896 AS PROPOSED IN OTHER CONTRACTS FOR THE NEW US 301 ROADWAY.
5. THE CONTRACTOR SHALL COORDINATE THE HOURS OF THE SR 1 NB RAMP TO SR 896 TOLL SUSPENSION WITH THE ENGINEER AND DELDOT. CMS-2 SHALL ONLY BE DISPLAYED DURING HOURS THE TOLL IS SUSPENDED.
6. THE "DETOUR" SIGNS ON SIGNS A THROUGH E UNDER LEGEND AND U AND W UNDER SPECIAL SIGNS SHALL HAVE A RETROREFLECTIVE FLUORESCENT ORANGE BACKGROUND WITH BLACK LEGEND. THE CARDINAL DIRECTION, ROUTE SHIELD AND DIRECTIONAL ARROW SIGNS SHALL HAVE A WHITE BACKGROUND WITH BLACK LEGEND.
7. FOR HOURS OF DETOUR SEE DWG. NO. TCN-01.
8. ALL SIGNS SHALL BE DOUBLE POSTED IN THE MEDIAN AND RIGHT SIDE OF ROADWAY WHEN INSTALLED ALONG A MULTI-LANE ROADWAY.
9. THIS DETOUR ONLY FOR USE WHEN DETOUR SR 1 NB ONLY. REFER TO DWG. NO. DP-03 FOR THE SR 1 NB DETOUR WHEN DETOURING SR 1 NB AND SB CONCURRENTLY.
10. THE CONTRACTOR SHALL PROVIDE TRAFFIC OFFICERS AND PORTABLE LIGHT ASSEMBLIES AT THE FOLLOWING INTERSECTIONS DURING THE DETOUR, AS DIRECTED BY THE ENGINEER. THE CONTRACTOR SHALL ALSO COORDINATE WITH THE DELDOT TMC TO MAKE SIGNAL TIMING CHANGES AT THE FOLLOWING INTERSECTIONS, AS REQUIRED:
    - US 13 AND BOYDS CORNER ROAD
    - BOYDS CORNER ROAD AND SR 1 SOUTHBOUND RAMPS
    - BOYDS CORNER ROAD AND SR 1 NORTHBOUND RAMPS
    - US 13 AND SR 1 FREE RAMP

GENERAL WORK AREA FOR CONSTRUCTION OF US 301 BRIDGE OVER SR 1

SINGLE LANE CLOSURE PRIOR TO DETOUR

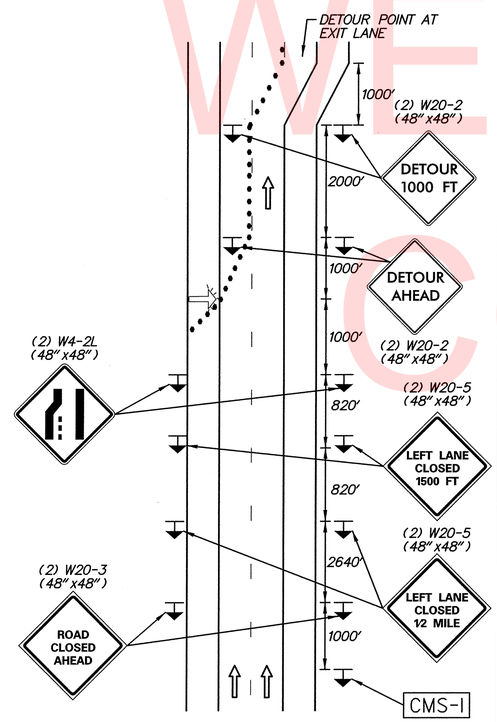

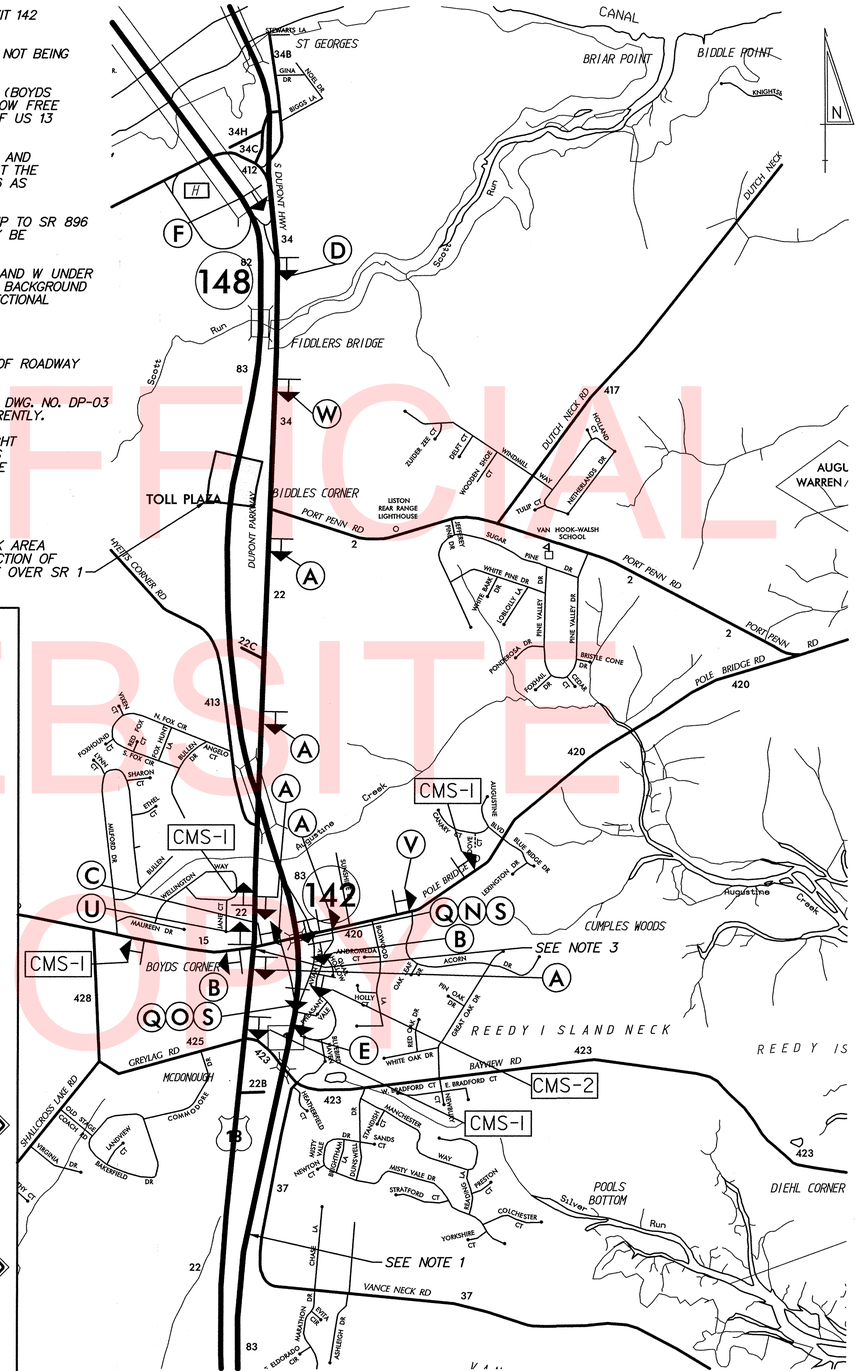

LEGEND

A — DETOUR NORTH 1 ↑	B — DETOUR NORTH 1 ←	C — DETOUR NORTH 1 →
D — DETOUR NORTH 1 ↖	E — DETOUR NORTH 1 ↗	F — END DETOUR
G — DETOUR AHEAD	H — DETOUR 1000 FT	I — DETOUR 500 FT
J — ROAD CLOSED AHEAD	K — ROAD CLOSED 1 MILE	L — ROAD CLOSED 1/2 MILE
M — ROAD NAME	N — ← DETOUR	O — DETOUR →
P — ROAD CLOSED XX MILES AHEAD LOCAL TRAFFIC ONLY	Q — ROAD CLOSED	R — ROAD CLOSED TO THRU TRAFFIC
S	T	

GENERAL NOTES

1. ALL DETOUR SIGNING, INCLUDING TRAILBLAZERS, ARE TO BE SUPPLIED AND MAINTAINED BY THE GENERAL CONTRACTOR IN COMPLIANCE WITH THE DELAWARE MANUAL ON UNIFORM TRAFFIC CONTROL DEVICES.
2. THE CONTRACTOR SHALL COMPLY WITH GUIDELINES FOR LIGHTS, BARRICADES, AND SIGNS PER THE LATEST VERSION OF THE DELAWARE MANUAL ON UNIFORM TRAFFIC CONTROL DEVICES, PART 6.
3. FIELD CONDITIONS MAY DICTATE CHANGES AT SOME TIME DURING THE LIFE OF THE CONTRACT. IN THE EVENT OF OMISSIONS OR CORRECTIONS, THE SIGNING PROVISIONS OF THE DELAWARE MANUAL ON UNIFORM TRAFFIC CONTROL DEVICES WILL PREVAIL.
4. WARNING SIGNS SHOULD BE MOUNTED ON BREAKAWAY POSTS AND HAVE RETROREFLECTIVE FLUORESCENT SHEETING.
5. 'S' BARRICADES SHALL COMPLETELY RUN THE FULL WIDTH OF ROADWAY.
6. BARRICADES SHALL BE A MINIMUM OF 6 FEET WIDE UNLESS DIRECTED BY THE ENGINEER.

UNOFFICIAL WEBSITE COPY

RECOMMENDED _____ DATE: _____ | RECOMMENDED _____ DATE: _____ | RECOMMENDED _____ DATE: 3/13/15 | APPROVED CHIEF SAFETY OFFICER _____ DATE: 3/13/2015 | APPROVED TRAFFIC ENGINEER _____ DATE: 3/13/2015

DELAWARE DEPARTMENT OF TRANSPORTATION

ADDENDUM / REVISIONS

SCALE 0 1500 3000 4500 FEET

US 301 & SR 1 INTERCHANGE

CONTRACT	PERMIT NO.	DP-02: SR 1 NORTHBOUND DETOUR 1	SHEET NO.
T200911302	DESIGNED BY: J.D.C.		429
COUNTY			TOTAL SHTS.
NEW CASTLE	CHECKED BY: J.M.M.		491

n:\31653-002\Contract 1B\CADD\DP02U301_1B.dgn
3/18/2014 1:54:14 PM

CHANGEABLE MESSAGE BOARDS

CMS-1 — PRIOR TO DETOUR
(10 DAYS PRIOR TO BEGINNING OF DETOUR)

SR 1 NB CLOSING XX/XX/XX	THROUGH XX/XX/XX 9PM-5AM

CMS-1 — DURING DETOUR

SR 1 NB CLOSED	FOLLOW DETOUR

CMS-2 — DURING DETOUR
(SEE NOTE 5)

NO TOLL	PROCEED WITH CAUTION

CMS-3 — PRIOR TO DETOUR
(10 DAYS PRIOR TO BEGINNING OF DETOUR)

RAMP TO SR 1 NB CLOSING	XX/XX/XX-XX/XX/XX 9PM-5AM

CMS-3 — DURING DETOUR

RAMP TO SR 1 NB CLOSED	FOLLOW DETOUR

SPECIAL SIGNS

U — DETOUR NORTH 1

V — RAMP CLOSED AHEAD

NOTES:

1. REDUCE SR 1 NORTHBOUND TRAFFIC TO ONE TRAVEL LANE PRIOR TO EXIT 142 FOLLOWING SINGLE LANE CLOSURE PRIOR TO DETOUR DETAIL ON DWG. NO. DP-02.
2. SIGNS SHALL BE COMPLETELY COVERED OR REMOVED WHEN DETOUR IS NOT BEING IMPLEMENTED.
3. CLOSE THE RIGHT LANE OF US 13 NORTHBOUND PRIOR TO THE SR 896 (BOYDS CORNER ROAD) INTERSECTION USING TYPICAL APPLICATION TA-33 TO ALLOW FREE FLOW RIGHT TURNS FROM SR 896 WESTBOUND INTO THE RIGHT LANE OF US 13 NORTHBOUND, NORTH OF SR 896.
4. THE CONTRACTOR SHALL COORDINATE THIS DETOUR WITH THE ENGINEER AND OTHER US 301 CONTRACTORS. THIS DETOUR SHALL NOT BE PERMITTED AT THE SAME TIME AS DETOURS FOR SR 1, US 13, EXISTING US 301 OR SR 896 AS PROPOSED IN OTHER CONTRACTS FOR THE NEW US 301 ROADWAY.
5. THE CONTRACTOR SHALL COORDINATE THE HOURS OF THE SR 1 NB RAMP TO SR 896 TOLL SUSPENSION WITH THE ENGINEER AND DELDOT. CMS-2 SHALL ONLY BE DISPLAYED DURING HOURS THE TOLL IS SUSPENDED.
6. CLOSE THE US 13 NORTHBOUND ON RAMP TO SR 1 NORTHBOUND AT SCOTT RUN BY INSTALLING DRUMS SPACED AT 25 FEET FROM THE BEGINNING OF THE TAPER FOR THE LEFT-TURN LANE TO THE BEGINNING OF THE DELINEATORS SEPARATING THE LEFT-TURN LANE FROM THE THROUGH LANES. INSTALL A TYPE 3 BARRICADE WITH A R11-2(MOD) (48"x30") "LEFT TURN LANE CLOSED AHEAD" SIGN 300 FEET NORTH OF THE BEGINNING OF THE TAPER.
7. THE "DETOUR" SIGNS ON SIGNS A THROUGH E UNDER LEGEND AND U UNDER SPECIAL SIGNS SHALL HAVE A DIAMOND GRADE FLUORESCENT ORANGE BACKGROUND WITH BLACK LEGEND. THE CARDINAL DIRECTION, ROUTE SHIELD AND DIRECTIONAL ARROW SIGNS SHALL HAVE A WHITE BACKGROUND WITH BLACK LEGEND.
8. FOR HOURS OF DETOUR SEE DWG. NO. TCN-01.
9. ALL SIGNS SHALL BE DOUBLE POSTED IN THE MEDIAN AND RIGHT SIDE OF ROADWAY WHEN INSTALLED ALONG A MULTI-LANE ROADWAY.
10. THIS DETOUR ONLY FOR USE WHEN DETOURING SR 1 NB AND SB CONCURRENTLY.
11. THE CONTRACTOR SHALL PROVIDE TRAFFIC OFFICERS AND PORTABLE LIGHT ASSEMBLIES AT THE FOLLOWING INTERSECTIONS DURING THE DETOUR, AS DIRECTED BY THE ENGINEER. THE CONTRACTOR SHALL ALSO COORDINATE WITH THE DELDOT TMC TO MAKE SIGNAL TIMING CHANGES AT THE FOLLOWING INTERSECTIONS, AS REQUIRED:
    - US 13 AND BOYDS CORNER ROAD
    - BOYDS CORNER ROAD AND SR 1 SOUTHBOUND RAMPS
    - BOYDS CORNER ROAD AND SR 1 NORTHBOUND RAMPS
    - US 13 AND SR 1 FREE RAMP
    - US 13 AND SR 72
12. THE CONTRACTOR SHALL COORDINATE TEMPORARILY LIFTING THE TRUCK RESTRICTION ON THE US 13 ST. GEORGES BRIDGE WITH THE USACOE. SEE DWG. NO. DP-05.

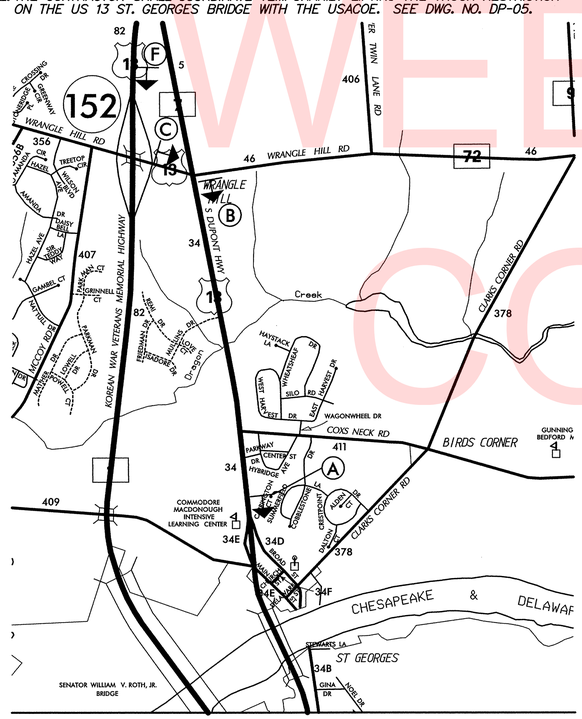

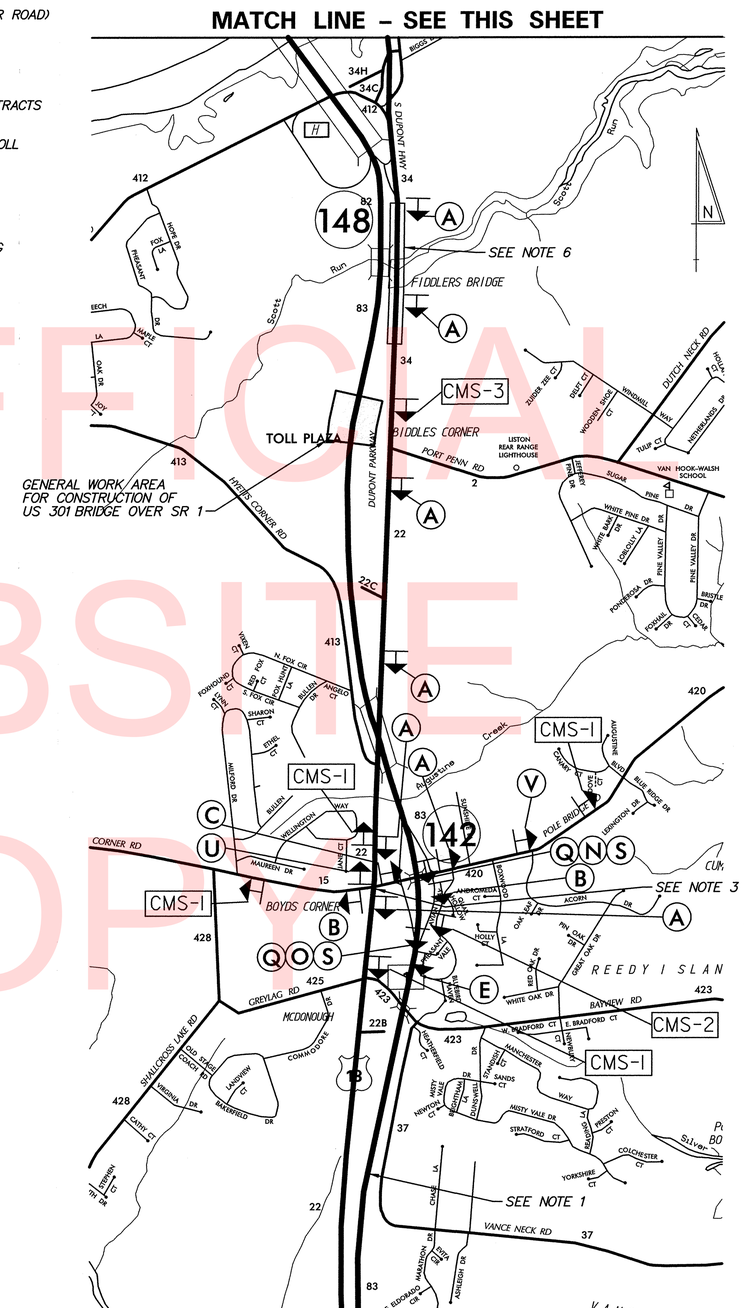

LEGEND

A — DETOUR NORTH 1 ↑
B — DETOUR NORTH 1 ←
C — DETOUR NORTH 1 →
D — DETOUR NORTH 1 ↖
E — DETOUR NORTH 1 ↗
F — END DETOUR
G — DETOUR AHEAD
H — DETOUR 1000 FT
I — DETOUR 500 FT
J — ROAD CLOSED AHEAD
K — ROAD CLOSED 1 MILE
L — ROAD CLOSED 1/2 MILE
M — ROAD NAME
N — DETOUR ←
O — DETOUR →
P — ROAD CLOSED XX MILES AHEAD LOCAL TRAFFIC ONLY
Q — ROAD CLOSED
R — ROAD CLOSED TO THRU TRAFFIC
S
T

GENERAL NOTES

1. ALL DETOUR SIGNING, INCLUDING TRAILBLAZERS, ARE TO BE SUPPLIED AND MAINTAINED BY THE GENERAL CONTRACTOR IN COMPLIANCE WITH THE DELAWARE MANUAL ON UNIFORM TRAFFIC CONTROL DEVICES.
2. THE CONTRACTOR SHALL COMPLY WITH GUIDELINES FOR LIGHTS, BARRICADES, AND SIGNS PER THE LATEST VERSION OF THE DELAWARE MANUAL ON UNIFORM TRAFFIC CONTROL DEVICES, PART 6.
3. FIELD CONDITIONS MAY DICTATE CHANGES AT SOME TIME DURING THE LIFE OF THE CONTRACT. IN THE EVENT OF OMISSIONS OR CORRECTIONS, THE SIGNING PROVISIONS OF THE DELAWARE MANUAL ON UNIFORM TRAFFIC CONTROL DEVICES WILL PREVAIL.
4. WARNING SIGNS SHOULD BE MOUNTED ON BREAKAWAY POSTS AND HAVE RETROREFLECTIVE FLUORESCENT SHEETING.
5. "S" BARRICADES SHALL COMPLETELY RUN THE FULL WIDTH OF ROADWAY.
6. BARRICADES SHALL BE A MINIMUM OF 6 FEET WIDE UNLESS DIRECTED BY THE ENGINEER.

UNOFFICIAL WEBSITE COPY

RECOMMENDED _____ DATE: _____
RECOMMENDED _____ DATE: _____
RECOMMENDED _____ DATE: 3/13/15
APPROVED CHIEF SAFETY OFFICER _____ DATE: 3/13/2015
APPROVED TRAFFIC ENGINEER _____ DATE: 3/13/2015

DELAWARE DEPARTMENT OF TRANSPORTATION

ADDENDUM / REVISIONS

SCALE 0 1500 3000 4500 FEET

US 301 & SR 1 INTERCHANGE

CONTRACT	PERMIT NO.	DP-03: SR 1 NORTHBOUND DETOUR 2	SHEET NO.
T200911302	DESIGNED BY: J.D.C.		430
COUNTY	CHECKED BY: J.M.M.		TOTAL SHTS.
NEW CASTLE			491

N:\36653-000\Contract 18\CADD\DP003U301_18.dgn
5/18/2014 2:24:05 PM

CHANGEABLE MESSAGE BOARDS

SPECIAL SIGNS

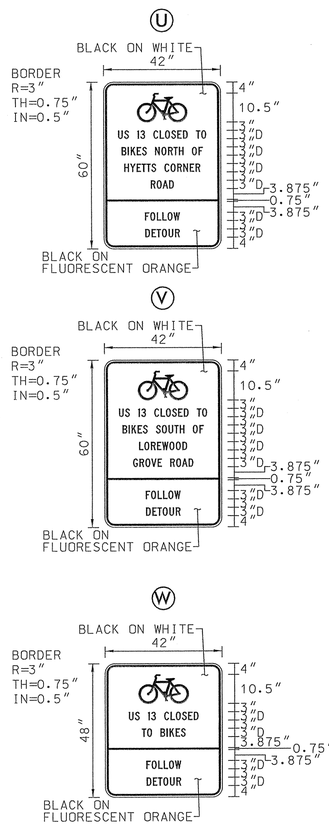

NOTES:
1. THIS DETOUR SHALL BE IMPLEMENTED FOR THE DURATION OF CONSTRUCTION.
2. DETOUR ROUTE TO USE TEMPORARY JAMISON CORNER ROAD RUNAROUND ROAD BY OTHERS IN CONTRACT T200911308.

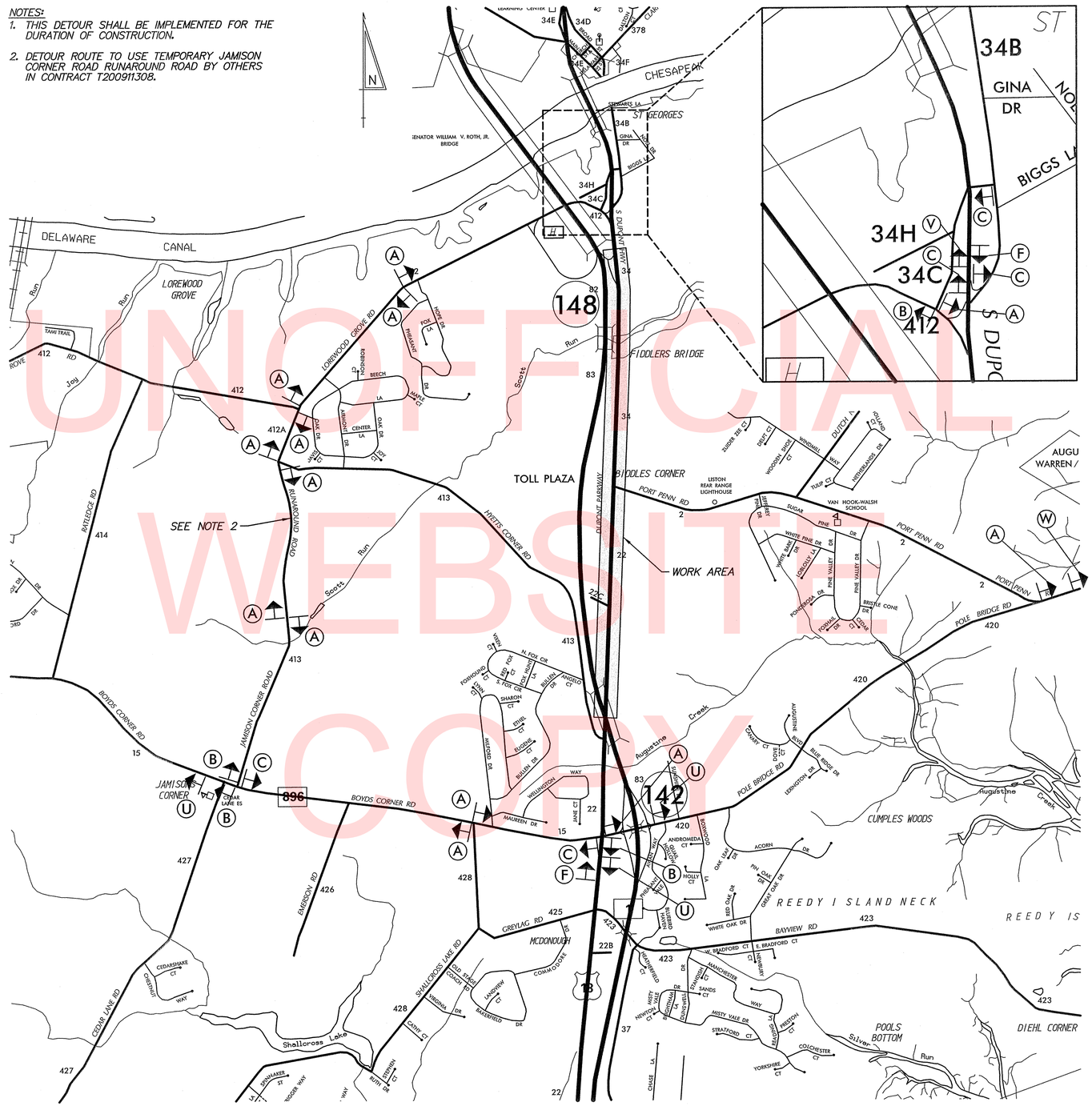

UNOFFICIAL WEBSITE COPY

LEGEND

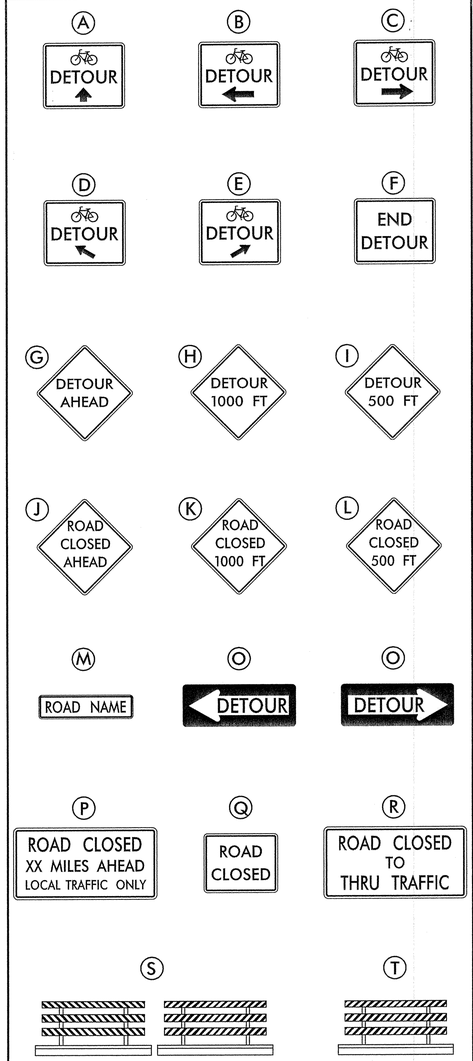

GENERAL NOTES

1. ALL DETOUR SIGNING, INCLUDING TRAILBLAZERS, ARE TO BE SUPPLIED AND MAINTAINED BY THE GENERAL CONTRACTOR IN COMPLIANCE WITH THE DELAWARE MANUAL ON UNIFORM TRAFFIC CONTROL DEVICES.
2. THE CONTRACTOR SHALL COMPLY WITH GUIDELINES FOR LIGHTS, BARRICADES, AND SIGNS PER THE LATEST VERSION OF THE DELAWARE MANUAL ON UNIFORM TRAFFIC CONTROL DEVICES, PART 6.
3. FIELD CONDITIONS MAY DICTATE CHANGES AT SOME TIME DURING THE LIFE OF THE CONTRACT. IN THE EVENT OF OMISSIONS OR CORRECTIONS, THE SIGNING PROVISIONS OF THE DELAWARE MANUAL ON UNIFORM TRAFFIC CONTROL DEVICES WILL PREVAIL.
4. WARNING SIGNS SHOULD BE MOUNTED ON BREAKAWAY POSTS AND HAVE RETROREFLECTIVE FLUORESCENT SHEETING.
5. 'S' BARRICADES SHALL COMPLETELY RUN THE FULL WIDTH OF ROADWAY.
6. BARRICADES SHALL BE A MINIMUM OF 6 FEET WIDE UNLESS DIRECTED BY THE ENGINEER.

RECOMMENDED _____ DATE: _____

RECOMMENDED _____ DATE: _____

RECOMMENDED _____ DATE: _____

APPROVED CHIEF SAFETY OFFICER _____ DATE: 9-26-12

APPROVED TRAFFIC ENGINEER _____ DATE: 9/27/12

DELAWARE DEPARTMENT OF TRANSPORTATION

ADDENDUM / REVISIONS

SCALE 0 1500 3000 4500 FEET

US 301 & SR 1 INTERCHANGE

CONTRACT	PERMIT NO.	
T200911302	DESIGNED BY: J.D.C.	
COUNTY		
NEW CASTLE	CHECKED BY: J.M.M.	

DP-04: US 13 BICYCLE DETOUR

SHEET NO.
431
TOTAL SHTS.
491

G:\13853-300\contract\b\cadd\DP004U301_B5.dgn
9/27/2012 9:46:07 AM

CHANGEABLE MESSAGE BOARDS

SPECIAL SIGNS

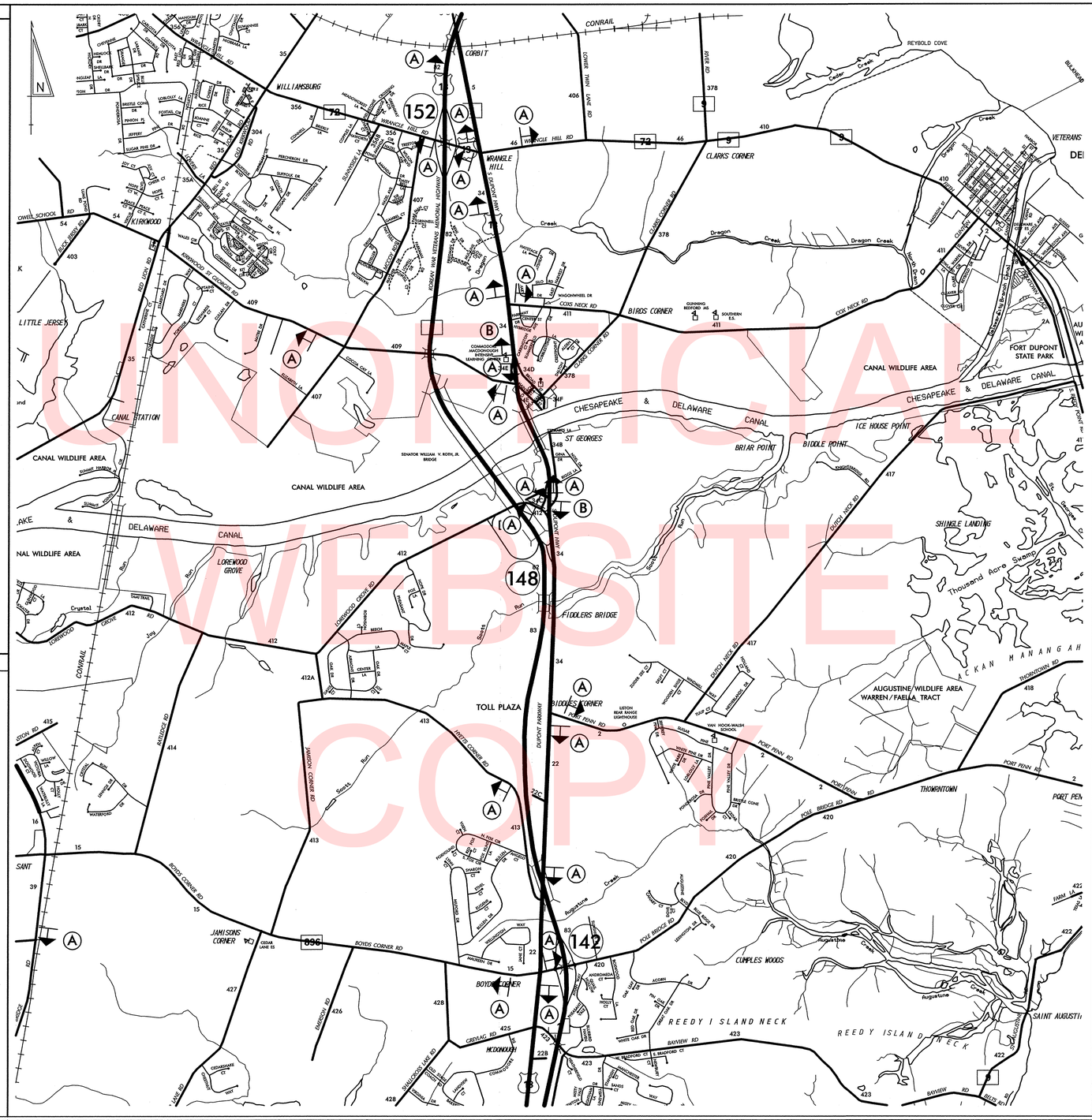

UNOFFICIAL WEBSITE COPY

LEGEND

(A) **NOTICE**
NO VEHICLES OVER 15 TON GVW ON US 13 ST GEORGES CANAL BRIDGE
(60"x84")
SEE NOTE 2

(B) **NOTICE**
NO VEHICLES OVER 15 TON GVW
(48"x60")
SEE NOTE 2

GENERAL NOTES

1. FIELD CONDITIONS MAY DICTATE CHANGES AT SOME TIME DURING THE LIFE OF THE CONTRACT. IN THE EVENT OF OMISSIONS OR CORRECTIONS, THE SIGNING PROVISIONS OF THE DELAWARE MANUAL ON UNIFORM TRAFFIC CONTROL DEVICES WILL PREVAIL.
2. ALL WEIGHT RESTRICTION SIGNS SHOWN ON THIS PLAN SHALL BE COMPLETELY COVERED DURING IMPLEMENTATION OF THE SR 1 NORTHBOUND DETOUR 2. (SEE DWG. NO. DP-03).
3. SIGN COVERINGS SHALL BE REMOVED WHEN DETOUR IS NOT BEING IMPLEMENTED.
4. COVERING AND REMOVAL OF SIGN COVERINGS WILL NOT BE MEASURED AND PAID FOR BUT WILL BE INCIDENTAL TO ITEM NO. 743000 - MAINTENANCE OF TRAFFIC.
5. THE CONTRACTOR SHALL COORDINATE TEMPORARILY LIFTING THE TRUCK RESTRICTION ON THE US 13 ST. GEORGES BRIDGE WITH THE USACOE.

RECOMMENDED _____ DATE: _____

RECOMMENDED _____ DATE: _____

RECOMMENDED _____ DATE: 3/13/15

APPROVED CHIEF SAFETY OFFICER _____ DATE: 3/13/2015

APPROVED TRAFFIC ENGINEER _____ DATE: 3/13/2015

DELAWARE DEPARTMENT OF TRANSPORTATION

ADDENDUM / REVISIONS

SCALE 0 2000 4000 6000 FEET

US 301 & SR 1 INTERCHANGE

CONTRACT	PERMIT NO.
T200911302	DESIGNED BY: J.D.C.
COUNTY	CHECKED BY: J.M.M.
NEW CASTLE	

DP-05: WEIGHT RESTRICTION SIGN COVERING FOR SR 1 NORTHBOUND DETOUR 2

SHEET NO. 432

TOTAL SHTS. 491

n:\36553-000\Contract 18\CADD\DP005U301_18.dgn
6/18/2014 1:54:21 PM

PROJECT LIGHTING NOTES:

1. SERVICE RUNS ARE SHOWN IN APPROXIMATE LOCATIONS. THE CONTRACTOR SHALL LOCATE THE SERVICE RUNS IN A MANNER THAT AVOIDS CONFLICTS WITH ALL EXISTING AND PROPOSED FEATURES AS FIELD CONDITIONS DICTATE AND AS APPROVED BY THE ENGINEER.
2. THE CONTRACTOR SHALL VERIFY ALL DIMENSIONS AND CONDITIONS PRIOR TO WORK.
3. THE LIGHTING CONTRACTOR SHALL COORDINATE HIS WORK WITH ALL THE CONTRACTORS INVOLVED ON THIS CONTRACT AND ADJACENT CONTRACTS. THE LIGHTING CONTRACTOR SHALL COORDINATE WITH THE ENGINEER AND THE GENERAL SUPERINTENDENT ON THE LOCATIONS OF ALL CONDUIT, JUNCTION WELLS, AND POLE BASES TO ELIMINATE CONSTRUCTION CONFLICTS.
4. EXISTING UTILITY LOCATIONS SHOWN ON THE PLANS ARE APPROXIMATE. IT SHALL BE THE RESPONSIBILITY OF THE CONTRACTOR TO VERIFY THE EXACT LOCATIONS PRIOR TO COMMENCING WORK.
5. THE CONTRACTOR SHALL CONTACT DELMARVA POWER TO COORDINATE SERVICE DROP LOCATIONS AND TO ENSURE ALL PROPOSED SERVICE FEEDS ARE APPROVED PRIOR TO INSTALLATION OF CABINETS AND ELECTRIC UTILITY SERVICE EQUIPMENT. THE CONTRACTOR SHALL ARRANGE A MEETING WITH DELMARVA POWER, THE ENGINEER AND THE DELDOT TRAFFIC SECTION TO ENSURE THAT POWER IS AVAILABLE WHEN REQUIRED.
6. COLOR CODING SHALL BE PROVIDED THROUGHOUT THE ENTIRE NETWORK FOR SERVICE, FEEDER, BRANCH AND CONTROL CONDUCTORS. EACH PHASE SHALL BE AN INDEPENDENT COLOR. CONDUCTORS SHALL HAVE FACTORY IMPREGNATED COLOR THROUGHOUT THEIR ENTIRE LENGTH.
7. ALL FUSED CONNECTIONS SHALL BE MADE IN THE POLE BASE. SPLICES IN JUNCTION BOXES OR PULL BOXES SHALL NOT BE FUSED.
8. ALL CONDUITS SHALL BE BONDED IN A CONTINUOUS RUN FROM THE SOURCE BY A COPPER GROUNDING CONDUCTOR WITH SIZE AS NOTED ON PLANS. 10 FEET OF ADDITIONAL SLACK FOR EACH GROUND WIRE IN EACH JUNCTION WELL SHALL BE PROVIDED AND NEATLY COILED.
9. ALL STATION, OFFSET AND DIMENSION INFORMATION SHOWN FOR PROPOSED LIGHTING STANDARDS IS TO THE CENTER OF THE PROPOSED POLE BASE.
10. THE CONTRACTOR SHALL COORDINATE THE INSTALLATION OF LIGHTING CONDUITS WITH ITMS CONDUITS. ITMS AND LIGHTING CONDUITS MAY SHARE A COMMON TRENCH BUT SHALL NOT SHARE COMMON JUNCTION WELLS.
11. ALL PROPOSED ROADWAY LIGHTING CONDUITS (SERVICE RUNS) SHALL BE RIGID POLYVINYL CHLORIDE SCHEDULE 80 WHEN INSTALLED BY TRENCHING AND SDR-13.5 HDPE WHEN INSTALLED BY BORING, UNLESS OTHERWISE NOTED ON PLANS.
12. SPLICES FOR ALL ROADWAY LIGHTING ELECTRICAL CABLES SHALL BE COMPLETED USING APPROVED SPLICE KITS OR METHODS APPROVED BY THE ENGINEER AND SHALL BE INCIDENTAL TO THE SUPPLY AND INSTALLATION OF THE VARIOUS ROADWAY LIGHTING ELECTRICAL CABLES.
13. ALL PROPOSED LIGHTING STANDARDS ON FOUNDATIONS IN GROUND SHALL BE INSTALLED WITH BREAKAWAY TRANSFORMER BASES WHETHER PROTECTED BY TRAFFIC BARRIER OR UNPROTECTED. PROPOSED LIGHTING STANDARDS MOUNTED TO THE US 301 NORTHBOUND RETAINING WALL PARAPET SHALL NOT HAVE BREAKAWAY TRANSFORMER BASES.
14. SEE DWG. NO. LI-17 FOR LIGHTING STANDARD POLE BASE DETAILS.
15. THE CONTRACTOR SHALL COORDINATE WITH DELMARVA POWER FOR THE REMOVAL OF EXISTING LEASED LIGHTS DESIGNATED TO BE REMOVED BY OTHERS.
16. (1) ¾" DIAMETER BY 10' LONG GROUND ROD SHALL BE INSTALLED AT EACH LIGHTING STANDARD POLE BASE. (1) ¾" DIAMETER BY 10' LONG GROUND ROD SHALL BE INSTALLED IN THE JUNCTION WELL CLOSEST TO THE LIGHTING CONTROL AND DISTRIBUTION ENCLOSURE AND THE BARE COPPER GROUNDING CONDUCTORS FOR EACH RUN OF CIRCUITS SHALL BE CONNECTED TO THE GROUND ROD. (1) ¾" DIAMETER BY 10' LONG GROUND ROD SHALL BE INSTALLED AT THE LIGHTING CONTROL AND DISTRIBUTION ENCLOSURE WHICH SHALL BE BONDED TO THE GROUND ROD IN THE JUNCTION WELL CLOSEST TO THE LIGHTING CONTROL AND DISTRIBUTION ENCLOSURE. (1) ¾" DIAMETER BY 10' LONG GROUND ROD SHALL BE INSTALLED AT THE ELECTRIC SERVICE PEDESTAL. GROUND RODS SHALL BE SEPARATED BY A MINIMUM OF 6 FEET.
17. ALL EXISTING CONDUITS BETWEEN JUNCTION WELLS AND EXISTING LIGHT POLES DESIGNATED TO BE REMOVED SHALL BE ABANDONED.
18. THE EXISTING ELECTRICAL CABLES IN ALL CONDUITS DESIGNATED TO BE ABANDONED SHALL BE REMOVED.
19. ALL FOUNDATIONS FOR EXISTING LIGHT POLES DESIGNATED TO BE REMOVED SHALL BE REMOVED TO A DEPTH OF 1'-0" BELOW FINISHED GRADE.
20. IF ANY UTILITY IS DAMAGED THE CONTRACTOR SHALL NOTIFY THE ENGINEER AND THE OWNER OF THE UTILITY IMMEDIATELY. ANY DAMAGE TO THE UTILITIES SHALL BE REPAIRED BY THE CONTRACTOR AT HIS EXPENSE UNDER THE DIRECTION OF THE UTILITY OWNER. UNDER NO CIRCUMSTANCE SHALL THE CONTRACTOR BACKFILL AN EXCAVATION OF AN IMPACTED UTILITY WITHOUT PERMISSION FROM THE UTILITY OWNER.

LIGHTING SERVICE SCHEDULE

SERVICE RUN	# OF CONDUITS	SIZE	DISTANCE (L.F.)	DESCRIPTION	INSTALLATION
5	1	3.0"	108*	(4)#2, (4)#4, (1)#2 GROUND	TRENCH
6	1	3.0"	25	(2)#4, (1)#4 GROUND	TRENCH
7**	1	1.0"	60*	(3)#10, (1)#10 GROUND	TRENCH
8	1	3.0"	5	(2)#4, (1)#4 GROUND	TRENCH
9	1	3.0"	137*	(4)#2, (4)#4, (1)#2 GROUND	TRENCH
30	1	3.0"	78	(4)#2, (4)#4, (1)#2 GROUND	BORE
44	1	3.0"	183	(4)#2, (4)#4, (1)#2 GROUND	BORE

* DISTANCE CONTINUES ON ADJACENT PLAN SHEET.
** RIGID GALVANIZED STEEL CONDUIT
NOTE: SERVICE RUN DISTANCE REFLECTS CONDUIT LENGTH ONLY.

NOTES:
1. PROPOSED CONDUIT TO SERVE UNDERPASS LIGHTING SYSTEM. SEE DWG. NO. LI-13 FOR DETAILS.

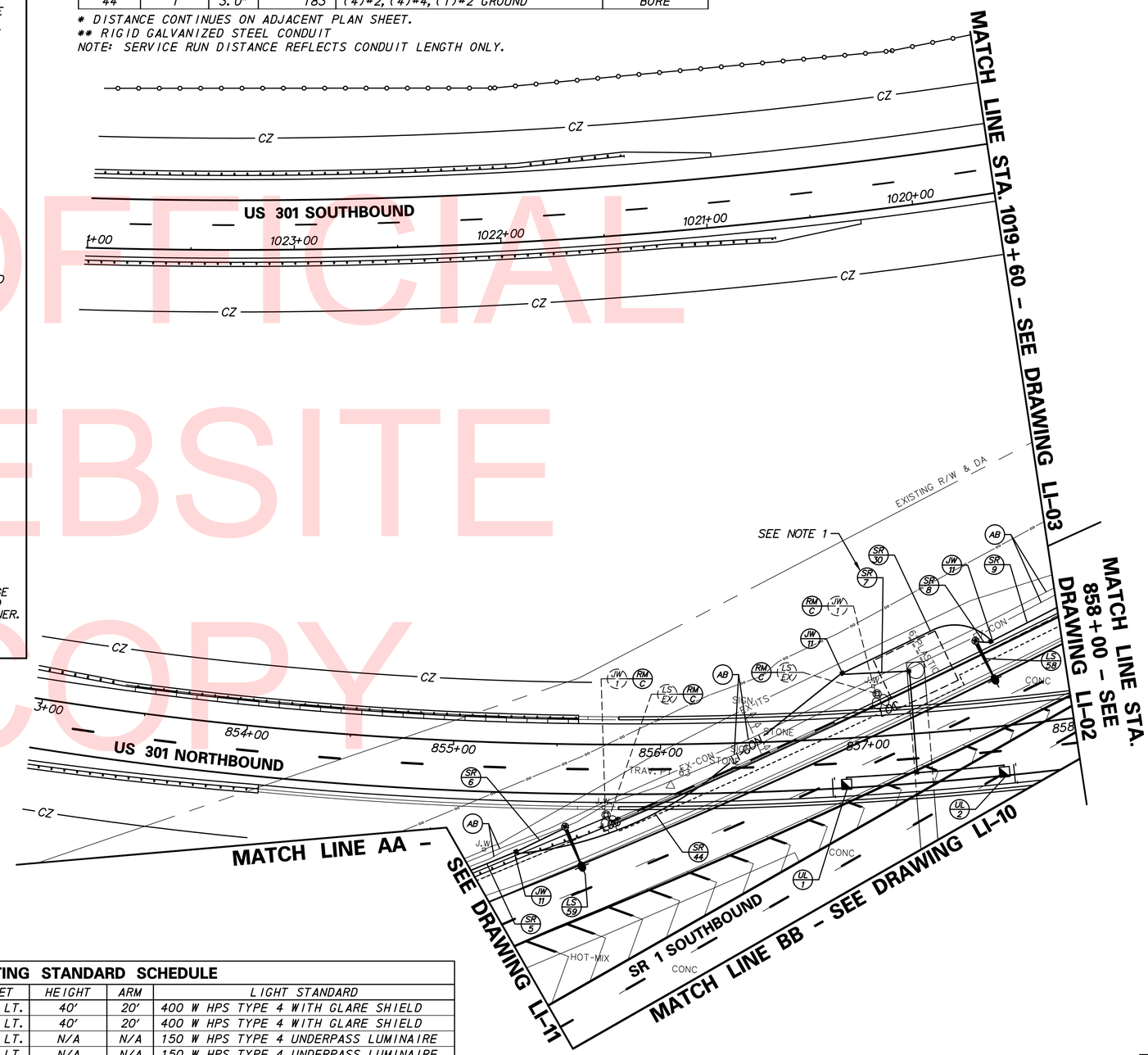

LIGHTING SYMBOL LEGEND

SYMBOL	DESCRIPTION
	PROPOSED LIGHTING STANDARD AND POLE BASE
	PROPOSED DOUBLE DAVIT ARM LIGHTING STANDARD
	EXISTING LIGHTING STANDARD AND POLE BASE
	EXISTING OFFSET LIGHT POLE AND POLE BASE (SINGLE AND DUAL MOUNT)
	EXISTING FLOODLIGHT TOWER AND POLE BASE
	PROPOSED UNDERPASS LUMINAIRE
CA X	PROPOSED LIGHTING CONTROL AND DISTRIBUTION ENCLOSURE AND IDENTIFIER
	PROPOSED LIGHTING JUNCTION WELL
J.W.	EXISTING LIGHTING JUNCTION WELL
P	PROPOSED ELECTRICAL SERVICE ON PEDESTAL
—LI-CON—	PROPOSED LIGHTING SERVICE RUN
—EX-CON—	EXISTING LIGHTING SERVICE RUN
LS X / LS X	LIGHTING STANDARD IDENTIFIER (EXISTING AND PROPOSED)
SR X / SR X	SERVICE RUN IDENTIFIER (EXISTING AND PROPOSED)
JW X / JW X	LIGHTING JUNCTION WELL IDENTIFIER (TYPE) (EXISTING AND PROPOSED)
RM C / RM O	REMOVE BY CONTRACTOR / REMOVE BY OTHERS
AB	ABANDON BY CONTRACTOR

LIGHTING STANDARD SCHEDULE

NO.	CIRCUIT NO.	STATION	OFFSET	HEIGHT	ARM	LIGHT STANDARD
LS-58	EX. S3	1786+25.3	95.4' LT.	40'	20'	400 W HPS TYPE 4 WITH GLARE SHIELD
LS-59	EX. S2	1784+8.4	116.0' LT.	40'	20'	400 W HPS TYPE 4 WITH GLARE SHIELD
UL-1	EX. F3	1785+36.8	66.1' LT.	N/A	N/A	150 W HPS TYPE 4 UNDERPASS LUMINAIRE
UL-2	EX. F1	1786+5.8	32.9' LT.	N/A	N/A	150 W HPS TYPE 4 UNDERPASS LUMINAIRE

UNOFFICIAL WEBSITE COPY

DELAWARE DEPARTMENT OF TRANSPORTATION

ADDENDUMS / REVISIONS

SCALE 0 30 60 90 FEET

US 301 & SR 1 INTERCHANGE

CONTRACT	BRIDGE NO.	BR1-433
T200911302	DESIGNED BY:	J.D.C.
COUNTY		
NEW CASTLE	CHECKED BY:	J.M.M.

LIGHTING PLAN

LI-01

SHEET NO. 433

TOTAL SHTS. 491

n:\33653-000\contract tb\cadd\traffic\2015 - Updates\LI001U301_1B.dgn 12/18/2015 8:13:35 AM

NOTES:

1. SEE DWG. NO. LI-12 FOR LIGHTING SERVICE SCHEDULE.
2. CONDUIT TO TIE INTO PROPOSED RETAINING WALL. SEE DWG. NO. LI-15 FOR DETAILS.
3. PROPOSED CONDUIT TO SERVE UNDERPASS LIGHTING. SEE DWG. NO. LI-14 FOR DETAILS.
4. LS-20 IS MOUNTED ON PROPOSED RETAINING WALL PARAPET.

LIGHTING STANDARD SCHEDULE

NO.	CIRCUIT NO.	STATION	OFFSET	HEIGHT	ARM	LIGHT STANDARD
LS-6	EX. B3	1786+88.2	94.9' RT.	40'	20'	400 W HPS TYPE 4
LS-7	EX. B1	1788+19.7	88.6' RT.	40'	20'	400 W HPS TYPE 4 WITH GLARE SHIELD
LS-8	EX. S3	1792+28.2	79.3' RT.	40'	20'	400 W HPS TYPE 3
LS-17	8	318+78.3	31.0' RT.	40'	10'	250 W HPS TYPE 3
LS-18	12	321+22.3	31.0' RT.	40'	10'	250 W HPS TYPE 3
LS-19	10	863+24.0	37.0' RT.	40'	10'	250 W HPS TYPE 3
LS-20	8	865+44.0	15.9' LT.	40'	5'	250 W HPS TYPE 3
LS-55	EX. F3	1792+33.5	87.9' LT.	40'	20'	400 W HPS TYPE 3
LS-56	EX. S1	1789+97.3	89.3' LT.	40'	20'	400 W HPS TYPE 3
LS-57	EX. F2	1787+75.8	89.4' LT.	40'	20'	400 W HPS TYPE 3
LS-63	EX. S1	1790+37.3	1.8' RT.	40'	20'	250 W HPS TYPE 3
UL-3	EX. B2	1788+72.7	42.9' RT.	N/A	N/A	150 W HPS TYPE 4 UNDPERPASS LUMINAIRE
UL-4	EX. B3	1789+48.6	63.6' RT.	N/A	N/A	150 W HPS TYPE 4 UNDPERPASS LUMINAIRE

LIGHTING SYMBOL LEGEND

SYMBOL	DESCRIPTION
	– PROPOSED LIGHTING STANDARD AND POLE BASE
	– PROPOSED DOUBLE DAVIT ARM LIGHTING STANDARD
	– EXISTING LIGHTING STANDARD AND POLE BASE
	– EXISTING OFFSET LIGHT POLE AND POLE BASE (SINGLE AND DUAL MOUNT)
	– EXISTING FLOODLIGHT TOWER AND POLE BASE
	– PROPOSED UNDERPASS LUMINAIRE
CA X	– PROPOSED LIGHTING CONTROL AND DISTRIBUTION ENCLOSURE AND IDENTIFIER
	– PROPOSED LIGHTING JUNCTION WELL
J.W.	– EXISTING LIGHTING JUNCTION WELL
P	– PROPOSED ELECTRICAL SERVICE ON PEDESTAL
—LI-CON—	– PROPOSED LIGHTING SERVICE RUN
—EX-CON—	– EXISTING LIGHTING SERVICE RUN
LS LS	– LIGHTING STANDARD IDENTIFIER (EXISTING AND PROPOSED)
SR SR	– SERVICE RUN IDENTIFIER (EXISTING AND PROPOSED)
JW X JW	– LIGHTING JUNCTION WELL IDENTIFIER (TYPE) (EXISTING AND PROPOSED)
RM C RM O	– REMOVE BY CONTRACTOR / REMOVE BY OTHERS
AB	– ABANDON BY CONTRACTOR

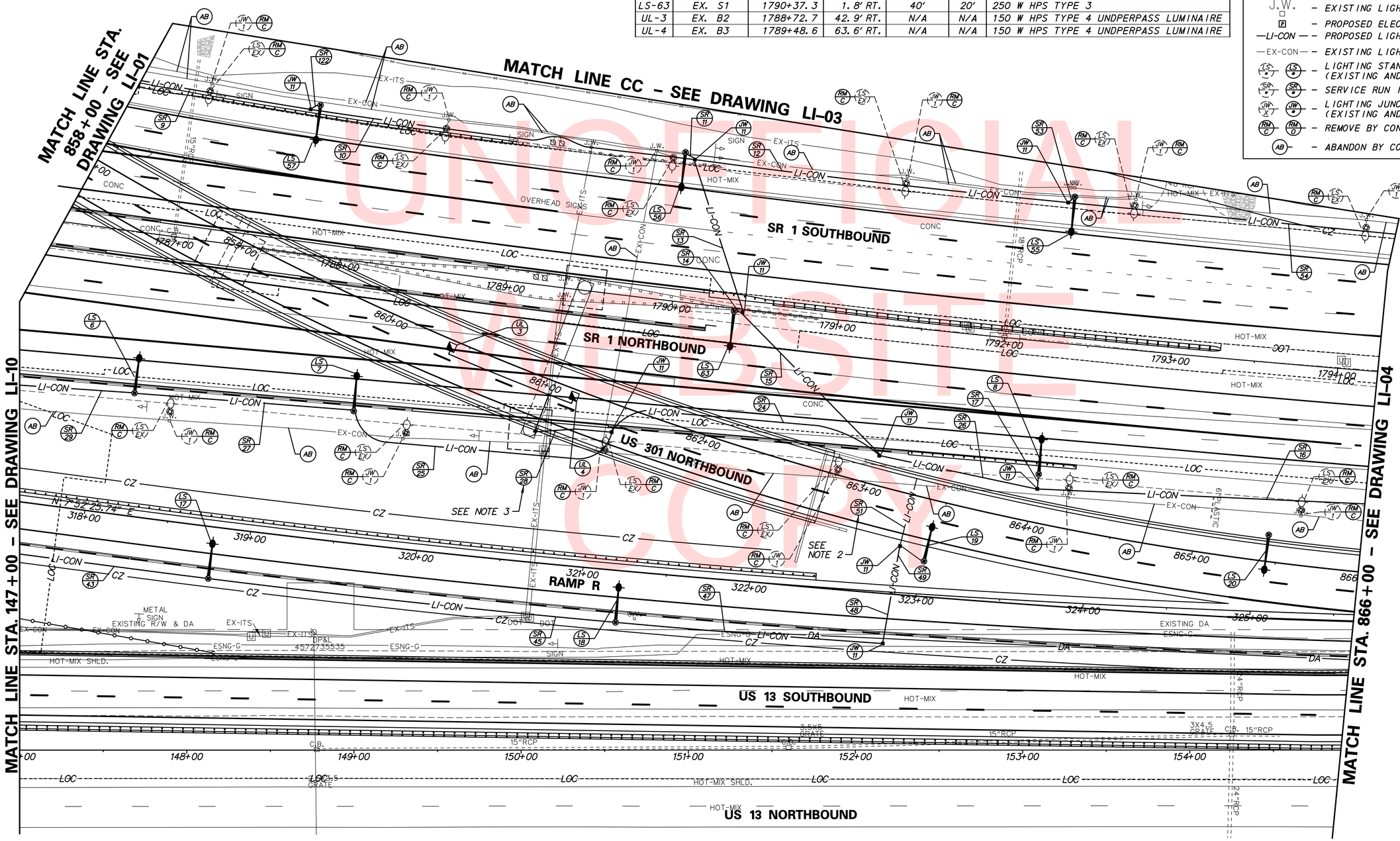

UNOFFICIAL WEBSITE COPY

DELAWARE DEPARTMENT OF TRANSPORTATION	ADDENDUMS / REVISIONS	SCALE 0 30 60 90 FEET	US 301 & SR 1 INTERCHANGE	CONTRACT T200911302	BRIDGE NO. BR1-433, RW1-3 & RW1-3R	LIGHTING PLAN	LI-02
				COUNTY NEW CASTLE	DESIGNED BY: J.D.C.		SHEET NO. 434
					CHECKED BY: J.M.M.		TOTAL SHTS. 491

n:\31653-000\contract tb\cadd\traffic\2015 - Updates\LI002U301_1B.dgn
12/18/2015 8:13:38 AM

LIGHTING SYMBOL LEGEND

SYMBOL	DESCRIPTION
	– PROPOSED LIGHTING STANDARD AND POLE BASE
	– PROPOSED DOUBLE DAVIT ARM LIGHTING STANDARD
	– EXISTING LIGHTING STANDARD AND POLE BASE
	– EXISTING OFFSET LIGHT POLE AND POLE BASE (SINGLE AND DUAL MOUNT)
	– EXISTING FLOODLIGHT TOWER AND POLE BASE
	– PROPOSED UNDERPASS LUMINAIRE
CA X	– PROPOSED LIGHTING CONTROL AND DISTRIBUTION ENCLOSURE AND IDENTIFIER
	– PROPOSED LIGHTING JUNCTION WELL
J.W.	– EXISTING LIGHTING JUNCTION WELL
P	– PROPOSED ELECTRICAL SERVICE ON PEDESTAL
—LI-CON—	– PROPOSED LIGHTING SERVICE RUN
—EX-CON—	– EXISTING LIGHTING SERVICE RUN
LS LS	– LIGHTING STANDARD IDENTIFIER (EXISTING AND PROPOSED)
SR SR	– SERVICE RUN IDENTIFIER (EXISTING AND PROPOSED)
JW X JW	– LIGHTING JUNCTION WELL IDENTIFIER (TYPE) (EXISTING AND PROPOSED)
RM C RM O	– REMOVE BY CONTRACTOR / REMOVE BY OTHERS
AB	– ABANDON BY CONTRACTOR

LIGHTING STANDARD SCHEDULE

NO.	CIRCUIT NO.	STATION	OFFSET	HEIGHT	ARM	LIGHT STANDARD
LS-54	EX. F1	1013+91.1	41.0' RT.	40'	15'	250 W HPS TYPE 3

LIGHTING SERVICE SCHEDULE

SERVICE RUN	# OF CONDUITS	SIZE	DISTANCE (L.F.)	DESCRIPTION	INSTALLATION
57	1	3.0"	175*	(2)#2, (1)#2 GROUND	TRENCH

* DISTANCE CONTINUES ON ADJACENT PLAN SHEET.
NOTE: SERVICE RUN DISTANCE REFLECTS CONDUIT LENGTH ONLY.

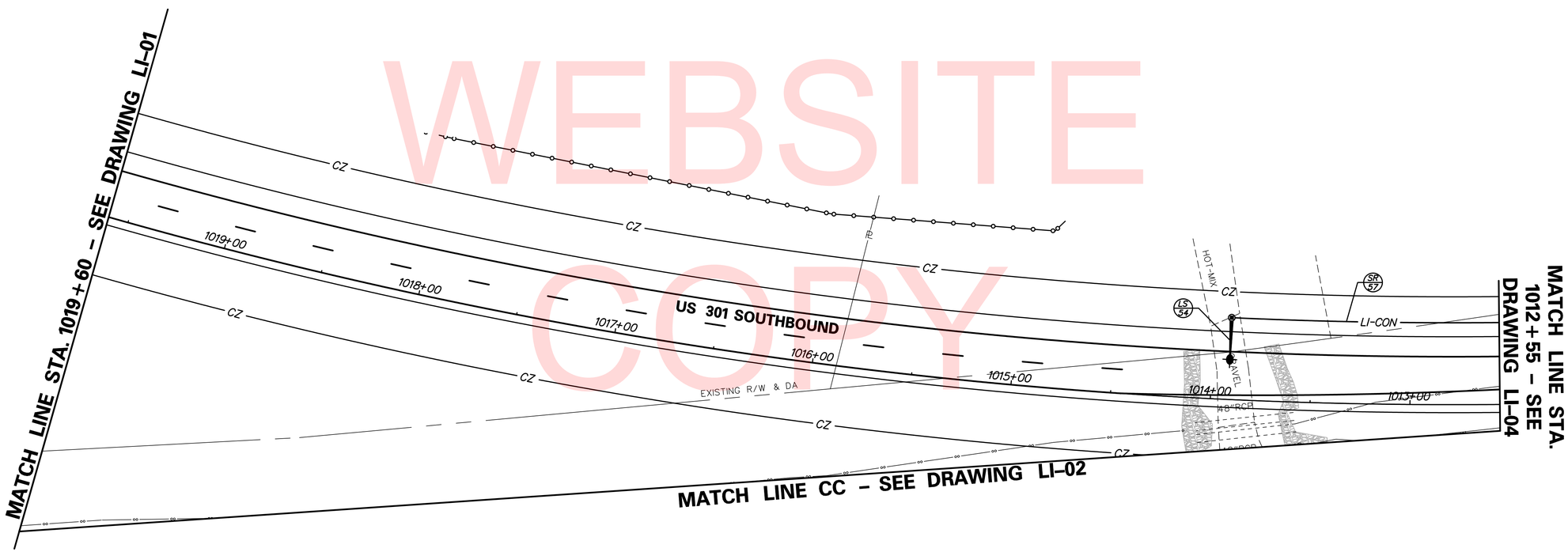

UNOFFICIAL WEBSITE COPY

n:\31653-000\contract th\cadd\LI003U301_1B.dgn
12/18/2015 8:13:42 AM

DELAWARE DEPARTMENT OF TRANSPORTATION	ADDENDUMS / REVISIONS	SCALE 0 30 60 90 FEET	US 301 & SR 1 INTERCHANGE	CONTRACT T200911302 / COUNTY NEW CASTLE	BRIDGE NO. / DESIGNED BY: J.D.C. / CHECKED BY: J.M.M.	LIGHTING PLAN	LI-03 / SHEET NO. 435 / TOTAL SHTS. 491

LIGHTING STANDARD SCHEDULE

NO.	CIRCUIT NO.	STATION	OFFSET	HEIGHT	ARM	LIGHT STANDARD
LS-9	EX. B1	1794+59.5	78.2' RT.	40'	15'	400 W HPS TYPE 3
LS-10	EX. B2	1796+80.5	78.2' RT.	40'	15'	250 W HPS TYPE 3
LS-11	EX. B3	1799+26.9	79.0' RT.	40'	15'	250 W HPS TYPE 3
LS-12	EX. B1	1801+72.5	73.4' RT.	40'	15'	250 W HPS TYPE 3
LS-21	12	867+40.2	15.9' LT.	40'	5'	250 W HPS TYPE 3
LS-22	10	869+65.2	9.9' LT.	40'	5'	250 W HPS TYPE 3
LS-23	8	871+90.3	12.25' LT	40'	10'	250 W HPS TYPE 3
LS-50	EX. F1	1005+2.3	41.0' RT.	40'	20'	250 W HPS TYPE 3
LS-51	EX. F3	1007+54.7	41.0' RT.	40'	20'	400 W HPS TYPE 3
LS-52	EX. F2	1010+5.6	41.0' RT.	40'	20'	400 W HPS TYPE 3
LS-53	EX. S2	1794+81.4	86.2' LT.	40'	20'	400 W HPS TYPE 3

NOTES:
1. LS-21 AND LS-22 ARE MOUNTED ON PROPOSED RETAINING WALL PARAPET.
2. CONDUIT TO TIE INTO PROPOSED RETAINING WALL. SEE DWG. NO. LI-15 FOR DETAILS.

LIGHTING SERVICE SCHEDULE

SERVICE RUN	# OF CONDUITS	SIZE	DISTANCE (L.F.)	DESCRIPTION	INSTALLATION
16	1	3.0"	231*	(4)#4, (1)#4 GROUND	TRENCH
18	1	3.0"	220	(4)#4, (1)#4 GROUND	TRENCH
19	1	3.0"	14	(2)#6, (1)#6 GROUND	TRENCH
20	1	3.0"	245	(3)#4, (1)#4 GROUND	TRENCH
21	1	3.0"	10	(4)#6, (1)#6 GROUND	TRENCH
22	1	3.0"	244	(2)#4, (1)#4 GROUND	TRENCH
23	1	3.0"	206*	(4)#6, (1)#6 GROUND	TRENCH
54	1	3.0"	240*	(4)#2, (2)#4, (1)#2 GROUND	TRENCH
55	1	3.0"	8	(2)#4, (1)#4 GROUND	TRENCH
56	1	3.0"	57	(4)#2, (1)#2 GROUND	TRENCH
57	1	3.0"	175*	(2)#2, (1)#2 GROUND	TRENCH
59	1	3.0"	201	(4)#2, (1)#2 GROUND	TRENCH
61	1	3.0"	247	(3)#2, (1)#2 GROUND	TRENCH
63	1	3.0"	249	(2)#2, (1)#2 GROUND	TRENCH

* DISTANCE CONTINUES ON ADJACENT PLAN SHEET.
NOTE: SERVICE RUN DISTANCE REFLECTS CONDUIT LENGTH ONLY.

LIGHTING SYMBOL LEGEND

SYMBOL	DESCRIPTION
	PROPOSED LIGHTING STANDARD AND POLE BASE
	PROPOSED DOUBLE DAVIT ARM LIGHTING STANDARD
	EXISTING LIGHTING STANDARD AND POLE BASE
	EXISTING OFFSET LIGHT POLE AND POLE BASE (SINGLE AND DUAL MOUNT)
	EXISTING FLOODLIGHT TOWER AND POLE BASE
	PROPOSED UNDERPASS LUMINAIRE
CA X	PROPOSED LIGHTING CONTROL AND DISTRIBUTION ENCLOSURE AND IDENTIFIER
	PROPOSED LIGHTING JUNCTION WELL
J.W.	EXISTING LIGHTING JUNCTION WELL
P	PROPOSED ELECTRICAL SERVICE ON PEDESTAL
—LI-CON—	PROPOSED LIGHTING SERVICE RUN
—EX-CON—	EXISTING LIGHTING SERVICE RUN
LS EX / LS	LIGHTING STANDARD IDENTIFIER (EXISTING AND PROPOSED)
SR / SR	SERVICE RUN IDENTIFIER (EXISTING AND PROPOSED)
JW X / JW	LIGHTING JUNCTION WELL IDENTIFIER (TYPE) (EXISTING AND PROPOSED)
RM C / RM O	REMOVE BY CONTRACTOR / REMOVE BY OTHERS
AB	ABANDON BY CONTRACTOR

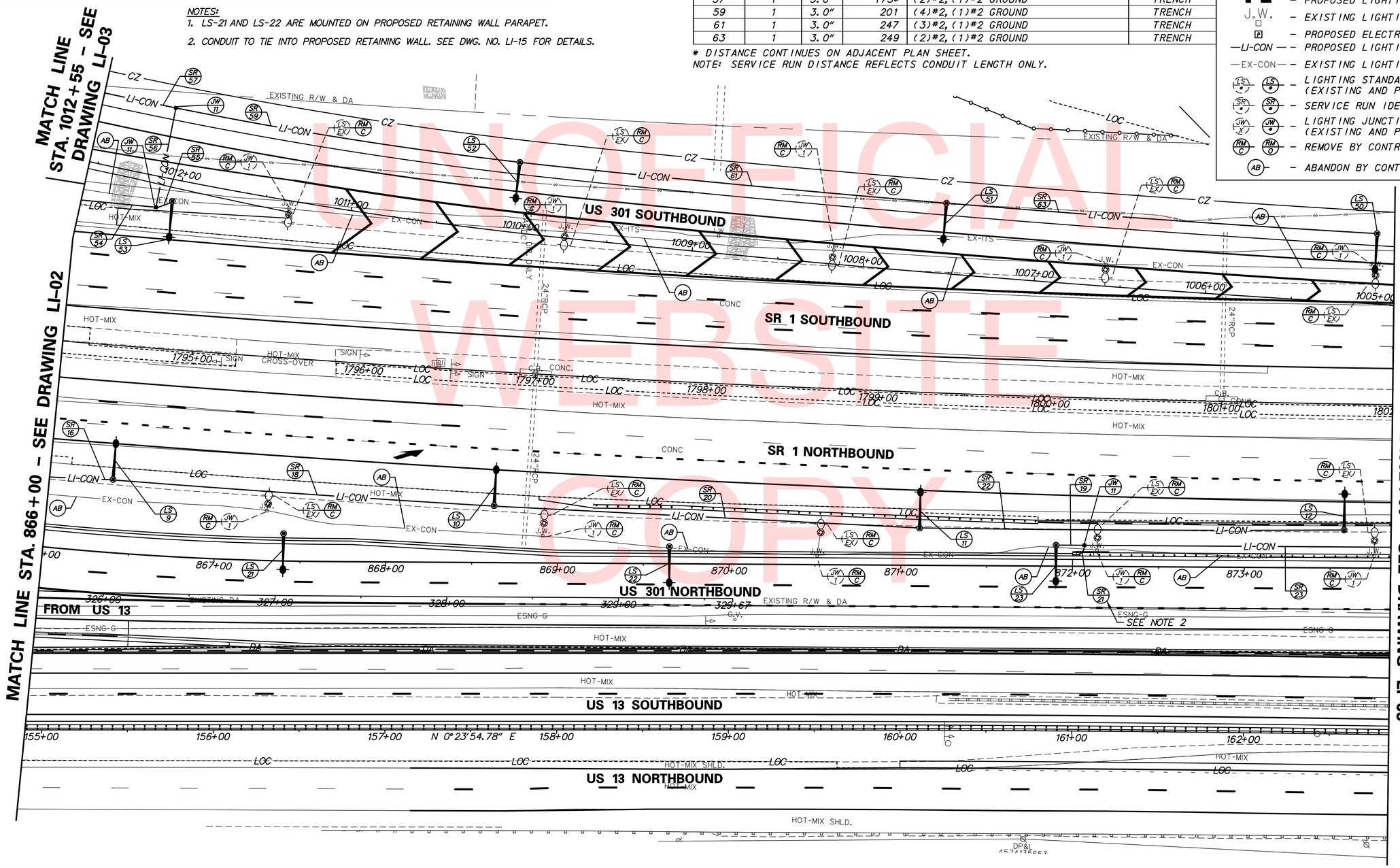

UNOFFICIAL WEBSITE COPY

DELAWARE DEPARTMENT OF TRANSPORTATION

ADDENDUMS / REVISIONS

SCALE 0 30 60 90 FEET

US 301 & SR 1 INTERCHANGE

CONTRACT	BRIDGE NO.	RW1-3 & RW1-3R
T200911302	DESIGNED BY: J.D.C.	
COUNTY		
NEW CASTLE	CHECKED BY: J.M.M.	

LIGHTING PLAN

LI-04

SHEET NO. 436

TOTAL SHTS. 491

n:\33653-000\contract tb\cadd\traffic\2015 - updates\LI004U301_1B.dgn
12/18/2015 8:35:45 AM

LIGHTING SYMBOL LEGEND

SYMBOL	DESCRIPTION
	– PROPOSED LIGHTING STANDARD AND POLE BASE
	– PROPOSED DOUBLE DAVIT ARM LIGHTING STANDARD
	– EXISTING LIGHTING STANDARD AND POLE BASE
	– EXISTING OFFSET LIGHT POLE AND POLE BASE (SINGLE AND DUAL MOUNT)
	– EXISTING FLOODLIGHT TOWER AND POLE BASE
	– PROPOSED UNDERPASS LUMINAIRE
CA X	– PROPOSED LIGHTING CONTROL AND DISTRIBUTION ENCLOSURE AND IDENTIFIER
	– PROPOSED LIGHTING JUNCTION WELL
J.W.	– EXISTING LIGHTING JUNCTION WELL
P	– PROPOSED ELECTRICAL SERVICE ON PEDESTAL
—LI-CON—	– PROPOSED LIGHTING SERVICE RUN
—EX-CON—	– EXISTING LIGHTING SERVICE RUN
LS / LS	– LIGHTING STANDARD IDENTIFIER (EXISTING AND PROPOSED)
SR / SR	– SERVICE RUN IDENTIFIER (EXISTING AND PROPOSED)
JW X / JW	– LIGHTING JUNCTION WELL IDENTIFIER (TYPE) (EXISTING AND PROPOSED)
RM C / RM O	– REMOVE BY CONTRACTOR / REMOVE BY OTHERS
AB	– ABANDON BY CONTRACTOR

LIGHTING STANDARD SCHEDULE

NO.	CIRCUIT NO.	STATION	OFFSET	HEIGHT	ARM	LIGHT STANDARD
LS-13	5/10**	1804+37.0	73.0' RT.	40'	**	(2)250 W HPS TYPE 3
LS-14	3	1806+73.2	73.0' RT.	40'	15'	250 W HPS TYPE 3
LS-15	1	1809+11.3	73.0' RT.	40'	15'	250 W HPS TYPE 3
LS-24	12	874+15.5	12.25' LT	40'	10'	250 W HPS TYPE 3
LS-26	8	878+67.0	47.3' RT.	40'	10'	250 W HPS TYPE 3
LS-27	12	880+91.9	40.9' RT.	40'	10'	250 W HPS TYPE 3
LS-47	5	1809+33.0	90.6' LT.	45'	20'	250 W HPS TYPE 3
LS-48	1	1806+95.3	90.5' LT.	40'	20'	250 W HPS TYPE 3
LS-49	3	1002+50.4	41.0' RT.	40'	20'	250 W HPS TYPE 3

** SEE NOTE 2

NOTES:

1. CONDUIT TO TIE INTO PROPOSED RETAINING WALL.
2. LS-13 TO HAVE DOUBLE DAVIT ARM. A 15' ARM SHALL BE MOUNTED OVER SR 1 NORTHBOUND WITH THE LUMINAIRE CONNECTED TO CIRCUIT 5. A 20' ARM SHALL BE MOUNTED OVER US 301 NORTHBOUND WITH THE LUMINAIRE CONNECTED TO CIRCUIT 10.
3. CONDUIT TO TIE INTO PROPOSED CONCRETE BARRIER.
4. LIGHTING STANDARD NO. LS-25 IS NOT USED.
5. CONDUIT AND JUNCTION BOXES INSTALLED WITHIN BRIDGE STRUCTURE. REFER TO BRIDGE AND/OR RETAINING WALL PLANS FOR DETAILS OF INSTALLATION.

LIGHTING SERVICE SCHEDULE

SERVICE RUN	# OF CONDUITS	SIZE	DISTANCE (L.F.)	DESCRIPTION	INSTALLATION
23	1	3.0"	206*	(4)#6, (1)#6 GROUND	TRENCH
100	1	3.0"	108	(3)#8, (1)#8 GROUND	TRENCH
101	2	3.0"	5	(4)#8, (1)#8 GROUND	TRENCH
102	1	3.0"	252	(2)#8, (1)#8 GROUND	TRENCH
104	1	3.0"	59	(4)#6, (4)#8, (1)#6 GROUND	BORE
105	1	3.0"	3	(2)#8, (1)#8 GROUND	TRENCH
106	1	3.0"	235	(4)#6, (3)#8, (1)#6 GROUND	TRENCH
107	1	3.0"	4	(2)#8, (1)#8 GROUND	TRENCH
108	1	3.0"	222	(4)#6, (2)#8, (1)#6 GROUND	TRENCH
109	1	3.0"	16	(2)#6, (2)#8, (1)#6 GROUND	TRENCH
123	2	3.0"	5	(4)#6, (4)#8, (1)#6 GROUND	TRENCH
124	1	3.0"	8	(3)#8, (1)#8 GROUND	TRENCH
125	1	3.0"	222	(2)#8, (1)#8 GROUND	TRENCH
126	1	3.0"	128	(2)#8, (1)#8 GROUND	TRENCH
127	1	3.0"	227	(4)#6, (1)#6 GROUND	TRENCH
128	2	3.0"	187*	(4)#6, (4)#8, (1)#6 GROUND	-
129	2	3.0"	143	(4)#8, (1)#8 GROUND	-
130	2	3.0"	143*	(4)#8, (1)#8 GROUND	-

* DISTANCE CONTINUES ON ADJACENT PLAN SHEET.
NOTE: SERVICE RUN DISTANCE REFLECTS CONDUIT LENGTH ONLY.

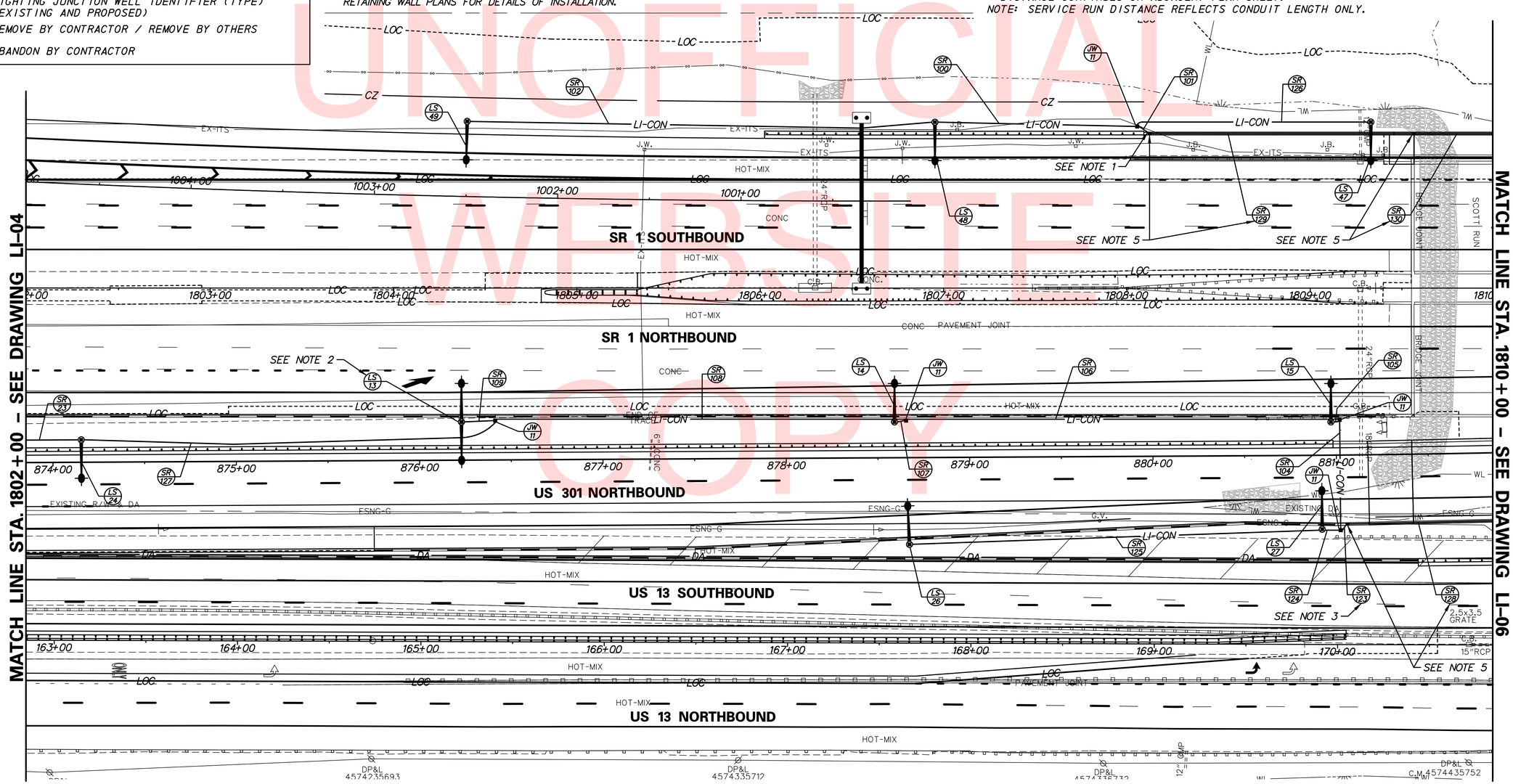

UNOFFICIAL WEBSITE COPY

DELAWARE DEPARTMENT OF TRANSPORTATION	ADDENDUMS / REVISIONS	SCALE 0 30 60 90 FEET	US 301 & SR 1 INTERCHANGE	CONTRACT T200911302	BRIDGE NO. BR1-903N, BR1-903S, BR1-432, RW1-1 & RW1-3R	LIGHTING PLAN
				COUNTY NEW CASTLE	DESIGNED BY: J.D.C.	SHEET NO. 437
					CHECKED BY: J.M.M.	TOTAL SHTS. 491

LI-05

n:\31653-000\contract tb\cadd\traffic\2015 - updates\U005U301_IB.dgn
12/18/2015 8:13:48 AM

LIGHTING SYMBOL LEGEND

SYMBOL	DESCRIPTION
	– PROPOSED LIGHTING STANDARD AND POLE BASE
	– PROPOSED DOUBLE DAVIT ARM LIGHTING STANDARD
	– EXISTING LIGHTING STANDARD AND POLE BASE
	– EXISTING OFFSET LIGHT POLE AND POLE BASE (SINGLE AND DUAL MOUNT)
	– EXISTING FLOODLIGHT TOWER AND POLE BASE
	– PROPOSED UNDERPASS LUMINAIRE
CA X	– PROPOSED LIGHTING CONTROL AND DISTRIBUTION ENCLOSURE AND IDENTIFIER
	– PROPOSED LIGHTING JUNCTION WELL
J.W.	– EXISTING LIGHTING JUNCTION WELL
P	– PROPOSED ELECTRICAL SERVICE ON PEDESTAL
—LI-CON—	– PROPOSED LIGHTING SERVICE RUN
—EX-CON—	– EXISTING LIGHTING SERVICE RUN
LS / LS	– LIGHTING STANDARD IDENTIFIER (EXISTING AND PROPOSED)
SR / SR	– SERVICE RUN IDENTIFIER (EXISTING AND PROPOSED)
JW X / JW	– LIGHTING JUNCTION WELL IDENTIFIER (TYPE) (EXISTING AND PROPOSED)
RM C / RM O	– REMOVE BY CONTRACTOR / REMOVE BY OTHERS
AB	– ABANDON BY CONTRACTOR

LIGHTING STANDARD SCHEDULE

NO.	CIRCUIT NO.	STATION	OFFSET	HEIGHT	ARM	LIGHT STANDARD
LS-28	10	883+17.4	43.4' RT.	40'	20'	400 W HPS TYPE 4
LS-29	8	885+18.5	43.0' RT.	40'	20'	400 W HPS TYPE 4
LS-30	2	887+21.2	43.0' RT.	40'	20'	400 W HPS TYPE 4
LS-31	4	889+27.3	41.8' RT.	40'	20'	250 W HPS TYPE 3
LS-44	5	1816+92.9	88.25' LT.	40'	20'	250 W HPS TYPE 3
LS-45	1	1814+42.6	90.8' LT.	40'	20'	250 W HPS TYPE 3
LS-46	3	1811+91.9	90.8' LT.	40'	20'	250 W HPS TYPE 3

NOTES:
1. CONDUIT TO TIE INTO PROPOSED BRIDGE PARAPET.
2. CONDUIT AND JUNCTION BOXES INSTALLED WITHIN BRIDGE STRUCTURE. REFER TO BRIDGE PLANS FOR DETAILS OF INSTALLATION.

LIGHTING SERVICE SCHEDULE

SERVICE RUN	# OF CONDUITS	SIZE	DISTANCE (L.F.)	DESCRIPTION	INSTALLATION
93	1	3.0"	225*	(4)#8, (1)#8 GROUND	TRENCH
95	1	3.0"	247	(4)#8, (1)#8 GROUND	TRENCH
96	2	3.0"	6	(4)#6, (4)#8, (1)#6 GROUND	TRENCH
97	1	3.0"	248	(4)#8, (1)#8 GROUND	TRENCH
98	2	3.0"	4	(4)#8, (1)#8 GROUND	TRENCH
99	1	3.0"	83	(4)#8, (1)#8 GROUND	TRENCH
110	1	3.0"	181*	(4)#6, (7)#8, (1)#6 GROUND	TRENCH
111	1	3.0"	6	(2)#8, (1)#8 GROUND	TRENCH
112	1	3.0"	205	(4)#6, (6)#8, (1)#6 GROUND	TRENCH
113	1	3.0"	6	(2)#8, (1)#8 GROUND	TRENCH
114	1	3.0"	202	(4)#6, (4)#8, (1)#6 GROUND	TRENCH
115	1	3.0"	6	(2)#6, (1)#6 GROUND	TRENCH
116	1	3.0"	210	(4)#6, (4)#8, (1)#6 GROUND	TRENCH
117	1	3.0"	16	(2)#6, (1)#6 GROUND	TRENCH
128	2	3.0"	187*	(4)#6, (4)#8, (1)#6 GROUND	-
130	2	3.0"	143*	(4)#8, (1)#8 GROUND	-

* DISTANCE CONTINUES ON ADJACENT PLAN SHEET.
NOTE: SERVICE RUN DISTANCE REFLECTS CONDUIT LENGTH ONLY.

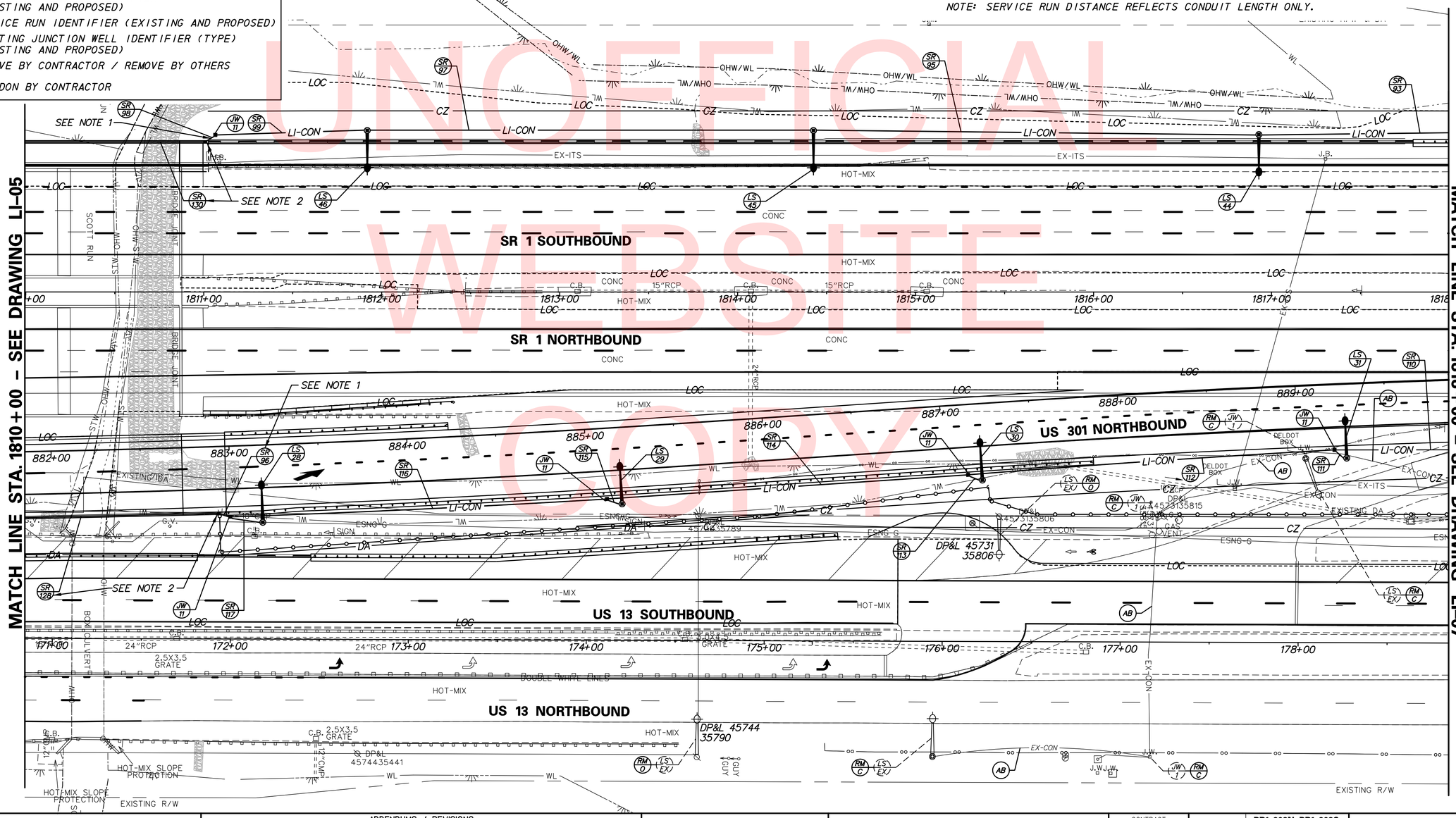

UNOFFICIAL WEBSITE COPY

DELAWARE DEPARTMENT OF TRANSPORTATION

ADDENDUMS / REVISIONS

SCALE 0 30 60 90 FEET

US 301 & SR 1 INTERCHANGE

CONTRACT	BRIDGE NO.	BR1-903N, BR1-903S, BR1-432 & RW1-1
T200911302	DESIGNED BY: J.D.C.	
COUNTY		
NEW CASTLE	CHECKED BY: J.M.M.	

LIGHTING PLAN

LI-06
SHEET NO. 438
TOTAL SHTS. 491

r:\31653-000\contract tb\cadd\traffic\2015 - updates\L0006U301_TB.dgn
12/18/2015 8:13:52 AM

LIGHTING SYMBOL LEGEND

SYMBOL	DESCRIPTION
	– PROPOSED LIGHTING STANDARD AND POLE BASE
	– PROPOSED DOUBLE DAVIT ARM LIGHTING STANDARD
	– EXISTING LIGHTING STANDARD AND POLE BASE
	– EXISTING OFFSET LIGHT POLE AND POLE BASE (SINGLE AND DUAL MOUNT)
	– EXISTING FLOODLIGHT TOWER AND POLE BASE
	– PROPOSED UNDERPASS LUMINAIRE
CA X	– PROPOSED LIGHTING CONTROL AND DISTRIBUTION ENCLOSURE AND IDENTIFIER
	– PROPOSED LIGHTING JUNCTION WELL
J.W.	– EXISTING LIGHTING JUNCTION WELL
P	– PROPOSED ELECTRICAL SERVICE ON PEDESTAL
—LI-CON—	– PROPOSED LIGHTING SERVICE RUN
—EX-CON—	– EXISTING LIGHTING SERVICE RUN
LS / LS	– LIGHTING STANDARD IDENTIFIER (EXISTING AND PROPOSED)
SR / SR	– SERVICE RUN IDENTIFIER (EXISTING AND PROPOSED)
JW X / JW	– LIGHTING JUNCTION WELL IDENTIFIER (TYPE) (EXISTING AND PROPOSED)
RM C / RM O	– REMOVE BY CONTRACTOR / REMOVE BY OTHERS
AB	– ABANDON BY CONTRACTOR

LIGHTING SERVICE SCHEDULE

SERVICE RUN	# OF CONDUITS	SIZE	DISTANCE (L.F.)	DESCRIPTION	INSTALLATION
65**	1	3.0"	5	(4)#4/0, (1)#2 GROUND	TRENCH
66	4	4.0"	28	(4)#6, (8)#8, (1)#6 GROUND	TRENCH
67	1	3.0"	70	(4)#8, (1)#8 GROUND	TRENCH
68**	1	3.0"	216	(4)#4/0, (1)#2 GROUND	TRENCH
69	1	3.0"	245	(4)#8, (1)#8 GROUND	TRENCH
71	1	3.0"	245	(4)#8, (1)#8 GROUND	TRENCH
73	1	3.0"	245*	(4)#8, (1)#8 GROUND	TRENCH
87	1	3.0"	93	(4)#8, (1)#8 GROUND	BORE
88	1	3.0"	84	(4)#8, (1)#8 GROUND	BORE
90	1	3.0"	22	(3)#8, (1)#8 GROUND	TRENCH
91	1	3.0"	248	(2)#8, (1)#8 GROUND	TRENCH
93	1	3.0"	225*	(4)#8, (1)#8 GROUND	TRENCH
110	1	3.0"	181*	(4)#6, (7)#8, (1)#6 GROUND	TRENCH

* DISTANCE CONTINUES ON ADJACENT PLAN SHEET.
** RIGID GALVANIZED STEEL CONDUIT
NOTE: SERVICE RUN DISTANCE REFLECTS CONDUIT LENGTH ONLY.

LIGHTING STANDARD SCHEDULE

NO.	CIRCUIT NO.	STATION	OFFSET	HEIGHT	ARM	LIGHT STANDARD
LS-32	6	891+78.1	44.7' RT.	40'	20'	250 W HPS TYPE 3
LS-33	2	1822+39.7	89.7' RT.	40'	20'	250 W HPS TYPE 3
LS-34	4	1824+87.2	87.8' RT.	40'	20'	250 W HPS TYPE 3
LS-42	1	1821+94.1	90.8' LT.	40'	20'	250 W HPS TYPE 3
LS-43	3	1819+43.8	90.8' LT.	40'	20'	250 W HPS TYPE 3

NOTES:

1. INSTALL ELECTRICAL SERVICE PEDESTAL WITH 277/480Y VAC, 3 PHASE, 4 WIRE, 200 AMP ELECTRICAL SERVICE.
2. INSTALL CABINET BASE AS PER STD. NO. T-4 WITH 3 INCH CONDUIT SWEEPS. UNUSED CONDUIT SWEEPS SHALL SHALL BE CAPPED. INSTALL LIGHTING CONTROL AND DISTRIBUTION ENCLOSURE. SEE LIGHTING CONTROL AND DISTRIBUTION ENCLOSURE DETAILS ON DWG. NO. LI-16.
3. SEE DWG. NO. LI-17 FOR LIGHTING CONTROL AND DISTRIBUTION ENCLOSURE WIRING DIAGRAM. SEE DWG. NO. LI-12 FOR PANELBOARD SCHEDULE.
4. COORDINATE WITH DELMARVA POWER FOR DISCONNECTION AND REMOVAL OF EXISTING ELECTRICAL SERVICE. REMOVE EXISTING SERVICE METER, DISCONNECT SWITCH, CONTROL ENCLOSURE, RISERS AND CONDUITS.

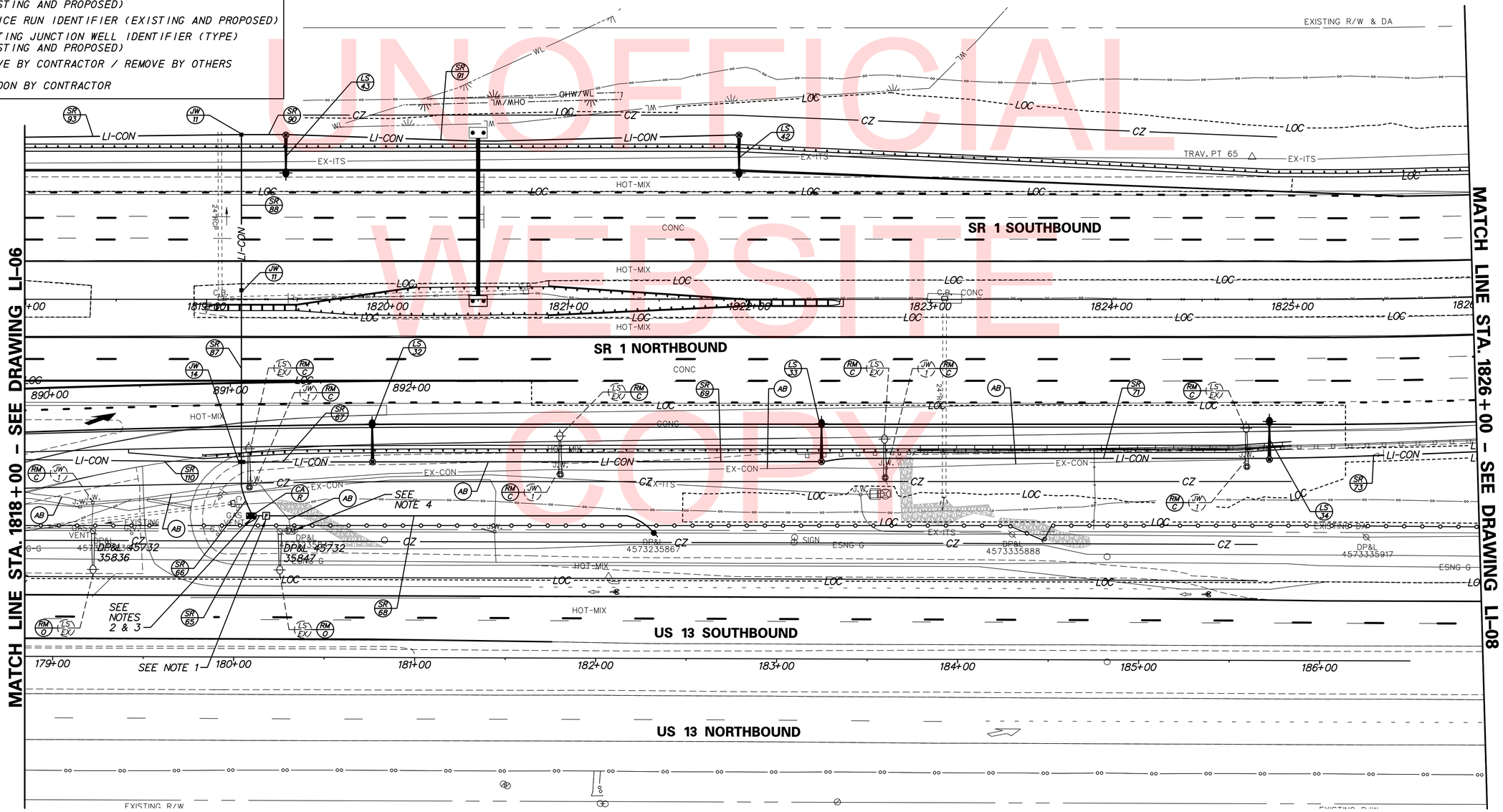

UNOFFICIAL WEBSITE COPY

DELAWARE DEPARTMENT OF TRANSPORTATION

ADDENDUMS / REVISIONS

SCALE 0 30 60 90 FEET

US 301 & SR 1 INTERCHANGE

CONTRACT	BRIDGE NO.
T200911302	DESIGNED BY: J.D.C.
COUNTY	
NEW CASTLE	CHECKED BY: J.M.M.

LIGHTING PLAN

LI-07

SHEET NO.
439
TOTAL SHTS.
491

n:\3653-000\contract tb\cadd\traffic\2015 - updates\LI007U301_18.dgn
12/18/2015 8:35:57 AM

LIGHTING SYMBOL LEGEND

SYMBOL	DESCRIPTION
	– PROPOSED LIGHTING STANDARD AND POLE BASE
	– PROPOSED DOUBLE DAVIT ARM LIGHTING STANDARD
	– EXISTING LIGHTING STANDARD AND POLE BASE
	– EXISTING OFFSET LIGHT POLE AND POLE BASE (SINGLE AND DUAL MOUNT)
	– EXISTING FLOODLIGHT TOWER AND POLE BASE
	– PROPOSED UNDERPASS LUMINAIRE
CA X	– PROPOSED LIGHTING CONTROL AND DISTRIBUTION ENCLOSURE AND IDENTIFIER
	– PROPOSED LIGHTING JUNCTION WELL
J.W.	– EXISTING LIGHTING JUNCTION WELL
P	– PROPOSED ELECTRICAL SERVICE ON PEDESTAL
—LI-CON—	– PROPOSED LIGHTING SERVICE RUN
—EX-CON—	– EXISTING LIGHTING SERVICE RUN
LS LS	– LIGHTING STANDARD IDENTIFIER (EXISTING AND PROPOSED)
SR SR	– SERVICE RUN IDENTIFIER (EXISTING AND PROPOSED)
JW X JW	– LIGHTING JUNCTION WELL IDENTIFIER (TYPE) (EXISTING AND PROPOSED)
RM C RM O	– REMOVE BY CONTRACTOR / REMOVE BY OTHERS
AB	– ABANDON BY CONTRACTOR

LIGHTING STANDARD SCHEDULE

NO.	CIRCUIT NO.	STATION	OFFSET	HEIGHT	ARM	LIGHT STANDARD
LS-35	6	1827+27.9	85.0' RT.	40'	20'	250 W HPS TYPE 3
LS-36	2	1829+69.9	84.5' RT.	40'	20'	250 W HPS TYPE 3
LS-37	4	1832+14.7	84.1' RT.	40'	20'	250 W HPS TYPE 3

LIGHTING SERVICE SCHEDULE

SERVICE RUN	# OF CONDUITS	SIZE	DISTANCE (L.F.)	DESCRIPTION	INSTALLATION
73	1	3.0"	245*	(4)#8, (1)#8 GROUND	TRENCH
75	1	3.0"	246	(4)#8, (1)#8 GROUND	TRENCH
77	1	3.0"	249	(4)#8, (1)#8 GROUND	TRENCH
79	1	3.0"	250*	(4)#8, (1)#8 GROUND	TRENCH

* DISTANCE CONTINUES ON ADJACENT PLAN SHEET.
NOTE: SERVICE RUN DISTANCE REFLECTS CONDUIT LENGTH ONLY.

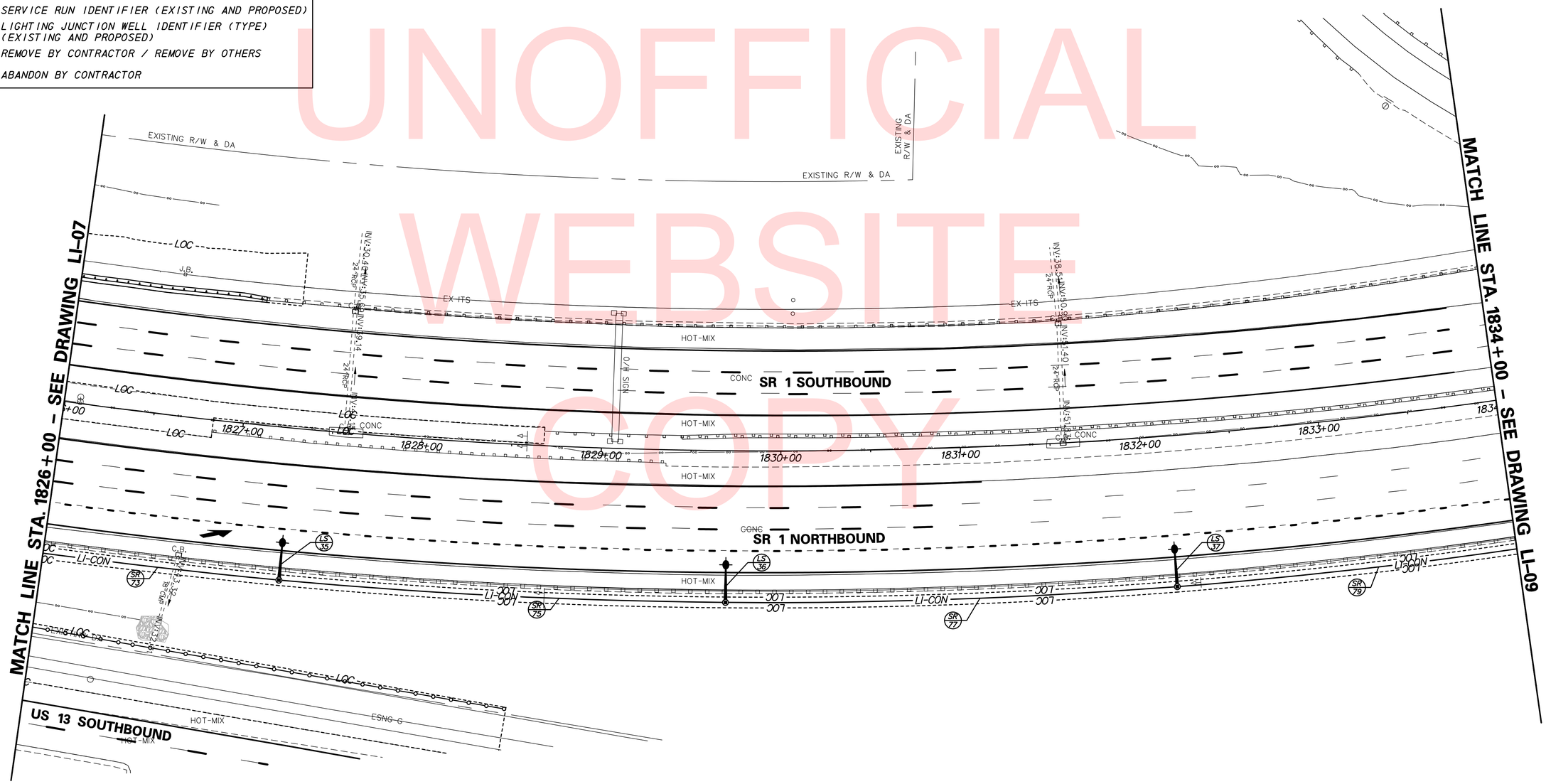

UNOFFICIAL WEBSITE COPY

n:\31653-000\contract th\cadd\LI008U301_1B.dgn
12/18/2015 8:14:00 AM

DELAWARE DEPARTMENT OF TRANSPORTATION

ADDENDUMS / REVISIONS

SCALE 0 30 60 90 FEET

US 301 & SR 1 INTERCHANGE

CONTRACT	BRIDGE NO.
T200911302	DESIGNED BY: J.D.C.
COUNTY	
NEW CASTLE	CHECKED BY: J.M.M.

LIGHTING PLAN

LI-08

SHEET NO. 440

TOTAL SHTS. 491

LIGHTING SYMBOL LEGEND

SYMBOL	DESCRIPTION
	– PROPOSED LIGHTING STANDARD AND POLE BASE
	– PROPOSED DOUBLE DAVIT ARM LIGHTING STANDARD
	– EXISTING LIGHTING STANDARD AND POLE BASE
	– EXISTING OFFSET LIGHT POLE AND POLE BASE (SINGLE AND DUAL MOUNT)
	– EXISTING FLOODLIGHT TOWER AND POLE BASE
	– PROPOSED UNDERPASS LUMINAIRE
CA X	– PROPOSED LIGHTING CONTROL AND DISTRIBUTION ENCLOSURE AND IDENTIFIER
	– PROPOSED LIGHTING JUNCTION WELL
J.W.	– EXISTING LIGHTING JUNCTION WELL
P	– PROPOSED ELECTRICAL SERVICE ON PEDESTAL
—LI-CON—	– PROPOSED LIGHTING SERVICE RUN
—EX-CON—	– EXISTING LIGHTING SERVICE RUN
LS / LS	– LIGHTING STANDARD IDENTIFIER (EXISTING AND PROPOSED)
SR / SR	– SERVICE RUN IDENTIFIER (EXISTING AND PROPOSED)
JW X / JW	– LIGHTING JUNCTION WELL IDENTIFIER (TYPE) (EXISTING AND PROPOSED)
RM C / RM O	– REMOVE BY CONTRACTOR / REMOVE BY OTHERS
AB	– ABANDON BY CONTRACTOR

LIGHTING STANDARD SCHEDULE

NO.	CIRCUIT NO.	STATION	OFFSET	HEIGHT	ARM	LIGHT STANDARD
LS-38	6	1834+59.9	83.4' RT.	40'	20'	250 W HPS TYPE 3
LS-39	2	1837+4.8	83.1' RT.	40'	20'	250 W HPS TYPE 3
LS-40	4	1839+50.9	82.8' RT.	40'	20'	250 W HPS TYPE 3
LS-41	6	1841+95.9	82.3' RT.	40'	20'	250 W HPS TYPE 3

LIGHTING SERVICE SCHEDULE

SERVICE RUN	# OF CONDUITS	SIZE	DISTANCE (L.F.)	DESCRIPTION	INSTALLATION
79	1	3.0"	250*	(4)#8, (1)#8 GROUND	TRENCH
81	1	3.0"	250	(4)#8, (1)#8 GROUND	TRENCH
83	1	3.0"	250	(3)#8, (1)#8 GROUND	TRENCH
85	1	3.0"	250	(2)#8, (1)#8 GROUND	TRENCH

* DISTANCE CONTINUES ON ADJACENT PLAN SHEET.
NOTE: SERVICE RUN DISTANCE REFLECTS CONDUIT LENGTH ONLY.

UNOFFICIAL WEBSITE COPY

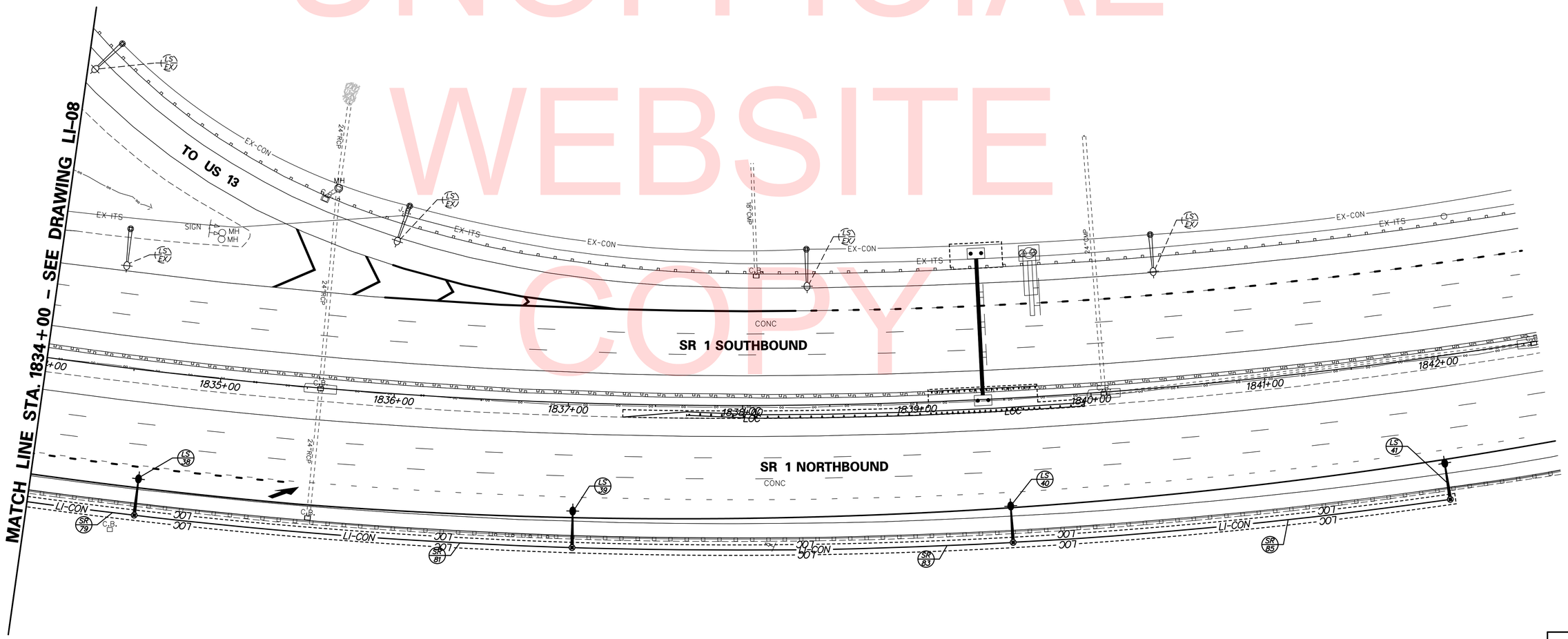

DELAWARE DEPARTMENT OF TRANSPORTATION	ADDENDUMS / REVISIONS	SCALE 0 30 60 90 FEET	US 301 & SR 1 INTERCHANGE	CONTRACT T200911302 / COUNTY NEW CASTLE	BRIDGE NO. / DESIGNED BY: J.D.C. / CHECKED BY: J.M.M.	LIGHTING PLAN

LI-09
SHEET NO. 441
TOTAL SHTS. 491

n:\33653-000\contract tb\cadd\LI009U301_1B.dgn
12/18/2015 8:14:03 AM

NOTES:

1. TIE PROPOSED SERVICE RUN NOS. 37 AND 38 INTO TYPE 11 JUNCTION WELL PROPOSED BY OTHERS IN CONTRACT NO. T201011302. SPLICE PROPOSED (4) #4 AWG ELECTRICAL CABLES IN SERVICE RUN NOS. 37 AND 38 TO THE ELECTRICAL CABLES PROPOSED BY OTHERS FOR EX. CIRCUIT NOS. B1, B2 AND B3. REPAIR EXISTING JUNCTION WELL.

2. ALL CONDUITS AND JUNCTION WELLS SHOWN SCREENED ON THIS PLAN ARE PROPOSED BY OTHERS UNDER CONTRACT NO. T201011302.

LIGHTING STANDARD SCHEDULE

NO.	CIRCUIT NO.	STATION	OFFSET	HEIGHT	ARM	LIGHT STANDARD
LS-1	EX. B1	1780+55.2	159.3' RT.	40'	20'	400 W HPS TYPE 4
LS-2	EX. B2	1781+66.8	148.9' RT.	40'	20'	400 W HPS TYPE 4
LS-3	EX. B3	1782+97.3	134.0' RT.	40'	20'	400 W HPS TYPE 4
LS-4	EX. B1	1784+24.5	119.5' RT.	40'	20'	400 W HPS TYPE 4
LS-5	EX. B2	1785+56.2	104.5' RT.	40'	20'	400 W HPS TYPE 4
LS-16	10	316+24.8	31.0' RT.	40'	10'	250 W HPS TYPE 3

LIGHTING SERVICE SCHEDULE

SERVICE RUN	# OF CONDUITS	SIZE	DISTANCE (L.F.)	DESCRIPTION	INSTALLATION
29	1	3.0"	130*	(4)#4, (1)#4 GROUND	TRENCH
31	1	3.0"	130	(4)#4, (1)#4 GROUND	TRENCH
33	1	3.0"	125	(4)#4, (1)#4 GROUND	TRENCH
35	1	3.0"	128	(4)#4, (1)#4 GROUND	TRENCH
37	1	3.0"	106	(4)#4, (1)#4 GROUND	TRENCH
38	1	3.0"	3	(2)#4, (1)#4 GROUND	TRENCH
43	1	3.0"	250*	(2)#6, (1)#6 GROUND	TRENCH

* DISTANCE CONTINUES ON ADJACENT PLAN SHEET.
NOTE: SERVICE RUN DISTANCE REFLECTS CONDUIT LENGTH ONLY.

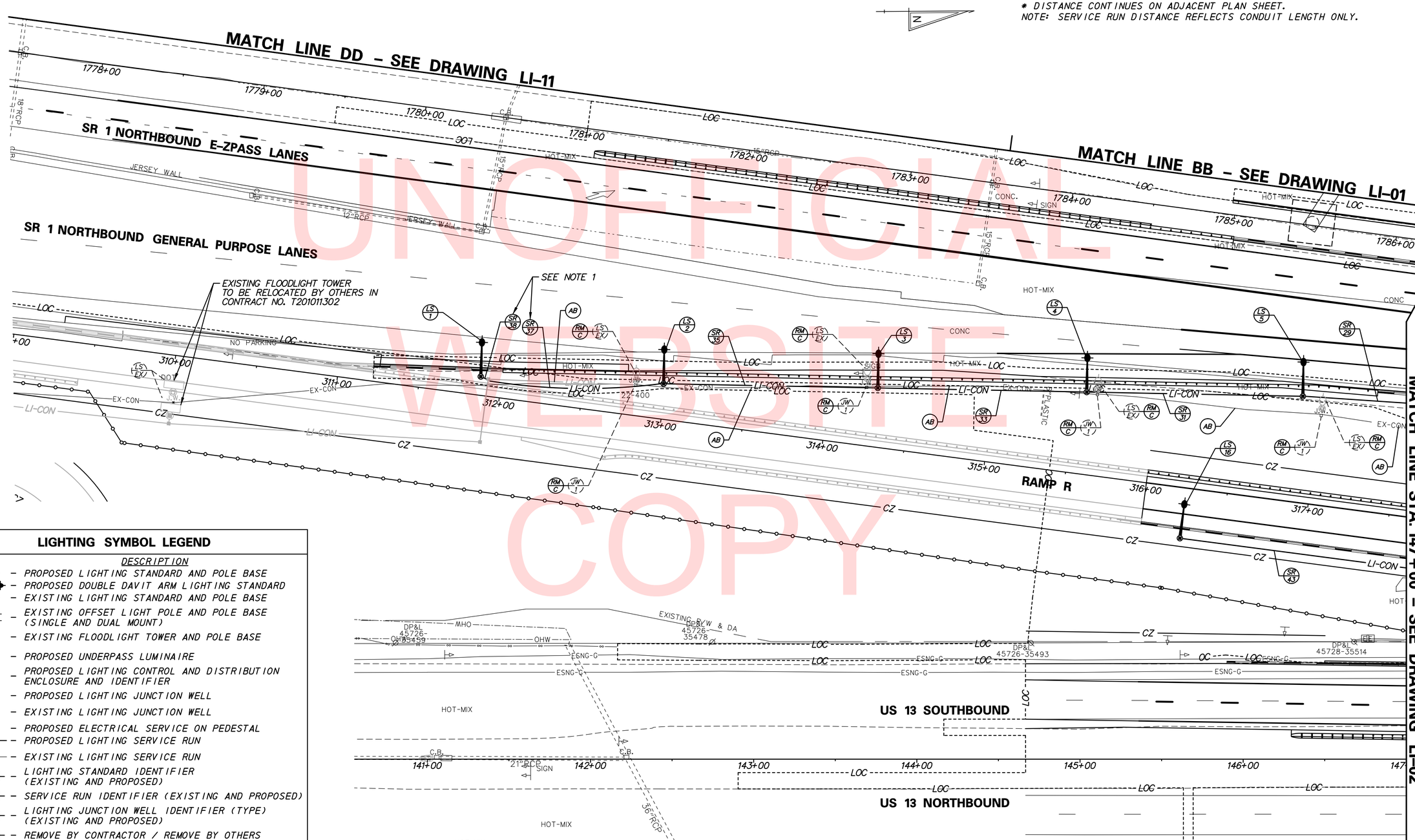

LIGHTING SYMBOL LEGEND

SYMBOL	DESCRIPTION
	– PROPOSED LIGHTING STANDARD AND POLE BASE
	– PROPOSED DOUBLE DAVIT ARM LIGHTING STANDARD
	– EXISTING LIGHTING STANDARD AND POLE BASE
	– EXISTING OFFSET LIGHT POLE AND POLE BASE (SINGLE AND DUAL MOUNT)
	– EXISTING FLOODLIGHT TOWER AND POLE BASE
	– PROPOSED UNDERPASS LUMINAIRE
CA X	– PROPOSED LIGHTING CONTROL AND DISTRIBUTION ENCLOSURE AND IDENTIFIER
	– PROPOSED LIGHTING JUNCTION WELL
J.W.	– EXISTING LIGHTING JUNCTION WELL
P	– PROPOSED ELECTRICAL SERVICE ON PEDESTAL
—LI-CON—	– PROPOSED LIGHTING SERVICE RUN
—EX-CON—	– EXISTING LIGHTING SERVICE RUN
LS EX / LS	– LIGHTING STANDARD IDENTIFIER (EXISTING AND PROPOSED)
SR EX / SR	– SERVICE RUN IDENTIFIER (EXISTING AND PROPOSED)
JW X / JW	– LIGHTING JUNCTION WELL IDENTIFIER (TYPE) (EXISTING AND PROPOSED)
RM C / RM O	– REMOVE BY CONTRACTOR / REMOVE BY OTHERS
AB	– ABANDON BY CONTRACTOR

UNOFFICIAL WEBSITE COPY

r:\31653-000\contract tb\cadd\traffic\2015 - updates\LI010J301_1B.dgn
12/18/2015 11:03:19 AM

DELAWARE DEPARTMENT OF TRANSPORTATION

ADDENDUMS / REVISIONS

SCALE 0 30 60 90 FEET

US 301 & SR 1 INTERCHANGE

CONTRACT	BRIDGE NO. BR1-433 & RW1-3R
T200911302	DESIGNED BY: J.D.C.
COUNTY	
NEW CASTLE	CHECKED BY: J.M.M.

LIGHTING PLAN

LI-10
SHEET NO.
442
TOTAL SHTS.
491

LIGHTING SYMBOL LEGEND

SYMBOL	DESCRIPTION
	– PROPOSED LIGHTING STANDARD AND POLE BASE
	– PROPOSED DOUBLE DAVIT ARM LIGHTING STANDARD
	– EXISTING LIGHTING STANDARD AND POLE BASE
	– EXISTING OFFSET LIGHT POLE AND POLE BASE (SINGLE AND DUAL MOUNT)
	– EXISTING FLOODLIGHT TOWER AND POLE BASE
	– PROPOSED UNDERPASS LUMINAIRE
CA X	– PROPOSED LIGHTING CONTROL AND DISTRIBUTION ENCLOSURE AND IDENTIFIER
	– PROPOSED LIGHTING JUNCTION WELL
J.W.	– EXISTING LIGHTING JUNCTION WELL
P	– PROPOSED ELECTRICAL SERVICE ON PEDESTAL
—LI-CON—	– PROPOSED LIGHTING SERVICE RUN
—EX-CON—	– EXISTING LIGHTING SERVICE RUN
LS LS	– LIGHTING STANDARD IDENTIFIER (EXISTING AND PROPOSED)
SR SR	– SERVICE RUN IDENTIFIER (EXISTING AND PROPOSED)
JW X JW	– LIGHTING JUNCTION WELL IDENTIFIER (TYPE) (EXISTING AND PROPOSED)
RM C RM O	– REMOVE BY CONTRACTOR / REMOVE BY OTHERS
AB	– ABANDON BY CONTRACTOR

LIGHTING STANDARD SCHEDULE

NO.	CIRCUIT NO.	STATION	OFFSET	HEIGHT	ARM	LIGHT STANDARD
LS-60	EX. F2	1782+79.2	134.3' LT.	40'	20'	400 W HPS TYPE 4
LS-61	EX. S1	1781+43.7	150.2' LT.	40'	20'	400 W HPS TYPE 4
LS-62	EX. F1	1780+19.2	166.9' LT.	40'	20'	400 W HPS TYPE 4

LIGHTING SERVICE SCHEDULE

SERVICE RUN	# OF CONDUITS	SIZE	DISTANCE (L.F.)	DESCRIPTION	INSTALLATION
1	1	3.0"	12	(2)#2, (1)#2 GROUND	TRENCH
2	1	3.0"	131	(4)#2, (4)#4, (1)#2 GROUND	TRENCH
3**	1	2.0"	6	EX. (4)#2, (1)#2 GROUND	TRENCH
4	1	3.0"	135	(4)#2, (4)#4, (1)#2 GROUND	TRENCH
5	1	3.0"	108*	(4)#2, (4)#4, (1)#2 GROUND	TRENCH
119	1	3.0"	4	(2)#4, (1)#4 GROUND	TRENCH
120	1	3.0"	4	(2)#2, (1)#2 GROUND	TRENCH

* DISTANCE CONTINUES ON ADJACENT PLAN SHEET.
** RIGID GALVANIZED STEEL CONDUIT
NOTE: SERVICE RUN DISTANCE REFLECTS CONDUIT LENGTH ONLY.

NOTES:

1. LOCATE AND INTERCEPT THE CONDUIT RUN CARRYING EXISTING CIRCUIT NOS. S1, S2 AND S3 AND INSTALL A TYPE 11 JUNCTION WELL. CUT AND OR PULL BACK THE CABLES IN THE EXISTING CONDUIT TO THE PROPOSED JUNCTION WELL SO THAT ELECTRICAL SERVICE IS MAINTAINED TO THE SOUTH AND SUFFICIENT LENGTH IS LEFT FOR SPLICING TO THE PROPOSED (4)#4 ELECTRICAL CABLES IN SERVICE RUN NO. 2.
2. LOCATE AND INTERCEPT THE EXISTING CONDUIT RUN CARRYING EXISTING CIRCUIT NOS. F1, F2 AND F3. PULL BACK THE EXISTING CABLES AND CUT THE EXISTING CONDUIT ONLY SO THAT CONNECTION IS MAINTAINED TO THE SOUTH. COUPLE PROPOSED SERVICE RUN NO. 3 TO THE REMAINING EXISTING CONDUIT AND RE-FEED CABLES TO THE PROPOSED TYPE 11 JUNCTION WELL. SPLICE THE EXISTING CABLES TO THE PROPOSED (4)#2 ELECTRICAL CABLES IN SERVICE RUN NO. 1 AND NO. 2.

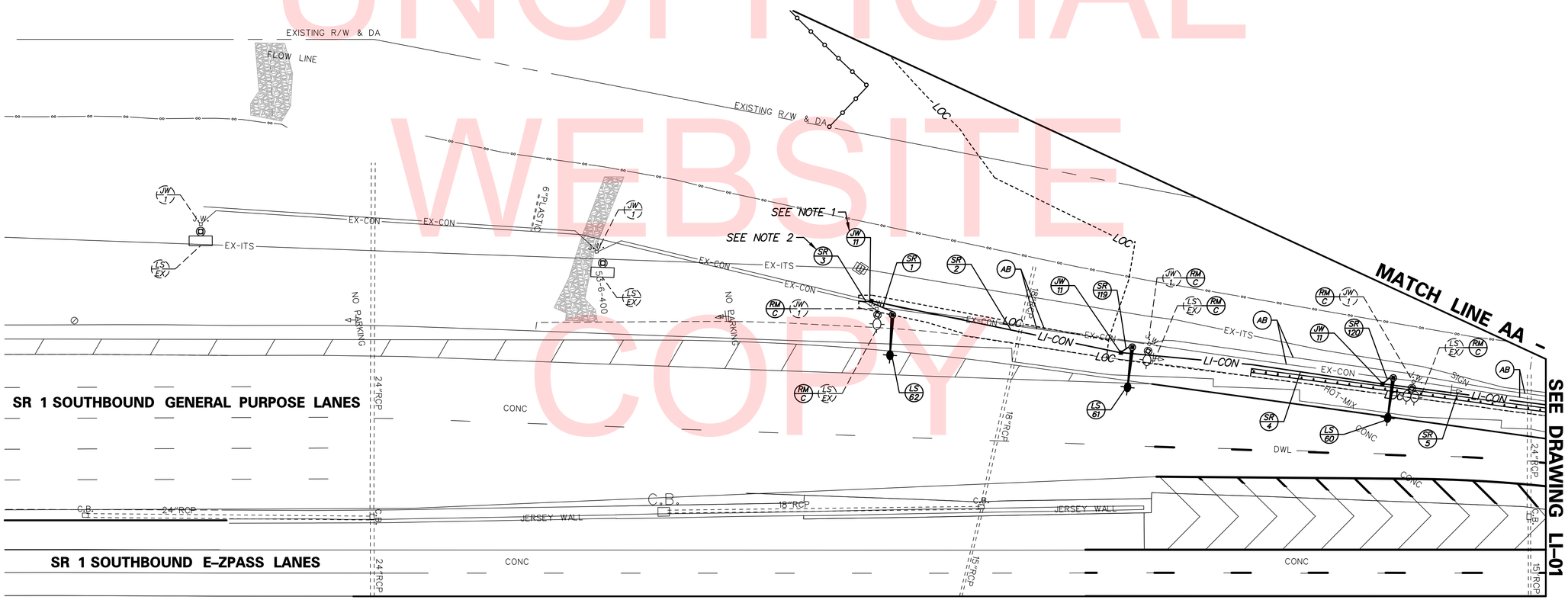

UNOFFICIAL WEBSITE COPY

n:\31653-000\contract 1b\cadd\traffic\2015 - updates\LI01U301_1B.dgn
12/18/2015 8:14:08 AM

DELAWARE DEPARTMENT OF TRANSPORTATION	ADDENDUMS / REVISIONS	SCALE 0 30 60 90 FEET	US 301 & SR 1 INTERCHANGE	CONTRACT T200911302	BRIDGE NO.	LIGHTING PLAN	LI-11
				COUNTY NEW CASTLE	DESIGNED BY: J.D.C.		SHEET NO. 443
					CHECKED BY: J.M.M.		TOTAL SHTS. 491

LIGHTING SERVICE SCHEDULE (LI-02)

SERVICE RUN	# OF CONDUITS	SIZE	DISTANCE (L.F.)	DESCRIPTION	INSTALLATION
9	1	3.0"	137*	(4)#2, (4)#4, (1)#2 GROUND	TRENCH
10	1	3.0"	232	(4)#2, (4)#4, (1)#2 GROUND	TRENCH
11	1	3.0"	5	(2)#4, (1)#4 GROUND	TRENCH
12	1	3.0"	223	(4)#2, (2)#4, (1)#2 GROUND	TRENCH
13	1	3.0"	94	(3)#4, (1)#4 GROUND	BORE
14	1	3.0"	3	(2)#4, (1)#4 GROUND	TRENCH
15	1	3.0"	118	(2)#4, (1)#4 GROUND	BORE
16	1	3.0"	231*	(4)#4, (1)#4 GROUND	TRENCH
17	1	3.0"	10	(2)#4, (1)#4 GROUND	TRENCH
24	1	3.0"	168	(4)#4, (1)#4 GROUND	BORE
25	1	3.0"	169	(4)#4, (1)#4 GROUND	TRENCH
26	1	3.0"	95	(6)#4, (1)#4 GROUND	TRENCH
27	1	3.0"	130	(4)#4, (1)#4 GROUND	TRENCH
28**	1	1.0"	75*	(3)#10, (1)#10 GROUND	TRENCH
29	1	3.0"	130*	(4)#4, (1)#4 GROUND	TRENCH
43	1	3.0"	250*	(2)#6, (1)#6 GROUND	TRENCH
45	1	3.0"	242	(3)#6, (1)#6 GROUND	TRENCH
47	1	3.0"	158	(4)#6, (1)#6 GROUND	TRENCH
48	1	3.0"	39	(4)#6, (1)#6 GROUND	TRENCH
49	1	3.0"	11	(2)#6, (1)#6 GROUND	TRENCH
51	1	3.0"	69	(4)#6, (1)#6 GROUND	TRENCH
53	1	3.0"	3	(2)#2, (1)#2 GROUND	TRENCH
54	1	3.0"	240*	(4)#2, (2)#4, (1)#2 GROUND	TRENCH
122	1	3.0"	5	(2)#2, (1)#2 GROUND	TRENCH

* DISTANCE CONTINUES ON ADJACENT PLAN SHEET.
** RIGID GALVANIZED STEEL CONDUIT
NOTE: SERVICE RUN DISTANCE REFLECTS CONDUIT LENGTH ONLY.

PANELBOARD SE

AIC RATING - MINIMUM 22KA
SOLID NEUTRAL
ENCLOSURE: BASE MOUNTED CABINET

600 AMP BUS
480/277 VOLTS
SURFACE MOUNTED

200 AMP MAIN
3 PHASE, 4 WIRE + GROUND
PANEL LOCATION: SEE PLANS

LOAD SERVED	CIRCUIT BREAKER			CKT. NO.	CKT. NO.	CIRCUIT BREAKER			LOAD SERVED
	FRAME	TRIP	POLE			FRAME	TRIP	POLE	
4-250W HPS	100	10	1	1	2	100	10	1	3-250W HPS, 1-400W HPS
4-250W HPS	100	10	1	3	4	100	10	1	4-250W HPS
3-250W HPS	100	10	1	5	6	100	10	1	4-250W HPS
SPARE	100	10	1	7	8	100	10	1	4-250W HPS, 1-400W HPS
SPARE	100	10	1	9	10	100	10	1	4-250W HPS, 1-400W HPS
SPARE	100	10	1	11	12	100	10	1	4-250W HPS
PHOTOELECTRIC CONTROL	100	10	1	13	14	100	10	1	FAN, GFCI

UNOFFICIAL WEBSITE COPY

LIGHTING SERVICE SCHEDULE

SERVICE RUN	# OF CONDUITS	SIZE	DISTANCE (L.F.)	DESCRIPTION	INSTALLATION
7	1	1.0"	60*	(3)#10, (1)#10 GROUND	TRENCH/STRUCTURE
32	1	1.0"	50	(3)#10, (1)#10 GROUND	STRUCTURE
34	1	1.0"	3	(3)#10, (1)#10 GROUND	STRUCTURE
36	1	1.0"	40	(2)#10, (1)#10 GROUND	STRUCTURE
41	1	1.0"	50	(2)#10, (1)#10 GROUND	STRUCTURE

* DISTANCE CONTINUES ON ADJACENT PLAN SHEET.
NOTE: SERVICE RUN DISTANCE REFLECTS CONDUIT LENGTH ONLY.

NOTES:

1. REFER TO BRIDGE NO. 1-433 PLANS FOR STRUCTURE AND LUMINAIRE SUPPORT DETAILS.
2. ALL CONDUIT STRAPS AND JUNCTION BOXES SHALL BE ATTACHED TO THE CONCRETE STRUCTURE USING 1/4" STAINLESS STEEL WEDGE ANCHORS WITH A MINIMUM EMBEDMENT OF 2".
3. CONDUITS MOUNTED TO BRIDGE STRUCTURE SHALL BE 1" DIAMETER RIGID GALVANIZED STEEL, SCHEDULE 40, UNLESS OTHERWISE NOTED.
4. CONDUIT CLAMPS SHALL BE STAINLESS STEEL AND ATTACH TO THE BRIDGE GIRDER USING NON-DESTRUCTIVE METHODS. DRILLING INTO THE BRIDGE GIRDER WILL NOT BE PERMITTED.
5. ALL CONDUITS MOUNTED TO THE BRIDGE STRUCTURE SHALL BE SUPPORTED BY CONDUIT STRAPS OR CLAMPS SPACED AT A MAXIMUM DISTANCE OF 10'-0" BETWEEN SUPPORTS. CONDUITS SHALL ALSO BE SUPPORTED WITHIN 3'-0" OF EACH JUNCTION BOX OR CONDULET.
6. JUNCTION BOXES SHALL BE 6"x6"x2" STAINLESS STEEL RATED NEMA 4X.
7. CONDUIT STRAPS SHALL BE TWO-HOLE AND STAINLESS STEEL.
8. UNDERPASS LUMINAIRES SHALL BE DOWNWARD FACING WITH 150 WATT HIGH PRESSURE SODIUM LAMPS PRODUCING AN IES TYPE 4 LATERAL DISTRIBUTION. CONTRACTOR SHALL VERIFY LUMINAIRE SIZE AND COMPATIBILITY WITH LUMINAIRE SUPPORT PLATE PRIOR TO PURCHASING LUMINAIRE OR FABRICATION OF LUMINAIRE SUPPORT PLATE.
9. THE CONTRACTOR SHALL SUBMIT SHOP DRAWINGS OF ALL PROPOSED UNDERPASS LIGHTING SYSTEM COMPONENTS INCLUDING CONDUIT, CONDUIT STRAPS AND CLAMPS, JUNCTION BOXES, BENDS, CONDULETS, EXPANSION COUPLINGS AND UNDERPASS LUMINAIRES TO THE ENGINEER FOR APPROVAL. SHOP DRAWING PREPARATION SHALL BE INCIDENTAL TO THE PERTINENT CONDUIT INSTALLATION ITEMS.
10. ALL CONDUIT STRAPS, CLAMPS, WEDGE ANCHORS AND CONDULETS WILL NOT BE MEASURED AND PAID FOR BUT WILL BE INCIDENTAL TO ITEM 745546 - INSTALLATION OF CONDUIT ON STRUCTURE.
11. INSTALLATION OF CONDUIT AND ALL NECESSARY FITTINGS SHALL BE PAID FOR UNDER ITEM NO. 745546 - INSTALLATION OF CONDUIT ON STRUCTURE.

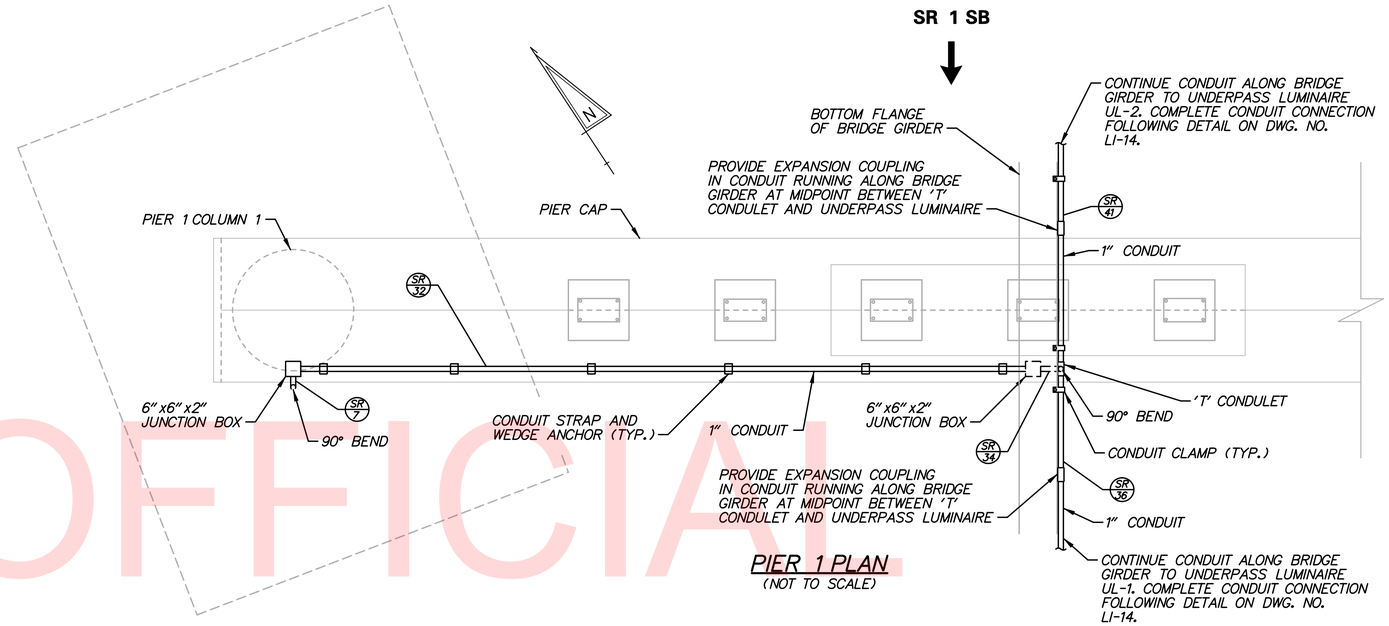

PIER 1 PLAN
(NOT TO SCALE)

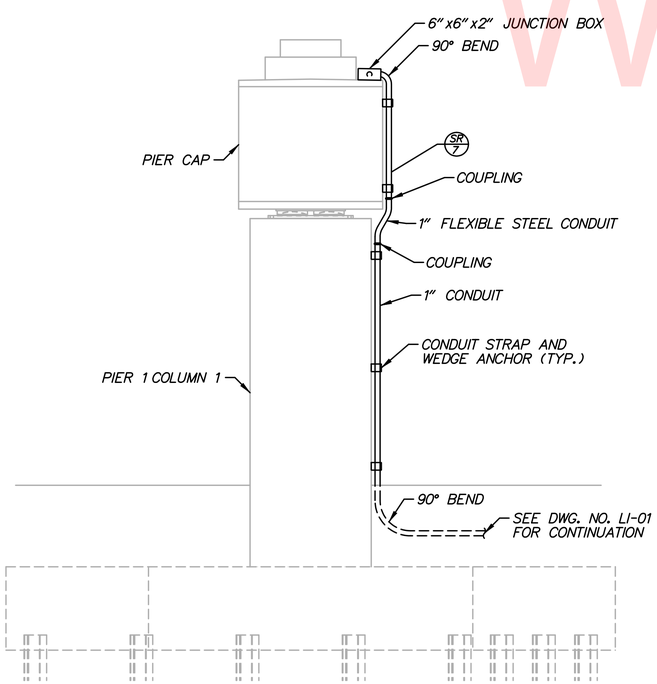

PIER 1 COLUMN 1 SIDE VIEW
(NOT TO SCALE)

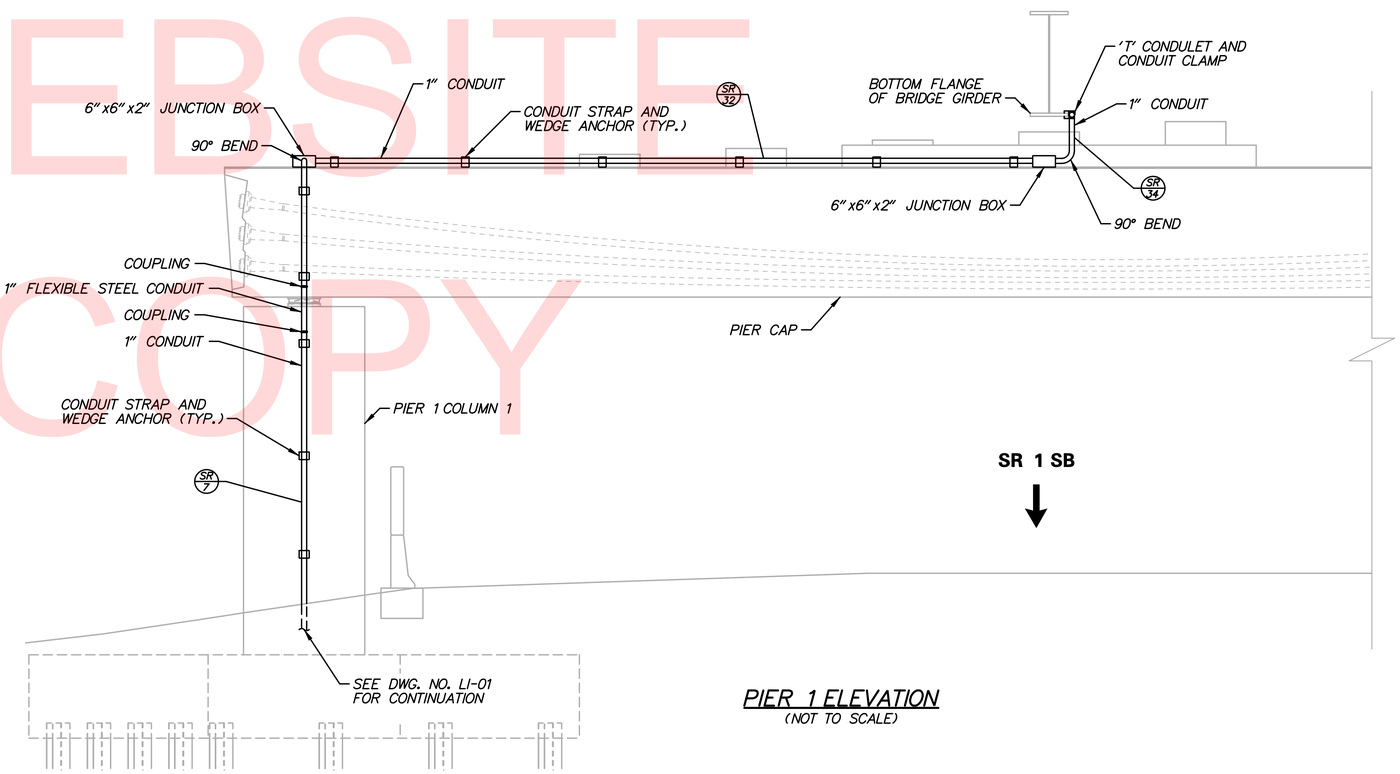

PIER 1 ELEVATION
(NOT TO SCALE)

UNOFFICIAL WEBSITE COPY

DELAWARE DEPARTMENT OF TRANSPORTATION	ADDENDUMS / REVISIONS	NOT TO SCALE	US 301 & SR 1 INTERCHANGE	CONTRACT T200911302 / COUNTY NEW CASTLE	BRIDGE NO. BR1-433 / DESIGNED BY: J.D.C. / CHECKED BY: J.M.M.	LIGHTING DETAILS	LI-13 / SHEET NO. 445 / TOTAL SHTS. 491

n:\33653-000\contract tb\cadd\LI013U301_1B.dgn 12/18/2015 8:14:12 AM

LIGHTING SERVICE SCHEDULE

SERVICE RUN	# OF CONDUITS	SIZE	DISTANCE (L.F.)	DESCRIPTION	INSTALLATION
28	1	1.0"	75*	(3)#10, (1)#10 GROUND	TRENCH/STRUCTURE
42	1	1.0"	25	(3)#10, (1)#10 GROUND	STRUCTURE
46	1	1.0"	60	(2)#10, (1)#10 GROUND	STRUCTURE
58	1	1.0"	30	(2)#10, (1)#10 GROUND	STRUCTURE
60	1	1.0"	3	(3)#10, (1)#10 GROUND	STRUCTURE

* DISTANCE CONTINUES ON ADJACENT PLAN SHEET.
NOTE: SERVICE RUN DISTANCE REFLECTS CONDUIT LENGTH ONLY.

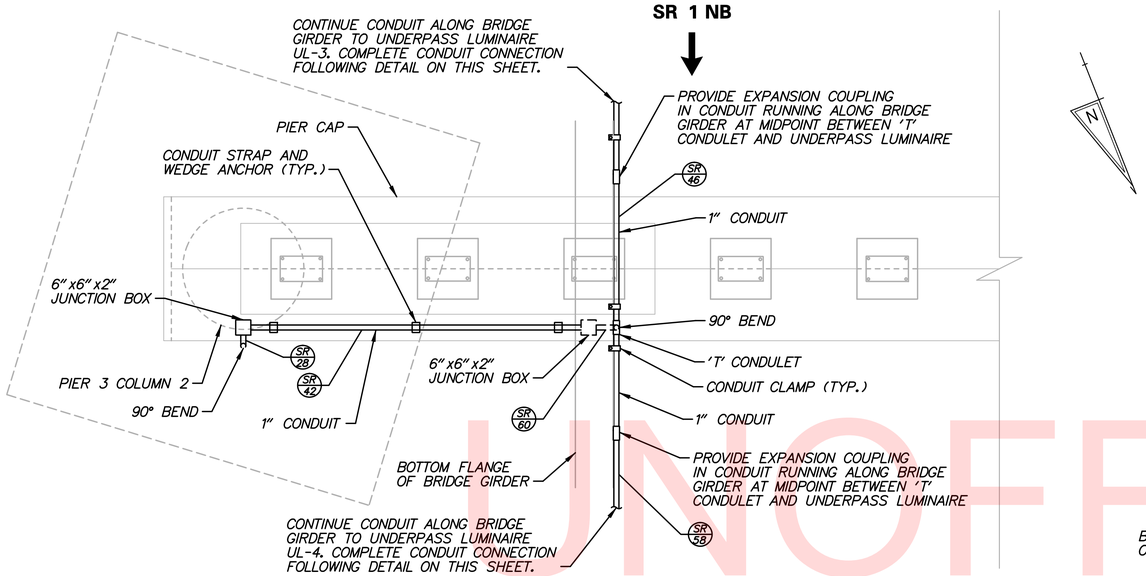

PIER 3 PLAN
(NOT TO SCALE)

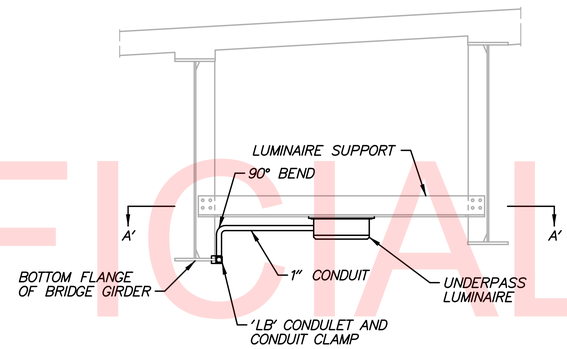

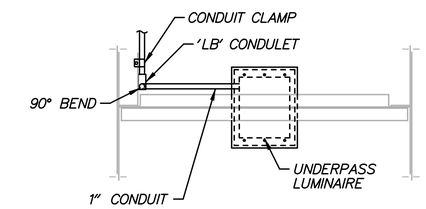

SECTION A'-A'

UNDERPASS LUMINAIRE CONDUIT CONNECTION DETAIL
(NOT TO SCALE)
(TYPICAL AT UNDERPASS LUMINAIRES UL-1, 2, 3 & 4)

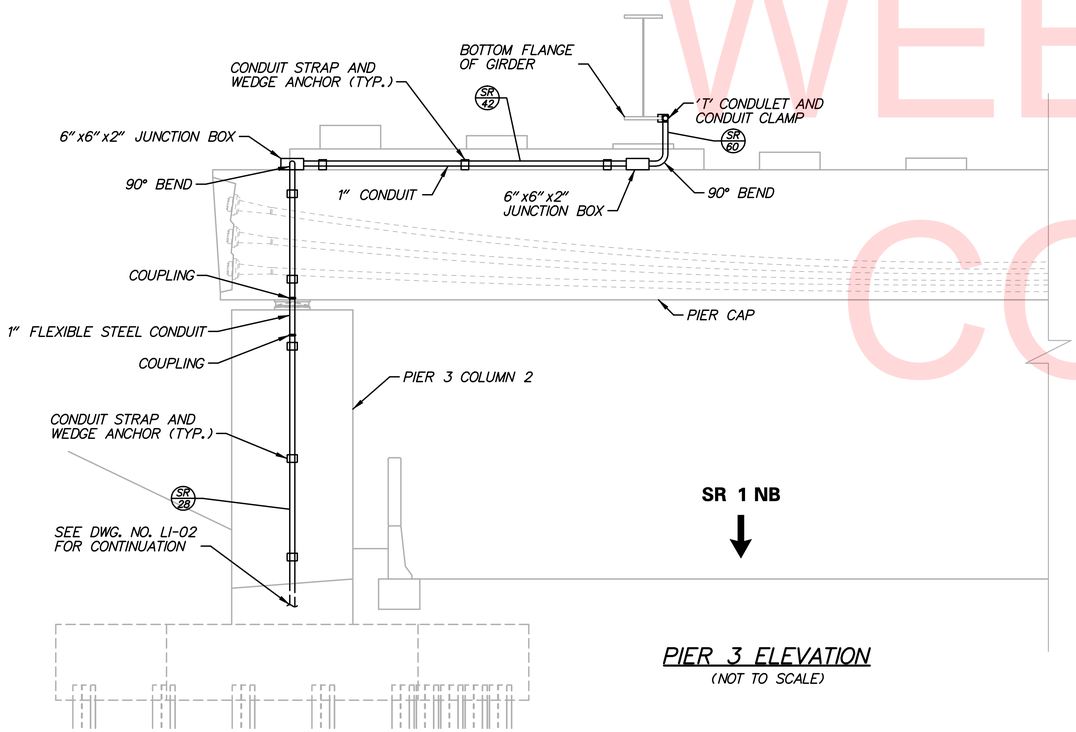

PIER 3 ELEVATION
(NOT TO SCALE)

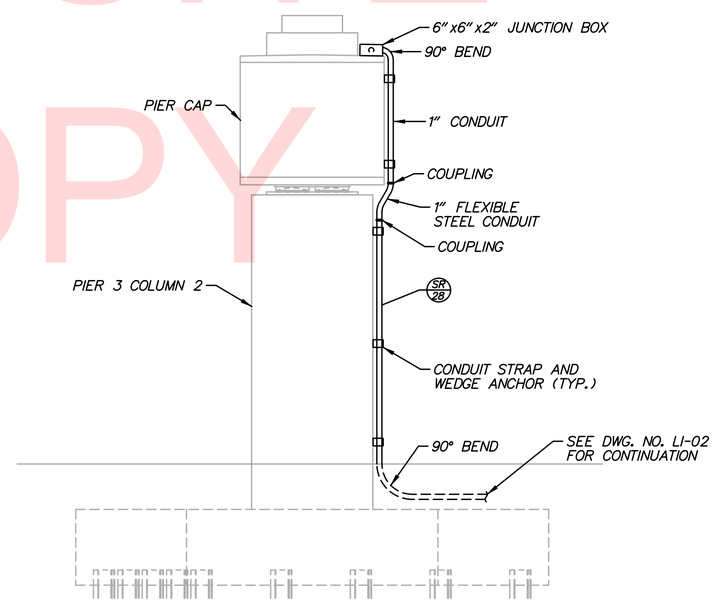

PIER 3 COLUMN 2 SIDE VIEW
(NOT TO SCALE)

NOTES:
1. REFER TO BRIDGE NO. 1-433 PLANS FOR STRUCTURE AND LUMINAIRE SUPPORT DETAILS.
2. REFER TO DWG. NO. LI-13 FOR DETAILS AND REQUIREMENTS OF ALL UNDERPASS LIGHTING SYSTEM COMPONENTS.

UNOFFICIAL WEBSITE COPY

LIGHTING SERVICE SCHEDULE					
SERVICE RUN	# OF CONDUITS	SIZE	DISTANCE (L.F.)	DESCRIPTION	INSTALLATION
62	1	3.0"	223	(4)#6, (1)#6 GROUND	-
64	1	3.0"	223	(4)#6, (1)#6 GROUND	-
70	1	3.0"	196	(4)#6, (1)#6 GROUND	-
72	1	3.0"	210	(4)#6, (1)#6 GROUND	-

* DISTANCE CONTINUES ON ADJACENT PLAN SHEET.
NOTE: SERVICE RUN DISTANCE REFLECTS CONDUIT LENGTH ONLY.

NOTES:

1. REFER TO RW1-3 PLANS FOR DETAILS AND PAYMENT OF CONDUIT AND JUNCTION BOX INSTALLATION WITHIN RETAINING WALL.
2. ALL CONDUITS WITHIN RETAINING WALL SHALL BE RIGID POLYVINYL CHLORIDE, SCHEDULE 80.
3. ALL JUNCTION BOXES SHALL BE STAINLESS STEEL RATED NEMA 4X. THE CONTRACTOR SHALL SUBMIT SHOP DRAWINGS OF THE PROPOSED JUNCTION BOXES TO THE ENGINEER FOR APPROVAL.
4. LIGHTING STANDARD MOUNTING ON RETAINING WALL NOT SHOWN FOR CLARITY. REFER TO RW1-3 PLANS FOR DETAILS.
5. ALL JUNCTION BOXES SHALL BE MOUNTED TO AND ACCESSED FROM TRAFFIC SIDE OF RETAINING WALL PARAPET.

MATCH LINE - SEE THIS SHEET

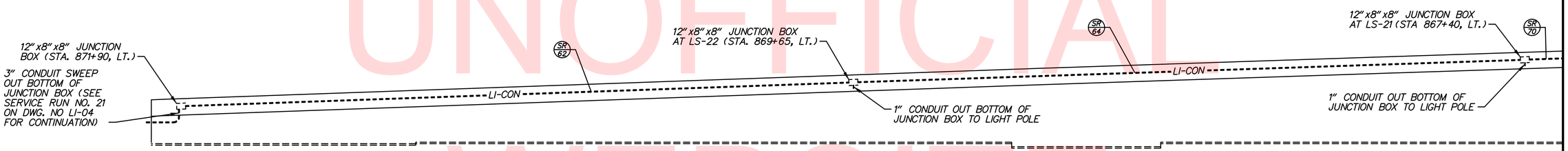

RW1-3 ELEVATION - NORTH SECTION

MATCH LINE - SEE THIS SHEET

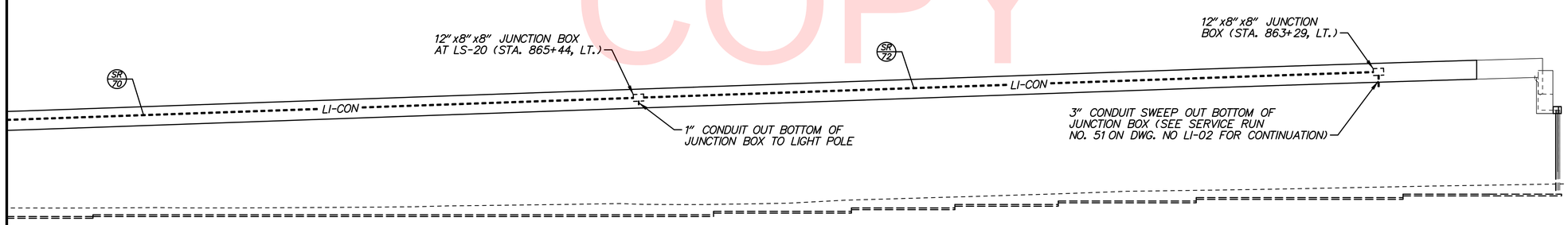

RW1-3 ELEVATION - SOUTH SECTION

UNOFFICIAL WEBSITE COPY

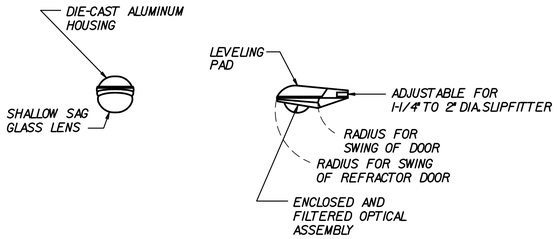

LUMINAIRE FIXTURE
SCALE: NONE

NOTES:
1. ALL PROPOSED LIGHTING STANDARD LUMINAIRES SHALL BE HIGH PRESSURE SODIUM COBRAHEAD STYLE FIXTURES WITH A MEDIUM VERTICAL LIGHT DISTRIBUTION AND CUT-OFF OPTICS MOUNTED WITH A ZERO DEGREE TILT ANGLE.
2. PHOTOCONTROL SHALL BE AT THE LIGHTING CONTROL AND DISTRIBUTION ENCLOSURE.
3. SEE LIGHTING STANDARD SCHEDULE ON PLANS FOR HORIZONTAL LIGHT DISTRIBUTION (TYPE III OR TYPE IV) AND WATTAGE (250 WATT OR 400 WATT).
4. INSTALL GLARE SHEILDS AS INDICATED ON LIGHTING STANDARD SCHEDULE ON PLANS. GLARE SHIELDS WILL NOT BE MEASURED AND PAID FOR BUT WILL BE INCIDENTAL TO THE RESPECTIVE ALUMINUM LIGHTING STANDARD ITEM.

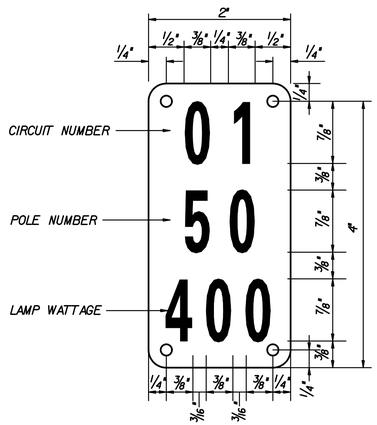

TYPICAL POLE IDENTIFICATION TAG
SCALE: NONE

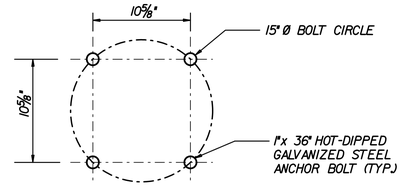

FOUNDATION ANCHOR BOLT CIRCLE DETAIL
SCALE: NONE

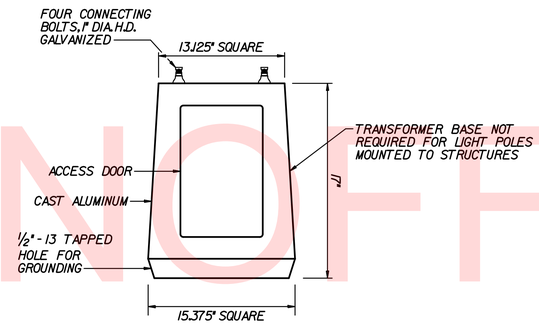

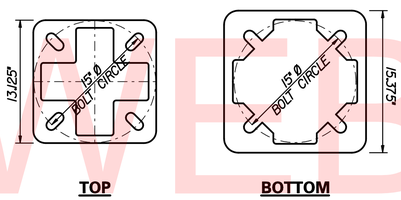

TOP **BOTTOM**

TRANSFORMER BASE DETAIL
SCALE: NONE

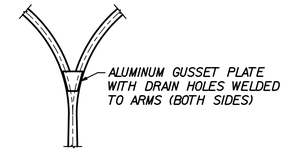

DOUBLE DAVIT ARM DETAIL
SCALE: NONE

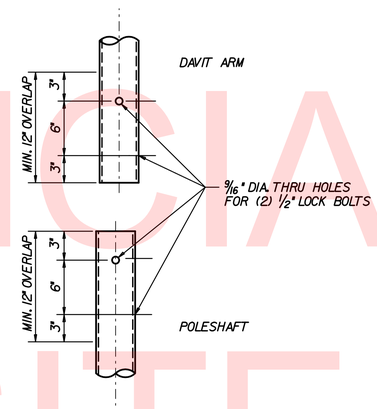

DETAIL 'A'
SCALE: NONE

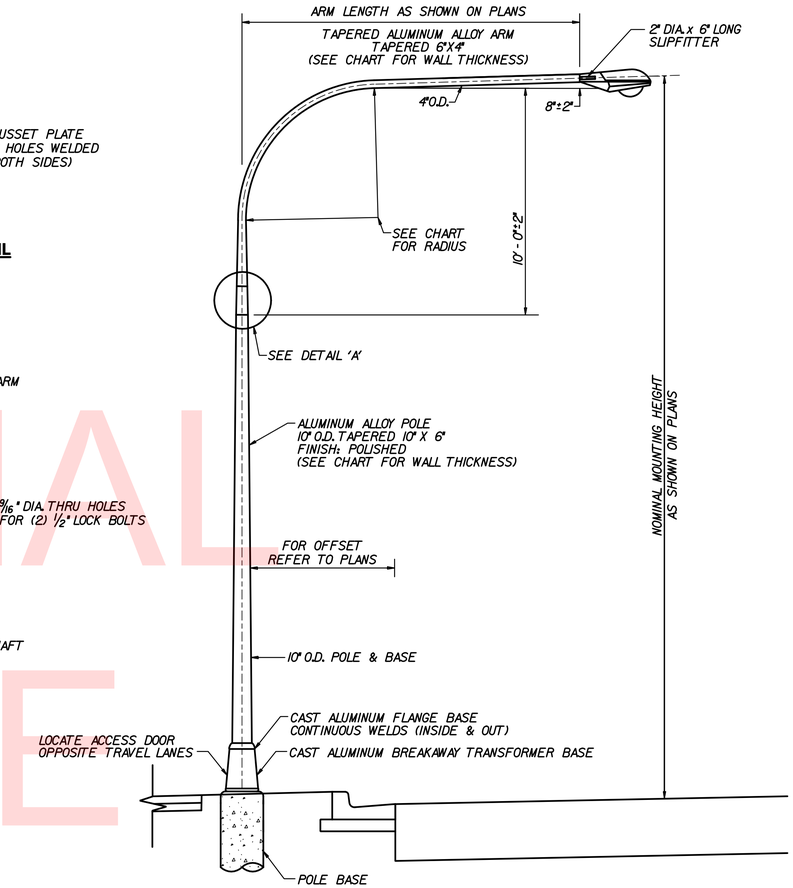

MOUNTING HEIGHT	ARM LENGTH	BEND RADIUS	WALL THICKNESS
40'	5'	3'-9"	0.188"
40'	10'	5'-6"	0.188"
40'	15'	5'-6"	0.188"
40'	20'	7'-0"	0.219"
45'	20'	7'-0"	0.250"

ALUMINUM LIGHTING STANDARD WITH SINGLE DAVIT ARM
SCALE: NONE

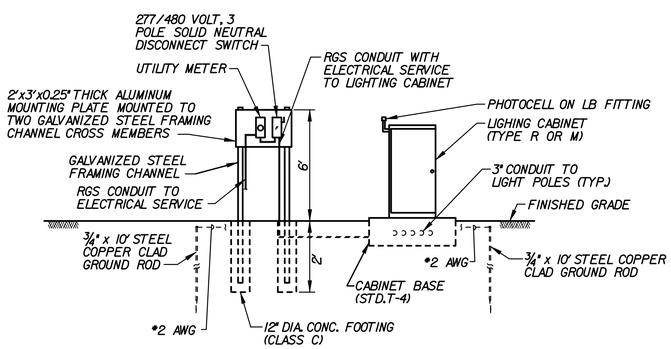

ELECTRICAL SERVICE ON PEDESTAL AND LIGHTING CONTROL AND DISTRIBUTION ENCLOSURE
SCALE: NONE

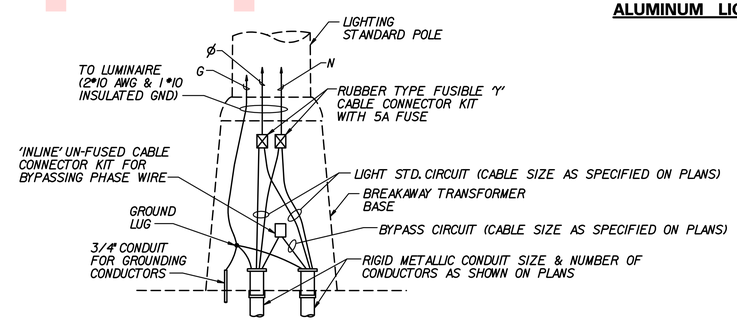

WIRING IN TRANSFORMER BASE
SCALE: NONE

UNOFFICIAL WEBSITE COPY

n:\31653-000\contract tb\cadd\LI016U301_1B.dgn
12/18/2015 8:14:15 AM

DELAWARE DEPARTMENT OF TRANSPORTATION	ADDENDUMS / REVISIONS	NOT TO SCALE	US 301 & SR 1 INTERCHANGE	CONTRACT T200911302 / COUNTY NEW CASTLE	BRIDGE NO. / DESIGNED BY: J.D.C. / CHECKED BY: J.M.M.
LIGHTING DETAILS	LI-16	SHEET NO. 448	TOTAL SHTS. 491		

LIGHTING STANDARD POLE BASE DETAIL

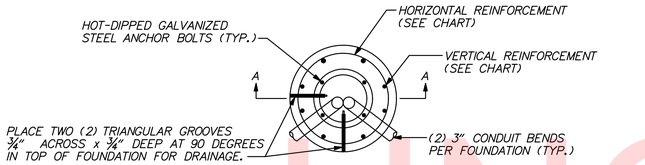

PLAN VIEW

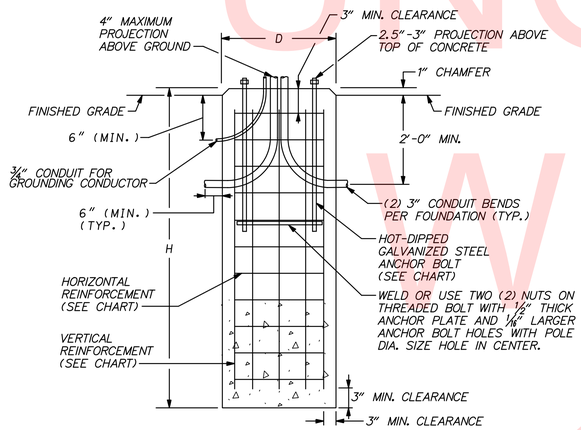

SECTION A-A

NOMINAL MOUNTING HEIGHT	DIAMETER (D)	HEIGHT (H)	ANCHOR BOLT DIMENSIONS	VERTICAL REINFORCEMENT	HORIZONTAL REINFORCEMENT	CONCRETE REQUIRED (C.Y.)
30' OR 40'	2.5'	11.5'	1"x36"	8 NO. 7	NO. 3 TIES AT 1'-0" CENTER TO CENTER	2.1
45'	3'	15'	1¼"x42"	10 NO. 7	NO. 3 TIES AT 1'-0" CENTER TO CENTER	4.0

NOTES:

1. ANCHOR BOLTS SHALL BE PLUMB. A ¼" THICK STEEL TEMPLATE SHALL BE USED FOR INSTALLATION OF ANCHOR BOLTS.
2. FOUNDATION SHALL NOT BE INSTALLED IN DRAINAGE DITCH.

LIGHTING CONTROL AND DISTRIBUTION ENCLOSURE WIRING DIAGRAM

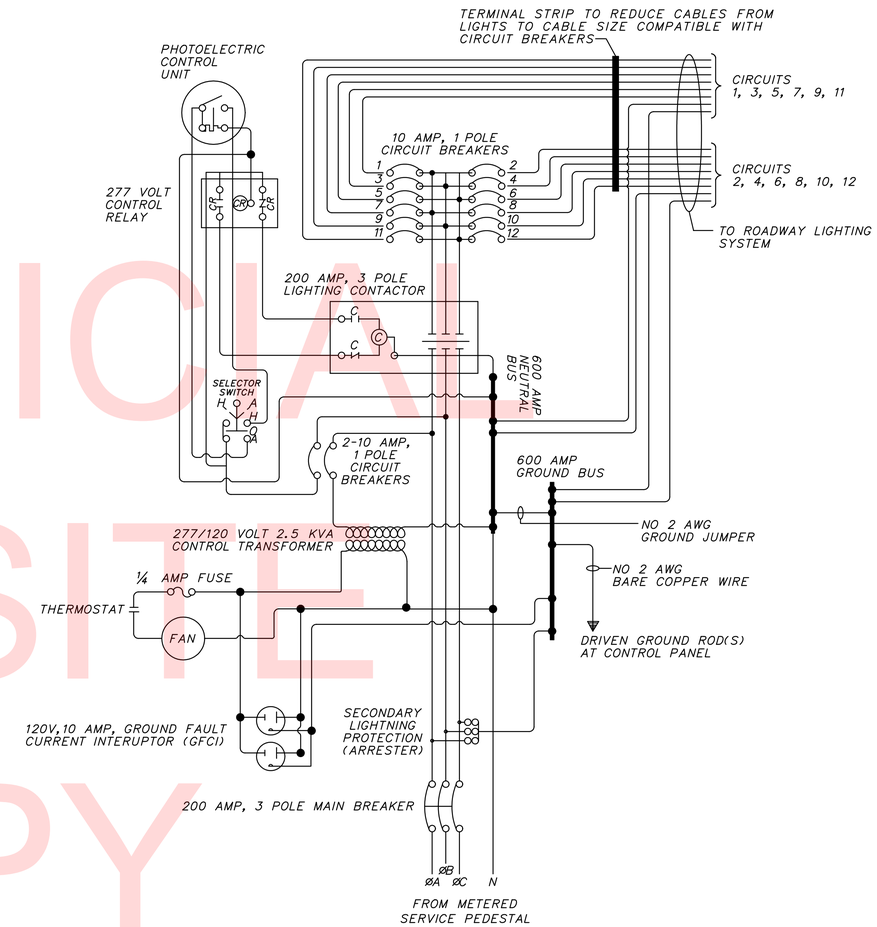

NOTES:

1. ALL WIRING FROM SERVICE FEEDS SHALL BE INSTALLED IN FLEXIBLE CONDUIT WITHIN THE LIGHTING CONTROL AND DISTRIBUTION ENCLOSURE.
2. NO CONDUCTORS MAY ENTER OR EXIT THROUGH THE REAR OF ANY PANEL.
3. THE LIGHTING CONTACTOR SHALL BE IN A PROPERLY SIZED ENCLOSURE.
4. A CONTINUOUS GROUNDING CONDUCTOR SHALL BE INSTALLED FROM THE METER SOCKET THROUGH ALL PANELS, THEN TO THE GROUNDING ELECTRODE.
5. ALL CONDUCTORS NOT IN CONDUIT SHALL BE BUNDLED OR WRAPPED AND SECURED IN CABINET AWAY FROM SHARP EDGES.
6. ALL CABLES SHALL MEET AMPACITY REQUIREMENTS OF THE NATIONAL ELECTRIC CODE. THE MINIMUM CABLE SIZE SHALL BE NO. 12 AWG.
7. ACTUAL NUMBER OF BREAKERS AND BREAKER RATINGS SHALL BE AS INDICATED ON PLANS AND RESPECTIVE PANEL SCHEDULES.

UNOFFICIAL WEBSITE COPY

ITMS LEGEND

- ITMS-CON – PROPOSED MULTIDUCT ITMS CONDUIT
- EX-ITS – EXISTING ITMS CONDUIT
- ITMS-CON – ITMS CONDUIT INSTALLED IN PHASE 1
- CA X – ITMS CABINET AND IDENTIFIER
- ITMS CONDUIT JUNCTION WELL
- JW X / JW X – JUNCTION WELL IDENTIFIER (TYPE) (EXISTING AND PROPOSED)
- CO X / CO X – CONDUIT RUN IDENTIFIER (# OF RUN) (EXISTING AND PROPOSED)
- PB X / PB X – POLE BASE IDENTIFIER (TYPE) (EXISTING AND PROPOSED)
- JB X – PROPOSED CONCRETE BARRIER JUNCTION BOX IDENTIFIER (TYPE)
- RM C – TO BE REMOVED BY CONTRACTOR
- AB – TO BE ABANDONED BY CONTRACTOR
- P – PROPOSED ELECTRICAL SERVICE ON PEDESTAL
- POLE BASE

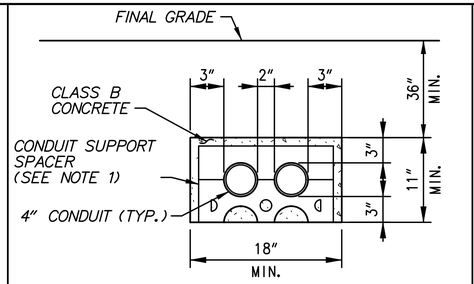

CONCRETE ENCASEMENT DETAIL

NTS

NOTE:
1. CONTRACTOR SHALL PROVIDE A CONDUIT SUPPORT SPACER DETAIL TO THE ENGINEER FOR APPROVAL PRIOR TO INSTALLATION.

SPECIAL NOTES:
1. ALL WORK ASSOCIATED WITH THE RELOCATION OF THE EXISTING ITMS PATHWAY LOCATED ALONG SR 1 SOUTHBOUND AS SHOWN ON DWG. NOS. SS-01 THROUGH SS-07 SHALL OCCUR AS THE FIRST ORDER OF WORK. ALL WORK SHALL BE COMPLETE, OPERATIONAL, AND ACCEPTED BY DELDOT TRAFFIC PRIOR TO IMPACTING EXISTING PATHWAY.
2. PRIOR TO RELOCATION OF THE ITMS PATHWAY THE CONTRACTOR SHALL STAKEOUT THE LOCATION OF ALL PROPOSED GUARDRAIL, GUARDRAIL END TREATMENTS, SIGNS, STRUCTURES AND DRAINAGE FEATURES WITHIN THE LIMITS OF THE PROPOSED ITMS PATHWAY AND CHECK FOR CONFLICTS WITH THE PROPOSED ITMS CONDUIT. ANY AND ALL COSTS ASSOCIATED WITH REPAIRS OR RELOCATION OF THE NEW ITMS CONDUIT DUE TO CONFLICTS WITH OTHER PROPOSED WORK SHALL BE MADE AT THE EXPENSE OF THE CONTRACTOR.

NOTES:
1. THE CONTRACTOR SHALL REMOVE THE EXISTING TYPE 4 JUNCTION WELL AND INSTALL A TYPE 7 JUNCTION WELL IN THE SAME LOCATION. COORDINATE REMOVAL AND INSTALLATION OF JUNCTION WELLS WITH DELDOT TRAFFIC. PROVIDE 4 WEEKS NOTICE.
2. CONDUITS TO BE INSTALLED IN CONCRETE ENCASED DUCT BANK, SEE DETAIL ON THIS SHEET.
3. CONSTRUCTION PHASE 1 CONDITIONS SHOWN.

ITMS CONDUIT RUN SCHEDULE

CO*	# OF CONDUITS	SIZE	LENGTH	B/T/O	AMOUNT AND TYPE OF CABLE/WIRE (SUPPLY AND INSTALLATION BY DELDOT FORCES)
1*	1	4 IN	371 FT**	-	1-144S, 1-24S, & 1-48S
2	2	4 IN	160 FT	T	1-144S, 1-24S, & 1-48S
3	2	4 IN	120 FT	T	1-144S, 1-24S, & 1-48S
4	2	4 IN	574 FT**	T	1-144S, 1-24S, & 1-48S

*DENOTES EXISTING CONDUIT
**QUANTITY CONTINUES ON ADJACENT SHEET
***DENOTES CONDUIT INSTALLED BY DELDOT FORCES

B = BORE, T = TRENCH, O = OPEN CUT, BM = BRIDGE MOUNTED

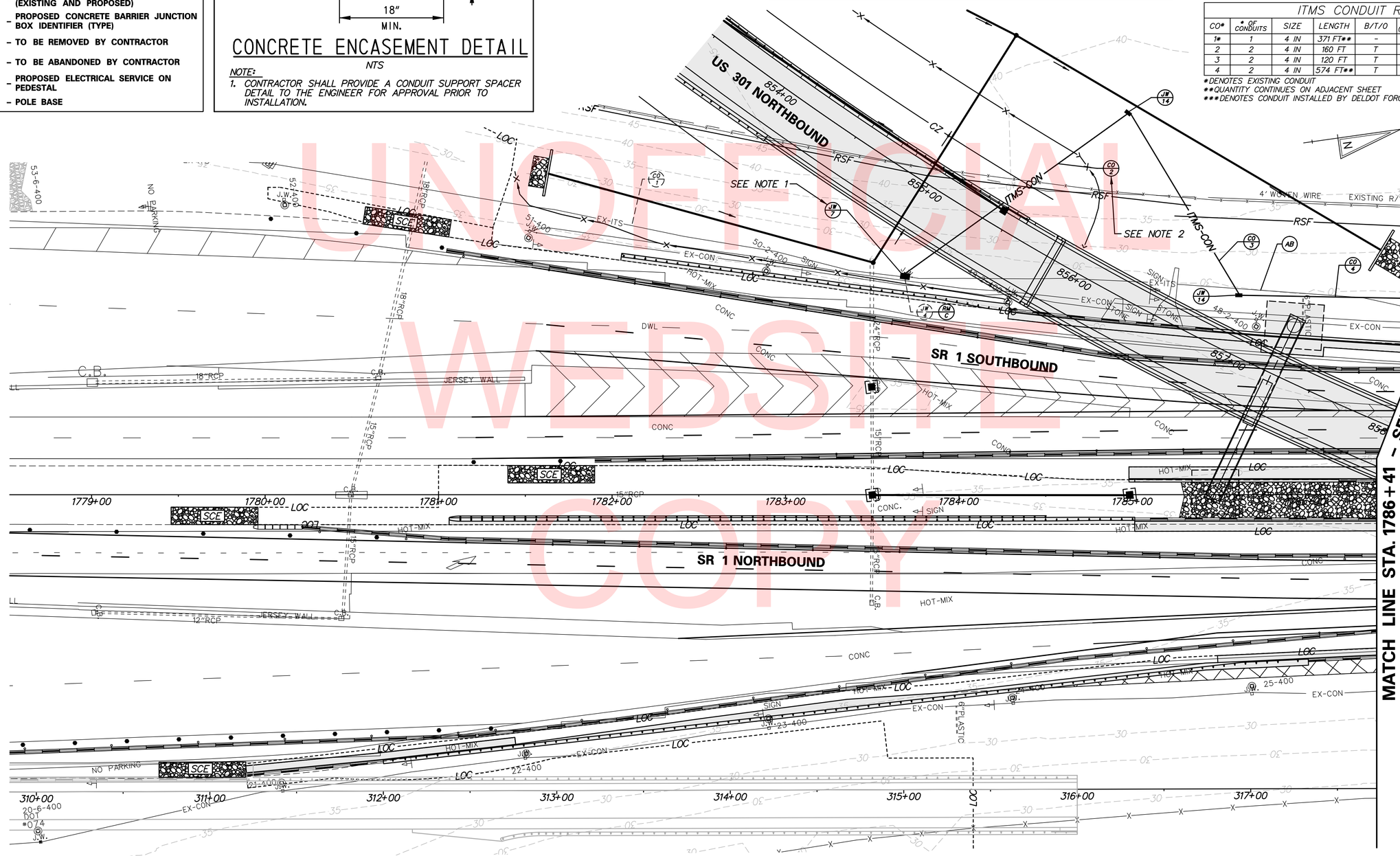

UNOFFICIAL WEBSITE COPY

DELAWARE DEPARTMENT OF TRANSPORTATION	ADDENDUMS / REVISIONS	SCALE 0 30 60 90 FEET	US 301 & SR 1 INTERCHANGE	CONTRACT T200911302	BRIDGE NO. BR1-433	ITMS PATHWAY RELOCATION PLANS	SS-01
				COUNTY NEW CASTLE	DESIGNED BY: J.H.R.	SIGNING, STRIPING & CONDUIT PLAN	SHEET NO. 450
					CHECKED BY: J.M.M.		TOTAL SHTS. 491

n:\31653-000\contract tb\cadd\traffic\2015 - updates\SS001U301_1B.dgn
12/18/2015 8:14:21 AM

SPECIAL NOTES:

1. ALL WORK ASSOCIATED WITH THE RELOCATION OF THE EXISTING ITMS PATHWAY LOCATED ALONG SR 1 SOUTHBOUND AS SHOWN ON DWG. NOS. SS-01 THROUGH SS-07 SHALL OCCUR AS THE FIRST ORDER OF WORK. ALL WORK SHALL BE COMPLETE, OPERATIONAL, AND ACCEPTED BY DELDOT TRAFFIC PRIOR TO IMPACTING EXISTING PATHWAY.

2. PRIOR TO RELOCATION OF THE ITMS PATHWAY THE CONTRACTOR SHALL STAKEOUT THE LOCATION OF ALL PROPOSED GUARDRAIL, GUARDRAIL END TREATMENTS, SIGNS, STRUCTURES AND DRAINAGE FEATURES WITHIN THE LIMITS OF THE PROPOSED ITMS PATHWAY AND CHECK FOR CONFLICTS WITH THE PROPOSED ITMS CONDUIT. ANY AND ALL COSTS ASSOCIATED WITH REPAIRS OR RELOCATION OF THE NEW ITMS CONDUIT DUE TO CONFLICTS WITH OTHER PROPOSED WORK SHALL BE MADE AT THE EXPENSE OF THE CONTRACTOR.

ITMS CONDUIT RUN SCHEDULE

CO*	# OF CONDUITS	SIZE	LENGTH	B/T/O	AMOUNT AND TYPE OF CABLE/WIRE (SUPPLY AND INSTALLATION BY DELDOT FORCES)
4	2	4 IN	574 FT**	T	1-144S, 1-24S, & 1-48S
5	2	4 IN	102 FT	B	1-144S, 1-24S, & 1-48S
6	2	4 IN	591 FT**	T/B	1-144S, 1-24S, & 1-48S

*DENOTES EXISTING CONDUIT
**QUANTITY CONTINUES ON ADJACENT SHEET
***DENOTES CONDUIT INSTALLED BY DELDOT FORCES

B = BORE, T = TRENCH, O = OPEN CUT, BM = BRIDGE MOUNTED

NOTES:

1. CONSTRUCTION PHASE 1 CONDITIONS SHOWN.

ITMS LEGEND

- ITMS-CON – PROPOSED MULTIDUCT ITMS CONDUIT
- EX-ITS – EXISTING ITMS CONDUIT
- ITMS-CON – ITMS CONDUIT INSTALLED IN PHASE 1
- CA/X – ITMS CABINET AND IDENTIFIER
- ITMS CONDUIT JUNCTION WELL
- JW/X – JUNCTION WELL IDENTIFIER (TYPE) (EXISTING AND PROPOSED)
- CO/X – CONDUIT RUN IDENTIFIER (# OF RUN) (EXISTING AND PROPOSED)
- PB/X – POLE BASE IDENTIFIER (TYPE) (EXISTING AND PROPOSED)
- JB/X – PROPOSED CONCRETE BARRIER JUNCTION BOX IDENTIFIER (TYPE)
- RM/C – TO BE REMOVED BY CONTRACTOR
- AB – TO BE ABANDONED BY CONTRACTOR
- P – PROPOSED ELECTRICAL SERVICE ON PEDESTAL
- POLE BASE

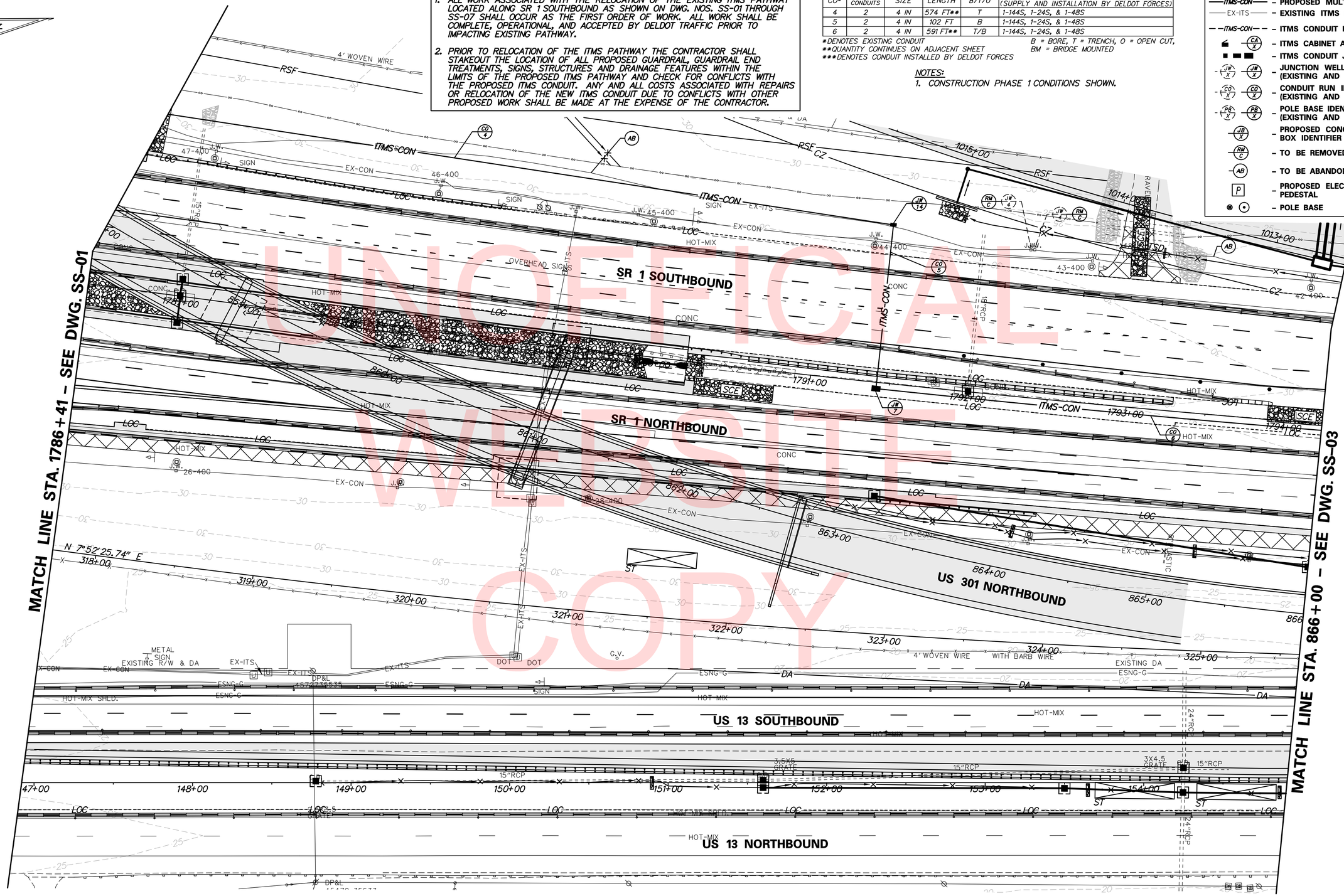

UNOFFICIAL WEBSITE COPY

DELAWARE DEPARTMENT OF TRANSPORTATION	ADDENDUMS / REVISIONS	SCALE 0 30 60 90 FEET	US 301 & SR 1 INTERCHANGE	CONTRACT T200911302 / COUNTY NEW CASTLE	BRIDGE NO. BR1-433, RW1-3 / DESIGNED BY: J.H.R. / CHECKED BY: J.M.M.

ITMS PATHWAY RELOCATION PLANS

SIGNING, STRIPING & CONDUIT PLAN

SS-02

SHEET NO. 451

TOTAL SHTS. 491

n:\31653-000\contract tb\cadd\traffic\2015 - updates\SS002U301_1B.dgn
12/18/2015 8:14:25 AM

ITMS CONDUIT RUN SCHEDULE

CO#	# OF CONDUITS	SIZE	LENGTH	B/T/O	AMOUNT AND TYPE OF CABLE/WIRE (SUPPLY AND INSTALLATION BY DELDOT FORCES)
6	2	4 IN	591 FT**	T/B	1-144S, 1-24S, & 1-48S
7	2	4 IN	594 FT**	T	1-144S, 1-24S, & 1-48S

*DENOTES EXISTING CONDUIT
**QUANTITY CONTINUES ON ADJACENT SHEET
***DENOTES CONDUIT INSTALLED BY DELDOT FORCES

B = BORE, T = TRENCH, O = OPEN CUT, BM = BRIDGE MOUNTED

NOTES:
1. CONSTRUCTION PHASE 1 CONDITIONS SHOWN.

SPECIAL NOTES:

1. ALL WORK ASSOCIATED WITH THE RELOCATION OF THE EXISTING ITMS PATHWAY LOCATED ALONG SR 1 SOUTHBOUND AS SHOWN ON DWG. NOS. SS-01 THROUGH SS-07 SHALL OCCUR AS THE FIRST ORDER OF WORK. ALL WORK SHALL BE COMPLETE, OPERATIONAL, AND ACCEPTED BY DELDOT TRAFFIC PRIOR TO IMPACTING EXISTING PATHWAY.
2. PRIOR TO RELOCATION OF THE ITMS PATHWAY THE CONTRACTOR SHALL STAKEOUT THE LOCATION OF ALL PROPOSED GUARDRAIL, GUARDRAIL END TREATMENTS, SIGNS, STRUCTURES AND DRAINAGE FEATURES WITHIN THE LIMITS OF THE PROPOSED ITMS PATHWAY AND CHECK FOR CONFLICTS WITH THE PROPOSED ITMS CONDUIT. ANY AND ALL COSTS ASSOCIATED WITH REPAIRS OR RELOCATION OF THE NEW ITMS CONDUIT DUE TO CONFLICTS WITH OTHER PROPOSED WORK SHALL BE MADE AT THE EXPENSE OF THE CONTRACTOR.

ITMS LEGEND

- ITMS-CON – PROPOSED MULTIDUCT ITMS CONDUIT
- EX-ITS – EXISTING ITMS CONDUIT
- ITMS-CON – ITMS CONDUIT INSTALLED IN PHASE 1
- CA X – ITMS CABINET AND IDENTIFIER
- ITMS CONDUIT JUNCTION WELL
- JW X – JUNCTION WELL IDENTIFIER (TYPE) (EXISTING AND PROPOSED)
- CO X – CONDUIT RUN IDENTIFIER (# OF RUN) (EXISTING AND PROPOSED)
- PB X – POLE BASE IDENTIFIER (TYPE) (EXISTING AND PROPOSED)
- JB X – PROPOSED CONCRETE BARRIER JUNCTION BOX IDENTIFIER (TYPE)
- RM C – TO BE REMOVED BY CONTRACTOR
- AB – TO BE ABANDONED BY CONTRACTOR
- P – PROPOSED ELECTRICAL SERVICE ON PEDESTAL
- POLE BASE

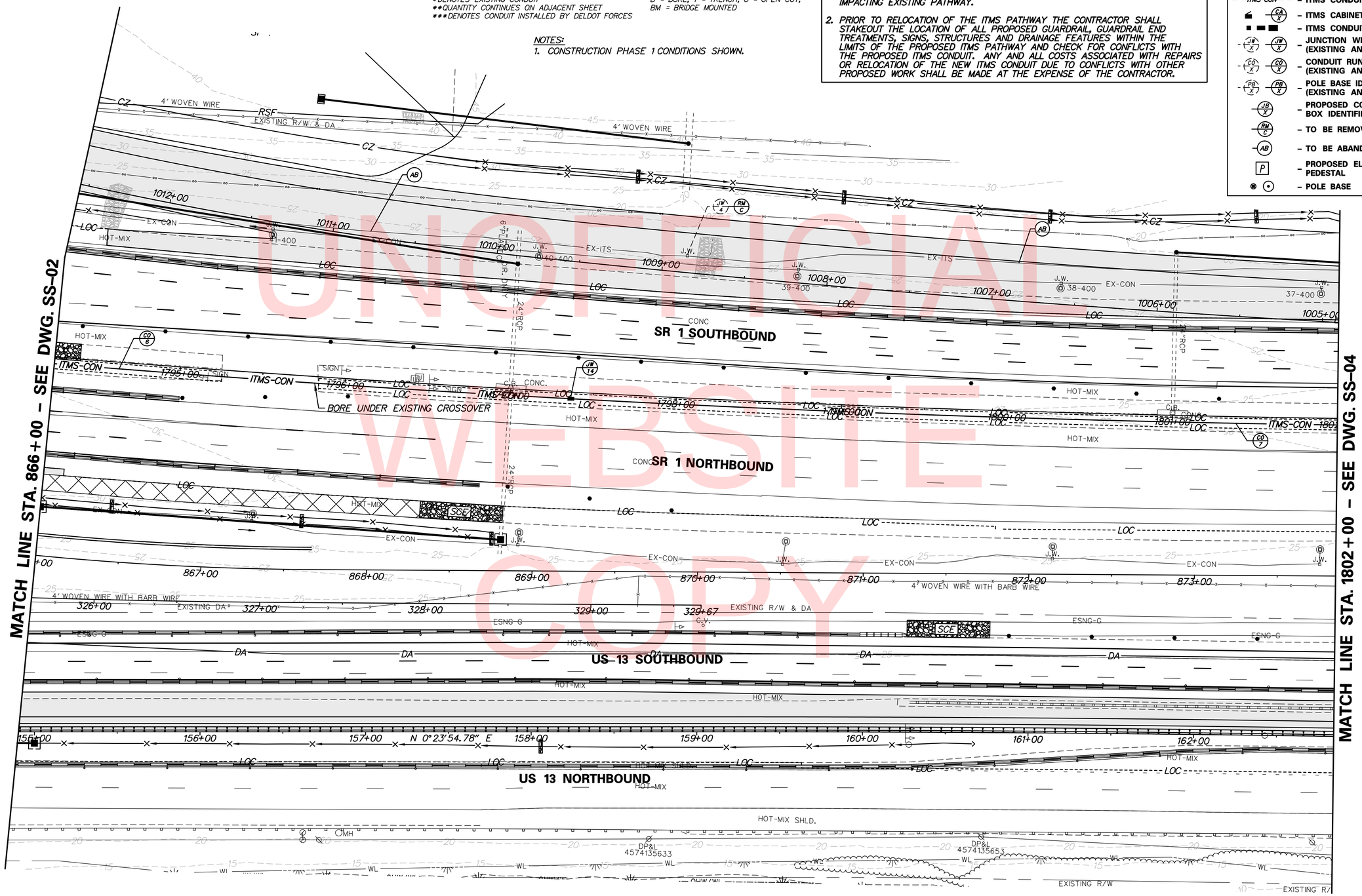

UNOFFICIAL WEBSITE COPY

DELAWARE DEPARTMENT OF TRANSPORTATION	ADDENDUMS / REVISIONS	SCALE 0 30 60 90 FEET	US 301 & SR 1 INTERCHANGE	CONTRACT T200911302 / COUNTY NEW CASTLE	BRIDGE NO. / DESIGNED BY: J.H.R. / CHECKED BY: J.M.M.

ITMS PATHWAY RELOCATION PLANS — SS-03

SIGNING, STRIPING & CONDUIT PLAN

SHEET NO. 452 / TOTAL SHTS. 491

n:\31653-000\contract tb\cadd\traffic\2015 - updates\SS003U301_1B.dgn
12/18/2015 8:14:29 AM

NOTES:

1. PROPOSED CONDUITS SHALL BE RIGID GALVANIZED STEEL. INSTALL PROPOSED CONDUIT ON MEDIAN SIDE OF BRIDGE 1-903S USING A STAINLESS STEEL CHANNELIZED CONDUIT SUPPORT STRUT AND CONDUIT CLAMPS. EXPANSION COUPLINGS SHALL BE USED WHERE THE CONDUIT SPANS JOINTS IN THE BRIDGE STRUCTURE. THE CONDUIT SUPPORT STRUT SHALL BE INSTALLED APPROXIMATELY 2'-0" BELOW THE TOP OF THE PARAPET AND ANCHORED INTO THE CONCRETE USING AN ADHESIVE ANCHOR. THE CONDUIT SUPPORTS SHALL BE SPACED A MAXIMUM DISTANCE OF 15 FEET ON CENTER BETWEEN SUPPORTS AND SHALL BE LOCATED WITHIN 3 FEET OF EITHER SIDE OF ANY EXPANSION COUPLINGS, ELBOWS OR OTHER NECESSARY FITTINGS.

2. THE CONTRACTOR SHALL SUBMIT TO THE ENGINEER FOR APPROVAL SHOP DRAWINGS OF THE PROPOSED CONDUIT SUPPORT SYSTEM COMPONENTS INCLUDING RELEVANT LOAD CALCULATIONS AND PROPOSED SUPPORT LOCATIONS. PAYMENT FOR THE CONDUIT SUPPORT SYSTEM, INCLUDING SHOP DRAWING PREPARATION AND CALCULATIONS, WILL BE MADE UNDER THE INSTALLATION OF CONDUIT ON STRUCTURE ITEM.

3. CONSTRUCTION PHASE 1 CONDITIONS SHOWN.

ITMS CONDUIT RUN SCHEDULE

CO#	# OF CONDUITS	SIZE	LENGTH	B/T/O	AMOUNT AND TYPE OF CABLE/WIRE (SUPPLY AND INSTALLATION BY DELDOT FORCES)
7	2	4 IN	594 FT**	T	1-144S, 1-24S, & 1-48S
8	2	4 IN	591 FT	T	1-144S, 1-24S, & 1-48S
9	2	4 IN	176 FT**	BM	1-144S, 1-24S, & 1-48S

*DENOTES EXISTING CONDUIT
**QUANTITY CONTINUES ON ADJACENT SHEET
***DENOTES CONDUIT INSTALLED BY DELDOT FORCES

B = BORE, T = TRENCH, O = OPEN CUT, BM = BRIDGE MOUNTED

ITMS LEGEND

- ITMS-CON – PROPOSED MULTIDUCT ITMS CONDUIT
- EX-ITS – EXISTING ITMS CONDUIT
- ITMS-CON – ITMS CONDUIT INSTALLED IN PHASE 1
- CA X – ITMS CABINET AND IDENTIFIER
- ITMS CONDUIT JUNCTION WELL
- JW X – JUNCTION WELL IDENTIFIER (TYPE) (EXISTING AND PROPOSED)
- CO X – CONDUIT RUN IDENTIFIER (# OF RUN) (EXISTING AND PROPOSED)
- PB X – POLE BASE IDENTIFIER (TYPE) (EXISTING AND PROPOSED)
- JB X – PROPOSED CONCRETE BARRIER JUNCTION BOX IDENTIFIER (TYPE)
- RM C – TO BE REMOVED BY CONTRACTOR
- AB – TO BE ABANDONED BY CONTRACTOR
- P – PROPOSED ELECTRICAL SERVICE ON PEDESTAL
- POLE BASE

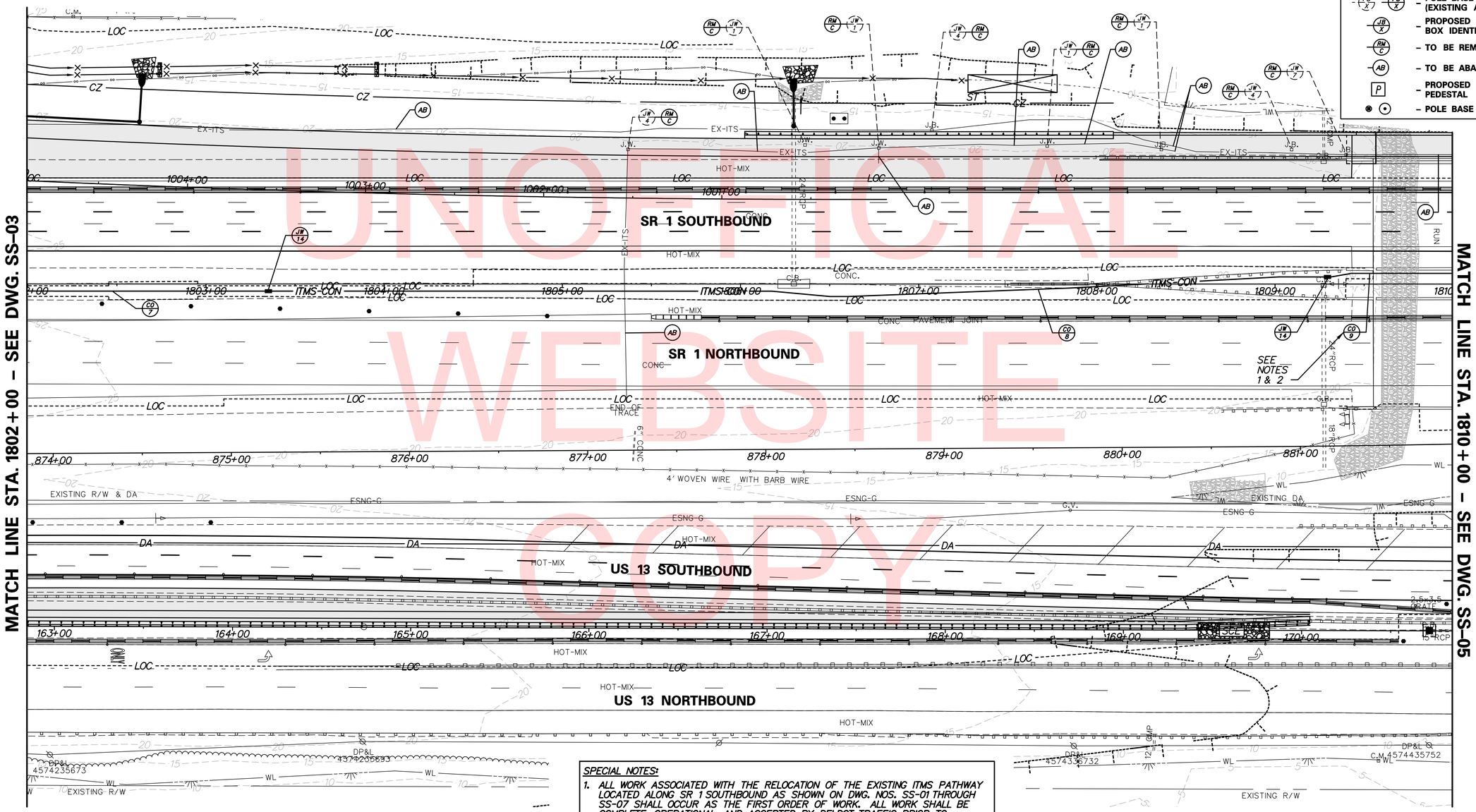

SPECIAL NOTES:

1. ALL WORK ASSOCIATED WITH THE RELOCATION OF THE EXISTING ITMS PATHWAY LOCATED ALONG SR 1 SOUTHBOUND AS SHOWN ON DWG. NOS. SS-01 THROUGH SS-07 SHALL OCCUR AS THE FIRST ORDER OF WORK. ALL WORK SHALL BE COMPLETE, OPERATIONAL, AND ACCEPTED BY DELDOT TRAFFIC PRIOR TO IMPACTING EXISTING PATHWAY.

2. PRIOR TO RELOCATION OF THE ITMS PATHWAY THE CONTRACTOR SHALL STAKEOUT THE LOCATION OF ALL PROPOSED GUARDRAIL, GUARDRAIL END TREATMENTS, SIGNS, STRUCTURES AND DRAINAGE FEATURES WITHIN THE LIMITS OF THE PROPOSED ITMS PATHWAY AND CHECK FOR CONFLICTS WITH THE PROPOSED ITMS CONDUIT. ANY AND ALL COSTS ASSOCIATED WITH REPAIRS OR RELOCATION OF THE NEW ITMS CONDUIT DUE TO CONFLICTS WITH OTHER PROPOSED WORK SHALL BE MADE AT THE EXPENSE OF THE CONTRACTOR.

UNOFFICIAL WEBSITE COPY

DELAWARE DEPARTMENT OF TRANSPORTATION

ADDENDUMS / REVISIONS

SCALE 0 30 60 90 FEET

US 301 & SR 1 INTERCHANGE

CONTRACT	BRIDGE NO.	BR1-903N, BR1-903S & RW1-1
T200911302	DESIGNED BY: J.H.R.	
COUNTY		
NEW CASTLE	CHECKED BY: J.M.M.	

ITMS PATHWAY RELOCATION PLANS

SIGNING, STRIPING & CONDUIT PLAN

SS-04

SHEET NO. 453

TOTAL SHTS. 491

n:\33653-000\contract tb\cadd\traffic\2015 - updates\SS004U301_IB.dgn
12/18/2015 8:14:33 AM

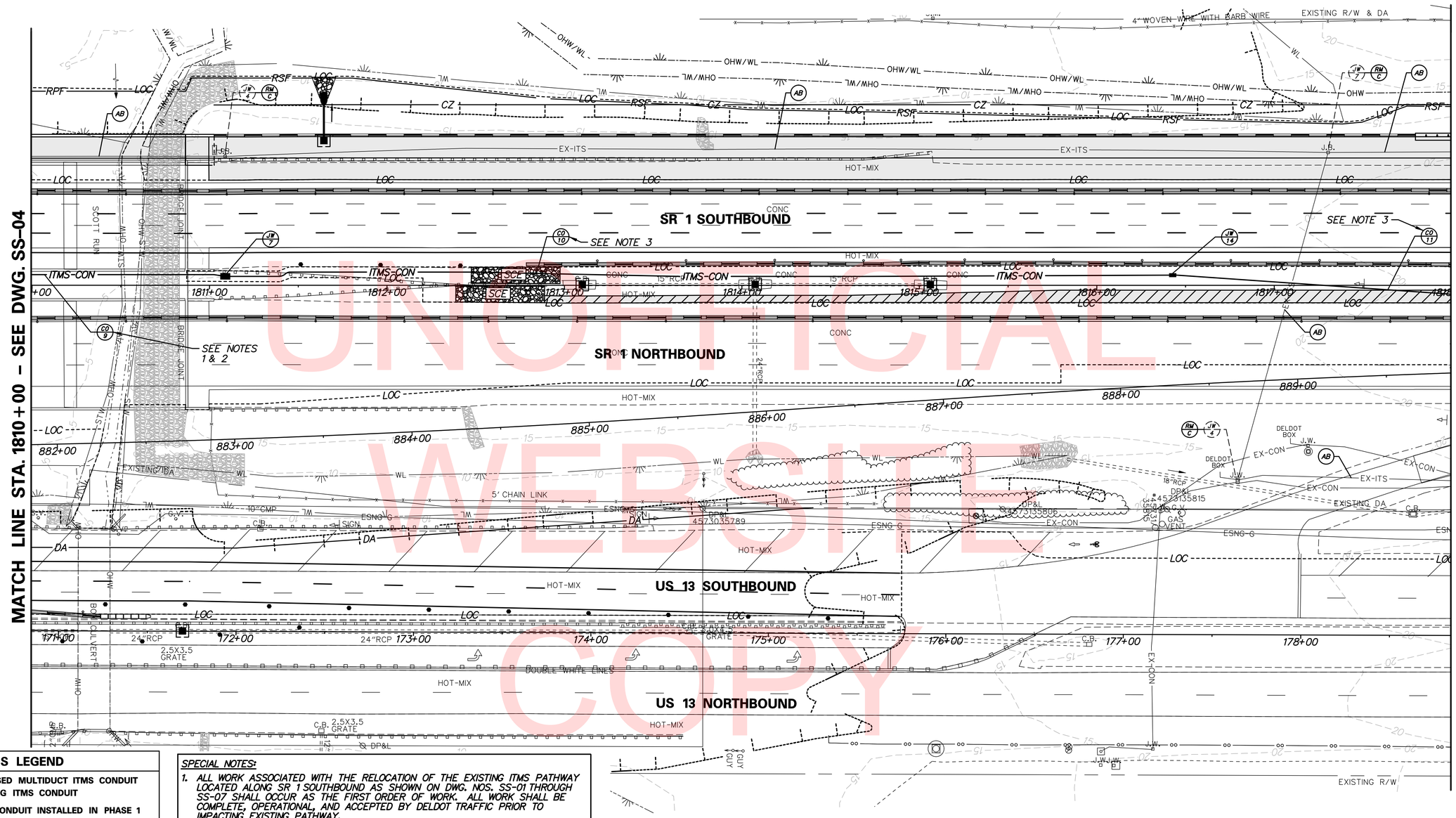

UNOFFICIAL WEBSITE COPY

ITMS LEGEND

- ITMS-CON – PROPOSED MULTIDUCT ITMS CONDUIT
- EX-ITS – EXISTING ITMS CONDUIT
- ITMS-CON – ITMS CONDUIT INSTALLED IN PHASE 1
- CA X – ITMS CABINET AND IDENTIFIER
- ITMS CONDUIT JUNCTION WELL
- JW X – JUNCTION WELL IDENTIFIER (TYPE) (EXISTING AND PROPOSED)
- CO X – CONDUIT RUN IDENTIFIER (# OF RUN) (EXISTING AND PROPOSED)
- PB X – POLE BASE IDENTIFIER (TYPE) (EXISTING AND PROPOSED)
- JB X – PROPOSED CONCRETE BARRIER JUNCTION BOX IDENTIFIER (TYPE)
- RM C – TO BE REMOVED BY CONTRACTOR
- AB – TO BE ABANDONED BY CONTRACTOR
- P – PROPOSED ELECTRICAL SERVICE ON PEDESTAL
- POLE BASE

SPECIAL NOTES:

1. *ALL WORK ASSOCIATED WITH THE RELOCATION OF THE EXISTING ITMS PATHWAY LOCATED ALONG SR 1 SOUTHBOUND AS SHOWN ON DWG. NOS. SS-01 THROUGH SS-07 SHALL OCCUR AS THE FIRST ORDER OF WORK. ALL WORK SHALL BE COMPLETE, OPERATIONAL, AND ACCEPTED BY DELDOT TRAFFIC PRIOR TO IMPACTING EXISTING PATHWAY.*
2. *PRIOR TO RELOCATION OF THE ITMS PATHWAY THE CONTRACTOR SHALL STAKEOUT THE LOCATION OF ALL PROPOSED GUARDRAIL, GUARDRAIL END TREATMENTS, SIGNS, STRUCTURES AND DRAINAGE FEATURES WITHIN THE LIMITS OF THE PROPOSED ITMS PATHWAY AND CHECK FOR CONFLICTS WITH THE PROPOSED ITMS CONDUIT. ANY AND ALL COSTS ASSOCIATED WITH REPAIRS OR RELOCATION OF THE NEW ITMS CONDUIT DUE TO CONFLICTS WITH OTHER PROPOSED WORK SHALL BE MADE AT THE EXPENSE OF THE CONTRACTOR.*

ITMS CONDUIT RUN SCHEDULE

CO#	# OF CONDUITS	SIZE	LENGTH	B/T/O	AMOUNT AND TYPE OF CABLE/WIRE (SUPPLY AND INSTALLATION BY DELDOT FORCES)
9	2	4 IN	176 FT**	BM	1-144S, 1-24S, & 1-48S
10	2	4 IN	530 FT	T/O	1-144S, 1-24S, & 1-48S
11	2	4 IN	527 FT**	T/B	1-144S, 1-24S, & 1-48S

*DENOTES EXISTING CONDUIT
**QUANTITY CONTINUES ON ADJACENT SHEET
***DENOTES CONDUIT INSTALLED BY DELDOT FORCES
B = BORE, T = TRENCH, O = OPEN CUT, BM = BRIDGE MOUNTED

NOTES:

1. *PROPOSED CONDUITS SHALL BE RIGID GALVANIZED STEEL. INSTALL PROPOSED CONDUIT ON MEDIAN SIDE OF BRIDGE 1-903S USING A STAINLESS STEEL CHANNELIZED CONDUIT SUPPORT STRUT AND CONDUIT CLAMPS. EXPANSION COUPLINGS SHALL BE USED WHERE THE CONDUIT SPANS JOINTS IN THE BRIDGE STRUCTURE. THE CONDUIT SUPPORT STRUT SHALL BE INSTALLED APPROXIMATELY 2'-0" BELOW THE TOP OF THE PARAPET AND ANCHORED INTO THE CONCRETE USING AN ADHESIVE ANCHOR. THE CONDUIT SUPPORTS SHALL BE SPACED A MAXIMUM DISTANCE OF 15 FEET ON CENTER BETWEEN SUPPORTS AND SHALL BE LOCATED WITHIN 3 FEET OF EITHER SIDE OF ANY EXPANSION COUPLINGS, ELBOWS OR OTHER NECESSARY FITTINGS.*
2. *THE CONTRACTOR SHALL SUBMIT TO THE ENGINEER FOR APPROVAL SHOP DRAWINGS OF THE PROPOSED CONDUIT SUPPORT SYSTEM COMPONENTS INCLUDING RELEVANT LOAD CALCULATIONS AND PROPOSED SUPPORT LOCATIONS. PAYMENT FOR THE CONDUIT SUPPORT SYSTEM, INCLUDING SHOP DRAWING PREPARATION AND CALCULATIONS, WILL BE MADE UNDER THE INSTALLATION OF CONDUIT ON STRUCTURE ITEM.*
3. *CONDUIT SHALL BE INSTALLED A MINIMUM OF 36" BELOW FINISHED GRADE TO AVOID IMPACTS DURING CONSTRUCTION AND REMOVAL OF TEMPORARY PAVEMENT. COST OF INSTALLING CONDUIT AT ADDITIONAL DEPTH WILL NOT BE MEASURED AND PAID FOR BUT WILL BE INCIDENTAL TO THE PERTINENT CONDUIT INSTALLATION ITEM.*
4. *CONSTRUCTION PHASE 1 CONDITIONS SHOWN.*

ITMS PATHWAY RELOCATION PLANS — SS-05

DELAWARE DEPARTMENT OF TRANSPORTATION

ADDENDUMS / REVISIONS

SCALE 0 30 60 90 FEET

US 301 & SR 1 INTERCHANGE

CONTRACT	BRIDGE NO.	BR1-903N, BR1-903S & RW1-1
T200911302	DESIGNED BY: J.H.R.	
COUNTY		
NEW CASTLE	CHECKED BY: J.M.M.	

SIGNING, STRIPING & CONDUIT PLAN

SHEET NO. 454 — TOTAL SHTS. 491

n:\31653-000\contract tb\cadd\traffic\2015 - updates\SS005U301_1B.dgn
12/18/2015 8:14:37 AM

NOTES:

1. TERMINATE PROPOSED CONDUIT AT EXISTING JUNCTION WELL TO REESTABLISH COMMUNICATIONS FOR EXISTING CCTV CAMERA. COORDINATE WORK WITH DELDOT TRAFFIC. PROVIDE 4 WEEKS NOTICE. REPAIR EXISTING JUNCTION WELL.
2. CONDUIT SHALL BE INSTALLED A MINIMUM OF 36" BELOW FINISHED GRADE TO AVOID IMPACTS DURING CONSTRUCTION AND REMOVAL OF TEMPORARY PAVEMENT. COST OF INSTALLING CONDUIT AT ADDITIONAL DEPTH WILL NOT BE MEASURED AND PAID FOR BUT WILL BE INCIDENTAL TO THE PERTINENT CONDUIT INSTALLATION ITEM.
3. CONSTRUCTION PHASE 1 CONDITIONS SHOWN.

ITMS CONDUIT RUN SCHEDULE

CO*	# OF CONDUITS	SIZE	LENGTH	B/T/O	AMOUNT AND TYPE OF CABLE/WIRE (SUPPLY AND INSTALLATION BY DELDOT FORCES)
11	2	4 IN	527 FT**	T/B	1-144S, 1-24S, & 1-48S
12	2	4 IN	485 FT**	T	1-144S, 1-24S, & 1-48S
14	1	4 IN	411 FT**	T	1-12S

*DENOTES EXISTING CONDUIT
**QUANTITY CONTINUES ON ADJACENT SHEET
***DENOTES CONDUIT INSTALLED BY DELDOT FORCES

B = BORE, T = TRENCH, O = OPEN CUT, BM = BRIDGE MOUNTED

SPECIAL NOTES:

1. ALL WORK ASSOCIATED WITH THE RELOCATION OF THE EXISTING ITMS PATHWAY LOCATED ALONG SR 1 SOUTHBOUND AS SHOWN ON DWG. NOS. SS-01 THROUGH SS-07 SHALL OCCUR AS THE FIRST ORDER OF WORK. ALL WORK SHALL BE COMPLETE, OPERATIONAL, AND ACCEPTED BY DELDOT TRAFFIC PRIOR TO IMPACTING EXISTING PATHWAY.
2. PRIOR TO RELOCATION OF THE ITMS PATHWAY THE CONTRACTOR SHALL STAKEOUT THE LOCATION OF ALL PROPOSED GUARDRAIL, GUARDRAIL END TREATMENTS, SIGNS, STRUCTURES AND DRAINAGE FEATURES WITHIN THE LIMITS OF THE PROPOSED ITMS PATHWAY AND CHECK FOR CONFLICTS WITH THE PROPOSED ITMS CONDUIT. ANY AND ALL COSTS ASSOCIATED WITH REPAIRS OR RELOCATION OF THE NEW ITMS CONDUIT DUE TO CONFLICTS WITH OTHER PROPOSED WORK SHALL BE MADE AT THE EXPENSE OF THE CONTRACTOR.

ITMS LEGEND

- ITMS-CON – PROPOSED MULTIDUCT ITMS CONDUIT
- EX-ITS – EXISTING ITMS CONDUIT
- ITMS-CON – ITMS CONDUIT INSTALLED IN PHASE 1
- CA X – ITMS CABINET AND IDENTIFIER
- ITMS CONDUIT JUNCTION WELL
- JW X – JUNCTION WELL IDENTIFIER (TYPE) (EXISTING AND PROPOSED)
- CO X – CONDUIT RUN IDENTIFIER (# OF RUN) (EXISTING AND PROPOSED)
- PB X – POLE BASE IDENTIFIER (TYPE) (EXISTING AND PROPOSED)
- JB X – PROPOSED CONCRETE BARRIER JUNCTION BOX IDENTIFIER (TYPE)
- RM C – TO BE REMOVED BY CONTRACTOR
- AB – TO BE ABANDONED BY CONTRACTOR
- P – PROPOSED ELECTRICAL SERVICE ON PEDESTAL
- POLE BASE

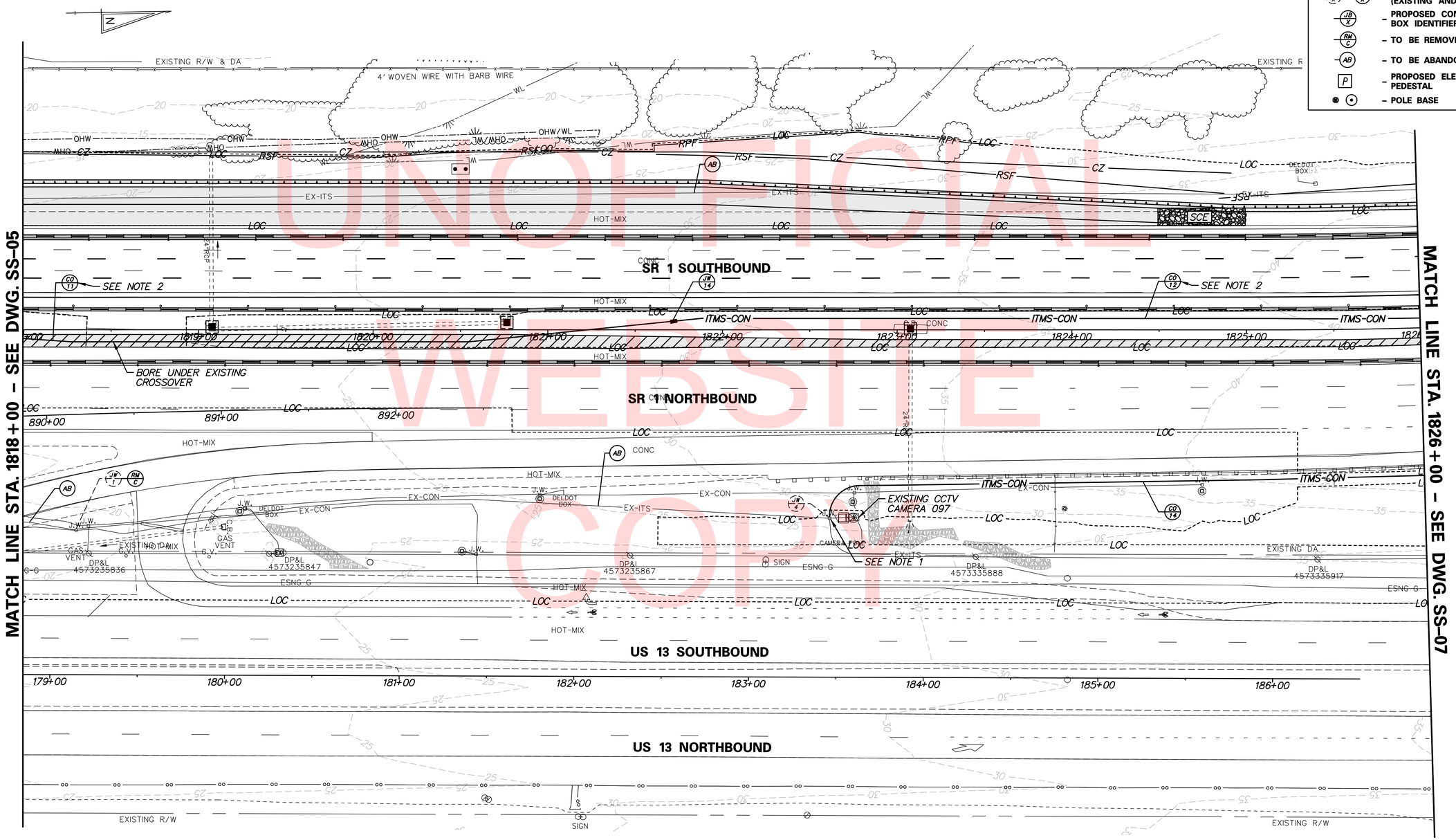

UNOFFICIAL WEBSITE COPY

DELAWARE DEPARTMENT OF TRANSPORTATION	ADDENDUMS / REVISIONS	SCALE 0 30 60 90 FEET	US 301 & SR 1 INTERCHANGE	CONTRACT T200911302	BRIDGE NO.	ITMS PATHWAY RELOCATION PLANS	SS-06
				COUNTY NEW CASTLE	DESIGNED BY: J.H.R.	SIGNING, STRIPING & CONDUIT PLAN	SHEET NO. 455
					CHECKED BY: J.M.M.		TOTAL SHTS. 491

n:\31653-000\contract tb\cadd\traffic\2015 - updates\SS006U301_1B.dgn
12/18/2015 8:14:42 AM

NOTES:

1. THE CONTRACTOR SHALL REMOVE THE EXISTING TYPE 4 JUNCTION WELL AND INSTALL A TYPE 7 JUNCTION WELL IN THE SAME LOCATION. COORDINATE REMOVAL AND INSTALLATION OF JUNCTION WELLS WITH DELDOT TRAFFIC. PROVIDE 4 WEEKS NOTICE.
2. CONDUIT SHALL BE INSTALLED A MINIMUM OF 36" BELOW FINISHED GRADE TO AVOID IMPACTS DURING CONSTRUCTION AND REMOVAL OF TEMPORARY PAVEMENT. COST OF INSTALLING CONDUIT AT ADDITIONAL DEPTH WILL NOT BE MEASURED AND PAID FOR BUT WILL BE INCIDENTAL TO THE PERTINENT CONDUIT INSTALLATION ITEM.
3. CONSTRUCTION PHASE 1 CONDITIONS SHOWN.
4. INSTALL MODIFIED CABINET BASE FOR TYPE F CABINET BY OTHERS (SEE DETAIL THIS SHEET).

SPECIAL NOTES:

1. ALL WORK ASSOCIATED WITH THE RELOCATION OF THE EXISTING ITMS PATHWAY LOCATED ALONG SR 1 SOUTHBOUND AS SHOWN ON DWG. NOS. SS-01 THROUGH SS-07 SHALL OCCUR AS THE FIRST ORDER OF WORK. ALL WORK SHALL BE COMPLETE, OPERATIONAL, AND ACCEPTED BY DELDOT TRAFFIC PRIOR TO IMPACTING EXISTING PATHWAY.
2. PRIOR TO RELOCATION OF THE ITMS PATHWAY THE CONTRACTOR SHALL STAKEOUT THE LOCATION OF ALL PROPOSED GUARDRAIL, GUARDRAIL END TREATMENTS, SIGNS, STRUCTURES AND DRAINAGE FEATURES WITHIN THE LIMITS OF THE PROPOSED ITMS PATHWAY AND CHECK FOR CONFLICTS WITH THE PROPOSED ITMS CONDUIT. ANY AND ALL COSTS ASSOCIATED WITH REPAIRS OR RELOCATION OF THE NEW ITMS CONDUIT DUE TO CONFLICTS WITH OTHER PROPOSED WORK SHALL BE MADE AT THE EXPENSE OF THE CONTRACTOR.

ITMS CONDUIT RUN SCHEDULE

CO*	# OF CONDUITS	SIZE	LENGTH	B/T/O	AMOUNT AND TYPE OF CABLE/WIRE (SUPPLY AND INSTALLATION BY DELDOT FORCES)
12	2	4 IN	485 FT**	T	1-144S, 1-24S, & 1-48S
13	2	4 IN	72 FT	B	1-144S, 1-24S, & 1-48S
14	1	4 IN	411 FT**	T	1-12S
15	1	4 IN	89 FT	B	1-12S
20*	1	4 IN	913 FT	-	1-144S, 1-24S, & 1-48S
58	6	4 IN	9 FT	T	COMMUNICATION CABLES

*DENOTES EXISTING CONDUIT
**QUANTITY CONTINUES ON ADJACENT SHEET
***DENOTES CONDUIT INSTALLED BY DELDOT FORCES

B = BORE, T = TRENCH, O = OPEN CUT, BM = BRIDGE MOUNTED

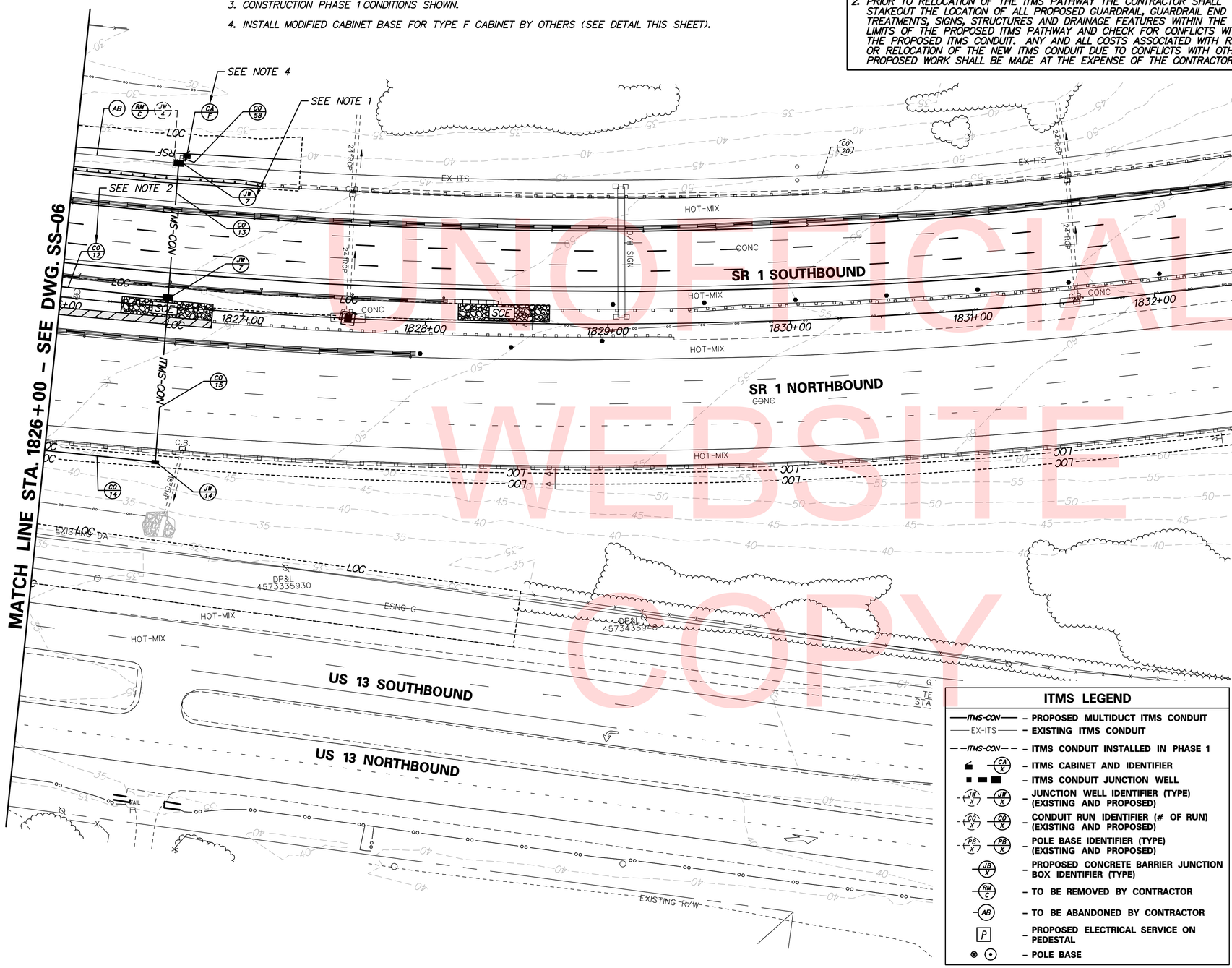

ITMS LEGEND

- ITMS-CON — PROPOSED MULTIDUCT ITMS CONDUIT
- EX-ITS — EXISTING ITMS CONDUIT
- ITMS-CON — ITMS CONDUIT INSTALLED IN PHASE 1
- CA X — ITMS CABINET AND IDENTIFIER
- ITMS CONDUIT JUNCTION WELL
- JW X — JUNCTION WELL IDENTIFIER (TYPE) (EXISTING AND PROPOSED)
- CO X — CONDUIT RUN IDENTIFIER (# OF RUN) (EXISTING AND PROPOSED)
- PB X — POLE BASE IDENTIFIER (TYPE) (EXISTING AND PROPOSED)
- JB X — PROPOSED CONCRETE BARRIER JUNCTION BOX IDENTIFIER (TYPE)
- RM C — TO BE REMOVED BY CONTRACTOR
- AB — TO BE ABANDONED BY CONTRACTOR
- P — PROPOSED ELECTRICAL SERVICE ON PEDESTAL
- POLE BASE

TYPE F CABINET BASE DETAIL

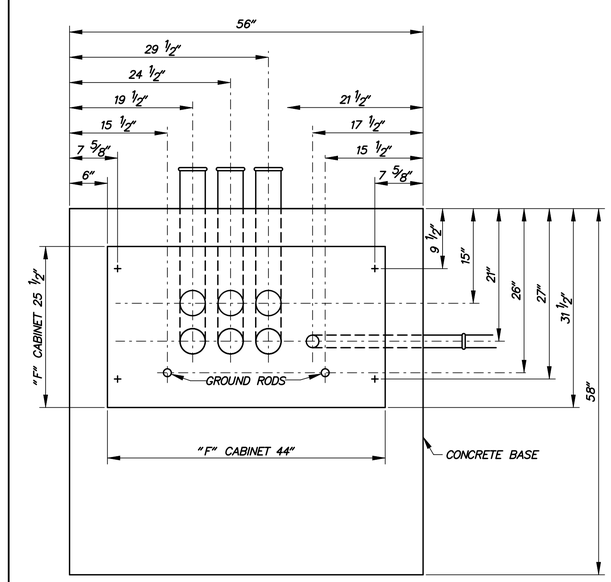

UNOFFICIAL WEBSITE COPY

ITMS PATHWAY RELOCATION PLANS — SS-07

DELAWARE DEPARTMENT OF TRANSPORTATION

ADDENDUMS / REVISIONS

SCALE 0 30 60 90 FEET

US 301 & SR 1 INTERCHANGE

CONTRACT	BRIDGE NO.
T200911302	DESIGNED BY: J.H.R.
COUNTY	
NEW CASTLE	CHECKED BY: J.M.M.

SIGNING, STRIPING & CONDUIT PLAN

SHEET NO. 456 / TOTAL SHTS. 491

n:\31653-000\contract tb\cadd\traffic\2015 - updates\SS0071301_18.dgn
12/18/2015 8:14:46 AM

SIGNING, STRIPING AND CONDUIT PLAN GENERAL NOTES:

1. THE CONTRACTOR SHALL INSTALL AND REMOVE ALL REGULATORY, WARNING AND SPECIAL SIGNS AND SIGN POSTS WITHIN THE CONTRACT LIMITS, AS SHOWN. DELDOT SHALL FURNISH AND SUPPLY THE STANDARD REGULATORY AND WARNING SIGNS AND STANDARD SIGN POSTS TO THE CONTRACTOR FOR INSTALLATION. FOR COORDINATION AND PICK-UP OF SIGNS AND POSTS THE CONTRACTOR SHALL CONTACT DELDOT'S SIGN SHOP AT (302) 760-2581. ALLOW SIX WEEKS FOR SIGN FABRICATION.
2. THE CONTRACTOR SHALL FURNISH AND INSTALL ALL NON-STANDARD SIGNS SHOWN ON THE GUIDE SIGN DIMENSIONS AND DETAILS SHEETS AND ALL STEEL BEAM SIGN SUPPORTS AS SHOWN ON PLANS.
3. UNLESS OTHERWISE NOTED, THE CONTRACTOR SHALL FURNISH AND INSTALL ALL CONDUIT, JUNCTION WELLS, POLE BASES AND CABINET BASES FOR ITMS DEVICES. DELDOT FORCES TO FURNISH AND INSTALL ALL ELECTRICAL AND COMMUNICATION CABLES, ELECTRICAL SERVICE FEEDS, CABINETS AND ITMS DEVICES (RTMS AND CCTV).
4. INSTALLATION OF GROUND MOUNT SIGNS ON DELDOT SUPPLIED STANDARD SIGN POSTS SHALL BE PAID FOR UNDER ITEM NOS. 749687 - INSTALLATION OR REMOVAL OF TRAFFIC SIGN(S) ON SINGLE SIGN POST AND 749690 - INSTALLATION OR REMOVAL OF TRAFFIC SIGNS ON MULTIPLE SIGN POSTS. INSTALLATION OF GROUND MOUNT SIGNS ON STEEL BEAM SIGN SUPPORTS SHALL BE PAID FOR UNDER ITEM NO. 605501 - GROUND MOUNT BREAKAWAY TYPE SIGN SUPPORTS AND FOUNDATION.
5. ALL CONCRETE FOUNDATIONS FOR SIGN STRUCTURES AND GROUND MOUNTED SIGNS DESIGNATED TO BE REMOVED SHALL BE REMOVED 1' BELOW FINAL GRADE.
6. ALL UNDERGROUD CONDUITS FOR ITMS SHALL BE SCHEDULE 80 RIGID PVC WHEN INSTALLED BY TRENCHING AND SDR-13.5 HDPE WHEN INSTALLED BY BORING UNLESS OTHERWISE NOTED.

NOTES:

1. PLOWABLE RAISED PAVEMENT MARKERS (RPMS) SHALL BE INSTALLED THROUGHOUT THE LIMITS OF THE PROPOSED PAVEMENT STRIPING AS PER FIGURES 3B-15A THROUGH 3B-15H OF THE DELAWARE MUTCD, AS APPLICABLE BELOW:
   - IN AREAS WHERE NEW LANES HAVE BEEN ADDED INSTALL RPMS AS NOTED ABOVE.
   - IN AREAS WHERE EXISTING LENSES WERE REMOVED DURING CONSTRUCTION PHASING, NEW LENSES ONLY SHALL BE INSTALLED IN THOSE AEAS WHERE PROPOSED STRIPING MATCHES EXISTING.
   - IN AREAS WHERE RPMS EXISTED PREVIOUSLY, BUT LANES HAVE NOW BEEN REMOVED IN THE ULTIMATE CONFIGURATION THE RPM HOUSING SHALL REMAIN WITH NO NEW LENS INSTALLED.
2. INSTALL POST MOUNTED AND/OR BARRIER MOUNTED DELINEATORS ALONG THE LIMITS OF THE PROPOSED CONSTRUCTION AS PER PART 3 OF THE DELAWARE MUTCD.
3. PROPOSED RTMS ON 40' STEEL POLE FOR SOUTHBOUND US 301 DETECTION (RTMS DEVICE, CABINET, SOLAR PANEL AND POLE BY DELDOT FORCES). MOUNT RTMS AT 18 FEET ABOVE ROADWAY SURFACE.

SIGNING LEGEND

①	REMOVE EXISTING SIGN
②	EXISTING SIGN TO REMAIN
③	PLACE NEW SIGN
④	RENEW EXISTING SIGN
⑤	REPOSITION EXISTING SIGN

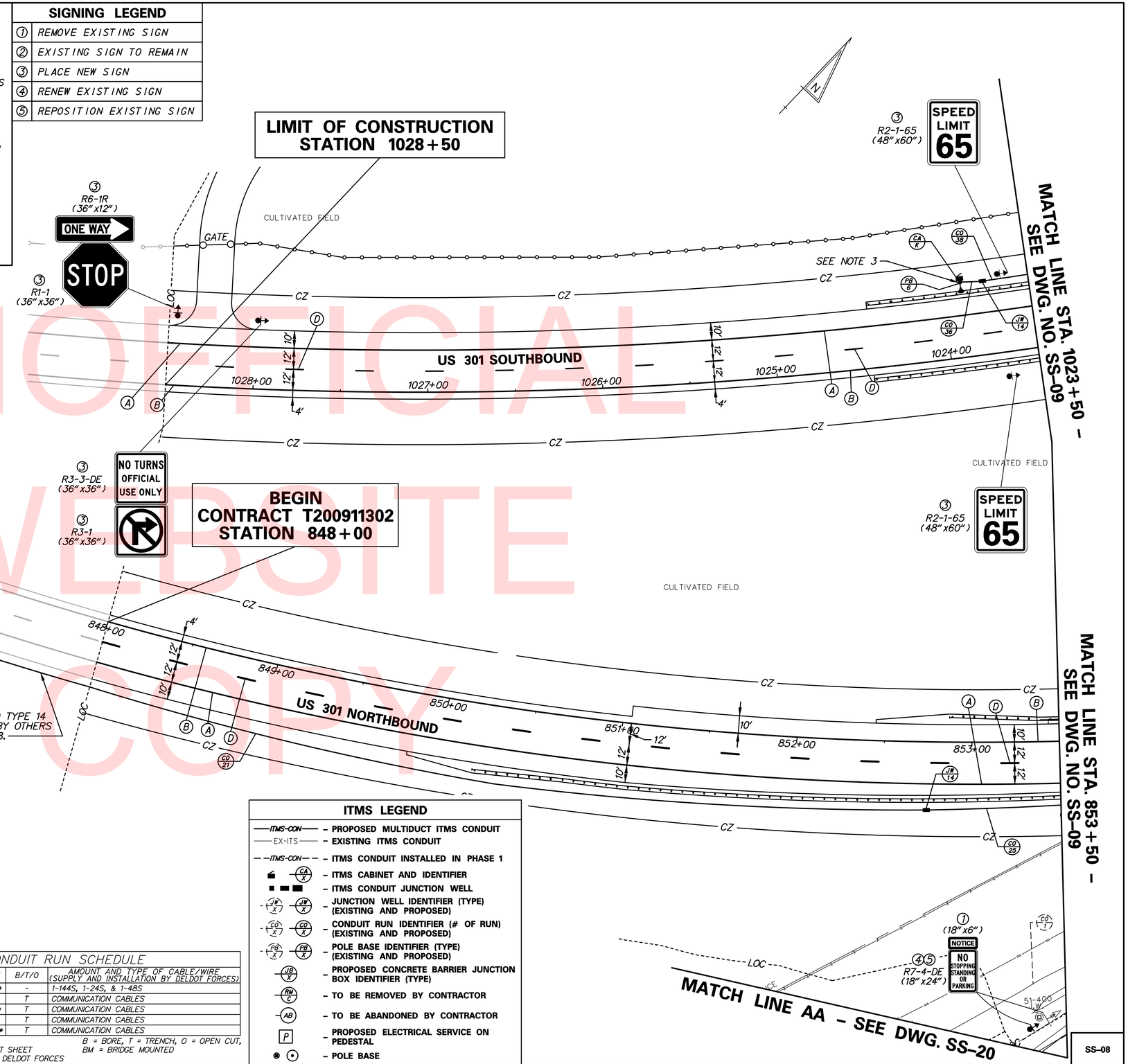

PAVEMENT MARKINGS LEGEND

SYMBOL	ITEM		QUANTITY
(A)	8" SOLID WHITE CONTRAST EPOXY RESIN PAINT, 3"BLACK, 5"WHITE	ITEM 748557	1050 LF
		ITEM 748548	1050 LF
(B)	5" SOLID YELLOW EPOXY RESIN PAINT (ITEM 748548)		1050 LF
(C)	13" DOTTED WHITE RETROREFLECTIVE PREFORMED PATTERNED CONTRAST PAVEMENT MARKINGS, 3' LINE & 9' GAP, 1.5"BLACK, 10"WHITE, 1.5"BLACK (ITEM 748567)		0 LF
(D)	8" BROKEN WHITE RETROREFLECTIVE PREFORMED PATTERNED CONTRAST PAVEMENT MARKINGS, 10' LINE & 30' GAP, 1.5"BLACK, 5"WHITE, 1.5"BLACK (ITEM 748566)		260 LF
(E)	RETROREFLECTIVE PREFORMED PATTERNED MARKINGS, SYMBOL/LEGEND (ITEM 748529)		0 SF
(F)	12" SOLID WHITE EPOXY RESIN PAINT (ITEM 748509)		0 LF
(G)	12" SOLID WHITE RETROREFLECTIVE PREFORMED PATTERNED MARKINGS (ITEM NO. 748513)		0 LF
(H)	5" SOLID WHITE EPOXY RESIN PAINT (ITEM 748548)		0 LF
(J)	5" BROKEN WHITE EPOXY RESIN PAINT PERMANENT PAVEMENT STRIPING, 10' LINE, 30' GAP (ITEM 748548)		0 LF
(K)	5" BROKEN WHITE EPOXY RESIN PAINT PERMANENT PAVEMENT STRIPING, 3' LINE, 9' GAP (ITEM 748548)		0 LF
(L)	PERMANENT PAVEMENT STRIPING, SYMBOL/LEGEND, ALKYD THERMOPLASTIC (ITEM 748015)		0 SF
(M)	10" SOLID WHITE EPOXY RESIN PAINT (ITEM 748549)		0 LF
(RM/C)	REMOVE EXISTING PAVEMENT STRIPING BY CONTRACTOR (ITEM 748530)		0 SF

ITMS CONDUIT RUN SCHEDULE

CO*	# OF CONDUITS	SIZE	LENGTH	B/T/O	AMOUNT AND TYPE OF CABLE/WIRE (SUPPLY AND INSTALLATION BY DELDOT FORCES)
1*	1	4 IN	371 FT**	-	1-144S, 1-24S, & 1-48S
21	1	4 IN	542 FT	T	COMMUNICATION CABLES
25	1	4 IN	93 FT**	T	COMMUNICATION CABLES
36	1	2.5 IN	10 FT	T	COMMUNICATION CABLES
38	1	4 IN	215 FT**	T	COMMUNICATION CABLES

*DENOTES EXISTING CONDUIT
**QUANTITY CONTINUES ON ADJACENT SHEET
***DENOTES CONDUIT INSTALLED BY DELDOT FORCES
B = BORE, T = TRENCH, O = OPEN CUT, BM = BRIDGE MOUNTED

ITMS LEGEND

- ITMS-CON — PROPOSED MULTIDUCT ITMS CONDUIT
- EX-ITS — EXISTING ITMS CONDUIT
- ITMS-CON — ITMS CONDUIT INSTALLED IN PHASE 1
- CA/X — ITMS CABINET AND IDENTIFIER
- ITMS CONDUIT JUNCTION WELL
- JW/X — JUNCTION WELL IDENTIFIER (TYPE) (EXISTING AND PROPOSED)
- CO/X — CONDUIT RUN IDENTIFIER (# OF RUN) (EXISTING AND PROPOSED)
- PB/X — POLE BASE IDENTIFIER (TYPE) (EXISTING AND PROPOSED)
- JB/X — PROPOSED CONCRETE BARRIER JUNCTION BOX IDENTIFIER (TYPE)
- RM/C — TO BE REMOVED BY CONTRACTOR
- AB — TO BE ABANDONED BY CONTRACTOR
- P — PROPOSED ELECTRICAL SERVICE ON PEDESTAL
- POLE BASE

UNOFFICIAL WEBSITE COPY

n:\3653-000\contract th\cadd\traffic\2015 - updates\SS008U301_1B.dgn
12/18/2015 8:14:52 AM

DELAWARE DEPARTMENT OF TRANSPORTATION

ADDENDUMS / REVISIONS

SCALE 0 30 60 90 FEET

US 301 & SR 1 INTERCHANGE

CONTRACT	BRIDGE NO.	BR1-433
T200911302	DESIGNED BY: J.H.R.	
COUNTY	CHECKED BY: J.M.M.	
NEW CASTLE		

SIGNING, STRIPING & CONDUIT PLAN

SS-08
SHEET NO. 457
TOTAL SHTS. 491

ITMS CONDUIT RUN SCHEDULE

CO*	# OF CONDUITS	SIZE	LENGTH	B/T/O	AMOUNT AND TYPE OF CABLE/WIRE (SUPPLY AND INSTALLATION BY DELDOT FORCES)
1*	2	4 IN	371 FT**	-	1-144S, 1-24S, & 1-48S
2*	2	4 IN	160 FT	-	1-144S, 1-24S, & 1-48S
3*	2	4 IN	120 FT	-	1-144S, 1-24S, & 1-48S
4*	2	4 IN	574 FT**	-	1-144S, 1-24S, & 1-48S
16	2	3 IN	4 FT	T	POWER AND COMMUNICATION CABLES
25	1	4 IN	93 FT**	T	COMMUNICATION CABLES
37	1	4 IN	55 FT	B	COMMUNICATION CABLES
38	1	4 IN	215 FT**	T	COMMUNICATION CABLES
39	1	4 IN	140 FT	T	COMMUNICATION CABLES
42	1	4 IN	116 FT**	B	(2)#6, (1)#6 GROUND
43	1	4 IN	148 FT	T	COMMUNICATION CABLES
44	1	4 IN	148 FT	T	(2)#6, (1)#6 GROUND
45***	1	2 IN	3 FT	T	(2)#6, (1)#6 GROUND
46***	1	2 IN	5 FT	T	(2)#6, (1)#6 GROUND
47	4	4 IN	11 FT	T	COMMUNICATION CABLES

*DENOTES EXISTING CONDUIT
**QUANTITY CONTINUES ON ADJACENT SHEET
***DENOTES CONDUIT INSTALLED BY DELDOT FORCES

B = BORE, T = TRENCH, O = OPEN CUT, BM = BRIDGE MOUNTED

SIGNING LEGEND

1	REMOVE EXISTING SIGN
2	EXISTING SIGN TO REMAIN
3	PLACE NEW SIGN
4	RENEW EXISTING SIGN
5	REPOSITION EXISTING SIGN

ITMS LEGEND

- ITMS-CON – PROPOSED MULTIDUCT ITMS CONDUIT
- EX-ITS – EXISTING ITMS CONDUIT
- ITMS-CON – ITMS CONDUIT INSTALLED IN PHASE 1
- CA X – ITMS CABINET AND IDENTIFIER
- ITMS CONDUIT JUNCTION WELL
- JW X – JUNCTION WELL IDENTIFIER (TYPE) (EXISTING AND PROPOSED)
- CO X – CONDUIT RUN IDENTIFIER (# OF RUN) (EXISTING AND PROPOSED)
- PB X – POLE BASE IDENTIFIER (TYPE) (EXISTING AND PROPOSED)
- JB X – PROPOSED CONCRETE BARRIER JUNCTION BOX IDENTIFIER (TYPE)
- RM C – TO BE REMOVED BY CONTRACTOR
- AB – TO BE ABANDONED BY CONTRACTOR
- P – PROPOSED ELECTRICAL SERVICE ON PEDESTAL
- POLE BASE

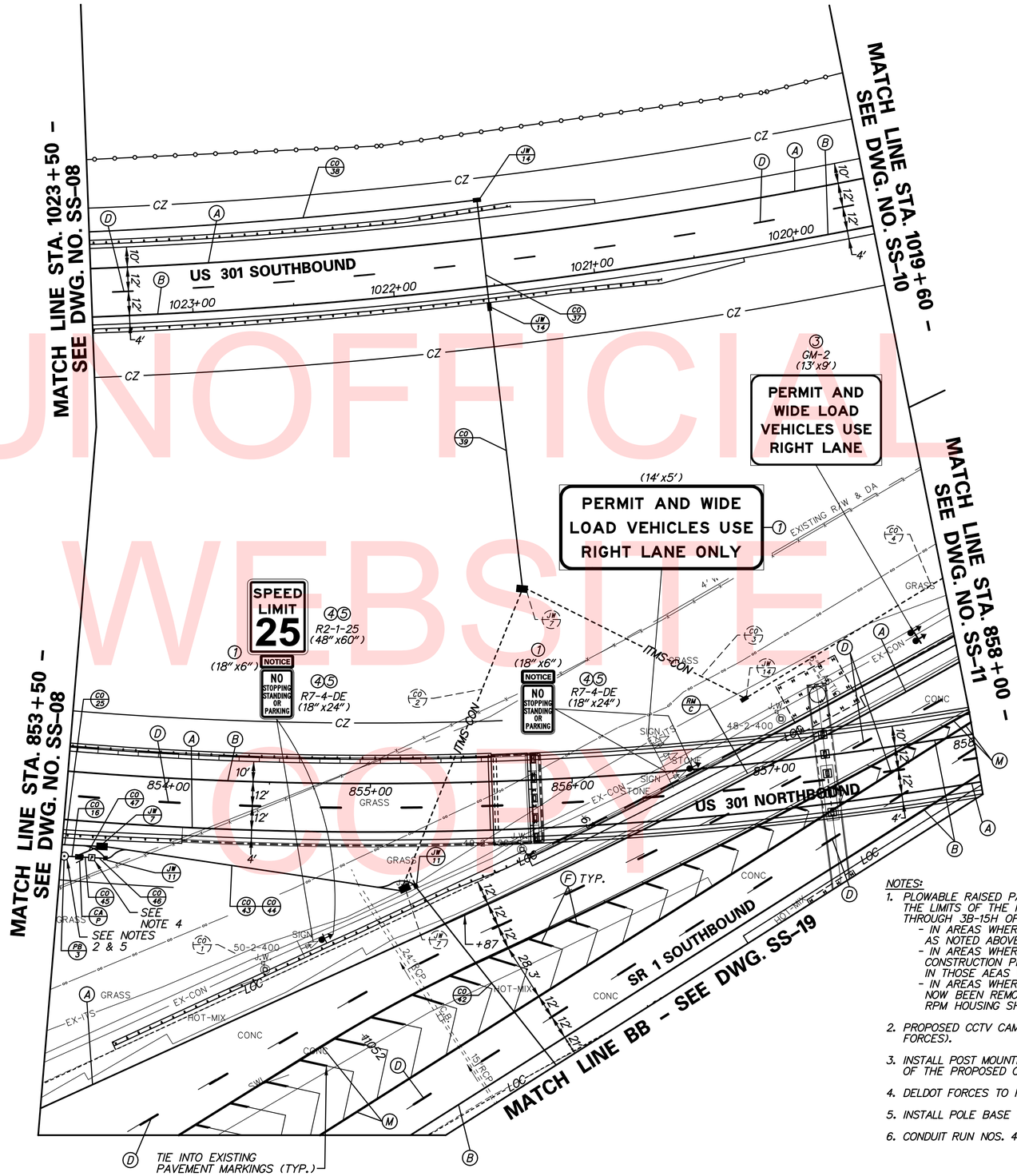

PAVEMENT MARKINGS LEGEND

SYMBOL	ITEM		QUANTITY
A	8" SOLID WHITE CONTRAST EPOXY RESIN PAINT, 3"BLACK, 5"WHITE	ITEM 748557	1,350 LF
		ITEM 748548	1,350 LF
B	5" SOLID YELLOW EPOXY RESIN PAINT (ITEM 748548)		1,180 LF
C	13" DOTTED WHITE RETROREFLECTIVE PREFORMED PATTERNED CONTRAST PAVEMENT MARKINGS, 3' LINE & 9' GAP, 1.5"BLACK, 10"WHITE, 1.5"BLACK (ITEM 748567)		0 LF
D	8" BROKEN WHITE RETROREFLECTIVE PREFORMED PATTERNED CONTRAST PAVEMENT MARKINGS, 10' LINE & 30' GAP, 1.5"BLACK, 5"WHITE, 1.5"BLACK (ITEM 748566)		430 LF
E	RETROREFLECTIVE PREFORMED PATTERNED MARKINGS, SYMBOL/LEGEND (ITEM 748529)		0 SF
F	12" SOLID WHITE EPOXY RESIN PAINT (ITEM 748509)		215 LF
G	12" SOLID WHITE RETROREFLECTIVE PREFORMED PATTERNED MARKINGS (ITEM NO. 748513)		0 LF
H	5" SOLID WHITE EPOXY RESIN PAINT (ITEM 748548)		0 LF
J	5" BROKEN WHITE EPOXY RESIN PAINT PERMANENT PAVEMENT STRIPING, 10' LINE, 30' GAP (ITEM 748548)		0 LF
K	5" BROKEN WHITE EPOXY RESIN PAINT PERMANENT PAVEMENT STRIPING, 3' LINE, 9' GAP (ITEM 748548)		0 LF
L	PERMANENT PAVEMENT STRIPING, SYMBOL/LEGEND, ALKYD THERMOPLASTIC (ITEM 748015)		0 SF
M	10" SOLID WHITE EPOXY RESIN PAINT (ITEM 748549)		830 LF
RM C	REMOVE EXISTING PAVEMENT STRIPING BY CONTRACTOR (ITEM 748530)		500 SF

NOTES:

1. PLOWABLE RAISED PAVEMENT MARKERS (RPMS) SHALL BE INSTALLED THROUGHOUT THE LIMITS OF THE PROPOSED PAVEMENT STRIPING AS PER FIGURES 3B-15A THROUGH 3B-15H OF THE DELAWARE MUTCD, AS APPLICABLE BELOW:
   - IN AREAS WHERE NEW LANES HAVE BEEN ADDED INSTALL RPMS AS NOTED ABOVE.
   - IN AREAS WHERE EXISTING LENSES WERE REMOVED DURING CONSTRUCTION PHASING, NEW LENSES ONLY SHALL BE INSTALLED IN THOSE AEAS WHERE PROPOSED STRIPING MATCHES EXISTING.
   - IN AREAS WHERE RPMS EXISTED PREVIOUSLY, BUT LANES HAVE NOW BEEN REMOVED IN THE ULTIMATE CONFIGURATION THE RPM HOUSING SHALL REMAIN WITH NO NEW LENS INSTALLED.
2. PROPOSED CCTV CAMERA ON 75' POLE (CAMERA, CABINET AND POLE BY DELDOT FORCES).
3. INSTALL POST MOUNTED AND/OR BARRIER MOUNTED DELINEATORS ALONG THE LIMITS OF THE PROPOSED CONSTRUCTION AS PER PART 3 OF THE DELAWARE MUTCD.
4. DELDOT FORCES TO PROVIDE DISCONNECT SWITCH PRIOR TO CCTV CAMERA CABINET.
5. INSTALL POLE BASE TYPE 3 WITH 10' POLE BASE EXTENSION.
6. CONDUIT RUN NOS. 45 & 46 SHALL BE RIGID GALVANIZED STEEL INSTALLED BY DELDOT FORCES.

UNOFFICIAL WEBSITE COPY

PAVEMENT MARKINGS LEGEND

SYMBOL	ITEM		QUANTITY
A	8" SOLID WHITE CONTRAST EPOXY RESIN PAINT, 3"BLACK, 5"WHITE	ITEM 748557	705 LF
		ITEM 748548	705 LF
B	5" SOLID YELLOW EPOXY RESIN PAINT (ITEM 748548)		705 LF
C	13" DOTTED WHITE RETROREFLECTIVE PREFORMED PATTERNED CONTRAST PAVEMENT MARKINGS, 3' LINE & 9' GAP, 1.5"BLACK, 10"WHITE, 1.5"BLACK (ITEM 748567)		0 LF
D	8" BROKEN WHITE RETROREFLECTIVE PREFORMED PATTERNED CONTRAST PAVEMENT MARKINGS, 10' LINE & 30' GAP, 1.5"BLACK, 5"WHITE, 1.5"BLACK (ITEM 748566)		130 LF
E	RETROREFLECTIVE PREFORMED PATTERNED MARKINGS, SYMBOL/LEGEND (ITEM 748529)		0 SF
F	12" SOLID WHITE EPOXY RESIN PAINT (ITEM 748509)		0 LF
G	12" SOLID WHITE RETROREFLECTIVE PREFORMED PATTERNED MARKINGS (ITEM NO. 748513)		0 LF
H	5" SOLID WHITE EPOXY RESIN PAINT (ITEM 748548)		0 LF
J	5" BROKEN WHITE EPOXY RESIN PAINT PERMANENT PAVEMENT STRIPING, 10' LINE, 30' GAP (ITEM 748548)		0 LF
K	5" BROKEN WHITE EPOXY RESIN PAINT PERMANENT PAVEMENT STRIPING, 3' LINE, 9' GAP (ITEM 748548)		0 LF
L	PERMANENT PAVEMENT STRIPING, SYMBOL/LEGEND, ALKYD THERMOPLASTIC (ITEM 748015)		0 SF
M	10" SOLID WHITE EPOXY RESIN PAINT (ITEM 748549)		0 LF
RM C	REMOVE EXISTING PAVEMENT STRIPING BY CONTRACTOR (ITEM 748530)		0 SF

NOTES:

1. PLOWABLE RAISED PAVEMENT MARKERS (RPMS) SHALL BE INSTALLED THROUGHOUT THE LIMITS OF THE PROPOSED PAVEMENT STRIPING AS PER FIGURES 3B-15A THROUGH 3B-15H OF THE DELAWARE MUTCD, AS APPLICABLE BELOW:
   - IN AREAS WHERE NEW LANES HAVE BEEN ADDED INSTALL RPMS AS NOTED ABOVE.
   - IN AREAS WHERE EXISTING LENSES WERE REMOVED DURING CONSTRUCTION PHASING, NEW LENSES ONLY SHALL BE INSTALLED IN THOSE AEAS WHERE PROPOSED STRIPING MATCHES EXISTING.
   - IN AREAS WHERE RPMS EXISTED PREVIOUSLY, BUT LANES HAVE NOW BEEN REMOVED IN THE ULTIMATE CONFIGURATION THE RPM HOUSING SHALL REMAIN WITH NO NEW LENS INSTALLED.
2. INSTALL POST MOUNTED AND/OR BARRIER MOUNTED DELINEATORS ALONG THE LIMITS OF THE PROPOSED CONSTRUCTION AS PER PART 3 OF THE DELAWARE MUTCD.

SIGNING LEGEND

1	REMOVE EXISTING SIGN
2	EXISTING SIGN TO REMAIN
3	PLACE NEW SIGN
4	RENEW EXISTING SIGN
5	REPOSITION EXISTING SIGN

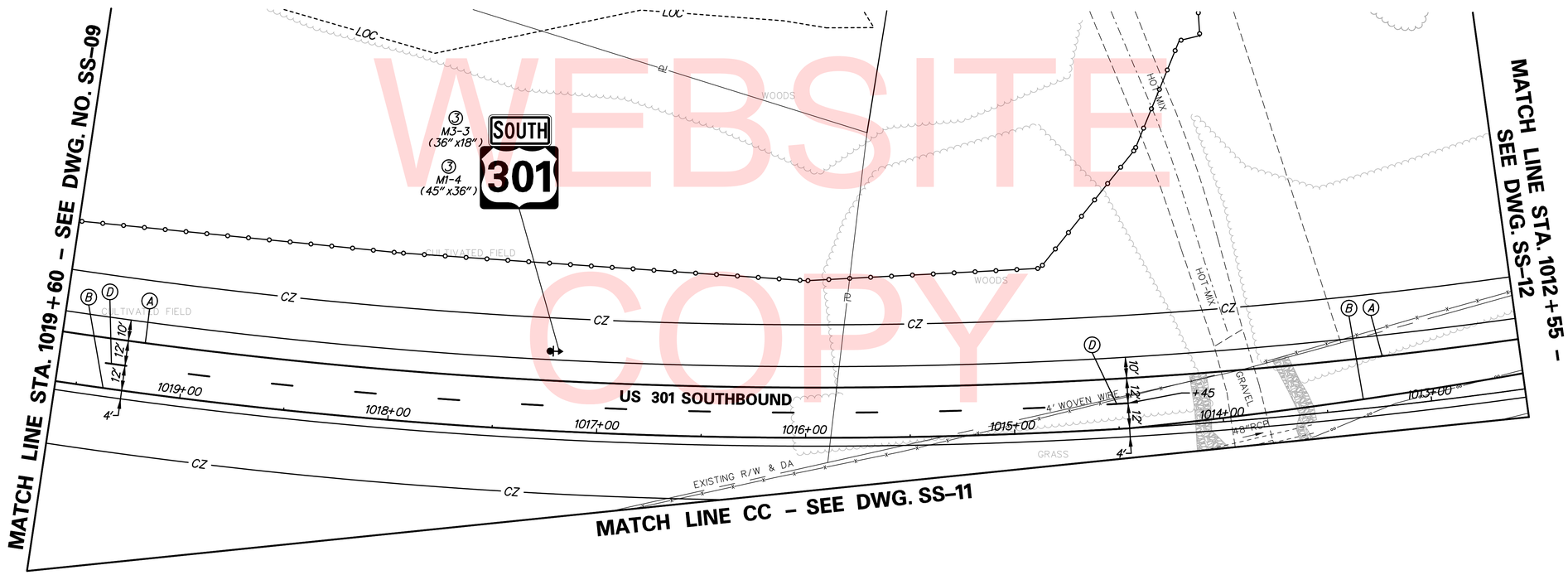

UNOFFICIAL WEBSITE COPY

DELAWARE DEPARTMENT OF TRANSPORTATION	ADDENDUMS / REVISIONS	SCALE 0 30 60 90 FEET	US 301 & SR 1 INTERCHANGE	CONTRACT T200911302 / COUNTY NEW CASTLE	BRIDGE NO. / DESIGNED BY: J.H.R. / CHECKED BY: J.M.M.	SIGNING, STRIPING & CONDUIT PLAN	SS-10 / SHEET NO. 459 / TOTAL SHTS. 491

n:\31653-000\contract tb\cadd\traffic\2015 - updates\SS010U301_IB.dgn
12/18/2015 8:14:59 AM

ITMS LEGEND

- ITMS-CON — PROPOSED MULTIDUCT ITMS CONDUIT
- EX-ITS — EXISTING ITMS CONDUIT
- ITMS-CON — ITMS CONDUIT INSTALLED IN PHASE 1
- CA/X — ITMS CABINET AND IDENTIFIER
- ITMS CONDUIT JUNCTION WELL
- JW/X, JP/X — JUNCTION WELL IDENTIFIER (TYPE) (EXISTING AND PROPOSED)
- CO/X, CO/X — CONDUIT RUN IDENTIFIER (# OF RUN) (EXISTING AND PROPOSED)
- PB/X, PB/X — POLE BASE IDENTIFIER (TYPE) (EXISTING AND PROPOSED)
- JB/X — PROPOSED CONCRETE BARRIER JUNCTION BOX IDENTIFIER (TYPE)
- RM/C — TO BE REMOVED BY CONTRACTOR
- AB — TO BE ABANDONED BY CONTRACTOR
- P — PROPOSED ELECTRICAL SERVICE ON PEDESTAL
- POLE BASE

PAVEMENT MARKINGS LEGEND

SYMBOL	ITEM		QUANTITY
A	8" SOLID WHITE CONTRAST EPOXY RESIN PAINT, 3"BLACK, 5"WHITE	ITEM 748557	3,170 LF
		ITEM 748548	3,170 LF
B	5" SOLID YELLOW EPOXY RESIN PAINT (ITEM 748548)		3,910 LF
C	13" DOTTED WHITE RETROREFLECTIVE PREFORMED PATTERNED CONTRAST PAVEMENT MARKINGS, 3' LINE & 9' GAP, 1.5"BLACK, 10"WHITE, 1.5"BLACK (ITEM 748567)		6 LF
D	8" BROKEN WHITE RETROREFLECTIVE PREFORMED PATTERNED CONTRAST PAVEMENT MARKINGS, 10' LINE & 30' GAP, 1.5"BLACK, 5"WHITE, 1.5"BLACK (ITEM 748566)		780 LF
E	RETROREFLECTIVE PREFORMED PATTERNED MARKINGS, SYMBOL/LEGEND (ITEM 748529)		0 SF
F	12" SOLID WHITE EPOXY RESIN PAINT (ITEM 748509)		2 LF
G	12" SOLID WHITE RETROREFLECTIVE PREFORMED PATTERNED MARKINGS (ITEM NO. 748513)		0 LF
H	5" SOLID WHITE EPOXY RESIN PAINT (ITEM 748548)		800 LF
J	5" BROKEN WHITE EPOXY RESIN PAINT PERMANENT PAVEMENT STRIPING, 10' LINE, 30' GAP (ITEM 748548)		200 LF
K	5" BROKEN WHITE EPOXY RESIN PAINT PERMANENT PAVEMENT STRIPING, 3' LINE, 9' GAP (ITEM 748548)		0 LF
L	PERMANENT PAVEMENT STRIPING, SYMBOL/LEGEND, ALKYD THERMOPLASTIC (ITEM 748015)		0 SF
M	10" SOLID WHITE EPOXY RESIN PAINT (ITEM 748549)		2,110 LF
RM/C	REMOVE EXISTING PAVEMENT STRIPING BY CONTRACTOR (ITEM 748530)		380 SF

NOTES:

1. PLOWABLE RAISED PAVEMENT MARKERS (RPMS) SHALL BE INSTALLED THROUGHOUT THE LIMITS OF THE PROPOSED PAVEMENT STRIPING AS PER FIGURES 3B-15A THROUGH 3B-15H OF THE DELAWARE MUTCD, AS APPLICABLE BELOW:
   - IN AREAS WHERE NEW LANES HAVE BEEN ADDED INSTALL RPMS AS NOTED ABOVE.
   - IN AREAS WHERE EXISTING LENSES WERE REMOVED DURING CONSTRUCTION PHASING, NEW LENSES ONLY SHALL BE INSTALLED IN THOSE AEAS WHERE PROPOSED STRIPING MATCHES EXISTING.
   - IN AREAS WHERE RPMS EXISTED PREVIOUSLY, BUT LANES HAVE NOW BEEN REMOVED IN THE ULTIMATE CONFIGURATION THE RPM HOUSING SHALL REMAIN WITH NO NEW LENS INSTALLED.
2. REMOVE EXISTING SIGNS AND SIGN SUPPORTS ONLY, EXISTING OVERHEAD SIGN STRUCTURE TO REMAIN.
3. INSTALL PROPOSED SIGN OH-1a VERTICALLY CENTERED ABOUT TRUSS AND HORIZONTALLY CENTERED OVER TWO "EZPASS ONLY" LEFT LANES. INSTALL PROPOSED SIGN OH-1b VERTICALY CENTERED ABOUT TRUSS AND HORIZONTALLY CENTERED OVER TWO "CASH" RIGHT LANES. SIGNS SHALL MAINTAIN A MIN. 17'-9" VERTICAL CLEARANCE FROM BOTTOM OF SIGN TO HIGH POINT OF ROADWAY.
4. INSTALL POST MOUNTED AND/OR BARRIER MOUNTED DELINEATORS ALONG THE LIMITS OF THE PROPOSED CONSTRUCTION AS PER PART 3 OF THE DELAWARE MUTCD.

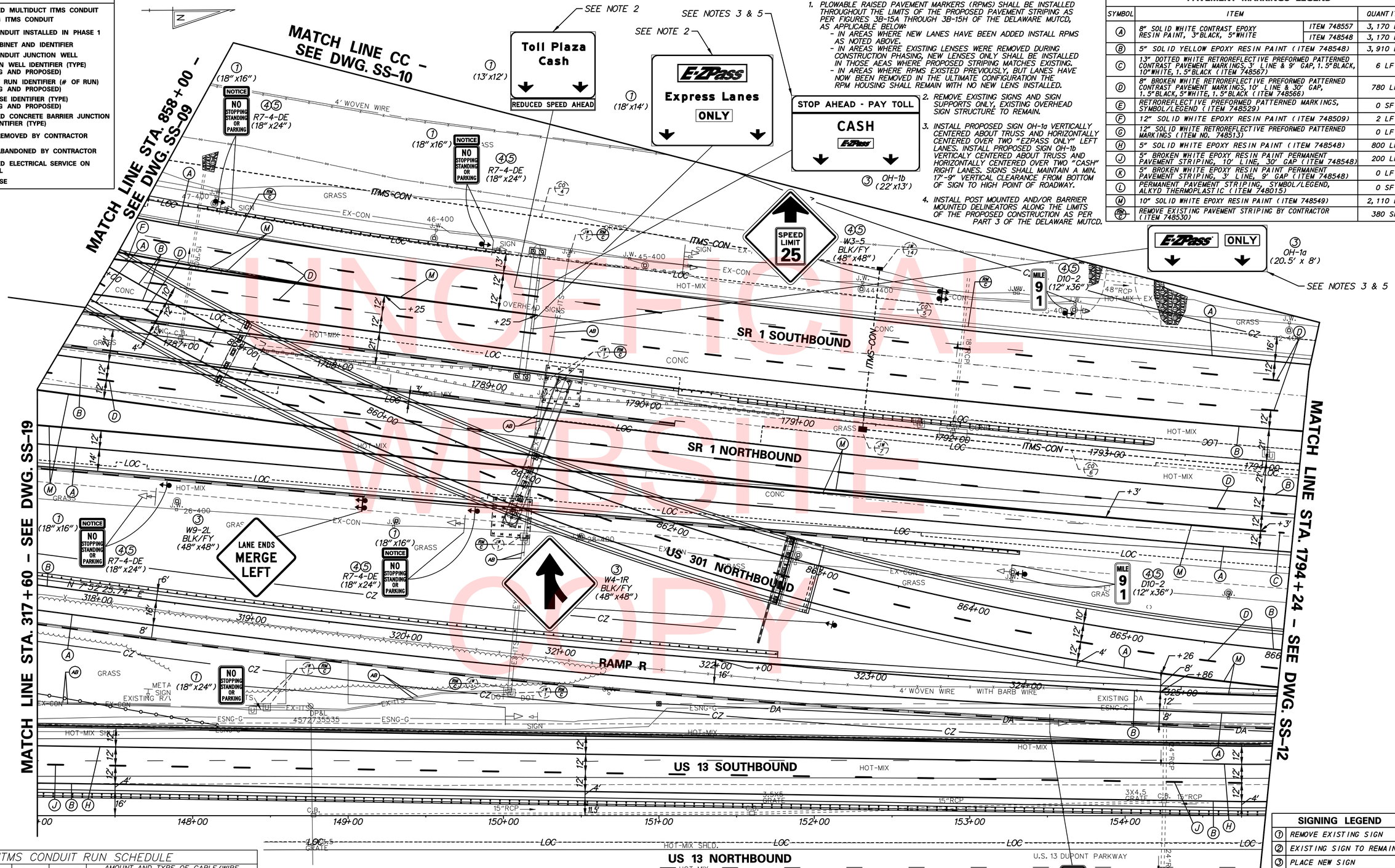

UNOFFICIAL WEBSITE COPY

ITMS CONDUIT RUN SCHEDULE

CO#	# OF CONDUITS	SIZE	LENGTH	B/T/O	AMOUNT AND TYPE OF CABLE/WIRE (SUPPLY AND INSTALLATION BY DELDOT FORCES)
4*	2	4 IN	574 FT**	-	1-144S, 1-24S, & 1-48S
5*	2	4 IN	102 FT	-	1-144S, 1-24S, & 1-48S
6*	2	4 IN	591 FT**	-	1-144S, 1-24S, & 1-48S

*DENOTES EXISTING CONDUIT
**QUANTITY CONTINUES ON ADJACENT SHEET
***DENOTES CONDUIT INSTALLED BY DELDOT FORCES

B = BORE, T = TRENCH, O = OPEN CUT, BM = BRIDGE MOUNTED

OVERHEAD SIGN SUPPORT SCHEDULE (SEE DWG. NO. SS-29)

SIGN NUMBER	NUMBER OF SUPPORTS	SPACING (FEET)	SUPPORT LENGTH (FEET)(LEFT TO RIGHT)
OH-1a	4	2. 75, 5, 5, 5, 2. 75	8, 8, 8, 8
OH-1b	4	2, 6, 6, 6, 2	13, 13, 13, 13

NOTES (CONTINUED):

5. THE CONTRACTOR SHALL FURNISH AND INSTALL NEW BOLTS AND FLAT BARS FOR ATTACHING THE OVERHEAD SIGN SUPPORTS TO THE SQUARE HORIZONTAL TRUSS MEMBERS. THE NEW BOLTS AND FLAT BARS SHALL MATCH THE DIMENSIONS AND MATERIAL PROPERTIES OF THE EXISTING.

SIGNING LEGEND

1	REMOVE EXISTING SIGN
2	EXISTING SIGN TO REMAIN
3	PLACE NEW SIGN
4	RENEW EXISTING SIGN
5	REPOSITION EXISTING SIGN

SS-11

DELAWARE DEPARTMENT OF TRANSPORTATION

ADDENDUMS / REVISIONS

SCALE 0 30 60 90 FEET

US 301 & SR 1 INTERCHANGE

CONTRACT	BRIDGE NO.	BR1-433, RW1-3 & RW1-3R
T200911302	DESIGNED BY: J.H.R.	
COUNTY		
NEW CASTLE	CHECKED BY: J.M.M.	

SIGNING, STRIPING & CONDUIT PLAN

SHEET NO. 460
TOTAL SHTS. 491

n:\31653-000\contract tb\cadd\traffic\2015 - updates\SS011U301_1B.dgn
12/18/2015 8:15:03 AM

ITMS CONDUIT RUN SCHEDULE

CO*	# OF CONDUITS	SIZE	LENGTH	B/T/O	AMOUNT AND TYPE OF CABLE/WIRE (SUPPLY AND INSTALLATION BY DELDOT FORCES)
6#	2	4 IN	591 FT**	-	1-144S, 1-24S, & 1-48S
7#	2	4 IN	594 FT**	-	1-144S, 1-24S, & 1-48S

*DENOTES EXISTING CONDUIT
**QUANTITY CONTINUES ON ADJACENT SHEET
***DENOTES CONDUIT INSTALLED BY DELDOT FORCES

B = BORE, T = TRENCH, O = OPEN CUT, BM = BRIDGE MOUNTED

NOTES:

1. PLOWABLE RAISED PAVEMENT MARKERS (RPMS) SHALL BE INSTALLED THROUGHOUT THE LIMITS OF THE PROPOSED PAVEMENT STRIPING AS PER FIGURES 3B-15A THROUGH 3B-15H OF THE DELAWARE MUTCD, AS APPLICABLE BELOW:
   - IN AREAS WHERE NEW LANES HAVE BEEN ADDED INSTALL RPMS AS NOTED ABOVE.
   - IN AREAS WHERE EXISTING LENSES WERE REMOVED DURING CONSTRUCTION PHASING, NEW LENSES ONLY SHALL BE INSTALLED IN THOSE AEAS WHERE PROPOSED STRIPING MATCHES EXISTING.
   - IN AREAS WHERE RPMS EXISTED PREVIOUSLY, BUT LANES HAVE NOW BEEN REMOVED IN THE ULTIMATE CONFIGURATION THE RPM HOUSING SHALL REMAIN WITH NO NEW LENS INSTALLED.
2. INSTALL POST MOUNTED AND/OR BARRIER MOUNTED DELINEATORS ALONG THE LIMITS OF THE PROPOSED CONSTRUCTION AS PER PART 3 OF THE DELAWARE MUTCD.
3. REMOVE EXISTING PAVEMENT LINE MARKINGS, 10'/30' SKIPS AND WHITE EDGELINE, FROM STATION 1796+60, RIGHT TO STATION 1808+80, RIGHT.
4. REMOVE EXISTING SIGN UPON OPENING OF RAMP R IN CONSTRUCTION PHASE 3.

ITMS LEGEND

- ITMS-CON — PROPOSED MULTIDUCT ITMS CONDUIT
- EX-ITS — EXISTING ITMS CONDUIT
- ITMS-CON — ITMS CONDUIT INSTALLED IN PHASE 1
- CA/X — ITMS CABINET AND IDENTIFIER
- ITMS CONDUIT JUNCTION WELL
- JW/X — JUNCTION WELL IDENTIFIER (TYPE) (EXISTING AND PROPOSED)
- CO/X — CONDUIT RUN IDENTIFIER (# OF RUN) (EXISTING AND PROPOSED)
- PB/X — POLE BASE IDENTIFIER (TYPE) (EXISTING AND PROPOSED)
- JB/X — PROPOSED CONCRETE BARRIER JUNCTION BOX IDENTIFIER (TYPE)
- RM/C — TO BE REMOVED BY CONTRACTOR
- AB — TO BE ABANDONED BY CONTRACTOR
- P — PROPOSED ELECTRICAL SERVICE ON PEDESTAL
- POLE BASE

PAVEMENT MARKINGS LEGEND

SYMBOL	ITEM		QUANTITY
A	8" SOLID WHITE CONTRAST EPOXY RESIN PAINT, 3"BLACK, 5"WHITE	ITEM 748557	2,445 LF
		ITEM 748548	2,445 LF
B	5" SOLID YELLOW EPOXY RESIN PAINT (ITEM 748548)		3,280 LF
C	13" DOTTED WHITE RETROREFLECTIVE PREFORMED PATTERNED CONTRAST PAVEMENT MARKINGS, 3' LINE & 9' GAP, 1.5"BLACK, 10"WHITE, 1.5"BLACK (ITEM 748567)		325 LF
D	8" BROKEN WHITE RETROREFLECTIVE PREFORMED PATTERNED CONTRAST PAVEMENT MARKINGS, 10' LINE & 30' GAP, 1.5"BLACK, 5"WHITE, 1.5"BLACK (ITEM 748566)		630 LF
E	RETROREFLECTIVE PREFORMED PATTERNED MARKINGS, SYMBOL/LEGEND (ITEM 748529)		42 SF
F	12" SOLID WHITE EPOXY RESIN PAINT (ITEM 748509)		0 LF
G	12" SOLID WHITE RETROREFLECTIVE PREFORMED PATTERNED MARKINGS (ITEM NO. 748513)		408 LF
H	5" SOLID WHITE EPOXY RESIN PAINT (ITEM 748548)		1,370 LF
J	5" BROKEN WHITE EPOXY RESIN PAINT PERMANENT PAVEMENT STRIPING, 10' LINE, 30' GAP (ITEM 748548)		340 LF
K	5" BROKEN WHITE EPOXY RESIN PAINT PERMANENT PAVEMENT STRIPING, 3' LINE, 9' GAP (ITEM 748548)		0 LF
L	PERMANENT PAVEMENT STRIPING, SYMBOL/LEGEND, ALKYD THERMOPLASTIC (ITEM 748015)		0 SF
M	10" SOLID WHITE EPOXY RESIN PAINT (ITEM 748549)		1735 LF
RM/C	REMOVE EXISTING PAVEMENT STRIPING BY CONTRACTOR (ITEM 748530)		1000 SF

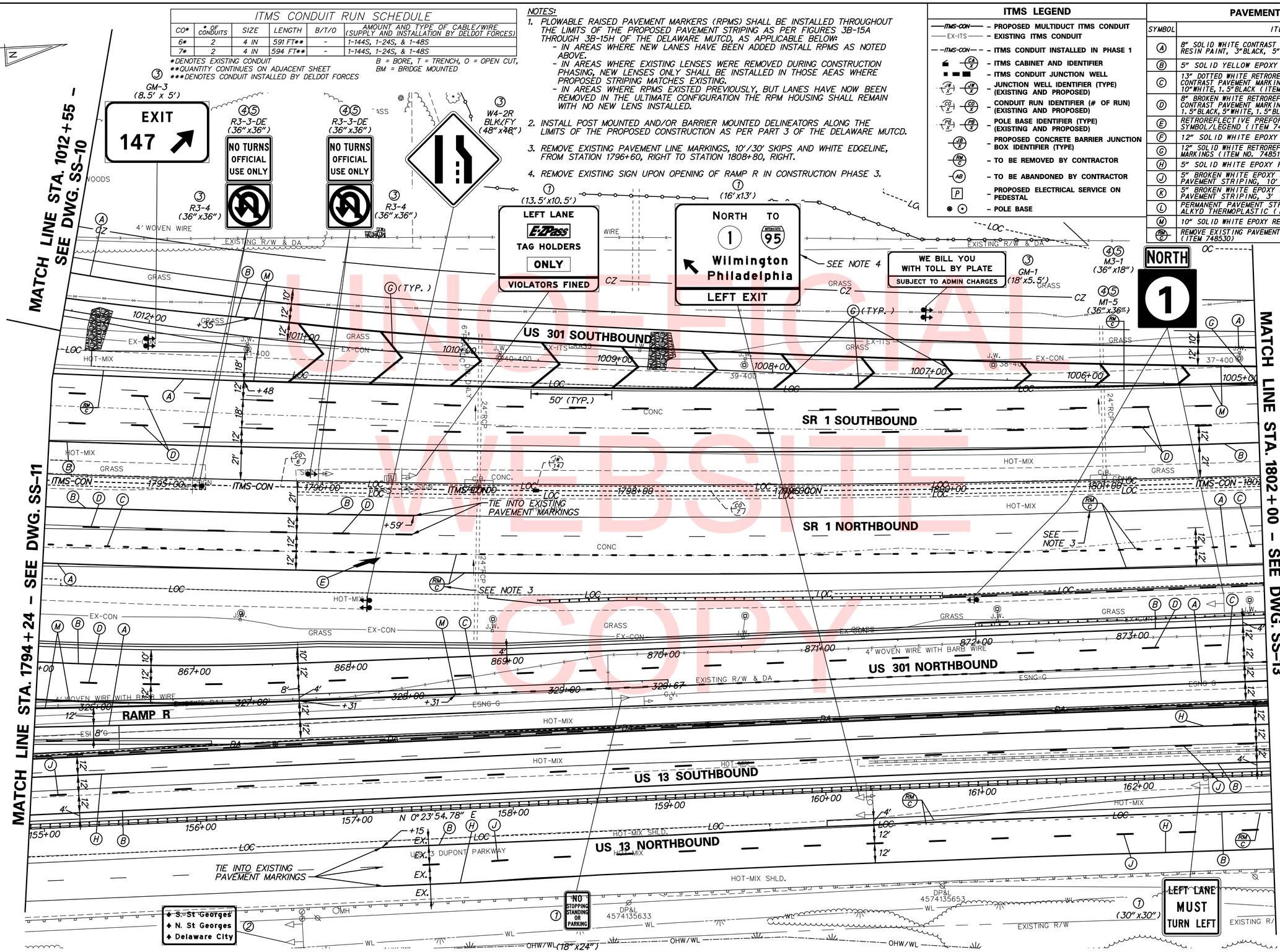

SIGNING LEGEND

1	REMOVE EXISTING SIGN
2	EXISTING SIGN TO REMAIN
3	PLACE NEW SIGN
4	RENEW EXISTING SIGN
5	REPOSITION EXISTING SIGN

SS-12

DELAWARE DEPARTMENT OF TRANSPORTATION

ADDENDUMS / REVISIONS

SCALE 0 30 60 90 FEET

US 301 & SR 1 INTERCHANGE

CONTRACT	BRIDGE NO.	RW1-3 & RW1-3R
T200911302	DESIGNED BY: J.H.R.	
COUNTY		
NEW CASTLE	CHECKED BY: J.M.M.	

SIGNING, STRIPING & CONDUIT PLAN

SHEET NO.
461
TOTAL SHTS.
491

nt\33653-000\contract tb\cadd\traffic\2015 - updates\SS012U301_1B_AET.dgn
12/18/2015 8:15:09 AM

PAVEMENT MARKINGS LEGEND

SYMBOL	ITEM		QUANTITY
(A)	8" SOLID WHITE CONTRAST EPOXY RESIN PAINT, 3"BLACK, 5"WHITE	ITEM 748557	2, 400 LF
		ITEM 748548	2, 400 LF
(B)	5" SOLID YELLOW EPOXY RESIN PAINT (ITEM 748548)		3, 200 LF
(C)	13" DOTTED WHITE RETROREFLECTIVE PREFORMED PATTERNED CONTRAST PAVEMENT MARKINGS, 3' LINE & 9' GAP, 1.5"BLACK, 10"WHITE, 1.5"BLACK (ITEM 748567)		112 LF
(D)	8" BROKEN WHITE RETROREFLECTIVE PREFORMED PATTERNED CONTRAST PAVEMENT MARKINGS, 10' LINE & 30' GAP, 1.5"BLACK, 5"WHITE, 1.5"BLACK (ITEM 748566)		630 LF
(E)	RETROREFLECTIVE PREFORMED PATTERNED MARKINGS, SYMBOL/LEGEND (ITEM 748529)		42 SF
(F)	12" SOLID WHITE EPOXY RESIN PAINT (ITEM 748509)		0 LF
(G)	12" SOLID WHITE RETROREFLECTIVE PREFORMED PATTERNED MARKINGS (ITEM NO. 748513)		52 LF
(H)	5" SOLID WHITE EPOXY RESIN PAINT (ITEM 748548)		1600 LF
(J)	5" BROKEN WHITE EPOXY RESIN PAINT PERMANENT PAVEMENT STRIPING, 10' LINE, 30' GAP (ITEM 748548)		400 LF
(K)	5" BROKEN WHITE EPOXY RESIN PAINT PERMANENT PAVEMENT STRIPING, 3' LINE, 9' GAP (ITEM 748548)		80 LF
(L)	PERMANENT PAVEMENT STRIPING, SYMBOL/LEGEND, ALKYD THERMOPLASTIC (ITEM 748015)		15. 5 SF
(M)	10" SOLID WHITE EPOXY RESIN PAINT (ITEM 748549)		1066 LF
(RM/C)	REMOVE EXISTING PAVEMENT STRIPING BY CONTRACTOR (ITEM 748530)		1300 SF

ITMS LEGEND

- ITMS-CON — PROPOSED MULTIDUCT ITMS CONDUIT
- EX-ITS — EXISTING ITMS CONDUIT
- ITMS-CON — ITMS CONDUIT INSTALLED IN PHASE 1
- (CA/X) — ITMS CABINET AND IDENTIFIER
- ITMS CONDUIT JUNCTION WELL
- (JW/X) (JW/X) — JUNCTION WELL IDENTIFIER (TYPE) (EXISTING AND PROPOSED)
- (CO/X) (CO/X) — CONDUIT RUN IDENTIFIER (# OF RUN) (EXISTING AND PROPOSED)
- (PB/X) (PB/X) — POLE BASE IDENTIFIER (TYPE) (EXISTING AND PROPOSED)
- (JB/X) — PROPOSED CONCRETE BARRIER JUNCTION BOX IDENTIFIER (TYPE)
- (RM/C) — TO BE REMOVED BY CONTRACTOR
- (AB) — TO BE ABANDONED BY CONTRACTOR
- (P) — PROPOSED ELECTRICAL SERVICE ON PEDESTAL
- POLE BASE

NOTES:

1. PLOWABLE RAISED PAVEMENT MARKERS (RPMS) SHALL BE INSTALLED THROUGHOUT THE LIMITS OF THE PROPOSED PAVEMENT STRIPING AS PER FIGURES 3B-15A THROUGH 3B-15H OF THE DELAWARE MUTCD, AS APPLICABLE BELOW:
   - IN AREAS WHERE NEW LANES HAVE BEEN ADDED INSTALL RPMS AS NOTED ABOVE.
   - IN AREAS WHERE EXISTING LENSES WERE REMOVED DURING CONSTRUCTION PHASING, NEW LENSES ONLY SHALL BE INSTALLED IN THOSE AEAS WHERE PROPOSED STRIPING MATCHES EXISTING.
   - IN AREAS WHERE RPMS EXISTED PREVIOUSLY, BUT LANES HAVE NOW BEEN REMOVED IN THE ULTIMATE CONFIGURATION THE RPM HOUSING SHALL REMAIN WITH NO NEW LENS INSTALLED.
2. INSTALL POST MOUNTED AND/OR BARRIER MOUNTED DELINEATORS ALONG THE LIMITS OF THE PROPOSED CONSTRUCTION AS PER PART 3 OF THE DELAWARE MUTCD.
3. REMOVE EXISTING PAVEMENT LINE MARKINGS, 10'/30' SKIPS AND WHITE EDGELINE, FROM STATION 1796+60, RIGHT TO STATION 1808+80, RIGHT.
4. REMOVE EXISTING WHITE EDGE LINE PAVEMENT MARKINGS AND TUBULAR MARKERS ALONG NORTHBOUND US 13 LEFT TURN LANE.

ITMS CONDUIT RUN SCHEDULE

CO*	# OF CONDUITS	SIZE	LENGTH	B/T/O	AMOUNT AND TYPE OF CABLE/WIRE (SUPPLY AND INSTALLATION BY DELDOT FORCES)
7*	2	4 IN	594 FT**	-	1-144S, 1-24S, & 1-48S
8*	2	4 IN	591 FT*	-	1-144S, 1-24S, & 1-48S
9*	2	4 IN	176 FT**	-	1-144S, 1-24S, & 1-48S

*DENOTES EXISTING CONDUIT
**QUANTITY CONTINUES ON ADJACENT SHEET
***DENOTES CONDUIT INSTALLED BY DELDOT FORCES

B = BORE, T = TRENCH, O = OPEN CUT, BM = BRIDGE MOUNTED

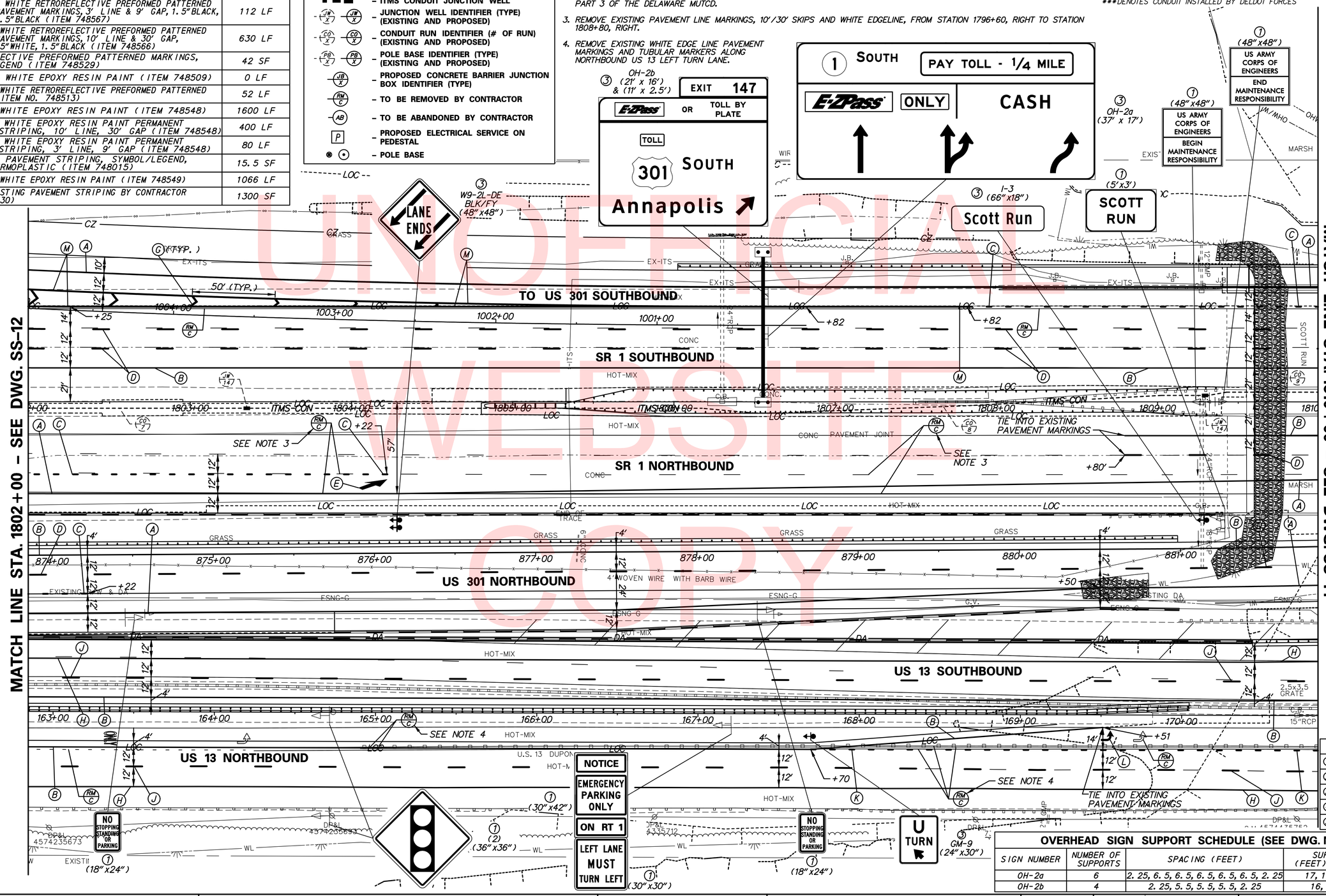

SIGNING LEGEND

(1)	REMOVE EXISTING SIGN
(2)	EXISTING SIGN TO REMAIN
(3)	PLACE NEW SIGN
(4)	RENEW EXISTING SIGN
(5)	REPOSITION EXISTING SIGN

OVERHEAD SIGN SUPPORT SCHEDULE (SEE DWG. NO. SS-29)

SIGN NUMBER	NUMBER OF SUPPORTS	SPACING (FEET)	SUPPORT LENGTH (FEET)(LEFT TO RIGHT)
OH-2a	6	2. 25, 6. 5, 6. 5, 6. 5, 6. 5, 6. 5, 2. 25	17, 17, 17, 17, 17, 17
OH-2b	4	2. 25, 5. 5, 5. 5, 5. 5, 2. 25	16, 16, 18. 5, 18. 5

SS-13

UNOFFICIAL WEBSITE COPY

DELAWARE DEPARTMENT OF TRANSPORTATION

ADDENDUMS / REVISIONS

SCALE 0 30 60 90 FEET

US 301 & SR 1 INTERCHANGE

CONTRACT	BRIDGE NO.	BR1-903N, BR1-903S, BR1-432, RW1-1 & RW1-3R
T200911302	DESIGNED BY: J.H.R.	
COUNTY		
NEW CASTLE	CHECKED BY: J.M.M.	

SIGNING, STRIPING & CONDUIT PLAN

SHEET NO.
462
TOTAL SHTS.
491

n:\3653-000\contract tb\cadd\traffic\2015 - updates\SS013U301_1B_AET.dgn
12/18/2015 8:15:14 AM

PAVEMENT MARKINGS LEGEND

SYMBOL	ITEM		QUANTITY
(A)	8" SOLID WHITE CONTRAST EPOXY RESIN PAINT, 3"BLACK, 5"WHITE	ITEM 748557	2,195 LF
		ITEM 748548	2,195 LF
(B)	5" SOLID YELLOW EPOXY RESIN PAINT (ITEM 748548)		2,995 LF
(C)	13" DOTTED WHITE RETROREFLECTIVE PREFORMED PATTERNED CONTRAST PAVEMENT MARKINGS, 3' LINE & 9' GAP, 1.5"BLACK, 10"WHITE, 1.5"BLACK (ITEM 748567)		363 LF
(D)	8" BROKEN WHITE RETROREFLECTIVE PREFORMED PATTERNED CONTRAST PAVEMENT MARKINGS, 10' LINE & 30' GAP, 1.5"BLACK, 5"WHITE, 1.5"BLACK (ITEM 748566)		640 LF
(E)	RETROREFLECTIVE PREFORMED PATTERNED MARKINGS, SYMBOL/LEGEND (ITEM 748529)		42 SF
(F)	12" SOLID WHITE EPOXY RESIN PAINT (ITEM 748509)		0 LF
(G)	12" SOLID WHITE RETROREFLECTIVE PREFORMED PATTERNED MARKINGS (ITEM NO. 748513)		0 LF
(H)	5" SOLID WHITE EPOXY RESIN PAINT (ITEM 748548)		1275 LF
(J)	5" BROKEN WHITE EPOXY RESIN PAINT PERMANENT PAVEMENT STRIPING, 10' LINE, 30' GAP (ITEM 748548)		210 LF
(K)	5" BROKEN WHITE EPOXY RESIN PAINT PERMANENT PAVEMENT STRIPING, 3' LINE, 9' GAP (ITEM 748548)		45 LF
(L)	PERMANENT PAVEMENT STRIPING, SYMBOL/LEGEND, ALKYD THERMOPLASTIC (ITEM 748015)		31 SF
(M)	10" SOLID WHITE EPOXY RESIN PAINT (ITEM 748549)		410 LF
(RM C)	REMOVE EXISTING PAVEMENT STRIPING BY CONTRACTOR (ITEM 748530)		1100 SF

ITMS LEGEND

- ITMS-CON – PROPOSED MULTIDUCT ITMS CONDUIT
- EX-ITS – EXISTING ITMS CONDUIT
- ITMS-CON – ITMS CONDUIT INSTALLED IN PHASE 1
- (CA X) – ITMS CABINET AND IDENTIFIER
- ITMS CONDUIT JUNCTION WELL
- (JW X) (JW X) – JUNCTION WELL IDENTIFIER (TYPE) (EXISTING AND PROPOSED)
- (CO X) (CO X) – CONDUIT RUN IDENTIFIER (# OF RUN) (EXISTING AND PROPOSED)
- (PB X) (PB X) – POLE BASE IDENTIFIER (TYPE) (EXISTING AND PROPOSED)
- (JB X) – PROPOSED CONCRETE BARRIER JUNCTION BOX IDENTIFIER (TYPE)
- (RM C) – TO BE REMOVED BY CONTRACTOR
- (AB) – TO BE ABANDONED BY CONTRACTOR
- (P) – PROPOSED ELECTRICAL SERVICE ON PEDESTAL
- POLE BASE

ITMS CONDUIT RUN SCHEDULE

CO#	# OF CONDUITS	SIZE	LENGTH	B/T/O	AMOUNT AND TYPE OF CABLE/WIRE (SUPPLY AND INSTALLATION BY DELDOT FORCES)
9#	2	4 IN	176 FT**	-	1-144S, 1-24S, & 1-48S
10#	2	4 IN	530 FT	-	1-144S, 1-24S, & 1-48S
11#	2	4 IN	527 FT**	-	1-144S, 1-24S, & 1-48S

*DENOTES EXISTING CONDUIT
**QUANTITY CONTINUES ON ADJACENT SHEET
***DENOTES CONDUIT INSTALLED BY DELDOT FORCES

B = BORE, T = TRENCH, O = OPEN CUT, BM = BRIDGE MOUNTED

SIGNING LEGEND

1	REMOVE EXISTING SIGN
2	EXISTING SIGN TO REMAIN
3	PLACE NEW SIGN
4	RENEW EXISTING SIGN
5	REPOSITION EXISTING SIGN

NOTES:

1. PLOWABLE RAISED PAVEMENT MARKERS (RPMS) SHALL BE INSTALLED THROUGHOUT THE LIMITS OF THE PROPOSED PAVEMENT STRIPING AS PER FIGURES 3B-15A THROUGH 3B-15H OF THE DELAWARE MUTCD, AS APPLICABLE BELOW:
   - IN AREAS WHERE NEW LANES HAVE BEEN ADDED INSTALL RPMS AS NOTED ABOVE.
   - IN AREAS WHERE EXISTING LENSES WERE REMOVED DURING CONSTRUCTION PHASING, NEW LENSES ONLY SHALL BE INSTALLED IN THOSE AEAS WHERE PROPOSED STRIPING MATCHES EXISTING.
   - IN AREAS WHERE RPMS EXISTED PREVIOUSLY, BUT LANES HAVE NOW BEEN REMOVED IN THE ULTIMATE CONFIGURATION THE RPM HOUSING SHALL REMAIN WITH NO NEW LENS INSTALLED.
2. REMOVE EXISTING WHITE EDGE LINE PAVEMENT MARKINGS AND TUBULAR MARKERS ALONG NORTHBOUND US 13 LEFT TURN LANE.
3. INSTALL POST MOUNTED AND/OR BARRIER MOUNTED DELINEATORS ALONG THE LIMITS OF THE PROPOSED CONSTRUCTION AS PER PART 3 OF THE DELAWARE MUTCD.

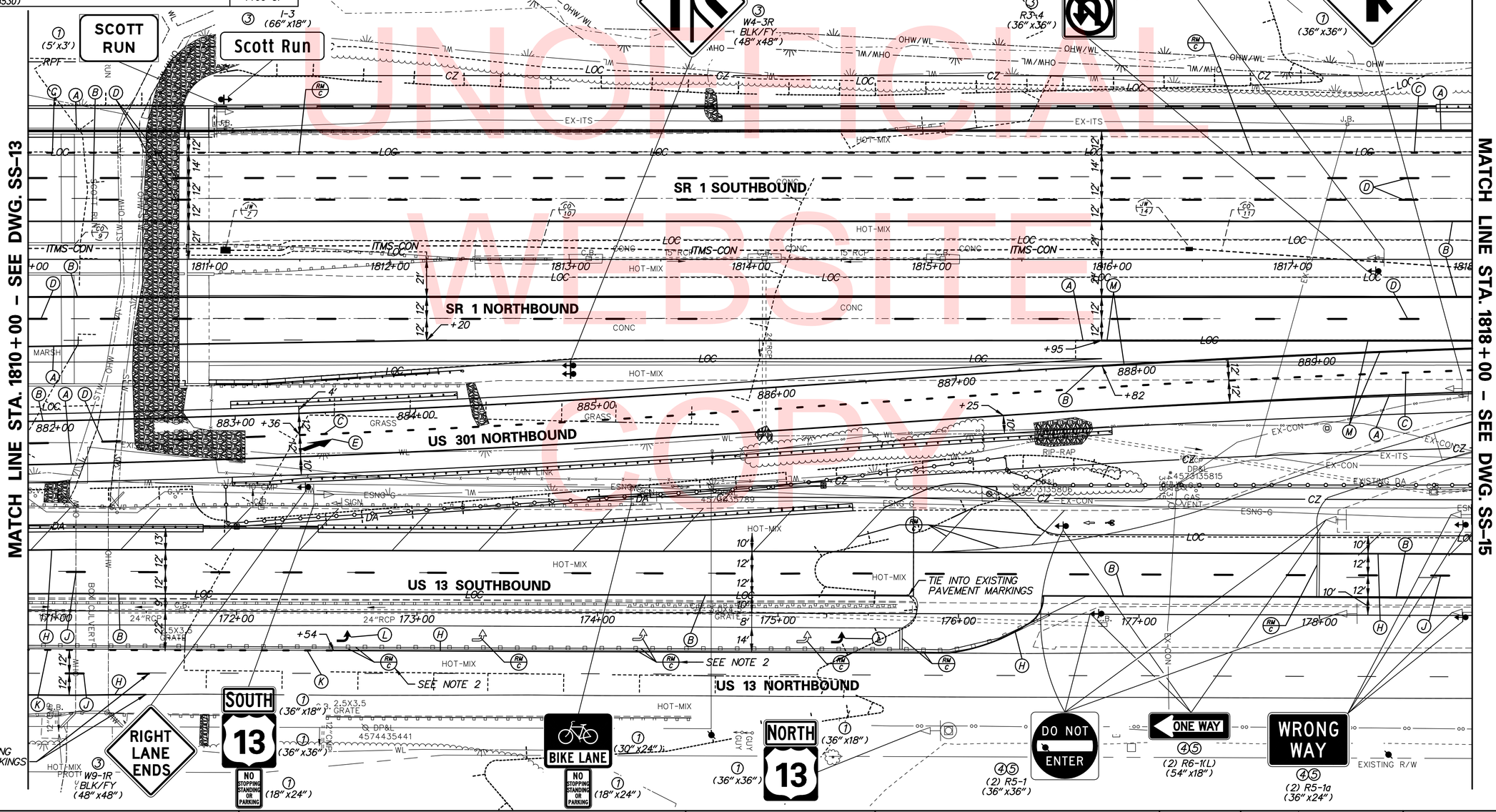

UNOFFICIAL WEBSITE COPY

DELAWARE DEPARTMENT OF TRANSPORTATION

ADDENDUMS / REVISIONS

SCALE 0 30 60 90 FEET

US 301 & SR 1 INTERCHANGE

CONTRACT	BRIDGE NO.	BR1-903N, BR1-903S, BR1-432 & RW1-1
T200911302	DESIGNED BY: J.H.R.	
COUNTY		
NEW CASTLE	CHECKED BY: J.M.M.	

SIGNING, STRIPING & CONDUIT PLAN

SS-14
SHEET NO. 463
TOTAL SHTS. 491

n\33653-000\contract tb\cadd\traffic\2015 - updates\SS014U301_1B.dgn
12/18/2015 8:15:24 AM

NOTES:

1. PLOWABLE RAISED PAVEMENT MARKERS (RPMS) SHALL BE INSTALLED THROUGHOUT THE LIMITS OF THE PROPOSED PAVEMENT STRIPING AS PER FIGURES 3B-15A THROUGH 3B-15H OF THE DELAWARE MUTCD, AS APPLICABLE BELOW:
   - IN AREAS WHERE NEW LANES HAVE BEEN ADDED INSTALL RPMS AS NOTED ABOVE.
   - IN AREAS WHERE EXISTING LENSES WERE REMOVED DURING CONSTRUCTION PHASING, NEW LENSES ONLY SHALL BE INSTALLED IN THOSE AEAS WHERE PROPOSED STRIPING MATCHES EXISTING.
   - IN AREAS WHERE RPMS EXISTED PREVIOUSLY, BUT LANES HAVE NOW BEEN REMOVED IN THE ULTIMATE CONFIGURATION THE RPM HOUSING SHALL REMAIN WITH NO NEW LENS INSTALLED.
2. INSTALL POST MOUNTED AND/OR BARRIER MOUNTED DELINEATORS ALONG THE LIMITS OF THE PROPOSED CONSTRUCTION AS PER PART 3 OF THE DELAWARE MUTCD.

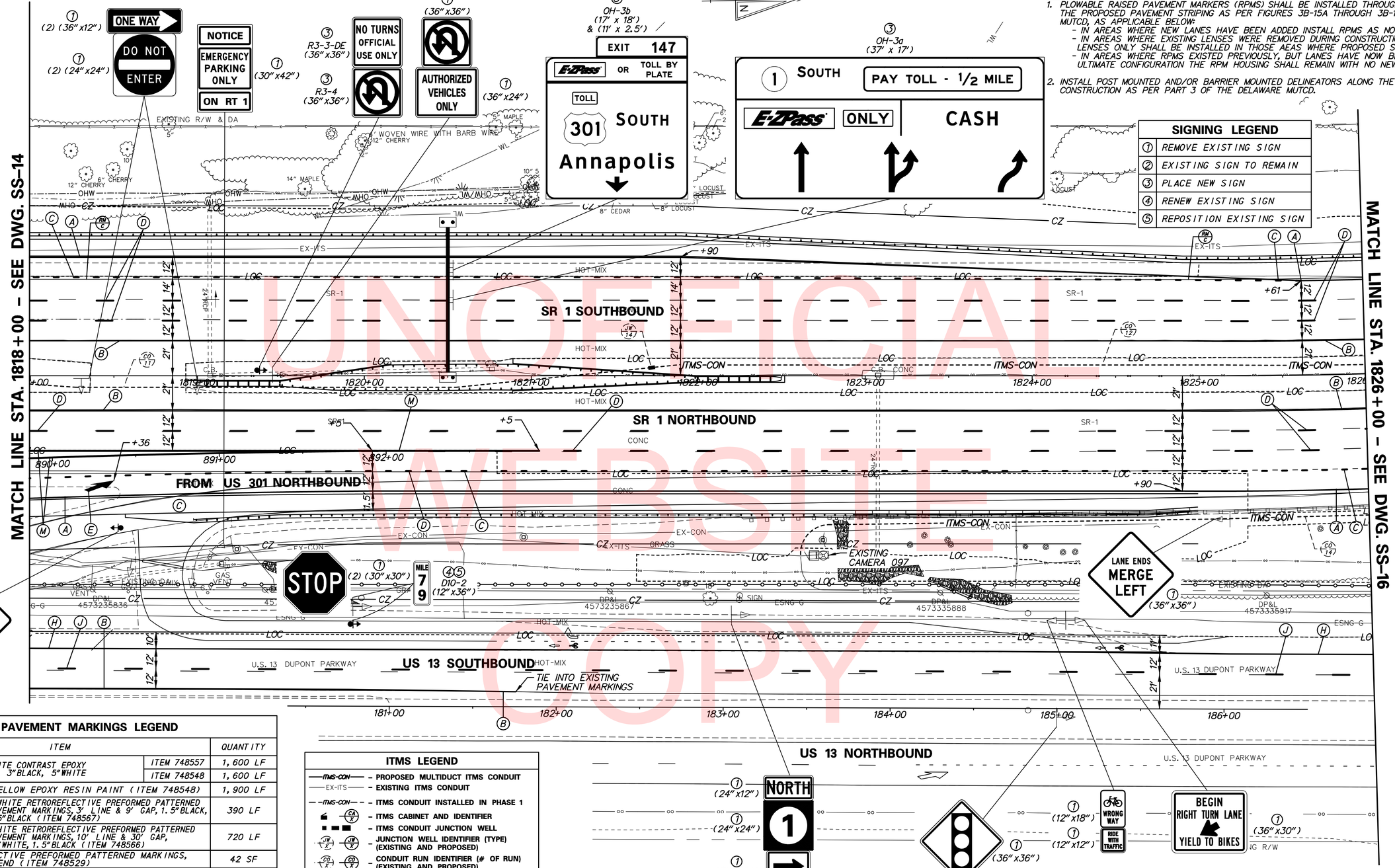

PAVEMENT MARKINGS LEGEND

SYMBOL	ITEM		QUANTITY
A	8" SOLID WHITE CONTRAST EPOXY RESIN PAINT, 3"BLACK, 5"WHITE	ITEM 748557	1,600 LF
		ITEM 748548	1,600 LF
B	5" SOLID YELLOW EPOXY RESIN PAINT (ITEM 748548)		1,900 LF
C	13" DOTTED WHITE RETROREFLECTIVE PREFORMED PATTERNED CONTRAST PAVEMENT MARKINGS, 3' LINE & 9' GAP, 1.5"BLACK, 10"WHITE, 1.5"BLACK (ITEM 748567)		390 LF
D	8" BROKEN WHITE RETROREFLECTIVE PREFORMED PATTERNED CONTRAST PAVEMENT MARKINGS, 10' LINE & 30' GAP, 1.5"BLACK, 5"WHITE, 1.5"BLACK (ITEM 748566)		720 LF
E	RETROREFLECTIVE PREFORMED PATTERNED MARKINGS, SYMBOL/LEGEND (ITEM 748529)		42 SF
F	12" SOLID WHITE EPOXY RESIN PAINT (ITEM 748509)		0 LF
G	12" SOLID WHITE RETROREFLECTIVE PREFORMED PATTERNED MARKINGS (ITEM NO. 748513)		0 LF
H	5" SOLID WHITE EPOXY RESIN PAINT (ITEM 748548)		800 LF
J	5" BROKEN WHITE EPOXY RESIN PAINT PERMANENT PAVEMENT STRIPING, 10' LINE, 30' GAP (ITEM 748548)		200 LF
K	5" BROKEN WHITE EPOXY RESIN PAINT PERMANENT PAVEMENT STRIPING, 3' LINE, 9' GAP (ITEM 748548)		0 LF
L	PERMANENT PAVEMENT STRIPING, SYMBOL/LEGEND, ALKYD THERMOPLASTIC (ITEM 748015)		0 SF
M	10" SOLID WHITE EPOXY RESIN PAINT (ITEM 748549)		510 LF
RM/C	REMOVE EXISTING PAVEMENT STRIPING BY CONTRACTOR (ITEM 748530)		800 SF

ITMS LEGEND

- ITMS-CON – PROPOSED MULTIDUCT ITMS CONDUIT
- EX-ITS – EXISTING ITMS CONDUIT
- ITMS-CON – ITMS CONDUIT INSTALLED IN PHASE 1
- CA/X – ITMS CABINET AND IDENTIFIER
- ITMS CONDUIT JUNCTION WELL
- JB/X JB/X – JUNCTION WELL IDENTIFIER (TYPE) (EXISTING AND PROPOSED)
- CO/X CO/X – CONDUIT RUN IDENTIFIER (# OF RUN) (EXISTING AND PROPOSED)
- PB/X PB/X – POLE BASE IDENTIFIER (TYPE) (EXISTING AND PROPOSED)
- JB/X – PROPOSED CONCRETE BARRIER JUNCTION BOX IDENTIFIER (TYPE)
- RM/C – TO BE REMOVED BY CONTRACTOR
- AB – TO BE ABANDONED BY CONTRACTOR
- P – PROPOSED ELECTRICAL SERVICE ON PEDESTAL
- POLE BASE

OVERHEAD SIGN SUPPORT SCHEDULE (SEE DWG. NO. SS-29)

SIGN NUMBER	NUMBER OF SUPPORTS	SPACING (FEET)	SUPPORT LENGTH (FEET)(LEFT TO RIGHT)
OH-3a	6	2. 25, 6. 5, 6. 5, 6. 5, 6. 5, 6. 5, 6. 5, 2. 25	17, 17, 17, 17, 17, 17
OH-3b	3	2. 5, 6, 6, 2. 5	18, 20. 5, 20. 5

ITMS CONDUIT RUN SCHEDULE

CO#	# OF CONDUITS	SIZE	LENGTH	B/T/O	AMOUNT AND TYPE OF CABLE/WIRE (SUPPLY AND INSTALLATION BY DELDOT FORCES)
11*	2	4 IN	527 FT**	-	1-144S, 1-24S, & 1-48S
12*	2	4 IN	485 FT**	-	1-144S, 1-24S, & 1-48S
14*	1	4 IN	411 FT**	-	1-12S

*DENOTES EXISTING CONDUIT
**QUANTITY CONTINUES ON ADJACENT SHEET
***DENOTES CONDUIT INSTALLED BY DELDOT FORCES

B = BORE, T = TRENCH, O = OPEN CUT, BM = BRIDGE MOUNTED

SS-15

DELAWARE DEPARTMENT OF TRANSPORTATION

ADDENDUMS / REVISIONS

SCALE 0 30 60 90 FEET

US 301 & SR 1 INTERCHANGE

CONTRACT	BRIDGE NO.
T200911302	DESIGNED BY: J.H.R.
COUNTY	
NEW CASTLE	CHECKED BY: J.M.M.

SIGNING, STRIPING & CONDUIT PLAN

SHEET NO. 464
TOTAL SHTS. 491

n:\31653-000\contract tb\cadd\traffic\2015 - updates\SS015U301_1B_AET.dgn
12/18/2015 8:15:34 AM

NOTES:

1. REMOVE EXISTING SIGNS AND SIGN SUPPORTS ONLY, EXISTING OVERHEAD SIGN STRUCTURE TO REMAIN.
2. INSTALL PROPOSED SIGN OH-4 VERTICALLY CENTERED ABOUT EXISTING TRUSS AND HORIZONTALLY CENTERED OVER THREE SOUTHBOUND SR 1 LANES. SIGNS SHALL MAINTAIN A MINIMUM 17'-9" VERTICAL CLEARANCE FROM BOTTOM OF SIGN TO HIGH POINT OF ROADWAY.
3. PLOWABLE RAISED PAVEMENT MARKERS (RPMS) SHALL BE INSTALLED THROUGHOUT THE LIMITS OF THE PROPOSED PAVEMENT STRIPING AS PER FIGURES 3B-15A THROUGH 3B-15H OF THE DELAWARE MUTCD, AS APPLICABLE BELOW:
   - IN AREAS WHERE NEW LANES HAVE BEEN ADDED INSTALL RPMS AS NOTED ABOVE.
   - IN AREAS WHERE EXISTING LENSES WERE REMOVED DURING CONSTRUCTION PHASING, NEW LENSES ONLY SHALL BE INSTALLED IN THOSE AEAS WHERE PROPOSED STRIPING MATCHES EXISTING.
   - IN AREAS WHERE RPMS EXISTED PREVIOUSLY, BUT LANES HAVE NOW BEEN REMOVED IN THE ULTIMATE CONFIGURATION THE RPM HOUSING SHALL REMAIN WITH NO NEW LENS INSTALLED.
4. INSTALL POST MOUNTED AND/OR BARRIER MOUNTED DELINEATORS ALONG THE LIMITS OF THE PROPOSED CONSTRUCTION AS PER PART 3 OF THE DELAWARE MUTCD.
5. THE CONTRACTOR SHALL FURNISH AND INSTALL NEW BOLTS AND FLAT BARS FOR ATTACHING THE OVERHEAD SIGN SUPPORTS TO THE SQUARE HORIZONTAL TRUSS MEMBERS. THE NEW BOLTS AND FLAT BARS SHALL MATCH THE DIMENSIONS AND MATERIAL PROPERTIES OF THE EXISTING.

ITMS CONDUIT RUN SCHEDULE

CO#	# OF CONDUITS	SIZE	LENGTH	B/T/O	AMOUNT AND TYPE OF CABLE/WIRE (SUPPLY AND INSTALLATION BY DELDOT FORCES)
12*	2	4 IN	485 FT**	-	1-144S, 1-24S, & 1-48S
13*	2	4 IN	72 FT	-	1-144S, 1-24S, & 1-48S
14*	1	4 IN	411 FT**	-	1-12S
15*	1	4 IN	89 FT	-	1-12S
20*	1	4 IN	91.3 FT**	-	1-144S, 1-24S, & 1-48S
58*	6	4 IN	9 FT	-	COMMUNICATION CABLES

*DENOTES EXISTING CONDUIT
**QUANTITY CONTINUES ON ADJACENT SHEET
***DENOTES CONDUIT INSTALLED BY DELDOT FORCES

B = BORE, T = TRENCH, O = OPEN CUT,
BM = BRIDGE MOUNTED

PAVEMENT MARKINGS LEGEND

SYMBOL	ITEM		QUANTITY
A	8" SOLID WHITE CONTRAST EPOXY RESIN PAINT, 3"BLACK, 5"WHITE	ITEM 748557	1,590 LF
		ITEM 748548	1,590 LF
B	5" SOLID YELLOW EPOXY RESIN PAINT (ITEM 748548)		1,305 LF
C	13" DOTTED WHITE RETROREFLECTIVE PREFORMED PATTERNED CONTRAST PAVEMENT MARKINGS, 3' LINE & 9' GAP, 1.5"BLACK, 10"WHITE, 1.5"BLACK (ITEM 748567)		205 LF
D	8" BROKEN WHITE RETROREFLECTIVE PREFORMED PATTERNED CONTRAST PAVEMENT MARKINGS, 10' LINE & 30' GAP, 1.5"BLACK, 5"WHITE, 1.5"BLACK (ITEM 748566)		660 LF
E	RETROREFLECTIVE PREFORMED PATTERNED MARKINGS, SYMBOL/LEGEND (ITEM 748529)		42 SF
F	12" SOLID WHITE EPOXY RESIN PAINT (ITEM 748509)		0 LF
G	12" SOLID WHITE RETROREFLECTIVE PREFORMED PATTERNED MARKINGS (ITEM NO. 748513)		0 LF
H	5" SOLID WHITE EPOXY RESIN PAINT (ITEM 748548)		312 LF
J	5" BROKEN WHITE EPOXY RESIN PAINT PERMANENT PAVEMENT STRIPING, 10' LINE, 30' GAP (ITEM 748548)		80 LF
K	5" BROKEN WHITE EPOXY RESIN PAINT PERMANENT PAVEMENT STRIPING, 3' LINE, 9' GAP (ITEM 748548)		0 LF
L	PERMANENT PAVEMENT STRIPING, SYMBOL/LEGEND, ALKYD THERMOPLASTIC (ITEM 748015)		0 SF
M	10" SOLID WHITE EPOXY RESIN PAINT (ITEM 748549)		0 LF
RM C	REMOVE EXISTING PAVEMENT STRIPING BY CONTRACTOR (ITEM 748530)		0 SF

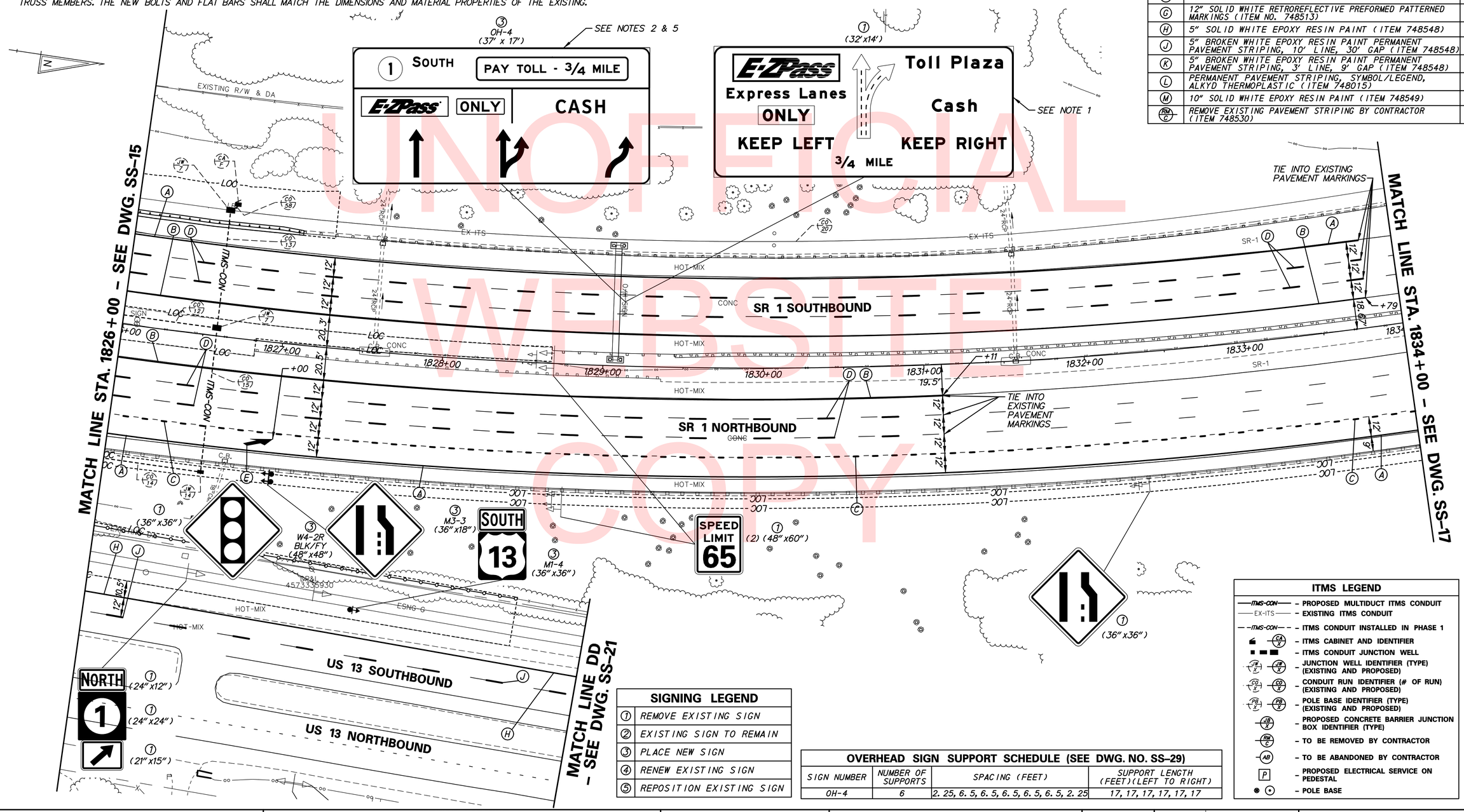

SIGNING LEGEND

①	REMOVE EXISTING SIGN
②	EXISTING SIGN TO REMAIN
③	PLACE NEW SIGN
④	RENEW EXISTING SIGN
⑤	REPOSITION EXISTING SIGN

OVERHEAD SIGN SUPPORT SCHEDULE (SEE DWG. NO. SS-29)

SIGN NUMBER	NUMBER OF SUPPORTS	SPACING (FEET)	SUPPORT LENGTH (FEET)(LEFT TO RIGHT)
OH-4	6	2. 25, 6. 5, 6. 5, 6. 5, 6. 5, 6. 5, 2. 25	17, 17, 17, 17, 17, 17

ITMS LEGEND

- ITMS-CON — PROPOSED MULTIDUCT ITMS CONDUIT
- EX-ITS — EXISTING ITMS CONDUIT
- ITMS-CON — ITMS CONDUIT INSTALLED IN PHASE 1
- CA X — ITMS CABINET AND IDENTIFIER
- ITMS CONDUIT JUNCTION WELL
- JW X / JW X — JUNCTION WELL IDENTIFIER (TYPE) (EXISTING AND PROPOSED)
- CO X / CO X — CONDUIT RUN IDENTIFIER (# OF RUN) (EXISTING AND PROPOSED)
- PB X / PB X — POLE BASE IDENTIFIER (TYPE) (EXISTING AND PROPOSED)
- JB X — PROPOSED CONCRETE BARRIER JUNCTION BOX IDENTIFIER (TYPE)
- RM C — TO BE REMOVED BY CONTRACTOR
- AB — TO BE ABANDONED BY CONTRACTOR
- P — PROPOSED ELECTRICAL SERVICE ON PEDESTAL
- POLE BASE

SS-16

DELAWARE DEPARTMENT OF TRANSPORTATION

ADDENDUMS / REVISIONS

SCALE 0 30 60 90 FEET

US 301 & SR 1 INTERCHANGE

CONTRACT	BRIDGE NO.
T200911302	DESIGNED BY: J.H.R.
COUNTY	CHECKED BY: J.M.M.
NEW CASTLE	

SIGNING, STRIPING & CONDUIT PLAN

SHEET NO.
465
TOTAL SHTS.
491

UNOFFICIAL WEBSITE COPY

r:\31653-000\contract tb\cadd\traffic\2015 - updates\SS016U301_TB.dgn
12/18/2015 8:15:39 AM

ITMS CONDUIT RUN SCHEDULE					
CO*	# OF CONDUITS	SIZE	LENGTH	B/T/O	AMOUNT AND TYPE OF CABLE/WIRE (SUPPLY AND INSTALLATION BY DELDOT FORCES)
20*	1	4 IN	913 FT**	-	1-144S, 1-24S, & 1-48S

*DENOTES EXISTING CONDUIT
**QUANTITY CONTINUES ON ADJACENT SHEET
***DENOTES CONDUIT INSTALLED BY DELDOT FORCES

B = BORE, T = TRENCH, O = OPEN CUT, BM = BRIDGE MOUNTED

GUARDRAIL SCHEDULE

NO.	ITEM DESCRIPTION / TYPE	BEGIN STA.	OFFSET	LENGTH
090	GALVANIZED STEEL BEAM GUARDRAIL, TYPE 2-31	1839+06.64	-6.03	62.50
091	GUARDRAIL END TREATMENT ATTENUATOR, TYPE 1-31	1837+67.93	5.78	50.00
092	GALVANIZED STEEL BEAM GUARDRAIL, TYPE 1-31	1838+07.06	7.33	100.00
093	GALVANIZED STEEL BEAM GUARDRAIL, TYPE 2-31	1839+06.80	7.41	62.50
094	GALVANIZED STEEL BEAM GUARDRAIL, TYPE 1-31	1839+69.14	7.19	12.50
095	END ANCHORAGE, TYPE 31	1839+81.61	7.17	12.50

SIGNING LEGEND

1	REMOVE EXISTING SIGN
2	EXISTING SIGN TO REMAIN
3	PLACE NEW SIGN
4	RENEW EXISTING SIGN
5	REPOSITION EXISTING SIGN

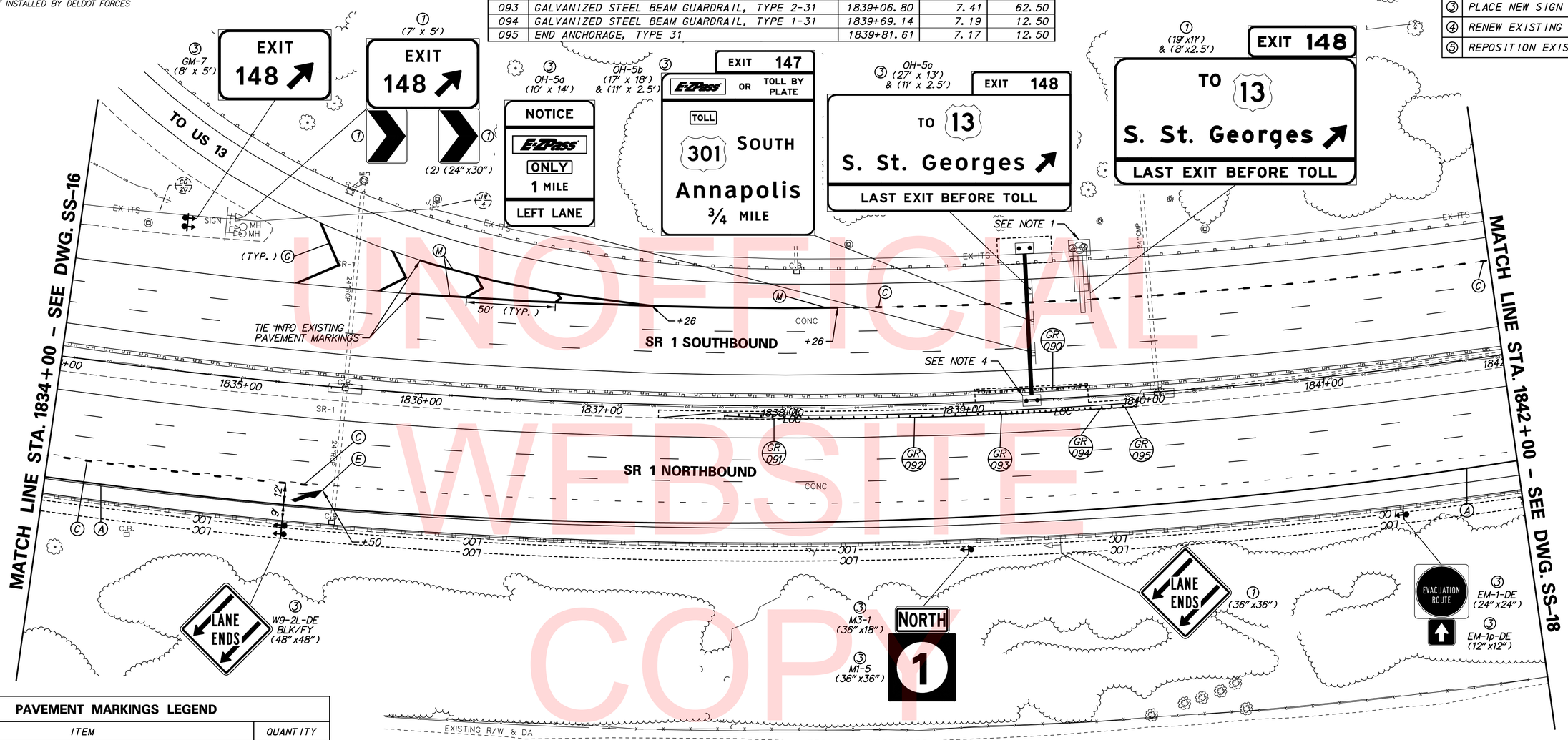

PAVEMENT MARKINGS LEGEND

SYMBOL	ITEM		QUANTITY
A	8" SOLID WHITE CONTRAST EPOXY RESIN PAINT, 3"BLACK, 5"WHITE	ITEM 748557	818 LF
		ITEM 748548	818 LF
B	5" SOLID YELLOW EPOXY RESIN PAINT (ITEM 748548)		0 LF
C	13" DOTTED WHITE RETROREFLECTIVE PREFORMED PATTERNED CONTRAST PAVEMENT MARKINGS, 3' LINE & 9' GAP, 1.5"BLACK, 10"WHITE, 1.5"BLACK (ITEM 748567)		129 LF
D	8" BROKEN WHITE RETROREFLECTIVE PREFORMED PATTERNED CONTRAST PAVEMENT MARKINGS, 10' LINE & 30' GAP, 1.5"BLACK, 5"WHITE, 1.5"BLACK (ITEM 748566)		0 LF
E	RETROREFLECTIVE PREFORMED PATTERNED MARKINGS, SYMBOL/LEGEND (ITEM 748529)		0 SF
F	12" SOLID WHITE EPOXY RESIN PAINT (ITEM 748509)		0 LF
G	12" SOLID WHITE RETROREFLECTIVE PREFORMED PATTERNED MARKINGS (ITEM NO. 748513)		110 LF
H	5" SOLID WHITE EPOXY RESIN PAINT (ITEM 748548)		0 LF
J	5" BROKEN WHITE EPOXY RESIN PAINT PERMANENT PAVEMENT STRIPING, 10' LINE, 30' GAP (ITEM 748548)		0 LF
K	5" BROKEN WHITE EPOXY RESIN PAINT PERMANENT PAVEMENT STRIPING, 3' LINE, 9' GAP (ITEM 748548)		0 LF
L	PERMANENT PAVEMENT STRIPING, SYMBOL/LEGEND, ALKYD THERMOPLASTIC (ITEM 748015)		0 SF
M	10" SOLID WHITE EPOXY RESIN PAINT (ITEM 748549)		362 LF
RM/C	REMOVE EXISTING PAVEMENT STRIPING BY CONTRACTOR (ITEM 748530)		0 SF

ITMS LEGEND

- ITMS-CON — PROPOSED MULTIDUCT ITMS CONDUIT
- EX-ITS — EXISTING ITMS CONDUIT
- ITMS-CON — ITMS CONDUIT INSTALLED IN PHASE 1
- CA/X — ITMS CABINET AND IDENTIFIER
- ITMS CONDUIT JUNCTION WELL
- JW/X — JUNCTION WELL IDENTIFIER (TYPE) (EXISTING AND PROPOSED)
- CO/X — CONDUIT RUN IDENTIFIER (# OF RUN) (EXISTING AND PROPOSED)
- PB/X — POLE BASE IDENTIFIER (TYPE) (EXISTING AND PROPOSED)
- JB/X — PROPOSED CONCRETE BARRIER JUNCTION BOX IDENTIFIER (TYPE)
- RM/C — TO BE REMOVED BY CONTRACTOR
- AB — TO BE ABANDONED BY CONTRACTOR
- P — PROPOSED ELECTRICAL SERVICE ON PEDESTAL
- POLE BASE

NOTES:

1. REMOVE EXISTING CANTILEVER SIGN STRUCTURE, SIGNS, SUPPORTS, AND FOUNDATION 12 INCHES BELOW GRADE.
2. PLOWABLE RAISED PAVEMENT MARKERS (RPMS) SHALL BE INSTALLED THROUGHOUT THE LIMITS OF THE PROPOSED PAVEMENT STRIPING AS PER FIGURES 3B-15A THROUGH 3B-15H OF THE DELAWARE MUTCD, AS APPLICABLE BELOW:
   - IN AREAS WHERE NEW LANES HAVE BEEN ADDED INSTALL RPMS AS NOTED ABOVE.
   - IN AREAS WHERE EXISTING LENSES WERE REMOVED DURING CONSTRUCTION PHASING, NEW LENSES ONLY SHALL BE INSTALLED IN THOSE AEAS WHERE PROPOSED STRIPING MATCHES EXISTING.
   - IN AREAS WHERE RPMS EXISTED PREVIOUSLY, BUT LANES HAVE NOW BEEN REMOVED IN THE ULTIMATE CONFIGURATION THE RPM HOUSING SHALL REMAIN WITH NO NEW LENS INSTALLED.
3. INSTALL POST MOUNTED AND/OR BARRIER MOUNTED DELINEATORS ALONG THE LIMITS OF THE PROPOSED CONSTRUCTION AS PER PART 3 OF THE DELAWARE MUTCD.
4. FOUNDATION EXCAVATION AND DISTURBED AREAS SHALL BE RESTORED TO EXISTING GRADES. POSITIVE DRAINAGE SHALL BE MAINTAINED AROUND FOOTING PEDESTAL EXTENSION TO MINIMIZE PONDING ON THE UPSTREAM FACE.

OVERHEAD SIGN SUPPORT SCHEDULE (SEE DWG. NO. SS-29)

SIGN NUMBER	NUMBER OF SUPPORTS	SPACING (FEET)	SUPPORT LENGTH (FEET)(LEFT TO RIGHT)
OH-5a	2	2, 6, 2	14, 14
OH-5b	3	2. 5, 6, 6, 2. 5	18, 20. 5, 20. 5
OH-5c	4	3, 7, 7, 7, 3	13, 13, 15. 5, 15. 5

UNOFFICIAL WEBSITE COPY

DELAWARE DEPARTMENT OF TRANSPORTATION

ADDENDUMS / REVISIONS

SCALE 0 30 60 90 FEET

US 301 & SR 1 INTERCHANGE

CONTRACT	BRIDGE NO.
T200911302	DESIGNED BY: J.H.R.
COUNTY	CHECKED BY: J.M.M.
NEW CASTLE	

SIGNING, STRIPING & CONDUIT PLAN

SS-17

SHEET NO. 466

TOTAL SHTS. 491

n:\31653-000\contract tb\cadd\traffic\JETSS017U301_1B_JET.dgn 12/18/2015 8:15:43 AM

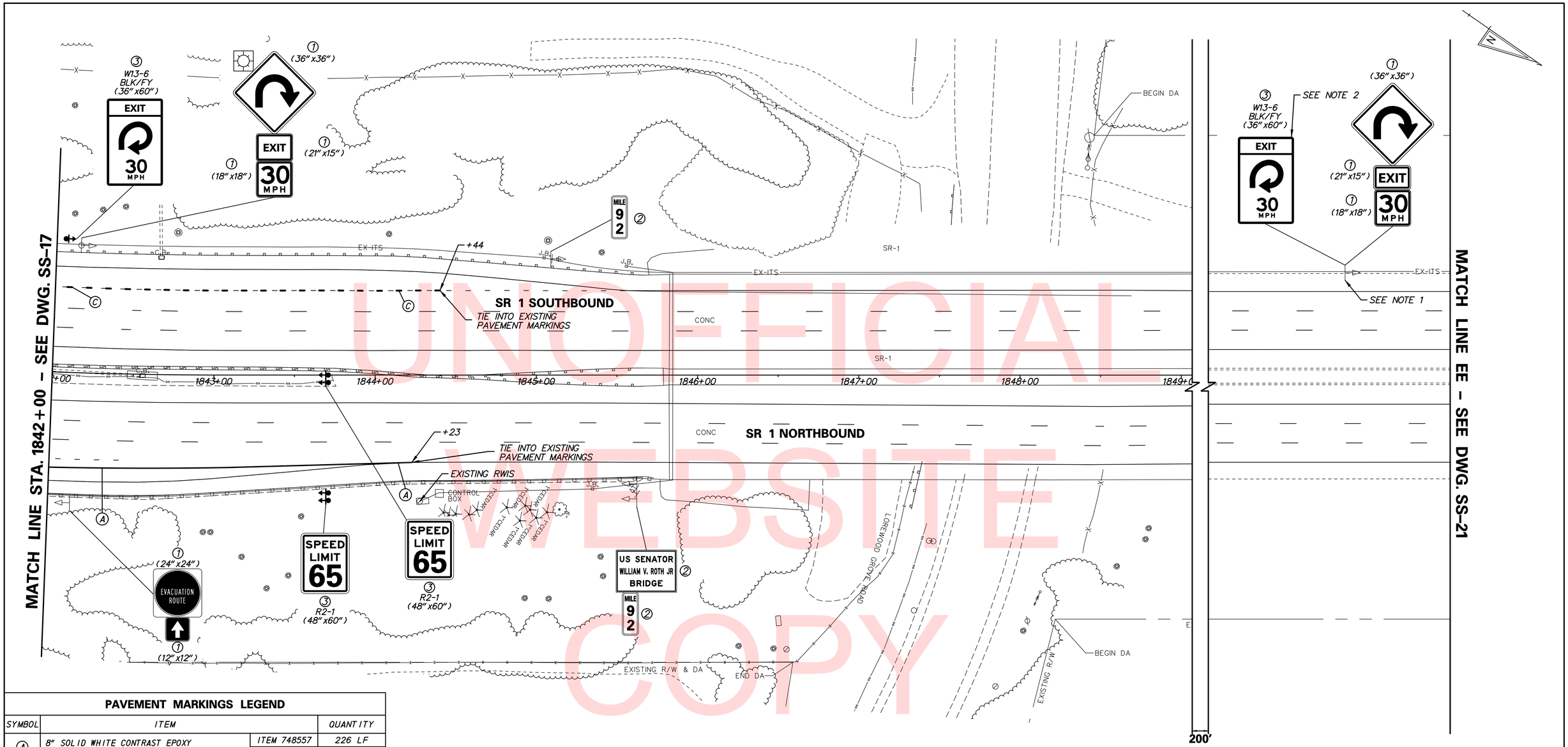

UNOFFICIAL WEBSITE COPY

PAVEMENT MARKINGS LEGEND

SYMBOL	ITEM		QUANTITY
Ⓐ	8" SOLID WHITE CONTRAST EPOXY RESIN PAINT, 3"BLACK, 5"WHITE	ITEM 748557	226 LF
		ITEM 748548	226 LF
Ⓑ	5" SOLID YELLOW EPOXY RESIN PAINT (ITEM 748548)		0 LF
Ⓒ	13" DOTTED WHITE RETROREFLECTIVE PREFORMED PATTERNED CONTRAST PAVEMENT MARKINGS, 3' LINE & 9' GAP, 1.5"BLACK, 10"WHITE, 1.5"BLACK (ITEM 748567)		61 LF
Ⓓ	8" BROKEN WHITE RETROREFLECTIVE PREFORMED PATTERNED CONTRAST PAVEMENT MARKINGS, 10' LINE & 30' GAP, 1.5"BLACK, 5"WHITE, 1.5"BLACK (ITEM 748566)		0 LF
Ⓔ	RETROREFLECTIVE PREFORMED PATTERNED MARKINGS, SYMBOL/LEGEND (ITEM 748529)		0 SF
Ⓕ	12" SOLID WHITE EPOXY RESIN PAINT (ITEM 748509)		0 LF
Ⓖ	12" SOLID WHITE RETROREFLECTIVE PREFORMED PATTERNED MARKINGS (ITEM NO. 748513)		0 LF
Ⓗ	5" SOLID WHITE EPOXY RESIN PAINT (ITEM 748548)		0 LF
Ⓙ	5" BROKEN WHITE EPOXY RESIN PAINT PERMANENT PAVEMENT STRIPING, 10' LINE, 30' GAP (ITEM 748548)		0 LF
Ⓚ	5" BROKEN WHITE EPOXY RESIN PAINT PERMANENT PAVEMENT STRIPING, 3' LINE, 9' GAP (ITEM 748548)		0 LF
Ⓛ	PERMANENT PAVEMENT STRIPING, SYMBOL/LEGEND, ALKYD THERMOPLASTIC (ITEM 748015)		0 SF
Ⓜ	10" SOLID WHITE EPOXY RESIN PAINT (ITEM 748549)		0 LF
RM/C	REMOVE EXISTING PAVEMENT STRIPING BY CONTRACTOR (ITEM 748530)		0 SF

NOTES:

1. EXISTING BRIDGE MOUNTED SIGN SUPPORT TO REMAIN FOR RE-USE.
2. INSTALL SIGN ON EXISTING BRIDGE MOUNTED SIGN SUPPORT.
3. PLOWABLE RAISED PAVEMENT MARKERS (RPMS) SHALL BE INSTALLED THROUGHOUT THE LIMITS OF THE PROPOSED PAVEMENT STRIPING AS PER FIGURES 3B-15A THROUGH 3B-15H OF THE DELAWARE MUTCD, AS APPLICABLE BELOW:
   - IN AREAS WHERE NEW LANES HAVE BEEN ADDED INSTALL RPMS AS NOTED ABOVE.
   - IN AREAS WHERE EXISTING LENSES WERE REMOVED DURING CONSTRUCTION PHASING, NEW LENSES ONLY SHALL BE INSTALLED IN THOSE AEAS WHERE PROPOSED STRIPING MATCHES EXISTING.
   - IN AREAS WHERE RPMS EXISTED PREVIOUSLY, BUT LANES HAVE NOW BEEN REMOVED IN THE ULTIMATE CONFIGURATION THE RPM HOUSING SHALL REMAIN WITH NO NEW LENS INSTALLED.

SIGNING LEGEND

①	REMOVE EXISTING SIGN
②	EXISTING SIGN TO REMAIN
③	PLACE NEW SIGN
④	RENEW EXISTING SIGN
⑤	REPOSITION EXISTING SIGN

SS-18

n:\31653-000\contract tb\cadd\SS018U301_1B.dgn
12/18/2015 8:15:48 AM

DELAWARE DEPARTMENT OF TRANSPORTATION

ADDENDUMS / REVISIONS

SCALE 0 30 60 90 FEET

US 301 & SR 1 INTERCHANGE

CONTRACT	BRIDGE NO.
T200911302	DESIGNED BY: J.H.R.
COUNTY	CHECKED BY: J.M.M.
NEW CASTLE	

SIGNING, STRIPING & CONDUIT PLAN

SHEET NO. 467
TOTAL SHTS. 491

PAVEMENT MARKINGS LEGEND

SYMBOL	ITEM		QUANTITY
A	8" SOLID WHITE CONTRAST EPOXY RESIN PAINT, 3"BLACK, 5"WHITE	ITEM 748557	415 LF
		ITEM 748548	415 LF
B	5" SOLID YELLOW EPOXY RESIN PAINT (ITEM 748548)		1,025 LF
C	13" DOTTED WHITE RETROREFLECTIVE PREFORMED PATTERNED CONTRAST PAVEMENT MARKINGS, 3' LINE & 9' GAP, 1.5"BLACK, 10"WHITE, 1.5"BLACK (ITEM 748567)		0 LF
D	8" BROKEN WHITE RETROREFLECTIVE PREFORMED PATTERNED CONTRAST PAVEMENT MARKINGS, 10' LINE & 30' GAP, 1.5"BLACK, 5"WHITE, 1.5"BLACK (ITEM 748566)		160 LF
E	RETROREFLECTIVE PREFORMED PATTERNED MARKINGS, SYMBOL/LEGEND (ITEM 748529)		0 SF
F	12" SOLID WHITE EPOXY RESIN PAINT (ITEM 748509)		7 LF
G	12" SOLID WHITE RETROREFLECTIVE PREFORMED PATTERNED MARKINGS (ITEM NO. 748513)		0 LF
H	5" SOLID WHITE EPOXY RESIN PAINT (ITEM 748548)		235 LF
J	5" BROKEN WHITE EPOXY RESIN PAINT PERMANENT PAVEMENT STRIPING, 10' LINE, 30' GAP (ITEM 748548)		60 LF
K	5" BROKEN WHITE EPOXY RESIN PAINT PERMANENT PAVEMENT STRIPING, 3' LINE, 9' GAP (ITEM 748548)		0 LF
L	PERMANENT PAVEMENT STRIPING, SYMBOL/LEGEND, ALKYD THERMOPLASTIC (ITEM 748015)		0 SF
M	10" SOLID WHITE EPOXY RESIN PAINT (ITEM 748549)		780 LF
RM/C	REMOVE EXISTING PAVEMENT STRIPING BY CONTRACTOR (ITEM 748530)		0 SF

ITMS LEGEND

- ITMS-CON — PROPOSED MULTIDUCT ITMS CONDUIT
- EX-ITS — EXISTING ITMS CONDUIT
- ITMS-CON — ITMS CONDUIT INSTALLED IN PHASE 1
- CA/X — ITMS CABINET AND IDENTIFIER
- ITMS CONDUIT JUNCTION WELL
- JW/X — JUNCTION WELL IDENTIFIER (TYPE) (EXISTING AND PROPOSED)
- CO/X — CONDUIT RUN IDENTIFIER (# OF RUN) (EXISTING AND PROPOSED)
- PB/X — POLE BASE IDENTIFIER (TYPE) (EXISTING AND PROPOSED)
- JB/X — PROPOSED CONCRETE BARRIER JUNCTION BOX IDENTIFIER (TYPE)
- RM/C — TO BE REMOVED BY CONTRACTOR
- AB — TO BE ABANDONED BY CONTRACTOR
- P — PROPOSED ELECTRICAL SERVICE ON PEDESTAL
- POLE BASE

SIGNING LEGEND

1	REMOVE EXISTING SIGN
2	EXISTING SIGN TO REMAIN
3	PLACE NEW SIGN
4	RENEW EXISTING SIGN
5	REPOSITION EXISTING SIGN

ITMS CONDUIT RUN SCHEDULE

CO*	# OF CONDUITS	SIZE	LENGTH	B/T/O	AMOUNT AND TYPE OF CABLE/WIRE (SUPPLY AND INSTALLATION BY DELDOT FORCES)
17***	1	2 IN	7 FT	T	(2)#6, (1)#6 GROUND
18***	1	2 IN	12 FT	T	(3)#2, (1)#2 GROUND
42	1	4 IN	116 FT**	B	(2)#6, (1)#6 GROUND
48	1	4 IN	130 FT	B	(2)#6, (1)#6 GROUND
49	1	4 IN	110 FT	T	(2)#6, (1)#6 GROUND
50	1	4 IN	106 FT	B	(2)#6, (1)#6 GROUND
51	1	4 IN	142 FT	B	(2)#6, (1)#6 GROUND

*DENOTES EXISTING CONDUIT
**QUANTITY CONTINUES ON ADJACENT SHEET
***DENOTES CONDUIT INSTALLED BY DELDOT FORCES

B = BORE, T = TRENCH, O = OPEN CUT, BM = BRIDGE MOUNTED

NOTES:

1. PLOWABLE RAISED PAVEMENT MARKERS (RPMS) SHALL BE INSTALLED THROUGHOUT THE LIMITS OF THE PROPOSED PAVEMENT STRIPING AS PER FIGURES 3B-15A THROUGH 3B-15H OF THE DELAWARE MUTCD, AS APPLICABLE BELOW:
   - IN AREAS WHERE NEW LANES HAVE BEEN ADDED INSTALL RPMS AS NOTED ABOVE.
   - IN AREAS WHERE EXISTING LENSES WERE REMOVED DURING CONSTRUCTION PHASING, NEW LENSES ONLY SHALL BE INSTALLED IN THOSE AEAS WHERE PROPOSED STRIPING MATCHES EXISTING.
   - IN AREAS WHERE RPMS EXISTED PREVIOUSLY, BUT LANES HAVE NOW BEEN REMOVED IN THE ULTIMATE CONFIGURATION THE RPM HOUSING SHALL REMAIN WITH NO NEW LENS INSTALLED.
2. PROPOSED 60 AMP, 120/240V, SINGLE PHASE, 3 WIRE ELECTRICAL SERVICE ON PEDESTAL INSTALLED BY DELDOT FORCES. EXACT SERVICE LOCATION OF ELECTRICAL SERVICE TO BE COORDINATED WITH DELMARVA POWER PENDING UTILITY RELOCATION DESIGN. A 2P (240V) CIRCUIT BREAKER SHALL BE PROVIDED FOR THE DEDICATED RWIS CIRCUIT.
3. REMOVE ABANDONED EXISTING ELECTRICAL SERVICE AND PEDESTAL EQUIPMENT.
4. INSTALL POST MOUNTED AND/OR BARRIER MOUNTED DELINEATORS ALONG THE LIMITS OF THE PROPOSED CONSTRUCTION AS PER PART 3 OF THE DELAWARE MUTCD.
5. ALL SIGNS SHOWN SCREENED ON THIS PLAN SHEET ARE PROPOSED BY OTHERS UNDER CONTRACT NO. T201011302.
6. REMOVE EXISTING SIGN UPON OPENING OF RAMP R IN CONSTRUCTION PHASE 3.
7. CONDUIT RUN NOS. 17 & 18 SHALL BE RIGID GALVANIZED STEEL INSTALLED BY DELDOT FORCES.

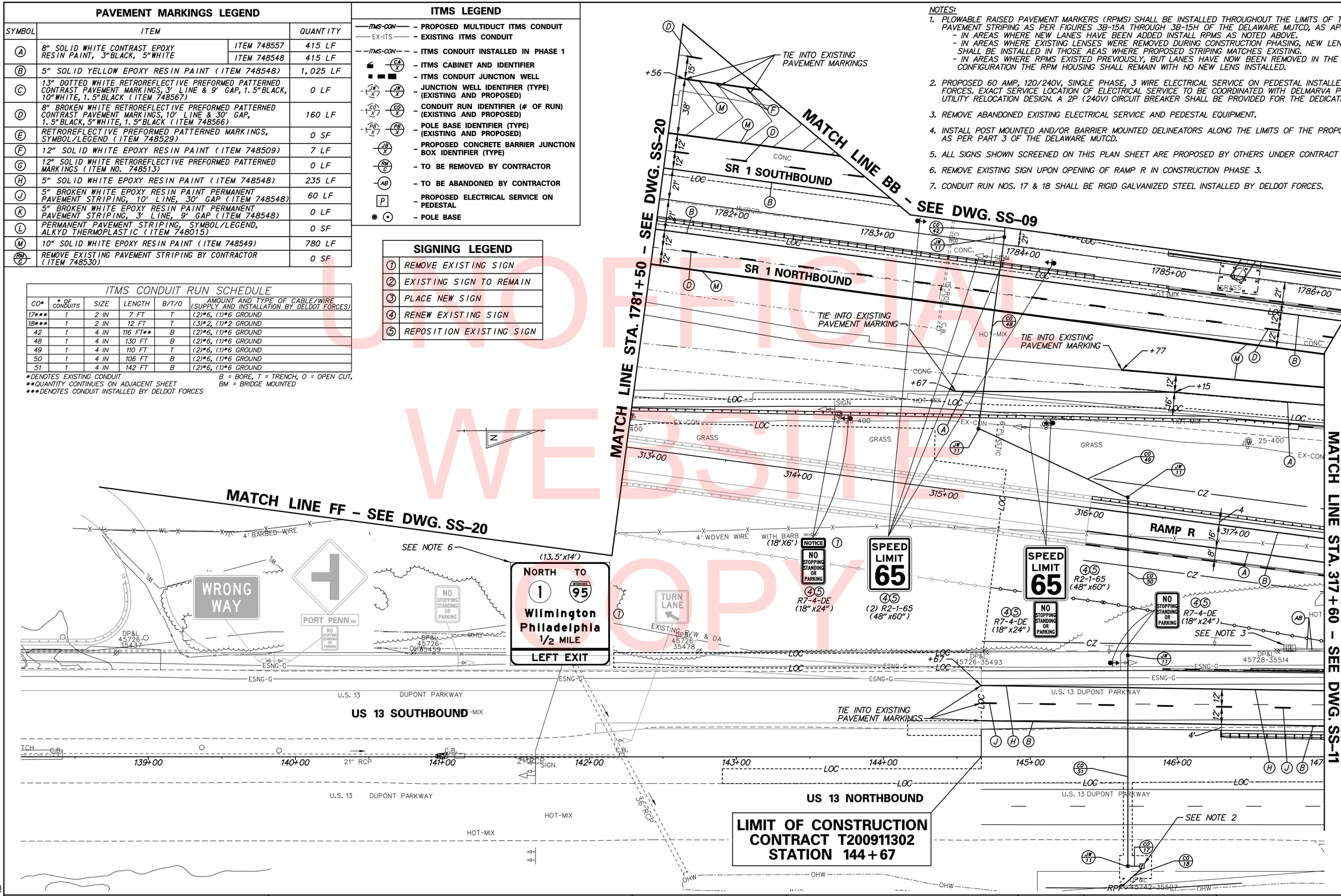

UNOFFICIAL WEBSITE COPY

DELAWARE DEPARTMENT OF TRANSPORTATION	ADDENDUMS / REVISIONS	SCALE 0 30 60 90 FEET	US 301 & SR 1 INTERCHANGE	CONTRACT T200911302	BRIDGE NO. RW1-3R	SIGNING, STRIPING & CONDUIT PLAN	SS-19
				COUNTY NEW CASTLE	DESIGNED BY: J.H.R.		SHEET NO. 468
					CHECKED BY: J.M.M.		TOTAL SHTS. 491

n:\31653-000\contract tb\cadd\traffic\2015 - updates\SS019U301_1B.dgn
12/18/2015 8:15:52 AM

NOTES:

1. PLOWABLE RAISED PAVEMENT MARKERS (RPMS) SHALL BE INSTALLED THROUGHOUT THE LIMITS OF THE PROPOSED PAVEMENT STRIPING AS PER FIGURES 3B-15A THROUGH 3B-15H OF THE DELAWARE MUTCD, AS APPLICABLE BELOW:
   - IN AREAS WHERE NEW LANES HAVE BEEN ADDED INSTALL RPMS AS NOTED ABOVE.
   - IN AREAS WHERE EXISTING LENSES WERE REMOVED DURING CONSTRUCTION PHASING, NEW LENSES ONLY SHALL BE INSTALLED IN THOSE AEAS WHERE PROPOSED STRIPING MATCHES EXISTING.
   - IN AREAS WHERE RPMS EXISTED PREVIOUSLY, BUT LANES HAVE NOW BEEN REMOVED IN THE ULTIMATE CONFIGURATION THE RPM HOUSING SHALL REMAIN WITH NO NEW LENS INSTALLED.
2. INSTALL POST MOUNTED AND/OR BARRIER MOUNTED DELINEATORS ALONG THE LIMITS OF THE PROPOSED CONSTRUCTION AS PER PART 3 OF THE DELAWARE MUTCD.
3. ALL SIGNS SHOWN SCREENED ON THIS PLAN ARE PROPOSED BY OTHERS IN CONTRACT NO. T201011302.

SIGNING LEGEND	
1	REMOVE EXISTING SIGN
2	EXISTING SIGN TO REMAIN
3	PLACE NEW SIGN
4	RENEW EXISTING SIGN
5	REPOSITION EXISTING SIGN

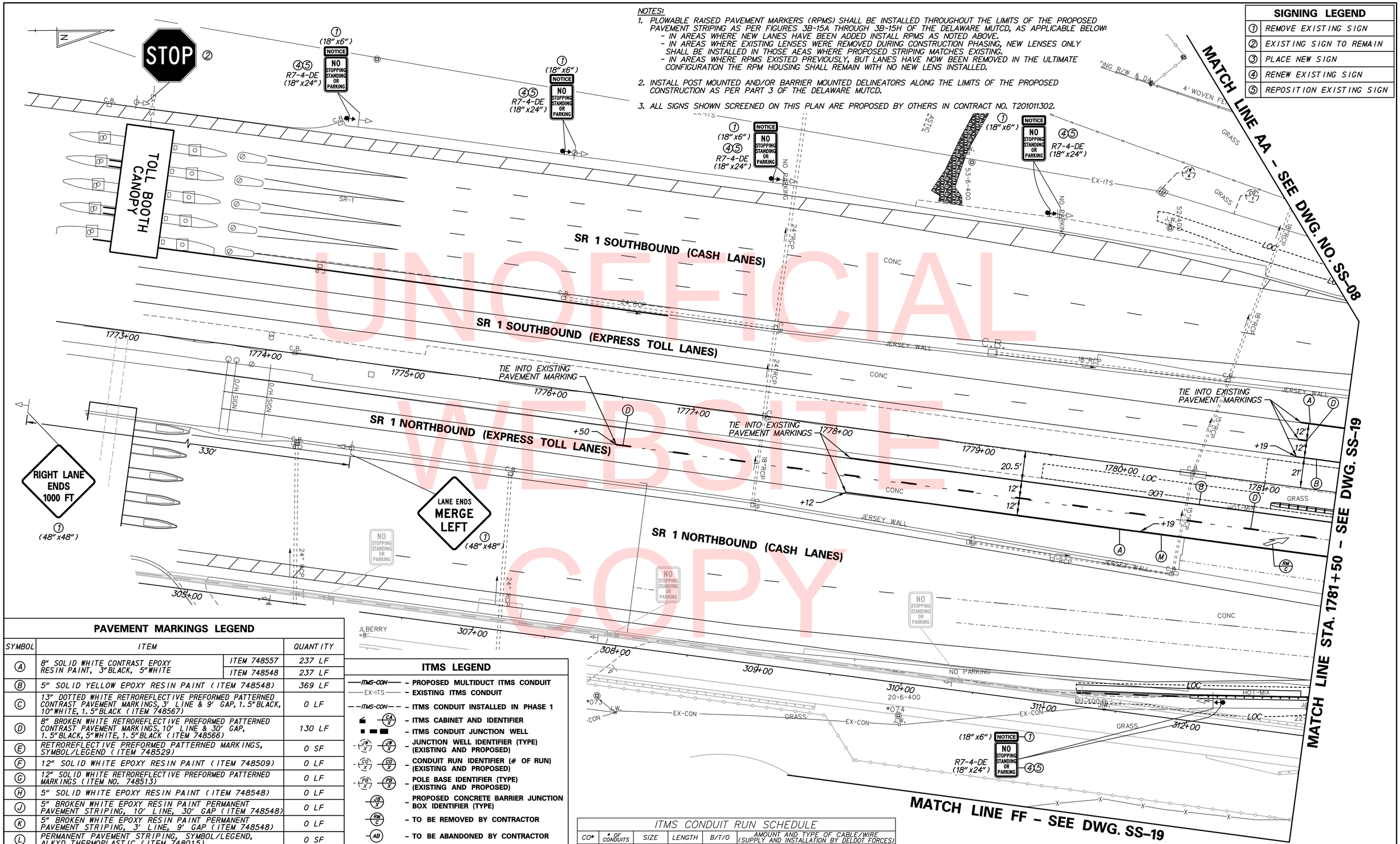

UNOFFICIAL WEBSITE COPY

PAVEMENT MARKINGS LEGEND

SYMBOL	ITEM		QUANTITY
A	8" SOLID WHITE CONTRAST EPOXY RESIN PAINT, 3"BLACK, 5"WHITE	ITEM 748557	237 LF
		ITEM 748548	237 LF
B	5" SOLID YELLOW EPOXY RESIN PAINT (ITEM 748548)		369 LF
C	13" DOTTED WHITE RETROREFLECTIVE PREFORMED PATTERNED CONTRAST PAVEMENT MARKINGS, 3' LINE & 9' GAP, 1.5"BLACK, 10"WHITE, 1.5"BLACK (ITEM 748567)		0 LF
D	8" BROKEN WHITE RETROREFLECTIVE PREFORMED PATTERNED CONTRAST PAVEMENT MARKINGS, 10' LINE & 30' GAP, 1.5"BLACK, 5"WHITE, 1.5"BLACK (ITEM 748566)		130 LF
E	RETROREFLECTIVE PREFORMED PATTERNED MARKINGS, SYMBOL/LEGEND (ITEM 748529)		0 SF
F	12" SOLID WHITE EPOXY RESIN PAINT (ITEM 748509)		0 LF
G	12" SOLID WHITE RETROREFLECTIVE PREFORMED PATTERNED MARKINGS (ITEM NO. 748513)		0 LF
H	5" SOLID WHITE EPOXY RESIN PAINT (ITEM 748548)		0 LF
J	5" BROKEN WHITE EPOXY RESIN PAINT PERMANENT PAVEMENT STRIPING, 10' LINE, 30' GAP (ITEM 748548)		0 LF
K	5" BROKEN WHITE EPOXY RESIN PAINT PERMANENT PAVEMENT STRIPING, 3' LINE, 9' GAP (ITEM 748548)		0 LF
L	PERMANENT PAVEMENT STRIPING, SYMBOL/LEGEND, ALKYD THERMOPLASTIC (ITEM 748015)		0 SF
M	10" SOLID WHITE EPOXY RESIN PAINT (ITEM 748549)		132 LF
RM C	REMOVE EXISTING PAVEMENT STRIPING BY CONTRACTOR (ITEM 748530)		42 SF

ITMS LEGEND

- ITMS-CON — PROPOSED MULTIDUCT ITMS CONDUIT
- EX-ITS — EXISTING ITMS CONDUIT
- ITMS-CON — ITMS CONDUIT INSTALLED IN PHASE 1
- CA X — ITMS CABINET AND IDENTIFIER
- ITMS CONDUIT JUNCTION WELL
- JW X — JUNCTION WELL IDENTIFIER (TYPE) (EXISTING AND PROPOSED)
- CO X — CONDUIT RUN IDENTIFIER (# OF RUN) (EXISTING AND PROPOSED)
- PB X — POLE BASE IDENTIFIER (TYPE) (EXISTING AND PROPOSED)
- JB X — PROPOSED CONCRETE BARRIER JUNCTION BOX IDENTIFIER (TYPE)
- RM C — TO BE REMOVED BY CONTRACTOR
- AB — TO BE ABANDONED BY CONTRACTOR
- P — PROPOSED ELECTRICAL SERVICE ON PEDESTAL
- POLE BASE

ITMS CONDUIT RUN SCHEDULE

CO*	# OF CONDUITS	SIZE	LENGTH	B/T/O	AMOUNT AND TYPE OF CABLE/WIRE (SUPPLY AND INSTALLATION BY DELDOT FORCES)
1*	1	4 IN	371 FT**	T	1-144S, 1-24S, & 1-48S

*DENOTES EXISTING CONDUIT
**QUANTITY CONTINUES ON ADJACENT SHEET
***DENOTES CONDUIT INSTALLED BY DELDOT FORCES

B = BORE, T = TRENCH, O = OPEN CUT, BM = BRIDGE MOUNTED

DELAWARE DEPARTMENT OF TRANSPORTATION

ADDENDUMS / REVISIONS

SCALE 0 30 60 90 FEET

US 301 & SR 1 INTERCHANGE

CONTRACT	BRIDGE NO.	
T200911302	DESIGNED BY: J.H.R.	
COUNTY		
NEW CASTLE	CHECKED BY: J.M.M.	

SIGNING, STRIPING & CONDUIT PLAN

SS-20
SHEET NO. 469
TOTAL SHTS. 491

n:\33653-000\contract tb\cadd\SS020U301_IB.dgn
12/18/2015 8:15:56 AM

NOTES:

1. PLOWABLE RAISED PAVEMENT MARKERS (RPMS) SHALL BE INSTALLED THROUGHOUT THE LIMITS OF THE PROPOSED PAVEMENT STRIPING AS PER FIGURES 3B-15A THROUGH 3B-15H OF THE DELAWARE MUTCD, AS APPLICABLE BELOW:
   - IN AREAS WHERE NEW LANES HAVE BEEN ADDED INSTALL RPMS AS NOTED ABOVE.
   - IN AREAS WHERE EXISTING LENSES WERE REMOVED DURING CONSTRUCTION PHASING, NEW LENSES ONLY SHALL BE INSTALLED IN THOSE AEAS WHERE PROPOSED STRIPING MATCHES EXISTING.
   - IN AREAS WHERE RPMS EXISTED PREVIOUSLY, BUT LANES HAVE NOW BEEN REMOVED IN THE ULTIMATE CONFIGURATION THE RPM HOUSING SHALL REMAIN WITH NO NEW LENS INSTALLED.
2. REMOVE EXISTING SIGN AND STEEL SUPPORTS ONLY, EXISTING "TRAFFCON" VMS, POLE MOUNTED CABINET, AND SOLAR PANEL TO BE RELOCATED TO PROPOSED SIGN GM-8.
3. INSTALL EXISTING "TRAFFCON" VMS, POLE MOUNTED CABINET, AND SOLAR PANEL TO NEW GALVANIZED STEEL SIGN SUPPORTS MATCHING EXISTING ATTACHMENT METHOD AND HARDWARE. COST OF RELOCATING EQUIPMENT TO NEW SIGN AND SIGN SUPPORTS WILL NOT BE MEASURED AND PAID FOR BUT WILL BE INCIDENTAL TO ITEM 749556 INSTALLATION OF SIGN ON GROUND MOUNTED POSTS.

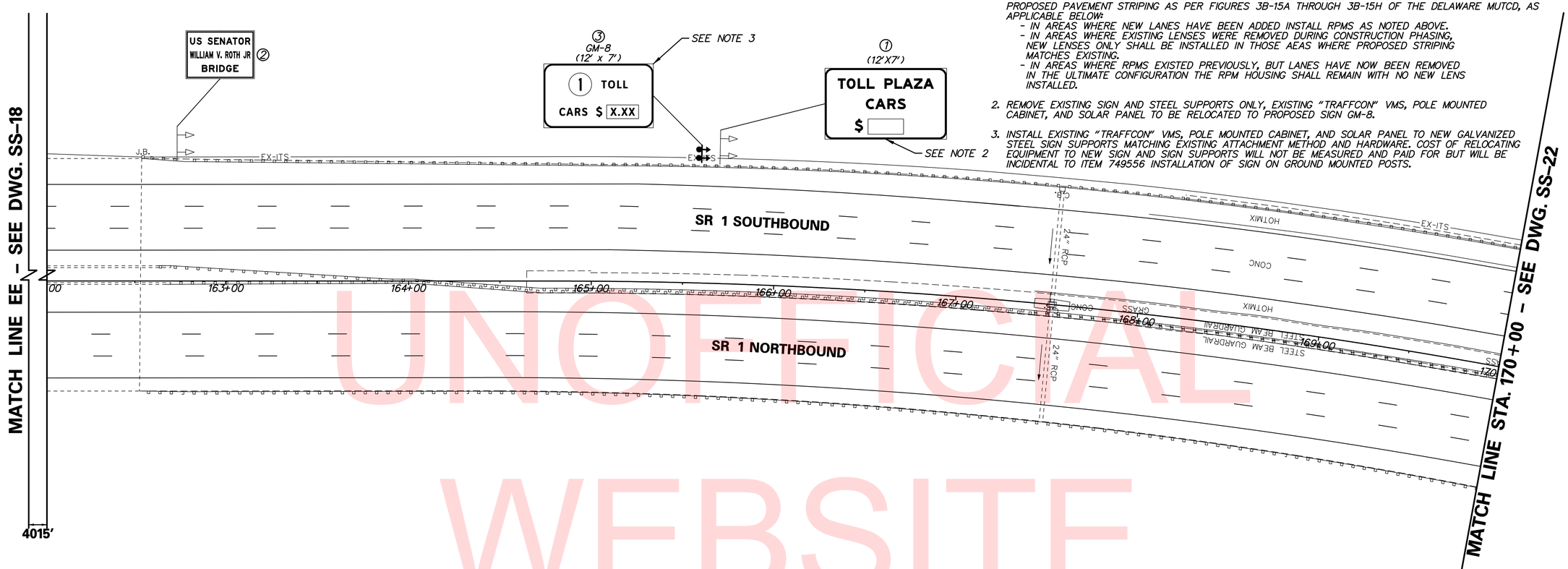

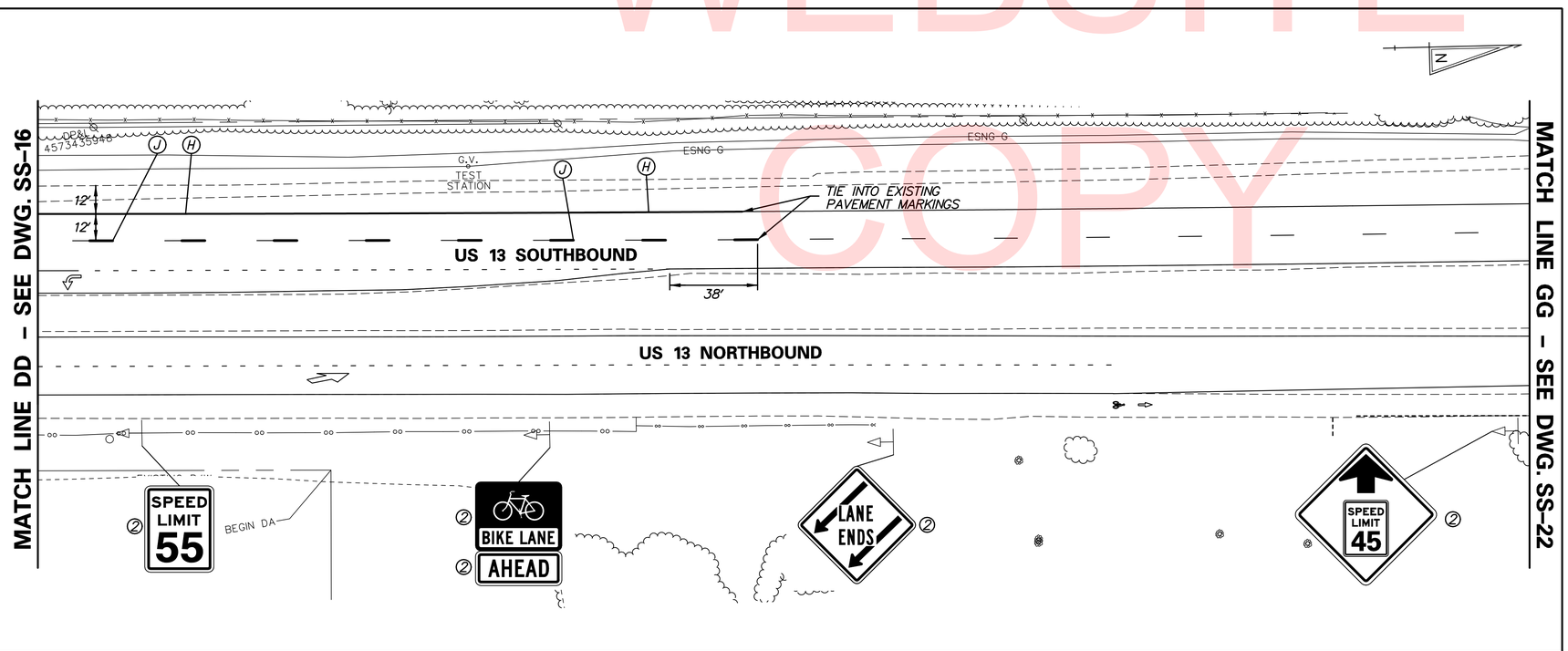

SIGNING LEGEND	
①	REMOVE EXISTING SIGN
②	EXISTING SIGN TO REMAIN
③	PLACE NEW SIGN
④	RENEW EXISTING SIGN
⑤	REPOSITION EXISTING SIGN

PAVEMENT MARKINGS LEGEND			
SYMBOL	ITEM		QUANTITY
Ⓐ	8" SOLID WHITE CONTRAST EPOXY RESIN PAINT, 3"BLACK, 5"WHITE	ITEM 748557	0 LF
		ITEM 748548	0 LF
Ⓑ	5" SOLID YELLOW EPOXY RESIN PAINT (ITEM 748548)		0 LF
Ⓒ	13" DOTTED WHITE RETROREFLECTIVE PREFORMED PATTERNED CONTRAST PAVEMENT MARKINGS, 3' LINE & 9' GAP, 1.5"BLACK, 10"WHITE, 1.5"BLACK (ITEM 748567)		0 LF
Ⓓ	8" BROKEN WHITE RETROREFLECTIVE PREFORMED PATTERNED CONTRAST PAVEMENT MARKINGS, 10' LINE & 30' GAP, 1.5"BLACK, 5"WHITE, 1.5"BLACK (ITEM 748566)		0 LF
Ⓔ	RETROREFLECTIVE PREFORMED PATTERNED MARKINGS, SYMBOL/LEGEND (ITEM 748529)		0 SF
Ⓕ	12" SOLID WHITE EPOXY RESIN PAINT (ITEM 748509)		0 LF
Ⓖ	12" SOLID WHITE RETROREFLECTIVE PREFORMED PATTERNED MARKINGS (ITEM NO. 748513)		0 LF
Ⓗ	5" SOLID WHITE EPOXY RESIN PAINT (ITEM 748548)		306 LF
Ⓙ	5" BROKEN WHITE EPOXY RESIN PAINT PERMANENT PAVEMENT STRIPING, 10' LINE, 30' GAP (ITEM 748548)		80 LF
Ⓚ	5" BROKEN WHITE EPOXY RESIN PAINT PERMANENT PAVEMENT STRIPING, 3' LINE, 9' GAP (ITEM 748548)		0 LF
Ⓛ	PERMANENT PAVEMENT STRIPING, SYMBOL/LEGEND, ALKYD THERMOPLASTIC (ITEM 748015)		0 SF
Ⓜ	10" SOLID WHITE EPOXY RESIN PAINT (ITEM 748549)		0 LF
RM C	REMOVE EXISTING PAVEMENT STRIPING BY CONTRACTOR (ITEM 748530)		0 SF

UNOFFICIAL WEBSITE COPY

r:\31653-000\contract tb\cadd\SS021U301_1B.dgn
12/18/2015 8:16:00 AM

DELAWARE DEPARTMENT OF TRANSPORTATION

ADDENDUMS / REVISIONS

SCALE 0 30 60 90 FEET

US 301 & SR 1 INTERCHANGE

CONTRACT	BRIDGE NO.	
T200911302	DESIGNED BY: J.H.R.	
COUNTY		
NEW CASTLE	CHECKED BY: J.M.M.	

SIGNING, STRIPING & CONDUIT PLAN

SS-21
SHEET NO.
470
TOTAL SHTS.
491

SIGNING LEGEND	
①	REMOVE EXISTING SIGN
②	EXISTING SIGN TO REMAIN
③	PLACE NEW SIGN
④	RENEW EXISTING SIGN
⑤	REPOSITION EXISTING SIGN

OVERHEAD SIGN SUPPORT SCHEDULE (SEE DWG. NO. SS–29)

SIGN NUMBER	NUMBER OF SUPPORTS	SPACING (FEET)	SUPPORT LENGTH (FEET)(LEFT TO RIGHT)
OH-6a	2	2, 6, 2	14, 14
OH-6b	3	2.5, 6, 6, 2.5	18, 20.5, 20.5
OH-6c	3	3, 6.5, 6.5, 3	13, 15.5, 15.5

GUARDRAIL SCHEDULE

NO.	ITEM DESCRIPTION / TYPE	BEGIN STA.	OFFSET	LENGTH
096	END ANCHORAGE, TYPE 31	170+36.80	-6.75	12.50
097	GALVANIZED STEEL BEAM GUARDRAIL, TYPE 1-31	170+50.94	-6.72	12.50
098	GALVANIZED STEEL BEAM GUARDRAIL, TYPE 2-31	170+63.41	-6.70	62.50
099	GALVANIZED STEEL BEAM GUARDRAIL, TYPE 1-31	171+25.77	-6.85	112.50
100	GUARDRAIL END TREATMENT ATTENUATOR, TYPE 1-31	172+37.99	-7.27	50.00
101	GALVANIZED STEEL BEAM GUARDRAIL, TYPE 2-31	170+63.33	6.97	62.50

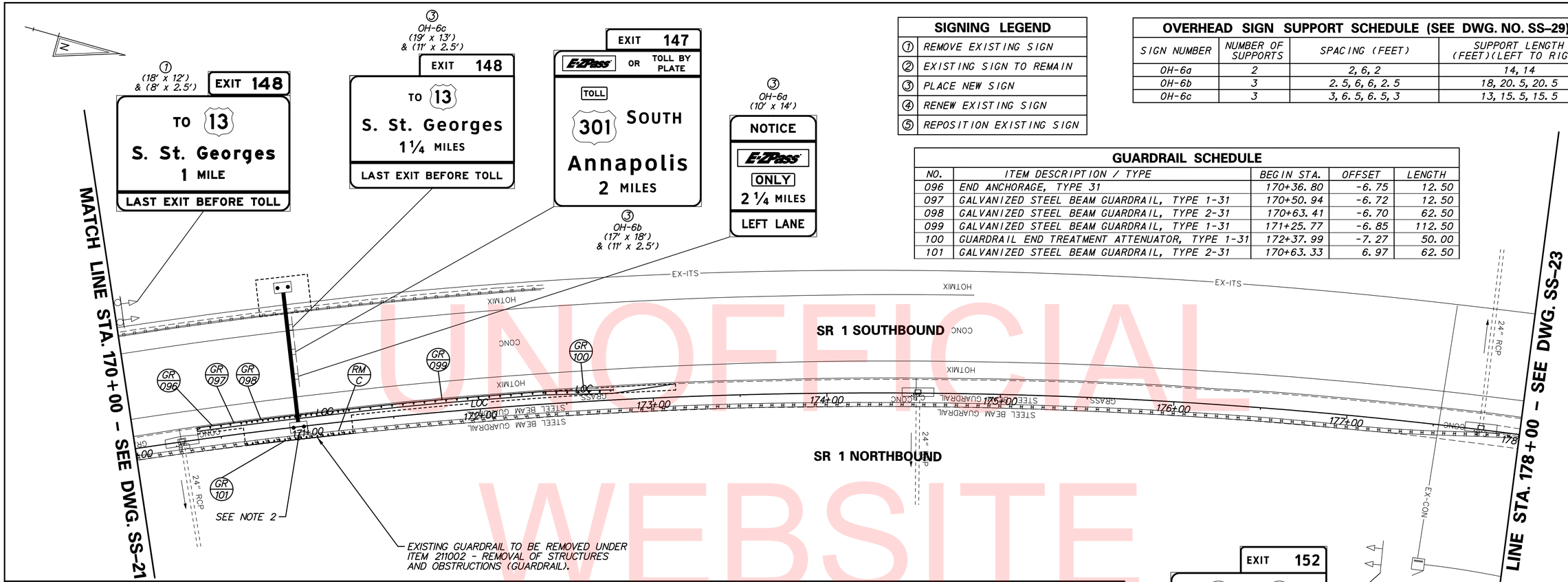

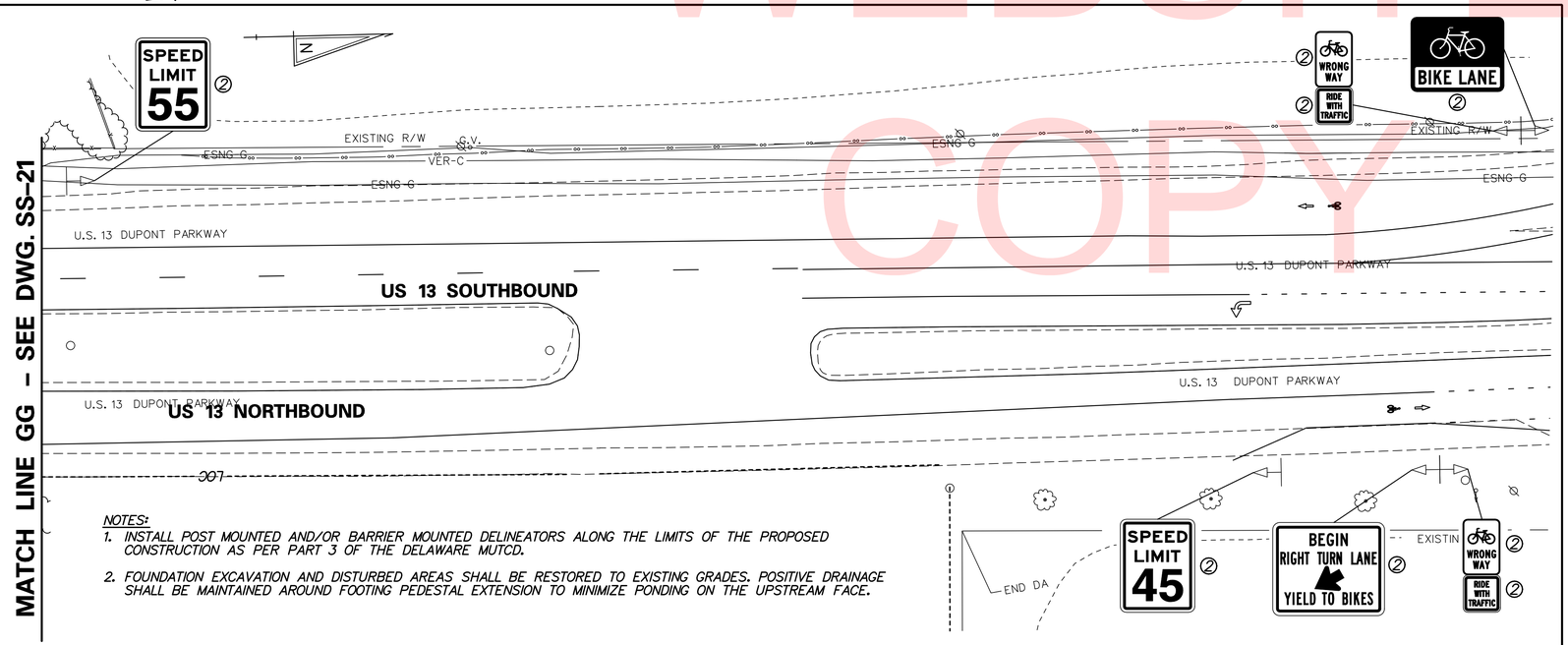

NOTES:
1. INSTALL POST MOUNTED AND/OR BARRIER MOUNTED DELINEATORS ALONG THE LIMITS OF THE PROPOSED CONSTRUCTION AS PER PART 3 OF THE DELAWARE MUTCD.
2. FOUNDATION EXCAVATION AND DISTURBED AREAS SHALL BE RESTORED TO EXISTING GRADES. POSITIVE DRAINAGE SHALL BE MAINTAINED AROUND FOOTING PEDESTAL EXTENSION TO MINIMIZE PONDING ON THE UPSTREAM FACE.

UNOFFICIAL WEBSITE COPY

DELAWARE DEPARTMENT OF TRANSPORTATION

ADDENDUMS / REVISIONS

SCALE 0 30 60 90 FEET

US 301 & SR 1 INTERCHANGE

CONTRACT	BRIDGE NO.	
T200911302	DESIGNED BY: J.H.R.	
COUNTY		
NEW CASTLE	CHECKED BY: J.M.M.	

SIGNING, STRIPING & CONDUIT PLAN

SS–22
SHEET NO.
471
TOTAL SHTS.
491

n:\31653-000\contract tb\cadd\traffic\AET\SS022U301_1B_AET.dgn 12/18/2015 8:16:03 AM

ITMS CONDUIT RUN SCHEDULE					
CO#	# OF CONDUITS	SIZE	LENGTH	B/T/O	AMOUNT AND TYPE OF CABLE/WIRE (SUPPLY AND INSTALLATION BY DELDOT FORCES)
19#**	1	2 IN	4 FT	T	(4)#2, (1)#6 GROUND
52#	1	4 IN	XXX FT	-	1-144S, 1-24S, & 1-48S
53#	1	4 IN	XXX FT	-	1-144S, 1-24S, & 1-48S
54#**	1	2 IN	141 FT	T	(3)#2, (1)#2 GROUND
55	1	2 IN	128 FT	T	(4)#2, (1)#6 GROUND
56	1	2.5 IN	32 FT	T	COMMUNICATION CABLES
57	2	3 IN	11 FT	T	POWER AND COMMMUNICATION CABLES

*DENOTES EXISTING CONDUIT
**QUANTITY CONTINUES ON ADJACENT SHEET
***DENOTES CONDUIT INSTALLED BY DELDOT FORCES

B = BORE, T = TRENCH, O = OPEN CUT, BM = BRIDGE MOUNTED

NOTES:

1. THE CONTRACTOR SHALL REMOVE THE EXISTING TYPE 4 JUNCTION WELL AND INSTALL A TYPE 7 JUNCTION WELL IN THE SAME LOCATION. COORDINATE REMOVAL AND INSTALLATION OF JUNCTION WELLS WITH DELDOT TRAFFIC.
2. INSTALL POST MOUNTED AND/OR BARRIER MOUNTED DELINEATORS ALONG THE LIMITS OF THE PROPOSED CONSTRUCTION AS PER PART 3 OF THE DELAWARE MUTCD.
3. PROPOSED 100 AMP, 120/240V, SINGLE PHASE, 3-WIRE ELECTRICAL SERVICE ON PEDESTAL INSTALLED BY DELDOT FORCES.
4. FOUNDATION EXCAVATION AND DISTURBED AREAS SHALL BE RESTORED TO EXISTING GRADES. POSITIVE DRAINAGE SHALL BE MAINTAINED AROUND FOOTING PEDESTAL EXTENSION TO MINIMIZE PONDING ON THE UPSTREAM FACE.
5. CONDUIT RUN NOS. 19 & 54 SHALL BE RIGID GALVANIZED STEEL INSTALLED BY DELDOT FORCES.

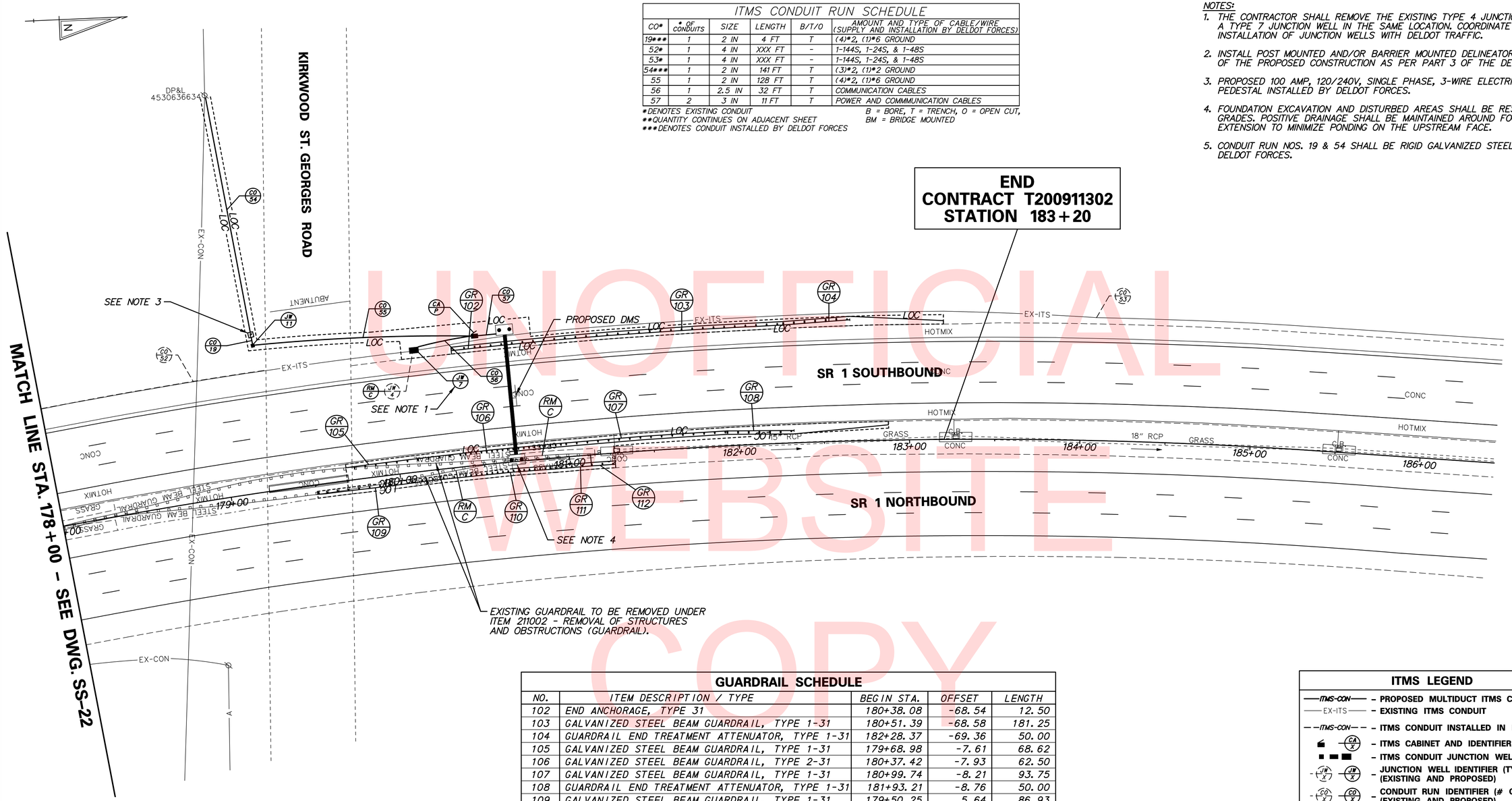

GUARDRAIL SCHEDULE				
NO.	ITEM DESCRIPTION / TYPE	BEGIN STA.	OFFSET	LENGTH
102	END ANCHORAGE, TYPE 31	180+38.08	-68.54	12.50
103	GALVANIZED STEEL BEAM GUARDRAIL, TYPE 1-31	180+51.39	-68.58	181.25
104	GUARDRAIL END TREATMENT ATTENUATOR, TYPE 1-31	182+28.37	-69.36	50.00
105	GALVANIZED STEEL BEAM GUARDRAIL, TYPE 1-31	179+68.98	-7.61	68.62
106	GALVANIZED STEEL BEAM GUARDRAIL, TYPE 2-31	180+37.42	-7.93	62.50
107	GALVANIZED STEEL BEAM GUARDRAIL, TYPE 1-31	180+99.74	-8.21	93.75
108	GUARDRAIL END TREATMENT ATTENUATOR, TYPE 1-31	181+93.21	-8.76	50.00
109	GALVANIZED STEEL BEAM GUARDRAIL, TYPE 1-31	179+50.25	5.64	86.93
110	GALVANIZED STEEL BEAM GUARDRAIL, TYPE 2-31	180+37.35	6.05	62.50
111	GALVANIZED STEEL BEAM GUARDRAIL, TYPE 1-31	180+99.94	6.49	12.50
112	END ANCHORAGE, TYPE 31	181+12.47	6.47	12.50

ITMS LEGEND

- ITMS-CON – PROPOSED MULTIDUCT ITMS CONDUIT
- EX-ITS – EXISTING ITMS CONDUIT
- ITMS-CON – ITMS CONDUIT INSTALLED IN PHASE 1
- CA X – ITMS CABINET AND IDENTIFIER
- ITMS CONDUIT JUNCTION WELL
- JW X – JUNCTION WELL IDENTIFIER (TYPE) (EXISTING AND PROPOSED)
- CO X – CONDUIT RUN IDENTIFIER (# OF RUN) (EXISTING AND PROPOSED)
- PB X – POLE BASE IDENTIFIER (TYPE) (EXISTING AND PROPOSED)
- JB X – PROPOSED CONCRETE BARRIER JUNCTION BOX IDENTIFIER (TYPE)
- RM C – TO BE REMOVED BY CONTRACTOR
- AB – TO BE ABANDONED BY CONTRACTOR
- P – PROPOSED ELECTRICAL SERVICE ON PEDESTAL
- POLE BASE

SIGNING LEGEND	
1	REMOVE EXISTING SIGN
2	EXISTING SIGN TO REMAIN
3	PLACE NEW SIGN
4	RENEW EXISTING SIGN
5	REPOSITION EXISTING SIGN

UNOFFICIAL WEBSITE COPY

SS-23

DELAWARE DEPARTMENT OF TRANSPORTATION

ADDENDUMS / REVISIONS

SCALE 0 30 60 90 FEET

US 301 & SR 1 INTERCHANGE

CONTRACT	BRIDGE NO.
T200911302	DESIGNED BY: J.H.R.
COUNTY	
NEW CASTLE	CHECKED BY: J.M.M.

SIGNING, STRIPING & CONDUIT PLAN

SHEET NO. 472
TOTAL SHTS. 491

n:\31653_000\contract tb\cadd\traffic\2015 - updates\SS023U301_TB.dgn 12/18/2015 8:16:07 AM

PANEL DESIGNATION	DWG. NO.	QUANTITY	LEGEND	SIZE AREA (SF)	SIZE WIDTH	SIZE HEIGHT	COLOR LEGEND	COLOR BCKGRND	BORDER THICKNESS	BORDER RADIUS	ARROW	SHEILD	REMARKS
GM-2	SS-09	1	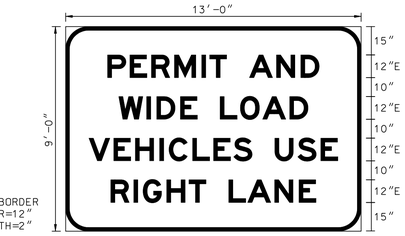	117	13'-0"	9'-0"	BLK	W	2"	12"	---	---	EXTRUDED ALUMINUM
OH-1a	SS-11	1	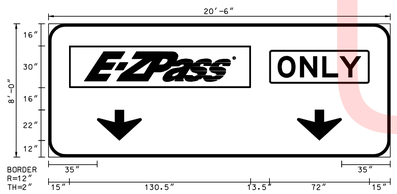	164	20'-6"	8'-0"	W	G	2"	12"	(2) STD. DOWN ARROW @0°	EZ-30, ONLY-24	EXTRUDED ALUMINUM SEE DWG. SS-27 FOR E-ZPASS AND ONLY LOGO DETAILS
OH-1b	SS-11	1		66	22'-0"	3'-0"	BLK	FY	2"	12"	---	---	EXTRUDED ALUMINUM
				220	22'-0"	10'-0"	W	G	2"	12"	(2) STD. DOWN ARROW @0°	EZ-21	EXTRUDED ALUMINUM SEE DWG. SS-27 FOR E-ZPASS LOGO DETAILS
GM-1	SS-12	1	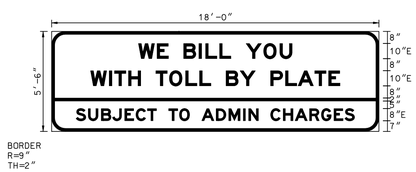	99	18'-0"	5'-6"	W	BLK	2"	9"	---	---	EXTRUDED ALUMINUM

PANEL DESIGNATION	DWG. NO.	QUANTITY	LEGEND	SIZE AREA	SIZE WIDTH	SIZE HEIGHT	COLOR LEGEND	COLOR BCKGRND	BORDER THICKNESS	BORDER RADIUS	ARROW	SHEILD	REMARKS
OH-2b	SS-13	1	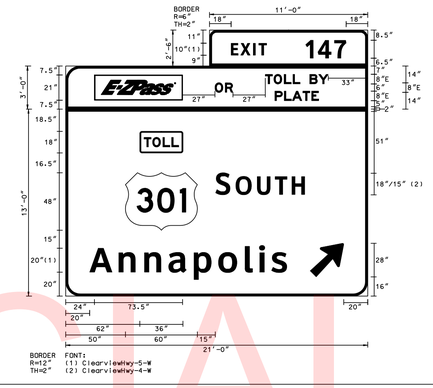	27.5	11'-0"	2'-6"	W	G	2"	6"	---	---	EXTRUDED ALUMINUM
				336	21'-0"	16'-0"	W	G	2"	12"	STD. UP ARROW @ 45°	EZ-21, M4-15 (36"x18") M1-4 (60"x48")	EXTRUDED ALUMINUM SEE DWG. SS-27 FOR E-ZPASS AND ONLY LOGO DETAILS
OH-3b	SS-15	1	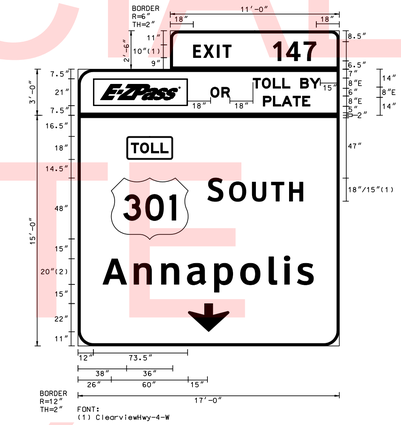	27.5	11'-0"	2'-6"	W	G	2"	6"	---	---	EXTRUDED ALUMINUM
				306	17'-0"	18'-0"	W	G	2"	12"	STD. DOWN ARROW @ 0°	EZ-21, M4-15 (36"x18") M1-4 (60"x48")	EXTRUDED ALUMINUM SEE DWG. SS-27 FOR E-ZPASS AND ONLY LOGO DETAILS
OH-5a	SS-17	1	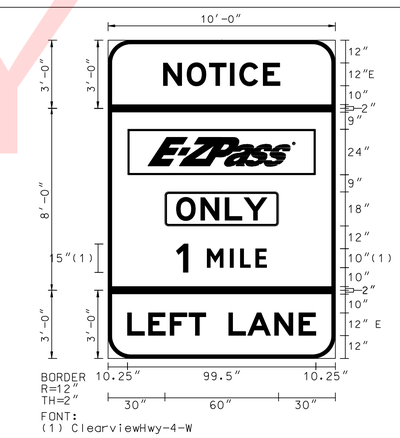	30	10'-0"	3'-0"	BLK	FY	2"	12"	---	---	EXTRUDED ALUMINUM
				80	10'-0"	8'-0"	W	G	2"	---	---	EZ-24, ONLY-18	EXTRUDED ALUMINUM SEE DWG. SS-27 FOR E-ZPASS AND ONLY LOGO DETAILS
				30	10'-0"	3'-0"	BLK	FY	2"	12"	---	---	EXTRUDED ALUMINUM

COLORS: BLK=BLACK, BLU=BLUE, BRO=BROWN, G=GREEN, R=RED, W=WHITE, Y=YELLOW, FY=FLUORESCENT YELLOW, FYG=FLUORESCENT YELLOW GREEN, PUR=PURPLE.

UNOFFICIAL WEBSITE COPY

PANEL DESIGNATION	DWG. NO.	QUANTITY	LEGEND	SIZE AREA	SIZE WIDTH	SIZE HEIGHT	COLOR LEGEND	COLOR BCKGRND	BORDER THICKNESS	BORDER RADIUS	ARROW	SHEILD	REMARKS
OH-2a	SS-13	1	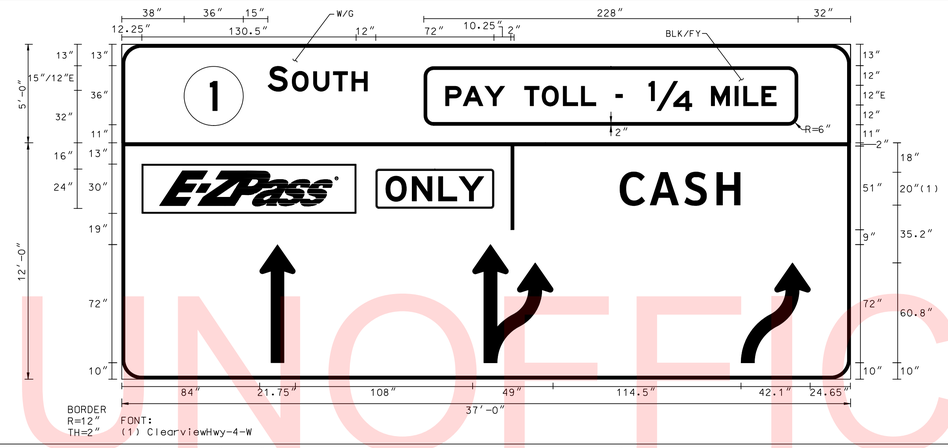	185	37'-0"	5'-0"	SEE LEFT	SEE LEFT	2"	12"	---	M1-5 (36"x36")	EXTRUDED ALUMINUM THE OVERALL HEIGHT OF THE FRACTION SHALL BE 18". THE HEIGHT OF THE FRACTION NUMERALS SHALL BE EQUAL TO THE HEIGHT OF THE ADJACENT TEXT.
				444	37'-0"	12'-0"	W	G	2"	12"	AR-1, AR-2, AR-3	EZ-30, ONLY-24	EXTRUDED ALUMINUM SEE DWG. SS-27 FOR E-ZPASS AND ONLY LOGO DETAILS SEE DWG. SS-27 FOR AR-1, AR-2 AND AR-3 DETAILS
OH-3a	SS-15	1	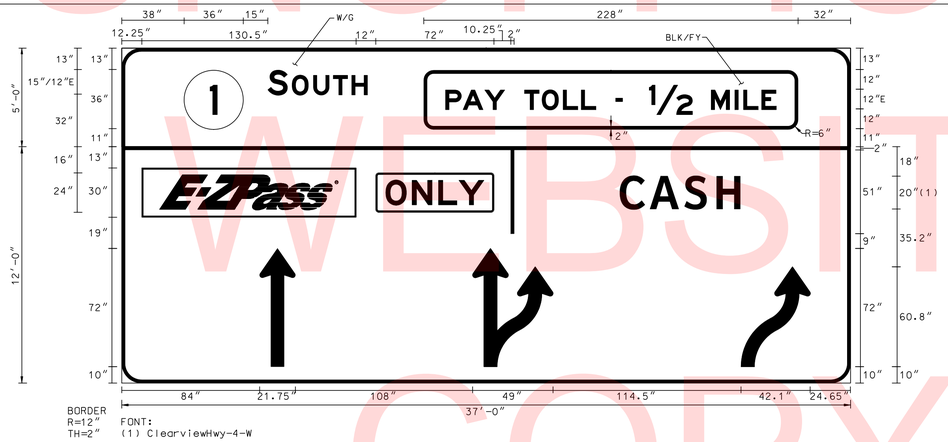	185	37'-0"	5'-0"	SEE LEFT	SEE LEFT	2"	12"	---	M1-5 (36"x36")	EXTRUDED ALUMINUM THE OVERALL HEIGHT OF THE FRACTION SHALL BE 18". THE HEIGHT OF THE FRACTION NUMERALS SHALL BE EQUAL TO THE HEIGHT OF THE ADJACENT TEXT.
				444	37'-0"	12'-0"	W	G	2"	12"	AR-1, AR-2, AR-3	EZ-30, ONLY-24	EXTRUDED ALUMINUM SEE DWG. SS-27 FOR E-ZPASS AND ONLY LOGO DETAILS SEE DWG. SS-27 FOR AR-1, AR-2 AND AR-3 DETAILS
OH-4	SS-16	1	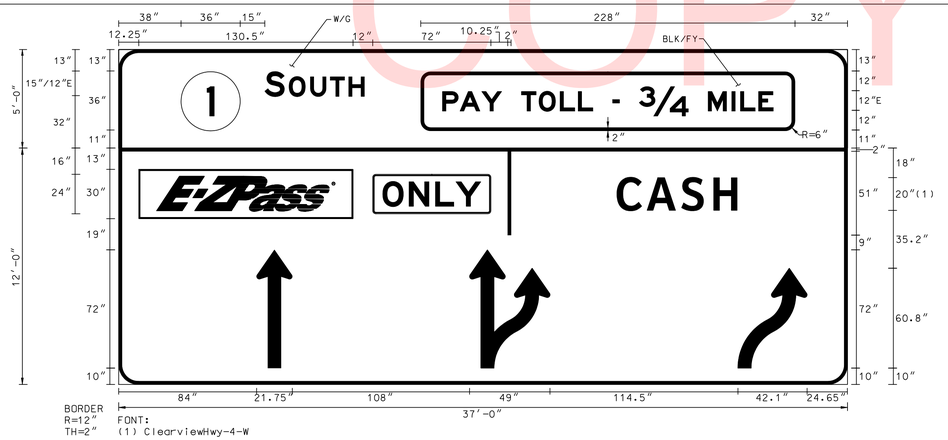	185	37'-0"	5'-0"	SEE LEFT	SEE LEFT	2"	12"	---	M1-5 (36"x36")	EXTRUDED ALUMINUM THE OVERALL HEIGHT OF THE FRACTION SHALL BE 18". THE HEIGHT OF THE FRACTION NUMERALS SHALL BE EQUAL TO THE HEIGHT OF THE ADJACENT TEXT.
				444	37'-0"	12'-0"	W	G	2"	12"	AR-1, AR-2, AR-3	EZ-30, ONLY-24	EXTRUDED ALUMINUM SEE DWG. SS-27 FOR E-ZPASS AND ONLY LOGO DETAILS SEE DWG. SS-27 FOR ARROW DETAILS

COLORS: BLK=BLACK, BLU=BLUE, BRO=BROWN, G=GREEN, R=RED, W=WHITE, Y=YELLOW, FY=FLUORESCENT YELLOW, FYG=FLUORESCENT YELLOW GREEN, PUR=PURPLE.

UNOFFICIAL WEBSITE COPY

n:\31653-000\contract tb\cadd\SS025U301_1B.dgn
12/18/2015 8:16:12 AM

DELAWARE DEPARTMENT OF TRANSPORTATION

ADDENDUMS / REVISIONS

NOT TO SCALE

US 301 & SR 1 INTERCHANGE

CONTRACT	BRIDGE NO.
T200911302	DESIGNED BY: J.H.R.
COUNTY	CHECKED BY: J.M.M.
NEW CASTLE	

GUIDE SIGN DIMENSIONS & DETAILS

SS-25

SHEET NO. 474

TOTAL SHTS. 491

PANEL DESIGNATION	DWG. NO.	QUANTITY	LEGEND	SIZE AREA (SF)	SIZE WIDTH	SIZE HEIGHT	COLOR LEGEND	COLOR BCKGRND	BORDER THICKNESS	BORDER RADIUS	ARROW	SHEILD	REMARKS
OH-5b	SS-17	1	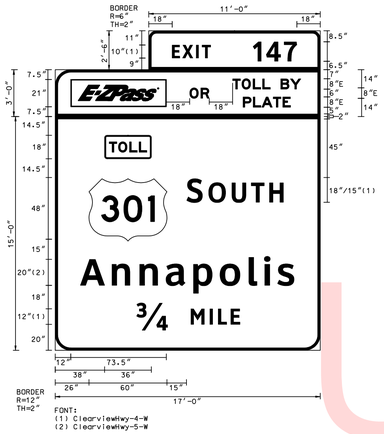	27.5	11'-0"	2'-6"	W	G	2"	6"	---	---	EXTRUDED ALUMINUM
				306	17'-0"	18'-0"	W	G	2"	12"	---	EZ-21, M4-15 (36"x18") M1-4 (60"x48")	EXTRUDED ALUMINUM SEE DWG. SS-27 FOR E-ZPASS AND ONLY LOGO DETAILS. THE OVERALL HEIGHT OF THE FRACTION SHALL BE 21". THE HEIGHT OF THE FRACTION NUMERALS SHALL BE EQUAL TO THE HEIGHT OF THE ADJACENT TEXT.
OH-5c	SS-17	1	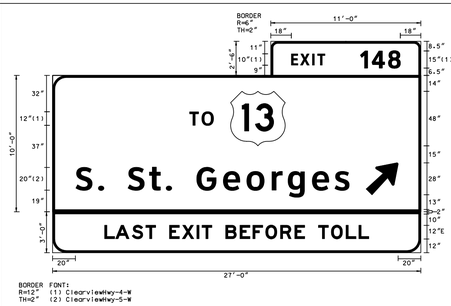	27.5	11'-0"	2'-6"	W	G	2"	6"	---	---	EXTRUDED ALUMINUM
				270	27'-0"	10'-0"	W	G	2"	12"	STD. UP ARROW @ 45°	M1-4 (48"x48")	EXTRUDED ALUMINUM
				81	27'-0"	3'-0"	BLK	FY	2"	12"	---	---	EXTRUDED ALUMINUM
GM-3	SS-12	1	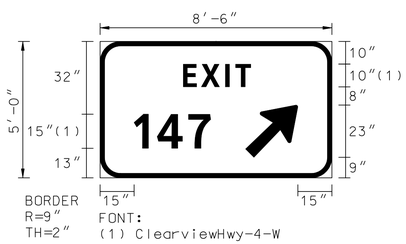	42.5	8'-6"	5'-0"	W	G	2"	9"	STD. UP ARROW @ 45°	---	EXTRUDED ALUMINUM
GM-7	SS-17	1	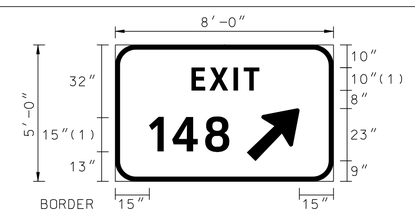	40	8'-0"	5'-0"	W	G	2"	9"	STD. UP ARROW @ 45°	---	EXTRUDED ALUMINUM

COLORS: BLK=BLACK, BLU=BLUE, BRO=BROWN, G=GREEN, R=RED, W=WHITE, Y=YELLOW, FY=FLUORESCENT YELLOW, FYG=FLUORESCENT YELLOW GREEN, PUR=PURPLE.

PANEL DESIGNATION	DWG. NO.	QUANTITY	LEGEND	SIZE AREA	SIZE WIDTH	SIZE HEIGHT	COLOR LEGEND	COLOR BCKGRND	BORDER THICKNESS	BORDER RADIUS	ARROW	SHEILD	REMARKS
OH-6a	SS-22	1	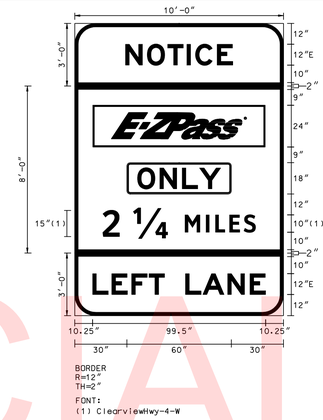	30	10'-0"	3'-0"	BLK	FY	2"	12"	---	---	EXTRUDED ALUMINUM
				80	10'-0"	8'-0"	W	G	2"	---	---	EZ-24, ONLY-18	EXTRUDED ALUMINUM SEE DWG. SS-27 FOR E-ZPASS AND ONLY LOGO DETAILS. THE OVERALL HEIGHT OF THE FRACTION SHALL BE 18". THE HEIGHT OF THE FRACTION NUMERALS SHALL BE EQUAL TO THE HEIGHT OF THE ADJACENT TEXT.
				30	10'-0"	3'-0"	BLK	FY	2"	12"	---	---	EXTRUDED ALUMINUM
OH-6b	SS-22	1	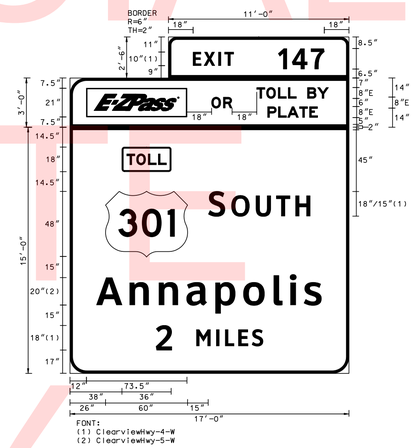	27.5	11'-0"	2'-6"	W	G	2"	6"	---	---	EXTRUDED ALUMINUM
				306	17'-0"	18'-0"	W	G	2"	12"	---	EZ-21, M4-15 (36"x18") M1-4 (60"x48")	EXTRUDED ALUMINUM SEE DWG. SS-27 FOR E-ZPASS AND ONLY LOGO DETAILS.
OH-6c	SS-22	1	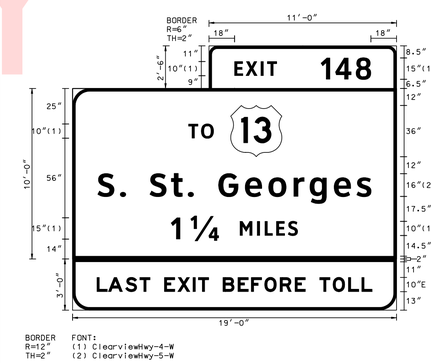	27.5	11'-0"	2'-6"	W	G	2"	6"	---	---	EXTRUDED ALUMINUM
				190	19'-0"	10'-0"	W	G	2"	12"	---	M1-4 (36"x36")	THE OVERALL HEIGHT OF THE FRACTION SHALL BE 18". THE HEIGHT OF THE FRACTION NUMERALS SHALL BE EQUAL TO THE HEIGHT OF THE ADJACENT TEXT.
				57	19'-0"	3'-0"	BLK	FY	2"	12"	---	---	EXTRUDED ALUMINUM

UNOFFICIAL WEBSITE COPY

PANEL DESIGNATION	DWG. NO.	QUANTITY	LEGEND	SIZE AREA (SF)	SIZE WIDTH	SIZE HEIGHT	COLOR LEGEND	COLOR BCKGRND	BORDER THICKNESS	BORDER RADIUS	ARROW	SHEILD	REMARKS
GM-8	SS-21	1	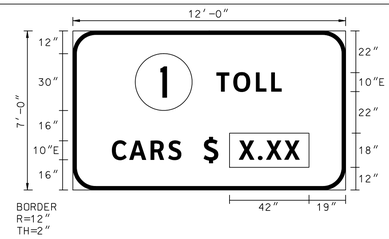	84	12'-0"	7'-0"	BLK	W	2"	12"	---	M1-5 (30"x30")	EXTRUDED ALUMINUM (CONTRACTOR TO RELOCATE EXISTING "TOLL RATE" VMS FROM EXISTING GROUND MOUNTED SIGN). SIGN CUT OUT SHALL MATCH EXISTING SIZE.
GM-9	SS-13	1	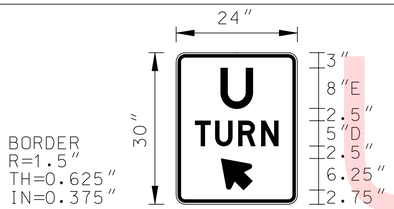	5	24"	30"	BLK	W	.625"	1.5"	STD. ARROW ø135°	---	---
ONLY-18	---	---	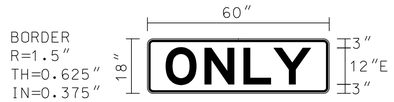	7.5	60"	18"	BLK	W	5/8"	1.5"	---	---	---
ONLY-24	---	---		12	72"	24"	BLK	W	5/8"	1.5"	---	---	---
EZ-21	---	---		10.7	73.5"	21"	W	PUR	1/2"	---	---	---	---
EZ-24	---	---		16.5	99"	24"	W	PUR	3/4"	---	---	---	---
EZ-30	---	---		27.19	130.5"	30"	W	PUR	3/4"	---	---	---	---

PANEL DESIGNATION	DWG. NO.	QUANTITY	LEGEND	SIZE AREA	SIZE WIDTH	SIZE HEIGHT	COLOR LEGEND	COLOR BCKGRND	BORDER THICKNESS	BORDER RADIUS	ARROW	SHEILD	REMARKS
AR-1	---	---	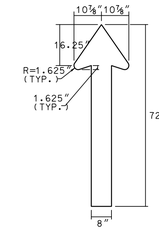	---	---	---	W	---	---	---	---	---	---
AR-2	---	---	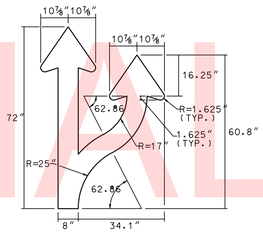	---	---	---	W	---	---	---	---	---	---
AR-3	---	---	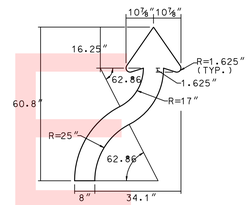	---	---	---	W	---	---	---	---	---	---

COLORS: BLK=BLACK, BLU=BLUE, BRO=BROWN, G=GREEN, R=RED, W=WHITE, Y=YELLOW, FY=FLUORESCENT YELLOW, FYG=FLUORESCENT YELLOW GREEN, PUR=PURPLE.

UNOFFICIAL WEBSITE COPY

SS-27

DELAWARE DEPARTMENT OF TRANSPORTATION

ADDENDUMS / REVISIONS

NOT TO SCALE

US 301 & SR 1 INTERCHANGE

CONTRACT	BRIDGE NO.
T200911302	DESIGNED BY: J.H.R.
COUNTY	CHECKED BY: J.M.M.
NEW CASTLE	

GUIDE SIGN DIMENSIONS & DETAILS

SHEET NO. 476

TOTAL SHTS. 491

n:\31653-000\contract tb\cadd\SS0270301_18.dgn 12/18/2015 8:16:15 AM

GUIDE SIGN STEEL SUPPORT CHART

SIGN NO.	SIGN SIZE (WXH)	SHEET NO.	POST SIZE	SUPPORT L-1	SUPPORT L-2	SUPPORT L-3	LATERAL CLEARANCE		SUPPPORT SPACING FROM LEFT EDGE OF SIGN
							OFFSET	OBJECT**	
GM-1	18' x 5.5'	SS-12	W8x18	15.0'	15.0'	-	9.5'	ES	3.6'-10.8'-3.6'
GM-2	13' x 9'	SS-09	W8x18	18.0'	19.0'	-	6.0'	B	2.5'-8.0'-2.5'
GM-3	8.5' x 5'	SS-12	W6x9	13.0'	13.0'	-	2.5'/2.5'	CG (ES/ES)	.5'-7.5'-.5'
GM-7	8' x 5'	SS-17	W6x9	13.0'	13.0'	-	12.1'/12.1'	CG (ES/ES)	1.6'-4.8'-1.6'
GM-8	12' x 7'	SS-21	W8x21	16.0'	20.0'	-	6.0'	W	2.0'-8.0'-2.0'

NOTES:

1. WHEN SPACING BETWEEN STEEL BEAM SUPPORTS IS GREATER THAN 8'-0" INSTALL DOUBLE ALUMINUM ANGLES (2½" x3½" x¼") FROM TOP TO BOTTOM OF SIGN WITH POST CLIPS INSTALLED AT EACH EXTRUDED ALUMINUM PANEL. COST TO FURNISH AND INSTALL ALUMINUM ANGLES SHALL BE INCIDENTAL TO THE INSTALLATION OF SIGNS ON GROUND MOUNT POSTS ITEM.
2. A MINIMUM 7'-0" FROM INSIDE OF FLANGE TO INSIDE OF FLANGE SHALL BE MAINTAINED BETWEEN ALL STEEL BEAM SIGN SUPPORTS LARGER THAN W6X9.
3. ALL STEEL BEAM SIGN SUPPORTS SHALL BE MOUNTED ON BREAKAWAY BASES REGARDLESS OF WHETHER PROTECTED BY TRAFFIC BARRIER OR UNPROTECTED. BREAKAWAY BASE SUPPORT SYSTEMS SHALL BE TRANSPO INDUSTRIES OR APPROVED EQUAL.
4. STEEL SUPPORTS DESIGNED FOR 90 MPH WIND SPEED AND 25 YEAR DESIGN LIFE USING ASTM A709, GRADE 36 STEEL BEAM SUPPORTS.

FOUNDATION SELECTION MATRIX

POST SIZE	FOUNDATION DIAMETER	ROADWAY CUT / FILL SLOPE										
		≥2:1	3:1	4:1	5:1	6:1	7:1	8:1	9:1	10:1	12:1	≤13:1
W6x9	30"	*	C	C	C	C	B	B	B	A	A	A
W6x12 or TS 5"X5"X¼"	30"	*	C	C	C	C	B	B	B	A	A	A
W6x15, W6x16 or TS 6"X6"X 1/4 "	30"	*	C	C	C	C	B	B	B	A	A	A
W8x18	30"	*	C	C	C	C	B	B	B	A	A	A
W8x21 or TS 7"X7"X¼"	30"	*	C	C	C	C	B	B	B	A	A	A
W10x22 or TS 8"X8"X5/16"	36"	*	*	C	C	C	C	B	B	B	A	A
W10x26	36"	*	*	C	C	C	C	B	B	B	A	A
W12x26	36"	*	*	C	C	C	C	B	B	B	A	A
W14x30	36"	*	*	C	C	C	C	B	B	B	A	A
W16x31	36"	*	*	C	C	C	C	B	B	B	A	A
W18x35 or W18x40	36"	*	*	C	C	C	C	B	B	B	A	A
W21x44	42"	*	*	C	C	C	C	C	B	B	B	A

*IF A FOUNDATION EXCEEDS THE 4" AASHTO CRITERIA, THE CONTRACTOR SHALL CONTACT THE ENGINEER FOR APPROPRIATE GUIDANCE.

SIGN STAKEOUT DIMENSIONS

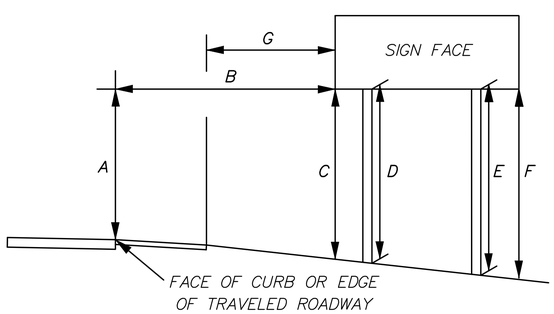

NOTE: CONTRACTOR SHALL COMPLETE SIGN STAKEOUT AND DETERMINE EXACT STEEL SIGN SUPPORT LENGTHS. STAKEOUT DIMENSIONS AND STEEL SIGN SUPPORT LENGTHS SHALL BE SUBMITTED TO ENGINEER FOR APPROVAL PRIOR TO FABRICATION OF STEEL SIGN SUPPORTS.

SIGN CLEARANCE

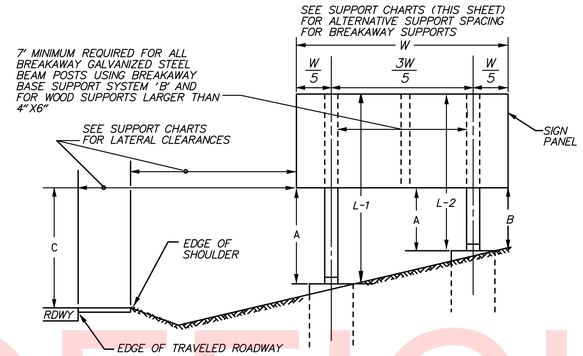

VERTICAL CLEARANCE OF SIGNS

A. 7'-6" MINIMUM FOR BREAKAWAY SUPPORTS OR 7'-0" FOR NON-BREAKAWAY SUPPORTS.
B. 2'-6" MINIMUM
C. 7'-6" MINIMUM & PREFERABLE. THIS DIMENSION IS TO BE INCREASED ONLY WHEN REQUIRED TO MEET A = 7'-6" FOR BREAKAWAY OR A (MIN.) = 7'-0" FOR NON-BREAKAWAY AND B (MIN) 2'-0"

ALL DIMENSIONS ARE TO BOTTOM OF SIGN

**TOTAL WEIGHT BELOW THE HINGES SHOULD BE LESS THAN 600 POUNDS

LATERAL CLEARANCE

SEE SUPPORT CHARTS

***OBJECT CODES

W = FACE OF W-BEAM TRAFFIC BARRIER
FOC = FACE OF CURB
ES = EDGE OF SHOULDER
ETR = EDGE OF TRAVELED ROADWAY
CM = CENTERED IN MEDIAN (LEFT OBJECT/ RIGHT OBJECT)
CG = CENTERED IN GORE (LEFT OBJECT/ RIGHT OBJECT)
B = FACE OF CONCRETE TRAFFIC BARRIER

STANDARD SIGN VERTICAL AND LATERAL CLEARANCE DETAIL

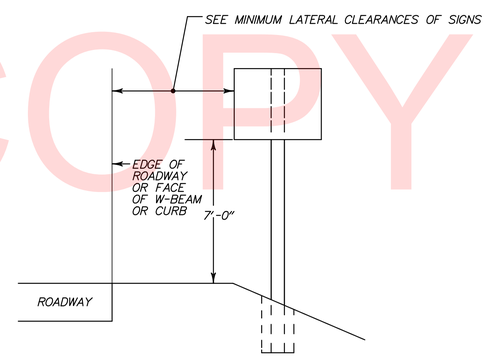

MINIMUM LATERAL CLEARANCE OF SIGNS:

1 = EDGE OF SIGN 6' FROM FACE OF W-BEAM TRAFFIC BARRIER
2 = EDGE OF SIGN 6' FROM EDGE OF SHOULDER
3 = EDGE OF SIGN 6' PREFERABLE MIN. (2' ABSOLUTE MIN.) FROM EACH EDGE OF SHOULDER IN MEDIAN OR CURB

NOTE: ALL SUPPORTS WITHIN THE CLEAR ZONE SHALL BE BREAKAWAY UNLESS PROTECTED BY TRAFFIC BARRIER, EXCEPT AS NOTED ABOVE FOR STEEL SUPPORTS.

GALVANIZED STEEL BEAM TYPE A SIGN POST FOUNDATION DETAIL

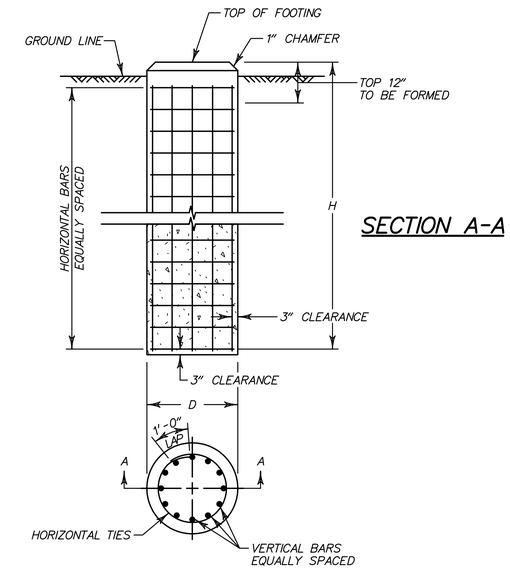

PLAN VIEW

FOUNDATION DATA TABLE

POST SIZE	D	H	VERTICAL REINFORCEMENT	HORIZONTAL REINFORCEMENT	CONCRETE REQUIRED (CY)
W6x9	30"	6'-0"	EIGHT (8)-NO. 7	SEVEN (7)-NO. 4	1.1
W6x12 OR TS-5x5x1/4	30"	6'-0"	EIGHT (8)-NO. 7	SEVEN (7)-NO. 4	1.1
W6x15, W6x16 OR TS-6x6x1/4	30"	6'-6"	EIGHT (8)-NO. 7	SEVEN (7)-NO. 4	1.2
W8x18	30"	7'-6"	EIGHT (8)-NO. 9	EIGHT (8)-NO. 4	1.4
W8x21 OR TS-7x7x1/4	30"	8'-0"	EIGHT (8)-NO. 9	NINE (9)-NO. 4	1.5
W10x22 OR TS-8x8x5/16	36"	8'-6"	EIGHT (8)-NO. 10	NINE (9)-NO. 4	2.3
W10x26	36"	9'-0"	EIGHT (8)-NO. 10	TEN (10)-NO. 4	2.4
W12x26	36"	10'-0"	EIGHT (8)-NO. 10	ELEVEN (11)-NO. 4	2.7
W14x30	36"	11'-0"	EIGHT (8)-NO. 10	TWELVE (12)-NO. 4	2.9
W16x31	36"	12'-0"	EIGHT (8)-NO. 10	THIRTEEN (13)-NO. 4	3.2
W18x35 OR W18x40	36"	13'-0"	EIGHT (8)-NO. 10	FOURTEEN (14)-NO. 4	3.5
W21x44	42"	12'-0"	TWELVE (12)-NO. 10	THIRTEEN (13)-NO. 4	4.3

STEEL POST BREAKAWAY SYSTEM SELECTION CHART

SYSTEM TYPE	ASSOCIATED POST SIZE
A16	W6X9
B525	W6X12, W6X15, W6x16, W8X18, W8X21, 5"x5" & 6"x6" SQUARE
B650	7"x7" AND 8"X8" SQUARE AND ALL I-BEAMS LARGER THAN W8X21

UNOFFICIAL WEBSITE COPY

n:\31653-000\contract tb\cadd\traffic\AET\SS028U301_1B_AET.dgn
12/18/2015 8:16:16 AM

DELAWARE DEPARTMENT OF TRANSPORTATION

ADDENDUMS / REVISIONS

NOT TO SCALE

US 301 & SR 1 INTERCHANGE

CONTRACT	BRIDGE NO.	
T200911302	DESIGNED BY: J.H.R.	
COUNTY		
NEW CASTLE	CHECKED BY: J.M.M.	

SIGNING CONSTRUCTION DETAILS

SS-28

SHEET NO.
477
TOTAL SHTS.
491

GALVANIZED STEEL BEAM TYPE B SIGN POST FOUNDATION DETAIL

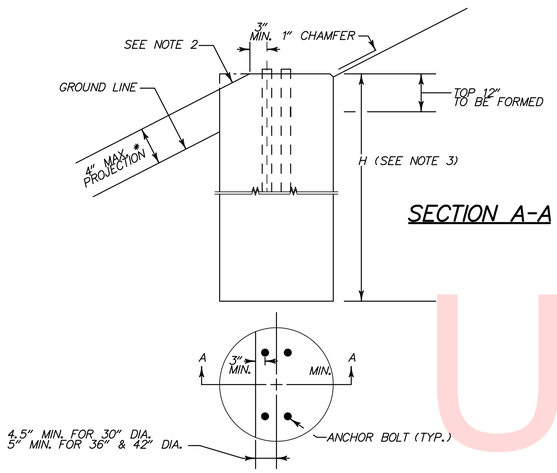

NOTES:

1. THIS FOUNDATION SHALL BE USED ONLY IN LOCATIONS MEETING SLOPE CRITERIA IN ACCORDANCE WITH THE STEEL BREAKAWAY SUPPORT FOUNDATION SELECTION MATRIX ON SIGNING CONSTRUCTION DETAILS SHEET.
2. SLOPED PORTIONS OF THE FOUNDATION SHALL MATCH THE FINISHED GROUND SLOPE.
3. REFER TO GALVANIZED STEEL BEAM TYPE A SIGN POST FOUNDATION DETAIL FOR FOUNDATION DIMENSIONS AND REINFORCING STEEL DETAILS.

GALVANIZED STEEL BEAM TYPE C SIGN POST FOUNDATION DETAIL

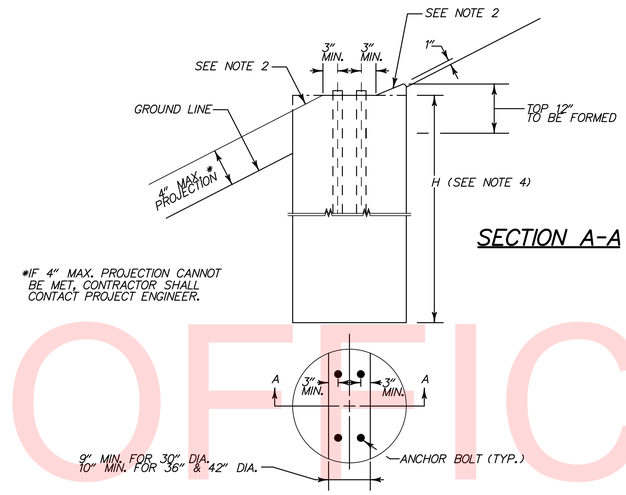

NOTES:

1. THIS FOUNDATION SHALL BE USED ONLY IN LOCATIONS MEETING SLOPE CRITERIA IN ACCORDANCE WITH THE STEEL BREAKAWAY SUPPORT FOUNDATION SELECTION MATRIX ON THE SIGNING CONSTRUCTION DETAILS SHEET.
2. SLOPED PORTIONS OF THE FOUNDATION SHALL MATCH THE FINISHED GROUND SLOPE.
3. ON FILL SLOPES GREATER THAN 6:1 BUT NO STEEPER THAN 3:1, FOUNDATIONS DESIRABLY SHOULD BE INSTALLED A MINIMUM OF 14 FT BEYOND THE HINGE POINT. THE HINGE POINT IS THE POINT OF SLOPE TRANSITION FROM THE SHOULDER SLOPE, OR A RELATIVELY FLAT RECOVERY AREA ADJACENT TO THE ROADWAY, TO A STEEPER FORESLOPE, (ALSO KNOWN AS THE FORESLOPE BREAK).
4. REFER TO GALVANIZED STEEL BEAM TYPE A SIGN POST FOUNDATION DETAIL FOR FOUNDATION DIMENSIONS AND REINFORCING STEEL DETAILS.

OVERHEAD SIGN SUPPORT DETAIL FOR NEW SIGN STRUCTURES

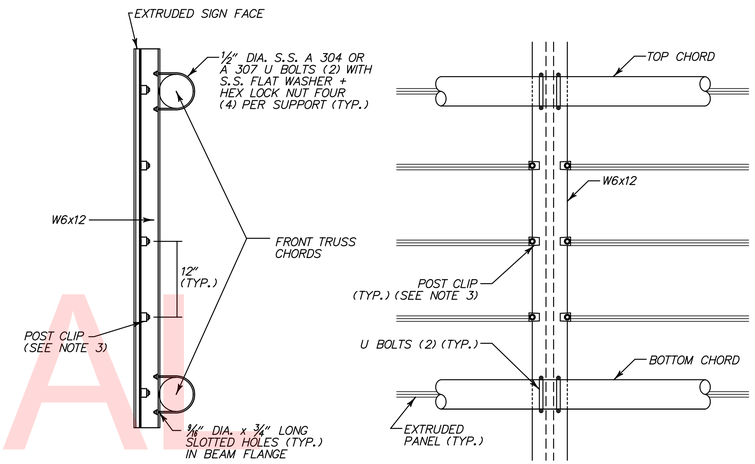

NOTES:

1. ALL STEEL SHALL BE HOT DIPPED GALVANIZED.
2. ALL W-BEAMS SHALL CONFORM TO A 709, GRADE 36.
3. POST CLIPS SHALL BE INSTALLED ON EACH SIDE OF SIGN SUPPORT SPACED EVERY 12" FOR ENTIRE HEIGHT OF SIGN, AS SHOWN. POST CLIPS SHALL MEET AASHTO STANDARD SPECIFICATIONS FOR STRUCTURAL SUPPORTS FOR HIGHWAY SIGNS, LUMINAIRES AND TRAFFIC SIGNALS.

BREAKAWAY POLES ADJUSTMENT FOR GROUND SLOPES DETAIL

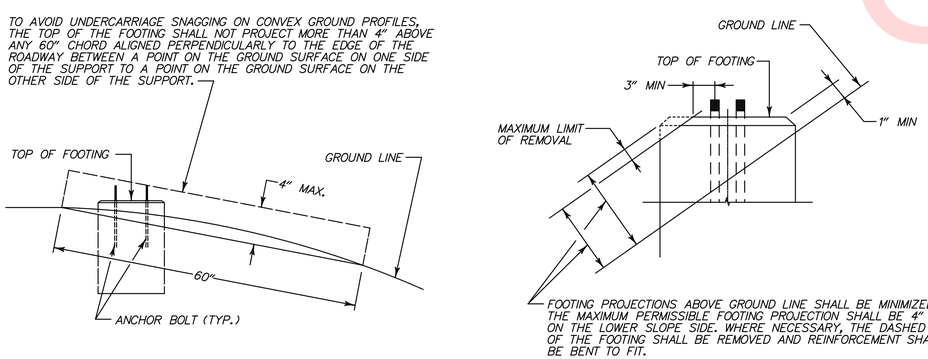

VERTICAL SUPPORT ATTACHMENT FOR GROUND MOUNTED SIGNS

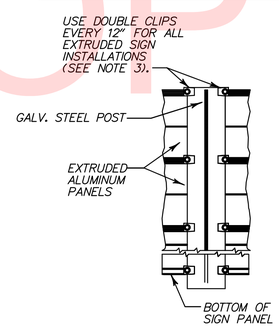

NOTES:

1. ALL STEEL SHALL BE HOT DIPPED GALVANIZED.
2. ALL STEEL SUPPORTS SHALL CONFORM TO A 709, GRADE 36.
3. POST CLIPS SHALL BE INSTALLED ON EACH SIDE OF SIGN SUPPORT SPACED EVERY 12" FOR ENTIRE HEIGHT OF SIGN, AS SHOWN. POST CLIPS SHALL MEET AASHTO STANDARD SPECIFICATIONS FOR STRUCTURAL SUPPORTS FOR HIGHWAY SIGNS, LUMINAIRES AND TRAFFIC SIGNALS.

INSTALLATION OF EXIT PANEL TO EXTRUDED SIGN

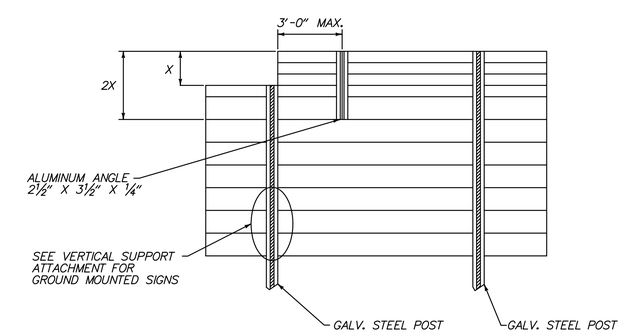

NOTES:

1. VERTICAL SUPPORTS ARE TO BE CONTINUOUS FOR ENTIRE HEIGHT OF SIGN, INCLUDING EXIT PANEL WHERE APPLICABLE.
2. ALL SUPPORTS (INCLUDING ANGLES) SHALL BE POST CLIPPED AT 12" INTERVALS.

UNOFFICIAL WEBSITE COPY

SIGN STRUCTURE NOTES:

1. SIGN STRUCTURE STANDARDS ARE IN ACCORDANCE WITH AASHTO "STANDARD SPECIFICATIONS FOR STRUCTURAL SUPPORTS FOR HIGHWAY SIGNS, LUMINAIRES AND TRAFFIC SIGNALS, 2009".
   ALL STRUCTURAL DETAILS HAVE BEEN ANALYZED AGAINST FATIGUE CATEGORY 1 IMPORTANCE FACTOR AS DESIGNATED IN THE ABOVE AASHTO SPECIFICATIONS.
2. ALL STRUCTURAL MAIN TUBES SHALL HAVE MIN. 35 ksi YIELD STRENGTH AND CONFORM TO ASTM A53, GRADE B, TYPE E OR S OR API 5L, PSL2, GRADE B.
3. ALL OTHER TUBES SHALL HAVE MIN. 36 KSI YIELD STRENGTH AND CONFORM TO A 501. A SUBSTITUTION USING A53, GRADE B MAY BE USED ON A CASE-BY-CASE BASIS, AS APPROVED BY THE ENGINEER.
4. ALL STEEL PLATES, W-BEAMS, MISCELLANEOUS SHAPES AND BARS SHALL CONFORM TO A 709, GRADE 36.
5. ALL PIPE FOR HANDRAIL TO BE ASTM A 500 GRADE 'A'.
6. ALL GRATING TO BE 1½" THICK GALVANIZED AND ABLE TO WITHSTAND 100 LBS./SQ.FT. LIVE LOAD.
7. ALL RAIL SHALL BE DESIGNED TO CARRY ONE 500 LBS. CONCENTRATED LOAD, PLACED ANYWHERE ALONG TOP OF RAILING.
8. ALL SIGN STRUCTURES HAVE BEEN DESIGNED FOR AN ADDITIONAL 15% OF THE PROPOSED SIGN AREA. ADDITIONAL AREA FOR AN EXIT PANEL (12' x 3' HIGH = 36 SQ. FT.) HAS BEEN INCLUDED FOR DESIGN OF ALL STRUCTURAL MEMBERS.
9. ALL STRUCTURES HAVE BEEN DESIGNED FOR STANDARD ALUMINUM EXTRUDED SIGN PANELS. ONLY SIGN STRUCTURE DMS-1 HAS BEEN DESIGNED FOR DYNAMIC MESSAGE SIGNS.
10. A DESIGN SIGN AREA HAS BEEN INCLUDED FOR SIGN STRUCTURE DMS-1 SINCE THE DMS AREA IS SMALL RELATIVE TO POTENTIAL STATIC SIGN SIZE AND MAY NOT PROVIDE SUFFICIENT CAPACITY AND VERTICAL CLEARANCE FOR FUTURE STATIC SIGN REPLACEMENT.
11. ALL SIGN STRUCTURE SUPPORTS SHALL BE LOCATED BEHIND PHYSICAL TRAFFIC BARRIERS.
12. MODIFICATIONS TO ANY TRUSSING-CHORD GUSSET PLATE CONNECTION IN ORDER TO ACCOMMODATE SIGN PANEL SUPPORTS SHALL NOT BE PERMITTED.
13. ALL MATERIALS AND WORKMANSHIP SHALL CONFORM TO THE STANDARDS OF THE AMERICAN SOCIETY FOR TESTING MATERIALS (ASTM) AND STANDARDS OF THE AMERICAN NATIONAL STANDARDS INSTITUTE (ANSI).
14. ALL WELDING SHALL BE IN ACCORDANCE WITH AASHTO AMERICAN WELDING SOCIETY (AWS) D1.5M/D1.5: 2008 BRIDGE WELDING CODE. WELDING NOT COVERED IN AWS D1.5 SHALL CONFORM TO AWS D1.1: 2008 STRUCTURAL WELDING CODE.
15. STRUCTURAL MEMBERS SHALL HAVE GALVANIZED FINISH ASTM A123.
16. FASTENERS AND ANCHOR BOLTS SHALL HAVE GALVANIZED FINISH ASTM A153.
17. GALVANIZING SHALL COMPLY WITH ASTM A143 AND A385.
18. AFTER FABRICATION, THE STEEL END POST ASSEMBLIES SHALL BE HOT-DIP GALVANIZED IN ACCORDANCE WITH AASHTO M111.
19. ALL ANCHOR BOLTS SHALL BE PLUMB AFTER FOUNDATION INSTALLATION. STEEL TEMPLATES SHALL BE USED TO SET ANCHOR BOLTS PLUMB WHEN POURING THE FOUNDATION.
20. USE LOCK NUTS AND FLAT WASHERS FOR ALL "U" BOLTS (A307 OR EQUIVALENT).
21. BASE PLATE SHALL BE IN FULL CONTACT WITH ALL FLAT WASHERS.
22. ANCHOR BOLTS SHALL CONFORM TO ASTM F1554, GRADE 55.
23. ANCHOR NUTS SHALL CONFORM TO ASTM A563, GRADE DH OR ASTM A194, GRADE 2H.
24. ANCHOR WASHERS SHALL CONFIRM TO ASTM F436.
25. CONNECTION BOLTS SHALL CONFORM TO ASTM A325.
26. HEAVY HEX NUTS SHALL CONFORM TO ASTM A536, GRADE DH OR ASTM A194, GRADE 2H.
27. WASHERS SHALL CONFORM TO ASTM F436.
28. ALL ANCHOR BOLT NUTS SHALL BE TIGHTENED IN STRICT CONFORMANCE WITH THE SEQUENCE OUTLINED IN APPENDIX A, PART 1 AND 2, SECTION 5.2 OF THE NCHRP REPORT 469.
29. GROUT SHALL NOT BE PLACED BETWEEN THE BASE PLATE AND CONCRETE TOP.
30. USE CLASS B CEMENT CONCRETE f'c=3000 PSI IN PEDESTALS AND FOOTINGS.
31. SIGN SUPPORT I-BEAMS AND HARDWARE TO ATTACH THE I-BEAMS TO THE STRUCTURE ARE INCLUDED IN ITEM 605755. HARDWARE TO ATTACH SIGNS TO I-BEAMS IS INCLUDED IN ITEM 749500.

INDEX OF DRAWINGS

SHEET NUMBER	DRAWING NUMBER	TITLE
479	SS-30	SIGN STRUCTURE NOTES AND QUANTITIES
480	SS-31	SIGN STRUCTURE ELEVATION-1
481	SS-32	SIGN STRUCTURE ELEVATION-2
482	SS-33	SIGN STRUCTURE SCHEDULE
483	SS-34	TOWER DETAILS
484	SS-35	TRUSS DETAILS
485	SS-36	DMS WALKWAY DETAILS
486	SS-37	FOUNDATION DETAILS

QUANTITIES

ITEM NO.	ITEM TITLE	UNIT	QUANTITY
605755	BOX TRUSS TYPE OVERHEAD SIGN SUPPORT AND FOUNDATION	L.S.	1

UNOFFICIAL WEBSITE COPY

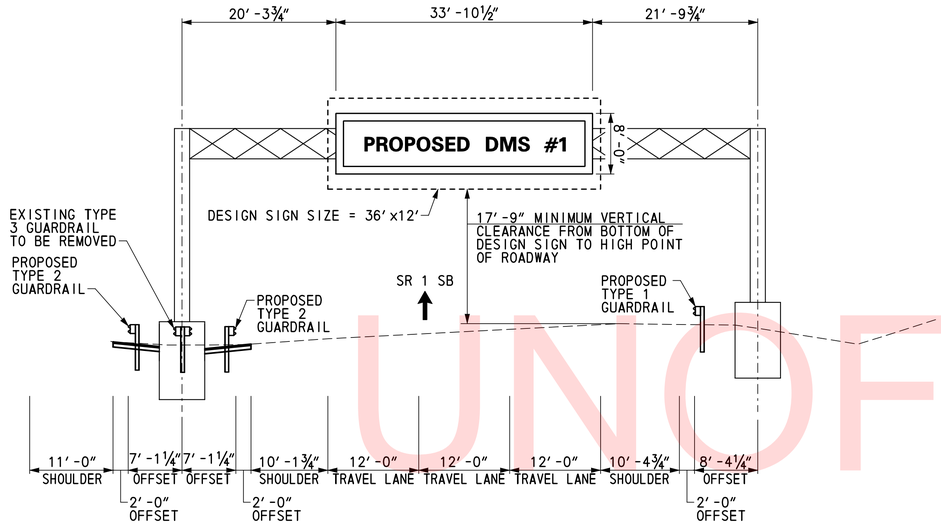

DMS-1 (76′-0″ SPAN LENGTH)
SR 1 SOUTHBOUND
STATION 180+69, LEFT
(SEE PLAN SHEET SS-23)

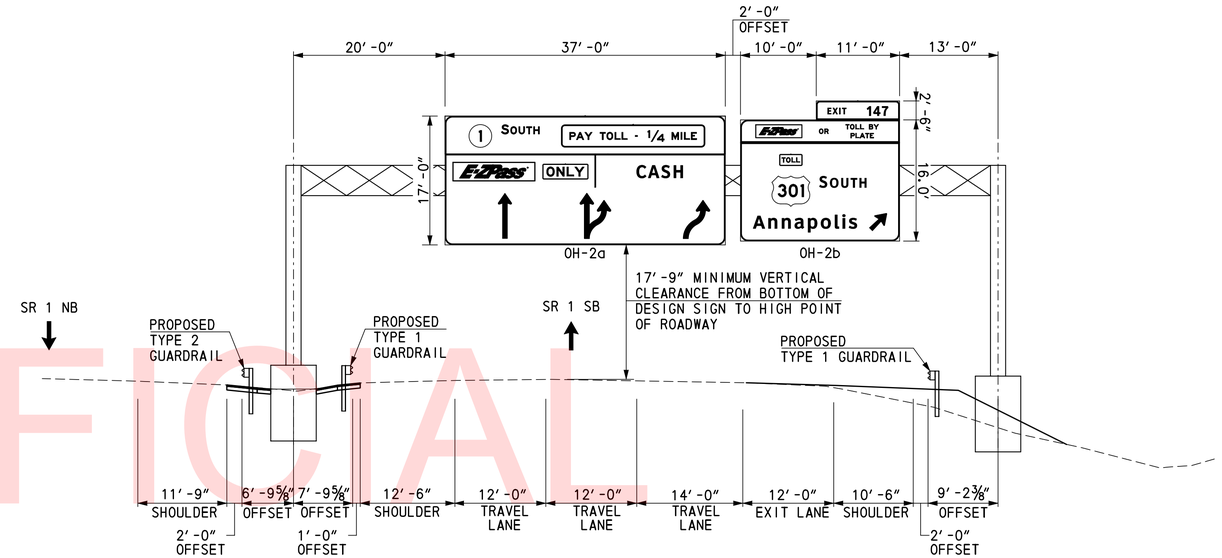

OH-2 (93′-0″ SPAN LENGTH)
SR 1 SOUTHBOUND
STATION 1806+55, LEFT
(SEE PLAN SHEET SS-13)

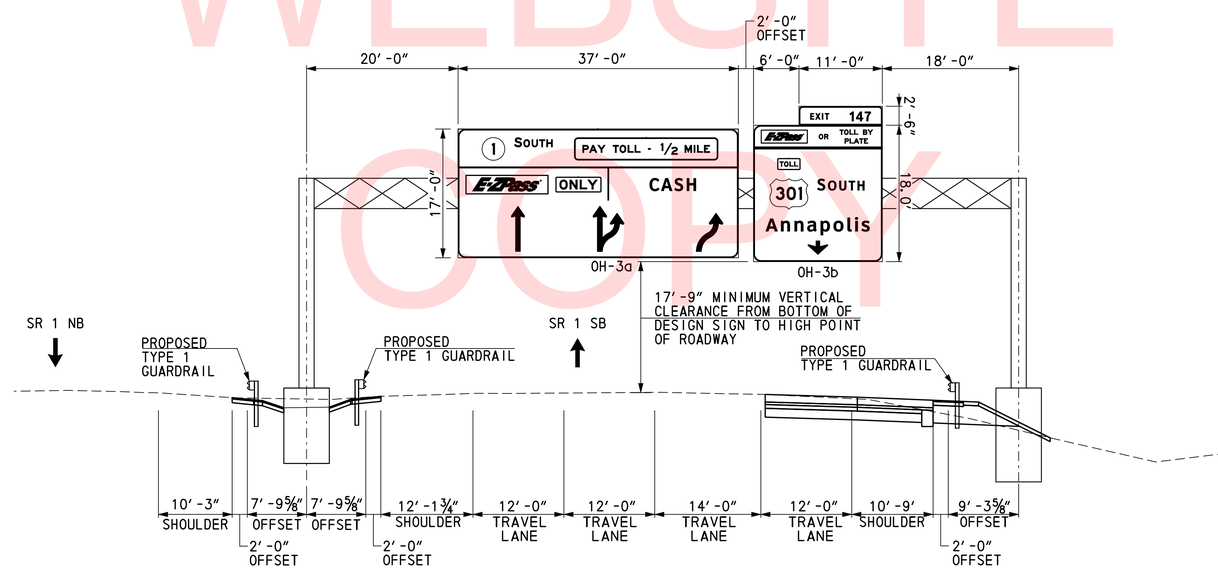

OH-3 (94′-0″ SPAN LENGTH)
SR 1 SOUTHBOUND
STATION 1820+50, LEFT
(SEE PLAN SHEET SS-15)

UNOFFICIAL WEBSITE COPY

$DGNNAME$ 11:17:41 PM
$$DATE$$

DELAWARE DEPARTMENT OF TRANSPORTATION	ADDENDUMS / REVISIONS	NOT TO SCALE	US 301 & SR 1 INTERCHANGE	CONTRACT T200911302	BRIDGE NO.	SIGN STRUCTURE ELEVATION–1	SS-31
				COUNTY NEW CASTLE	DESIGNED BY: BSW		SHEET NO. 480
					CHECKED BY: BJH		TOTAL SHTS. 491

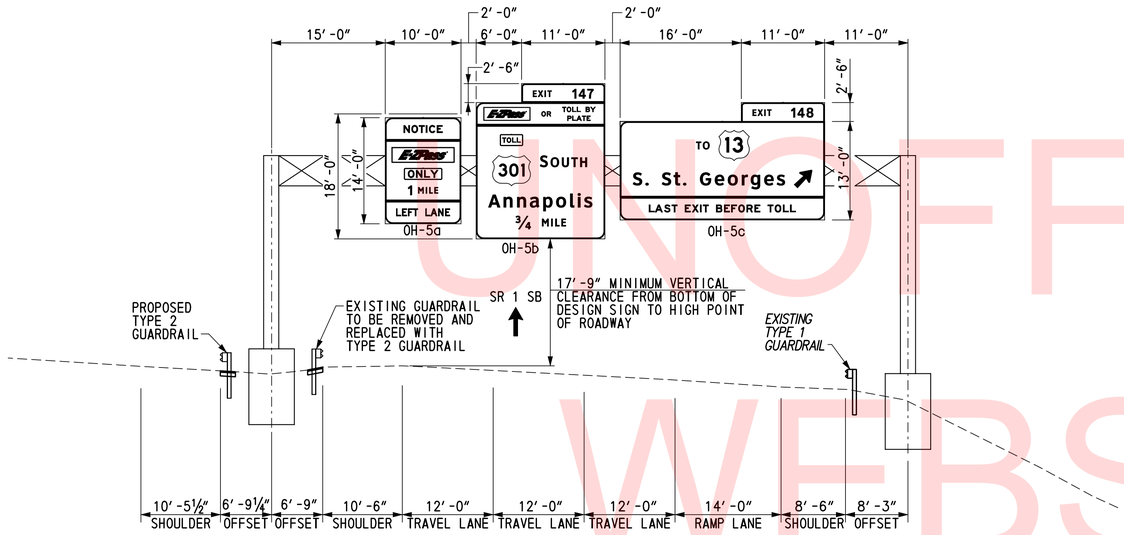

OH-5 (84′-0″ SPAN LENGTH)
SR 1 SOUTHBOUND
STATION 1839+38, LEFT
(SEE DWG. NO. SS-17)

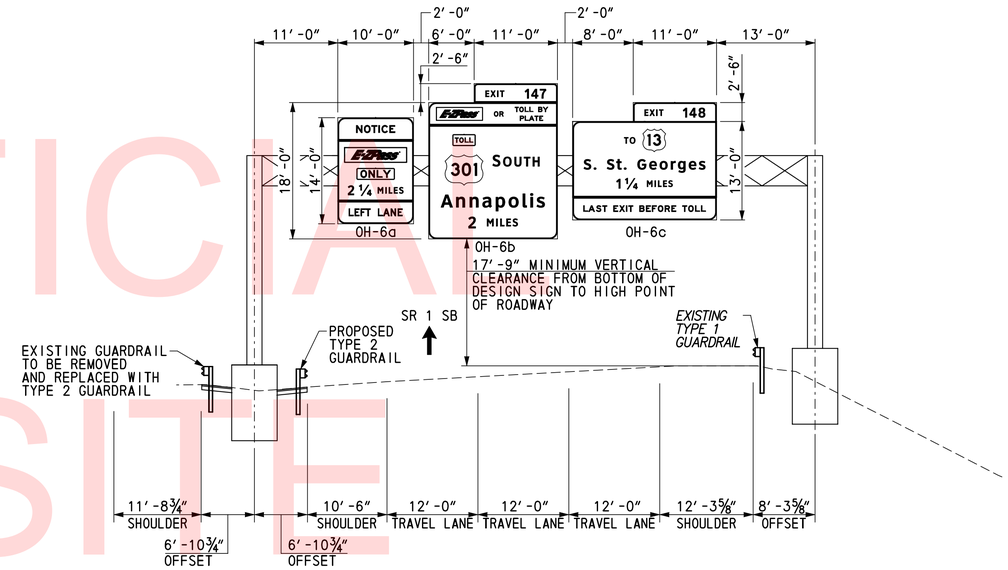

OH-6 (74′-0″ SPAN LENGTH)
SR 1 SOUTHBOUND
STATION 170+95, LEFT
(SEE DWG. NO. SS-22)

UNOFFICIAL WEBSITE COPY

SS-32

DELAWARE DEPARTMENT OF TRANSPORTATION	ADDENDUMS / REVISIONS	NOT TO SCALE	US 301 & SR 1 INTERCHANGE	CONTRACT T200911302	BRIDGE NO.	SIGN STRUCTURE ELEVATION–2	SHEET NO. 481
				COUNTY NEW CASTLE	DESIGNED BY: BSW		TOTAL SHTS. 491
					CHECKED BY: BJH		

$DGNNAME$
$$DATE$$ 1:18:44 PM

STRUCTURE MARK	SPAN LENGTH	ELEVATIONS*			TOWER POLE SIZE	TOWER BRACING TUBE SIZE	TRUSS CHORD TUBE SIZE	TRUSS CHORD BRACING SIZE	DESIGN SIGN	TOTAL CAMBER (△ V)
		℄ TRUSS & SIGN	BOTTOM OF BASE PLATE 1	BOTTOM OF BASE PLATE 2						
DMS-1	76′-0″	66.70	41.46	44.09	20″ O.D. x 0.344″ THK.	6.625″ O.D. x 0.280″ THK.	6.625″ O.D. x 0.250″ THK.	3.500″ O.D. x 0.250 THK.	36′-0″(W)x12′-0″(H)	1 13/16″
OH-2	93′-0″	49.10	24.39	23.11	24″ O.D. x 0.312″ THK.	6.625″ O.D. x 0.280″ THK.	8.625″ O.D. x 0.250″ THK.	3.500″ O.D. x 0.250 THK.	62′-0″(W)x18′-0″(H)	2 9/16″
OH-3	94′-0″	53.31	27.94	27.46	24″ O.D. x 0.312″ THK.	6.625″ O.D. x 0.280″ THK.	8.625″ O.D. x 0.250″ THK.	3.500″ O.D. x 0.250 THK.	62′-0″(W)x18′-0″(H)	2 9/16″
OH-5	84′-0″	109.87	85.70	82.42	20″ O.D. x 0.344″ THK.	6.625″ O.D. x 0.280″ THK.	8.625″ O.D. x 0.250″ THK.	3.500″ O.D. x 0.250 THK.	60′-0″(W)x18′-0″(H)	2 3/16″
OH-6	74′-0″	96.20	69.90	72.08	20″ O.D. x 0.344″ THK.	6.625″ O.D. x 0.280″ THK.	6.625″ O.D. x 0.250″ THK.	3.500″ O.D. x 0.250 THK.	60′-0″(W)x18′-0″(H)	1 5/8″

* SEE ELEVATIONS NOTE

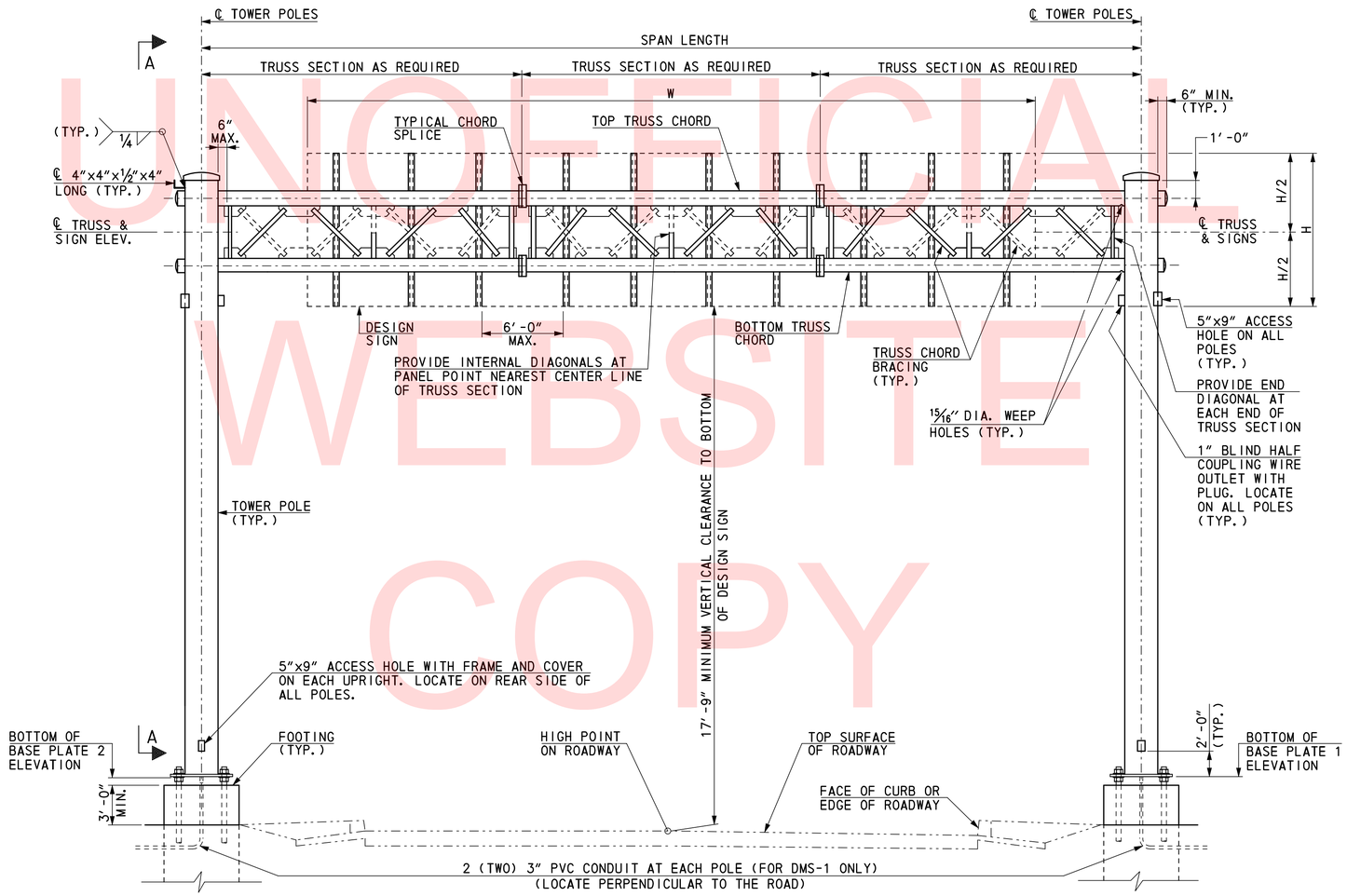

REAR ELEVATION VIEW

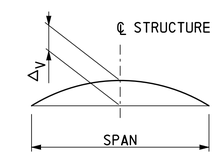

CAMBER DIAGRAM

NOTES:

- ELEVATIONS ARE BASED ON APPROXIMATE GROUND ELEVATION AND APPROXIMATE TOP OF ROAD HIGH POINT ELEVATION. CONTRACTOR SHALL FIELD VERIFY AND ADJUST ELEVATIONS AS DIRECTED BY THE ENGINEER, TO MEET THE MINIMUM REQUIREMENTS INDICATED.
- TWO SPLICES (THREE TRUSS SECTIONS) SHALL BE PROVIDED FOR ALL OVERHEAD STRUCTURES.
- SIGN PANELS SHALL BE CENTERED VERTICALLY ABOUT THE CENTERLINE OF THE TRUSS.
- FOR SECTION A-A, SEE DRAWING SS-36.

UNOFFICIAL WEBSITE COPY

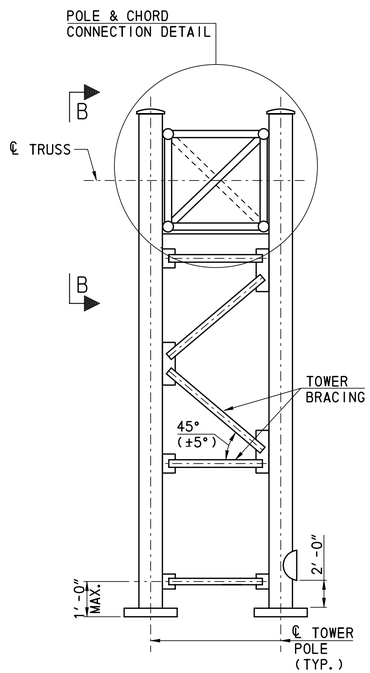

SECTION A-A

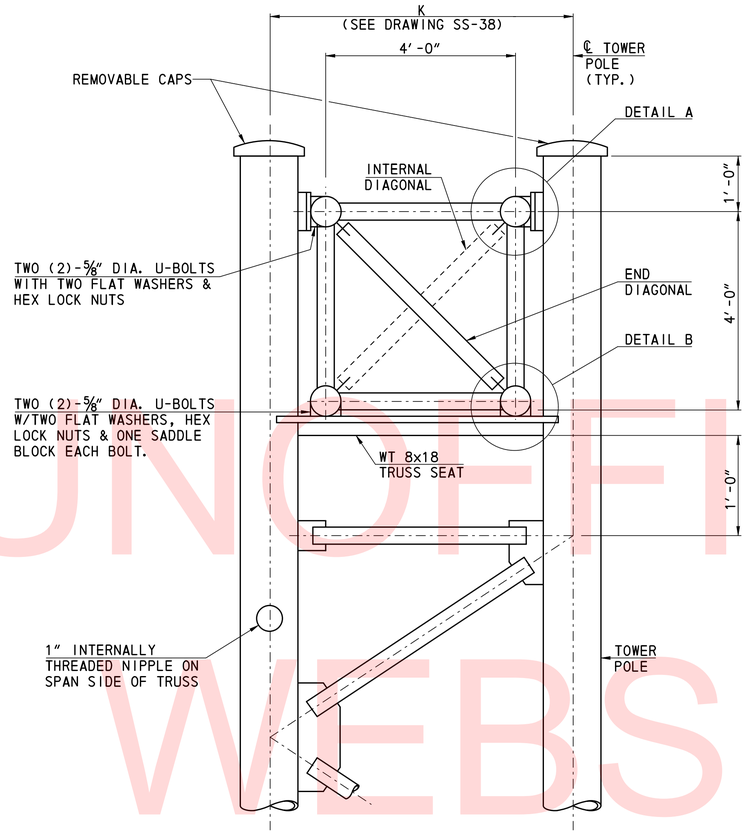

POLE & CHORD CONNECTION DETAIL

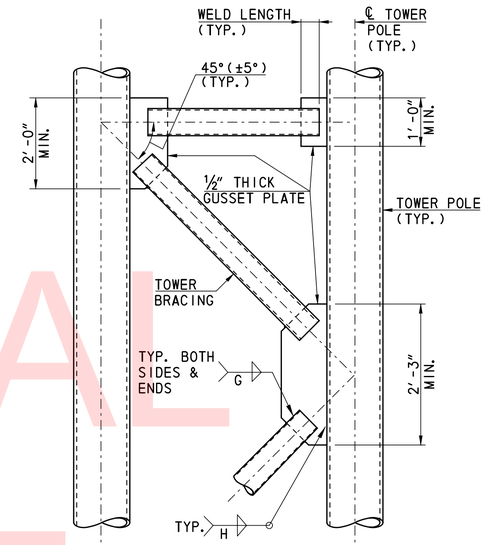

TOWER BRACING DETAIL

GUSSET PLATE AND WELDING SIZE TABLE FOR TOWER BRACING				
BRACING SIZE	GUSSET PLATE THICKNESS	WELD SIZE		MINIMUM WELD LENGTH
		G	H	
6.625" O.D. x 0.280" THK.	⅝"	3/16"	5/16"	6"

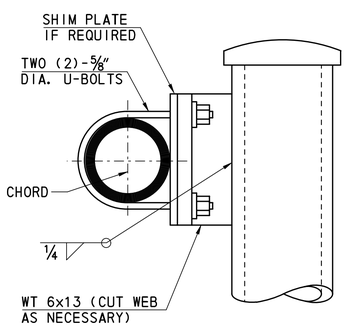

DETAIL A

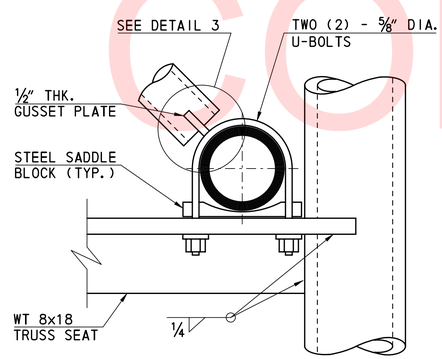

DETAIL B

NOTES:

- FOR LOCATION OF SECTION A-A. SEE DRAWING SS-35.
- FOR SECTION B-B, SEE DRAWING SS-37.
- FOR DETAIL 3, SEE DRAWING SS-37.

UNOFFICIAL WEBSITE COPY

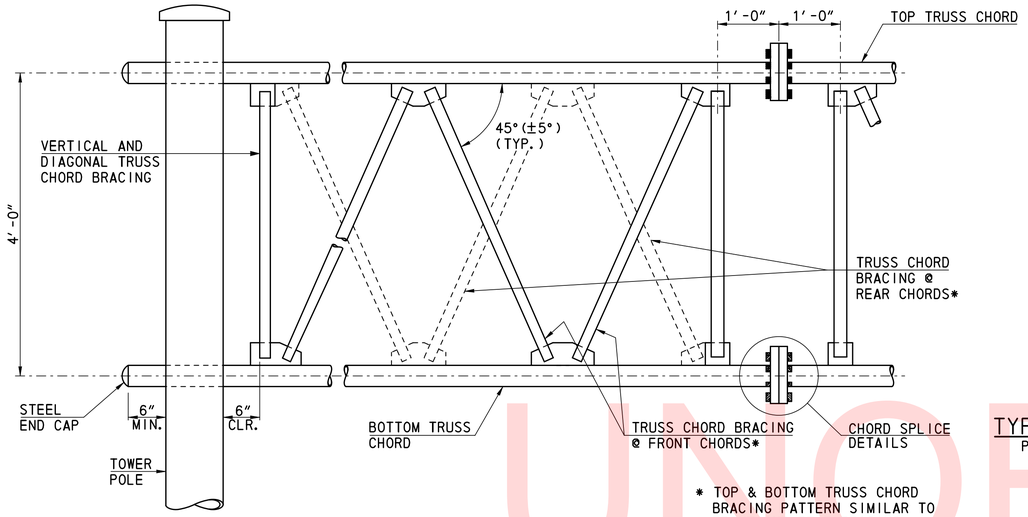

* TOP & BOTTOM TRUSS CHORD BRACING PATTERN SIMILAR TO FRONT AND REAR BRACING

SECTION B-B

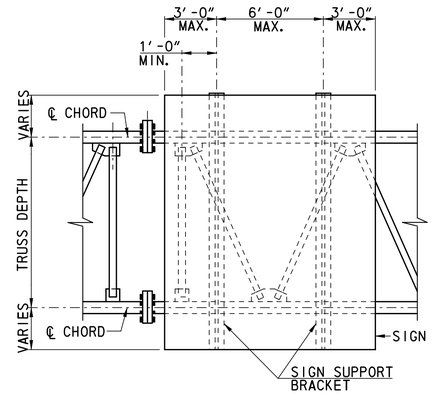

TYPICAL SIGN SUPPORT BRACKET SPACING DIAGRAM

PROVIDE ADDITIONAL BRACKETS AS REQUIRED AT 6'-0" MAXIMUM SPACING

WELDING SIZE TABLE FOR TRUSS CHORD BRACING			
MEMBER SIZE	E	F	MIN. WELD LENGTH
3.500" O.D. x 0.250" THK	5/16"	5/16"	4"

CHORD SPLICE SCHEDULE				
CHORD SIZE	O.D.	B.C.	NO. & SIZE OF BOLTS	CHORD SPLICE PLATE THICKNESS
6.625" O.D.	13¾"	10¼"	EIGHT (8)-1" DIA.	2"
8.625" O.D.	17½"	13"	EIGHT (8)-1¼" DIA.	2"

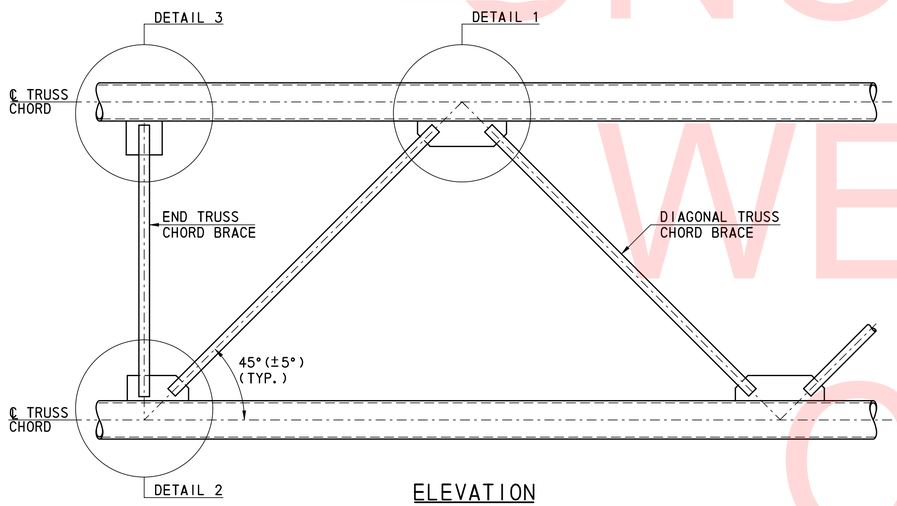

ELEVATION

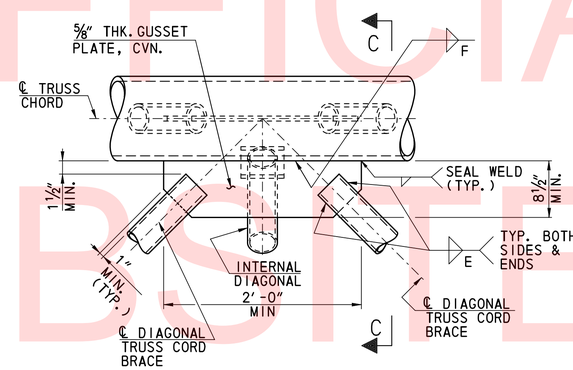

DETAIL 1

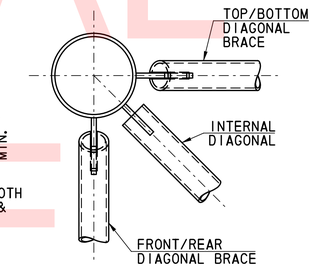

SECTION C-C

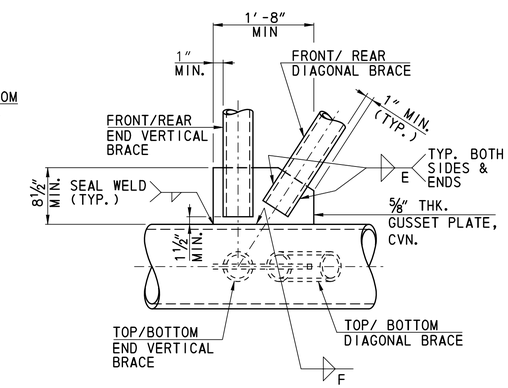

DETAIL 2

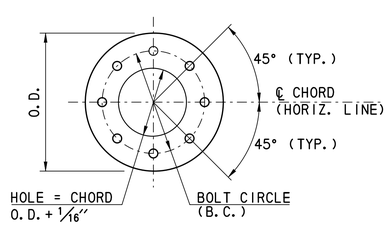

SECTION D-D

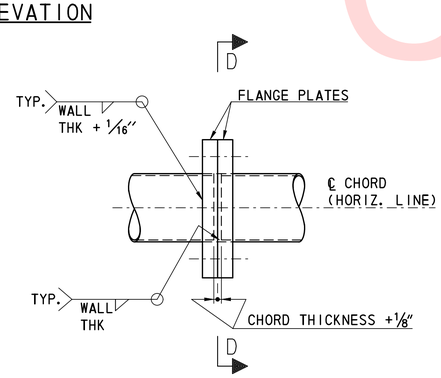

ELEVATION

CHORD SPLICE DETAILS

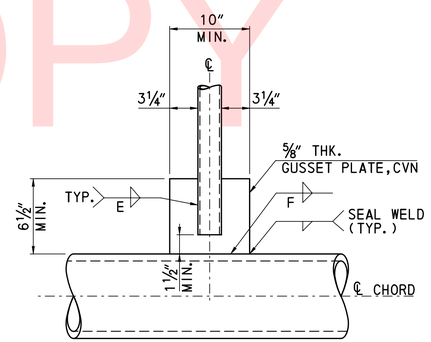

DETAIL 3

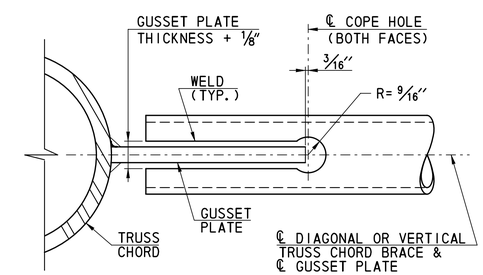

COPE HOLE DETAIL

NOTES:

- COPE HOLES TO BE PROVIDED AT BOTH ENDS AND BOTH FACES OF ALL END VERTICALS AND END DIAGONALS.
- TRUSS CHORD BRACING SHALL BE COPED FOR PROPER FIT UP TO TRUSS CHORD IN ACCORDANCE WITH AWS D1.1.
- PROPER AND ADEQUATE VENTING FOR GALVANIZING SHALL BE PROVIDED. ALL VENTING HOLES SHALL BE INTERNAL AND CONFORM TO ASTM A 385.
- FOR LOCATION OF SECTION B-B, SEE DRAWING SS-36.

UNOFFICIAL WEBSITE COPY

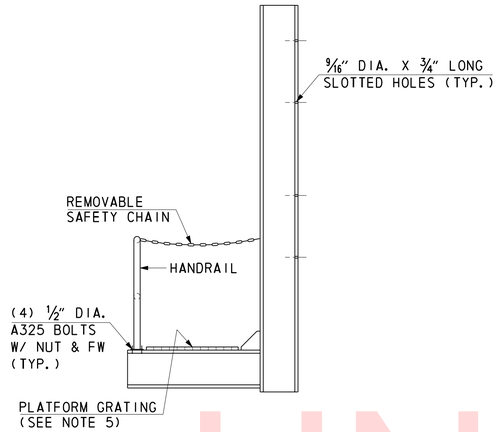

RIGHT SIDE
ENTRY PLATFORM

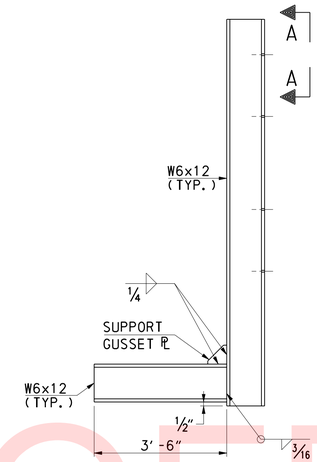

PLATFORM
SUPPORT DETAILS

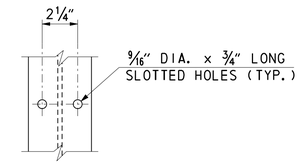

SECTION A-A

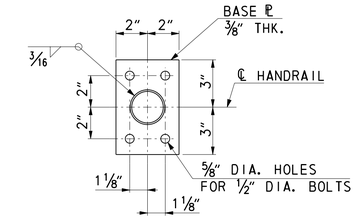

SECTION B-B

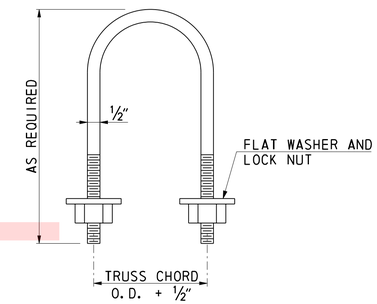

U-BOLT DETAIL

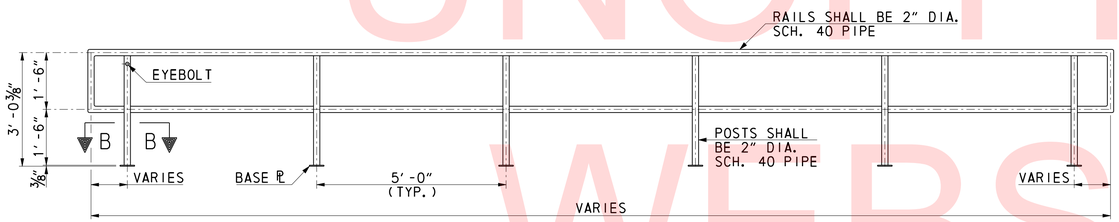

HANDRAIL DETAIL

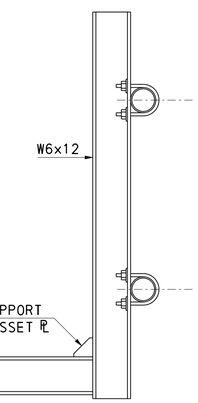

DETAIL AT
PLATFORM SUPPORT

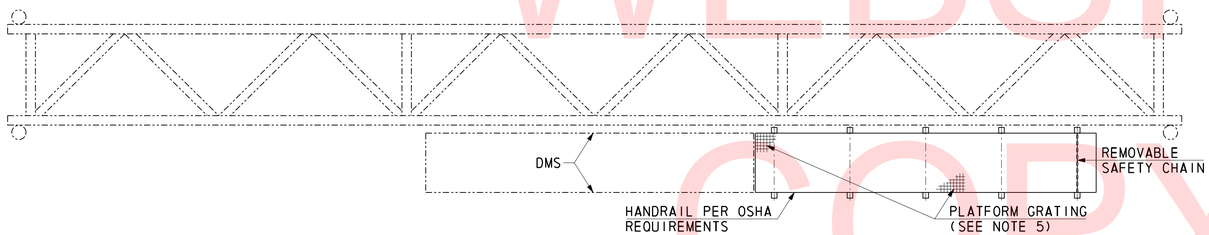

PLAN - CATWALK FOR DMS SIGN STRUCTURE

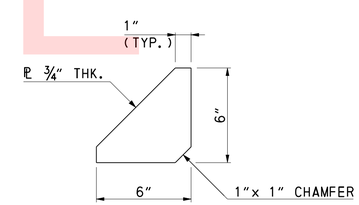

SUPPORT GUSSET PL

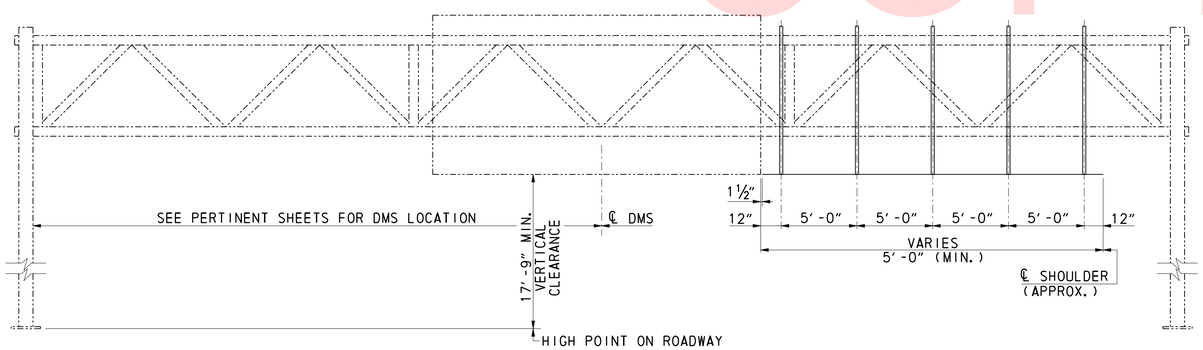

ELEVATION - CATWALK FOR DMS SIGN STRUCTURE
DIRECTION OF TRAFFIC

NOTE
LAYOUT OF PLATFORM SUPPORT IS FOR INFORMATIONAL PURPOSES ONLY. ACTUAL LAYOUT SHALL BE SUBMITTED TO THE ENGINEER AS A SHOP DRAWING FOR REVIEW AND APPROVAL.

NOTES

1. ALL PLATES AND STRUCTURAL SHAPES TO CONFORM TO A709, GRADE 36, AND GALVANIZED TO CONFORM TO A123.
2. ALL HARDWARE TO BE GALVANIZED IN CONFORMANCE WITH A153. U-BOLTS SHALL CONFORM TO A276 TYPE 304 (STAINLESS STEEL) OR A307.
3. ALL WELDING SHALL BE IN ACCORDANCE WITH AASHTO/AWS BRIDGE WELDING CODE D1.5M/D1.5: 2008.
4. ALL PIPE FOR HANDRAIL TO BE ASTM A500 GRADE 'A'.
5. ALL GRATING TO BE 1 1/2" THICK GALVANIZED AND ABLE TO WITHSTAND 100 LBS/SQ FT LIVE LOAD.
6. ALL RAIL SHALL BE DESIGNED TO CARRY ONE 500 POUND CONCENTRATED LOAD, PLACED ALONG TOP OF RAILING.
7. USE LOCK NUTS AND FLAT WASHERS FOR ALL 'U' BOLTS.
8. THE COST FOR FURNISHING AND INSTALLING THE PLATFORM GRATING, PLATFORM SUPPORTS, HANDRAIL AND THE ASSOCIATED HARDWARE SHALL BE INCLUDED UNDER THE PAYMENT FOR THE PERTINENT OVERHEAD SIGN STRUCTURE ITEM OR PERTINENT CANTILEVER SIGN STRUCTURE ITEM.

UNOFFICIAL WEBSITE COPY

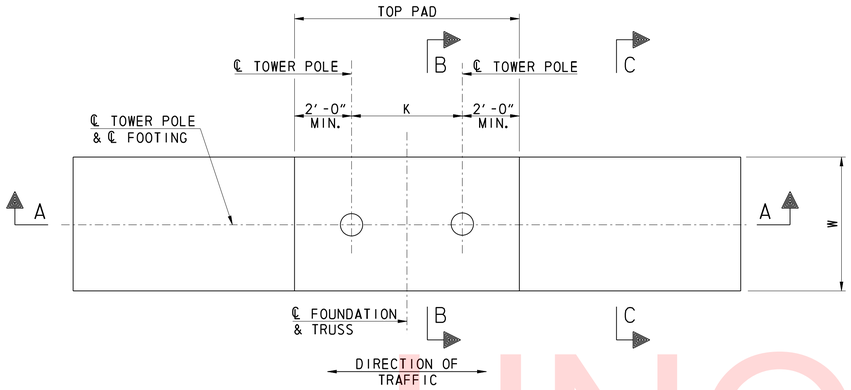

PLAN

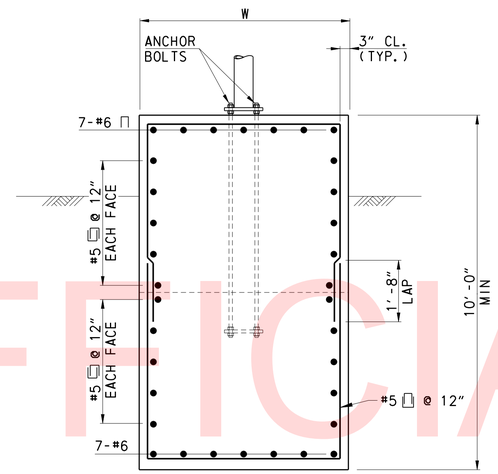

SECTION B-B

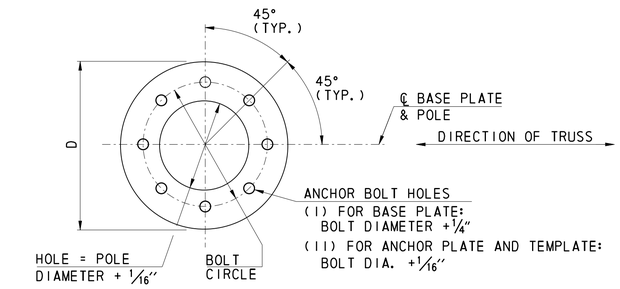

PLAN

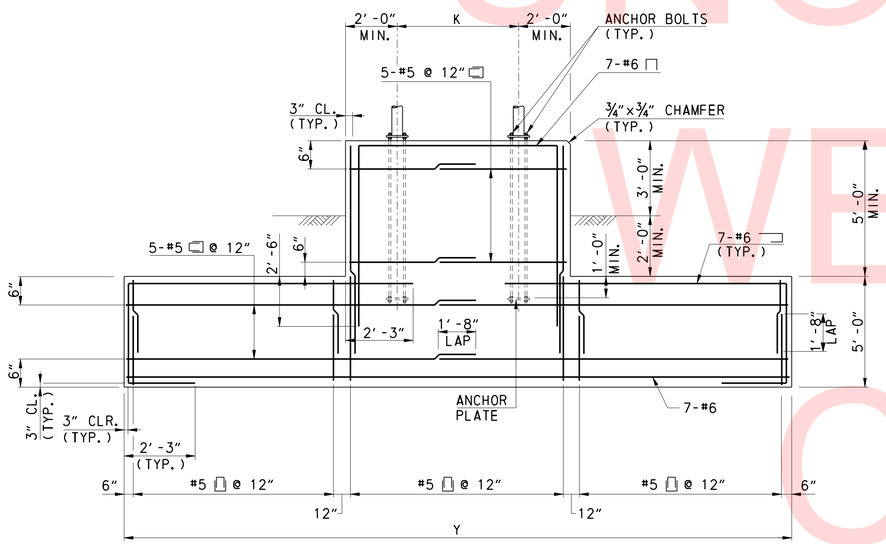

SECTION A-A

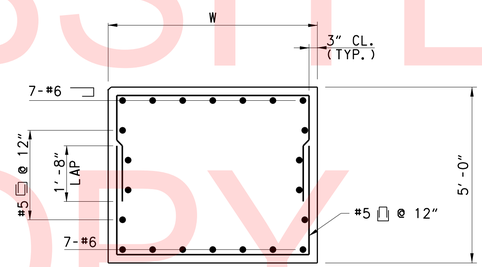

SECTION C-C

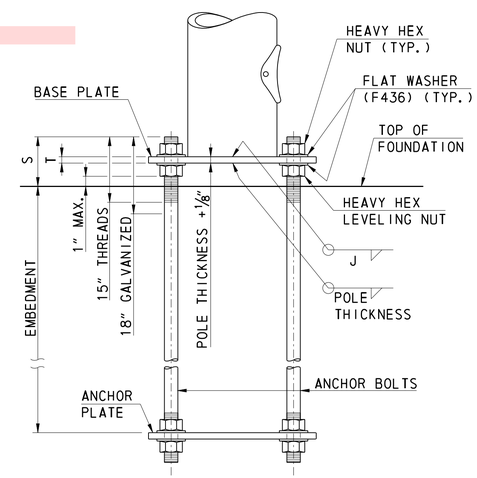

SECTION

BASE PLATE AND ANCHOR PLATE DETAILS

UNOFFICIAL WEBSITE COPY

BASE PLATE SCHEDULE									
TOWER POLE SIZE	K	D	BOLT CIRCLE	T	S	ANCHOR BOLT DIA.	MINIMUM EMBEDMENT LENGTH	ANCHOR PLATE SIZE	FILLET WELD SIZE J
20.00″ O.D. × 0.344″ THK.	7′-0″	36″	27 1/2″	3″	11 1/4″	2 3/4″	6′-0″	3/4″ × 36″ DIA.	7/16″
24.00″ O.D. × 0.312″ THK.	7′-6″	41 1/2″	32″	3″	12″	3″	6′-6″	3/4″ × 41 1/2″ DIA.	7/16″

FOUNDATION DETAIL SCHEDULE		
STRUCTURE MARK	FOOTING DIMENSION	
	W	Y
DMS-1	6′-0″	26′-0″
OH-2	6′-0″	26′-0″
OH-3	6′-0″	26′-0″
OH-5	6′-0″	26′-0″
OH-6	6′-0″	26′-0″

NOTES:

- ALL ANCHOR BOLTS SHALL BE PLUMB AFTER FOUNDATION INSTALLATION. STEEL TEMPLATE PLATE SHALL BE USED TO SET ANCHOR BOLTS.
- BASE PLATE SHALL BE IN FULL CONTACT WITH ALL FLAT WASHERS.
- ALL ANCHOR BOLTS SHALL BE TIGHTENED PER NCHRP REPORT 469. SEE DRAWING SS-30, NOTES.
- GROUT SHALL NOT BE PLACED BETWEEN THE BASE PLATE AND CONCRETE BASE.

SS-37

DELAWARE DEPARTMENT OF TRANSPORTATION

ADDENDUMS / REVISIONS

NOT TO SCALE

US 301 & SR 1 INTERCHANGE

CONTRACT	BRIDGE NO.	
T200911302	DESIGNED BY:	BSW
COUNTY	CHECKED BY:	BJH
NEW CASTLE		

FOUNDATION DETAILS

SHEET NO. 486

TOTAL SHTS. 491

$DGNNAME$ 10:48:59 AM
$$DATE$$

CONDUIT RUN SCHEDULE

CO#	# OF CONDUITS	SIZE	LENGTH	B/T/O	AMOUNT AND TYPE OF CABLE/ WIRE
1*	1	1.5 IN	244 FT	-	<REMOVE EX. (1) 2/*8 U.F.W./GROUND>
2*	1	2.5 IN	120 FT	-	<REMOVE EX. (1) 4/*18>
3*	1	1.5 IN	16 FT	-	<REMOVE EX. (2) LOOP CABLES>
4*	2	2.5 IN	7 FT	-	<REMOVE EX. (3) 4/*18, EX. (2) 16/*14, EX. (1) FIBER OPTIC CABLE>
5*	1	2.5 IN	6 FT	-	<REMOVE EX. (2) 4/*18, EX. (1) FIBER OPTIC CABLE>
6*	1	2.5 IN	145 FT	-	<REMOVE EX. (2) 4/*18, EX. (1) FIBER OPTIC CABLE>
7*	1	2.5 IN	150 FT	-	<REMOVE EX. (2) 4/*18, EX. (1) FIBER OPTIC CABLE>
8*	1	2.5 IN	256 FT	-	<REMOVE EX. (1) 4/*18, EX. (1) FIBER OPTIC CABLE>
9*	1	1.5 IN	13 FT	-	<REMOVE EX. (4) LOOP CABLES>
10*	1	1.5 IN	36 FT	-	<REMOVE EX. (4) LOOP CABLES>
11*	1	2.5 IN	190 FT	-	<REMOVE EX. (1) FIBER OPTIC CABLE>
12*	1	2.5 IN	5 FT	-	<REMOVE EX. (2) 16/*14, EX. (2) 4/*18, EX. (1) FIBER OPTIC CABLE>

*DENOTES EXISTING CONDUIT

B = BORE, T = TRENCH, O = OPEN CUT

NOTES:

7. DELDOT TRAFFIC CONTRACTOR SHALL REMOVE ALL EXISTING EQUIPMENT DESIGNATED FOR REMOVAL BY OTHERS INCLUDING SIGNAL POLES, SPAN WIRE, SIGNAL HEADS, SIGNAL CABINET AND ELECTRICAL CABLES.
8. THE PROJECT CONTRACTOR SHALL REMOVE ALL EXISTING EQUIPMENT DESIGNATED FOR REMOVAL BY CONTRACTOR INCLUDING SIGNAL POLE AND CABINET FOUNDATIONS, JUNCTION WELLS AND ELECTRICAL SERVICE EQUIPMENT.
9. THE CONTRACTOR SHALL COORDINATE WITH DELMARVA POWER FOR DISCONNECTION OF THE EXISTING ELECTRICAL SERVICE AND REMOVAL OF THE ELECTRICAL SERVICE RISER.

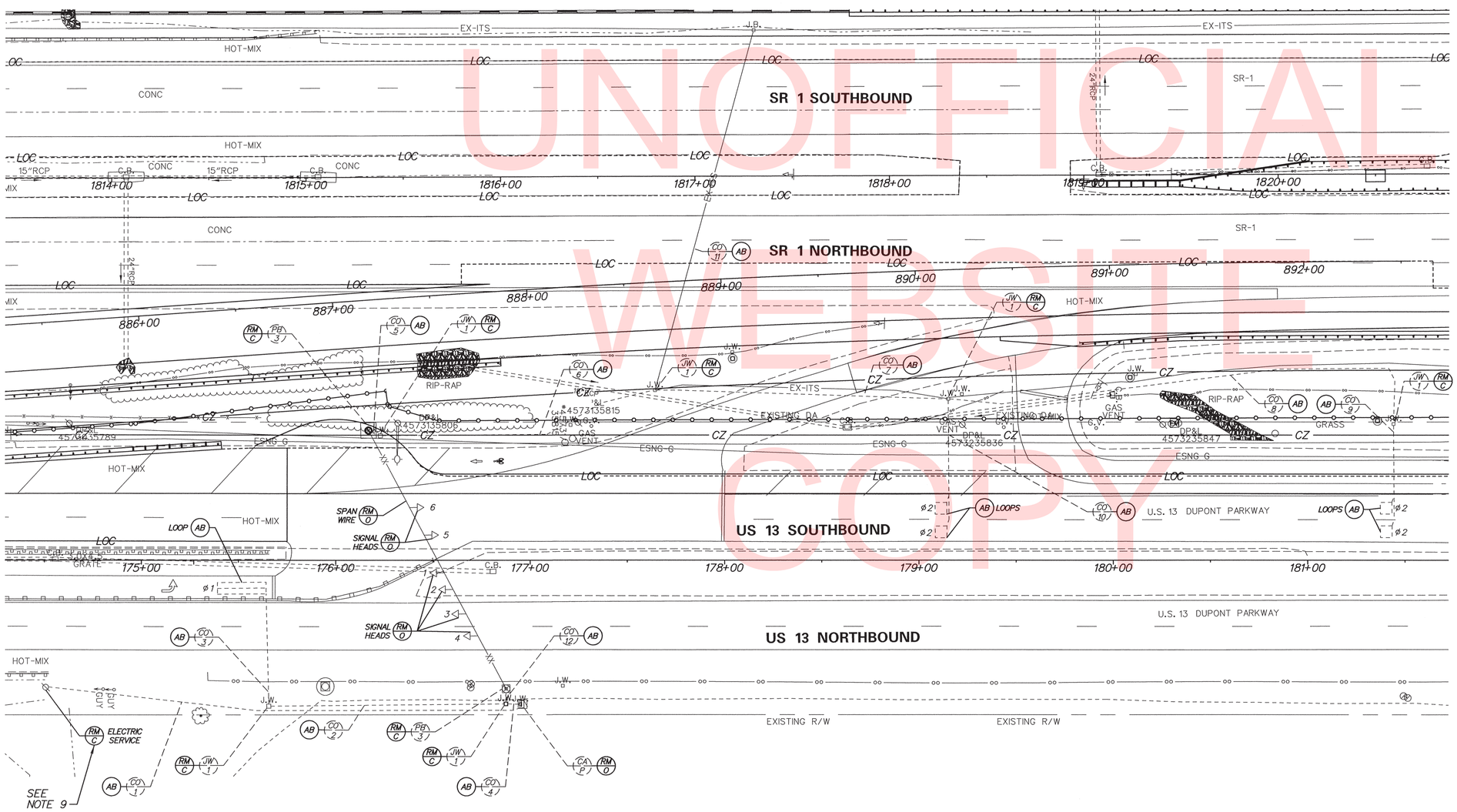

UNOFFICIAL WEBSITE COPY

SIGNAL PHASING

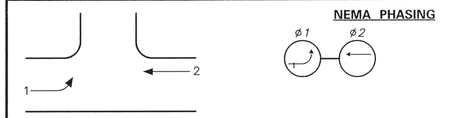

PHASING NOTES

1. PHASES ASSOCIATED BY A SOLID LINE WILL NOT OPERATE CONCURRENTLY.
2. PHASES ASSOCIATED BY A DASHED LINE WILL OPERATE CONCURRENTLY.

SIGNAL HEAD DIAGRAM

LEGEND

PROPOSED SIGNAL CABINET	REMOVE BY CONTRACTOR
EXISTING SIGNAL CABINET	REMOVE BY OTHERS
PROPOSED SIGNAL POLE BASE	ABANDON
EXISTING SIGNAL POLE BASE	PROPOSED POLE BASE IDENTIFIER (TYPE OF POLE BASE)
PROPOSED PEDESTRIAN POLE BASE	EXISTING POLE BASE IDENTIFIER (TYPE OF POLE BASE)
EXISTING PEDESTRIAN POLE BASE	PROPOSED JUNCTION WELL IDENTIFIER (TYPE OF JUNCTION WELL)
PROPOSED WOOD POLE	EXISTING JUNCTION WELL IDENTIFIER (TYPE OF JUNCTION WELL)
EXISTING UTILITY POLE	PROPOSED CONDUIT RUN IDENTIFIER (# OF CONDUIT RUN)
PROPOSED JUNCTION WELL	EXISTING CONDUIT RUN IDENTIFIER (# OF CONDUIT RUN)
EXISTING JUNCTION WELL	PROPOSED OVERHEAD RUN IDENTIFIER (# OF OVERHEAD RUN)
PROPOSED SIGNAL HEAD	EXISTING OVERHEAD RUN IDENTIFIER (# OF OVERHEAD RUN)
EXISTING SIGNAL HEAD	PROPOSED MAST ARM IDENTIFIER (LENGTH OF ARM)
PROPOSED PEDESTRIAN SIGNAL HEAD	EXISTING MAST ARM IDENTIFIER (LENGTH OF ARM)
EXISTING PEDESTRIAN SIGNAL HEAD	PROPOSED CABINET IDENTIFIER (TYPE OF CABINET)
PROPOSED PEDESTRIAN PUSHBUTTON	EXISTING CABINET IDENTIFIER (TYPE OF CABINET)
EXISTING PEDESTRIAN PUSHBUTTON	PROPOSED SPAN WIRE
PROPOSED VIDEO DETECTION	EXISTING SPAN WIRE
EXISTING VIDEO DETECTION	RIGHT-OF-WAY OR PROPERTY LINE
PROPOSED MICROWAVE DETECTION	PROPOSED SPAN INSULATOR
EXISTING MICROWAVE DETECTION	EXISTING SPAN INSULATOR
OVERHEAD SIGNING	SERVICE PEDESTAL
PROPOSED OPTICOM RECEIVER	
EXISTING OPTICOM RECEIVER	
PROPOSED MAST ARM	
EXISTING MAST ARM	
PROPOSED LUMINAIRE	
EXISTING LUMINAIRE	
PROPOSED LOOP DETECTOR (TYPE 1 OR 2)	
EXISTING LOOP DETECTOR (TYPE 1 OR 2)	

GENERAL SIGNAL NOTES

1. LOOP DETECTORS (EXISTING TO BE ABANDONED):
   TYPE #1 - 6' x 6' - US 13 SOUTHBOUND MOVEMENT.
   TYPE #2 - 6' x 25' - US 13 NORTHBOUND LEFT-TURN MOVEMENT.
2. ALL SIGNAL POLES ARE 32 FEET, EXCEPT WHERE SHOWN.
3. CO #1 IS NOT DRAWN TO SCALE, NOR IS THE DIRECTION NECESSARILY CORRECT.
4. ALL SIGNAL EQUIPMENT REMOVED FROM PROJECT IS TO BE RETURNED TO DELDOT TRAFFIC - DOVER, DELAWARE.
5. POLE BASES, CABINET BASE AND CONDUIT JUNCTION WELLS ARE TO BE REMOVED IN ACCORDANCE WITH SECTION 201 AND 202 OF THE STANDARD SPECIFICATIONS OR AS DIRECTED BY ENGINEER. EXISTING CONDUIT IS TO BE ABANDONED.
6. ALL UNDERGROUND AND OVERHEAD UTILITIES SHOWN ON THESE PLANS ARE SCHEMATIC ONLY AND MAY NOT BE COMPLETE. THE CONTRACTOR SHALL BE RESPONSIBLE FOR NOTIFYING MISS UTILITY, AND/OR THE APPROPRIATE UTILITY PRIOR TO THE BEGINNING OF CONSTRUCTION FOR THE UTILITY MARKOUTS. IF THE CONTRACTOR PERCEIVES THAT A CONFLICT BETWEEN UTILITIES AND THE TRAFFIC SIGNAL WILL OCCUR, THE CONTRACTOR SHALL NOTIFY DELDOT TRAFFIC IMMEDIATELY BEFORE CONSTRUCTION.

RECOMMENDED _____ DATE: 11.29.12

RECOMMENDED _____ DATE: _____

RECOMMENDED _____ DATE: _____

APPROVED TRAFFIC ENGINEER _____ DATE: 11/30/12

APPROVED FOR INSTALLATION
CHIEF TRAFFIC ENGINEER _____ DATE: 11/30/12

DELAWARE DEPARTMENT OF TRANSPORTATION

ADDENDUM / REVISIONS

SCALE 0 30 60 90 FEET

US 301 & SR 1 INTERCHANGE

CONTRACT	T200911302
COUNTY	NEW CASTLE
PERMIT NO.	N-608
DESIGNED BY:	J.D.C.
CHECKED BY:	J.M.M.

SG-01: SIGNAL REMOVAL PLAN US 13 @ SR 1 NB

SHEET NO.	487
TOTAL SHTS.	491

N:\31653_003\Contract 1B\CADD\SG001U301_1B.dgn
11/29/2012 7:20:09 AM

NO.	PARCEL OWNERSHIP	ASSESSMENT NO.	TITLE SOURCE
235	HELEN M. ELKINS AND MARIS MACLEOD VAN ALLEN	13-008.00-009	W.R. 92843 (D.R. 1-27-12)
239	STATE OF DELAWARE (DEPARTMENT OF TRANSPORTATION)	13-003.00-015	D.R. C-66-387
240	PARKWAY GRAVEL, INC.	13-003.00-014	D.R. Y-89-945

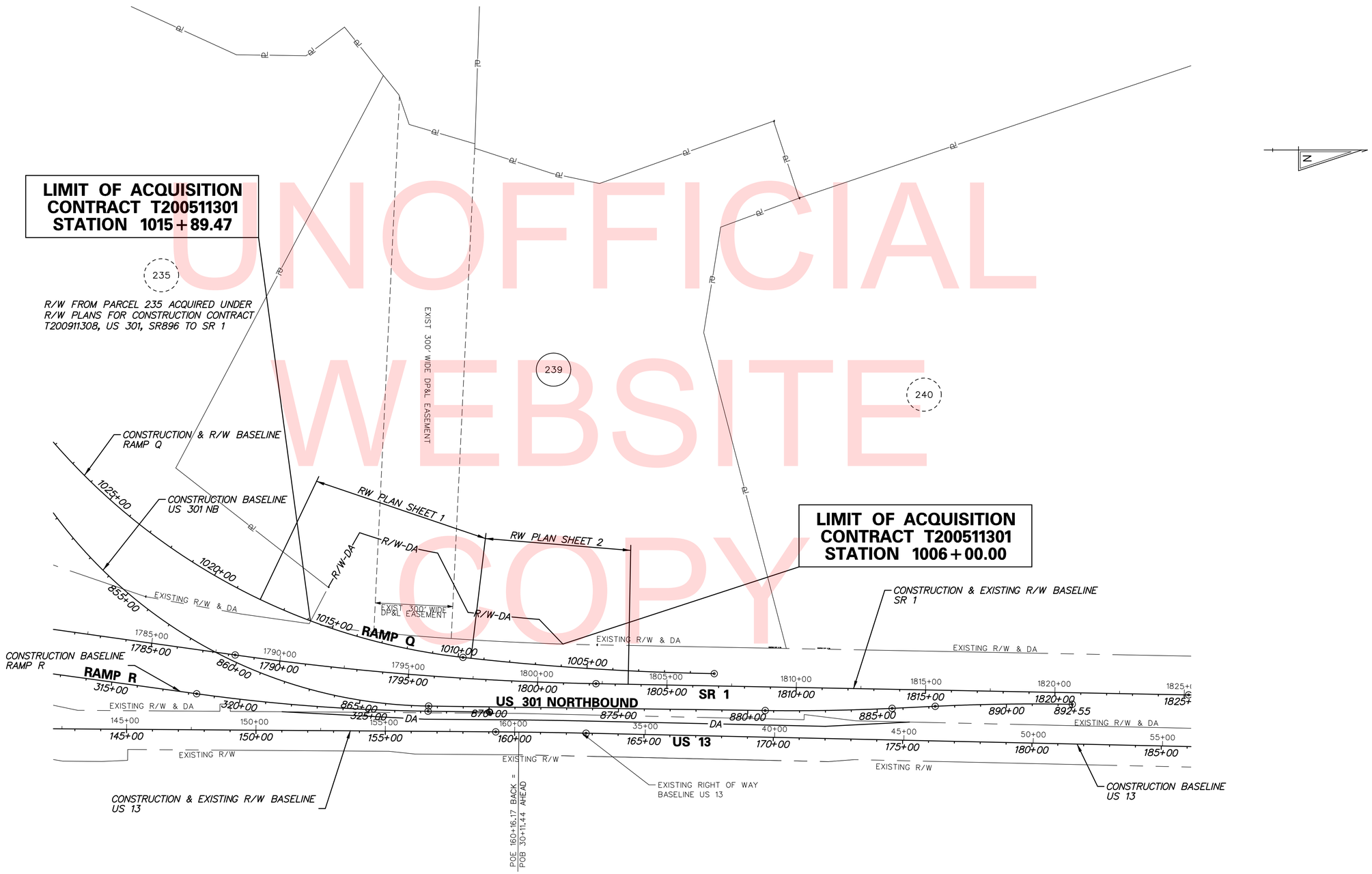

UNOFFICIAL WEBSITE COPY

n:\31653-000\contract tb\cadd\RWRM001U301_1B.dgn
2/4/2013 3:47:50 PM

DELAWARE DEPARTMENT OF TRANSPORTATION

ADDENDUMS / REVISIONS

SCALE 0 200 400 600 FEET

US 301 & SR 1 INTERCHANGE

CONTRACT	BRIDGE NO.
T200911302	DESIGNED BY: KAH
COUNTY	CHECKED BY: BRT
NEW CASTLE	

RIGHT OF WAY MOSAIC

RM-01

SHEET NO. 488

TOTAL SHTS. 491

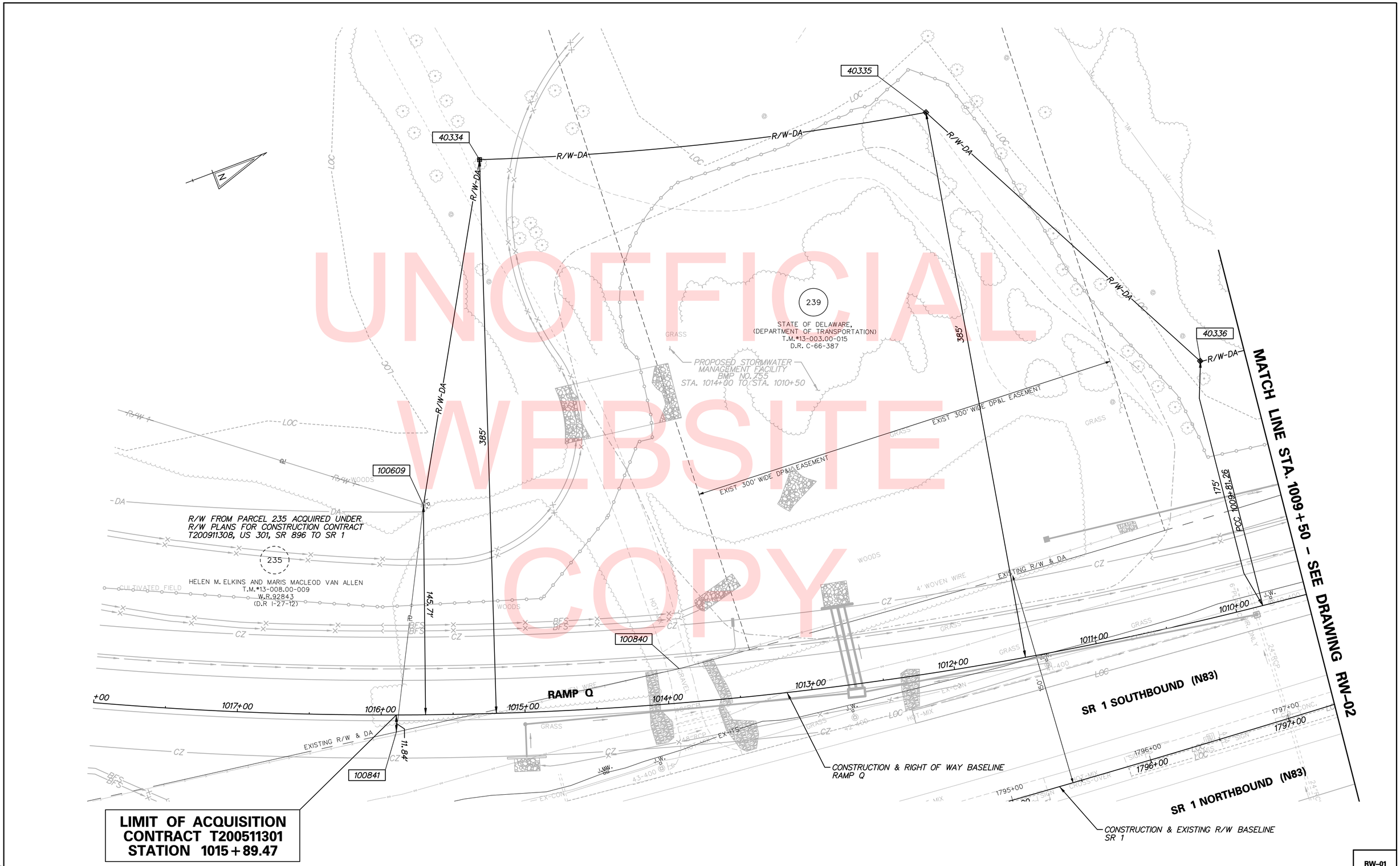

UNOFFICIAL WEBSITE COPY

N:\31653-000\Contract 1B\CADD\RW001U301_1B.dgn
5/31/2013 5:34:32 PM

DELAWARE DEPARTMENT OF TRANSPORTATION

ADDENDUMS / REVISIONS

SCALE 0 30 60 90 FEET

US 301 & SR 1 INTERCHANGE

CONTRACT	BRIDGE NO.
T200911302	DESIGNED BY: KAH
COUNTY	CHECKED BY: BRT
NEW CASTLE	

RIGHT OF WAY PLAN

RW–01

SHEET NO. 489

TOTAL SHTS. 491

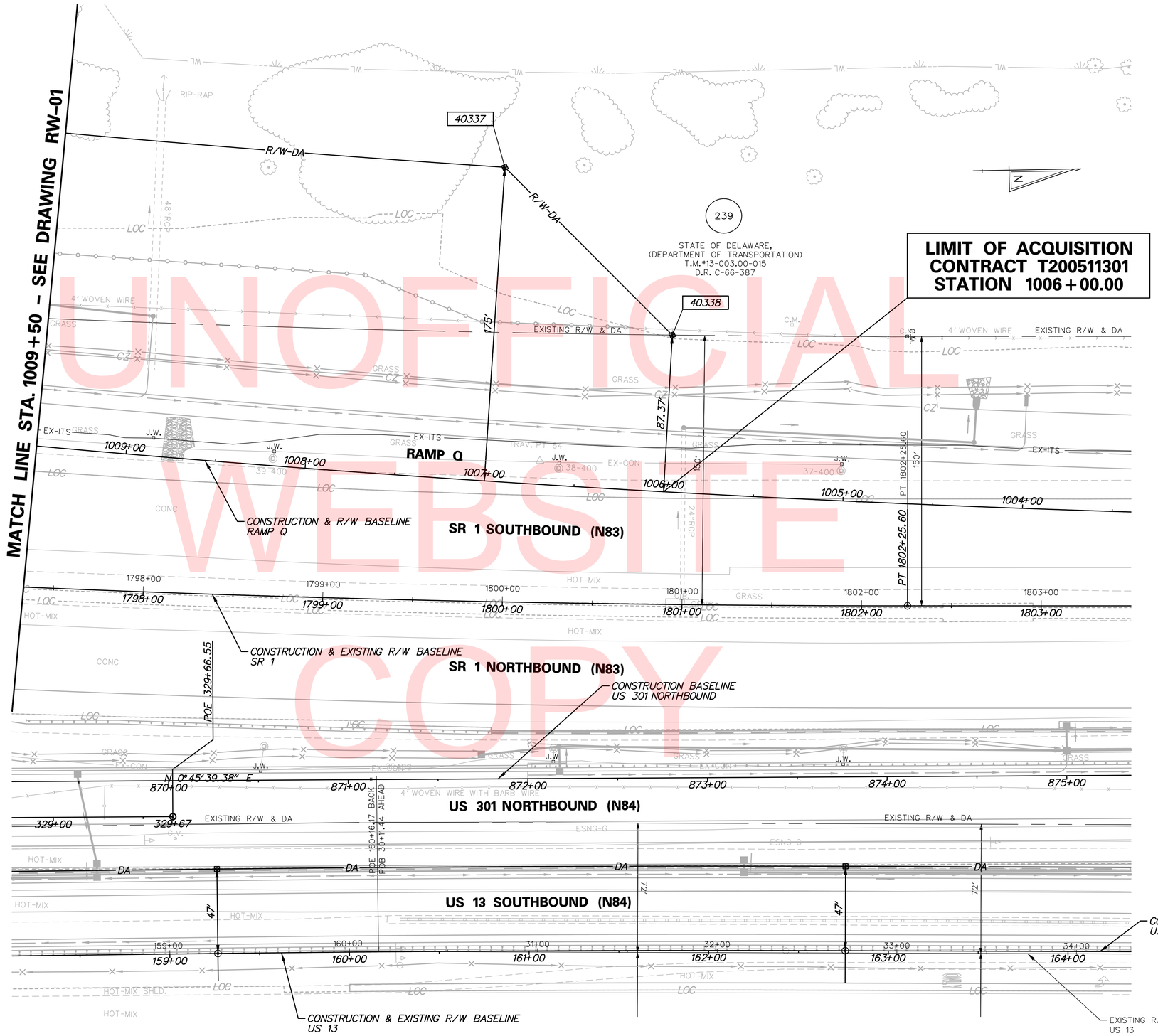

UNOFFICIAL WEBSITE COPY

DELAWARE
DEPARTMENT OF TRANSPORTATION

ADDENDUMS / REVISIONS

SCALE
0 30 60 90
FEET

US 301 &
SR 1 INTERCHANGE

CONTRACT	BRIDGE NO.	
T200911302	DESIGNED BY: KAH	
COUNTY		
NEW CASTLE	CHECKED BY: BRT	

RIGHT OF WAY PLAN

RW-02
SHEET NO.
490
TOTAL SHTS.
491

r:\31653-000\contract_tb\cadd\RW002U301_IB.dgn
2/4/2013 3:47:42 PM

ASSESSMENT NUMBER	OWNERSHIP OF RECORD	TYPE OF ACQUISITION	TITLE SOURCE	PARCEL AREA (ACRES)
13-003.00-015	(239) STATE OF DELAWARE, (DEPARTMENT OF TRANSPORTATION)	FEE	D.R. C-66-387	81.138

ALIGNMENT NUMBER & DESCRIPTION: 1000 - RAMP Q

PT. NO.	ALIGN. NO.	STATION	OFFSET *	NORTH	EAST	BEARING	DISTANCE	CHORD BEARING	CHORD LENGTH	ARC LENGTH	RADIUS **
100609	1000	1015+69.14	145.71	557558.9940	590088.9694						
						N 60°05′28.71″ W	243.2577				
40334	1000	1015+20.00	385.00	557680.2870	589878.1085			N 14°38′41.85″ E	311.8002	312.0943	-2075.0000
						N 62°54′27.87″ E	257.6795				
40335	1000	1011+50.00	385.00	557981.9571	589956.9405						
								N 5°37′25.67″ E	276.4766	276.4852	-10125.0000
40336	1000	1009+81.26	175.00	558099.3107	590186.3460						
						N 46°09′17.29″ E	132.0047				
40337	1000	1007+00.00	175.00	558374.4565	590213.4396						
								S 3°42′17.80″ W	782.5230	782.6761	11424.7359
40338	1000	1006+00.00	87.37	558465.8978	590308.6433						
						S 8°03′55.71″ W	201.2994				
100840	1000	1013+90.81	23.81	557685.0101	590258.0779						
						N 62°30′43.47″ W	158.7915				
100841	1000	1015+89.47	-11.84	557485.7019	590229.8346						
100609	1000	1015+69.14	145.71	557558.9940	590088.9694						

FIGURE 4123900 AREA = 199915.0647 SQ. FT. (4.5894 ACRES)

COUNTY ASSESSMENT PARCEL NUMBER	PLAN SHEET NUMBER	OWNERSHIP OF RECORD	TITLE SOURCE	PROPERTY AREA BEFORE ACQUISITION (ACRE) D=DEED C=CALCULATED A=ASSESMENT	ACQUISITION CODE FEE, R/W, P/E, TCE	AREA TO BE ACQUIRED: ACQUISITION (SQ. FEET /ACRES)	AREA TO BE ACQUIRED: AREA OCCUPIED BY EXISTING RIGHT OF WAY (SQ. FEET /ACRES)	AREA TO BE ACQUIRED: EASEMENT: PERMANENT (SQ. FEET /ACRES)	AREA TO BE ACQUIRED: EASEMENT:	PROPERTY AREA REMAINING (SQ. FEET /ACRES)	DEED RECORD OF ACQUISITION	REMARKS
13-003.00-015	-	(239) STATE OF DELAWARE, (DEPARTMENT OF TRANSPORTATION)	D.R. C-66-387	C - 81.14	FEE	199915.0647 / 4.59				3334434.9706 / 76.55		BMP #755
												DP&L EASEMENT FEE: 97485.85 SF/2.238 AC

ACQUISITION CODES

FEE - ACQUISITION **P/E - PERMANENT EASEMENT**
R/W - AREA OCCUPIED BY EXISTING R/W **TCE - TEMPORARY EASEMENT**

UNOFFICIAL WEBSITE COPY

LEGEND

FEE AREA OF ACQUISITION
R/W AREA OCCUPIED BY EXISTING R/W
P/E PERMANENT EASEMENT
TCE TEMPORARY CONSTRUCTION EASEMENT

* "-" OFFSET IS LEFT OF BASELINE
** "-" CURVE TURNS TO THE LEFT

RB-01

N:\31653-000\Contract 1B\CADD\RB001U301_1B.dgn
2/4/2013 3:46:37 PM

DELAWARE DEPARTMENT OF TRANSPORTATION

ADDENDUMS / REVISIONS

NOT TO SCALE

US 301 & SR 1 INTERCHANGE

CONTRACT: T200911302
COUNTY: NEW CASTLE
BRIDGE NO.
DESIGNED BY: KAH
CHECKED BY: BRT

RIGHT-OF-WAY DATA AND TABULATION SHEET

SHEET NO. 491
TOTAL SHTS. 491