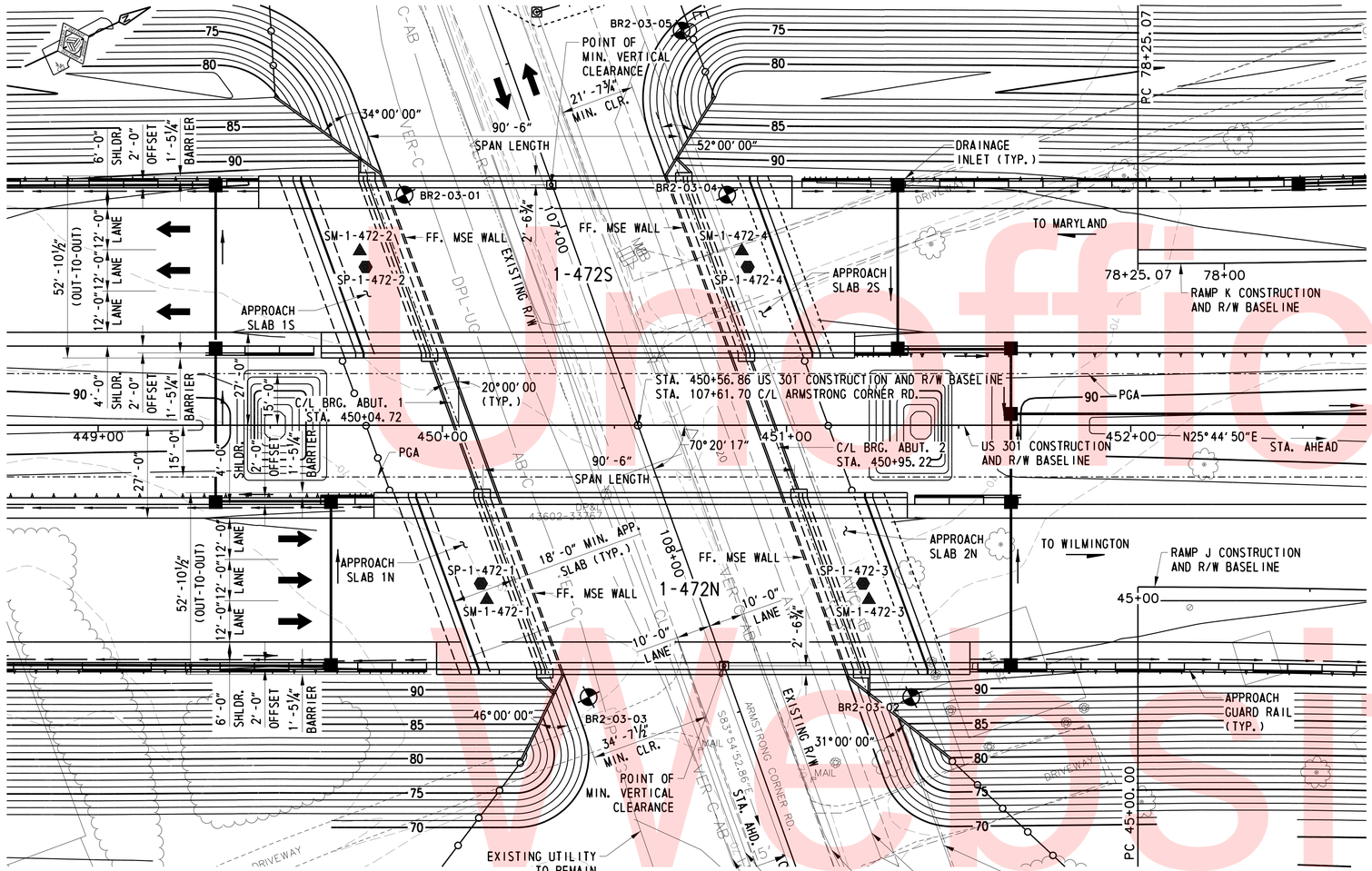

PLAN

SCALE: 1" = 20'-0"

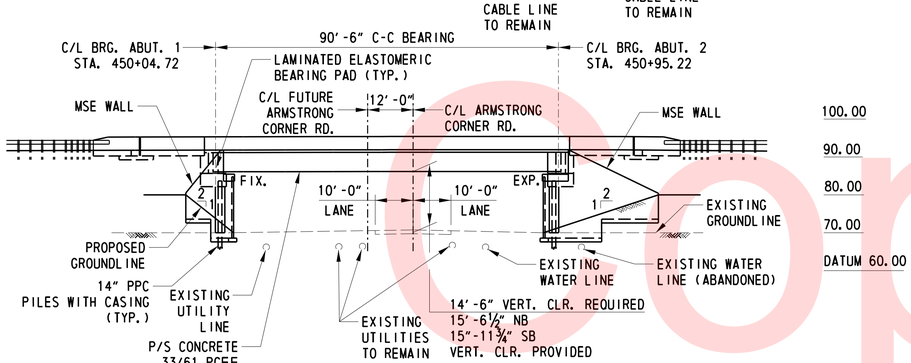

ELEVATION

SCALE: 1" = 20'-0"

NOTES:

1. NORTHBOUND BRIDGE SHOWN SOUTHBOUND SIMILAR.
2. FUTURE ARMSTRONG CORNER ROAD IS NOT PART OF THIS CONTRACT.
3. FUTURE ARMSTRONG CORNER ROAD TO EXHIBIT 2-12'-0" LANES AND 8'-0" SHOULDERS.

LOAD RATING SUMMARY

DESIGN VEHICLE	RATING FACTOR	RATING WEIGHT (TONS)	CONTROLLING MEMBER	CONTROLLING POINT	LOAD EFFECT
HL-93 TRUCK (INVENTORY)	1.10	N/A	INTERIOR BEAM	105	LONG. REINF. MAX. EFFECTS MAX. MOMENT W/ CONCURRENT SHEAR
HL-93 TANDEM (INVENTORY)	1.26	N/A	INTERIOR BEAM	105	LONG. REINF. MAX. EFFECTS MAX. MOMENT W/ CONCURRENT SHEAR
HL-93 TRUCK TRAIN (INVENTORY)	N/A	N/A	N/A	N/A	N/A
HS-20 (INVENTORY)	1.32	47.64	INTERIOR BEAM	106	LONG. REINF. MIN. EFFECTS MAX. SHEAR W/ CONCURRENT MOMENT
HL-93 TRUCK (OPERATING)	1.41	N/A	INTERIOR BEAM	105	LONG. REINF. MAX. EFFECTS MAX. MOMENT W/ CONCURRENT SHEAR
HL-93 TANDEM (OPERATING)	1.62	N/A	INTERIOR BEAM	105	LONG. REINF. MAX. EFFECTS MAX. MOMENT W/ CONCURRENT SHEAR
HL-93 TRUCK TRAIN (OPERATING)	N/A	N/A	N/A	N/A	N/A
HS-20 (OPERATING)	1.63	58.75	INTERIOR BEAM	106	LONG. REINF. MIN. EFFECTS MAX. SHEAR W/ CONCURRENT MOMENT
DE S220 (LEGAL)	2.08	41.61	INTERIOR BEAM	106	LONG. REINF. MIN. EFFECTS MAX. SHEAR W/ CONCURRENT MOMENT
DE S335 (LEGAL)	1.28	44.86	INTERIOR BEAM	106	LONG. REINF. MIN. EFFECTS MAX. SHEAR W/ CONCURRENT MOMENT
DE S437 (LEGAL)	1.26	46.01	INTERIOR BEAM	106	LONG. REINF. MIN. EFFECTS MAX. SHEAR W/ CONCURRENT MOMENT
DE T330 (LEGAL)	1.75	52.42	INTERIOR BEAM	106	LONG. REINF. MAX. EFFECTS MAX. MOMENT W/ CONCURRENT SHEAR
DE T435 (LEGAL)	1.46	51.11	INTERIOR BEAM	106	LONG. REINF. MIN. EFFECTS MAX. SHEAR W/ CONCURRENT MOMENT
DE T540 (LEGAL)	1.44	57.49	INTERIOR BEAM	106	LONG. REINF. MAX. EFFECTS MAX. MOMENT W/ CONCURRENT SHEAR

NOTE: LOAD RATING DOES INCLUDE FUTURE WEARING SURFACE AS NOTED IN THE PLANS.

LEGEND

- ⬢ - SETTLEMENT PLATFORMS
- ▲ - SETTLEMENT MONUMENTS

US 301 GEOMETRY

VERTICAL DATA

PVI STA. 449+41.00
EL. 92.90
VC = 610.00'
MO = -1.11'
SSD = 1048.41'

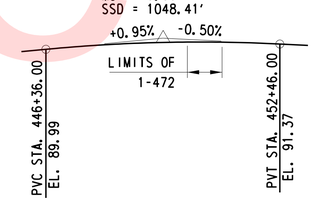

HORIZONTAL DATA

TANGENT

ARMSTRONG CORNER ROAD

VERTICAL DATA

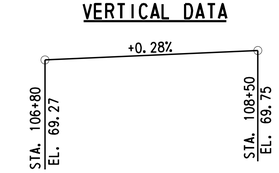

HORIZONTAL DATA

TANGENT

CROSS REFERENCE NOTES:

1. FOR SETTLEMENT PLATFORM AND MONUMENT STATIONS AND OFFSETS, SEE DWG. 1-472 DT-1.
2. FOR SETTLEMENT PLATFORM DETAILS, SEE DWG. 1-472 DT-1.

Unofficial Website Copy

P:\cadd2\60049040 US301\Structure\Plans\FINAL\B2-3NS\BR2-3PE-01.dgn

DELAWARE DEPARTMENT OF TRANSPORTATION	ADDENDUMS / REVISIONS	SCALE 0 20 40 60 FEET	US 301 LEVELS ROAD TO SUMMIT BRIDGE ROAD	CONTRACT T200911303	BRIDGE NO. 1-472N&S	US 301 MAINLINE OVER ARMSTRONG CORNER ROAD	1-472 PE-1
				COUNTY NEW CASTLE	DESIGNED BY: ADH	BRIDGE PLAN AND ELEVATION	SHEET NO. 356
					CHECKED BY: DHG		TOTAL SHTS. 1256

PROJECT NOTES

1. DESIGN SPECIFICATIONS:

AASHTO LRFD BRIDGE DESIGN SPECIFICATIONS, 4TH EDITION, 2007, INCLUDING 2008 AND 2009 INTERIM REVISIONS, AND AS SUPPLEMENTED BY DELAWARE DEPARTMENT OF TRANSPORTATION BRIDGE DESIGN MANUAL, MAY 2005, INCLUDING LATEST REVISIONS.

PROVIDE MATERIALS AND PERFORM WORK IN ACCORDANCE WITH THE DELAWARE DEPARTMENT OF TRANSPORTATION STANDARD SPECIFICATIONS AND CONSTRUCTION DETAILS, AASHTO/AWS D1.5M/D1.5 BRIDGE WELDING CODE, AND CONTRACT SPECIAL PROVISIONS.

LIVE LOAD DISTRIBUTION TO BEAMS IS BASED UPON AASHTO DISTRUBUTION FACTORS.

2. LOADING:

UNIT WEIGHTS OF MATERIALS SHALL BE IN ACCORDANCE WITH THE DELAWARE DESIGN MANUAL.

FUTURE OVERLAY ALLOWANCE SHALL BE 25 LBS/SQ FT.

STEEL BRIDGE DECK FORMS WHICH STAY IN PLACE (INCLUDING CONCRETE IN FORM CORRUGATIONS) SHALL BE 15 LBS/SQ FT.

VEHICLE LIVE LOAD SHALL BE AASHTO HL-93 DESIGN VEHICLE, WHICH CONSISTS OF A DESIGN TRUCK OR TANDEM WITH DYNAMIC LOAD ALLOWANCE AND A LANE LOAD. RATINGS SHALL USE ALL DELAWARE LEGAL LOADS SPECIFIED IN THE BRIDGE DESIGN MANUAL.

BARRIER HAS BEEN DESIGNED FOR TEST LEVEL FOUR (TL-4).

FATIGUE DESIGN IS BASED ON THE FOLLOWING:
ADTT 3,045 (2030 ONE-DIRECTIONAL).

FOR THERMAL LOADS, CONSIDER THE MODERATE TEMPERATURE RANGE AS STIPULATED IN THE AASHTO LRFD DESIGN SPECIFICATIONS, THE NORMAL TEMPERATURE SHALL BE CONSIDERED TO BE 68F.

FOR SEISMIC LOADS, CONSIDER SEISMIC PERFORMANCE ZONE 1, WITH A SITE CLASS = D AND IMPORTANCE CATEGORY - ESSENTIAL.

SEISMIC FORCES WERE CONSIDERED FOR ACCELERATION COEFFICIENT OF 0.08.

3. PORTLAND CEMENT CONCRETE:

PORTLAND CEMENT CONCRETE FOR CAST-IN-PLACE ELEMENTS SHALL BE AS FOLLOWS:
(28 DAY COMPRESSIVE STRENGTH)
ITEM NO. 602003 (CLASS A, F'c=4500 PSI) - ABUTMENT FOOTING
ITEM NO. 602013 (CLASS D, F'c=4500 PSI) - DECK AND DIAPHRAGMS
ITEM NO. 602014 (CLASS D, F'c=4500 PSI) - APPROACH SLAB, MOMENT SLAB AND SLEEPER SLAB
ITEM NO. 602015 (CLASS A, F'c=4500 PSI) - ABUTMENT ABOVE FOOTING: BACKWALL AND CHEEKWALL
ITEM NO. 602017 (CLASS A, F'c=4500 PSI) - BARRIER

RAKE FINISH ALL HORIZONTAL CONSTRUCTION JOINTS, EXCEPT AS INDICATED.

CONSTRUCT DECK SLAB TRANSVERSE CONSTRUCTION JOINTS PARALLEL TO BRIDGE CENTERLINE OF BEARING.

PLACE CHEEKWALL AND BACKWALL CONCRETE AFTER BEAMS HAVE BEEN SET IN POSITION.

DECK SLAB THICKNESS INCLUDES ½" INTEGRAL WEARING SURFACE.

MIX REQUIREMENTS SHALL CONFORM TO SECTION 812 OF THE DELAWARE DEPARTMENT OF TRANSPORTATION STANDARD SPECIFICATIONS.

ALL EXPOSED CORNERS OF CONCRETE SHALL BE CHAMFERED WITH ¾" X ¾" MILLED CHAMFER STRIPS UNLESS NOTED OTHERWISE, EXCEPT ON UNEXPOSED FOOTINGS OR WHERE INDICATED BY THE NOTATION ON THE PLANS, "DO NOT CHAMFER".

NO SLIP-FORMING OF BARRIERS IS PERMITTED, UNLESS NOTED OTHERWISE.

4. BAR REINFORCEMENT:

REINFORCING STEEL SHALL CONFORM TO AASHTO M31 (ASTM A615), GRADE 60.

PROVIDE 2" CONCRETE COVER ON REINFORCEMENT BARS, EXCEPT AS NOTED.

FUSION-BONDED EPOXY COATED REINFORCING STEEL SHALL CONFORM TO AASHTO M284 (ASTM D3963), AND SHALL BE DENOTED WITH A SUFFIX "E" IN THE BAR MARKS.

DO NOT WELD GRADE 60 REINFORCING STEEL, UNLESS NOTED OTHERWISE.

5. PRESTRESSED CONCRETE DESIGN:

THE PRECAST CONCRETE GIRDERS ARE DESIGNED AS NONCOMPOSITE FOR ALL DEAD LOADS EXCEPT THE BARRIERS AND FUTURE WEARING SURFACE. THE PRECAST GIRDERS ARE DESIGNED AS COMPOSITE FOR LIVE LOADS AS WELL AS THE BARRIER AND FUTURE WEARING SURFACE DEAD LOADS.

PRESTRESSED CONCRETE:

THE MINIMUM COMPRESSIVE STRENGTH FOR PRESTRESSED CONCRETE AT THE AGE OF 28 DAYS SHALL BE f'c = 8,000 PSI. THE MINIMUM COMPRESSIVE STRENGTH AT THE TRANSFER OF PRESTRESS SHALL BE f'ci =6,400 PSI.

PRESTRESSED STEEL:

PRETENSIONING STEEL FOR BEAMS SHALL CONSIST OF HIGH STRENGTH 7-WIRE LOW RELAXATION STRANDS, WITH NOMINAL 0.60 INCH DIAMETER CONFORMING TO THE REQUIREMENTS OF AASHTO M203 (ASTM A416) GRADE 270. EACH 0.60 INCH DIAMETER STRAND SHALL BE PRETENSIONED TO 43,943 LBS. (0.75 Fpu).

AFTER ESTIMATED LOSSES OF 22,490 PSI, THE FINAL EFFECTIVE PRESTRESS FORCE PER STRAND IS 39,063 LBS.

FABRICATOR TO CHECK FOR STABILITY DURING ERECTION.

6. SERVICEABILITY:

LIVE LOAD DEFLECTION SHALL BE LIMITED TO L/800.

FOR REINFORCEMENT DISTRIBUTION REQUIREMENTS, CONSIDER CLASS 2 EXPOSURE CRITERIA FOR DECKS.

7. CONSTRUCTION JOINTS:

KEYED CONSTRUCTION JOINTS SHALL BE 2" X 4" OR AS NOTED. ALL EXPOSED CONSTRUCTION JOINT EDGES SHALL HAVE A ¾" V-NOTCH, UNLESS NOTED OTHERWISE.

8. STRUCTURAL EXCAVATIONS:

EXCAVATION REQUIRED TO ATTAIN THE GRADE FOR INSTALLATION OF MSE WALLS SHALL BE INCIDENTAL TO ITEM NO. 602772 - MECHANICALLY STABILIZED EARTH WALLS.

9. STRUCTURAL BACKFILL:

MSE WALL BACKFILL SHALL BE AS SPECIFIED ON THE PLANS.

10. ROADWAY CLEARANCES:

A MINIMUM OF 14'-6" VERTICAL CLEARANCE SHALL BE MAINTAINED ABOVE ALL ROADWAYS. A MINIMUM OF 2'-0" HORIZONTAL CLEARANCE SHALL BE MAINTAINED FROM THE OUTSIDE EDGE OF SHOULDER OFFSET (FACE OF CURB) TO THE FACE OF ANY OBSTRUCTION. THESE CLEARANCES APPLY AT ALL TIMES, INCLUDING DURING CONSTRUCTION.

11. UTILITIES:

COORDINATE ALL WORK RELATED TO PUBLIC AND PRIVATE UTILITIES IN ACCORDANCE WITH SECTION 107.04 OF THE STANDARD SPECIFICATIONS.

VERIFY AND LOCATE ALL EXISTING UTILITIES PRIOR TO STARTING WORK. CONDUCT OPERATIONS IN A MANNER WHICH ENSURES THAT THE UTILITIES WILL NOT BE DISTURBED OR ENDANGERED AND ASSUME FULL RESPONSIBILITY FOR ANY DAMAGE TO UTILITIES DURING CONSTRUCTION. THE DEPARTMENT DOES NOT ASSUME RESPONSIBILITY FOR REIMBURSEMENT, PARTICIPATION IN DESIGN AND/OR REVISION, OR LIABILITY FOR ACCURACY OF TYPE, SIZE AND LOCATION OF ANY UTILITY.

12. WORKING OVER ROADWAYS:

DO NOT PICK OR LIFT OVER LANES AND OR SHOULDERS OPEN TO TRAFFIC.

DO NOT PERFORM ANY WORK DIRECTLY OVER OPEN LANES OF TRAFFIC WITHOUT ADEQUATE SHIELDING OR WORK PLATFORMS, LANE CLOSURES OR DETOURS IN ACCORDANCE WITH THE CONTRACT PLANS AND SPECIFICATIONS.

INSTALL SIP FORMS, ADDITIONAL PROTECTIVE SHIELD SYSTEM, WORK PLATFORMS AND/OR OVERHANG FALSEWORK BEFORE BEGINNING ANY CONSTRUCTION OPERATIONS OVER TRAFFIC.

IF THE CONTRACTOR DETERMINES THAT ADDITIONAL PROTECTIVE SHIELDING OR WORK PLATFORMS ARE NEEDED TO PROTECT TRAFFIC, SUBMIT PLANS AND CALCULATIONS FOR REVIEW AND APPROVAL FOR PROTECTING TRAFFIC WHILE WORKING OVER TRAVELWAYS. HAVE THE DRAWINGS AND DESIGN CALCULATIONS PREPARED, SIGNED, AND SEALED BY A DELAWARE REGISTERED PROFESSIONAL ENGINEER. THE APPROVAL OF THE ENGINEER WILL NOT RELIEVE THE CONTRACTOR OF THE RESPONSIBILITY FOR THE SAFETY OF THE METHOD OR EQUIPMENT. BASED ON CONTRACTOR MEANS AND METHODS DETERMINE AND CLEARLY DEFINE ALL DEAD AND LIVE LOADS FOR THIS SYSTEM, WHICH, AT A MINIMUM, SHALL BE INSTALLED BETWEEN BEAMS OR GIRDERS OVER ANY TRAVEL WAY OR SHOULDER AREA WHERE TRAFFIC IS MAINTAINED. NO SEPARATE PAYMENT WILL BE MADE FOR ADDITIONAL PROTECTIVE SHIELDING OR WORK PLATFORMS.

ALL FORMWORK INCLUDING STAY-IN-PLACE FORMS SHALL BE MORTAR TIGHT.

WHILE PLACING DECK, DECK OVERHANG AND PARAPET CONCRETE OVER LANES OPEN TO TRAFFIC, NO CLOSURE OR DETOURS WILL BE ALLOWED DURING THESE OPERATIONS.

THE MAINTENANCE OF TRAFFIC REQUIRED FOR THE INSTALLATION OF THESE ITEMS WILL BE PAID UNDER THE MAINTENANCE OF TRAFFIC UNIT BID ITEMS. CONTRACTOR SHALL ADHERE TO THE TRAFFIC CONTROL PLAN, DELAWARE MUTCD, AND TRAFFIC LANE CLOSURE AND WORK RESTRICTIONS PROVIDED IN THE CONTRACT DOCUMENTS.

INDEX OF DRAWINGS

SHEET NO.	DRAWING NO.	TITLE
356	1-472 PE-1	BRIDGE PLAN AND ELEVATION
357	1-472 PN-1	PROJECT NOTES AND INDEX OF DRAWINGS
358	1-472 GG-1	GEOMETRIC LAYOUT
359	1-472 TS-1	TYPICAL SECTION AND QUANTITIES
360	1-472 PL-1	ABUTMENTS 1 AND 2 - PILE PLAN
361	1-472 PL-2	PILE DETAILS AND NOTES
362	1-472 AB-1	ABUTMENT 1 NORTHBOUND - PLAN AND REINFORCEMENT
363	1-472 AB-2	ABUTMENT 1 SOUTHBOUND - PLAN AND REINFORCEMENT
364	1-472 AB-3	ABUTMENT 2 NORTHBOUND - PLAN AND REINFORCEMENT
365	1-472 AB-4	ABUTMENT 2 SOUTHBOUND - PLAN AND REINFORCEMENT
366	1-472 AB-5	ABUTMENTS 1 AND 2 - SECTIONS AND DETAILS
367	1-472 WW-1	MEDIAN AND WINGWALL ELEVATIONS - ABUTMENT 1
368	1-472 WW-2	MEDIAN AND WINGWALL ELEVATIONS - ABUTMENT 2
369	1-472 WW-3	MSE WALL DETAILS
370	1-472 BR-1	ABUTMENT REINFORCEMENT SCHEDULE
371	1-472 FR-1	FRAMING PLAN - NORTHBOUND
372	1-472 FR-2	FRAMING PLAN - SOUTHBOUND
373	1-472 BM-1	BEAM DETAILS - 1
374	1-472 BM-2	BEAM DETAILS - 2
375	1-472 DPH-1	DIAPHRAGM DETAILS - 1
376	1-472 DPH-2	DIAPHRAGM DETAILS - 2
377	1-472 BD-1	BEARING DETAILS
378	1-472 DK-1	BRIDGE DECK REINFORCEMENT - NORTHBOUND
379	1-472 DK-2	BRIDGE DECK REINFORCEMENT - SOUTHBOUND
380	1-472 AS-1	BRIDGE APPROACH SLAB REINFORCEMENT - NORTHBOUND
381	1-472 AS-2	BRIDGE APPROACH SLAB REINFORCEMENT - SOUTHBOUND
382	1-472 PA-1	DECK SECTIONS AND DETAILS
383	1-472 BR-2	DECK REINFORCEMENT SCHEDULE
384	1-472 BR-3	APPROACH SLAB REINFORCEMENT SCHEDULE
385	1-472 FD-1	FINISHED DECK ELEVATIONS - NORTHBOUND
386	1-472 FD-2	FINISHED DECK ELEVATIONS - SOUTHBOUND
387	1-472 FD-3	FINISHED APPROACH SLAB ELEVATIONS
388	1-472 EX-1	EXPANSION JOINT DETAILS
389	1-472 DT-1	SETTLEMENT PLATFORM DETAIL
390	1-472 BO-1	TEST BORINGS

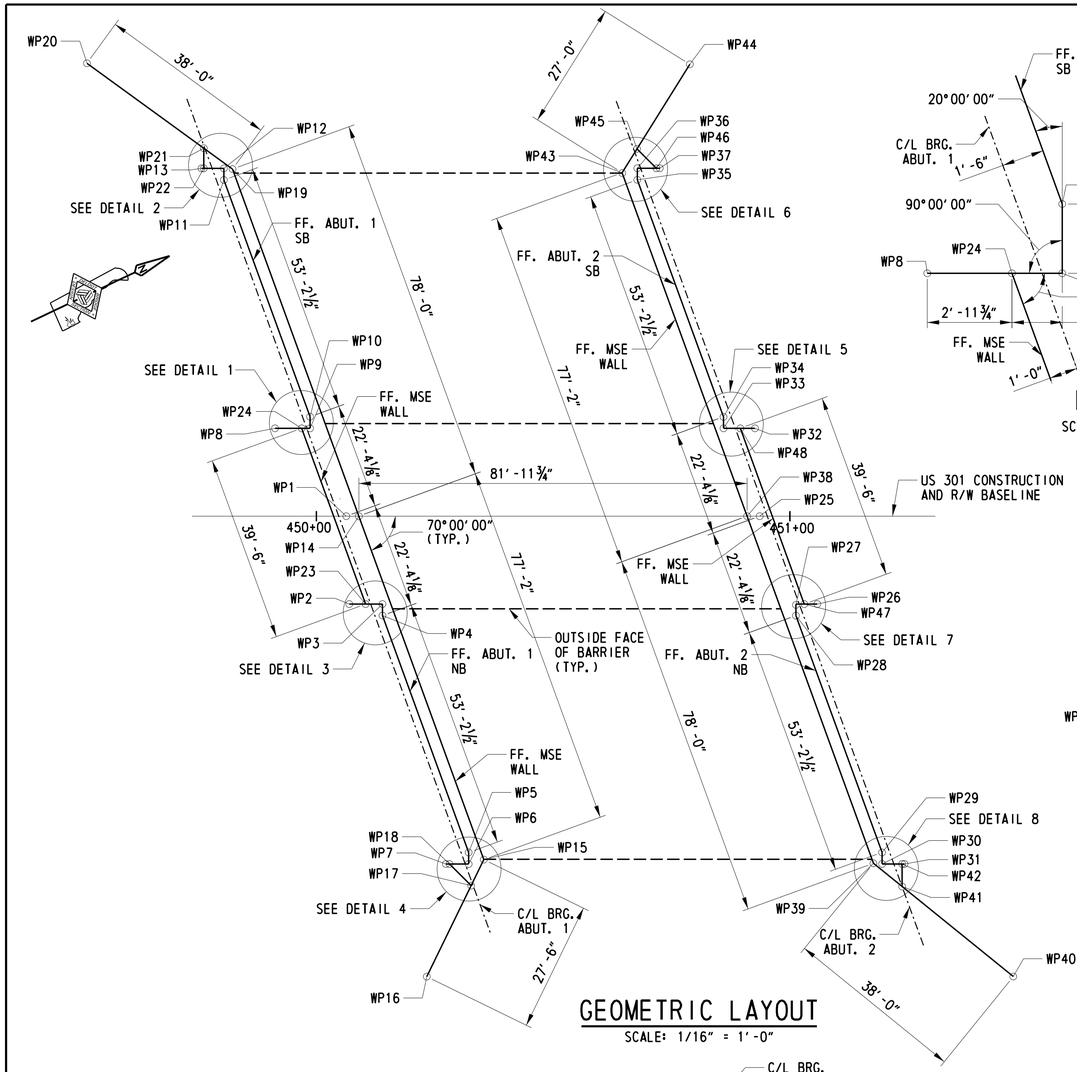

GEOMETRIC LAYOUT
SCALE: 1/16" = 1'-0"

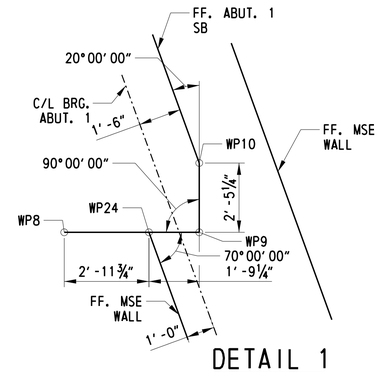

DETAIL 1
SCALE: 3/8" = 1'-0"

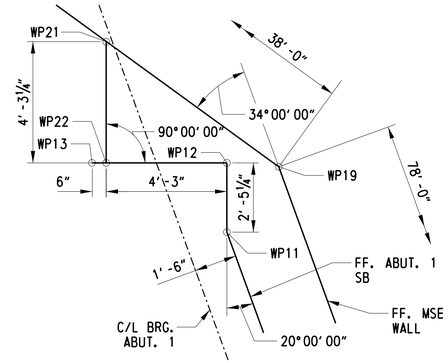

DETAIL 2
SCALE: 3/8" = 1'-0"

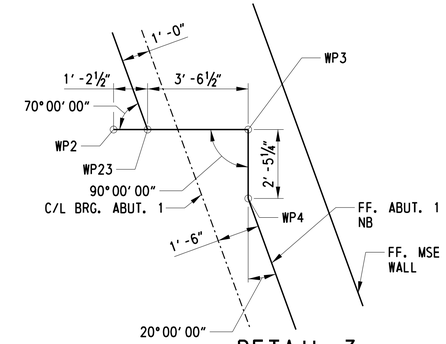

DETAIL 3
SCALE: 3/8" = 1'-0"

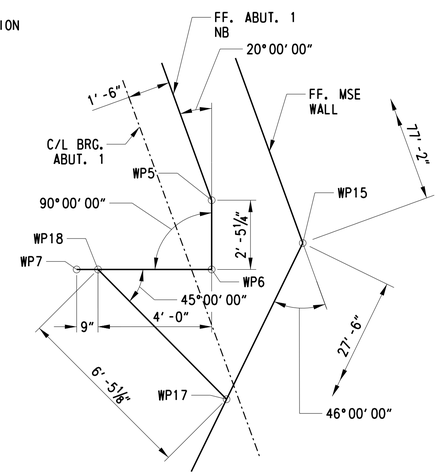

DETAIL 4
SCALE: 3/8" = 1'-0"

WORKING POINTS

WORK PT.	STATION	OFFSET	COORDINATES	
			NORTHING	EASTING
WP1	450+06.32	0.00	539340.2441	569361.8613
WP2	450+09.21	18.56	539334.7866	569379.8378
WP3	450+13.96	18.56	539339.0650	569381.9012
WP4	450+13.96	21.00	539338.0062	569384.0967
WP5	450+32.16	71.00	539332.6779	569437.0381
WP6	450+32.16	73.44	539331.6190	569439.2336
WP7	450+27.41	73.44	539327.3406	569437.1702
WP8	449+93.92	-18.56	539337.1447	569339.7580
WP9	449+98.67	-18.56	539341.4231	569341.8214
WP10	449+98.67	-21.00	539342.4820	569339.6259
WP11	449+80.47	-71.00	539347.8103	569286.6844
WP12	449+80.47	-73.44	539348.8692	569284.4889
WP13	449+75.72	-73.44	539344.5908	569282.4255
WP14	450+08.98	0.00	539342.6404	569363.0170
WP15	450+35.37	72.51	539334.9130	569439.7957
WP16	450+23.31	97.23	539313.3176	569456.8219
WP17	450+32.70	77.98	539330.1351	569443.5627
WP18	450+28.16	73.44	539328.0161	569437.4960
WP19	449+82.30	-73.30	539350.4513	569285.4090
WP20	449+51.56	-95.63	539332.4635	569251.9361
WP21	449+76.22	-77.71	539346.8969	569278.7948
WP22	449+76.22	-73.44	539345.0411	569282.6427
WP23	450+10.41	18.56	539335.8696	569380.3601

WORKING POINTS

WORK PT.	STATION	OFFSET	COORDINATES	
			NORTHING	EASTING
WP24	449+96.90	-18.56	539339.8259	569341.0511
WP25	450+93.62	0.00	539418.8836	569399.7878
WP26	451+06.02	18.56	539421.9830	569421.8911
WP27	451+01.27	18.56	539417.7046	569419.8277
WP28	451+01.27	21.00	539416.6457	569422.0232
WP29	451+19.47	71.00	539411.3174	569474.9646
WP30	451+19.47	73.44	539410.2585	569477.1601
WP31	451+24.22	73.44	539414.5370	569479.2235
WP32	450+90.73	-18.56	539424.3411	569381.8113
WP33	450+85.98	-18.56	539420.0627	569379.7479
WP34	450+85.98	-21.00	539421.1215	569377.5524
WP35	450+67.78	-71.00	539426.4498	569324.6109
WP36	450+67.78	-73.44	539427.5087	569322.4154
WP37	450+72.53	-73.44	539431.7871	569324.4788
WP38	450+90.96	0.00	539416.4873	569398.6321
WP39	451+17.64	73.30	539408.6764	569476.2400
WP40	451+47.17	97.21	539424.8877	569510.6085
WP41	451+23.72	78.22	539412.0111	569483.3097
WP42	451+23.72	73.44	539414.0866	569479.0063
WP43	450+64.57	-72.51	539424.2148	569321.8533
WP44	450+78.88	-95.41	539447.0487	569307.4446
WP45	450+67.70	-77.52	539429.2079	569318.7025
WP46	450+71.78	-73.44	539431.1116	569324.1530
WP47	451+03.04	18.56	539419.3018	569420.5980
WP48	450+89.53	-18.56	539423.2581	569381.2890

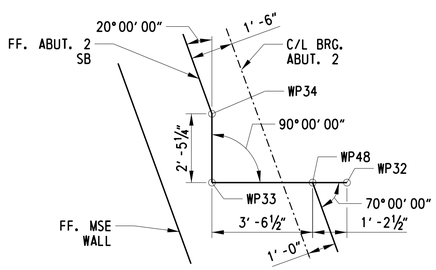

DETAIL 5
SCALE: 3/8" = 1'-0"

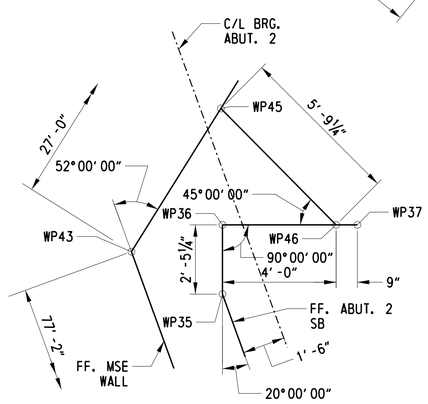

DETAIL 6
SCALE: 3/8" = 1'-0"

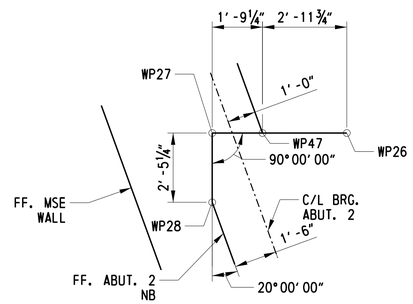

DETAIL 7
SCALE: 3/8" = 1'-0"

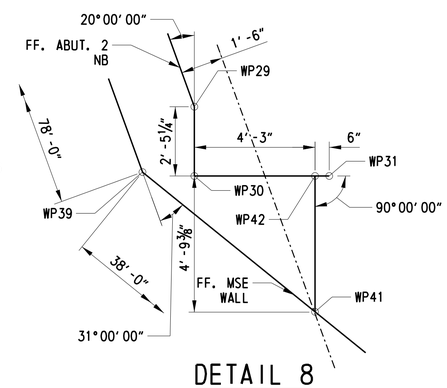

DETAIL 8
SCALE: 3/8" = 1'-0"

1-472 GG-1

DELAWARE
DEPARTMENT OF TRANSPORTATION

ADDENDUMS / REVISIONS

US 301
LEVELS ROAD
TO SUMMIT BRIDGE ROAD

CONTRACT	BRIDGE NO.	1-472N&S
T200911303	DESIGNED BY: ADH	
COUNTY		
NEW CASTLE	CHECKED BY: DHG	

US 301 MAINLINE OVER
ARMSTRONG CORNER ROAD
GEOMETRIC LAYOUT

SHEET NO. 358
TOTAL SHTS. 1256

G:\60049040 US301\Structure\Plans\FINAL\B2-3NS\BR2-3S0-01.dgn

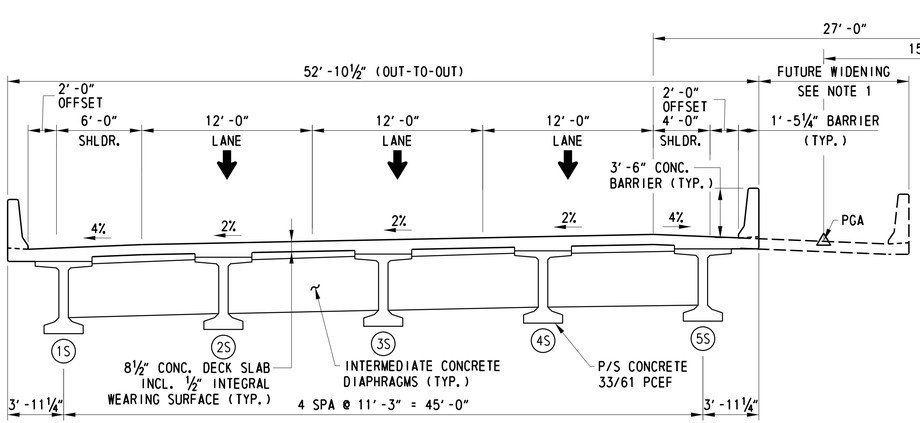

SOUTHBOUND

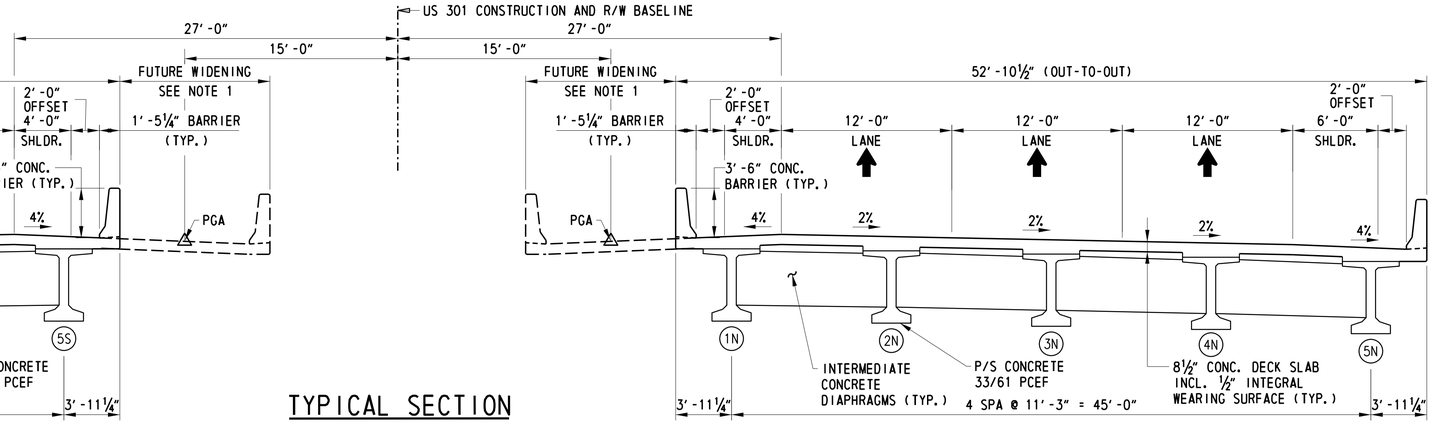

NORTHBOUND

TYPICAL SECTION

STATIONS AHEAD
SCALE: 3/16"= 1'-0"

ESTIMATED BRIDGE QUANTITIES

ITEM NO.	DESCRIPTION	UNIT	NORTHBOUND QUANTITIES	SOUTHBOUND QUANTITIES	TOTAL
202505	SETTLEMENT PLATFORM	EA	2	2	4
202518	SETTLEMENT MONUMENT	EA	2	2	4
302012	DELAWARE NO. 57 STONE	TON	78	78	156
602003	PORTLAND CEMENT CONCRETE MASONRY, ABUTMENT FOOTING, CLASS A	CY	90	90	180
602013	PORTLAND CEMENT CONCRETE MASONRY, SUPERSTRUCTURE, CLASS D	CY	190	190	380
602014	PORTLAND CEMENT CONCRETE MASONRY, APPROACH SLAB, CLASS D	CY	176	176	352
602015	PORTLAND CEMENT CONCRETE MASONRY, ABUTMENT, ABOVE FOOTING, CLASS A	CY	29	29	58
602017	PORTLAND CEMENT CONCRETE MASONRY, PARAPET, CLASS A	CY	41	41	82
602772	MECHANICALLY STABILIZED EARTH WALLS	LS	-	-	-
604000	BAR REINFORCEMENT, EPOXY COATED	LBS	96,050	96,050	192,100
605511	PREFABRICATED EXPANSION JOINT SYSTEM, 3"	LF	113	113	226
618041 (ALTERNATE)	FURNISH CAST-IN-PLACE CONCRETE PILES, 14"	LF	1,052	1,052	2,104

ESTIMATED BRIDGE QUANTITIES

ITEM NO.	DESCRIPTION	UNIT	NORTHBOUND QUANTITIES	SOUTHBOUND QUANTITIES	TOTAL
618046 (ALTERNATE)	FURNISH CAST-IN-PLACE CONCRETE TEST PILES, 14"	LF	152	152	304
618081	FURNISH PRECAST PRESTRESSED CONCRETE PILE, 14"x14"	LF	1,052	1,052	2,104
618091	FURNISH PRECAST PRESTRESSED CONCRETE TEST PILE, 14"x14"	LF	152	152	304
619021 (ALTERNATE)	INSTALL CAST-IN-PLACE CONCRETE PILES, 14"	LF	1,052	1,052	2,104
619025 (ALTERNATE)	INSTALL CAST-IN-PLACE CONCRETE TEST PILES, 14"	LF	152	152	304
619061	INSTALL PRECAST PRESTRESSED CONCRETE PILE, 14"x14"	LF	1,052	1,052	2,104
619067	INSTALL PRECAST PRESTRESSED CONCRETE TEST PILE, 14"x14"	LF	152	152	304
619501	PRODUCTION PILE RESTRIKE	EA	2	2	4
619502	TEST PILE RESTRIKE	EA DY	2	2	4
619519	DYNAMIC PILE TESTING BY CONTRACTOR	EA	2	2	4
619539	SIGNAL MATCHING ANALYSIS BY CONTRACTOR	EA	2	2	4
623000	PRESTRESSED REINFORCED CONCRETE MEMBERS	LS	-	-	-

CROSS REFERENCE NOTE:

1. FOR DEPTH OF DECK AT CENTER LINE OF BEARING, SEE DWG. 1-472 PA-1.

NOTE:

1. CROSS SLOPE OF FUTURE LANE SLOPES AT 2% DOWN TO PGA. THE CURRENT FASCIA BEAM HAUNCH WOULD NEED TO BE INCREASED TO ACCOUNT FOR CHANGE IN ELEVATION OF DECK SLAB.

1-472 TS-1

DELAWARE DEPARTMENT OF TRANSPORTATION

ADDENDUMS / REVISIONS

SCALE 2 0 2 4 6 FEET

US 301 LEVELS ROAD TO SUMMIT BRIDGE ROAD

CONTRACT T200911303
COUNTY NEW CASTLE
BRIDGE NO. 1-472N&S
DESIGNED BY: ADH
CHECKED BY: DHG

US 301 MAINLINE OVER ARMSTRONG CORNER ROAD
TYPICAL SECTION AND QUANTITIES

SHEET NO. 359
TOTAL SHTS. 1256

P:\cadd2\60049040 US301\Structure\Plans\FINAL\B2-3NS\BR2-3TS-01.dgn

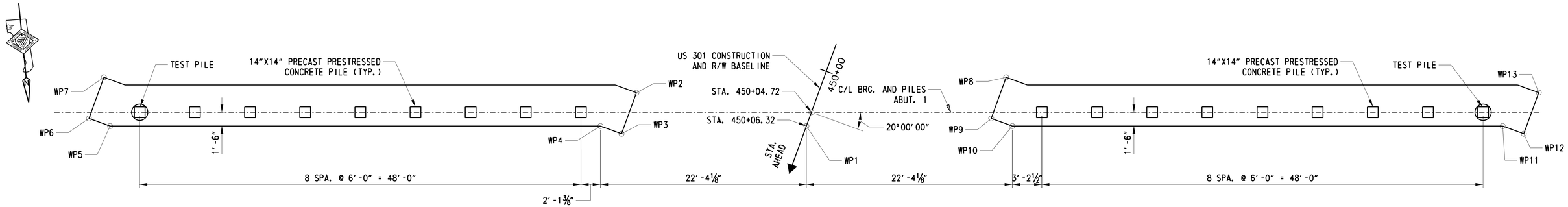

ABUTMENT 1 PILE PLAN

SCALE: 3/16" = 1'-0"

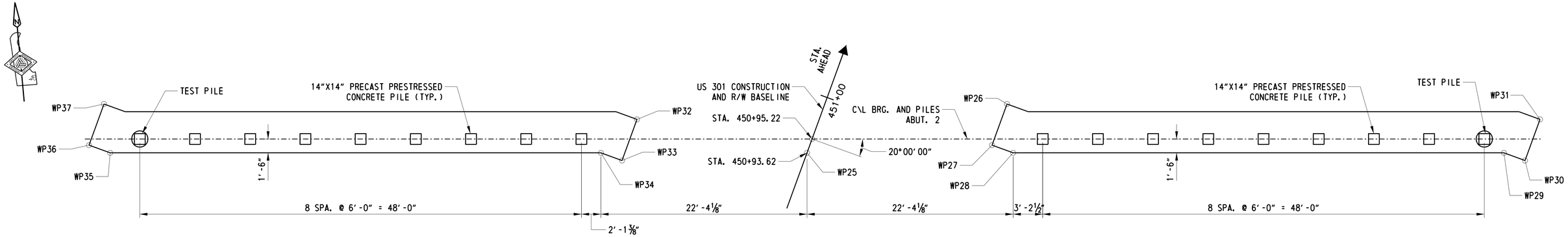

ABUTMENT 2 PILE PLAN

SCALE: 3/16" = 1'-0"

CROSS REFERENCE NOTE:

1. FOR PILE DETAILS AND NOTES, SEE DWG 1-472 PL-2.

G:\60049040 US301\Structure\Plans\FINAL\B2-3NS\BR2-3PL-01.dgn

DELAWARE DEPARTMENT OF TRANSPORTATION	ADDENDUMS / REVISIONS	US 301 LEVELS ROAD TO SUMMIT BRIDGE ROAD	CONTRACT T200911303	BRIDGE NO. 1-472N&S	US 301 MAINLINE OVER ARMSTRONG CORNER ROAD	1-472 PL-1	
			COUNTY NEW CASTLE	DESIGNED BY: ADH	ABUTMENTS 1 AND 2 - PILE PLAN	SHEET NO. 360	
				CHECKED BY: DHG		TOTAL SHTS. 1256	

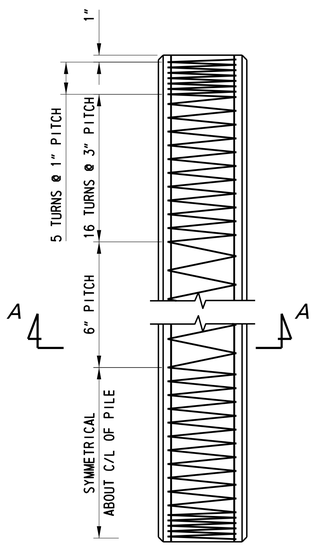

PRESTRESSED CONCRETE PILE

SCALE: 1" = 1'-0"

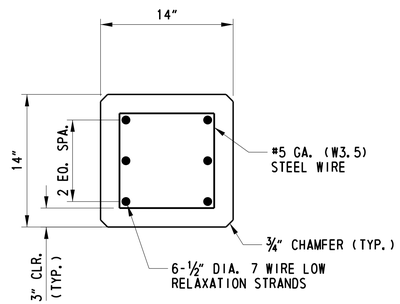

SECTION A-A

SCALE: 1½" = 1'-0"

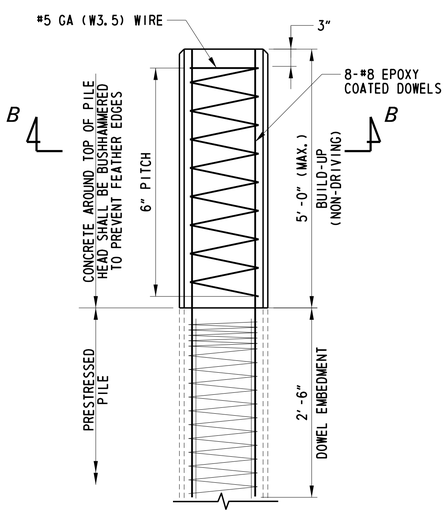

PILE BUILD-UP DETAIL

SCALE: 1" = 1'-0"

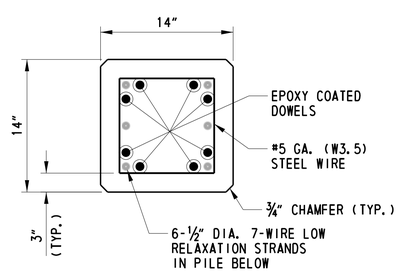

SECTION B-B

SCALE: 1½" = 1'-0"

PILE NOTES:

1. PILES SHALL BE 14"x14" PRECAST PRESTRESSED CONCRETE PILES. PILES SHALL NOT BE COATED. PILES SHALL BE CASED.
2. THE MINIMUM COMPRESSIVE STRENGTH FOR THE PRESTRESSED CONCRETE PILES AT THE AGE OF 28 DAYS SHALL BE f'c=6000 PSI. THE MINIMUM COMPRESSIVE STRENGTH AT TIME OF TRANSFER OF PRESTRESS SHALL BE f'ci=4800 PSI.
3. ALL PRESTRESSING STRANDS SHALL MEET THE REQUIREMENTS OF ASTM 416, GRADE 270, LOW RELAXATION. 1/2" DIAMETER STRANDS SHALL HAVE AN ULTIMATE STRENGTH OF 41,300 LBS.
4. SPIRAL TIES SHALL BE #5 GAGE STEEL WIRE CONFORMING TO THE REQUIREMENTS OF AASHTO M32 (ASTM A82).
5. THE SPLICING OF PRESTRESSED PRECAST CONCRETE PILES SHALL NOT BE PERMITTED.
6. REINFORCING STRAPS SHALL BE PROVIDED FOR THE ABUTMENT STEM AND BACKWALL TO RESIST THE LONGITUDINAL FORCES ON THE SUPERSTRUCTURE.
7. PILE CASINGS SHALL BE INSTALLED AT THE PROPOSED PILE LOCATIONS DURING THE ABUTMENT MSE WALL CONSTRUCTION.
8. A MINIMUM QUARANTINE PERIOD OF 30 DAYS IS REQUIRED AFTER THE CONSTRUCTION OF THE FULL HEIGHT OF THE FILL AT THE ABUTMENTS IS ACHIEVED.
9. PILES MAY NOT BE DRIVEN UNTIL AFTER COMPLETION OF THE QUARANTINE PERIOD.
10. TEST PILES MAY BE DRIVEN PRIOR TO PLACING MSE WALL BACKFILL. RESTRIKES OF THESE TEST PILES SHALL BE PERFORMED PRIOR TO PLACING ANY EMBANKMENT IN ACCORDANCE WITH ITEM 619502-TEST PILE RESTRIKE. TEST PILES BEHIND MSE WALLS SHALL THEN BE CASED PRIOR TO PLACING EMBANKMENT. AFTER THE SETTLEMENT HAS BEEN ACHIEVED AND THE SUBSTRUCTURE HAS BEEN RELEASED BY THE ENGINEER, PRODUCTION PILES MAY BE INSTALLED. AT THIS POINT, THE TEST PILE SHALL BE ACTING AS A PRODUCTION PILE AND IT SHALL BE RE-STRUCK AS DIRECTED BY THE ENGINEER PRIOR TO PLACING ANY OTHER PRODUCTION PILES WITH PAYMENT UNDER ITEM 619501- PRODUCTION PILE RESTRIKE.
11. THE ENGINEER SHALL APPROVE THE COMPLETION OF THE QUARANTINE PERIOD, BASED ON RESULTS OF INSTRUMENTATION.
12. SEE THE SPECIAL PROVISIONS 202505 AND 202518 FOR SETTLEMENT MONITORING REQUIREMENTS.
13. ALL PILES SHALL BE DRIVEN TO THE NOMINAL PILE DRIVING RESISTANCE LISTED IN THE PILE INSTALLATION DATA TABLE.
14. TEST PILES SHALL BE 10 FEET LONGER THAN PRODUCTION PILES AS INDICATED ON PILE INSTALLATION DATA TABLE.
15. THE CONTRACTOR SHALL BE RESPONSIBLE FOR SUBMITTING A WAVE EQUATION ANALYSIS AND ALL OTHER INCIDENTALS IN ACCORDANCE WITH THE PROJECT SPECIFICATIONS. THE WAVE EQUATION AND HIGH-STRAIN DYNAMIC PILE TESTING MUST BE SIGNED AND STAMPED BY A PROFESSIONAL ENGINEER LICENSED IN THE STATE OF DELAWARE IN ACCORDANCE WITH THE PROJECT SPECIFICATIONS.
16. UPON COMPLETION OF THE HIGH-STRAIN DYNAMIC PILE TESTING THE CONTRACTOR SHALL SUBMIT A SIGNAL MATCHING ANALYSIS TO THE ENGINEER FOR REVIEW AND APPROVAL IN ACCORDANCE WITH THE PROJECT SPECIFICATIONS.
17. DELDOT STANDARD SPECIFICATION 619.11(a)(6) SHALL BE MODIFIED BY REFERENCE TO SPECIAL PROVISIONS 619519 & 619539.
18. PILE LENGTHS FOR ORDERING PURPOSES SHALL BE DETERMINED BY TEST PILES. A MINIMUM OF ONE (1) PILE PER SUBSTRUCTURE, AS SHOWN ON THE PLANS, SHALL BE DYNAMICALLY TESTED WITH SIGNAL MATCHING ANALYSIS BY THE CONTRACTOR IN ACCORDANCE WITH SPECIAL PROVISION 619519 AND 619539. TEST AND PRODUCTION PILE RE-STRIKES WILL BE PAID AS FOLLOWS:
    a.) ALL TEST PILE(S) WILL BE RESTRUCK AFTER A WAITING PERIOD OF AT LEAST 48 HOURS. TEST PILE RESTRIKES SHALL BE INCIDENTAL TO THE INITIAL INSTALLATION OF THE PILE PROVIDED THEY ARE REQUESTED WITHIN FIVE WORKING DAYS FROM THE COMPLETION OF THE INITIAL DRIVE. IF TEST PILE RESTRIKES ARE REQUESTED AFTER THE FIVE WORKING DAYS FROM THE COMPLETION OF THE INITIAL DRIVE THEN THE TEST PILE RESTRIKE SHALL BE PAID AS NOTED IN SPECIAL PROVISION 619502.
    b.) IF DIRECTED BY THE ENGINEER TO RESTRIKE A PRODUCTION PILE, THE RESTRIKE OF THE PRODUCTION PILE SHALL BE PAID SEPARATELY UNDER ITEM NO. 619501.
19. THE DEPARTMENT RESERVES THE RIGHT TO PERFORM DYNAMIC TESTING OF RESTRIKES.
20. PROVIDE 1 1/2" DIAMETER PREFORMED HOLES IN PILE HEAD AT THE DOWEL LOCATIONS. DOWELS SHALL BE GROUTED INTO PLACE WITH AN APPROVED EPOXY GROUT. PRIOR TO THE GROUTING PROCEDURE, PREFORMED HOLES SHALL REMAIN PLUGGED TO ENSURE THAT WATER AND FOREIGN MATERIAL DOES NOT ENTER THE PREFORMED HOLES.
21. MINIMUM COMPRESSIVE STRENGTH OF EPOXY GROUT SHALL BE f'c=6000 PSI.
22. THE COMPRESSIVE STRENGTH OF THE PILE BUILD-UP SHALL BE f'c=6000 PSI.
23. DOWEL HOLES SHALL BE POSITIONED TO MAINTAIN A 1" CLEAR DISTANCE FROM ALL PRESTRESSING STRANDS IN THE PILE.

PICK-UP NOTES:

1. UNLESS SPECIAL LIFTING DEVICES ARE ATTACHED FOR PICK-UP, PICK-UP POINTS SHALL BE PLAINLY MARKED ON ALL PILES AFTER REMOVAL OF THE FORMS. THE PILE SHALL BE SUPPORTED ONLY AT THE INDICATED PICK-UP POINTS WHILE BEING STORED OR HANDLED.
2. THE USE OF PROPER RIGGING IS REQUIRED TO INSURE THAT THE PICK-UP POINTS REMAIN IN A STRAIGHT LINE DURING LIFTING AND WHEN POSITIONING THE PILE FOR DRIVING.
3. THE USE OF SPECIAL EMBEDDED OR ATTACHED LIFTING DEVICES, THE USE OF OTHER PICK-UP LOCATIONS OR ANY OTHER METHOD OF PICK-UP SHALL BE SUBJECT TO THE APPROVAL OF THE ENGINEER.

ADDITIONAL NOTES FOR CAST-IN-PLACE ALTERNATE:

1. A CONTRACTOR'S ALTERNATE OF USING 14" CAST-IN-PLACE CONCRETE PILES (14" MONOTUBES) IS ALLOWED. ASSUME A ONE TO ONE PILE SUBSTITUTION.
2. MONOTUBE SHELLS SHALL HAVE A 3 GAUGE THICKNESS, AN 8 IN TIP WITH A CLOSED CONICAL POINT, 14 IN BUTT AND 15 FT Y TAPER AT 0.40 IN/FT
3. THE ESTIMATED TIP ELEVATION SHALL BE 16 FT.
4. A NOMINAL PILE DRIVING RESISTANCE OF 361 KIPS SHALL BE OBTAINED.

PILE INSTALLATION DATA

	DESIGN DATA		ACTUAL FIELD DATA	
SUBSTRUCTURE UNITS	NOMINAL PILE DRIVING RESISTANCE (KIP)	ESTIMATED PILE TIP ELEVATION	AVERAGE MINIMUM TIP ELEVATION	AVERAGE MAXIMUM TIP ELEVATION
ABUTMENT 1	361	16.0		
ABUTMENT 2	361	16.0		

ABUTMENT 1 PILE DRIVING INFORMATION

PILE SIZE AND TYPE:
ACTUAL BEARING OBTAINED:
HAMMER TYPE:
PILE HAMMER ENERGY:
SPECIAL DRIVING CONDITIONS AND COMMENTS:

ABUTMENT 2 PILE DRIVING INFORMATION

PILE SIZE AND TYPE:
ACTUAL BEARING OBTAINED:
HAMMER TYPE:
PILE HAMMER ENERGY:
SPECIAL DRIVING CONDITIONS AND COMMENTS:

CROSS REFERENCE NOTE:

1. FOR PILE CASING DETAIL, SEE DWG. 1-472 AB-5.

1-472 PL-2

DELAWARE DEPARTMENT OF TRANSPORTATION

ADDENDUMS / REVISIONS

US 301 LEVELS ROAD TO SUMMIT BRIDGE ROAD

CONTRACT	BRIDGE NO.	1-472N&S	US 301 MAINLINE OVER ARMSTRONG CORNER ROAD	SHEET NO.
T200911303	DESIGNED BY: ADH		PILE DETAILS AND NOTES	361
COUNTY				TOTAL SHTS.
NEW CASTLE	CHECKED BY: DHG			1256

P:\cadd2\60049040_US301\Structure\Plans\FINAL\B2-3NS\BR2-3PL-02.dgn

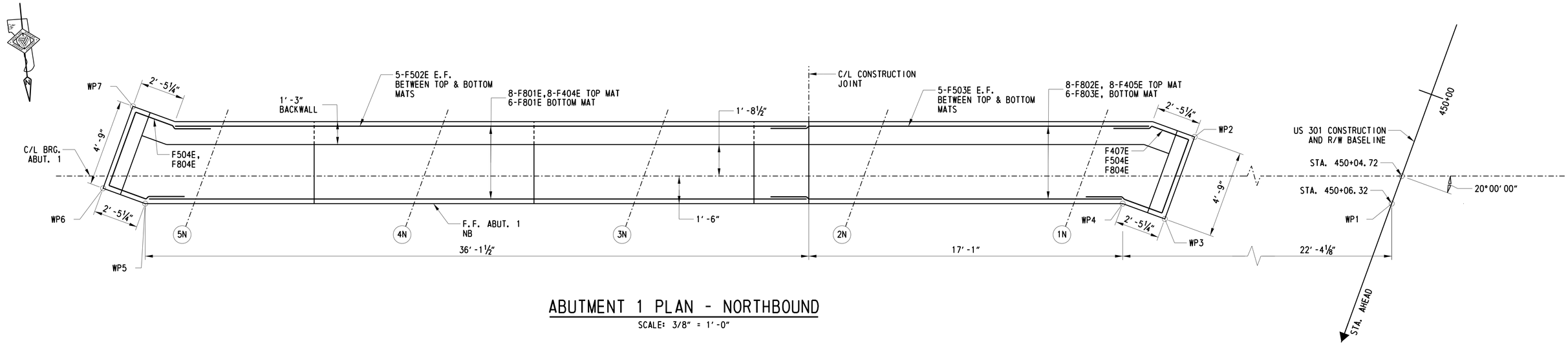

ABUTMENT 1 PLAN - NORTHBOUND

SCALE: 3/8" = 1'-0"

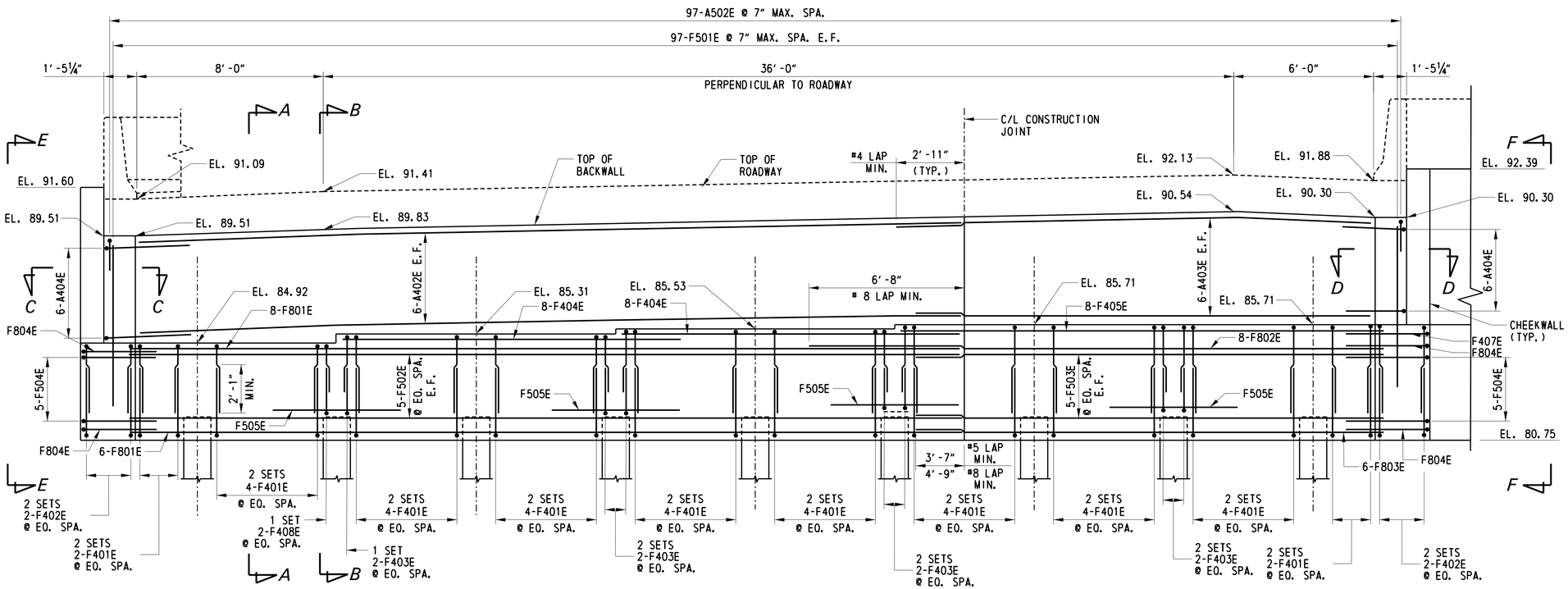

ABUTMENT 1 ELEVATION - NORTHBOUND

SCALE: 3/8" = 1'-0"

CROSS REFERENCE NOTES:

1. FOR PROJECT NOTES, SEE DWG. 1-472 PN-1.
2. FOR SECTIONS AND DETAILS, SEE DWG. 1-472 AB-5.
3. FOR MEDIAN AND WINGWALL ELEVATIONS, SEE DWG. 1-472 WW-1 AND 1-472 WW-2.
4. FOR REINFORCEMENT SCHEDULE, SEE DWG. 1-472 BR-1.

NOTES:

1. MSE WALL AND COPING NOT SHOWN FOR CLARITY.
2. ABUTMENT SEAT STEPS MID-WAY BETWEEN GIRDERS
3. ONLY TRANSVERSE FOOTING REINFORCEMENT IS SHOWN IN PLAN VIEW FOR CLARITY.
4. PILE CASINGS NOT SHOWN FOR CLARITY.

1-472 AB-1

DELAWARE DEPARTMENT OF TRANSPORTATION

ADDENDUMS / REVISIONS

SCALE 1 0 1 2 3 FEET

US 301 LEVELS ROAD TO SUMMIT BRIDGE ROAD

CONTRACT	BRIDGE NO.	1-472N&S
T200911303	DESIGNED BY: ADH	
COUNTY	CHECKED BY: DHG	
NEW CASTLE		

US 301 MAINLINE OVER ARMSTRONG CORNER ROAD ABUTMENT 1 NORTHBOUND – PLAN AND REINFORCEMENT

SHEET NO. 362

TOTAL SHTS. 1256

P:\cadd2\60049040 US301\Structure\Plans\FINAL\B2-3NS\BR2-3AB-01.dgn

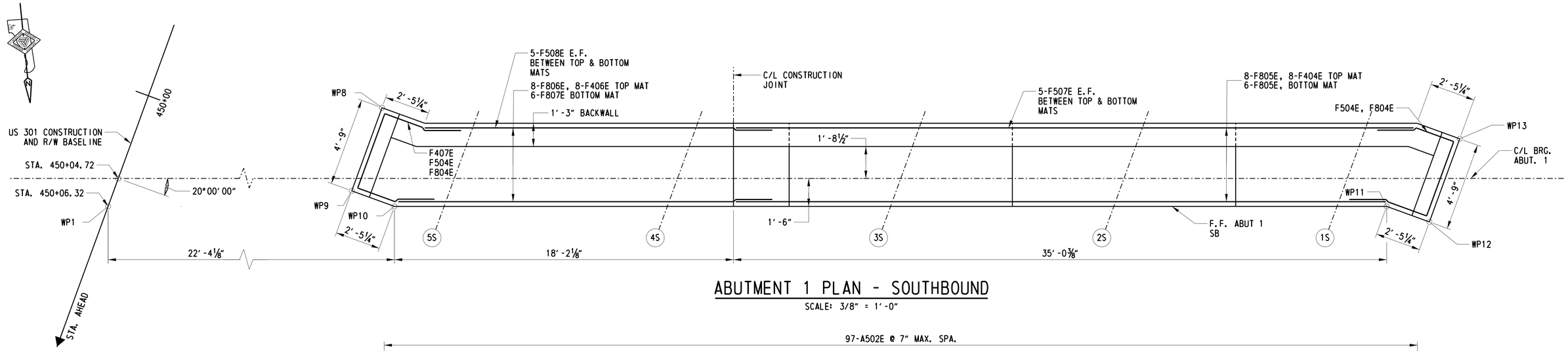

ABUTMENT 1 PLAN - SOUTHBOUND

SCALE: 3/8" = 1'-0"

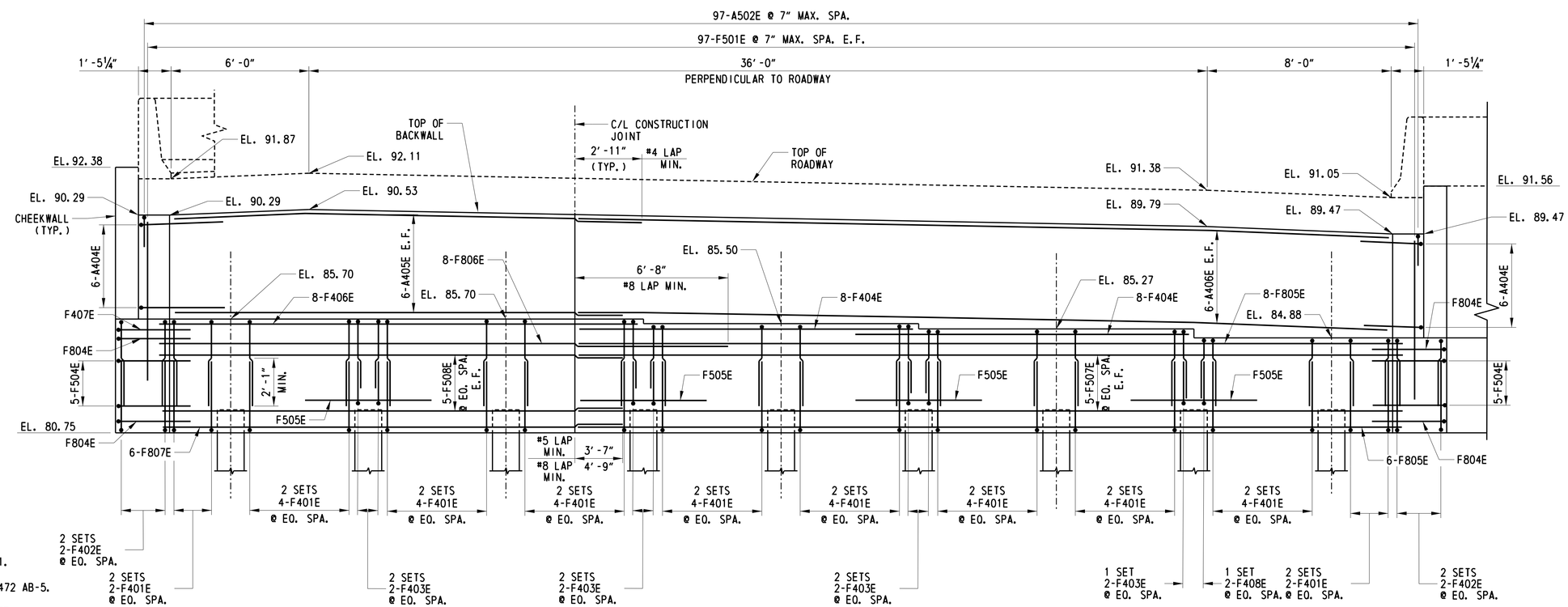

ABUTMENT 1 ELEVATION - SOUTHBOUND

SCALE: 3/8" = 1'-0"

CROSS REFERENCE NOTES:

1. FOR PROJECT NOTES, SEE DWG. 1-472 PN-1.
2. FOR SECTIONS AND DETAILS, SEE DWG. 1-472 AB-5.
3. FOR MEDIAN AND WINGWALL ELEVATIONS, SEE DWG. 1-472 WW-1 AND 1-472 WW-2.
4. FOR REINFORCEMENT SCHEDULE, SEE DWG. 1-472 BR-1.

NOTES:

1. MSE WALL AND COPING NOT SHOWN FOR CLARITY.
2. ABUTMENT SEAT STEPS MID-WAY BETWEEN GIRDERS
3. ONLY TRANSVERSE FOOTING REINFORCEMENT IS SHOWN IN PLAN VIEW FOR CLARITY.
4. PILE CASINGS NOT SHOWN FOR CLARITY.

1-472 AB-2

DELAWARE DEPARTMENT OF TRANSPORTATION	ADDENDUMS / REVISIONS	SCALE 1 0 1 2 3 FEET	US 301 LEVELS ROAD TO SUMMIT BRIDGE ROAD	CONTRACT T200911303	BRIDGE NO. 1-472N&S	US 301 MAINLINE OVER ARMSTRONG CORNER ROAD ABUTMENT 1 SOUTHBOUND – PLAN AND REINFORCEMENT	SHEET NO. 363
				COUNTY NEW CASTLE	DESIGNED BY: ADH		TOTAL SHTS. 1256
					CHECKED BY: DHG		

P:\cadd2\60049040 US301\Structure\Plans\FINAL\B2-3NS\BR2-3AB-03.dgn

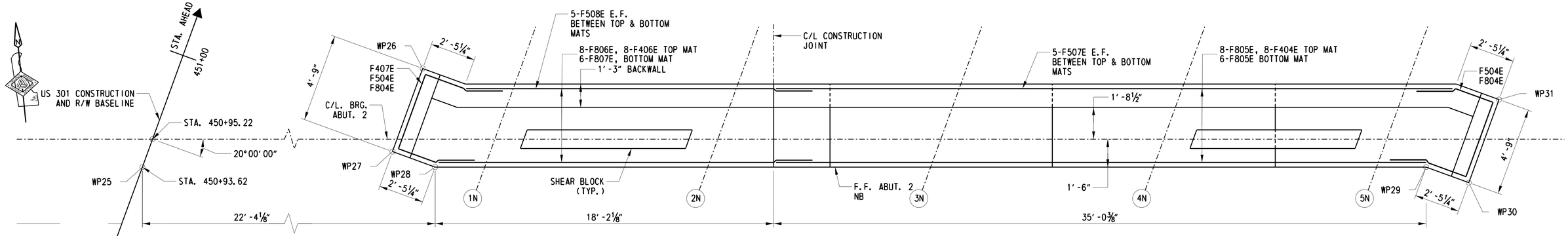

ABUTMENT 2 PLAN - NORTHBOUND

SCALE: 3/8" = 1'-0"

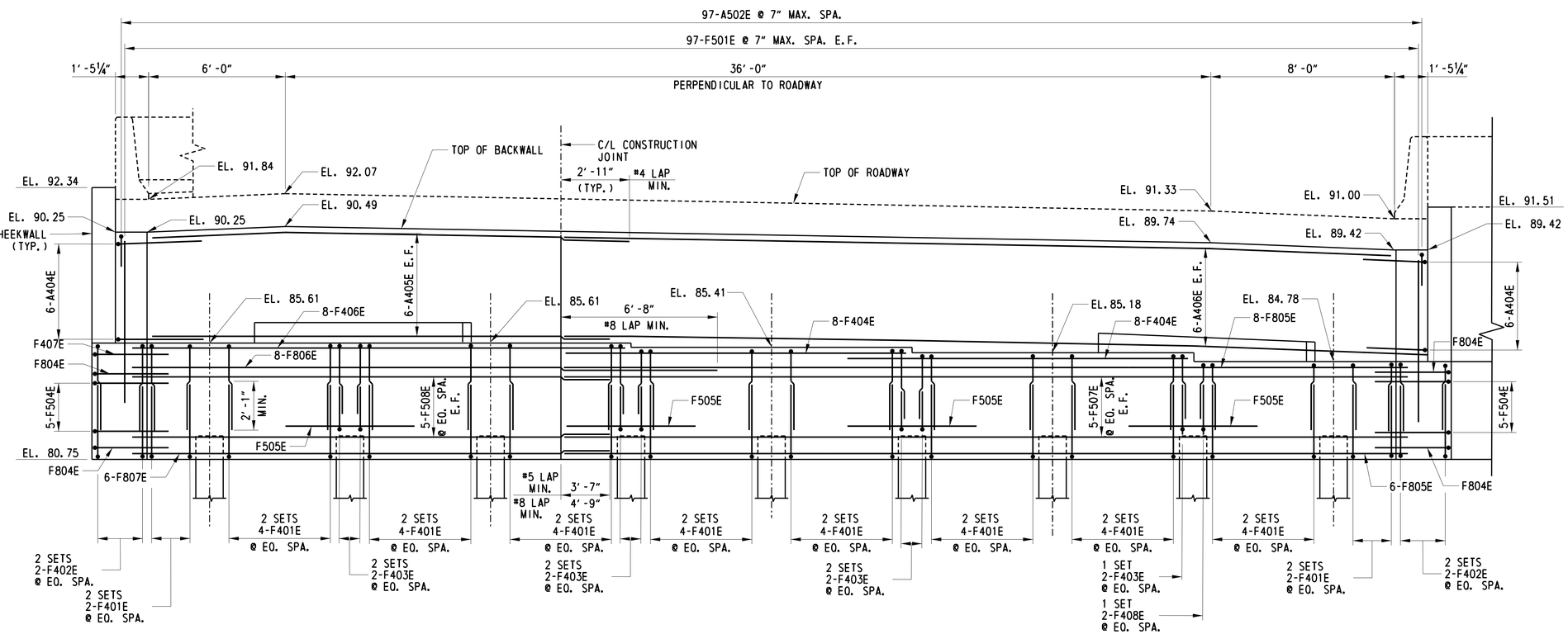

ABUTMENT 2 ELEVATION - NORTHBOUND

SCALE: 3/8" = 1'-0"

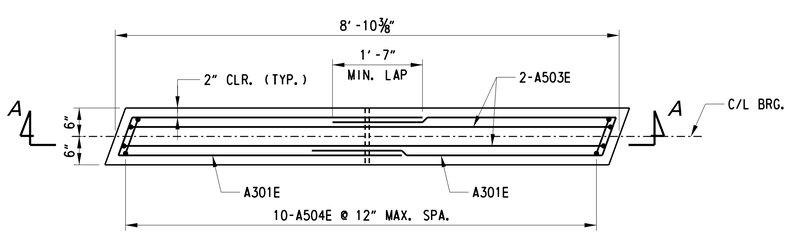

SHEAR BLOCK PLAN

SCALE: 3/4" = 1'-0"

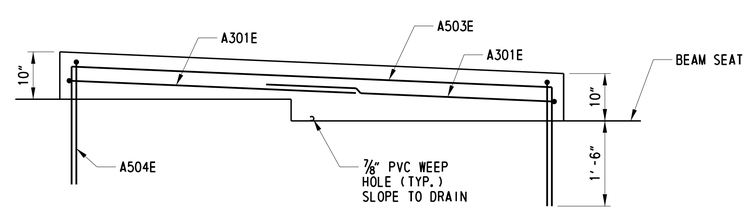

SECTION A-A

SCALE: 3/4" = 1'-0"

NOTES:

1. MSE WALL AND COPING NOT SHOWN FOR CLARITY.
2. ABUTMENT SEAT STEPS MID-WAY BETWEEN GIRDERS
3. ONLY TRANSVERSE FOOTING REINFORCEMENT IS SHOWN IN PLAN VIEW FOR CLARITY.
4. PILE CASINGS NOT SHOWN FOR CLARITY.

CROSS REFERENCE NOTES:

1. FOR PROJECT NOTES, SEE DWG. 1-472 PN-1.
2. FOR SECTIONS AND DETAILS, SEE DWG. 1-472 AB-5.
3. FOR MEDIAN AND WINGWALL ELEVATIONS, SEE DWG. 1-472 WW-1 AND 1-472 WW-2.
4. FOR REINFORCEMENT SCHEDULE, SEE DWG. 1-472 BR-1.

1-472 AB-3

DELAWARE DEPARTMENT OF TRANSPORTATION

ADDENDUMS / REVISIONS

US 301 LEVELS ROAD TO SUMMIT BRIDGE ROAD

CONTRACT	BRIDGE NO.	1-472N&S	US 301 MAINLINE OVER ARMSTRONG CORNER ROAD ABUTMENT 2 NORTHBOUND – PLAN AND REINFORCEMENT	SHEET NO.
T200911303	DESIGNED BY: ADH			364
COUNTY				TOTAL SHTS.
NEW CASTLE	CHECKED BY: DHG			1256

P:\cadd2\60049040 US301\Structure\Plans\FINAL\B2-3NS\BR2-3AB-05.dgn

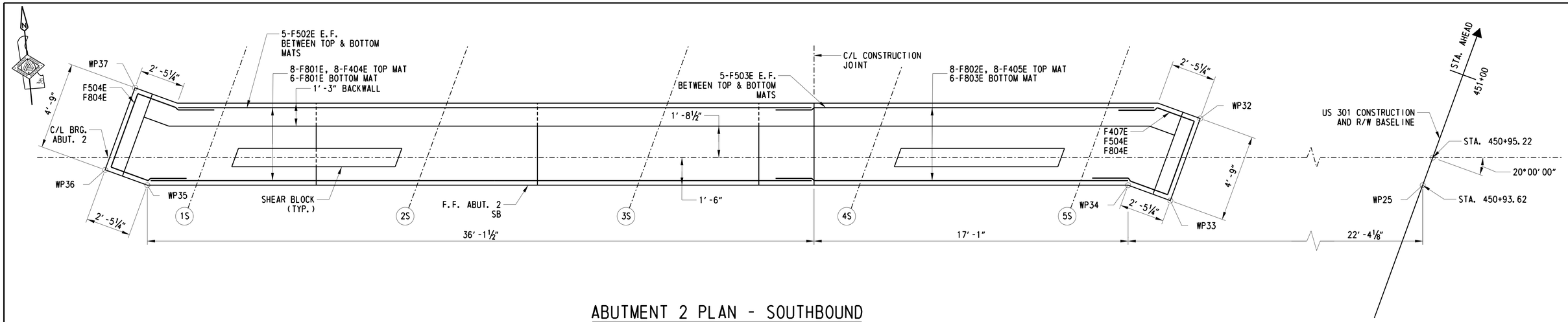

ABUTMENT 2 PLAN - SOUTHBOUND

SCALE: 3/8" = 1'-0"

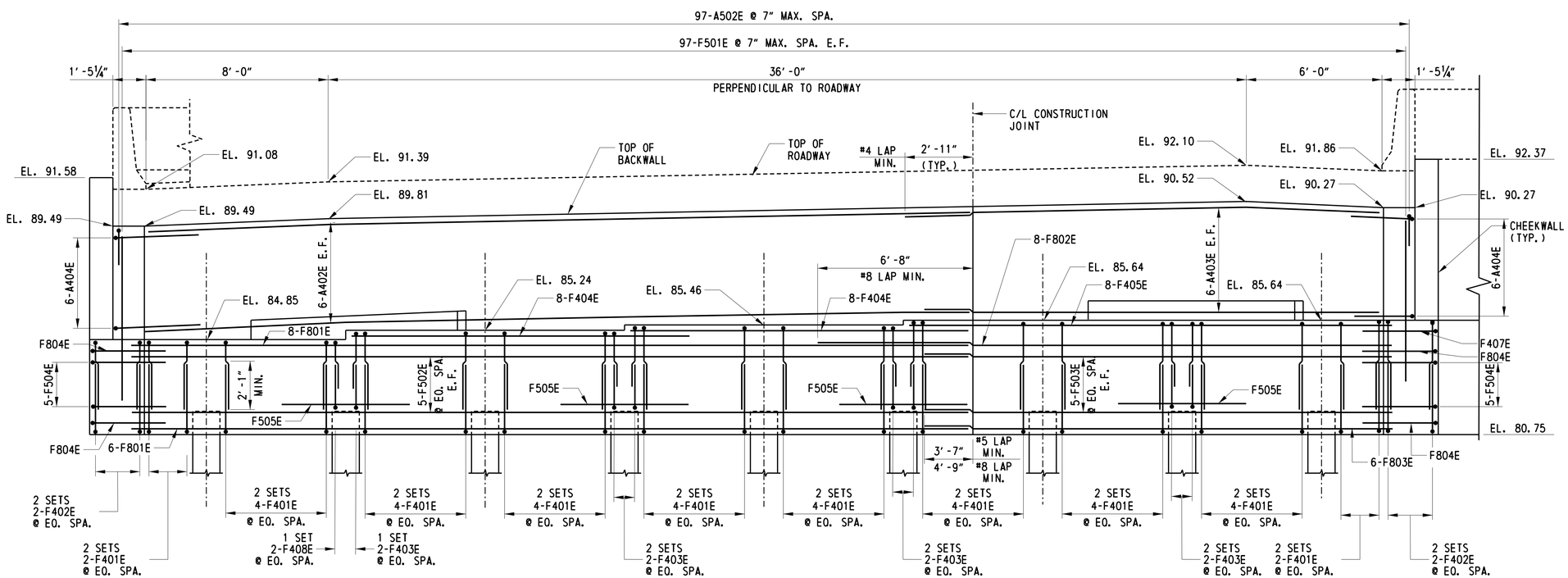

ABUTMENT 2 ELEVATION - SOUTHBOUND

SCALE: 3/8" = 1'-0"

CROSS REFERENCE NOTES:

1. FOR PROJECT NOTES, SEE DWG. 1-472 PN-1.
2. FOR SECTIONS AND DETAILS, SEE DWG. 1-472 AB-5.
3. FOR MEDIAN AND WINGWALL ELEVATIONS, SEE DWG. 1-472 WW-1 AND 1-472 WW-2.
4. FOR REINFORCEMENT SCHEDULE, SEE DWG. 1-472 BR-1.
5. FOR SHEAR BLOCK DETAILS, SEE DWG. 1-472 AB-3.

NOTES:

1. MSE WALL AND COPING NOT SHOWN FOR CLARITY.
2. ABUTMENT SEAT STEPS MID-WAY BETWEEN GIRDERS
3. ONLY TRANSVERSE FOOTING REINFORCEMENT IS SHOWN IN PLAN VIEW FOR CLARITY.
4. PILE CASINGS NOT SHOWN FOR CLARITY.

1-472 AB-4

DELAWARE DEPARTMENT OF TRANSPORTATION

ADDENDUMS / REVISIONS

SCALE 1 0 1 2 3 FEET

US 301 LEVELS ROAD TO SUMMIT BRIDGE ROAD

CONTRACT	BRIDGE NO.	1-472N&S
T200911303	DESIGNED BY: ADH	
COUNTY	CHECKED BY: DHG	
NEW CASTLE		

US 301 MAINLINE OVER ARMSTRONG CORNER ROAD ABUTMENT 2 SOUTHBOUND – PLAN AND REINFORCEMENT

SHEET NO. 365

TOTAL SHTS. 1256

P:\cadd2\60049040 US301\Structure\Plans\FINAL\B2-3NS\BR2-3AB-07.dgn

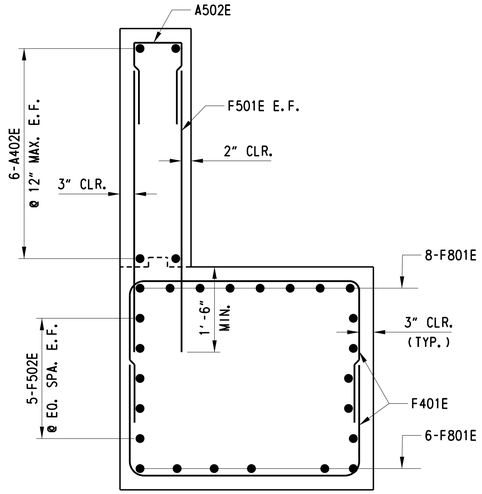

SECTION A-A

SCALE: 3/4" = 1'-0"

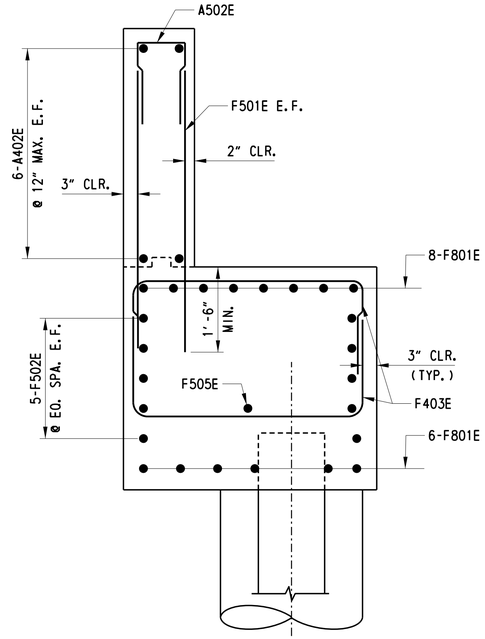

SECTION B-B

SCALE: 3/4" = 1'-0"

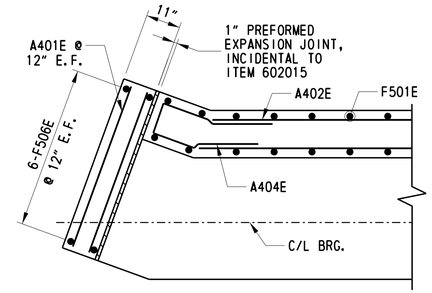

SECTION C-C

SCALE: 1/2" = 1'-0"

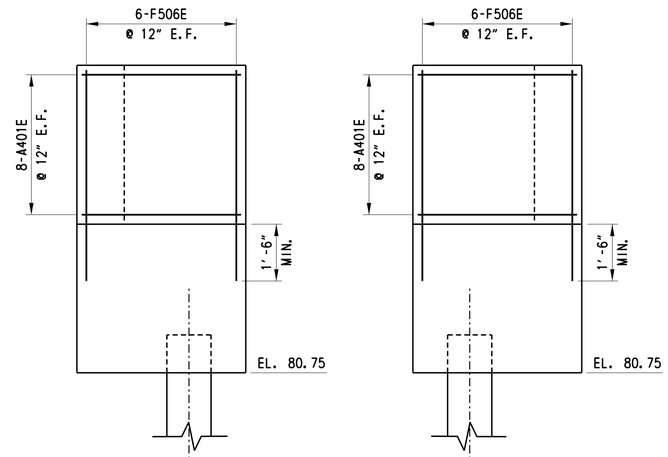

VIEW E-E

SCALE: 1/2" = 1'-0"

VIEW F-F

SCALE: 1/2" = 1'-0"

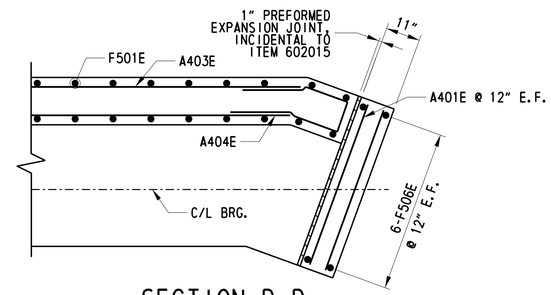

SECTION D-D

SCALE: 1/2" = 1'-0"

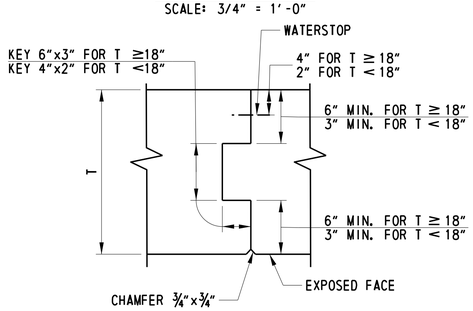

CONSTRUCTION JOINTS

SCALE: 1 1/2" = 1'-0"

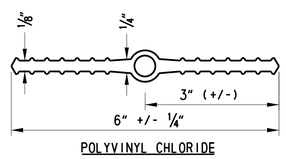

WATERSTOP

NOT TO SCALE

NOTE:
PROVIDE HOLES OR SLOTS IN WATERSTOP, AS REQUIRED, WHEN NECESSARY TO ACCOMMODATE REINFORCEMENT BARS, BUT DO NOT COMPROMISE SEAL.

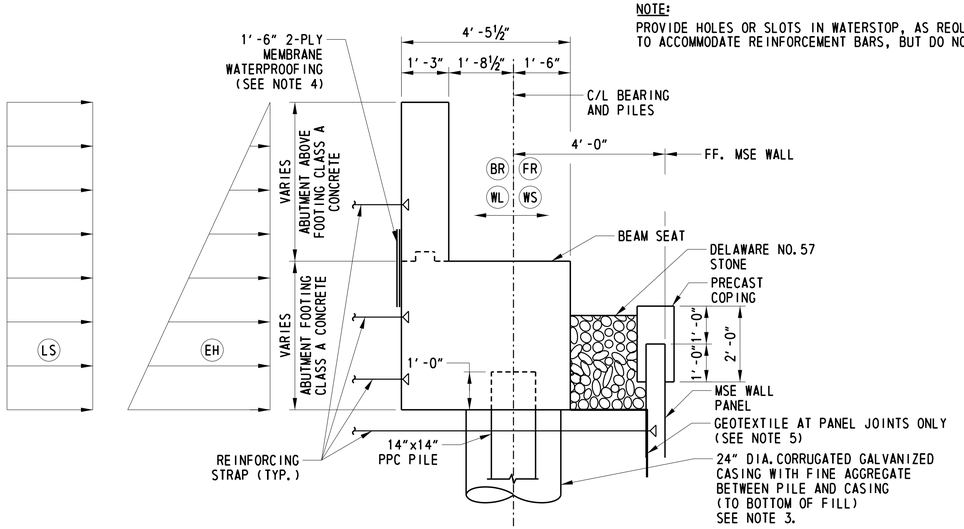

TYPICAL ABUTMENT SECTION

SCALE: 1/2" = 1'-0"

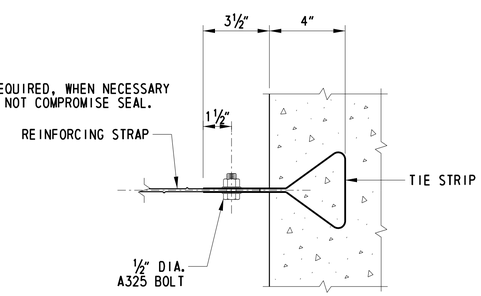

ABUTMENT STRAP ANCHOR DETAIL

NOT TO SCALE

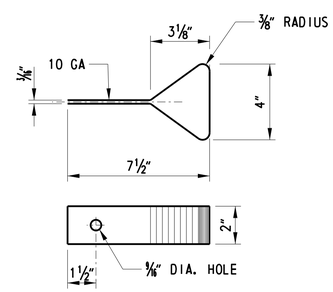

TIE STRIP DETAIL

NOT TO SCALE

ABUTMENT 1 LATERAL LOADS	
TYPE	SERVICE LOAD (KIPS/FT)
EH	1.49 KIP/FT
BR	3.07 KIP/FT
FR	1.21 KIP/FT
WL	0.26 KIP/FT
WS	0.79 KIP/FT
LS	0.58 KIP/FT

ABUTMENT 2 LATERAL LOADS	
TYPE	SERVICE LOAD (KIPS/FT)
EH	1.49 KIP/FT
FR	1.21 KIP/FT
WL	0.11 KIP/FT
WS	0.36 KIP/FT
LS	0.58 KIP/FT

CROSS REFERENCE NOTES:

1. FOR PROJECT NOTES, SEE DWG. 1-472 PN-1.
2. FOR ABUTMENT REINFORCEMENT, SEE DWG. 1-472 AB-1 TO 1-472 AB-4.
3. FOR ABUTMENT REINFORCEMENT SCHEDULE, SEE DWG. 1-472 BR-1.
4. FOR MEDIAN AND WINGWALL ELEVATIONS, SEE DWG. 1-472 WW-1 AND 1-472 WW-2.

ABUTMENT LATERAL LOADS:

1. CONTRACTOR SHALL DESIGN THE REINFORCING STRAPS IN THE ABUTMENT STEM AND BACKWALL TO RESIST LATERAL LOADS "EH", "BR", "FR", "WL", "LS" AND "WS".
2. LOAD "EH" IS THE HORIZONTAL EARTH PRESSURE EXERTED ON THE ABUTMENT.
3. LOAD "BR" IS THE HORIZONTAL LOAD DUE TO BRAKING FORCE ON THE SUPERSTRUCTURE.
4. LOAD "FR" IS THE HORIZONTAL LOAD DUE TO THE FRICTION BETWEEN THE APPROACH SLABS AND BACKWALL AS A RESULT OF BRIDGE EXPANSION AND CONTRACTION.
5. LOAD "WL" IS THE HORIZONTAL LOAD DUE TO THE WIND ON LIVE LOAD ON THE SUPERSTRUCTURE.
6. LOAD "WS" IS THE HORIZONTAL LOAD DUE TO THE WIND ON STRUCTURE.
7. LOAD "LS" IS THE ADDITIONAL HORIZONTAL SOIL PRESSURE DUE TO 3FT OF SOIL SURCHARGE IN ACCORDANCE WITH AASHTO 3.11.6.4. CONTRACTOR IS RESPONSIBLE FOR PROVIDING MSE WALL DESIGNER WITH OTHER CONSTRUCTION LOADS WHICH WILL BE IN EXCESS OF 3FT OF SOIL SURCHARGE.

NOTES:

1. STOP KEYED JOINTS IN TOP OF EXPOSED WALL FLUSH TO A DEPTH OF 12".
2. STOP WATERSTOP 12" FROM TOP OF WALL.
3. FINE AGGREGATE SHALL BE IN ACCORDANCE WITH SECTION 804 OF THE STANDARD SPECIFICATIONS. THIS ITEM SHALL BE INCIDENTAL TO THE PILE INSTALLATION.
4. THE WATERPROOFING MEMBRANE SHALL BE INCIDENTAL TO ITEM 602015.
5. THE GEOTEXTILE SHALL BE INCIDENTAL TO ITEM 602772.
6. FOR ADDITIONAL REQUIREMENTS FOR STRAP ANCHORS AND TIE STRIPS, SEE SPECIAL PROVISION 602772. MECHANICALLY STABILIZED EARTH WALLS.

1-472 AB-5

DELAWARE DEPARTMENT OF TRANSPORTATION

ADDENDUMS / REVISIONS

US 301 LEVELS ROAD TO SUMMIT BRIDGE ROAD

CONTRACT	BRIDGE NO.	1-472N&S
T200911303	DESIGNED BY: ADH	
COUNTY	CHECKED BY: DHG	
NEW CASTLE		

US 301 MAINLINE OVER ARMSTRONG CORNER ROAD

ABUTMENTS 1 AND 2 – SECTIONS AND DETAILS

SHEET NO. 366

TOTAL SHTS. 1256

P:\cadd2\60049040_US301\Structure\Plans\FINAL\B2-3NS\BR2-3FT-03.dgn

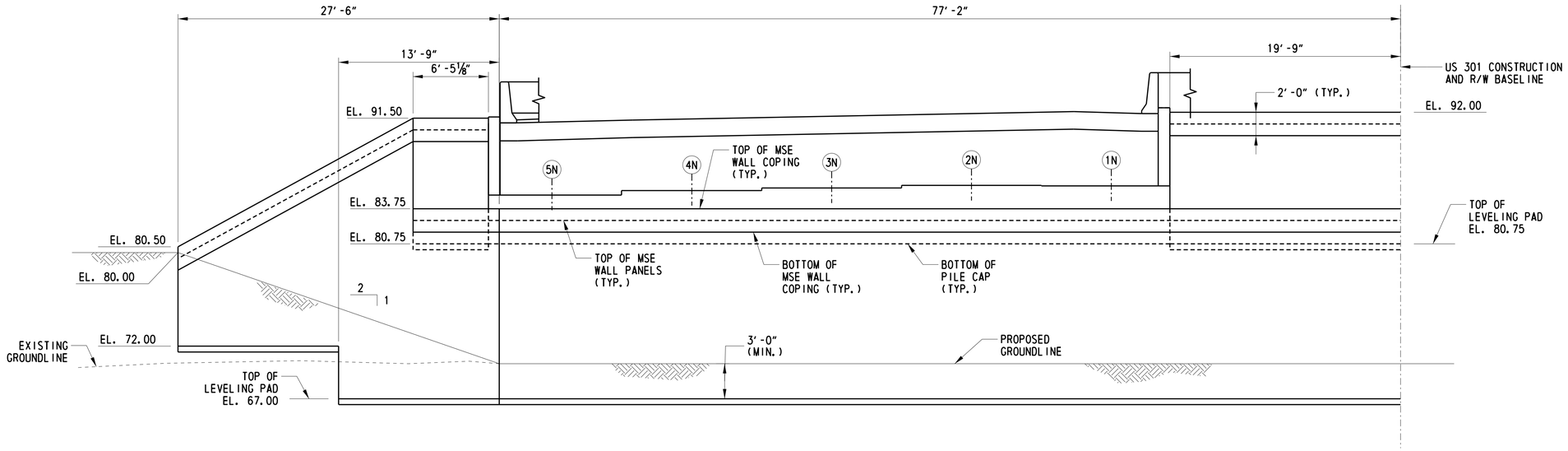

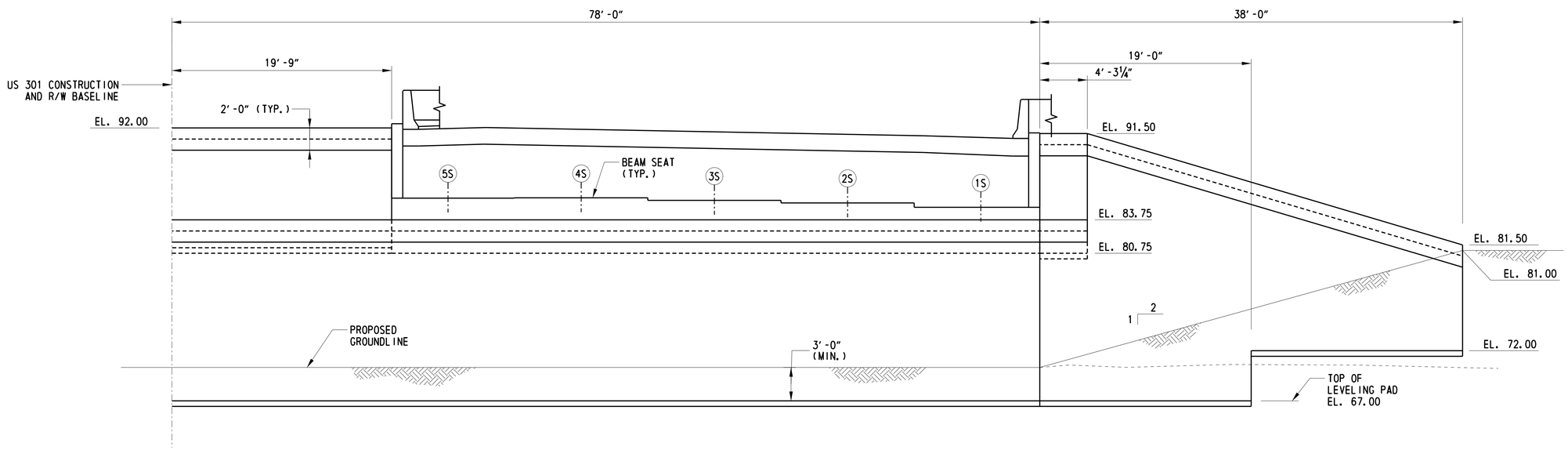

MEDIAN AND WINGWALL ELEVATIONS - ABUTMENT 1

SCALE: 3/16" = 1'-0"

CROSS REFERENCE NOTES:

1. FOR PROJECT NOTES, SEE DWG. 1-472 PN-1.
2. FOR GEOMETRIC LAYOUT, SEE DWG. 1-472 GG-1.
3. FOR ABUTMENT PLAN AND ELEVATION, SEE DWG. 1-472 AB-1 TO 1-472 AB-4.
4. FOR MSE WALL SECTIONS AND DETAILS, SEE DWG. 1-472 WW-3.

1-472 WW-1

DELAWARE DEPARTMENT OF TRANSPORTATION	ADDENDUMS / REVISIONS	SCALE 2 0 2 4 6 FEET	US 301 LEVELS ROAD TO SUMMIT BRIDGE ROAD	CONTRACT T200911303	BRIDGE NO. 1-472N&S	US 301 MAINLINE OVER ARMSTRONG CORNER ROAD	SHEET NO. 367
				COUNTY NEW CASTLE	DESIGNED BY: ADH	MEDIAN AND WINGWALL ELEVATIONS – ABUTMENT 1	TOTAL SHTS. 1256
					CHECKED BY: DHG		

P:\cadd2\60049040_US301\Structure\Plans\FINAL\B2-3NS\BR2-3WW-01.dgn

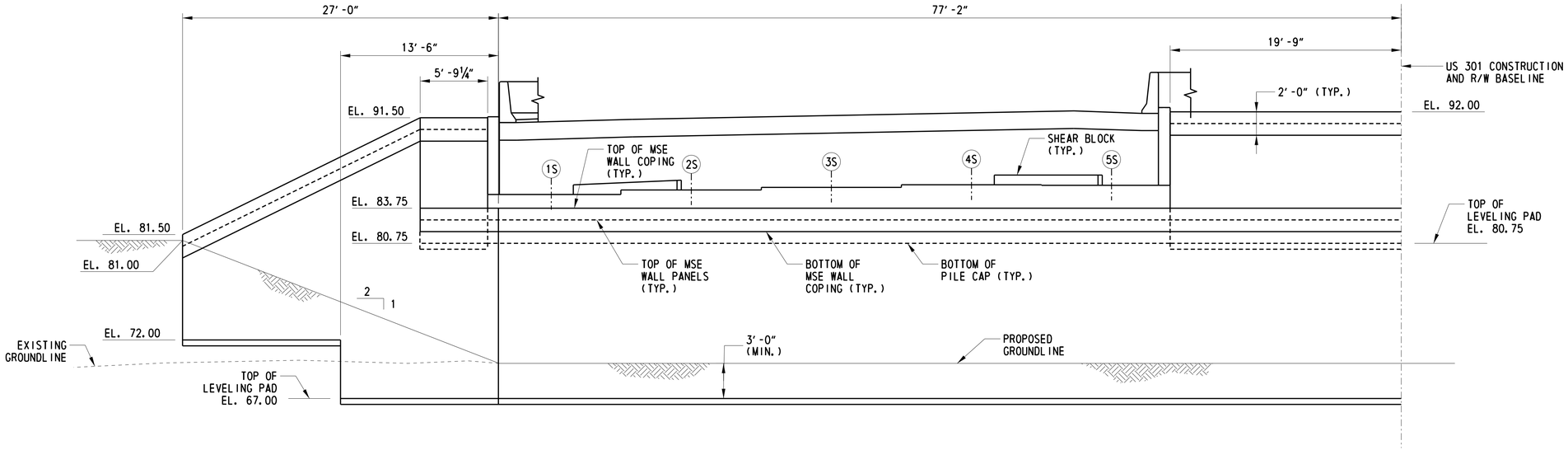

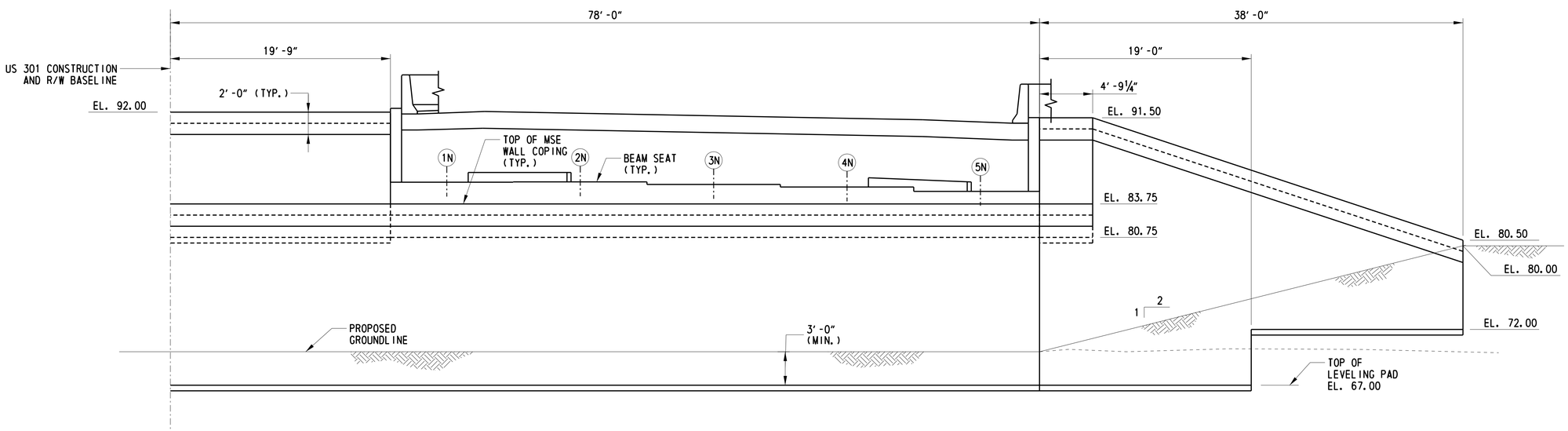

MEDIAN AND WINGWALL ELEVATIONS - ABUTMENT 2

SCALE: 3/16" = 1'-0"

CROSS REFERENCE NOTES:

1. FOR PROJECT NOTES, SEE DWG. 1-472 PN-1.
2. FOR GEOMETRIC LAYOUT, SEE DWG. 1-472 GG-1.
3. FOR ABUTMENT PLAN AND ELEVATION, SEE DWG. 1-472 AB-1 TO 1-472 AB-4.
4. FOR MSE WALL SECTIONS AND DETAILS, SEE DWG. 1-472 WW-3.

1-472 WW-2

DELAWARE DEPARTMENT OF TRANSPORTATION	ADDENDUMS / REVISIONS	SCALE 2 0 2 4 6 FEET	US 301 LEVELS ROAD TO SUMMIT BRIDGE ROAD	CONTRACT T200911303	BRIDGE NO. 1-472N&S	US 301 MAINLINE OVER ARMSTRONG CORNER ROAD	SHEET NO. 368
				COUNTY NEW CASTLE	DESIGNED BY: ADH	MEDIAN AND WINGWALL ELEVATIONS – ABUTMENT 2	TOTAL SHTS. 1256
					CHECKED BY: DHG		

P:\cadd2\60049040_US301\Structure\Plans\FINAL\B2-3NS\BR2-3WW-02.dgn

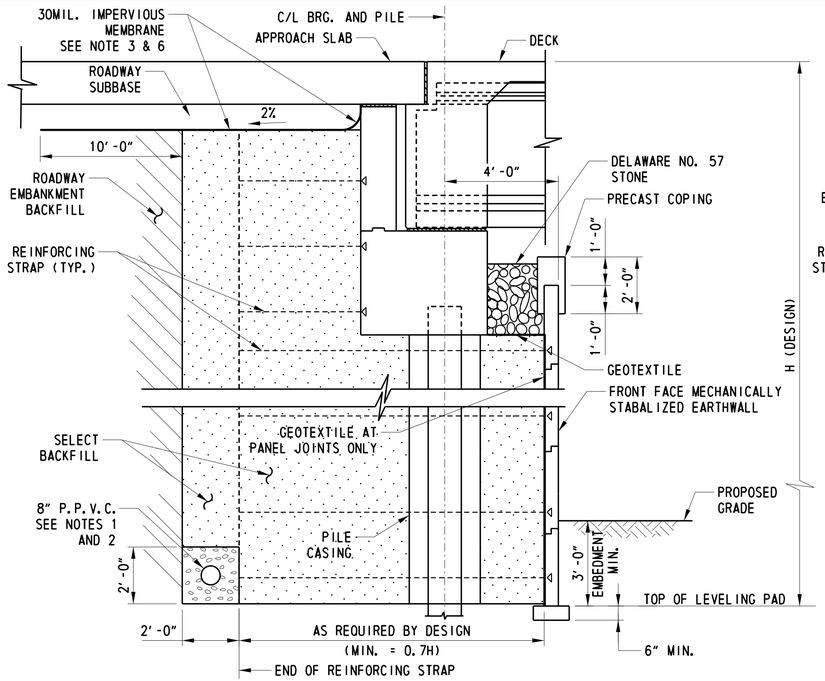

TYPICAL MSE WALL SECTION AT ABUTMENT

SCALE: 3/8" = 1'-0"

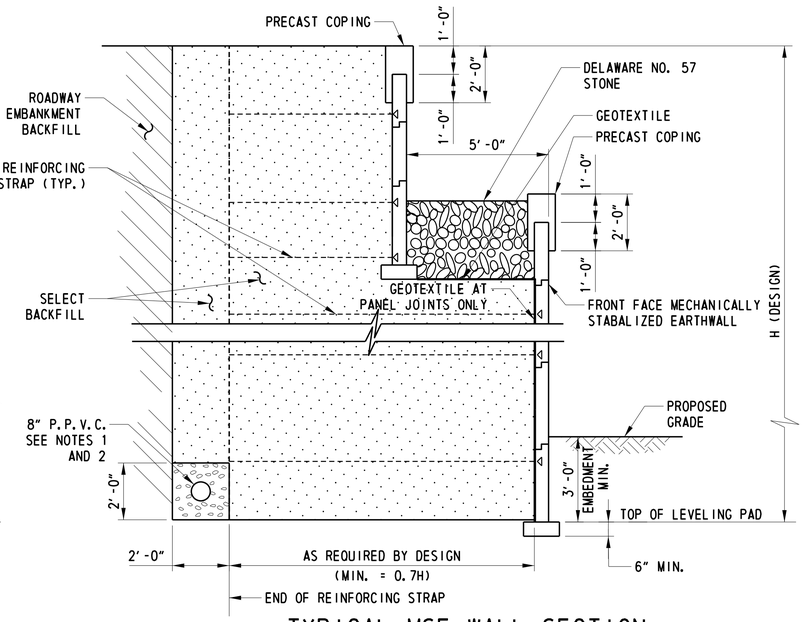

TYPICAL MSE WALL SECTION AT MEDIAN

SCALE: 3/8" = 1'-0"

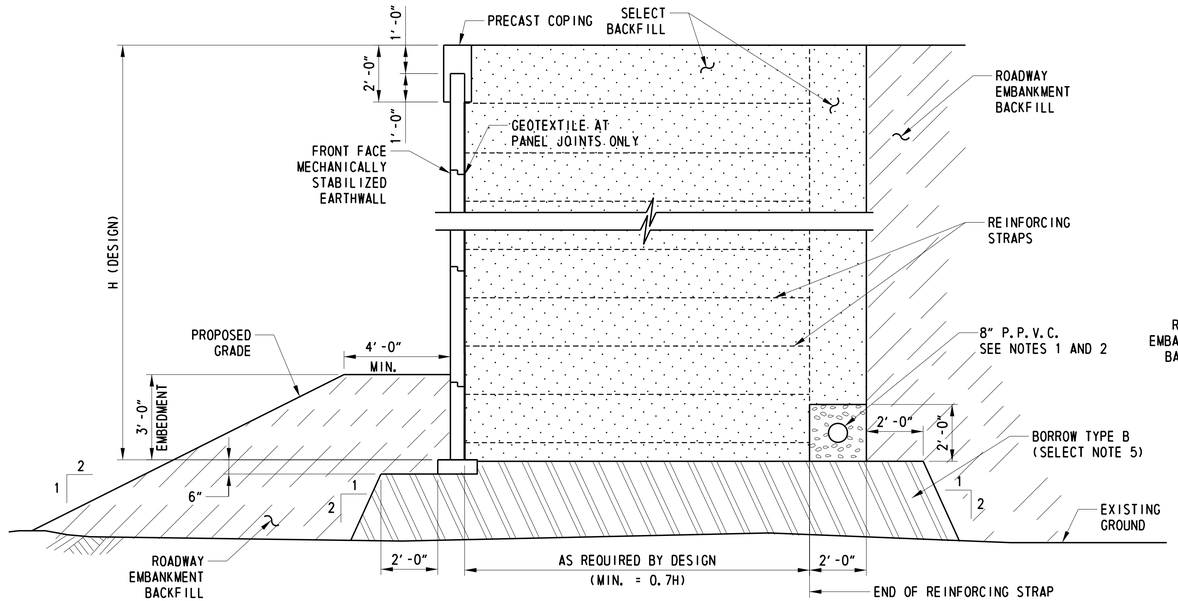

TYPICAL MSE WALL SECTION WINGWALL ON FILL

SCALE: 3/8" = 1'-0"

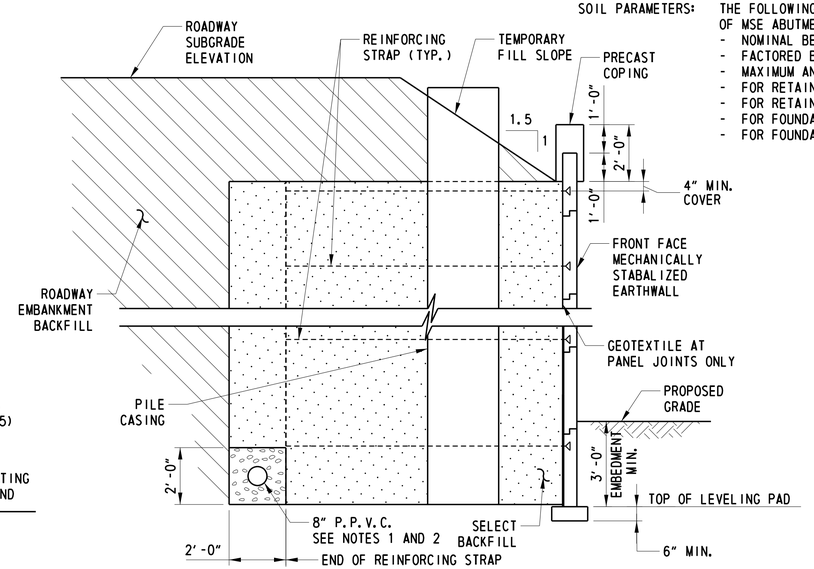

FILL PLACEMENT DURING QUARANTINE PERIOD

SCALE: 3/8" = 1'-0"

MSE WALL NOTES:

SPECIFICATIONS: PROPRIETARY MSE WALLS SHALL BE DESIGNED IN ACCORDANCE WITH THE FOLLOWING:
- AASHTO LRFD BRIDGE DESIGN SPECIFICATIONS, 4TH EDITION WITH ALL CURRENT REVISIONS.
- FEDERAL HIGHWAY ADMINISTRATION PUBLICATION NOS. FHWA-NHI-10-024 AND FHWA-NHI-10-025, "DESIGN AND CONSTRUCTION OF MECHANICALLY STABILIZED EARTH WALLS AND REINFORCED SOIL SLOPES", VOLUME I AND VOLUME II.

CONCRETE DESIGN SHALL BE PERFORMED USING THE LOAD AND RESISTANCE FACTOR DESIGN METHOD.

CONCRETE: LEVELING PAD CONCRETE SHALL BE 3,000 PSI. MIX REQUIREMENTS SHALL CONFORM TO SECTION 812 OF THE DELAWARE DEPARTMENT OF TRANSPORTATION STANDARD SPECIFICATIONS.

CHAMFERS: ALL EXPOSED CORNERS OF CONCRETE SHALL BE CHAMFERED WITH ¾" x ¾" MILLED CHAMFER STRIPS, UNLESS OTHERWISE NOTED, EXCEPT ON UNEXPOSED FOOTINGS OR WHERE INDICATED BY THE FOLLOWING NOTATION ON THE PLANS: "DO NOT CHAMFER".

REINFORCING STEEL: REINFORCING STEEL SHALL CONFORM TO AASHTO M31 (ASTM A 615), GRADE 60. ALL SPLICES, NOT SHOWN, SHALL BE LAPPED AS PER THE LRFD BRIDGE DESIGN SPECIFICATIONS. MINIMUM COVER FOR ANY BAR SHALL BE 2" UNLESS OTHERWISE NOTED.

FOR TIES AND STIRRUPS, STANDARD ACI BENDING TOLERANCES ARE MODIFIED TO PLUS (+) ZERO INCHES, MINUS (-) NORMAL ACI BENDING TOLERANCE.

LEVELING PAD: THE PROPRIETARY WALL MANUFACTURER MAY RELOCATE THE LEVELING PAD STEPS AT THEIR DISCRETION PROVIDED THAT THE MINIMUM EMBEDMENT IS MAINTAINED. ANY CHANGE TO THE STEP LOCATIONS SHALL BE SUBMITTED TO THE ENGINEER FOR APPROVAL.

ROADWAY LIMITS: THE PROPRIETARY WALL MANUFACTURER SHALL ASSURE THAT PROPOSED PROPRIETARY WALL COMPONENTS ARE POSITIONED SUCH THAT THE DESIGNATED ROADWAY LIMITS ARE NOT ENCROACHED UPON.

COORDINATION: CONTRACTOR AND PROPRIETARY WALL MANUFACTURER SHALL COORDINATE LOCATIONS OF INLETS AND PIPES WITH LOCATIONS OF PROPRIETARY WALL TIE BACK SYSTEM.

SERVICE LIFE: ALL RETAINING WALL COMPONENTS SHALL BE DESIGNED FOR A MINIMUM SERVICE LIFE OF 100 YEARS.

WALL SYSTEM: RETAINING WALL TYPE SHALL BE MECHANICALLY STABILIZED EARTH (MSE) WALLS. NO OTHER WALL TYPE MAY BE SUBSTITUTED.

MSE WALL BACKFILL: MSE WALL BACKFILL SHALL BE SELECT BACKFILL IN ACCORDANCE WITH SPECIAL PROVISION 602772 WITH MINIMUM ANGLE OF INTERNAL FRICTION OF 34 DEGREES AND A MOIST UNIT WEIGHT OF 125 LB/FT³.

REINFORCING STRAPS: SET REINFORCING STRAPS TO CLEAR PILE CASING, 2" MIN. CLEARANCE. MAXIMUM IN-FIELD SKEW OF 15 DEGREES. IF GREATER SKEW ANGLE IS REQUIRED, CONTACT MSE WALL FIELD REPRESENTATIVE PRIOR TO INSTALLATION.

SOIL PARAMETERS: THE FOLLOWING ARE RECOMMENDED SOIL PARAMETERS TO BE USED FOR THE DESIGN OF MSE ABUTMENT AND WINGWALLS:
- NOMINAL BEARING RESISTANCE = 16.6 KIP/FT²
- FACTORED BEARING RESISTANCE = 10.8 KIP/FT²
- MAXIMUM ANTICIPATED SETTLEMENT = 4.5IN
- FOR RETAINED SOIL, MOIST UNIT WEIGHT = 120 LB/FT³
- FOR RETAINED SOIL, ANGLE OF INTERNAL FRICTION = 30 DEGREES
- FOR FOUNDATION SOIL, MOIST UNIT WEIGHT = 120 LB/FT³
- FOR FOUNDATION SOIL, ANGLE OF INTERNAL FRICTION = 30 DEGREES

NOTES:

1. DRAIN PERFORATED POLYVINYL CHLORIDE PIPE (P.P.V.C.) TO DAYLIGHT.
2. SURROUND P.P.V.C. WITH A CONTINUOUS 2'-0"x2'-0" OF DELAWARE NO. 57 STONE ENCLOSED IN GEOTEXTILE.
3. SLOPE MEMBRANE A MINIMUM OF 2% AWAY FROM THE BACKWALL.
4. CONTRACTOR TO PROVIDE PROTECTION TO THE PILE CASING DURING QUARANTINE PERIOD TO PREVENT MATERIAL FROM ENTERING CASING.
5. BORROW TYPE B SHALL BE INCIDENTAL TO ITEM 602772.
6. IMPERVIOUS MEMBRANE SHALL BE INCIDENTAL TO ITEM 602772.

CROSS REFERENCE NOTES:

1. FOR PROJECT NOTES, SEE DWG 1-472 PN-1.
2. FOR MEDIAN AND WINGWALL ELEVATION, SEE DWG. 1-472 WW-1 TO 1-472 WW-2.
3. FOR GEOMETRIC LAYOUT, SEE DWG. 1-472 GG-1.
4. FOR LOADS TO BE RESISTED BY REINFORCING STRAPS IN ABUTMENT, SEE DWG. 1-472 AB-5.

1-472 WW-3

DELAWARE DEPARTMENT OF TRANSPORTATION	ADDENDUMS / REVISIONS	SCALE 1 0 1 2 3 FEET	US 301 LEVELS ROAD TO SUMMIT BRIDGE ROAD	CONTRACT T200911303	BRIDGE NO. 1-472N&S	US 301 MAINLINE OVER ARMSTRONG CORNER ROAD	SHEET NO. 369
				COUNTY NEW CASTLE	DESIGNED BY: ADH	MSE WALL DETAILS	TOTAL SHTS. 1256
					CHECKED BY: DHG		

P:\cadd2\60049040_US301\Structure\Plans\FINAL\B2-3MS\BR2-3MSE-01.dgn

REINFORCING BAR SCHEDULE

NORTHBOUND ABUTMENT 1 AND 2 BAR SCHEDULE

MARK	LENGTH	NO. BARS	TYPE	A	B	C	D	E	F	G	H	I	J	K	REMARKS
A301E	10′-10½″	4	46	5′-1″	0″	8½″	0″	5′-1″	1′-8¾″						
A401E	4′-5″	64	STR												
A402E	34′-9″	12	STR												
A403E	21′-9″	12	STR												
A404E	7′-7¾″	24	46	2′-1″	1′-3¾″	11″	1′-3″	2′-1″	8½″						
A405E	20′-1″	12	STR												
A406E	36′-5″	12	STR												
A502E	6′-0″	194	4	2′-7″	10″	2′-7″									
A503E	12′-9⅝″	4	4	2′-2″	8′-5⅝″	2′-2″									
A504E	5′-0″	20	4	2′-2″	8″	2′-2″									
F401E	10′-7½″	144	4	3′-4″	3′-11½″	3′-4″									
F402E	10′-11″	16	4	3′-4″	4′-3″	3′-4″									
F403E	9′-5½″	28	4	2′-9″	3′-11½″	2′-9″									
F404E	13′-10″	32	STR												
F405E	21′-5″	8	STR												
F406E	20′-10″	8	STR												
F407E	12′-9½″	2	46	2′-1″	2′-2¾″	4′-3″	2′-1¾″	2′-1″	8½″						
F408E	8′-11½″	4	4	2′-6″	3′-11½″	2′-6″									
F501E	6′-6″	388	STR												
F502E	35′-11″	10	STR												
F503E	22′-5″	10	STR												
F504E	13′-9½″	20	46	2′-7″	2′-2¾″	4′-3″	2′-1¾″	2′-7″	10⅝″						
F505E	6′-4″	8	STR												
F506E	8′-3″	48	STR												
F507E	36′-6″	10	STR												
F508E	21′-10″	10	STR												
F801E	36′-0″	14	STR												
F802E	25′-5″	8	STR												
F803E	23′-6″	6	STR												
F804E	18′-1½″	8	46	4′-9″	2′-2¾″	4′-3″	2′-1¾″	4′-9″	1′-7½″						
F805E	36′-6″	14	STR												
F806E	25′-0″	8	STR												
F807E	23′-1″	6	STR												
D1101E	4′-0″	22	STR												DOWELS AT ABUT. 1

SOUTHBOUND ABUTMENT 1 AND 2 BAR SCHEDULE

MARK	LENGTH	NO. BARS	TYPE	A	B	C	D	E	F	G	H	I	J	K	REMARKS
A301E	10′-10½″	4	46	5′-1″	0″	8½″	0″	5′-1″	1′-8¾″						
A401E	4′-5″	64	STR												
A402E	34′-9″	12	STR												
A403E	21′-9″	12	STR												
A404E	7′-7¾″	24	46	2′-1″	1′-3¾″	11″	1′-3″	2′-1″	8½″						
A405E	20′-1″	12	STR												
A406E	35′-5″	12	STR												
A502E	6′-0″	194	4	2′-7″	10″	2′-7″									
A503E	12′-9⅝″	4	4	2′-2″	8′-5⅝″	2′-2″									
A504E	5′-0″	20	4	2′-2″	8″	2′-2″									
F401E	10′-7½″	144	4	3′-4″	3′-11½″	3′-4″									
F402E	10′-11″	16	4	3′-4″	4′-3″	3′-4″									
F403E	9′-5½″	28	4	2′-9″	3′-11½″	2′-9″									
F404E	13′-10″	32	STR												
F405E	21′-5″	8	STR												
F406E	20′-10″	8	STR												
F407E	12′-9½″	2	46	2′-1″	2′-2¾″	4′-3″	2′-1¾″	2′-1″	8½″						
F408E	8′-11½″	4	4	2′-6″	3′-11½″	2′-6″									
F501E	6′-6″	388	STR												
F502E	35′-11″	10	STR												
F503E	22′-5″	10	STR												
F504E	13′-9½″	20	46	2′-7″	2′-2¾″	4′-3″	2′-1¾″	2′-7″	10⅝″						
F505E	6′-4″	8	STR												
F506E	8′-3″	48	STR												
F507E	36′-6″	10	STR												
F508E	21′-10″	10	STR												
F801E	36′-0″	14	STR												
F802E	25′-5″	8	STR												
F803E	23′-6″	6	STR												
F804E	18′-1½″	8	46	4′-9″	2′-2¾″	4′-3″	2′-1¾″	4′-9″	1′-7½″						
F805E	36′-6″	14	STR												
F806E	25′-0″	8	STR												
F807E	23′-1″	6	STR												
D1101E	4′-0″	22	STR												DOWELS AT ABUT. 1

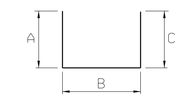

4

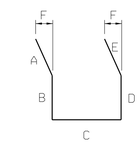

46

1-472 BR-1

DELAWARE
DEPARTMENT OF TRANSPORTATION

ADDENDUMS / REVISIONS

US 301
LEVELS ROAD
TO SUMMIT BRIDGE ROAD

CONTRACT	BRIDGE NO.	1-472N&S
T200911303	DESIGNED BY: ADH	
COUNTY		
NEW CASTLE	CHECKED BY: DHG	

US 301 MAINLINE OVER ARMSTRONG CORNER ROAD
ABUTMENT REINFORCEMENT SCHEDULE

SHEET NO. 370
TOTAL SHTS. 1256

P:\cadd2\60049040 US301\Structure\Plans\FINAL\B2-3NS\BR2-3BR-01.dgn

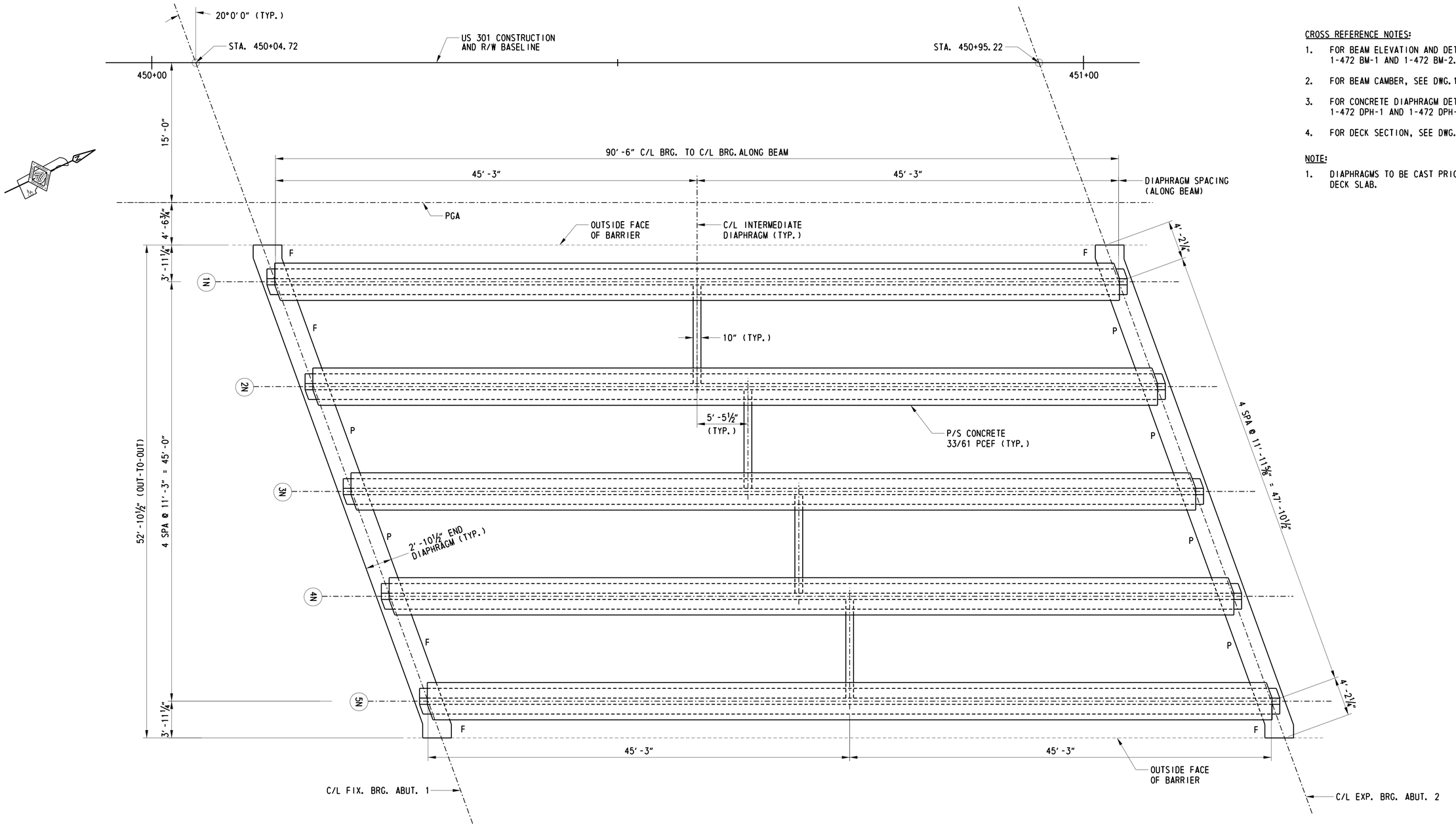

FRAMING PLAN - NORTHBOUND

SCALE: 3/16" = 1'-0"

CROSS REFERENCE NOTES:

1. FOR BEAM ELEVATION AND DETAILS, SEE DWG. 1-472 BM-1 AND 1-472 BM-2.
2. FOR BEAM CAMBER, SEE DWG. 1-472 BM-2.
3. FOR CONCRETE DIAPHRAGM DETAILS, SEE DWG. 1-472 DPH-1 AND 1-472 DPH-2.
4. FOR DECK SECTION, SEE DWG. 1-472 PA-1.

NOTE:

1. DIAPHRAGMS TO BE CAST PRIOR TO CASTING DECK SLAB.

LEGEND:

P PARTIAL DEPTH END DIAPHRAGM
F FULL DEPTH END DIAPHRAGM

1-472 FR-1

DELAWARE DEPARTMENT OF TRANSPORTATION	ADDENDUMS / REVISIONS	SCALE 2 0 2 4 6 FEET	US 301 LEVELS ROAD TO SUMMIT BRIDGE ROAD	CONTRACT T200911303	BRIDGE NO. 1-472N&S	US 301 MAINLINE OVER ARMSTRONG CORNER ROAD FRAMING PLAN - NORTHBOUND	SHEET NO. 371
				COUNTY NEW CASTLE	DESIGNED BY: ADH		TOTAL SHTS. 1256
					CHECKED BY: DHG		

G:\60049040 US301\Structure\Plans\FINAL\B2-3NS\BR2-3FR-01.dgn

CROSS REFERENCE NOTES:

1. FOR BEAM ELEVATION AND DETAILS, SEE DWG. 1-472 BM-1 AND 1-472 BM-2.
2. FOR BEAM CAMBER, SEE DWG. 1-472 BM-2.
3. FOR CONCRETE DIAPHRAGM DETAILS, SEE DWG. 1-472 DPH-1 AND 1-472 DPH-2.
4. FOR DECK SECTION, SEE DWG. 1-472 PA-1.

NOTE:

1. DIAPHRAGMS TO BE CAST PRIOR TO CASTING DECK SLAB.

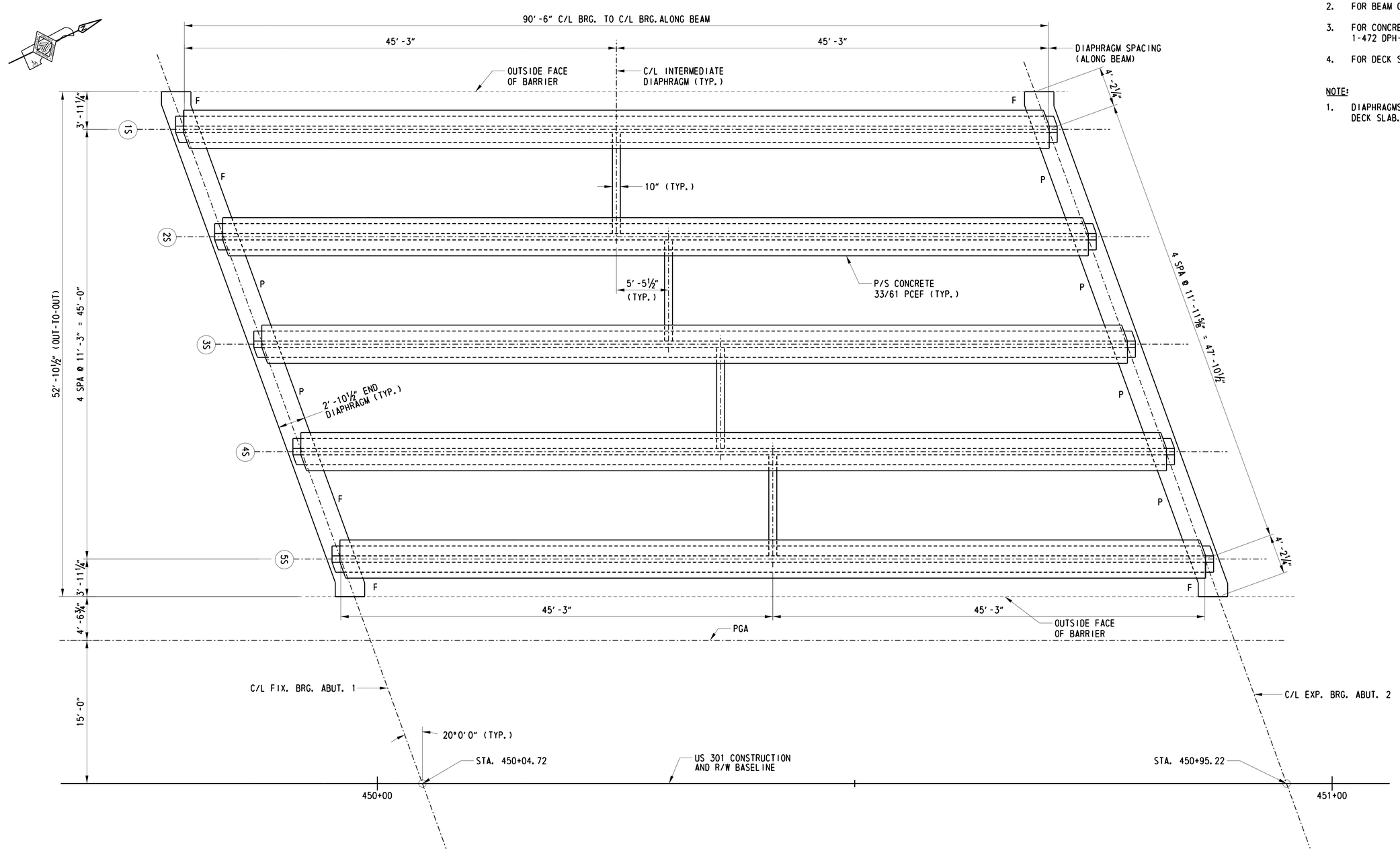

FRAMING PLAN - SOUTHBOUND

SCALE: 3/16" = 1'-0"

LEGEND:

P PARTIAL DEPTH END DIAPHRAGM
F FULL DEPTH END DIAPHRAGM

1-472 FR-2

DELAWARE DEPARTMENT OF TRANSPORTATION	ADDENDUMS / REVISIONS	SCALE 2 0 2 4 6 FEET	US 301 LEVELS ROAD TO SUMMIT BRIDGE ROAD	CONTRACT T200911303	BRIDGE NO. 1-472N&S	US 301 MAINLINE OVER ARMSTRONG CORNER ROAD	SHEET NO. 372
				COUNTY NEW CASTLE	DESIGNED BY: ADH	FRAMING PLAN - SOUTHBOUND	TOTAL SHTS. 1256
					CHECKED BY: DHG		

G:\60049040 US301\Structure\Plans\FINAL\B2-3NS\BR2-3FR-02.dgn

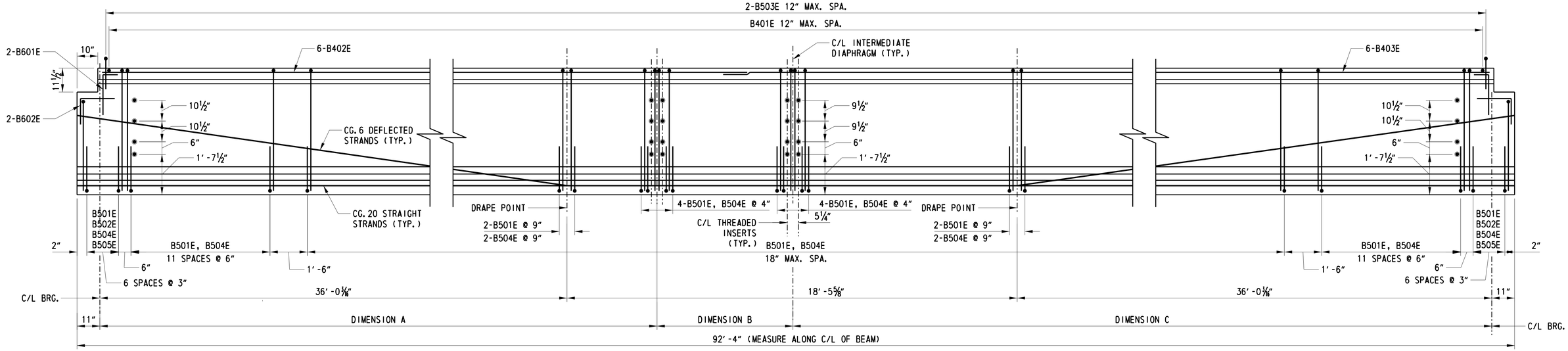

BEAM ELEVATION

SCALE: 1/2" = 1'-0"

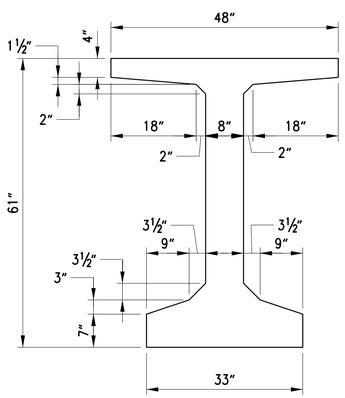

TYPICAL SECTION

SCALE: 3/4" = 1'-0"

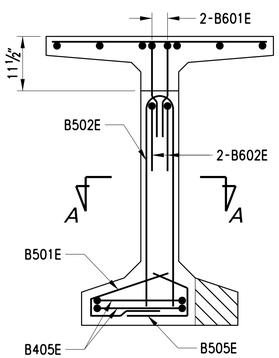

NOTCH END REINFORCEMENT

SCALE: 3/4" = 1'-0"

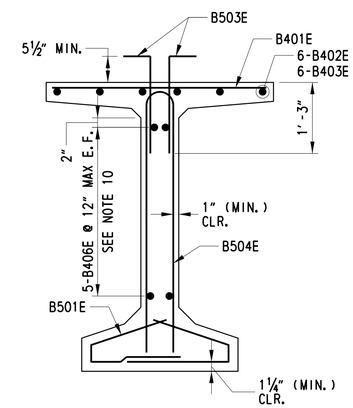

TYPICAL REINFORCEMENT

SCALE: 3/4" = 1'-0"

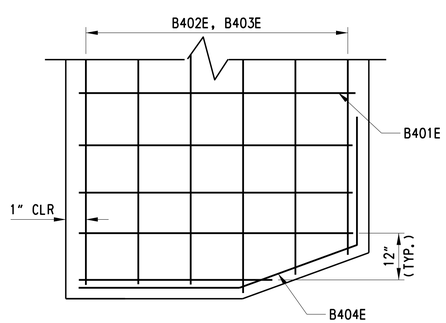

PLAN - TOP FLANGE

SCALE: 1" = 1'-0"

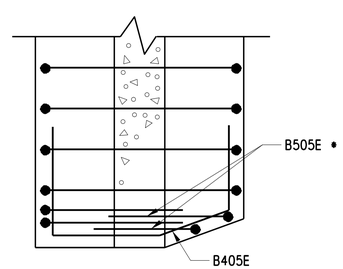

• MODIFY REINFORCEMENT BARS TO ACCOMODATE CLIPPED FLANGE.

SECTION A-A - BOTTOM FLANGE

SCALE: 1" = 1'-0"

INTERMEDIATE DIAPHRAGM SPACING

GIRDERS	DIMENSIONS		
	A	B	C
1N,5N,1S,5S	45'-3"	-	45'-3"
2N & 2S	41'-1 7/8"	5'-5½"	43'-10⅝"
3N & 3S	42'-6¼"	5'-5½"	42'-6¼"
4N & 4S	43'-10⅝"	5'-5½"	41'-1 7/8"

CROSS REFERENCE NOTES:

1. FOR PROJECT NOTES, SEE DWG. 1-472 PN-1.
2. FOR FRAMING PLAN, SEE DWG. 1-472 FR-1 AND 1-472 FR-2.
3. FOR ADDITIONAL BEAM DETAILS, SEE DWG. 1-472 BM-2.
4. FOR PERMANENT STEEL BRIDGE DECK FORM DETAILS, SEE DWG. 1-472 BM-2.
5. FOR DIAPHRAGM SECTION AND DETAILS, SEE DWG. 1-472 DPH-1 AND 1-472 DPH-2.
6. FOR TYPICAL SECTION, SEE DWG. 1-472 TS-1.
7. FOR CAMBER TABLE, SEE DWG. 1-472 BM-2.

NOTES:

1. ALL BEAMS ARE 33/61 PCEF.
2. ALL MILD STEEL REINFORCEMENT IN BEAMS SHALL BE EPOXY COATED.
3. GIRDER LENGTH IN CASTING BED SHALL BE DETERMINED AND DEPICTED IN SHOP DRAWINGS TO COMPENSATE FOR GRADE SHORTENING DUE TO PRESTRESS EFFECTS.
4. TOP SURFACE OF ALL GIRDERS SHALL BE ROUGH FINISHED TO A FULL AMPLITUDE OF 1/4" AND SCRUBBED TRANSVERSELY WITH A COARSE WIRE BRUSH TO REMOVE ALL LAITANCE AND TO PRODUCE A ROUGHENED SURFACE FOR BONDING.
5. NO CLEAR COVER LESS THAN THAT SHOWN ON THESE PLANS WILL BE ACCEPTED.
6. DO NOT PLACE PRESTRESSING STRANDS AT CORNER LOCATION IN BOTTOM ROW.
7. END ZONE REINFORCEMENT MAY BE INCREASED BY FABRICATOR TO REFLECT FABRICATOR'S EXPERIENCE AND/OR TO CONTROL CRACKING.
8. FABRICATOR TO CHECK STABILITY FOR HANDLING AND TRANSPORTING OF THE MEMBER.
9. OMIT DIAPHRAGM THREADED INSERTS ON OUTSIDE FACE OF FASCIA BEAMS.
10. LONGITUDINAL REINFORCEMENT FULL LENGTH OF WEB. OMIT AT STRAND DRAPE POINTS TO MAINTAIN PROPER CLEARANCE. REINFORCEMENT NOT SHOWN IN ELEVATION FOR CLARITY.

1-472 BM-1

DELAWARE DEPARTMENT OF TRANSPORTATION

ADDENDUMS / REVISIONS

US 301 LEVELS ROAD TO SUMMIT BRIDGE ROAD

CONTRACT	BRIDGE NO.	1-472N&S
T200911303	DESIGNED BY: ADH	
COUNTY	CHECKED BY: DHG	
NEW CASTLE		

US 301 MAINLINE OVER ARMSTRONG CORNER ROAD

BEAM DETAILS – 1

SHEET NO. 373

TOTAL SHTS. 1256

P:\cadd2\60049040 US301\Structure\Plans\FINAL\B2-3NS\BR2-3BM-01.dgn

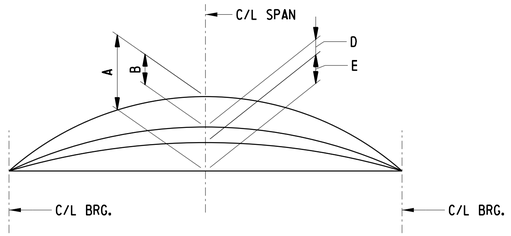

BEAM CAMBER DIAGRAM

NTS

CAMBER					
BEAM	A (IN)	B (IN)	C (IN)	D (IN)	E (IN)
1N, 1S, 5N, 5S	3.483	-1.289	2.194	-0.791	1.403
2N - 4N & 2S - 4S	3.483	-1.289	2.194	-0.964	1.230

LEGEND:

A DENOTES CAMBER DUE TO PRESTRESS AT ERECTION, CREEP FACTOR MULTIPLIER = 1.8.

B DENOTES DEFLECTION DUE TO GIRDER DEAD LOAD AT ERECTION, CREEP MULTIPLIER = 1.85.

C A+B

D DENOTES DEFLECTION DUE TO SLAB, BARRIER AND DIAPHRAGMS.(DOES NOT INCLUDE FUTURE WEARING SURFACE)

E DENOTES NET CAMBER, C+D.

PRESTRESSING DATA	
LOCATION	ALL BEAMS
BEAM SIZE, I-BEAM	33x61
INITIAL PRESTRESSING FORCE PER BEAM 0.60 DIA. LOW RELAXATION STRANDS	1142.50 Kips
NUMBER OF STRANDS	26
CONCRETE STRENGTH AT STRAND RELEASE (f'ci)	6.40 ksi
CONCRETE STRENGTH AT 28 DAYS f'c	8.00 ksi

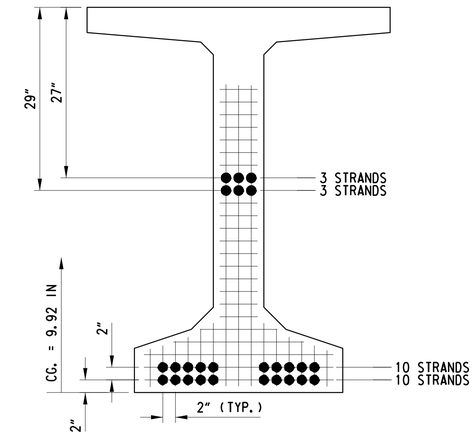

BEAM END PATTERN

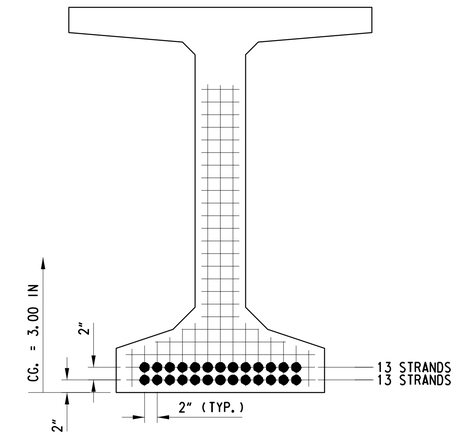

MID SPAN PATTERN

DRAPING PATTERN

SCALE: 1" = 1'-0"

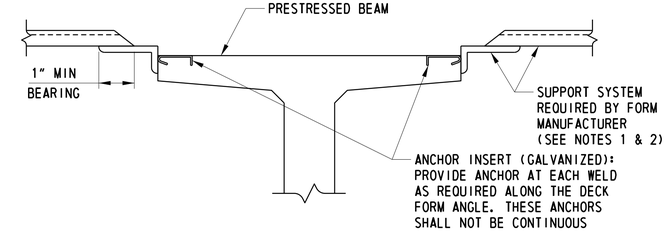

FORM ANCHOR DETAIL

SCALE: 1" = 1'-0"

CROSS REFERENCE NOTES:

1. FOR PROJECT NOTES, SEE DWG. 1-472 PN-1.
2. FOR FRAMING PLAN, SEE DWG. 1-472 FR-1 AND 1-472 FR-2.
3. FOR BEAM ELEVATION AND TYPICAL SECTION, SEE DWG. 1-472 BM-1.

NOTES:

1. PERMANENT STEEL BRIDGE DECK FORMS AND SUPPORTS SHALL BE PROVIDED CONFORMING TO THE REQUIREMENTS OF SECTION 602 OF THE DELDOT STANDARD SPECIFICATIONS AND AS SHOWN IN THE BDM.
2. ANY PERMANENTLY EXPOSED FORM METAL WHERE THE GALVANIZED COATING HAS BEEN DAMAGED SHALL BE THOROUGHLY CLEANED, WIRE BRUSHED AND PAINTED WITH TWO COATS OF ZINC DUST-ZINC OXIDE PAINT, NO COLOR ADDED, TO THE SATISFACTION OF THE ENGINEER. MINOR HEAT DISCOLORATION IN AREAS OF WELDS NEED NOT BE TOUCHED UP.
3. THE MAXIMUM CORRUGATION DEPTH AND WIDTH SHALL BE SUCH THAT THE TOTAL DEAD LOAD OF THE FORM AND CONCRETE IN THE FORM DOES NOT EXCEED 15 LBS/FT^2.
4. VARY THICKNESS OF CONCRETE HAUNCH TO COMPENSATE FOR ANY INACCURACIES IN BEAM CAMBER.
5. CAMBER VALUES ARE THEORETICAL VALUES AND MAY VARY WITH ACTUAL CONCRETE STRENGTH (AGE), VARIOUS PRESTRESSING CONDITIONS, CREEP FACTOR AND PRESTRESS LOSSES. CONTRACTOR TO VERIFY THESE VALUES IN THE FIELD.

1-472 BM-2

DELAWARE DEPARTMENT OF TRANSPORTATION

ADDENDUMS / REVISIONS

SCALE 1 0 1 FEET

US 301 LEVELS ROAD TO SUMMIT BRIDGE ROAD

CONTRACT	BRIDGE NO.	1-472N&S	US 301 MAINLINE OVER ARMSTRONG CORNER ROAD	SHEET NO.
T200911303	DESIGNED BY: ADH		BEAM DETAILS – 2	374
COUNTY				TOTAL SHTS.
NEW CASTLE	CHECKED BY: DHG			1256

P:\cadd2\60049040 US301\Structure\Plans\FINAL\B2-3NS\BR2-3BM-02.dgn

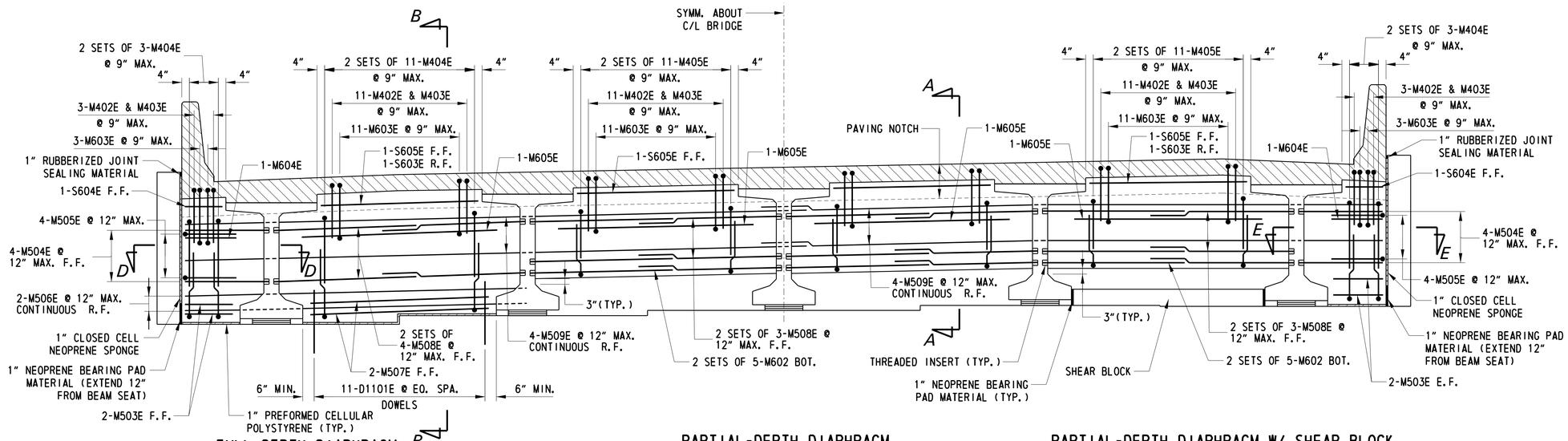

FULL-DEPTH DIAPHRAGM

(BAYS 1 & 4)

PARTIAL-DEPTH DIAPHRAGM

(BAYS 2 & 3)
ABUTMENT 2 PARTIAL DEPTH DIAPHRAGM REINFORCEMENT SAME AS ABUTMENT 1

PARTIAL-DEPTH DIAPHRAGM W/ SHEAR BLOCK

(BAYS 1 & 4)

NOTE:
S603E & M509E ARE CONTINUOUS ALONG R.F. OF DIAPHRAGM AND LAP AT MIDSPAN OF BRIDGE

ABUTMENT 1 (FIXED)

ABUTMENT 2 (EXP.)

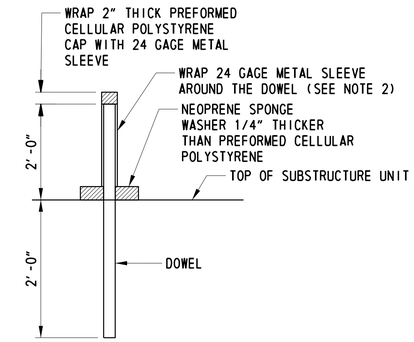

DOWEL DETAIL

SCALE: NTS

TYPICAL DIAPHRAGM SECTION

SCALE: 3/8" = 1'-0"

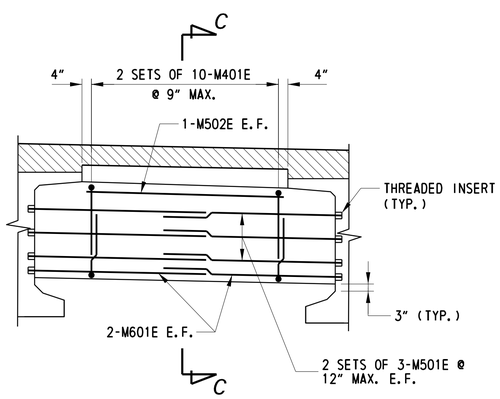

INTERMEDIATE DIAPHRAGM

SCALE: 3/8" = 1'-0"

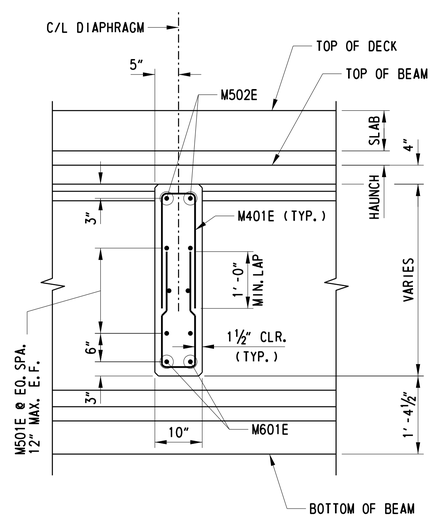

SECTION C-C

SCALE: 3/4" = 1'-0"

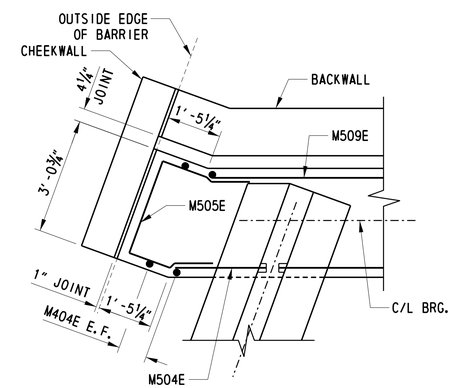

SECTION D-D

SCALE: 1/2" = 1'-0"

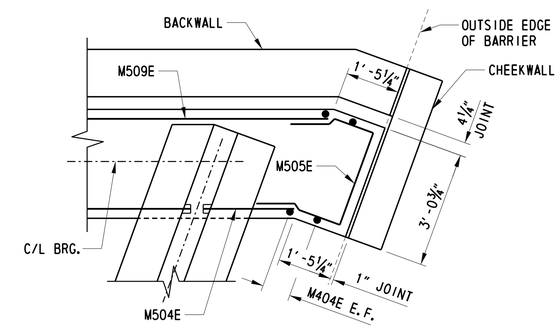

SECTION E-E

SCALE: 1/2" = 1'-0"

NOTES:

1. INSERTS FOR DEFORMED BARS SHALL BE ONE SIZE SMALLER. THE MINIMUM LENGTH OF INSERT IS 3".
2. BITUMINOUS TAR PAPER OR SCHEDULE 40 P.V.C. PIPE ARE PERMITTED TO BE USED AS ALTERNATE BOND BREAKER MATERIALS IN LIEU OF THE METAL SLEEVE. OTHER BOND BREAKER MATERIALS MAY BE USED WITH THE APPROVAL OF THE ENGINEER. DO NOT USE ALUMINUM SLEEVES.
3. MINIMUM LAP SPLICE LENGTHS:
   2'-7" #5 BARS
   3'-1" #6 BARS
4. 1" CLOSED CELL NEOPRENE SPONGE, 1" NEOPRENE BEARING PAD MATERIAL, 1" PREFORMED CELLULAR POLYSTYRENE AND 1" RUBBERIZED JOINT SEALING MATERIAL TO BE INCIDENTAL TO ITEM 602013.

CROSS REFERENCE NOTES:

1. FOR SHEAR BLOCK DETAILS, SEE DWG. 1-472 AB-3.
2 FOR SECTION A-A AND B-B, SEE DWG. 1-472 DPH-2
3. FOR CHEEKWALL REINFORCEMENT, SEE DWG. 1-472 AB-5.

1-472 DPH-1

DELAWARE DEPARTMENT OF TRANSPORTATION	ADDENDUMS / REVISIONS	US 301 LEVELS ROAD TO SUMMIT BRIDGE ROAD	CONTRACT T200911303	BRIDGE NO. 1-472N&S	US 301 MAINLINE OVER ARMSTRONG CORNER ROAD	SHEET NO. 375
			COUNTY NEW CASTLE	DESIGNED BY: ADH	DIAPHRAGM DETAILS – 1	TOTAL SHTS. 1256
				CHECKED BY: DHG		

P:\cadd2\60049040 US301\Structure\Plans\FINAL\B2-3NS\BR2-3DPH-01.dgn

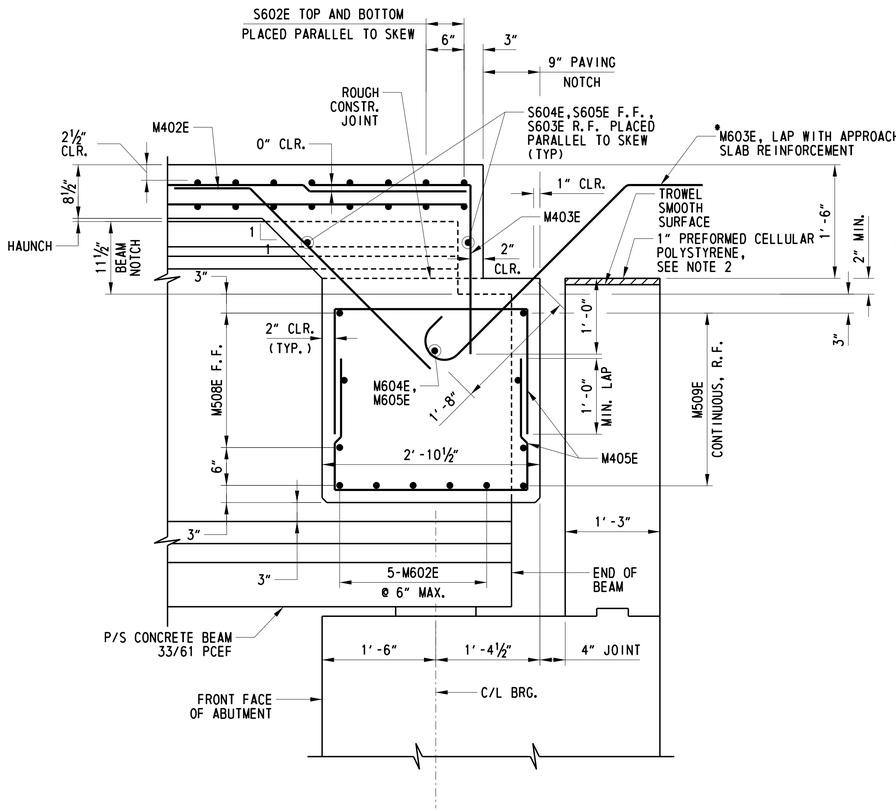

SECTION A-A
PARTIAL-DEPTH DIAPHRAGM
(FIXED AND EXPANSION)

SCALE: 1" = 1'-0"

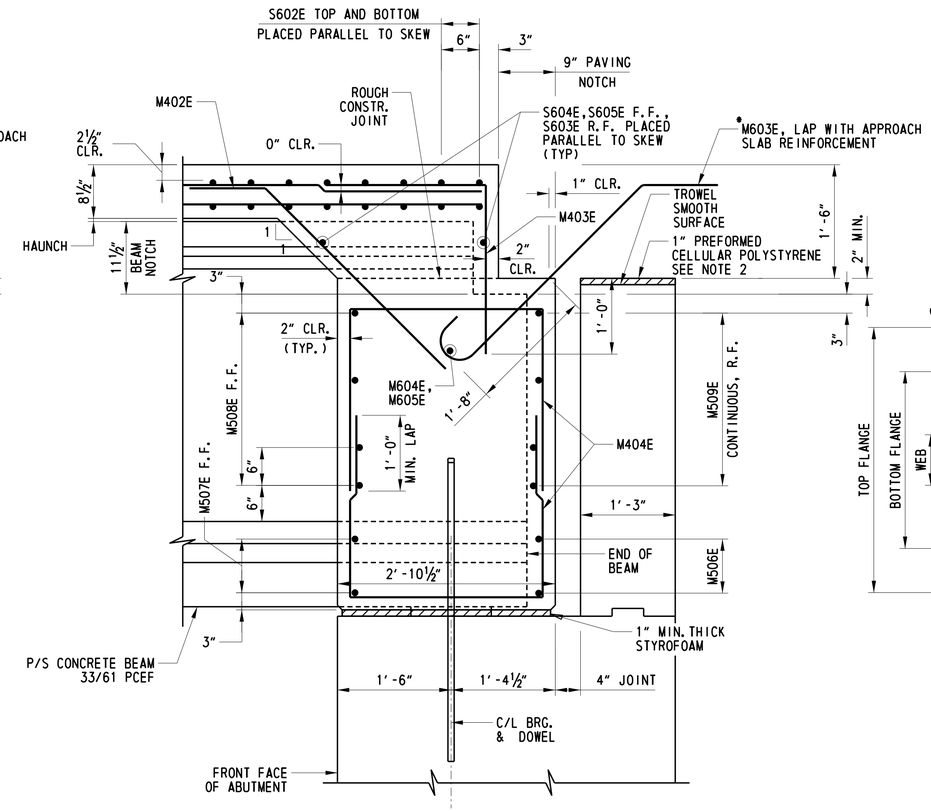

SECTION B-B
FULL-DEPTH DIAPHRAGM
(FIXED)

SCALE: 1" = 1'-0"

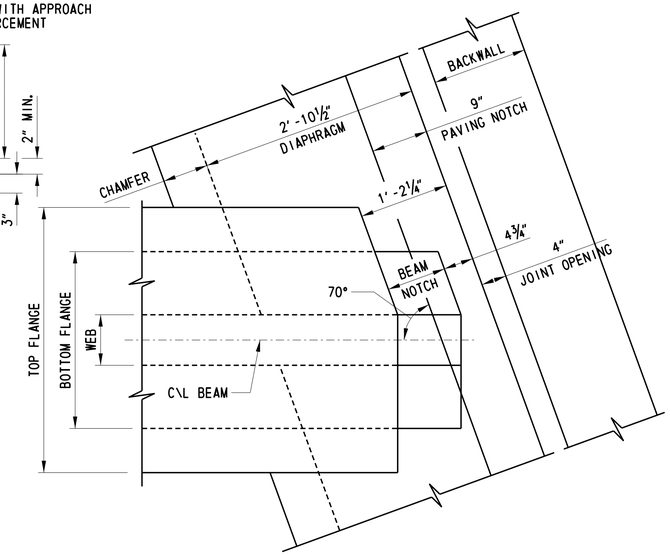

PLAN - END OF BEAM

SCALE: 1" = 1'-0"

•APPROACH SLAB NOT SHOWN FOR CLARITY.

NOTES:

1. INSERTS FOR DEFORMED BARS SHALL BE ONE SIZE SMALLER FOR DEFORMED BARS. THE MINIMUM LENGTH OF INSERT IS 3".
2. 1" PREFORMED CELLULAR POLYSTYRENE INCIDENTAL TO ITEM 602014. 1" PREFORMED CELLULAR POLYSTYRENE TO REMAIN IN PLACE.

CROSS REFERENCE NOTES:

1. FOR APPROACH SLAB DETAILS, SEE DWG. 1-472 PA-1.
2. FOR ADDITIONAL DOWEL DETAILS, SEE DWG 1-472 DPH-1.

1-472 DPH-2

DELAWARE DEPARTMENT OF TRANSPORTATION	ADDENDUMS / REVISIONS	SCALE 1 0 1 FEET	US 301 LEVELS ROAD TO SUMMIT BRIDGE ROAD	CONTRACT T200911303	BRIDGE NO. 1-472N&S	US 301 MAINLINE OVER ARMSTRONG CORNER ROAD	SHEET NO. 376
				COUNTY NEW CASTLE	DESIGNED BY: ADH	DIAPHRAGM DETAILS – 2	TOTAL SHTS. 1256
					CHECKED BY: DHG		

P:\cadd2\60049040_US301\Structure\Plans\FINAL\B2-3NS\BR2-3DPH-02.dgn

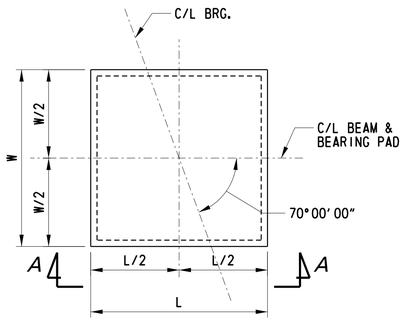

BEARING PAD PLAN

NTS

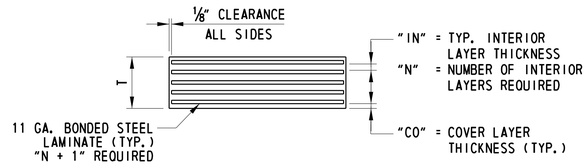

SECTION A-A

BEARING PAD DATA									
LOCATION	QUANTITY	L (IN)	W (IN)	T (IN)	IN (IN)	N	N+1	CO (IN)	COMPRESSION AREA (IN²)
ABUT 1 (FIXED)	10	14	17	3.401	0.4375	5	6	0.25	238
ABUT 2 (EXPANSION)	10	15	16	3.958	0.4375	6	7	0.25	240

UNFACTORED BEAM REACTIONS			
LOCATION		DEAD LOAD (kip)	LIVE LOAD (kip)
ABUT 1 (FIXED)	EXTERIOR BEAM	136.00	89.67
	INTERIOR BEAM	150.00	102.94
ABUT 2 (EXP.)	EXTERIOR BEAM	134.60	89.67
	INTERIOR BEAM	149.10	102.94

LAMINATED ELASTOMERIC BEARING PAD NOTES:

1. SMOOTH CUT AND DEBURR METAL SHIMS.
2. GRIT BLAST AND DEGREASE METAL SHIMS.
3. ALL BEARINGS ARE TO BE MOLDED TO DESIGN DIMENSIONS. CUTTING TO SIZE AFTER FABRICATION IS PROHIBITED.
4. HOLES ARE NOT PERMITTED IN THE ELASTOMERIC BEARINGS.
5. PROVIDE NEOPRENE 50 +/-5 DUROMETER.
6. PROVIDE MINIMUM LOW-TEMPERATURE NEOPRENE, GRADE 3.
7. VULCANIZE PATCH PIN GROOVES.

NOTE:

1. LAMINATED ELASTOMERIC BEARING PADS SHALL BE INCIDENTAL TO ITEM 623000.

CROSS REFERENCE NOTES:

1. FOR FRAMING PLAN, SEE DWG. 1-472 FR-1 AND 1-472 FR-2.
2. FOR BEAM ELEVATION AND TYPICAL SECTIONS, SEE DWG. 1-472 BM-1 AND 1-472 BM-2.

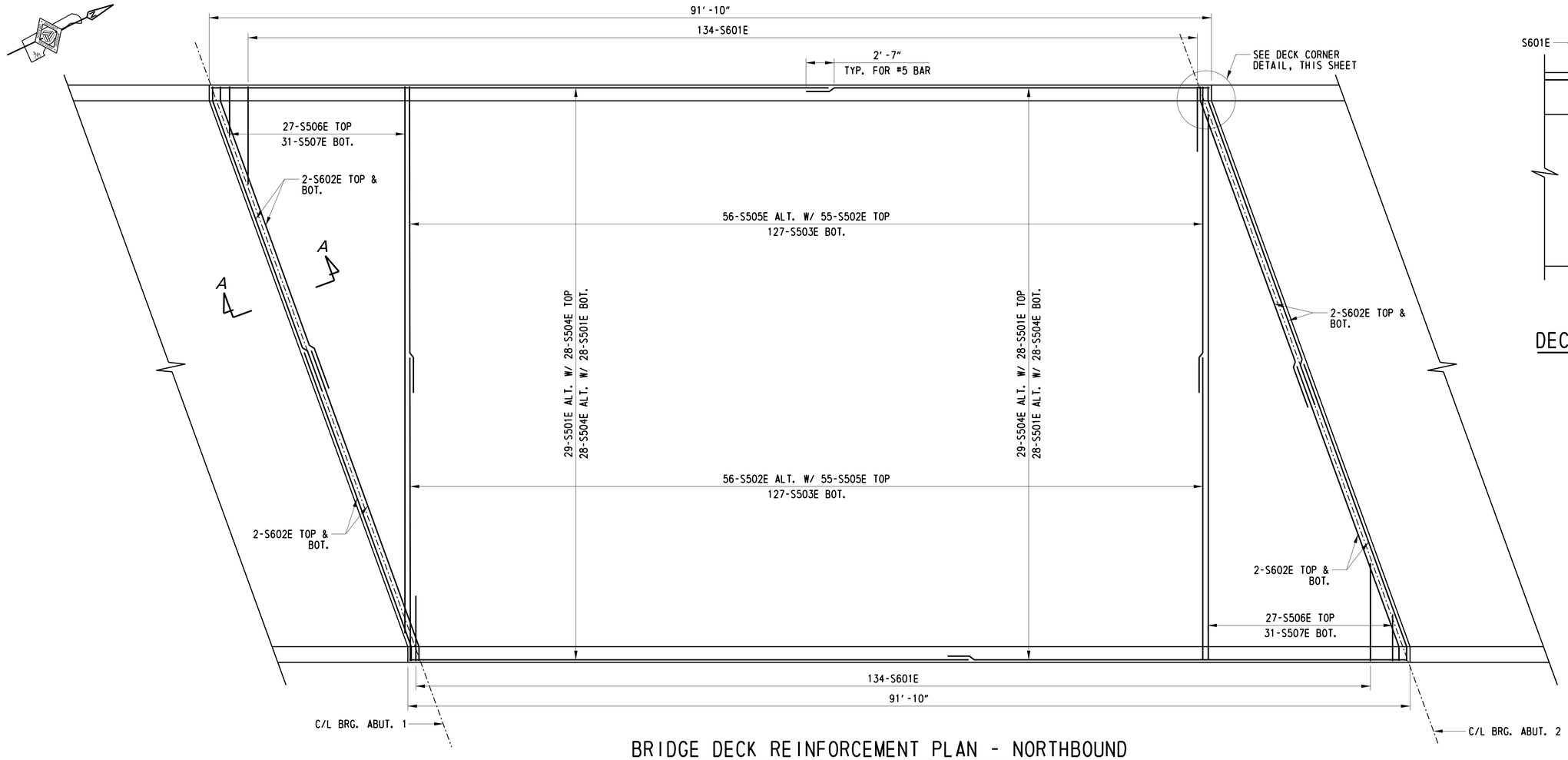

BRIDGE DECK REINFORCEMENT PLAN - NORTHBOUND

SCALE: 3/16" = 1'-0"

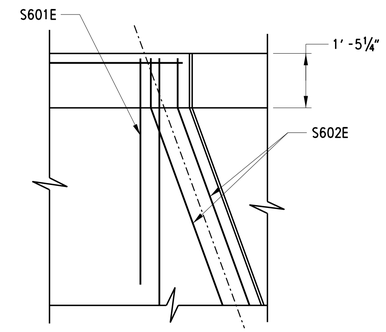

DECK CORNER DETAIL

SCALE: 1/2" = 1'-0"

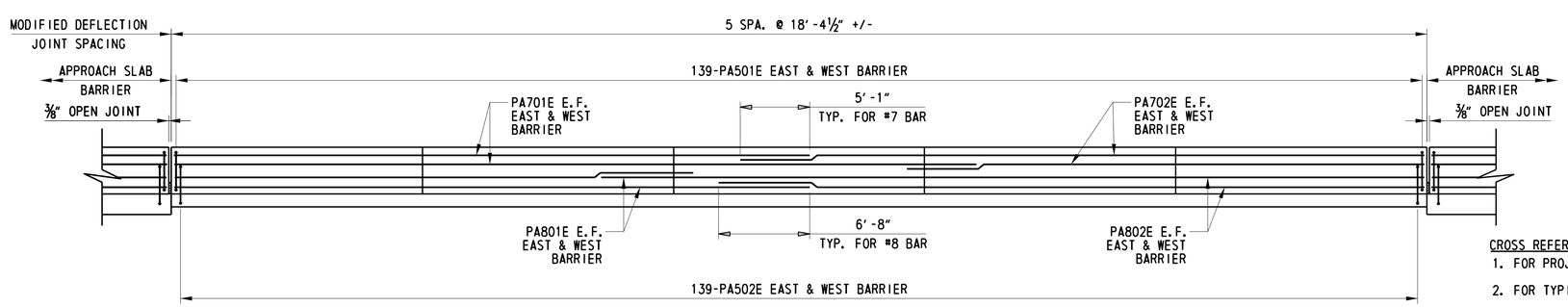

ELEVATION - DECK AND BARRIER REINFORCEMENT

SCALE: 3/16" = 1'-0"

CROSS REFERENCE NOTES:

1. FOR PROJECT NOTES, SEE DWG. 1-472 PN-1.
2. FOR TYPICAL DECK AND BARRIER SECTION, SEE DWG. 1-472 PA-1.
3. FOR REINFORCEMENT BAR SCHEDULE, SEE DWG. 1-472 BR-2.
4. FOR SECTION A-A, SEE DWG. 1-472 PA-1.
5. FOR MODIFIED DEFLECTION CONTROL JOINT, SEE DWG. 1-472 DK-2.

1-472 DK-1

DELAWARE DEPARTMENT OF TRANSPORTATION	ADDENDUMS / REVISIONS	US 301 LEVELS ROAD TO SUMMIT BRIDGE ROAD	CONTRACT T200911303	BRIDGE NO. 1-472N&S	US 301 MAINLINE OVER ARMSTRONG CORNER ROAD BRIDGE DECK REINFORCEMENT – NORTHBOUND	SHEET NO. 378
			COUNTY NEW CASTLE	DESIGNED BY: ADH		TOTAL SHTS. 1256
				CHECKED BY: DHG		

P:\cadd2\60049040 US301\Structure\Plans\FINAL\B2-3NS\BR2-3DK-01.dgn

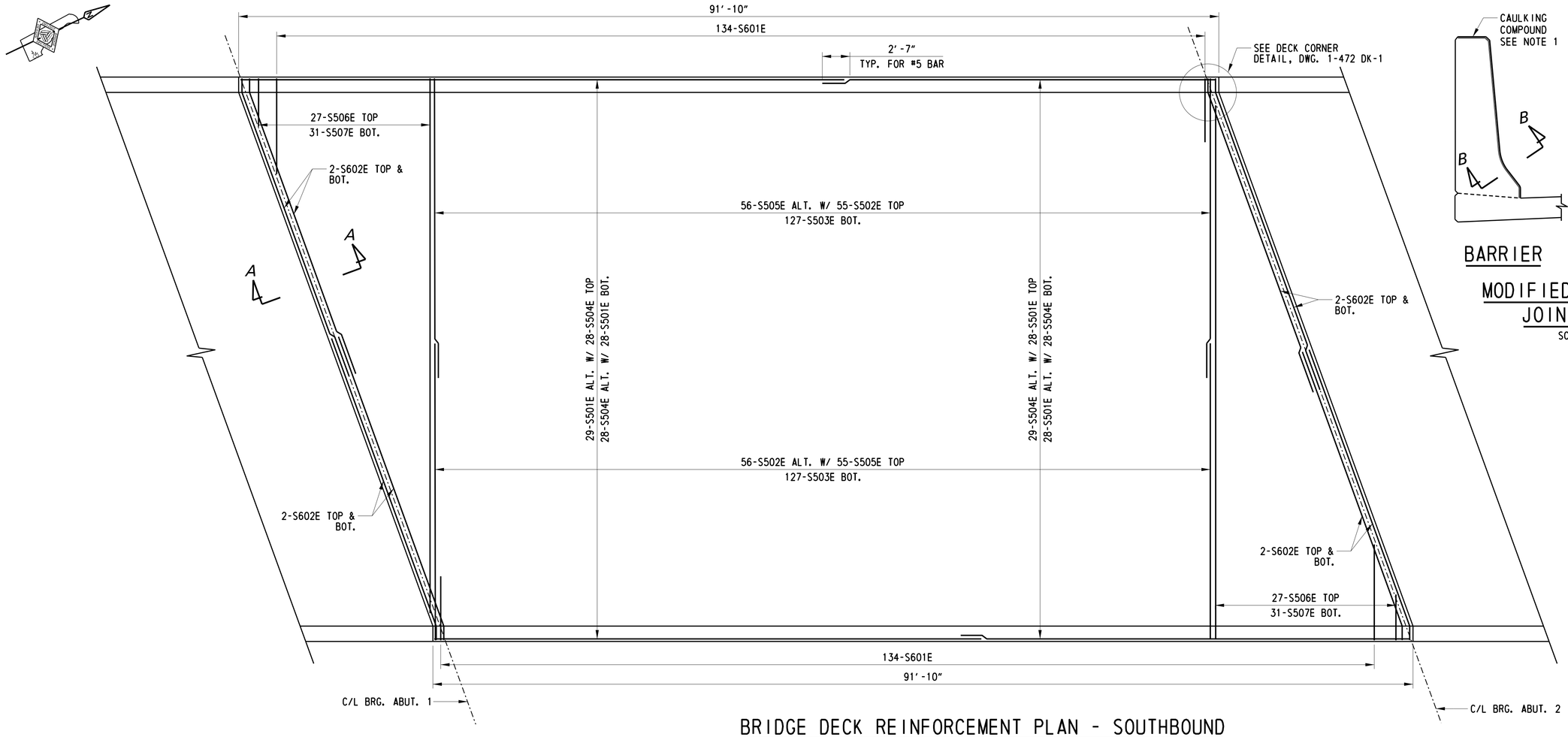

BRIDGE DECK REINFORCEMENT PLAN - SOUTHBOUND

SCALE: 3/16" = 1'-0"

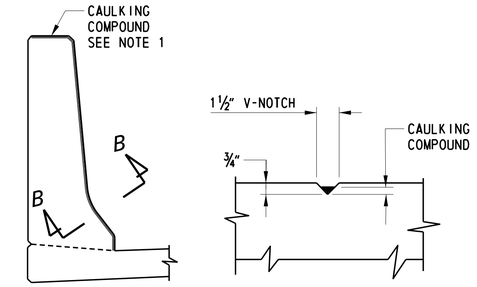

BARRIER SECTION B-B

MODIFIED DEFLECTION JOINT DETAIL

SCALE: NTS

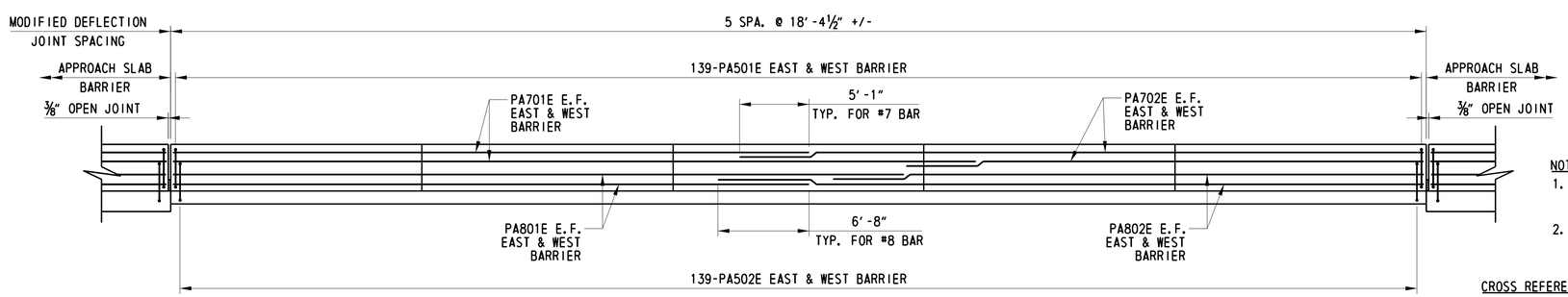

ELEVATION - DECK AND BARRIER REINFORCEMENT

SCALE: 3/16" = 1'-0"

NOTES:

1. CAULKING COMPOUND SHALL CONFORM TO THE REQUIREMENTS OF ASTM C834 OR C920.
2. MODIFIED DEFLECTION JOINT DETAIL INCIDENTAL TO ITEM 602017.

CROSS REFERENCE NOTES:

1. FOR PROJECT NOTES, SEE DWG. 1-472 PN-1.
2. FOR TYPICAL DECK AND BARRIER SECTION, SEE DWG. 1-472 PA-1.
3. FOR REINFORCEMENT BAR SCHEDULE, SEE DWG. 1-472 BR-2.
4. FOR SECTION A-A, SEE DWG. 1-472 PA-1.

1-472 DK-2

DELAWARE DEPARTMENT OF TRANSPORTATION	ADDENDUMS / REVISIONS	SCALE 2 0 2 4 6 FEET	US 301 LEVELS ROAD TO SUMMIT BRIDGE ROAD	CONTRACT T200911303	BRIDGE NO. 1-472N&S	US 301 MAINLINE OVER ARMSTRONG CORNER ROAD BRIDGE DECK REINFORCEMENT – SOUTHBOUND	SHEET NO. 379
				COUNTY NEW CASTLE	DESIGNED BY: ADH		TOTAL SHTS. 1256
					CHECKED BY: DHG		

P:\cadd2\60049040_US301\Structure\Plans\FINAL\B2-3NS\BR2-30K-02.dgn

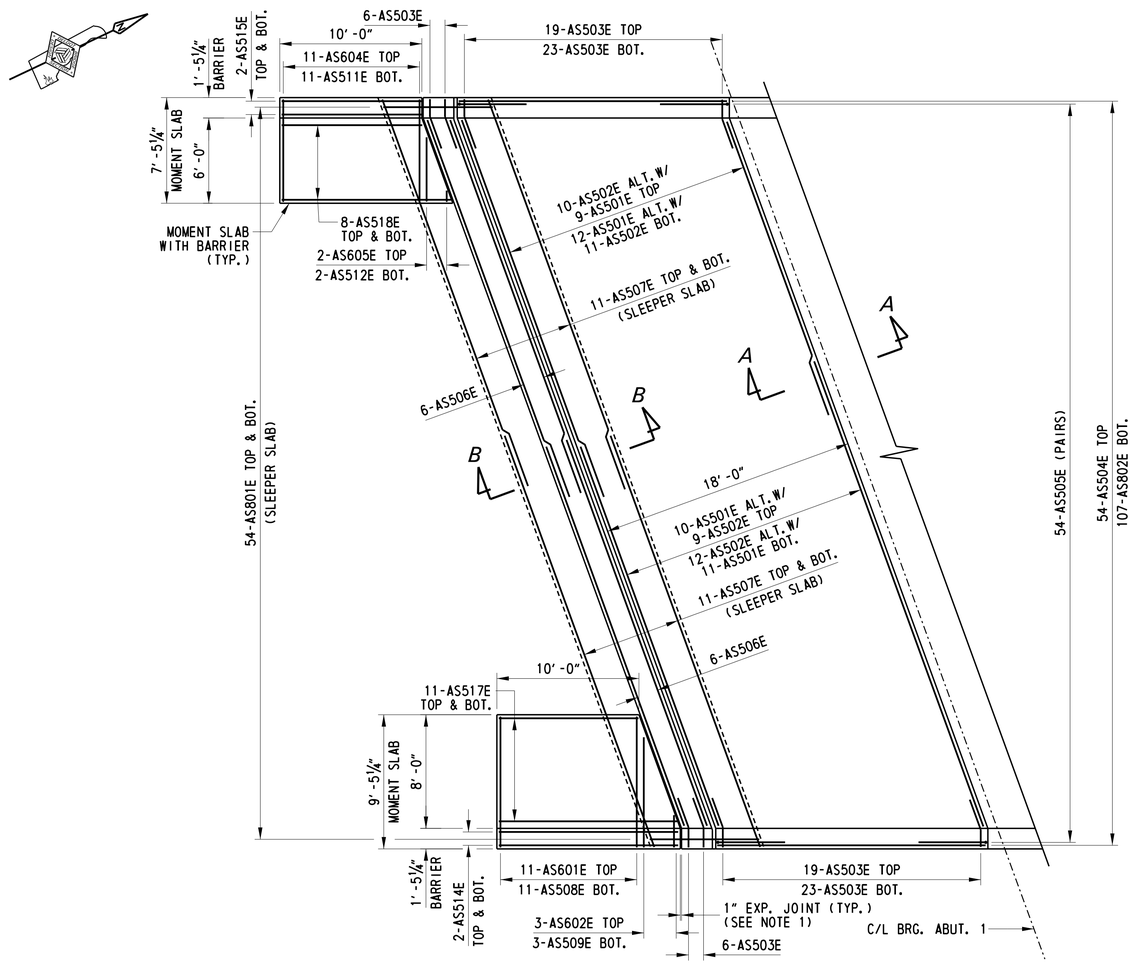

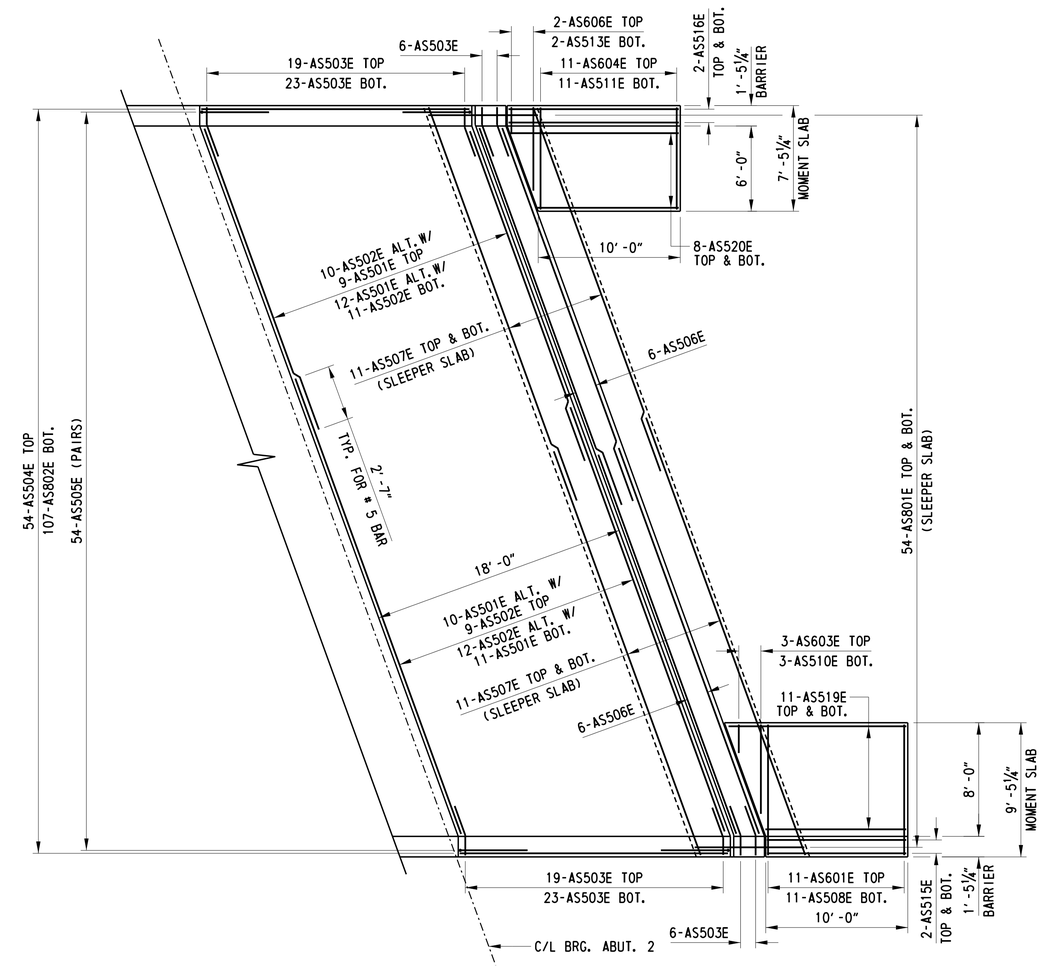

BRIDGE APPROACH SLAB REINFORCEMENT PLAN - NORTHBOUND

SCALE: 3/16" = 1'-0"

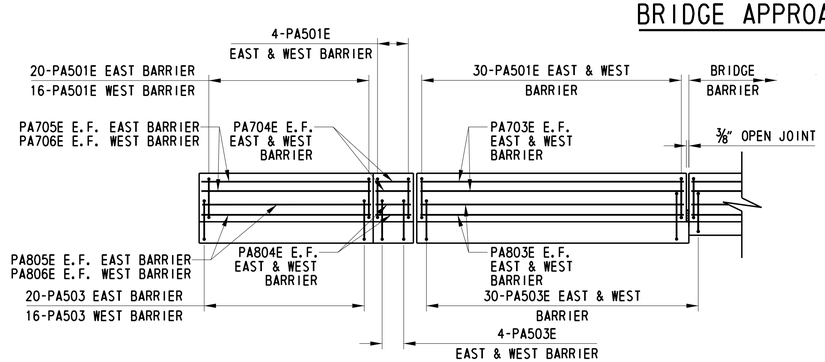

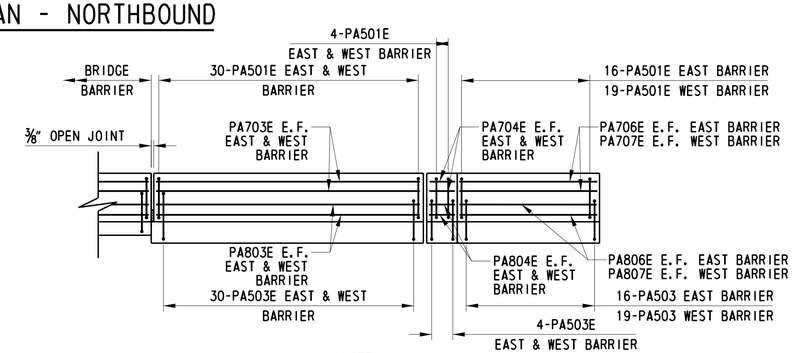

ELEVATION - BRIDGE APPROACH SLAB BARRIER REINFORCEMENT

SCALE: 3/16" = 1'-0"

NOTE:

1. FOR JOINT DETAIL SEE DELDOT ROADWAY STANDARD P-1. INCIDENTAL TO ITEM 602014.

CROSS REFERENCE NOTES:

1. FOR PROJECT NOTES, SEE DWG. 1-472 PN-1.
2. FOR DECK PLAN, SEE DWG. 1-472 DK-1.
3. FOR REINFORCEMENT BAR SCHEDULE, SEE DWG. 1-472 BR-3.
4. FOR SECTIONS A-A AND B-B, SEE DWG. 1-472 PA-1.

1-472 AS-1

DELAWARE DEPARTMENT OF TRANSPORTATION	ADDENDUMS / REVISIONS	SCALE 2 0 2 4 6 FEET	US 301 LEVELS ROAD TO SUMMIT BRIDGE ROAD	CONTRACT T200911303	BRIDGE NO. 1-472N&S	US 301 MAINLINE OVER ARMSTRONG CORNER ROAD BRIDGE APPROACH SLAB REINFORCEMENT – NORTHBOUND	SHEET NO. 380
				COUNTY NEW CASTLE	DESIGNED BY: ADH		TOTAL SHTS. 1256
					CHECKED BY: DHG		

P:\cadd2\60049040 US301\Structure\Plans\FINAL\B2-3NS\BR2-3AS-01.dgn

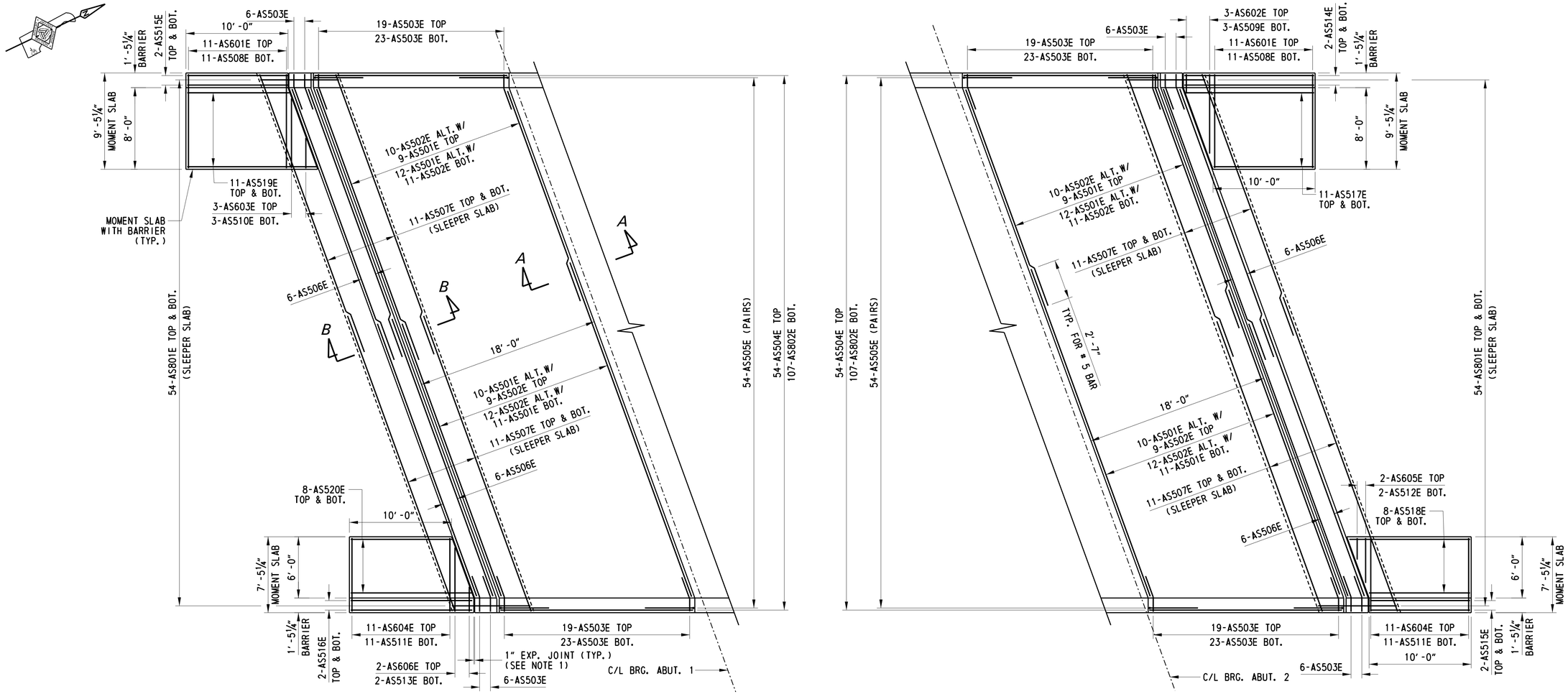

BRIDGE APPROACH SLAB REINFORCEMENT PLAN - SOUTHBOUND

SCALE: 3/16" = 1'-0"

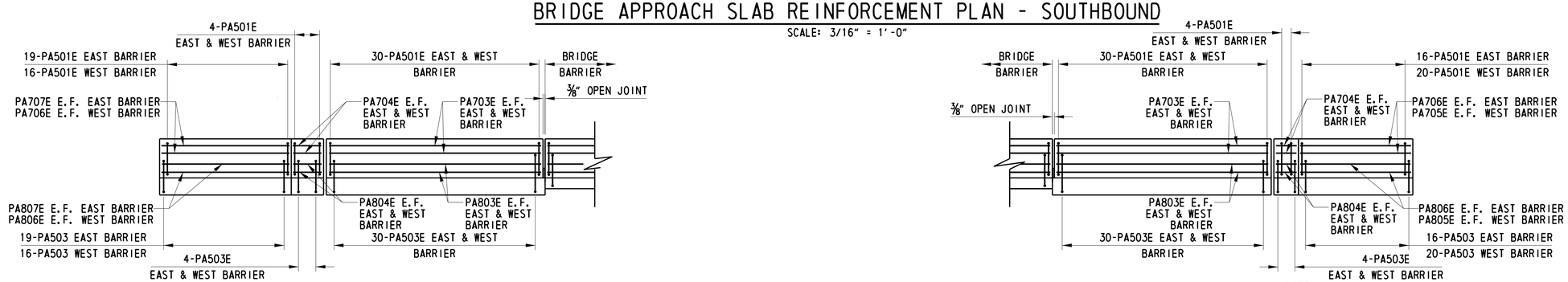

ELEVATION - BRIDGE APPROACH SLAB BARRIER REINFORCEMENT

SCALE: 3/16" = 1'-0"

NOTE:

1. FOR JOINT DETAIL SEE DELDOT ROADWAY STANDARD P-1. INCIDENTAL TO ITEM 602014.

CROSS REFERENCE NOTES:

1. FOR PROJECT NOTES, SEE DWG. 1-472 PN-1.
2. FOR DECK PLAN, SEE DWG. 1-472 DK-2.
3. FOR REINFORCEMENT BAR SCHEDULE, SEE DWG. 1-472 BR-3.
4. FOR SECTIONS A-A AND B-B, SEE DWG. 1-472 PA-1.

1-472 AS-2

DELAWARE DEPARTMENT OF TRANSPORTATION	ADDENDUMS / REVISIONS	SCALE 2 0 2 4 6 FEET	US 301 LEVELS ROAD TO SUMMIT BRIDGE ROAD	CONTRACT T200911303	BRIDGE NO. 1-472N&S	US 301 MAINLINE OVER ARMSTRONG CORNER ROAD BRIDGE APPROACH SLAB REINFORCEMENT – SOUTHBOUND	SHEET NO. 381
				COUNTY NEW CASTLE	DESIGNED BY: ADH		TOTAL SHTS. 1256
					CHECKED BY: DHG		

P:\cadd2\60049040 US301\Structure\Plans\FINAL\B2-3NS\BR2-3AS-02.dgn

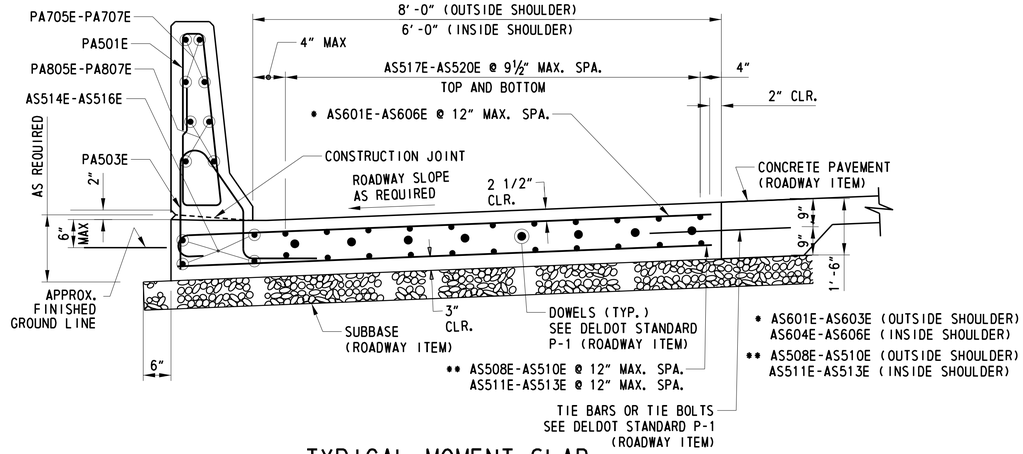

TYPICAL MOMENT SLAB

SCALE: 1" = 1'-0"

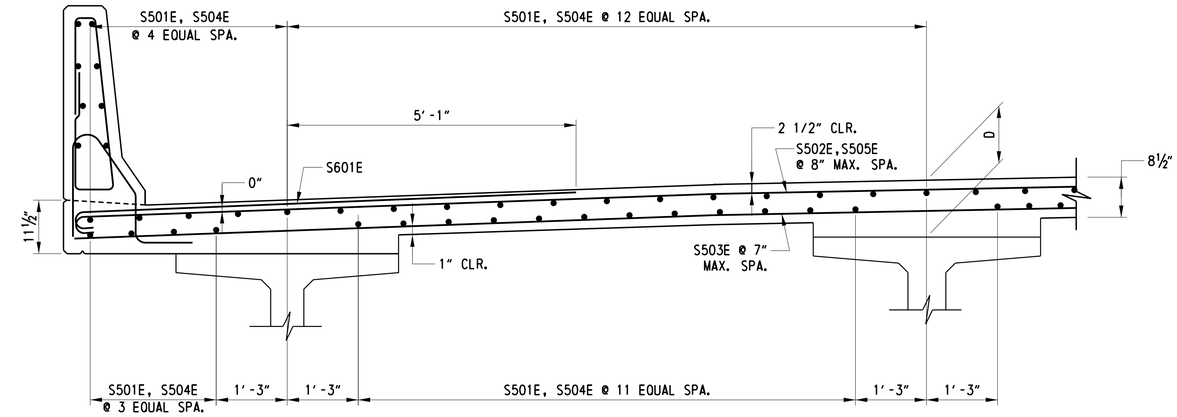

TYPICAL DECK REINFORCEMENT SECTION

SCALE: 3/4" = 1'-0"

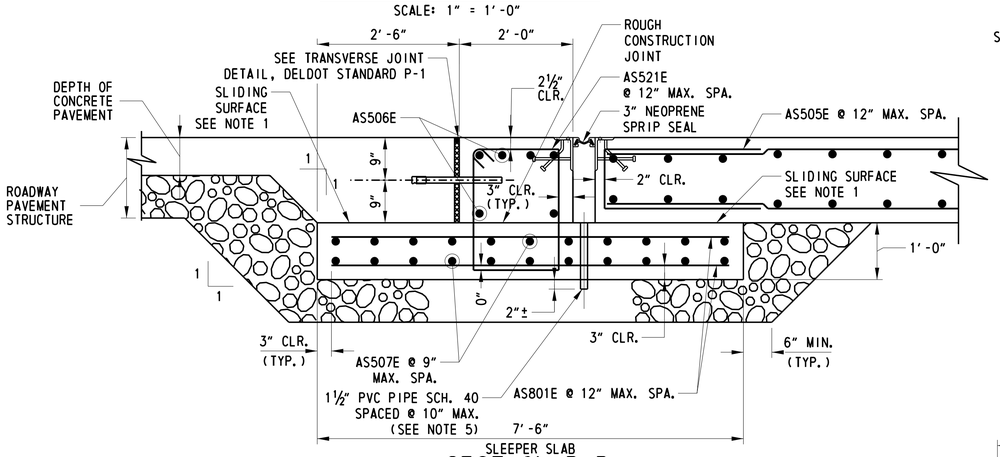

SECTION B-B

SCALE: 3/4" = 1'-0"

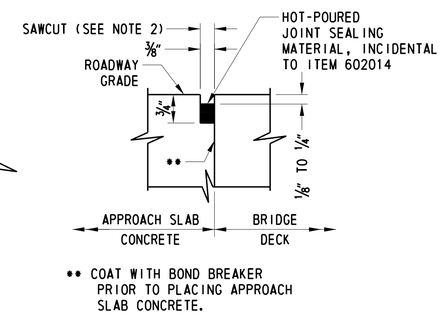

** COAT WITH BOND BREAKER PRIOR TO PLACING APPROACH SLAB CONCRETE.

DETAIL 1

SCALE: 6" = 1'-0"

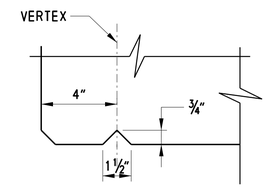

DRIP NOTCH DETAIL

SCALE: 3" = 1'-0"

SLAB THICKNESS "D" AT C/L OF BRGS. (IN)					
BEAM NO.	1S	2S	3S	4S	5S
C/L BRG. ABUT. 1	11.00	10.35	10.35	10.71	11.00
C/L BRG. ABUT. 2	11.00	10.35	10.35	10.83	11.00
BEAM NO.	1N	2N	3N	4N	5N
C/L BRG. ABUT. 1	11.00	10.83	10.35	10.35	11.00
C/L BRG. ABUT. 2	11.00	10.71	10.35	10.35	11.00

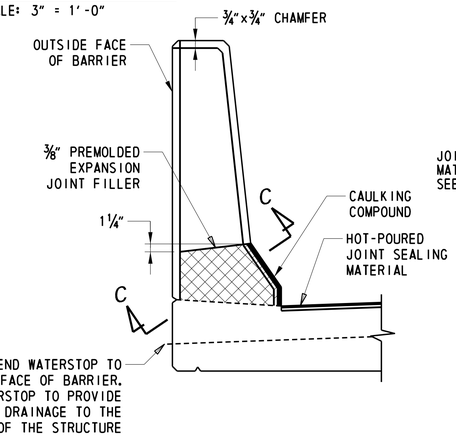

JOINT SEAL AND WATERSTOP TERMINATION DETAIL

SCALE: NTS

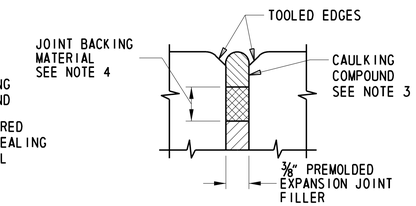

SECTION C-C

SCALE: NTS

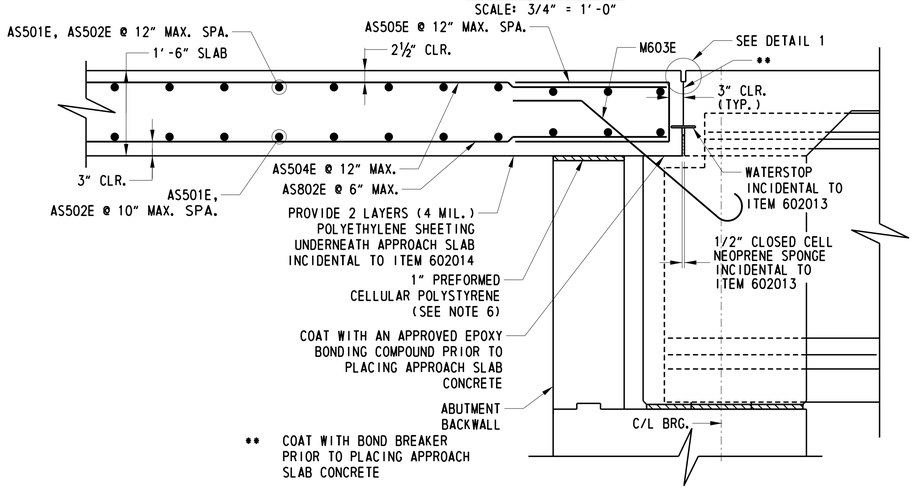

SECTION A-A

SCALE: 3/4" = 1'-0"

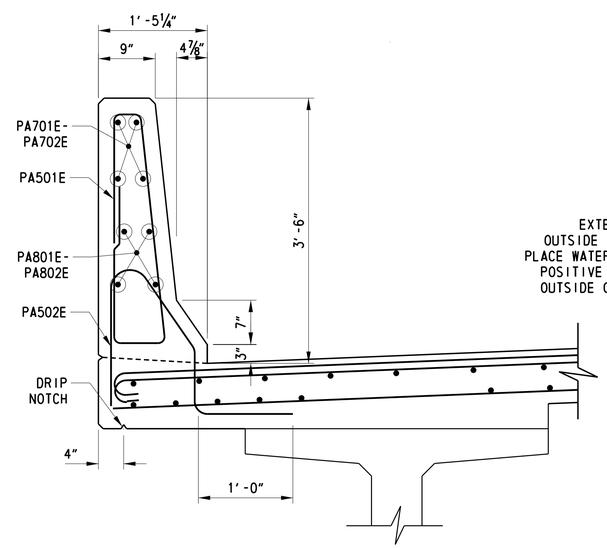

TYPICAL BARRIER REINFORCEMENT SECTION

SCALE: 1" = 1'-0"

CROSS REFERENCE NOTES:

1. FOR DECK REINFORCING PLAN, SEE DWG. 1-472 DK-1 AND 1-472 DK-2.
2. FOR REINFORCEMENT SCHEDULE, SEE SEE DWG. 1-472 BR-2 AND 1-472 BR-3.
3. FOR EXPANSION JOINT DETAILS, SEE SEE DWG. 1-472 EX-1.

NOTES:

1. TROWEL SMOOTH AND PLACE 2 LAYERS OF 4 MIL. POLYETHYLENE SHEETING AS BOND BREAKER. POLYETHYLENE TO BE INCIDENTAL TO ITEM 602014.
2. WATER BLAST OPENING IMMEDIATELY FOLLOWING SAW CUTTING OPERATION TO REMOVE ANY RESIDUAL SLURRY BEFORE IT DRIES.
3. CAULKING COMPOUND SHALL CONFORM TO THE REQUIREMENTS OF ASTM C834 OR C920. INCIDENTAL TO ITEM 602017.
4. JOINT BACKING MATERIAL SHALL BE IN ACCORDANCE WITH ASTM D5249. INCIDENTAL TO ITEM 602017.
5. PVC PIPE TO BE INCIDENTAL TO ITEM 602014.
6. 1" PREFORMED CELLULAR POLYSTYRENETO BE INCIDENTAL TO ITEM 602014.

1-472 PA-1.

DELAWARE DEPARTMENT OF TRANSPORTATION

ADDENDUMS / REVISIONS

US 301 LEVELS ROAD TO SUMMIT BRIDGE ROAD

CONTRACT	BRIDGE NO.	1-472N&S
T200911303	DESIGNED BY: ADH	
COUNTY		
NEW CASTLE	CHECKED BY: DHG	

US 301 MAINLINE OVER ARMSTRONG CORNER ROAD

DECK SECTIONS AND DETAILS

SHEET NO. 382

TOTAL SHTS. 1256

P:\cadd2\60049040 US301\Structure\Plans\FINAL\B2-3NS\BR2-3PA-01.dgn

REINFORCING BAR SCHEDULE

NORTHBOUND DECK BAR SCHEDULE

MARK	LENGTH	NO. BARS	TYPE	A	B	C	D	E	F	G	H	I	J	K	REMARKS
S501E	35'-0"	113	STR												
S502E	23'-0"	111	14	7"	22'-5"		5"								
S503E	27'-7"	254	STR												
S504E	60'-0"	113	STR												
S505E	34'-0"	111	14	7"	33'-5"		5"								
S506E	VARIES	54	14	7"	VARIES		5"								VARY 2 EA.,
	2'-4" TO				1'-9" TO										"B" BY 1'-10"
	50'-0"				49'-5"										
S507E	VARIES	62	STR												VARY 2 EA. BY 1'-7¼"
	1'-6" TO														
	49'-7"														
S601E	9'-8"	268	14	8"	9'-0"		6"								
S602E	30'-9"	16	11	29'-6"	1'-3"	5"									
S603E	29'-6"	4	STR												
S604E	1'-6"	4	STR												
S605E	7'-4"	8	STR												
PA501E	7'-3⅜"	278	28	2'-9¼"	3"	1⅝"	2¾"	2'-9½"	3⅛"	5⅛"		3½"			
PA502E	5'-0⅛"	278	43	1'-0⅛"	7"	9⅛"	1'-6"	1"	9"	7"	3"	10"			
PA701E	36'-7"	8	STR												
PA702E	60'-0"	8	STR												
PA801E	60'-0"	8	STR												
PA802E	38'-2"	8	STR												

SOUTHBOUND DECK BAR SCHEDULE

MARK	LENGTH	NO. BARS	TYPE	A	B	C	D	E	F	G	H	I	J	K	REMARKS
S501E	35'-0"	113	STR												
S502E	23'-0"	111	14	7"	22'-5"		5"								
S503E	27'-7"	254	STR												
S504E	60'-0"	113	STR												
S505E	34'-0"	111	14	7"	33'-5"		5"								
S506E	VARIES	54	14	7"	VARIES		5"								VARY 2 EA.,
	2'-4" TO				1'-9" TO										"B" BY 1'-10"
	50'-0"				49'-5"										
S507E	VARIES	62	STR												VARY 2 EA. BY 1'-7¼"
	1'-6" TO														
	49'-7"														
S601E	9'-8"	268	14	8"	9'-0"		6"								
S602E	30'-9"	16	11	29'-6"	1'-3"	5"									
S603E	29'-6"	4	STR												
S604E	1'-6"	4	STR												
S605E	7'-4"	8	STR												
PA501E	7'-3⅜"	278	28	2'-9¼"	3"	1⅝"	2¾"	2'-9½"	3⅛"	5⅛"		3½"			
PA502E	5'-0⅛"	278	43	1'-0⅛"	7"	9⅛"	1'-6"	1"	9"	7"	3"	10"			
PA701E	36'-7"	8	STR												
PA702E	60'-0"	8	STR												
PA801E	60'-0"	8	STR												
PA802E	38'-2"	8	STR												

NORTHBOUND DIAPHRAGM BAR SCHEDULE

MARK	LENGTH	NO. BARS	TYPE	A	B	C	D	E	F	G	H	I	J	K	REMARKS
M401E	4'-9"	80	4	2'-1"	7"	2'-1"									
M402E	5'-3"	100	11	1'-0"	4'-3"	3'-0"									
M403E	5'-0"	100	10	2'-4"	2'-8"										
M404E	7'-6½"	68	4	2'-6"	2'-6½"	2'-6"									
M405E	6'-2½"	132	4	1'-10"	2'-6½"	1'-10"									
M501E	7'-0"	48	STR												
M502E	7'-0"	8	STR												
M503E	3'-3"	12	11	1'-1"	2'-2"	9"									
M504E	2'-0"	16	STR												
M505E	9'-10"	16	46	2'-1"	1'-3½"	3'-1"	1'-2½"	2'-2"	9"						
M506E	15'-8"	4	STR												
M507E	8'-8"	4	STR												
M508E	7'-0"	52	STR												
M509E	27'-11"	16	STR												
M601E	7'-0"	16	STR												
M602E	7'-3"	60	STR												
M603E	5'-6"	100	45	8"	3'-10"	1'-0"	6"	8½"							
M604E	2'-6"	4	STR												
M605E	8'-9"	8	STR												
D1101E	4'-0"	22	STR												DOWELS

SOUTHBOUND DIAPHRAGM BAR SCHEDULE

MARK	LENGTH	NO. BARS	TYPE	A	B	C	D	E	F	G	H	I	J	K	REMARKS
M401E	4'-9"	80	4	2'-1"	7"	2'-1"									
M402E	5'-3"	100	11	1'-0"	4'-3"	3'-0"									
M403E	5'-0"	100	10	2'-4"	2'-8"										
M404E	7'-6½"	68	4	2'-6"	2'-6½"	2'-6"									
M405E	6'-2½"	132	4	1'-10"	2'-6½"	1'-10"									
M501E	7'-0"	48	STR												
M502E	7'-0"	8	STR												
M503E	3'-3"	12	11	1'-1"	2'-2"	9"									
M504E	2'-0"	16	STR												
M505E	9'-10"	16	46	2'-1"	1'-3½"	3'-1"	1'-2½"	2'-2"	9"						
M506E	15'-8"	4	STR												
M507E	8'-8"	4	STR												
M508E	7'-0"	52	STR												
M509E	27'-11"	16	STR												
M601E	7'-0"	16	STR												
M602E	7'-3"	60	STR												
M603E	5'-6"	100	45	8"	3'-10"	1'-0"	6"	8½"							
M604E	2'-6"	4	STR												
M605E	8'-9"	8	STR												
D1101E	4'-0"	22	STR												DOWELS

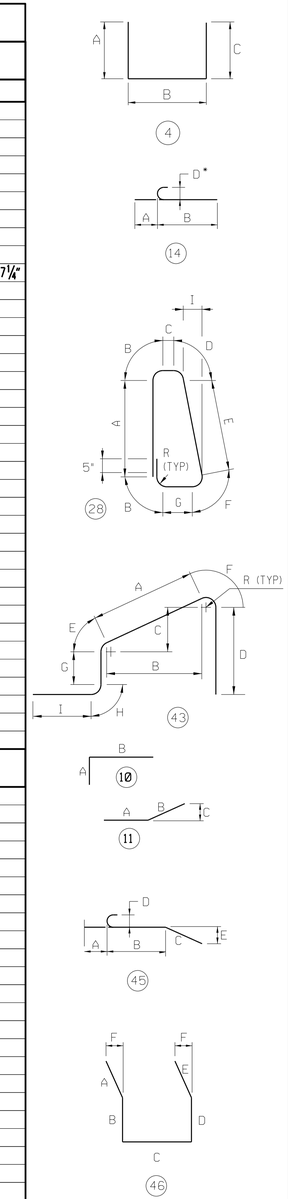

1-472 BR-2

DELAWARE DEPARTMENT OF TRANSPORTATION

ADDENDUMS / REVISIONS

US 301 LEVELS ROAD TO SUMMIT BRIDGE ROAD

CONTRACT	BRIDGE NO.	1-472N&S
T200911303	DESIGNED BY: ADH	
COUNTY		
NEW CASTLE	CHECKED BY: DHG	

US 301 MAINLINE OVER ARMSTRONG CORNER ROAD DECK REINFORCEMENT SCHEDULE

SHEET NO. 383

TOTAL SHTS. 1256

P:\cadd2\60049040_US301\Structure\Plans\FINAL\B2-3NS\BR2-3BR-02.dgn

REINFORCING BAR SCHEDULE

NORTHBOUND APPROACH SLAB BAR SCHEDULE

MARK	LENGTH	NO. BARS	TYPE	A	B	C	D	E	F	G	H	I	J	K	REMARKS
AS501E	16′-6″	84	STR												
AS502E	40′-0″	84	STR												
AS503E	3′-10¼″	192	11	1′-3¼″	2′-7″	10⅝″									
AS504E	18′-10″	108	STR												
AS505E	6′-2½″	216	4	2′-7″	1′-0½″	2′-7″									
AS506E	28′-6″	24	STR												
AS507E	29′-3″	88	STR												
AS508E	9′-1″	22	STR												
AS509E	VARIES	3	STR												VARY EA. BY 2′-9″
	8′-4″ TO														
	2′-10″														
AS510E	VARIES	3	STR												VARY EA. BY 2′-9″
	6′-11″ TO														
	1′-5″														
AS511E	7′-1″	22	STR												
AS512E	VARIES	2	STR												
	4′-11″ TO														
	2′-2″														
AS513E	VARIES	2	STR												
	6′-4″ TO														
	3′-7″														
AS514E	12′-7″	4	STR												
AS515E	9′-8″	8	STR												
AS516E	11′-10″	4	STR												
AS517E	VARIES	22	STR												VARY EA. BY 3¼″
	12′-5½″														
	TO 9′-9″														
AS518E	VARIES	16	STR												VARY EA. BY 3½″
	9′-7″ TO														
	11′-7½″														
AS519E	VARIES	22	STR												VARY EA. BY 3½″
	12′-5″ TO														
	9′-6″														
AS520E	VARIES	16	STR												VARY EA. BY 3¼″
	12′-4½″														
	TO 9′-8″														
AS521E	8′-1″	110	25	2′-1″	1′-6″	3¾″	2½″								
AS601E	9′-9″	22	14	8″	9′-1″		6″								
AS602E	VARIES	3	14	8″	VARIES		6″								VARY "B" BY 2′-9″
	9′-0″ TO				8′-4″ TO										
	3′-6″				2′-10″										
AS603E	VARIES	3	14	8″	VARIES		6″								VARY "B" BY 2′-9″
	7′-7″ TO				6′-11″ TO										
	2′-1″				1′-5″										
AS604E	7′-9″	22	14	8″	7′-1″		6″								
AS605E	VARIES	2	14	8″	VARIES		6″								
	5′-7″ TO				4′-11″ TO										
	2′-10″				2′-2″										
AS606E	VARIES	2	14	8″	VARIES		6″								
	7′-0″ TO				6′-4″ TO		6″								
	4′-3″				3′-7″										
AS801E	7′-5″	216	STR												
AS802E	18′-10″	214	STR												
PA501E	7′-6⅜″	207	28	2′-9¼″	3″	1⅝″	2¾″	2′-9½″	3⅛″	5⅛″		3½″			
PA503E	6′-2⅛″	207	43	1′-0⅛″	7″	9¼″	2′-1″	1″	9″	1′-2″	3″	10″			
PA703E	18′-9″	16	STR												
PA704E	1′-9″	16	STR												
PA705E	12′-7″	4	STR												
PA706E	9′-8″	8	STR												
PA707E	11′-10″	4	STR												
PA803E	18′-9″	16	STR												
PA804E	1′-9″	16	STR												
PA805E	12′-7″	4	STR												
PA806E	9′-8″	8	STR												
PA807E	11′-10″	4	STR												

SOUTHBOUND APPROACH SLAB BAR SCHEDULE

MARK	LENGTH	NO. BARS	TYPE	A	B	C	D	E	F	G	H	I	J	K	REMARKS
AS501E	16′-6″	84	STR												
AS502E	40′-0″	84	STR												
AS503E	3′-10¼″	192	11	1′-3¼″	2′-7″	10⅝″									
AS504E	18′-10″	108	STR												
AS505E	6′-2½″	216	4	2′-7″	1′-0½″	2′-7″									
AS506E	28′-6″	24	STR												
AS507E	29′-3″	88	STR												
AS508E	9′-1″	22	STR												
AS509E	VARIES	3	STR												VARY EA. BY 2′-9″
	8′-4″ TO														
	2′-10″														
AS510E	VARIES	3	STR												VARY EA. BY 2′-9″
	6′-11″ TO														
	1′-5″														
AS511E	7′-1″	22	STR												
AS512E	VARIES	2	STR												
	4′-11″ TO														
	2′-2″														
AS513E	VARIES	2	STR												
	6′-4″ TO														
	3′-7″														
AS514E	12′-7″	4	STR												
AS515E	9′-8″	8	STR												
AS516E	11′-10″	4	STR												
AS517E	VARIES	22	STR												VARY EA. BY 3¼″
	12′-5½″ TO														
	9′-9″														
AS518E	VARIES	16	STR												VARY EA. BY 3½″
	9′-7″ TO														
	11′-7½″														
AS519E	VARIES	22	STR												VARY EA. BY 3½″
	12′-5″ TO														
	9′-6″														
AS520E	VARIES	16	STR												VARY EA. BY 3¼″
	12′-4½″ TO														
	9′-8″														
AS521E	8′-1″	110	25	2′-1″	1′-6″	3¾″	2½″								
AS601E	9′-9″	22	14	8″	9′-1″		6″								
AS602E	VARIES	3	14	8″	VARIES		6″								VARY "B" BY 2′-9″
	9′-0″ TO				8′-4″ TO										
	3′-6″				2′-10″										
AS603E	VARIES	3	14	8″	VARIES		6″								VARY "B" BY 2′-9″
	7′-7″ TO				6′-11″ TO										
	2′-1″				1′-5″										
AS604E	7′-9″	22	14	8″	7′-1″		6″								
AS605E	VARIES	2	14	8″	VARIES		6″								
	5′-7″ TO				4′-11″ TO										
	2′-10″				2′-2″										
AS606E	VARIES	2	14	8″	VARIES		6″								
	7′-0″ TO				6′-4″ TO		6″								
	4′-3″				3′-7″										
AS801E	7′-5″	216	STR												
AS802E	18′-10″	214	STR												
PA501E	7′-6⅜″	207	28	2′-9¼″	3″	1⅝″	2¾″	2′-9½″	3⅛″	5⅛″		3½″			
PA503E	6′-2⅛″	207	43	1′-0⅛″	7″	9¼″	2′-1″	1″	9″	1′-2″	3″	10″			
PA703E	18′-9″	16	STR												
PA704E	1′-9″	16	STR												
PA705E	12′-7″	4	STR												
PA706E	9′-8″	8	STR												
PA707E	11′-10″	4	STR												
PA803E	18′-9″	16	STR												
PA804E	1′-9″	16	STR												
PA805E	12′-7″	4	STR												
PA806E	9′-8″	8	STR												
PA807E	11′-10″	4	STR												

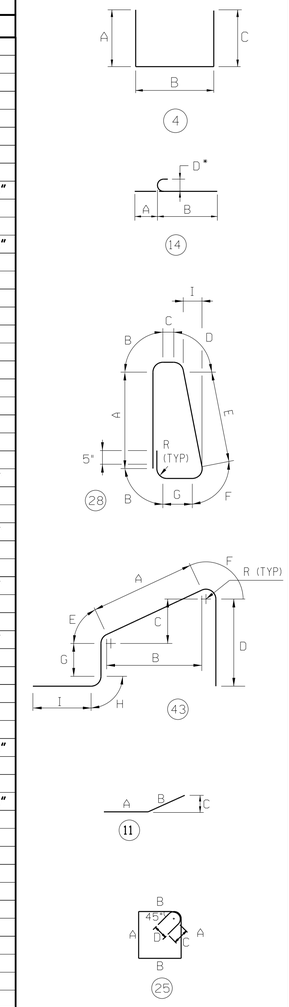

P:\cadd2\60049040 US301\Structure\Plans\FINAL\B2-3NS\BR2-3BR-03.dgn

1-472 BR-3

DELAWARE DEPARTMENT OF TRANSPORTATION

ADDENDUMS / REVISIONS

US 301 LEVELS ROAD TO SUMMIT BRIDGE ROAD

CONTRACT: T200911303
COUNTY: NEW CASTLE
BRIDGE NO.: 1-472N&S
DESIGNED BY: ADH
CHECKED BY: DHG

US 301 MAINLINE OVER ARMSTRONG CORNER ROAD APPROACH SLAB REINFORCEMENT SCHEDULE

SHEET NO. 384
TOTAL SHTS. 1256

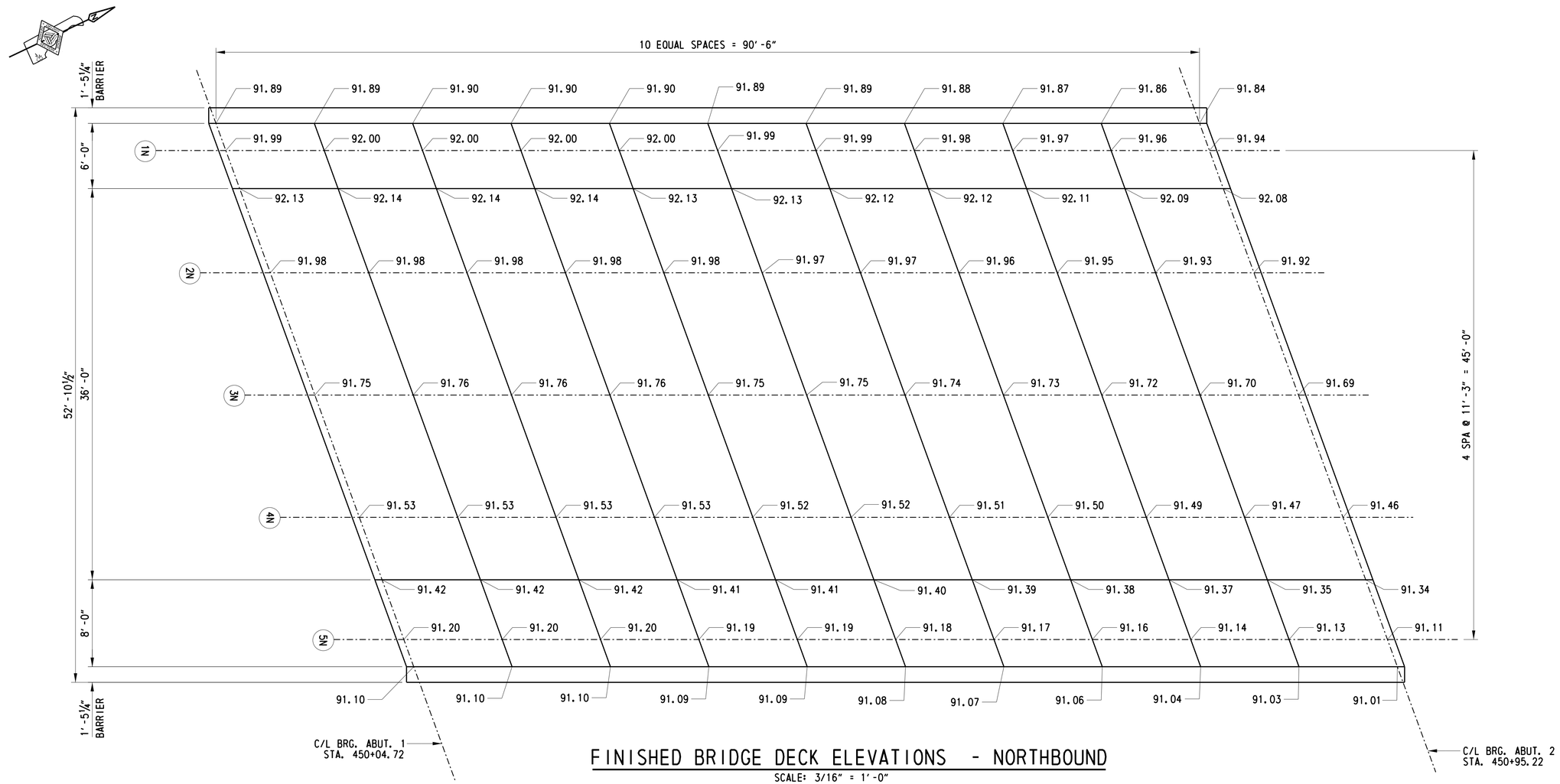

FINISHED BRIDGE DECK ELEVATIONS - NORTHBOUND

SCALE: 3/16" = 1'-0"

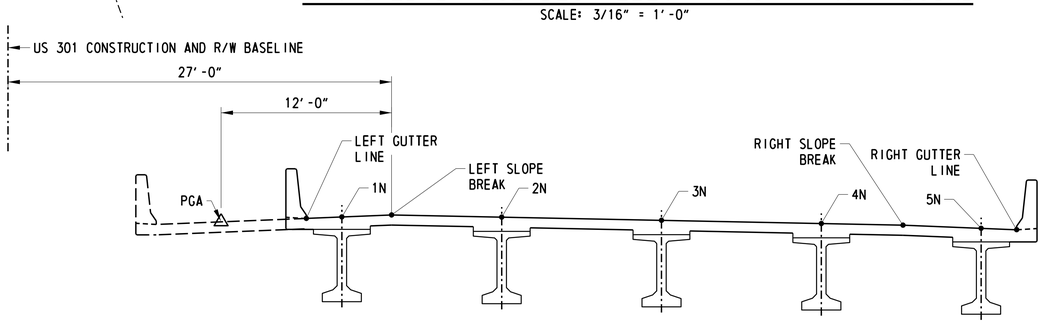

TYPICAL SECTION - NORTHBOUND

SCALE: 3/16" = 1'-0"

CROSS REFERENCE NOTES:

1. FOR VERTICAL CURVE DATA, SEE DWG. 1-472 PE-1.
2. FOR CROSS SLOPES, SEE DWG. 1-472 TS-1.

1-472 FD-1

DELAWARE DEPARTMENT OF TRANSPORTATION	ADDENDUMS / REVISIONS	SCALE 2 0 2 4 6 FEET	US 301 LEVELS ROAD TO SUMMIT BRIDGE ROAD	CONTRACT T200911303	BRIDGE NO. 1-472N&S	US 301 MAINLINE OVER ARMSTRONG CORNER ROAD FINISHED DECK ELEVATIONS – NORTHBOUND	SHEET NO. 385
				COUNTY NEW CASTLE	DESIGNED BY: ADH		TOTAL SHTS. 1256
					CHECKED BY: DHG		

G:\60049040 US301\Structure\Plans\FINAL\B2-3NS\BR2-3FD-01.dgn

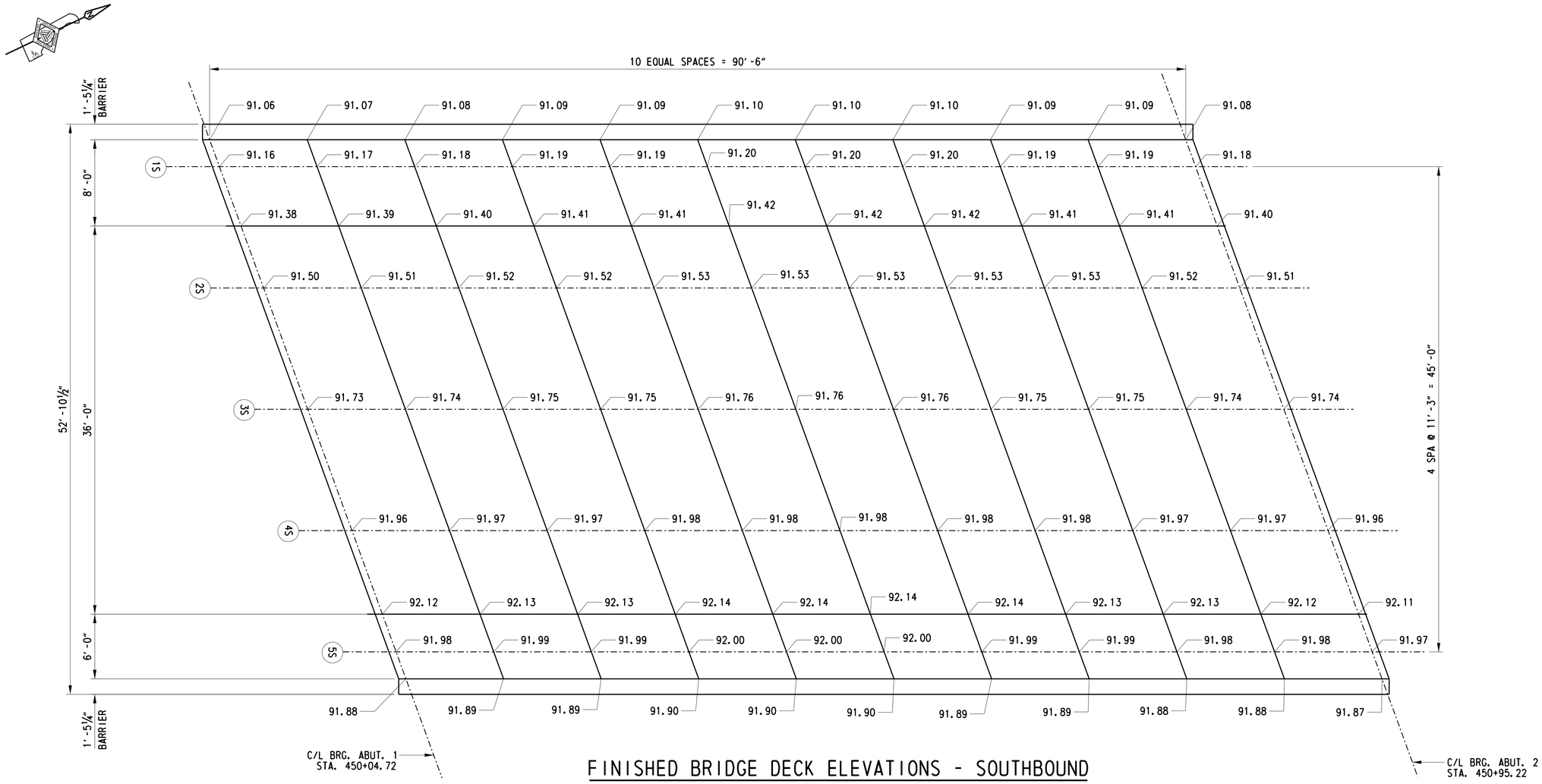

FINISHED BRIDGE DECK ELEVATIONS - SOUTHBOUND

SCALE: 3/16" = 1'-0"

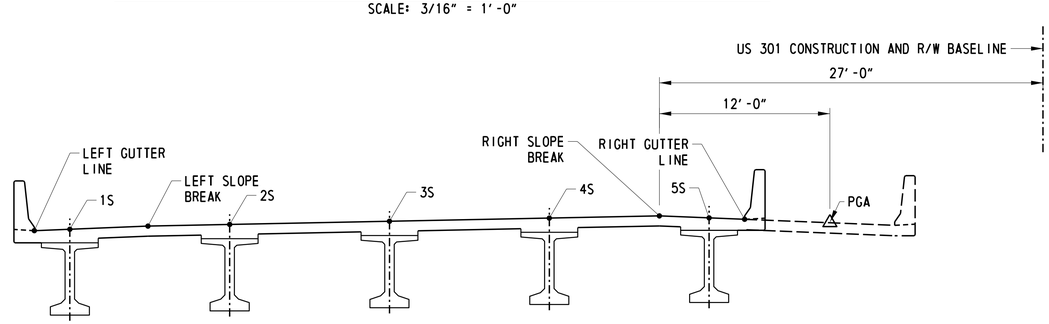

TYPICAL SECTION - SOUTHBOUND

SCALE: 3/16" = 1'-0"

CROSS REFERENCE NOTES:

1. FOR VERTICAL CURVE DATA, SEE DWG. 1-472 PE-1.
2. FOR CROSS SLOPES, SEE DWG. 1-472 TS-1.

1-472 FD-2

DELAWARE DEPARTMENT OF TRANSPORTATION	ADDENDUMS / REVISIONS	SCALE 2 0 2 4 6 FEET	US 301 LEVELS ROAD TO SUMMIT BRIDGE ROAD	CONTRACT T200911303	BRIDGE NO. 1-472N&S	US 301 MAINLINE OVER ARMSTRONG CORNER ROAD FINISHED DECK ELEVATIONS – SOUTHBOUND	SHEET NO. 386
				COUNTY NEW CASTLE	DESIGNED BY: ADH		TOTAL SHTS. 1256
					CHECKED BY: DHG		

G:\60049040 US301\Structure\Plans\FINAL\B2-3NS\BR2-3FD-02.dgn

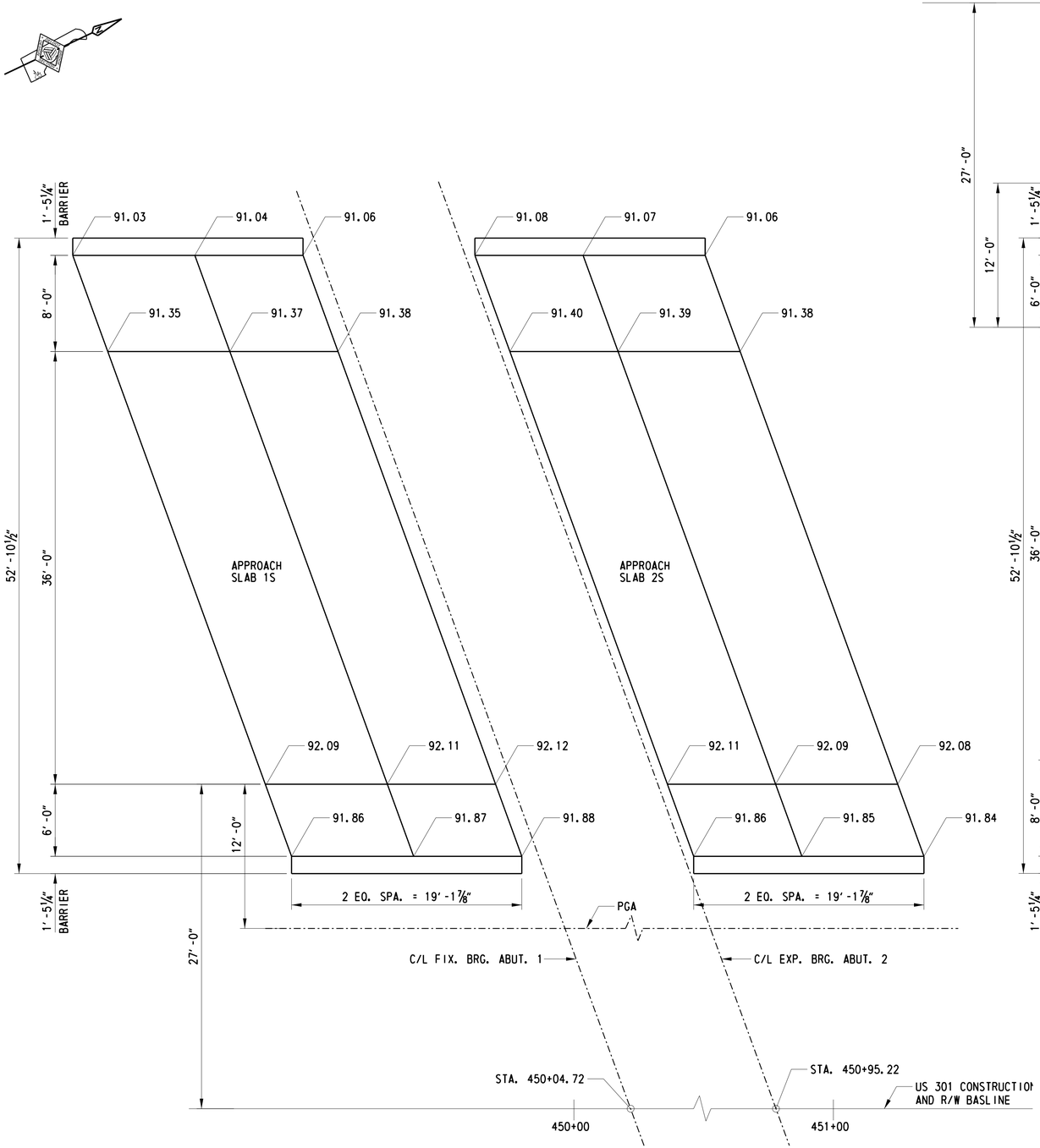

APPROACH SLABS - SOUTHBOUND

SCALE: 3/16" = 1'-0"

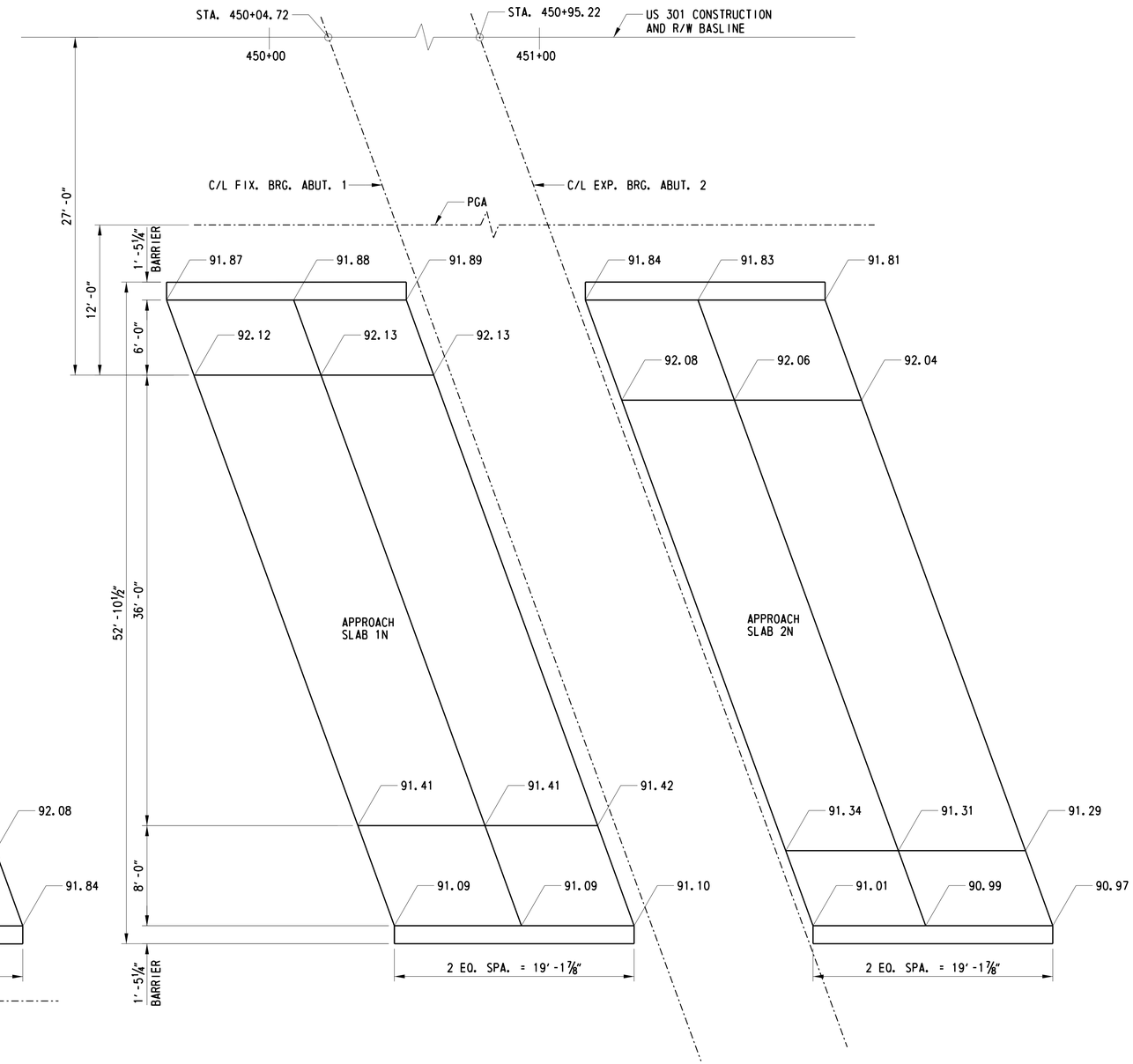

APPROACH SLABS - NORTHBOUND

SCALE: 3/16" = 1'-0"

CROSS REFERENCE NOTES:

1. FOR VERTICAL CURVE DATA, SEE SHEET 1-472 PE-1.
2. FOR CROSS SLOPES, SEE SHEET 1-472 TS-1.

1-472 FD-3

DELAWARE DEPARTMENT OF TRANSPORTATION	ADDENDUMS / REVISIONS	SCALE 2 0 2 4 6 FEET	US 301 LEVELS ROAD TO SUMMIT BRIDGE ROAD	CONTRACT T200911303	BRIDGE NO. 1-472N&S	US 301 MAINLINE OVER ARMSTRONG CORNER ROAD FINISHED APPROACH SLAB ELEVATIONS	SHEET NO. 387
				COUNTY NEW CASTLE	DESIGNED BY: ADH		TOTAL SHTS. 1256
					CHECKED BY: DHG		

G:\60049040 US301\Structure\Plans\FINAL\B2-3NS\BR2-3DK-04.dgn

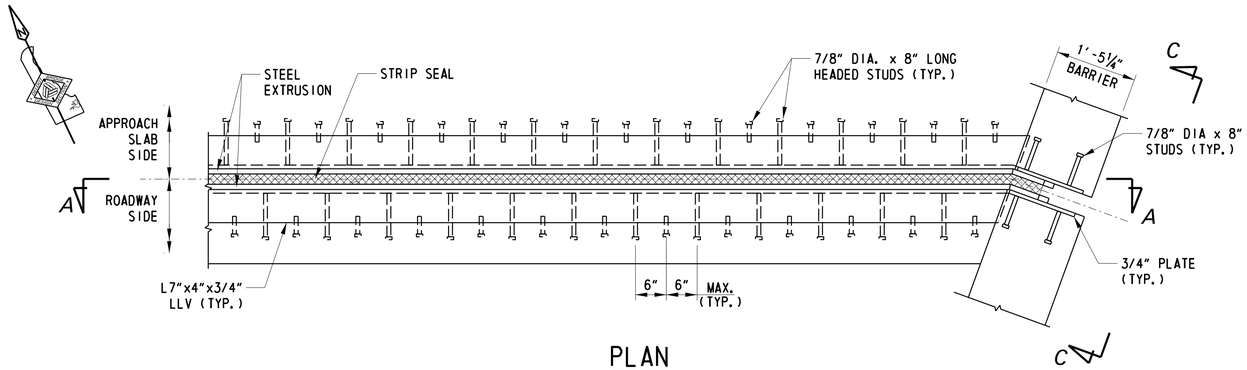

PLAN

SCALE: 3/4" = 1'-0"

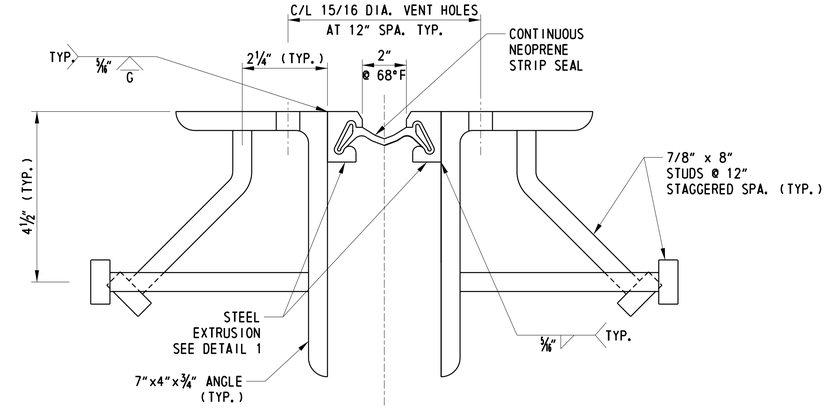

PREFABRICATED EXPANSION JOINT SYSTEM 3"

NTS

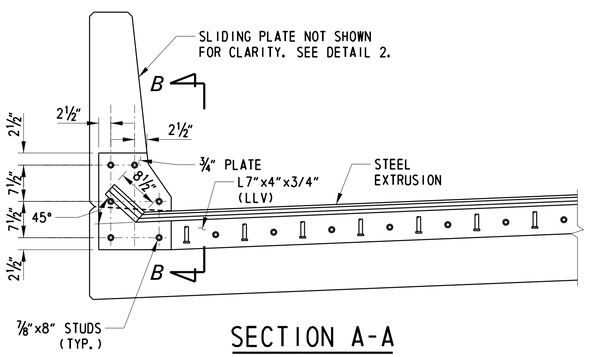

SECTION A-A

SCALE: 3/4" = 1'-0"

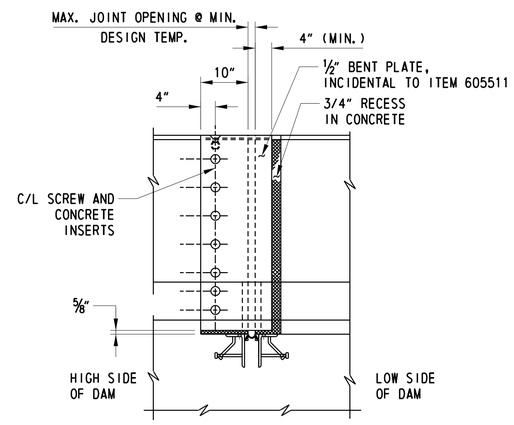

SECTION B-B

SCALE: 3/4" = 1'-0"

- FORM CONCRETE RECESS AREA IN BARRIER AND GRIND TO PROVIDE SMOOTH SURFACE. APPLY ONE COAT OF ASPHALT CEMENT PAINT WA-1 OR PERFORMANCE GRADED ASPHALT CEMENT PG 64-22 TO ALLOW BENT SLIDING PLATE TO MOVE FREELY WITHOUT FRICTION.

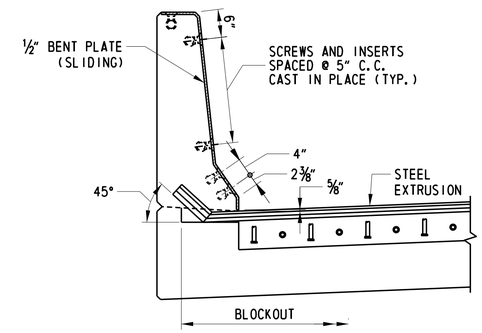

DETAIL 2

SCALE: 3/4" = 1'-0"

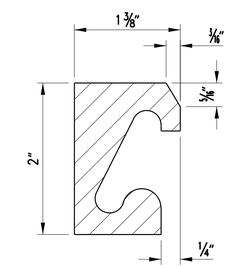

DETAIL 1

NTS

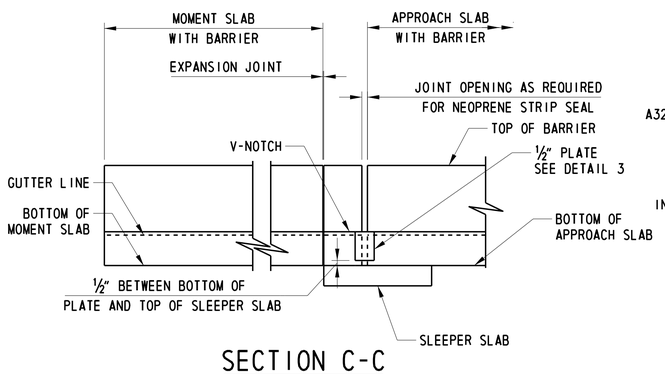

SECTION C-C

NTS

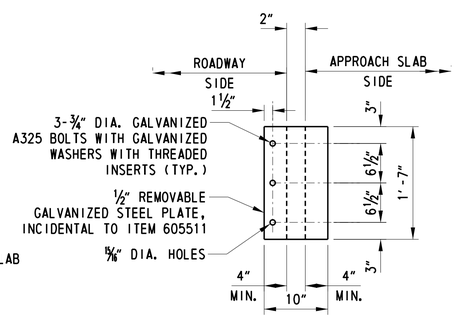

DETAIL 3

NTS

NOTES:

1. STRUCTURAL STEEL FOR DECK JOINTS SHALL CONFORM TO AASHTO M270, GRADE 36.
2. STEEL EXTRUSIONS FOR DECK JOINTS SHALL CONFORM TO AASHTO M270, GRADE 36.
3. THE NEOPRENE STRIP SEAL SHALL BE PROVIDED CONTINUOUS THROUGHOUT THE LIMITS OF THE DECK. SPLICING OF THE NEOPRENE STRIP SEAL IS NOT PERMITTED.
4. COST FOR MATERIALS, FABRICATION AND INSTALLATION OF STRIP SEAL EXPANSION JOINTS, 3" MOVEMENT CLASSIFICATION, WITH STEEL ELEMENTS INCLUDING STUDS AND STEEL EXTRUSIONS, SHALL BE PAID FOR UNDER ITEM 605511.
5. EXPANSION JOINT PLAN IS SHOWN AT APPROACH SLAB.

1-472 EX-1

DELAWARE DEPARTMENT OF TRANSPORTATION	ADDENDUMS / REVISIONS	US 301 LEVELS ROAD TO SUMMIT BRIDGE ROAD	CONTRACT T200911303	BRIDGE NO. 1-472N&S	US 301 MAINLINE OVER ARMSTRONG CORNER ROAD EXPANSION JOINT DETAILS	SHEET NO. 388
			COUNTY NEW CASTLE	DESIGNED BY: ADH		TOTAL SHTS. 1256
				CHECKED BY: DHG		

P:\cadd2\60049040 US301\Structure\Plans\FINAL\B2-3NS\BR2-3EX-01.dgn

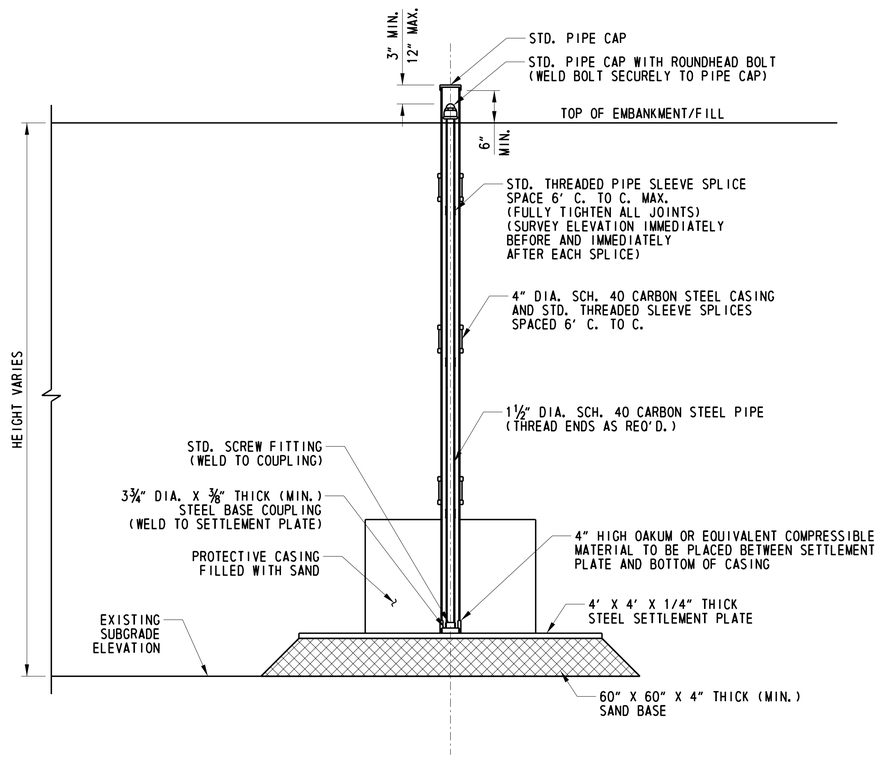

SETTLEMENT PLATFORM

NTS

SETTLEMENT PLATFORM	STATION	OFFSET	SETTLEMENT MONUMENT	STATION	OFFSET
SP-1-472-1	450+11.22	46.00' RT	SM-1-472-1	450+13.04	51.00' RT
SP-1-472-2	449+77.73	46.00' LT	SM-1-472-2	449+75.91	51.00' LT
SP-1-472-3	451+22.20	46.00' RT	SM-1-472-3	451+24.02	51.00' RT
SP-1-472-4	450+88.72	46.00' LT	SM-1-472-4	450+86.90	51.00' LT

CROSS REFERENCE NOTE:

1. FOR LOCATION OF SETTLEMENT PLATFORMS AND MONUMENTS, SEE DWG. 1-472 PE-1.

NOTE:

1. THE BASE OF THE SETTLEMENT PLATFORM SHALL BE PLACED ON THE TOP OF THE EXISTING SUBGRADE.
2. READINGS ON THE SETTLEMENT PLATFORMS SHALL BE MADE AFTER THE INITIAL INSTALLATION OF THE RISER AND CASING PIPES AND INSTALLATION RECORD SHEETS ARE APPROVED BY THE ENGINEER AND PRIOR TO FILL PLACEMENT. DURING FILL PLACEMENT, READINGS ON ALL SETTLEMENT PLATFORMS SHALL BE TAKEN AT A MINIMUM OF 3 CALENDAR DAY INTERVALS. AFTER COMPLETION OF THE FILL, INSTALL SETTLEMENT MONUMENTS AS INDICATED ON THE BRIDGE PLANS AND TAKE INITIAL READINGS. READINGS ON ALL SETTLEMENT MONITORING DEVICES SHALL THEN BE TAKEN AT A MINIMUM OF 3 CALENDAR DAY INTERVALS. AFTER THE FILL HAS BEEN COMPLETED AND TWO (2) SECCESSIVE READINGS OF EACH DEVICE HAS RECORDED LESS THAN OR EQUAL TO 0.1", THE IMMEDIATE SETTLEMENT WILL BE DEEMED COMPLETE AND THE GEOTECHNICAL ENGINEER CAN RELEASE THE SUBSTRUCTURE FOR INSTALLATION OF PRODUCTION PILES SO LONG AS THE MINIMUM 30 DAY QUARANTINE PERIOD HAS BEEN MET. AFTER COMPLETION OF THE MSE WALL PANEL PLACEMENT, THE CONTRACTOR SHALL ESTABLISH REFERENCE POINTS TO MONITOR SETTLEMENT ON TOP OF THE MSE WALL PANELS OR ON TOP OF THE MSE WALL LEVELING PAD AT POINTS WITHIN FIVE FEET OF ALL ENDS AND CORNERS AND AT THE CENTER OF BRIDGES AND THE CENTERLINE OF US301. AFTER THE SUBSTRUCTURE HAS BEEN RELEASED, READINGS ON ALL SETTLEMENT MONITORING DEVICES AND REFERENCE POINTS SHALL CONTINUE TO BE TAKEN AT A MINIMUM OF 30-DAY INTERVALS FOR THE NEXT 6 MONTHS OR AS DIRECTED BY THE ENGINEER.
3. COST OF MATERIALS, FABRICATION, INSTALLATION AND MONITORING OF SETTLEMENT PLATFORMS IS INCLUDED IN ITEM 202505.
4. COST OF MATERIALS, FABRICATION, INSTALLATION AND MONITORING OF MONUMENTS IS INCLUDED IN ITEM 202518.

1-472 DT-1

DELAWARE
DEPARTMENT OF TRANSPORTATION

ADDENDUMS / REVISIONS

US 301
LEVELS ROAD
TO SUMMIT BRIDGE ROAD

CONTRACT	BRIDGE NO.	1-472N&S
T200911303	DESIGNED BY: ADH	
COUNTY	CHECKED BY: DHG	
NEW CASTLE		

US 301 MAINLINE OVER ARMSTRONG CORNER ROAD

SETTLEMENT PLATFORM DETAIL

SHEET NO. 389
TOTAL SHTS. 1256

P:\cadd2\60049040 US301\Structure\Plans\FINAL\B2-3NS\BR2-3DT-01.dgn

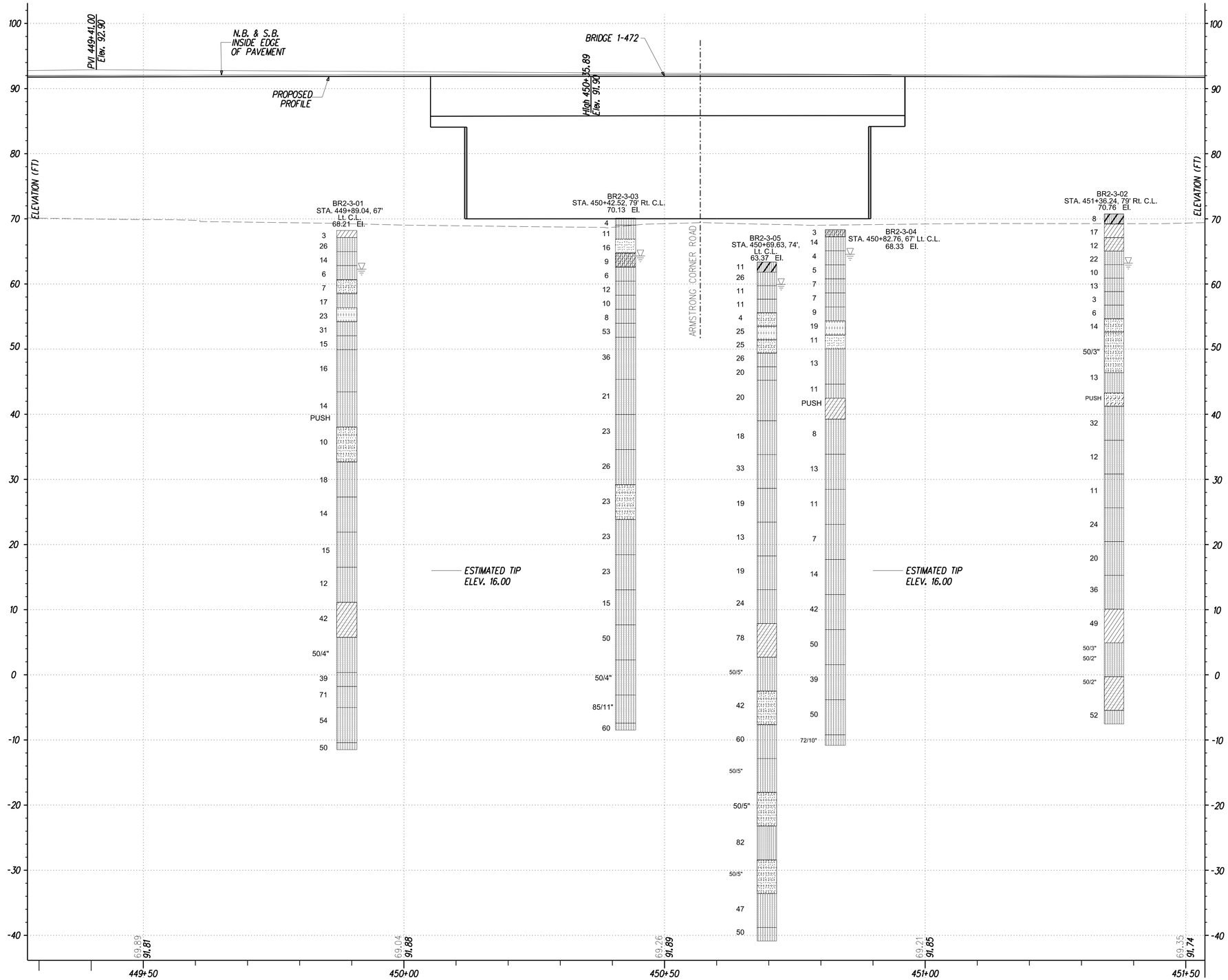

KEY TO SYMBOLS

SYMBOL DESCRIPTION

STRATA SYMBOLS

- LOW PLASTICITY CLAY
- SILTY SAND
- POORLY GRADED SAND WITH SILT
- WELL GRADED SAND WITH SILT
- CLAYEY SAND
- SILTY LOW PLASTICITY CLAY
- POORLY GRADED SAND WITH CLAY
- POORLY GRADED SAND
- POORLY GRADED CLAYEY SILTY SAND
- SILT

MISC. SYMBOLS

- WATER TABLE DURING DRILLING

VERTICAL SCALE FEET 0 8 16 24

1-472 BO-1

G:\60049040 US301\STRUCTURE\PLANS\FINAL\B2-3NS\BR2-3BO-01.DGN

DELAWARE DEPARTMENT OF TRANSPORTATION

ADDENDUMS / REVISIONS

HORIZONTAL SCALE 0 10 20 30 FEET

US 301 LEVELS ROAD TO SUMMIT BRIDGE ROAD

CONTRACT	BRIDGE NO.	1-472N&S
T200911303	DESIGNED BY: ZH	
COUNTY	CHECKED BY: RDB	
NEW CASTLE		

US 301 MAINLINE OVER ARMSTRONG CORNER ROAD

TEST BORINGS

SHEET NO. 390

TOTAL SHTS. 1256

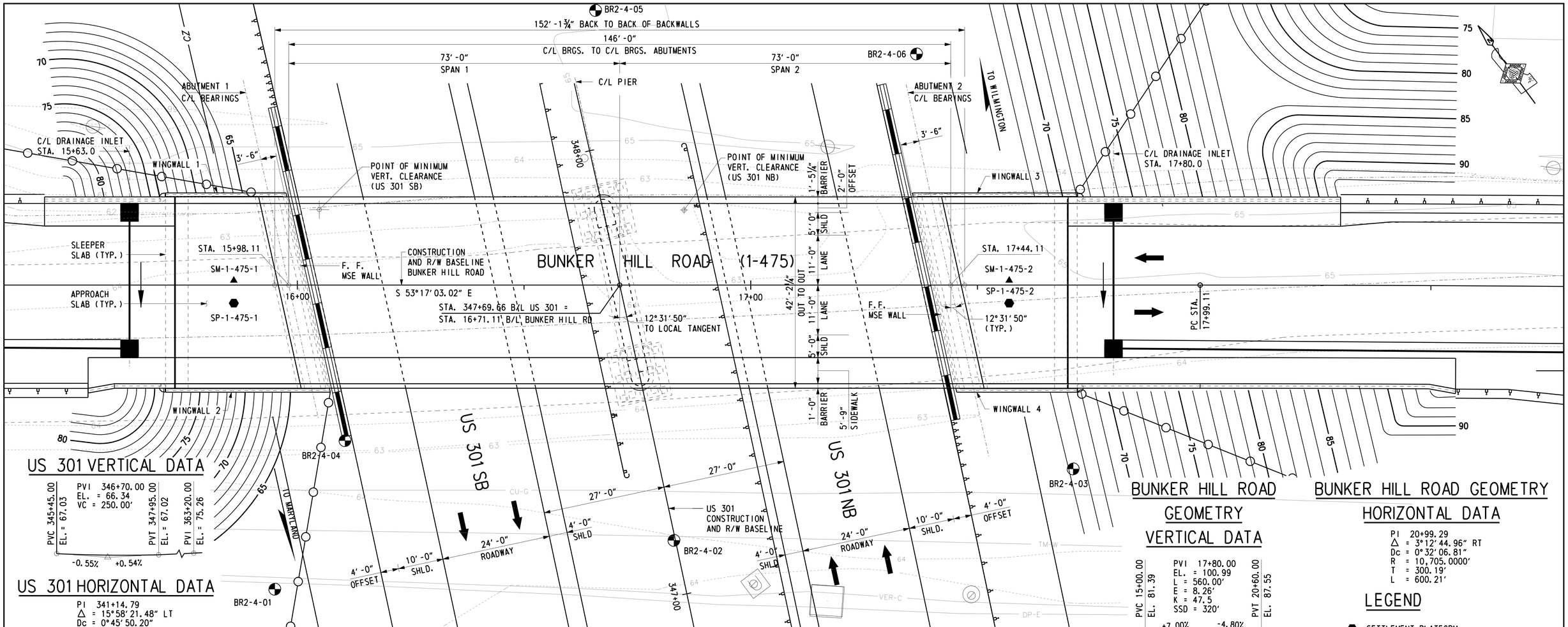

US 301 VERTICAL DATA

PVC 345+45.00 EL. = 67.03 | PVI 346+70.00 EL. = 66.34 VC = 250.00' | PVT 347+95.00 EL. = 67.02 | PVI 363+20.00 EL. = 75.26

-0.55% +0.54%

US 301 HORIZONTAL DATA

PI 341+14.79
△ = 15°58'21.48" LT
Dc = 0°45'50.20"
R = 7,500.0000'
T = 1,052.23'
L = 2,090.81'

BUNKER HILL ROAD GEOMETRY VERTICAL DATA

PVC 15+00.00 EL. 81.39 | PVI 17+80.00 EL. = 100.99 L = 560.00' E = 8.26' K = 47.5 SSD = 320' | PVT 20+60.00 EL. 87.55

+7.00% -4.80%

BRIDGE LIMITS

BUNKER HILL ROAD GEOMETRY HORIZONTAL DATA

PI 20+99.29
△ = 3°12'44.96" RT
Dc = 0°32'06.81"
R = 10,705.0000'
T = 300.19'
L = 600.21'

LEGEND

- SETTLEMENT PLATFORM
- SETTLEMENT MONUMENT

PLAN

SCALE: 1/32" = 1'-0"

1'-0" | 6 SPA. @ 7'-2" = 43'-0" | 21 SPACES @ 7'-5⅜" ± = 156'-5⅞" | 14 SPACES @ 7'-2" = 100-4" | 1'-0"

20 SPACES @ 7'-6⅜" ± = 150'-7⅜"

BARRIER CONTROL JOINT SPACING

FENCE POST SPACING (SIDEWALK SIDE ONLY)

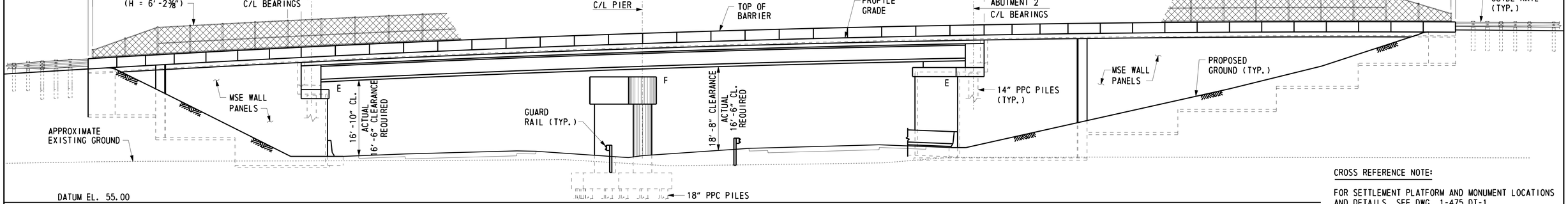

ELEVATION

SCALE: 1/32" = 1'-0"

CROSS REFERENCE NOTE:

FOR SETTLEMENT PLATFORM AND MONUMENT LOCATIONS AND DETAILS, SEE DWG. 1-475 DT-1.

U:\Projects\AA\21387385\CAD\Bridge\BR2-4\pe01_BR2-4_US301.dgn

7/15/2015

Steve_Lambert

DELAWARE DEPARTMENT OF TRANSPORTATION

ADDENDUMS / REVISIONS

SCALE 0 10 20 30 FEET

US 301 LEVELS ROAD TO SUMMIT BRIDGE ROAD

CONTRACT	BRIDGE NO.	1-475
T200511303	DESIGNED BY: R. F. KIRCHNER	
COUNTY		
NEW CASTLE	CHECKED BY: G. P. MISTRY	

BUNKER HILL ROAD OVER US 301 MAINLINE

BRIDGE PLAN AND ELEVATION

1-475 PE-1
SHEET NO.
391
TOTAL SHTS.
1256

ESTIMATED BRIDGE QUANTITIES

ITEM NO.	DESCRIPTION	UNIT	QUANTITY
202505	SETTLEMENT PLATFORM	EACH	2
202518	SETTLEMENT MONUMENT	EACH	2
207000	EXCAVATION AND BACKFILL FOR STRUCTURES	CY	75
302012	DELAWARE NO. 57 STONE	TON	12
602006	PORTLAND CEMENT CONCRETE MASONRY, PIER FOOTING, CLASS B	CY	38
602007	PORTLAND CEMENT CONCRETE MASONRY, PIER ABOVE FOOTING, CLASS A	CY	86
602013	PORTLAND CEMENT CONCRETE MASONRY, SUPERSTRUCTURE, CLASS D	CY	235
602014	PORTLAND CEMENT CONCRETE MASONRY, APPROACH SLAB, CLASS D	CY	135
602015	PORTLAND CEMENT CONCRETE MASONRY, ABUTMENT ABOVE FOOTING, CLASS A	CY	75
602017	PORTLAND CEMENT CONCRETE MASONRY, PARAPET, CLASS A	CY	250
602772	MECHANICALLY STABILIZED EARTH WALLS	LS	1
603000	BAR REINFORCEMENT	LB	26,000
604000	BAR REINFORCEMENT, EPOXY COATED	LB	154,000
605511	PREFABRICATED EXPANSION JOINT SYSTEM, 3"	LF	85
605581	ELASTOMERIC BRIDGE BEARING PAD	EACH	20
618081	FURNISH PRECAST PRESTRESSED CONCRETE PILE, 14"X14"	LF	900
618083	FURNISH PRECAST PRESTRESSED CONCRETE PILE, 18"X18"	LF	820
618091	FURNISH PRECAST PRESTRESSED CONCRETE TEST PILE, 14"X14"	LF	170
618093	FURNISH PRECAST PRESTRESSED CONCRETE TEST PILE, 18"X18"	LF	125
619061	INSTALL PRECAST PRESTRESSED CONCRETE PILE, 14"X14"	LF	900
619063	INSTALL PRECAST PRESTRESSED CONCRETE PILE, 18"X18"	LF	820
619067	INSTALL PRECAST PRESTRESSED CONCRETE TEST PILE, 14"X14"	LF	170
619069	INSTALL PRECAST PRESTRESSED CONCRETE TEST PILE, 18"X18"	LF	125
619501	PRODUCTION PILE RESTRIKE	EACH	10
619502	TEST PILE RESTRIKE	EACH	4
619519	DYNAMIC PILE TESTING BY CONTRACTOR	EACH	4
619539	SIGNAL MATCHING ANALYSIS BY CONTRACTOR	EACH	8
623003	PRESTRESSED REINFORCED CONCRETE MEMBERS BULB-T BEAM	LS	1
727004	CHAIN-LINK FENCE	LF	302

INDEX OF DRAWINGS

SHEET NO.	DRAWING NO.	TITLE
391	1-475 PE-1	BRIDGE PLAN AND ELEVATION
392	1-475 PN-1	INDEX OF DRAWINGS
393	1-475 PN-2	PROJECT NOTES
394	1-475 FT-1	GEOMETRIC LAYOUT
395	1-475 TS-1	TYPICAL SECTION
396	1-475 PL-1	PRESTRESSED CONCRETE PILE DETAILS
397	1-475 AB-1	ABUTMENT FOUNDATION PLANS
398	1-475 AB-2	ABUTMENT 1 PLAN AND ELEVATION
399	1-475 AB-3	ABUTMENT 2 PLAN AND ELEVATION
400	1-475 AB-4	ABUTMENT 1 REINFORCEMENT
401	1-475 AB-5	ABUTMENT 2 REINFORCEMENT
402	1-475 AB-6	ABUTMENT REINFORCEMENT DETAILS
403	1-475 AB-7	ABUTMENT REINFORCING BAR LIST
404	1-475 WW-1	WING WALL 1 AND 2 PLAN AND ELEVATION
405	1-475 WW-2	WING WALL 3 AND 4 PLAN AND ELEVATION
406	1-475 WW-3	WING WALL DETAILS 1
407	1-475 WW-4	WING WALL DETAILS 2
408	1-475 WW-5	WING WALL DETAILS 3
409	1-475 WW-6	MOMENT SLAB AND BARRIER REINFORCING 1
410	1-475 WW-7	MOMENT SLAB AND BARRIER REINFORCING 2
411	1-475 WW-8	MOMENT SLAB AND BARRIER REINFORCING 3
412	1-475 WW-9	MOMENT SLAB AND BARRIER REINFORCING 4
413	1-475 PR-1	PIER FOUNDATION PLAN
414	1-475 PR-2	PIER PLAN AND ELEVATION
415	1-475 PR-3	PIER REINFORCEMENT 1
416	1-475 PR-4	PIER REINFORCEMENT 2
417	1-475 PR-5	PIER REINFORCING BAR LIST
418	1-475 BD-1	BEARING DETAILS
419	1-475 FR-1	FRAMING PLAN
420	1-475 BM-1	GIRDER DETAILS
421	1-475 BM-2	DIAPHRAGMS 1
422	1-475 BM-3	DIAPHRAGMS 2
423	1-475 CT-1	CAMBER TABLE
424	1-475 BM-4	GIRDERS AND DIAPHRAGMS REINFORCING BAR LIST
425	1-475 DK-1	BRIDGE DECK POURING SEQUENCE
426	1-475 DK-2	BRIDGE DECK AND BARRIER REINFORCEMENT 1
427	1-475 DK-3	BRIDGE DECK AND BARRIER REINFORCEMENT 2
428	1-475 DK-4	BRIDGE DECK AND BARRIER REINFORCEMENT 3
429	1-475 DK-5	BRIDGE DECK AND BARRIER REINFORCING BAR LIST
430	1-475 FD-1	FINISHED DECK ELEVATIONS
431	1-475 EX-1	EXPANSION JOINT DETAILS
432	1-475 RA-1	CHAIN LINK SAFETY FENCE DETAILS 1
433	1-475 RA-2	CHAIN LINK SAFETY FENCE DETAILS 2
434	1-475 AS-1	APPROACH SLAB PLANS
435	1-475 AS-2	APPROACH SLABS REINFORCEMENT 1
436	1-475 AS-3	APPROACH SLABS REINFORCEMENT 2
437	1-475 AS-4	APPROACH SLABS REINFORCEMENT 3
438	1-475 AS-5	APPROACH SLABS REINFORCING BAR LIST
439	1-475 DT-1	SETTLEMENT PLATFORM
440	1-475 BO-1	BORINGS 1

NOTES:

1. ITEM NO. 602014 INCLUDES APPROACH SLAB AND SLEEPER SLAB CONCRETE.

2. ITEM NO. 602017 INCLUDES CONCRETE FOR BARRIER, SIDEWALK AND MOMENT SLAB.

PROJECT NOTES

1. DESIGN SPECIFICATIONS:

AASHTO LRFD BRIDGE DESIGN SPECIFICATIONS, 4th EDITION, 2007, WITH 2008 AND 2009 INTERIM REVISIONS AND AS SUPPLEMENTED BY THE DELAWARE DEPARTMENT OF TRANSPORTATION BRIDGE DESIGN MANUAL, MAY 2005, INCLUDING LATEST REVISIONS.

PROVIDE MATERIALS AND PERFORM WORK IN ACCORDANCE WITH THE DELAWARE DEPARTMENT OF TRANSPORTATION STANDARD SPECIFICATIONS AND CONSTRUCTION DETAILS, ANSI/AASHTO/AWS D1.5 BRIDGE WELDING CODE AND CONTRACT SPECIAL PROVISIONS.

LIVE LOAD DISTRIBUTION TO GIRDERS IS BASED UPON AASHTO DISTRIBUTION FACTORS.

2. LOADING:

UNIT WEIGHTS OF MATERIALS SHALL BE IN ACCORDANCE WITH THE DELAWARE BRIDGE DESIGN MANUAL.

FUTURE OVERLAY ALLOWANCE SHALL BE 25 LBS/SQ FT.

STEEL BRIDGE DECK FORMS WHICH STAY IN PLACE (INCLUDING CONCRETE IN FORM CORRUGATIONS) SHALL BE 15 LBS/SQ FT.

VEHICLE LIVE LOAD SHALL BE AASHTO HL-93 DESIGN VEHICLE, WHICH CONSISTS OF A DESIGN TRUCK OR TANDEM WITH DYNAMIC LOAD ALLOWANCE AND A LANE LOAD. RATING SHALL USE ALL DELAWARE LEGAL LOADS SPECIFIED IN THE BRIDGE DESIGN MANUAL.

A PEDESTRIAN LOAD OF 75 PSF SHALL BE APPLIED TO SIDEWALK AREA.

BARRIER HAS BEEN DESIGNED FOR TEST LEVEL FOUR (TL-4).

FATIGUE DESIGN SHALL BE BASED ON THE FOLLOWING ONE DIRECTIONAL TRAFFIC VOLUMES (2030):
DESIGN ADT = 6,900, DESIGN ADTT = 100

FOR THERMAL LOADS, CONSIDER THE MODERATE TEMPERATURE RANGE AS STIPULATED IN THE AASHTO LRFD DESIGN SPECIFICATIONS. THE NORMAL TEMPERATURE SHALL BE CONSIDERED TO BE 68F.

FOR SEISMIC LOADS, CONSIDER SEISMIC PERFORMANCE ZONE 1, WITH A SITE CLASS = D AND IMPORTANCE CATEGORY - ESSENTIAL. ACCELERATION COEFFICIENT = 0.08.

3. PORTLAND CEMENT CONCRETE:

PORTLAND CEMENT CONCRETE FOR CAST-IN-PLACE ELEMENTS SHALL BE AS FOLLOWS:
(28 DAY COMPRESSIVE STRENGTH)
ITEM NO. 602006 (CLASS B, F'c=3000 PSI) - PIER FOOTING
ITEM NO. 602007 (CLASS A, F'c=4500 PSI) - PIER ABOVE FOOTING
ITEM NO. 602013 (CLASS D, F'c=4500 PSI) - DECK AND DIAPHRAGMS
ITEM NO. 602014 (CLASS D, F'c=4500 PSI) - APPROACH SLAB, SLEEPER SLAB
ITEM NO. 602015 (CLASS A, F'c=4500 PSI) - ABUTMENT ABOVE FOOTING
ITEM NO. 602017 (CLASS A, F'c=4500 PSI) - BARRIER, SIDEWALK, MOMENT SLAB

RAKE FINISH ALL HORIZONTAL CONSTRUCTION, EXCEPT AS INDICATED.

CONSTRUCT DECK SLAB TRANSVERSE CONSTRUCTION JOINTS PARALLEL TO BRIDGE CENTERLINE OF BEARING.

PLACE CHEEKWALL AND BACKWALL CONCRETE AFTER GIRDERS HAVE BEEN SET IN POSITION.

DECK SLAB THICKNESS INCLUDES ½" INTEGRAL WEARING SURFACE.

MIX REQUIREMENTS SHALL CONFORM TO SECTION 812 OF THE DELAWARE DEPARTMENT OF TRANSPORTATION STANDARD SPECIFICATIONS.

ALL EXPOSED CORNERS OF CONCRETE SHALL BE CHAMFERED WITH ¾" X ¾" MILLED CHAMFER STRIPS UNLESS NOTED OTHERWISE, EXCEPT ON UNEXPOSED FOOTINGS OR WHERE INDICATED BY THE NOTATION ON THE PLANS, "DO NOT CHAMFER".

NO SLIP-FORMING OF BARRIERS IS PERMITTED, UNLESS NOTED OTHERWISE.

4. BAR REINFORCEMENT:

REINFORCING STEEL SHALL CONFORM TO AASHTO M31 (ASTM A615), GRADE 60.

ALL REINFORCING STEEL SHALL HAVE A CLEAR COVER OF 2" UNLESS OTHERWISE SPECIFIED ON THE PLANS.

FUSION-BONDED EPOXY COATED REINFORCING STEEL SHALL CONFORM TO AASHTO M284 (ASTM D3963), AND SHALL BE DENOTED WITH A SUFFIX "E" IN THE BAR MARKS.

DO NOT WELD GRADE 60 REINFORCING STEEL.

5. PRESTRESSED CONCRETE DESIGN:

THE PRECAST CONCRETE GIRDERS ARE DESIGNED AS NONCOMPOSITE SIMPLE SPANS FOR ALL DEAD LOADS EXCEPT THE BARRIERS AND FUTURE WEARING SURFACE. THE PRECAST GIRDERS ARE DESIGNED AS COMPOSITE CONTINUOUS SPANS FOR LIVE LOADS AS WELL AS THE BARRIER AND FUTURE WEARING SURFACE DEAD LOADS.

THE TIME FROM CASTING OF CONCRETE GIRDERS TO POURING OF PIER DIAPHRAGM SHALL BE NO LESS THAN 90 DAYS. IF TIME IS NOT SUFFICIENT, CONTRACTOR MUST SUBMIT DESIGN FOR APPROVAL SHOWING STRUCTURAL DESIGN CALCULATIONS TO ACCOUNT FOR RESTRAINT MOMENTS. FOR CONTINUOUS SPANS, PIER DIPHRAGMS SHALL NOT BE POURED UNTIL DECK POURS 1 AND 2 ARE COMPLETED.

PRESTRESSED CONCRETE:

THE MINIMUM COMPRESSIVE STRENGTH FOR PRESTRESSED CONCRETE GIRDERS AT THE AGE OF 28 DAYS SHALL BE f'c = 8,000 PSI. THE MINIMUM COMPRESSIVE STRENGTH AT THE TRANSFER OF PRESTRESS SHALL BE f'ci = 6,400 PSI.

PRESTRESSED STEEL:

PRETENSIONING STEEL FOR GIRDERS SHALL CONSIST OF 0.60 INCH DIAMETER HIGH STRENGTH 7-WIRE LOW RELAXATION STRANDS CONFORMING TO THE REQUIREMENTS OF AASHTO M203 (ASTM A416) GRADE 270. EACH 0.60 INCH DIAMETER STRAND SHALL BE PRETENSIONED TO 43,942 LBS. (0.75 Fpu).

AFTER ESTIMATED LOSSES OF 17,330 PSI, THE FINAL EFFECTIVE PRESTRESS FORCE PER STRAND IS 40,180 LBS.

6. SERVICEABILITY:

LIVE LOAD DEFLECTION SHALL BE LIMITED TO L/1000 FOR VEHICULAR AND PDESTRIAN LOADING.

FOR REINFORCEMENT DISTRIBUTION REQUIREMENTS, CONSIDER CLASS 2 EXPOSURE CRITERIA FOR DECKS.

7. CONSTRUCTION JOINTS:

KEYED CONSTRUCTION JOINTS SHALL BE 2" X 4" OR AS NOTED. ALL EXPOSED CONSTRUCTION JOINT EDGES SHALL HAVE A ¾" V-NOTCH, UNLESS NOTED OTHERWISE.

8. STRUCTURAL EXCAVATIONS:

EXCAVATION REQUIRED TO ATTAIN THE GRADE FOR INSTALLATION OF MSE WALLS SHALL BE INCIDENTAL TO ITEM NO. 602772 - MECHANICALLY STABILIZED EARTH WALLS.

9. STRUCTURAL BACKFILL:

MSE BACKFILL SHALL BE AS SPECIFIED ON PLANS.

10. ROADWAY CLEARANCES:

A MINIMUM OF 16'-6" VERTICAL CLEARANCE SHALL BE MAINTAINED ABOVE ALL ROADWAYS. A MINIMUM OF 2'-0" HORIZONTAL CLEARANCE SHALL BE MAINTAINED FROM THE OUTSIDE EDGE OF SHOULDER OFFSET (FACE OF CURB) TO THE FACE OF ANY OBSTRUCTION. THESE CLEARANCES APPLY AT ALL TIMES INCLUDING DURING CONSTRUCTION.

11. UTILITIES:

COORDINATE ALL WORK RELATED TO PUBLIC AND PRIVATE UTILITIES IN ACCORDANCE WITH SECTION 107.04 OF THE STANDARD SPECIFICATIONS.

VERIFY AND LOCATE ALL EXISTING UTILITIES PRIOR TO STARTING WORK. CONDUCT OPERATIONS IN A MANNER WHICH ENSURES THAT THE UTILITIES WILL NOT BE DISTURBED OR ENDANGERED AND ASSUME FULL RESPONSIBILITY FOR ANY DAMAGE TO UTILITIES DURING CONSTRUCTION. THE DEPARTMENT DOES NOT ASSUME RESPONSIBILITY FOR REIMBURSEMENT, PARTICIPATION IN DESIGN AND/OR REVISION, OR LIABILITY FOR ACCURACY OF TYPE, SIZE AND LOCATION OF ANY UTILITY.

12. CONSTRUCTION NOTES:

a) PROVIDE A MINIMUM TEMPORARY VERTICAL CLEARANCE OF 16'-6" AT ALL TIMES DURING CONSTRUCTION.

b) DO NOT PICK OR LIFT OVER LANES AND/OR SHOULDERS OPEN TO TRAFFIC.

c) DO NOT PERFORM ANY WORK DIRECTLY OVER OPEN LANES OF TRAFFIC WITHOUT ADEQUATE SHIELDING OR WORK PLATFORMS, LANE CLOSURES OR DETOURS IN ACCORDANCE WITH THE CONTRACT PLANS AND SPECIFICATIONS.

d) INSTALL SIP FORMS, ADDITIONAL PROTECTIVE SHIELD SYSTEM, WORK PLATFORMS AND/OR OVERHANG FALSEWORK BEFORE BEGINNING ANY CONSTRUCTION OPERATIONS OVER TRAFFIC.

e) IF THE CONTRACTOR DETERMINES THAT ADDITIONAL PROTECTIVE SHIELDING OR WORK PLATFORMS ARE NEEDED TO PROTECT TRAFFIC, SUBMIT PLANS AND CALCULATIONS FOR REVIEW AND APPROVAL FOR PROTECTING TRAFFIC WHILE WORKING OVER TRAVELWAYS. HAVE THE DRAWINGS AND DESIGN CALCULATIONS PREPARED, SIGNED, AND SEALED BY A DELAWARE REGISTERED PROFESSIONAL ENGINEER. THE APPROVAL OF THE ENGINEER WILL NOT RELIEVE THE CONTRACTOR OF THE RESPONSIBILITY FOR THE SAFETY OF THE METHOD OR EQUIPMENT. BASED ON CONTRACTOR MEANS AND METHODS, DETERMINE AND CLEARLY DEFINE ALL DEAD AND LIVE LOADS FOR THIS SYSTEM, WHICH, AT A MINIMUM, SHALL BE INSTALLED WHERE TRAFFIC IS MAINTAINED. NO SEPARATE PAYMENT WILL BE MADE FOR ADDITIONAL PROTECTIVE SHIELDING OR WORK PLATFORMS.

f) ALL FORMWORK INCLUDING STAY-IN-PLACE FORMS SHALL BE MORTAR TIGHT.

g) WHILE PLACING DECK, DECK OVERHANG AND PARAPET CONCRETE OVER LANES OPEN TO TRAFFIC, NO CLOSURE OR DETOURS WILL BE ALLOWED DURING THESE OPERATIONS.

h) THE MAINTENANCE OF TRAFFIC REQUIRED FOR THE INSTALLATION OF THESE ITEMS WILL BE PAID UNDER THE MAINTENANCE OF TRAFFIC UNIT BID ITEMS. CONTRACTOR SHALL ADHERE TO THE TRAFFIC CONTROL PLAN, DELAWARE MUTCD, AND TRAFFIC LANE CLOSURE AND WORK RESTRICTIONS PROVIDED IN THE CONTRACT DOCUMENTS.

BRIDGE LOAD RATING (TONS)

DESIGN VEHICLE	RATING FACTOR	RATING WEIGHT (TONS)	CONTROLLING MEMBER	CONTROLLING POINT	LOAD EFFECT
HL-93 TRUCK (INVENTORY)	1.15	N/A	INTERIOR BEAM	105	FLEXURE
HL-93 TANDEM (INVENTORY)	1.29	N/A	INTERIOR BEAM	105	FLEXURE
HL-93 TRUCK TRAIN (INVENTORY)	1.18	N/A	INTERIOR BEAM	110	FLEXURE
HS20 (INVENTORY)	1.45	52.2	INTERIOR BEAM	110	SHEAR
HL-93 TRUCK (OPERATING)	1.48	N/A	INTERIOR BEAM	105	FLEXURE
HL-93 TANDEM (OPERATING)	1.68	N/A	INTERIOR BEAM	105	FLEXURE
HL-93 TRUCK TRAIN (OPERATING)	1.52	N/A	INTERIOR BEAM	110	FLEXURE
HS20 (OPERATING)	1.90	68.4	INTERIOR BEAM	110	SHEAR
DE S220 & LEGAL-LANE (LEGAL)	2.43	48.6	INTERIOR BEAM	105	FLEXURE
DE S335 & LEGAL-LANE (LEGAL)	1.35	47.3	INTERIOR BEAM	105	FLEXURE
DE S437 & LEGAL-LANE (LEGAL)	1.29	47.3	INTERIOR BEAM	105	FLEXURE
DE T330 & LEGAL-LANE (LEGAL)	2.00	60.0	INTERIOR BEAM	105	FLEXURE
DE T435 & LEGAL-LANE (LEGAL)	1.75	61.3	INTERIOR BEAM	105	FLEXURE
DE T540 & LEGAL-LANE (LEGAL)	1.56	62.4	INTERIOR BEAM	105	FLEXURE

NOTE: LOAD RATING DOES INCLUDE FUTURE WEARING SURFACE AS NOTED IN THE PLANS.

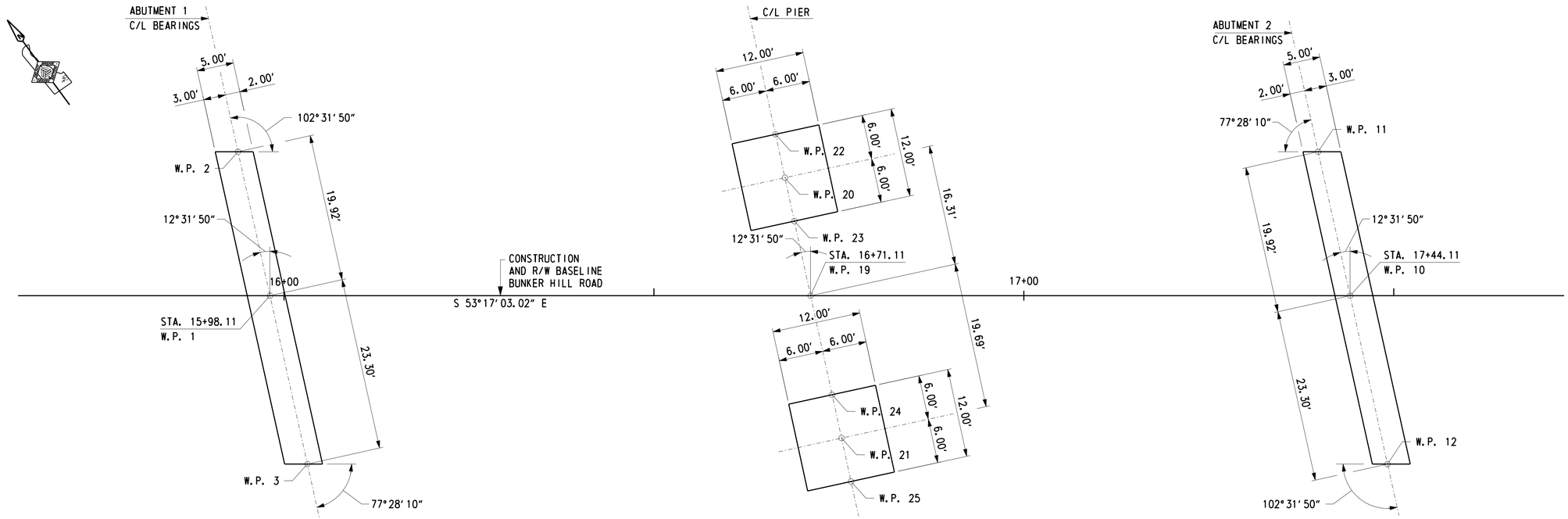

WORKING POINTS

W.P. NO.	STATION	OFFSET	COORDINATES NORTHING	COORDINATES EASTING
1	15+98.11	0.00'	530,657.9211	564,379.5561
2	15+93.79	19.44' LT.	530,676.0852	564,387.7137
3	16+03.17	22.75' RT.	530,636.6616	564,370.0082
4	15+97.25	19.98' LT.	530,674.4479	564,390.8152
5	16+06.87	23.29' RT.	530,634.0119	564,372.6550
6	15+69.83	19.98' LT.	530,690.8418	564,368.8337
7	15+69.83	23.29' RT.	530,656.1554	564,342.9643
8	15+44.25	18.94' LT.	530,705.2987	564,347.7070
9	15+53.87	23.29' RT.	530,665.6976	564,330.1695
10	17+44.11	0.00'	530,570.6355	564,496.5912
11	17+39.79	19.44' LT.	530,588.7996	564,504.7489
12	17+49.17	22.75' RT.	530,549.3760	564,487.0434
13	17+36.08	19.98' LT.	530,591.4493	564,502.1021
14	17+45.70	23.29' RT.	530,551.0133	564,483.9419
15	17+73.17	19.98' LT.	530,569.2796	564,531.8279
16	17+73.17	23.29' RT.	530,534.5932	564,505.9585
17	18+30.03	18.94' LT.	530,534.3809	564,576.8039
18	18+55.82	23.29' RT.	530,485.1333	564,572.0248
19	16+71.11	0.00'	530,614.2798	564,438.0717
20	16+67.57	15.92' LT.	530,629.1605	564,444.7547
21	16+75.38	19.22' RT.	530,596.3204	564,430.0060
22	16+66.27	21.78' LT.	530,634.6338	564,447.2129
23	16+68.87	10.07' LT.	530,623.6871	564,442.2966
24	16+74.08	13.36' RT.	530,601.7937	564,432.4641
25	16+76.68	25.08' RT.	530,590.8470	564,427.5478
26	15+59.78	22.25' RT.	530,663.0002	564,335.5290
27	18+49.90	22.25' RT.	530,489.5217	564,567.9331

PLAN

SCALE: 1/8" = 1'-0"

CROSS REFERENCE NOTE:

1. FOR LOCATION OF WORKING POINTS ALONG WING WALLS, SEE DWG. 1-475 AB-2 AND 1-475 AB-3.

Steve_Lambert 7/15/2015 U:\Projects\AA\21387385\CAD\Bridge\BR2-4\f01_BR2-4_US301.dgn

DELAWARE DEPARTMENT OF TRANSPORTATION

ADDENDUMS / REVISIONS

US 301
LEVELS ROAD
TO SUMMIT BRIDGE ROAD

CONTRACT	BRIDGE NO.	1-475
T200511303	DESIGNED BY: J. S. LI	
COUNTY	CHECKED BY: R. F. KIRCHNER	
NEW CASTLE		

BUNKER HILL ROAD
OVER US 301 MAINLINE

GEOMETRIC LAYOUT

1-475 FT-1
SHEET NO.
394
TOTAL SHTS.
1256

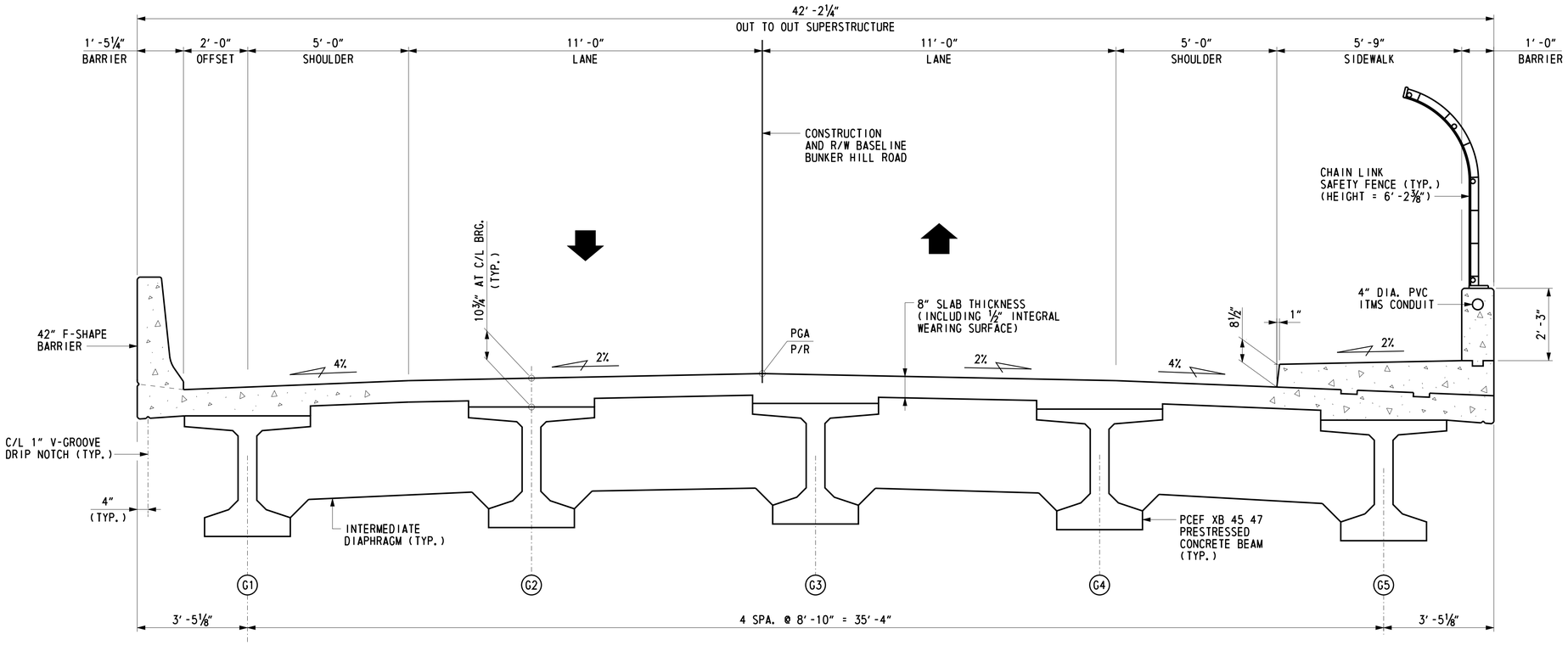

TYPICAL SECTION

(LOOKING STATION AHEAD)
SCALE: ½″ = 1′-0″

CROSS REFERENCE NOTES:

1. FOR FRAMING PLAN, SEE DWG. 1-475 FR-1.
2. FOR DECK, BARRIER AND SIDEWALK REINFORCEMENT, SEE DWG. 1-475 DK-2 TO 1-475 DK-4.
3. FOR FENCE DETAILS, SEE DWGS. 1-475 RA-1 AND 1-475 RA-2.
4. FOR US 301 TYPICAL ROADWAY SECTION, SEE DWG. TS-04.
5. FOR DETAILS OF CONDUIT IN BARRIER, SEE CONSTRUCTION DETAILS DWG. DT-07. INSTALLATION OF CONDUIT, CONDUIT EXPANSION JOINTS AND JUNCTION BOXES SHALL BE INCIDENTAL TO ITEM 602017, PORTLAND CEMENT CONCRETE MASONRY, PARAPET, CLASS A.

PILE PICK-UP NOTES:

1. UNLESS SPECIAL LIFTING DEVICES ARE ATTACHED FOR PICK-UP, PICK-UP POINTS SHALL BE PLAINLY MARKED ON ALL PILES AFTER REMOVAL OF THE FORMS. THE PILE SHALL BE SUPPORTED ONLY AT THE INDICATED PICK-UP POINTS WHILE BEING STORED OR HANDLED.

2. THE USE OF PROPER RIGGING IS REQUIRED TO INSURE THAT THE PICK-UP POINTS REMAIN IN A STRAIGHT LINE DURING LIFTING AND WHEN POSITIONING THE PILE FOR DRIVING.

3. THE USE OF SPECIAL EMBEDDED OR ATTACHED LIFTING DEVICES, THE USE OF OTHER PICK-UP LOCATIONS OR ANY OTHER METHOD OF PICK-UP SHALL BE SUBJECT TO THE APPROVAL OF THE ENGINEER.

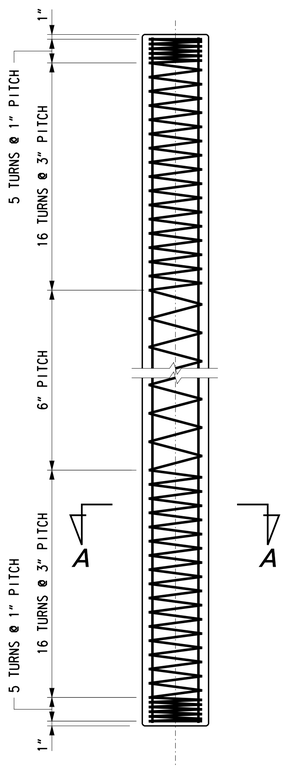

14" SQUARE PRESTRESSED CONCRETE PILE

SCALE: ¾" = 1'-0"

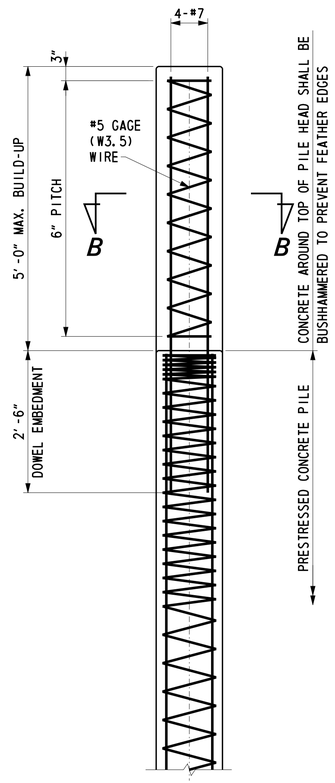

14" SQUARE PILE BUILD-UP DETAIL

SCALE: ¾" = 1'-0"

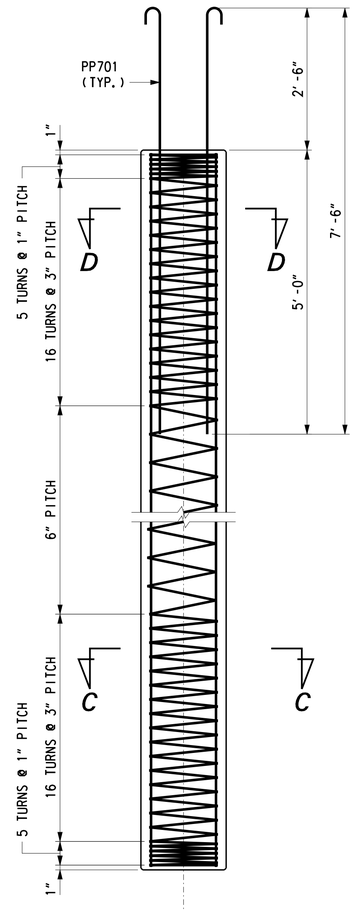

18" SQUARE PRESTRESSED CONCRETE PILE

SCALE: ¾" = 1'-0"

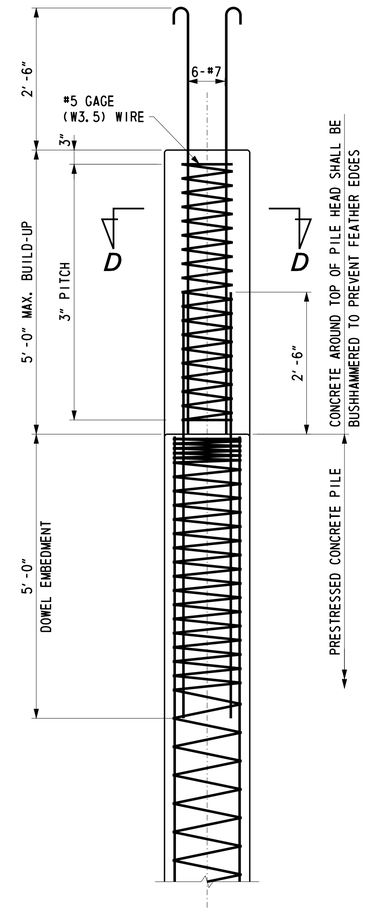

18" SQUARE PILE BUILD-UP DETAIL

SCALE: ¾" = 1'-0"

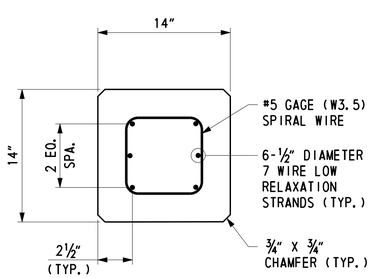

SECTION A-A

SCALE: 1½" = 1'-0"

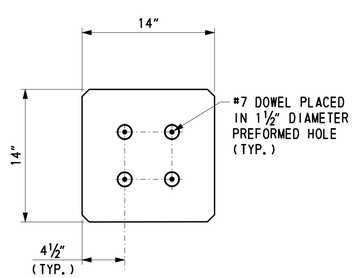

SECTION B-B

(STRANDS AND SPIRALS NOT SHOWN)

SCALE: 1½" = 1'-0"

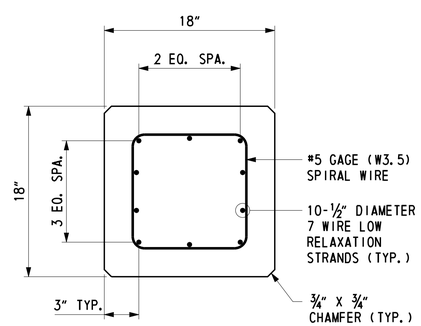

SECTION C-C

SCALE: 1½" = 1'-0"

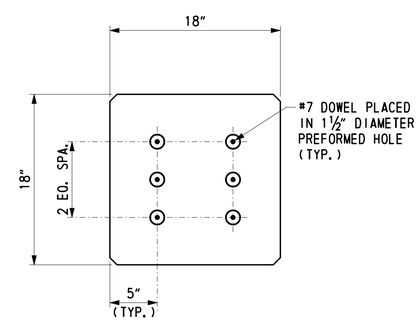

SECTION D-D

(STRANDS AND SPIRALS NOT SHOWN)

SCALE: 1½" = 1'-0"

NOTES:

1. ALL PILES SHALL BE 14" X 14" OR 18" X 18" PRECAST PRESTRESSED CONCRETE PILES AS DESIGNATED ON THE FOUNDATION PLANS. PILES SHALL NOT BE COATED.

2. THE MINIMUM COMPRESSIVE STRENGTH FOR THE PRESTRESSED CONCRETE PILES AT THE AGE OF 28 DAYS SHALL BE fc'=6000 PSI. THE MINIMUM COMPRESSIVE STRENGTH AT TIME OF TRANSFER SHALL BE f'ci=4800 PSI.

3. ALL PRESTRESSING STRANDS SHALL MEET THE REQUIREMENTS OF ASTM A416, GRADE 270, LOW RELAXATION. STRANDS SHALL BE ONE HALF (½) INCH DIAMETER AND SHALL HAVE AN ULTIMATE STRENGTH OF 41,300 LBS. CUT STRANDS FLUSH WITH PILE HEAD AND PILE TIP.

4. SPIRAL TIES SHALL BE #5 GAGE STEEL WIRE CONFORMING TO THE REQUIREMENTS OF ASTM A82.

5. THE SPLICING OF PRESTRESSED PRECAST CONCRETE PILES SHALL NOT BE PERMITTED.

6. PROVIDE 1½" DIAMETER PREFORMED HOLES IN PILE HEAD AT THE DOWEL LOCATIONS. DOWELS SHALL BE GROUTED IN PLACE WITH AN APPROVED EPOXY GROUT WITH A MINIMUM COMPRESSIVE STRENGTH OF fc'=6000 PSI. THE CONTRACTOR SHALL SUBMIT A GROUT PLACEMENT PROCEDURE FOR APPROVAL. PREFORMED HOLES SHALL BE PLUGGED PRIOR TO GROUTING TO ENSURE THAT MOISTURE AND DEBRIS DO NOT ENTER HOLES.

7. DOWEL HOLES SHALL BE POSITIONED TO MAINTAIN A ONE INCH CLEAR DISTANCE FROM ALL PRESTRESSING STRANDS IN THE PILE.

8. ALL TEST PILES SHALL BE TEN (10) FEET LONGER THAN THE PRODUCTION PILE LENGTH INDICATED ON PILE INSTALLATION DATA TABLE.

9. ALL PILES SHALL BE DRIVEN TO THE NOMINAL PILE DRIVING RESISTANCE LISTED IN THE PILE INSTALLATION DATA TABLES ON THE PILE FOUNDATION PLANS.

10. THE CONTRACTOR SHALL BE RESPONSIBLE FOR SUBMITTING A WAVE EQUATION ANALYSIS AND ALL OTHER INCIDENTALS IN ACCORDANCE WITH THE PROJECT SPECIFICATIONS. THE NET CROSS-SECTIONAL AREA SHALL BE CONSIDERED IN THE WAVE EQUATION ANALYSIS. THE WAVE EQUATION AND HIGH-STRAIN DYNAMIC PILE TESTING MUST BE SIGNED AND STAMPED BY A PROFESSIONAL ENGINEER LICENSED IN THE STATE OF DELAWARE IN ACCORDANCE WITH THE PROJECT SPECIFICATIONS.

11. UPON COMPLETION OF THE HIGH-STRAIN DYNAMIC PILE TESTING, THE CONTRACTOR SHALL SUBMIT A SIGNAL MATCHING ANALYSIS TO THE ENGINEER FOR REVIEW AND APPROVAL IN ACCORDANCE WITH THE PROJECT SPECIFICATIONS.

12. FOR ABUTMENT PILES, PILE CASINGS SHALL BE INSTALLED AT THE PROPOSED PILE LOCATIONS.

13. A QUARANTINE PERIOD OF THIRTY (30) DAYS IS REQUIRED AFTER THE CONSTRUCTION OF THE FULL HEIGHT OF THE FILL AT THE ABUTMENTS IS ACHIEVED.

14. ABUTMENT PILES MAY NOT BE DRIVEN UNTIL AFTER COMPLETION OF THE THIRTY (30) DAY QUARANTINE PERIOD, UNLESS NOTED BELOW FOR TEST PILES.

15. THE ENGINEER SHALL APPROVE THE COMPLETION OF THE WAITING PERIOD, BASED ON RESULTS OF INSTRUMENTATION.

16. TEST PILES MAY BE DRIVEN PRIOR TO PLACING MSE WALL BACKFILL. RESTRIKES OF THESE TEST PILES SHALL BE PERFORMED PRIOR TO PLACING ANY EMBANKMENT IN ACCORDANCE WITH ITEM 619502-TEST PILE RESTRIKE. TEST PILES BEHIND MSE WALLS SHALL THEN BE CASED PRIOR TO PLACING EMBANKMENT. AFTER THE SETTLEMENT HAS BEEN ACHIEVED AND THE SUBSTRUCTURE HAS BEEN RELEASED BY THE ENGINEER, PRODUCTION PILES MAY BE INSTALLED. AT THIS POINT, THE TEST PILE SHALL BE ACTING AS A PRODUCTION PILE AND IT SHALL BE RE-STRUCK AS DIRECTED BY THE ENGINEER PRIOR TO PLACING ANY OTHER PRODUCTION PILES WITH PAYMENT UNDER ITEM 619501-PRODUCTION PILE RESTRIKE.

17. SEE SPECIAL PROVISIONS 202505 AND 202518 FOR SETTLEMENT MONITORING REQUIREMENTS.

18. PILE LENGTHS FOR ORDERING PURPOSES SHALL BE DETERMINED BY TEST PILES. A MINIMUM OF ONE PILE PER SUBSTRUCTURE, AS SHOWN ON THE PLANS, SHALL BE DYNAMICALLY TESTED WITH SIGNAL MATCHING ANALYSIS BY THE CONTRACTOR IN ACCORDANCE WITH SPECIAL PROVISION 619519 AND 619539. TEST AND PRODUCTION PILE RESTRIKES WILL BE PAID AS FOLLOWS:

    A. ALL TEST PILE(S) WILL BE RESTRUCK AFTER A WAITING PERIOD OF AT LEAST 48 HOURS. TEST PILE RESTRIKES SHALL BE INCIDENTAL TO THE INITIAL INSTALLATION OF THE PILE PROVIDED THEY ARE REQUESTED WITHIN FIVE WORKING DAYS FROM THE COMPLETION OF THE INITIAL DRIVE. IF TEST PILE RESTRIKES ARE REQUESTED AFTER THE FIVE (5) WORKING DAYS FROM THE COMPLETION OF THE INITIAL DRIVE THEN THE TEST PILE RESTRIKE SHALL BE PAID AS NOTED IN SPECIAL PROVISION 619502.

    B. IF DIRECTED BY THE ENGINEER TO RESTRIKE A PRODUCTION PILE, THE RESTRIKE OF THE PRODUCTION PILE SHALL BE PAID SEPARATELY UNDER ITEM NO. 619501.

    C. DELDOT STANDARD SPECIFICATION 619.11(a)(6) SHALL BE MODIFIED BY REFERENCE TO SPECIAL PROVISION 619519 AND 619539.

19. THE DEPARTMENT RESERVES THE RIGHT TO PERFORM DYNAMIC TESTING OF RESTRIKES.

DELAWARE DEPARTMENT OF TRANSPORTATION

ADDENDUMS / REVISIONS

US 301 LEVELS ROAD TO SUMMIT BRIDGE ROAD

CONTRACT	BRIDGE NO.	1-475
T200511303	DESIGNED BY: R. F. KIRCHNER	
COUNTY		
NEW CASTLE	CHECKED BY: G. P. MISTRY	

BUNKER HILL ROAD OVER US 301 MAINLINE PRESTRESSED CONCRETE PILE DETAILS

1-475 PL-1
SHEET NO.
396
TOTAL SHTS.
1256

Steve_Lambert 7/21/2015 U:\Projects\AA\21387385\CAD\Bridge\BR2-4\pl01_BR2-4_US301.dgn

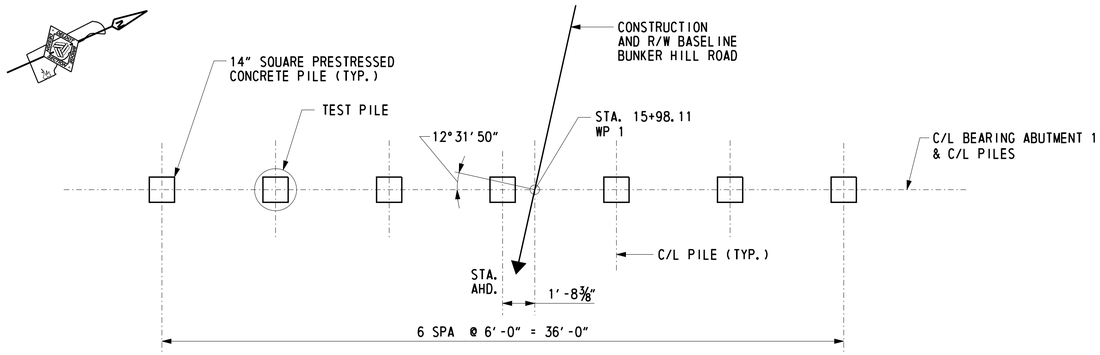

ABUTMENT 1 PILE PLAN

SCALE: ¼" = 1'-0"

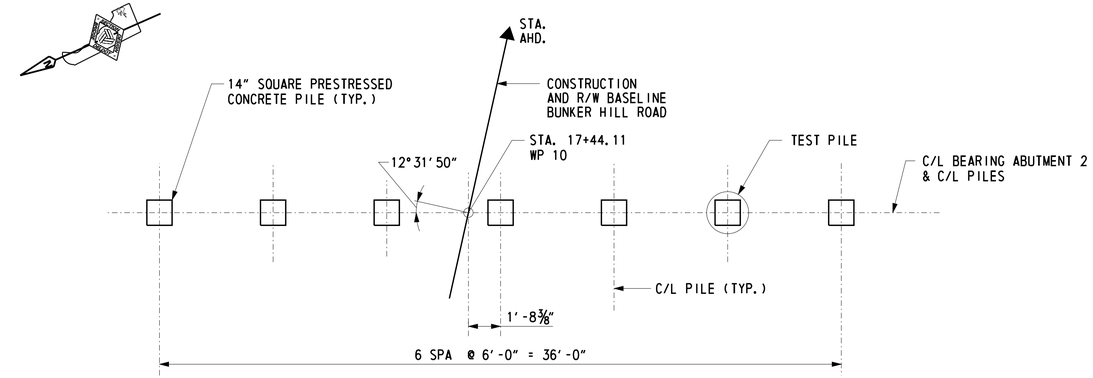

ABUTMENT 2 PILE PLAN

SCALE: ¼" = 1'-0"

PILE INSTALLATION DATA

SUBSTRUCTURE UNIT	DESIGN DATA: NOMINAL PILE DRIVING RESISTANCE (KIPS)	DESIGN DATA: ESTIMATED PILE TIP ELEVATION	ACTUAL FIELD DATA: AVERAGE MINIMUM TIP ELEVATION	ACTUAL FIELD DATA: AVERAGE MAXIMUM TIP ELEVATION
ABUTMENT 1	300	7.0		
ABUTMENT 2	300	7.0		

ABUTMENT 1 PILE DRIVING INFORMATION

PILE SIZE AND TYPE:
ACTUAL BEARING OBTAINED:
HAMMER TYPE:
PILE HAMMER ENERGY:
SPECIAL DRIVING CONDITIONS AND COMMENTS:

ABUTMENT 2 PILE DRIVING INFORMATION

PILE SIZE AND TYPE:
ACTUAL BEARING OBTAINED:
HAMMER TYPE:
PILE HAMMER ENERGY:
SPECIAL DRIVING CONDITIONS AND COMMENTS:

LEGEND

DENOTES 14" SQ. PLUMB PRESTRESSED CONCRETE PILE

DENOTES TEST PILE

NOTE:

TEST PILE SHALL BE TEN (10) FEET LONGER THAN THE PRODUCTION PILE LENGTH INDICATED IN THE PILE INSTALLATION DATA TABLE.

CROSS REFERENCE NOTES:

1. FOR BRIDGE PLAN AND ELEVATION, SEE DWG. 1-475 PE-1.
2. FOR ABUTMENT PLAN AND ELEVATION, SEE DWG. 1-475 AB-2 & 1-475 AB-3.
3. FOR PILE DETAILS, SEE DWG. 1-475 PL-1.
4. FOR GEOMETRIC LAYOUT, SEE DWG. 1-475 FT-1.

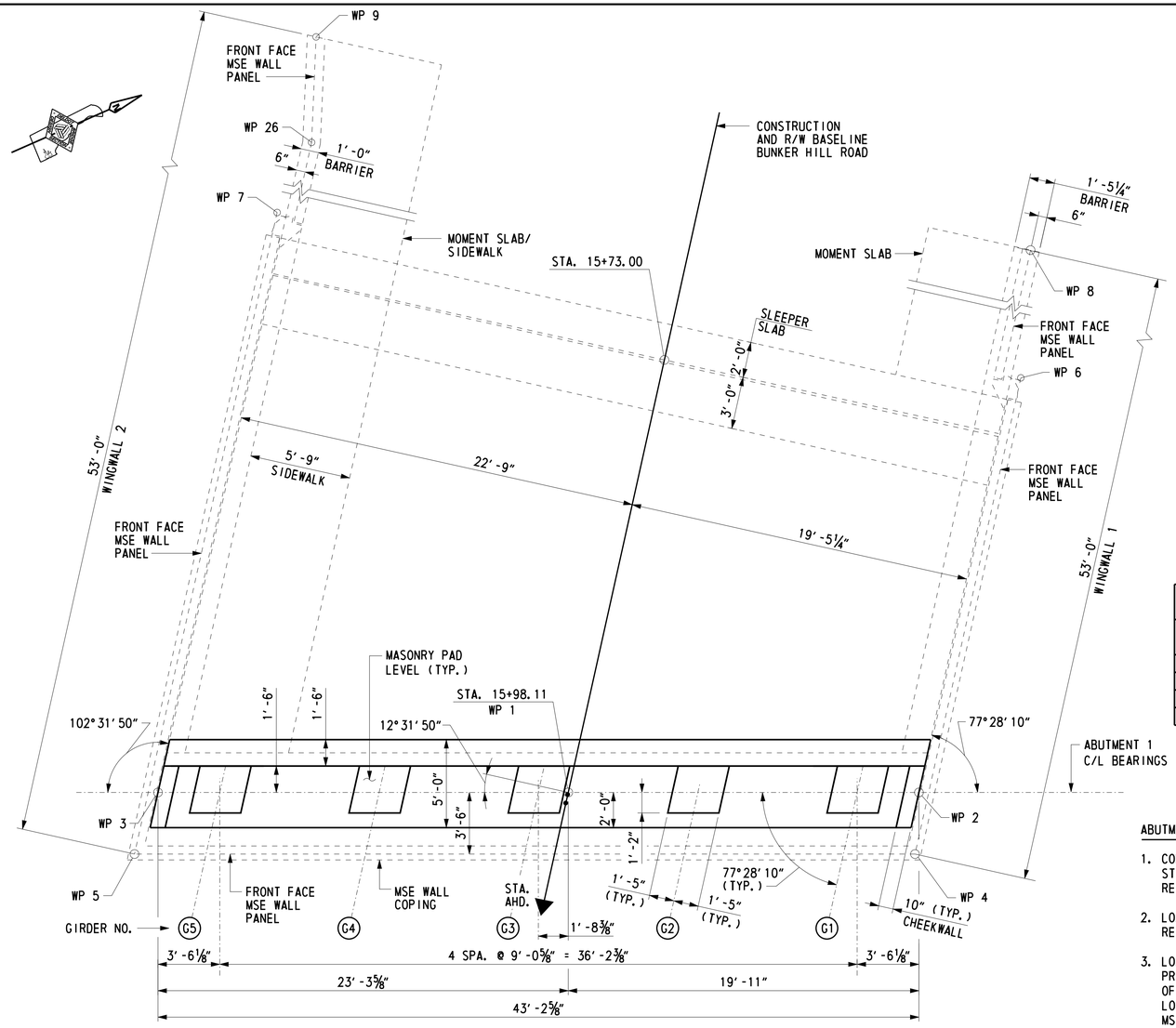

PLAN - ABUTMENT 1

SCALE: ¼" = 1'-0"

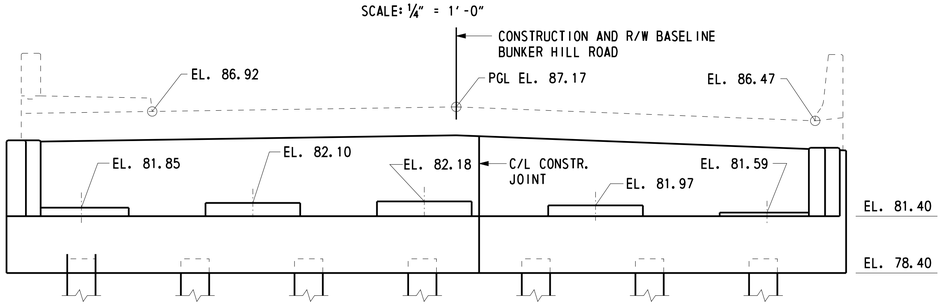

ELEVATION - ABUTMENT 1

(LOOKING BACK STATION)
SCALE: ¼" = 1'-0"

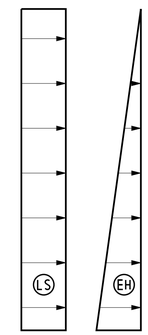

ABUTMENT LATERAL LOADS	
TYPE	SERVICE LOAD (KIPS/FT.)
EH	1.55
LS	1.00
BR	0.25
TU	1.00

ABUTMENT LATERAL LOADS:

1. CONTRACTOR SHALL DESIGN THE SOIL REINFORCING STRAPS IN THE ABUTMENT STEM AND BACKWALL TO RESIST LATERAL LOADS "EH", "LS", "BR" AND "TU".
2. LOAD "EH" IS THE HORIZONTAL EARTH PRESSURE RESULTANT EXERTED ON THE ABUTMENT.
3. LOAD "LS" IS THE ADDITIONAL HORIZONTAL SOIL PRESSURE RESULTANT DUE TO AN EQUIVALENT HEIGHT OF THREE (3) FEET OF SOIL TO ACCOUNT FOR VEHICULAR LOADING. CONTRACTOR IS RESPONSIBLE FOR PROVIDING MSE WALL DESIGNER WITH OTHER CONSTRUCTION LOADS WHICH WILL BE IN EXCESS OF THREE (3) FEET OF SOIL SURCHARGE.
4. LOAD "BR" IS THE HORIZONTAL LOAD DUE TO BRAKING FORCE ON THE SUPERSTRUCTURE.
5. LOAD "TU" IS THE HORIZONTAL LOAD DUE TO BRIDGE EXPANSION AND CONTRACTION.
6. THE POINT OF APPLICATION OF THE LOADS "EH" AND "LS" ARE AT THE CENTROID OF THE PRESSURE DIAGRAM. THE LOADS "BR" AND "TU" ARE APPLIED AT THE CENTER OF THE BEARINGS. THE LOADS "BR" AND "TU" MAY ACT TOGETHER IN EITHER DIRECTION.

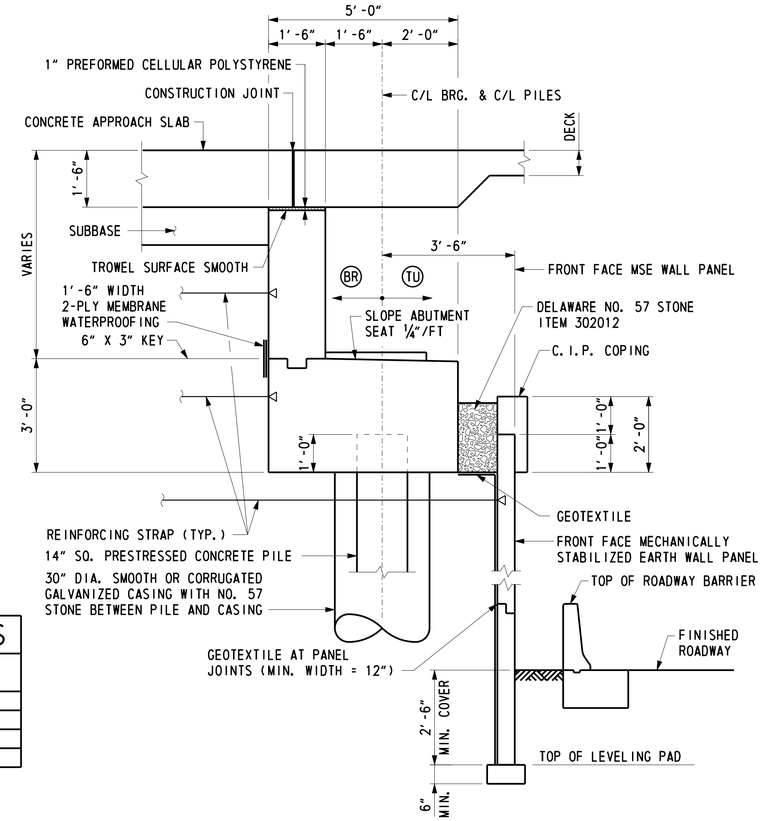

TYPICAL ABUTMENT SECTION

SCALE: ½" = 1'-0"

NOTES:

1. MSE WALL COPING AND GEOTEXTILE SHALL BE INCIDENTAL TO ITEM NO. 602772 - MECHANICALLY STABILIZED EARTH WALLS.
2. MSE WALL AND COPING NOT SHOWN IN ELEVATION VIEW.
3. BEAM SEAT ELEVATION IS AT FRONT FACE OF BACKWALL.
4. METAL CASING FOR PILES SHALL EXTEND FROM BOTTOM OF ABUTMENT TO BOTTOM OF MSE WALL LEVELING PAD. COST OF METAL CASING AND NO. 57 STONE IN CASING SHALL BE INCIDENTAL TO FURNISHING PILE ITEM.
5. BACKWALL ELEVATIONS SHOWN ARE TOP OF DECK AT FRONT FACE BACKWALL.
6. REINFORCING STRAPS SHALL BE PROVIDED FOR THE ABUTMENT STEM AND BACKWALL TO RESIST THE LONGITUDINAL FORCES ON THE SUPERSTRUCTURE.
7. MEMBRANE WATERPROOFING SHALL BE INCIDENTAL TO ITEM NO. 602015 - PORTLAND CEMENT CONCRETE MASONRY, ABUTMENT ABOVE FOOTING, CLASS A.
8. PREFORMED CELLULAR POLYSTYRENE SHALL BE INCIDENTAL TO ITEM 602014 - PORTLAND CEMENT CONCRETE MASONRY, APPROACH SLAB, CLASS D.

CROSS REFERENCE NOTES:

1. FOR BRIDGE PLAN AND ELEVATION, SEE DWG. 1-475 PE-1.
2. FOR GEOMETRIC LAYOUT, SEE DWG. 1-475 FT-1.
3. FOR TYPICAL SIDE ELEVATION, SEE DWG. 1-475 AB-3.
4. FOR MSE WINGWALLS PLAN AND ELEVATION, SEE DWG. 1-475 WW-1.
5. FOR ABUTMENT REINFORCEMENT, SEE DWG. 1-475 AB-4.
6. FOR ABUTMENT STRAP ANCHOR DETAIL, SEE DWG. 1-475 AB-6.
7. FOR MSE WALL OFFSET DETAIL AT WP 6 AND WP 7, SEE DWG. 1-475 WW-1.
8. FOR CONSTRUCTION SEQUENCE OF PILES AND ABUTMENT, SEE NOTES ON DWG. 1-475 PL-1.

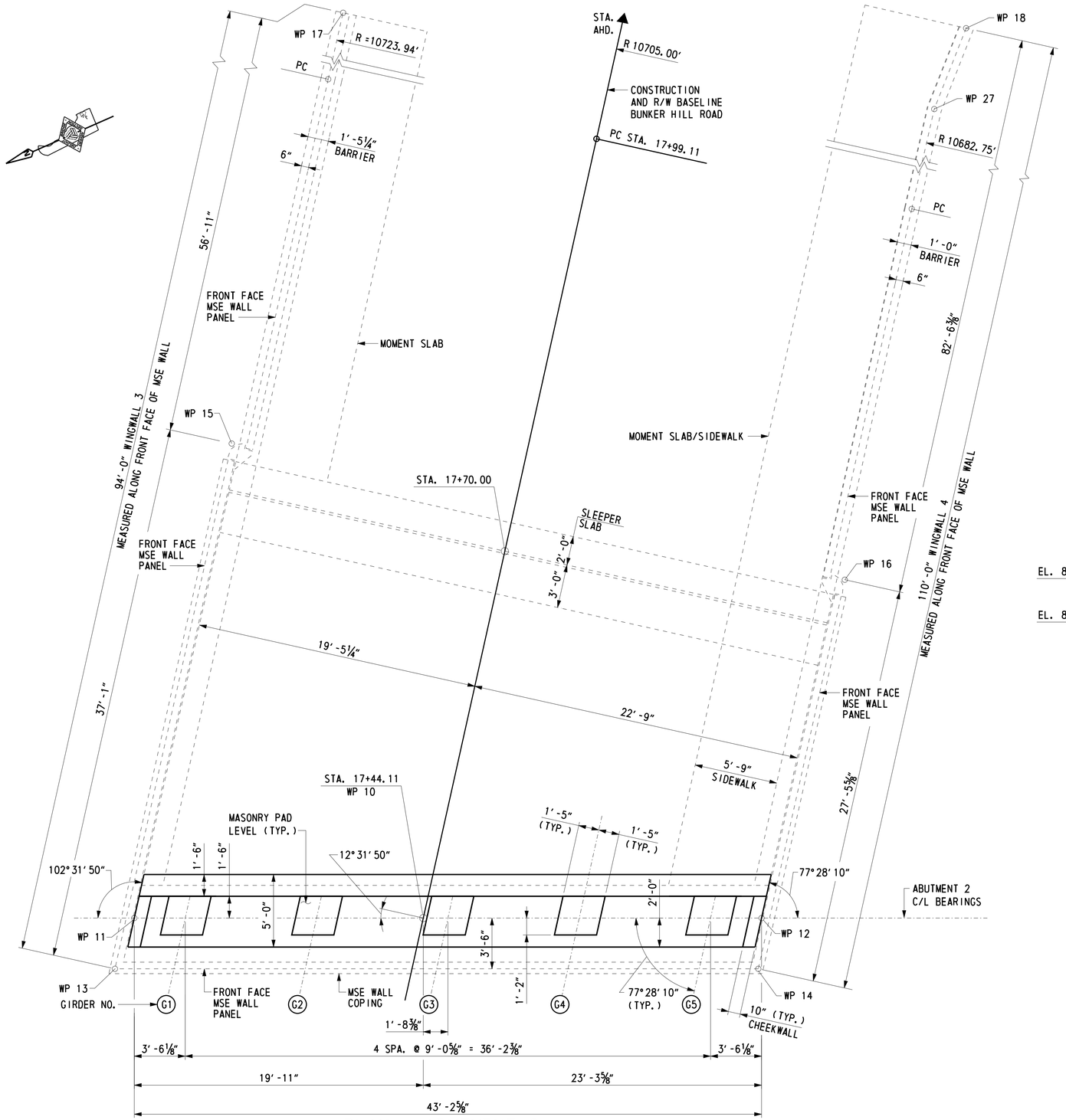

PLAN - ABUTMENT 2

SCALE: ¼" = 1'-0"

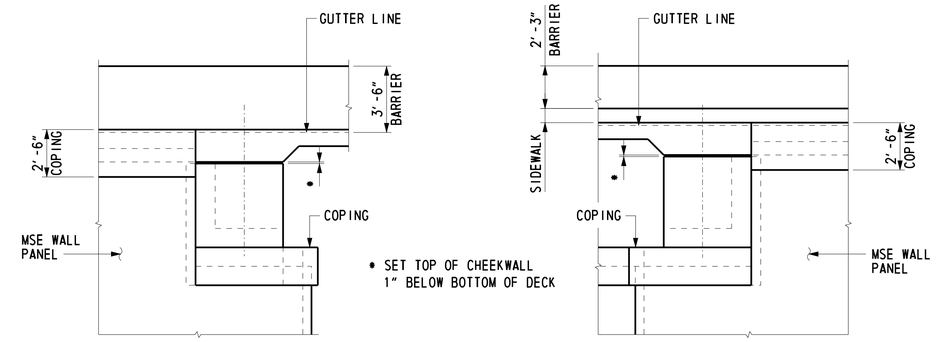

BARRIER SIDE

SIDEWALK SIDE

SIDE ELEVATIONS

SCALE: ¼" = 1'-0"

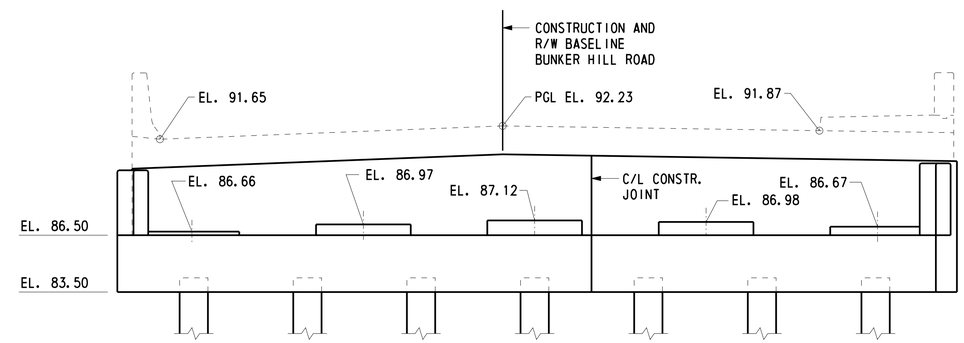

ELEVATION - ABUTMENT 2

(LOOKING AHEAD STATION)
SCALE: ¼" = 1'-0"

NOTES:

1. MSE WALL AND COPING NOT SHOWN IN ELEVATION VIEW.
2. BACKWALL ELEVATIONS SHOWN ARE TOP OF DECK AT FRONT FACE BACKWALL.
3. BEAM SEAT ELEVATION IS AT FRONT FACE OF BACKWALL.

CROSS REFERENCE NOTES:

1. FOR BRIDGE PLAN AND ELEVATION, SEE DWG. 1-475 PE-1.
2. FOR GEOMETRIC LAYOUT, SEE DWG. 1-475 FT-1.
3. FOR TYPICAL ABUTMENT SECTION, SEE DWG. 1-475 AB-2.
4. FOR ABUTMENT LATERAL LOADS, SEE DWG. 1-475 AB-2.
5. FOR MSE WINGWALLS PLAN AND ELEVATION, SEE DWG. 1-475 WW-2.
6. FOR ABUTMENT REINFORCEMENT, SEE DWG. 1-475 AB-5.
7. FOR MSE WALL OFFSET DETAIL AT WP 15 AND WP 16, SEE DWG. 1-475 WW-1.
8. FOR CONSTRUCTION SEQUENCE OF PILES AND ABUTMENT, SEE NOTES ON DWG. 1-475 PL-1.

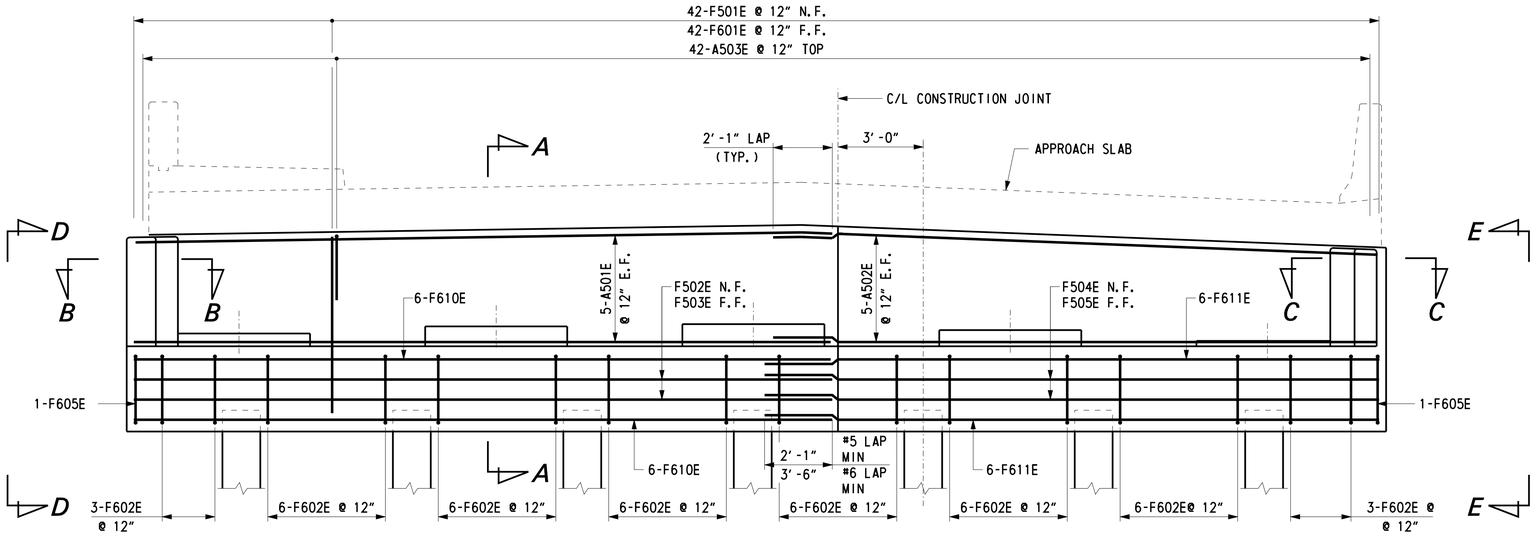

ABUTMENT 1 ELEVATION

SCALE: 3/8" = 1'-0"

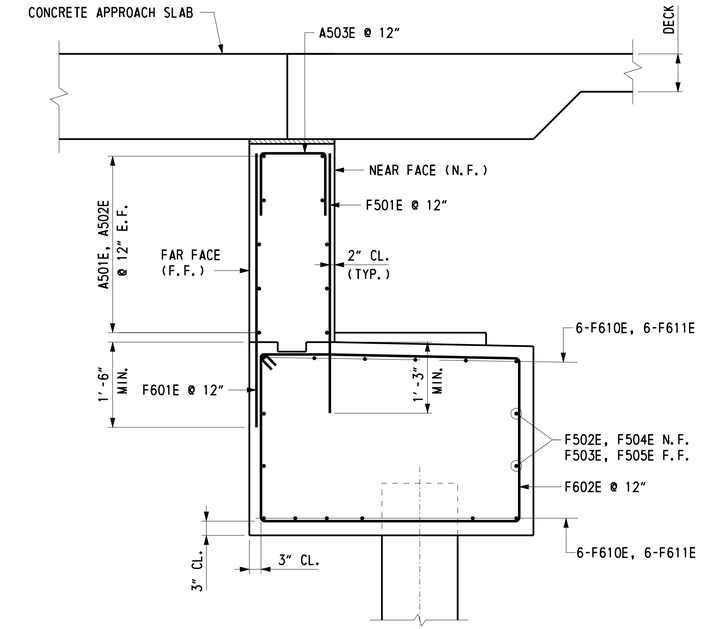

SECTION A-A

SCALE: 3/4" = 1'-0"

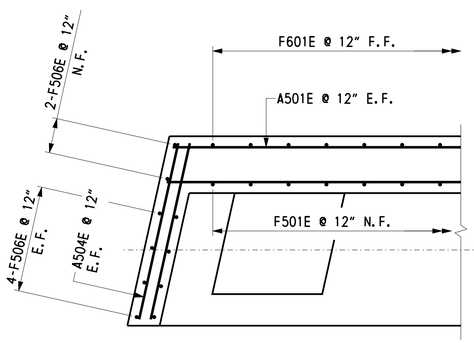

SECTION B-B

SCALE: 1/2" = 1'-0"

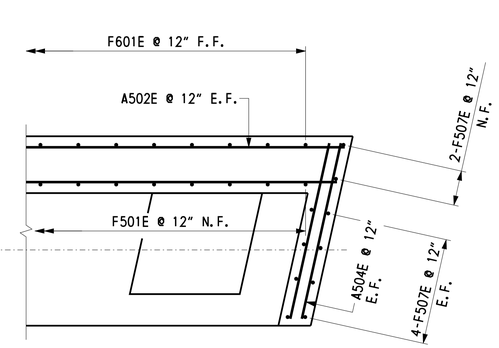

SECTION C-C

SCALE: 1/2" = 1'-0"

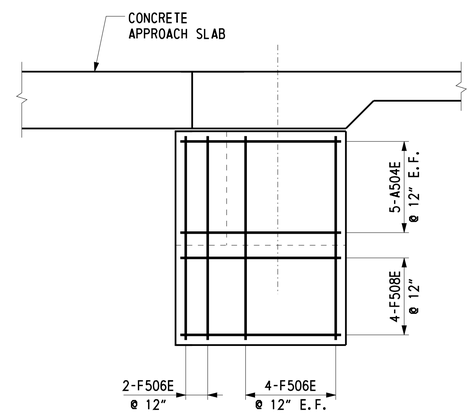

VIEW D-D

SCALE: 1/2" = 1'-0"

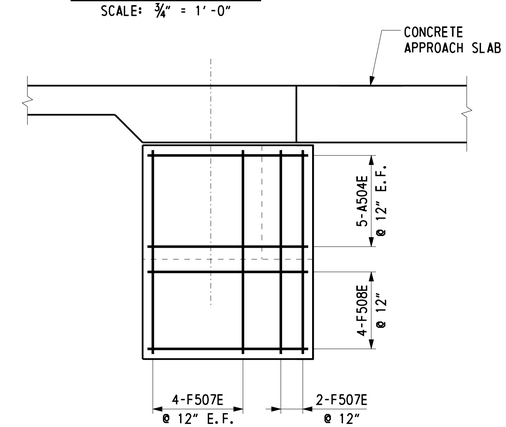

VIEW E-E

SCALE: 1/2" = 1'-0"

CROSS REFERENCE NOTES:

1. FOR ABUTMENT 1 PLAN AND ELEVATION, SEE DWG. 1-475 AB-2.
2. FOR WING WALL 1 AND 2 PLAN AND ELEVATION, SEE DWG. 1-475 WW-1.
3. FOR MASONRY PAD REINFORCEMENT, SEE DWG. 1-475 AB-6.
4. FOR REINFORCING BAR LIST, SEE DWG. 1-475 AB-7.

U:\Projects\AA\21387385\CAD\Bridge\BR2-4\ab04_BR2-4_US301.dgn 7/15/2015 Steve_Lambert

DELAWARE DEPARTMENT OF TRANSPORTATION

ADDENDUMS / REVISIONS

US 301 LEVELS ROAD TO SUMMIT BRIDGE ROAD

CONTRACT	BRIDGE NO.	1-475
T200511303	DESIGNED BY: K.D.BEAVER	
COUNTY		
NEW CASTLE	CHECKED BY: R.F.KIRCHNER	

BUNKER HILL ROAD OVER US 301 MAINLINE

ABUTMENT 1 REINFORCEMENT

1-475 AB-4
SHEET NO.
400
TOTAL SHTS.
1256

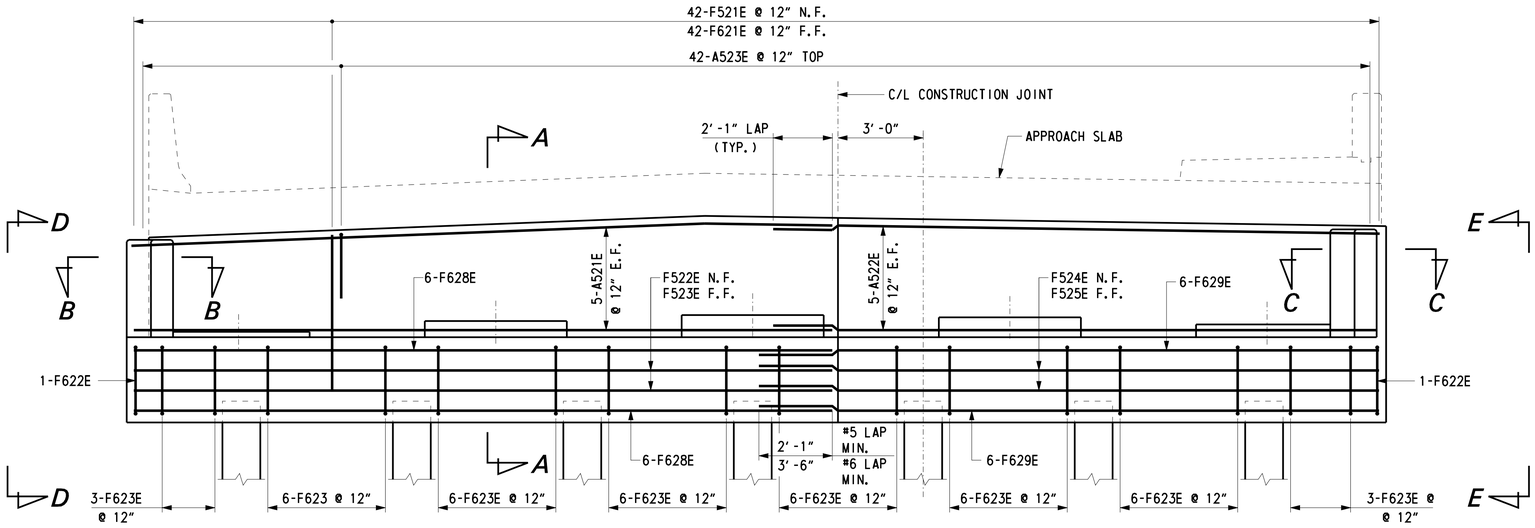

ABUTMENT 2 ELEVATION

SCALE: 3/8" = 1'-0"

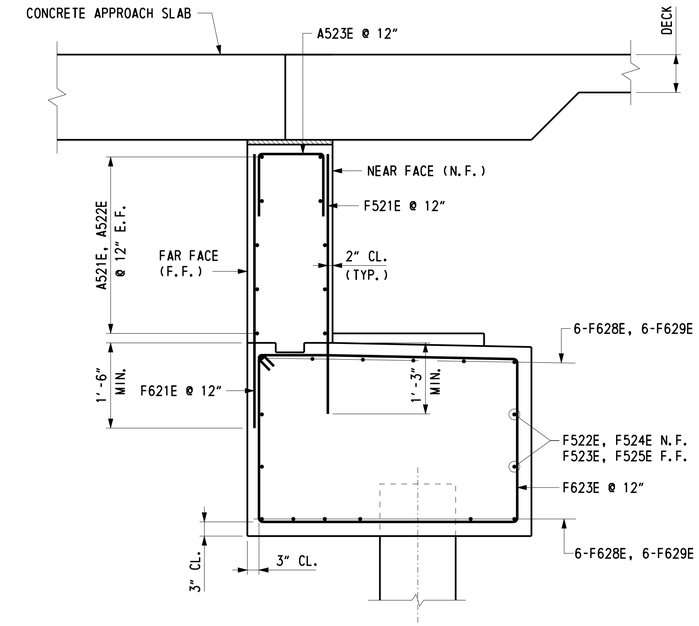

SECTION A-A

SCALE: 3/4" = 1'-0"

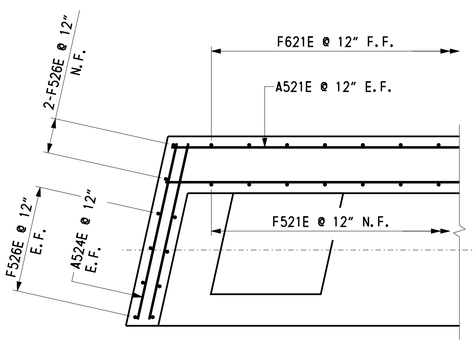

SECTION B-B

SCALE: 1/2" = 1'-0"

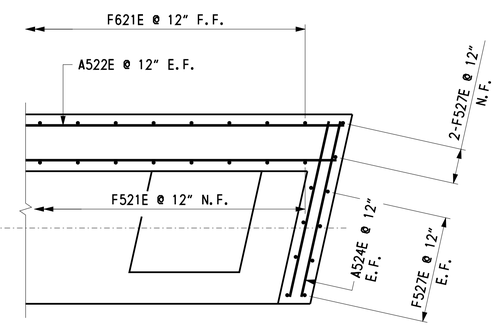

SECTION C-C

SCALE: 1/2" = 1'-0"

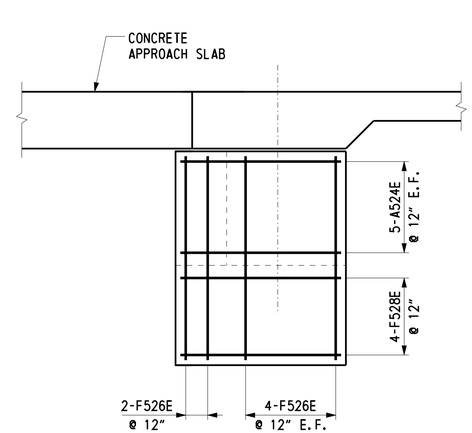

VIEW D-D

SCALE: 1/2" = 1'-0"

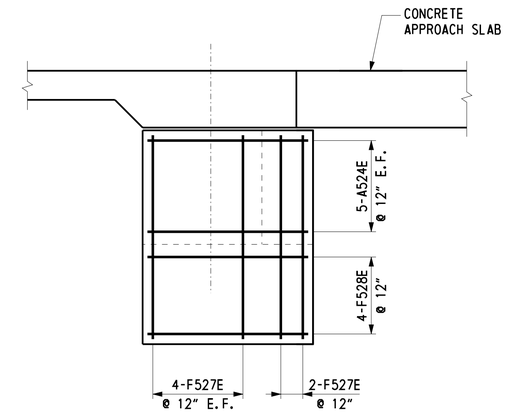

VIEW E-E

SCALE: 1/2" = 1'-0"

CROSS REFERENCE NOTES:

1. FOR ABUTMENT 2 PLAN AND ELEVATION, SEE DWG. 1-475 AB-3.
2. FOR WING WALL 3 AND 4 PLAN AND ELEVATION, SEE DWG. 1-475 WW-2.
3. FOR MASONRY PAD REINFORCEMENT, SEE DWG. 1-475 AB-6.
4. FOR REINFORCING BAR LIST, SEE DWG. 1-475 AB-7.

U:\Projects\AA\21987385\CAD\Bridge\BR2-4\ab05_BR2-4_US301.dgn 7/15/2015 Steve_Lambert

DELAWARE DEPARTMENT OF TRANSPORTATION	ADDENDUMS / REVISIONS	US 301 LEVELS ROAD TO SUMMIT BRIDGE ROAD	CONTRACT T200511303	BRIDGE NO. 1-475	BUNKER HILL ROAD OVER US 301 MAINLINE	1-475 AB-5	
			COUNTY NEW CASTLE	DESIGNED BY: K.D. BEAVER	ABUTMENT 2 REINFORCEMENT	SHEET NO. 401	
				CHECKED BY: R.F. KIRCHNER		TOTAL SHTS. 1256	

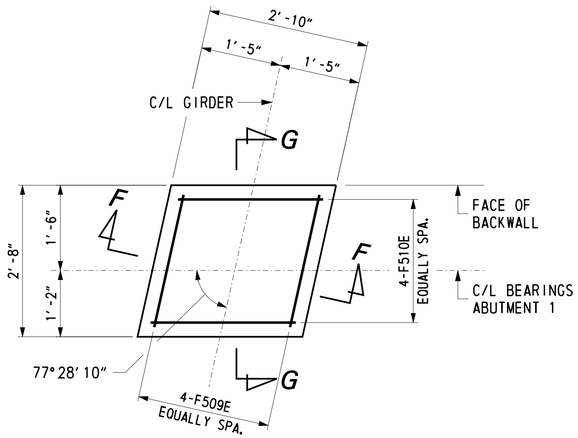

PLAN - ABUTMENT 1 MASONRY PAD

SCALE: ¾" = 1'-0"

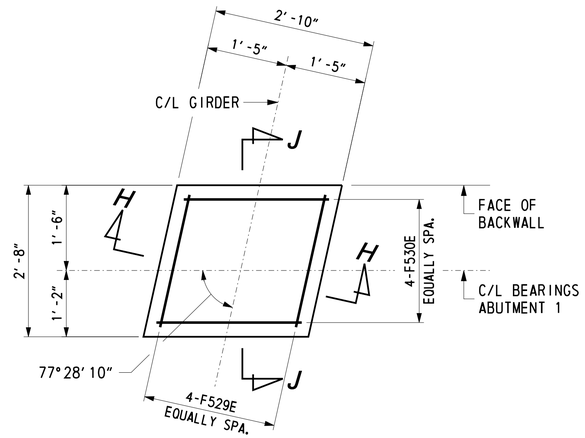

PLAN - ABUTMENT 2 MASONRY PAD

SCALE: ¾" = 1'-0"

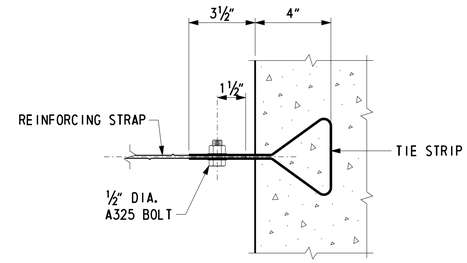

ABUTMENT STRAP ANCHOR DETAIL

NOT TO SCALE

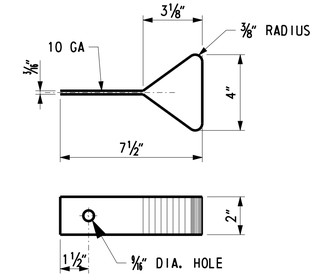

TIE STRIP DETAIL

NOT TO SCALE

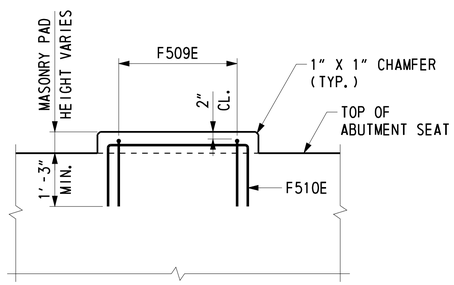

SECTION F-F

SCALE: ¾" = 1'-0"

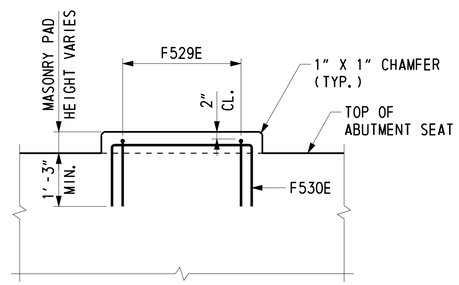

SECTION H-H

SCALE: ¾" = 1'-0"

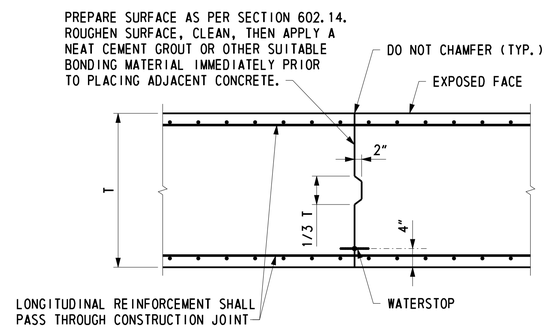

ABUTMENT CONSTRUCTION JOINT DETAIL

NOT TO SCALE

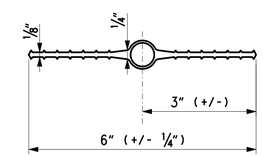

PVC WATERSTOP DETAIL

NOT TO SCALE

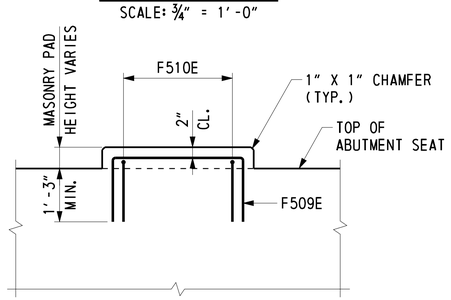

SECTION G-G

SCALE: ¾" = 1'-0"

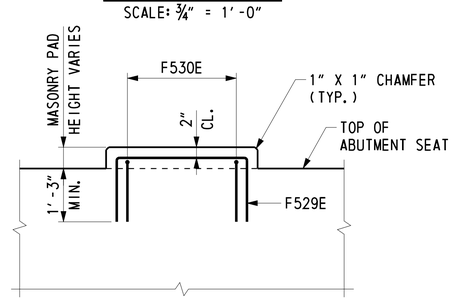

SECTION J-J

SCALE: ¾" = 1'-0"

NOTES:

1. ABUTMENT 1 MASONRY PAD REINFORCEMENT APPLIES AT GIRDERS G2 THROUGH G5. GIRDER G1 MASONRY PAD SHALL BE POURED MONOLITHIC WITH ABUTMENT.
2. ABUTMENT 2 MASONRY PAD REINFORCEMENT APPLIES AT GIRDERS G2 THROUGH G4. GIRDERS G1 AND G5 MASONRY PAD SHALL BE POURED MONOLITHIC WITH ABUTMENT.
3. CHAMFER NOT SHOWN IN PLAN VIEW.
4. TIE STRIP MATERIAL IS SAME AS USED IN MSE WALL PANELS, SEE MSE WALL SPECIAL PROVISION.

CROSS REFERENCE NOTES:

1. FOR ABUTMENT 1 PLAN AND ELEVATION, SEE DWG. 1-475 AB-2.
2. FOR ABUTMENT 2 PLAN AND ELEVATION, SEE DWG. 1-475 AB-3.
3. FOR REINFORCING BAR LIST, SEE DWG. 1-475 AB-7.

REINFORCING BAR LIST

ABUTMENT 1

MARK	LENGTH	NO. BARS	TYPE	A	B	C	D	E	G	H	J	K	O	R	REMARKS
F501E	5'-4"	42	STR.												
F502E	24'-8"	2	STR.												
F503E	23'-8"	2	STR.												
F504E	20'-4"	2	STR.												
F505E	21'-4"	2	STR.												
F506E	6'-4"	10	STR.												
F507E	6'-1"	10	STR.												
F508E	4'-8"	8	STR.												
F509E	6'-2"	16	17		1'-11"	2'-4"	1'-11"								
F510E	6'-4"	16	17		1'-11"	2'-6"	1'-11"								
F601E	5'-7"	42	STR.												
F602E	15'-8"	42	T1	0'-8"	4'-7"	2'-7"	4'-7"	2'-7"	0'-8"						
F605E	15'-10"	2	T1	0'-8"	4'-8"	2'-7"	4'-8"	2'-7"	0'-8"						
F610E	23'-8"	12	STR.												
F611E	22'-8"	12	STR.												
A501E	23'-8"	10	STR.												
A502E	21'-4"	10	STR.												
A503E	3'-2"	42	17		1'-0"	1'-2"	1'-0"								
A504E	4'-8"	20	STR.												

ABUTMENT 2

MARK	LENGTH	NO. BARS	TYPE	A	B	C	D	E	G	H	J	K	O	R	REMARKS
F521E	5'-4"	42	STR.												
F522E	24'-8"	2	STR.												
F523E	23'-8"	2	STR.												
F524E	20'-4"	2	STR.												
F525E	21'-4"	2	STR.												
F526E	6'-1"	10	STR.												
F527E	6'-2"	10	STR.												
F528E	4'-8"	8	STR.												
F529E	5'-10"	12	17		1'-9"	2'-4"	1'-9"								
F530E	6'-0"	12	17		1'-9"	2'-6"	1'-9"								
F621E	5'-7"	42	STR.												
F622E	15'-10"	2	T1	0'-8"	4'-8"	2'-7"	4'-8"	2'-7"	0'-8"						
F623E	15'-8"	42	T1	0'-8"	4'-7"	2'-7"	4'-7"	2'-7"	0'-8"						
F628E	23'-8"	12	STR.												
F629E	22'-8"	12	STR.												
A521E	23'-8"	10	STR.												
A522E	21'-4"	10	STR.												
A523E	3'-2"	42	17		1'-0"	1'-2"	1'-0"								
A524E	4'-8"	20	STR.												

BENDING DIAGRAMS

ALL DIMENSIONS ARE FROM OUT TO OUT.

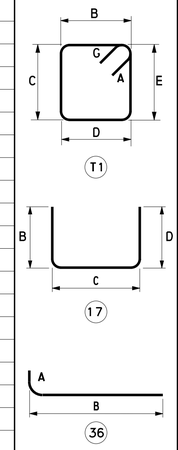

DELAWARE DEPARTMENT OF TRANSPORTATION

ADDENDUMS / REVISIONS

US 301
LEVELS ROAD
TO SUMMIT BRIDGE ROAD

CONTRACT	BRIDGE NO.	1-475
T200511303	DESIGNED BY: K.D.BEAVER	
COUNTY	CHECKED BY: R.F.KIRCHNER	
NEW CASTLE		

BUNKER HILL ROAD
OVER US 301 MAINLINE
ABUTMENTS 1 AND 2
REINFORCING BAR LIST

1-475 AB-7
SHEET NO.
403
TOTAL SHTS.
1256

Steve_Lambert 7/15/2015 U:\Projects\AA\21387385\CAD\Bridge\BR2-4\ab07_BR2-4_US301.dgn

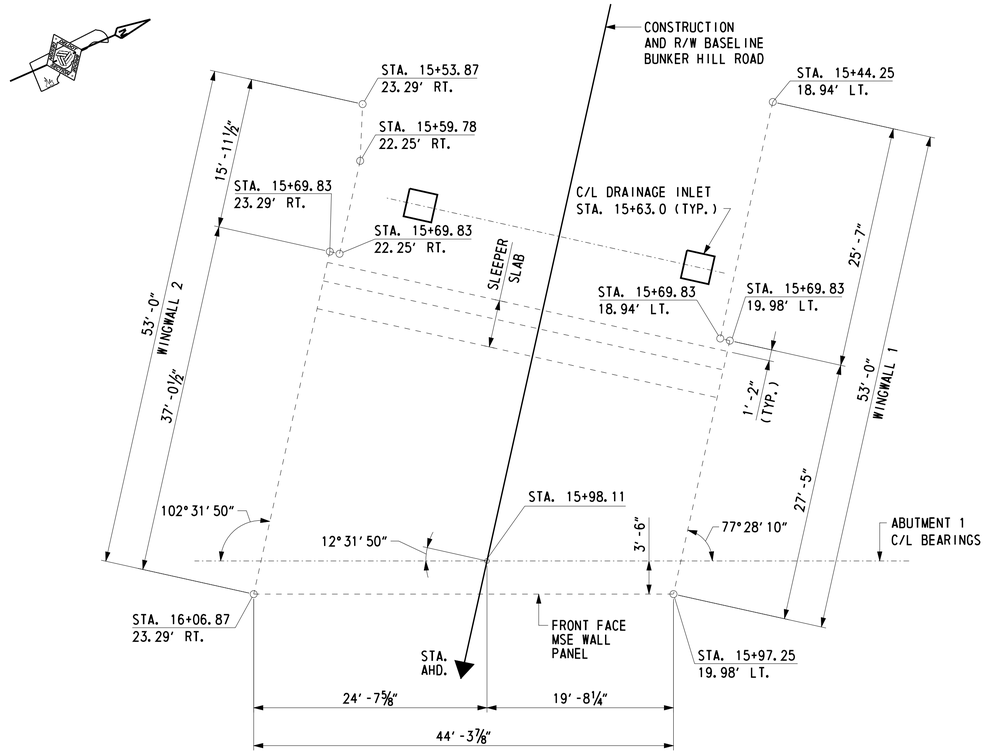

MSE WALL PLAN AT ABUTMENT 1

SCALE: ⅛" = 1'-0"

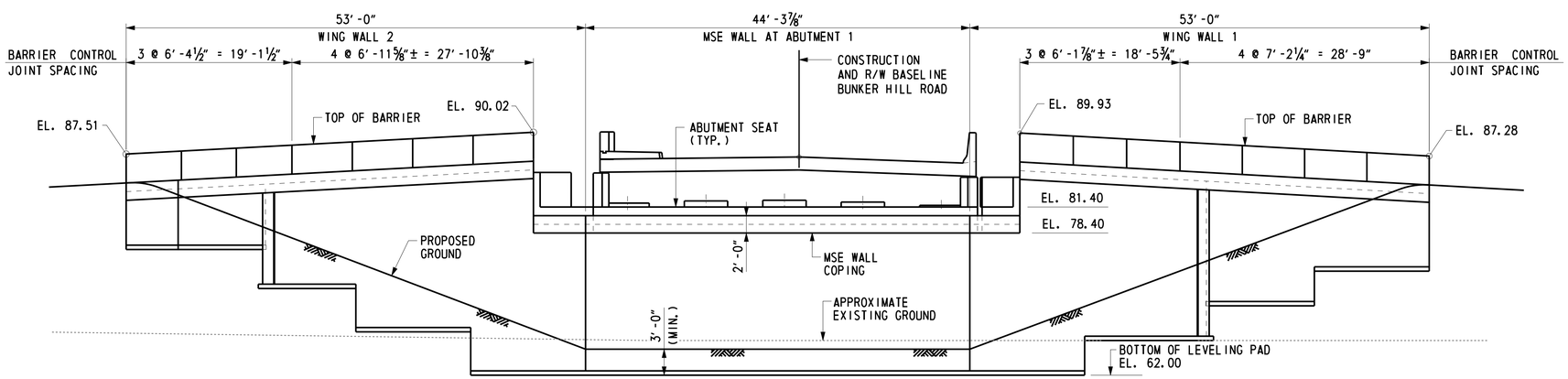

DEVELOPED ELEVATION AT ABUTMENT 1

(LOOKING BACK STATION)
SCALE: ⅛" = 1'-0"

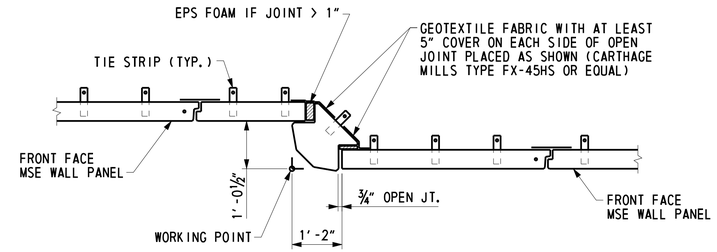

WALL OFFSET & CORNER ELEMENT DETAIL

NOT TO SCALE

NOTE:

MSE WALL CORNER ELEMENT WITH EPS FOAM SHALL BE INCIDENTAL TO MSE WALL ITEM.

CROSS REFERENCE NOTES:

1. FOR BRIDGE PLAN AND ELEVATION, SEE DWG. 1-475 PE-1.
2. FOR ABUTMENT 1 PLAN AND ELEVATION, SEE DWG. 1-475 AB-2.
3. FOR MSE WALL NOTES, SEE DWG. 1-475 WW-3.
4. FOR MSE WINGWALL DETAILS, SEE DWG. 1-475 WW-3 & 1-475 WW-4.
5. FOR SOIL PROPERTIES AND FOUNDATION NOTES, SEE DWG. 1-475 WW-4.
6. FOR CONSTRUCTION SEQUENCE OF PILES AND ABUTMENT, SEE NOTES ON DWG. 1-475 PL-1.
7. FOR GRADING OF PROPOSED GROUND ALONG WINGWALLS, SEE DWG. 1-475 PE-1.

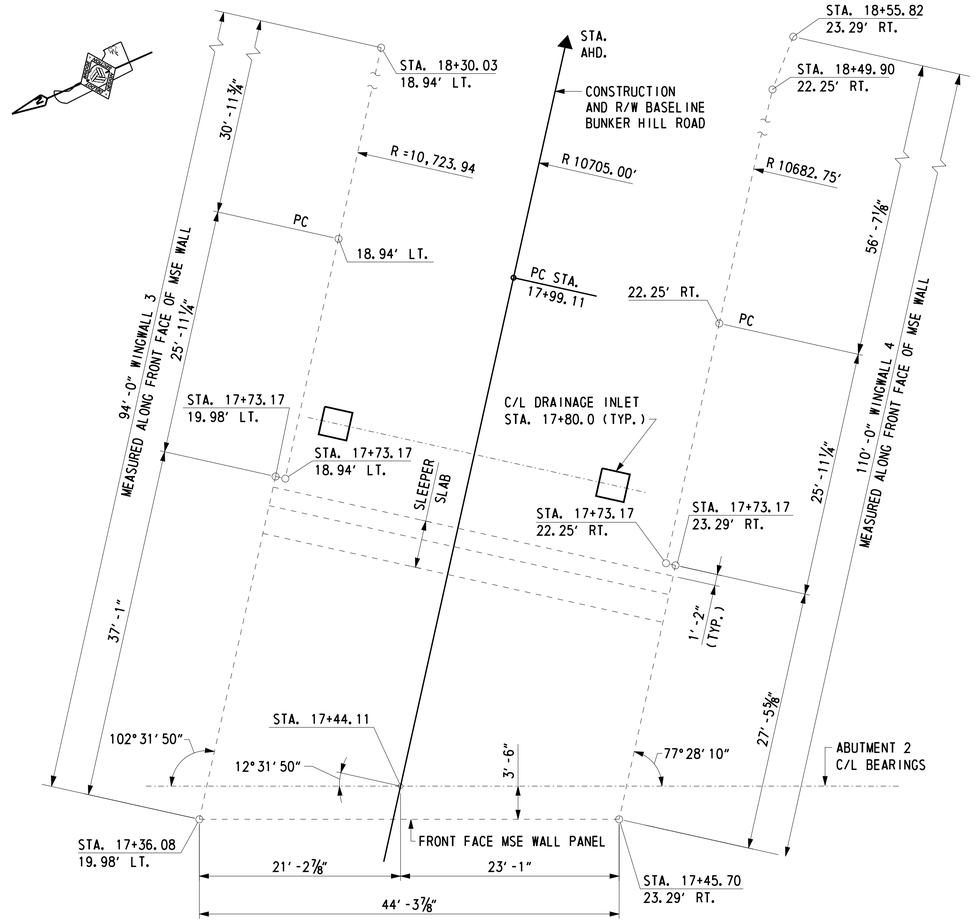

MSE WALL PLAN AT ABUTMENT 2

SCALE: ⅛" = 1'-0"

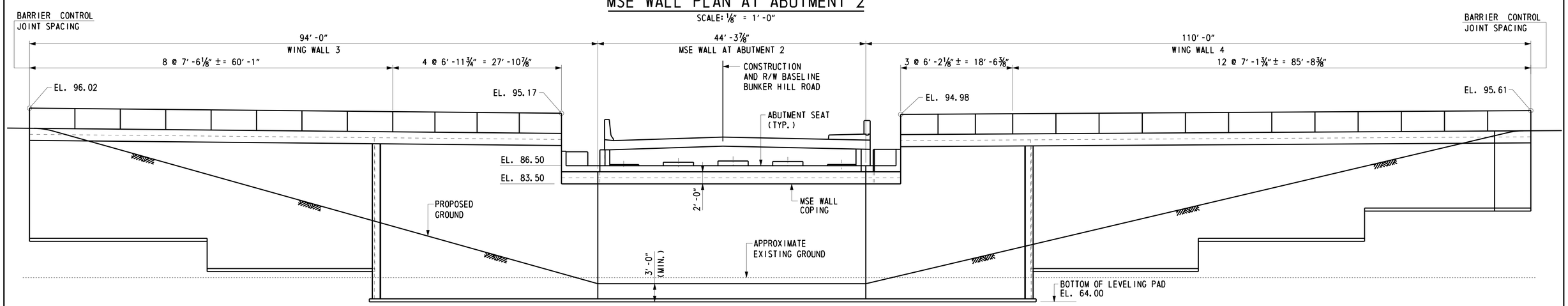

DEVELOPED ELEVATION AT ABUTMENT 2

(LOOKING AHEAD STATION)
SCALE: ⅛" = 1'-0"

CROSS REFERENCE NOTES:

1. FOR BRIDGE PLAN AND ELEVATION, SEE DWG. 1-475 PE-1.
2. FOR ABUTMENT 2 PLAN AND ELEVATION, SEE DWG. 1-475 AB-3.
3. FOR MSE WALL NOTES, SEE DWG. 1-475 WW-3.
4. FOR MSE WALL OFFSET DETAIL, SEE DWG. 1-475 WW-1.
5. FOR MSE WINGWALL DETAILS, SEE DWG. 1-475 WW-3 & 1-475 WW-4.
6. FOR SOIL PROPERTIES AND FOUNDATION NOTES, SEE DWG. 1-475 WW-4.
7. FOR CONSTRUCTION SEQUENCE OF PILES AND ABUTMENT, SEE NOTES ON DWG. PL-1.
8. FOR GRADING OF PROPOSED GROUND ALONG WINGWALLS, SEE DWG. 1-475 PE-1.

U:\Projects\AA\21387385\CAD\Bridge\BR2-4\ww02_BR2-4_US301.dgn 7/15/2015 Steve_Lambert

DELAWARE DEPARTMENT OF TRANSPORTATION

ADDENDUMS / REVISIONS

US 301 LEVELS ROAD TO SUMMIT BRIDGE ROAD

CONTRACT	BRIDGE NO.	1-475
T200511303	DESIGNED BY: R. F. KIRCHNER	
COUNTY		
NEW CASTLE	CHECKED BY: J. S. LI	

BUNKER HILL ROAD OVER US 301 MAINLINE WING WALLS 3 AND 4 PLAN AND ELEVATION

1-475 WW-2
SHEET NO.
405
TOTAL SHTS.
1256

NOTES:

1. DRAIN PERFORATED POLYVINYLCHLORIDE PIPE (P.P.V.C.) TO DAYLIGHT.
2. SURROUND PCMP WITH CONTINUOUS 2'-0" X 2'-0" OF DELAWARE NO. 57 STONE ENCLOSED IN GEOTEXTILE.
3. SLOPE MEMBRANE A MINIMUM OF 2% AWAY FROM THE BACKWALL.
4. FOR DRAINAGE SYSTEM, BACKFILL AND ADDITIONAL INFORMATION, SEE TYPICAL WINGWALL SECTION WITH BARRIER ON MOMENT SLAB.
5. COST OF COMPRESSIBLE FOAM MATERIAL AND PREFORMED JOINT FILLER SHALL BE INCIDENTAL TO MSE WALL ITEM.
6. COST OF IMPERVIOUS MEMBRANE UNDER SUBBASE SHALL BE INCIDENTAL TO ITEM 602772.
7. REINFORCEMENT FOR CAST IN PLACE COPING INCLUDING CONNECTION TO MSE WALL PANELS SHALL BE DEVELOPED BY MSE WALL SUPPLIER. COST OF COPING AND REINFORCEMENT SHALL BE INCIDENTAL TO MSE WALL ITEM.

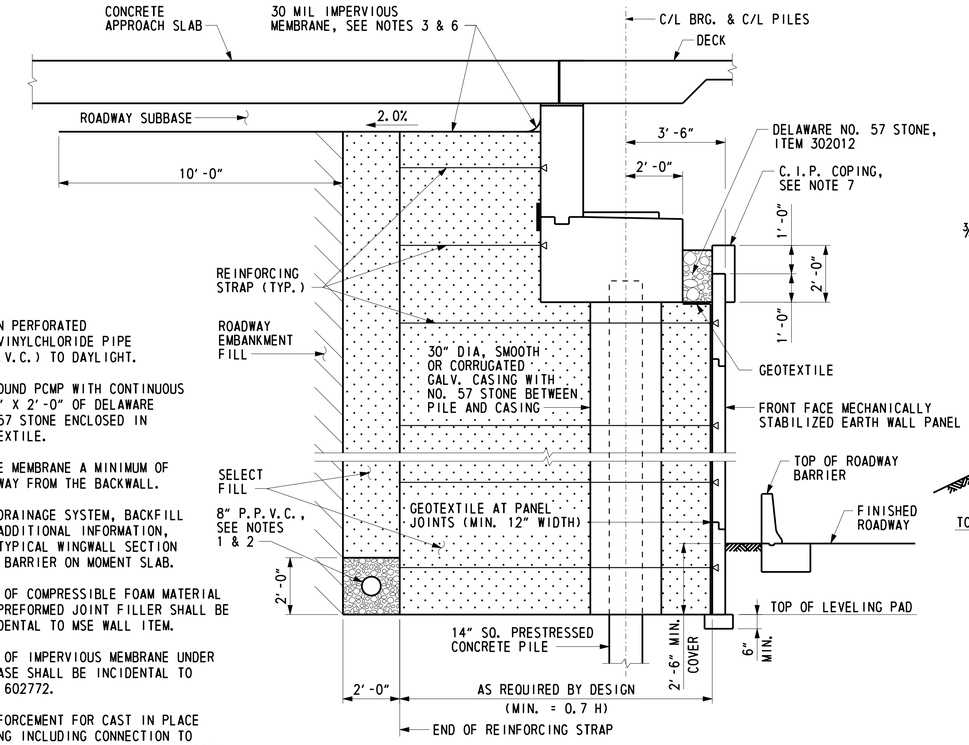

TYPICAL MSE WALL SECTION AT ABUTMENT

SCALE: 3/8" = 1'-0"

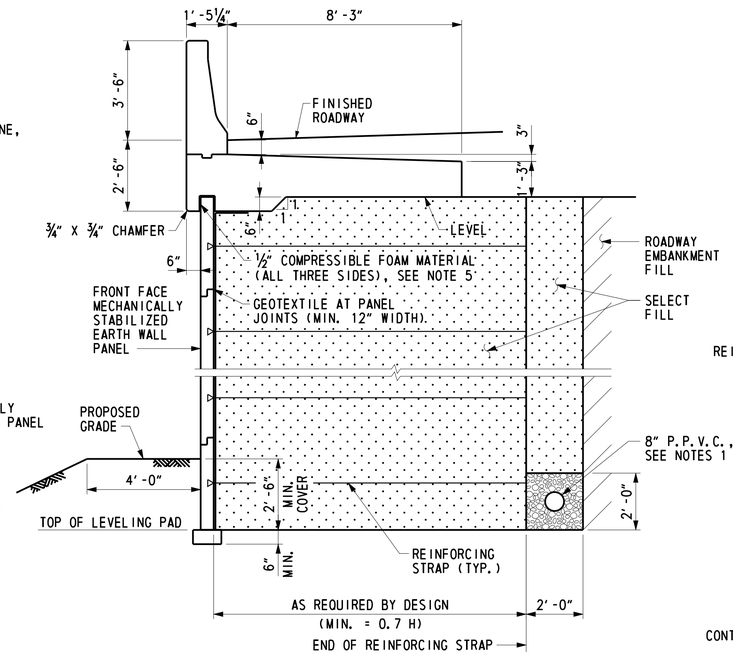

TYPICAL WINGWALL SECTION WITH BARRIER ON MOMENT SLAB

SCALE: 3/8" = 1'-0"

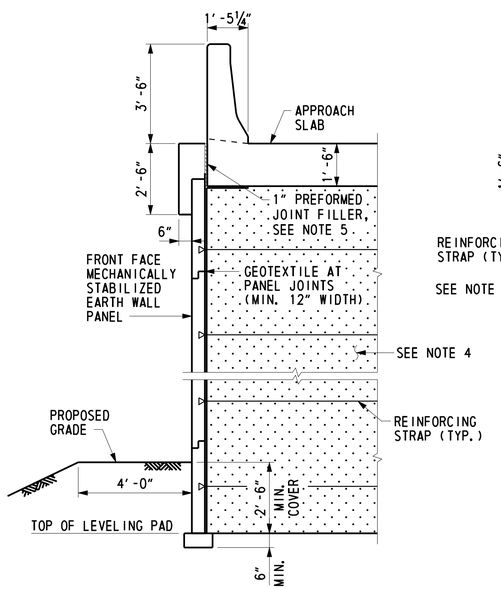

TYPICAL WINGWALL SECTION WITH BARRIER ON APPROACH SLAB

SCALE: 3/8" = 1'-0"

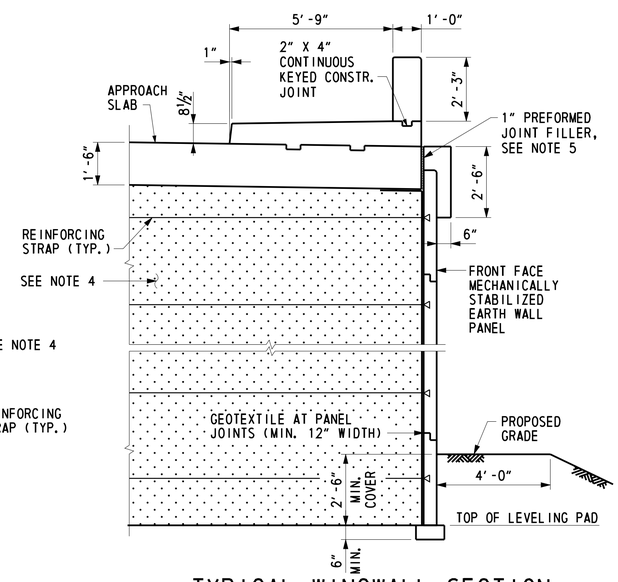

TYPICAL WINGWALL SECTION WITH SIDEWALK ON APPROACH SLAB

SCALE: 3/8" = 1'-0"

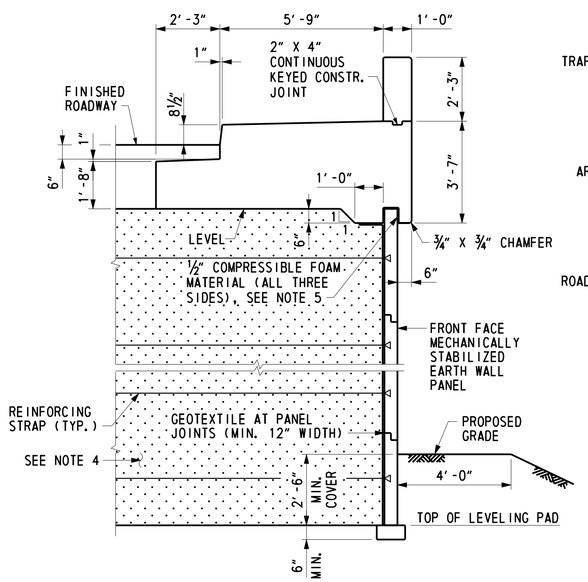

TYPICAL WINGWALL SECTION WITH SIDEWALK ON MOMENT SLAB

SCALE: 3/8" = 1'-0"

MSE WALL NOTES

SPECIFICATIONS: PROPRIETARY MSE WALLS SHALL BE DESIGNED IN ACCORDANCE WITH THE FOLLOWING:
- AASHTO LRFD BRIDGE DESIGN SPECIFICATIONS, 4TH EDITION WITH ALL CURRENT REVISIONS.
- FEDERAL HIGHWAY ADMINISTRATION PUBLICATION NOS. FHWA-NHI-10-024 AND FHWA-NHI-025, "DESIGN AND CONSTRUCTION OF MECHANICALLY STABILIZED EARTH WALLS AND REINFORCED SOIL SLOPES", VOLUME I AND VOLUME II.

CONCRETE DESIGN SHALL BE PERFORMED USING THE LOAD AND RESISTANCE FACTOR DESIGN METHOD.

CONCRETE: ALL CONCRETE FOR BARRIERS, MOMENT SLABS, AND ROADWAY BARRIERS SHALL BE 4,500 PSI. LEVELING PAD CONCRETE SHALL BE 3,500 PSI. MIX REQUIREMENTS SHALL CONFORM TO SECTION 812 OF THE DELAWARE DEPARTMENT OF TRANSPORTATION STANDARD SPECIFICATIONS.

CHAMFERS: ALL EXPOSED CORNERS OF CONCRETE SHALL BE CHAMFERED WITH ¾" x ¾" MILLED CHAMFER STRIPS, UNLESS OTHERWISE NOTED, EXCEPT ON UNEXPOSED FOOTINGS OR WHERE INDICATED BY THE FOLLOWING NOTATION ON THE PLANS: "DO NOT CHAMFER".

REINFORCING STEEL: REINFORCING STEEL SHALL CONFORM TO ASTM A 615, GRADE 60. ALL SPLICES, NOT SHOWN, SHALL BE LAPPED AS PER THE LRFD BRIDGE DESIGN SPECIFICATIONS. MINIMUM COVER FOR ANY BAR SHALL BE 2" UNLESS OTHERWISE NOTED.

FOR TIES AND STIRRUPS, STANDARD ACI BENDING TOLERANCES ARE MODIFIED TO PLUS (+) ZERO INCHES, MINUS (-) NORMAL ACI BENDING TOLERANCE.

ONLY GRADE 60 CAN BE USED ON THIS PROJECT.

ALL REINFORCING STEEL IN THE BARRIER AND MOMENT SLAB SHALL BE FUSION-BONDED EPOXY COATED, AND SHALL CONFORM TO ASTM D3963.

ALL KEYS ARE NOMINAL SIZE.

THE MSE WALL MANUFACTURER MAY SUBSTITUTE ALTERNATE REINFORCING CONFIGURATIONS AND SUBMIT FOR APPROVAL.

EXPANSION AND CONTRACTION JOINTS: THE LOCATION OF THE EXPANSION AND CONTRACTION JOINTS IN THE BARRIER/MOMENT SLAB SHOWN ON THE PLANS MAY BE ADJUSTED TO ACCOMMODATE THE PANEL TYPE USED IN THE PROJECT. ANY CHANGE TO THESE JOINT LOCATIONS SHALL BE SUBMITTED TO THE ENGINEER FOR APPROVAL.

LEVELING PAD: THE PROPRIETARY WALL MANUFACTURER MAY RELOCATE THE LEVELING PAD STEPS AT THEIR DISCRETION PROVIDED THAT THE MINIMUM EMBEDMENT IS MAINTAINED. ANY CHANGE TO THE STEP LOCATIONS SHALL BE SUBMITTED TO THE ENGINEER FOR APPROVAL.

ROADWAY LIMITS: THE PROPRIETARY WALL MANUFACTURER SHALL ASSURE THAT PROPOSED PROPRIETARY WALL COMPONENTS ARE POSITIONED SUCH THAT THE DESIGNATED ROADWAY LIMITS ARE NOT ENCROACHED UPON.

MOMENT SLAB: THE MOMENT SLAB IS DESIGNED IN ACCORDANCE WITH THE SAME CRITERIA SPECIFIED FOR MECHANICALLY STABILIZED EARTH WALLS IN SECTION 11.10.10.2 OF AASHTO LRFD BRIDGE DESIGN SPECIFICATIONS, 4TH. EDITION.

TRAFFIC BARRIER JOINTS: TRAFFIC BARRIER FOOTING/ MOMENT SLAB SHALL HAVE CONSTRUCTION JOINTS TO COINCIDE WITH THE BARRIER JOINTS.

COORDINATION: CONTRACTOR AND PROPRIETARY WALL MANUFACTURER SHALL COORDINATE LOCATIONS OF INLETS AND PIPES WITH LOCATIONS OF PROPRIETARY WALL TIE BACK SYSTEM AND MOMENT SLAB.

ARCHITECTURAL FINISH: THE MSE WALL PANELS SHALL RECEIVE AN ARCHITECTURAL FINISH.

SERVICE LIFE: ALL RETAINING WALL COMPONENTS SHALL BE DESIGNED FOR A MINIMUM SERVICE LIFE OF 100 YEARS.

WALL SYSTEM: ONLY ONE MSE WALL SYSTEM MAY BE USED ON THIS PROJECT.

ROADWAY SUPERELEVATION: FOR ROADWAY SUPERELEVATION, SEE SUPERELEVATION TABLES.

MSE WALL BACKFILL: MSE WALL BACKFILL SHALL CONSIST OF SELECT FILL CONFORMING TO THE REQUIREMENTS OF SPECIAL PROVISION 602772.

REINFORCING STRAPS: SET REINFORCING STRAPS TO CLEAR PILE CASING, 2" MIN. CLEARANCE. MAXIMUM IN-FIELD SKEW OF 15 DEGREES. IF GREATER SKEW ANGLE IS REQUIRED, CONTACT MSE WALL FIELD REPRESENTATIVE PRIOR TO INSTALLATION.

WALLS ON FILL: CONTRACTOR SHALL UTILIZE EROSION CONTROL BLANKETS TO PROTECT SLOPE IN FILL AREAS. COST SHALL BE INCIDENTAL TO MSE WALL ITEM.

CROSS REFERENCE NOTES:

1. FOR BRIDGE PLAN AND ELEVATION, SEE DWG. 1-475 PE-1.
2. FOR MSE WINGWALLS PLAN AND ELEVATION, SEE DWG. 1-475 WW-1 & 1-475 WW-2.
3. FOR TYPICAL MSE WINGWALL SECTION ON FILL, SEE DWG. 1-475 WW-4
4. FOR SOIL PROPERTIES AND FOUNDATION NOTES, SEE DWG. 1-475 WW-4.
5. FOR MOMENT SLAB REINFORCEMENT, SEE DWG. 1-475 WW-6 THRU 1-475 WW-9.
6. FOR TEMPORARY FILL PLACEMENT DURING QUARANTINE PERIOD, SEE DWG. 1-475 WW-5.

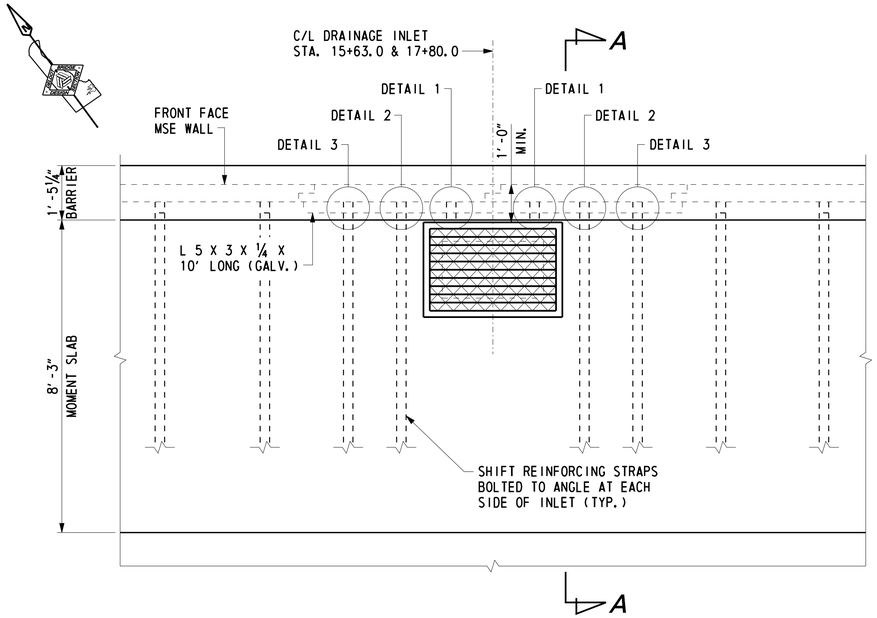

PART PLAN - MSE WALL AT DRAINAGE INLET

SCALE: ½" = 1'-0"

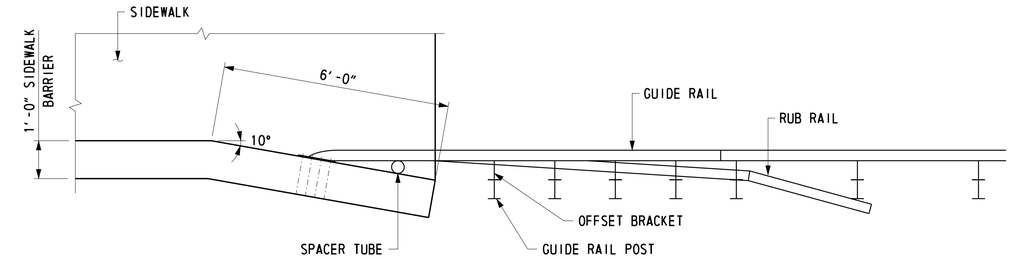

PLAN - END OF WINGWALL DETAIL

SCALE: ½" = 1'-0"

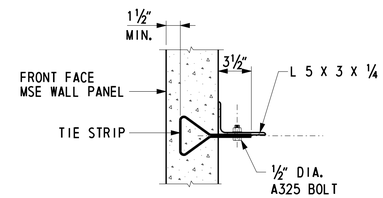

DETAIL 1

(ANGLE BOLTED TO TIE STRAP)
SCALE : 1½" = 1'-0"

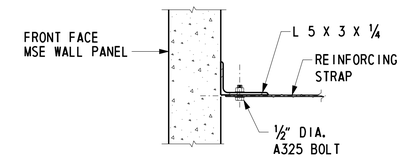

DETAIL 2

(SHIFTED REINFORCING STRAP BOLTED TO ANGLE)
SCALE : 1½" = 1'-0"

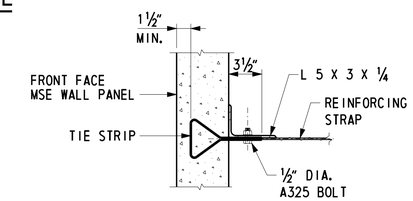

DETAIL 3

(ANGLE BOLTED TO TIE STRAP WITH REINFORCING STRAP)
SCALE : 1½" = 1'-0"

MSE WALL AT DRAINAGE INLET NOTES:

THE PROPOSED DETAILS ARE CONCEPTUAL AND ARE PROVIDED FOR INFORMATIONAL PURPOSES ONLY. THE DESIGN OF ALL ELEMENTS INCLUDING REINFORCING STRAPS, STEEL ANGLES, CONNECTIONS, ETC., SHALL BE PERFORMED BY THE CONTRACTOR. THESE DETAILS SHALL BE SUBMITTED FOR APPROVAL PRIOR TO PROCEEDING WITH ANY WORK.

THE CONTRACTOR MAY PROPOSE AND DESIGN AN ALTERNATE WALL SUPPORT SYSTEM. THE CONTRACTOR SHALL OBTAIN THE ENGINEER'S APPROVAL OF THE ALTERNATE SYSTEM PRIOR TO ORDERING, FABRICATING, AND CONSTRUCTING ANY WALL COMPONENTS.

THE COST OF THE MSE WALL SUPPORT SYSTEM AT THE DRAINAGE INLET INCLUDING THE DESIGN SHALL BE INCIDENTAL TO THE PERTINENT MSE WALL ITEM. THE COST OF THE INLETS, PIPES, AND GRATES ARE PAID UNDER OTHER ITEMS.

MOMENT SLAB REINFORCING IS NOT SHOWN.

SOIL PROPERTIES

SOIL TYPE	UNIT WEIGHT (PCF)	DRAINED ANGLE OF FRICTION (DEGREES)	FACTORED BEARING RESISTANCE (KSF)
SELECT FILL	125	34	-
FOUNDATION SOIL			
ABUTMENT A	120	28	8.9
ABUTMENT B	120	28	8.9

MSE WALL FOUNDATION NOTES:

1. THE FACTORED BEARING RESISTANCE SHALL BE VERIFIED PRIOR TO THE CONSTRUCTION OF THE MSE WALL.
2. THE INTERNAL STABILITY OF THE MSE WALL SHALL BE DESIGNED BY THE CONTRACTOR USING THE SOIL PARAMETERS PROVIDED FOR EACH STRUCTURE LOCATION. THE INTERNAL STABILITY CALCULATIONS SHALL BE SIGNED AND SEALED BY A PROFESSIONAL ENGINEER LICENSED IN THE STATE OF DELAWARE AS INDICATED IN THE PROJECT SPECIFICATIONS.
3. THE MINIMUM REINFORCED ZONE WIDTH SHALL BE AT LEAST 70% OF THE WALL HEIGHT.
4. THE CONTRACTOR IS RESPONSIBLE FOR DEVELOPING MEANS AND METHODS, IN CONSULTATION WITH THE MSE WALL MANUFACTURER, FOR CONSTRUCTING THE MSE WALLS TO THE LINES, GRADES AND DIMENSIONS SHOWN ON THE PLANS.
5. FOR THE WINGWALL SECTION ON FILL, THE CONTRACTOR MAY LOWER THE ELEVATION OF THE LEVELING PAD BY PROVIDING 2'-6" MIN. EMBEDMENT INTO THE EXISTING GROUND AND THEREBY ELIMINATE THE USE OF BORROW TYPE B FILL. THIS OPTION SHALL BE AT NO ADDITIONAL COST TO THE DEPARTMENT.
6. TYPE B BORROW FOR WINGWALL SECTION ON FILL SHALL BE INCIDENTAL TO ITEM 602772 - MECHANICALLY STABILIZED EARTH WALLS.

NOTES:

1. DRAINAGE INLET SHOWN ADJACENT TO BRIDGE BARRIER ON NORTH SIDE OF BRIDGE. INLET DETAIL ADJACENT TO SIDEWALK SIMILAR.
2. PROVIDE 6'-0" CLEAR FROM CURBLINE TO FACE OF GUIDE RAIL ADJACENT TO SIDEWALK ON SOUTH SIDE OF BRIDGE.

CROSS REFERENCE NOTES:

1. FOR BRIDGE PLAN AND ELEVATION, SEE DWG. 1-475 PE-1.
2. FOR MSE WINGWALLS PLAN AND ELEVATION, SEE DWG. 1-475 WW-1 & 1-475 WW-2.
3. FOR MOMENT SLAB REINFORCEMENT, SEE DWG. 1-475 WW-6 THRU 1-475 WW-9.

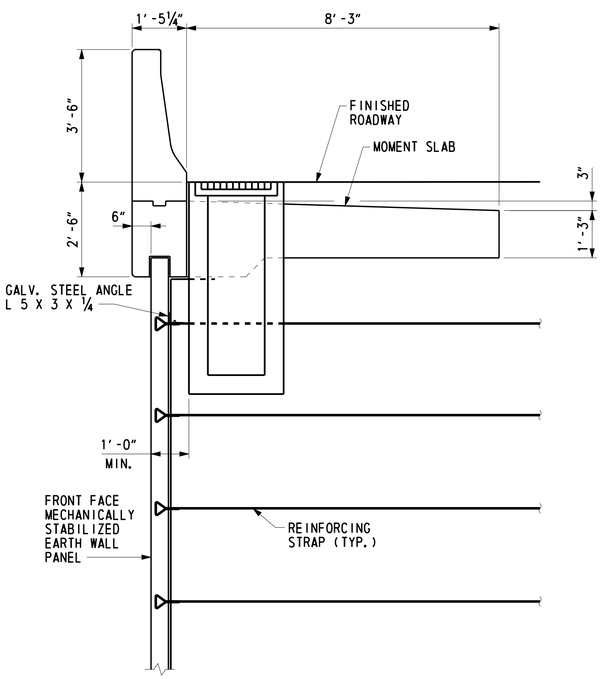

SECTION A-A

SCALE: ½" = 1'-0"

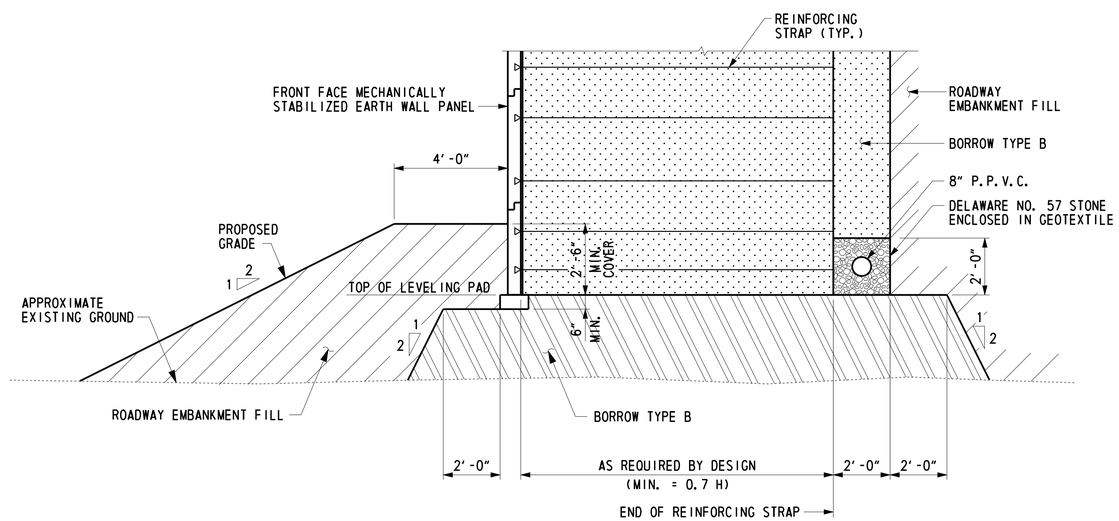

TYPICAL WINGWALL SECTION ON FILL

SCALE: ⅜" = 1'-0"

U:\Projects\AA\21387385\CAD\Bridge\BR2-4\ww04_BR2-4_US301.dgn

8/13/2015

Steve_Lambert

DELAWARE DEPARTMENT OF TRANSPORTATION

ADDENDUMS / REVISIONS

US 301 LEVELS ROAD TO SUMMIT BRIDGE ROAD

CONTRACT	BRIDGE NO. 1-475
T200511303	DESIGNED BY: R. F. KIRCHNER
COUNTY	
NEW CASTLE	CHECKED BY: G. P. MISTRY

BUNKER HILL ROAD OVER US 301 MAINLINE

WINGWALL DETAILS 2

1-475 WW-4
SHEET NO.
407
TOTAL SHTS.
1256

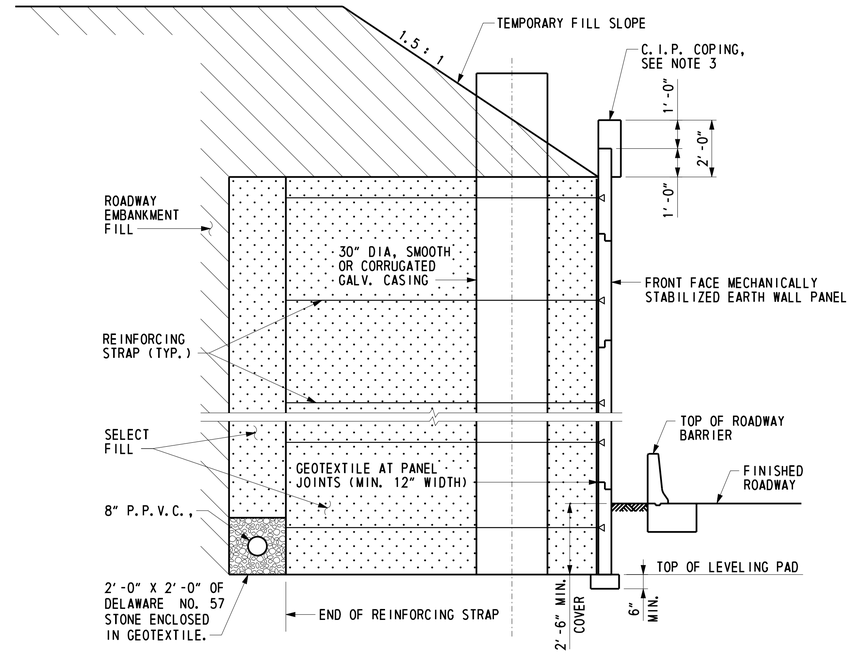

TEMPORARY FILL PLACEMENT DURING QUARANTINE PERIOD

SCALE: 3/8" = 1'-0"

TEMPORARY FILL PLACEMENT NOTES:

1. A QUARANTINE PERIOD OF 30 DAYS IS REQUIRED AFTER CONSTRUCTION OF THE FULL HEIGHT OF THE FILL AT THE ABUTMENTS IS ACHIEVED. THE CONTRACTOR SHALL PLACE TEMPORARY FILL ABOVE THE ABUTMENT MSE WALL ELEVATION AS SHOWN ON THE TEMPORARY FILL PLACEMENT DETAIL. SINCE THE ABUTMENT WING WALLS FOLLOW THE ROADWAY ALIGNMENT, THE WINGWALLS SHALL INITIALLY BE CONSTRUCTED TO THE SAME ELEVATION AS THE ABUTMENT MSE WALL, WITH THE TEMPORARY FILL PLACED AT THE SAME SLOPE AS SHOWN ON THIS DETAIL.
2. THE MSE WALL REINFORCING ZONE SHALL BE PROTECTED BY AN IMPERVIOUS MEMBRANE TO ENSURE THAT THE TEMPORARY FILL DOES NOT PENETRATE MSE WALL REINFORCING ZONE.
3. THE CASING FOR THE PILES SHALL BE PROTECTED DURING THE QUARANTINE PERIOD TO ENSURE THAT FILL MATERIAL WILL NOT ENTER PILE CASING DURING CONSTRUCTION.
4. THE COST OF TEMPORARY FILL SHALL BE INCIDENTAL TO MSE WALL ITEM.
5. AS AN ALTERNATE TO PLACING TEMPORARY FILL, A WIRE-FACED WALL MAY BE CONSTRUCTED BEHIND THE BACKWALL TO ALLOW THE FULL HEIGHT OF THE BACKFILL TO BE PLACED PRIOR TO THE QUARANTINE PERIOD.

NOTES:

1. FOR DRAINAGE SYSTEM, BACKFILL AND ADDITIONAL INFORMATION, SEE TYPICAL MSE WALL SECTION AT ABUTMENT.
2. METAL CASING FOR PILES MAY INITIALLY BE CONSTRUCTED ABOVE THE TEMPORARY FILL SLOPE AS SHOWN, AND CUT TO PROPER ELEVATION AFTER QUARANTINE PERIOD.
3. REINFORCEMENT FOR CAST IN PLACE COPING INCLUDING CONNECTION TO MSE WALL PANELS SHALL BE DEVELOPED BY MSE WALL SUPPLIER. COST OF COPING AND REINFORCEMENT SHALL BE INCIDENTAL TO MSE WALL ITEM.

CROSS REFERENCE NOTES:

1. FOR BRIDGE PLAN AND ELEVATION, SEE DWG. 1-475 PE-1.
2. FOR TYPICAL MSE WALL SECTION AT ABUTMENT, SEE DWG. 1-475 WW-3.

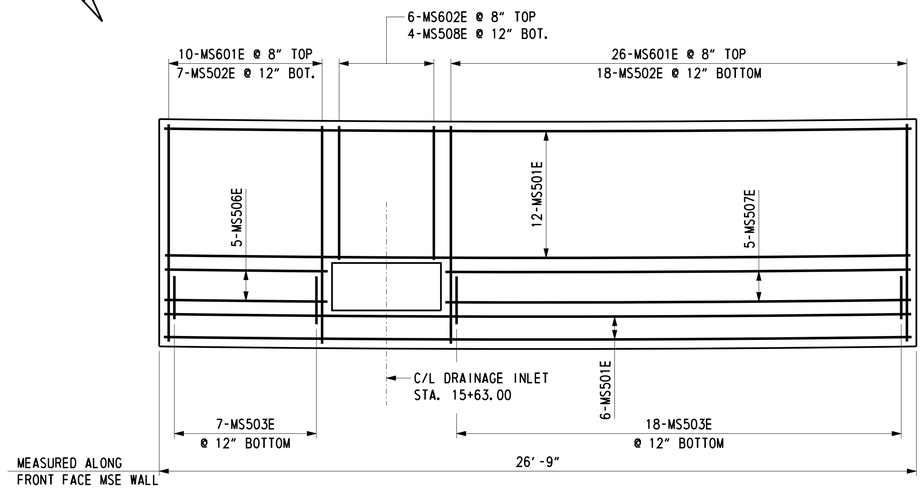

WING WALL 1 MOMENT SLAB PLAN

NOT TO SCALE

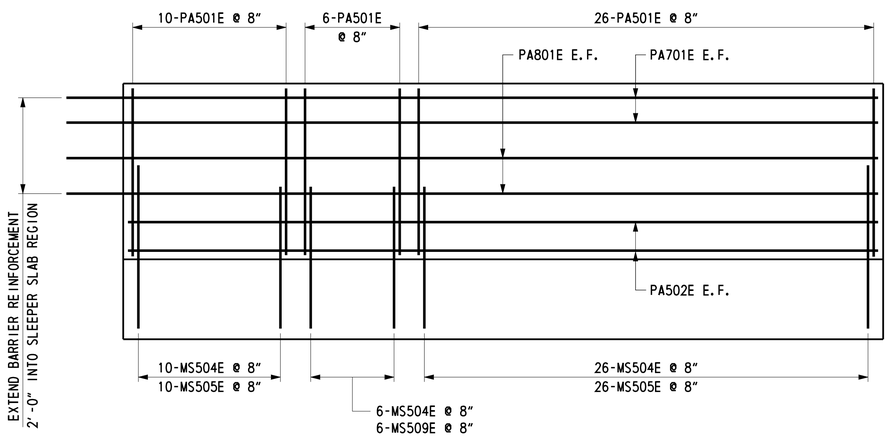

WING WALL 1 BARRIER ELEVATION

NOT TO SCALE

REINFORCING BAR LIST

WINGWALL 1 MOMENT SLAB AND BARRIER

MARK	LENGTH	NO. BARS	TYPE	A	B	C	D	E	F	G	H	K	REMARKS
PA501E	7'-6¼"	41	28	2'-9¼"	0'-2 15/16"	0'-1⅝"	0'-2¾"	2'-9½"		0'-3⅛"	0'-5⅛"		
PA502E	26'-3"	4	STR										
PA701E	28'-5"	4	STR										
PA801E	28'-5"	4	STR										
MS501E	26'-3"	18	STR										
MS502E	8'-4"	25	STR										
MS503E	3'-6"	25	16		1'-0"	9"	1'-9"				1'-3"	1'-3"	
MS504E	4'-1"	42	STR										
MS505E	4'-9"	36	4S	1'-0"	2'-0"	1'-9"					1'-0"	1'-5"	
MS506E	5'-7"	5	STR										
MS507E	16'-4"	5	STR										
MS508E	5'-3"	4	STR										
MS509E	4'-2"	6	4S		2'-5"	1'-9"					1'-0"	1'-5"	
MS601E	9'-3"	36	STR										
MS602E	5'-3"	6	STR										

BENDING DIAGRAMS

ALL DIMENSIONS ARE FROM OUT TO OUT.

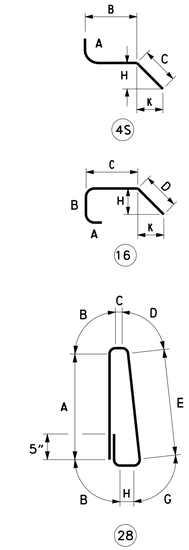

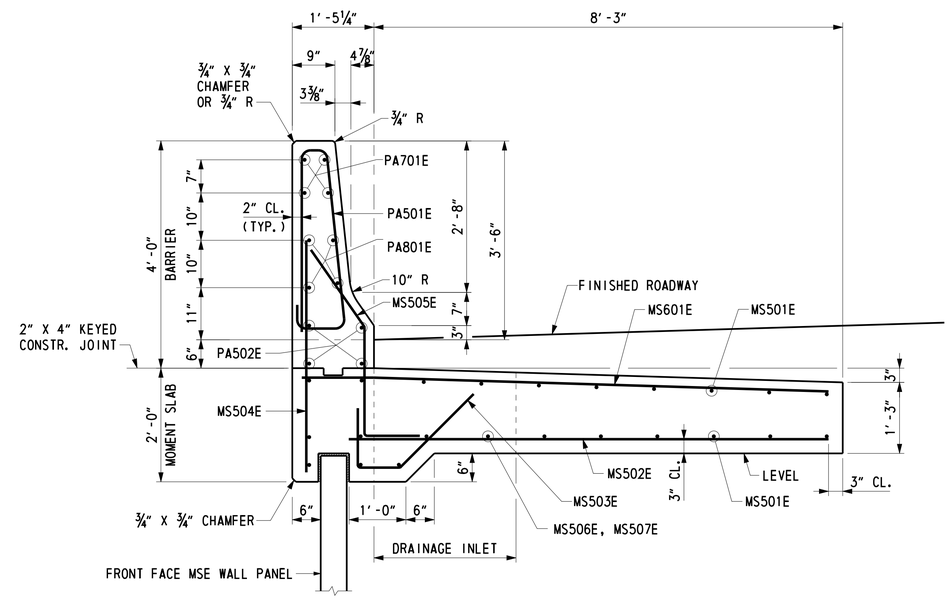

WING WALL 1 MOMENT SLAB AND BARRIER SECTION

SCALE: ¾" = 1'-0"

CROSS REFERENCE NOTES:

1. FOR ABUTMENT 1 PLAN AND ELEVATION, SEE DWG. 1-475 AB-2.
2. FOR WING WALL ELEVATIONS, SEE DWG. 1-475 WW-1.
3. FOR APPROACH SLAB PLAN, SEE DWG. 1-475 AS-1.

DELAWARE
DEPARTMENT OF TRANSPORTATION

ADDENDUMS / REVISIONS

US 301
LEVELS ROAD
TO SUMMIT BRIDGE ROAD

CONTRACT	BRIDGE NO.	1-475
T200511303	DESIGNED BY: K. D. BEAVER	
COUNTY		
NEW CASTLE	CHECKED BY: R.F.KIRCHNER	

BUNKER HILL ROAD
OVER US 301 MAINLINE
MOMENT SLAB AND
BARRIER REINFORCING 1

1-475 WW-6
SHEET NO.
409
TOTAL SHTS.
1256

Steve_Lambert 7/15/2015 U:\Projects\AA\21387385\CAD\Bridge\BR2-4\ww06_BR2-4_US301.dgn

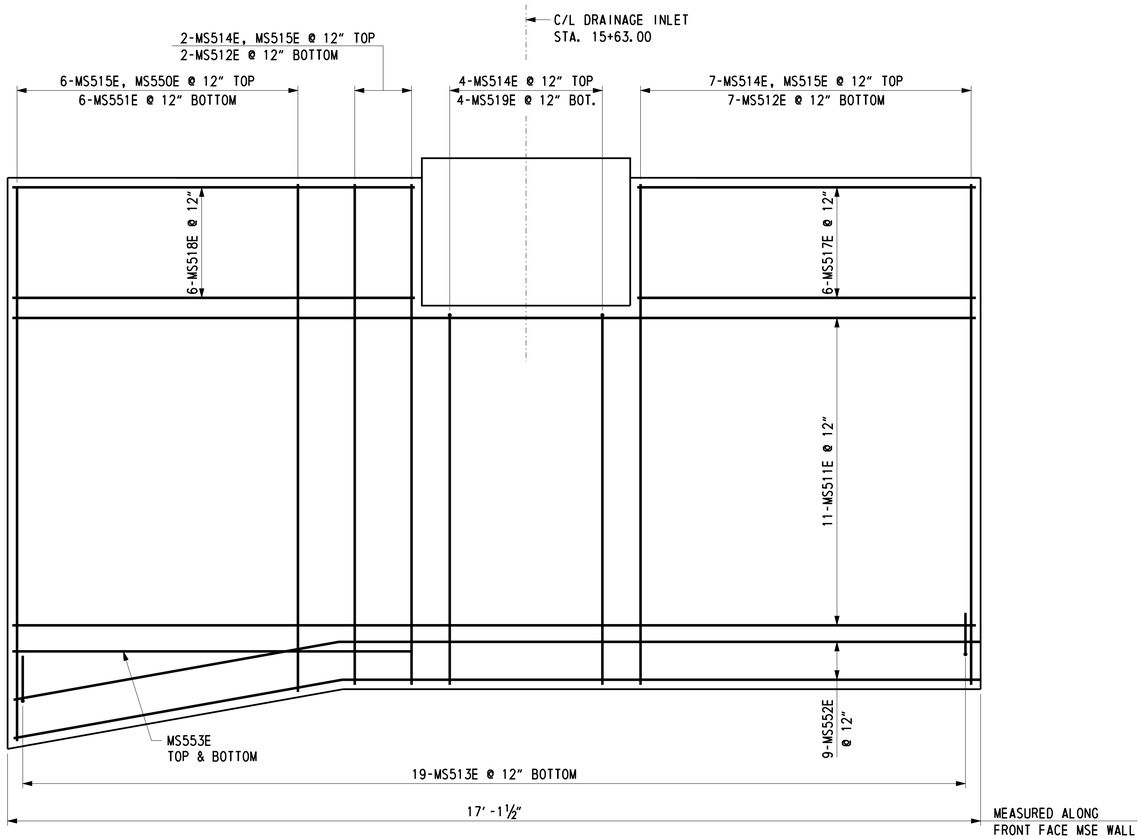

WING WALL 2 MOMENT SLAB PLAN

SCALE: ¾" = 1'-0"

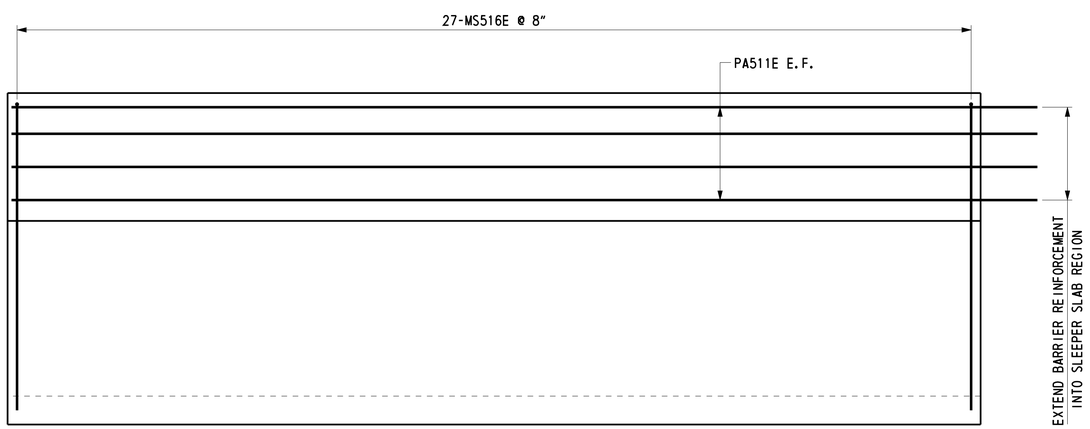

WING WALL 2 BARRIER ELEVATION

SCALE: ¾" = 1'-0"

REINFORCING BAR LIST

WINGWALL 2 MOMENT SLAB AND SIDEWALK/BARRIER

MARK	LENGTH	NO. BARS	TYPE	A	B	C	D	H	K	REMARKS
PA511E	18'-10"	8	16			13'-0"	5'-10"	1'-0"	5'-9"	
MS511E	16'-8"	11	STR.							
MS512E	7'-8"	9	STR.							
MS513E	3'-6"	19	16		1'-0"	0'-9"	1'-9"	1'-3"	1'-3"	
MS514E	8'-2"	13	16			6'-4"	1'-10"	1'-9⅞"	0'-1½"	
MS515E	2'-9"	15	STR.							
MS516E	9'-5"	27	17		5'-5"	0'-8"	3'-4"			
MS517E	5'-7"	6	STR.							
MS518E	6'-9"	6	STR.							
MS519E	5'-5"	4	STR.							
MS550E	8'-4" TO 9'-2"	6	16			6'-6" TO 7'-4"	1'-10"	1'-9⅞"	0'-1½"	Δ= 2 "
MS551E	7'-10" TO 8'-8"	6	STR.							Δ= 2 "
MS552E	16'-8"	9	16			10'-11"	5'-9"	1'-0"	5'-8"	
MS553E	8'-0"	2	STR.							

BENDING DIAGRAMS

ALL DIMENSIONS ARE FROM OUT TO OUT.

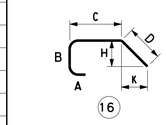

16

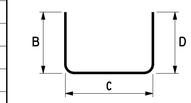

17

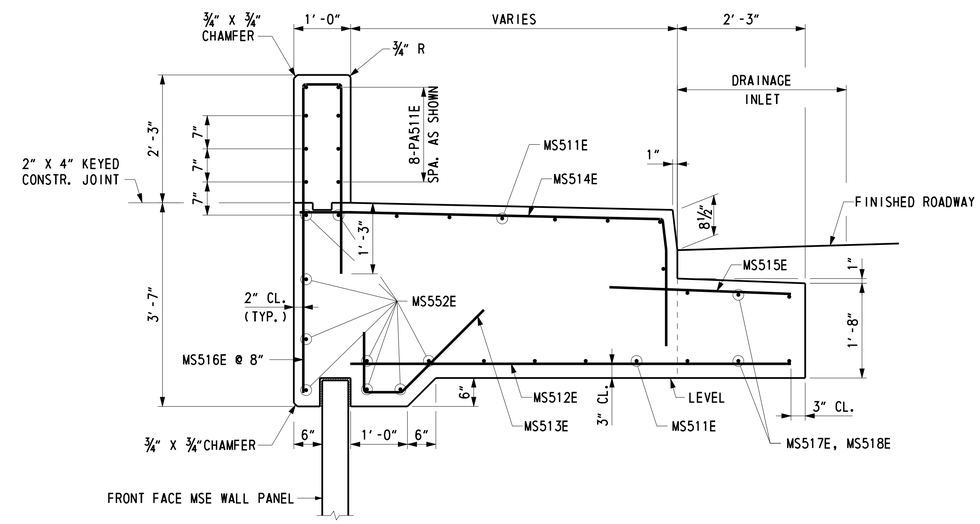

WING WALL 2 MOMENT SLAB AND SIDEWALK/BARRIER SECTION

SCALE: ¾" = 1'-0"

CROSS REFERENCE NOTES:

1. FOR ABUTMENT 1 PLAN AND ELEVATION, SEE DWG. 1-475 AB-2.
2. FOR WING WALL ELEVATION, SEE DWG. 1-475 WW-1.
3. FOR APPROACH SLAB PLAN, SEE DWG. 1-475 AS-1.

DELAWARE DEPARTMENT OF TRANSPORTATION	ADDENDUMS / REVISIONS	US 301 LEVELS ROAD TO SUMMIT BRIDGE ROAD	CONTRACT T200511303 / COUNTY NEW CASTLE	BRIDGE NO. 1-475 / DESIGNED BY: K.D. BEAVER / CHECKED BY: R.F.KIRCHNER	BUNKER HILL ROAD OVER US 301 MAINLINE MOMENT SLAB AND BARRIER REINFORCING 2

1-475 WW-7
SHEET NO. 410
TOTAL SHTS. 1256

Steve_Lambert 7/15/2015 U:\Projects\AA\21387385\CAD\Bridge\BR2-4\ww07_BR2-4_US301.dgn

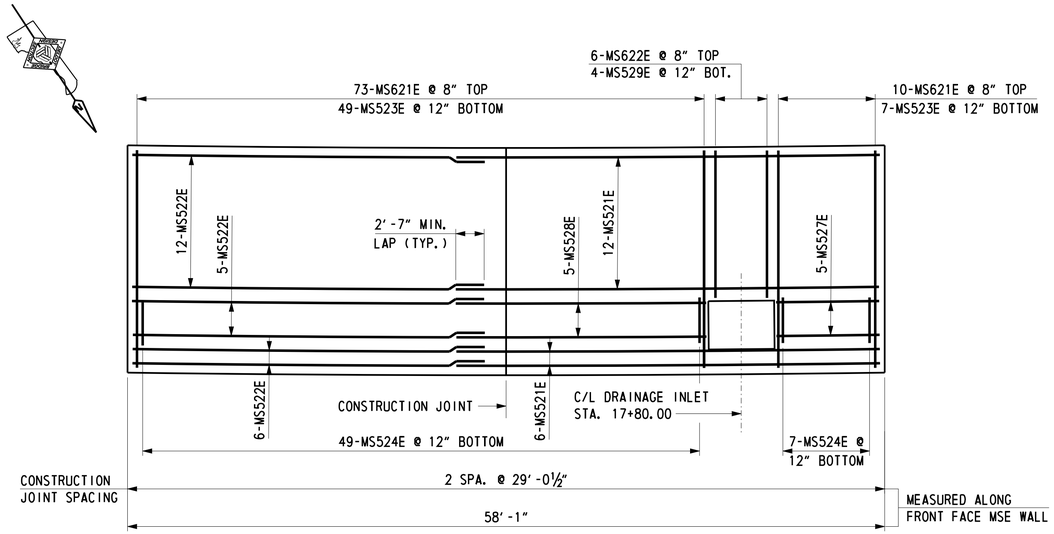

WINGWALL 3 MOMENT SLAB PLAN

NOT TO SCALE

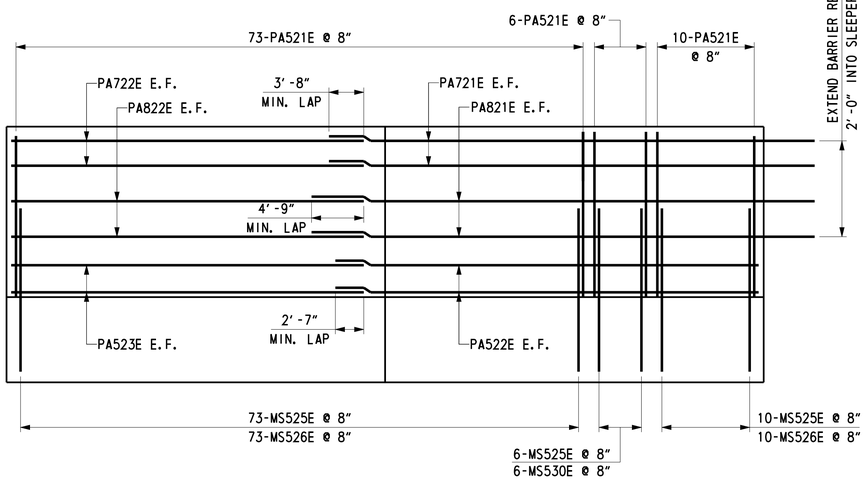

WINGWALL 3 BARRIER ELEVATION

NOT TO SCALE

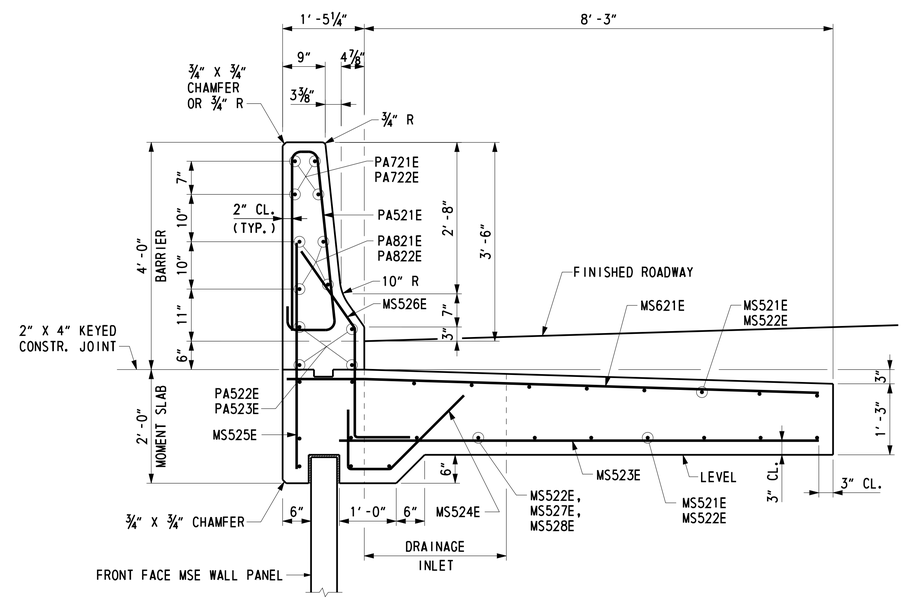

WINGWALL 3 MOMENT SLAB AND BARRIER SECTION

SCALE: ¾" = 1'-0"

REINFORCING BAR LIST

WINGWALL 3 MOMENT SLAB AND BARRIER

MARK	LENGTH	NO. BARS	TYPE	A	B	C	D	E	F	G	H	K	REMARKS
PA521E	7'-6¼"	88	28	2'-9¼"	0'-2 15/16"	0'-1⅝"	0'-2¾"	2'-9½"		0'-3⅛"	0'-5⅛"		
PA522E	33'-6"	4	STR										
PA523E	26'-11"	4	STR										
PA721E	36'-7"	4	STR										
PA722E	26'-11"	4	STR										
PA821E	37'-8"	4	STR										
PA822E	26'-11"	4	STR										
MS521E	33'-5"	18	STR										
MS522E	26'-10"	23	STR										
MS523E	8'-4"	56	STR										
MS524E	3'-6"	56	16		1'-0"	9"	1'-9"				1'-3"	1'-3"	
MS525E	4'-1"	89	STR										
MS526E	4'-9"	83	4S	1'-0"	2'-0"	1'-9"					1'-0"	1'-5"	
MS527E	5'-7"	5	STR										
MS528E	23'-3"	5	STR										
MS529E	5'-3"	4	STR										
MS530E	4'-2"	6	4S		2'-5"	1'-9"					1'-0"	1'-5"	
MS621E	9'-3"	83	STR										
MS622E	5'-3"	6	STR										

BENDING DIAGRAMS

ALL DIMENSIONS ARE FROM OUT TO OUT.

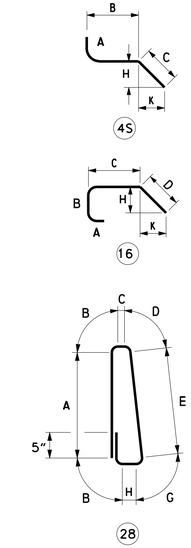

CROSS REFERENCE NOTES:

1. FOR ABUTMENT 2 PLAN AND ELEVATION, SEE DWG. 1-475 AB-3.
2. FOR WINGWALL ELEVATIONS, SEE DWG. 1-475 WW-2.
3. FOR APPROACH SLAB PLAN, SEE DWG. 1-475 AS-1.

DELAWARE
DEPARTMENT OF TRANSPORTATION

ADDENDUMS / REVISIONS

US 301
LEVELS ROAD
TO SUMMIT BRIDGE ROAD

CONTRACT	BRIDGE NO.	1-475
T200511303	DESIGNED BY:	K.D. BEAVER
COUNTY	CHECKED BY:	R.F.KIRCHNER
NEW CASTLE		

BUNKER HILL ROAD
OVER US 301 MAINLINE
MOMENT SLAB AND
BARRIER REINFORCING 3

1-475 WW-8
SHEET NO.
411
TOTAL SHTS.
1256

Steve_Lambert 7/15/2015 U:\Projects\AA\21387385\CAD\Bridge\BR2-4\ww08_BR2-4_US301.dgn

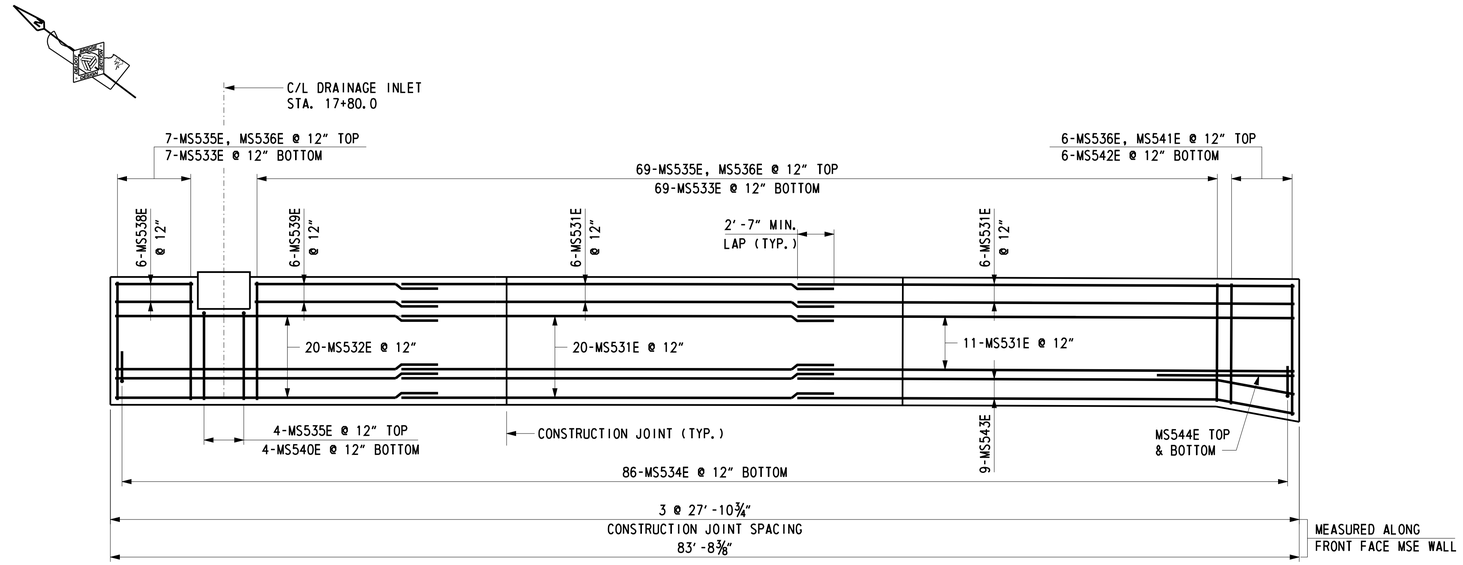

WING WALL 4 MOMENT SLAB PLAN

SCALE : 3/16" = 1'-0"

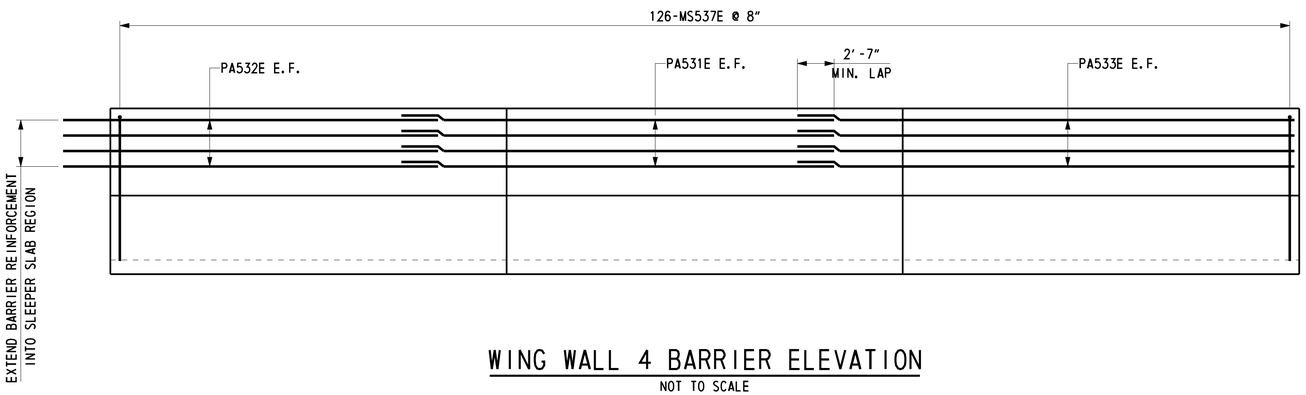

WING WALL 4 BARRIER ELEVATION

NOT TO SCALE

REINFORCING BAR LIST

WINGWALL 4 MOMENT SLAB AND SIDEWALK/BARRIER

MARK	LENGTH	NO. BARS	TYPE	A	B	C	D	H	K	REMARKS
PA531E	32'-4"	8	STR.							
PA532E	27'-9"	8	STR.							
PA533E	32'-5"	8	16			26'-7"	5'-10"	1'-0"	5'-9"	
MS531E	32'-3"	43	STR.							
MS532E	25'-8"	20	STR.							
MS533E	7'-8"	76	STR.							
MS534E	3'-6"	86	16		1'-0"	0'-9"	1'-9"	1'-3"	1'-3"	
MS535E	8'-2"	80	16			6'-4"	1'-10"	1'-9⅞"	0'-1½"	
MS536E	2'-9"	82	STR.							
MS537E	9'-5"	126	17		5'-5"	0'-8"	3'-4"			
MS538E	5'-7"	6	STR.							
MS539E	15'-6"	6	STR.							
MS540E	5'-5"	4	STR.							
MS541E	8'-4" TO 9'-2"	6	16			6'-6" TO 7'-4"	1'-10"	1'-9⅞"	0'-1½"	△ = 2"
MS542E	7'-10" TO 8'-8"	6	STR.							△ = 2"
MS543E	23'-2"	9	16			17'-5"	5'-9"	1'-0"	5'-8"	
MS544E	8'-0"	2	STR.							

BENDING DIAGRAMS

ALL DIMENSIONS ARE FROM OUT TO OUT.

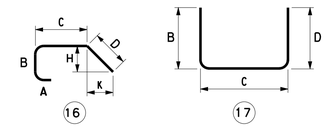

CROSS REFERENCE NOTES:

1. FOR ABUTMENT 2 PLAN AND ELEVATION, SEE DWG. 1-475 AB-3.
2. FOR WING WALL ELEVATION, SEE DWG. 1-475 WW-2.
3. FOR APPROACH SLAB PLAN, SEE DWG. 1-475 AS-1.

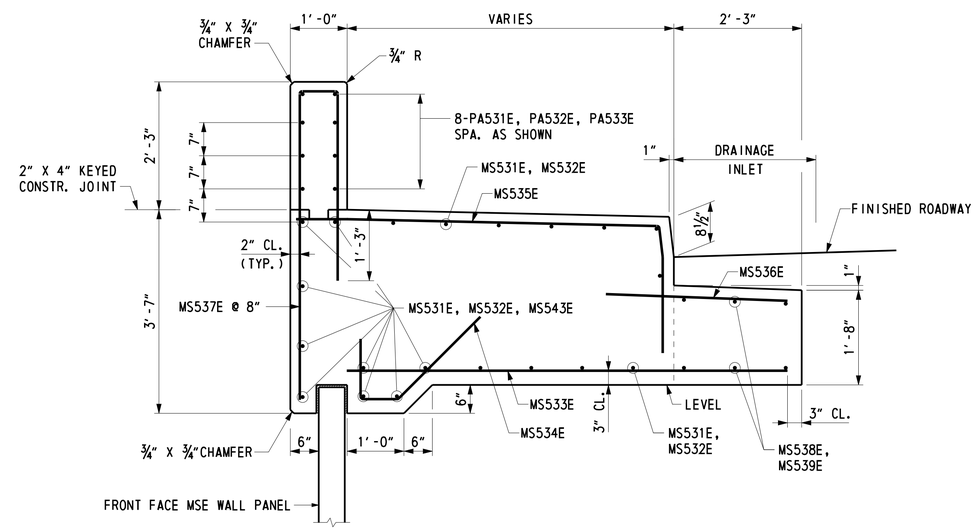

WING WALL 4 MOMENT SLAB AND SIDEWALK/BARRIER SECTION

SCALE: ¾" = 1'-0"

DELAWARE DEPARTMENT OF TRANSPORTATION	ADDENDUMS / REVISIONS	US 301 LEVELS ROAD TO SUMMIT BRIDGE ROAD	CONTRACT T200511303	BRIDGE NO. 1-475	BUNKER HILL ROAD OVER US 301 MAINLINE MOMENT SLAB AND BARRIER REINFORCING 4
			COUNTY NEW CASTLE	DESIGNED BY: K. D. BEAVER	
				CHECKED BY: R.F.KIRCHNER	

1-475 WW-9
SHEET NO. 412
TOTAL SHTS. 1256

Steve_Lambert 7/15/2015 U:\Projects\AA\21387385\CAD\Bridge\BR2-4\ww09_BR2-4_US301.dgn

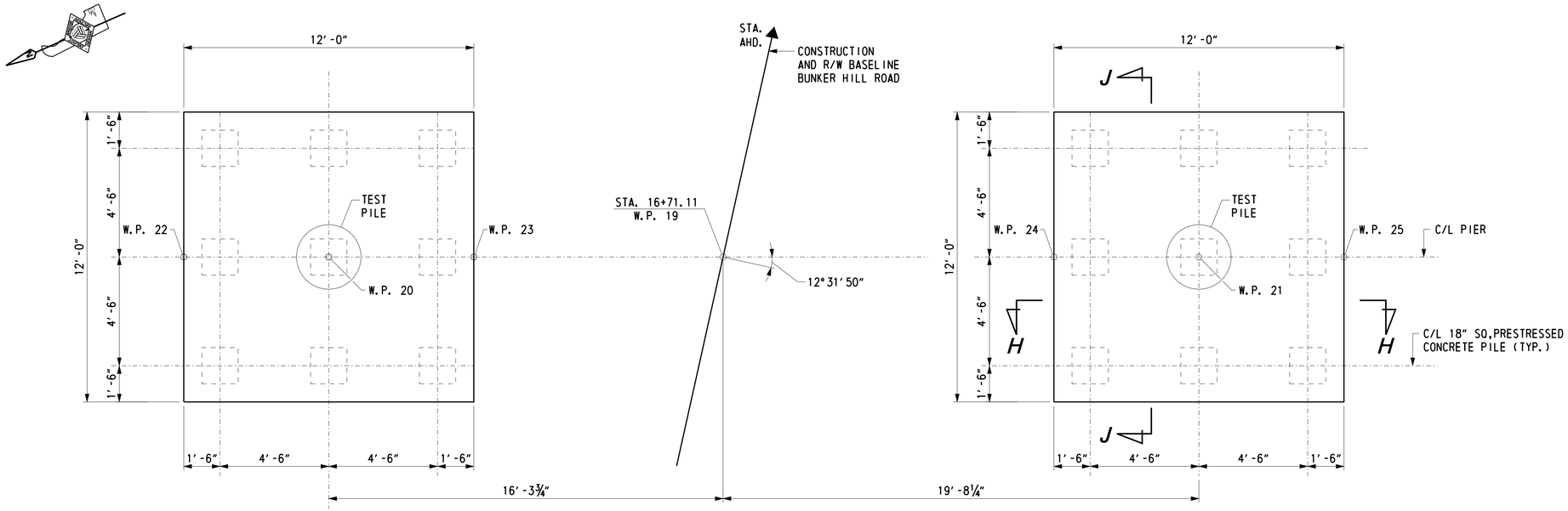

PIER FOUNDATION PLAN

SCALE: ⅜" = 1'-0"

PILE INSTALLATION DATA

	DESIGN DATA		ACTUAL FIELD DATA	
SUBSTRUCTURE UNIT	NOMINAL PILE DRIVING RESISTANCE (KIPS)	ESTIMATED PILE TIP ELEVATION	AVERAGE MINIMUM TIP ELEVATION	AVERAGE MAXIMUM TIP ELEVATION
PIER	400	8.0		

PIER PILE DRIVING INFORMATION

PILE SIZE AND TYPE:
ACTUAL BEARING OBTAINED:
HAMMER TYPE:
PILE HAMMER ENERGY:
SPECIAL DRIVING CONDITIONS AND COMMENTS:

LEGEND

DENOTES 18" SQ. PLUMB PRESTRESSED CONCRETE PILE

DENOTES TEST PILE

NOTE:

TEST PILE SHALL BE TEN (10) FEET LONGER THAN THE PRODUCTION PILE LENGTH INDICATED IN THE PILE INSTALLATION DATA TABLE.

CROSS REFERENCE NOTES:

1. FOR BRIDGE PLAN AND ELEVATION, SEE DWG. 1-475 PE-1.
2. FOR GEOMETRIC LAYOUT, SEE DWG. 1-475 FT-1.
3. FOR PIER PLAN AND ELEVATION, SEE DWG. 1-475 PR-2.
4. FOR FOOTING REINFORCING DETAILS SHOWN BY SECTIONS H-H AND J-J, SEE DWG. 1-475 PR-4.
5. FOR PILE DETAILS, SEE DWG. 1-475 PL-1.

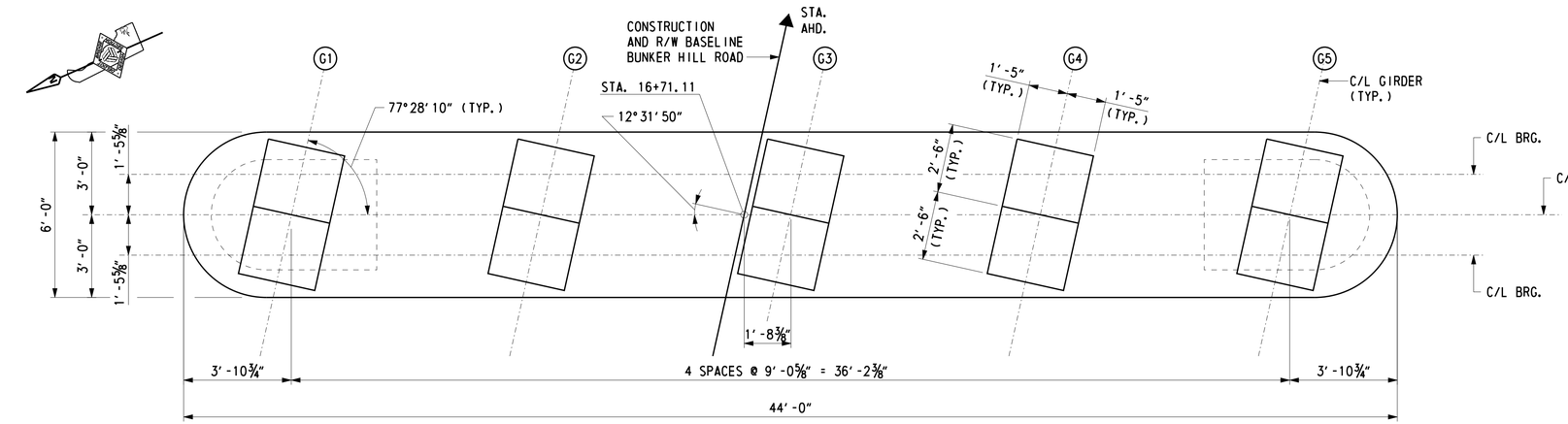

PLAN

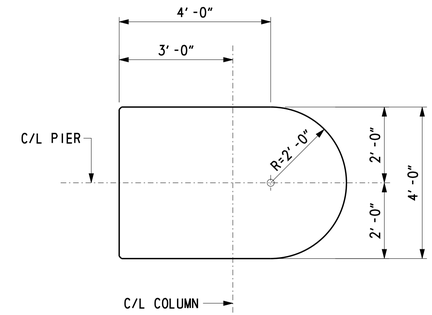

SECTION A-A

SCALE: ½" = 1'-0"

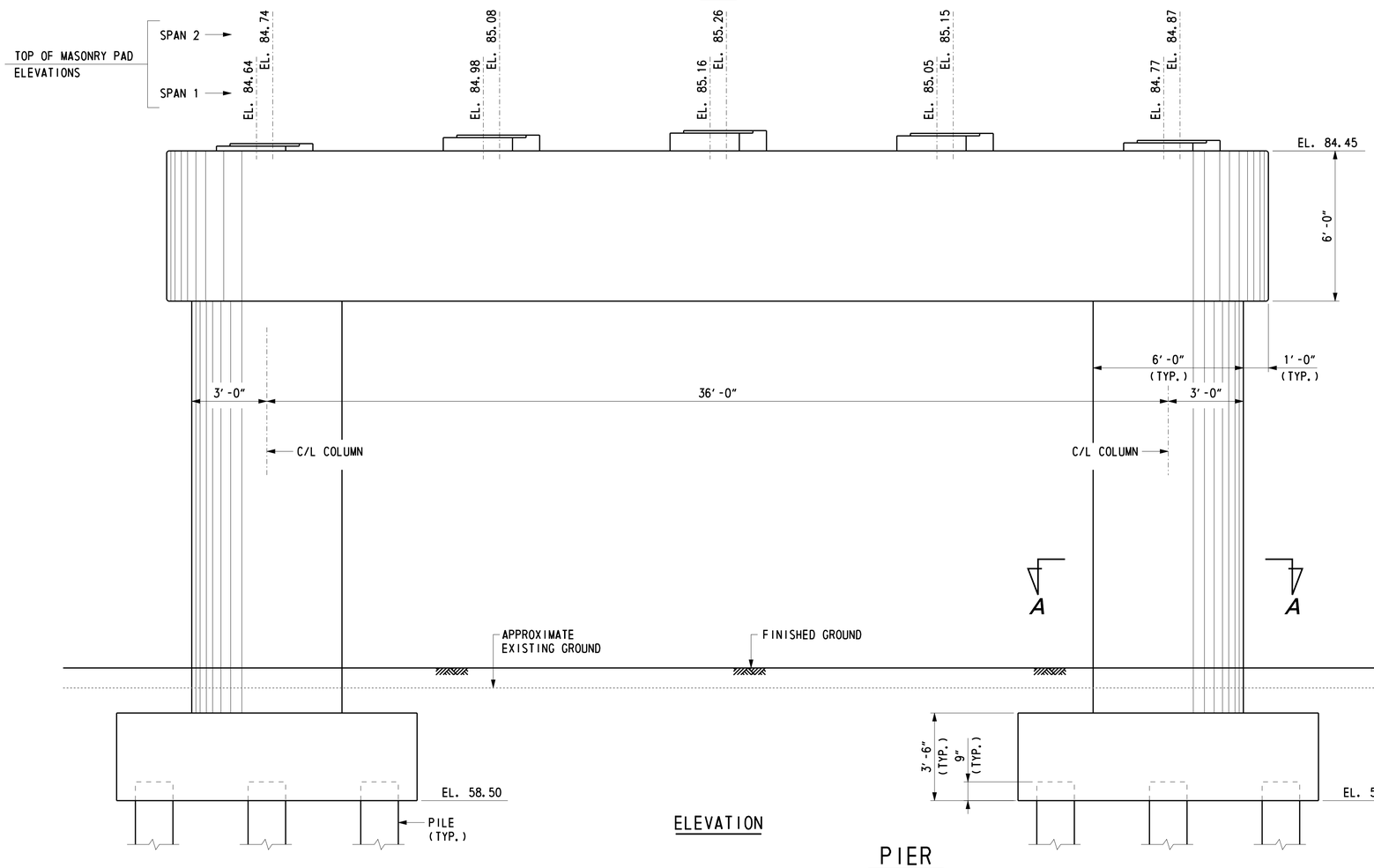

ELEVATION

PIER

(LOOKING STATION AHEAD)
SCALE: ⅜" = 1'-0"

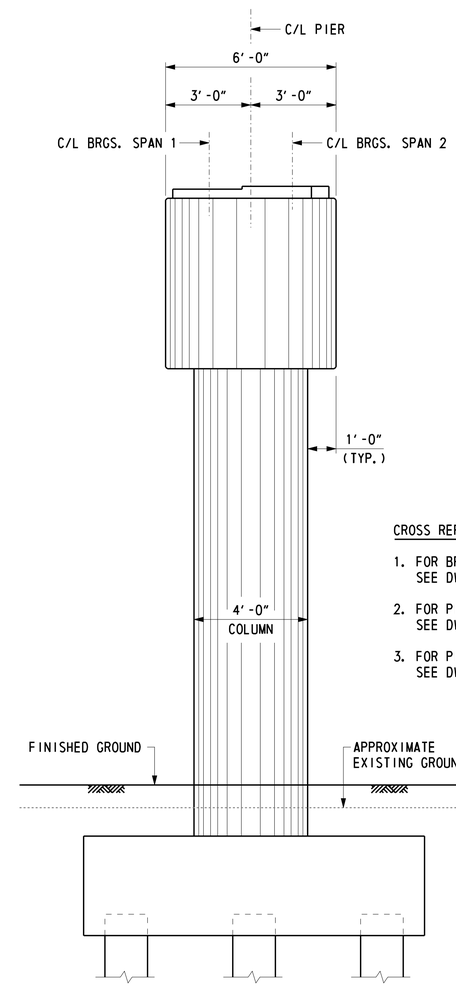

END VIEW

CROSS REFERENCE NOTES:

1. FOR BRIDGE PLAN AND ELEVATION, SEE DWG. 1-475 PE-1.
2. FOR PIER FOUNDATION PLAN, SEE DWG. 1-475 PR-1.
3. FOR PIER REINFORCING DETAILS, SEE DWG. 1-475 PR-3 & 1-475 PR-4.

U:\Projects\AA\21387385\CAD\Bridge\BR2-4\pr02_BR2-4_US301.dgn 7/15/2015 Steve_Lambert

DELAWARE DEPARTMENT OF TRANSPORTATION	ADDENDUMS / REVISIONS	US 301 LEVELS ROAD TO SUMMIT BRIDGE ROAD	CONTRACT T200511303	BRIDGE NO. 1-475	BUNKER HILL ROAD OVER US 301 MAINLINE	1-475 PR-2	
			COUNTY NEW CASTLE	DESIGNED BY: K. D. BEAVER	PIER PLAN AND ELEVATION	SHEET NO. 414	
				CHECKED BY: G. P. MISTRY		TOTAL SHTS. 1256	

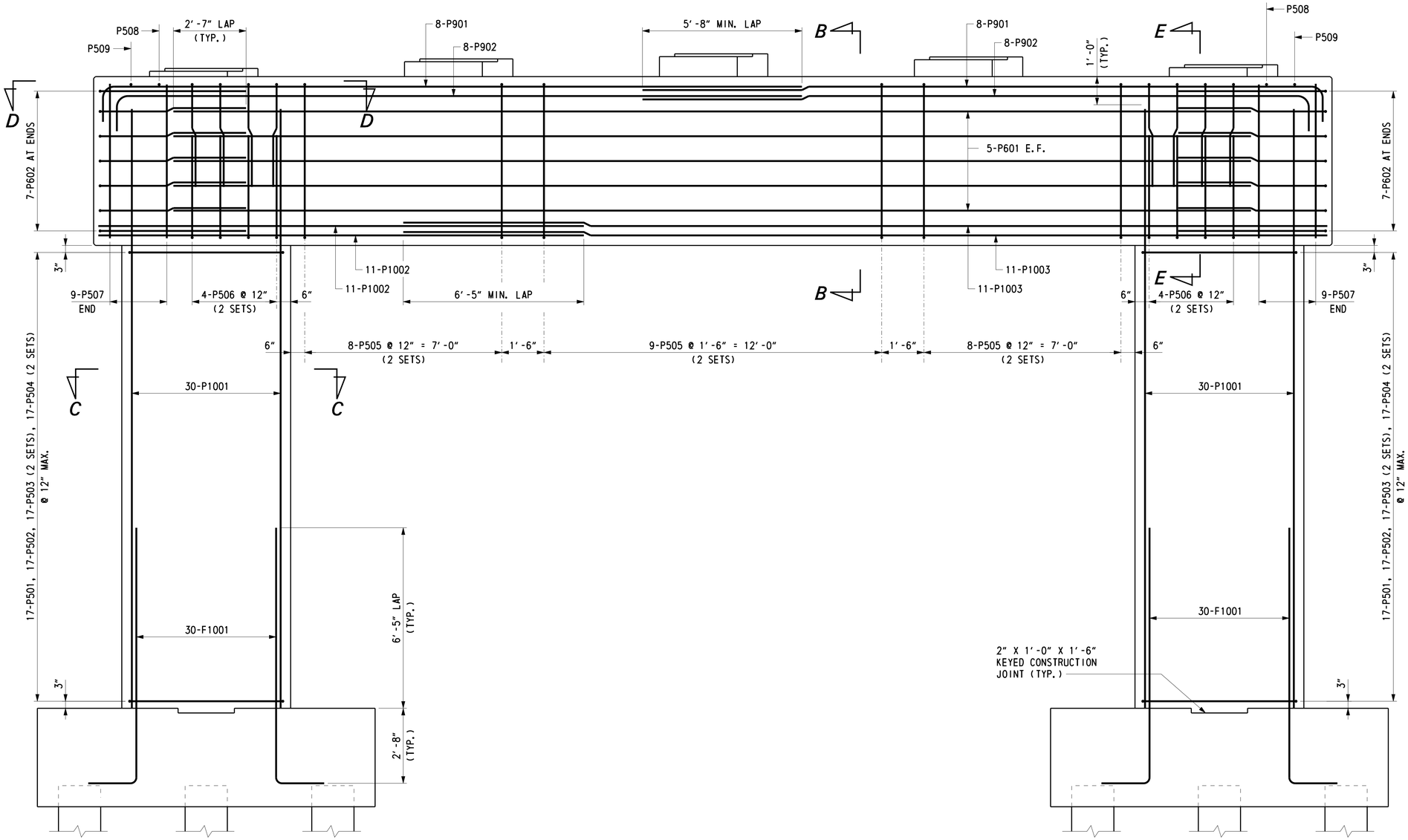

PIER ELEVATION

SCALE: ½" = 1'-0"

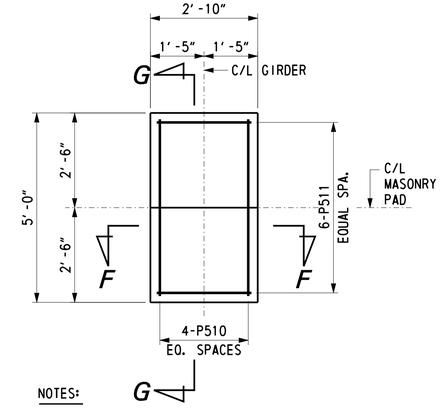

NOTES:

1. PIER BEARING PAD REINFORCEMENT APPLIES AT GIRDERS G2 THRU G5. GIRDER G1 MASONRY PAD SHALL BE POURED MONOLITHIC WITH PIER
2. CHAMFER NOT SHOWN ON PLAN VIEW.

PLAN - PIER MASONRY PAD

SCALE: ½" = 1'-0"

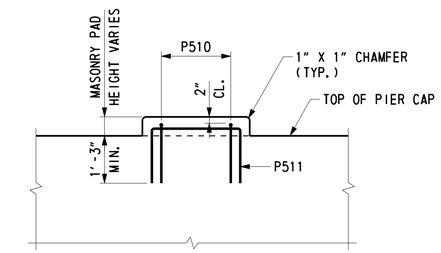

SECTION F-F

SCALE: ½" = 1'-0"

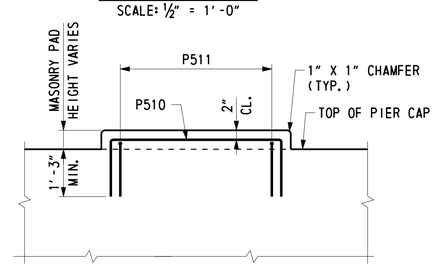

SECTION G-G

SCALE: ½" = 1'-0"

CROSS REFERENCE NOTES:

1. FOR BRIDGE PLAN AND ELEVATION, SEE DWG. PE-1.
2. FOR PIER PLAN AND ELEVATION, SEE DWG. 1-475 PR-2.
3. FOR PIER FOUNDATION PLAN,, SEE DWG. 1-475 PR-1.
4. FOR SECTIONS B-B TO E-E, SEE DWG. 1-475 PR-4.
5. FOR REINFORCING BAR LIST, SEE DWG. 1-475 PR-5.
6. FOR PIER DIAPHRAGM REINFORCEMENT, SEE DWG. 1-475 BM-3.

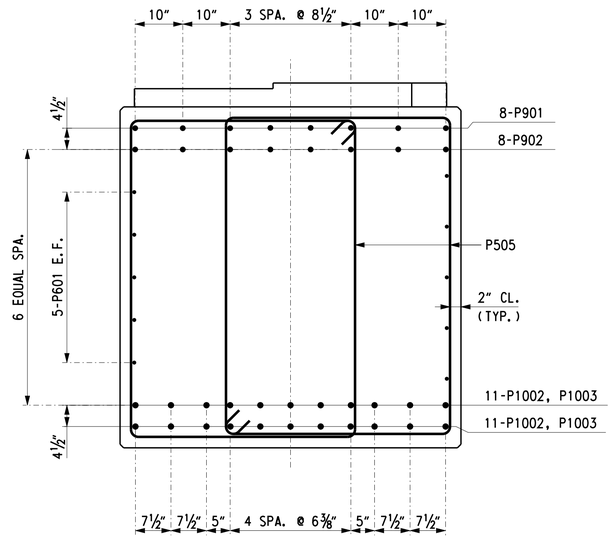

SECTION B-B

SCALE: ¾" = 1'-0"

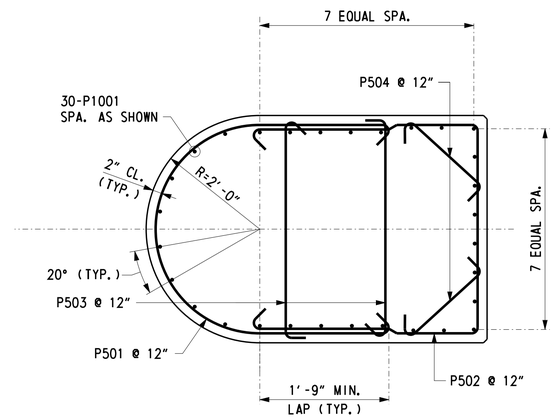

SECTION C-C

SCALE: ¾" = 1'-0"

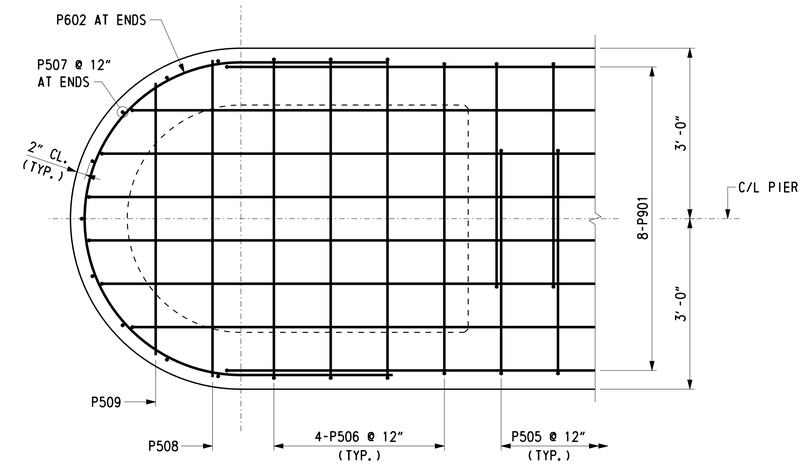

SECTION D-D

SCALE: ¾" = 1'-0"

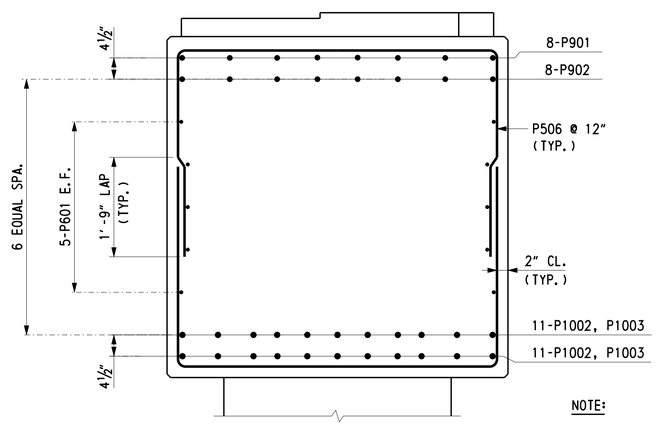

NOTE:

COLUMN REINFORCEMENT NOT SHOWN.

SECTION E-E

SCALE: ¾" = 1'-0"

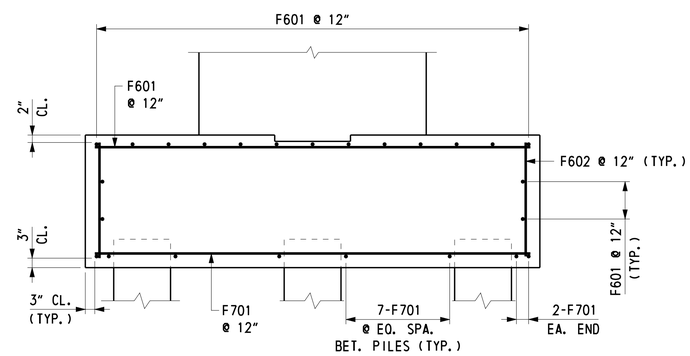

SECTION H-H

SCALE: ½" = 1'-0"

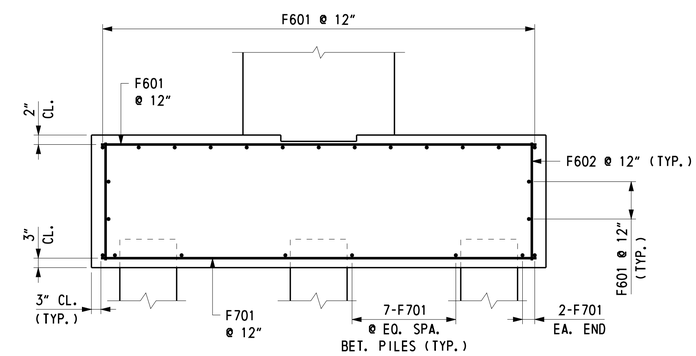

SECTION J-J

SCALE: ½" = 1'-0"

CROSS REFERENCE NOTES:

1. FOR BRIDGE PLAN AND ELEVATION, SEE DWG. 1-475 PE-1.
2. FOR PIER PLAN AND ELEVATION, SEE DWG. 1-475 PR-2.
3. FOR PIER REINFORCING ELEVATION, SEE DWG. 1-475 PR-3.
4. FOR MASONRY PAD REINFORCEMENT, SEE DWG. 1-475 PR-3.
5. FOR LOCATION OF SECTIONS H-H AND J-J, SEE DWG. 1-475 PR-1.

REINFORCING BAR LIST

PIER

MARK	LENGTH	NO. BARS	TYPE	A	B	C	D	E	G	H	J	K	O	R	REMARKS
F601	11′-6″	64	STR.												
F602	3′-1″	96	STR.												
F701	11′-6″	72	STR.												
F1001	10′-11″	60	36	1′-10″	9′-1″										
P501	9′-3″	34	10	1′-9″	5′-9″	1′-9″							3′-8″	1′-10″	
P502	12′-3″	34	S3	0′-5½″	3′-10″	3′-8″	3′-10″		0′-5½″						
P503	4′-11½″	68	T9	0′-5½″	3′-8″				0′-10″						
P504	2′-8½″	68	T9	0′-5½″	1′-5″				0′-10″						
P505	20′-3″	50	T1	0′-5½″	4′-0″	5′-8″	4′-0″	5′-8″	0′-5½″						
P506	13′-2″	16	17		3′-9″	5′-8″	3′-9″								
P507	6′-11½″	18	T9	0′-5½″	5′-8″				0′-10″						
P508	5′-7″	2	STR.												
P509	4′-10″	2	STR.												
P510	8′-6″	16	17		1′-11″	4′-8″	1′-11″								
P511	6′-4″	24	17		1′-11″	2′-6″	1′-11″								
P601	38′-0″	10	STR.												
P602	13′-11″	14	10	2′-7″	8′-9″	2′-7″							5′-6¾″	2′-9⅜″	
P901	26′-3″	16	36	1′-7″	24′-8″										
P902	25′-8″	16	36	1′-7″	24′-1″										
P1001	21′-6″	60	STR.												
P1002	16′-9″	22	STR.												
P1003	33′-4″	22	STR.												
PP701	8′-4″	108	1	0′-10″	7′-6″						0′-7″				

BENDING DIAGRAMS

ALL DIMENSIONS ARE FROM OUT TO OUT.

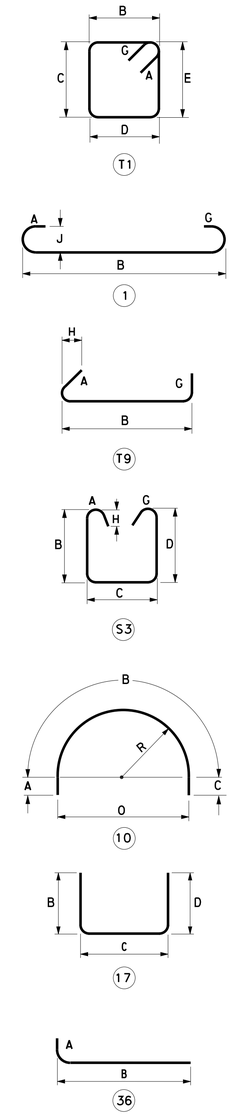

DELAWARE DEPARTMENT OF TRANSPORTATION

ADDENDUMS / REVISIONS

US 301
LEVELS ROAD
TO SUMMIT BRIDGE ROAD

CONTRACT	BRIDGE NO.	1–475
T200511303	DESIGNED BY: K. D. BEAVER	
COUNTY		
NEW CASTLE	CHECKED BY: G. P. MISTRY	

BUNKER HILL ROAD
OVER US 301 MAINLINE
PIER
REINFORCING BAR LIST

1-475 PR-5
SHEET NO.
417
TOTAL SHTS.
1256

Steve_Lambert 7/15/2015 U:\Projects\AA\21387385\CAD\Bridge\BR2-4\pr05_BR2-4_US301.dgn

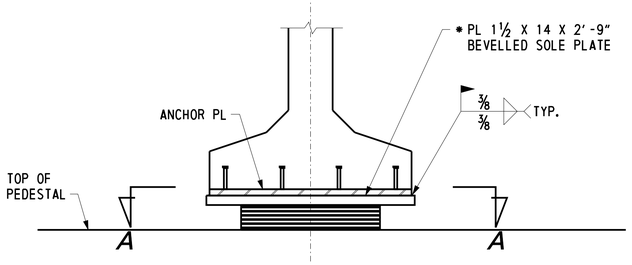

FIXED BEARING DETAIL - ELEVATION

SCALE: 1" = 1'-0"

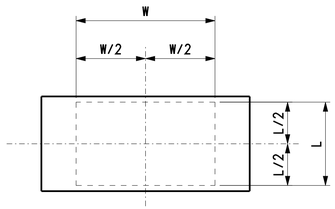

FIXED BEARING DETAIL - SECTION A-A

SCALE: 1" = 1'-0"

* AT C/L BEARING

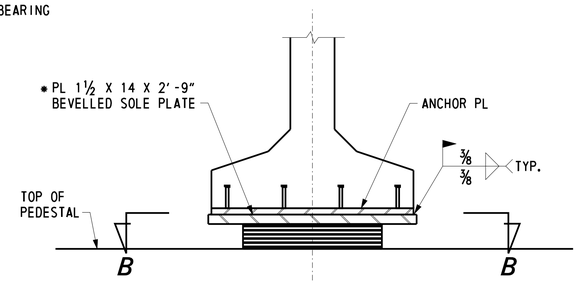

EXPANSION BEARING DETAIL - ELEVATION

SCALE: 1" = 1'-0"

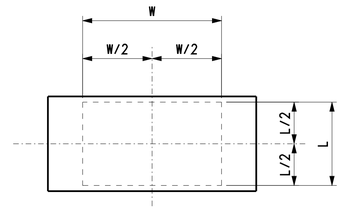

EXPANSION BEARING DETAIL - SECTION B-B

SCALE: 1" = 1'-0"

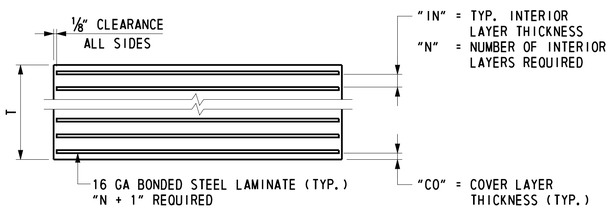

TYPICAL LAMINATED ELASTOMERIC PAD SECTION

NOT TO SCALE

BEARING PAD DATA									
LOCATION	TYPE	QUANTITY	L	W	T	N	N+1	IN	CO
ABUTMENT 1	EXP	5	11	22	3⅜	5	6	½	¼
PIER	FIX	10	11	22	3⅜	5	6	½	¼
ABUTMENT 2	EXP	5	11	22	3⅜	5	6	½	¼

L = LENGTH OF PAD ALONG C/L GIRDER
W = WIDTH OF PAD

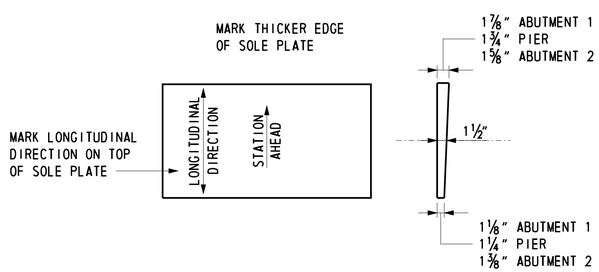

PLAN SIDE VIEW

SOLE PLATE DETAIL

SCALE: 1" = 1'-0"

BEARING NOTES:

1. WHEN WELDING, THE TEMPERATURE OF THE STEEL ADJACENT TO THE ELASTOMER SHOULD BE KEPT BELOW 250° F. THE TEMPERATURE SHALL BE CONTROLLED BY THE WELDING PROCEDURE. TEMPERATURE INDICATING CRAYONS, OR OTHER HEAT INDICATING DEVICES APPROVED BY THE ENGINEER SHALL BE USED FOR INSPECTION. SHOULD THE HEAT INTENSITY CAUSE CRACKING OR SPALLING ON THE SURFACE OF THE ADJACENT CONCRETE BEAM, ALTERNATE WELDING PROCEDURES SHALL BE USED.
2. ALL BEARINGS SHALL BE MARKED PRIOR TO SHIPPING. THE MARKS SHALL INCLUDE THE BEARING LOCATION ON THE BRIDGE, AND A DIRECTION ARROW THAT POINTS UP-STATION. ALL MARKS SHALL BE PERMANENT AND BE VISIBLE AFTER THE BEARING IS INSTALLED.
3. STEEL LAMINATE SHALL CONFORM TO AASHTO M270 GRADE 36 OR BETTER. ALL STRUCTURAL STEEL FOR THE BEARINGS SHALL BE GALVANIZED AND CONFORM TO AASHTO M270 GRADE 50.
4. 1000 RMS (FINISH ALL OVER) ALL PLATES EXCEPT WHERE OTHERWISE NOTED ON THESE PLANS OR IN THE CONTRACT SPECIFICATIONS.
5. TOP OF SOLE PLATE MUST BE BEVELED TO FIT GRADE OF ROADWAY AS SHOWN IN SOLE PLATE DETAIL.
6. BEARINGS SHALL BE PLACED NORMAL TO THE CENTER LINE OF GIRDER.
7. ALL CENTER LINES OF BEARING AND CENTER LINE OF PADS ARE COINCIDENTS.
8. ALL BEARING SHOES ARE TO BE SHIPPED ASSEMBLED AS UNITS.
9. MAXIMUM VERTICAL SERVICE LOAD FOR THE FIXED BEARING(S): DL = 90 KIPS
   LL = 110 KIPS
10. MAXIMUM VERTICAL SERVICE LOAD FOR THE EXPANSION BEARING(S): DL = 81 KIPS
    LL = 94 KIPS
11. COST FOR MATERIALS, FABRICATION AND INSTALLATION OF ELASTOMERIC BEARING PADS INCLUDING SOLE PLATES SHALL BE PAID UNDER ITEM 605581.

LAMINATED ELASTOMERIC BEARING PAD NOTES:

1. MANUFACTURE ALL BEARINGS IN ACCORDANCE WITH THE SPECIFICATIONS.
2. ALL BEARING PADS SHALL BE MOLDED TO DESIGN DIMENSIONS. CUTTING TO SIZE AFTER FABRICATION IS PROHIBITED.
3. HOLES ARE NOT PERMITTED IN ELASTOMERIC BEARINGS.
4. PROVIDE NEOPRENE 60 DUROMETER.
5. VULCANIZE PATCH PIN GROOVES.
6. PROVIDE MINIMUM LOW-TEMPERATURE NEOPRENE GRADE 3.
7. ELASTOMERIC BEARING PAD SHALL BE FACTORY VULCANIZED TO THE SOLE PLATE.

CROSS REFERENCE NOTES:

1. FOR ANCHOR PLATE DETAILS, SEE DWG. 1-475 BM-1.

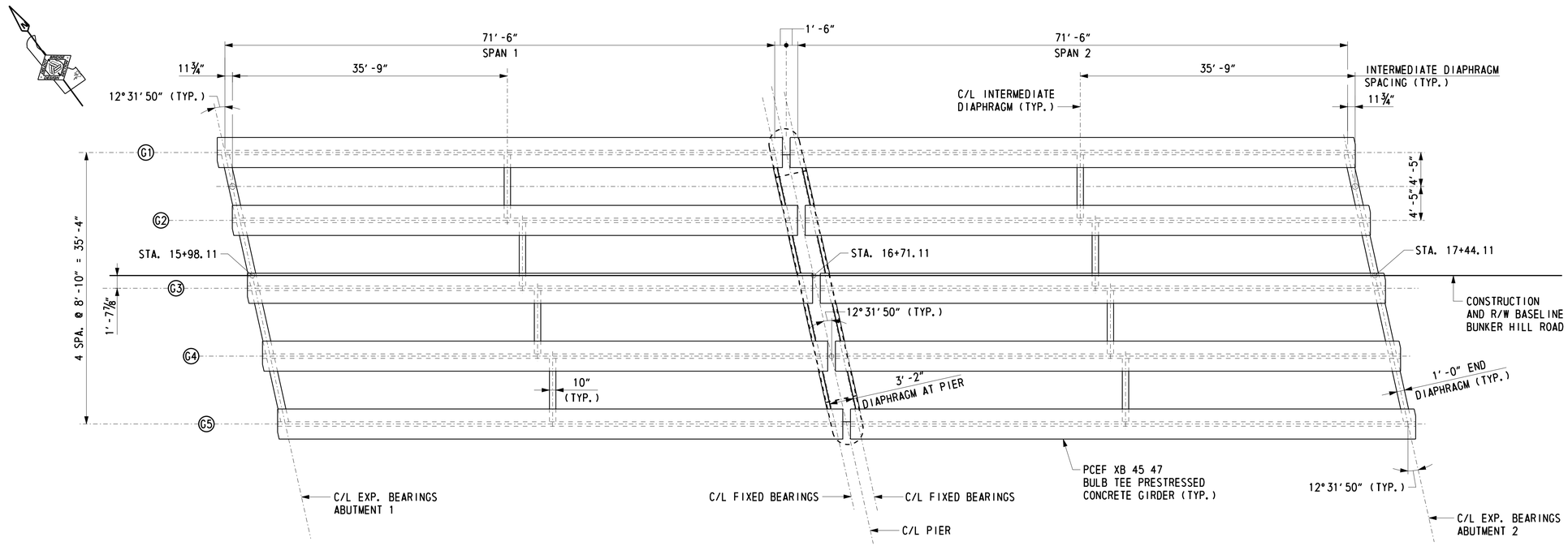

FRAMING PLAN

SCALE: ⅛" = 1'-0"

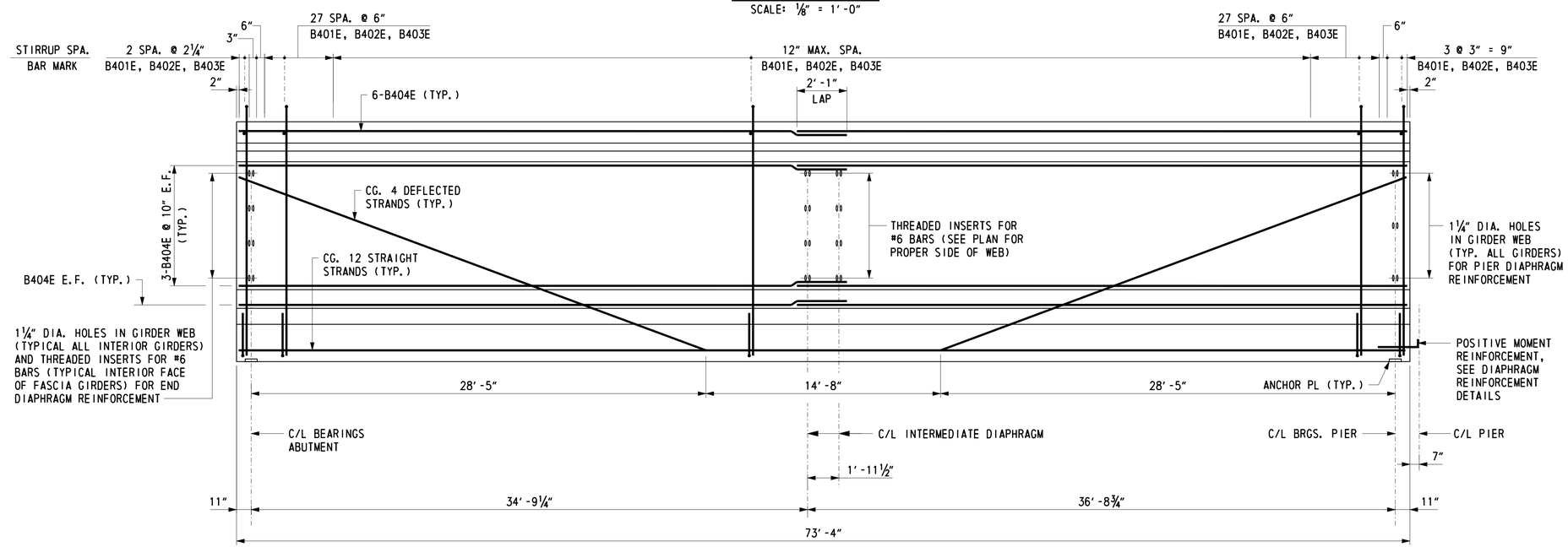

GIRDER ELEVATION - SPAN 1

SCALE : ¼" = 1'-0" HORIZ.
1" = 1'-0" VERT.

NOTES:

1. GIRDERS ARE PCEF XB 45 47 BULB TEE CONCRETE.
2. GIRDER LENGTHS IN CASTING BED SHALL BE DETERMINED AND DEPICTED IN SHOP DRAWINGS TO COMPENSATE FOR GRADE SHORTENING DUE TO PRESTRESS EFFECT.
3. TOP SURFACE OF ALL GIRDERS SHALL BE ROUGH FINISHED TO A FULL AMPLITUDE OF 1/4 " AND SCRUBBED TRANSVERSELY WITH A COARSE WIRE BRUSH TO REMOVE ALL LAITANCE AND TO PRODUCE A ROUGHENED SURFACE FOR BONDING.
4. NO CLEAR COVER LESS THAN AS SHOWN ON THESE PLANS WILL BE ACCEPTED.
5. GIRDER ELEVATION FOR SPAN 2 IS SYMMETRICAL TO SPAN 1.
6. THREADED INSERTS PROVIDED FOR DIAPHRAGM REINFORCEMENT SHALL BE ABLE TO DEVELOP FULL STRENGTH OF THE REINFORCEMENT.
7. CLIP FLANGE AT ABUTMENT ENDS OF GIRDERS. CLIPPED FLANGE REINFORCEMENT DETAILS APPLY AS SHOWN ON GIRDER DETAILS SHEET.
8. GIRDER LIFTING DETAILS SHALL BE PROVIDED BY THE CONTRACTOR AND ARE SUBJECT TO THE APPROVAL OF THE ENGINEER.

CROSS REFERENCE NOTES:

1. FOR PROJECT NOTES, SEE DWG. 1-475 PN-2.
2. FOR TYPICAL SECTION, SEE DWG. 1-475 TS-1.
3. FOR GIRDER DETAILS, SEE DWG. 1-475 BM-1.
4. FOR DIAPHRAGM DETAILS, SEE DWG. 1-475 BM-2 & 1-475 BM-3.
5. FOR CAMBER TABLE, SEE DWG. 1-475 CT-1.

U:\Projects\AA\21387385\CAD\Bridge\BR2-4\f01_BR2-4_US301.dgn
8/13/2015
Steve_Lambert

DELAWARE DEPARTMENT OF TRANSPORTATION	ADDENDUMS / REVISIONS	US 301 LEVELS ROAD TO SUMMIT BRIDGE ROAD	CONTRACT T200511303	BRIDGE NO. 1-475	BUNKER HILL ROAD OVER US 301 MAINLINE FRAMING PLAN AND GIRDER ELEVATION	1-475 FR-1
			COUNTY NEW CASTLE	DESIGNED BY: K. D. BEAVER		SHEET NO. 419
				CHECKED BY: R.F.KIRCHNER		TOTAL SHTS. 1256

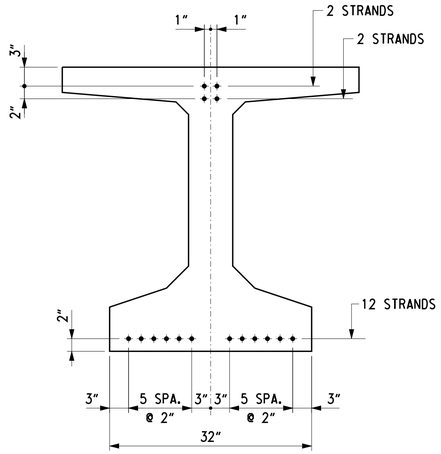

PRESTRESSING AT END OF GIRDER AT ABUTMENTS

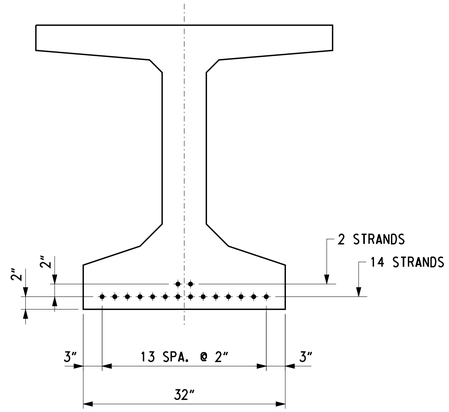

PRESTRESSING AT MIDSPAN

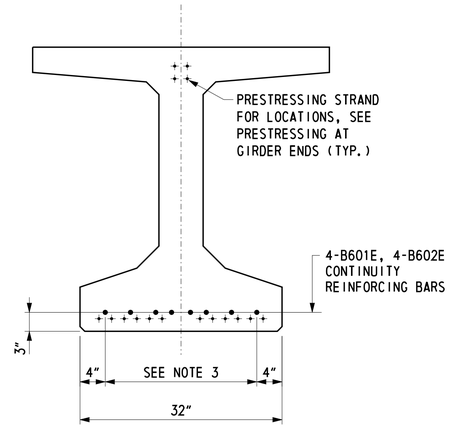

REBAR OPTION AT END OF GIRDER AT PIER

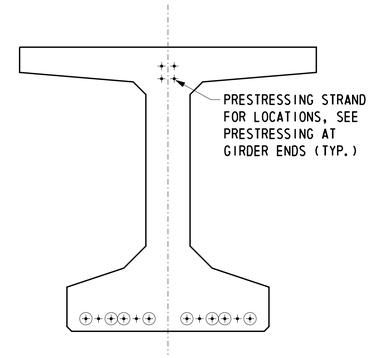

EXTENDED STRAND OPTION AT END OF GIRDER AT PIER

SECTION - PCEF BULB TEE SERIES XB 45 47

SCALE: 1" = 1'-0"

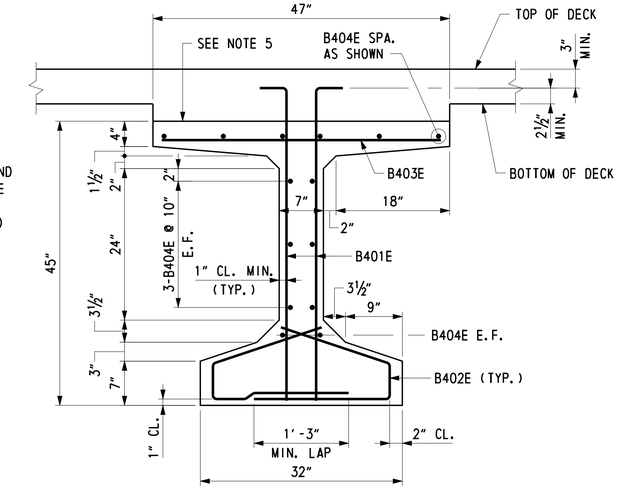

TYPICAL BAR REINFORCEMENT

SCALE: 1" = 1'-0"

LEGEND

+ PRESTRESSING STRAND

⊕ EXTENDED STRAND, SEE NOTE 4 (MAX. 6" TRANSVERSE SPA.)

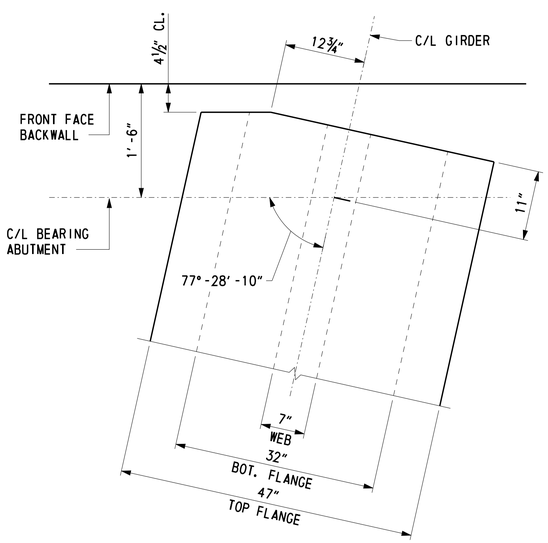

END OF GIRDER DETAIL AT ABUTMENTS

SCALE: 1" = 1'-0"

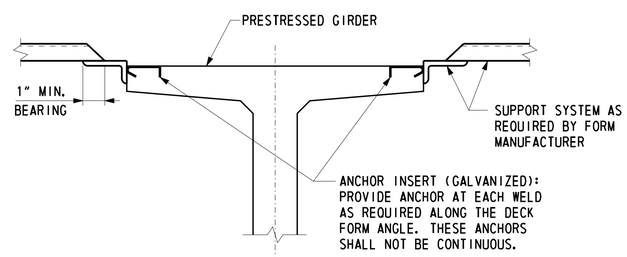

FORM ANCHOR DETAIL

SCALE: 1" = 1'-0"

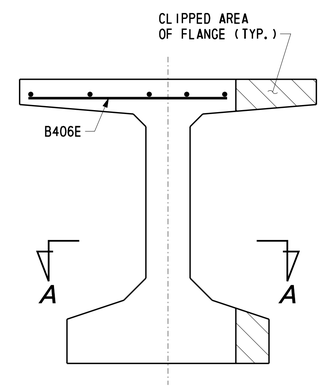

GIRDER END VIEW

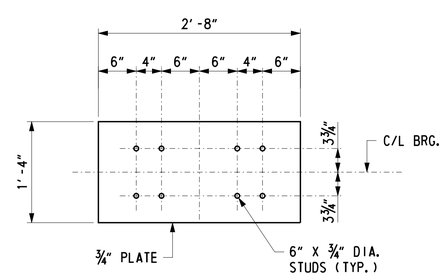

ANCHOR PLATE DETAIL

SCALE: 1" = 1'-0"

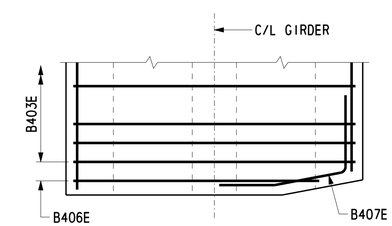

PLAN - TOP FLANGE

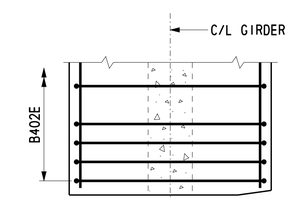

SECTION A-A BOTTOM FLANGE

CLIPPED FLANGE REINFORCEMENT DETAILS

SCALE: 1" = 1'-0"

NOTES:

1. PERMANENT STEEL BRIDGE DECK FORMS AND SUPPORTS SHALL BE PROVIDED CONFORMING TO THE REQUIREMENTS OF SECTION 602 OF THE DELDOT STANDARD SPECIFICATIONS.
2. ANY PERMANENTLY EXPOSED FORM METAL WHERE THE GALVANIZED COATING HAS BEEN DAMAGED SHALL BE THOROUGHLY CLEANED, WIRE BRUSHED AND PAINTED WITH TWO COATS OF ZINC DUST - ZINC OXIDE PAINT, NO COLOR ADDED, TO THE SATISFACTION OF THE ENGINEER. MINOR HEAT DISCOLORATION IN AREAS OF WELDS NEED NOT BE TOUCHED UP.
3. LATERAL SPACING OF CONTINUITY BARS IS APPROXIMATE. BARS AT ADJACENT ENDS OF GIRDERS AT PIER SHALL BE OFFSET TO ALLOW GIRDER PLACEMENT AT ERECTION.
4. EXTENDED STRANDS AT ENDS OF GIRDER MUST BE BENT SLIGHTLY WITH THE APPROVAL OF THE ENGINEER TO PROPERLY POSITION GIRDER DURING ERECTION.
5. TOP SURFACE OF ALL GIRDERS SHALL BE ROUGH FINISHED TO A FULL AMPLITUDE OF ¼" AND SCRUBBED TRANSVERSELY WITH A WIRE BRUSH TO REMOVE ALL LAITANCE AND TO PRODUCE A ROUGHENED SURFACE FOR BONDING.
6. ANCHOR PLATES AND STUDS SHALL BE GALVANIZED. ANCHOR PLATES SHALL CONFORM TO AASHTO M270 GRADE 50. STUDS SHALL CONFORM TO AASHTO M169, ASTM A 108. ANCHOR PLATES SHALL BE CAST WITH AND THE COST INCIDENTAL TO THE PRESTRESSED CONCRETE GIRDERS.

CROSS REFERENCE NOTES:

1. FOR PROJECT NOTES SEE DWG. 1-475 PN-2.
2. FOR TYPICAL SECTION, SEE DWG. 1-475 TS-1.
3. FOR FRAMING PLAN AND GIRDER ELEVATION, SEE DWG. 1-475 FR-1.
4. FOR REINFORCING BAR LIST, SEE DWG. 1-475 BM-4.
5. FOR DIAPHRAGM DETAILS, SEE DWGS, 1-475 BM-2 & 1-75 BM-3.

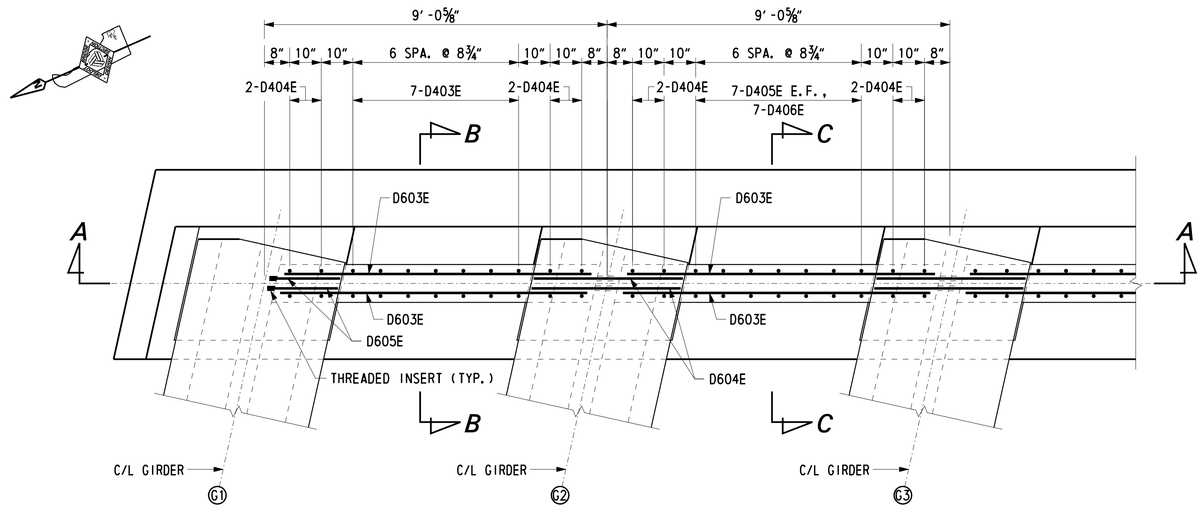

END DIAPHRAGM PLAN

(ABUTMENT 2 SHOWN)
SCALE: ½″ = 1′-0″

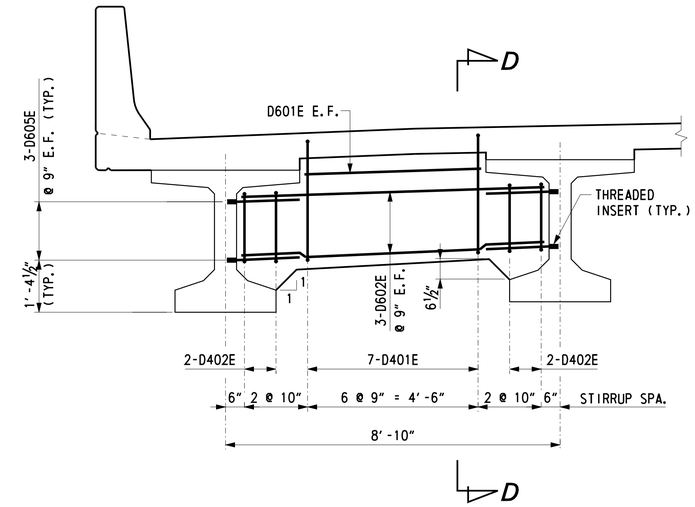

INTERMEDIATE DIAPHRAGM

SCALE: ½″ = 1′-0″

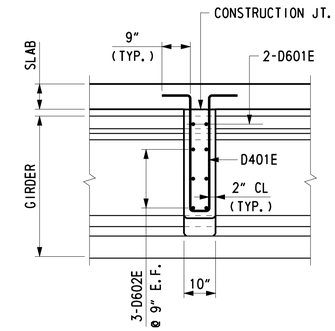

SECTION D-D

SCALE: ½″ = 1′-0″

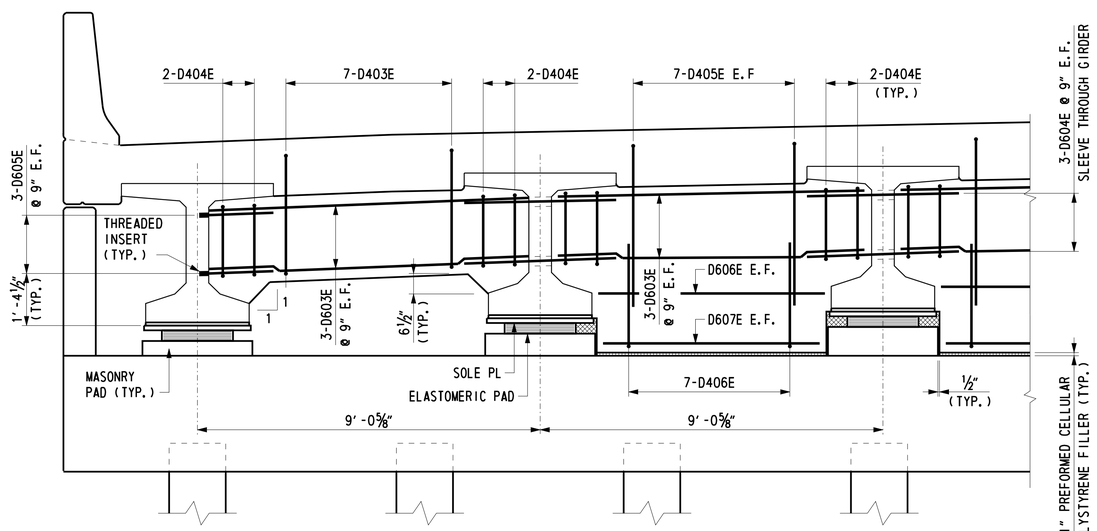

SECTION A-A

SCALE: ½″ = 1′-0″

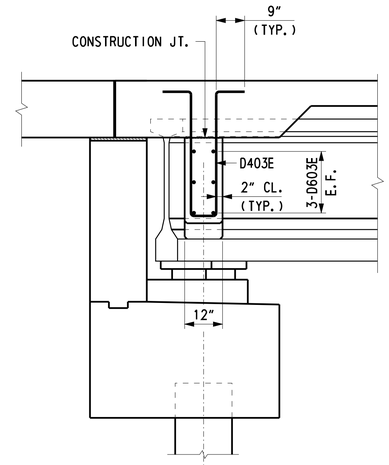

SECTION B-B

SCALE: ½″ = 1′-0″

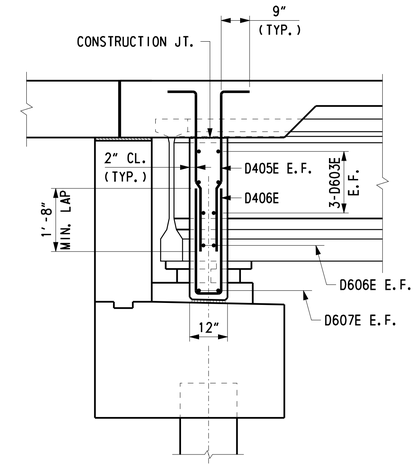

SECTION C-C

SCALE: ½″ = 1′-0″

NOTES:

1. FULL DEPTH END DIAPHRAGM APPLIES BETWEEN GIRDERS G2 & G3 AS WELL AS BETWEEN GIRDERS G3 & G4.
2. PREFORMED CELLULAR POLYSTYRENE FILLER SHALL BE INCIDENTAL TO ITEM 602013 - PORTLAND CEMENT CONCRETE MASONRY, SUPERSTRUCTURE, CLASS D.

CROSS REFERENCE NOTES:

1. FOR PROJECT NOTES, SEE DWG. 1-475 PN-2.
2. FOR TYPICAL SECTION, SEE DWG. 1-475 TS-1.
3. FOR FRAMING PLAN, SEE DWG. 1-475 FR-1.
4. FOR REINFORCING BAR LIST, SEE DWG. 1-475 BM-4.

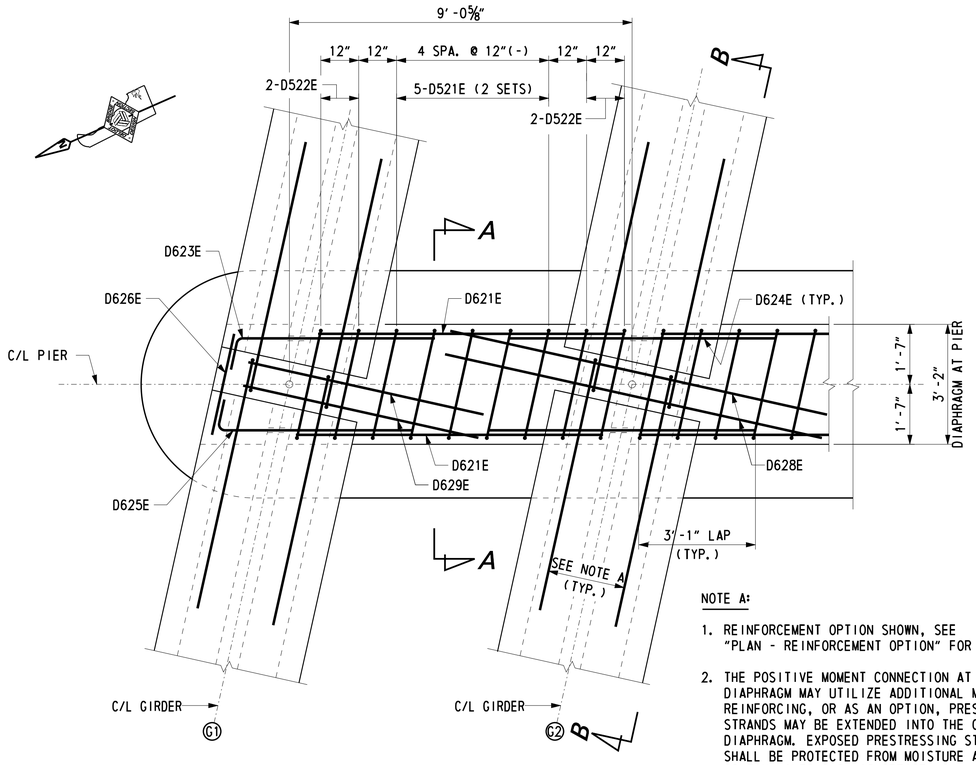

PLAN

SCALE: ½" = 1'-0"

NOTE A:

1. REINFORCEMENT OPTION SHOWN, SEE "PLAN - REINFORCEMENT OPTION" FOR LAYOUT.
2. THE POSITIVE MOMENT CONNECTION AT THE PIER DIAPHRAGM MAY UTILIZE ADDITIONAL MILD REINFORCING, OR AS AN OPTION, PRESTRESSING STRANDS MAY BE EXTENDED INTO THE CONTINUITY DIAPHRAGM. EXPOSED PRESTRESSING STRANDS SHALL BE PROTECTED FROM MOISTURE AND CONTAMINANTS SUCH AS GREASE, OIL, WAX, DIRT, PAINT OR LOOSE RUST. COST OF POSITIVE MOMENT REINFORCING SHALL BE INCIDENTAL TO ITEM 623003 - PRESTRESSED REINFORCED CONCRETE MEMBERS, BULB-T BEAM.

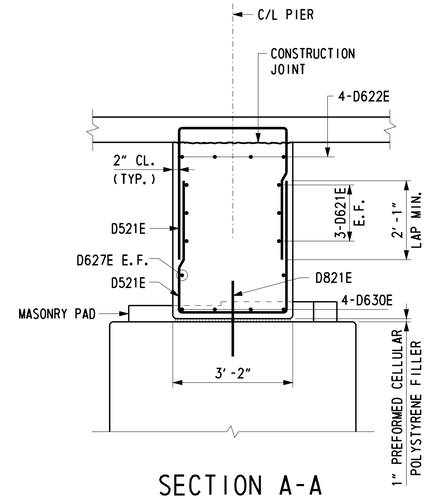

SECTION A-A

SCALE: ½" = 1'-0"

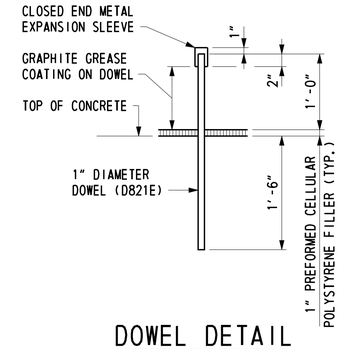

DOWEL DETAIL

SCALE: 1" = 1'-0"

NOTES:

1. D821E DOWELS SHALL BE 1" DIAMETER PLAIN BARS CAPPED WITH A SNUG FIT, CLOSED END METAL EXPANSION SLEEVE, TEMPORARILY SECURED TO THE DOWEL SO AS TO PROVIDE A 1" LONG SOCKET BEYOND THE BAR END AND TO LAP BACK 2" ON THE BAR. IMMEDIATELY PRIOR TO POURING DIAPHRAGM CONCRETE, DOWELS SHALL BE COATED WITH GRAPHITE GREASE.
2. COST OF DOWELS, EXPANSION SLEEVES, GRAPHITE COATING AND PREFORMED CELLULAR POLYSTYRENE FILLER SHALL BE INCIDENTAL TO ITEM 602013 - PORTLAND CEMENT CONCRETE MASONRY, SUPERSTRUCTURE, CLASS D.

CROSS REFERENCE NOTES:

1. FOR PROJECT NOTES, SEE DWG. 1-475 PN-2.
2. FOR TYPICAL SECTION, SEE DWG. 1-475 TS-1.
3. FOR FRAMING PLAN, SEE DWG. 1-475 FR-1.
4. FOR REINFORCING BAR LIST, SEE DWG. 1-475 BM-4.

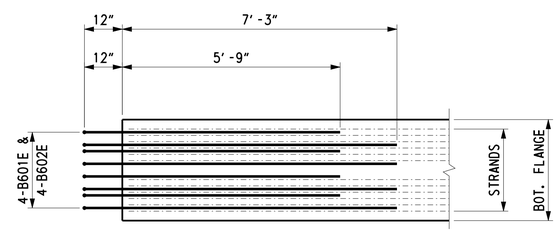

PLAN - REINFORCEMENT OPTION

SCALE: ½" = 1'-0"

PLAN - EXTENDED STRAND OPTION

SCALE: ½" = 1'-0"

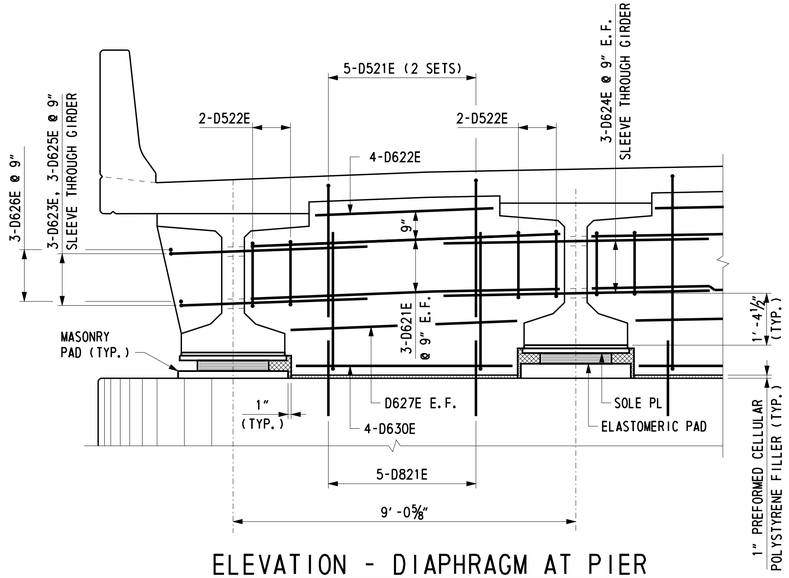

ELEVATION - DIAPHRAGM AT PIER

SCALE: ½" = 1'-0"

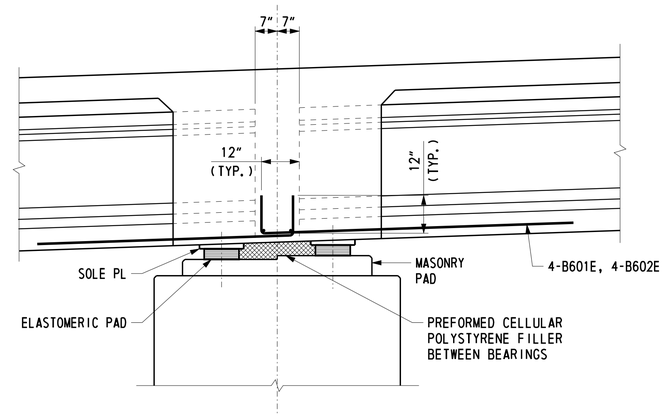

SECTION B-B - REINFORCEMENT OPTION

SCALE: ½" = 1'-0"

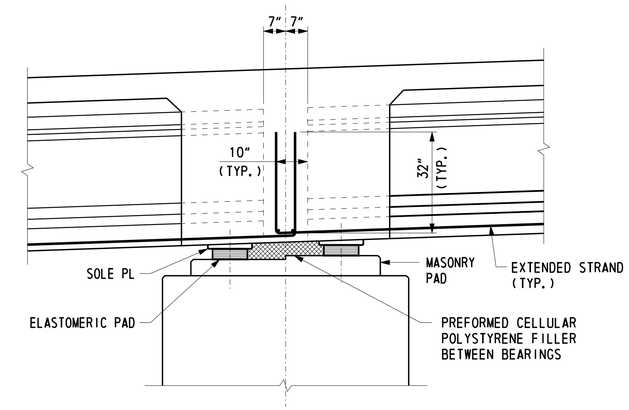

SECTION B-B - EXTENDED STRAND OPTION

SCALE: ½" = 1'-0"

U:\Projects\AA\21387385\CAD\Bridge\BR2-4\bm03_BR2-4_US301.dgn

8/13/2015

Steve_Lambert

DELAWARE DEPARTMENT OF TRANSPORTATION	ADDENDUMS / REVISIONS		US 301 LEVELS ROAD TO SUMMIT BRIDGE ROAD	CONTRACT T200511303	BRIDGE NO. 1-475	BUNKER HILL ROAD OVER US 301 MAINLINE	1-475 BM-3
				COUNTY NEW CASTLE	DESIGNED BY: W. A. O'CONNOR	DIAPHRAGMS 2	SHEET NO. 422
					CHECKED BY: G. P. MISTRY/W. A. O'CONNOR		TOTAL SHTS. 1256

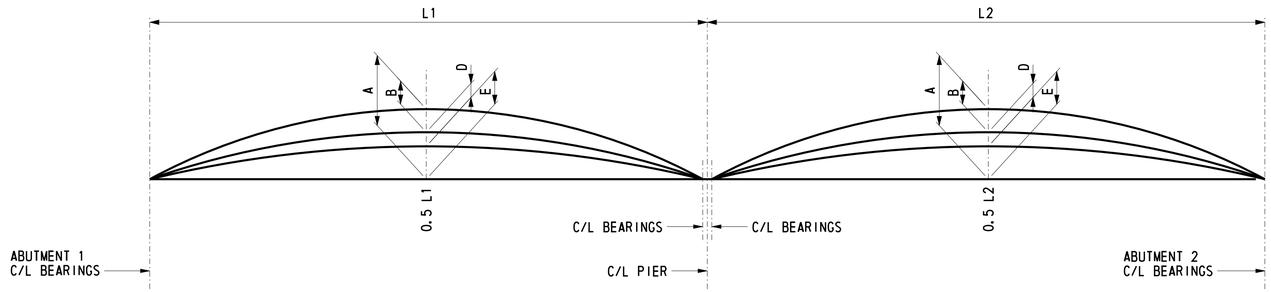

GIRDER CAMBER DIAGRAM

NOT TO SCALE

CAMBER ORDINATES (INCHES)

GIRDER NO.	ITEM	ABUT. 1 C/L BRGS.	SPAN 1 0.5L1	C/L PIER	SPAN 2 0.5L2	ABUT. 2 C/L BRGS.
G1 & G5	A	0	2 5/16	0	2 5/16	0
	B	0	-1	0	-1	0
	C	0	1 5/16	0	1 5/16	0
	D	0	- 9/16	0	- 9/16	0
	E	0	3/4	0	3/4	0
	F	0	1 11/16	0	1 11/16	0
G2 - G4	A	0	2 5/16	0	2 5/16	0
	B	0	-1	0	-1	0
	C	0	1 5/16	0	1 5/16	0
	D	0	- 5/8	0	- 5/8	0
	E	0	11/16	0	11/16	0
	F	0	1 11/16	0	1 11/16	0

LEGEND

A = DENOTES CAMBER DUE TO PRESTRESS AT ERECTION, CREEP MULTIPLIER = 1.8.

B = DENOTES DEFLECTION DUE TO GIRDER DEAD LOAD AT ERECTION, CREEP MULTIPLIER = 1.85.

C = A+B

D = DENOTES DEFLECTION DUE TO SLAB AND DIAPHRAGMS.

E = DENOTES NET CAMBER AT ERECTION, C+D.

F = DENOTES VERTICAL CURVE ORDINATE MEASURED FROM ROADWAY PROFILE TO CHORD LINE BETWEEN SUPPORTS.

NOTES:

1. CAMBER VALUES ARE THEORETICAL VALUES AND MAY VARY WITH CONCRETE STRENGTH (AGE), PRESTRESSING CONDITIONS, CREEP MULTIPLIER AND PRESTRESS LOSES.
2. THICKNESS OF CONCRETE HAUNCH VARIES TO OBTAIN VERTICAL CURVE PROFILE.

REINFORCING BAR LIST

GIRDER AND DIAPHRAGMS

	MARK	LENGTH	NO. BARS	TYPE	A	B	C	D	E	F	G	H	J	K	O	R	REMARKS
GIRDERS	B401E	4′-10″	2,140	17		0′-8″	4′-2″										
	B402E	3′-8″	2,140	16		1′-10″	0′-5″	1′-5″				1′-3½″		0′-6″			
	B403E	3′-8″	1,070	STR.													
	B404E	37′-7″	280	STR.													
	B406E	3′-0″	10	STR.													
	B407E	2′-7	10	23			1′-0″	0′-7″	1′-0″			0′-11¾″		0′- 2½″			
	B601E	7′-9″	40	17		1′-0″	6′-9″										
	B602E	9′-3″	40	17		1′-0″	8′-3″										
DIAPHRAGMS	D401E	8′-2″	56	S4	0′-9″	3′-1″	0′-6″	3′-1″			0′-9″						
	D402E	5′-1″	32	T2	0′-4½″	0′-6″	1′-8″	0′-6″	1′-8″		0′-4½″						
	D403E	8′-4″	28	S4	0′-9″	3′-1″	0′-8″	3′-1″			0′-9″						
	D404E	5′-5″	32	T2	0′-4½″	0′-8″	1′-8″	0′-8″	1′-8″		0′-4½″						
	D405E	4′-2″	56	S4	0′-9″	3′-5″											
	D406E	7′-6″	28	17		3′-5″	0′-8″	3′-8″									
	D521E	10′-3″	40	17		3′-8″	2′-11″	3′-8″									
	D522E	10′-2″	16	T2	0′-6″	2′-11″	1′-8″	2′-11″	1′-8″		0′-6″						
	D601E	4′-7″	16	STR.													
	D602E	7′-11″	48	STR.													
	D603E	8′-1″	48	STR.													
	D604E	7′-1″	36	STR.													
	D605E	3′-7″	120	STR.													ONE END THREADED
	D606E	6′-0″	8	STR.													
	D607E	5′-8″	8	STR.													
	D621E	8′-1″	24	STR.													
	D622E	4′-9″	16	STR.													
	D623E	6′-9″	6	19		1′-6″	5′-3″					1′-5½″		0′-4″			
	D624E	7′-1″	18	STR.													
	D625E	6′-9″	6	30	5′-3″	1′-6″						1′-5½″		0′-4″			
	D626E	2′-11″	6	STR.													
	D627E	6′-0″	8	STR.													
	D628E	7′-4″	6	STR.													
	D629E	4′-10″	4	STR.													
	D630E	5′-8″	16	STR.													
	D821E	2′-7″	20	STR.													

BENDING DIAGRAMS

ALL DIMENSIONS ARE FROM OUT TO OUT.

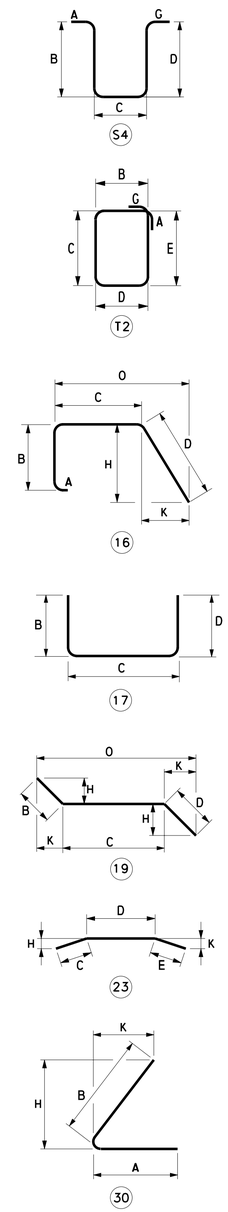

Steve_Lambert 7/15/2015 U:\Projects\AA\21387385\CAD\Bridge\BR2-4\bm04_BR2-4_US301.dgn

DELAWARE
DEPARTMENT OF TRANSPORTATION

ADDENDUMS / REVISIONS

US 301
LEVELS ROAD
TO SUMMIT BRIDGE ROAD

CONTRACT	BRIDGE NO.	1-475
T200511303	DESIGNED BY: K. D. BEAVER	
COUNTY		
NEW CASTLE	CHECKED BY: J. S. LI/W. A.O'CONNOR	

BUNKER HILL ROAD
OVER US 301 MAINLINE
GIRDERS AND DIAPHRAGMS
REINFORCING BAR LIST

1-475 BM-4
SHEET NO.
424
TOTAL SHTS.
1256

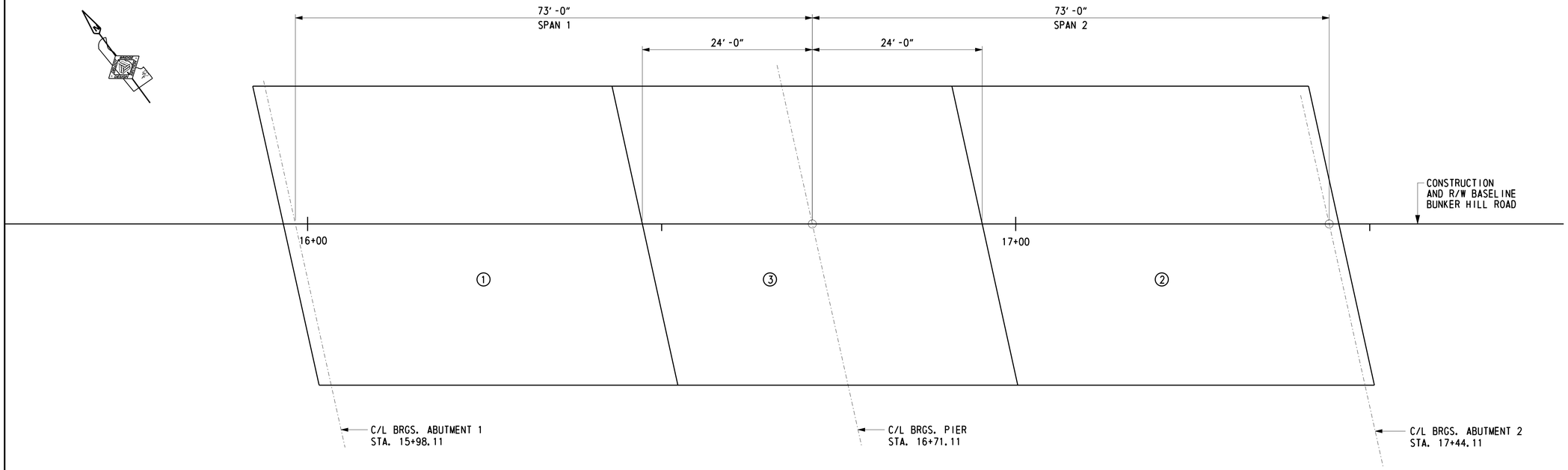

BRIDGE DECK POURING SEQUENCE

SCALE: 1/8" = 1'-0"

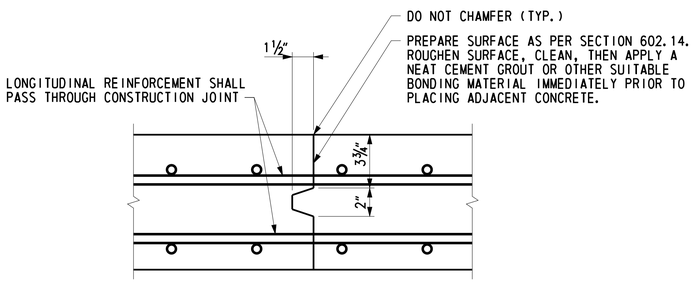

BRIDGE DECK CONSTRUCTION JOINT

NOT TO SCALE

PLACEMENT SEQUENCE:

1. CAST INTERMEDIATE AND END DIAPHRAGMS AT ABUTMENTS.
2. CAST POSITIVE MOMENT REGIONS ADJACENT TO ABUTMENTS IN THE NUMBER ORDER INDICATED ON THE PLAN.
3. CAST CONTINUITY DIAPHRAGMS AT PIER.
4. CAST NEGATIVE MOMENT REGION.

NOTES:

1. THE POURING SEQUENCE FOR THE BRIDGE DECK SLAB SHALL BE MADE IN THE NUMBERED ORDER INDICATED. THERE MUST BE AT LEAST FORTY (40) HOURS BETWEEN THE COMPLETION OF ONE NUMBERED POUR AND THE START OF THE NEXT NUMBERED POUR.
2. AS AN ALTERNATE, CONTRACTOR MAY UTILIZE TWO CREWS AND TWO SETS OF EQUIPMENT TO CONSTRUCT POURS NUMBER 1 AND 2 SIMULTANEOUSLY AT NO ADDITIONAL COST TO THE DEPARTMENT.
3. ALLOW SUFFICIENT TIME FOR DIAPHRAGMS TO REACH A MINIMUM COMPRESSIVE STRENGTH OF 3,000 PSI BEFORE POURING DECK ABOVE DIAPHRAGM.

CROSS REFERENCE NOTES:

1. FOR PROJECT NOTES, SEE DWG. 1-475 PN-2.
2. FOR TYPICAL SECTION, SEE SEE DWG. 1-475 TS-1.

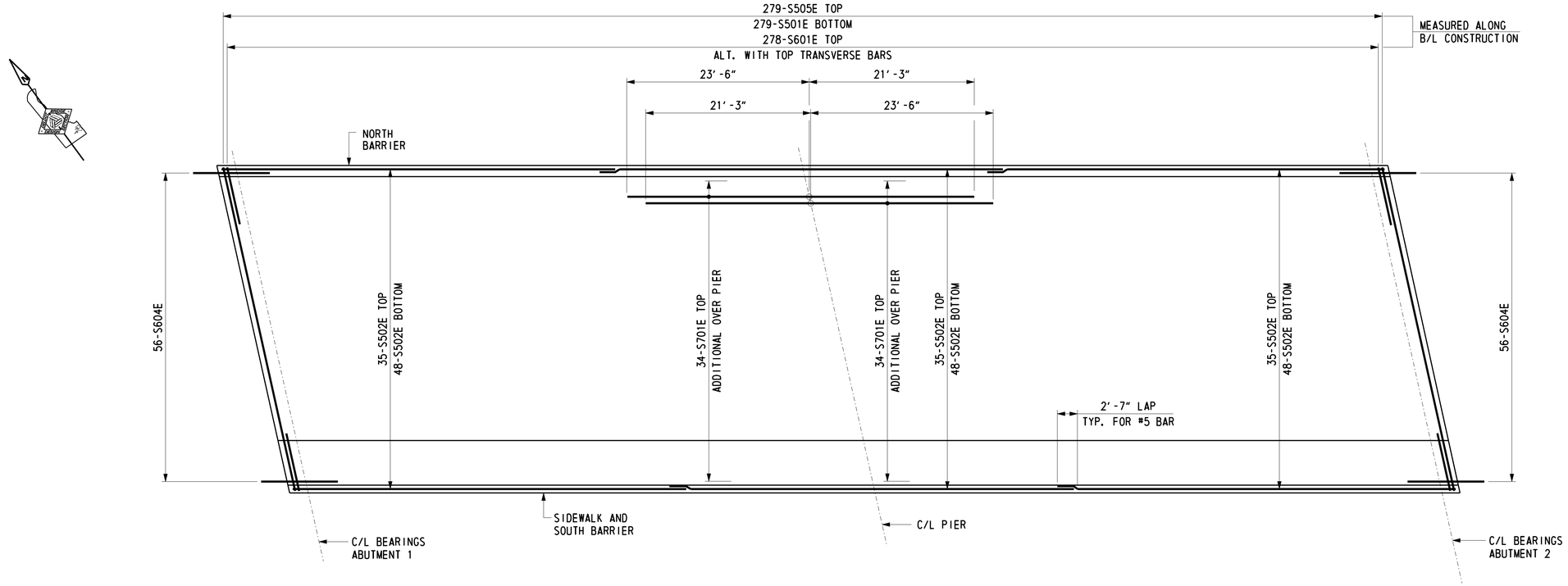

BRIDGE DECK REINFORCEMENT PLAN

SCALE: 1/8" = 1'-0"

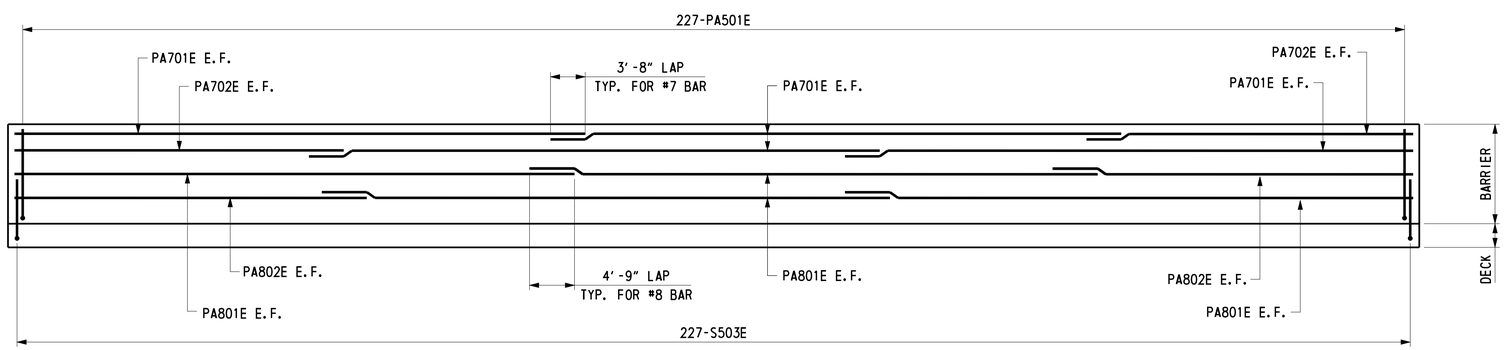

ELEVATION - DECK AND NORTH BARRIER REINFORCEMENT

NOT TO SCALE

CROSS REFERENCE NOTES:

1. FOR PROJECT NOTES, SEE DWG. 1-475 PN-2.
2. FOR TYPICAL SECTION, SEE DWG. 1-475 TS-1.
3. FOR TYPICAL DECK AND BARRIER REINFORCEMENT SECTIONS, SEE DWG. 1-475 DK-4.
4. FOR REINFORCING BAR LIST, SEE DWG. 1-475 DK-5.

DELAWARE DEPARTMENT OF TRANSPORTATION	ADDENDUMS / REVISIONS		US 301 LEVELS ROAD TO SUMMIT BRIDGE ROAD	CONTRACT T200511303	BRIDGE NO. 1-475	BUNKER HILL ROAD OVER US 301 MAINLINE BRIDGE DECK AND BARRIER REINFORCEMENT 1	1-475 DK-2
				COUNTY NEW CASTLE	DESIGNED BY: K. D. BEAVER		SHEET NO. 426
					CHECKED BY: J. S. LI		TOTAL SHTS. 1256

Steve_Lambert 8/13/2015 U:\Projects\AA\21387385\CAD\Bridge\BR2-4\dk02_BR2-4_US301.dgn

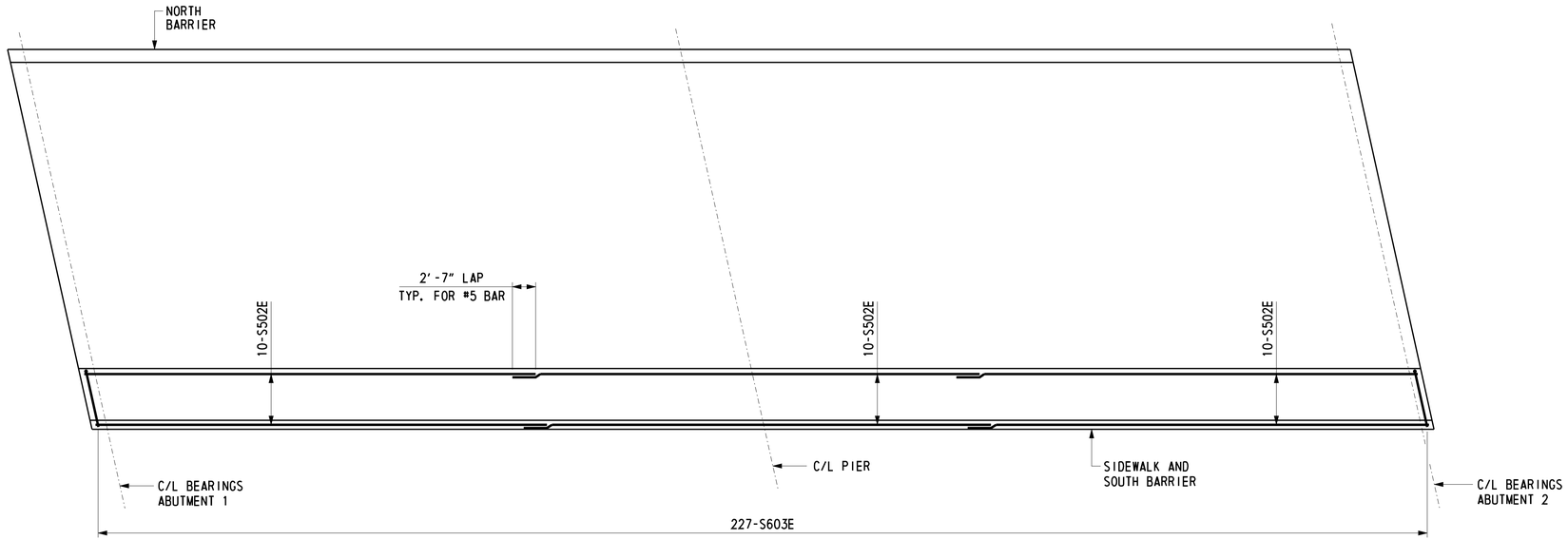

SIDEWALK REINFORCEMENT PLAN

SCALE: 1/8" = 1'-0"

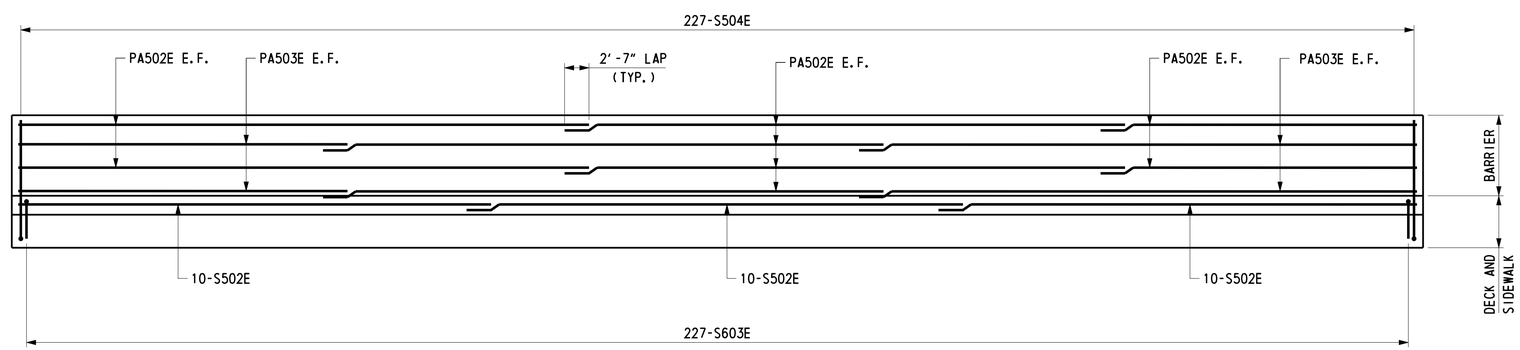

ELEVATION - DECK, SIDEWALK AND SOUTH BARRIER REINFORCEMENT

NOT TO SCALE

CROSS REFERENCE NOTES:

1. FOR PROJECT NOTES, SEE DWG. 1-475 PN-2.
2. FOR TYPICAL SECTION, SEE DWG. 1-475 TS-1.
3. FOR TYPICAL DECK, BARRIER AND SIDEWALK REINFORCEMENT SECTIONS, SEE DWG. 1-475 DK-4.
4. FOR REINFORCING BAR LIST, SEE DWG. 1-475 DK-5.

DELAWARE DEPARTMENT OF TRANSPORTATION	ADDENDUMS / REVISIONS		US 301 LEVELS ROAD TO SUMMIT BRIDGE ROAD	CONTRACT T200511303	BRIDGE NO. 1-475	BUNKER HILL ROAD OVER US 301 MAINLINE BRIDGE DECK AND BARRIER REINFORCEMENT 2	1-475 DK-3
				COUNTY NEW CASTLE	DESIGNED BY: K. D. BEAVER		SHEET NO. 427
					CHECKED BY: J. S. LI		TOTAL SHTS. 1256

Steve_Lambert 8/13/2015 U:\Projects\AA\21387385\CAD\Bridge\BR2-4\dk03_BR2-4_US301.dgn

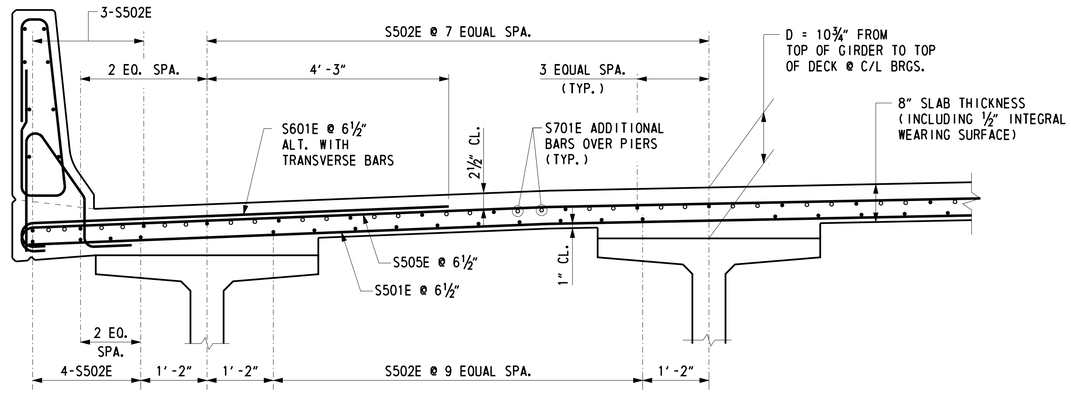

TYPICAL DECK REINFORCEMENT SECTION

SCALE: ¾" = 1'-0"

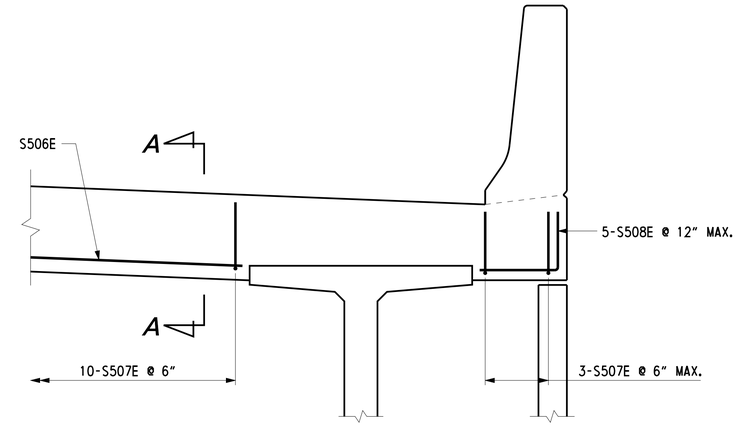

TYPICAL CONCRETE END HAUNCH SECTION

SCALE: ¾" = 1'-0"

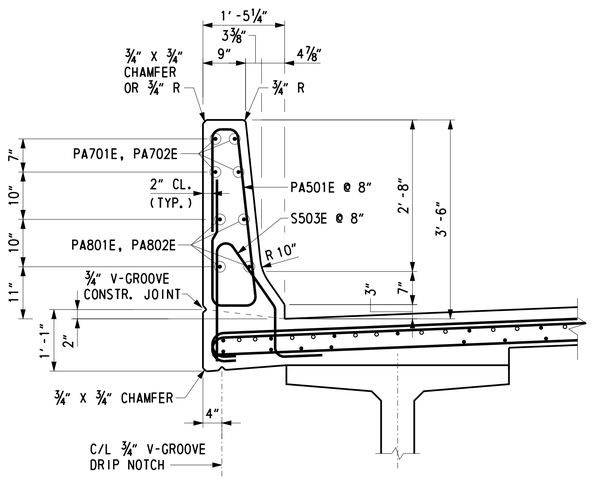

BARRIER REINFORCEMENT SECTION

SCALE: ¾" = 1'-0"

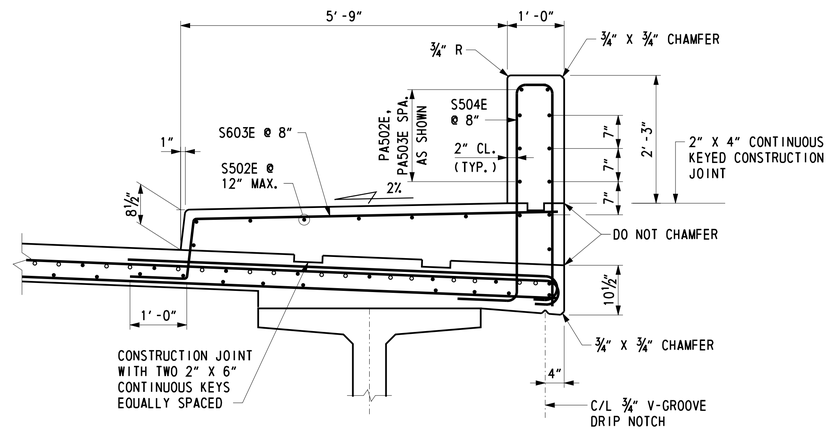

SIDEWALK AND BARRIER REINFORCEMENT SECTION

SCALE: ¾" = 1'-0"

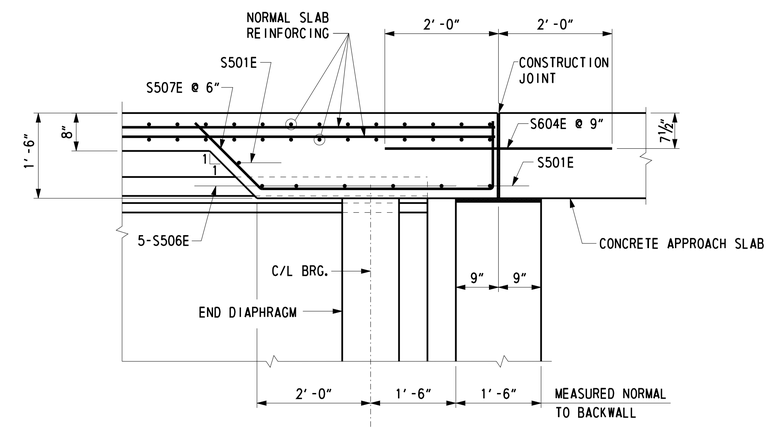

SECTION A-A

SCALE: ¾" = 1'-0"

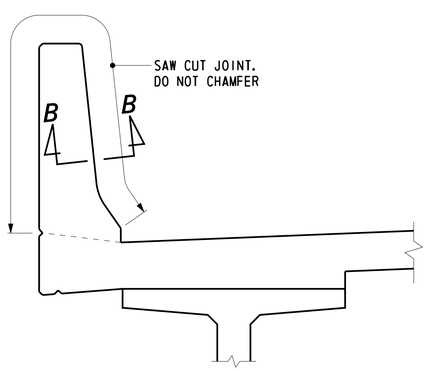

BARRIER CONTROL JOINT DETAIL

SCALE: ¾" = 1'-0"

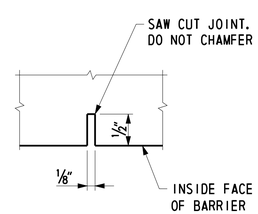

SECTION B-B

NOT TO SCALE

NOTES:

1. TRANSVERSE REINFORCEMENT SHALL BE PLACED PARALLEL TO SKEWED SUPPORTS. BAR SPACING SHOWN IN SECTIONS IS MEASURED NORMAL TO SUPPORTS.
2. LONGITUDINAL SLAB REINFORCEMENT IS SET TO PASS THROUGH TRANSVERSE BARRIER BARS AS SHOWN.
3. ALL LONGITUDINAL BARRIER BARS SHALL BE PLACED CONTINUOUSLY IN BARRIER, LAPPING AS NECESSARY. BARRIER IS PLACED CONTINUOUSLY.
4. FRONT FACE OF BARRIER DIMENSIONED FROM PLUMB LINE.
5. SAW CUT CONTROLS JOINT THE SAME DAY THAT THE FORMS ARE STRIPPED.

CROSS REFERENCE NOTES:

1. FOR PROJECT NOTES, SEE DWG. 1-475 PN-2.
2. FOR DECK REINFORCEMENT PLAN, SEE DWG. 1-475 DK-2.
3. FOR REINFORCING BAR LIST, SEE DWG. 1-475 DK-5.
4. FOR CONTROL JOINT SPACING, SEE DWG. 1-475 PE-1.

REINFORCING BAR LIST

	MARK	LENGTH	NO. BARS	TYPE	A	B	C	D	E	F	G	H	J	K	O	R	REMARKS
BRIDGE DECK	S501E	42′-10″	283	STR.													
	S502E	51′-10″	279	STR.													
	S503E	5′-0½″	227	43	1′-1″	0′-8⅜″	0′-10″	1′-6⅞″	0′-1″		0′-7⅝″	0′-7″	0′-3″	0′-10″			
	S504E	9′-0″	227	S4	0′-10″	3′-9″	0′-8″	3′-9″									
	S505E	44′-0″	279	1	0′-7″	42′-10″					0′-7″		0′-5″				
	S506E	4′-9″	40	STR.													
	S507E	6′-10″	92	16		1′-2″	4′-0″	1′-8″				1′-2″		1′-2″			
	S508E	2′-5″	20	17		1′-2″	1′-3″										
	S601E	8′-4″	556	1	0′-8″	7′-8″							0′-6″				
	S603E	8′-5½″	227	16S		1′-0″	1′-1½″	6′-4″				6′-4″		0′-1½″			
	S604E	4′-0″	112	STR.													
	S701E	44′-9″	68	STR.													
BARRIER	PA501E	7′-6¼″	227	28	2′-9¼″	0′-2 15/16″	0′-1⅝″	0′-2¾″	2′-9½″		0′-3⅛″	0′-5⅛″					
	PA502E	60′-0″	16	STR.													
	PA503E	35′-5″	8	STR.													
	PA701E	60′-0″	8	STR.													
	PA702E	37′-7″	4	STR.													
	PA801E	60′-0″	8	STR.													
	PA802E	39′-9″	4	STR.													

BENDING DIAGRAMS

ALL DIMENSIONS ARE FROM OUT TO OUT.

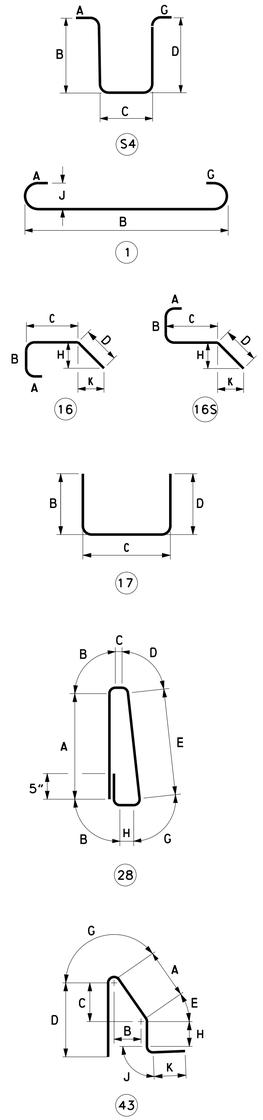

DELAWARE
DEPARTMENT OF TRANSPORTATION

ADDENDUMS / REVISIONS

US 301
LEVELS ROAD
TO SUMMIT BRIDGE ROAD

CONTRACT	BRIDGE NO.	1-475
T200511303	DESIGNED BY: K. D. BEAVER	
COUNTY		
NEW CASTLE	CHECKED BY: J. S. LI	

BUNKER HILL ROAD
OVER US 301 MAINLINE
BRIDGE DECK AND BARRIER
REINFORCING BAR LIST

1-475 DK-5
SHEET NO.
429
TOTAL SHTS.
1256

Steve_Lambert 7/15/2015 U:\Projects\AA\21987385\CAD\Bridge\BR2-4\dk05_BR2-4_US301.dgn

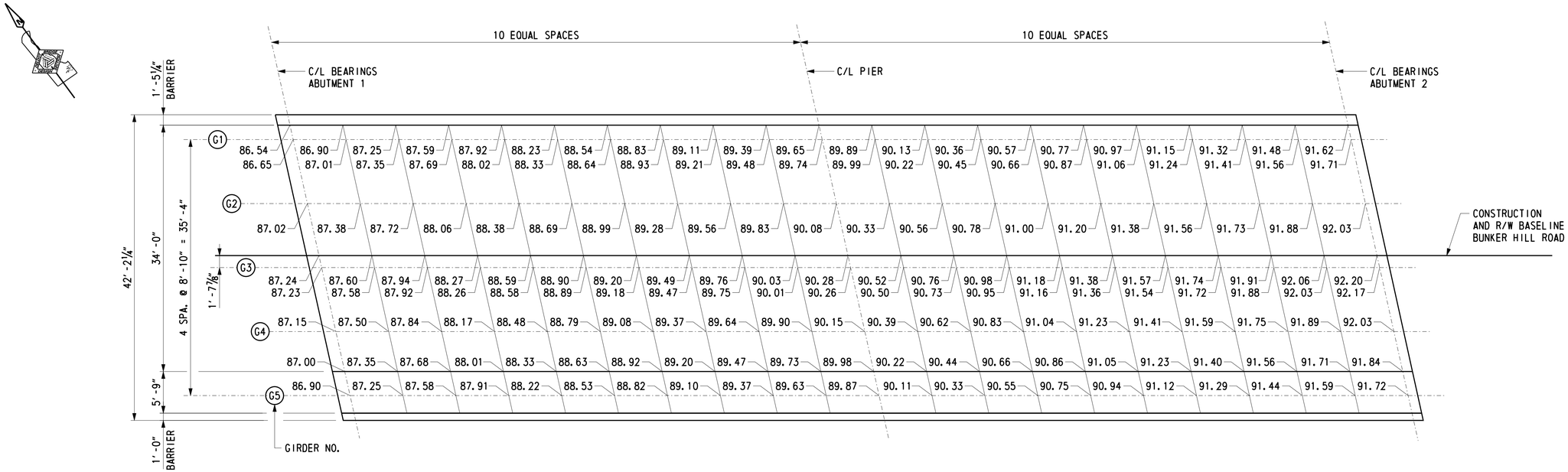

FINISHED DECK ELEVATIONS

SCALE: ⅛" = 1'-0"

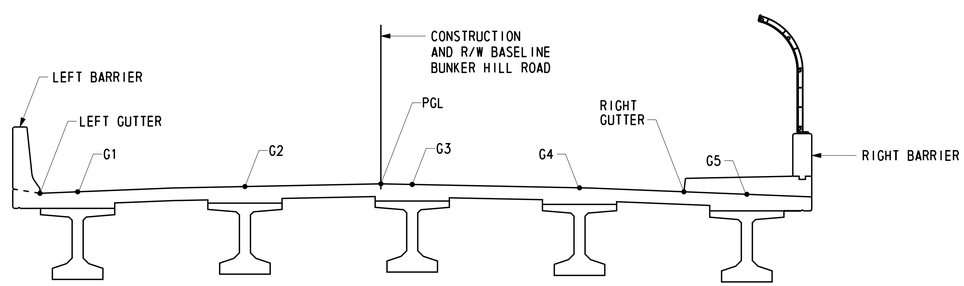

TYPICAL SECTION

(LOOKING STATION AHEAD)
SCALE: ¼" = 1'-0"

NOTE:

THE FINISHED BRIDGE DECK ELEVATIONS SHOWN ARE TO TOP OF CONCRETE DECK.

CROSS REFERENCE NOTES:

1. FOR VERTICAL CURVE DATA, SEE DWG. 1-475 PE-1.
2. FOR GIRDER ELEVATION, SEE DWG. 1-475 BM-1.

DELAWARE DEPARTMENT OF TRANSPORTATION	ADDENDUMS / REVISIONS		US 301 LEVELS ROAD TO SUMMIT BRIDGE ROAD	CONTRACT T200511303	BRIDGE NO. 1-475	BUNKER HILL ROAD OVER US 301 MAINLINE	1-475 FD-1
				COUNTY NEW CASTLE	DESIGNED BY: K. D. BEAVER	FINISHED DECK ELEVATIONS	SHEET NO. 430
					CHECKED BY: J. S. LI		TOTAL SHTS. 1256

Steve_Lambert 7/15/2015 U:\Projects\AA\21387385\CAD\Bridge\BR2-4\fd01_BR2-4_US301.dgn

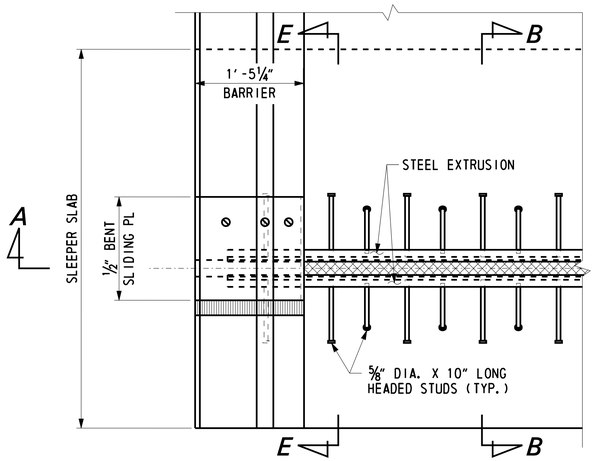

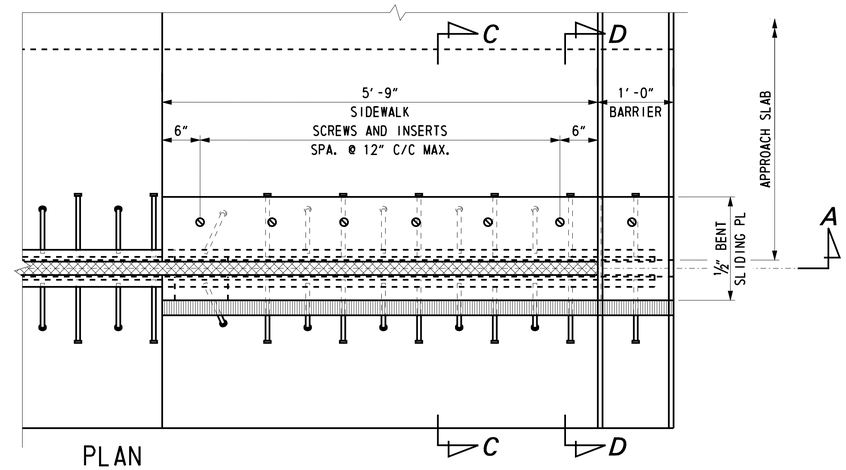

PLAN

(ABUTMENT 1 SHOWN)
SCALE: 1" = 1'-0"

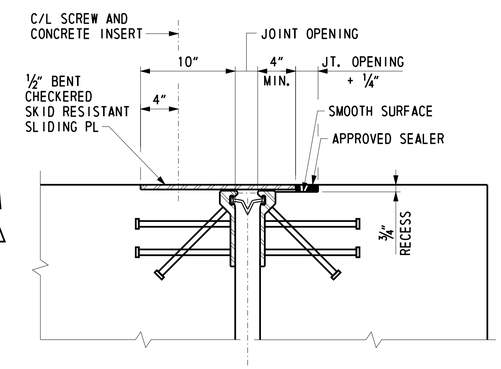

SECTION C-C

SCALE: 1½" = 1'-0"

NOTES:

1. STRUCTURAL STEEL FOR DECK JOINTS SHALL CONFORM TO AASHTO M270, GRADE 36.
2. STEEL EXTRUSIONS FOR DECK JOINTS SHALL CONFORM TO AASHTO M270, GRADE 36.
3. THE NEOPRENE STRIP SEAL SHALL BE PROVIDED CONTINUOUS THROUGHOUT THE LIMITS OF THE DECK. SPLICING OF THE NEOPRENE STRIP SEAL IS NOT PERMITTED.
4. USE FLATHEAD STAINLESS STEEL ASTM F 738M OR F 593 (TYPE 304) FOR COUNTERSUNK SCREWS WITH INSERTS. ALL CONCRETE INSERTS AND M 20 COUNTERSUNK MACHINE SCREWS ARE ¾" DIAMETER UNLESS OTHERWISE NOTED.
5. CONSTRUCT EXPANSION JOINT TO MATCH ROADWAY GRADE AND CROSS SLOPE.
6. GRIND ALL STEEL EDGES EXPOSED TO TRAFFIC OR PEDESTRIANS TO 3/16" MIN. RADIUS.
7. COST FOR MATERIALS, FABRICATION AND INSTALLATION OF STRIP SEAL EXPANSION JOINTS, 3" MOVEMENT CLASSIFICATION, WITH STEEL ELEMENTS INCLUDING STUDS, SLIDING PLATES AND STEEL EXTRUSIONS, SHALL BE PAID FOR UNDER ITEM 605511.

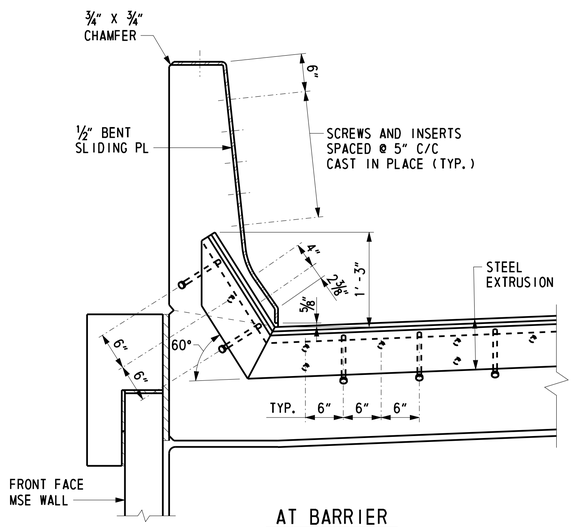

AT BARRIER

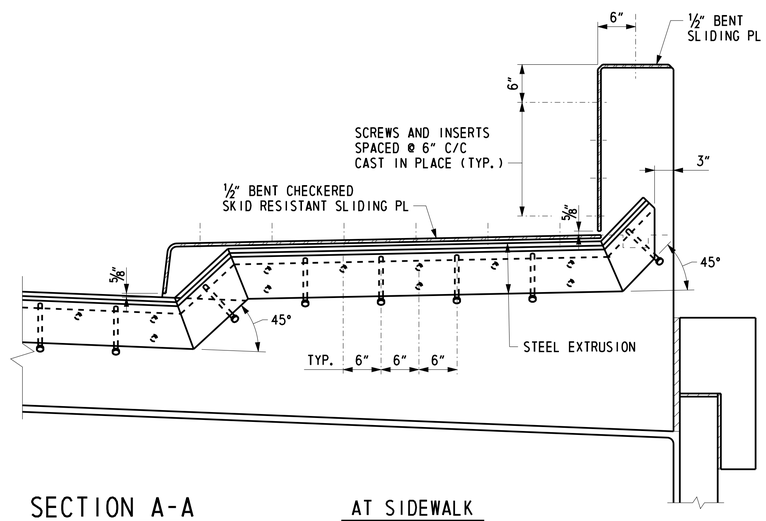

SECTION A-A

SCALE: 1" = 1'-0"

AT SIDEWALK

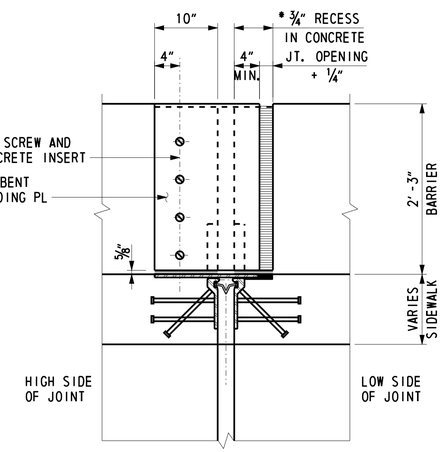

SECTION D-D

SCALE: 1" = 1'-0"

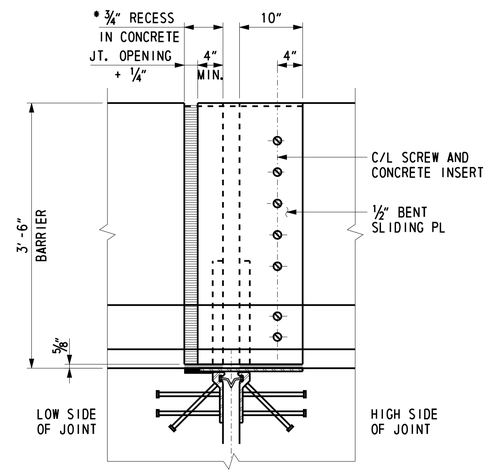

SECTION E-E

SCALE: 1" = 1'-0"

* FORM CONCRETE RECESS AREA IN BARRIER AND GRIND TO PROVIDE SMOOTH SURFACE. APPLY ONE COAT OF ASPHALT CEMENT PAINT TO ALLOW BENT SLIDING PLATE TO MOVE FREELY WITHOUT FRICTION.

JOINT OPENING (INCH)												
LOCATION	TEMPERATURE (°F)											MOVEMENT CLASSIFICATION
	0	10	20	30	40	50	60	68	80	90	100	
ABUTMENT 1	2 9/16	2 1/2	2 1/16	2 3/8	2 1/4	2 3/16	2 1/16	2	1 15/16	1 13/16	1 3/4	3"
ABUTMENT 2	2 9/16	2 1/2	2 1/16	2 3/8	2 1/4	2 3/16	2 1/16	2	1 15/16	1 13/16	1 3/4	3"

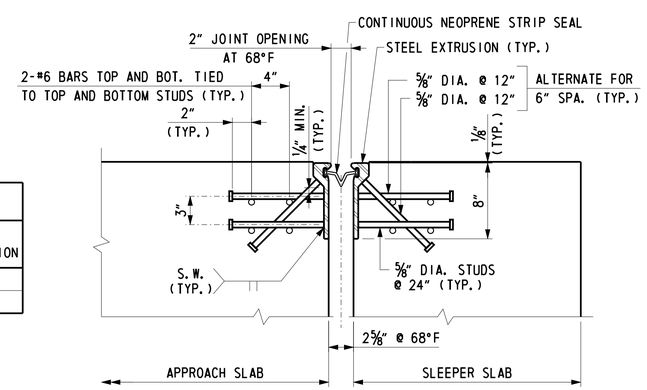

SECTION B-B

SCALE: 1½" = 1'-0"

CROSS REFERENCE NOTES:

1. FOR BRIDGE PLAN AND ELEVATION, SEE DWG. 1-475 PE-1.
2. FOR TYPICAL SECTION, SEE DWG. 1-475 TS-1.
3. FOR APPROACH SLAB PLANS, SEE DWG. 1-475 AS-1.

DELAWARE DEPARTMENT OF TRANSPORTATION

ADDENDUMS / REVISIONS

US 301 LEVELS ROAD TO SUMMIT BRIDGE ROAD

CONTRACT	BRIDGE NO.	1-475
T200511303	DESIGNED BY: R. F. KIRCHNER	
COUNTY		
NEW CASTLE	CHECKED BY: W. A. O'CONNOR	

BUNKER HILL ROAD OVER US 301 MAINLINE

EXPANSION JOINT DETAILS

1-475 EX-1
SHEET NO.
431
TOTAL SHTS.
1256

U:\Projects\AA\21387385\CAD\Bridge\BR2-4\ex01_BR2-4_US301.dgn 7/15/2015 Steve_Lambert

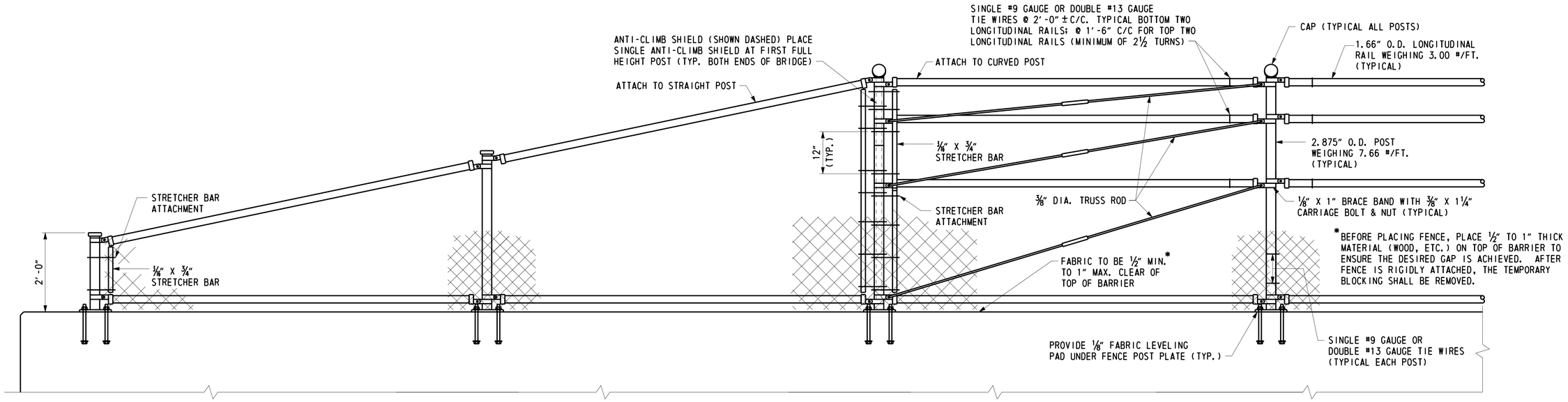

TYPICAL CHAIN LINK SAFETY FENCE ELEVATION

SCALE: ¾" = 1'-0"

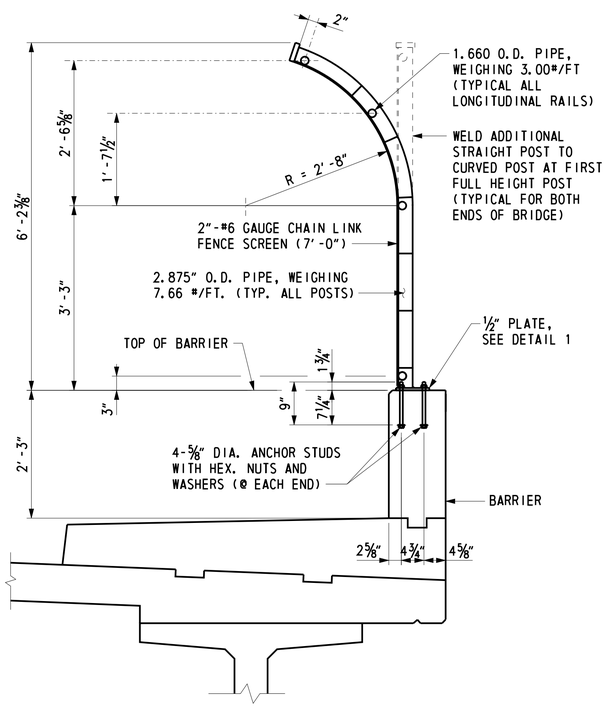

TYPICAL SECTION

SCALE: ¾" = 1'-0"

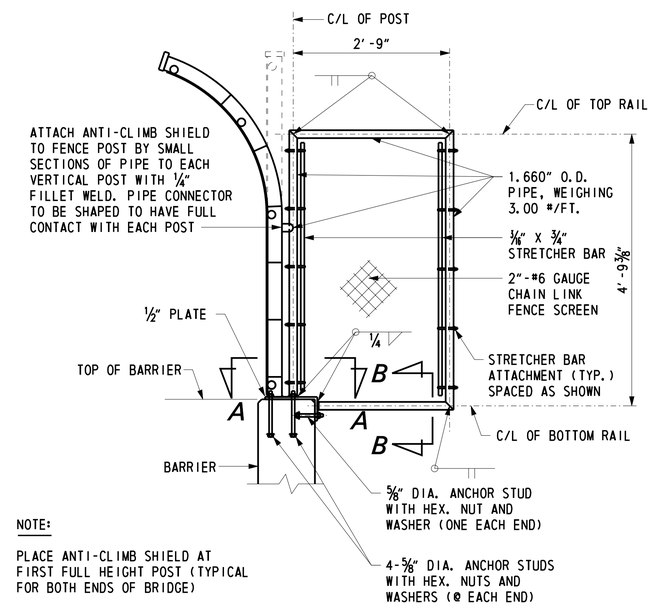

NOTE:

PLACE ANTI-CLIMB SHIELD AT FIRST FULL HEIGHT POST (TYPICAL FOR BOTH ENDS OF BRIDGE)

TYPICAL ANTI-CLIMB SHIELD SECTION

SCALE: ¾" = 1'-0"

NOTES:

1. AS AN OPTION, THE CONTRACTOR MAY SET THE FENCE ANCHOR STUDS IN PREFORMED (SLEEVED OR DRILLED) HOLES USING APPROVED EPOXY GROUT. NUTS AND WASHERS SHALL BE OMITTED FROM EMBEDDED ENDS OF ANCHOR STUDS FOR THIS OPTION. NO ADDITIONAL COMPENSATION WILL BE ALLOWED FOR THIS OPTION.
2. COST OF ANTI-CLIMB SHIELD SHALL BE INCIDENTAL TO ITEM 727004, CHAIN LINK SAFETY FENCE.
3. LOCATION OF FENCE POSTS SHALL NOT COINCIDE WITH CONTROL JOINTS ON THE BARRIERS. FENCE POST AND BARRIER CONTROL JOINT LOCATIONS SHALL ALTERNATE.

CROSS REFERENCE NOTES:

1. FOR FENCE POST AND BARRIER CONTROL JOINT SPACING, SEE DWG. 1-475 PE-01.
2. FOR CHAIN LINK SAFETY FENCE MISCELLANEOUS DETAILS, SEE DWG. 1-475 RA-2.

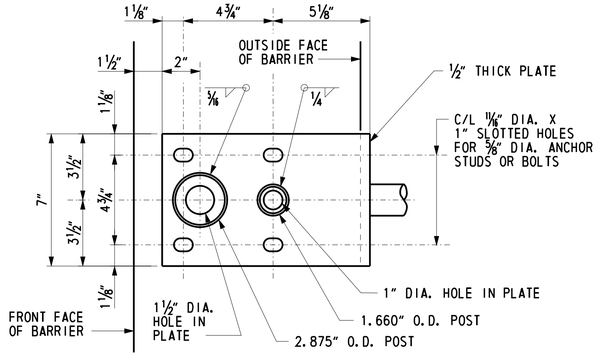

SECTION A-A

SCALE: 3" = 1'-0"

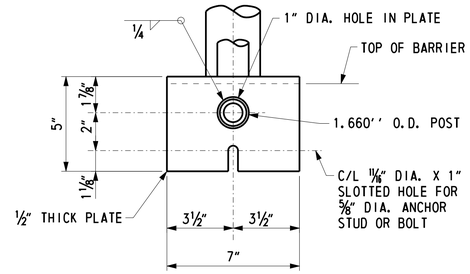

SECTION B-B

SCALE: 3" = 1'-0"

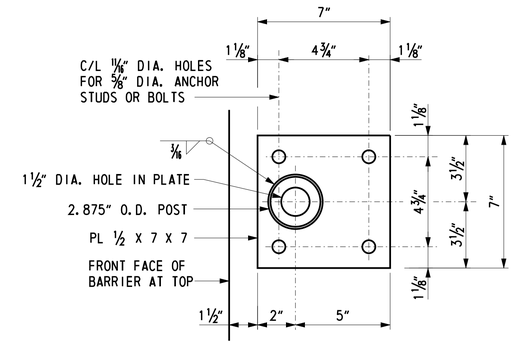

DETAIL 1

SCALE: 3" = 1'-0"

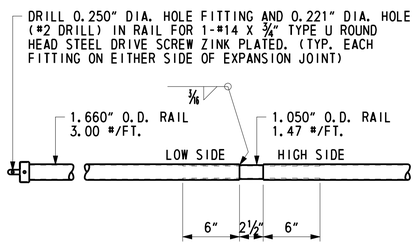

EXPANSION JOINT DETAIL

SCALE: 1 1/2" = 1'-0"

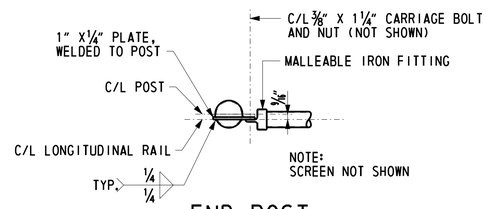

END POST

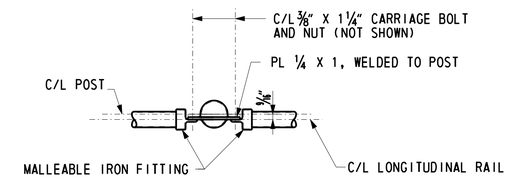

INTERMEDIATE POST

TOP LONGITUDINAL RAIL - POST ATTACHMENT

SCALE: 1 1/2" = 1'-0"

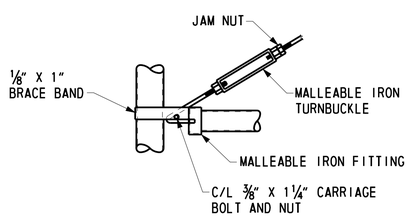

TRUSS ROD ATTACHMENT

SCALE: 1 1/2" = 1'-0"

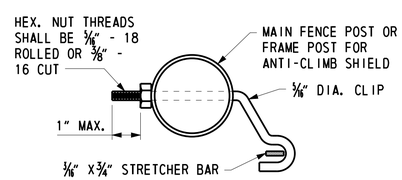

STRETCHER BAR ATTACHMENT

NOT TO SCALE

U:\Projects\AA\21387385\CAD\Bridge\BR2-4\ra02_BR2-4_US301.dgn 7/15/2015 Steve_Lambert

DELAWARE DEPARTMENT OF TRANSPORTATION	ADDENDUMS / REVISIONS		US 301 LEVELS ROAD TO SUMMIT BRIDGE ROAD	CONTRACT T200511303	BRIDGE NO. 1-475	BUNKER HILL ROAD OVER US 301 MAINLINE CHAIN LINK SAFETY FENCE DETAILS 2	1-475 RA-2
				COUNTY NEW CASTLE	DESIGNED BY: R. F. KIRCHNER		SHEET NO. 433
					CHECKED BY: W. A. O'CONNOR		TOTAL SHTS. 1256

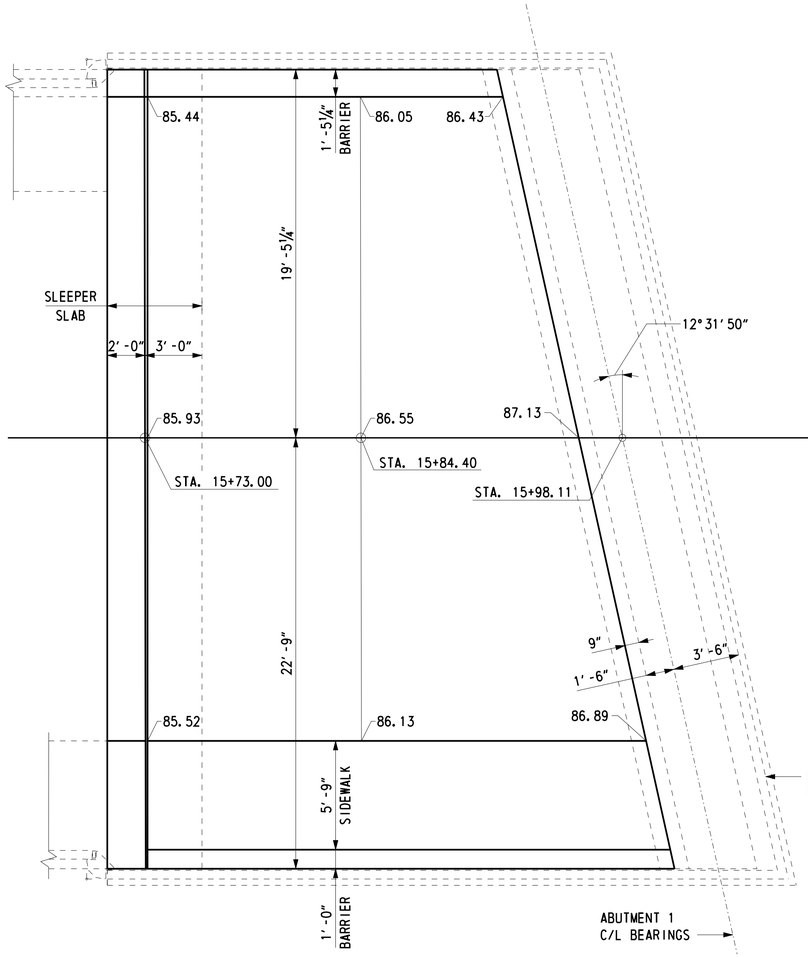

APPROACH SLAB AT ABUTMENT 1 PLAN

SCALE: ¼" = 1'-0"

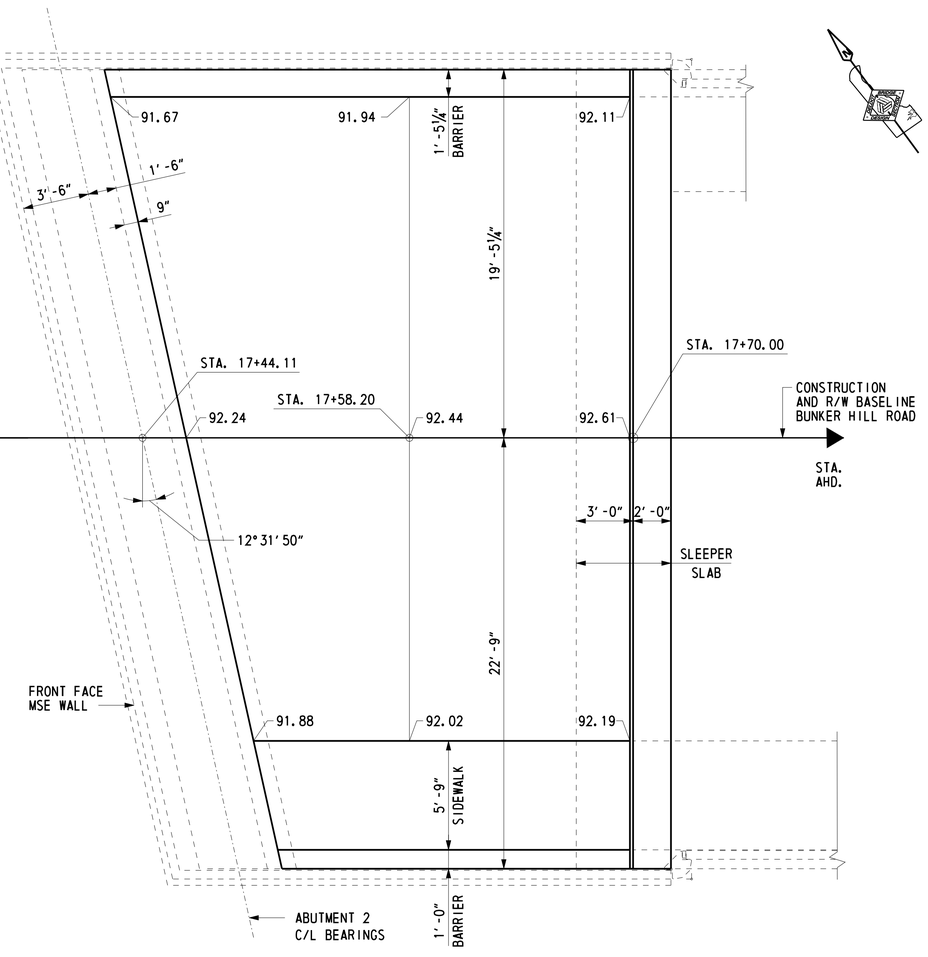

APPROACH SLAB AT ABUTMENT 2 PLAN

SCALE: ¼" = 1'-0"

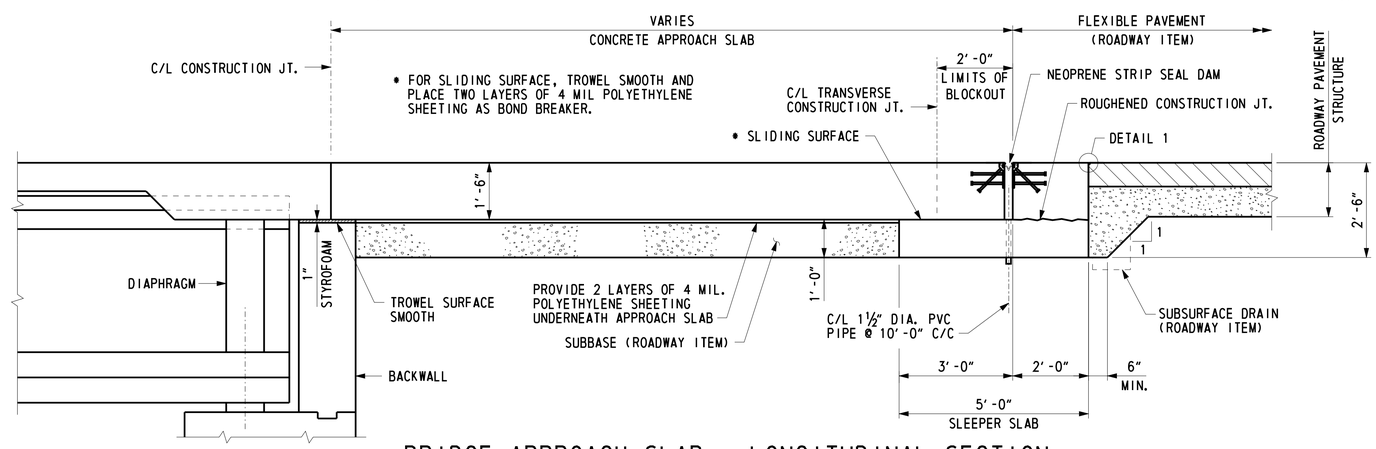

BRIDGE APPROACH SLAB - LONGITUDINAL SECTION

SCALE: ½" = 1'-0"

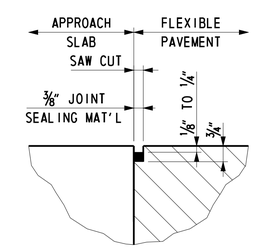

DETAIL 1

SCALE: ½" = 1'-0"

NOTES:

1. PAYMENT FOR POLYETHYLENE SHEETING SHALL BE INCIDENTAL TO ITEM 602014 - PORTLAND CEMENT CONCRETE MASONRY. APPROACH SLAB, CLASS D.
2. FOR ADDITIONAL ROADWAY PAVEMENT JOINT DETAILS, SEE DELDOT STANDARD P-1. PAYMENT FOR ROADWAY JOINTS SHALL BE INCIDENTAL TO ROADWAY PAVEMENT ITEM.

CROSS REFERENCE NOTES:

1. FOR BRIDGE PLAN AND ELEVATION, SEE DWG. 1-475 PE-1.
2. FOR ABUTMENT 1 PLAN AND ELEVATION, SEE DWG. 1-475 AB-2.
3. FOR ABUTMENT 2 PLAN AND ELEVATION, SEE DWG. 1-475 AB-3.
4. FOR MSE WALL PLAN AND ELEVATION, SEE DWG. 1-475 WW-1 & 1-475 WW-2.
5. FOR APPROACH SLAB REINFORCING, SEE DWG. 1-475 AS-2 TO 1-475 AS-4.

DELAWARE DEPARTMENT OF TRANSPORTATION	ADDENDUMS / REVISIONS	US 301 LEVELS ROAD TO SUMMIT BRIDGE ROAD	CONTRACT T200511303	BRIDGE NO. 1-475	BUNKER HILL ROAD OVER US 301 MAINLINE	1-475 AS-1 SHEET NO. 434
			COUNTY NEW CASTLE	DESIGNED BY: R. F. KIRCHNER		TOTAL SHTS. 1256
				CHECKED BY: J. S. LI	APPROACH SLAB PLANS	

Steve_Lambert 7/24/2015 U:\Projects\AA\21387385\CAD\Bridge\BR2-4\as01_BR2-4_US301.dgn

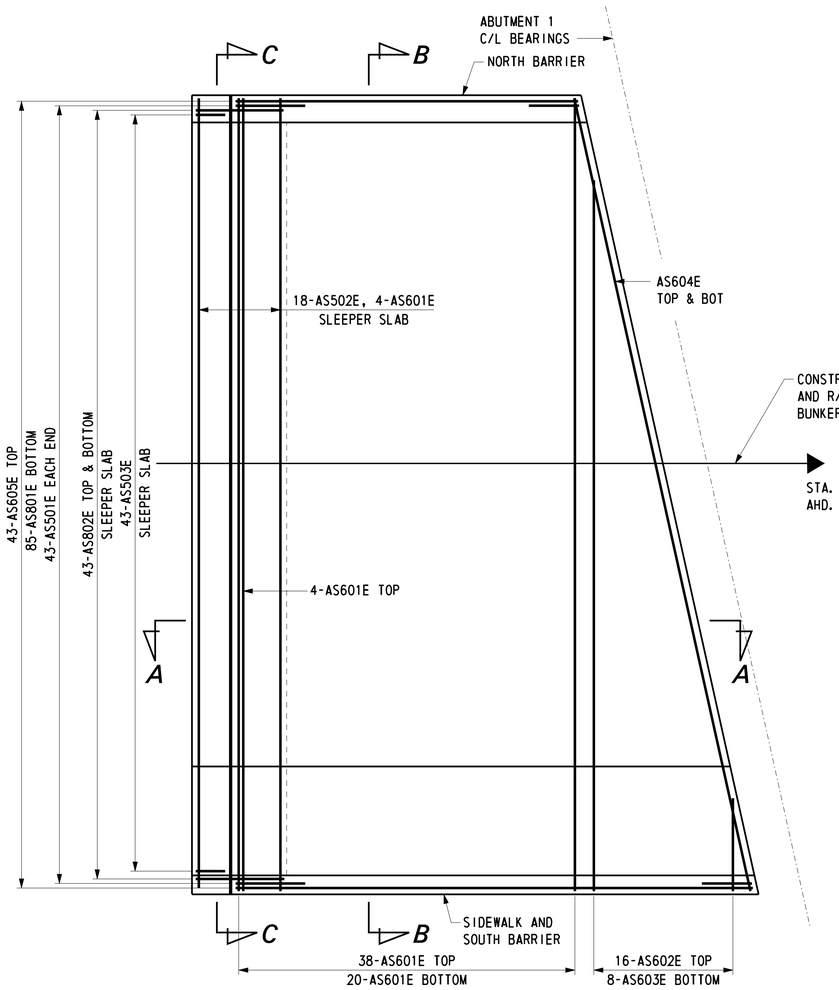

APPROACH SLAB AT ABUTMENT 1 PLAN

SCALE: 1/4" = 1'-0"

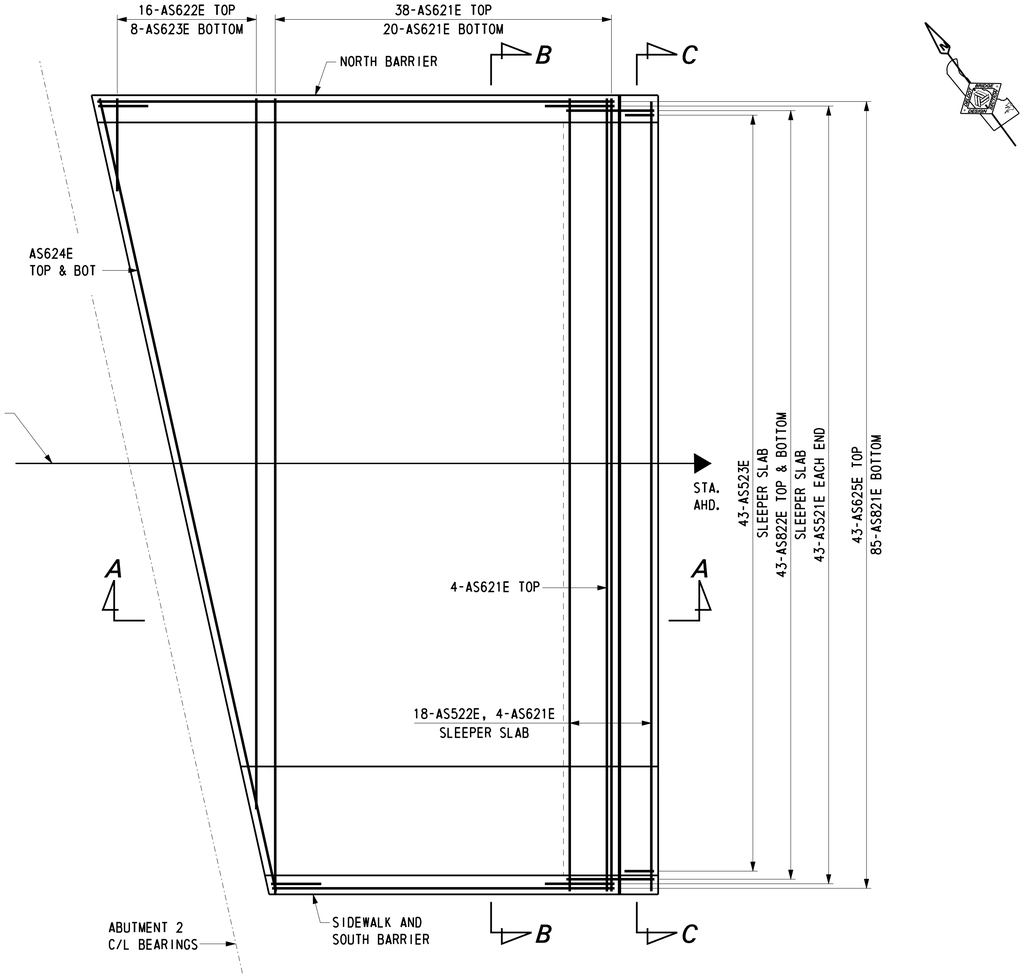

APPROACH SLAB AT ABUTMENT 2 PLAN

SCALE: 1/4" = 1'-0"

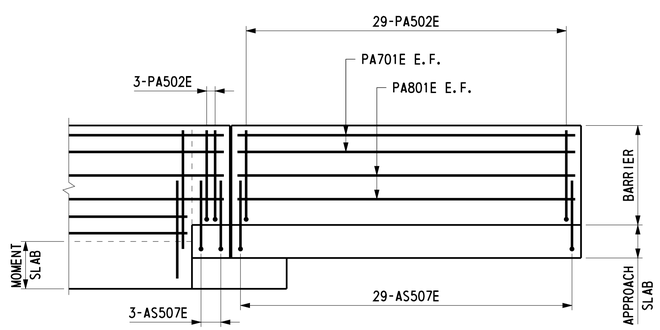

ELEVATION - DECK AND NORTH BARRIER REINFORCEMENT

NOT TO SCALE

NOTE:

NORMAL BARRIER ON MOMENT
SLAB REINFORCEMENT NOT SHOWN.

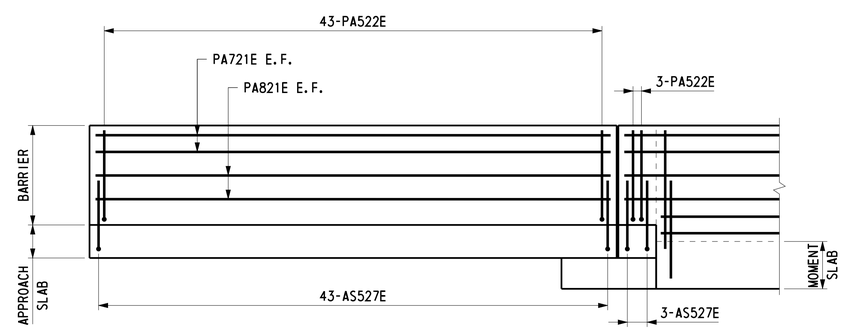

ELEVATION - DECK AND NORTH BARRIER REINFORCEMENT

NOT TO SCALE

CROSS REFERENCE NOTES:

1. FOR BRIDGE PLAN AND ELEVATION, SEE DWG. 1-475 PE-1.
2. FOR ABUTMENT 1 PLAN AND ELEVATION, SEE DWG. 1-475 AB-2.
3. FOR ABUTMENT 2 PLAN AND ELEVATION, SEE DWG. 1-475 AB-3.
4. FOR APPROACH SLAB PLANS, SEE DWG. 1-475 AS-1.
5. FOR SECTIONS A-A TO C-C, SEE DWG. 1-475 AS-4.
6. FOR REINFORCING BAR LIST, SEE DWG. 1-475 AS-5.
7. FOR SLAB DOWELS, SEE DWG. 1-475 DK-2.

DELAWARE DEPARTMENT OF TRANSPORTATION	ADDENDUMS / REVISIONS		US 301 LEVELS ROAD TO SUMMIT BRIDGE ROAD	CONTRACT T200511303	BRIDGE NO. 1-475	BUNKER HILL ROAD OVER US 301 MAINLINE APPROACH SLAB REINFORCEMENT 1	1-475 AS-2
				COUNTY NEW CASTLE	DESIGNED BY: K. D. BEAVER		SHEET NO. 435
					CHECKED BY: J. S. LI		TOTAL SHTS. 1256

Steve_Lambert 7/15/2015 U:\Projects\AA\21387385\CAD\Bridge\BR2-4\as02_BR2-4_US301.dgn

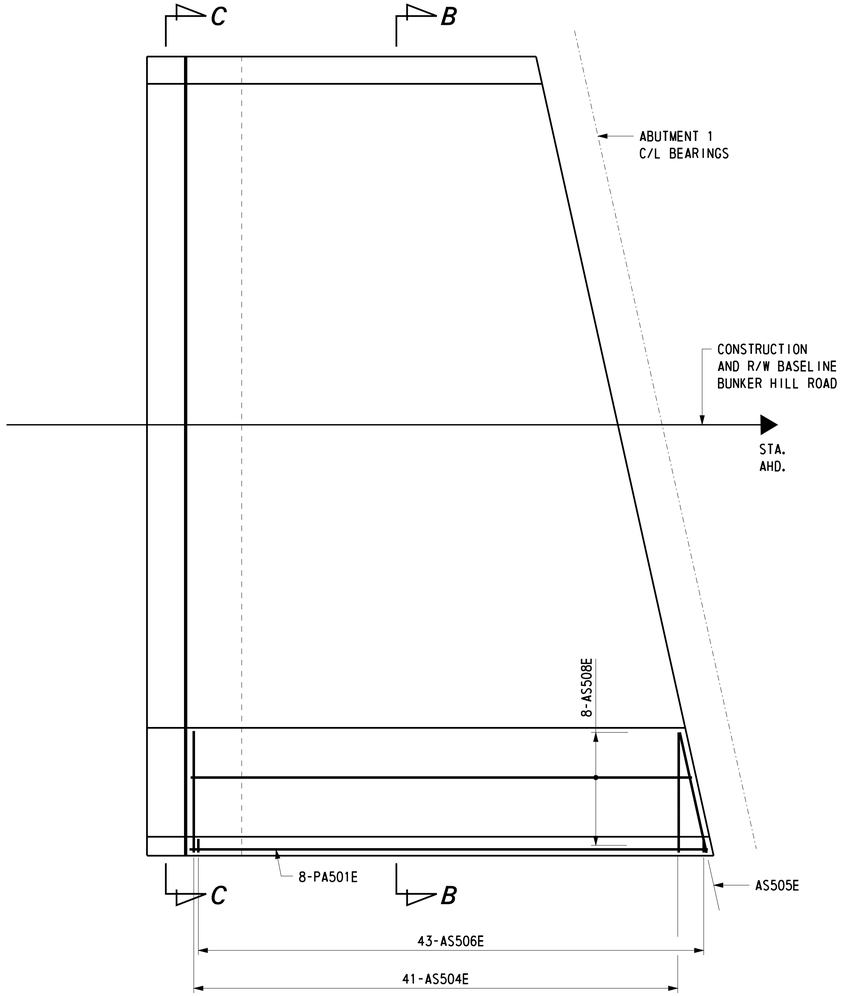

BARRIER AND SIDEWALK ON APPROACH SLAB AT ABUTMENT 1 PLAN

SCALE: 1/4" = 1'-0"

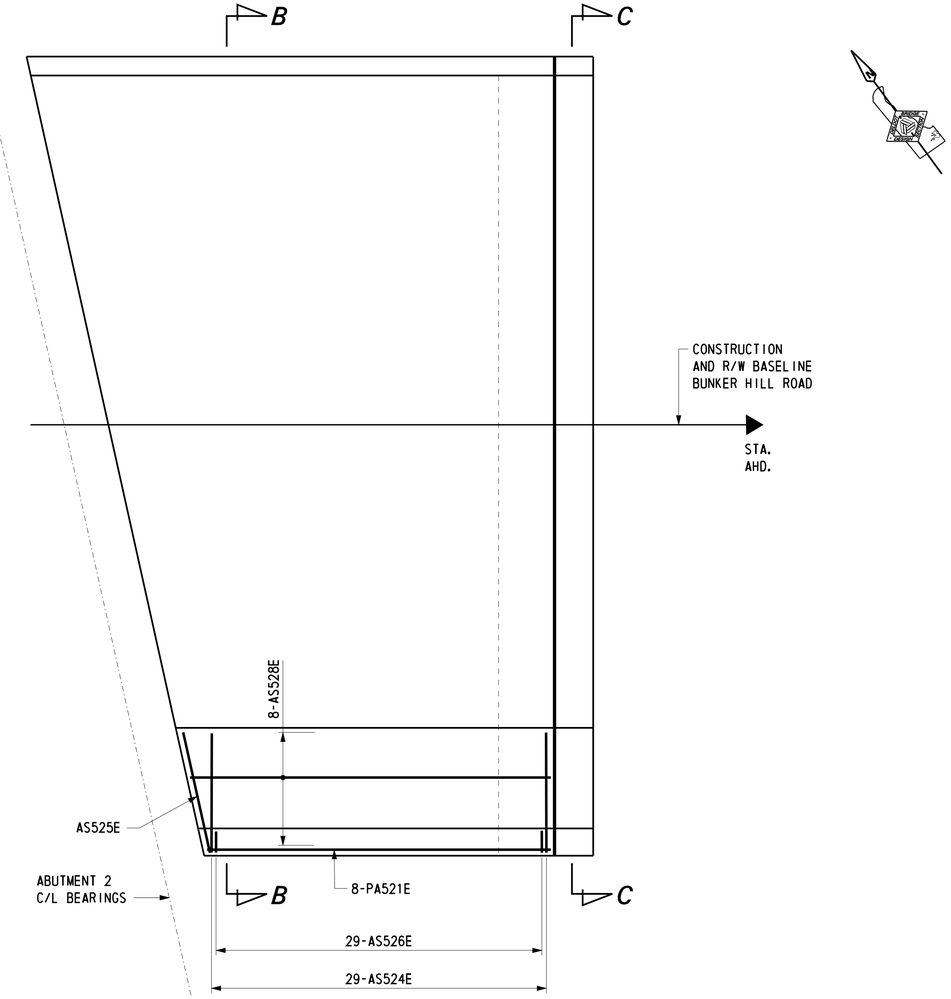

BARRIER AND SIDEWALK ON APPROACH SLAB AT ABUTMENT 2 PLAN

SCALE: 1/4" = 1'-0"

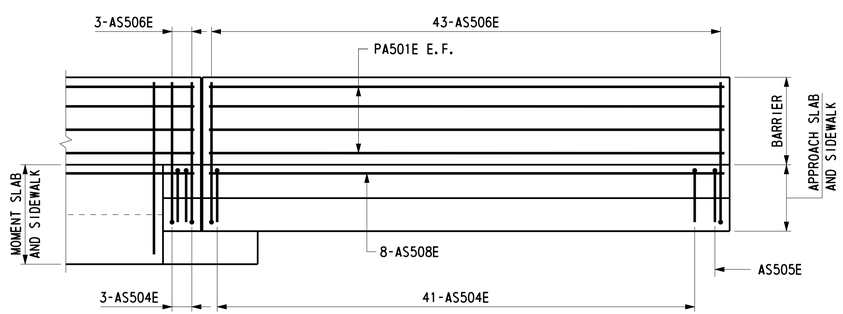

ELEVATION - DECK, SIDEWALK AND SOUTH BARRIER REINFORCEMENT

NOT TO SCALE

NOTE:

NORMAL BARRIER ON MOMENT SLAB REINFORCEMENT NOT SHOWN.

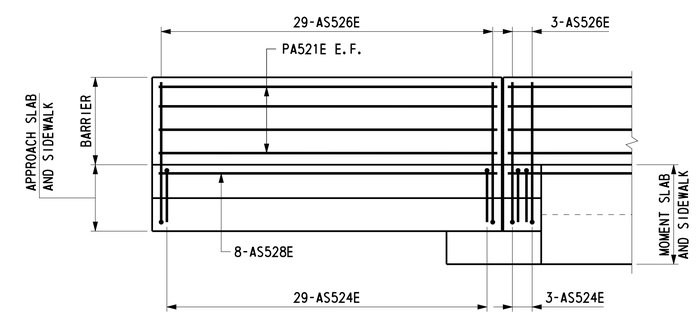

ELEVATION - DECK, SIDEWALK AND SOUTH BARRIER REINFORCEMENT

NOT TO SCALE

CROSS REFERENCE NOTES:

1. FOR BRIDGE PLAN AND ELEVATION, SEE DWG. 1-475 PE-1.
2. FOR ABUTMENT 1 PLAN AND ELEVATION, SEE DWG. 1-475 AB-2.
3. FOR ABUTMENT 2 PLAN AND ELEVATION, SEE DWG. 1-475 AB-3.
4. FOR APPROACH SLAB PLAN, SEE DWG. 1-475 AS-1.
5. FOR SECTION B-B AND C-C, SEE DWG. 1-475 AS-4.
6. FOR REINFORCING BAR LIST, SEE DWG. 1-475 AS-5.

DELAWARE DEPARTMENT OF TRANSPORTATION	ADDENDUMS / REVISIONS		US 301 LEVELS ROAD TO SUMMIT BRIDGE ROAD	CONTRACT T200511303	BRIDGE NO. 1-475	BUNKER HILL ROAD OVER US 301 MAINLINE APPROACH SLAB REINFORCEMENT 2	1-475 AS-3
				COUNTY NEW CASTLE	DESIGNED BY: K. D. BEAVER		SHEET NO. 436
					CHECKED BY: J. S. LI		TOTAL SHTS. 1256

U:\Projects\AA\2387385\CAD\Bridge\BR2-4\as03_BR2-4_US301.dgn 7/15/2015 Steve_Lambert

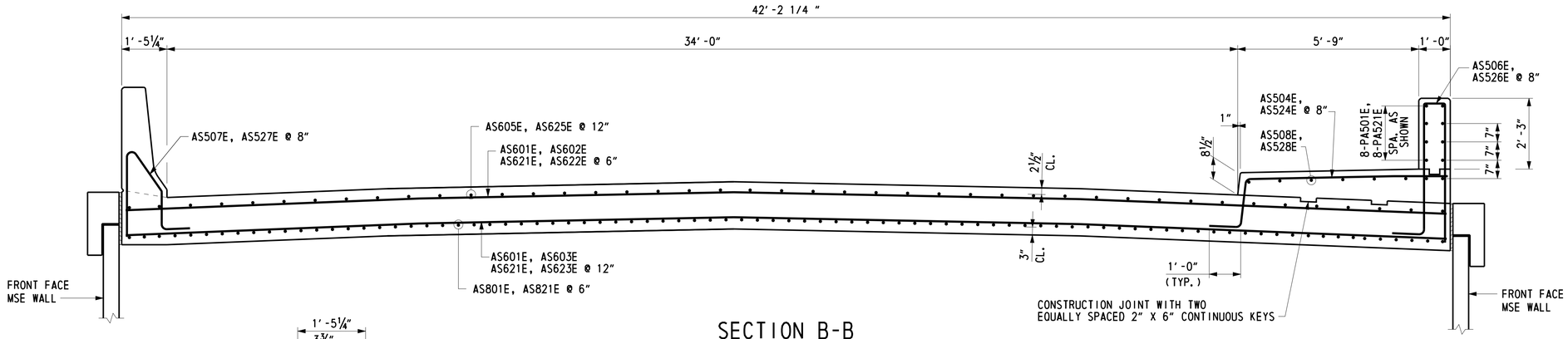

SECTION B-B

SCALE: ½" = 1'-0"

CROSS REFERENCE NOTES:

1. FOR BRIDGE PLAN AND ELEVATION, SEE DWG. 1-475 PE-1.
2. FOR APPROACH SLAB REINFORCEMENT PLANS, SEE DWG. 1-475 AS-2 & 1-475 AS-3.
3. FOR REINFORCING BAR LIST, SEE DWG. 1-475 AS-5.

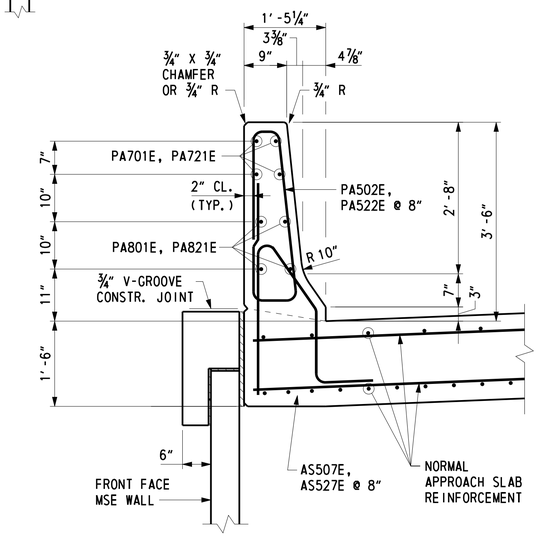

TYPICAL BARRIER REINFORCEMENT SECTION

SCALE: ¾" = 1'-0"

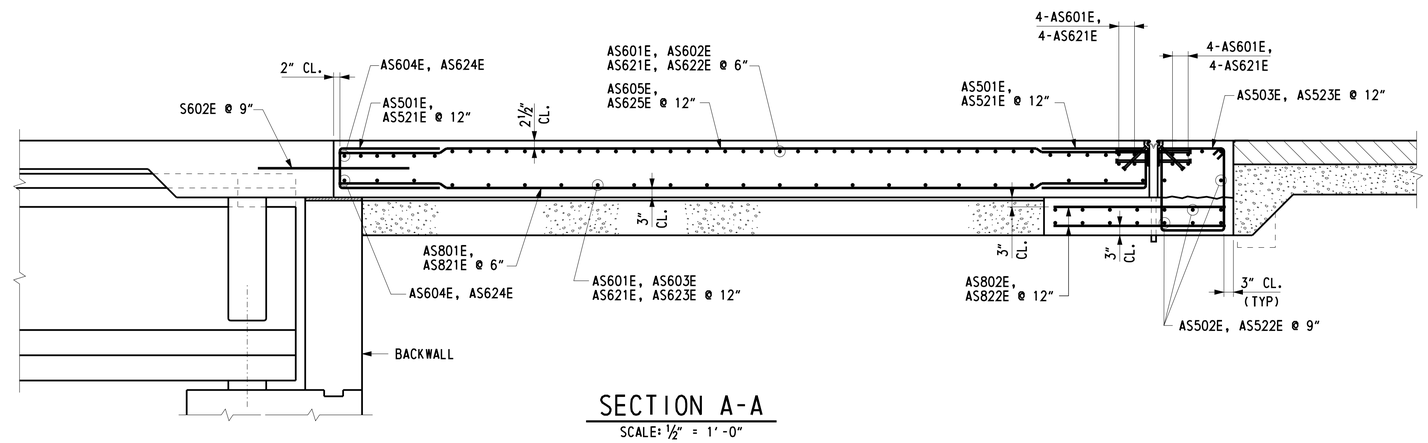

SECTION A-A

SCALE: ½" = 1'-0"

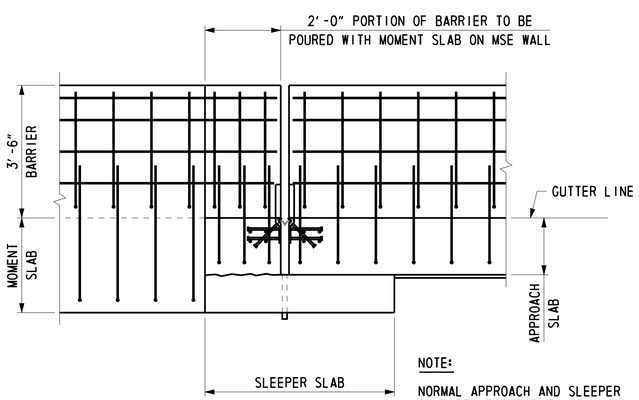

NOTE:

NORMAL APPROACH AND SLEEPER SLAB REINFORCEMENT NOT SHOWN. SECTION SHOWN FOR ABUTMENT 1. ORIENTATION IS OPPOSITE HAND FOR ABUTMENT 2.

SECTION D-D

SCALE: ½" = 1'-0"

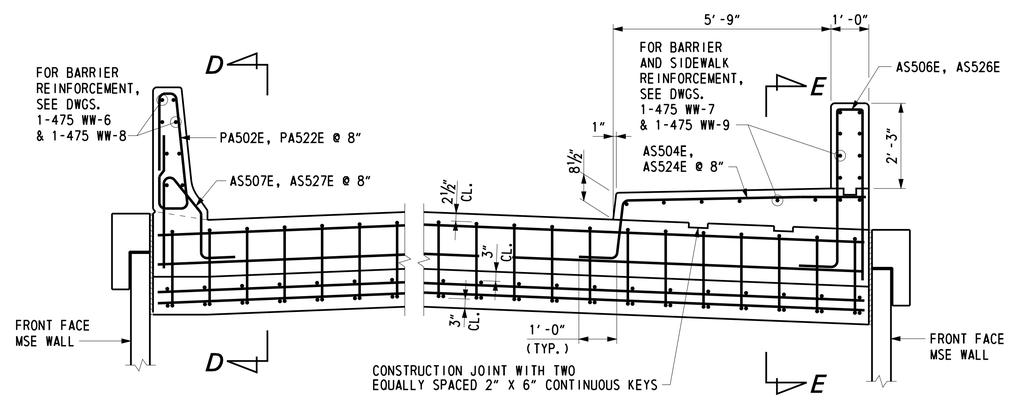

SECTION C-C

SCALE: ½" = 1'-0"

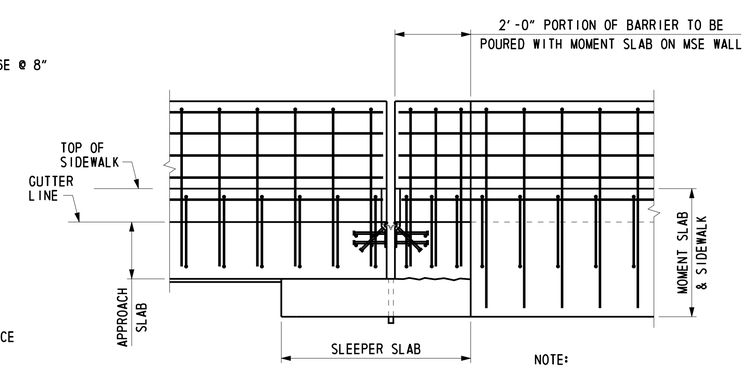

NOTE:

NORMAL APPROACH AND SLEEPER SLAB REINFORCEMENT NOT SHOWN. SECTION SHOWN FOR ABUTMENT 1. ORIENTATION IS OPPOSITE HAND FOR ABUTMENT 2.

SECTION E-E

SCALE: ½" = 1'-0"

U:\Projects\AA\21987385\CAD\Bridge\BR2-4\as04_BR2-4_US301.dgn

7/15/2015

Steve_Lambert

DELAWARE DEPARTMENT OF TRANSPORTATION	ADDENDUMS / REVISIONS	US 301 LEVELS ROAD TO SUMMIT BRIDGE ROAD	CONTRACT T200511303	BRIDGE NO. 1-475	BUNKER HILL ROAD OVER US 301 MAINLINE APPROACH SLABS REINFORCEMENT 3	1-475 AS-4
			COUNTY NEW CASTLE	DESIGNED BY: K. D. BEAVER		SHEET NO. 437
				CHECKED BY: J. S. Li		TOTAL SHTS. 1256

REINFORCING BAR LIST

APPROACH AND SLEEPER SLAB AT ABUTMENT 1

MARK	LENGTH	NO. BARS	TYPE	A	B	C	D	E	F	G	H	J	K	R	REMARKS
AS501E	6'-2½"	86	17		2'-7"	1'-0½"	2'-7"								
AS502E	41'-10"	18	STR												
AS503E	8'-1"	43	T1	0'-6"	1'-6"	2'-0½"	1'-6"	2'-0½"		0'-6"					
AS504E	9'-1½"	44	19S		1'-0"	1'-8½"	6'-5"				6'-5"		0'-1½"		
AS505E	9'-3½"	1	19S		1'-0"	1'-8½"	6'-7"				6'-7"		0'-1½"		
AS506E	10'-3"	46	S4	0'-10"	4'-4½"	0'-8"	4'-4½"								
AS507E	5'-0½"	32	43	1'-1"	0'-8⅜"	0'-10"	2'-1⅞"	0'-1"		0'-7⅝"	1'-2"	0'-3"	0'-10"		
AS508E	25'-10½" TO 27'-3"	8	STR												Δ = 2⅜"
AS601E	41'-10"	66	STR												
AS602E	6'-1" TO 39'-10"	16	STR												Δ = 2'-3"
AS603E	6'-1" TO 37'-7"	8	STR												Δ = 4'-6"
AS604E	42'-10"	2	STR												
AS605E	18'-0" TO 27'-3"	43	STR												Δ = 2⅝" ±
AS801E	18'-0" TO 27'-3"	85	STR												Δ = 1 5/16" ±
AS802E	4'-6"	86	STR												
PA501E	27'-2"	8	STR												
PA502E	7'-6¼"	32	28	2'-9¼"	0'-2 15/16"	0'-1⅝"	0'-2¾"	2'-9½"		0'-3⅛"	0'-5⅛"				
PA701E	18'-0"	4	STR												
PA801E	18'-0"	4	STR												

APPROACH AND SLEEPER SLAB AT ABUTMENT 2

MARK	LENGTH	NO. BARS	TYPE	A	B	C	D	E	F	G	H	J	K	R	REMARKS
AS521E	6'-2½"	86	17		2'-7"	1'-0½"	2'-7"								
AS522E	41'-10"	18	STR												
AS523E	8'-1"	43	T1	0'-6"	1'-6"	2'-0½"	1'-6"	2'-0½"		0'-6"					
AS524E	9'-1½"	32	19S		1'-0"	1'-8½"	6'-5"				6'-5"		0'-1½"		
AS525E	9'-3½"	1	19S		1'-0"	1'-8½"	6'-7"				6'-7"		0'-1½"		
AS526E	10'-3"	32	S4	0'-10"	4'-4½"	0'-8"	4'-4½"								
AS527E	5'-0½"	46	43	1'-1"	0'-8⅜"	0'-10"	2'-1⅞"	0'-1"		0'-7⅝"	1'-2"	0'-3"	0'-10"		
AS528E	18'-0" TO 19'-5"	8	STR												Δ = 2⅜"
AS621E	41'-10"	66	STR												
AS622E	6'-1" TO 39'-10"	16	STR												Δ = 2'-3"
AS623E	6'-1" TO 37'-7"	8	STR												Δ = 4'-6"
AS624E	42'-10"	2	STR												
AS625E	18'-0" TO 27'-3"	43	STR												Δ = 2⅝" ±
AS821E	18'-0" TO 27'-3"	85	STR												Δ = 1 5/16" ±
AS822E	4'-6"	86	STR												
PA521E	18'-0"	8	STR												
PA522E	7'-6¼"	46	28	2'-9¼"	0'-2 15/16"	0'-1⅝"	0'-2¾"	2'-9½"		0'-3⅛"	0'-5⅛"				
PA721E	27'-1"	4	STR												
PA821E	27'-1"	4	STR												

BENDING DIAGRAMS

ALL DIMENSIONS ARE FROM OUT TO OUT.

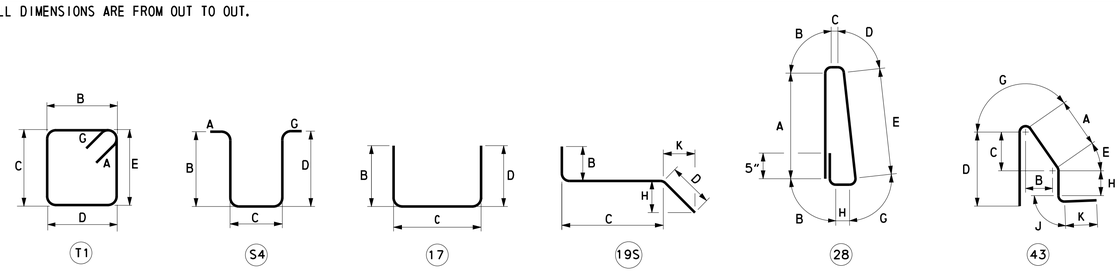

DELAWARE DEPARTMENT OF TRANSPORTATION

ADDENDUMS / REVISIONS

US 301
LEVELS ROAD
TO SUMMIT BRIDGE ROAD

CONTRACT	BRIDGE NO.	1-475
T200511303	DESIGNED BY: K. D. BEAVER	
COUNTY		
NEW CASTLE	CHECKED BY: J. S. Li	

BUNKER HILL ROAD
OVER US 301 MAINLINE
APPROACH SLABS
REINFORCING BAR LIST

1-475 AS-5
SHEET NO.
438
TOTAL SHTS.
1256

U:\Projects\AA\21387385\CAD\Bridge\BR2-4\as05_BR2-4_US301.dgn
7/15/2015
Steve_Lambert

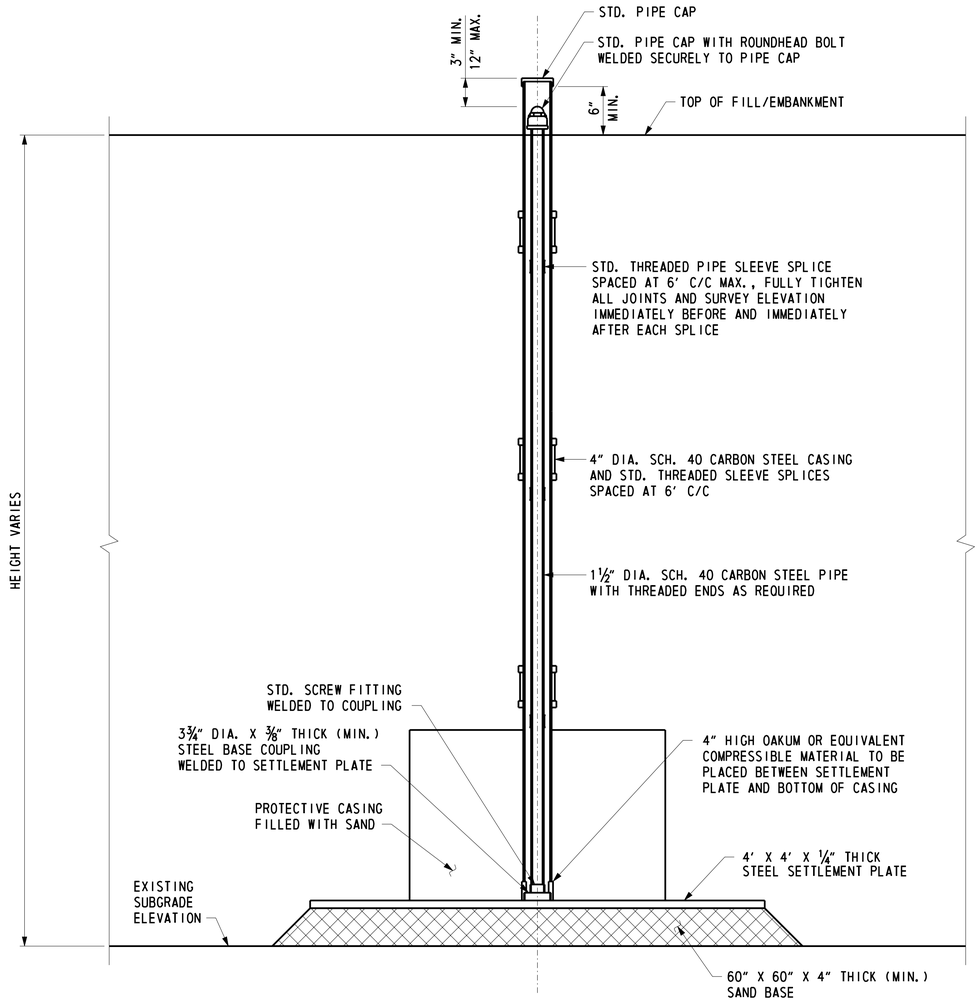

SETTLEMENT PLATFORM

NOT TO SCALE

SETTLEMENT PLATFORM	STATION	OFFSET	SETTLEMENT MONUMENT	STATION	OFFSET
SP-1-475-1	15+86.00	4.00' RT	SM-1-475-1	15+86.00	1.00' LT
SP-1-475-2	17+57.00	4.00' RT	SM-1-475-2	17+57.00	1.00' LT

SETTLEMENT NOTE

READINGS ON THE SETTLEMENT PLATFORMS SHALL BE MADE AFTER THE INITIAL INSTALLATION OF THE RISER AND CASING PIPES AND INSTALLATION RECORD SHEETS ARE APPROVED BY THE ENGINEER AND PRIOR TO FILL PLACEMENT. DURING FILL PLACEMENT, READINGS ON ALL SETTLEMENT PLATFORMS SHALL BE TAKEN AT A MINIMUM OF 3 CALENDAR DAY INTERVALS. AFTER COMPLETION OF THE FILL, INSTALL SETTLEMENT MONUMENTS AS INDICATED ON THE BRIDGE PLANS AND TAKE INITIAL READINGS. READINGS ON ALL SETTLEMENT MONITORING DEVICES SHALL THEN BE TAKEN AT A MINIMUM OF THREE (3) CALENDAR DAY INTERVALS. AFTER THE FILL HAS BEEN COMPLETED AND TWO (2) SUCCESSIVE READINGS OF EACH DEVICE HAVE BEEN RECORDED LESS THAN OR EQUAL TO 0.1", THE IMMEDIATE SETTLEMENT WILL BE DEEMED COMPLETE AND THE GEOTECHNICAL ENGINEER CAN RELEASE THE SUBSTRUCTURE FOR INSTALLATION OF PRODUCTION PILES SO LONG AS THE MINIMUM THIRTY (30) DAY QUARANTINE PERIOD HAS BEEN MET. AFTER COMPLETION OF THE MSE WALL PANEL PLACEMENT, THE CONTRACTOR SHALL ESTABLISH REFERENCE POINTS TO MONITOR SETTLEMENT ON TOP OF THE MSE WALL PANELS OR ON TOP OF THE MSE WALL LEVELING PAD AT POINTS WITHIN FIVE FEET OF ALL ENDS AND CORNERS AND AT THE CENTER OF BRIDGES AND THE CENTERLINE OF US 301. AFTER THE SUBSTRUCTURE HAS BEEN RELEASED, READINGS ON ALL SETTLEMENT MONITORING DEVICES AND REFERENCE POINTS SHALL CONTINUE TO BE TAKEN AT A MINIMUM OF 30-DAY INTERVALS FOR THE NEXT SIX (6) MONTHS OR AS DIRECTED BY THE ENGINEER.

NOTES:

1. THE BASE OF THE SETTLEMENT PLATFORM SHALL BE PLACED ON THE TOP OF EXISTING GROUND.
2. COST FOR MATERIALS, FABRICATION, INSTALLATION AND MONITORING SHALL BE PAID UNDER THE RESPECTIVE SPECIAL PROVISION ITEM (SETTLEMENT PLATFORM OR SETTLEMENT MONUMENT).

CROSS REFERENCE NOTE:

FOR LOCATION OF SETTLEMENT PLATFORMS AND MONUMENTS, SEE DWG. 1-475 PE-1.

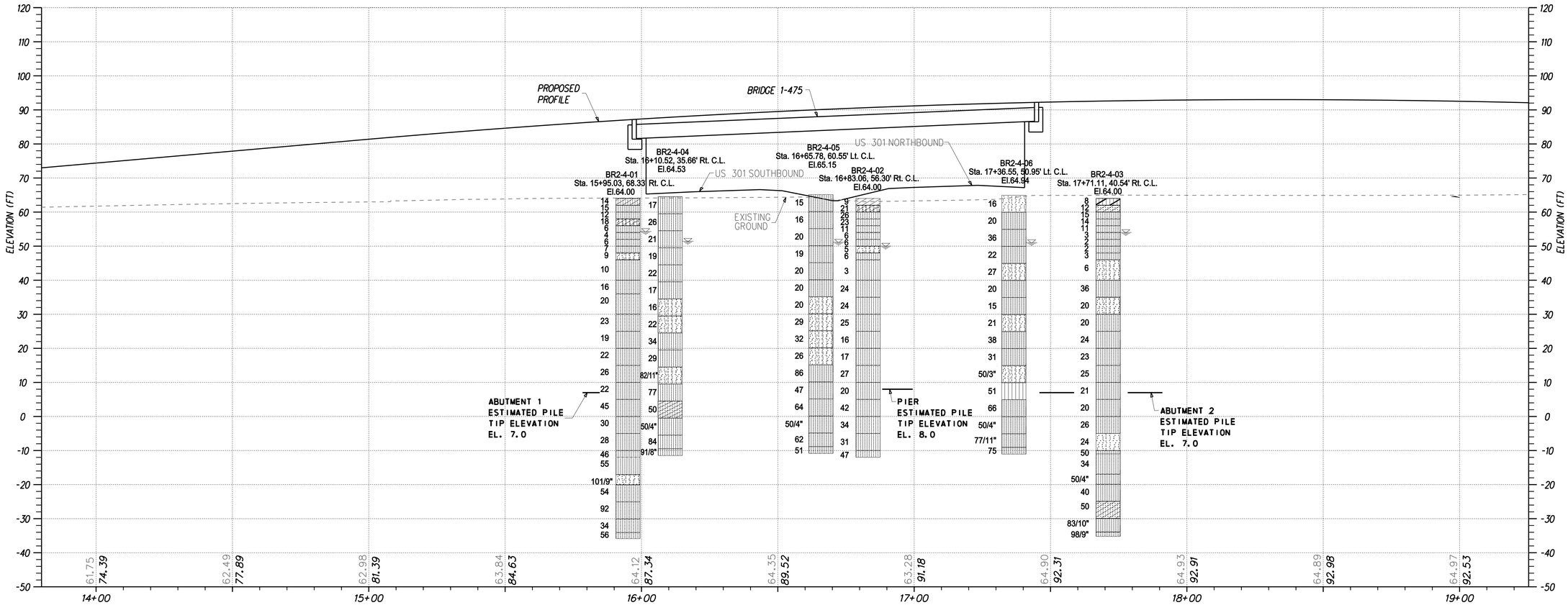

KEY TO SYMBOLS

SYMBOL	DESCRIPTION	SYMBOL	DESCRIPTION
STRATA SYMBOLS			
	CLAYEY SAND		LOW PLASTICITY CLAY
	SILTY SAND		SILTY LOW PLASTICITY CLAY
	POORLY GRADED CLAYEY SILTY SAND		POORLY GRADED SAND
	POORLY GRADED SAND WITH SILT	**MISC. SYMBOLS**	
	SILT		WATER TABLE DURING DRILLING

VERTICAL SCALE FEET 48 32 16 0

1-475 BO-1

DELAWARE DEPARTMENT OF TRANSPORTATION

ADDENDUMS / REVISIONS

HORIZONTAL SCALE 0 20 40 60 FEET

US 301 LEVELS ROAD TO SUMMIT BRIDGE ROAD

CONTRACT	BRIDGE NO.	1-475
T200511303	DESIGNED BY: ZH	
COUNTY		
NEW CASTLE	CHECKED BY: RDB	

BUNKER HILL ROAD OVER US 301 MAINLINE

BORINGS

SHEET NO. 440

TOTAL SHTS. 1256

U:\Projects\AA\21387385\CAD\Bridge\BR2-4\bo01_BR2-4_US301.dgn 7/15/2015 Steve_Lambert

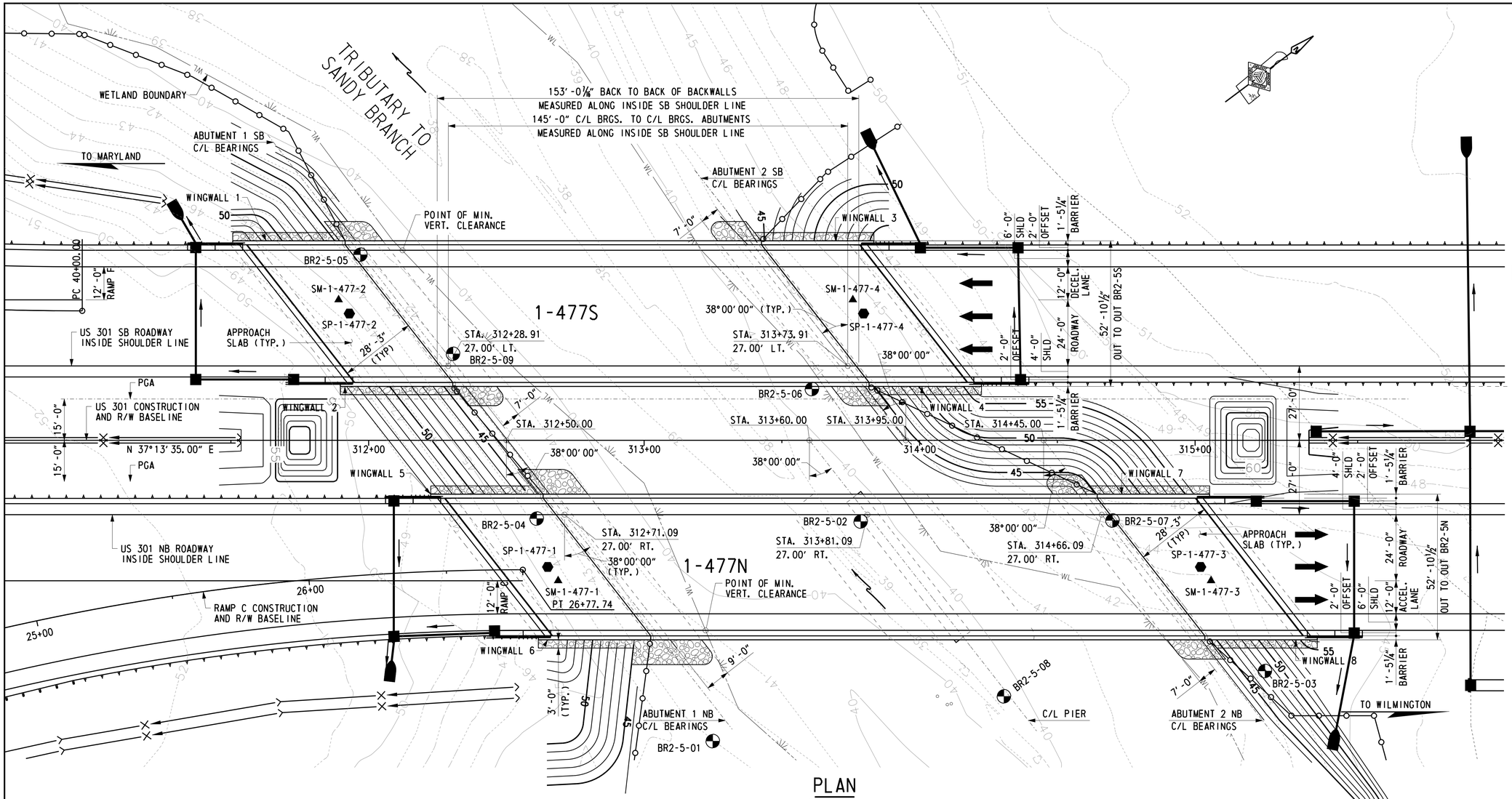

PLAN

SCALE: 1" = 20' -0"

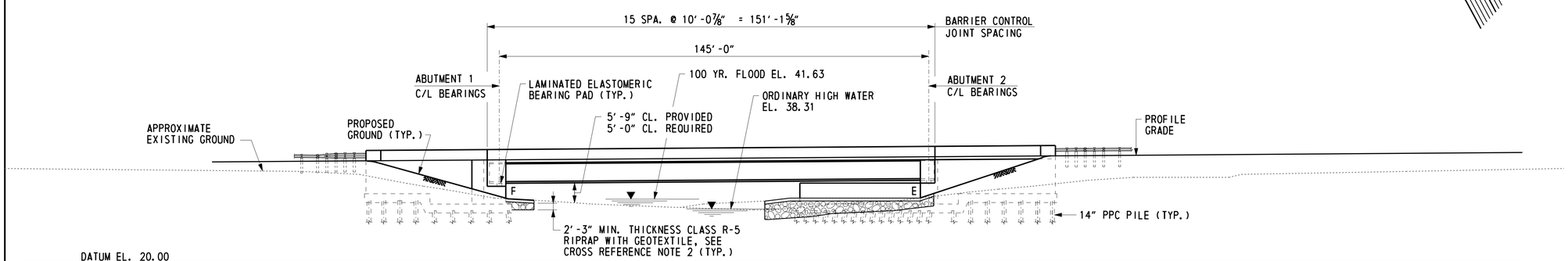

ELEVATION - SOUTHBOUND ROADWAY

SCALE: 1" = 20' -0"

US 301 VERTICAL DATA

PVT 309+53.00
EL. 52.90
+0.72%
PVC 331+20.00
EL. 68.51

US 301 HORIZONTAL DATA

TANGENT

RAMP C HORIZONTAL DATA

PI STA. 25+09.98
△ = 22°57' 21.10" RT.
Dc = 6°44' 55.03"
R = 849.00'
T = 172.39'
L = 340.16'

LEGEND

- SETTLEMENT PLATFORM
- SETTLEMENT MONUMENT

CROSS REFERENCE NOTES:

1. FOR SETTLEMENT PLATFORM AND MONUMENT LOCATIONS AND DETAILS, SEE DWG. 1-477 DT-1.
2. RECESS AND COVER RIPRAP IN ACCORDANCE WITH THE STREAM RESTORATION AND SLOPE RIPRAP TREATMENT NOTES FOUND ON EC-05.

U:\Projects\AA\21987385\CAD\Bridge\BR2-5\pe01_BR2-5_US301.dgn

8/14/2015

Steve_Lambert

DELAWARE DEPARTMENT OF TRANSPORTATION

ADDENDUMS / REVISIONS

SCALE 0 20 40 60 FEET

US 301 LEVELS ROAD TO SUMMIT BRIDGE ROAD

CONTRACT T200511303	BRIDGE NO.	1-477N&S
COUNTY NEW CASTLE	DESIGNED BY: R. F. KIRCHNER	
	CHECKED BY: G. P. MISTRY	

US 301 MAINLINE OVER TRIBUTARY TO SANDY BRANCH SOUTHBOUND ROADWAY BRIDGE PLAN AND ELEVATION

1-477 PE-1	
SHEET NO.	441
TOTAL SHTS.	1256

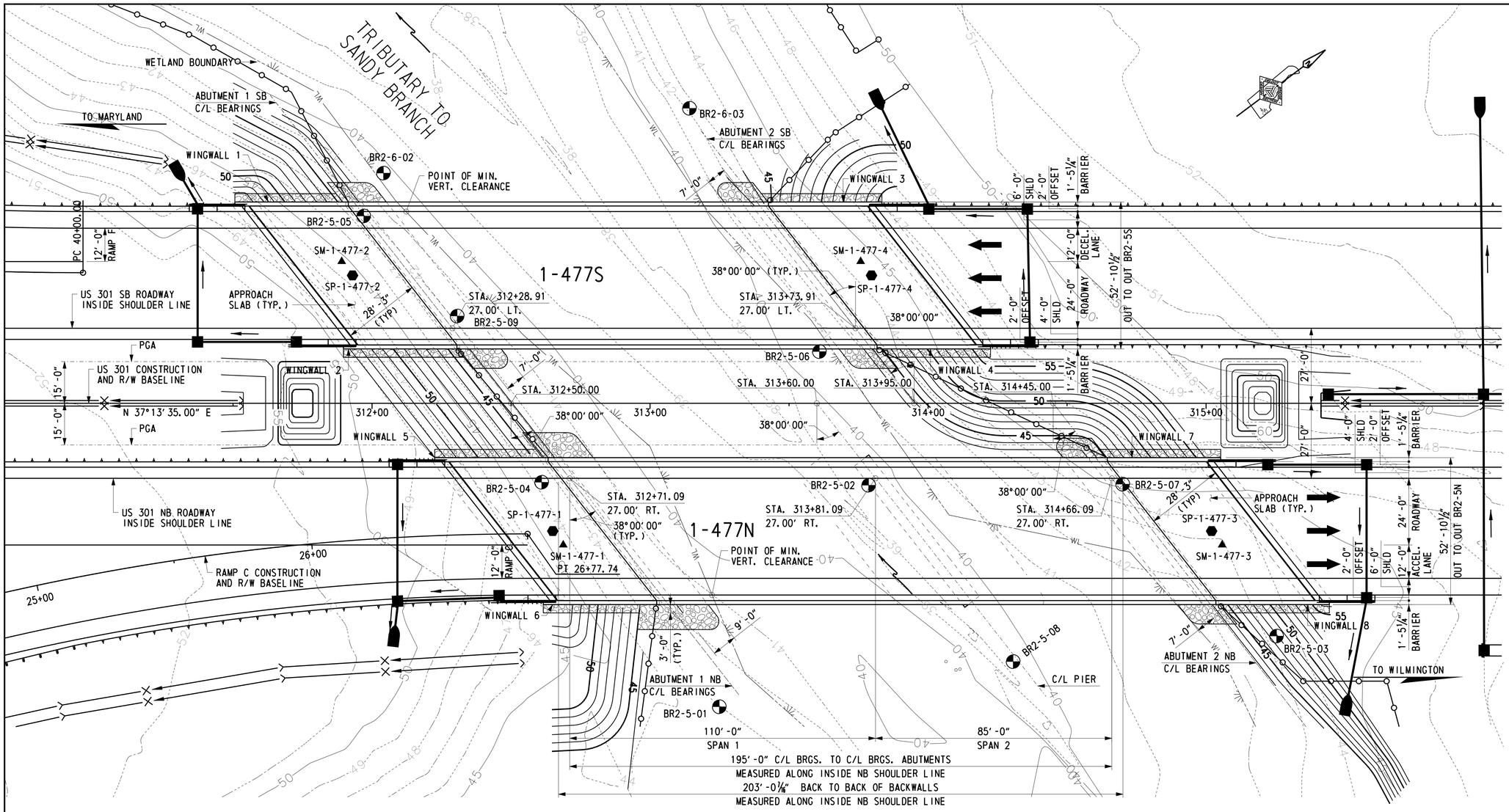

PLAN

SCALE: 1" = 20'-0"

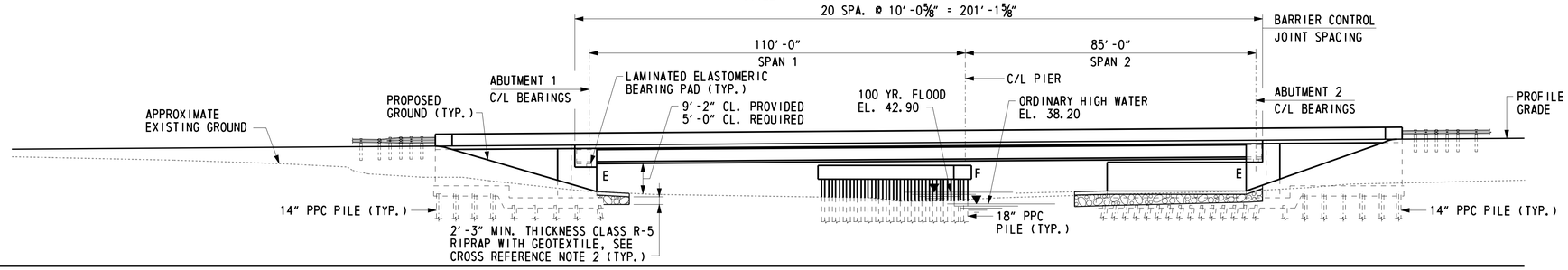

ELEVATION - NORTHBOUND ROADWAY

SCALE: 1" = 20'-0"

US 301 VERTICAL DATA

PVT 309+53.00 EL. 52.90 — +0.72% — PVC 331+20.00 EL. 68.51

US 301 HORIZONTAL DATA

TANGENT

RAMP C HORIZONTAL DATA

PI STA. 25+09.98
△ = 22°57'21.10" RT.
Dc = 6°44'55.03"
R = 849.00'
T = 172.39'
L = 340.16'

LEGEND

- ⬢ SETTLEMENT PLATFORM
- ▲ SETTLEMENT MONUMENT

CROSS REFERENCE NOTES:

1. FOR SETTLEMENT PLATFORM AND MONUMENT LOCATIONS AND DETAILS, SEE DWG. 1-477 DT-1.
2. RECESS AND COVER RIPRAP IN ACCORDANCE WITH THE STREAM RESTORATION AND SLOPE RIPRAP TREATMENT NOTES FOUND ON EC-05.

U:\Projects\AA\21387385\CAD\Bridge\BR2-5\pe02_BR2-5_US301.dgn
8/14/2015
Steve_Lambert

DELAWARE DEPARTMENT OF TRANSPORTATION

ADDENDUMS / REVISIONS

SCALE 0 20 40 60 FEET

US 301 LEVELS ROAD TO SUMMIT BRIDGE ROAD

CONTRACT	BRIDGE NO.	1-477N&S
T200511303	DESIGNED BY: R. F. KIRCHNER	
COUNTY		
NEW CASTLE	CHECKED BY: G. P. MISTRY	

US 301 MAINLINE OVER TRIBUTARY TO SANDY BRANCH NORTHBOUND ROADWAY BRIDGE PLAN AND ELEVATION

1-477 PE-2	
SHEET NO.	442
TOTAL SHTS.	1256

ESTIMATED BRIDGE QUANTITIES

ITEM NO.	DESCRIPTION	UNIT	QUANTITY	
			SB ROADWAY	NB ROADWAY
202505	SETTLEMENT PLATFORM	EACH	2	2
202518	SETTLEMENT MONUMENT	EACH	2	2
207000	EXCAVATION AND BACKFILL FOR STRUCTURES	CY	950	950
210000	BORROW, TYPE C	CY	2,300	2,450
302012	DELAWARE NO. 57 STOME	TON	20	50
602004	PORTLAND CEMENT CONCRETE MASONRY, ABUTMENT FOOTING, CLASS B	CY	395	395
602007	PORTLAND CEMENT CONCRETE MASONRY, PIER ABOVE FOOTING, CLASS A	CY	0	66
602013	PORTLAND CEMENT CONCRETE MASONRY, SUPERSTRUCTURE, CLASS D	CY	360	470
602014	PORTLAND CEMENT CONCRETE MASONRY, APPROACH SLAB, CLASS D	CY	260	260
602015	PORTLAND CEMENT CONCRETE MASONRY, ABUTMENT ABOVE FOOTING, CLASS A	CY	375	440
602017	PORTLAND CEMENT CONCRETE MASONRY, PARAPET, CLASS A	CY	60	73
603000	BAR REINFORCEMENT	LB	40,000	53,000
604000	BAR REINFORCEMENT, EPOXY COATED	LB	192,000	229,000
605511	PREFABRICATED EXPANSION JOINT SYSTEM, 3"	LF	133	133
605581	ELASTOMERIC BRIDGE BEARING PAD	EACH	12	24
618081	FURNISH PRECAST PRESTRESSED CONCRETE PILE, 14"X14"	LF	6,400	6,400
618083	FURNISH PRECAST PRESTRESSED CONCRETE PILE, 18"X18"	LF	-	1,260
618091	FURNISH PRECAST PRESTRESSED CONCRETE TEST PILE, 14"X14"	LF	130	130
618093	FURNISH PRECAST PRESTRESSED CONCRETE TEST PILE, 18"X18"	LF	-	60
619061	INSTALL PRECAST PRESTRESSED CONCRETE PILE, 14"X14"	LF	6,400	6,400
619063	INSTALL PRECAST PRESTRESSED CONCRETE PILE, 18"X18"	LF	-	1,260
619067	INSTALL PRECAST PRESTRESSED CONCRETE TEST PILE, 14"X14"	LF	130	130
619069	INSTALL PRECAST PRESTRESSED CONCRETE TEST PILE, 18"X18"	LF	-	60
619501	PRODUCTION PILE RESTRIKE	EACH	10	10
619502	TEST PILE RESTRIKE	EACH	4	4
619519	DYNAMIC PILE TESTING BY CONTRACTOR	EACH	2	3
619539	SIGNAL MATCHING ANALYSIS BY CONTRACTOR	EACH	4	6
623003	PRESTRESSED REINFORCED CONCRETE MEMBERS BULB-T BEAM	LS	1	1
712021	RIPRAP, CLASS 5	TON	235	260
713003	GEOTEXTILE, RIPRAP	SY	200	220
733001	TOPSOILING, 4" DEPTH	SY	400	440
745522	SUPPLY OF 3" SCH 80 PVC CONDUIT	LF	235	280
746596	JUNCTION BOX STRUCTURE	EA	2	2

INDEX OF DRAWINGS

SHEET NO.	DRAWING NO.	TITLE
441	1-477 PE-1	SOUTHBOUND ROADWAY BRIDGE PLAN AND ELEVATION
442	1-477 PE-2	NORTHBOUND ROADWAY BRIDGE PLAN AND ELEVATION
443	1-477 PN-1	INDEX OF DRAWINGS
444	1-477 PN-2	PROJECT NOTES
445	1-477 FT-1	SOUTHBOUND ROADWAY GEOMETRIC LAYOUT
446	1-477 FT-2	NORTHBOUND ROADWAY GEOMETRIC LAYOUT
447	1-477 TS-1	TYPICAL SECTION
448	1-477 PL-1	PRESTRESSED CONCRETE PILE DETAILS
449	1-477 AB-1	ABUTMENT 1 - SOUTHBOUND ROADWAY PILE PLAN
450	1-477 AB-2	ABUTMENT 2 - SOUTHBOUND ROADWAY PILE PLAN
451	1-477 AB-3	ABUTMENT 1 - SOUTHBOUND ROADWAY PLAN AND ELEVATION
452	1-477 AB-4	ABUTMENT 2 - SOUTHBOUND ROADWAY PLAN AND ELEVATION
453	1-477 AB-5	SOUTHBOUND ROADWAY WING WALL ELEVATIONS
454	1-477 AB-6	SOUTHBOUND ROADWAY TYPICAL ABUTMENT SECTION
455	1-477 AB-7	ABUTMENT 1 - NORTHBOUND ROADWAY PILE PLAN
456	1-477 AB-8	ABUTMENT 2 - NORTHBOUND ROADWAY PILE PLAN
457	1-477 AB-9	ABUTMENT 1 - NORTHBOUND ROADWAY PLAN AND ELEVATION
458	1-477 AB-10	ABUTMENT 2 - NORTHBOUND ROADWAY PLAN AND ELEVATION
459	1-477 AB-11	NORTHBOUND ROADWAY WING WALL ELEVATIONS
460	1-477 AB-12	NORTHBOUND ROADWAY TYPICAL ABUTMENT SECTION
461	1-477 AB-13	ABUTMENT 1 - SOUTHBOUND ROADWAY REINFORCEMENT 1
462	1-477 AB-14	ABUTMENT 1 - SOUTHBOUND ROADWAY REINFORCEMENT 2
463	1-477 AB-15	ABUTMENT 1 - SOUTHBOUND ROADWAY REINFORCEMENT 3
464	1-477 AB-16	ABUTMENT 1 - SOUTHBOUND ROADWAY REINFORCEMENT 4
465	1-477 AB-17	ABUTMENT 1 - SOUTHBOUND ROADWAY REINFORCEMENT 5
466	1-477 AB-18	ABUTMENT 2 - SOUTHBOUND ROADWAY REINFORCEMENT 1
467	1-477 AB-19	ABUTMENT 2 - SOUTHBOUND ROADWAY REINFORCEMENT 2
468	1-477 AB-20	ABUTMENT 2 - SOUTHBOUND ROADWAY REINFORCEMENT 3
469	1-477 AB-21	ABUTMENT 2 - SOUTHBOUND ROADWAY REINFORCEMENT 4
470	1-477 AB-22	ABUTMENT 2 - SOUTHBOUND ROADWAY REINFORCEMENT 5
471	1-477 AB-23	ABUTMENT 1 - SOUTHBOUND ROADWAY REINFORCING BAR LIST
472	1-477 AB-24	ABUTMENT 2 - SOUTHBOUND ROADWAY REINFORCING BAR LIST
473	1-477 AB-25	ABUTMENT 1 - NORTHBOUND ROADWAY REINFORCEMENT 1
474	1-477 AB-26	ABUTMENT 1 - NORTHBOUND ROADWAY REINFORCEMENT 2
475	1-477 AB-27	ABUTMENT 1 - NORTHBOUND ROADWAY REINFORCEMENT 3
476	1-477 AB-28	ABUTMENT 1 - NORTHBOUND ROADWAY REINFORCEMENT 4
477	1-477 AB-29	ABUTMENT 1 - NORTHBOUND ROADWAY REINFORCEMENT 5
478	1-477 AB-30	ABUTMENT 2 - NORTHBOUND ROADWAY REINFORCEMENT 1
479	1-477 AB-31	ABUTMENT 2 - NORTHBOUND ROADWAY REINFORCEMENT 2
480	1-477 AB-32	ABUTMENT 2 - NORTHBOUND ROADWAY REINFORCEMENT 3
481	1-477 AB-33	ABUTMENT 2 - NORTHBOUND ROADWAY REINFORCEMENT 4
482	1-477 AB-34	ABUTMENT 2 - NORTHBOUND ROADWAY REINFORCEMENT 5
483	1-477 AB-35	ABUTMENT 1 - NORTHBOUND ROADWAY REINFORCING BAR LIST
484	1-477 AB-36	ABUTMENT 2 - NORTHBOUND ROADWAY REINFORCING BAR LIST

INDEX OF DRAWINGS (CONTINUED)

SHEET NO.	DRAWING NO.	TITLE
485	1-477 PR-1	PIER FOUNDATION PLAN
486	1-477 PR-2	PIER PLAN AND ELEVATION
487	1-477 PR-3	PIER REINFORCEMENT
488	1-477 BD-1	BEARING DETAILS
489	1-477 FR-1	SOUTHBOUND ROADWAY FRAMING PLAN AND GIRDER ELEVATION
490	1-477 BM-1	SOUTHBOUND ROADWAY GIRDER DETAILS
491	1-477 BM-2	SOUTHBOUND ROADWAY DIAPHRAGMS 1
492	1-477 BM-3	SOUTHBOUND ROADWAY DIAPHRAGMS 2
493	1-477 CT-1	SOUTHBOUND ROADWAY CAMBER TABLE
494	1-477 FR-2	NORTHBOUND ROADWAY FRAMING PLAN
495	1-477 BM-4	NORTHBOUND ROADWAY GIRDER DETAILS 1
496	1-477 BM-5	NORTHBOUND ROADWAY GIRDER DETAILS 2
497	1-477 BM-6	NORTHBOUND ROADWAY GIRDER DETAILS 3
498	1-477 BM-7	NORTHBOUND ROADWAY DIAPHRAGMS 1
499	1-477 BM-8	NORTHBOUND ROADWAY DIAPHRAGMS 2
500	1-477 CT-2	NORTHBOUND ROADWAY CAMBER TABLE
501	1-477 BM-9	GIRDERS AND DIAPHRAGMS REINFORCING BAR LIST
502	1-477 DK-1	BRIDGE DECK POURING SEQUENCE
503	1-477 DK-2	BRIDGE DECK AND BARRIER REINFORCEMENT 1
504	1-477 DK-3	BRIDGE DECK AND BARRIER REINFORCEMENT 2
505	1-477 DK-4	BRIDGE DECK AND BARRIER REINFORCEMENT 3
506	1-477 DK-5	BRIDGE DECK AND BARRIER REINFORCEMENT 4
507	1-477 DK-6	BRIDGE DECK AND BARRIER REINFORCING BAR LIST
508	1-477 FD-1	SOUTHBOUND ROADWAY FINISHED DECK ELEVATIONS
509	1-477 FD-2	NORTHBOUND ROADWAY FINISHED DECK ELEVATIONS
510	1-477 EX-1	EXPANSION JOINT DETAILS
511	1-477 AS-1	SOUTHBOUND ROADWAY APPROACH SLAB PLANS
512	1-477 AS-2	NORTHBOUND ROADWAY APPROACH SLAB PLANS
513	1-477 AS-3	APPROACH SLAB DETAILS
514	1-477 AS-4	APPROACH SLABS - SB ROADWAY REINFORCEMENT 1
515	1-477 AS-5	APPROACH SLABS - SB ROADWAY REINFORCEMENT 2
516	1-477 AS-6	APPROACH SLABS - SB ROADWAY REINFORCING BAR LIST
517	1-477 AS-7	APPROACH SLABS - NB ROADWAY REINFORCEMENT 1
518	1-477 AS-8	APPROACH SLABS - NB ROADWAY REINFORCEMENT 2
519	1-477 AS-9	APPROACH SLABS - NB ROADWAY REINFORCING BAR LIST
520	1-477 DT-1	SETTLEMENT PLATFORM
521	1-477 BO-1	BORINGS 1
522	1-477 BO-2	BORINGS 2

PROJECT NOTES

1. DESIGN SPECIFICATIONS:

AASHTO LRFD BRIDGE DESIGN SPECIFICATIONS, 4th EDITION, 2007, INCLUDING 2008 AND 2009 INTERIM REVISIONS, AND AS SUPPLEMENTED BY DELAWARE DEPARTMENT OF TRANSPORTATION BRIDGE DESIGN MANUAL, MAY 2005, INCLUDING LATEST REVISIONS.

PROVIDE MATERIALS AND PERFORM WORK IN ACCORDANCE WITH THE DELAWARE DEPARTMENT OF TRANSPORTATION STANDARD SPECIFICATIONS AND CONSTRUCTION DETAILS, ANSI/AASHTO/AWS D1.5 BRIDGE WELDING CODE AND CONTRACT SPECIAL PROVISIONS.

LIVE LOAD DISTRIBUTION TO GIRDERS IS BASED UPON ASSHTO DISTRIBUTION FACTORS.

2. LOADING:

UNIT WEIGHTS OF MATERIALS SHALL BE IN ACCORDANCE WITH THE DELAWARE BRIDGE DESIGN MANUAL.

FUTURE OVERLAY ALLOWANCE SHALL BE 25 LBS/SQ FT.

STEEL BRIDGE DECK FORMS WHICH STAY IN PLACE (INCLUDING CONCRETE IN FORM CORRUGATIONS) SHALL BE 15 LBS/SQ FT.

VEHICLE LIVE LOAD SHALL BE AASHTO HL-93 DESIGN VEHICLE, WHICH CONSISTS OF A DESIGN TRUCK OR TANDEM WITH DYNAMIC LOAD ALLOWANCE AND A LANE LOAD. RATING SHALL USE ALL DELAWARE LEGAL LOADS SPECIFIED IN THE BRIDGE DESIGN MANUAL.

BARRIER HAS BEEN DESIGNED FOR TEST LEVEL FOUR (TL-4).

FATIGUE DESIGN SHALL BE BASED ON THE FOLLOWING ONE DIRECTIONAL TRAFFIC VOLUMES (2030):
DESIGN ADT = 57,000, DESIGN ADTT = 5,130

FOR THERMAL LOADS, CONSIDER THE MODERATE TEMPERATURE RANGE AS STIPULATED IN THE AASHTO LRFD DESIGN SPECIFICATIONS. THE NORMAL TEMPERATURE SHALL BE CONSIDERED TO BE 68F.

FOR SEISMIC LOADS, CONSIDER SEISMIC PERFORMANCE ZONE 1, WITH A SITE CLASS = D AND IMPORTANCE CATEGORY - ESSENTIAL. ACCELERATION COEFFICIENT = 0.08.

3. PORTLAND CEMENT CONCRETE:

PORTLAND CEMENT CONCRETE FOR CAST-IN-PLACE ELEMENTS SHALL BE AS FOLLOWS:
(28 DAY COMPRESSIVE STRENGTH)
ITEM NO. 602004 (CLASS B, F'c=3000 PSI) - ABUTMENT AND WING WALL FOOTING
ITEM NO. 602007 (CLASS A, F'c=4500 PSI) - PIER ABOVE FOOTING
ITEM NO. 602013 (CLASS D, F'c=4500 PSI) - DECK AND DIAPHRAGMS
ITEM NO. 602014 (CLASS D, F'c=4500 PSI) - APPROACH SLAB
ITEM NO. 602015 (CLASS A, F'c=4500 PSI) - ABUTMENT AND WING WALL ABOVE FOOTING
ITEM NO. 602017 (CLASS A, F'c=4500 PSI) - BARRIER

RAKE FINISH ALL HORIZONTAL CONSTRUCTION, EXCEPT AS NOTED.

CONSTRUCT DECK SLAB TRANSVERSE CONSTRUCTION JOINTS PARALLEL TO BRIDGE CENTERLINE OF BEARING.

PLACE CHEEKWALL AND BACKWALL CONCRETE AFTER GIRDERS HAVE BEEN SET IN POSITION.

DECK SLAB THICKNESS INCLUDES ½" INTEGRAL WEARING SURFACE.

MIX REQUIREMENTS SHALL CONFORM TO SECTION 812 OF THE DELAWARE DEPARTMENT OF TRANSPORTATION STANDARD SPECIFICATIONS.

ALL EXPOSED CORNERS OF CONCRETE SHALL BE CHAMFERED WITH ¾" X ¾" MILLED CHAMFER STRIPS UNLESS NOTED OTHERWISE, EXCEPT ON UNEXPOSED FOOTINGS OR WHERE INDICATED BY THE NOTATION ON THE PLANS, "DO NOT CHAMFER".

NO SLIP-FORMING OF BARRIERS IS PERMITTED, UNLESS NOTED OTHERWISE.

4. BAR REINFORCEMENT:

REINFORCING STEEL SHALL CONFORM TO AASHTO M31 (ASTM A615), GRADE 60.

ALL REINFORCING STEEL SHALL HAVE A CLEAR COVER OF 2" UNLESS OTHERWISE SPECIFIED ON THE PLANS.

FUSION-BONDED EPOXY COATED REINFORCING STEEL SHALL CONFORM TO AASHTO M284 (ASTM D3963), AND SHALL BE DENOTED WITH A SUFFIX "E" IN THE BAR MARKS.

DO NOT WELD GRADE 60 REINFORCING STEEL.

5. PRESTRESSED CONCRETE DESIGN:

THE PRECAST CONCRETE GIRDERS ARE DESIGNED AS NONCOMPOSITE SIMPLE SPANS FOR ALL DEAD LOADS EXCEPT THE BARRIERS AND FUTURE WEARING SURFACE. THE PRECAST GIRDERS ARE DESIGNED AS COMPOSITE CONTINUOUS SPANS FOR LIVE LOADS AS WELL AS THE BARRIER AND FUTURE WEARING SURFACE DEAD LOADS.

THE TIME FROM CASTING OF CONCRETE GIRDERS TO POURING OF PIER DIAPHRAGM SHALL BE NO LESS THAN 90 DAYS. IF TIME IS NOT SUFFICIENT, CONTRACTOR MUST SUBMIT DESIGN FOR APPROVAL SHOWING STRUCTURAL DESIGN CALCULATIONS TO ACCOUNT FOR RESTRAINT MOMENTS. FOR CONTINUOUS SPANS, PIER DIPHRAGMS SHALL NOT BE POURED UNTIL DECK POURS 1 AND 2 ARE COMPLETED.

PRESTRESSED CONCRETE:

THE MINIMUM COMPRESSIVE STRENGTH FOR PRESTRESSED CONCRETE GIRDERS AT THE AGE OF 28 DAYS SHALL BE f'c = 8,000 PSI. THE MINIMUM COMPRESSIVE STRENGTH AT THE TRANSFER OF PRESTRESS SHALL BE f'ci = 6,400 PSI.

PRESTRESSED STEEL:

PRETENSIONING STEEL FOR GIRDERS SHALL CONSIST OF 0.60 INCH DIAMETER HIGH STRENGTH 7-WIRE LOW RELAXATION STRANDS CONFORMING TO THE REQUIREMENTS OF AASHTO M203 (ASTM A416) GRADE 270. EACH 0.60 INCH DIAMETER STRAND SHALL BE PRETENSIONED TO 43,942 LBS. (0.75 Fpu).

FOR BRIDGE NO. 1-477 SOUTHBOUND ROADWAY, AFTER ESTIMATED LOSSES OF 25,010 PSI, THE FINAL EFFECTIVE PRESTRESS FORCE PER STRAND IS 38,515 LBS. FOR BRIDGE NO. 1-477 NORTHBOUND ROADWAY, SPAN 1, AFTER ESTIMATED LOSSES OF 24,830 PSI, THE FINAL EFFECTIVE PRESTRESS FORCE PER STRAND IS 38,530 LBS. FOR BRIDGE NO. 1-477 NORTHBOUND ROADWAY, SPAN 2, AFTER ESTIMATED LOSSES OF 21,800 PSI, THE FINAL EFFECTIVE PRESTRESS FORCE PER STRAND IS 39,210 LBS.

6. SERVICEABILITY:

LIVE LOAD DEFLECTION SHALL BE LIMITED TO L/800.

FOR REINFORCEMENT DISTRIBUTION REQUIREMENTS, CONSIDER CLASS 2 EXPOSURE CRITERIA FOR DECKS.

7. CONSTRUCTION JOINTS:

KEYED CONSTRUCTION JOINTS SHALL BE 2" X 4" OR AS NOTED. ALL EXPOSED CONSTRUCTION JOINT EDGES SHALL HAVE A ¾" V-NOTCH, UNLESS NOTED OTHERWISE.

8. STRUCTURAL BACKFILL:

STRUCTURAL BACKFILL SHALL CONFORM TO THE REQUIREMENTS OF BORROW TYPE C.

9. ROADWAY CLEARANCES:

A MINIMUM OF 5'-0" VERTICAL CLEARANCE SHALL BE MAINTAINED ABOVE WETLANDS. A MINIMUM OF 2'-0" HORIZONTAL CLEARANCE SHALL BE MAINTAINED FROM THE OUTSIDE EDGE OF SHOULDER OFFSET (FACE OF CURB) TO THE FACE OF ANY OBSTRUCTION. THESE CLEARANCES APPLY AT ALL TIMES INCLUDING DURING CONSTRUCTION.

10. UTILITIES:

COORDINATE ALL WORK RELATED TO PUBLIC AND PRIVATE UTILITIES IN ACCORDANCE WITH SECTION 107.04 OF THE STANDARD SPECIFICATIONS.

VERIFY AND LOCATE ALL EXISTING UTILITIES PRIOR TO STARTING WORK. CONDUCT OPERATIONS IN A MANNER WHICH ENSURES THAT THE UTILITIES WILL NOT BE DISTURBED OR ENDANGERED AND ASSUME FULL RESPONSIBILITY FOR ANY DAMAGE TO UTILITIES DURING CONSTRUCTION. THE DEPARTMENT DOES NOT ASSUME RESPONSIBILITY FOR REIMBURSEMENT, PARTICIPATION IN DESIGN AND/OR REVISION, OR LIABILITY FOR ACCURACY OF TYPE, SIZE AND LOCATION OF ANY UTILITY.

11. CONSTRUCTION NOTES:

ALL FORMWORK INCLUDING STAY-IN-PLACE FORMS SHALL BE MORTAR TIGHT.

12. HYDRAULIC DATA:

SOUTHBOUND:	NORTHBOUND:
DRAINAGE AREA = 0.37 SQ. MI.	DRAINAGE AREA = 0.37 SQ. MI.
DESIGN FREQUENCY = 100 YEARS	DESIGN FREQUENCY = 100 YEARS
DESIGN FLOOD ELEVATION = 41.6	DESIGN FLOOD ELEVATION = 42.9
50 YEAR FLOOD ELEVATION = 41.3	50 YEAR FLOOD ELEVATION = 42.5
DESIGN DISCHARGE = 565 CFS	DESIGN DISCHARGE = 565 CFS
PROPOSED OPENING = 940 SF	PROPOSED OPENING = 1,195 SF

THE PROPOSED STRUCTURE HAS BEEN ANALYZED FOR THE EFFECTS OF SCOUR IN ACORDANCE WITH HEC-18 - "EVALUATING SCOUR AT BRIDGES" AND HEC-23 - "BRIDGE SCOUR AND STREAM INSTABILITY COUNTERMEASURES". SCOUR COUNTERMEASURES HAVE BEEN DESIGNED FOR THE WORST CASE OF THE OVERTOPPING FLOOD OR THE 500 YEAR FLOOD EVENT.

DESIGN EVENT: 500 YEAR — DESIGN VELOCITY: 5.6 FT/S (1-477N), 7.5 FT/S (1-477S)

DESIGN DISCHARGE: 985 CFS — DESIGN DEPTH OF FLOW: 5.3 FT (1-477N), 4.4 FT (1-477S)

BRIDGE LOAD RATING (TONS)
SOUTHBOUND ROADWAY

DESIGN VEHICLE	RATING FACTOR	RATING WEIGHT (TONS)	CONTROLLING MEMBER	CONTROLLING POINT	LOAD EFFECT
HL-93 TRUCK (INVENTORY)	1.20	N/A	INTERIOR BEAM	105	FLEXURE
HL-93 TANDEM (INVENTORY)	1.42	N/A	INTERIOR BEAM	105	FLEXURE
HL-93 TRUCK TRAIN (INVENTORY)	N/A	N/A	N/A	N/A	N/A
HS20 (INVENTORY)	1.70	61.2	INTERIOR BEAM	105	FLEXURE
HL-93 TRUCK (OPERATING)	1.71	N/A	INTERIOR BEAM	100	SHEAR
HL-93 TANDEM (OPERATING)	2.08	N/A	INTERIOR BEAM	100	SHEAR
HL-93 TRUCK TRAIN (OPERATING)	N/A	N/A	N/A	N/A	N/A
HS20 (OPERATING)	2.65	95.4	INTERIOR BEAM	100	SHEAR
DE S220 & LEGAL-LANE (LEGAL)	2.59	51.8	INTERIOR BEAM	105	FLEXURE
DE S335 & LEGAL-LANE (LEGAL)	1.46	51.1	INTERIOR BEAM	105	FLEXURE
DE S437 & LEGAL-LANE (LEGAL)	1.39	50.9	INTERIOR BEAM	105	FLEXURE
DE T330 & LEGAL-LANE (LEGAL)	1.87	56.1	INTERIOR BEAM	105	FLEXURE
DE T435 & LEGAL-LANE (LEGAL)	1.62	56.7	INTERIOR BEAM	105	FLEXURE
DE T540 & LEGAL-LANE (LEGAL)	1.43	57.2	INTERIOR BEAM	105	FLEXURE

NOTE: LOAD RATING DOES INCLUDE FUTURE WEARING SURFACE AS NOTED IN THE PLANS.

BRIDGE LOAD RATING (TONS)
NORTHBOUND ROADWAY

DESIGN VEHICLE	RATING FACTOR	RATING WEIGHT (TONS)	CONTROLLING MEMBER	CONTROLLING POINT	LOAD EFFECT
HL-93 TRUCK (INVENTORY)	1.26	N/A	INTERIOR BEAM	110	SHEAR
HL-93 TANDEM (INVENTORY)	1.47	N/A	INTERIOR BEAM	105	FLEXURE
HL-93 TRUCK TRAIN (INVENTORY)	1.34	N/A	INTERIOR BEAM	110	FLEXURE
HS20 (INVENTORY)	1.71	61.6	INTERIOR BEAM	105	FLEXURE
HL-93 TRUCK (OPERATING)	1.74	N/A	INTERIOR BEAM	110	FLEXURE
HL-93 TANDEM (OPERATING)	1.93	N/A	INTERIOR BEAM	110	SHEAR
HL-93 TRUCK TRAIN (OPERATING)	1.74	N/A	INTERIOR BEAM	110	FLEXURE
HS20 (OPERATING)	2.72	97.9	INTERIOR BEAM	108	SHEAR
DE S220 & LEGAL-LANE (LEGAL)	2.45	49.0	INTERIOR BEAM	105	FLEXURE
DE S335 & LEGAL-LANE (LEGAL)	1.39	48.7	INTERIOR BEAM	105	FLEXURE
DE S437 & LEGAL-LANE (LEGAL)	1.31	48.0	INTERIOR BEAM	105	FLEXURE
DE T330 & LEGAL-LANE (LEGAL)	1.87	56.1	INTERIOR BEAM	105	FLEXURE
DE T435 & LEGAL-LANE (LEGAL)	1.61	56.4	INTERIOR BEAM	105	FLEXURE
DE T540 & LEGAL-LANE (LEGAL)	1.44	57.6	INTERIOR BEAM	105	FLEXURE

NOTE: LOAD RATING DOES INCLUDE FUTURE WEARING SURFACE AS NOTED IN THE PLANS.

CROSS REFERENCE NOTE:

FOR CONSTRUCTION IN REGION OF STREAM CHANNEL, SEE PIER FOUNDATION PLAN DWG. 1-477 PR-1 AND ENVIRONMENTAL COMPLIANCE DWGS. EC-05 & EC-13.

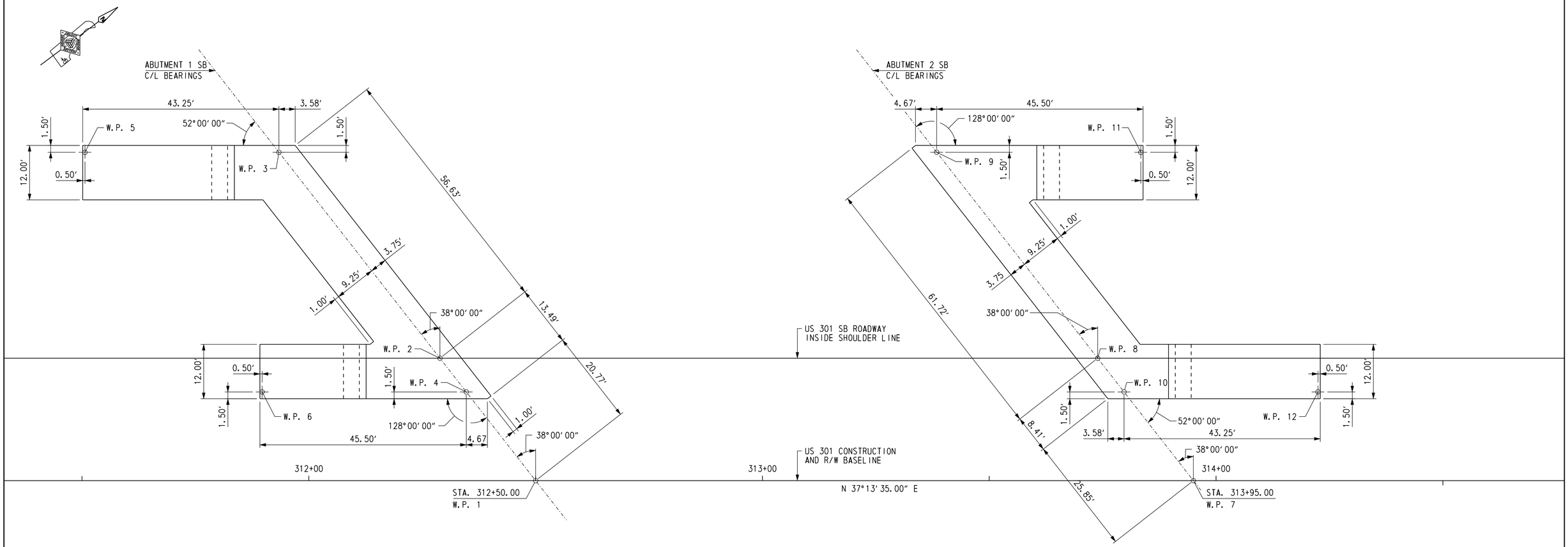

PLAN

SCALE: 3/32" = 1'-0"

SB ROADWAY WORKING POINTS				
W.P. NO.	STATION	OFFSET	COORDINATES	
			NORTHING	EASTING
1	312+50.00	0.00'	527,706.4258	562,471.7190
2	312+28.91	27.00' LT.	527,705.9632	562,437.4586
3	311+93.41	72.44' LT.	527,705.1847	562,379.8029
4	312+34.72	19.56' LT.	527,706.0906	562,446.8961
5	311+50.66	72.44' LT.	527,671.1449	562,353.9406
6	311+89.72	19.56' LT.	527,670.2593	562,419.6726
7	313+95.00	0.00'	527,821.8823	562,559.4390
8	313+73.91	27.00' LT.	527,821.4197	562,525.1787
9	313+38.41	72.44' LT.	527,820.6411	562,467.5229
10	313+79.72	19.56' LT.	527,821.5471	562,534.6161
11	313+83.41	72.44' LT.	527,856.4724	562,494.7464
12	314+22.47	19.56' LT.	527,855.5868	562,560.4784

DELAWARE
DEPARTMENT OF TRANSPORTATION

ADDENDUMS / REVISIONS

US 301
LEVELS ROAD
TO SUMMIT BRIDGE ROAD

CONTRACT	BRIDGE NO.	1-477N&S
T200511303	DESIGNED BY: J. S. LI	
COUNTY		
NEW CASTLE	CHECKED BY: R. F. KIRCHNER	

US 301 MAINLINE OVER
TRIBUTARY TO SANDY BRANCH
SOUTHBOUND ROADWAY
GEOMETRIC LAYOUT

1-477 FT-1
SHEET NO.
445
TOTAL SHTS.
1256

U:\Projects\AA\21987385\CAD\Bridge\BR2-5\ft01_BR2-5_US301.dgn
11/8/2012
Steve_Lambert

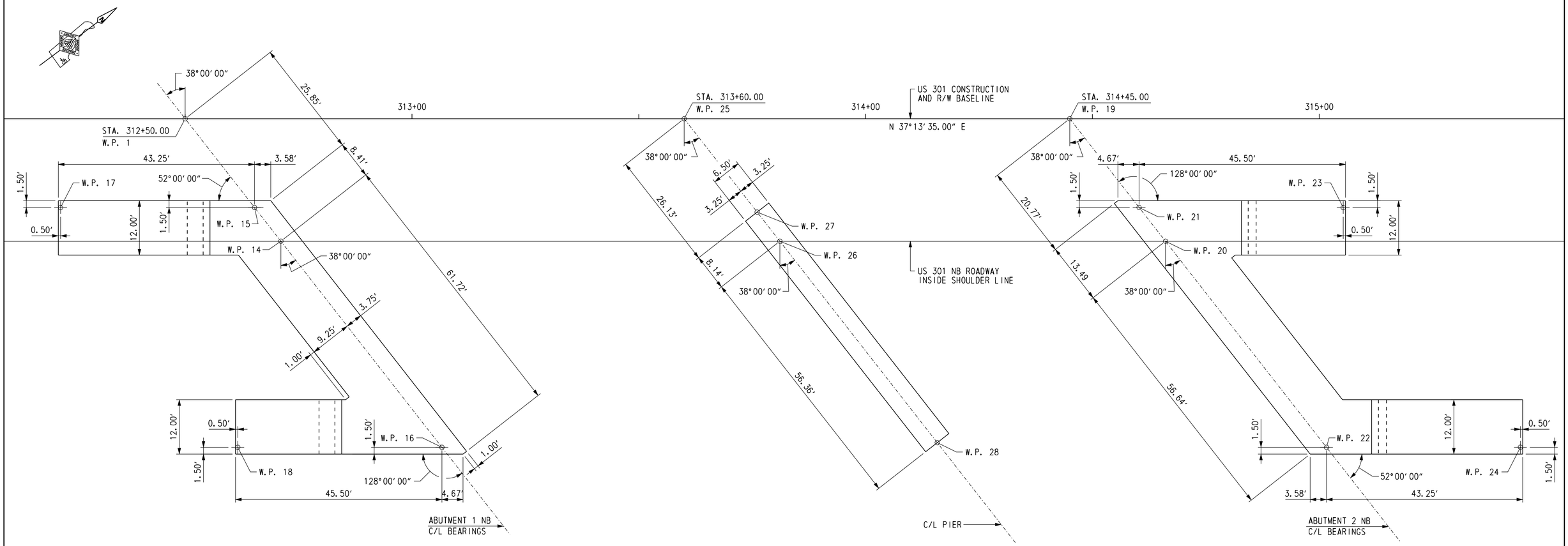

PLAN

SCALE: 3/32″ = 1′-0″

NB ROADWAY WORKING POINTS				
W.P. NO.	STATION	OFFSET	COORDINATES	
			NORTHING	EASTING
13	312+50.00	0.00′	527,706.4258	562,471.7190
14	312+71.09	27.00′ RT.	527,706.8884	562,505.9794
15	312+65.28	19.56′ RT.	527,706.7610	562,496.5419
16	313+06.59	72.44′ RT.	527,707.6670	562,563.6351
17	312+22.53	19.56′ RT.	527,672.7213	562,470.6796
18	312+61.59	72.44′ RT.	527,671.8356	562,536.4116
19	314+45.00	0.00′	527,861.6948	562,589.6873
20	314+66.09	27.00′ RT.	527,862.1575	562,623.9477
21	314+60.28	19.56′ RT.	527,862.0300	562,614.5102
22	315+01.59	72.44′ RT.	527,862.9360	562,681.6035
23	315+05.28	19.56′ RT.	527,897.8613	562,641.7337
24	315+44.34	72.44′ RT.	527,896.9757	562,707.4658
25	313+60.00	0.00′	527,794.0135	562,538.2652
26	313+81.09	27.00′ RT.	527,794.4761	562,572.5256
27	313+76.09	20.59′ RT.	527,794.3662	562,564.3909
28	314+15.80	71.42′ RT.	527,795.2371	562,628.8851

U:\Projects\AA\21387385\CAD\Bridge\BR2-5\f02_BR2-5_US301.dgn

11/8/2012

Steve_Lambert

DELAWARE DEPARTMENT OF TRANSPORTATION

ADDENDUMS / REVISIONS

US 301 LEVELS ROAD TO SUMMIT BRIDGE ROAD

CONTRACT: T200511303
COUNTY: NEW CASTLE
BRIDGE NO.: **1-477N&S**
DESIGNED BY: J. S. LI
CHECKED BY: R. F. KIRCHNER

US 301 MAINLINE OVER TRIBUTARY TO SANDY BRANCH NORTHBOUND ROADWAY GEOMETRIC LAYOUT

1-477 FT-2
SHEET NO. 446
TOTAL SHTS. 1256

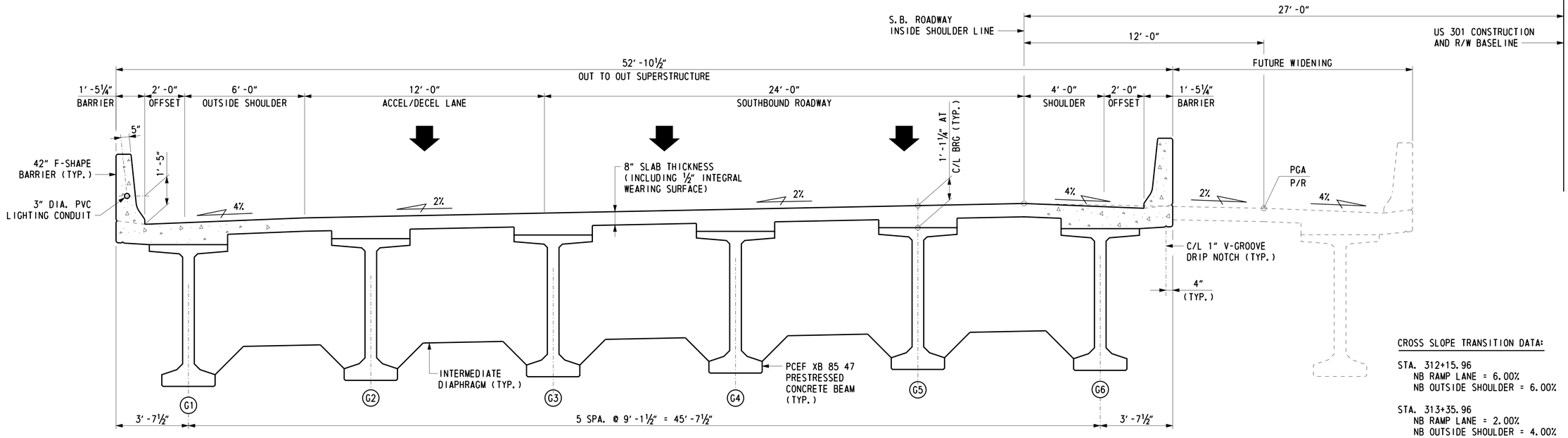

TYPICAL SOUTHBOUND ROADWAY SECTION

(LOOKING STATION AHEAD)
SCALE: ⅜" = 1' -0"

CROSS SLOPE TRANSITION DATA:

STA. 312+15.96
NB RAMP LANE = 6.00%
NB OUTSIDE SHOULDER = 6.00%

STA. 313+35.96
NB RAMP LANE = 2.00%
NB OUTSIDE SHOULDER = 4.00%

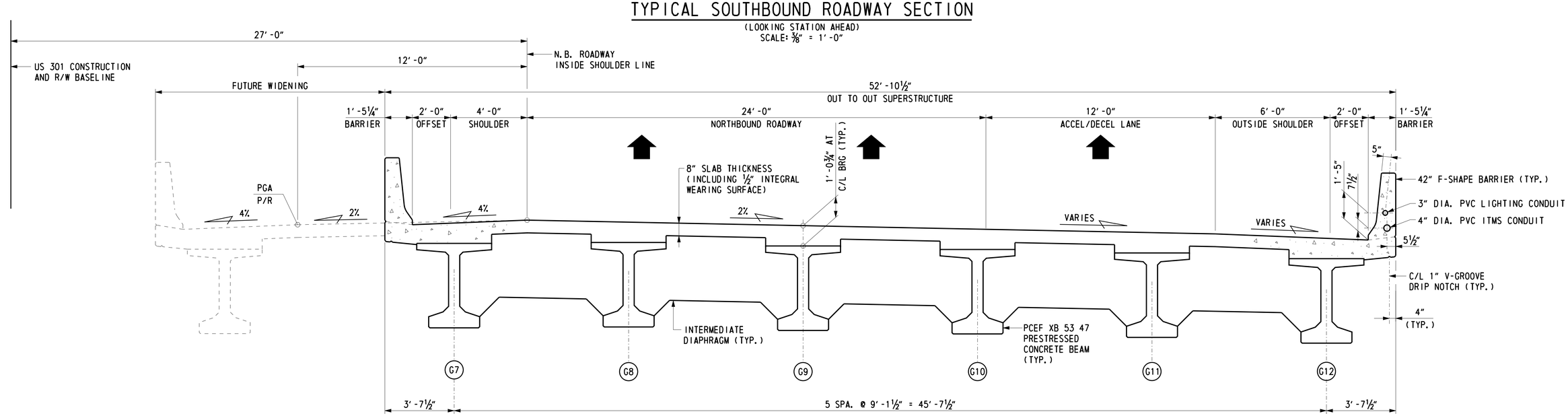

TYPICAL NORTHBOUND ROADWAY SECTION

(LOOKING STATION AHEAD)
SCALE: ⅜" = 1' -0"

CROSS REFERENCE NOTES:

1. FOR FRAMING PLAN, SEE DWG. 1-477 FR-1 & 1-477 FR-2.
2. FOR DECK AND BARRIER REINFORCEMENT, SEE DWGS. 1-477 DK-2 THRU 1-477 DK-5.
3. FOR LOCATION OF CONDUITS AND JUNCTION BOXES, SEE DWG. LI-03 & LI-08. FOR LIGHTING CONDUITS, JUNCTION BOX DETAILS FOR LIGHTING CONDUITS, AND CONDUIT EXPANSION JOINT DETAILS, SEE DWG. LI-30. FOR ITMS CONDUITS SEE SHEET DT-07. INSTALLATION OF CONDUITS, CONDUIT EXPANSION JOINTS AND JUNCTION BOXES SHALL BE INCIDENTAL TO ITEM 602017, PORTLAND CEMENT CONCRETE MASONRY, PARAPET, CLASS A.

DELAWARE DEPARTMENT OF TRANSPORTATION	ADDENDUMS / REVISIONS		US 301 LEVELS ROAD TO SUMMIT BRIDGE ROAD	CONTRACT T200511303	BRIDGE NO. 1-477N&S	US 301 MAINLINE OVER TRIBUTARY TO SANDY BRANCH	1-477 TS-1
				COUNTY NEW CASTLE	DESIGNED BY: R. F. KIRCHNER		SHEET NO. 447
					CHECKED BY: G. P. MISTRY	TYPICAL SECTION	TOTAL SHTS. 1256

U:\Projects\AA\21387985\CAD\Bridge\BR2-5\ts01_BR2-5_US301.dgn
8/13/2015
Steve_Lambert

PILE PICK-UP NOTES:

1. UNLESS SPECIAL LIFTING DEVICES ARE ATTACHED FOR PICK-UP, PICK-UP POINTS SHALL BE PLAINLY MARKED ON ALL PILES AFTER REMOVAL OF THE FORMS. THE PILE SHALL BE SUPPORTED ONLY AT THE INDICATED PICK-UP POINTS WHILE BEING STORED OR HANDLED.

2. THE USE OF PROPER RIGGING IS REQUIRED TO INSURE THAT THE PICK-UP POINTS REMAIN IN A STRAIGHT LINE DURING LIFTING AND WHEN POSITIONING THE PILE FOR DRIVING.

3. THE USE OF SPECIAL EMBEDDED OR ATTACHED LIFTING DEVICES, THE USE OF OTHER PICK-UP LOCATIONS OR ANY OTHER METHOD OF PICK-UP SHALL BE SUBJECT TO THE APPROVAL OF THE ENGINEER.

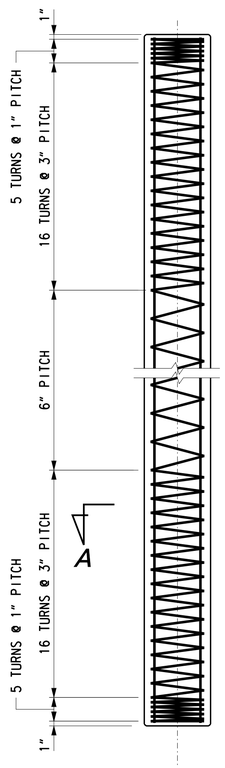

14" SQUARE PRESTRESSED CONCRETE PILE

SCALE: ¾" = 1'-0"

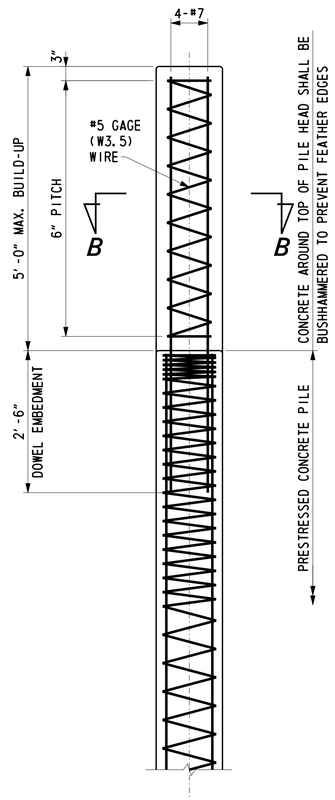

14" SQUARE PILE BUILD-UP DETAIL

SCALE: ¾" = 1'-0"

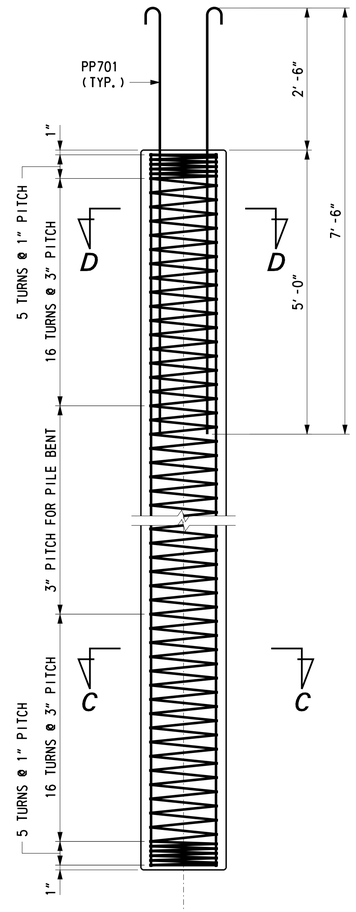

18" SQUARE PRESTRESSED CONCRETE PILE

SCALE: ¾" = 1'-0"

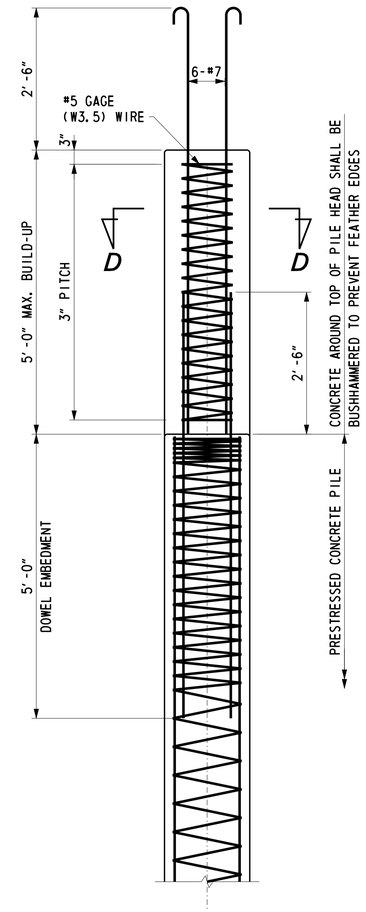

18" SQUARE PILE BUILD-UP DETAIL

SCALE: ¾" = 1'-0"

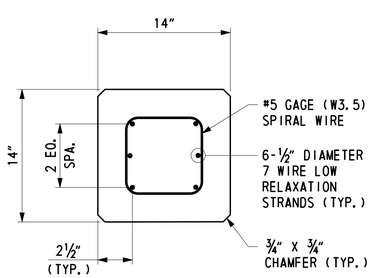

SECTION A-A

SCALE: 1½" = 1'-0"

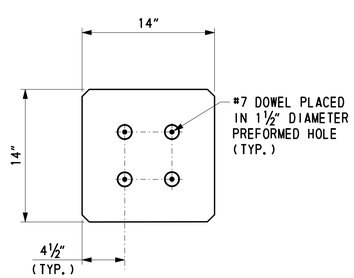

SECTION B-B

(STRANDS AND SPIRALS NOT SHOWN)

SCALE: 1½" = 1'-0"

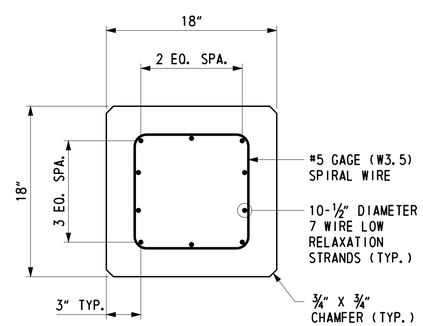

SECTION C-C

SCALE: 1½" = 1'-0"

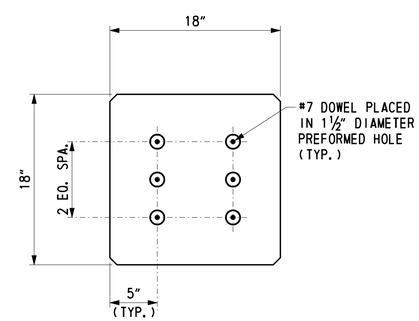

SECTION D-D

(STRANDS AND SPIRALS NOT SHOWN)

SCALE: 1½" = 1'-0"

NOTES:

1. ALL PILES SHALL BE 14" X 14" OR 18" X 18" PRECAST PRESTRESSED CONCRETE PILES AS DESIGNATED ON THE FOUNDATION PLANS. PILES SHALL NOT BE COATED.

2. THE MINIMUM COMPRESSIVE STRENGTH FOR THE PRESTRESSED CONCRETE PILES AT THE AGE OF 28 DAYS SHALL BE fc'=6000 PSI. THE MINIMUM COMPRESSIVE STRENGTH AT TIME OF TRANSFER SHALL BE f'ci=4800 PSI.

3. ALL PRESTRESSING STRANDS SHALL MEET THE REQUIREMENTS OF ASTM A416, GRADE 270, LOW RELAXATION. STRANDS SHALL BE ONE HALF (½) INCH DIAMETER AND SHALL HAVE AN ULTIMATE STRENGTH OF 41,300 LBS. CUT STRANDS FLUSH WITH PILE HEAD AND PILE TIP.

4. SPIRAL TIES SHALL BE #5 GAGE STEEL WIRE CONFORMING TO THE REQUIREMENTS OF ASTM A82.

5. WHEN PILES ARE EXPOSED SUCH AS IN PILE BENTS, THE SPIRAL TIES AND PILE HEAD DOWELS SHALL BE EPOXY COATED.

6. THE SPLICING OF PRESTRESSED PRECAST CONCRETE PILES SHALL NOT BE PERMITTED.

7. PROVIDE 1½" DIAMETER PREFORMED HOLES IN PILE HEAD AT THE DOWEL LOCATIONS. DOWELS SHALL BE GROUTED IN PLACE WITH AN APPROVED EPOXY GROUT WITH A MINIMUM COMPRESSIVE STRENGTH OF fc'=6000 PSI. THE CONTRACTOR SHALL SUBMIT A GROUT PLACEMENT PROCEDURE FOR APPROVAL. PREFORMED HOLES SHALL BE PLUGGED PRIOR TO GROUTING TO ENSURE THAT MOISTURE AND DEBRIS DO NOT ENTER HOLES.

8. DOWEL HOLES SHALL BE POSITIONED TO MAINTAIN A ONE INCH CLEAR DISTANCE FROM ALL PRESTRESSING STRANDS IN THE PILE.

9. ALL TEST PILES SHALL BE TEN (10) FEET LONGER THAN THE PRODUCTION PILE LENGTH INDICATED ON PILE INSTALLATION DATA TABLE.

10. ALL PILES SHALL BE DRIVEN TO THE NOMINAL PILE DRIVING RESISTANCE LISTED IN THE PILE INSTALLATION DATA TABLE.

11. THE CONTRACTOR SHALL BE RESPONSIBLE FOR SUBMITTING A WAVE EQUATION ANALYSIS AND ALL OTHER INCIDENTALS IN ACCORDANCE WITH THE PROJECT SPECIFICATIONS. THE NET CROSS-SECTIONAL AREA SHALL BE CONSIDERED IN THE WAVE EQUATION ANALYSIS. THE WAVE EQUATION AND HIGH-STRAIN DYNAMIC PILE TESTING MUST BE SIGNED AND STAMPED BY A PROFESSIONAL ENGINEER LICENSED IN THE STATE OF DELAWARE IN ACCORDANCE WITH THE PROJECT SPECIFICATIONS.

12. UPON COMPLETION OF THE HIGH-STRAIN DYNAMIC PILE TESTING, THE CONTRACTOR SHALL SUBMIT A SIGNAL MATCHING ANALYSIS TO THE ENGINEER FOR REVIEW AND APPROVAL IN ACCORDANCE WITH THE PROJECT SPECIFICATIONS.

13. TO MINIMIZE THE EFFECT OF DOWNDRAG ON THE ABUTMENT PILES, THE APPROACH ROADWAY FILL SHALL BE PLACED PRIOR TO CONSTRUCTION OF THE ABUTMENT FOUNDATION. A MINIMUM QUARANTINE PERIOD OF THIRTY (30) DAYS SHALL BE REQUIRED AFTER THE FULL HEIGHT OF THE APPROACH ROADWAY FILL IS ACHIEVED.

14. ABUTMENT PILES MAY NOT BE DRIVEN UNTIL AFTER THE COMPLETION OF THE THIRTY (30) DAY QUARANTINE PERIOD, UNLESS NOTED BELOW FOR TEST PILES.

15. THE ENGINEER SHALL APPROVE THE COMPLETION OF THE WAITING PERIOD, BASED ON THE RESULTS OF INSTRUMENTATION.

16. TEST PILES MAY BE DRIVEN PRIOR TO PLACING EMBANKMENT AND SURCHARGE MATERIAL. RESTRIKES OF THESE TEST PILES SHALL BE PERFORMED PRIOR TO PLACING EMBANKMENT IN ACCORDANCE WITH ITEM 619502-TEST PILE RESTRIKE. AFTER THE SETTLEMENT HAS BEEN ACHIEVED AND THE SUBSTRUCTURE HAS BEEN RELEASED BY THE ENGINEER, PRODUCTION PILES MAY BE INSTALLED. AT THIS POINT, THE TEST PILE SHALL BE ACTING AS A PRODUCTION PILE AND IT SHALL BE RE-STRUCK PRIOR TO PLACING ANY OTHER PRODUCTION PILES WITH PAYMENT UNDER ITEM 619501-PRODUCTION PILE RESTRIKE.

17. SEE THE SPECIAL PROVISIONS 202505 AND 202518 FOR SETTLEMENT MONITORING REQUIREMENTS.

18. PILE LENGTHS FOR ORDERING PURPOSES SHALL BE DETERMINED BY TEST PILES. A MINIMUM OF ONE PILE PER SUBSTRUCTURE, AS SHOWN ON THE PLANS, SHALL BE DYNAMICALLY TESTED WITH SIGNAL MATCHING ANALYSIS BY THE CONTRACTOR IN ACCORDANCE WITH SPECIAL PROVISION 619519 AND 619539. TEST AND PRODUCTION PILE RESTRIKES WILL BE PAID AS FOLLOWS:

    A. ALL TEST PILE(S) WILL BE RESTRUCK AFTER A WAITING PERIOD OF AT LEAST 48 HOURS. TEST PILE RESTRIKES SHALL BE INCIDENTAL TO THE INITIAL INSTALLATION OF THE PILE PROVIDED THEY ARE REQUESTED WITHIN FIVE (5) WORKING DAYS FROM THE COMPLETION OF THE INITIAL DRIVE. IF TEST PILE RESTRIKES ARE REQUESTED AFTER THE FIVE (5) WORKING DAYS FROM THE COMPLETION OF THE INITIAL DRIVE THEN THE TEST PILE RESTRIKE SHALL BE PAID AS NOTED IN SPECIAL PROVISION 619502.

    B. IF DIRECTED BY THE ENGINEER TO RESTRIKE A PRODUCTION PILE, THE RESTRIKE OF THE PRODUCTION PILE SHALL BE PAID SEPARATELY UNDER ITEM NO. 619501.

    C. DELDOT STANDARD SPECIFICATION 619.11(a)(6) SHALL BE MODIFIED BY REFERENCE TO SPECIAL PROVISION 619519 AND 619539.

19. THE DEPARTMENT RESERVES THE RIGHT TO PERFORM DYNAMIC TESTING OF RESTRIKES.

DELAWARE DEPARTMENT OF TRANSPORTATION	ADDENDUMS / REVISIONS	US 301 LEVELS ROAD TO SUMMIT BRIDGE ROAD	CONTRACT T200511303	BRIDGE NO. 1-477N&S	US 301 MAINLINE OVER TRIBUTARY TO SANDY BRANCH PRESTRESSED CONCRETE PILE DETAILS	1-477N PL-1
			COUNTY NEW CASTLE	DESIGNED BY: R. F. KIRCHNER		SHEET NO. 448
				CHECKED BY: G. P. MISTRY		TOTAL SHTS. 1256

U:\Projects\AA\21387385\CAD\Bridge\BR2-5\pl01_BR2-5_US301.dgn 7/21/2015 Steve_Lambert

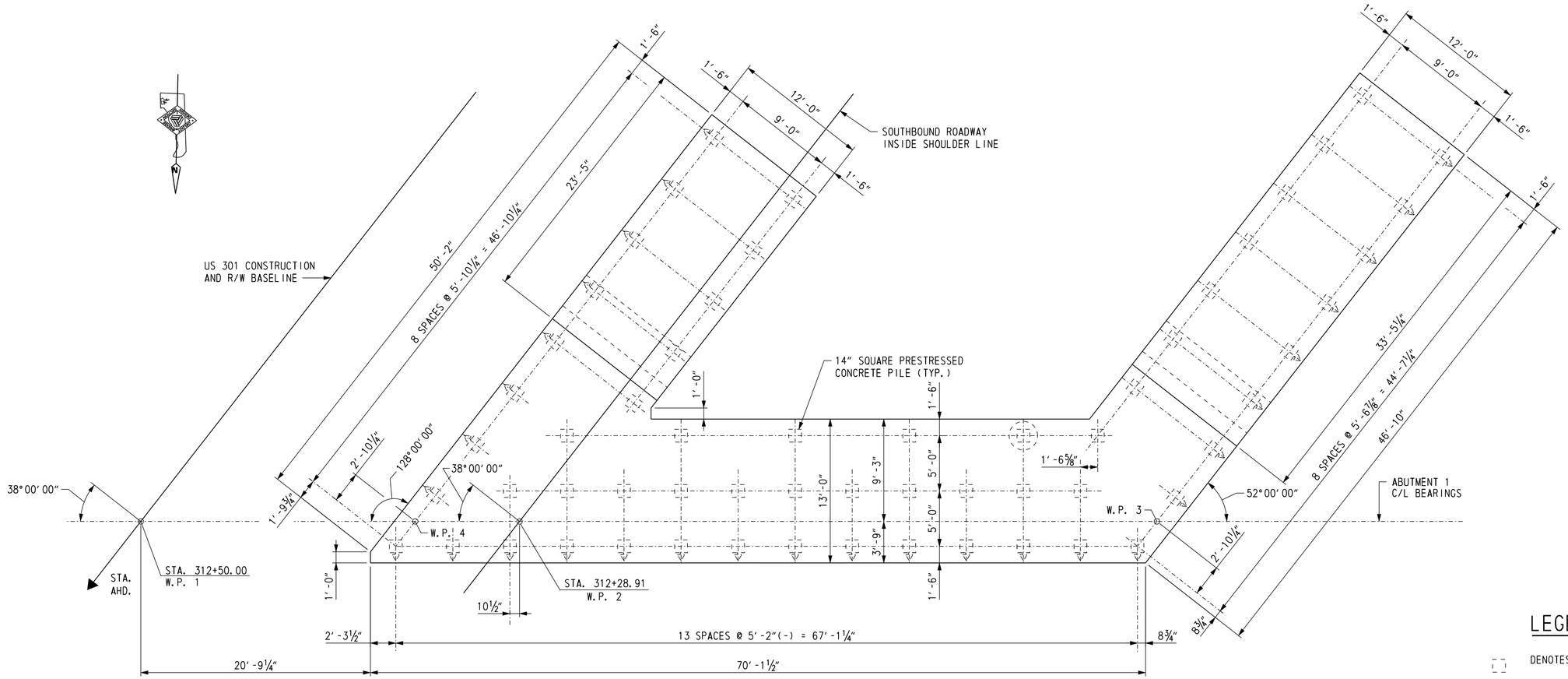

ABUTMENT 1 SOUTHBOUND ROADWAY PILE PLAN

SCALE: 3/16" = 1'-0"

LEGEND

DENOTES PLUMB PILE

DENOTES PILE BATTERED 1:4
AND DIRECTION OF BATTER

DENOTES TEST PILE

NOTE:

TEST PILE SHALL BE TEN (10) FEET LONGER THAN THE PRODUCTION PILE LENGTH INDICATED IN THE PILE INSTALLATION DATA TABLE.

PILE INSTALLATION DATA

	DESIGN DATA			ACTUAL FIELD DATA	
SUBSTRUCTURE UNIT	NOMINAL PILE DRIVING RESISTANCE (KIPS)	MINIMUM PILE TIP ELEVATION	ESTIMATED PILE TIP ELEVATION	AVERAGE MINIMUM TIP ELEVATION	AVERAGE MAXIMUM TIP ELEVATION
ABUTMENT 1	400.0	-11.0	-16.0		
ABUTMENT 2	400.0	-11.0	-16.0		

ABUTMENT 1 PILE DRIVING INFORMATION

PILE SIZE AND TYPE:
ACTUAL BEARING OBTAINED:
HAMMER TYPE:
PILE HAMMER ENERGY:
SPECIAL DRIVING CONDITIONS AND COMMENTS:

ABUTMENT 2 PILE DRIVING INFORMATION

PILE SIZE AND TYPE:
ACTUAL BEARING OBTAINED:
HAMMER TYPE:
PILE HAMMER ENERGY:
SPECIAL DRIVING CONDITIONS AND COMMENTS:

CROSS REFERENCE NOTES:

1. FOR BRIDGE PLAN AND ELEVATION, SEE DWG. 1-477 PE-1.
2. FOR ABUTMENT PLAN AND ELEVATION, SEE DWG. 1-477 AB-3.
3. FOR TYPICAL ABUTMENT AND WINGWALL SECTIONS, SEE DWG. 1-477 AB-6.
4. FOR PILE DETAILS, SEE DWG. 1-477 PL-1.
5. FOR ABUTMENT REINFORCEMENT, SEE DWGS. 1-477 AB-13 THRU 1-477 AB-17.

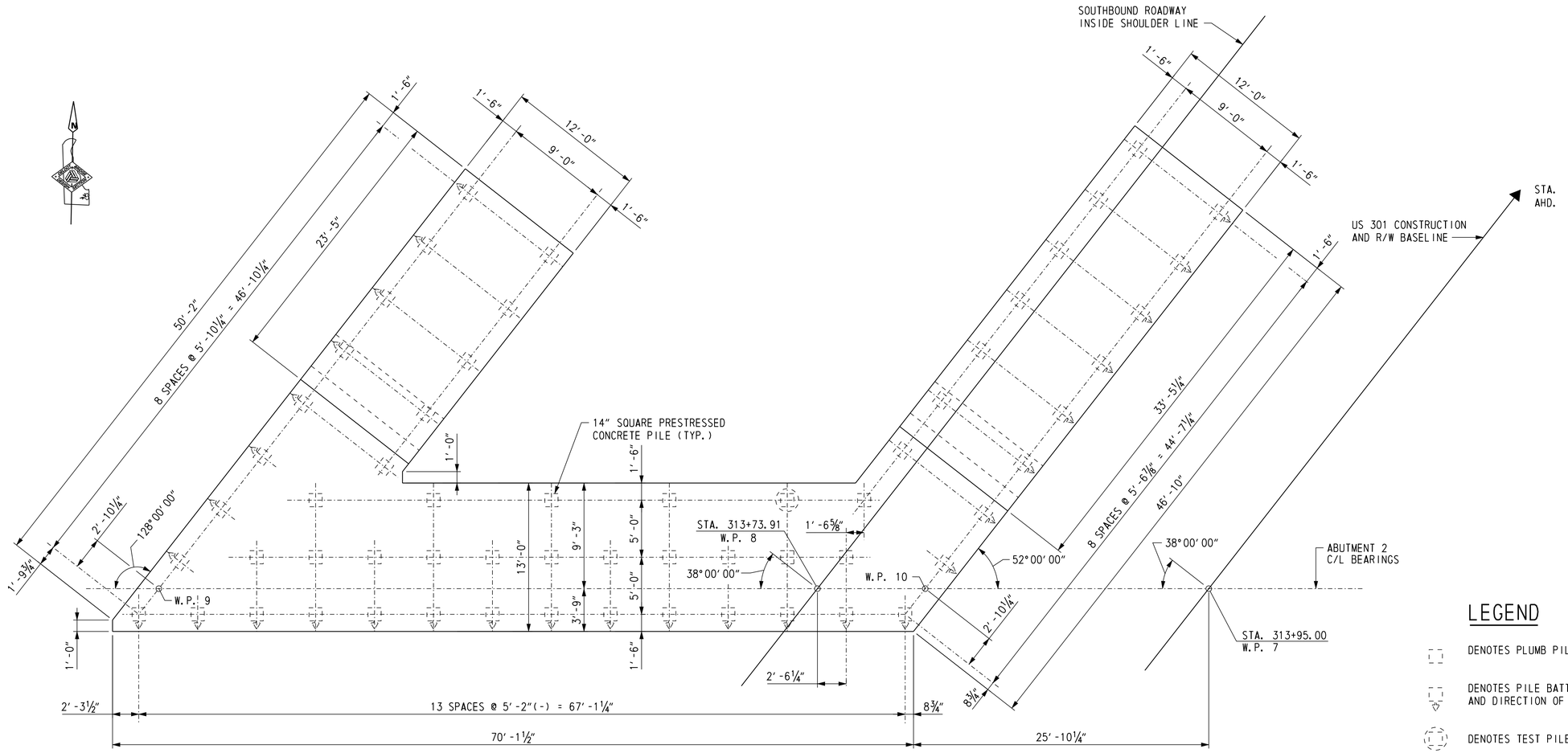

ABUTMENT 2 SOUTHBOUND ROADWAY PILE PLAN

SCALE: 3/16" = 1'-0"

LEGEND

- DENOTES PLUMB PILE
- DENOTES PILE BATTERED 1:4 AND DIRECTION OF BATTER
- DENOTES TEST PILE

NOTE:

TEST PILE SHALL BE TEN (10) FEET LONGER THAN THE PRODUCTION PILE LENGTH INDICATED IN THE PILE INSTALLATION DATA TABLE.

CROSS REFERENCE NOTES:

1. FOR BRIDGE PLAN AND ELEVATION, SEE DWG. 1-477 PE-1.
2. FOR ABUTMENT PLAN AND ELEVATION, SEE DWG. 1-477 AB-4.
3. FOR TYPICAL ABUTMENT AND WINGWALL SECTIONS, SEE DWG. 1-477 AB-6.
4. FOR PILE DETAILS, SEE DWG. 1-477 PL-1.
5. FOR ABUTMENT REINFORCEMENT, SEE DWGS. 1-477 AB-18 THRU 1-477 AB-22.

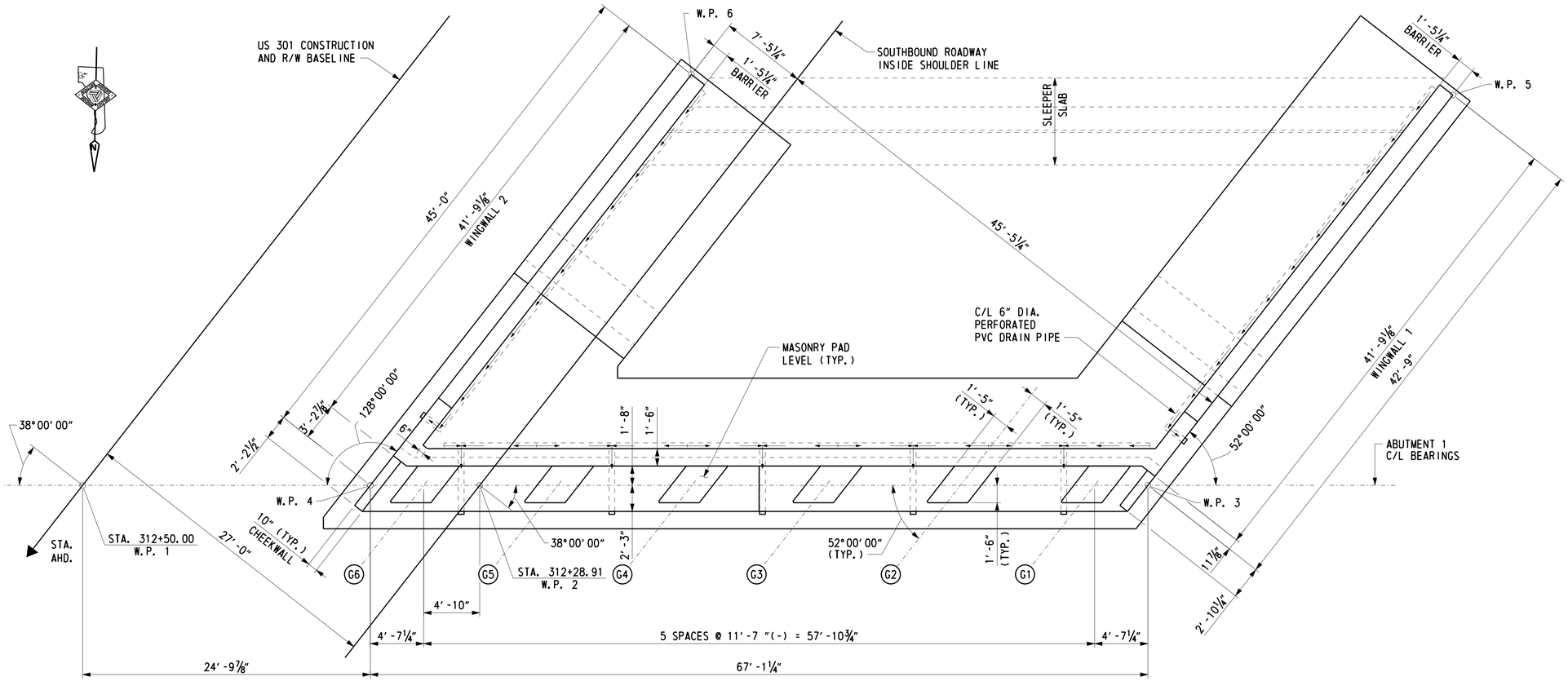

PLAN

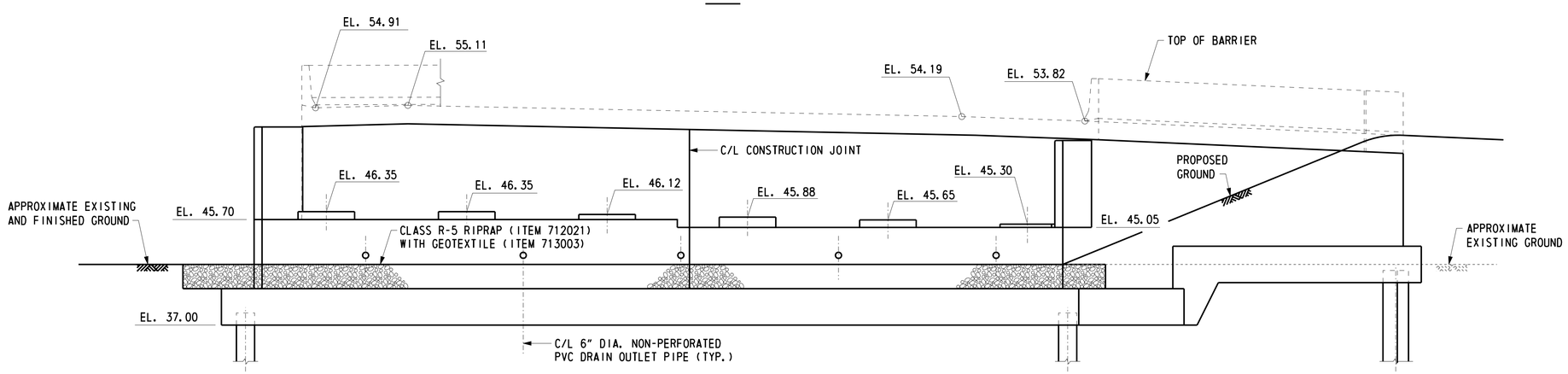

ELEVATION

ABUTMENT 1 - SOUTHBOUND ROADWAY

(LOOKING BACK STATION)
SCALE: ⅛" = 1'-0"

NOTES:

1. BEAM SEAT STEPS MIDWAY BETWEEN GIRDERS. BEAM SEAT ELEVATIONS ARE AT FRONT FACE OF BACKWALL.
2. BACKWALL ELEVATIONS SHOWN ARE TOP OF DECK AT FRONT FACE OF BACKWALL.
3. THE 6" DIA. PERFORATED PVC DRAIN PIPE AND THE 6" DIA. NON-PERFORATED PVC DRAIN OUTLET PIPE SHALL BE INCIDENTAL TO ITEM NO. 602015.

CROSS REFERENCE NOTES:

1. FOR BRIDGE PLAN AND ELEVATION, SEE DWG. 1-477 PE-1.
2. FOR GEOMETRIC LAYOUT, SEE DWG. 1-477 FT-1.
3. FOR FOUNDATION PLAN, SEE DWG. 1-477 AB-1.
4. FOR WINGWALL ELEVATIONS, SEE DWG. 1-477 AB-5.
5. FOR TYPICAL ABUTMENT AND WINGWALL SECTIONS, SEE DWG. 1-477 AB-6.
6. FOR CONSTRUCTION AND EXPANSION JOINT DETAILS, SEE DWG. 1-447 AB-6.
7. FOR ABUTMENT REINFORCEMENT, SEE DWGS. 1-477 AB-13 THRU 1-477 AB-17.

DELAWARE DEPARTMENT OF TRANSPORTATION	ADDENDUMS / REVISIONS		US 301 LEVELS ROAD TO SUMMIT BRIDGE ROAD	CONTRACT T200511303	BRIDGE NO. 1-477N&S	US 301 MAINLINE OVER TRIBUTARY TO SANDY BRANCH ABUTMENT 1 SB ROADWAY PLAN AND ELEVATION	1-477 AB-3
				COUNTY NEW CASTLE	DESIGNED BY: J. S. LI		SHEET NO. 451
					CHECKED BY: W. A. O'CONNOR		TOTAL SHTS. 1256

U:\Projects\AA\21367385\CAD\Bridge\BR2-5\ab03_BR2-5_US301.dgn
8/14/2015
Steve_Lambert

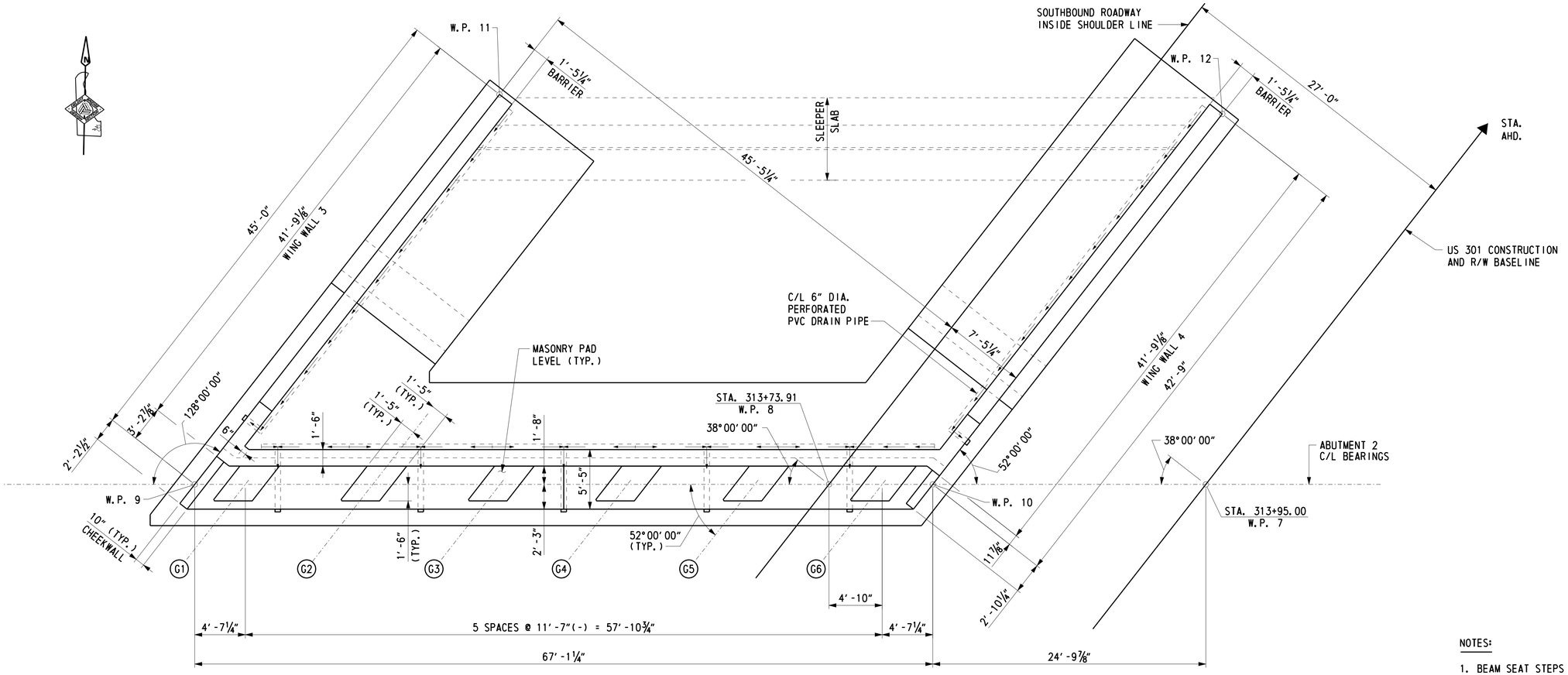

PLAN

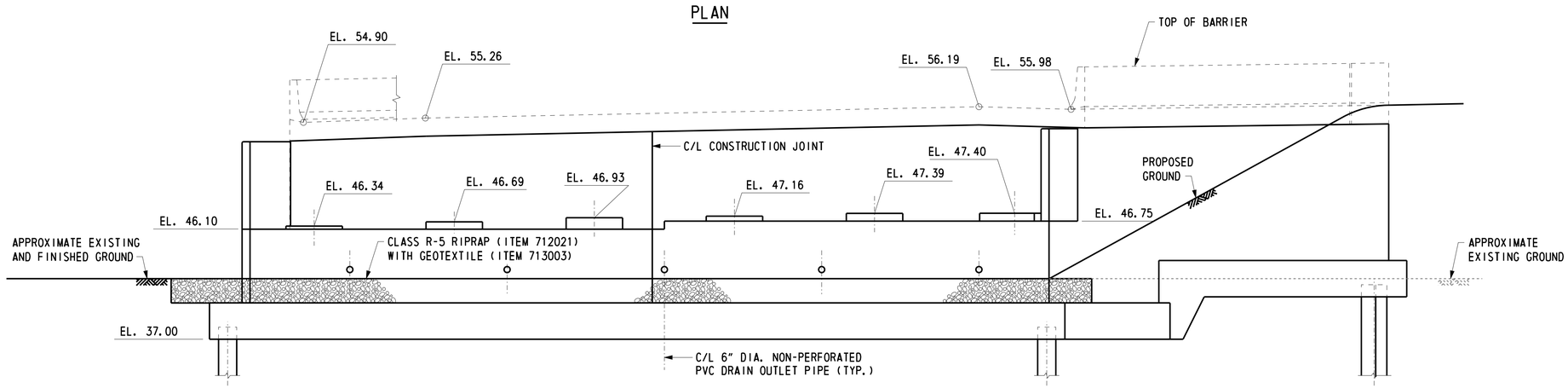

ELEVATION

ABUTMENT 2 - SOUTHBOUND ROADWAY

(LOOKING AHEAD STATION)
SCALE: ⅛" = 1'-0"

NOTES:

1. BEAM SEAT STEPS MIDWAY BETWEEN GIRDERS. BEAM SEAT ELEVATIONS ARE AT FRONT FACE OF BACKWALL.
2. BACKWALL ELEVATIONS SHOWN ARE TOP OF DECK AT FRONT FACE OF BACKWALL.
3. THE 6" DIA. PERFORATED PVC DRAIN PIPE AND THE 6" DIA. NON-PERFORATED PVC DRAIN OUTLET PIPE SHALL BE INCIDENTAL TO ITEM NO. 602015.

CROSS REFERENCE NOTES:

1. FOR BRIDGE PLAN AND ELEVATION, SEE DWG. 1-477 PE-1.
2. FOR GEOMETRIC LAYOUT, SEE DWG. 1-477 FT-1.
3. FOR FOUNDATION PLAN, SEE DWG. 1-477 AB-2.
4. FOR WINGWALL ELEVATIONS, SEE DWG. 1-477 AB-5.
5. FOR TYPICAL ABUTMENT AND WINGWALL SECTIONS, SEE DWG. 1-477 AB-6.
6. FOR CONSTRUCTION AND EXPANSION JOINT DETAILS, SEE DWG. 1-447 AB-6.
7. FOR ABUTMENT REINFORCEMENT, SEE DWGS. 1-477 AB-18 THRU 1-477 AB-22.

DELAWARE DEPARTMENT OF TRANSPORTATION

ADDENDUMS / REVISIONS

US 301
LEVELS ROAD
TO SUMMIT BRIDGE ROAD

CONTRACT	T200511303
COUNTY	NEW CASTLE
BRIDGE NO.	1-477N&S
DESIGNED BY:	J. S. LI
CHECKED BY:	W. A. O'CONNOR

US 301 MAINLINE OVER TRIBUTARY TO SANDY BRANCH
ABUTMENT 2 SB ROADWAY
PLAN AND ELEVATION

	1-477 AB-4
SHEET NO.	452
TOTAL SHTS.	1256

U:\Projects\AA\21387385\CAD\Bridge\BR2-5\ab04_BR2-5_US301.dgn
8/14/2015
Steve_Lambert

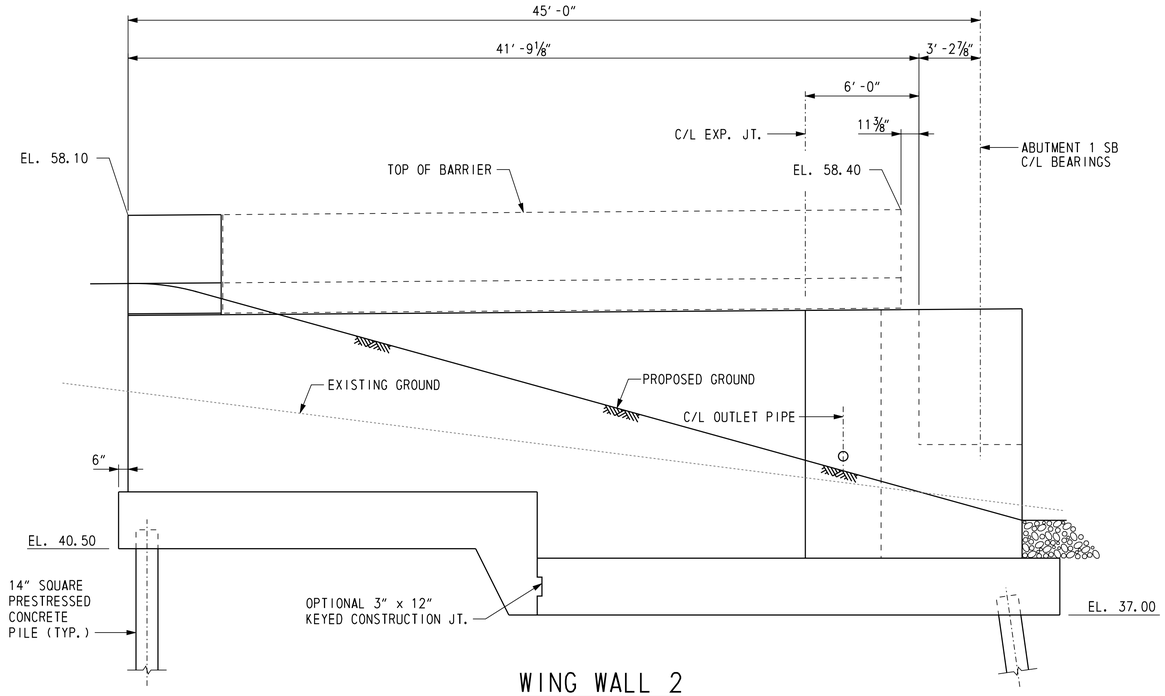

WING WALL 2

SCALE: 1/4" = 1'-0"

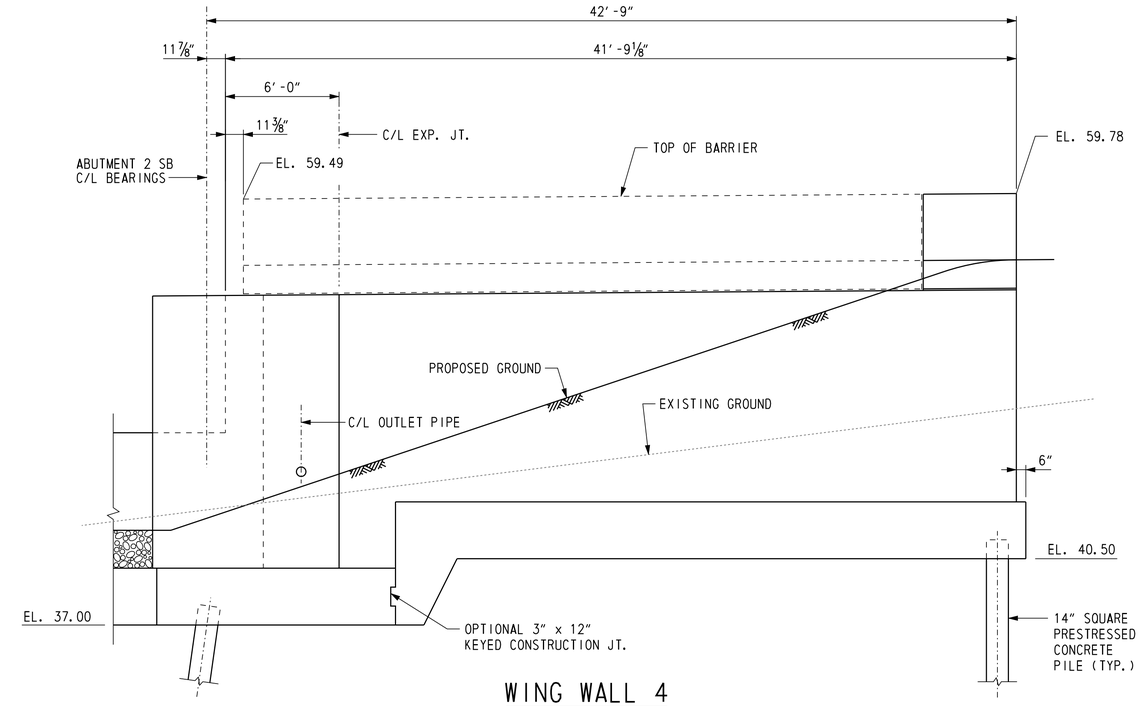

WING WALL 4

SCALE: 1/4" = 1'-0"

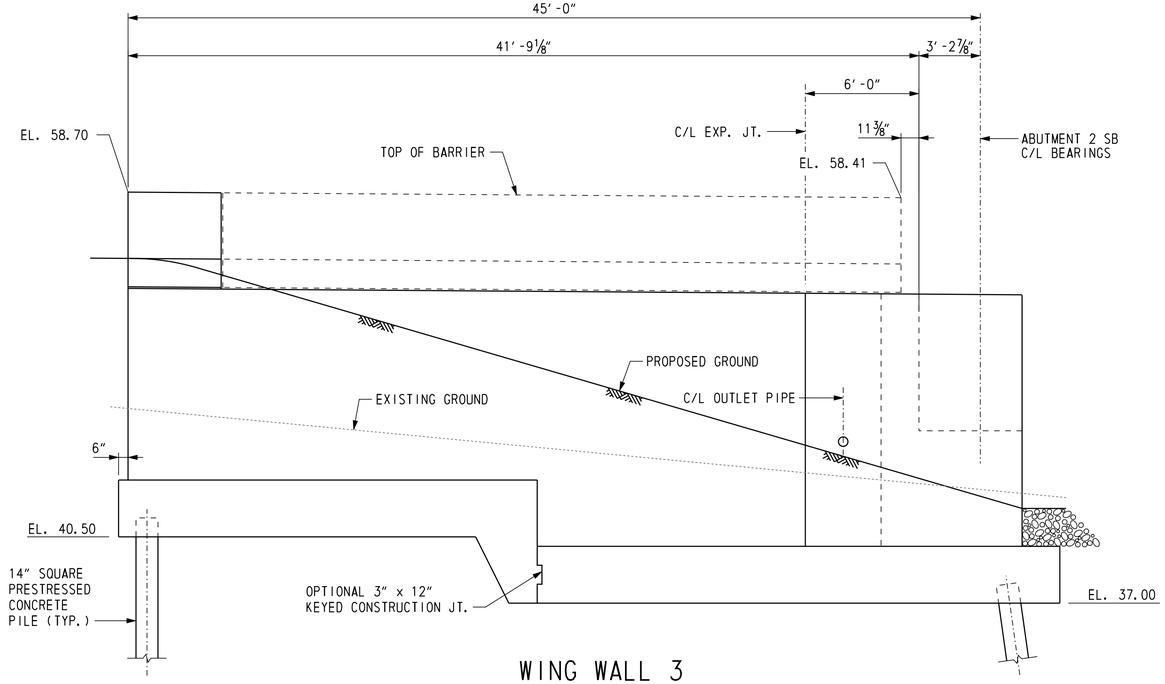

WING WALL 3

SCALE: 1/4" = 1'-0"

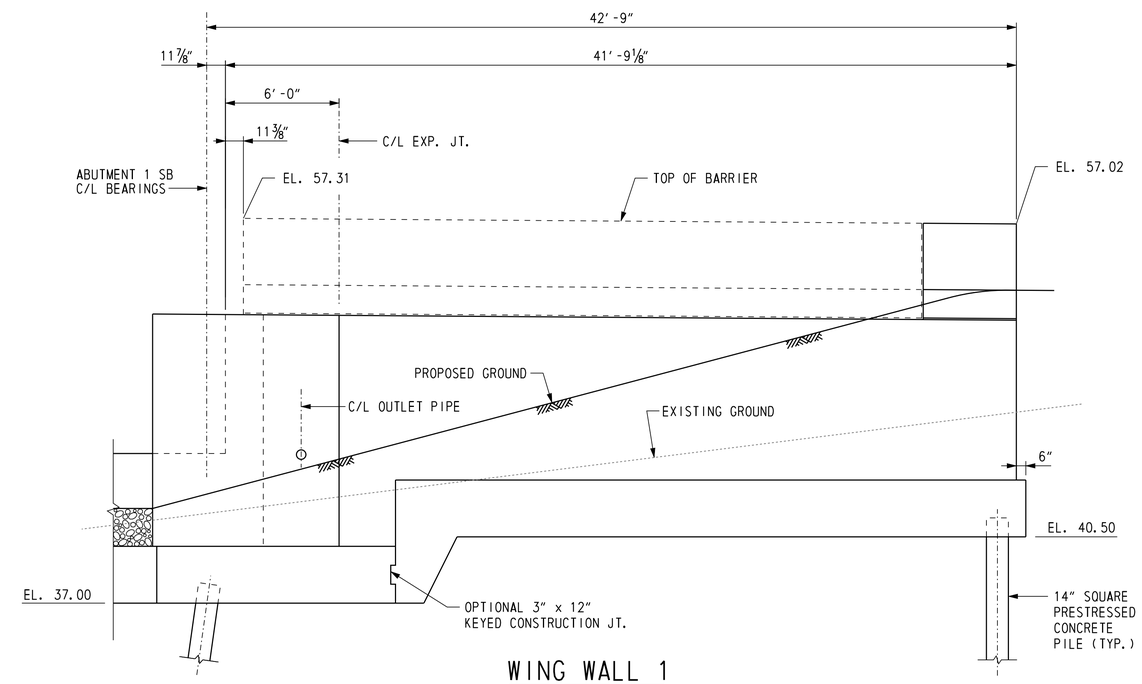

WING WALL 1

SCALE: 1/4" = 1'-0"

U:\Projects\AA\21987385\CAD\Bridge\BR2-5\ab05_BR2-5_US301.dgn

11/2/2012

Steve_Lambert

DELAWARE DEPARTMENT OF TRANSPORTATION

ADDENDUMS / REVISIONS

US 301
LEVELS ROAD
TO SUMMIT BRIDGE ROAD

CONTRACT	BRIDGE NO.	1-477N&S
T200511303	DESIGNED BY: J. S. LI	
COUNTY		
NEW CASTLE	CHECKED BY: W. A. O'CONNOR	

US 301 MAINLINE OVER TRIBUTARY TO SANDY BRANCH SOUTHBOUND ROADWAY WING WALL ELEVATIONS

1-477 AB-5
SHEET NO.
453
TOTAL SHTS.
1256

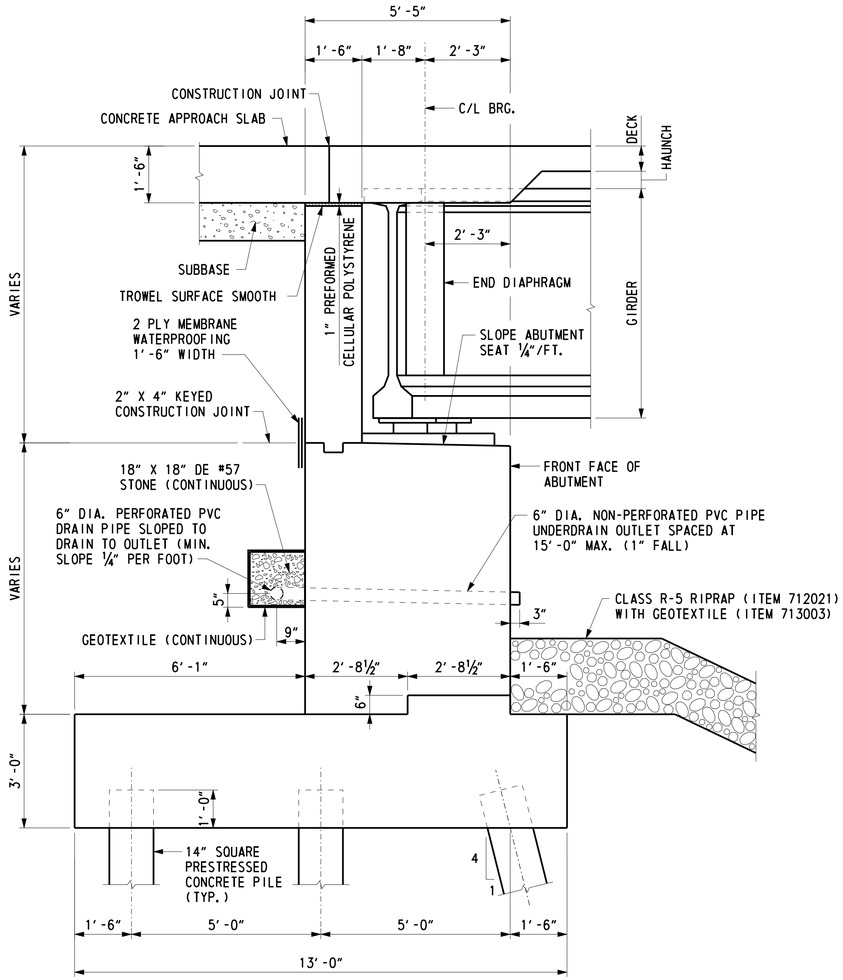

TYPICAL SOUTHBOUND ABUTMENT SECTION

SCALE: 1/2" = 1'-0"

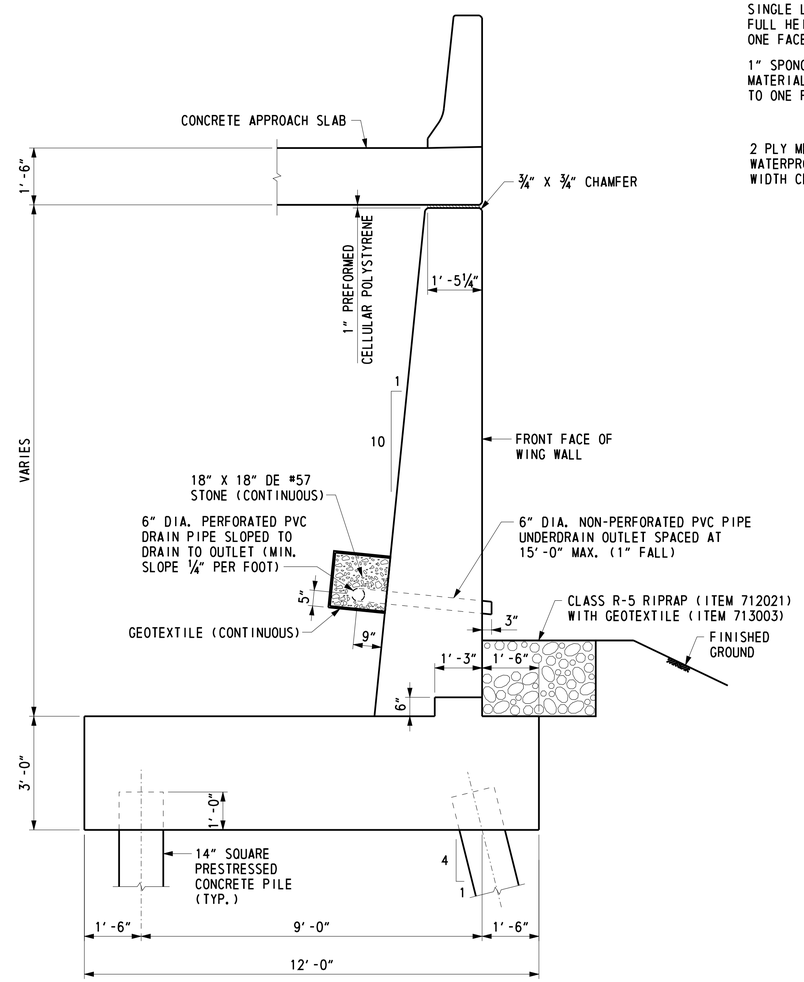

TYPICAL WING WALL SECTION

SCALE: 1/2" = 1'-0"

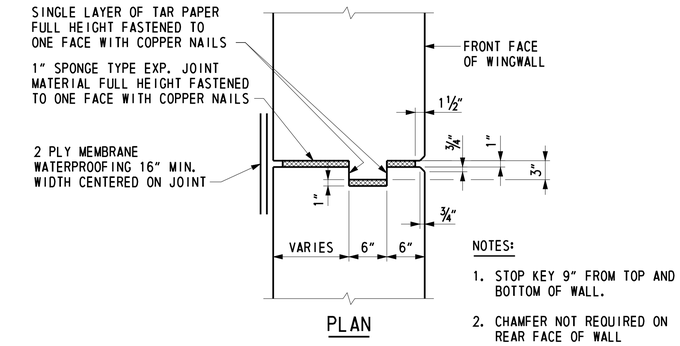

NOTES:

1. STOP KEY 9" FROM TOP AND BOTTOM OF WALL.
2. CHAMFER NOT REQUIRED ON REAR FACE OF WALL

WINGWALL EXPANSION JOINT DETAIL

SCALE: 1" = 1'-0"

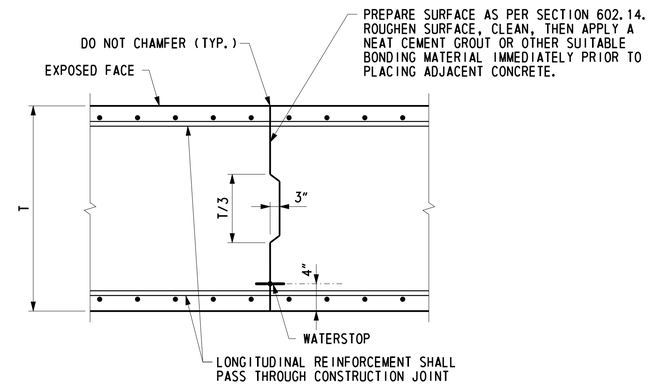

ABUTMENT CONSTRUCTION JOINT DETAIL

NOT TO SCALE

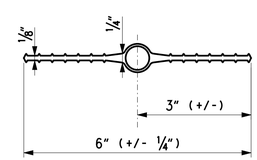

PVC WATERSTOP DETAIL

NOT TO SCALE

NOTES:

1. PAYMENT FOR JOINT FILLER, TAR PAPER AND MEMBRANE WATERPROOFING SHALL BE INCIDENTAL TO ITEM NO. 602015 - PORTLAND CEMENT CONCRETE MASONRY, ABUTMENT ABOVE FOOTING, CLASS A. PAYMENT FOR PREFORMED CELLULAR POLYSTYRENE SHALL BE INCIDENTAL TO ITEM NO. 602014 - PORTLAND CEMENT CONCRETE MASONRY, APPROACH SLAB, CLASS D.
2. PAYMENT FOR PREFORMED CELLULAR POLYSTYRENE SHALL BE INCIDENTAL TO ITEM NO. 602014 - PORTLAND CEMENT CONCRETE MASONRY, APPROACH SLAB, CLASS D.
3. THE 6" DIA. PERFORATED PVC DRAIN PIPE AND THE 6" DIA. NON-PERFORATED PVC DRAIN OUTLET PIPE SHALL BE INCIDENTAL TO ITEM NO. 602015.

CROSS REFERENCE NOTES:

1. FOR FOUNDATION PLAN, SEE DWG. 1-477 AB-1 & 1-477 AB-2.
2. FOR ABUTMENT PLAN AND ELEVATION, SEE DWG. 1-477 AB-3 & 1-477 AB-4.
3. FOR WINGWALL ELEVATIONS, SEE DWG. 1-477 AB-5.
4. FOR ABUTMENT AND WINGWALL REINFORCEMENT, SEE DWGS. 1-477 AB-13 THRU 1-477 AB-22.
5. FOR APPROACH ROADWAY FILL DETAIL, SEE DWG. 1-477 AB-12.
6. FOR LIMITS AND DEPTH OF RIPRAP, SEE DWG. 1-477 PE-1.

U:\Projects\AA\21987385\CAD\Bridge\BR2-5\ab06_BR2-5_US301.dgn
9/14/2015
Steve_Lambert

DELAWARE DEPARTMENT OF TRANSPORTATION

ADDENDUMS / REVISIONS

US 301 LEVELS ROAD TO SUMMIT BRIDGE ROAD

CONTRACT	BRIDGE NO.	1-477N&S
T200511303	DESIGNED BY: J. S. LI	
COUNTY		
NEW CASTLE	CHECKED BY: W. A. O'CONNOR	

US 301 MAINLINE OVER TRIBUTARY TO SANDY BRANCH SOUTHBOUND ROADWAY TYPICAL ABUTMENT SECTION

1-477 AB-6
SHEET NO.
454
TOTAL SHTS.
1256

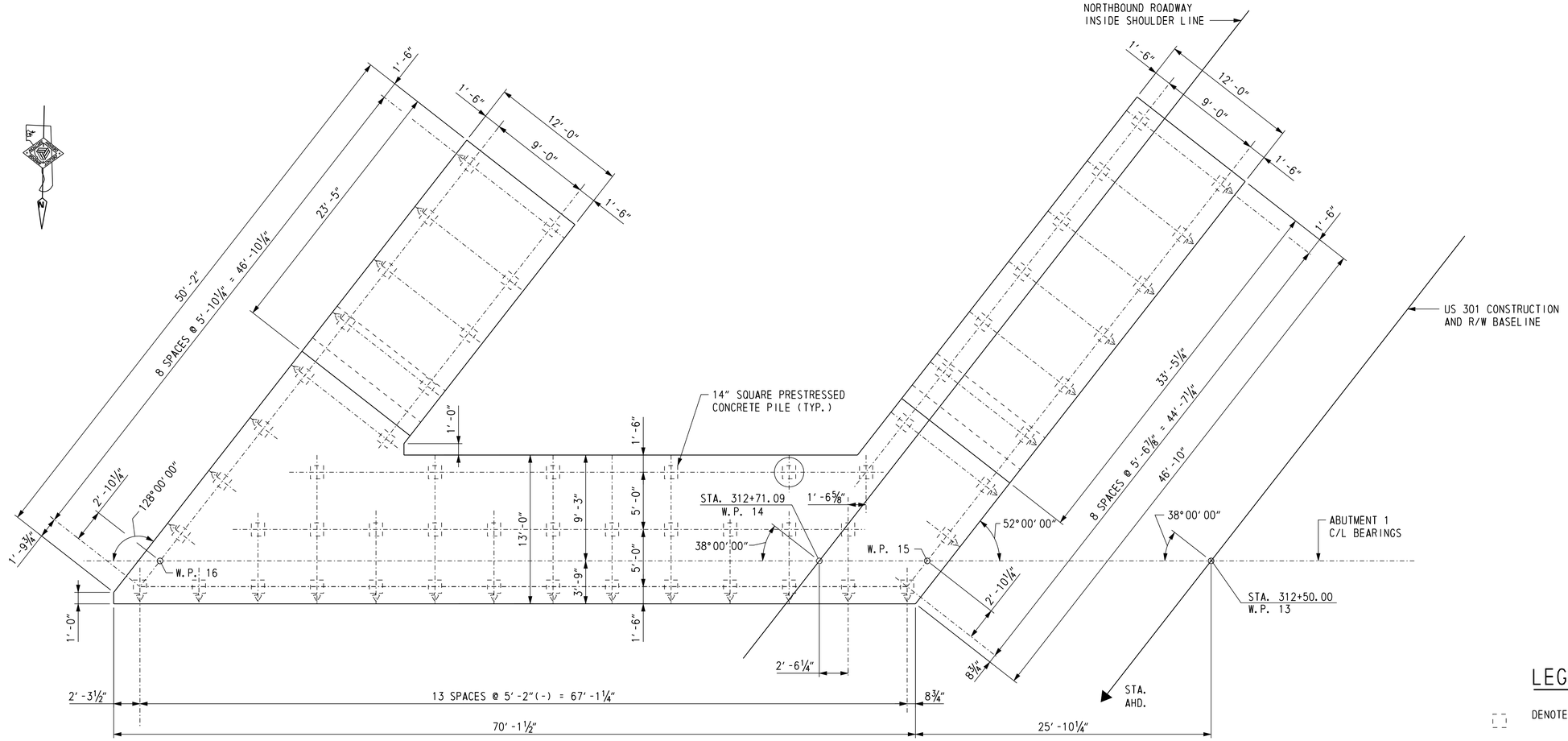

ABUTMENT 1 NORTHBOUND ROADWAY PILE PLAN

SCALE: 3/16" = 1'-0"

LEGEND

DENOTES PLUMB PILE

DENOTES PILE BATTERED 1:4 AND DIRECTION OF BATTER

DENOTES TEST PILE

PILE INSTALLATION DATA

SUBSTRUCTURE UNIT	DESIGN DATA			ACTUAL FIELD DATA	
	NOMINAL PILE DRIVING RESISTANCE (KIPS)	MINIMUM PILE TIP ELEVATION	ESTIMATED PILE TIP ELEVATION	AVERAGE MINIMUM TIP ELEVATION	AVERAGE MAXIMUM TIP ELEVATION
ABUTMENT 1	400.0	-11.0	-16.0		
ABUTMENT 2	400.0	-11.0	-16.0		

NOTE:

TEST PILE SHALL BE TEN (10) FEET LONGER THAN THE PRODUCTION PILE LENGTH INDICATED IN THE PILE INSTALLATION DATA TABLE.

ABUTMENT 1 PILE DRIVING INFORMATION

PILE SIZE AND TYPE:
ACTUAL BEARING OBTAINED:
HAMMER TYPE:
PILE HAMMER ENERGY:
SPECIAL DRIVING CONDITIONS AND COMMENTS:

ABUTMENT 2 PILE DRIVING INFORMATION

PILE SIZE AND TYPE:
ACTUAL BEARING OBTAINED:
HAMMER TYPE:
PILE HAMMER ENERGY:
SPECIAL DRIVING CONDITIONS AND COMMENTS:

CROSS REFERENCE NOTES:

1. FOR BRIDGE PLAN AND ELEVATION, SEE DWG. 1-477 PE-2.
2. FOR ABUTMENT PLAN AND ELEVATION, SEE DWG. 1-477 AB-9.
3. FOR TYPICAL ABUTMENT AND WINGWALL SECTIONS, SEE DWG. 1-477 AB-12.
4. FOR PILE DETAILS, SEE DWG. 1-477 PL-1.
5. FOR ABUTMENT REINFORCEMENT, SEE DWGS. 1-477 AB-25 THRU 1-477 AB-29.

DELAWARE DEPARTMENT OF TRANSPORTATION

ADDENDUMS / REVISIONS

US 301 LEVELS ROAD TO SUMMIT BRIDGE ROAD

CONTRACT	BRIDGE NO.	1-477N&S
T200511303	DESIGNED BY: J. S. LI	
COUNTY		
NEW CASTLE	CHECKED BY: W. A. O'CONNOR	

US 301 MAINLINE OVER TRIBUTARY TO SANDY BRANCH ABUTMENT 1 NB ROADWAY PILE PLAN

1-477 AB-7
SHEET NO.
455
TOTAL SHTS.
1256

U:\Projects\AA\21387385\CAD\Bridge\BR2-5\ab07_BR2-5_US301.dgn
11/8/2012
Steve_Lambert

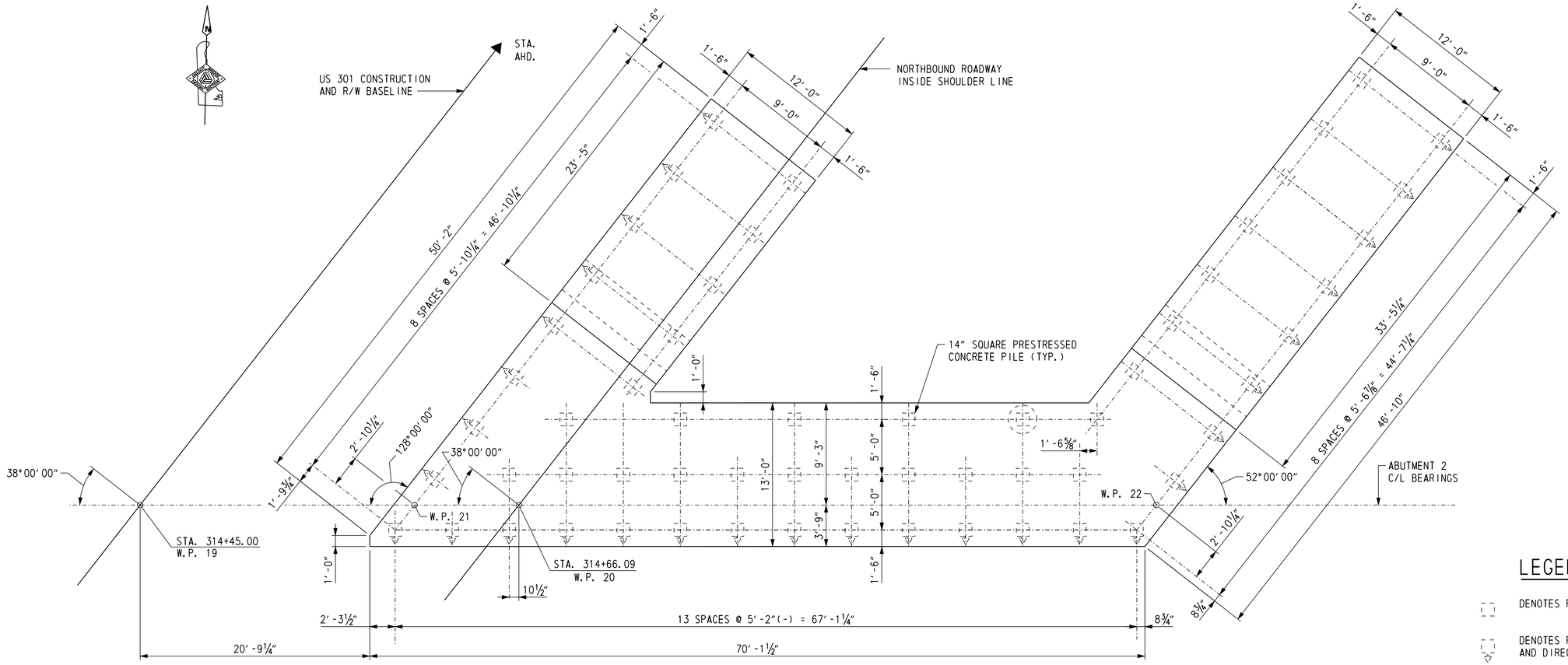

ABUTMENT 2 NORTHBOUND ROADWAY PILE PLAN

SCALE: 3/16" = 1'-0"

LEGEND

DENOTES PLUMB PILE

DENOTES PILE BATTERED 1:4 AND DIRECTION OF BATTER

DENOTES TEST PILE

NOTE:

TEST PILE SHALL BE TEN (10) FEET LONGER THAN THE PRODUCTION PILE LENGTH INDICATED IN THE PILE INSTALLATION DATA TABLE.

CROSS REFERENCE NOTES:

1. FOR BRIDGE PLAN AND ELEVATION, SEE DWG. 1-477 PE-2.
2. FOR ABUTMENT PLAN AND ELEVATION, SEE DWG. 1-477 AB-10.
3. FOR TYPICAL ABUTMENT AND WINGWALL SECTIONS, SEE DWG. 1-477 AB-12.
4. FOR PILE DETAILS, SEE DWG. 1-477 PL-1.
5. FOR ABUTMENT REINFORCEMENT, SEE DWGS. 1-477 AB-30 THRU 1-477 AB-34.

DELAWARE DEPARTMENT OF TRANSPORTATION	ADDENDUMS / REVISIONS		US 301 LEVELS ROAD TO SUMMIT BRIDGE ROAD	CONTRACT T200511303	BRIDGE NO. 1-477N&S	US 301 MAINLINE OVER TRIBUTARY TO SANDY BRANCH ABUTMENT 2 NB ROADWAY PILE PLAN	1-477 AB-8
				COUNTY NEW CASTLE	DESIGNED BY: J. S. LI		SHEET NO. 456
					CHECKED BY: W. A. O'CONNOR		TOTAL SHTS. 1256

Steve_Lambert 11/8/2012 U:\Projects\AA\21387385\CAD\Bridge\BR2-5\ab08_BR2-5_US301.dgn

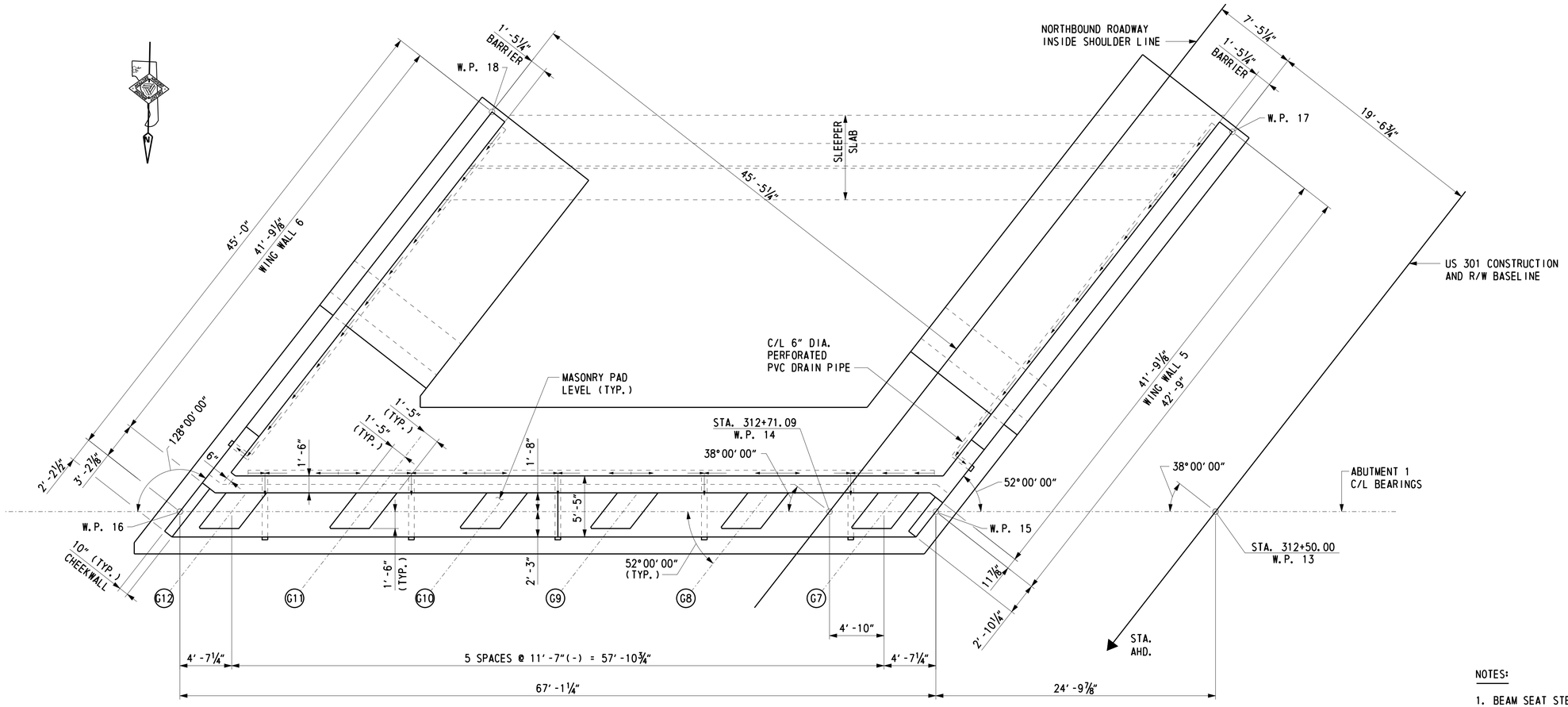

PLAN

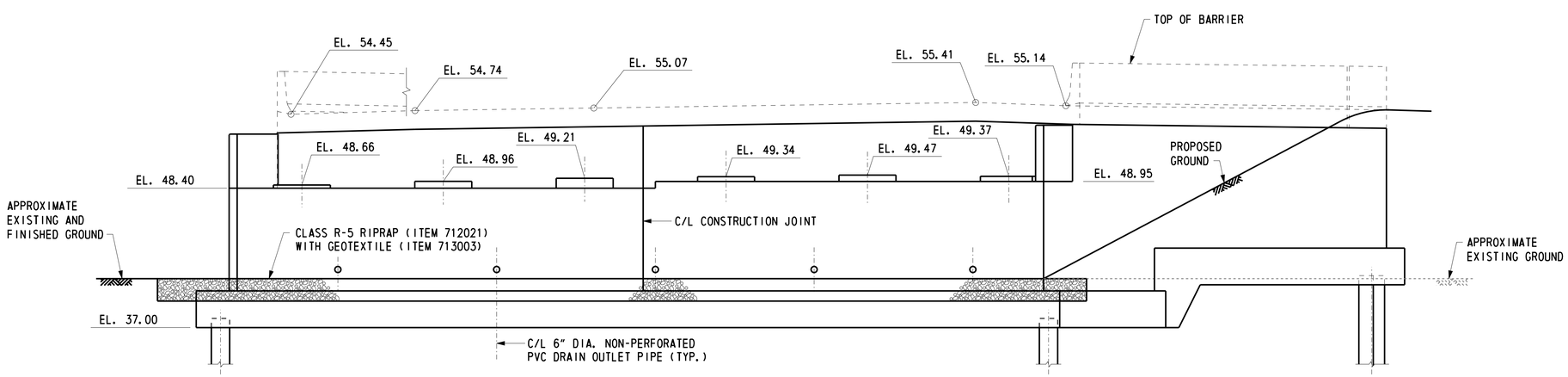

ELEVATION

ABUTMENT 1 - NORTHBOUND ROADWAY

(LOOKING BACK STATION)
SCALE: 3/16" = 1'-0"

NOTES:

1. BEAM SEAT STEPS MIDWAY BETWEEN GIRDERS. BEAM SEAT ELEVATIONS ARE AT FRONT FACE OF BACKWALL.
2. BACKWALL ELEVATIONS SHOWN ARE TOP OF DECK AT FRONT FACE OF BACKWALL.
3. THE 6" DIA. PERFORATED PVC DRAIN PIPE AND THE 6" DIA. NON-PERFORATED PVC DRAIN OUTLET PIPE SHALL BE INCIDENTAL TO ITEM NO. 602015.

CROSS REFERENCE NOTES:

1. FOR BRIDGE PLAN AND ELEVATION, SEE DWG. 1-477 PE-2.
2. FOR GEOMETRIC LAYOUT, SEE DWG. 1-477 FT-2.
3. FOR FOUNDATION PLAN, SEE DWG. 1-477 AB-7.
4. FOR WINGWALL ELEVATIONS, SEE DWG. 1-477 AB-11.
5. FOR TYPICAL ABUTMENT AND WINGWALL SECTIONS, SEE DWG. 1-477 AB-12.
6. FOR CONSTRUCTION AND EXPANSION JOINT DETAILS, SEE DWG. 1-477 AB-6.
7. FOR ABUTMENT REINFORCEMENT, SEE DWGS. 1-477 AB-25 THRU 1-477 AB-29.

DELAWARE DEPARTMENT OF TRANSPORTATION

ADDENDUMS / REVISIONS

US 301
LEVELS ROAD
TO SUMMIT BRIDGE ROAD

CONTRACT	T200511303
COUNTY	NEW CASTLE
BRIDGE NO.	1-477N&S
DESIGNED BY:	J. S. LI
CHECKED BY:	W. A. O'CONNOR

US 301 MAINLINE OVER TRIBUTARY TO SANDY BRANCH
ABUTMENT 1 NB ROADWAY
PLAN AND ELEVATION

	1-477 AB-9
SHEET NO.	457
TOTAL SHTS.	1256

U:\Projects\AA\21387385\CAD\Bridge\BR2-5\ab09_BR2-5_US301.dgn
8/14/2015
Steve_Lambert

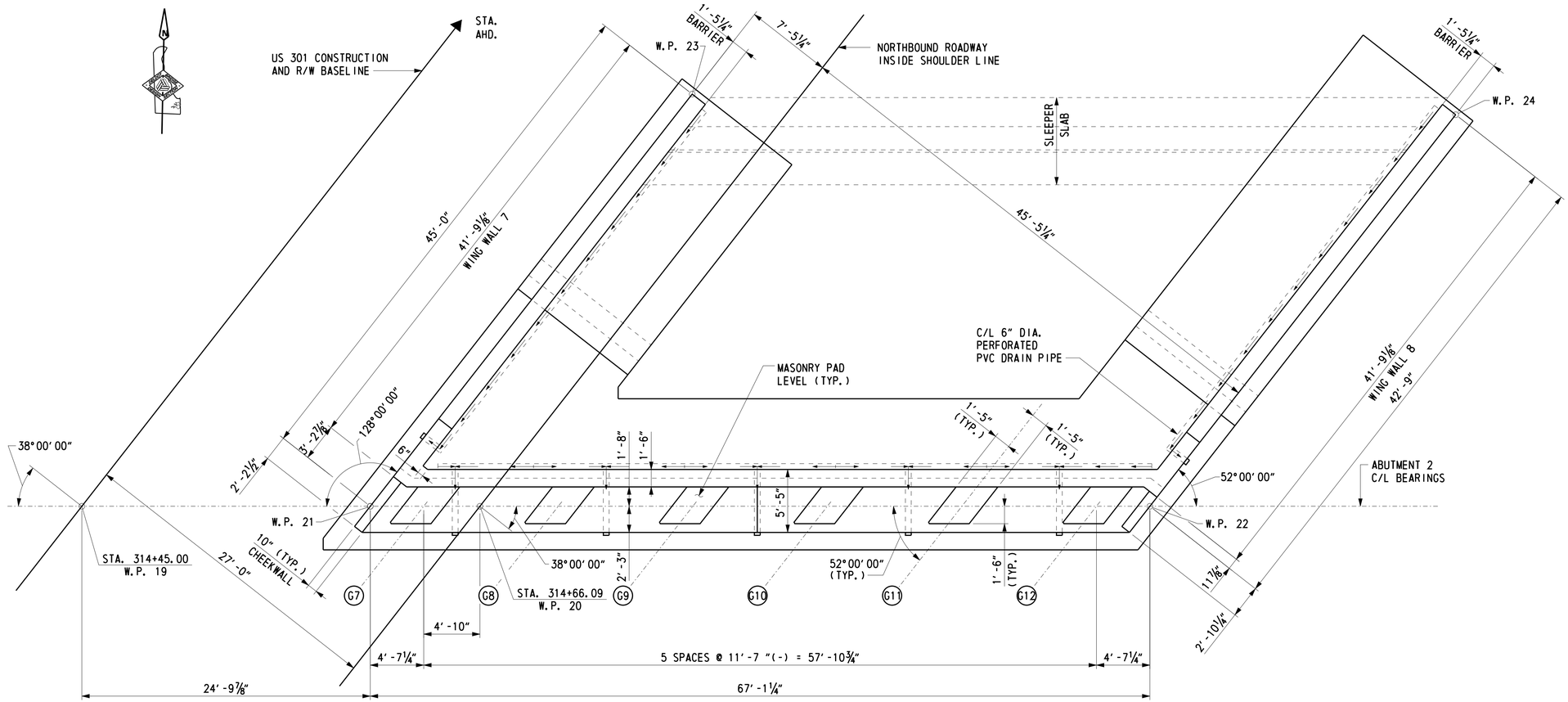

PLAN

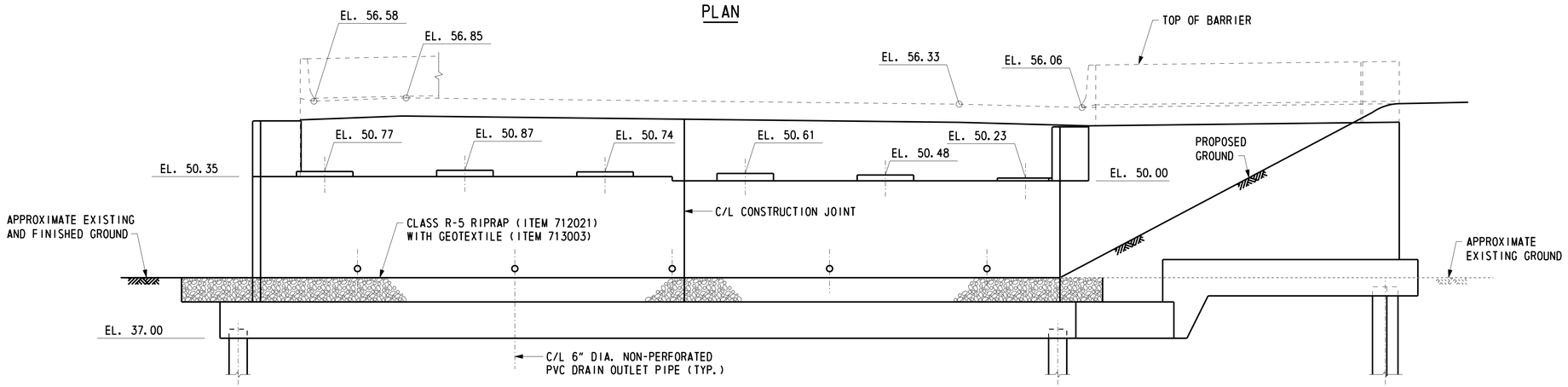

ELEVATION

ABUTMENT 2 - NORTHBOUND ROADWAY

(LOOKING STATION AHEAD)
SCALE: 3/16" = 1'-0"

NOTES:

1. BEAM SEAT STEPS MIDWAY BETWEEN GIRDERS. BEAM SEAT ELEVATIONS ARE AT FRONT FACE OF BACKWALL.
2. BACKWALL ELEVATIONS SHOWN ARE TOP OF DECK AT FRONT FACE OF BACKWALL.
3. THE 6" DIA. PERFORATED PVC DRAIN PIPE AND THE 6" DIA. NON-PERFORATED PVC DRAIN OUTLET PIPE SHALL BE INCIDENTAL TO ITEM NO. 602015.

CROSS REFERENCE NOTES:

1. FOR BRIDGE PLAN AND ELEVATION, SEE DWG. 1-477 PE-2.
2. FOR GEOMETRIC LAYOUT, SEE DWG. 1-477 FT-2.
3. FOR FOUNDATION PLAN, SEE DWG. 1-477 AB-8.
4. FOR WINGWALL ELEVATIONS, SEE DWG. 1-477 AB-11.
5. FOR TYPICAL ABUTMENT AND WINGWALL SECTIONS, SEE DWG. 1-477 AB-12.
6. FOR CONSTRUCTION AND EXPANSION JOINT DETAILS, SEE DWG. 1-477 AB-6.
7. FOR ABUTMENT REINFORCEMENT, SEE DWGS. 1-477 AB-30 THRU 1-477 AB-34.

DELAWARE DEPARTMENT OF TRANSPORTATION	ADDENDUMS / REVISIONS	US 301 LEVELS ROAD TO SUMMIT BRIDGE ROAD	CONTRACT T200511303	BRIDGE NO. 1-477N&S	US 301 MAINLINE OVER TRIBUTARY TO SANDY BRANCH ABUTMENT 2 NB ROADWAY PLAN AND ELEVATION	1-477 AB-10	
			COUNTY NEW CASTLE	DESIGNED BY: J. S. LI		SHEET NO. 458	
				CHECKED BY: W. A. O'CONNOR		TOTAL SHTS. 1256	

U:\Projects\AA\21387385\CAD\Bridge\BR2-5\ab10_BR2-5_US301.dgn
8/14/2015
Steve_Lambert

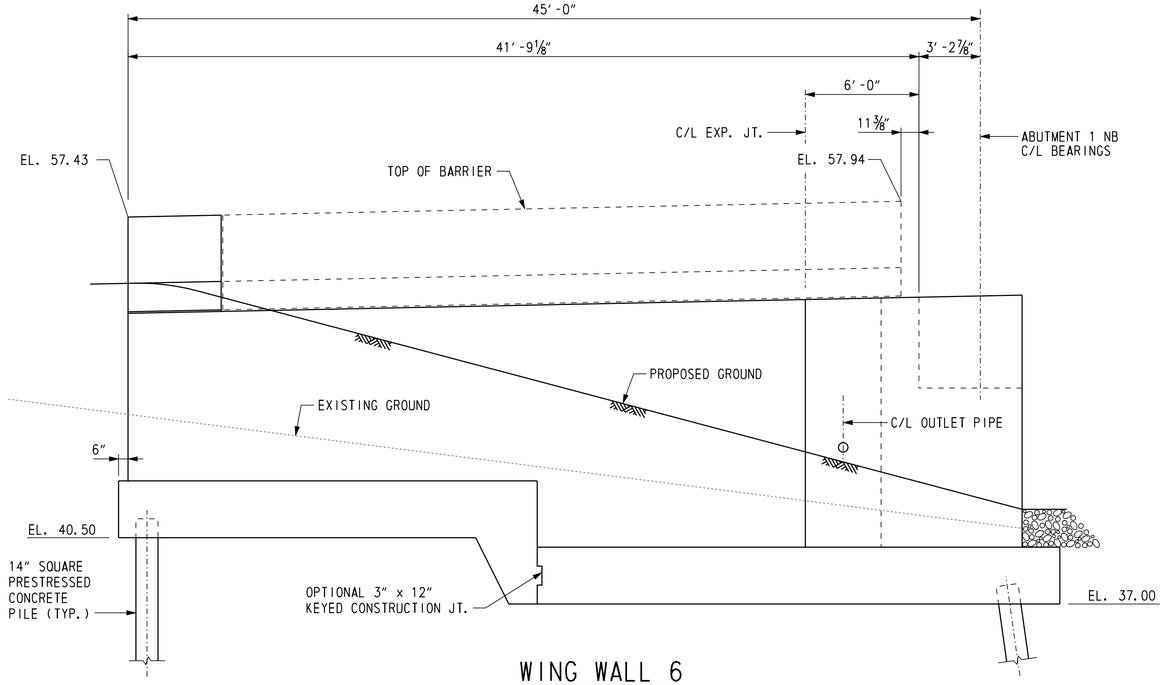

WING WALL 6

SCALE: ¼″ = 1′-0″

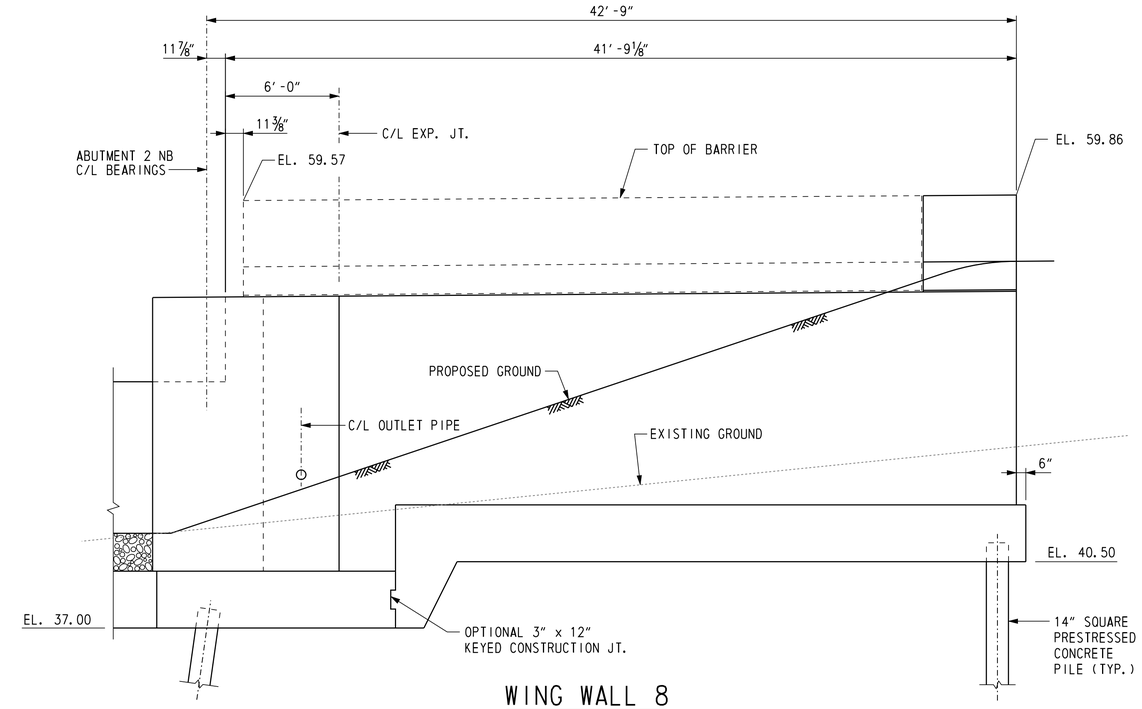

WING WALL 8

SCALE: ¼″ = 1′-0″

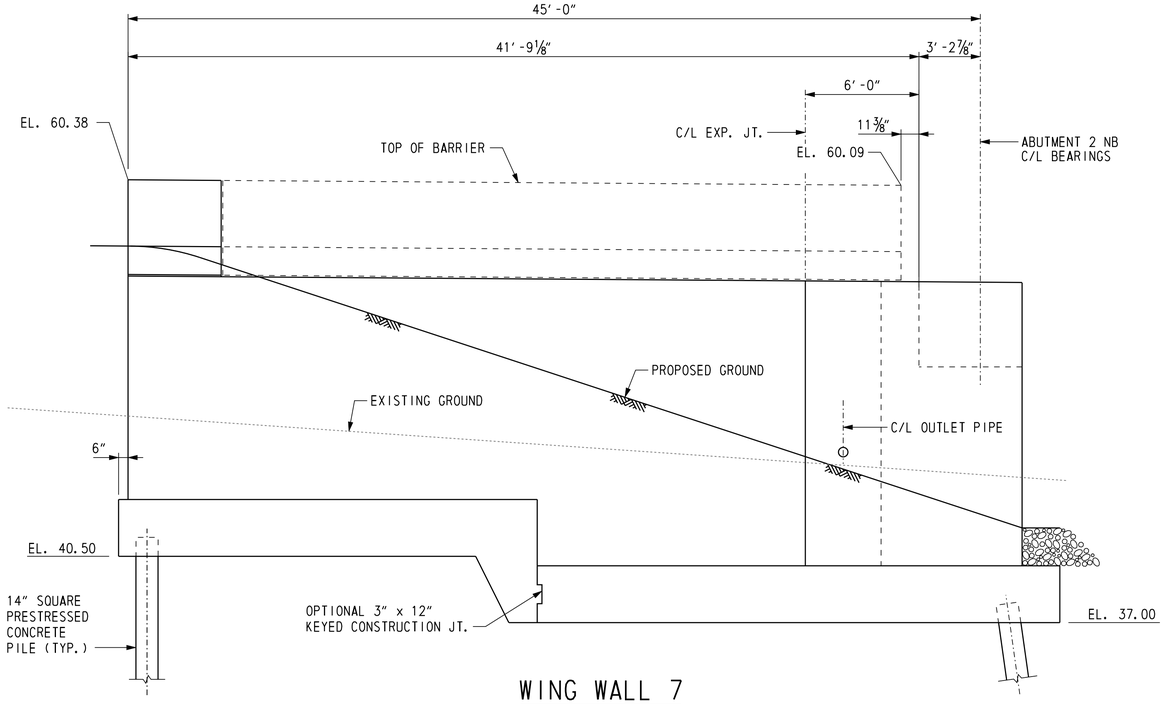

WING WALL 7

SCALE: ¼″ = 1′-0″

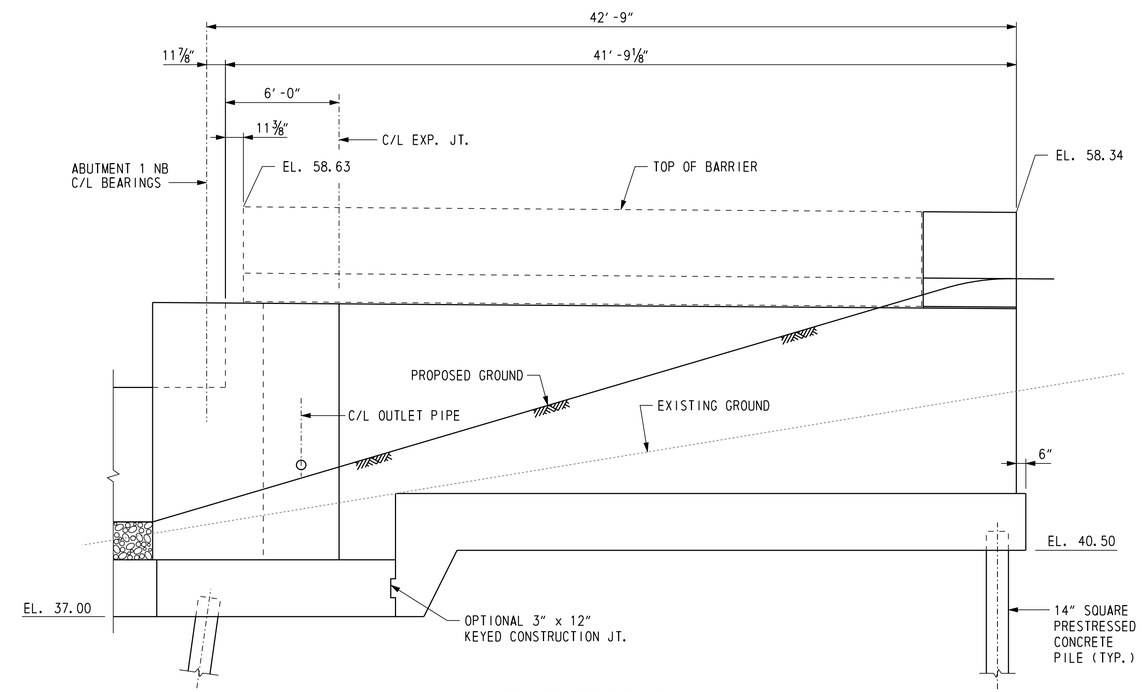

WING WALL 5

SCALE: ¼″ = 1′-0″

U:\Projects\AA\21387385\CAD\Bridge\BR2-5\ab11_BR2-5_US301.dgn

11/8/2012

Steve_Lambert

DELAWARE DEPARTMENT OF TRANSPORTATION

ADDENDUMS / REVISIONS

US 301
LEVELS ROAD
TO SUMMIT BRIDGE ROAD

CONTRACT	BRIDGE NO.	1-477N&S
T200511303	DESIGNED BY: J. S. LI	
COUNTY		
NEW CASTLE	CHECKED BY: W. A. O'CONNOR	

US 301 MAINLINE OVER TRIBUTARY TO SANDY BRANCH NORTHBOUND ROADWAY WING WALL ELEVATIONS

1-477 AB-11	
SHEET NO.	459
TOTAL SHTS.	1256

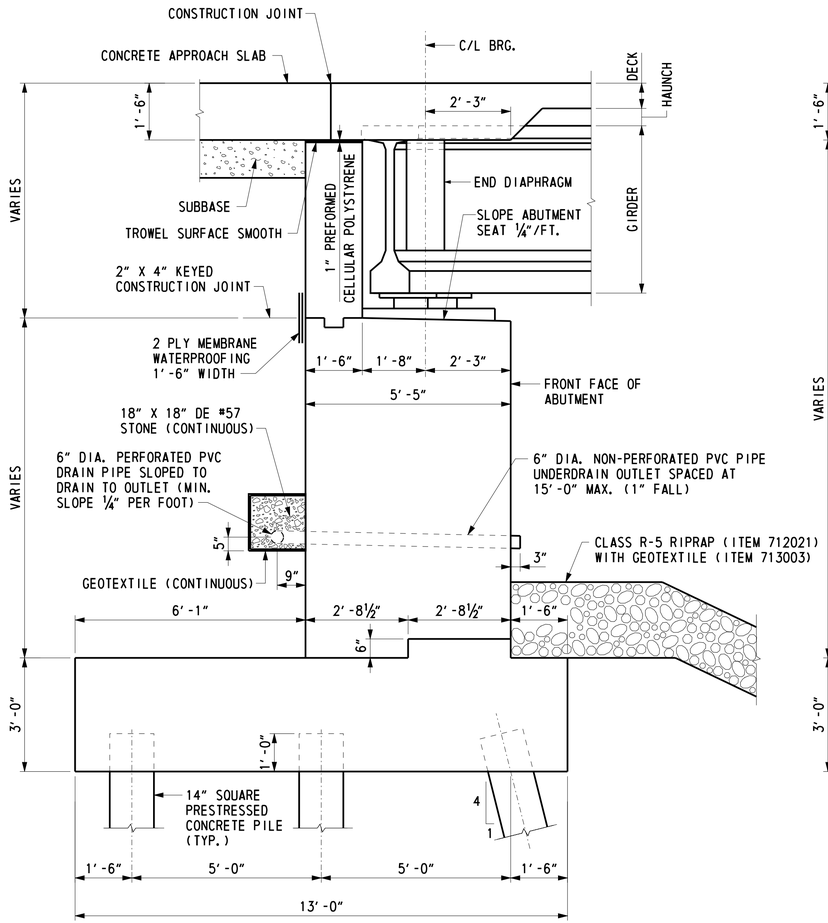

TYPICAL NORTHBOUND ABUTMENT SECTION

SCALE: 1/2" = 1'-0"

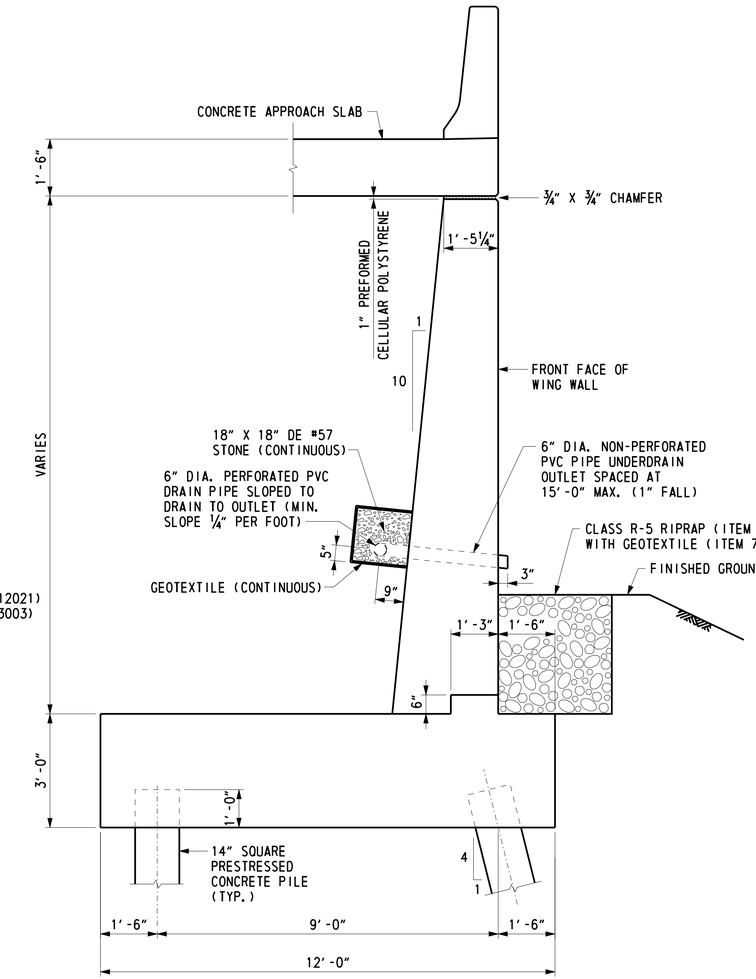

TYPICAL WING WALL SECTION

SCALE: 1/2" = 1'-0"

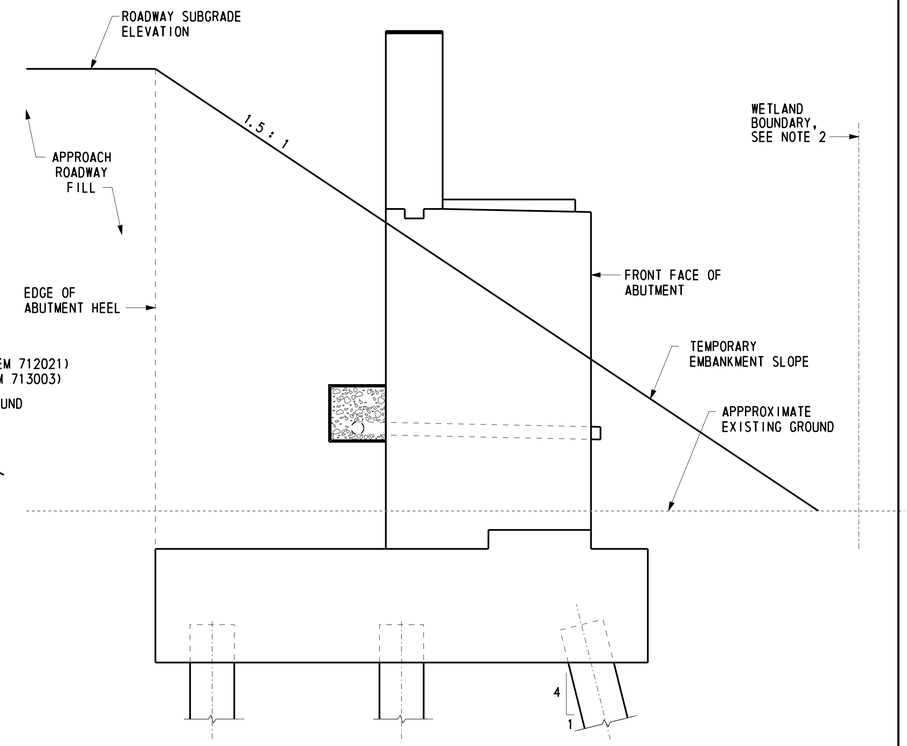

APPROACH ROADWAY FILL DETAIL

SCALE: 1/2" = 1'-0"

NOTES:

1. APPROACH ROADWAY FILL SHALL BE PLACED PRIOR TO CONSTRUCTION OF ABUTMENT.
2. TOE OF TEMPORARY EMBANKMENT SLOPE FALL OUTSIDE OF LIMIT OF WETLANDS. CONTRACTOR SHALL BE RESPONSIBLE TO MARK WETLAND BOUNDARY IN THE FIELD PRIOR TO CONSTRUCTION.
3. PAYMENT FOR WATERPROOFING SHALL BE INCIDENTAL TO ITEM NO. 602015 - PORTLAND CEMENT CONCRETE MASONRY, ABUTMENT ABOVE FOOTING, CLASS A. PAYMENT FOR PREFORMED CELLULAR POLYSTYRENE SHALL BE INCIDENTAL TO ITEM NO. 602014 - PORTLAND CEMENT CONCRETE MASONRY, APPROACH SLAB, CLASS D.
4. THE 6" DIA. PERFORATED PVC DRAIN PIPE AND THE 6" DIA. NON-PERFORATED PVC DRAIN OUTLET PIPE SHALL BE INCIDENTAL TO ITEM NO. 602015.

CROSS REFERENCE NOTES:

1. FOR FOUNDATION PLAN, SEE DWG. 1-477 AB-7 & 1-477 AB-8.
2. FOR ABUTMENT PLAN AND ELEVATION, SEE DWG. 1-477 AB-9 & 1-477 AB-10.
3. FOR WINGWALL ELEVATIONS, SEE DWG. 1-477 AB-11.
4. FOR ABUTMENT AND WINGWALL REINFORCEMENT, SEE DWGS. 1-477 AB-25 THRU 1-477 AB-34.
5. FOR ABUTMENT CONSTRUCTION JOINT DETAIL AND WINGWALL EXPANSION JOINT DETAIL, SEE DWG. 1-477 AB-6.
6. FOR ABUTMENT SEQUENCE OF CONSTRUCTION, SEE DWG, 1-477 PL-1.
7. FOR LIMITS AND DEPTH OF RIPRAP, SEE DWG. 1-477 PE-2.
8. FOR WETLAND BOUNDARY NOTES AND DETAILS, SEE ENVIRONMENTAL COMPLIANCE DWGS. EC-05 AND EC-13.

U:\Projects\AA\21387385\CAD\Bridge\BR2-5\ab12_BR2-5_US301.dgn
8/15/2015
Steve_Lambert

DELAWARE DEPARTMENT OF TRANSPORTATION

ADDENDUMS / REVISIONS

US 301
LEVELS ROAD
TO SUMMIT BRIDGE ROAD

CONTRACT	BRIDGE NO.	1-477N&S
T200511303	DESIGNED BY: J. S. Li	
COUNTY	CHECKED BY: W. A. O'CONNOR	
NEW CASTLE		

US 301 MAINLINE OVER TRIBUTARY TO SANDY BRANCH NORTHBOUND ROADWAY TYPICAL ABUTMENT SECTION

1-477 AB-12	
SHEET NO.	460
TOTAL SHTS.	1256

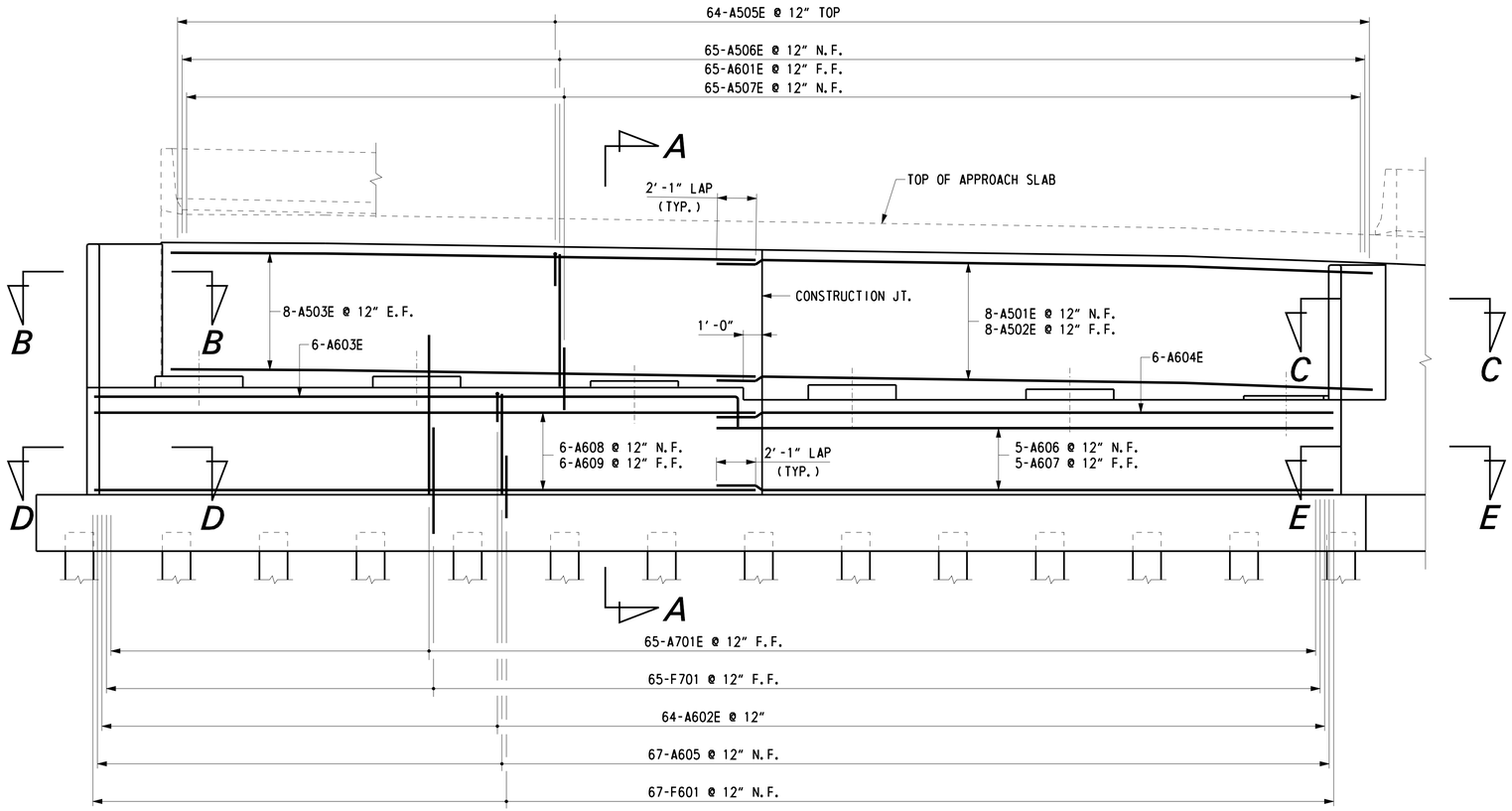

ELEVATION - ABUTMENT 1 SOUTHBOUND ROADWAY

SCALE: 1/4" = 1'-0"

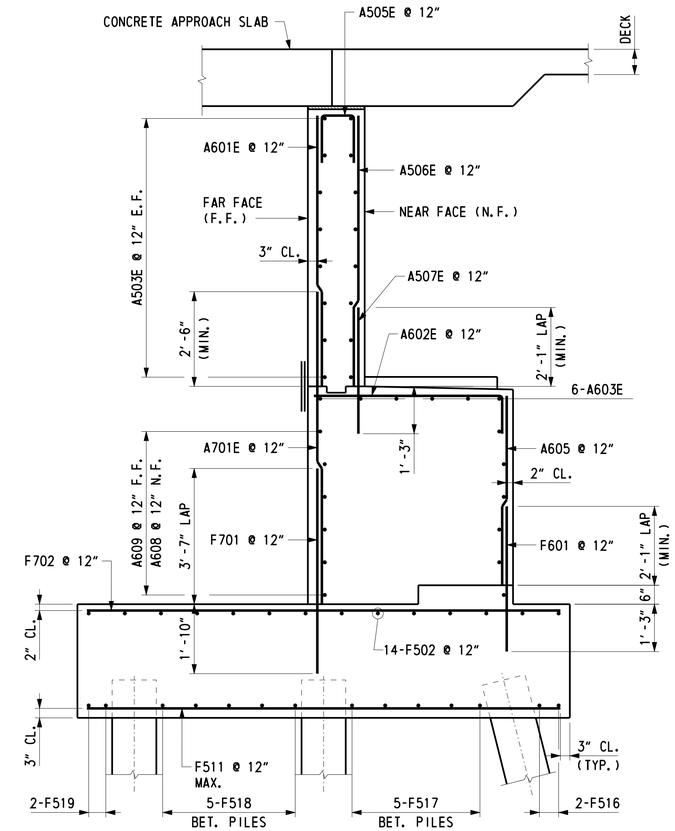

SECTION A-A

SCALE: 1/2" = 1'-0"

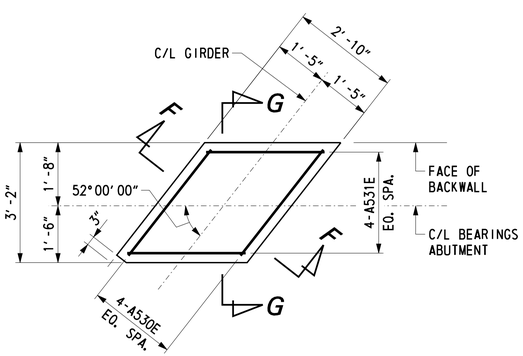

PLAN - ABUTMENT MASONRY PAD

SCALE: 1/2" = 1'-0"

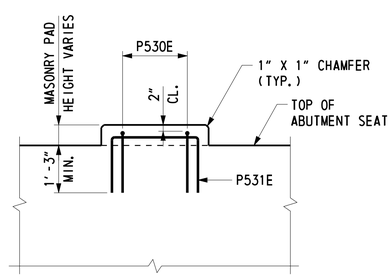

SECTION F-F

SCALE: 1/2" = 1'-0"

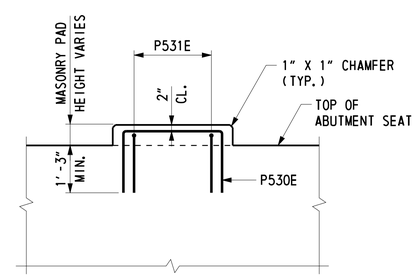

SECTION G-G

SCALE: 1/2" = 1'-0"

NOTE:

ABUTMENT 1 SOUTHBOUND ROADWAY MASONRY PAD REINFORCEMENT APPLIES AT GIRDERS G2 THROUGH G6. GIRDER G1 MASONRY PAD SHALL BE POURED MONOLITHIC WITH ABUTMENT.

CROSS REFERENCE NOTES:

1. FOR FOUNDATION PLAN, SEE DWG. 1-477 AB-1.
2. FOR ABUTMENT PLAN AND ELEVATION, SEE DWG. 1-477 AB-3.
3. FOR WINGWALL ELEVATION, SEE DWG. 1-477 AB-5.
4. FOR SECTIONS B-B TO E-E, SEE DWG. 1-477 AB-14.
5. FOR FOOTING REINFORCEMENT PLAN, SEE DWG. 1-477 AB-16 AND 1-477 AB-17.
6. FOR WINGWALL REINFORCEMENT, SEE DWG. 1-477 AB-15.
7. FOR REINFORCING BAR LIST, SEE DWG. 1-477 AB-23.
8. FOR END DIAPHRAGM DOWELS, SEE DWG. 1-477 BM-2.

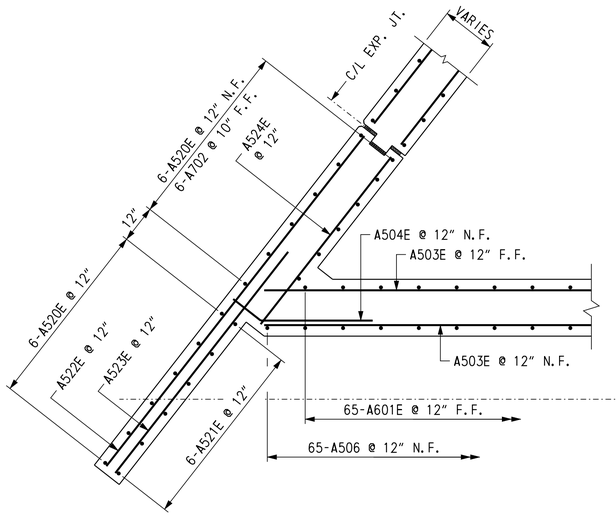

SECTION B-B

SCALE: ½" = 1'-0"

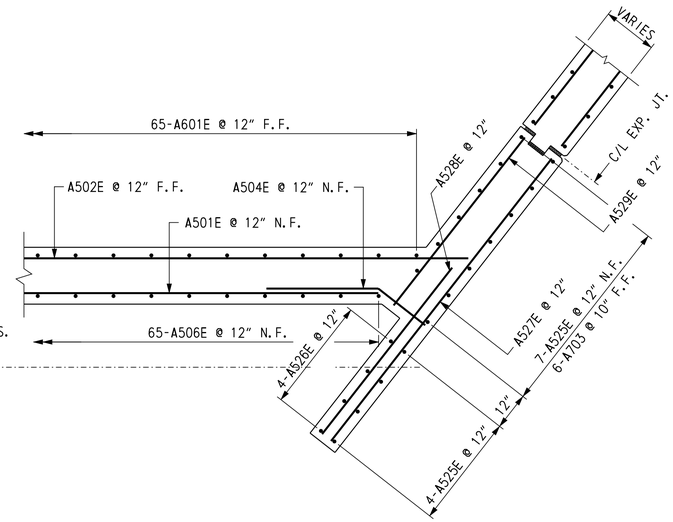

SECTION C-C

SCALE: ½" = 1'-0"

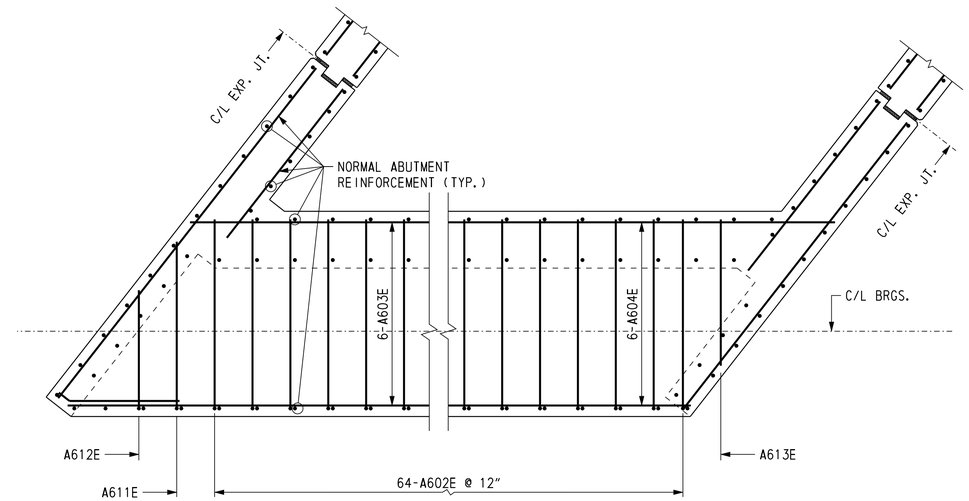

PLAN - BEAM SEAT DETAIL

SCALE: ½" = 1'-0"

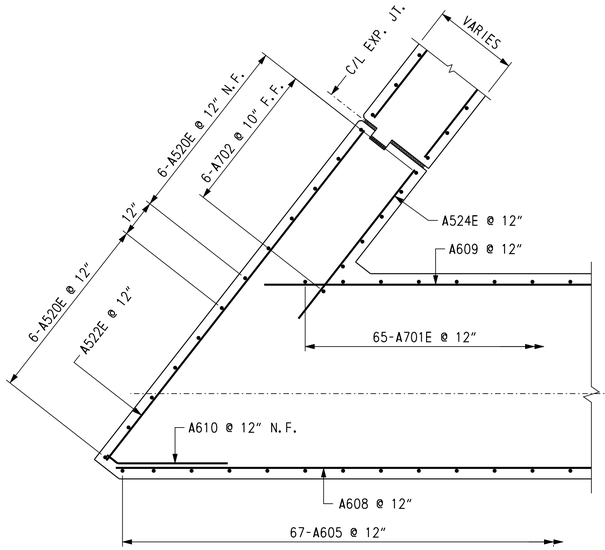

SECTION D-D

SCALE: ½" = 1'-0"

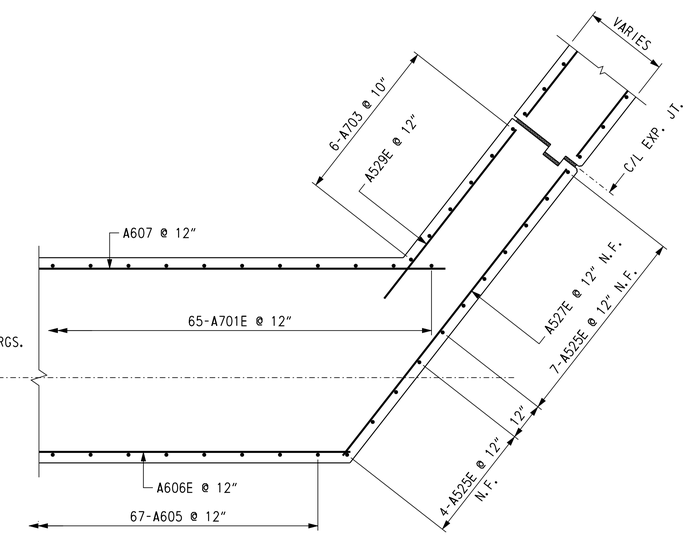

SECTION E-E

SCALE: ½" = 1'-0"

NOTES:

1. BARS A520E AND A525E LAP WITH F501 DOWELS (LAP = 2'-1" MIN.). EMBED DOWELS 1'-0" IN FOOTING.

CROSS REFERENCE NOTES:

1. FOR ABUTMENT REINFORCEMENT, SEE DWG. 1-477 AB-13.
2. FOR WINGWALL REINFORCEMENT, SEE DWG. 1-477 AB-15.
3. FOR REINFORCING BAR LIST, SEE DWG. 1-477 AB-23.

DELAWARE DEPARTMENT OF TRANSPORTATION	ADDENDUMS / REVISIONS	US 301 LEVELS ROAD TO SUMMIT BRIDGE ROAD	CONTRACT T200511303	BRIDGE NO. 1-477N&S	US 301 MAINLINE OVER TRIBUTARY TO SANDY BRANCH ABUTMENT 1 SB ROADWAY REINFORCEMENT 2	1-477 AB-14
			COUNTY NEW CASTLE	DESIGNED BY: J. S. LI		SHEET NO. 462
				CHECKED BY: W. A. O'CONNOR		TOTAL SHTS. 1256

U:\Projects\AA\21387385\CAD\Bridge\BR2-5\ab14_BR2-5_US301.dgn
11/8/2012
Steve_Lambert

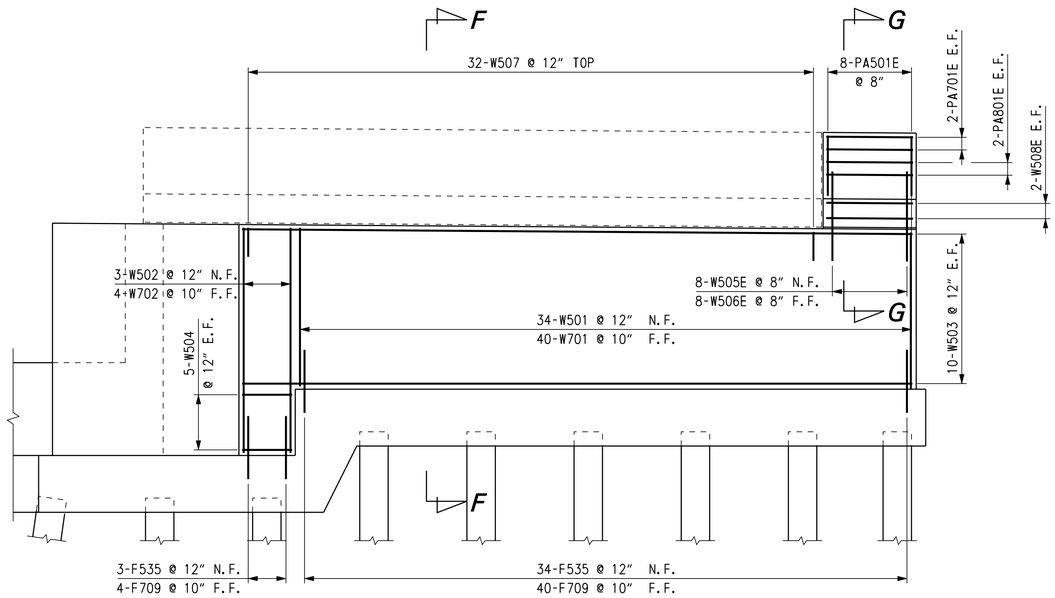

WING WALL 1

SCALE: 1/4" = 1'-0"

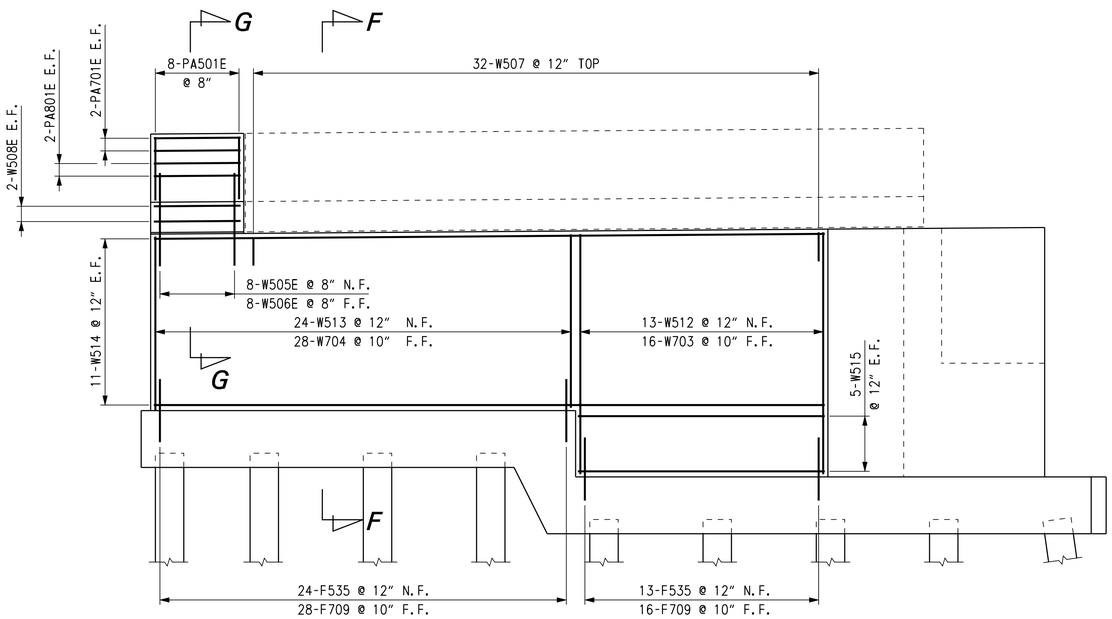

WING WALL 2

SCALE: 1/4" = 1'-0"

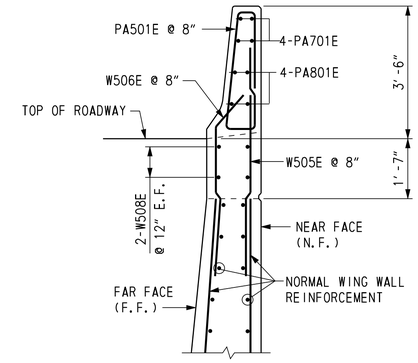

SECTION G-G

SCALE: 1/2" = 1'-0"

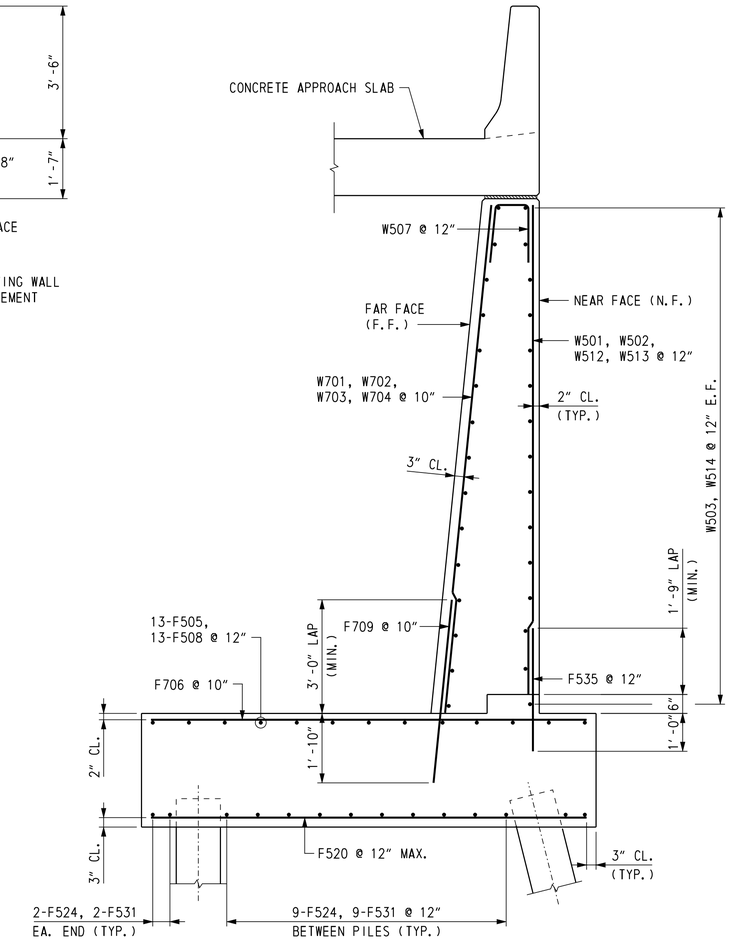

SECTION F-F

SCALE: 1/2" = 1'-0"

CROSS REFERENCE NOTES:

1. FOR WINGWALL ELEVATIONS, SEE DWG. 1-477 AB-5.
2. FOR ABUTMENT REINFORCEMENT, SEE DWG. 1-477 AB-13 AND 1-477 AB-14.
3. FOR FOOTING REINFORCEMENT, SEE DWGS. 1-477 AB-16 AND 1-477 AB-17.
4. FOR REINFORCING BAR LIST, SEE DWG. 1-477 AB-23.

DELAWARE DEPARTMENT OF TRANSPORTATION	ADDENDUMS / REVISIONS	US 301 LEVELS ROAD TO SUMMIT BRIDGE ROAD	CONTRACT T200511303	BRIDGE NO. 1-477N&S	US 301 MAINLINE OVER TRIBUTARY TO SANDY BRANCH ABUTMENT 1 SB ROADWAY REINFORCEMENT 3	1-477 AB-15
			COUNTY NEW CASTLE	DESIGNED BY: J. S. LI		SHEET NO. 463
				CHECKED BY: W. A. O'CONNOR		TOTAL SHTS. 1256

U:\Projects\AA\21387385\CAD\Bridge\BR2-5\ab15_BR2-5_US301.dgn
11/8/2012
Steve_Lambert

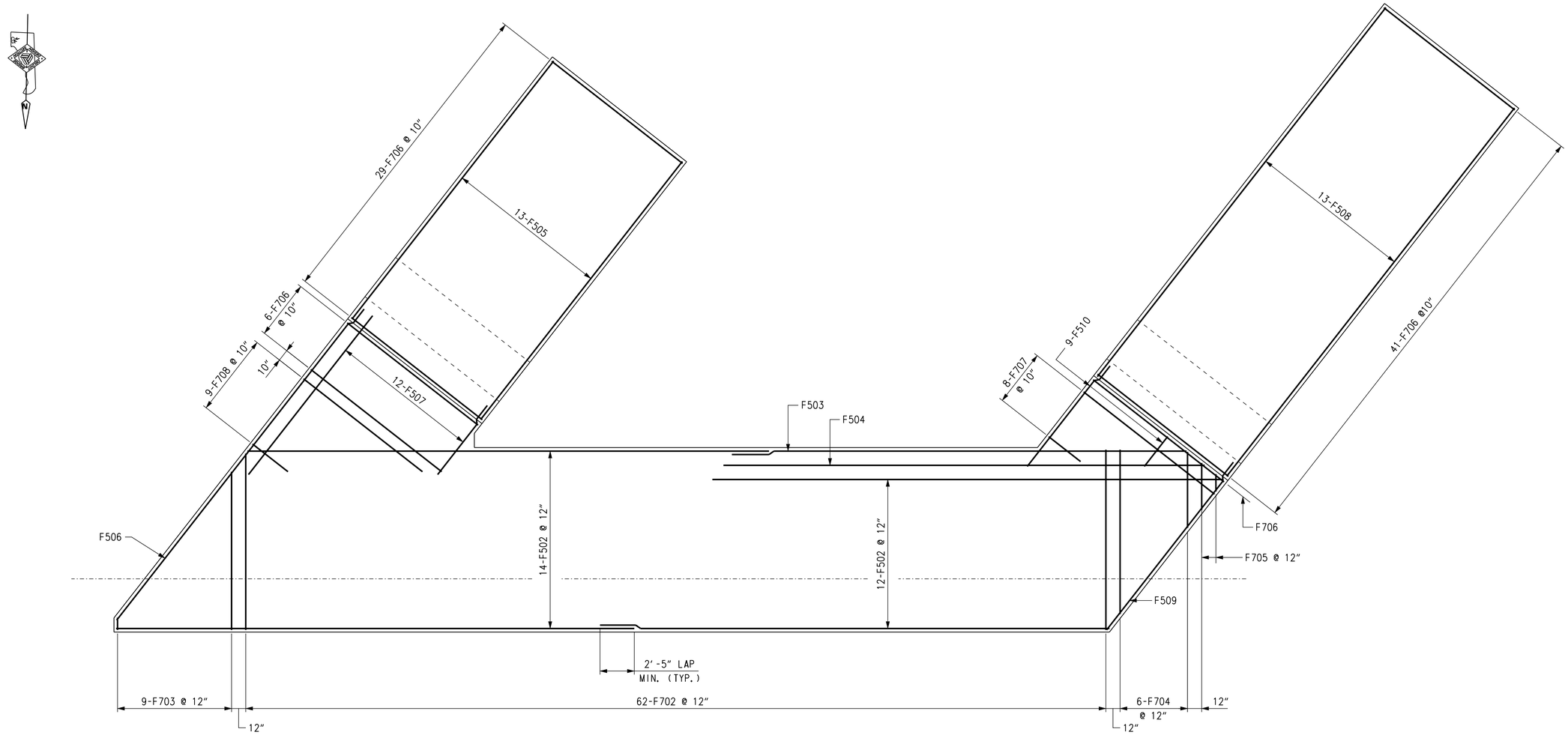

PLAN - TOP MAT FOOTING REINFORCEMENT

SCALE: 1/4" = 1'-0"

CROSS REFERENCE NOTES:

1. FOR FOUNDATION PLAN, SEE DWG. 1-477 AB-1.
2. FOR ABUTMENT PLAN AND ELEVATION, SEE DWG. 1-477 AB-3.
3. FOR FOOTING STEP DETAIL, SEE DWG. 1-477 AB-17.
4. FOR REINFORCING BAR LIST, SEE DWG. 1-477 AB-23.

DELAWARE DEPARTMENT OF TRANSPORTATION	ADDENDUMS / REVISIONS		US 301 LEVELS ROAD TO SUMMIT BRIDGE ROAD	CONTRACT T200511303	BRIDGE NO. 1-477N&S	US 301 MAINLINE OVER TRIBUTARY TO SANDY BRANCH ABUTMENT 1 SB ROADWAY REINFORCEMENT 4	1-477 AB-16
				COUNTY NEW CASTLE	DESIGNED BY: J. S. LI		SHEET NO. 464
					CHECKED BY: W. A. O'CONNOR		TOTAL SHTS. 1256

Steve_Lambert 11/8/2012 U:\Projects\AA\21387385\CAD\Bridge\BR2-5\ab16_BR2-5_US301.dgn

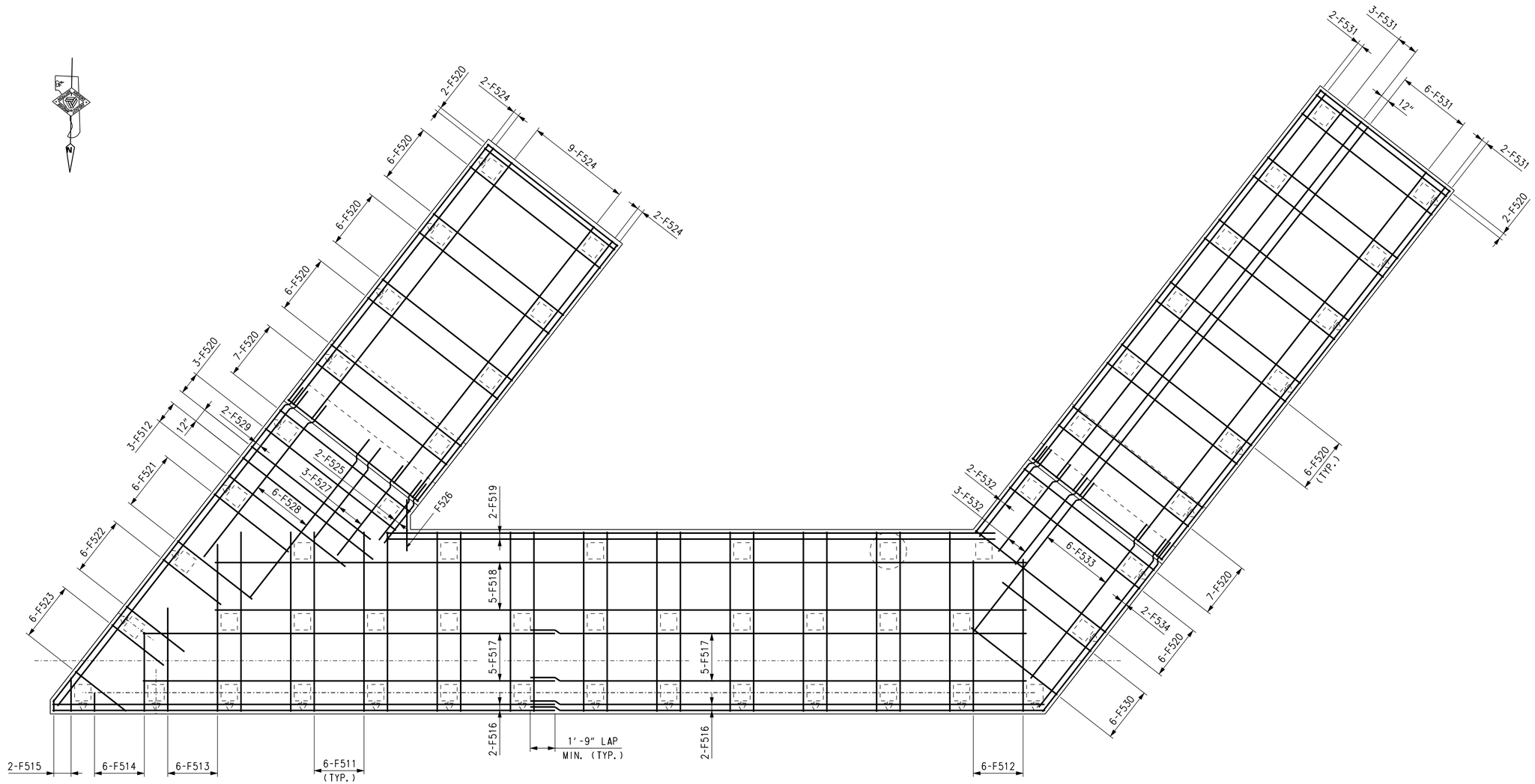

PLAN - BOTTOM MAT FOOTING REINFORCEMENT

SCALE: 1/4" = 1'-0"

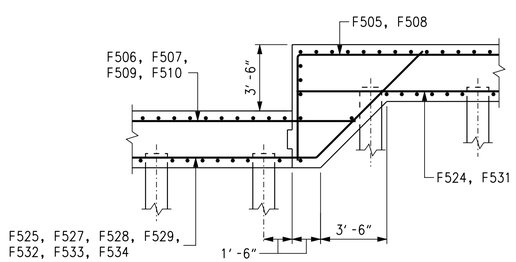

FOOTING STEP DETAIL

SCALE: 1/4" = 1'-0"

CROSS REFERENCE NOTES:

1. FOR FOUNDATION PLAN, SEE DWG. 1-477 AB-1.
2. FOR ABUTMENT PLAN AND ELEVATION, SEE DWG. 1-477 AB-3.
3. FOR REINFORCING BAR LIST, SEE DWG. 1-477 AB-23.

DELAWARE DEPARTMENT OF TRANSPORTATION	ADDENDUMS / REVISIONS	US 301 LEVELS ROAD TO SUMMIT BRIDGE ROAD	CONTRACT T200511303	BRIDGE NO. 1-477N&S	US 301 MAINLINE OVER TRIBUTARY TO SANDY BRANCH ABUTMENT 1 SB ROADWAY REINFORCEMENT 5	1-477 AB-17
			COUNTY NEW CASTLE	DESIGNED BY: J. S. LI		SHEET NO. 465
				CHECKED BY: W. A. O'CONNOR		TOTAL SHTS. 1256

U:\Projects\AA\21387385\CAD\Bridge\BR2-5\ab17_BR2-5_US301.dgn
11/8/2012
Steve_Lambert

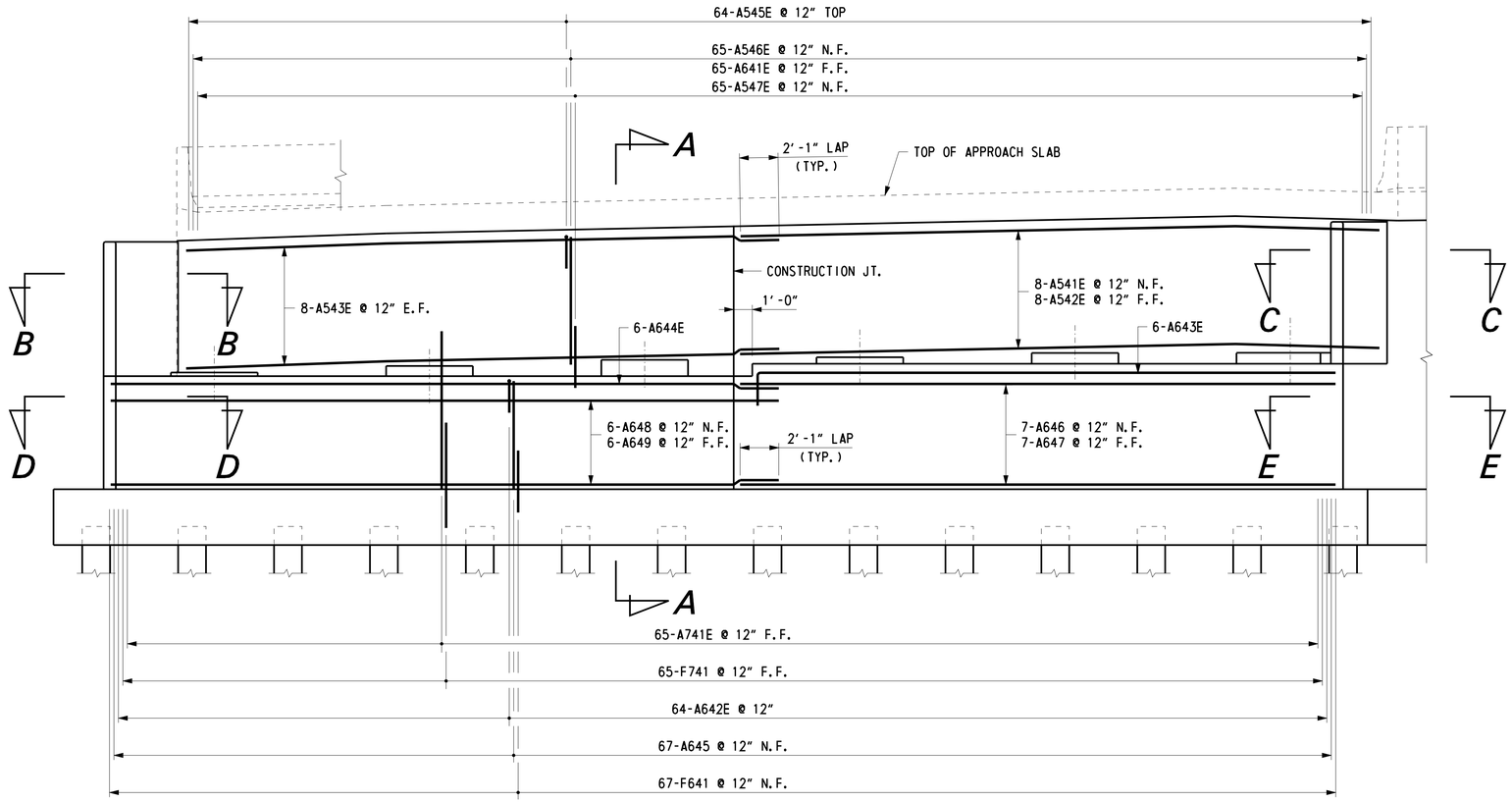

ELEVATION - ABUTMENT 2 SOUTHBOUND ROADWAY

SCALE: 1/4" = 1'-0"

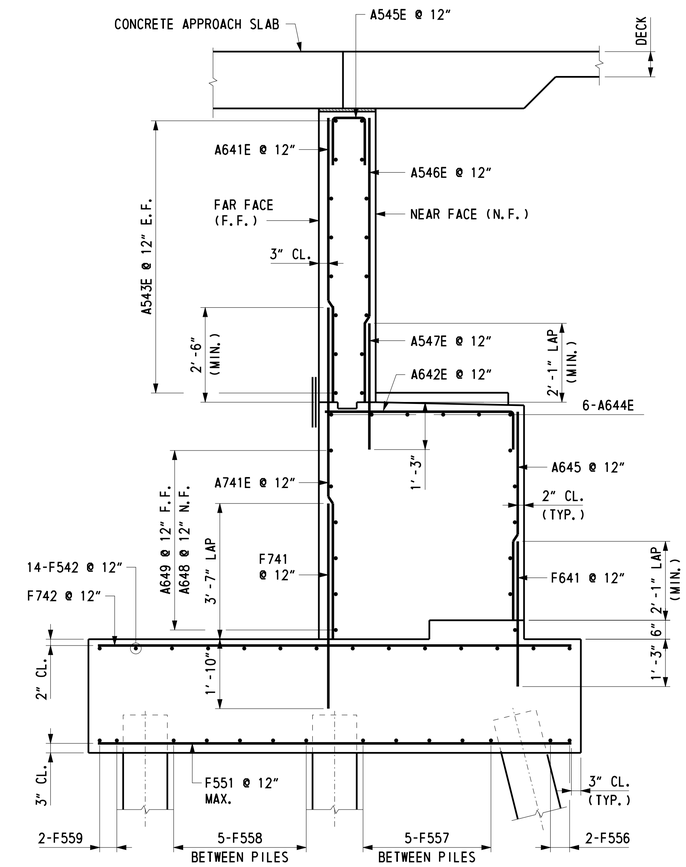

SECTION A-A

SCALE: 1/2" = 1'-0"

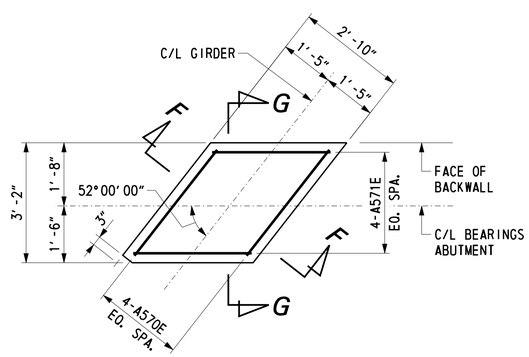

PLAN - ABUTMENT MASONRY PAD

SCALE: 1/2" = 1'-0"

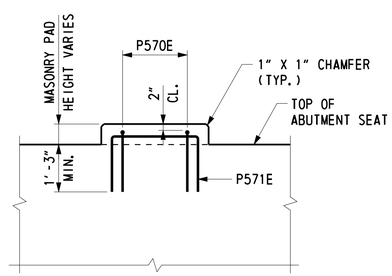

SECTION F-F

SCALE: 1/2" = 1'-0"

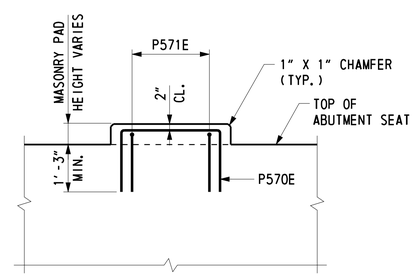

SECTION G-G

SCALE: 1/2" = 1'-0"

NOTE

ABUTMENT 2 SOUTHBOUND ROADWAY MASONRY PAD REINFORCEMENT APPLIES AT GIRDERS G2 THROUGH G6. GIRDER G1 MASONRY PAD SHALL BE POURED MONOLITHIC WITH ABUTMENT.

CROSS REFERENCE NOTES:

1. FOR FOUNDATION PLAN, SEE DWG. 1-477 AB-2.
2. FOR ABUTMENT PLAN AND ELEVATION, SEE DWG. 1-477 AB-4.
3. FOR WINGWALL ELEVATION, SEE DWG. 1-477 AB-5.
4. FOR SECTIONS B-B TO E-E, SEE DWG. 1-477 AB-19.
5. FOR FOOTING REINFORCEMENT PLAN, SEE DWGS. 1-477 AB-21 AND 1-477 AB-22.
6. FOR WINGWALL REINFORCEMENT, SEE DWG. 1-477 AB-20.
7. FOR REINFORCING BAR LIST, SEE DWG. 1-477 AB-24.

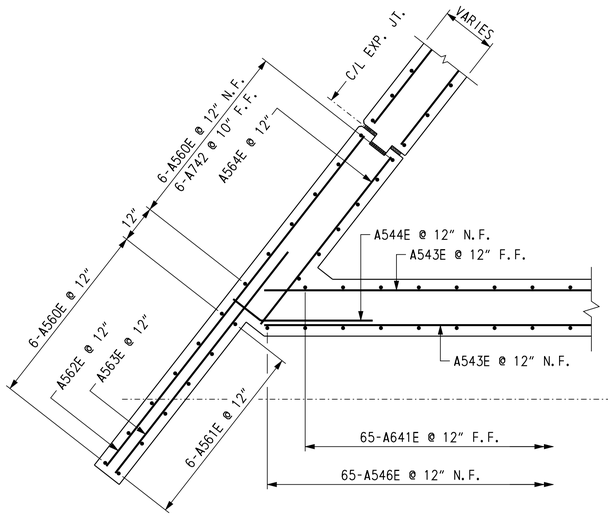

SECTION B-B

SCALE: ½" = 1'-0"

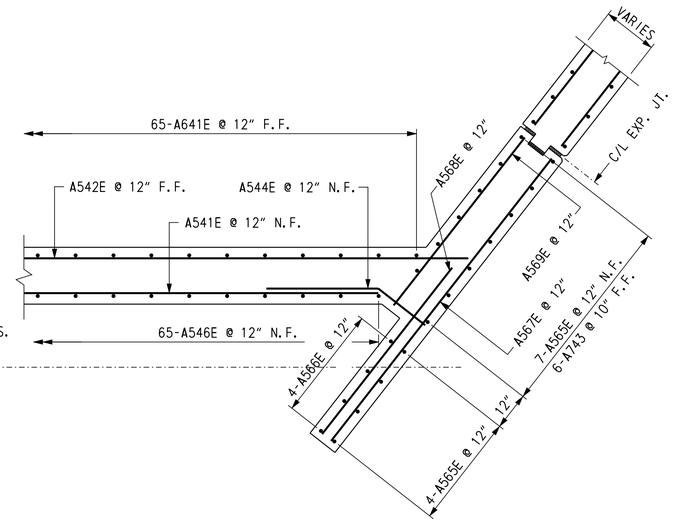

SECTION C-C

SCALE: ½" = 1'-0"

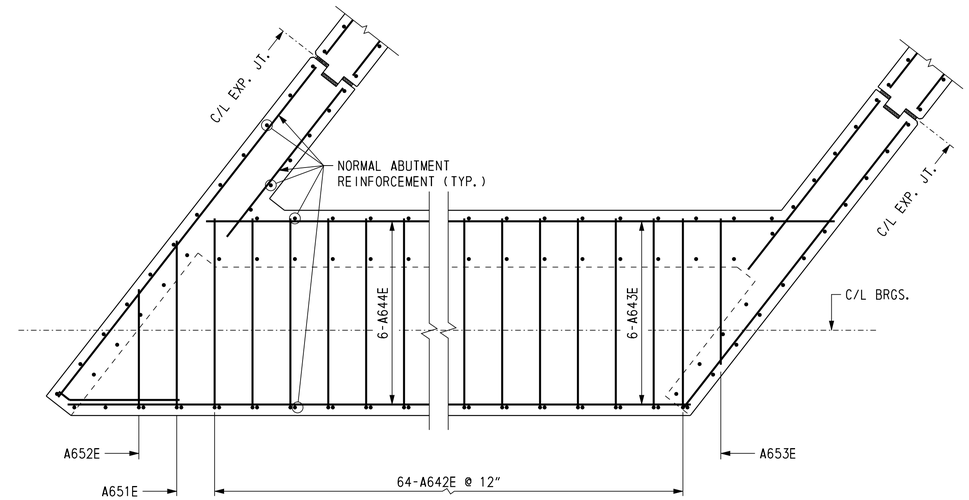

PLAN - BEAM SEAT DETAIL

SCALE: ½" = 1'-0"

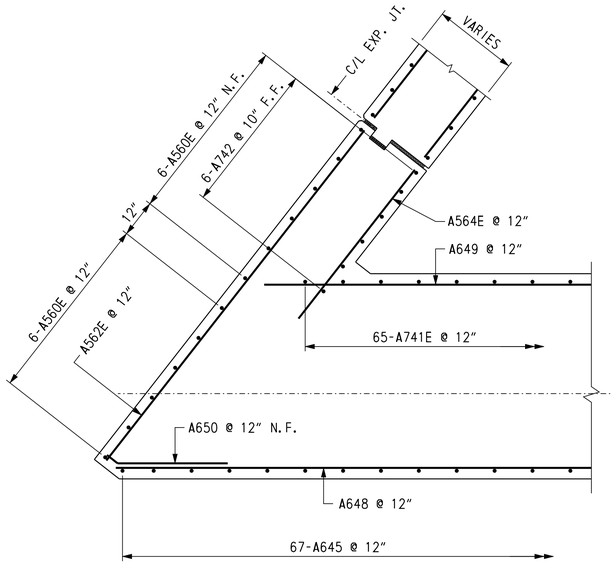

SECTION D-D

SCALE: ½" = 1'-0"

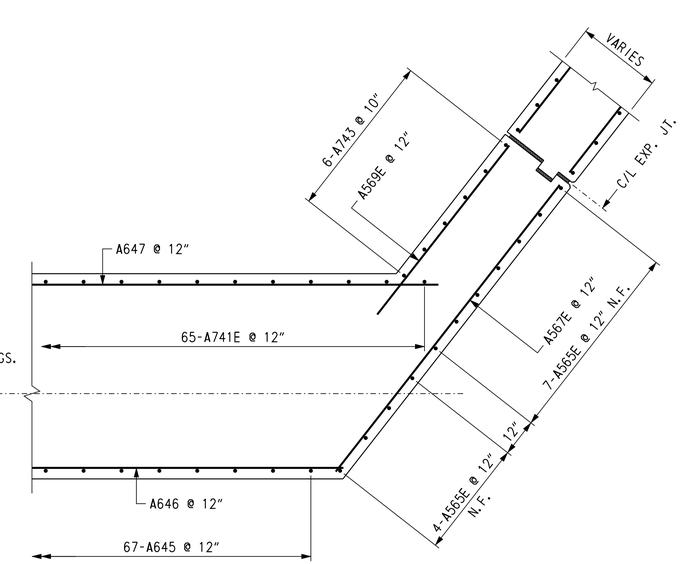

SECTION E-E

SCALE: ½" = 1'-0"

NOTES:

1. BARS A560E AND A565E LAP WITH F541 DOWELS (LAP = 2'-1" MIN.). EMBED DOWELS 1'-0" IN FOOTING.

CROSS REFERENCE NOTES:

1. FOR ABUTMENT REINFORCEMENT, SEE DWG. 1-477 AB-18.
2. FOR WINGWALL REINFORCEMENT, SEE DWG. 1-477 AB-20.
3. FOR REINFORCING BAR LIST, SEE DWG. 1-477 AB-24.

DELAWARE DEPARTMENT OF TRANSPORTATION	ADDENDUMS / REVISIONS	US 301 LEVELS ROAD TO SUMMIT BRIDGE ROAD	CONTRACT T200511303	BRIDGE NO. 1-477N&S	US 301 MAINLINE OVER TRIBUTARY TO SANDY BRANCH ABUTMENT 2 SB ROADWAY REINFORCEMENT 2	1-477 AB-19	
			COUNTY NEW CASTLE	DESIGNED BY: J. S. LI		SHEET NO. 467	
				CHECKED BY: W. A. O'CONNOR		TOTAL SHTS. 1256	

U:\Projects\AA\21387385\CAD\Bridge\BR2-5\ab19_BR2-5_US301.dgn
11/8/2012
Steve_Lambert

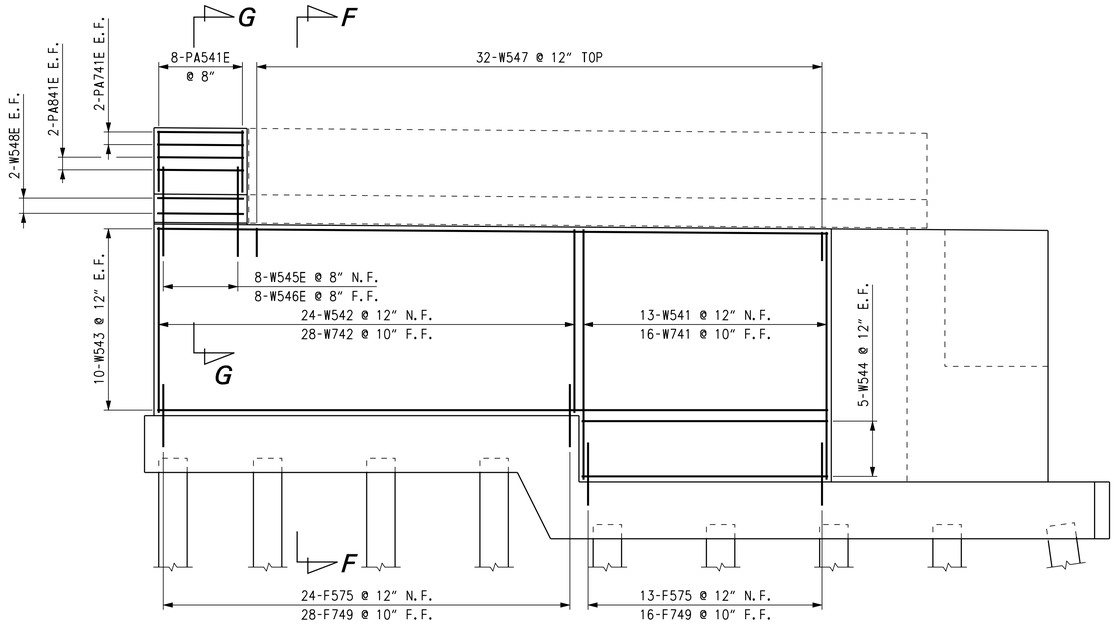

WING WALL 3

SCALE: ¼" = 1'-0"

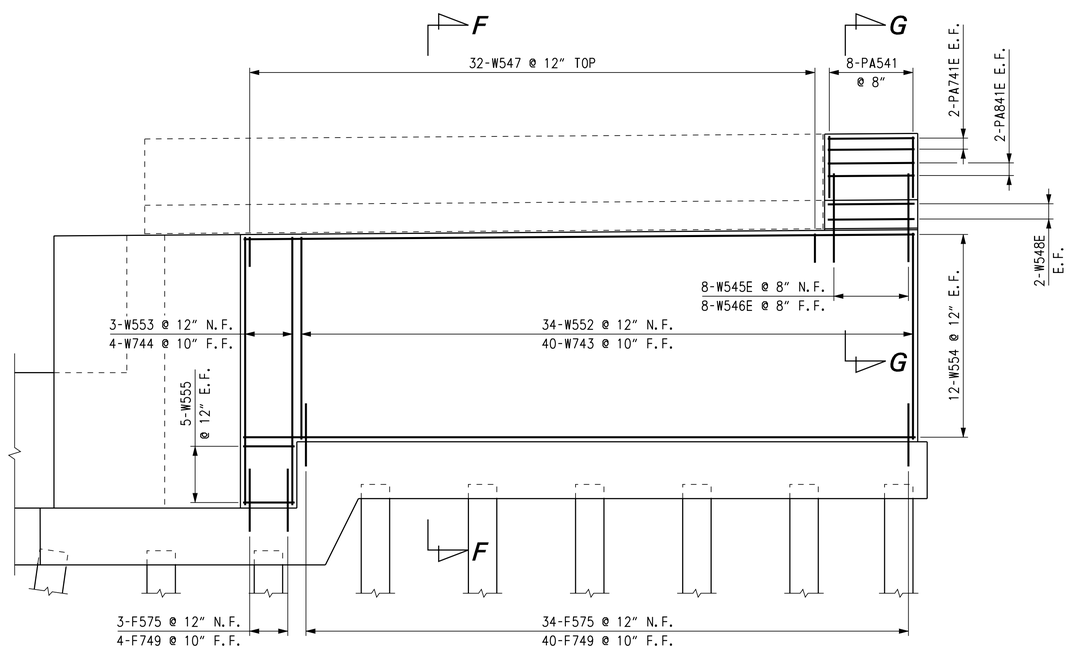

WING WALL 4

SCALE: ¼" = 1'-0"

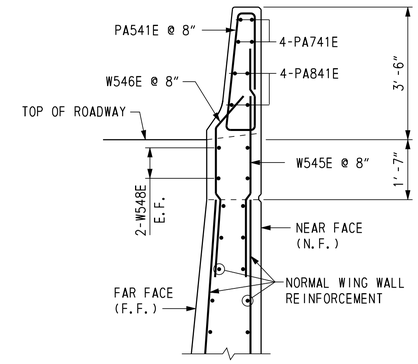

SECTION G-G

SCALE: ½" = 1'-0"

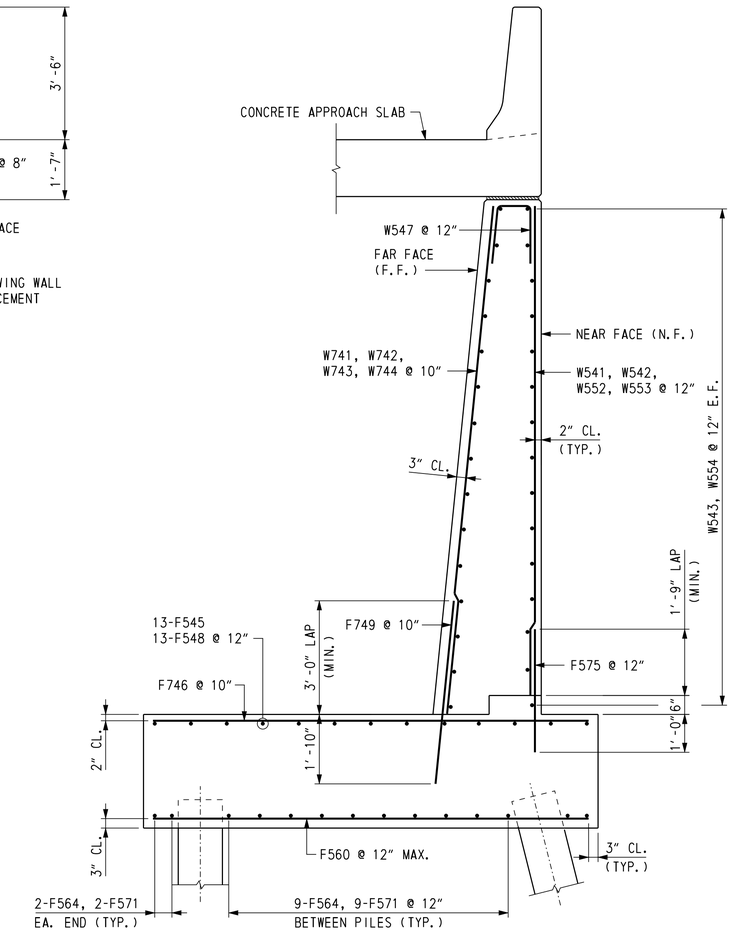

SECTION F-F

SCALE: ½" = 1'-0"

CROSS REFERENCE NOTES:

1. FOR WINGWALL ELEVATIONS, SEE DWG. 1-477 AB-5.
2. FOR ABUTMENT REINFORCEMENT, SEE DWG. 1-477 AB-18 AND 1-477 AB-19.
3. FOR FOOTING REINFORCEMENT, SEE DWGS. 1-477 AB-21 AND 1-477 AB-22.
4. FOR REINFORCING BAR LIST, SEE DWG. 1-477 AB-24.

DELAWARE DEPARTMENT OF TRANSPORTATION	ADDENDUMS / REVISIONS	US 301 LEVELS ROAD TO SUMMIT BRIDGE ROAD	CONTRACT T200511303	BRIDGE NO. 1-477N&S	US 301 MAINLINE OVER TRIBUTARY TO SANDY BRANCH ABUTMENT 2 SB ROADWAY REINFORCEMENT 3	1-477 AB-20
			COUNTY NEW CASTLE	DESIGNED BY: J. S. LI		SHEET NO. 468
				CHECKED BY: W. A. O'CONNOR		TOTAL SHTS. 1256

U:\Projects\AA\21387385\CAD\Bridge\BR2-5\ab20_BR2-5_US301.dgn
11/2/2012
Steve_Lambert

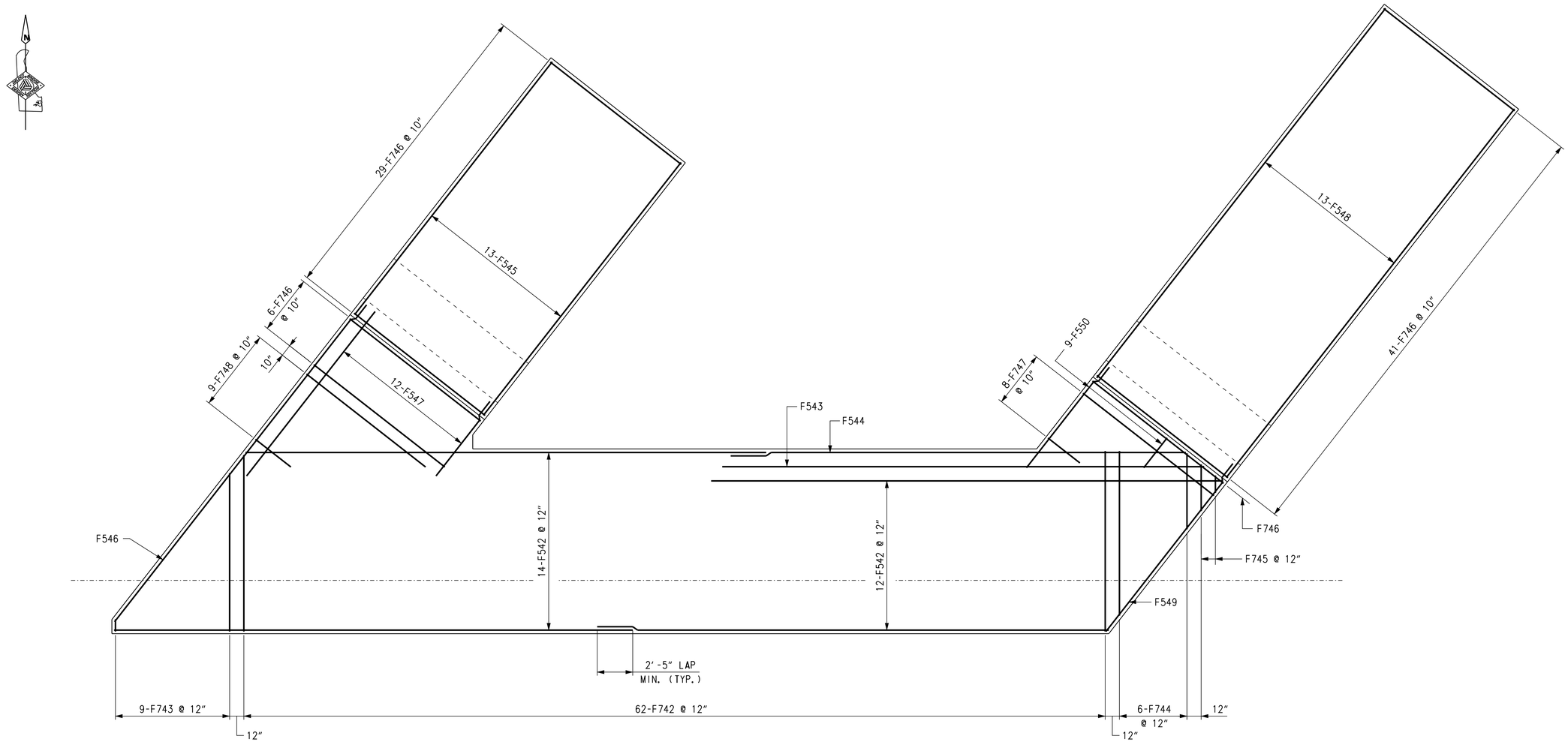

PLAN - TOP MAT FOOTING REINFORCEMENT

SCALE: ¼" = 1'-0"

CROSS REFERENCE NOTES:

1. FOR FOUNDATION PLAN, SEE DWG. 1-477 AB-2.
2. FOR ABUTMENT PLAN AND ELEVATION, SEE DWG. 1-477 AB-4.
3. FOR FOOTING STEP DETAIL, SEE DWG. 1-477 AB-22.
4. FOR REINFORCING BAR LIST, SEE DWG. 1-477 AB-24.

DELAWARE DEPARTMENT OF TRANSPORTATION	ADDENDUMS / REVISIONS		US 301 LEVELS ROAD TO SUMMIT BRIDGE ROAD	CONTRACT T200511303	BRIDGE NO. 1-477N&S	US 301 MAINLINE OVER TRIBUTARY TO SANDY BRANCH ABUTMENT 2 SB ROADWAY REINFORCEMENT 4	1-477N AB-21
				COUNTY NEW CASTLE	DESIGNED BY: J. S. Li		SHEET NO. 469
					CHECKED BY: W. A. O'CONNOR		TOTAL SHTS. 1256

U:\Projects\AA\21387385\CAD\Bridge\BR2-5\ab21_BR2-5_US301.dgn
11/8/2012
Steve_Lambert

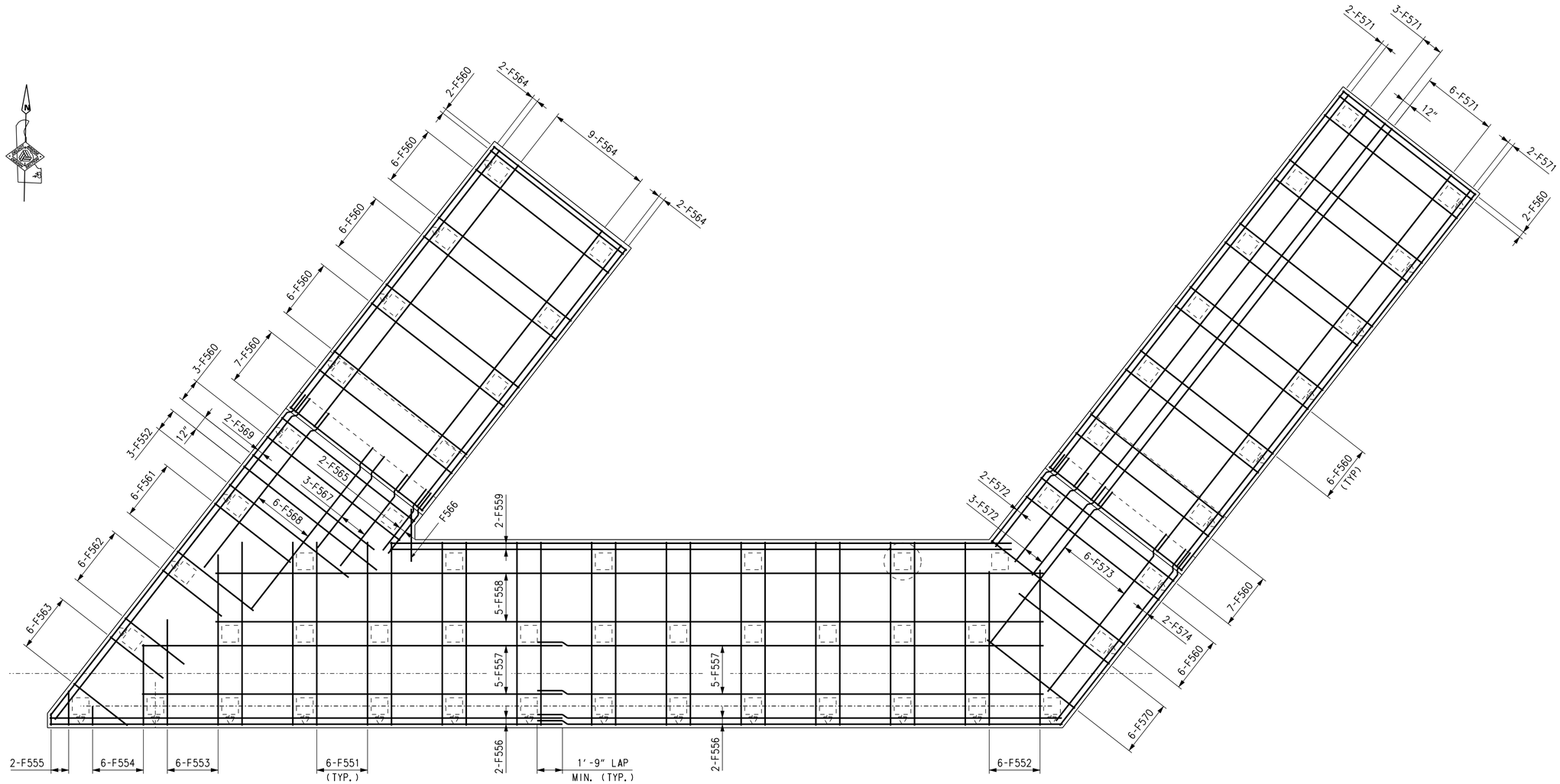

PLAN - BOTTOM MAT FOOTING REINFORCEMENT

SCALE: 1/4" = 1'-0"

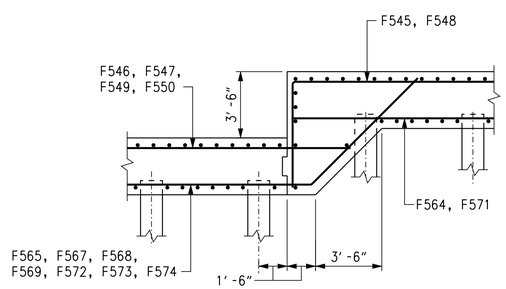

FOOTING STEP DETAIL

SCALE: 1/4" = 1'-0"

CROSS REFERENCE NOTES:

1. FOR FOUNDATION PLAN, SEE DWG. 1-477 AB-2.
2. FOR ABUTMENT PLAN AND ELEVATION, SEE DWG. 1-477 AB-4.
3. FOR REINFORCING BAR LIST, SEE DWG. 1-477 AB-24.

DELAWARE DEPARTMENT OF TRANSPORTATION	ADDENDUMS / REVISIONS		US 301 LEVELS ROAD TO SUMMIT BRIDGE ROAD	CONTRACT T200511303	BRIDGE NO. 1-477N&S	US 301 MAINLINE OVER TRIBUTARY TO SANDY BRANCH ABUTMENT 2 SB ROADWAY REINFORCEMENT 5	1-477 AB-22
				COUNTY NEW CASTLE	DESIGNED BY: J. S. LI		SHEET NO. 470
					CHECKED BY: W. A. O'CONNOR		TOTAL SHTS. 1256

U:\Projects\AA\21387385\CAD\Bridge\BR2-5\ab22_BR2-5_US301.dgn
11/8/2012
Steve_Lambert

REINFORCING BAR LIST

ABUTMENT 1 SOUTHBOUND ROADWAY

MARK	LENGTH	NO. BARS	TYPE	A	B	C	D	E	G	H	J	K	REMARKS
A501E	34′-3″	8	STR.										
A502E	36′-11″	8	STR.										
A503E	31′-3″	16	STR.										
A504E	3′-3″	16	19		1′-2″	2′-1″				0′-8⅝″		0′-11″	
A505E	5′-4″	64	17		2′-1″	1′-2″	2′-1″						
A506E	7′-0″	65	STR.										
A507E	4′-2″	65	STR.										
A520E	12′-8″	12	STR.										
A521E	8′-9″	6	STR.										
A522E	11′-1″	14	STR.										
A523E	6′-6½″	8	STR.										
A524E	5′-8″	14	STR.										
A525E	11′-5″	11	STR.										
A526E	8′-4″	4	STR.										
A527E	9′-6″	13	STR.										
A528E	4′-11″	8	STR.										
A529E	5′-8″	13	STR.										
A530E	7′-5″	20	17		1′-11″	3′-7″	1′-11″						
A531E	7′-0″	20	17		1′-11″	3′-2″	1′-11″						
A601E	7′-0″	65	STR.										
A602E	6′-0″	64	36	1′-0″	5′-0″								
A603E	32′-0″ TO 34′-11″	6	36	1′-0″	31′-0″ TO 33′-11″								Δ =7″
A604E	33′-3″ TO 37′-0″	6	STR.										Δ =9″
A605	4′-5″	67	STR.										
A606	33′-0″	5	STR.										
A607	36′-10″	5	STR.										
A608	34′-11″	6	STR.										
A609	32′-0″	6	STR.										
A610	2′-7″	7	19		0′-6″	2′-1″				0′-3⅝″		0′-4¾″	
A611E	4′-9″	1	36	1′-0″	3′-9″								
A612E	3′-6″	1	36	1′-0″	2′-6″								
A613E	3′-9″	1	STR.										
A701E	8′-5″	65	STR.										
A702	13′-2″	6	STR.										
A703	12′-1″	6	STR.										
F501	4′-3″	23	STR.										
F502	36′-7¾″	26	STR.										
F503	32′-4½″	1	STR.										
F504	34′-5¼″	1	STR.										
F505	28′-11″	13	36	6′-0″	22′-11″								
F506	30′-6″	1	STR.										
F507	8′-3⅞″ TO 16′-6¼″	12	STR.										Δ =9″
F508	38′-11″	13	36	6′-0″	32′-11″								
F509	17′-2″	1	STR.										
F510	5′-10″ TO 11′-11″	9	STR.										Δ =9⅛″
F511	12′-6″	60	STR.										
F512	10′-7″	9	STR.										
F513	8′-9″ TO 10′-7″	6	STR.										Δ =4⅜″
F514	2′-2″ TO 5′-4″	6	STR.										Δ =7⅝″
F515	1′-0″ TO 1′-11″	2	STR.										Δ =11″
F516	35′-10¼″	4	STR.										
F517	33′-1″	10	STR.										
F518	57′-2″	5	STR.										
F519	41′-4″	2	STR.										
F520	11′-6″	75	STR.										

ABUTMENT 1 SOUTHBOUND ROADWAY

MARK	LENGTH	NO. BARS	TYPE	A	B	C	D	E	G	H	J	K	REMARKS
F521	6′-6″	6	STR.										
F522	5′-3″	6	STR.										
F523	4′-3″	6	STR										
F524	22′-11″	13	STR										
F525	13′-3″	2	19			4′-8″	8′-7″			6′-1″		6′-1″	
F526	2′-6″	1	STR.										
F527	17′-0″	3	19			8′-5″	8′-7″			6′-1″		6′-1″	
F528	22′-10½″	6	19			14′-3½″	8′-7″			6′-1″		6′-1″	
F529	36′-7″	2	19			28′-0″	8′-7″			6′-1″		6′-1″	
F530	7′-6″	6	STR.										
F531	32′-11″	13	STR.										
F532	16′-7″	5	19			8′-0″	8′-7″			6′-1″		6′-1″	
F533	22′-2″	6	19			13′-7″	8′-7″			6′-1″		6′-1″	
F534	23′-2″	2	19			14′-7″	8′-7″			6′-1″		6′-1″	
F535	3′-9″	74	STR.										
F601	4′-6″	67	STR.										
F701	6′-1″	77	STR.										
F702	12′-6″	62	STR.										
F703	0′-10″ TO 11′-3″	9	STR.										Δ =1′-3⅝″
F704	5′-7⅝″ TO 11′-3″	6	STR.										Δ =1′-1½″
F705	1′-0″ TO 3′-1″	2	STR.										Δ =2′-1″
F706	11′-6″	77	STR.										
F707	1′-4″ TO 7′-10″	8	STR.										Δ =0′-11″
F708	1′-4″ TO 10′-10″	9	STR.										Δ =1′-2¼″
F709	5′-4″	88	STR.										
PA501E	7′-6¼″	16	28	2′-9¼″	0′-2¹⁵⁄₁₆″	0′-1⅝″	0′-2¾″	2′-9½″	0′-3⅛″	0′-5⅛″			
PA701E	4′-8″	8	STR.										
PA801E	4′-8″	8	STR.										
W501	7′-7″	34	STR.										
W502	11′-1″	3	STR.										
W503	35′-5″	20	STR.										
W504	2′-6″	10	STR.										
W505E	5′-7″	16	STR.										
W506E	5′-8″	16	19			4′-1″	1′-9″			1′-0″		1′-5¼″	
W507	2′-8″	64	12S		0′-10″	1′-0″	0′-10″			0′-10″		0′-1″	
W508E	4′-8″	8	STR.										
W512	12′-2″	13	STR.										
W513	8′-8″	24	STR.										
W514	35′-5″	22	STR.										
W515	12′-6″	10	STR.										
W701	8′-1¼″	40	STR.										
W702	11′-7¼′	4	STR.										
W703	12′-8¼″	16	STR.										
W704	9′-2⅛″	28	STR.										

BENDING DIAGRAMS

ALL DIMENSIONS ARE FROM OUT TO OUT.

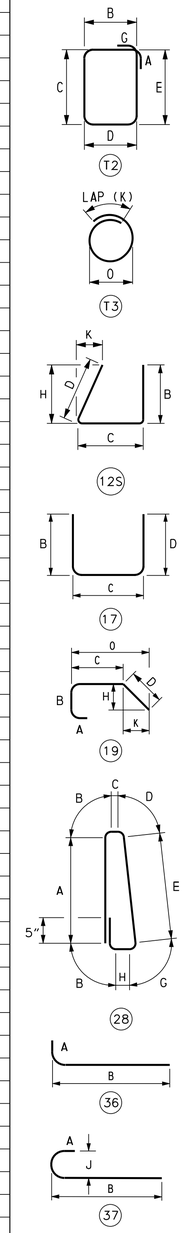

DELAWARE DEPARTMENT OF TRANSPORTATION

ADDENDUMS / REVISIONS

US 301
LEVELS ROAD
TO SUMMIT BRIDGE ROAD

CONTRACT	BRIDGE NO.	1-477N&S
T200511303	DESIGNED BY: J. S. LI	
COUNTY		
NEW CASTLE	CHECKED BY: W. A. O'CONNOR	

US 301 MAINLINE OVER TRIBUTARY TO SANDY BRANCH
ABUTMENT 1 SB ROADWAY
REINFORCING BAR LIST

1-477 AB-23
SHEET NO.
471
TOTAL SHTS.
1256

U:\Projects\AA\21387385\CAD\Bridge\BR2-5\ab23_BR2-5_US301.dgn
11/8/2012
Steve_Lambert

REINFORCING BAR LIST

ABUTMENT 2 SOUTHBOUND ROADWAY

MARK	LENGTH	NO. BARS	TYPE	A	B	C	D	E	G	H	J	K	REMARKS
A541E	33′-10½″	8	STR.										
A542E	36′-6″	8	STR.										
A543E	31′-8″	16	STR.										
A544E	3′-3″	16	19		1′-2″	2′-1″				0′-8⅝″		0′-11″	
A545E	5′-4″	64	17		2′-1″	1′-2″	2′-1″						
A546E	7′-0″	65	STR.										
A547E	4′-1″	65	STR.										
A560E	12′-7″	12	STR.										
A561E	8′-4″	6	STR.										
A562E	11′-1″	14	STR.										
A563E	6′-6½″	8	STR.										
A564E	5′-8″	14	STR.										
A565E	13′-9″	11	STR.										
A566E	8′-9″	4	STR.										
A567E	9′-6″	15	STR.										
A568E	4′-11″	8	STR.										
A569E	5′-8″	15	STR.										
A570E	7′-5″	20	17		1′-11″	3′-7″	1′-11″						
A571E	7′-0″	20	17		1′-11″	3′-2″	1′-11″						
A641E	7′-0″	65	STR.										
A642E	6′-0″	64	36	1′-0″	5′-0″								
A643E	32′-7″ TO 36′-4″	6	36	1′-0″	31′-7″ TO 35′-4″								Δ = 9″
A644E	32′-7″ TO 35′-6″	6	STR.										Δ = 7″
A645	5′-5″	67	STR.										
A646	32′-7″	7	STR.										
A647	36′-4″	7	STR.										
A648	35′-4″	6	STR.										
A649	32′-5″	6	STR.										
A650	2′-7″	7	19		0′-6″	2′-1″				0′-3⅝″		0′-4¾″	
A651E	4′-9″	1	36	1′-0″	3′-9″								
A652E	3′-6″	1	36	1′-0″	2′-6″								
A653E	3′-9″	1	STR.										
A741E	9′-4″	65	STR.										
A742	13′-2″	6	STR.										
A743	14′-3″	6	STR.										
F541	4′-3″	23	STR.										
F542	36′-7¾″	26	STR.										
F543	32′-4½″	1	STR.										
F544	34′-5¼″	1	STR.										
F545	28′-11″	13	36	6′-0″	22′-11″								
F546	30′-6″	1	STR.										
F547	8′-3⅞″ TO 16′-6¼″	12	STR.										Δ = 9″
F548	38′-11″	13	36	6′-0″	32′-11″								
F549	17′-2″	1	STR.										
F550	5′-10″ TO 11′-11″	9	STR.										Δ = 9⅛″
F551	12′-6″	60	STR.										
F552	10′-7″	9	STR.										
F553	8′-9″ TO 10′-7″	6	STR.										Δ = 4⅜″
F554	2′-2″ TO 5′-4″	6	STR.										Δ = 7⅝″
F555	1′-0″ TO 1′-11″	2	STR.										Δ = 11″
F556	35′-10¼″	4	STR.										
F557	33′-1″	10	STR.										
F558	57′-2″	5	STR.										
F559	41′-4″	2	STR.										

ABUTMENT 2 SOUTHBOUND ROADWAY

MARK	LENGTH	NO. BARS	TYPE	A	B	C	D	E	G	H	J	K	REMARKS
F560	11′-6″	75	STR.										
F561	6′-6″	6	STR.										
F562	5′-3″	6	STR.										
F563	4′-3″	6	STR.										
F564	22′-11″	13	STR.										
F565	13′-3″	2	19.			4′-8″	8′-7″			6′-1″		6′-1″	
F566	2′-6″	1	STR.										
F567	17′-0″	3	19			8′-5″	8′-7″			6′-1″		6′-1″	
F568	22′-10½″	6	19			14′-3½″	8′-7″			6′-1″		6′-1″	
F569	36′-7″	2	19			28′-0″	8′-7″			6′-1″		6′-1″	
F570	7′-6″	6	STR.										
F571	32′-11″	13	STR.										
F572	16′-7″	5	19			8′-0″	8′-7″			6′-1″		6′-1″	
F573	22′-2″	6	19			13′-7″	8′-7″			6′-1″		6′-1″	
F574	23′-2″	2	19			14′-7″	8′-7″			6′-1″		6′-1″	
F575	3′-9″	74	STR.										
F641	4′-6″	67	STR.										
F741	6′-1″	77	STR.										
F742	12′-6″	62	STR.										
F743	0′-10″ TO 11′-3″	9	STR.										Δ = 1′-3⅝″
F744	5′-7⅝″ TO 11′-3″	6	STR.										Δ = 1′-1½″
F745	1′-0″ TO 3′-1″	2	STR.										Δ = 2′-1″
F746	11′-6″	77	STR.										
F747	1′-4″ TO 7′-10″	8	STR.										Δ = 0′-11″
F748	1′-4″ TO 10′-10″	9	STR.										Δ = 1′-2¼″
F749	5′-4″	88	STR.										
PA541E	7′-6¼″	16	28	2′-9¼″	0′-2 15/16″	0′-1⅝″	0′-2¾″	2′-9½″	0′-3⅛″	0′-5⅛″			
PA741E	4′-8″	8	STR.										
PA841E	4′-8″	8	STR.										
W541	12′-6″	13	STR.										
W542	9′-0″	24	STR.										
W543	35′-5″	20	STR.										
W544	12′-6″	10	STR.										
W545E	5′-7″	16	STR.										
W546E	5′-8″	16	19			4′-1″	1′-9″			1′-0″		1′-5¼″	
W547	2′-8″	64	12S		0′-10″	1′-0″	0′-10″			0′-10″		0′-1″	
W548E	4′-8″	8	STR.										
W552	10′-1″	34	STR.										
W553	13′-7″	3	STR.										
W554	35′-5″	24	STR.										
W555	2′-6″	10	STR.										
W741	13′-0″	16	STR.										
W742	9′-6″	28	STR.										
W743	10′-6⅞″	40	STR.										
W744	14′-0⅞″	4	STR.										

BENDING DIAGRAMS

ALL DIMENSIONS ARE FROM OUT TO OUT.

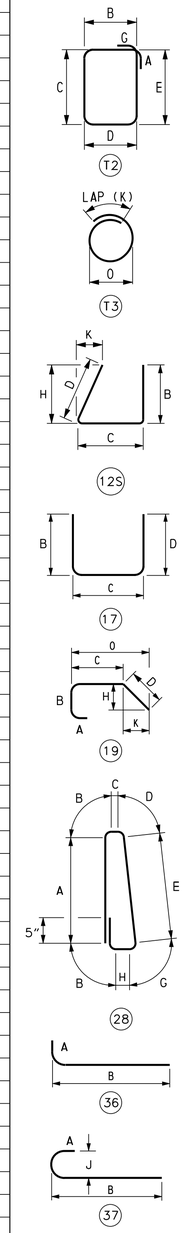

DELAWARE DEPARTMENT OF TRANSPORTATION

ADDENDUMS / REVISIONS

US 301 LEVELS ROAD TO SUMMIT BRIDGE ROAD

CONTRACT	BRIDGE NO.	1-477N&S
T200511303	DESIGNED BY: J. S. LI	
COUNTY		
NEW CASTLE	CHECKED BY: W. A. O'CONNOR	

US 301 MAINLINE OVER TRIBUTARY TO SANDY BRANCH ABUTMENT 2 SB ROADWAY REINFORCING BAR LIST

1-477 AB-24	
SHEET NO.	472
TOTAL SHTS.	1256

U:\Projects\AA\21387385\CAD\Bridge\BR2-5\ab24_BR2-5_US301.dgn
11/8/2012
Steve_Lambert

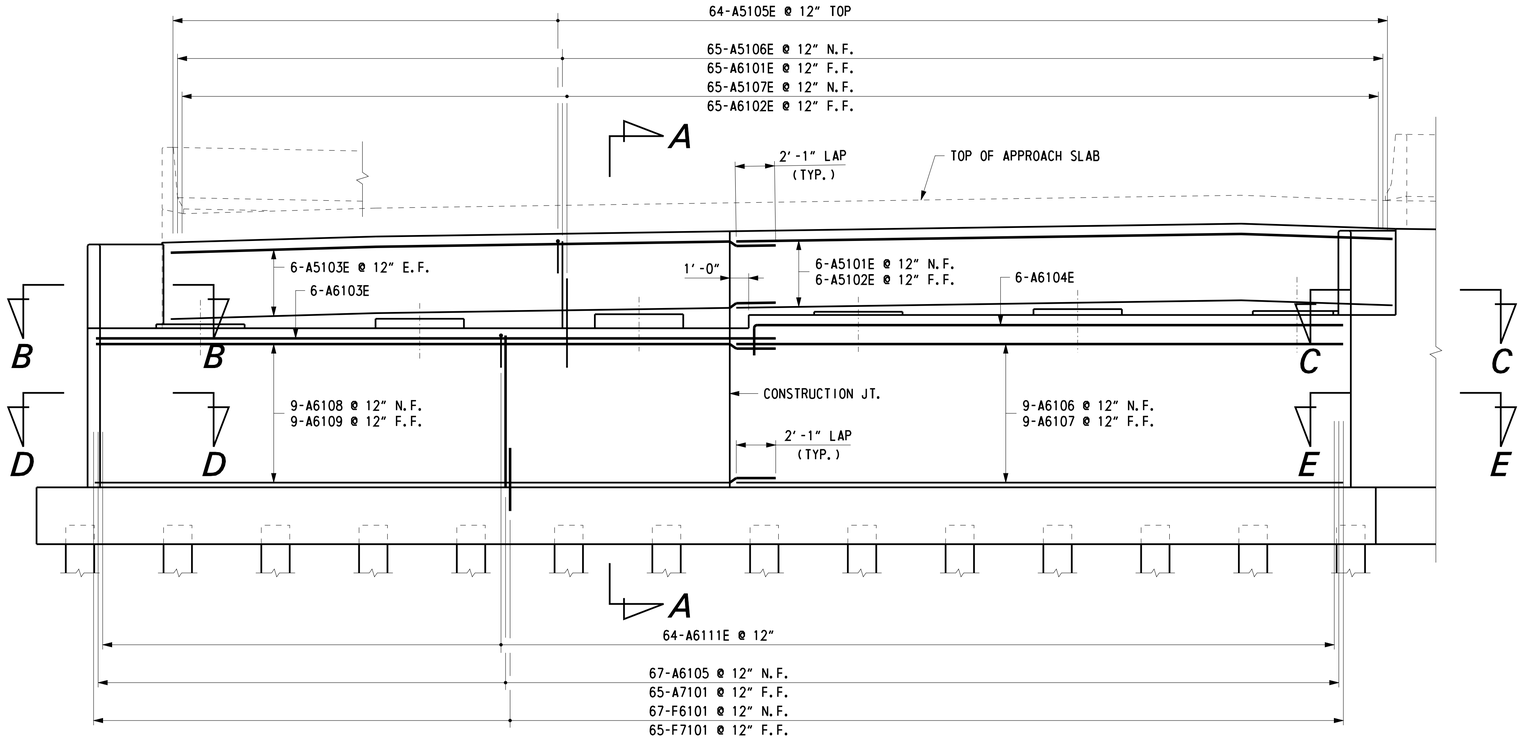

ELEVATION - ABUTMENT 1 NORTHBOUND ROADWAY

SCALE: 1/4" = 1'-0"

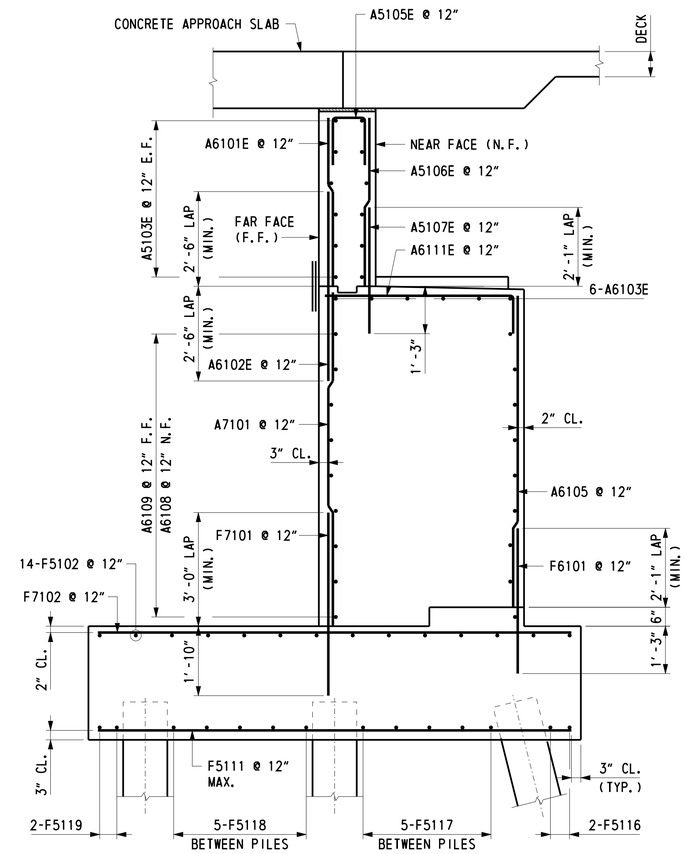

SECTION A-A

SCALE: 1/2" = 1'-0"

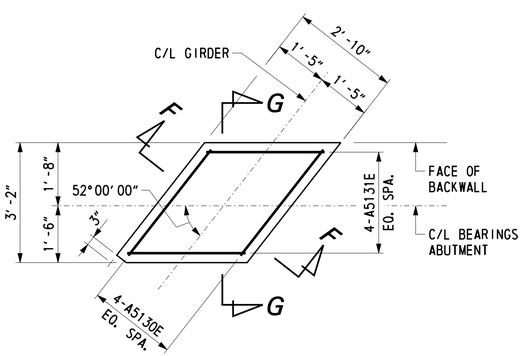

PLAN - ABUTMENT MASONRY PAD

SCALE: 1/2" = 1'-0"

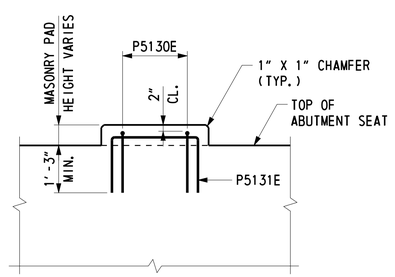

SECTION F-F

SCALE: 1/2" = 1'-0"

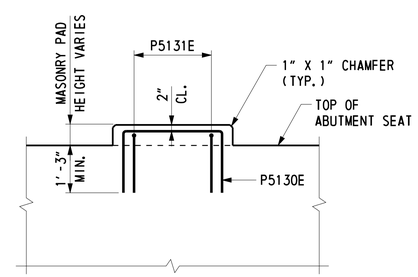

SECTION G-G

SCALE: 1/2" = 1'-0"

NOTE:

ABUTMENT 1 NORTHBOUND ROADWAY MASONRY PAD REINFORCEMENT APPLIES AT GIRDERS G7 THROUGH G11. GIRDER G12 MASONRY PAD SHALL BE POURED MONOLITHIC WITH ABUTMENT.

CROSS REFERENCE NOTES:

1. FOR FOUNDATION PLAN, SEE DWG. 1-477 AB-7.
2. FOR ABUTMENT PLAN AND ELEVATION, SEE DWG. 1-477 AB-9.
3. FOR WINGWALL ELEVATION, SEE DWG. 1-477 AB-11.
4. FOR SECTIONS B-B TO E-E, SEE DWG. 1-477 AB-26.
5. FOR FOOTING REINFORCEMENT PLAN, SEE DWGS. 1-477 AB-28 AND 1-477 AB-29.
6. FOR WINGWALL REINFORCEMENT, SEE DWG. 1-477 AB-27.
7. FOR REINFORCING BAR LIST, SEE DWG. 1-477 AB-35.

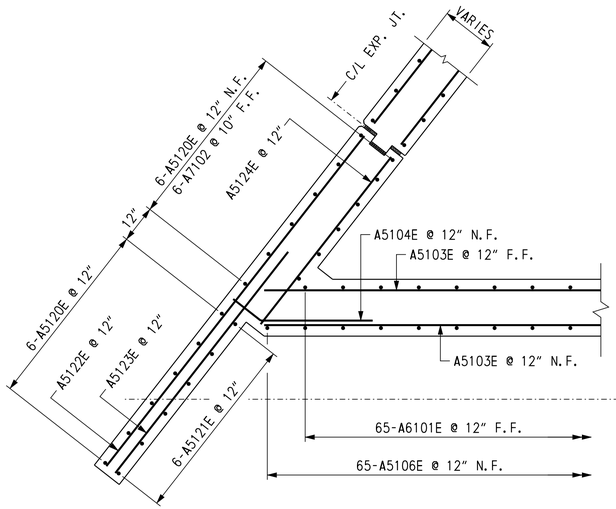

SECTION B-B

SCALE: ½" = 1'-0"

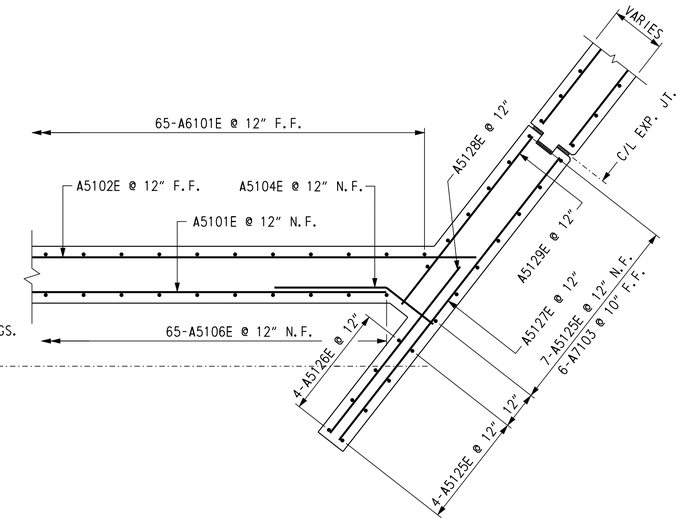

SECTION C-C

SCALE: ½" = 1'-0"

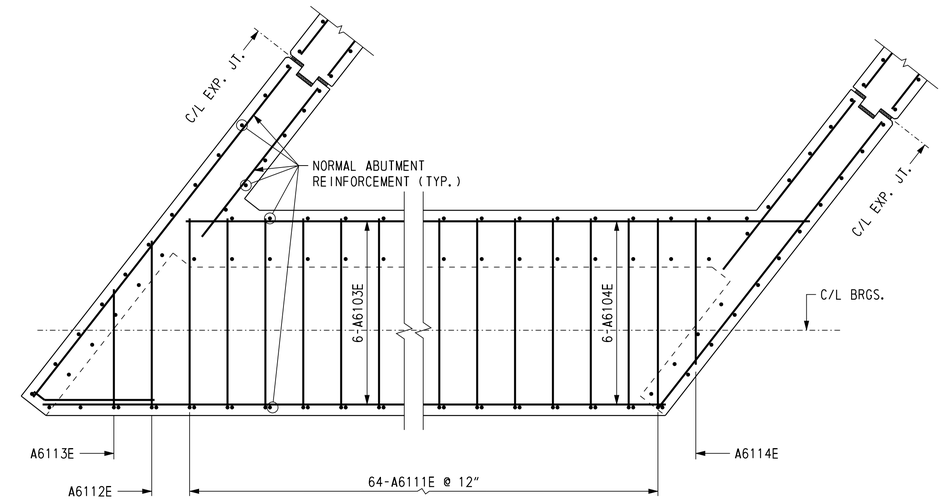

PLAN - BEAM SEAT DETAIL

SCALE: ½" = 1'-0"

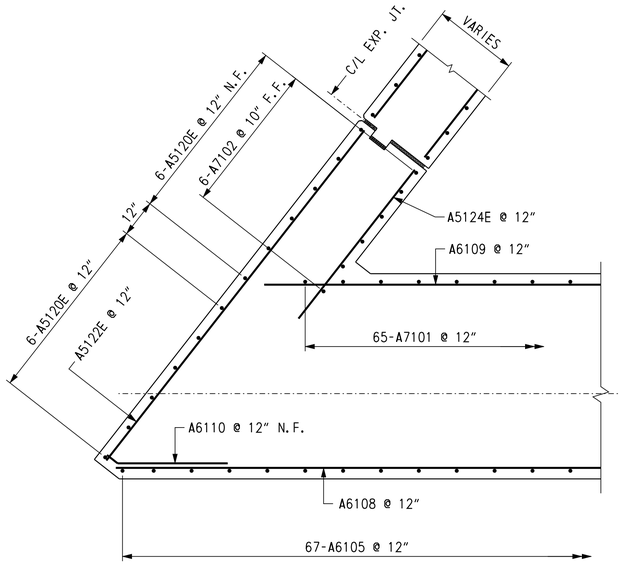

SECTION D-D

SCALE: ½" = 1'-0"

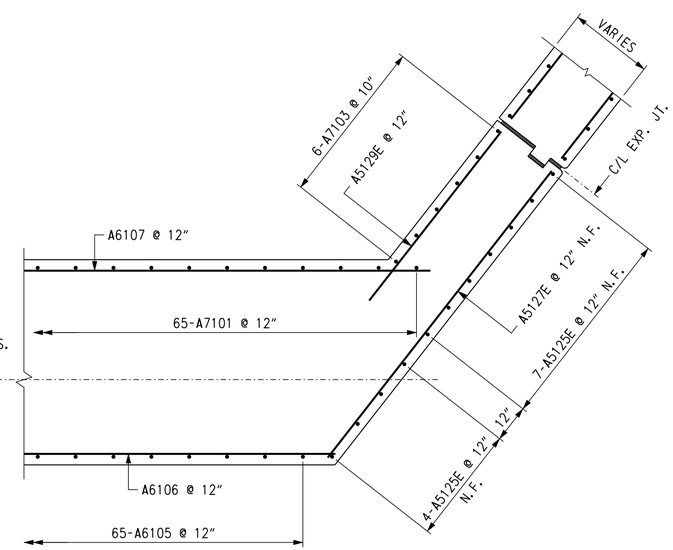

SECTION E-E

SCALE: ½" = 1'-0"

NOTES:

1. BARS A5120E AND A5125E LAP WITH F5101 DOWELS (LAP = 2'-1" MIN.). EMBED DOWELS 1'-0" IN FOOTING.

CROSS REFERENCE NOTES:

1. FOR ABUTMENT REINFORCEMENT, SEE DWG. 1-477 AB-25.
2. FOR WINGWALL REINFORCEMENT, SEE DWG. 1-477 AB-27.
3. FOR REINFORCING BAR LIST, SEE DWG. 1-477 AB-35.

DELAWARE DEPARTMENT OF TRANSPORTATION	ADDENDUMS / REVISIONS	US 301 LEVELS ROAD TO SUMMIT BRIDGE ROAD	CONTRACT T200511303	BRIDGE NO. 1-477N&S	US 301 MAINLINE OVER TRIBUTARY TO SANDY BRANCH ABUTMENT 1 NB ROADWAY REINFORCEMENT 2	1-477 AB-26	
			COUNTY NEW CASTLE	DESIGNED BY: J. S. LI		SHEET NO. 474	
				CHECKED BY: W. A. O'CONNOR		TOTAL SHTS. 1256	

U:\Projects\AA\21387385\CAD\Bridge\BR2-5\ab28_BR2-5_US301.dgn
11/8/2012
Steve_Lambert

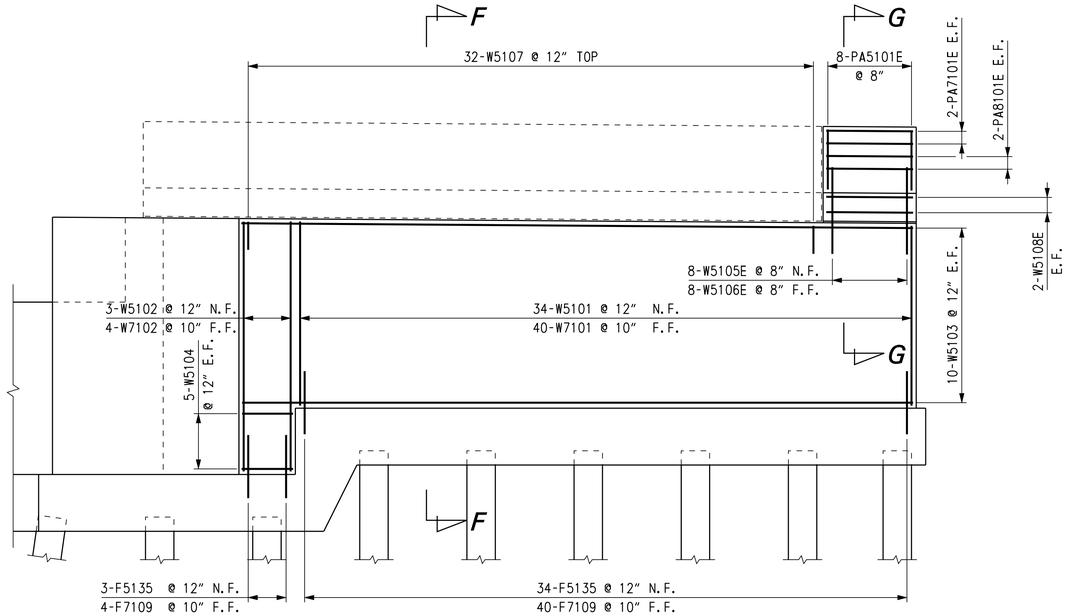

WING WALL 5

SCALE: ¼" = 1'-0"

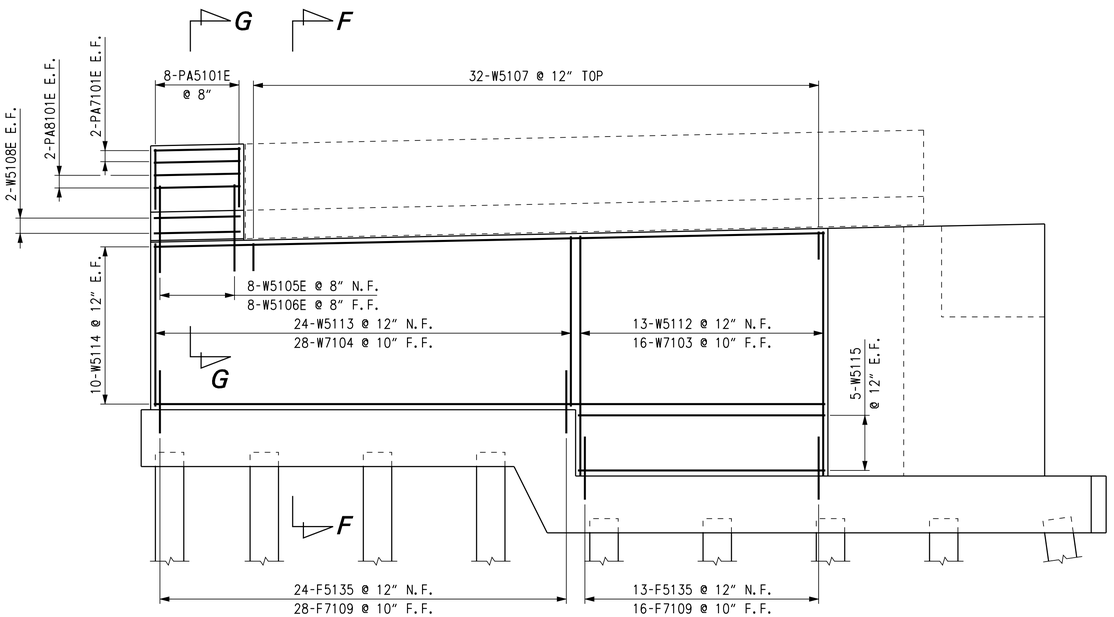

WING WALL 6

SCALE: ¼" = 1'-0"

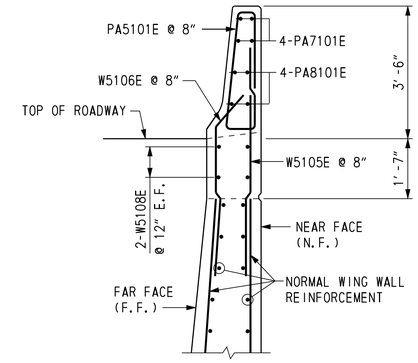

SECTION G-G

SCALE: ½" = 1'-0"

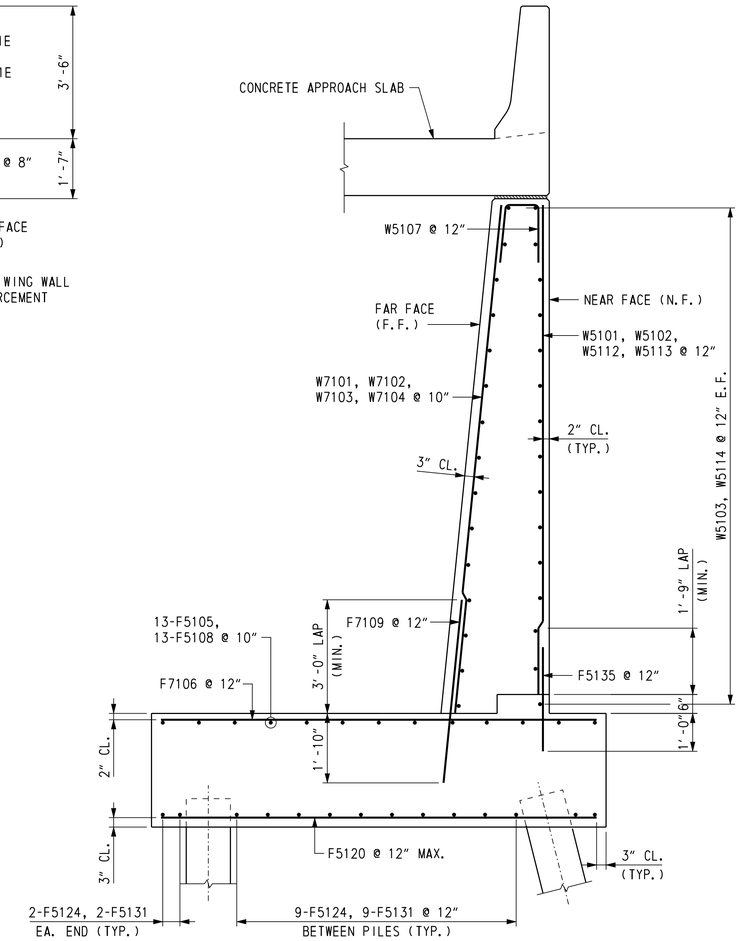

SECTION F-F

SCALE: ½" = 1'-0"

CROSS REFERENCE NOTES:

1. FOR WINGWALL ELEVATIONS, SEE DWG. 1-477 AB-11.
2. FOR ABUTMENT REINFORCEMENT, SEE DWGS. 1-477 AB-25 AND 1-477 AB-26.
3. FOR FOOTING REINFORCEMENT, SEE DWGS. 1-477 AB-28 AND 1-477 AB-29.
4. FOR REINFORCING BAR LIST, SEE DWG. 1-477 AB-35.

U:\Projects\AA\21367385\CAD\Bridge\BR2-5\ab27_BR2-5_US301.dgn

11/9/2012

Steve_Lambert

DELAWARE DEPARTMENT OF TRANSPORTATION	ADDENDUMS / REVISIONS	US 301 LEVELS ROAD TO SUMMIT BRIDGE ROAD	CONTRACT T200511303	BRIDGE NO. 1-477N&S	US 301 MAINLINE OVER TRIBUTARY TO SANDY BRANCH ABUTMENT 1 NB ROADWAY REINFORCEMENT 3	1-477 AB-27
			COUNTY NEW CASTLE	DESIGNED BY: J. S. LI		SHEET NO. 475
				CHECKED BY: W. A. O'CONNOR		TOTAL SHTS. 1256

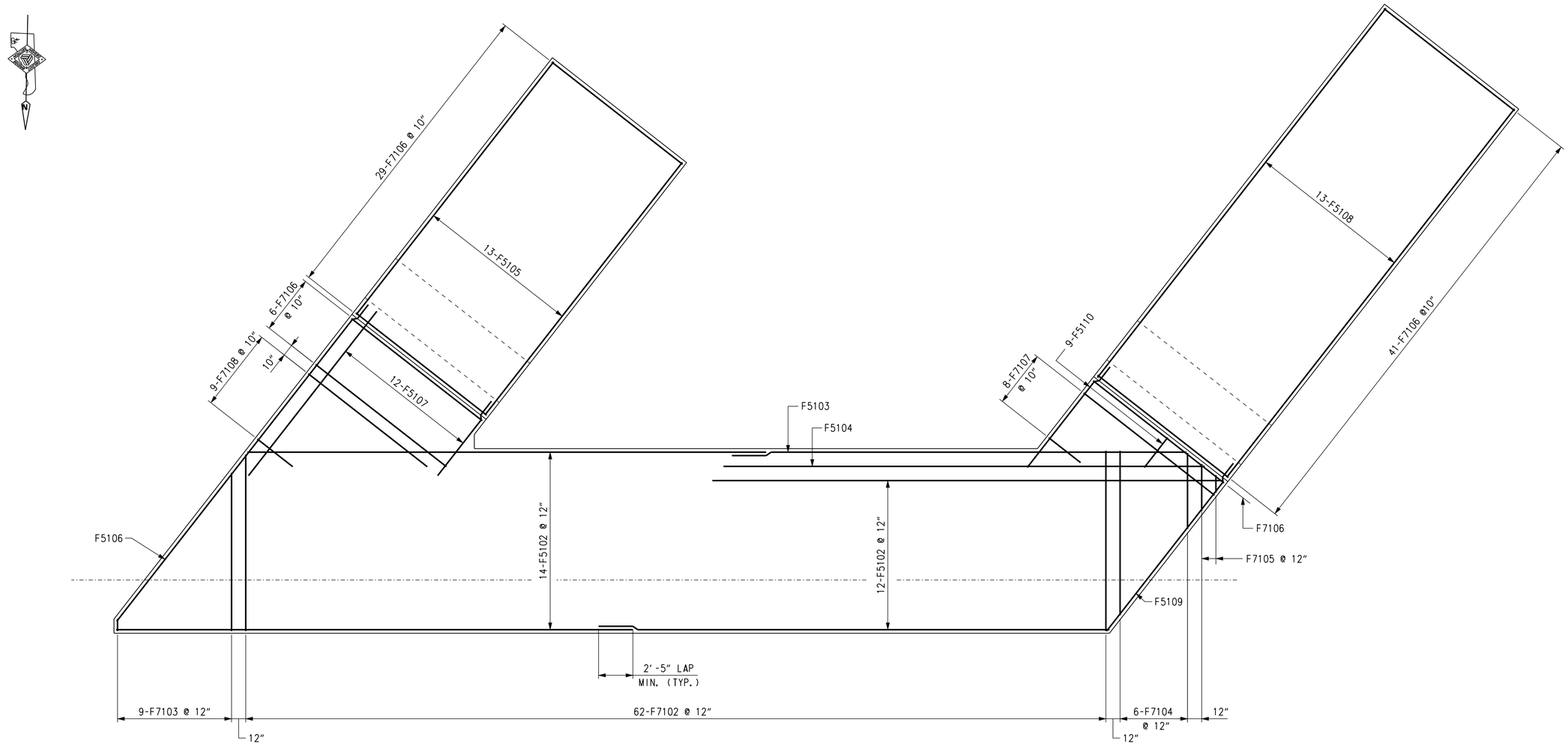

PLAN - TOP MAT FOOTING REINFORCEMENT

SCALE: ¼" = 1'-0"

CROSS REFERENCE NOTES:

1. FOR FOUNDATION PLAN, SEE DWG. 1-477 AB-7.
2. FOR ABUTMENT PLAN AND ELEVATION, SEE DWG. 1-477 AB-9.
3. FOR FOOTING STEP DETAIL, SEE DWG, 1-477 AB-29.
4. FOR REINFORCING BAR LIST, SEE DWG. 1-477 AB-35.

DELAWARE DEPARTMENT OF TRANSPORTATION	ADDENDUMS / REVISIONS	US 301 LEVELS ROAD TO SUMMIT BRIDGE ROAD	CONTRACT T200511303	BRIDGE NO. 1-477N&S	US 301 MAINLINE OVER TRIBUTARY TO SANDY BRANCH ABUTMENT 1 NB ROADWAY REINFORCEMENT 4	1-477 AB-28	
			COUNTY NEW CASTLE	DESIGNED BY: J. S. LI		SHEET NO. 476	
				CHECKED BY: W. A. O'CONNOR		TOTAL SHTS. 1256	

U:\Projects\AA\21387385\CAD\Bridge\BR2-5\ab28_BR2-5_US301.dgn 11/8/2012 Steve_Lambert

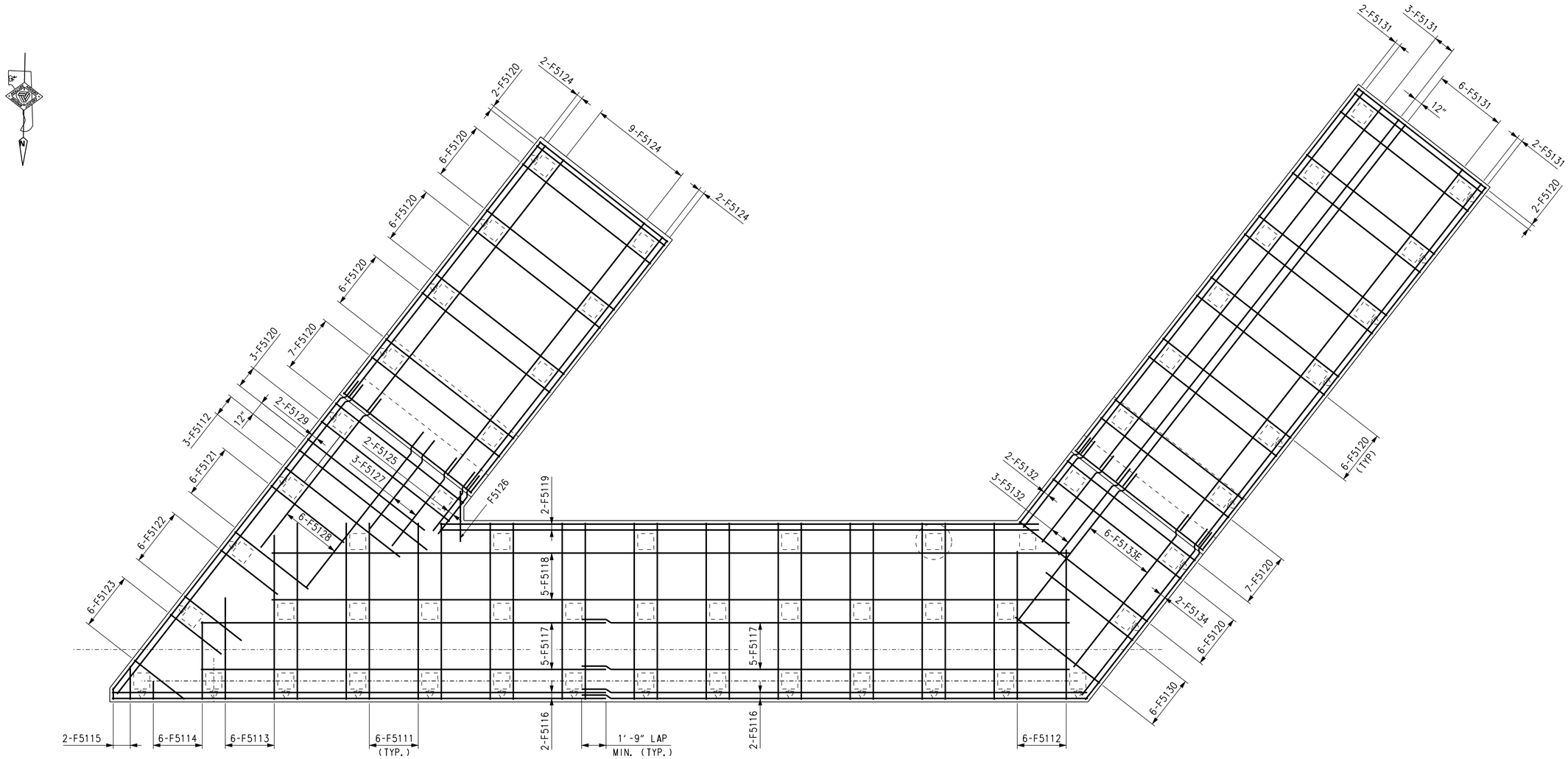

PLAN - BOTTOM MAT FOOTING REINFORCEMENT

SCALE: 1/4" = 1'-0"

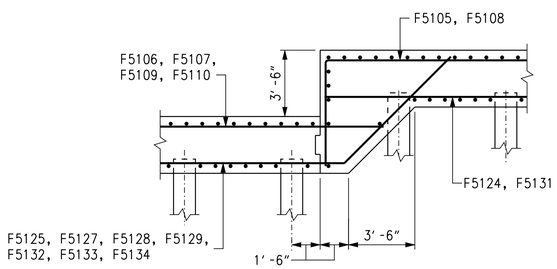

FOOTING STEP DETAIL

SCALE: 1/4" = 1'-0"

CROSS REFERENCE NOTES:

1. FOR FOUNDATION PLAN, SEE DWG. 1-477 AB-7.
2. FOR ABUTMENT PLAN AND ELEVATION, SEE DWG. 1-477 AB-9.
3. FOR REINFORCING BAR LIST, SEE DWG. 1-477 AB-35.

DELAWARE DEPARTMENT OF TRANSPORTATION	ADDENDUMS / REVISIONS	US 301 LEVELS ROAD TO SUMMIT BRIDGE ROAD	CONTRACT T200511303	BRIDGE NO. 1-477N&S	US 301 MAINLINE OVER TRIBUTARY TO SANDY BRANCH ABUTMENT 1 NB ROADWAY REINFORCEMENT 5	1-477 AB-29	
			COUNTY NEW CASTLE	DESIGNED BY: J. S. LI		SHEET NO. 477	
				CHECKED BY: W. A. O'CONNOR		TOTAL SHTS. 1256	

U:\Projects\AA\21387385\CAD\Bridge\BR2-5\ab29_BR2-5_US301.dgn
11/8/2012
Steve_Lambert

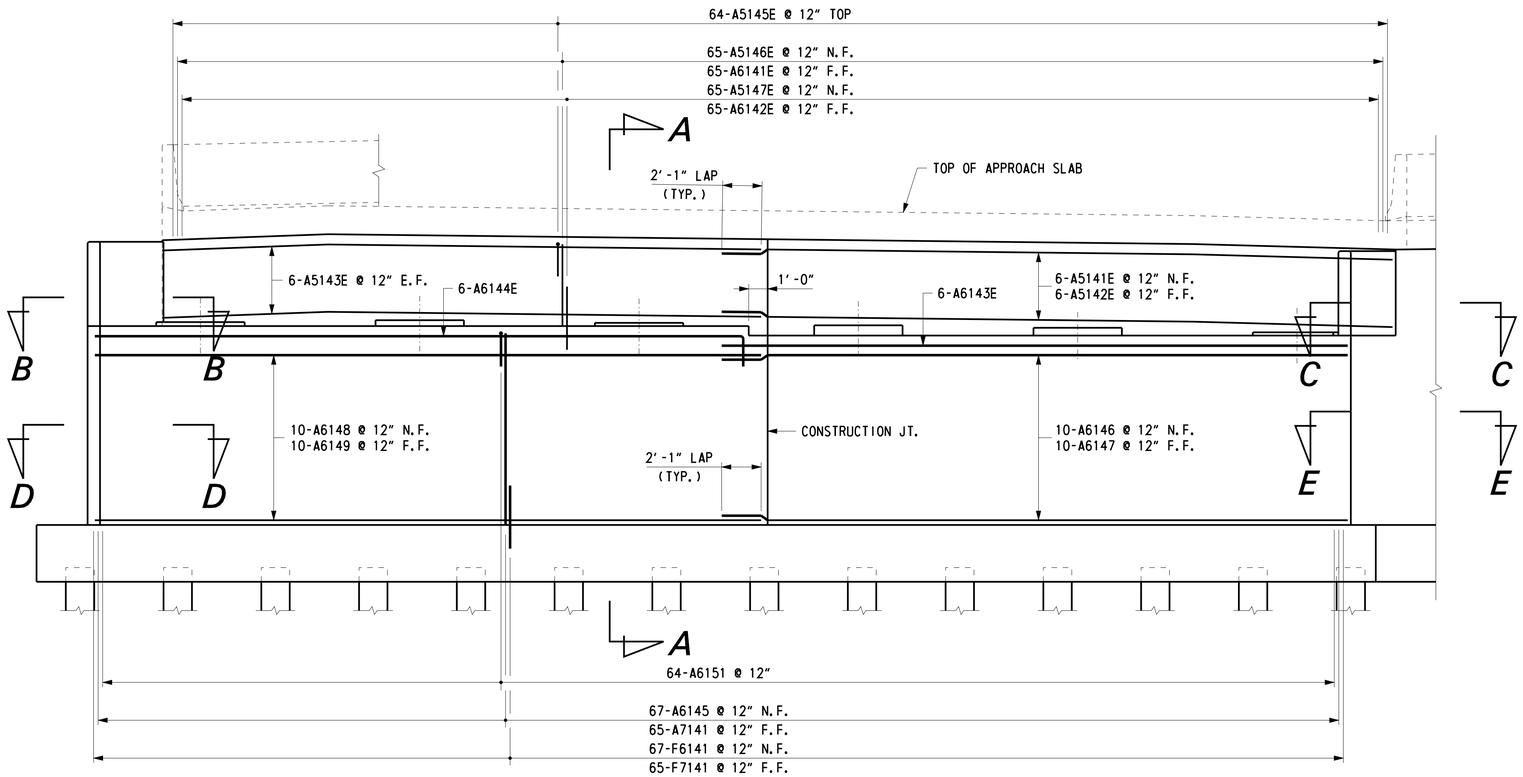

ELEVATION - ABUTMENT 2 NORTHBOUND ROADWAY

SCALE: 1/4" = 1'-0"

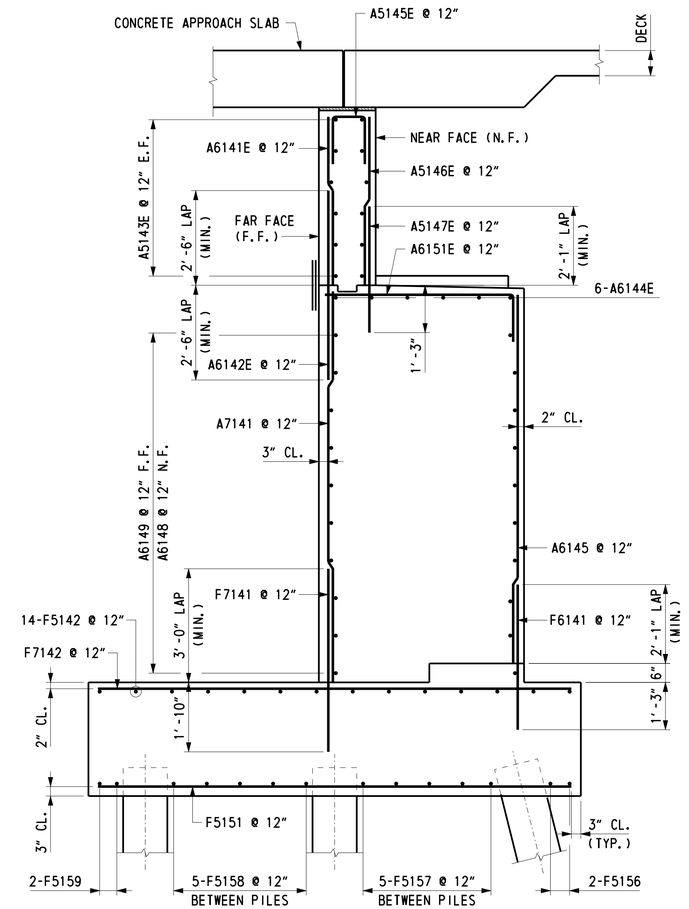

SECTION A-A

SCALE: 1/2" = 1'-0"

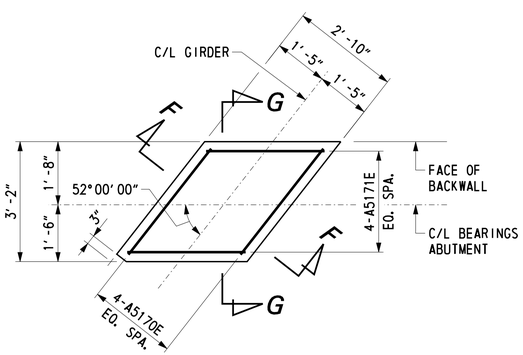

PLAN - ABUTMENT MASONRY PAD

SCALE: 1/2" = 1'-0"

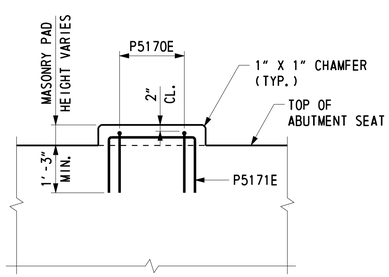

SECTION F-F

SCALE: 1/2" = 1'-0"

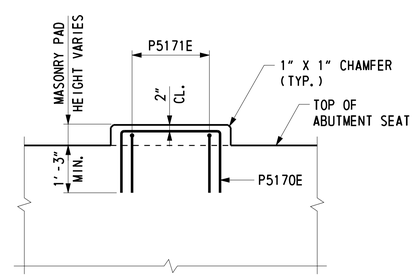

SECTION G-G

SCALE: 1/2" = 1'-0"

NOTE:

ABUTMENT 2 NORTHBOUND ROADWAY MASONRY PAD REINFORCEMENT APPLIES AT GIRDERS G7 THROUGH G11. GIRDER G12 MASONRY PAD SHALL BE POURED MONOLITHIC WITH ABUTMENT.

CROSS REFERENCE NOTES:

1. FOR FOUNDATION PLAN, SEE DWG. 1-477 AB-8.
2. FOR ABUTMENT PLAN AND ELEVATION, SEE DWG. 1-477 AB-10.
3. FOR WINGWALL ELEVATION, SEE DWG. 1-477 AB-11.
4. FOR SECTIONS B-B TO E-E, SEE DWG. 1-477 AB-31.
5. FOR FOOTING REINFORCEMENT PLAN, SEE DWG. 1-477 AB-33 AND 1-477 AB-34.
6. FOR WINGWALL REINFORCEMENT, SEE DWG. 1-477 AB-32.
7. FOR REINFORCING BAR LIST, SEE DWG. 1-477 AB-36.

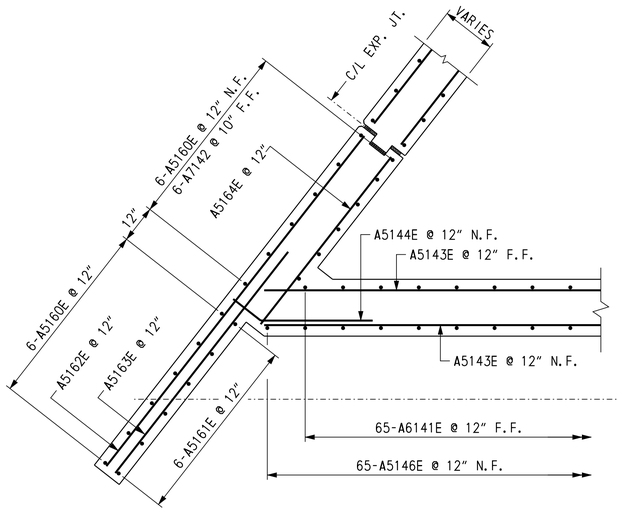

SECTION B-B

SCALE: ½" = 1'-0"

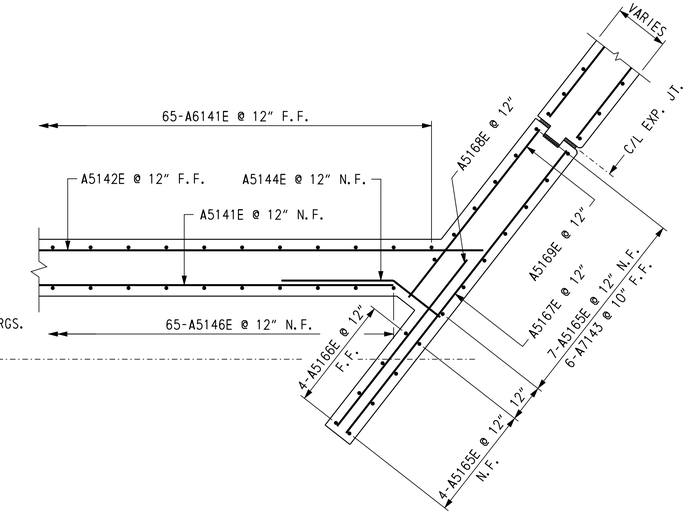

SECTION C-C

SCALE: ½" = 1'-0"

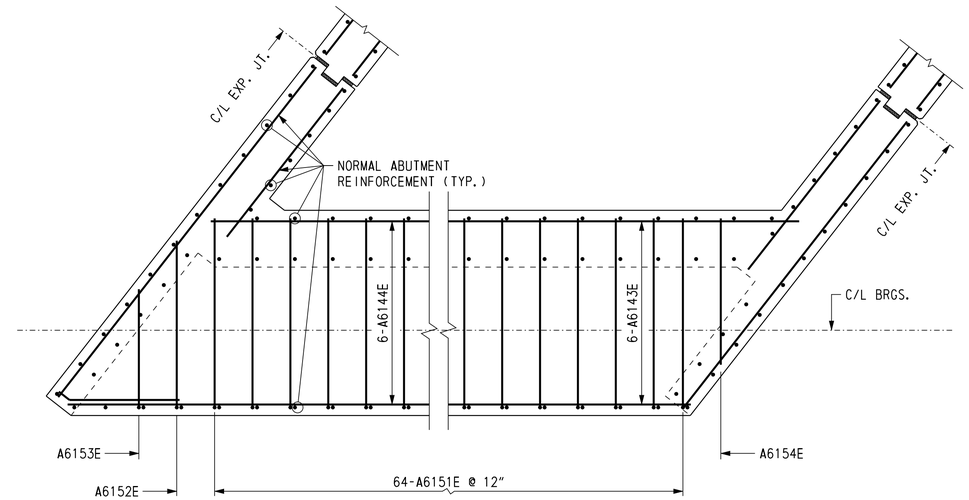

PLAN - BEAM SEAT DETAIL

SCALE: ½" = 1'-0"

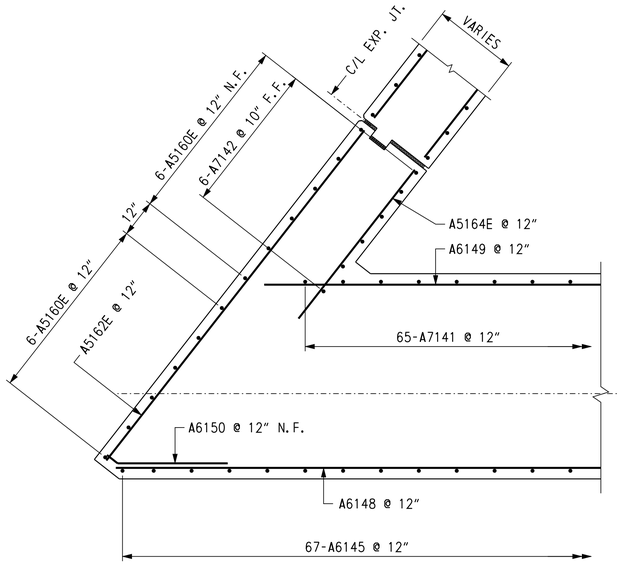

SECTION D-D

SCALE: ½" = 1'-0"

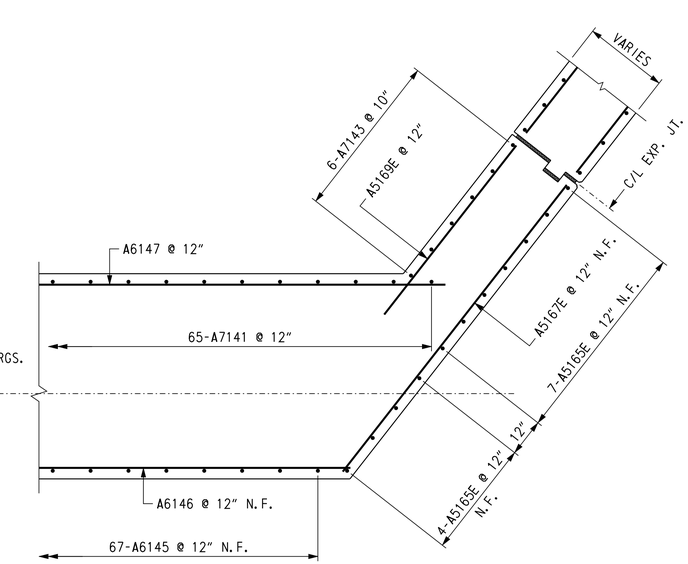

SECTION E-E

SCALE: ½" = 1'-0"

NOTES:

1. BARS A5160E AND A5165E LAP WITH F5141 DOWELS (LAP = 2'-1" MIN.). EMBED DOWELS 1'-0" IN FOOTING.

CROSS REFERENCE NOTES:

1. FOR ABUTMENT REINFORCEMENT, SEE DWG. 1-477 AB-30.
2. FOR WINGWALL REINFORCEMENT, SEE DWG. 1-477 AB-32.
3. FOR REINFORCING BAR LIST, SEE DWG. 1-477 AB-36.

DELAWARE DEPARTMENT OF TRANSPORTATION	ADDENDUMS / REVISIONS	US 301 LEVELS ROAD TO SUMMIT BRIDGE ROAD	CONTRACT T200511303	BRIDGE NO. 1-477N&S	US 301 MAINLINE OVER TRIBUTARY TO SANDY BRANCH ABUTMENT 2 NB ROADWAY REINFORCEMENT 2	1-477 AB-31	
			COUNTY NEW CASTLE	DESIGNED BY: J. S. LI		SHEET NO. 479	
				CHECKED BY: W. A. O'CONNOR		TOTAL SHTS. 1256	

U:\Projects\AA\2138738S\CAD\Bridge\BR2-5\ab31_BR2-5_US301.dgn
11/8/2012
Steve_Lambert

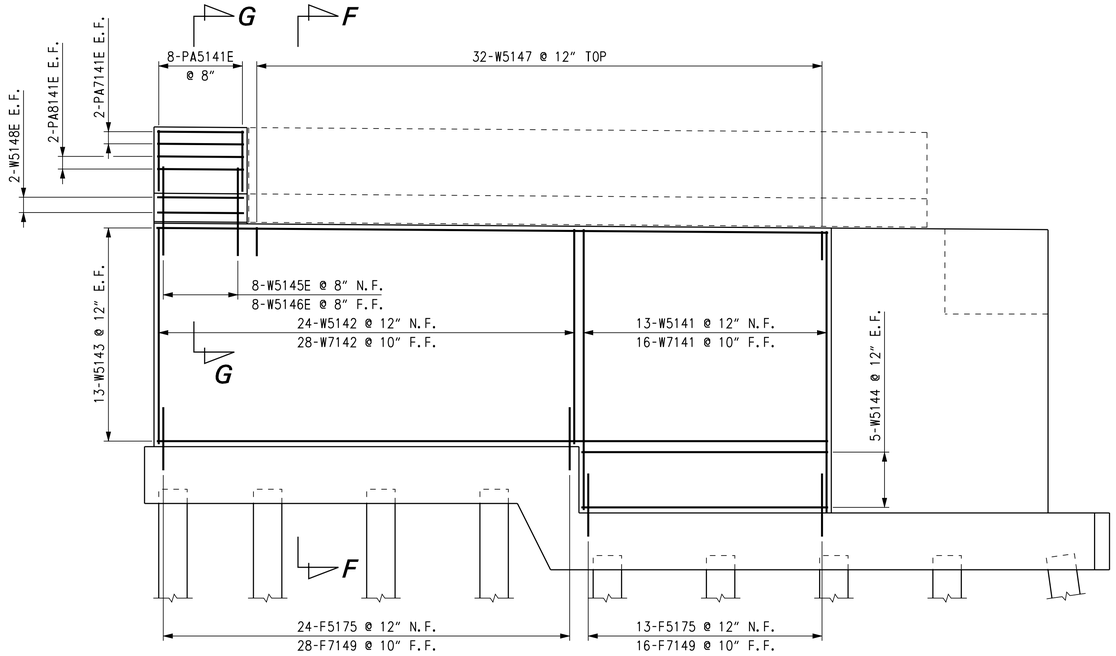

WING WALL 7

SCALE: ¼" = 1'-0"

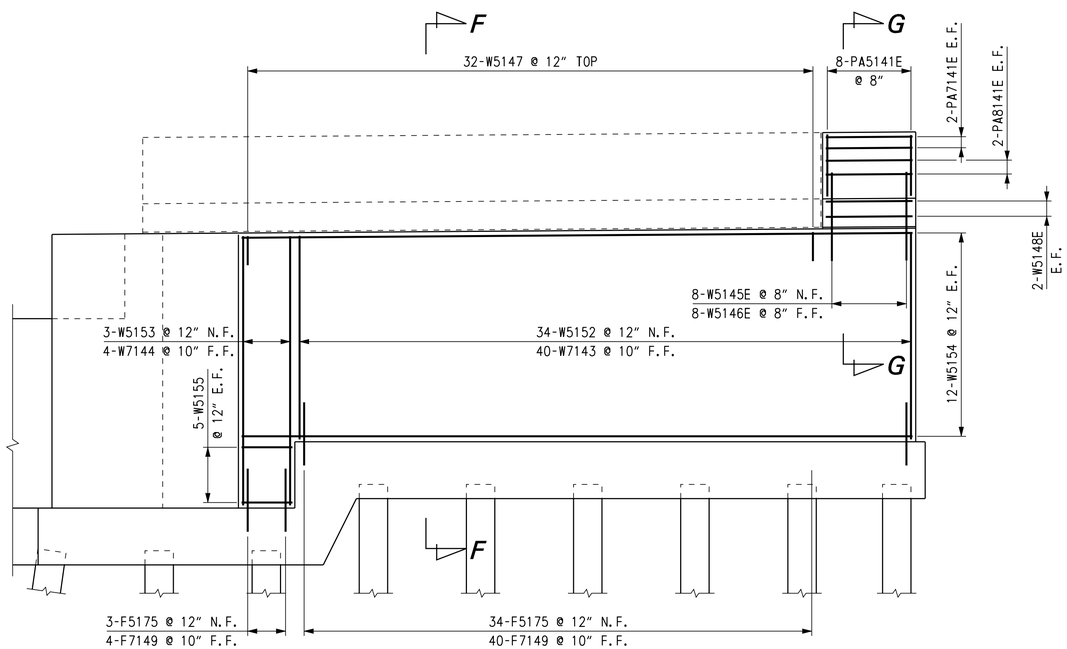

WING WALL 8

SCALE: ¼" = 1'-0"

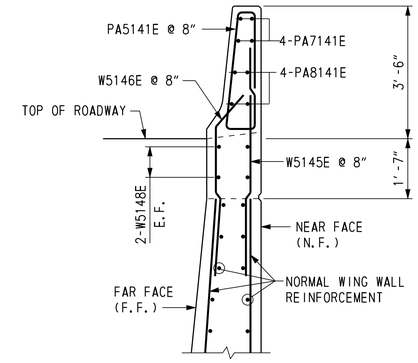

SECTION G-G

SCALE: ½" = 1'-0"

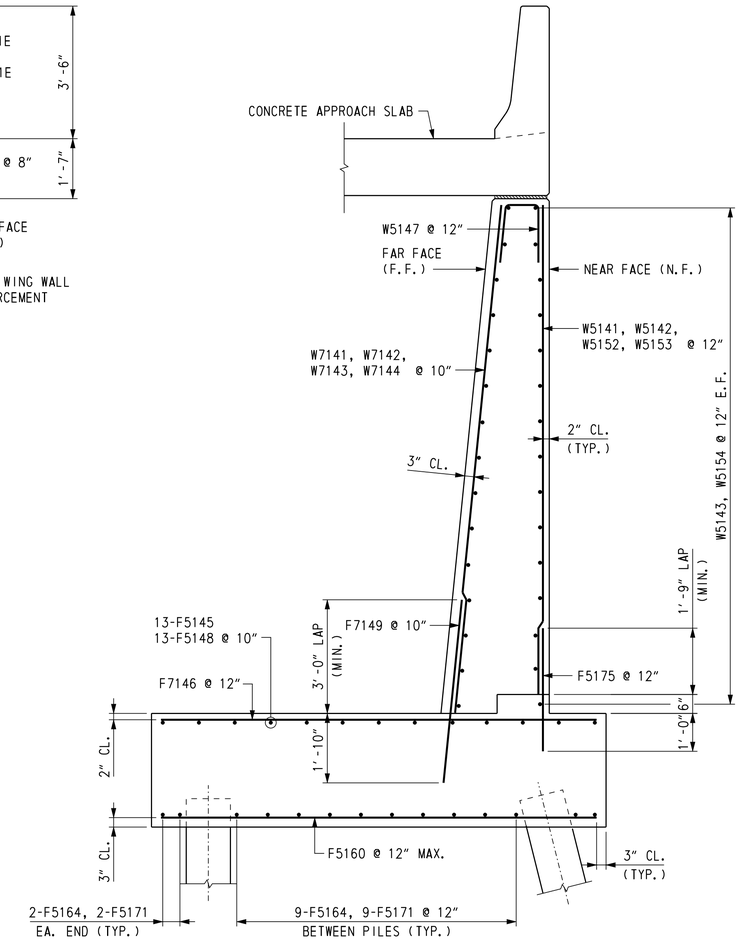

SECTION F-F

SCALE: ½" = 1'-0"

CROSS REFERENCE NOTES:

1. FOR WINGWALL ELEVATIONS, SEE DWG. 1-477 AB-11.
2. FOR ABUTMENT REINFORCEMENT, SEE DWG. 1-477 AB-30 AND 1-477 AB-31.
3. FOR FOOTING REINFORCEMENT, SEE DWG. 1-477 AB-33 AND 1-477 AB-34.
4. FOR REINFORCING BAR LIST, SEE DWG. 1-477 AB-36.

DELAWARE DEPARTMENT OF TRANSPORTATION	ADDENDUMS / REVISIONS	US 301 LEVELS ROAD TO SUMMIT BRIDGE ROAD	CONTRACT T200511303	BRIDGE NO. 1-477N&S	US 301 MAINLINE OVER TRIBUTARY TO SANDY BRANCH ABUTMENT 2 NB ROADWAY REINFORCEMENT 3	1-477 AB-32
			COUNTY NEW CASTLE	DESIGNED BY: J. S. LI		SHEET NO. 480
				CHECKED BY: W. A. O'CONNOR		TOTAL SHTS. 1256

U:\Projects\AA\21387385\CAD\Bridge\BR2-5\ab32_BR2-5_US301.dgn
11/8/2012
Steve_Lambert

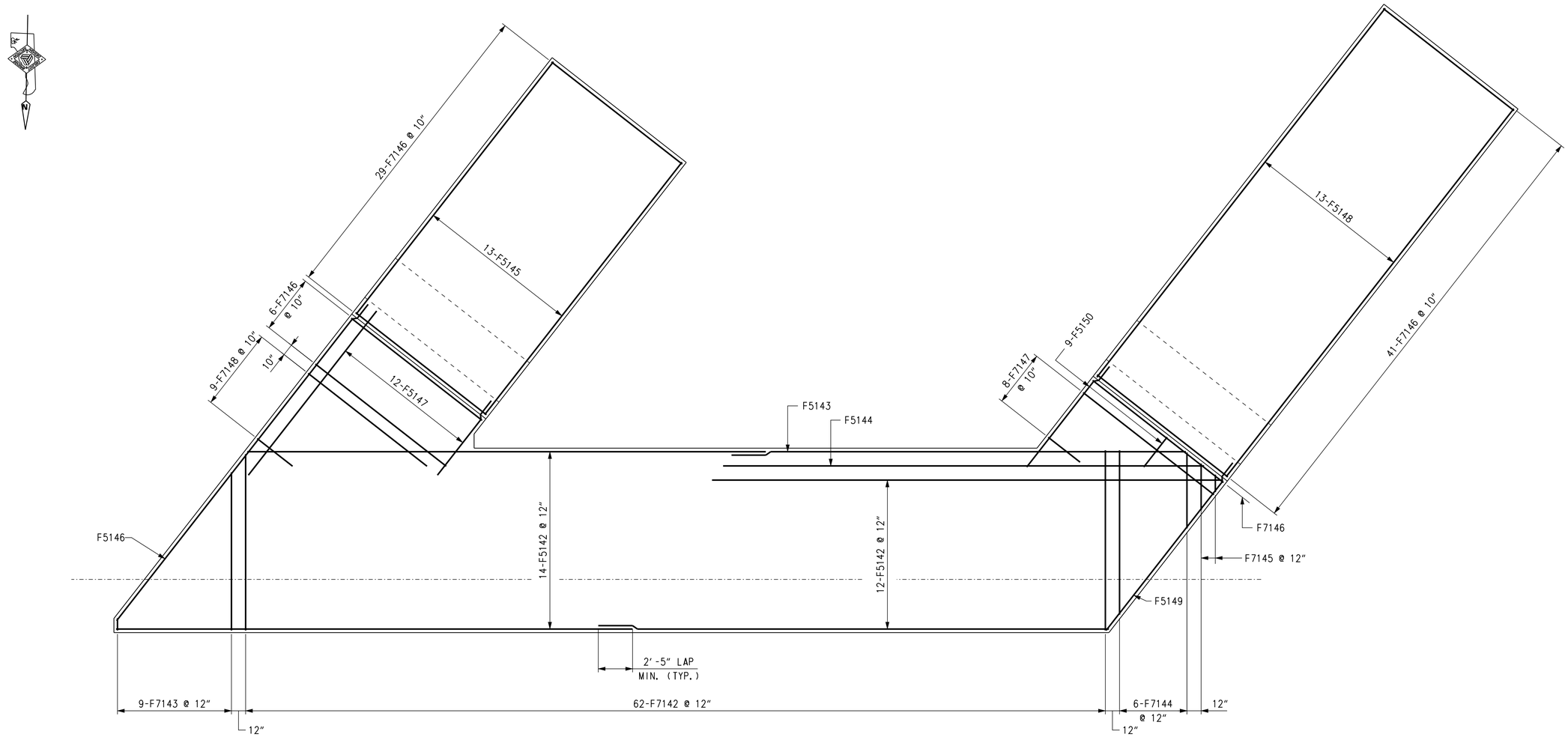

PLAN - TOP MAT FOOTING REINFORCEMENT

SCALE: 1/4" = 1'-0"

CROSS REFERENCE NOTES:

1. FOR FOUNDATION PLAN, SEE DWG. 1-477 AB-8.
2. FOR ABUTMENT PLAN AND ELEVATION, SEE DWG. 1-477 AB-10.
3. FOR FOOTING STEP DETAIL, SEE DWG. 1-477 AB-34.
4. FOR REINFORCING BAR LIST, SEE DWG. 1-477 AB-36.

DELAWARE DEPARTMENT OF TRANSPORTATION	ADDENDUMS / REVISIONS	US 301 LEVELS ROAD TO SUMMIT BRIDGE ROAD	CONTRACT T200511303	BRIDGE NO. 1-477N&S	US 301 MAINLINE OVER TRIBUTARY TO SANDY BRANCH ABUTMENT 2 NB ROADWAY REINFORCEMENT 4	1-477 AB-33	
			COUNTY NEW CASTLE	DESIGNED BY: J. S. LI		SHEET NO. 481	
				CHECKED BY: W. A. O'CONNOR		TOTAL SHTS. 1256	

U:\Projects\AA\21387385\CAD\Bridge\BR2-5\ab33_BR2-5_US301.dgn 11/8/2012 Steve_Lambert

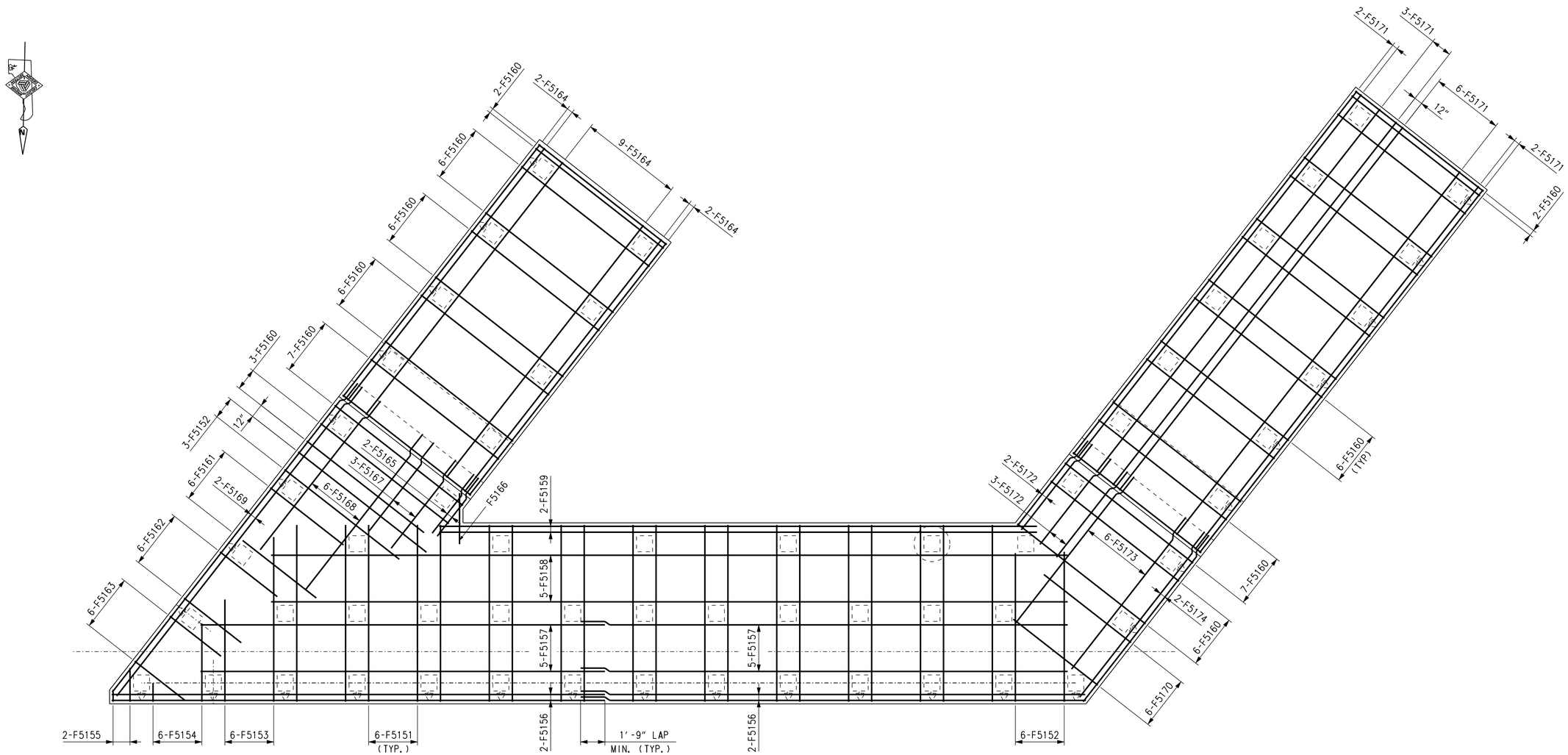

PLAN - BOTTOM MAT FOOTING REINFORCEMENT

SCALE: 1/4" = 1'-0"

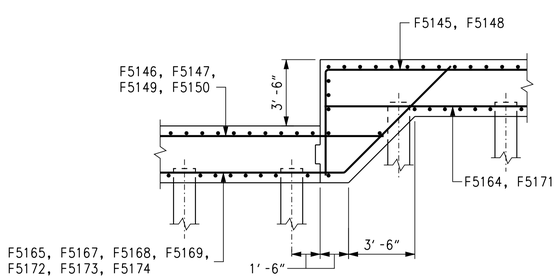

FOOTING STEP DETAIL

SCALE: 1/4" = 1'-0"

CROSS REFERENCE NOTES:

1. FOR FOUNDATION PLAN, SEE DWG. 1-477 AB-8.
2. FOR ABUTMENT PLAN AND ELEVATION, SEE DWG. 1-477 AB-10.
3. FOR REINFORCING BAR LIST, SEE DWG. 1-477 AB-36.

DELAWARE DEPARTMENT OF TRANSPORTATION	ADDENDUMS / REVISIONS	US 301 LEVELS ROAD TO SUMMIT BRIDGE ROAD	CONTRACT T200511303	BRIDGE NO. 1-477N&S	US 301 MAINLINE OVER TRIBUTARY TO SANDY BRANCH ABUTMENT 2 NB ROADWAY REINFORCEMENT 5	1-477 AB-34	
			COUNTY NEW CASTLE	DESIGNED BY: J. S. LI		SHEET NO. 482	
				CHECKED BY: W. A. O'CONNOR		TOTAL SHTS. 1256	

U:\Projects\AA\21387385\CAD\Bridge\BR2-5\ab34_BR2-5_US301.dgn
11/8/2012
Steve_Lambert

REINFORCING BAR LIST

ABUTMENT 1 NORTHBOUND

MARK	LENGTH	NO. BARS	TYPE	A	B	C	D	E	G	H	J	K	REMARKS
A5101E	33′-10″	6	STR.										
A5102E	36′-6″	6	STR.										
A5103E	31′-8″	12	STR.										
A5104E	3′-3″	12	19		1′-2″	2′-1″				0′-8⅝″		0′-11″	
A5105E	5′-4″	64	17		2′-1″	1′-2″	2′-1″						
A5106E	4′-3″	65	STR.										
A5107E	4′-0″	65	STR.										
A5120E	12′-3″	12	STR.										
A5121E	5′-7″	6	STR.										
A5122E	11′-1″	14	STR.										
A5123E	6′-6½″	6	STR.										
A5124E	5′-8″	14	STR.										
A5125E	12′-11″	11	STR.										
A5126E	5′-8″	4	STR.										
A5127E	9′-6″	15	STR.										
A5128E	4′-11″	6	STR.										
A5129E	5′-8″	15	STR.										
A5130E	7′-5″	20	17		1′-11″	3′-7″	1′-11″						
A5131E	7′-0″	20	17		1′-11″	3′-2″	1′-11″						
A6101E	4′-3″	65	STR.										
A6102E	5′-10″	65	STR.										
A6103E	32′-7″ TO 35′-6″	6	STR.										Δ = 7″
A6104E	32′-7″ TO 36′-4″	6	36	1′-0″	31′-7″ TO 35′-4″								Δ = 9″
A6105	7′-9″	67	STR.										
A6106	32′-7″	9	STR.										
A6107	36′-4″	9	STR.										
A6108	35′-4″	8	STR.										
A6109	32′-5″	8	STR.										
A6110	2′-7″	9	19		0′-6″	2′-1″				0′-3⅝″		0′-4¾″	
A6111E	6′-0″	64	36	1′-0″	5′-0″								
A6112E	4′-9″	1	36	1′-0″	3′-9″								
A6113E	3′-6″	1	36	1′-0″	2′-6″								
A6114E	3′-9″	1	STR.										
A7101	8′-3″	65	STR.										
A7102	12′-8″	6	STR.										
A7103	13′-4″	6	STR.										
F5101	4′-2″	23	STR.										
F5102	36′-7¾″	26	STR.										
F5103	32′-4½″	1	STR.										
F5104	34′-5¼″	1	STR.										
F5105	28′-11″	13	36	6′-0″	22′-11″								
F5106	30′-6″	1	STR.										
F5107	8′-3⅞″ TO 16′-6¼″	12	STR.										Δ =9″
F5108	38′-11″	13	36	6′-0″	32′-11″								
F5109	17′-2″	1	STR.										
F5110	5′-10″ TO 11′-11″	9	STR.										Δ =9⅛″
F5111	12′-6″	60	STR.										
F5112	10′-7″	9	STR.										
F5113	8′-9″ TO 10′-7″	6	STR.										Δ =4⅜″
F5114	2′-2″ TO 5′-4″	6	STR.										Δ =7⅝″
F5115	1′-0″ TO 1′-11″	2	STR.										Δ =11″

ABUTMENT 1 NORTHBOUND

MARK	LENGTH	NO. BARS	TYPE	A	B	C	D	E	G	H	J	K	REMARKS
F5116	35′-10¼″	4	STR										
F5117	33′-1″	10	STR										
F5118	57′-2″	5	STR										
F5119	41′-4″	2	STR										
F5120	11′-6″	75	STR.										
F5121	6′-6″	6	STR.										
F5122	5′-3″	6	STR.										
F5123	4′-3″	6	STR.										
F5124	22′-11″	13	STR.										
F5125	13′-3″	2	19			4′-8″	8′-7″			6′-1″		6′-1″	
F5126	2′-6″	1	STR.										
F5127	17′-0″	3	19			8′-5″	8′-7″			6′-1″		6′-1″	
F5128	22′-10½″	6	19			14′-3½″	8′-7″			6′-1″		6′-1″	
F5129	36′-7″	2	19			28′-0″	8′-7″			6′-1″		6′-1″	
F5130	7′-6″	6	STR.										
F5131	32′-11″	13	STR.										
F5132	16′-7″	5	19			8′-0″	8′-7″			6′-1″		6′-1″	
F5133	22′-2″	6	19			13′-7″	8′-7″			6′-1″		6′-1″	
F5134	23′-2″	2	19			14′-7″	8′-7″			6′-1″		6′-1″	
F5135	3′-11″	74	STR.										
F6101	4′-5″	67	STR.										
F7101	5′-5″	77	STR.										
F7102	12′-6″	62	STR.										
F7103	0′-10″ TO 11′-3″	9	STR.										Δ =1′-3⅝″
F7104	5′-7⅝″ TO 11′-3″	6	STR.										Δ =1′-1½″
F7105	1′-0″ TO 3′-1″	2	STR.										Δ =2′-1″
F7106	11′-6″	77	STR.										
F7107	1′-4″ TO 7′-10″	6	STR.										Δ =0′-11″
F7108	1′-4″ TO 10′-10″	8	STR.										Δ =1′-2¼″
F7109	5′-6″	88	STR.										
PA5101E	7′-6¼″	16	28	2′-9¼″	0′-2¹⁵⁄₁₆″	0′-1⅝″	0′-2¾″	2′-9½″	0′-3⅛″	0′-5⅛″			
PA7101E	4′-8″	8	STR.										
PA8101E	4′-8″	8	STR.										
W5101	8′-11″	34	STR.										
W5102	12′-5″	3	STR.										
W5103	35′-5″	20	STR.										
W5104	2′-6″	10	STR.										
W5105E	5′-7″	16	STR.										
W5106E	5′-8″	16	19			4′-1″	1′-9″			1′-0″		1′-5¼″	
W5107	2′-8″	64	12S		0′-10″	1′-0″	0′-10″			0′-10″		0′-1″	
W5108E	4′-8″	8	STR.										
W5112	11′-6″	13	STR.										
W5113	8′-0″	24	STR.										
W5114	35′-5″	20	STR.										
W5115	12′-6″	10	STR.										
W7101	9′-5″	40	STR.										
W7102	12′-11″	4	STR.										
W7103	12′-0″	16	STR.										
W7104	8′-6″	28	STR.										

BENDING DIAGRAMS

ALL DIMENSIONS ARE FROM OUT TO OUT.

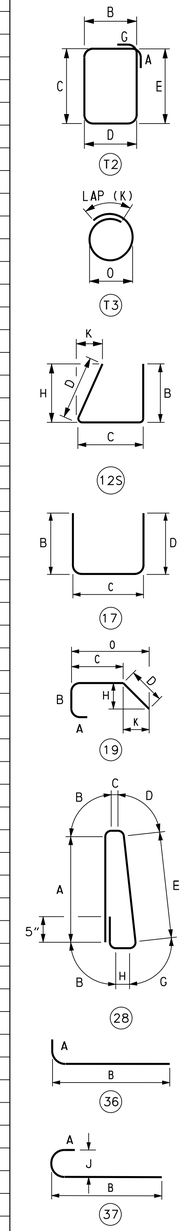

U:\Projects\AA\21367385\CAD\Bridge\BR2-5\ab35_BR2-5_US301.dgn

11/9/2012

Steve_Lambert

DELAWARE DEPARTMENT OF TRANSPORTATION

ADDENDUMS / REVISIONS

US 301 LEVELS ROAD TO SUMMIT BRIDGE ROAD

CONTRACT	BRIDGE NO.	1-477N&S
T200511303	DESIGNED BY: J. S. LI	
COUNTY		
NEW CASTLE	CHECKED BY: W. A. O'CONNOR	

US 301 MAINLINE OVER TRIBUTARY TO SANDY BRANCH ABUTMENT 1 NB ROADWAY REINFORCING BAR LIST

1-477 AB-35
SHEET NO.
483
TOTAL SHTS.
1256

REINFORCING BAR LIST

ABUTMENT 2 NORTHBOUND

MARK	LENGTH	NO. BARS	TYPE	A	B	C	D	E	G	H	J	K	REMARKS
A5141E	34′-3″	6	STR.										
A5142E	36′-11″	6	STR.										
A5143E	31′-3″	12	STR.										
A5144E	3′-3″	12	19		1′-2″	2′-1″				0′-8⅝″		0′-11″	
A5145E	5′-4″	64	17		2′-1″	1′-2″	2′-1″						
A5146E	4′-4″	65	STR.										
A5147E	3′-11″	65	STR.										
A5160E	14′-3″	12	STR.										
A5161E	5′-9″	6	STR.										
A5162E	11′-1″	17	STR.										
A5163E	6′-6½″	6	STR.										
A5164E	5′-8″	17	STR.										
A5165E	13′-9″	11	STR.										
A5166E	5′-7″	4	STR.										
A5167E	9′-6″	16	STR.										
A5168E	4′-11″	6	STR.										
A5169E	5′-8″	16	STR.										
A5170E	7′-5″	20	17		1′-11″	3′-7″	1′-11″						
A5171E	7′-0″	20	17		1′-11″	3′-2″	1′-11″						
A6141E	4′-4″	65	STR.										
A6142E	5′-9″	65	STR.										
A6143E	33′-3″ TO 37′-0″	6	STR.										Δ = 9″
A6144E	32′-0″ TO 34′-11″	6	36	1′-0″	31′-0″ TO 33′-11″								Δ = 7″
A6145	9′-4″	67	STR.										
A6146	33′-0″	10	STR.										
A6147	36′-10″	10	STR.										
A6148	34′-11″	10	STR.										
A6149	32′-0″	10	STR.										
A6150	2′-7″	11	19		0′-6″	2′-1″				0′-3⅝″		0′-4¾″	
A6151E	6′-0″	64	36	1′-0″	5′-0″								
A6152E	4′-9″	1	36	1′-0″	3′-9″								
A6153E	3′-6″	1	36	1′-0″	2′-6″								
A6154E	3′-9″	1	STR.										
A7141	9′-10″	65	STR.										
A7142	14′-10″	6	STR.										
A7143	14′-3″	6	STR.										
F5141	4′-0″	23	STR.										
F5142	36′-7¾″	26	STR.										
F5143	32′-4½″	1	STR.										
F5144	34′-5¼″	1	STR.										
F5145	28′-11″	13	36	6′-0″	22′-11″								
F5146	30′-6″	1	STR.										
F5147	8′-3⅞″ TO 16′-6¼″	12	STR.										Δ= 9″
F5148	38′-11″	13	36	6′-0″	32′-11″								
F5149	17′-2″	1	STR.										
F5150	5′-10″ TO 11′-11″	9	STR.										Δ = 9 1/8 ″
F5151	12′-6″	60	STR.										
F5152	10′-7″	9	STR.										
F5153	8′-9″ TO 10′-7″	6	STR.										Δ = 4 3/8 ″
F5154	2′-2″ TO 5′-4″	6	STR.										Δ = 7 5/8 ″
F5155	1′-0″ TO 1′-11″	2	STR.										Δ = 11″
F5156	35′-10¼″	4	STR.										
F5157	33′-1″	10	STR.										
F5158	57′-2″	5	STR.										
F5159	41′-4″	2	STR.										

ABUTMENT 2 NORTHBOUND

MARK	LENGTH	NO. BARS	TYPE	A	B	C	D	E	G	H	J	K	REMARKS
F5160	11′-6″	75	STR.										
F5161	6′-6″	6	STR.										
F5162	5′-3″	6	STR.										
F5163	4′-3″	6	STR.										
F5164	22′-11″	13	STR.										
F5165	13′-3″	2	19			4′-8″	8′-7″			6′-1″		6′-1″	
F5166	2′-6″	1	STR.										
F5167	17′-0″	3	19			8′-5″	8′-7″			6′-1″		6′-1″	
F5168	23′-10½″	6	19			14′-3½″	8′-7″			6′-1″		6′-1″	
F5169	36′-7″	2	19			28′-0″	8′-7″			6′-1″		6′-1″	
F5170	7′-6″	6	STR.										
F5171	32′-11″	13	STR.										
F5172	16′-7″	5	19			8′-0″	8′-7″			6′-1″		6′-1″	
F5173	22′-2″	6	19			13′-7″	8′-7″			6′-1″		6′-1″	
F5174	23′-2″	2	19			14′-7″	8′-7″			6′-1″		6′-1″	
F5175	3′-11″	74	STR.										
F6141	4′-3″	67	STR.										
F7141	5′-3″	77	STR.										
F7142	12′-6″	62	STR.										
F7143	0′-10″ TO 11′-3″	9	STR.										Δ = 1′-3⅝″
F7144	5′-7⅝″ TO 11′-3″	6	STR.										Δ = 1′-1½″
F7145	1′-0″ TO 3′-1″	2	STR.										Δ = 2′-1″
F7146	11′-6″	77	STR.										
F7147	1′-4″ TO 7′-10″	6	STR.										Δ = 0′-11″
F7148	1′-4″ TO 10′-10″	9	STR.										Δ = 1′-2¼″
F7149	5′-6″	88	STR.										
PA5141E	7′-6¼″	16	28	2′-9¼″	0′-2 15/16″	0′-1⅝″	0′-2¾″	2′-9½″	0′-3⅛″	0′-5⅛″			
PA7141E	4′-8″	8	STR.										
PA8141E	4′-8″	8	STR.										
W5141	14′-2″	13	STR.										
W5142	10′-8″	24	STR.										
W5143	35′-5″	26	STR.										
W5144	12′-6″	10	STR.										
W5145E	5′-7″	16	STR.										
W5146E	5′-8″	16	19			4′-1″	1′-9″			1′-0″		1′-5¼″	
W5147	2′-8″	64	12S		0′-10″	1′-0″	0′-10″			0′-10″		0′-1″	
W5148E	4′-8″	8	STR.										
W5152	10′-2″	34	STR.										
W5153	13′-8″	3	STR.										
W5154	35′-5″	24	STR.										
W5155	2′-6″	10	STR.										
W7141	14′-8″	16	STR.										
W7142	11′-2″	28	STR.										
W7143	10′-7⅞″	40	STR.										
W7144	14′-1⅞″	4	STR.										

BENDING DIAGRAMS

ALL DIMENSIONS ARE FROM OUT TO OUT.

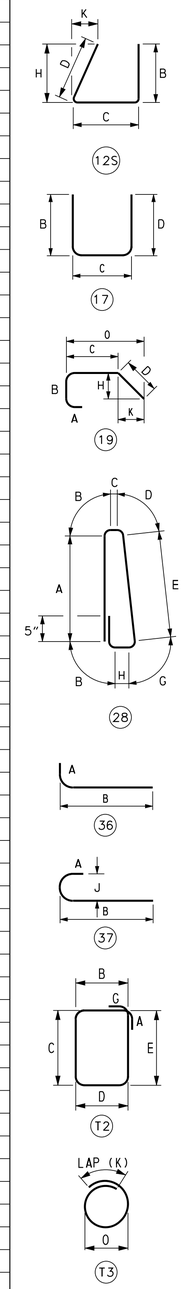

DELAWARE DEPARTMENT OF TRANSPORTATION

ADDENDUMS / REVISIONS

US 301
LEVELS ROAD
TO SUMMIT BRIDGE ROAD

CONTRACT	BRIDGE NO.	1-477N&S
T200511303	DESIGNED BY: J. S. LI	
COUNTY		
NEW CASTLE	CHECKED BY: W. A. O'CONNOR	

US 301 MAINLINE OVER TRIBUTARY TO SANDY BRANCH
ABUTMENT 2 NB ROADWAY
REINFORCING BAR LIST

1-477 AB-36
SHEET NO.
484
TOTAL SHTS.
1256

U:\Projects\AA\21987385\CAD\Bridge\BR2-5\ab36_BR2-5_US301.dgn
11/9/2012
Steve_Lambert

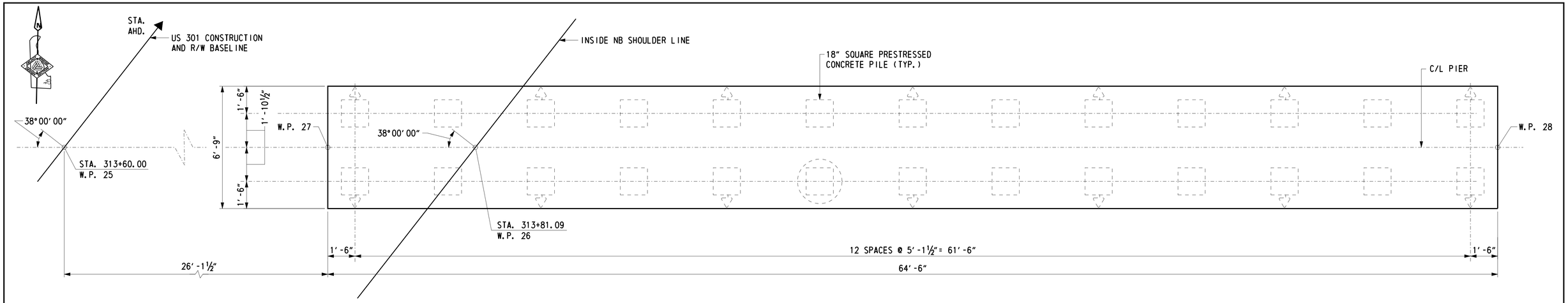

PIER FOUNDATION PLAN

SCALE: ⅜" = 1'-0"

LEGEND

- DENOTES PLUMB PILE
- DENOTES PILE BATTERED 1:4 AND DIRECTION OF BATTER
- DENOTES TEST PILE

PILE INSTALLATION DATA

	DESIGN DATA			ACTUAL FIELD DATA	
SUBSTRUCTURE UNIT	NOMINAL PILE DRIVING RESISTANCE (KIPS)	MINIMUM PILE TIP ELEVATION	ESTIMATED PILE TIP ELEVATION	AVERAGE MINIMUM TIP ELEVATION	AVERAGE MAXIMUM TIP ELEVATION
PIER	400.0	+2.0	-3.0		

PIER PILE DRIVING INFORMATION

PILE SIZE AND TYPE:
ACTUAL BEARING OBTAINED:
HAMMER TYPE:
PILE HAMMER ENERGY:
SPECIAL DRIVING CONDITIONS AND COMMENTS:

CROSS REFERENCE NOTES:

1. FOR BRIDGE PLAN AND ELEVATION, SEE DWG. 1-477 PE-2.
2. FOR PIER PLAN AND ELEVATION, SEE DWG. 1-477 PR-2.
3. FOR PRESTRESSED CONCRETE PILE DETAILS, SEE DWG. 1-477 PL-1.

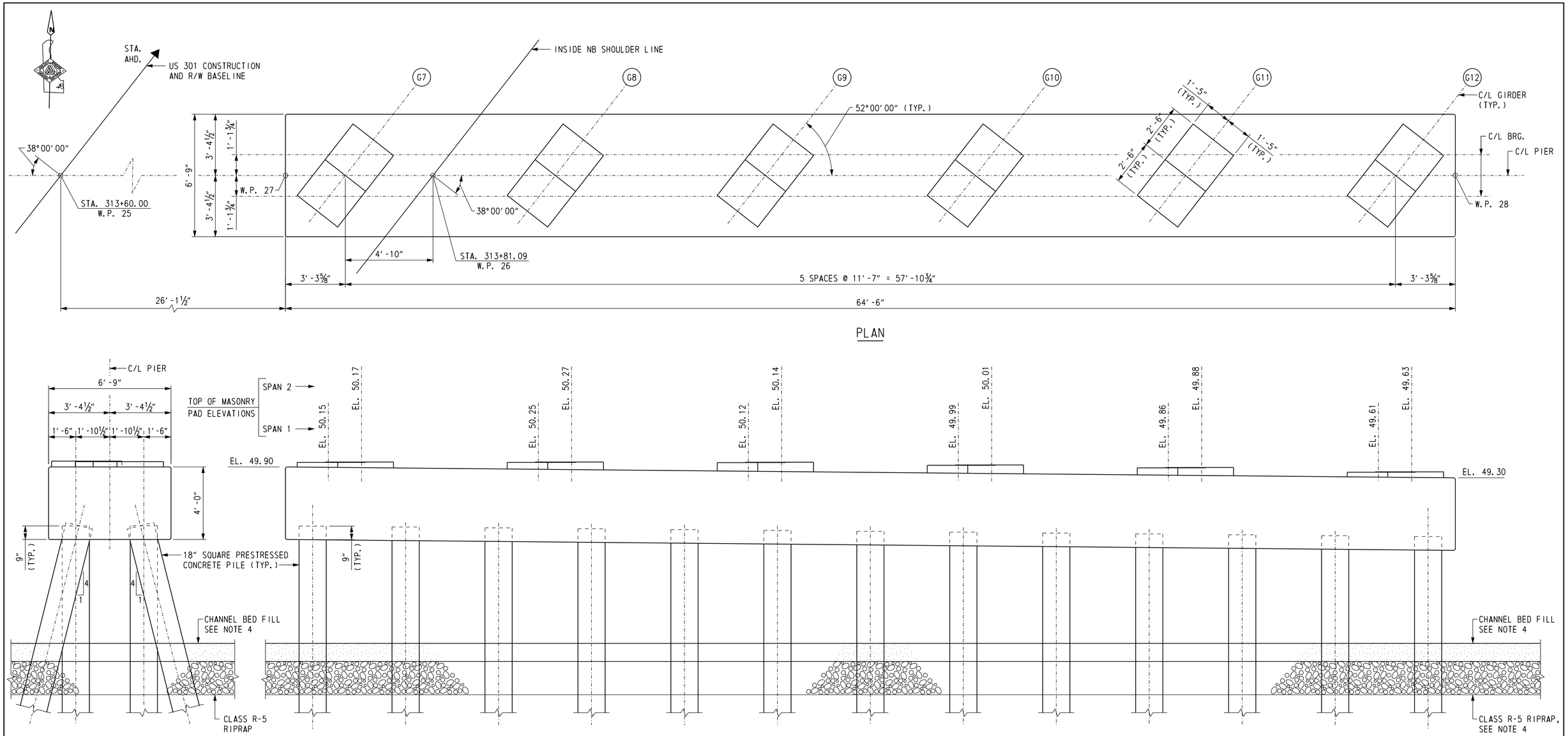

CROSS REFERENCE NOTES:

1. FOR BRIDGE PLAN AND ELEVATION, SEE DWG. 1-477 PE-2.
2. FOR GEOMETRIC LAYOUT, SEE DWG. 1-477 FT-2.
3. FOR PIER FOUNDATION PLAN, SEE DWG. 1-477 PR-1.
4. FOR PIER RIPRAP DETAIL, SEE DWG. 1-477 PR-1
5. FOR PIER REINFORCING DETAILS, SEE DWG. 1-477 PR-3.

DELAWARE DEPARTMENT OF TRANSPORTATION	ADDENDUMS / REVISIONS	US 301 LEVELS ROAD TO SUMMIT BRIDGE ROAD	CONTRACT T200511303	BRIDGE NO. 1-477N&S	US 301 MAINLINE OVER TRIBUTARY TO SANDY BRANCH NORTHBOUND ROADWAY PIER PLAN AND ELEVATION	1-477 PR-2	
			COUNTY NEW CASTLE	DESIGNED BY: K.D.BEAVER		SHEET NO. 486	
				CHECKED BY: G.P.MISTRY		TOTAL SHTS. 1256	

U:\Projects\AA\21387385\CAD\Bridge\BR2-5\pr02_BR2-5_US301.dgn
11/8/2012
Steve_Lambert

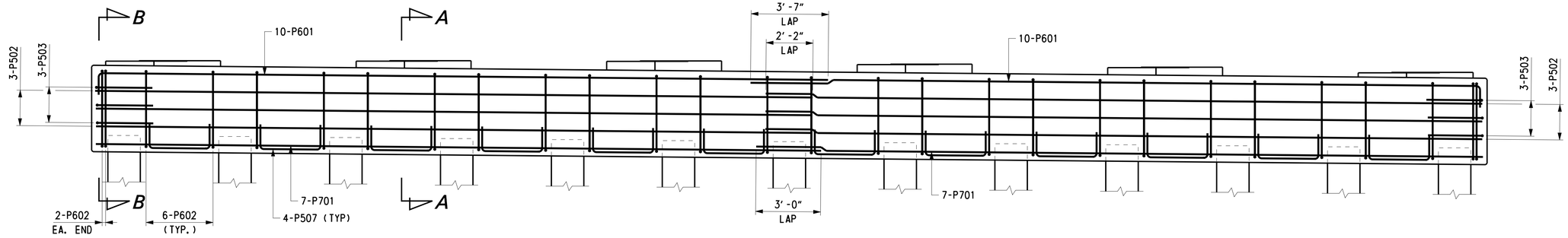

PIER ELEVATION

SCALE: 3/8" = 1'-0"

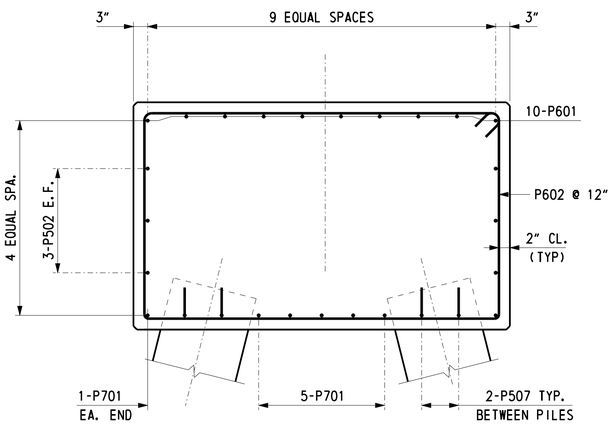

SECTION A-A

SCALE: 3/4" = 1'-0"

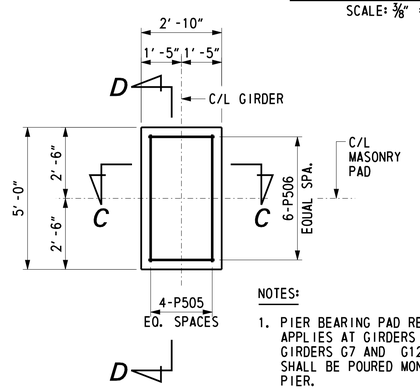

NOTES:

1. PIER BEARING PAD REINFORCEMENT APPLIES AT GIRDERS G8 THRU G11. GIRDERS G7 AND G12 MASONRY PAD SHALL BE POURED MONOLITHIC WITH PIER.
2. CHAMFER NOT SHOWN ON PLAN VIEW.

PLAN - PIER MASONRY PAD

SCALE: 3/8" = 1'-0"

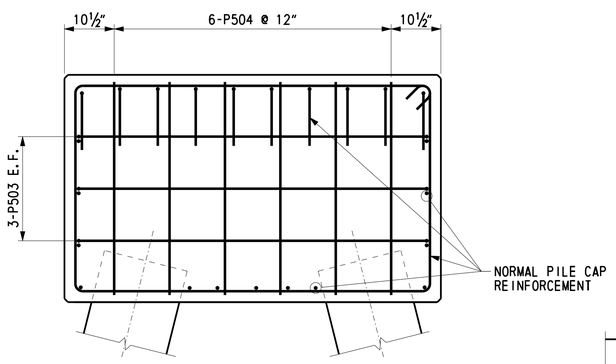

SECTION B-B

SCALE: 3/4" = 1'-0"

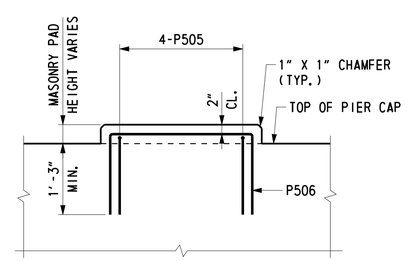

SECTION C-C

SCALE: 3/4" = 1'-0"

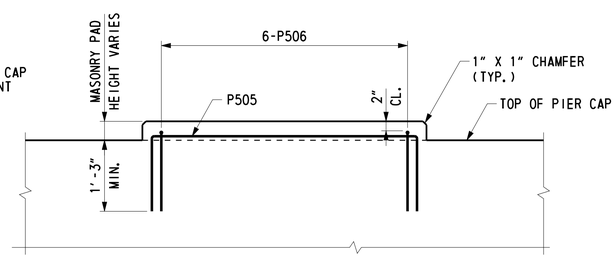

SECTION D-D

SCALE: 3/4" = 1'-0"

REINFORCING BAR LIST

PIER CAP

MARK	LENGTH	NO. BARS	TYPE	A	B	C	D	E	F	G	J	R	REMARKS
P502	33'-2"	12	STR										
P503	10'-9"	6	17		2'-2"	6'-5"	2'-2"						
P504	3'-8"	12	STR										
P505	7'-10"	16	17		1'-7"	4'-8"	1'-7"						
P506	5'-8"	24	17		1'-7"	2'-6"	1'-7"						
P507	5'-6"	48	17		1'-0"	3'-6"	1'-0"						
P601	34'-11"	20	36	1'-0"	33'-11"								
P602	21'-6"	76	T1	0'-8"	6'-5"	3'-8"	6'-5"	3'-8"		0'-8"			
P701	33'-7"	14	STR										
PP701	8'-4"	156	1	0'-10"	7'-6"						0'-7"		

BENDING DIAGRAMS

ALL DIMENSIONS ARE FROM OUT TO OUT.

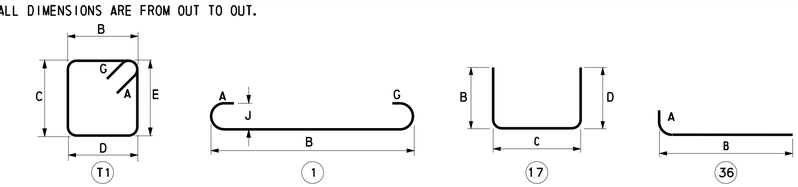

CROSS REFERENCE NOTES:

1. FOR PIER PLAN AND ELEVATION, SEE DWG. 1-477 PR-2.
2. FOR PIER FOUNDATION PLAN, SEE DWG. 1-477 PR-1.
3. FOR PRESTRESSED CONCRETE PILE REINFORCEMENT, SEE DWG. 1-477 PL-1.
4. FOR PIER DIAPHRAGM REINFORCEMENT, SEE DWG 1-477 BM-8.

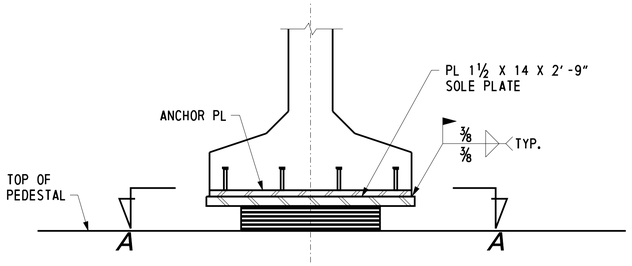

FIXED BEARING DETAIL - ELEVATION

SCALE: 1" = 1'-0"

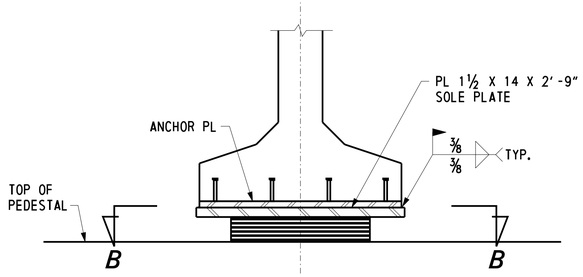

EXPANSION BEARING DETAIL - ELEVATION

SCALE: 1" = 1'-0"

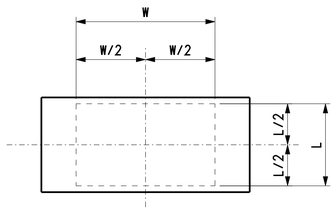

FIXED BEARING DETAIL - SECTION A-A

SCALE: 1" = 1'-0"

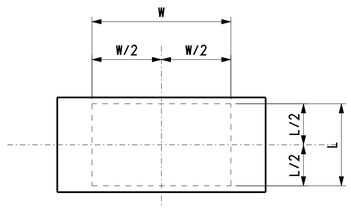

EXPANSION BEARING DETAIL - SECTION B-B

SCALE: 1" = 1'-0"

BEARING NOTES:

1. WHEN WELDING, THE TEMPERATURE OF THE STEEL ADJACENT TO THE ELASTOMER SHOULD BE KEPT BELOW 250° F. THE TEMPERATURE SHALL BE CONTROLLED BY THE WELDING PROCEDURE. TEMPERATURE INDICATING CRAYONS, OR OTHER HEAT INDICATING DEVICES APPROVED BY THE ENGINEER SHALL BE USED FOR INSPECTION. SHOULD THE HEAT INTENSITY CAUSE CRACKING OR SPALLING ON THE SURFACE OF THE ADJACENT CONCRETE BEAM, ALTERNATE WELDING PROCEDURES SHALL BE USED.
2. ALL BEARINGS SHALL BE MARKED PRIOR TO SHIPPING. THE MARKS SHALL INCLUDE THE BEARING LOCATION ON THE BRIDGE, AND A DIRECTION ARROW THAT POINTS UP-STATION. ALL MARKS SHALL BE PERMANENT AND BE VISIBLE AFTER THE BEARING IS INSTALLED.
3. STEEL LAMINATE SHALL CONFORM TO AASHTO MM270 GRADE 36 OR BETTER. ALL STRUCTURAL STEEL FOR THE BEARINGS SHALL CONFORM TO AASHTO M270 GRADE 50 AND SHALL BE GALVANIZED.
4. 1000 RMS (FINISH ALL OVER) ALL PLATES EXCEPT WHERE OTHERWISE NOTED ON THESE PLANS OR IN THE CONTRACT SPECIFICATIONS.
5. BEARINGS SHALL BE PLACED NORMAL TO THE CENTER LINE OF GIRDER.
6. ALL CENTER LINES OF BEARING AND CENTER LINE OF PADS ARE COINCIDENTS.
7. ALL BEARING SHOES ARE TO BE SHIPPED ASSEMBLED AS UNITS.
8. MAXIMUM VERTICAL SERVICE LOAD FOR THE FIXED BEARING(S):

   1-477S: DL=194 KIPS LL=134 KIPS
   1-477N: DL=131 KIPS LL=135 KIPS

9. MAXIMUM VERTICAL SERVICE LOAD FOR THE EXPANSION BEARING(S):

   1-477S: DL=194 KIPS LL=134 KIPS
   1-477N: DL=122 KIPS LL=118 KIPS

10. COST FOR MATERIALS, FABRICATION AND INSTALLATION OF ELASTOMERIC BEARING PADS INCLUDING SOLE PLATES SHALL BE PAID UNDER ITEM 605581.

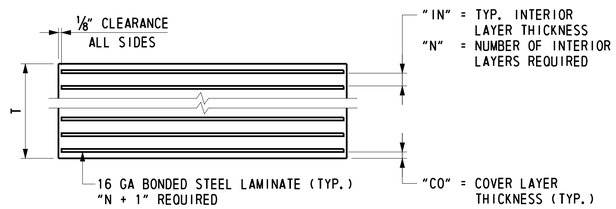

TYPICAL LAMINATED ELASTOMERIC PAD SECTION

NOT TO SCALE

BEARING PAD DATA - SOUTHBOUND ROADWAY

LOCATION	TYPE	QUANTITY	L	W	T	N	N+1	IN	CO
ABUTMENT 1SB	FIX	6	12	22	3 15/16	6	7	½	¼
ABUTMENT 2SB	EXP	6	12	22	3 15/16	6	7	½	¼

L = LENGTH OF PAD ALONG C/L GIRDER
W = WIDTH OF PAD

BEARING PAD DATA - NORTHBOUND ROADWAY

LOCATION	TYPE	QUANTITY	L	W	T	N	N+1	IN	CO
ABUTMENT 1NB	EXP	6	12	20	3⅜	5	6	½	¼
PIER	FIX	12	12	20	3⅜	5	6	½	¼
ABUTMENT 2NB	EXP	6	12	20	3⅜	5	6	½	¼

L = LENGTH OF PAD ALONG C/L GIRDER
W = WIDTH OF PAD

LAMINATED ELASTOMERIC BEARING PAD NOTES:

1. MANUFACTURE ALL BEARINGS IN ACCORDANCE WITH THE SPECIFICATIONS.
2. ALL BEARING PADS SHALL BE MOLDED TO DESIGN DIMENSIONS. CUTTING TO SIZE AFTER FABRICATION IS PROHIBITED.
3. HOLES ARE NOT PERMITTED IN ELASTOMERIC BEARINGS.
4. PROVIDE NEOPRENE 60 DUROMETER.
5. VULCANIZE PATCH PIN GROOVES.
6. PROVIDE MINIMUM LOW-TEMPERATURE NEOPRENE GRADE 3.
7. ELASTOMERIC BEARING PAD SHALL BE FACTORY VULCANIZED TO THE SOLE PLATE.

CROSS REFERENCE NOTE:

FOR ANCHOR PLATE DETAILS, SEE DWG. 1-477 BM-1 AND 1-477 BM-6.

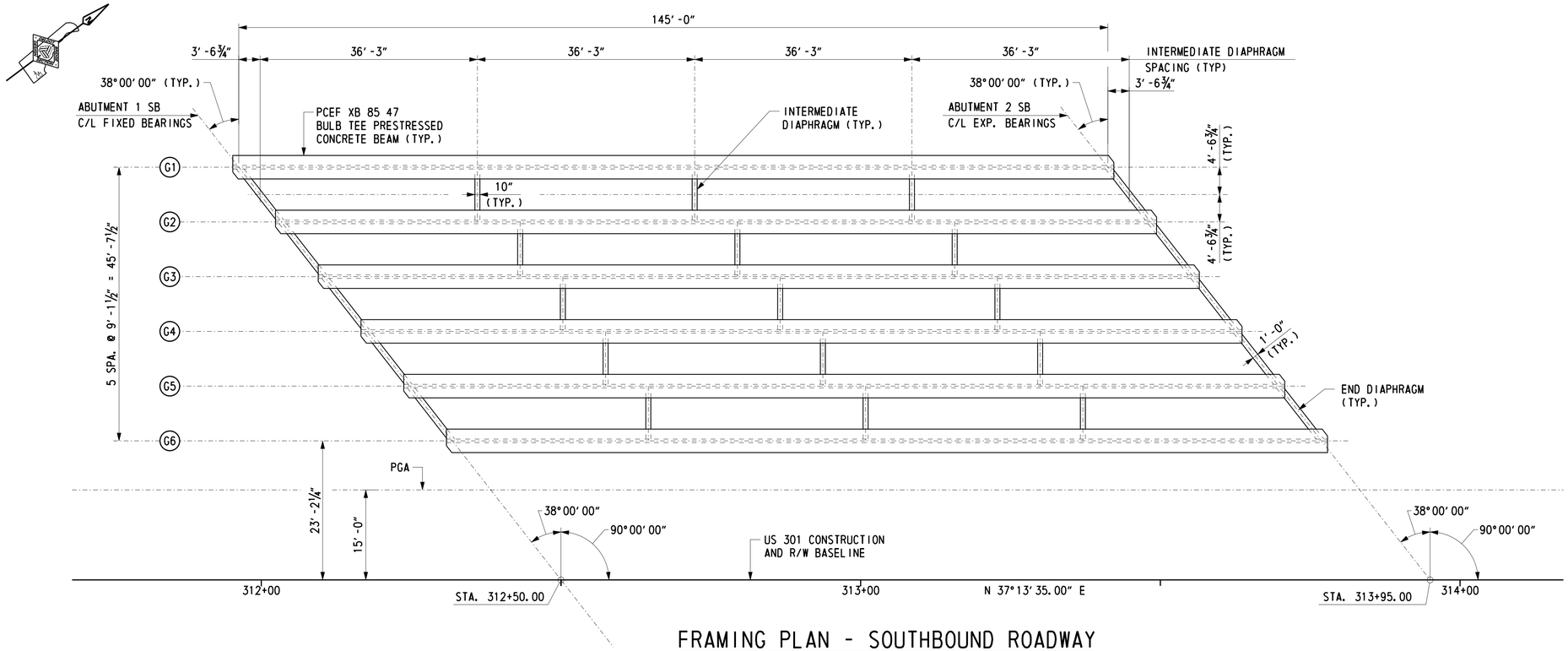

FRAMING PLAN - SOUTHBOUND ROADWAY

SCALE: 1/12" = 1'-0"

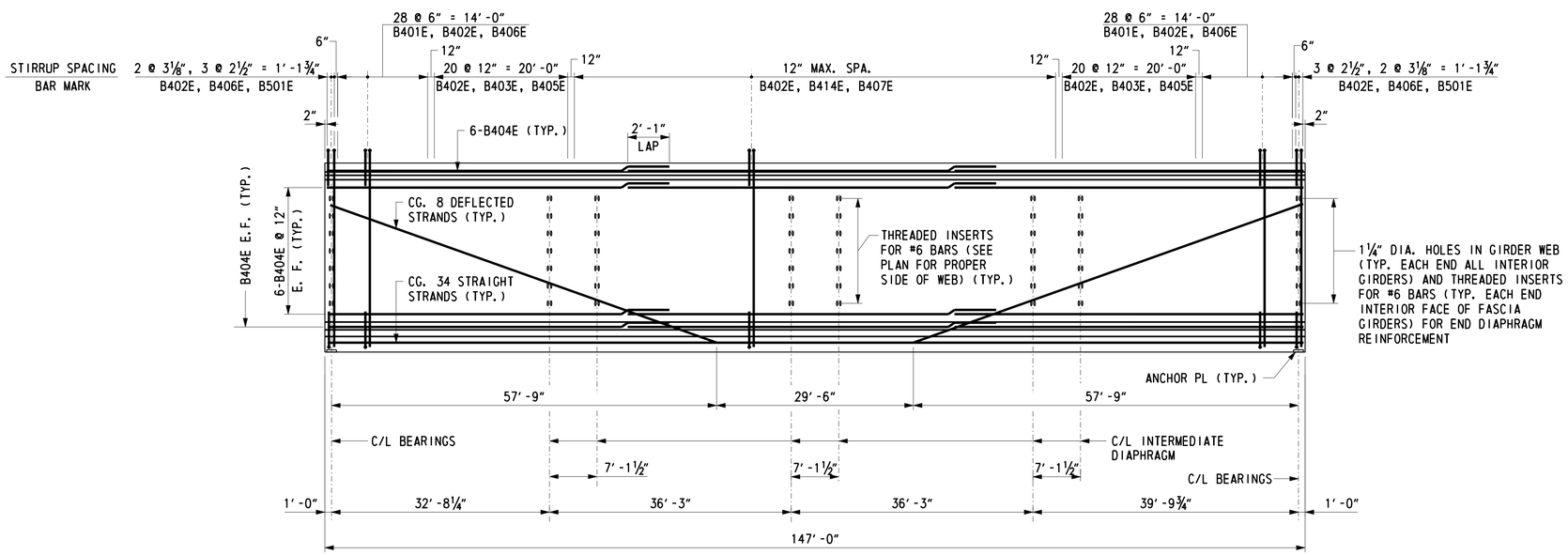

GIRDER ELEVATION

SCALE: 1/8" = 1'-0" HORIZ.
3/8" = 1'-0" VERT.

NOTES:

1. GIRDERS ARE PCEF XB 85 47 BULB TEE CONCRETE.
2. GIRDER LENGTHS IN CASTING BED SHALL BE DETERMINED AND DEPICTED IN SHOP DRAWINGS TO COMPENSATE FOR GRADE SHORTENING DUE TO PRESTRESS EFFECT.
3. TOP SURFACE OF ALL GIRDERS SHALL BE ROUGH FINISHED TO A FULL AMPLITUDE OF 1/4 " AND SCRUBBED TRANSVERSELY WITH A COARSE WIRE BRUSH TO REMOVE ALL LAITANCE AND TO PRODUCE A ROUGHENED SURFACE FOR BONDING.
4. NO CLEAR COVER LESS THAN AS SHOWN ON THESE PLANS WILL BE ACCEPTED.
5. THREADED INSERTS PROVIDED FOR DIAPHRAGM REINFORCEMENT SHALL BE ABLE TO DEVELOP FULL STRENGTH OF THE REINFORCEMENT.
6. CLIP FLANGE AT ABUTMENT ENDS OF GIRDERS. CLIPPED FLANGE REINFORCEMENT DETAILS APPLY AS SHOWN ON GIRDER DETAILS SHEET.

CROSS REFERENCE NOTES:

1. FOR PROJECT NOTES, SEE DWG. 1-477 PN-2.
2. FOR BRIDGE PLAN AND ELEVATION, SEE DWG. 1-477 PE-1.
3. FOR TYPICAL SECTION, SEE DWG. 1-477 TS-1.
4. FOR GIRDER DETAILS, SEE DWG. 1-477 BM-1.
5. FOR DIAPHRAGM DETAILS, SEE DWG. 1-477 BM-2 AND 1-477 BM-3.
6. FOR CAMBER TABLE, SEE DWG. 1-477 CT-1.
7. FOR CLIPPED FLANGE DETAIL AT END OF GIRDER, SEE DWG. 1-477 BM-1.
8. FOR REINFORCING BAR LIST, SEE DWG. 1-477 BM-9.

U:\Projects\AA\21387385\CAD\Bridge\BR2-5\fr01_BR2-5_US301.dgn
8/13/2015
Steve_Lambert

DELAWARE DEPARTMENT OF TRANSPORTATION

ADDENDUMS / REVISIONS

US 301 LEVELS ROAD TO SUMMIT BRIDGE ROAD

CONTRACT	T200511303
COUNTY	NEW CASTLE
BRIDGE NO.	1-477N&S
DESIGNED BY:	K. D. BEAVER
CHECKED BY:	R. F. KIRCHNER

US 301 MAINLINE OVER TRIBUTARY TO SANDY BRANCH SB ROADWAY FRAMING PLAN AND GIRDER ELEVATION

1-477 FR-1	
SHEET NO.	489
TOTAL SHTS.	1256

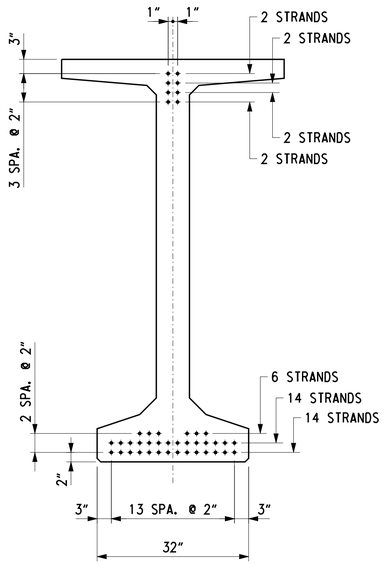

PRESTRESSING AT GIRDER ENDS

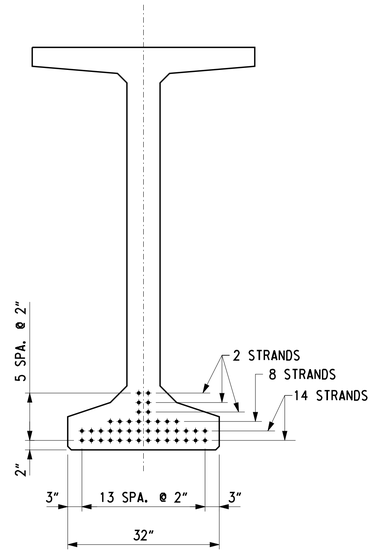

PRESTRESSING AT MIDSPAN

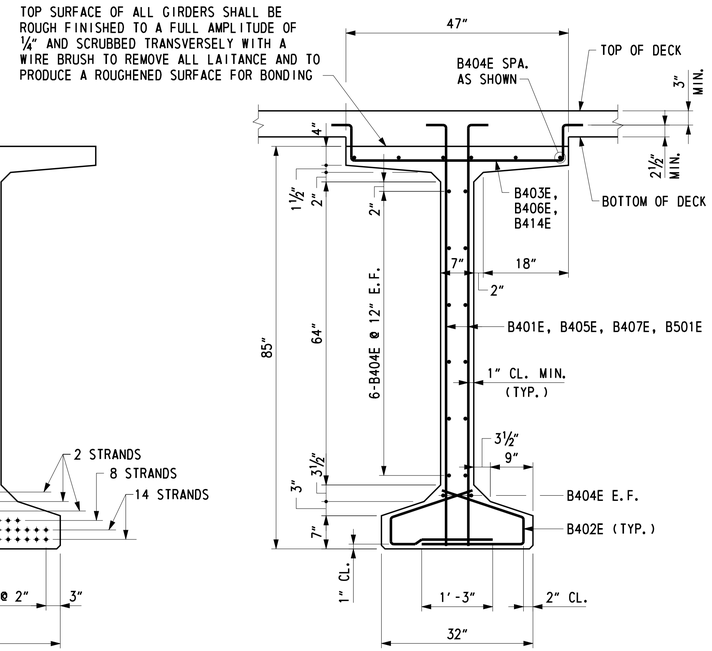

BAR REINFORCEMENT

SECTION - PCEF BULB TEE SERIES XB 85 47

SCALE: ¾" = 1'-0"

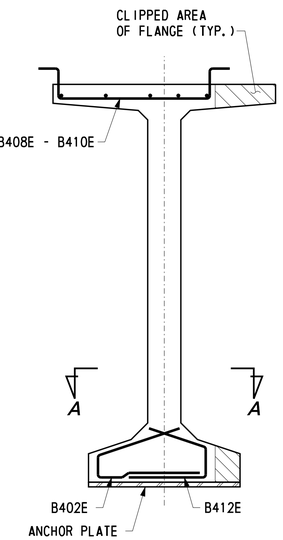

GIRDER END VIEW

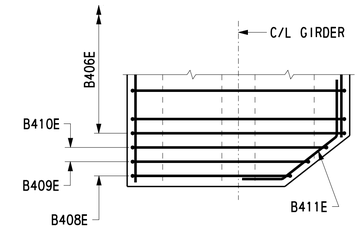

PLAN - TOP FLANGE

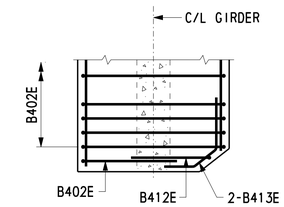

SECTION A-A - BOTTOM FLANGE

CLIPPED FLANGE REINFORCEMENT DETAILS

SCALE: ¾" = 1'-0"

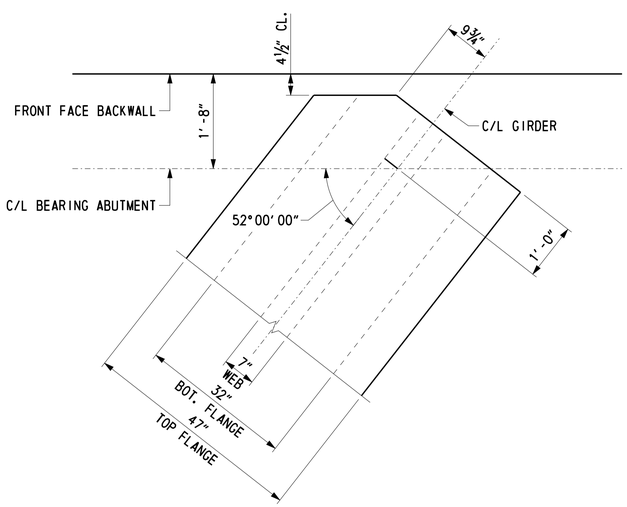

END OF GIRDER DETAIL AT ABUTMENTS

SCALE: ¾" = 1'-0"

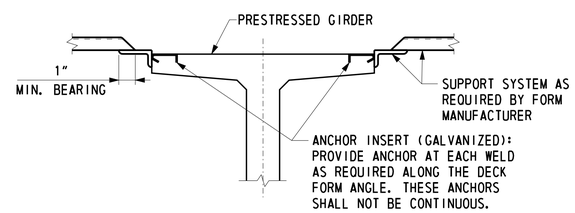

FORM ANCHOR DETAIL

SCALE: ¾" = 1'-0"

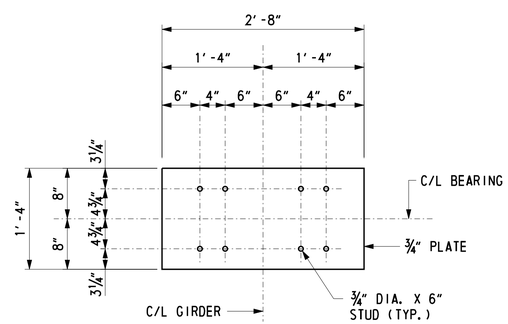

ANCHOR PLATE DETAIL

SCALE: 1" = 1'-0"

NOTES:

1. PERMANENT STEEL BRIDGE DECK FORMS AND SUPPORTS SHALL BE PROVIDED CONFORMING TO THE REQUIREMENTS OF SECTION 602 OF THE DELDOT STANDARD SPECIFICATIONS.
2. ANY PERMANENTLY EXPOSED FORM METAL WHERE THE GALVANIZED COATING HAS BEEN DAMAGED SHALL BE THOROUGHLY CLEANED, WIRE BRUSHED AND PAINTED WITH TWO COATS OF ZINC DUST - ZINC OXIDE PAINT, NO COLOR ADDED, TO THE SATISFACTION OF THE ENGINEER. MINOR HEAT DISCOLORATION IN AREAS OF WELDS NEED NOT BE TOUCHED UP.
3. CLIP ANCHOR PLATE AT ABUTMENTS TO REMAIN FLUSH WITH GIRDER FLANGE.
4. GIRDER LIFTING DETAILS SHALL BE PROVIDED BY THE CONTRACTOR AND ARE SUBJECT TO THE APPROVAL OF THE ENGINEER.
5. ANCHOR PLATES AND STUDS SHALL BE GALVANIZED. ANCHOR PLATES SHALL CONFORM TO AASHTO M270 GRADE 50. STUDS SHALL CONFORM TO AASHTO M169, ASTM A 108. ANCHOR PLATES SHALL BE CAST WITH AND THE COST INCIDENTAL TO THE PRESTRESSED CONCRETE GIRDERS.

CROSS REFERENCE NOTES:

1. FOR PROJECT NOTES, SEE DWG. 1-477 PN-2.
2. FOR TYPICAL SECTION, SEE DWG. 1-477 TS-1.
3. FOR FRAMING PLAN AND GIRDER ELEVATION, SEE DWG. 1-477 FR-1.

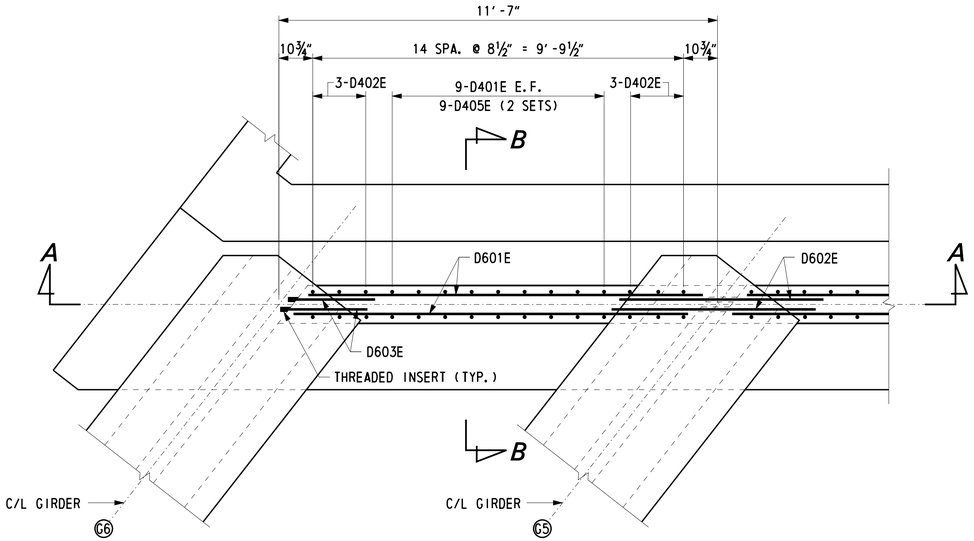

END DIAPHRAGM PLAN - ABUTMENT 1

SCALE: ½" = 1'-0"

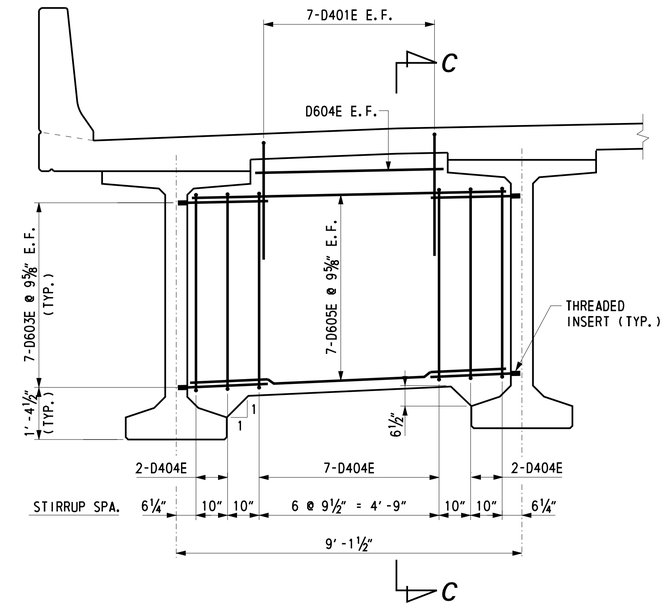

INTERMEDIATE DIAPHRAGM

SCALE: ½" = 1'-0"

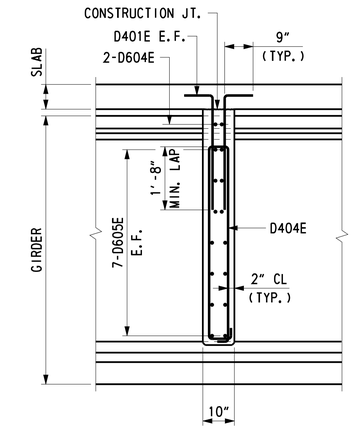

SECTION C-C

SCALE: ½" = 1'-0"

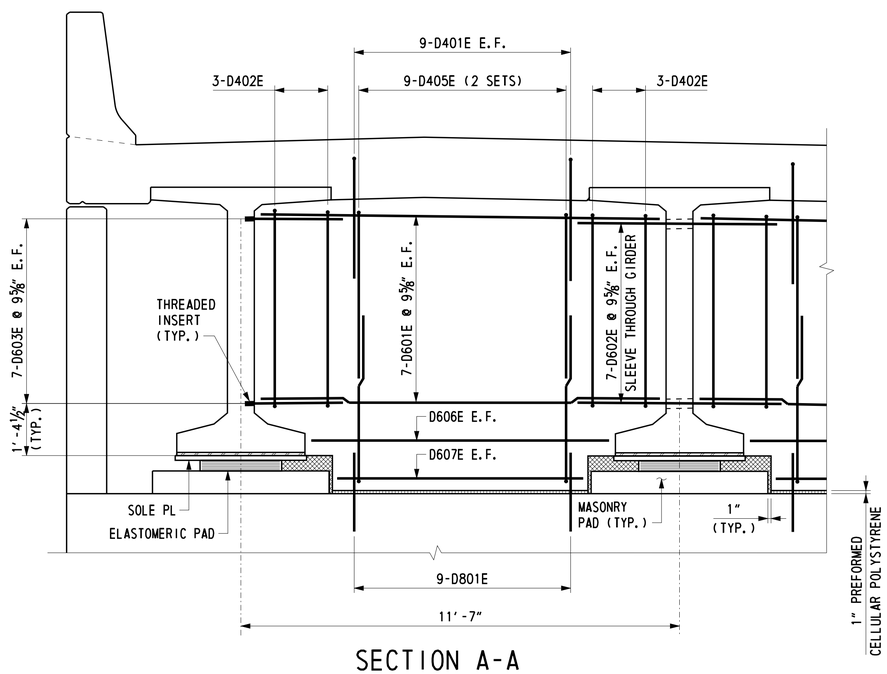

SECTION A-A

SCALE: ½" = 1'-0"

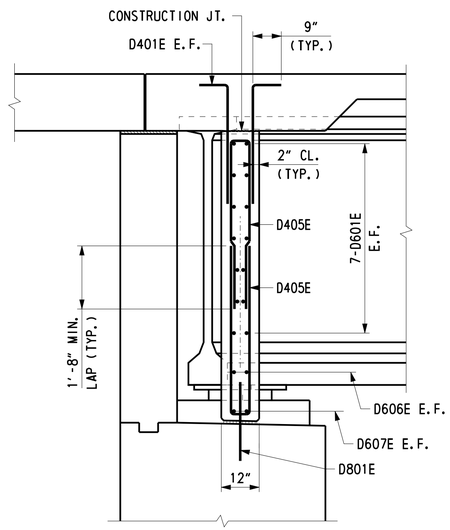

SECTION B-B

SCALE: ½" = 1'-0"

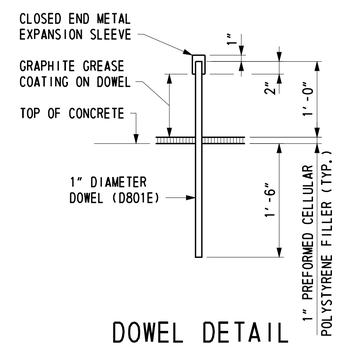

DOWEL DETAIL

SCALE: 1" = 1'-0"

NOTES:

1. D801E DOWELS SHALL BE 1" DIAMETER PLAIN BARS CAPPED WITH A SNUG FIT, CLOSED END METAL EXPANSION SLEEVE, TEMPORARILY SECURED TO THE DOWEL SO AS TO PROVIDE A 1" LONG SOCKET BEYOND THE BAR END AND TO LAP BACK 2" ON THE BAR. IMMEDIATELY PRIOR TO POURING DIAPHRAGM CONCRETE, DOWELS SHALL BE COATED WITH GRAPHITE GREASE.
2. COST OF DOWELS, EXPANSION SLEEVES, GRAPHITE COATING AND PREFORMED CELLULAR POLYSTYRENE SHALL BE INCIDENTAL TO ITEM 602013 - PORTLAND CEMENT CONCRETE MASONRY, SUPERSTRUCTURE, CLASS D.

CROSS REFERENCE NOTES:

1. FOR PROJECT NOTES, SEE DWG. 1-477 PN-2.
2. FOR TYPICAL SECTION, SEE DWG. 1-477 TS-1.
3. FOR FRAMING PLAN, SEE DWG. 1-477 FR-1.
4. FOR REINFORCING BAR LIST, SEE DWG. 1-477 BM-9.

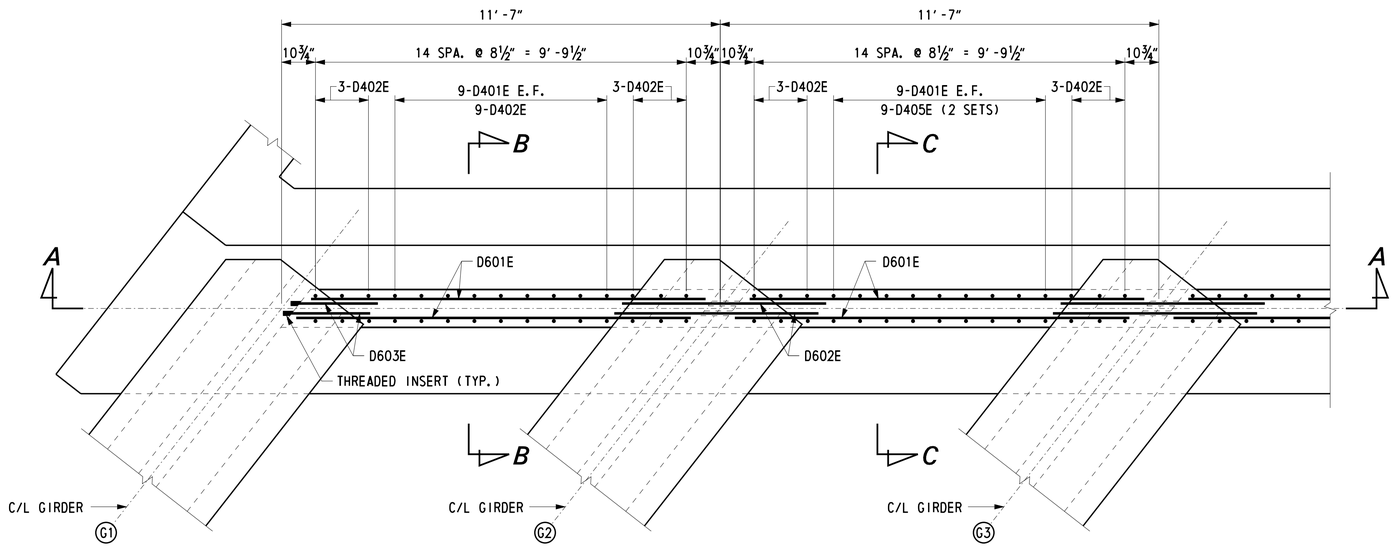

END DIAPHRAGM PLAN - ABUTMENT 2

SCALE: ½" = 1'-0"

NOTES:

1. FULL DEPTH END DIAPHRAGM APPLIES BETWEEN GIRDERS G2 & G3 AS WELL AS BETWEEN GIRDERS G4 & G5.
2. COST OF DOWELS, EXPANSION SLEEVES, GRAPHITE COATING AND PREFORMED CELLULAR POLYSTYRENE SHALL BE INCIDENTAL TO ITEM 602013 - PORTLAND CEMENT CONCRETE MASONRY, SUPERSTRUCTURE, CLASS D.

CROSS REFERENCE NOTES:

1. FOR PROJECT NOTES, SEE DWG. 1-477 PN-2.
2. FOR TYPICAL SECTION, SEE DWG. 1-477 TS-1.
3. FOR FRAMING PLAN, SEE DWG. 1-477 FR-1.
4. FOR REINFORCING BAR LIST, SEE DWG. 1-477 BM-9.

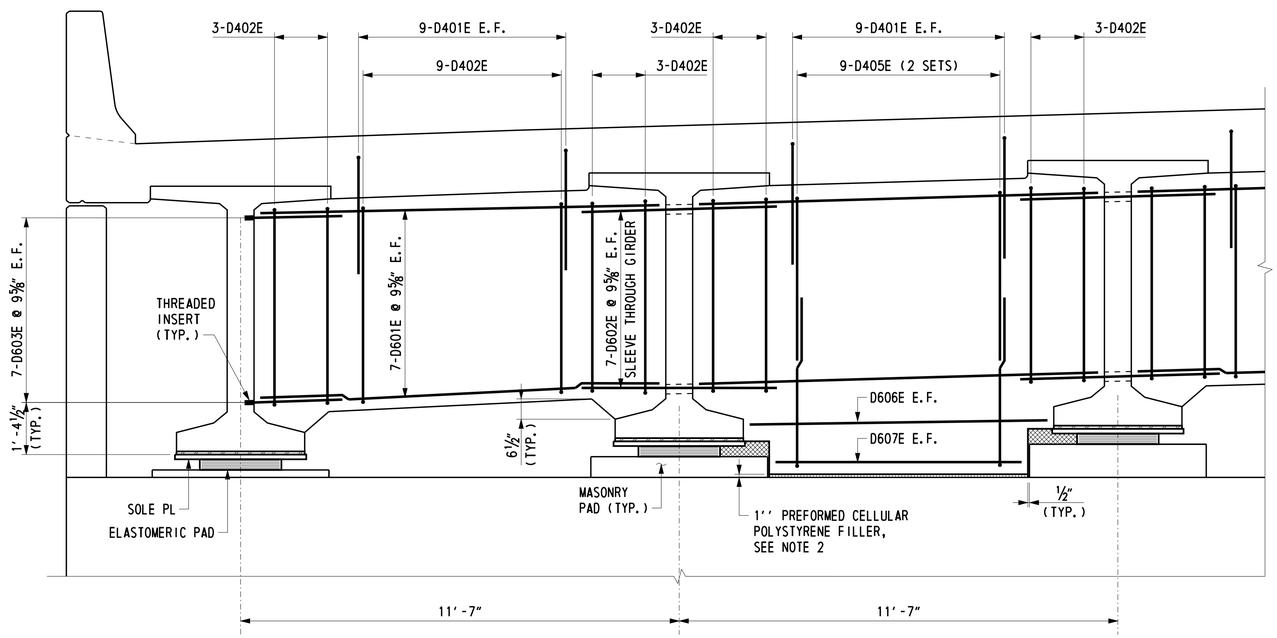

SECTION A-A

SCALE: ½" = 1'-0"

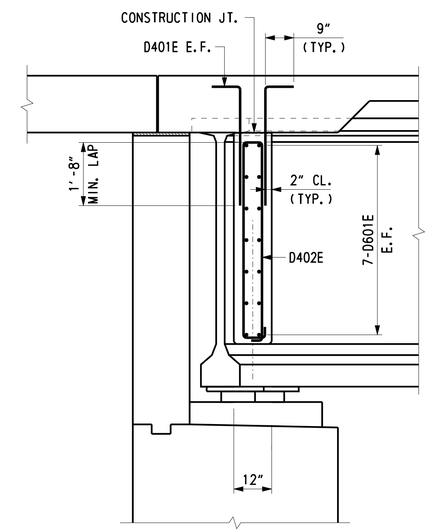

SECTION B-B

SCALE: ½" = 1'-0"

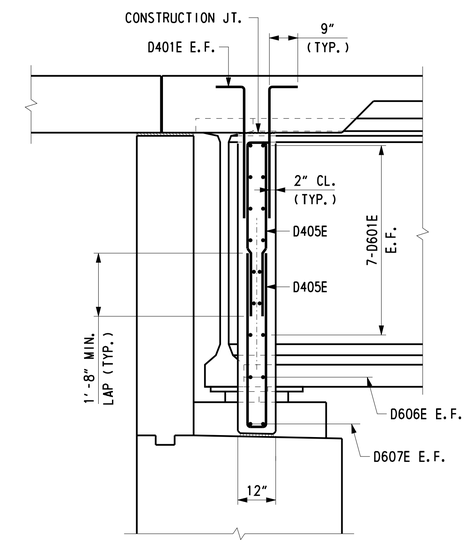

SECTION C-C

SCALE: ½" = 1'-0"

U:\Projects\AA\21387385\CAD\Bridge\BR2-5\bm03_BR2-5_US301.dgn

8/13/2015

Steve_Lambert

DELAWARE DEPARTMENT OF TRANSPORTATION	ADDENDUMS / REVISIONS		US 301 LEVELS ROAD TO SUMMIT BRIDGE ROAD	CONTRACT T200511303	BRIDGE NO. 1-477N&S	US 301 MAINLINE OVER TRIBUTARY TO SANDY BRANCH SOUTHBOUND ROADWAY DIAPHRAGMS 2	1-477 BM-3
				COUNTY NEW CASTLE	DESIGNED BY: K. D. BEAVER		SHEET NO. 492
					CHECKED BY: J. S. LI		TOTAL SHTS. 1256

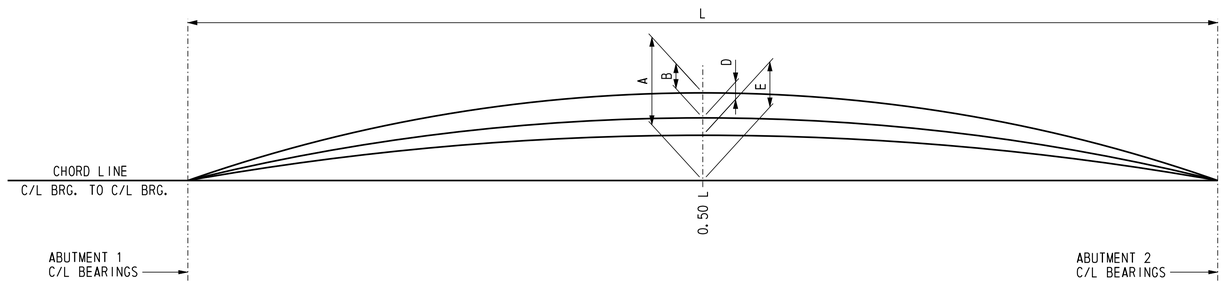

GIRDER CAMBER DIAGRAM

NOT TO SCALE

CAMBER ORDINATES (INCHES)				
GIRDER NO.	ITEM	ABUT. 1 C/L BRG.	SPAN 1 0.5L	ABUT. 2 C/L BRG.
G1 & G6	A	0	8 11/16	0
	B	0	-4 1/16	0
	C	0	4 3/8	0
	D	0	-2 1/16	0
	E	0	2 5/16	0
	F	0	0	0
G2 - G5	A	0	8 11/16	0
	B	0	-4 5/16	0
	C	0	4 3/8	0
	D	0	-2 7/16	0
	E	0	1 15/16	0
	F	0	0	0

LEGEND

A = DENOTES CAMBER DUE TO PRESTRESS AT ERECTION, CREEP MULTIPLIER = 1.8.

B = DENOTES DEFLECTION DUE TO GIRDER DEAD LOAD AT ERECTION, CREEP MULTIPLIER = 1.85.

C = A+B

D = DENOTES DEFLECTION DUE TO SLAB AND DIAPHRAGMS.

E = DENOTES NET CAMBER AT ERECTION, C+D.

F = DENOTES VERTICAL CURVE ORDINATE MEASURED FROM ROADWAY PROFILE TO CHORD LINE BETWEEN BEARINGS.

NOTES:

1. CAMBER VALUES ARE THEORETICAL VALUES AND MAY VARY WITH CONCRETE STRENGTH (AGE), PRESTRESSING CONDITIONS, CREEP MULTIPLIER AND PRESTRESS LOSES.
2. THICKNESS OF CONCRETE HAUNCH VARIES TO OBTAIN VERTICAL CURVE PROFILE.

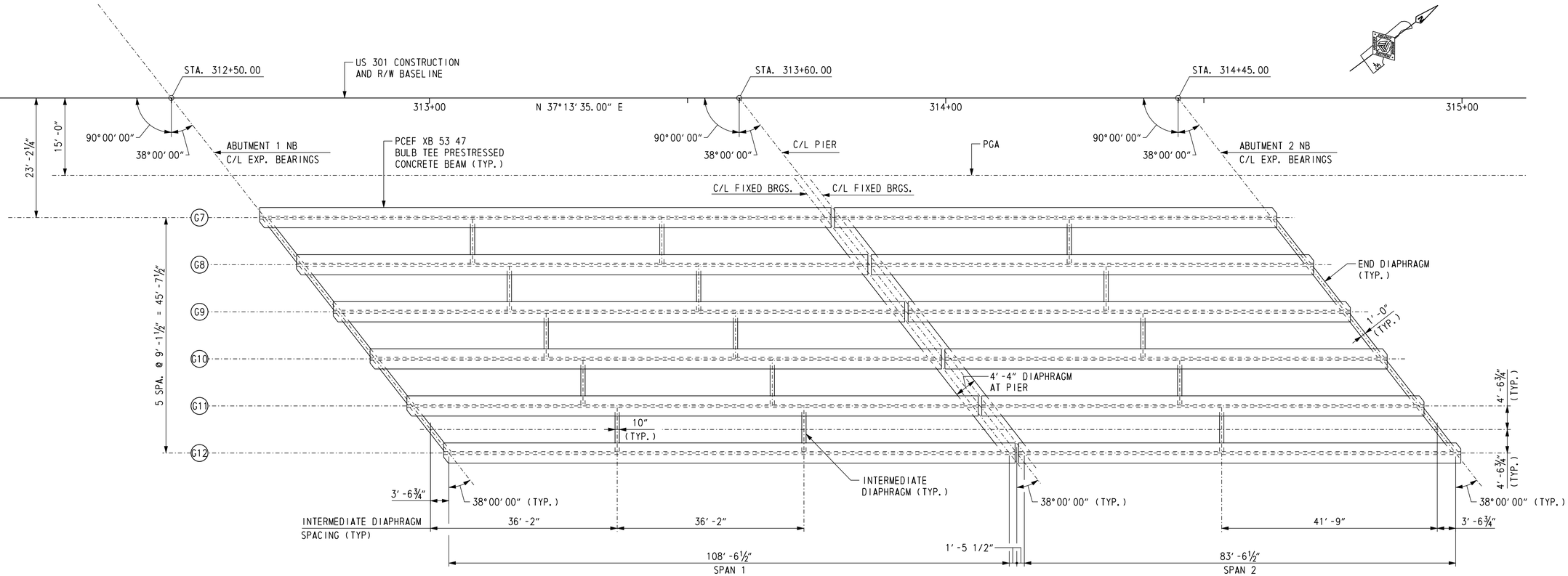

FRAMING PLAN - NORTHBOUND ROADWAY

SCALE: 1/16″ = 1′-0″

CROSS REFERENCE NOTES:

1. FOR BRIDGE PLAN AND ELEVATION, SEE DWG. 1-477 PE-2.
2. FOR TYPICAL SECTION, SEE DWG. 1-477 TS-1.
3. FOR GIRDER ELEVATION, SEE DWG. 1-477 BM-4.
4. FOR GIRDER DETAILS, SEE DWGS. 1-477 BM-4 THRU 1-477 BM-6.
5. FOR DIAPHRAGM DETAILS, SEE DWGS. 1-477 BM-7 & 1-477 BM-8.
6. FOR CAMBER TABLE, SEE DWG. 1-477 CT-2.

U:\Projects\AA\21987385\CAD\Bridge\BR2-5\fr02_BR2-5_US301.dgn

11/9/2012

Steve_Lambert

DELAWARE DEPARTMENT OF TRANSPORTATION	ADDENDUMS / REVISIONS	US 301 LEVELS ROAD TO SUMMIT BRIDGE ROAD	CONTRACT T200511303	BRIDGE NO. 1-477N&S	US 301 MAINLINE OVER TRIBUTARY TO SANDY BRANCH NORTHBOUND ROADWAY FRAMING PLAN	1-477 FR-2	
			COUNTY NEW CASTLE	DESIGNED BY: K. D. BEAVER		SHEET NO. 494	
				CHECKED BY: R. F. KIRCHNER		TOTAL SHTS. 1256	

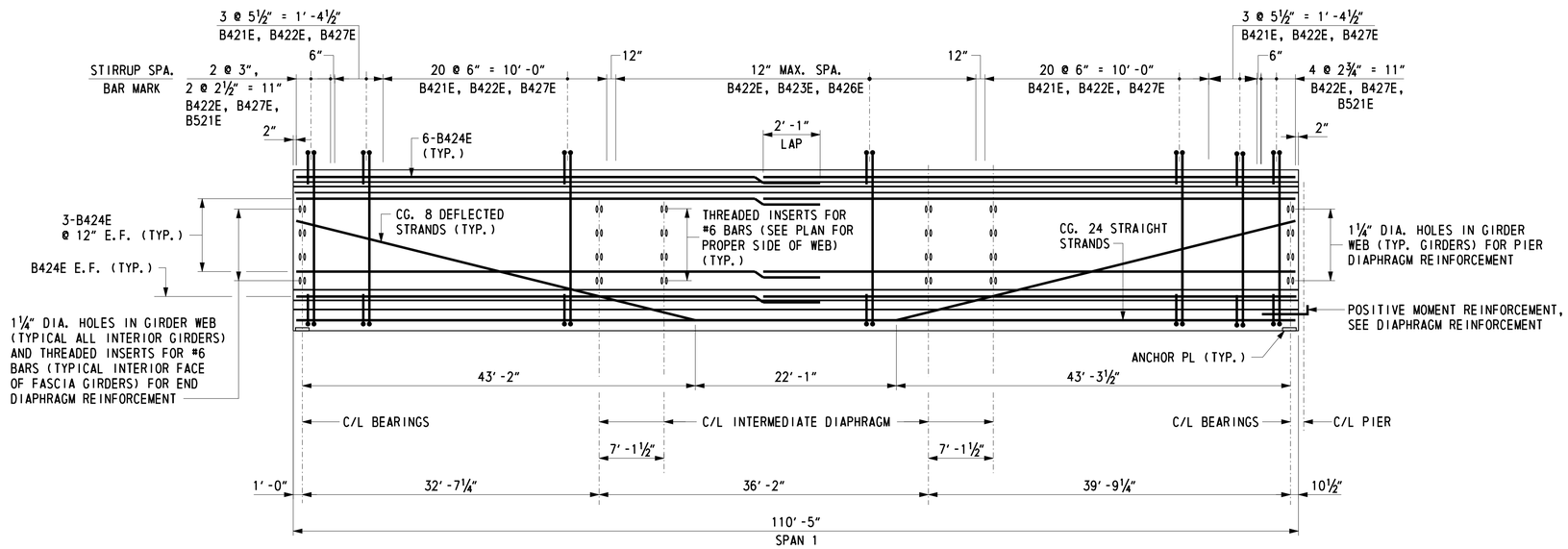

GIRDER ELEVATION - SPAN 1

SCALE: ⅛" = 1'-0" HORIZ.
½" = 1'-0" VERT.

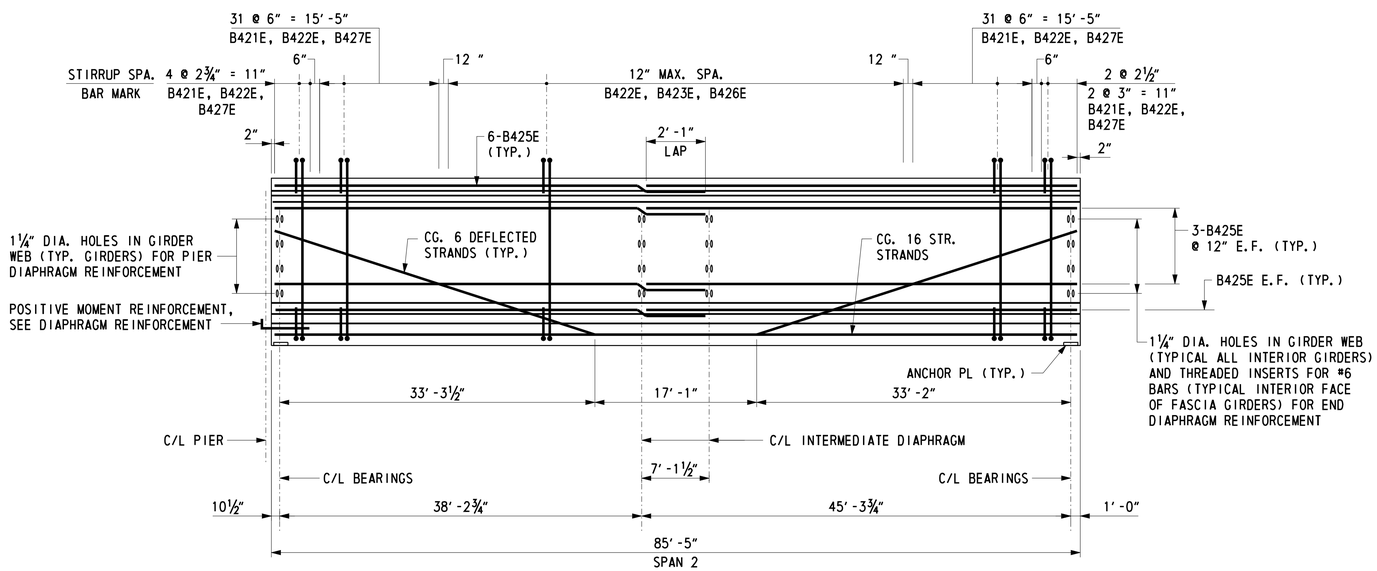

GIRDER ELEVATION - SPAN 2

SCALE: ⅛" = 1'-0" HORIZ.
½" = 1'-0" VERT.

NOTES:

1. GIRDERS ARE PCEF XB 53 47 BULB TEE CONCRETE.
2. GIRDER LENGTHS IN CASTING BED SHALL BE DETERMINED AND DEPICTED IN SHOP DRAWINGS TO COMPENSATE FOR GRADE SHORTENING DUE TO PRESTRESS EFFECT.
3. TOP SURFACE OF ALL GIRDERS SHALL BE ROUGH FINISHED TO A FULL AMPLITUDE OF ¼" AND SCRUBBED TRANSVERSELY WITH A COARSE WIRE BRUSH TO REMOVE ALL LAITANCE AND TO PRODUCE A ROUGHENED SURFACE FOR BONDING.
4. NO CLEAR COVER LESS THAN AS SHOWN ON THESE PLANS WILL BE ACCEPTED.
5. THREADED INSERTS PROVIDED FOR DIAPHRAGM REINFORCEMENT SHALL BE ABLE TO DEVELOP FULL STRENGTH OF THE REINFORCEMENT.
6. CLIP FLANGE AT ABUTMENT ENDS OF GIRDERS. CLIPPED FLANGE REINFORCEMENT DETAILS APPLY AS SHOWN ON GIRDER DETAILS SHEET.

CROSS REFERENCE NOTES:

1. FOR PROJECT NOTES, SEE DWG. 1-477 PN-2.
2. FOR TYPICAL SECTION, SEE DWG. 1-477 TS-1.
3. FOR FRAMING PLAN, SEE DWG. 1-477 FR-2.
4. FOR GIRDER DETAILS, SEE DWG. 1-477 BM-5 AND 1-477 BM-6.
5. FOR DIAPHRAGM REINFORCEMENT, SEE DWG. 1-477 BM-7 AND 1-477 BM-8.
6. FOR CAMBER TABLE, SEE DWG. 1-477 CT-2.
7. FOR CLIPPED FLANGE DETAIL AT ABUTMENT END OF GIRDER, SEE DWG. 1-477 BM-6.

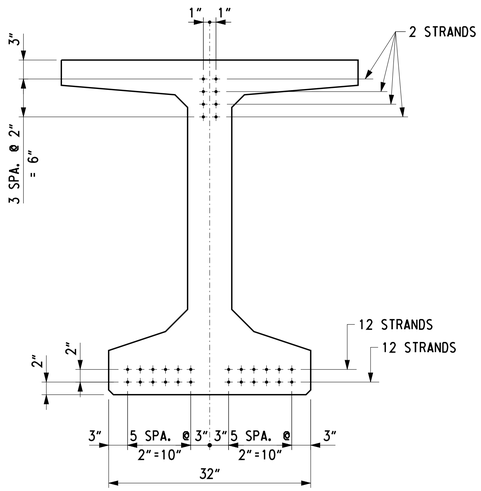

STRAND LOCATION AT END OF GIRDER
(SPAN 1 AT ABUTMENT)

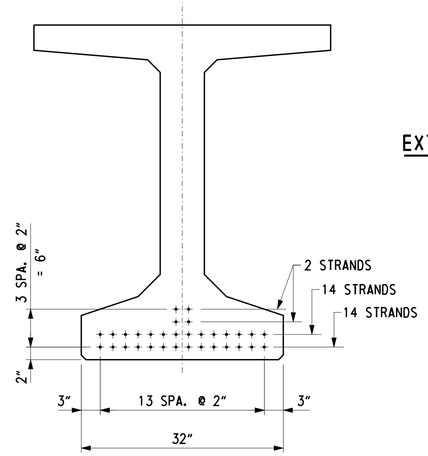

STRAND LOCATION AT MID-SPAN
(SPAN 1)

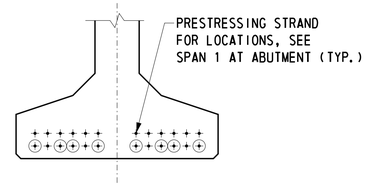

EXTENDED STRAND OPTION AT END OF GIRDER
(SPAN 1 AT PIER)

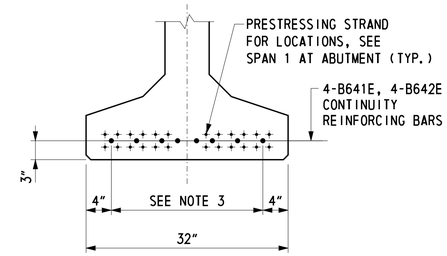

REBAR OPTION AT END OF GIRDER
(SPAN 1 AT PIER)

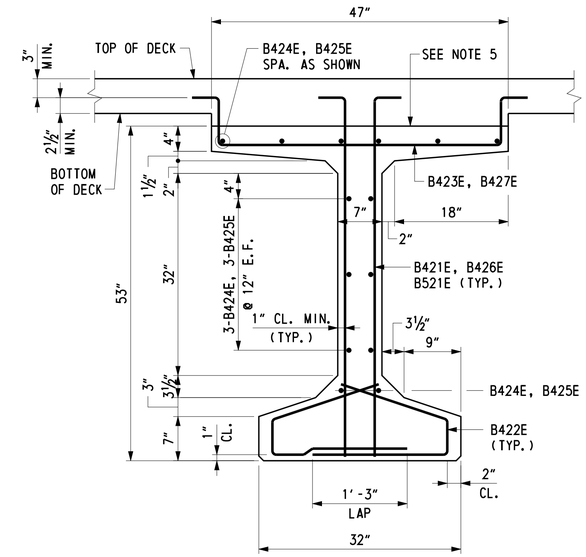

TYPICAL BAR REINFORCEMENT
SCALE: 1" = 1'-0"

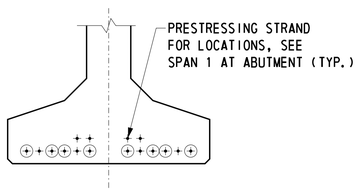

EXTENDED STRAND OPTION AT END OF GIRDER
(SPAN 2 AT PIER)

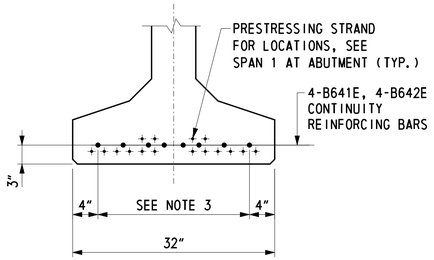

REBAR OPTION AT END OF GIRDER
(SPAN 2 AT PIER)

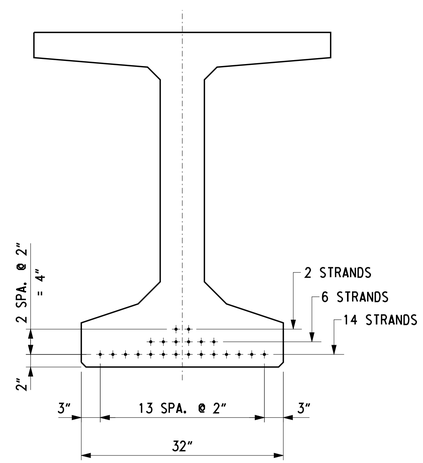

STRAND LOCATION AT
MID-SPAN (SPAN 2)

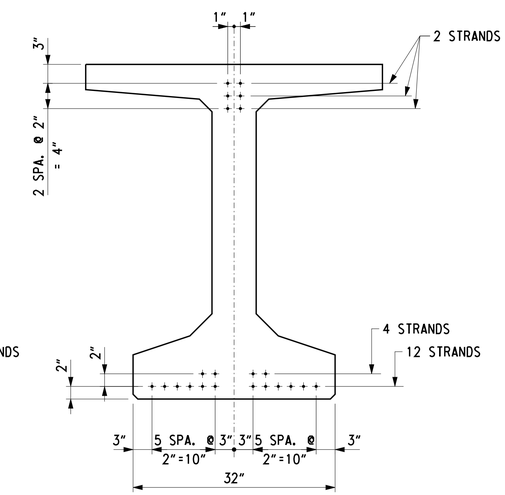

STRAND LOCATION AT END OF GIRDER
(SPAN 2 AT ABUTMENT)

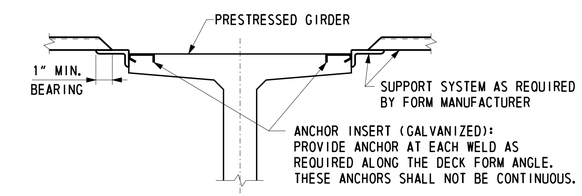

FORM ANCHOR DETAIL
SCALE: ¾" = 1'-0"

SECTION - PCEF BULB TEE SERIES XB 53 47
SCALE: 1" = 1'-0"

NOTES:

1. PERMANENT STEEL BRIDGE DECK FORMS AND SUPPORTS SHALL BE PROVIDED CONFORMING TO THE REQUIREMENTS OF SECTION 602 OF THE DELDOT STANDARD SPECIFICATIONS.
2. ANY PERMANENTLY EXPOSED FORM METAL WHERE THE GALVANIZED COATING HAS BEEN DAMAGED SHALL BE THOROUGHLY CLEANED, WIRE BRUSHED AND PAINTED WITH TWO COATS OF ZINC DUST - ZINC OXIDE PAINT, NO COLOR ADDED, TO THE SATISFACTION OF THE ENGINEER. MINOR HEAT DISCOLORATION IN AREAS OF WELDS NEED NOT BE TOUCHED UP.
3. LATERAL SPACING OF CONTINUITY BARS IS APPROXIMATE. BARS AT ADJACENT ENDS OF GIRDERS AT PIER SHALL BE OFFSET TO ALLOW GIRDER PLACEMENT AT ERECTION.
4. EXTENDED STRANDS AT ENDS OF GIRDER MUST BE BENT SLIGHTLY WITH THE APPROVAL OF THE ENGINEER TO PROPERLY POSITION GIRDER DURING ERECTION.
5. TOP SURFACE OF ALL GIRDERS SHALL BE ROUGH FINISHED TO A FULL AMPLITUDE OF 1/4 " AND SCRUBBED TRANSVERSELY WITH A WIRE BRUSH TO REMOVE ALL LAITANCE AND TO PRODUCE A ROUGHENED SURFACE FOR BONDING.

LEGEND

+ PRESTRESSING STRAND

⊕ EXTENDED STRAND, SEE NOTE 4 (MAX. 6" TRANSVERSE SPA.)

CROSS REFERENCE NOTES:

1. FOR PROJECT NOTES, SEE DWG. 1-477 PN-2.
2. FOR TYPICAL SECTION, SEE DWG. 1-477 TS-1.
3. FOR FRAMING PLAN, SEE DWG. 1-477 FR-2.
4. FOR GIRDER ELEVATION, SEE DWG. 1-477 BM-4.
5. FOR REINFORCING BAR LIST, SEE DWG. 1-477 BM-9.

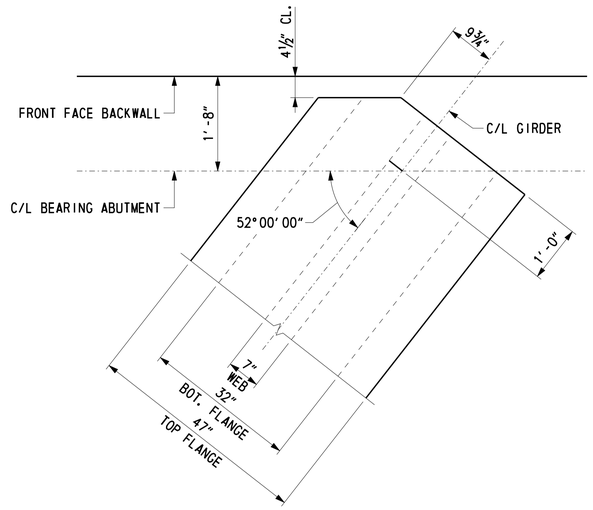

END OF GIRDER DETAIL AT ABUTMENTS

SCALE: ¾" = 1'-0"

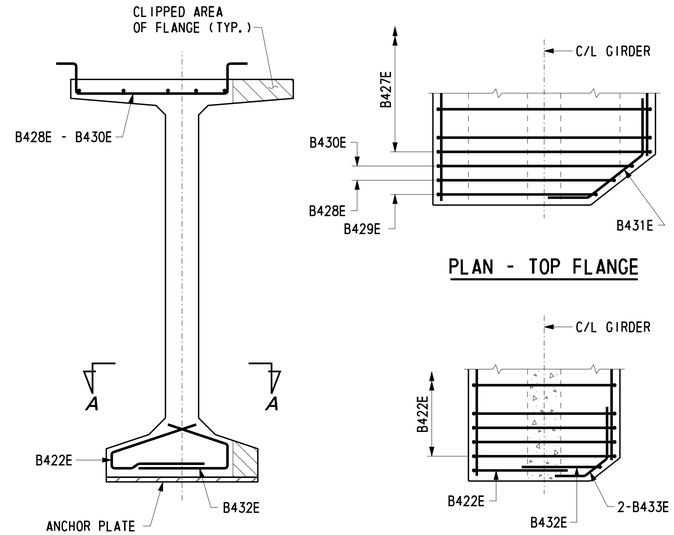

GIRDER END VIEW

PLAN - TOP FLANGE

SECTION A-A - BOTTOM FLANGE

CLIPPED FLANGE REINFORCEMENT DETAILS

SCALE: ¾" = 1'-0"

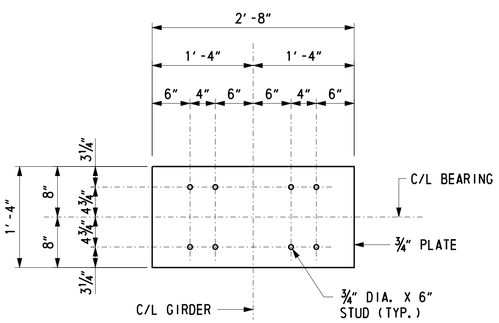

ANCHOR PLATE DETAIL

SCALE: 1" = 1'-0"

NOTES:

1. CLIP ANCHOR PLATE AT ABUTMENTS TO REMAIN FLUSH WITH GIRDER FLANGE.
2. GIRDER LIFTING DETAILS SHALL BE PROVIDED BY THE CONTRACTOR AND ARE SUBJECT TO THE APPROVAL OF THE ENGINEER.
3. ANCHOR PLATES AND STUDS SHALL BE GALVANIZED. ANCHOR PLATES SHALL CONFORM TO AASHTO M270 GRADE 50. STUDS SHALL CONFORM TO AASHTO M169, ASTM A 108. ANCHOR PLATES SHALL BE CAST WITH AND THE COST INCIDENTAL TO THE PRESTRESSED CONCRETE GIRDERS.

CROSS REFERENCE NOTES:

1. FOR PROJECT NOTES, SEE DWG. 1-477 PN-2.
2. FOR TYPICAL SECTION, SEE DWG. 1-477 TS-1.
3. FOR FRAMING PLAN, SEE DWG. 1-477 FR-2.
4. FOR GIRDER ELEVATION, SEE DWG. 1-477 BM-4.
5. FOR REINFORCING BAR LIST, SEE DWG. 1-477 BM-9.

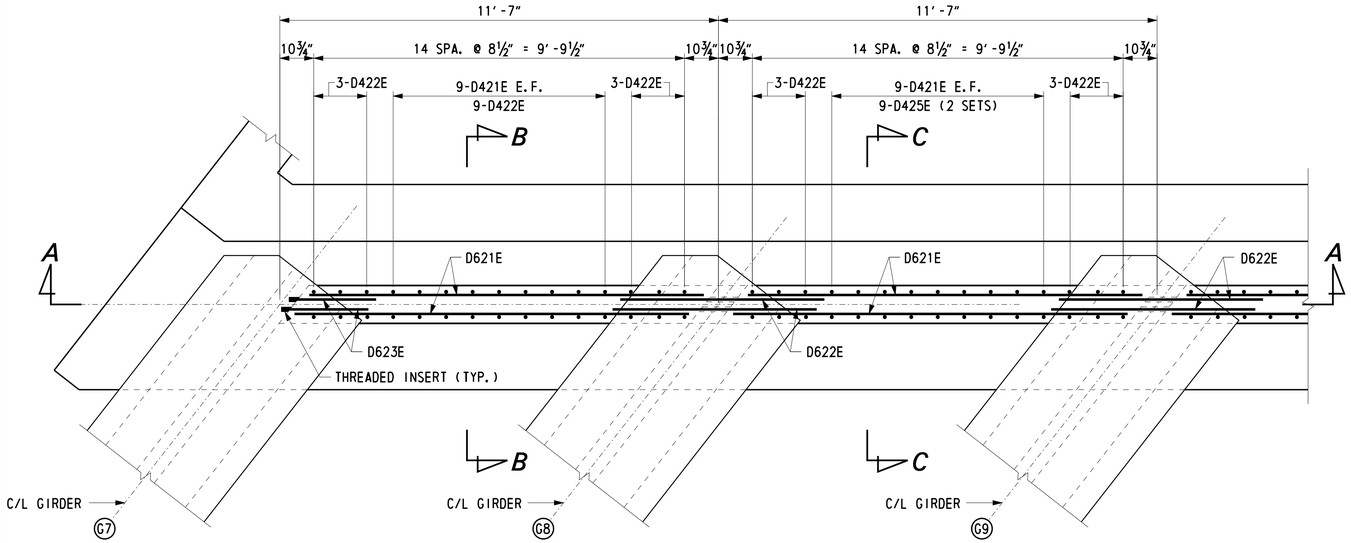

END DIAPHRAGM PLAN

(ABUTMENT 2 SHOWN)
SCALE: ½" = 1'-0"

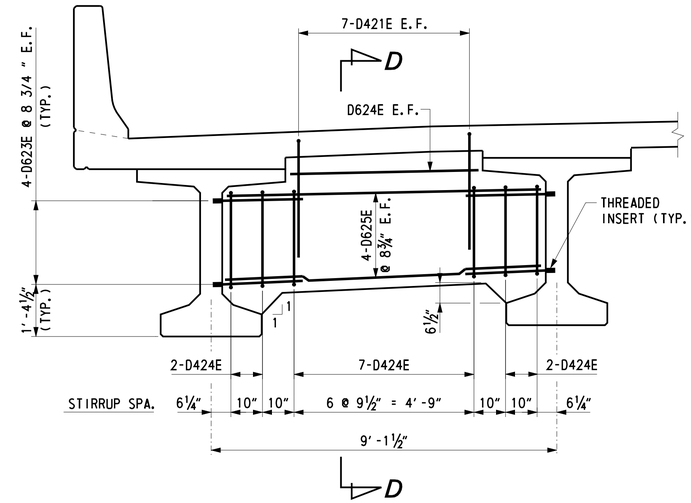

INTERMEDIATE DIAPHRAGM

SCALE: ½" = 1'-0"

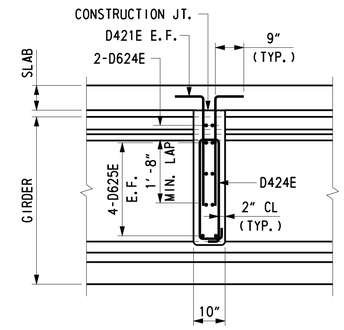

SECTION D-D

SCALE: ½" = 1'-0"

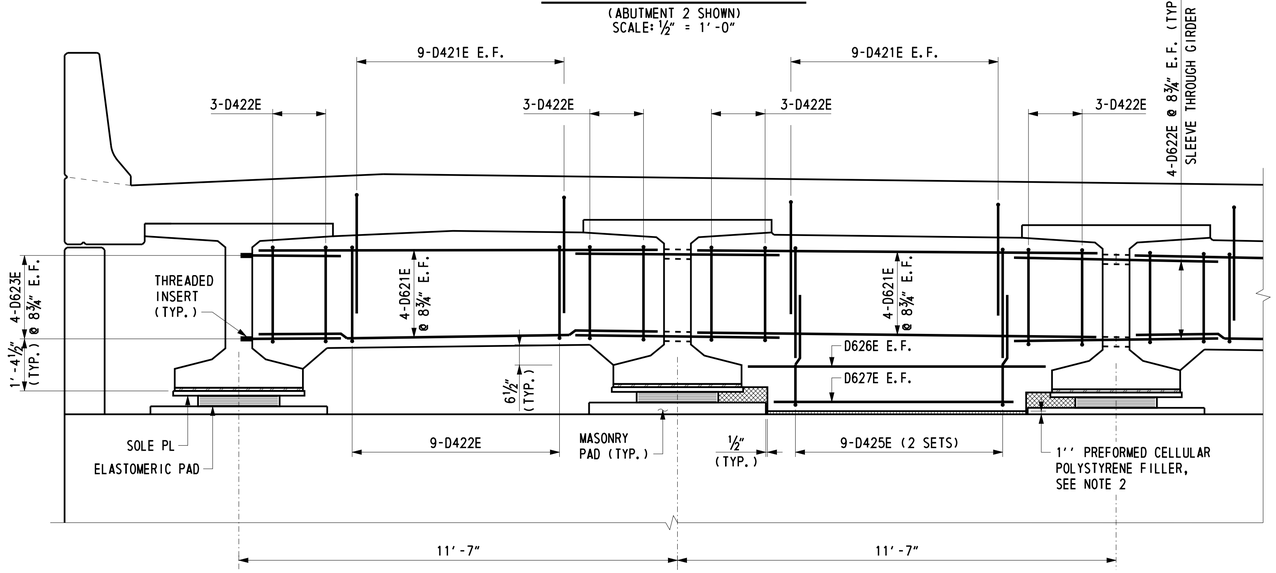

SECTION A-A

SCALE: ½" = 1'-0"

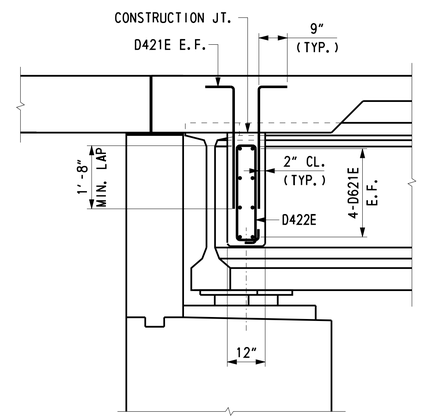

SECTION B-B

SCALE: ½" = 1'-0"

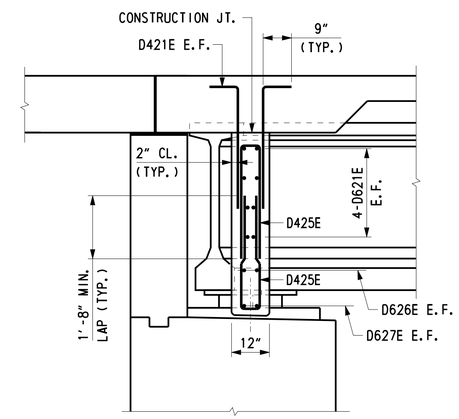

SECTION C-C

SCALE: ½" = 1'-0"

NOTES:

1. FULL DEPTH END DIAPHRAGM APPLIES BETWEEN GIRDERS G8 & G9 AS WELL AS BETWEEN GIRDERS G10 & G11.
2. COST OF PREFORMED CELLULAR POLYSTYRENE SHALL BE INCIDENTAL TO ITEM 602013 - PORTLAND CEMENT CONCRETE MASONRY, SUPERSTRUCTURE, CLASS D.

CROSS REFERENCE NOTES:

1. FOR PROJECT NOTES, SEE DWG. 1-475 PN-2.
2. FOR TYPICAL SECTION, SEE DWG. 1-475 TS-1.
3. FOR FRAMING PLAN, SEE DWG. 1-475 FR-2.
4. FOR REINFORCING BAR LIST, SEE DWG. 1-477 BM-9.

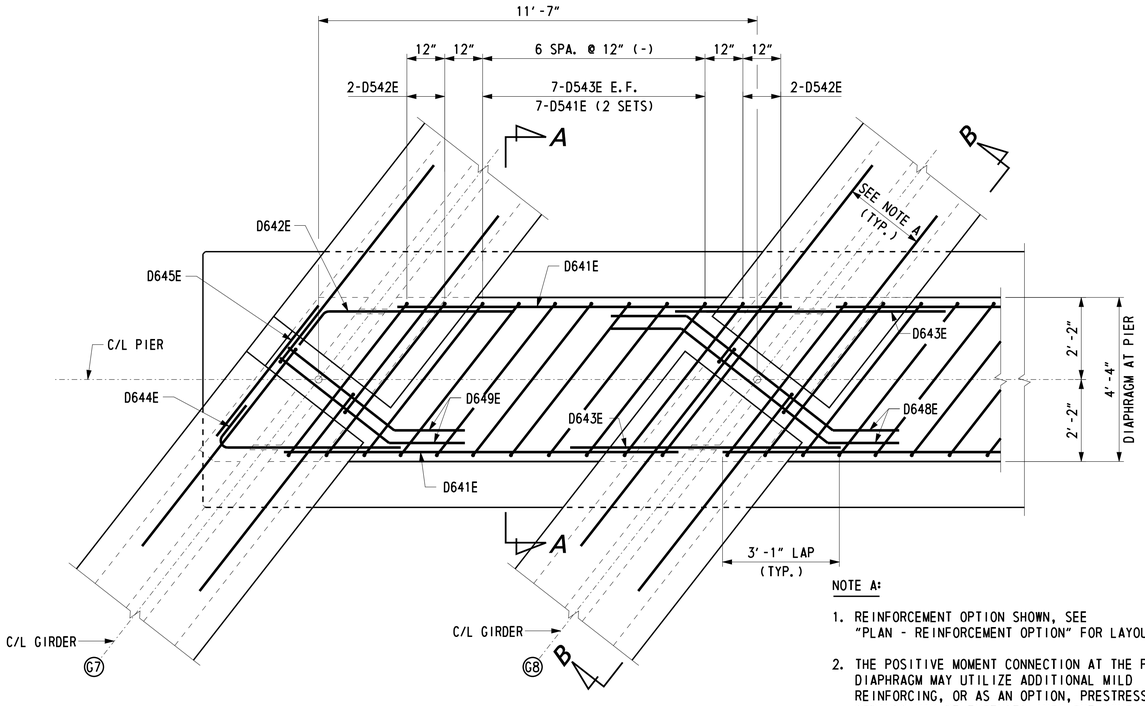

PLAN

SCALE: ½" = 1'-0"

NOTE A:

1. REINFORCEMENT OPTION SHOWN, SEE "PLAN - REINFORCEMENT OPTION" FOR LAYOUT.
2. THE POSITIVE MOMENT CONNECTION AT THE PIER DIAPHRAGM MAY UTILIZE ADDITIONAL MILD REINFORCING, OR AS AN OPTION, PRESTRESSING STRANDS MAY BE EXTENDED INTO THE CONTINUITY DIAPHRAGM. EXPOSED PRESTRESSING STRANDS SHALL BE PROTECTED FROM MOISTURE AND CONTAMINANTS SUCH AS GREASE, OIL, WAX, DIRT, PAINT OR LOOSE RUST. COST OF POSITIVE MOMENT REINFORCING SHALL BE INCIDENTAL TO ITEM 623003 - PRESTRESSED REINFORCED CONCRETE MEMBERS, BULB-T BEAM.

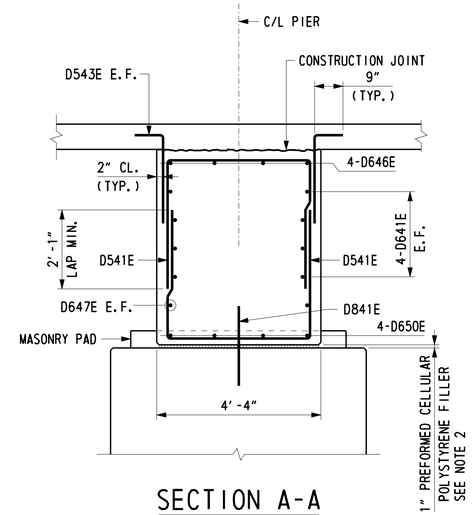

SECTION A-A

SCALE: ½" = 1'-0"

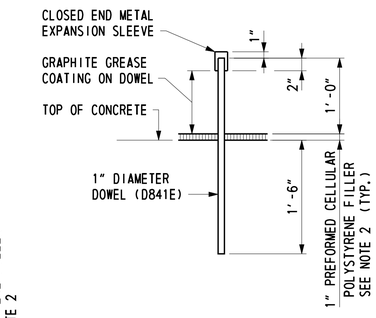

DOWEL DETAIL

SCALE: 1" = 1'-0"

NOTES:

1. D841E DOWELS SHALL BE 1" DIAMETER PLAIN BARS CAPPED WITH A SNUG FIT, CLOSED END METAL EXPANSION SLEEVE, TEMPORARILY SECURED TO THE DOWEL SO AS TO PROVIDE A 1" LONG SOCKET BEYOND THE BAR END AND TO LAP BACK 2" ON THE BAR. IMMEDIATELY PRIOR TO POURING DIAPHRAGM CONCRETE, DOWELS SHALL BE COATED WITH GRAPHITE GREASE.
2. COST OF DOWELS, EXPANSION SLEEVES, GRAPHITE COATING AND PREFORMED CELLULAR POLYSTYRENE SHALL BE INCIDENTAL TO ITEM 602013 - PORTLAND CEMENT CONCRETE MASONRY, SUPERSTRUCTURE, CLASS D.

CROSS REFERENCE NOTES:

1. FOR PROJECT NOTES, SEE DWG. 1-477 PN-2.
2. FOR TYPICAL SECTION, SEE DWG. 1-477 TS-1.
3. FOR FRAMING PLAN, SEE DWG. 1-477 FR-2.
4. FOR REINFORCING BAR LIST, SEE DWG. 1-477 BM-9.

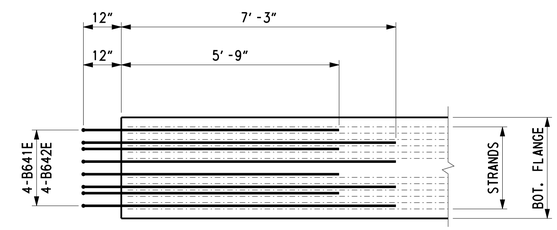

PLAN - REINFORCEMENT OPTION

SCALE: ½" = 1'-0"

PLAN - EXTENDED STRAND OPTION

SCALE: ½" = 1'-0"

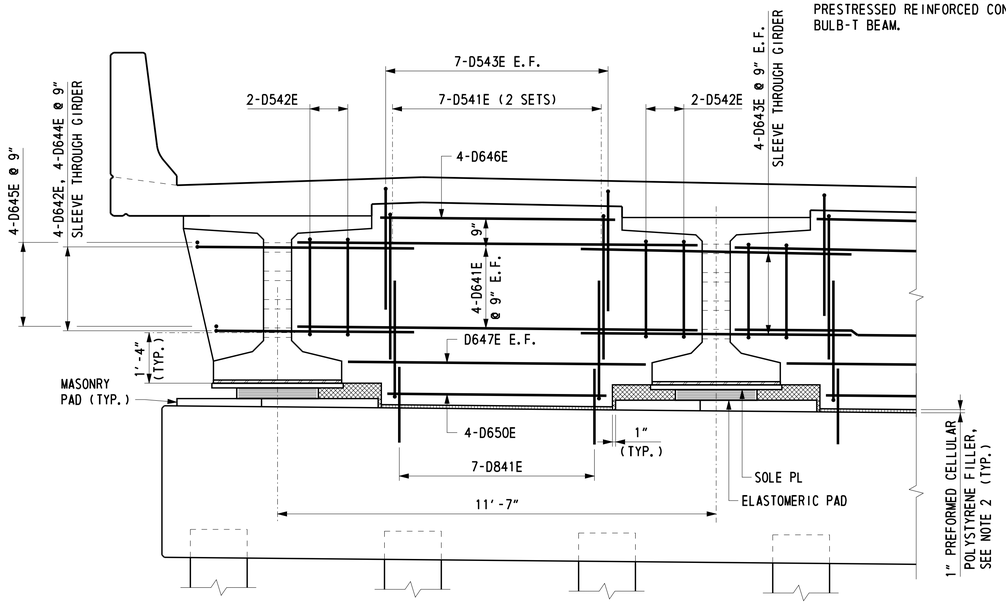

ELEVATION - DIAPHRAGM AT PIER

SCALE: ½" = 1'-0"

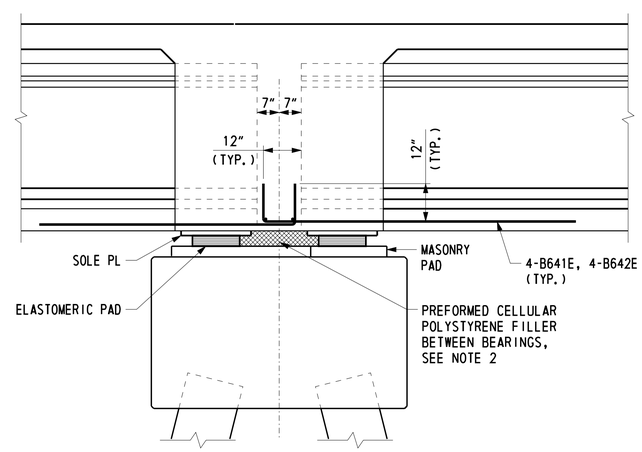

SECTION B-B - REINFORCEMENT OPTION

SCALE: ½" = 1'-0"

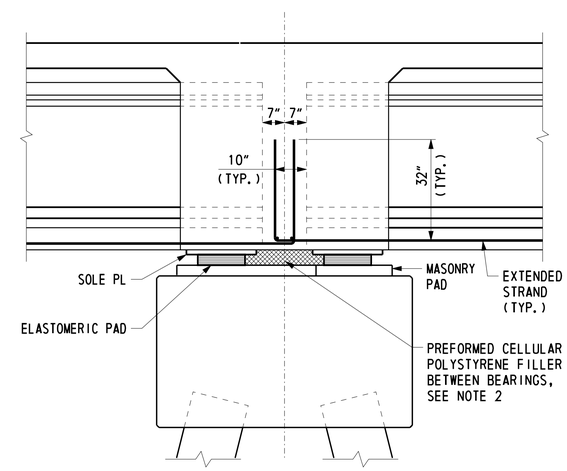

SECTION B-B - EXTENDED STRAND OPTION

SCALE: ½" = 1'-0"

U:\Projects\AA\21387385\CAD\Bridge\BR2-5\bm08_BR2-5_US301.dgn

8/14/2015

Steve_Lambert

DELAWARE DEPARTMENT OF TRANSPORTATION	ADDENDUMS / REVISIONS	US 301 LEVELS ROAD TO SUMMIT BRIDGE ROAD	CONTRACT T200511303	BRIDGE NO. 1-477N&S	US 301 MAINLINE OVER TRIBUTARY TO SANDY BRANCH NORTHBOUND ROADWAY DIAPHRAGMS 2	1-477 BM-8
			COUNTY NEW CASTLE	DESIGNED BY: W. A. O'CONNOR		SHEET NO. 499
				CHECKED BY: G. P. MISTRY/W. A. O'CONNOR		TOTAL SHTS. 1256

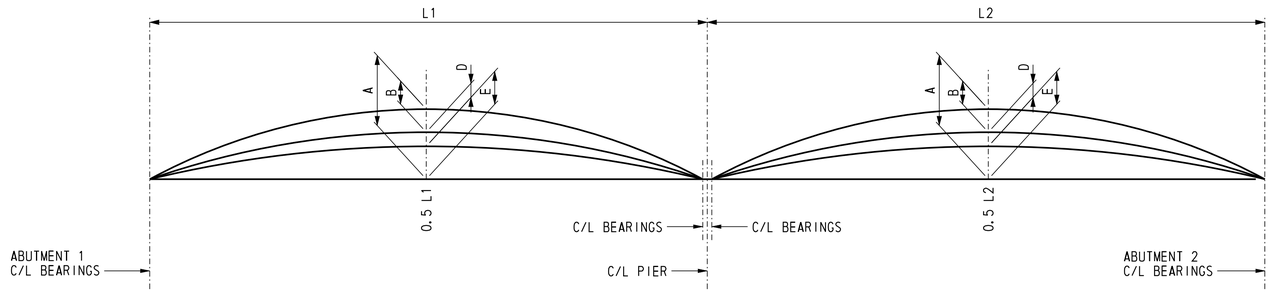

GIRDER CAMBER DIAGRAM

NOT TO SCALE

CAMBER ORDINATES (INCHES)						
GIRDER NO.	ITEM	ABUT. 1 C/L BRGS.	SPAN 1 0.5L1	C/L PIER	SPAN 2 0.5L2	ABUT. 2 C/L BRGS.
G1 & G6	A	0	7 1/16	0	3 1/16	0
	B	0	-3 1/16	0	-1 1/4	0
	C	0	3 3/4	0	1 13/16	0
	D	0	-2	0	-3/4	0
	E	0	1 3/4	0	1 1/16	0
	F	0	0	0	0	0
G2 - G5	A	0	7 1/16	0	3 1/16	0
	B	0	-3 1/16	0	-1 1/4	0
	C	0	3 3/4	0	1 13/16	0
	D	0	-2 3/16	0	-13/16	0
	E	0	1 7/16	0	1	0
	F	0	0	0	0	0

LEGEND:

A = DENOTES CAMBER DUE TO PRESTRESS AT ERECTION, CREEP MULTIPLIER = 1.8.

B = DENOTES DEFLECTION DUE TO GIRDER DEAD LOAD AT ERECTION, CREEP MULTIPLIER = 1.85.

C = A+B

D = DENOTES DEFLECTION DUE TO SLAB AND DIAPHRAGMS.

E = DENOTES NET CAMBER AT ERECTION, C+D.

F = DENOTES VERTICAL CURVE ORDINATE MEASURED FROM ROADWAY PROFILE TO CHORD LINE BETWEEN SUPPORTS.

NOTES:

1. CAMBER VALUES ARE THEORETICAL VALUES AND MAY VARY WITH CONCRETE STRENGTH (AGE), PRESTRESSING CONDITIONS, CREEP MULTIPLIER AND PRESTRESS LOSES.
2. THICKNESS OF CONCRETE HAUNCH VARIES TO OBTAIN VERTICAL CURVE PROFILE.

REINFORCING BAR LIST

GIRDER AND DIAPHRAGMS - SOUTHBOUND ROADWAY

	MARK	LENGTH	NO. BARS	TYPE	A	B	C	D	E	F	G	H	J	K	REMARKS
GIRDERS	B401E	8′-3½″	696	17		0′-8″	7′-7½″								
	B402E	3′-8″	2,220	16		1′-10″	0′-5″	1′-5″				1′-3½″		0′-6″	
	B403E	6′-8″	252	S4	0′-8″	0′-10″	3′-8″	0′-10″			0′-8″				
	B404E	50′-3″	360	STR.											
	B405E	8′-2½″	504	17		0′-8″	7′-6½″								
	B406E	6′-10″	420	S4	0′-8″	0′-11″	3′-8″	0-11″			0′-8″				
	B407E	8′-1½″	876	17		0′-8″	7′-5½″								
	B408E	5′-11″	12	S4	0′-8″	0′-11″	2′-9″	0′-11″			0′-8″				
	B409E	6′-3″	12	S4	0′-8″	0′-11″	3′-1″	0′-11″			0′-8″				
	B410E	6′-7″	12	S4	0′-8″	0′-11″	3′-5″	0′-11″			0′-8″				
	B411E	3′-4″	12	23			1′-0″	1′-4″	1′-0″			0′-9½″		0′-7½″	
	B412E	3′-3½″	12	16		1′-8″	0′-5½″	1′-2″				1′-1½″		0′-4½″	
	B413E	2′-6″	24	23			1″-0″	0′-6″	1′-0″			0′-9½″		0′-7½″	
	B414E	6′-6″	438	S4	0′-8″	0′-9″	3′-8″	0′-9″			0′-8″				
	B501E	8′-5½″	144	17		0′-10″	7′-7½″								
DIAPHRAGMS	D401E	4′-3″	390	36	0′-9″	3′-6″									
	D402E	12′-1″	87	T2	0′-4½″	0′-8″	5′-0″	0′-8″	5′-0″		0′-4½″				
	D404E	11′-9″	165	T2	0′-4½″	0′-6″	5′-0″	0′-6″	5′-0″		0′-4½″				
	D405E	9′-8″	126	17		4′-6″	0′-8″	4′-6″							
	D601E	10′-6″	140	STR.											
	D602E	7′-1″	112	STR.											
	D603E	3′-7″	476	STR.											ONE END THREADED
	D604E	4′-10½″	30	STR.											
	D605E	8′-2½″	210	STR.											
	D606E	7′-9″	14	STR.											
	D607E	7′-4″	14	STR.											
	D801E	2′-7″	45	STR.											DOWEL

GIRDER AND DIAPHRAGMS - NORTHBOUND ROADWAY

	MARK	LENGTH	NO. BARS	TYPE	A	B	C	D	E	F	G	H	J	K	REMARKS
GIRDERS	B421E	5′-7″	1,464	17		0′-8″	4′-11″								
	B422E	3′-8″	3,204	16		1′-10″	0′-5″	1′-5″				1′-3½″		0′-6″	
	B423E	6′-7″	810	S4	0′-8″	0′-9½″	3′-8″	0′-9½″			0′-8″				
	B424E	56′-1″	168	STR.											
	B425E	43′-7″	168	STR.											
	B426E	5′-6″	1,620	17		0′-8″	4′-10″								
	B427E	6′-9″	792	S4	0′-8″	0′-10½″	3′-8″	0′-10½″			0′-8″				
	B428E	5′-10″	12	S4	0′-8″	0′-10½″	2′-9″	0′-10½″			0′-8″				
	B429E	6′-2″	12	S4	0′-8″	0′-10½″	3′-1″	0′-10½″			0′-8″				
	B430E	6′-6″	12	S4	0′-8″	0′-10½″	3′-5″	0′-10½″			0′-8″				
	B431E	3′-4″	12	23			1′-0″	1′-4″	1′-0″			0′-9½″		0′-7½″	
	B432E	3′-3½″	12	16		1′-8″	0′-5½″	1′-2″				1′-1½″		0′-4½″	
	B433E	2′-6″	24	23			1′-0″	0′-6″	1′-0″			0′-9½″		0′-7½″	
	B521E	5′-9″	120	17		0′-10″	4′-11″								
	B641E	7′-9″	48	17		1′-0″	6′-9″								
	B642E	9′-3″	48	17		1′-0″	8′-3″								
DIAPHRAGMS	D421E	4′-2″	390	36	0′-9″	3′-5 ″									
	D422E	6′-9″	114	T2	0′-4½″	0′-8″	2′-4″	0′-8″	2′-4″	0′-4½″					
	D424E	6′-5″	165	T2	0′-4½″	0′-6″	2′-4″	0′-6″	2′-4″	0′-4½″					
	D425E	7′-0″	72	17		3′-2″	0′-8″	3′-2″							
	D541E	12′-7″	70	17		3′-9″	5′-1″	3′-9″							
	D542E	16′-0″	20	T2	0′-6″	5′-1″	2′-5″	5′-1″	2′-5″		0′-6″				
	D543E	3′-7″	70	36	0′-10″	2′-9″									
	D621E	10′-6″	80	STR.											
	D622E	7′-1″	64	STR.											
	D623E	3′-7″	272	STR.											ONE END THREADED
	D624E	4′-10½″	30	STR.											
	D625E	8′-2½″	120	STR.											
	D626E	7′-9″	8	STR.											
	D627E	7′-4″	8	STR.											
	D641E	10′-6″	40	STR.											
	D642E	8′-4″	8	19		2′-6″	5′-10″					1′-11½″		1′-6½″	
	D643E	7′-1″	32	STR.											
	D644E	8′-4″	8	30	5′-10″	2′-6″						1′-11½″		1′-6½″	
	D645E	5′-1″	8	STR.											
	D646E	6′-3″	20	STR.											
	D647E	7′-10″	10	STR.											
	D648E	7′-10″	8	4		1′-2″	5′-6″	1′-2″				3′-4½″		4′-4″	
	D649E	4′-9″	4	16			1′-0″	3′-9″				2′-5″		2′-10″	
	D650E	7′-4″	20	STR.											
	D841E	2′-7″	35	STR.											DOWEL

BENDING DIAGRAMS

ALL DIMENSIONS ARE FROM OUT TO OUT.

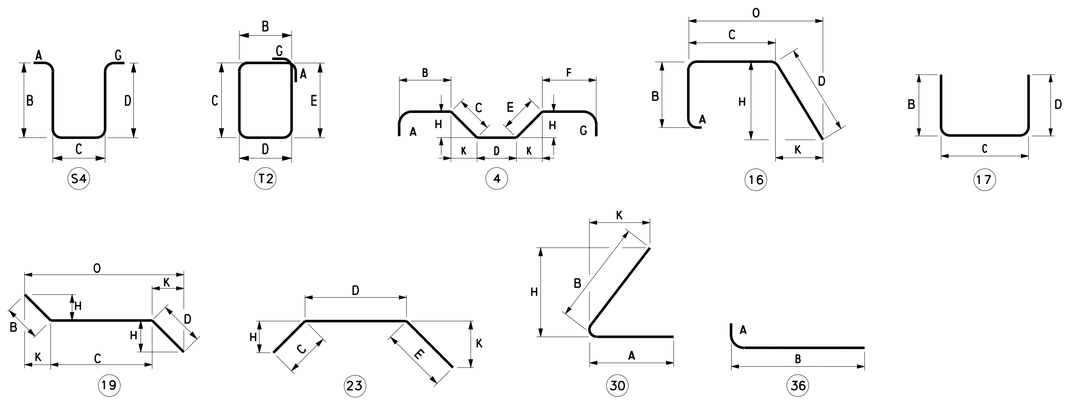

1-477 BM-9	
SHEET NO.	501
TOTAL SHTS.	1256

DELAWARE DEPARTMENT OF TRANSPORTATION

ADDENDUMS / REVISIONS

US 301 LEVELS ROAD TO SUMMIT BRIDGE ROAD

CONTRACT: T200511303
COUNTY: NEW CASTLE
BRIDGE NO. **1-477N&S**
DESIGNED BY: K. D. BEAVER
CHECKED BY: J. S. LI/W. A. O'CONNOR

US 301 MAINLINE OVER TRIBUTARY TO SANDY BRANCH GIRDER AND DIAPHRAGMS REINFORCING BAR LIST

U:\Projects\AA\21387385\CAD\Bridge\BR2-5\bm09_BR2-5_US301.dgn
8/13/2015
Steve_Lambert

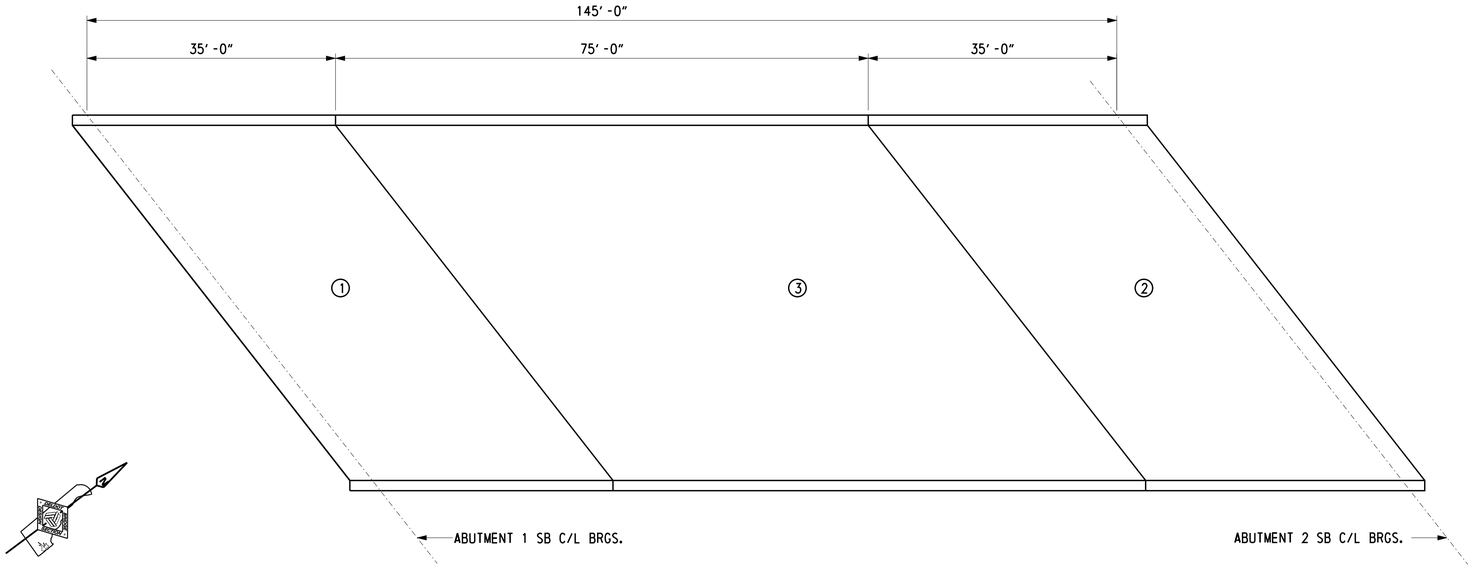

BRIDGE DECK POURING SEQUENCE SOUTHBOUND ROADWAY

SCALE: 1/32" = 1'-0"

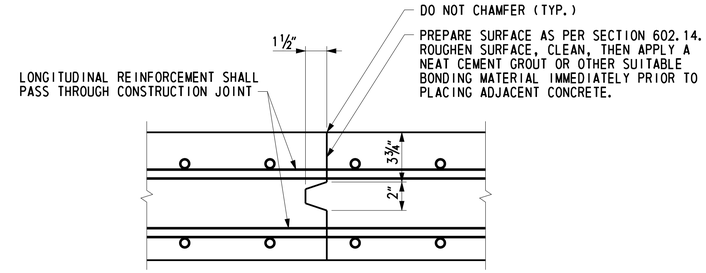

BRIDGE DECK CONSTRUCTION JOINT

NOT TO SCALE

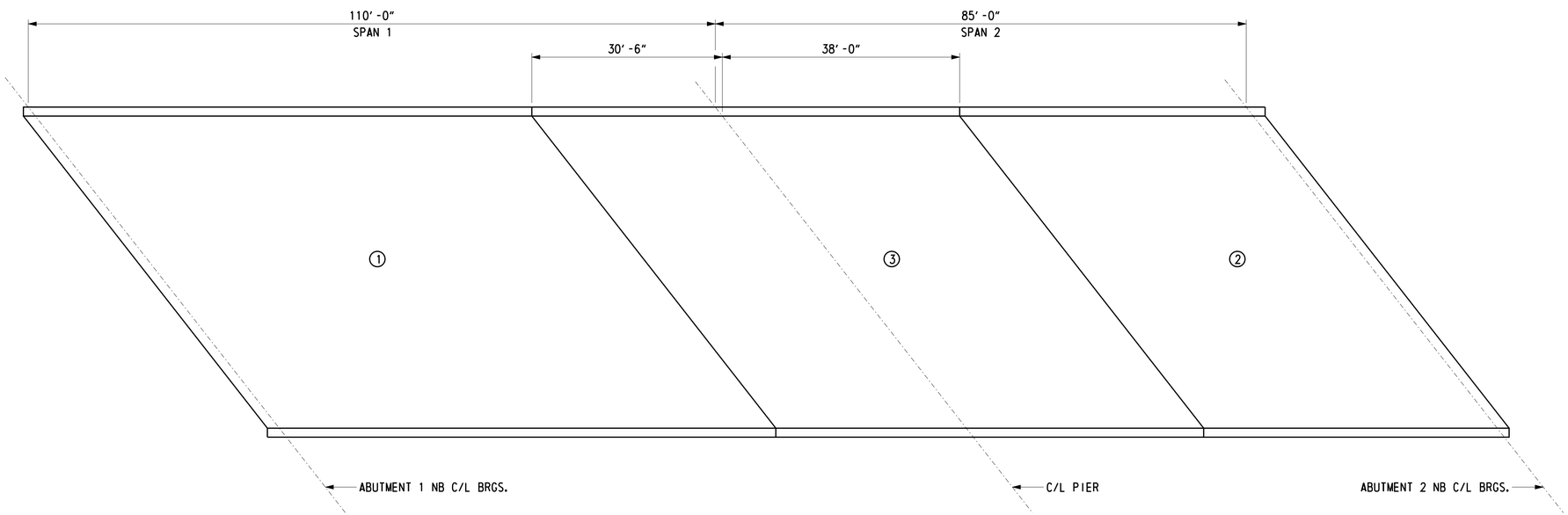

BRIDGE DECK POURING SEQUENCE NORTHBOUND ROADWAY

SCALE: 1/32" = 1'-0"

PLACEMENT SEQUENCE:

1. CAST INTERMEDIATE AND END DIAPHRAGMS AT ABUTMENTS.
2. CAST POSITIVE MOMENT REGIONS ADJACENT TO ABUTMENTS IN THE NUMBER ORDER INDICATED ON THE PLAN.
3. CAST CONTINUITY DIAPHRAGMS AT PIER.
4. CAST NEGATIVE MOMENT REGION.

NOTES:

1. THE POURING SEQUENCE FOR THE BRIDGE DECK SLAB SHALL BE MADE IN THE NUMBERED ORDER INDICATED. THERE MUST BE AT LEAST FORTY (40) HOURS BETWEEN THE COMPLETION OF ONE NUMBERED POUR AND THE START OF THE NEXT NUMBERED POUR.
2. AS AN ALTERNATE, CONTRACTOR MAY UTILIZE TWO CREWS AND TWO SETS OF EQUIPMENT TO CONSTRUCT POURS NUMBER 1 AND 2 SIMULTANEOUSLY.
3. ALLOW SUFFICIENT TIME FOR DIAPHRAGMS TO REACH A MINIMUM COMPRESSIVE STRENGTH OF 3,000 PSI BEFORE POURING DECK ABOVE DIAPHRAGM.

CROSS REFERENCE NOTES:

1. FOR PROJECT NOTES, SEE DWG. 1-477 PN-2.
2. FOR TYPICAL SECTION, SEE SEE DWG. 1-477 TS-1.
3. FOR REINFORCING BAR LIST, SEE DWG. 1-477 DK-6.

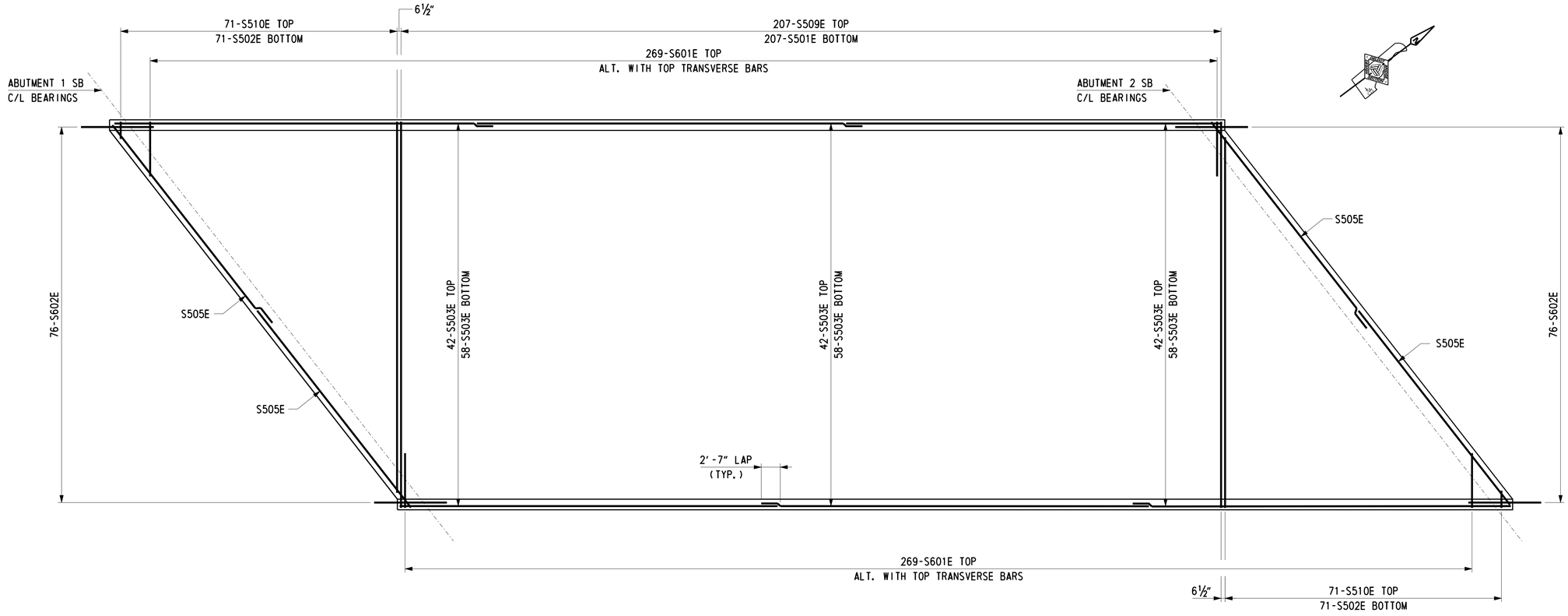

PLAN - SOUTHBOUND ROADWAY DECK REINFORCEMENT

SCALE: ⅛" = 1'-0"

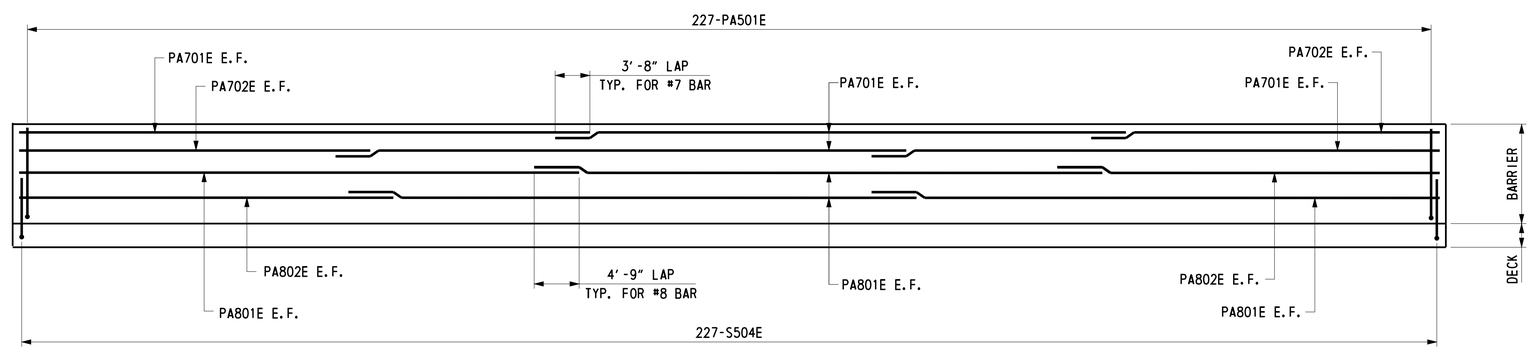

ELEVATION - SOUTHBOUND ROADWAY DECK AND BARRIER REINFORCEMENT

NOT TO SCALE

CROSS REFERENCE NOTES:

1. FOR PROJECT NOTES, SEE DWG. 1-477 PN-2.
2. FOR TYPICAL SECTION, SEE DWG. 1-477 DK-3.
3. FOR REINFORCING BAR LIST, SEE DWG. 1-477 DK-6.

DELAWARE DEPARTMENT OF TRANSPORTATION	ADDENDUMS / REVISIONS		US 301 LEVELS ROAD TO SUMMIT BRIDGE ROAD	CONTRACT T200511303	BRIDGE NO. 1-477N&S	US 301 MAINLINE OVER TRIBUTARY TO SANDY BRANCH BRIDGE DECK AND BARRIER REINFORCEMENT 1	1-477 DK-2
				COUNTY NEW CASTLE	DESIGNED BY: K. D. BEAVER		SHEET NO. 503
					CHECKED BY: J. S. LI		TOTAL SHTS. 1256

U:\Projects\AA\21387385\CAD\Bridge\BR2-5\dk02_BR2-5_US301.dgn
8/13/2015
Steve_Lambert

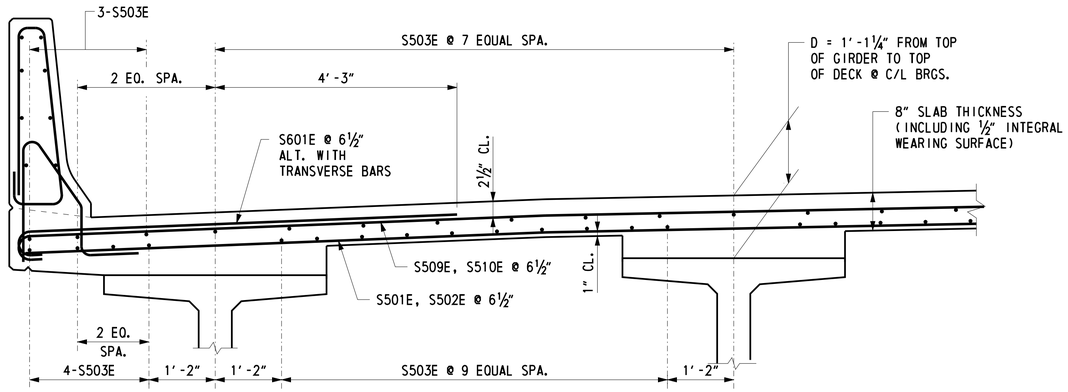

TYPICAL SOUTHBOUND ROADWAY DECK REINFORCEMENT SECTION

SCALE: ¾" = 1'-0"

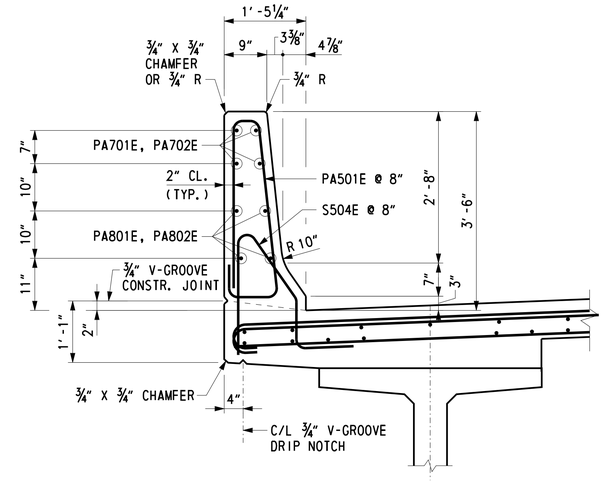

TYPICAL SOUTHBOUND ROADWAY BARRIER REINFORCEMENT SECTION

SCALE: ¾" = 1'-0"

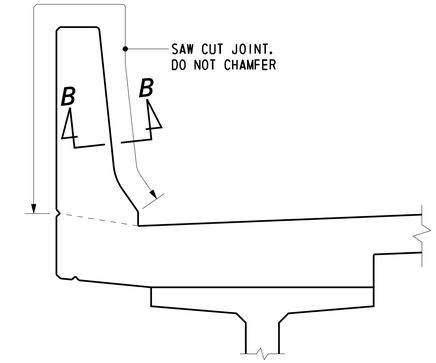

BARRIER CONTROL JOINT DETAIL

SCALE: ¾" = 1'-0"

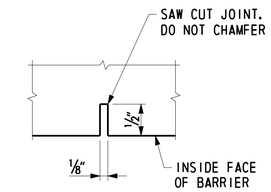

SECTION B-B

NOT TO SCALE

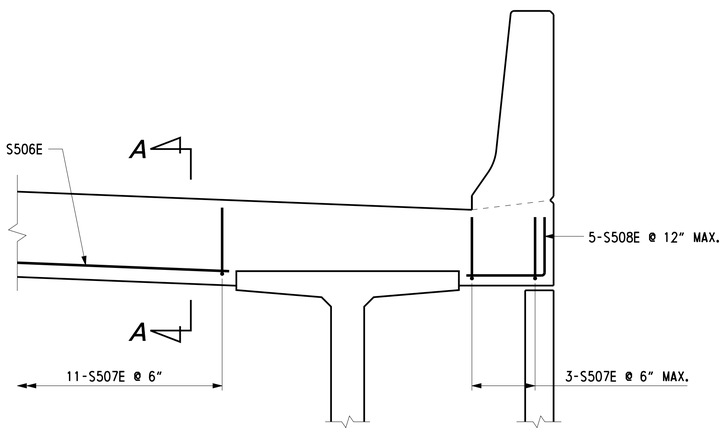

TYPICAL SOUTHBOUND ROADWAY CONCRETE END HAUNCH SECTION

SCALE: ¾" = 1'-0"

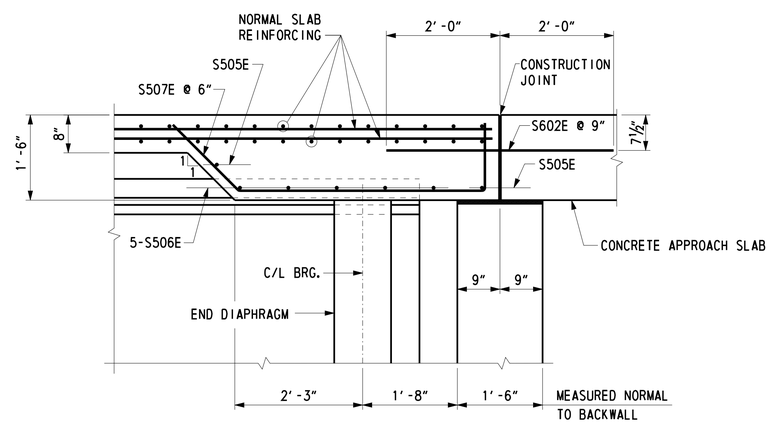

SECTION A-A

SCALE: ¾" = 1'-0"

NOTES:

1. LONGITUDINAL SLAB REINFORCEMENT IS SET TO PASS THROUGH TRANSVERSE BARRIER BARS AS SHOWN.
2. ALL LONGITUDINAL BARRIER BARS SHALL BE PLACED CONTINUOUSLY IN BARRIER, LAPPING AS NECESSARY. BARRIER IS PLACED CONTINUOUSLY.
3. FRONT FACE OF BARRIER DIMENSIONED FROM PLUMB LINE.
4. SAW CUT CONTROL JOINTS THE SAME DAY THAT THE FORMS ARE STRIPPED.
5. CONCRETE END HAUNCH REINFORCEMENT IS PLACED PARALLEL TO SKEWED SUPPORTS AND PARALLEL TO LONGITUDINAL SLAB REINFORCEMENT.

CROSS REFERENCE NOTES:

1. FOR PROJECT NOTES, SEE DWG. 1-477 PN-2.
2. FOR DECK REINFORCEMENT PLAN, SEE DWG. 1-477 DK-2.
3. FOR REINFORCING BAR LIST, SEE DWG. 1-477 DK-6.
4. FOR LOCATION OF CONDUITS IN BARRIER, SEE DWG. 1-477 TS-1.
5. FOR CONTROL JOINT SPACING, SEE DWGS. 1-477 PE-1 AND 1-477 PE-2.

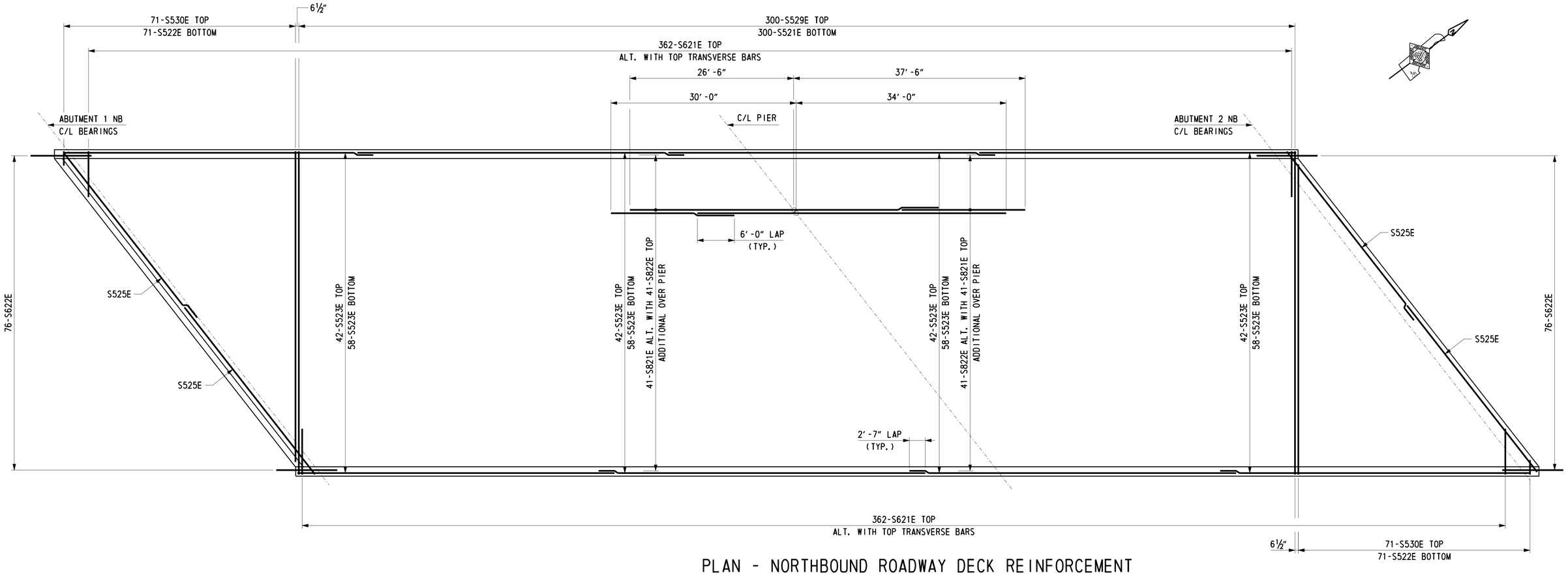

PLAN - NORTHBOUND ROADWAY DECK REINFORCEMENT

SCALE: ⅛" = 1'-0"

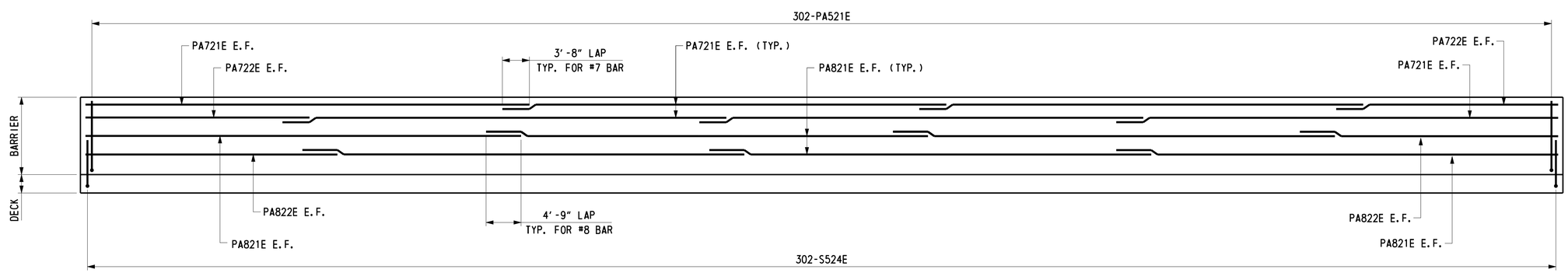

ELEVATION - NORTHBOUND ROADWAY DECK AND BARRIER REINFORCEMENT

NOT TO SCALE

CROSS REFERENCE NOTES:

1. FOR PROJECT NOTES, SEE DWG. 1-477 PN-2.
2. FOR TYPICAL SECTION, SEE SEE DWG. 1-477 DK-5.
3. FOR REINFORCING BAR LIST, SEE DWG. 1-477 DK-6.

DELAWARE DEPARTMENT OF TRANSPORTATION	ADDENDUMS / REVISIONS		US 301 LEVELS ROAD TO SUMMIT BRIDGE ROAD	CONTRACT T200511303	BRIDGE NO. 1-477N&S	US 301 MAINLINE OVER TRIBUTARY TO SANDY BRANCH BRIDGE DECK AND BARRIER REINFORCEMENT 3	1-477 DK-4
				COUNTY NEW CASTLE	DESIGNED BY: K. D. BEAVER		SHEET NO. 505
					CHECKED BY: J. S. LI		TOTAL SHTS. 1256

U:\Projects\AA\21387385\CAD\Bridge\BR2-5\dk04_BR2-5_US301.dgn 8/13/2015 Steve_Lambert

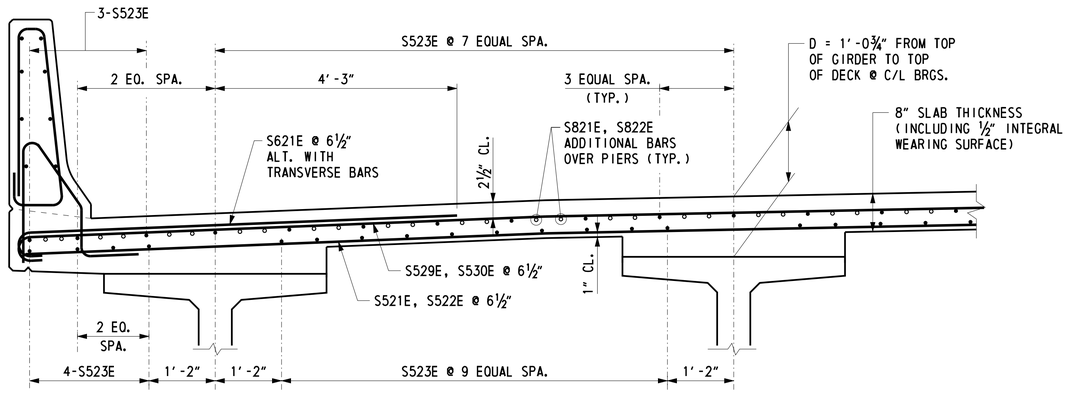

TYPICAL NORTHBOUND ROADWAY DECK REINFORCEMENT SECTION

SCALE: ¾" = 1'-0"

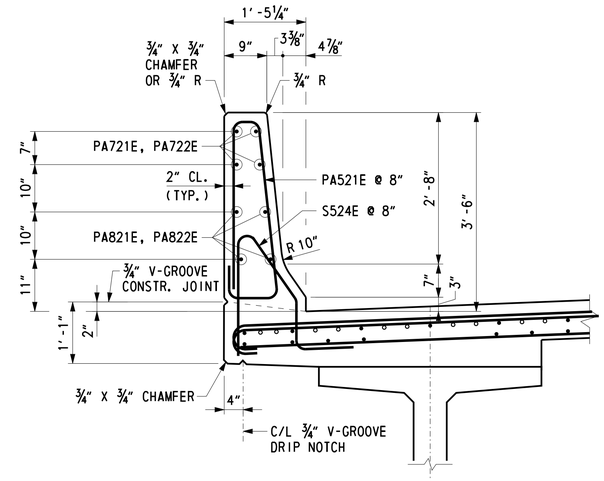

TYPICAL NORTHBOUND ROADWAY BARRIER REINFORCEMENT SECTION

SCALE: ¾" = 1'-0"

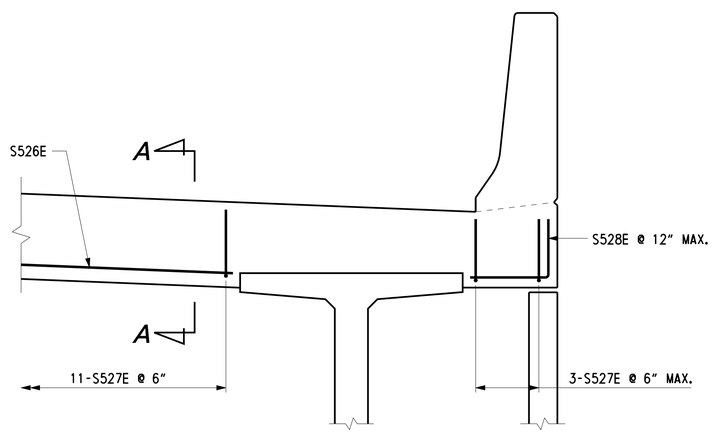

TYPICAL NORTHBOUND ROADWAY CONCRETE END HAUNCH SECTION

SCALE: ¾" = 1'-0"

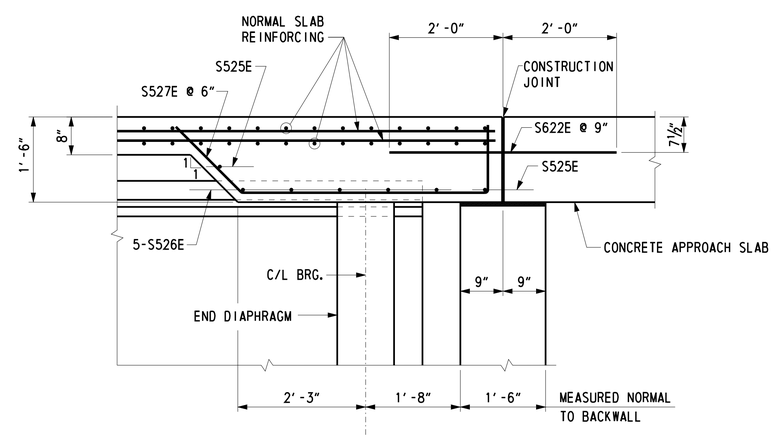

SECTION A-A

SCALE: ¾" = 1'-0"

NOTES:

1. LONGITUDINAL SLAB REINFORCEMENT IS SET TO PASS THROUGH TRANSVERSE BARRIER BARS AS SHOWN.
2. ALL LONGITUDINAL BARRIER BARS SHALL BE PLACED CONTINUOUSLY IN BARRIER, LAPPING AS NECESSARY. BARRIER IS PLACED CONTINUOUSLY.
3. FRONT FACE OF BARRIER DIMENSIONED FROM PLUMB LINE.
4. SAW CUT CONTROL JOINTS THE SAME DAY THAT THE FORMS ARE STRIPPED.
5. CONCRETE END HAUNCH REINFORCEMENT IS PLACED PARALLEL TO SKEWED SUPPORTS AND PARALLEL TO LONGITUDINAL SLAB REINFORCEMENT.

CROSS REFERENCE NOTES:

1. FOR PROJECT NOTES, SEE DWG. 1-477 PN-2.
2. FOR DECK REINFORCEMENT PLAN, SEE DWG. 1-477 DK-4.
3. FOR BARRIER CONTROL JOINT DETAIL, SEE DWG. 1-477 DK-3.
4. FOR REINFORCING BAR LIST, SEE DWG. 1-477 DK-6.
5. FOR LOCATION OF CONDUITS IN BARRIER, SEE DWG. 1-477 TS-1.

REINFORCING BAR LIST

SOUTHBOUND ROADWAY BRIDGE DECK AND BARRIER

	MARK	LENGTH	NO. BARS	TYPE	A	B	C	D	E	G	H	J	K	REMARKS
BRIDGE DECK	S501E	52′-6″	207	STR.										
	S502E	2′-8″ TO 50′-10″	142	STR.										△=8¼″, 2 SETS OF 71 BARS
	S503E	52′-0″	300	STR.										
	S504E	5′-0½″	454	43	1′-1″	0′-8⅜″	0′-10″	1′-6⅞″	0′-1″	0′-7⅝″	0′-7″	0′-3″	0′-10″	
	S505E	34′-8″	16	STR.										
	S506E	6′-3″	50	STR.										
	S507E	8′-6″	122	16		1′-2″	5′-6″	1′-10″			1′-2″		1′-5½″	
	S508E	2′-10″	20	17		1′-2″	1′-8″							
	S509E	53′-8″	207	1	0′-7″	52′-6″				0′-7″		0′-5″		
	S510E	3′-3″ TO 51′-5″	142	1	0′-7″	2′-8″ TO 50′-10″						0′-5″		△=8½″, 2 SETS OF 71 BARS
	S601E	8′-5″	538	1	0′-8″	7′-9″						0′-6″		
	S602E	4′-0″	152	STR.										
BARRIER	PA501E	7′-6¼″	454	28	2′-9¼″	0′-2 15/16″	0′-1⅝″	0′-2¾″	2′-9½″	0′-3⅛″	0′-5⅛″			
	PA701E	60′-0″	16	STR.										
	PA702E	38′-2″	8	STR.										
	PA801E	60′-0″	16	STR.										
	PA802E	40′-4″	8	STR.										

NORTHBOUND ROADWAY BRIDGE DECK AND BARRIER

	MARK	LENGTH	NO. BARS	TYPE	A	B	C	D	E	G	H	J	K	REMARKS
BRIDGE DECK	S521E	52′-6″	300	STR.										
	S522E	2′-8″ TO 50′-10″	142	STR.										△=8¼″, 2 SETS OF 71 BARS
	S523E	52′-2″	400	STR.										
	S524E	5′-0½″	604	43	1′-1″	0′-8⅜″	0′-10″	1′-6⅞″	0′-1″	0′-7⅝″	0′-7″	0′-3″	0′-10″	
	S525E	34′-8″	16	STR.										
	S526E	6′-3″	50	STR.										
	S527E	8′-6″	122	16		1′-2″	5′-6″	1′-10″			1′-2″		1′-5½″	
	S528E	2′-10″	20	17		1′-2″	1′-8″							
	S529E	53′-8″	300	1	0′-7″	52′-6″				0′-7″		0′-5″		
	S530E	3′-3″ TO 51′-5″	142	1	0′-7″	2′-8″ TO 50′-10″						0′-5″		△=8½″, 2 SETS OF 71 BARS
	S621E	8′-5″	724	1	0′-8″	7′-9″						0′-6″		
	S622E	4′-0″	152	STR.										
	S821E	50′-0″	82	STR.										
	S822E	20′-0″	82	STR.										
BARRIER	PA521E	7′-6¼″	604	28	2′-9¼″	0′-2 15/16″	0′-1⅝″	0′-2¾″	2′-9½″	0′-3⅛″	0′-5⅛″			
	PA721E	58′-0″	24	STR.										
	PA722E	37′-10″	8	STR.										
	PA821E	58′-0″	24	STR.										
	PA822E	41′-1″	8	STR.										

BENDING DIAGRAMS

ALL DIMENSIONS ARE FROM OUT TO OUT.

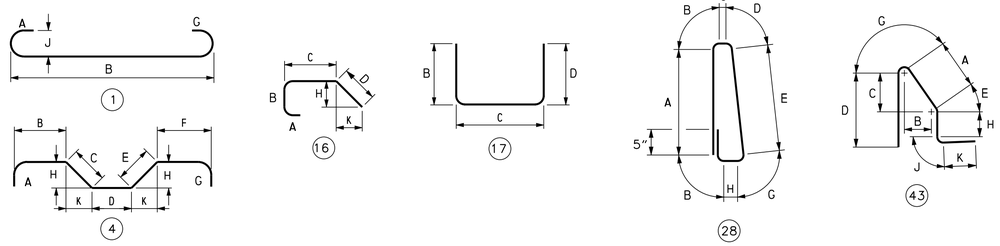

DELAWARE DEPARTMENT OF TRANSPORTATION

ADDENDUMS / REVISIONS

US 301 LEVELS ROAD TO SUMMIT BRIDGE ROAD

CONTRACT	BRIDGE NO.	1-477N&S
T200511303	DESIGNED BY: K. D. BEAVER	
COUNTY		
NEW CASTLE	CHECKED BY: J. S. LI	

US 301 MAINLINE OVER TRIBUTARY TO SANDY BRANCH BRIDGE DECK AND BARRIER REINFORCING BAR LIST

1-477 DK-6
SHEET NO.
507
TOTAL SHTS.
1256

U:\Projects\AA\21387385\CAD\Bridge\BR2-5\dk06_BR2-5_US301.dgn
11/8/2012
Steve_Lambert

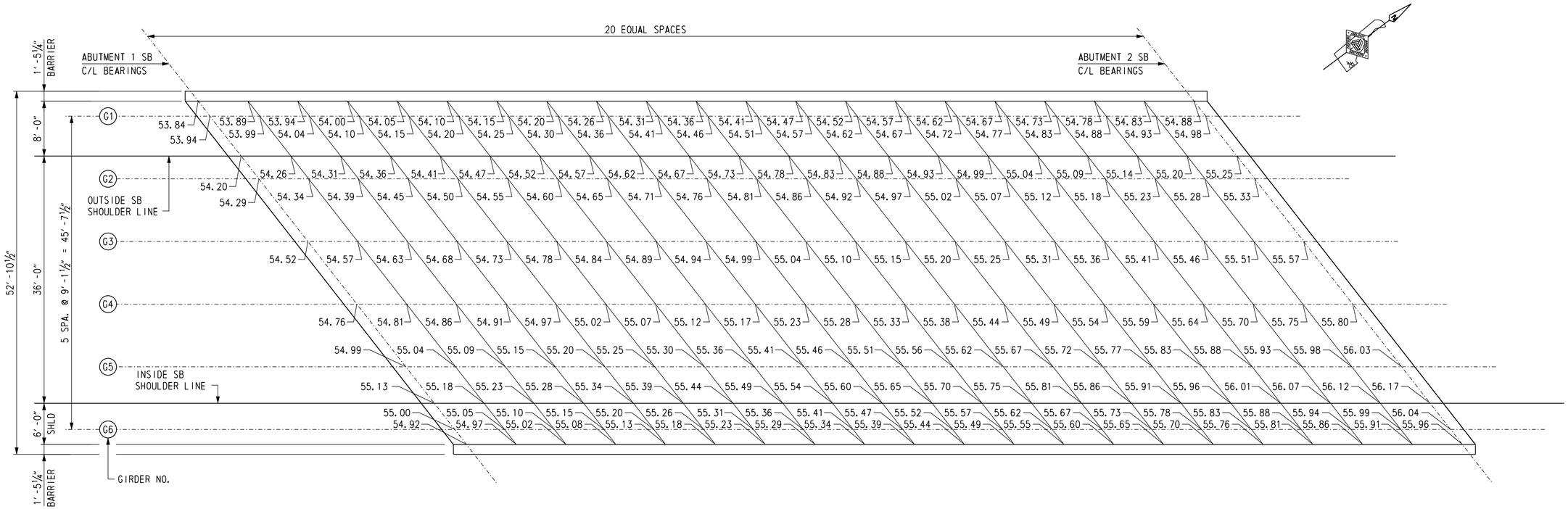

FINISHED DECK ELEVATIONS

SCALE: ⅛" = 1'-0"

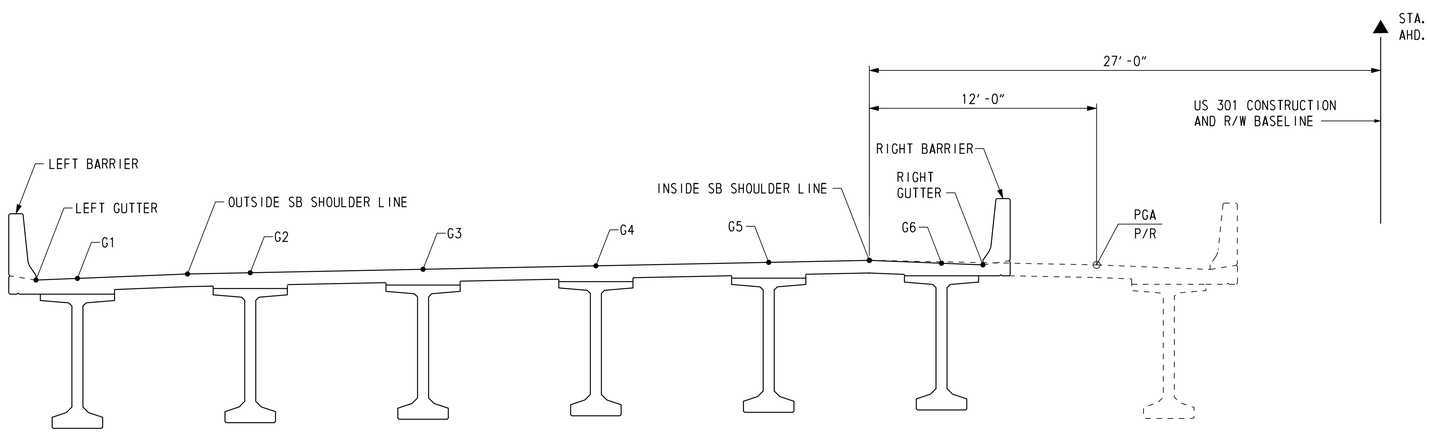

TYPICAL SOUTHBOUND ROADWAY SECTION

(LOOKING STATION AHEAD)
SCALE: ¼" = 1'-0"

NOTE:

THE FINISHED BRIDGE DECK ELEVATIONS SHOWN ARE TO TOP OF CONCRETE DECK.

CROSS REFERENCE NOTES:

1. FOR VERTICAL CURVE DATA, SEE DWG. 1-477 PE-1.
2. FOR GIRDER ELEVATION, SEE DWG. 1-477 FR-1.

DELAWARE DEPARTMENT OF TRANSPORTATION	ADDENDUMS / REVISIONS	US 301 LEVELS ROAD TO SUMMIT BRIDGE ROAD	CONTRACT T200511303	BRIDGE NO. 1-477N&S	US 301 MAINLINE OVER TRIBUTARY TO SANDY BRANCH SOUTHBOUND ROADWAY FINISHED DECK ELEVATIONS	1-477 FD-1	
			COUNTY NEW CASTLE	DESIGNED BY: K. D. BEAVER		SHEET NO. 508	
				CHECKED BY: J. S. LI		TOTAL SHTS. 1256	

U:\Projects\AA\21387385\CAD\Bridge\BR2-5\fd01_BR2-5_US301.dgn
11/8/2012
Steve_Lambert

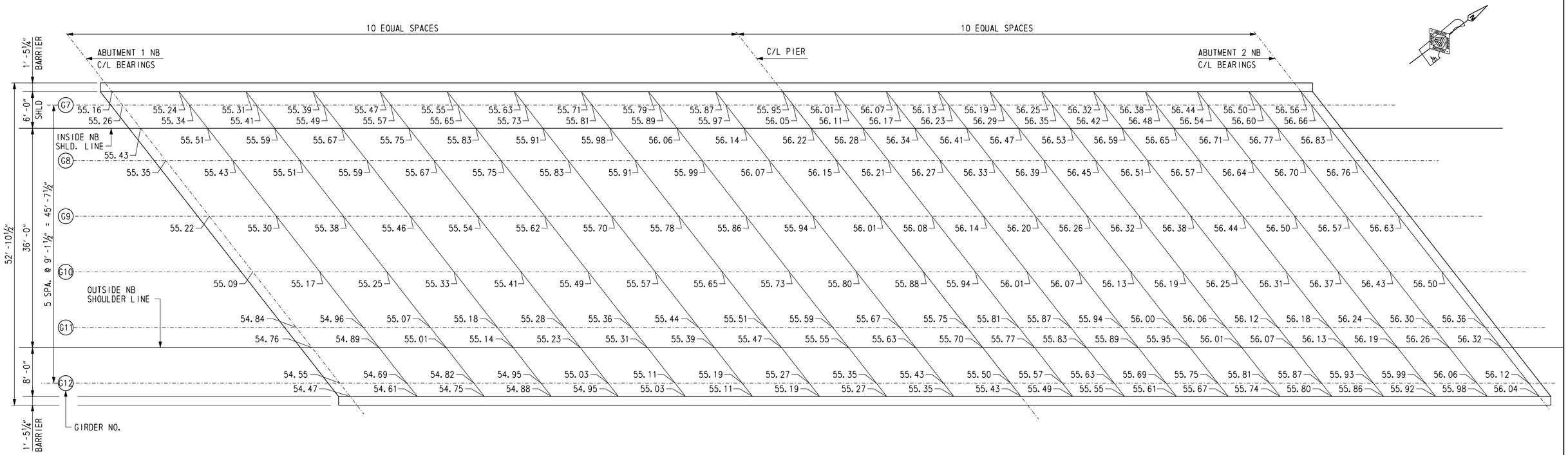

FINISHED DECK ELEVATIONS

SCALE: ⅛" = 1'-0"

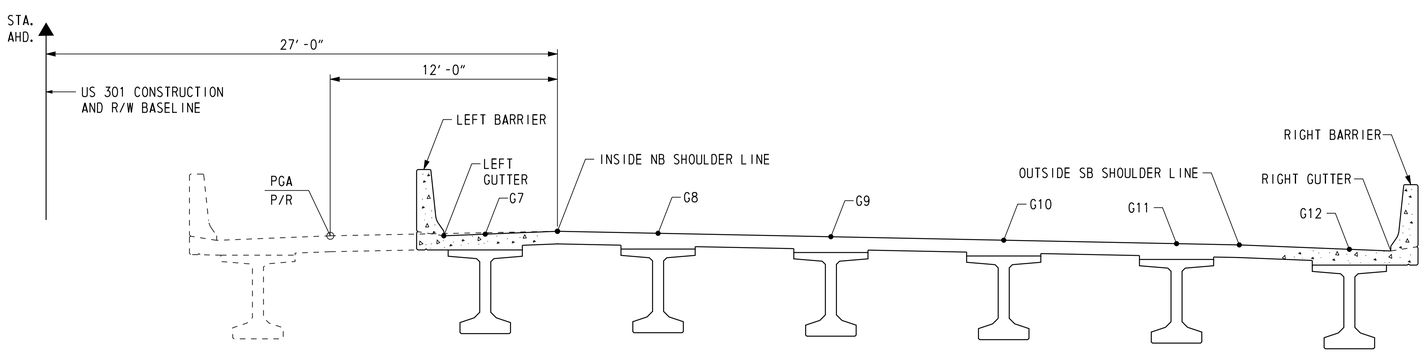

TYPICAL NORTHBOUND ROADWAY SECTION

(LOOKING STATION AHEAD)
SCALE: ⅜" = 1'-0"

NOTE:

THE FINISHED BRIDGE DECK ELEVATIONS SHOWN ARE TO TOP OF CONCRETE DECK.

CROSS REFERENCE NOTES:

1. FOR VERTICAL CURVE DATA, SEE DWG. 1-477 PE-2.
2. FOR GIRDER ELEVATION, SEE DWG. 1-477 BM-4.

U:\Projects\AA\21387385\CAD\Bridge\BR2-5\fd02_BR2-5_US301.dgn

11/8/2012

Steve_Lambert

DELAWARE DEPARTMENT OF TRANSPORTATION	ADDENDUMS / REVISIONS		US 301 LEVELS ROAD TO SUMMIT BRIDGE ROAD	CONTRACT T200511303	BRIDGE NO. 1-477N&S	US 301 MAINLINE OVER TRIBUTARY TO SANDY BRANCH NORTHBOUND ROADWAY FINISHED DECK ELEVATIONS	1-477 FD-2
				COUNTY NEW CASTLE	DESIGNED BY: K. D. BEAVER		SHEET NO. 509
					CHECKED BY: J. S. LI		TOTAL SHTS. 1256

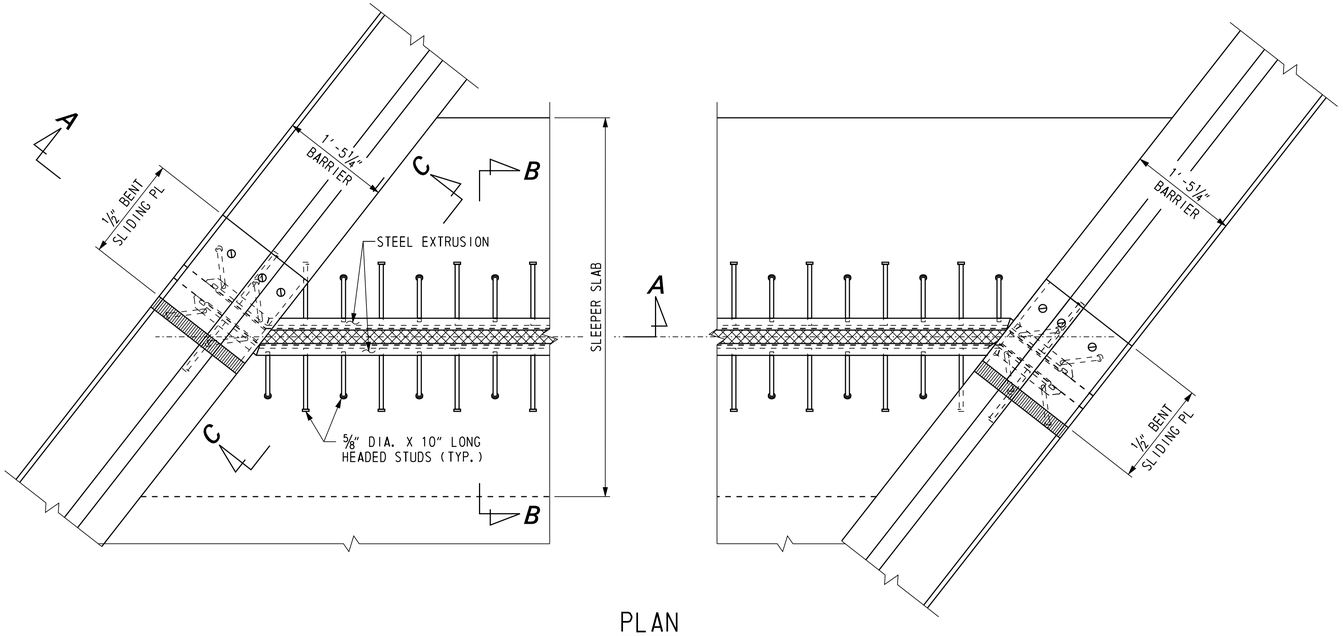

PLAN

SCALE: 1" = 1'-0"

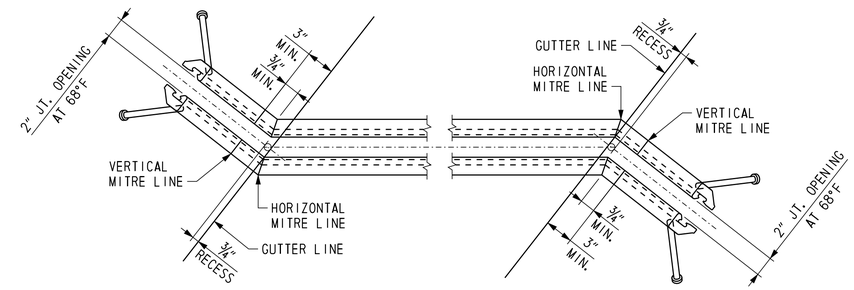

EXPANSION JOINT SKEW DETAIL

SCALE: 1½" = 1'-0"

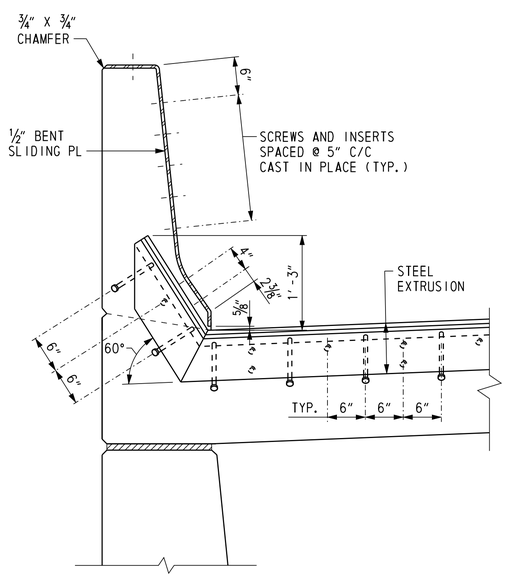

SECTION A-A

SCALE: 1" = 1'-0"

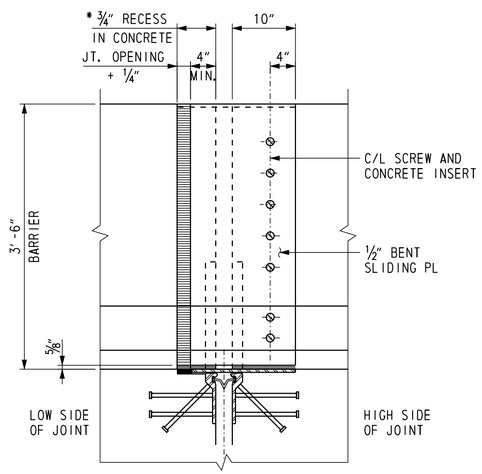

SECTION C-C

SCALE: 1" = 1'-0"

* FORM CONCRETE RECESS AREA IN BARRIER AND GRIND TO PROVIDE SMOOTH SURFACE. APPLY ONE COAT OF ASPHALT CEMENT PAINT TO ALLOW BENT SLIDING PLATE TO MOVE FREELY WITHOUT FRICTION.

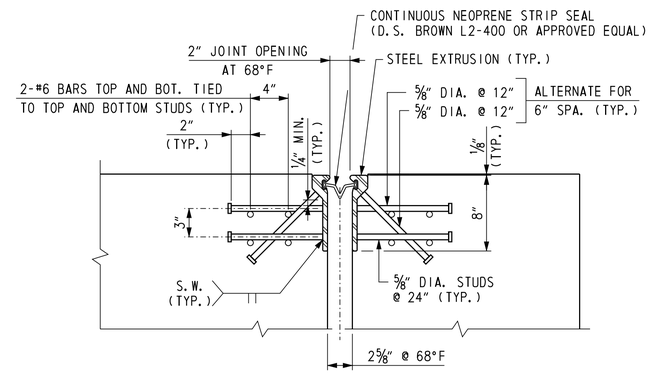

SECTION B-B

SCALE: 1½" = 1'-0"

NOTES:

1. STRUCTURAL STEEL FOR DECK JOINTS SHALL CONFORM TO AASHTO M270, GRADE 36.
2. STEEL EXTRUSIONS FOR DECK JOINTS SHALL CONFORM TO AASHTO M270, GRADE 36.
3. THE NEOPRENE STRIP SEAL SHALL BE PROVIDED CONTINUOUS THROUGHOUT THE LIMITS OF THE DECK. SPLICING OF THE NEOPRENE STRIP SEAL IS NOT PERMITTED.
4. USE FLATHEAD STAINLESS STEEL ASTM F 738M OR F 593 (TYPE 304) FOR COUNTERSUNK SCREWS WITH INSERTS. ALL CONCRETE INSERTS AND M 20 COUNTERSUNK MACHINE SCREWS ARE ¾" DIAMETER UNLESS OTHERWISE NOTED.
5. CONSTRUCT EXPANSION JOINT TO MATCH ROADWAY GRADE AND CROSS SLOPE.
6. GRIND ALL STEEL EDGES EXPOSED TO TRAFFIC OR PEDESTRIANS TO 3/16" MIN. RADIUS.
7. COST FOR MATERIALS, FABRICATION AND INSTALLATION OF STRIP SEAL EXPANSION JOINTS, 3" MOVEMENT CLASSIFICATION, WITH STEEL ELEMENTS INCLUDING STUDS, SLIDING PLATES AND STEEL EXTRUSIONS, SHALL BE PAID FOR UNDER ITEM 605511.

JOINT OPENING (INCH)

LOCATION	TEMPERATURE (°F)											MOVEMENT CLASSIFICATION
	0	10	20	30	40	50	60	68	80	90	100	
ABUTMENT 1 SB ROADWAY	2	2	2	2	2	2	2	2	2	2	2	3"
ABUTMENT 2 SB ROADWAY	2⅞	2¾	2⅝	2½	2⅜	2¼	2⅛	2	1⅞	1¾	1⅝	3"
ABUTMENT 1 NB ROADWAY	2 11/16	2⅝	2½	2⅜	2 5/16	2 3/16	2⅛	2	1⅞	1 13/16	1 11/16	3"
ABUTMENT 2 NB ROADWAY	2 9/16	2½	2 7/16	2 5/16	2¼	2 3/16	2 1/16	2	1 15/16	1 13/16	1¾	3"

CROSS REFERENCE NOTES:

1. FOR BRIDGE PLAN AND ELEVATION, SEE DWG. 1-477 PE-1 & 1-477 PE-2.
2. FOR TYPICAL SECTION, SEE DWG. 1-477 TS-1.
3. FOR APPROACH SLAB PLANS, SEE DWG. 1-477 AS-1 & 1-477 AS-2.

U:\Projects\AA\21387385\CAD\Bridge\BR2-5\ex01_BR2-5_US301.dgn
11/8/2012
Steve_Lambert

DELAWARE DEPARTMENT OF TRANSPORTATION

ADDENDUMS / REVISIONS

US 301
LEVELS ROAD
TO SUMMIT BRIDGE ROAD

CONTRACT	BRIDGE NO.	1-477N&S
T200511303	DESIGNED BY: R. F. KIRCHNER	
COUNTY		
NEW CASTLE	CHECKED BY: W. A. O'CONNOR	

US 301 MAINLINE OVER TRIBUTARY TO SANDY BRANCH

EXPANSION JOINT DETAILS

1-477 EX-1
SHEET NO.
510
TOTAL SHTS.
1256

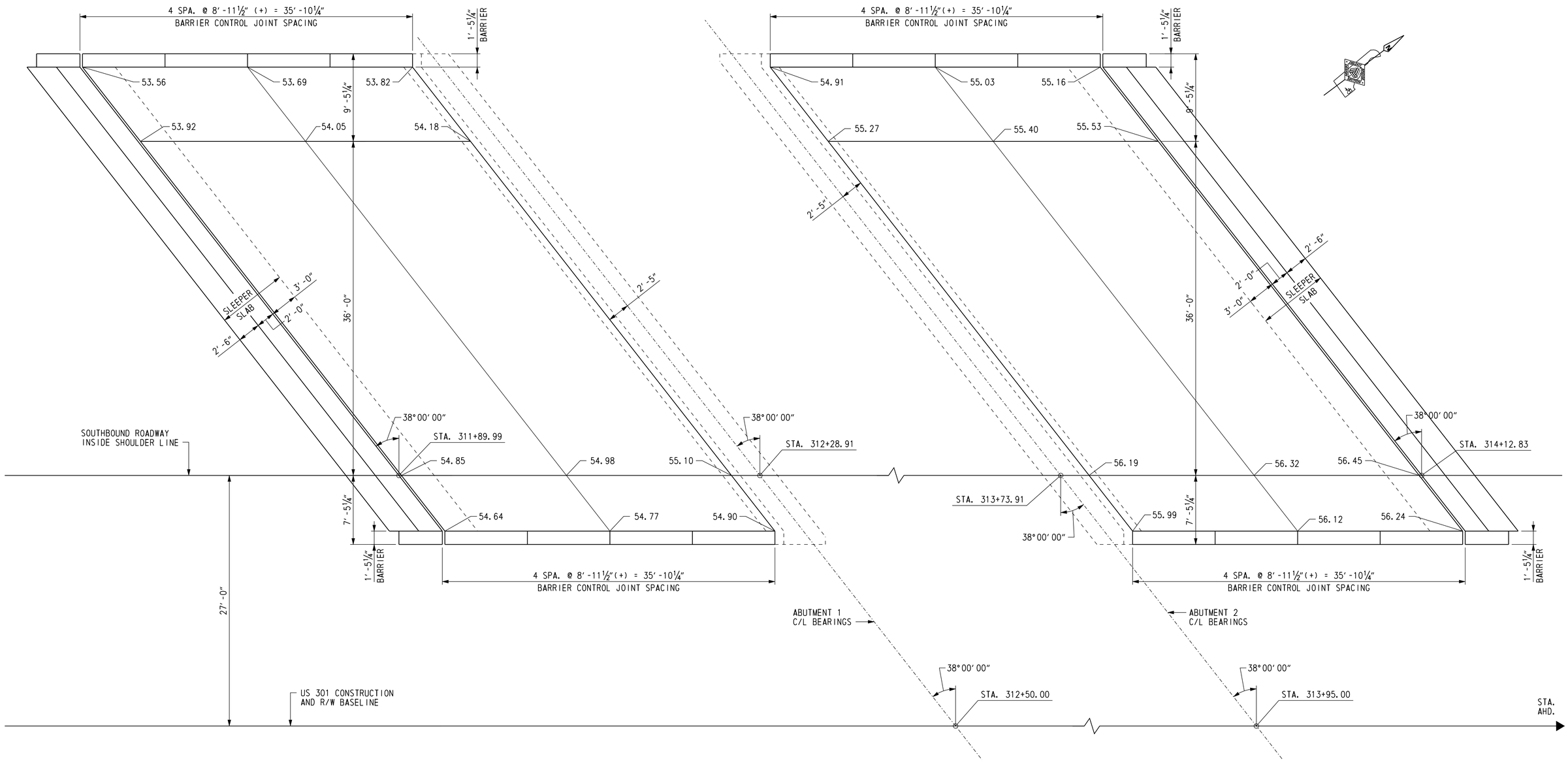

PLAN - APPROACH SLABS AT SOUTHBOUND ROADWAY ABUTMENTS

SCALE: 3/16" = 1'-0"

CROSS REFERENCE NOTES:

1. FOR BRIDGE PLAN AND ELEVATION, SEE DWG. 1-477 PE-1.
2. FOR ABUTMENT 1 PLAN AND ELEVATION, SEE DWG. 1-477 AB-3.
3. FOR ABUTMENT 2 PLAN AND ELEVATION, SEE DWG. 1-477 AB-4.
4. FOR APPROACH SLAB DETAILS, SEE DWG. 1-477 AS-3.
5. FOR APPROACH SLAB REINFORCING, SEE DWG. 1-477 AS-4 AND 1-477 AS-5.

DELAWARE DEPARTMENT OF TRANSPORTATION	ADDENDUMS / REVISIONS		US 301 LEVELS ROAD TO SUMMIT BRIDGE ROAD	CONTRACT T200511303	BRIDGE NO. 1-477N&S	US 301 MAINLINE OVER TRIBUTARY TO SANDY BRANCH SOUTHBOUND ROADWAY APPROACH SLAB PLANS	1-477 AS-1
				COUNTY NEW CASTLE	DESIGNED BY: R. F. KIRCHNER		SHEET NO. 511
					CHECKED BY: G. P. MISTRY		TOTAL SHTS. 1256

Steve_Lambert 11/9/2012 U:\Projects\AA\21367385\CAD\Bridge\BR2-5\as01_BR2-5_US301.dgn

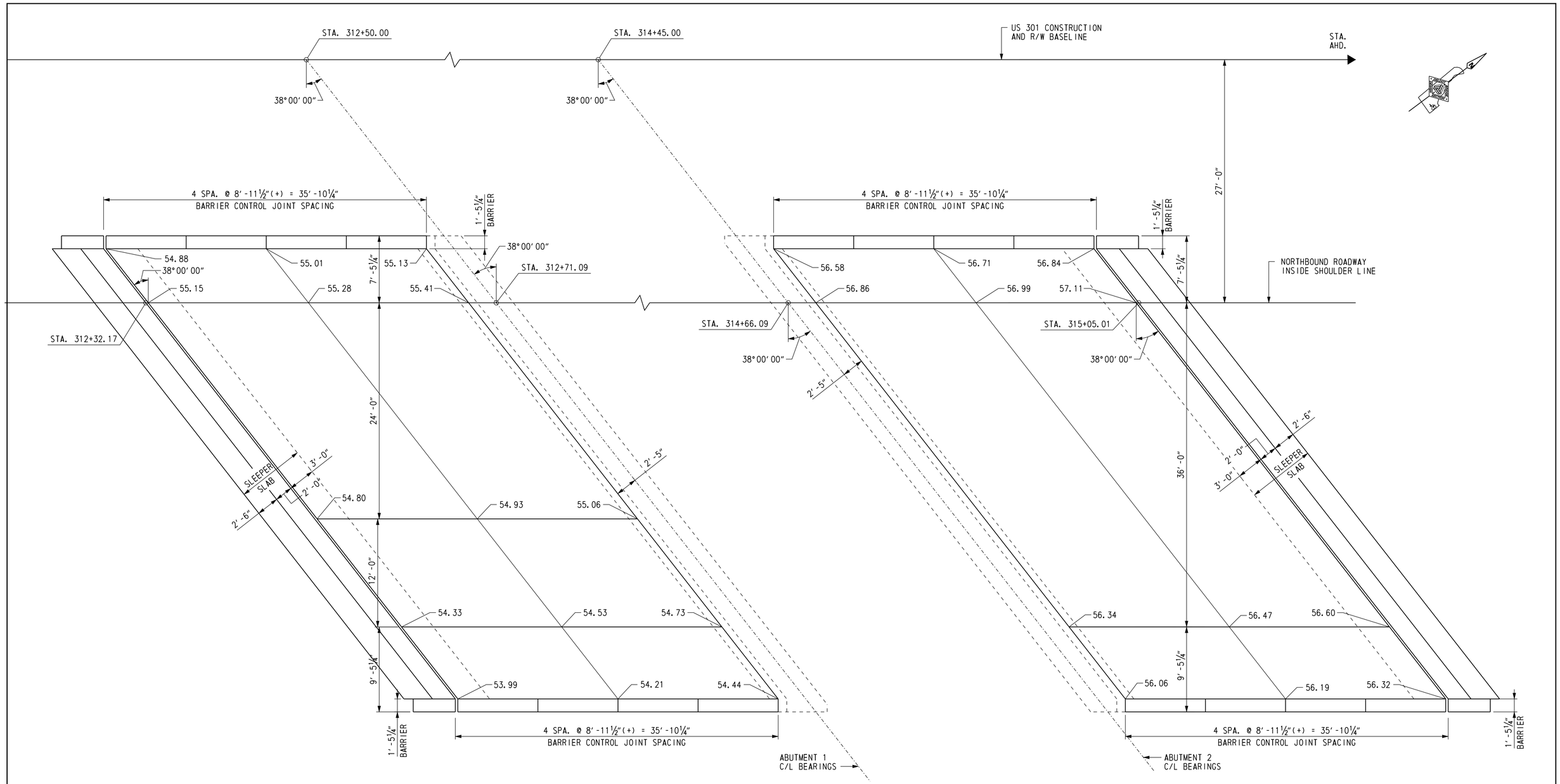

PLAN - APPROACH SLABS AT NORTHBOUND ROADWAY ABUTMENTS

SCALE: 3/16″ = 1′-0″

CROSS REFERENCE NOTES:

1. FOR BRIDGE PLAN AND ELEVATION, SEE DWG. 1-477 PE-2.
2. FOR ABUTMENT 1 PLAN AND ELEVATION, SEE DWG. 1-477 AB-9.
3. FOR ABUTMENT 2 PLAN AND ELEVATION, SEE DWG. 1-477 AB-10.
4. FOR APPROACH SLAB DETAILS, SEE DWG. 1-477 AS-3.
5. FOR APPROACH SLAB REINFORCING, SEE DWG. 1-477 AS-7 AND 1-477 AS-8.

DELAWARE DEPARTMENT OF TRANSPORTATION	ADDENDUMS / REVISIONS	US 301 LEVELS ROAD TO SUMMIT BRIDGE ROAD	CONTRACT T200511303	BRIDGE NO. 1-477N&S	US 301 MAINLINE OVER TRIBUTARY TO SANDY BRANCH NORTHBOUND ROADWAY APPROACH SLAB PLANS	1-477 AS-2	
			COUNTY NEW CASTLE	DESIGNED BY: R. F. KIRCHNER		SHEET NO. 512	
				CHECKED BY: G. P. MISTRY		TOTAL SHTS. 1256	

U:\Projects\AA\21387385\CAD\Bridge\BR2-5\as02_BR2-5_US301.dgn
11/8/2012
Steve_Lambert

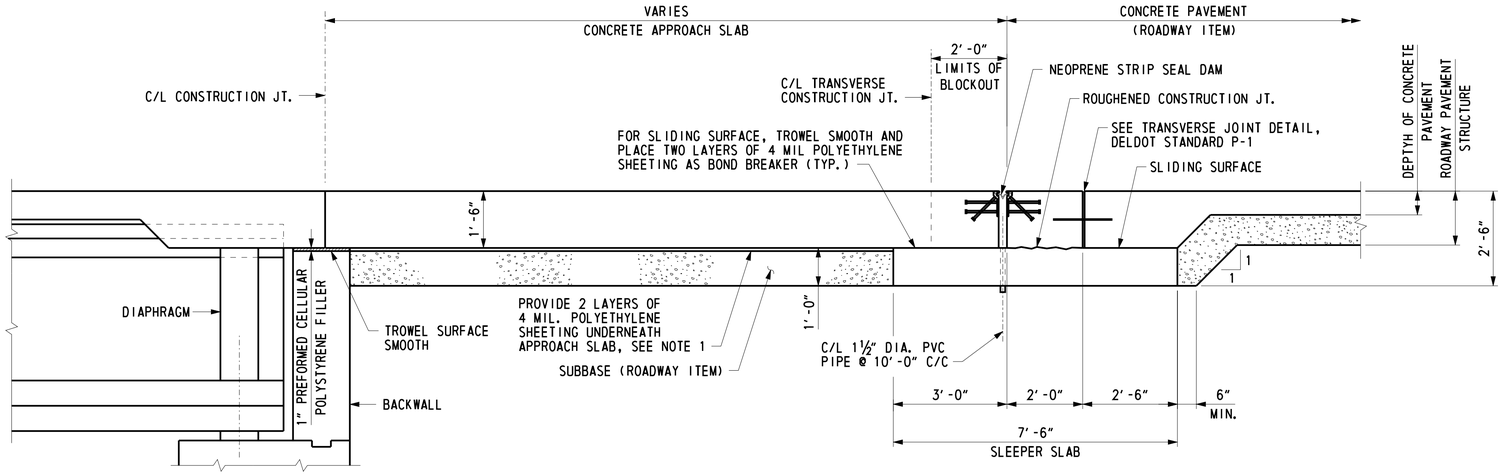

BRIDGE APPROACH SLAB - LONGITUDINAL SECTION

SCALE: ½" = 1'-0"

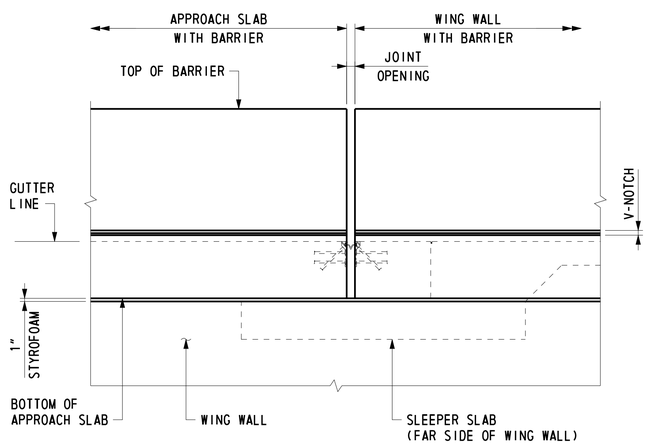

WING WALL ELEVATION AT SLEEPER SLAB

SCALE: ½" = 1'-0"

NOTES:

1. PAYMENT FOR POLYETHYLENE SHEETING SHALL BE INCIDENTAL TO ITEM 602014 - PORTLAND CEMENT CONCRETE MASONRY. APPROACH SLAB, CLASS D.
2. FOR ADDITIONAL ROADWAY PAVEMENT JOINT DETAILS, SEE DELDOT STANDARD P-1. PAYMENT FOR ROADWAY JOINTS SHALL BE INCIDENTAL TO ROADWAY PAVEMENT ITEM.

CROSS REFERENCE NOTES:

1. FOR BRIDGE PLAN AND ELEVATION, SEE DWG. 1-477 PE-1 & 1-477 PE-2.
2. FOR APPROACH SLAB PLANS, SEE DWG. 1-477 AS-1 & 1-477 AS-2.
3. FOR TYPICAL ABUTMENT AND WINGWALL SECTIONS, SEE DWG. 1-477 AB-6 & 1-477 AB-12.
4. FOR APPROACH SLAB REINFORCING, SEE DWG. 1-477 AS-4, 1-477 AS-5, 1-477 AS-7 & 1-477 AS-8.

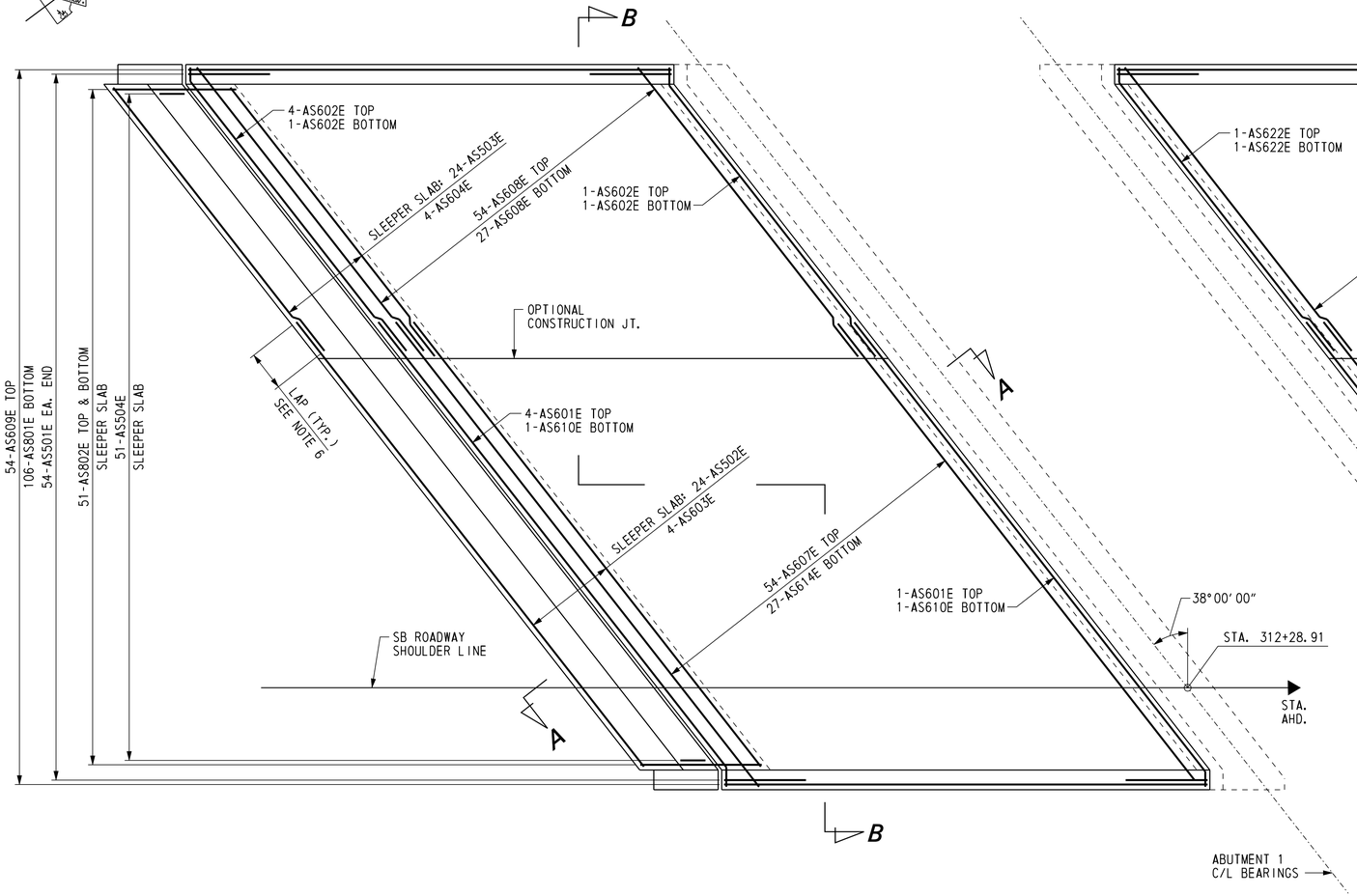

PLAN - APPROACH SLAB AT ABUTMENT 1 SOUTHBOUND ROADWAY

SCALE: 3/16" = 1'-0"

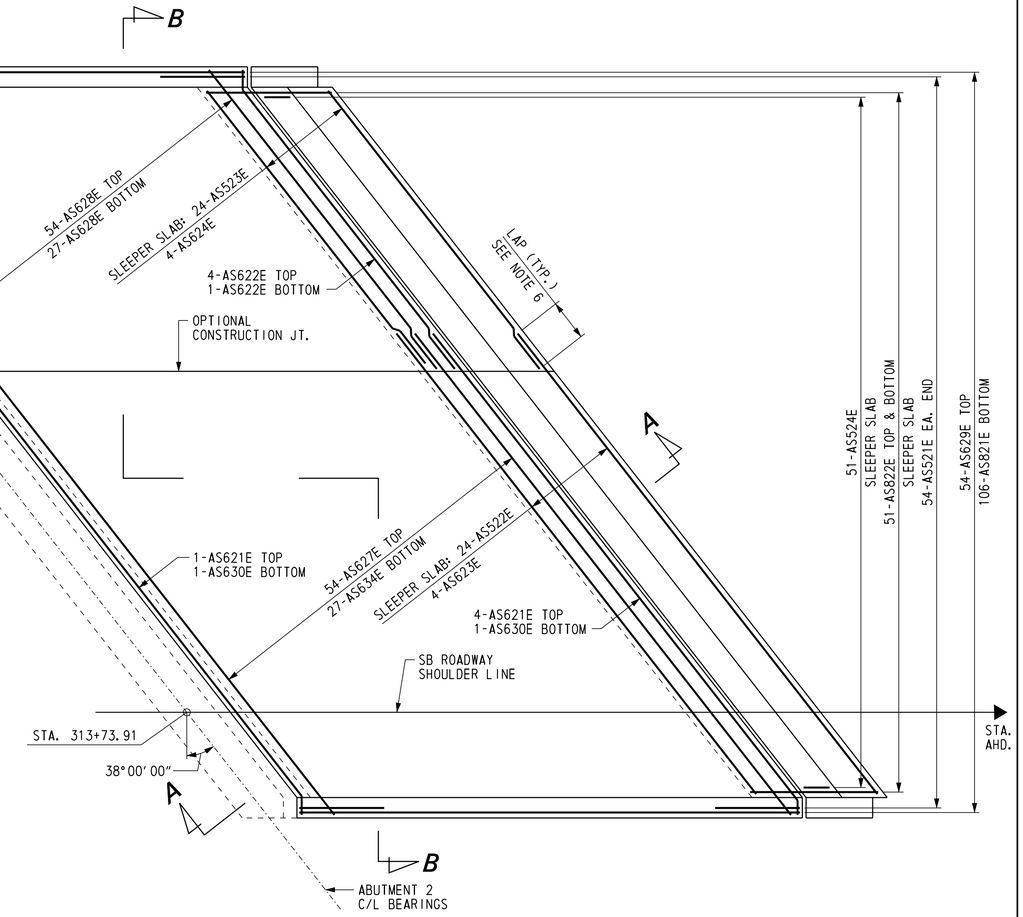

PLAN - APPROACH SLAB AT ABUTMENT 2 SOUTHBOUND ROADWAY

SCALE: 3/16" = 1'-0"

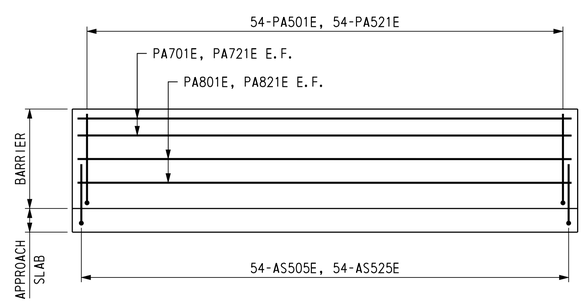

ELEVATION - DECK AND BARRIER REINFORCEMENT

NOT TO SCALE

CROSS REFERENCE NOTES:

1. FOR BRIDGE PLAN AND ELEVATION, SEE DWG. 1-477 PE-1.
2. FOR ABUTMENT 1 PLAN AND ELEVATION, SEE DWG. 1-477 AB-3.
3. FOR ABUTMENT 2 PLAN AND ELEVATION, SEE DWG. 1-477 AB-4.
4. FOR APPROACH SLAB PLANS, SEE DWG. 1-477 AS-1.
5. FOR SECTIONS A-A AND B-B, SEE DWG. 1-477 AS-5.
6. FOR BAR LAP LENGTHS, SEE DWG. 1-477 AS-5.
7. FOR REINFORCING BAR LIST, SEE DWG. 1-477 AS-6.
8. FOR SLAB DOWELS, SEE DWG. 1-477 DK-2.

DELAWARE DEPARTMENT OF TRANSPORTATION	ADDENDUMS / REVISIONS	US 301 LEVELS ROAD TO SUMMIT BRIDGE ROAD	CONTRACT T200511303	BRIDGE NO. 1-477N&S	US 301 MAINLINE OVER TRIBUTARY TO SANDY BRANCH APPROACH SLABS - SB ROADWAY REINFORCEMENT 1	1-477 AS-4
			COUNTY NEW CASTLE	DESIGNED BY: R. F. KIRCHNER		SHEET NO. 514
				CHECKED BY: G. P. MISTRY		TOTAL SHTS. 1256

U:\Projects\AA\21387385\CAD\Bridge\BR2-5\as04_BR2-5_US301.dgn
11/8/2012
Steve_Lambert

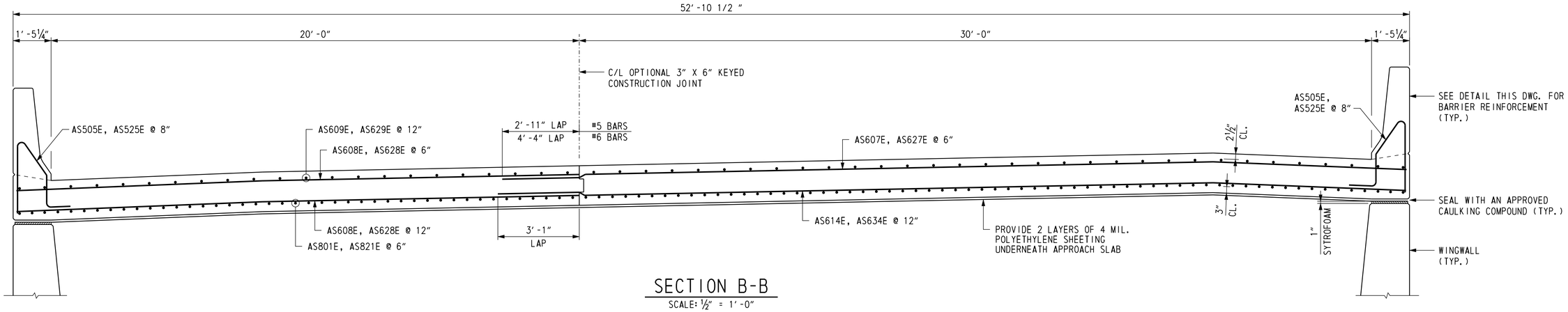

SECTION B-B

SCALE: ½" = 1'-0"

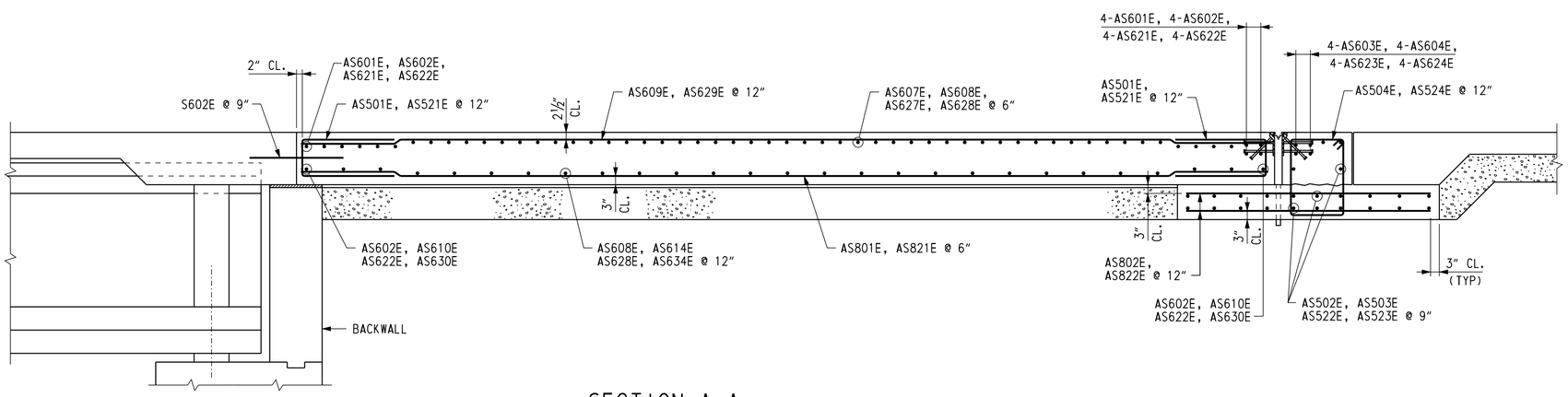

SECTION A-A

SCALE: ½" = 1'-0"

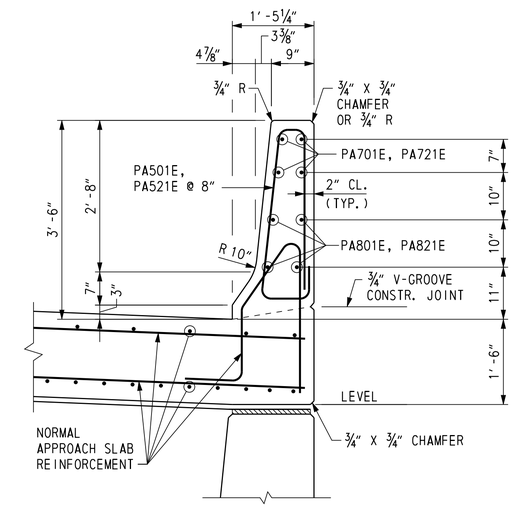

TYPICAL BARRIER REINFORCEMENT SECTION

SCALE: ¾" = 1'-0"

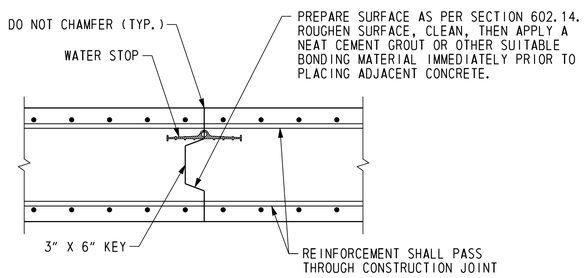

OPTIONAL CONSTRUCTION JOINT DETAIL

NOT TO SCALE

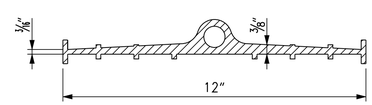

PVC WATER STOP DETAIL

NOT TO SCALE

CROSS REFERENCE NOTES:

1. FOR BRIDGE PLAN AND ELEVATION, SEE DWG. 1-477 PE-1.
2. FOR APPROACH SLAB PLAN AT ABUTMENTS, SEE DWG. 1-477 AS-1.
3. FOR APPROACH SLAB DETAILS, SEE DWG. 1-477 AS-3.
4. FOR APPROACH SLAB REINFORCEMENT PLAN, SEE DWG. 1-477 AS-4.
5. FOR REINFORCING BAR LIST, SEE DWG. 1-477 AS-6.
6. FOR LOCATION OF CONDUITS IN BARRIER, SEE DWG. 1-477 TS-1.

DELAWARE DEPARTMENT OF TRANSPORTATION	ADDENDUMS / REVISIONS	US 301 LEVELS ROAD TO SUMMIT BRIDGE ROAD	CONTRACT T200511303	BRIDGE NO. 1-477N&S	US 301 MAINLINE OVER TRIBUTARY TO SANDY BRANCH APPROACH SLABS - SB ROADWAY REINFORCEMENT 2	1-477 AS-5	
			COUNTY NEW CASTLE	DESIGNED BY: R. F. KIRCHNER		SHEET NO. 515	
				CHECKED BY: G. P. MISTRY		TOTAL SHTS. 1256	

U:\Projects\AA\21387385\CAD\Bridge\BR2-5\as05_BR2-5_US301.dgn
11/8/2012
Steve_Lambert

REINFORCING BAR LIST

APPROACH AND SLEEPER SLAB AT ABUTMENT 1 SOUTHBOUND ROADWAY

MARK	LENGTH	NO. BARS	TYPE	A	B	C	D	E	F	G	H	J	K	R	REMARKS
AS501E	6′-2½″	108	17		2′-7″	1′-0½″	2′-7″								
AS502E	41′-0″	24	STR.												LAP = 2′-11″
AS503E	25′-1″	24	STR.												LAP = 2′-11″
AS504E	8′-11″	51	T1	0′-6″	1′-11″	2′-0½″	1′-11″	2′-0½″		0′-6″					
AS505E	6′-2½″	108	43	1′-1″	0′-8⅜″	0′-10″	2′-1⅞″	0′-1″		0′-7⅝″	1′-2″	0′-3″	0′-10″		
AS601E	43′-10″	5	4		42′-7″	1′-3″					0′-9″		1′-0″		LAP = 4′-4″
AS602E	26′-5″	7	4		25′-2″	1′-3″					0′-9″		1′-0″		LAP = 4′-4″
AS603E	42′-5″	4	STR.												LAP = 4′-4″
AS604E	25′-0″	4	STR.												LAP = 4′-4″
AS607E	44′-3″	54	STR.												LAP = 4′-4″
AS608E	26′-10″	81	STR.												LAP = 4′-4″
AS609E	35′-1″	54	STR.												
AS610E	42′-7″	2	4		41′-4″	1′-3″					0′-9″		1′-0″		LAP = 3′-1″
AS614E	43′-0″	27	STR.												LAP = 3′-1″
AS801E	35′-1″	106	STR.												
AS802E	8′-10″	102	STR.												
PA501E	7′-6¼″	108	28	2′-9¼″	0′-2¹⁵⁄₁₆″	0′-1⅝″	0′-2¾″	2′-9½″		0′-3⅛″	0′-5⅛″				
PA701E	35′-3″	8	STR.												
PA801E	35′-3″	8	STR.												

APPROACH AND SLEEPER SLAB AT ABUTMENT 2 SOUTHBOUND ROADWAY

MARK	LENGTH	NO. BARS	TYPE	A	B	C	D	E	F	G	H	J	K	R	REMARKS
AS521E	6′-2½″	108	17		2′-7″	1′-0½″	2′-7″								
AS522E	41′-0″	24	STR.												LAP = 2′-11″
AS523E	25′-1″	24	STR.												LAP = 2′-11″
AS524E	8′-11″	51	T1	0′-6″	1′-11″	2′-0½″	1′-11″	2′-0½″		0′-6″					
AS525E	6′-2½″	108	43	1′-1″	0′-8⅜″	0′-10″	2′-1⅞″	0′-1″		0′-7⅝″	1′-2″	0′-3″	0′-10″		
AS621E	43′-10″	5	4		42′-7″	1′-3″					0′-9″		1′-0″		LAP = 4′-4″
AS622E	26′-5″	7	4		25′-2″	1′-3″					0′-9″		1′-0″		LAP = 4′-4″
AS623E	42′-5″	4	STR.												LAP = 4′-4″
AS624E	25′-0″	4	STR.												LAP = 4′-4″
AS627E	44′-3″	54	STR.												LAP = 4′-4″
AS628E	26′-10″	81	STR.												LAP = 4′-4″
AS629E	35′-1″	54	STR.												
AS630E	42′-7″	2	4		41′-4″	1′-3″					0′-9″		1′-0″		LAP = 3′-1″
AS634E	43′-0″	27	STR.												LAP = 3′-1″
AS821E	35′-1″	106	STR.												
AS822E	8′-10″	102	STR.												
PA521E	7′-6¼″	108	28	2′-9¼″	0′-2¹⁵⁄₁₆″	0′-1⅝″	0′-2¾″	2′-9½″		0′-3⅛″	0′-5⅛″				
PA721E	35′-3″	8	STR.												
PA821E	35′-3″	8	STR.												

BENDING DIAGRAMS

ALL DIMENSIONS ARE FROM OUT TO OUT.

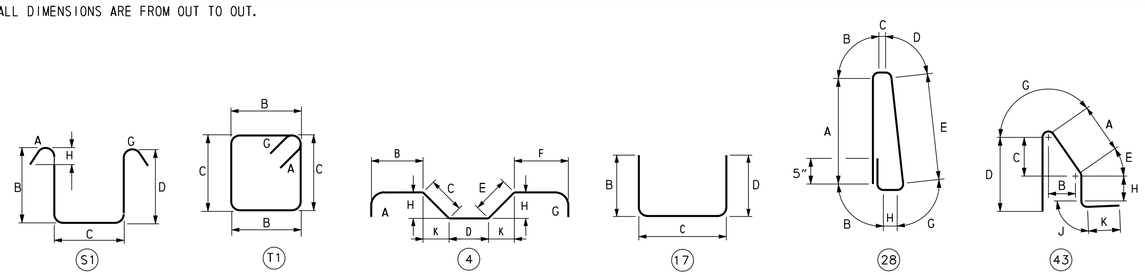

DELAWARE DEPARTMENT OF TRANSPORTATION

ADDENDUMS / REVISIONS

US 301 LEVELS ROAD TO SUMMIT BRIDGE ROAD

CONTRACT	BRIDGE NO.	1-477N&S
T200511303	DESIGNED BY: R. F. KIRCHNER	
COUNTY		
NEW CASTLE	CHECKED BY: G. P. MISTRY	

US 301 MAINLINE OVER TRIBUTARY TO SANDY BRANCH APPROACH SLABS - SB ROADWAY REINFORCING BAR LIST

1-477 AS-6	
SHEET NO.	516
TOTAL SHTS.	1256

U:\Projects\AA\21387385\CAD\Bridge\BR2-5\as06_BR2-5_US301.dgn
11/8/2012
Steve_Lambert

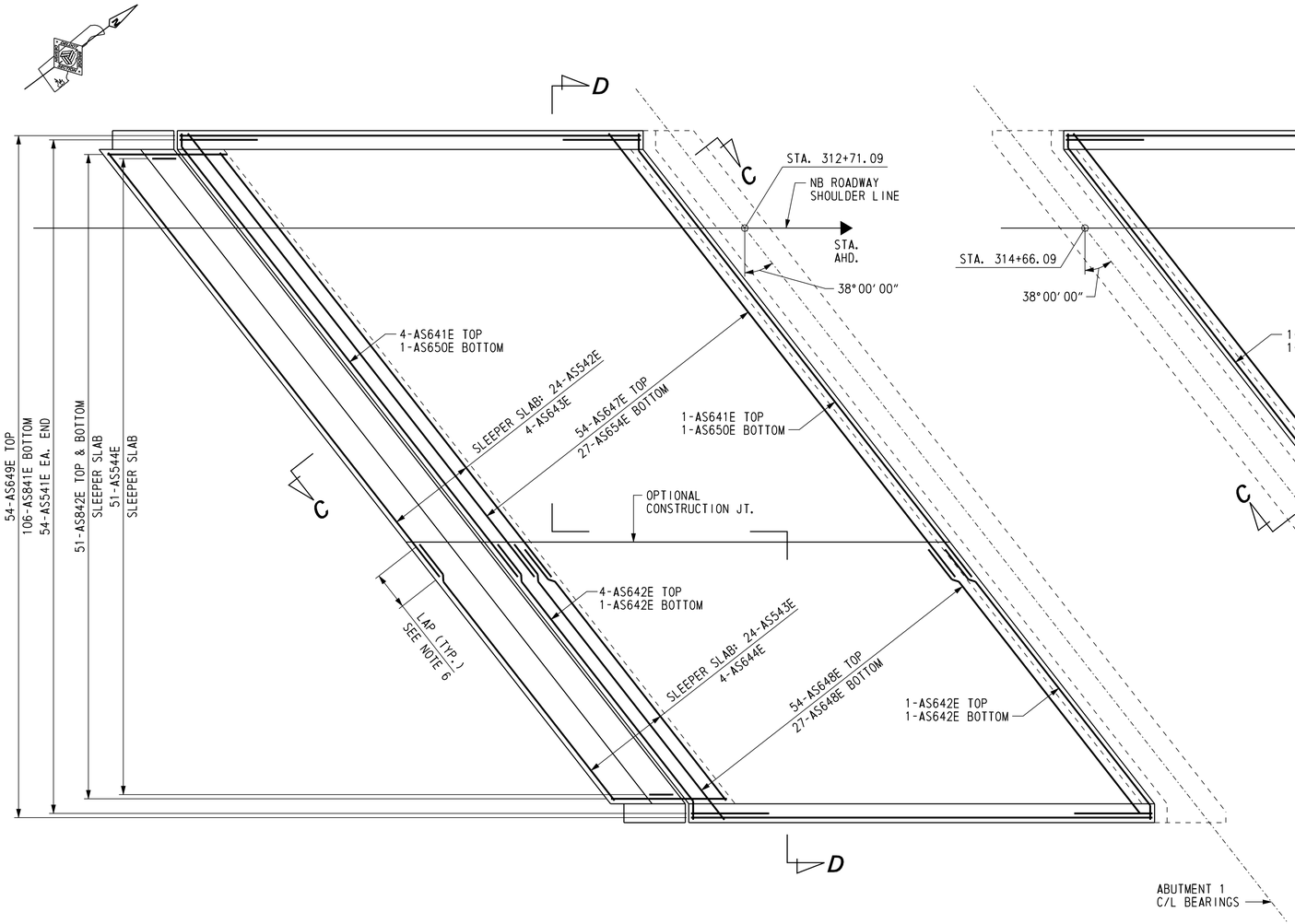

PLAN - APPROACH SLAB AT ABUTMENT 1 NORTHBOUND ROADWAY

SCALE: 3/16" = 1'-0"

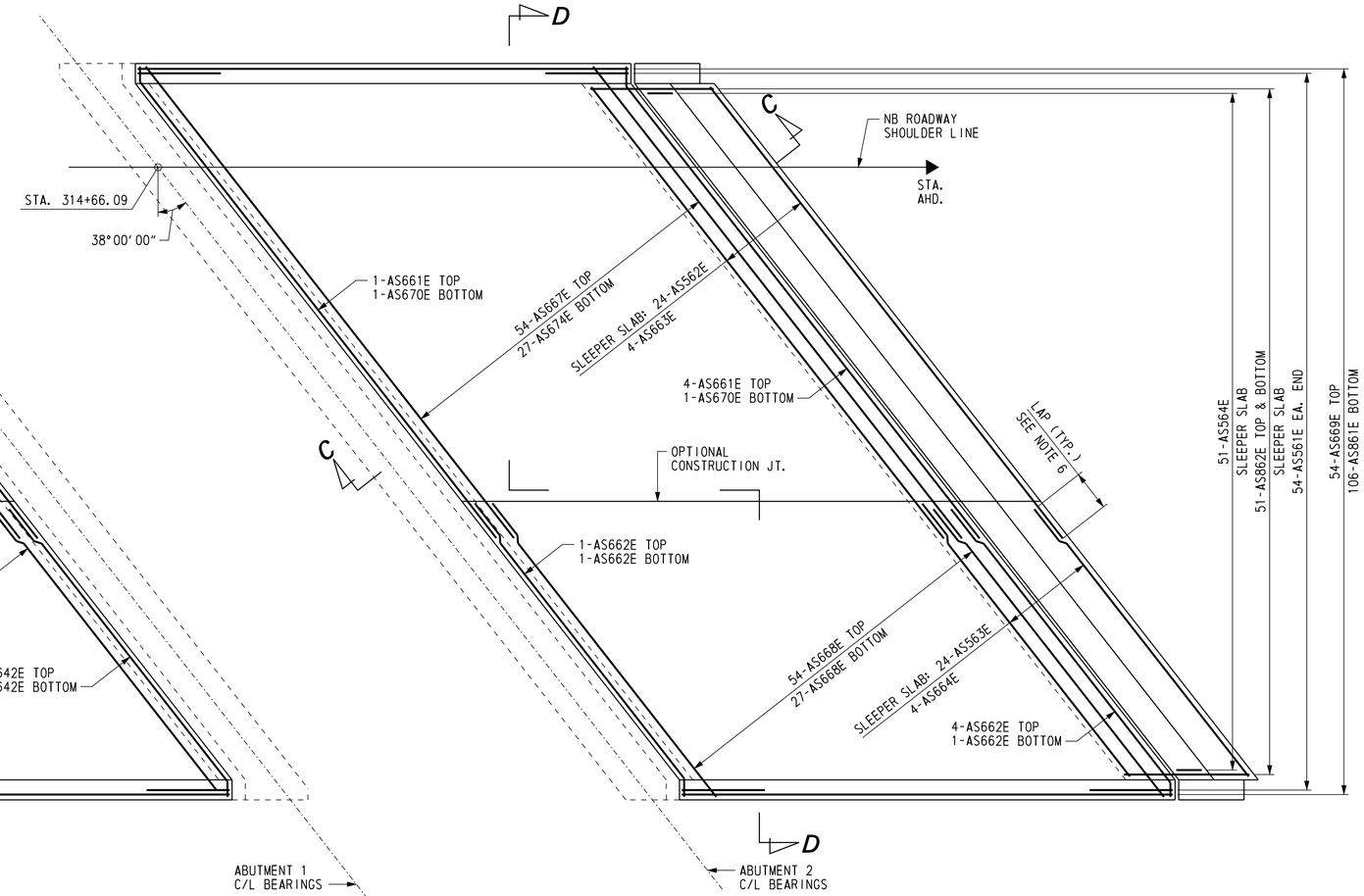

PLAN - APPROACH SLAB AT ABUTMENT 2 NORTHBOUND ROADWAY

SCALE: 3/16" = 1'-0"

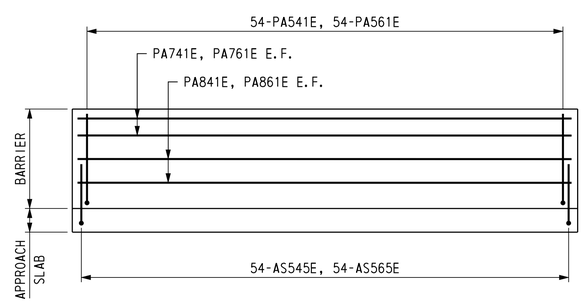

ELEVATION - DECK AND BARRIER REINFORCEMENT

NOT TO SCALE

CROSS REFERENCE NOTES:

1. FOR BRIDGE PLAN AND ELEVATION, SEE DWG. 1-477 PE-2.
2. FOR ABUTMENT 1 PLAN AND ELEVATION, SEE DWG. 1-477 AB-9.
3. FOR ABUTMENT 2 PLAN AND ELEVATION, SEE DWG. 1-477 AB-10.
4. FOR APPROACH SLAB PLANS, SEE DWG. 1-477 AS-2.
5. FOR SECTIONS C-C AND D-D, SEE DWG. 1-477 AS-8.
6. FOR BAR LAP LENGTHS, SEE DWG. 1-477 AS-8.
7. FOR REINFORCING BAR LIST, SEE DWG. 1-477 AS-9.
8. FOR SLAB DOWELS, SEE DWG. 1-477 DK-4.

DELAWARE DEPARTMENT OF TRANSPORTATION	ADDENDUMS / REVISIONS	US 301 LEVELS ROAD TO SUMMIT BRIDGE ROAD	CONTRACT T200511303	BRIDGE NO. 1-477N&S	US 301 MAINLINE OVER TRIBUTARY TO SANDY BRANCH APPROACH SLABS - NB ROADWAY REINFORCEMENT 1	1-477 AS-7	SHEET NO.
			COUNTY NEW CASTLE	DESIGNED BY: R. F. KIRCHNER		517	TOTAL SHTS.
				CHECKED BY: G. P. MISTRY		1256	

U:\Projects\AA\21387385\CAD\Bridge\BR2-5\as07_BR2-5_US301.dgn
11/8/2012
Steve_Lambert

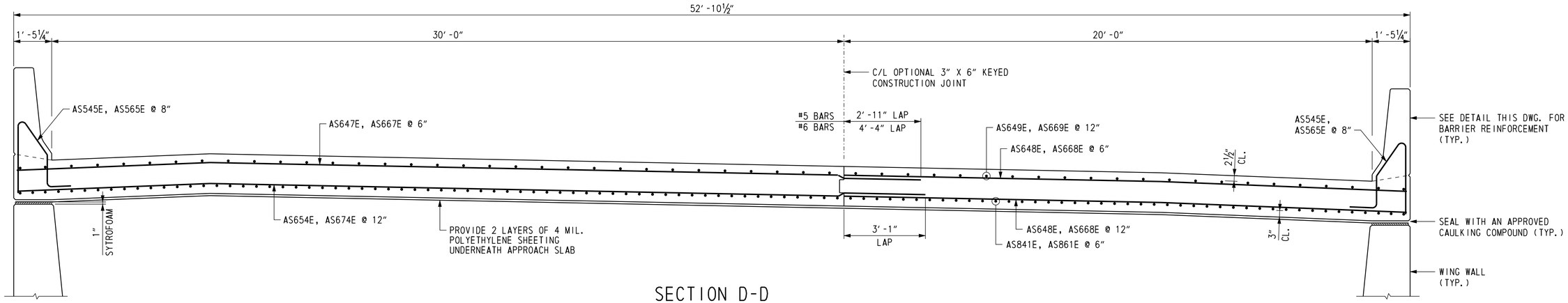

SECTION D-D

SCALE: ½" = 1'-0"

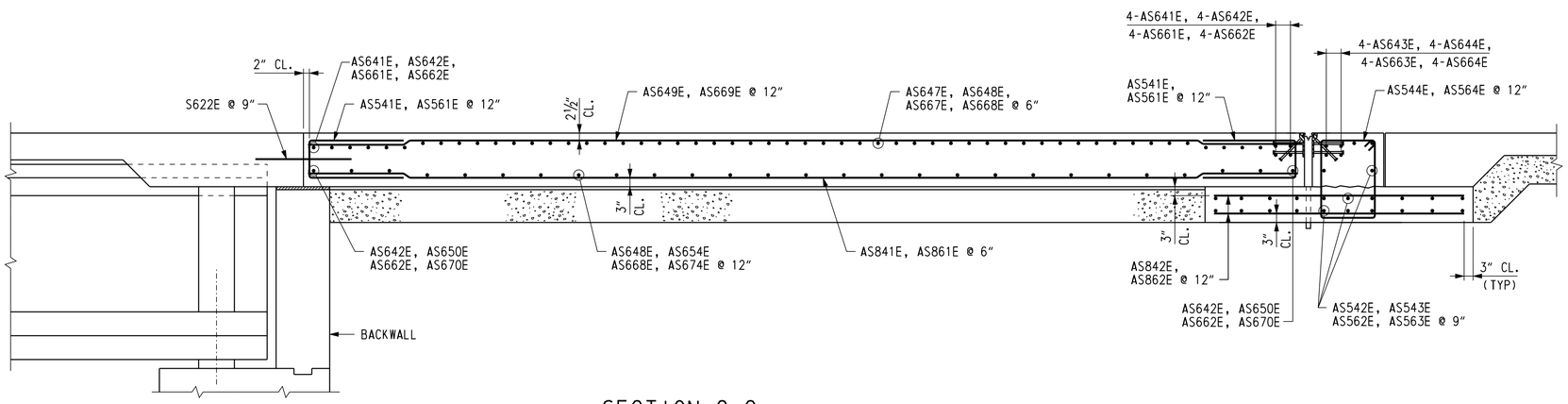

SECTION C-C

SCALE: ½" = 1'-0"

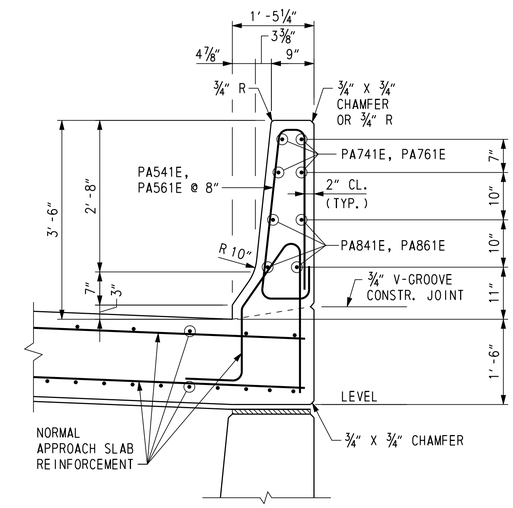

TYPICAL BARRIER REINFORCEMENT SECTION

SCALE: ¾" = 1'-0"

CROSS REFERENCE NOTES:

1. FOR BRIDGE PLAN AND ELEVATION, SEE DWG. 1-477 PE-2.
2. FOR APPROACH SLAB PLAN AT ABUTMENTS, SEE DWG. 1-477 AS-2.
3. FOR APPROACH SLAB DETAILS, SEE DWG. 1-477 AS-3.
4. FOR OPTIONAL CONSTRUCTION JOINT DETAIL, SEE DWG. 1-477 AS-5
5. FOR APPROACH SLAB REINFORCEMENT PLAN, SEE DWG. 1-477 AS-7.
6. FOR REINFORCING BAR LIST, SEE DWG. 1-477 AS-9.
7. FOR LOCATION OF CONDUITS IN BARRIER, SEE DWG. 1-477 TS-1.

REINFORCING BAR LIST

APPROACH AND SLEEPER SLAB AT ABUTMENT 1 NORTHBOUND ROADWAY

MARK	LENGTH	NO. BARS	TYPE	A	B	C	D	E	F	G	H	J	K	R	REMARKS
AS541E	6′-2½″	108	17		2′-7″	1′-0½″	2′-7″								
AS542E	41′-0″	24	STR.												LAP = 2′-11″
AS543E	25′-1″	24	STR.												LAP = 2′-11″
AS544E	8′-11″	51	T1	0′-6″	1′-11″	2′-0½″	1′-11″	2′-0½″		0′-6″					
AS545E	6′-2½″	108	43	1′-1″	0′-8⅜″	0′-10″	2′-1⅞″	0′-1″		0′-7⅝″	1′-2″	0′-3″	0′-10″		
AS641E	43′-10″	5	4		42′-7″	1′-3″					0′-9″		1′-0″		LAP = 4′-4″
AS642E	26′-5″	7	4		25′-2″	1′-3″					0′-9″		1′-0″		LAP = 4′-4″
AS643E	42′-5″	4	STR.												LAP = 4′-4″
AS644E	25′-0″	4	STR.												LAP = 4′-4″
AS647E	44′-3″	54	STR.												LAP = 4′-4″
AS648E	26′-10″	81	STR.												LAP = 4′-4″
AS649E	35′-1″	54	STR.												
AS650E	42′-7″	2	4		41′-4″	1′-3″					0′-9″		1′-0″		LAP = 3′-1″
AS654E	43′-0″	27	STR.												LAP = 3′-1″
AS841E	35′-1″	106	STR.												
AS842E	8′-10″	102	STR.												
PA541E	7′-6¼″	108	28	2′-9¼″	0′-2¹⁵⁄₁₆″	0′-1⅝″	0′-2¾″	2′-9½″		0′-3⅛″	0′-5⅛″				
PA741E	35′-3″	8	STR.												
PA841E	35′-3″	8	STR.												

APPROACH AND SLEEPER SLAB AT ABUTMENT 2 NORTHBOUND ROADWAY

MARK	LENGTH	NO. BARS	TYPE	A	B	C	D	E	F	G	H	J	K	R	REMARKS
AS561E	6′-2½″	108	17		2′-7″	1′-0½″	2′-7″								
AS562E	41′-0″	24	STR.												LAP = 2′-11″
AS563E	25′-1″	24	STR.												LAP = 2′-11″
AS564E	8′-11″	51	T1	0′-6″	1′-11″	2′-0½″	1′-11″	2′-0½″		0′-6″					
AS565E	6′-2½″	108	43	1′-1″	0′-8⅜″	0′-10″	2′-1⅞″	0′-1″		0′-7⅝″	1′-2″	0′-3″	0′-10″		
AS661E	43′-10″	5	4		42′-7″	1′-3″					0′-9″		1′-0″		LAP = 4′-4″
AS662E	26′-5″	7	4		25′-2″	1′-3″					0′-9″		1′-0″		LAP = 4′-4″
AS663E	42′-5″	4	STR.												LAP = 4′-4″
AS664E	25′-0″	4	STR.												LAP = 4′-4″
AS667E	44′-3″	54	STR.												LAP = 4′-4″
AS668E	26′-10″	81	STR.												LAP = 4′-4″
AS669E	35′-1″	54	STR.												
AS670E	42′-7″	2	4		41′-4″	1′-3″					0′-9″		1′-0″		LAP = 3′-1″
AS674E	43′-0″	27	STR.												LAP = 3′-1″
AS861E	35′-1″	106	STR.												
AS862E	8′-10″	102	STR.												
PA561E	7′-6¼″	108	28	2′-9¼″	0′-2¹⁵⁄₁₆″	0′-1⅝″	0′-2¾″	2′-9½″		0′-3⅛″	0′-5⅛″				
PA761E	35′-3″	8	STR.												
PA861E	35′-3″	8	STR.												

BENDING DIAGRAMS

ALL DIMENSIONS ARE FROM OUT TO OUT.

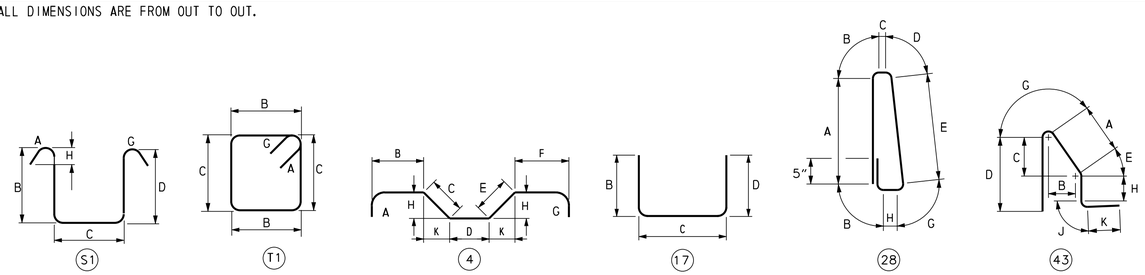

DELAWARE DEPARTMENT OF TRANSPORTATION

ADDENDUMS / REVISIONS

US 301 LEVELS ROAD TO SUMMIT BRIDGE ROAD

CONTRACT	BRIDGE NO.	1-477N&S
T200511303	DESIGNED BY: R. F. KIRCHNER	
COUNTY		
NEW CASTLE	CHECKED BY: G. P. MISTRY	

US 301 MAINLINE OVER TRIBUTARY TO SANDY BRANCH APPROACH SLABS - NB ROADWAY REINFORCING BAR LIST

1-477 AS-9	
SHEET NO.	519
TOTAL SHTS.	1256

U:\Projects\AA\21387385\CAD\Bridge\BR2-5\as09_BR2-5_US301.dgn
11/8/2012
Steve_Lambert

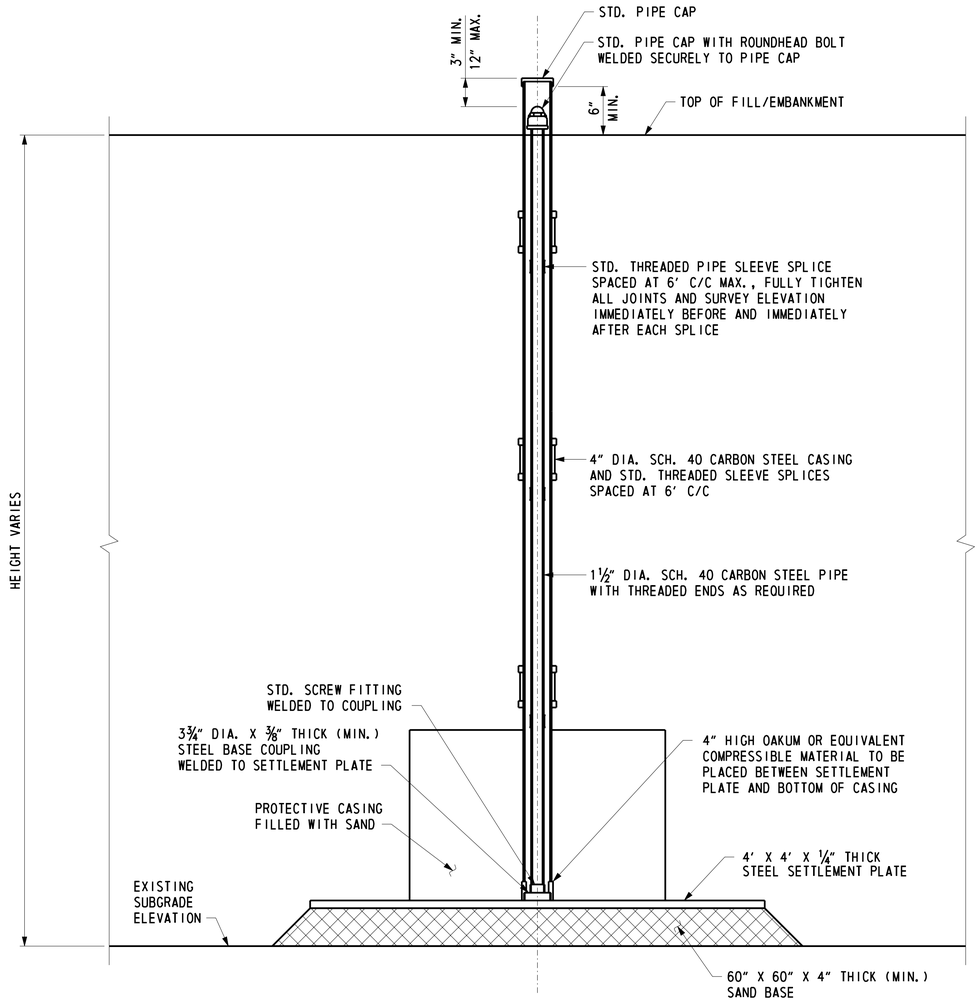

SETTLEMENT PLATFORM

NOT TO SCALE

SETTLEMENT PLATFORM	STATION	OFFSET	SETTLEMENT MONUMENT	STATION	OFFSET
SP-1-477-1	312+65.00	46.00' RT	SM-1-477-1	312+69.00	51.00' RT
SP-1-477-2	311+93.00	46.00' LT	SM-1-477-2	311+89.00	51.00' LT
SP-1-477-3	315+02.00	46.00' RT	SM-1-477-3	315+06.00	51.00' RT
SP-1-477-4	313+80.00	46.00' LT	SM-1-477-4	313+76.00	51.00' LT

SETTLEMENT NOTE

READINGS ON THE SETTLEMENT PLATFORMS SHALL BE MADE AFTER THE INITIAL INSTALLATION OF THE RISER AND CASING PIPES AND INSTALLATION RECORD SHEETS ARE APPROVED BY THE ENGINEER AND PRIOR TO FILL PLACEMENT. DURING FILL PLACEMENT, READINGS ON ALL SETTLEMENT PLATFORMS SHALL BE TAKEN AT A MINIMUM OF 3 CALENDAR DAY INTERVALS. AFTER COMPLETION OF THE FILL, INSTALL SETTLEMENT MONUMENTS AS INDICATED ON THE BRIDGE PLANS AND TAKE INITIAL READINGS. READINGS ON ALL SETTLEMENT MONITORING DEVICES SHALL THEN BE TAKEN AT A MINIMUM OF THREE (3) CALENDAR DAY INTERVALS. AFTER THE FILL HAS BEEN COMPLETED AND TWO (2) SUCCESSIVE READINGS OF EACH DEVICE HAVE BEEN RECORDED LESS THAN OR EQUAL TO 0.1", THE IMMEDIATE SETTLEMENT WILL BE DEEMED COMPLETE AND THE GEOTECHNICAL ENGINEER CAN RELEASE THE SUBSTRUCTURE FOR INSTALLATION OF PRODUCTION PILES SO LONG AS THE MINIMUM THIRTY (30) DAY QUARANTINE PERIOD HAS BEEN MET. AFTER COMPLETION OF THE MSE WALL PANEL PLACEMENT, THE CONTRACTOR SHALL ESTABLISH REFERENCE POINTS TO MONITOR SETTLEMENT ON TOP OF THE MSE WALL PANELS OR ON TOP OF THE MSE WALL LEVELING PAD AT POINTS WITHIN FIVE FEET OF ALL ENDS AND CORNERS AND AT THE CENTER OF BRIDGES AND THE CENTERLINE OF US 301. AFTER THE SUBSTRUCTURE HAS BEEN RELEASED, READINGS ON ALL SETTLEMENT MONITORING DEVICES AND REFERENCE POINTS SHALL CONTINUE TO BE TAKEN AT A MINIMUM OF 30-DAY INTERVALS FOR THE NEXT SIX (6) MONTHS OR AS DIRECTED BY THE ENGINEER.

NOTES:

1. THE BASE OF THE SETTLEMENT PLATFORM SHALL BE PLACED ON THE TOP OF EXISTING GROUND.
2. COST FOR MATERIALS, FABRICATION, INSTALLATION AND MONITORING SHALL BE PAID UNDER THE RESPECTIVE SPECIAL PROVISION ITEM (SETTLEMENT PLATFORM OR SETTLEMENT MONUMENT).

CROSS REFERENCE NOTE:

FOR LOCATION OF SETTLEMENT PLATFORMS AND MONUMENTS, SEE DWGS. 1-477 PE-1 AND 1-477 PE-2.

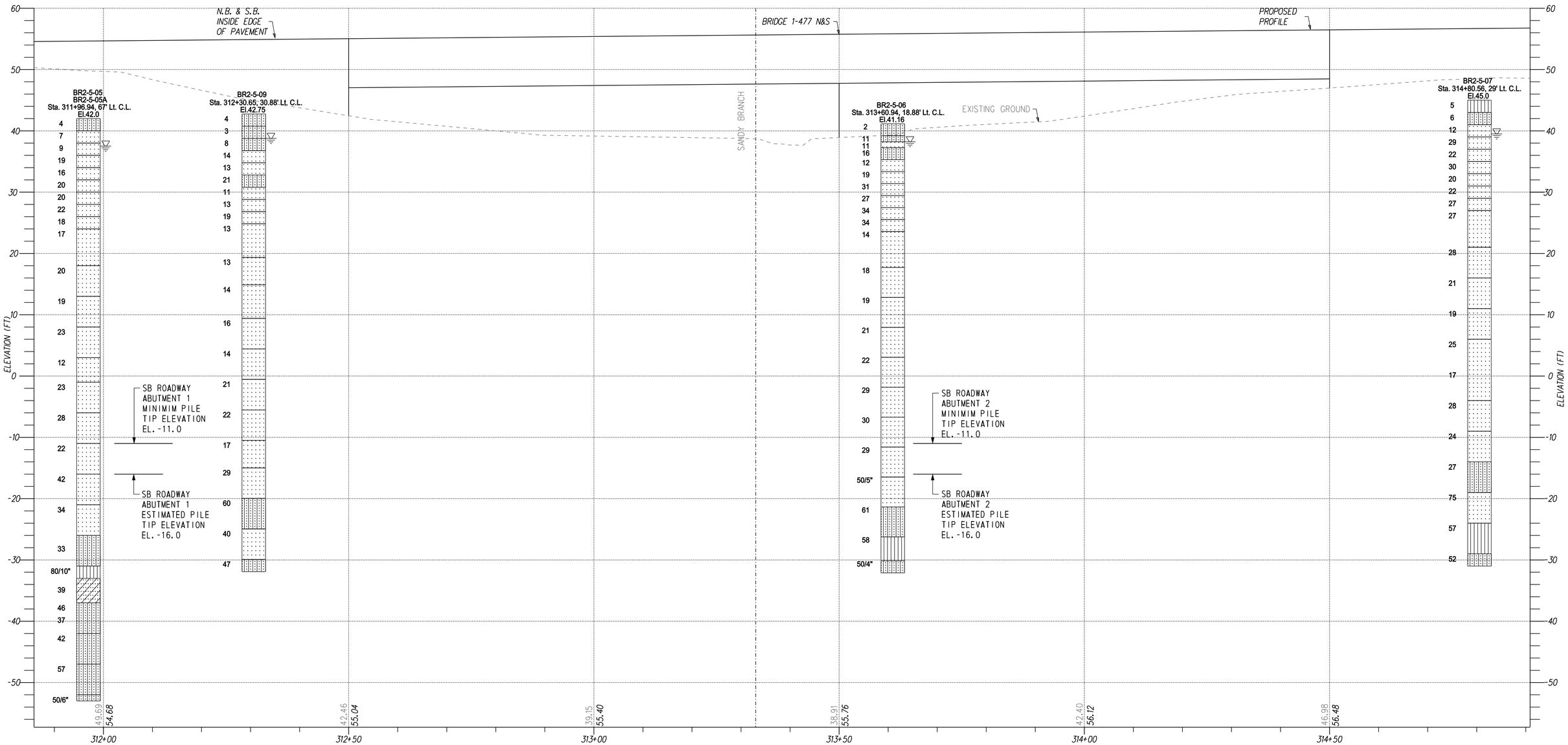

KEY TO SYMBOLS

SYMBOL DESCRIPTION

STRATA SYMBOLS

- SILT
- SAND
- SILTY SAND
- ELASTIC SILT
- CLAYEY SAND
- POORLY GRADED CLAYEY SILTY SAND

MISC. SYMBOLS

- WATER TABLE DURING DRILLING

VERTICAL SCALE FEET 0 8 16 24

DELAWARE DEPARTMENT OF TRANSPORTATION	ADDENDUMS / REVISIONS	HORIZONTAL SCALE 0 10 20 30 FEET	US 301 LEVELS ROAD TO SUMMIT BRIDGE ROAD	CONTRACT T200511303 / COUNTY NEW CASTLE	BRIDGE NO. 1-477N&S / DESIGNED BY: ZH / CHECKED BY: RDB
					US 301 MAINLINE OVER TRIBUTARY TO SANDY BRANCH
					BORINGS 1

1-477 BO-1

SHEET NO. 521

TOTAL SHTS. 1256

U:\Projects\AA\21387385\CAD\Bridge\BR2-5\bo01_BR2-5_US301.dgn

11/8/2012

Steve_Lambert

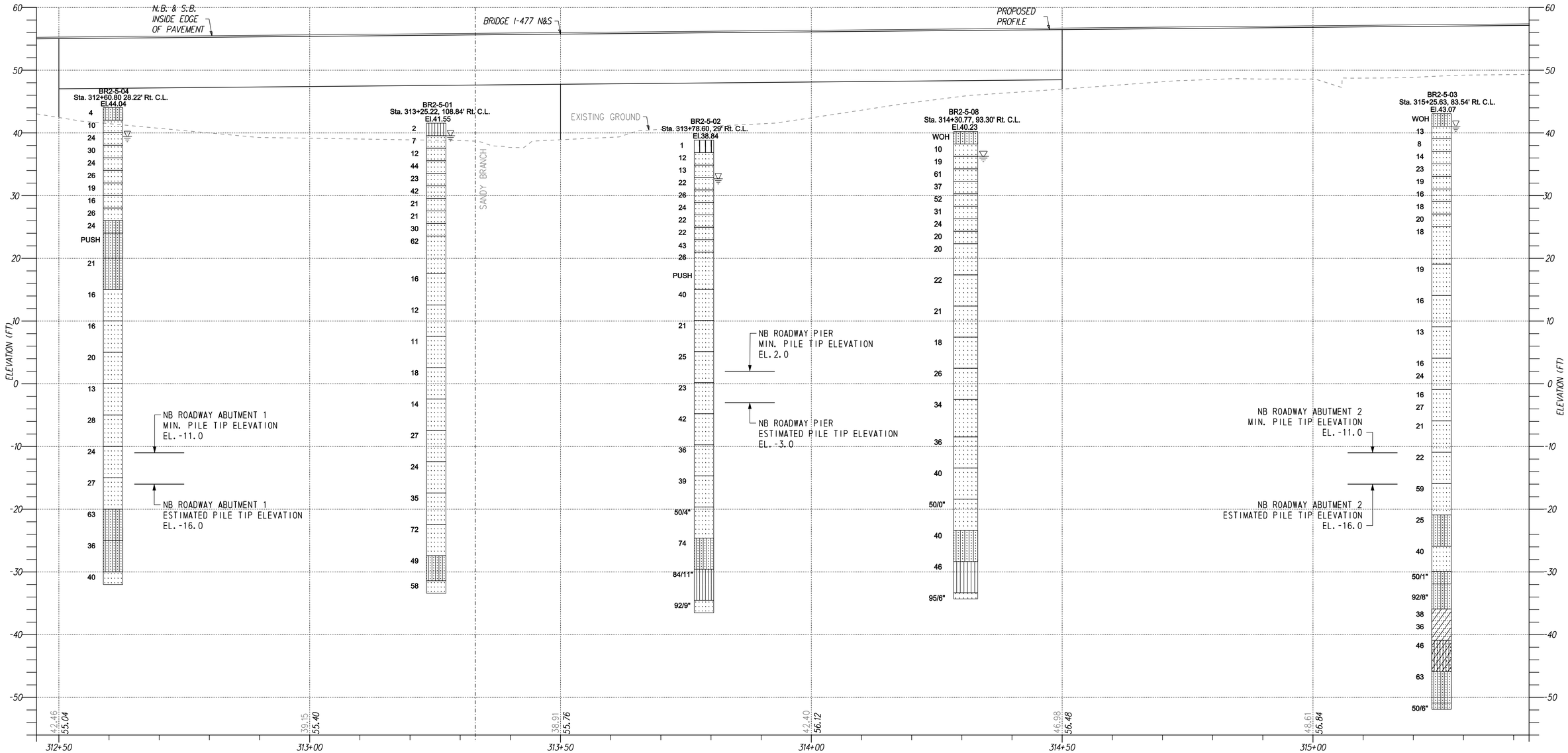

KEY TO SYMBOLS

SYMBOL DESCRIPTION

STRATA SYMBOLS

- SILT
- SAND
- SILTY SAND
- ELASTIC SILT
- CLAYEY SAND
- POORLY GRADED CLAYEY SILTY SAND

MISC. SYMBOLS

- WATER TABLE DURING DRILLING

VERTICAL SCALE FEET 0 8 16 24

DELAWARE DEPARTMENT OF TRANSPORTATION

ADDENDUMS / REVISIONS

HORIZONTAL SCALE 0 10 20 30 FEET

US 301 LEVELS ROAD TO SUMMIT BRIDGE ROAD

CONTRACT	BRIDGE NO.	1-477N&S
T200511303	DESIGNED BY: ZH	
COUNTY		
NEW CASTLE	CHECKED BY: RDB	

US 301 MAINLINE OVER TRIBUTARY TO SANDY BRANCH

BORINGS 2

1-477 BO-2

SHEET NO. 522

TOTAL SHTS. 1256

U:\Projects\AA\21387385\CAD\Bridge\BR2-5\bo02_BR2-5_US301.dgn 11/8/2012 Steve_Lambert

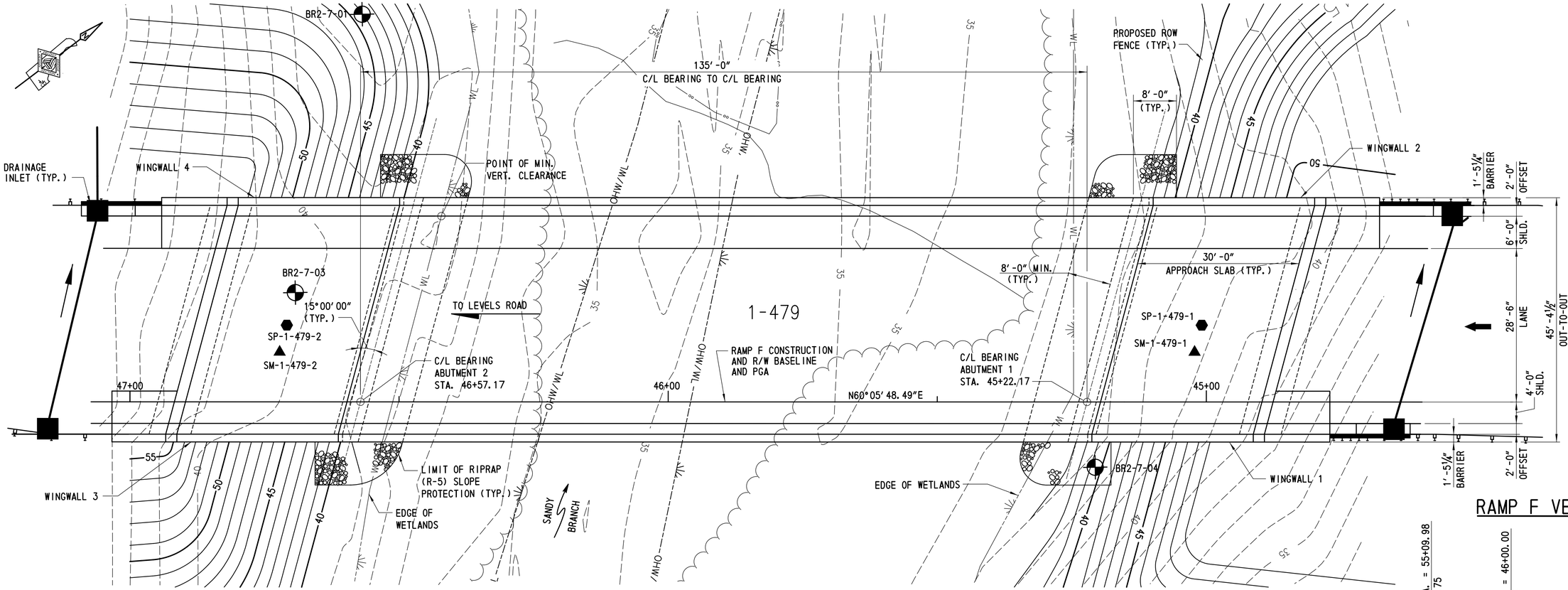

PLAN

SCALE: 1"=10'

NOTE:
BORING NUMBER BR2-7-02 IS NOT SHOWN ON PLAN, BUT IS LOCATED AT NORTHING 527402, EASTING 561887.

RAMP F VERTICAL DATA

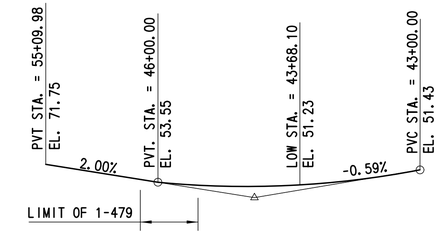

PVI STA. = 44+50.00
EL. = 50.55
VC = 300.00
MO = 0.97
SSD = 702.35

RAMP F HORIZONTAL DATA

TANGENT

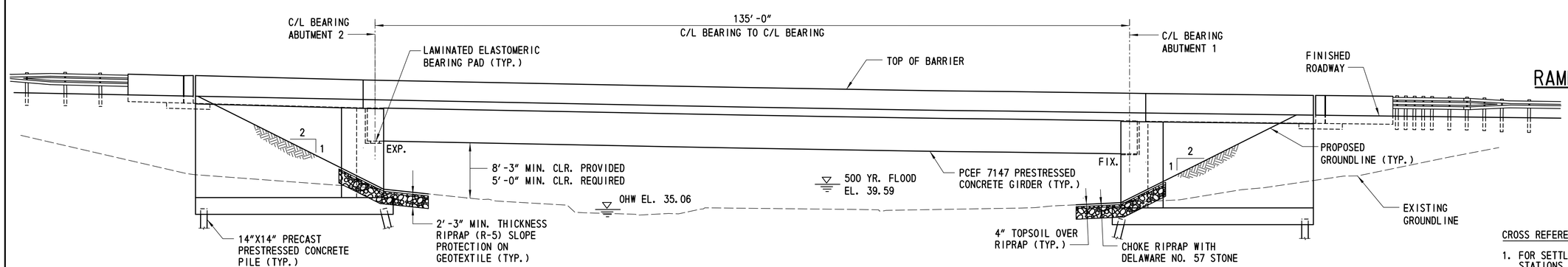

ELEVATION

SCALE: 1"= 10'

LEGEND

- ⬢ - SETTLEMENT PLATFORM
- ▲ - SETTLEMENT MONUMENT

CROSS REFERENCE NOTES:

1. FOR SETTLEMENT PLATFORM AND MONUMENT STATIONS AND OFFSETS, SEE DWG. NO. 1-479 DT-1.
2. FOR SETTLEMENT PLATFORM DETAILS, SEE DWG. NO. 1-479 DT-1.
3. RECESS AND CHOKE RIPRAP IN ACCORDANCE WITH THE STREAM RESTORATION AND SLOPE RIPRAP TREATMENT NOTES FOUND ON DWG. NO. EC-05.

DELAWARE DEPARTMENT OF TRANSPORTATION	ADDENDUMS / REVISIONS	SCALE 0 10 20 30 FEET	US 301 LEVELS ROAD TO SUMMIT BRIDGE ROAD	CONTRACT T200911303 / COUNTY NEW CASTLE	BRIDGE NO. 1-479 / DESIGNED BY: PRH / CHECKED BY: JW	RAMP F OVER SANDY BRANCH GENERAL PLAN AND ELEVATION	1-479 PE-1 / SHEET NO. 523 / TOTAL SHTS. 1256

PROJECT NOTES

1. DESIGN SPECIFICATIONS:

AASHTO LRFD BRIDGE DESIGN SPECIFICATIONS, 4TH EDITION, 2007, INCLUDING 2008 AND 2009 INTERIM REVISIONS, AND AS SUPPLEMENTED BY DELAWARE DEPARTMENT OF TRANSPORTATION BRIDGE DESIGN MANUAL, MAY 2005, INCLUDING LATEST REVISIONS.

PROVIDE MATERIALS AND PERFORM WORK IN ACCORDANCE WITH THE DELAWARE DEPARTMENT OF TRANSPORTATION STANDARD SPECIFICATIONS AND CONSTRUCTION DETAILS, AASHTO/AWS D1.5M/D1.5 BRIDGE WELDING CODE, AND CONTRACT SPECIAL PROVISIONS.

LIVE LOAD DISTRIBUTION TO BEAMS IS BASED UPON AASHTO DISTRUBUTION FACTORS.

2. LOADING:

UNIT WEIGHTS OF MATERIALS SHALL BE IN ACCORDANCE WITH THE DELAWARE BRIDGE DESIGN MANUAL.

FUTURE OVERLAY ALLOWANCE SHALL BE 25 LBS/SQ FT.

STEEL BRIDGE DECK FORMS WHICH STAY IN PLACE (INCLUDING CONCRETE IN FORM CORRUGATIONS) SHALL BE 15 LBS/SQ FT.

VEHICLE LIVE LOAD SHALL BE AASHTO HL-93 DESIGN VEHICLE, WHICH CONSISTS OF A DESIGN TRUCK OR TANDEM WITH DYNAMIC LOAD ALLOWANCE AND A LANE LOAD. RATINGS SHALL USE ALL DELAWARE LEGAL LOADS SPECIFIED IN THE BRIDGE DESIGN MANUAL.

BARRIER HAS BEEN DESIGNED FOR TEST LEVEL FOUR (TL-4).

FATIGUE DESIGN IS BASED ON THE FOLLOWING:
PRESTRESSED CONCRETE: ADTT 1,236 (2030 ONE-DIRECTIONAL).

FOR THERMAL LOADS, CONSIDER THE MODERATE TEMPERATURE RANGE AS STIPULATED IN THE AASHTO LRFD DESIGN SPECIFICATIONS, THE NORMAL TEMPERATURE SHALL BE CONSIDERED TO BE 68F.

FOR SEISMIC LOADS, CONSIDER SEISMIC PERFORMANCE ZONE 1, WITH A SITE CLASS = D AND IMPORTANCE CATEGORY - ESSENTIAL.

SEISMIC FORCES WERE CONSIDERED FOR ACCELERATION COEFFICIENT OF 0.08.

3. PORTLAND CEMENT CONCRETE:

PORTLAND CEMENT CONCRETE FOR CAST-IN-PLACE ELEMENTS SHALL BE AS FOLLOWS:
(28 DAY COMPRESSIVE STRENGTH)
ITEM NO. 602004 (CLASS B, f'c=3000 PSI) - ABUTMENT AND WINGWALL FOOTING
ITEM NO. 602013 (CLASS D, f'c=4500 PSI) - DECK AND DIAPHRAGMS
ITEM NO. 602014 (CLASS D, f'c=4500 PSI) - APPROACH SLAB, MOMENT SLAB AND SLEEPER SLAB
ITEM NO. 602015 (CLASS A, f'c=4500 PSI) - ABUTMENT AND WINGWALL ABOVE FOOTING
ITEM NO. 602017 (CLASS A, f'c=4500 PSI) - BARRIER

RAKE FINISH ALL HORIZONTAL CONSTRUCTION, EXCEPT AS INDICATED.

CONSTRUCT DECK SLAB TRANSVERSE CONSTRUCTION JOINTS PARALLEL TO BRIDGE CENTERLINE OF BEARING.

PLACE CHEEKWALL AND BACKWALL CONCRETE AFTER BEAMS HAVE BEEN SET IN POSITION.

DECK SLAB THICKNESS INCLUDES ½" INTEGRAL WEARING SURFACE.

MIX REQUIREMENTS SHALL CONFORM TO SECTION 812 OF THE DELAWARE DEPARTMENT OF TRANSPORTATION STANDARD SPECIFICATIONS.

ALL EXPOSED CORNERS OF CONCRETE SHALL BE CHAMFERED WITH ¾" X ¾" MILLED CHAMFER STRIPS UNLESS NOTED OTHERWISE, EXCEPT ON UNEXPOSED FOOTINGS OR WHERE INDICATED BY THE NOTATION ON THE PLANS, "DO NOT CHAMFER".

NO SLIP-FORMING OF BARRIERS IS PERMITTED, UNLESS NOTED OTHERWISE.

4. BAR REINFORCEMENT:

REINFORCING STEEL SHALL CONFORM TO AASHTO M31 (ASTM A615), GRADE 60.

PROVIDE 2" CONCRETE COVER ON REINFORCEMENT BARS, EXCEPT AS NOTED.

FUSION-BONDED EPOXY COATED REINFORCING STEEL SHALL CONFORM TO AASHTO M284 (ASTM D3963), AND SHALL BE DENOTED WITH A SUFFIX "E" IN THE BAR MARKS

DO NOT WELD GRADE 60 REINFORCING STEEL, UNLESS NOTED OTHERWISE.

5. PRESTRESSED CONCRETE DESIGN:

THE PRECAST CONCRETE GIRDERS ARE DESIGNED AS NONCOMPOSITE FOR ALL DEAD LOADS EXCEPT THE BARRIERS AND FUTURE WEARING SURFACE. THE PRECAST GIRDERS ARE DESIGNED AS COMPOSITE FOR LIVE LOADS AS WELL AS THE BARRIER AND FUTURE WEARING SURFACE DEAD LOADS.

PRESTRESSED CONCRETE:

THE MINIMUM COMPRESSIVE STRENGTH FOR PRESTRESSED CONCRETE AT THE AGE OF 28 DAYS SHALL BE f'c=8,000 PSI. THE MINIMUM COMPRESSIVE STRENGTH AT THE TRANSFER OF PRESTRESS SHALL BE f'ci=6,400 PSI.

PRESTRESSED STEEL:

PRETENSIONING STEEL FOR BEAMS SHALL CONSIST OF HIGH STRENGTH 7-WIRE LOW RELAXATION STRANDS, WITH A NOMINAL 0.60 INCH DIAMETER, CONFORMING TO THE REQUIREMENTS OF AASHTO M203 (ASTM A416) GRADE 270. EACH 0.60 INCH DIAMETER STRAND SHALL BE PRETENSIONED TO 43,942 LBS. (0.75 Fpu).

AFTER ESTIMATED LOSSES OF 27,499 PSI, THE FINAL EFFECTIVE PRESTRESS FORCE PER STRAND IS 37,975 LBS.

6. SERVICEABILITY:

LIVE LOAD DEFLECTION SHALL BE LIMITED TO L/800.

FOR REINFORCEMENT DISTRIBUTION REQUIREMENTS, CONSIDER CLASS 2 EXPOSURE CRITERIA FOR DECKS.

7. CONSTRUCTION JOINTS:

KEYED CONSTRUCTION JOINTS SHALL BE 2" X 4" OR AS NOTED. ALL EXPOSED CONSTRUCTION JOINT EDGES SHALL HAVE A ¾" V-NOTCH, UNLESS NOTED OTHERWISE.

8. STRUCTURAL BACKFILL:

STRUCTURAL BACKFILL SHALL CONFORM TO THE REQUIREMENTS OF BORROW TYPE C.

9. UTILITIES:

COORDINATE ALL WORK RELATED TO PUBLIC AND PRIVATE UTILITIES IN ACCORDANCE WITH SECTION 107.04 OF THE STANDARD SPECIFICATIONS.

VERIFY AND LOCATE ALL EXISTING UTILITIES PRIOR TO STARTING WORK. CONDUCT OPERATIONS IN A MANNER WHICH ENSURES THAT THE UTILITIES WILL NOT BE DISTURBED OR ENDANGERED AND ASSUME FULL RESPONSIBILITY FOR ANY DAMAGE TO UTILITIES DURING CONSTRUCTION. THE DEPARTMENT DOES NOT ASSUME RESPONSIBILITY FOR REIMBURSEMENT, PARTICIPATION IN DESIGN AND/OR REVISION, OR LIABILITY FOR ACCURACY OF TYPE, SIZE AND LOCATION OF ANY UTILITY.

10. HYDRAULIC DATA:

DRAINAGE AREA = 0.46 SQ. MILES
DESIGN FREQUENCY = 100 YEARS
DESIGN FLOOD ELEVATION = 38.36
25-YR FLOOD ELEVATION = 37.54
DESIGN DISCHARGE (100-YR) = 973 CFS
PROPOSED OPENING = 1,134 SF

11. MINIMUM VERTICAL CLEARANCE OF 5'-0" IS TO BE MAINTAINED AT ALL TIMES DURING CONSTRUCTION.

THE PROPOSED STRUCTURE HAS BEEN ANALYZED FOR THE EFFECTS OF SCOUR IN ACCORDANCE WITH HEC-18- 'EVALUATING SCOUR AT BRIDGES' AND HEC-23- 'BRIDGE SCOUR AND STREAM INSTABILITY COUNTERMEASURES'. SCOUR COUNTERMEASURES HAVE BEEN DESIGNED FOR THE WORST CASE OF THE OVERTOPPING FLOOD OR THE 500-YR FLOOD EVENT.

DESIGN EVENT: 500 YR — DESIGN VELOCITY: 10.7 FT/S

DESIGN DISCHARGE: 1640 CFS — DESIGN DEPTH OF FLOW: 5.3 FT

INDEX OF DRAWINGS

SHEET NO.	DRAWING NO.	TITLE
523	1-479 PE-1	GENERAL PLAN AND ELEVATION
524	1-479 PN-1	PROJECT NOTES AND INDEX OF DRAWINGS
525	1-479 TS-1	TYPICAL SECTION AND QUANTITIES
526	1-479 FT-1	GEOMETRIC LAYOUT
527	1-479 FT-2	ABUTMENT 1 PILE PLAN
528	1-479 FT-3	ABUTMENT 2 PILE PLAN
529	1-479 PL-1	PILE DETAILS
530	1-479 AB-1	ABUTMENT 1 PLAN AND ELEVATION
531	1-479 AB-2	ABUTMENT 1 FOOTING REINFORCEMENT PLAN 1
532	1-479 AB-3	ABUTMENT 1 FOOTING REINFORCEMENT PLAN 2
533	1-479 AB-4	ABUTMENT 1 REINFORCEMENT DETAILS 1
534	1-479 AB-5	ABUTMENT 1 REINFORCEMENT DETAILS 2
535	1-479 AB-6	ABUTMENT 2 PLAN AND ELEVATION
536	1-479 AB-7	ABUTMENT 2 FOOTING REINFORCEMENT PLAN 1
537	1-479 AB-8	ABUTMENT 2 FOOTING REINFORCEMENT PLAN 2
538	1-479 AB-9	ABUTMENT 2 REINFORCEMENT DETAILS 1
539	1-479 AB-10	ABUTMENT 2 REINFORCEMENT DETAILS 2
540	1-479 WW-1	WINGWALL ELEVATIONS
541	1-479 WW-2	WINGWALL DETAILS 1
542	1-479 WW-3	WINGWALL DETAILS 2
543	1-479 BR-1	ABUTMENT 1 REINFORCEMENT SCHEDULE
544	1-479 BR-2	ABUTMENT 2 REINFORCEMENT SCHEDULE
545	1-479 BD-1	BEARING DETAILS
546	1-479 FR-1	FRAMING PLAN
547	1-479 BM-1	GIRDER PLAN AND ELEVATION
548	1-479 BM-2	GIRDER DETAILS
549	1-479 DPH-1	DIAPHRAGM DETAILS
550	1-479 DK-1	DECK POURING SEQUENCE
551	1-479 DK-2	DECK AND BARRIER REINFORCEMENT
552	1-479 DK-3	DECK DETAILS
553	1-479 AS-1	APPROACH SLAB AND BARRIER REINFORCEMENT
554	1-479 AS-2	APPROACH SLAB DETAILS
555	1-479 BR-3	DECK REINFORCEMENT SCHEDULE
556	1-479 FD-1	FINISHED DECK ELEVATIONS
557	1-479 FD-2	FINISHED APPROACH SLAB ELEVATIONS
558	1-479 EX-1	EXPANSION JOINT DETAILS
559	1-479 DT-1	SETTLEMENT PLATFORM DETAIL
560	1-479 BO-1	TEST BORINGS

LOAD RATING SUMMARY

DESIGN VEHICLE	RATING FACTOR	RATING WEIGHT (TONS)	CONTROLLING MEMBER	CONTROLLING POINT	LOAD EFFECT
HL-93 TRUCK (INVENTORY)	1.06	N/A	INTERIOR BEAM	105	CONC. STRESS MAX. EFFECTS DL+PS+LL BOT. OF GIRDER
HL-93 TANDEM (INVENTORY)	1.26	N/A	INTERIOR BEAM	105	CONC. STRESS MAX. EFFECTS DL+PS+LL BOT. OF GIRDER
HL-93 TRUCK TRAIN (INVENTORY)	N/A	N/A	N/A	N/A	N/A
HS-20 (INVENTORY)	1.61	57.94	INTERIOR BEAM	105	CONC. STRESS MAX. EFFECTS DL+PS+LL BOT. OF GIRDER
HL-93 TRUCK (OPERATING)	1.65	N/A	EXTERIOR BEAM	105	LONG. REINF. MAX. EFFECTS MAX. MOMENT W/ CONCURRENT SHEAR
HL-93 TANDEM (OPERATING)	1.94	N/A	EXTERIOR BEAM	105	LONG. REINF. MAX. EFFECTS MAX. MOMENT W/ CONCURRENT SHEAR
HL-93 TRUCK TRAIN (OPERATING)	N/A	N/A	N/A	N/A	N/A
HS-20 (OPERATING)	2.18	78.37	INTERIOR BEAM	106	LONG. REINF. MIN. EFFECTS MAX. SHEAR W/ CONCURRENT MOMENT
DE S220 (LEGAL)	2.25	44.93	INTERIOR BEAM	105	CONC. STRESS MAX. EFFECTS DL+PS+LL BOT. OF GIRDER
DE S335 (LEGAL)	1.26	44.25	INTERIOR BEAM	105	CONC. STRESS MAX. EFFECTS DL+PS+LL BOT. OF GIRDER
DE S437 (LEGAL)	1.20	44.13	INTERIOR BEAM	105	CONC. STRESS MAX. EFFECTS DL+PS+LL BOT. OF GIRDER
DE T330 (LEGAL)	1.63	49.01	INTERIOR BEAM	105	CONC. STRESS MAX. EFFECTS DL+PS+LL BOT. OF GIRDER
DE T435 (LEGAL)	1.42	49.64	INTERIOR BEAM	105	CONC. STRESS MAX. EFFECTS DL+PS+LL BOT. OF GIRDER
DE T540 (LEGAL)	1.25	49.94	INTERIOR BEAM	105	CONC. STRESS MAX. EFFECTS DL+PS+LL BOT. OF GIRDER

NOTE: LOAD RATING DOES INCLUDE FUTURE WEARING SURFACE AS NOTED IN THE PLANS.

ESTIMATED BRIDGE QUANTITIES

ITEM NUMBER	DESCRIPTION	UNIT	QUANTITY
202505	SETTLEMENT PLATFORM	EACH	2
202518	SETTLEMENT MONUMENT	EACH	2
207000	EXCAVATION AND BACKFILL FOR STRUCTURES	CY	559
302012	DELAWARE NO. 57 STONE	TON	13
602004	PORTLAND CEMENT CONCRETE MASONRY, ABUTMENT FOOTING, CLASS B	CY	252
602013	PORTLAND CEMENT CONCRETE MASONRY, SUPERSTRUCTURE, CLASS D	CY	225
602014	PORTLAND CEMENT CONCRETE MASONRY, APPROACH SLAB, CLASS D	CY	209
602015	PORTLAND CEMENT CONCRETE MASONRY, ABUTMENT ABOVE FOOTING, CLASS A	CY	341
602017	PORTLAND CEMENT CONCRETE MASONRY, PARAPET, CLASS A	CY	58
603000	BAR REINFORCEMENT	LB	36,886
604000	BAR REINFORCEMENT, EPOXY COATED	LB	126,860
605512	PREFABRICATED EXPANSION JOINT SYSTEM, 4"	LF	95
605581	ELASTOMERIC BRIDGE BEARING PAD	EA	10
618041 (ALTERNATE)	FURNISH CAST-IN-PLACE CONCRETE PILES, 14"	LF	5,253
618046 (ALTERNATE)	FURNISH CAST-IN-PLACE CONCRETE TEST PILES, 14"	LF	102
618081	FURNISH PRECAST PRESTRESSED CONCRETE PILE, 14"x14"	LF	6,073
618091	FURNISH PRECAST PRESTRESSED CONCRETE TEST PILE, 14"x14"	LF	118
619021 (ALTERNATE)	INSTALL CAST-IN-PLACE CONCRETE PILES, 14"	LF	5,253
619025 (ALTERNATE)	INSTALL CAST-IN-PLACE CONCRETE TEST PILES, 14"	LF	102
619061	INSTALL PRECAST PRESTRESSED CONCRETE PILE, 14"x14"	LF	6,073
619067	INSTALL PRECAST PRESTRESSED CONCRETE TEST PILE, 14"x14"	LF	118
619501	PRODUCTION PILE RESTRIKE	EACH	6
619502	TEST PILE RESTRIKE	EADY	2
619519	DYNAMIC PILE TESTING BY CONTRACTOR	EACH	4
619539	SIGNAL MATCHING ANALYSIS BY CONTRACTOR	EACH	4
623003	PRESTRESSED REINFORCED CONCRETE MEMBERS, BULB TBEAM	LS	-
712006	RIPRAP, R-5	SY	141
713003	GEOTEXTILE, RIPRAP	SY	141
733001	TOPSOILING, 4" DEPTH	SY	282
745522	SUPPLY OF 3" SCHEDULE 80 PVC CONDUIT	LF	200
746596	JUNCTION BOX ON STRUCTURE	EACH	2

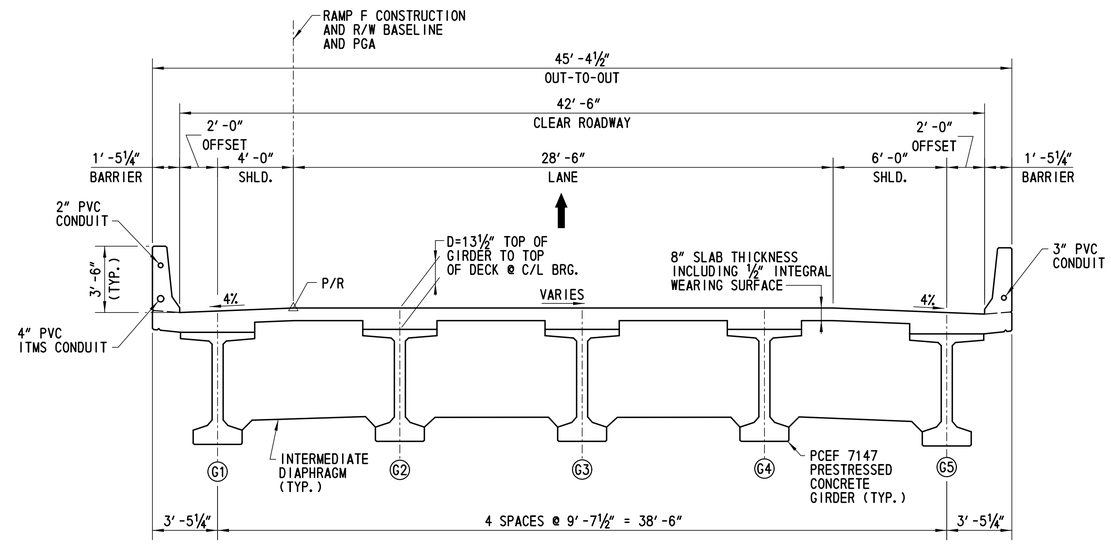

TYPICAL SECTION

STATIONS AHEAD
SCALE: ¼" = 1'-0"

RAMP F SUPERELEVATION TRANSITION

STATION	CROSS SLOPE (LANE)
44+33.08	4%
45+23.08	2%
46+13.08	0%
47+03.08	2%

NOTES:

1. THE QUANTITY OF ITEM NO. 602004, PORTLAND CEMENT CONCRETE MASONRY, ABUTMENT FOOTING, CLASS B, INCLUDES THE WINGWALL FOOTING CONCRETE.
2. THE QUANTITY OF ITEM NO. 602015, PORTLAND CEMENT CONCRETE MASONRY, ABUTMENT ABOVE FOOTING, CLASS A, INCLUDES THE WINGWALL CONCRETE ABOVE THE FOOTING.
3. CONDUIT AND JUNCTION BOX INSTALLATION TO BE INCIDENTAL TO ITEM 602017.

CROSS REFERENCE NOTES:

1. FOR GIRDER PLAN AND ELEVATION, SEE DWG. NO. 1-479 BM-1.
2. FOR GIRDER DETAILS, SEE DWG. NO. 1-479 BM-2.
3. FOR INTERMEDIATE AND END DIAPHRAGM DETAILS, SEE DWG. NO. 1-479 DPH-1.
4. FOR DECK AND BARRIER REINFORCEMENT, SEE DWG. NO. 1-479 DK-2.
5. FOR DECK DETAILS, SEE DWG. NO. 1-479 DK-3.
6. FOR FINISHED DECK ELEVATIONS, SEE DWG. 1-479 FD-1.
7. FOR GENERAL PLAN AND ELEVATION, SEE DWG. NO. 1-479 PE-1.
8. FOR 2" AND 4" PVC CONDUIT DETAILS, SEE DWG. NO. DT-07.
9. FOR 3" PVC CONDUIT DETAILS, SEE DWG. LI-30.

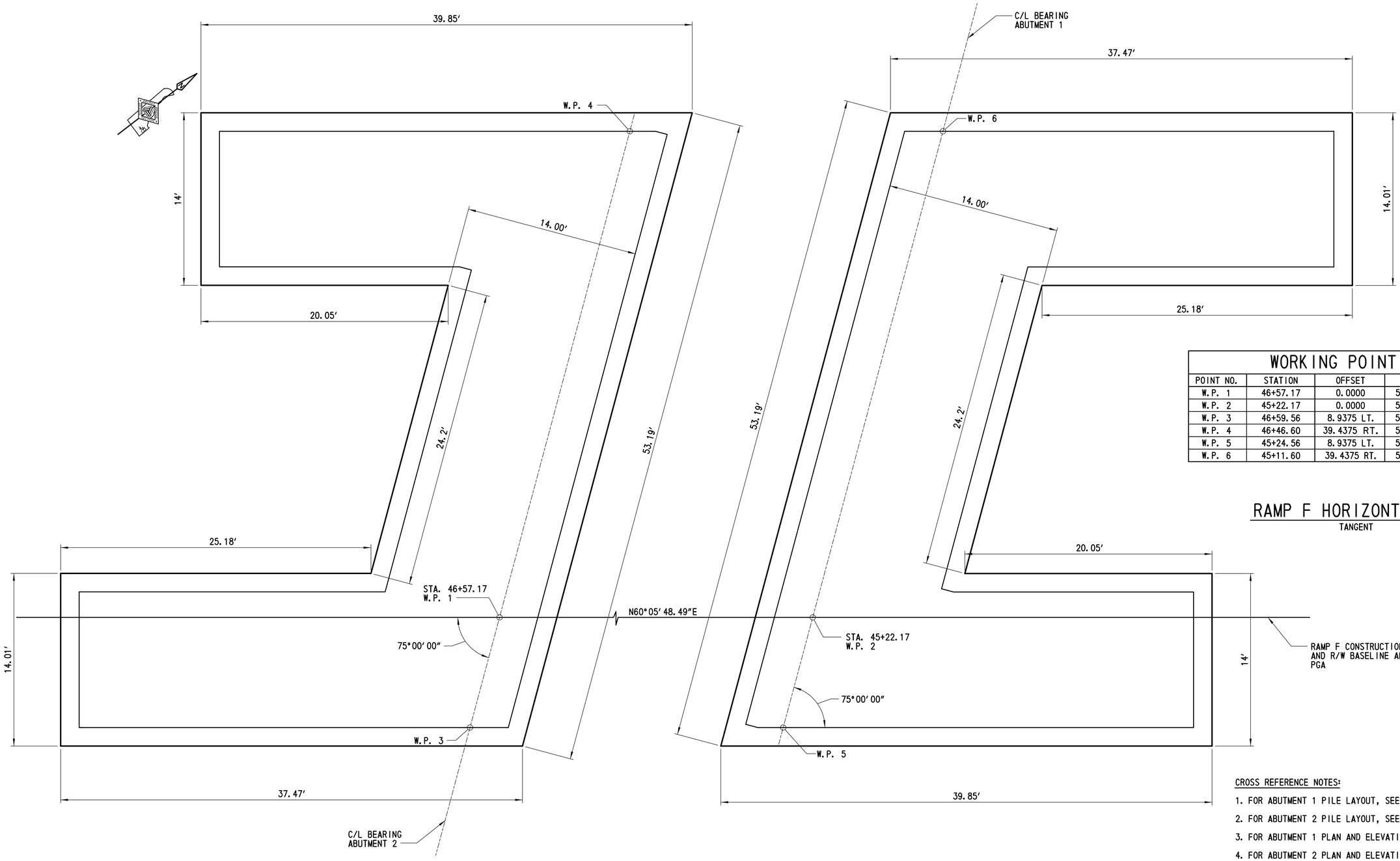

GEOMETRIC LAYOUT

SCALE: ¼″= 1′-0″

WORKING POINT DATA

POINT NO.	STATION	OFFSET	NORTHING	EASTING
W.P. 1	46+57.17	0.0000	527215.4489	561824.6122
W.P. 2	45+22.17	0.0000	527282.7513	561941.6395
W.P. 3	46+59.56	8.9375 LT.	527206.5074	561826.9919
W.P. 4	46+46.60	39.4375 RT.	527254.9042	561814.1116
W.P. 5	45+24.56	8.9375 LT.	527273.8098	561944.0192
W.P. 6	45+11.60	39.4375 RT.	527322.2066	561931.1389

RAMP F HORIZONTAL DATA

TANGENT

CROSS REFERENCE NOTES:

1. FOR ABUTMENT 1 PILE LAYOUT, SEE DWG. NO. 1-479 FT-2.
2. FOR ABUTMENT 2 PILE LAYOUT, SEE DWG. NO. 1-479 FT-3.
3. FOR ABUTMENT 1 PLAN AND ELEVATION, SEE DWG. NO. 1-479 AB-1.
4. FOR ABUTMENT 2 PLAN AND ELEVATION, SEE DWG. NO. 1-479 AB-6.

DELAWARE DEPARTMENT OF TRANSPORTATION	ADDENDUMS / REVISIONS	SCALE 0 2 8 / 1 4 FEET	US 301 LEVELS ROAD TO SUMMIT BRIDGE ROAD	CONTRACT T200911303	BRIDGE NO. 1-479	RAMP F OVER SANDY BRANCH	1-479 FT-1
				COUNTY NEW CASTLE	DESIGNED BY: EE	GEOMETRIC LAYOUT	SHEET NO. 526
					CHECKED BY: JW		TOTAL SHTS. 1256

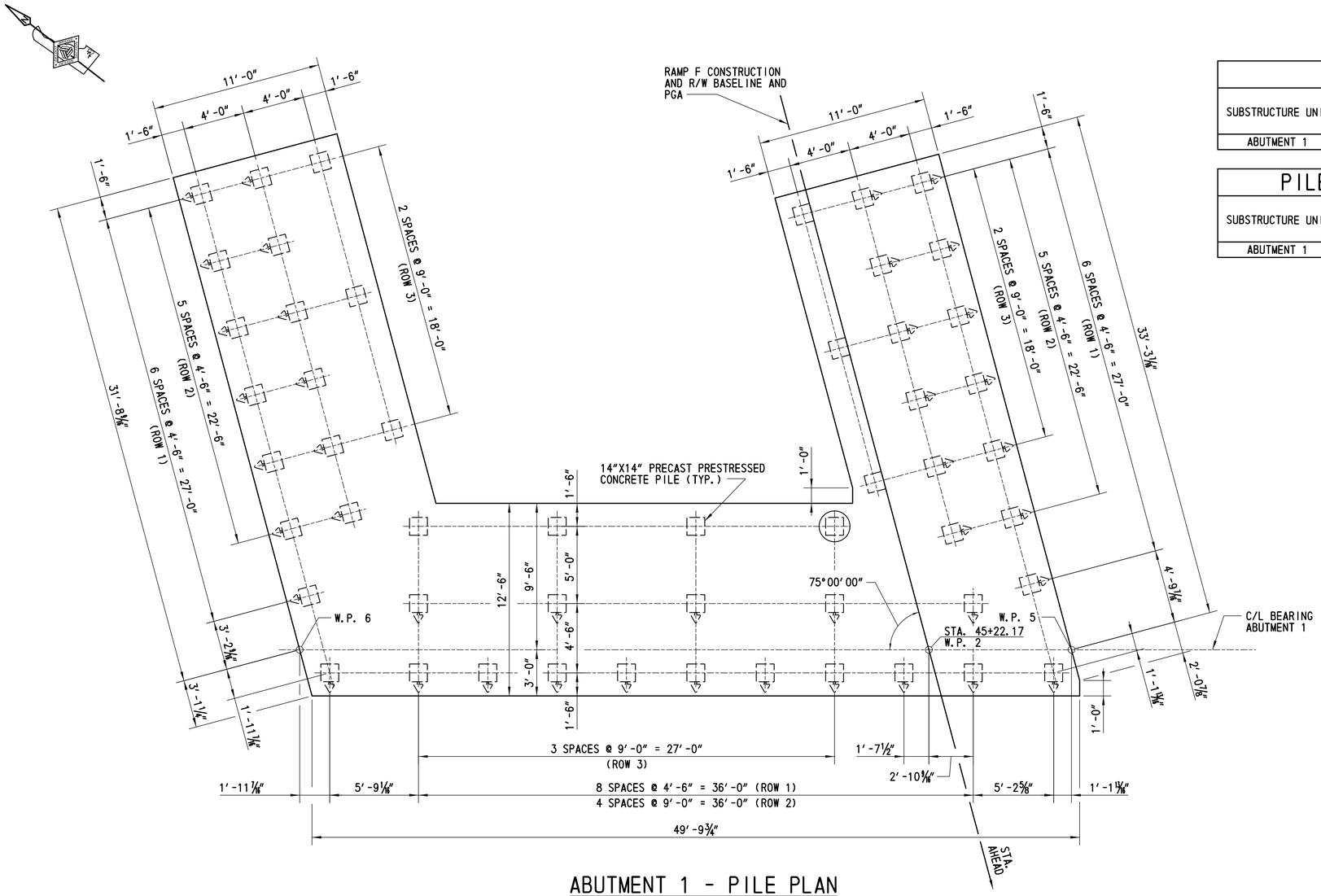

ABUTMENT 1 - PILE PLAN

SCALE: 1/4" = 1'-0"

PILE INSTALLATION DATA

SUBSTRUCTURE UNIT	DESIGN DATA		ACTUAL FIELD DATA	
	NOMINAL PILE DRIVING RESISTANCE (KIP)	ESTIMATED TIP ELEVATION	AVERAGE MINIMUM TIP ELEVATION	AVERAGE MAXIMUM TIP ELEVATION
ABUTMENT 1	377	-20.00		

PILE INSTALLATION DATA (MONOTUBE ALTERNATE)

SUBSTRUCTURE UNIT	DESIGN DATA		ACTUAL FIELD DATA	
	NOMINAL PILE DRIVING RESISTANCE (KIP)	ESTIMATED TIP ELEVATION	AVERAGE MINIMUM TIP ELEVATION	AVERAGE MAXIMUM TIP ELEVATION
ABUTMENT 1	377	-18.00		

PILE DRIVING INFORMATION

PILE SIZE AND TYPE:
ACTUAL BEARING OBTAINED:
HAMMER TYPE:
AVERAGE ACTUAL BLOWS/FT.:
PILE HAMMER ENERGY:
SPECIAL DRIVING CONDITIONS AND COMMENTS:

PILE LEGEND

BATTERED PILE

PLUMB PILE

TEST PILE

CROSS REFERENCE NOTES:

1. FOR GENERAL PLAN AND ELEVATION, SEE DWG. NO. 1-479 PE-1.
2. FOR ABUTMENT 1 PLAN AND ELEVATION, SEE DWG. NO. 1-479 AB-1.
3. FOR ABUTMENT 1 TYPICAL SECTION, SEE DWG. NO. 1-479 AB-4.
4. FOR PILE DETAILS, SEE DWG. NO. 1-479 PL-1.
5. FOR FOOTING REINFORCEMENT, SEE DWG. NOS. 1-479 AB-2 AND 1-479 AB-3.
6. FOR WORKING POINT COORDINATES, SEE DWG. NO. 1-479 FT-1.

DELAWARE DEPARTMENT OF TRANSPORTATION

ADDENDUMS / REVISIONS

SCALE 0 1 2 4 8 FEET

US 301 LEVELS ROAD TO SUMMIT BRIDGE ROAD

CONTRACT T200911303
COUNTY NEW CASTLE

BRIDGE NO. 1-479
DESIGNED BY: LT
CHECKED BY: JW

RAMP F OVER SANDY BRANCH

ABUTMENT 1 PILE PLAN

1-479 FT-2
SHEET NO. 527
TOTAL SHTS. 1256

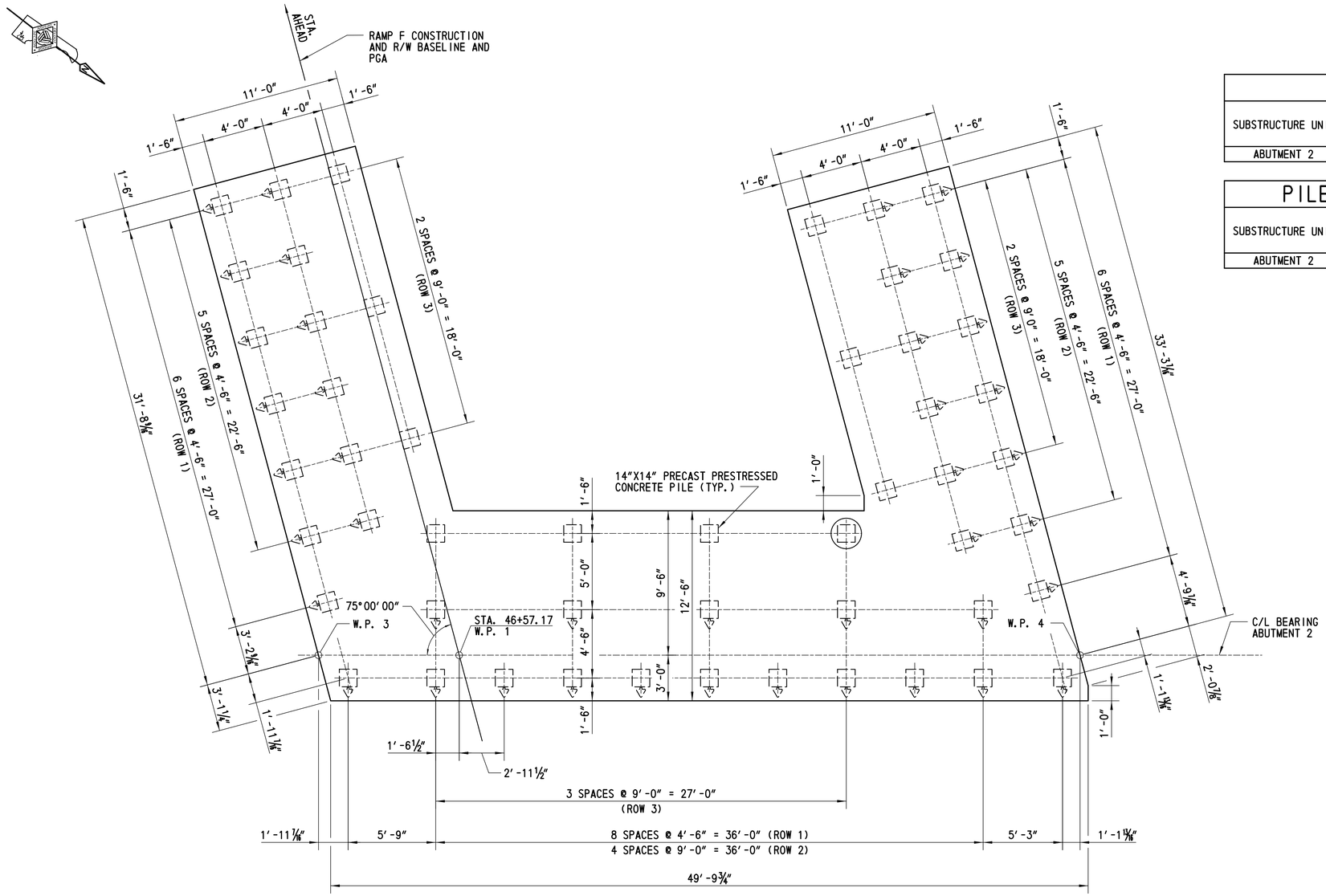

ABUTMENT 2 - PILE PLAN

SCALE: ¼"= 1'-0"

PILE INSTALLATION DATA

SUBSTRUCTURE UNIT	DESIGN DATA		ACTUAL FIELD DATA	
	NOMINAL PILE DRIVING RESISTANCE (KIP)	ESTIMATED TIP ELEVATION	AVERAGE MINIMUM TIP ELEVATION	AVERAGE MAXIMUM TIP ELEVATION
ABUTMENT 2	377	-30.00		

PILE INSTALLATION DATA (MONOTUBE ALTERNATE)

SUBSTRUCTURE UNIT	DESIGN DATA		ACTUAL FIELD DATA	
	NOMINAL PILE DRIVING RESISTANCE (KIP)	ESTIMATED TIP ELEVATION	AVERAGE MINIMUM TIP ELEVATION	AVERAGE MAXIMUM TIP ELEVATION
ABUTMENT 2	377	-16.00		

PILE DRIVING INFORMATION

PILE SIZE AND TYPE:
ACTUAL BEARING OBTAINED:
HAMMER TYPE:
AVERAGE ACTUAL BLOWS/FT.:
PILE HAMMER ENERGY:
SPECIAL DRIVING CONDITIONS AND COMMENTS:

PILE LEGEND

BATTERED PILE
PLUMB PILE
TEST PILE

CROSS REFERENCE NOTES:

1. FOR GENERAL PLAN AND ELEVATION, SEE DWG. NO. 1-479 PE-1.
2. FOR ABUTMENT 2 PLAN AND ELEVATION, SEE DWG. NO. 1-479 AB-6.
3. FOR ABUTMENT 2 TYPICAL SECTION, SEE DWG. NO. 1-479 AB-9.
4. FOR PILE DETAILS, SEE DWG. NO. 1-479 PL-1.
5. FOR FOOTING REINFORCEMENT, SEE DWG. NOS. 1-479 AB-7 AND 1-479 AB-8.
6. FOR WORKING POINT COORDINATES, SEE DWG. NO. 1-479 FT-1.

DELAWARE DEPARTMENT OF TRANSPORTATION

ADDENDUMS / REVISIONS

SCALE 0 1 2 4 8 FEET

US 301 LEVELS ROAD TO SUMMIT BRIDGE ROAD

CONTRACT T200911303
COUNTY NEW CASTLE
BRIDGE NO. 1-479
DESIGNED BY: LT
CHECKED BY: JW

RAMP F OVER SANDY BRANCH
ABUTMENT 2 PILE PLAN

1-479 FT-3
SHEET NO. 528
TOTAL SHTS. 1256

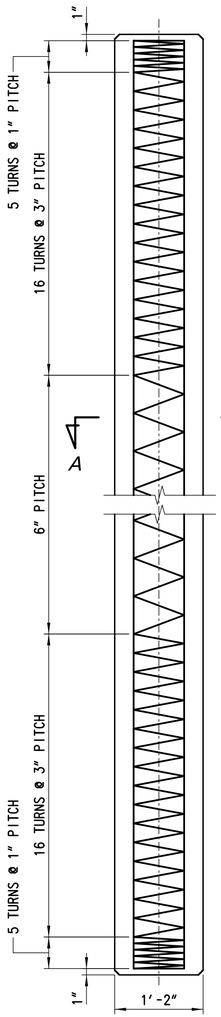

PRESTRESSED CONCRETE PILE

SCALE: 1" = 1'-0"

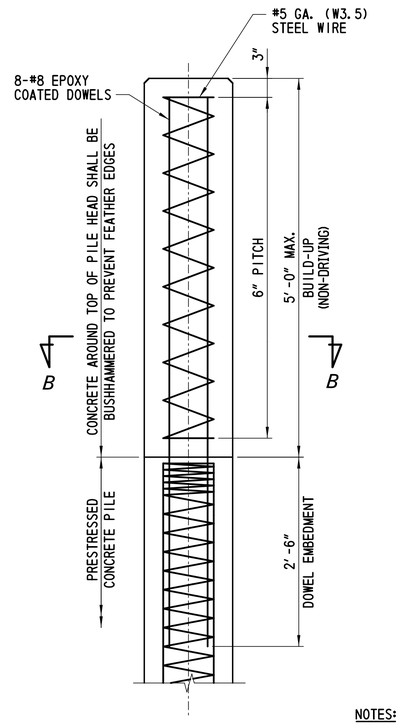

BUILD-UP DETAIL

SCALE: 1" = 1'-0"

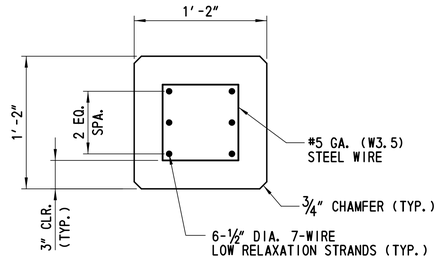

SECTION A-A

SCALE: 1 1/2" = 1'-0"

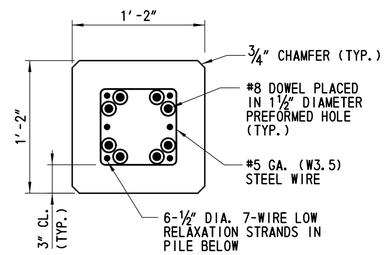

SECTION B-B

SCALE: 1 1/2" = 1'-0"

NOTES:

1. THE COMPRESSIVE STRENGTH OF THE PILE BUILD-UP SHALL BE f'c=6000 PSI.
2. PREFORMED DOWEL HOLES SHALL BE LONG ENOUGH TO ALLOW FOR ANTICIPATED PILE CUT-OFFS AND THE NET CROSS-SECTIONAL AREA SHALL BE CONSIDERED IN THE WAVE EQUATION.
3. ONCE DOWELS ARE PLACED, THE HOLES SHALL BE FILLED WITH AN APPROVED EPOXY GROUT. MINIMUM COMPRESSIVE STRENGTH OF EPOXY GROUT SHALL BE f'c=6000 PSI.
4. PRIOR TO THE GROUTING PROCEDURE, PREFORMED HOLES SHALL REMAIN PLUGGED TO ENSURE THAT WATER AND FOREIGN MATERIAL DO NOT ENTER.
5. DOWEL HOLES SHALL BE POSITIONED TO MAINTAIN 1" CLEAR DISTANCE FROM ALL PRESTRESSING STRANDS IN THE PILE.

ADDITIONAL NOTES FOR CAST-IN-PLACE ALTERNATE:

1. A ONE TO ONE SUBSTITUTION OF 14" STEEL MONOTUBE PILES IS ALLOWED FOR THE 14"X14" PRESTRESSED PRECAST CONCRETE PILES DETAILED IN THE CONTRACT DOCUMENTS.
2. STEEL MONOTUBE PILES SHALL HAVE A 3 GAUGE THICKNESS, AN 8IN TIP WITH A CLOSED CONICAL POINT, 14IN BUTT AND 15FT TAPER AT 0.40IN/FT.
3. ALL PILES SHALL BE DRIVEN TO THE TIP ELEVATIONS AND NOMINAL PILE DRIVING RESISTANCES LISTED IN THE PILE INSTALLATION DATA TABLES.

PILE PICK-UP NOTES:

1. UNLESS SPECIAL LIFTING DEVICES ARE ATTACHED FOR PICK-UP, PICK-UP POINTS SHALL BE PLAINLY MARKED ON ALL PILES AFTER REMOVAL OF THE FORMS. THE PILE SHALL BE SUPPORTED ONLY AT THE INDICATED PICK-UP POINTS WHILE BEING STORED OR HANDLED.
2. THE USE OF PROPER RIGGING IS REQUIRED TO ENSURE THAT THE PICK-UP POINTS REMAIN IN A STRAIGHT LINE DURING LIFTING AND WHEN POSITIONING THE PILE FOR DRIVING.
3. THE USE OF SPECIAL EMBEDDED OR ATTACHED LIFTING DEVICES, THE USE OF OTHER PICK-UP LOCATIONS OR ANY OTHER METHOD OF PICK-UP SHALL BE SUBJECT TO THE APPROVAL OF THE ENGINEER.

PILE NOTES:

1. ALL PILES SHALL BE 14"X14" PRESTRESSED PRECAST CONCRETE PILES. PILES SHALL NOT BE COATED.
2. THE MINIMUM COMPRESSIVE STRENGTH FOR THE PRESTRESSED CONCRETE PILES AT THE AGE OF 28 DAYS SHALL BE f'c=6000 PSI. THE MINIMUM COMPRESSIVE STRENGTH AT THE TIME OF TRANSFER OF PRESTRESS SHALL BE f'ci=4800 PSI.
3. PRETENSIONING STEEL FOR PILES SHALL CONSIST OF 1/2" DIAMETER 7-WIRE LOW RELAXTION STRANDS CONFORMING TO THE REQUIREMENTS OF AASHTO M203 (ASTM A416) GRADE 270. EACH 1/2" DIAMETER STRAND SHALL BE PRETENSIONED TO 30,982 LBS.(0.75 Fpu).
4. SPIRAL TIES SHALL BE #5 GAGE STEEL WIRE CONFORMING TO THE REQUIREMENTS OF SECTION 618.18.
5. THE SPLICING OF PRESTRESSED PRECAST CONCRETE PILES SHALL NOT BE PERMITTED.
6. A MINIMUM QUARANTINE PERIOD OF 30 DAYS IS REQUIRED AFTER THE CONSTRUCTION OF THE FULL HEIGHT OF THE FILL AT THE ABUTMENTS IS ACHIEVED.
7. PILES MAY NOT BE DRIVEN UNTIL AFTER THE COMPLETION OF THE 30 DAY QUARANTINE PERIOD.
8. ALL TEST PILES SHALL BE 10 FT LONGER THAN PRODUCTION PILES AS INDICATED IN THE PILE INSTALLATION DATA TABLE.
9. THE ENGINEER SHALL APPROVE THE COMPLETION OF THE WAITING PERIOD, BASED ON RESULTS OF INSTRUMENTATION.
10. TEST PILES MAY BE DRIVEN PRIOR TO PLACING EMBANKMENT AND SURCHARGE MATERIAL. RESTRIKES OF THESE TEST PILES SHALL BE PERFORMED PRIOR TO PLACING EMBANKMENT IN ACCORDANCE WITH ITEM NO. 619502 - TEST PILE RESTRIKE. AFTER THE SETTLEMENT HAS BEEN ACHIEVED AND THE SUBSTRUCTURE HAS BEEN RELEASED BY THE ENGINEER, PRODUCTION PILES MAY BE INSTALLED. AT THIS POINT, THE TEST PILE SHALL BE ACTING AS A PRODUCTION PILE AND IT SHALL BE RE-STRUCK PRIOR TO PLACING ANY OTHER PRODUCTION PILES WITH PAYMENT UNDER ITEM NO. 619501 - PRODUCTION PILE RESTRIKE.
11. SEE SPECIAL PROVISIONS 202505 AND 202518 FOR SETTLEMENT MONITORING LOCATIONS AND REQUIREMENTS.
12. THE CONTRACTOR SHALL BE RESPONSIBLE FOR SUBMITTING A WAVE EQUATION ANALYSIS AND ALL OTHER INCIDENTALS IN ACCORDANCE WITH THE PROJECT SPECIFICATIONS. THE WAVE EQUATION AND HIGH-STRAIN DYNAMIC PILE TESTING MUST BE SIGNED AND STAMPED BY A PROFESSIONAL ENGINEER LICENSED IN THE STATE OF DELAWARE IN ACCORDANCE WITH THE PROJECT SPECIFICATIONS.
13. UPON COMPLETION OF THE HIGH-STRAIN DYNAMIC PILE TESTING THE CONTRACTOR SHALL SUBMIT A SIGNAL MATCHING ANALYSIS TO THE ENGINEER FOR REVIEW AND APPROVAL IN ACCORDANCE WITH THE PROJECT SPECIFICATIONS.
14. ALL PILES SHALL BE DRIVEN TO THE NOMINAL PILE DRIVING RESISTANCE LISTED IN THE PILE INSTALLATION DATA TABLE.
15. DELDOT STANDARD SPECIFICATION 619.11(a)(6) SHALL BE MODIFIED BY REFERENCE TO SPECIAL PROVISIONS 619519 AND 619539.
16. PILE LENGTHS FOR ORDERING PURPOSES SHALL BE DETERMINED BY THE TEST PILES. A MINIMUM OF ONE PILE PER SUBSTRUCTURE, AS SHOWN ON THE PLANS, SHALL BE DYNAMICALLY TESTED WITH SIGNAL MATCHING ANALYSIS BY THE CONTRACTOR IN ACCORDANCE WITH SPECIAL PROVISIONS 619519 AND 619539. TEST AND PRODUCTION PILE RESTRIKES WILL BE PAID AS FOLLOWS:
    A. ALL TEST PILE(S) WILL BE RESTRUCK AFTER A WAITING PERIOD OF AT LEAST 48 HOURS. TEST PILE RESTRIKES SHALL BE INCIDENTAL TO THE INITIAL INSTALLATION OF THE PILE PROVIDED THEY ARE REQUESTED WITHIN FIVE WORKING DAYS FROM THE COMPLETION OF THE INITIAL DRIVE. IF TEST PILE RESTRIKES ARE REQUESTED AFTER THE FIVE WORKING DAYS FROM THE COMPLETION OF THE INITIAL DRIVE, THE TEST PILE RESTRIKE SHALL BE PAID AS NOTED IN SPECIAL PROVISION 619502.
    B. IF DIRECTED BY THE ENGINEER TO RESTRIKE A PRODUCTION PILE, THE RESTRIKE OF THE PRODUCTION PILE SHALL BE PAID SEPARATELY UNDER ITEM NO. 619501.
17. THE DEPARTMENT RESERVES THE RIGHT TO PERFORM DYNAMIC TESTING OF RESTRIKES.

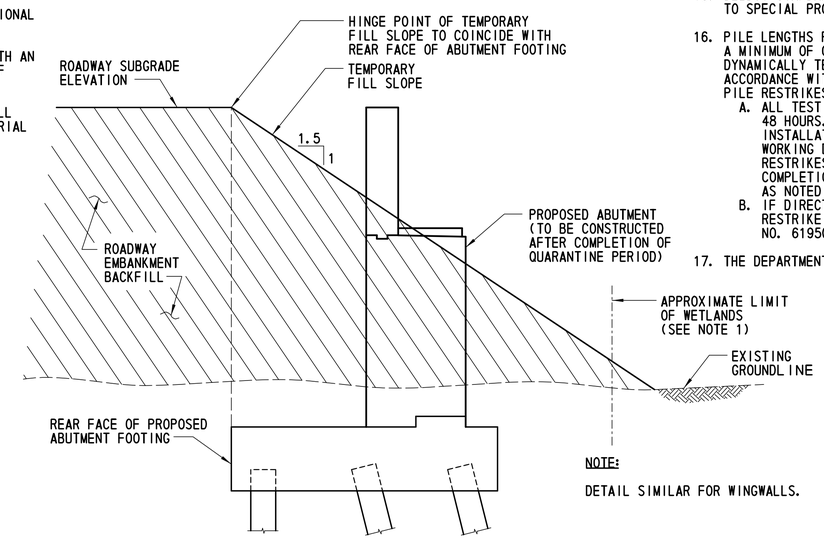

FILL PLACEMENT DURING QUARANTINE PERIOD

NTS

NOTE:

DETAIL SIMILAR FOR WINGWALLS.

NOTE:

1. CONTRACTOR IS RESPONSIBLE FOR HAVING THE LIMITS OF WETLANDS MARKERS IN THE FIELD PRIOR TO CONSTRUCTION.

CROSS REFERENCE NOTES:

1. FOR ABUTMENT 1 PILE PLAN, SEE DWG. NO. 1-479 FT-2.
2. FOR ABUTMENT 2 PILE PLAN, SEE DWG. NO. 1-479 FT-3.
3. FOR ADDITIONAL ENVIROMENTAL COMPLIANCE NOTES, SEE DWG. EC-05.
4. FOR ADDITIONAL ENVIROMENTAL DETAILS, SEE DWG. EC-12 & EC-14.

DELAWARE DEPARTMENT OF TRANSPORTATION	ADDENDUMS / REVISIONS	US 301 LEVELS ROAD TO SUMMIT BRIDGE ROAD	CONTRACT T200911303	BRIDGE NO. 1-479	RAMP F OVER SANDY BRANCH	1-479 PL-1	
			COUNTY NEW CASTLE	DESIGNED BY: LT	PILE DETAILS	SHEET NO. 529	
				CHECKED BY: JW		TOTAL SHTS. 1256	

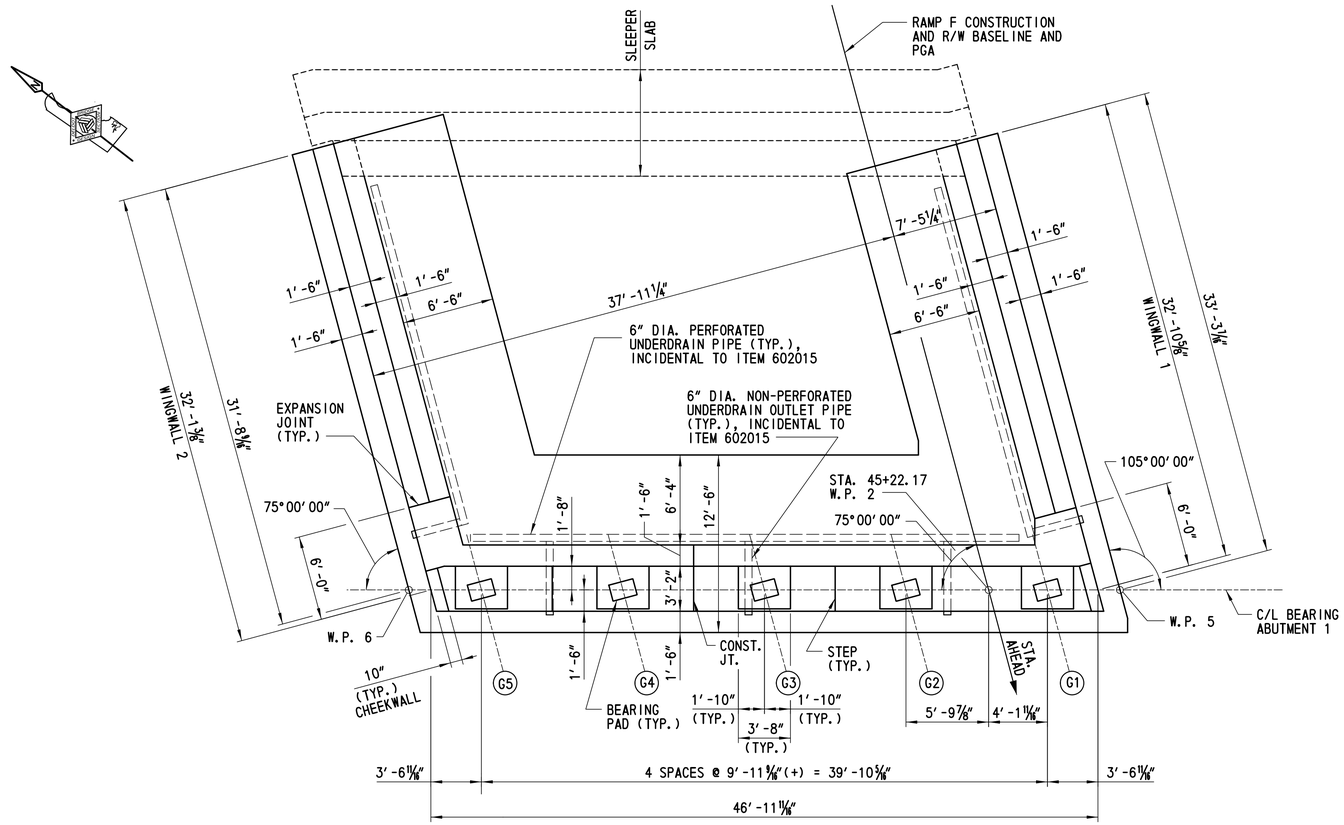

PLAN

SCALE: ⅜" = 1'-0"

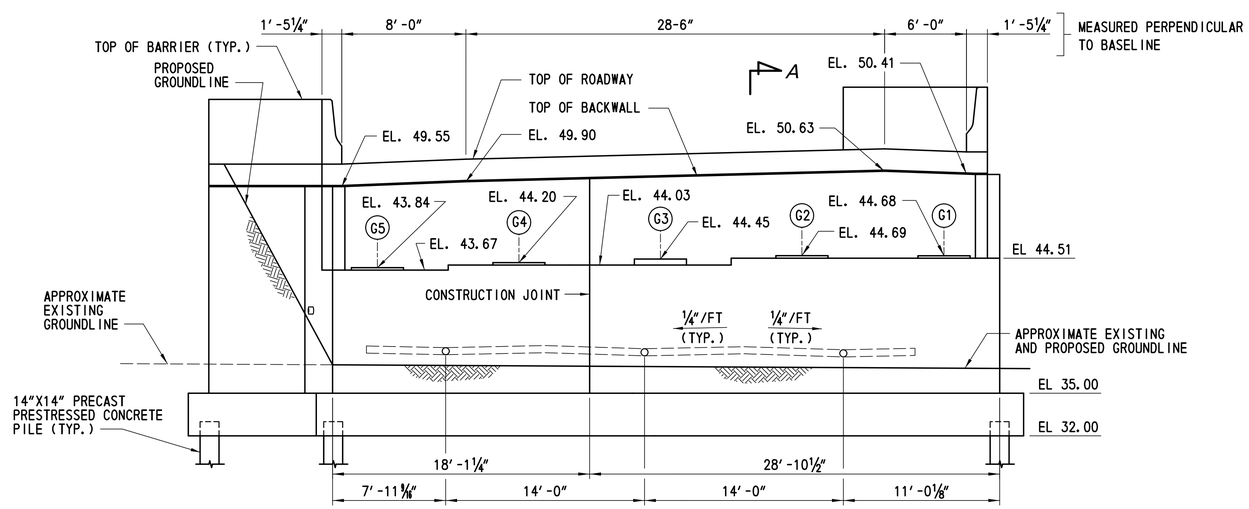

ELEVATION

SCALE: ⅜" = 1'-0"

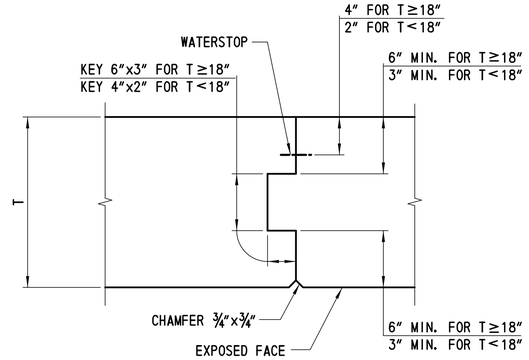

CONSTRUCTION JOINT DETAIL

SCALE: 1½" = 1'-0"

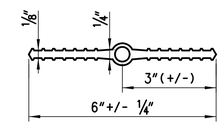

POLYVINYL CHLORIDE

WATERSTOP

NOT TO SCALE

NOTES:

1. PROVIDE HOLES OR SLOTS IN WATERSTOP, AS REQUIRED, WHEN NECESSARY TO ACCOMMODATE REINFORCEMENT BARS, BUT DO NOT COMPROMISE SEAL.
2. STOP WATERSTOP 9" FROM TOP OF WALL.

NOTES:

1. TOP OF ABUTMENT SEAT ELEVATIONS SHOWN ARE AT THE FRONT FACE OF BACKWALL.
2. TOP OF BACKWALL ELEVATIONS SHOWN AT CENTER OF BACKWALL.
3. ABUTMENT SEAT STEPS LOCATED MID-WAY BETWEEN GIRDERS.

CROSS REFERENCE NOTES:

1. FOR GENERAL PLAN AND ELEVATION, SEE DWG. NO. 1-479 PE-1.
2. FOR GEOMETRIC LAYOUT, SEE DWG. NO. 1-479 FT-1.
3. FOR PILE LAYOUT AT ABUTMENT 1, SEE DWG. NO. 1-479 FT-2.
4. FOR SECTION A-A, SEE DWG. NO. 1-479 AB-4.
5. FOR ABUTMENT DETAILS, SEE DWG. NOS. 1-479 AB-4 AND 1-479 AB-5.
6. FOR WINGWALL ELEVATIONS, SEE DWG. NO. 1-479 WW-1.
7. FOR BEARING DETAILS, SEE DWG. NO. 1-479 BD-1.
8. FOR STEM EXPANSION JOINT DETAIL, SEE DWG. NO. 1-479 AB-10.

DELAWARE DEPARTMENT OF TRANSPORTATION	ADDENDUMS / REVISIONS	US 301 LEVELS ROAD TO SUMMIT BRIDGE ROAD	CONTRACT T200911303	BRIDGE NO. 1-479	RAMP F OVER SANDY BRANCH ABUTMENT 1 PLAN AND ELEVATION	1-479 AB-1	
			COUNTY NEW CASTLE	DESIGNED BY: LT		SHEET NO. 530	
				CHECKED BY: JW		TOTAL SHTS. 1256	

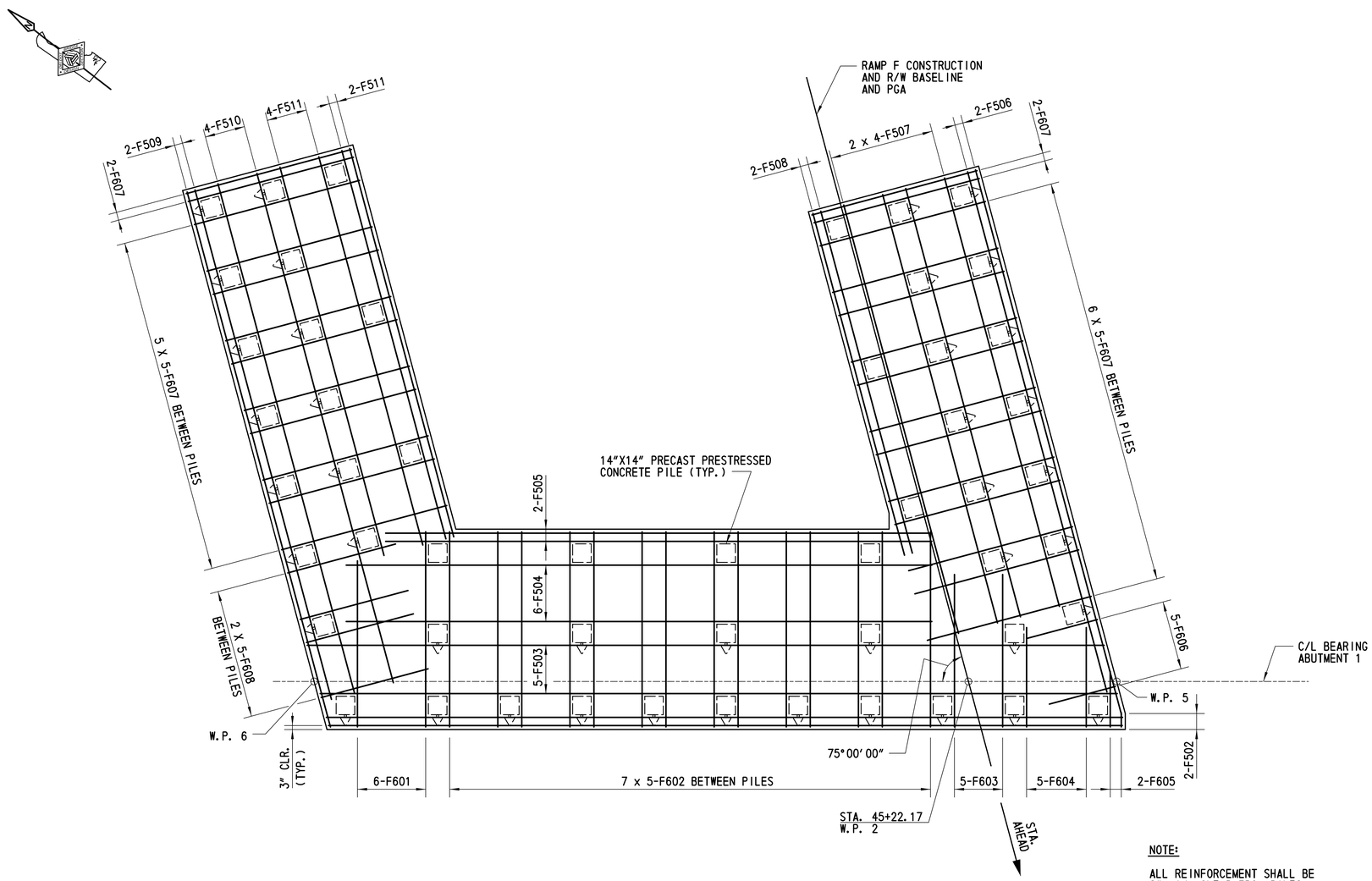

ABUTMENT 1 - BOTTOM MAT REINFORCEMENT PLAN

SCALE: ¼"= 1'-0"

NOTE:

ALL REINFORCEMENT SHALL BE
2" MIN. CLEAR FROM PILES.

CROSS REFERENCE NOTES:

1. FOR ABUTMENT 1 PILE PLAN, SEE DWG. NO. 1-479 FT-2.
2. FOR ABUTMENT 1 PLAN AND ELEVATION, SEE DWG. NO. 1-479 AB-1.
3. FOR REINFORCING BAR SCHEDULE, SEE DWG. NO. 1-479 BR-1.
4. FOR WORKING POINT COORDINATES, SEE DWG. NO. 1-479 FT-1.

DELAWARE DEPARTMENT OF TRANSPORTATION	ADDENDUMS / REVISIONS	SCALE 0 2 8 / 1 4 FEET	US 301 LEVELS ROAD TO SUMMIT BRIDGE ROAD	CONTRACT T200911303	BRIDGE NO. 1-479	RAMP F OVER SANDY BRANCH ABUTMENT 1 FOOTING REINFORCEMENT PLAN 1	1-479 AB-2
				COUNTY NEW CASTLE	DESIGNED BY: LT		SHEET NO. 531
					CHECKED BY: JW		TOTAL SHTS. 1256

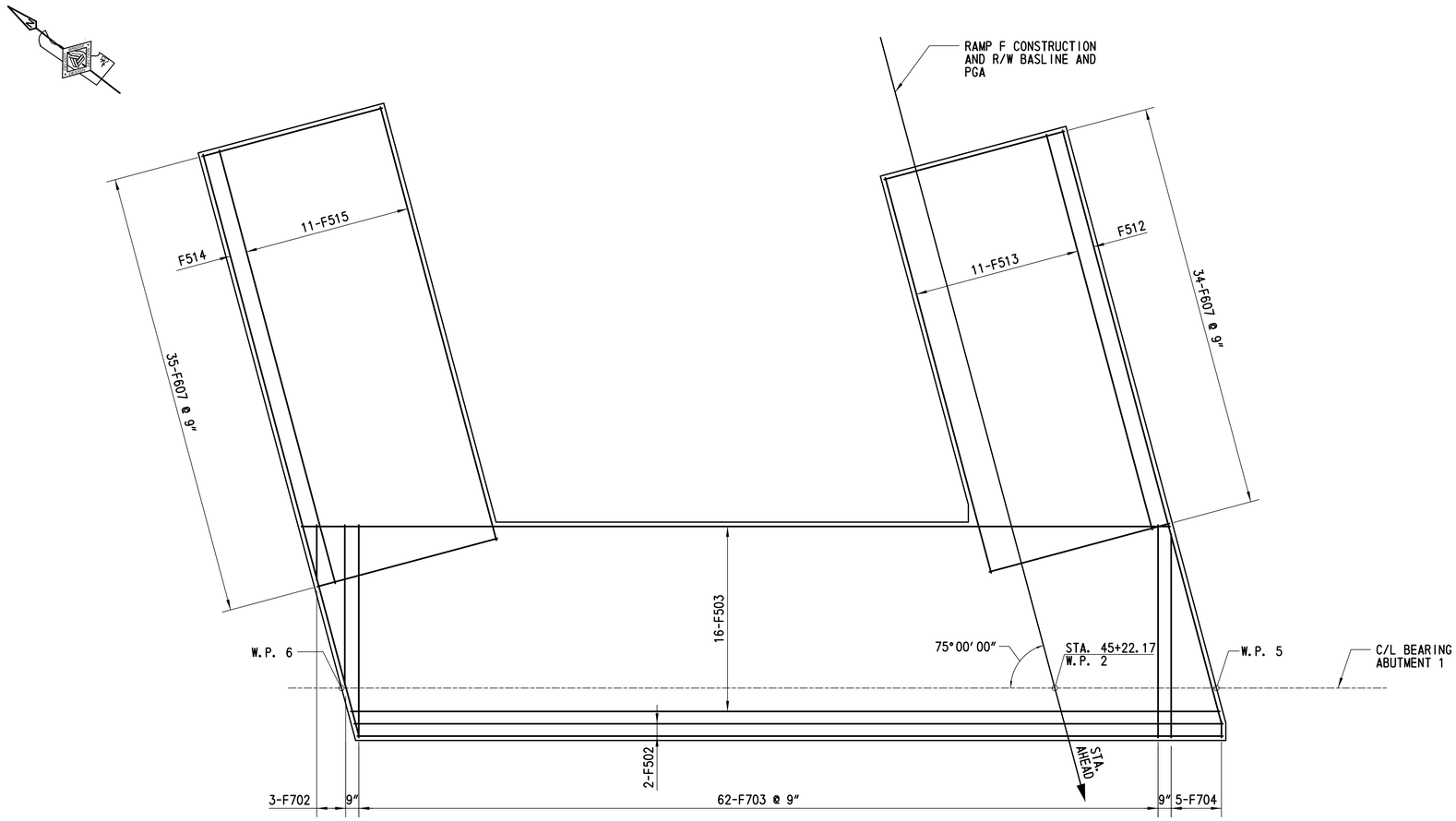

ABUTMENT 1 - TOP MAT REINFORCEMENT PLAN

SCALE: ¼"= 1'-0"

CROSS REFERENCE NOTES:

1. FOR ABUTMENT 1 PILE PLAN, SEE DWG. NO. 1-479 FT-2.
2. FOR ABUTMENT 1 PLAN AND ELEVATION, SEE DWG. NO. 1-479 AB-1.
3. FOR REINFORCING BAR SCHEDULE, SEE DWG. NO. 1-479 BR-1.
4. FOR WORKING POINT COORDINATES, SEE DWG. NO. 1-479 FT-1.

DELAWARE DEPARTMENT OF TRANSPORTATION	ADDENDUMS / REVISIONS	SCALE 0 2 8 / 1 4 FEET	US 301 LEVELS ROAD TO SUMMIT BRIDGE ROAD	CONTRACT T200911303	BRIDGE NO. 1-479	RAMP F OVER SANDY BRANCH ABUTMENT 1 FOOTING REINFORCEMENT PLAN 2	1-479 AB-3	SHEET NO. 532
				COUNTY NEW CASTLE	DESIGNED BY: LT			TOTAL SHTS. 1256
					CHECKED BY: JW			

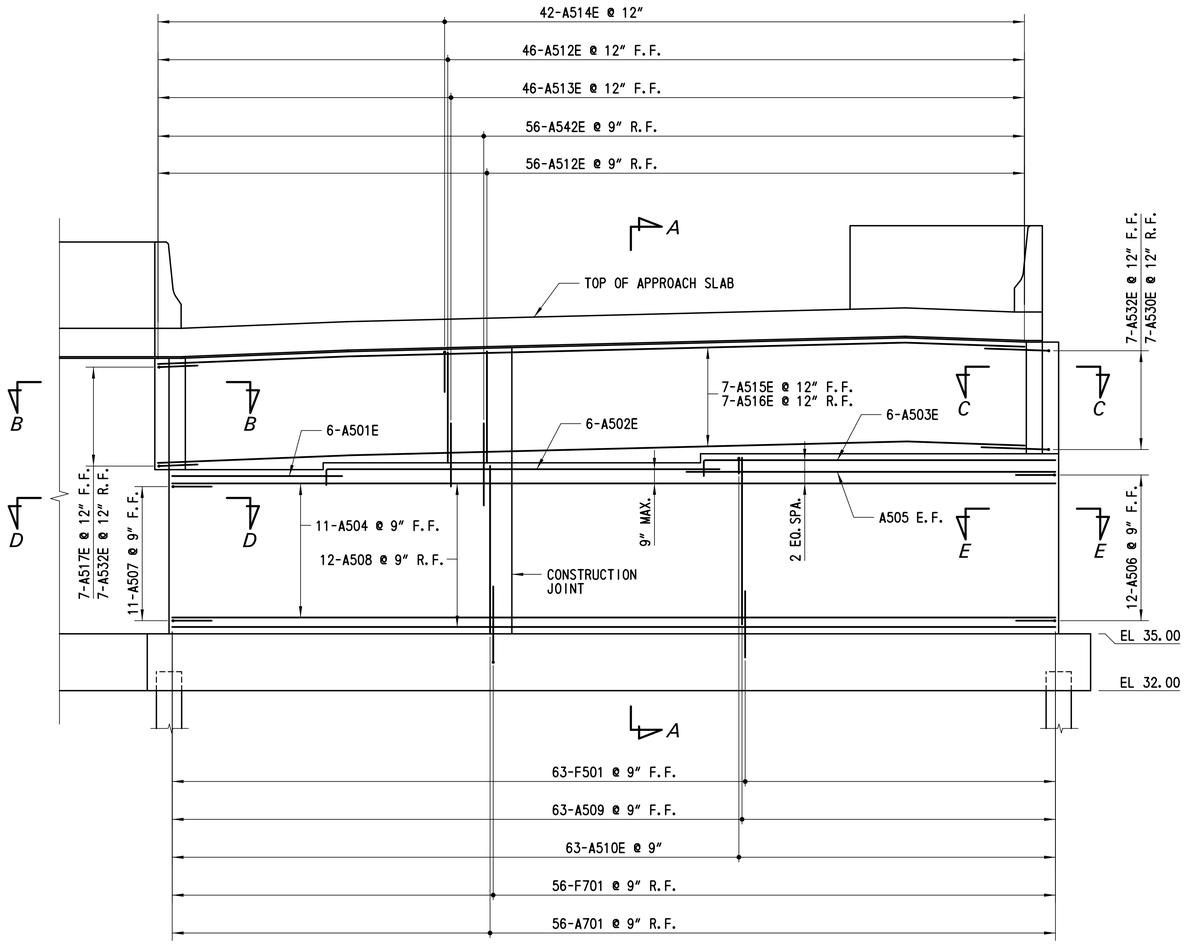

ELEVATION - ABUTMENT 1 REINFORCEMENT

SCALE: ¼" = 1'-0"

NOTE:

PEDESTALS, PEDESTAL REINFORCEMENT AND END DIAPHRAGM DOWELS NOT SHOWN FOR CLARITY.

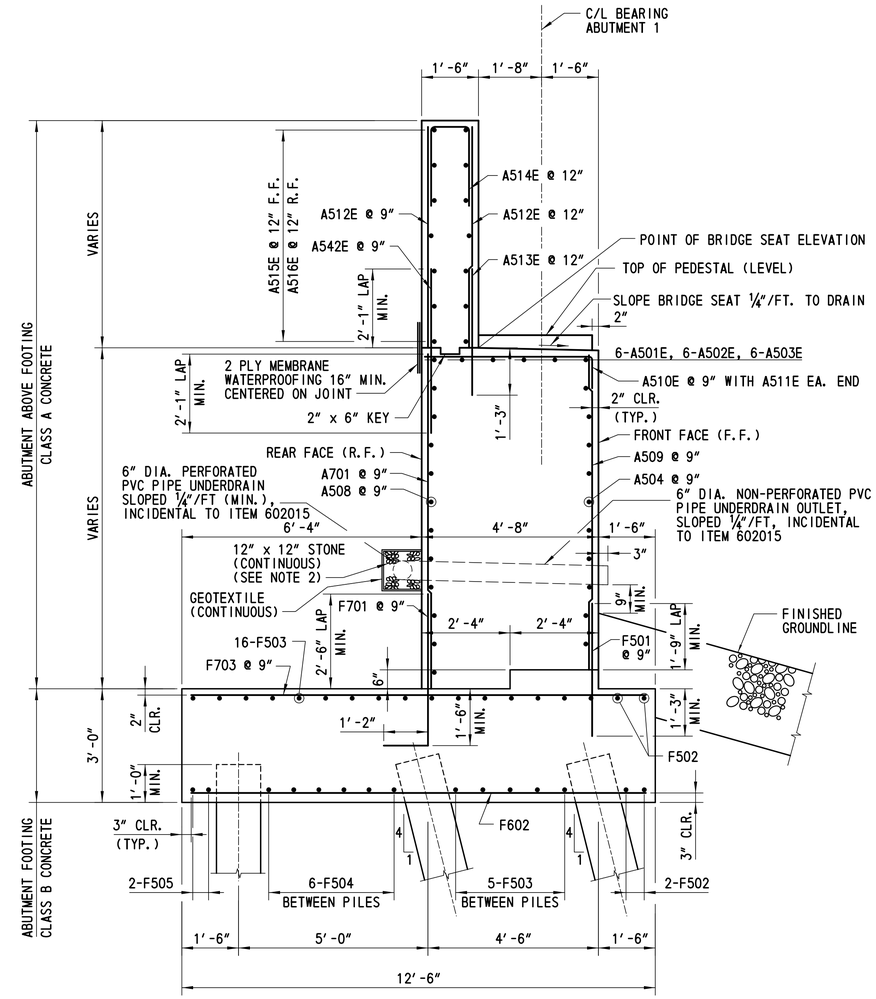

SECTION A-A

SCALE: ½" = 1'-0"

NOTES:

1. APPROACH SLAB NOT SHOWN FOR CLARITY.
2. STONE SHALL BE DELAWARE NO. 57 CONFORMING TO THE REQUIREMENTS OF SECTION 813.
3. THE WATERPROOFING MEMBRANE SHALL BE INCIDENTAL TO ITEM NO. 602015.

CROSS REFERENCE NOTES:

1. FOR FOUNDATION PLAN, SEE DWG. NO. 1-479 FT-2.
2. FOR ABUTMENT 1 PLAN AND ELEVATION, SEE DWG. NO. 1-479 AB-1.
3. FOR ABUTMENT 1 FOOTING REINFORCEMENT, SEE DWG. NOS. 1-479 AB-2 AND 1-479 AB-3.
4. FOR SECTIONS B-B, C-C, D-D AND E-E, SEE DWG. NO. 1-479 AB-5.
5. FOR PEDESTAL REINFORCEMENT DETAIL, SEE DWG. NO. 1-479 AB-5.
6. FOR END DIAPHRAGM DETAILS, SEE DWG. NO. 1-479 DPH-1.
7. FOR REINFORCING BAR SCHEDULE, SEE DWG. NO. 1-479 BR-1.

DELAWARE DEPARTMENT OF TRANSPORTATION	ADDENDUMS / REVISIONS		US 301 LEVELS ROAD TO SUMMIT BRIDGE ROAD	CONTRACT T200911303	BRIDGE NO. 1-479	RAMP F OVER SANDY BRANCH ABUTMENT 1 REINFORCEMENT DETAILS 1	1-479 AB-4
				COUNTY NEW CASTLE	DESIGNED BY: LT		SHEET NO. 533
					CHECKED BY: JW		TOTAL SHTS. 1256

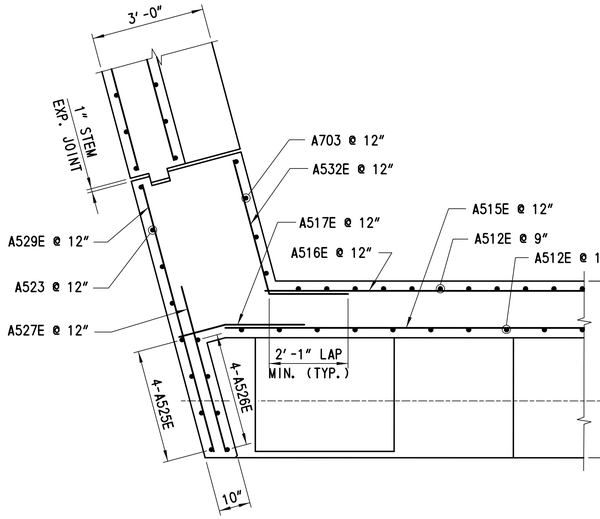

SECTION B-B

SCALE: ½"= 1'-0"

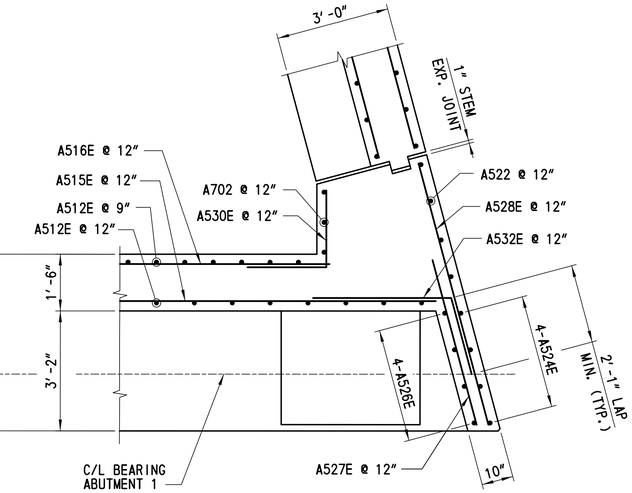

SECTION C-C

SCALE: ½"= 1'-0"

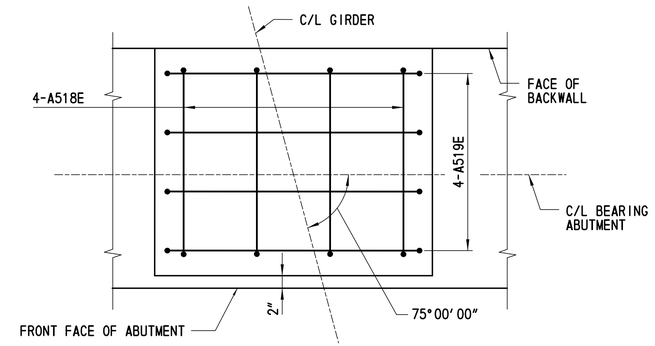

PLAN

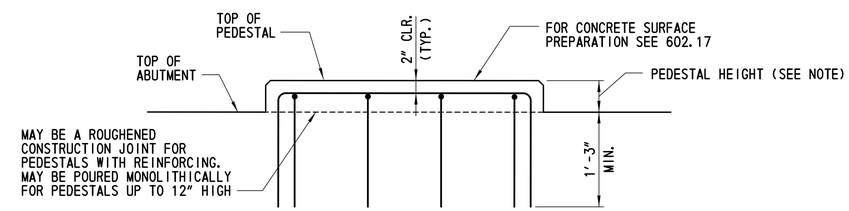

ELEVATION

NOTE:

PEDESTAL REINFORCEMENT NOT REQUIRED FOR PEDESTAL HEIGHTS LESS THAN 4".

PEDESTAL REINFORCEMENT DETAIL

SCALE: 1"= 1'-0"

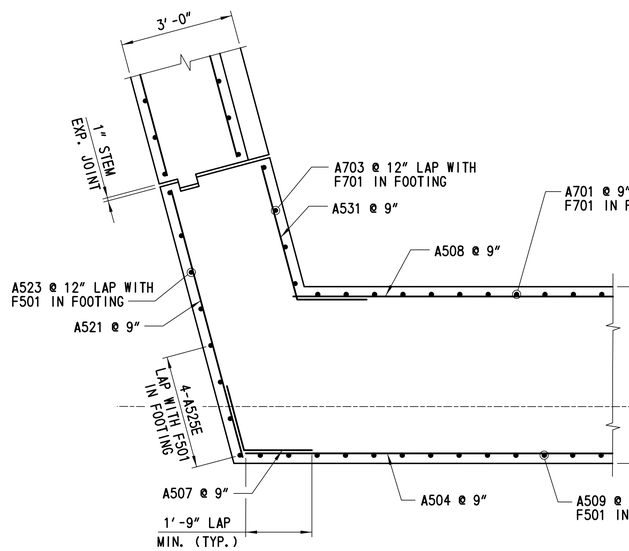

SECTION D-D

SCALE: ½"= 1'-0"

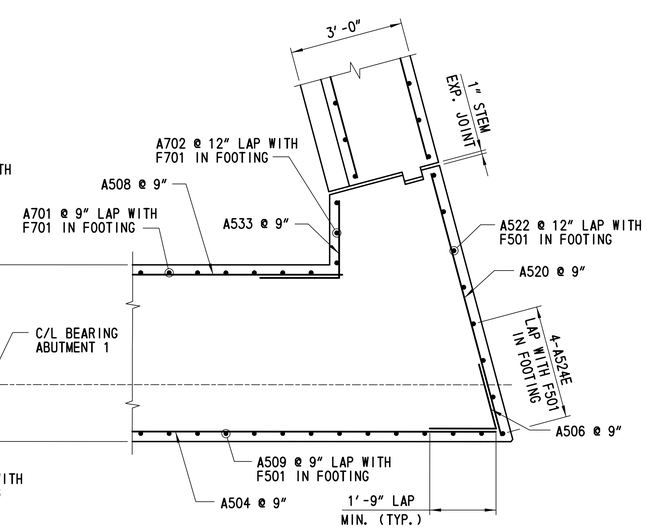

SECTION E-E

SCALE: ½"= 1'-0"

CROSS REFERENCE NOTES:

1. FOR ABUTMENT 1 PLAN AND ELEVATION, SEE DWG. NO 1-479 AB-1.
2. FOR ABUTMENT 1 REINFORCEMENT, SEE DWG. NO. 1-479 AB-4.
3. FOR WINGWALL REINFORCEMENT, SEE DWG. NO. 1-479 WW-2.
4. FOR REINFORCING BAR SCHEDULE, SEE DWG. NO. 1-479 BR-1.
5. FOR STEM EXPANSION JOINT DETAIL, SEE DWG. NO. 1-479 AB-10.

DELAWARE DEPARTMENT OF TRANSPORTATION	ADDENDUMS / REVISIONS	US 301 LEVELS ROAD TO SUMMIT BRIDGE ROAD	CONTRACT T200911303	BRIDGE NO. 1-479	RAMP F OVER SANDY BRANCH	1-479 AB-5	
			COUNTY NEW CASTLE	DESIGNED BY: LT	ABUTMENT 1 REINFORCEMENT DETAILS 2	SHEET NO. 534	
				CHECKED BY: JW		TOTAL SHTS. 1256	

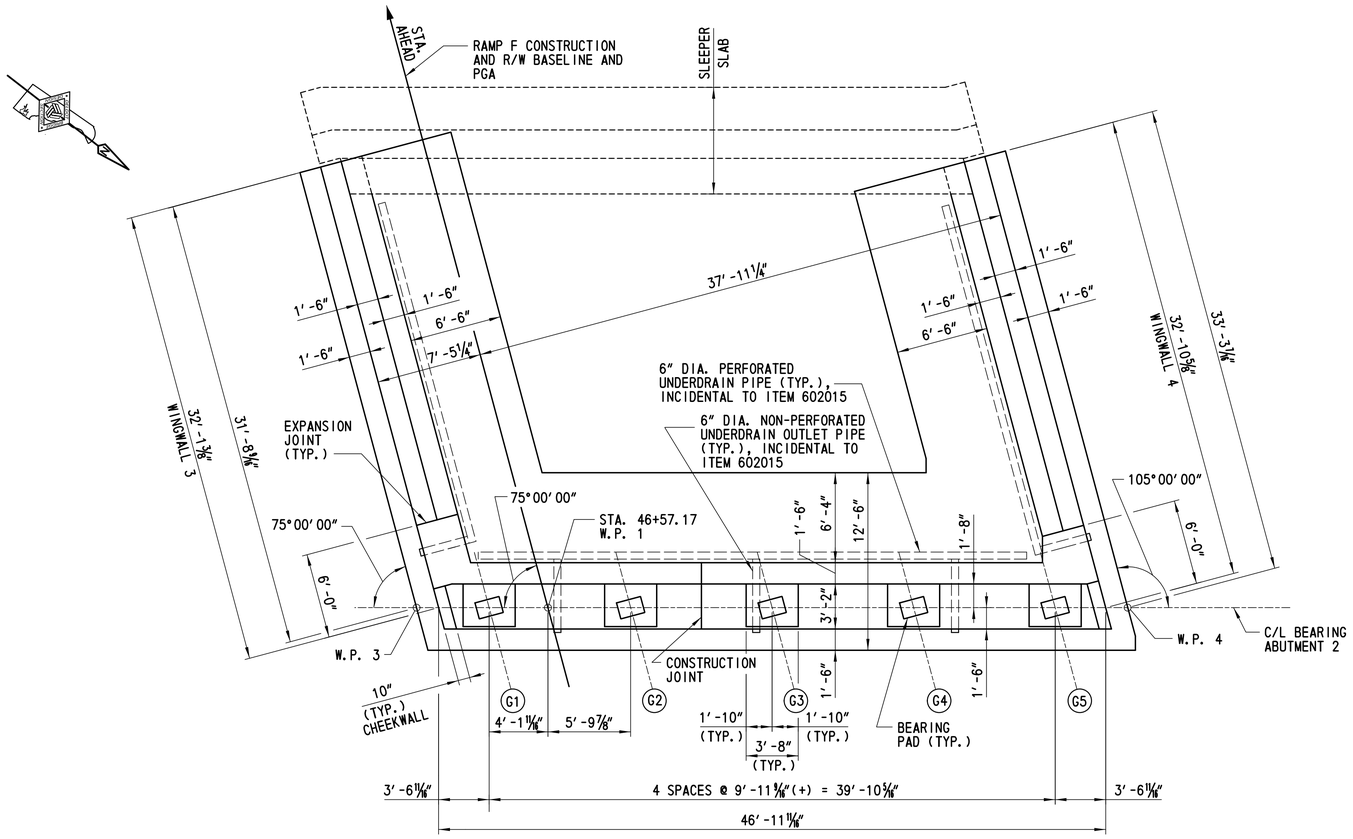

PLAN

SCALE: 3⁄16″ = 1′-0″

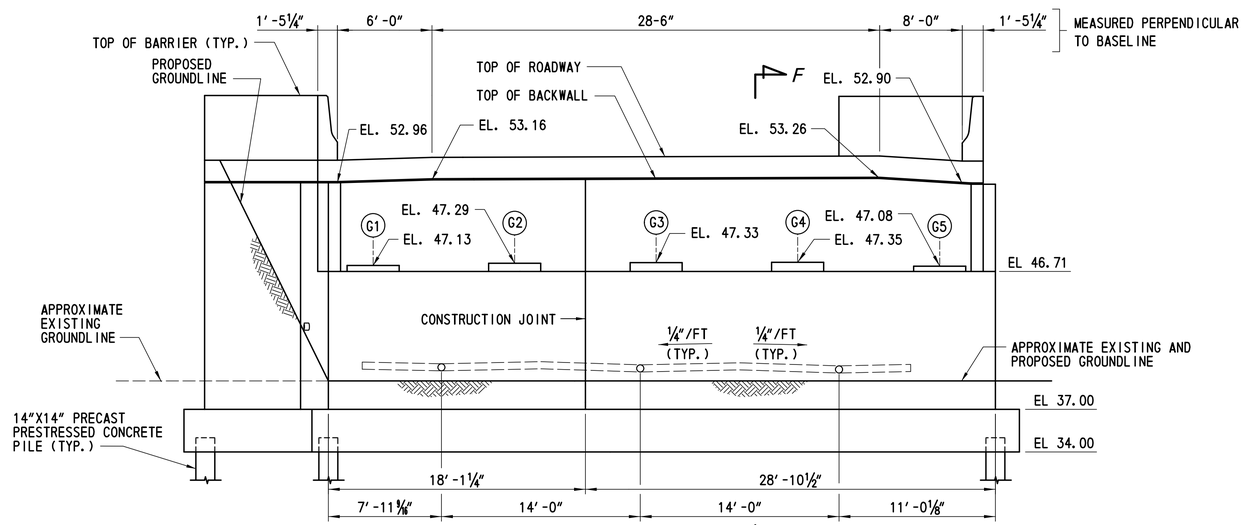

ELEVATION F

SCALE: 3⁄16″ = 1′-0″

NOTES:

1. TOP OF ABUTMENT SEAT ELEVATIONS SHOWN ARE AT THE FRONT FACE OF BACKWALL.
2. TOP OF BACKWALL ELEVATIONS SHOWN AT CENTER OF BACKWALL.

CROSS REFERENCE NOTES:

1. FOR GENERAL PLAN AND ELEVATION, SEE DWG. NO. 1-479 PE-1.
2. FOR GEOMETRIC LAYOUT, SEE DWG. NO. 1-479 FT-1.
3. FOR PILE LAYOUT AT ABUTMENT 2, SEE DWG. NO. 1-479 FT-3.
4. FOR SECTION F-F, SEE DWG. NO. 1-479 AB-9.
5. FOR ABUTMENT DETAILS, SEE DWG. NOS. 1-479 AB-9 AND 1-479 AB-10.
6. FOR WINGWALL ELEVATIONS, SEE DWG. NO. 1-479 WW-1.
7. FOR BEARING DETAILS, SEE DWG. NO. 1-479 BD-1.
8. FOR CONSTRUCTION JOINT DETAIL, SEE DWG. NO. 1-479 AB-1.
9. FOR STEM EXPANSION JOINT DETAIL, SEE DWG. NO. 1-479 AB-10.

DELAWARE DEPARTMENT OF TRANSPORTATION	ADDENDUMS / REVISIONS	SCALE 0 2 8 / 1 4 FEET	US 301 LEVELS ROAD TO SUMMIT BRIDGE ROAD	CONTRACT T200911303	BRIDGE NO. 1–479	RAMP F OVER SANDY BRANCH	1-479 AB-6	
				COUNTY NEW CASTLE	DESIGNED BY: LT	ABUTMENT 2 PLAN AND ELEVATION	SHEET NO. 535	
					CHECKED BY: JW		TOTAL SHTS. 1256	

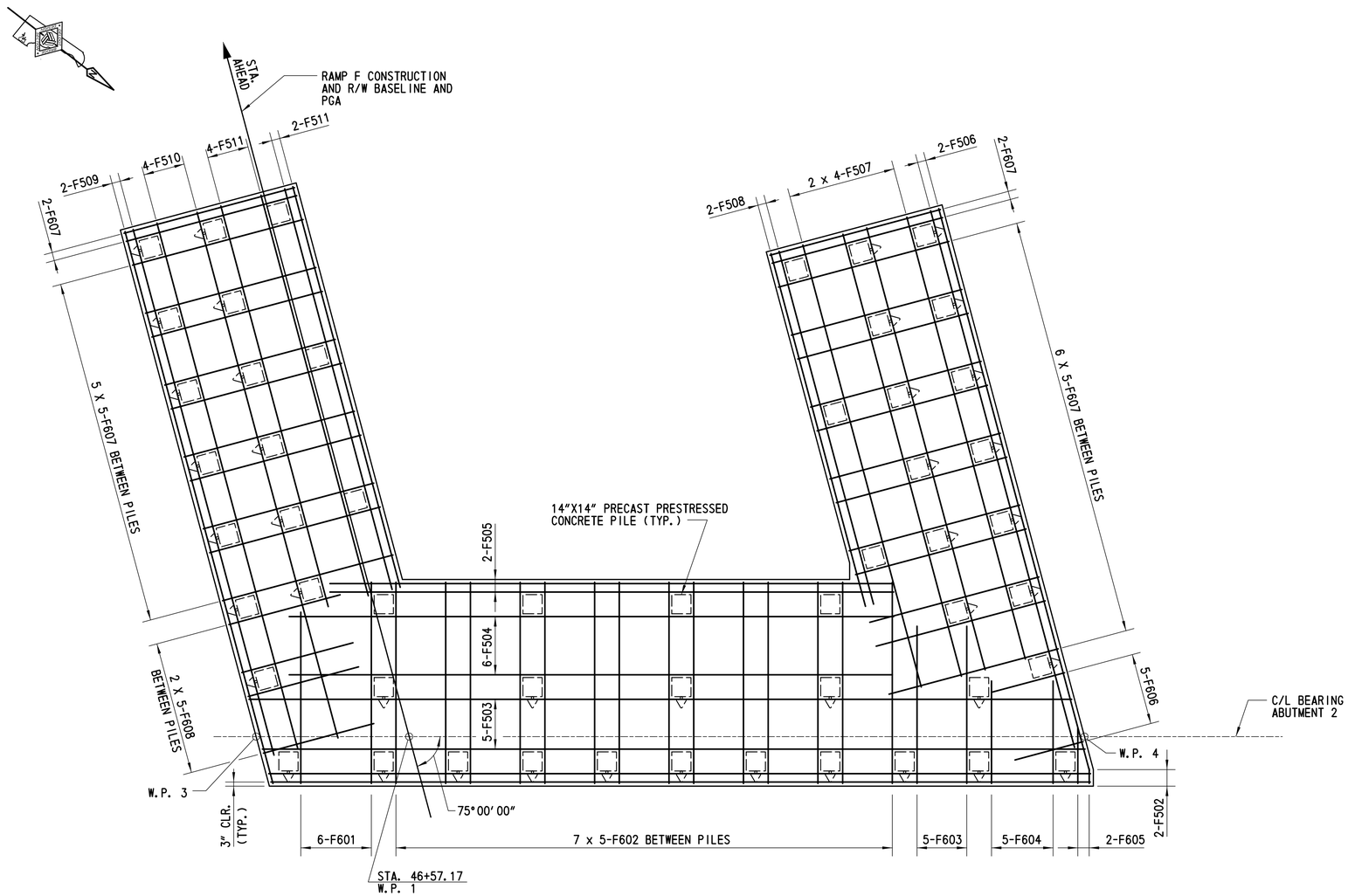

ABUTMENT 2 - BOTTOM MAT REINFORCEMENT PLAN

SCALE: 1/4"= 1'-0"

NOTE:

ALL REINFORCEMENT SHALL BE 2" MIN. CLEAR FROM PILES.

CROSS REFERENCE NOTES:

1. FOR ABUTMENT 2 PILE PLAN, SEE DWG. NO. 1-479 FT-3.
2. FOR ABUTMENT 2 PLAN AND ELEVATION, SEE DWG. NO. 1-479 AB-6.
3. FOR REINFORCING BAR SCHEDULE, SEE DWG. NO. 1-479 BR-2.
4. FOR WORKING POINT COORDINATES, SEE DWG. NO. 1-479 FT-1.

DELAWARE DEPARTMENT OF TRANSPORTATION	ADDENDUMS / REVISIONS	SCALE 0 2 8 / 1 4 FEET	US 301 LEVELS ROAD TO SUMMIT BRIDGE ROAD	CONTRACT T200911303	BRIDGE NO. 1-479	RAMP F OVER SANDY BRANCH ABUTMENT 2 FOOTING REINFORCEMENT PLAN 1	1-479 AB-7	
				COUNTY NEW CASTLE	DESIGNED BY: LT		SHEET NO. 536	
					CHECKED BY: JW		TOTAL SHTS. 1256	

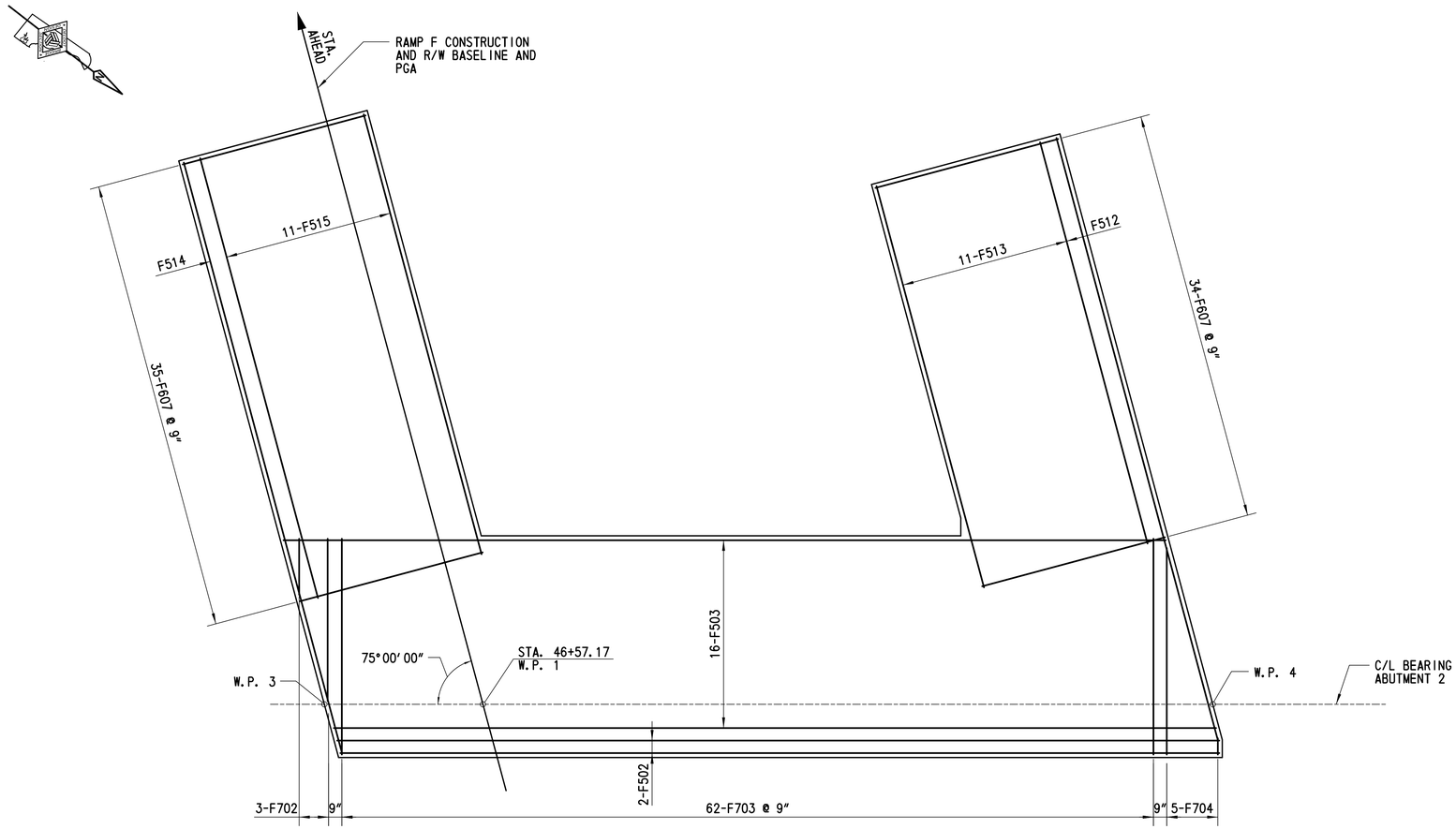

ABUTMENT 2 - TOP MAT REINFORCEMENT PLAN

SCALE: ¼"= 1'-0"

CROSS REFERENCE NOTES:

1. FOR ABUTMENT 2 PILE PLAN, SEE DWG. NO. 1-479 FT-3.
2. FOR ABUTMENT 2 PLAN AND ELEVATION, SEE DWG. NO. 1-479 AB-6.
3. FOR REINFORCING BAR SCHEDULE, SEE DWG. NO. 1-479 BR-2.
4. FOR WORKING POINT COORDINATES, SEE DWG. NO. 1-479 FT-1.

DELAWARE DEPARTMENT OF TRANSPORTATION	ADDENDUMS / REVISIONS	SCALE 0 2 8 / 1 4 FEET	US 301 LEVELS ROAD TO SUMMIT BRIDGE ROAD	CONTRACT T200911303	BRIDGE NO. 1-479	RAMP F OVER SANDY BRANCH	1-479 AB-8	
				COUNTY NEW CASTLE	DESIGNED BY: LT	ABUTMENT 2 FOOTING REINFORCEMENT PLAN 2	SHEET NO. 537	
					CHECKED BY: JW		TOTAL SHTS. 1256	

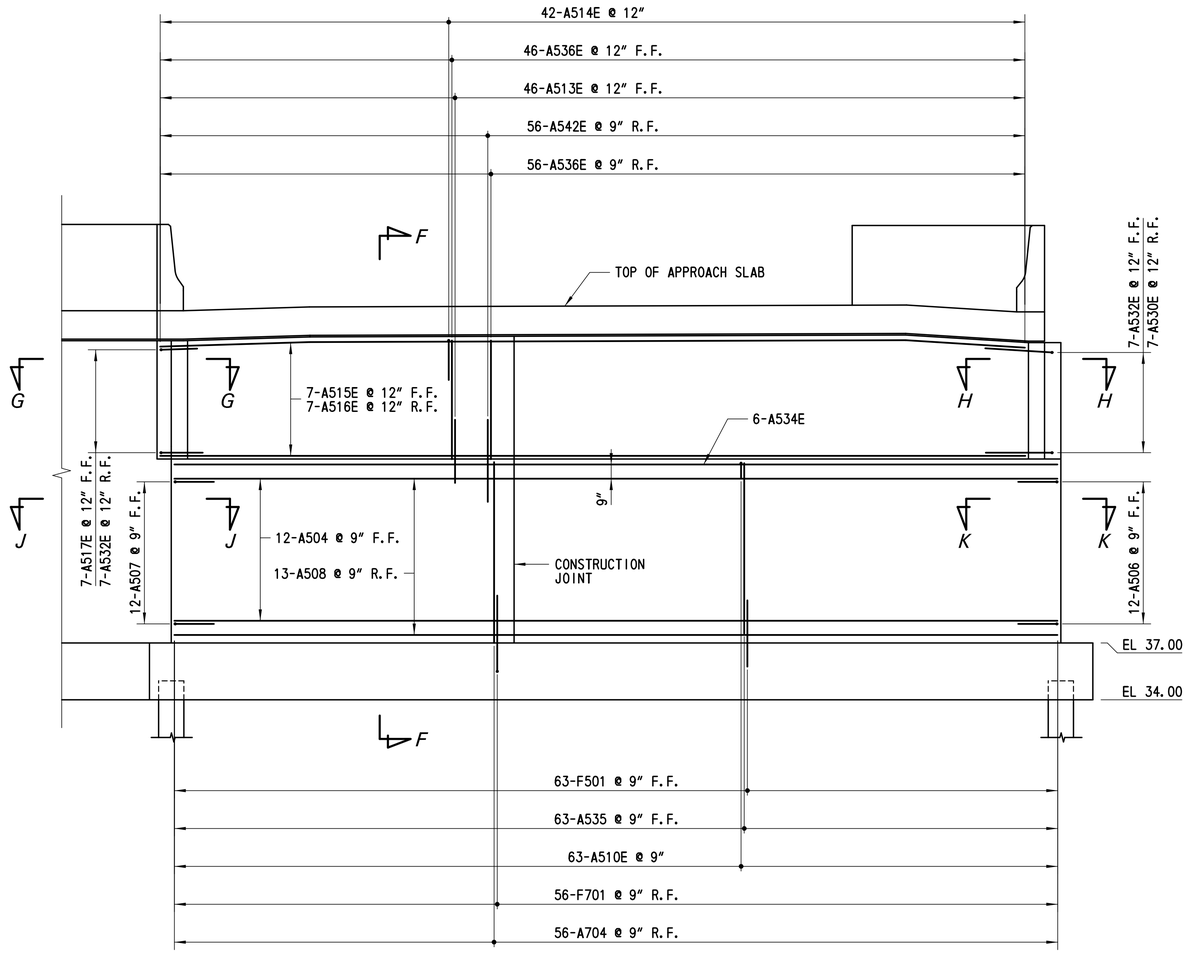

ELEVATION - ABUTMENT 2 REINFORCEMENT

SCALE: 1/4" = 1'-0"

NOTE:

PEDESTALS AND PEDESTAL REINFORCEMENT NOT SHOWN FOR CLARITY.

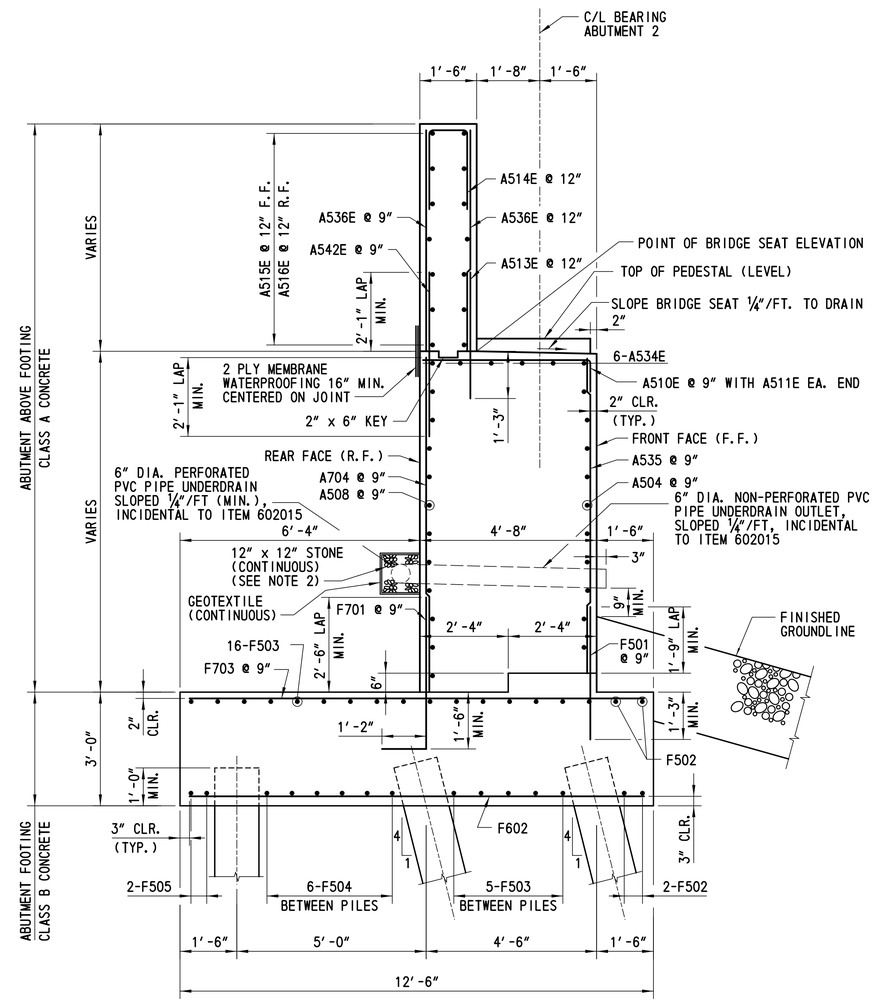

SECTION F-F

SCALE: 1/2" = 1'-0"

NOTES:

1. APPROACH SLAB NOT SHOWN FOR CLARITY.
2. STONE SHALL BE DELAWARE NO. 57 STONE CONFORMING TO THE REQUIREMENTS OF SECTION 813.
3. THE WATERPROOFING MEMBRANE SHALL BE INCIDENTAL TO ITEM NO. 602015.

CROSS REFERENCE NOTES:

1. FOR FOUNDATION PLAN, SEE DWG. NO. 1-479 FT-3.
2. FOR ABUTMENT 2 PLAN AND ELEVATION, SEE DWG. NO. 1-479 AB-6.
3. FOR ABUTMENT 2 FOOTING REINFORCEMENT, SEE DWG. NOS. 1-479 AB-7 AND 1-479 AB-8.
4. FOR SECTIONS G-G, H-H, J-J AND K-K, SEE DWG. NO. 1-479 AB-10.
5. FOR PEDESTAL REINFORCEMENT DETAIL, SEE DWG. NO. 1-479 AB-5.
6. FOR REINFORCING BAR SCHEDULE, SEE DWG. NO. 1-479 BR-2.

DELAWARE DEPARTMENT OF TRANSPORTATION	ADDENDUMS / REVISIONS		US 301 LEVELS ROAD TO SUMMIT BRIDGE ROAD	CONTRACT T200911303	BRIDGE NO. 1-479	RAMP F OVER SANDY BRANCH ABUTMENT 2 REINFORCEMENT DETAILS 1	1-479 AB-9	
				COUNTY NEW CASTLE	DESIGNED BY: LT		SHEET NO. 538	
					CHECKED BY: JW		TOTAL SHTS. 1256	

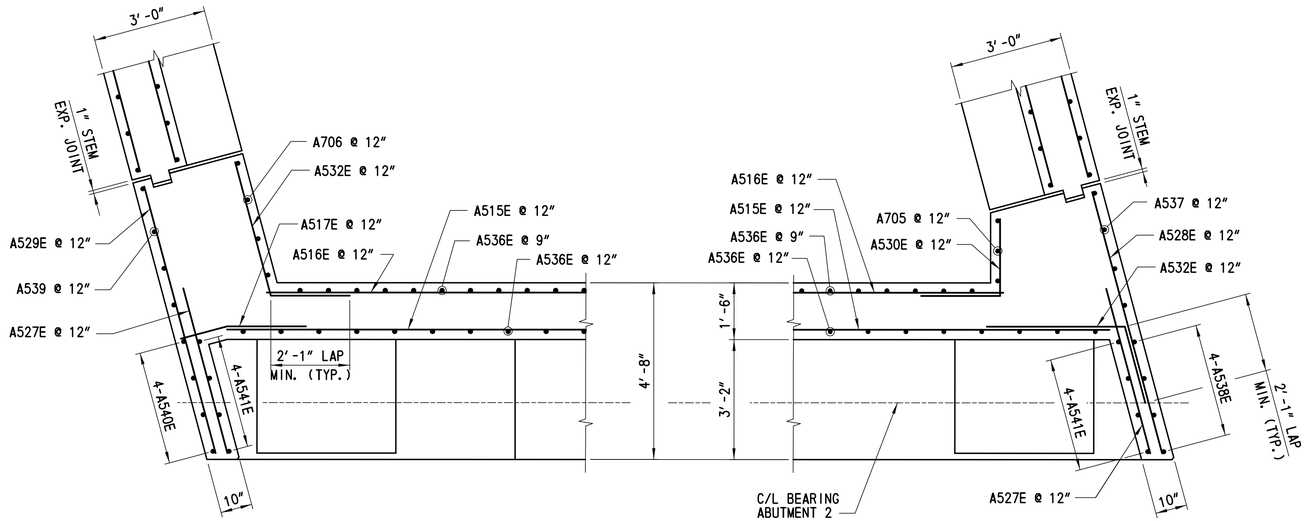

SECTION G-G

SCALE: ½"= 1'-0"

SECTION H-H

SCALE: ½"= 1'-0"

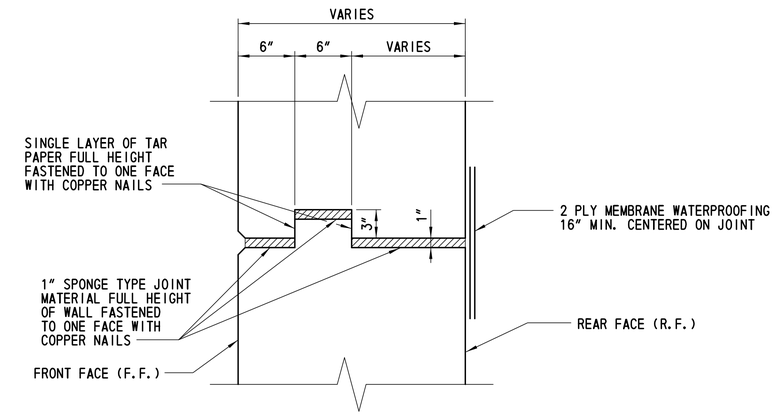

STEM EXPANSION JOINT DETAIL

SCALE: 1½"= 1'-0"

NOTES:

1. STOP KEY 9" BELOW TOP OF WALL.
2. REINFORCEMENT SHALL NOT PASS THROUGH EXPANSION JOINT.
3. ONLY PLACE EXPANSION JOINT IN STEM (NO JOINT IN FOOTING).
4. NO CHAMFER REQUIRED ON REAR FACE.
5. THE WATERPROOFING MEMBRANE SHALL BE INCIDENTAL TO ITEM NO. 602015.
6. THE 1" SPONGE TYPE JOINT MATERIAL SHALL BE INCIDENTAL TO ITEM NO. 602015.

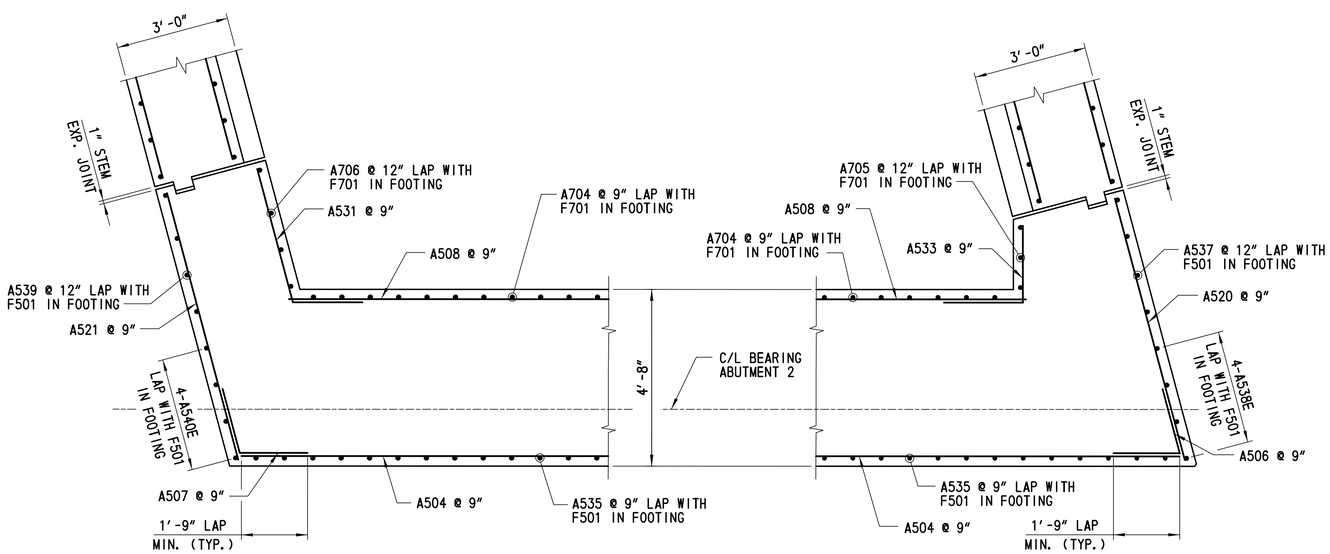

SECTION J-J

SCALE: ½"= 1'-0"

SECTION K-K

SCALE: ½"= 1'-0"

CROSS REFERENCE NOTES:

1. FOR ABUTMENT 2 PLAN AND ELEVATION, SEE DWG. NO. 1-479 AB-6.
2. FOR ABUTMENT 2 REINFORCEMENT, SEE DWG. NO. 1-479 AB-9.
3. FOR WINGWALL REINFORCEMENT, SEE DWG. NO. 1-479 WW-3.
4. FOR REINFORCING BAR SCHEDULE, SEE DWG. NO. 1-479 BR-2.

DELAWARE DEPARTMENT OF TRANSPORTATION	ADDENDUMS / REVISIONS	US 301 LEVELS ROAD TO SUMMIT BRIDGE ROAD	CONTRACT T200911303	BRIDGE NO. 1-479	RAMP F OVER SANDY BRANCH ABUTMENT 2 REINFORCEMENT DETAILS 2
			COUNTY NEW CASTLE	DESIGNED BY: LT	
				CHECKED BY: JW	

1-479 AB-10
SHEET NO.
539
TOTAL SHTS.
1256

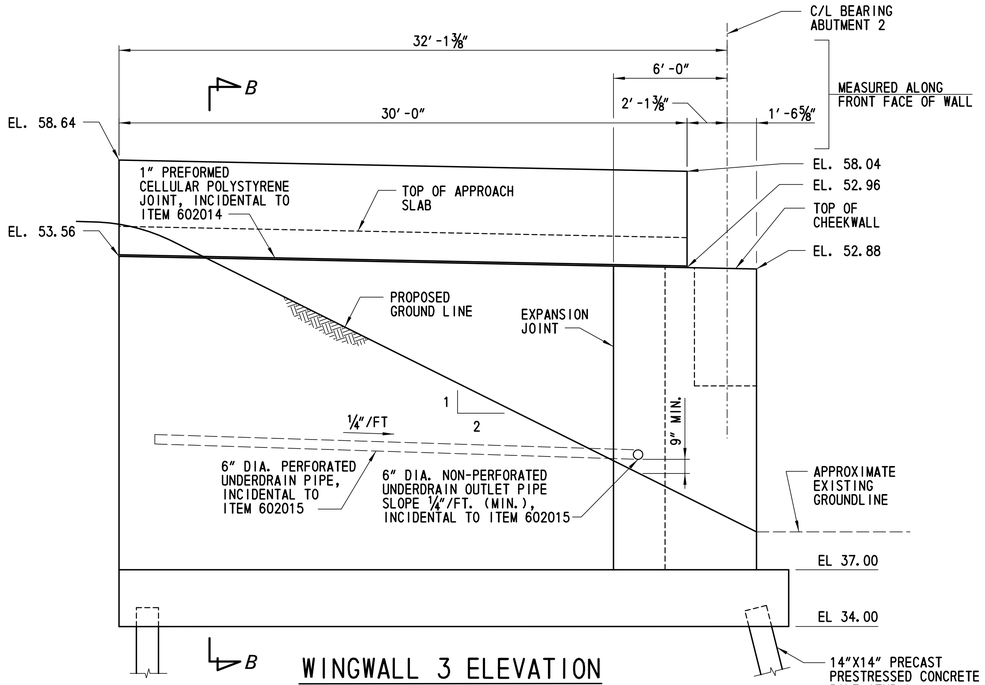

WINGWALL 3 ELEVATION

SCALE: ¼″ = 1′-0″

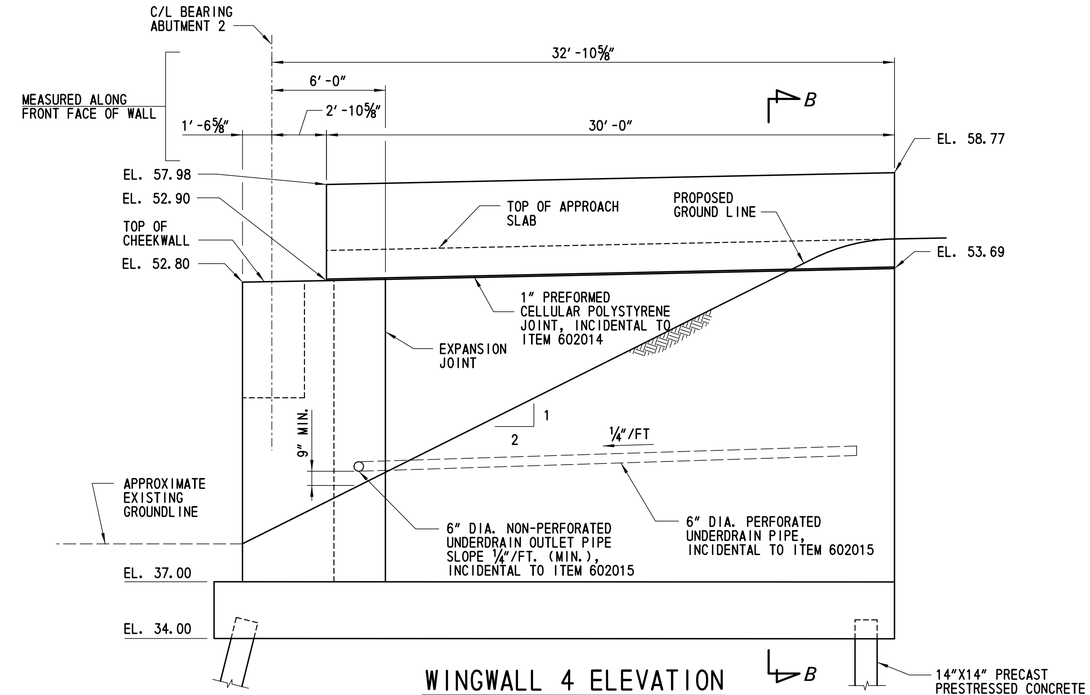

WINGWALL 4 ELEVATION

SCALE: ¼″ = 1′-0″

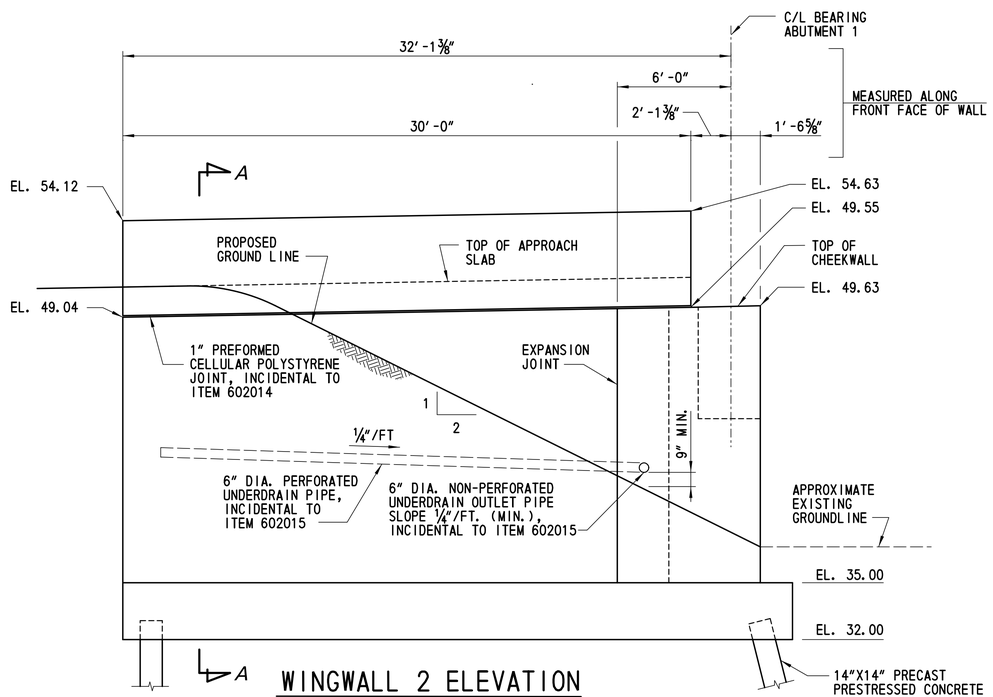

WINGWALL 2 ELEVATION

SCALE: ¼″ = 1′-0″

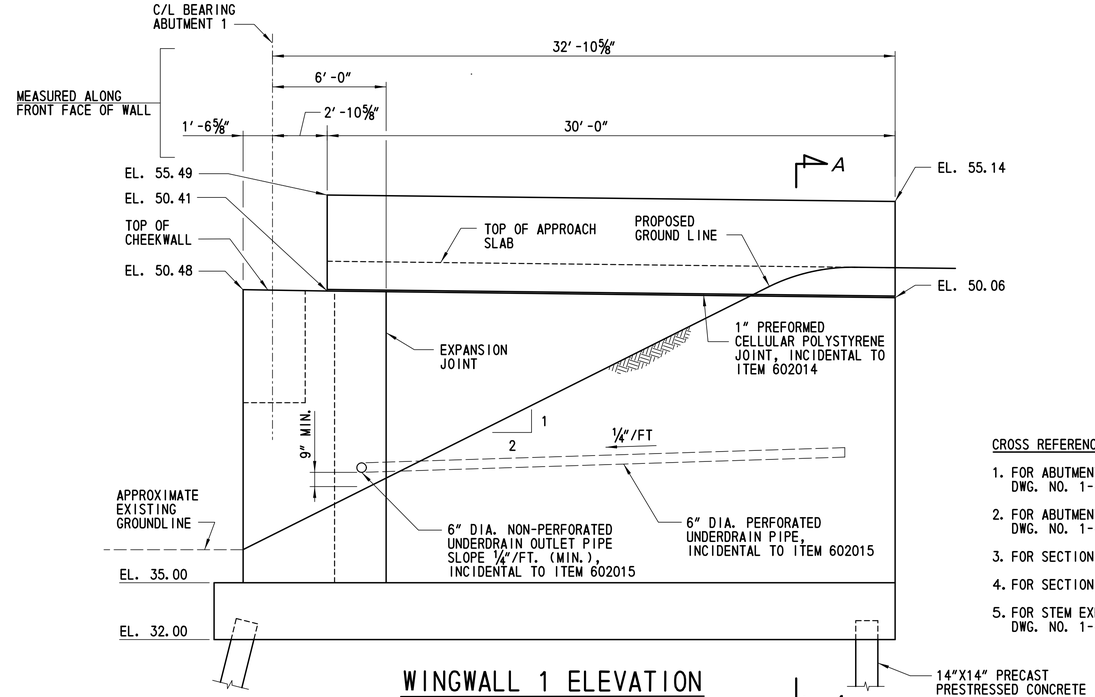

WINGWALL 1 ELEVATION

SCALE: ¼″ = 1′-0″

CROSS REFERENCE NOTES:

1. FOR ABUTMENT 1 PLAN AND ELEVATION, SEE DWG. NO. 1-479 AB-1.
2. FOR ABUTMENT 2 PLAN AND ELEVATION, SEE DWG. NO. 1-479 AB-6.
3. FOR SECTION A-A, SEE DWG. NO. 1-479 WW-2.
4. FOR SECTION B-B, SEE DWG. NO. 1-479 WW-3.
5. FOR STEM EXPANSION JOINT DETAIL, SEE DWG. NO. 1-479 AB-10.

DELAWARE DEPARTMENT OF TRANSPORTATION	ADDENDUMS / REVISIONS	SCALE 0 2 8 / 1 4 FEET	US 301 LEVELS ROAD TO SUMMIT BRIDGE ROAD	CONTRACT T200911303 / COUNTY NEW CASTLE	BRIDGE NO. 1-479 / DESIGNED BY: KW / CHECKED BY: JW	RAMP F OVER SANDY BRANCH — WINGWALL ELEVATIONS

1-479 WW-1
SHEET NO. 540
TOTAL SHTS. 1256

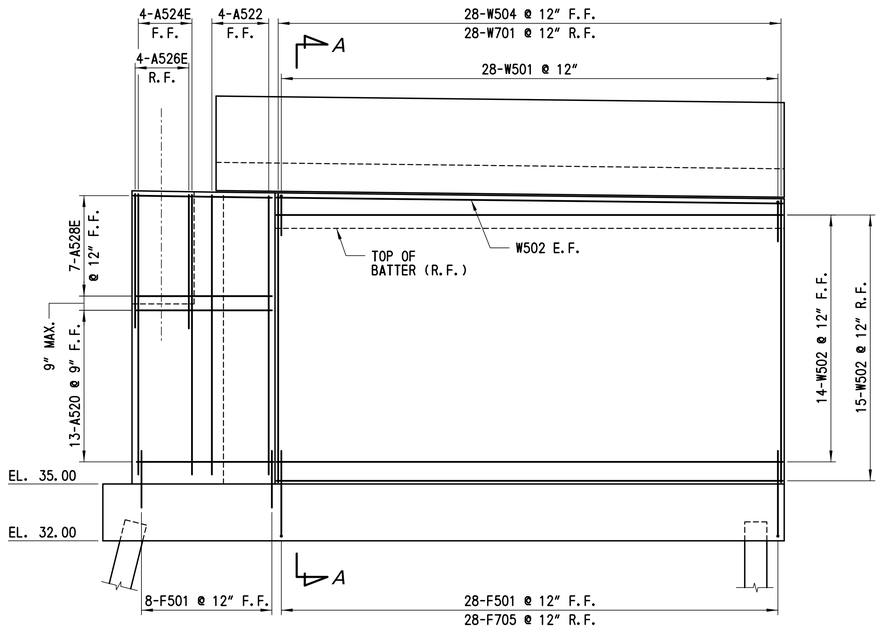

WINGWALL 1 ELEVATION

SCALE: 1/4" = 1'-0"

NOTE:

FOR ADDITIONAL ABUTMENT REINFORCEMENT, NOT SHOWN FOR CLARITY, SEE DWG. NO. 1-479 AB-5.

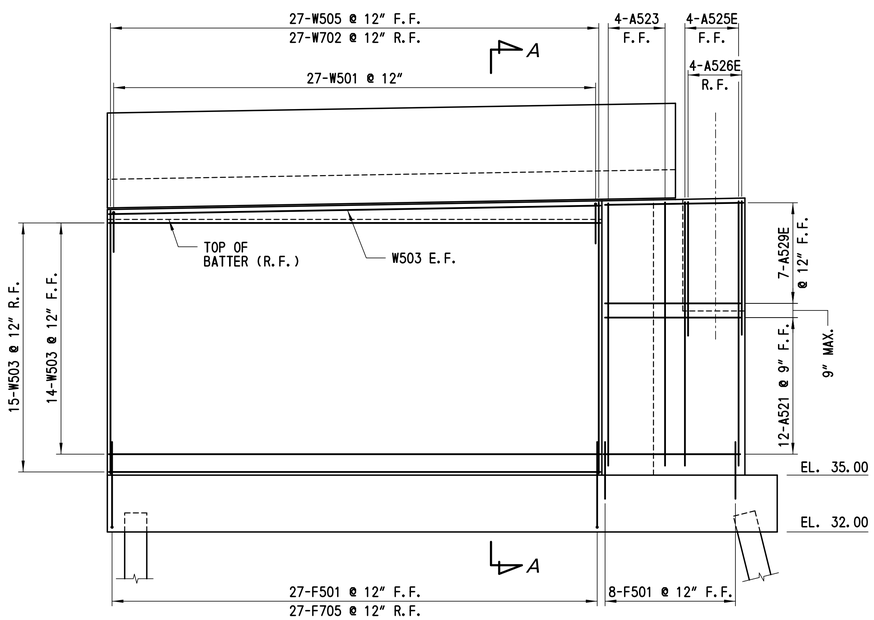

WINGWALL 2 ELEVATION

SCALE: 1/4" = 1'-0"

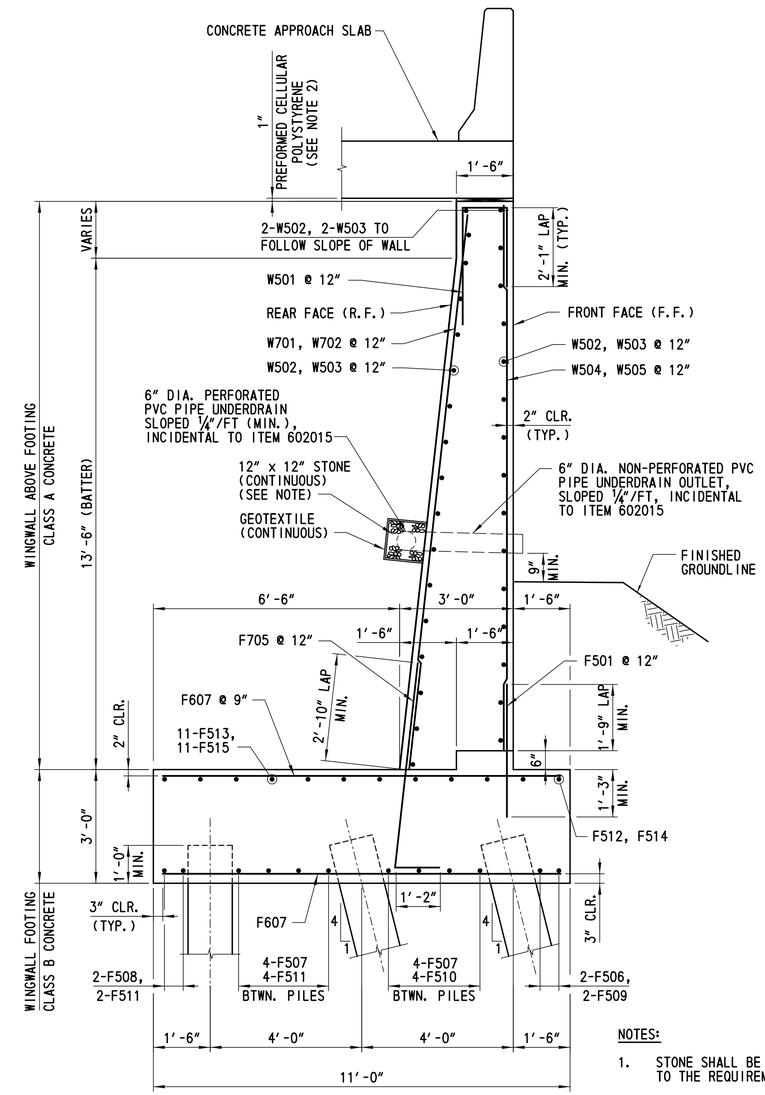

SECTION A-A

SCALE: 1/2" = 1'-0"

NOTES:

1. STONE SHALL BE DELAWARE NO. 57 CONFORMING TO THE REQUIREMENTS OF SECTION 813.
2. 1" PREFORMED CELLULAR POLYSTYRENE TO BE INCIDENTAL TO ITEM 602014.

CROSS REFERENCE NOTES:

1. FOR WINGWALL ELEVATIONS, SEE DWG. NO. 1-479 WW-1.
2. FOR FOOTING REINFORCEMENT, SEE DWG. NOS. 1-479 AB-2 AND 1-479 AB-3.
3. FOR APPROACH SLAB REINFORCEMENT, SEE DWG. NO. 1-479 AS-1.
4. FOR REINFORCING BAR SCHEDULE, SEE DWG. NO. 1-479 BR-1.

DELAWARE DEPARTMENT OF TRANSPORTATION	ADDENDUMS / REVISIONS	US 301 LEVELS ROAD TO SUMMIT BRIDGE ROAD	CONTRACT T200911303	BRIDGE NO. 1-479	RAMP F OVER SANDY BRANCH	1-479 WW-2
			COUNTY NEW CASTLE	DESIGNED BY: KW	WINGWALL DETAILS 1	SHEET NO. 541
				CHECKED BY: JW		TOTAL SHTS. 1256

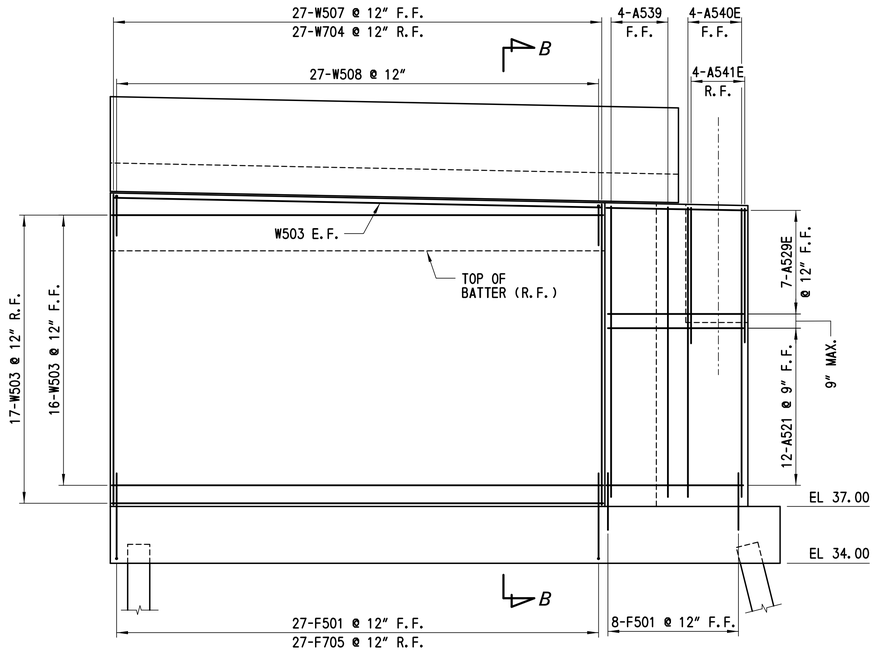

WINGWALL 3 ELEVATION

SCALE: 1/4" = 1'-0"

NOTE:

FOR ADDITIONAL ABUTMENT REINFORCEMENT, NOT SHOWN FOR CLARITY, SEE DWG. NO. 1-479 AB-10.

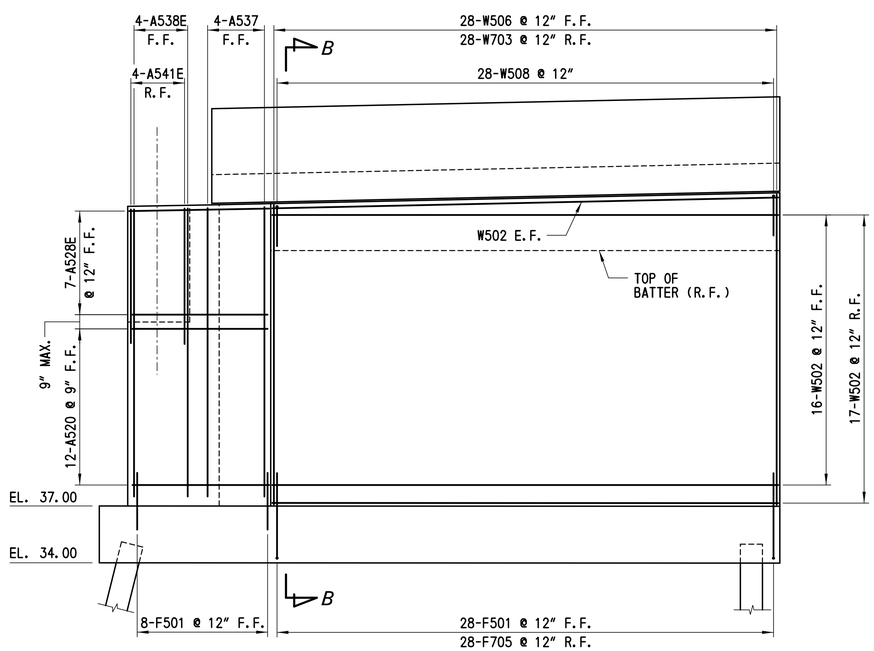

WINGWALL 4 ELEVATION

SCALE: 1/4" = 1'-0"

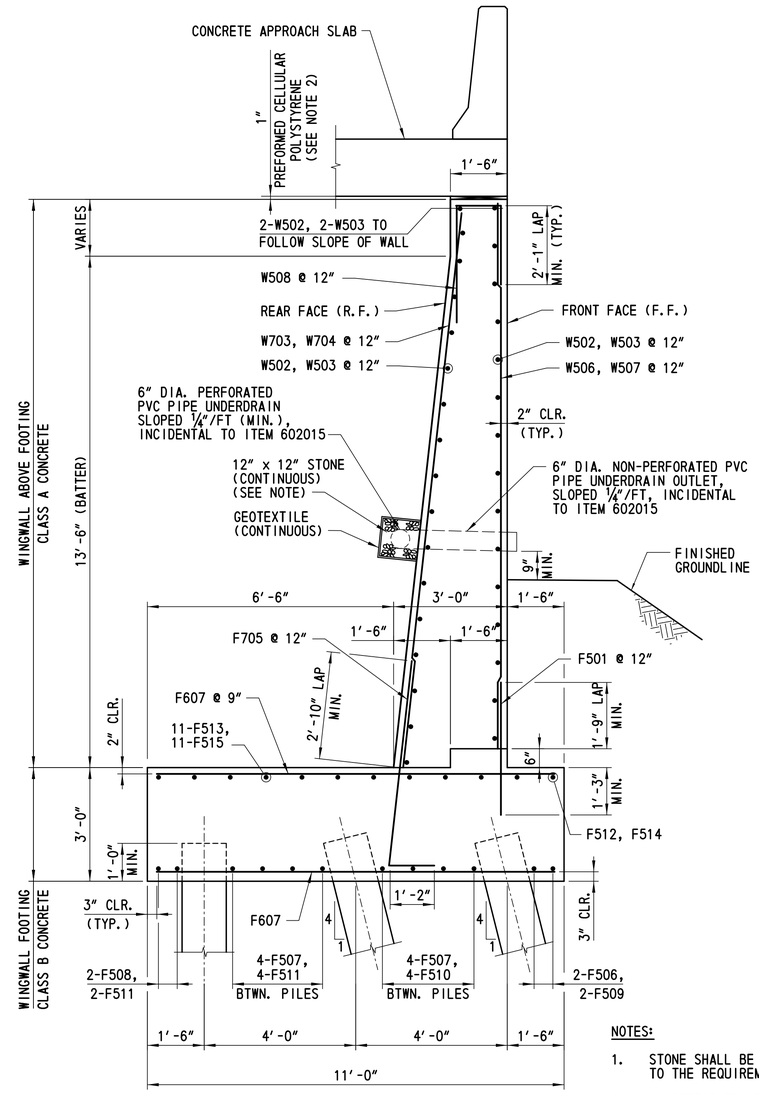

SECTION B-B

SCALE: 1/2" = 1'-0"

NOTES:

1. STONE SHALL BE DELAWARE NO. 57 CONFORMING TO THE REQUIREMENTS OF SECTION 813.
2. 1" PREFORMED CELLULAR POLYSTYRENE TO BE INCIDENTAL TO ITEM 602014.

CROSS REFERENCE NOTES:

1. FOR WINGWALL ELEVATIONS, SEE DWG. NO. 1-479 WW-1.
2. FOR FOOTING REINFORCEMENT, SEE DWG. NOS. 1-479 AB-7 AND 1-479 AB-8.
3. FOR APPROACH SLAB REINFORCEMENT, SEE DWG. NO. 1-479 AS-1.
4. FOR REINFORCING BAR SCHEDULE, SEE DWG. NO. 1-479 BR-2.

DELAWARE DEPARTMENT OF TRANSPORTATION	ADDENDUMS / REVISIONS	US 301 LEVELS ROAD TO SUMMIT BRIDGE ROAD	CONTRACT T200911303	BRIDGE NO. 1-479	RAMP F OVER SANDY BRANCH	1-479 WW-3
			COUNTY NEW CASTLE	DESIGNED BY: KW	WINGWALL DETAILS 2	SHEET NO. 542
				CHECKED BY: JW		TOTAL SHTS. 1256

REINFORCING BAR SCHEDULE

ABUTMENT 1

MARK	LENGTH	NO. BARS	TYPE	A	B	C	D	E	F	G	H	J	K	O	REMARKS
A501E	9′-0″	6	STR.												
A502E	21′-7″	6	2	10″	20′-9″										
A503E	19′-5″	6	2	10″	18′-7″										
A504	46′-8″	11	STR.												
A505	19′-6″	2	STR.												
A506	3′-6″	12	T7			1′-9″	1′-9″						5½″		
A507	3′-6″	11	16			1′-9″	1′-9″				1′-8″		5½″	2′-2½″	
A508	40′-9″	12	STR.												
A509	8′-0″	63	STR.												
A510E	5′-2″	63	2	10″	4′-4″										
A511E	2′-6″	2	2	10″	1′-8″										
A512E	5′-10½″	102	STR.												
A513E	4′-0″	46	STR.												
A514E	5′-4″	42	17		2′-1″	1′-2″	2′-1″								
A515E	44′-9″	7	STR.												
A516E	40′-9″	7	STR.												
A517E	3′-3″	7	16			2′-1″	1′-2″				3⅝″		1′-1½″	3′-2½″	
A518E	5′-10″	4	17		1′-7″	2′-8″	1′-7″								
A519E	6′-6″	4	17		1′-7″	3′-4″	1′-7″								
A520	7′-2″	13	STR.												
A521	7′-3½″	12	STR.												
A522	14′-9″	4	STR.												
A523	13′-10″	4	STR.												
A524E	14′-9″	4	STR.												
A525E	13′-10″	4	STR.												
A526E	7′-3″	8	STR.												
A527E	4′-6″	14	STR.												
A528E	7′-2″	7	STR.												
A529E	7′-3½″	7	STR.												
A530E	3′-11″	7	2	1′-10″	2′-1″										
A531	5′-8″	12	16			3′-7″	1′-9″				1′-8¼″		5⅜″	4′-0⅜″	
A532E	5′-8″	14	16			3′-7″	2′-1″				2′-0¼″		6½″	4′-1½″	
A533	3′-7″	12	2	1′-10″	1′-9″										
A542E	4′-9″	56	STR.												
A701	8′-6″	56	STR.												
A702	15′-3″	3	STR.												
A703	14′-4″	4	STR.												
F501	4′-5″	134	STR.												
F502	49′-4″	4	STR.												
F503	49′-7″	21	STR.												
F504	36′-7″	6	STR.												
F505	34′-1″	2	STR.												
F506	33′-6″ TO 35′-0″	2	STR.												LENGTH △ = 1′-6″
F507	27′-8″	8	STR.												
F508	22′-0″	2	STR.												
F509	32′-10″ TO 34′-4″	2	STR.												LENGTH △ = 1′-6″
F510	32′-10″	4	STR.												
F511	25′-1″	6	STR.												
F512	35′-0″	1	STR.												
F513	23′-3″	11	STR.												
F514	34′-4″	1	STR.												
F515	25′-8″	11	STR.												
F601	10′-3″ TO 12′-0″	6	STR.												LENGTH △ = 4 1/16″
F602	12′-0″	35	STR.												
F603	9′-6″	5	STR.												
F604	6′-1″	5	STR.												
F605	8½″ TO 3′-3½″	2	STR.												LENGTH △ = 2′-7″
F606	4′-3″	5	STR.												
F607	10′-6″	128	STR.												
F608	6′-11″	10	STR.												
D1101E	4′-0″	18	STR.												DOWELS AT ABUT 1

ABUTMENT 1

MARK	LENGTH	NO. BARS	TYPE	A	B	C	D	E	F	G	H	J	K	O	REMARKS
F701	6′-1″	63	2	1′-2″	4′-11″										
F702	3′-6″ TO 9′-2″	3	STR.												LENGTH △ = 2′-10″
F703	12′-0″	62	STR.												
F704	9″ TO 11′-5½″	5	STR.												LENGTH △ = 2′-8⅛″
F705	7′-3″	55	T7			1′-2″	6′-1″						7¼″		
W501	6′-9″	55	17		2′-1″	1′-2″	3′-6″								
W502	26′-6½″	31	STR.												
W503	25′-9½″	31	STR.												
W504	14′-4½″	28	STR.												
W505	13′-4½″	27	STR.												
W701	14′-11″	28	STR.												
W702	13′-11″	27	STR.												

DELAWARE
DEPARTMENT OF TRANSPORTATION

ADDENDUMS / REVISIONS

US 301
LEVELS ROAD
TO SUMMIT BRIDGE ROAD

CONTRACT	BRIDGE NO.	1–479
T200911303	DESIGNED BY:	LT
COUNTY		
NEW CASTLE	CHECKED BY:	BCM

RAMP F OVER
SANDY BRANCH
ABUTMENT 1
REINFORCEMENT SCHEDULE

1-479 BR-1
SHEET NO.
543
TOTAL SHTS.
1256

REINFORCING BAR SCHEDULE

ABUTMENT 2

MARK	LENGTH	NO. BARS	TYPE	A	B	C	D	E	F	G	H	J	K	O	REMARKS
A504	46′-8″	12	STR.												
A506	3′-6″	12	T7			1′-9″	1′-9″						5½″		
A507	3′-6″	12	16			1′-9″	1′-9″				1′-8″		5½″	2′-2½″	
A508	40′-9″	13	STR.												
A510E	5′-2″	63	2	10″	4′-4″										
A511E	2′-6″	2	2	10″	1′-8″										
A513E	4′-0″	46	STR.												
A514E	5′-4″	42	17		2′-1″	1′-2″	2′-1″								
A515E	44′-9″	7	STR.												
A516E	40′-9″	7	STR.												
A517E	3′-3″	7	16			2′-1″	1′-2″				3⅝″		1′-1½″	3′-2½″	
A518E	5′-10″	20	17		1′-7″	2′-8″	1′-7″								
A519E	6′-6″	20	17		1′-7″	3′-4″	1′-7″								
A520	7′-2″	12	STR.												
A521	7′-3½″	12	STR.												
A527E	4′-6″	14	STR.												
A528E	7′-2″	7	STR.												
A529E	7′-3½″	7	STR.												
A530E	3′-11″	7	2	1′-10″	2′-1″										
A531	5′-8″	13	16			3′-7″	1′-9″				1′-8¼″		5⅜″	4′-0⅜″	
A532E	5′-8″	14	16			3′-7″	2′-1″				2′-0¼″		6½″	4′-1½″	
A533	3′-7″	13	2	1′-10″	1′-9″										
A534E	46′-8″	6	STR.												
A535	9′-0″	63	STR.												
A536E	6′-0″	102	STR.												
A537	15′-3″	4	STR.												
A538E	15′-3″	4	STR.												
A539	15′-3½″	4	STR.												
A540E	15′-3½″	4	STR.												
A541E	7′-4″	8	STR.												
A542E	4′-9″	56	STR.												
A704	9′-6″	56	STR.												
A705	15′-9″	3	STR.												
A706	15′-9½″	4	STR.												
F501	4′-5″	134	STR.												
F502	49′-4″	4	STR.												
F503	49′-7″	21	STR.												
F504	36′-7″	6	STR.												
F505	34′-1″	2	STR.												
F506	33′-6″ TO 35′-0″	2	STR.												LENGTH △ = 1′-6″
F507	27′-8″	8	STR.												
F508	22′-0″	2	STR.												
F509	32′-10″ TO 34′-4″	2	STR.												LENGTH △ = 1′-6″
F510	32′-10″	4	STR.												
F511	25′-1″	6	STR.												
F512	35′-0″	1	STR.												
F513	23′-3″	11	STR.												
F514	34′-5″	1	STR.												
F515	25′-8″	11	STR.												
F601	10′-3 TO 12′-0″	6	STR.												LENGTH △ = 4¼″
F602	12′-0″	35	STR.												
F603	9′-6″	5	STR.												
F604	6′-1″	5	STR.												
F605	8½″ TO 3′-3½″	2	STR.												LENGTH △ = 2′-7″
F606	4′-3″	5	STR.												
F607	10′-6″	128	STR.												
F608	6′-11″	10	STR.												

ABUTMENT 2

MARK	LENGTH	NO. BARS	TYPE	A	B	C	D	E	F	G	H	J	K	O	REMARKS
F701	6′-1″	63	2	1′-2″	4′-11″										
F702	3′-6″ TO 9′-2″	3	STR.												LENGTH △ = 2′-10″
F703	12′-0″	62	STR.												
F704	9″ TO 11′-5½″	5	STR.												LENGTH △ = 2′-8⅛″
F705	7′-3″	55	T7			1′-2″	6′-1″						7¼″		
W502	26′-6½″	35	STR.												
W503	25′-9½″	35	STR.												
W506	15′-3″	28	STR.												
W507	15′-3½″	27	STR.												
W508	7′-10″	55	17		2′-1″	1′-2″	4′-7″								
W703	15′-9″	28	STR.												
W704	15′-10″	27	STR.												

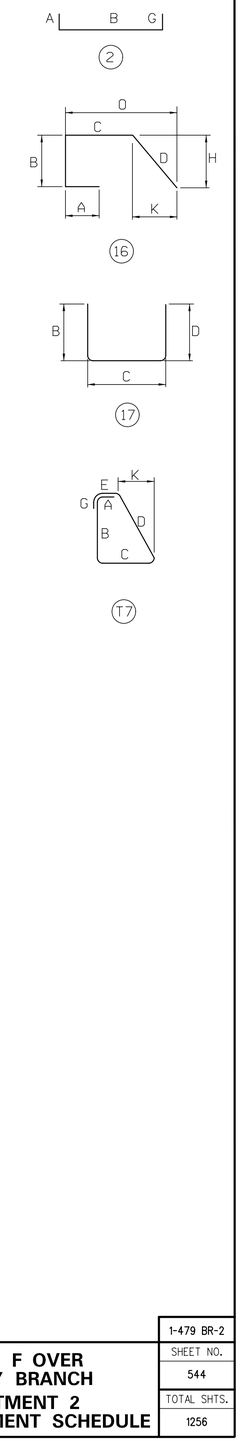

DELAWARE
DEPARTMENT OF TRANSPORTATION

ADDENDUMS / REVISIONS

US 301
LEVELS ROAD
TO SUMMIT BRIDGE ROAD

CONTRACT	BRIDGE NO.	1–479
T200911303	DESIGNED BY:	LT
COUNTY		
NEW CASTLE	CHECKED BY:	BCM

RAMP F OVER
SANDY BRANCH
ABUTMENT 2
REINFORCEMENT SCHEDULE

1-479 BR-2
SHEET NO.
544
TOTAL SHTS.
1256

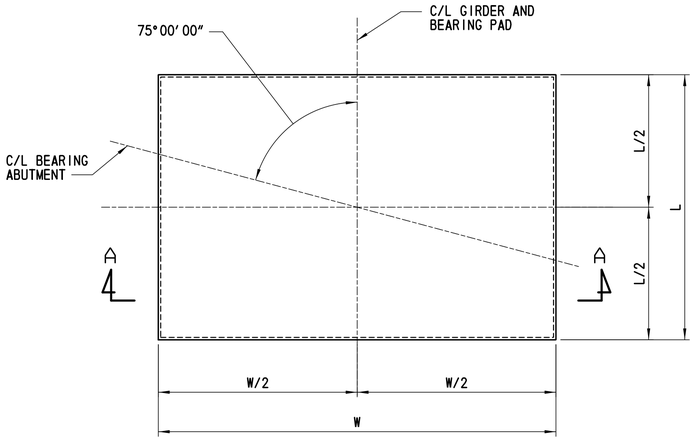

PLAN

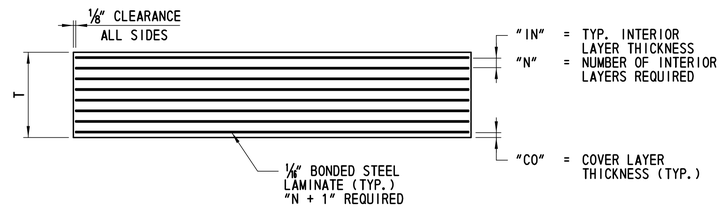

SECTION A-A

NOTES:

1. ELASTORMERIC BEARINGS SHALL BE 60 DUROMETER HARDNESS SHORE TYPE A.
2. MINIMUM LOW TEMPERATURE ELASTOMER SHALL BE GRADE 3.
3. ALL BEARINGS ARE TO BE MOLDED TO DESIGN DIMENSIONS. CUTTING TO SIZE AFTER FABRICATION IS PROHIBITED.
4. HOLES ARE NOT PERMITTED IN THE ELASTOMERIC BEARINGS.
5. VULCANIZE PATCH PIN GROOVES.
6. STEEL LAMINATE SHALL HAVE A MINIMUM YIELD STRENGTH (Fy) OF 36 KSI.
7. MAXIMUM DESIGN LOAD (SERVICE):
   FIXED BEARING: DL = 232 KIPS
   LL = 127 KIPS
   EXP. BEARING: DL = 232 KIPS
   LL = 127 KIPS

STEEL REINFORCED ELASTOMERIC BEARING PAD

SCALE: 3″ = 1′-0″

BEARING PAD DATA

LOCATION	QUANTITY	L (IN)	W (IN)	T (IN)	IN (IN)	N	N + 1	CO (IN)
ABUTMENT 1 (FIXED)	5	14	21	4½	½	7	8	¼
ABUTMENT 2 (EXP.)	5	14	21	4½	½	7	8	¼

DELAWARE DEPARTMENT OF TRANSPORTATION

ADDENDUMS / REVISIONS

SCALE 0 ¼ ⅛ ½ FEET

US 301 LEVELS ROAD TO SUMMIT BRIDGE ROAD

CONTRACT T200911303
COUNTY NEW CASTLE
BRIDGE NO. 1–479
DESIGNED BY: BM
CHECKED BY: JW

RAMP F OVER SANDY BRANCH
BEARING DETAILS

1-479 BD-1
SHEET NO. 545
TOTAL SHTS. 1256

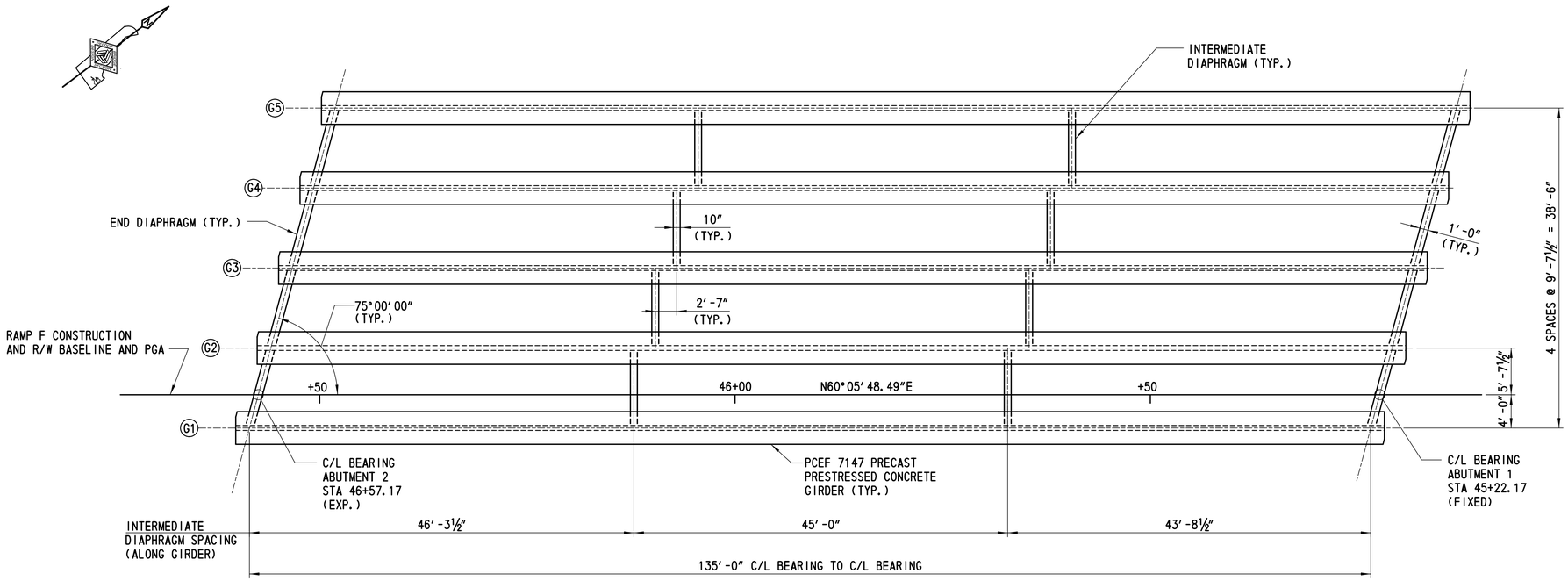

FRAMING PLAN

SCALE: ⅛″= 1′-0″

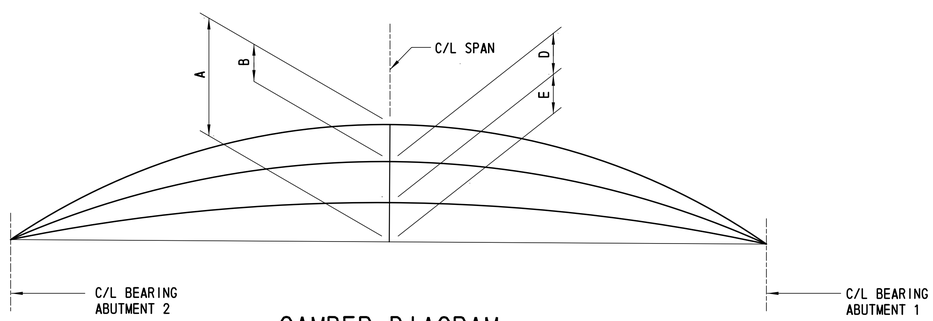

CAMBER DIAGRAM

NTS

CAMBER/DEFLECTION TABLE (INCHES)					
GIRDER NO.	A	B	C	D	E
G1 & G5	8 15/16	-4 5/16	4 3/8	-2 15/16″	1 11/16″
G2 - G4	8 15/16	-4 5/16	4 3/8	-2 15/16″	1 7/16″

LEGEND:

A = CAMBER DUE TO PRESTRESS AT ERECTION, CREEP MULTIPLIER = 1.8.

B = DEFLECTION DUE TO GIRDER DEAD LOAD AT ERECTION, CREEP MULTIPLIER = 1.85.

C = A+B

D = DEFLECTION DUE TO SLAB, DIAPHRAGMS, SIP FORMS, AND BARRIERS.

E = NET CAMBER, C+D.

NOTES:

1. PRESTRESS CAMBER AND DEAD LOAD DEFLECTION DATA SHOWN IS THEORETICAL AND MAY VARY WITH CONCRETE STRENGTH, VARIABLE PRESTRESSING CONDITIONS AND PRESTRESS LOSSES. CONTRACTOR SHALL VERIFY VALUES IN THE FIELD.
2. THE THICKNESS OF THE GIRDER HAUNCHES SHALL BE VARIED TO COMPENSATE FOR ANY INACCURACIES IN THE FINAL CAMBER.

CROSS REFERENCE NOTES:

1. FOR GENERAL PLAN AND ELEVATION, SEE DWG. NO. 1-479 PE-1.
2. FOR TYPICAL SECTION, SEE DWG. NO. 1-479 TS-1.
3. FOR GIRDER PLAN AND ELEVATION, SEE DWG. NO. 1-479 BM-1.
4. FOR GIRDER DETAILS, SEE DWG. NO. 1-479 BM-2.
5. FOR INTERMEDIATE AND END DIAPHRAGM DETAILS, SEE DWG. NO. 1-479 DPH-1.

DELAWARE DEPARTMENT OF TRANSPORTATION

ADDENDUMS / REVISIONS

SCALE 0 2 4 8 16 FEET

US 301 LEVELS ROAD TO SUMMIT BRIDGE ROAD

CONTRACT T200911303

COUNTY NEW CASTLE

BRIDGE NO. 1-479

DESIGNED BY: LT

CHECKED BY: BCW

RAMP F OVER SANDY BRANCH

FRAMING PLAN

1-479 FR-1

SHEET NO. 546

TOTAL SHTS. 1256

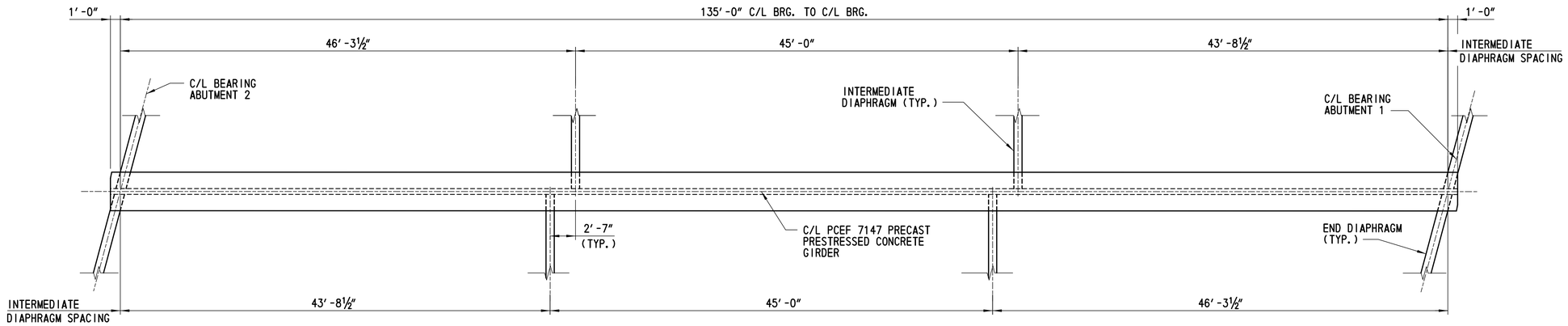

GIRDER PLAN

NTS

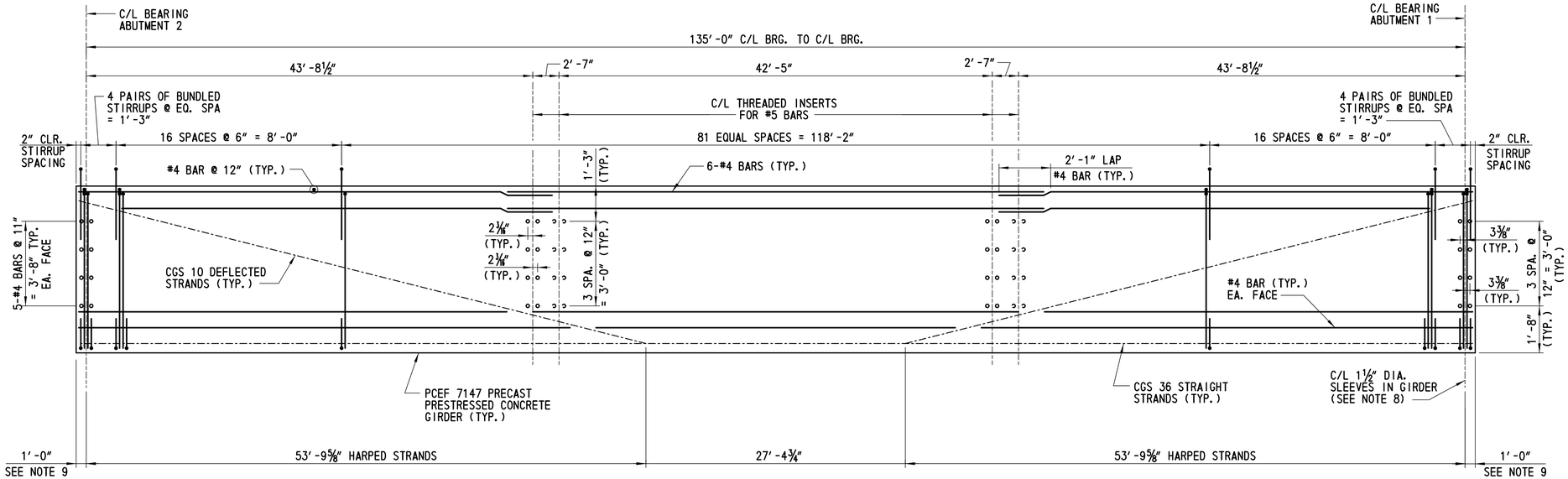

GIRDER ELEVATION

NTS

NOTES:

1. NOT ALL PRESTRESSING STRANDS SHOWN FOR CLARITY. CENTER OF GRAVITY FOR STRANDS GROUP (CGS) SHOWN ONLY.
2. GIRDER LENGTHS IN CASTING BED SHALL BE DETERMINED AND DEPICTED IN SHOP DRAWINGS TO COMPENSATE FOR GRADE SHORTENING DUE TO PRESTRESS EFFECTS.
3. SECTION IS A PCEF 7147.
4. ALL MILD STEEL REINFORCEMENT IN GIRDERS SHALL BE EPOXY COATED.
5. TOP SURFACE OF GIRDERS SHALL BE ROUGH FINISHED TO A FULL AMPLITUDE OF A 1/4" AND SCRUBBED TRANSVERSELY WITH A COURSE WIRE BRUSH TO REMOVE ALL LAITANCE TO PRODUCE A ROUGHENED SURFACE FOR BONDING.
6. END ZONE REINFORCEMENT MAY BE INCREASED BY THE FABRICATOR TO REFLECT FABRICATORS EXPERIENCE AND/OR TO CONTROL CRACKING.
7. NO CLEAR COVER LESS THAN AS SHOWN ON THESE PLANS WILL BE ACCEPTED.
8. OMIT SLEEVES AND THREADED INSERTS ON THE EXTERIOR FACE OF FASCIA GIRDERS.
9. DIMENSION REFERENCED FROM C/L OF GIRDER.
10. FABRICATOR TO CHECK GIRDER STABILITY FOR HANDLING, TRANSPORTATION AND ERECTION.

CROSS REFERENCE NOTES:

1. FOR GENERAL PLAN AND ELEVATION, SEE DWG. NO. 1-479 PE-1.
2. FOR PROJECT NOTES, SEE DWG. NO. 1-479 PN-1.
3. FOR TYPICAL SECTION, SEE DWG. NO. 1-479 TS-1.
4. FOR FRAMING PLAN, SEE DWG. NO. 1-479 FR-1.
5. FOR GIRDER DETAILS, SEE DWG. NO. 1-479 BM-2.
6. FOR CAMBER DIAGRAM, SEE DWG. NO. 1-479 FR-1.
7. FOR INTERMEDIATE AND END DIAPHRAGM DETAILS, SEE DWG. NO. 1-479 DPH-1.

DELAWARE DEPARTMENT OF TRANSPORTATION	ADDENDUMS / REVISIONS	US 301 LEVELS ROAD TO SUMMIT BRIDGE ROAD	CONTRACT T200911303	BRIDGE NO. 1-479	RAMP F OVER SANDY BRANCH GIRDER PLAN AND ELEVATION	1-479 BM-1
			COUNTY NEW CASTLE	DESIGNED BY: LT		SHEET NO. 547
				CHECKED BY: BCW		TOTAL SHTS. 1256

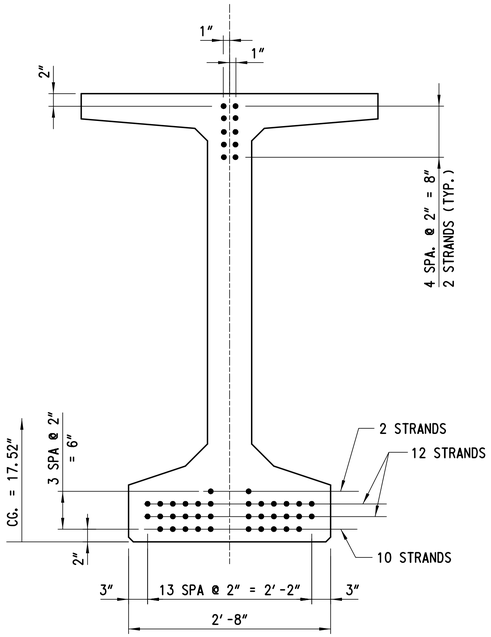

PRESTRESSING AT GIRDER ENDS

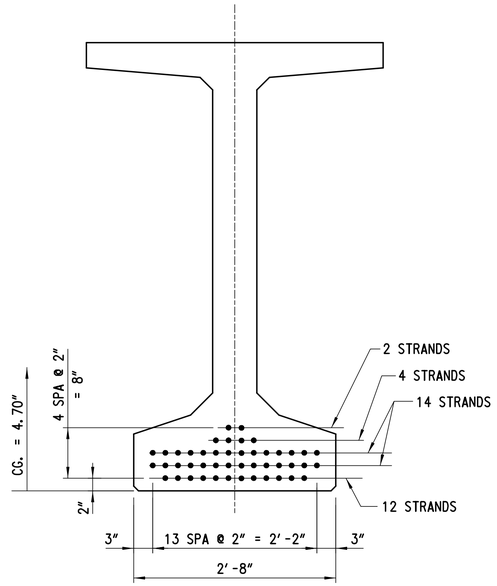

PRESTRESSING AT MIDSPAN

TYPICAL GIRDER SECTIONS

SCALE: 1" = 1'-0"

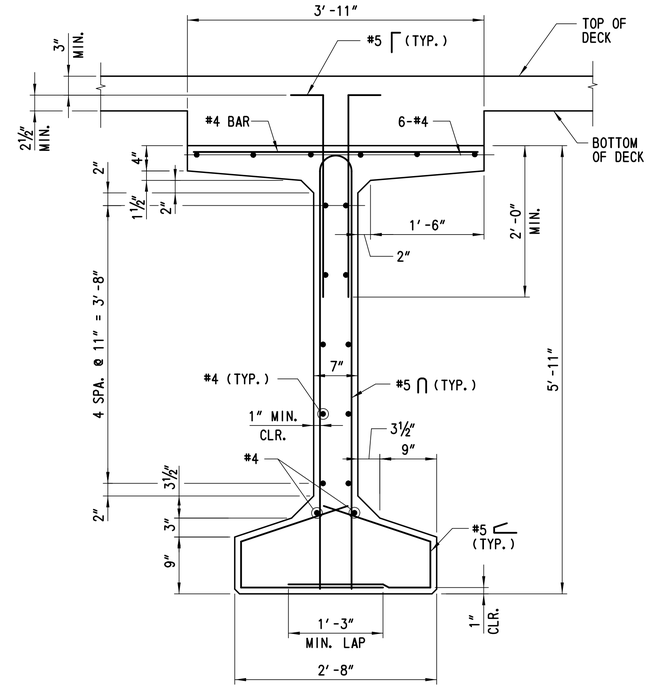

TYPICAL REINFORCEMENT

NOTES:

1. GIRDER LIFTING DETAILS SHALL BE PROVIDED BY THE CONTRACTOR AND ARE SUBJECT TO THE APPROVAL OF THE ENGINEER.
2. TYPICAL COVER - 1" CLR. TO STIRRUPS, 1½" CLR. TO LONGITUDINAL BARS AND STRANDS.
3. PERMANENT STEEL BRIDGE DECK FORMS AND SUPPORTS SHALL BE PROVIDED CONFORMING TO THE REQUIREMENTS OF SECTION 602 OF THE DELDOT STANDARD SPECIFICATIONS AND AS SHOWN IN THE BDM.
4. ANY PERMANENTLY EXPOSED FORM METAL WHERE THE GALVANIZED COATING HAS BEEN DAMAGED SHALL BE THOROUGHLY CLEANED, WIRE BRUSHED AND PAINTED WITH TWO COATS OF ZINC DUST-ZINC OXIDE PAINT, NO COLOR ADDED TO THE SATISFACTION OF THE ENGINEER. MINOR HEAT DISCOLORATION IN AREAS OF WELDS NEED NOT BE TOUCHED UP.

CROSS REFERENCE NOTES:

1. FOR GIRDER PLAN AND ELEVATION, SEE DWG. NO. 1-479 BM-1.
2. FOR FRAMING PLAN AND CAMBER SCHEDULE, SEE DWG. NO. 1-479 FR-1.
3. FOR TYPICAL SECTION, SEE DWG. NO. 1-479 TS-1.

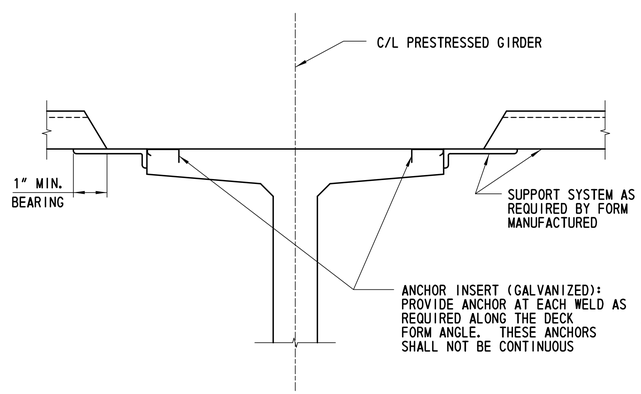

FORM ANCHOR DETAIL

SCALE: 1" = 1'-0"

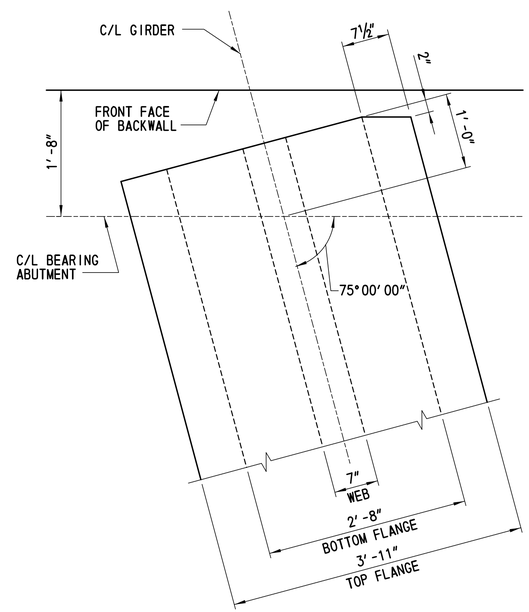

TYPICAL GIRDER END DETAIL

SCALE: 1" = 1'-0"

NOTES:

1. CLIP TOP FLANGE AT EACH END OF GIRDER AS SHOWN.
2. INSERTS/SLEEVES FOR END DIAPHRAGM NOT SHOWN.

DELAWARE DEPARTMENT OF TRANSPORTATION	ADDENDUMS / REVISIONS	SCALE 0 1 ½ 2 FEET	US 301 LEVELS ROAD TO SUMMIT BRIDGE ROAD	CONTRACT T200911303 / COUNTY NEW CASTLE	BRIDGE NO. 1-479 / DESIGNED BY: LT / CHECKED BY: BCW	RAMP F OVER SANDY BRANCH GIRDER DETAILS

1-479 BM-2
SHEET NO. 548
TOTAL SHTS. 1256

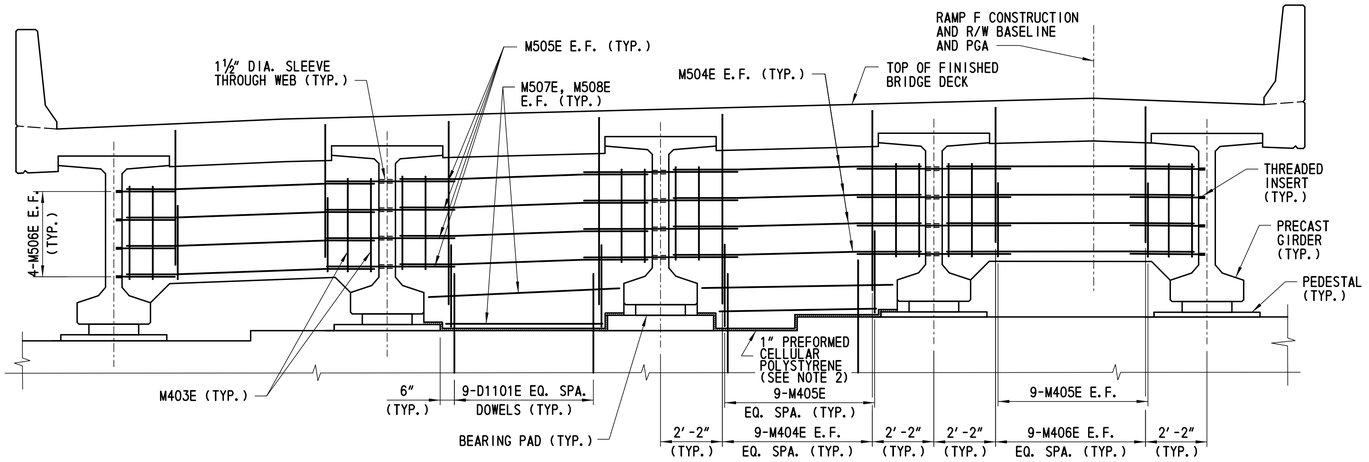

END DIAPHRAGM - ABUTMENT 1 (FIXED)

SCALE: ⅜" = 1'-0"

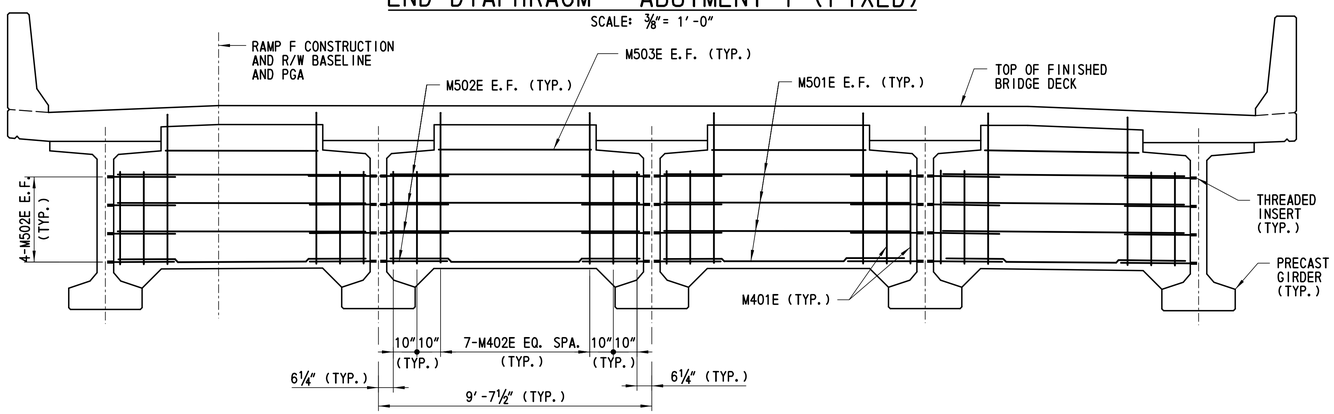

INTERMEDIATE DIAPHRAGM

SCALE: ⅜" = 1'-0"

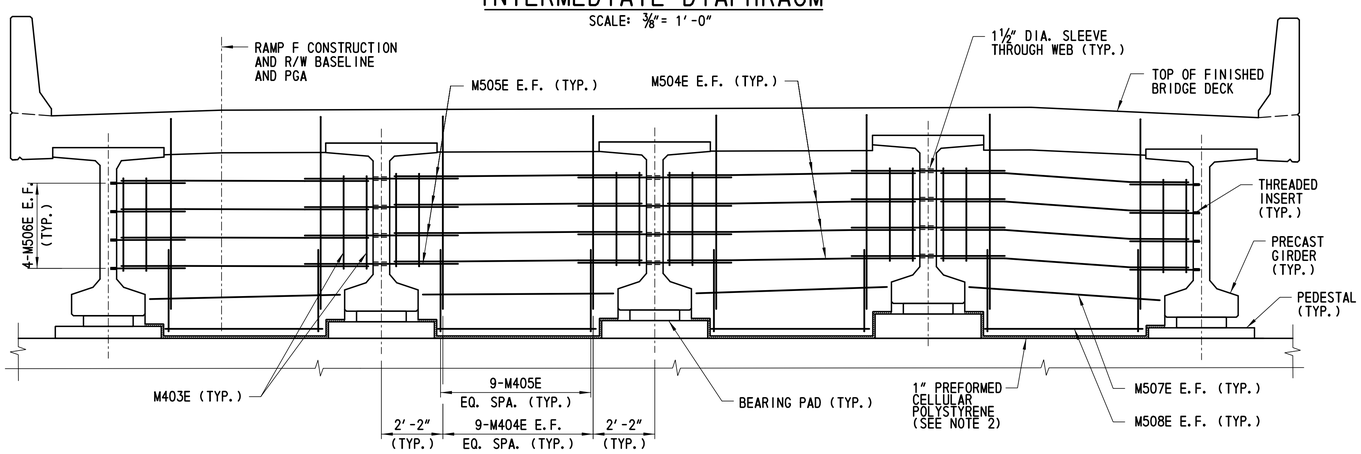

END DIAPHRAGM - ABUTMENT 2 (EXPANSION)

SCALE: ⅜" = 1'-0"

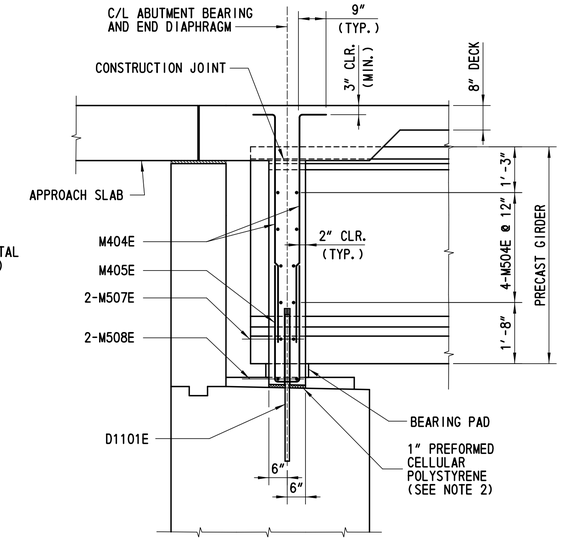

END DIAPHRAGM BETWEEN GIRDERS ABUTMENT 1 (FIXED)

SCALE: ½" = 1'-0"

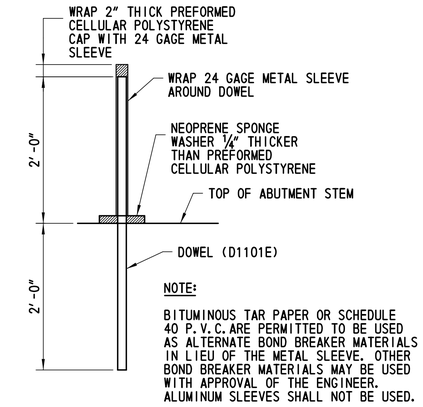

DOWEL DETAIL

SCALE: 1½" = 1'-0"

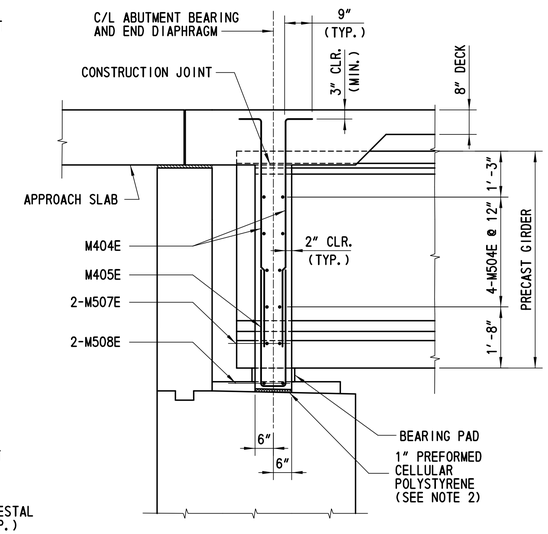

END DIAPHRAGM BETWEEN GIRDERS ABUTMENT 2 (EXPANSION)

SCALE: ½" = 1'-0"

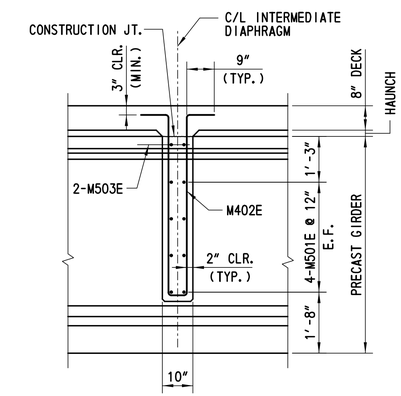

INTERMEDIATE DIAPHRAGM BETWEEN GIRDERS

SCALE: ½" = 1'-0"

NOTES:

1. MINIMUM LAP SPLICE LENGTHS:
   #4 BAR - 1'-8"
   #5 BAR - 2'-1"
2. 1" PREFORMED CELLULAR POLYSTYRENE IS INCIDENTAL TO ITEM 602013.

CROSS REFERENCE NOTES:

1. FOR TYPICAL SECTION, SEE DWG. NO. 1-479 TS-1.
2. FOR FRAMING PLAN, SEE DWG. NO. 1-479 FR-1.
3. FOR DECK DETAILS, SEE DWG. NOS. 1-479 DK-2 AND 1-479 DK-3.

DELAWARE DEPARTMENT OF TRANSPORTATION	ADDENDUMS / REVISIONS	US 301 LEVELS ROAD TO SUMMIT BRIDGE ROAD	CONTRACT T200911303	BRIDGE NO. 1-479	RAMP F OVER SANDY BRANCH
			COUNTY NEW CASTLE	DESIGNED BY: BCM	DIAPHRAGM DETAILS
				CHECKED BY: BCW	

1-479 DPH-1
SHEET NO. 549
TOTAL SHTS. 1256

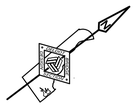

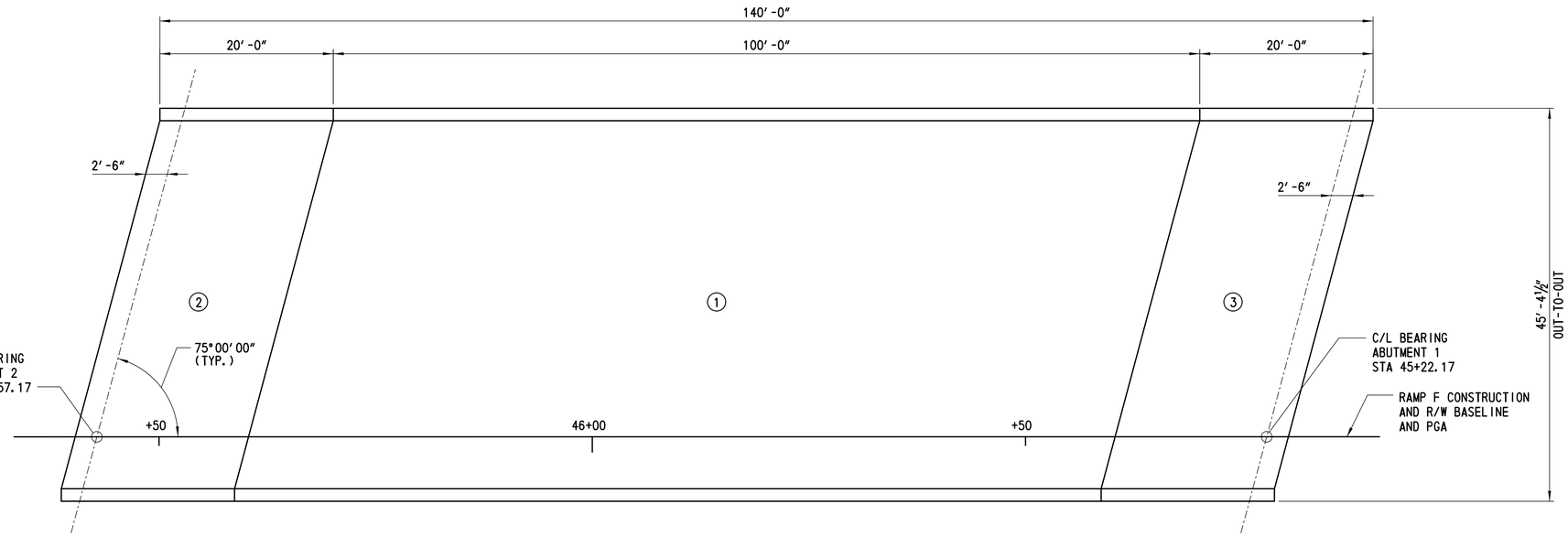

BRIDGE DECK POURING SEQUENCE

SCALE: ⅛″ = 1′-0″

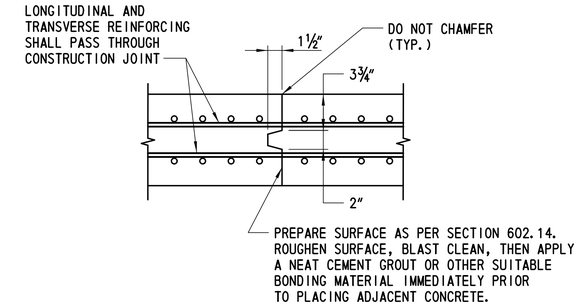

BRIDGE DECK CONSTRUCTION JOINT

NTS

PLACEMENT SEQUENCE:

1. CAST INTERMEDIATE DIAPHRAGMS.
2. CAST POUR NO. 1 AS SHOWN.
3. CAST END DIAPHRAGMS AT ABUTMENTS.
4. CAST POUR NO. 2 AND 3 AS SHOWN.

NOTES:

1. CONTRACTOR MAY REVERSE THE ORDER OF THE POURS NUMBERED 2 AND 3.
2. THE CONTRACTOR MAY USE TWO CREWS AND TWO SETS OF EQUIPMENT TO CONSTRUCT POURS 2 AND 3 SIMULTANEOUSLY.

CROSS REFERENCE NOTES:

1. FOR DECK REINFORCEMENT PLAN, SEE DWG. NO. 1-479 DK-2.
2. FOR DECK DETAILS, SEE DWG. NO. 1-479 DK-3.
3. FOR FINISHED DECK ELEVATIONS, SEE DWG. NO. 1-479 FD-1.
4. FOR REINFORCING BAR SCHEDULE, SEE DWG. NO. 1-479 BR-3.

DELAWARE DEPARTMENT OF TRANSPORTATION	ADDENDUMS / REVISIONS	SCALE 0 2 4 8 16 FEET	US 301 LEVELS ROAD TO SUMMIT BRIDGE ROAD	CONTRACT T200911303	BRIDGE NO. 1–479	RAMP F OVER SANDY BRANCH DECK POURING SEQUENCE	1-479 DK-1	SHEET NO. 550
				COUNTY NEW CASTLE	DESIGNED BY: PRH			TOTAL SHTS. 1256
					CHECKED BY: JW			

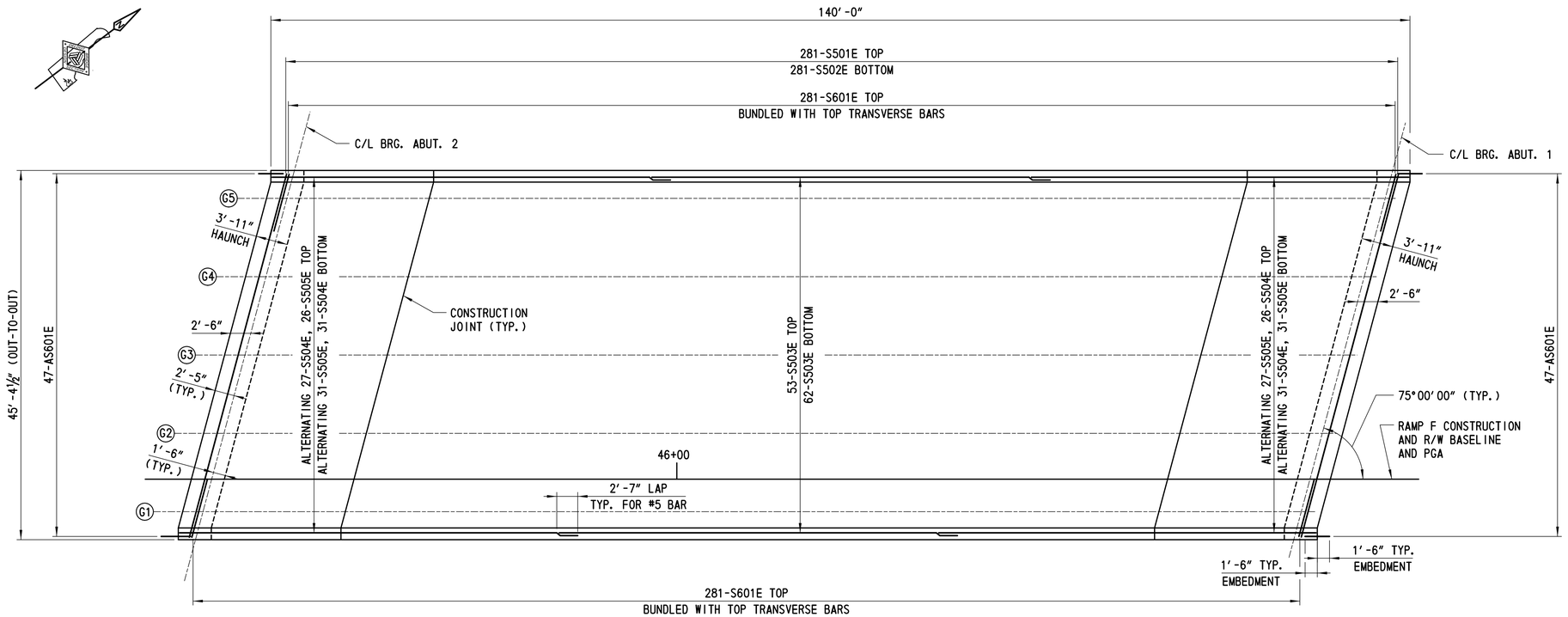

BRIDGE DECK REINFORCEMENT PLAN

SCALE: ⅛″= 1′-0″

NOTE:

BARRIER REINFORCEMENT NOT SHOWN IN PLAN VIEW FOR CLARITY.

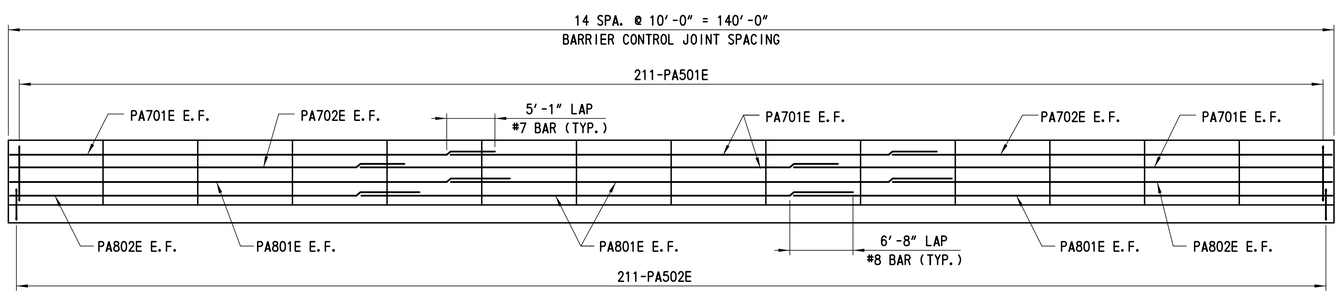

ELEVATION - DECK AND BARRIER REINFORCEMENT

NTS

CROSS REFERENCE NOTES:

1. FOR TYPICAL DECK AND PARAPET REINFORCEMENT SECTIONS, SEE DWG. NO. 1-479 DK-3.
2. FOR FINISHED DECK ELEVATIONS, SEE DWG. NO. 1-479 FD-1.
3. FOR REINFORCING BAR SCHEDULE, SEE DWG. NO. 1-479 BR-3.
4. FOR BARRIER CONTROL JOINT DETAIL, SEE DWG. NO. 1-479 DK-3.

DELAWARE DEPARTMENT OF TRANSPORTATION	ADDENDUMS / REVISIONS	SCALE 0 2 4 8 16 FEET	US 301 LEVELS ROAD TO SUMMIT BRIDGE ROAD	CONTRACT T200911303	BRIDGE NO. 1-479	RAMP F OVER SANDY BRANCH DECK AND BARRIER REINFORCEMENT	1-479 DK-2
				COUNTY NEW CASTLE	DESIGNED BY: EE		SHEET NO. 551
					CHECKED BY: BCW		TOTAL SHTS. 1256

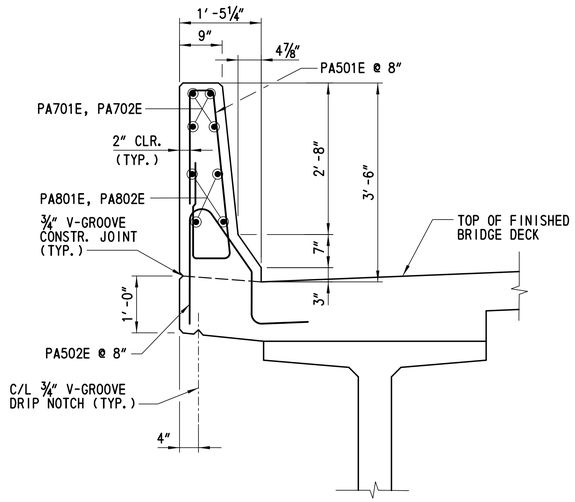

TYPICAL BARRIER REINFORCING SECTION @ DECK SLAB

SCALE: ¾"= 1'-0"

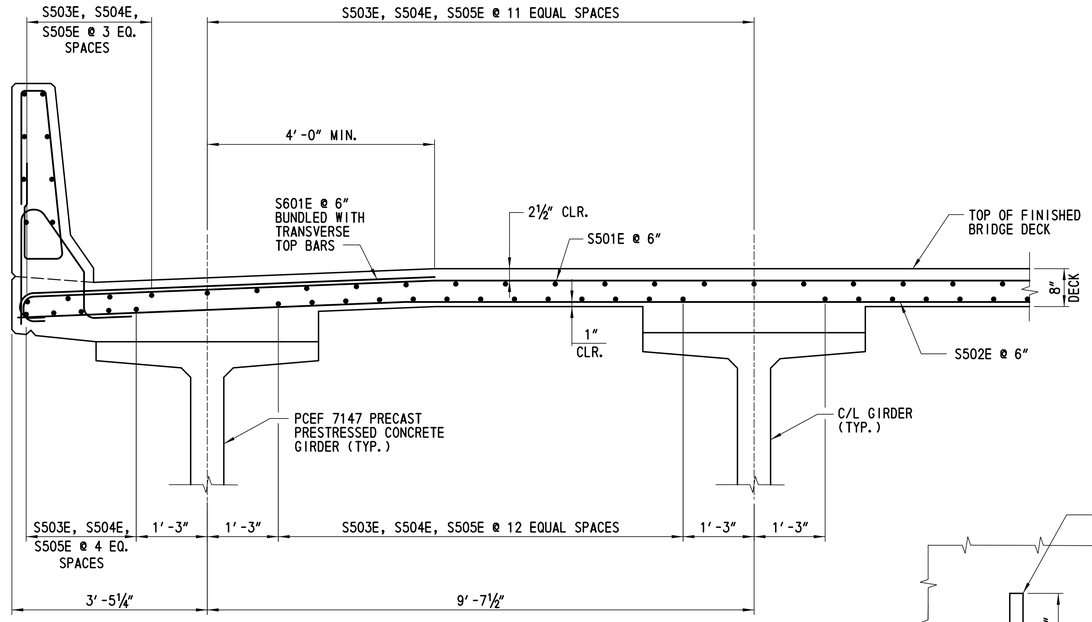

TYPICAL DECK REINFORCING SECTION

SCALE: ¾"= 1'-0"

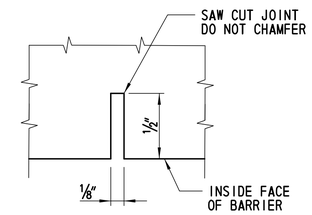

SECTION B-B

NOT TO SCALE

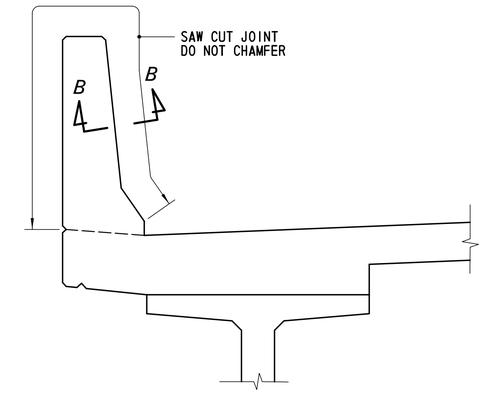

BARRIER CONTROL JOINT DETAIL

SCALE: ¾"= 1'-0"

NOTES:

1. SAW CUT CONTROL JOINTS THE SAME DAY THAT THE FORMS ARE STRIPPED.
2. DETAIL FOR BARRIER ON APPROACH SLAB SIMILAR.

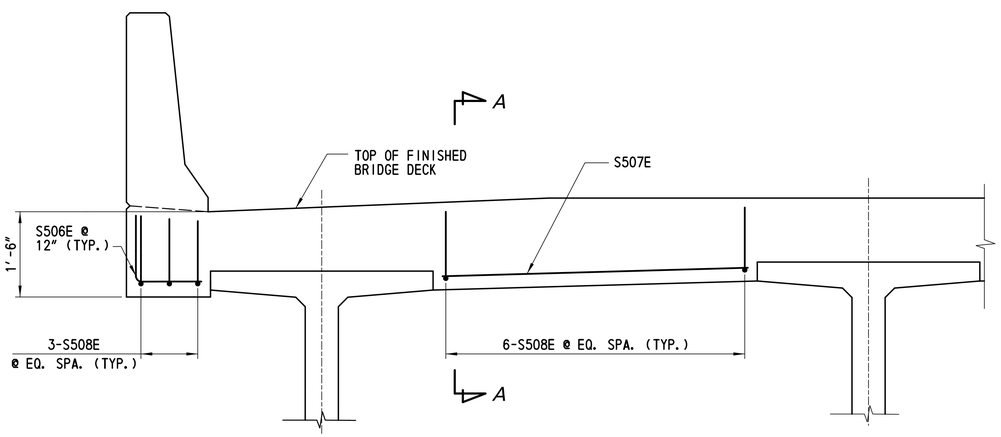

TYPICAL END HAUNCH SECTION

SCALE: ¾"= 1'-0"

NOTE:

TYPICAL DECK REINFORCEMENT NOT SHOWN FOR CLARITY.

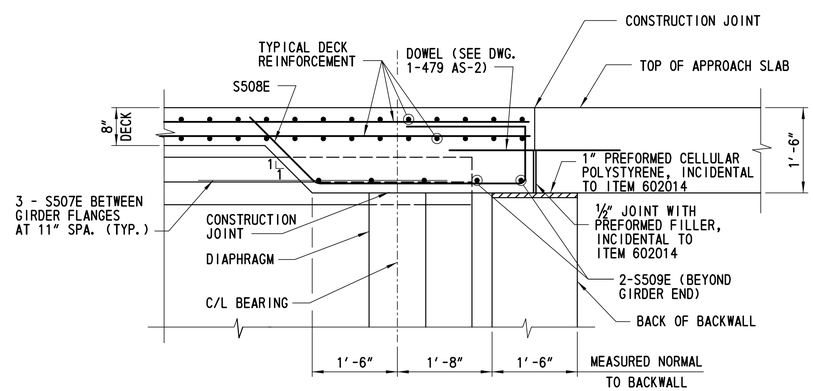

SECTION A-A

SCALE: ¾"= 1'-0"

CROSS REFERENCE NOTES:

1. BRIDGE DECK REINFORCEMENT PLAN, SEE DWG. NO. 1-479 DK-2.
2. FOR BRIDGE DECK POURING SEQUENCE, SEE DWG. NO. 1-479 DK-1.
3. FOR FINISHED BRIDGE DECK ELEVATIONS, SEE DWG. NO. 1-479 FD-1.
4. FOR REINFORCING BAR SCHEDULE, SEE 1-479 BR-3 DWG. NO. 1-479 BR-3.
5. FOR CONTROL JOINT SPACING, SEE DWG NO. 1-479 DK-2.

DELAWARE DEPARTMENT OF TRANSPORTATION	ADDENDUMS / REVISIONS	SCALE 0 1 2 4 ½ FEET	US 301 LEVELS ROAD TO SUMMIT BRIDGE ROAD	CONTRACT T200911303	BRIDGE NO. 1-479	RAMP F OVER SANDY BRANCH DECK DETAILS	1-479 DK-3
				COUNTY NEW CASTLE	DESIGNED BY: EE		SHEET NO. 552
					CHECKED BY: BCW		TOTAL SHTS. 1256

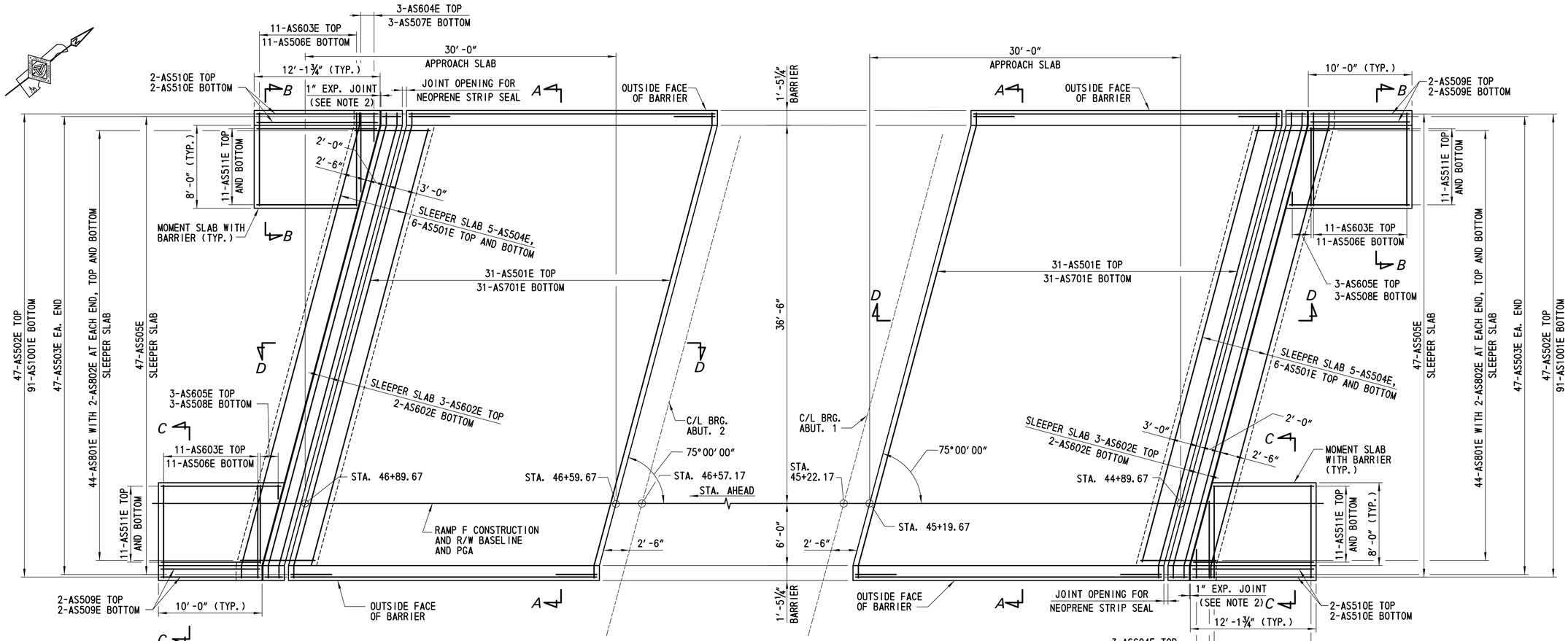

APPROACH SLAB REINFORCEMENT PLAN

SCALE: 3/16″= 1′-0″

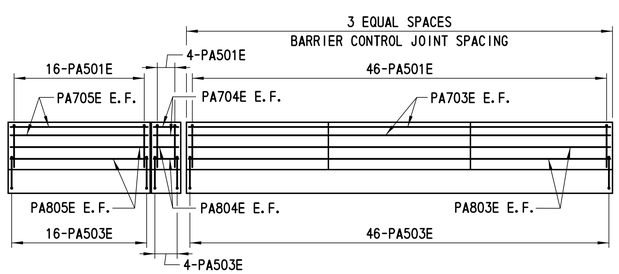

ELEVATION - APPROACH SLAB AND BARRIER

SCALE: 3/16″= 1′-0″

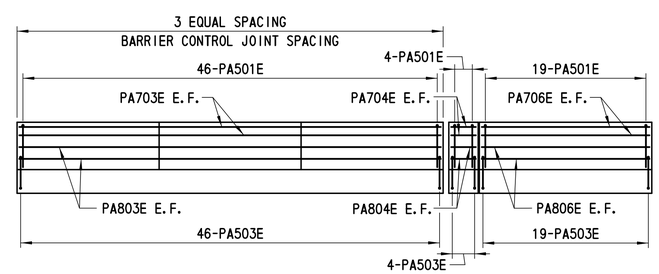

ELEVATION - APPROACH SLAB AND BARRIER

SCALE: 3/16″= 1′-0″

NOTES:

1. BARRIER REINFORCEMENT NOT SHOWN IN PLAN VIEW FOR CLARITY.
2. PROVIDE 1″ FLUSH EXPANSION JOINT BETWEEN MOMENT SLAB AND SLEEPER SLAB (SEE DELDOT STANDARD P-1).

CROSS REFERENCE NOTES:

1. FOR SECTION A-A, B-B, C-C AND D-D, SEE DWG. NO. 1-479 AS-2.
2. FOR FINISHED APPROACH SLAB ELEVATIONS, SEE DWG. NO. 1-479 FD-2.
3. FOR REINFORCING SCHEDULE, SEE DWG. NO. 1-479 BR-3.
4. FOR EXPANSION JOINT DETAILS, SEE DWG. NO. 1-479 EX-1.
5. FOR BARRIER CONTROL JOINT DETAIL, SEE DWG. 1-479 DK-3.

DELAWARE DEPARTMENT OF TRANSPORTATION	ADDENDUMS / REVISIONS	SCALE 0 2 8 / 1 4 FEET	US 301 LEVELS ROAD TO SUMMIT BRIDGE ROAD	CONTRACT T200911303	BRIDGE NO. 1-479	RAMP F OVER SANDY BRANCH APPROACH SLAB AND BARRIER REINFORCEMENT	1-479 AS-1
				COUNTY NEW CASTLE	DESIGNED BY: EE		SHEET NO. 553
					CHECKED BY: JW		TOTAL SHTS. 1256

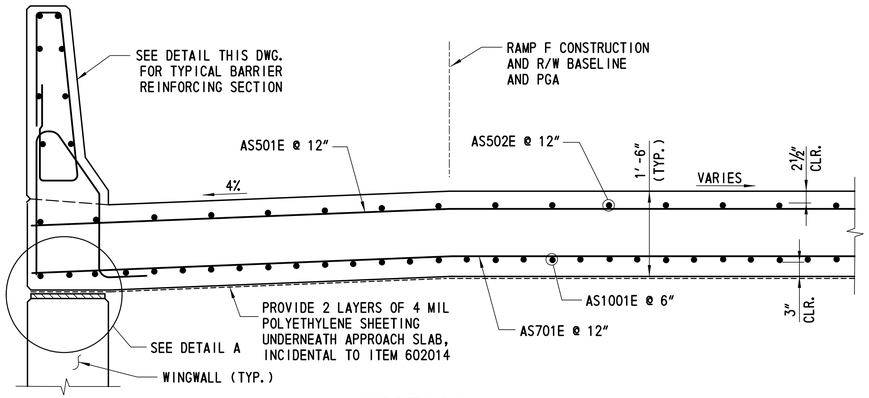

SECTION A-A

SCALE: ¾"= 1'-0"

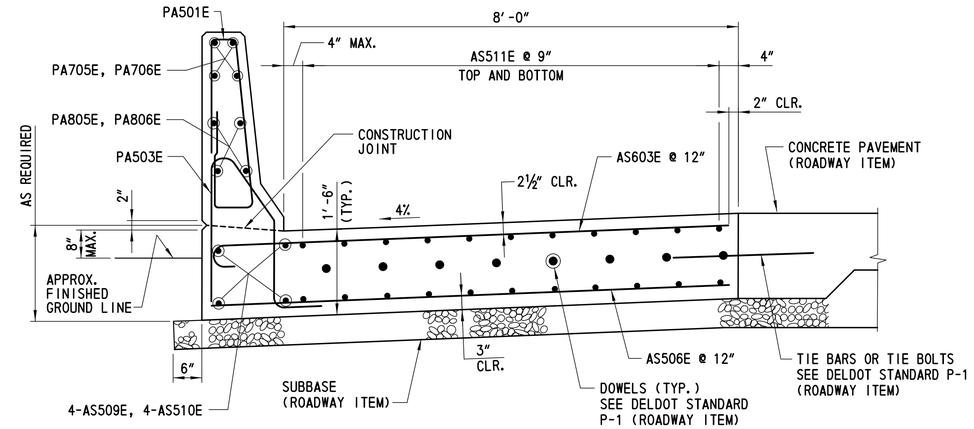

SECTION B-B

SCALE: ¾"= 1'-0"

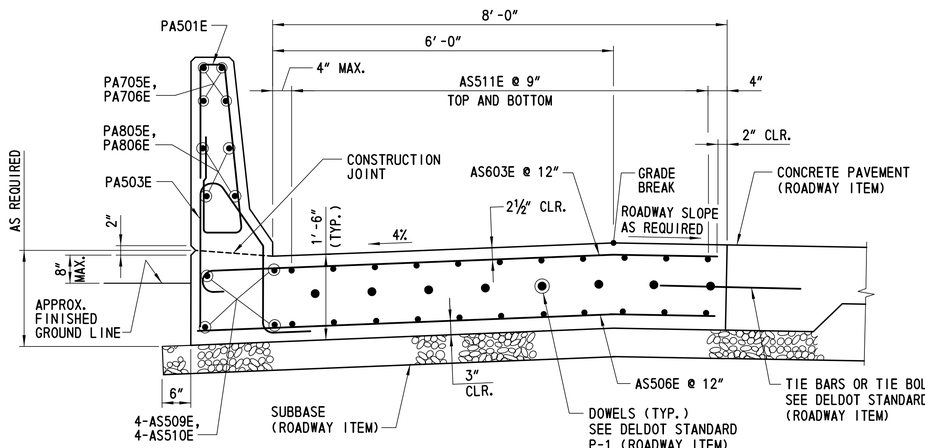

SECTION C-C

SCALE: ¾"= 1'-0"

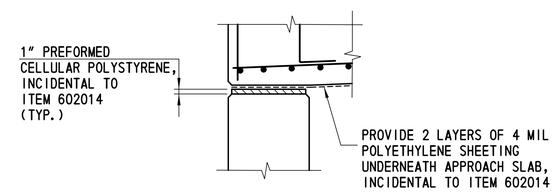

DETAIL A

SCALE: ¾"= 1'-0"

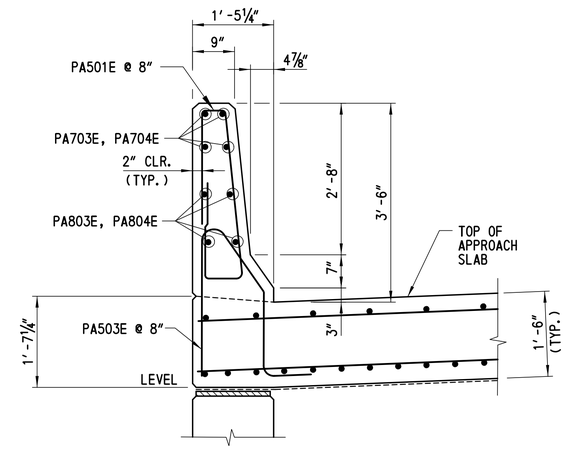

TYPICAL BARRIER REINFORCING SECTION

SCALE: ¾"= 1'-0"

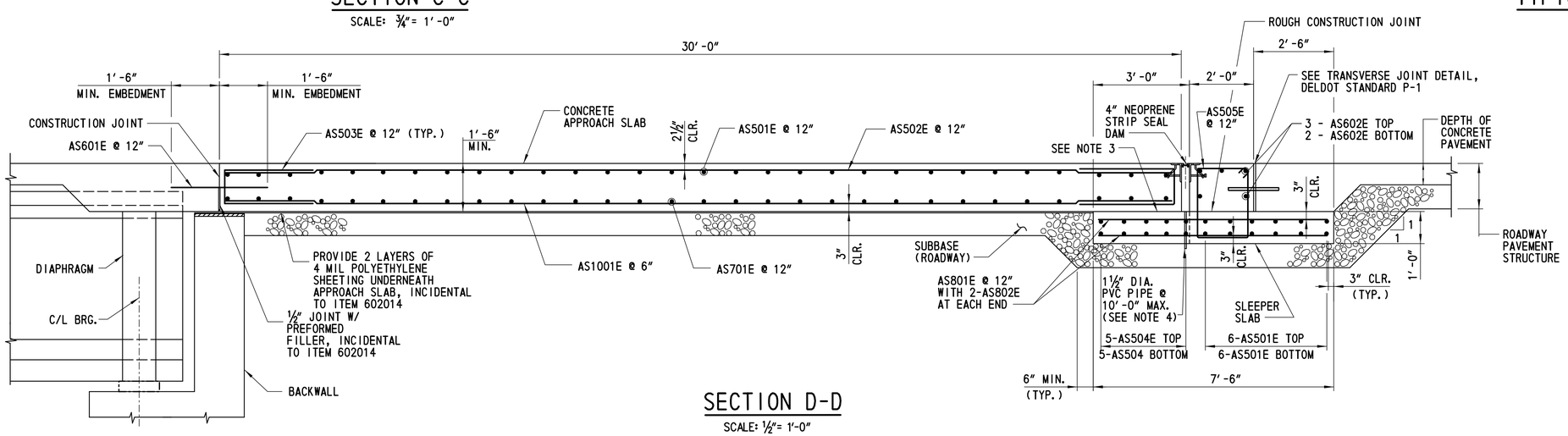

SECTION D-D

SCALE: ½"= 1'-0"

NOTES:

1. SECTION D-D SHOWN LEVEL FOR CLARITY. SLOPE APPROACH SLAB AND SLEEPER SLAB AS REQUIRED TO MATCH ROADWAY PROFILE.
2. SLEEPER SLAB DIMENSIONS SHOWN NORMAL TO ABUTMENT FOR CLARITY.
3. TROWEL SMOOTH AND PLACE 2 LAYERS OF 4 MIL POLYETHYLENE SHEETING.
4. PVC PIPE TO BE INCIDENTAL TO ITEM 602014.

CROSS REFERENCE NOTES:

1. FOR APPROACH SLAB REINFORCEMENT PLAN, SEE DWG. NO. 1-479 AS-1.
2. FOR FINISHED APPROACH SLAB ELEVATIONS, SEE DWG. NO. 1-479 FD-2.
3. FOR REINFORCING BAR SCHEDULE, SEE DWG. NO. 1-479 BR-3.
4. FOR EXPANSION JOINT DETAILS, SEE DWG. NO. 1-479 EX-1.

DELAWARE DEPARTMENT OF TRANSPORTATION	ADDENDUMS / REVISIONS	US 301 LEVELS ROAD TO SUMMIT BRIDGE ROAD	CONTRACT T200911303	BRIDGE NO. 1-479	RAMP F OVER SANDY BRANCH	1-479 AS-2
			COUNTY NEW CASTLE	DESIGNED BY: EE	APPROACH SLAB DETAILS	SHEET NO. 554
				CHECKED BY: JW		TOTAL SHTS. 1256

REINFORCING BAR SCHEDULE

DECK BAR SCHEDULE

MARK	LENGTH	NO. BARS	TYPE	A	B	C	D	E	G	H	J	K	O	R	REMARKS
S501E	47′-7″	281	1	7″	46′-5″				7″		5″				
S502E	46′-7½″	281	STR.												
S503E	55′-0″	115	STR.												
S504E	53′-3″	115	STR.												
S505E	36′-7″	115	STR.												
S506E	2′-4″	20	2	1′-2″	1′-2″										
S507E	5′-7″	24	STR.												
S508E	8′-3½″	60	16	2′-1″	1′-2½″	3′-8½″	1′-7″			1′-1½″		1′-2″			
S509E	46′-7½″	4	STR.												
S601E	8′-0″	562	1	8″	7′-4″						6″				

APPROACH SLAB BAR SCHEDULE

AS501E	46′-7½″	86	STR.												
AS502E	29′-8″	94	STR.												
AS503E	7′-0½″	188	2	3′-0″	1′-0½″				3′-0″						
AS504E	43′-9″	20	STR.												
AS505E	8′-7″	94	T1	7″	1′-8″	2′-0½″	1′-8″	2′-0½″	7″						
AS506E	9′-1¼″	44	STR.												
AS507E	2′-6″ TO 8′-0″	6	STR.												LENGTH △ = 2′-9″, 2 SETS
AS508E	1′-6″ TO 7′-6″	6	STR.												LENGTH △ = 3′-0″, 2 SETS
AS509E	9′-8″	8	STR.												
AS510E	11′-9¾″	8	STR.												
AS511E	9′-8″ TO 11′-9″	88	STR.												LENGTH △ = 2½″, 8 SETS
AS601E	3′-0″	94	STR.												DOWEL
AS602E	46′-7½″	10	STR.												
AS603E	9′-9¼″	44	1	8″	9′-1¼″						6″				
AS604E	2′-6″ TO 8′-0″	6	STR.												LENGTH △ = 2′-9″, 2 SETS
AS605E	1′-6″ TO 7′-6″	6	STR.												LENGTH △ = 3′-0″, 2 SETS
AS701E	46′-7½″	62	STR.												
AS801E	7′-3″	176	STR.												
AS802E	4′-0″	16	STR.												
AS1001E	29′-8″	182	STR.												

DIAPHRAGM BAR SCHEDULE

M401E	8′-1″	32	T1	4½″	6″	3′-2″	6″	3′-2″	4½″						
M402E	11′-10″	56	S4	9″	4′-11″	6″	4′-11″		9″						
M403E	8′-5″	32	T1	4½″	8″	3′-2″	8″	3′-2″	4½″						
M404E	7′-7″	108	2	9″	6′-10″										
M405E	6′-8″	72	2	3′-0″	8″				3′-0″						
M406E	5′-6″	36	2	9″	4′-9″										
M501E	8′-9″	64	STR.												
M502E	2′-5″	128	STR.												
M503E	5′-4″	16	STR.												
M504E	9′-0″	64	STR.												
M505E	5′-7″	48	STR.												
M506E	2′-9″	32	STR.												
M507E	6′-11″	12	STR.												
M508E	5′-9″	12	STR.												

BARRIER BAR SCHEDULE

MARK	LENGTH	NO. BARS	TYPE	A	B	C	D	E	G	H	J	K	O	R	REMARKS
PA501E	7′-6″	692	28	2′-8¾″	3⅞″	½″	3⅝″	2′-8⅞″	4¼″	3¼″				3¾″	
PA502E	5′-4¾″	422	43	1′-2½″	8¼″	11⅞″	1′-10⅜″	1⅜″	6⅜″	6⅛″	4″	10″		3¾″	
PA503E	6′-8¾″	270	43	1′-2½″	8¼″	11⅞″	2′-6⅜″	1⅜″	6⅜″	1′-2⅛″	4″	10″		3¾″	
PA701E	53′-0″	16	STR.												
PA702E	43′-10″	8	STR.												
PA703E	29′-8″	16	STR.												
PA704E	2′-1″	16	STR.												
PA705E	9′-8″	8	STR.												
PA706E	11′-9¾″	8	STR.												
PA801E	53′-0″	16	STR.												
PA802E	47′-0″	8	STR.												
PA803E	29′-8″	16	STR.												
PA804E	2′-1″	16	STR.												
PA805E	9′-8″	8	STR.												
PA806E	11′-9¾″	8	STR.												

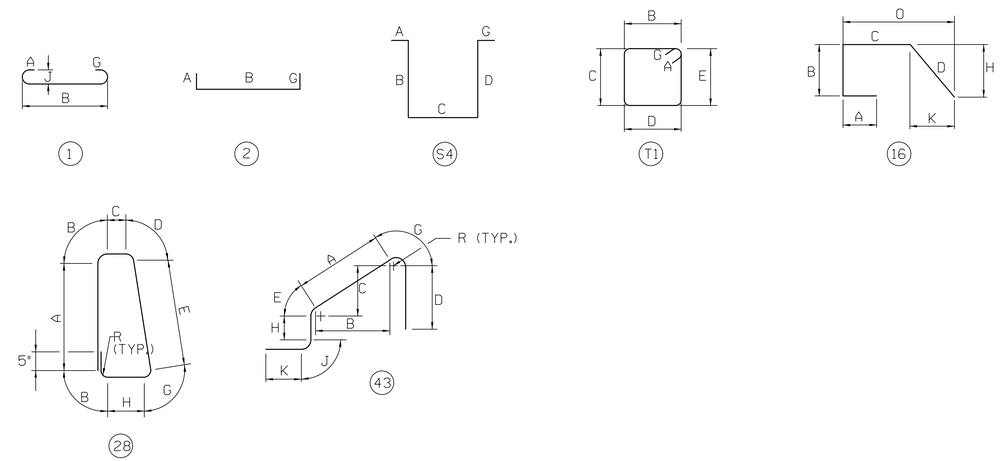

DELAWARE DEPARTMENT OF TRANSPORTATION	ADDENDUMS / REVISIONS	US 301 LEVELS ROAD TO SUMMIT BRIDGE ROAD	CONTRACT T200911303	BRIDGE NO. 1-479	RAMP F OVER SANDY BRANCH DECK REINFORCEMENT SCHEDULE
			COUNTY NEW CASTLE	DESIGNED BY: LT	
				CHECKED BY: BCM	

1-479 BR-3
SHEET NO. 555
TOTAL SHTS. 1256

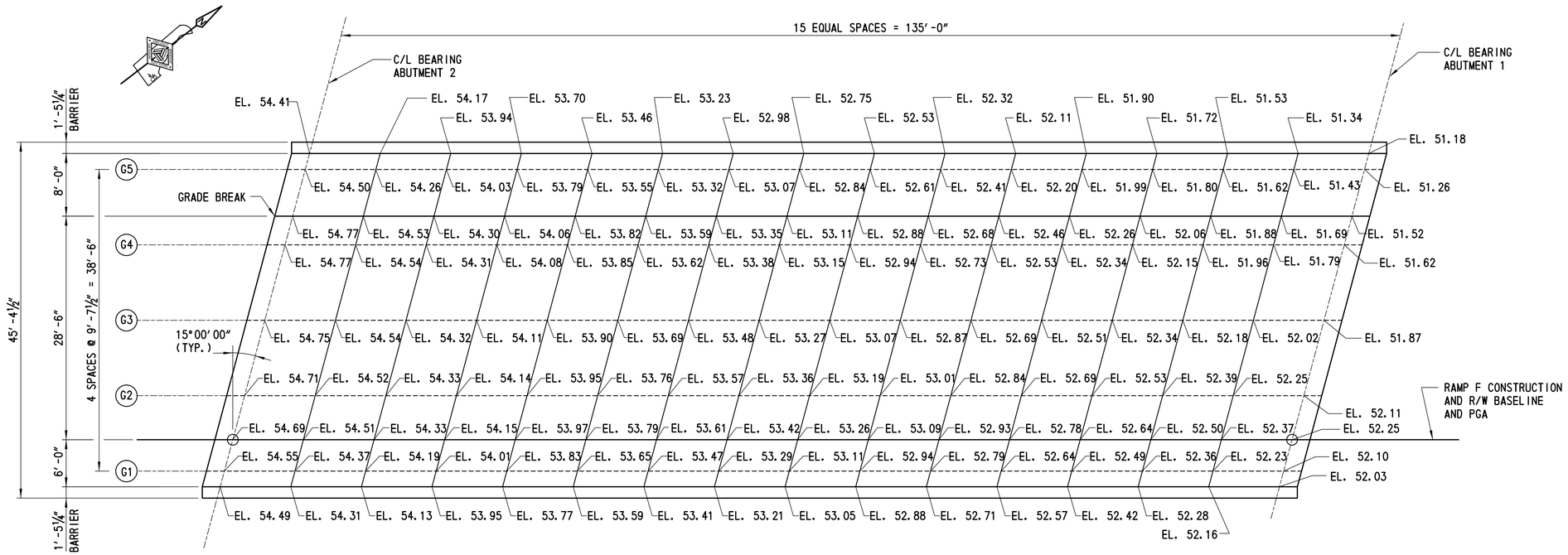

FINISHED DECK ELEVATIONS

SCALE: ⅛" = 1'-0"

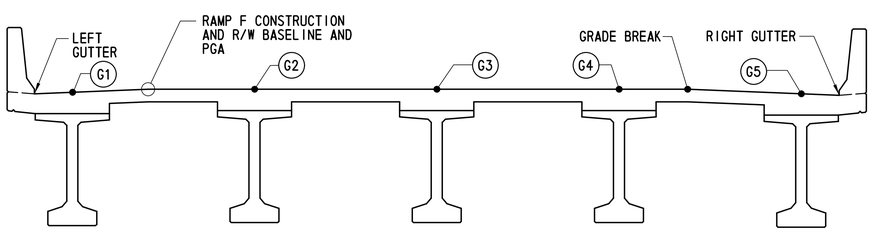

TYPICAL SECTION

STATIONS AHEAD

SCALE: ¼" = 1'-0"

CROSS REFERENCE NOTES:

1. FOR VERTICAL CURVE DATA, SEE DWG. NO. 1-479 PE-1.
2. FOR DECK POURING SEQUENCE, SEE DWG. NO. 1-479 DK-1.
3. FOR DECK REINFORCEMENT PLAN, SEE DWG. NO. 1-479 DK-2.
4. FOR DECK DETAILS, SEE DWG. NO. 1-479 DK-3.

DELAWARE DEPARTMENT OF TRANSPORTATION	ADDENDUMS / REVISIONS	US 301 LEVELS ROAD TO SUMMIT BRIDGE ROAD	CONTRACT T200911303	BRIDGE NO. 1-479	RAMP F OVER SANDY BRANCH FINISHED DECK ELEVATIONS	1-479 FD-1	
			COUNTY NEW CASTLE	DESIGNED BY: LT		SHEET NO. 556	
				CHECKED BY: JW		TOTAL SHTS. 1256	

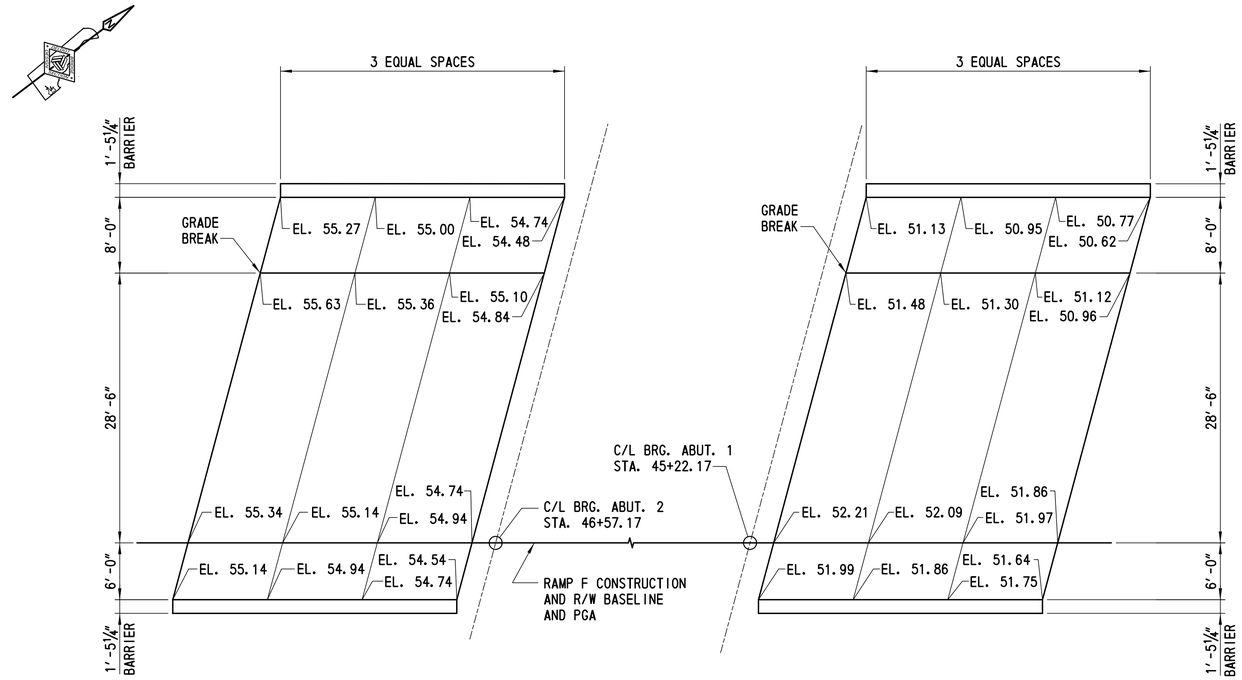

FINISHED APPROACH SLAB ELEVATIONS

SCALE: ⅛"= 1'-0"

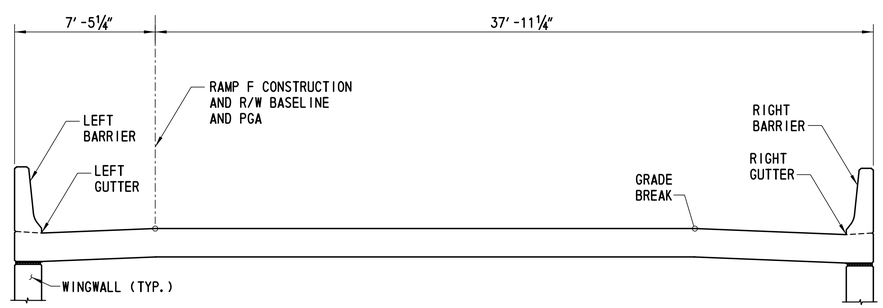

TYPICAL APPROACH SLAB SECTION

STATIONS AHEAD
SCALE: ¼"= 1'-0"

CROSS REFERENCE NOTES:

1. FOR APPROACH SLAB REINFORCEMENT PLAN, SEE DWG. NO. 1-479 AS-1.
2. FOR APPROACH SLAB DETAILS, SEE DWG. NO. 1-479 AS-2.
3. FOR VERTICAL CURVE DATA, SEE DWG. NO. 1-479 PE-1.

DELAWARE DEPARTMENT OF TRANSPORTATION	ADDENDUMS / REVISIONS	US 301 LEVELS ROAD TO SUMMIT BRIDGE ROAD	CONTRACT T200911303	BRIDGE NO. 1-479	RAMP F OVER SANDY BRANCH FINISHED APPROACH SLAB ELEVATIONS	1-479 FD-2	
			COUNTY NEW CASTLE	DESIGNED BY: PRH		SHEET NO. 557	
				CHECKED BY: JW		TOTAL SHTS. 1256	

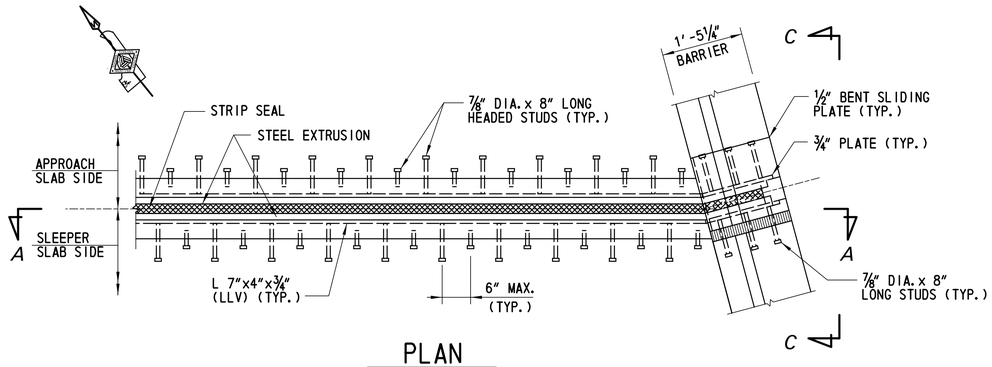

PLAN

SCALE: 3/4" = 1'-0"

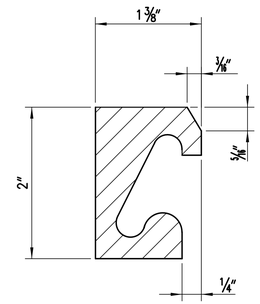

DETAIL 1

NTS

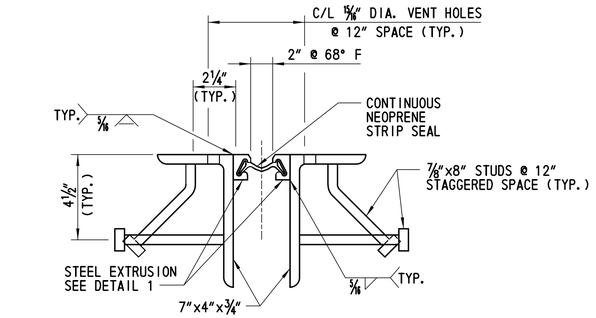

PREFABRICATED EXPANSION JOINT SYSTEM 4"

SCALE: 3" = 1'-0"

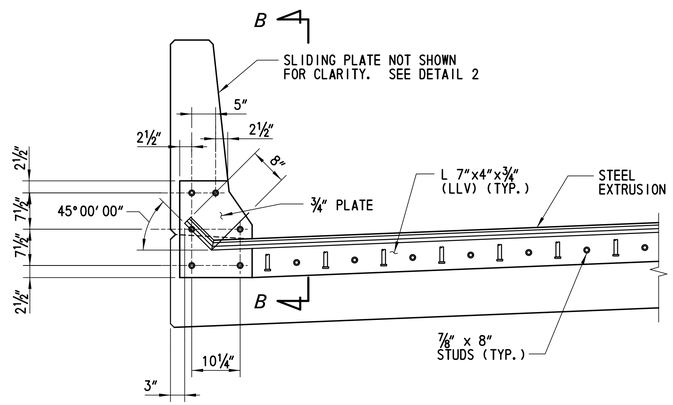

SECTION A-A

SCALE: 3/4" = 1'-0"

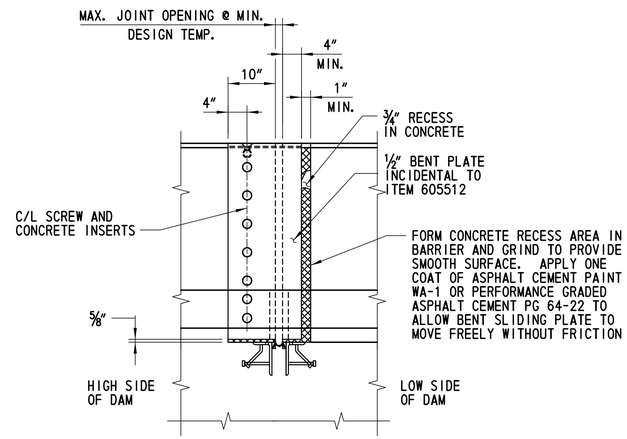

SECTION B-B

SCALE: 3/4" = 1'-0"

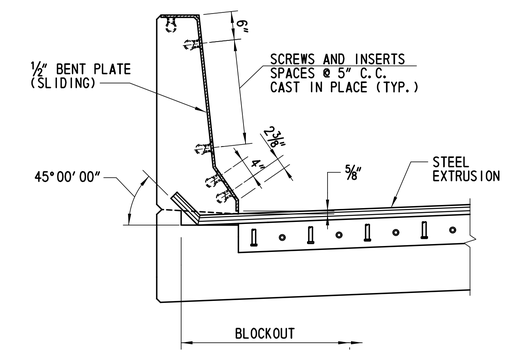

DETAIL 2

SCALE: 3/4" = 1'-0"

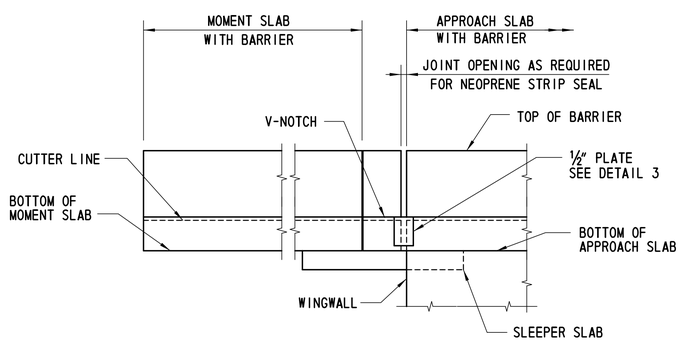

SECTION C-C

SCALE: 1/4" = 1'-0"

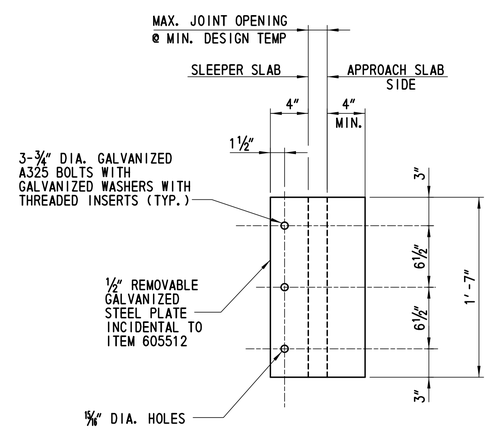

DETAIL 3

SCALE: 1 1/2" = 1'-0"

JOINT OPENING (INCH)								
LOCATION	TEMPERATURE (°F)							
	10	20	30	40	50	60	70	80
ABUTMENT 1	2 3/16	2 1/8	2 1/8	2 1/16	2 1/16	2	2	1 15/16
ABUTMENT 2	2 15/16	2 11/16	2 9/16	2 3/8	2 1/4	2 1/8	2	1 13/16"

NOTES:

1. STRUCTURAL STEEL FOR DECK JOINTS SHALL CONFORM TO AASHTO M270, GRADE 36.
2. STEEL EXTRUSIONS FOR DECK JOINTS SHALL CONFORM TO AASHTO M270, GRADE 36.
3. THE NEOPRENE STRIP SEAL SHALL BE PROVIDED CONTINUOUS THROUGHOUT THE LIMITS OF THE DECK. SPLICING OF THE NEOPRENE STEEL SEAL IS NOT PERMITTED.
4. COST FOR MATERIALS, FABRICATION AND INSTALLATION OF STRIP SEAL EXPANSION JOINTS, 4" MOVEMENT CLASSIFICATION, WITH STEEL ELEMENTS INCLUDING STUDS AND STEEL EXTRUSIONS, SHALL BE PAID FOR UNDER ITEM 605512.
5. CONSTRUCT EXPANSION JOINT TO MATCH ROADWAY GRADE AND CROSS SLOPE.
6. GRIND ALL STEEL EDGES EXPOSED TO TRAFFIC TO 3/16" MIN. RADIUS.
7. BOND NEOPRENE STRIP SEAL TO EXTRUSION WITH APPROVED ADHESIVE.

DELAWARE DEPARTMENT OF TRANSPORTATION	ADDENDUMS / REVISIONS	US 301 LEVELS ROAD TO SUMMIT BRIDGE ROAD	CONTRACT T200911303	BRIDGE NO. 1-479	RAMP F OVER SANDY BRANCH	1-479 EX-1	
			COUNTY NEW CASTLE	DESIGNED BY: PRH	EXPANSION JOINT DETAILS	SHEET NO. 558	
				CHECKED BY: JW		TOTAL SHTS. 1256	

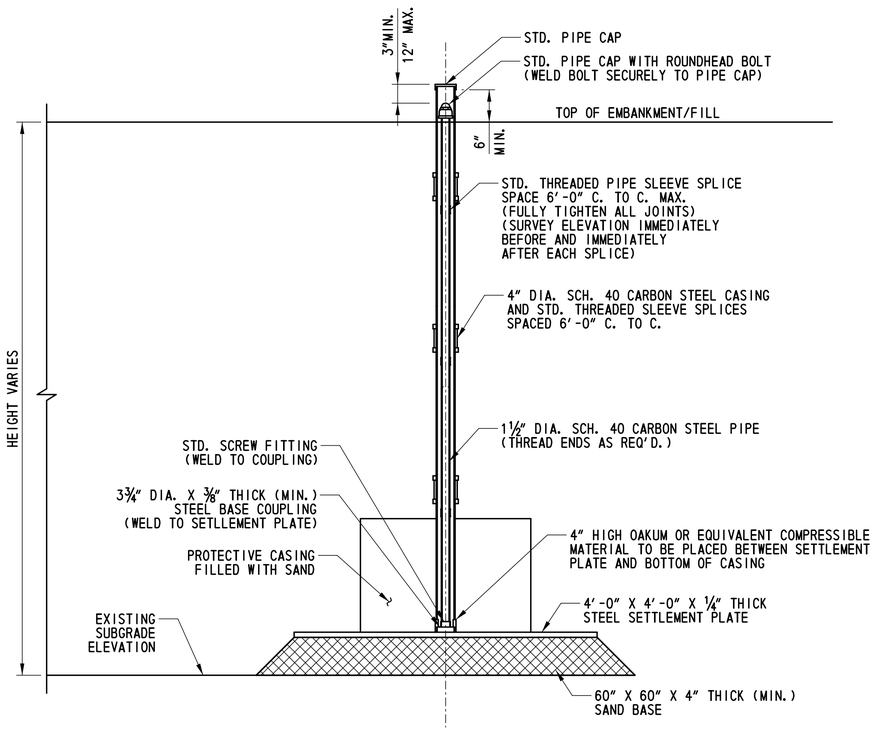

SETTLEMENT PLATFORM

N. T. S.

SETTLEMENT PLATFORM	STATION	OFFSET	SETTLEMENT MONUMENT	STATION	OFFSET
SP-1-479-1	45+00.85	14.25' RT	SM-1-479-1	45+02.19	9.25' RT
SP-1-479-2	46+70.85	14.25' RT	SM-1-479-2	46+72.19	9.25' RT

NOTES:

1. THE BASE OF THE SETTLEMENT PLATFORM SHALL BE PLACED ON THE TOP OF THE EXISTING GROUND.
2. READINGS ON THE SETTLEMENT PLATFORMS SHALL BE MADE AFTER THE INITIAL INSTALLATION OF THE RISER AND CASING PIPES AND INSTALLATION RECORD SHEETS ARE APPROVED BY THE ENGINEER AND PRIOR TO FILL PLACEMENT. DURING FILL PLACEMENT, READINGS ON ALL SETTLEMENT PLATFORMS SHALL BE TAKEN AT A MINIMUM OF THREE (3) CALENDAR DAY INTERVALS. AFTER COMPLETION OF THE FILL AND SURCHARGE PLACEMENT, INSTALL SETTLEMENT MONUMENTS AS INDICATED ON THE BRIDGE PLANS AND TAKE INITIAL READINGS. READINGS ON ALL SETTLEMENT MONITORING DEVICES SHALL THEN BE TAKEN AT A MINIMUM OF THREE (3) CALENDAR DAY INTERVALS. AFTER THE FILL HAS BEEN COMPLETED AND TWO (2) SUCCESSIVE READINGS OF EACH DEVICE HAS RECORDED LESS THAN OR EQUAL TO 0.1 INCH, THE IMMEDIATE SETTLEMENT WILL BE DEEMED COMPLETE AND THE GEOTECHNICAL ENGINEER CAN RELEASE THE SUBSTRUCTURE FOR REMOVAL OF SURCHARGE AND INSTALLATION OF PRODUCTION PILES SO LONG AS THE MINIMUM 30 DAY QUARANTINE PERIOD IS MET. AFTER COMPLETION OF THE ABUTMENT, THE CONTRACTOR SHALL ESTABLISH REFERENCE POINTS TO MONITOR SETTLEMENT ON TOP OF THE ABUTMENT SEAT WITHIN 5 FEET OF ALL ENDS AND CORNERS AND AT THE CENTER OF BRIDGES AND THE CENTERLINE OF US301. AFTER THE CONCRETE ABUTMENTS HAVE BEEN CONSTRUCTED, READINGS ON ALL SETTLEMENT MONITORING DEVICES AND REFERENCE POINTS SHALL CONTINUE TO BE TAKEN AT A MINIMUM OF THIRTY (30) DAY INTERVALS FOR THE NEXT SIX (6) MONTHS OR AS DIRECTED BY THE ENGINEER.
3. COSTS OF MATERIALS, FABRICATION, INSTALLATION AND MONITORING OF SETTLEMENT PLATFORMS IS INCLUDED IN 202505.
4. COST OF MATERIALS, FABRICATION, INSTALLATION AND MONITORING OF MONUMENTS IS INCLUDED IN ITEM 202518.

CROSS REFERENCE NOTE:

FOR LOCATION OF SETTLEMENT PLATFORMS AND MONUMENTS, SEE DWG. 1-479 PE-1.

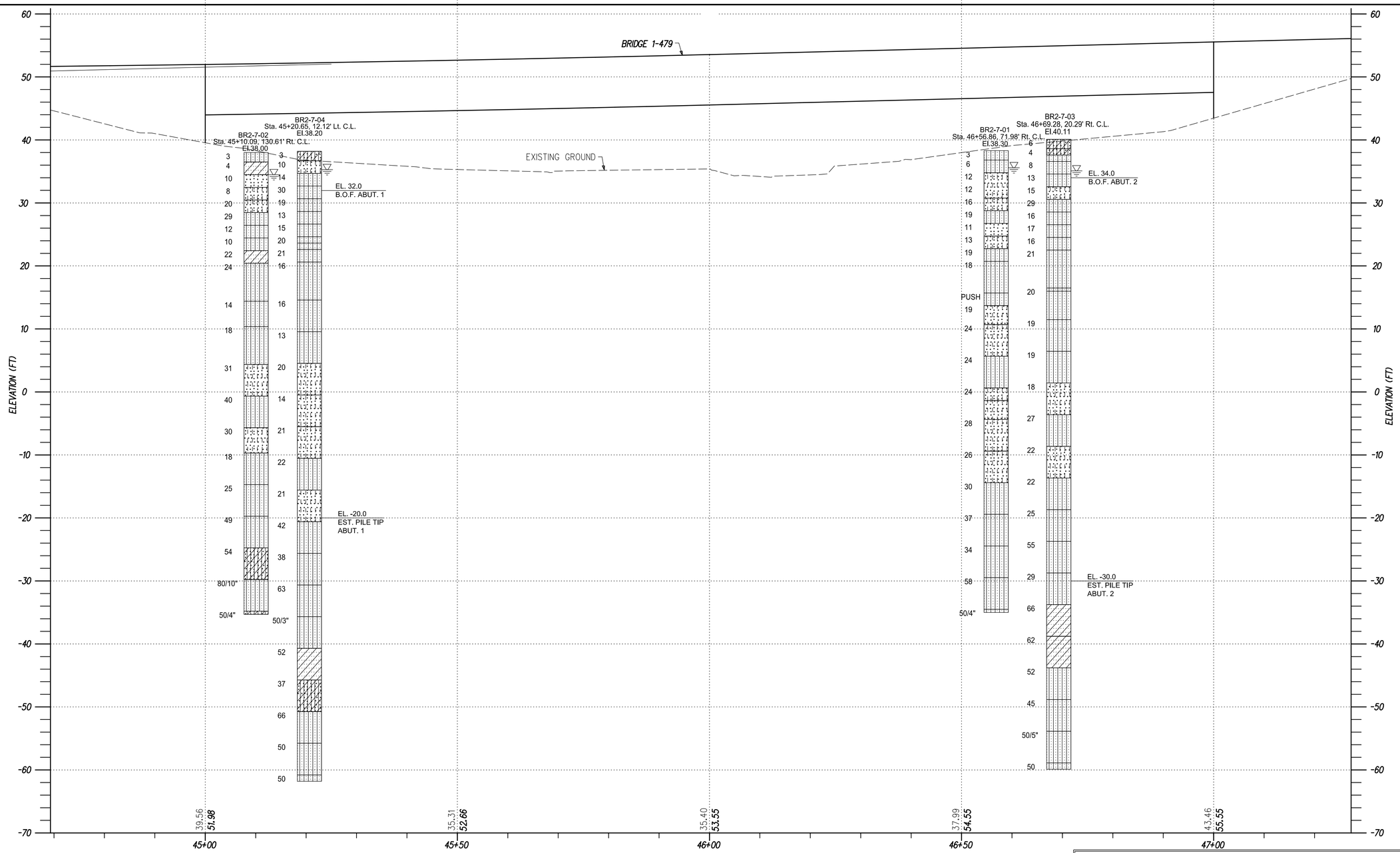

SYMBOL DESCRIPTION

STRATA SYMBOLS

- SILTY SAND
- CLAYEY SAND
- POORLY GRADED CLAYEY SILTY SAND
- POORLY GRADED SAND WITH SILT

KEY TO SYMBOLS

- POORLY GRADED SAND
- LOW PLASTICITY ORGANIC SILTS
- POORLY GRADED SAND WITH CLAY

MISC. SYMBOLS

- WATER TABLE DURING DRILLING

VERTICAL SCALE FEET: 0, 8, 16, 24

DELAWARE DEPARTMENT OF TRANSPORTATION

ADDENDUMS / REVISIONS

HORIZONTAL SCALE: 0, 15, 30, 45 FEET

US 301 LEVELS ROAD TO SUMMIT BRIDGE ROAD

CONTRACT	BRIDGE NO.	1–479
T200911303	DESIGNED BY: ZH	
COUNTY		
NEW CASTLE	CHECKED BY: RDB	

RAMP F OVER SANDY BRANCH

TEST BORINGS

1-479 B0-1

SHEET NO. 560

TOTAL SHTS. 1256

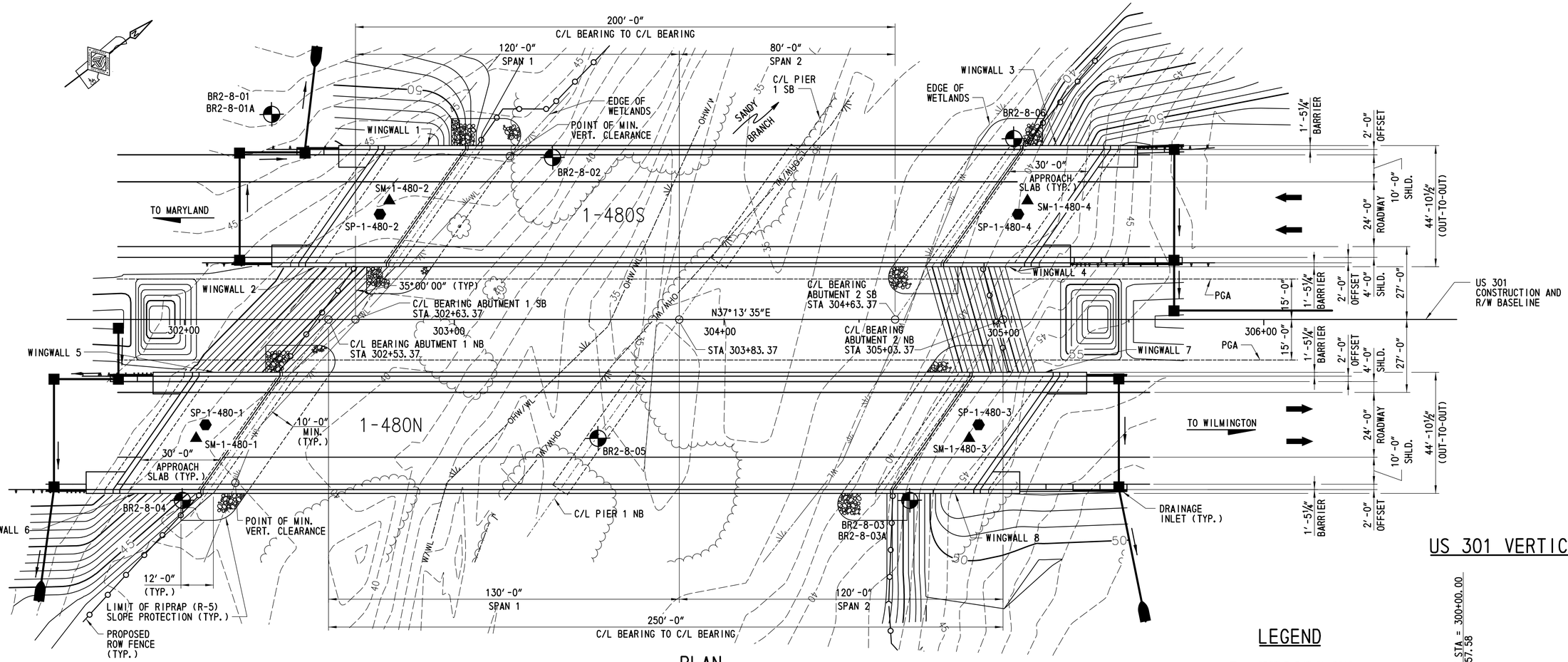

PLAN

SCALE: 1" = 20'-0"

US 301 VERTICAL DATA

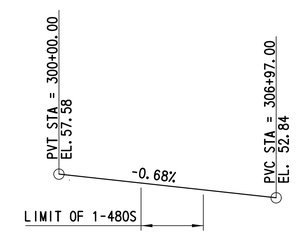

LEGEND

- ⬢ - SETTLEMENT PLATFORM
- ▲ - SETTLEMENT MONUMENT

US 301 HORIZONTAL DATA

TANGENT

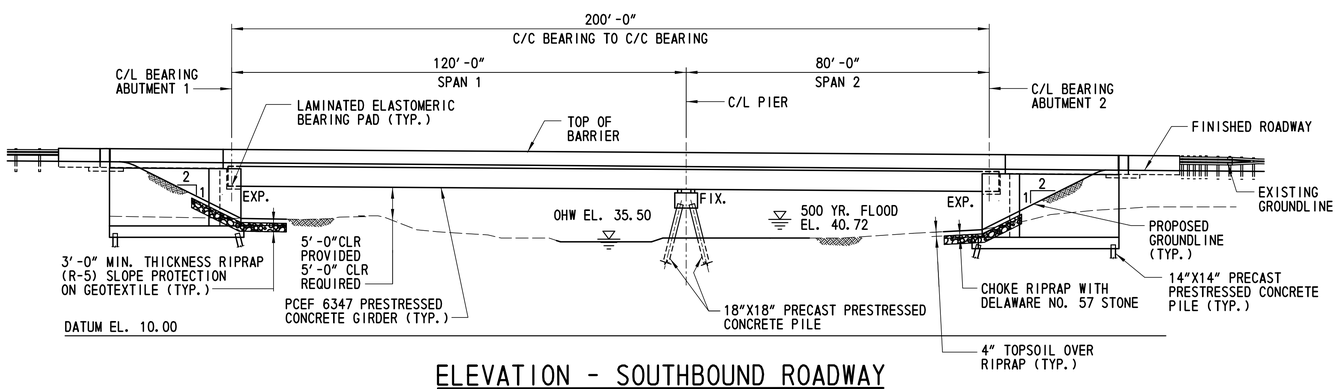

ELEVATION - SOUTHBOUND ROADWAY

SCALE: 1" = 20'-0"

CROSS REFERENCE NOTES:

1. FOR SETTLEMENT PLATFORM AND MONUMENT STATIONS AND OFFSETS, SEE DWG. NO. 1-480 DT-1.
2. FOR SETTLEMENT PLATFORM DETAILS, SEE DWG. NO. 1-480 DT-1.
3. RECESS AND COVER RIPRAP IN ACCORDANCE WITH AND SLOPE RIPRAP TREATMENT NOTES ON DWG. NO. EC-05.

DELAWARE DEPARTMENT OF TRANSPORTATION	ADDENDUMS / REVISIONS	SCALE 0 20 40 60 FEET	US 301 LEVELS ROAD TO SUMMIT BRIDGE ROAD	CONTRACT T200911303	BRIDGE NO. 1-480N&S	US 301 MAINLINE OVER SANDY BRANCH GENERAL PLAN AND SB ELEVATION	1-480 PE-1
				COUNTY NEW CASTLE	DESIGNED BY: PRH		SHEET NO. 561
					CHECKED BY: JW		TOTAL SHTS. 1256

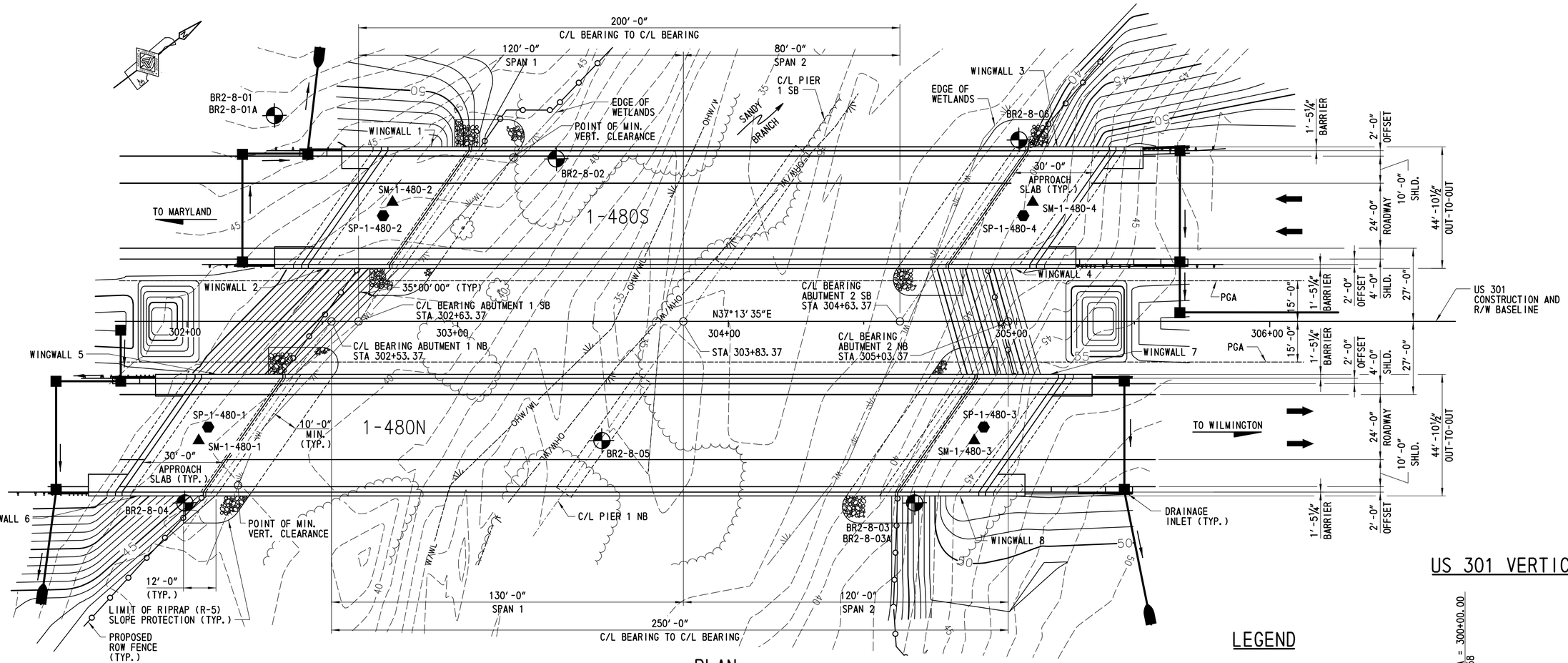

PLAN

SCALE: 1"=20'

LEGEND

- ⬢ - SETTLEMENT PLATFORM
- ▲ - SETTLEMENT MONUMENT

US 301 VERTICAL DATA

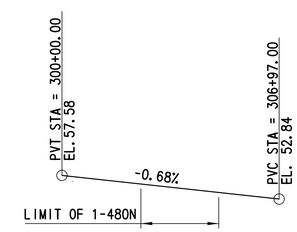

US 301 HORIZONTAL DATA

TANGENT

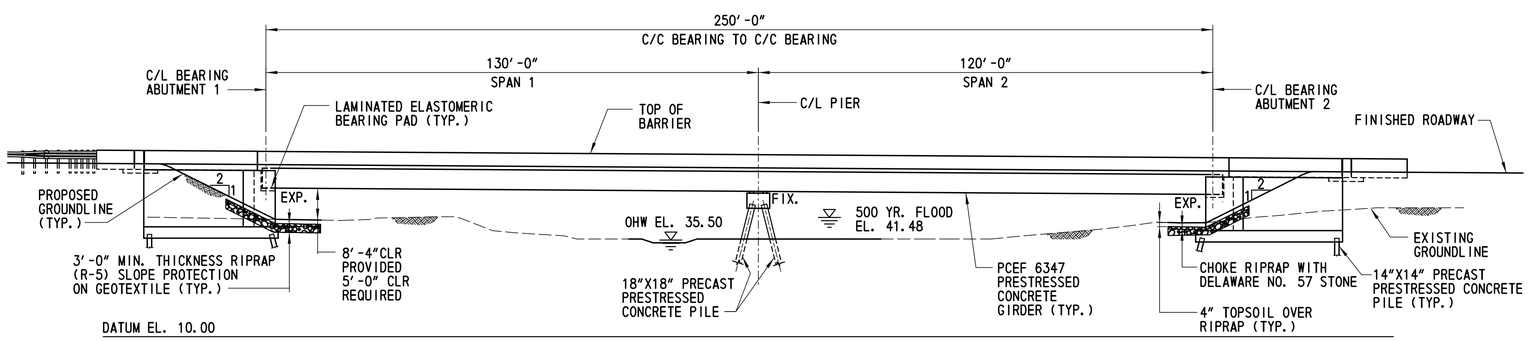

ELEVATION - NORTHBOUND ROADWAY

SCALE: 1"=20'

CROSS REFERENCE NOTES:

1. FOR SETTLEMENT PLATFORM AND MONUMENT STATIONS AND OFFSETS, SEE DWG. NO. 1-480 DT-1.
2. FOR SETTLEMENT PLATFORM DETAILS, SEE DWG. NO. 1-480 DT-1.
3. RECESS AND COVER RIPRAP IN ACCORDANCE WITH SLOPE RIPRAP TREATMENT NOTES ON DWG. NO. EC-05.

DELAWARE DEPARTMENT OF TRANSPORTATION	ADDENDUMS / REVISIONS	SCALE 0 20 40 60 FEET	US 301 LEVELS ROAD TO SUMMIT BRIDGE ROAD	CONTRACT T200911303	BRIDGE NO. 1-480N&S	US 301 MAINLINE OVER SANDY BRANCH GENERAL PLAN AND NB ELEVATION	1-480 PE-2
				COUNTY NEW CASTLE	DESIGNED BY: PRH		SHEET NO. 562
					CHECKED BY: JW		TOTAL SHTS. 1256

PROJECT NOTES

1. DESIGN SPECIFICATIONS:

   AASHTO LRFD BRIDGE DESIGN SPECIFICATIONS, 4TH EDITION, 2007, INCLUDING 2008 AND 2009 INTERIM REVISIONS, AND AS SUPPLEMENTED BY DELAWARE DEPARTMENT OF TRANSPORTATION BRIDGE DESIGN MANUAL, MAY 2005, INCLUDING LATEST REVISIONS.

   PROVIDE MATERIALS AND PERFORM WORK IN ACCORDANCE WITH THE DELAWARE DEPARTMENT OF TRANSPORTATION STANDARD SPECIFICATIONS AND CONSTRUCTION DETAILS, AASHTO/AWS D1.5M/D1.5 BRIDGE WELDING CODE, AND CONTRACT SPECIAL PROVISIONS.

   LIVE LOAD DISTRIBUTION TO BEAMS IS BASED UPON AASHTO DISTRUBUTION FACTORS.

2. LOADING:

   UNIT WEIGHTS OF MATERIALS SHALL BE IN ACCORDANCE WITH THE DELAWARE BRIDGE DESIGN MANUAL.

   FUTURE OVERLAY ALLOWANCE SHALL BE 25 LBS/SQ FT.

   STEEL BRIDGE DECK FORMS WHICH STAY IN PLACE (INCLUDING CONCRETE IN FORM CORRUGATIONS) SHALL BE 15 LBS/SQ FT.

   VEHICLE LIVE LOAD SHALL BE AASHTO HL-93 DESIGN VEHICLE, WHICH CONSISTS OF A DESIGN TRUCK OR TANDEM WITH DYNAMIC LOAD ALLOWANCE AND A LANE LOAD. RATINGS SHALL USE ALL DELAWARE LEGAL LOADS SPECIFIED IN THE BRIDGE DESIGN MANUAL.

   BARRIER HAS BEEN DESIGNED FOR TEST LEVEL FOUR (TL-4).

   FATIGUE DESIGN IS BASED ON THE FOLLOWING:
   PRESTRESSED CONCRETE: ADTT 1,236 (2030 ONE-DIRECTIONAL).

   FOR THERMAL LOADS, CONSIDER THE MODERATE TEMPERATURE RANGE AS STIPULATED IN THE AASHTO LRFD DESIGN SPECIFICATIONS, THE NORMAL TEMPERATURE SHALL BE CONSIDERED TO BE 68F.

   FOR SEISMIC LOADS, CONSIDER SEISMIC PERFORMANCE ZONE 1, WITH A SITE CLASS = D AND IMPORTANCE CATEGORY - ESSENTIAL.

   SEISMIC FORCES WERE CONSIDERED FOR ACCELERATION COEFFICIENT OF 0.08.

3. PORTLAND CEMENT CONCRETE:

   PORTLAND CEMENT CONCRETE FOR CAST-IN-PLACE ELEMENTS SHALL BE AS FOLLOWS:
   (28 DAY COMPRESSIVE STRENGTH)
   ITEM NO. 602004 (CLASS B, f'c=3000 PSI) - ABUT. & WINGWALL FOOTING
   ITEM NO. 602007 (CLASS A, f'c=4500 PSI) - PIER ABOVE FOOTING
   ITEM NO. 602013 (CLASS D, f'c=4500 PSI) - DECK AND DIAPHRAGMS
   ITEM NO. 602014 (CLASS D, f'c=4500 PSI) - APPROACH SLAB, MOMENT SLAB AND SLEEPER SLAB
   ITEM NO. 602015 (CLASS A, f'c=4500 PSI) - ABUT. & WINGWALL ABOVE FOOTING
   ITEM NO. 602017 (CLASS A, f'c=4500 PSI) - BARRIER

   RAKE FINISH ALL HORIZONTAL CONSTRUCTION, EXCEPT AS INDICATED.

   CONSTRUCT DECK SLAB TRANSVERSE CONSTRUCTION JOINTS PARALLEL TO BRIDGE CENTERLINE OF BEARING.

   PLACE CHEEKWALL AND BACKWALL CONCRETE AFTER BEAMS HAVE BEEN SET IN POSITION.

   DECK SLAB THICKNESS INCLUDES ½" INTEGRAL WEARING SURFACE.

   MIX REQUIREMENTS SHALL CONFORM TO SECTION 812 OF THE DELAWARE DEPARTMENT OF TRANSPORTATION STANDARD SPECIFICATIONS.

   ALL EXPOSED CORNERS OF CONCRETE SHALL BE CHAMFERED WITH ¾" X ¾" MILLED CHAMFER STRIPS UNLESS NOTED OTHERWISE, EXCEPT ON UNEXPOSED FOOTINGS OR WHERE INDICATED BY THE NOTATION ON THE PLANS, "DO NOT CHAMFER".

   NO SLIP-FORMING OF BARRIERS IS PERMITTED, UNLESS NOTED OTHERWISE.

4. BAR REINFORCEMENT:

   REINFORCING STEEL SHALL CONFORM TO AASHTO M31 (ASTM A615), GRADE 60.

   PROVIDE 2" CONCRETE COVER ON REINFORCEMENT BARS, EXCEPT AS NOTED.

   FUSION-BONDED EPOXY COATED REINFORCING STEEL SHALL CONFORM TO AASHTO M284 (ASTM D3963), AND SHALL BE DENOTED WITH A SUFFIX "E" IN THE BAR MARKS.

   DO NOT WELD GRADE 60 REINFORCING STEEL, UNLESS NOTED OTHERWISE.

5. PRESTRESSED CONCRETE DESIGN:

   THE PRECAST CONCRETE GIRDERS ARE DESIGNED AS NONCOMPOSITE FOR ALL DEAD LOADS EXCEPT THE BARRIERS AND FUTURE WEARING SURFACE. THE PRECAST GIRDERS ARE DESIGNED AS CONTINUOUS AND COMPOSITE FOR LIVE LOADS AS WELL AS THE BARRIER AND FUTURE WEARING SURFACE DEAD LOADS.

   THE PRECAST CONCRETE GIRDERS SHALL HAVE A MINIMUM AGE OF 90 DAYS FROM THE TIME OF PRESTRESSING RELEASE UNTIL THE TIME THAT THE PIER DIAPHRAGM IS CAST.

   PRESTRESSED CONCRETE:

   THE MINIMUM COMPRESSIVE STRENGTH FOR PRESTRESSED CONCRETE AT THE AGE OF 28 DAYS SHALL BE f'c=8,000 PSI. THE MINIMUM COMPRESSIVE STRENGTH AT THE TRANSFER OF PRESTRESS SHALL BE f'ci=6,400 PSI.

   PRESTRESSED STEEL:

   PRETENSIONING STEEL FOR GIRDERS SHALL CONSIST OF HIGH STRENGTH 7-WIRE LOW RELAXATION STRANDS, WITH A NOMINAL 0.60 INCH DIAMETER, CONFORMING TO THE REQUIREMENTS OF AASHTO M203 (ASTM A416) GRADE 270. EACH 0.60 INCH DIAMETER STRAND SHALL BE PRETENSIONED TO 43,942 LBS. (0.75 Fpu).

		ESTIMATED LOSSES (PSI)	FINAL EFFECTIVE PRESTRESS FORCE PER STRAND (LBS)
1-480 (NB)	SPAN 1	30,475	37,329
	SPAN 2	33,009	36,779
1-480 (SB)	SPAN 1	33,009	36,779
	SPAN 2	22,111	39,144

   CAMBER GROWTH IN PRETENSIONED BEAMS BETWEEN THE TIME OF STRESSING AND THE TIME OF SLAB PLACEMENT IS ASSUMED TO BE 80% FOR CAMBER CALCULATIONS.

6. SERVICEABILITY:

   LIVE LOAD DEFLECTION SHALL BE LIMITED TO L/800.

   FOR REINFORCEMENT DISTRIBUTION REQUIREMENTS, CONSIDER CLASS 2 EXPOSURE CRITERIA FOR DECKS.

7. CONSTRUCTION JOINTS:

   KEYED CONSTRUCTION JOINTS SHALL BE 2" X 4" OR AS NOTED. ALL EXPOSED CONSTRUCTION JOINT EDGES SHALL HAVE A ¾" V-NOTCH, UNLESS NOTED OTHERWISE.

8. STRUCTURAL BACKFILL:

   STRUCTURAL BACKFILL SHALL CONFORM TO THE REQUIREMENTS OF BORROW TYPE C.

9. UTILITIES:

   COORDINATE ALL WORK RELATED TO PUBLIC AND PRIVATE UTILITIES IN ACCORDANCE WITH SECTION 107.04 OF THE STANDARD SPECIFICATIONS.

   VERIFY AND LOCATE ALL EXISTING UTILITIES PRIOR TO STARTING WORK. CONDUCT OPERATIONS IN A MANNER WHICH ENSURES THAT THE UTILITIES WILL NOT BE DISTURBED OR ENDANGERED AND ASSUME FULL RESPONSIBILITY FOR ANY DAMAGE TO UTILITIES DURING CONSTRUCTION. THE DEPARTMENT DOES NOT ASSUME RESPONSIBILITY FOR REIMBURSEMENT, PARTICIPATION IN DESIGN AND/OR REVISION, OR LIABILITY FOR ACCURACY OF TYPE, SIZE AND LOCATION OF ANY UTILITY.

10. HYDRAULIC DATA:

SOUTHBOUND:	NORTHBOUND:
DRAINAGE AREA = 0.46 SQ. MI.	DRAINAGE AREA = 0.46 SQ. MI.
DESIGN FREQUENCY = 100 YEARS	DESIGN FREQUENCY = 100 YEARS
DESIGN FLOOD ELEVATION = 39.63	DESIGN FLOOD ELEVATION = 40.32
25-YR FLOOD ELEVATION = 38.61	25-YR FLOOD ELEVATION = 39.29
DESIGN DISCHARGE = 973 CFS	DESIGN DISCHARGE = 973 CFS
PROPOSED OPENING = 1577 SF	PROPOSED OPENING = 1903 SF

11. MINIMUM VERTICAL CLEARANCE OF 5'-0" IS TO BE MAINTAINED AT ALL TIMES DURING CONSTRUCTION.

LOAD RATING SUMMARY
(NORTHBOUND)

DESIGN VEHICLE	RATING FACTOR	RATING WEIGHT (TONS)	CONTROLLING MEMBER	CONTROLLING POINT	LOAD EFFECT
HL-93 TRUCK (INVENTORY)	1.20	N/A	EXTERIOR BEAM	105	CONC. STRESS MAX. EFFECTS DL+PS+LL BOT OF BEAM
HL-93 TANDEM (INVENTORY)	1.42	N/A	EXTERIOR BEAM	105	CONC. STRESS MAX. EFFECTS DL+PS+LL BOT OF BEAM
HL-93 TRUCK TRAIN (INVENTORY)	1.33	N/A	EXTERIOR BEAM*	110	FLEXURE MINIMUM EFFECTS
HS-20 (INVENTORY)	1.75	62.83	EXTERIOR BEAM	106	LONG. REINF. MAX. EFFECTS MAX. MOMENT W/ CONCURRENT SHEAR
HL-93 TRUCK (OPERATING)	1.57	N/A	EXTERIOR BEAM	104	LONG. REINF. MAX. EFFECTS MAX. MOMENT W/ CONCURRENT SHEAR
HL-93 TANDEM (OPERATING)	1.91	N/A	EXTERIOR BEAM	105	LONG. REINF. MAX. EFFECTS MAX. MOMENT W/ CONCURRENT SHEAR
HL-93 TRUCK TRAIN (OPERATING)	1.72	N/A	EXTERIOR BEAM*	110	FLEXURE MINIMUM EFFECTS
HS-20 (OPERATING)	2.23	80.30	EXTERIOR BEAM	106	LONG. REINF. MIN. EFFECTS MAX. SHEAR W/ CONCURRENT MOMENT
DE S220 (LEGAL)	2.49	49.72	EXTERIOR BEAM	105	CONC. STRESS MAX. EFFECTS DL+PS+LL BOT OF GIRDER
DE S335 (LEGAL)	1.40	49.01	EXTERIOR BEAM	105	CONC. STRESS MAX. EFFECTS DL+PS+LL BOT OF GIRDER
DE S437 (LEGAL)	1.33	48.84	EXTERIOR BEAM	105	CONC. STRESS MAX. EFFECTS DL+PS+LL BOT OF GIRDER
DE T330 (LEGAL)	1.82	54.56	EXTERIOR BEAM	105	CONC. STRESS MAX. EFFECTS DL+PS+LL BOT OF GIRDER
DE T435 (LEGAL)	1.58	55.29	EXTERIOR BEAM	105	CONC. STRESS MAX. EFFECTS DL+PS+LL BOT OF GIRDER
DE T540 (LEGAL)	1.39	55.64	EXTERIOR BEAM	105	CONC. STRESS MAX. EFFECTS DL+PS+LL BOT OF GIRDER

NOTE: LOAD RATING DOES INCLUDE FUTURE WEARING SURFACE AS NOTED IN THE PLANS.

LOAD RATING SUMMARY
(SOUTHBOUND)

DESIGN VEHICLE	RATING FACTOR	RATING WEIGHT (TONS)	CONTROLLING MEMBER	CONTROLLING POINT	LOAD EFFECT
HL-93 TRUCK (INVENTORY)	1.35	N/A	EXTERIOR BEAM*	110	FLEXURE MINIMUM EFFECTS
HL-93 TANDEM (INVENTORY)	1.62	N/A	EXTERIOR BEAM*	207	LONG. REINF. MAX. EFFECTS MAX. MOMENT W/ CONCURRENT SHEAR
HL-93 TRUCK TRAIN (INVENTORY)	1.20	N/A	EXTERIOR BEAM*	110	FLEXURE MINIMUM EFFECTS
HS-20 (INVENTORY)	1.77	63.63	EXTERIOR BEAM*	207	LONG. REINF. MAX. EFFECTS MAX. MOMENT W/ CONCURRENT SHEAR
HL-93 TRUCK (OPERATING)	1.75	N/A	EXTERIOR BEAM*	110	FLEXURE MINIMUM EFFECTS
HL-93 TANDEM (OPERATING)	2.05	N/A	EXTERIOR BEAM*	207	LONG. REINF. MAX. EFFECTS MAX. MOMENT W/ CONCURRENT SHEAR
HL-93 TRUCK TRAIN (OPERATING)	1.56	N/A	EXTERIOR BEAM*	110	FLEXURE MINIMUM EFFECTS
HS-20 (OPERATING)	2.24	80.51	EXTERIOR BEAM*	207	LONG. REINF. MAX. EFFECTS MAX. MOMENT W/ CONCURRENT SHEAR
DE S220 & LEGAL LANE (LEGAL)	2.47	49.32	EXTERIOR BEAM*	110	FLEXURE MINIMUM EFFECTS
DE S335 & LEGAL LANE (LEGAL)	1.63	57.09	EXTERIOR BEAM*	110	FLEXURE MINIMUM EFFECTS
DE S437 & LEGAL LANE (LEGAL)	1.56	57.29	EXTERIOR BEAM*	110	FLEXURE MINIMUM EFFECTS
DE T330 & LEGAL LANE (LEGAL)	2.15	64.53	EXTERIOR BEAM*	110	FLEXURE MINIMUM EFFECTS
DE T435 & LEGAL LANE (LEGAL)	1.90	66.56	EXTERIOR BEAM*	110	FLEXURE MINIMUM EFFECTS
DE T540 & LEGAL LANE (LEGAL)	1.72	68.64	EXTERIOR BEAM*	110	FLEXURE MINIMUM EFFECTS

NOTE: LOAD RATING DOES INCLUDE FUTURE WEARING SURFACE AS NOTED IN THE PLANS.

* LIVE LOAD CONTINUITY CONDITION CONTROLLED RATING.

THE PROPOSED STRUCTURE HAS BEEN ANALYZED FOR THE EFFECTS OF SCOUR IN ACCORDANCE WITH HEC-18- 'EVALUATING SCOUR AT BRIDGES' AND HEC-23- 'BRIDGE SCOUR AND STREAM INSTABILITY COUNTERMEASURES'. SCOUR COUNTERMEASURES HAVE BEEN DESIGNED FOR THE WORST CASE OF THE OVERTOPPING FLOOD OR THE 500-YR FLOOD EVENT.

DESIGN EVENT: 500 YR — DESIGN VELOCITY: 7.4 FT/S (1-480N), 5.2 FT/S (1-480S)

DESIGN DISCHARGE: 1640 CFS — DESIGN DEPTH OF FLOW: 6.0 FT (1-480N), 6.3 FT (1-480S)

INDEX OF DRAWINGS

SHEET NO.	DRAWING NO.	TITLE
561	1-480 PE-1	GENERAL PLAN AND SB ELEVATION
562	1-480 PE-2	GENERAL PLAN AND NB ELEVATION
563	1-480 PN-1	PROJECT NOTES AND INDEX OF DRAWINGS
564	1-480 TS-1	TYPICAL SECTION AND QUANTITIES
565	1-480 FT-1	GEOMETRIC LAYOUT
566	1-480 FT-2	ABUTMENT 1 SB PILE PLAN
567	1-480 FT-3	ABUTMENT 2 SB PILE PLAN
568	1-480 FT-4	ABUTMENT 1 NB PILE PLAN
569	1-480 FT-5	ABUTMENT 2 NB PILE PLAN
570	1-480 FT-6	PIER PILE PLAN
571	1-480 PL-1	PILE DETAILS
572	1-480 AB-1	ABUTMENT 1 SB PLAN AND ELEVATION
573	1-480 AB-2	ABUTMENT 1 SB FOOTING REINFORCEMENT PLAN
574	1-480 AB-3	ABUTMENT 1 SB REINFORCEMENT DETAILS 1
575	1-480 AB-4	ABUTMENT 1 SB REINFORCEMENT DETAILS 2
576	1-480 AB-5	ABUTMENT 2 SB PLAN AND ELEVATION
577	1-480 AB-6	ABUTMENT 2 SB FOOTING REINFORCEMENT PLAN
578	1-480 AB-7	ABUTMENT 2 SB REINFORCEMENT DETAILS 1
579	1-480 AB-8	ABUTMENT 2 SB REINFORCEMENT DETAILS 2
580	1-480 WW-1	WINGWALL ELEVATIONS (1-4)
581	1-480 WW-2	WINGWALL DETAILS 1
582	1-480 WW-3	WINGWALL DETAILS 2
583	1-480 BR-1	ABUTMENT 1 SB REINFORCEMENT SCHEDULE
584	1-480 BR-2	ABUTMENT 2 SB REINFORCEMENT SCHEDULE
585	1-480 AB-9	ABUTMENT 1 NB PLAN AND ELEVATION
586	1-480 AB-10	ABUTMENT 1 NB FOOTING REINFORCEMENT PLAN
587	1-480 AB-11	ABUTMENT 1 NB REINFORCEMENT DETAILS 1
588	1-480 AB-12	ABUTMENT 1 NB REINFORCEMENT DETAILS 2
589	1-480 AB-13	ABUTMENT 2 NB PLAN AND ELEVATION
590	1-480 AB-14	ABUTMENT 2 NB FOOTING REINFORCEMENT PLAN
591	1-480 AB-15	ABUTMENT 2 NB REINFORCEMENT DETAILS 1
592	1-480 AB-16	ABUTMENT 2 NB REINFORCEMENT DETAILS 2
593	1-480 WW-4	WINGWALL ELEVATIONS (5-8)
594	1-480 WW-5	WINGWALL DETAILS 3
595	1-480 WW-6	WINGWALL DETAILS 4
596	1-480 BR-3	ABUTMENT 1 NB REINFORCEMENT SCHEDULE
597	1-480 BR-4	ABUTMENT 2 NB REINFORCEMENT SCHEDULE
598	1-480 PR-1	PIER PLAN AND ELEVATION
599	1-480 PR-2	PIER DETAILS
600	1-480 BR-5	PIER REINFORCEMENT SCHEDULE
601	1-480 BD-1	BEARING DETAILS
602	1-480 FR-1	SB FRAMING PLAN
603	1-480 BM-1	SB SPAN 1 GIRDER PLAN AND ELEVATION
604	1-480 BM-2	SB SPAN 2 GIRDER PLAN AND ELEVATION
605	1-480 BM-3	SB GIRDER SECTIONS
606	1-480 FR-2	NB FRAMING PLAN
607	1-480 BM-4	NB SPAN 1 GIRDER PLAN AND ELEVATION
608	1-480 BM-5	NB SPAN 2 GIRDER PLAN AND ELEVATION
609	1-480 BM-6	NB GIRDER SECTIONS
610	1-480 BM-7	TYPICAL GIRDER DETAILS
611	1-480 DPH-1	DIAPHRAGM DETAILS 1
612	1-480 DPH-2	DIAPHRAGM DETAILS 2
613	1-480 DK-1	SB DECK POURING SEQUENCE
614	1-480 DK-2	SB DECK AND BARRIER REINFORCEMENT
615	1-480 DK-3	NB DECK POURING SEQUENCE
616	1-480 DK-4	NB DECK AND BARRIER REINFORCEMENT
617	1-480 DK-5	DECK DETAILS
618	1-480 AS-1	SB APPROACH SLAB AND BARRIER REINFORCEMENT
619	1-480 AS-2	NB APPROACH SLAB AND BARRIER REINFORCEMENT
620	1-480 AS-3	APPROACH SLAB DETAILS
621	1-480 BR-6	SB DECK REINFORCEMENT SCHEDULE
622	1-480 BR-7	NB DECK REINFORCEMENT SCHEDULE
623	1-480 FD-1	SB SPAN 1 FINISHED DECK ELEVATIONS
624	1-480 FD-2	SB SPAN 2 FINISHED DECK ELEVATIONS
625	1-480 FD-3	NB SPAN 1 FINISHED DECK ELEVATIONS
626	1-480 FD-4	NB SPAN 2 FINISHED DECK ELEVATIONS
627	1-480 FD-5	SB FINISHED APPROACH SLAB ELEVATIONS
628	1-480 FD-6	NB FINISHED APPROACH SLAB ELEVATIONS
629	1-480 EX-1	EXPANSION JOINT DETAILS
630	1-480 DT-1	SETTLEMENT PLATFORM DETAIL
631	1-480 BO-1	TEST BORINGS

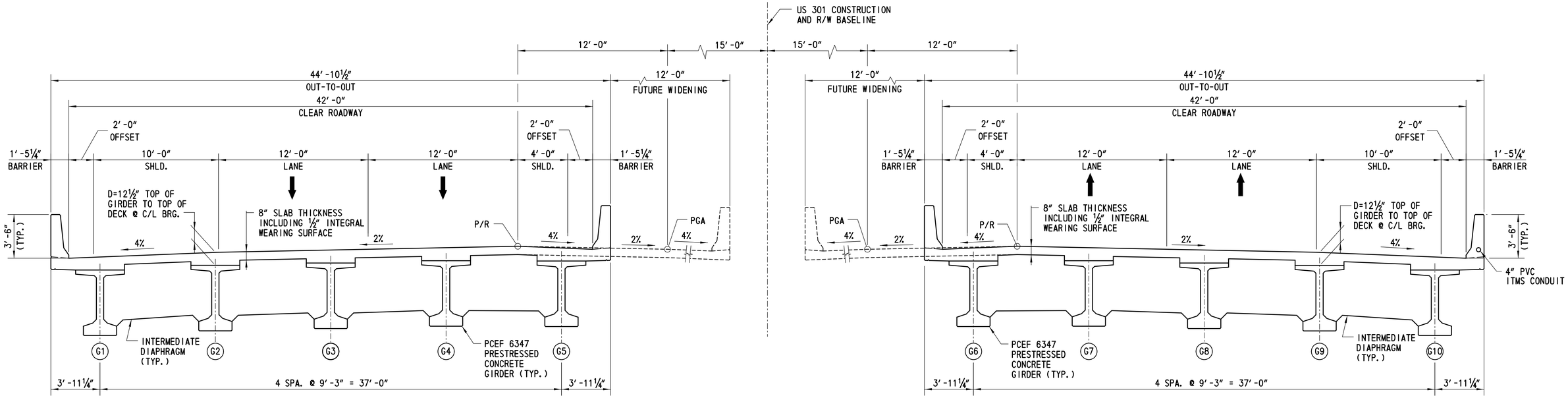

SOUTHBOUND (SB)

TYPICAL SECTION

STATIONS AHEAD
SCALE: ¼″= 1′-0″

NORTHBOUND (NB)

ESTIMATED BRIDGE QUANTITIES

ITEM NUMBER	DESCRIPTION	UNIT	SOUTHBOUND QUANTITY	NORTHBOUND QUANTITY	TOTAL
202505	SETTLEMENT PLATFORM	EACH	2	2	4
202518	SETTLEMENT MONUMENT	EACH	2	2	4
207000	EXCAVATION AND BACKFILL FOR STRUCTURES	CY	820	865	1,685
302012	DELAWARE NO. 57 STONE	TON	47	58	105
602004	PORTLAND CEMENT CONCRETE MASONRY, ABUTMENT FOOTING, CLASS B	CY	268	261	529
602007	PORTLAND CEMENT CONCRETE MASONRY, PIER ABOVE FOOTING, CLASS A	CY	50	50	100
602013	PORTLAND CEMENT CONCRETE MASONRY, SUPERSTRUCTURE, CLASS D	CY	351	421	772
602014	PORTLAND CEMENT CONCRETE MASONRY, APPROACH SLAB, CLASS D	CY	219	219	438
602015	PORTLAND CEMENT CONCRETE MASONRY, ABUTMENT ABOVE FOOTING, CLASS A	CY	416	391	807
602017	PORTLAND CEMENT CONCRETE MASONRY, PARAPET, CLASS A	CY	76	89	165
603000	BAR REINFORCEMENT	LB	46,325	43,120	89,445
604000	BAR REINFORCEMENT, EPOXY COATED	LB	169,352	198,175	367,527
605512	PREFABRICATED EXPANSION JOINT SYSTEM, 4″	LF	106	106	212
605581	ELASTOMERIC BRIDGE BEARING PAD	EACH	20	20	40
618041 (ALTERNATE)	FURNISH CAST-IN-PLACE CONCRETE PILES, 14″	LF	4,839	4,761	9,600
618046 (ALTERNATE)	FURNISH CAST-IN-PLACE CONCRETE TEST PILES, 14″	LF	88	92	180
618081	FURNISH PRECAST PRESTRESSED CONCRETE PILE, 14″x14″	LF	5,874	6,133	12,007
618083	FURNISH PRECAST PRESTRESSED CONCRETE PILE, 18″x18″	LF	1,279	1,289	2,568

ESTIMATED BRIDGE QUANTITIES

ITEM NUMBER	DESCRIPTION	UNIT	SOUTHBOUND QUANTITY	NORTHBOUND QUANTITY	TOTAL
618091	FURNISH PRECAST PRESTRESSED CONCRETE TEST PILE, 14″x14″	LF	109	117	226
618093	FURNISH PRECAST PRESTRESSED CONCRETE TEST PILE, 18″x18″	LF	85	86	171
619021 (ALTERNATE)	INSTALL CAST-IN-PLACE CONCRETE PILES, 14″	LF	4,839	4,761	9,600
619025 (ALTERNATE)	INSTALL CAST-IN-PLACE CONCRETE TEST PILES, 14″	LF	88	92	180
619061	INSTALL PRECAST PRESTRESSED CONCRETE PILE, 14″x14″	LF	5,874	6,133	12,007
619063	INSTALL PRECAST PRESTRESSED CONCRETE PILE, 18″x18″	LF	1,279	1,289	2,568
619067	INSTALL PRECAST PRESTRESSED CONCRETE TEST PILE, 14″x14″	LF	109	117	226
619069	INSTALL PRECAST PRESTRESSED CONCRETE TEST PILE, 18″x18″	LF	85	86	171
619501	PRODUCTION PILE RESTRIKE	EACH	6	6	12
619502	TEST PILE RESTRIKE	EADY	3	3	6
619519	DYNAMIC PILE TESTING BY CONTRACTOR	EACH	3	3	6
619539	SIGNAL MATCHING ANALYSIS BY CONTRACTOR	EACH	3	3	6
623003	PRESTRESSED REINFORCED CONCRETE MEMBERS, BULB TBEAM	LS	-	-	-
712006	RIPRAP, R-5	SY	229	229	458
713003	GEOTEXTILE, RIPRAP	SY	229	229	458
733001	TOPSOILING, 4″ DEPTH	SY	229	229	458

NOTES:

1. THE QUANTITY OF ITEM NO. 602004, PORTLAND CEMENT CONCRETE MASONRY, ABUTMENT FOOTING, CLASS B, INCLUDES THE WINGWALL FOOTING CONCRETE.
2. THE QUANTITY OF ITEM NO. 602015, PORTLAND CEMENT CONCRETE MASONRY, ABUTMENT ABOVE FOOTING, CLASS A, INCLUDES THE WINGWALL CONCRETE ABOVE THE FOOTING.
3. INSTALLATION OF 4″ PVC CONDUIT IS INCIDENTAL TO ITEM 602017.

CROSS REFERENCE NOTES:

1. FOR GENERAL PLAN AND SB ELEVATION, SEE DWG. NO. 1-480 PE-1.
2. FOR GENERAL PLAN AND NB ELEVATION, SEE DWG. NO. 1-480 PE-2.
3. FOR SB DECK POURING SEQUENCE, SEE DWG. NO. 1-480 DK-1.
4. FOR NB DECK POURING SEQUENCE, SEE DWG. NO. 1-480 DK-3.
5. FOR SB FRAMING PLAN, SEE DWG. NO. 1-480 FR-1.
6. FOR NB FRAMING PLAN, SEE DWG. NO. 1-480 FR-2.
7. FOR SB SPAN 1 GIRDER PLAN AND ELEVATION, SEE DWG. NO. 1-480 BM-1.
8. FOR SB SPAN 2 GIRDER PLAN AND ELEVATION, SEE DWG. NO. 1-480 BM-2.
9. FOR NB SPAN 1 GIRDER PLAN AND ELEVATION, SEE DWG. NO. 1-480 BM-4.
10. FOR NB SPAN 2 GIRDER PLAN AND ELEVATION, SEE DWG. NO. 1-480 BM-5.
11. FOR SB GIRDER SECTIONS, SEE DWG. NO. 1-480 BM-3.
12. FOR NB GIRDER SECTIONS, SEE DWG. NO. 1-480 BM-6.
13. FOR DIAPHRAGM DETAILS, SEE DWG. NOS. 1-480 DPH-1 AND 1-480 DPH-2.
14. FOR SB DECK DETAILS, SEE DWG. NO. 1-480 DK-2.
15. FOR NB DECK DETAILS, SEE DWG. NO. 1-480 DK-4.
16. FOR CONDUIT DETAILS, SEE DWG. NO. DT-07.

DELAWARE DEPARTMENT OF TRANSPORTATION

ADDENDUMS / REVISIONS

SCALE 0 1 2 4 8 FEET

US 301 LEVELS ROAD TO SUMMIT BRIDGE ROAD

CONTRACT	BRIDGE NO.	1-480N&S
T200911303	DESIGNED BY: LT	
COUNTY		
NEW CASTLE	CHECKED BY: JW	

US 301 MAINLINE OVER SANDY BRANCH
TYPICAL SECTION AND QUANTITIES

1-480 TS-1
SHEET NO. 564
TOTAL SHTS. 1256

WORKING POINT DATA				
POINT NO.	STATION	OFFSET	NORTHING	EASTING
W.P. 1	302+53.37	0.00	526912.8578	561868.7918
W.P. 2	302+63.37	0.00	526920.8203	561874.8415
W.P. 3	303+83.37	0.00	527016.3705	561947.4374
W.P. 4	304+63.37	0.00	527080.0706	561995.8347
W.P. 5	305+03.37	0.00	527111.9207	562020.0333
W.P. 6	303+09.54	65.94 LT.	526997.4729	561850.2700
W.P. 7	302+76.02	18.06 LT.	526941.8181	561868.1105
W.P. 8	302+40.72	18.06 RT.	526891.8601	561875.5228
W.P. 9	302+07.20	65.94 RT.	526836.2052	561893.3633
W.P. 10	304+28.60	64.60 LT.	527091.4633	561923.3659
W.P. 11	303+96.96	19.40 LT.	527038.9281	561940.2064
W.P. 12	303+69.78	19.40 RT.	526993.8129	561954.6683
W.P. 13	303+38.14	64.60 RT.	526941.2777	561971.5088
W.P. 14	305+09.54	65.94 LT.	527156.7232	561971.2632
W.P. 15	304+76.02	18.06 LT.	527101.0684	561989.1037
W.P. 16	304+90.72	18.06 RT.	527090.9229	562026.7642
W.P. 17	304+57.20	65.94 RT.	527035.2680	562044.6047

US 301 HORIZONTAL DATA

TANGENT

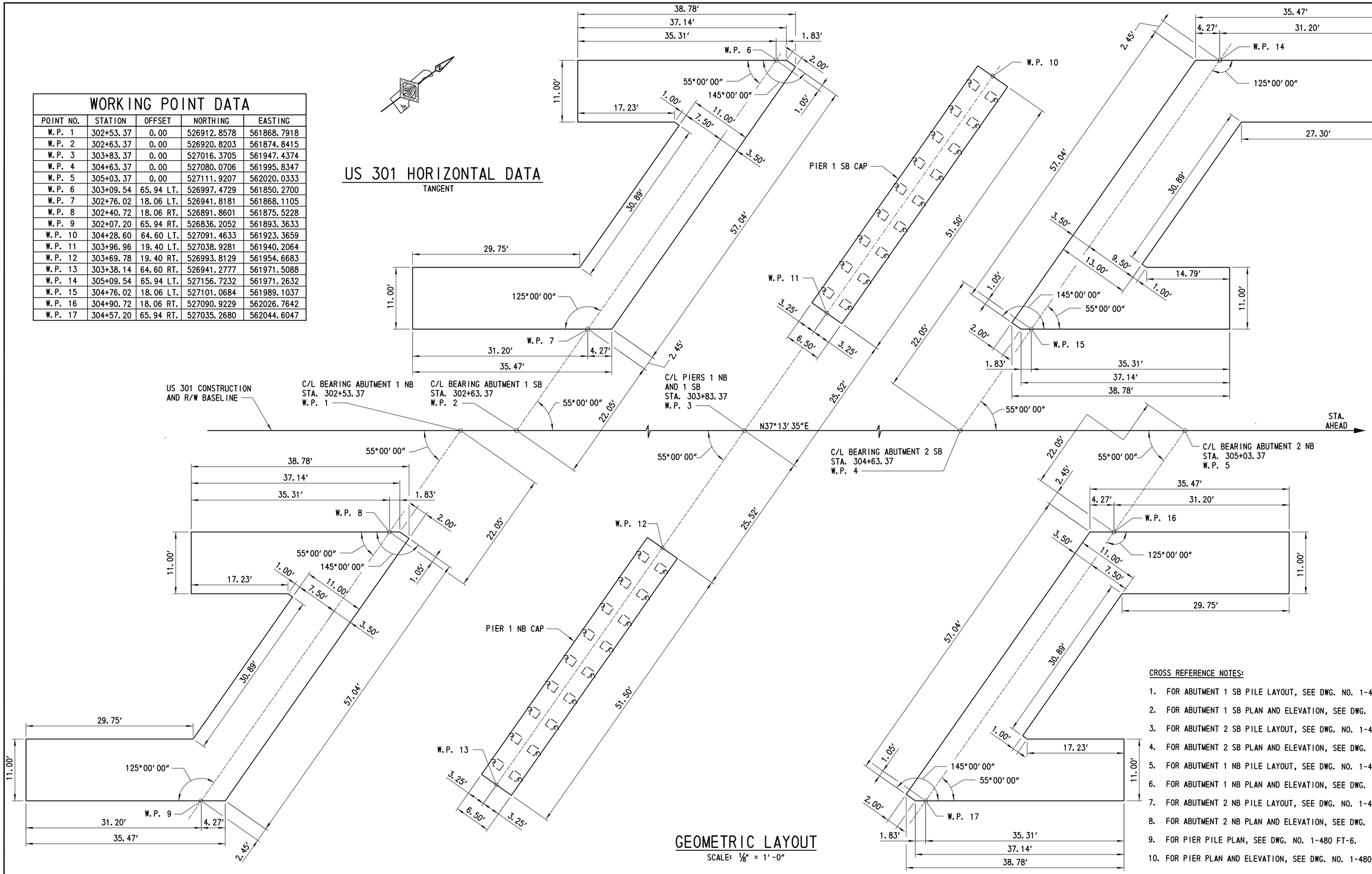

GEOMETRIC LAYOUT

SCALE: 1/8" = 1'-0"

CROSS REFERENCE NOTES:

1. FOR ABUTMENT 1 SB PILE LAYOUT, SEE DWG. NO. 1-480 FT-2.
2. FOR ABUTMENT 1 SB PLAN AND ELEVATION, SEE DWG. NO. 1-480 AB-1.
3. FOR ABUTMENT 2 SB PILE LAYOUT, SEE DWG. NO. 1-480 FT-3.
4. FOR ABUTMENT 2 SB PLAN AND ELEVATION, SEE DWG. NO. 1-480 AB-5.
5. FOR ABUTMENT 1 NB PILE LAYOUT, SEE DWG. NO. 1-480 FT-4.
6. FOR ABUTMENT 1 NB PLAN AND ELEVATION, SEE DWG. NO. 1-480 AB-9.
7. FOR ABUTMENT 2 NB PILE LAYOUT, SEE DWG. NO. 1-480 FT-5.
8. FOR ABUTMENT 2 NB PLAN AND ELEVATION, SEE DWG. NO. 1-480 AB-13.
9. FOR PIER PILE PLAN, SEE DWG. NO. 1-480 FT-6.
10. FOR PIER PLAN AND ELEVATION, SEE DWG. NO. 1-480 PR-1.

DELAWARE DEPARTMENT OF TRANSPORTATION

ADDENDUMS / REVISIONS

SCALE 0 2 4 8 16 FEET

US 301 LEVELS ROAD TO SUMMIT BRIDGE ROAD

CONTRACT T200911303

COUNTY NEW CASTLE

BRIDGE NO. 1-480N&S

DESIGNED BY: PRH

CHECKED BY: JW

US 301 MAINLINE OVER SANDY BRANCH

GEOMETRIC LAYOUT

1-480 FT-1

SHEET NO. 565

TOTAL SHTS. 1256

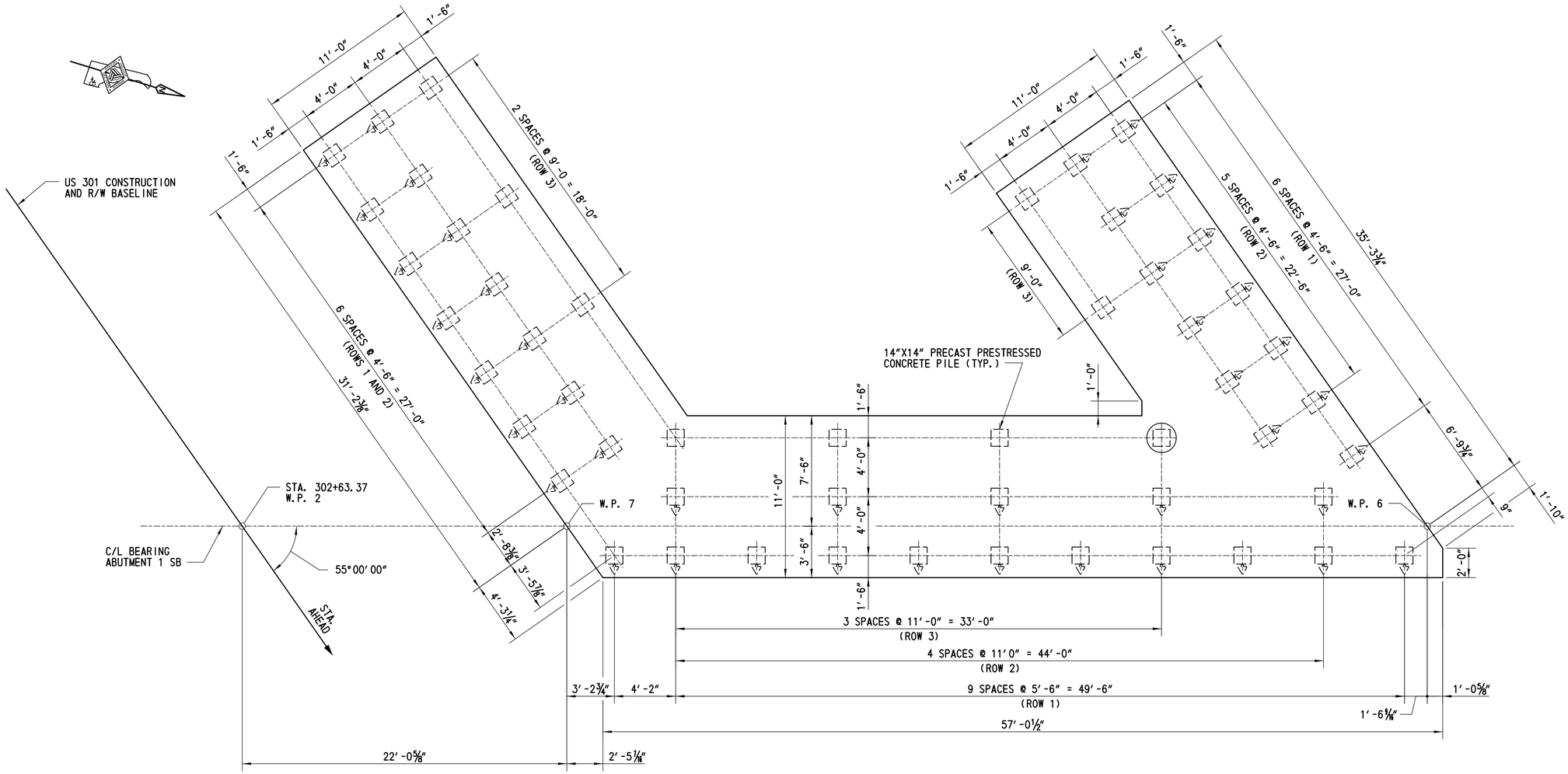

ABUTMENT 1 SB - PILE PLAN

SCALE: ¼"= 1'-0"

PILE LEGEND

- BATTERED PILE
- PLUMB PILE
- TEST PILE

PILE DRIVING INFORMATION

PILE SIZE AND TYPE:
ACTUAL BEARING OBTAINED:
HAMMER TYPE:
AVERAGE ACTUAL BLOWS/FT.:
PILE HAMMER ENERGY:
SPECIAL DRIVING CONDITIONS AND COMMENTS:

PILE INSTALLATION DATA

SUBSTRUCTURE UNIT	DESIGN DATA			ACTUAL FIELD DATA	
	NOMINAL PILE DRIVING RESISTANCE (KIP)	MINIMUM TIP ELEVATION	ESTIMATED TIP ELEVATION	AVERAGE MINIMUM TIP ELEVATION	AVERAGE MAXIMUM TIP ELEVATION
ABUTMENT 1 SB	326	N/A	-21.0		

PILE INSTALLATION DATA (MONOTUBE ALTERNATE)

SUBSTRUCTURE UNIT	DESIGN DATA			ACTUAL FIELD DATA	
	NOMINAL PILE DRIVING RESISTANCE (KIP)	MINIMUM TIP ELEVATION	ESTIMATED TIP ELEVATION	AVERAGE MINIMUM TIP ELEVATION	AVERAGE MAXIMUM TIP ELEVATION
ABUTMENT 1 SB	326	N/A	-9.0		

CROSS REFERENCE NOTES:

1. FOR GENERAL PLAN AND ELEVATION, SEE DWG. NO. 1-480 PE-1.
2. FOR ABUTMENT 1 SB PLAN AND ELEVATION, SEE DWG. NO. 1-480 AB-1.
3. FOR ABUTMENT 1 SB TYPICAL SECTION, SEE DWG. NO. 1-480 AB-3.
4. FOR PILE DETAILS, SEE DWG. NO. 1-480 PL-1.
5. FOR ABUTMENT 1 SB FOOTING REINFORCEMENT, SEE DWG. NO. 1-480 AB-2.
6. FOR WORKING POINT COORDINATES, SEE DWG. NO. 1-480 FT-1.

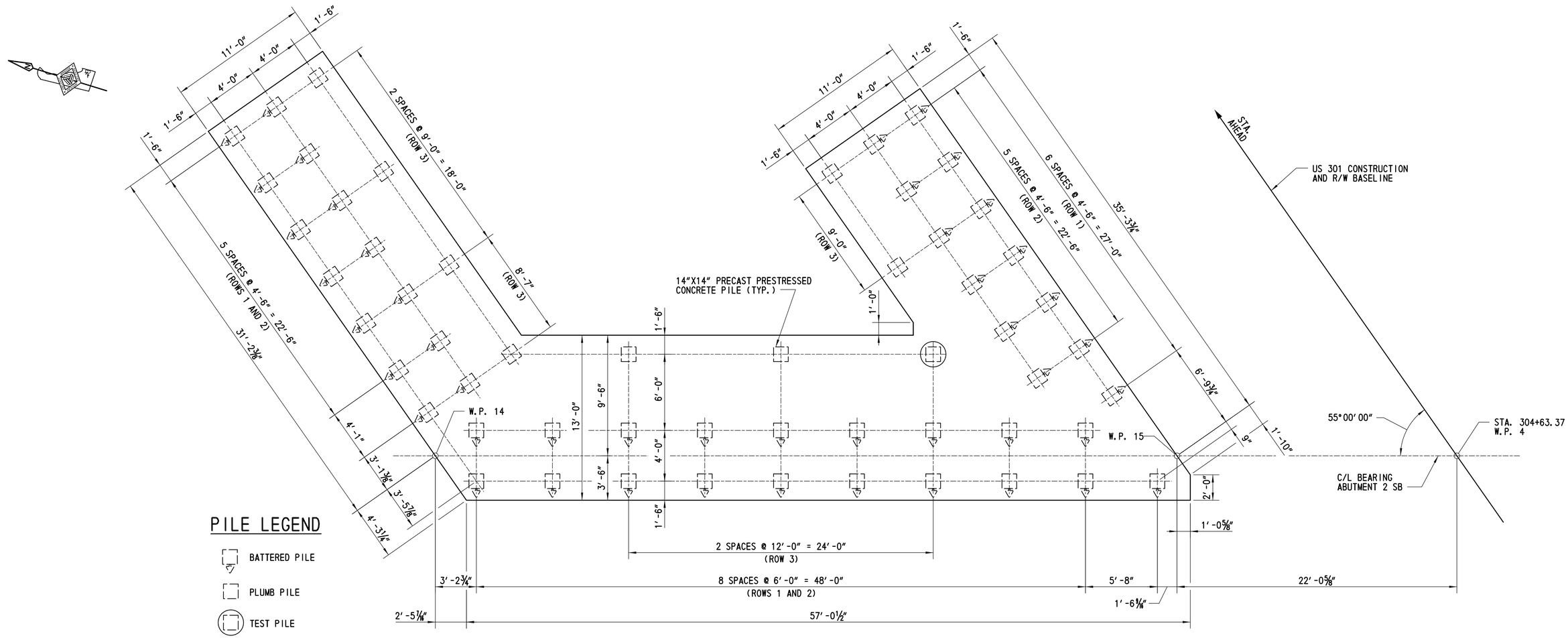

PILE LEGEND

- BATTERED PILE
- PLUMB PILE
- TEST PILE

ABUTMENT 2 SB - PILE PLAN

SCALE: ¼"= 1'-0"

PILE DRIVING INFORMATION

PILE SIZE AND TYPE:
ACTUAL BEARING OBTAINED:
HAMMER TYPE:
AVERAGE ACTUAL BLOWS/FT.:
PILE HAMMER ENERGY:
SPECIAL DRIVING CONDITIONS AND COMMENTS:

PILE INSTALLATION DATA

SUBSTRUCTURE UNIT	DESIGN DATA			ACTUAL FIELD DATA	
	NOMINAL PILE DRIVING RESISTANCE (KIP)	MINIMUM TIP ELEVATION	ESTIMATED TIP ELEVATION	AVERAGE MINIMUM TIP ELEVATION	AVERAGE MAXIMUM TIP ELEVATION
ABUTMENT 2 SB	285	-13.0	-17.0		

PILE INSTALLATION DATA (MONOTUBE ALTERNATE)

SUBSTRUCTURE UNIT	DESIGN DATA			ACTUAL FIELD DATA	
	NOMINAL PILE DRIVING RESISTANCE (KIP)	MINIMUM TIP ELEVATION	ESTIMATED TIP ELEVATION	AVERAGE MINIMUM TIP ELEVATION	AVERAGE MAXIMUM TIP ELEVATION
ABUTMENT 2 SB	288	-2.0	-8.0		

CROSS REFERENCE NOTES:

1. FOR GENERAL PLAN AND ELEVATION, SEE DWG. NO. 1-480 PE-1.
2. FOR ABUTMENT 2 SB PLAN AND ELEVATION, SEE DWG. NO. 1-480 AB-5.
3. FOR ABUTMENT 2 SB TYPICAL SECTION, SEE DWG. NO. 1-480 AB-7.
4. FOR PILE DETAILS, SEE DWG. NO. 1-480 PL-1.
5. FOR ABUTMENT 2 SB FOOTING REINFORCEMENT, SEE DWG. NO. 1-480 AB-6.
6. FOR WORKING POINT COORDINATES, SEE DWG. NO. 1-480 FT-1.

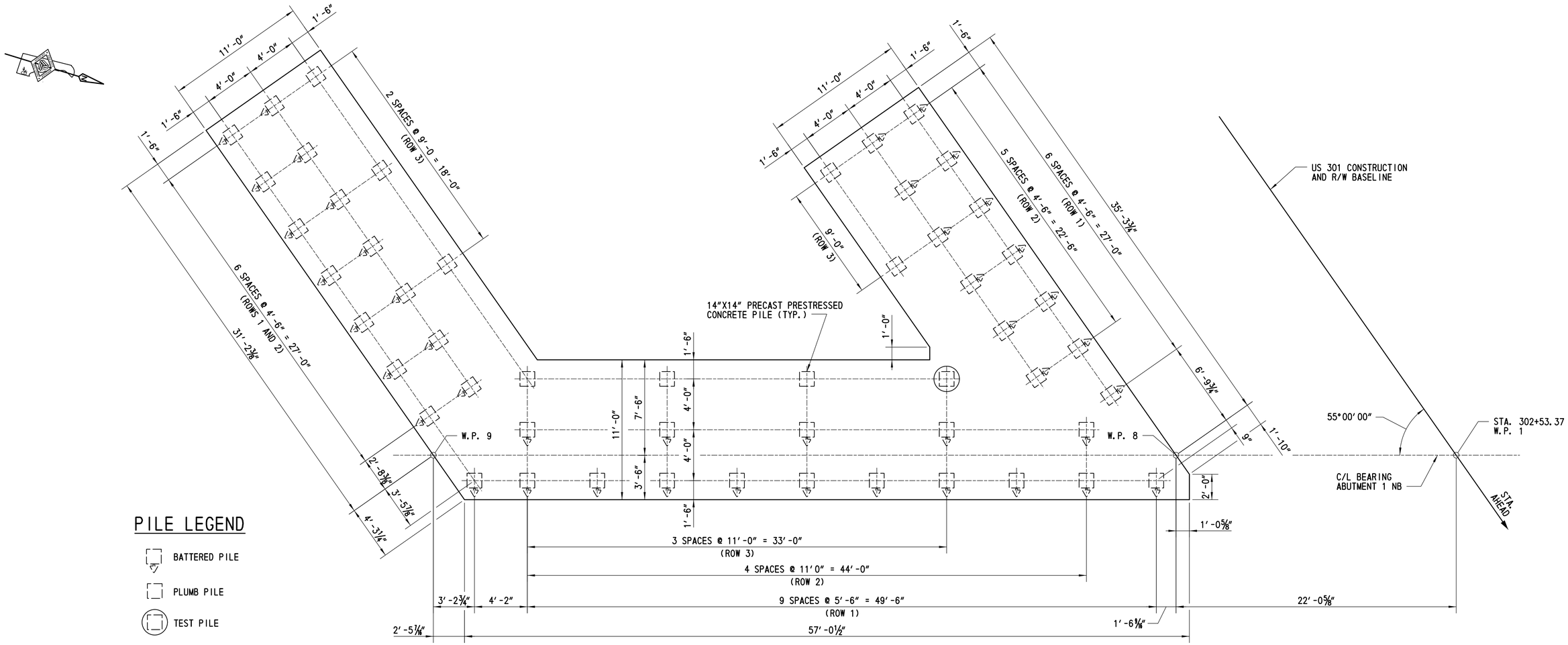

PILE LEGEND

- BATTERED PILE
- PLUMB PILE
- TEST PILE

ABUTMENT 1 NB - PILE PLAN

SCALE: ¼"= 1'-0"

PILE DRIVING INFORMATION

PILE SIZE AND TYPE:
ACTUAL BEARING OBTAINED:
HAMMER TYPE:
AVERAGE ACTUAL BLOWS/FT.:
PILE HAMMER ENERGY:
SPECIAL DRIVING CONDITIONS AND COMMENTS:

PILE INSTALLATION DATA

SUBSTRUCTURE UNIT	DESIGN DATA			ACTUAL FIELD DATA	
	NOMINAL PILE DRIVING RESISTANCE (KIP)	MINIMUM TIP ELEVATION	ESTIMATED TIP ELEVATION	AVERAGE MINIMUM TIP ELEVATION	AVERAGE MAXIMUM TIP ELEVATION
ABUTMENT 1 NB	326	N/A	-21.0		

PILE INSTALLATION DATA (MONOTUBE ALTERNATE)

SUBSTRUCTURE UNIT	DESIGN DATA			ACTUAL FIELD DATA	
	NOMINAL PILE DRIVING RESISTANCE (KIP)	MINIMUM TIP ELEVATION	ESTIMATED TIP ELEVATION	AVERAGE MINIMUM TIP ELEVATION	AVERAGE MAXIMUM TIP ELEVATION
ABUTMENT 1 NB	326	N/A	-9.0		

CROSS REFERENCE NOTES:

1. FOR GENERAL PLAN AND ELEVATION, SEE DWG. NO. 1-480 PE-2.
2. FOR ABUTMENT 1 NB PLAN AND ELEVATION, SEE DWG. NO. 1-480 AB-9.
3. FOR ABUTMENT 1 NB TYPICAL SECTION, SEE DWG. NO. 1-480 AB-11.
4. FOR PILE DETAILS, SEE DWG. NO. 1-480 PL-1.
5. FOR ABUTMENT 1 NB FOOTING REINFORCEMENT, SEE DWG. NO. 1-480 AB-10.
6. FOR WORKING POINT COORDINATES, SEE DWG. NO. 1-480 FT-1.

DELAWARE
DEPARTMENT OF TRANSPORTATION

ADDENDUMS / REVISIONS

SCALE
0 2 8
1 4
FEET

US 301
LEVELS ROAD
TO SUMMIT BRIDGE ROAD

CONTRACT	BRIDGE NO.	1-480N&S
T200911303	DESIGNED BY: LT	
COUNTY		
NEW CASTLE	CHECKED BY: JW	

US 301 MAINLINE OVER
SANDY BRANCH
ABUTMENT 1 NB
PILE PLAN

1-480 FT-4
SHEET NO.
568
TOTAL SHTS.
1256

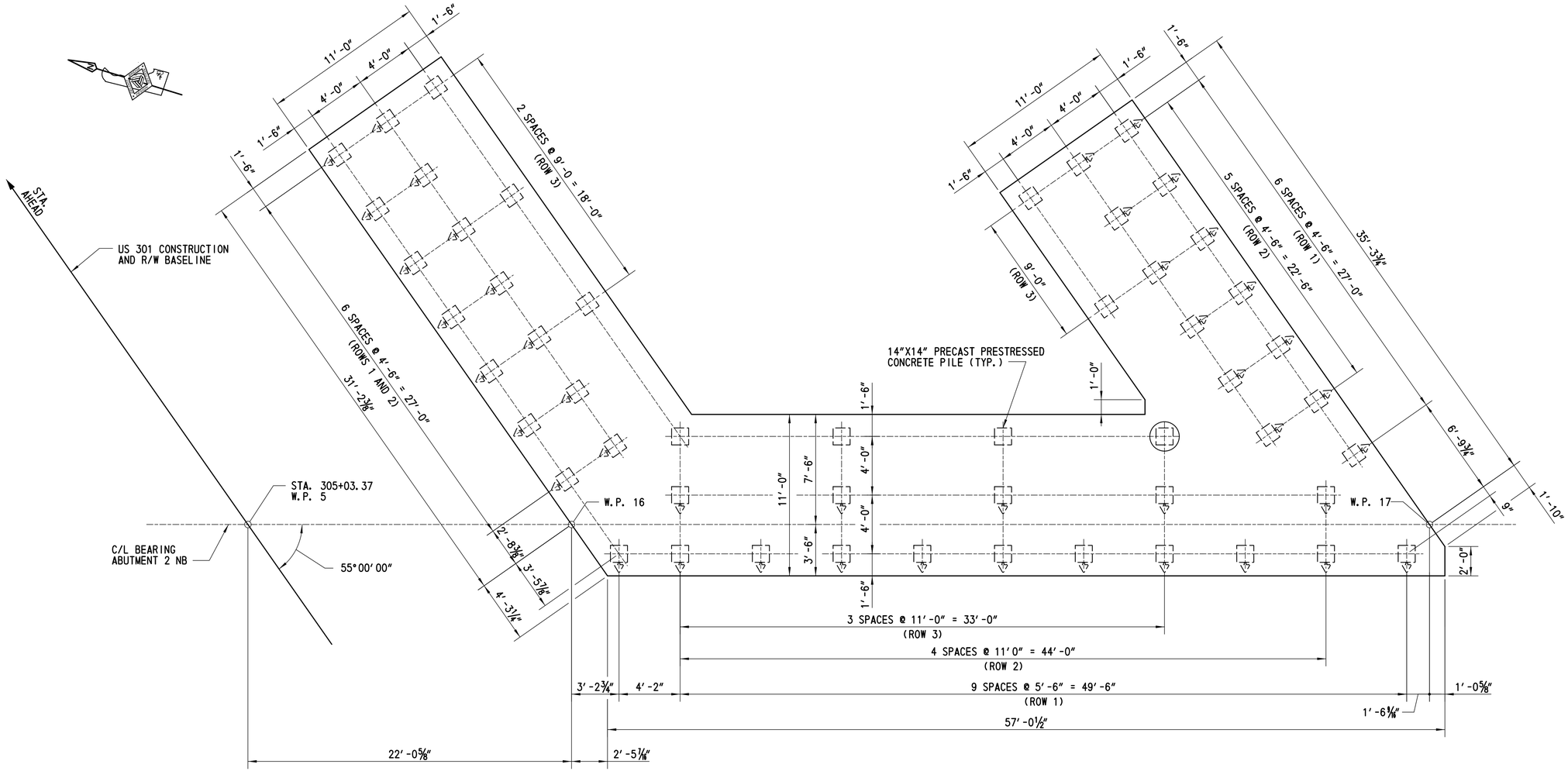

ABUTMENT 2 NB - PILE PLAN

SCALE: ¼"= 1'-0"

PILE LEGEND

- BATTERED PILE
- PLUMB PILE
- TEST PILE

PILE DRIVING INFORMATION

PILE SIZE AND TYPE:
ACTUAL BEARING OBTAINED:
HAMMER TYPE:
AVERAGE ACTUAL BLOWS/FT.:
PILE HAMMER ENERGY:
SPECIAL DRIVING CONDITIONS AND COMMENTS:

PILE INSTALLATION DATA

SUBSTRUCTURE UNIT	DESIGN DATA			ACTUAL FIELD DATA	
	NOMINAL PILE DRIVING RESISTANCE (KIP)	MINIMUM TIP ELEVATION	ESTIMATED TIP ELEVATION	AVERAGE MINIMUM TIP ELEVATION	AVERAGE MAXIMUM TIP ELEVATION
ABUTMENT 2 NB	326	N/A	-23.0		

PILE INSTALLATION DATA (MONOTUBE ALTERNATE)

SUBSTRUCTURE UNIT	DESIGN DATA			ACTUAL FIELD DATA	
	NOMINAL PILE DRIVING RESISTANCE (KIP)	MINIMUM TIP ELEVATION	ESTIMATED TIP ELEVATION	AVERAGE MINIMUM TIP ELEVATION	AVERAGE MAXIMUM TIP ELEVATION
ABUTMENT 2 NB	326	N/A	-10.0		

CROSS REFERENCE NOTES:

1. FOR GENERAL PLAN AND ELEVATION, SEE DWG. NO. 1-480 PE-2.
2. FOR ABUTMENT 2 NB PLAN AND ELEVATION, SEE DWG. NO. 1-480 AB-13.
3. FOR ABUTMENT 2 NB TYPICAL SECTION, SEE DWG. NO. 1-480 AB-15.
4. FOR PILE DETAILS, SEE DWG. NO. 1-480 PL-1.
5. FOR ABUTMENT 2 NB FOOTING REINFORCEMENT, SEE DWG. NO. 1-480 AB-14.
6. FOR WORKING POINT COORDINATES, SEE DWG. NO. 1-480 FT-1.

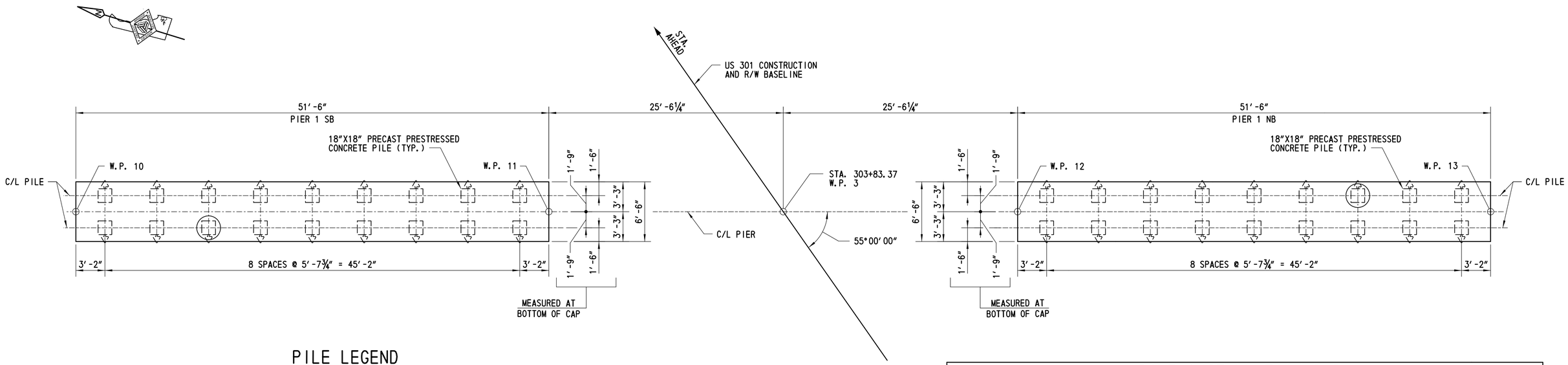

PIER - PILE PLAN

SCALE: 3/16″ = 1′-0″

PILE LEGEND

BATTERED PILE

TEST PILE

PILE INSTALLATION DATA

SUBSTRUCTURE UNIT	DESIGN DATA			ACTUAL FIELD DATA	
	NOMINAL PILE DRIVING RESISTANCE (KIP)	MINIMUM TIP ELEVATION	ESTIMATED TIP ELEVATION	AVERAGE MINIMUM TIP ELEVATION	AVERAGE MAXIMUM TIP ELEVATION
PIER 1 SB	615	-21.0	-29.0		
PIER 1 NB	615	-21.0	-29.0		

PILE DRIVING INFORMATION

PILE SIZE AND TYPE:

ACTUAL BEARING OBTAINED:

HAMMER TYPE:

AVERAGE ACTUAL BLOWS/FT.:

PILE HAMMER ENERGY:

SPECIAL DRIVING CONDITIONS AND COMMENTS: _____

CROSS REFERENCE NOTES:

1. FOR GENERAL PLAN AND ELEVATION, SEE DWG. NOS. 1-480 PE-1 AND 1-480 PE-2.
2. FOR PIER 1 SB AND NB PLAN AND ELEVATION, SEE DWG. NO. 1-480 PR-1.
3. FOR PILE DETAILS, SEE DWG. NO. 1-480 PL-1.
4. FOR WORKING POINT COORDINATES, SEE DWG. NO. 1-480 FT-1.(4) INCHES TOPSOIL.

DELAWARE DEPARTMENT OF TRANSPORTATION

ADDENDUMS / REVISIONS

SCALE 0 1 2 4 8 FEET

US 301 LEVELS ROAD TO SUMMIT BRIDGE ROAD

CONTRACT T200911303

COUNTY NEW CASTLE

BRIDGE NO. 1-480N&S

DESIGNED BY: PRH

CHECKED BY: JW

US 301 MAINLINE OVER SANDY BRANCH

PIER PILE PLAN

1-480 FT-6

SHEET NO. 570

TOTAL SHTS. 1256

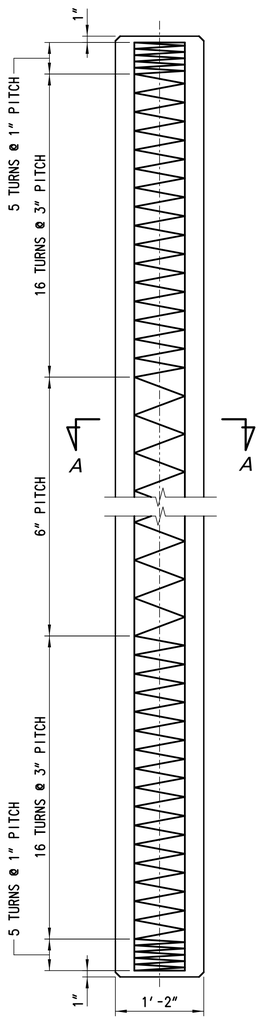

14"X14" PRESTRESSED CONCRETE PILE

SCALE: 1" = 1'-0"

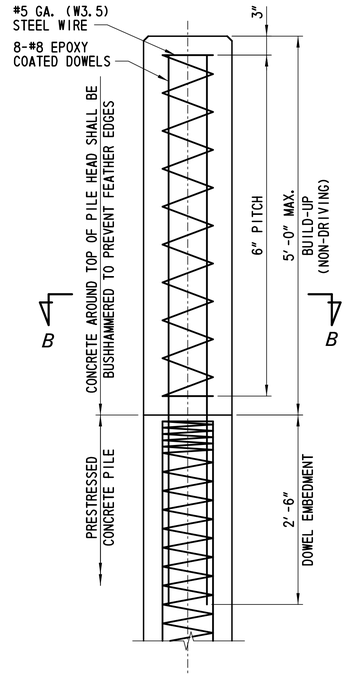

14" PILE BUILD-UP DETAIL

SCALE: 1" = 1'-0"

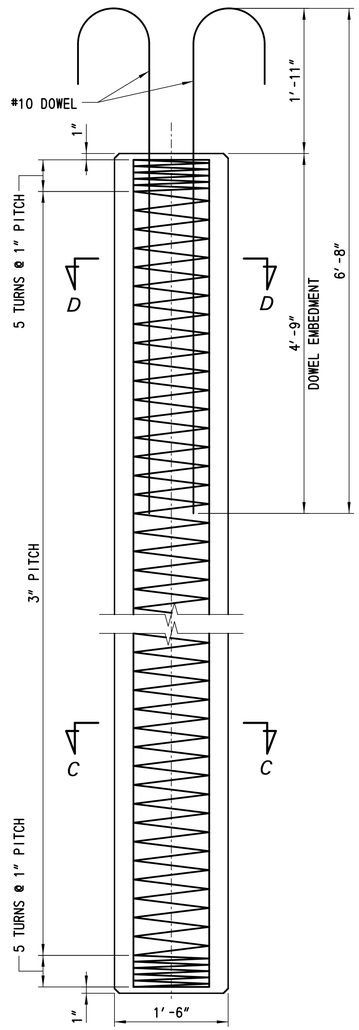

18"X18" PRESTRESSED CONCRETE PILE

SCALE: 1" = 1'-0"

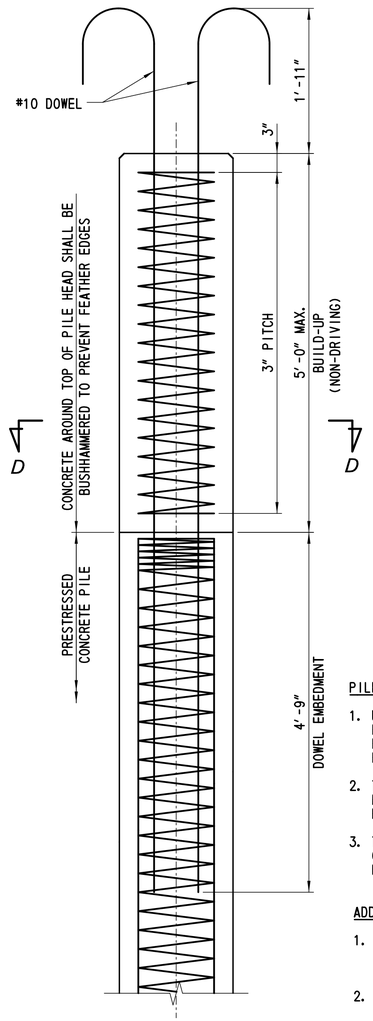

18" PILE BUILD-UP DETAIL

SCALE: 1" = 1'-0"

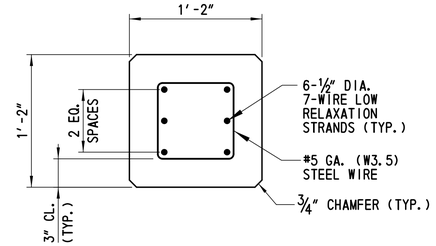

SECTION A-A

SCALE: 1½" = 1'-0"

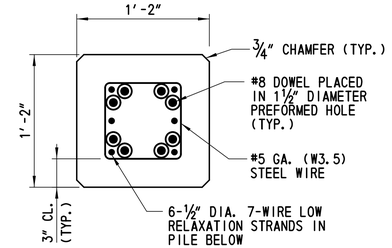

SECTION B-B

SCALE: 1½" = 1'-0"

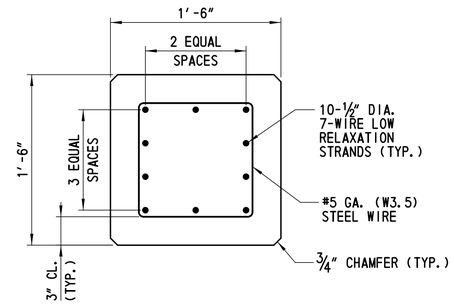

SECTION C-C

SCALE: 1½" = 1'-0"

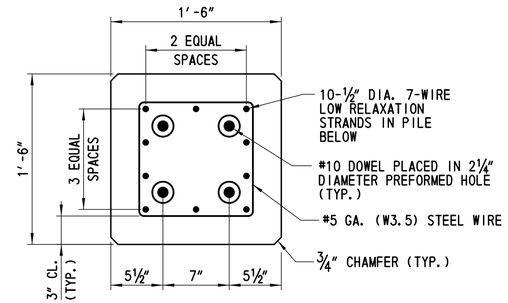

SECTION D-D

SCALE: 1½" = 1'-0"

PILE PICK-UP NOTES:

1. UNLESS SPECIAL LIFTING DEVICES ARE ATTACHED FOR PICK-UP, PICK-UP POINTS SHALL BE PLAINLY MARKED ON ALL PILES AFTER REMOVAL OF THE FORMS. THE PILE SHALL BE SUPPORTED ONLY AT THE INDICATED PICK-UP POINTS WHILE BEING STORED OR HANDLED.
2. THE USE OF PROPER RIGGING IS REQUIRED TO ENSURE THAT THE PICK-UP POINTS REMAIN IN A STRAIGHT LINE DURING LIFTING AND WHEN POSITIONING THE PILE FOR DRIVING.
3. THE USE OF SPECIAL EMBEDDED OR ATTACHED LIFTING DEVICES, THE USE OF OTHER PICK-UP LOCATIONS OR ANY OTHER METHOD OF PICK-UP SHALL BE SUBJECT TO THE APPROVAL OF THE ENGINEER.

ADDITIONAL NOTES FOR CAST-IN-PLACE ALTERNATE:

1. A ONE TO ONE SUBSTITUTION OF 14" STEEL MONOTUBE PILES IS ALLOWED FOR THE 14"X14" PRESTRESSED PRECAST CONCRETE PILES DETAILED IN THE CONTRACT DOCUMENTS.
2. NO PILE SUBSTITUTION WILL BE ALLOWED FOR THE 18"X18" PRESTRESSED PRECAST CONCRETE PILES.
3. STEEL MONOTUBE PILES SHALL HAVE A 3 GAUGE THICKNESS, AN 8IN TIP WITH A CLOSED CONICAL POINT, 14IN BUTT AND 15FT TAPER AT 0.40IN/FT.
4. ALL PILES SHALL BE DRIVEN TO THE TIP ELEVATIONS AND NOMINAL PILE DRIVING RESISTANCES LISTED IN THE PILE INSTALLATION DATA TABLES.

PILE BUILD-UP NOTES:

1. THE COMPRESSIVE STRENGTH OF THE PILE BUILD-UP SHALL BE f'c=6000 PSI.
2. PREFORMED DOWEL HOLES SHALL BE LONG ENOUGH TO ALLOW FOR ANTICIPATED PILE CUT-OFFS AND THE NET CROSS-SECTIONAL AREA SHALL BE CONSIDERED IN THE WAVE EQUATION.
3. ONCE DOWELS ARE PLACED, THE HOLES SHALL BE FILLED WITH AN APPROVED EPOXY GROUT. MINIMUM COMPRESSIVE STRENGTH OF EPOXY GROUT SHALL BE f'c=6000 PSI.
4. PRIOR TO THE GROUTING PROCEDURE, PREFORMED HOLES SHALL REMAIN PLUGGED TO ENSURE THAT WATER AND FOREIGN MATERIAL DO NOT ENTER.
5. DOWEL HOLES SHALL BE POSITIONED TO MAINTAIN A 1" CLEAR DISTANCE FROM ALL PRESTRESSING STRANDS IN THE PILE.

CROSS REFERENCE NOTES:

1. FOR ABUTMENT 1 SB PILE PLAN, SEE DWG. NO. 1-480 FT-2.
2. FOR ABUTMENT 2 SB PILE PLAN, SEE DWG. NO. 1-480 FT-3.
3. FOR ABUTMENT 1 NB PILE PLAN, SEE DWG. NO. 1-480 FT-4.
4. FOR ABUTMENT 2 NB PILE PLAN, SEE DWG. NO. 1-480 FT-5.
5. FOR PIER PILE PLAN, SEE DWG. NO. 1-480 FT-6.
6. FOR FILL PLACEMENT DURING QUARANTINE PERIOD DETAIL, SEE DWG. NO. 1-480 DT-1.

PILE NOTES:

1. ALL ABUTMENT PILES SHALL BE 14"X14" PRESTRESSED PRECAST CONCRETE PILES. ALL PIER PILES SHALL BE 18"X18" PRESTRESSED PRECAST CONCRETE PILES. PILES SHALL NOT BE COATED.
2. THE MINIMUM COMPRESSIVE STRENGTH FOR THE PRESTRESSED CONCRETE PILES AT THE AGE OF 28 DAYS SHALL BE f'c=6000 PSI. THE MINIMUM COMPRESSIVE STRENGTH AT THE TIME OF TRANSFER OF PRESTRESS SHALL BE f'ci=4800 PSI.
3. PRETENSIONING STEEL FOR PILES SHALL CONSIST OF ½" DIAMETER 7-WIRE LOW RELAXTION STRANDS CONFORMING TO THE REQUIREMENTS OF AASHTO M203 (ASTM A416) GRADE 270. EACH ½" DIAMETER STRAND SHALL BE PRETENSIONED TO 30,982 LBS. (0.75 Fpu).
4. SPIRAL TIES SHALL BE #5 GAGE STEEL WIRE CONFORMING TO THE REQUIREMENTS OF SECTION 618.18.
5. THE SPLICING OF PRESTRESSED PRECAST CONCRETE PILES SHALL NOT BE PERMITTED.
6. A MINIMUM QUARANTINE PERIOD OF 30 DAYS IS REQUIRED AFTER THE CONSTRUCTION OF THE FULL HEIGHT OF THE FILL AT THE ABUTMENTS IS ACHIEVED.
7. PILES MAY NOT BE DRIVEN UNTIL AFTER THE COMPLETION OF THE 30 DAY QUARANTINE PERIOD.
8. ALL TEST PILES SHALL BE 10 FT LONGER THAN PRODUCTION PILES AS INDICATED IN THE PILE INSTALLATION DATA TABLE.
9. THE ENGINEER SHALL APPROVE THE COMPLETION OF THE WAITING PERIOD, BASED ON RESULTS OF INSTRUMENTATION.
10. TEST PILES MAY BE DRIVEN PRIOR TO PLACING EMBANKMENT AND SURCHARGE MATERIAL. RESTRIKES OF THESE TEST PILES SHALL BE PERFORMED PRIOR TO PLACING EMBANKMENT IN ACCORDANCE WITH ITEM NO. 619502 - TEST PILE RESTRIKE. AFTER THE SETTLEMENT HAS BEEN ACHIEVED AND THE SUBSTRUCTURE HAS BEEN RELEASED BY THE ENGINEER, PRODUCTION PILES MAY BE INSTALLED. AT THIS POINT, THE TEST PILE SHALL BE ACTING AS A PRODUCTION PILE AND IT SHALL BE RE-STRUCK PRIOR TO PLACING ANY OTHER PRODUCTION PILES WITH PAYMENT UNDER ITEM NO. 619501 - PRODUCTION PILE RESTRIKE.
11. SEE SPECIAL PROVISIONS 202505 AND 202518 FOR SETTLEMENT MONITORING LOCATIONS AND REQUIREMENTS.
12. THE CONTRACTOR SHALL BE RESPONSIBLE FOR SUBMITTING A WAVE EQUATION ANALYSIS AND ALL OTHER INCIDENTALS IN ACCORDANCE WITH THE PROJECT SPECIFICATIONS. THE WAVE EQUATION AND HIGH-STRAIN DYNAMIC PILE TESTING MUST BE SIGNED AND STAMPED BY A PROFESSIONAL ENGINEER LICENSED IN THE STATE OF DELAWARE IN ACCORDANCE WITH THE PROJECT SPECIFICATIONS.
13. UPON COMPLETION OF THE HIGH-STRAIN DYNAMIC PILE TESTING THE CONTRACTOR SHALL SUBMIT A SIGNAL MATCHING ANALYSIS TO THE ENGINEER FOR REVIEW AND APPROVAL IN ACCORDANCE WITH THE PROJECT SPECIFICATIONS.
14. ALL PILES SHALL BE DRIVEN TO THE NOMINAL PILE DRIVING RESISTANCE LISTED IN THE PILE INSTALLATION DATA TABLE.
15. DELDOT STANDARD SPECIFICATION 619.11(a)(6) SHALL BE MODIFIED BY REFERENCE TO SPECIAL PROVISIONS 619519 AND 619539.
16. PILE LENGTHS FOR ORDERING PURPOSES SHALL BE DETERMINED BY THE TEST PILES. A MINIMUM OF ONE PILE PER SUBSTRUCTURE, AS SHOWN ON THE PLANS, SHALL BE DYNAMICALLY TESTED WITH SIGNAL MATCHING ANALYSIS BY THE CONTRACTOR IN ACCORDANCE WITH SPECIAL PROVISIONS 619519 AND 619539. TEST AND PRODUCTION PILE RESTRIKES WILL BE PAID AS FOLLOWS:
    A. ALL TEST PILE(S) WILL BE RESTRUCK AFTER A WAITING PERIOD OF AT LEAST 48 HOURS. TEST PILE RESTRIKES SHALL BE INCIDENTAL TO THE INITIAL INSTALLATION OF THE PILE PROVIDED THEY ARE REQUESTED WITHIN FIVE WORKING DAYS FROM THE COMPLETION OF THE INITIAL DRIVE. IF TEST PILE RESTRIKES ARE REQUESTED AFTER THE FIVE WORKING DAYS FROM THE COMPLETION OF THE INITIAL DRIVE, THE TEST PILE RESTRIKE SHALL BE PAID AS NOTED IN SPECIAL PROVISION 619502.
    B. IF DIRECTED BY THE ENGINEER TO RESTRIKE A PRODUCTION PILE, THE RESTRIKE OF THE PRODUCTION PILE SHALL BE PAID SEPARATELY UNDER ITEM NO. 619501.
17. THE DEPARTMENT RESERVES THE RIGHT TO PERFORM DYNAMIC TESTING OF RESTRIKES.

DELAWARE DEPARTMENT OF TRANSPORTATION	ADDENDUMS / REVISIONS	US 301 LEVELS ROAD TO SUMMIT BRIDGE ROAD	CONTRACT T200911303	BRIDGE NO. 1-480N&S	US 301 MAINLINE OVER SANDY BRANCH	1-480 PL-1	
			COUNTY NEW CASTLE	DESIGNED BY: LT, PRH	PILE DETAILS	SHEET NO. 571	
				CHECKED BY: JW, AMS		TOTAL SHTS. 1256	

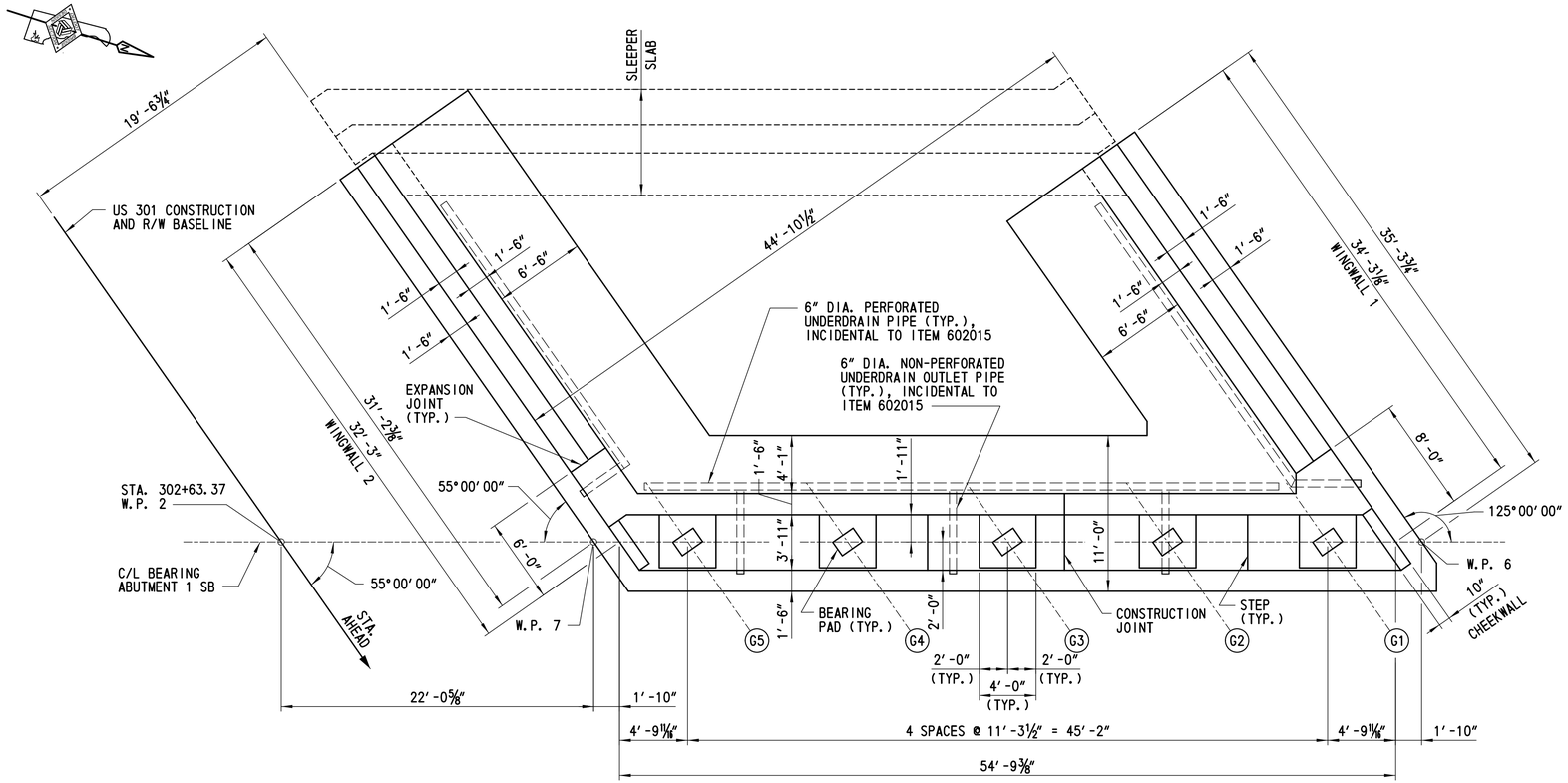

PLAN

SCALE: 3/16" = 1'-0"

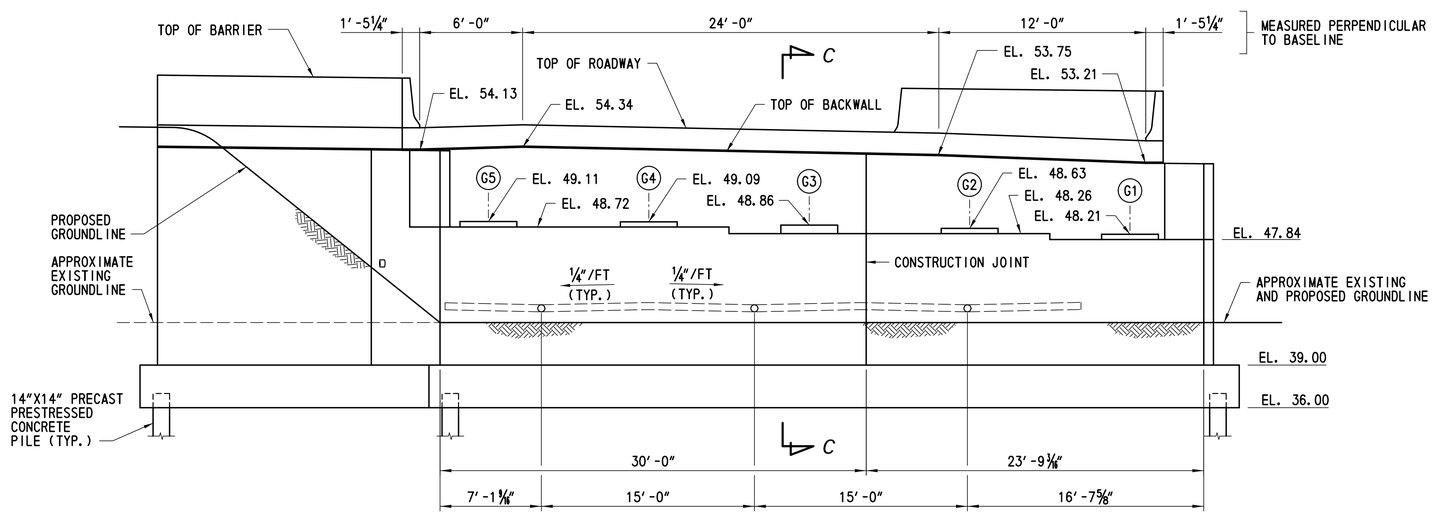

ELEVATION

SCALE: 3/16" = 1'-0"

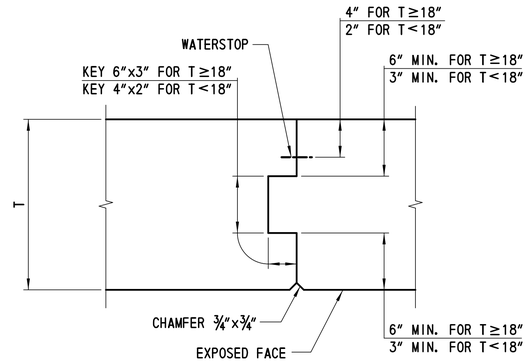

CONSTRUCTION JOINT DETAIL

SCALE: 1½" = 1'-0"

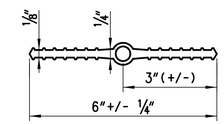

POLYVINYL CHLORIDE

WATERSTOP

NOT TO SCALE

NOTES:

1. PROVIDE HOLES OR SLOTS IN WATERSTOP, AS REQUIRED, WHEN NECESSARY TO ACCOMMODATE REINFORCEMENT BARS, BUT DO NOT COMPROMISE SEAL.
2. STOP WATERSTOP 9" FROM TOP OF WALL.

NOTES:

1. TOP OF ABUTMENT SEAT ELEVATIONS SHOWN ARE AT THE FRONT FACE OF BACKWALL.
2. TOP OF BACKWALL ELEVATIONS SHOWN AT CENTER OF BACKWALL.
3. ABUTMENT SEAT STEPS LOCATED MID-WAY BETWEEN GIRDERS.

CROSS REFERENCE NOTES:

1. FOR GENERAL PLAN AND ELEVATION, SEE DWG. NO. 1-480 PE-1.
2. FOR GEOMETRIC LAYOUT, SEE DWG. NO. 1-480 FT-1.
3. FOR ABUTMENT 1 SB PILE PLAN, SEE DWG. NO. 1-480 FT-2.
4. FOR SECTION C-C, SEE DWG. NO. 1-480 AB-3.
5. FOR ABUTMENT 1 SB DETAILS, SEE DWG. NOS. 1-480 AB-3 AND 1-480 AB-4.
6. FOR WINGWALL ELEVATIONS, SEE DWG. NO. 1-480 WW-1.
7. FOR BEARING DETAILS, SEE DWG. NO. 1-480 BD-1.
8. FOR STEM EXPANSION JOINT DETAIL, SEE DWG. NO. 1-480 AB-8.

DELAWARE DEPARTMENT OF TRANSPORTATION	ADDENDUMS / REVISIONS	US 301 LEVELS ROAD TO SUMMIT BRIDGE ROAD	CONTRACT T200911303	BRIDGE NO. 1-480N&S	US 301 MAINLINE OVER SANDY BRANCH ABUTMENT 1 SB PLAN AND ELEVATION	1-480 AB-1	
			COUNTY NEW CASTLE	DESIGNED BY: LT		SHEET NO. 572	
				CHECKED BY: JW		TOTAL SHTS. 1256	

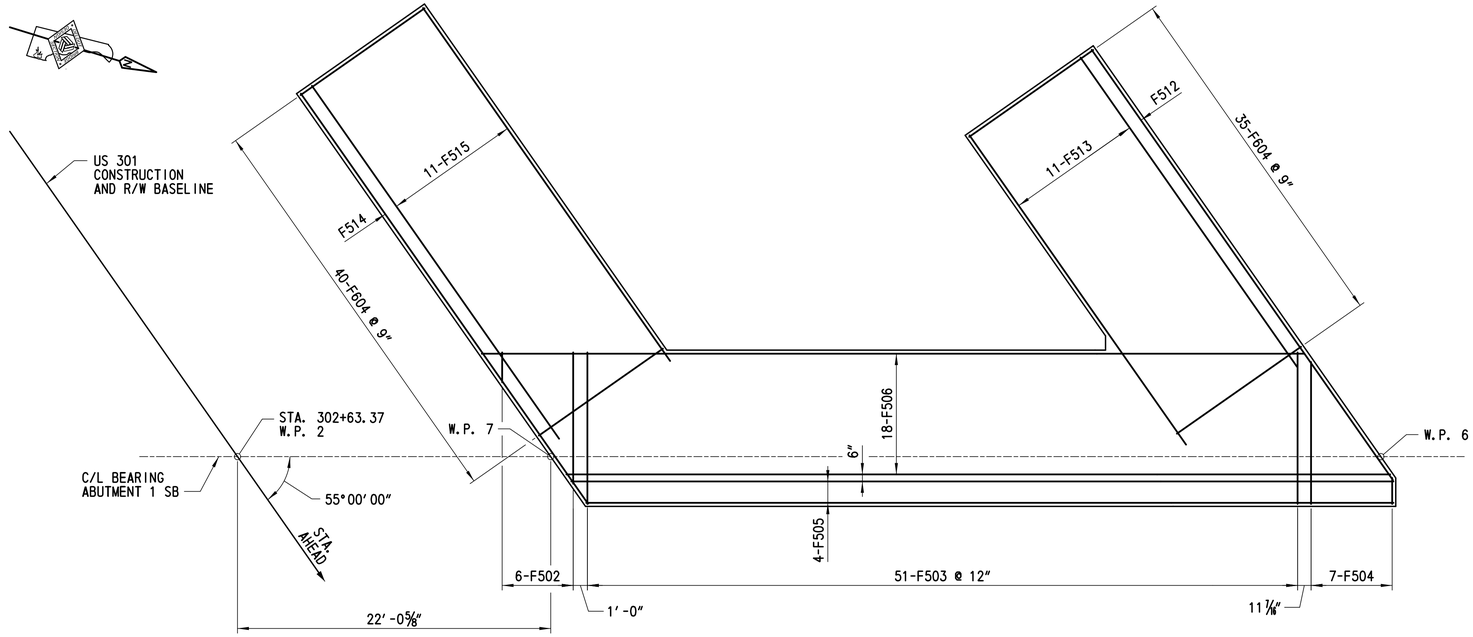

ABUTMENT 1 SB - TOP MAT REINFORCEMENT PLAN

SCALE: 3/16" = 1'-0"

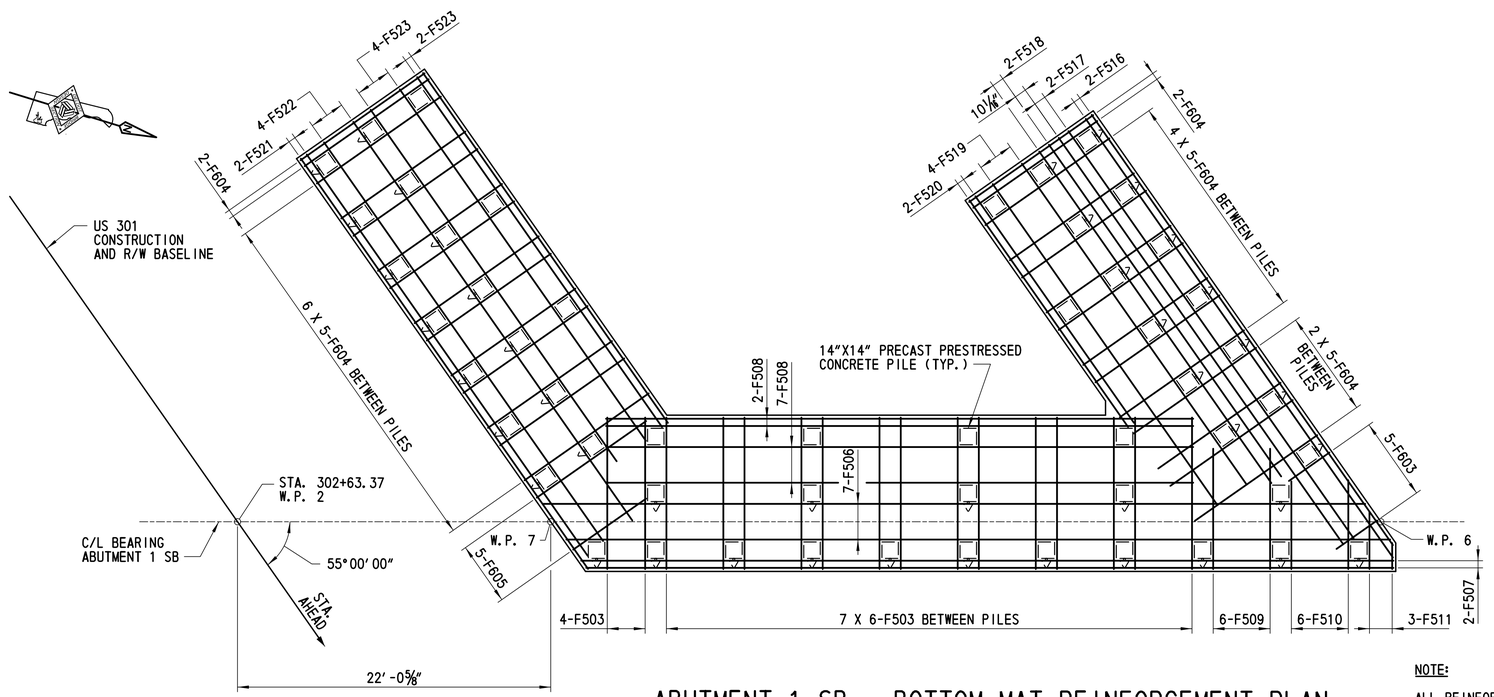

ABUTMENT 1 SB - BOTTOM MAT REINFORCEMENT PLAN

SCALE: 3/16" = 1'-0"

NOTE:

ALL REINFORCEMENT SHALL BE 2" MIN. CLEAR FROM PILES.

CROSS REFERENCE NOTES:

1. FOR ABUTMENT 1 SB PILE PLAN, SEE DWG. NO. 1-480 FT-2.
2. FOR ABUTMENT 1 SB PLAN AND ELEVATION, SEE DWG. NO. 1-480 AB-1.
3. FOR REINFORCING BAR SCHEDULE, SEE DWG. NO. 1-480 BR-1.
4. FOR WORKING POINT COORDINATES, SEE DWG. NO. 1-480 FT-1.

DELAWARE DEPARTMENT OF TRANSPORTATION	ADDENDUMS / REVISIONS	SCALE 0 2 8 / 1 4 FEET	US 301 LEVELS ROAD TO SUMMIT BRIDGE ROAD	CONTRACT T200911303	BRIDGE NO. 1-480N&S	US 301 MAINLINE OVER SANDY BRANCH ABUTMENT 1 SB FOOTING REINFORCEMENT PLAN	1-480 AB-2
				COUNTY NEW CASTLE	DESIGNED BY: LT		SHEET NO. 573
					CHECKED BY: JW		TOTAL SHTS. 1256

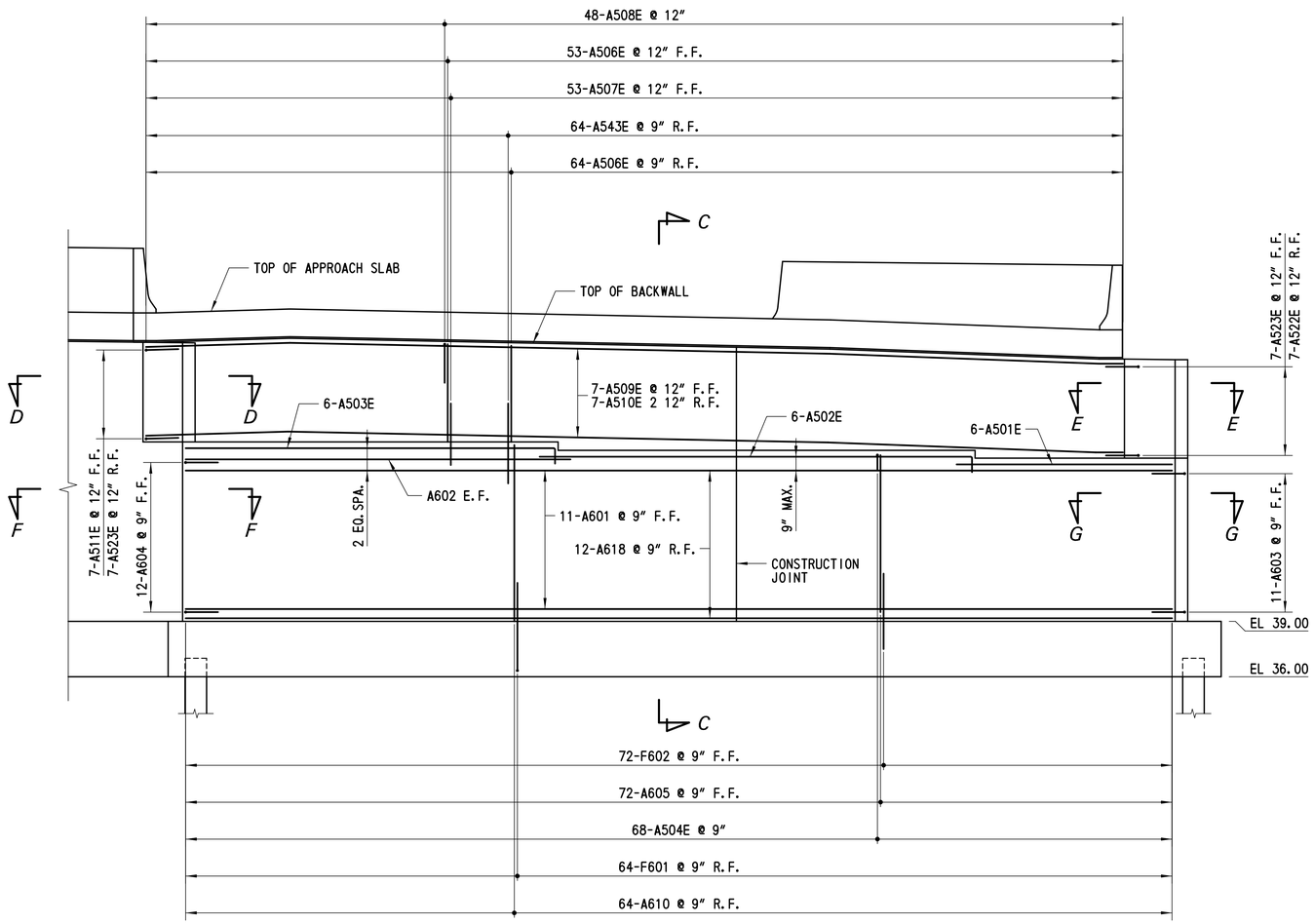

ELEVATION - ABUTMENT 1 SB REINFORCEMENT

SCALE: ¼" = 1'-0"

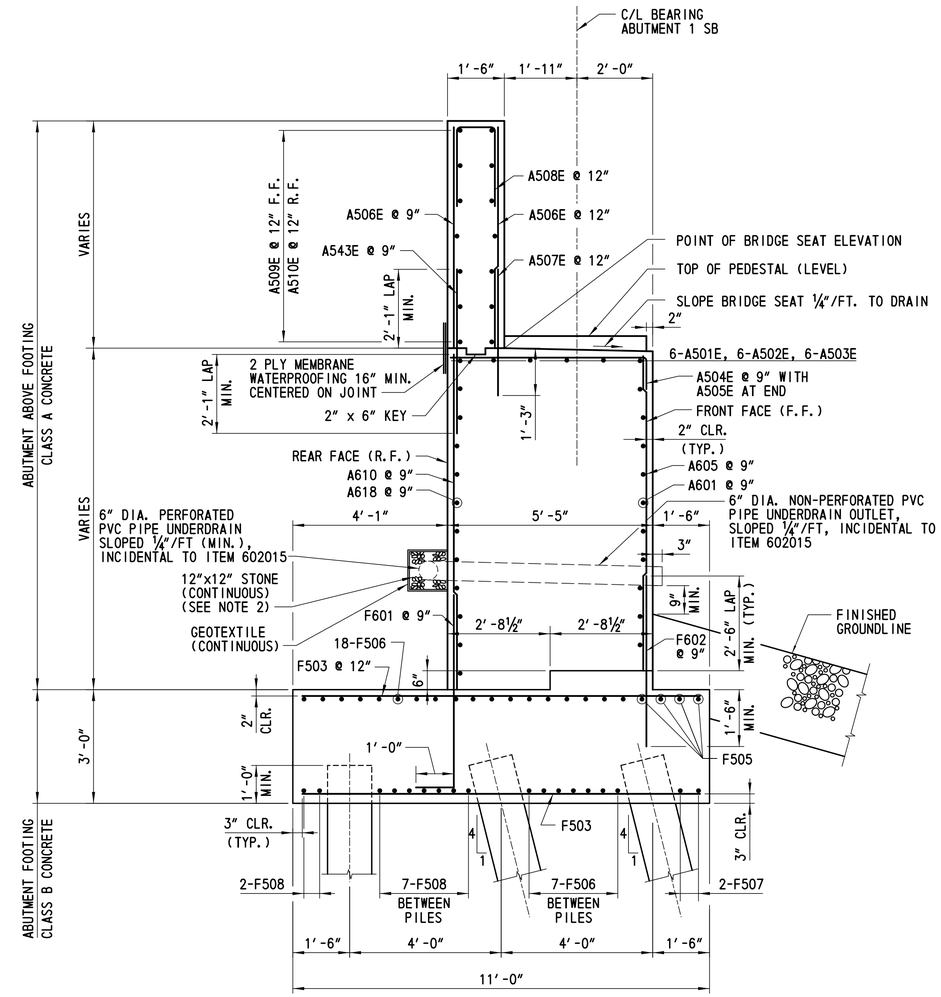

SECTION C-C

SCALE: ½" = 1'-0"

NOTES:

1. APPROACH SLAB NOT SHOWN FOR CLARITY.
2. STONE SHALL BE DELAWARE NO. 57 CONFORMING TO THE REQUIREMENTS OF SECTION 813.
3. THE WATERPROOFING MEMBRANE SHALL BE INCIDENTAL TO ITEM NO. 602015.

NOTE:

PEDESTALS AND PEDESTAL REINFORCEMENT NOT SHOWN FOR CLARITY.

CROSS REFERENCE NOTES:

1. FOR ABUTMENT 1 SB PILE PLAN, SEE DWG. NO. 1-480 FT-2.
2. FOR ABUTMENT 1 SB PLAN AND ELEVATION, SEE DWG. NO. 1-480 AB-1.
3. FOR ABUTMENT 1 FOOTING REINFORCEMENT, SEE DWG. NO. 1-480 AB-2.
4. FOR SECTIONS D-D, E-E, F-F AND G-G, SEE DWG. NO. 1-480 AB-4.
5. FOR PEDESTAL REINFORCEMENT DETAIL, SEE DWG. NO. 1-480 AB-4.
6. FOR REINFORCING BAR SCHEDULE, SEE DWG. NO. 1-480 BR-1.

DELAWARE DEPARTMENT OF TRANSPORTATION	ADDENDUMS / REVISIONS	US 301 LEVELS ROAD TO SUMMIT BRIDGE ROAD	CONTRACT T200911303	BRIDGE NO. 1-480N&S	US 301 MAINLINE OVER SANDY BRANCH ABUTMENT 1 SB REINFORCEMENT DETAILS 1	SHEET NO. 574	1-480 AB-3
			COUNTY NEW CASTLE	DESIGNED BY: LT		TOTAL SHTS. 1256	
				CHECKED BY: JW			

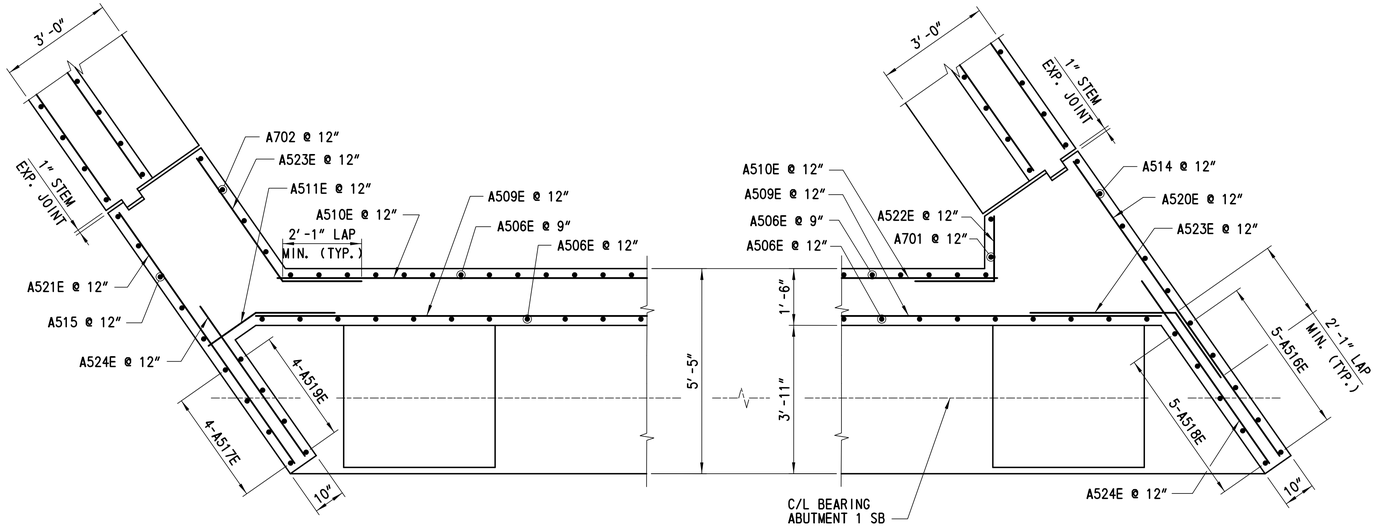

SECTION D-D

SCALE: ½"= 1'-0"

SECTION E-E

SCALE: ½"= 1'-0"

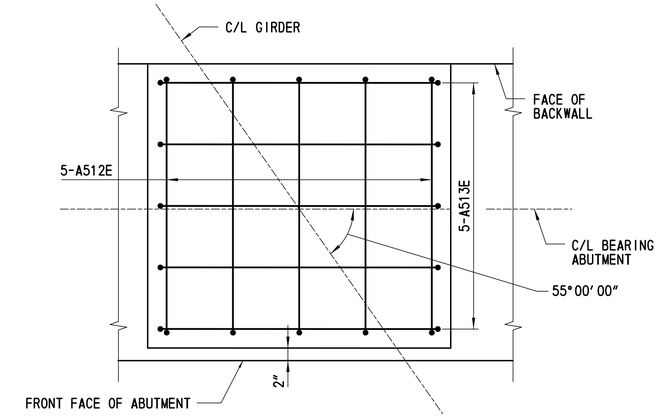

PLAN

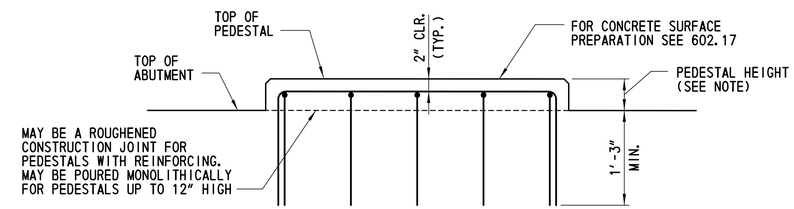

ELEVATION

NOTE:

PEDESTAL REINFORCEMENT NOT REQUIRED FOR PEDESTAL HEIGHTS LESS THAN 4".

PEDESTAL REINFORCEMENT DETAIL

SCALE: 1"= 1'-0"

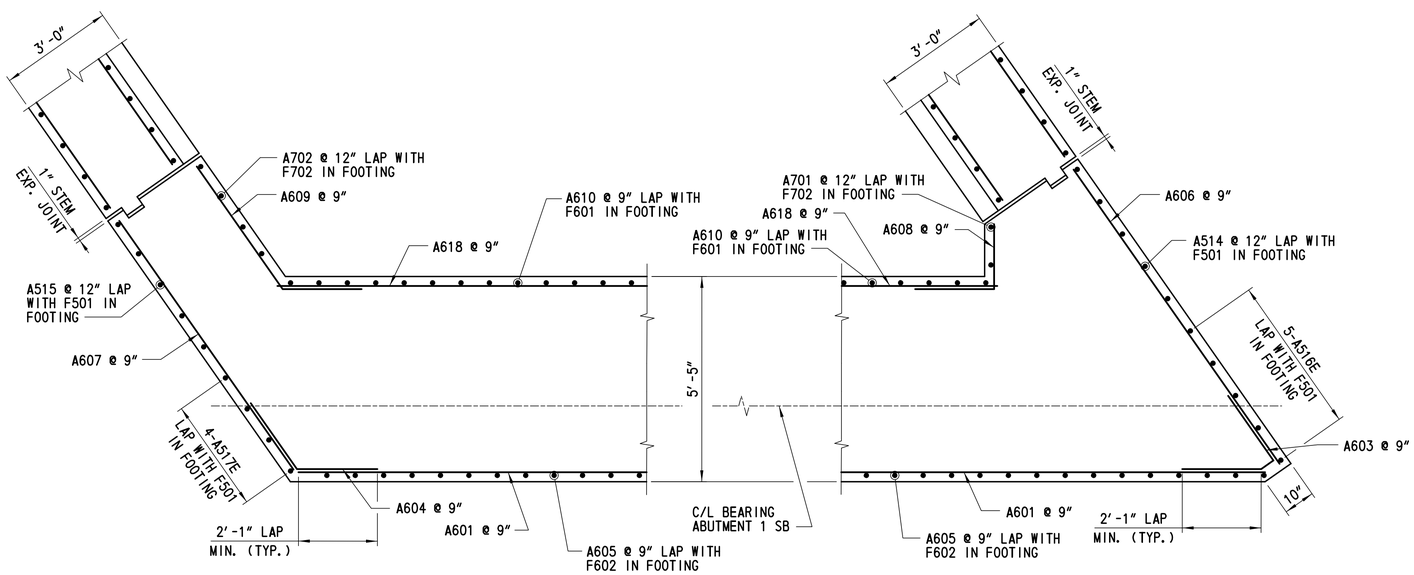

SECTION F-F

SCALE: ½"= 1'-0"

SECTION G-G

SCALE: ½"= 1'-0"

CROSS REFERENCE NOTES:

1. FOR ABUTMENT 1 SB PLAN AND ELEVATION, SEE DWG. NO 1-480 AB-1.
2. FOR ABUTMENT 1 SB REINFORCEMENT, SEE DWG. NO. 1-480 AB-3.
3. FOR WINGWALL REINFORCEMENT, SEE DWG. NO. 1-480 WW-2.
4. FOR REINFORCING BAR SCHEDULE, SEE DWG. NO. 1-480 BR-1.
5. FOR STEM EXPANSION JOINT DETAIL, SEE DWG. NO. 1-480 AB-8.

DELAWARE DEPARTMENT OF TRANSPORTATION	ADDENDUMS / REVISIONS	US 301 LEVELS ROAD TO SUMMIT BRIDGE ROAD	CONTRACT T200911303	BRIDGE NO. 1-480N&S	US 301 MAINLINE OVER SANDY BRANCH ABUTMENT 1 SB REINFORCEMENT DETAILS 2	SHEET NO. 575	1-480 AB-4
			COUNTY NEW CASTLE	DESIGNED BY: LT		TOTAL SHTS. 1256	
				CHECKED BY: JW			

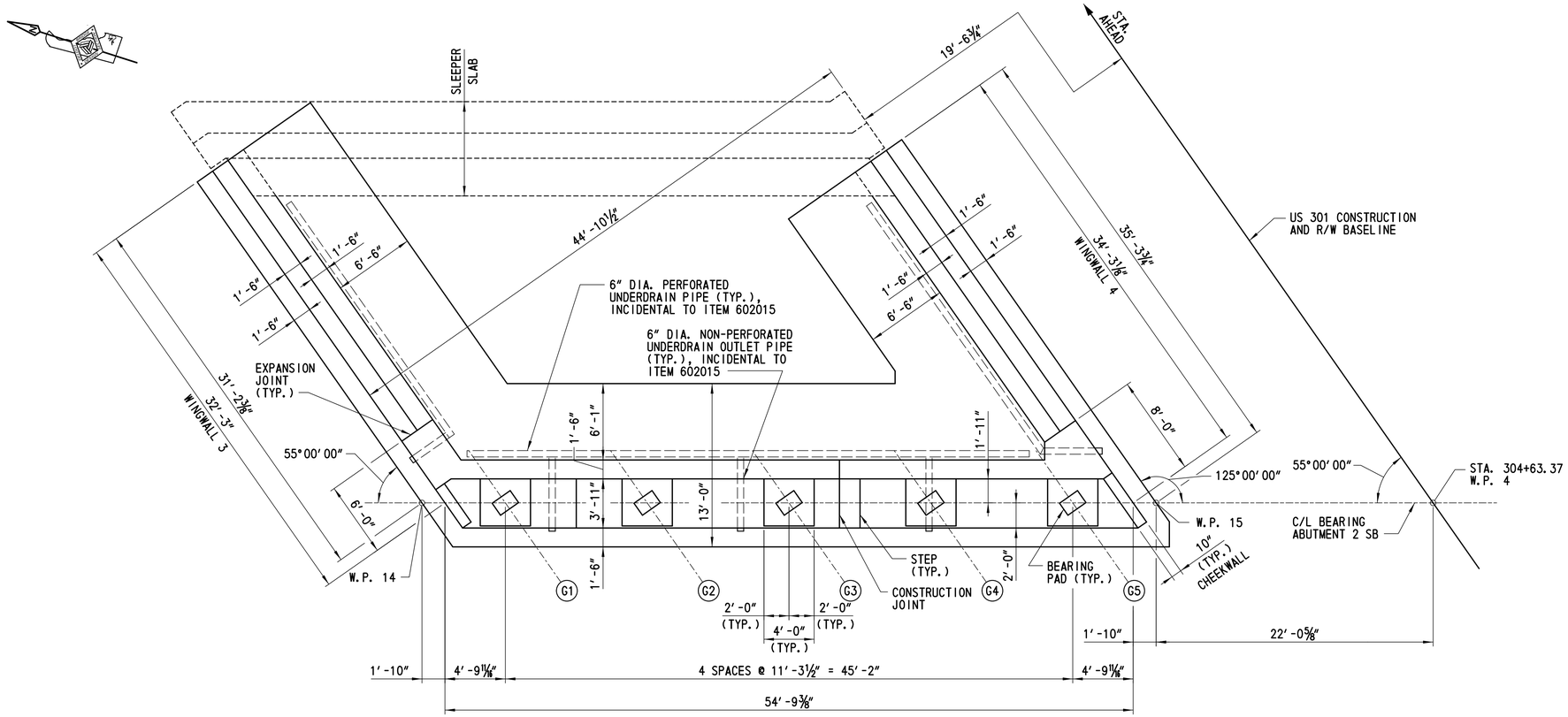

PLAN

SCALE: 3/16" = 1'-0"

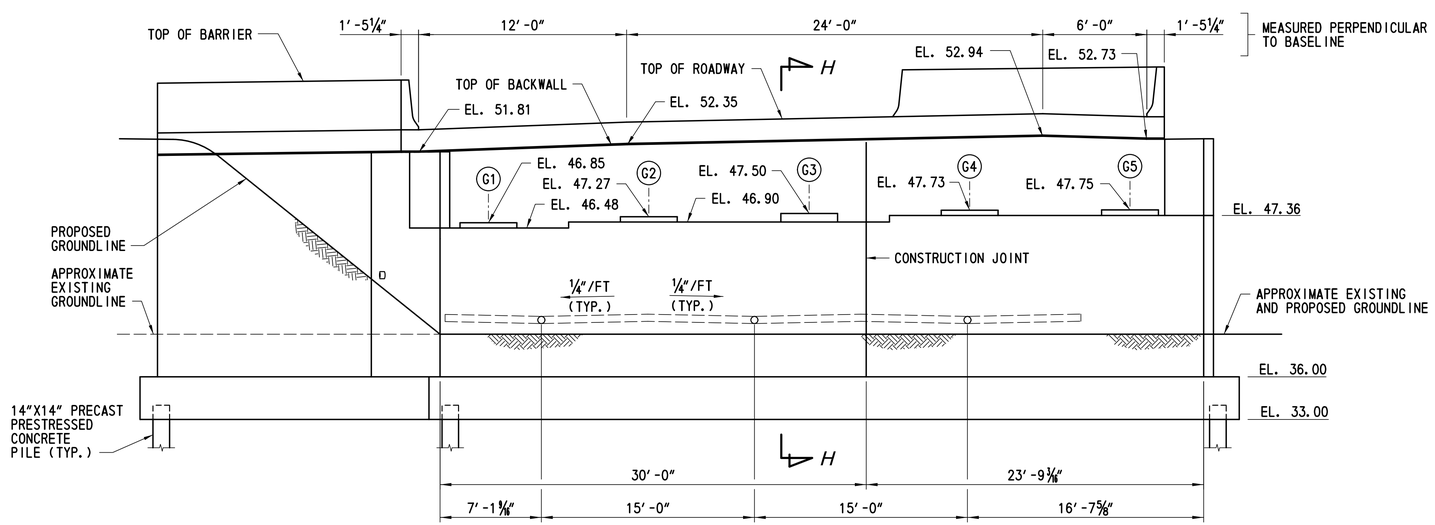

ELEVATION

SCALE: 3/16" = 1'-0"

NOTES:

1. TOP OF ABUTMENT SEAT ELEVATIONS SHOWN ARE AT THE FRONT FACE OF BACKWALL.
2. TOP OF BACKWALL ELEVATIONS SHOWN AT CENTER OF BACKWALL.
3. ABUTMENT SEAT STEPS LOCATED MID-WAY BETWEEN GIRDERS.

CROSS REFERENCE NOTES:

1. FOR GENERAL PLAN AND ELEVATION, SEE DWG. NO. 1-480 PE-1.
2. FOR GEOMETRIC LAYOUT, SEE DWG. NO. 1-480 FT-1.
3. FOR ABUTMENT 2 SB PILE PLAN, SEE DWG. NO. 1-480 FT-3.
4. FOR SECTION H-H, SEE DWG. NO. 1-480 AB-7.
5. FOR ABUTMENT 2 SB DETAILS, SEE DWG. NOS. 1-480 AB-7 AND 1-480 AB-8.
6. FOR WINGWALL ELEVATIONS, SEE DWG. NO. 1-480 WW-1.
7. FOR BEARING DETAILS, SEE DWG. NO. 1-480 BD-1.
8. FOR CONSTRUCTION JOINT DETAIL, SEE DWG. NO. 1-480 AB-1.
9. FOR STEM EXPANSION JOINT DETAIL, SEE DWG. NO. 1-480 AB-8.

DELAWARE DEPARTMENT OF TRANSPORTATION	ADDENDUMS / REVISIONS	SCALE 0 2 8 / 1 4 FEET	US 301 LEVELS ROAD TO SUMMIT BRIDGE ROAD	CONTRACT T200911303	BRIDGE NO. 1-480N&S	US 301 MAINLINE OVER SANDY BRANCH ABUTMENT 2 SB PLAN AND ELEVATION	1-480 AB-5
				COUNTY NEW CASTLE	DESIGNED BY: LT		SHEET NO. 576
					CHECKED BY: JW		TOTAL SHTS. 1256

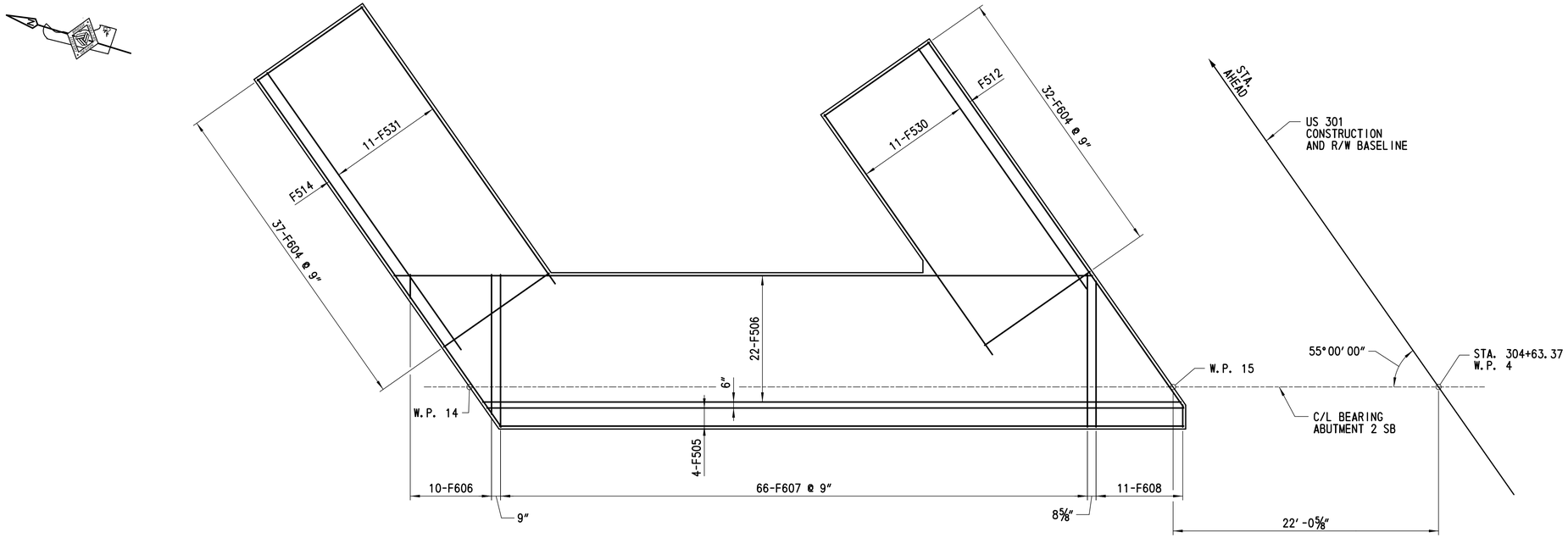

ABUTMENT 2 SB - TOP MAT REINFORCEMENT PLAN

SCALE: 3/16" = 1'-0"

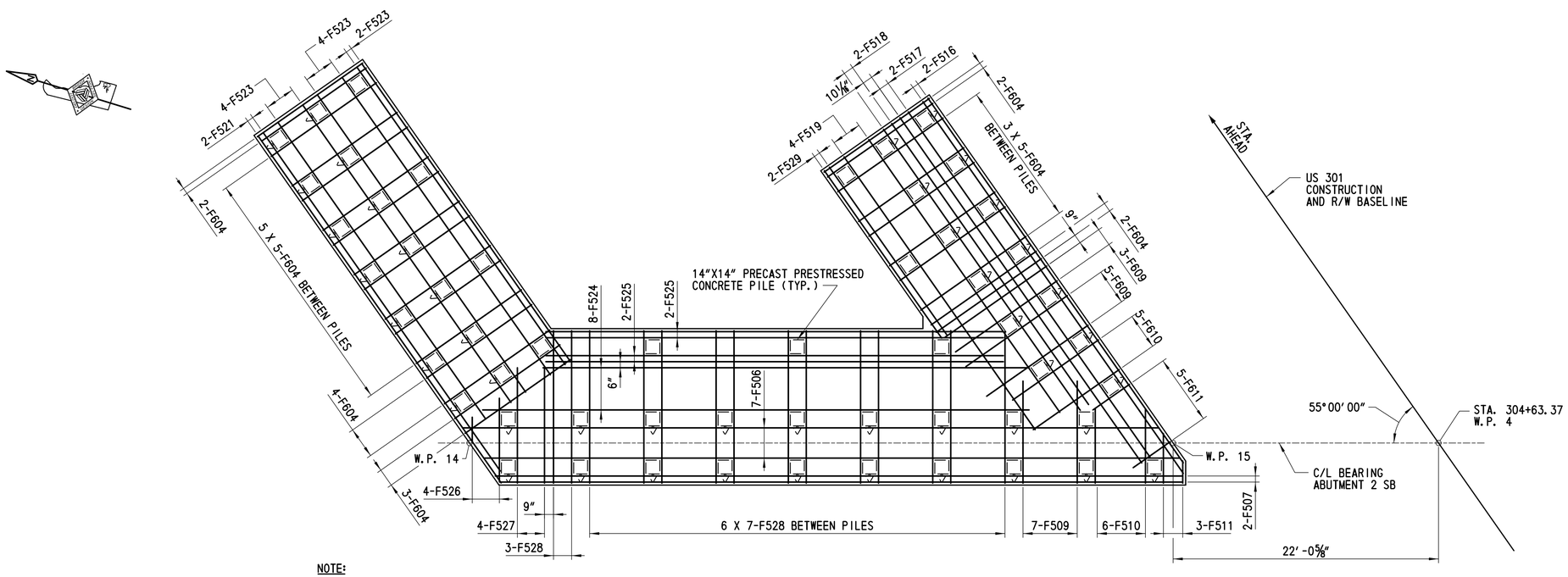

NOTE:

ALL REINFORCEMENT SHALL BE 2" MIN. CLEAR FROM PILES.

ABUTMENT 2 SB - BOTTOM MAT REINFORCEMENT PLAN

SCALE: 3/16" = 1'-0"

CROSS REFERENCE NOTES:

1. FOR ABUTMENT 2 SB PILE PLAN, SEE DWG. NO. 1-480 FT-3.
2. FOR ABUTMENT 2 SB PLAN AND ELEVATION, SEE DWG. NO. 1-480 AB-5.
3. FOR REINFORCING BAR SCHEDULE, SEE DWG. NO. 1-480 BR-2.
4. FOR WORKING POINT COORDINATES, SEE DWG. NO. 1-480 FT-1.

DELAWARE DEPARTMENT OF TRANSPORTATION	ADDENDUMS / REVISIONS	SCALE 0 2 8 / 1 4 FEET	US 301 LEVELS ROAD TO SUMMIT BRIDGE ROAD	CONTRACT T200911303	BRIDGE NO. 1-480N&S	US 301 MAINLINE OVER SANDY BRANCH ABUTMENT 2 SB FOOTING REINFORCEMENT PLAN	1-480 AB-6
				COUNTY NEW CASTLE	DESIGNED BY: LT		SHEET NO. 577
					CHECKED BY: JW		TOTAL SHTS. 1256

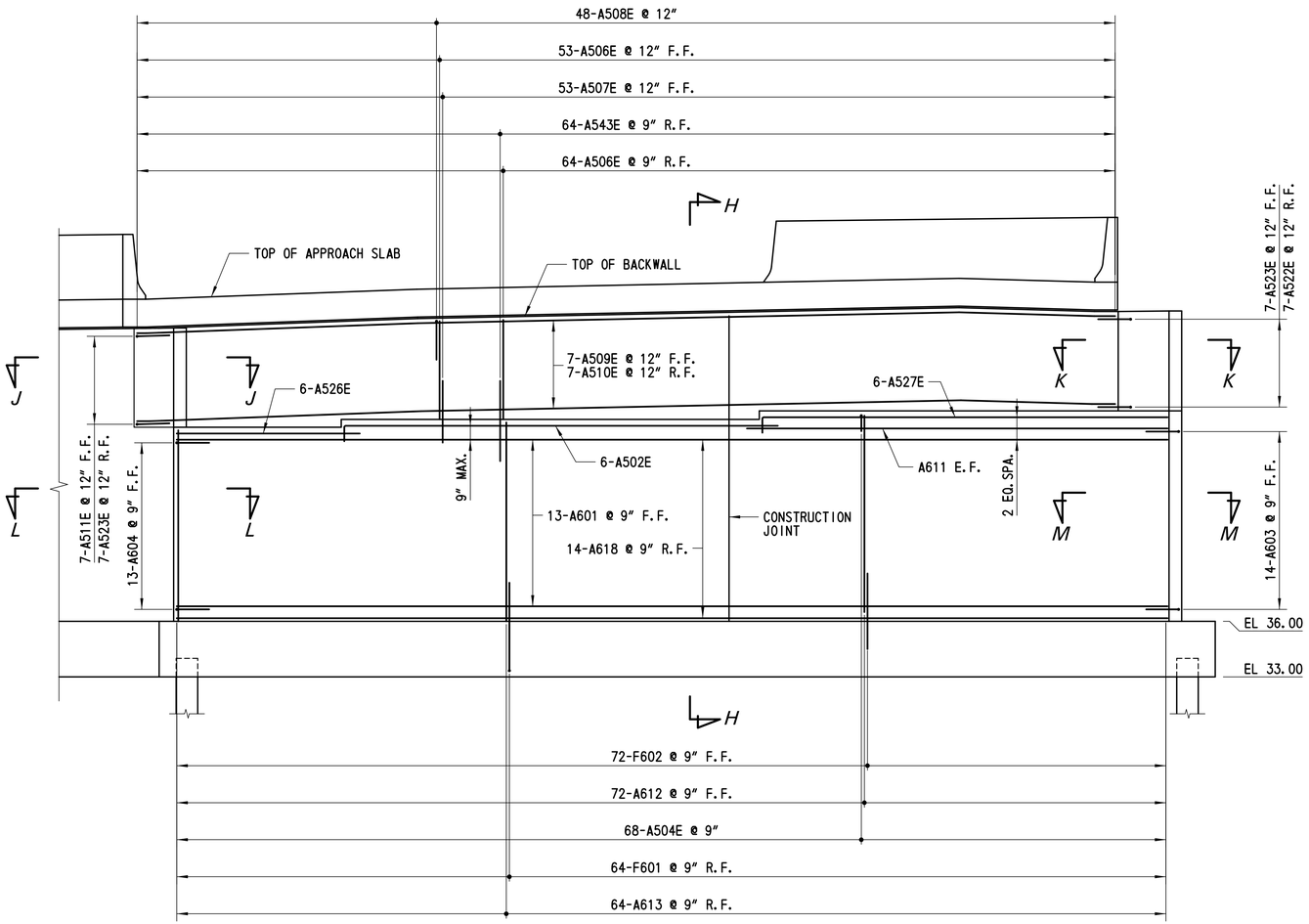

ELEVATION - ABUTMENT 2 SB REINFORCEMENT

SCALE: ¼"= 1'-0"

NOTE:

PEDESTALS AND PEDESTAL REINFORCEMENT NOT SHOWN FOR CLARITY.

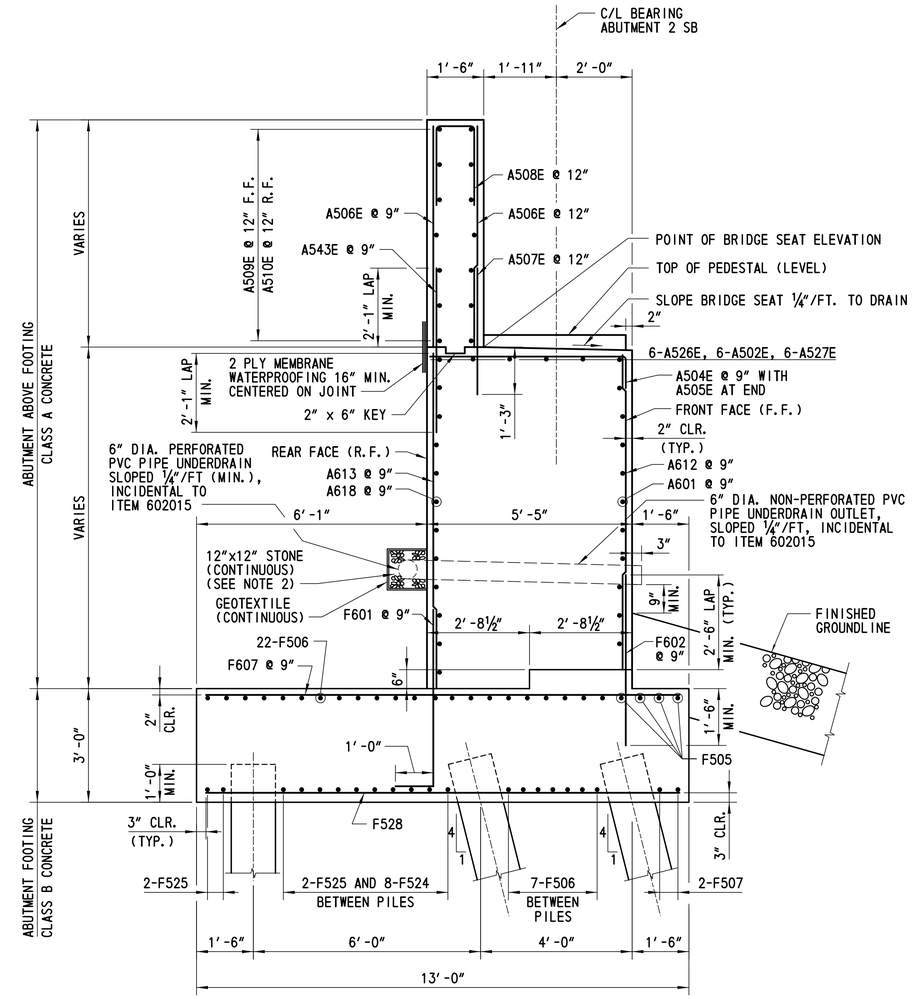

SECTION H-H

SCALE: ½"= 1'-0"

NOTES:

1. APPROACH SLAB NOT SHOWN FOR CLARITY.
2. STONE SHALL BE DELAWARE NO. 57 CONFORMING TO THE REQUIREMENTS OF SECTION 813.
3. THE WATERPROOFING MEMBRANE SHALL BE INCIDENTAL TO ITEM NO. 602015.

CROSS REFERENCE NOTES:

1. FOR ABUTMENT 2 SB PILE PLAN, SEE DWG. NO. 1-480 FT-3.
2. FOR ABUTMENT 2 SB PLAN AND ELEVATION, SEE DWG. NO. 1-480 AB-5.
3. FOR ABUTMENT 2 SB FOOTING REINFORCEMENT, SEE DWG. NO 1-480 AB-6.
4. FOR SECTIONS J-J, K-K, L-L AND M-M, SEE DWG. NO. 1-480 AB-8.
5. FOR PEDESTAL REINFORCEMENT DETAIL, SEE DWG. NO. 1-480 AB-4.
6. FOR REINFORCING BAR SCHEDULE, SEE DWG. NO. 1-480 BR-2.

DELAWARE DEPARTMENT OF TRANSPORTATION	ADDENDUMS / REVISIONS		US 301 LEVELS ROAD TO SUMMIT BRIDGE ROAD	CONTRACT T200911303	BRIDGE NO. 1-480N&S	US 301 MAINLINE OVER SANDY BRANCH ABUTMENT 2 SB REINFORCEMENT DETAILS 1	1-480 AB-7 SHEET NO. 578	TOTAL SHTS. 1256
				COUNTY NEW CASTLE	DESIGNED BY: LT			
					CHECKED BY: JW			

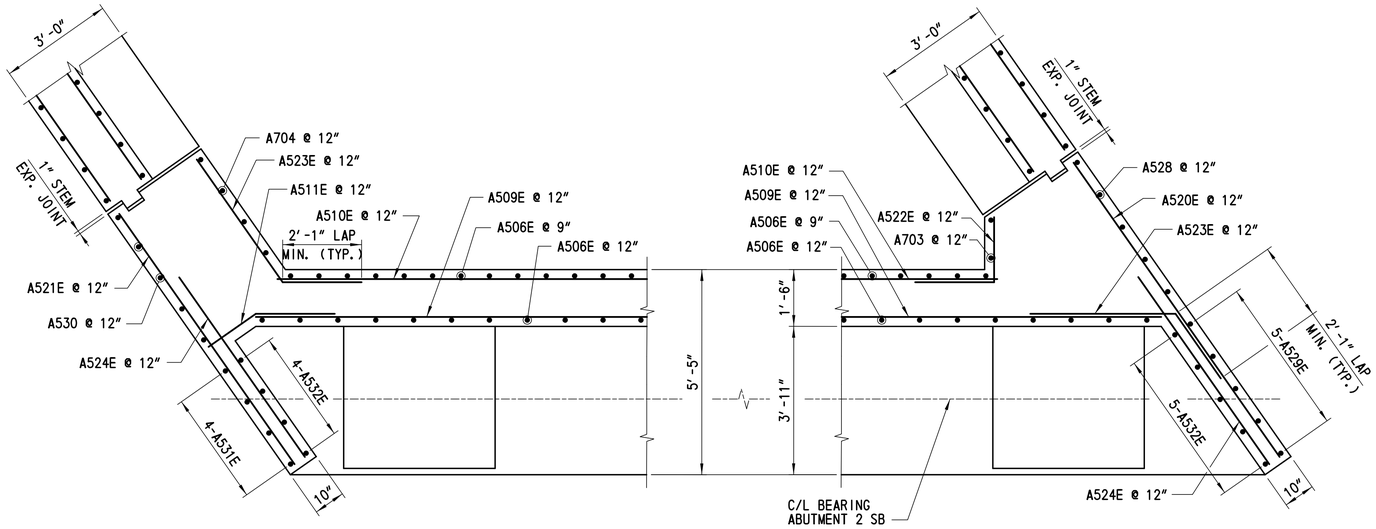

SECTION J-J

SCALE: ½"= 1'-0"

SECTION K-K

SCALE: ½"= 1'-0"

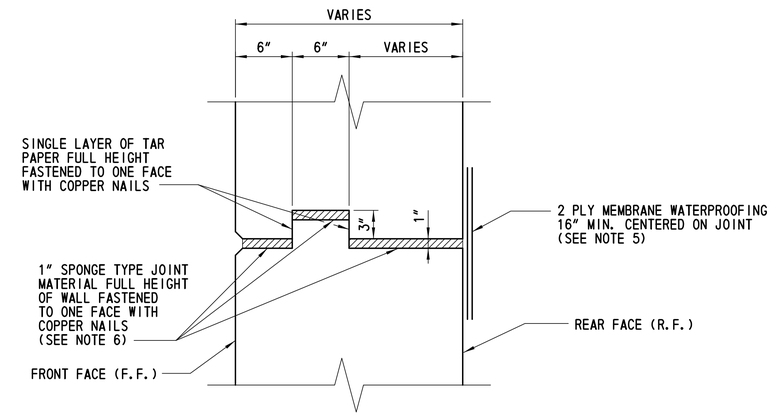

STEM EXPANSION JOINT DETAIL

SCALE: 1½"= 1'-0"

NOTES:

1. STOP KEY 9" BELOW TOP OF WALL.
2. REINFORCEMENT SHALL NOT PASS THROUGH EXPANSION JOINT.
3. ONLY PLACE EXPANSION JOINT IN STEM (NO JOINT IN FOOTING).
4. NO CHAMFER REQUIRED ON REAR FACE.
5. THE WATERPROOFING MEMBRANE SHALL BE INCIDENTAL TO ITEM NO. 602015.
6. THE 1" SPONGE TYPE JOINT MATERIAL SHALL BE INCIDENTAL TO ITEM NO. 602015.

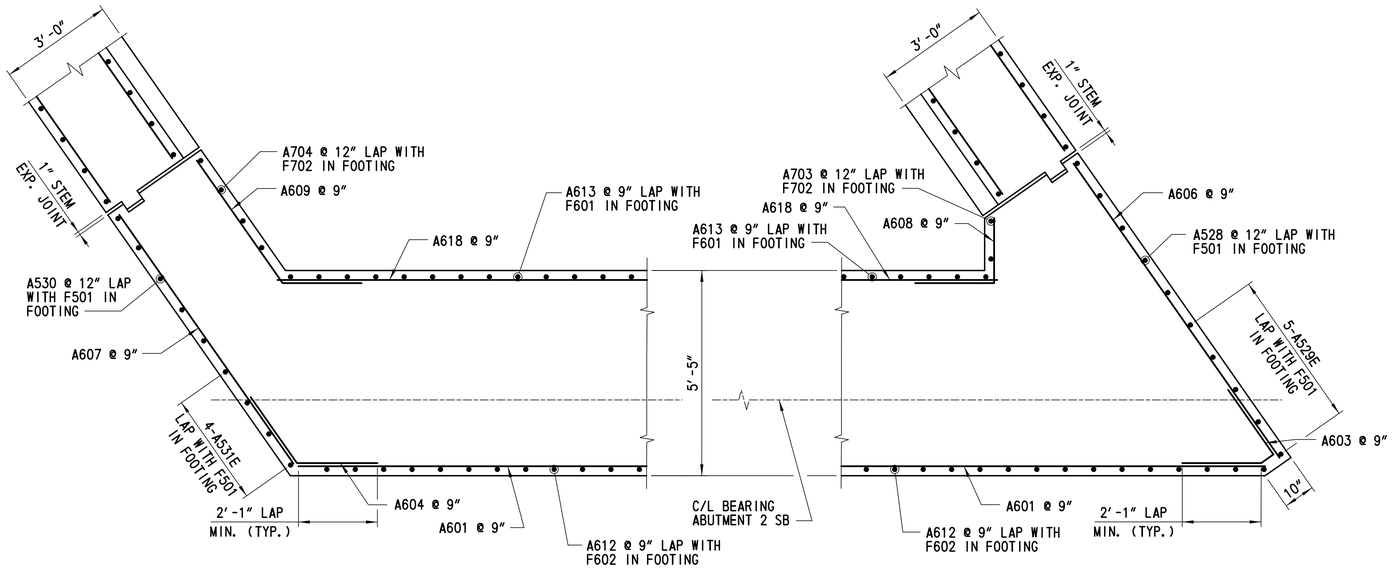

SECTION L-L

SCALE: ½"= 1'-0"

SECTION M-M

SCALE: ½"= 1'-0"

CROSS REFERENCE NOTES:

1. FOR ABUTMENT 2 SB PLAN AND ELEVATION, SEE DWG. NO. 1-480 AB-5.
2. FOR ABUTMENT 2 SB REINFORCEMENT, SEE DWG. NO. 1-480 AB-7.
3. FOR WINGWALL REINFORCEMENT, SEE DWG. NO. 1-480 WW-3.
4. FOR REINFORCING BAR SCHEDULE, SEE DWG. NO. 1-480 BR-2.

DELAWARE DEPARTMENT OF TRANSPORTATION	ADDENDUMS / REVISIONS	US 301 LEVELS ROAD TO SUMMIT BRIDGE ROAD	CONTRACT T200911303	BRIDGE NO. 1-480N&S	US 301 MAINLINE OVER SANDY BRANCH ABUTMENT 2 SB REINFORCEMENT DETAILS 2	1-480 AB-8	
			COUNTY NEW CASTLE	DESIGNED BY: LT		SHEET NO. 579	
				CHECKED BY: JW		TOTAL SHTS. 1256	

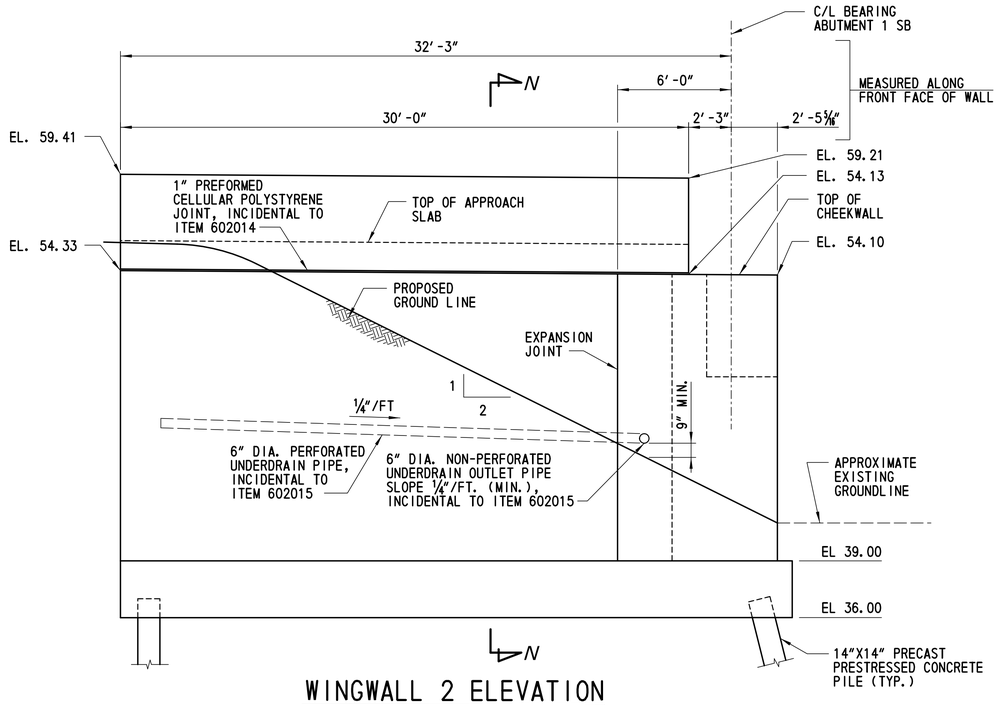

WINGWALL 2 ELEVATION

SCALE: 1/4″ = 1′-0″

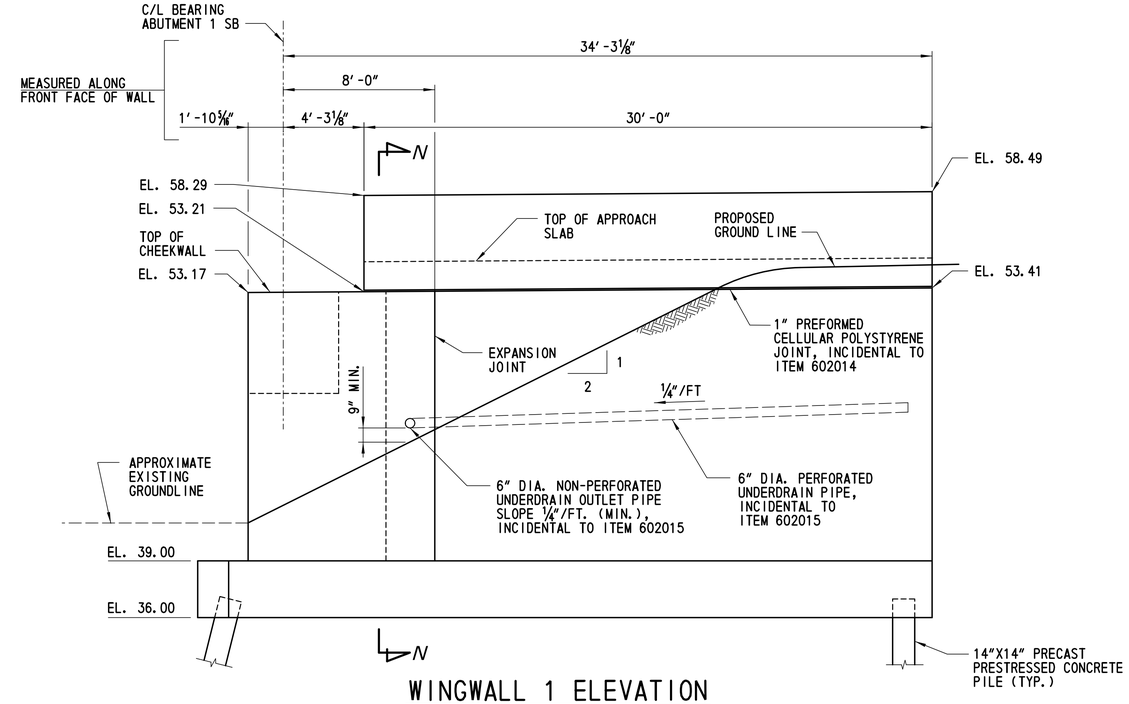

WINGWALL 1 ELEVATION

SCALE: 1/4″ = 1′-0″

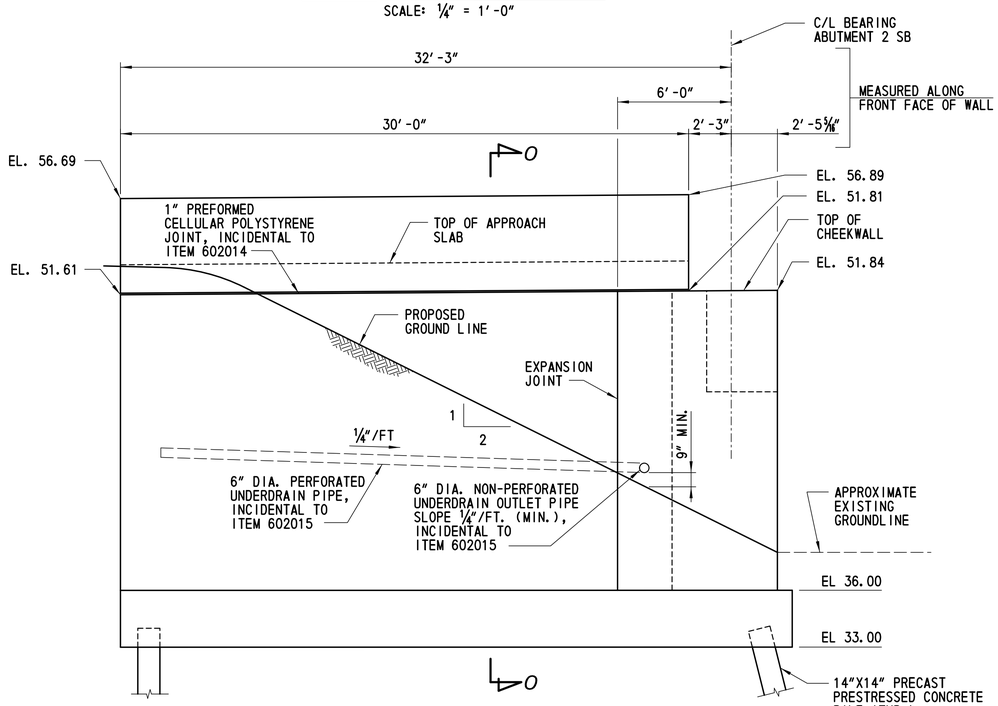

WINGWALL 3 ELEVATION

SCALE: 1/4″ = 1′-0″

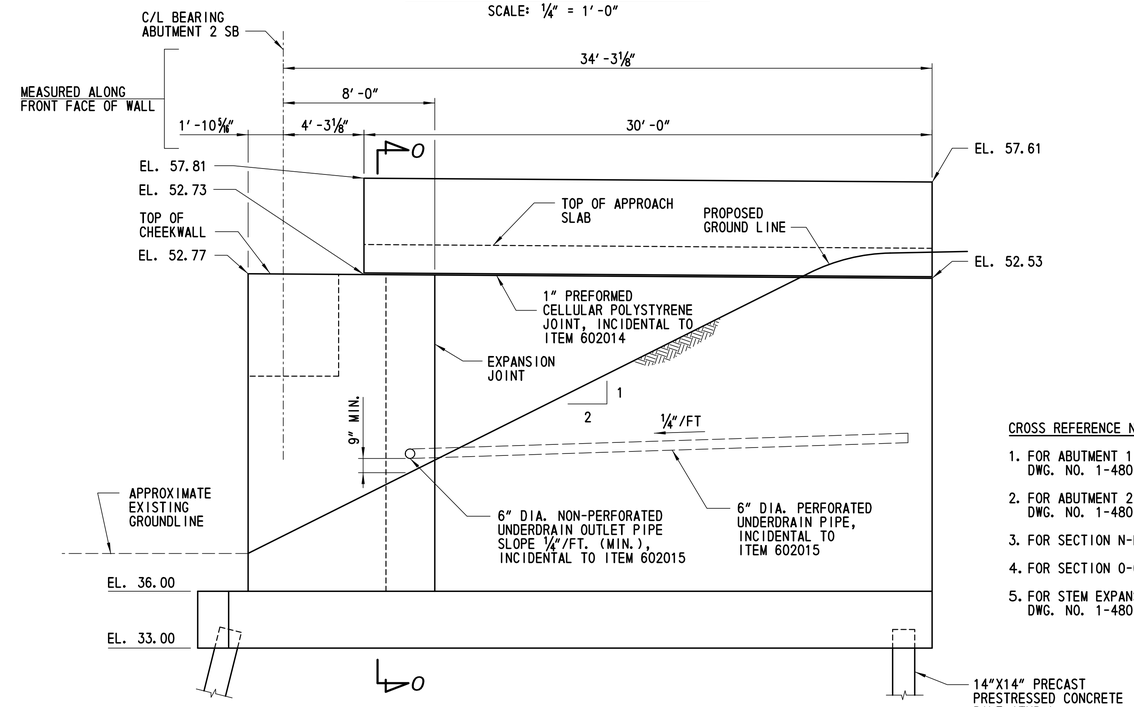

WINGWALL 4 ELEVATION

SCALE: 1/4″ = 1′-0″

CROSS REFERENCE NOTES:

1. FOR ABUTMENT 1 SB PLAN AND ELEVATION, SEE DWG. NO. 1-480 AB-1.
2. FOR ABUTMENT 2 SB PLAN AND ELEVATION, SEE DWG. NO. 1-480 AB-5.
3. FOR SECTION N-N, SEE DWG. NO. 1-480 WW-2.
4. FOR SECTION O-O, SEE DWG. NO. 1-480 WW-3.
5. FOR STEM EXPANSION JOINT DETAIL, SEE DWG. NO. 1-480 AB-8.

DELAWARE
DEPARTMENT OF TRANSPORTATION

ADDENDUMS / REVISIONS

SCALE
0 2 8
1 4
FEET

US 301
LEVELS ROAD
TO SUMMIT BRIDGE ROAD

CONTRACT	BRIDGE NO.	1-480N&S
T200911303	DESIGNED BY: KW	
COUNTY	CHECKED BY: JW	
NEW CASTLE		

US 301 MAINLINE OVER
SANDY BRANCH
WINGWALL ELEVATIONS
(1–4)

1-480 WW-1
SHEET NO.
580
TOTAL SHTS.
1256

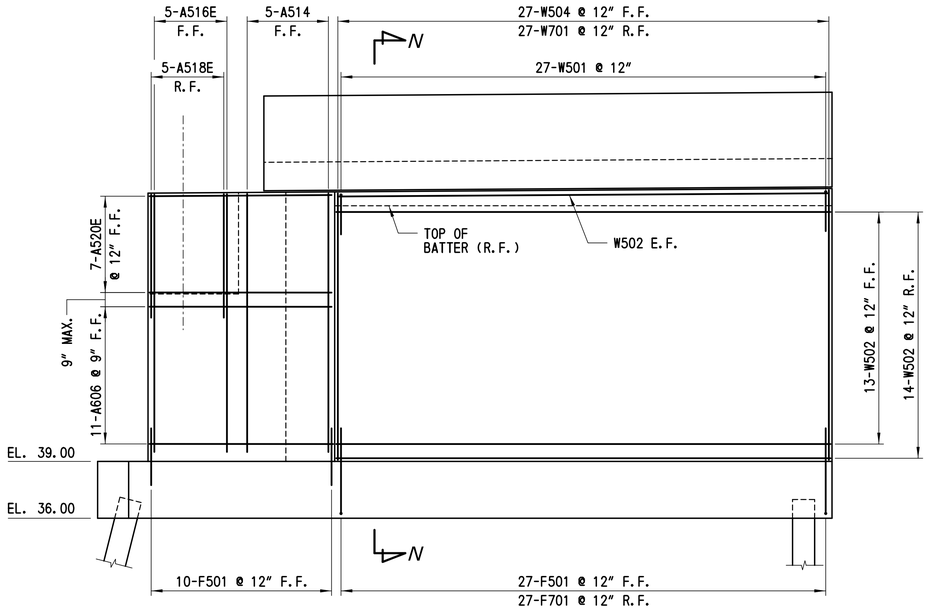

WINGWALL 1 ELEVATION

SCALE: ¼" = 1'-0"

NOTE:

FOR ADDITIONAL ABUTMENT REINFORCEMENT, NOT SHOWN FOR CLARITY, SEE DWG. NO. 1-480 AB-4.

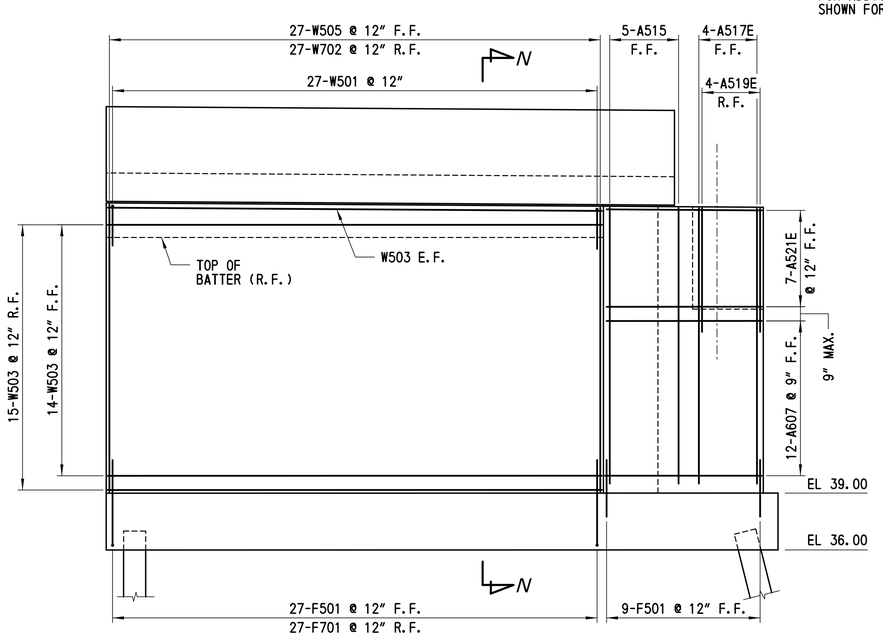

WINGWALL 2 ELEVATION

SCALE: ¼" = 1'-0"

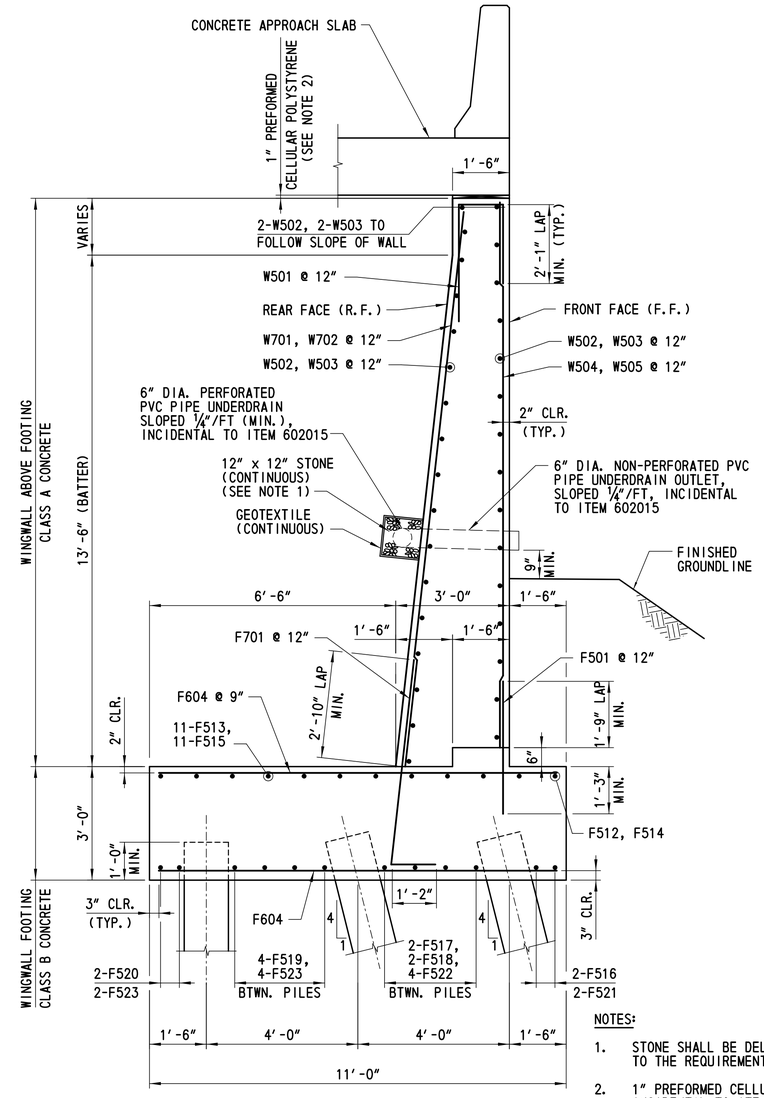

NOTES:

1. STONE SHALL BE DELAWARE NO. 57 CONFORMING TO THE REQUIREMENTS OF SECTION 813.
2. 1" PREFORMED CELLULAR POLYSTYRENE TO BE INCIDENTAL TO ITEM 602014.

SECTION N-N

SCALE: ½"= 1'-0"

CROSS REFERENCE NOTES:

1. FOR WINGWALL ELEVATIONS, SEE DWG. NO. 1-480 WW-1.
2. FOR FOOTING REINFORCEMENT, SEE DWG. NO. 1-480 AB-2.
3. FOR APPROACH SLAB REINFORCEMENT, SEE DWG. NO. 1-480 AS-1.
4. FOR REINFORCING BAR SCHEDULE, SEE DWG. NO. 1-480 BR-1.

DELAWARE DEPARTMENT OF TRANSPORTATION	ADDENDUMS / REVISIONS	US 301 LEVELS ROAD TO SUMMIT BRIDGE ROAD	CONTRACT T200911303	BRIDGE NO. 1-480N&S	US 301 MAINLINE OVER SANDY BRANCH	1-480 WW-2	
			COUNTY NEW CASTLE	DESIGNED BY: BCW	WINGWALL DETAILS 1	SHEET NO. 581	
				CHECKED BY: JW		TOTAL SHTS. 1256	

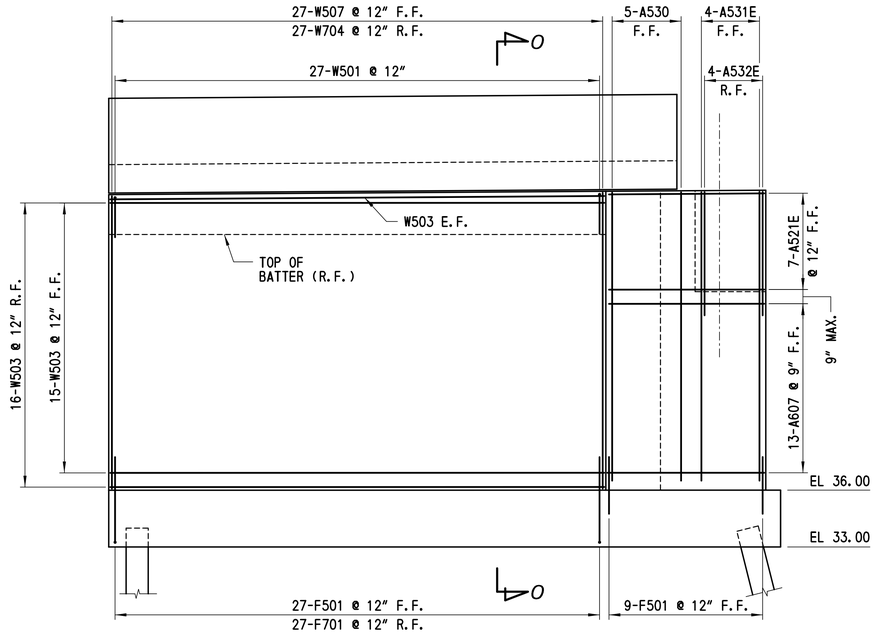

WINGWALL 3 ELEVATION

SCALE: ¼" = 1'-0"

NOTE:

FOR ADDITIONAL ABUTMENT REINFORCEMENT, NOT SHOWN FOR CLARITY, SEE DWG. NO. 1-480 AB-8.

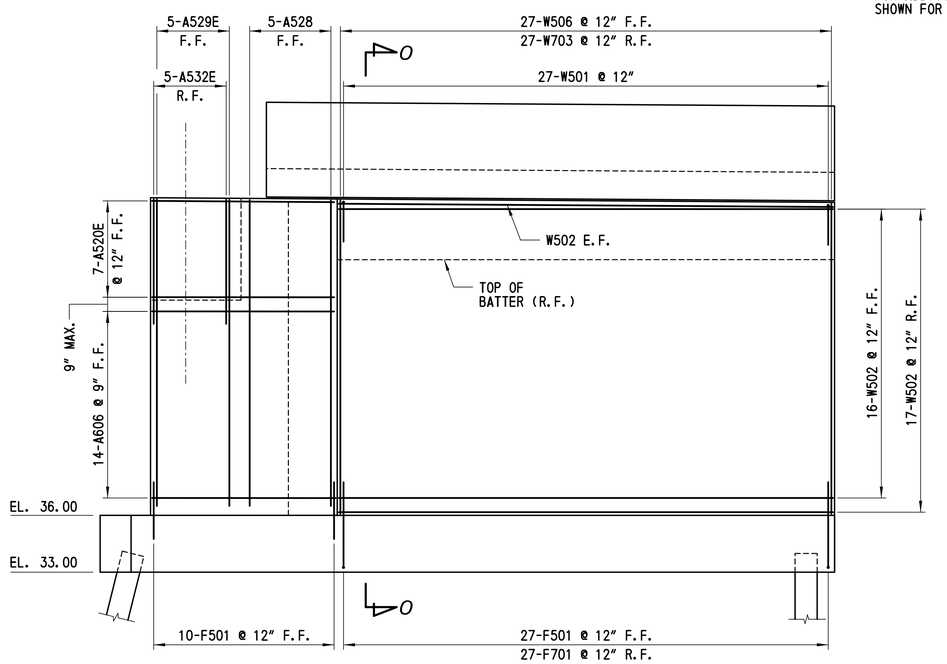

WINGWALL 4 ELEVATION

SCALE: ¼" = 1'-0"

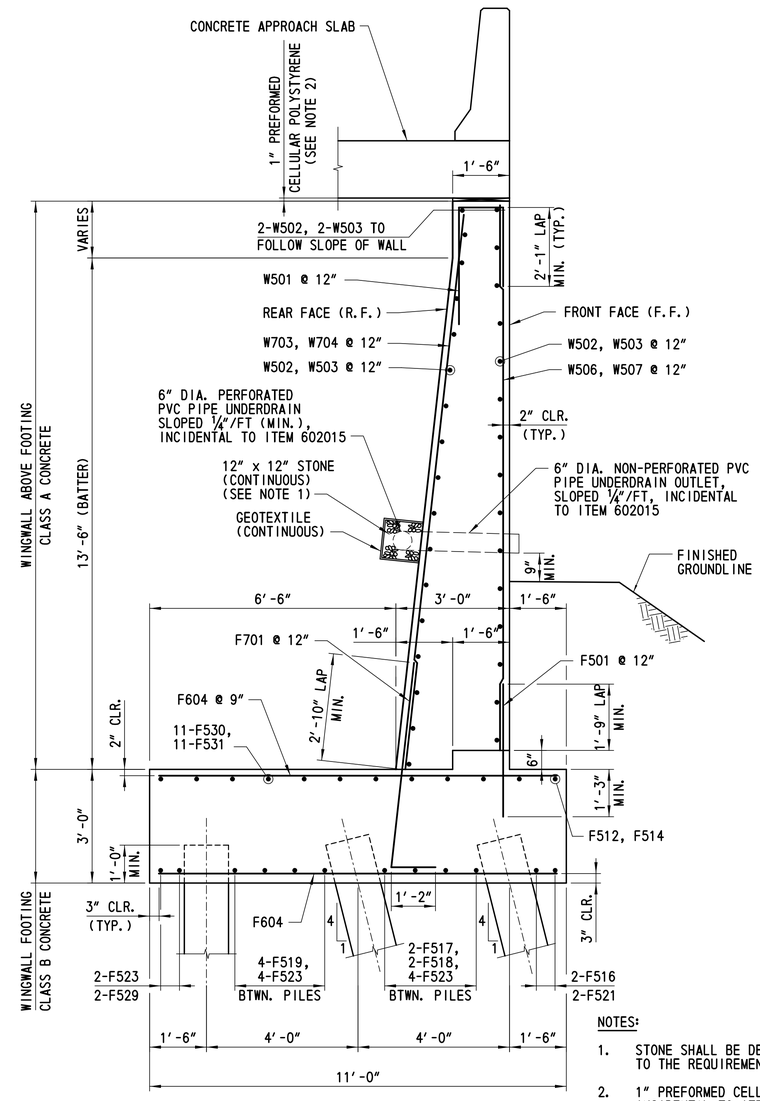

NOTES:

1. STONE SHALL BE DELAWARE NO. 57 CONFORMING TO THE REQUIREMENTS OF SECTION 813.
2. 1" PREFORMED CELLULAR POLYSTYRENE TO BE INCIDENTAL TO ITEM 602014.

SECTION 0-0

SCALE: ½" = 1'-0"

CROSS REFERENCE NOTES:

1. FOR WINGWALL ELEVATIONS, SEE DWG. NO. 1-480 WW-1.
2. FOR FOOTING REINFORCEMENT, SEE DWG. NO. 1-480 AB-6.
3. FOR APPROACH SLAB REINFORCEMENT, SEE DWG. NO. 1-480 AS-1.
4. FOR REINFORCING BAR SCHEDULE, SEE DWG. NO. 1-480 BR-2.

DELAWARE DEPARTMENT OF TRANSPORTATION	ADDENDUMS / REVISIONS	US 301 LEVELS ROAD TO SUMMIT BRIDGE ROAD	CONTRACT T200911303	BRIDGE NO. 1-480N&S	US 301 MAINLINE OVER SANDY BRANCH	1-480 WW-3
			COUNTY NEW CASTLE	DESIGNED BY: BCW	WINGWALL DETAILS 2	SHEET NO. 582
				CHECKED BY: JW		TOTAL SHTS. 1256

REINFORCING BAR SCHEDULE

ABUTMENT 1 SB

MARK	LENGTH	NO. BARS	TYPE	A	B	C	D	E	F	G	H	J	K	O	REMARKS
A501E	11′-8″	6	STR.												
A502E	24′-3″	6	2	10″	23′-5″										
A503E	20′-10″ TO 23′-4″	6	2	10″	20′-0″ TO 22′-6″										LENGTH △ = 6″
A504E	5′-11″	68	2	10″	5′-1″										
A505E	1′-10″ TO 4′-7″	6	2	10″	1′-0″ TO 3′-9″										LENGTH △ = 1′-4½″
A506E	5′-2″	117	STR.												
A507E	4′-0″	53	STR.												
A508E	5′-4″	48	17		2′-1″	1′-2″	2′-1″								
A509E	52′-0″	7	STR.												
A510E	47′-0″	7	STR.												
A511E	3′-6½″	7	16			2′-1″	1′-5½″				10″		1′-2¼″	3′-3¼″	
A512E	6′-11″	25	17		1′-9″	3′-5″	1′-9″								
A513E	7′-2″	25	17		1′-9″	3′-8″	1′-9″								
A514	13′-5″	5	STR.												
A515	14′-4″	5	STR.												
A516E	13′-5″	5	STR.												
A517E	14′-4″	4	STR.												
A518E	6′-10″	5	STR.												
A519E	6′-9″	4	STR.												
A520E	9′-6″	7	STR.												
A521E	8′-0″	7	STR.												
A522E	3′-8″	7	2	1′-7″	2′-1″										
A523E	5′-11″	14	16			3′-10″	2′-1″				1′-8½″		1′-2⅜″	5′-0⅜″	
A524E	6′-0″	14	STR.												
A525															BAR REMOVED
A543E	4′-10″	64	STR.												
A601	53′-8″	11	STR.												
A602	23′-6″	2	STR.												
A603	4′-8½″	11	16		2′-1″	6½″	2′-1″				1′-2⅜″		1′-8½″	2′-3″	
A604	4′-8″	12	16			2′-4″	2′-4″				1′-11″		1′-4″	3′-8″	
A605	8′-2″	72	STR.												
A606	9′-6″	11	STR.												
A607	8′-0″	12	STR.												
A608	3′-8″	12	2	1′-7″	2′-1″										
A609	5′-11″	13	16			3′-10″	2′-1″				1′-8½″		1′-2⅜″	5′-0⅜″	
A610	8′-8″	64	STR.												
A618	47′-0″	12	STR.												
A701	13′-11″	2	STR.												
A702	14′-10″	4	STR.												
F501	3′-9″	73	STR.												
F502	1′-11″ TO 9′-0″	6	STR.												LENGTH △ = 1′-5″
F503	10′-6″	97	STR.												
F504	1′-8″ TO 9′-10″	7	STR.												LENGTH △ = 1′-4⅝″
F505	56′-8″ TO 57′-8″	4	STR.												LENGTH △ = 4″
F506	57′-10″	25	STR.												
F507	56′-8″ TO 57′-0″	2	STR.												LENGTH △ = 4″
F508	41′-2″	9	STR.												
F509	8′-4″	6	STR.												
F510	6′-0″	6	STR.												
F511	1′-8″ TO 3′-11″	3	STR.												LENGTH △ = 1′-1½″
F512	36′-9″	1	STR.												
F513	26′-6″	11	STR.												
F514	35′-1″	1	STR.												
F515	30′-3″	11	STR.												
F516	36′-10″ TO 37′-7″	2	STR.												LENGTH △= 9″
F517	34′-10″	2	STR.												
F518	28′-5″	2	STR.												
F519	27′-6″	4	STR.												
F520	19′-3″	2	STR.												
F521	34′-3″ TO 35′-1″	2	STR.												LENGTH △ = 10″
F522	34′-1″	4	STR.												
F523	30′-0″	6	STR.												

ABUTMENT 1 SB

MARK	LENGTH	NO. BARS	TYPE	A	B	C	D	E	F	G	H	J	K	O	REMARKS
F601	7′-1′	64	2	1′-0″	6′-1″										
F602	5′-5″	72	STR.												
F603	3′-4″	5	STR.												
F604	10′-6″	139	STR.												
F605	6′-1″ TO 9′-3″	5	STR.												LENGTH △ = 9½″
F701	7′-3″	54	T7			1′-2″	6′-1″						7¼″		
F702	7′-3″	6	2	1′-2″	6′-1″										
W501	7′-3″	54	17		2′-1″	1′-2″	4′-0″								
W502	26′-0″	29	STR.												
W503	25′-11″	31	STR.												
W504	13′-6″	27	STR.												
W505	14′-5″	27	STR.												
W701	14′-0″	27	STR.												
W702	14′-9″	27	STR.												

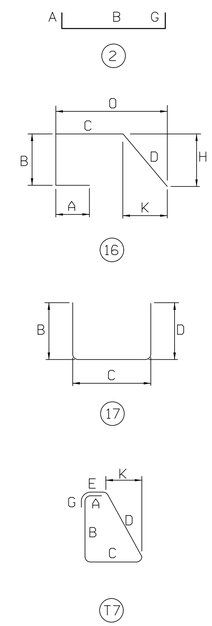

DELAWARE DEPARTMENT OF TRANSPORTATION

ADDENDUMS / REVISIONS

US 301
LEVELS ROAD
TO SUMMIT BRIDGE ROAD

CONTRACT T200911303
COUNTY NEW CASTLE
BRIDGE NO. 1-480N&S
DESIGNED BY: LT
CHECKED BY: JW

US 301 MAINLINE OVER SANDY BRANCH
ABUTMENT 1 SB
REINFORCEMENT SCHEDULE

1-480 BR-1
SHEET NO. 583
TOTAL SHTS. 1256

REINFORCING BAR SCHEDULE

ABUTMENT 2 SB

MARK	LENGTH	NO. BARS	TYPE	A	B	C	D	E	F	G	H	J	K	O	REMARKS
A502E	24′-3″	6	2	10″	23′-5″										
A504E	5′-11″	68	2	10″	5′-1″										
A505E	1′-10″ TO 4′-7″	6	2	10″	1′-0″ TO 3′-9″										LENGTH △ = 1′-4½″
A506E	5′-2″	117	STR.												
A507E	4′-0″	53	STR.												
A508E	5′-4″	48	17		2′-1″	1′-2″	2′-1″								
A509E	52′-0″	7	STR.												
A510E	47′-0″	7	STR.												
A511E	3′-6½″	7	16			2′-1″	1′5½″				10″		1′-2¼″	3′-3¼″	
A512E	6′-11″	25	17		1′-9″	3′-5″	1′-9″								
A513E	7′-2″	25	17		1′-9″	3′-8″	1′-9″								
A520E	9′-6″	7	STR.												
A521E	8′-0″	7	STR.												
A522E	3′-8″	7	2	1′-7″	2′-1″										
A523E	5′-11″	14	16			3′-10″	2′-1″				1-8½″		1′-2⅜″	5′-0⅜″	
A524E	6′-0″	14	STR.												
A525															BAR REMOVED
A526E	11′-8″	6	STR.												
A527E	20′-2″ TO 22′-8″	6	2	10″	19′-4″ TO 21′-10″										LENGTH △ = 6″
A528	15′-11″	5	STR.												
A529E	15′-11″	5	STR.												
A530	15′-0″	5	STR.												
A531E	15′-0″	4	STR.												
A532E	6′-9″	9	STR.												
A543E	4′-10″	64	STR.												
A601	53′-8″	13	STR.												
A603	4′-8½″	14	16		2′-1″	6½″	2′-1″				1′-2⅜″		1′-8½″	2′-3″	
A604	4′-8″	13	16			2′-4″	2′-4″				1′-11″		1′-4″	3′-8″	
A606	9′-6″	14	STR.												
A607	8′-0″	13	STR.												
A608	3′-8″	14	2	1′-7″	2′-1″										
A609	5′-11″	14	16			3′-10″	2′-1″				1-8½″		1′-2⅜″	5′-0⅜″	
A611	22′-10″	2	STR.												
A612	9′-10″	72	STR.												
A613	9′-4″	64	STR.												
A618	47′-0″	14	STR.												
A703	16′-5″	2	STR.												
A704	15′-6″	4	STR.												
F501	3′-9″	73	STR.												
F505	56′-8″ TO 57′-8″	4	STR.												LENGTH △ = 4″
F506	57′-10″	29	STR.												
F507	56′-8″ TO 57′-0″	2	STR.												LENGTH △ = 4″
F509	8′-4″	7	STR.												
F510	6′-0″	6	STR.												
F511	1′-8″ TO 3′-11″	3	STR.												LENGTH △ = 1′-1½″
F512	36′-9″	1	STR.												
F514	35′-1″	1	STR.												
F516	36′-10″ TO 37′-7″	2	STR.												LENGTH △ = 9″
F517	34′-10″	2	STR.												
F518	28′-5″	2	STR.												
F519	27′-6″	4	STR.												
F521	34′-3″ TO 35′-1″	2	STR.												LENGTH △ = 10″
F523	30′-0″	10	STR.												
F524	40′-4″ TO 45′-7″	8	STR.												LENGTH △ = 9″
F525	38′-0″	4	STR.												
F526	2′-1″ TO 6′-10″	4	STR.												LENGTH △ = 1′-7″
F527	9′-6″	4	STR.												
F528	12′-6″	45	STR.												
F529	16′-11″	2	STR.												
F530	24′-3″	11	STR.												
F531	28′-0″	11	STR.												

ABUTMENT 2 SB

MARK	LENGTH	NO. BARS	TYPE	A	B	C	D	E	F	G	H	J	K	O	REMARKS
F601	7′-1′	64	2	1′-0″	6′-1″										
F602	5′-5″	72	STR.												
F604	10′-6″	122	STR.												
F606	1′-9″ TO 11′-6″	10	STR.												LENGTH △ = 1′-1″
F607	12′-6″	66	STR.												
F608	1′-8″ TO 11′-11″	11	STR.												LENGTH △ = 1′-0¼″
F609	10′-2″	8	STR.												
F610	8′-7″	5	STR.												
F611	3′-7″	5	STR.												
F701	7′-3″	54	T7			1′-2″	6′-1″						7¼″		
F702	7′-3″	6	2	1′-2″	6′-1″										
W501	7′-3″	54	17		2′-1″	1′-2″	4′-0″								
W502	26′-0″	35	STR.												
W503	25′-11″	33	STR.												
W506	15′-10″	27	STR.												
W507	14′-11″	27	STR.												
W703	16′-4″	27	STR.												
W704	15′-5″	27	STR.												

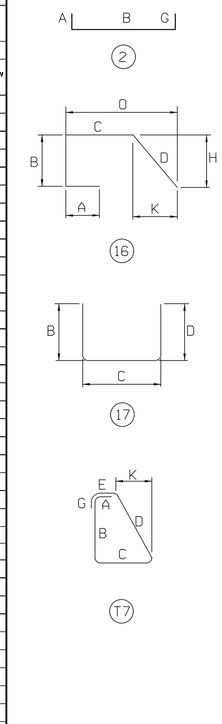

DELAWARE
DEPARTMENT OF TRANSPORTATION

ADDENDUMS / REVISIONS

US 301
LEVELS ROAD
TO SUMMIT BRIDGE ROAD

CONTRACT	BRIDGE NO.	1-480N&S
T200911303	DESIGNED BY: LT	
COUNTY	CHECKED BY: JW	
NEW CASTLE		

US 301 MAINLINE OVER SANDY BRANCH
ABUTMENT 2 SB
REINFORCEMENT SCHEDULE

1-480 BR-2	
SHEET NO.	584
TOTAL SHTS.	1256

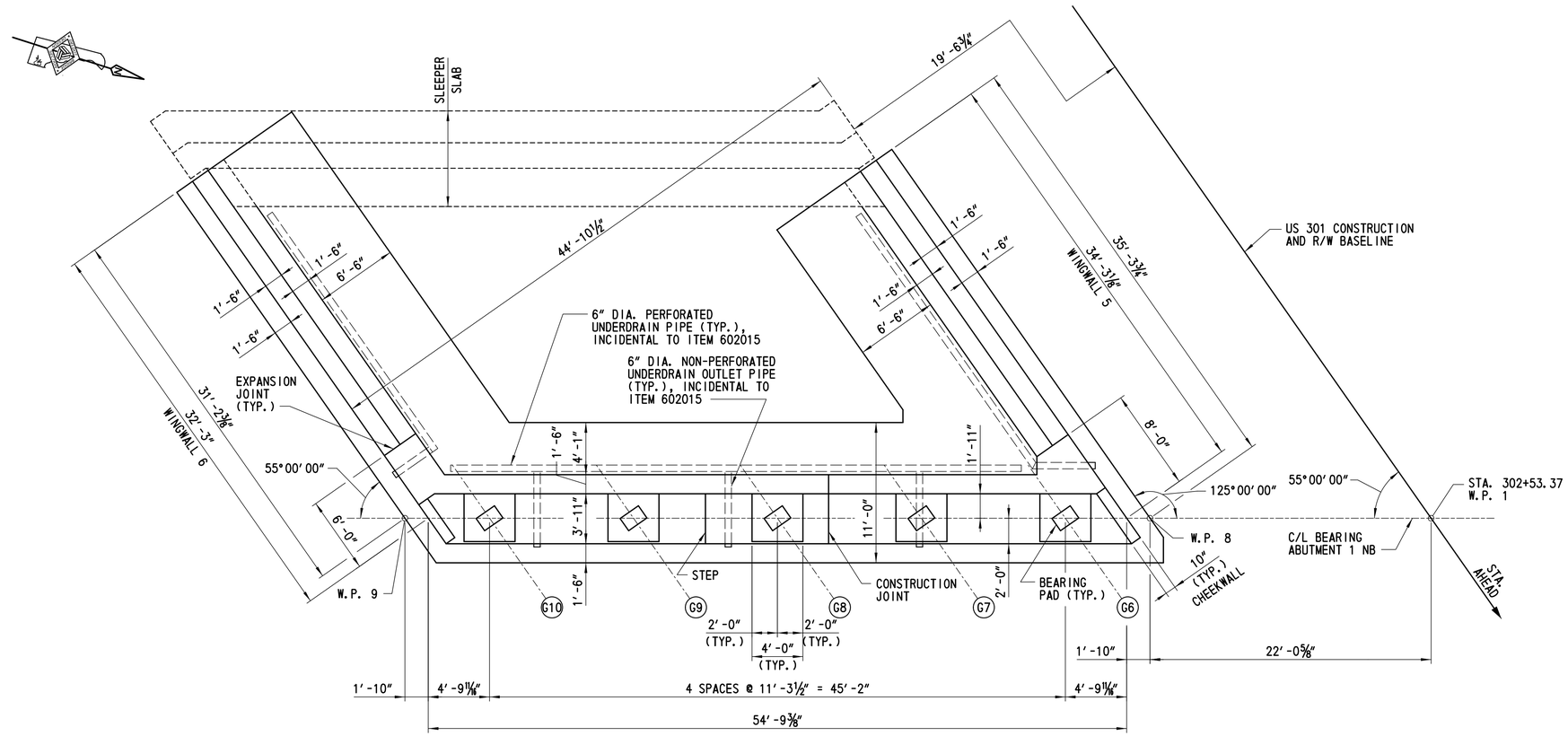

PLAN

SCALE: 3/16" = 1'-0"

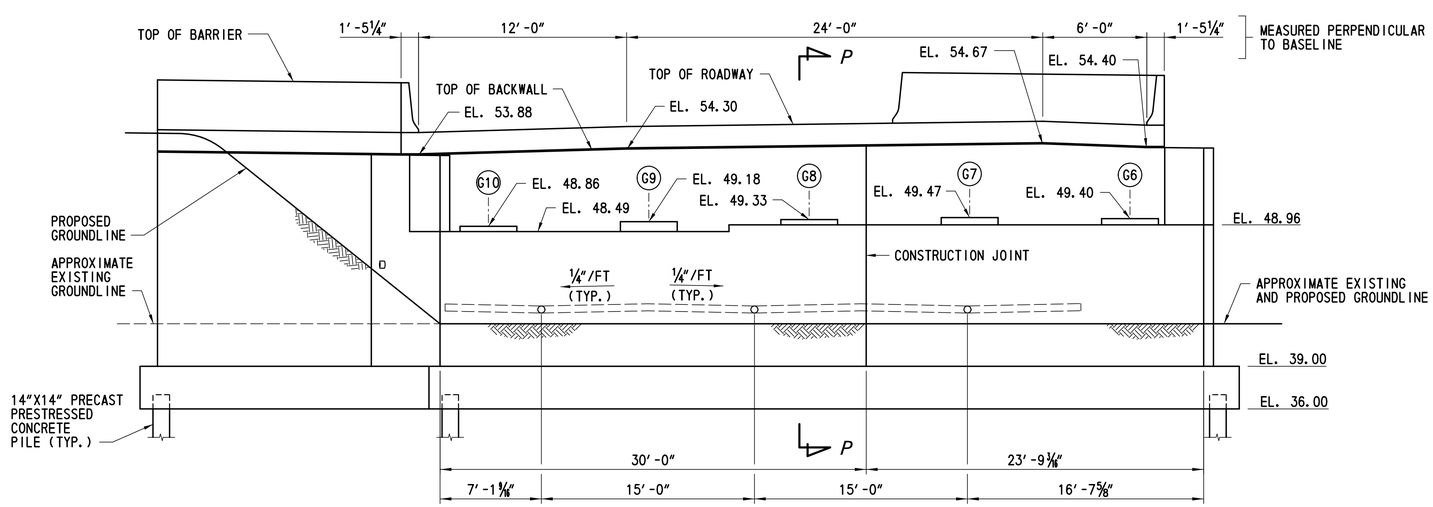

ELEVATION

SCALE: 3/16" = 1'-0"

NOTES:

1. TOP OF ABUTMENT SEAT ELEVATIONS SHOWN ARE AT THE FRONT FACE OF BACKWALL.
2. TOP OF BACKWALL ELEVATIONS SHOWN AT CENTER OF BACKWALL.
3. ABUTMENT SEAT STEPS LOCATED MID-WAY BETWEEN GIRDERS.

CROSS REFERENCE NOTES:

1. FOR GENERAL PLAN AND ELEVATION, SEE DWG. NO. 1-480 PE-2.
2. FOR GEOMETRIC LAYOUT, SEE DWG. NO. 1-480 FT-1.
3. FOR ABUTMENT 1 NB PILE PLAN, SEE DWG. NO. 1-480 FT-4.
4. FOR SECTION P-P, SEE DWG. NO. 1-480 AB-11.
5. FOR ABUTMENT 1 NB DETAILS, SEE DWG. NOS. 1-480 AB-11 AND 1-480 AB-12.
6. FOR WINGWALL ELEVATIONS, SEE DWG. NO. 1-480 WW-4.
7. FOR BEARING DETAILS, SEE DWG. NO. 1-480 BD-1.
8. FOR CONSTRUCTION JOINT DETAIL, SEE DWG. NO. 1-480 AB-1.
9. FOR STEM EXPANSION JOINT DETAIL, SEE DWG. NO. 1-480 AB-8.

DELAWARE DEPARTMENT OF TRANSPORTATION	ADDENDUMS / REVISIONS	SCALE 0 2 8 / 1 4 FEET	US 301 LEVELS ROAD TO SUMMIT BRIDGE ROAD	CONTRACT T200911303	BRIDGE NO. 1-480N&S	US 301 MAINLINE OVER SANDY BRANCH ABUTMENT 1 NB PLAN AND ELEVATION	1-480 AB-9
				COUNTY NEW CASTLE	DESIGNED BY: LT		SHEET NO. 585
					CHECKED BY: JW		TOTAL SHTS. 1256

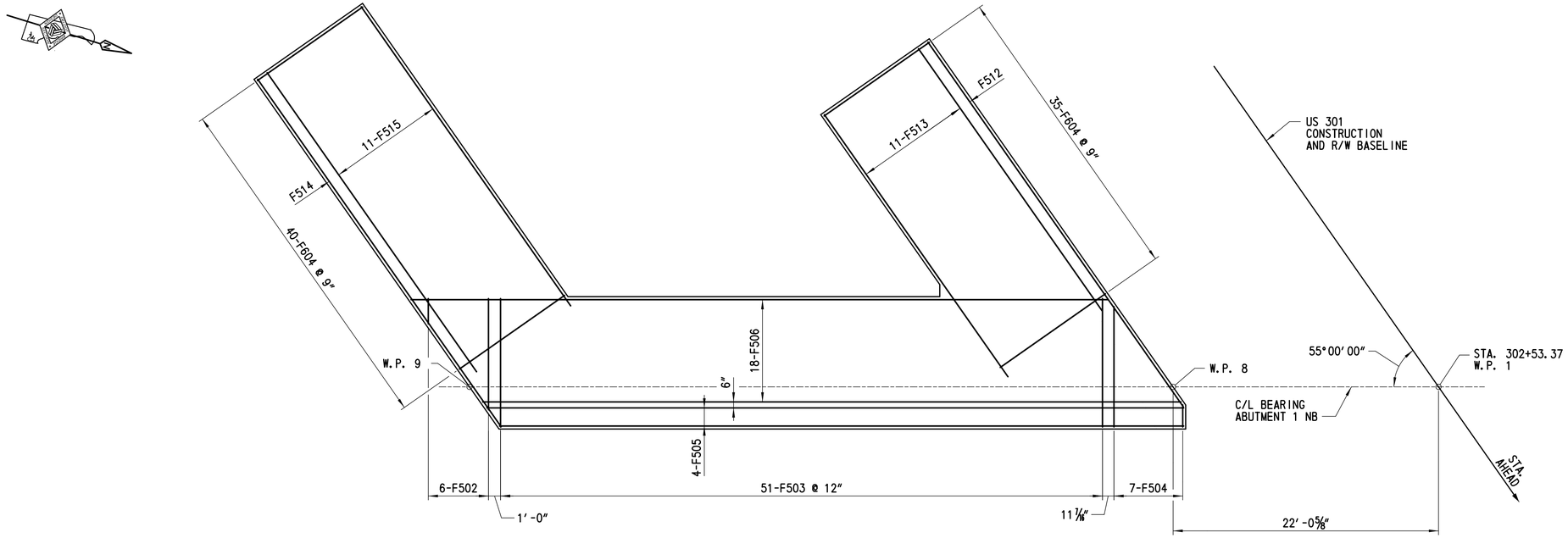

ABUTMENT 1 NB - TOP MAT REINFORCEMENT PLAN

SCALE: 3/16" = 1'-0"

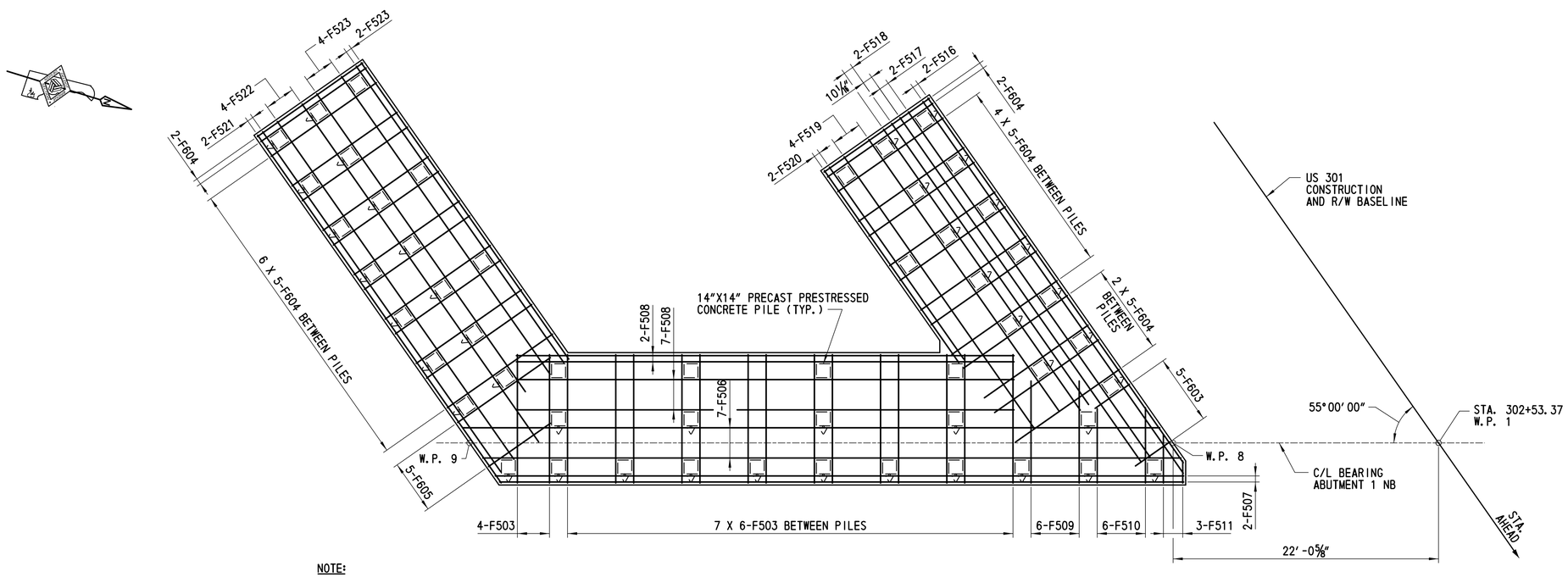

NOTE:

ALL REINFORCEMENT SHALL BE
2" MIN. CLEAR FROM PILES.

ABUTMENT 1 NB - BOTTOM MAT REINFORCEMENT PLAN

SCALE: 3/16" = 1'-0"

CROSS REFERENCE NOTES:

1. FOR ABUTMENT 1 NB PILE PLAN, SEE DWG. NO. 1-480 FT-4.
2. FOR ABUTMENT 1 NB PLAN AND ELEVATION, SEE DWG. NO. 1-480 AB-9.
3. FOR REINFORCING BAR SCHEDULE, SEE DWG. NO. 1-480 BR-3.
4. FOR WORKING POINT COORDINATES, SEE DWG. NO. 1-480 FT-1.

DELAWARE DEPARTMENT OF TRANSPORTATION	ADDENDUMS / REVISIONS	SCALE 0 2 8 / 1 4 FEET	US 301 LEVELS ROAD TO SUMMIT BRIDGE ROAD	CONTRACT T200911303	BRIDGE NO. 1-480N&S	US 301 MAINLINE OVER SANDY BRANCH ABUTMENT 1 NB FOOTING REINFORCEMENT PLAN	1-480 AB-10
				COUNTY NEW CASTLE	DESIGNED BY: LT		SHEET NO. 586
					CHECKED BY: JW		TOTAL SHTS. 1256

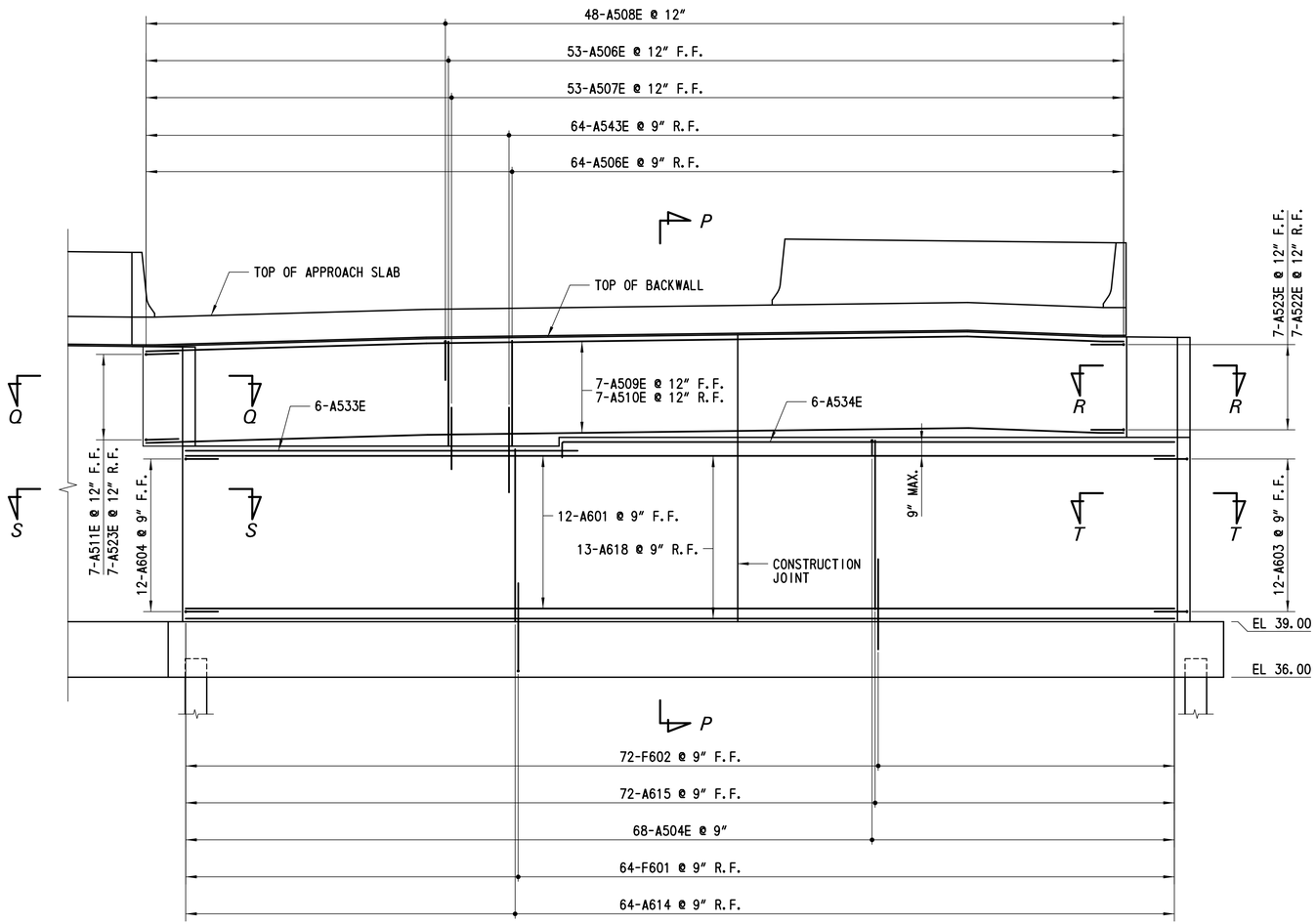

ELEVATION - ABUTMENT 1 NB REINFORCEMENT

SCALE: 1/4" = 1'-0"

NOTE:

PEDESTALS AND PEDESTAL REINFORCEMENT NOT SHOWN FOR CLARITY.

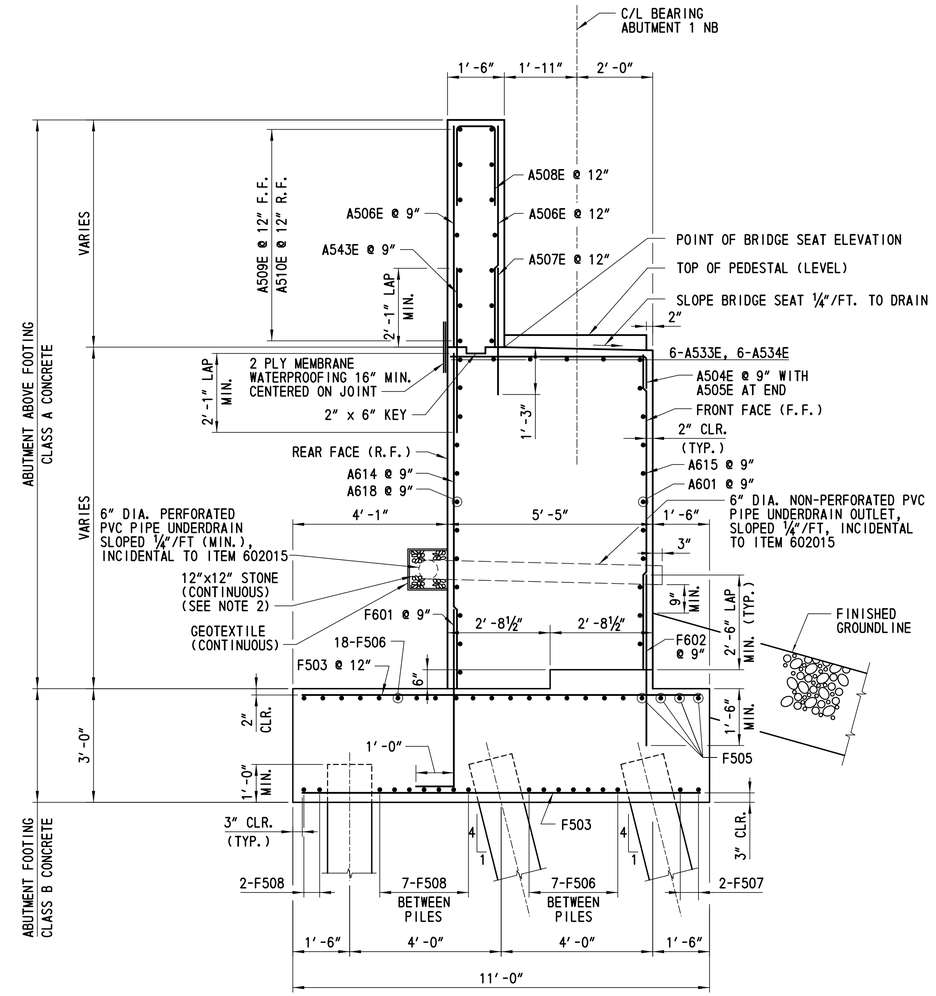

SECTION P-P

SCALE: 1/2" = 1'-0"

NOTES:

1. APPROACH SLAB NOT SHOWN FOR CLARITY.
2. STONE SHALL BE DELAWARE NO. 57 CONFORMING TO THE REQUIREMENTS OF SECTION 813.
3. THE WATERPROOFING MEMBRANE SHALL BE INCIDENTAL TO ITEM NO. 602015.

CROSS REFERENCE NOTES:

1. FOR ABUTMENT 1 NB PILE PLAN, SEE DWG. NO. 1-480 FT-4.
2. FOR ABUTMENT 1 NB PLAN AND ELEVATION, SEE DWG. NO. 1-480 AB-9.
3. FOR ABUTMENT 1 FOOTING REINFORCEMENT, SEE DWG. NO. 1-480 AB-10.
4. FOR SECTIONS Q-Q, R-R, S-S AND T-T, SEE DWG. NO. 1-480 AB-12.
5. FOR PEDESTAL REINFORCEMENT DETAIL, SEE DWG. NO. 1-480 AB-4.
6. FOR REINFORCING BAR SCHEDULE, SEE DWG. NO. 1-480 BR-3.

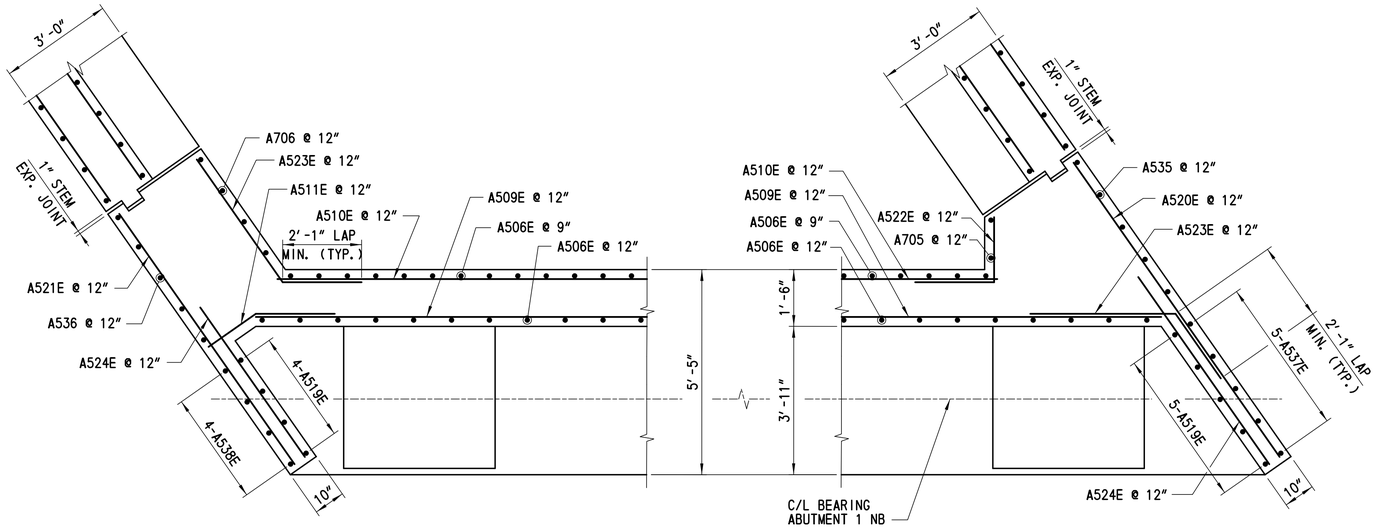

SECTION Q-Q

SCALE: ½"= 1'-0"

SECTION R-R

SCALE: ½"= 1'-0"

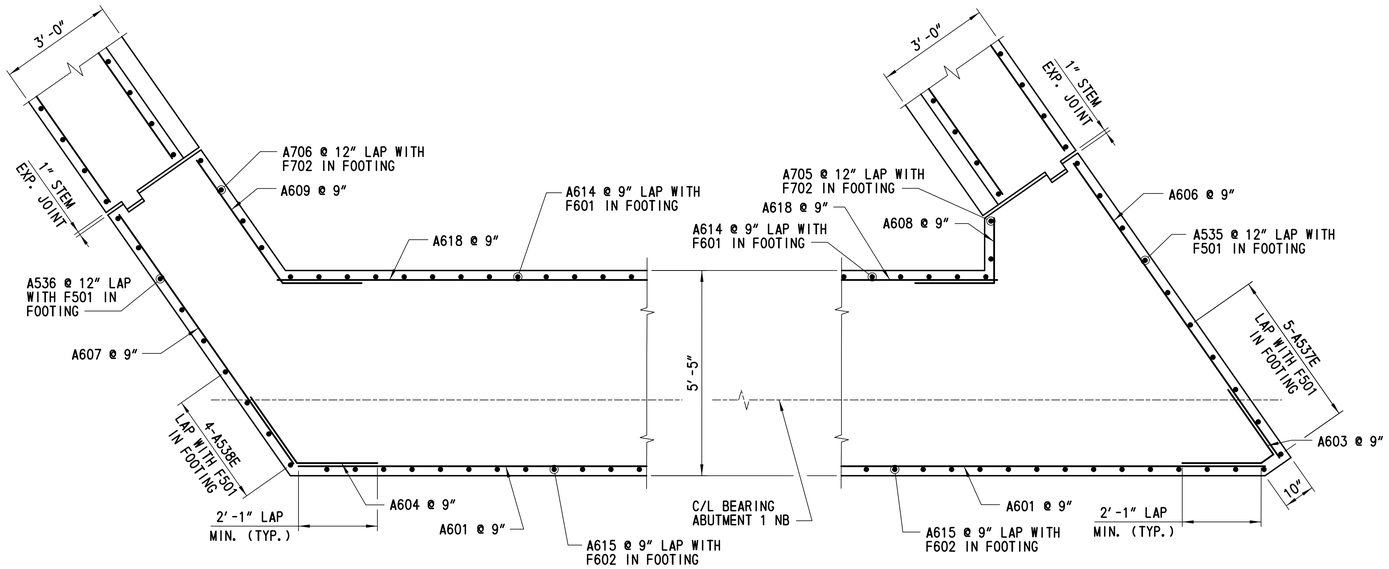

SECTION S-S

SCALE: ½"= 1'-0"

SECTION T-T

SCALE: ½"= 1'-0"

CROSS REFERENCE NOTES:

1. FOR ABUTMENT 1 NB PLAN AND ELEVATION, SEE DWG. NO 1-480 AB-9.
2. FOR ABUTMENT 1 NB REINFORCEMENT, SEE DWG. NO. 1-480 AB-11.
3. FOR WINGWALL REINFORCEMENT, SEE DWG. NO. 1-480 WW-5.
4. FOR REINFORCING BAR SCHEDULE, SEE DWG. NO. 1-480 BR-3.
5. FOR STEM EXPANSION JOINT DETAIL, SEE DWG. NO. 1-480 AB-8.

DELAWARE DEPARTMENT OF TRANSPORTATION	ADDENDUMS / REVISIONS	SCALE 0 1 4 ½ 2 FEET	US 301 LEVELS ROAD TO SUMMIT BRIDGE ROAD	CONTRACT T200911303	BRIDGE NO. 1-480N&S	US 301 MAINLINE OVER SANDY BRANCH ABUTMENT 1 NB REINFORCEMENT DETAILS 2	1-480 AB-12
				COUNTY NEW CASTLE	DESIGNED BY: LT		SHEET NO. 588
					CHECKED BY: JW		TOTAL SHTS. 1256

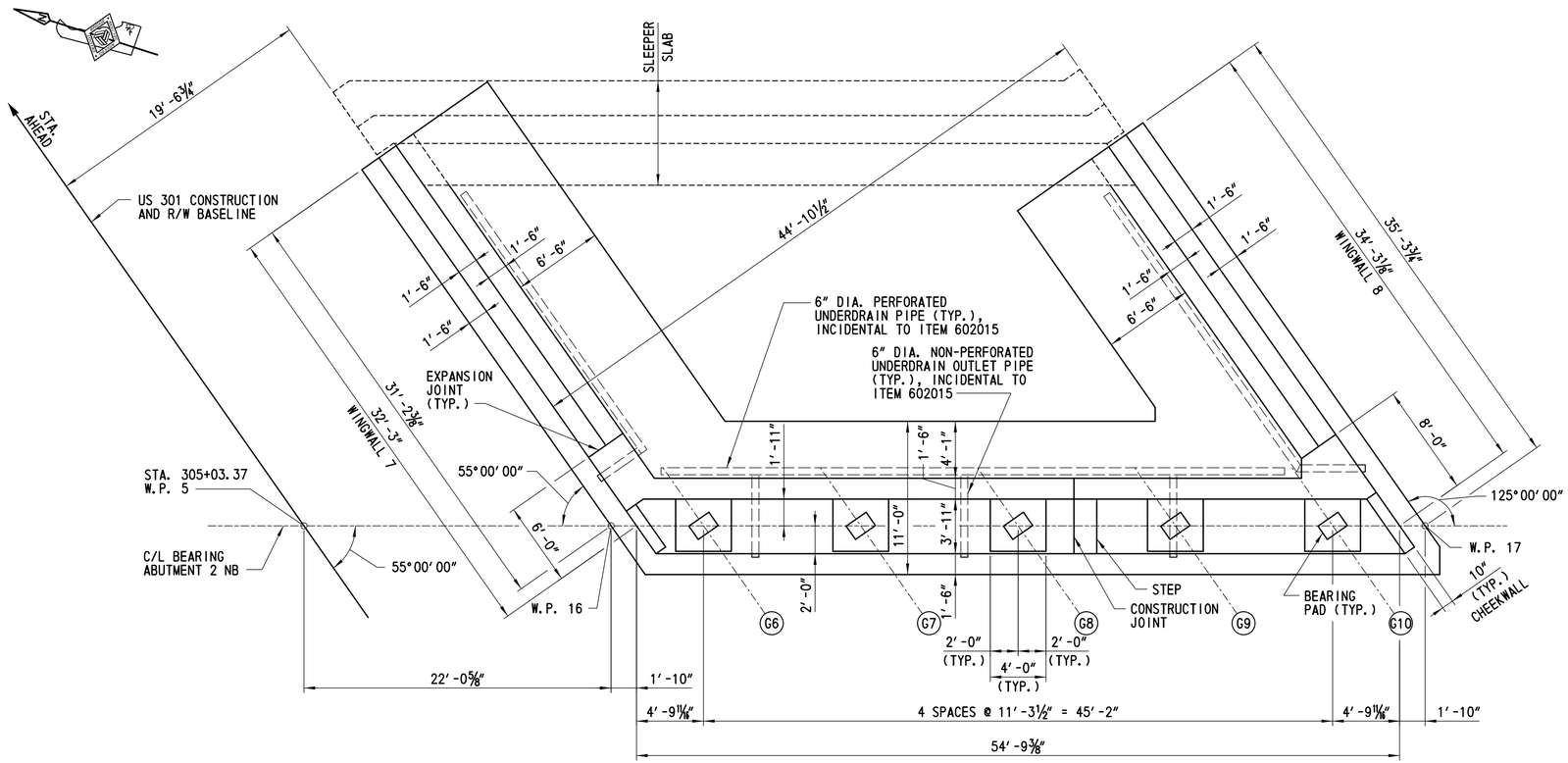

PLAN

SCALE: ³⁄₁₆″ = 1′-0″

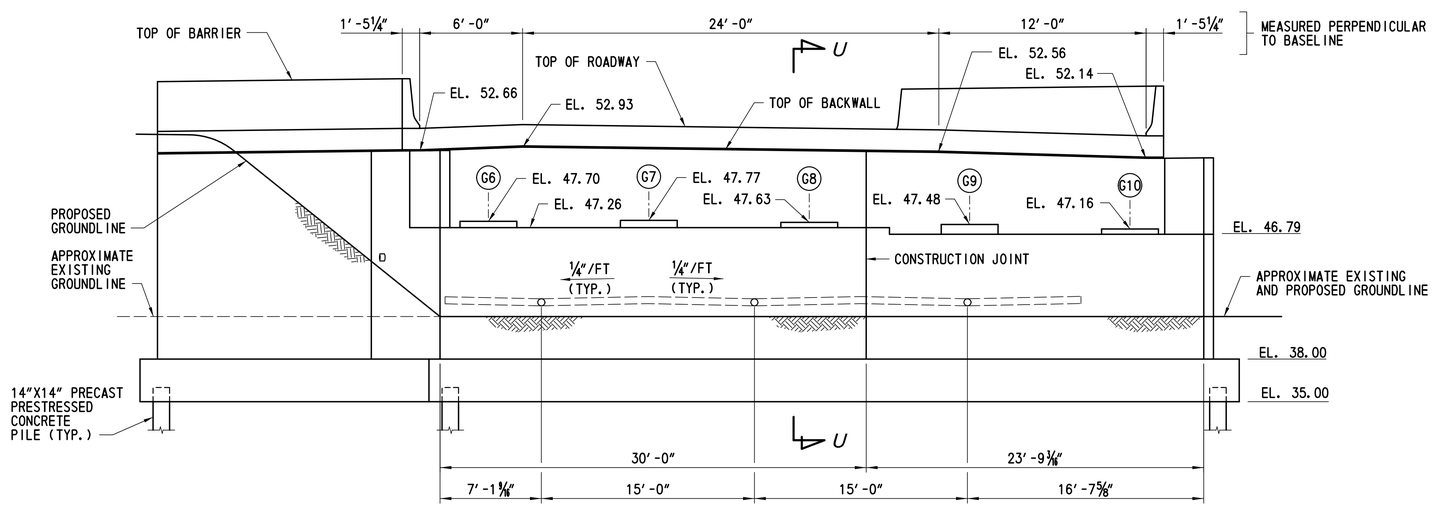

ELEVATION

SCALE: ³⁄₁₆″ = 1′-0″

NOTES:

1. TOP OF ABUTMENT SEAT ELEVATIONS SHOWN ARE AT THE FRONT FACE OF BACKWALL.
2. TOP OF BACKWALL ELEVATIONS SHOWN AT CENTER OF BACKWALL.
3. ABUTMENT SEAT STEPS LOCATED MID-WAY BETWEEN GIRDERS.

CROSS REFERENCE NOTES:

1. FOR GENERAL PLAN AND ELEVATION, SEE DWG. NO. 1-480 PE-2.
2. FOR GEOMETRIC LAYOUT, SEE DWG. NO. 1-480 FT-1.
3. FOR ABUTMENT 2 NB PILE PLAN, SEE DWG. NO. 1-480 FT-5.
4. FOR SECTION U-U, SEE DWG. NO. 1-480 AB-15.
5. FOR ABUTMENT 2 NB DETAILS, SEE DWG. NOS. 1-480 AB-15 AND 1-480 AB-16.
6. FOR WINGWALL ELEVATIONS, SEE DWG. NO. 1-480 WW-4.
7. FOR BEARING DETAILS, SEE DWG. NO. 1-480 BD-1.
8. FOR CONSTRUCTION JOINT DETAIL, SEE DWG. NO. 1-480 AB-1.
9. FOR STEM EXPANSION JOINT DETAIL, SEE DWG. NO. 1-480 AB-8.

DELAWARE DEPARTMENT OF TRANSPORTATION	ADDENDUMS / REVISIONS	SCALE 0 2 8 / 1 4 FEET	US 301 LEVELS ROAD TO SUMMIT BRIDGE ROAD	CONTRACT T200911303	BRIDGE NO. 1-480N&S	US 301 MAINLINE OVER SANDY BRANCH ABUTMENT 2 NB PLAN AND ELEVATION	1-480 AB-13
				COUNTY NEW CASTLE	DESIGNED BY: LT		SHEET NO. 589
					CHECKED BY: JW		TOTAL SHTS. 1256

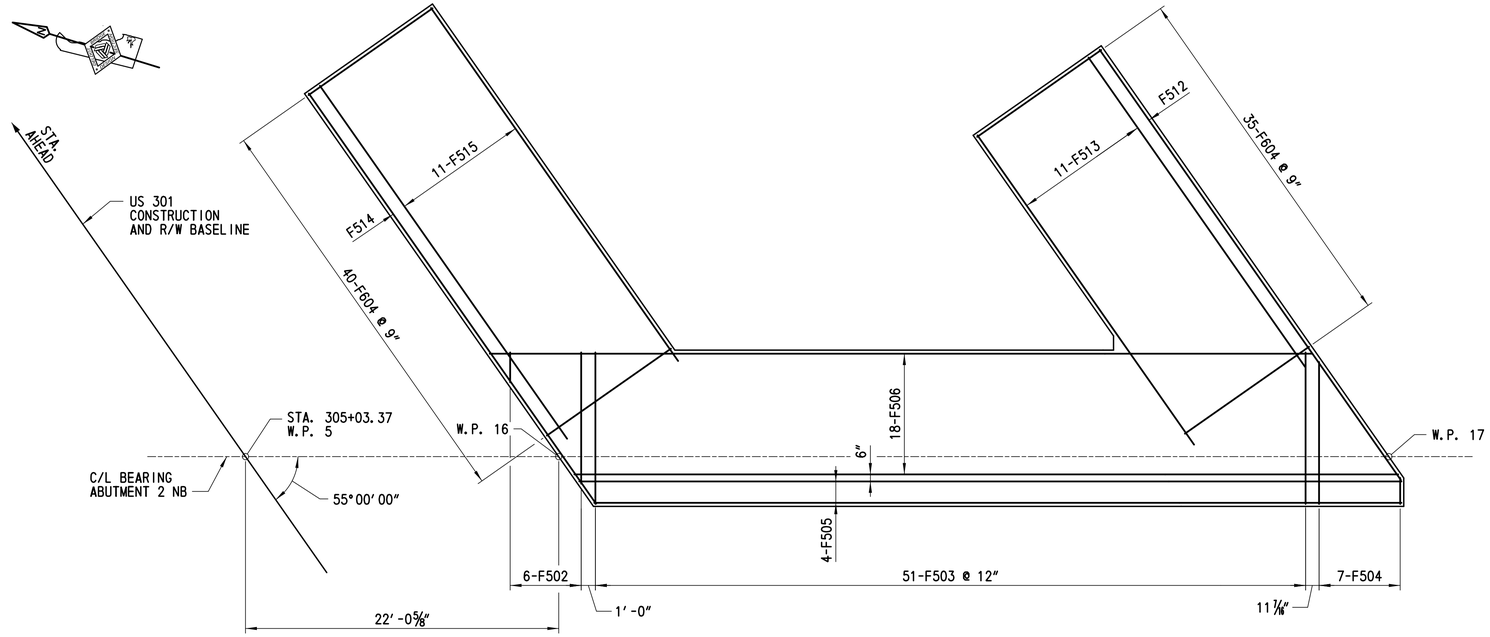

ABUTMENT 2 NB - TOP MAT REINFORCEMENT PLAN

SCALE: 3/16" = 1'-0"

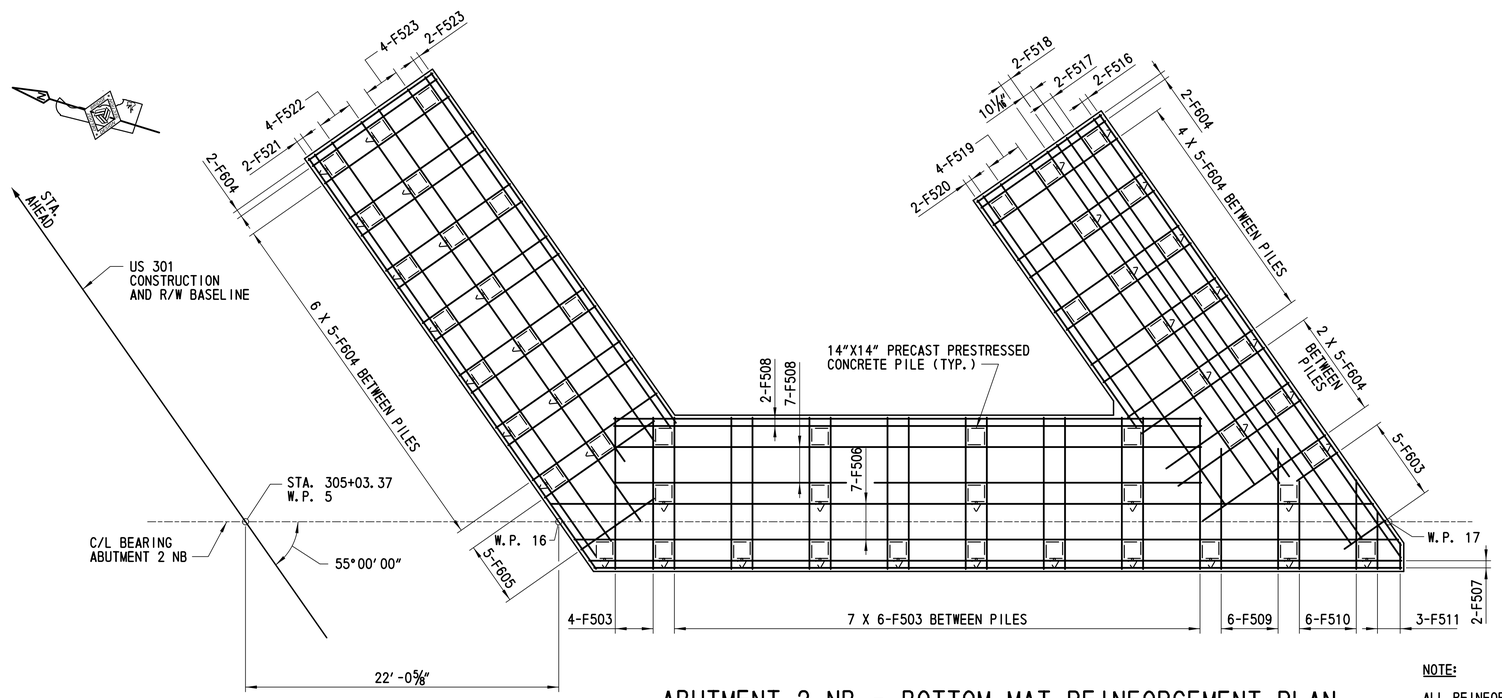

ABUTMENT 2 NB - BOTTOM MAT REINFORCEMENT PLAN

SCALE: 3/16" = 1'-0"

NOTE:

ALL REINFORCEMENT SHALL BE 2" MIN. CLEAR FROM PILES.

CROSS REFERENCE NOTES:

1. FOR ABUTMENT 2 NB PILE PLAN, SEE DWG. NO. 1-480 FT-5.
2. FOR ABUTMENT 2 NB PLAN AND ELEVATION, SEE DWG. NO. 1-480 AB-13.
3. FOR REINFORCING BAR SCHEDULE, SEE DWG. NO. 1-480 BR-4.
4. FOR WORKING POINT COORDINATES, SEE DWG. NO. 1-480 FT-1.

DELAWARE DEPARTMENT OF TRANSPORTATION	ADDENDUMS / REVISIONS	SCALE 0 2 8 / 1 4 FEET	US 301 LEVELS ROAD TO SUMMIT BRIDGE ROAD	CONTRACT T200911303	BRIDGE NO. 1-480N&S	US 301 MAINLINE OVER SANDY BRANCH ABUTMENT 2 NB FOOTING REINFORCEMENT PLAN	1-480 AB-14
				COUNTY NEW CASTLE	DESIGNED BY: LT		SHEET NO. 590
					CHECKED BY: JW		TOTAL SHTS. 1256

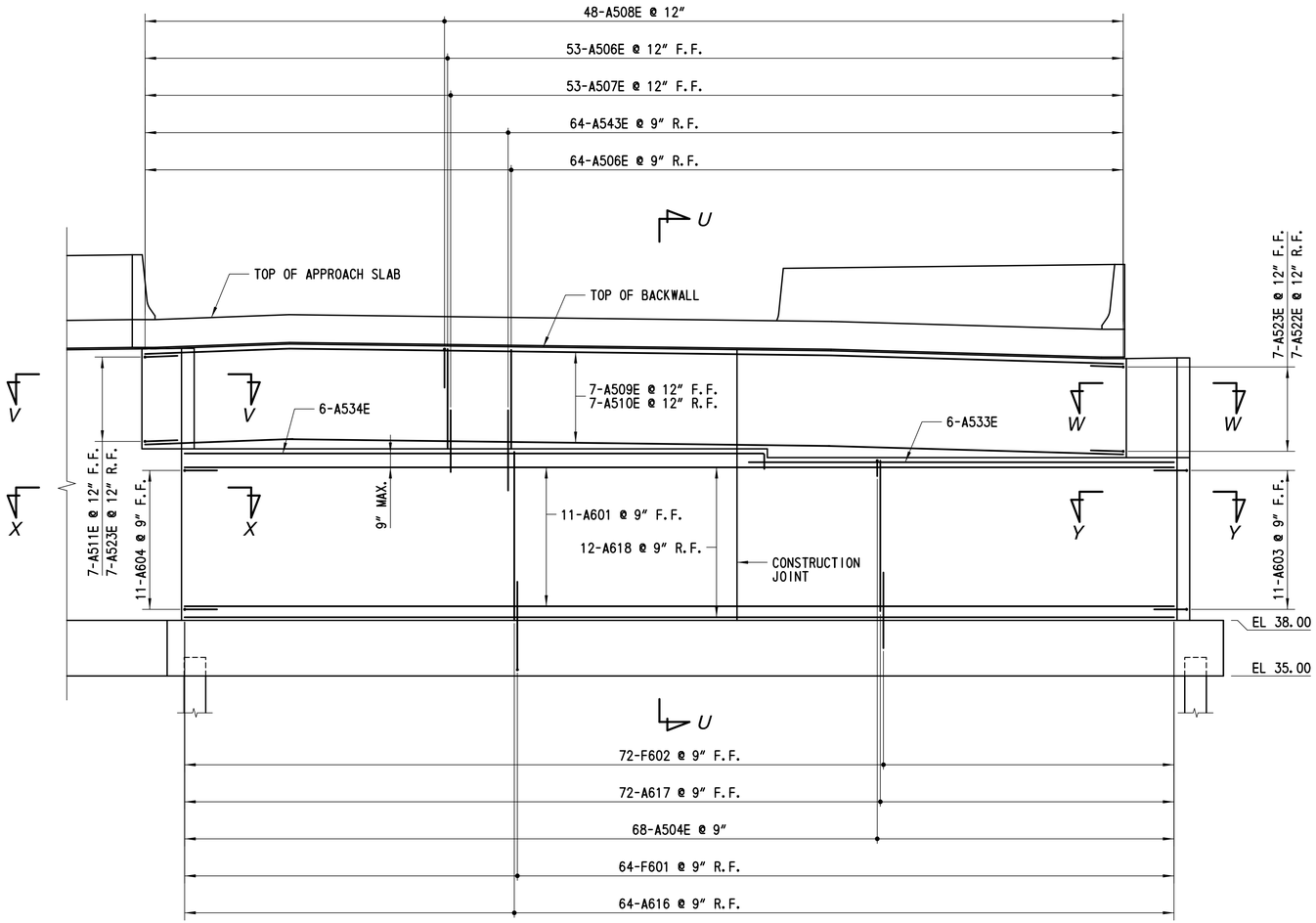

ELEVATION - ABUTMENT 2 NB REINFORCEMENT

SCALE: ¼" = 1'-0"

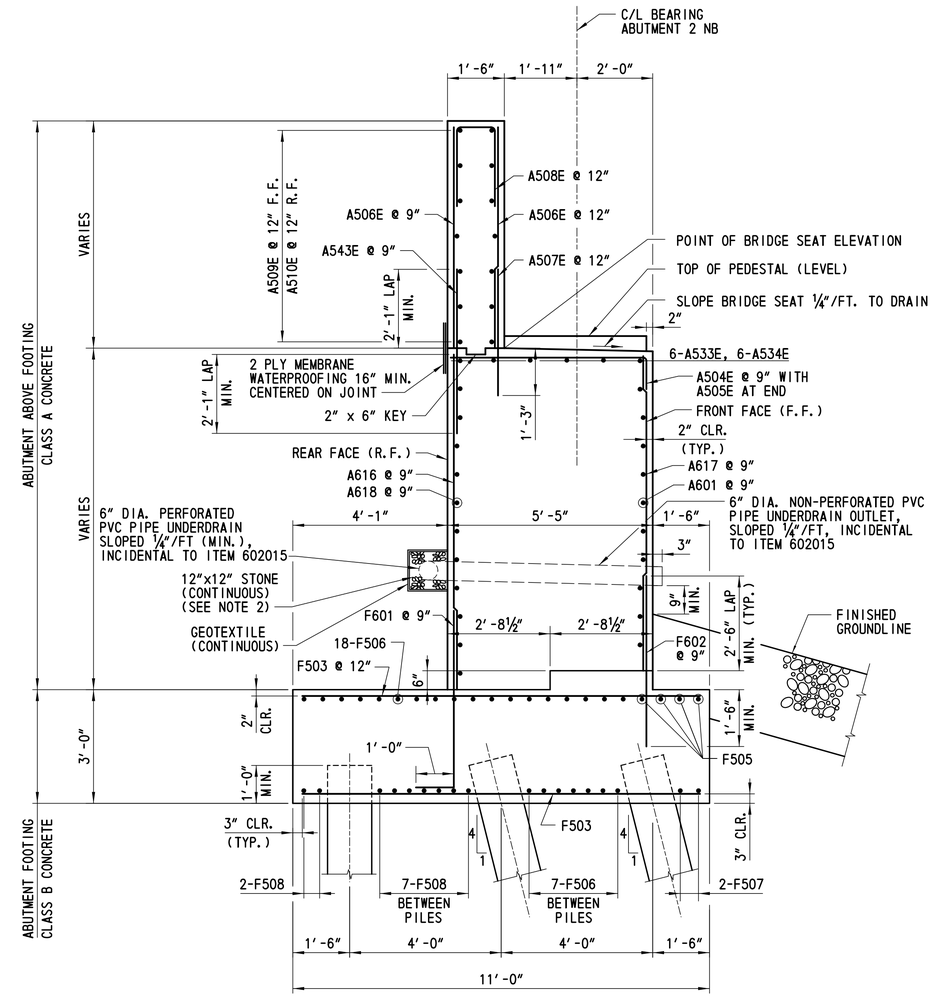

SECTION U-U

SCALE: ½" = 1'-0"

NOTES:

1. APPROACH SLAB NOT SHOWN FOR CLARITY.
2. STONE SHALL BE DELAWARE NO. 57 CONFORMING TO THE REQUIREMENTS OF SECTION 813.
3. THE WATERPROOFING MEMBRANE SHALL BE INCIDENTAL TO ITEM NO. 602015.

NOTE:

PEDESTALS AND PEDESTAL REINFORCEMENT NOT SHOWN FOR CLARITY.

CROSS REFERENCE NOTES:

1. FOR ABUTMENT 2 NB PILE PLAN, SEE DWG. NO. 1-480 FT-5.
2. FOR ABUTMENT 2 NB PLAN AND ELEVATION, SEE DWG. NO. 1-480 AB-13.
3. FOR ABUTMENT 2 NB FOOTING REINFORCEMENT, SEE DWG. NO. 1-480 AB-14.
4. FOR SECTIONS V-V, W-W, X-X AND Y-Y, SEE DWG. NO. 1-480 AB-16.
5. FOR PEDESTAL REINFORCEMENT DETAIL, SEE DWG. NO. 1-480 AB-4.
6. FOR REINFORCING BAR SCHEDULE, SEE DWG. NO. 1-480 BR-4.

DELAWARE DEPARTMENT OF TRANSPORTATION	ADDENDUMS / REVISIONS	US 301 LEVELS ROAD TO SUMMIT BRIDGE ROAD	CONTRACT T200911303	BRIDGE NO. 1-480N&S	US 301 MAINLINE OVER SANDY BRANCH ABUTMENT 2 NB REINFORCEMENT DETAILS 1	1-480 AB-15
			COUNTY NEW CASTLE	DESIGNED BY: LT		SHEET NO. 591
				CHECKED BY: JW		TOTAL SHTS. 1256

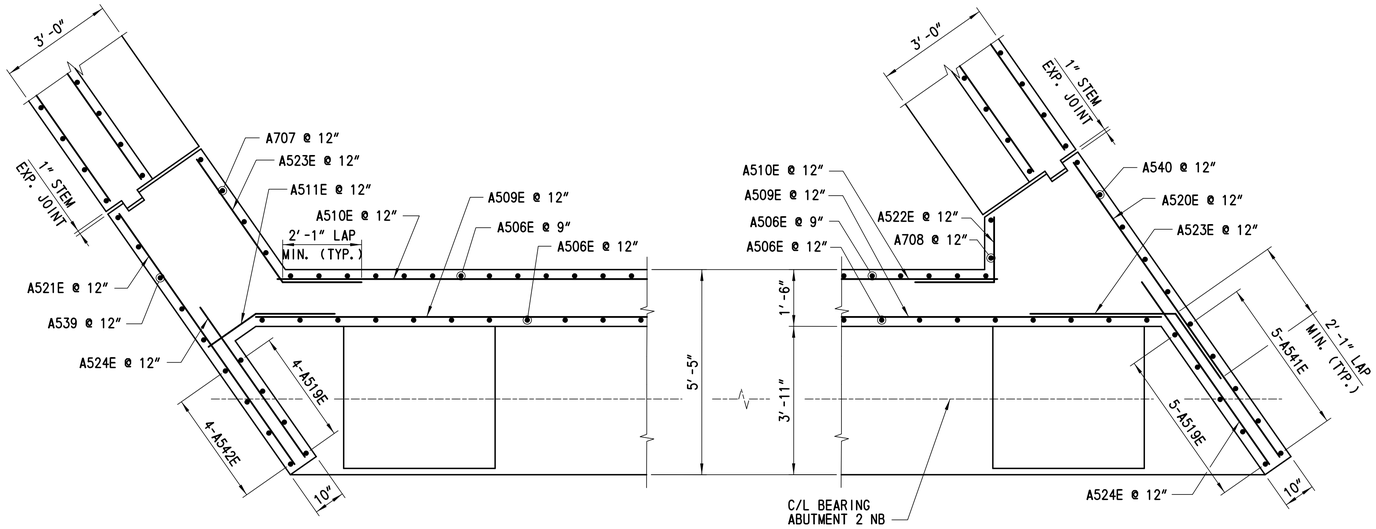

SECTION V-V

SCALE: ½"= 1'-0"

SECTION W-W

SCALE: ½"= 1'-0"

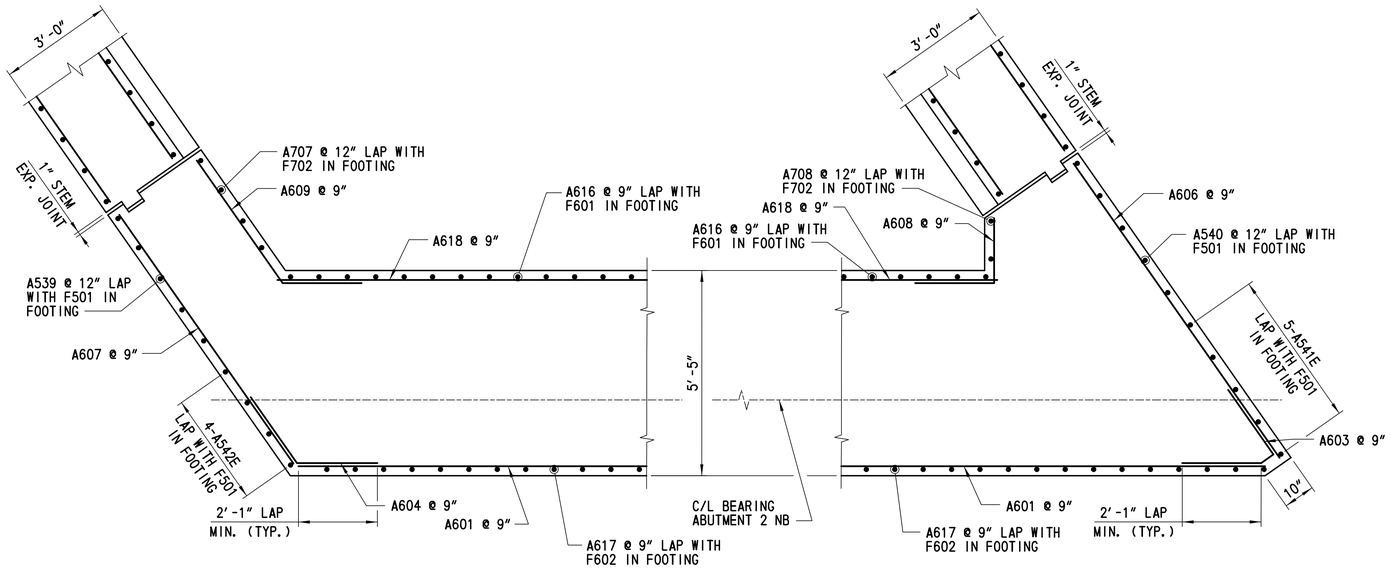

SECTION X-X

SCALE: ½"= 1'-0"

SECTION Y-Y

SCALE: ½"= 1'-0"

CROSS REFERENCE NOTES:

1. FOR ABUTMENT 2 NB PLAN AND ELEVATION, SEE DWG. NO 1-480 AB-13.
2. FOR ABUTMENT 2 NB REINFORCEMENT, SEE DWG. NO. 1-480 AB-15.
3. FOR WINGWALL REINFORCEMENT, SEE DWG. NO. 1-480 WW-6.
4. FOR REINFORCING BAR SCHEDULE, SEE DWG. NO. 1-480 BR-4.
5. FOR STEM EXPANSION JOINT DETAIL, SEE DWG. NO. 1-480 AB-8.

DELAWARE DEPARTMENT OF TRANSPORTATION	ADDENDUMS / REVISIONS	SCALE 0 1 4 ½ 2 FEET	US 301 LEVELS ROAD TO SUMMIT BRIDGE ROAD	CONTRACT T200911303	BRIDGE NO. 1-480N&S	US 301 MAINLINE OVER SANDY BRANCH ABUTMENT 2 NB REINFORCEMENT DETAILS 2	1-480 AB-16
				COUNTY NEW CASTLE	DESIGNED BY: LT		SHEET NO. 592
					CHECKED BY: JW		TOTAL SHTS. 1256

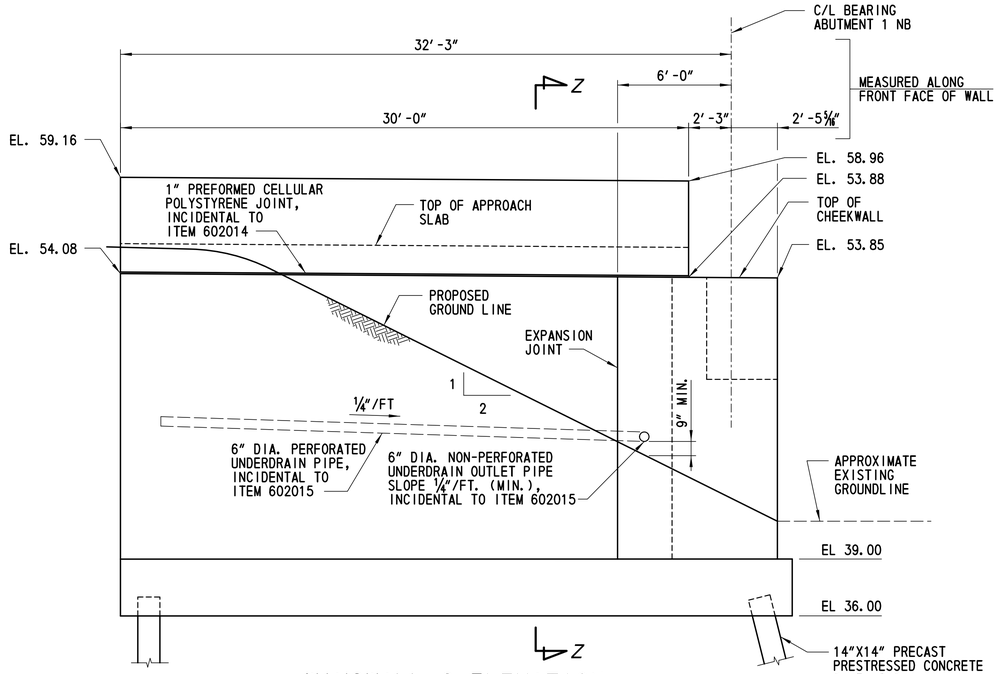

WINGWALL 6 ELEVATION

SCALE: 1/4″ = 1′-0″

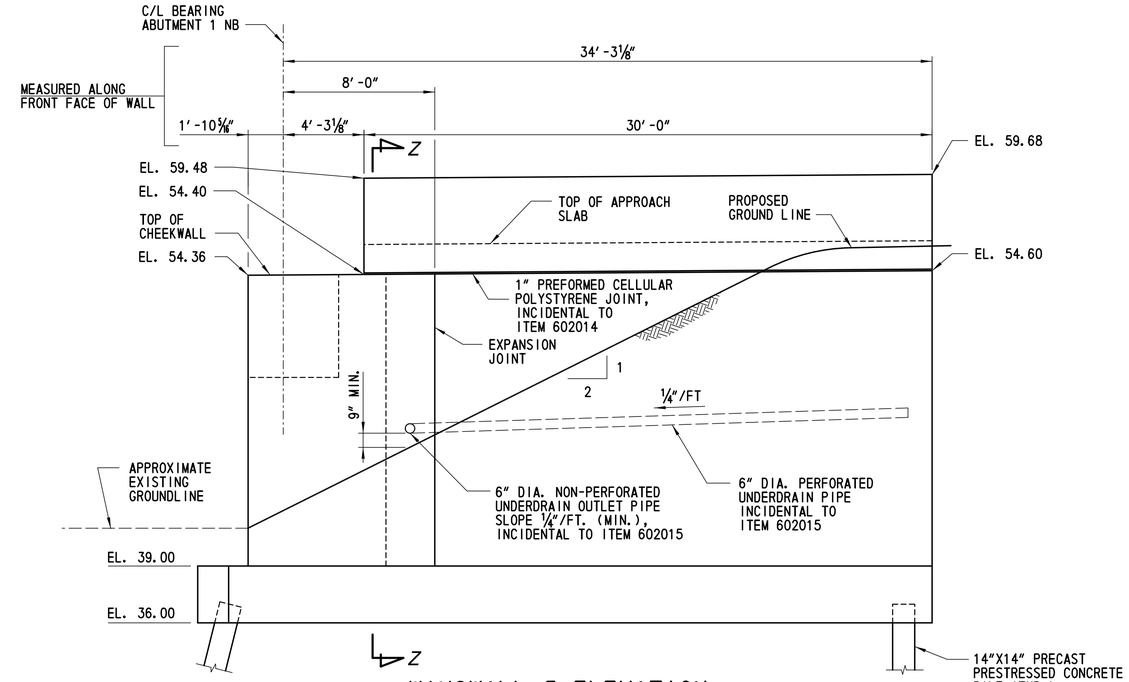

WINGWALL 5 ELEVATION

SCALE: 1/4″ = 1′-0″

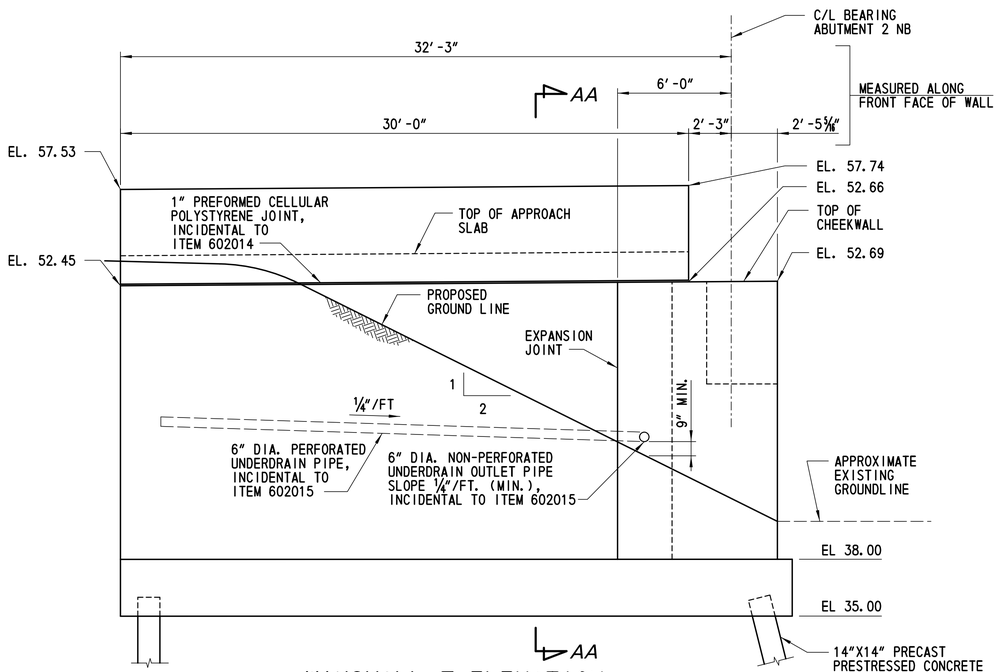

WINGWALL 7 ELEVATION

SCALE: 1/4″ = 1′-0″

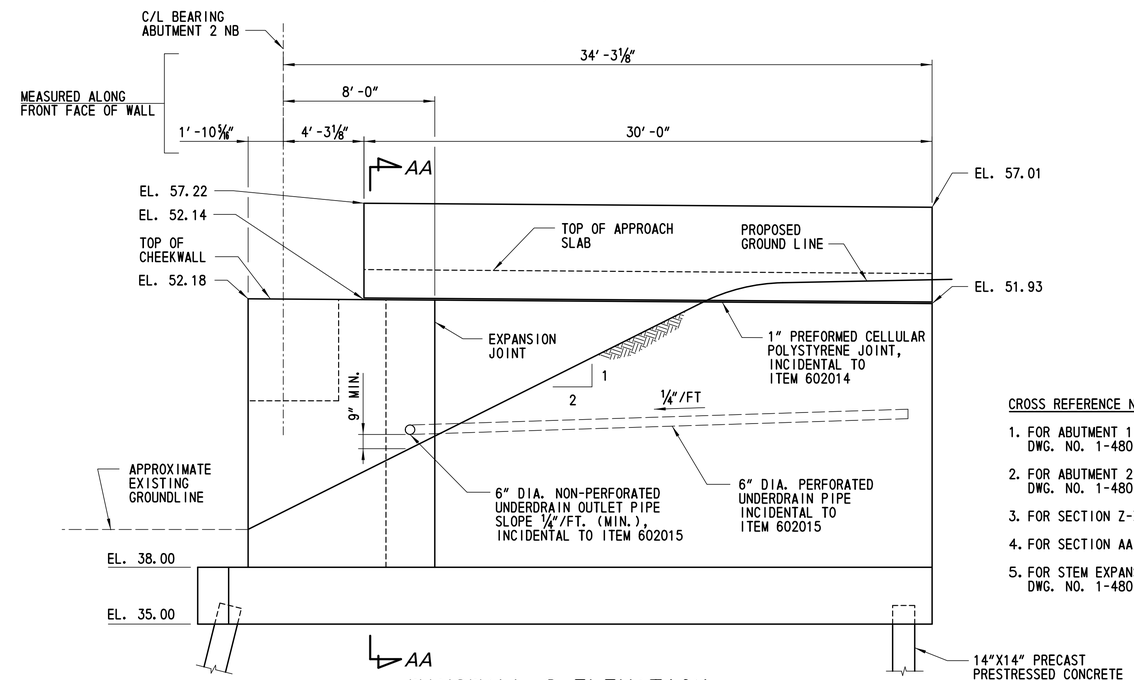

WINGWALL 8 ELEVATION

SCALE: 1/4″ = 1′-0″

CROSS REFERENCE NOTES:

1. FOR ABUTMENT 1 NB PLAN AND ELEVATION, SEE DWG. NO. 1-480 AB-9.
2. FOR ABUTMENT 2 NB PLAN AND ELEVATION, SEE DWG. NO. 1-480 AB-13.
3. FOR SECTION Z-Z, SEE DWG. NO. 1-480 WW-5.
4. FOR SECTION AA-AA, SEE DWG. NO. 1-480 WW-6.
5. FOR STEM EXPANSION JOINT DETAIL, SEE DWG. NO. 1-480 AB-8.

DELAWARE DEPARTMENT OF TRANSPORTATION	ADDENDUMS / REVISIONS	SCALE 0 2 8 / 1 4 FEET	US 301 LEVELS ROAD TO SUMMIT BRIDGE ROAD	CONTRACT T200911303	BRIDGE NO. 1-480N&S	US 301 MAINLINE OVER SANDY BRANCH WINGWALL ELEVATIONS (5-8)	1-480 WW-4
				COUNTY NEW CASTLE	DESIGNED BY: KW		SHEET NO. 593
					CHECKED BY: JW		TOTAL SHTS. 1256

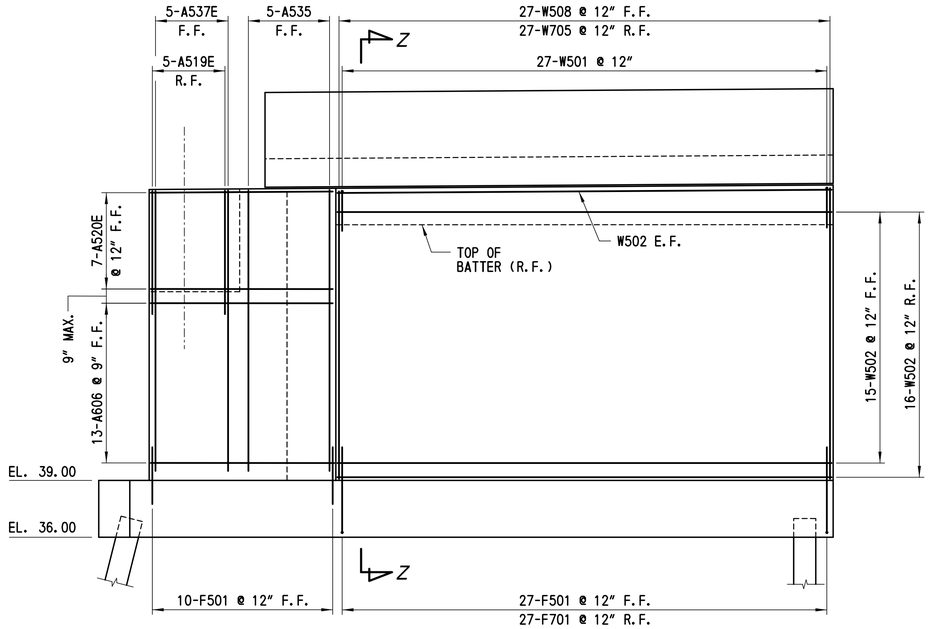

WINGWALL 5 ELEVATION

SCALE: ¼" = 1'-0"

NOTE:

FOR ADDITIONAL ABUTMENT REINFORCEMENT, NOT SHOWN FOR CLARITY, SEE DWG. NO. 1-480 AB-12.

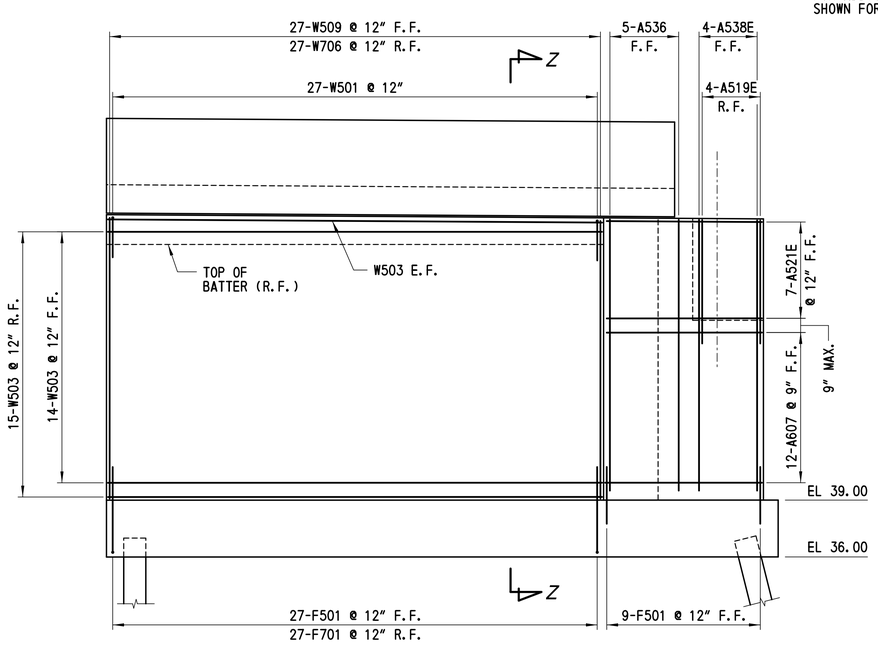

WINGWALL 6 ELEVATION

SCALE: ¼" = 1'-0"

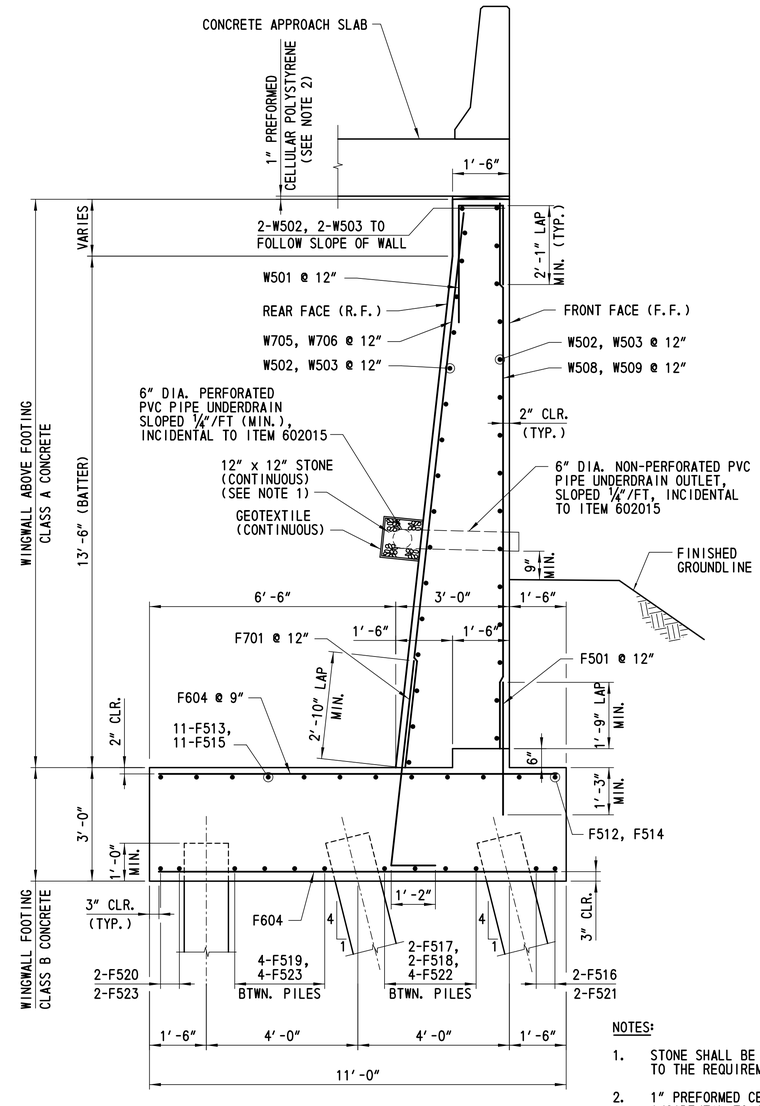

SECTION Z-Z

SCALE: ½" = 1'-0"

NOTES:

1. STONE SHALL BE DELAWARE NO. 57 CONFORMING TO THE REQUIREMENTS OF SECTION 813.
2. 1" PREFORMED CELLULAR POLYSTYRENE TO BE INCIDENTAL TO ITEM 602014.

CROSS REFERENCE NOTES:

1. FOR WINGWALL ELEVATIONS, SEE DWG. NO. 1-480 WW-4.
2. FOR FOOTING REINFORCEMENT, SEE DWG. NO. 1-480 AB-10.
3. FOR APPROACH SLAB REINFORCEMENT, SEE DWG. NO. 1-480 AS-2.
4. FOR REINFORCING BAR SCHEDULE, SEE DWG. NO. 1-480 BR-3.

DELAWARE DEPARTMENT OF TRANSPORTATION	ADDENDUMS / REVISIONS	US 301 LEVELS ROAD TO SUMMIT BRIDGE ROAD	CONTRACT T200911303	BRIDGE NO. 1-480N&S	US 301 MAINLINE OVER SANDY BRANCH	1-480 WW-5	
			COUNTY NEW CASTLE	DESIGNED BY: BCW	WINGWALL DETAILS 3	SHEET NO. 594	
				CHECKED BY: JW		TOTAL SHTS. 1256	

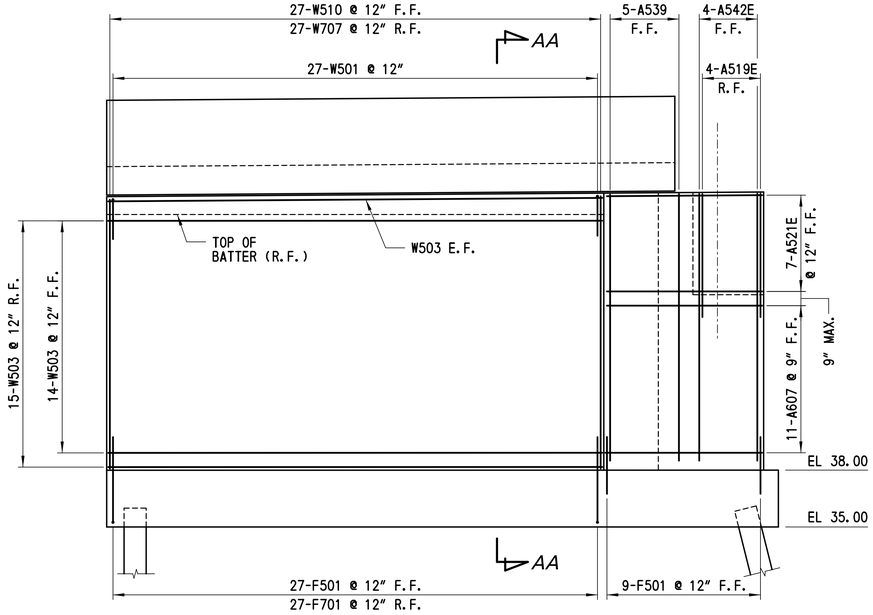

WINGWALL 7 ELEVATION

SCALE: ¼" = 1'-0"

NOTE:

FOR ADDITIONAL ABUTMENT REINFORCEMENT, NOT SHOWN FOR CLARITY, SEE DWG. NO. 1-480 AB-16.

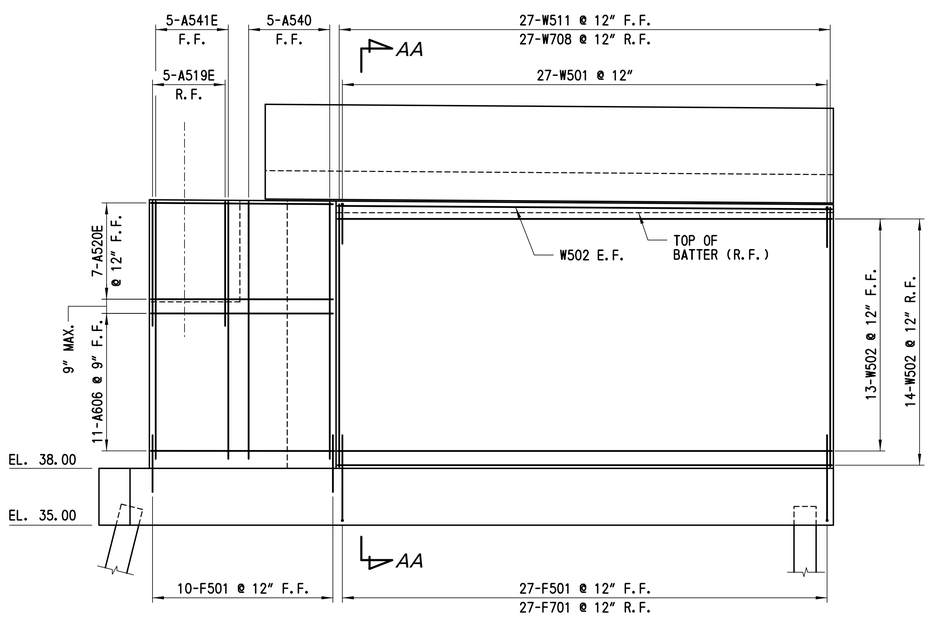

WINGWALL 8 ELEVATION

SCALE: ¼" = 1'-0"

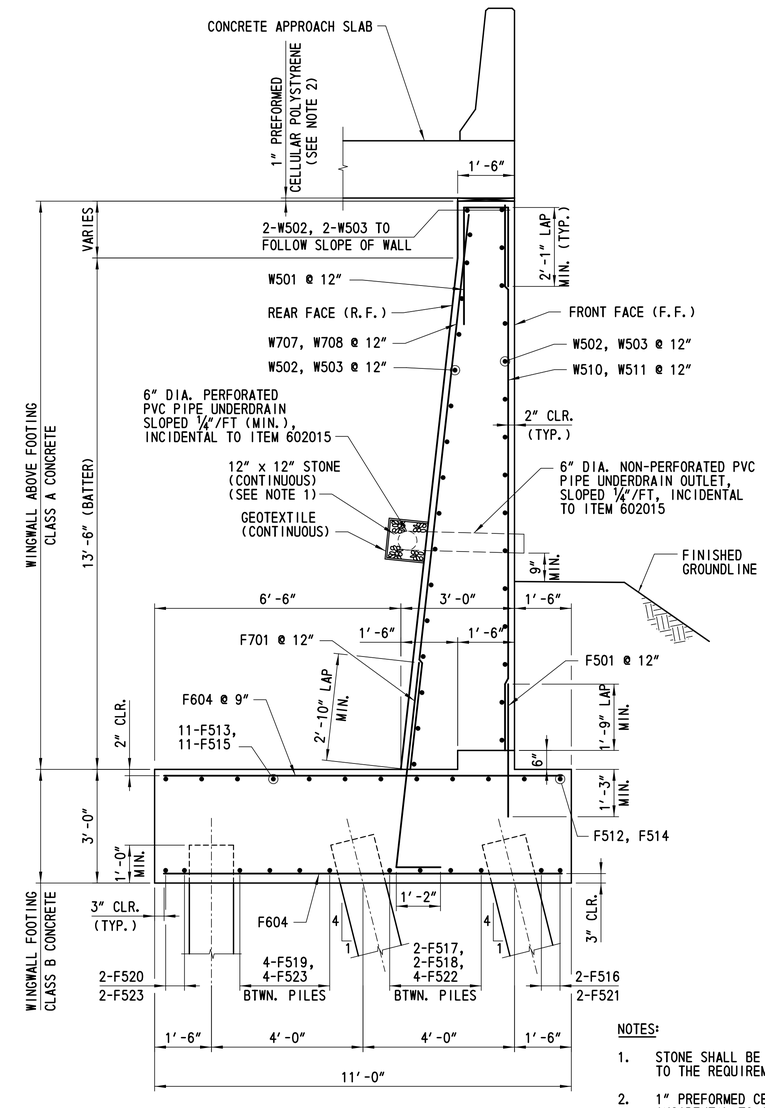

SECTION AA-AA

SCALE: ½" = 1'-0"

NOTES:

1. STONE SHALL BE DELAWARE NO. 57 CONFORMING TO THE REQUIREMENTS OF SECTION 813.
2. 1" PREFORMED CELLULAR POLYSTYRENE TO BE INCIDENTAL TO ITEM 602014.

CROSS REFERENCE NOTES:

1. FOR WINGWALL ELEVATIONS, SEE DWG. NO. 1-480 WW-4.
2. FOR FOOTING REINFORCEMENT, SEE DWG. NO. 1-480 AB-14.
3. FOR APPROACH SLAB REINFORCEMENT, SEE DWG. NO. 1-480 AS-2.
4. FOR REINFORCING BAR SCHEDULE, SEE DWG. NO. 1-480 BR-4.

DELAWARE DEPARTMENT OF TRANSPORTATION	ADDENDUMS / REVISIONS	US 301 LEVELS ROAD TO SUMMIT BRIDGE ROAD	CONTRACT T200911303	BRIDGE NO. 1-480N&S	US 301 MAINLINE OVER SANDY BRANCH	1-480 WW-6	
			COUNTY NEW CASTLE	DESIGNED BY: BCW	WINGWALL DETAILS 4	SHEET NO. 595	
				CHECKED BY: JW		TOTAL SHTS. 1256	

REINFORCING BAR SCHEDULE

ABUTMENT 1 NB

MARK	LENGTH	NO. BARS	TYPE	A	B	C	D	E	F	G	H	J	K	O	REMARKS
A504E	5′-11″	68	2	10″	5′-1″										
A505E	1′-10″ TO 4′-7″	6	2	10″	1′-0″ TO 3′-9″										LENGTH △ = 1′-4½″
A506E	5′-2″	117	STR.												
A507E	4′-0″	53	STR.												
A508E	5′-4″	48	17		2′-1″	1′-2″	2′-1″								
A509E	52′-0″	7	STR.												
A510E	47′-0″	7	STR.												
A511E	3′-6½″	7	16			2′-1″	1′-5½″				10″		1′-2¼″	3′-3¼″	
A512E	6′-11″	25	17		1′-9″	3′-5″	1′-9″								
A513E	7′-2″	25	17		1′-9″	3′-8″	1′-9″								
A519E	6′-9″	9	STR.												
A520E	9′-6″	7	STR.												
A521E	8′-0″	7	STR.												
A522E	3′-8″	7	2	1′-7″	2′-1″										
A523E	5′-11″	14	16			3′-10″	2′-1″				1′-8½″		1′-2⅜″	5′-0⅜″	
A524E	6′-0″	14	STR.												
A525															BAR REMOVED
A533E	20′-3″ TO 22′-9″	6	STR.												LENGTH △ = 6″
A534E	31′-5″ TO 33′-11″	6	2	10″	30′-7″ TO 33′-1″										LENGTH △ = 6″
A535	14′-8″	5	STR.												
A536	14′-2″	5	STR.												
A537E	14′-8″	5	STR.												
A538E	14′-2″	4	STR.												
A543E	4′-10″	64	STR.												
A601	53′-8″	12	STR.												
A603	4′-8½″	12	16		2′-1″	6½″	2′-1″				1′-2⅜″		1′-8½″	2′-3″	
A604	4′-8″	12	16			2′-4″	2′-4″				1′-11″		1′-4″	3′-8″	
A606	9′-6″	13	STR.												
A607	8′-0″	12	STR.												
A608	3′-8″	13	2	1′-7″	2′-1″										
A609	5′-11″	13	16			3′-10″	2′-1″				1′-8½″		1′-2⅜″	5′-0⅜″	
A614	9′-4″	64	STR.												
A615	8′-10″	72	STR.												
A618	47′-0″	13	STR.												
A705	15′-2″	2	STR.												
A706	14′-8″	4	STR.												
F501	3′-9″	73	STR.												
F502	1′-11″ TO 9′-0″	6	STR.												LENGTH △ = 1′-5″
F503	10′-6″	97	STR.												
F504	1′-8″ TO 9′-10″	7	STR.												LENGTH △ = 1′-4⅝″
F505	56′-8″ TO 57′-8″	4	STR.												LENGTH △ = 4″
F506	57′-10″	25	STR.												
F507	56′-8″ TO 57′-0″	2	STR.												LENGTH △ = 4″
F508	41′-2″	9	STR.												
F509	8′-4″	6	STR.												
F510	6′-0″	6	STR.												
F511	1′-8″ TO 3′-11″	3	STR.												LENGTH △ = 1′-1½″
F512	36′-9″	1	STR.												
F513	26′-6″	11	STR.												
F514	35′-1″	1	STR.												
F515	30′-3″	11	STR.												
F516	36′-10″ TO 37′-7″	2	STR.												LENGTH △ = 9″
F517	34′-10″	2	STR.												
F518	28′-5″	2	STR.												
F519	27′-6″	4	STR.												
F520	19′-3″	2	STR.												
F521	34′-3″ TO 35′-1″	2	STR.												LENGTH △ = 10″
F522	34′-1″	4	STR.												
F523	30′-0″	6	STR.												

ABUTMENT 1 NB

MARK	LENGTH	NO. BARS	TYPE	A	B	C	D	E	F	G	H	J	K	O	REMARKS
F601	7′-1′	64	2	1′-0″	6′-1″										
F602	5′-5″	72	STR.												
F603	3′-4″	5	STR.												
F604	10′-6″	139	STR.												
F605	6′-1″ TO 9′-3″	5	STR.												LENGTH △ = 9½″
F701	7′-3″	54	T7			1′-2″	6′-1″						7¼″		
F702	7′-3″	6	2	1′-2″	6′-1″										
W501	7′-3″	54	17		2′-1″	1′-2″	4′-0″								
W502	26′-0″	31	STR.												
W503	25′-11″	31	STR.												
W508	14′-9″	27	STR.												
W509	14′-2″	27	STR.												
W705	15′-3″	27	STR.												
W706	14′-8″	27	STR.												

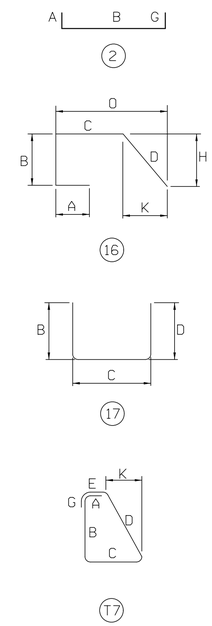

DELAWARE
DEPARTMENT OF TRANSPORTATION

ADDENDUMS / REVISIONS

US 301
LEVELS ROAD
TO SUMMIT BRIDGE ROAD

CONTRACT	BRIDGE NO.	1-480N&S
T200911303	DESIGNED BY: LT	
COUNTY		
NEW CASTLE	CHECKED BY: JW	

US 301 MAINLINE OVER
SANDY BRANCH
ABUTMENT 1 NB
REINFORCEMENT SCHEDULE

1-480 BR-3
SHEET NO.
596
TOTAL SHTS.
1256

REINFORCING BAR SCHEDULE

ABUTMENT 2 NB

MARK	LENGTH	NO. BARS	TYPE	A	B	C	D	E	F	G	H	J	K	O	REMARKS
A504E	5′-11″	68	2	10″	5′-1″										
A505E	1′-10″ TO 4′-7″	6	2	10″	1′-0″ TO 3′-9″										LENGTH △ = 1′-4½″
A506E	5′-2″	117	STR.												
A507E	4′-0″	53	STR.												
A508E	5′-4″	48	17		2′-1″	1′-2″	2′-1″								
A509E	52′-0″	7	STR.												
A510E	47′-0″	7	STR.												
A511E	3′-6½″	7	16			2′-1″	1′-5½″				10″		1′-2¼″	3′-3¼″	
A512E	6′-11″	25	17		1′-9″	3′-5″	1′-9″								
A513E	7′-2″	25	17		1′-9″	3′-8″	1′-9″								
A519E	6′-6″	9	STR.												
A520E	9′-6″	7	STR.												
A521E	8′-0″	7	STR.												
A522E	3′-8″	7	2	1′-7″	2′-1″										
A523E	5′-11″	14	16			3′-10″	2′-1″				1′-8½″		1′-2⅜″	5′-0⅜″	
A524E	6′-0″	14	STR.												
A525															BAR REMOVED
A533E	20′-3″ TO 22′-9″	6	STR.												LENGTH △ = 6″
A534E	31′-5″ TO 33′-11″	6	2	10″	30′-7″ TO 33′-1″										LENGTH △ = 6″
A539	14′-0″	5	STR.												
A540	13′-6″	5	STR.												
A541E	13′-6″	5	STR.												
A542E	14′-0″	4	STR.												
A543E	4′-10″	64	STR.												
A601	53′-8″	11	STR.												
A603	4′-8½″	11	16		2′-1″	6½″	2′-1″				1′-2⅜″		1′-8½″	2′-3″	
A604	4′-8″	11	16			2′-4″	2′-4″				1′-11″		1′-4″	3′-8″	
A606	9′-6″	11	STR.												
A607	8′-0″	11	STR.												
A608	3′-8″	12	2	1′-7″	2′-1″										
A609	5′-11″	12	16			3′-10″	2′-1″				1′-8½″		1′-2⅜″	5′-0⅜″	
A616	8′-7½″	64	STR.												
A617	8′-1½″	72	STR.												
A618	47′-0″	12	STR.												
A707	14′-6″	4	STR.												
A708	14′-0″	2	STR.												
F501	3′-9″	73	STR.												
F502	1′-11″ TO 9′-0″	6	STR.												LENGTH △ = 1′-5″
F503	10′-6″	97	STR.												
F504	1′-8″ TO 9′-10″	7	STR.												LENGTH △ = 1′-4 5/16″
F505	56′-8″ TO 57′-8″	4	STR.												LENGTH △ = 4″
F506	57′-10″	25	STR.												
F507	56′-8″ TO 57′-0″	2	STR.												LENGTH △ = 4″
F508	41′-2″	9	STR.												
F509	8′-4″	6	STR.												
F510	6′-0″	6	STR.												
F511	1′-8″ TO 3′-11″	3	STR.												LENGTH △ = 1′-1½″
F512	36′-9″	1	STR.												
F513	26′-6″	11	STR.												
F514	35′-1″	1	STR.												
F515	30′-3″	11	STR.												
F516	36′-10″ TO 37′-7″	2	STR.												LENGTH △ = 9″
F517	34′-10″	2	STR.												
F518	28′-5″	2	STR.												
F519	27′-6″	4	STR.												
F520	19′-3″	2	STR.												
F521	34′-3″ TO 35′-1″	2	STR.												LENGTH △ = 10″
F522	34′-1″	4	STR.												
F523	30′-0″	6	STR.												

ABUTMENT 2 NB

MARK	LENGTH	NO. BARS	TYPE	A	B	C	D	E	F	G	H	J	K	O	REMARKS
F601	7′-1′	64	2	1′-0″	6′-1″										
F602	5′-5″	72	STR.												
F603	3′-4″	5	STR.												
F604	10′-6″	139	STR.												
F605	6′-1″ TO 9′-3″	5	STR.												LENGTH △ = 9½″
F701	7′-3″	54	T7			1′-2″	6′-1″						7¼″		
F702	7′-3″	6	2	1′-2″	6′-1″										
W501	7′-3″	54	17		2′-1″	1′-2″	4′-0″								
W502	26′-0″	29	STR.												
W503	25′-11″	29	STR.												
W510	13′-9″	27	STR.												
W511	13′-3″	27	STR.												
W707	14′-3″	27	STR.												
W708	13′-9″	27	STR.												

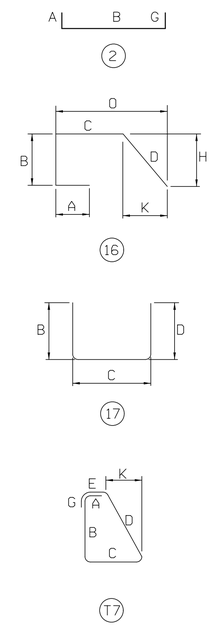

DELAWARE
DEPARTMENT OF TRANSPORTATION

ADDENDUMS / REVISIONS

US 301
LEVELS ROAD
TO SUMMIT BRIDGE ROAD

CONTRACT	BRIDGE NO.	1-480N&S
T200911303	DESIGNED BY: LT	
COUNTY		
NEW CASTLE	CHECKED BY: JW	

US 301 MAINLINE OVER
SANDY BRANCH
ABUTMENT 2 NB
REINFORCEMENT SCHEDULE

1-480 BR-4
SHEET NO.
597
TOTAL SHTS.
1256

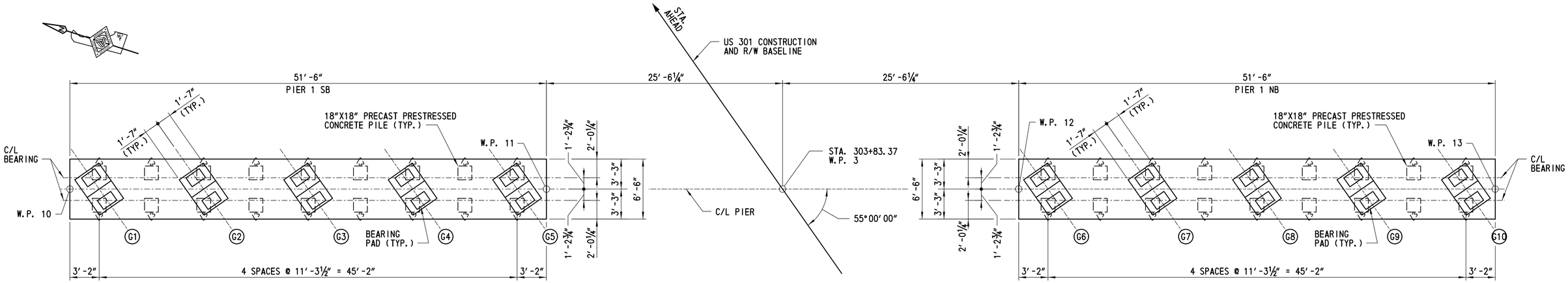

PLAN

SCALE: 3/16″ = 1′-0″

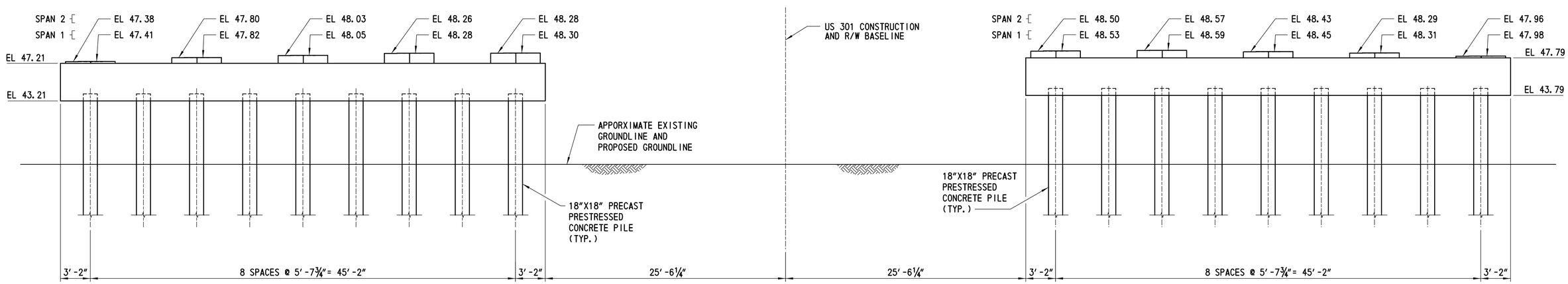

ELEVATION

SCALE: 3/16″ = 1′-0″

CROSS REFERENCE NOTES:

1. FOR GENERAL PLAN AND ELEVATION, SEE DWG. NOS. 1-480 PE-1 1-480 PE-2.
2. FOR GEOMETRIC LAYOUT, SEE DWG. NO. 1-480 FT-1.
3. FOR PIER PILE PLAN, SEE DWG. NO. 1-480 FT-6.
4. FOR PIER DETAILS, SEE DWG. NO. 1-480 PR-2.
5. FOR PIER RIPRAP DETAIL, SEE DWG. NO. 1-480 FT-6.

DELAWARE DEPARTMENT OF TRANSPORTATION	ADDENDUMS / REVISIONS	SCALE 0 2 8 / 1 4 FEET	US 301 LEVELS ROAD TO SUMMIT BRIDGE ROAD	CONTRACT T200911303	BRIDGE NO. 1-480N&S	US 301 MAINLINE OVER SANDY BRANCH PIER PLAN AND ELEVATION	1-480 PR-1
				COUNTY NEW CASTLE	DESIGNED BY: PRH		SHEET NO. 598
					CHECKED BY: AMS		TOTAL SHTS. 1256

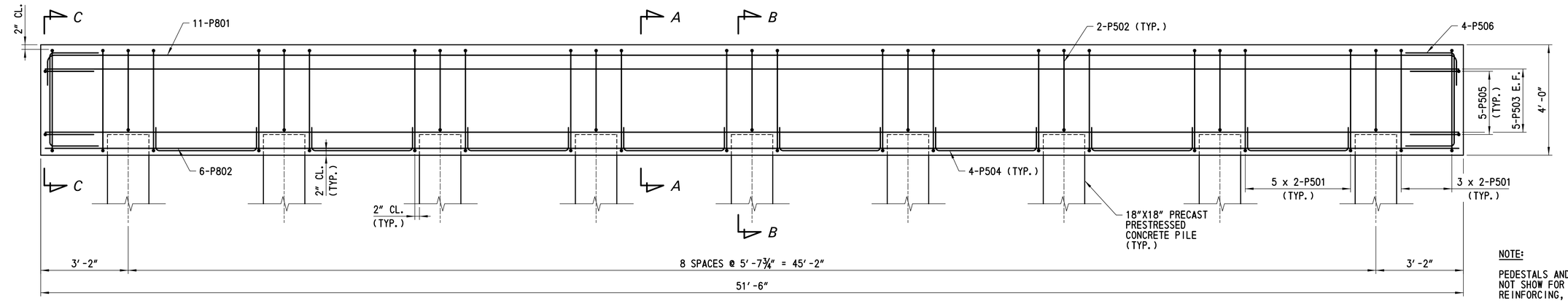

NOTE:

PEDESTALS AND PEDESTAL REINFORCING NOT SHOW FOR CLARITY. FOR PEDESTAL REINFORCING, SEE DETAIL THIS SHEET.

ELEVATION - PIER REINFORCING

SCALE: ½"= 1'-0"

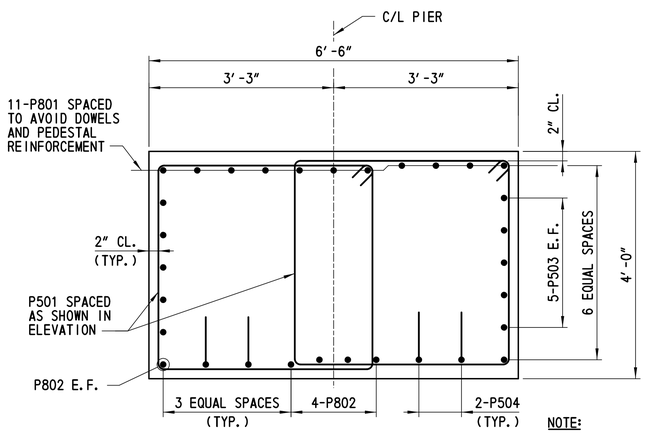

NOTE:

FOR DOWEL DETAIL, SEE DWG. NO. 1-480 DPH-2.

SECTION A-A

SCALE: ¾"= 1'-0"

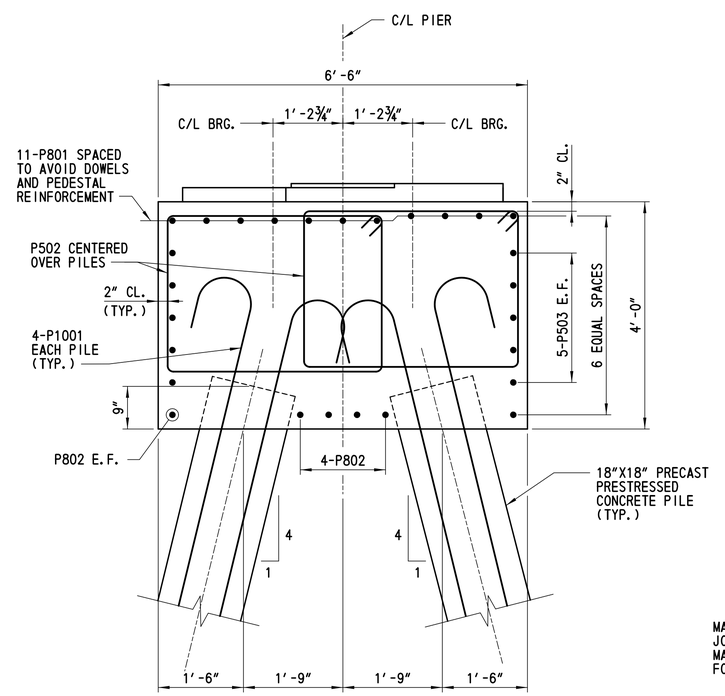

SECTION B-B

SCALE: ¾"= 1'-0"

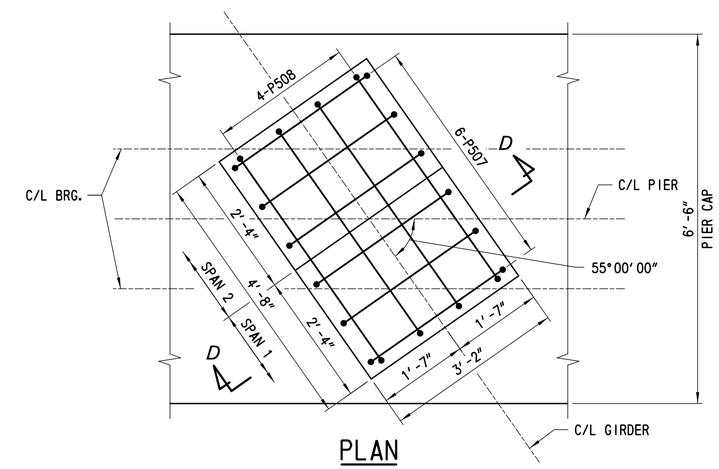

PLAN

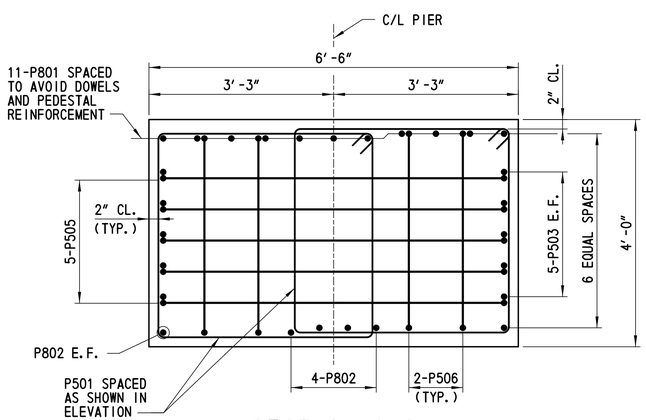

SECTION C-C

SCALE: ¾"= 1'-0"

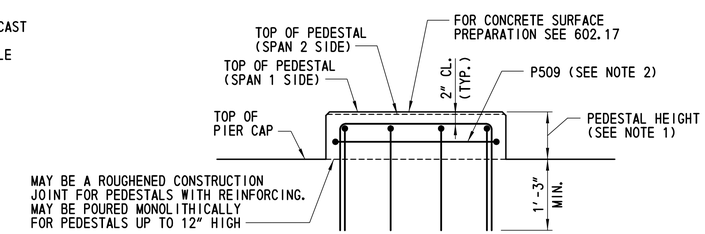

SECTION D-D

NOTES:

1. PEDESTAL REINFORCEMENT NOT REQUIRED FOR PEDESTAL HEIGHTS LESS THAN 4".
2. THIS BAR ONLY REQUIRED FOR PEDESTAL HEIGHTS OF 9" OR GREATER. BAR SHALL BE PLACED AT MID-HEIGHT OF PEDESTAL.

PEDESTAL REINFORCEMENT DETAIL

SCALE: ¾"= 1'-0"

CROSS REFERENCE NOTES:

1. FOR PIER PILE PLAN, SEE DWG. NO. 1-480 FT-6.
2. FOR PIER PLAN AND ELEVATION, SEE DWG. NO. 1-480 PR-1.
3. FOR PILE DETAILS, SEE DWG. NO. 1-480 PL-1.
4. FOR REINFORCING BAR SCHEDULE, SEE DWG. NO. 1-480 BR-5.

DELAWARE DEPARTMENT OF TRANSPORTATION	ADDENDUMS / REVISIONS	US 301 LEVELS ROAD TO SUMMIT BRIDGE ROAD	CONTRACT T200911303	BRIDGE NO. 1-480N&S	US 301 MAINLINE OVER SANDY BRANCH PIER DETAILS	1-480 PR-2
			COUNTY NEW CASTLE	DESIGNED BY: PRH		SHEET NO. 599
				CHECKED BY: JW		TOTAL SHTS. 1256

REINFORCING BAR SCHEDULE

SB PIER BAR SCHEDULE

MARK	LENGTH	NO. BARS	TYPE	A	B	C	D	E	G	H	J	K	O	R	REMARKS
P501	16′-0″	92	T1	7″	3′-9″	3′-8″	3′-9″	3′-8″	7″						
P502	14′-2″	18	T1	7″	3′-9″	2′-9″	3′-9″	2′-9″	7″						
P503	51′-2″	10	STR.												
P504	5′-4″	32	2	10″	3′-8″				10″						
P505	10′-6″	10	2	2′-2″	6′-2″				2′-2″						
P506	7′-10½″	8	2	2′-2″	3′-6½″				2′-2″						
P507	7′-6″	30	2	2′-5″	2′-8″				2′-5″						
P508	8′-10″	20	2	2′-4″	4′-2″				2′-4″						
P509	15′-6″	2	T1	7″	2′-10″	4′-4″	2′-10″	4′-4″	7″						
P801	53′-10″	11	2	1′-4″	51′-2″				1′-4″						
P802	51′-2″	6	STR.												
P1001	7′-1½″	72	1	5½″	6′-8″						10¼″				
D1101E	4′-0″	28	STR.												DOWELS AT SB PIER

NB PIER BAR SCHEDULE

MARK	LENGTH	NO. BARS	TYPE	A	B	C	D	E	G	H	J	K	O	R	REMARKS
P501	16′-0″	92	T1	7″	3′-9″	3′-8″	3′-9″	3′-8″	7″						
P502	14′-2″	18	T1	7″	3′-9″	2′-9″	3′-9″	2′-9″	7″						
P503	51′-2″	10	STR.												
P504	5′-4″	32	2	10″	3′-8″				10″						
P505	10′-6″	10	2	2′-2″	6′-2″				2′-2″						
P506	7′-10½″	8	2	2′-2″	3′-6½″				2′-2″						
P507	7′-6″	30	2	2′-5″	2′-8″				2′-5″						
P508	8′-10″	20	2	2′-4″	4′-2″				2′-4″						
P509	15′-6″	3	T1	7″	2′-10″	4′-4″	2′-10″	4′-4″	7″						
P801	53′-10″	11	2	1′-4″	51′-2″				1′-4″						
P802	51′-2″	6	STR.												
P1001	7′-1½″	72	1	5½″	6′-8″						10¼″				
D1101E	4′-0″	28	STR.												DOWELS AT NB PIER

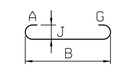

1

2

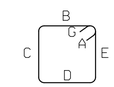

T1

DELAWARE
DEPARTMENT OF TRANSPORTATION

ADDENDUMS / REVISIONS

US 301
LEVELS ROAD
TO SUMMIT BRIDGE ROAD

CONTRACT	BRIDGE NO.	1-480N&S
T200911303	DESIGNED BY:	LT
COUNTY		
NEW CASTLE	CHECKED BY:	PRH

US 301 MAINLINE OVER
SANDY BRANCH
PIER REINFORCEMENT
SCHEDULE

1-480 BR-5

SHEET NO. 600

TOTAL SHTS. 1256

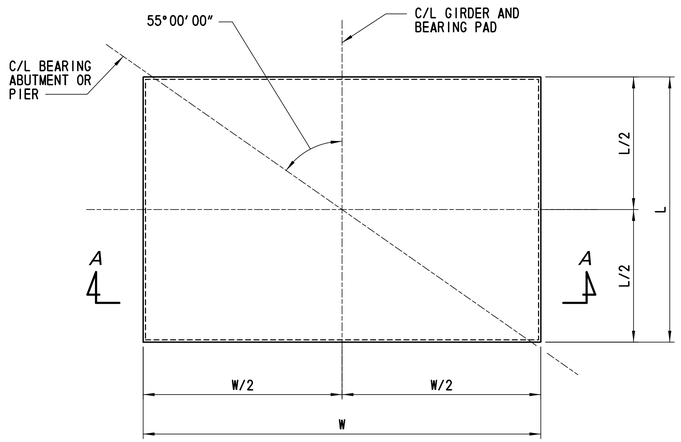

PLAN

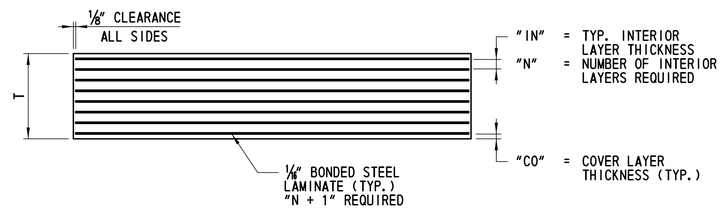

SECTION A-A

NOTES:

1. ELASTORMERIC BEARINGS SHALL BE 60 DUROMETER HARDNESS SHORE TYPE A.
2. MINIMUM LOW TEMPERATURE ELASTOMER SHALL BE GRADE 3.
3. ALL BEARINGS ARE TO BE MOLDED TO DESIGN DIMENSIONS. CUTTING TO SIZE AFTER FABRICATION IS PROHIBITED.
4. HOLES ARE NOT PERMITTED IN THE ELASTOMERIC BEARINGS.
5. VULCANIZE PATCH PIN GROOVES.
6. STEEL LAMINATE SHALL HAVE A MINIMUM YIELD STRENGTH (Fy) OF 36 KSI.
7. MAXIMUM DESIGN LOAD (SERVICE):

ABUTMENT 1 SB (EXP.):	DL = 192 KIPS
	LL = 119 KIPS
PIER 1 SB (FIXED):	DL = 161 KIPS
	LL = 112 KIPS
ABUTMENT 2 SB (EXP.):	DL = 137 KIPS
	LL = 105 KIPS
ABUTMENT 1 NB (EXP.):	DL = 203 KIPS
	LL = 124 KIPS
PIER 1 NB (FIXED):	DL = 177 KIPS
	LL = 125 KIPS
ABUTMENT 2 NB (EXP.):	DL = 190 KIPS
	LL = 120 KIPS

STEEL REINFORCED ELASTOMERIC BEARING PAD

SCALE: 3″ = 1′-0″

BEARING PAD DATA

LOCATION	QUANTITY	L (IN)	W (IN)	T (IN)	IN (IN)	N	N + 1	CO (IN)
ABUT. 1 SB (EXP.)	5	14	21	4½	½	7	8	¼
PIER 1 SB (FIXED)	10	14	21	4½	½	7	8	¼
ABUT. 2 SB (EXP.)	5	14	21	4½	½	7	8	¼
ABUT. 1 NB (EXP.)	5	14	21	4½	½	7	8	¼
PIER 1 NB (FIXED)	10	14	21	4½	½	7	8	¼
ABUT. 2 NB (EXP.)	5	14	21	4½	½	7	8	¼

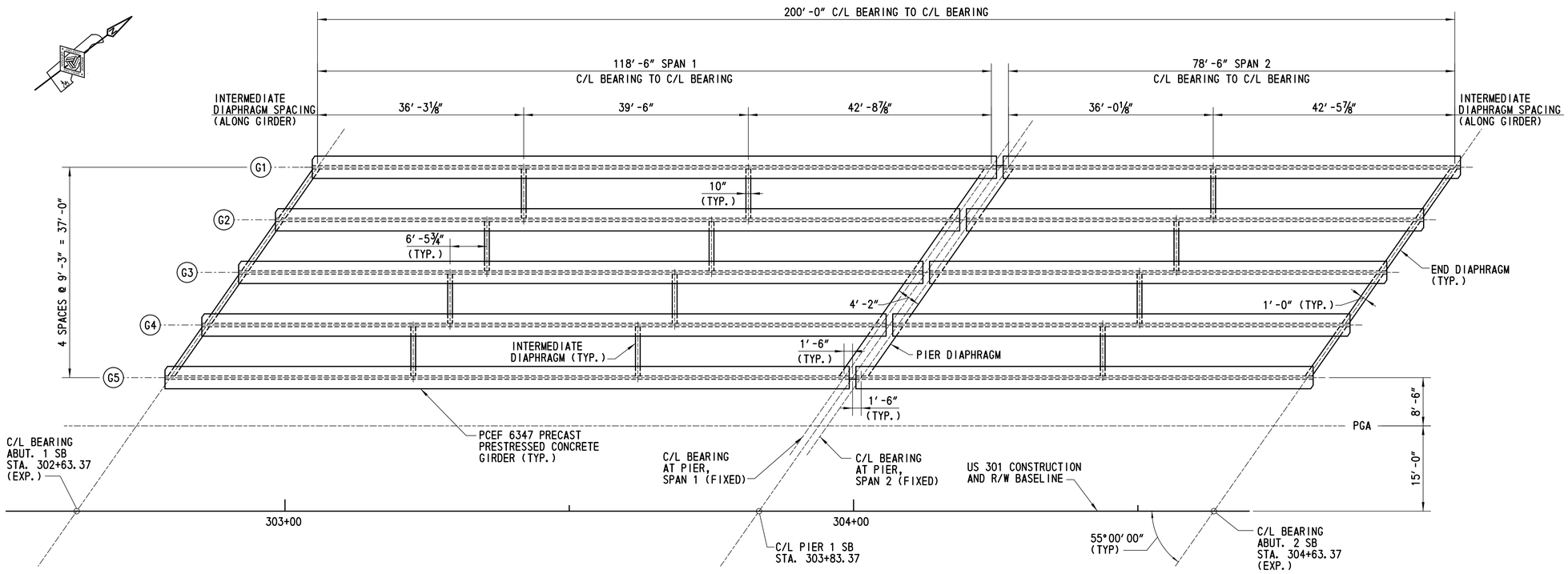

SB FRAMING PLAN

SCALE: 1/24″= 1′-0″

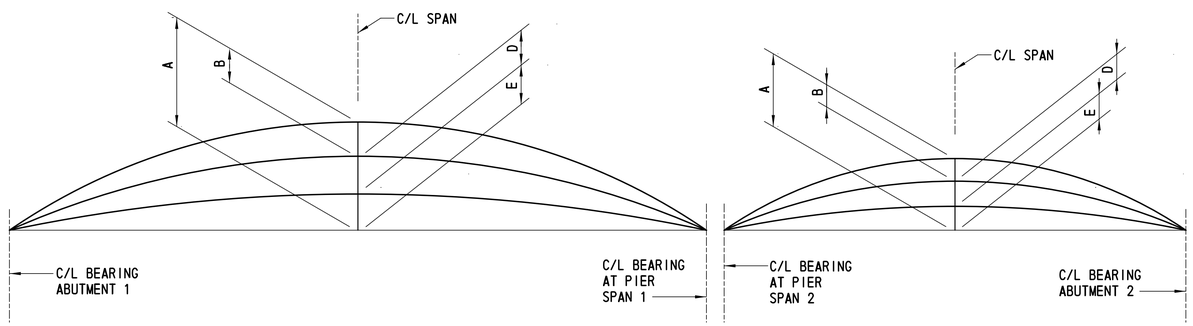

SB CAMBER DIAGRAM

NTS

LEGEND:

A = CAMBER DUE TO PRESTRESS AT ERECTION, CREEP MULTIPLIER = 1.8.

B = DEFLECTION DUE TO GIRDER DEAD LOAD AT ERECTION, CREEP MULTIPLIER = 1.85.

C = A+B

D = DEFLECTION DUE TO SLAB, DIAPHRAGMS, SIP FORMS, AND BARRIERS.

E = NET CAMBER, C+D.

CAMBER/DEFLECTION TABLE (INCHES)					
SPAN 1					
GIRDER NO.	A	B	C	D	E
G1 & G5	7⅞″	-3¼″	4⅝″	-1⅞″	2¾″
G2 - G4	7⅞″	-3¼″	4⅝″	-2⅛″	2½″
SPAN 2					
GIRDER NO.	A	B	C	D	E
G1 & G5	1⅞″	-⅝″	1¼″	-⅜″	⅞″
G2 - G4	1⅞″	-⅝″	1¼″	-⅜″	⅞″

NOTES:

1. PRESTRESS CAMBER AND DEAD LOAD DEFLECTION DATA SHOWN IS THEORETICAL AND MAY VARY WITH CONCRETE STRENGTH, VARIABLE PRESTRESSING CONDITIONS AND PRESTRESS LOSSES. CONTRACTOR SHALL VERIFY VALUES IN THE FIELD.
2. THE THICKNESS OF THE GIRDER HAUNCHES SHALL BE VARIED TO COMPENSATE FOR ANY INACCURACIES IN THE FINAL CAMBER.

CROSS REFERENCE NOTES:

1. FOR GENERAL PLAN AND ELEVATION, SEE DWG. NO. 1-480 PE-1.
2. FOR TYPICAL SECTION, SEE DWG. NO. 1-480 TS-1.
3. FOR GIRDER PLAN AND ELEVATION, SEE DWG. NO. 1-480 BM-1 AND 1-480 BM-2.
4. FOR GIRDER DETAILS, SEE DWG. NO. 1-480 BM-3.
5. FOR INTERMEDIATE AND END DIAPHRAGM DETAILS, SEE DWG. NO. 1-480 DPH-1.
6. FOR PIER DIAPHRAGM DETAILS, SEE DWG. NO. 1-480 DPH-2.

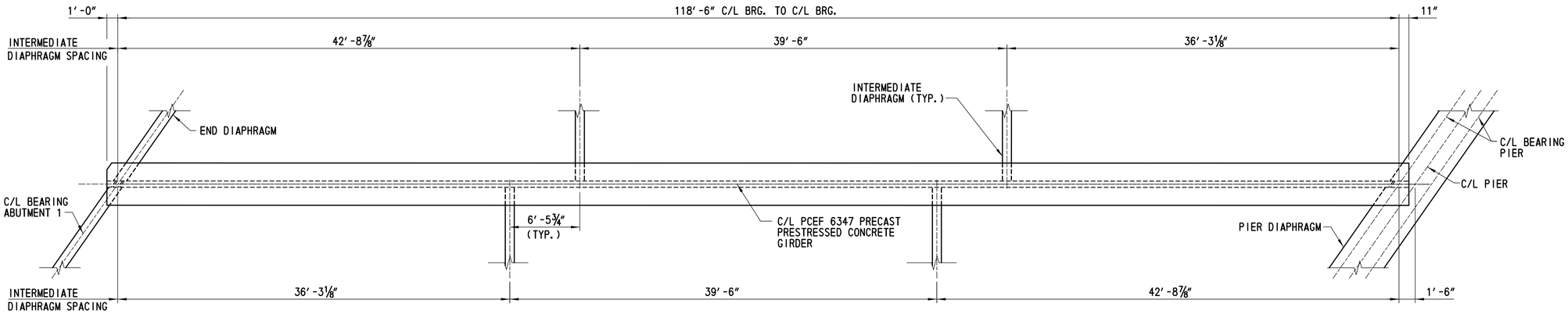

SB SPAN 1 GIRDER PLAN

NTS

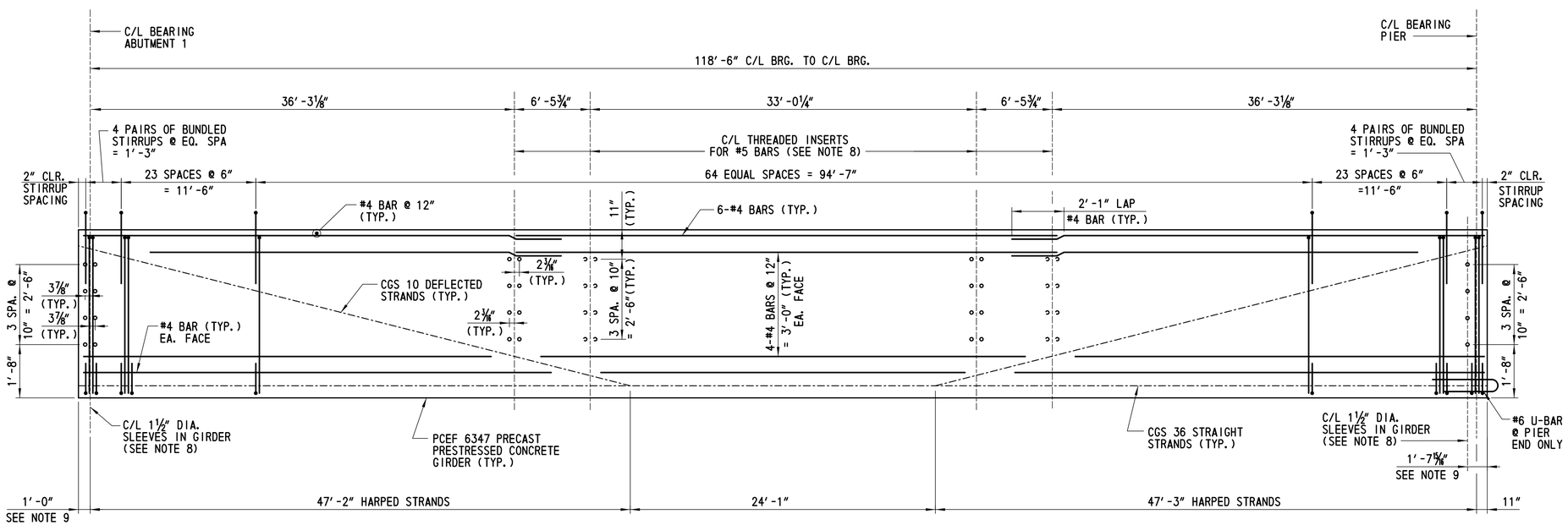

SB SPAN 1 GIRDER ELEVATION

NTS

NOTES:

1. NOT ALL PRESTRESSING STRANDS SHOWN FOR CLARITY. CENTER OF GRAVITY FOR STRANDS GROUP (CGS) SHOWN ONLY.
2. GIRDER LENGTHS IN CASTING BED SHALL BE DETERMINED AND DEPICTED IN SHOP DRAWINGS TO COMPENSATE FOR GRADE SHORTENING DUE TO PRESTRESS EFFECTS.
3. SECTION IS A PCEF 6347.
4. ALL MILD STEEL REINFORCEMENT IN GIRDERS SHALL BE EPOXY COATED.
5. TOP SURFACE OF GIRDERS SHALL BE ROUGH FINISHED TO A FULL AMPLITUDE OF A 1/4″ AND SCRUBBED TRANSVERSELY WITH A COURSE WIRE BRUSH TO REMOVE ALL LAITANCE TO PRODUCE A ROUGHENED SURFACE FOR BONDING.
6. END ZONE REINFORCEMENT MAY BE INCREASED BY THE FABRICATOR TO REFLECT FABRICATORS EXPERIENCE AND/OR TO CONTROL CRACKING.
7. NO CLEAR COVER LESS THAN AS SHOWN ON THESE PLANS WILL BE ACCEPTED.
8. OMIT SLEEVES AND THREADED INSERTS ON THE EXTERIOR FACE OF FASCIA GIRDERS.
9. DIMENSION REFERENCED FROM C/L OF GIRDER WEB.
10. FABRICATOR TO CHECK GIRDER STABILITY FOR HANDLING, TRANSPORTATION AND ERECTION.

CROSS REFERENCE NOTES:

1. FOR GENERAL PLAN AND ELEVATION, SEE DWG. NO. 1-480 PE-1.
2. FOR PROJECT NOTES, SEE DWG. NO. 1-480 PN-1.
3. FOR TYPICAL SECTION, SEE DWG. NO. 1-480 TS-1.
4. FOR FRAMING PLAN, SEE DWG. NO. 1-480 FR-1.
5. FOR GIRDER SECTIONS, SEE DWG. NO. 1-480 BM-3.
6. FOR CAMBER SCHEDULE, SEE DWG. NO. 1-480 FR-1.
7. FOR INTERMEDIATE AND END DIAPHRAGM DETAILS, SEE DWG. NOS. 1-480 DPH-1 AND 1-480 DPH-2.
8. FOR TYPICAL GIRDER DETAILS, SEE DWG. NO. 1-480 BM-7.

DELAWARE DEPARTMENT OF TRANSPORTATION	ADDENDUMS / REVISIONS		US 301 LEVELS ROAD TO SUMMIT BRIDGE ROAD	CONTRACT T200911303	BRIDGE NO. 1-480N&S	US 301 MAINLINE OVER SANDY BRANCH SB SPAN 1 GIRDER PLAN AND ELEVATION	1-480 BM-1
				COUNTY NEW CASTLE	DESIGNED BY: LT		SHEET NO. 603
					CHECKED BY: BCW		TOTAL SHTS. 1256

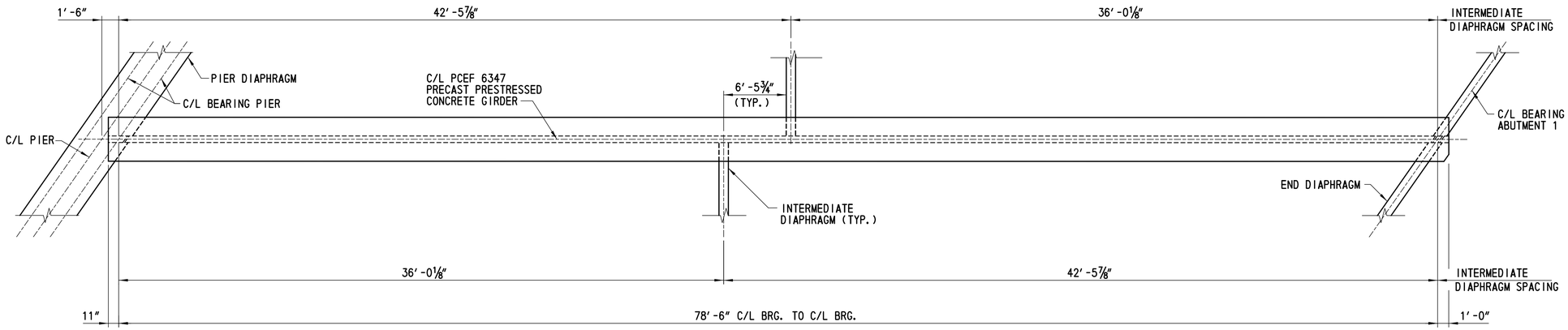

SB SPAN 2 GIRDER PLAN

NTS

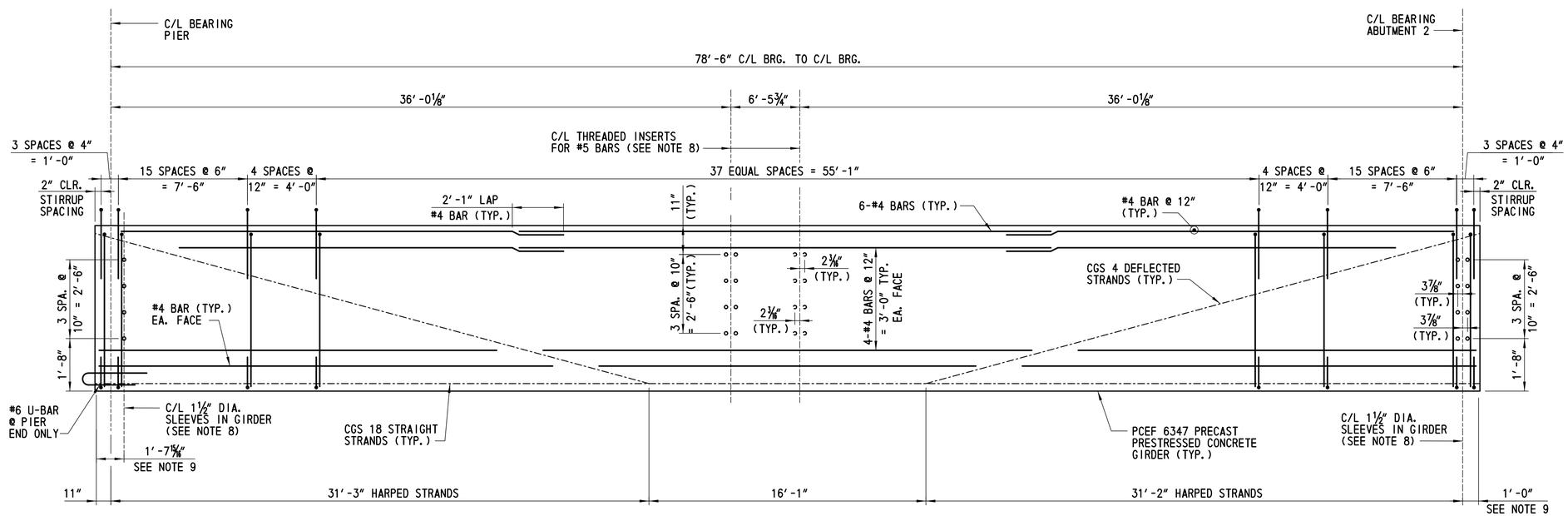

SB SPAN 2 GIRDER ELEVATION

NTS

NOTES:

1. NOT ALL PRESTRESSING STRANDS SHOWN FOR CLARITY. CENTER OF GRAVITY FOR STRANDS GROUP (CGS) SHOWN ONLY.
2. GIRDER LENGTHS IN CASTING BED SHALL BE DETERMINED AND DEPICTED IN SHOP DRAWINGS TO COMPENSATE FOR GRADE SHORTENING DUE TO PRESTRESS EFFECTS.
3. SECTION IS A PCEF 6347.
4. ALL MILD STEEL REINFORCEMENT IN GIRDERS SHALL BE EPOXY COATED.
5. TOP SURFACE OF GIRDERS SHALL BE ROUGH FINISHED TO A FULL AMPLITUDE OF A 1/4″ AND SCRUBBED TRANSVERSELY WITH A COURSE WIRE BRUSH TO REMOVE ALL LAITANCE TO PRODUCE A ROUGHENED SURFACE FOR BONDING.
6. END ZONE REINFORCEMENT MAY BE INCREASED BY THE FABRICATOR TO REFLECT FABRICATORS EXPERIENCE AND/OR TO CONTROL CRACKING.
7. NO CLEAR COVER LESS THAN AS SHOWN ON THESE PLANS WILL BE ACCEPTED.
8. OMIT SLEEVES AND THREADED INSERTS ON THE EXTERIOR FACE OF FASCIA GIRDERS.
9. DIMENSION REFERENCED FROM C/L OF GIRDER WEB.
10. FABRICATOR TO CHECK GIRDER STABILITY FOR HANDLING, TRANSPORTATION AND ERECTION.

CROSS REFERENCE NOTES:

1. FOR GENERAL PLAN AND ELEVATION, SEE DWG. NO. 1-480 PE-1.
2. FOR PROJECT NOTES, SEE DWG. NO. 1-480 PN-1.
3. FOR TYPICAL SECTION, SEE DWG. NO. 1-480 TS-1.
4. FOR FRAMING PLAN, SEE DWG. NO. 1-480 FR-1.
5. FOR GIRDER SECTIONS, SEE DWG. NO. 1-480 BM-3.
6. FOR CAMBER SCHEDULE, SEE DWG. NO. 1-480 FR-1.
7. FOR INTERMEDIATE AND END DIAPHRAGM DETAILS, SEE DWG. NOS. 1-480 DPH-1 AND 1-480 DPH-2.
8. FOR TYPICAL GIRDER DETAILS, SEE DWG. NO. 1-480 BM-7.

DELAWARE DEPARTMENT OF TRANSPORTATION	ADDENDUMS / REVISIONS	US 301 LEVELS ROAD TO SUMMIT BRIDGE ROAD	CONTRACT T200911303	BRIDGE NO. 1-480N&S	US 301 MAINLINE OVER SANDY BRANCH SB SPAN 2 GIRDER PLAN AND ELEVATION	1-480 BM-2
			COUNTY NEW CASTLE	DESIGNED BY: LT		SHEET NO. 604
				CHECKED BY: BCW		TOTAL SHTS. 1256

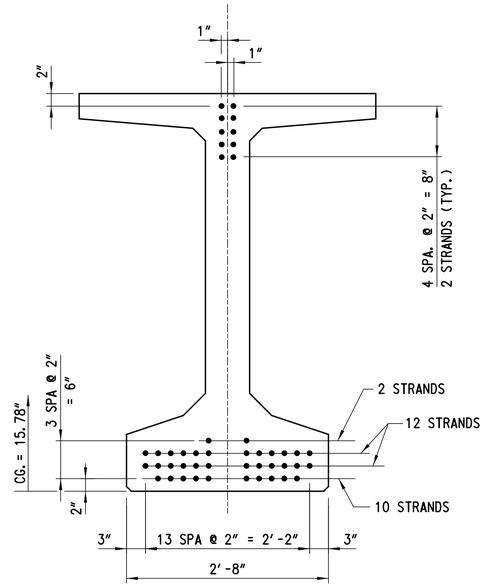

PRESTRESSING AT GIRDER ENDS

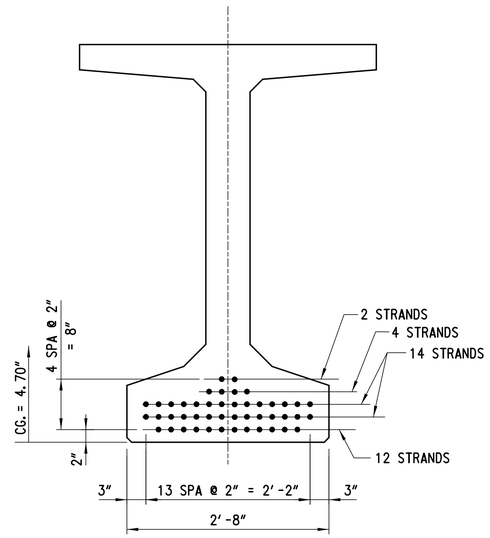

PRESTRESSING AT MIDSPAN

TYPICAL SB SPAN 1 GIRDER SECTIONS

SCALE: 1"= 1'-0"

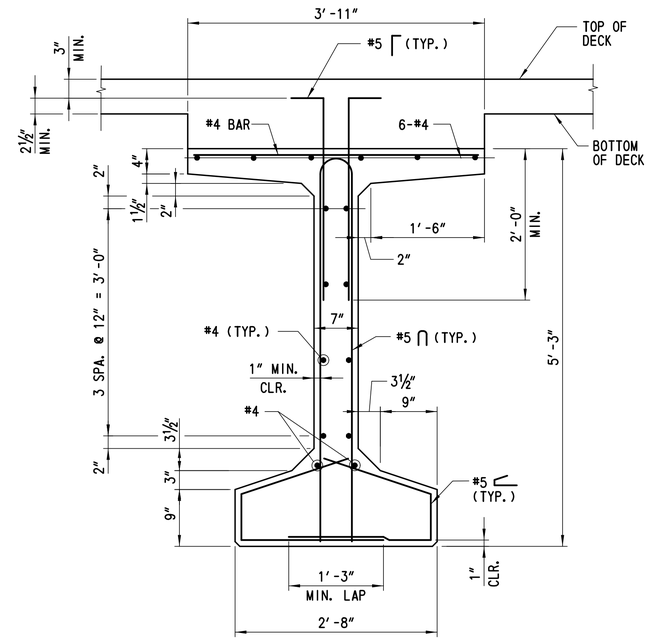

TYPICAL REINFORCEMENT

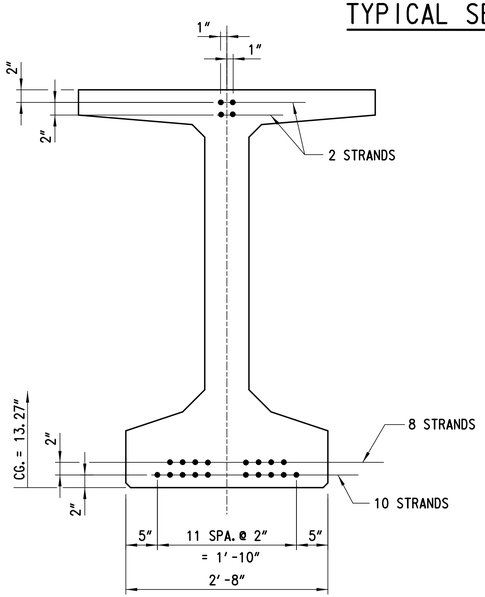

PRESTRESSING AT GIRDER ENDS

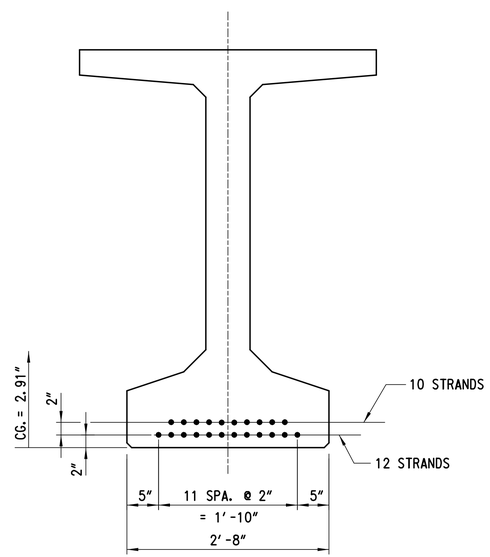

PRESTRESSING AT MIDSPAN

TYPICAL SB SPAN 2 GIRDER SECTIONS

SCALE: 1"= 1'-0"

NOTES:

1. GIRDER LIFTING DETAILS SHALL BE PROVIDED BY THE CONTRACTOR AND ARE SUBJECT TO THE APPROVAL OF THE ENGINEER.
2. TYPICAL COVER - 1" CLR. TO STIRRUPS, 1½" CLR. TO LONGITUDINAL BARS AND STRANDS.

CROSS REFERENCE NOTES:

1. FOR GIRDER PLAN AND ELEVATION, SEE DWG. NOS. 1-480 BM-1 AND 1-480N BM-2.
2. FOR FRAMING PLAN AND CAMBER SCHEDULE, SEE DWG. NO. 1-480 FR-1.
3. FOR TYPICAL GIRDER DETAILS, SEE DWG. NO 1-480 BM-7.
4. FOR TYPICAL SECTION, SEE DWG. NO. 1-480 TS-1.

DELAWARE DEPARTMENT OF TRANSPORTATION	ADDENDUMS / REVISIONS	SCALE 0 1 ½ 2 FEET	US 301 LEVELS ROAD TO SUMMIT BRIDGE ROAD	CONTRACT T200911303	BRIDGE NO. 1-480N&S	US 301 MAINLINE OVER SANDY BRANCH	1-480 BM-3	
				COUNTY NEW CASTLE	DESIGNED BY: LT	SB GIRDER SECTIONS	SHEET NO. 605	
					CHECKED BY: BCW		TOTAL SHTS. 1256	

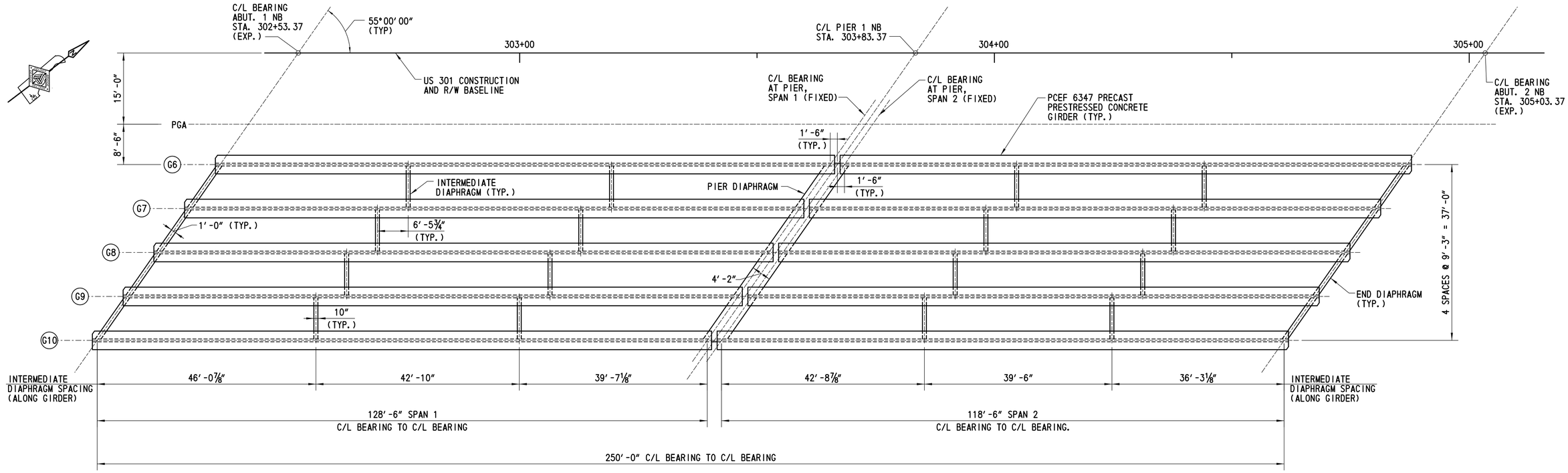

NB FRAMING PLAN

SCALE: 1/32" = 1'-0"

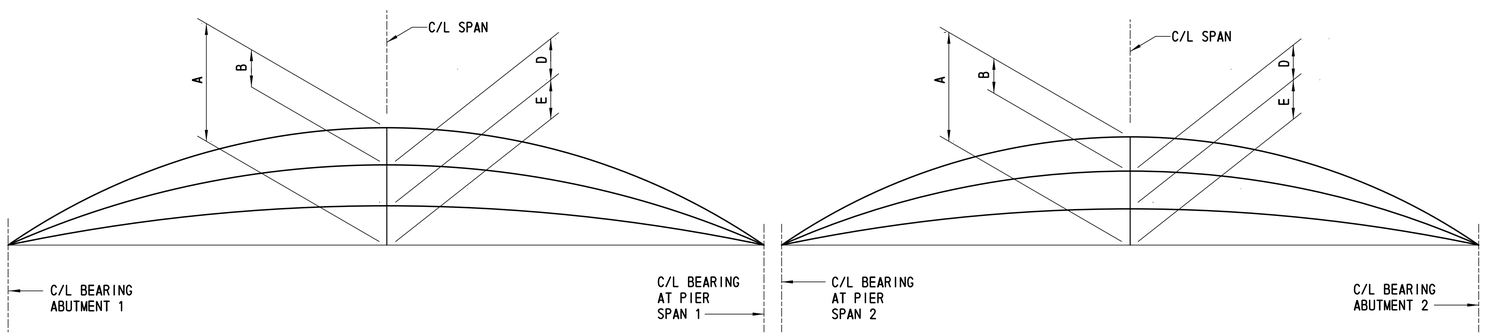

NB CAMBER DIAGRAM

NTS

LEGEND:

A = CAMBER DUE TO PRESTRESS AT ERECTION, CREEP MULTIPLIER = 1.8.

B = DEFLECTION DUE TO GIRDER DEAD LOAD AT ERECTION, CREEP MULTIPLIER = 1.85.

C = A+B

D = DEFLECTION DUE TO SLAB, DIAPHRAGMS, SIP FORMS, AND BARRIERS.

E = NET CAMBER, C+D.

CAMBER/DEFLECTION TABLE (INCHES)					
SPAN 1					
GIRDER NO.	A	B	C	D	E
G6 & G10	9 3/16"	-4 1/2"	4 11/16"	-2 5/8"	2 1/16"
G7 - G9	9 3/16"	-4 1/2"	4 11/16"	-2 7/8"	1 13/16"
SPAN 2					
GIRDER NO.	A	B	C	D	E
G6 & G10	7 13/16"	-3 1/4"	4 9/16"	-1 7/8"	2 11/16"
G7 - G9	7 13/16"	-3 1/4"	4 9/16"	-2 1/16"	2 1/2"

NOTES:

1. PRESTRESS CAMBER AND DEAD LOAD DEFLECTION DATA SHOWN IS THEORETICAL AND MAY VARY WITH CONCRETE STRENGTH, VARIABLE PRESTRESSING CONDITIONS AND PRESTRESS LOSSES. CONTRACTOR SHALL VERIFY VALUES IN THE FIELD.
2. THE THICKNESS OF THE GIRDER HAUNCHES SHALL BE VARIED TO COMPENSATE FOR ANY INACCURACIES IN THE FINAL CAMBER.

CROSS REFERENCE NOTES:

1. FOR GENERAL PLAN AND ELEVATION, SEE DWG. NO. 1-480 PE-2.
2. FOR TYPICAL SECTION, SEE DWG. NO. 1-480 TS-1.
3. FOR GIRDER PLAN AND ELEVATION, SEE DWG. NOS. 1-480 BM-4 AND 1-480 BM-5.
4. FOR GIRDER DETAILS, SEE DWG. NO. 1-480 BM-6.
5. FOR INTERMEDIATE AND END DIAPHRAGM DETAILS, SEE DWG. NO. 1-480 DPH-1.
6. FOR PIER DIAPHRAGM DETAILS, SEE DWG. NO. 1-480 DPH-2.

DELAWARE
DEPARTMENT OF TRANSPORTATION

ADDENDUMS / REVISIONS

US 301
LEVELS ROAD
TO SUMMIT BRIDGE ROAD

CONTRACT	BRIDGE NO.	1-480N&S
T200911303	DESIGNED BY:	LT
COUNTY		
NEW CASTLE	CHECKED BY:	BCW

US 301 MAINLINE OVER SANDY BRANCH

NB FRAMING PLAN

1-480 FR-2
SHEET NO.
606
TOTAL SHTS.
1256

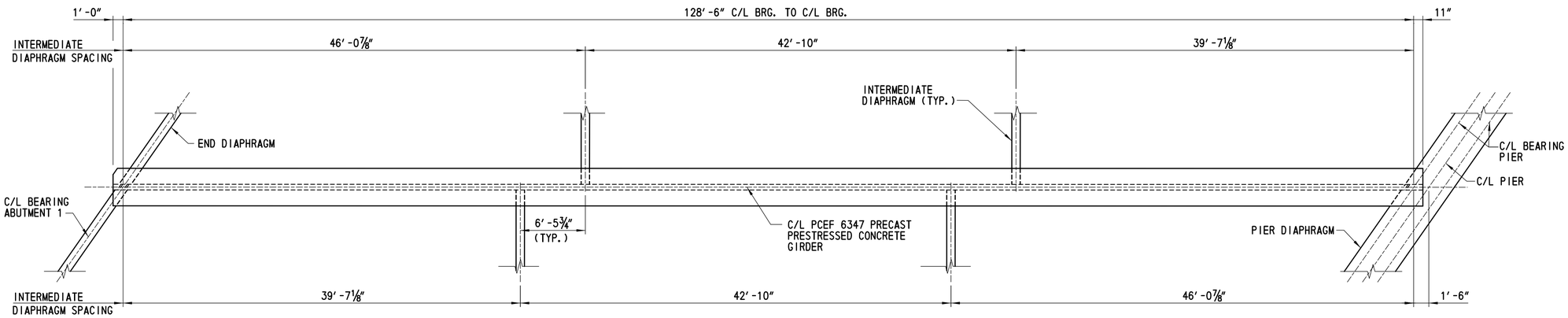

NB SPAN 1 GIRDER PLAN

NTS

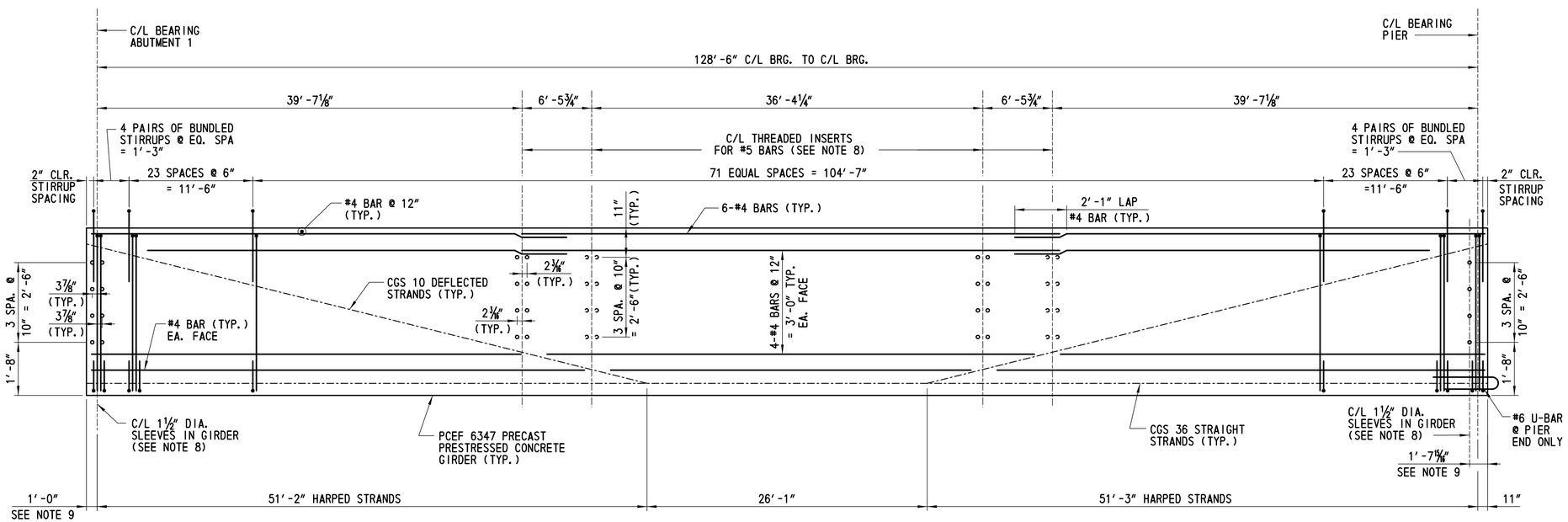

NB SPAN 1 GIRDER ELEVATION

NTS

NOTES:

1. NOT ALL PRESTRESSING STRANDS SHOWN FOR CLARITY. CENTER OF GRAVITY FOR STRANDS GROUP (CGS) SHOWN ONLY.
2. GIRDER LENGTHS IN CASTING BED SHALL BE DETERMINED AND DEPICTED IN SHOP DRAWINGS TO COMPENSATE FOR GRADE SHORTENING DUE TO PRESTRESS EFFECTS.
3. SECTION IS A PCEF 6347.
4. ALL MILD STEEL REINFORCEMENT IN GIRDERS SHALL BE EPOXY COATED.
5. TOP SURFACE OF GIRDERS SHALL BE ROUGH FINISHED TO A FULL AMPLITUDE OF A 1/4″ AND SCRUBBED TRANSVERSELY WITH A COURSE WIRE BRUSH TO REMOVE ALL LAITANCE TO PRODUCE A ROUGHENED SURFACE FOR BONDING.
6. END ZONE REINFORCEMENT MAY BE INCREASED BY THE FABRICATOR TO REFLECT FABRICATORS EXPERIENCE AND/OR TO CONTROL CRACKING.
7. NO CLEAR COVER LESS THAN AS SHOWN ON THESE PLANS WILL BE ACCEPTED.
8. OMIT SLEEVES AND THREADED INSERTS ON THE EXERIOR FACE OF FASCIA GIRDERS.
9. DIMENSION REFERENCED FROM C/L OF GIRDER WEB.
10. FABRICATOR TO CHECK GIRDER STABILITY FOR HANDLING, TRANSPORTATION AND ERECTION.

CROSS REFERENCE NOTES:

1. FOR GENERAL PLAN AND ELEVATION, SEE DWG. NO. 1-480 PE-2.
2. FOR PROJECT NOTES, SEE DWG. NO. 1-480 PN-1.
3. FOR TYPICAL SECTION, SEE DWG. NO. 1-480 TS-1.
4. FOR FRAMING PLAN, SEE DWG. NO. 1-480 FR-2.
5. FOR GIRDER SECTIONS, SEE DWG. NO. 1-480 BM-6.
6. FOR CAMBER SCHEDULE, SEE DWG. NO. 1-480 FR-2.
7. FOR INTERMEDIATE AND END DIAPHRAGM DETAILS, SEE DWG. NOS. 1-480 DPH-1 AND 1-480 DPH-2.
8. FOR TYPICAL GIRDER DETAILS, SEE DWG. NO. 1-480 BM-7.

DELAWARE DEPARTMENT OF TRANSPORTATION	ADDENDUMS / REVISIONS		US 301 LEVELS ROAD TO SUMMIT BRIDGE ROAD	CONTRACT T200911303	BRIDGE NO. 1-480N&S	US 301 MAINLINE OVER SANDY BRANCH NB SPAN 1 GIRDER PLAN AND ELEVATION	1-480 BM-4
				COUNTY NEW CASTLE	DESIGNED BY: LT		SHEET NO. 607
					CHECKED BY: BCW		TOTAL SHTS. 1256

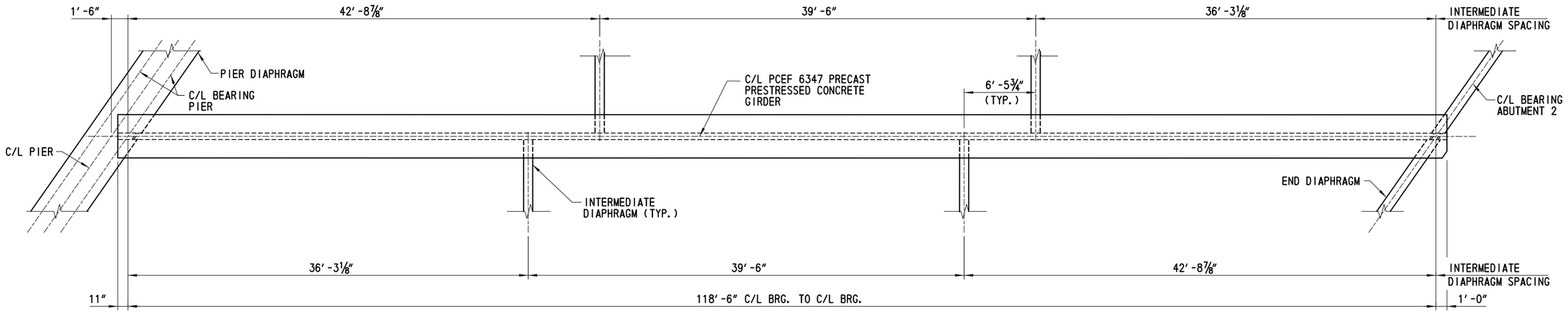

NB SPAN 2 GIRDER PLAN

NTS

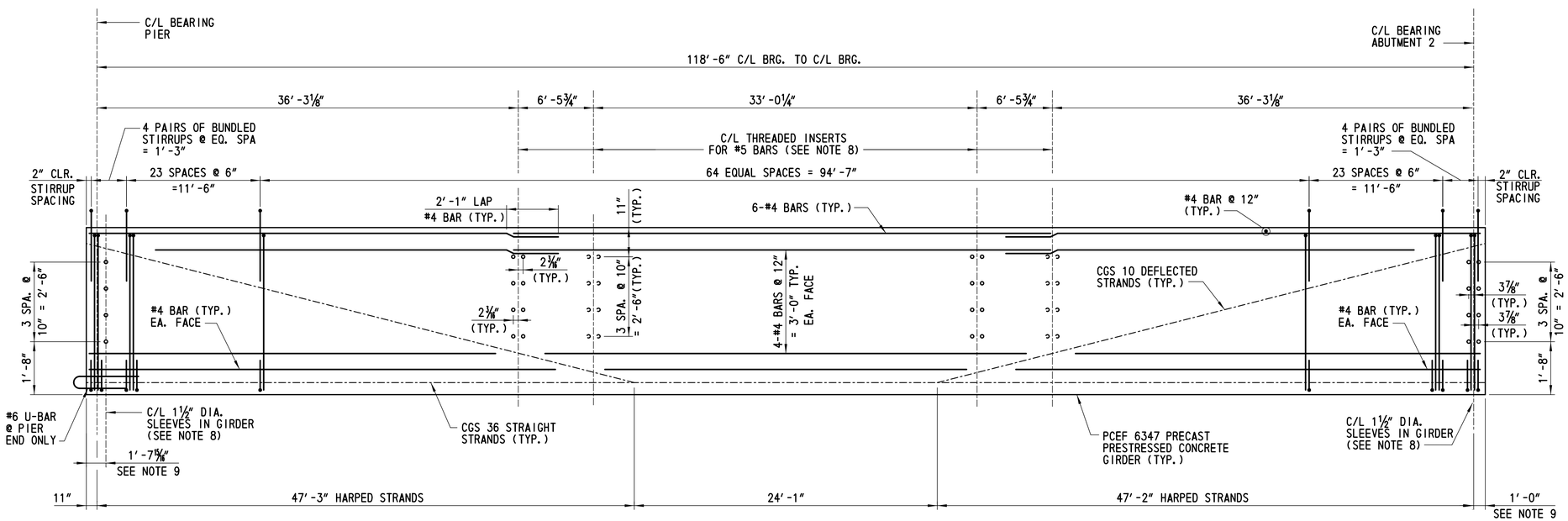

NB SPAN 2 GIRDER ELEVATION

NTS

NOTES:

1. NOT ALL PRESTRESSING STRANDS SHOWN FOR CLARITY. CENTER OF GRAVITY FOR STRANDS GROUP (CGS) SHOWN ONLY.
2. GIRDER LENGTHS IN CASTING BED SHALL BE DETERMINED AND DEPICTED IN SHOP DRAWINGS TO COMPENSATE FOR GRADE SHORTENING DUE TO PRESTRESS EFFECTS.
3. SECTION IS A PCEF 6347.
4. ALL MILD STEEL REINFORCEMENT IN GIRDERS SHALL BE EPOXY COATED.
5. TOP SURFACE OF GIRDERS SHALL BE ROUGH FINISHED TO A FULL AMPLITUDE OF A 1/4″ AND SCRUBBED TRANSVERSELY WITH A COURSE WIRE BRUSH TO REMOVE ALL LAITANCE TO PRODUCE A ROUGHENED SURFACE FOR BONDING.
6. END ZONE REINFORCEMENT MAY BE INCREASED BY THE FABRICATOR TO REFLECT FABRICATORS EXPERIENCE AND/OR TO CONTROL CRACKING.
7. NO CLEAR COVER LESS THAN AS SHOWN ON THESE PLANS WILL BE ACCEPTED.
8. OMIT SLEEVES AND THREADED INSERTS ON THE EXTERIOR FACE OF FASCIA GIRDERS.
9. DIMENSION REFERENCED FROM C/L OF GIRDER WEB.
10. FABRICATOR TO CHECK GIRDER STABILITY FOR HANDLING, TRANSPORTATION AND ERECTION.

CROSS REFERENCE NOTES:

1. FOR GENERAL PLAN AND ELEVATION, SEE DWG. NO. 1-480 PE-2.
2. FOR PROJECT NOTES, SEE DWG. NO. 1-480 PN-1.
3. FOR TYPICAL SECTION, SEE DWG. NO. 1-480 TS-1.
4. FOR FRAMING PLAN, SEE DWG. NO. 1-480 FR-2.
5. FOR GIRDER SECTIONS, SEE DWG. NO. 1-480 BM-6.
6. FOR CAMBER SCHEDULE, SEE DWG. NO. 1-480 FR-2.
7. FOR INTERMEDIATE AND END DIAPHRAGM DETAILS, SEE DWG. NOS. 1-480 DPH-1 AND 1-480 DPH-2.
8. FOR TYPICAL GIRDER DETAILS, SEE DWG. NO. 1-480 BM-7.

DELAWARE DEPARTMENT OF TRANSPORTATION	ADDENDUMS / REVISIONS		US 301 LEVELS ROAD TO SUMMIT BRIDGE ROAD	CONTRACT T200911303	BRIDGE NO. 1-480N&S	US 301 MAINLINE OVER SANDY BRANCH NB SPAN 2 GIRDER PLAN AND ELEVATION	1-480 BM-5
				COUNTY NEW CASTLE	DESIGNED BY: LT		SHEET NO. 608
					CHECKED BY: BCW		TOTAL SHTS. 1256

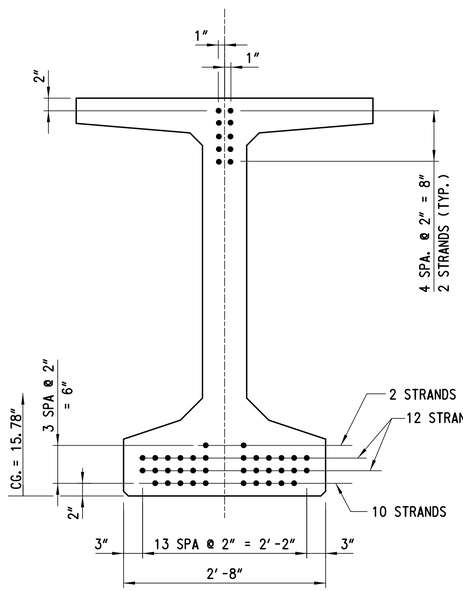

PRESTRESSING AT GIRDER ENDS

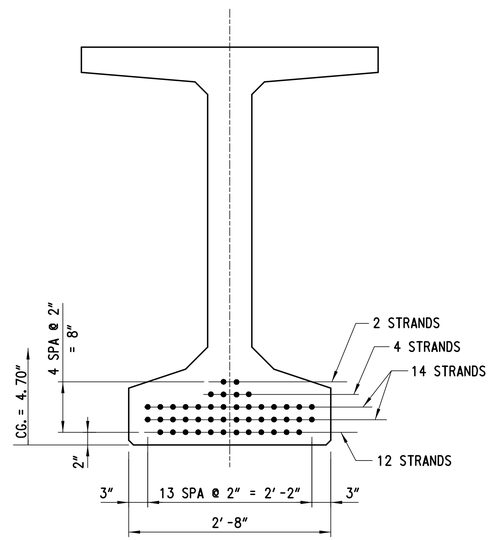

PRESTRESSING AT MIDSPAN

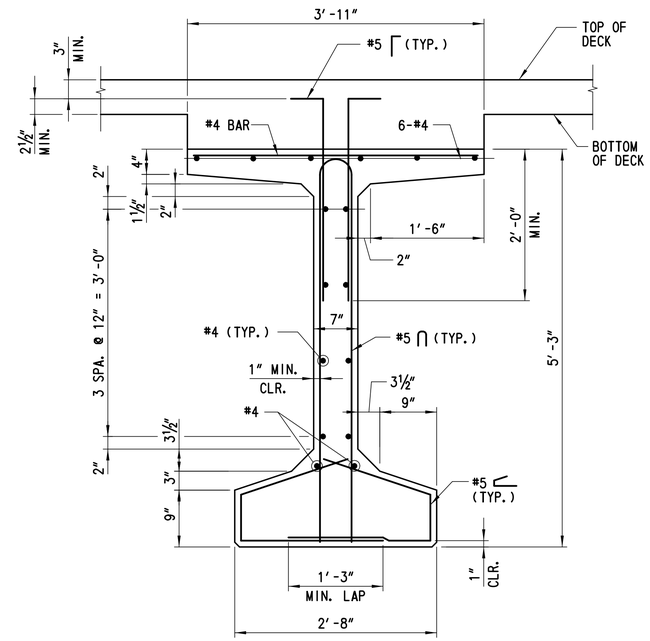

TYPICAL REINFORCEMENT

TYPICAL NB GIRDER SECTIONS

SCALE: 1" = 1'-0"

NOTES:

1. GIRDER LIFTING DETAILS SHALL BE PROVIDED BY THE CONTRACTOR AND ARE SUBJECT TO THE APPROVAL OF THE ENGINEER.
2. TYPICAL COVER - 1" CLR. TO STIRRUPS, 1½" CLR. TO LONGITUDINAL BARS AND STRANDS.

CROSS REFERENCE NOTES:

1. FOR GIRDER PLAN AND ELEVATION, SEE DWG. NOS. 1-480 BM-4 AND 1-480 BM-5.
2. FOR FRAMING PLAN AND CAMBER SCHEDULE, SEE DWG. NO. 1-480 FR-2.
3. FOR GIRDER DETAILS, SEE DWG. NO. 1-480 BM-7.
4. FOR TYPICAL SECTION, SEE DWG. NO. 1-480 TS-1.

DELAWARE DEPARTMENT OF TRANSPORTATION	ADDENDUMS / REVISIONS	SCALE 0 1 ½ 2 FEET	US 301 LEVELS ROAD TO SUMMIT BRIDGE ROAD	CONTRACT T200911303	BRIDGE NO. 1-480N&S	US 301 MAINLINE OVER SANDY BRANCH	1-480 BM-6	
				COUNTY NEW CASTLE	DESIGNED BY: LT	NB GIRDER SECTIONS	SHEET NO. 609	
					CHECKED BY: BCW		TOTAL SHTS. 1256	

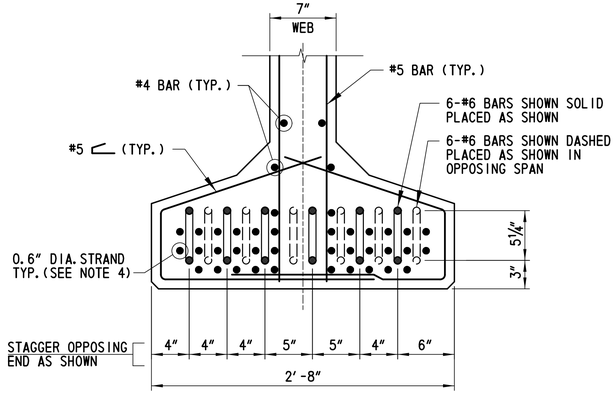

END OF GIRDER REINFORCEMENT DETAIL
SECTION AT PIER

SCALE: 1½" = 1'-0"

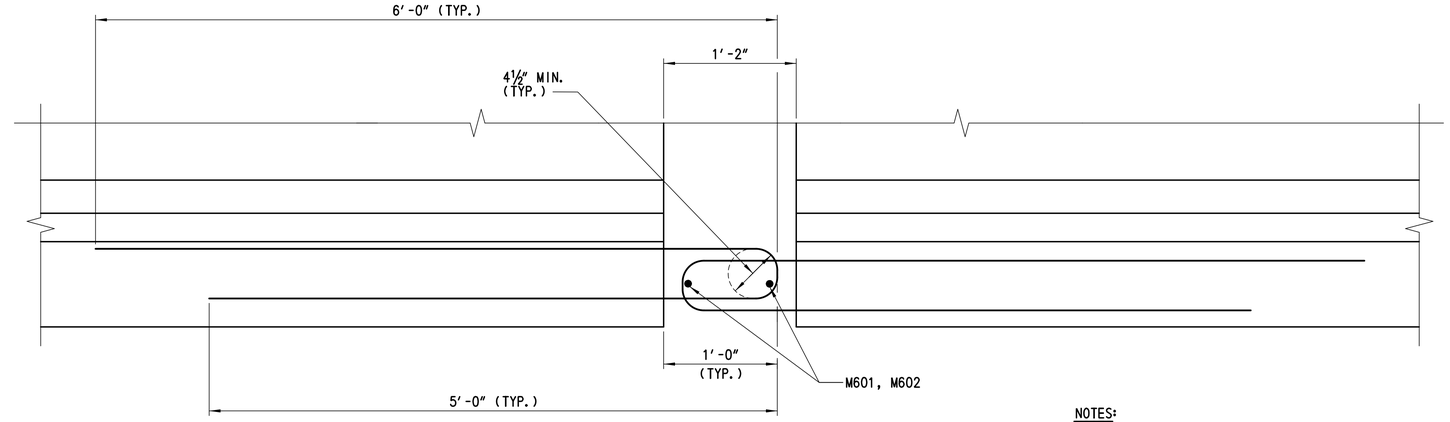

GIRDER END DETAIL AT PIER

SCALE: 1½" = 1'-0"

NOTES:

1. PRESTRESSING STRANDS AND MILD REINFORCEMENT NOT SHOWN FOR CLARITY.
2. U-BARS SHOWN STAGGERED FOR CLARITY.
3. ORIENTATION OF THE LONG LEG OF THE U-BARS SHALL ALTERNATE TO STAGGER THE TERMINATION OF THE BARS WITHIN THE GIRDER.

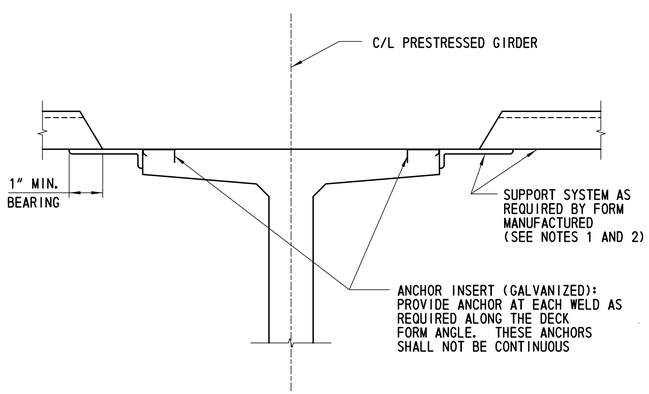

FORM ANCHOR DETAIL

SCALE: 1" = 1'-0"

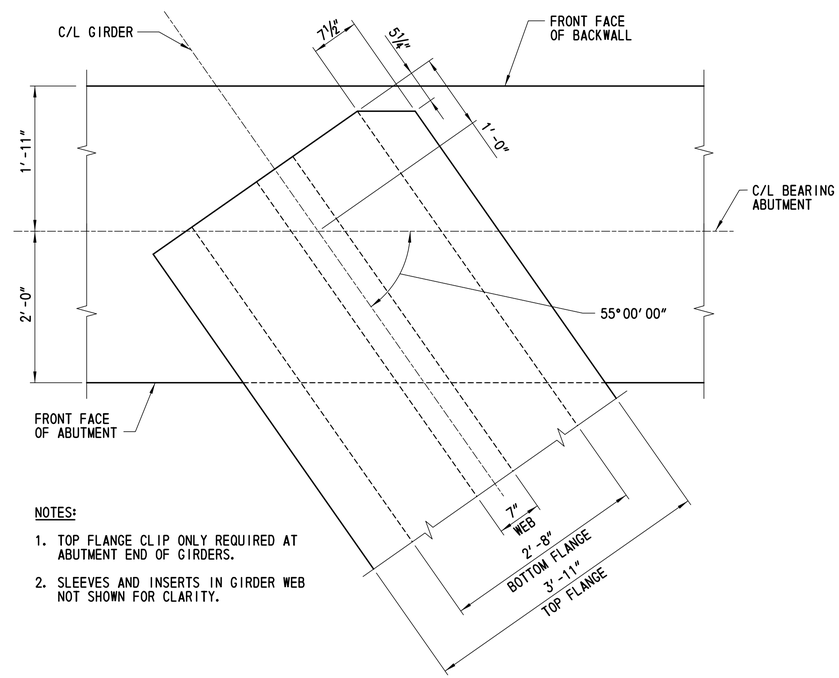

NOTES:

1. TOP FLANGE CLIP ONLY REQUIRED AT ABUTMENT END OF GIRDERS.
2. SLEEVES AND INSERTS IN GIRDER WEB NOT SHOWN FOR CLARITY.

GIRDER END DETAIL AT ABUTMENT

SCALE: 1" = 1'-0"

NOTES:

1. PERMANENT STEEL BRIDGE DECK FORMS AND SUPPORTS SHALL BE PROVIDED CONFORMING TO THE REQUIREMENTS OF SECTION 602 OF THE DELDOT STANDARD SPECIFICATIONS AND AS SHOWN IN THE BDM.
2. ANY PERMANENTLY EXPOSED FORM METAL WHERE THE GALVANIZED COATING HAS BEEN DAMAGED SHALL BE THOROUGHLY CLEANED, WIRE BRUSHED AND PAINTED WITH TWO COATS OF ZINC DUST-ZINC OXIDE PAINT, NO COLOR ADDED TO THE SATISFACTION OF THE ENGINEER. MINOR HEAT DISCOLORATION IN AREAS OF WELDS NEED NOT BE TOUCHED UP.
3. SECTION OF NORTHBOUND GIRDERS SHOWN. SOUTHBOUND GIRDERS ARE SIMILAR.

CROSS REFERENCE NOTES:

1. FOR TYPICAL SECTION, SEE DWG. NO. 1-480N TS-1
2. FOR SB SPAN 1 GIRDER PLAN AND ELEVATION, SEE DWG. NO. 1-480 BM-1.
3. FOR SB SPAN 2 GIRDER PLAN AND ELEVATION, SEE DWG. NO. 1-480 BM-2.
4. FOR NB SPAN 1 GIRDER PLAN AND ELEVATION, SEE DWG. NO. 1-480 BM-4.
5. FOR NB SPAN 2 GIRDER PLAN AND ELEVATION, SEE DWG. NO. 1-480 BM-5.
6. FOR SB GIRDER SECTIONS, SEE DWG. NO. 1-480 BM-3.
7. FOR NB GIRDER SECTIONS, SEE DWG. NO. 1-480 BM-6.
8. FOR SB FRAMING PLAN, SEE DWG. NO. 1-480N FR-1
9. FOR NB FRAMING PLAN, SEE DWG. NO. 1-480N FR-2.

DELAWARE DEPARTMENT OF TRANSPORTATION	ADDENDUMS / REVISIONS	US 301 LEVELS ROAD TO SUMMIT BRIDGE ROAD	CONTRACT T200911303	BRIDGE NO. 1-480N&S	US 301 MAINLINE OVER SANDY BRANCH	1-480 BM-7	
			COUNTY NEW CASTLE	DESIGNED BY: LT	TYPICAL GIRDER DETAILS	SHEET NO. 610	
				CHECKED BY: BCW		TOTAL SHTS. 1256	

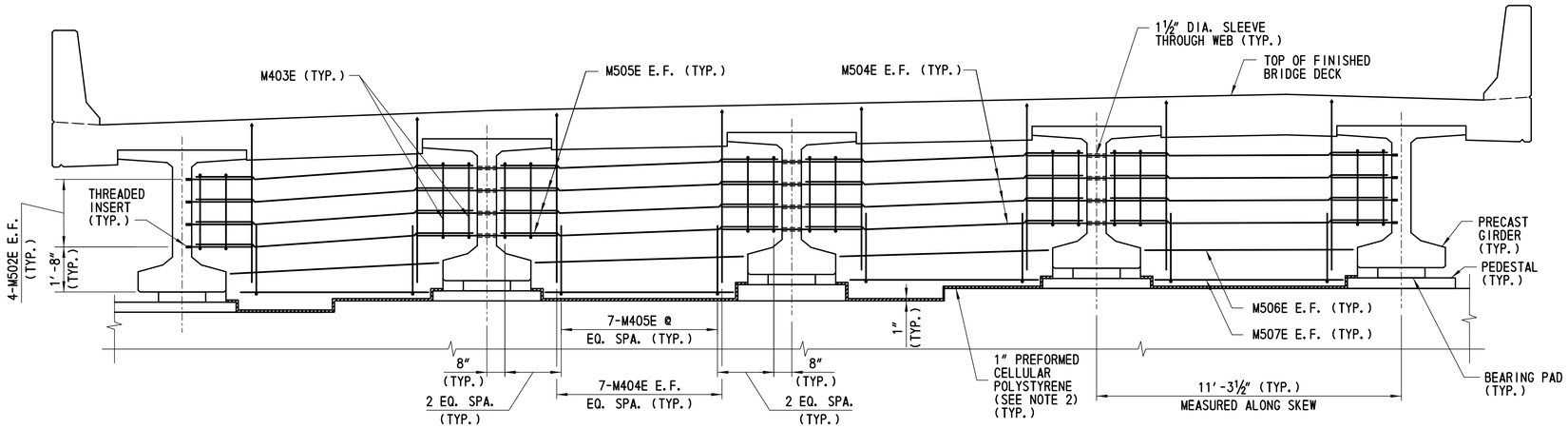

TYPICAL END DIAPHRAGM AT ABUTMENT (EXPANSION)

SCALE: ⅜"= 1'-0"

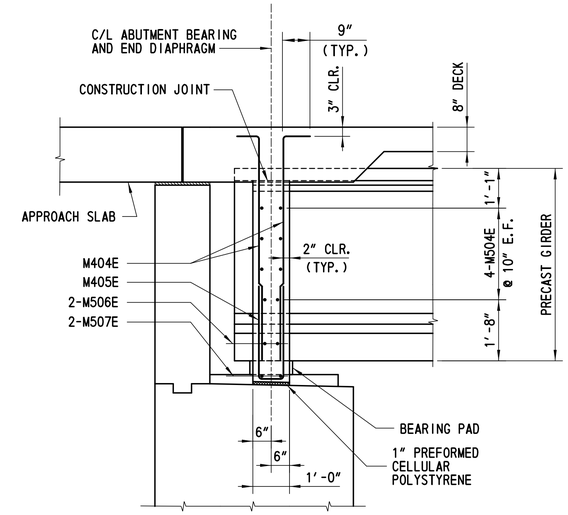

END DIAPHRAGM BETWEEN GIRDERS

SCALE: ½"= 1'-0"

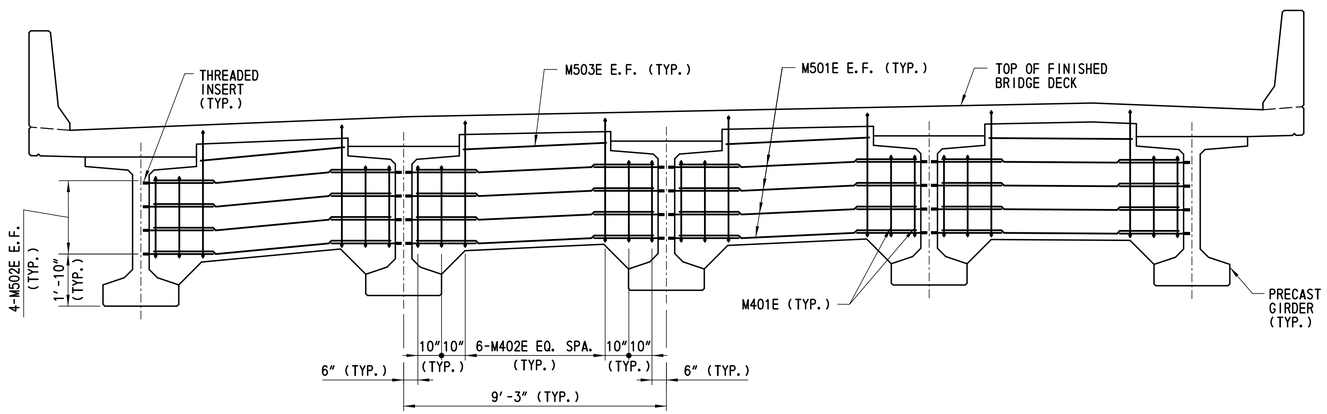

TYPICAL INTERMEDIATE DIAPHRAGM

SCALE: ⅜"= 1'-0"

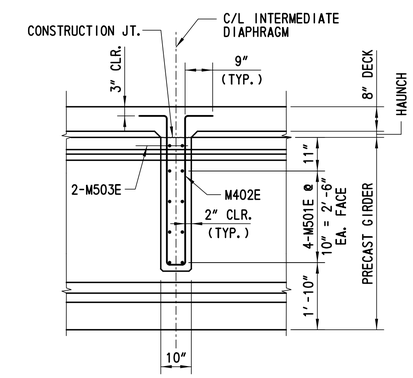

INTERMEDIATE DIAPHRAGM BETWEEN GIRDERS

SCALE: ½"= 1'-0"

NOTES:

1. MINIMUM LAP SPLICE LENGTHS:
   #4 BAR - 1'-8"
   #5 BAR - 2'-1"
2. 1" PREFORMED CELLULAR POLYSTYRENE TO BE INCIDENTAL TO ITEM NO. 602013.

CROSS REFERENCE NOTES:

1. FOR TYPICAL SECTION, SEE DWG. NO. 1-480 TS-1.
2. FOR SB FRAMING PLAN, SEE DWG. NO. 1-480 FR-1.
3. FOR NB FRAMING PLAN, SEE DWG. NO. 1-480 FR-2.
4. FOR SB DECK POURING SEQUENCE, SEE DWG. NO. 1-480 DK-1.
5. FOR NB DECK POURING SEQUENCE, SEE DWG. NO. 1-480 DK-3.

DELAWARE DEPARTMENT OF TRANSPORTATION	ADDENDUMS / REVISIONS	US 301 LEVELS ROAD TO SUMMIT BRIDGE ROAD	CONTRACT T200911303	BRIDGE NO. 1-480N&S	US 301 MAINLINE OVER SANDY BRANCH	1-480 DPH-1	
			COUNTY NEW CASTLE	DESIGNED BY: BCM	DIAPHRAGM DETAILS 1	SHEET NO. 611	
				CHECKED BY: BCW		TOTAL SHTS. 1256	

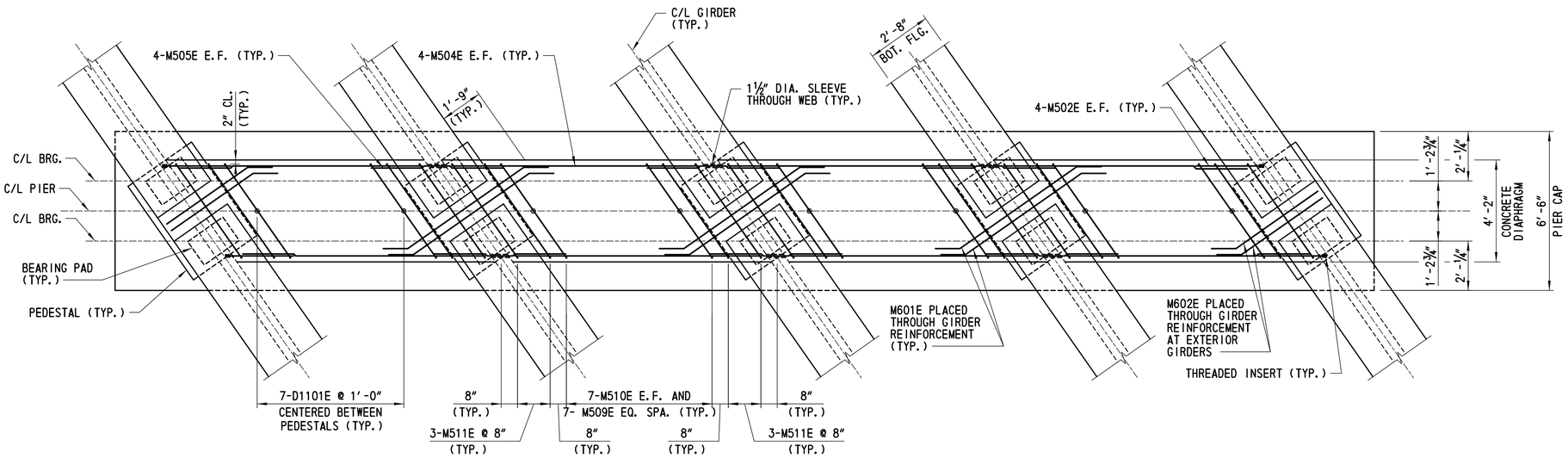

PIER DIAPHRAGM PLAN (FIXED)

SCALE: ⅜" = 1'-0"

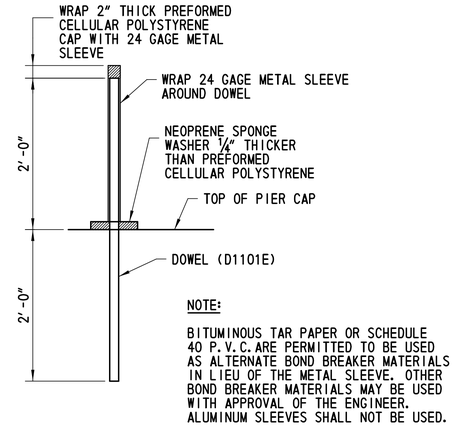

DOWEL DETAIL

SCALE: 1" = 1'-0"

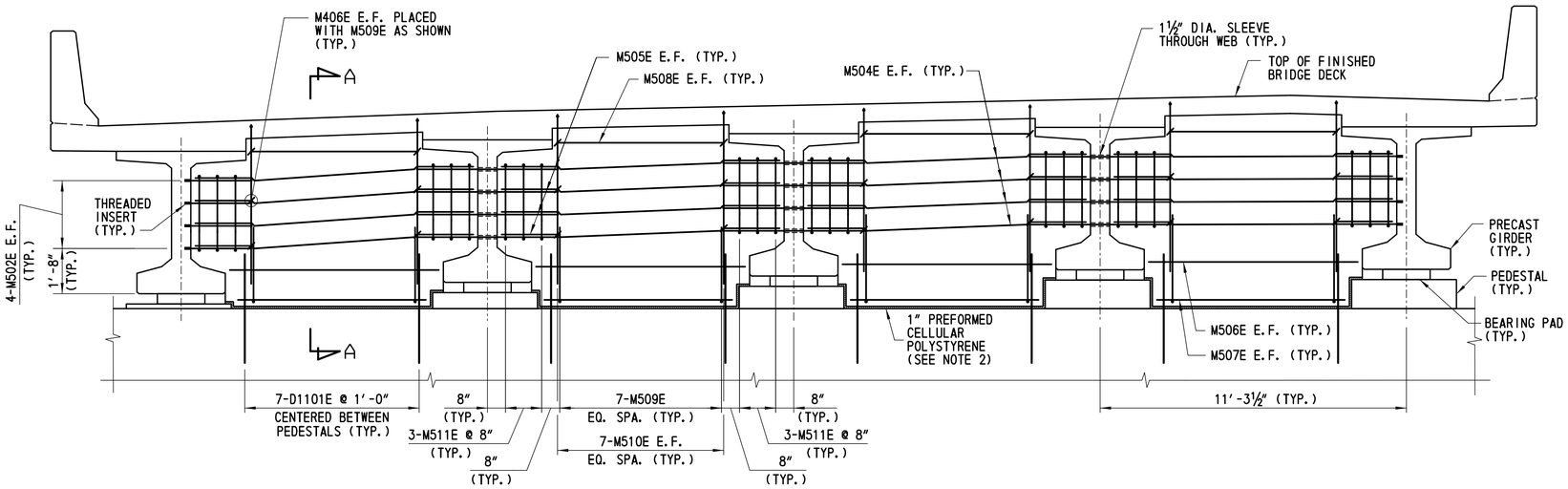

PIER DIAPHRAGM ELEVATION (FIXED)

SCALE: ⅜" = 1'-0"

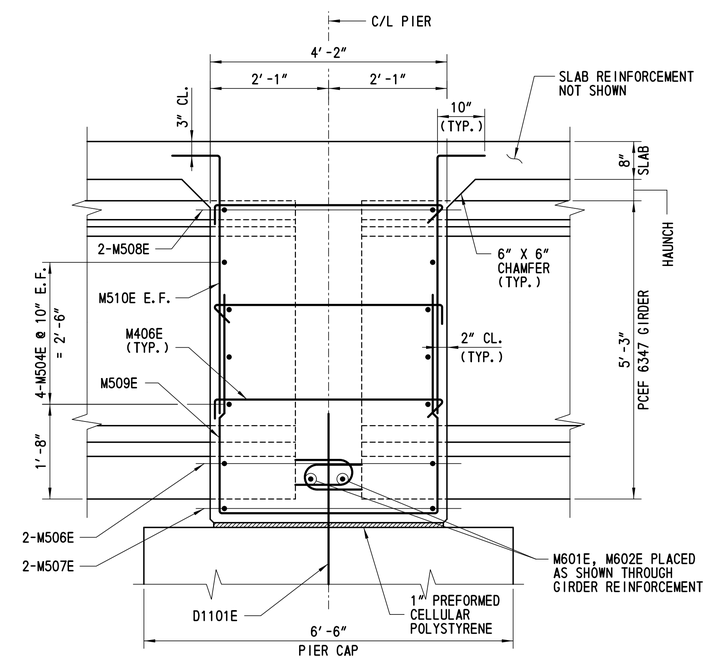

SECTION A-A

SCALE: ¾" = 1'-0"

NOTE:

FOR DOWEL BAR (D1101E), SEE DETAIL THIS SHEET

NOTES:

1. MINIMUM LAP SPLICE LENGTHS:
   #5 BAR - 2'-1"
2. 1" PREFORMED CELLULAR POLYSTYRENE TO BE INCIDENTAL TO ITEM NO. 602013.

CROSS REFERENCE NOTES:

1. FOR TYPICAL SECTION, SEE DWG. NO. 1-480 TS-1.
2. FOR FRAMING PLAN, SEE DWG. NO. 1-480 FR-1 AND 1-480 FR-2.
3. FOR DECK DETAILS, SEE DWG. NOS. 1-480 DK-2, 1-480 DK-4, AND 1-480 DK-5.

DELAWARE DEPARTMENT OF TRANSPORTATION	ADDENDUMS / REVISIONS	US 301 LEVELS ROAD TO SUMMIT BRIDGE ROAD	CONTRACT T200911303	BRIDGE NO. 1-480N&S	US 301 MAINLINE OVER SANDY BRANCH	1-480 DPH-2
			COUNTY NEW CASTLE	DESIGNED BY: BCM	DIAPHRAGM DETAILS 2	SHEET NO. 612
				CHECKED BY: BCW		TOTAL SHTS. 1256

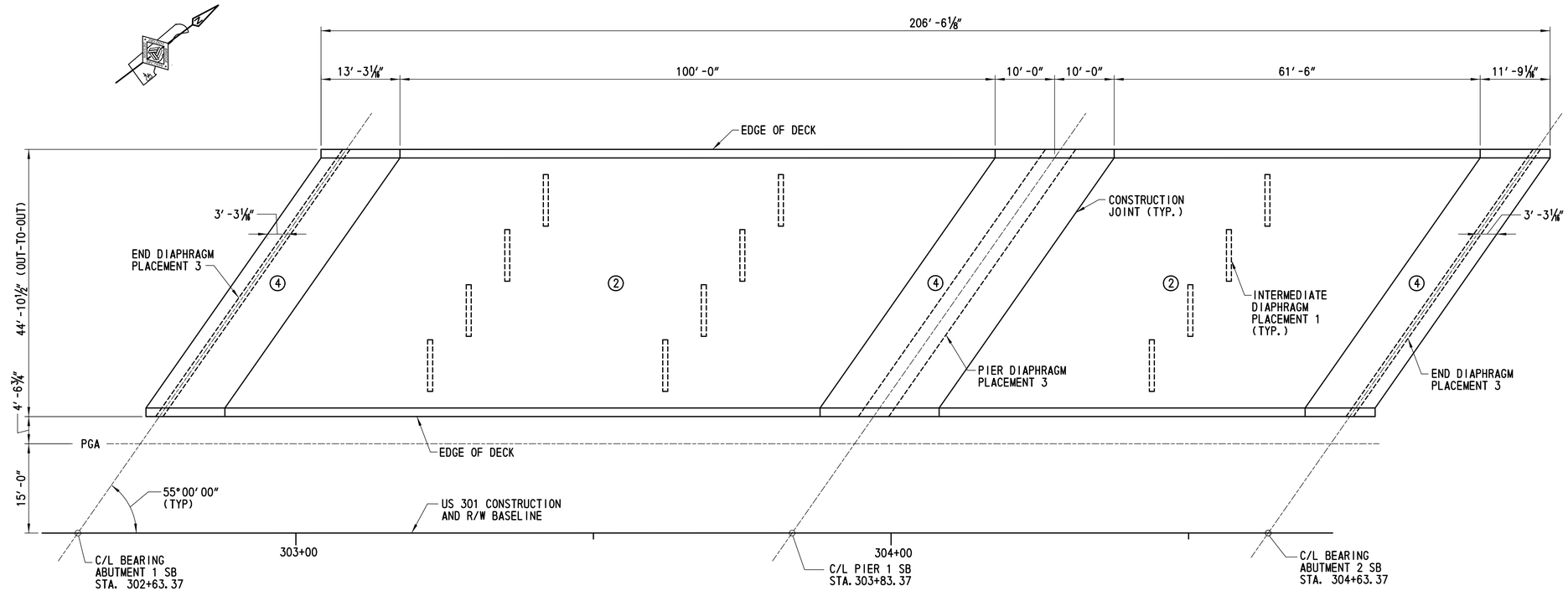

SB BRIDGE DECK POURING SEQUENCE

SCALE: 1/32″ = 1′-0″

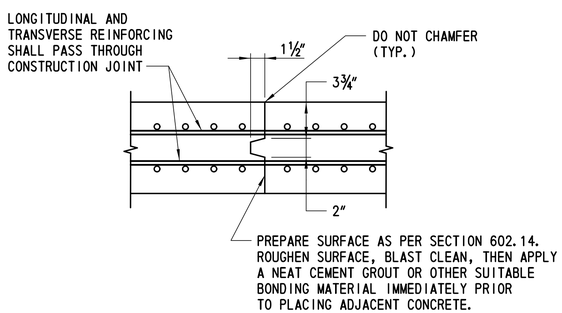

BRIDGE DECK CONSTRUCTION JOINT

NTS

PLACEMENT SEQUENCE:

1. CAST INTERMEDIATE DIAPHRAGMS.
2. CAST POUR NO. 2 AS SHOWN.
3. CAST END DIAPHRAGMS AT ABUTMENTS AND DIAPHRAGM AT PIER.
4. CAST POUR NO. 4 AS SHOWN.

NOTE:

1. THE CONTRACTOR MAY SUBMIT AN ALTERNATE DECK POUR SEQUENCE FOR APPROVAL.

CROSS REFERENCE NOTES:

1. FOR DECK REINFORCEMENT PLAN, SEE DWG. NO. 1-480 DK-2.
2. FOR DECK DETAILS, SEE DWG. NO. 1-480 DK-5.
3. FOR FINISHED DECK ELEVATIONS, SEE DWG. NOS. 1-480 FD-1 AND 1-480 FD-2.
4. FOR REINFORCING BAR SCHEDULE, SEE DWG. NO. 1-480 BR-6.
5. FOR ADDITIONAL PRESTRESSING NOTES, SEE DWG. NO. 1-480 PN-1.

DELAWARE DEPARTMENT OF TRANSPORTATION	ADDENDUMS / REVISIONS	US 301 LEVELS ROAD TO SUMMIT BRIDGE ROAD	CONTRACT T200911303	BRIDGE NO. 1-480N&S	US 301 MAINLINE OVER SANDY BRANCH SB DECK POURING SEQUENCE	1-480 DK-1	SHEET NO. 613
			COUNTY NEW CASTLE	DESIGNED BY: PRH			TOTAL SHTS. 1256
				CHECKED BY: BCW			

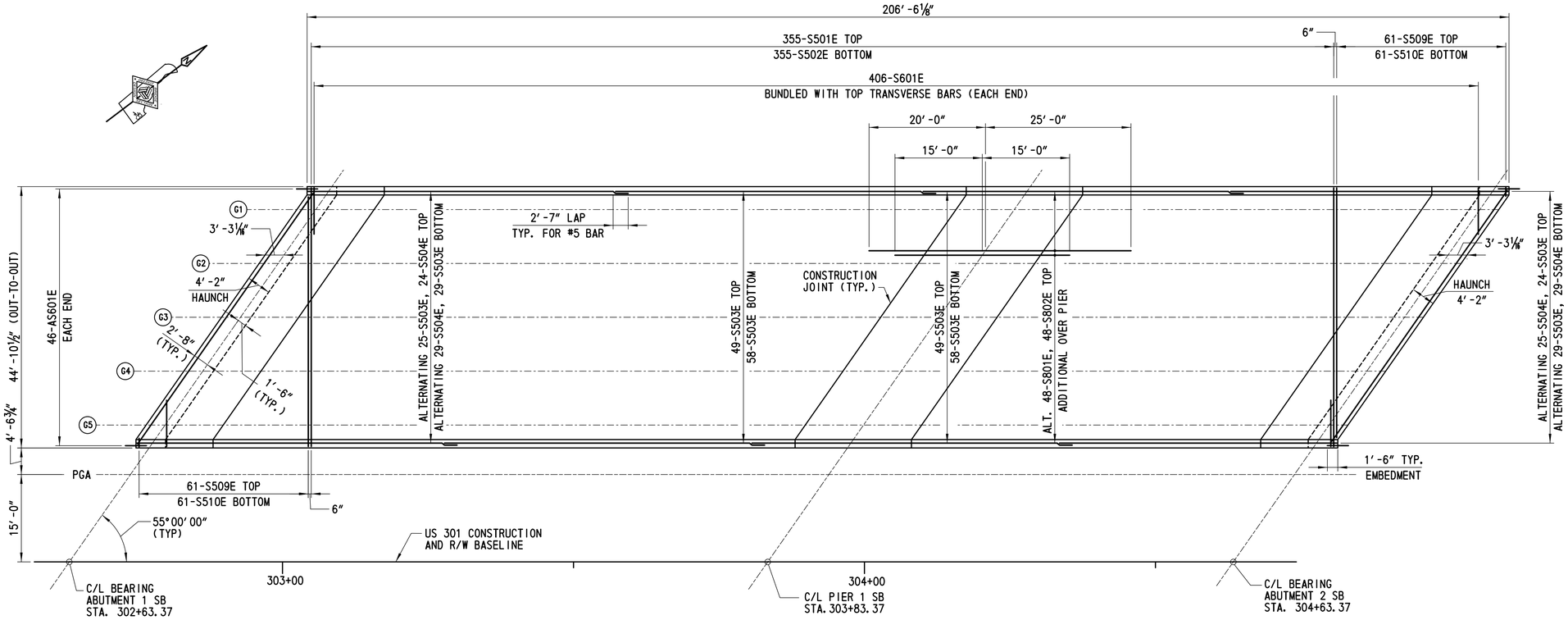

SB BRIDGE DECK REINFORCEMENT PLAN

SCALE: ¹⁄₁₆″= 1′-0″

NOTE:

BARRIER REINFORCEMENT NOT SHOWN IN PLAN VIEW FOR CLARITY.

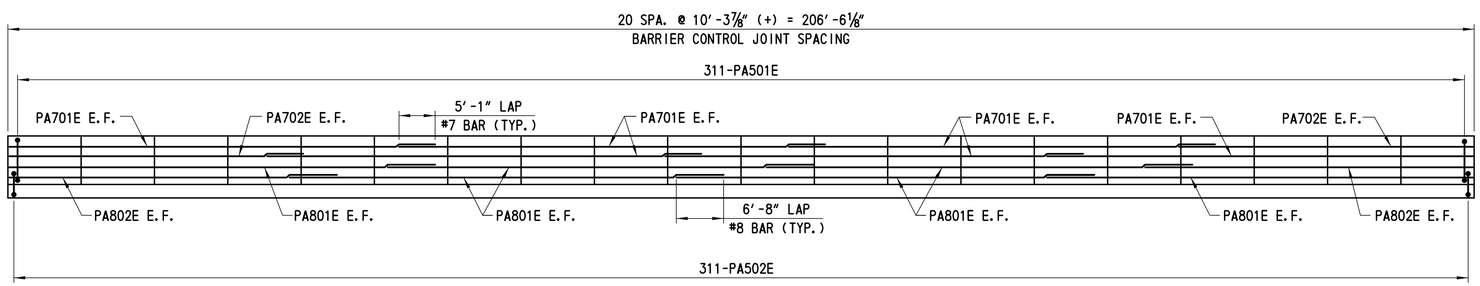

ELEVATION - DECK AND BARRIER REINFORCEMENT

NTS

CROSS REFERENCE NOTES:

1. FOR TYPICAL DECK AND PARAPET REINFORCEMENT SECTIONS, SEE DWG. NO. 1-480 DK-5.
2. FOR FINISHED DECK ELEVATIONS, SEE DWG. NOS. 1-480 FD-1 AND 1-480 FD-2.
3. FOR REINFORCING BAR SCHEDULE, SEE DWG. NO. 1-480 BR-6.
4. FOR DECK POURING SEQUENCE, SEE DWG. NO. 1-480 DK-1.
5. FOR BARRIER CONTROL JOINT DETAIL. SEE DWG. NO. 1-480 DK-5.

DELAWARE DEPARTMENT OF TRANSPORTATION	ADDENDUMS / REVISIONS		US 301 LEVELS ROAD TO SUMMIT BRIDGE ROAD	CONTRACT T200911303	BRIDGE NO. 1-480N&S	US 301 MAINLINE OVER SANDY BRANCH SB DECK AND BARRIER REINFORCEMENT	1-480 DK-2
				COUNTY NEW CASTLE	DESIGNED BY: EE		SHEET NO. 614
					CHECKED BY: BCW		TOTAL SHTS. 1256

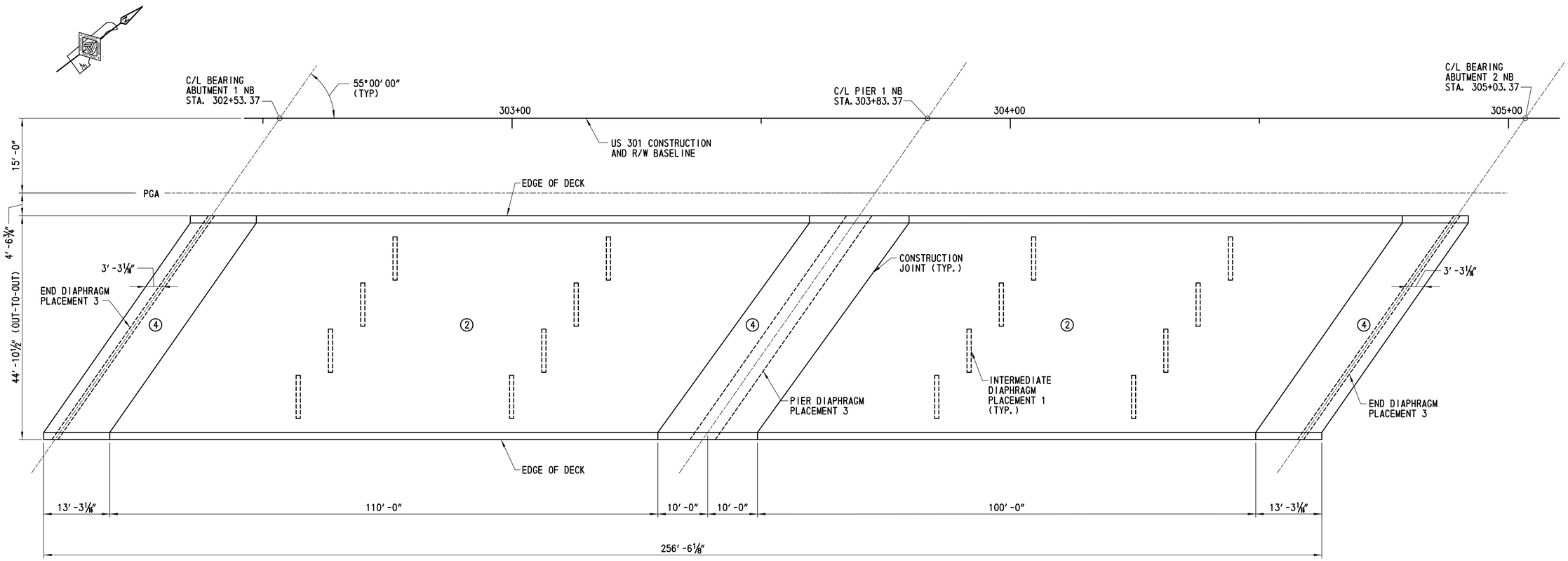

NB BRIDGE DECK POURING SEQUENCE

SCALE: 3/32″= 1′-0″

PLACEMENT SEQUENCE:

1. CAST INTERMEDIATE DIAPHRAGMS.
2. CAST POUR NO. 2 AS SHOWN.
3. CAST END DIAPHRAGMS AT ABUTMENTS AND DIAPHRAGM AT PIER.
4. CAST POUR NO. 4 AS SHOWN.

NOTE:

1. THE CONTRACTOR MAY SUBMIT AN ALTERNATE DECK POUR SEQUENCE FOR APPROVAL.

CROSS REFERENCE NOTES:

1. FOR DECK REINFORCEMENT PLAN, SEE DWG. NO. 1-480 DK-4.
2. FOR DECK DETAILS, SEE DWG. NO. 1-480 DK-5.
3. FOR FINISHED DECK ELEVATIONS, SEE DWG. NOS. 1-480 FD-3 AND 1-480 FD-4.
4. FOR REINFORCING BAR SCHEDULE, SEE DWG. NO. 1-480 BR-6.
5. FOR BRIDGE DECK CONSTRUCTION JOINT DETAIL, SEE DWG. NO. 1-480 DK-1.
6. FOR ADDITIONAL PRESTRESSING NOTES, SEE DWG. NO 1-480 PN-1.

DELAWARE DEPARTMENT OF TRANSPORTATION	ADDENDUMS / REVISIONS		US 301 LEVELS ROAD TO SUMMIT BRIDGE ROAD	CONTRACT T200911303	BRIDGE NO. 1-480N&S	US 301 MAINLINE OVER SANDY BRANCH NB DECK POURING SEQUENCE	1-480 DK-3
				COUNTY NEW CASTLE	DESIGNED BY: PRH		SHEET NO. 615
					CHECKED BY: BCW		TOTAL SHTS. 1256

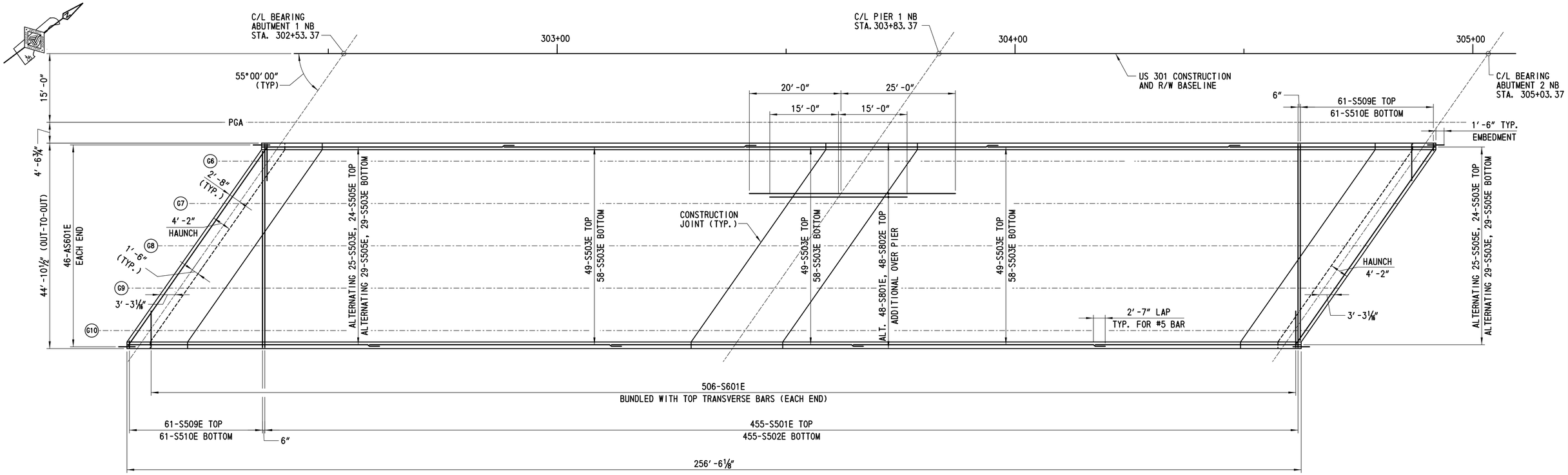

NB BRIDGE DECK REINFORCEMENT PLAN

SCALE: ½"= 1'-0"

NOTE:

BARRIER REINFORCEMENT NOT SHOWN IN PLAN VIEW FOR CLARITY.

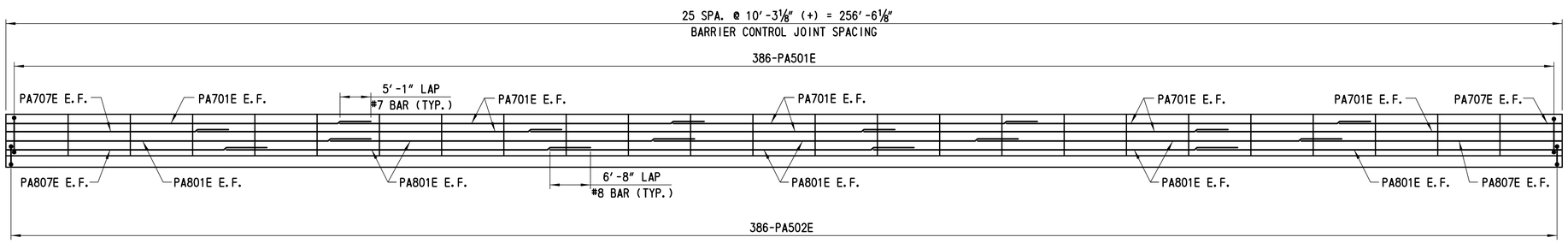

ELEVATION - DECK AND BARRIER REINFORCEMENT

NTS

CROSS REFERENCE NOTES:

1. FOR TYPICAL DECK AND PARAPET REINFORCEMENT SECTIONS, SEE DWG. NO. 1-480 DK-5.
2. FOR FINISHED DECK ELEVATIONS, SEE DWG. NOS. 1-480 FD-3 AND 1-480 FD-4.
3. FOR REINFORCING BAR SCHEDULE, SEE DWG. NO. 1-480 BR-7.
4. FOR DECK POURING SEQUENCE, SEE DWG. NO. 1-480 DK-3.
5. FOR BARRIER CONTROL JOINT DETAIL, SEE DWG. NO. 1-480 DK-5.

DELAWARE DEPARTMENT OF TRANSPORTATION	ADDENDUMS / REVISIONS	US 301 LEVELS ROAD TO SUMMIT BRIDGE ROAD	CONTRACT T200911303	BRIDGE NO. 1-480N&S	US 301 MAINLINE OVER SANDY BRANCH NB DECK AND BARRIER REINFORCEMENT	1-480 DK-4	
			COUNTY NEW CASTLE	DESIGNED BY: EE		SHEET NO. 616	
				CHECKED BY: BCW		TOTAL SHTS. 1256	

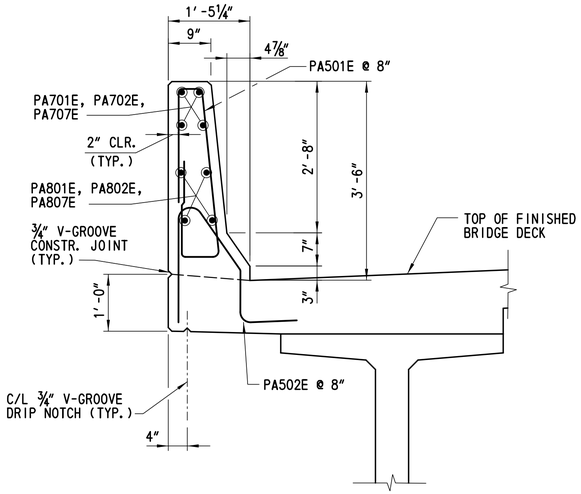

TYPICAL BARRIER REINFORCING SECTION @ DECK SLAB

(CONDUIT NOT SHOWN FOR CLARITY)
SCALE: ¾″= 1′-0″

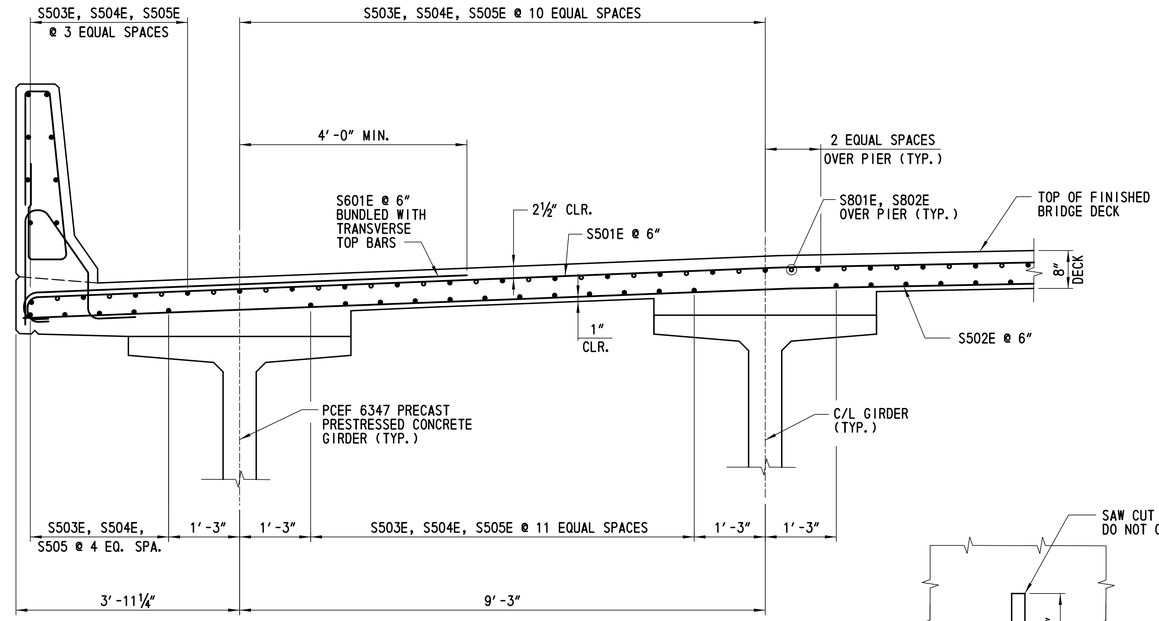

TYPICAL DECK REINFORCING SECTION

SCALE: ¾″= 1′-0″

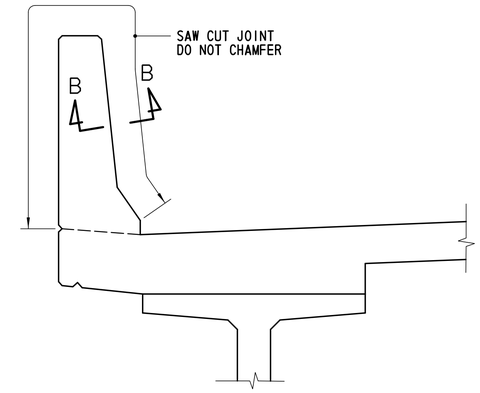

BARRIER CONTROL JOINT DETAIL

SCALE: ¾″= 1′-0″

NOTES:

1. SAW CUT CONTROL JOINTS THE SAME DAY THAT THE FORMS ARE STRIPPED.
2. DETAIL FOR BARRIER ON APPROACH SLAB SIMILAR.

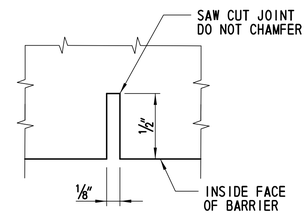

SECTION B-B

NOT TO SCALE

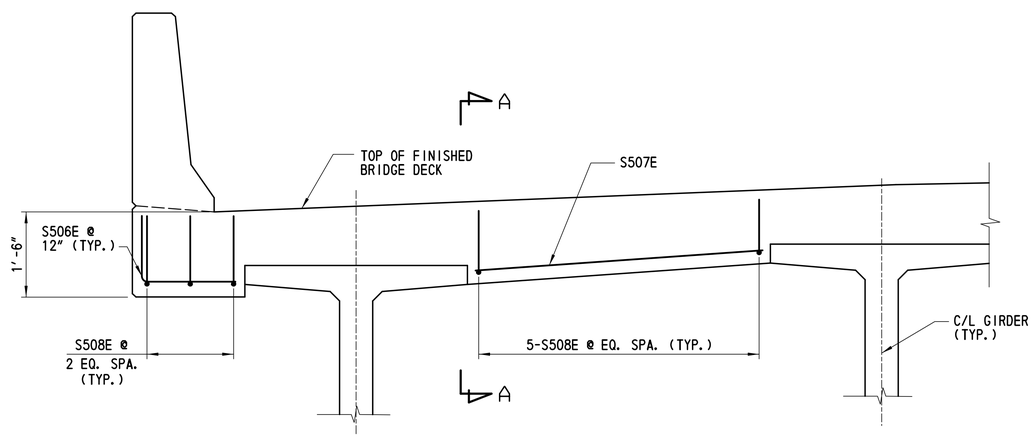

TYPICAL END HAUNCH SECTION

SCALE: ¾″= 1′-0″

NOTE:

TYPICAL DECK REINFORCEMENT NOT SHOWN FOR CLARITY.

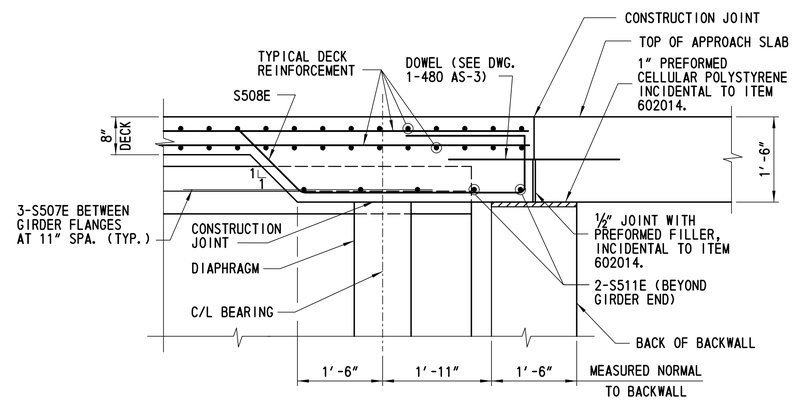

SECTION A-A

SCALE: ¾″= 1′-0″

CROSS REFERENCE NOTES:

1. BRIDGE DECK REINFORCEMENT PLAN, SEE DWG. NOS. 1-480 DK-2 AND 1-480 DK-4.
2. FOR BRIDGE DECK POURING SEQUENCE, SEE DWG. NOS. 1-480 DK-1 AND 1-480 DK-3.
3. FOR FINISHED BRIDGE DECK ELEVATIONS, SEE DWG. NOS. 1-480 FD-1, 1-480 FD-2, 1-480 FD-3, AND 1-480 FD-4.
4. FOR REINFORCING BAR SCHEDULE, SEE DWG. NOS. 1-480 BR-6 AND 1-480 BR-7.
5. FOR BARRIER CONTROL JOINT SPACING, SEE DWG. NOS. 1-480 DK-2 AND 1-480 DK-4.
6. FOR CONDUIT DETAILS, SEE DWG. NOS. 1-480 DT-07 AND 1-480 TS-1.

DELAWARE DEPARTMENT OF TRANSPORTATION	ADDENDUMS / REVISIONS	SCALE 0 1 4 ½ 2 FEET	US 301 LEVELS ROAD TO SUMMIT BRIDGE ROAD	CONTRACT T200911303	BRIDGE NO. 1-480N&S	US 301 MAINLINE OVER SANDY BRANCH DECK DETAILS	1-480 DK-5
				COUNTY NEW CASTLE	DESIGNED BY: EE/PH		SHEET NO. 617
					CHECKED BY: BCW		TOTAL SHTS. 1256

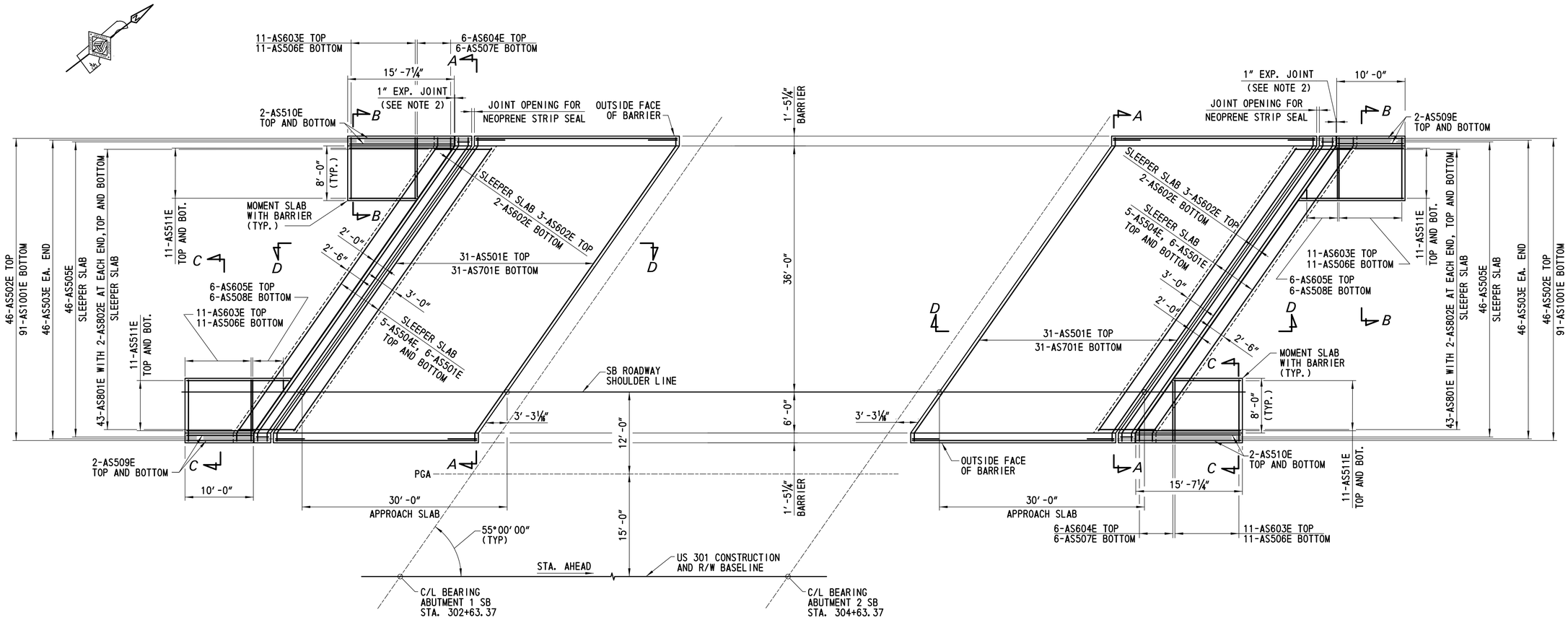

SB APPROACH SLAB REINFORCEMENT PLAN

SCALE: ⅛"= 1'-0"

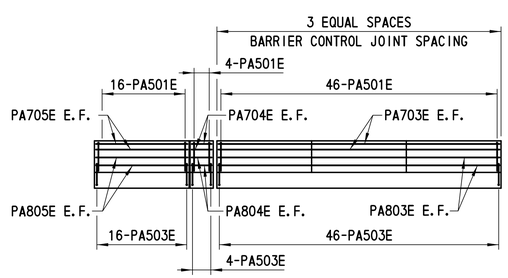

ELEVATION - APPROACH SLAB AND BARRIER

SCALE: ⅛"= 1'-0"

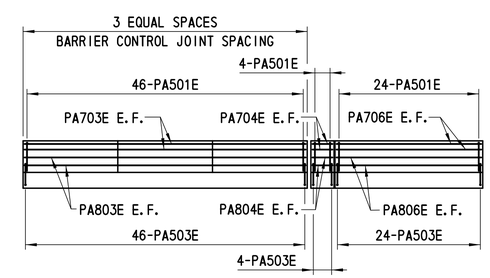

ELEVATION - APPROACH SLAB AND BARRIER

SCALE: ⅛"= 1'-0"

NOTES:

1. BARRIER REINFORCEMENT NOT SHOWN IN PLAN VIEW FOR CLARITY.
2. PROVIDE 1" FLUSH EXPANSION JOINT BETWEEN MOMENT SLAB AND SLEEPER SLAB (SEE DELDOT STANDARD P-1).

CROSS REFERENCE NOTES:

1. FOR SECTION A-A, B-B, C-C, AND D-D SEE DWG. NO. 1-480 AS-3.
2. FOR FINISHED APPROACH SLAB ELEVATIONS, SEE DWG. NOS. 1-480 FD-5 AND 1-480 FD-6.
3. FOR REINFORCING SCHEDULE, SEE DWG. NO. 1-480 BR-6.
4. FOR EXPANSION JOINT DETAILS, SEE DWG. NO. 1-480 EX-1.
5. FOR BARRIER CONTROL JOINT DETAIL, SEE DWG. NO. 1-480 DK-5.

DELAWARE DEPARTMENT OF TRANSPORTATION	ADDENDUMS / REVISIONS	SCALE 0 2 4 8 16 FEET	US 301 LEVELS ROAD TO SUMMIT BRIDGE ROAD	CONTRACT T200911303	BRIDGE NO. 1-480N&S	US 301 MAINLINE OVER SANDY BRANCH SB APPROACH SLAB AND BARRIER REINFORCEMENT	1-480 AS-1
				COUNTY NEW CASTLE	DESIGNED BY: EE		SHEET NO. 618
					CHECKED BY: JW		TOTAL SHTS. 1256

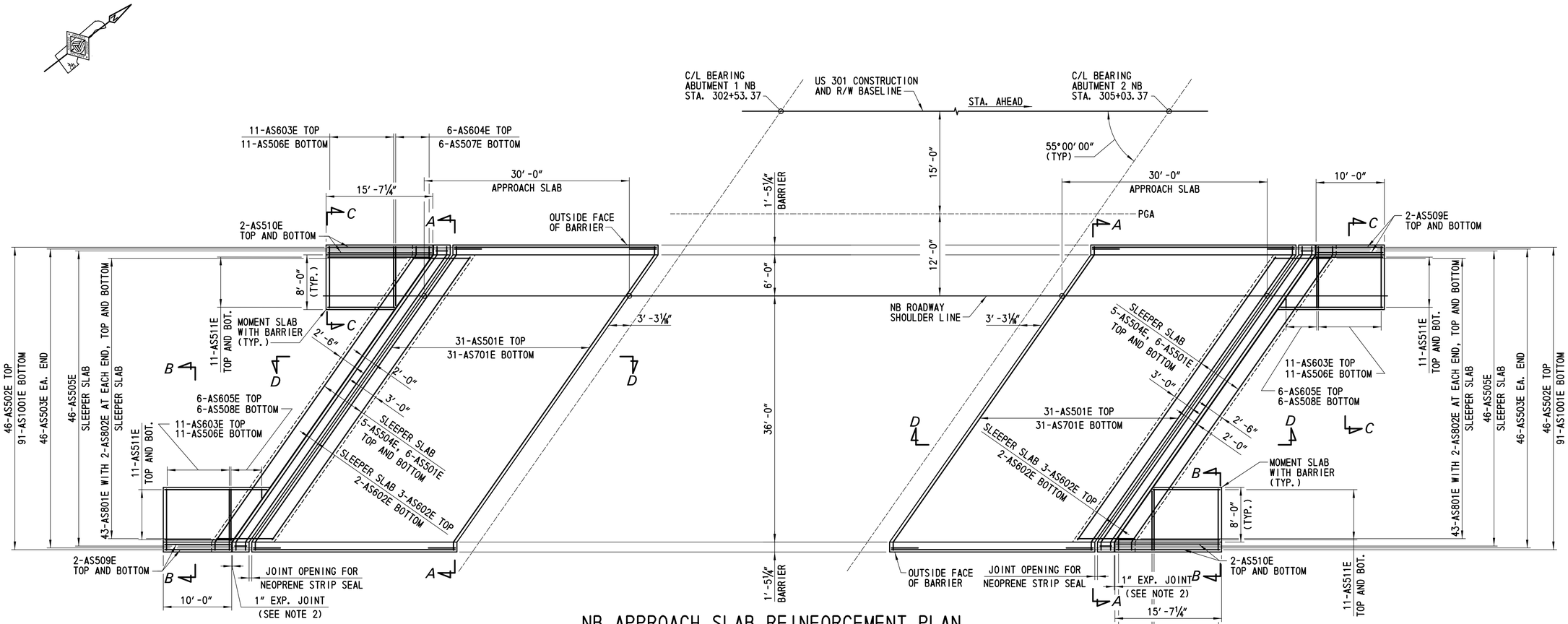

NB APPROACH SLAB REINFORCEMENT PLAN

SCALE: ⅛"= 1'-0"

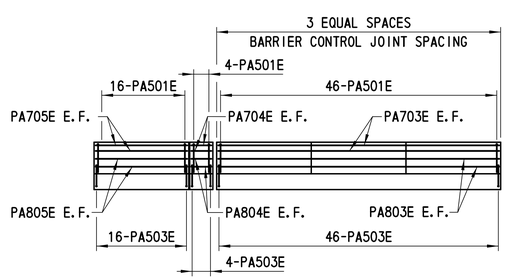

ELEVATION - APPROACH SLAB AND BARRIER

SCALE: ⅛"= 1'-0"

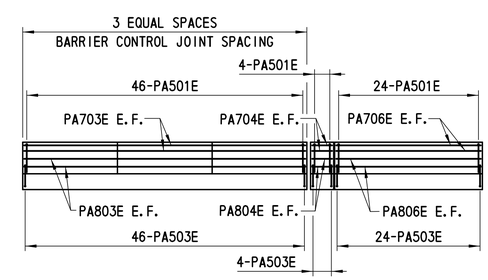

ELEVATION - APPROACH SLAB AND BARRIER

SCALE: ⅛"= 1'-0"

NOTES:

1. BARRIER REINFORCEMENT NOT SHOWN IN PLAN VIEW FOR CLARITY.
2. PROVIDE 1" FLUSH EXPANSION JOINT BETWEEN MOMENT SLAB AND SLEEPER SLAB (SEE DELDOT STANDARD P-1).

CROSS REFERENCE NOTES:

1. FOR SECTION A-A, B-B, C-C, AND D-D SEE DWG. NO. 1-480 AS-3.
2. FOR FINISHED APPROACH SLAB ELEVATIONS, SEE DWG. NO. 1-480 FD-5 AND 1-480 FD-6.
3. FOR REINFORCING SCHEDULE, SEE DWG. NO. 1-480 BR-7.
4. FOR EXPANSION JOINT DETAILS, SEE DWG. NO. 1-480 EX-1.
5. FOR BARRIER CONTROL JOINT DETAIL, SEE DWG. NO. 1-480 DK-5.

DELAWARE DEPARTMENT OF TRANSPORTATION	ADDENDUMS / REVISIONS	SCALE 0 4 16 / 2 8 FEET	US 301 LEVELS ROAD TO SUMMIT BRIDGE ROAD	CONTRACT T200911303	BRIDGE NO. 1-480N&S	US 301 MAINLINE OVER SANDY BRANCH NB APPROACH SLAB AND BARRIER REINFORCEMENT	1-480 AS-2
				COUNTY NEW CASTLE	DESIGNED BY: EE		SHEET NO. 619
					CHECKED BY: JW		TOTAL SHTS. 1256

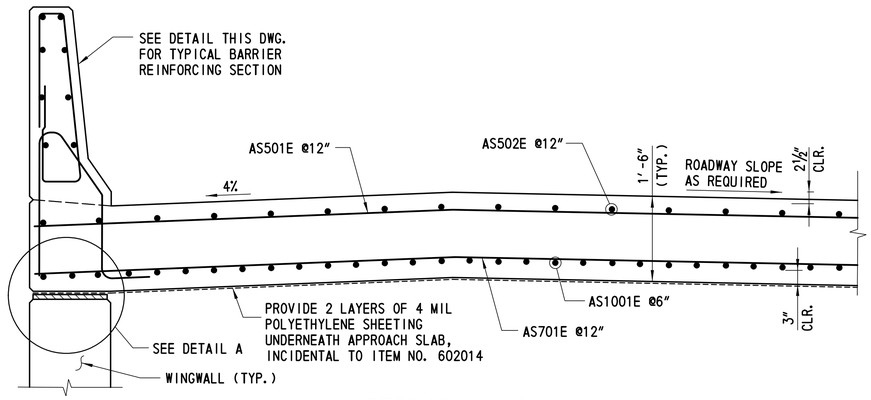

SECTION A-A

SCALE: ¾"= 1'-0"

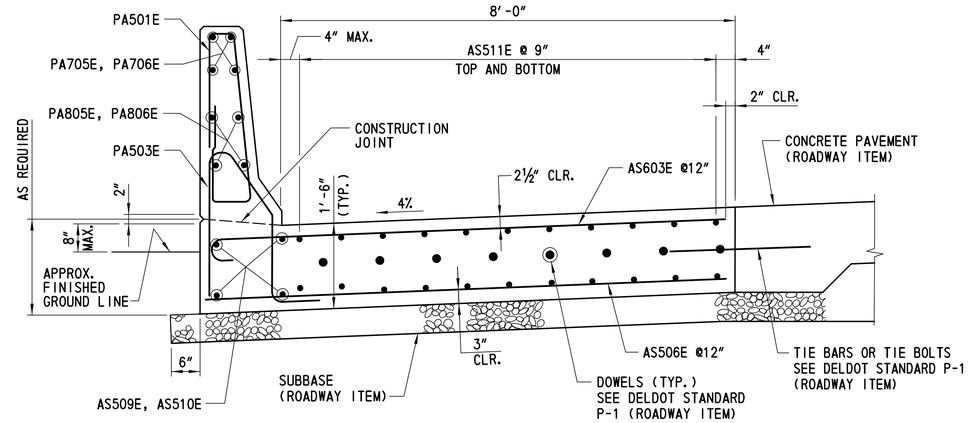

SECTION B-B

SCALE: ¾"= 1'-0"

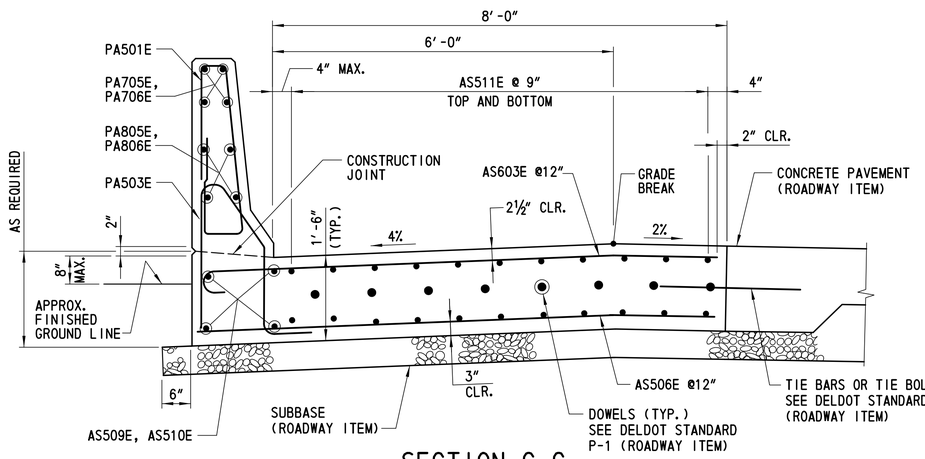

SECTION C-C

SCALE: ¾"= 1'-0"

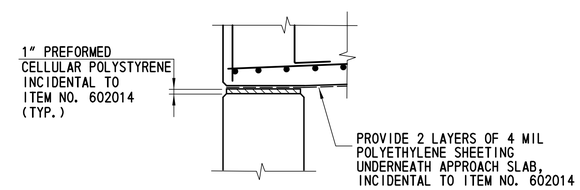

DETAIL A

SCALE: ¾"= 1'-0"

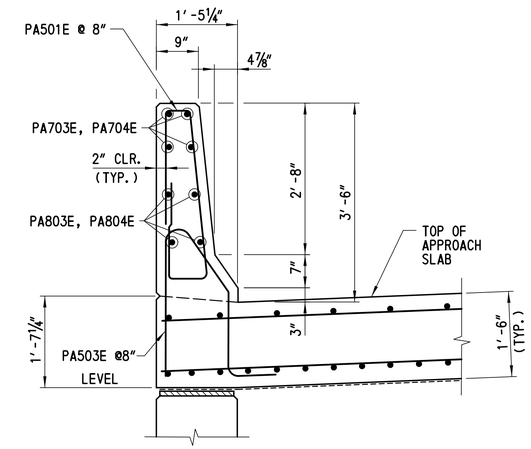

TYPICAL BARRIER REINFORCING SECTION

SCALE: ¾"= 1'-0"

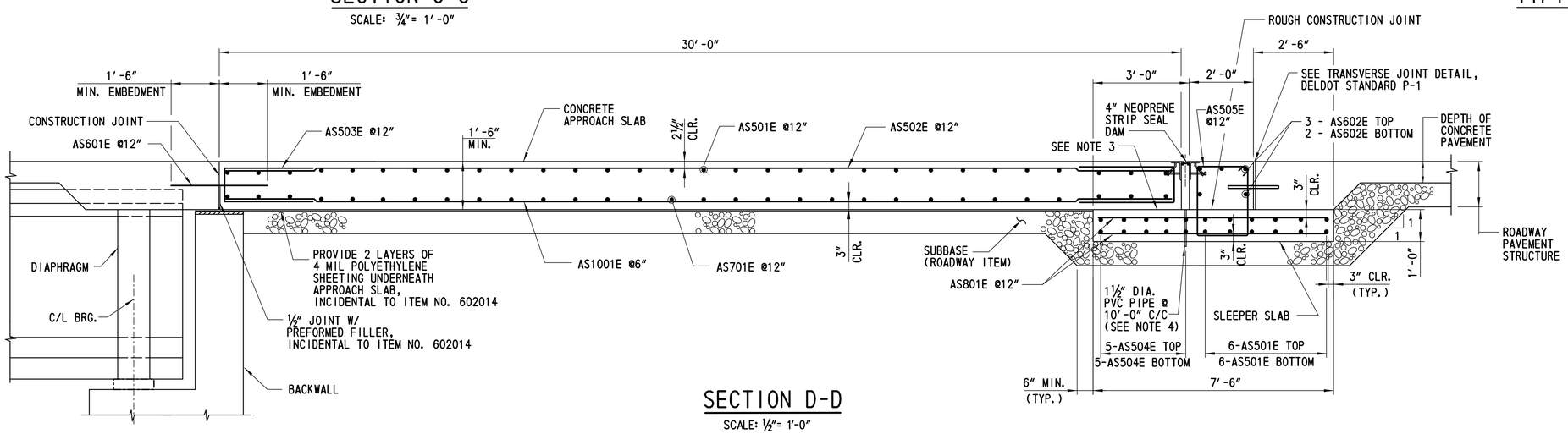

SECTION D-D

SCALE: ½"= 1'-0"

NOTES:

1. SECTION D-D SHOWN LEVEL FOR CLARITY. SLOPE APPROACH SLAB AND SLEEPER SLAB AS REQUIRED TO MATCH ROADWAY PROFILE.
2. SLEEPER SLAB AND ABUTMENT SHOWN NORMAL TO ABUTMENT FOR CLARITY.
3. TROWEL SMOOTH AND PLACE 2 LAYERS OF 4 MIL POLYETHYLENE SHEETING.
4. PVC PIPE TO BE INCIDENTAL TO ITEM NO. 602014.

CROSS REFERENCE NOTES:

1. FOR APPROACH SLAB REINFORCEMENT PLAN, SEE DWG. NOS. 1-480 AS-1 AND 1-480 AS-2.
2. FOR FINISHED APPROACH SLAB ELEVATIONS, SEE DWG. NOS. 1-480 FD-5 AND 1-480 FD-6 .
3. FOR REINFORCING BAR SCHEDULE, SEE DWG. NOS. 1-480 BR-6 AND 1-480 BR-7.
4. FOR EXPANSION JOINT DETAILS, SEE DWG. NO. 1-480 EX-1.
5. FOR CONDUIT DETAILS, SEE DWG. NO. 1-480 DT-07.

DELAWARE DEPARTMENT OF TRANSPORTATION

ADDENDUMS / REVISIONS

US 301 LEVELS ROAD TO SUMMIT BRIDGE ROAD

CONTRACT	BRIDGE NO.	1-480N&S	US 301 MAINLINE OVER SANDY BRANCH	1-480 AS-3
T200911303	DESIGNED BY: EE			SHEET NO. 620
COUNTY			APPROACH SLAB DETAILS	TOTAL SHTS.
NEW CASTLE	CHECKED BY: JW			1256

REINFORCING BAR SCHEDULE

SB DECK BAR SCHEDULE

MARK	LENGTH	NO. BARS	TYPE	A	B	C	D	E	G	H	J	K	O	R	REMARKS
S501E	45′-8½″	355	1	7″	44′-6½″				7″		5″				
S502E	44′-6½″	355	STR.												
S503E	55′-0″	321	STR.												
S504E	48′-11″	107	STR.												
S506E	3′-2″	12	2	1′-2″	2′-0″										
S507E	6′-1¼″	24	STR.												
S508E	9′-9⅞″	52	16	2′-1″	1′-2½″	4′-8¼″	1′-10⅛″			1′-2½″		1′-5¾″	6′-2″		
S509E	1′-10¼″ TO 43′-2″	122	1	7″	1′-3¼″ TO 42′-7″						5″				LENGTH △ = 8¼″, 2 SETS
S510E	1′-3¼″ TO 42′-7″	122	STR.												LENGTH △ = 8¼″, 2 SETS
S511E	53′-9¾″	4	29		1′-3¼″	51′-3¼″	1′-3¼″			9¼″		9¼″	53′-6¼″		
S601E	8′-6″	812	1	8″	7′-10″						6″				
S801E	45′-0″	48	STR.												
S802E	30′-0″	48	STR.												

SB APPROACH SLAB BAR SCHEDULE

MARK	LENGTH	NO. BARS	TYPE	A	B	C	D	E	G	H	J	K	O	R	REMARKS
AS501E	53′-9¾″	86	29		1′-3¼″	51′-3¼″	1′-3¼″			9¼″		9¼″	53′-6¼″		
AS502E	29′-8″	92	STR.												
AS503E	7′-0½″	184	2	3′-0″	1′-0½″				3′-0″						
AS504E	50′-10¼″	20	STR.												
AS505E	8′-7″	92	T1	7″	1′-8″	2′-0½″	1′-8″	2′-0½″	7″						
AS506E	9′-1¼″	44	STR.												
AS507E	1′-10″ TO 8′-6″	12	STR.												LENGTH △ = 1′-4″, 2 SETS
AS508E	2′-0″ TO 7′-4″	12	STR.												LENGTH △ = 1′-0⅞″, 2 SETS
AS509E	9′-8″	8	STR.												
AS510E	15′-3¼″	8	STR.												
AS511E	9′-10¼″ TO 15′-0″	88	STR.												LENGTH △ = 6⅛″, 8 SETS
AS601E	3′-0″	92	STR.												DOWEL
AS602E	53′-9¾″	10	29		1′-3¼″	51′-3¼″	1′-3¼″			9¼″		9¼″	53′-6¼″		
AS603E	9′-9¼″	44	1	8″	9′-1¼″						6″				
AS604E	2′-6″ TO 9′-2″	12	1	8″	1′-10″ TO 8′-6″						6″				LENGTH △ = 1′-4″, 2 SETS
AS605E	2′-0″ TO 7′-4″	12	STR.												LENGTH △ = 1′-0⅞″, 2 SETS
AS701E	53′-9¾″	62	29		1′-3¼″	51′-3¼″	1′-3¼″			9¼″		9¼″	53′-6¼″		
AS801E	8′-6½″	172	STR.												
AS802E	5′-0″	16	STR.												
AS1001E	29′-8″	182	STR.												

SB DIAPHRAGM BAR SCHEDULE

MARK	LENGTH	NO. BARS	TYPE	A	B	C	D	E	G	H	J	K	O	R	REMARKS
M401E	7′-6″	48	T1	6″	6″	2′-9″	6″	2′-9″	6″						
M402E	9′-10″	72	S4	9″	3′-11″	6″	3′-11″		9″						
M403E	8′-1½″	32	T1	6″	9¾″	2′-9″	9¾″	2′-9″	6″						
M404E	7′-0″	112	2	9″	6′-3″										
M405E	5′-11¾″	56	2	2′-7″	9¾″				2′-7″						
M406E	6′-0″	84	T9	8″	4′-8″				8″						
M501E	8′-4″	96	STR.												
M502E	2′-5″	224	STR.												
M503E	5′-0″	24	STR.												
M504E	10′-3″	96	STR.												
M505E	5′-2″	72	STR.												
M506E	7′-8″	24	STR.												
M507E	6′-11½″	24	STR.												
M508E	6′-2¼″	8	STR.												
M509E	11′-2″	28	2	3′-3″	4′-8″				3′-3″						
M510E	7′-2″	56	2	10″	6′-4″										
M511E	16′-0″	24	T1	7″	4′-8″	2′-9″	4′-8″	2′-9″	7″						
M601E	7′-10″	6	29		1′-0″	5′-10″	1′-0″			6⅞″		6⅞″	7′-5⅝″		
M602E	5′-1″	4	29		1′-0″	4′-1″				6⅞″			4′-10⅞″		
D1101E	4′-0″	28	STR.												DOWEL

SB BARRIER BAR SCHEDULE

MARK	LENGTH	NO. BARS	TYPE	A	B	C	D	E	G	H	J	K	O	R	REMARKS
PA501E	7′-6″	692	28	2′-8¾″	3⅞″	½″	3⅝″	2′-8⅞″	4¼″	3¼″				3¾″	
PA502E	5′-4¾″	422	43	1′-2½″	8¼″	11⅞″	1′-10⅜″	1⅜″	6⅜″	6⅛″	4″	10″		3¾″	
PA503E	6′-8¾″	270	43	1′-2½″	8¼″	11⅞″	2′-6⅜″	1⅜″	6⅜″	1′-2⅛″	4″	10″		3¾″	
PA701E	60′-0″	24	STR.												
PA702E	41′-5″	8	STR.												
PA703E	29′-8″	16	STR.												
PA704E	2′-1¼″	16	STR.												
PA705E	9′-8″	8	STR.												
PA706E	15′-3¼″	8	STR.												
PA801E	60′-0″	24	STR.												
PA802E	46′-2″	8	STR.												
PA803E	29′-8″	16	STR.												
PA804E	2′-1¼″	16	STR.												
PA805E	9′-8″	8	STR.												
PA806E	15′-3¼″	8	STR.												

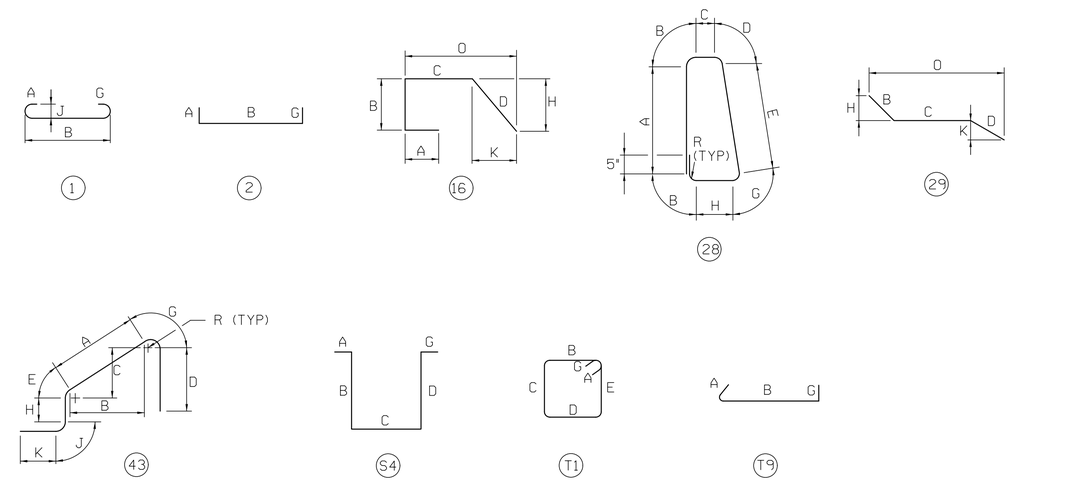

DELAWARE
DEPARTMENT OF TRANSPORTATION

ADDENDUMS / REVISIONS

US 301
LEVELS ROAD
TO SUMMIT BRIDGE ROAD

CONTRACT	BRIDGE NO.	1-480N&S
T200911303	DESIGNED BY:	LT
COUNTY	CHECKED BY:	PRH
NEW CASTLE		

US 301 MAINLINE OVER SANDY BRANCH
SB DECK REINFORCEMENT SCHEDULE

1-480 BR-6
SHEET NO.
621
TOTAL SHTS.
1256

REINFORCING BAR SCHEDULE

NB DECK BAR SCHEDULE

MARK	LENGTH	NO. BARS	TYPE	A	B	C	D	E	G	H	J	K	O	R	REMARKS
S501E	45′-8½″	455	1	7″	44′-6½″				7″		5″				
S502E	44′-6½″	455	STR.												
S503E	55′-0″	428	STR.												
S505E	46′-6″	107	STR.												
S506E	3′-2″	12	2	1′-2″	2′-0″										
S507E	6′-1¼″	24	STR.												
S508E	9′-9⅞″	52	16	2′-1″	1′-2½″	4′-8¼″	1′-10⅛″			1′-2½″		1′-5¾″	6′-2″		
S509E	1′-10¼″ TO 43′-2″	122	1	7″	1′-3¼″ TO 42′-7″						5″				LENGTH △ = 8¼″, 2 SETS
S510E	1′-3¼″ TO 42′-7″	122	STR.												LENGTH △ = 8¼″, 2 SETS
S511E	53′-9¾″	4	29		1′-3¼″	51′-3¼″	1′-3¼″			9¼″		9¼″	53′-6¼″		
S601E	8′-6″	1012	1	8″	7′-10″						6″				
S801E	45′-0″	48	STR.												
S802E	30′-0″	48	STR.												

NB APPROACH SLAB BAR SCHEDULE

AS501E	53′-9¾″	86	29		1′-3¼″	51′-3¼″	1′-3¼″			9¼″		9¼″	53′-6¼″		
AS502E	29′-8″	92	STR.												
AS503E	7′-0½″	184	2	3′-0″	1′-0½″				3′-0″						
AS504E	50′-10¼″	20	STR.												
AS505E	8′-7″	92	T1	7″	1′-8″	2′-0½″	1′-8″	2′-0½″	7″						
AS506E	9′-1¼″	44	STR.												
AS507E	1′-10″ TO 8′-6″	12	STR.												LENGTH △ = 1′-4″, 2 SETS
AS508E	2′-0″ TO 7′-4″	12	STR.												LENGTH △ = 1′-0⅞″, 2 SETS
AS509E	9′-8″	8	STR.												
AS510E	15′-3¼″	8	STR.												
AS511E	9′-10¼″ TO 15′-0″	88	STR.												LENGTH △ = 6⅛″, 8 SETS
AS601E	3′-0″	92	STR.												DOWEL
AS602E	53′-9¾″	10	29		1′-3¼″	51′-3¼″	1′-3¼″			9¼″		9¼″	53′-6¼″		
AS603E	9′-9¼″	44	1	8″	9′-1¼″						6″				
AS604E	2′-6″ TO 9′-2″	12	1	8″	1′-10″ TO 8′-6″						6″				LENGTH △ = 1′-4″, 2 SETS
AS605E	2′-0″ TO 7′-4″	12	STR.												LENGTH △ = 1′-0⅞″, 2 SETS
AS701E	53′-9¾″	62	29		1′-3¼″	51′-3¼″	1′-3¼″			9¼″		9¼″	53′-6¼″		
AS801E	8′-6½″	172	STR.												
AS802E	5′-0″	16	STR.												
AS1001E	29′-8″	182	STR.												

NB DIAPHRAGM BAR SCHEDULE

M401E	7′-6″	64	T1	6″	6″	2′-9″	6″	2′-9″	6″						
M402E	9′-10″	96	S4	9″	3′-11″	6″	3′-11″		9″						
M403E	8′-1½″	32	T1	6″	9¾″	2′-9″	9¾″	2′-9″	6″						
M404E	7′-0″	112	2	9″	6′-3″										
M405E	5′-11¾″	56	2	2′-7″	9¾″				2′-7″						
M406E	6′-0″	84	T9	8″	4′-8″				8″						
M501E	8′-4″	128	STR.												
M502E	2′-5″	288	STR.												
M503E	5′-0″	32	STR.												
M504E	10′-3″	96	STR.												
M505E	5′-2″	72	STR.												
M506E	7′-8″	24	STR.												
M507E	6′-11½″	24	STR.												
M508E	6′-2¼″	8	STR.												
M509E	11′-2″	28	2	3′-3″	4′-8″				3′-3″						
M510E	7′-2″	56	2	10″	6′-4″										
M511E	16′-0″	24	T1	7″	4′-8″	2′-9″	4′-8″	2′-9″	7″						
M601E	7′-10″	6	29		1′-0″	5′-10″	1′-0″			6⅞″		6⅞″	7′-5⅝″		
M602E	5′-1″	4	29		1′-0″	4′-1″				6⅞″			4′-10⅞″		
D1101E	4′-0″	28	STR.												DOWEL

NB BARRIER BAR SCHEDULE

MARK	LENGTH	NO. BARS	TYPE	A	B	C	D	E	G	H	J	K	O	R	REMARKS
PA501E	7′-6″	692	28	2′-8¾″	3⅞″	½″	3⅝″	2′-8⅞″	4¼″	3¼″				3¾″	
PA502E	5′-4¾″	422	43	1′-2½″	8¼″	11⅞″	1′-10⅜″	1⅜″	6⅜″	6⅛″	4″	10″		3¾″	
PA503E	6′-8¾″	270	43	1′-2½″	8¼″	11⅞″	2′-6⅜″	1⅜″	6⅜″	1′-2⅛″	4″	10″		3¾″	
PA701E	60′-0″	32	STR.												
PA703E	29′-8″	16	STR.												
PA704E	2′-1¼″	16	STR.												
PA705E	9′-8″	8	STR.												
PA706E	15′-3¼″	8	STR.												
PA707E	36′-6″	8	STR.												
PA801E	60′-0″	32	STR.												
PA803E	29′-8″	16	STR.												
PA804E	2′-1¼″	16	STR.												
PA805E	9′-8″	8	STR.												
PA806E	15′-3¼″	8	STR.												
PA807E	42′-10″	8	STR.												

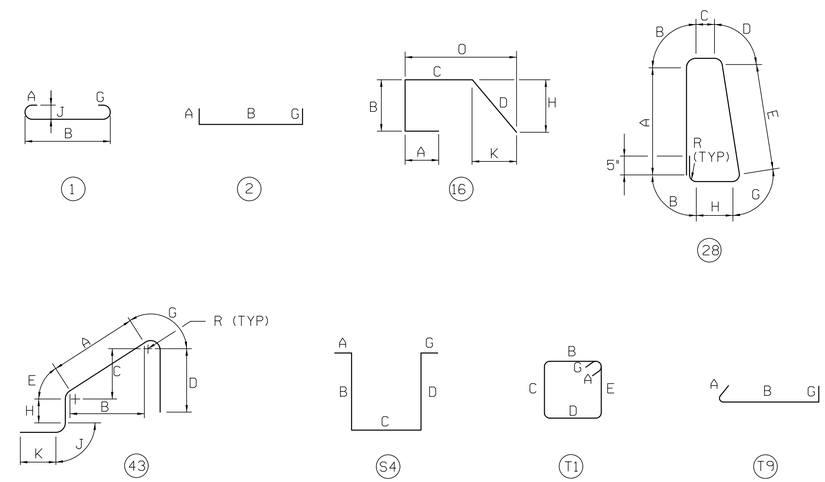

DELAWARE DEPARTMENT OF TRANSPORTATION

ADDENDUMS / REVISIONS

US 301
LEVELS ROAD
TO SUMMIT BRIDGE ROAD

CONTRACT	BRIDGE NO.	1-480N&S
T200911303	DESIGNED BY:	LT
COUNTY	CHECKED BY:	PRH
NEW CASTLE		

US 301 MAINLINE OVER SANDY BRANCH
NB DECK REINFORCEMENT SCHEDULE

1-480 BR-7
SHEET NO.
622
TOTAL SHTS.
1256

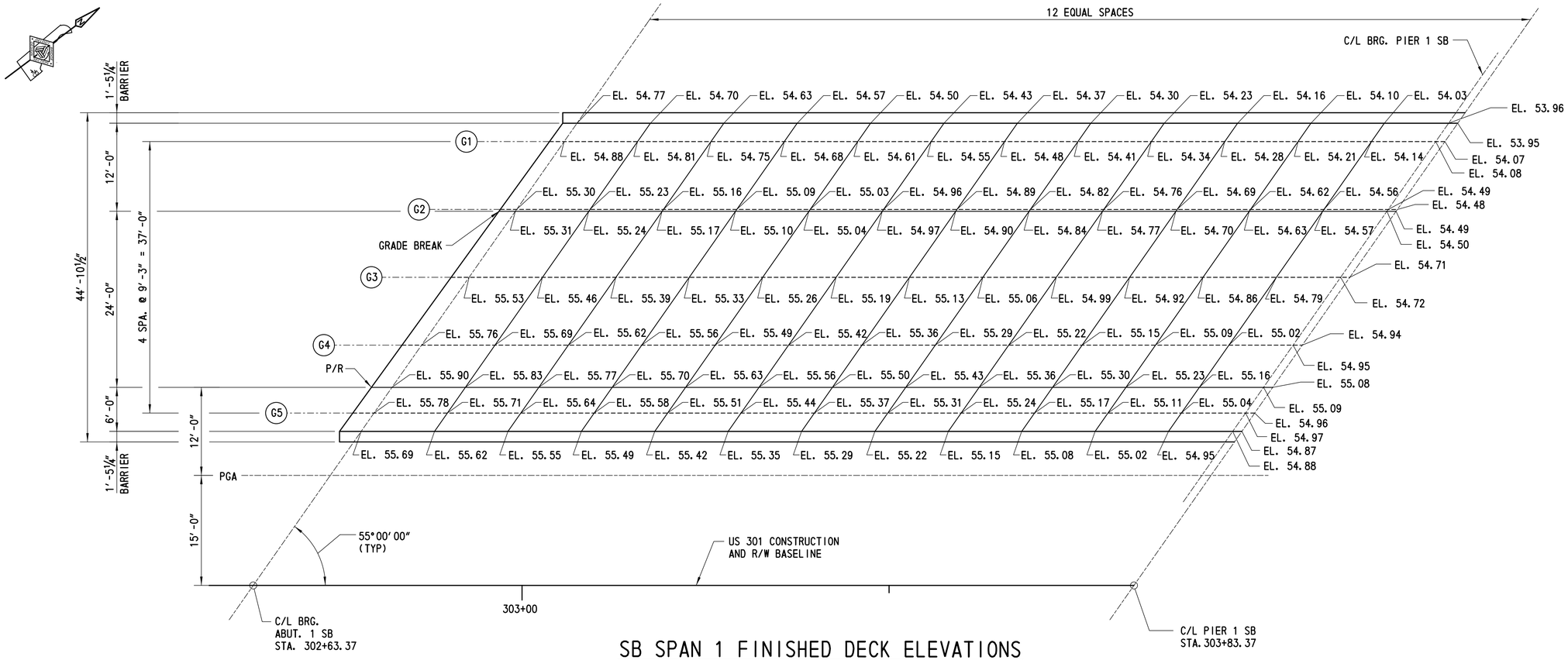

SB SPAN 1 FINISHED DECK ELEVATIONS

SCALE: ⅛" = 1'-0"

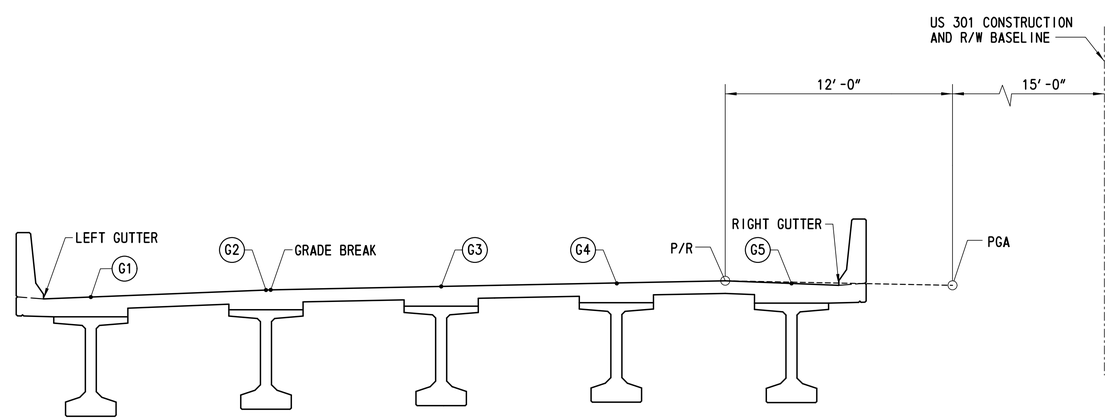

TYPICAL SECTION

STATIONS AHEAD
SCALE: ¼" = 1'-0"

CROSS REFERENCE NOTES:

1. FOR VERTICAL CURVE DATA, SEE DWG. NO. 1-480 PE-1.
2. FOR DECK POURING SEQUENCE, SEE DWG. NO. 1-480 DK-1.
3. FOR DECK REINFORCEMENT PLAN, SEE DWG. NO. 1-480 DK-2.
4. FOR DECK DETAILS, SEE DWG. NO. 1-480 DK-5.
5. FOR CROSS SLOPES, SEE DWG. NO. 1-480 TS-1.

DELAWARE DEPARTMENT OF TRANSPORTATION	ADDENDUMS / REVISIONS	US 301 LEVELS ROAD TO SUMMIT BRIDGE ROAD	CONTRACT T200911303	BRIDGE NO. 1-480N&S	US 301 MAINLINE OVER SANDY BRANCH SB SPAN 1 FINISHED DECK ELEVATIONS	1-480 FD-1
			COUNTY NEW CASTLE	DESIGNED BY: DW		SHEET NO. 623
				CHECKED BY: JW		TOTAL SHTS. 1256

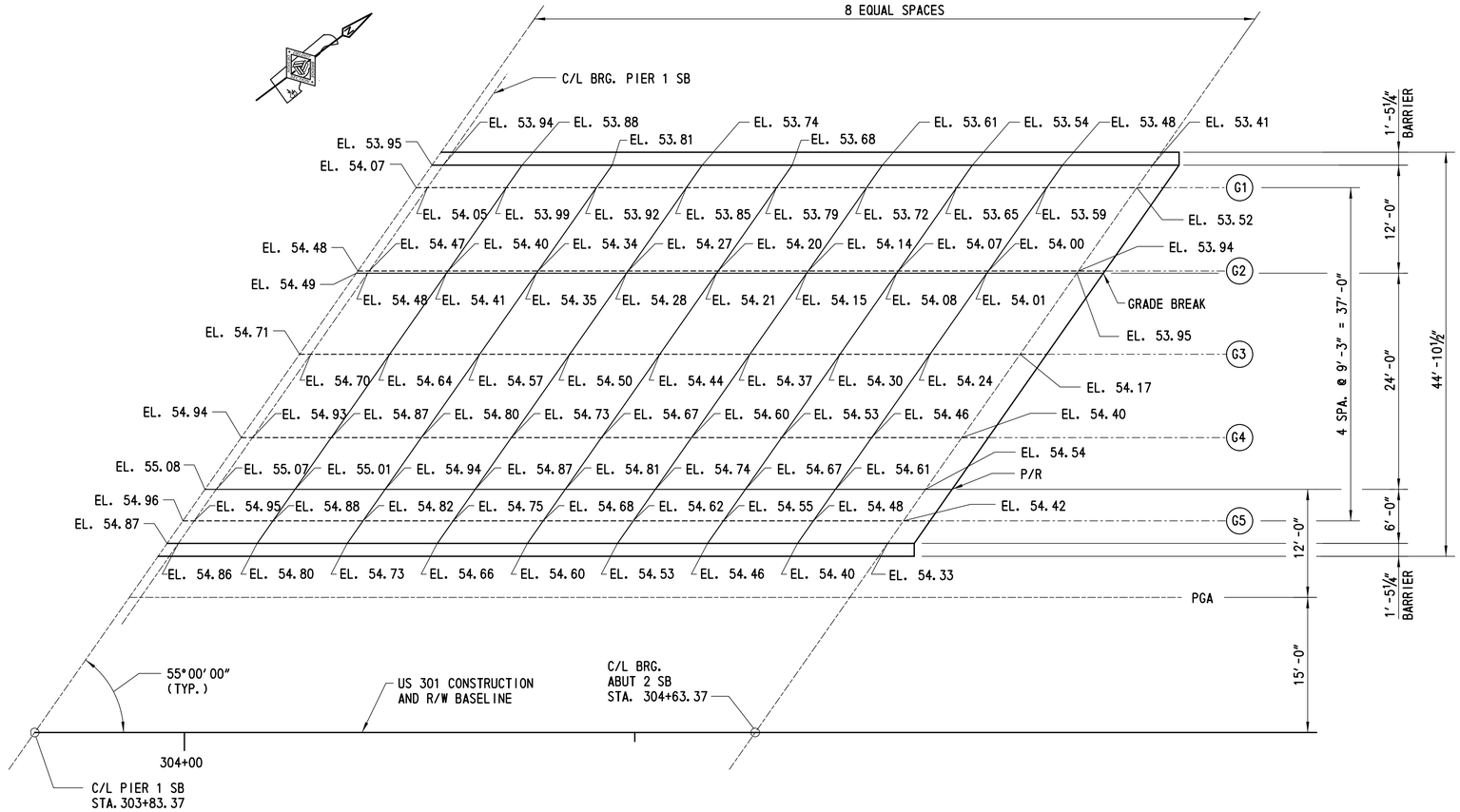

SB SPAN 2 FINISHED DECK ELEVATIONS

SCALE: ⅛" = 1'-0"

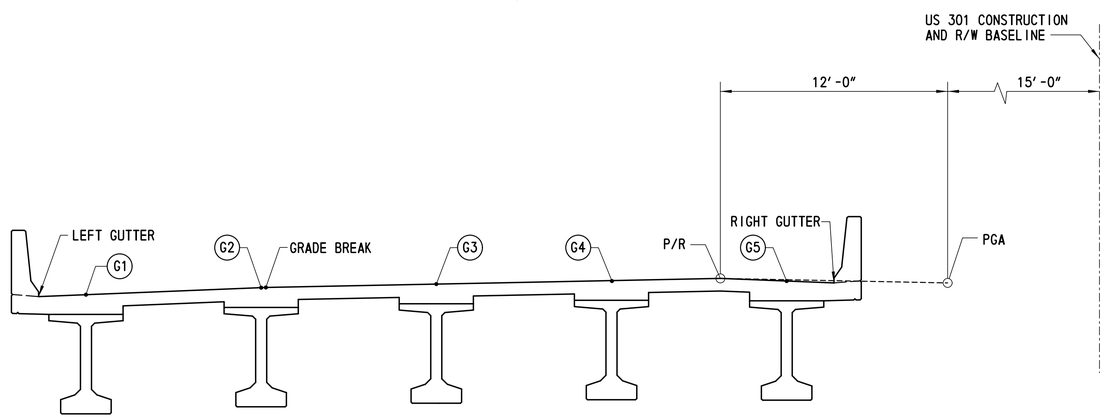

TYPICAL SECTION

STATIONS AHEAD
SCALE: ¼" = 1'-0"

CROSS REFERENCE NOTES:

1. FOR VERTICAL CURVE DATA, SEE DWG. NO. 1-480 PE-1.
2. FOR DECK POURING SEQUENCE, SEE DWG. NO. 1-480 DK-1.
3. FOR DECK REINFORCEMENT PLAN, SEE DWG. NO. 1-480 DK-2.
4. FOR DECK DETAILS, SEE DWG. NO. 1-480 DK-5.
5. FOR CROSS SLOPES, SEE DWG. NO. 1-480 TS-1.

DELAWARE DEPARTMENT OF TRANSPORTATION	ADDENDUMS / REVISIONS	US 301 LEVELS ROAD TO SUMMIT BRIDGE ROAD	CONTRACT T200911303	BRIDGE NO. 1-480N&S	US 301 MAINLINE OVER SANDY BRANCH SB SPAN 2 FINISHED DECK ELEVATIONS	1-480 FD-2	
			COUNTY NEW CASTLE	DESIGNED BY: DW		SHEET NO. 624	
				CHECKED BY: JW		TOTAL SHTS. 1256	

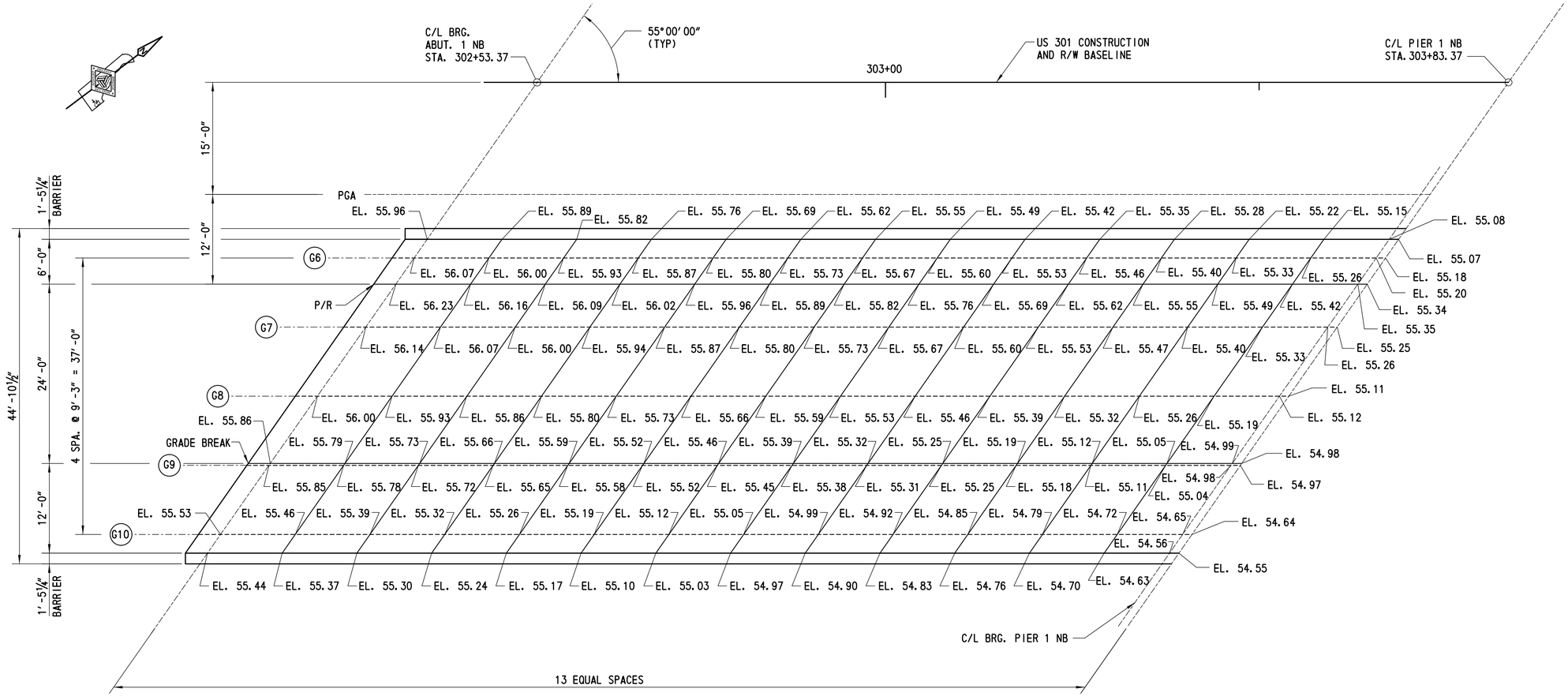

NB SPAN 1 FINISHED DECK ELEVATIONS

SCALE: ⅛"= 1'-0"

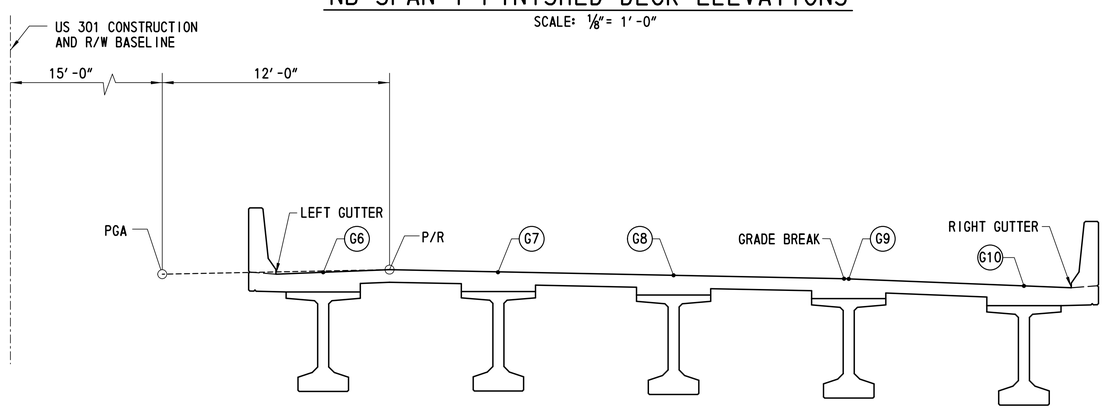

TYPICAL SECTION

STATIONS AHEAD
SCALE: ¼"= 1'-0"

CROSS REFERENCE NOTES:

1. FOR VERTICAL CURVE DATA, SEE DWG. NO. 1-480 PE-2.
2. FOR DECK POURING SEQUENCE, SEE DWG. NO. 1-480 DK-3.
3. FOR DECK REINFORCEMENT PLAN, SEE DWG. NO. 1-480 DK-4.
4. FOR DECK DETAILS, SEE DWG. NO. 1-480 DK-5.
5. FOR CROSS SLOPES, SEE DWG. NO. 1-480 TS-1.

DELAWARE DEPARTMENT OF TRANSPORTATION	ADDENDUMS / REVISIONS	US 301 LEVELS ROAD TO SUMMIT BRIDGE ROAD	CONTRACT T200911303	BRIDGE NO. 1-480N&S	US 301 MAINLINE OVER SANDY BRANCH NB SPAN 1 FINISHED DECK ELEVATIONS	1-480 FD-3	
			COUNTY NEW CASTLE	DESIGNED BY: DW		SHEET NO. 625	
				CHECKED BY: JW		TOTAL SHTS. 1256	

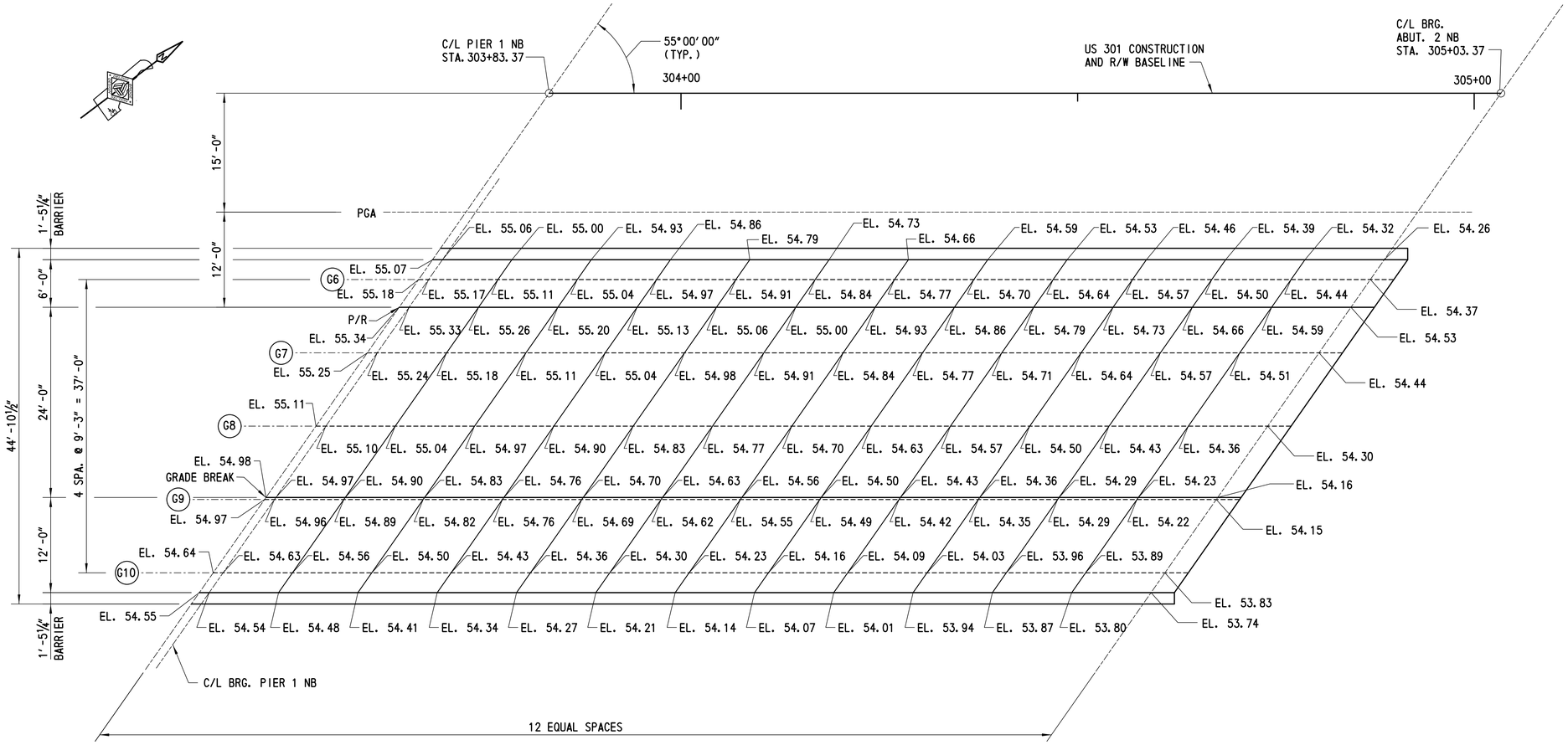

NB SPAN 2 FINISHED DECK ELEVATIONS

SCALE: ⅛" = 1'-0"

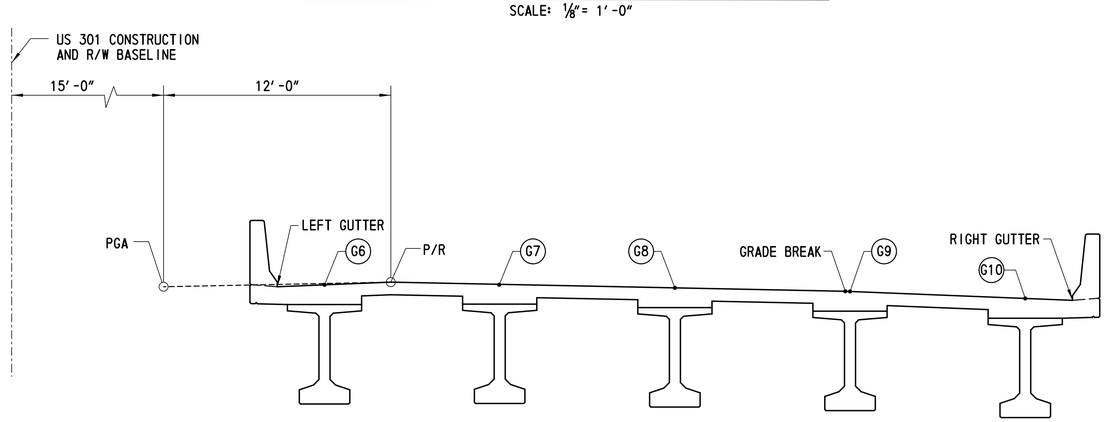

TYPICAL SECTION

STATIONS AHEAD
SCALE: ¼" = 1'-0"

CROSS REFERENCE NOTES:

1. FOR VERTICAL CURVE DATA, SEE DWG. NO. 1-480 PE-2.
2. FOR DECK POURING SEQUENCE, SEE DWG. NO. 1-480 DK-3.
3. FOR DECK REINFORCEMENT PLAN, SEE DWG. NO. 1-480 DK-4.
4. FOR DECK DETAILS, SEE DWG. NO. 1-480 DK-5.
5. FOR CROSS SLOPES, SEE DWG. NO. 1-480 TS-1.

DELAWARE DEPARTMENT OF TRANSPORTATION	ADDENDUMS / REVISIONS	US 301 LEVELS ROAD TO SUMMIT BRIDGE ROAD	CONTRACT T200911303	BRIDGE NO. 1-480N&S	US 301 MAINLINE OVER SANDY BRANCH NB SPAN 2 FINISHED DECK ELEVATIONS	1-480 FD-4	
			COUNTY NEW CASTLE	DESIGNED BY: DW		SHEET NO. 626	
				CHECKED BY: JW		TOTAL SHTS. 1256	

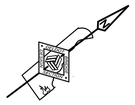

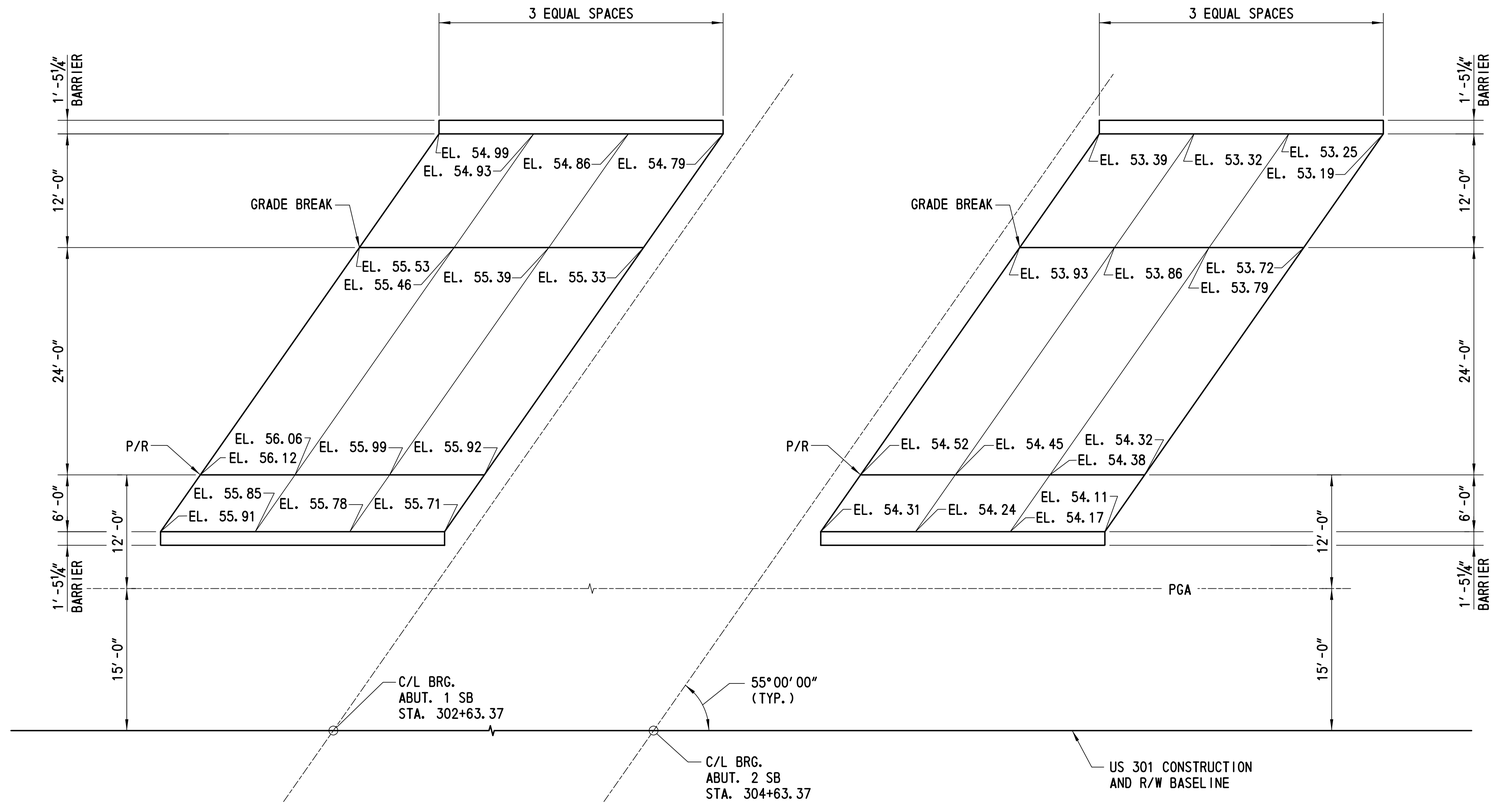

SB FINISHED APPROACH SLAB ELEVATIONS

SCALE: ⅛"= 1'-0"

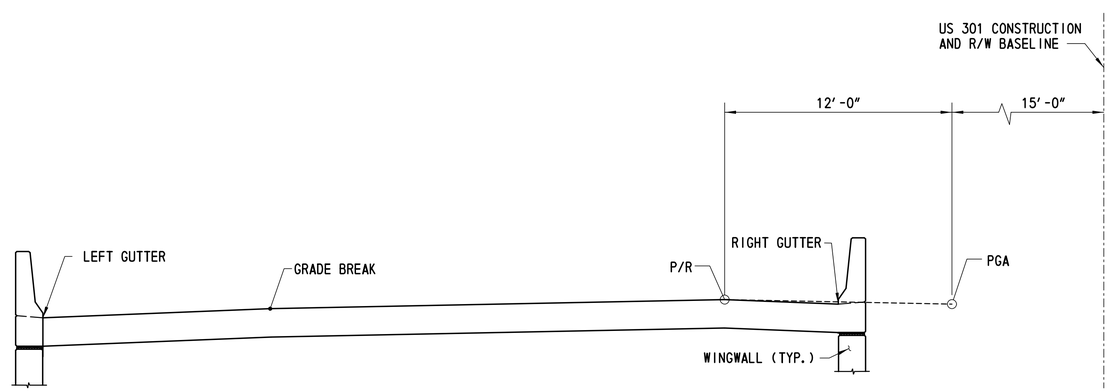

TYPICAL SECTION

STATIONS AHEAD
SCALE: ¼"= 1'-0"

CROSS REFERENCE NOTES:

1. FOR VERTICAL CURVE DATA, SEE DWG. NO. 1-480 PE-1.
2. FOR APPROACH SLAB REINFORCEMENT PLAN, SEE DWG. NO. 1-480 AS-1.
3. FOR APPROACH SLAB DETAILS, SEE DWG. NO. 1-480 AS-3.

DELAWARE DEPARTMENT OF TRANSPORTATION	ADDENDUMS / REVISIONS	US 301 LEVELS ROAD TO SUMMIT BRIDGE ROAD	CONTRACT T200911303	BRIDGE NO. 1-480N&S	US 301 MAINLINE OVER SANDY BRANCH SB FINISHED APPROACH SLAB ELEVATIONS	1-480 FD-5	
			COUNTY NEW CASTLE	DESIGNED BY: PRH		SHEET NO. 627	
				CHECKED BY: JW		TOTAL SHTS. 1256	

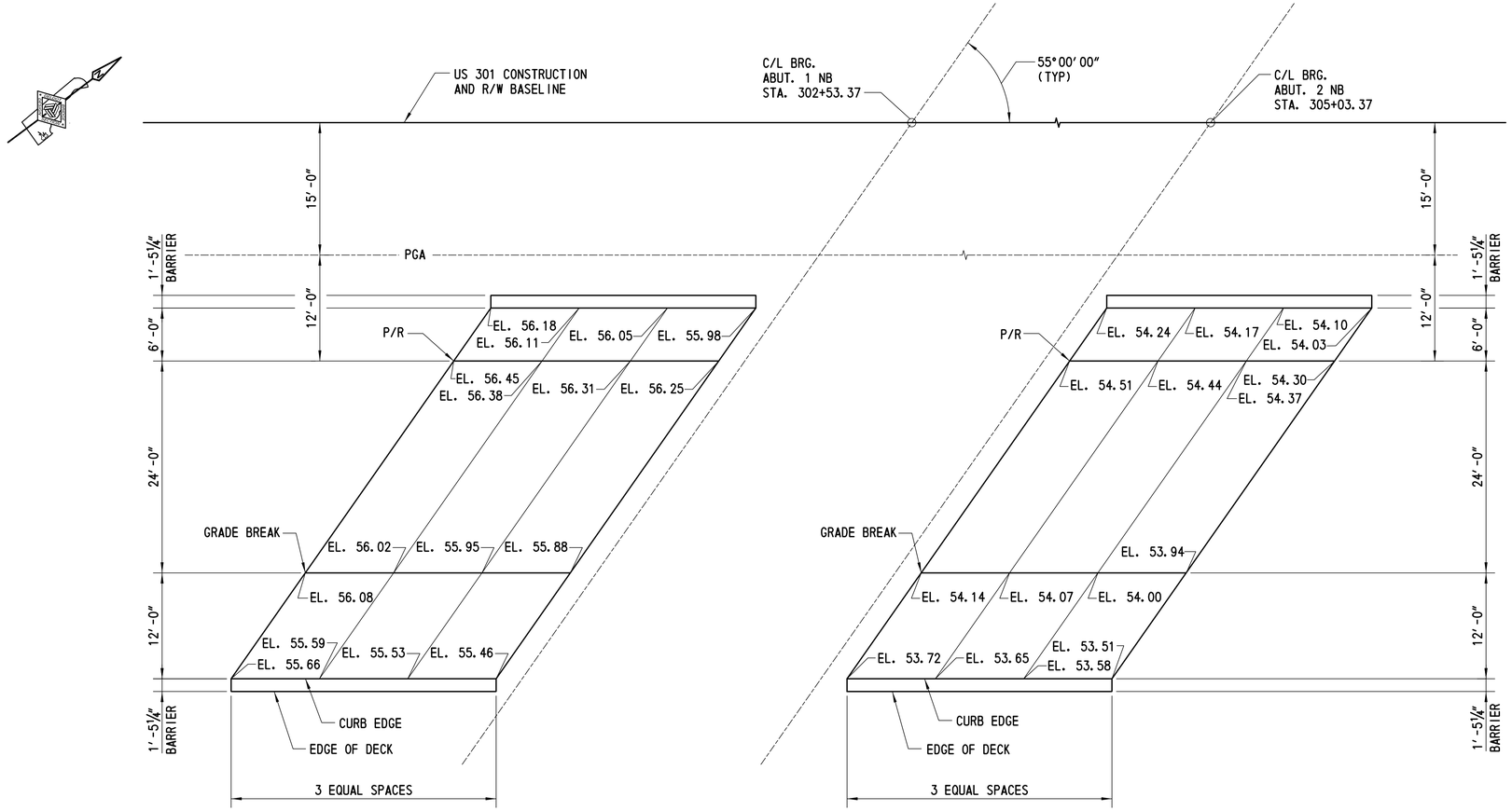

NB FINISHED APPROACH SLAB ELEVATIONS

SCALE: ⅛"= 1'-0"

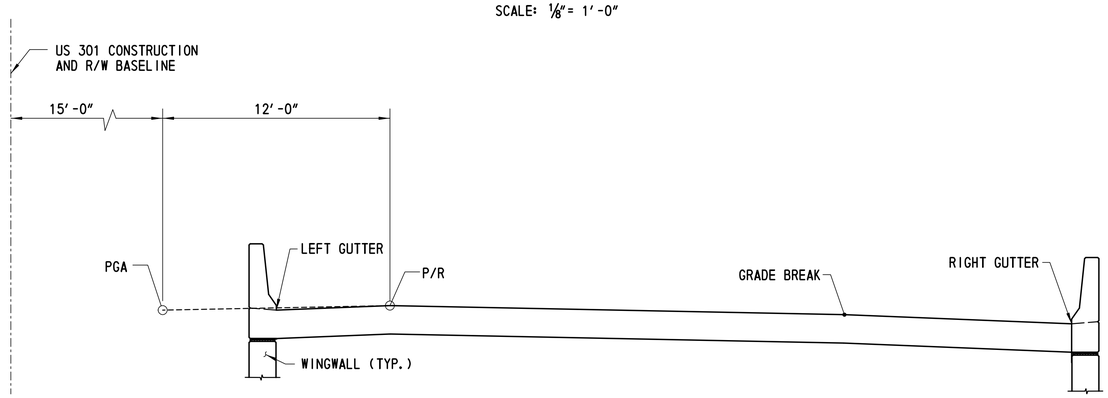

TYPICAL SECTION

STATIONS AHEAD
SCALE: ¼"= 1'-0"

CROSS REFERENCE NOTES:

1. FOR VERTICAL CURVE DATA, SEE DWG. NO. 1-480 PE-2.
2. FOR APPROACH SLAB REINFORCEMENT PLAN, SEE DWG. NO. 1-480 AS-2.
3. FOR APPROACH SLAB DETAILS, SEE DWG. NO. 1-480 AS-3.

DELAWARE DEPARTMENT OF TRANSPORTATION	ADDENDUMS / REVISIONS	US 301 LEVELS ROAD TO SUMMIT BRIDGE ROAD	CONTRACT T200911303	BRIDGE NO. 1-480N&S	US 301 MAINLINE OVER SANDY BRANCH NB FINISHED APPROACH SLAB ELEVATIONS	1-480 FD-6	
			COUNTY NEW CASTLE	DESIGNED BY: PRH		SHEET NO. 628	
				CHECKED BY: JW		TOTAL SHTS. 1256	

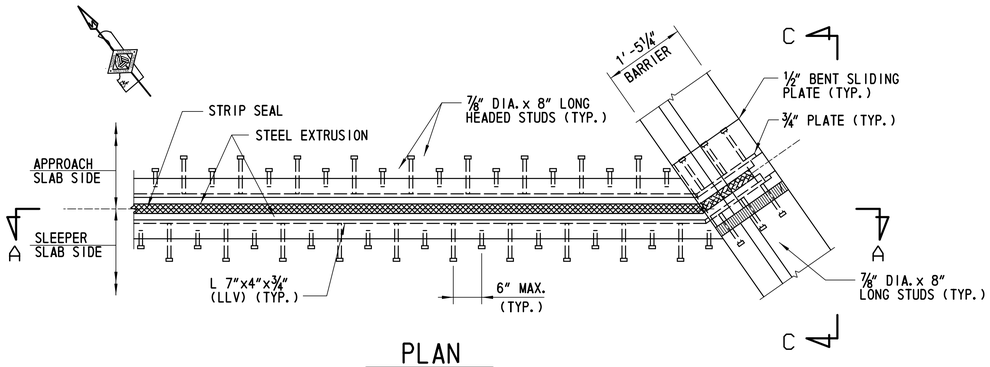

PLAN

SCALE: 3/4" = 1'-0"

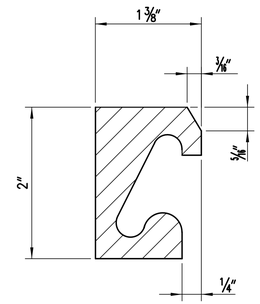

DETAIL 1

NTS

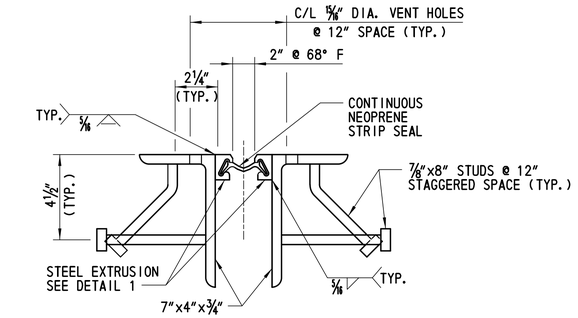

PREFABRICATED EXPANSION JOINT SYSTEM 4"

SCALE: 3" = 1'-0"

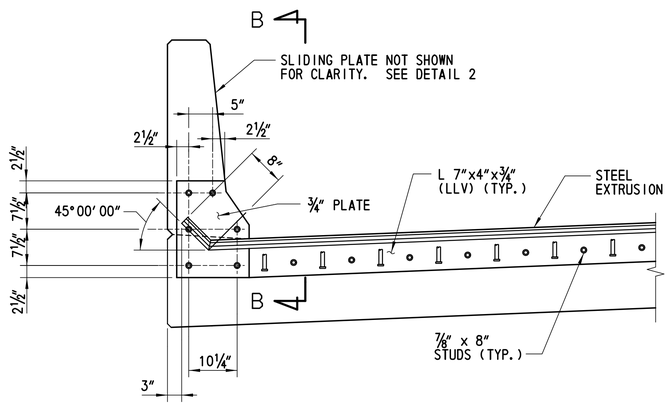

SECTION A-A

SCALE: 3/4" = 1'-0"

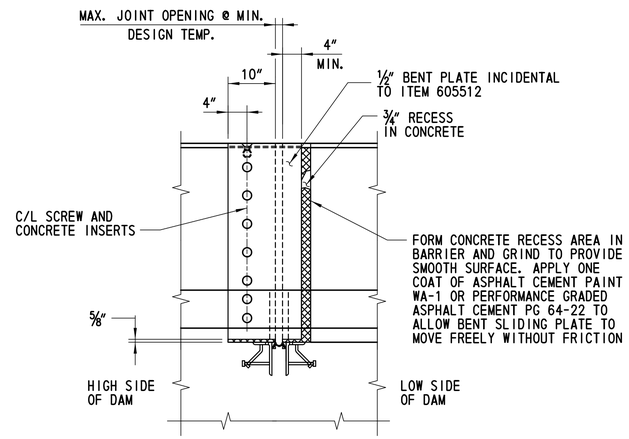

SECTION B-B

SCALE: 3/4" = 1'-0"

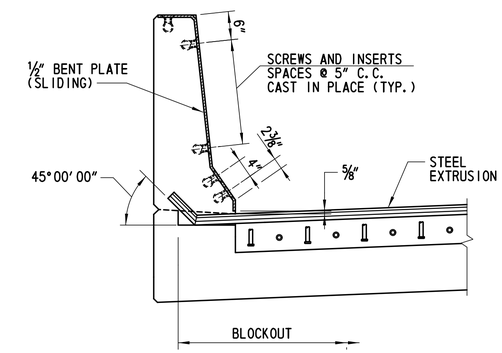

DETAIL 2

SCALE: 3/4" = 1'-0"

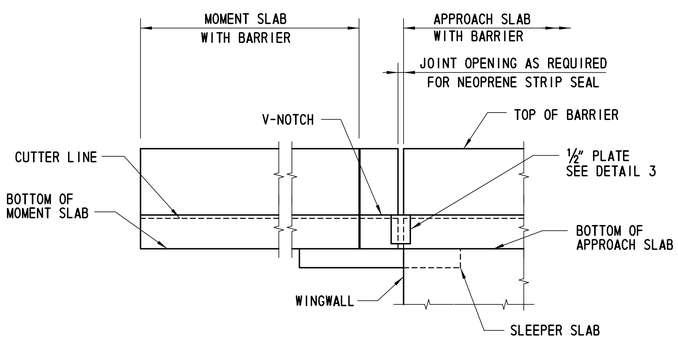

SECTION C-C

SCALE: 1/4" = 1'-0"

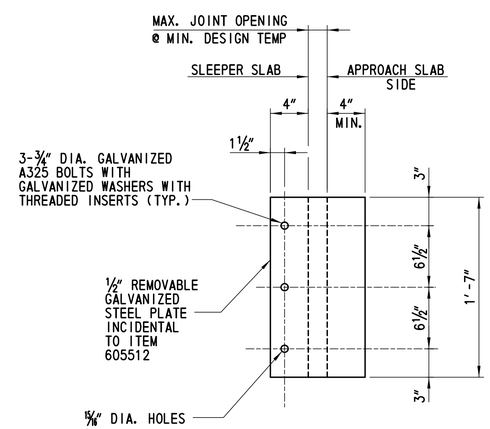

DETAIL 3

SCALE: 1 1/2" = 1'-0"

JOINT OPENING (INCH)								
LOCATION	TEMPERATURE (°F)							
	10	20	30	40	50	60	70	80
ABUTMENT 1 SB	2 3/4	2 5/8	2 1/2	2 3/8	2 1/4	2 1/8	2	1 13/16
ABUTMENT 2 SB	2 13/16	2 1/2	2 3/8	2 1/4	2 3/16	2 1/16	2	1 7/8
ABUTMENT 1 NB	2 13/16	2 11/16	2 9/16	2 3/8	2 1/4	2 1/8	2	1 13/16
ABUTMENT 2 NB	2 3/4	2 5/8	2 1/2	2 3/8	2 1/4	2 1/8	2	1 13/16

NOTES:

1. STRUCTURAL STEEL FOR DECK JOINTS SHALL CONFORM TO AASHTO M270, GRADE 36.
2. STEEL EXTRUSIONS FOR DECK JOINTS SHALL CONFORM TO AASHTO M270, GRADE 36.
3. THE NEOPRENE STRIP SEAL SHALL BE PROVIDED CONTINUOUS THROUGHOUT THE LIMITS OF THE DECK. SPLICING OF THE NEOPRENE STEEL SEAL IS NOT PERMITTED.
4. COST FOR MATERIALS, FABRICATION AND INSTALLATION OF STRIP SEAL EXPANSION JOINTS, 4" MOVEMENT CLASSIFICATION, WITH STEEL ELEMENTS INCLUDING STUDS AND STEEL EXTRUSIONS, SHALL BE PAID FOR UNDER ITEM 605512.
5. CONSTRUCT EXPANSION JOINT TO MATCH ROADWAY GRADE AND CROSS SLOPE.
6. GRIND ALL STEEL EDGES EXPOSED TO TRAFFIC TO 3/16" MIN. RADIUS.
7. BOND NEOPRENE STRIP SEAL TO EXTRUSION WITH APPROVED ADHESIVE.

DELAWARE DEPARTMENT OF TRANSPORTATION

ADDENDUMS / REVISIONS

US 301 LEVELS ROAD TO SUMMIT BRIDGE ROAD

CONTRACT	BRIDGE NO.	1-480N&S
T200911303	DESIGNED BY:	PRH
COUNTY	CHECKED BY:	JW
NEW CASTLE		

US 301 MAINLINE OVER SANDY BRANCH

EXPANSION JOINT DETAILS

1-480 EX-1
SHEET NO.
629
TOTAL SHTS.
1256

SETTLEMENT PLATFORM	STATION	OFFSET	SETTLEMENT MONUMENT	STATION	OFFSET
SP-1-480-1	302+07.81	39.00' RT	SM-1-480-1	302+04.31	44.00' RT
SP-1-480-2	302+72.43	39.00' LT	SM-1-480-2	302+75.93	44.00' LT
SP-1-480-3	304+94.32	39.00' RT	SM-1-480-3	304+90.82	44.00' RT
SP-1-480-4	305+08.94	39.00' LT	SM-1-480-4	305+12.44	44.00' LT

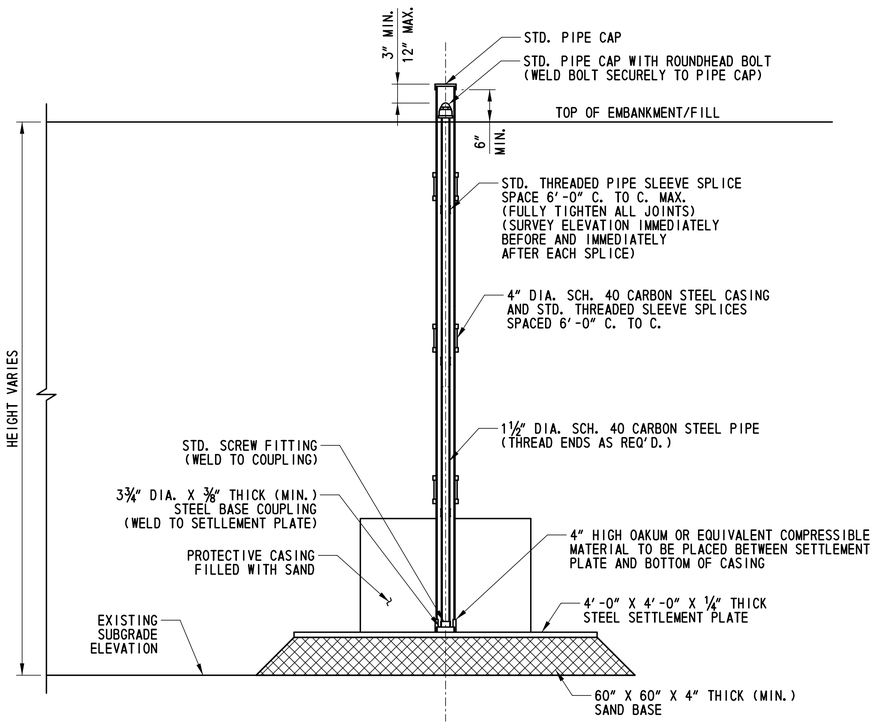

SETTLEMENT PLATFORM

NTS

NOTES:

1. THE BASE OF THE SETTLEMENT PLATFORM SHALL BE PLACED ON THE TOP OF THE EXISTING GROUND.

2. READINGS ON THE SETTLEMENT PLATFORMS SHALL BE MADE AFTER THE INITIAL INSTALLATION OF THE RISER AND CASING PIPES AND INSTALLATION RECORD SHEETS ARE APPROVED BY THE ENGINEER AND PRIOR TO FILL PLACEMENT. DURING FILL PLACEMENT, READINGS ON ALL SETTLEMENT PLATFORMS SHALL BE TAKEN AT A MINIMUM OF THREE (3) CALENDAR DAY INTERVALS. AFTER COMPLETION OF THE FILL AND SURCHARGE PLACEMENT, INSTALL SETTLEMENT MONUMENTS AS INDICATED ON THE BRIDGE PLANS AND TAKE INITIAL READINGS. READINGS ON ALL SETTLEMENT MONITORING DEVICES SHALL THEN BE TAKEN AT A MINIMUM OF THREE (3) CALENDAR DAY INTERVALS. AFTER THE FILL HAS BEEN COMPLETED AND TWO (2) SUCCESSIVE READINGS OF EACH DEVICE HAS RECORDED LESS THAN OR EQUAL TO 0.1 INCH, THE IMMEDIATE SETTLEMENT WILL BE DEEMED COMPLETE AND THE GEOTECHNICAL ENGINEER CAN RELEASE THE SUBSTRUCTURE FOR REMOVAL OF SURCHARGE AND INSTALLATION OF PRODUCTION PILES SO LONG AS THE MINIMUM 30 DAY QUARANTINE PERIOD HAS BEEN MET. AFTER COMPLETION OF THE ABUTMENT, THE CONTRACTOR SHALL ESTABLISH REFERENCE POINTS TO MONITOR SETTLEMENT ON TOP OF THE ABUTMENT SEAT WITHIN 5 FEET OF ALL ENDS AND CORNERS AND AT THE CENTER OF BRIDGES AND THE CENTERLINE OF US301. AFTER THE CONCRETE ABUTMENTS HAVE BEEN CONSTRUCTED, READINGS ON ALL SETTLEMENT MONITORING DEVICES AND REFERENCE POINTS SHALL CONTINUE TO BE TAKEN AT A MINIMUM OF THIRTY (30) DAY INTERVALS FOR THE NEXT SIX (6) MONTHS OR AS DIRECTED BY THE ENGINEER.

3. COST OF MATERIALS, FABRICATION, INSTALLATION AND MONITORING OF SETTLEMENT PLATFORMS IS INCLUDED IN ITEM 202505.

4. COST OF MATERIALS, FABRICATION, INSTALLATION AND MONITORING OF MONUMENTS IS INCLUDED IN ITEM 202518.

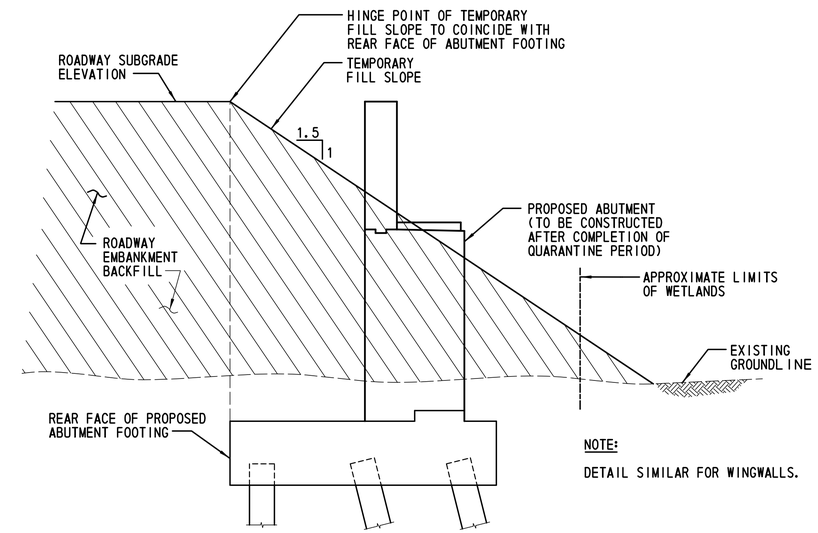

NOTE:

DETAIL SIMILAR FOR WINGWALLS.

FILL PLACEMENT DURING QUARANTINE PERIOD

NTS

NOTE:

1. CONTRACTOR IS RESPONSIBLE FOR HAVING THE LIMITS OF WETLANDS MARKED IN THE FIELD PRIOR TO CONSTRUCTION.

CROSS REFERENCE NOTES:

1. FOR LOCATION OF SETTLEMENT PLATFORMS AND MONUMENTS, SEE DWG. NOS. 1-480 PE-1 AND 1-480 PE-2.

2. FOR ADDITIONAL ENVIRONMENTAL NOTES, SEE DWG. EC-05.

3. FOR ADDITIONAL ENVIRONMENTAL DETAILS, SEE DWG. EC-12 & EC-14.

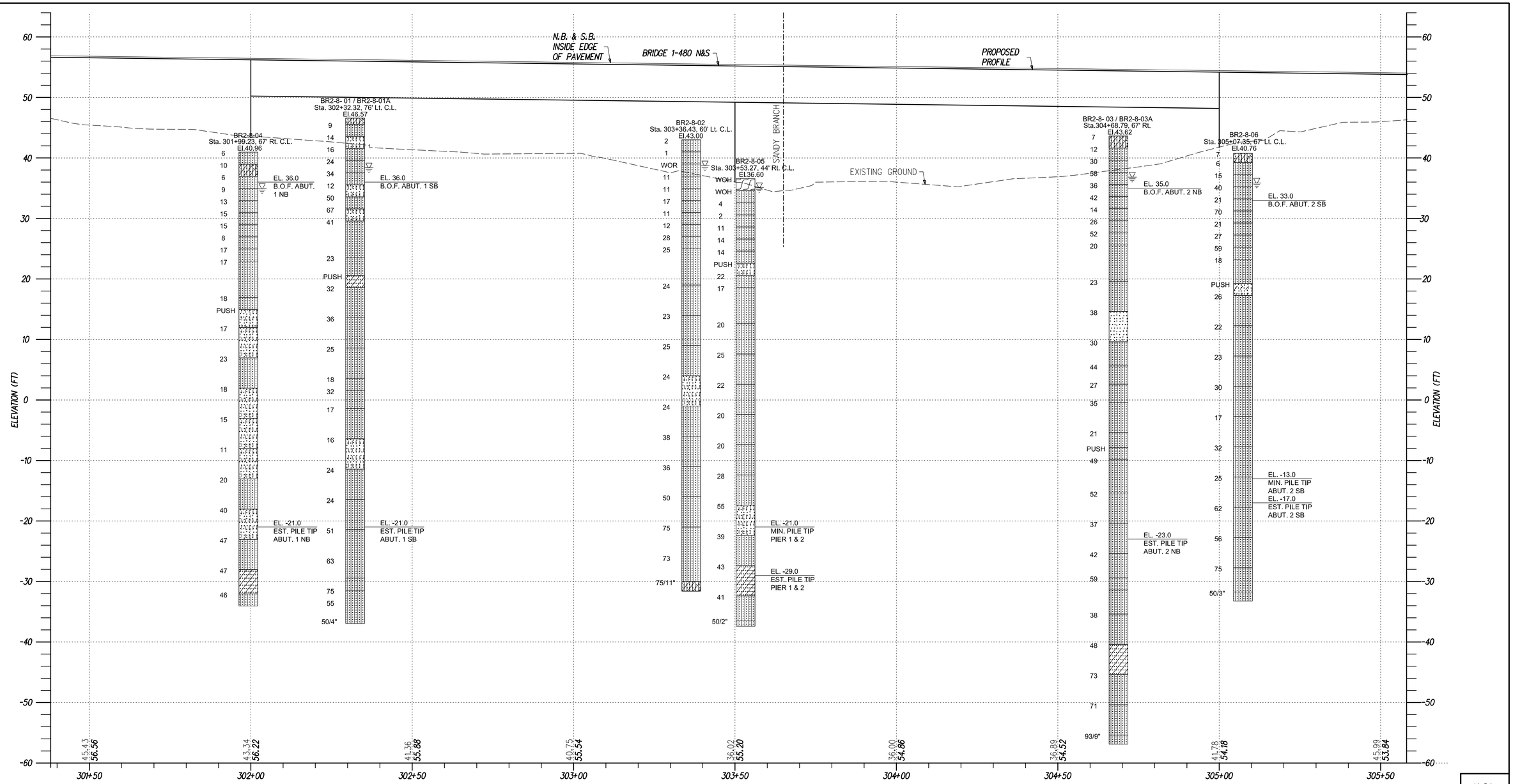

KEY TO SYMBOLS

SYMBOL DESCRIPTION

STRATA SYMBOLS

- SILTY SAND
- CLAYEY SAND
- POORLY GRADED CLAYEY SILTY SAND
- POORLY GRADED SAND WITH SILT
- POORLY GRADED SAND
- LOW PLASTICITY ORGANIC SILTS
- POORLY GRADED SAND WITH CLAY

MISC. SYMBOLS

- WATER TABLE DURING DRILLING

VERTICAL SCALE FEET 0 8 16 24

DELAWARE DEPARTMENT OF TRANSPORTATION

ADDENDUMS / REVISIONS

HORIZONTAL SCALE 0 15 30 45 FEET

US 301 LEVELS ROAD TO SUMMIT BRIDGE ROAD

CONTRACT	BRIDGE NO.	1-480N&S
T200911303	DESIGNED BY: ZH	
COUNTY	CHECKED BY: RDB	
NEW CASTLE		

US 301 MAINLINE OVER SANDY BRANCH

BRIDGE DETAILS TEST BORINGS

1-480 BO-1

SHEET NO. 631

TOTAL SHTS. 1256

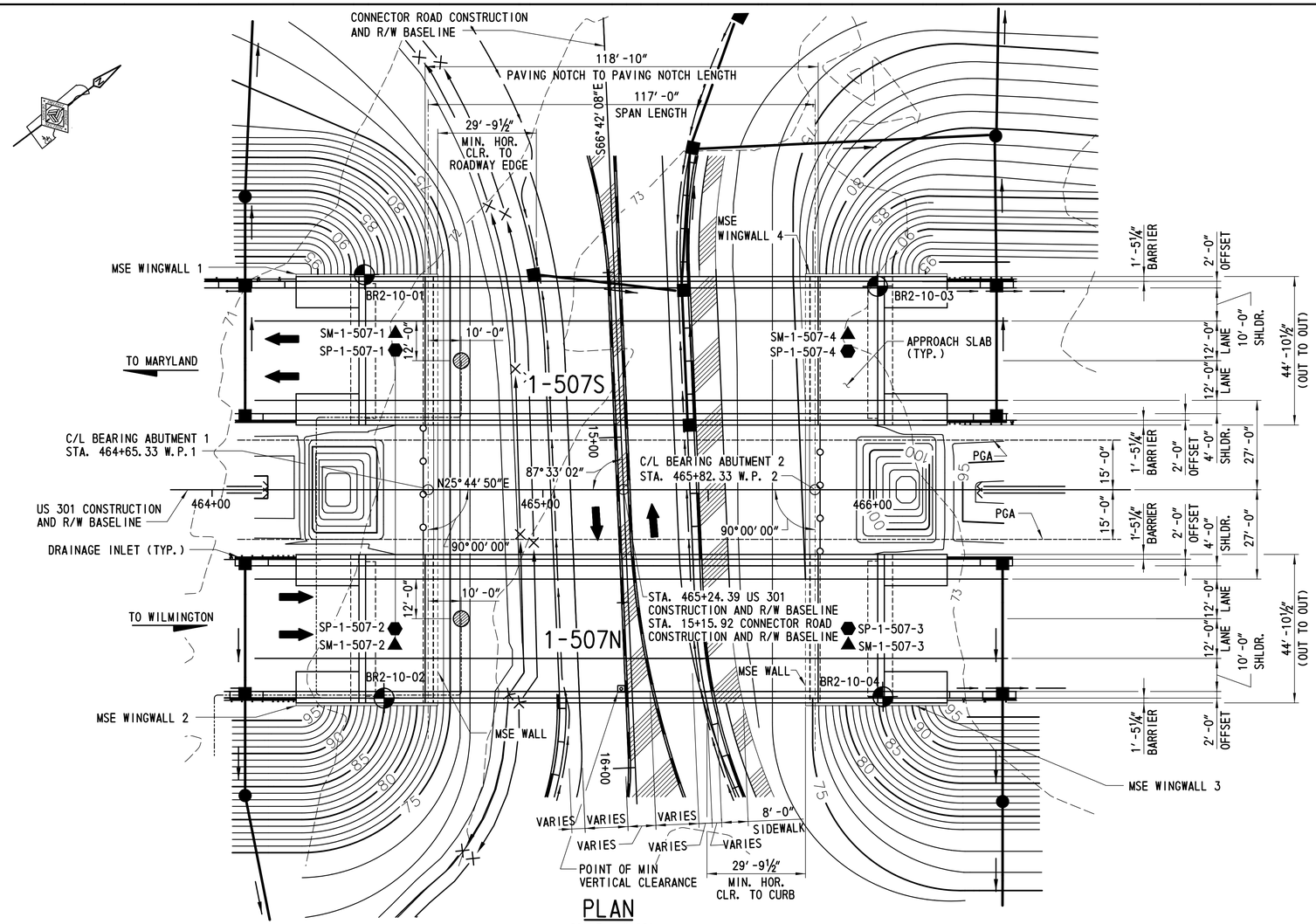

PLAN

SCALE: 1"=20'

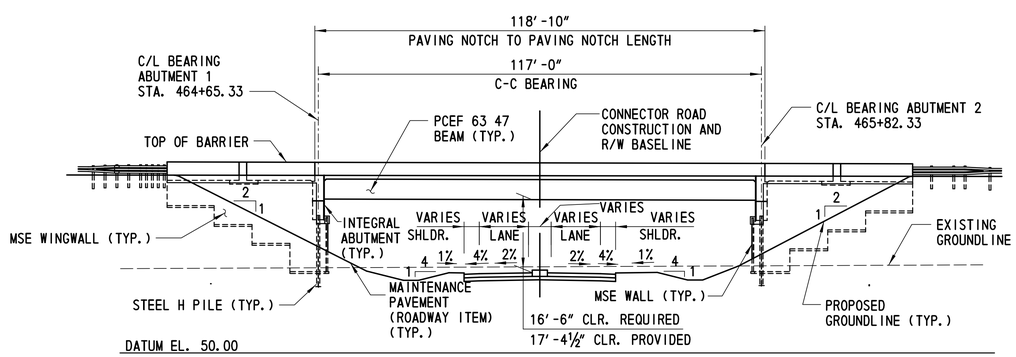

ELEVATION

SCALE: 1"=20'

CONNECTOR ROAD

VERTICAL DATA

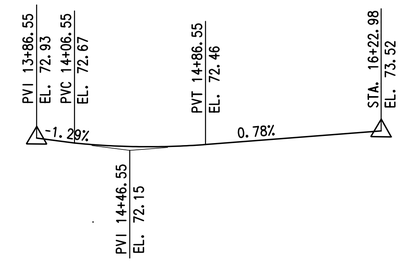

HORIZONTAL DATA

TANGENT

PVI STA. = 14+46.55
EL. = 72.15
VC = 80.00
MO = 0.2065
SSD = 896.10'

US301

VERTICAL DATA

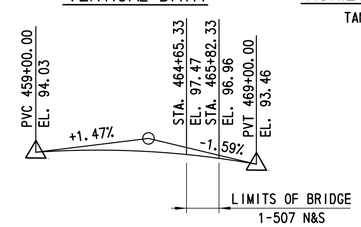

HORIZONTAL DATA

TANGENT

PVI STA. = 464+00.00
EL. = 101.40
VC = 1000.00
MO = -3.8278
SSD = 839.53'

LEGEND

- ⬢ - SETTLEMENT PLATFORMS
- ▲ - SETTLEMENT MONUMENTS
- ◍ - RWIS PUCK (SEE SIGNING, STRIPING AND CONDUIT PLANS)

NOTES:

1. NORTHBOUND BRIDGE SHOWN. SOUTHBOUND BRIDGE SIMILAR.
2. THE TYPICAL SECTION OF CONNECTOR RD VARIES BENEATH THE BRIDGE.
3. ALL PROPOSED ITMS CONNECTIONS AND TERMINATIONS TO BE COMPLETED BY DELDOT TRAFFIC FORCES.

CROSS REFERENCE NOTES:

1. FOR DETAILS AND LOCATIONS OF SETTLEMENT PLATFORMS, SEE DWG. 1-507 DT-2.
2. FOR A TYPICAL SECTION AT THE RWIS PUCK LOCATIONS, SEE DWG. 1-507 RD-3.

DELAWARE DEPARTMENT OF TRANSPORTATION	ADDENDUMS / REVISIONS	SCALE 0 20 40 60 FEET	US 301 LEVELS ROAD TO SUMMIT BRIDGE ROAD	CONTRACT T200911303	BRIDGE NO. 1-507N&S	US 301 MAINLINE OVER CONNECTOR ROAD GENERAL PLAN AND ELEVATION	1-507 PE-1
				COUNTY NEW CASTLE	DESIGNED BY: LT		SHEET NO. 632
					CHECKED BY: ML		TOTAL SHTS. 1256

PROJECT NOTES

1. DESIGN SPECIFICATIONS:

AASHTO LRFD BRIDGE DESIGN SPECIFICATIONS, 4TH EDITION, 2007, INCLUDING 2008 AND 2009 INTERIM REVISIONS, AND AS SUPPLEMENTED BY DELAWARE DEPARTMENT OF TRANSPORTATION BRIDGE DESIGN MANUAL, MAY 2005, INCLUDING LATEST REVISIONS.

PROVIDE MATERIALS AND PERFORM WORK IN ACCORDANCE WITH THE DELAWARE DEPARTMENT OF TRANSPORTATION STANDARD SPECIFICATIONS AND CONSTRUCTION DETAILS, AASHTO/AWS D1.5M/D1.5 BRIDGE WELDING CODE, AND CONTRACT SPECIAL PROVISIONS.

LIVE LOAD DISTRIBUTION TO BEAMS IS BASED UPON AASHTO DISTRUBUTION FACTORS.

2. LOADING:

UNIT WEIGHTS OF MATERIALS SHALL BE IN ACCORDANCE WITH THE DELAWARE BRIDGE DESIGN MANUAL.

FUTURE OVERLAY ALLOWANCE SHALL BE 25 LBS/SQ FT.

STEEL BRIDGE DECK FORMS WHICH STAY IN PLACE (INCLUDING CONCRETE IN FORM CORRUGATIONS) SHALL BE 15 LBS/SQ FT.

VEHICLE LIVE LOAD SHALL BE AASHTO HL-93 DESIGN VEHICLE, WHICH CONSISTS OF A DESIGN TRUCK OR TANDEM WITH DYNAMIC LOAD ALLOWANCE AND A LANE LOAD. RATINGS SHALL USE ALL DELAWARE LEGAL LOADS SPECIFIED IN THE BRIDGE DESIGN MANUAL.

BARRIER HAS BEEN DESIGNED FOR TEST LEVEL FOUR (TL-4).

FATIGUE DESIGN IS BASED ON THE FOLLOWING:
ADTT 3,045 (2030 ONE-DIRECTIONAL)

FOR THERMAL LOADS, CONSIDER THE MODERATE TEMPERATURE RANGE AS STIPULATED IN THE AASHTO LRFD DESIGN SPECIFICATION. THE NORMAL TEMPERATURE SHALL BE CONSIDERED TO BE 68 F.

FOR SEISMIC LOADS, THE BRIDGE IS IN SEISMIC PERFORMANCE ZONE 1, WITH A SITE CLASS = D AND IMPORTANCE CATEGORY - ESSENTIAL.

SEISMIC FORCES ACCELERATION COEFFICIENT IS 0.08.

3. PORTLAND CEMENT CONCRETE:

PORTLAND CEMENT CONCRETE FOR CAST-IN-PLACE ELEMENTS SHALL BE AS FOLLOWS:
(28 DAY COMPRESSIVE STRENGTH)
ITEM NO. 602003 (CLASS A, F'c=4500 PSI) - ABUTMENT FOOTING
ITEM NO. 602013 (CLASS D, F'c=4500 PSI) - DECK AND DIAPHRAGMS
ITEM NO. 602014 (CLASS D, F'c=4500 PSI) - APPROACH SLAB
ITEM NO. 602017 (CLASS A, F'c=4500 PSI) - BARRIER

RAKE FINISH ALL HORIZONTAL CONSTRUCTION JOINTS, EXCEPT AS INDICATED.

CONSTRUCT DECK SLAB TRANSVERSE CONSTRUCTION JOINTS PARALLEL TO BRIDGE CENTERLINE OF BEARING.

DECK SLAB THICKNESS INCLUDES ½" INTEGRAL WEARING SURFACE.

MIX REQUIREMENTS SHALL CONFORM TO SECTION 812 OF THE DELAWARE DEPARTMENT OF TRANSPORTATION STANDARD SPECIFICATIONS.

ALL EXPOSED CORNERS OF CONCRETE SHALL BE CHAMFERED WITH ¾" X ¾" MILLED CHAMFER STRIPS UNLESS NOTED OTHERWISE, EXCEPT ON UNEXPOSED FOOTINGS OR WHERE INDICATED BY THE NOTATION ON THE PLANS, "DO NOT CHAMFER".

NO SLIP-FORMING OF BARRIERS IS PERMITTED, UNLESS NOTED OTHERWISE.

4. BAR REINFORCEMENT:

REINFORCING STEEL SHALL CONFORM TO AASHTO M31 (ASTM A615), GRADE 60.

PROVIDE 2" CONCRETE COVER ON REINFORCEMENT BARS, EXCEPT AS NOTED.

FUSION-BONDED EPOXY COATED REINFORCING STEEL SHALL CONFORM TO AASHTO M284 (ASTM D3963), AND SHALL BE DENOTED WITH A SUFFIX "E" IN THE BAR MARKS.

DO NOT WELD GRADE 60 REINFORCING STEEL, UNLESS NOTED OTHERWISE.

5. PRESTRESSED CONCRETE DESIGN:

THE PRECAST CONCRETE GIRDERS ARE DESIGNED AS NONCOMPOSITE FOR ALL DEAD LOADS EXCEPT THE BARRIERS AND FUTURE WEARING SURFACE. THE PRECAST GIRDERS ARE DESIGNED AS COMPOSITE FOR LIVE LOADS AS WELL AS THE BARRIER AND FUTURE WEARING SURFACE DEAD LOADS.

PRESTRESSED CONCRETE:

THE MINIMUM COMPRESSIVE STRENGTH FOR PRESTRESSED CONCRETE AT THE AGE OF 28 DAYS SHALL BE f'c = 8,000 PSI. THE MINIMUM COMPRESSIVE STRENGTH AT THE TRANSFER OF PRESTRESS SHALL BE f'ci =6,400 PSI.

PRESTRESSED STEEL:

PRETENSIONING STEEL FOR BEAMS SHALL CONSIST OF HIGH STRENGTH 7-WIRE LOW RELAXATION STRANDS, WITH NOMINAL 0.60 INCH DIAMETER, CONFORMING TO THE REQUIREMENTS OF AASHTO M203 (ASTM A416) GRADE 270. EACH 0.60 INCH DIAMETER STRAND SHALL BE PRETENSIONED TO 43,942 LBS. (0.75 Fpu).

AFTER ESTIMATED LOSSES OF 24,970 PSI, THE FINAL EFFECTIVE PRESTRESS FORCE PER STRAND IS 38,524 LBS.

CONTRACTOR TO CHECK FOR STABILITY DURING ERECTION.

6. SERVICEABILITY:

LIVE LOAD DEFLECTION SHALL BE LIMITED TO L/800.

FOR REINFORCEMENT DISTRIBUTION REQUIREMENTS, CONSIDER CLASS 2 EXPOSURE CRITERIA FOR DECKS.

7. CONSTRUCTION JOINTS:

KEYED CONSTRUCTION JOINTS SHALL BE 2" X 4" OR AS NOTED. ALL EXPOSED CONSTRUCTION JOINT EDGES SHALL HAVE A ¾" V-NOTCH, UNLESS NOTED OTHERWISE.

8. STRUCTURAL EXCAVATIONS:

EXCAVATION REQUIRED TO ATTAIN THE GRADE FOR INSTALLATION OF THE MSE WALLS SHALL BE INCIDENTAL TO ITEM NO. 602553 MECHANICALLY STABILIZED EARTH WALLS.

9. STRUCTURAL BACKFILL:

MSE WALL BACKFILL SHALL BE AS SPECIFIED ON THE PLANS.

10. ROADWAY CLEARANCES:

A MINIMUM OF 16'-6" VERTICAL CLEARANCE SHALL BE MAINTAINED ABOVE CONNECTOR RD. A MINIMUM OF 2'-0" HORIZONTAL CLEARANCE SHALL BE MAINTAINED FROM THE OUTSIDE EDGE OF SHOULDER OFFSET (FACE OF CURB) TO THE FACE OF ANY OBSTRUCTION. THESE CLEARANCES APPLY AT ALL TIMES INCLUDING DURING CONSTRUCTION.

11. UTILITIES:

COORDINATE ALL WORK RELATED TO PUBLIC AND PRIVATE UTILITIES IN ACCORDANCE WITH SECTION 107.04 OF THE STANDARD SPECIFICATIONS.

VERIFY AND LOCATE ALL EXISTING UTILITIES PRIOR TO STARTING WORK. CONDUCT OPERATIONS IN A MANNER WHICH ENSURES THAT THE UTILITIES WILL NOT BE DISTURBED OR ENDANGERED AND ASSUME FULL RESPONSIBILITY FOR ANY DAMAGE TO UTILITIES DURING CONSTRUCTION. THE DEPARTMENT DOES NOT ASSUME RESPONSIBILITY FOR REIMBURSEMENT, PARTICIPATION IN DESIGN AND/OR REVISION, OR LIABILITY FOR ACCURACY OF TYPE, SIZE AND LOCATION OF ANY UTILITY.

LOAD RATING SUMMARY

DESIGN VEHICLE	RATING FACTOR	RATING WEIGHT (TONS)	CONTROLLING MEMBER	CONTROLLING POINT	LOAD EFFECT
HL-93 TRUCK (INVENTORY)	1.15	N/A	EXTERIOR BEAM	105	LONG. REINF. MAX. EFFECTS MAX. MOMENT W/ CONCURRENT SHEAR
HL-93 TANDEM (INVENTORY)	1.35	N/A	EXTERIOR BEAM	105	LONG. REINF. MAX. EFFECTS MAX. MOMENT W/ CONCURRENT SHEAR
HL-93 TRUCK TRAIN (INVENTORY)	N/A	N/A	N/A	N/A	N/A
HS-20 (INVENTORY)	1.51	54.29	EXTERIOR BEAM	106	LONG. REINF. MAX. EFFECTS MAX. MOMENT W/ CONCURRENT SHEAR
HL-93 TRUCK (OPERATING)	1.48	N/A	EXTERIOR BEAM	104	LONG. REINF. MAX. EFFECTS MAX. MOMENT W/ CONCURRENT SHEAR
HL-93 TANDEM (OPERATING)	1.73	N/A	EXTERIOR BEAM	105	LONG. REINF. MAX. EFFECTS MAX. MOMENT W/ CONCURRENT SHEAR
HL-93 TRUCK TRAIN (OPERATING)	N/A	N/A	N/A	N/A	N/A
HS-20 (OPERATING)	1.93	69.36	EXTERIOR BEAM	106	LONG. REINF. MIN. EFFECTS MAX. SHEAR W/ CONCURRENT MOMENT
DE S220 (LEGAL)	2.32	46.41	EXTERIOR BEAM	105	CONC. STRESS MAX. EFFECTS DL+PS+LL BOT. OF BEAM
DE S335 (LEGAL)	1.30	45.64	EXTERIOR BEAM	105	CONC. STRESS MAX. EFFECTS DL+PS+LL BOT. OF BEAM
DE S437 (LEGAL)	1.24	45.50	EXTERIOR BEAM	105	CONC. STRESS MAX. EFFECTS DL+PS+LL BOT. OF BEAM
DE T330 (LEGAL)	1.71	51.44	EXTERIOR BEAM	105	CONC. STRESS MAX. EFFECTS DL+PS+LL BOT. OF BEAM
DE T435 (LEGAL)	1.49	52.18	EXTERIOR BEAM	105	CONC. STRESS MAX. EFFECTS DL+PS+LL BOT. OF BEAM
DE T540 (LEGAL)	1.32	52.62	EXTERIOR BEAM	105	CONC. STRESS MAX. EFFECTS DL+PS+LL BOT. OF BEAM

NOTE: LOAD RATING DOES INCLUDE FUTURE WEARING SURFACE AS NOTED IN THE PLANS.

ABBREVIATION

E.F. = EACH FACE

F.F. = FRONT FACE

R.F. = REAR FACE

T.F. = TOP FACE

B.F. = BOTTOM FACE

INDEX OF DRAWINGS

SHEET NO.	DRAWING NO.	TITLE
632	1-507 PE-1	GENERAL PLAN AND ELEVATION
633	1-507 PN-1	PROJECT NOTES AND INDEX OF DRAWINGS
634	1-507 TS-1	TYPICAL SECTION AND QUANTITIES
635	1-507 FT-1	GEOMETRIC LAYOUT
636	1-507 FT-2	FOUNDATION PLAN
637	1-507 FT-3	PILE DRIVING NOTES
638	1-507 AB-1	ABUTMENT 1 PLAN AND ELEVATION
639	1-507 AB-2	ABUTMENT 2 PLAN AND ELEVATION
640	1-507 AB-3	ABUTMENT SECTIONS
641	1-507 AB-4	ABUTMENT 1 NB REINFORCING
642	1-507 AB-5	ABUTMENT 2 NB REINFORCING
643	1-507 AB-6	ABUTMENT 1 SB REINFORCING
644	1-507 AB-7	ABUTMENT 2 SB REINFORCING
645	1-507 AB-8	ABUTMENT REINFORCING
646	1-507 WW-1	WINGWALL ELEVATIONS
647	1-507 WW-2	WINGWALL SECTIONS
648	1-507 BR-1	SUBSTRUCTURE REINFORCEMENT SCHEDULE
649	1-507 FR-1	FRAMING PLAN
650	1-507 BM-1	BEAM ELEVATION AND DETAILS
651	1-507 CT-1	CAMBER AND DIAPHRAGM DETAILS
652	1-507 DK-1	SB SLAB AND BARRIER REINFORCEMENT
653	1-507 DK-2	NB SLAB AND BARRIER REINFORCEMENT
654	1-507 DK-3	DECK AND APPROACH SLAB REINFORCEMENT
655	1-507 DK-4	APPROACH AND MOMENT SLAB REINFORCEMENT
656	1-507 EX-1	EXPANSION JOINT DETAILS
657	1-507 DT-1	DECK POURING SEQUENCE
658	1-507 RD-1	MSE WALL DETAILS - 1
659	1-507 RD-2	MSE WALL DETAILS - 2
660	1-507 RD-3	MSE WALL COPING AND MISCELLANEOUS DETAILS
661	1-507 FD-1	FINISHED DECK ELEVATIONS - 1
662	1-507 FD-2	FINISHED DECK ELEVATIONS - 2
663	1-507 FD-3	FINISHED APPROACH SLAB ELEVATIONS
664	1-507 BR-2	SUPERSTRUCTURE REINFORCEMENT SCHEDULE
665	1-507 DT-2	SETTLEMENT PLATFORM DETAILS
666	1-507 BO-1	TEST BORINGS

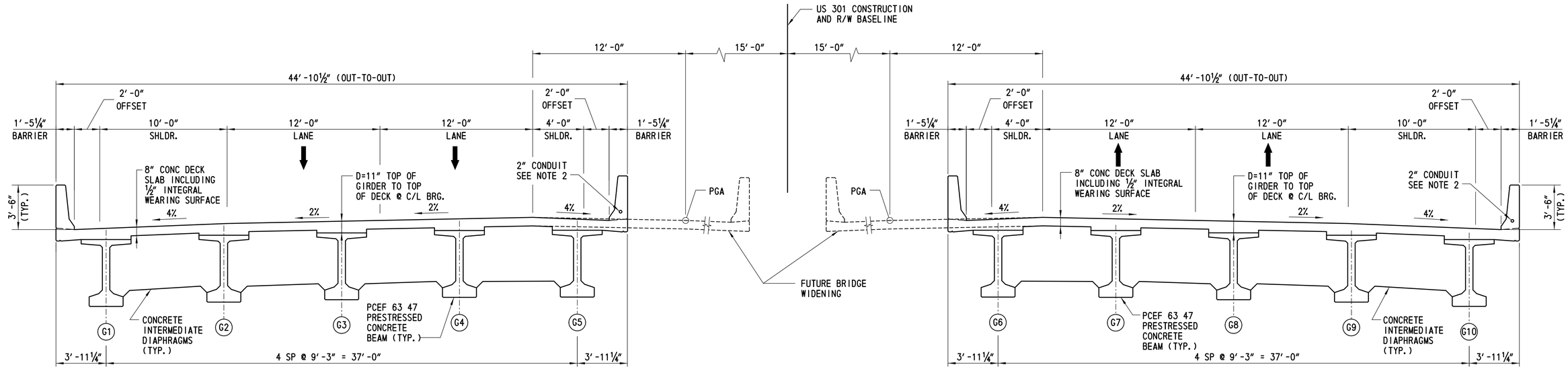

SOUTHBOUND

TYPICAL SECTION

STATIONS AHEAD
SCALE: ¼″= 1′-0″

NORTHBOUND

CROSS REFERENCE NOTES:

1. FOR GENERAL PLAN AND ELEVATION, SEE DWG. 1-507 PE-1.
2. FOR BARRIER DETAILS, SEE DWG. 1-507 DK-3.
3. FOR INTERMEDIATE DIAPHRAGM DETAILS, SEE DWG. 1-507 CT-1.
4. FOR FINISHED DECK ELEVATIONS, SEE DWG. 1-507 FD-1 AND 1-507 FD-2.

NOTES:

1. CROSS SLOPE OF FUTURE LANE SLOPES 2% DOWN TO PGA. THE CURRENT HAUNCH FOR FASCIA BEAMS (5) AND (6) WOULD NEED TO BE INCREASED TO ACCOUNT FOR CHANGE IN ELEVATION OF FUTURE DECK SLAB.
2. 2″ DIA. CONDUITS SHALL BE INSTALLED IN THE EAST BARRIERS ONLY TO ACCOMMODATE PROPOSED RWIS PUCK. FOR DETAILS REFER TO "SIGNING, STRIPING AND CONDUIT PLANS".

ESTIMATED BRIDGE QUANTITIES

ITEM NUMBER	DESCRIPTION	UNIT	NORTHBOUND QUANTITIES	SOUTHBOUND QUANTITIES	TOTAL
202505	SETTLEMENT PLATFORM	EA	2	2	4
202518	SETTLEMENT MONUMENT	EA	2	2	4
602003	PORTLAND CEMENT CONCRETE MASONRY, ABUTMENT FOOTING, CLASS A	CY	50	50	100
602013	PORTLAND CEMENT CONCRETE MASONRY, SUPERSTRUCTURE, CLASS D	CY	224	224	448
602014	PORTLAND CEMENT CONCRETE MASONRY, APPROACH SLAB, CLASS D	CY	166	166	332
602017	PORTLAND CEMENT CONCRETE MASONRY, PARAPET, CLASS A	CY	49	49	98
602772	MECHANICALLY STABILIZED EARTH WALLS	LS	-	-	-
604000	BAR REINFORCEMENT, EPOXY COATED	LB	97,371	97,371	194,742
605512	PREFABRICATED EXPANSION JOINT SYSTEM, 4″	LF	90	90	180
618069	STEEL H PILES, HP12x84	LF	1,367	1,367	2,734
618070	STEEL H TEST PILES, HP12x84	LF	191	191	382
619049	INSTALL STEEL H PILES, HP12x84	LF	1,367	1,367	2,734
619050	INSTALL STEEL H TEST PILES, HP12x84	LF	191	191	382
619501	PRODUCTION PILE RESTRIKE	EA	2	2	4
619502	TEST PILE RESTRIKE	EA DY	2	2	4
619519	DYNAMIC PILE TESTING BY CONTRACTOR	EA	2	2	4
619539	SIGNAL MATCHING ANALYSIS BY CONTRACTOR	EA	2	2	4
623003	PRESTRESSED REINFORCED CONCRETE MEMBERS: BULB TBEAM	LS	-	-	-

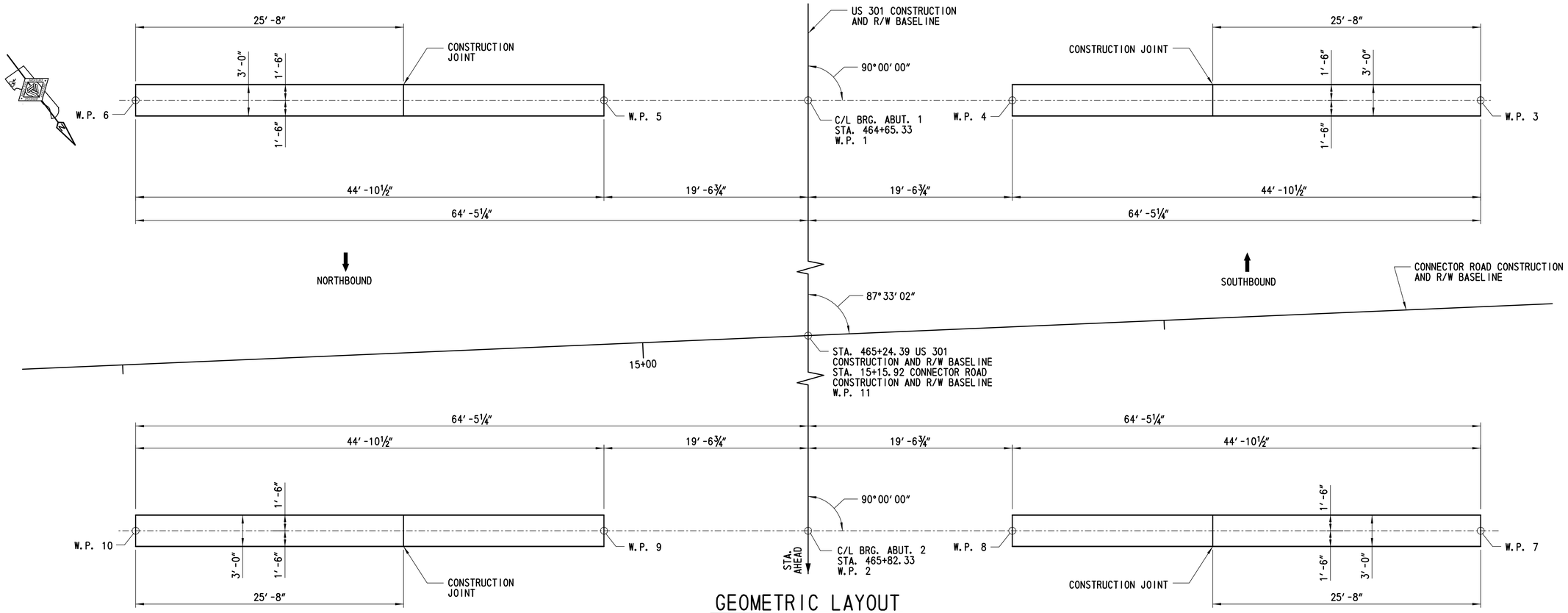

GEOMETRIC LAYOUT

SCALE: 3/16″ = 1′-0″

WORKING POINT DATA				
POINT NO.	STATION	OFFSET	NORTHING	EASTING
W.P. 1	464+65.33	0.00′	540654.4059	569995.6591
W.P. 2	465+82.33	0.00′	540759.7901	570046.4841
W.P. 3	464+65.33	64.44′ LT	540682.3977	569937.6190
W.P. 4	464+65.33	19.56′ LT	540662.9039	569978.0388
W.P. 5	464+65.33	19.56′ RT	540645.9080	570013.2795
W.P. 6	464+65.33	64.44′ RT	540626.4142	570053.6992
W.P. 7	465+82.33	64.44′ LT	540787.7818	569988.4440
W.P. 8	465+82.33	19.56′ LT	540768.2881	570028.8638
W.P. 9	465+82.33	19.56′ RT	540751.2921	570064.1044
W.P. 10	465+82.33	64.44′ RT	540731.7983	570104.5242
W.P. 11	465+24.39	0.00′	540707.6024	570021.3149

CROSS REFERENCE NOTES:

1. FOR ABUTMENT PLAN AND ELEVATIONS, SEE DWG. 1-507 AB-1 AND 1-507 AB-2.
2. FOR PILE LAYOUT, SEE DWG. 1-507 FT-2.

DELAWARE DEPARTMENT OF TRANSPORTATION

ADDENDUMS / REVISIONS

SCALE 0 2 8 / 1 4 FEET

US 301 LEVELS ROAD TO SUMMIT BRIDGE ROAD

CONTRACT T200911303 | COUNTY NEW CASTLE | BRIDGE NO. 1-507N&S | DESIGNED BY: KW | CHECKED BY: JW

US 301 MAINLINE OVER CONNECTOR ROAD
GEOMETRIC LAYOUT

1-507 FT-1 | SHEET NO. 635 | TOTAL SHTS. 1256

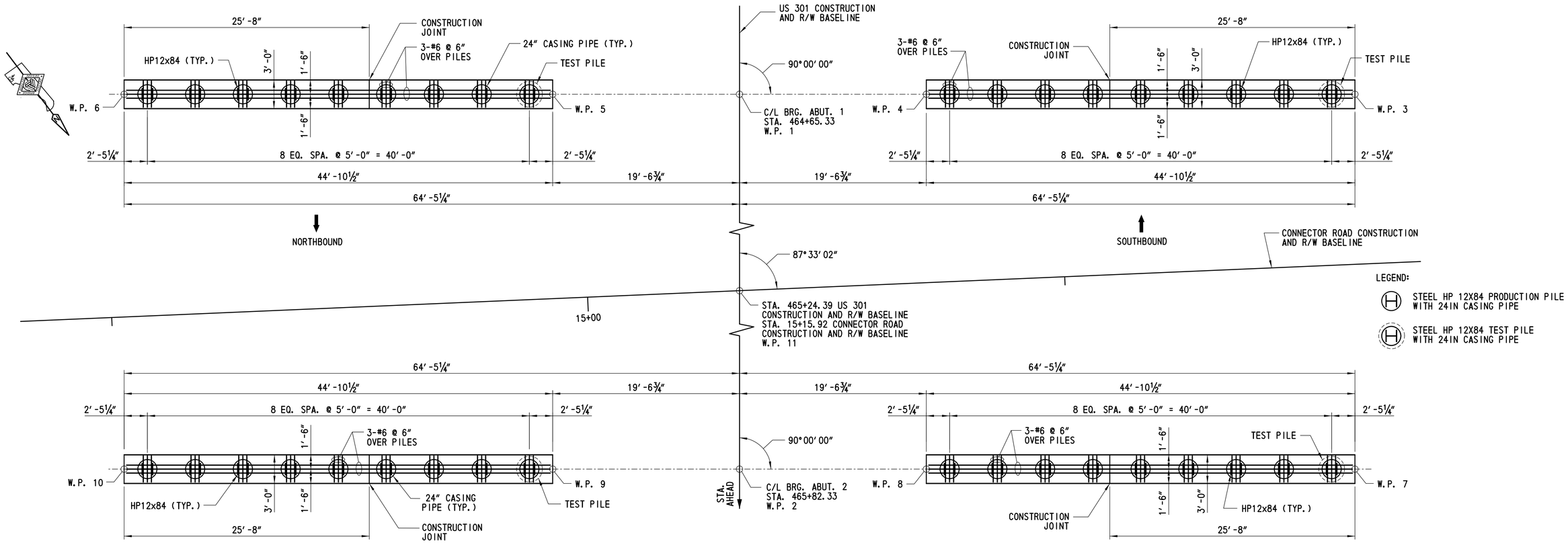

FOUNDATION PLAN

SCALE: 3/16″ = 1′-0″

PILE INSTALLATION DATA				
	DESIGN DATA		ACTUAL FIELD DATA	
SUBSTRUCTURE UNIT	NOMINAL PILE DRIVING RESISTANCE (KIP)	ESTIMATED TIP ELEVATION (FT)	AVERAGE MIN. TIP ELEVATION (FT)	AVERAGE MAX. TIP ELEVATION (FT)
ABUTMENT 1	334	1.0		
ABUTMENT 2	334	1.0		

CROSS REFERENCE NOTES:

1. FOR ABUTMENT PLAN AND ELEVATIONS, SEE DWG. 1-507 AB-1 AND 1-507 AB-2.
2. SEE DWG. 1-507 AB-3 FOR PIPE CASING DETAIL.

PILE DRIVING INFORMATION FOR ABUT. 1		
	1-507 N	1-507 S
PILE SIZE AND TYPE:		
ACTUAL BEARING OBTAINED:		
HAMMER TYPE:		
AVERAGE ACTUAL BLOWS/FT.:		
PILE HAMMER ENERGY:		
SPECIAL DRIVING CONDITIONS AND COMMENTS:		

PILE DRIVING INFORMATION FOR ABUT. 2		
	1-507 N	1-507 S
PILE SIZE AND TYPE:		
ACTUAL BEARING OBTAINED:		
HAMMER TYPE:		
AVERAGE ACTUAL BLOWS/FT.:		
PILE HAMMER ENERGY:		
SPECIAL DRIVING CONDITIONS AND COMMENTS:		

DELAWARE DEPARTMENT OF TRANSPORTATION

ADDENDUMS / REVISIONS

SCALE 0 1 2 4 8 FEET

US 301 LEVELS ROAD TO SUMMIT BRIDGE ROAD

CONTRACT T200911303 | COUNTY NEW CASTLE | BRIDGE NO. 1-507N&S | DESIGNED BY: LT | CHECKED BY: MHI

US 301 MAINLINE OVER CONNECTOR ROAD FOUNDATION PLAN

1-507 FT-2 | SHEET NO. 636 | TOTAL SHTS. 1256

PILE CONSTRUCTION SEQUENCE NOTES:

1. INSTALL 24-INCH I.D. CORRUGATED, GALVANIZED PIPES (CMP) AT THE PROPOSED PILE LOCATIONS PRIOR TO THE PLACEMENT OF THE MSE WALL. THE COST OF THE CMP SHALL BE INCIDENTAL TO PAY ITEMS 619049 AND 619050. REFER TO SECTION 614.02(a) OF THE STANDARD SPECIFICATIONS FOR CORRUGATED PIPE.

2. INSTALL ONE SETTLEMENT PLATFORM AT EACH ABUTMENT AND TAKE BASELINE READING PRIOR TO THE PLACEMENT OF THE FILL. INSTALL ONE SETTLEMENT MONUMENT AFTER THE PLACEMENT OF THE FILL.

3. UPON COMPLETION OF THE MSE WALL AND APPROACH EMBANKMENT, MONITOR SETTLEMENT PLATFORMS UNTIL SUFFICIENT SETTLEMENT HAS BEEN ACHIEVED AS DEFINED BY LESS THAN 0.1 INCHES OF MOVEMENT IN TWO SUCCESSIVE WEEKLY SETTLEMENT PLATFORM READINGS. THE TIME FOR SETTLEMENT MONITORING COULD NOT BE LESS THAN 30 DAYS (QUARANTINE PERIOD FOR PILE DRIVING).

4. UPON COMPLETION OF MSE WALL SETTLEMENT, AS INDICATED FROM SETTLEMENT PLATFORM READINGS, DRIVE TEST PILES THROUGH THE GALVANIZED PIPES AND PERFORM DYNAMIC PILE TESTING.

5. BASED ON TEST RESULTS, DRIVE PRODUCTION PILES THROUGH THE GALVANIZED PIPES TO THE REQUIRED BLOW COUNTS.

6. FILL THE ANNULAR SPACES BETWEEN PILES AND GALVANIZED PIPES WITH FINE AGGREGATE AS PER DELAWARE DEPARTMENT OF TRANSPORTATION STANDARD SPECIFICATIONS, SECTION 804. THE COST OF THE FILL MATERIAL SHALL BE INCIDENTAL TO PAY ITEMS 619049 AND 619050.

PILE DRIVING NOTES:

1. ALL PILES SHALL BE TYPE HP12X84 PILES (ASTM A572), GRADE 50. PILES SHALL NOT BE COATED.

2. ALL TEST PILES SHALL BE 10-FT LONGER THAN INDICATED ON PILE INSTALLATION DATA TABLE.

3. ALL PILES SHALL BE DRIVEN TO THE NOMINAL PILE DRIVING RESISTANCE LISTED IN THE PILE INSTALLATION DATA TABLE.

4. THE CONTRACTOR SHALL BE RESPONSIBLE FOR SUBMITTING A WAVE EQUATION ANALYSIS AND ALL OTHER INCIDENTALS IN ACCORDANCE WITH THE PROJECT SPECIFICATIONS. THE WAVE EQUATION AND HIGH-STRAIN DYNAMIC PILE TESTING MUST BE SIGNED AND STAMPED BY A PROFESSIONAL ENGINEER LICENSED IN THE STATE OF DELAWAREIN ACCORDANCE WITH THE PROJECT SPECIFICATIONS.

5. UPON COMPLETION OF THE HIGH-STRAIN DYNAMIC PILE TESTING, THE CONTRACTOR SHALL SUBMIT A SIGNAL MATCHING ANALYSIS TO THE ENGINEER FOR REVIEW AND APPROVAL IN ACCORDANCE WITH THE PROJECT SPECIFICATIONS.

6. A MINIMUM QUARANTINE PERIOD OF 30-DAYS IS REQUIRED AFTER CONSTRUCTION OF THE FULL HEIGHT OF THE FILL AT THE ABUTMENTS IS ACHIEVED.

7. PILES MAY NOT BE DRIVEN UNTIL AFTER COMPLETION OF THE QUARANTINE PERIOD.

8. THE ENGINEER SHALL APPROVE THE COMPLETION OF THE QUARANTINE PERIOD, BASED ON RESULTS OF INSTRUMENTATION.

9. TEST PILES MAY BE DRIVEN PRIOR TO PLACING MSE WALL BACKFILL. RESTRIKES OF THESE TEST PILES SHALL BE PERFORMED PRIOR TO PLACING ANY EMBANKMENT IN ACCORDANCE WITH ITEM NO. 619502 - TEST PILE RESTRIKE. TEST PILES BEHIND MSE WALLS SHALL THEN BE CASED PRIOR TO PLACING EMBANKMENT. AFTER THE SETTLEMENT HAS BEEN ACHIEVED AND THE SUBSTRUCTURE HAS BEEN RELEASED BY THE ENGINEER, PRODUCTION PILES MAY BE INSTALLED. AT THIS POINT, THE TEST PILE SHALL BE ACTING AS A PRODUCTION PILE AND IT SHALL BE RE-STRUCK AS DIRECTED BY THE ENGINEER PRIOR TO PLACING ANY OTHER PRODUCTION PILES WITH PAYMENT UNDER ITEM NO. 619501 - PRODUCTION PILE RESTRIKE.

10. SEE THE SPECIAL PROVISIONS 202505 AND 202518 FOR SETTLEMENT MONITORING REQUIREMENTS.

11. DELDOT STANDARD SPECIFICATION 619.11(a)(6) SHALL BE MODIFIED BY REFERENCE TO SPECIAL PROVISIONS 619519 AND 619539.

12. PILE LENGTHS FOR ORDERING PURPOSES SHALL BE DETERMINED BY TEST PILES. A MINIMUM OF ONE (1) PILE PER SUBSTRUCTURE, AS SHOWN ON THE PLANS, SHALL BE DYNAMICALLY TESTED WITH SIGNAL MATCHING ANALYSIS BY THE CONTRACTOR IN ACCORDANCE WITH SPECIAL PROVISION 619519 AND 619539. TEST AND PRODUCTION PILE RESTRIKES WILL BE PAID AS FOLLOWS:

    a. ALL TEST PILE(S) WILL BE RESTRUCK AFTER A WAITING PERIOD OF AT LEAST 48 HOURS. TEST PILE RESTRIKES SHALL BE INCIDENTAL TO THE INITIAL INSTALLATION OF THE PILE PROVIDED THEY ARE REQUESTED WITHIN FIVE WORKING DAYS FROM THE COMPLETION OF THE INITIAL DRIVE. IF TEST PILE RESTRIKES ARE REQUESTED AFTER THE FIVE WORKING DAYS FROM THE COMPLETION OF THE INITIAL DRIVE, THEN THE TEST PILE RESTRIKE SHALL BE PAID AS NOTED IN SPECIAL PROVISION 619502.

    b. IF DIRECTED BY THE ENGINEER TO RESTRIKE A PRODUCTION PILE, THE RESTRIKE OF THE PRODUCTION PILE SHALL BE PAID SEPARATELY UNDER ITEM NO. 619501.

13. THE DEPARTMENT RESERVES THE RIGHT TO PERFORM DYNAMIC TESTING OF RESTRIKES.

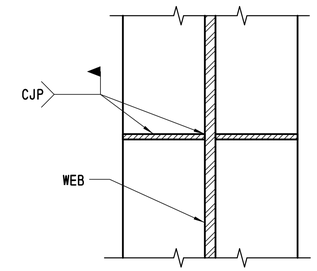

SECTION A-A

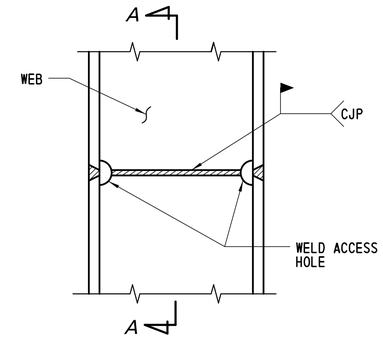

ELEVATION

NOTES:

1. ALL WELDS SHALL BE COMPLETE PENETRATION AND SHALL CONFORM TO THE ANSI/AASHTO/AWS BRIDGE WELDING CODE, D1.5.

2. WELDING PROCEDURE SPECIFICATIONS MUST BE APPROVED BY THE ENGINEER PRIOR TO WELDING.

3. WHENEVER POSSIBLE, ALL PILES SHALL BE SPLICED ON THE GROUND IN THE FLAT POSITION.

4. WEB SHALL BE COPED TO ALLOW FOR COMPLETE PENETRATION WELDING OF FLANGES.

5. WELDED MECHANICAL PILE SPLICERS MAY BE USED PROVIDED THAT COMPLETE DETAILS AND WELDING PROCEDURES HAVE BEEN REVIEWED AND APPROVED BY THE ENGINEER.

6. ALL SPLICES SHOULD BE LOCATED AT MORE THAN 20 FT BELOW THE BOTTOM OF THE PILE CAP.

H-PILE SPLICE DETAILS

NOT TO SCALE

CROSS REFERENCE NOTE:

FOR FILL PLACEMENT DURING QUARANTINE PERIOD DETAIL, SEE DWG. 1-507 RD-1.

CROSS REFERENCE NOTES:

1. FOR GENERAL PLAN AND ELEVATION, SEE DWG. 1-507 PE-1.
2. FOR GEOMETRIC LAYOUT AND FOUNDATION PLAN, SEE DWG. 1-507 FT-1 AND 1-507 FT-2.
3. FOR ABUTMENT 2 PLAN AND ELEVATION, SEE DWG. 1-507 AB-2.
4. FOR ADDITIONAL ABUTMENT DETAILS, SEE DWG. 1-507 AB-3, 1-507 AB-4, 1-507 AB-6 AND 1-507 AB-8.
5. FOR MSE WALL CORNER DETAIL, SEE DWG. 1-507 RD-1.
6. FOR MSE WALL VERTICAL COPING, SEE DWG. 1-507 RD-2.
7. FOR ABUTMENT CONSTRUCTION JOINT DETAIL, SEE DWG. 1-507 AB-8.

NOTES:

1. TOP OF DECK ELEVATIONS TAKEN ALONG CENTERLINE OF BEARING.
2. MSE WALL LEVELING PAD NOT SHOWN ON PLAN VIEW FOR CLARITY.
3. JOINT FILLER BETWEEN ABUTMENT AND MSE WALL IS NOT SHOWN FOR CLARITY.

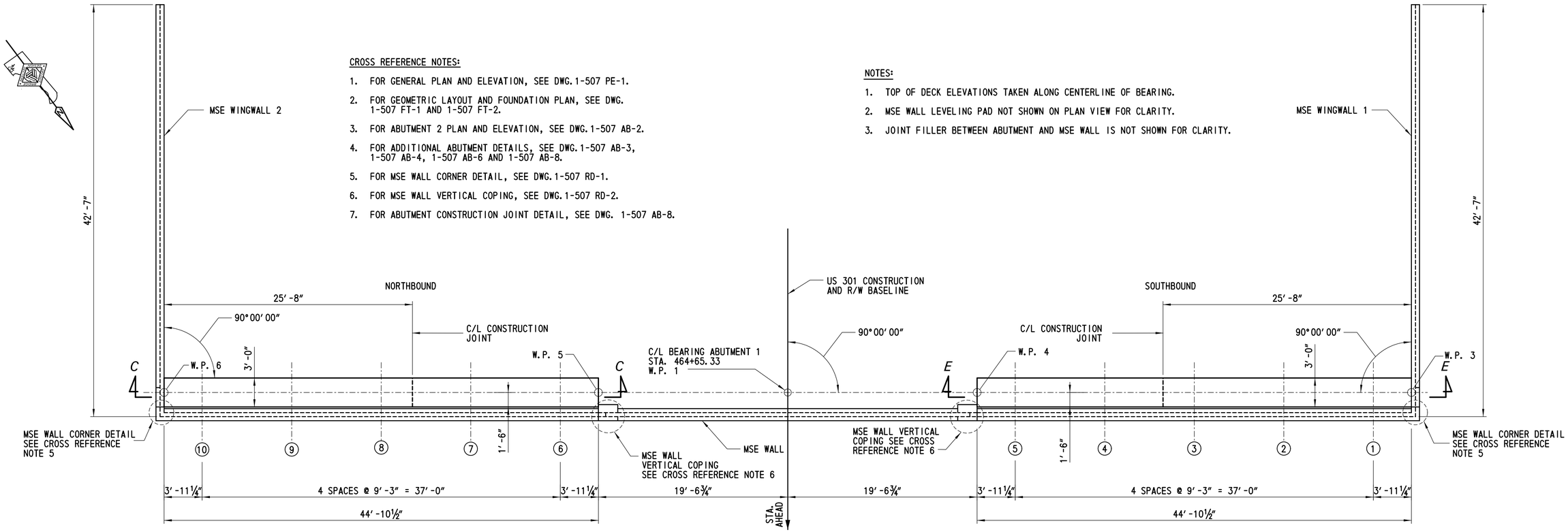

PLAN

SCALE: 3/16" = 1'-0"

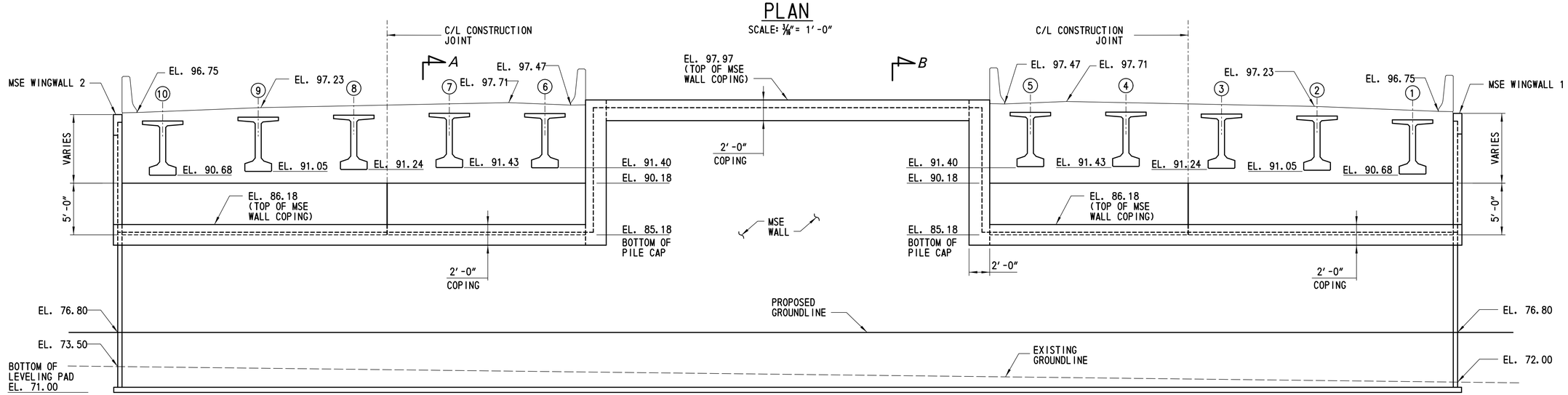

ELEVATION

SCALE: 3/16" = 1'-0"

DELAWARE DEPARTMENT OF TRANSPORTATION	ADDENDUMS / REVISIONS	SCALE 0 2 8 / 1 4 FEET	US 301 LEVELS ROAD TO SUMMIT BRIDGE ROAD	CONTRACT T200911303 / COUNTY NEW CASTLE	BRIDGE NO. 1-507N&S / DESIGNED BY: LT / CHECKED BY: ML	US 301 MAINLINE OVER CONNECTOR ROAD ABUTMENT 1 PLAN AND ELEVATION	1-507 AB-1 / SHEET NO. 638 / TOTAL SHTS. 1256

CROSS REFERENCE NOTES:

1. FOR GENERAL PLAN AND ELEVATION, SEE DWG. 1-507 PE-1.
2. FOR GEOMETRIC LAYOUT AND FOUNDATION PLAN, SEE DWG. 1-507 FT-1 AND 1-507 FT-2.
3. FOR ABUTMENT 1 PLAN AND ELEVATION, SEE DWG. 1-507 AB-1.
4. FOR ADDITIONAL ABUTMENT DETAILS, SEE DWG. 1-507 AB-3, 1-507 AB-5, 1-507 AB-7 AND 1-507 AB-8.
5. FOR MSE WALL CORNER DETAIL, SEE DWG. 1-507 RD-1.
6. FOR MSE WALL VERTICAL COPING, SEE DWG. 1-507 RD-2.
7. FOR ABUTMENT CONSTRUCTION JOINT DETAIL, SEE DWG. 1-507 AB-8.

NOTES:

1. TOP OF DECK ELEVATIONS TAKEN ALONG CENTERLINE OF BEARING.
2. MSE WALL LEVELING PAD NOT SHOWN ON PLAN VIEW FOR CLARITY.
3. JOINT FILLER BETWEEN ABUTMENT AND MSE WALL IS NOT SHOWN FOR CLARITY.

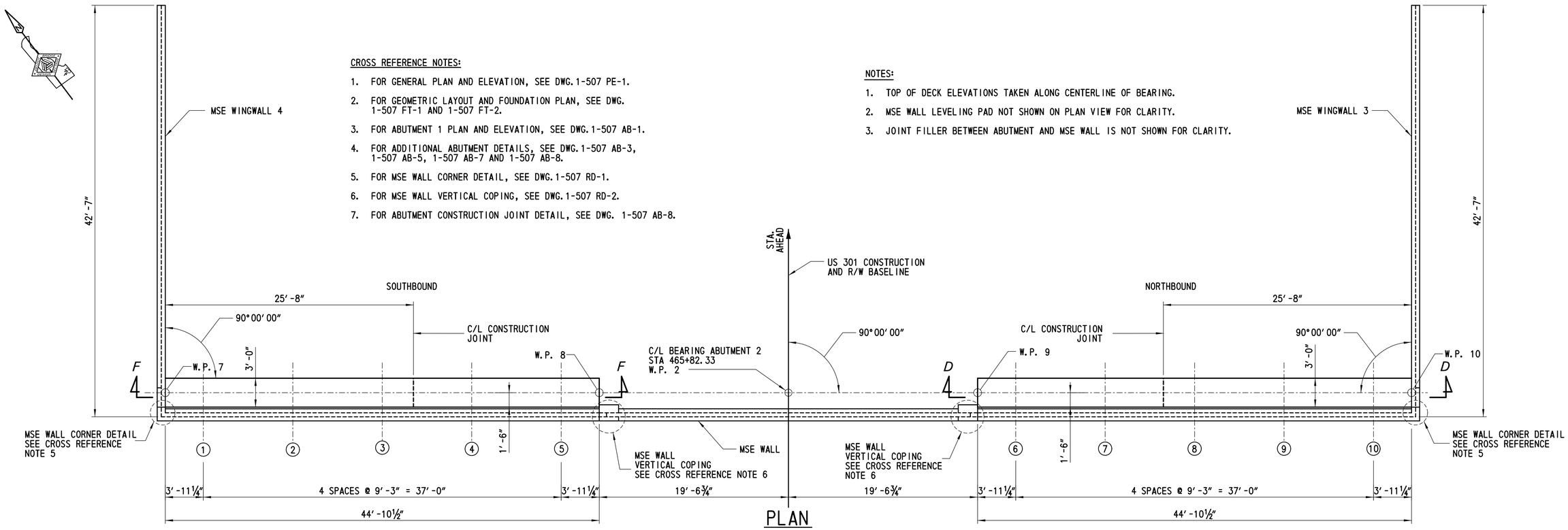

PLAN

SCALE: 3/16" = 1'-0"

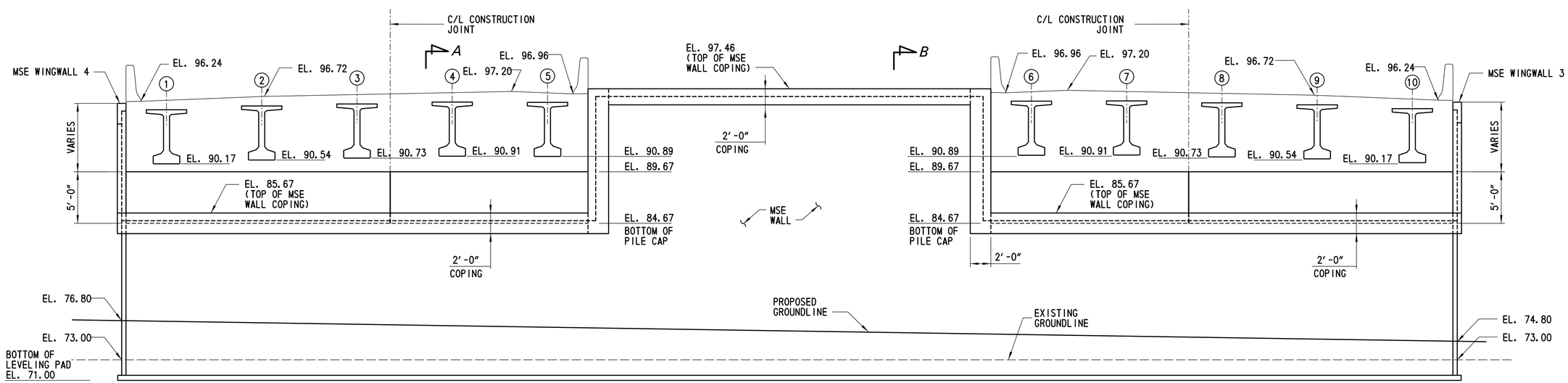

ELEVATION

SCALE: 3/16" = 1'-0"

DELAWARE DEPARTMENT OF TRANSPORTATION	ADDENDUMS / REVISIONS	SCALE 0 2 8 / 1 4 FEET	US 301 LEVELS ROAD TO SUMMIT BRIDGE ROAD	CONTRACT T200911303 / COUNTY NEW CASTLE	BRIDGE NO. 1-507N&S / DESIGNED BY: LT / CHECKED BY: ML	US 301 MAINLINE OVER CONNECTOR ROAD ABUTMENT 2 PLAN AND ELEVATION	1-507 AB-2 / SHEET NO. 639 / TOTAL SHTS. 1256

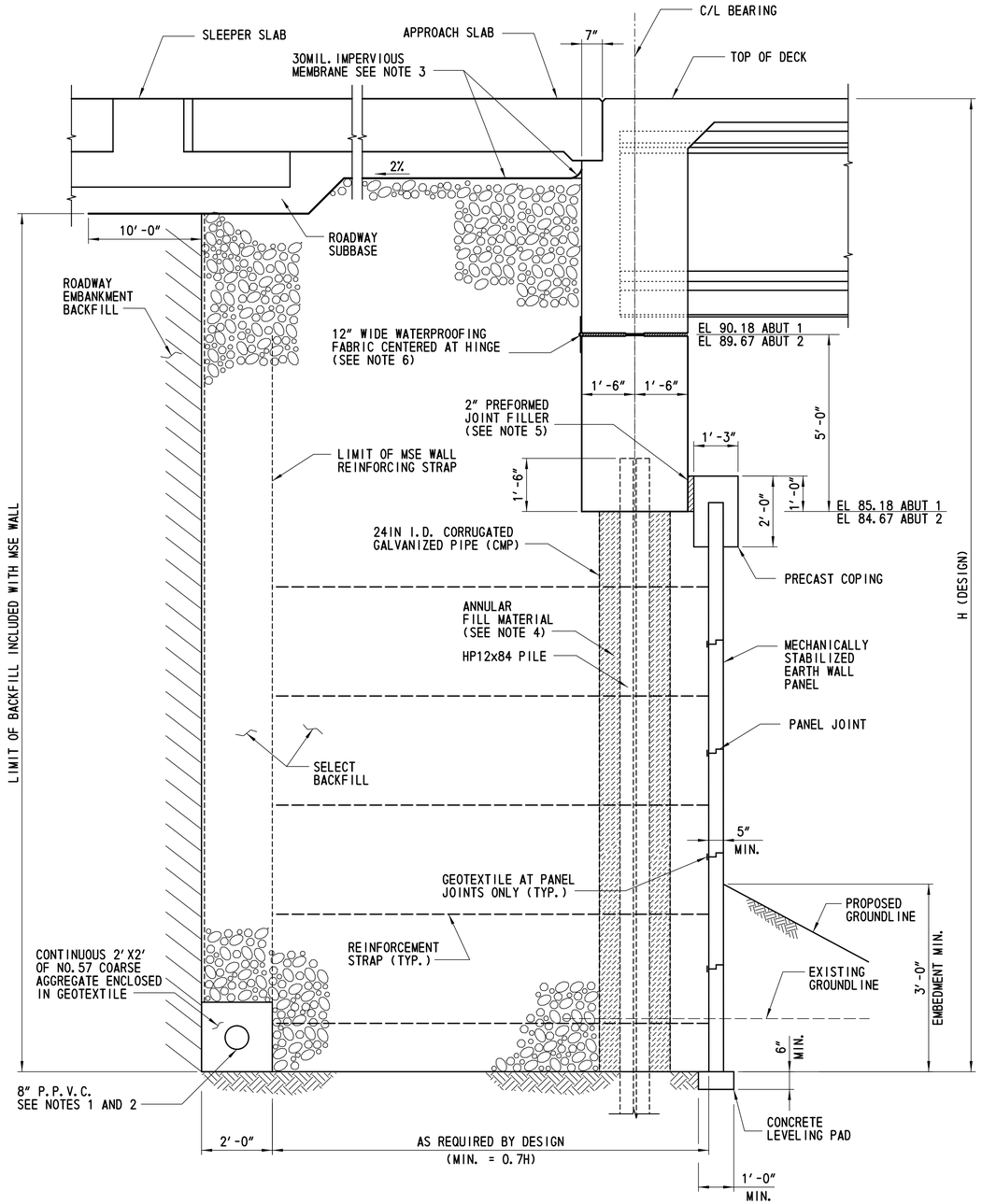

SECTION A-A

SCALE: ½" = 1'-0"

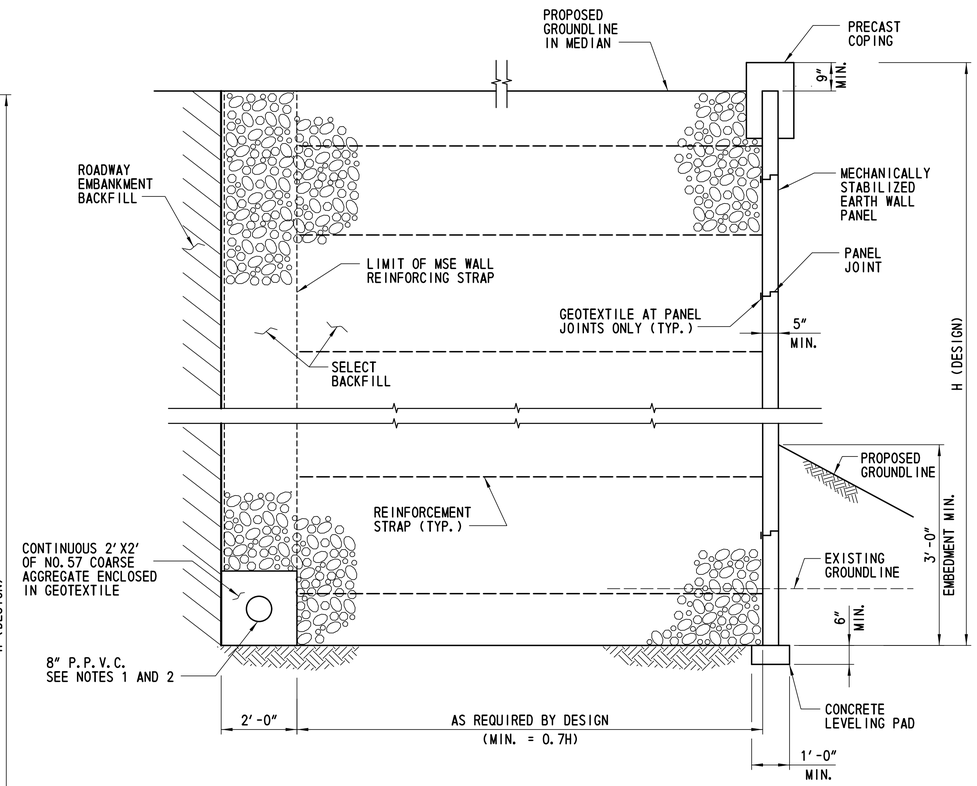

SECTION B-B

SCALE: ½" = 1'-0"

CROSS REFERENCE NOTES:

1. FOR WINGWALL ELEVATIONS, SEE DWG. 1-507 WW-1.
2. FOR GENERAL PLAN AND ELEVATION, SEE DWG. 1-507 PE-1.
3. FOR FOUNDATION PLAN, SEE DWG. 1-507 FT-2.
4. FOR ABUTMENT PLAN AND ELEVATION, SEE DWG. 1-507 AB-1 AND 1-507 AB-2.
5. FOR APPROACH SLAB DETAILS, SEE DWG. 1-507 DK-3 AND 1-507 DK-4.

NOTES:

1. DRAIN PERFORATED POLYVINYL CHLORIDE PIPE (P.P.V.C.) TO DAYLIGHT. THE COST OF P.P.V.C. SHALL BE INCIDENTAL TO PAY ITEM 602772.
2. SURROUND P.P.V.C. WITH A CONTINUOUS 2'X2' OF DELAWARE NO. 57 STONE ENCLOSED IN GEOTEXTILE. THE COST OF DELAWARE NO. 57 STONE AND GEOTEXTILE SHALL BE INCIDENTAL TO PAY ITEM 602772.
3. SLOPE MEMBRANE A MINIMUM OF 2% AWAY FROM THE BACKWALL. MEMBRANE TO BE INCIDENTAL TO ITEM 602772.
4. FILL THE ANNULAR SPACES BETWEEN PILES AND GALVANIZED PIPES WITH FINE AGGREGATE AS PER DELDOT STANDARD SPECIFICATION, SECTION 804. FINE AGGREGATE SHALL BE INCIDENTAL TO ITEM NO. 619049.
5. JOINT FILLER SHALL BE INCIDENTAL TO ITEM NO. 602003.
6. WATERPROOFING FABRIC SHALL BE INCIDENTAL TO ITEM NO. 602013.

MSE WALL NOTES:

SPECIFICATIONS: PROPRIETARY MSE WALLS SHALL BE DESIGNED IN ACCORDANCE WITH THE FOLLOWING:
- AASHTO LRFD BRIDGE DESIGN SPECIFICATIONS, 4TH EDITION WITH ALL CURRENT REVISIONS.
- FEDERAL HIGHWAY ADMINISTRATION PUBLICATION NOS. FHWA-NHI-10-024 AND FHWA-NHI-10-025, "DESIGN AND CONSTRUCTION OF MECHANICALLY STABILIZED EARTH WALLS AND REINFORCED SOIL SLOPES", VOLUME I AND VOLUME II.

CONCRETE DESIGN SHALL BE PERFORMED USING THE LOAD AND RESISTANCE FACTOR DESIGN METHOD.

CONCRETE: LEVELING PAD CONCRETE SHALL BE 3,000 PSI. PRECAST COPING CONCRETE SHALL BE 4,500 PSI. MIX REQUIREMENTS SHALL CONFORM TO SECTION 812 OF THE DELAWARE DEPARTMENT OF TRANSPORTATION STANDARD SPECIFICATIONS.

CHAMFERS: ALL EXPOSED CORNERS OF CONCRETE SHALL BE CHAMFERED WITH ¾"X¾" MILLED CHAMFER STRIPS, UNLESS OTHERWISE NOTED, EXCEPT ON UNEXPOSED FOOTINGS OR WHERE INDICATED BY THE FOLLOWING NOTATION ON THE PLANS: "DO NOT CHAMFER".

REINFORCING STEEL: REINFORCING STEEL SHALL CONFORM TO AASHTO M31 (ASTM A 615), GRADE 60. ALL SPLICES, NOT SHOWN, SHALL BE LAPPED AS PER THE LRFD BRIDGE DESIGN SPECIFICATIONS. MINIMUM COVER FOR ANY BAR SHALL BE 2" UNLESS OTHERWISE NOTED.

FOR TIES AND STIRRUPS, STANDARD ACI BENDING TOLERANCES ARE MODIFIED TO PLUS (+) ZERO INCHES, MINUS (-) NORMAL ACI BENDING TOLERANCE.

LEVELING PAD: THE PROPRIETARY WALL MANUFACTURER MAY RELOCATE THE LEVELING PAD STEPS AT THEIR DISCRETION PROVIDED THAT THE MINIMUM EMBEDMENT IS MAINTAINED. ANY CHANGE TO THE STEP LOCATIONS SHALL BE SUBMITTED TO THE ENGINEER FOR APPROVAL.

ROADWAY LIMITS: THE PROPRIETARY WALL MANUFACTURER SHALL ASSURE THAT PROPOSED PROPRIETARY WALL COMPONENTS ARE POSITIONED SUCH THAT THE DESIGNATED ROADWAY LIMITS ARE NOT ENCROACHED UPON.

COORDINATION: CONTRACTOR AND PROPRIETARY WALL MANUFACTURER SHALL COORDINATE LOCATIONS OF INLETS AND PIPES WITH LOCATIONS OF PROPRIETARY WALL TIE BACK SYSTEM.

SERVICE LIFE: ALL RETAINING WALL COMPONENTS SHALL BE DESIGNED FOR A MINIMUM SERVICE LIFE OF 100 YEARS.

WALL SYSTEM: RETAINING WALL TYPE SHALL BE MECHANICALLY STABILIZED EARTH (MSE) WALLS. NO OTHER WALL TYPE MAY BE SUBSTITUTED.

MSE WALL BACKFILL: MSE WALL BACKFILL SHALL BE DELDOT SELECT BACKFILL WITH MINIMUM ANGLE OF INTERNAL FRICTION OF 34 DEGREES AND A MOIST UNIT WEIGHT OF 125 LB/FT³.

REINFORCING STRAPS: SET REINFORCING STRAPS TO CLEAR PILE CASING , 2" MIN. CLEARANCE. MAXIMUM IN-FIELD SKEW OF 15 DEGREES. IF GREATER SKEW ANGLE IS REQUIRED, CONTACT MSE WALL FIELD REPRESENTATIVE PRIOR TO INSTALLATION.

REINFORCING STRAPS OF ABUTMENT MSE WALLS: IN ADDITION TO EARTH AND TRAFFIC SURCHARGE LOADS, MSE STRAPS SHALL BE DESIGNED TO RESIST LATERAL LOADS CAUSED BY THE MOVEMENT OF THE PILES. THESE LOADS ARE AS FOLLOWS:

SERVICE LIMIT: 700 PSF APPLIED IN A RECTANGULAR DISTRIBUTION FROM THE BOTTOM OF THE PILE CAP TO 12.0 FT BELOW THE BOTTOM OF THE PILE CAP.

STRENGTH LIMIT: 900 PSF APPLIED IN A RECTANGULAR DISTRIBUTION FROM THE BOTTOM OF THE PILE CAP TO 12.0 FT BELOW THE BOTTOM OF THE PILE CAP.

SOIL PARAMETERS: THE FOLLOWING ARE RECOMMENDED SOIL PARAMETERS TO BE USED FOR THE DESIGN OF MSE ABUTMENT AND WINGWALLS:
- NOMINAL BEARING RESISTANCE = 16.6 KSF
- FACTORED BEARING RESISTANCE = 10.8 KSF
- MAXIMUM ANTICIPATED SETTLEMENT = 4.5 IN
- FOR RETAINED SOIL, MOIST UNIT WEIGHT = 120 LB/FT³
- FOR RETAINED SOIL, ANGLE OF INTERNAL FRICTION = 30 DEGREES
- FOR FOUNDATION SOIL, MOIST UNIT WEIGHT = 120 LB/FT³
- FOR FOUNDATION SOIL, ANGLE OF INTERNAL FRICTION = 30 DEGREES

COPING: FABRICATION AND INSTALLATION OF COPING ALONG MSE WALL SHALL BE INCIDENTAL TO ITEM 602772.

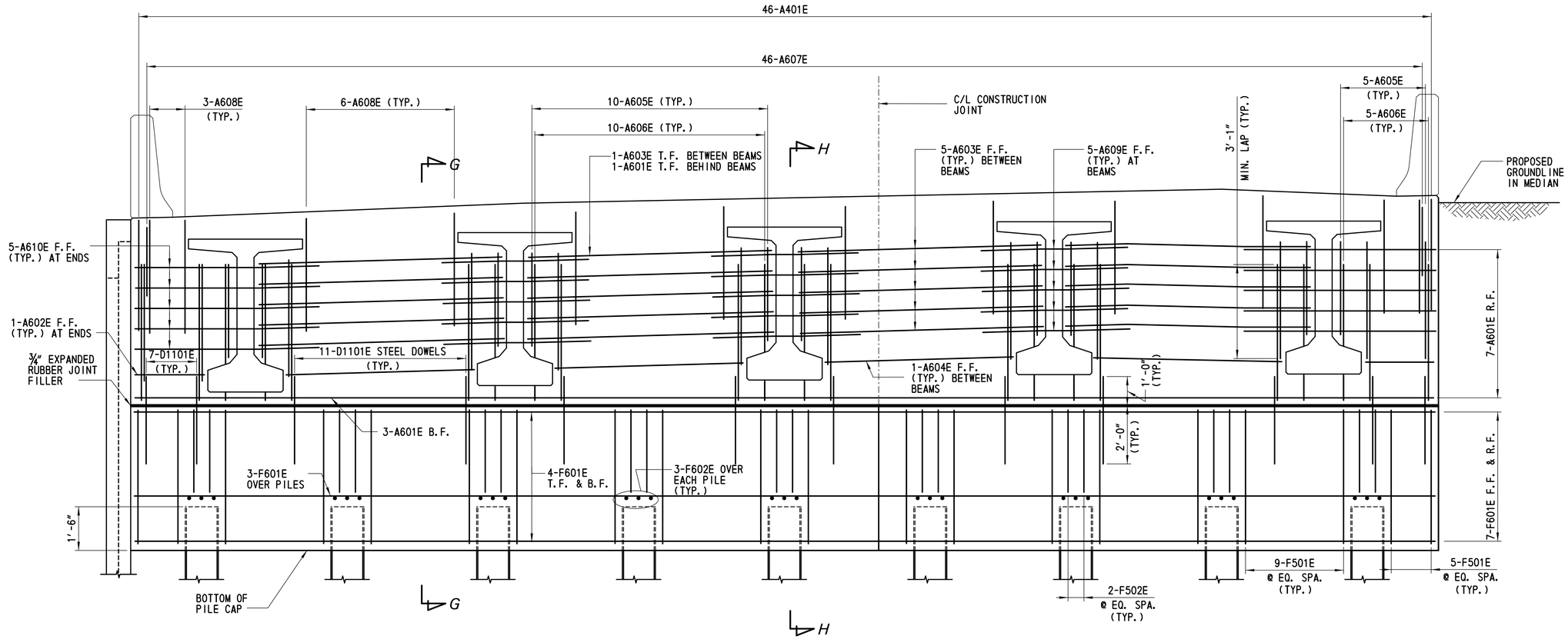

ABUTMENT 1 NORTHBOUND DETAIL SECTION C-C

SCALE: ½" = 1'-0"

CROSS REFERENCE NOTES:

1. PORTION OF THE INTEGRAL CURED ABUTMENT ABOVE THE HINGE SHALL BE PLACED AFTER THE PLACEMENT OF THE DECK CONCRETE. REFER TO THE DECK POURING SEQUENCE DWG. 1-507 DT-1.
2. FOR SECTION G-G AND H-H, SEE DWG. 1-507 AB-8.
3. FOR THE ELEVATIONS AT BEAMS BOTTOMS, SEE DWG. 1-507 AB-1.
4. FOR THE CONSTRUCTION JOINT DETAIL, SEE DWG. 1-507 AB-8.

NOTES:

1. BACKFILL BEHIND INTEGRAL ABUTMENT FOOTING SHALL NOT BE PLACED UNTIL CONCRETE IN THE UPPER PORTION OF THE INTEGRAL ABUTMENT ATTAINS A MINIMUM COMPRESSIVE STRENGTH OF 3000 psi. THE REMAINDER OF THE BACKFILL BEHIND BOTH BRIDGE ABUTMENTS SHALL BE PLACED SUCH THAT THE DIFFERENTIAL IN THE HEIGHT OF FILL AT EACH ABUTMENT SHALL NOT EXCEED 6".
2. THE INTEGRAL BACKWALL SHALL BE CAST WHEN THE LEAST THERMAL MOVEMENT OF THE SUPERSTRUCTURE CAN BE EXPECTED DURING THE PERIOD OF INITIAL SET OF THE CONCRETE IN THE BACKWALL: FOR INSTANCE 1) AT DUSK OR 2) DURING AN EXPECTED UNIFORMLY CLOUDY DAY.
3. BEAMS SHALL BE HELD IN PLACE AND REST ON TEMPORARY SUPPORTS (BY OTHERS) UNTIL INTEGRAL ABUTMENT CONCRETE GAINS A MINIMUM STRENGTH OF 3000 PSI. THE CONTRACTOR SHALL SUBMIT THE TEMPORARY BEAM SUPPORT METHOD TO THE ENGINEER FOR APPROVAL. COST OF TEMPORARY SUPPORT SHALL BE INCLUDED IN THE PRICE OF THE PRESTRESSED CONCRETE BEAM.
4. GALVANIZED SLEEVE PIPES NOT SHOWN FOR CLARITY.

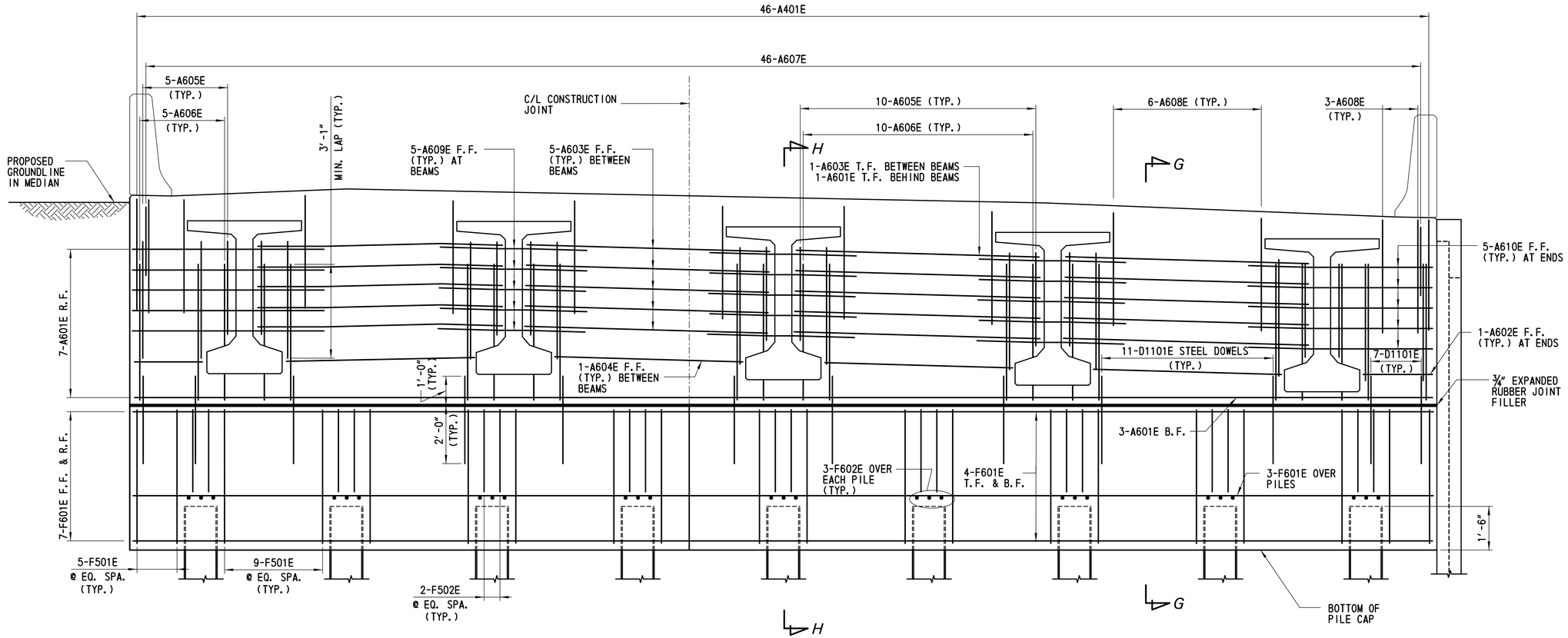

ABUTMENT 2 NORTHBOUND DETAIL SECTION D-D

SCALE: ½" = 1'-0"

CROSS REFERENCE NOTES:

1. PORTION OF THE INTEGRAL CURED ABUTMENT ABOVE THE HINGE SHALL BE PLACED AFTER THE PLACEMENT OF THE DECK CONCRETE. REFER TO THE DECK POURING SEQUENCE DWG. 1-507 DT-1.
2. FOR SECTION G-G AND H-H, SEE DWG. 1-507 AB-8.
3. FOR THE ELEVATIONS AT BEAMS BOTTOMS, SEE DWG. 1-507 AB-2.
4. FOR THE CONSTRUCTION JOINT DETAIL, SEE DWG. 1-507 AB-8.

NOTES:

1. BACKFILL BEHIND INTEGRAL ABUTMENT FOOTING SHALL NOT BE PLACED UNTIL CONCRETE IN THE UPPER PORTION OF THE INTEGRAL ABUTMENT ATTAINS A MINIMUM COMPRESSIVE STRENGTH OF 3000 psi. THE REMAINDER OF THE BACKFILL BEHIND BOTH BRIDGE ABUTMENTS SHALL BE PLACED SUCH THAT THE DIFFERENTIAL IN THE HEIGHT OF FILL AT EACH ABUTMENT SHALL NOT EXCEED 6".
2. THE INTEGRAL BACKWALL SHALL BE CAST WHEN THE LEAST THERMAL MOVEMENT OF THE SUPERSTRUCTURE CAN BE EXPECTED DURING THE PERIOD OF INITIAL SET OF THE CONCRETE IN THE BACKWALL: FOR INSTANCE 1) AT DUSK OR 2) DURING AN EXPECTED UNIFORMLY CLOUDY DAY.
3. BEAMS SHALL BE HELD IN PLACE AND REST ON TEMPORARY SUPPORTS (BY OTHERS) UNTIL INTEGRAL ABUTMENT CONCRETE GAINS A MINIMUM STRENGTH OF 3000 PSI. THE CONTRACTOR SHALL SUMBIT THE TEMPORARY BEAM SUPPORT METHOD TO THE ENGINEER FOR APPROVAL. COST OF TEMPORARY SUPPORT SHALL BE INCLUDED IN THE PRICE OF THE PRESTRESSED CONCRETE BEAM.
4. GALVANIZED SLEEVE PIPES NOT SHOWN FOR CLARITY.

DELAWARE DEPARTMENT OF TRANSPORTATION	ADDENDUMS / REVISIONS	SCALE 0 1 2 4 ½ FEET	US 301 LEVELS ROAD TO SUMMIT BRIDGE ROAD	CONTRACT T200911303	BRIDGE NO. 1-507N&S	US 301 MAINLINE OVER CONNECTOR ROAD ABUTMENT 2 NB REINFORCING	1-507 AB-5	
				COUNTY NEW CASTLE	DESIGNED BY: PRH		SHEET NO. 642	
					CHECKED BY: MHI		TOTAL SHTS. 1256	

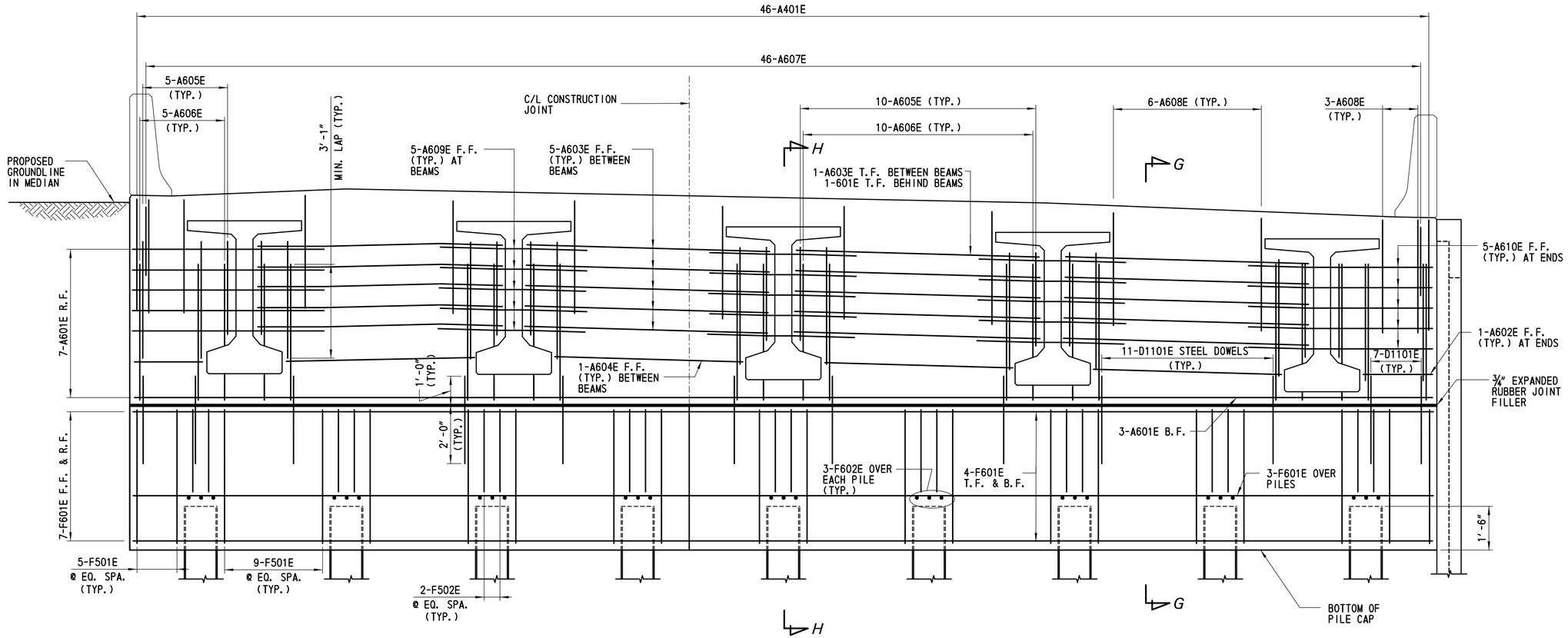

ABUTMENT 1 SOUTHBOUND DETAIL SECTION E-E

SCALE: ½" = 1'-0"

CROSS REFERENCE NOTES:

1. PORTION OF THE INTEGRAL CURED ABUTMENT ABOVE THE HINGE SHALL BE PLACED AFTER THE PLACEMENT OF THE DECK CONCRETE. REFER TO THE DECK POURING SEQUENCE DWG. 1-507 DT-1.
2. FOR SECTION G-G AND H-H, SEE DWG. 1-507 AB-8.
3. FOR THE ELEVATIONS AT BEAMS BOTTOMS, SEE DWG. 1-507 AB-1.
4. FOR THE CONSTRUCTION JOINT DETAIL, SEE DWG. 1-507 AB-8.

NOTES:

1. BACKFILL BEHIND INTEGRAL ABUTMENT FOOTING SHALL NOT BE PLACED UNTIL CONCRETE IN THE UPPER PORTION OF THE INTEGRAL ABUTMENT ATTAINS A MINIMUM COMPRESSIVE STRENGTH OF 3000 psi. THE REMAINDER OF THE BACKFILL BEHIND BOTH BRIDGE ABUTMENTS SHALL BE PLACED SUCH THAT THE DIFFERENTIAL IN THE HEIGHT OF FILL AT EACH ABUTMENT SHALL NOT EXCEED 6".
2. THE INTEGRAL BACKWALL SHALL BE CAST WHEN THE LEAST THERMAL MOVEMENT OF THE SUPERSTRUCTURE CAN BE EXPECTED DURING THE PERIOD OF INITIAL SET OF THE CONCRETE IN THE BACKWALL: FOR INSTANCE 1) AT DUSK OR 2) DURING AN EXPECTED UNIFORMLY CLOUDY DAY.
3. BEAMS SHALL BE HELD IN PLACE AND REST ON TEMPORARY SUPPORTS (BY OTHERS) UNTIL INTEGRAL ABUTMENT CONCRETE GAINS A MINIMUM STRENGTH OF 3000 PSI. THE CONTRACTOR SHALL SUBMIT THE TEMPORARY BEAM SUPPORT METHOD TO THE ENGINEER FOR APPROVAL. COST OF TEMPORARY SUPPORT SHALL BE INCLUDED IN THE PRICE OF THE PRESTRESSED CONCRETE BEAM.
4. GALVANIZED SLEEVE PIPES NOT SHOWN FOR CLARITY.

DELAWARE DEPARTMENT OF TRANSPORTATION	ADDENDUMS / REVISIONS	SCALE 0 ½ 1 2 4 FEET	US 301 LEVELS ROAD TO SUMMIT BRIDGE ROAD	CONTRACT T200911303	BRIDGE NO. 1-507N&S	US 301 MAINLINE OVER CONNECTOR ROAD ABUTMENT 1 SB REINFORCING	1-507 AB-6
				COUNTY NEW CASTLE	DESIGNED BY: PRH		SHEET NO. 643
					CHECKED BY: MHI		TOTAL SHTS. 1256

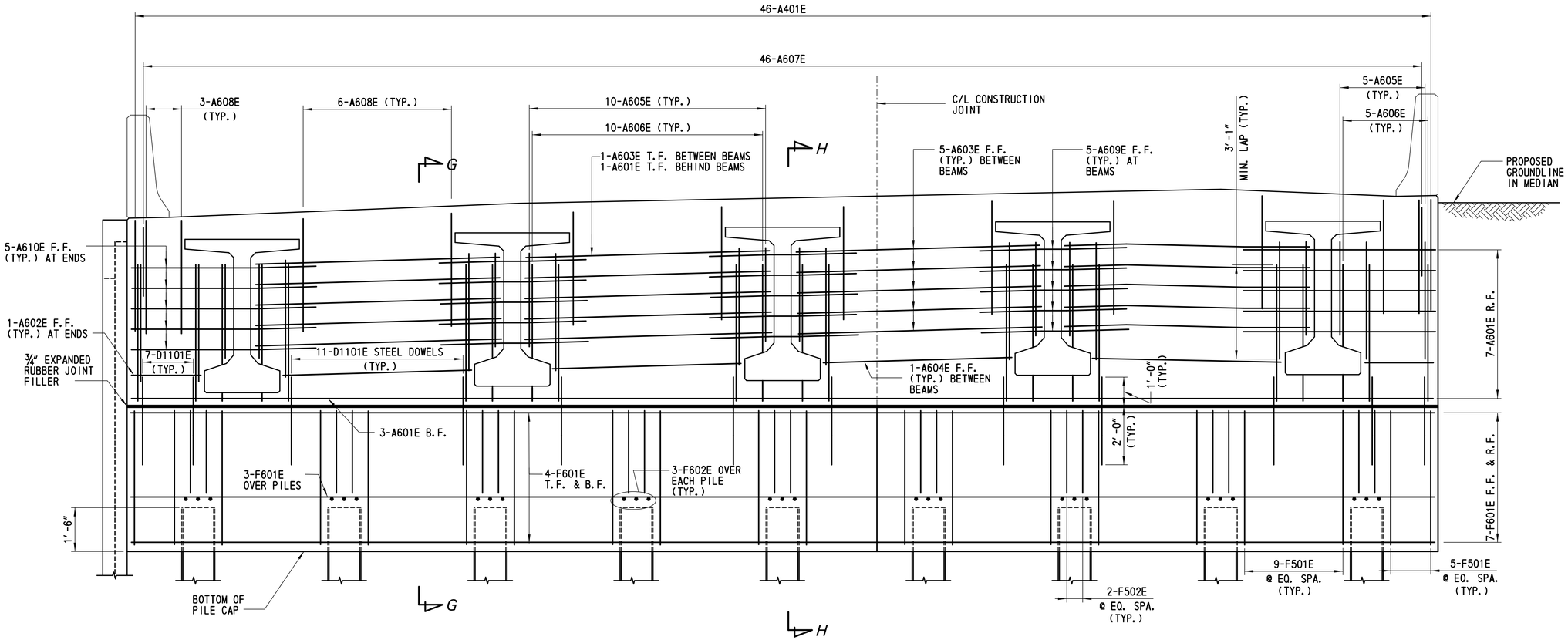

ABUTMENT 2 SOUTHBOUND DETAIL SECTION F-F

SCALE: ½" = 1'-0"

CROSS REFERENCE NOTES:

1. PORTION OF THE INTEGRAL CURED ABUTMENT ABOVE THE HINGE SHALL BE PLACED AFTER THE PLACEMENT OF THE DECK CONCRETE. REFER TO THE DECK POURING SEQUENCE DWG. 1-507 DT-1.
2. FOR SECTION G-G AND H-H, SEE DWG. 1-507 AB-8.
3. FOR THE ELEVATIONS AT BEAMS BOTTOMS, SEE DWG. 1-507 AB-2.
4. FOR THE CONSTRUCTION JOINT DETAIL, SEE DWG. 1-507 AB-8.

NOTES:

1. BACKFILL BEHIND INTEGRAL ABUTMENT FOOTING SHALL NOT BE PLACED UNTIL CONCRETE IN THE UPPER PORTION OF THE INTEGRAL ABUTMENT ATTAINS A MINIMUM COMPRESSIVE STRENGTH OF 3000 psi. THE REMAINDER OF THE BACKFILL BEHIND BOTH BRIDGE ABUTMENTS SHALL BE PLACED SUCH THAT THE DIFFERENTIAL IN THE HEIGHT OF FILL AT EACH ABUTMENT SHALL NOT EXCEED 6".
2. THE INTEGRAL BACKWALL SHALL BE CAST WHEN THE LEAST THERMAL MOVEMENT OF THE SUPERSTRUCTURE CAN BE EXPECTED DURING THE PERIOD OF INITIAL SET OF THE CONCRETE IN THE BACKWALL: FOR INSTANCE 1) AT DUSK OR 2) DURING AN EXPECTED UNIFORMLY CLOUDY DAY.
3. BEAMS SHALL BE HELD IN PLACE AND REST ON TEMPORARY SUPPORTS (BY OTHERS) UNTIL INTEGRAL ABUTMENT CONCRETE GAINS A MINIMUM STRENGTH OF 3000 PSI. THE CONTRACTOR SHALL SUBMIT THE TEMPORARY BEAM SUPPORT METHOD TO THE ENGINEER FOR APPROVAL. COST OF TEMPORARY SUPPORT SHALL BE INCLUDED IN THE PRICE OF THE PRESTRESSED CONCRETE BEAM.
4. GALVANIZED SLEEVE PIPES NOT SHOWN FOR CLARITY.

DELAWARE DEPARTMENT OF TRANSPORTATION	ADDENDUMS / REVISIONS	SCALE 0 1 2 4 ½ FEET	US 301 LEVELS ROAD TO SUMMIT BRIDGE ROAD	CONTRACT T200911303	BRIDGE NO. 1-507N&S	US 301 MAINLINE OVER CONNECTOR ROAD ABUTMENT 2 SB REINFORCING	1-507 AB-7	
				COUNTY NEW CASTLE	DESIGNED BY: PRH		SHEET NO. 644	
					CHECKED BY: MHI		TOTAL SHTS. 1256	

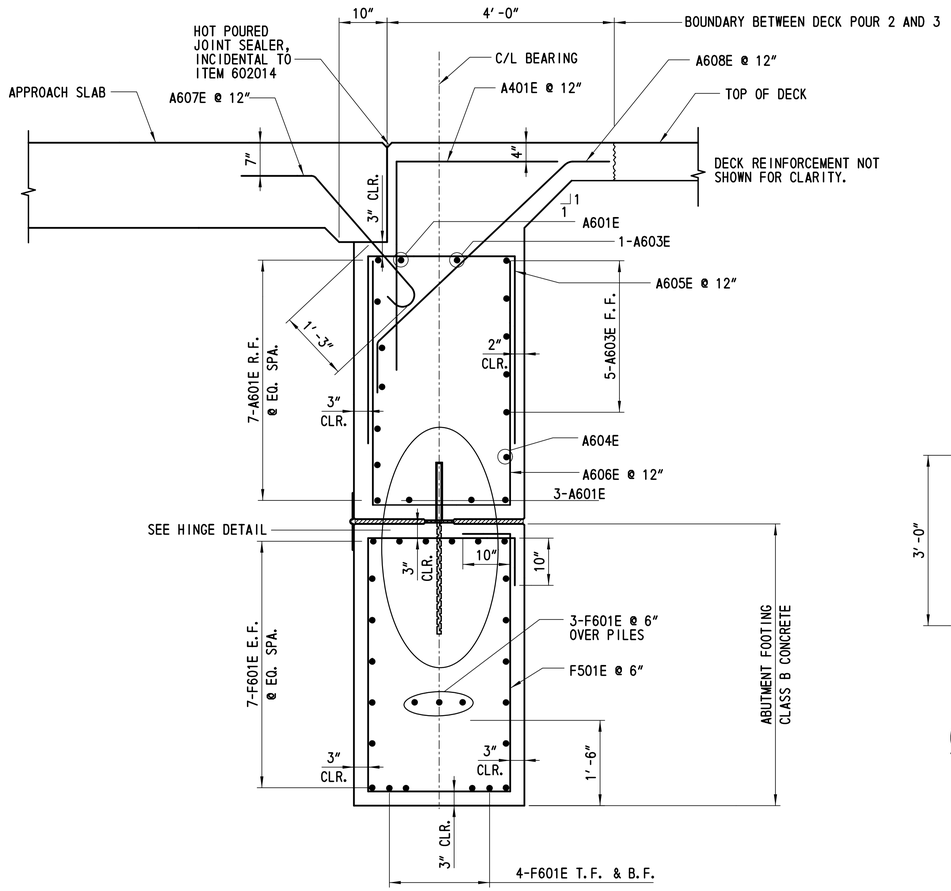

SECTION G-G
(BETWEEN GIRDERS)
(BETWEEN PILES)

SCALE: ¾"= 1'-0"

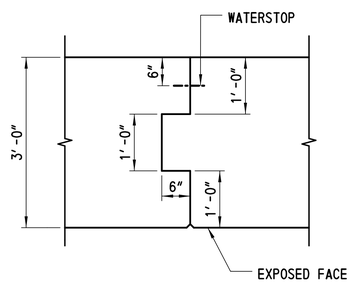

CONSTRUCTION JOINT
(AT ABUTMENT)

SCALE: ¾"= 1'-0"

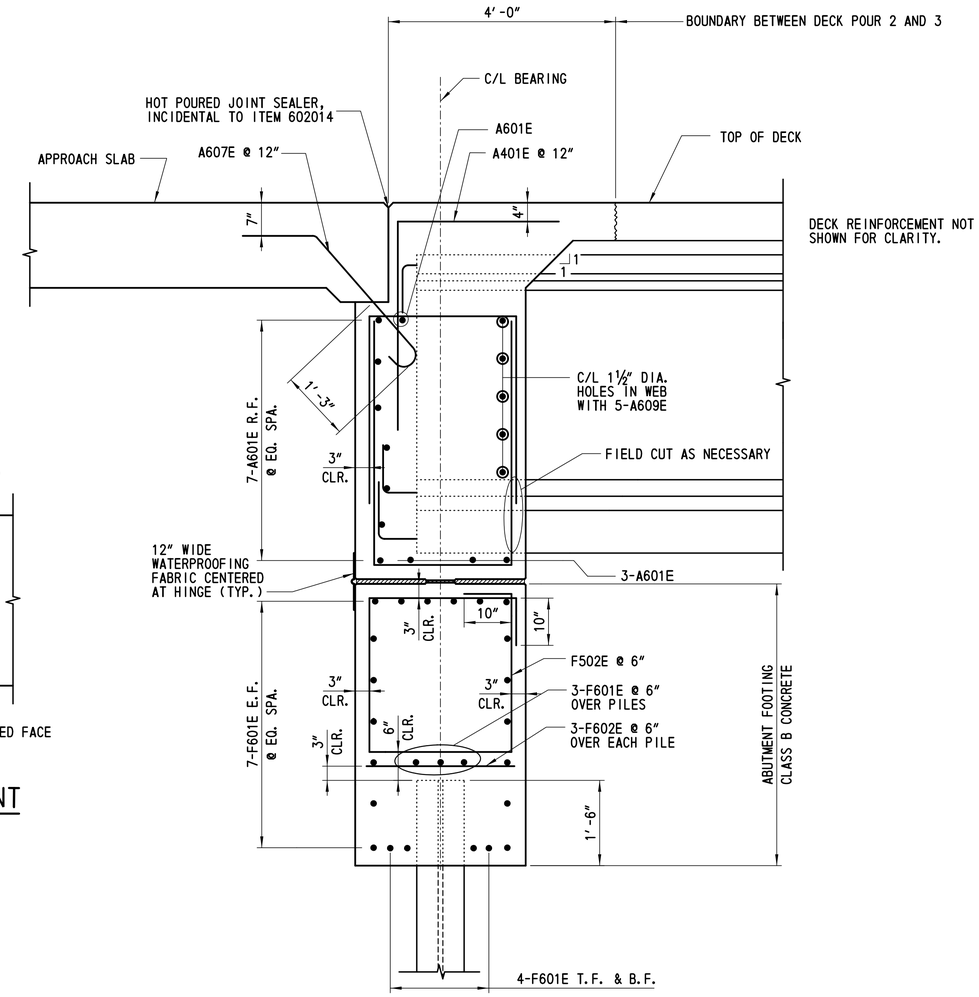

SECTION H-H
(AT GIRDER)
(AT PILE)

SCALE: ¾"= 1'-0"

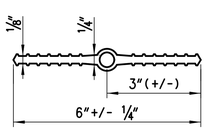

POLYVINYL CHLORIDE

WATERSTOP

NOT TO SCALE

NOTES:

1. PROVIDE HOLES OR SLOTS IN WATERSTOP, AS REQUIRED, WHEN NECESSARY TO ACCOMMODATE REINFORCEMENT BARS, BUT DO NOT COMPROMISE SEAL.
2. STOP WATERSTOP 9" FROM TOP OF WALL.

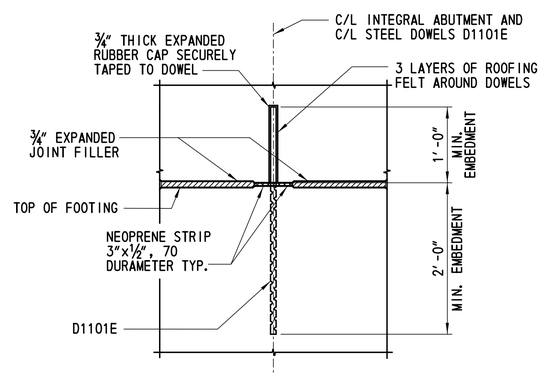

HINGE DETAIL

NTS

CROSS REFERENCE NOTES:

1. FOR PROJECT PLAN AND ELEVATION, SEE DWG. 1-507 PE-1.
2. FOR GEOMETRIC LAYOUT AND FOUNDATION PLAN, SEE DWG. 1-507 FT-1 AND 1-507 FT-2.
3. FOR ABUTMENT PLAN AND ELEVATION, SEE DWG. 1-507 AB-1 AND 1-507 AB-2.
4. FOR LOCATION OF ABUTMENT CONSTRUCTION JOINTS, SEE DWG. 1-507 AB-1 AND 1-507 AB-2.
5. FOR DECK AND APPROACH SLAB DETAILS, SEE DWG. 1-507 DK-1, 1-507 DK-2, 1-507 DK-3, AND 1-507 DK-4.
6. FOR DECK POURING SEQUENCE, SEE DWG. 1-507 DT-1.
7. FOR CONSTRUCTION JOINT LOCATION, SEE DWG. NO. 1-507 AB-4 THROUGH 1-507 AB-7.

NOTES:

1. GALVANIZED PIPES NOT SHOWN FOR CLARITY.
2. ROOFING FELT, ¾" EXPANDED JOINT FILLER, ¾" THICK EXPANDED RUBBER CAP, AND NEOPRENE STRIP SHALL BE INCIDENTAL TO ITEM 602013.

1-507 AB-8

DELAWARE DEPARTMENT OF TRANSPORTATION	ADDENDUMS / REVISIONS	SCALE 0 1 4 ½ 2 FEET	US 301 LEVELS ROAD TO SUMMIT BRIDGE ROAD	CONTRACT T200911303 / COUNTY NEW CASTLE	BRIDGE NO. 1-507N&S / DESIGNED BY: PRH / CHECKED BY: MHI	US 301 MAINLINE OVER CONNECTOR ROAD ABUTMENT REINFORCING	SHEET NO. 645 / TOTAL SHTS. 1256

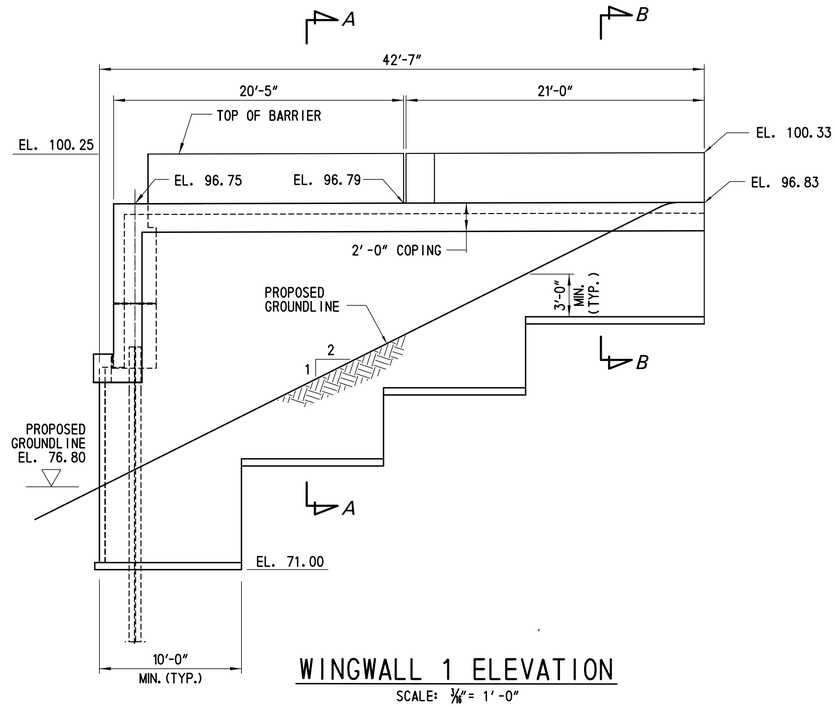

WINGWALL 1 ELEVATION

SCALE: 3/16" = 1'-0"

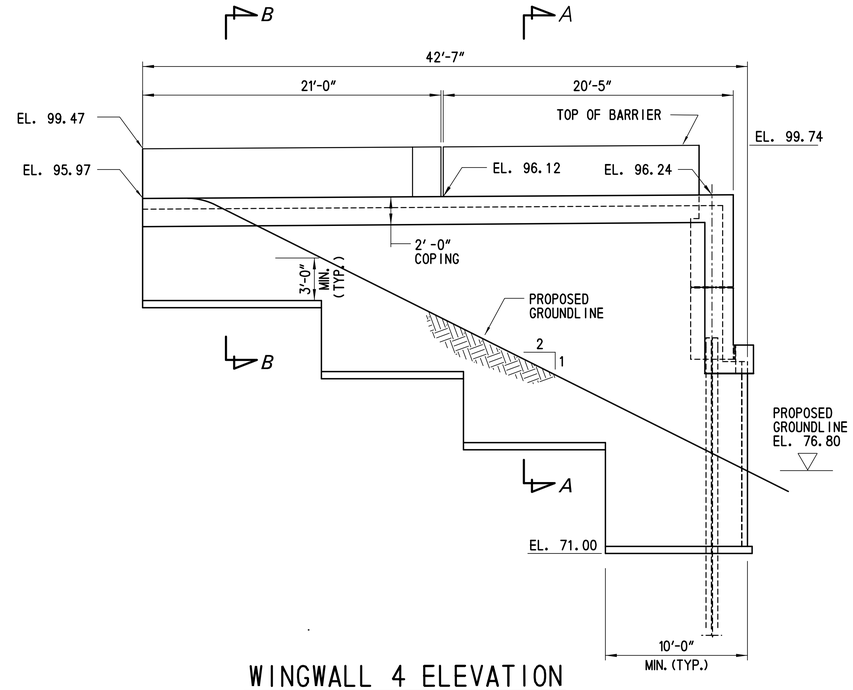

WINGWALL 4 ELEVATION

SCALE: 3/16" = 1'-0"

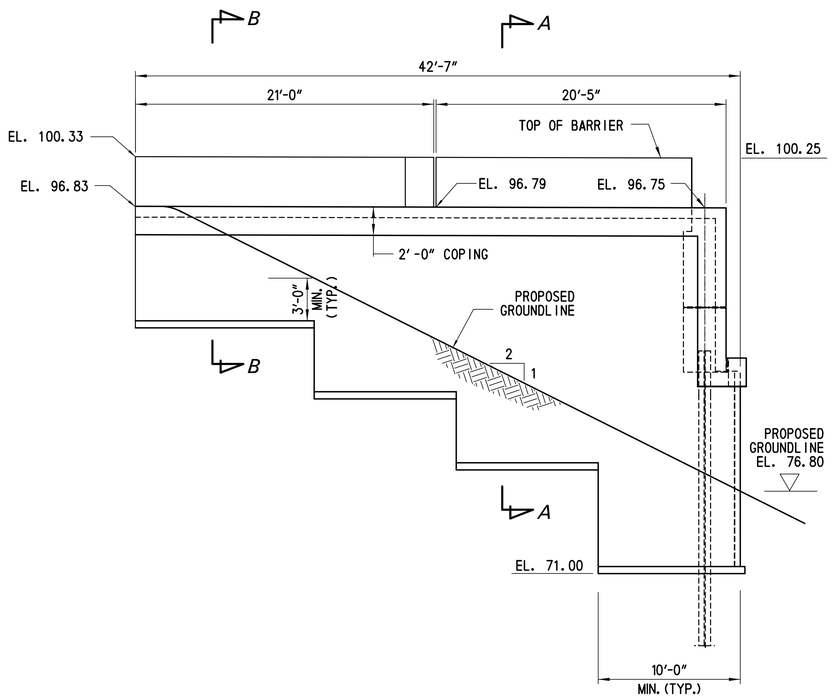

WINGWALL 2 ELEVATION

SCALE: 3/16" = 1'-0"

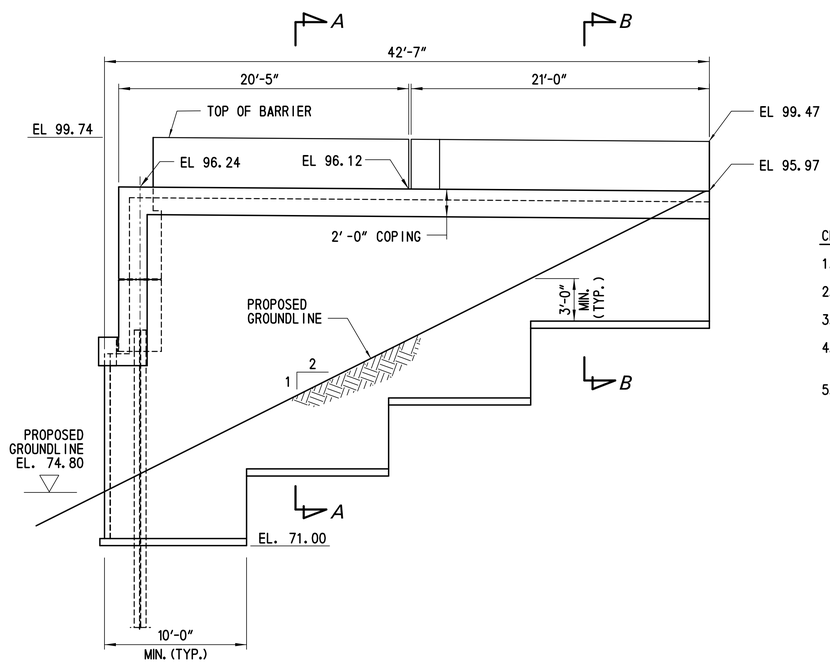

WINGWALL 3 ELEVATION

SCALE: 3/16" = 1'-0"

CROSS REFERENCE NOTES:

1. FOR WINGWALL SECTIONS, SEE DWG. 1-507 WW-2.
2. FOR GENERAL PLAN AND ELEVATION, SEE DWG. 1-507 PE-1.
3. FOR FOUNDATION PLAN, SEE DWG. 1-507 FT-2.
4. FOR ABUTMENT PLAN AND ELEVATION, SEE DWG. 1-507 AB-01 AND 1-507 AB-2.
5. FOR APPROACH SLAB DETAILS, SEE DWG. 1-507 DK-3.

DELAWARE DEPARTMENT OF TRANSPORTATION	ADDENDUMS / REVISIONS	SCALE 0 2 8 / 1 4 FEET	US 301 LEVELS ROAD TO SUMMIT BRIDGE ROAD	CONTRACT T200911303 / COUNTY NEW CASTLE	BRIDGE NO. 1-507N&S / DESIGNED BY: LT / CHECKED BY: ML	US 301 MAINLINE OVER CONNECTOR ROAD WINGWALL ELEVATIONS	1-507 WW-1 / SHEET NO. 646 / TOTAL SHTS. 1256

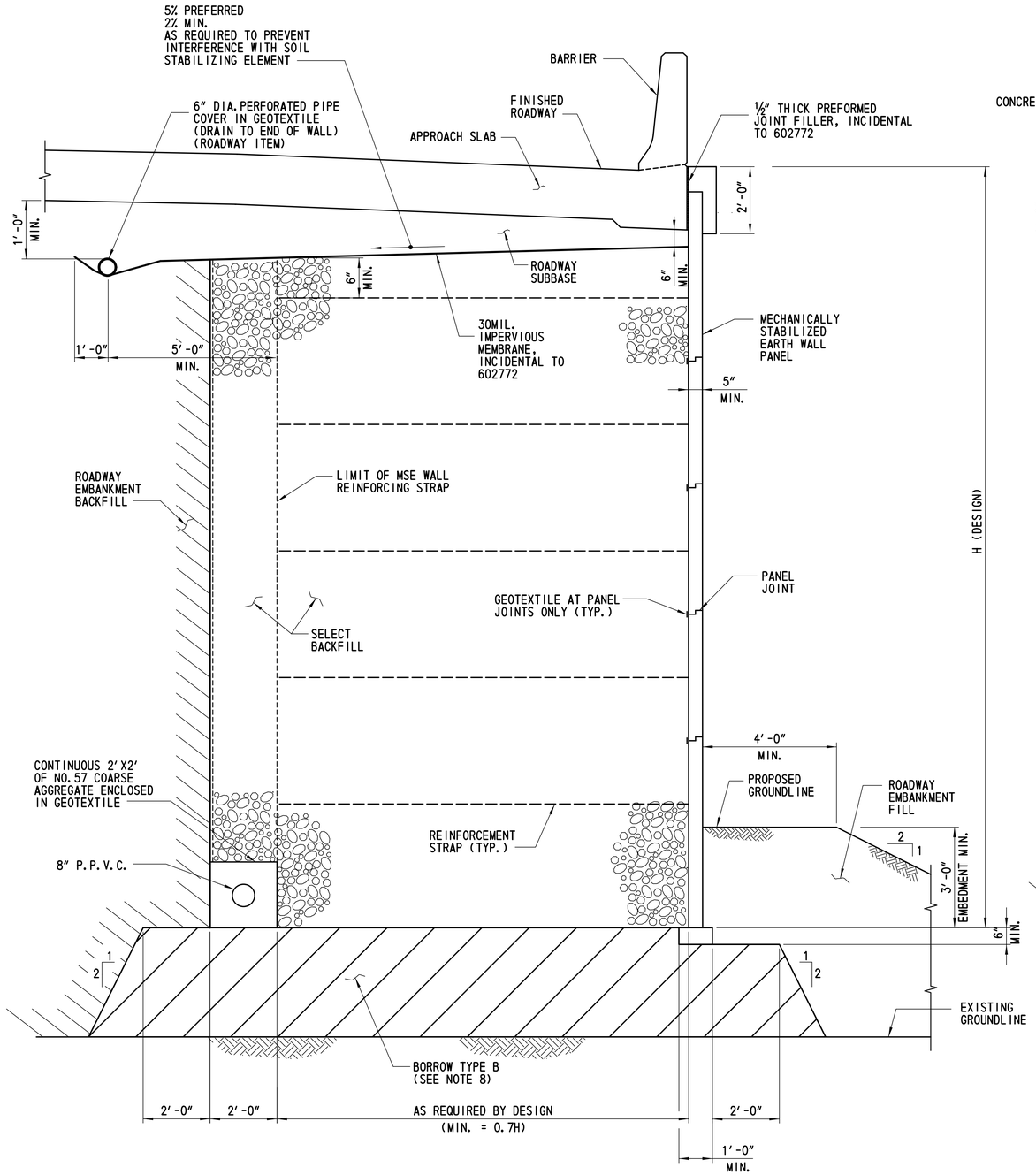

WINGWALL SECTION A-A

SCALE: ½"= 1'-0"

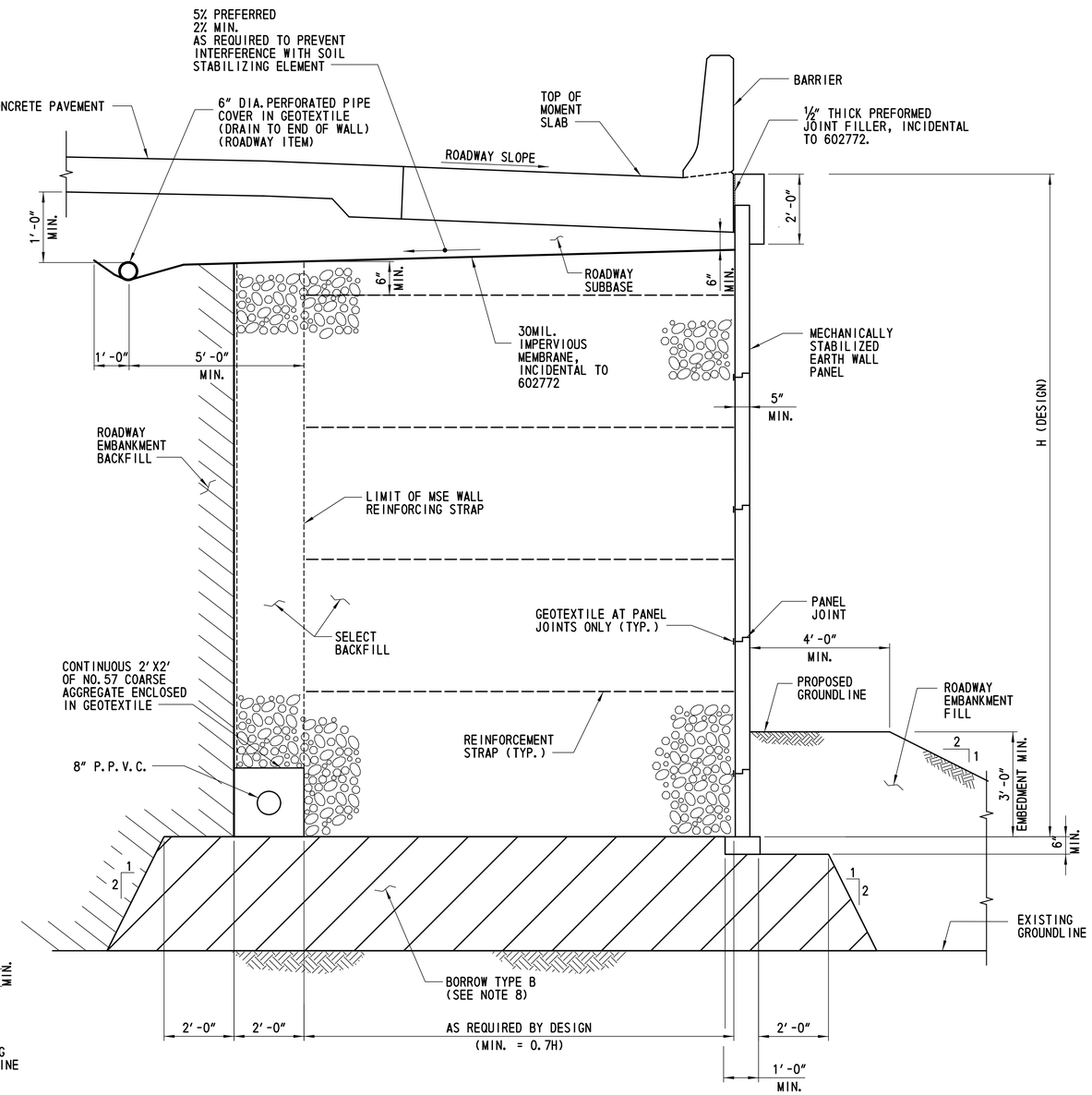

WINGWALL SECTION B-B

SCALE: ½"= 1'-0"

CROSS REFERENCE NOTES:

1. FOR WINGWALL ELEVATIONS, SEE DWG. 1-507 WW-1.
2. FOR GENERAL PLAN AND ELEVATION, SEE DWG. 1-507 PE-1.
3. FOR FOUNDATION PLAN, SEE DWG. 1-507 FT-2.
4. FOR ABUTMENT PLAN AND ELEVATION, SEE DWG. 1-507 AB-1. AND 1-507 AB-2.
5. FOR APPROACH SLAB DETAILS, SEE DWG. 1-507 DK-3 AND 1-507 DK-4.
6. FOR MSE WALL NOTES, SEE DWG. 1-507 AB-3.
7. SELECT BACKFILL SHALL BE INCIDENTAL TO ITEM 602772 MECHANICALLY STABILIZED EARTH WALLS.
8. BORROW TYPE B SHALL BE INCIDENTAL TO ITEM 602772.

DELAWARE DEPARTMENT OF TRANSPORTATION	ADDENDUMS / REVISIONS	SCALE 0 1 2 4 ½ FEET	US 301 LEVELS ROAD TO SUMMIT BRIDGE ROAD	CONTRACT T200911303	BRIDGE NO. 1-507N&S	US 301 MAINLINE OVER CONNECTOR ROAD	1-507 WW-2
				COUNTY NEW CASTLE	DESIGNED BY: LT	WINGWALL SECTIONS	SHEET NO. 647
					CHECKED BY: ML		TOTAL SHTS. 1256

NORTHBOUND REINFORCING BAR SCHEDULE

ABUTMENT 1 BAR SCHEDULE

MARK	LENGTH	NO. BARS	TYPE	A	B	C	D	E	F	G	H	I	J	K	REMARKS
A401E	6′-6″	46	10	3′-8″	2′-10″										
A601E	44′-6½″	11	STR.												
A602E	2′-3¼″	2	STR.												
A603E	8′-4″	24	STR.												
A604E	6′-3″	4	STR.												
A605E	10′-7″	50	4	4′-0″	2′-7″	4′-0″									FIELD CUT AS NECESSARY AT GIRDERS
A606E	11′-11″	50	4	4′-8″	2′-7″	4′-8″									FIELD CUT AS NECESSARY AT GIRDERS
A607E	4′-6½″	46	39	8″	2′-10½″	1′-0″	6″	8½″							
A608E	7′-3″	30	31	1′-0″	5′-3″	1′-0″	8½″	8½″							
A609E	7′-1″	15	STR.												
A610E	7′-3¾″	10	STR.												
D1101E	3′-0″	58	STR.												DOWELS
F501E	15′-8″	82	2	4′-6″	2′-6″										
F502E	12′-2″	18	2	2′-9″	2′-6″										
F601E	44′-4½″	25	STR.												
F602E	2′-6″	27	STR.												

ABUTMENT 2 BAR SCHEDULE

MARK	LENGTH	NO. BARS	TYPE	A	B	C	D	E	F	G	H	I	J	K	REMARKS
A401E	6′-6″	46	10	3′-8″	2′-10″										
A601E	44′-6½″	11	STR.												
A602E	2′-3¼″	2	STR.												
A603E	8′-4″	24	STR.												
A604E	6′-3″	4	STR.												
A605E	10′-7″	50	4	4′-0″	2′-7″	4′-0″									FIELD CUT AS NECESSARY AT GIRDERS
A606E	11′-11″	50	4	4′-8″	2′-7″	4′-8″									FIELD CUT AS NECESSARY AT GIRDERS
A607E	4′-6½″	46	39	8″	2′-10½″	1′-0″	6″	8½″							
A608E	7′-3″	30	31	1′-0″	5′-3″	1′-0″	8½″	8½″							
A609E	7′-1″	15	STR.												
A610E	7′-3¾″	10	STR.												
D1101E	3′-0″	58	STR.												DOWELS
F501E	15′-8″	82	2	4′-6″	2′-6″										
F502E	12′-2″	18	2	2′-9″	2′-6″										
F601E	44′-4½″	25	STR.												
F602E	2′-6″	27	STR.												

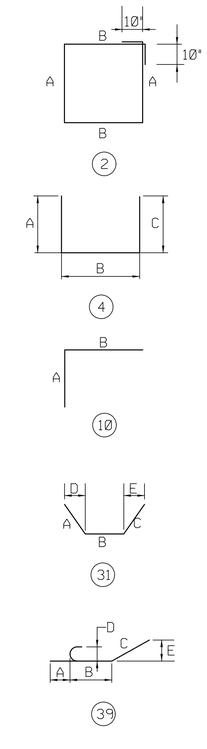

SOUTHBOUND REINFORCING BAR SCHEDULE

ABUTMENT 1 BAR SCHEDULE

MARK	LENGTH	NO. BARS	TYPE	A	B	C	D	E	F	G	H	I	J	K	REMARKS
A401E	6′-6″	46	10	3′-8″	2′-10″										
A601E	44′-6½″	11	STR.												
A602E	2′-3¼″	2	STR.												
A603E	8′-4″	24	STR.												
A604E	6′-3″	4	STR.												
A605E	10′-7″	50	4	4′-0″	2′-7″	4′-0″									FIELD CUT AS NECESSARY AT GIRDERS
A606E	11′-11″	50	4	4′-8″	2′-7″	4′-8″									FIELD CUT AS NECESSARY AT GIRDERS
A607E	4′-6½″	46	39	8″	2′-10½″	1′-0″	6″	8½″							
A608E	7′-3″	30	31	1′-0″	5′-3″	1′-0″	8½″	8½″							
A609E	7′-1″	15	STR.												
A610E	7′-3¾″	10	STR.												
D1101E	3′-0″	58	STR.												DOWELS
F501E	15′-8″	82	2	4′-6″	2′-6″										
F502E	12′-2″	18	2	2′-9″	2′-6″										
F601E	44′-4½″	25	STR.												
F602E	2′-6″	27	STR.												

ABUTMENT 2 BAR SCHEDULE

MARK	LENGTH	NO. BARS	TYPE	A	B	C	D	E	F	G	H	I	J	K	REMARKS
A401E	6′-6″	46	10	3′-8″	2′-10″										
A601E	44′-6½″	11	STR.												
A602E	2′-3¼″	2	STR.												
A603E	8′-4″	24	STR.												
A604E	6′-3″	4	STR.												
A605E	10′-7″	50	4	4′-0″	2′-7″	4′-0″									FIELD CUT AS NECESSARY AT GIRDERS
A606E	11′-11″	50	4	4′-8″	2′-7″	4′-8″									FIELD CUT AS NECESSARY AT GIRDERS
A607E	4′-6½″	46	39	8″	2′-10½″	1′-0″	6″	8½″							
A608E	7′-3″	30	31	1′-0″	5′-3″	1′-0″	8½″	8½″							
A609E	7′-1″	15	STR.												
A610E	7′-3¾″	10	STR.												
D1101E	3′-0″	58	STR.												DOWELS
F501E	15′-8″	82	2	4′-6″	2′-6″										
F502E	12′-2″	18	2	2′-9″	2′-6″										
F601E	44′-4½″	25	STR.												
F602E	2′-6″	27	STR.												

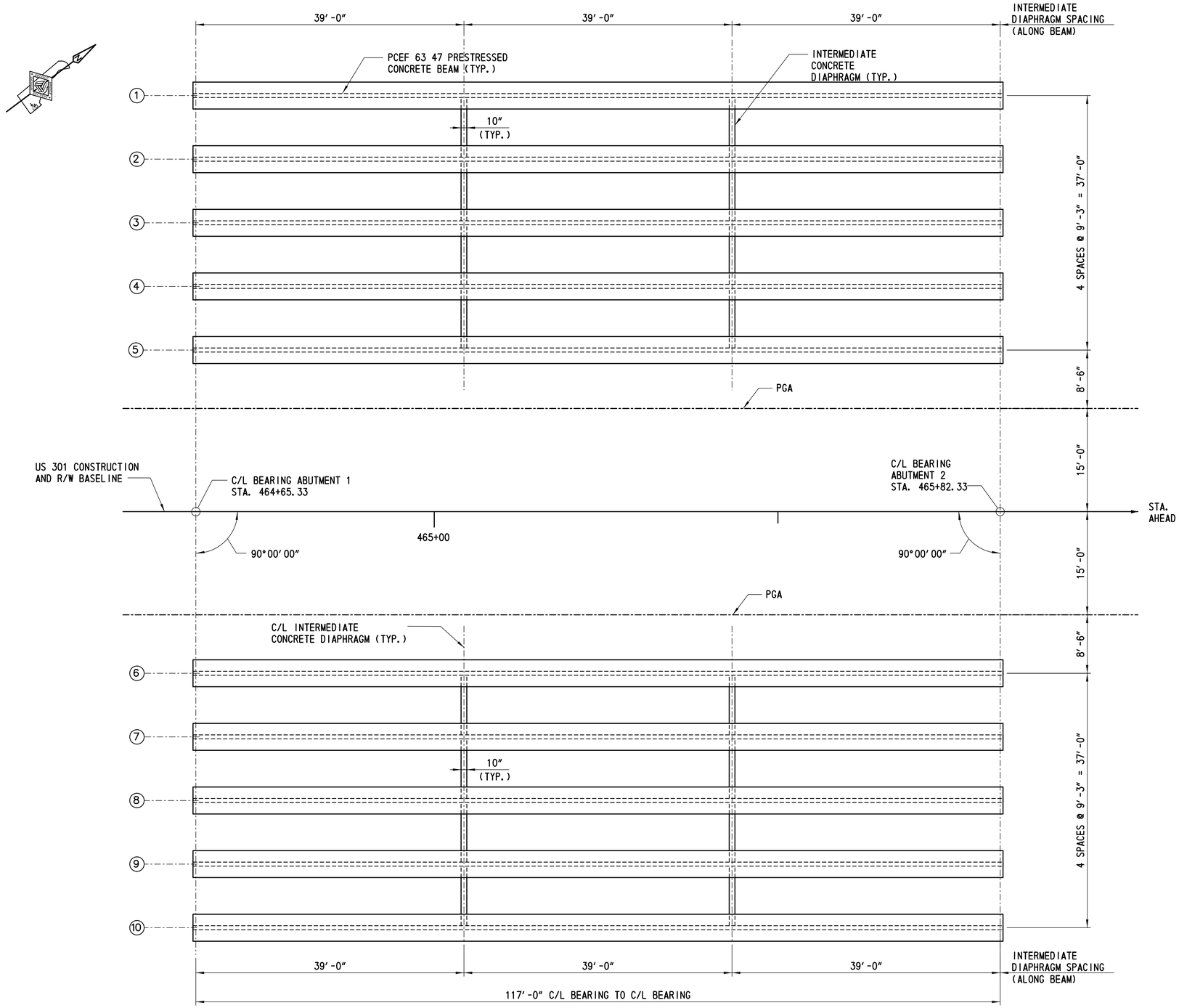

FRAMING PLAN

SCALE: 1/8" = 1'-0"

CROSS REFERENCE NOTES:

1. FOR GENERAL PLAN AND ELEVATION, SEE DWG. 1-507 PE-1.
2. FOR TYPICAL SECTION, SEE DWG. 1-507 TS-1.
3. FOR PRESTRESSED CONCRETE BEAM ELEVATION, SEE DWG. 1-507 BM-1.
4. FOR INTERMEDIATE CONCRETE DIAPHRAGM DETAILS, SEE DWG. 1-507 CT-1.

DELAWARE DEPARTMENT OF TRANSPORTATION	ADDENDUMS / REVISIONS	SCALE 0 2 4 8 16 FEET	US 301 LEVELS ROAD TO SUMMIT BRIDGE ROAD	CONTRACT T200911303	BRIDGE NO. 1-507N&S	US 301 MAINLINE OVER CONNECTOR ROAD FRAMING PLAN	1-507 FR-1
				COUNTY NEW CASTLE	DESIGNED BY: LT		SHEET NO. 649
					CHECKED BY: MHI		TOTAL SHTS. 1256

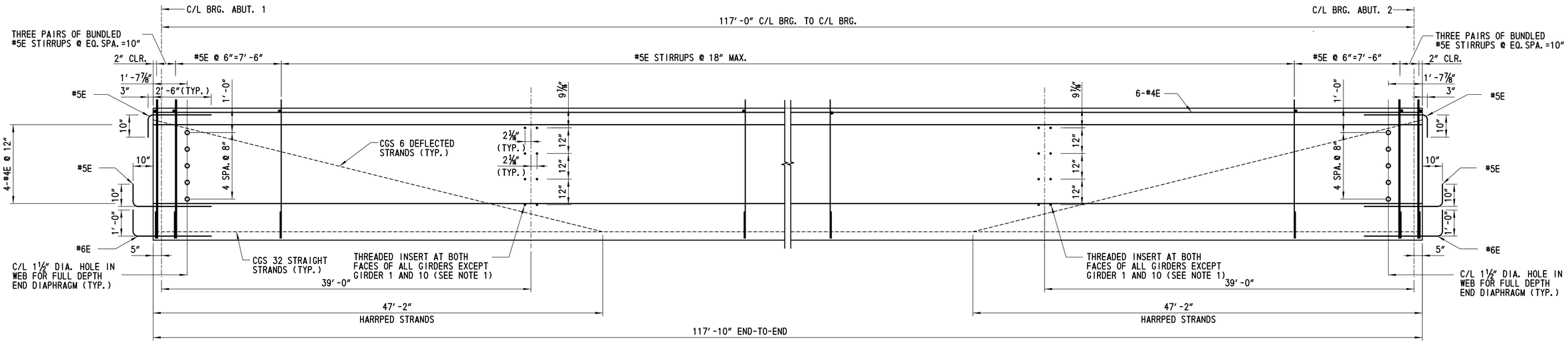

BEAM ELEVATION

NTS

LEGEND

- • LONGITUDINAL REINFORCEMENT
- × 6/10" DIA PRESTRESSED STRAND
- ⊗ HARPED STRAND

NOTE:

1. TYPICAL COVER 1" CLR. TO STIRRUPS.

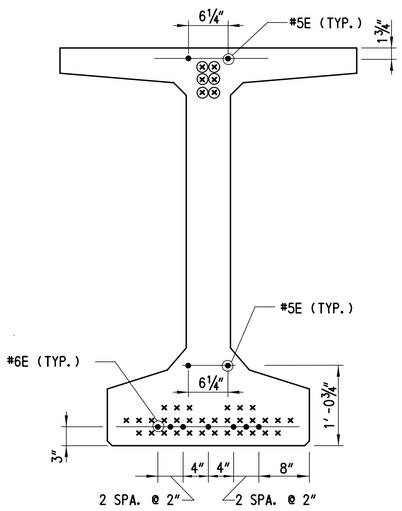

ADDITIONAL REINFORCEMENT AT GIRDER END

SCALE: 1"= 1'-0"

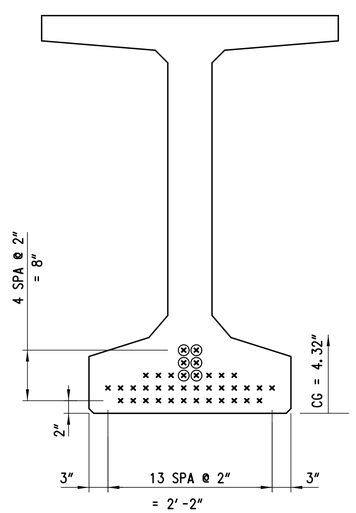

PRESTRESSING AT MID-SPAN

SCALE: 1"= 1'-0"

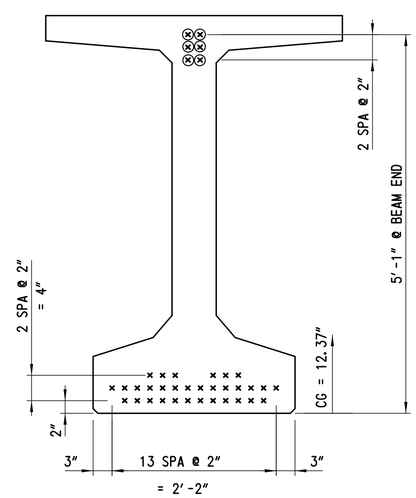

PRESTRESSING AT GIRDER END

SCALE: 1"= 1'-0"

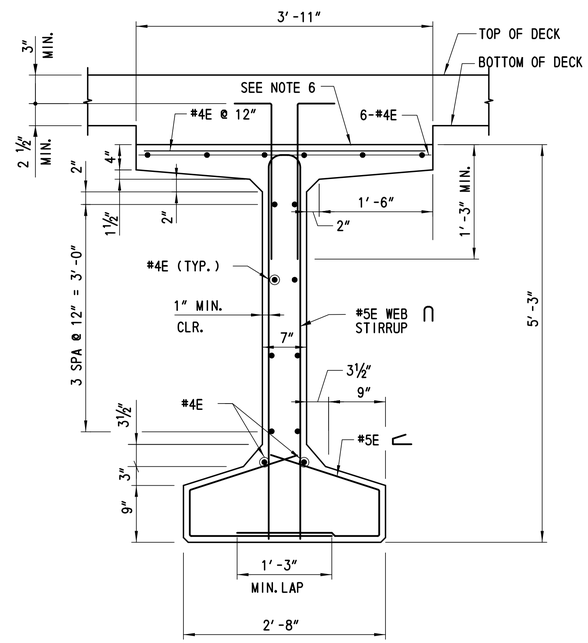

TYPICAL REINFORCEMENT

SCALE: 1"= 1'-0"

NOTES:

1. GIRDER 1 AND 10 SHALL HAVE INSERTS ON THE INTERIOR SIDE ONLY.
2. BEAM LENGTHS SHOWN DO NOT ACCOUNT FOR BEAM ELASTIC SHORTENING AT PRESTRESS RELEASE. CONTRACTOR SHALL COMPENSATE FOR BEAM ELASTIC SHORTENING WHEN CASTING BEAMS.
3. SECTION IS A PCEF 63 47. NO SUBSTITUTIONS WILL BE ALLOWED.
4. ALL REINFORCEMENT SHALL BE EPOXY COATED.
5. THE FABRICATOR SHALL CHECK STABILITY FOR HANDLING AND TRANSPORTING OF THE BEAMS. INCLUDE THIS INFORMATION WITH SHOP DRAWINGS.
6. TOP SURFACE OF BEAMS SHALL BE ROUGH FINISHED TO A FULL AMPLITUDE OF A 1/4" AND SCRUBBED TRANSVERSELY WITH A COURSE WIRE BRUSH TO REMOVE ALL LAITANCE TO PRODUCE A ROUGHENED SURFACE FOR BONDING.
7. END ZONE REINFORCEMENT MAY BE INCREASED BY THE FABRICATOR TO REFLECT FABRICATORS EXPERIENCE AND OR TO CONTROL CRACKING.

CROSS REFERENCE NOTES:

1. FOR GENERAL PLAN AND ELEVATION, SEE DWG. 1-507 PE-1.
2. FOR PROJECT NOTES, SEE DWG. 1-507 PN-1.
3. FOR TYPICAL SECTION, SEE DWG. 1-507 TS-1.
4. FOR FRAMING PLAN, SEE DWG. 1-507 FR-1.
5. FOR INTERMEDIATE DIAPHRAGM DETAILS, SEE DWG. 1-507 CT-1.
6. FOR CAMBER SCHEDULE, SEE DWG. 1-507 CT-1.
7. FOR BEAM END DETAILS, SEE DWG. 1-507 AB-8.

DELAWARE DEPARTMENT OF TRANSPORTATION	ADDENDUMS / REVISIONS	SCALE 0 ½ 1 2 FEET	US 301 LEVELS ROAD TO SUMMIT BRIDGE ROAD	CONTRACT T200911303	BRIDGE NO. 1-507N&S	US 301 MAINLINE OVER CONNECTOR ROAD BEAM ELEVATION AND DETAILS
				COUNTY NEW CASTLE	DESIGNED BY: LT	
					CHECKED BY: MHI/ML	

	1-507 BM-1
SHEET NO.	650
TOTAL SHTS.	1256

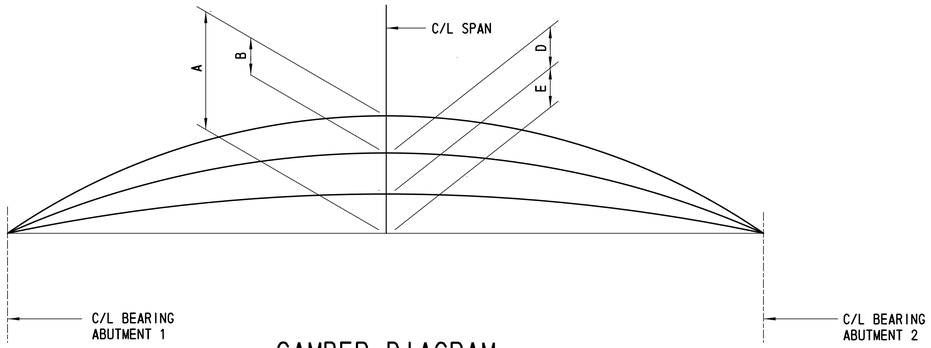

CAMBER DIAGRAM

NTS

CAMBER/DEFLECTION TABLE (INCHES)					
BEAM NO'S	A	B	C	D	E
1 & 5	6 11/16	-3 1/16	3 5/8	-1 7/8	1 3/4
6 & 10	6 11/16	-3 1/16	3 5/8	-1 7/8	1 3/4
2 - 4	6 11/16	-3 1/16	3 5/8	-2 1/16	1 9/16
7 - 9	6 11/16	-3 1/16	3 5/8	-2 1/16	1 9/16

LEGEND:

A = CAMBER DUE TO PRESTRESS AT ERECTION, CREEP MULTIPLIER = 1.8.

B = DEFLECTION DUE TO GIRDER DEAD LOAD AT ERECTION, CREEP MULTIPLIER = 1.85.

C = A+B

D = DEFLECTION DUE TO SLAB, DIAPHRAGMS, SIP FORMS, BARRIERS AND INTEGRAL WEARING SURFACE.

E = NET CAMBER, C+D.

CROSS REFERENCE NOTES:

1. FOR GENERAL PLAN AND ELEVATION SEE DWG. 1-507 PE-1.
2. FOR PROJECT NOTES SEE DWG. 1-507 PN-1.
3. FOR FRAMING PLAN, SEE DWG. 1-507 FR-1.
4. FOR BEAM ELEVATION AND TYPICAL SECTION, SEE DWG. 1-507 BM-1.

NOTES:

1. PERMANENT STEEL DECK FORMS AND SUPPORTS SHALL BE PROVIDED CONFORMING TO THE REQUIREMENTS OF SECTION 602 OF THE DELDOT STANDARD SPECIFICATIONS AND AS SHOWN IN THE BDM.
2. ANY PERMANENTLY EXPOSED FORM METAL WHERE THE GALVANIZED COATING HAS BEEN DAMAGED SHALL BE THOROUGHLY CLEANED, WIRE BRUSHED AND PAINTED WITH TWO COATS OF ZINC DUST-ZINC OXIDE PAINT, NO COLOR ADDED. TO THE SATISFACTION OF THE ENGINEER. MINOR HEAT DISCOLORATION IN AREAS OF WELDS NEED NOT BE TOUCHED UP.
3. THE MAXIMUM CORRUGATION DEPTH AND WIDTH SHALL BE SUCH THAT THE TOTAL DEAD LOAD OF THE FORM AND CONCRETE IN THE FORM DOES NOT EXCEED 15 LBS/FT.
4. VARY THICKNESS OF CONCRETE HAUNCH TO COMPENSATE FOR ANY INACCURACIES IN BEAM CAMBER.
5. CAMBER VALUES ARE THEORETICAL VALUES AND MAY VARY WITH CONCRETE STRENGTH (AGE), VARIOUS PRESTRESSING CONDITIONS, CREEP FACTOR AND PRESTRESS LOSSES. CONTRACTOR TO VERIFY THESE VALUES IN THE FIELD.

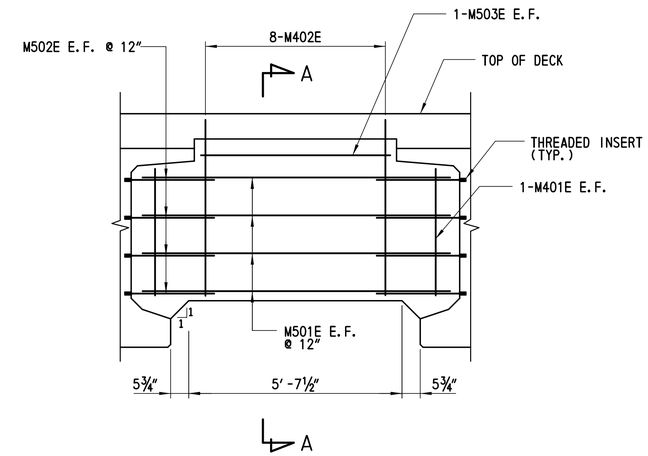

INTERMEDIATE DIAPHRAGM

SCALE: ½" = 1'-0"

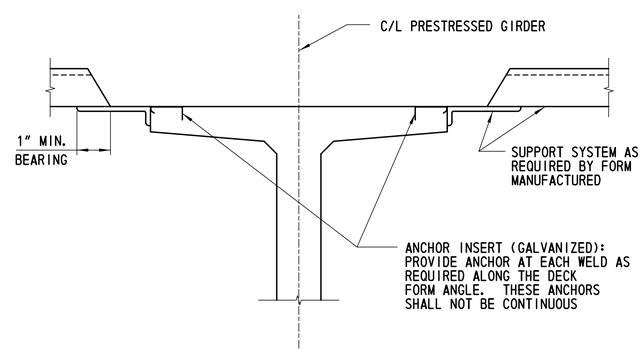

FORM ANCHOR DETAIL

SCALE: 1" = 1'-0"

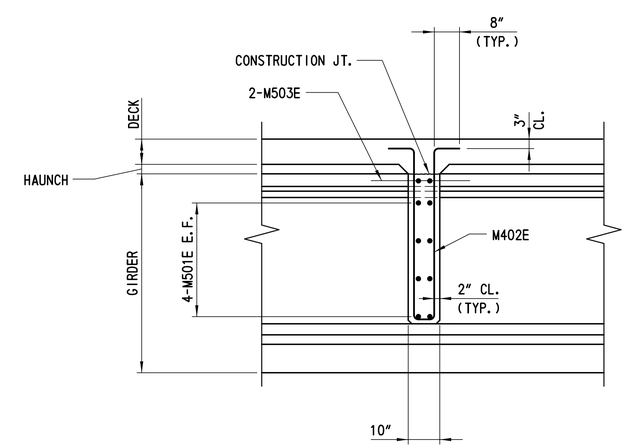

SECTION A-A

SCALE: ½" = 1'-0"

DELAWARE DEPARTMENT OF TRANSPORTATION	ADDENDUMS / REVISIONS		US 301 LEVELS ROAD TO SUMMIT BRIDGE ROAD	CONTRACT T200911303	BRIDGE NO. 1-507N&S	US 301 MAINLINE OVER CONNECTOR ROAD CAMBER AND DIAPHRAGM DETAILS	1-507 CT-1
				COUNTY NEW CASTLE	DESIGNED BY: LT		SHEET NO. 651
					CHECKED BY: ML		TOTAL SHTS. 1256

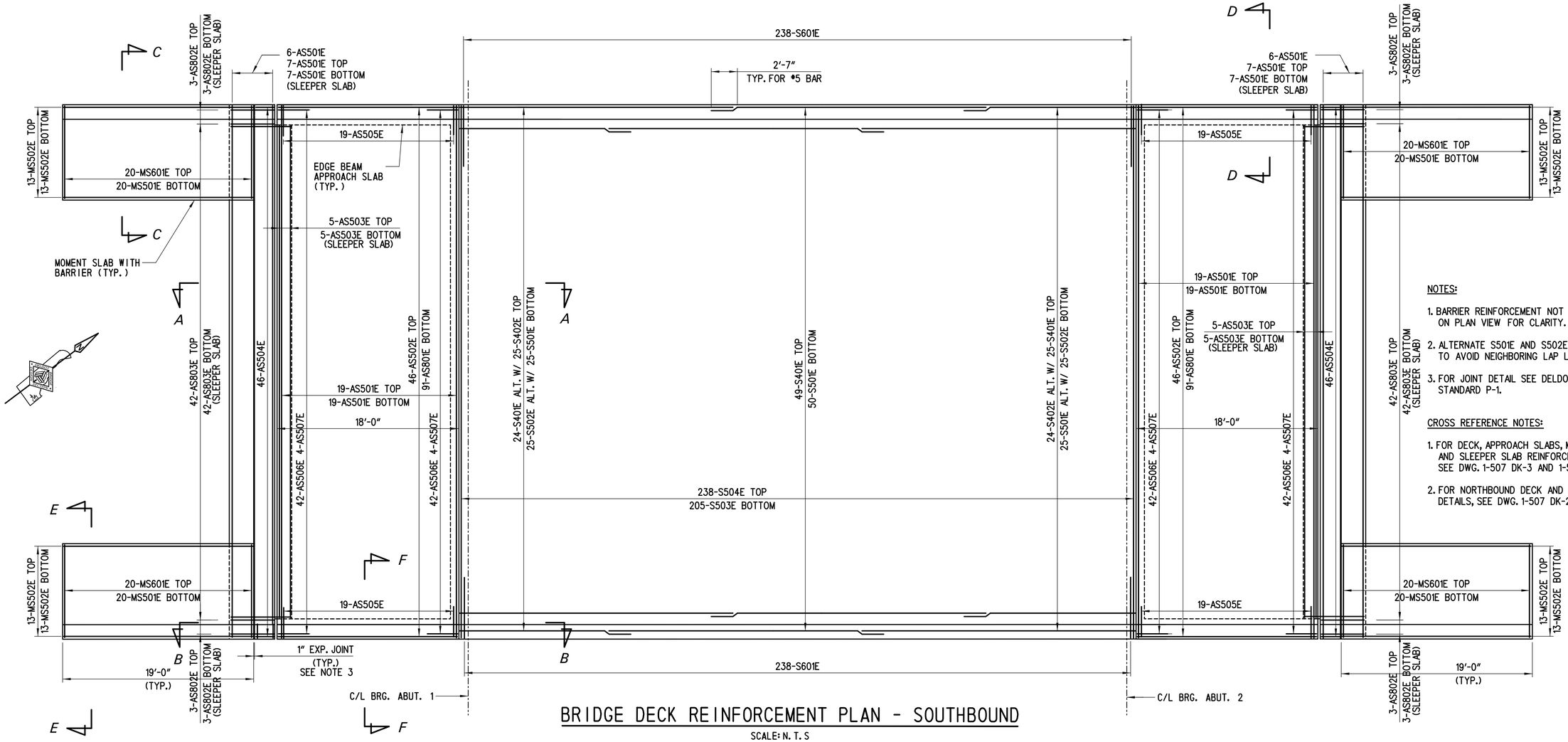

BRIDGE DECK REINFORCEMENT PLAN - SOUTHBOUND

SCALE: N. T. S

NOTES:

1. BARRIER REINFORCEMENT NOT SHOWN ON PLAN VIEW FOR CLARITY.
2. ALTERNATE S501E AND S502E ON DECK TO AVOID NEIGHBORING LAP LOCATIONS.
3. FOR JOINT DETAIL SEE DELDOT ROADWAY STANDARD P-1.

CROSS REFERENCE NOTES:

1. FOR DECK, APPROACH SLABS, MOMENT SLABS AND SLEEPER SLAB REINFORCEMENT DETAILS SEE DWG. 1-507 DK-3 AND 1-507 DK-4.
2. FOR NORTHBOUND DECK AND BARRIER REINFORCING DETAILS, SEE DWG. 1-507 DK-2.

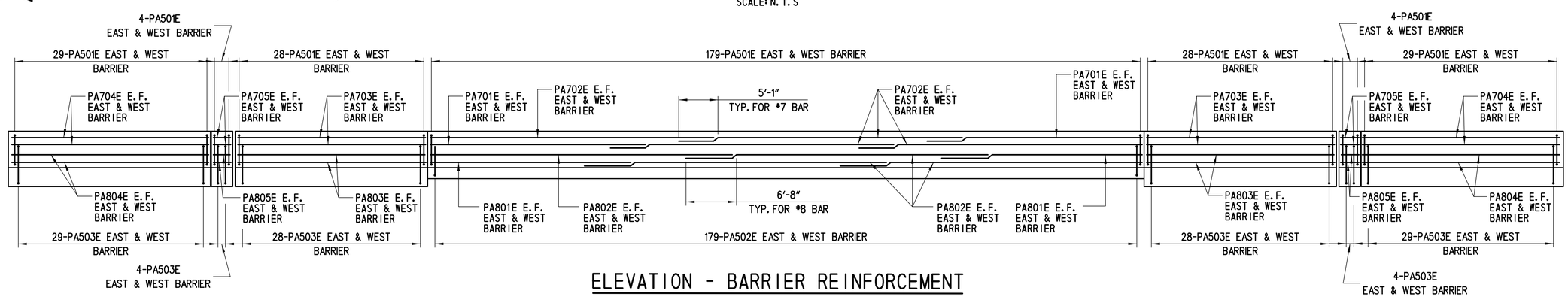

ELEVATION - BARRIER REINFORCEMENT

SCALE: N. T. S

DELAWARE DEPARTMENT OF TRANSPORTATION	ADDENDUMS / REVISIONS		US 301 LEVELS ROAD TO SUMMIT BRIDGE ROAD	CONTRACT T200911303	BRIDGE NO. 1-507N&S	US 301 MAINLINE OVER CONNECTOR ROAD SB SLAB AND BARRIER REINFORCEMENT	1-507 DK-1
				COUNTY NEW CASTLE	DESIGNED BY: LT		SHEET NO. 652
					CHECKED BY: DW		TOTAL SHTS. 1256

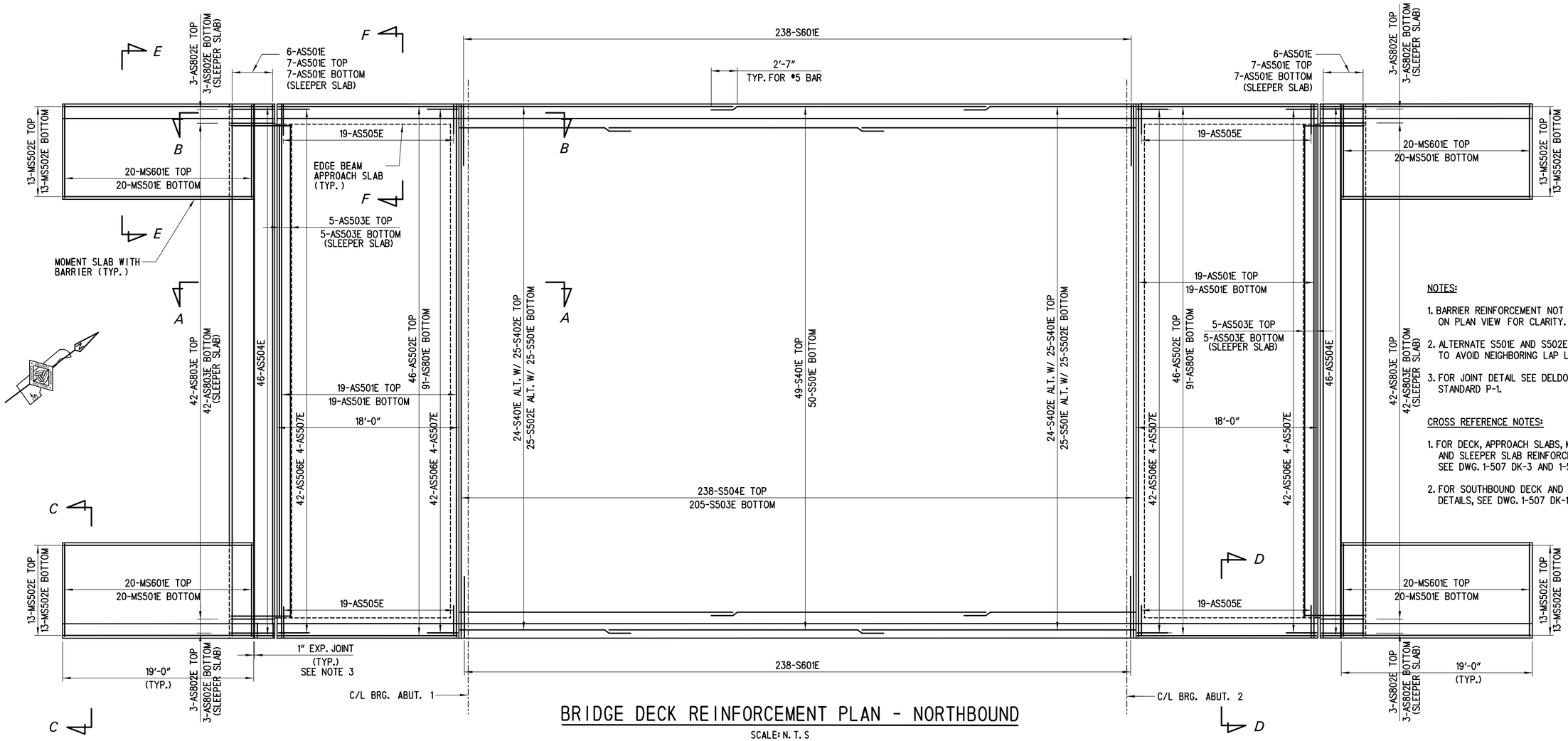

BRIDGE DECK REINFORCEMENT PLAN - NORTHBOUND

SCALE: N. T. S

NOTES:

1. BARRIER REINFORCEMENT NOT SHOWN ON PLAN VIEW FOR CLARITY.
2. ALTERNATE S501E AND S502E ON DECK TO AVOID NEIGHBORING LAP LOCATIONS.
3. FOR JOINT DETAIL SEE DELDOT ROADWAY STANDARD P-1.

CROSS REFERENCE NOTES:

1. FOR DECK, APPROACH SLABS, MOMENT SLABS AND SLEEPER SLAB REINFORCEMENT DETAILS SEE DWG. 1-507 DK-3 AND 1-507 DK-4.
2. FOR SOUTHBOUND DECK AND BARRIER REINFORCING DETAILS, SEE DWG. 1-507 DK-1.

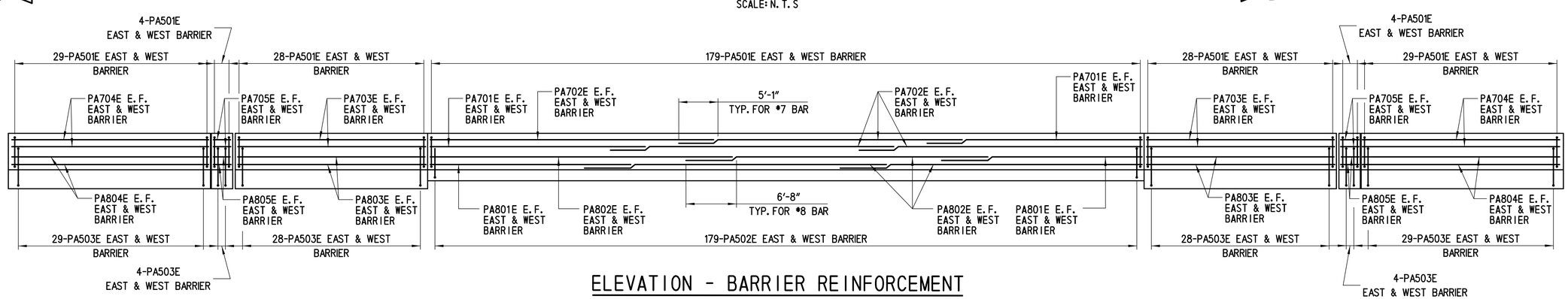

ELEVATION - BARRIER REINFORCEMENT

SCALE: N. T. S

DELAWARE DEPARTMENT OF TRANSPORTATION	ADDENDUMS / REVISIONS		US 301 LEVELS ROAD TO SUMMIT BRIDGE ROAD	CONTRACT T200911303	BRIDGE NO. 1-507N&S	US 301 MAINLINE OVER CONNECTOR ROAD NB SLAB AND BARRIER REINFORCEMENT	1-507 DK-2
				COUNTY NEW CASTLE	DESIGNED BY: LT		SHEET NO. 653
					CHECKED BY: DW		TOTAL SHTS. 1256

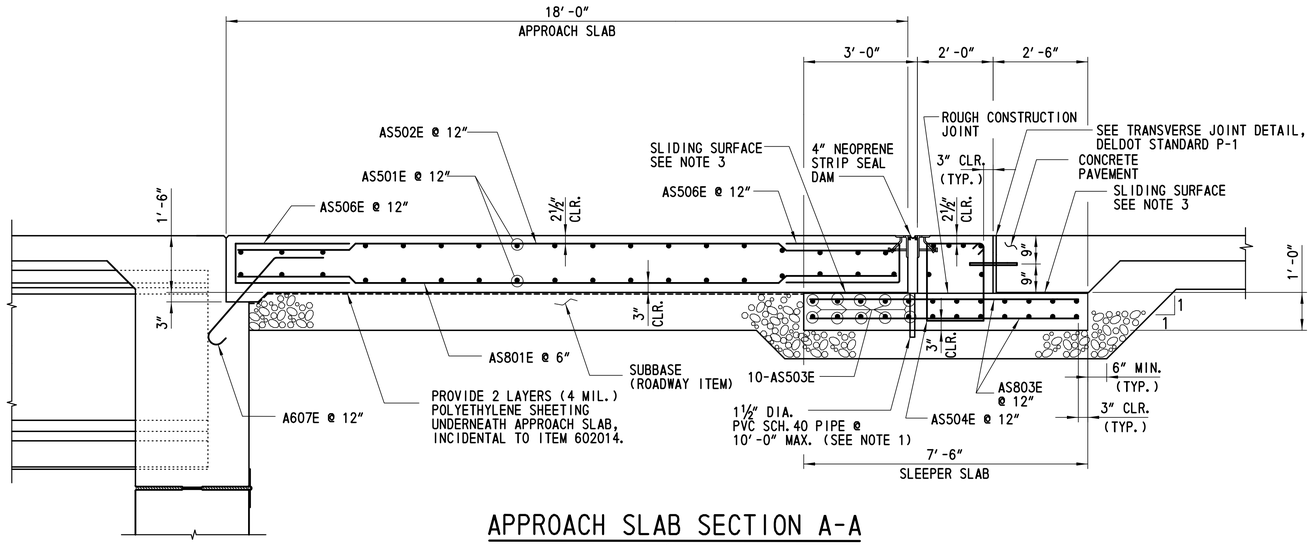

APPROACH SLAB SECTION A-A

SCALE: ½" = 1'-0"

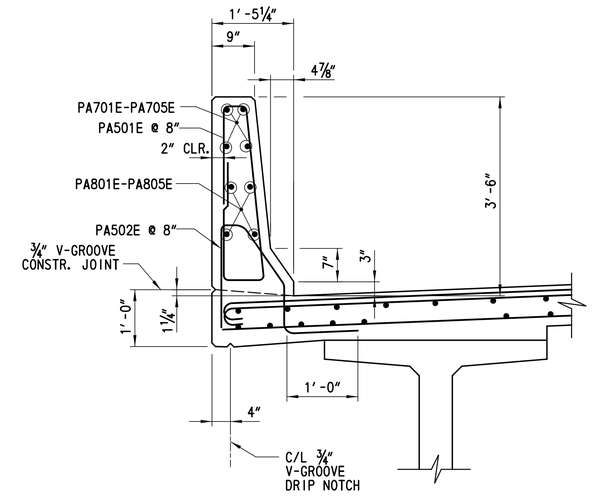

TYPICAL BARRIER REINFORCEMENT SECTION

(CONDUIT NOT SHOWN FOR CLARITY)
SCALE: ¾" = 1'-0"

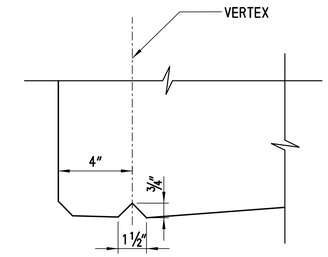

DRIP NOTCH DETAIL

SCALE: 3" = 1'-0"

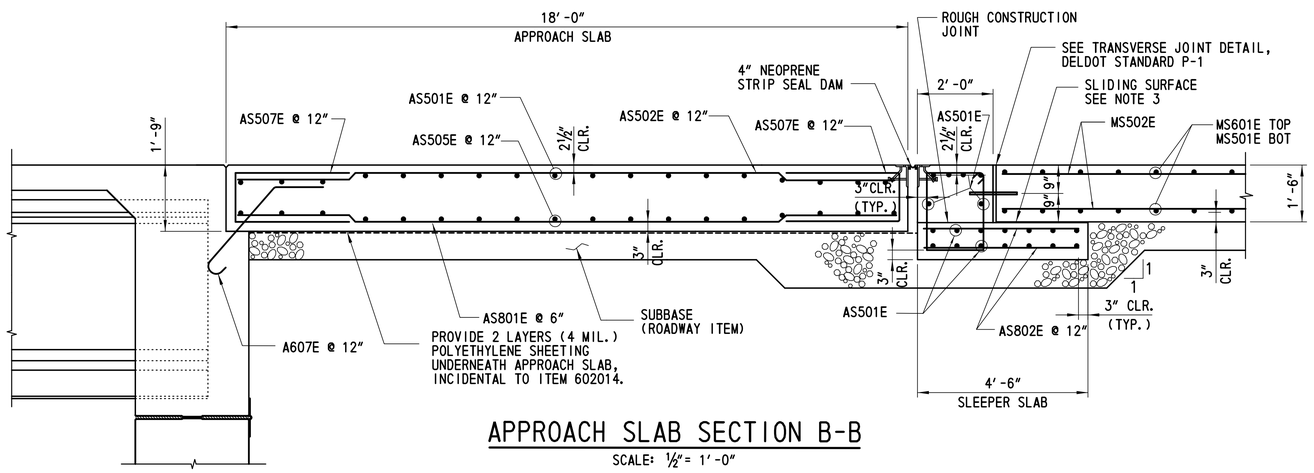

APPROACH SLAB SECTION B-B

SCALE: ½" = 1'-0"

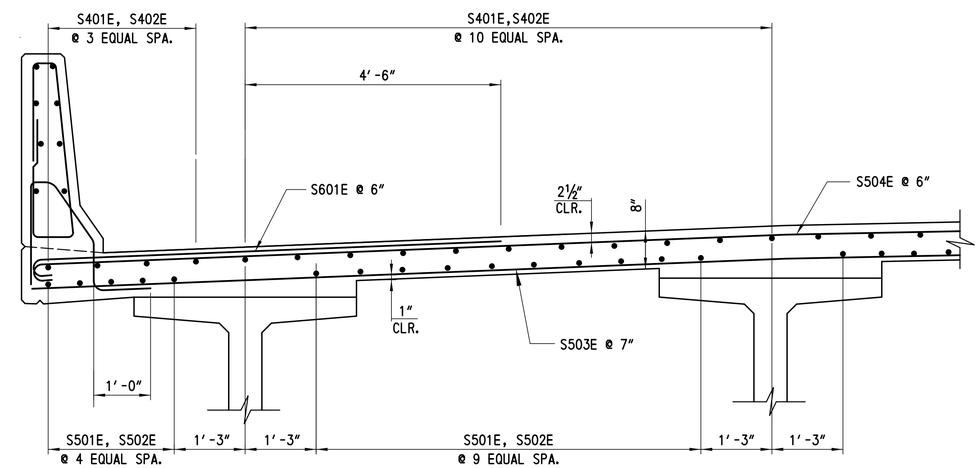

TYPICAL DECK REINFORCEMENT SECTION

SCALE: ¾" = 1'-0"

NOTES:

1. PVC PIPE TO BE INCIDENTAL TO ITEM 602014.

CROSS REFERENCE NOTES:

1. FOR PLAN VIEW OF DECK AND APPROACH SLAB, SEE DWG. 1-507 DK-1 AND 1-507 DK-2.
2. FOR EXPANSION JOINT DETAIL, SEE DWG. 1-507 EX-1.
3. TROWEL SMOOTH AND PLACE 2 LAYERS OF 4 MIL. POLYETHYLENE SHEETING AS BOND BREAKER.
4. FOR CONDUIT DETAILS, SEE DWG. TS-1.

DELAWARE DEPARTMENT OF TRANSPORTATION	ADDENDUMS / REVISIONS	US 301 LEVELS ROAD TO SUMMIT BRIDGE ROAD	CONTRACT T200911303	BRIDGE NO. 1-507N&S	US 301 MAINLINE OVER CONNECTOR ROAD DECK AND APPROACH SLAB REINFORCEMENT	1-507 DK-3	
			COUNTY NEW CASTLE	DESIGNED BY: LT		SHEET NO. 654	
				CHECKED BY: JW		TOTAL SHTS. 1256	

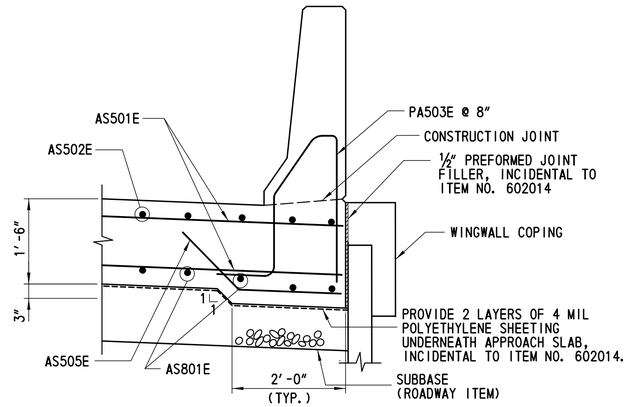

SECTION D-D
APPROACH SLAB EDGE BEAM

SCALE: ¾"= 1'-0"

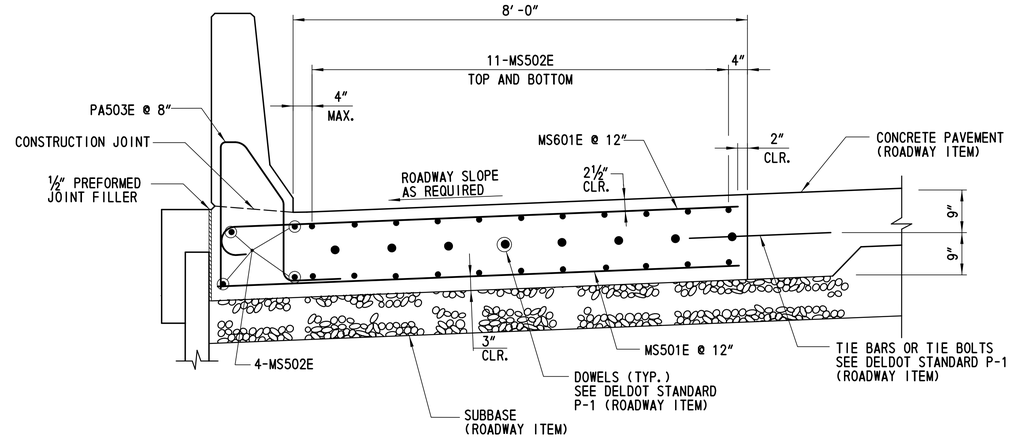

SECTION C-C

SCALE: ¾"= 1'-0"

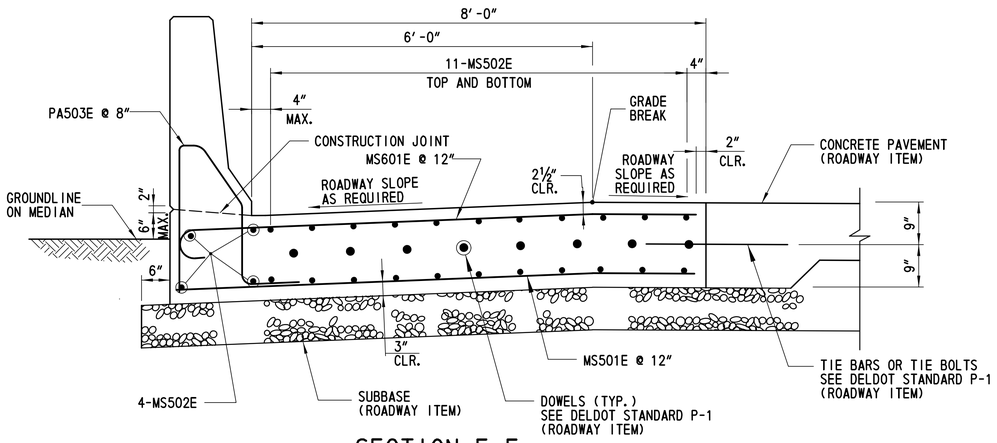

SECTION E-E

SCALE: ¾"= 1'-0"

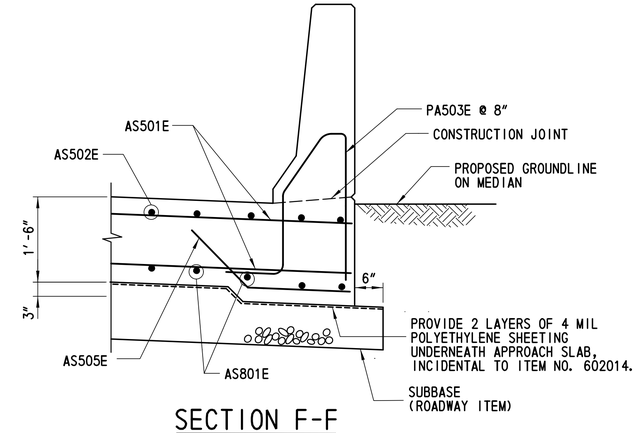

SECTION F-F

SCALE: ¾"= 1'-0"

NOTES:

1. FOR LONGITUDINAL REINFORCEMENT OF MSE WALL COPING IN SECTION C-C, SEE DWG. 1-507 RD-3 FOR ONE-LEG COPING.

CROSS REFERENCE NOTES:

1. FOR DETAILS OF DECK AND APPROACH SLAB, SEE DWG. 1-507 DK-1, DWG. 1-507 DK-2. AND DWG. 1-507 DK-3.
2. FOR EXPANSION JOINT DETAIL, SEE DWG. 1-507 EX-1.

DELAWARE DEPARTMENT OF TRANSPORTATION	ADDENDUMS / REVISIONS	SCALE 0 1 2 4 ½ FEET	US 301 LEVELS ROAD TO SUMMIT BRIDGE ROAD	CONTRACT T200911303	BRIDGE NO. 1-507N&S	US 301 MAINLINE OVER CONNECTOR ROAD APPROACH AND MOMENT SLAB REINFORCEMENT	1-507 DK-4
				COUNTY NEW CASTLE	DESIGNED BY: LT		SHEET NO. 655
					CHECKED BY: ML		TOTAL SHTS. 1256

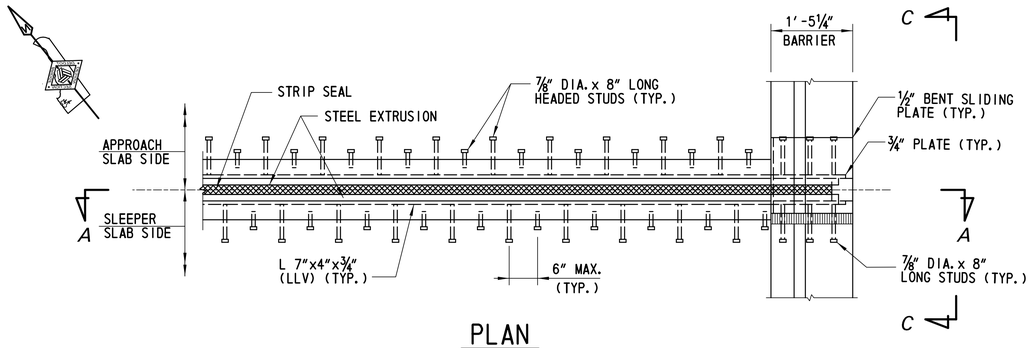

PLAN

SCALE: ¾" = 1'-0"

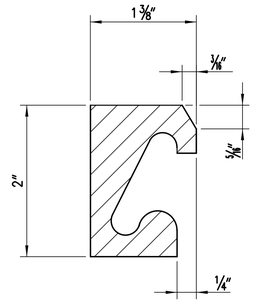

DETAIL 1

NTS

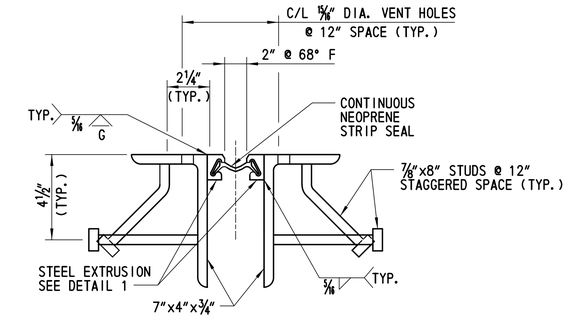

PREFABRICATED EXPANSION JOINT SYSTEM 4"

SCALE: 3" = 1'-0"

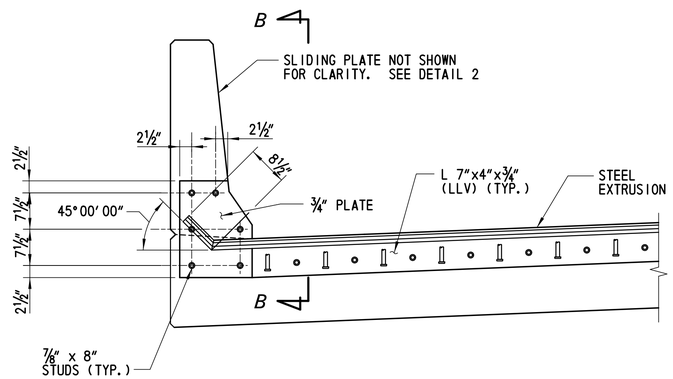

SECTION A-A

SCALE: ¾" = 1'-0"

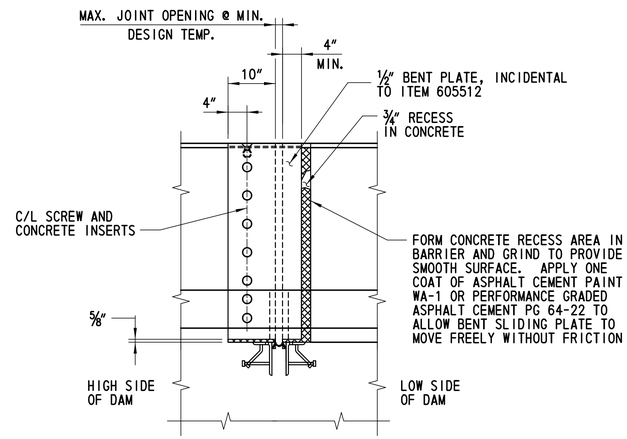

SECTION B-B

SCALE: ¾" = 1'-0"

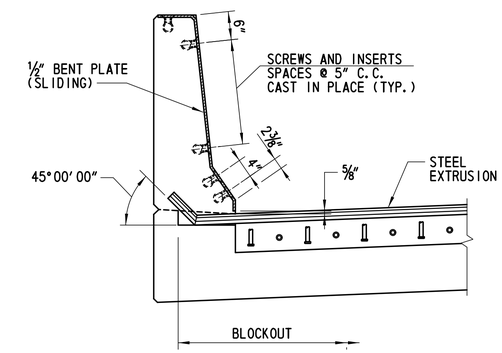

DETAIL 2

SCALE: ¾" = 1'-0"

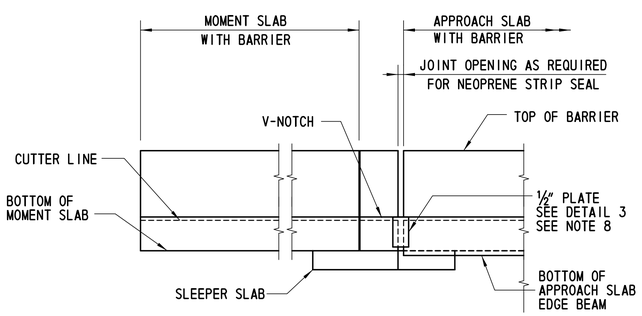

SECTION C-C

SCALE: ¼"= 1'-0"

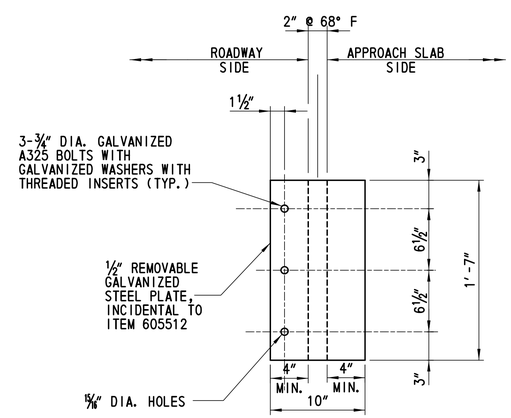

DETAIL 3

SCALE: 1½"= 1'-0"

JOINT OPENING (INCH)								
LOCATION	TEMPERATURE (°F)							
	10	20	30	40	50	60	70	80
ABUTMENT 1	2 ⅜	2 5/16	2 ¼	2 3/16	2 ⅛	2 1/16	2	1 15/16
ABUTMENT 2	2 ⅜	2 5/16	2 ¼	2 3/16	2 ⅛	2 1/16	2	1 15/16

NOTES:

1. STRUCTURAL STEEL FOR DECK JOINTS SHALL CONFORM TO AASHTO M270, GRADE 36.
2. STEEL EXTRUSIONS FOR DECK JOINTS SHALL CONFORM TO AASHTO M270, GRADE 36.
3. THE NEOPRENE STRIP SEAL SHALL BE PROVIDED CONTINUOUS THROUGHOUT THE LIMITS OF THE DECK. SPLICING OF THE NEOPRENE STRIP SEAL IS NOT PERMITTED.
4. COST FOR MATERIALS, FABRICATION AND INSTALLATION OF STRIP SEAL EXPANSION JOINTS, 4" MOVEMENT CLASSIFICATION, WITH STEEL ELEMENTS INCLUDING STUDS, STEEL EXTRUSIONS, AND SLIDING PLATE, SHALL BE PAID FOR UNDER ITEM 605512.
5. CONSTRUCT EXPANSION JOINT TO MATCH ROADWAY GRADE AND CROSS SLOPE.
6. GRIND ALL STEEL EDGES EXPOSED TO TRAFFIC TO 3/16" MIN. RADIUS.
7. BOND NEOPRENE STRIP SEAL TO EXTRUSION WITH APPROVED ADHESIVE.
8. PLATE SHOWN IN DETAIL 3 IS ONLY NEEDED IN THE MEDIAN SIDE.

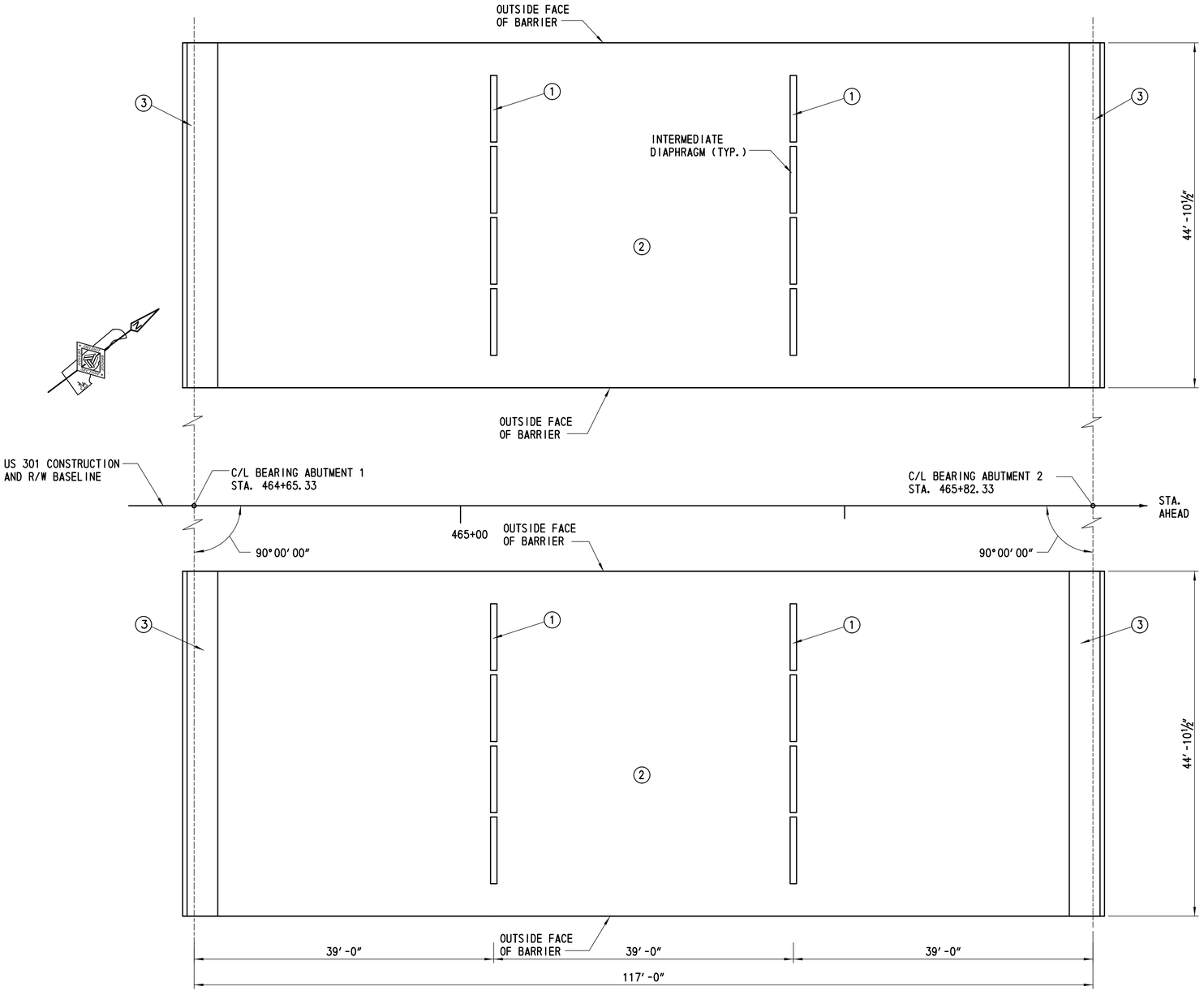

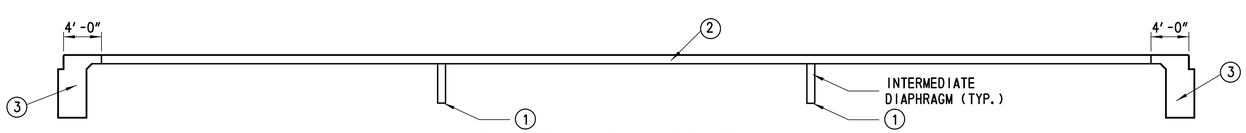

DECK POURING SEQUENCE

SCALE: ⅛" = 1'-0"

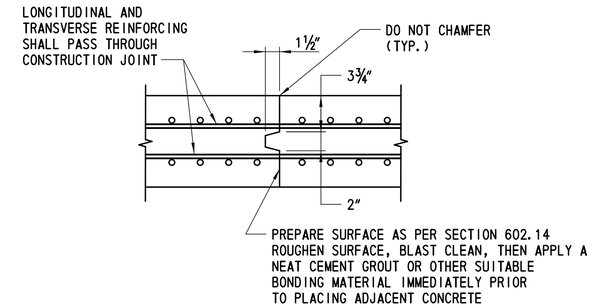

BRIDGE DECK CONSTRUCTION JOINT

NTS

POURING SEQUENCE NOTES:

1. THE CONTRACTOR SHALL FOLLOW THE POURING SEQUENCE SHOWN ON THESE PLANS. NO OTHER POURING SEQUENCE WILL BE ALLOWED.
2. THE POURING SEQUENCE FOR THE BRIDGE DECK SLAB SHALL BE MADE IN THE NUMBERED ORDER INDICATED: 1, 2, 3.
3. PLACE DECK CONCRETE IN POUR 2 AFTER INTERMEDIATE DIAPHRAGMS HAVE REACHED THE MINIMUM 7 DAY STRENGTH.
4. TIME FROM CASTING OF BEAMS TO POUR SEQUENCE 3 TO BE NO LESS THAN 90 DAYS. IF TIME IS NOT SUFFICIENT, CONTRACTOR MUST SUBMIT DESIGN FOR APPROVAL SHOWING STRUCTURAL DESIGN OF RESTAINT MOMENTS.

CROSS REFERENCE NOTES:

1. FOR DECK REINFORCEMENT PLAN, SEE DWG. 1-507 DK-1 AND 1-507 DK-2.
2. FOR DECK DETAILS, SEE DWG. 1-507 DK-3.
3. FOR FINISHED DECK ELEVATIONS, SEE DWG. 1-507 FD-1 AND 1-507 FD-2.
4. FOR REINFORCING BAR SCHEDULE, SEE DWG. 1-507 BR-2.

DELAWARE DEPARTMENT OF TRANSPORTATION	ADDENDUMS / REVISIONS	SCALE 0 2 4 8 16 FEET	US 301 LEVELS ROAD TO SUMMIT BRIDGE ROAD	CONTRACT T200911303	BRIDGE NO. 1-507N&S	US 301 MAINLINE OVER CONNECTOR ROAD DECK POURING SEQUENCE	1-507 DT-1	SHEET NO. 657
				COUNTY NEW CASTLE	DESIGNED BY: LT			TOTAL SHTS. 1256
					CHECKED BY: ML			

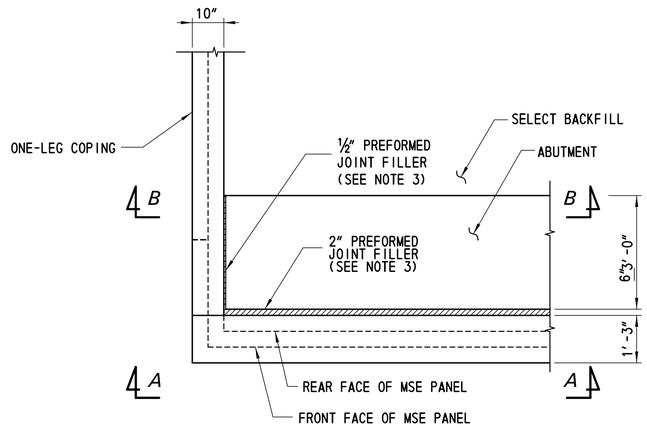

MSE WALL CORNER DETAIL

SCALE: ½" = 1'-0"

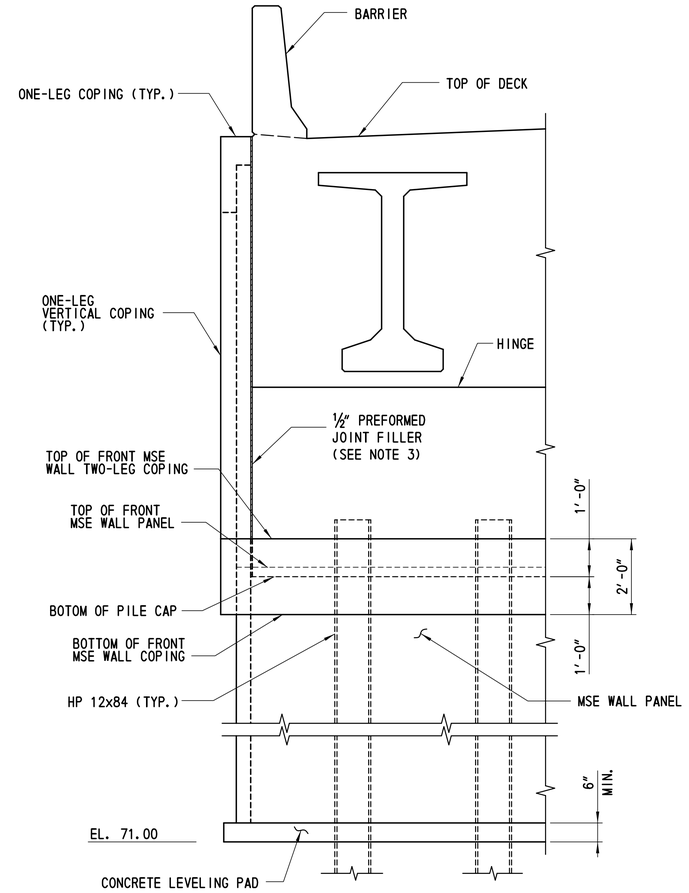

SECTION A-A

SCALE: ½" = 1'-0"

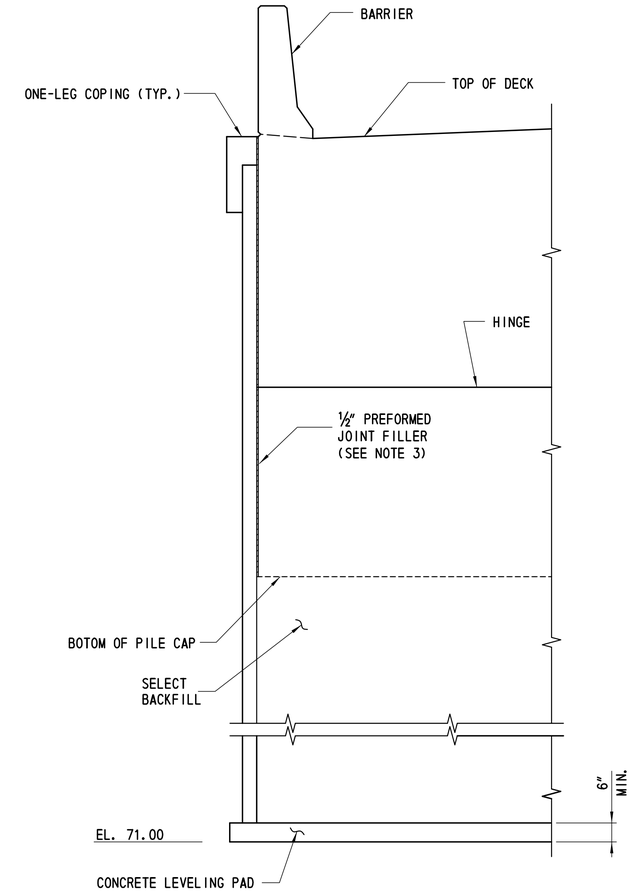

SECTION B-B

SCALE: ½" = 1'-0"

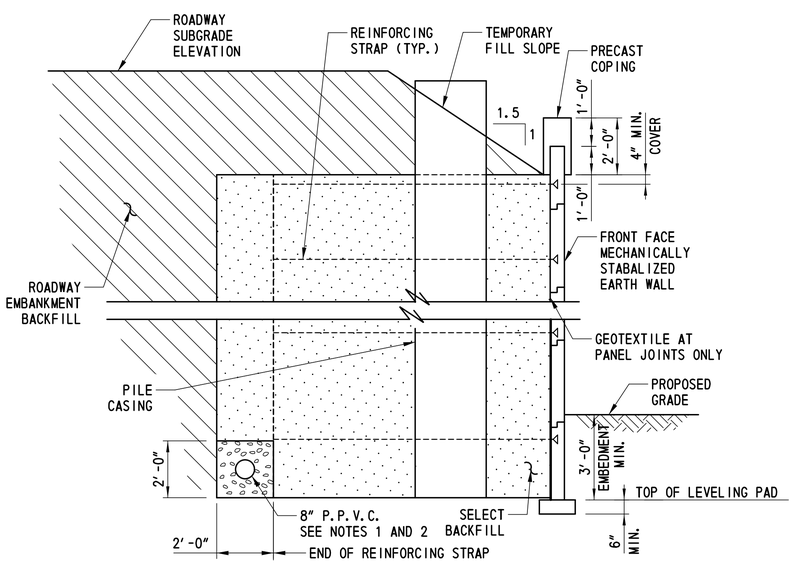

FILL PLACEMENT DURING QUARANTINE PERIOD

SCALE: ⅜" = 1'-0"

NOTES:

1. DRAIN P.P.V.C. TO DAYLIGHT.
2. SURROUND P.P.V.C. WITH A CONTINUOUS 2'-0" x 2'-0" OF DELAWARE NO. 57 STONE ENCLOSED IN GEOTEXTILE.
3. CONTRACTOR TO PROVIDE PROTECTION TO THE PILE CASING DURING QUARANTINE PERIOD TO PREVENT MATERIAL FROM ENTERING CASING.

NOTES:

1. LEVELING PAD AND BARRIER ARE NOT SHOWN ON PLAN VIEW FOR CLARITY.
2. PILE CASING DETAILS ARE NOT SHOWN ON ELEVATION FOR CLARITY.
3. PREFORMED JOINT FILLER SHALL BE INCIDENTAL TO ITEM NO. 602003.

CROSS REFERENCE NOTES:

1. SEE DWG. 1-507 RD-3 FOR MSE WALL COPING DETAILS.
2. SEE DWG. 1-507 AB-3 FOR WINGWALL DETAILS.

DELAWARE DEPARTMENT OF TRANSPORTATION	ADDENDUMS / REVISIONS	SCALE 0 1 4 ½ 2 FEET	US 301 LEVELS ROAD TO SUMMIT BRIDGE ROAD	CONTRACT T200911303	BRIDGE NO. 1-507N&S	US 301 MAINLINE OVER CONNECTOR ROAD	1-507 RD-1
				COUNTY NEW CASTLE	DESIGNED BY: LT	MSE WALL DETAILS – 1	SHEET NO. 658
					CHECKED BY: ML		TOTAL SHTS. 1256

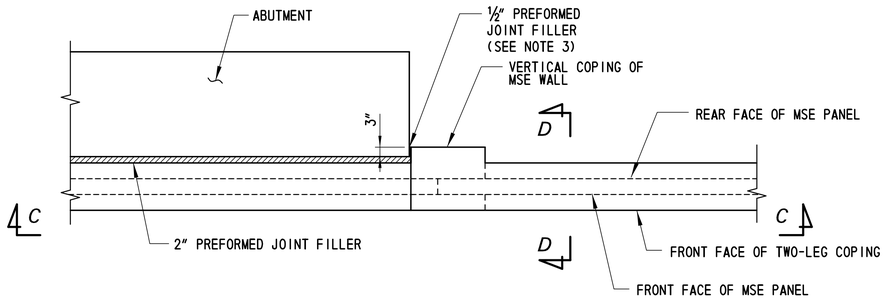

MSE WALL VERTICAL COPING DETAIL

SCALE: ½" = 1'-0"

NOTES:

1. LEVELING PAD AND BARRIER ARE NOT SHOWN ON PLAN VIEW FOR CLARITY.
2. PILE CASING DETAILS ARE NOT SHOWN ON ELEVATION FOR CLARITY.
3. ½" AND 2" PREFORMED JOINT FILLER MATERIAL INCIDENTAL TO ITEM 602003.

CROSS REFERENCE NOTES:

1. SEE DWG. 1-507 RD-3 FOR MSE WALL COPING DETAILS.

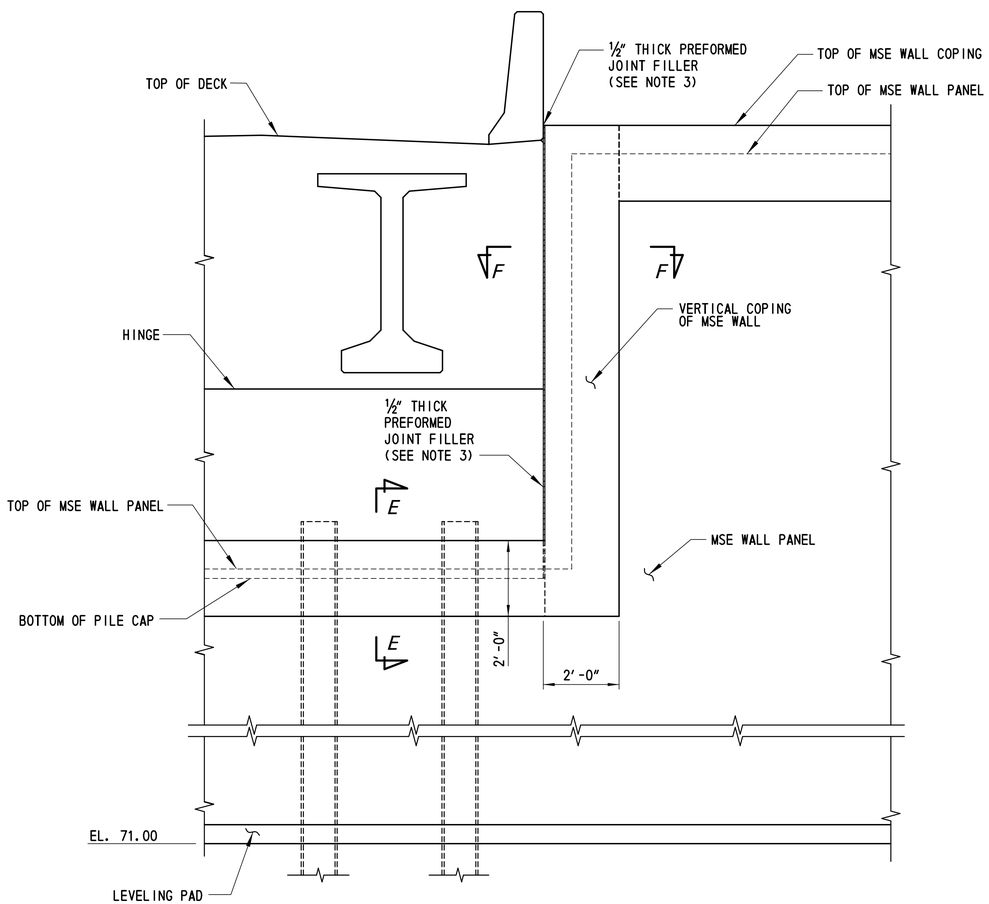

SECTION C-C

SCALE: ½" = 1'-0"

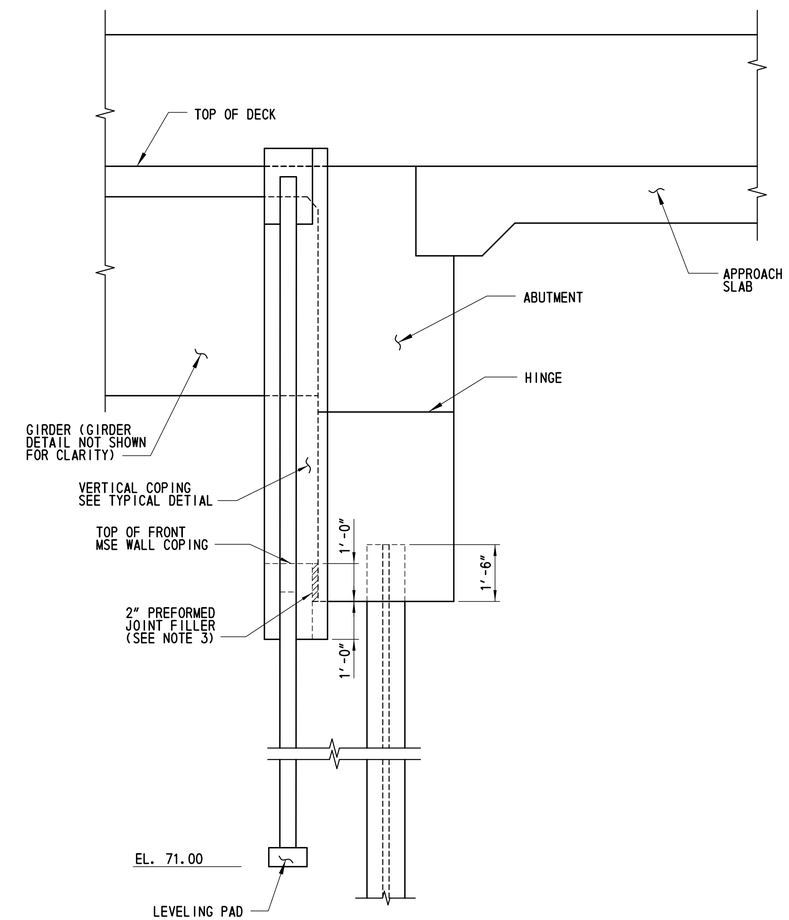

SECTION D-D

SCALE: ½" = 1'-0"

DELAWARE DEPARTMENT OF TRANSPORTATION	ADDENDUMS / REVISIONS	SCALE 0 1 2 4 ½ FEET	US 301 LEVELS ROAD TO SUMMIT BRIDGE ROAD	CONTRACT T200911303 / COUNTY NEW CASTLE	BRIDGE NO. 1-507N&S / DESIGNED BY: LT / CHECKED BY: ML	US 301 MAINLINE OVER CONNECTOR ROAD MSE WALL DETAILS – 2	1-507 RD-2 / SHEET NO. 659 / TOTAL SHTS. 1256

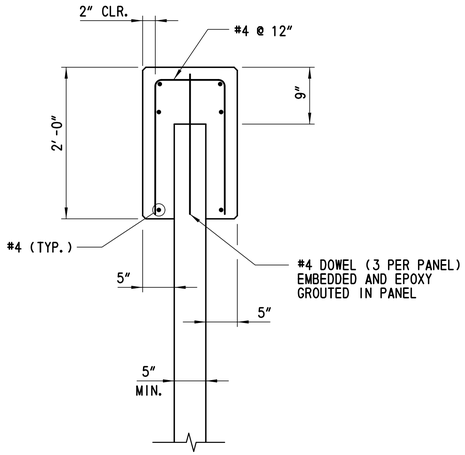

SECTION E-E
TWO-LEG COPING
SCALE: 1"= 1'-0"

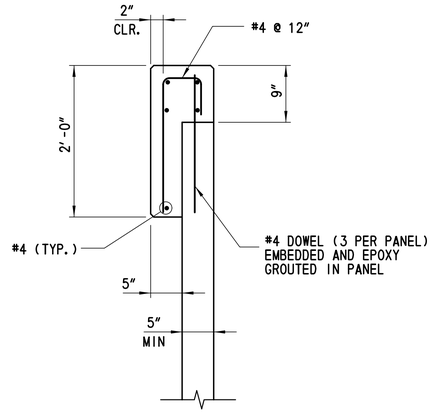

ONE-LEG COPING
SCALE: 1"= 1'-0"

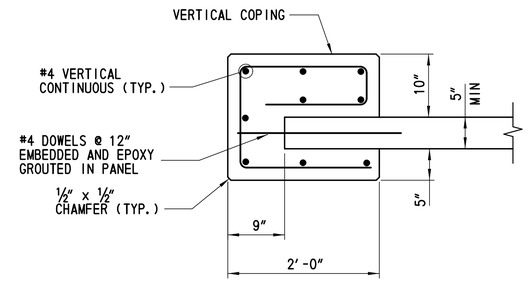

SECTION F-F
TWO-LEG VERTICAL COPING
SCALE: 1"= 1'-0"

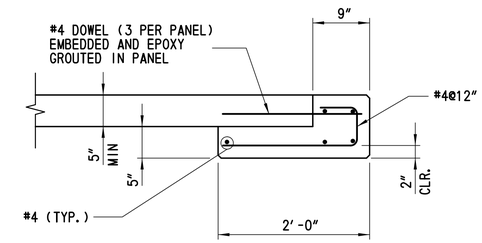

ONE-LEG VERTICAL COPING
SCALE: 1"= 1'-0"

NOTES:

1. ALL COPING TO BE PRECAST CONCRETE.
2. THE COST OF COPING INCLUDING FABRICATION AND INSTALLATION SHALL BE INCIDENTAL TO THE COST FOR MSE WALLS, ITEM 602772.

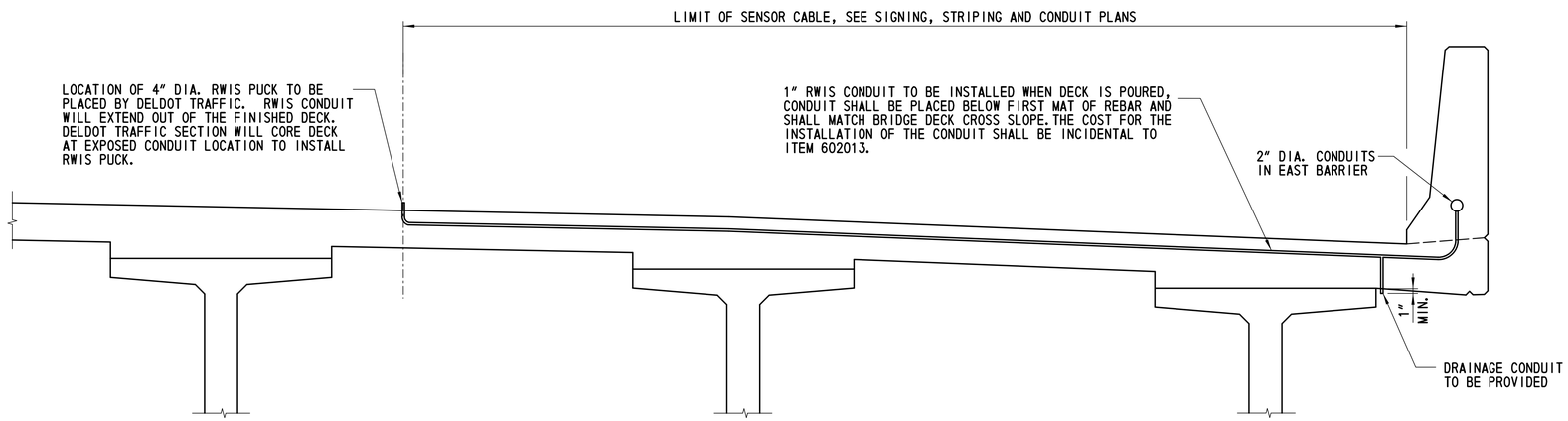

TYPICAL SECTION OF DECK PARAPET AT RWIS
SCALE: ¾"= 1'-0"

DELAWARE DEPARTMENT OF TRANSPORTATION	ADDENDUMS / REVISIONS		US 301 LEVELS ROAD TO SUMMIT BRIDGE ROAD	CONTRACT T200911303	BRIDGE NO. 1-507N&S	US 301 MAINLINE OVER CONNECTOR ROAD MSE WALL COPING AND MISCELLANEOUS DETAILS	1-507 RD-3
				COUNTY NEW CASTLE	DESIGNED BY: LT		SHEET NO. 660
					CHECKED BY: ML		TOTAL SHTS. 1256

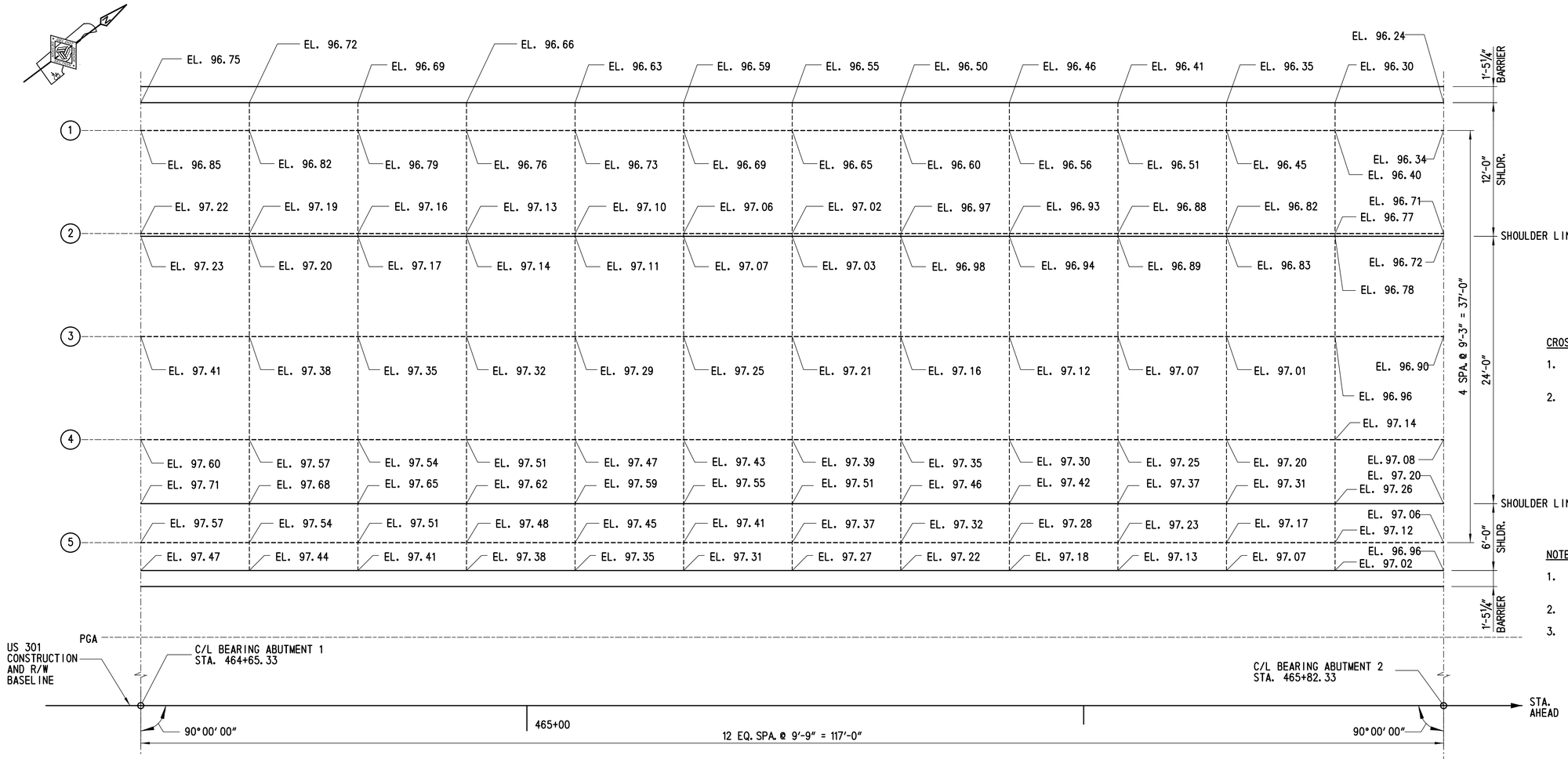

FINISHED DECK ELEVATION - SOUTHBOUND

SCALE: 3/16" = 1'-0"

CROSS REFERENCE NOTES:

1. FOR SUPERSTRUCTURE TYPICAL SECTION, SEE DWG. 1-507 TS-1.
2. FOR VERTICAL CURVE DATA, SEE DWG. 1-507 PE-1

NOTES:

1. CURBLINES AND BREAK POINTS IN DECK ARE SHOWN SOLID.
2. BEAM LINES ARE SHOWN DASHED.
3. P/R - POINT OF ROTATION

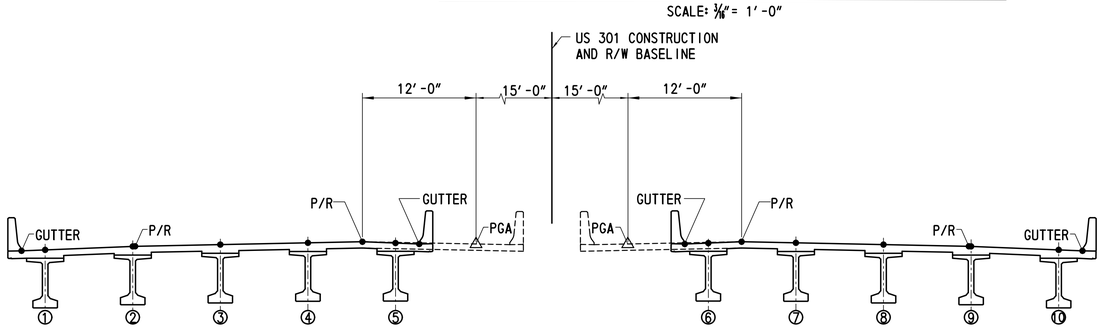

SOUTHBOUND

NORTHBOUND

TYPICAL SECTION

STATIONS AHEAD
SCALE: 1/8" = 1'-0"

DELAWARE DEPARTMENT OF TRANSPORTATION	ADDENDUMS / REVISIONS	US 301 LEVELS ROAD TO SUMMIT BRIDGE ROAD	CONTRACT T200911303	BRIDGE NO. 1-507N&S	US 301 MAINLINE OVER CONNECTOR ROAD	1-507 FD-1	
			COUNTY NEW CASTLE	DESIGNED BY: LT	FINISHED DECK ELEVATIONS – 1	SHEET NO. 661	
				CHECKED BY: ML		TOTAL SHTS. 1256	

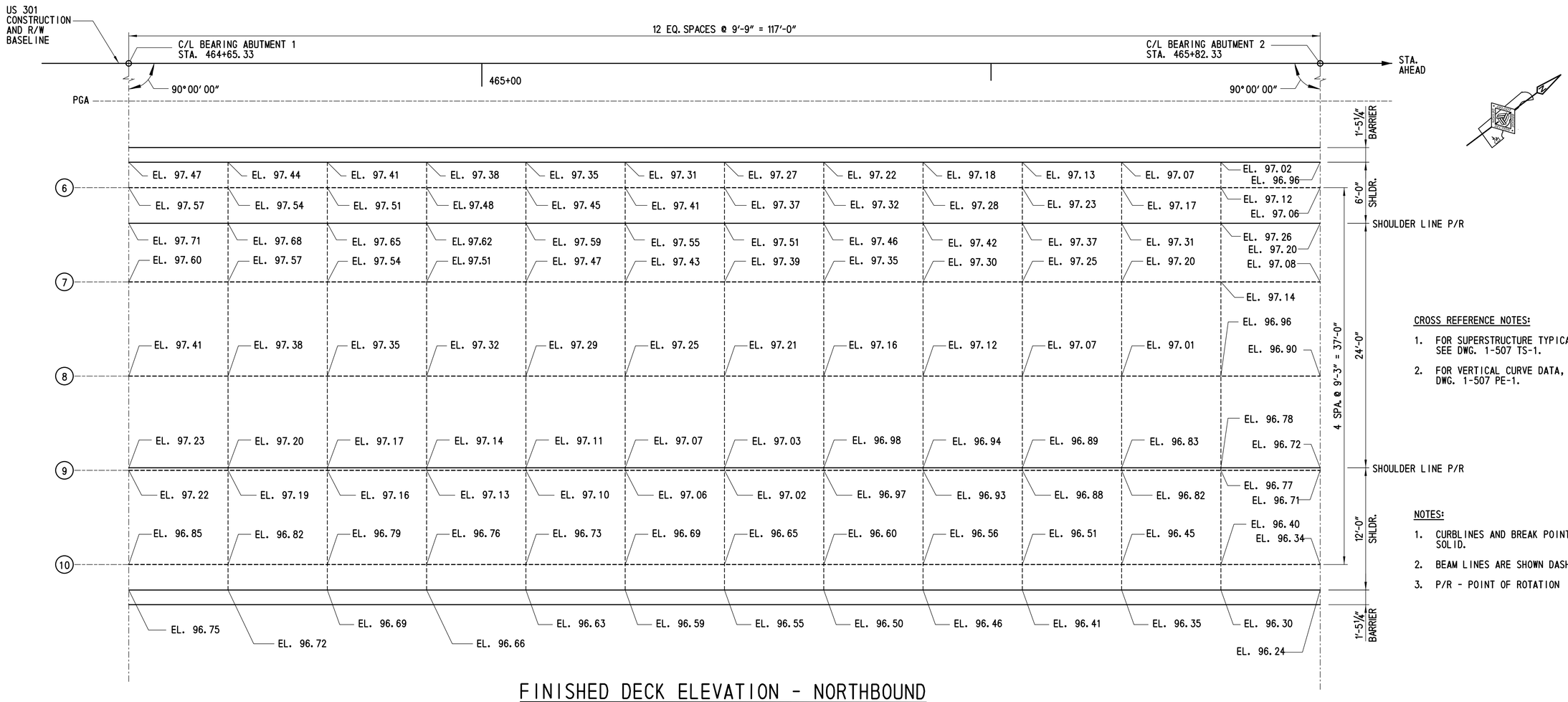

FINISHED DECK ELEVATION - NORTHBOUND

SCALE: 3/16" = 1'-0"

CROSS REFERENCE NOTES:

1. FOR SUPERSTRUCTURE TYPICAL SECTION, SEE DWG. 1-507 TS-1.
2. FOR VERTICAL CURVE DATA, SEE DWG. 1-507 PE-1.

NOTES:

1. CURBLINES AND BREAK POINTS IN DECK ARE SHOWN SOLID.
2. BEAM LINES ARE SHOWN DASHED.
3. P/R - POINT OF ROTATION

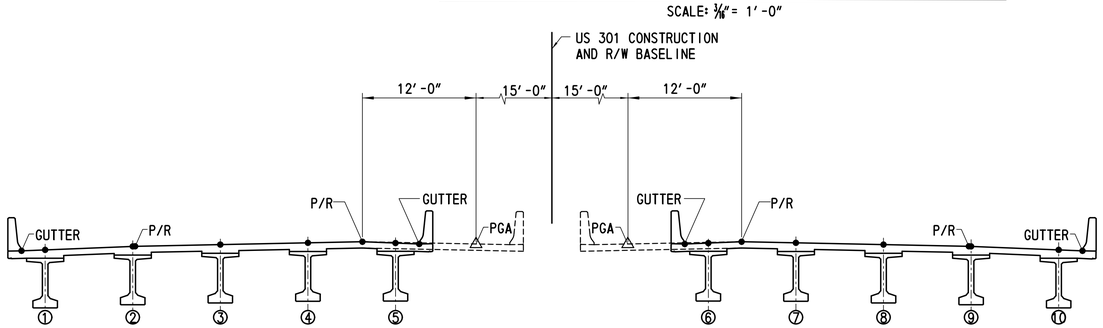

SOUTHBOUND

NORTHBOUND

TYPICAL SECTION

STATIONS AHEAD
SCALE: 1/8" = 1'-0"

DELAWARE DEPARTMENT OF TRANSPORTATION	ADDENDUMS / REVISIONS	US 301 LEVELS ROAD TO SUMMIT BRIDGE ROAD	CONTRACT T200911303	BRIDGE NO. 1-507N&S	US 301 MAINLINE OVER CONNECTOR ROAD FINISHED DECK ELEVATIONS – 2	1-507 FD-2	
			COUNTY NEW CASTLE	DESIGNED BY: LT		SHEET NO. 662	
				CHECKED BY: ML		TOTAL SHTS. 1256	

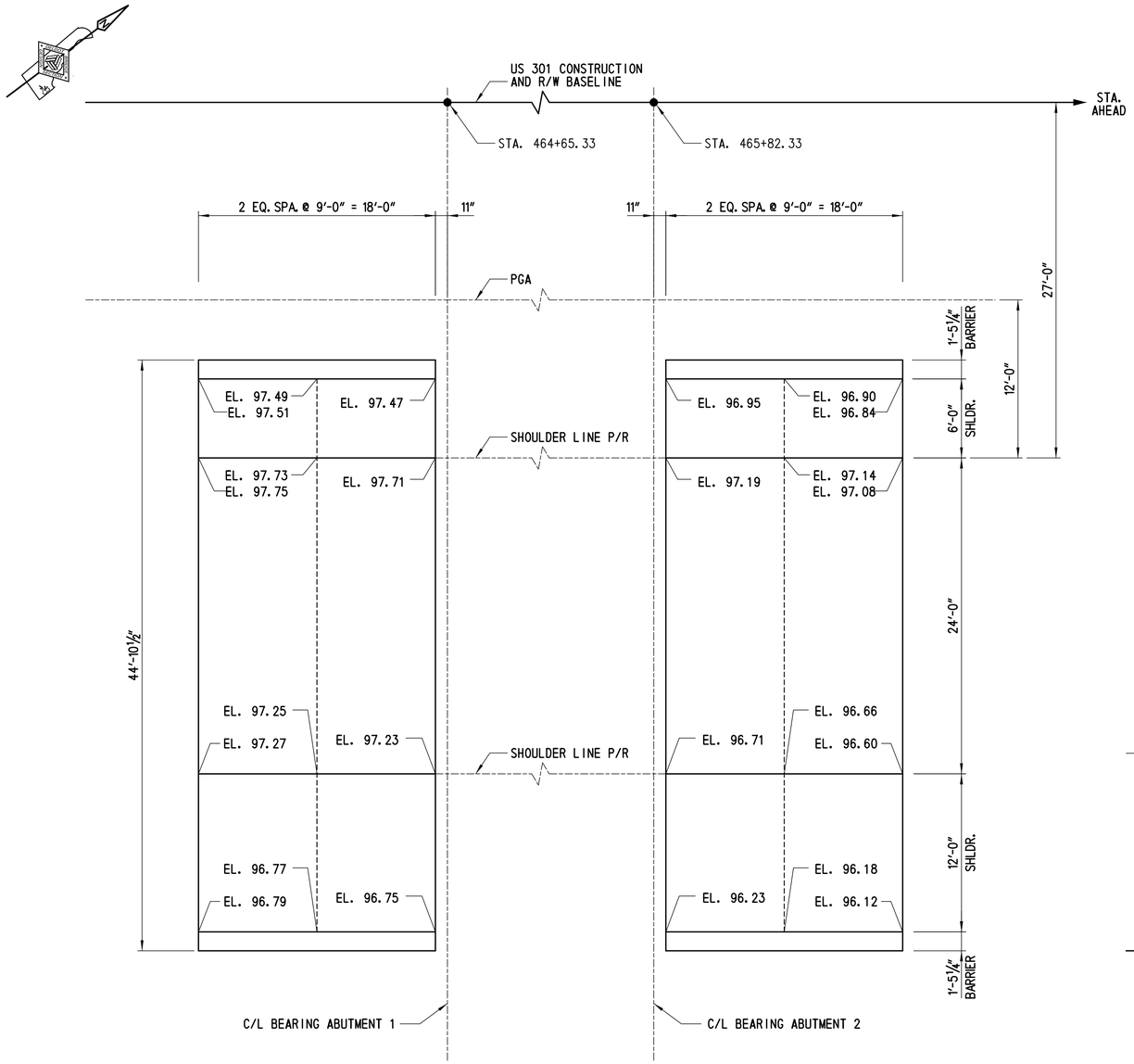

FINISHED APPROACH SLAB ELEVATION - NORTHBOUND

SCALE: 3/16" = 1'-0"

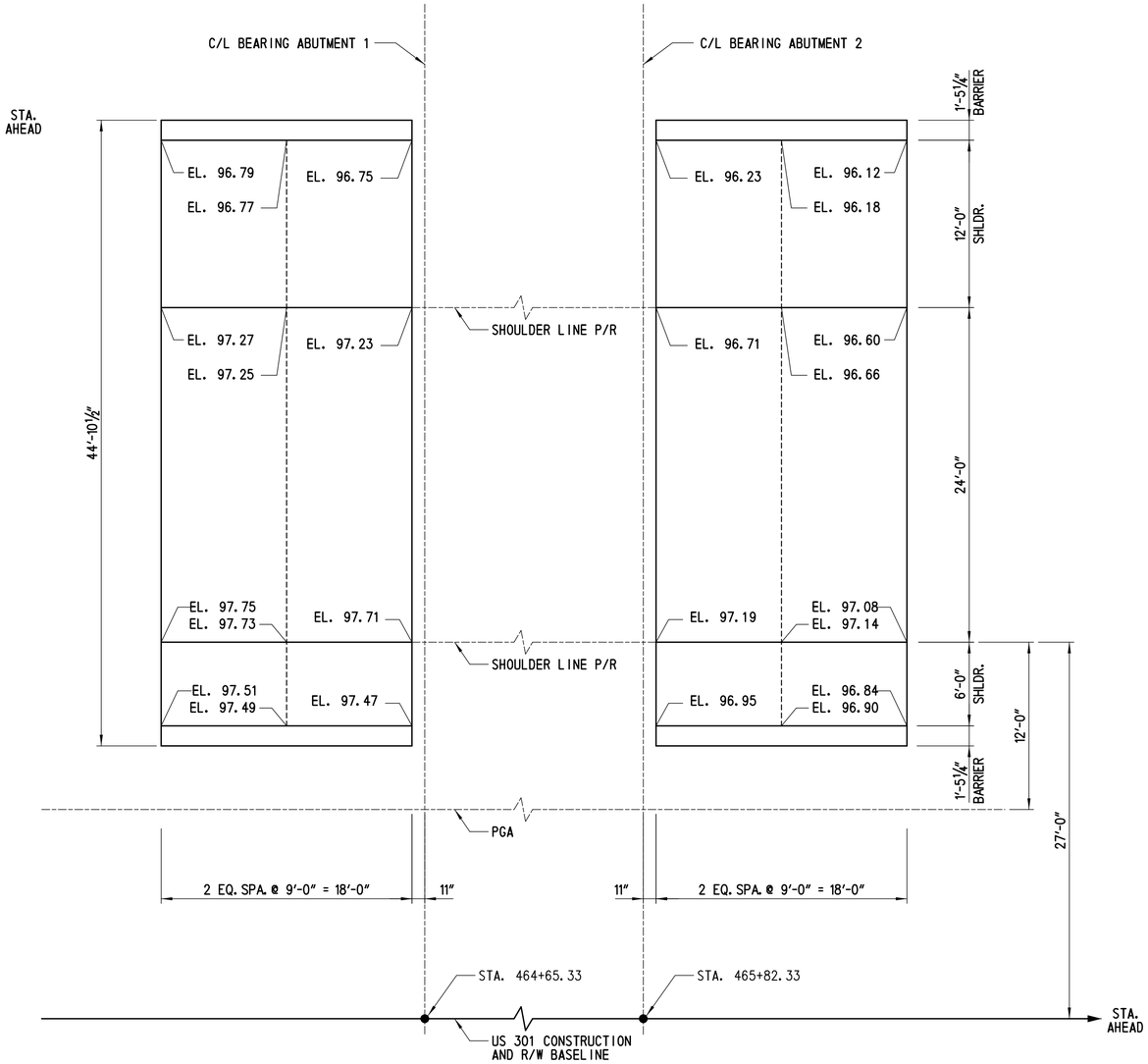

FINISHED APPROACH SLAB ELEVATION - SOUTHBOUND

SCALE: 3/16" = 1'-0"

CROSS REFERENCE NOTES:

1. FOR FINISHED DECK ELEVATION, SEE DWG. 1-507 FD-1 AND 1-507 FD-2.
2. FOR APPROACH SLAB DETAIL, SEE DWG. 1-507 DK-3 AND 1-507 DK-4.
3. FOR VERTICAL CURVE DATA, SEE DWG. 1-507 PE-1.
4. FOR CROSS SLOPES, SEE DWG. 1-507 TS-1.

NOTES:

1. P/R - POINT OF ROTATION

DELAWARE DEPARTMENT OF TRANSPORTATION	ADDENDUMS / REVISIONS	SCALE 0 2 8 / 1 4 FEET	US 301 LEVELS ROAD TO SUMMIT BRIDGE ROAD	CONTRACT T200911303	BRIDGE NO. 1-507N&S	US 301 MAINLINE OVER CONNECTOR ROAD FINISHED APPROACH SLAB ELEVATIONS	1-507 FD-3	
				COUNTY NEW CASTLE	DESIGNED BY: LT		SHEET NO. 663	
					CHECKED BY: ML		TOTAL SHTS. 1256	

SUPERSTRUCTURE REINFORCING BAR SCHEDULE

NORTHBOUND SUPERSTRUCTURE BAR SCHEDULE

MARK	LENGTH	NO. BARS	TYPE	A	B	C	D	E	F	G	H	I	J	K	REMARKS
S401E	45′-0″	98	STR.												
S402E	33′-8″	49	STR.												
S501E	45′-0″	100	STR.												
S502E	33′-8″	50	STR.												
S503E	44′-6″	205	STR.												
S504E	45′-8″	238	15	7″	44′-6″		5″								
S601E	9′-0″	476	14	8″	8′-4″		6″								
AS501E	44′-6″	116	STR.												
AS502E	17′-8″	92	STR.												
AS503E	40′-1″	20	STR.												
AS504E	8′-1″	92	25	2′-1″	1′-6″	3¾″	2½″								
AS505E	3′-1¾″	76	11	1′-8¾″	1′-5″	1′-0″									
AS506E	6′-2½″	168	4		2′-7″	1′-0½″	2′-7″								
AS507E	6′-5½″	16	4		2′-7″	1′-3½″	2′-7″								
AS801E	17′-8″	182	STR.												
AS802E	4′-0″	24	STR.												
AS803E	7′-0″	168	STR.												
MS501E	9′-1″	80	STR.												
MS502E	18′-8″	104	STR.												
MS601E	9′-9″	80	14	8″	9′-1″		6″								
PA501E	7′-6⅜″	602	28	2′-9¼″	3″	1⅝″	2¾″	2′-9½″	3⅛″	5⅛″		3½″			
PA502E	5′-0″	358	43	1′-1⅛″	7″	9⅛″	1′-6″	1″	9″	7″	3″	10″			
PA503E	6′-2⅛″	244	43	1′-1⅛″	7″	9⅛″	2′-1″	1″	9″	1′-2″	3″	10″			
PA701E	38′-8″	8	STR.												
PA702E	45′-0″	16	STR.												
PA703E	17′-8″	16	STR.												
PA704E	18′-8″	16	STR.												
PA705E	1′-8″	16	STR.												
PA801E	31′-10″	8	STR.												
PA802E	50′-0″	16	STR.												
PA803E	17′-8″	16	STR.												
PA804E	18′-8″	16	STR.												
PA805E	1′-8″	16	STR.												
M401E	7′-2″	16	4	3′-4″	6″	3′-4″									
M402E	10′-4″	64	5	8″	4′-3″	6″	4′-3″	8″							
M501E	8′-1″	64	STR.												
M502E	3′-2″	128	STR.												
M503E	5′-0″	16	STR.												

SOUTHBOUND SUPERSTRUCTURE BAR SCHEDULE

MARK	LENGTH	NO. BARS	TYPE	A	B	C	D	E	F	G	H	I	J	K	REMARKS
S401E	45′-0″	98	STR.												
S402E	33′-8″	49	STR.												
S501E	45′-0″	100	STR.												
S502E	33′-8″	50	STR.												
S503E	44′-6″	205	STR.												
S504E	45′-8″	238	15	7″	44′-6″		5″								
S601E	9′-0″	476	14	8″	8′-4″		6″								
AS501E	44′-6″	116	STR.												
AS502E	17′-8″	92	STR.												
AS503E	40′-1″	20	STR.												
AS504E	8′-1″	92	25	2′-1″	1′-6″	3¾″	2½″								
AS505E	3′-1¾″	76	11	1′-8¾″	1′-5″	1′-0″									
AS506E	6′-2½″	168	4		2′-7″	1′-0½″	2′-7″								
AS507E	6′-5½″	16	4		2′-7″	1′-3½″	2′-7″								
AS801E	17′-8″	182	STR.												
AS802E	4′-0″	24	STR.												
AS803E	7′-0″	168	STR.												
MS501E	9′-1″	80	STR.												
MS502E	18′-8″	104	STR.												
MS601E	9′-9″	80	14	8″	9′-1″		6″								
PA501E	7′-6⅜″	602	28	2′-9¼″	3″	1⅝″	2¾″	2′-9½″	3⅛″	5⅛″		3½″			
PA502E	5′-0″	358	43	1′-1⅛″	7″	9⅛″	1′-6″	1″	9″	7″	3″	10″			
PA503E	6′-2⅛″	244	43	1′-1⅛″	7″	9⅛″	2′-1″	1″	9″	1′-2″	3″	10″			
PA701E	38′-8″	8	STR.												
PA702E	45′-0″	16	STR.												
PA703E	17′-8″	16	STR.												
PA704E	18′-8″	16	STR.												
PA705E	1′-8″	16	STR.												
PA801E	31′-10″	8	STR.												
PA802E	50′-0″	16	STR.												
PA803E	17′-8″	16	STR.												
PA804E	18′-8″	16	STR.												
PA805E	1′-8″	16	STR.												
M401E	7′-2″	16	4	3′-4″	6″	3′-4″									
M402E	10′-4″	64	5	8″	4′-3″	6″	4′-3″	8″							
M501E	8′-1″	64	STR.												
M502E	3′-2″	128	STR.												
M503E	5′-0″	16	STR.												

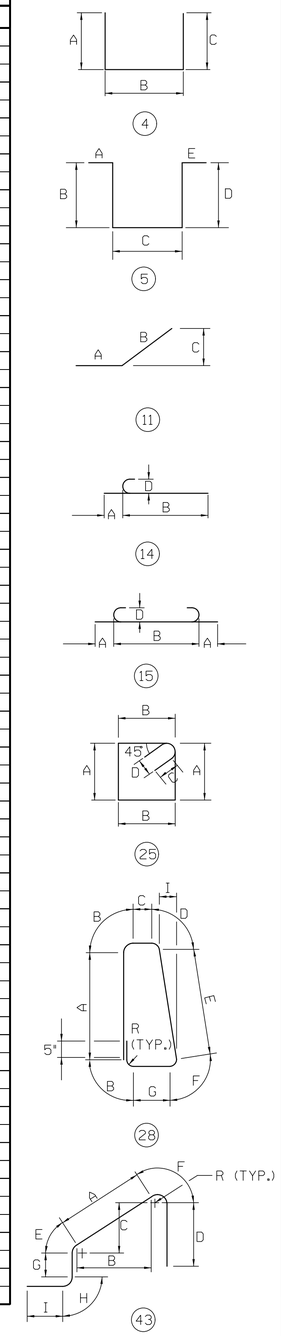

DELAWARE DEPARTMENT OF TRANSPORTATION	ADDENDUMS / REVISIONS	US 301 LEVELS ROAD TO SUMMIT BRIDGE ROAD	CONTRACT T200911303	BRIDGE NO. 1-507N&S	US 301 MAINLINE OVER CONNECTOR ROAD SUPERSTRUCTURE REINFORCEMENT SCHEDULE
			COUNTY NEW CASTLE	DESIGNED BY: LT	
				CHECKED BY: ML	

1-507 BR-2	
SHEET NO.	664
TOTAL SHTS.	1256

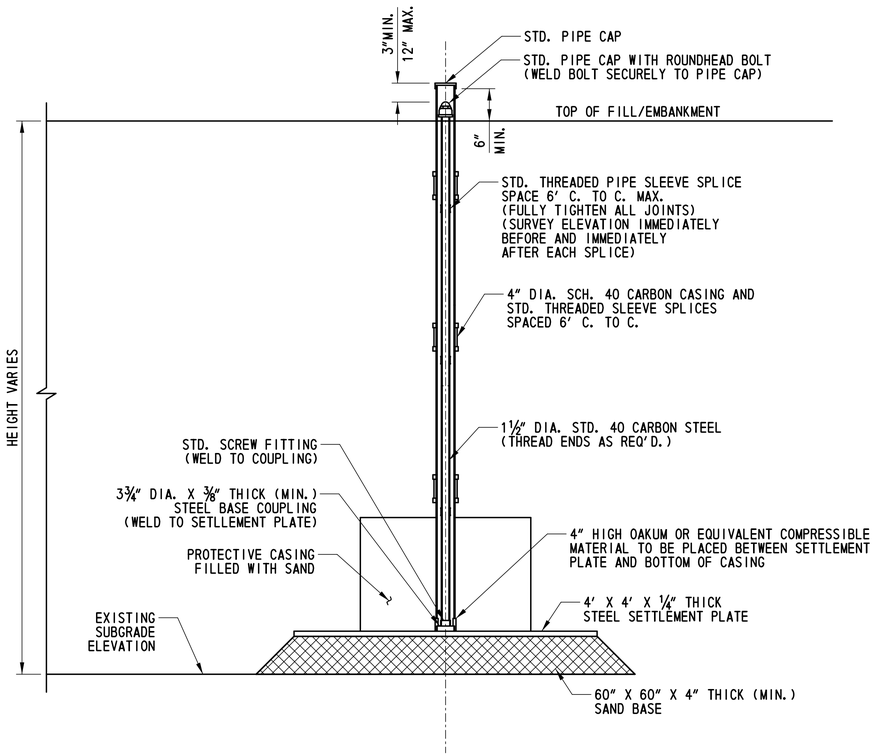

SETTLEMENT PLATFORM

N. T. S.

SETTLEMENT PLATFORM	STATION	OFFSET	SETTLEMENT MONUMENT	STATION	OFFSET
SP-1-507-1	464+55.41	42.00' LT	SM-1-507-1	464+55.41	47.00' LT
SP-1-507-2	464+55.41	42.00' RT	SM-1-507-2	464+55.41	47.00' RT
SP-1-507-3	465+92.25	42.00' RT	SM-1-507-3	465+92.25	47.00' RT
SP-1-507-4	465+92.25	42.00' LT	SM-1-507-4	465+92.25	47.00' LT

NOTES:

1. THE BASE OF THE SETTLEMENT PLATFORM SHALL BE PLACED ON THE TOP OF THE EXISTING GROUND.

2. READINGS ON THE SETTLEMENT PLATFORMS SHALL BE MADE AFTER THE INITIAL INSTALLATION OF THE RISER AND CASING PIPES AND INSTALLATION RECORD SHEETS ARE APPROVED BY THE ENGINEER AND PRIOR TO FILL PLACEMENT. DURING FILL PLACEMENT, READINGS ON ALL SETTLEMENT PLATFORMS SHALL BE TAKEN AT A MINIMUM OF THREE (3) CALENDAR DAY INTERVALS. AFTER COMPLETION OF THE FILL, INSTALL SETTLEMENT MONUMENTS AS INDICATED ON THE BRIDGE PLANS AND TAKE INITIAL READINGS. READINGS ON ALL SETTLEMENT MONITORING DEVICES SHALL THEN BE TAKEN AT A MINIMUM OF THREE (3) CALENDAR DAY INTERVALS. AFTER THE FILL HAS BEEN COMPLETED AND TWO (2) SUCCESSIVE READINGS OF EACH DEVICE HAS RECORDED LESS THAN OR EQUAL TO 0.1 INCH, THE IMMEDIATE SETTLEMENT WILL BE DEEMED COMPLETE AND THE GEOTECHNICAL ENGINEER CAN RELEASE THE SUBSTRUCTURE FOR INSTALLATION OF PRODUCTION PILES SO LONG AS THE MINIMUM 30 DAY QUARANTINE PERIOD HAS BEEN MET. AFTER COMPLETION OF THE MSE WALL PANEL PLACEMENT, THE CONTRACTOR SHALL ESTABLISH REFERENCE POINTS TO MONITOR SETTLEMENT ON TOP OF THE MSE WALL PANELS OR ON TOP OF THE MSE WALL LEVELING PAD AT POINTS WITHIN 5 FEET OF ALL ENDS AND CORNERS AND AT THE CENTER OF BRIDGES AND THE CENTERLINE OF US301. AFTER THE SUBSTRUCTURE HAS BEEN RELEASED, READINGS ON ALL SETTLEMENT MONITORING DEVICES AND REFERENCE POINTS SHALL CONTINUE TO BE TAKEN AT A MINIMUM OF THIRTY (30) DAY INTERVALS FOR THE NEXT SIX (6) MONTHS OR AS DIRECTED BY THE ENGINEER.

3. COST OF MATERIALS, FABRICATION, INSTALLATION AND MONITORING OF SETTLEMENT PLATFORMS IS INCLUDED IN ITEM 202505.

4. COST OF MATERIALS, FABRICATION, INSTALLATION AND MONITORING OF MONUMENTS IS INCLUDED IN ITEM 202518.

CROSS REFERENCE NOTE:

1. FOR LOCATION OF SETTLEMENT PLATFORMS AND MONUMENTS, SEE DWG. 1-507 PE-1.

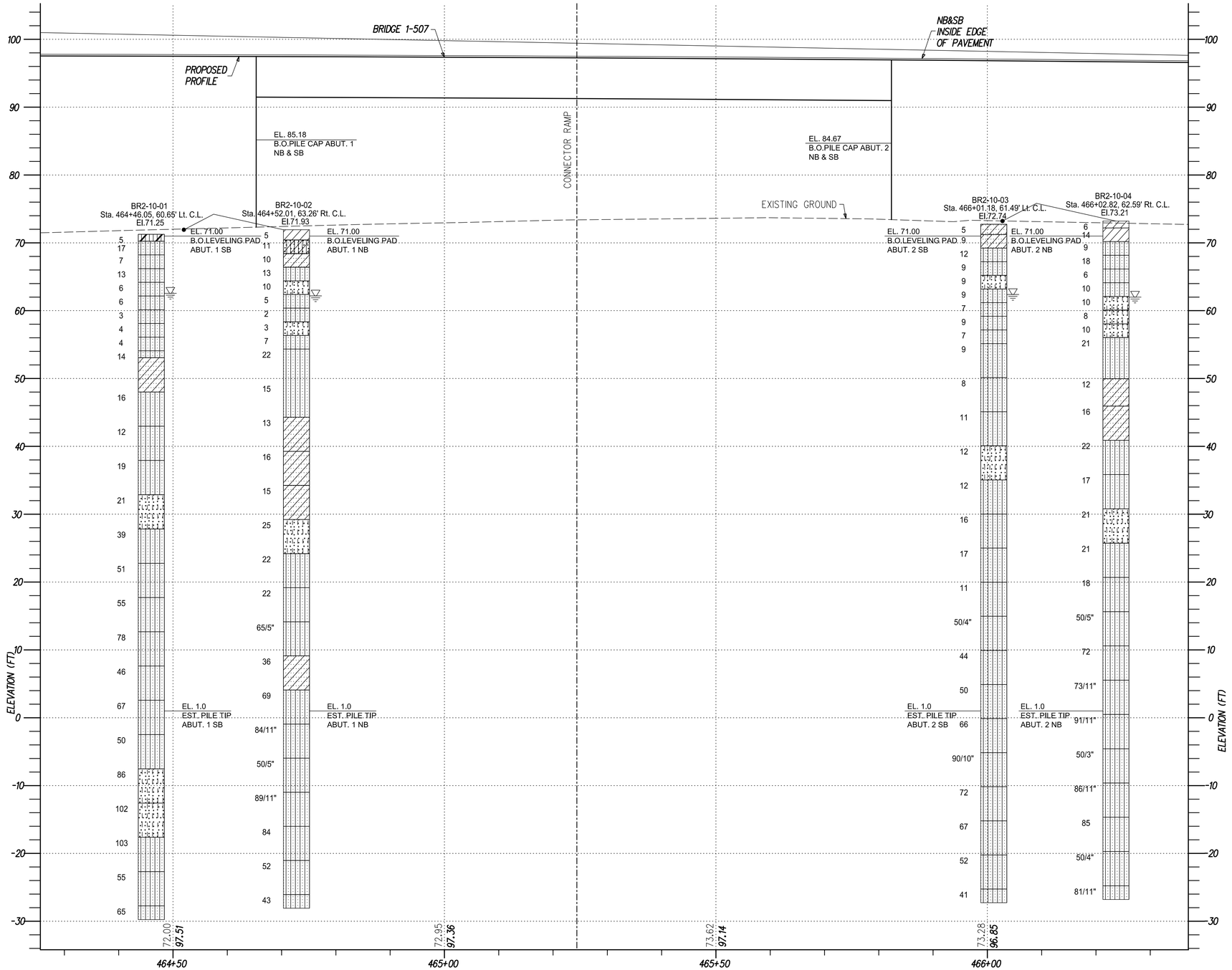

KEY TO SYMBOLS

SYMBOL DESCRIPTION

STRATA SYMBOLS

- SILTY LOW PLASTICITY CLAY
- SILTY SAND
- CLAYEY SAND
- POORLY GRADED SAND WITH SILT
- LOW PLASTICITY CLAY
- POORLY GRADED CLAYEY SILTY SAND

MISC. SYMBOLS

- WATER TABLE DURING DRILLING

VERTICAL SCALE FEET 24 16 8 0

1-507 BO-1

P:\CADD2\60049040 US301\STRUCTURE\PLANS\FINAL\BR2-10_1-507\B001BR210.DGN

DELAWARE DEPARTMENT OF TRANSPORTATION

ADDENDUMS / REVISIONS

HORIZONTAL SCALE 0 10 20 30 FEET

US 301 LEVELS ROAD TO SUMMIT BRIDGE ROAD

CONTRACT T200911303	BRIDGE NO.	1-507N&S	US 301 MAINLINE OVER CONNECTOR ROAD TEST BORINGS
COUNTY NEW CASTLE	DESIGNED BY: ZH		
	CHECKED BY: RDB		

SHEET NO. 666

TOTAL SHTS. 1256

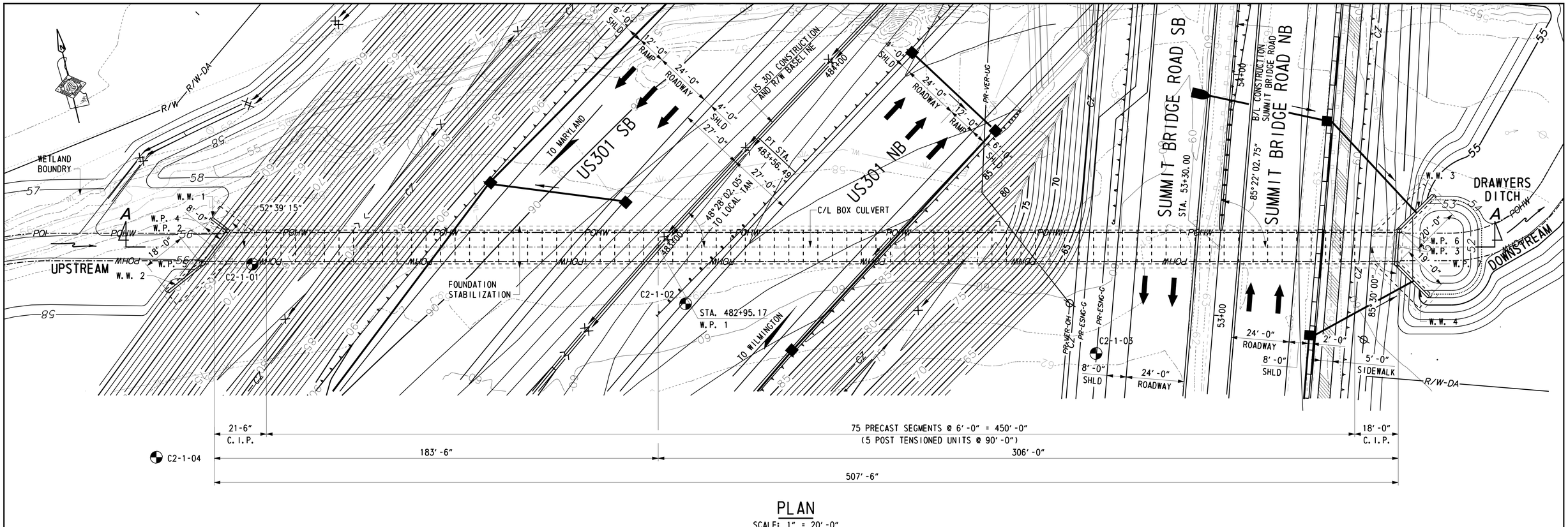

PLAN

SCALE: 1" = 20' -0"

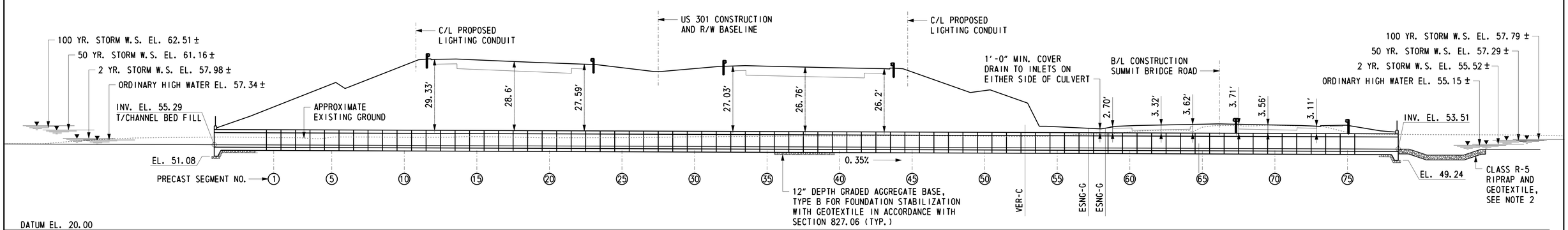

SECTION A-A

SCALE: 1" = 20' -0"

US 301 VERTICAL DATA

PVT 478+22.50
EL. 84.27

0.86%

PVC 491+20.00
EL. 95.42

US 301 HORIZONTAL DATA

PC STA. 472+26.77
PI STA. 478+05.62
PT STA. 483+56.49
R = 2,103.00'
L = 1,129.73'

SUMMIT BRIDGE ROAD VERTICAL DATA

PVC 51+78.00
EL. 64.49

-0.550%

PVI 54.78.00
EL. 62.84

0.760%

PVT 57+78.00
EL. 65.12

SUMMIT BRIDGE ROAD HORIZONTAL DATA

TANGENT

WORKING POINTS

W.P. NO.	STATION	OFFSET	COORDINATES	
			NORTHING	EASTING
1	482+95.17	0.00'	542,146.3055	571,010.0733
2	481+80.84	140.68' LT.	542,188.4761	570,831.3031
3	485+04.69	223.92' RT.	542,075.8554	571,307.8471
4	481+88.86	141.47' LT.	542,194.3747	570,837.5455
5	481+72.81	140.54' LT.	542,183.0419	570,824.6724
6	485+10.14	219.55' RT.	542,082.5014	571,309.9868
7	484+99.24	228.39' RT.	542,069.1140	571,305.7651

CROSS REFERENCE NOTES:

1. FOR GENERAL NOTES, SEE DWG. 1-508A PN-1.
2. FOR STREAM RELOCATION PLANS, SEE DWGS. SR01 THRU SR03.
3. FOR PROPOSED LIGHTING CONDUIT DETAILS, SEE SIGNING, STRIPING AND CONDUIT PLANS ON DWGS. SS-38 THRU SS-40.

U:\Projects\AA\21397285\CAD\Bridge\C2-1\pe01_C2-1_US301.dgn
8/17/2015
Steve_Lambert

DELAWARE DEPARTMENT OF TRANSPORTATION

ADDENDUMS / REVISIONS

SCALE 0 20 40 60 FEET

US 301 LEVELS ROAD TO SUMMIT BRIDGE ROAD

CONTRACT	BRIDGE NO. 1-508A
T200911303	DESIGNED BY: D.D. DIEHL
COUNTY	CHECKED BY: T.W. FEROLI
NEW CASTLE	

US 301 MAINLINE OVER DRAWYERS DITCH 12 FOOT X 6 FOOT BOX CULVERT PLAN AND SECTION

1-508A PE-1
SHEET NO.
667
TOTAL SHTS.
1256

ESTIMATED BRIDGE QUANTITIES

ITEM NO.	DESCRIPTION	UNIT	QUANTITY
207000	EXCAVATION AND BACKFILL FOR STRUCTURES	CY	2,600
302007	GRADED AGGREGATE BASE COURSE, TYPE B (FOR FOUNDATION STABILIZATION)	TON	570
602001	PORTLAND CEMENT CONCRETE MASONRY, CLASS A	CY	140
602506	PRECAST CONCRETE CULVERT	LS	1
604000	BAR REINFORCEMENT, EPOXY COATED	LB	26,000
712531	CHANNEL BED FILL	CY	280
713001	GEOTEXTILE (FOR GRADED AGGREGATE BASE)	SY	1,060
715001	PERFORATED PIPE UNDERDRAIN, 6"	LF	45
727009	CHAIN LINK FENCE	LF	100

INDEX OF DRAWINGS

SHEET NO.	DRAWING NO.	TITLE
667	1-508A PE-1	PLAN AND SECTION
668	1-508A PN-1	INDEX OF DRAWINGS
669	1-508A CU-1	ELEVATIONS AND SECTIONS
670	1-508A CU-2	CAST IN PLACE CULVERT PLAN
671	1-508A CU-3	UPSTREAM FOOTING PLAN
672	1-508A CU-4	WINGWALL REINFORCEMENT 1
673	1-508A CU-5	DOWNSTREAM FOOTING PLAN
674	1-508A CU-6	WINGWALL REINFORCEMENT 2
675	1-508A CU-7	CIP CULVERT REINFORCEMENT 1
676	1-508A CU-8	CIP CULVERT REINFORCEMENT 2
677	1-508A CU-9	REINFORCING BAR LIST 1
678	1-508A CU-10	REINFORCING BAR LIST 2
679	1-508A CU-11	PRECAST BOX REINFORCEMENT
680	1-508A BO-1	BORINGS 1
681	1-508A BO-2	BORINGS 2

PROJECT NOTES

SPECIFICATIONS: DELDOT BRIDGE DESIGN MANUAL, MAY 2005, WITH JANUARY 2008 REVISIONS; DELDOT STANDARD SPECIFICATIONS, 2001, WITH 2009 REVISIONS; AASHTO, LRFD BRIDGE DESIGN SPECIFICATIONS, 4TH EDITION, WITH 2009 INTERIM; US 301 DESIGN MANUAL.

DESIGN: LRFD DESIGN METHOD.

LOADING: HL 93 TRUCK LOADING.

CONCRETE: ALL CAST IN PLACE CONCRETE SHALL BE CLASS A (4,500 PSI). WINGWALLS AND HEADWALLS SHALL BE CAST IN PLACE. ALL PRECAST CONCRETE SHALL BE f'c = 5000 PSI.

REINFORCING STEEL: REINFORCING STEEL SHALL BE AASHTO M31, GRADE 60 UNLESS OTHERWISE NOTED AND SHALL BE PROTECTED WITH FUSION BONDED EPOXY CONFORMING TO AASHTO M284 WHERE INDICATED ON PLANS. ALL REINFORCING STEEL SHALL HAVE A CLEAR COVER OF TWO (2) INCHES UNLESS OTHERWISE SPECIFIED ON THE PLANS.

POST TENSIONING STEEL: FOUR LONGITUDINAL ONE HALF INCH DIAMETER, 270 ksi LOW RELAXATION POLYPROPYLENE SHEATHED PRESTRESSING STRANDS WITH CORROSION INHIBITOR OR OTHER APPROVED POST-TENSIONING DEVICE, SHALL BE PLACED IN POSITION THROUGH PREFORMED HOLES IN THE CORNERS OF PRECAST UNITS. THESE SHEATHED PRESTRESSING STRANDS SHALL BE STRESSED TO A TENSION OF 31 KIPS PER STRAND. THE MINIMUM ULTIMATE STRENGTH OF EACH STRAND SHALL BE 41 KIPS.

HYDRAULIC DATA: DRAINAGE AREA = 0.70 SQ. MI.
DESIGN FREQUENCY = 100 YEARS
DESIGN FLOOD ELEVATION = 62.5
50 YEAR FLOOD ELEVATION = 61.4
DESIGN DISCHARGE = 509 CFS
PROPOSED OPENING = 72 SF

CULVERT 1-508A IS A CLOSED BOTTOM BOX CULVERT. CLOSED CELL CULVERTS DO NOT REQUIRE A SCOUR ASSESSMENT WITH FLOW NOT CONTACTING NATIVE SOIL. A PRE-FORMED SCOUR POOL IS DESIGNED TO PROTECT THE OUTLET FROM POTENTIAL SCOUR AND SLOW OUTLET VELOCITY PRIOR TO DISCHARGE ENTERING THE NATURAL CHANNEL DOWNSTREAM OF THE CULVERT.

POST-TENSIONING NOTES:

1. SHOW ALL POST-TENSIONING DETAILS ON SHOP DRAWINGS.
2. SNUG FIT ALL JOINTS BEFORE POST-TENSIONING.
3. INSTALL STRANDS IN PRECAST SECTIONS. STRESS EACH STRAND TO AN EFFECTIVE FORCE OF 10 PSI OVER THE CROSS SECTION OF ANY SECTION. CHECK RAM AREA AND CALIBRATION CURVES OF EQUIPMENT FURNISHED FOR GAGE PRESSURES.
4. COMPLETE TENSIONING IN THREE PASSES; ONE-THIRD, ONE-HALF AND FULL POST TENSIONING FORCE. FIRST AND SECOND TENSIONINGS MAY BE ALTERED AS REQUIRED TO MAINTAIN PROPER ALIGNMENT OF THE CULVERT. WHERE MORE THAN EIGHT STRANDS ARE REQUIRED, TENSION ADDITIONAL STRANDS SIMILARLY AROUND THE CENTRAL AXIS.
5. AFTER STRESSING, GROUT ALL STRAND DUCTS, RECESSES AND BLOCKOUTS.
6. SUBMIT POST-TENSIONING COMPUTATIONS WITH SHOP DRAWINGS SHOWING THE STRAND PATTERN AND REQUIRED POST-TENSIONING FORCE. BASE DESIGN UPON THE FOLLOWING CRITERIA:
   a. THE TOTAL POST-TENSION FORCE IS THE SUM OF THE FORCE REQUIRED TO OVERCOME SOIL FRICTION PLUS THE FORCE REQUIRED TO CREATE A PRESSURE OF 10 PSI OVER THE CROSS SECTION OF THE CULVERT.
   b. MAXIMUM TOTAL POST-TENSION FORCE SHOULD NOT CREATE A PRESSURE GREATER THAN 100 PSI OVER THE CROSS SECTION OF ANY SEGMENT.
   c. MAXIMUM LOAD ON A ½" DIAMETER STRAND IS 31 KIPS.
   d. USE A COEFFICIENT OF SOIL FRICTION OF 0.6.
   e. PLACE STRANDS SYMMETRICALLY ABOUT BOTH AXES OF THE CULVERT CROSS SECTION.
   f. LOCATE STRANDS SO AS TO NOT INTERFERE WITH REINFORCEMENT DETAILS.
7. ALL POST-TENSIONING MUST BE WITNESSED AND APPROVED BY THE ENGINEER.
8. AFTER POST-TENSIONING IS APPROVED, CUT STRANDS TO PROVIDE A MINIMUM OF 2½" CLEAR FROM OUTSIDE FACE OF CONCRETE AND COAT RECESS WITH EPOXY BONDING COMPOUND. FILL ALL RECESSES WITH NON-SHRINK GROUT.
9. POST-TENSION AND GROUT BEFORE BACKFILLING AND PLACING TRAFFIC OVER THE BOX. AFTER GROUTING, WAIT AT LEAST TWO (2) DAYS BEFORE BACKFILLING.
10. ALL POST-TENSIONING CHUCKS MUST BE OF THE REUSABLE TYPE. OPERATORS MUST EXERCISE PROPER PRECAUTIONS WHEN RE-ALIGNING WEDGES AFTER RELEASE OF TENDONS AND PRIOR TO RETENSIONING AND RE-SEATING.
11. KEEP JOINT CLEAN AT POST-TENSIONING STAGE.
12. POST-TENSIONING DUCTS MAY BE PLACED WITHIN THE WALLS OR SLAB ANYWHERE BETWEEN THE LAYERS OF REINFORCEMENT TO AVOID THE SLOPED PORTION OF THE JOINT SO AS TO PROMOTE SEALING OF THE DUCT.
13. REMOVE A MINIMAL AMOUNT OF POLYSTRAND TO ACCOMMODATE INTERMEDIATE SPLICES AT BOX ENDS.
14. AS AN ALTERNATE TO A POST-TENSIONING STRAND SYSTEM, THE CONTRACTOR MAY USE AN EQUIVALENT POST-TENSIONING THREADED BAR SYSTEM WITH EACH UNIT TENSIONED AND COUPLE NUTS PROVIDED TO LINK THE ADJACENT UNITS TOGETHER.

PRECAST BOX CULVERT NOTES:

1. DESIGN PLANS / WORKING DRAWINGS

   INFORMATION PERTAINING TO THE PRECAST REINFORCED CONCRETE BOX CULVERT IS INTENDED TO SERVE AS AN INDICATION OF THE TYPE OF CONSTRUCTION ACCEPTABLE FOR USE. THE CONTRACTOR WILL BE REQUIRED TO PREPARE AND SUBMIT FOR APPROVAL A COMPLETE SET OF DETAILED SHOP DRAWINGS FOR THE PRECAST CONCRETE UNITS INCLUDING:

   A. AN OVERALL PLAN SHOWING ALL UNITS TOGETHER AND DETAILS OF EACH TYPE OF UNIT .
   B. A PLAN VIEW OF REINFORCEMENT FOR ANY IRREGULAR SHAPED SECTIONS.
   C. REINFORCING BAR LIST.
   D. BILL OF MATERIALS INCLUDING ALL ACCESSORIES.
   E. METHOD AND SEQUENCE OF POST-TENSIONING.

2. PRECAST ELEMENTS, ACCESSORIES AND INSTALLATION

   PAYMENT FOR ITEM 602506 - PRECAST CONCRETE CULVERT SHALL INCLUDE:

   A. ALL PRECAST ELEMENTS.
   B. ALL ASSOCIATED REINFORCEMENT.
   C. ALL ACCESSORIES (INCLUDING, BUT NOT LIMITED TO, CONCRETE FINISH, POST-TENSIONING TENDONS, POST-TENSIONING PVC CONDUIT SLEEVES, CONNECTION PLATES, GROUT, JOINT WRAP, JOINT GASKETS, THREADED INSERTS) UNLESS NOTED OTHERWISE.
   D. DELIVERY AND INSTALLATION OF ALL PRECAST ELEMENTS AND ALL ACCESSORIES.

3. JOINTS BETWEEN PRECAST SECTIONS

   A. FLEXIBLE PREFORMED GASKET MATERIAL IN ACCORDANCE WITH ASTM C990 SHALL BE PROVIDED AT THE JOINTS BETWEEN ALL PRECAST UNITS IN ORDER TO MAKE THE JOINTS WATERTIGHT. AFTER INSTALLATION, THE GASKETS SHALL BE COMPRESSED SUCH THAT GAPS ARE NOT VISIBLE.
   B. ALL JOINTS BETWEEN PRECAST BOX CULVERT SECTIONS SHALL BE TONGUE AND GROOVE.
   C. THE LOCATIONS OF THE JOINTS IN THE BOX CULVERT SHALL BE DETERMINED BY THE PRECASTER AND SUBMITTED IN THE SHOP DRAWINGS FOR APPROVAL.
   D. THE REINFORCEMENT SHALL HAVE 2 INCH COVER AT THE END OF EACH SECTION AND MEET OR EXCEED THE MINIMUM AREA OF STEEL PER FOOT DENOTED IN THE PLANS.
   E. ALL JOINT EXTERIORS SHALL BE COVERED WITH A MINIMUM 9 INCH WIDE GEOTEXTILE OR WRAP CENTERED ON THE JOINT TO PREVENT LOSS OF FILL MATERIAL. THE GEOTEXTILE OR WRAP SHALL COMPLY WITH ASTM C877 OR PETROLAC, PHILLIPS FIBER CORPORATION.

4. MISCELLANEOUS NOTES

   A. ALL EXPOSED SURFACES SHALL BE PROTECTED WITH A WATER MISCIBLE, PENETRATING SILANE SEALER BEFORE BACKFILLING.
   B. ALL EXPOSED EDGES SHALL BE CHAMFERED ¾" UNLESS OTHERWISE NOTED.
   C. SUGGESTED PLACEMENT OF PRECAST SEGMENTS: CONTRACTOR SHALL UTILIZE A CRANE TO LIFT EACH UNIT FROM TRAILER HOLDING IN PLACE WHILE INSTALLATION CREW PULLS THE UNITS TOGETHER WITH COME-ALONGS OR AN INTERNALLY ANCHORED SYSTEM.
   D. FOR PRECAST UNITS ADJACENT TO THE CAST IN PLACE BOX SEGMENTS, #5 @12" EPOXY COATED CONNECTING DOWELS, WITH 1'-3" MINIMUM EMBEDMENT, SHALL BE PROVIDED AT THE CENTER OF THE TOP, BOTTOM AND SIDES OF THE BOX CULVERT SECTION.

CROSS REFERENCE NOTE:

1. FOR SEQUENCE OF CONSTRUCTION, SEE CONSTRUCTION PHASING, MOT AND EROSION AND SEDIMENT CONTROL PLANS FOR PHASE 1-1 AND PHASE 1-2, SEE DWGS. CS-95 THRU CS-97.
2. FOR PAYMENT OF CLASS R-5 RIPRAP AND GEOTEXTILE UNDER RIPRAP, SEE STREAM RESTORATION PLANS, DWGS. SR-01 THRU SR-03.

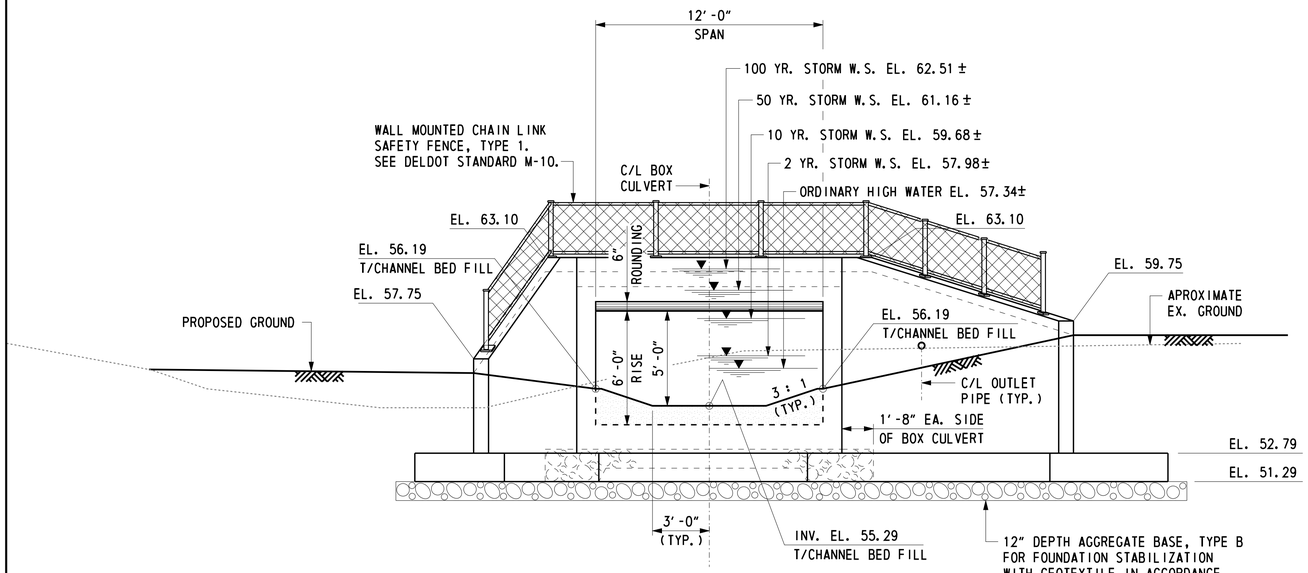

UPSTREAM ELEVATION

LOOKING DOWNSTREAM
SCALE: 1/4" = 1'-0"

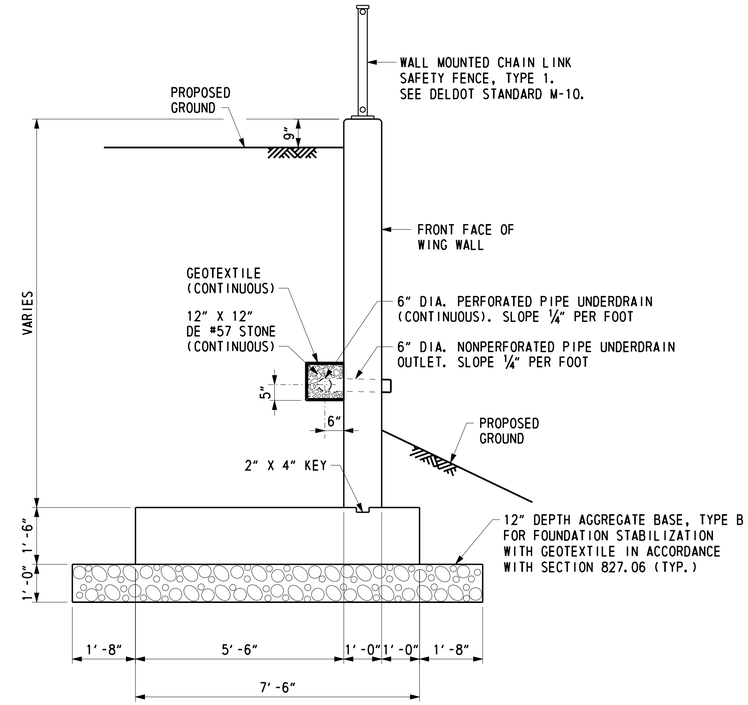

TYPICAL WINGWALL SECTION

SCALE: 1/2" = 1'-0"

NOTES:

1. GRADE CHANNEL USING CHANNEL BED FILL (712531).
2. RECESS AND CHOKE RIPRAP WITH CHANNEL BED FILL (712531).
3. CLASS R-5 RIPRAP AT DOWNSTREAM END OF CULVERT NOT SHOWN, SEE STREAM RELOCATION DWGS. SR01 THRU SR03.

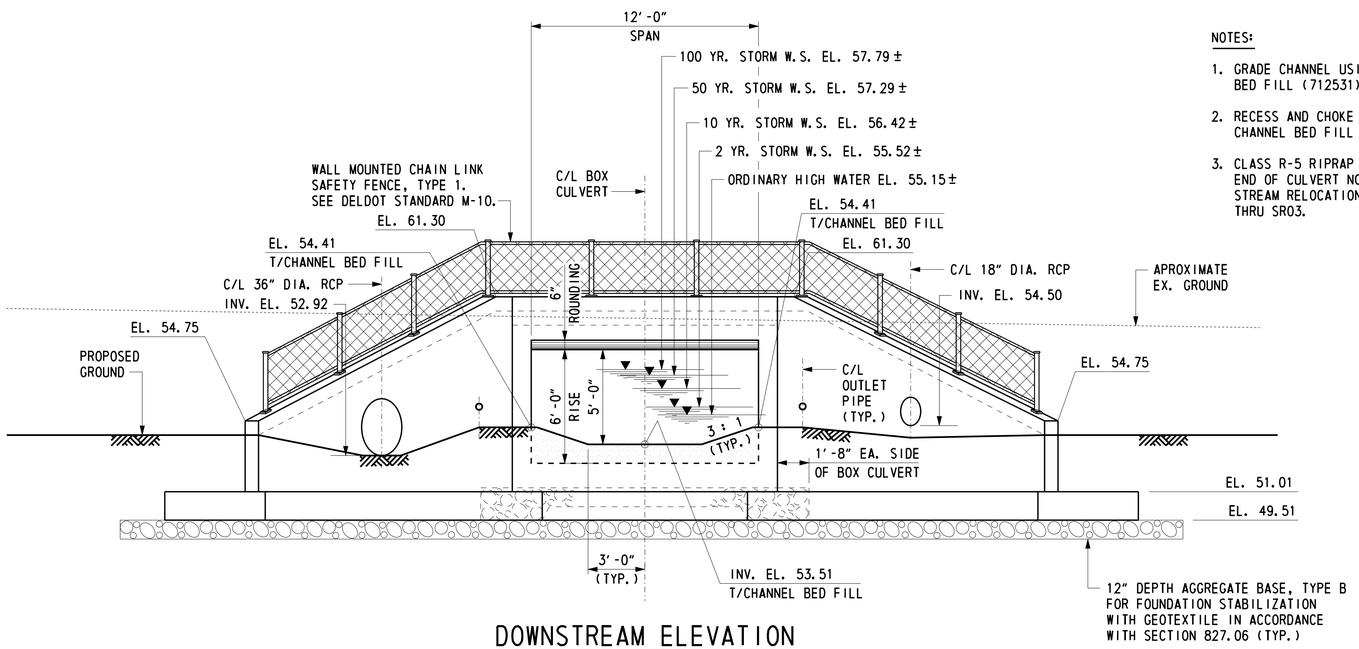

DOWNSTREAM ELEVATION

LOOKING UPSTREAM
SCALE: 1/4" = 1'-0"

U:\Projects\AA\21987385\CAD\Bridge\C2-1\cu01_C2-1_US301.dgn

8/14/2015

Steve_Lambert

DELAWARE DEPARTMENT OF TRANSPORTATION	ADDENDUMS / REVISIONS		US 301 LEVELS ROAD TO SUMMIT BRIDGE ROAD	CONTRACT T200911303	BRIDGE NO. 1-508A	US 301 MAINLINE OVER DRAWYERS DITCH 12 FOOT X 6 FOOT BOX CULVERT ELEVATIONS AND SECTIONS	1-508A CU-1
				COUNTY NEW CASTLE	DESIGNED BY: K. D. BEAVER		SHEET NO. 669
					CHECKED BY: J. S. LI		TOTAL SHTS. 1256

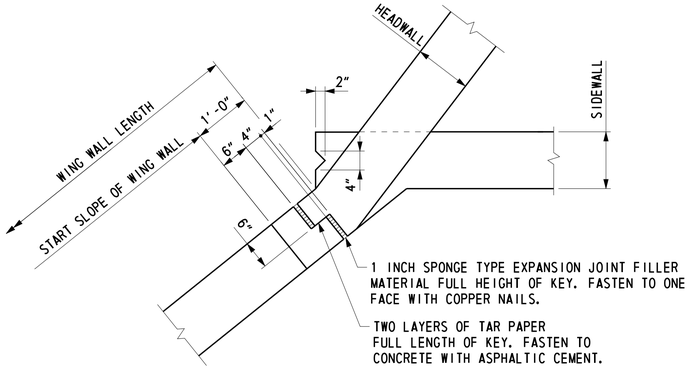

WING WALL EXPANSION JOINT

(CHAIN LINK SAFETY FENCE NOT SHOWN)
SCALE: ¾" = 1'-0"

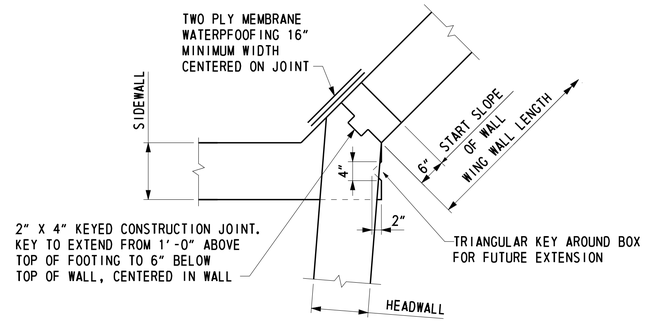

WING WALL CONSTRUCTION JOINT

(CHAIN LINK SAFETY FENCE NOT SHOWN)
SCALE: ¾" = 1'-0"

NOTE:

PAYMENT FOR JOINT FILLER, TAR PAPER AND MEMBRANE WATERPROOFING SHALL BE INCIDENTAL TO ITEM 602001 - PORTLAND CEMENT CONCRETE MASONRY, CLASS A.

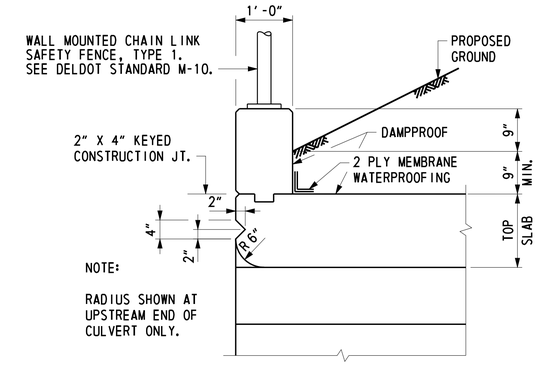

TYPICAL HEADWALL SECTION

SCALE: ¾" = 1'-0"

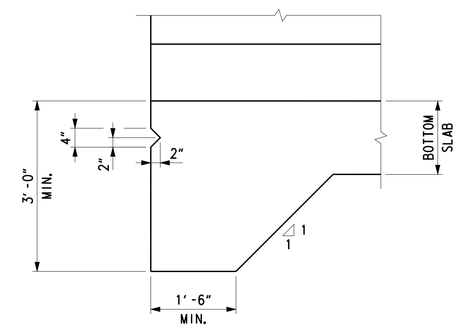

TYPICAL TOE WALL SECTION

SCALE: ¾" = 1'-0"

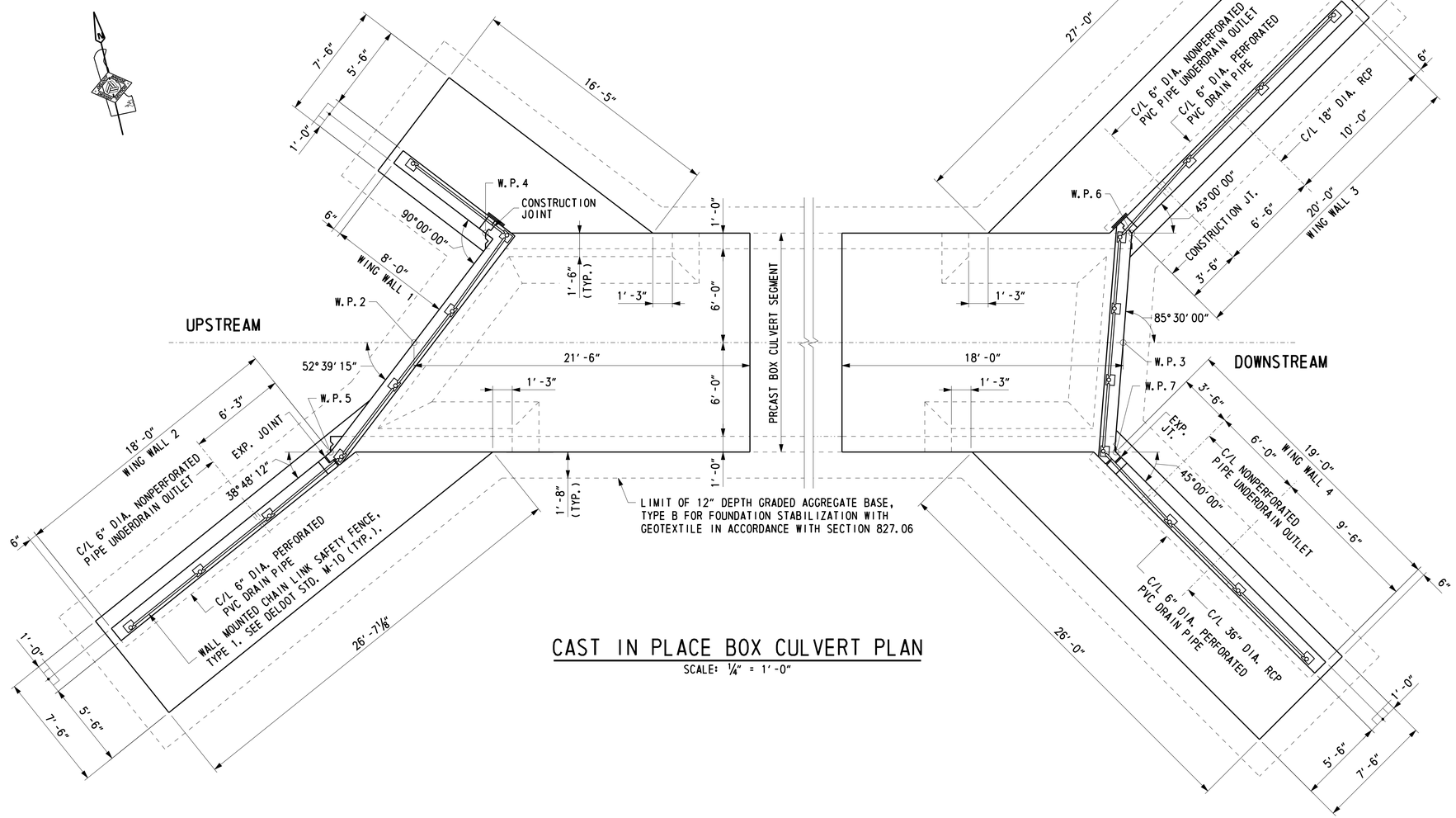

CAST IN PLACE BOX CULVERT PLAN

SCALE: ¼" = 1'-0"

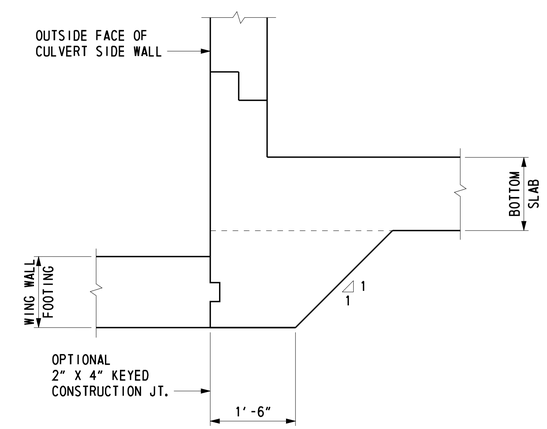

WINGWALL FOOTING TIE-IN SECTION

SCALE: ¾" = 1'-0"

CROSS REFERENCE NOTE:

FOR REINFORCEMENT PLANS, SEE DWGS. 1-508A CU-3 THRU 1-508A CU-10.

U:\Projects\AA\21397385\CAD\Bridge\C2-1\cu02_C2-1_US301.dgn
7/21/2015
Steve_Lambert

DELAWARE DEPARTMENT OF TRANSPORTATION	ADDENDUMS / REVISIONS	US 301 LEVELS ROAD TO SUMMIT BRIDGE ROAD	CONTRACT T200911303	BRIDGE NO. 1-508A	US 301 MAINLINE OVER DRAWYERS DITCH 12 FOOT X 6 FOOT BOX CULVERT CAST IN PLACE CULVERT PLAN	1-508A CU-2	
			COUNTY NEW CASTLE	DESIGNED BY: K. D. BEAVER		SHEET NO. 670	
				CHECKED BY: J. S. LI		TOTAL SHTS. 1256	

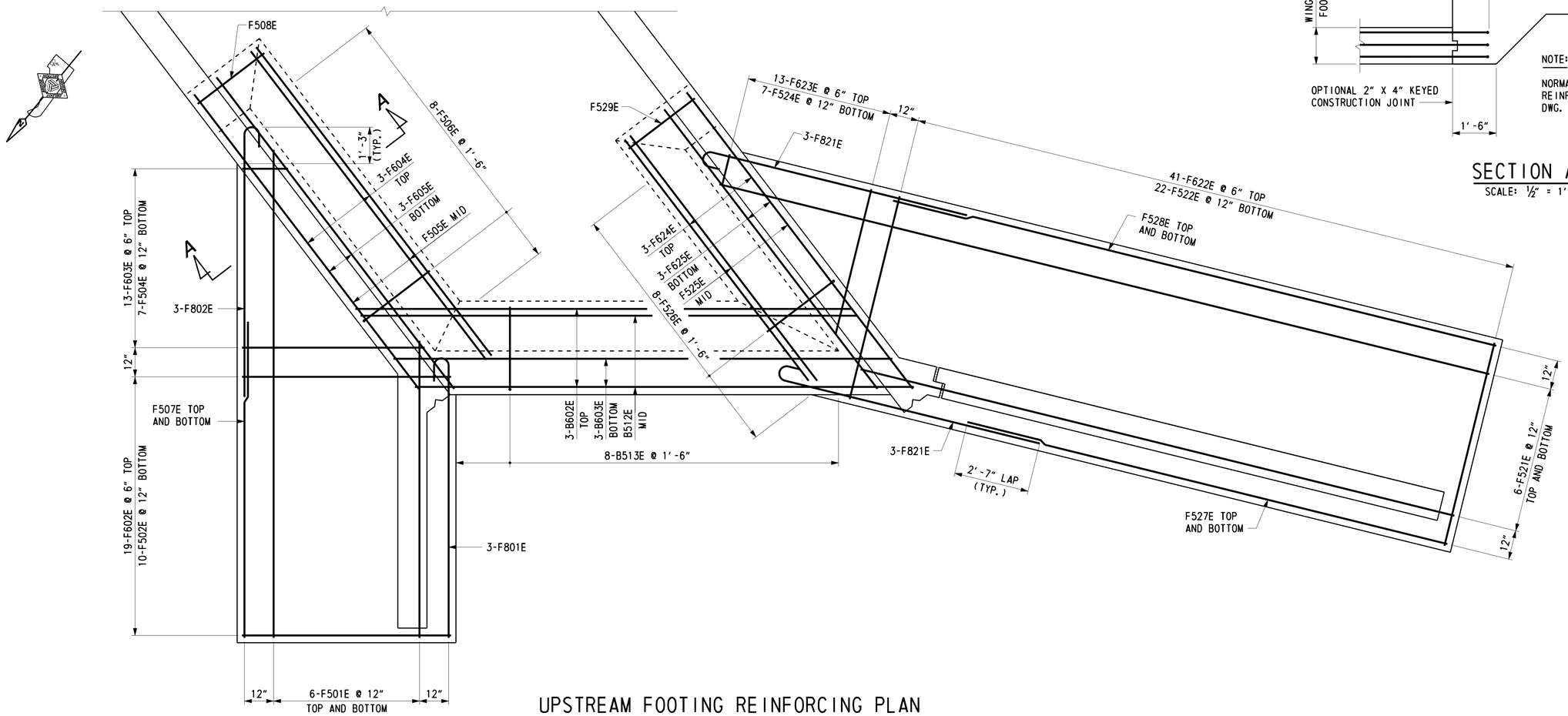

UPSTREAM FOOTING REINFORCING PLAN

SCALE: ½" = 1'-0"

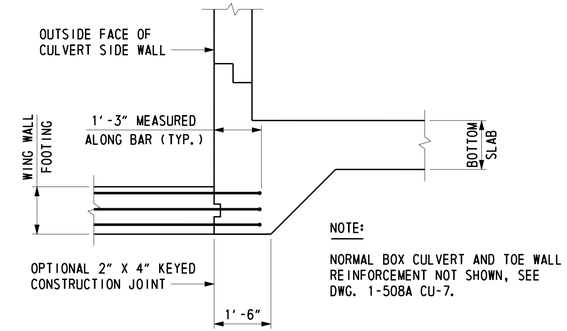

NOTE:

NORMAL BOX CULVERT AND TOE WALL REINFORCEMENT NOT SHOWN, SEE DWG. 1-508A CU-7.

SECTION A-A

SCALE: ½" = 1'-0"

CROSS REFERENCE NOTES:

1. FOR CAST IN PLACE BOX CULVERT PLAN, SEE DWG. 1-508A CU-2.
2. FOR UPSTREAM WINGWALL REINFORCEMENT, SEE DWG. 1-508A CU-4.
3. FOR REINFORCING BAR LIST, SEE DWG. 1-508A CU-9 AND 1-508A CU-10.
4. FOR CAST IN PLACE BOX CULVERT REINFORCEMENT, SEE DWG. 1-508A CU-7.

U:\Projects\AA\21597395\CAD\Bridge\C2-1\cu03_C2-1_US301.dgn 8/4/2015 Steve_Lambert

DELAWARE DEPARTMENT OF TRANSPORTATION	ADDENDUMS / REVISIONS	US 301 LEVELS ROAD TO SUMMIT BRIDGE ROAD	CONTRACT T200911303	BRIDGE NO. 1-508A	US 301 MAINLINE OVER DRAWYERS DITCH 12 FOOT X 6 FOOT BOX CULVERT UPSTREAM FOOTING PLAN	1-508A CU-3	
			COUNTY NEW CASTLE	DESIGNED BY: K. D. BEAVER		SHEET NO. 671	
				CHECKED BY: J. S. LI		TOTAL SHTS. 1256	

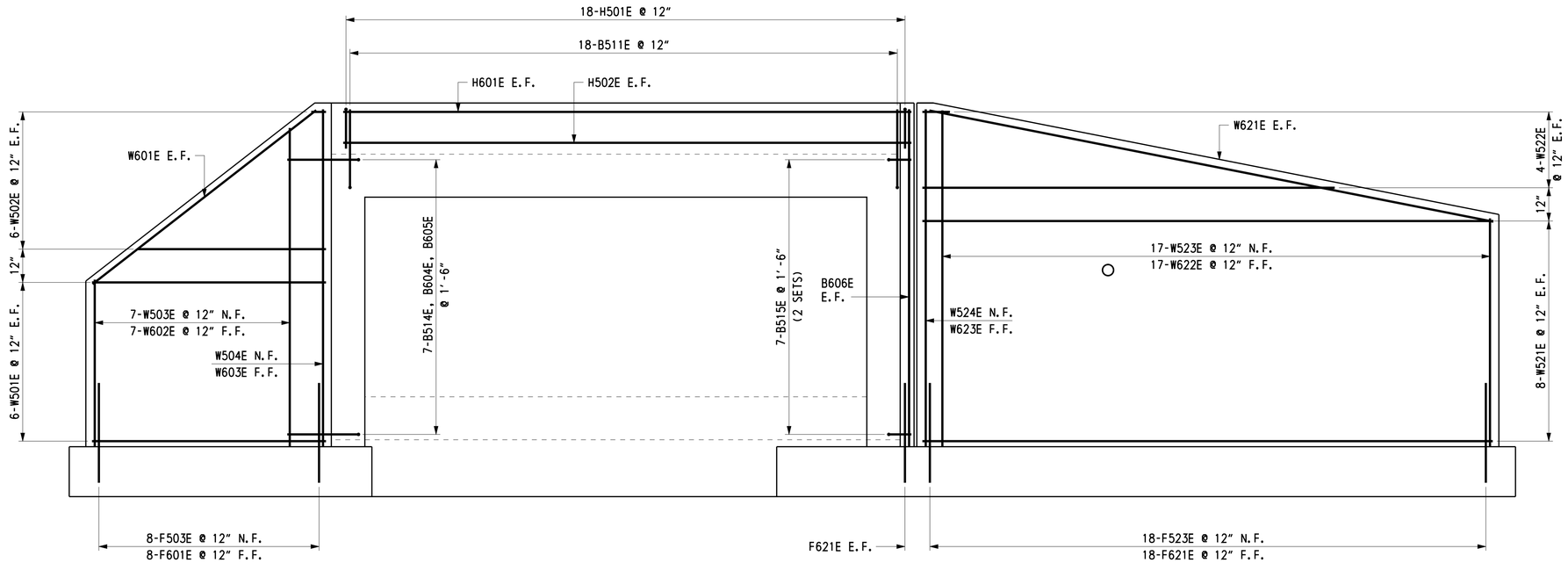

DEVELOPED UPSTREAM WINGWALL ELEVATION

SCALE: ½" = 1'-0"

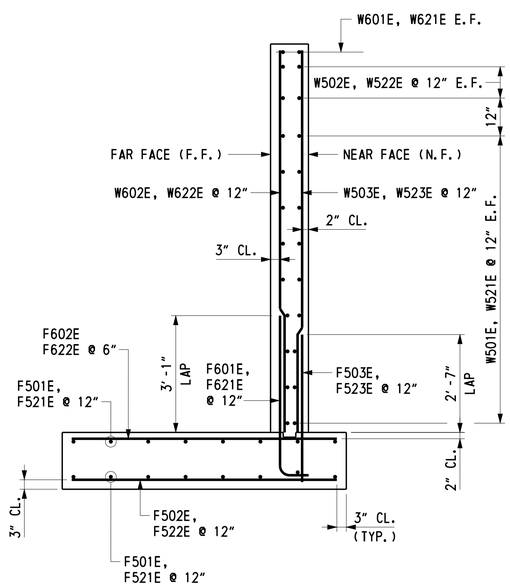

TYPICAL UPSTREAM WINGWALL SECTION

SCALE: ½" = 1'-0"

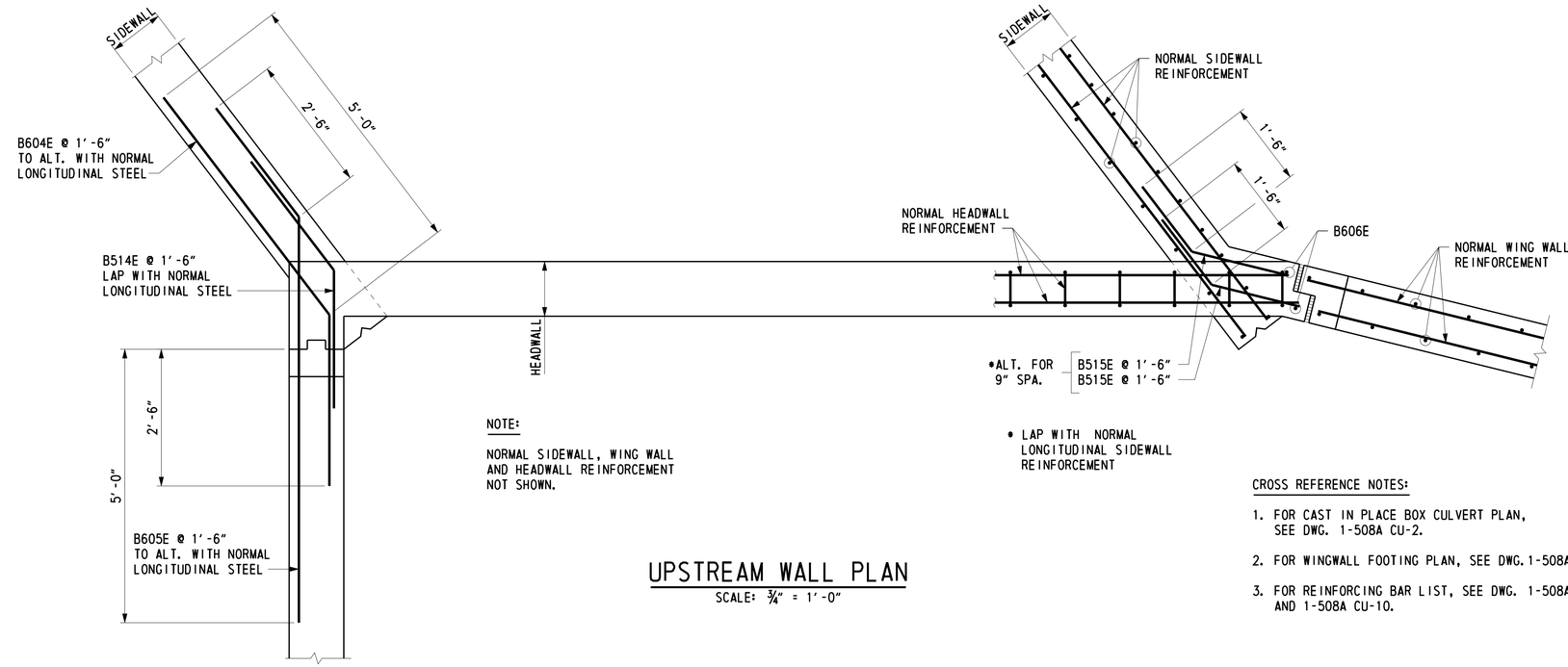

NOTE:

NORMAL SIDEWALL, WING WALL AND HEADWALL REINFORCEMENT NOT SHOWN.

* LAP WITH NORMAL LONGITUDINAL SIDEWALL REINFORCEMENT

UPSTREAM WALL PLAN

SCALE: ¾" = 1'-0"

CROSS REFERENCE NOTES:

1. FOR CAST IN PLACE BOX CULVERT PLAN, SEE DWG. 1-508A CU-2.
2. FOR WINGWALL FOOTING PLAN, SEE DWG. 1-508A CU-3.
3. FOR REINFORCING BAR LIST, SEE DWG. 1-508A CU-9 AND 1-508A CU-10.

DELAWARE DEPARTMENT OF TRANSPORTATION	ADDENDUMS / REVISIONS	US 301 LEVELS ROAD TO SUMMIT BRIDGE ROAD	CONTRACT T200911303	BRIDGE NO. 1-508A	US 301 MAINLINE OVER DRAWYERS DITCH 12 FOOT X 6 FOOT BOX CULVERT WINGWALL REINFORCEMENT 1	1-508A CU-4	
			COUNTY NEW CASTLE	DESIGNED BY: K. D. BEAVER		SHEET NO. 672	
				CHECKED BY: J. S. LI		TOTAL SHTS. 1256	

U:\Projects\AA\21397385\CAD\Bridge\C2-1\cu04_C2-1_US301.dgn
7/14/2015
Steve_Lambert

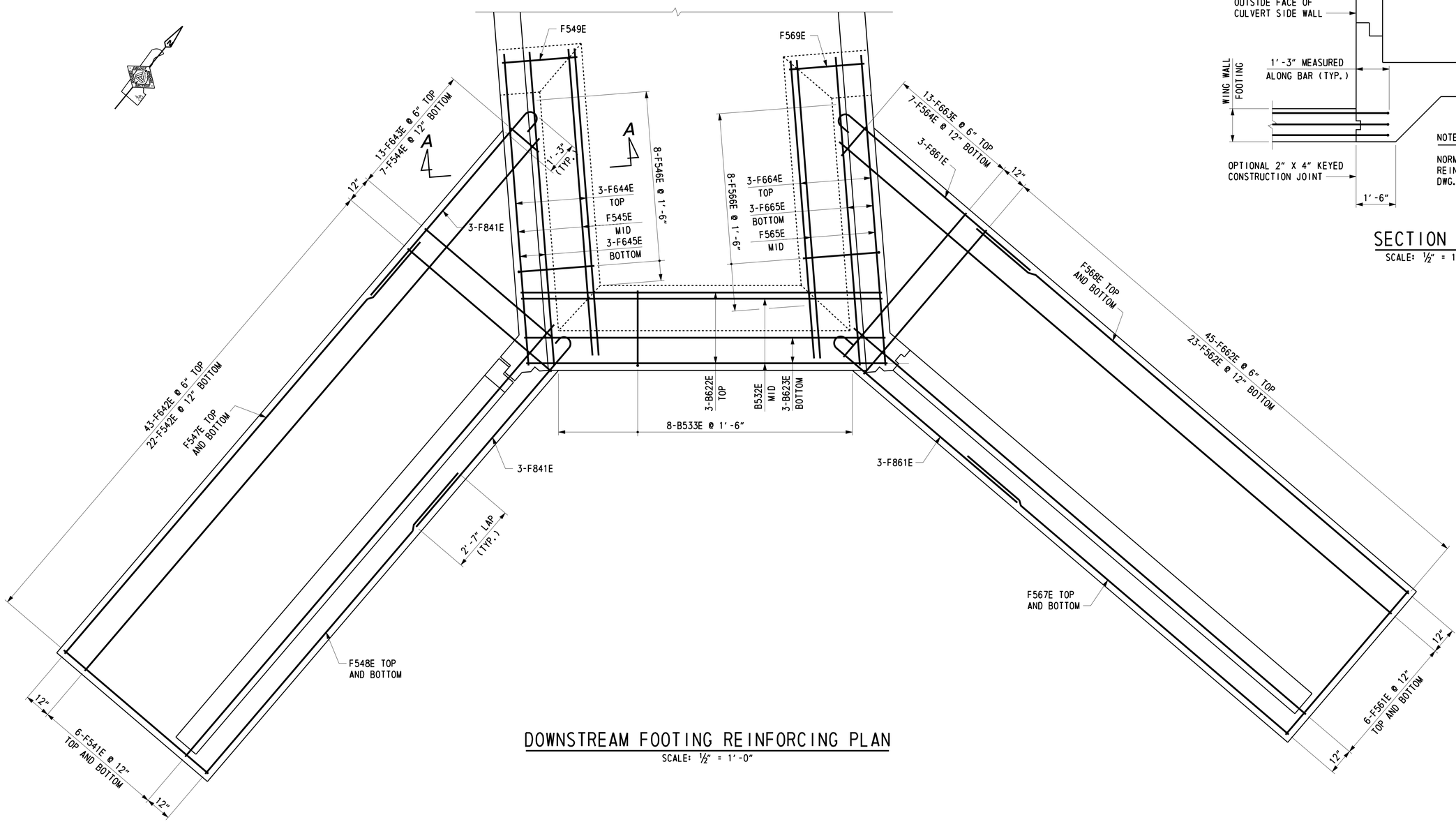

DOWNSTREAM FOOTING REINFORCING PLAN

SCALE: ½" = 1'-0"

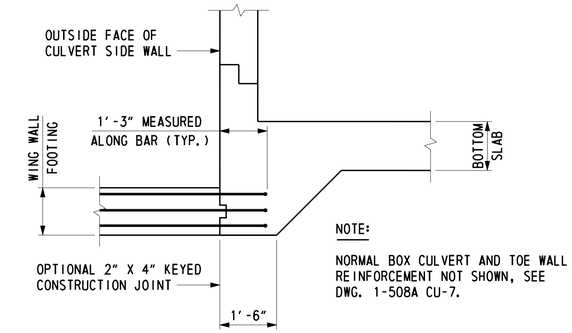

NOTE:

NORMAL BOX CULVERT AND TOE WALL REINFORCEMENT NOT SHOWN, SEE DWG. 1-508A CU-7.

SECTION A-A

SCALE: ½" = 1'-0"

CROSS REFERENCE NOTES:

1. FOR CAST IN PLACE BOX CULVERT PLAN, SEE DWG. 1-508A CU-2.
2. FOR DOWNSTREAM WINGWALL REINFORCEMENT, SEE DWG. 1-508A CU-6.
3. FOR REINFORCING BAR LIST, SEE DWG. 1-508A CU-9 AND 1-508A CU-10.
4. FOR CAST IN PLACE BOX CULVERT REINFORCEMENT, SEE DWG. 1-508A CU-7.

DELAWARE DEPARTMENT OF TRANSPORTATION	ADDENDUMS / REVISIONS		US 301 LEVELS ROAD TO SUMMIT BRIDGE ROAD	CONTRACT T200911303	BRIDGE NO. 1-508A	US 301 MAINLINE OVER DRAWYERS DITCH 12 FOOT X 6 FOOT BOX CULVERT DOWNSTREAM FOOTING PLAN	1-508A CU-5
				COUNTY NEW CASTLE	DESIGNED BY: K. D. BEAVER		SHEET NO. 673
					CHECKED BY: J. S. LI		TOTAL SHTS. 1256

U:\Projects\AA\21587385\CADD\Bridge\C2-1\cu05_C2-1_US301.dgn
8/14/2015
Steve_Lambert

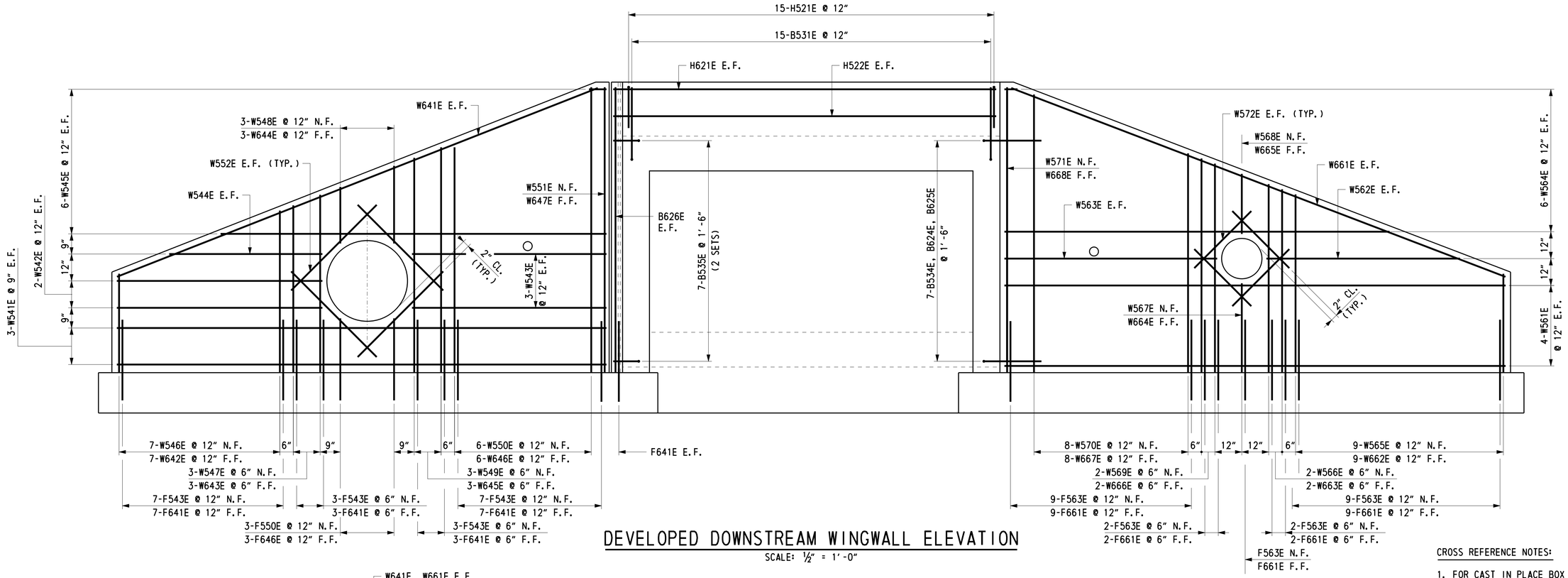

DEVELOPED DOWNSTREAM WINGWALL ELEVATION

SCALE: ½" = 1'-0"

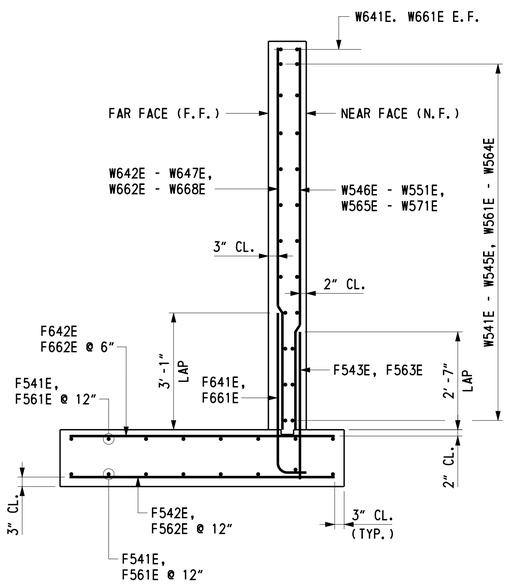

TYPICAL DOWNSTREAM WINGWALL SECTION

SCALE: ½" = 1'-0"

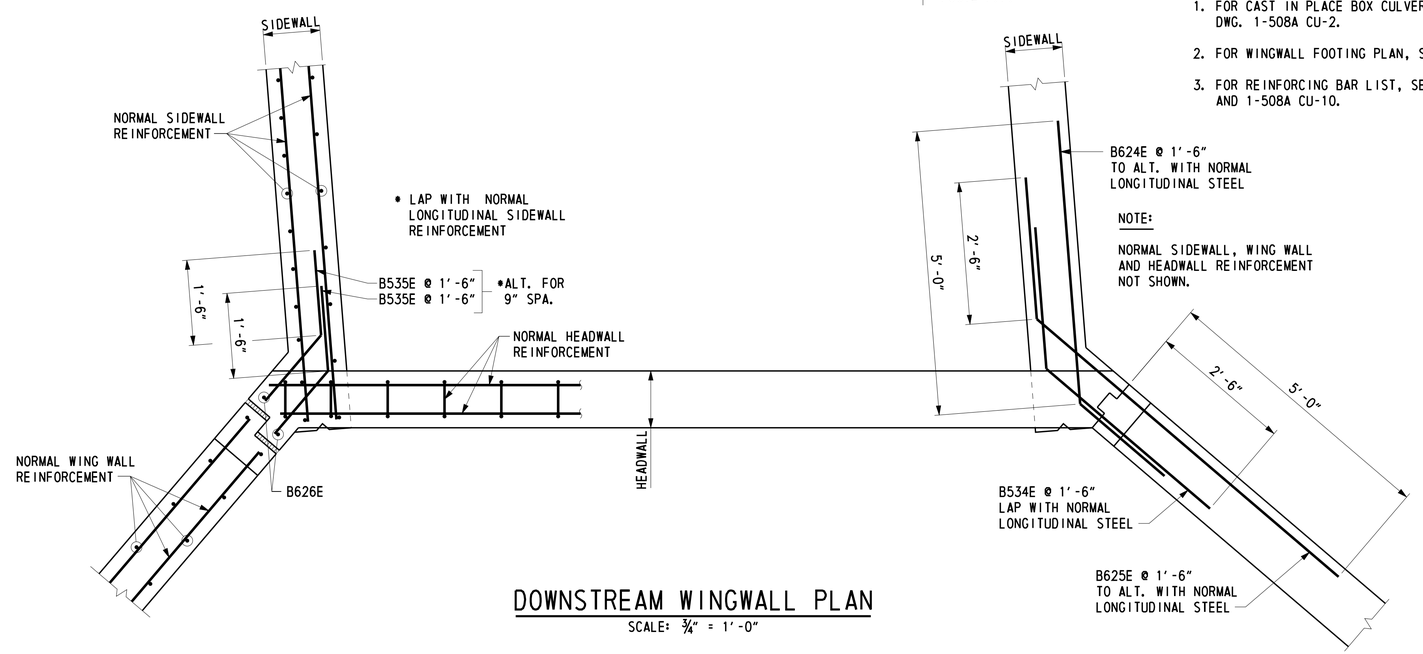

NOTE:

NORMAL SIDEWALL, WING WALL AND HEADWALL REINFORCEMENT NOT SHOWN.

DOWNSTREAM WINGWALL PLAN

SCALE: ¾" = 1'-0"

CROSS REFERENCE NOTES:

1. FOR CAST IN PLACE BOX CULVERT PLAN, SEE DWG. 1-508A CU-2.
2. FOR WINGWALL FOOTING PLAN, SEE DWG. 1-508A CU-5.
3. FOR REINFORCING BAR LIST, SEE DWG. 1-508A CU-9 AND 1-508A CU-10.

U:\Projects\AA\21587385\CAD\Bridge\C2-1\cu06_C2-1_US301.dgn 7/14/2015 Steve_Lambert

DELAWARE DEPARTMENT OF TRANSPORTATION	ADDENDUMS / REVISIONS		US 301 LEVELS ROAD TO SUMMIT BRIDGE ROAD	CONTRACT T200911303	BRIDGE NO. 1-508A	US 301 MAINLINE OVER DRAWYERS DITCH 12 FOOT X 6 FOOT BOX CULVERT WINGWALL REINFORCEMENT 2	1-508A CU-6
				COUNTY NEW CASTLE	DESIGNED BY: K. D. BEAVER		SHEET NO. 674
					CHECKED BY: J. S. LI		TOTAL SHTS. 1256

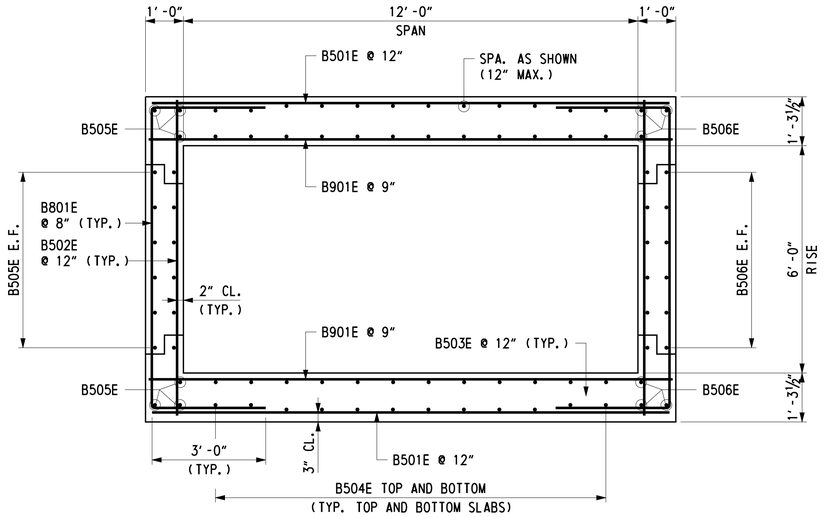

UPSTREAM CAST IN PLACE BOX CULVERT SECTION

SCALE: ½" = 1'-0"

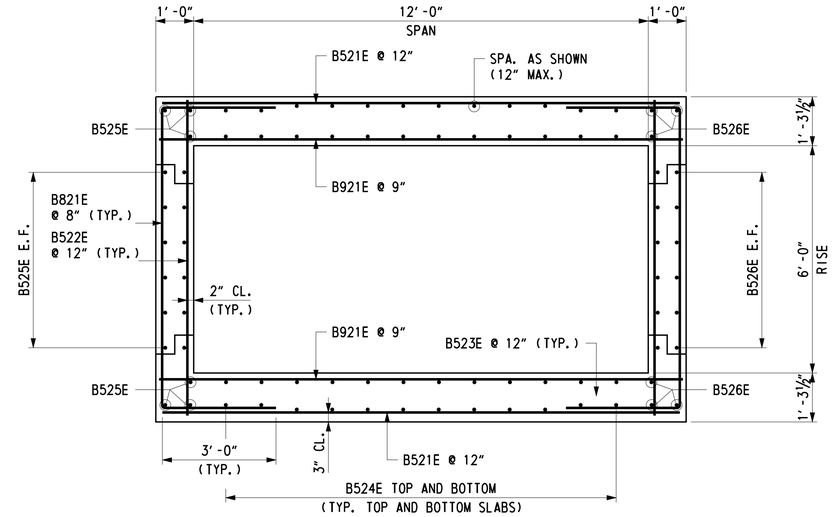

DOWNSTREAM CAST IN PLACE BOX CULVERT SECTION

SCALE: ½" = 1'-0"

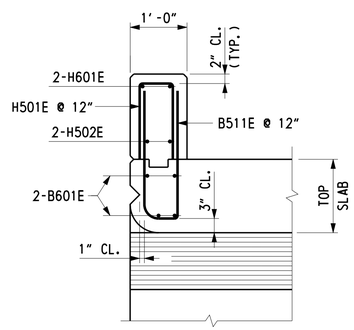

NOTE:

NORMAL BOX CULVERT
REINFORCEMENT NOT SHOWN.

UPSTREAM HEADWALL REINFORCING SECTION

SCALE: ¾" = 1'-0"

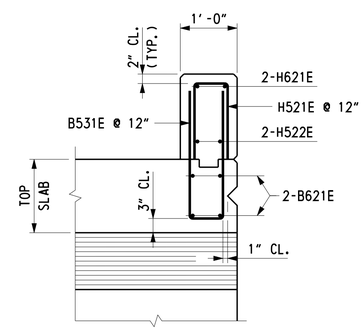

DOWNSTREAM HEADWALL REINFORCING SECTION

SCALE: ¾" = 1'-0"

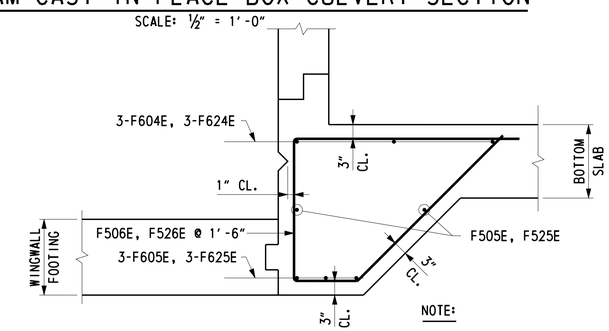

NOTE:

NORMAL BOX CULVERT AND WINGWALL
FOOTING REINFORCEMENT NOT SHOWN.

UPSTREAM WINGWALL FOOTING TIE-IN REINFORCING

SCALE: ¾" = 1'-0"

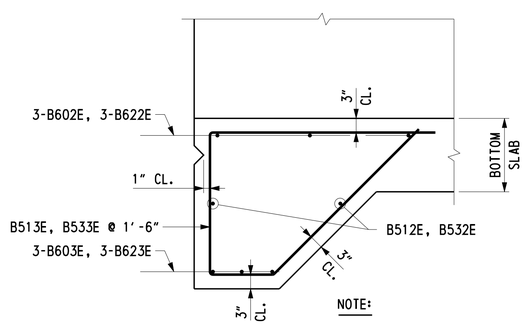

NOTE:

NORMAL BOX CULVERT
REINFORCEMENT NOT SHOWN.

CAST IN PLACE TOE WALL REINFORCING

SCALE: ¾" = 1'-0"

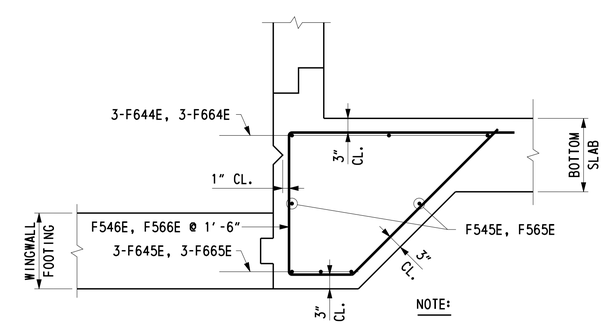

NOTE:

NORMAL BOX CULVERT AND WINGWALL
FOOTING REINFORCEMENT NOT SHOWN.

DOWNSTREAM WINGWALL FOOTING TIE-IN REINFORCING

SCALE: ¾" = 1'-0"

CROSS REFERENCE NOTES:

1. FOR CAST IN PLACE BOX CULVERT PLAN, SEE DWG. 1-508A CU-2.
2. FOR WINGWALL FOOTING REINFORCING PLANS, SEE DWG. 1-508A CU-3 AND 1-508A CU-5.
3. FOR WINGWALL REINFORCING, SEE DWG. 1-508A CU-4 AND 1-508A CU-6.
4. FOR REINFORCING BAR LIST, SEE DWGS. 1-508A CU-9 AND 1-508A CU-10.

U:\Projects\AA\2597395\CAD\Bridge\C2-1\cu07_C2-1_US301.dgn
7/14/2015
Steve_Lambert

DELAWARE DEPARTMENT OF TRANSPORTATION	ADDENDUMS / REVISIONS		US 301 LEVELS ROAD TO SUMMIT BRIDGE ROAD	CONTRACT T200911303	BRIDGE NO. 1-508A	US 301 MAINLINE OVER DRAWYERS DITCH 12 FOOT X 6 FOOT BOX CULVERT CIP CULVERT REINFORCEMENT 1	1-508A CU-7
				COUNTY NEW CASTLE	DESIGNED BY: D. D. DIEHL		SHEET NO. 675
					CHECKED BY: B. C. MEHTA		TOTAL SHTS. 1256

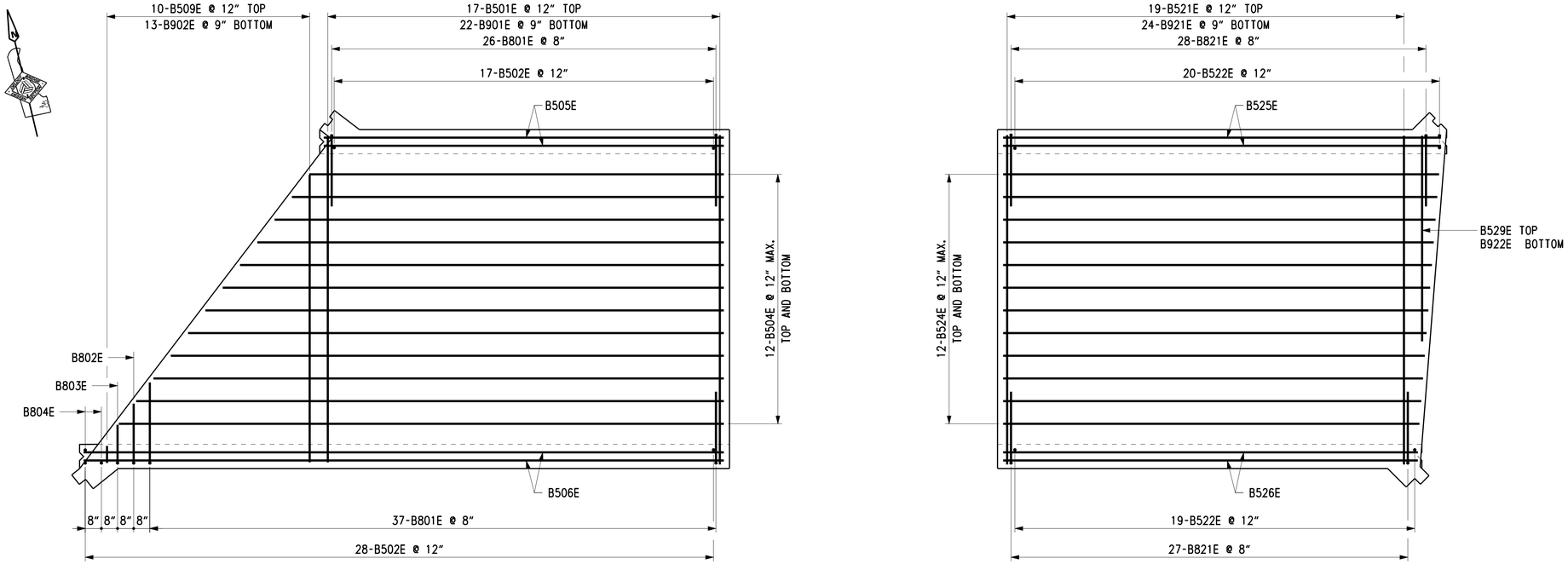

CAST IN PLACE BOX CULVERT TOP SLAB REINFORCEMENT PLAN

SCALE: 3/8" = 1'-0"

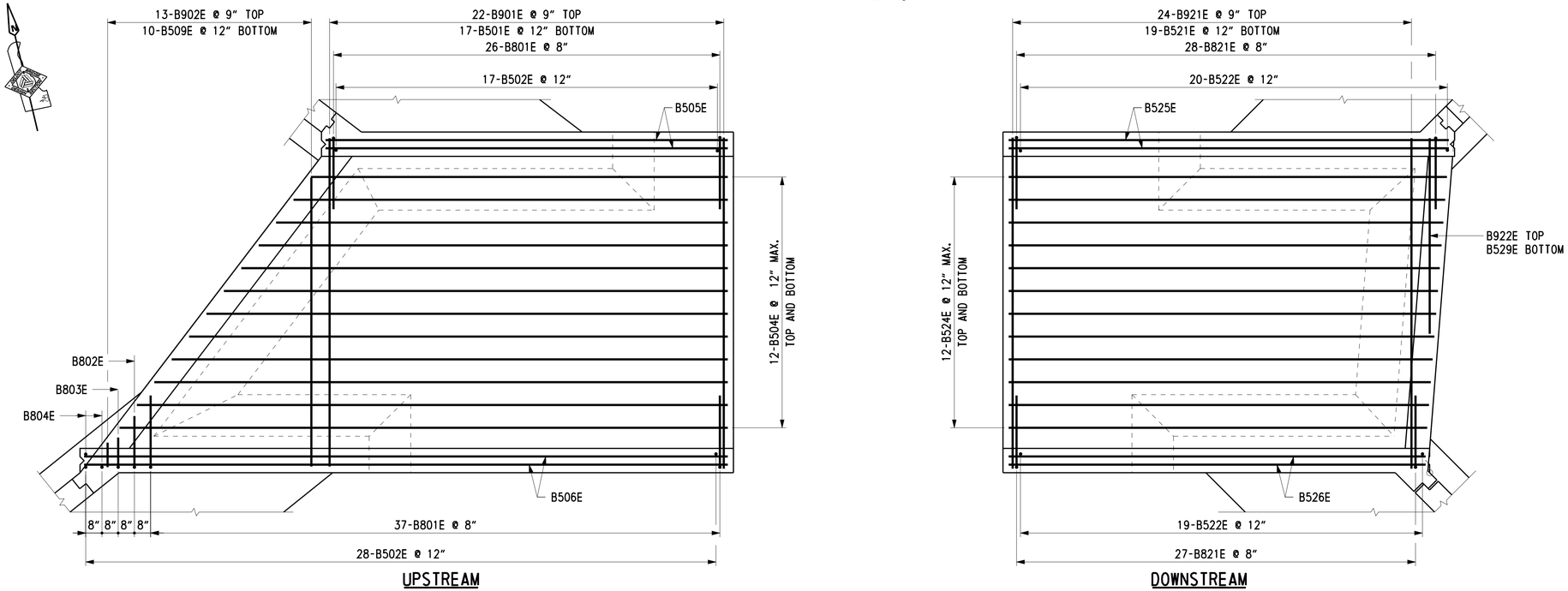

CAST IN PLACE BOX CULVERT BOTTOM SLAB REINFORCEMENT PLAN

SCALE: 3/8" = 1'-0"

CROSS REFERENCE NOTES:

1. FOR TYPICAL CAST IN PLACE BOX CULVERT SECTION, SEE DWG. 1-508A CU-7.
2. FOR WINGWALL FOOTING REINFORCING PLANS, SEE DWGS. 1-508A CU-3 AND 1-508A CU-5.
3. FOR TOE WALL AND WINGWALL FOOTING TIE IN REINFORCING, SEE DWG. 1-508A CU-7.
4. FOR REINFORCING BAR LIST, SEE DWGS. 1-508A CU-9 AND 1-508A CU-10.

DELAWARE DEPARTMENT OF TRANSPORTATION	ADDENDUMS / REVISIONS		US 301 LEVELS ROAD TO SUMMIT BRIDGE ROAD	CONTRACT T200911303	BRIDGE NO. 1-508A	US 301 MAINLINE OVER DRAWYERS DITCH 12 FOOT X 6 FOOT BOX CULVERT CIP CULVERT REINFORCEMENT 2	1-508A CU-9
				COUNTY NEW CASTLE	DESIGNED BY: K. D. BEAVER		SHEET NO. 676
					CHECKED BY: J. S. LI		TOTAL SHTS. 1256

Steve_Lambert 7/14/2015 U:\Projects\AA\21387385\CAD\Bridge\C2-1\cu08_C2-1_US301.dgn

REINFORCING BAR LIST

12 FOOT X 6 FOOT BOX CULVERT - UPSTREAM

MARK	LENGTH	NO. BARS	TYPE	A	B	C	D	E	G	H	J	K	R	REMARKS
B501E	13′-8″	34	STR.											
B502E	8′-2″	45	STR.											
B504E	17′-2½″ TO 25′-0″	48	STR.											△ = 8½″, 4 SETS
B505E	16′-7″	18	STR.											
B506E	26′-4″	18	STR.											
B509E	0′-6″ TO 12′-4″	20	STR.											△ = 1′-3¾″, 2 SETS
B511E	4′-2″	18	17		1′-9½″	0′-7″	1′-9½″							
B512E	17′-2″	2	STR.											
B513E	10′-10″	8	32		3′-9″	2′-6″	1′-0″	3′-7″		2′-6″		2′-6″		
B514E	5′-2″	7	3			2′-7″	2′-7″			1′-7″		2′-1″		
B515E	3′-0″	14	3			1′-6″	1′-6″			0′-11″		1′-2″		
B601E	17′-11″	4	STR.											
B602E	17′-2″	3	STR.											
B603E	17′-2″	3	STR.											
B604E	8′-2″	7	3			5′-0″	3′-2″			3′-0″		4′-0″		
B605E	9′-10″	7	3			2′-6″	7′-4″			1′-6″		2′-0″		
B606E	10′-2″	2	STR.											
B801E	14′-2″	63	17		3′-0″	8′-2″	3′-0″							
B802E	18′-2″	1	17		2′-3″	13′-8″	2′-3″							
B803E	16′-8″	1	17		1′-6″	13′-8″	1′-6″							
B804E	13′-8″	2	STR.											
B901E	13′-8″	44	STR.											
B902E	0′-6″ TO 12′-4″	26	STR.											△ = 1′-0″, 2 SETS
F501E	10′-0″ TO 16′-5″	12	STR.											△ = 1′-3½″, 2 SETS
F502E	7′-0″	10	STR.											
F503E	3′-10″	8	STR.											
F504E	1′-6″ TO 6′-0″	7	STR.											△ = 9″
F505E	12′-3″	2	STR.											
F506E	10′-10″	8	32		3′-9″	2′-6″	1′-0″	3′-7″		2′-6″		2′-6″		
F507E	10′-9″	2	STR.											
F508E	2′-8½″	1	STR.											
F601E	5′-4″	8	36	1′-0″	4′-4″									
F602E	7′-0″	19	STR.											
F603E	1′-6″ TO 6′-0″	13	STR.											△ = 4½″
F604E	13′-2″	3	STR.											
F605E	13′-11″	3	3			2′-8″	10′-11″			1′-10½″		1′-10½″		
F801E	10′-5″	3	37	0′-11″	9′-6″						0′-8″			
F802E	10′-2″	3	37	0′-11″	9′-3″						0′-8″			
F521E	20′-3″ TO 27′-0″	12	STR.											△ = 1′-4¼″, 2 SETS
F522E	7′-0″	22	STR.											
F523E	3′-10″	18	STR.											
F524E	1′-6″ TO 5′-0″	7	STR.											△ = 7″
F525E	10′-4″ TO 12′-2″	2	STR.											△ =1′-10″, 2 SETS
F526E	10′-10″	8	32		3′-9″	2′-6″	1′-0″	3′-7″		2′-6″		2′-6″		
F527E	16′-10″	2	STR.											
F528E	20′-11″	2	STR.											
F529E	2′-8½″	1	STR.											

12 FOOT X 6 FOOT BOX CULVERT - UPSTREAM

MARK	LENGTH	NO. BARS	TYPE	A	B	C	D	E	G	H	J	K	R	REMARKS
F621E	5′-4″	20	36	1′-0″	4′-4″									
F622E	7′-0″	41	STR											
F623E	1′-6″ TO 5′-0″	13	STR											△ = 3½″
F624E	10′-6″ TO 13′-0″	3	STR											△ = 1′-3″
F625E	13′-0″ TO 13′-10″	3	3			2′-8″	10′-4″ TO 11′-2″			1′-10½″		1′-10½″		△ = 5″
F821E	10′-2″	6	37	0′-11″	9′-3″						0′-8″			
H501E	3′-3″	18	17		1′-4″	0′-7″	1′-4″							
H502E	17′-11″	2	STR											
H601E	17′-11″	2	STR											
W501E	7′-0″	12	STR											
W502E	0′-6″ TO 6′-1″	12	STR											△ = 1′-1½″, 2 SETS
W503E	4′-10″ TO 9′-5″	7	STR											△ = 9″
W504E	10′-2″	1	STR											
W601E	8′-10″	2	STR											
W602E	4′-10″ TO 9′-5″	7	STR											△ = 9″
W603E	10′-2″	1	STR											
W521E	17′-0″	16	STR											
W522E	0′-9″ TO 12′-8″	8	STR											△ = 4′-0″, 2 SETS
W523E	6′-10″ TO 10′-0″	16	STR											△ = 2⅜″
W524E	10′-2″	1	STR											
W621E	17′-4″	2	STR											
W622E	6′-10″ TO 10′-0″	17	STR											△ = 2⅜″
W623E	10′-2″	1	STR											

BENDING DIAGRAMS

ALL DIMENSIONS ARE FROM OUT TO OUT.

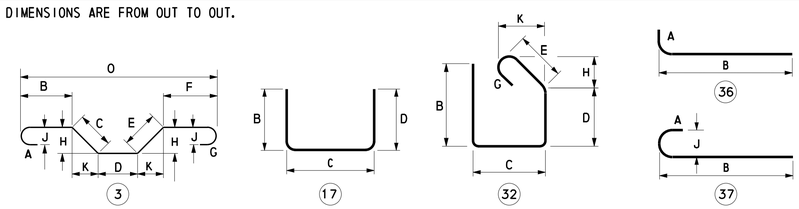

DELAWARE DEPARTMENT OF TRANSPORTATION

ADDENDUMS / REVISIONS

US 301
LEVELS ROAD
TO SUMMIT BRIDGE ROAD

CONTRACT	BRIDGE NO.	1-508A
T200911303	DESIGNED BY: K. D. BEAVER	
COUNTY	CHECKED BY: J. S. LI	
NEW CASTLE		

US 301 MAINLINE
OVER DRAWYERS DITCH
12 FOOT X 6 FOOT BOX CULVERT
REINFORCING BAR LIST

1-508A CU-9	
SHEET NO.	677
TOTAL SHTS.	1256

U:\Projects\AA\21387385\CAD\Bridge\C2-1\cu09_C2-1_US301.dgn
7/14/2015
Steve_Lambert

REINFORCING BAR LIST

12 FOOT X 6 FOOT BOX CULVERT - DOWNSTREAM

MARK	LENGTH	NO. BARS	TYPE	A	B	C	D	E	G	H	J	K	R	REMARKS
B521E	13′-8″	38	STR.											
B522E	8′-2″	39	STR.											
B524E	17′-2″ TO 18′-1″	48	STR.											△ = 1″, 4 SETS
B525E	18′-2″	18	STR.											
B526E	17′-2″	18	STR.											
B529E	8′-6″	2	STR.											
B531E	4′-2″	15	17		1′-9½″	0′-7″	1′-9½″							
B532E	13′-8″	2	STR.											
B533E	10′-10″	8	32		3′-9″	2′-6″	1′-0″	3′-7″		2′-6″		2′-6″		
B534E	5′-2″	7	3			2′-7″	2′-7″			1′-10″		1′-10″		
B535E	3′-0″	14	3			1′-6″	1′-6″			1′-1″		1′-1″		
B621E	14′-1″	4	STR.											
B622E	13′-8″	3	STR.											
B623E	13′-8″	3	STR.											
B624E	7′-11″	7	3			5′-0″	2′-11″			3′-6½″		3′-6½″		
B625E	9′-6″	7	3			2′-6	7′-0″			1′-9″		1′-9″		
B626E	10′-1″	2	STR.											
B821E	14′-2″	55	17		3′-0″	8′-2″	3′-0″							
B921E	13′-8″	48	STR.											
B922E	8′-6″	2	STR.											
W541E	18′-2″	6	STR.											
W542E	7′-8″	4	STR.											
W543E	7′-2″	6	STR.											
W544E	5′-3″	2	STR.											
W545E	0′-7″ TO 13′-6″	12	STR.											△ = 2′-7″, 2 SETS
W546E	3′-7″ TO 5′-10″	7	STR.											△ = 4½″
W547E	6′-0″ TO 6′-4½″	3	STR.											△ = 2¼″
W548E	1′-7″ TO 2′-4″	3	STR.											△ = 4½″
W549E	7′-7½″ TO 8′-0″	3	STR.											△ = 2¼″
W550E	8′-2¼″ TO 10′-0¾″	6	STR.											△ = 4½″
W551E	10′-1½″	1	STR.											
W552E	4′-4″	8	STR.											
W641E	19′-2″	2	STR.											
W642E	3′-7″ TO 5′-10″	7	STR.											△ = 4½″
W643E	6′-0″ TO 6′-4½″	3	STR.											△ = 2¼″
W644E	1′-7″ TO 2′-4″	3	STR.											△ = 4½″
W645E	7′-7½″ TO 8′-0″	3	STR.											△ = 2¼″
W646E	8′-2¼″ TO 10′-0¾″	6	STR.											△ = 4½″
W647E	10′-1½″	1	STR.											
W561E	19′-8″	8	STR.											
W562E	7′-0″	2	STR.											
W563E	8′-11″	2	STR.											
W564E	0′-7″ TO 14′-9″	12	STR.											△ = 2′-10″, 2 SETS
W565E	3′-7″ TO 6′-3″	9	STR.											△ = 4″
W566E	6′-5″ TO 6′-7″	2	STR.											△ = 2″
W567E	3′-4″	1	STR.											
W568E	1′-9″	1	STR.											
W569E	7′-3″ TO 7′-5″	2	STR.											△ = 2″
W570E	7′-7″ TO 9′-11″	8	STR.											△ = 4″
W571E	10′-1″	1	STR.											
W572E	2′-10″	8	STR.											
W661E	20′-7″	2	STR.											
W662E	3′-7″ TO 6′-3″	9	STR.											△ = 4″
W663E	6′-5″ TO 6′-7″	2	STR.											△ = 2″

12 FOOT X 6 FOOT BOX CULVERT - DOWNSTREAM

MARK	LENGTH	NO. BARS	TYPE	A	B	C	D	E	G	H	J	K	R	REMARKS
W664E	3′-4″	1	STR.											
W665E	1′-9″	1	STR.											
W666E	7′-3″ TO 7′-5″	2	STR.											△ = 2″
W667E	7′-7″ TO 9′-11″	8	STR.											△ = 4″
W668E	10′-1″	1	STR.											
F541E	21′-3″ TO 26′-3″	12	STR.											△ = 12″, 2 SETS
F542E	7′-0″	22	STR.											
F543E	3′-10″	20	STR.											
F544E	1′-6″ TO 6′-0″	7	STR.											△ = 9″
F545E	11′-3″	2	STR.											
F546E	10′-10″	8	36		3′-9″	2′-6″	1′-0″	3′-7″		2′-6″		2′-6″		
F547E	20′-4″	2	STR.											
F548E	14′-10″	2	STR.											
F549E	2′-8½″	1	STR.											
F550E	3′-0″	3	STR.											
F641E	5′-4″	22	36	1′-0″	4′-4″									
F642E	7′-0″	43	STR.											
F643E	1′-6″ TO 6′-0″	13	STR.											△ = 4½″
F644E	12′-2″	3	STR.											
F645E	12′-11″	3	3			2′-8″	10′-3″			1′-10½″		1′-10½″		
F646E	4′-0″	3	36	1′-0″	3′-0″									
F841E	10′-2″	6	37	0′-11″	9′-3″						0′-8″			
F561E	22′-6″ TO 27′-6″	12	STR.											△ = 12″, 2 SETS
F562E	7′-0″	23	STR.											
F563E	3′-10″	23	STR.											
F564E	1′-6″ TO 7′-0″	7	STR.											△ = 11″
F565E	11′-2″	2	STR.											
F566E	10′-10″	8	32		3′-9″	2′-6″	1′-0″	3′-7″		2′-6″		2′-6″		
F567E	16′-7″	2	STR.											
F568E	21′-4″	2	STR.											
F569E	2′-8½″	1	STR.											
F661E	5′-4″	23	36	1′-0″	4′-4″									
F662E	7′-0″	45	STR.											
F663E	1′-6″ TO 7′-0″	13	STR.											△ = 5½″
F664E	12′-1″	3	STR.											
F665E	12′-10″	3	3			2′-8″	10′-2″			1′-10½″		1′-10½″		
F861E	10′-2″	6	37	0′-11″	9′-3″						0′-8″			
H521E	3′-3″	15	17		1′-4″	0′-7″	1′-4″							
H522E	14′-1″	2	STR.											
H621E	14′-1″	2	STR.											

BENDING DIAGRAMS

ALL DIMENSIONS ARE FROM OUT TO OUT.

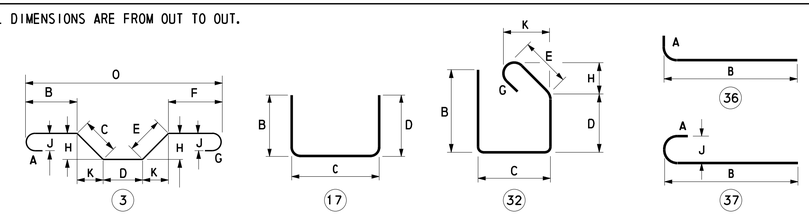

U:\Projects\AA\21397395\CAD\Bridge\C2-1\cu10_C2-1_US301.dgn

7/14/2015

Steve_Lambert

DELAWARE DEPARTMENT OF TRANSPORTATION

ADDENDUMS / REVISIONS

US 301 LEVELS ROAD TO SUMMIT BRIDGE ROAD

CONTRACT	BRIDGE NO.	1-508A
T200911303	DESIGNED BY: K. D. BEAVER	
COUNTY		
NEW CASTLE	CHECKED BY: J. S. LI	

US 301 MAINLINE OVER DRAWYERS DITCH 12 FOOT X 6 FOOT BOX CULVERT REINFORCING BAR LIST

1-508A CU-10	
SHEET NO.	678
TOTAL SHTS.	1256

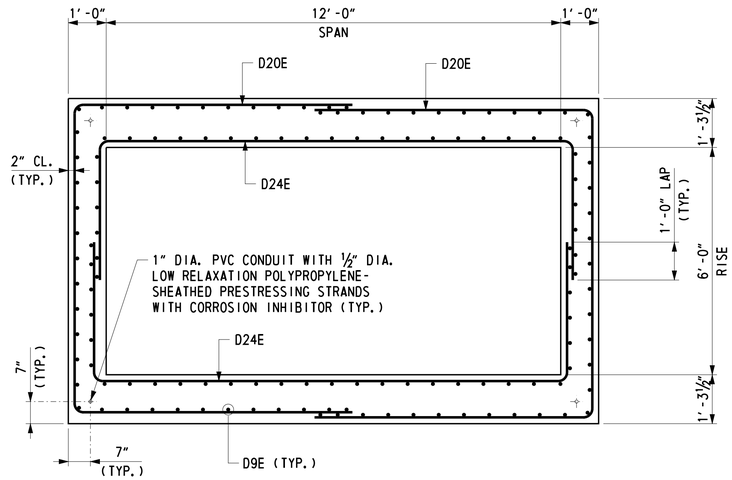

TYPICAL SECTION - PRECAST BOX CULVERT SEGMENT

SCALE: ½″ = 1′-0″

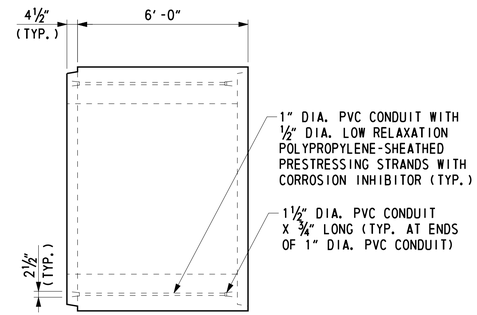

INTERIOR SEGMENT

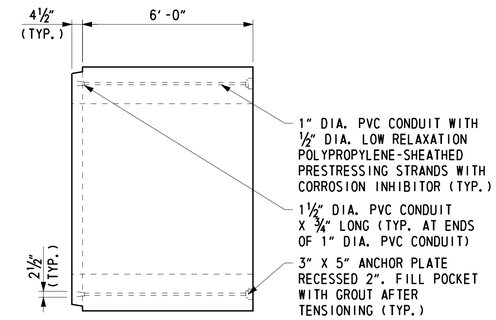

END SEGMENT

ELEVATION VIEWS - POST TENSIONING COMPONENTS DETAIL

SCALE: ⅜″ = 1′-0″

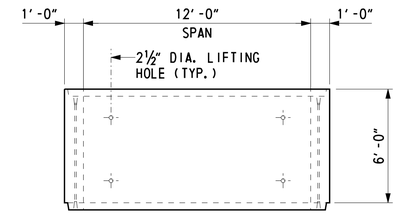

TOP VIEW

NOTE:

AT THE CONTRACTOR'S OPTION ALTERNATE LIFTING DETAILS WILL BE CONSIDERED SUBJECT TO THE APPROVAL OF THE ENGINEER.

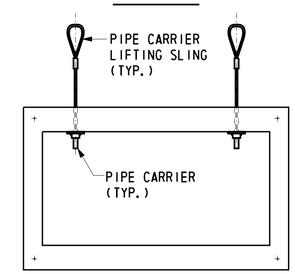

SECTION

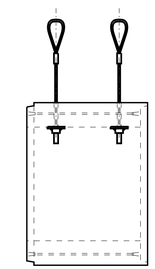

SIDE VIEW

LIFTING DETAIL

SCALE: ¼″ = 1′-0″

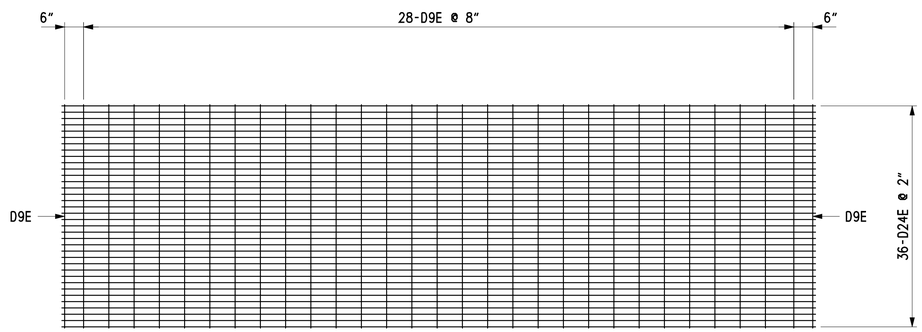

TOP AND BOTTOM CAGE REINFORCEMENT

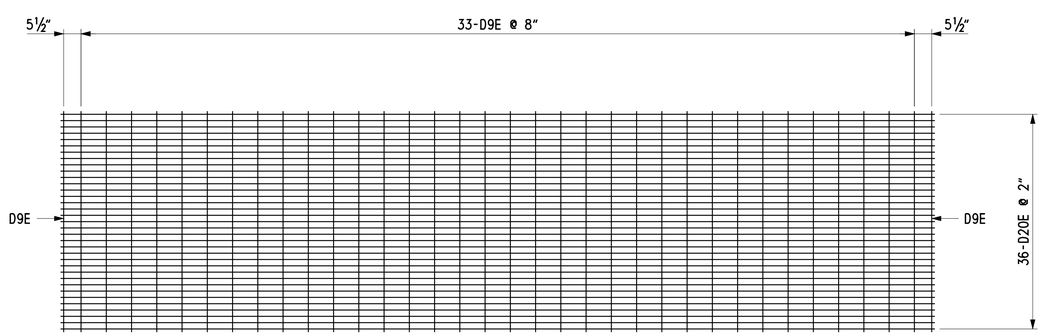

SIDE CAGE REINFORCEMENT

PRECAST BOX CULVERT SEGMENT

SCALE: ½″ = 1′-0″

REINFORCING BAR LIST (WELDED WIRE FABRIC)

PRECAST BOX CULVERT

MARK	LENGTH	NO. BARS	TYPE	A	B	C	D	E	F	REMARKS
D20E	23′-1″	75 X 72	17		7′-5″	8′-3″	7′-5″			
D24E	19′-10″	75 X 72	17		3′-9″	12′-4″	3′-9″			
D9E	5′-10″	75 X 130	STR.							

BENDING DIAGRAMS

ALL DIMENSIONS ARE FROM OUT TO OUT.

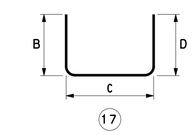

CROSS REFERENCE NOTE:

FOR PRECAST BOX CULVERT NOTES, SEE DWG. 1-508A PN-1.

1-508A CU-11

DELAWARE DEPARTMENT OF TRANSPORTATION

ADDENDUMS / REVISIONS

US 301
LEVELS ROAD
TO SUMMIT BRIDGE ROAD

CONTRACT	BRIDGE NO.	1-508A
T200911303	DESIGNED BY:	
COUNTY		
NEW CASTLE	CHECKED BY:	

US 301 MAINLINE
OVER DRAWYERS DITCH
12 FOOT X 6 FOOT BOX CULVERT
PRECAST BOX REINFORCEMENT

SHEET NO. 679
TOTAL SHTS. 1256

U:\Projects\AA\21397385\CAD\Bridge\C2-1\cut1_C2-1_US301.dgn
7/14/2015
Steve_Lambert

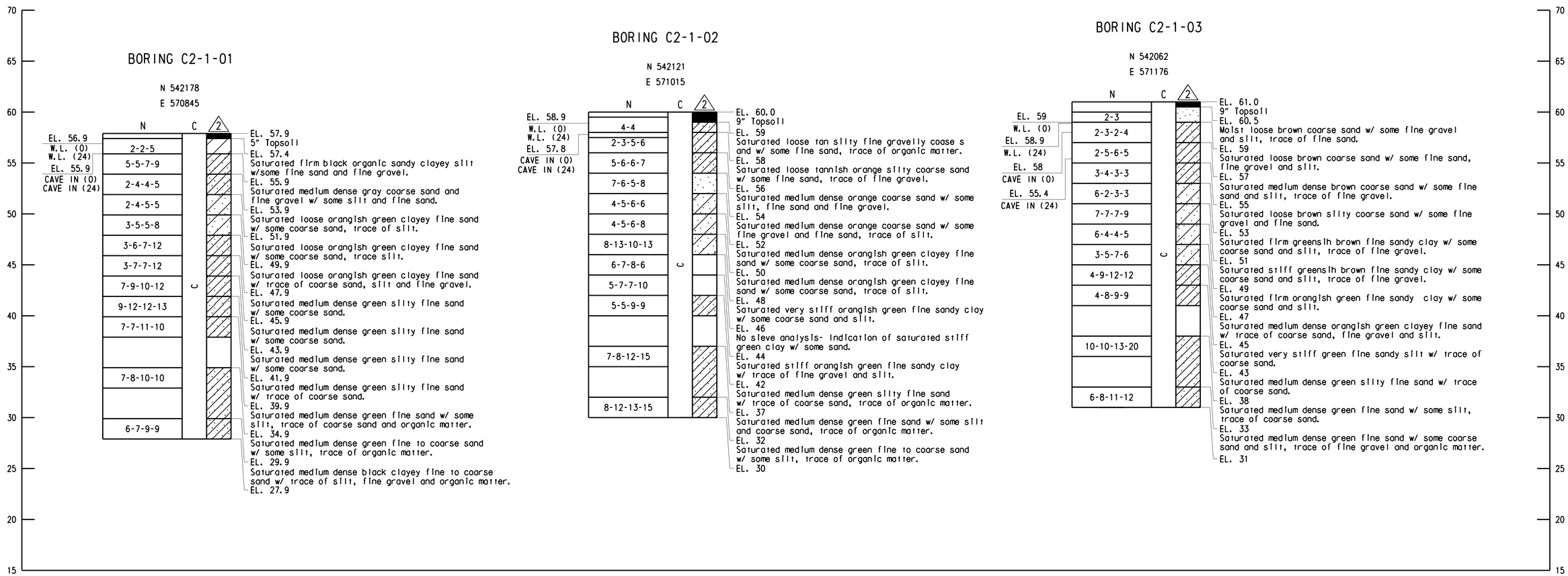

BORINGS

SCALE: 1" = 10'-0"

NOTES:

1. THE BORINGS AND STANDARD PENETRATION TESTS WERE TAKEN IN DECEMBER 2009 BY THE WALTON CORPORATION.
2. N = BLOWS ON A 2 INCH O.D. SAMPLING SPOON BY 140 LB. DRIVE-WEIGHT FALLING 30 INCHES INDICATING SUCCESSIVE SIX (6) INCH INCREMENTS OF PEENTRATION IN LIEU OF BLOWS PER FOOT. BLOWS RESULTING IN LESS THAN SIX (6) INCHES OF PENETRATION ARE SO INDICATED.
3. BORINGS AND SAMPLINGS CONFORM TO AASHTO DESIGNATION T-206.

DELAWARE DEPARTMENT OF TRANSPORTATION	ADDENDUMS / REVISIONS	SCALE 0 5 10 15 FEET	US 301 LEVELS ROAD TO SUMMIT BRIDGE ROAD	CONTRACT T200911303	BRIDGE NO. 1-508A	US 301 MAINLINE OVER DRAWYERS DITCH	1-508A BO-1
				COUNTY NEW CASTLE	DESIGNED BY: P. M. DALONI		SHEET NO. 680
					CHECKED BY: R. C. KRHOUNEK	BORINGS 1	TOTAL SHTS. 1256

Steve_Lambert 7/14/2015 U:\Projects\AA\2397395\CAD\Bridge\C2-1\bo01_C2-1_US301.dgn

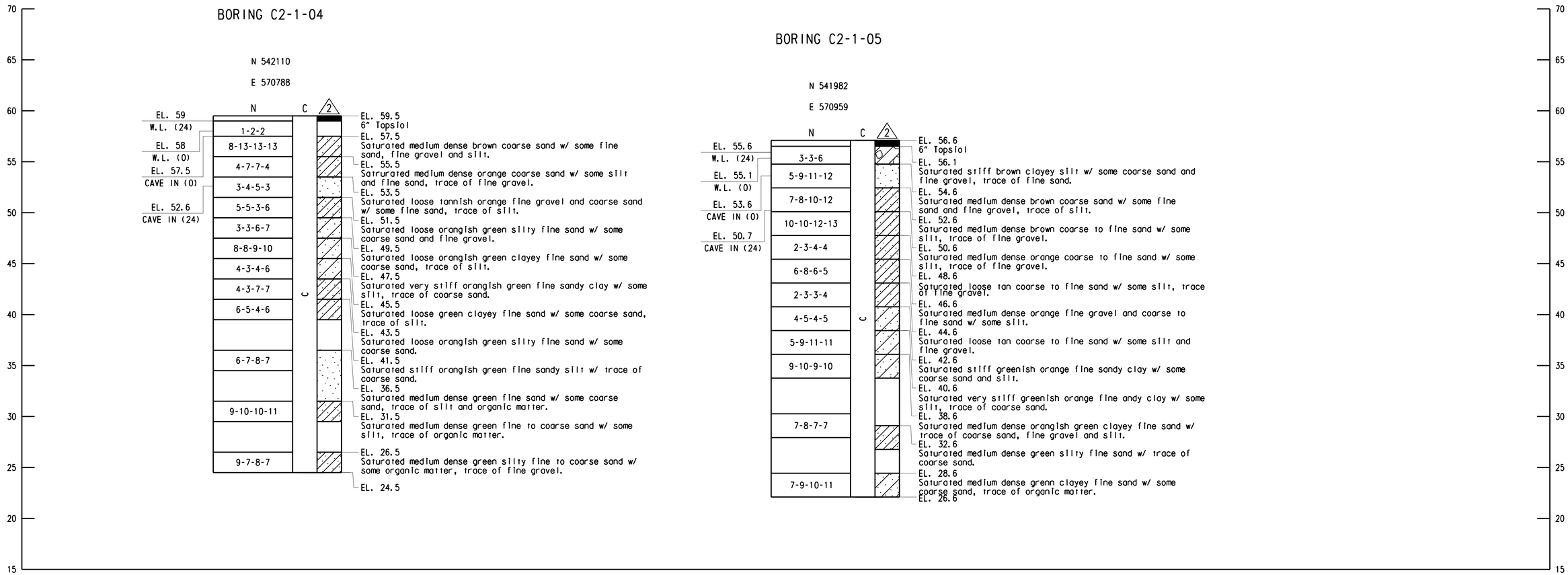

BORINGS

SCALE: 1" = 10'-0"

NOTES:

1. THE BORINGS AND STANDARD PENETRATION TESTS WERE TAKEN IN DECEMBER 2009 BY THE WALTON CORPORATION.
2. N = BLOWS ON A 2 INCH O.D. SAMPLING SPOON BY 140 LB. DRIVE-WEIGHT FALLING 30 INCHES INDICATING SUCCESSIVE SIX (6) INCH INCREMENTS OF PEENTRATION IN LIEU OF BLOWS PER FOOT. BLOWS RESULTING IN LESS THAN SIX (6) INCHES OF PENETRATION ARE SO INDICATED.
3. BORINGS AND SAMPLINGS CONFORM TO AASHTO DESIGNATION T-206.

U:\Projects\AA\21387385\CAD\Bridge\C2-1\bo02_C2-1_US301.dgn

7/14/2015

Steve_Lambert

DELAWARE DEPARTMENT OF TRANSPORTATION	ADDENDUMS / REVISIONS	SCALE 0 5 10 15 FEET	US 301 LEVELS ROAD TO SUMMIT BRIDGE ROAD	CONTRACT T200911303	BRIDGE NO. 1-508A	US 301 MAINLINE OVER DRAWYERS DITCH	1-508A BO-2
				COUNTY NEW CASTLE	DESIGNED BY: R. C. KRHOUNEK		SHEET NO. 681
					CHECKED BY: J. E. SHERRING	BORINGS 2	TOTAL SHTS. 1256

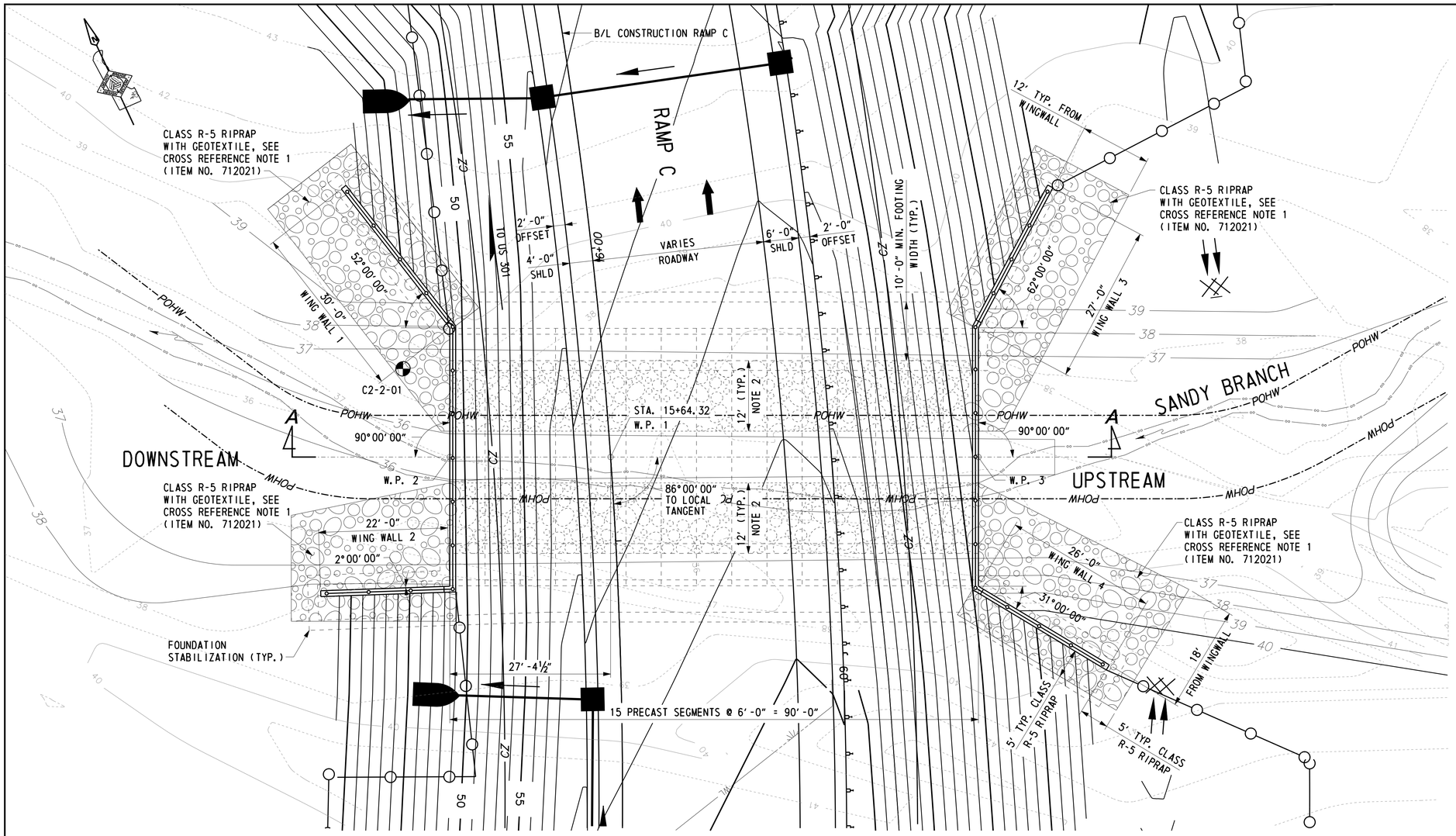

PRECAST ARCH CULVERT PLAN

SCALE: 1" = 10'-0"

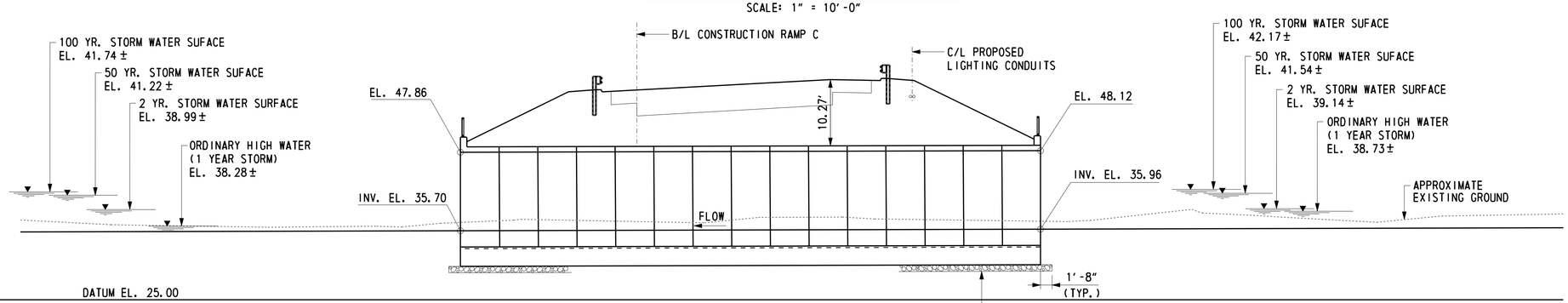

SECTION A-A

SCALE: 1" = 10'-0"

PROJECT NOTES

SPECIFICATIONS:

DELDOT BRIDGE DESIGN MANUAL, MAY 2005, WITH JANUARY 2008 REVISIONS; DELDOT STANDARD SPECIFICATIONS, 2001, WITH 2009 REVISIONS; AASHTO, LRFD BRIDGE DESIGN SPECIFICATIONS, 4TH EDITION, WITH 2008 AND 2009 INTERIM; US 301 DESIGN MANUAL.

DESIGN:

LRFD DESIGN METHOD.

LOADING:

HL 93 TRUCK LOADING.

CONCRETE:

ALL CAST IN PLACE CONCRETE SHALL BE CLASS A (4,500 PSI). THE CONCRETE FOR WINGWALL FOOTINGS THAT ARE NOT EXPOSED SHALL BE CLASS B (3,000 PSI). FOOTINGS SHALL BE CAST IN PLACE. WINGWALLS AND HEADWALLS MAY BE CAST IN PLACE. ALL PRECAST CONCRETE SHALL BE f'c = 5000 psi.

REINFORCING STEEL:

REINFORCING STEEL SHALL BE AASHTO M31, GRADE 60 UNLESS OTHERWISE NOTED AND SHALL BE PROTECTED WITH FUSION BONDED EPOXY CONFORMING TO AASHTO M284 WHERE INDICATED ON PLANS. ALL REINFORCING STEEL SHALL HAVE A CLEAR COVER OF 2" UNLESS SPECIFIED OTHERWISE ON THE PLANS.

HYDRAULIC DATA:

DRAINAGE AREA = 0.46 SQ. MI.
DESIGN FREQUENCY = 100 YEARS
DESIGN FLOOD ELEVATION = 42.1
50 YEAR FLOOD ELEVATION = 41.5
DESIGN DISCHARGE = 973 CFS
PROPOSED OPENING = 320 SF

THE PROPOSED STRUCTURE HAS BEEN ANALYZED FOR THE EFFECTS OF SCOUR IN ACORDANCE WITH HEC-18 - "EVALUATING SCOUR AT BRIDGES" AND HEC-23 - "BRIDGE SCOUR AND STREAM INSTABILITY COUNTERMEASURES". SCOUR COUNTERMEASURES HAVE BEEN DESIGNED FOR THE WORST CASE OF THE OVERTOPPING FLOOD OR THE 500 YEAR FLOOD EVENT.

DESIGN EVENT: 500 YEAR — DESIGN VELOCITY: 6.5 FT/S

DESIGN DISCHARGE: 1,640 CFS — DESIGN DEPTH OF FLOW: 8.0 FT

RAMP C VERTICAL DATA

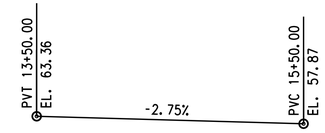

RAMP C HORIZONTAL DATA

PC STA. 13+35.22
PI STA. 15+04.36
PT STA. 16+68.96
R = 833.00'
L = 333.75'

WORKING POINTS

W.P. NO.	STATION	OFFSET	COORDINATES	
			NORTHING	EASTING
1	15+64.32	0.00'	526,630.8788	562,169.0583
2	15+66.30	37.31' LT.	526,642.6515	562,144.3408
3	15+60.26	62.48' RT.	526,603.9511	562,225.5952

CROSS REFERENCE NOTES:

1. RECESS AND CHOKE RIPRAP IN ACCORDANCE WITH THE STREAM RESTORATION AND SLOPE RIPRAP TREATMENT NOTES FOUND ON EC-05.
2. EXTEND RIPRAP TWELVE (12) FEET FROM EDGE OF FOOTING.
3. FOR NOTES FOR PRECAST ELEMENTS, SEE DWG. 1-508B PN-1.
4. FOR ADDITIONAL REQUIREMENTS, SEE STREAM RESTORATION PLAN DWG. SR-03.

DELAWARE DEPARTMENT OF TRANSPORTATION

ADDENDUMS / REVISIONS

SCALE 0 10 20 30 FEET

US 301 LEVELS ROAD TO SUMMIT BRIDGE ROAD

CONTRACT T200511301 — COUNTY NEW CASTLE

BRIDGE NO. 1-508B — DESIGNED BY: D.D. DIEHL — CHECKED BY: T. W. FEROLI

RAMP C OVER SANDY BRANCH

PRECAST ARCH CULVERT PLAN AND SECTION

1-508B PE-1 — SHEET NO. 682 — TOTAL SHTS. 1256

U:\Projects\AA\21997385\CAD\Bridge\C2-2\pe01_C2-2_US301.dgn 8/17/2015 Steve_Lambert

NOTES FOR PRECAST ELEMENTS

1. DESIGN PLANS AND WORKING DRAWINGS

   THE INFORMATION SHOWN ON THESE PLANS FOR THE PRECAST CONCRETE ARCH CULVERT AND THE WINGWALL SECTIONS DEMONSTRATES THE TYPE OF CONSTRUCTION THAT IS ACCEPTABLE FOR USE ON THIS PROJECT. THE CONTRACTOR IS REPONSIBILE FOR CONSTRUCTION OF THE PRECAST ARCH CULVERT AND WINGWALLS TO THE LINES, GRADES AND DIMENSIONS SHOWN ON THE PLANS. THE CONTRACTOR SHALL VERIFY ALL ELEVATIONS PRIOR TO CONSTRUCTION. THE CONTRACTOR IS REQUIRED TO SUBMIT SHOP DRAWINGS OF THE CULVERT AND WINGWALL UNITS FOR APPROVAL PRIOR TO CONSTRUCTION. THE SHOP DRAWINGS SHALL INCLUDE THE FOLLOWING:

   A. AN OVERALL PLAN SHOWING ALL UNITS IN ONE VIEW, AS WELL AS DETAILS OF EACH UNIT.
   B. A PLAN VIEW OF THE REINFORCEMENT LAYOUT FOR ANY IRREGULAR SHAPED (CURVED, SKEWED, ETC...) PORTION OF THE STRUCTURE.
   C. A REINFORCEMENT BAR SCHEDULE.
   D. A BILL OF MATERIALS INCLUDING ALL ACCESSORIES.
   E. THE METHOD AND SEQUENCE OF POST-TENSIONING.

2. PAYMENT FOR PRECAST ELEMENTS, ACCESSORIES AND INSTALLATION
   PAYMENT FOR ITEM 602737 - "PRECAST CONCRETE ARCH" SHALL INCLUDE:

   A. ALL PRECAST ELEMENTS.
   B. ALL REINFORCEMENT IN PRECAST ELEMENTS.
   C. ALL ACCESSORIES (INCLUDING, BUT NOT LIMITED TO, DRAINAGE SYSTEM, CONCRETE FINISH, CONNECTION PLATES, POST-TENSIONING TENDONS, GROUT, JOINT WRAP, JOINT GASKETS, THREADED INSERTS) THAT IS MENTIONED IN THE FOLLOWING NOTES UNLESS NOTED OTHERWISE.
   D. DELIVERY AND INSTALLATION OF ALL PRECAST ELEMENTS AND ASSESSORIES.

3. MISCELLANEOUS CONCRETE NOTES

   A. ALL EXPOSED SURFACES SHALL BE PROTECTED WITH A WATER MISCIBLE, PENETRATING SILANE SEALER SUCH AS ENVIROSEAL 20 BY BASF SUPERIOR OR APPROVED EQUAL.
   B. ALL EXPOSED EDGES SHALL BE CHAMFERED ¾" UNLESS OTHERWISE NOTED.

4. ARCH POST-TENSIONING

   THE PRECAST ARCH SECTIONS SHALL BE POST-TENSIONED TOGETHER WITH A MINIMUM OF FOUR POST-TENSIONING TENDONS. THE SECTIONS SHALL BE POST-TENSIONED SUCH THAT THE NEOPRENE GASKETS ARE COMPRESSED ALL AROUND AND THERE IS A ½" MAXIMUM GAP BETWEEN SECTIONS. THE MAXIMUM POST-TENSIONING FORCE PER TENDON SHALL BE 28,900 LBS. POST-TENSIONING DETAILS (PLACEMENT, SEQUENCE OF TENSIONING, ETC...) SHALL BE SHOWN ON THE SHOP DRAWINGS. ALL POCKETS FOR POST-TENSIONING DUCTS SHALL BE FILLED WITH NON-SHRINK GROUT.

5. WINGWALL POST-TENSIONING

   THE PRECAST WINGWALL SECTIONS SHALL BE POST-TENSIONED TOGETHER WITH A MINIMUM OF TWO POST-TENSIONING TENDONS, USING THE SAME REQUIREMENTS AS NOTE 4, AND SHALL ALSO BE POSITIVELY CONNECTED TO THE CULVERT. A BOLTED CONNECTION TO THE CULVERT MAY BE USED, WITH THE DETAILS SHOWN IN THE SUBMITTED SHOP DRAWINGS.

6. BOLTED CONNECTIONS

   THE BOLTED CONNECTIONS SHALL CONSIST OF AT LEAST TWO SETS OF STEEL PLATES WITH AT LEAST TWO BOLTS OR THREADED RODS ON EACH SIDE OF EACH CONNECTION. SLOTTED HOLES IN THE PLATE SHALL NOT BE PERMITTED. HOLES FOR BOLTS OR THREADED RODS MAY BE FIELD DRILLED.

7. JOINTS BETWEEN PRECAST SECTIONS

   A. NEOPRENE GASKETS SHALL BE PROVIDED AT THE JOINTS BETWEEN ALL PRECAST UNITS IN ORDER TO MAKE THE JOINTS WATERTIGHT.
   B. JOINTS BETWEEN RIGID FRAME SECTIONS SHALL HAVE A SHEAR KEY ALL AROUND.
   C. THE LOCATION OF THE JOINTS IN THE PRECAST CULVERT SHALL BE DETERMINED BY THE MANUFACTURER AND SHALL BE SUBMITTED WITH THE SHOP DRAWINGS FOR APPROVAL.
   D. THE EXTERIOR OF ALL JOINTS SHALL BE COVERED WITH A MINIMUM OF 9" WIDE JOINT WRAP CENTERED ON THE JOINT.

8. BEARING RESISTANCE

   ARCH CULVERT BEARING RESISTANCE = 7.0 PSF.
   WINGWALL BEARING RESISTANCE = 4.0 PSF.

ESTIMATED QUANTITIES

ITEM NO.	DESCRIPTION	UNIT	QUANTITY
207000	EXCAVATION AND BACKFILL FOR STRUCTURES	CY	1090
302007	GRADED AGGREGATE BASE COURSE, TYPE B (FOR FOUNDATION STABILIZATION; WINGWALLS AND CULVERT STRUCTURE)	TON	210
602002	PORTLAND CEMENT CONCRETE MASONRY, CLASS B (CULVERT FOOTING)	CY	200
602002	PORTLAND CEMENT CONCRETE MASONRY, CLASS B (WINGWALL FOOTING)	CY	70
602737	PRECAST CONCRETE ARCH	LS	1
604000	BAR REINFORCEMENT, EPOXY COATED (CULVERT AND WINGWALL FOOTINGS)	LB	22,500
712021	RIPRAP; R-5 (FOR CULVERT STRUCTURE CHANNEL SCOUR PROTECTION)	TON	620
712531	CHANNEL BED FILL	CY	288
713001	GEOTEXTILE, GRADED AGGREGATE BASE	SY	385
713003	GEOTEXTILE, RIPRAP	SY	460
727009	CHAIN LINK FENCE	LF	195

INDEX OF DRAWINGS

SHEET NO.	DRAWING NO.	TITLE
682	1-508B PE-1	PLAN AND SECTION
683	1-508B PN-1	INDEX OF DRAWINGS
684	1-508B CU-1	ELEVATIONS AND SECTIONS
685	1-508B BO-1	BORINGS

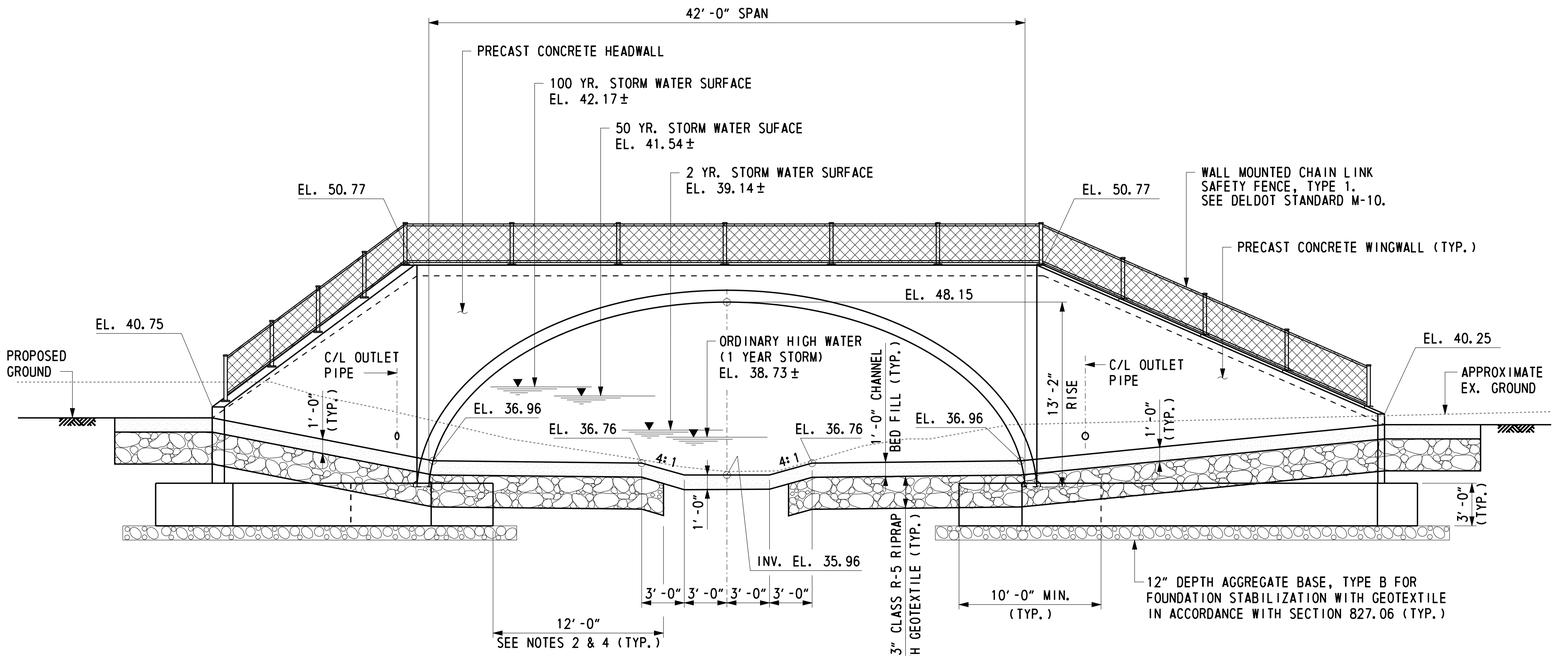

UPSTREAM ELEVATION

LOOKING DOWNSTREAM
SCALE: 3/16" = 1'-0"

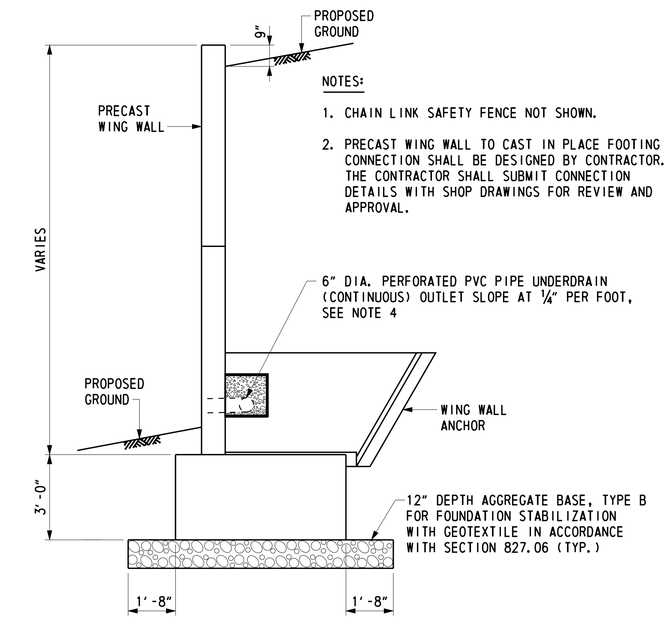

NOTES:

1. CHAIN LINK SAFETY FENCE NOT SHOWN.
2. PRECAST WING WALL TO CAST IN PLACE FOOTING CONNECTION SHALL BE DESIGNED BY CONTRACTOR. THE CONTRACTOR SHALL SUBMIT CONNECTION DETAILS WITH SHOP DRAWINGS FOR REVIEW AND APPROVAL.

TYPICAL PRECAST WING WALL SECTION

SCALE: 3/8" = 1'-0"

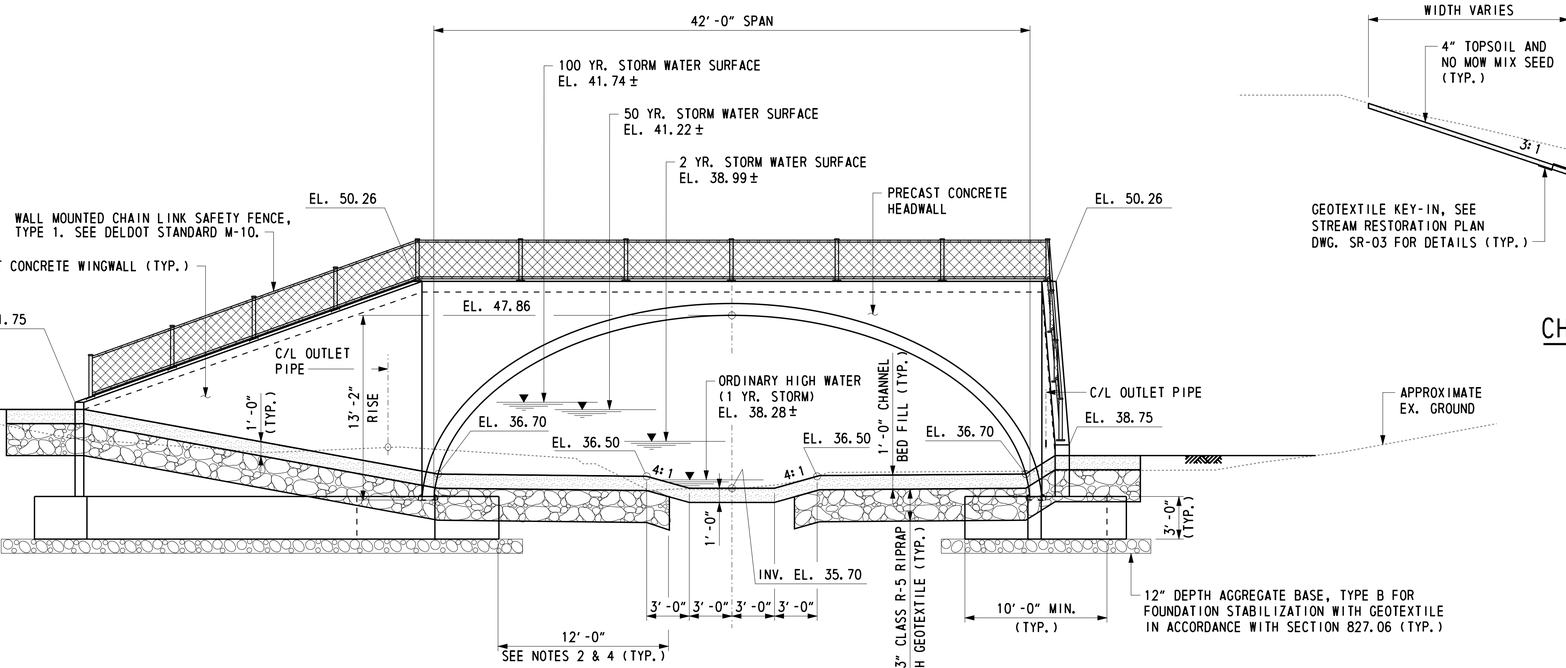

DOWNSTREAM ELEVATION

LOOKING UPSTREAM
SCALE: 3/16" = 1'-0"

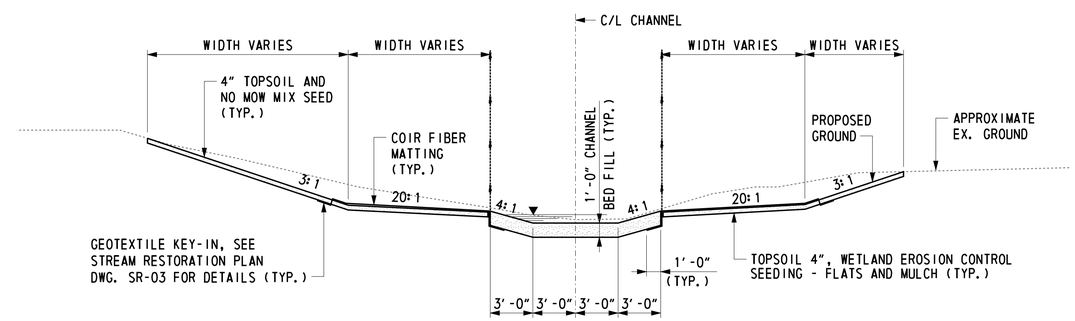

CHANNEL SECTION OUTSIDE OF CULVERT

SCALE: 3/16" = 1'-0"

NOTES:

1. CONTRACTOR TO SURVEY THE EXISTING STREAM AT THE UPSTREAM AND DOWNSTREAM TIE-IN LOCATIONS TO ENSURE A SMOOTH TRANSITION FROM THE GRADED CHANNEL TO THE EXISTING STREAM.
2. INSIDE THE CULVERT, RECESS AND CHOKE RIPRAP WITH CHANNEL BED FILL (712531).
3. EXTEND RIPRAP TWELVE (12) FEET FROM EDGE OF FOOTING.
4. UNDERDRAIN DRAINAGE SYSTEM FOR WINGWALLS SHALL BE INCIDENTAL TO PRECAST CONCRETE ARCH ITEM.
5. UPSTREAM AND DOWNSTREAM OF THE CULVERT, RECESS AND CHOKE RIPRAP WITH CHANNEL BED FILL WITHIN THE POHW LINES. CHANNEL BED FILL SHALL EXTEND TO THE LIMITS OF CHANNEL GRADING WITHIN THE POHW LINES SHOWN ON THE PLANS. RIPRAP OUTSIDE THE POHW LINES SHALL BE RECESSED FOUR (4) INCHES, CHOKED WITH DE#57 STONE, BACKFILLED WITH FOUR (4) INCHES OF TOPSOIL, SEEDED WITH WETLAND EROSION CONTROL SEEDING - FLATS AND MULCHED IN ACCORDANCE WITH THE ENVIRONMENTAL COMPLIANCE PLANS.
6. STREAMBANK OUTSIDE OF THE CULVERT SHALL BE LIVE STAKED WITH DOGWOOD AND DISTURBED AREAS SHALL BE TOPSOILED, SEEDED WITH WETLAND EROSION CONTROL SEEDING - FLATS AND PLANTED WITH ALDER TEN (10) FEET ON CENTER IN ACCORDANCE WITH THE STREAM RELOCATION AND RESTORATION PLANS DWG. SR-03.

DELAWARE DEPARTMENT OF TRANSPORTATION

ADDENDUMS / REVISIONS

US 301
LEVELS ROAD
TO SUMMIT BRIDGE ROAD

CONTRACT	BRIDGE NO.	1-508B
T200511301	DESIGNED BY: D.D. DIEHL	
COUNTY		
NEW CASTLE	CHECKED BY: T. W. FEROLI	

RAMP C OVER SANDY BRANCH

PRECAST ARCH CULVERT ELEVATIONS AND SECTIONS

1-508B CU-1
SHEET NO.
684
TOTAL SHTS.
1256

U:\Projects\AA\2198738S\CAD\Bridge\C2-2\cu01_C2-2_US301.dgn
8/4/2015
Steve_Lambert

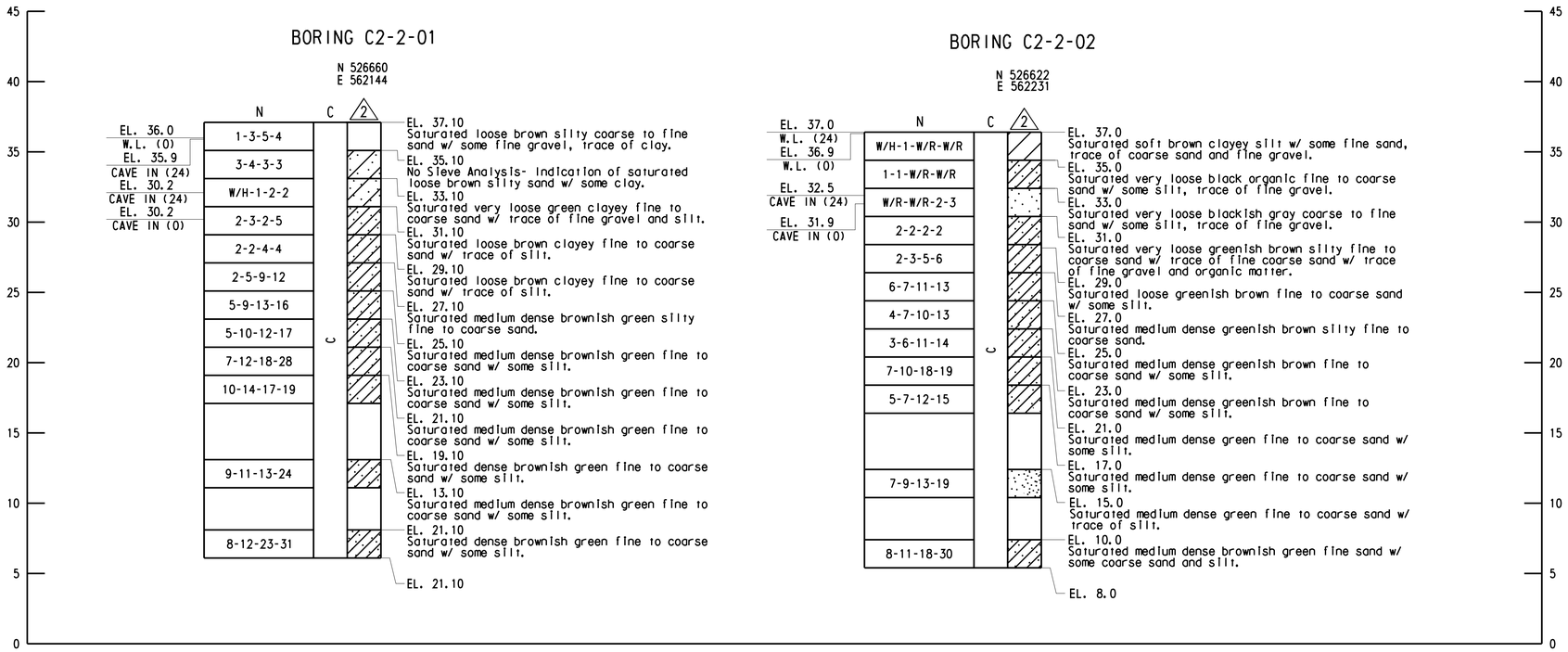

BORINGS

SCALE: 1" = 5'-0"

NOTES:

1. THE BORINGS AND STANDARD PENETRATION TESTS WERE TAKEN IN DECEMBER 2009 BY THE WALTON CORPORATION.
2. N = BLOWS ON A TWO (2) INCH O.D. SAMPLING SPOON BY 140 LB. DRIVEWEIGHT FALLING 30 INCHES INDICATING SUCCESSIVE SIX (6) INCH INCREMENTS OF PEENTRATION IN LIEU OF BLOWS PER FOOT. BLOWS RESULTING IN LESS THAN SIX (6) INCHES OF PENETRATION ARE SO INDICATED.
3. BORINGS AND SAMPLINGS CONFORM TO AASHTO DESIGNATION T-206.

U:\Projects\AA\21597395\CAD\Bridge\C2-2\bo01_C2-2_US301.dgn

7/14/2015

Steve_Lambert

DELAWARE DEPARTMENT OF TRANSPORTATION	ADDENDUMS / REVISIONS	SCALE 0 5 10 15 FEET	US 301 LEVELS ROAD TO SUMMIT BRIDGE ROAD	CONTRACT T200511301	BRIDGE NO. 1-508B	RAMP C OVER SANDY BRANCH	1-508B BO-1	SHEET NO. 685
				COUNTY NEW CASTLE	DESIGNED BY: P. M. DALONI	BORINGS		TOTAL SHTS. 1256
					CHECKED BY: R. C. KRHOUNEK			

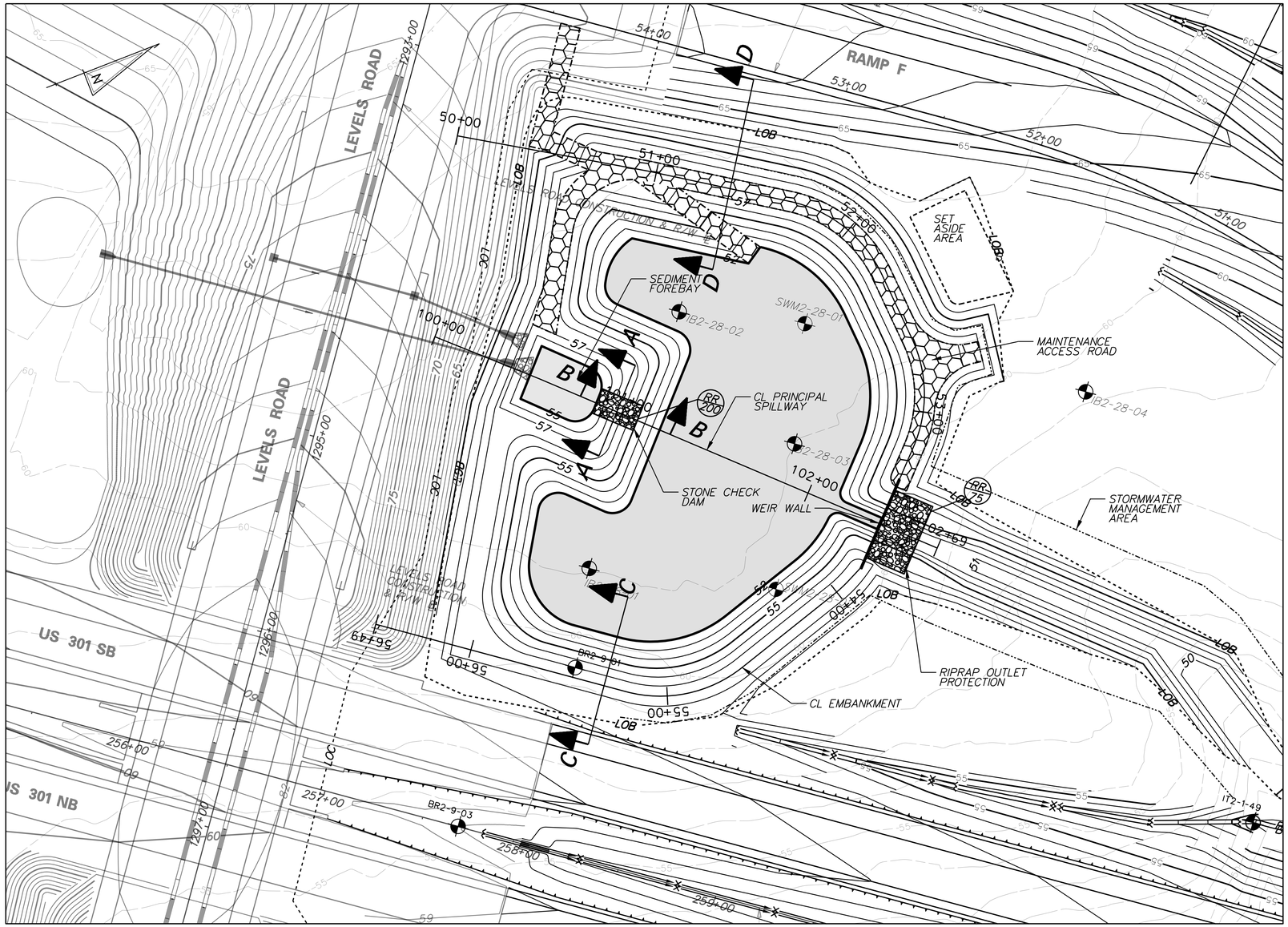

PLAN - BMP 650 (BASIN 1A)

POND DESIGN SUMMARY				
DESIGN STORM	FACILITY INFLOW (CFS)	FACILITY DISCHARGE (CFS)	WATER SURFACE ELEVATION (FT)	STORAGE VOLUME (AC. FT)
QUALITY STORM (1-YR)	4.75	0.00	52.49	0.25
10 - YEAR	18.92	1.53	53.66	0.88
100 - YEAR	45.48	11.18	55.07	1.78

HAZARD CLASSIFICATION: CLASS A AS PER POND CODE 378

DRAINAGE AREA TO FACILITY: 9.95 AC

MANAGEMENT PROVIDED BY FACILITY: WATER QUALITY BY INFILTRATION OF 1-YEAR STORM RUNOFF, WATER QUANTITY FOR 10 AND 100-YEAR STORMS.

RIPRAP SCHEDULE		
NO.	TYPE	AREA (SY)
75	R-5	86
200	R-4	32

CHECK CONSTRUCTION PLANS FOR SCHEDULE OF RIPRAP OUTSIDE OF THE BASIN AREA.

INFILTRATION BASIN CONSTRUCTION SEQUENCE

THE STORMWATER MANAGEMENT BASIN SHALL FUNCTION AS AN INFILTRATION FACILITY AND SHALL BE CONSTRUCTED IN ACCORDANCE WITH THE FOLLOWING SPECIFICATIONS:

SECTION 271 - STORMWATER MANAGEMENT POND
SECTION 272 - POND OUTLET STRUCTURE, CONCRETE

1. PRIOR TO DISTURBANCE OF THE SITE UPSTREAM OF THE BASIN, INSTALL FENCE AROUND THE BASIN AREA TO PREVENT CONSTRUCTION EQUIPMENT AND STOCKPILED MATERIALS FROM ENTERING THE BASIN AREA AND COMPACTING THE SUBGRADE SOILS.
2. CONSTRUCT INFILTRATION BASIN AFTER ALL AREAS DRAINING TO THE BASIN HAVE BEEN PERMANENTLY STABILIZED AND THE ENGINEER HAS APPROVED THE CONSTRUCTION. IF BASIN CONSTRUCTION CANNOT BE DELAYED UNTIL ITS DRAINAGE AREA IS STABILIZED, DIVERSION BERMS OR OTHER SUITABLE MEASURES SHOULD BE PLACED AROUND THE BASIN'S PERIMETER DURING ALL PHASES OF CONSTRUCTION TO DIVERT ALL RUNOFF AND SEDIMENT AWAY FROM THE BASIN. THESE DIVERSION MEASURES SHOULD NOT BE REMOVED UNTIL ALL CONSTRUCTION WITHIN THE BASIN'S DRAINAGE AREA IS COMPLETED AND THE DRAINAGE AREA STABILIZED.
3. SEE CONSTRUCTION PLANS FOR EROSION AND SEDIMENT CONTROL MEASURES.
4. CONSTRUCT THE INFILTRATION BASIN WITHOUT COMPACTING THE BASINS SUBGRADE SOILS. EXCAVATION SHALL BE PERFORMED BY CONSTRUCTION EQUIPMENT PLACED OUTSIDE THE BASIN, WHERE POSSIBLE. ALL EXCAVATION SHALL BE PERFORMED WITH THE LIGHTEST PRACTICAL EXCAVATION EQUIPMENT.
5. CONSTRUCT WEIR WALL, RIPRAP ENERGY DISSIPATER AT THE END OF PRINCIPAL SPILLWAY AND PARTIAL EMBANKMENT AS NEEDED TO INSTALL WEIR WALL. DE-WATER FOUNDATION AS NEEDED IN ACCORDANCE WITH SECTION 111 AND USE SUMP PIT FOR DUMPING.
6. EXCAVATE THE POND AND COMPLETE THE EMBANKMENT, GRADES AND DETAILS SHOWN IN THE CONSTRUCTION PLANS. DURING EXCAVATION, THE CONTRACTOR SHALL SALVAGE AND STOCKPILE SOILS CLASSIFIED AS CH, CL, SC AND GG PER THE UNIFIED SOIL CLASSIFICATION SYSTEM TO BE USED TO CONSTRUCT EMBANKMENT. THE ABOVE CLASSIFIED SOILS MAY BE OBTAINED FROM ELSEWHERE WITHIN THE PROJECT LIMITS, IF NECESSARY.
7. STABILIZE BASIN EMBANKMENT AND BOTTOM WITH PERMANENT SEEDING.
8. REMOVE EROSION AND SEDIMENT CONTROLS, WATER DIVERSION PRACTICES AND FENCE UPON FINAL STABILIZATION AND APPROVAL FROM INSPECTOR.
9. THE CONTRACTOR SHALL PROVIDE 'AS-BUILT' DRAWINGS OF ALL STORMWATER MANAGEMENT FACILITIES SUCH AS PONDS, INFILTRATION BASINS, BIOFILTRATION SWALES, ETC. 'AS-BUILT' DRAWINGS SHALL SHOW THE ACTUAL FINISHED GROUND CONTOURS, OUTLET STRUCTURE DIMENSIONS AND ELEVATIONS, ETC. AS THEY EXIST AT THE COMPLETION OF THE PROJECT. THESE DRAWINGS SHALL BE SIGNED BY A PROFESSIONAL ENGINEER OR LAND SURVEYOR.

PLANTING SCHEDULE

PERMANENT GRASS SEEDING - WET GROUND UP TO ELEVATION 53.0
PERMANENT GRASS SEEDING - DRY GROUND ABOVE ELEVATION 53.0
PLACE TOPSOIL ABOVE BASIN BOTTOM ELEVATION 52.0

POND QUANTITIES			
ITEM NO.	ITEM	QTY.	UNITS.
202000	EXCAVATION AND EMBANKMENT	15723	CY
272501	POND OUTLET STRUCTURE, 1, SPECIAL	1	EACH
302011	DELAWARE NO. 3 STONE	189	TON
302012	DELAWARE NO. 57 STONE	20	TON
712006	R-5 RIPRAP	86	SY
712020	R-4 RIPRAP	18	TON
713001	GEOTEXTILES, STABILIZATION	1275	SY
713003	GEOTEXTILES, RIPRAP	150	SY
733002	TOPSOILING, 6" DEPTH	7920	SY
734013	PERMANENT GRASS SEEDING, DRY GROUND	7685	SY
734015	PERMANENT GRASS SEEDING, WET GROUND	2575	SY

DELAWARE DEPARTMENT OF TRANSPORTATION

ADDENDUMS / REVISIONS

SCALE 0 30 60 90 FEET

US 301 LEVELS ROAD TO SUMMIT BRIDGE ROAD

CONTRACT T200911303 | COUNTY NEW CASTLE | BRIDGE NO. | DESIGNED BY: BAS | CHECKED BY: JJW

STORMWATER MANAGEMENT DETAILS BMP 650 (BASIN 1A)

SW01 | SHEET NO. 686 | TOTAL SHTS. 1256

11/13/2012
J:\BRIDGE_HIGHWAYS\9040_Deldot_301\Civil\Plans\2A\SWM\Pond 1\SW_1A_01.dgn

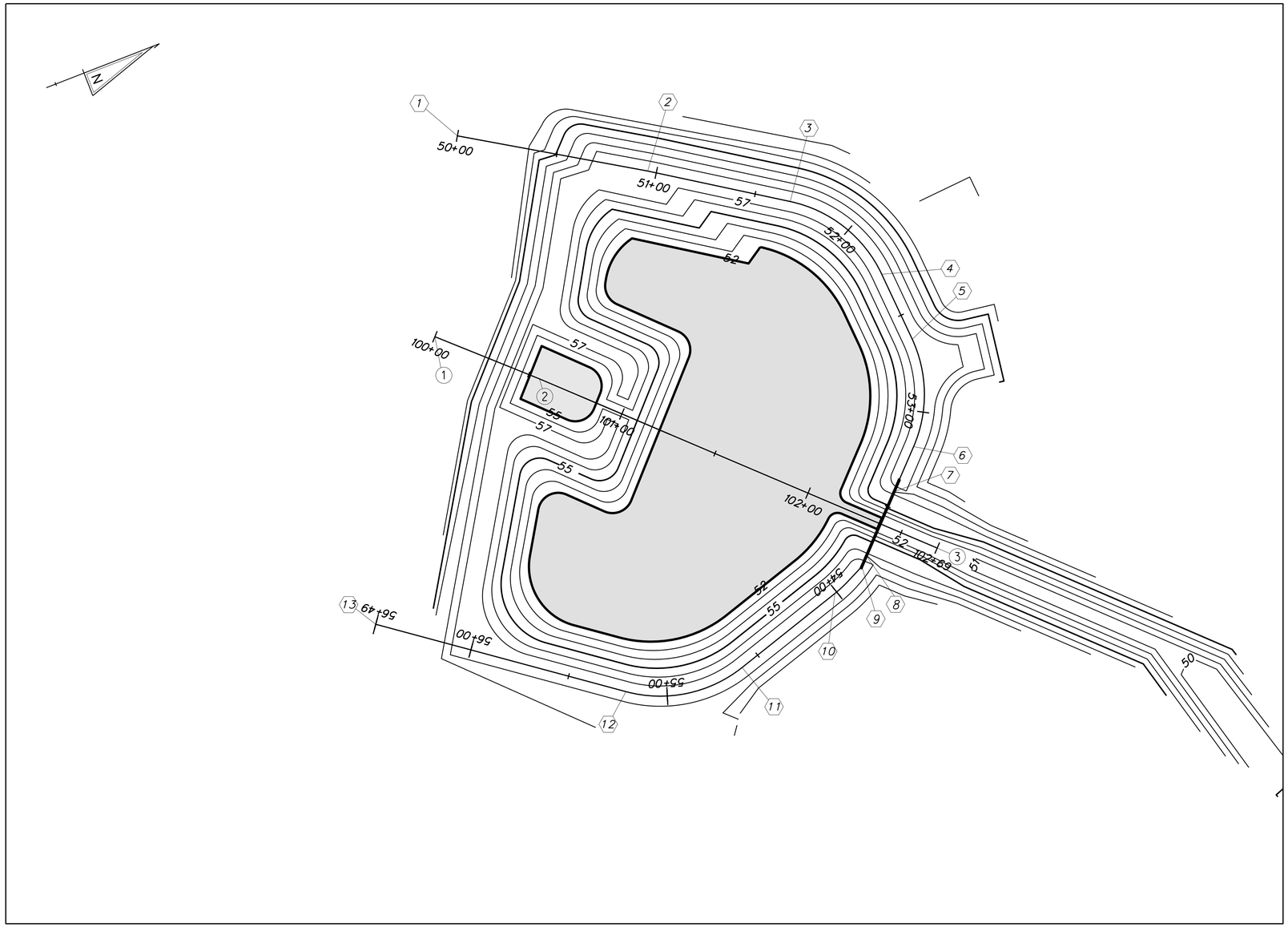

STAKEOUT - BMP 650 (BASIN 1A)

CL PRINCIPAL SPILLWAY				
	NOTE	STATION	NORTHING	EASTING
1	POE	100+00.00	526607.1814	561346.6760
2	PI	100+55.69	526647.1711	561385.4300
3	POE	102+69.00	526797.7479	561537.0619

CL EMBANKMENT				
		STATION	NORTHING	EASTING
1	POB	STA. 50+00.00	526654.9238	561258.9378
2	PI	STA. 50+95.67	526735.4847	561310.5305
3	PC	STA. 51+67.71	526795.0525	561351.0569
4	PT	STA. 52+27.59	526823.4013	561401.4069
5	PC	STA. 52+63.11	526825.2546	561436.8753
6	PT	STA. 53+19.05	526805.8613	561486.2302
7	PI	STA. 53+42.20	526788.4992	561503.2777
8	PI	STA. 53+76.54	526763.8964	561527.4348
9	PC	STA. 53+82.25	526759.8500	561531.4700
10	PT	STA. 54+00.98	526742.4660	561538.7599
11	PC	STA. 54+59.65	526686.1819	561555.3344
12	PT	STA. 55+20.50	526628.4979	561544.7383
13	POE	STA. 56+48.59	526526.5018	561467.2450

11/15/2012
J:\BRIDGE_HIGHWAYS\9040_Delaware_301\Civil\Plans\2A\SWM\Pond 1\SW_1A_02.dgn

DELAWARE DEPARTMENT OF TRANSPORTATION

ADDENDUMS / REVISIONS

SCALE 0 30 60 90 FEET

US 301 LEVELS ROAD TO SUMMIT BRIDGE ROAD

CONTRACT: T200911303
COUNTY: NEW CASTLE
BRIDGE NO.:
DESIGNED BY: BAS
CHECKED BY: JJW

STORMWATER MANAGEMENT DETAILS BMP 650 (BASIN 1A)

SW02
SHEET NO. 687
TOTAL SHTS. 1256

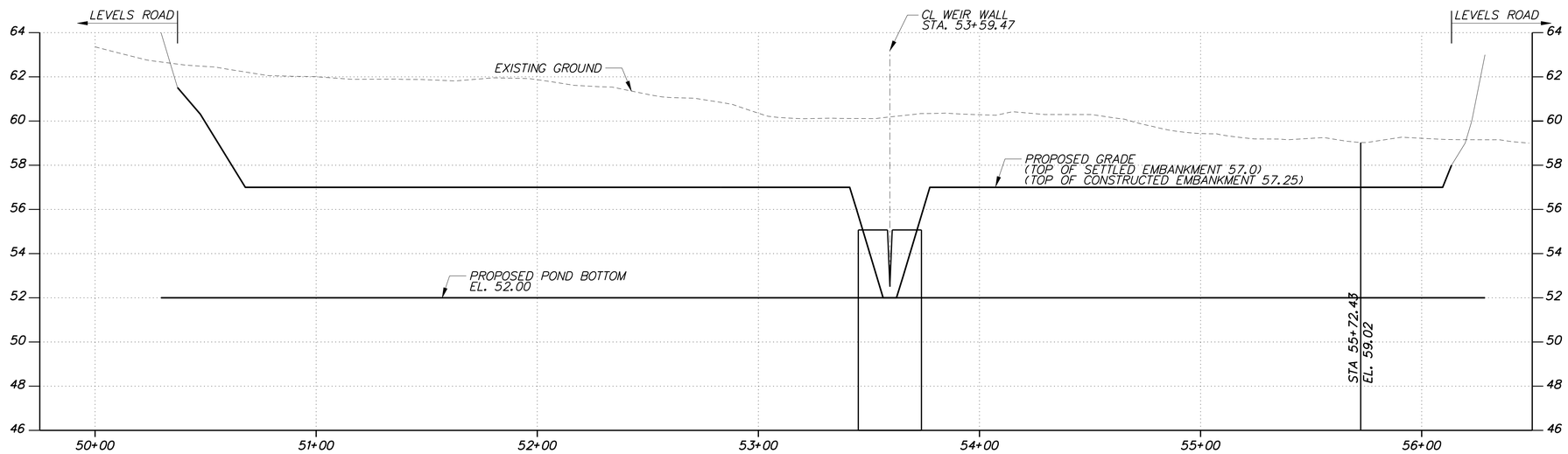

EMBANKMENT PROFILE FOR BMP 650 (BASIN 1A)

HORIZONTAL SCALE: 1" = 30'

0 30 60 90

FEET

VERTICAL SCALE: 1" = 3'

0 3 6 9

FEET

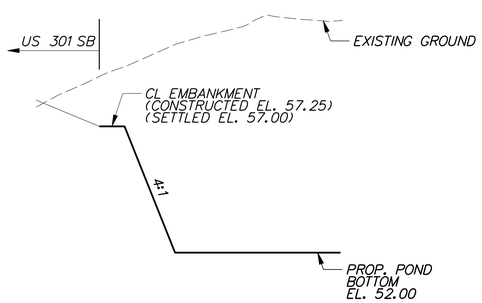

SECTION C-C FROM BASIN PLAN

SCALE: NONE

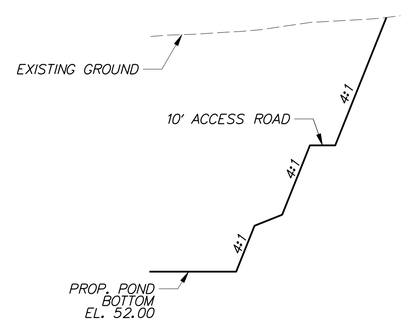

SECTION D-D FROM BASIN PLAN

SCALE: NONE

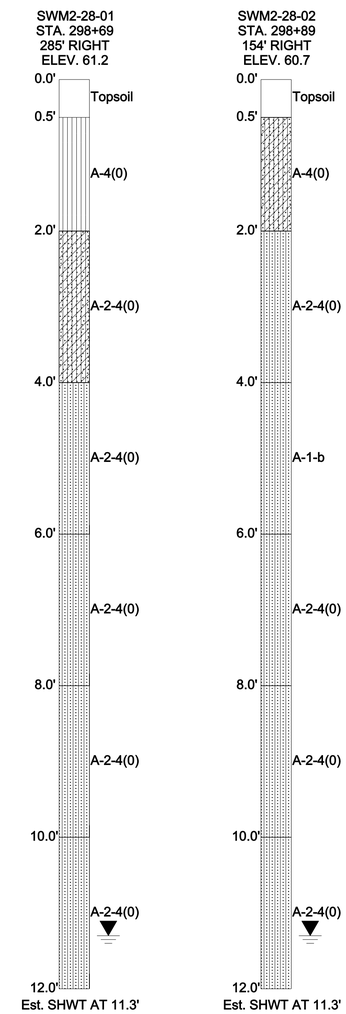

DELAWARE DEPARTMENT OF TRANSPORTATION	ADDENDUMS / REVISIONS	AS SHOWN	US 301 LEVELS ROAD TO SUMMIT BRIDGE ROAD	CONTRACT T200911303	BRIDGE NO.	STORMWATER MANAGEMENT DETAILS BMP 650 (BASIN 1A)	SW03
				COUNTY NEW CASTLE	DESIGNED BY: BAS		SHEET NO. 688
					CHECKED BY: JJW		TOTAL SHTS. 1256

11/13/2012
J:\BRIDGE_HIGHWAYS\9040_Deldot_301\Civil\Plans\2A\SWM\Pond 1\SW_1A_03.dgn

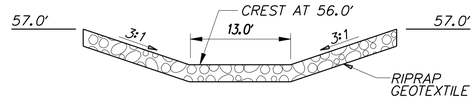

SECTION A-A FROM BASIN PLAN

SCALE: NONE

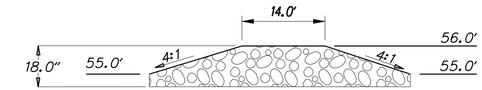

SECTION B-B FROM BASIN PLAN

SCALE: NONE

NOTES:

1. RIPRAP ITEM 712020
2. GEOTEXTILES, RIPRAP ITEM 713003
3. SEE STANDARD NO. E-10 FOR GEOTEXTILE PLACEMENT

STONE CHECK DAM

SCALE: NONE

DATA

WEIR TOP OF WIDTH (Do)= 2.12'
APRON LENGTH (La) = 20'
APRON WIDTH (W) = 22'
RIPRAP SIZE (R No.)
= R-5 WITH NO. 57 STONE

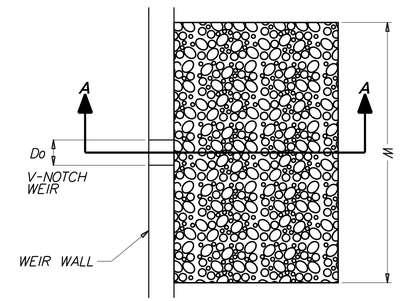

PLAN

SCALE: NONE

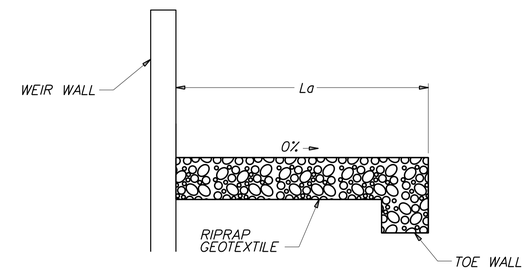

SECTION A-A

SCALE: NONE

NOTES:

1. RIPRAP ITEM 712006
2. GEOTEXTILES, RIPRAP ITEM 713003
3. DELEWARE NO. 57 STONE ITEM 302012
4. SEE STANDARD NO. E-10 FOR RIPRAP DEPTH AND GEOTEXTILE PLACEMENT.
5. DEPRESS CENTERLINE OF APRON SLIGHTLY TO PREVENT EDGE CUTTING

BASIN RIPRAP OUTLET PROTECTION

SCALE: NONE

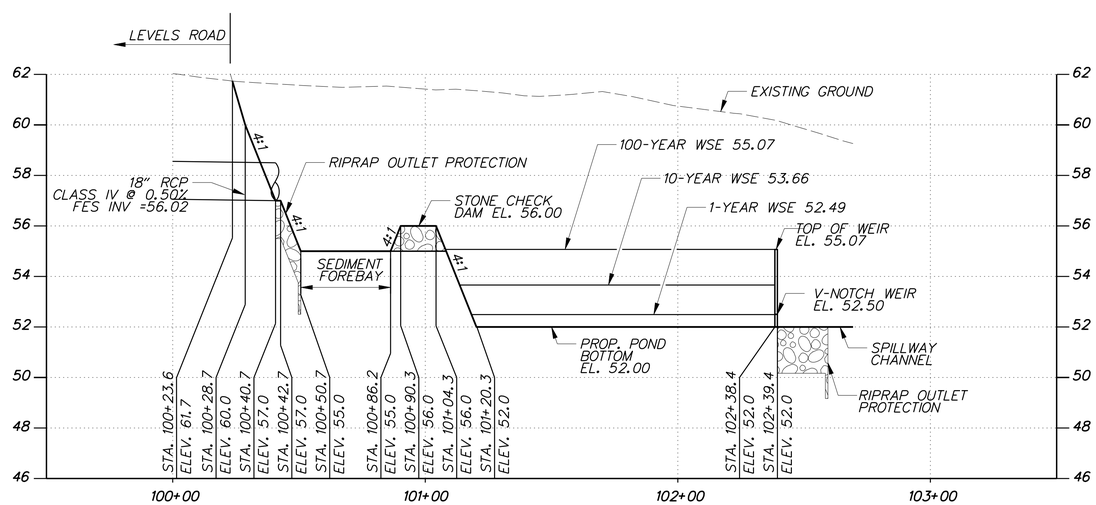

HORIZONTAL SCALE: 1" = 30'

0 30 60 90

FEET

VERTICAL SCALE: 1" = 3'

0 3 6 9

FEET

SPILLWAY PROFILE - BMP 650 (BASIN 1A)

11/13/2012
J:\BRIDGE_HIGHWAYS\9040_Deldot_301\Civil\Plans\2A\SWM\Pond 1\SW_1A_04.dgn

DELAWARE DEPARTMENT OF TRANSPORTATION	ADDENDUMS / REVISIONS	AS SHOWN	US 301 LEVELS ROAD TO SUMMIT BRIDGE ROAD	CONTRACT T200911303	BRIDGE NO.	STORMWATER MANAGEMENT DETAILS BMP 650 (BASIN 1A)	SW04
				COUNTY NEW CASTLE	DESIGNED BY: BAS		SHEET NO. 689
					CHECKED BY: JJW		TOTAL SHTS. 1256

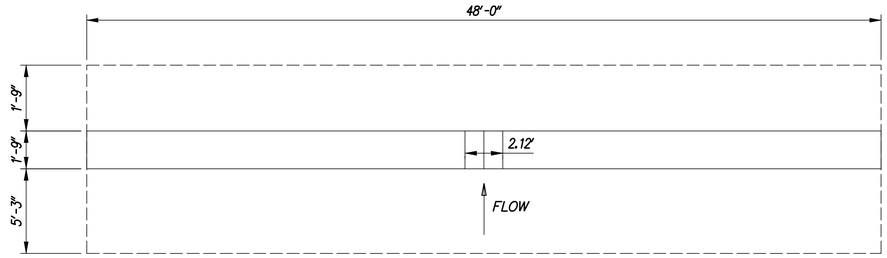

WEIR WALL PLAN

SCALE: NONE

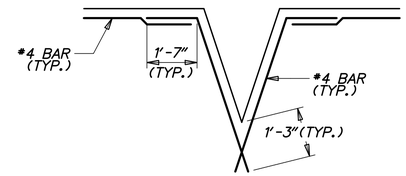

OPENING DETAILS

SCALE: NONE

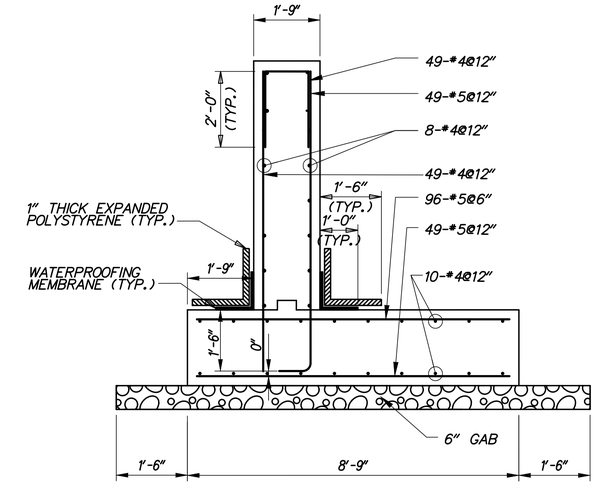

WEIR WALL SECTION

SCALE: 1/2"=1'-0"

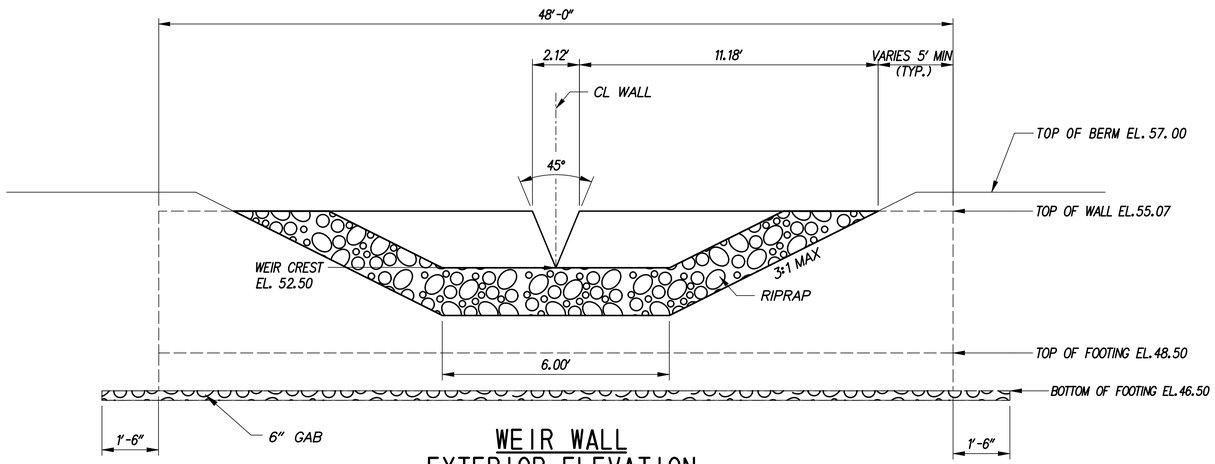

WEIR WALL EXTERIOR ELEVATION WITH RIPRAP APRON

SCALE: NONE

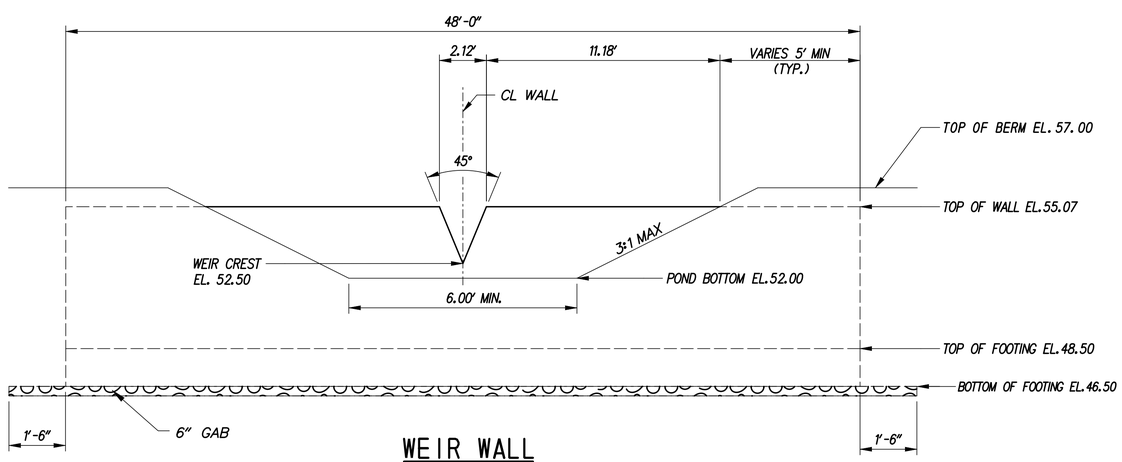

WEIR WALL INTERIOR ELEVATION

SCALE: NONE

GENERAL NOTES

1. DESIGN SPECIFICATIONS:

   AASHTO LRFD BRIDGE DESIGN SPECIFICATIONS, 4TH EDITION, 2007, INCLUDING 2008 AND 2009 INTERIM REVISIONS, AND AS SUPPLEMENTED BY DELAWARE DEPARTMENT OF TRANSPORTATION BRIDGE DESIGN MANUAL, MAY 2005, INCLUDING LATEST REVISIONS.

   PROVIDE MATERIALS AND PERFORM WORK IN ACCORDANCE WITH THE DELAWARE DEPARTMENT OF TRANSPORTATION STANDARD SPECIFICATIONS AND CONSTRUCTION DETAILS, AASHTO/AWS D1.5M/D1.5 BRIDGE WELDING CODE, AND CONTRACT SPECIAL PROVISIONS.

2. LOADING:

   UNIT WEIGHTS OF MATERIALS SHALL BE IN ACCORDANCE WITH THE DELAWARE DESIGN MANUAL.

3. PORTLAND CEMENT CONCRETE:

   PORTLAND CEMENT CONCRETE FOR CAST-IN-PLACE ELEMENTS SHALL BE AS FOLLOWS:
   (28 DAY COMPRESSIVE STRENGTH)
   (CLASS B, F'c=3000 PSI) - WEIR WALL FOOTING
   (CLASS A, F'c=4500 PSI) - WEIR WALL STEM

   WEIR WALLS MUST BE CAST-IN-PLACE.

   MIX REQUIREMENTS SHALL CONFORM TO SECTION 812 OF THE DELAWARE DEPARTMENT OF TRANSPORTATION STANDARD SPECIFICATIONS.

   ALL EXPOSED CORNERS OF CONCRETE SHALL BE CHAMFERED WITH ¾" X ¾" MILLED CHAMFER STRIPS EXCEPT ON UNEXPOSED FOOTINGS.

4. BAR REINFORCEMENT:

   REINFORCING STEEL SHALL CONFORM TO AASHTO M31 (ASTM A615), GRADE 60 AND IS TO BE EPOXY COATED. FUSION-BONDED EPOXY COATED REINFORCING STEEL SHALL CONFORM TO AASHTO M284 (ASTM D3963).

   PROVIDE 3" CONCRETE COVER ON REINFORCEMENT BARS, EXCEPT AS NOTED.

   LAP LENGTH OF #4 BARS TO BE 3'-0". STAGGER SPLICE LOCATIONS.

   DO NOT WELD GRADE 60 REINFORCING STEEL.

5. CONSTRUCTION JOINTS:

   KEYED CONSTRUCTION JOINTS SHALL BE 2" x 4" OR AS NOTED.

6. WATERPROOFING MEMBRANE:

   ADHESIVE BACKED WATERPROOFING MEMBRANE IS TO BE USED. SPLICING OF THE MEMBRANE IS PROHIBITED.

7. REFER TO SPECIFICATION SECTION 272501 FOR CONSTRUCTION SEQUENCE.

8. GAB IS INCIDENTAL TO WALL CONSTRUCTION.

G:\60049040 US301\CIVIL\PLANS\2A\CP\SW-05.DGN

DELAWARE DEPARTMENT OF TRANSPORTATION	ADDENDUMS / REVISIONS	AS SHOWN	US 301 LEVELS ROAD TO SUMMIT BRIDGE ROAD	CONTRACT T200911303	BRIDGE NO.	STORMWATER MANAGEMENT DETAILS BMP 650 (BASIN 1A)	SW-05
				COUNTY NEW CASTLE	DESIGNED BY: BAS		SHEET NO. 690
					CHECKED BY: JJW		TOTAL SHTS. 1256

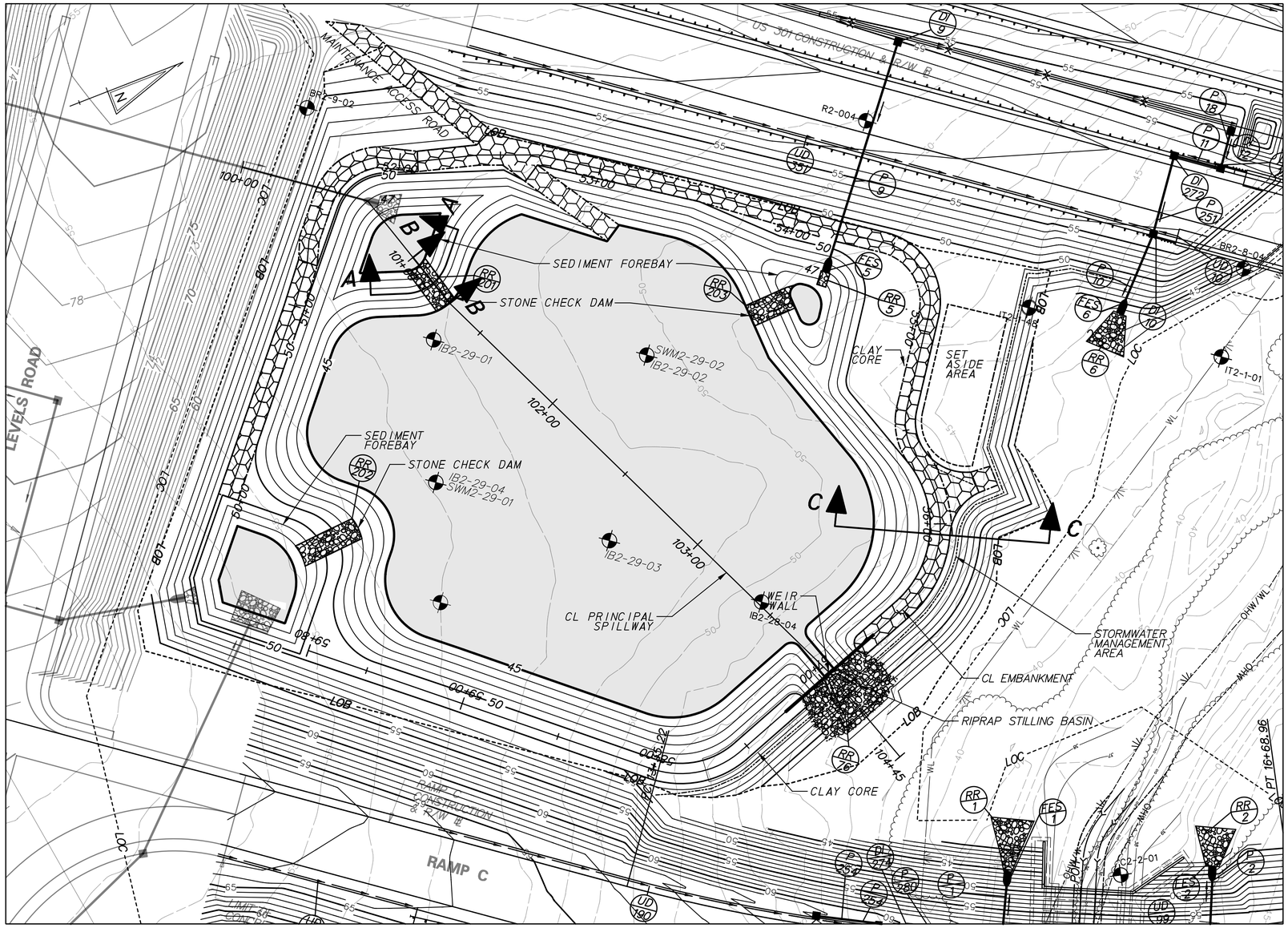

PLAN - BMP 651 (BASIN 1B)

POND DESIGN SUMMARY				
DESIGN STORM	FACILITY INFLOW (CFS)	FACILITY DISCHARGE (CFS)	WATER SURFACE ELEVATION (FT)	STORAGE VOLUME (AC. FT)
QUALITY STORM (1-YR)	22.49	0	45.63	0.71
10 - YEAR	65.08	3.82	47.22	2.64
100 - YEAR	138.76	24.94	48.86	4.99

HAZARD CLASSIFICATION: CLASS A AS PER POND CODE 378

DRAINAGE AREA TO FACILITY: 23.19 AC

MANAGEMENT PROVIDED BY FACILITY: WATER QUALITY BY INFILTRATION OF 1-YEAR STORM RUNOFF, WATER QUANTITY FOR 10 AND 100-YEAR STORMS.

RIPRAP SCHEDULE

NO.	TYPE	AREA (SY)
76	R-5	159
5	R-4	4
201	R-4	30
202	R-4	39
203	R-4	28

CHECK CONSTRUCTION PLANS FOR SCHEDULE OF RIPRAP OUTSIDE OF THE BASIN AREA.

INFILTRATION BASIN CONSTRUCTION SEQUENCE

THE STORMWATER MANAGEMENT BASIN SHALL FUNCTION AS AN INFILTRATION FACILITY AND SHALL BE CONSTRUCTED IN ACCORDANCE WITH THE FOLLOWING SPECIFICATIONS:

SECTION 271 - STORMWATER MANAGEMENT POND
SECTION 272 - POND OUTLET STRUCTURE, CONCRETE
SECTION 274 CLAY BORROW, STORMWATER MANAGEMENT POND

1. PRIOR TO DISTURBANCE OF THE SITE UPSTREAM OF THE BASIN, INSTALL FENCE AROUND THE BASIN AREA TO PREVENT CONSTRUCTION EQUIPMENT AND STOCKPILED MATERIALS FROM ENTERING THE BASIN AREA AND COMPACTING THE SUBGRADE SOILS.

2. CONSTRUCT INFILTRATION BASIN AFTER ALL AREAS DRAINING TO THE BASIN HAVE BEEN PERMANENTLY STABILIZED AND THE ENGINEER HAS APPROVED THE CONSTRUCTION. IF BASIN CONSTRUCTION CANNOT BE DELAYED UNTIL ITS DRAINAGE AREA IS STABILIZED, DIVERSION BERMS OR OTHER SUITABLE MEASURES SHOULD BE PLACED AROUND THE BASIN'S PERIMETER DURING ALL PHASES OF CONSTRUCTION TO DIVERT ALL RUNOFF AND SEDIMENT AWAY FROM THE BASIN. THESE DIVERSION MEASURES SHOULD NOT BE REMOVED UNTIL ALL CONSTRUCTION WITHIN THE BASIN'S DRAINAGE AREA IS COMPLETED AND THE DRAINAGE AREA STABILIZED.

3. SEE CONSTRUCTION PLANS FOR EROSION AND SEDIMENT CONTROL MEASURES.

4. CONSTRUCT THE INFILTRATION BASIN WITHOUT COMPACTING THE BASINS SUBGRADE SOILS. EXCAVATION SHALL BE PERFORMED BY CONSTRUCTION EQUIPMENT PLACED OUTSIDE THE BASIN, WHERE POSSIBLE. ALL EXCAVATION SHALL BE PERFORMED WITH THE LIGHTEST PRACTICAL EXCAVATION EQUIPMENT.

5. CONSTRUCT WEIR WALL, RIPRAP ENERGY DISSIPATER AT THE END OF PRINCIPAL SPILLWAY AND PARTIAL EMBANKMENT AS NEEDED TO INSTALL WEIR WALL. DE-WATER FOUNDATION AS NEEDED IN ACCORDANCE WITH SECTION 111 AND USE SUMP PIT FOR DUMPING.

6. EXCAVATE THE POND AND COMPLETE THE EMBANKMENT, GRADES AND DETAILS SHOWN IN THE CONSTRUCTION PLANS. DURING EXCAVATION, THE CONTRACTOR SHALL SALVAGE AND STOCKPILE SOILS CLASSIFIED AS CH, CL, SC AND GG PER THE UNIFIED SOIL CLASSIFICATION SYSTEM TO BE USED TO CONSTRUCT EMBANKMENT. THE ABOVE CLASSIFIED SOILS MAY BE OBTAINED FROM ELSEWHERE WITHIN THE PROJECT LIMITS, IF NECESSARY.

7. STABILIZE BASIN EMBANKMENT AND BOTTOM WITH PERMANENT SEEDING.

8. REMOVE EROSION AND SEDIMENT CONTROLS, WATER DIVERSION PRACTICES AND FENCE UPON FINAL STABILIZATION AND APPROVAL FROM INSPECTOR.

9. THE CONTRACTOR SHALL PROVIDE 'AS-BUILT' DRAWINGS OF ALL STORMWATER MANAGEMENT FACILITIES SUCH AS PONDS, INFILTRATION BASINS, BIOFILTRATION SWALES, ETC. 'AS-BUILT' DRAWINGS SHALL SHOW THE ACTUAL FINISHED GROUND CONTOURS, OUTLET STRUCTURE DIMENSIONS AND ELEVATIONS, ETC. AS THEY EXIST AT THE COMPLETION OF THE PROJECT. THESE DRAWINGS SHALL BE SIGNED BY A PROFESSIONAL ENGINEER OR LAND SURVEYOR.

PLANTING SCHEDULE

PERMANENT GRASS SEEDING - WET GROUND UP TO ELEVATION 46.0
PERMANENT GRASS SEEDING - DRY GROUND ABOVE ELEVATION 46.0
PLACE TOPSOIL ABOVE BASIN BOTTOM ELEVATION 45.0

POND QUANTITIES			
ITEM NO.	ITEM	QTY.	UNITS.
202000	EXCAVATION AND EMBANKMENT	23786	CY
272501	POND OUTLET STRUCTURE, 2, SPECIAL	1	EACH
274000	CLAY BORROW, STORMWATER MANAGEMENT POND, CUT-OFF TRENCH	732	CY
302011	DELAWARE NO. 3 STONE	302	TON
302012	DELAWARE NO. 57 STONE	37	TON
712005	R-4 RIPRAP	4	SY
712006	R-5 RIPRAP	159	SY
712020	R-4 RIPRAP	60	TON
713001	GEOTEXTILES, STABILIZATION	2040	SY
713003	GEOTEXTILES, RIPRAP	310	SY
733002	TOPSOILING, 6" DEPTH	7780	SY
734013	PERMANENT GRASS SEEDING, DRY GROUND	7365	SY
734015	PERMANENT GRASS SEEDING, WET GROUND	5856	SY

P:\CADD2\60049040_US301\CIVIL\PLANS\2A\BALT\SWM\POND_1\SW_1B_01.DGN

DELAWARE DEPARTMENT OF TRANSPORTATION

ADDENDUMS / REVISIONS

SCALE 0 30 60 90 FEET

US 301 LEVELS ROAD TO SUMMIT BRIDGE ROAD

CONTRACT	BRIDGE NO.	
T200911303	DESIGNED BY: BAS	
COUNTY	CHECKED BY: JJW	
NEW CASTLE		

STORMWATER MANAGEMENT DETAILS BMP 651 (BASIN 1B)

SW06
SHEET NO.
691
TOTAL SHTS.
1256

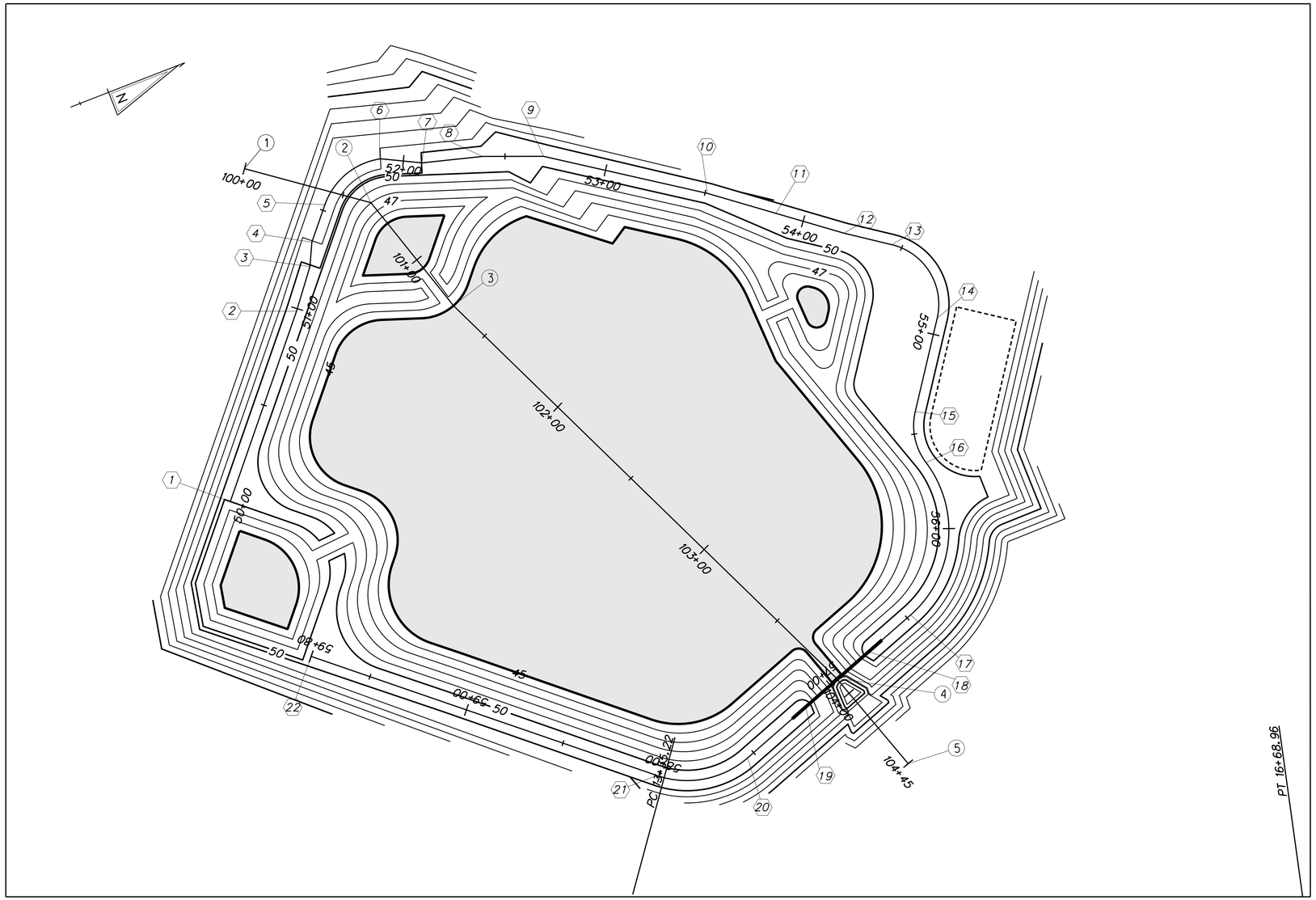

STAKEOUT - BMP 651 (BASIN 1B)

CL PRINCIPAL SPILLWAY			
STATION		NORTHING	EASTING
1	POB STA. 100+00.00	526389.7328	561656.2923
2	PI STA. 100+64.17	526440.8249	561695.1105
3	PI STA. 101+28.77	526459.2397	561757.0349
4	PI STA. 103+90.33	526564.1039	561996.6478
5	POE STA. 104+45.04	526580.9197	562048.7153

CL EMBANKMENT			
STATION		NORTHING	EASTING
1	POB STA. 50+00.00	526321.7963	561804.6381
2	PI STA. 50+98.70	526387.0002	561730.5423
3	PI STA. 51+21.56	526401.3481	561712.7474
4	PI STA. 51+33.50	526406.7184	561702.0801
5	PC STA. 51+52.94	526419.5626	561687.4843
6	PT STA. 51+89.45	526453.6679	561677.8120
7	PI STA. 52+09.13	526471.2901	561686.4463
8	PI STA. 52+39.07	526500.0523	561694.7467
9	PI STA. 52+68.90	526527.6918	561705.9725
10	PI STA. 53+51.15	526595.1530	561753.0301
11	PI STA. 53+86.12	526622.5574	561774.7520
12	PI STA. 54+20.82	526649.7484	561796.3048
13	PC STA. 54+44.97	526669.3653	561810.3845
14	PT STA. 54+91.95	526676.3281	561852.1327
15	PC STA. 55+38.86	526649.1559	561890.3756
16	PRC STA. 55+65.25	526644.6351	561915.5214
17	PT STA. 56+47.75	526609.4776	561981.7488
18	PI STA. 56+75.12	526583.6107	561990.6887
19	PI STA. 57+16.02	526544.9543	562004.0489
20	PC STA. 57+53.88	526509.1735	562016.4151
21	PT STA. 58+01.35	526464.7281	562007.6502
22	POE STA. 59+80.46	526329.8748	561889.7759

DELAWARE DEPARTMENT OF TRANSPORTATION

ADDENDUMS / REVISIONS

SCALE 0 30 60 90 FEET

US 301 LEVELS ROAD TO SUMMIT BRIDGE ROAD

CONTRACT T200911303
COUNTY NEW CASTLE
BRIDGE NO.
DESIGNED BY: BAS
CHECKED BY: JJW

STORMWATER MANAGEMENT DETAILS BMP 651 (BASIN 1B)

SW07
SHEET NO. 692
TOTAL SHTS. 1256

11/13/2012
J:\BRIDGE_HIGHWAYS\9040_Deldot_301\Civil\Plans\2A\SWM\Pond 1\SW_1B_02.dgn

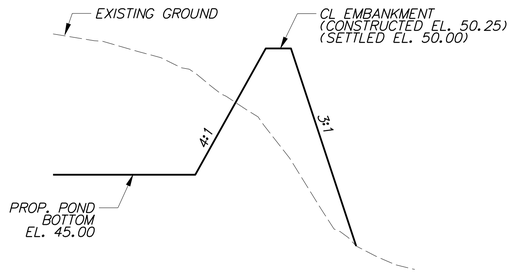

SECTION C-C FROM BASIN PLAN

SCALE: NONE

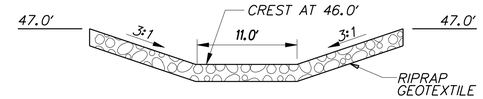

SECTION A-A FROM BASIN PLAN

SCALE: NONE

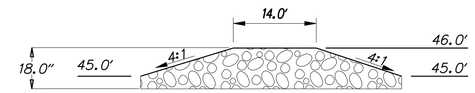

SECTION B-B FROM BASIN PLAN

SCALE: NONE

STONE CHECK DAM

SCALE: NONE

NOTES:

1. RIPRAP ITEM 712020
2. GEOTEXTILES, RIPRAP ITEM 713003
3. SEE STANDARD NO. E-10 FOR GEOTEXTILE PLACEMENT

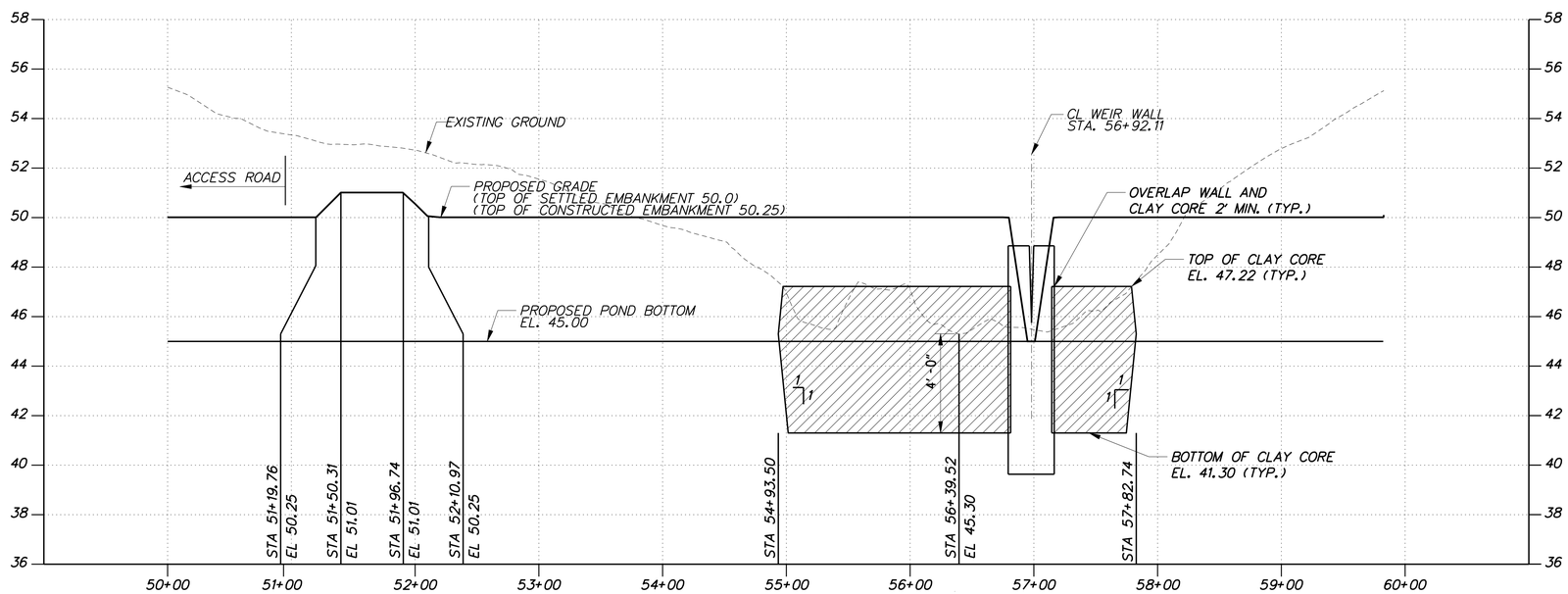

EMBANKMENT PROFILE FOR BMP 651 (BASIN 1B)

HORIZONTAL SCALE: 1" = 60'

0 60 120 180

FEET

VERTICAL SCALE: 1" = 3'

0 3 6 9

FEET

11/13/2012
J:\BRIDGE_HIGHWAYS\9040_Deldot_301\Civil\Plans\2A\SWM\Pond 1\SW_1B_03.dgn

DELAWARE DEPARTMENT OF TRANSPORTATION	ADDENDUMS / REVISIONS	AS SHOWN	US 301 LEVELS ROAD TO SUMMIT BRIDGE ROAD	CONTRACT T200911303	BRIDGE NO.	STORMWATER MANAGEMENT DETAIL BMP 651 (BASIN 1B)	SW08
				COUNTY NEW CASTLE	DESIGNED BY: BAS		SHEET NO. 693
					CHECKED BY: JJW		TOTAL SHTS. 1256

NOTES:

1. RIPRAP ITEM 712005
2. GEOTEXTILES, RIPRAP ITEM 713003
3. DELEWARE NO. 57 STONE ITEM 302012
4. SEE STANDARD NO. E-10 FOR RIPRAP DEPTH AND GEOTEXTILE PLACEMENT.
5. DEPRESS CENTERLINE OF APRON SLIGHTLY TO PREVENT EDGE CUTTING

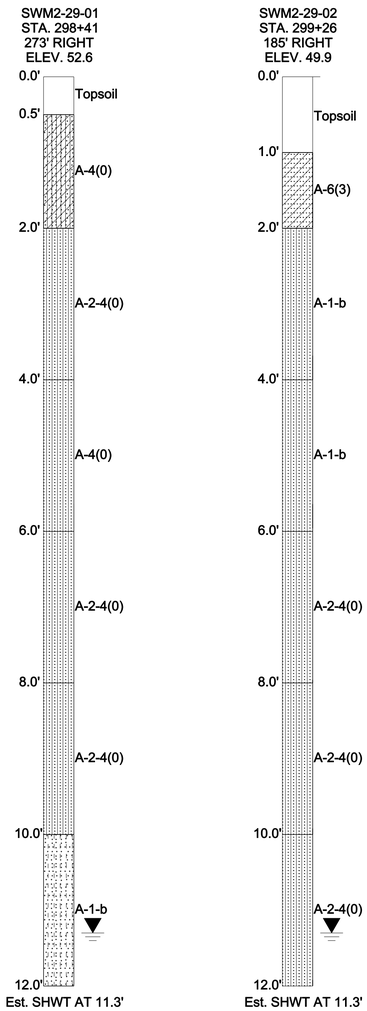

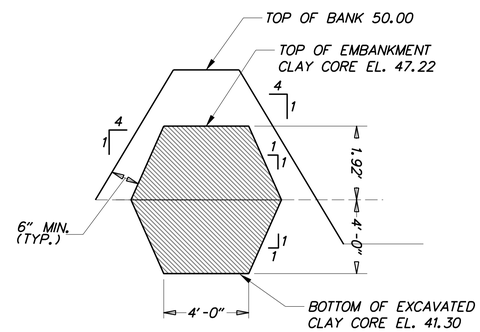

CLAY CORE TYPICAL SECTION

SCALE: NONE

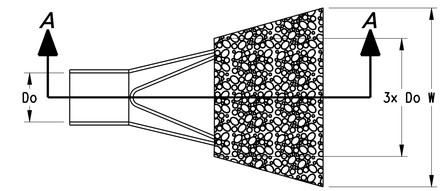

PLAN

SCALE: NONE

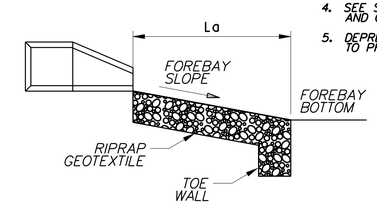

SECTION A-A

SCALE: NONE

DATA

PIPE DIAMETER (Do)
APRON LENGTH (La)
APRON WIDTH (W)
RIPRAP SIZE (R No.)

FES ID	Do	La	W	R No.
5	1.5'	7.0'	6.0'	R-4

FOREBAY RIPRAP OUTLET PROTECTION

SCALE: NONE

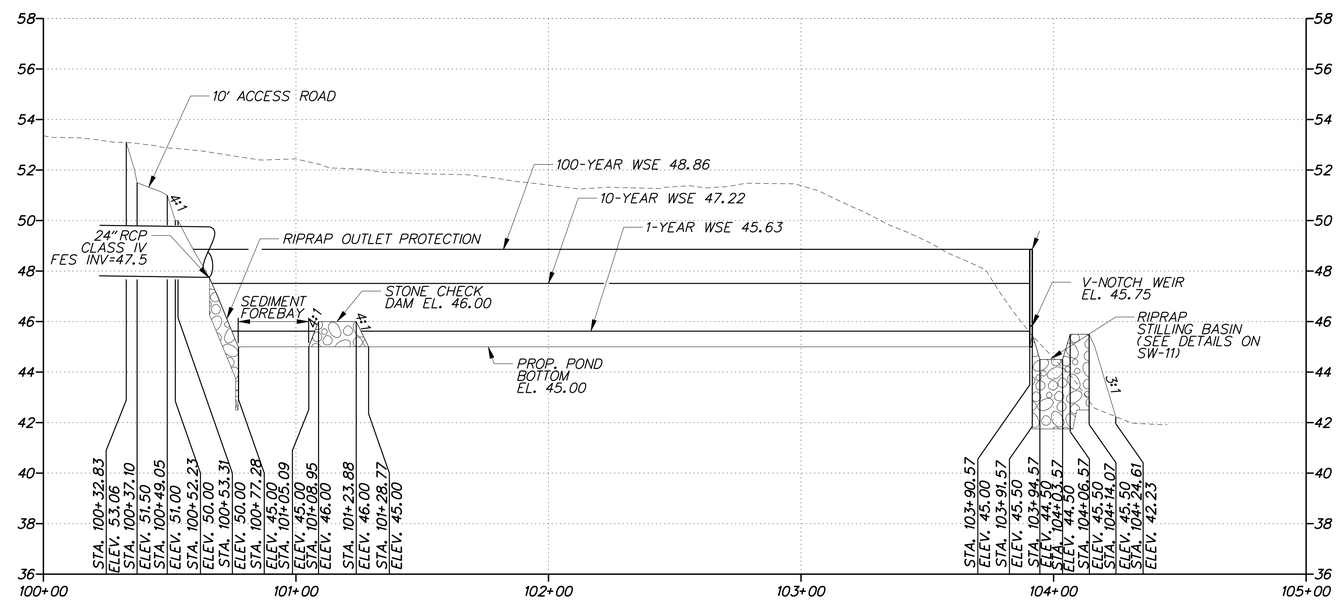

SPILLWAY PROFILE - BMP 651 (BASIN 1B)

HORIZONTAL SCALE: 1" = 30'

0 30 60 90

FEET

VERTICAL SCALE: 1" = 3'

0 3 6 9

FEET

11/13/2012
J:\BRIDGE_HIGHWAYS\9040_Deldot_301\Civil\Plans\2A\SWM\Pond 1\SW_1B_04.dgn

DELAWARE DEPARTMENT OF TRANSPORTATION	ADDENDUMS / REVISIONS	AS SHOWN	US 301 LEVELS ROAD TO SUMMIT BRIDGE ROAD	CONTRACT T200911303	BRIDGE NO.	STORMWATER MANAGEMENT DETAILS BMP 651 (BASIN 1B)	SW09
				COUNTY NEW CASTLE	DESIGNED BY: BAS		SHEET NO. 694
					CHECKED BY: JJW		TOTAL SHTS. 1256

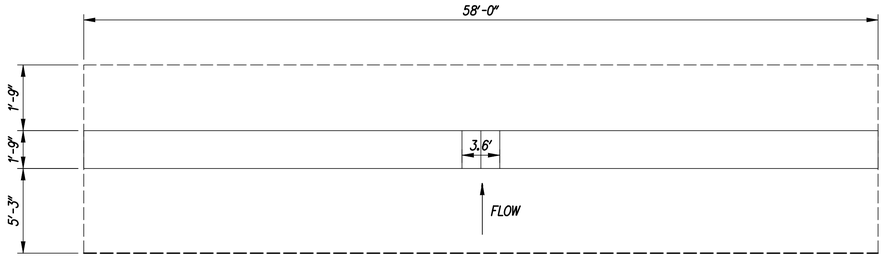

WEIR WALL PLAN

SCALE: NONE

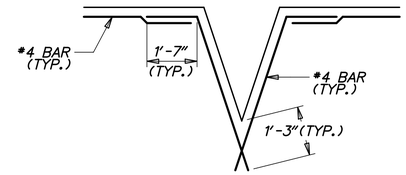

OPENING DETAILS

SCALE: NONE

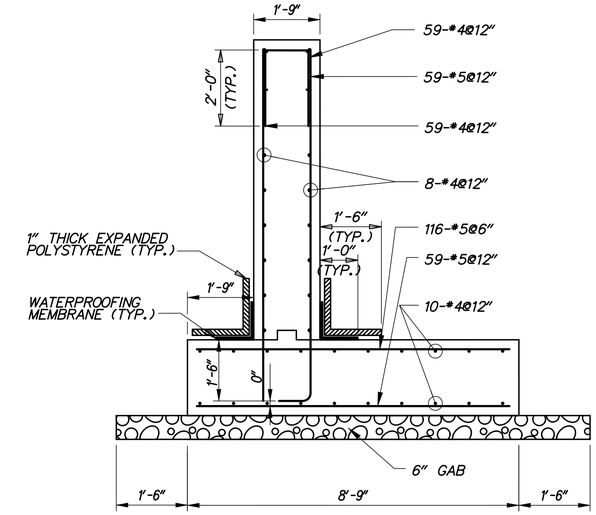

WEIR WALL SECTION

SCALE: 1/2" =1'-0"

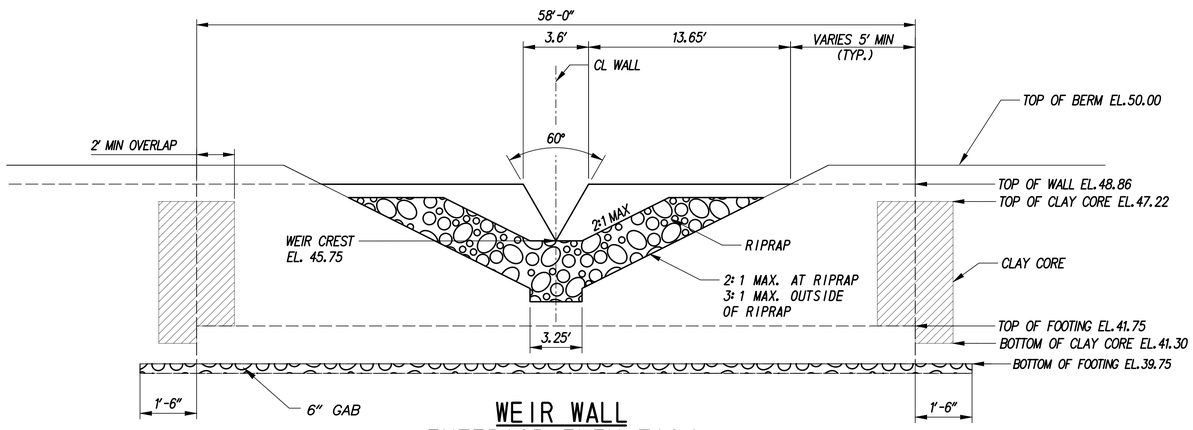

WEIR WALL EXTERIOR ELEVATION WITH RIPRAP STILLING BASIN

SCALE: NONE

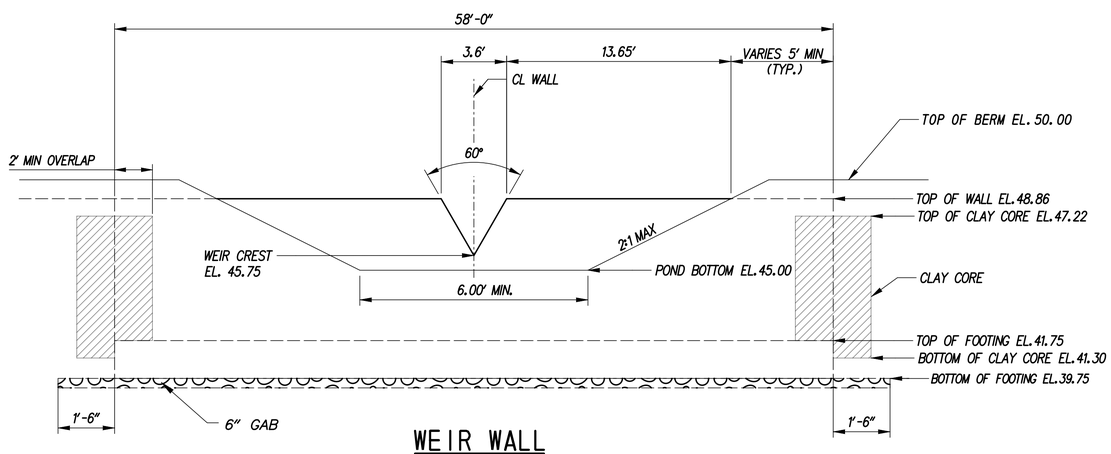

WEIR WALL INTERIOR ELEVATION

SCALE: NONE

GENERAL NOTES

1. DESIGN SPECIFICATIONS:

   AASHTO LRFD BRIDGE DESIGN SPECIFICATIONS, 4TH EDITION, 2007, INCLUDING 2008 AND 2009 INTERIM REVISIONS, AND AS SUPPLEMENTED BY DELAWARE DEPARTMENT OF TRANSPORTATION BRIDGE DESIGN MANUAL, MAY 2005, INCLUDING LATEST REVISIONS.

   PROVIDE MATERIALS AND PERFORM WORK IN ACCORDANCE WITH THE DELAWARE DEPARTMENT OF TRANSPORTATION STANDARD SPECIFICATIONS AND CONSTRUCTION DETAILS, AASHTO/AWS D1.5M/D1.5 BRIDGE WELDING CODE, AND CONTRACT SPECIAL PROVISIONS.

2. LOADING:

   UNIT WEIGHTS OF MATERIALS SHALL BE IN ACCORDANCE WITH THE DELAWARE DESIGN MANUAL.

3. PORTLAND CEMENT CONCRETE:

   PORTLAND CEMENT CONCRETE FOR CAST-IN-PLACE ELEMENTS SHALL BE AS FOLLOWS:
   (28 DAY COMPRESSIVE STRENGTH)
   (CLASS B, F'c=3000 PSI) - WEIR WALL FOOTING
   (CLASS A, F'c=4500 PSI) - WEIR WALL STEM

   WEIR WALLS MUST BE CAST-IN-PLACE.

   MIX REQUIREMENTS SHALL CONFORM TO SECTION 812 OF THE DELAWARE DEPARTMENT OF TRANSPORTATION STANDARD SPECIFICATIONS.

   ALL EXPOSED CORNERS OF CONCRETE SHALL BE CHAMFERED WITH ¾" X ¾" MILLED CHAMFER STRIPS EXCEPT ON UNEXPOSED FOOTINGS.

4. BAR REINFORCEMENT:

   REINFORCING STEEL SHALL CONFORM TO AASHTO M31 (ASTM A615), GRADE 60 AND IS TO BE EPOXY COATED. FUSION-BONDED EPOXY COATED REINFORCING STEEL SHALL CONFORM TO AASHTO M284 (ASTM D3963).

   PROVIDE 3" CONCRETE COVER ON REINFORCEMENT BARS, EXCEPT AS NOTED.

   LAP LENGTH OF #4 BARS TO BE 3'-0". STAGGER SPLICE LOCATIONS.

   DO NOT WELD GRADE 60 REINFORCING STEEL.

5. CONSTRUCTION JOINTS:

   KEYED CONSTRUCTION JOINTS SHALL BE 2" x 4" OR AS NOTED.

6. WATERPROOFING MEMBRANE:

   ADHESIVE BACKED WATERPROOFING MEMBRANE IS TO BE USED. SPLICING OF THE MEMBRANE IS PROHIBITED.

7. REFER TO SPECIFICATION SECTION 272501 FOR CONSTRUCTION SEQUENCE.

8. GAB IS INCIDENTAL TO WALL CONSTRUCTION.

G:\60049040 US301\CIVIL\PLANS\2A\CP\SW-10.DGN

DELAWARE DEPARTMENT OF TRANSPORTATION	ADDENDUMS / REVISIONS	AS SHOWN	US 301 LEVELS ROAD TO SUMMIT BRIDGE ROAD	CONTRACT T200911303	BRIDGE NO.	STORMWATER MANAGEMENT DETAILS BMP 651 (BASIN 1B)	SW-10
				COUNTY NEW CASTLE	DESIGNED BY: BAS		SHEET NO. 695
					CHECKED BY: JJW		TOTAL SHTS. 1256

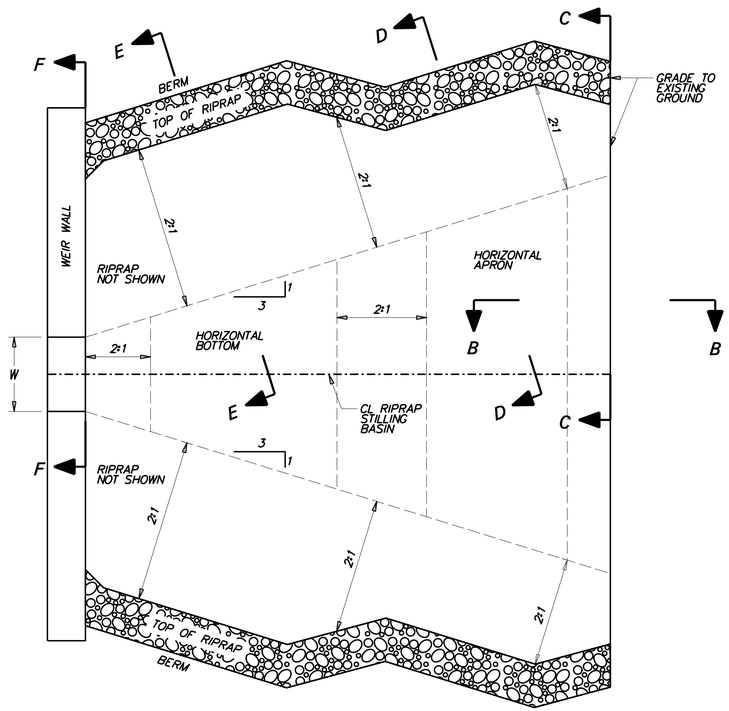

PLAN

SCALE: NONE

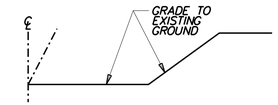

SECTION C-C

SCALE: NONE

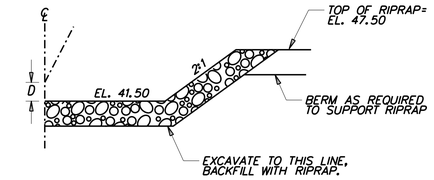

SECTION E-E

SCALE: NONE

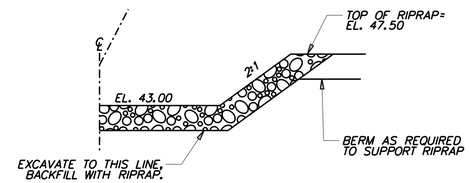

SECTION D-D

SCALE: NONE

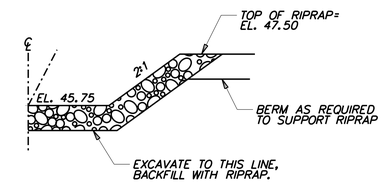

SECTION F-F

SCALE: NONE

DATA

TOP OF V-NOTCH WEIR WIDTH W=3.59'
DEPTH OF BASIN FROM WEIR CREST (D) = 1.50'
RIPRAP SIZE (R No.) = R-5 WITH NO. 57 STONE

NOTES:

1. RIPRAP ITEM 712006
2. GEOTEXTILES, RIPRAP ITEM 713003
3. DELEWARE NO. 57 STONE ITEM 302012
4. SEE STANDARD NO. E-10 FOR RIPRAP DEPTH AND GEOTEXTILE PLACEMENT.

RIPRAP STILLING BASIN

SCALE: NONE

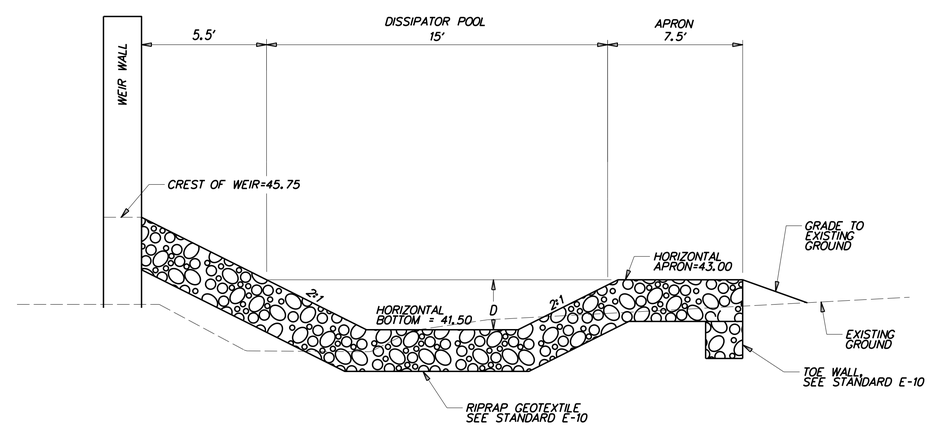

PROFILE THRU RIPRAP STILLING BASIN

SCALE: NONE

DELAWARE DEPARTMENT OF TRANSPORTATION	ADDENDUMS / REVISIONS	AS SHOWN	US 301 LEVELS ROAD TO SUMMIT BRIDGE ROAD	CONTRACT T200911303 / COUNTY NEW CASTLE	BRIDGE NO. / DESIGNED BY: BAS / CHECKED BY: JJW	STORMWATER MANAGEMENT DETAILS BMP 651 (BASIN 1B)

SW11
SHEET NO. 696
TOTAL SHTS. 1256

11/13/2012
J:\BRIDGE_HIGHWAYS\9040_Deldot_301\Civil\Plans\2A\SWM\Pond 1\SW_1B_06.dgn

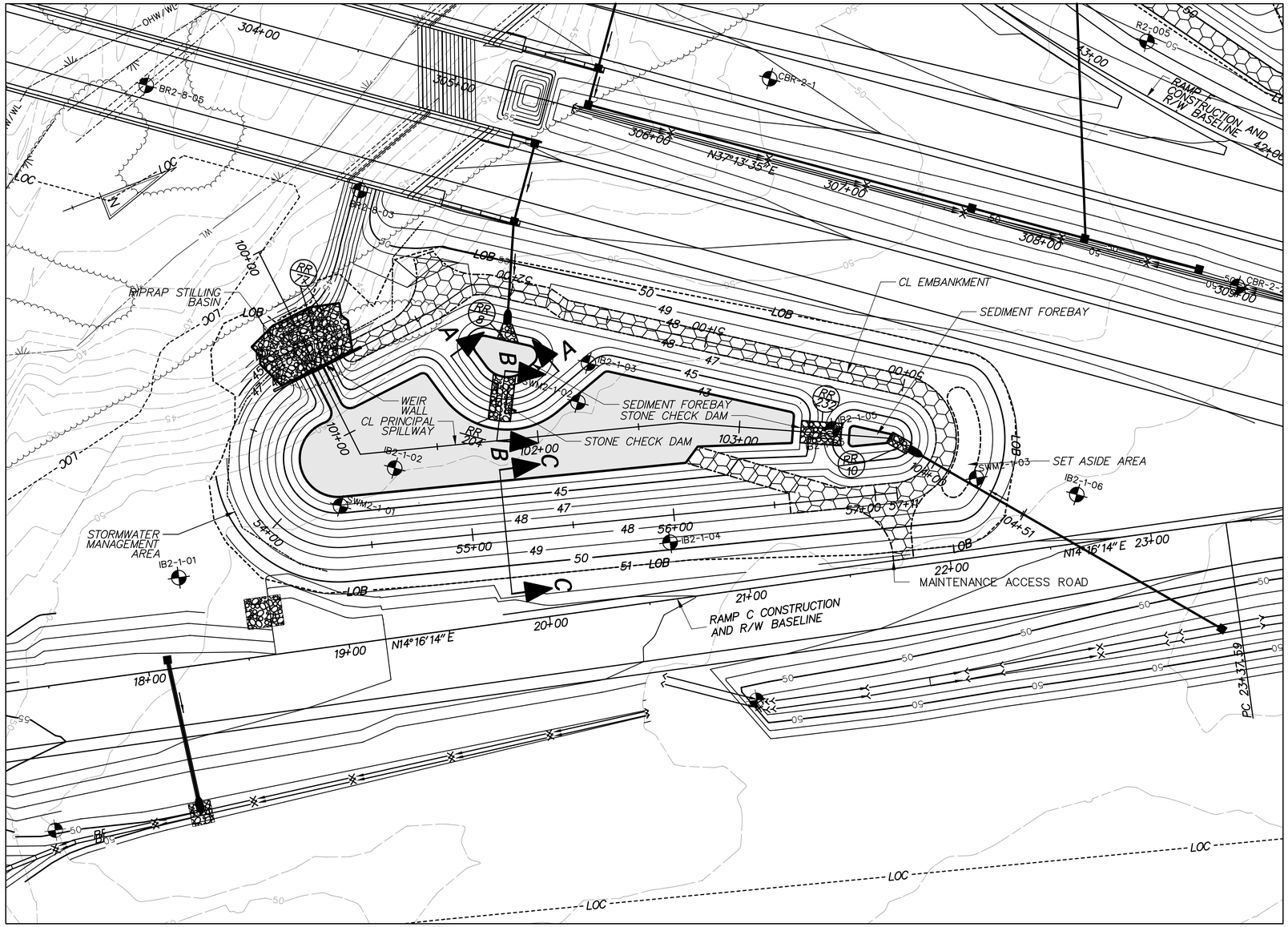

PLAN - BMP 652 (BASIN 1C)

POND DESIGN SUMMARY				
DESIGN STORM	FACILITY INFLOW (CFS)	FACILITY DISCHARGE (CFS)	WATER SURFACE ELEVATION(FT)	STORAGE VOLUME (AC. FT)
QUALITY STORM (1-YR)	5.37	0.00	43.63	0.14
10 - YEAR	16.25	0.23	45.52	0.73
100 - YEAR	34.29	2.78	46.45	1.10

HAZARD CLASSIFICATION: CLASS A AS PER POND CODE 378

DRAINAGE AREA TO FACILITY: 4.50 AC

MANAGEMENT PROVIDED BY FACILITY: WATER QUALITY BY INFILTRATION OF 1-YEAR STORM RUNOFF, WATER QUANTITY FOR 10 AND 100-YEAR STORMS.

RIPRAP SCHEDULE		
NO.	TYPE	AREA (SY)
77	R-5	168
8	R-4	8
10	R-4	8
204	R-4	28
232	R-4	25

CHECK CONSTRUCTION PLANS FOR SCHEDULE OF RIPRAP OUTSIDE OF THE BASIN AREA.

INFILTRATION BASIN CONSTRUCTION SEQUENCE

THE STORMWATER MANAGEMENT BASIN SHALL FUNCTION AS AN INFILTRATION FACILITY AND SHALL BE CONSTRUCTED IN ACCORDANCE WITH THE FOLLOWING SPECIFICATIONS:

SECTION 271 - STORMWATER MANAGEMENT POND
SECTION 272 - POND OUTLET STRUCTURE, CONCRETE

1. PRIOR TO DISTURBANCE OF THE SITE UPSTREAM OF THE BASIN, INSTALL FENCE AROUND THE BASIN AREA TO PREVENT CONSTRUCTION EQUIPMENT AND STOCKPILED MATERIALS FROM ENTERING THE BASIN AREA AND COMPACTING THE SUBGRADE SOILS.
2. CONSTRUCT INFILTRATION BASIN AFTER ALL AREAS DRAINING TO THE BASIN HAVE BEEN PERMANENTLY STABILIZED AND THE ENGINEER HAS APPROVED THE CONSTRUCTION. IF BASIN CONSTRUCTION CANNOT BE DELAYED UNTIL ITS DRAINAGE AREA IS STABILIZED, DIVERSION BERMS OR OTHER SUITABLE MEASURES SHOULD BE PLACED AROUND THE BASIN'S PERIMETER DURING ALL PHASES OF CONSTRUCTION TO DIVERT ALL RUNOFF AND SEDIMENT AWAY FROM THE BASIN. THESE DIVERSION MEASURES SHOULD NOT BE REMOVED UNTIL ALL CONSTRUCTION WITHIN THE BASIN'S DRAINAGE AREA IS COMPLETED AND THE DRAINAGE AREA STABILIZED.
3. SEE CONSTRUCTION PLANS FOR EROSION AND SEDIMENT CONTROL MEASURES.
4. CONSTRUCT THE INFILTRATION BASIN WITHOUT COMPACTING THE BASINS SUBGRADE SOILS. EXCAVATION SHALL BE PERFORMED BY CONSTRUCTION EQUIPMENT PLACED OUTSIDE THE BASIN, WHERE POSSIBLE. ALL EXCAVATION SHALL BE PERFORMED WITH THE LIGHTEST PRACTICAL EXCAVATION EQUIPMENT.
5. CONSTRUCT WEIR WALL, RIPRAP ENERGY DISSIPATER AT THE END OF PRINCIPAL SPILLWAY AND PARTIAL EMBANKMENT AS NEEDED TO INSTALL WEIR WALL. DE-WATER FOUNDATION AS NEEDED IN ACCORDANCE WITH SECTION 111 AND USE SUMP PIT FOR DUMPING.
6. EXCAVATE THE POND AND COMPLETE THE EMBANKMENT, GRADES AND DETAILS SHOWN IN THE CONSTRUCTION PLANS. DURING EXCAVATION, THE CONTRACTOR SHALL SALVAGE AND STOCKPILE SOILS CLASSIFIED AS CH, CL, SC AND GG PER THE UNIFIED SOIL CLASSIFICATION SYSTEM TO BE USED TO CONSTRUCT EMBANKMENT. THE ABOVE CLASSIFIED SOILS MAY BE OBTAINED FROM ELSEWHERE WITHIN THE PROJECT LIMITS, IF NECESSARY.
7. STABILIZE BASIN EMBANKMENT AND BOTTOM WITH PERMANENT SEEDING.
8. REMOVE EROSION AND SEDIMENT CONTROLS, WATER DIVERSION PRACTICES AND FENCE UPON FINAL STABILIZATION AND APPROVAL FROM INSPECTOR.
9. THE CONTRACTOR SHALL PROVIDE 'AS-BUILT' DRAWINGS OF ALL STORMWATER MANAGEMENT FACILITIES SUCH AS PONDS, INFILTRATION BASINS, BIOFILTRATION SWALES, ETC. 'AS-BUILT' DRAWINGS SHALL SHOW THE ACTUAL FINISHED GROUND CONTOURS, OUTLET STRUCTURE DIMENSIONS AND ELEVATIONS, ETC. AS THEY EXIST AT THE COMPLETION OF THE PROJECT. THESE DRAWINGS SHALL BE SIGNED BY A PROFESSIONAL ENGINEER OR LAND SURVEYOR.

PLANTING SCHEDULE

PERMANENT GRASS SEEDING - WET GROUND UP TO ELEVATION 44.0
PERMANENT GRASS SEEDING - DRY GROUND ABOVE ELEVATION 44.0
PLACE TOPSOIL ABOVE BASIN BOTTOM ELEVATION 43.0

POND QUANTITIES			
ITEM NO.	ITEM	QTY.	UNITS.
202000	EXCAVATION AND EMBANKMENT	8845	CY
272501	POND OUTLET STRUCTURE, 3, SPECIAL	1	EACH
302011	DELAWARE NO. 3 STONE	196	TON
302012	DELAWARE NO. 57 STONE	39	TON
712005	R-4 RIPRAP	16	SY
712006	R-5 RIPRAP	168	SY
712020	R-4 RIPRAP	34	TON
713001	GEOTEXTILES, STABILIZATION	1319	SY
713003	GEOTEXTILES, RIPRAP	289	SY
733002	TOPSOILING, 6" DEPTH	6636	SY
734013	PERMANENT GRASS SEEDING, DRY GROUND	6432	SY
734015	PERMANENT GRASS SEEDING, WET GROUND	1193	SY

P:\CADD2\60049040 US301\CIVIL\PLANS\2A\BALT\SWM\POND 1\SW_1C_01.DGN

DELAWARE DEPARTMENT OF TRANSPORTATION

ADDENDUMS / REVISIONS

SCALE 0 30 60 90 FEET

US 301 LEVELS ROAD TO SUMMIT BRIDGE ROAD

CONTRACT T200911303 | COUNTY NEW CASTLE | BRIDGE NO. | DESIGNED BY: BAS | CHECKED BY: JJW

STORMWATER MANAGEMENT DETAILS BMP 652 (BASIN 1C)

SW12 | SHEET NO. 697 | TOTAL SHTS. 1256

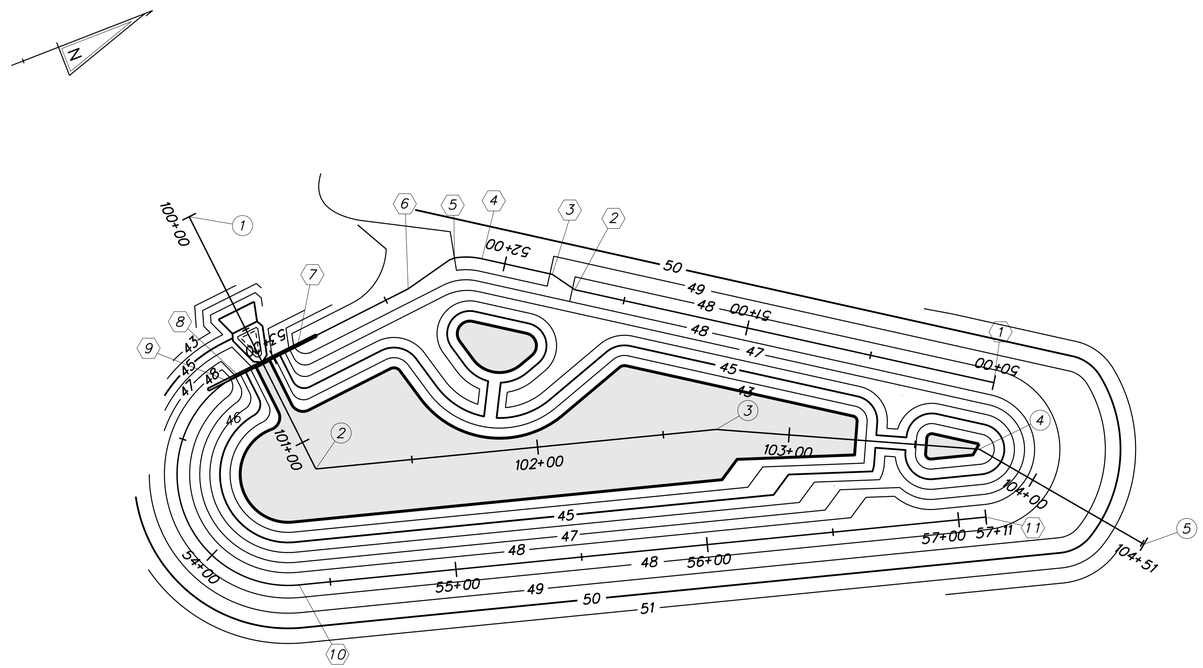

CL PRINCIPAL SPILLWAY			
STATION		NORTHING	EASTING
1	POB STA. 100+00.00	526986.0519	562061.8086
2	PI STA. 101+11.76	526994.8267	562173.2219
3	PI STA. 102+71.01	527147.5045	562218.5151
4	PI STA. 103+75.54	527241.0862	562265.0887
5	POE STA. 104+50.79	527287.2504	562324.5146

CL EMBANKMENT			
STATION		NORTHING	EASTING
1	POB STA. 50+00.00	527256.3707	562242.8452
2	PI STA. 51+69.97	527116.5688	562146.1708
3	PI STA. 51+80.74	527110.6188	562137.1932
4	PC STA. 52+09.29	527087.1350	562120.9539
5	PT STA. 52+20.23	527074.9498	562116.5517
6	PI STA. 52+40.08	527055.5989	562120.9647
7	PI STA. 52+89.03	527006.8173	562125.0151
8	PC STA. 53+15.67	526980.2681	562127.1932
9	PI STA. 53+30.33	526975.3695	562127.4247
10	PT STA. 54+37.58	526971.3798	562213.2265
11	POE STA. 57+10.82	527233.3350	562290.9377

STAKEOUT - BMP 652 (BASIN 1C)

11/14/2012
J:\BRIDGE_HIGHWAYS\9040_Deldot_301\Civil\Plans\2A\SWM\Pond 1\SW_1C_02.dgn

DELAWARE DEPARTMENT OF TRANSPORTATION

ADDENDUMS / REVISIONS

SCALE 0 30 60 90 FEET

US 301 LEVELS ROAD TO SUMMIT BRIDGE ROAD

CONTRACT T200911303
COUNTY NEW CASTLE
BRIDGE NO.
DESIGNED BY: BAS
CHECKED BY: JJW

STORMWATER MANAGEMENT DETAILS BMP 652 (BASIN 1C)

SW13
SHEET NO. 698
TOTAL SHTS. 1256

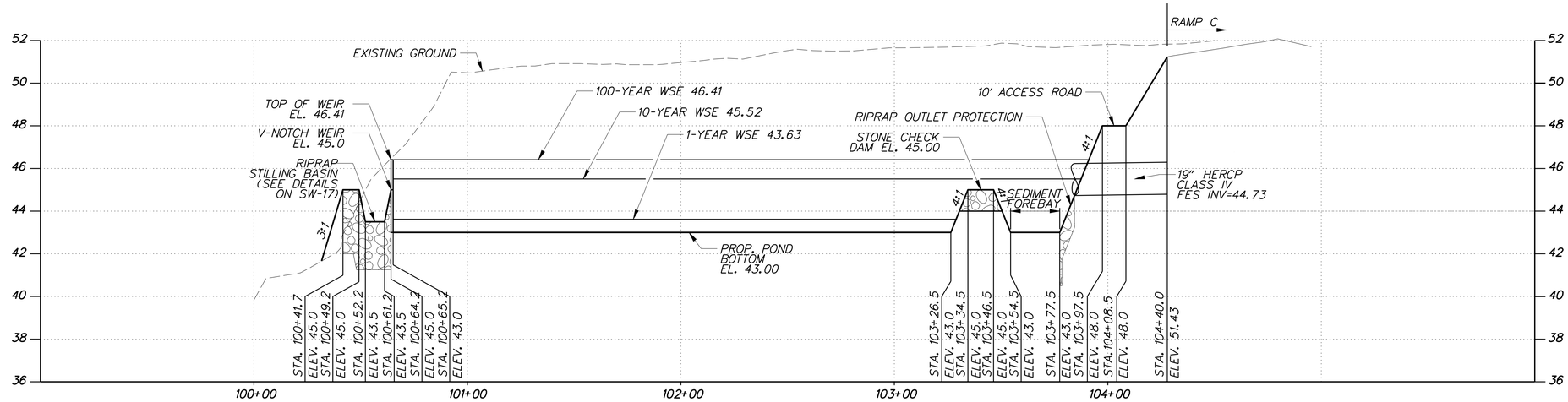

SPILLWAY PROFILE - BMP 652 (BASIN 1C)

HORIZONTAL SCALE: 1" = 30'

0 30 60 90

FEET

VERTICAL SCALE: 1" = 3'

0 3 6 9

FEET

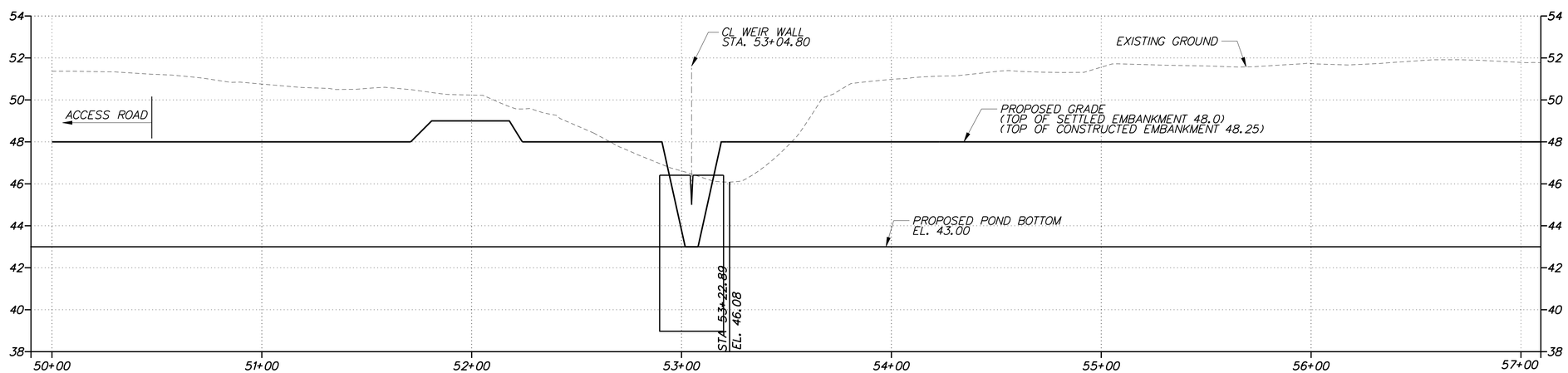

EMBANKMENT PROFILE FOR BMP 652 (BASIN 1C)

HORIZONTAL SCALE: 1" = 30'

0 30 60 90

FEET

VERTICAL SCALE: 1" = 3'

0 3 6 9

FEET

11/13/2012
J:\BRIDGE_HIGHWAYS\9040_Deldot_301\Civil\Plans\2A\SWM\Pond 1\SW_1C_03.dgn

DELAWARE DEPARTMENT OF TRANSPORTATION	ADDENDUMS / REVISIONS	AS SHOWN	US 301 LEVELS ROAD TO SUMMIT BRIDGE ROAD	CONTRACT T200911303	BRIDGE NO.	STORMWATER MANAGEMENT DETAILS BMP 652 (BASIN 1C)	SW14
				COUNTY NEW CASTLE	DESIGNED BY: BAS		SHEET NO. 699
					CHECKED BY: JJW		TOTAL SHTS. 1256

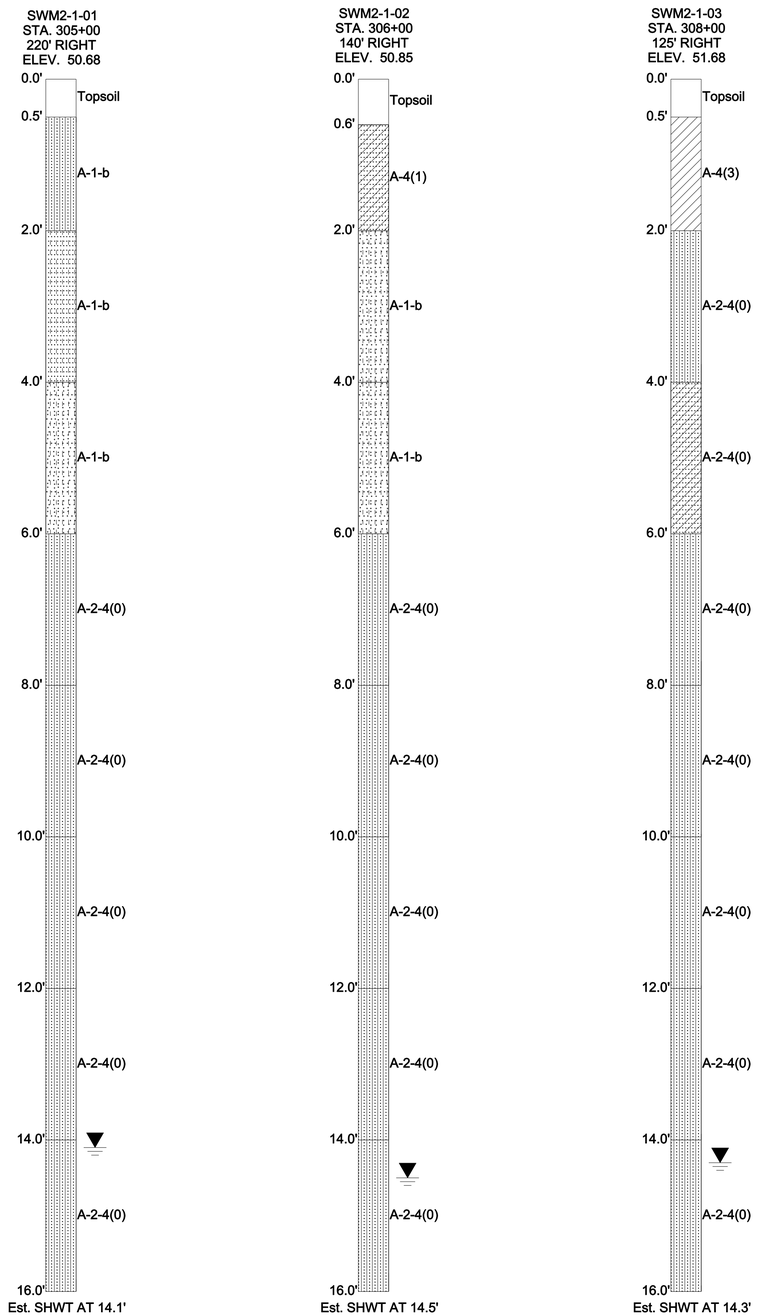

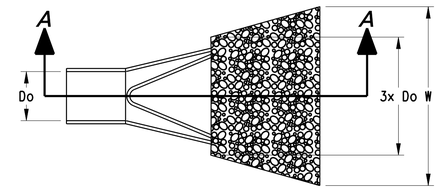

PLAN
SCALE: NONE

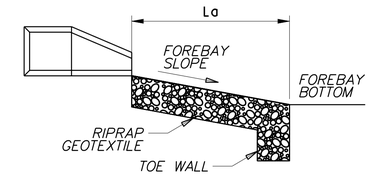

SECTION A-A
SCALE: NONE

NOTES:
1. RIPRAP ITEM 712005
2. GEOTEXTILES, RIPRAP ITEM 713003
3. DELEWARE NO. 57 STONE ITEM 302012
4. SEE STANDARD NO. E-10 FOR RIPRAP DEPTH AND GEOTEXTILE PLACEMENT.
5. DEPRESS CENTERLINE OF APRON SLIGHTLY TO PREVENT EDGE CUTTING

DATA
WEIR TOP WIDTH (Do)= xxx
PIPE DIAMETER (Do)
APRON LENGTH (La)
APRON WIDTH (W)
RIPRAP SIZE (R No.)

FES ID	Do	La	W	R No.
10	1.5'	11.0'	6.0'	R-4
8	1.5'	9.0'	11.0'	R-4

FOREBAY RIPRAP OUTLET PROTECTION
SCALE: NONE

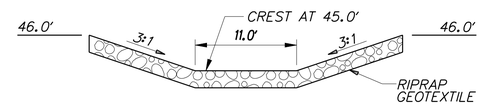

SECTION A-A FROM BASIN PLAN
SCALE: NONE

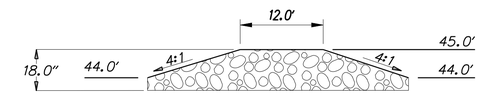

SECTION B-B FROM BASIN PLAN
SCALE: NONE

NOTES:
1. RIPRAP ITEM 712020
2. GEOTEXTILES, RIPRAP ITEM 713003
3. SEE STANDARD NO. E-10 FOR GEOTEXTILE PLACEMENT

STONE CHECK DAM
SCALE: NONE

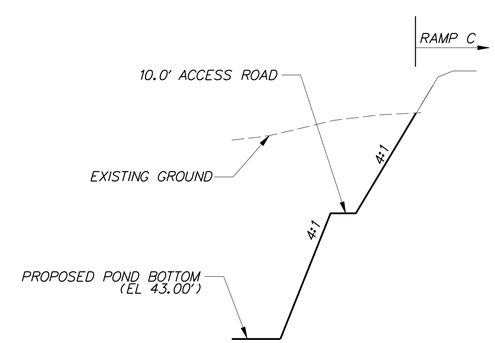

SECTION C-C FROM BASIN PLAN
SCALE: NONE

11/13/2012
J:\BRIDGE_HIGHWAYS\9040_Deldot_301\Civil\Plans\2A\SWM\Pond 1\SW_1C_04.dgn

DELAWARE DEPARTMENT OF TRANSPORTATION	ADDENDUMS / REVISIONS	AS SHOWN	US 301 LEVELS ROAD TO SUMMIT BRIDGE ROAD	CONTRACT T200911303 / COUNTY NEW CASTLE	BRIDGE NO. / DESIGNED BY: BAS / CHECKED BY: JJW	STORMWATER MANAGEMENT DETAILS BMP 652 (BASIN 1C)

SW15
SHEET NO. 700
TOTAL SHTS. 1256

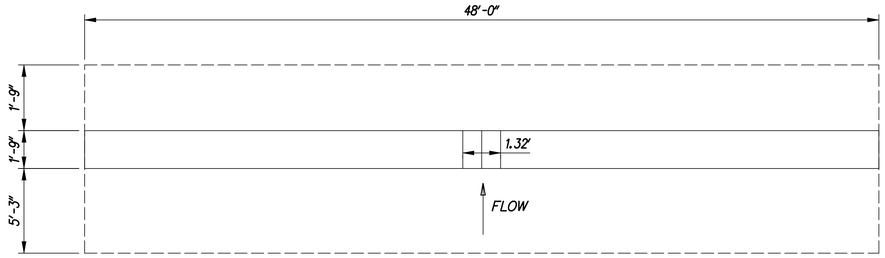

WEIR WALL PLAN

SCALE: NONE

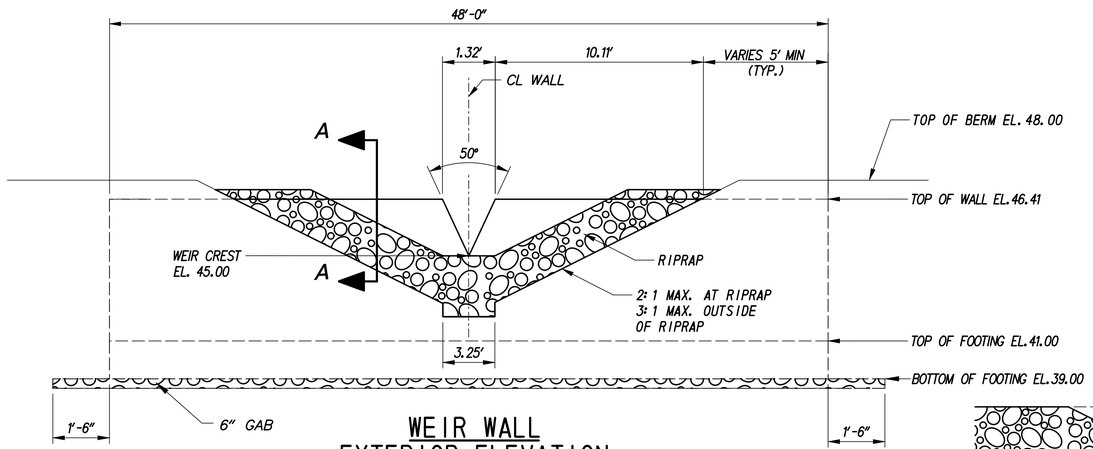

WEIR WALL EXTERIOR ELEVATION WITH RIPRAP STILLING BASIN

SCALE: NONE

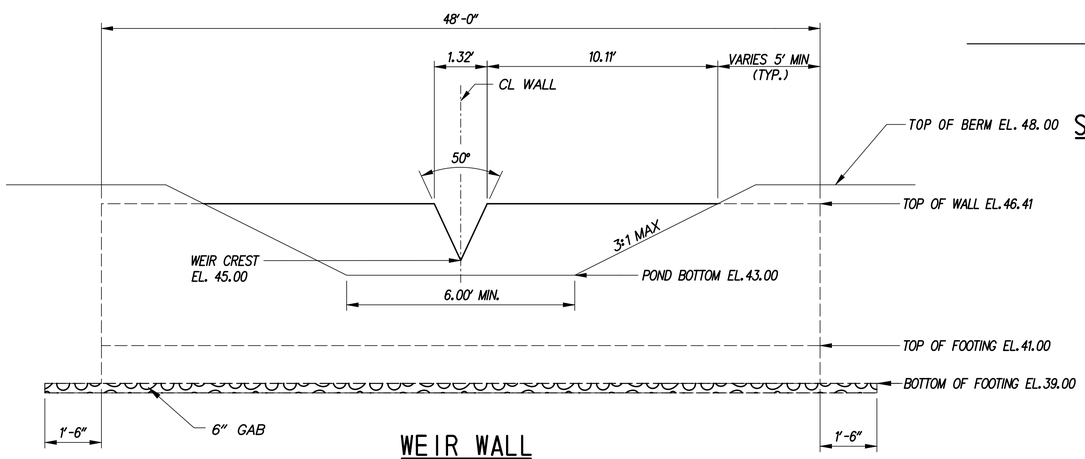

WEIR WALL INTERIOR ELEVATION

SCALE: NONE

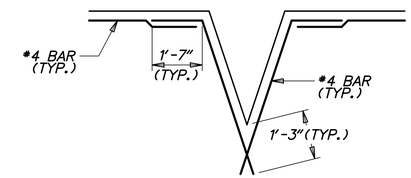

OPENING DETAILS

SCALE: NONE

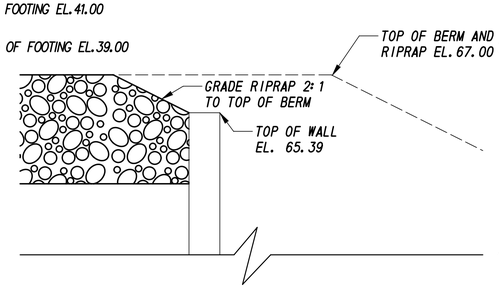

WEIR WALL SECTION A-A

SCALE: NONE

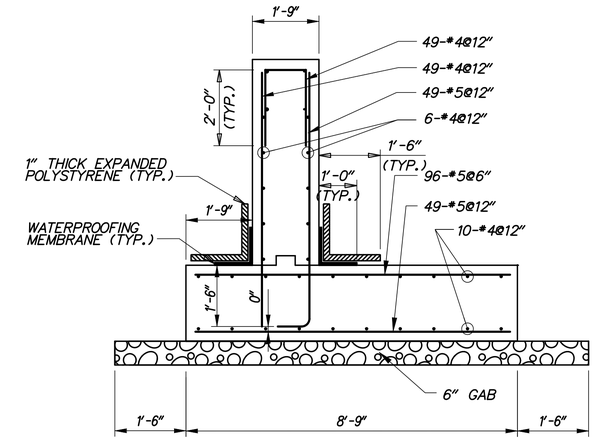

WEIR WALL SECTION

SCALE: 1/2" =1'-0"

GENERAL NOTES

1. DESIGN SPECIFICATIONS:

   AASHTO LRFD BRIDGE DESIGN SPECIFICATIONS, 4TH EDITION, 2007, INCLUDING 2008 AND 2009 INTERIM REVISIONS, AND AS SUPPLEMENTED BY DELAWARE DEPARTMENT OF TRANSPORTATION BRIDGE DESIGN MANUAL, MAY 2005, INCLUDING LATEST REVISIONS.

   PROVIDE MATERIALS AND PERFORM WORK IN ACCORDANCE WITH THE DELAWARE DEPARTMENT OF TRANSPORTATION STANDARD SPECIFICATIONS AND CONSTRUCTION DETAILS, AASHTO/AWS D1.5M/D1.5 BRIDGE WELDING CODE, AND CONTRACT SPECIAL PROVISIONS.

2. LOADING:

   UNIT WEIGHTS OF MATERIALS SHALL BE IN ACCORDANCE WITH THE DELAWARE DESIGN MANUAL.

3. PORTLAND CEMENT CONCRETE:

   PORTLAND CEMENT CONCRETE FOR CAST-IN-PLACE ELEMENTS SHALL BE AS FOLLOWS:
   (28 DAY COMPRESSIVE STRENGTH)
   (CLASS B, F'c=3000 PSI) - WEIR WALL FOOTING
   (CLASS A, F'c=4500 PSI) - WEIR WALL STEM

   WEIR WALLS MUST BE CAST-IN-PLACE.

   MIX REQUIREMENTS SHALL CONFORM TO SECTION 812 OF THE DELAWARE DEPARTMENT OF TRANSPORTATION STANDARD SPECIFICATIONS.

   ALL EXPOSED CORNERS OF CONCRETE SHALL BE CHAMFERED WITH ¾" X ¾" MILLED CHAMFER STRIPS EXCEPT ON UNEXPOSED FOOTINGS.

4. BAR REINFORCEMENT:

   REINFORCING STEEL SHALL CONFORM TO AASHTO M31 (ASTM A615), GRADE 60 AND IS TO BE EPOXY COATED. FUSION-BONDED EPOXY COATED REINFORCING STEEL SHALL CONFORM TO AASHTO M284 (ASTM D3963).

   PROVIDE 3" CONCRETE COVER ON REINFORCEMENT BARS, EXCEPT AS NOTED.

   LAP LENGTH OF #4 BARS TO BE 3'-0". STAGGER SPLICE LOCATIONS.

   DO NOT WELD GRADE 60 REINFORCING STEEL.

5. CONSTRUCTION JOINTS:

   KEYED CONSTRUCTION JOINTS SHALL BE 2" x 4" OR AS NOTED.

6. WATERPROOFING MEMBRANE:

   ADHESIVE BACKED WATERPROOFING MEMBRANE IS TO BE USED. SPLICING OF THE MEMBRANE IS PROHIBITED.

7. REFER TO SPECIFICATION SECTION 272501 FOR CONSTRUCTION SEQUENCE.

8. GAB IS INCIDENTAL TO WALL CONSTRUCTION.

G:\60049040 US301\CIVIL\PLANS\2A\CP\SW-16.DGN

DELAWARE DEPARTMENT OF TRANSPORTATION	ADDENDUMS / REVISIONS	AS SHOWN	US 301 LEVELS ROAD TO SUMMIT BRIDGE ROAD	CONTRACT T200911303	BRIDGE NO.	STORMWATER MANAGEMENT DETAILS BMP 652 (BASIN 1C)	SW-16
				COUNTY NEW CASTLE	DESIGNED BY: BAS		SHEET NO. 701
					CHECKED BY: JJW		TOTAL SHTS. 1256

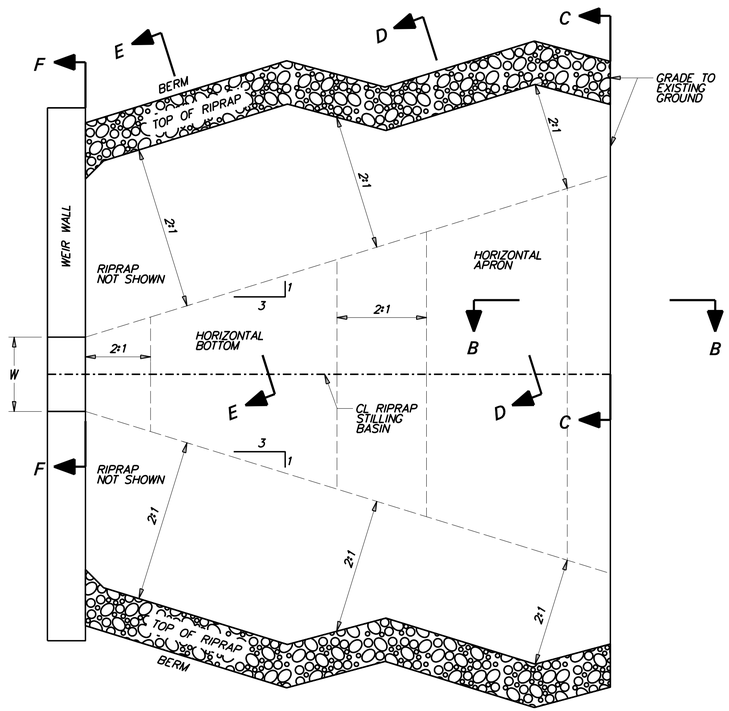

PLAN

SCALE: NONE

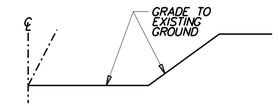

SECTION C-C

SCALE: NONE

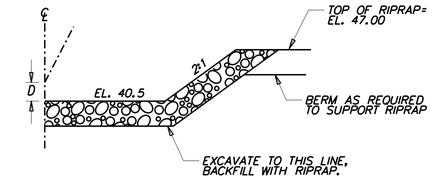

SECTION E-E

SCALE: NONE

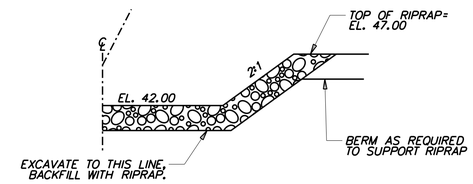

SECTION D-D

SCALE: NONE

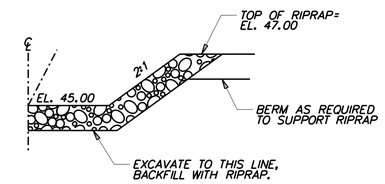

SECTION F-F

SCALE: NONE

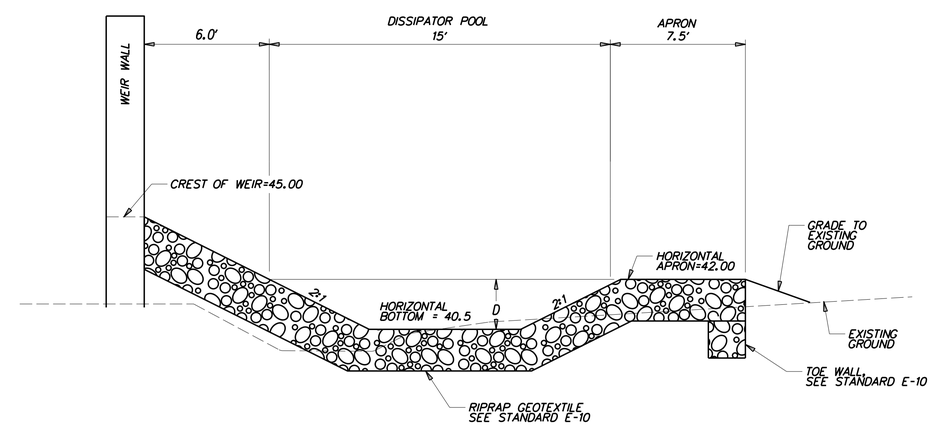

PROFILE THRU RIPRAP STILLING BASIN

SCALE: NONE

DATA

TOP OF V-NOTCH WEIR WIDTH W=1.32'

DEPTH OF BASIN FROM WEIR CREST (D) = 1.50'

RIPRAP SIZE (R No.) = R-5 WITH NO. 57 STONE

NOTES:

1. RIPRAP ITEM 712006
2. GEOTEXTILES, RIPRAP ITEM 713003
3. DELEWARE NO. 57 STONE ITEM 302012
4. SEE STANDARD NO. E-10 FOR RIPRAP DEPTH AND GEOTEXTILE PLACEMENT.

RIPRAP STILLING BASIN

SCALE: NONE

11/13/2012
J:\BRIDGE_HIGHWAYS\9040_Deldot_301\Civil\Plans\2A\SWM\Pond 1\SW_1C_06.dgn

DELAWARE DEPARTMENT OF TRANSPORTATION	ADDENDUMS / REVISIONS	AS SHOWN	US 301 LEVELS ROAD TO SUMMIT BRIDGE ROAD	CONTRACT T200911303	BRIDGE NO.	STORMWATER MANAGEMENT DETAILS BMP 652 (BASIN 1C)	SW17
				COUNTY NEW CASTLE	DESIGNED BY: BAS		SHEET NO. 702
					CHECKED BY: JJW		TOTAL SHTS. 1256

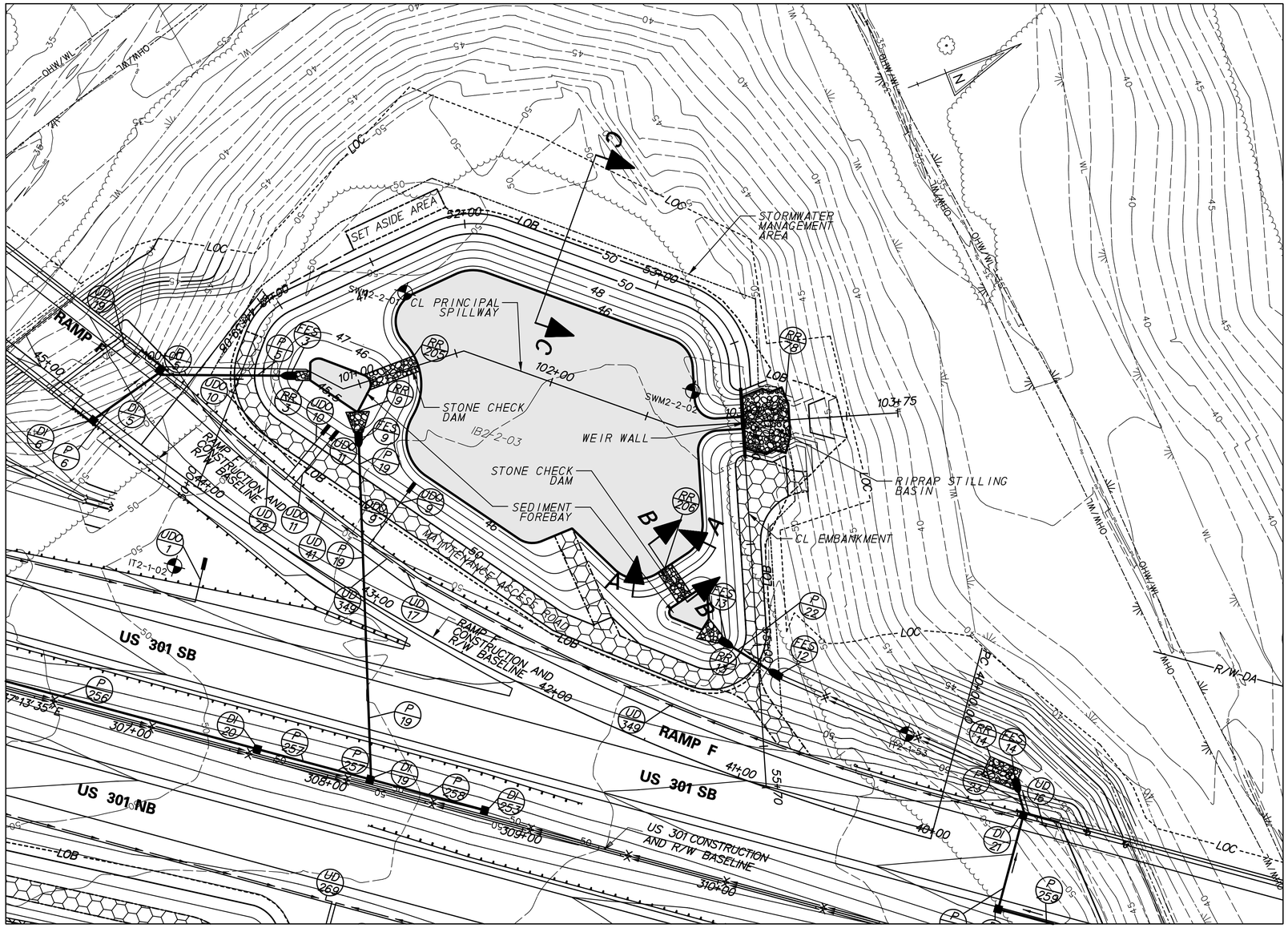

PLAN - BMP 658 (BASIN 2A)

POND DESIGN SUMMARY				
DESIGN STORM	FACILITY INFLOW (CFS)	FACILITY DISCHARGE(CFS)	WATER SURFACE ELEVATION (FT)	STORAGE VOLUME (AC. FT)
QUALITY STORM (1-YR)	4.25	0.00	45.72	0.09
10 - YEAR	12.44	0.19	46.65	0.53
100 - YEAR	26.36	1.22	47.36	0.91

HAZARD CLASSIFICATION: CLASS A AS PER POND CODE 378

DRAINAGE AREA TO FACILITY: 3.42 AC

MANAGEMENT PROVIDED BY FACILITY: WATER QUALITY BY INFILTRATION OF 1-YEAR STORM RUNOFF, WATER QUANTITY FOR 10 AND 100-YEAR STORMS.

RIPRAP SCHEDULE		
NO.	TYPE	AREA (SY)
78	R-5	89
3	R-4	4
9	R-4	10
13	R-4	10
205	R-4	23
206	R-4	16

CHECK CONSTRUCTION PLANS FOR SCHEDULE OF RIPRAP OUTSIDE OF THE BASIN AREA.

INFILTRATION BASIN CONSTRUCTION SEQUENCE

THE STORMWATER MANAGEMENT BASIN SHALL FUNCTION AS AN INFILTRATION FACILITY AND SHALL BE CONSTRUCTED IN ACCORDANCE WITH THE FOLLOWING SPECIFICATIONS:

SECTION 271 - STORMWATER MANAGEMENT POND
SECTION 272 - POND OUTLET STRUCTURE, CONCRETE

1. PRIOR TO DISTURBANCE OF THE SITE UPSTREAM OF THE BASIN, INSTALL FENCE AROUND THE BASIN AREA TO PREVENT CONSTRUCTION EQUIPMENT AND STOCKPILED MATERIALS FROM ENTERING THE BASIN AREA AND COMPACTING THE SUBGRADE SOILS.
2. CONSTRUCT INFILTRATION BASIN AFTER ALL AREAS DRAINING TO THE BASIN HAVE BEEN PERMANENTLY STABILIZED AND THE ENGINEER HAS APPROVED THE CONSTRUCTION. IF BASIN CONSTRUCTION CANNOT BE DELAYED UNTIL ITS DRAINAGE AREA IS STABILIZED, DIVERSION BERMS OR OTHER SUITABLE MEASURES SHOULD BE PLACED AROUND THE BASIN'S PERIMETER DURING ALL PHASES OF CONSTRUCTION TO DIVERT ALL RUNOFF AND SEDIMENT AWAY FROM THE BASIN. THESE DIVERSION MEASURES SHOULD NOT BE REMOVED UNTIL ALL CONSTRUCTION WITHIN THE BASIN'S DRAINAGE AREA IS COMPLETED AND THE DRAINAGE AREA STABILIZED.
3. SEE CONSTRUCTION PLANS FOR EROSION AND SEDIMENT CONTROL MEASURES.
4. CONSTRUCT THE INFILTRATION BASIN WITHOUT COMPACTING THE BASINS SUBGRADE SOILS. EXCAVATION SHALL BE PERFORMED BY CONSTRUCTION EQUIPMENT PLACED OUTSIDE THE BASIN, WHERE POSSIBLE. ALL EXCAVATION SHALL BE PERFORMED WITH THE LIGHTEST PRACTICAL EXCAVATION EQUIPMENT.
5. CONSTRUCT WEIR WALL, RIPRAP ENERGY DISSIPATER AT THE END OF PRINCIPAL SPILLWAY AND PARTIAL EMBANKMENT AS NEEDED TO INSTALL WEIR WALL. DE-WATER FOUNDATION AS NEEDED IN ACCORDANCE WITH SECTION 111 AND USE SUMP PIT FOR DUMPING.
6. EXCAVATE THE POND AND COMPLETE THE EMBANKMENT, GRADES AND DETAILS SHOWN IN THE CONSTRUCTION PLANS. DURING EXCAVATION, THE CONTRACTOR SHALL SALVAGE AND STOCKPILE SOILS CLASSIFIED AS CH, CL, SC AND GG PER THE UNIFIED SOIL CLASSIFICATION SYSTEM TO BE USED TO CONSTRUCT EMBANKMENT. THE ABOVE CLASSIFIED SOILS MAY BE OBTAINED FROM ELSEWHERE WITHIN THE PROJECT LIMITS, IF NECESSARY.
7. STABILIZE BASIN EMBANKMENT AND BOTTOM WITH PERMANENT SEEDING.
8. REMOVE EROSION AND SEDIMENT CONTROLS, WATER DIVERSION PRACTICES AND FENCE UPON FINAL STABILIZATION AND APPROVAL FROM INSPECTOR.
9. THE CONTRACTOR SHALL PROVIDE 'AS-BUILT' DRAWINGS OF ALL STORMWATER MANAGEMENT FACILITIES SUCH AS PONDS, INFILTRATION BASINS, BIOFILTRATION SWALES, ETC. 'AS-BUILT'DRAWINGS SHALL SHOW THE ACTUAL FINISHED GROUND CONTOURS, OUTLET STRUCTURE DIMENSIONS AND ELEVATIONS, ETC. AS THEY EXIST AT THE COMPLETION OF THE PROJECT. THESE DRAWINGS SHALL BE SIGNED BY A PROFESSIONAL ENGINEER OR LAND SURVEYOR.

PLANTING SCHEDULE

PERMANENT GRASS SEEDING - WET GROUND UP TO ELEVATION 46.5
PERMANENT GRASS SEEDING - DRY GROUND ABOVE ELEVATION 46.5
PLACE TOPSOIL ABOVE BASIN BOTTOM ELEVATION 45.5

POND QUANTITIES			
ITEM NO.	ITEM	QTY.	UNITS.
202000	EXCAVATION AND EMBANKMENT	6709	CY
272501	POND OUTLET STRUCTURE, 4, SPECIAL	1	EACH
302011	DELAWARE NO. 3 STONE	198	TON
302012	DELAWARE NO. 57 STONE	21	TON
712005	R-4 RIPRAP	24	SY
712006	R-5 RIPRAP	89	SY
712020	R-4 RIPRAP	28	TON
713001	GEOTEXTILES, STABILIZATION	1336	SY
713003	GEOTEXTILES, RIPRAP	197	SY
733002	TOPSOILING, 6" DEPTH	1090	SY
734013	PERMANENT GRASS SEEDING, DRY GROUND	3727	SY
734015	PERMANENT GRASS SEEDING, WET GROUND	2097	SY

DELAWARE DEPARTMENT OF TRANSPORTATION

ADDENDUMS / REVISIONS

SCALE 0 30 60 90 FEET

US 301 LEVELS ROAD TO SUMMIT BRIDGE ROAD

CONTRACT T200911303 | COUNTY NEW CASTLE | BRIDGE NO. | DESIGNED BY: BAS | CHECKED BY: JJW

STORMWATER MANAGEMENT DETAILS BMP 658 (BASIN 2A)

SW18 | SHEET NO. 703 | TOTAL SHTS. 1256

P:\CADD2\60049040_US301\CIVIL\PLANS\2A\BALT\SWM\POND 2\SW_2A_01.DGN

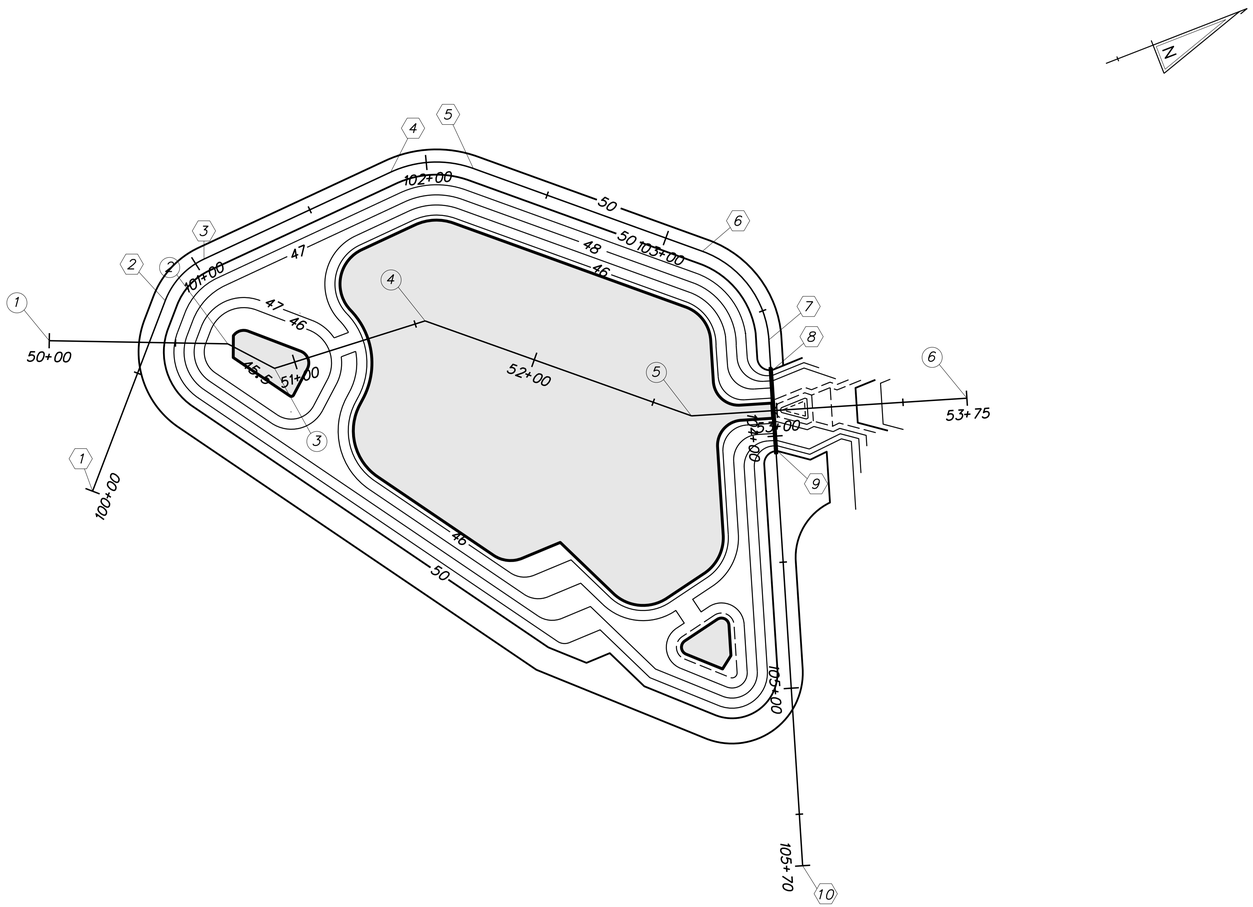

CL PRINCIPAL SPILLWAY			
	STATION	NORTHING	EASTING
1	POB STA. 50+00.00	527348.6533	561982.0144
2	PI STA. 50+70.70	527413.6505	562009.8268
3	PI STA. 50+91.60	527427.1321	562025.7976
4	PI STA. 51+54.10	527489.4233	562030.8824
5	PI STA. 52+66.09	527572.9356	562105.5009
6	POE STA. 53+75.36	527676.5659	562140.1567

CL EMBANKMENT			
	STATION	NORTHING	EASTING
1	POB STA. 100+00.00	527342.0585	562043.6531
2	PC STA. 100+80.69	527397.1441	561984.6856
3	PT STA. 101+03.81	527417.5958	561975.2010
4	PC STA. 101+85.31	527499.0030	561971.2052
5	PT STA. 102+18.97	527529.9054	561982.2178
6	PC STA. 103+15.41	527601.5283	562046.7955
7	PT STA. 103+61.80	527612.6779	562089.1892
8	PI STA. 103+74.39	527608.6837	562101.1330
9	PI STA. 104+05.35	527598.8646	562130.4947
10	POE STA. 105+70.43	527546.5086	562287.0531

STAKEOUT - BMP 658 (BASIN 2A)

11/14/2012
J:\BRIDGE_HIGHWAYS\9040_Deldot_301\Civil\Plans\2A\SWM\Pond 2\SW_2A_02.dgn

DELAWARE DEPARTMENT OF TRANSPORTATION

ADDENDUMS / REVISIONS

SCALE 0 30 60 90 FEET

US 301 LEVELS ROAD TO SUMMIT BRIDGE ROAD

CONTRACT T200911303
COUNTY NEW CASTLE
BRIDGE NO.
DESIGNED BY: BAS
CHECKED BY: JJW

STORMWATER MANAGEMENT DETAILS BMP 658 (BASIN 2A)

SW19
SHEET NO. 704
TOTAL SHTS. 1256

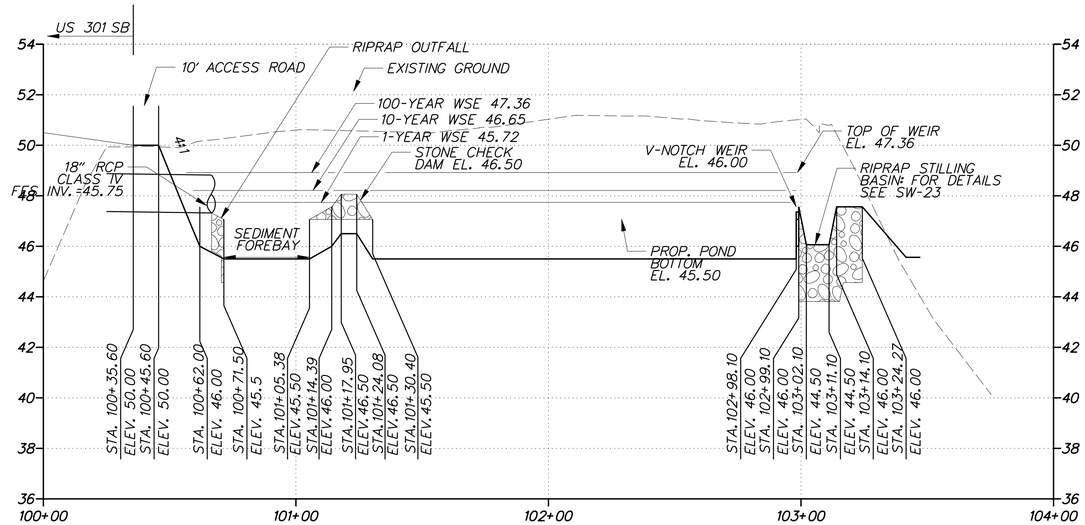

SPILLWAY PROFILE - BMP 658 (BASIN 2A)

HORIZONTAL SCALE: 1" = 30'
0 30 60 90
FEET

VERTICAL SCALE: 1" = 3'
0 3 6 9
FEET

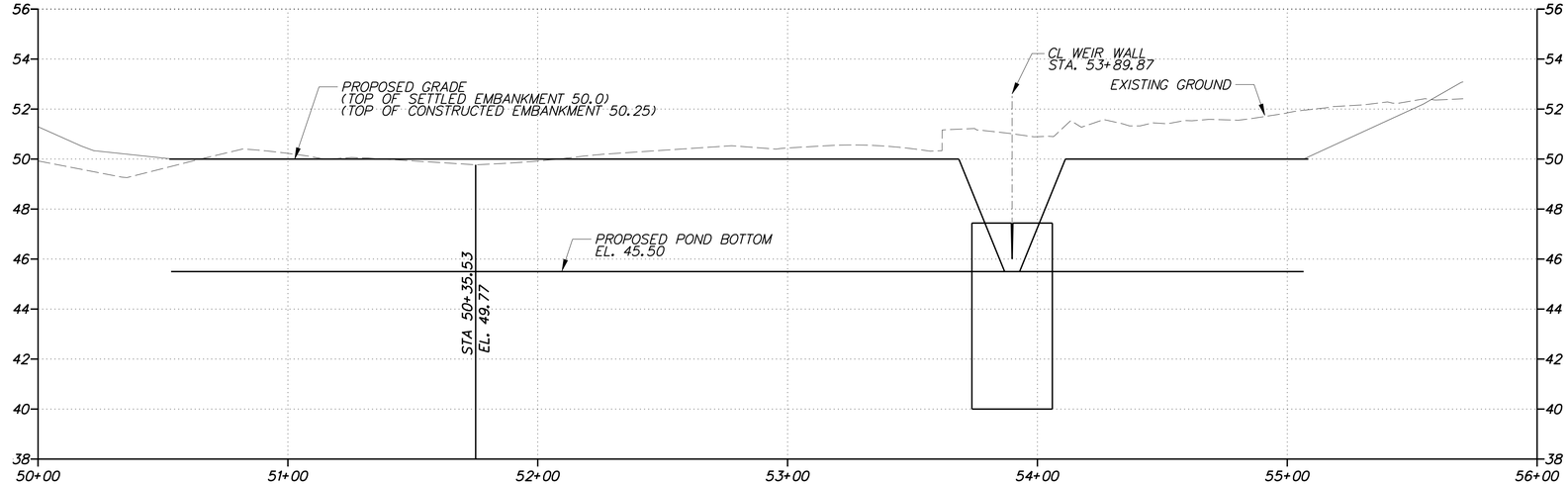

EMBANKMENT PROFILE FOR BMP 658 (BASIN 2A)

HORIZONTAL SCALE: 1" = 30'
0 30 60 90
FEET

VERTICAL SCALE: 1" = 3'
0 3 6 9
FEET

11/13/2012
J:\BRIDGE_HIGHWAYS\9040_Deldot_301\Civil\Plans\2A\SWM\Pond 2\SW_2A_03.dgn

DELAWARE DEPARTMENT OF TRANSPORTATION

ADDENDUMS / REVISIONS

AS SHOWN

US 301 LEVELS ROAD TO SUMMIT BRIDGE ROAD

CONTRACT	BRIDGE NO.
T200911303	DESIGNED BY: BAS
COUNTY	
NEW CASTLE	CHECKED BY: JJW

STORMWATER MANAGEMENT DETAILS BMP 658 (BASIN 2A)

SW20
SHEET NO.
705
TOTAL SHTS.
1256

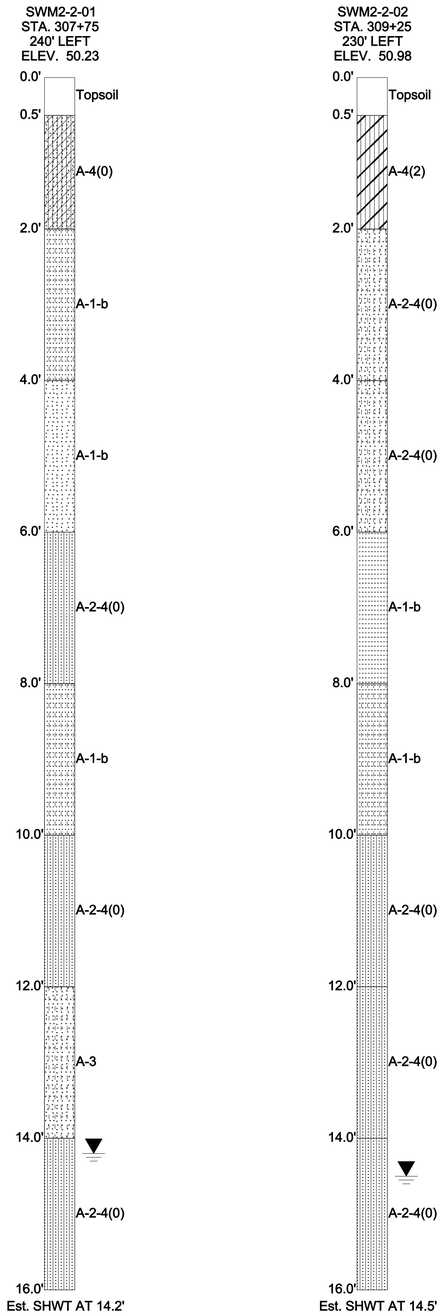

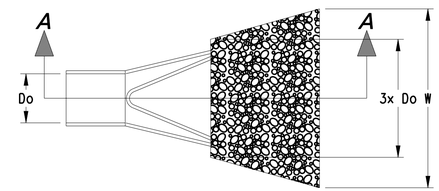

PLAN

SCALE: NONE

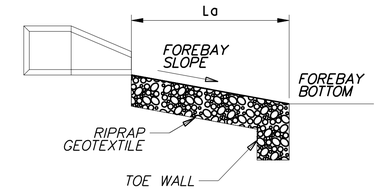

SECTION A-A

SCALE: NONE

NOTES:

1. RIPRAP ITEM 712005
2. GEOTEXTILES, RIPRAP ITEM 713003
3. DELEWARE NO. 57 STONE ITEM 302012
4. SEE STANDARD NO. E-10 FOR RIPRAP DEPTH AND GEOTEXTILE PLACEMENT.
5. DEPRESS CENTERLINE OF APRON SLIGHTLY TO PREVENT EDGE CUTTING

DATA

PIPE DIAMETER (Do)
APRON LENGTH (La)
APRON WIDTH (W)
RIPRAP SIZE (R No.)

FES ID	Do	La	W	R No.
3	1.5'	9.0'	11.0'	R-4
9	1.5'	7.0'	4.0'	R-4
13	1.5'	9.0'	11.0'	R-4

FOREBAY RIPRAP OUTLET PROTECTION

SCALE: NONE

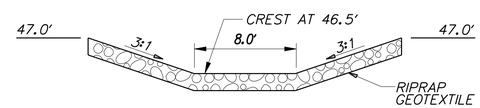

SECTION A-A FROM BASIN PLAN

SCALE: NONE

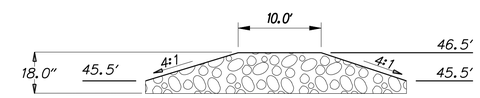

SECTION B-B FROM BASIN PLAN

SCALE: NONE

STONE CHECK DAM

SCALE: NONE

NOTES:

1. RIPRAP ITEM 712020
2. GEOTEXTILES, RIPRAP ITEM 713003
3. SEE STANDARD NO. E-10 FOR GEOTEXTILE PLACEMENT

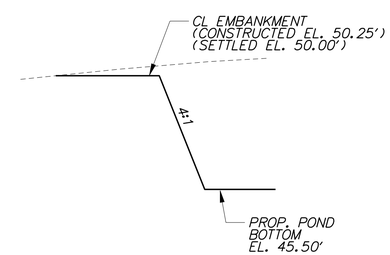

SECTION C-C FROM BASIN PLAN

SCALE: NONE

11/13/2012
J:\BRIDGE_HIGHWAYS\9040_Deldot_301\Civil\Plans\2A\SWM\Pond 2\SW_2A_04.dgn

DELAWARE DEPARTMENT OF TRANSPORTATION

ADDENDUMS / REVISIONS

AS SHOWN

US 301 LEVELS ROAD TO SUMMIT BRIDGE ROAD

CONTRACT: T200911303
COUNTY: NEW CASTLE
BRIDGE NO.:
DESIGNED BY: BAS
CHECKED BY: JJW

STORMWATER MANAGEMENT DETAILS BMP 658 (BASIN 2A)

SW21
SHEET NO. 706
TOTAL SHTS. 1256

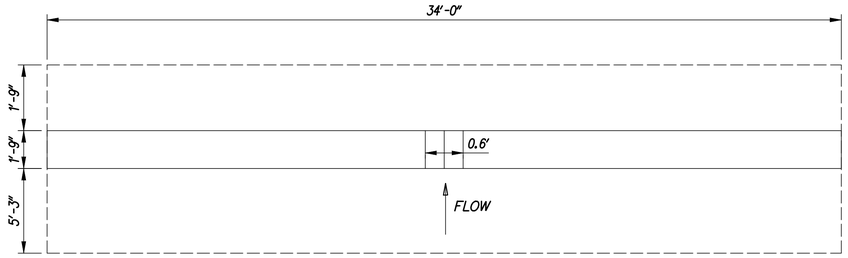

WEIR WALL PLAN

SCALE: NONE

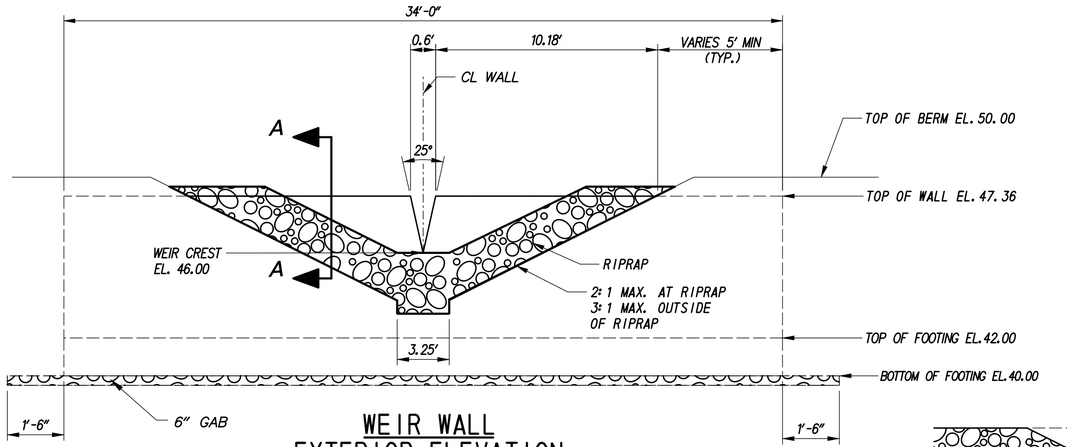

WEIR WALL EXTERIOR ELEVATION WITH RIPRAP STILLING BASIN

SCALE: NONE

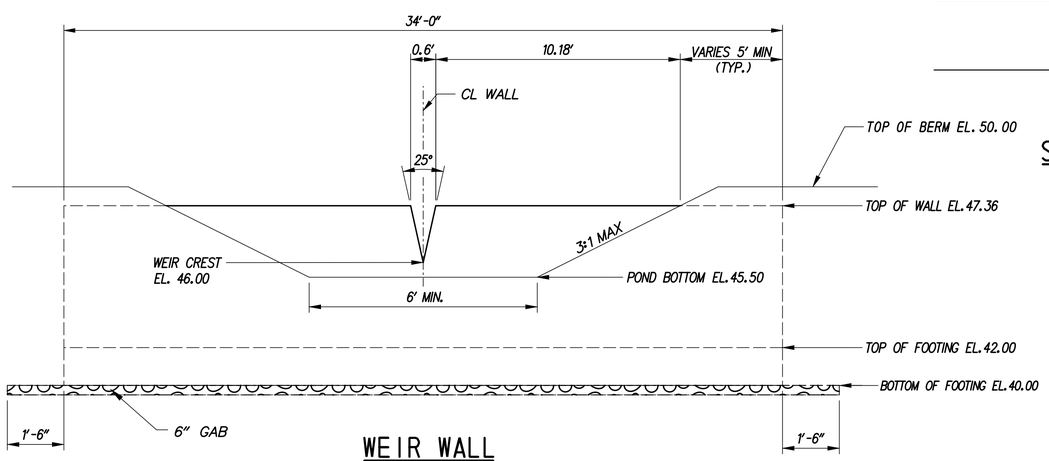

WEIR WALL INTERIOR ELEVATION

SCALE: NONE

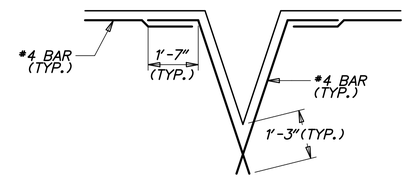

OPENING DETAILS

SCALE: NONE

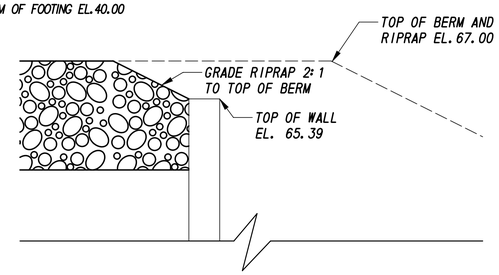

WEIR WALL SECTION A-A

SCALE: NONE

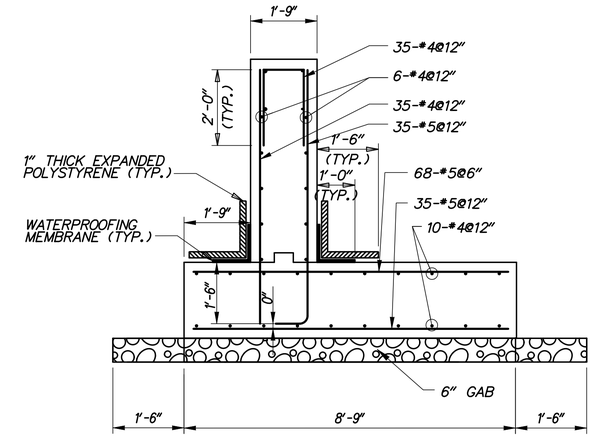

WEIR WALL SECTION

SCALE: 1/2" =1'-0"

GENERAL NOTES

1. DESIGN SPECIFICATIONS:

   AASHTO LRFD BRIDGE DESIGN SPECIFICATIONS, 4TH EDITION, 2007, INCLUDING 2008 AND 2009 INTERIM REVISIONS, AND AS SUPPLEMENTED BY DELAWARE DEPARTMENT OF TRANSPORTATION BRIDGE DESIGN MANUAL, MAY 2005, INCLUDING LATEST REVISIONS.

   PROVIDE MATERIALS AND PERFORM WORK IN ACCORDANCE WITH THE DELAWARE DEPARTMENT OF TRANSPORTATION STANDARD SPECIFICATIONS AND CONSTRUCTION DETAILS, AASHTO/AWS D1.5M/D1.5 BRIDGE WELDING CODE, AND CONTRACT SPECIAL PROVISIONS.

2. LOADING:

   UNIT WEIGHTS OF MATERIALS SHALL BE IN ACCORDANCE WITH THE DELAWARE DESIGN MANUAL.

3. PORTLAND CEMENT CONCRETE:

   PORTLAND CEMENT CONCRETE FOR CAST-IN-PLACE ELEMENTS SHALL BE AS FOLLOWS:
   (28 DAY COMPRESSIVE STRENGTH)
   (CLASS B, F'c=3000 PSI) - WEIR WALL FOOTING
   (CLASS A, F'c=4500 PSI) - WEIR WALL STEM

   WEIR WALLS MUST BE CAST-IN-PLACE.

   MIX REQUIREMENTS SHALL CONFORM TO SECTION 812 OF THE DELAWARE DEPARTMENT OF TRANSPORTATION STANDARD SPECIFICATIONS.

   ALL EXPOSED CORNERS OF CONCRETE SHALL BE CHAMFERED WITH ¾" X ¾" MILLED CHAMFER STRIPS EXCEPT ON UNEXPOSED FOOTINGS.

4. BAR REINFORCEMENT:

   REINFORCING STEEL SHALL CONFORM TO AASHTO M31 (ASTM A615), GRADE 60 AND IS TO BE EPOXY COATED. FUSION-BONDED EPOXY COATED REINFORCING STEEL SHALL CONFORM TO AASHTO M284 (ASTM D3963).

   PROVIDE 3" CONCRETE COVER ON REINFORCEMENT BARS, EXCEPT AS NOTED.

   LAP LENGTH OF #4 BARS TO BE 3'-0". STAGGER SPLICE LOCATIONS.

   DO NOT WELD GRADE 60 REINFORCING STEEL.

5. CONSTRUCTION JOINTS:

   KEYED CONSTRUCTION JOINTS SHALL BE 2" x 4" OR AS NOTED.

6. WATERPROOFING MEMBRANE:

   ADHESIVE BACKED WATERPROOFING MEMBRANE IS TO BE USED. SPLICING OF THE MEMBRANE IS PROHIBITED.

7. REFER TO SPECIFICATION SECTION 272501 FOR CONSTRUCTION SEQUENCE.

8. GAB IS INCIDENTAL TO WALL CONSTRUCTION.

G:\60049040 US301\CIVIL\PLANS\2A\CP\SW-22.DGN

DELAWARE DEPARTMENT OF TRANSPORTATION	ADDENDUMS / REVISIONS	AS SHOWN	US 301 LEVELS ROAD TO SUMMIT BRIDGE ROAD	CONTRACT T200911303	BRIDGE NO.	STORMWATER MANAGEMENT DETAILS BMP 658 (BASIN 2A)	SW-22
				COUNTY NEW CASTLE	DESIGNED BY: BAS		SHEET NO. 707
					CHECKED BY: JJW		TOTAL SHTS. 1256

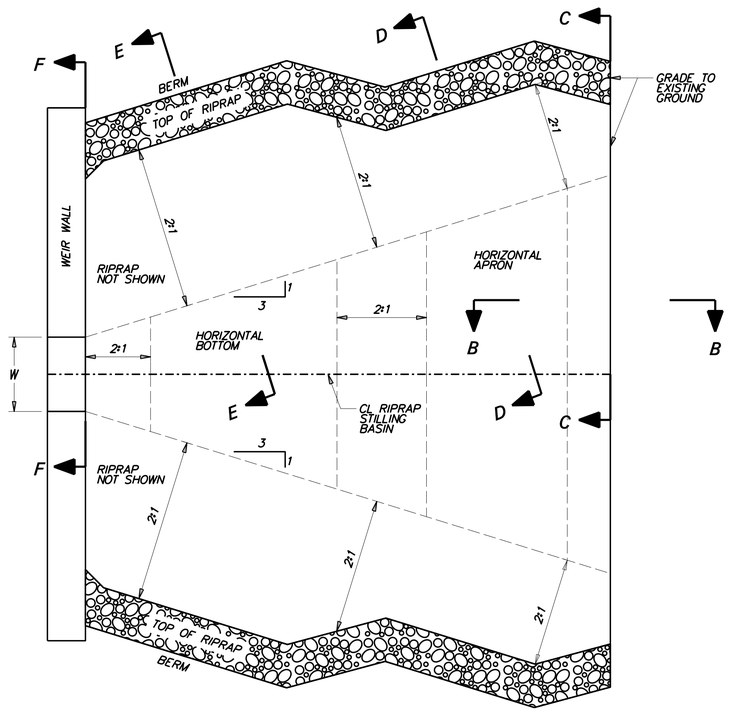

PLAN

SCALE: NONE

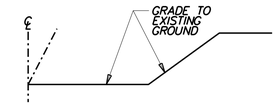

SECTION C-C

SCALE: NONE

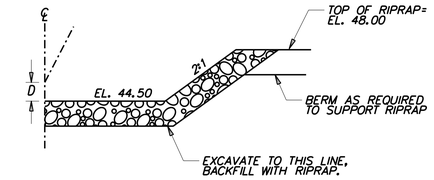

SECTION E-E

SCALE: NONE

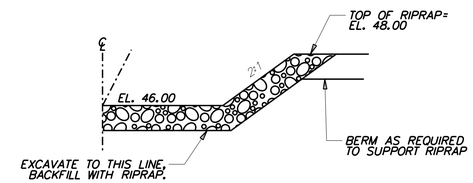

SECTION D-D

SCALE: NONE

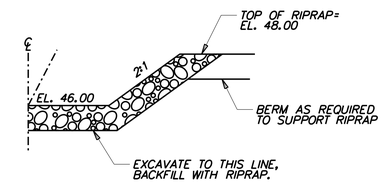

SECTION F-F

SCALE: NONE

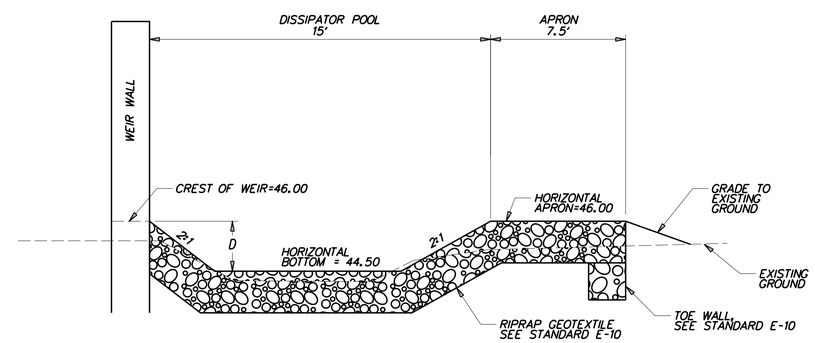

PROFILE THRU RIPRAP STILLING BASIN

SCALE: NONE

DATA

TOP OF V-NOTCH WEIR WIDTH W=0.6'

DEPTH OF BASIN FROM WEIR CREST (D) = 1.50'

RIPRAP SIZE (R No.) = R-5 WITH NO. 57 STONE

NOTES:

1. RIPRAP ITEM 712006
2. GEOTEXTILES, RIPRAP ITEM 713003
3. DELEWARE NO. 57 STONE ITEM 302012
4. SEE STANDARD NO. E-10 FOR RIPRAP DEPTH AND GEOTEXTILE PLACEMENT.

RIPRAP STILLING BASIN

DELAWARE DEPARTMENT OF TRANSPORTATION	ADDENDUMS / REVISIONS	AS SHOWN	US 301 LEVELS ROAD TO SUMMIT BRIDGE ROAD	CONTRACT T200911303	BRIDGE NO.	STORMWATER MANAGEMENT DETAILS BMP 658 (BASIN 2A)	SW23
				COUNTY NEW CASTLE	DESIGNED BY:		SHEET NO. 708
					CHECKED BY:		TOTAL SHTS. 1256

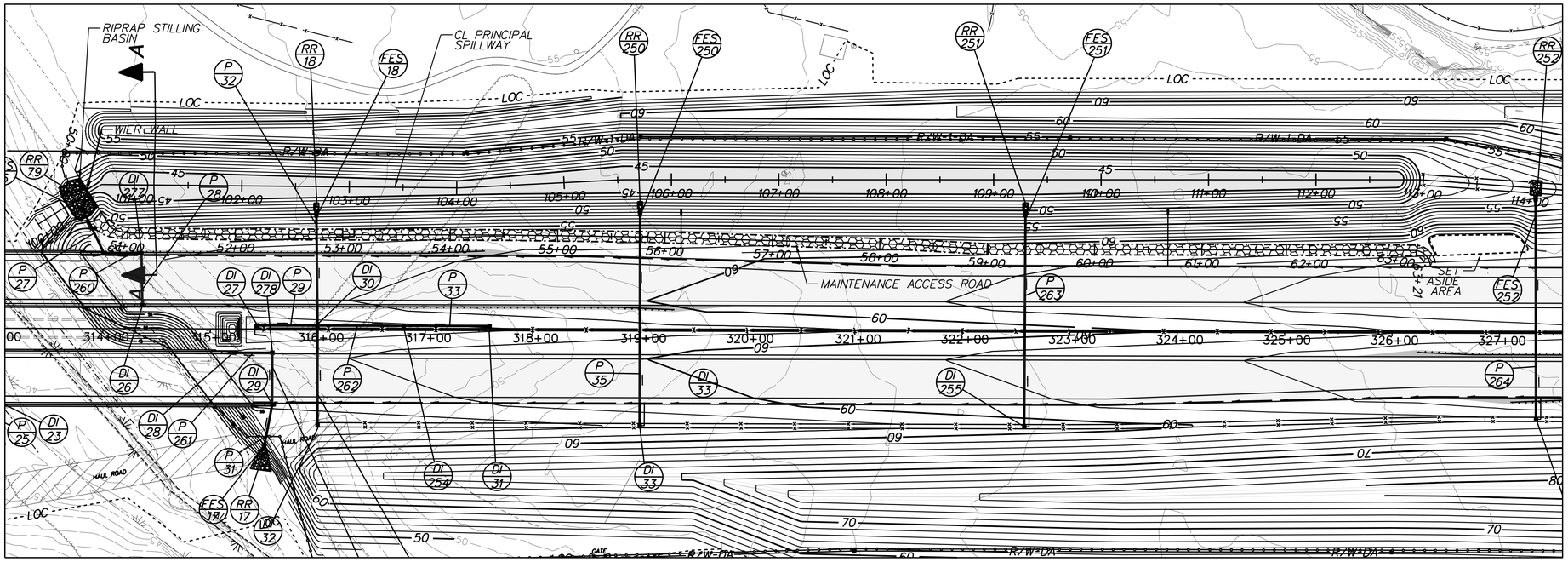

PLAN - BMP 659 (BASIN 2B)

INFILTRATION BASIN CONSTRUCTION SEQUENCE

THE STORMWATER MANAGEMENT BASIN SHALL FUNCTION AS AN INFILTRATION FACILITY AND SHALL BE CONSTRUCTED IN ACCORDANCE WITH THE FOLLOWING SPECIFICATIONS:

SECTION 271 - STORMWATER MANAGEMENT POND
SECTION 272 - POND OUTLET STRUCTURE, CONCRETE

1. PRIOR TO DISTURBANCE OF THE SITE UPSTREAM OF THE BASIN, INSTALL FENCE AROUND THE BASIN AREA TO PREVENT CONSTRUCTION EQUIPMENT AND STOCKPILED MATERIALS FROM ENTERING THE BASIN AREA AND COMPACTING THE SUBGRADE SOILS.

2. CONSTRUCT INFILTRATION BASIN AFTER ALL AREAS DRAINING TO THE BASIN HAVE BEEN PERMANENTLY STABILIZED AND THE ENGINEER HAS APPROVED THE CONSTRUCTION. IF BASIN CONSTRUCTION CANNOT BE DELAYED UNTIL ITS DRAINAGE AREA IS STABILIZED, DIVERSION BERMS OR OTHER SUITABLE MEASURES SHOULD BE PLACED AROUND THE BASIN'S PERIMETER DURING ALL PHASES OF CONSTRUCTION TO DIVERT ALL RUNOFF AND SEDIMENT AWAY FROM THE BASIN. THESE DIVERSION MEASURES SHOULD NOT BE REMOVED UNTIL ALL CONSTRUCTION WITHIN THE BASIN'S DRAINAGE AREA IS COMPLETED AND THE DRAINAGE AREA STABILIZED.

3. SEE CONSTRUCTION PLANS FOR EROSION AND SEDIMENT CONTROL MEASURES.

4. CONSTRUCT THE INFILTRATION BASIN WITHOUT COMPACTING THE BASINS SUBGRADE SOILS. EXCAVATION SHALL BE PERFORMED BY CONSTRUCTION EQUIPMENT PLACED OUTSIDE THE BASIN, WHERE POSSIBLE. ALL EXCAVATION SHALL BE PERFORMED WITH THE LIGHTEST PRACTICAL EXCAVATION EQUIPMENT.

5. CONSTRUCT WEIR WALL, RIPRAP ENERGY DISSIPATER AT THE END OF PRINCIPAL SPILLWAY AND PARTIAL EMBANKMENT AS NEEDED TO INSTALL WEIR WALL. DE-WATER FOUNDATION AS NEEDED IN ACCORDANCE WITH SECTION 111 AND USE SUMP PIT FOR DUMPING.

6. EXCAVATE THE POND AND COMPLETE THE EMBANKMENT, GRADES AND DETAILS SHOWN IN THE CONSTRUCTION PLANS. DURING EXCAVATION, THE CONTRACTOR SHALL SALVAGE AND STOCKPILE SOILS CLASSIFIED AS CH, CL, SC AND GG PER THE UNIFIED SOIL CLASSIFICATION SYSTEM TO BE USED TO CONSTRUCT EMBANKMENT. THE ABOVE CLASSIFIED SOILS MAY BE OBTAINED FROM ELSEWHERE WITHIN THE PROJECT LIMITS, IF NECESSARY.

7. STABILIZE BASIN EMBANKMENT AND BOTTOM WITH PERMANENT SEEDING.

8. REMOVE EROSION AND SEDIMENT CONTROLS, WATER DIVERSION PRACTICES AND FENCE UPON FINAL STABILIZATION AND APPROVAL FROM INSPECTOR.

9. THE CONTRACTOR SHALL PROVIDE 'AS-BUILT' DRAWINGS OF ALL STORMWATER MANAGEMENT FACILITIES SUCH AS PONDS, INFILTRATION BASINS, BIOFILTRATION SWALES, ETC. 'AS-BUILT' DRAWINGS SHALL SHOW THE ACTUAL FINISHED GROUND CONTOURS, OUTLET STRUCTURE DIMENSIONS AND ELEVATIONS, ETC. AS THEY EXIST AT THE COMPLETION OF THE PROJECT. THESE DRAWINGS SHALL BE SIGNED BY A PROFESSIONAL ENGINEER OR LAND SURVEYOR.

RIPRAP SCHEDULE

NO.	TYPE	AREA (SY)
79	R-5	102
18	R-4	4
250	R-4	4
251	R-4	4

CHECK CONSTRUCTION PLANS FOR SCHEDULE OF RIPRAP OUTSIDE OF THE BASIN AREA.

PLANTING SCHEDULE

PERMANENT GRASS SEEDING - WET GROUND UP TO ELEVATION 46.0
PERMANENT GRASS SEEDING - DRY GROUND ABOVE ELEVATION 46.0
PLACE TOPSOIL ABOVE BASIN BOTTOM ELEVATION 45.0

POND QUANTITIES

ITEM NO.	ITEM	QTY.	UNITS.
202000	EXCAVATION AND EMBANKMENT	33818	CY
272501	POND OUTLET STRUCTURE, 5, SPECIAL	1	EACH
302011	DELAWARE NO. 3 STONE	437	TON
302012	DELAWARE NO. 57 STONE	24	TON
712005	R-4 RIPRAP	12	SY
712006	R-5 RIPRAP	102	SY
713001	GEOTEXTILES, STABILIZATION	2954	SY
713003	GEOTEXTILES, RIPRAP	150	SY
733002	TOPSOILING, 6" DEPTH	31107	SY
734013	PERMANENT GRASS SEEDING, DRY GROUND	29625	SY
734015	PERMANENT GRASS SEEDING, WET GROUND	3276	SY
735533	SOIL RETENTION BLANKET MULCH, TYPE 3	12267	SY

POND DESIGN SUMMARY

DESIGN STORM	FACILITY INFLOW (CFS)	FACILITY DISCHARGE (CFS)	WATER SURFACE ELEVATION (FT)	STORAGE VOLUME (AC. FT)
QUALITY STORM (1-YR)	7.92	0.00	45.39	0.27
10 - YEAR	32.47	4.27	46.63	1.17
100 - YEAR	79.06	26.15	47.94	2.44

HAZARD CLASSIFICATION: CLASS A AS PER POND CODE 378

DRAINAGE AREA TO FACILITY: 15.85 AC

MANAGEMENT PROVIDED BY FACILITY: WATER QUALITY BY INFILTRATION OF 1-YEAR STORM RUNOFF, WATER QUANTITY FOR 10 AND 100-YEAR STORMS.

11/14/2012
J:\BRIDGE_HIGHWAYS\9040_Deldot_301\Civil\Plans\2A\SWM\Pond 2\SW_2B_01.dgn

DELAWARE DEPARTMENT OF TRANSPORTATION

ADDENDUMS / REVISIONS

SCALE 0 100 200 300 FEET

US 301 LEVELS ROAD TO SUMMIT BRIDGE ROAD

CONTRACT T200911303
COUNTY NEW CASTLE
BRIDGE NO.
DESIGNED BY: BAS
CHECKED BY: JJW

STORMWATER MANAGEMENT DETAILS BMP 659 (BASIN 2B)

SW24
SHEET NO. 709
TOTAL SHTS. 1256

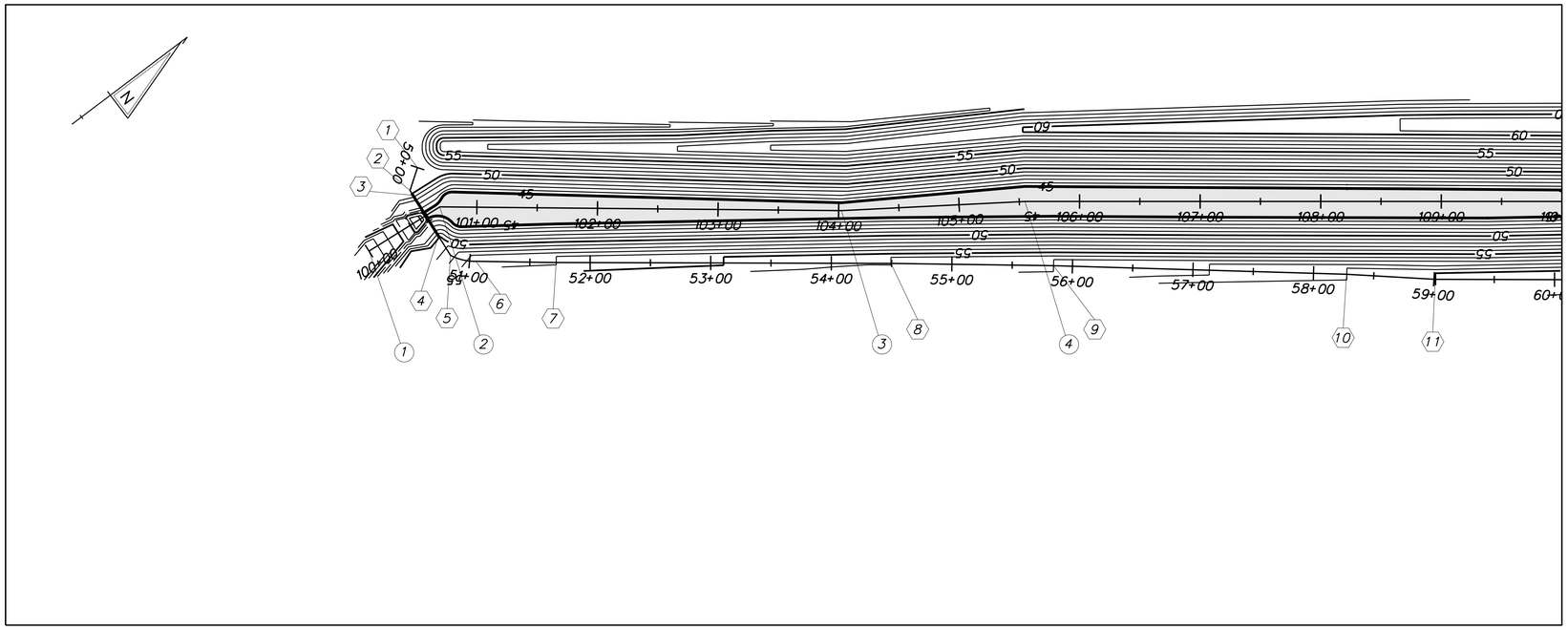

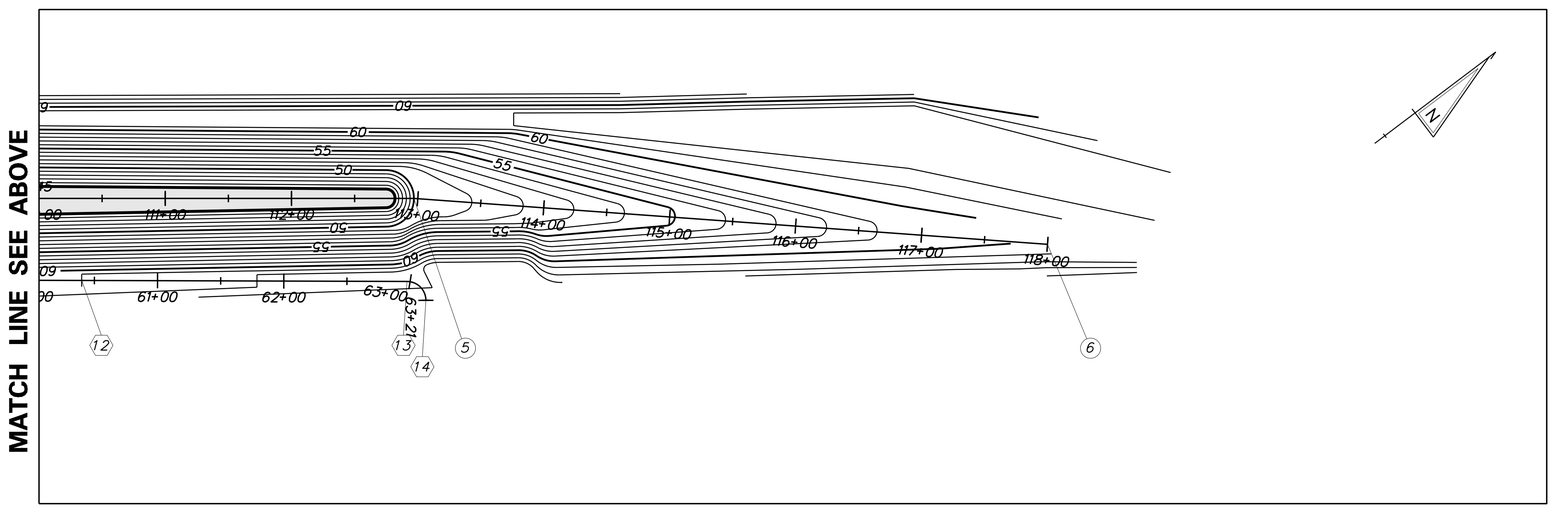

CL PRINCIPAL SPILLWAY			
STATION		NORTHING	EASTING
1	POB STA. 100+00.00	527836.5093	562448.6466
2	PI STA. 100+69.24	527905.4831	562454.7682
3	PI STA. 104+02.38	528169.3768	562658.0846
4	PI STA. 105+54.72	528295.3575	562743.7381
5	PI STA. 112+96.93	528887.5293	563191.1888
6	POE STA. 118+00.00	529265.9385	563522.6778

CL EMBANKMENT			
STATION		NORTHING	EASTING
1	POB STA. 50+00.00	527910.3578	562417.6276
2	PI STA. 50+19.97	527893.9583	562429.0184
3	PI STA. 50+24.65	527893.5447	562433.6787
4	PI STA. 50+64.61	527890.0121	562473.4822
5	PC STA. 50+83.32	527888.3573	562492.1279
6	PT STA. 51+05.23	527902.1401	562508.8312
7	PI STA. 51+71.83	527954.6542	562549.7970
8	PI STA. 54+49.42	528175.6853	562717.7292
9	PI STA. 55+84.34	528282.1846	562800.5545
10	PI STA. 58+27.43	528471.7588	562952.7252
11	PI STA. 59+01.05	528527.8747	563000.3819
12	PI STA. 60+39.98	528638.4987	563084.4304
13	PC STA. 62+97.57	528843.5371	563240.3576
14	PT STA. 63+21.04	528846.4708	563261.2791

STAKEOUT - BMP 659 (BASIN 2B)

11/13/2012
J:\BRIDGE_HIGHWAYS\9040_Deldot_301\Civil\Plans\2A\SWM\Pond 2\SW_2B_02.dgn

DELAWARE DEPARTMENT OF TRANSPORTATION

ADDENDUMS / REVISIONS

SCALE 0 100 200 300 FEET

US 301 LEVELS ROAD TO SUMMIT BRIDGE ROAD

CONTRACT T200911303
COUNTY NEW CASTLE
BRIDGE NO.
DESIGNED BY: BAS
CHECKED BY: JJW

STORMWATER MANAGEMENT DETAILS BMP 659 (BASIN 2B)

SW25
SHEET NO. 710
TOTAL SHTS. 1256

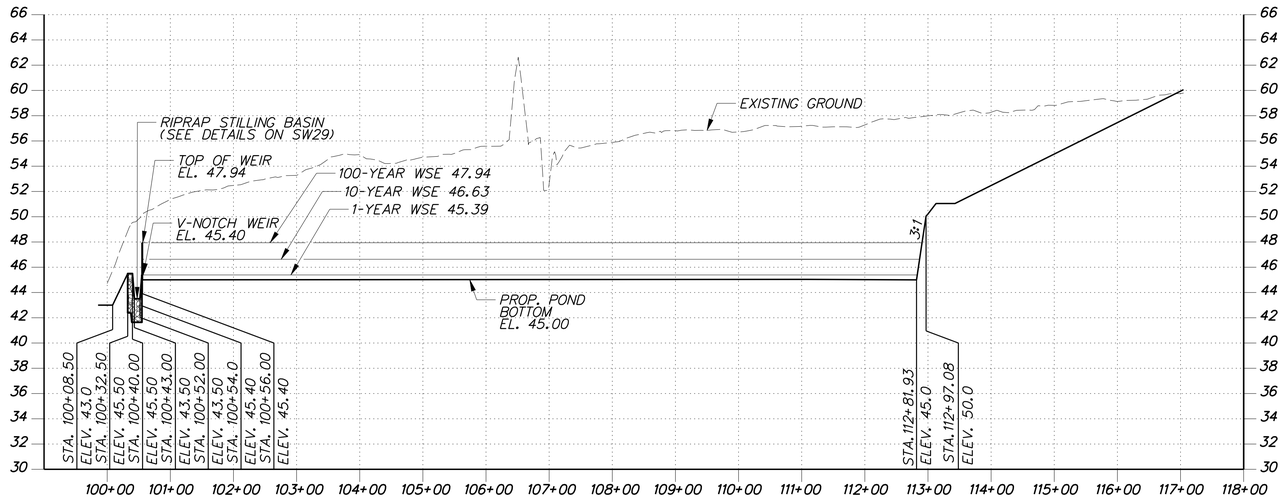

SPILLWAY PROFILE - BMP 659 (BASIN 2B)

HORIZONTAL SCALE: 1" = 120'
0 120 240 360
FEET

VERTICAL SCALE: 1" = 6'
0 6 12 18
FEET

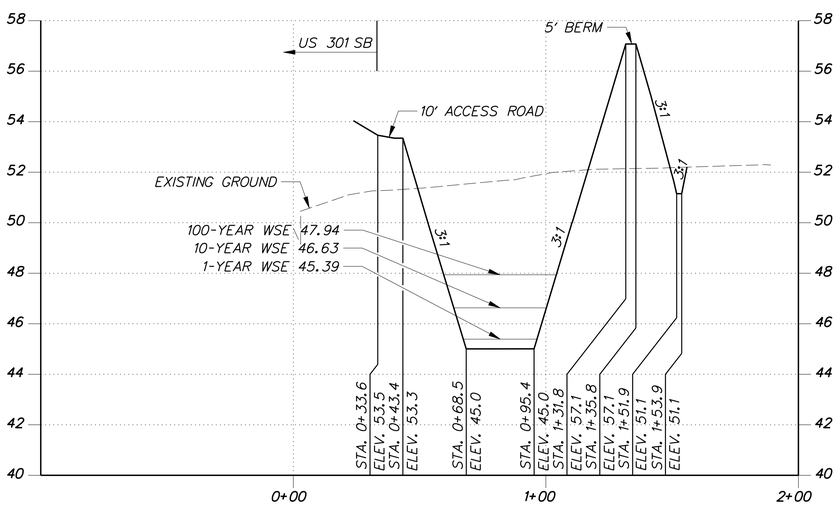

SECTION A-A

HORIZONTAL SCALE: 1" = 30'
0 30 60 90
FEET

VERTICAL SCALE: 1" = 3'
0 3 6 9
FEET

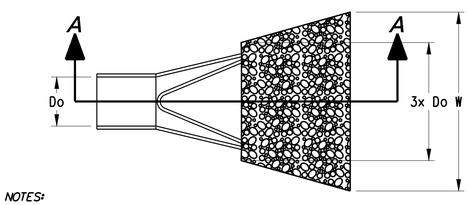

PLAN

SCALE: NONE

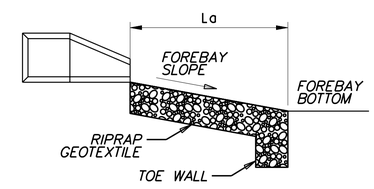

SECTION A-A

SCALE: NONE

NOTES:

1. RIPRAP ITEM 712005
2. GEOTEXTILES, RIPRAP ITEM 713003
3. DELEWARE NO. 57 STONE ITEM 302012
4. SEE STANDARD NO. E-10 FOR RIPRAP DEPTH AND GEOTEXTILE PLACEMENT.
5. DEPRESS CENTERLINE OF APRON SLIGHTLY TO PREVENT EDGE CUTTING

DATA

WEIR TOP WIDTH (Do)= xxx
PIPE DIAMETER (Do)
APRON LENGTH (La)
APRON WIDTH (W)
RIPRAP SIZE (R No.)

FES ID	Do	La	W	R No.
18	1.5'	9.0'	11.0'	R-4
250	1.5'	7.0'	4.0'	R-4
251	1.5'	7.0'	4.0'	R-4

FOREBAY RIPRAP OUTLET PROTECTION

SCALE: NONE

11/13/2012
J:\BRIDGE_HIGHWAYS\9040_Deldot_301\Civil\Plans\2A\SWM\Pond 2\SW_2B_03.dgn

DELAWARE DEPARTMENT OF TRANSPORTATION	ADDENDUMS / REVISIONS	AS SHOWN	US 301 LEVELS ROAD TO SUMMIT BRIDGE ROAD	CONTRACT T200911303	BRIDGE NO.	STORMWATER MANAGEMENT DETAILS BMP 659 (BASIN 2B)	SW26
				COUNTY NEW CASTLE	DESIGNED BY: BAS		SHEET NO. 711
					CHECKED BY: JJW		TOTAL SHTS. 1256

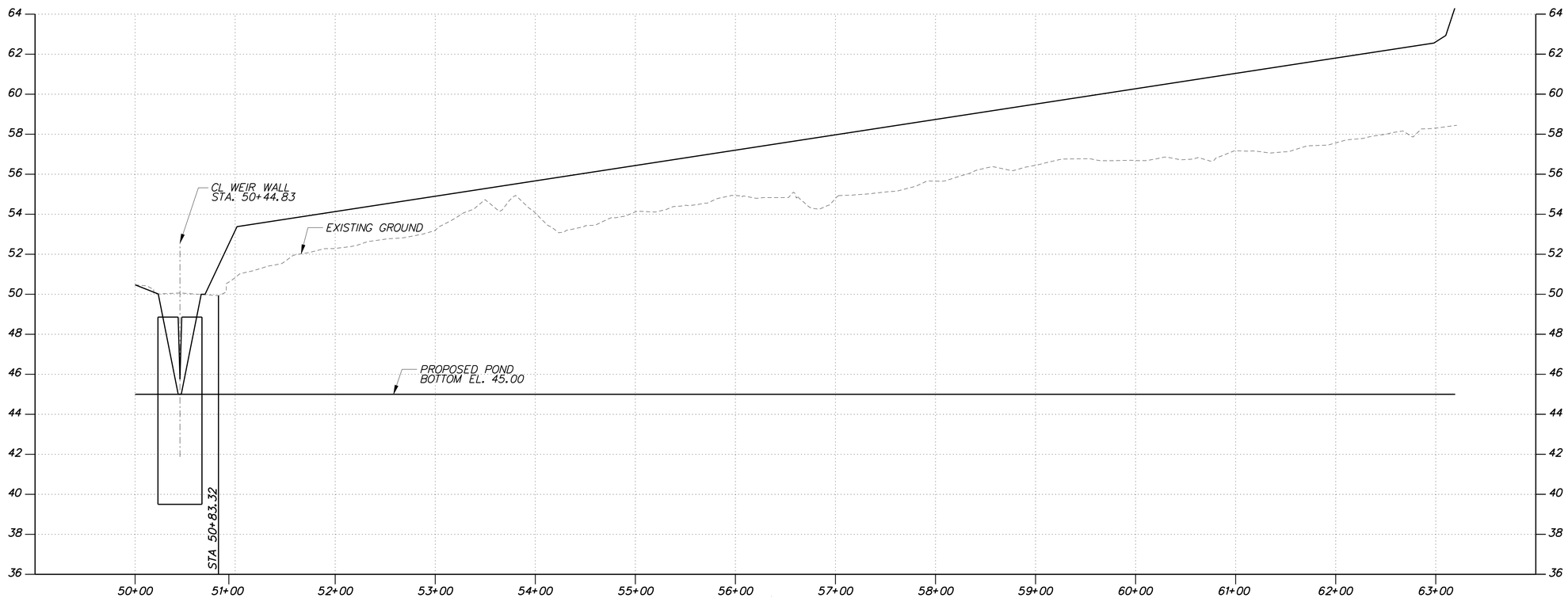

EMBANKMENT PROFILE FOR BMP 659 (BASIN 2B)

HORIZONTAL SCALE: 1" = 60'

0 60 120 180

FEET

VERTICAL SCALE: 1" = 3'

0 3 6 9

FEET

11/13/2012
J:\BRIDGE_HIGHWAYS\9040_Deldot_301\Civil\Plans\2A\SWM\Pond 2\SW_2B_04.dgn

DELAWARE DEPARTMENT OF TRANSPORTATION	ADDENDUMS / REVISIONS	AS SHOWN	US 301 LEVELS ROAD TO SUMMIT BRIDGE ROAD	CONTRACT T200911303	BRIDGE NO.	STORMWATER MANAGEMENT DETAILS BMP 659 (BASIN 2B)	SW27 SHEET NO. 712
				COUNTY NEW CASTLE	DESIGNED BY: BAS		TOTAL SHTS. 1256
					CHECKED BY: JJW		

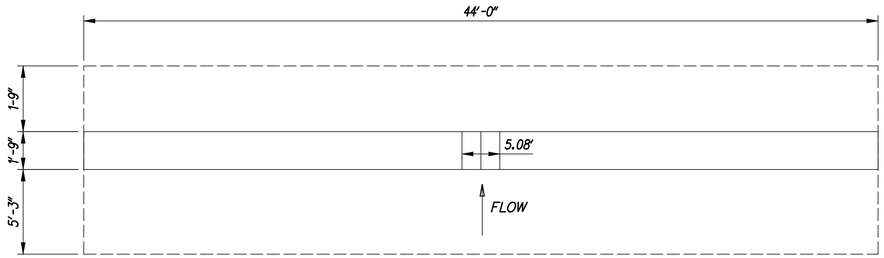

WEIR WALL PLAN

SCALE: NONE

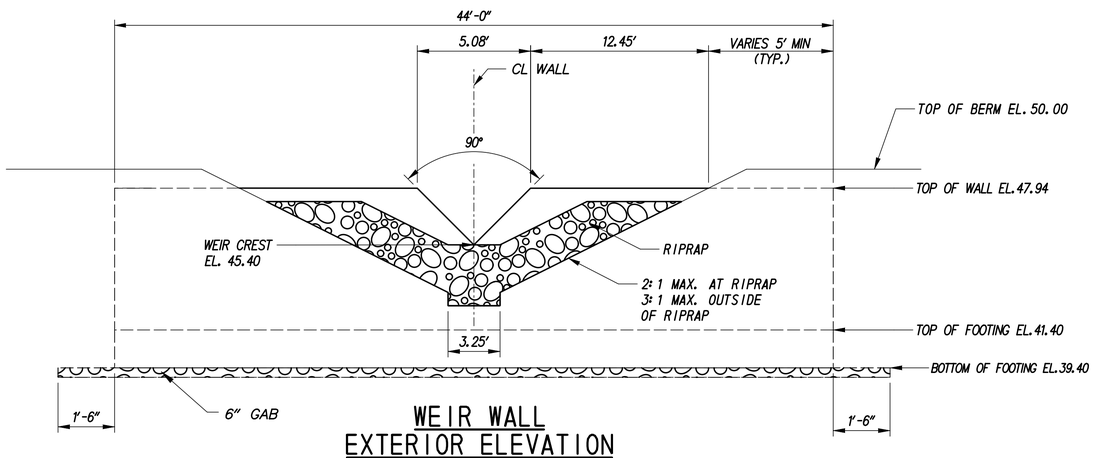

WEIR WALL EXTERIOR ELEVATION WITH RIPRAP STILLING BASIN

SCALE: NONE

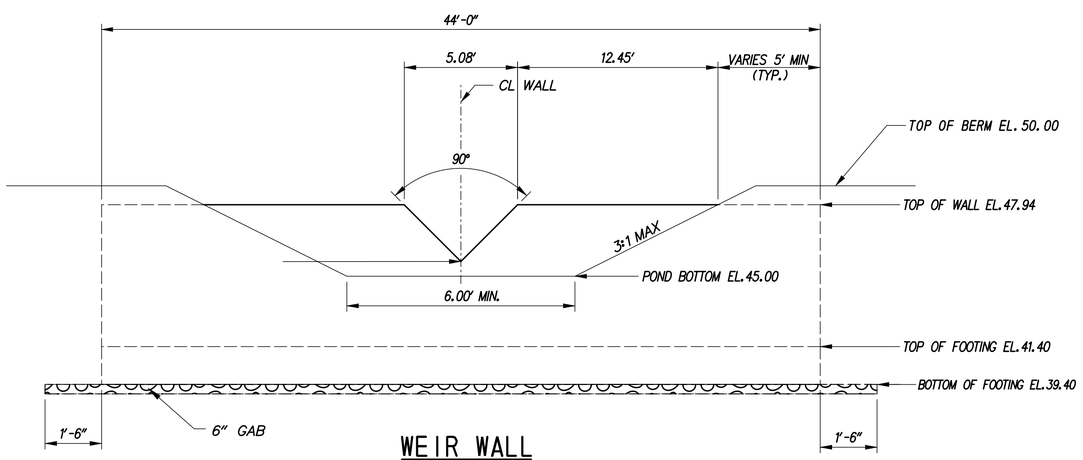

WEIR WALL INTERIOR ELEVATION

SCALE: NONE

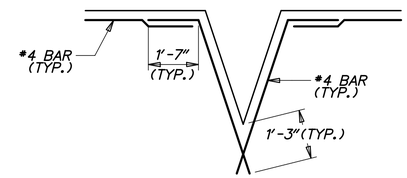

OPENING DETAILS

SCALE: NONE

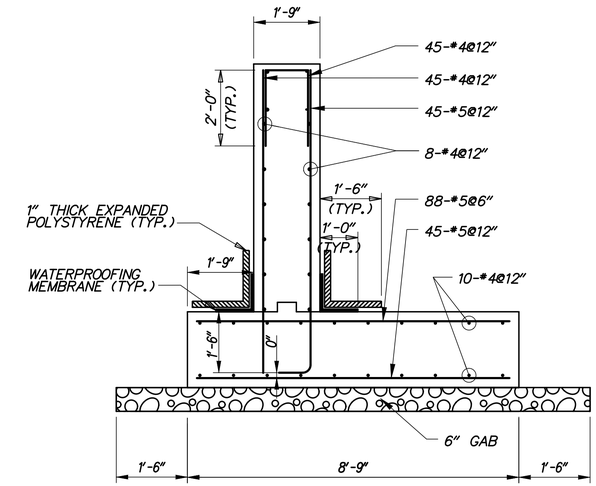

WEIR WALL SECTION

SCALE: 1/2" =1'-0"

GENERAL NOTES

1. DESIGN SPECIFICATIONS:

   AASHTO LRFD BRIDGE DESIGN SPECIFICATIONS, 4TH EDITION, 2007, INCLUDING 2008 AND 2009 INTERIM REVISIONS, AND AS SUPPLEMENTED BY DELAWARE DEPARTMENT OF TRANSPORTATION BRIDGE DESIGN MANUAL, MAY 2005, INCLUDING LATEST REVISIONS.

   PROVIDE MATERIALS AND PERFORM WORK IN ACCORDANCE WITH THE DELAWARE DEPARTMENT OF TRANSPORTATION STANDARD SPECIFICATIONS AND CONSTRUCTION DETAILS, AASHTO/AWS D1.5M/D1.5 BRIDGE WELDING CODE, AND CONTRACT SPECIAL PROVISIONS.

2. LOADING:

   UNIT WEIGHTS OF MATERIALS SHALL BE IN ACCORDANCE WITH THE DELAWARE DESIGN MANUAL.

3. PORTLAND CEMENT CONCRETE:

   PORTLAND CEMENT CONCRETE FOR CAST-IN-PLACE ELEMENTS SHALL BE AS FOLLOWS:
   (28 DAY COMPRESSIVE STRENGTH)
   (CLASS B, F'c=3000 PSI) - WEIR WALL FOOTING
   (CLASS A, F'c=4500 PSI) - WEIR WALL STEM

   WEIR WALLS MUST BE CAST-IN-PLACE.

   MIX REQUIREMENTS SHALL CONFORM TO SECTION 812 OF THE DELAWARE DEPARTMENT OF TRANSPORTATION STANDARD SPECIFICATIONS.

   ALL EXPOSED CORNERS OF CONCRETE SHALL BE CHAMFERED WITH ¾" X ¾" MILLED CHAMFER STRIPS EXCEPT ON UNEXPOSED FOOTINGS.

4. BAR REINFORCEMENT:

   REINFORCING STEEL SHALL CONFORM TO AASHTO M31 (ASTM A615), GRADE 60 AND IS TO BE EPOXY COATED. FUSION-BONDED EPOXY COATED REINFORCING STEEL SHALL CONFORM TO AASHTO M284 (ASTM D3963).

   PROVIDE 3" CONCRETE COVER ON REINFORCEMENT BARS, EXCEPT AS NOTED.

   LAP LENGTH OF #4 BARS TO BE 3'-0". STAGGER SPLICE LOCATIONS.

   DO NOT WELD GRADE 60 REINFORCING STEEL.

5. CONSTRUCTION JOINTS:

   KEYED CONSTRUCTION JOINTS SHALL BE 2" x 4" OR AS NOTED.

6. WATERPROOFING MEMBRANE:

   ADHESIVE BACKED WATERPROOFING MEMBRANE IS TO BE USED. SPLICING OF THE MEMBRANE IS PROHIBITED.

7. REFER TO SPECIFICATION SECTION 272501 FOR CONSTRUCTION SEQUENCE.

8. GAB IS INCIDENTAL TO WALL CONSTRUCTION.

G:\60049040 US301\CIVIL\PLANS\2A\CP\SW-28.DGN

DELAWARE DEPARTMENT OF TRANSPORTATION	ADDENDUMS / REVISIONS	AS SHOWN	US 301 LEVELS ROAD TO SUMMIT BRIDGE ROAD	CONTRACT T200911303	BRIDGE NO.	STORMWATER MANAGEMENT DETAILS BMP 659 (BASIN 2B)	SW-28
				COUNTY NEW CASTLE	DESIGNED BY: BAS		SHEET NO. 713
					CHECKED BY: JJW		TOTAL SHTS. 1256

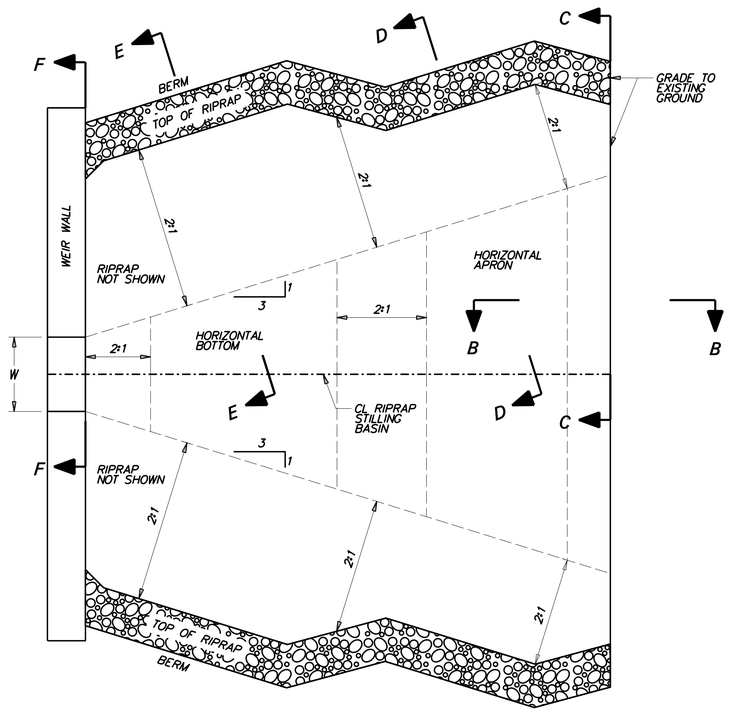

PLAN

SCALE: NONE

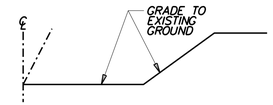

SECTION C-C

SCALE: NONE

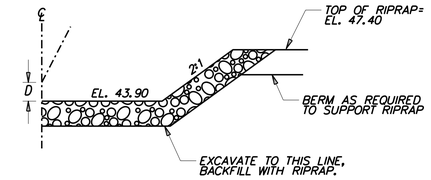

SECTION E-E

SCALE: NONE

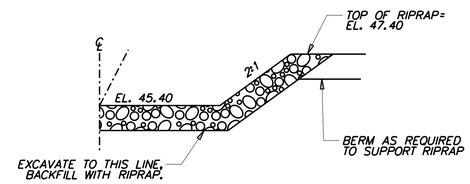

SECTION D-D

SCALE: NONE

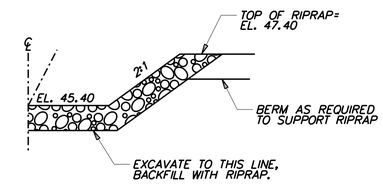

SECTION F-F

SCALE: NONE

DATA

TOP OF V-NOTCH WEIR WIDTH W=5.08'

DEPTH OF BASIN FROM WEIR CREST (D) = 1.50'

RIPRAP SIZE (R No.) = R-5 WITH NO. 57 STONE

NOTES:

1. RIPRAP ITEM 712006
2. GEOTEXTILES, RIPRAP ITEM 713003
3. DELEWARE NO. 57 STONE ITEM 302012
4. SEE STANDARD NO. E-10 FOR RIPRAP DEPTH AND GEOTEXTILE PLACEMENT.

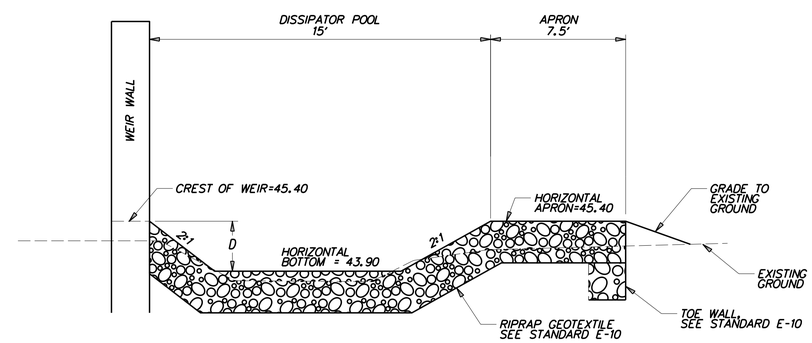

PROFILE THRU RIPRAP STILLING BASIN

SCALE: NONE

RIPRAP STILLING BASIN

SCALE: NONE

DELAWARE DEPARTMENT OF TRANSPORTATION	ADDENDUMS / REVISIONS	AS SHOWN	US 301 LEVELS ROAD TO SUMMIT BRIDGE ROAD	CONTRACT T200911303 / COUNTY NEW CASTLE	BRIDGE NO. / DESIGNED BY: BAS / CHECKED BY: JJW	STORMWATER MANAGEMENT DETAILS BMP 659 (BASIN 2B)

	SW29
SHEET NO.	714
TOTAL SHTS.	1256

11/13/2012
J:\BRIDGE_HIGHWAYS\9040_Deldot_301\Civil\Plans\2A\SWM\Pond 2\SW_2B_06.dgn

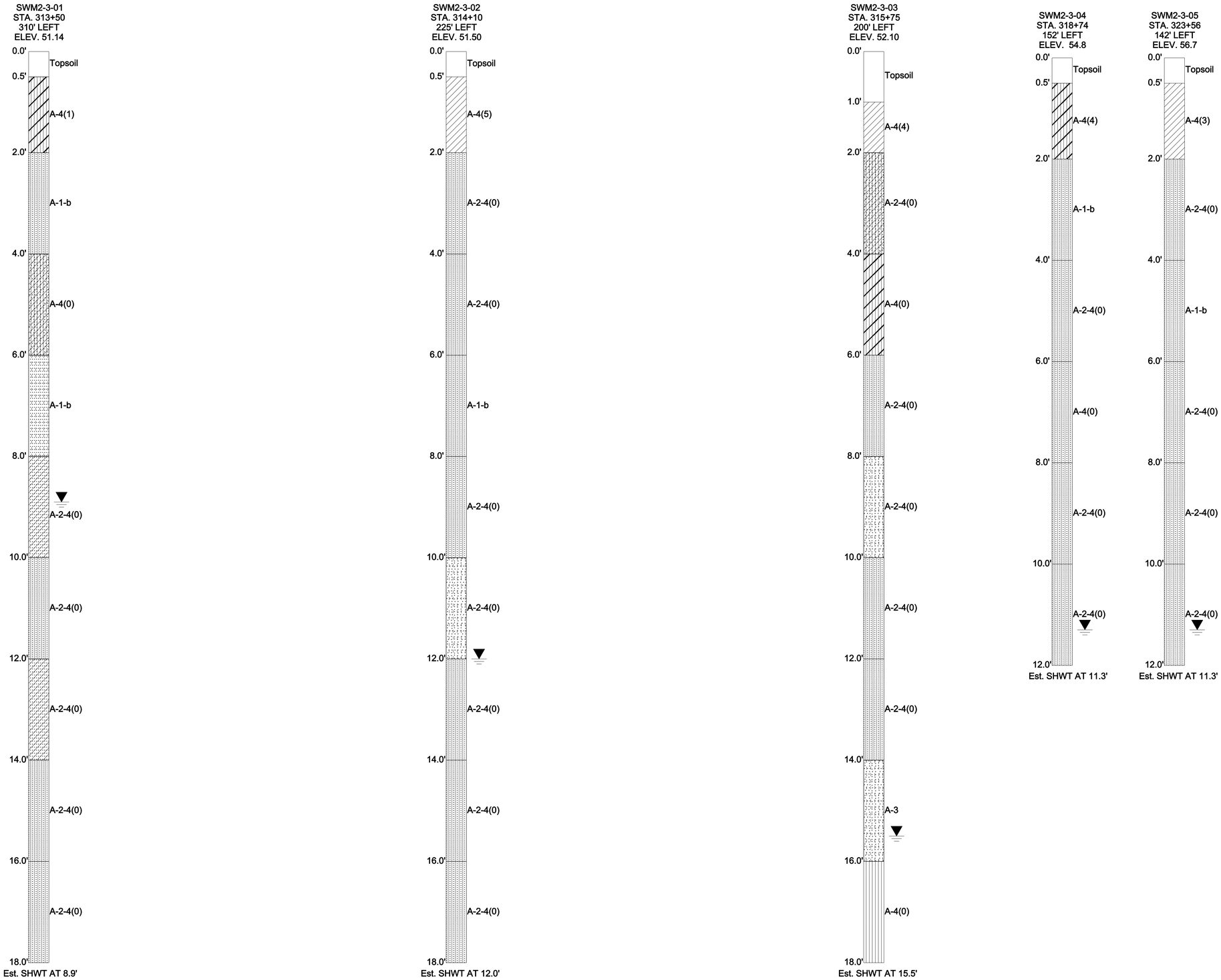

11/13/2012
J:\BRIDGE_HIGHWAYS\9040_Deldot_301\Civil\Plans\2A\SWM\Pond 2\SW_2B_07.dgn

DELAWARE DEPARTMENT OF TRANSPORTATION

ADDENDUMS / REVISIONS

AS SHOWN

US 301 LEVELS ROAD TO SUMMIT BRIDGE ROAD

CONTRACT	BRIDGE NO.
T200911303	DESIGNED BY: BAS
COUNTY	
NEW CASTLE	CHECKED BY: JJW

STORMWATER MANAGEMENT DETAILS BMP 659 (BASIN 2B)

SW30
SHEET NO.
715
TOTAL SHTS.
1256

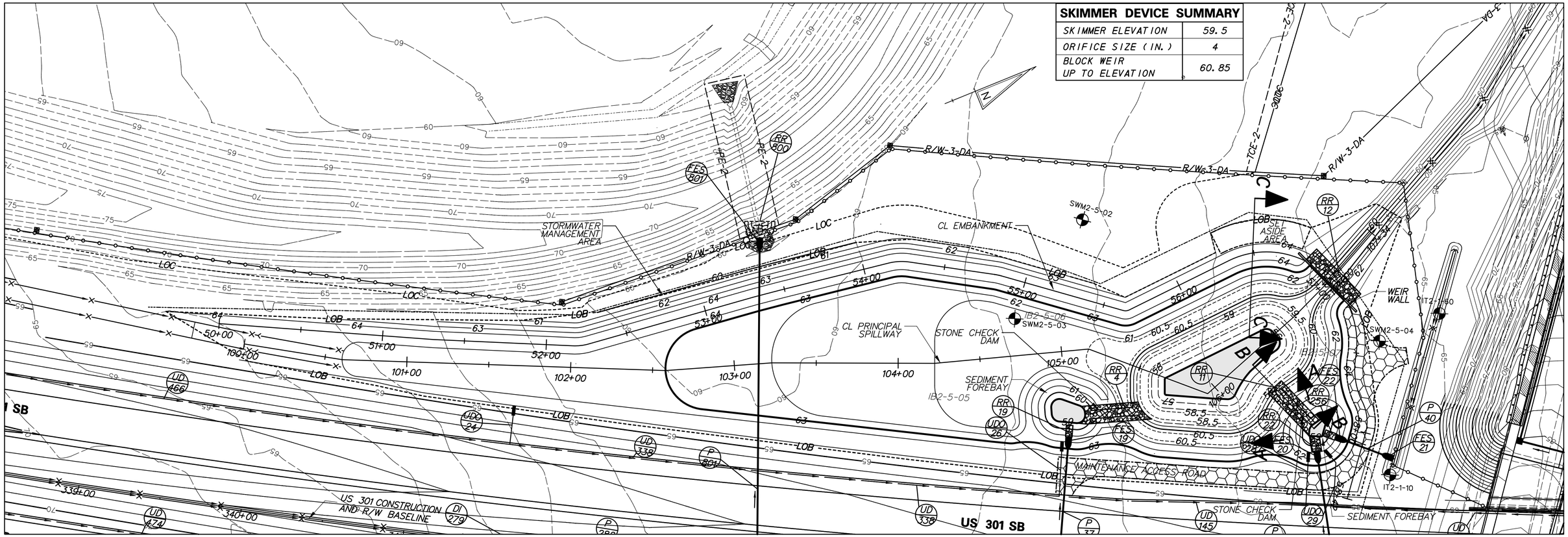

POND CONSTRUCTION SEQUENCE AND NOTES

THE STORMWATER MANAGEMENT POND SHALL FUNCTION AS A SEDIMENT BASIN DURING ROADWAY CONSTRUCTION AND SHALL BE CONSTRUCTED IN ACCORDANCE WITH THE FOLLOWING SECTIONS OF THE STANDARD SPECIFICATIONS:

SECTION 271 - STORMWATER MANAGMENT POND
SECTION 272 - POND OUTLET STRUCTURE, CONCRETE

1. INSTALL STABILIZED CONSTRUCTION ENTRANCE.
2. CLEAR AND GRUB FOR INSTALLATION OF PERIMETER EROSION AND SEDIMENT CONTROLS.
3. INSTALL PERIMETER SEDIMENT CONTROLS AS SHOWN ON EROSION SEDIMENT CONTROL PLANS
4. CLEAR AND GRUB REMAINING AREA FOR POND CONSTRUCTION.
5. CONSTRUCT POND OUTLET STRUCTURE, RIPRAP ENERGY DISSIPATOR AT END OF PRINCIPAL SPILLWAY AND PARTIAL EMBANKMENT AS NEEDED TO INSTALL POND OUTLET STRUCTURE. INSTALL SKIMMER DEWATERING DEVICE. DE-WATER FOUNDATION AS NEEDED IN ACCORDANCE WITH SECTION 111 AND USE SUMP PIT FOR DUMPING. (SEE EROSION AND SEDIMENT CONTROL DETAILS FOR SKIMMER DEWATERING DEVICE INSTALLATION).
6. EXCAVATE THE POND AND COMPLETE THE EMBANKMENT, GRADES AND DETAILS SHOWN IN THE CONSTRUCTION PLANS. DURING EXCAVATION, THE CONTRACTOR SHALL SALVAGE AND STOCKPILE SOILS CLASSIFIED AS CH, CL, AND GM PER THE UNIFIED SOIL CLASSIFIED SYSTEM TO BE USED TO CONSTRUCT EMBANKMENT AND TO LINE THE POND. THE ABOVE CLASSIFIED SOILS MAY BE OBTAINED FROM ELSEWHERE WITHIN THE PROJECT LIMITS, IF NECESSARY.
7. STABILIZE ALL BARE AREAS.
   NOTE: SEE EROSION AND SEDIMENT CONTROL PLANS FOR LOCATION OF EROSION AND SEDIMENT CONTROL MEASURES.
8. THE CONTRATOR SHALL PROVIDE 'AS-BUILT' DRAWINGS OF ALL STORMWATER MANAGEMENT FACILITIES SUCH AS PONDS, INFILTRATION BASINS, BIOFILTRATION SWALES, ETC. 'AS-BUILT' DRAWINGS SHALL SHOW THE ACTUAL FINISHED GROUND CONTOURS, OUTLET STRUCTURE DIMENSIONS AND ELEVATIONS, ETC. AS THEY EXIST AT THE COMPLETION OF THE PROJECT. THESE DRAWINGS SHALL BE SIGNED BY A PROFESSIONAL ENGINEER OR LAND SURVEYOR.

PLAN - BMP 660 (BASIN 3)

MAINTENANCE OF POND AS A SEDIMENT BASIN

1. CONTRACTOR SHALL INSPECT THE BASIN IMMEDIATELY AFTER EVERY RAIN AND MAKE REPAIRS AS NEEDED.
2. CONTRACTOR SHALL CLEARLY MARK THE CLEANOUT ELEVATION ON A STAKE DRIVEN INTO THE GROUND AT A LOCATION CLEARLY VISIBLE FROM THE EMBANKMENT. SEDIMENT SHALL BE REMOVED WHEN CLEANOUT ELEVATION IS REACHED AND DISPOSED OF AT A LOCATION APPROVED BY THE ENGINEER. CLEANOUT ELEVATION IS 60.34.

CONVERSION TO PERMANENT STORMWATER MANAGEMENT POND

1. CONVERT THE BASIN INTO THE PERMANENT STORMWATER MANAGEMENT POND AFTER ALL AREAS DRAINING TO THE POND HAVE BEEN PERMANENTLY STABILIZED AND THE ENGINEER HAS APPROVED THE CONVERSION.
2. REMOVE ACCUMULATED SEDIMENT TO ELEVATION 56.00 AND DISPOSE SEDIMENT AT A LOCATION APPROVED BY THE ENGINEER.
3. COMPLETE STABILIZATION OF ALL BARE AREAS. REMOVE EROSION AND SEDIMENT CONTROL MEASURES AND DEACTIVATE SKIMMER DEWATER DEVICE.

PLANTING SCHEDULE

PERMANENT GRASS SEEDING - WET GROUND UP TO ELEVATION 60.50
PERMANENT GRASS SEEDING - DRY GROUND ABOVE ELEVATION 60.50
PLACE TOPSOIL ON LOWER BENCH ELEVATION 58.50 AND ABOVE.

POND DESIGN SUMMARY

DESIGN STORM	FACILITY INFLOW(CFS)	FACILITY DISCHARGE(CFS)	WATER SURFACE ELEVATION(FT)	STORAGE VOLUME (AC. FT)
QUALITY STORM (1-YR)	6.09	0.53	60.48	0.32
10 - YEAR	22.13	2.88	61.42	0.79
100 - YEAR	51.27	9.39	62.58	1.51

HAZARD CLASSIFICATION: CLASS A AS PER POND CODE 378
DRAINAGE AREA TO FACILITY: 7.38 AC
MANAGEMENT PROVIDED BY FACILITY: WATER QUALITY FOR 1-YEAR STORM, WATER QUANTITY FOR 10 AND 100-YEAR STORMS.

POND QUANTITIES

ITEM NO.	ITEM	QTY.	UNITS.
202000	EXCAVATION AND EMBANKMENT	4925	CY
272501	POND OUTLET STRUCTURE, 6, SPECIAL	1	EACH
302011	DELAWARE NO. 3 STONE	126	TON
302012	DELAWARE NO. 57 STONE	10	TON
712005	R-4 RIPRAP	15	SY
712006	R-5 RIPRAP	41	SY
712020	R-4 RIPRAP	64	TON
713001	GEOTEXTILES, STABILIZATION	845	SY
713003	GEOTEXTILES, RIPRAP	188	SY
733002	TOPSOILING, 6" DEPTH	10869	SY
734013	PERMANENT GRASS SEEDING, DRY GROUND	10021	SY
734015	PERMANENT GRASS SEEDING, WET GROUND	1252	SY

RIPRAP SCHEDULE

NO.	TYPE	AREA (SY)
12	R-5	41
4	R-4	45
11	R-4	41
19	R-4	4
22	R-4	7
256	R-4	4

CHECK CONSTRUCTION PLANS FOR SCHEDULE OF RIPRAP OUTSIDE OF THE BASIN AREA.

DELAWARE DEPARTMENT OF TRANSPORTATION

ADDENDUMS / REVISIONS

SCALE 0 30 60 90 FEET

US 301 LEVELS ROAD TO SUMMIT BRIDGE ROAD

CONTRACT T200911303
COUNTY NEW CASTLE
BRIDGE NO.
DESIGNED BY: BAS
CHECKED BY: JJW

STORMWATER MANAGEMENT DETAILS BMP 660 (BASIN 3)

SW31
SHEET NO. 716
TOTAL SHTS. 1256

P:\CADD2\60049040 US301\CIVIL\PLANS\2A\BALT\SWM\POND 3\SW_3_01.DGN

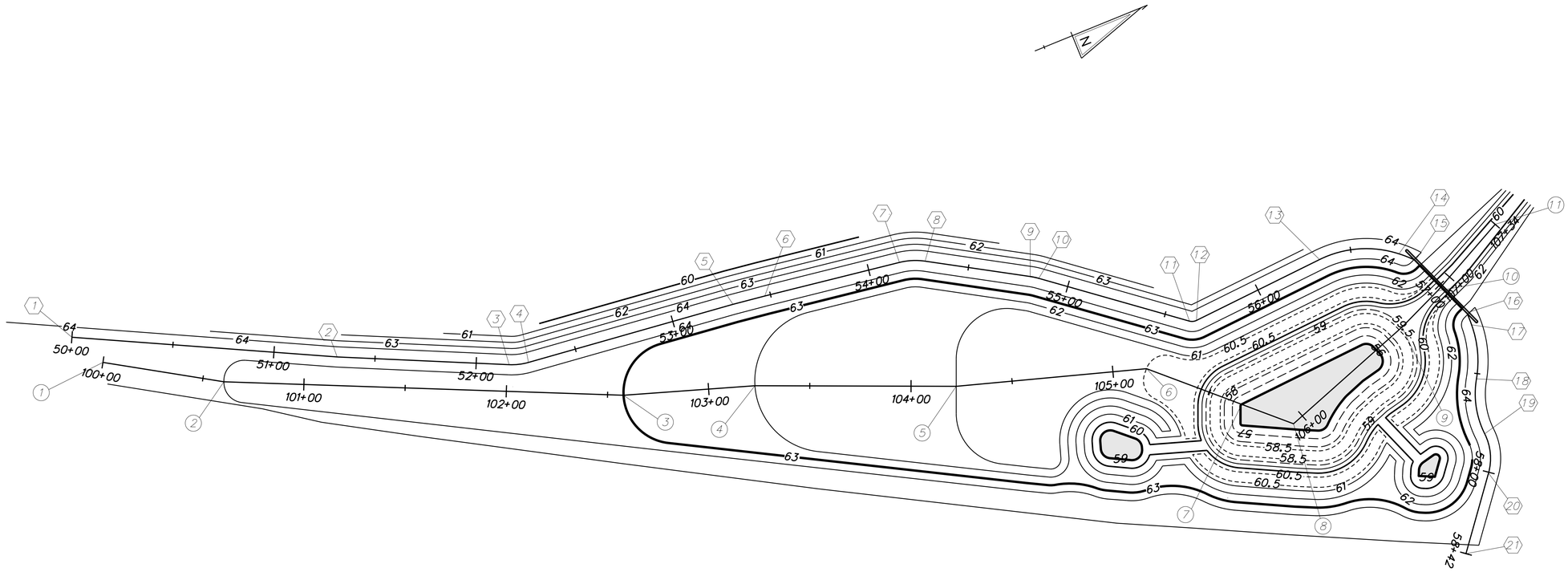

STAKEOUT - BMP 660 (BASIN 3)

CL PRINCIPAL SPILLWAY			
STATION		NORTHING	EASTING
1	POB STA. 100+00.00	529969.2774	563994.7457
2	PI STA. 100+60.49	530020.9847	564026.1318
3	PI STA. 102+57.90	530201.1979	564106.7198
4	PI STA. 103+22.93	530263.0452	564126.8336
5	PI STA. 104+22.30	530354.9620	564164.5909
6	PI STA. 105+16.64	530445.2385	564191.9620
7	PI STA. 105+66.80	530482.0997	564225.9754
8	PI STA. 105+94.16	530502.2109	564244.5329
9	PI STA. 106+65.91	530569.8304	564220.5526
10	PI STA. 106+90.99	530592.8491	564210.5903
11	POE STA. 107+34.39	530631.5406	564190.9160

CL EMBANKMENT			
STATION		NORTHING	EASTING
1	POB STA. 50+00.00	529959.7964	563977.4735
2	PI STA. 51+31.30	530077.3938	564035.8736
3	PC STA. 52+16.28	530154.5793	564071.4358
4	PT STA. 52+25.93	530163.8374	564074.0072
5	PI STA. 53+30.90	530268.1702	564085.5386
6	PI STA. 53+47.12	530284.2445	564087.6572
7	PC STA. 54+15.63	530352.0688	564097.3865
8	PT STA. 54+28.39	530364.0385	564101.5976
9	PC STA. 54+80.81	530409.2247	564128.1778
10	PT STA. 54+85.16	530412.8129	564130.6197
11	PC STA. 55+62.49	530473.7493	564178.2386
12	PT STA. 55+66.10	530477.0810	564179.2159
13	PC STA. 56+33.90	530544.6882	564174.3153
14	PCC STA. 56+74.18	530582.0368	564186.4833
15	PT STA. 56+82.87	530588.6107	564192.3676
16	PC STA. 57+19.39	530602.5283	564226.1317
17	PCC STA. 57+25.55	530602.0437	564232.4696
18	PRC STA. 57+52.62	530594.2176	564258.0773
19	PRC STA. 57+80.50	530587.7628	564284.7172
20	PT STA. 58+00.45	530582.1759	564303.4045
21	POE STA. 58+41.71	530556.8767	564335.9982

11/14/2012
J:\BRIDGE_HIGHWAYS\9040_Deldot_301\Civil\Plans\2A\SWM\Pond 3\SW_3_02.dgn

DELAWARE DEPARTMENT OF TRANSPORTATION

ADDENDUMS / REVISIONS

SCALE 0 30 60 90 FEET

US 301 LEVELS ROAD TO SUMMIT BRIDGE ROAD

CONTRACT T200911303
COUNTY NEW CASTLE
BRIDGE NO.
DESIGNED BY: BAS
CHECKED BY: JJW

STORMWATER MANAGEMENT DETAILS BMP 660 (BASIN 3)

SW32
SHEET NO. 717
TOTAL SHTS. 1256

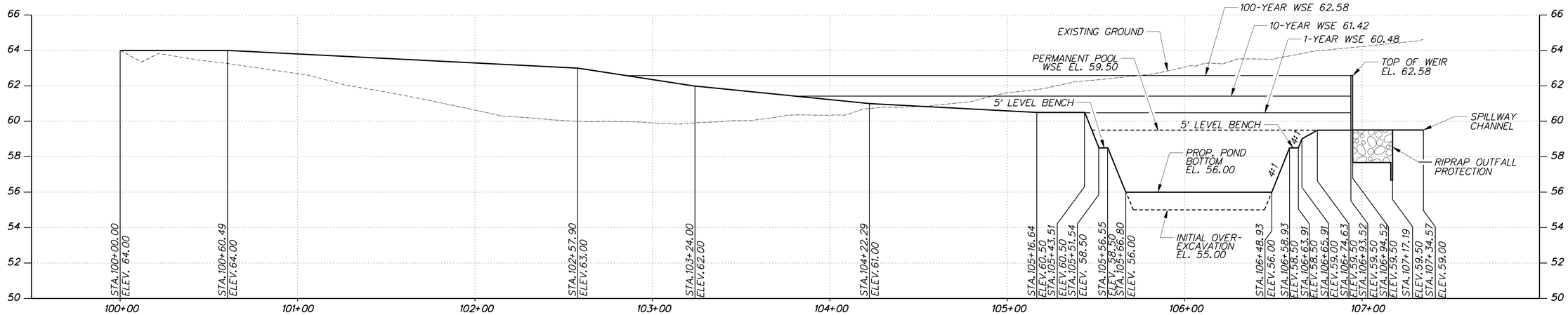

SPILLWAY PROFILE - BMP 660 (BASIN 3)

HORIZONTAL SCALE: 1" = 30'
0 30 60 90
FEET

VERTICAL SCALE: 1" = 3'
0 3 6 9
FEET

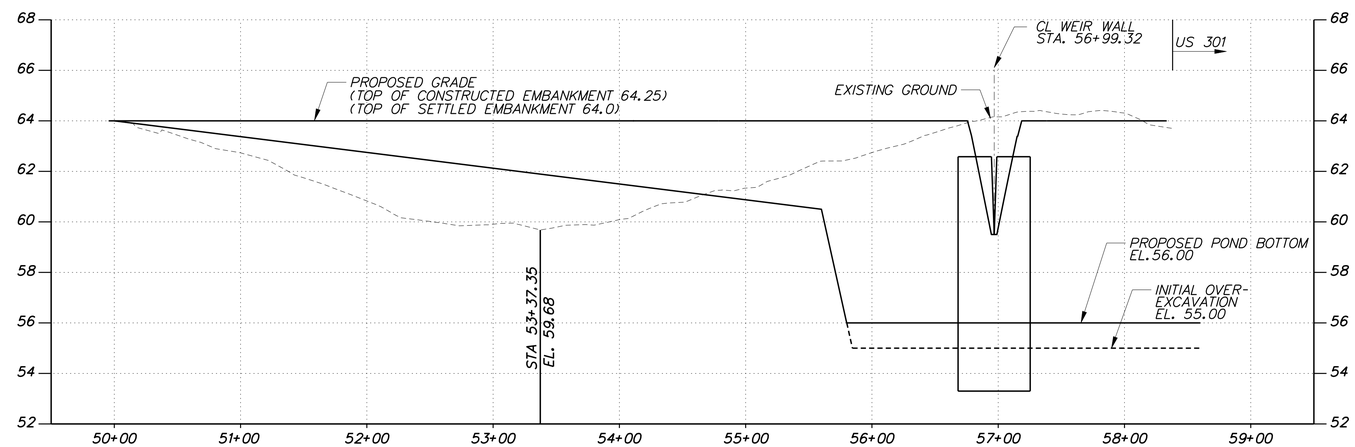

EMBANKMENT PROFILE FOR BMP 660 (BASIN 3)

HORIZONTAL SCALE: 1" = 60'
0 60 120 180
FEET

VERTICAL SCALE: 1" = 3'
0 3 6 9
FEET

11/13/2012
J:\BRIDGE_HIGHWAYS\9040_Deldot_301\Civil\Plans\2A\SWM\Pond 3\SW_3_03.dgn

DELAWARE DEPARTMENT OF TRANSPORTATION	ADDENDUMS / REVISIONS	AS SHOWN	US 301 LEVELS ROAD TO SUMMIT BRIDGE ROAD	CONTRACT T200911303	BRIDGE NO.	STORMWATER MANAGEMENT DETAILS BMP 660 (BASIN 3)	SW33
				COUNTY NEW CASTLE	DESIGNED BY: BAS		SHEET NO. 718
					CHECKED BY: JJW		TOTAL SHTS. 1256

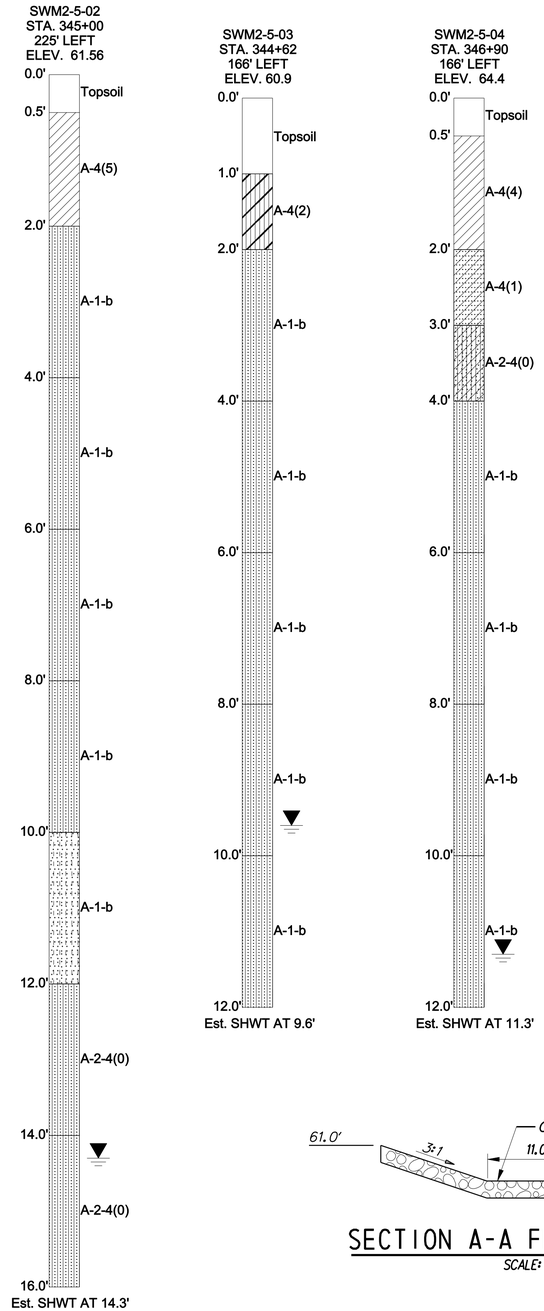

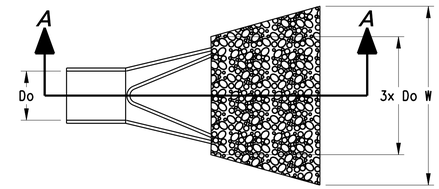

PLAN

SCALE: NONE

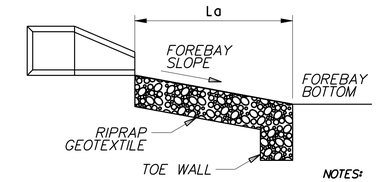

SECTION A-A

SCALE: NONE

NOTES:

1. RIPRAP ITEM 712005
2. GEOTEXTILES, RIPRAP ITEM 713003
3. DELEWARE NO. 57 STONE ITEM 302012
4. SEE STANDARD NO. E-10 FOR RIPRAP DEPTH AND GEOTEXTILE PLACEMENT.
5. DEPRESS CENTERLINE OF APRON SLIGHTLY TO PREVENT EDGE CUTTING

DATA

PIPE DIAMETER (Do)
APRON LENGTH (La)
APRON WIDTH (W)
RIPRAP SIZE (R No.)

FES ID	Do	La	W	R No.
19	1.5'	7.0'	9.0'	R-4
20	2.0'	9.0'	6.0'	R-4
22	1.5'	7.0'	4.0'	R-4

FOREBAY RIPRAP OUTLET PROTECTION

SCALE: NONE

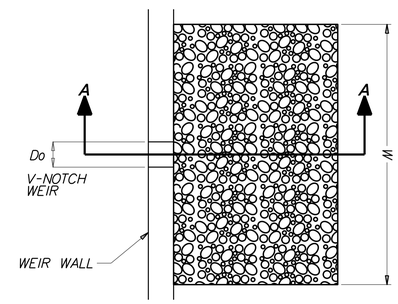

PLAN

SCALE: NONE

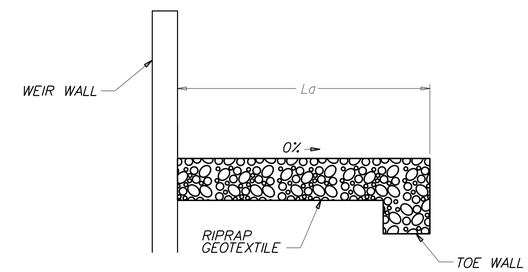

SECTION A-A

SCALE: NONE

DATA

WEIR TOP OF WIDTH (Do)= 1.36'
APRON LENGTH (La) = 20'
APRON WIDTH (W) = 22'
RIPRAP SIZE (R No.)
= R-5 WITH NO. 57 STONE

NOTES:

1. RIPRAP ITEM 712006
2. GEOTEXTILES, RIPRAP ITEM 713003
3. DELEWARE NO. 57 STONE ITEM 302012
4. SEE STANDARD NO. E-10 FOR RIPRAP DEPTH AND GEOTEXTILE PLACEMENT.
5. DEPRESS CENTERLINE OF APRON SLIGHTLY TO PREVENT EDGE CUTTING

BASIN RIPRAP OUTLET PROTECTION

SCALE: NONE

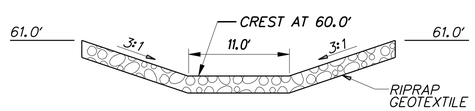

SECTION A-A FROM BASIN PLAN

SCALE: NONE

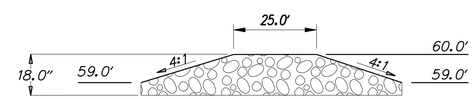

SECTION B-B FROM BASIN PLAN

SCALE: NONE

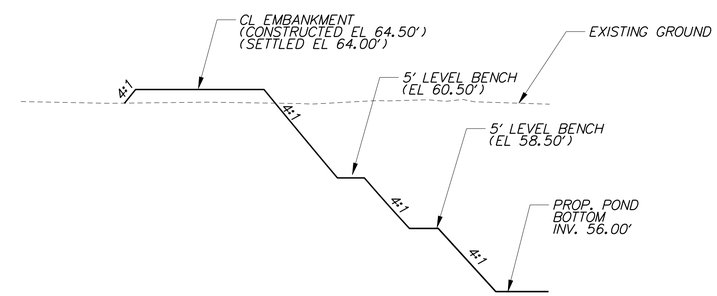

SECTION C-C FROM BASIN PLAN

SCALE: NONE

STONE CHECK DAM

SCALE: NONE

NOTES:

1. RIPRAP ITEM 712020
2. GEOTEXTILES, RIPRAP ITEM 713003
3. SEE STANDARD NO. E-10 FOR GEOTEXTILE PLACEMENT

11/13/2012
J:\BRIDGE_HIGHWAYS\9040_Deldot_301\Civil\Plans\2A\SWM\Pond 3\SW_3_04.dgn

DELAWARE DEPARTMENT OF TRANSPORTATION	ADDENDUMS / REVISIONS	AS SHOWN	US 301 LEVELS ROAD TO SUMMIT BRIDGE ROAD	CONTRACT T200911303	BRIDGE NO.	STORMWATER MANAGEMENT DETAILS BMP 660 (BASIN 3)	SW34
				COUNTY NEW CASTLE	DESIGNED BY: BAS		SHEET NO. 719
					CHECKED BY: JJW		TOTAL SHTS. 1256

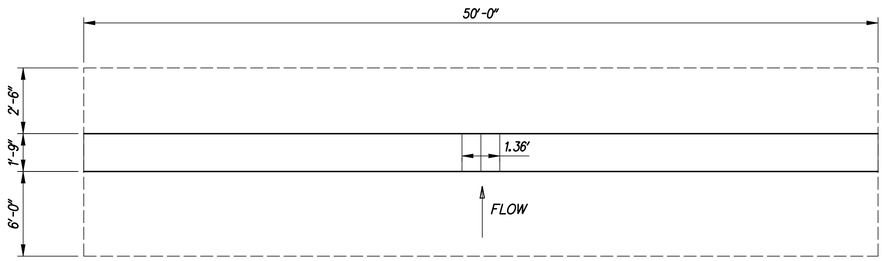

WEIR WALL PLAN

SCALE: NONE

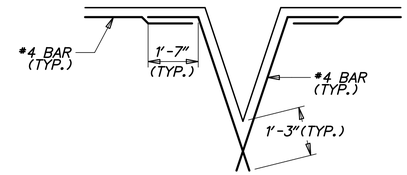

OPENING DETAILS

SCALE: NONE

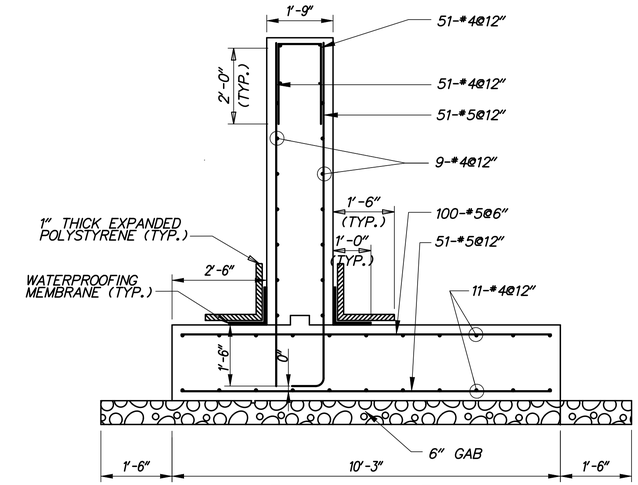

WEIR WALL SECTION

SCALE: 1/2"=1'-0"

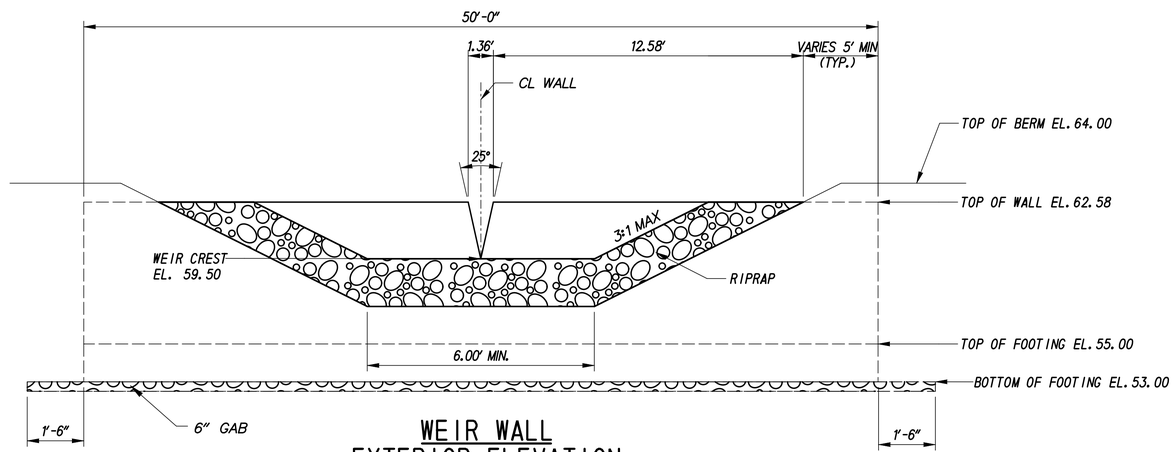

WEIR WALL EXTERIOR ELEVATION WITH RIPRAP APRON

SCALE: NONE

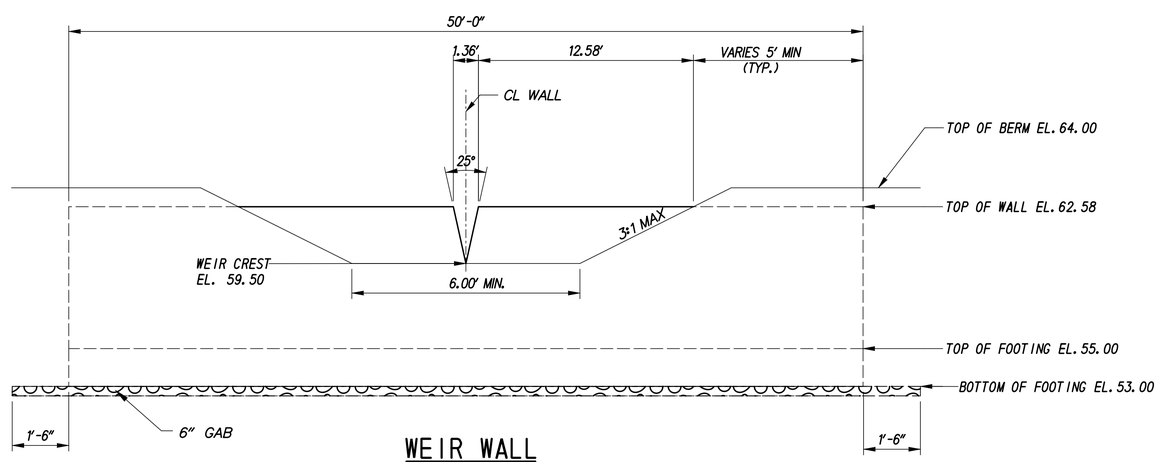

WEIR WALL INTERIOR ELEVATION

SCALE: NONE

GENERAL NOTES

1. DESIGN SPECIFICATIONS:

   AASHTO LRFD BRIDGE DESIGN SPECIFICATIONS, 4TH EDITION, 2007, INCLUDING 2008 AND 2009 INTERIM REVISIONS, AND AS SUPPLEMENTED BY DELAWARE DEPARTMENT OF TRANSPORTATION BRIDGE DESIGN MANUAL, MAY 2005, INCLUDING LATEST REVISIONS.

   PROVIDE MATERIALS AND PERFORM WORK IN ACCORDANCE WITH THE DELAWARE DEPARTMENT OF TRANSPORTATION STANDARD SPECIFICATIONS AND CONSTRUCTION DETAILS, AASHTO/AWS D1.5M/D1.5 BRIDGE WELDING CODE, AND CONTRACT SPECIAL PROVISIONS.

2. LOADING:

   UNIT WEIGHTS OF MATERIALS SHALL BE IN ACCORDANCE WITH THE DELAWARE DESIGN MANUAL.

3. PORTLAND CEMENT CONCRETE:

   PORTLAND CEMENT CONCRETE FOR CAST-IN-PLACE ELEMENTS SHALL BE AS FOLLOWS:
   (28 DAY COMPRESSIVE STRENGTH)
   (CLASS B, F'c=3000 PSI) - WEIR WALL FOOTING
   (CLASS A, F'c=4500 PSI) - WEIR WALL STEM

   WEIR WALLS MUST BE CAST-IN-PLACE.

   MIX REQUIREMENTS SHALL CONFORM TO SECTION 812 OF THE DELAWARE DEPARTMENT OF TRANSPORTATION STANDARD SPECIFICATIONS.

   ALL EXPOSED CORNERS OF CONCRETE SHALL BE CHAMFERED WITH ¾" X ¾" MILLED CHAMFER STRIPS EXCEPT ON UNEXPOSED FOOTINGS.

4. BAR REINFORCEMENT:

   REINFORCING STEEL SHALL CONFORM TO AASHTO M31 (ASTM A615), GRADE 60 AND IS TO BE EPOXY COATED. FUSION-BONDED EPOXY COATED REINFORCING STEEL SHALL CONFORM TO AASHTO M284 (ASTM D3963).

   PROVIDE 3" CONCRETE COVER ON REINFORCEMENT BARS, EXCEPT AS NOTED.

   LAP LENGTH OF #4 BARS TO BE 3'-0". STAGGER SPLICE LOCATIONS.

   DO NOT WELD GRADE 60 REINFORCING STEEL.

5. CONSTRUCTION JOINTS:

   KEYED CONSTRUCTION JOINTS SHALL BE 2" x 4" OR AS NOTED.

6. WATERPROOFING MEMBRANE:

   ADHESIVE BACKED WATERPROOFING MEMBRANE IS TO BE USED. SPLICING OF THE MEMBRANE IS PROHIBITED.

7. REFER TO SPECIFICATION SECTION 272501 FOR CONSTRUCTION SEQUENCE.

8. GAB IS INCIDENTAL TO WALL CONSTRUCTION.

G:\60049040 US301\CIVIL\PLANS\2A\CP\SW-35.DGN

DELAWARE DEPARTMENT OF TRANSPORTATION	ADDENDUMS / REVISIONS	AS SHOWN	US 301 LEVELS ROAD TO SUMMIT BRIDGE ROAD	CONTRACT T200911303	BRIDGE NO.	STORMWATER MANAGEMENT DETAILS BMP 660 (BASIN 3)	SW-35
				COUNTY NEW CASTLE	DESIGNED BY: BAS		SHEET NO. 720
					CHECKED BY: JJW		TOTAL SHTS. 1256

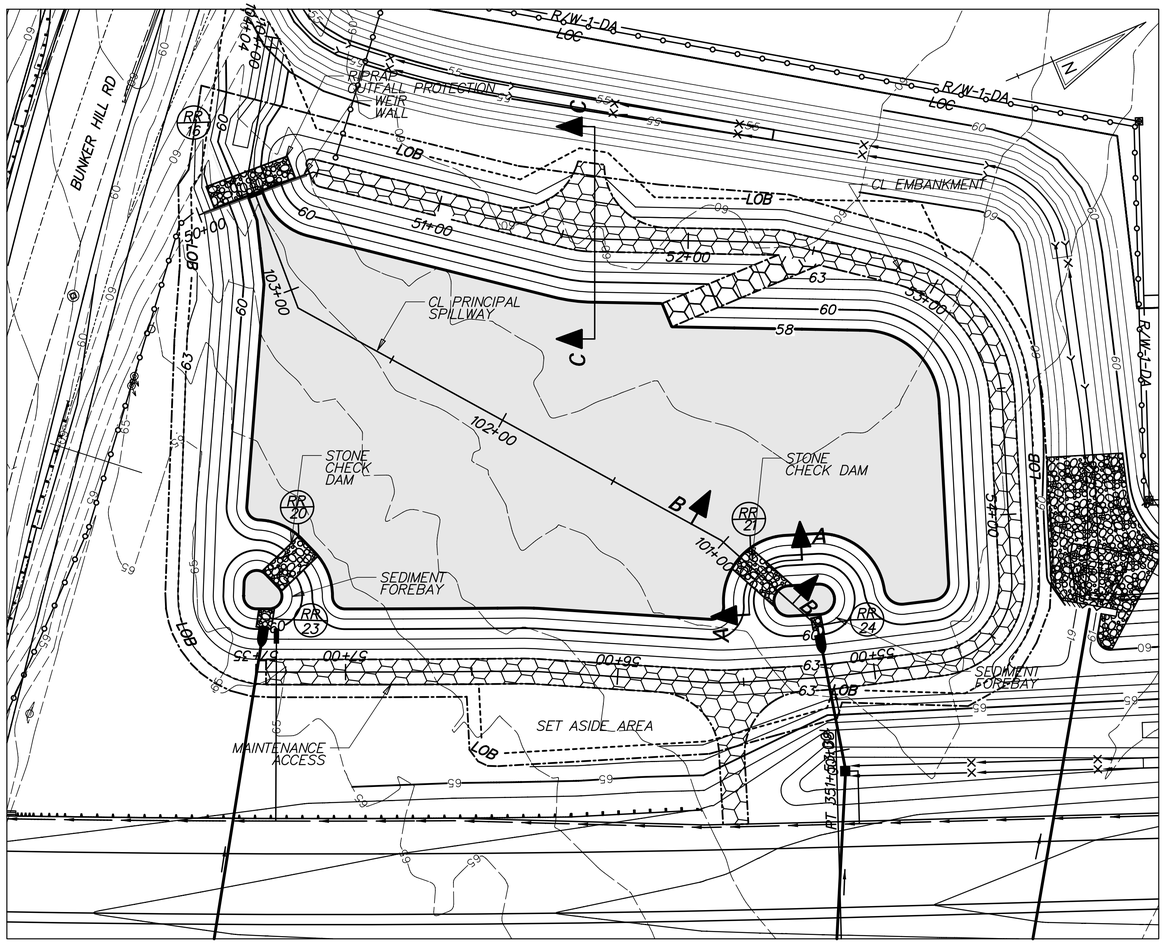

PLAN - BMP 663 (BASIN 4)

POND DESIGN SUMMARY				
DESIGN STORM	FACILITY INFLOW (CFS)	FACILITY DISCHARGE (CFS)	WATER SURFACE ELEVATION (FT)	STORAGE VOLUME (AC. FT)
QUALITY STORM (1-YR)	8.78	0.00	58.32	0.68
10 - YEAR	32.42	0.67	60.07	1.20
100 - YEAR	76.25	5.03	61.40	4.09

HAZARD CLASSIFICATION: CLASS A AS PER POND CODE 378
DRAINAGE AREA TO FACILITY: 13.21 ACRES
MANAGEMENT PROVIDED BY FACILITY: WATER QUALITY BY INFILTRATION OF 1-YEAR STORM RUNOFF, WATER QUANTITY FOR 10 AND 100-YEAR STORMS.

RIPRAP SCHEDULE		
NO.	TYPE	AREA (SY)
16	R-5	37
20	R-4	25
21	R-4	26
23	R-4	6
24	R-4	4

CHECK CONSTRUCTION PLANS FOR SCHEDULE OF RIPRAP OUTSIDE OF THE BASIN AREA.

INFILTRATION BASIN CONSTRUCTION SEQUENCE

THE STORMWATER MANAGEMENT BASIN SHALL FUNCTION AS AN INFILTRATION FACILITY AND SHALL BE CONSTRUCTED IN ACCORDANCE WITH THE FOLLOWING SPECIFICATIONS:

SECTION 271 - STORMWATER MANAGEMENT POND
SECTION 272 - POND OUTLET STRUCTURE, CONCRETE

1. PRIOR TO DISTURBANCE OF THE SITE UPSTREAM OF THE BASIN, INSTALL FENCE AROUND THE BASIN AREA TO PREVENT CONSTRUCTION EQUIPMENT AND STOCKPILED MATERIALS FROM ENTERING THE BASIN AREA AND COMPACTING THE SUBGRADE SOILS.

2. CONSTRUCT INFILTRATION BASIN AFTER ALL AREAS DRAINING TO THE BASIN HAVE BEEN PERMANENTLY STABILIZED AND THE ENGINEER HAS APPROVED THE CONSTRUCTION. IF BASIN CONSTRUCTION CANNOT BE DELAYED UNTIL ITS DRAINAGE AREA IS STABILIZED, DIVERSION BERMS OR OTHER SUITABLE MEASURES SHOULD BE PLACED AROUND THE BASIN'S PERIMETER DURING ALL PHASES OF CONSTRUCTION TO DIVERT ALL RUNOFF AND SEDIMENT AWAY FROM THE BASIN. THESE DIVERSION MEASURES SHOULD NOT BE REMOVED UNTIL ALL CONSTRUCTION WITHIN THE BASIN'S DRAINAGE AREA IS COMPLETED AND THE DRAINAGE AREA STABILIZED.

3. SEE CONSTRUCTION PLANS FOR EROSION AND SEDIMENT CONTROL MEASURES.

4. CONSTRUCT THE INFILTRATION BASIN WITHOUT COMPACTING THE BASIN'S SUBGRADE SOILS. EXCAVATION SHALL BE PERFORMED BY CONSTRUCTION EQUIPMENT PLACED OUTSIDE THE BASIN, WHERE POSSIBLE. ALL EXCAVATION SHALL BE PERFORMED WITH THE LIGHTEST PRACTICAL EXCAVATION EQUIPMENT.

5. CONSTRUCT POND OUTLET STRUCTURE, RIPRAP ENERGY DISSIPATER AT END OF PRINCIPAL SPILLWAY AND PARTIAL EMBANKMENT AS NEEDED TO INSTALL POND OUTLET STRUCTURE. INSTALL SKIMMER DEWATERING DEVICE. DE-WATER FOUNDATION AS NEEDED IN ACCORDANCE WITH SECTION 110.13 AND USE SUMP PIT FOR DUMPING.

6. EXCAVATE THE POND AND COMPLETE THE EMBANKMENT, GRADES AND DETAILS SHOWN IN THE CONSTRUCTION PLANS.

   A. DURING EXCAVATION, THE CONTRACTOR SHALL SALVAGE AND STOCKPILE SOILS CLASSIFIED AS CH, CL, CH AND GM PER THE UNIFIED SOIL CLASSIFICATION SYSTEM TO BE USED TO CONSTRUCT EMBANKMENT. THE ABOVE CLASSIFIED SOILS MAY BE OBTAINED FROM ELSEWHERE WITHIN THE PROJECT LIMITS, IF NECESSARY.

   B. DURING EXCAVATION, THE CONTRACTOR SHALL SALVAGE AND STOCKPILE SOILS CLASSIFIED AS SW AND SP PER THE UNIFIED SOIL CLASSIFICATION SYSTEM TO BE USED TO FILL THE BASIN BOTTOM WHERE OVEREXCAVATED FOR REMOVAL OF UNSUITABLE SOIL. THE ABOVE CLASSIFIED SOILS MAY BE OBTAINED FROM ELSEWHERE WITHIN THE PROJECT LIMITS, IF NECESSARY.

7. STABILIZE BASIN EMBANKMENT AND BOTTOM WITH PERMANENT SEEDING PER LANDSCAPING PLANS.

8. REMOVE EROSION AND SEDIMENT CONTROLS, WATER DIVERSION PRACTICES AND FENCE UPON FINAL STABILIZATION AND APPROVAL FROM INSPECTOR.

PLANTING SCHEDULE

PERMANENT GRASS SEEDING - WET GROUND UP TO ELEVATION 59.0.
PERMANENT GRASS SEEDING - DRY GROUND ABOVE ELEVATION 59.0.

POND QUANTITIES			
ITEM NO.	ITEM	QTY.	UNITS.
202000	EXCAVATION AND EMBANKMENT	7131	CY
272501	POND OUTLET STRUCTURE, 7, SPECIAL	1	EACH
302011	DELAWARE NO. 3 STONE	306	TON
302012	DELAWARE NO. 57 STONE	9	TON
712005	R-4 RIPRAP	10	SY
712006	R-5 RIPRAP	37	SY
712020	R-4 RIPRAP	30	TON
713001	GEOTEXTILES, STABILIZATION	2057	SY
713003	GEOTEXTILES, RIPRAP	134	SY
733002	TOPSOILING, 6" DEPTH	6002	SY
734013	PERMANENT GRASS SEEDING, DRY GROUND	5671	SY
734015	PERMANENT GRASS SEEDING, WET GROUND	3875	SY

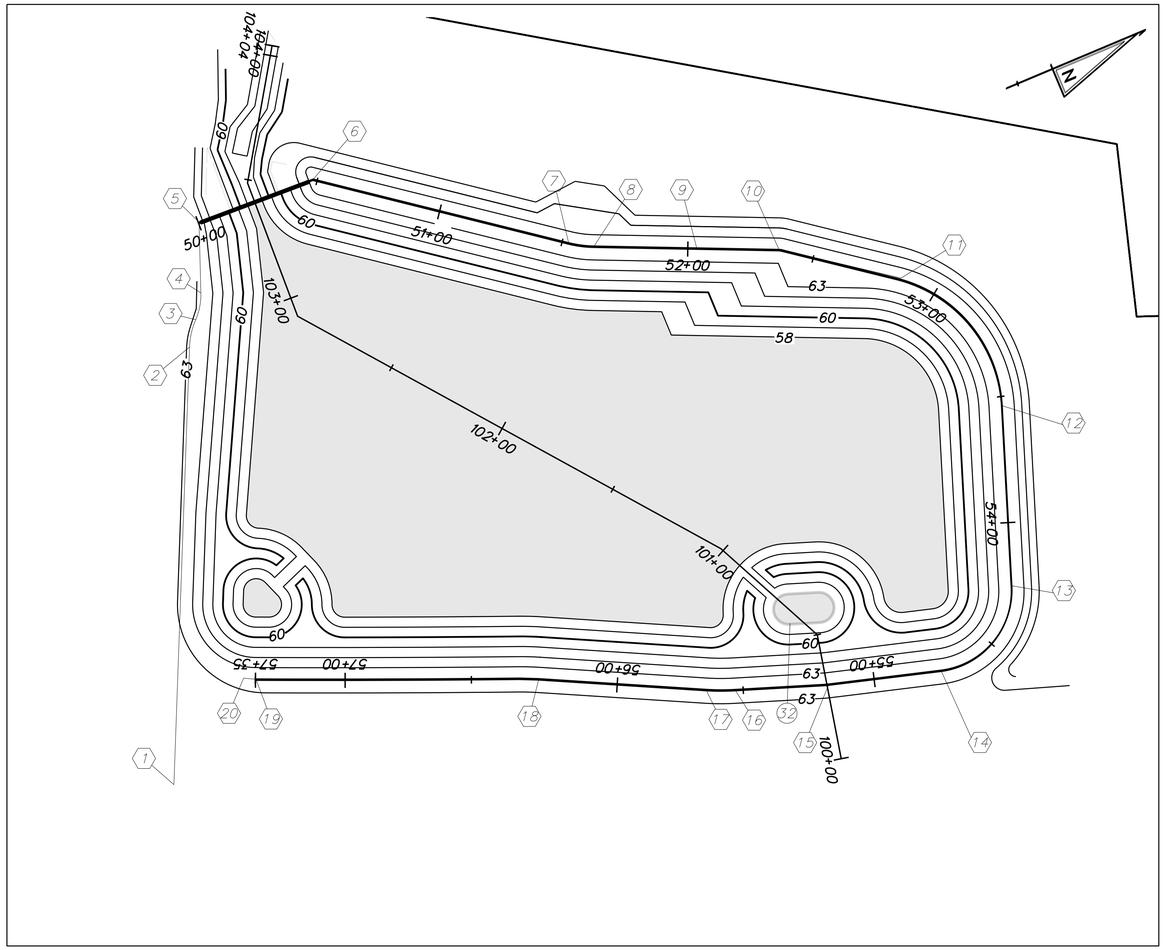

PLAN - BMP 663 (BASIN 4)

CL PRINCIPAL SPILLWAY			
STATION		NORTHING	EASTING
1	POB STA. 100+00.00	531002.5369	564503.9204
2	PI STA. 100+50.00	531012.8209	564454.9895
3	PI STA. 101+01.17	530990.8403	564408.7802
4	PI STA. 102+92.36	530872.0296	564258.9850
5	PI STA. 103+48.74	530874.1909	564202.6526
6	POE STA. 104+03.95	530904.2271	564156.3252

CL EMBANKMENT			
STATION		NORTHING	EASTING
1	POB STA. 50+00.00	530850.1416	564209.8704
2	PI STA. 50+02.15	530852.2949	564209.9530
3	PI STA. 50+45.35	530895.4631	564211.6095
4	PI STA. 50+48.31	530898.4186	564211.7229
5	PC STA. 51+52.54	530981.8843	564274.1504
6	PT STA. 51+62.71	530990.6421	564279.2724
7	PI STA. 52+03.36	531027.8185	564295.7071
8	PC STA. 52+35.94	531057.6236	564308.8831
9	PT STA. 52+37.10	531058.6203	564309.4700
10	PC STA. 52+83.98	531096.1836	564337.4565
11	PT STA. 53+54.11	531115.0921	564400.1352
12	PC STA. 54+25.48	531090.9890	564467.3138
13	PT STA. 54+73.54	531052.1571	564487.2983
14	PI STA. 55+18.22	531009.1721	564475.1364
15	PC STA. 55+53.50	530973.9873	564462.7058
16	PT STA. 55+64.96	530963.4431	564458.2263
17	PC STA. 56+31.24	530904.1145	564428.6794
18	PT STA. 57+35.50	530800.7834	564385.3572

11/14/2012
J:\BRIDGE_HIGHWAYS\9040_Deldot_301\Civil\Plans\2A\SWM\Pond 4\SW_4_02.dgn

DELAWARE
DEPARTMENT OF TRANSPORTATION

ADDENDUMS / REVISIONS

SCALE
0 30 60 90
FEET

US 301
LEVELS ROAD
TO SUMMIT BRIDGE ROAD

CONTRACT T200911303
COUNTY NEW CASTLE
BRIDGE NO.
DESIGNED BY: BAS
CHECKED BY: JJW

STORMWATER
MANAGEMENT DETAILS
BMP 663 (BASIN 4)

SW37
SHEET NO. 722
TOTAL SHTS. 1256

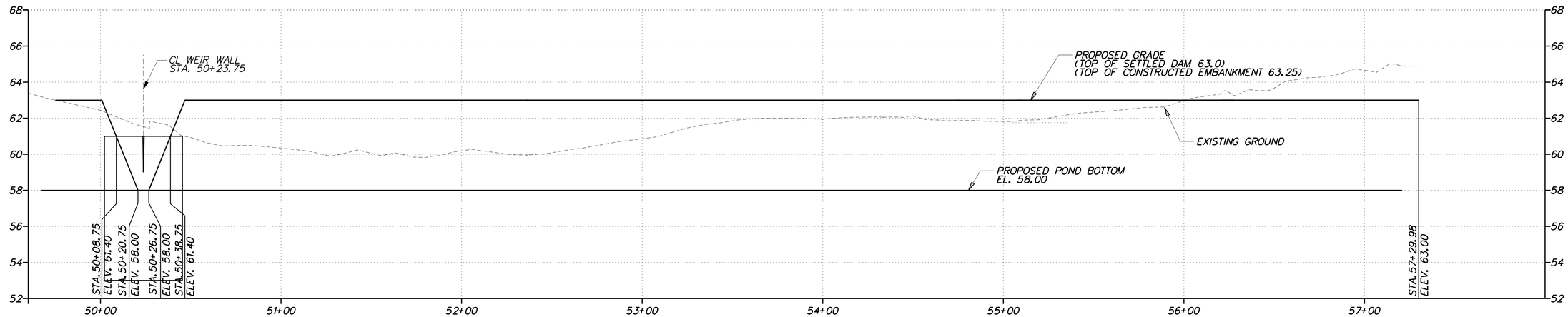

EMBANKMENT PROFILE FOR BMP 663 (BASIN 4)

HORIZONTAL SCALE: 1"=30'

0 30 60 90

FEET

VERTICAL SCALE: 1"=3'

0 3 6 9

FEET

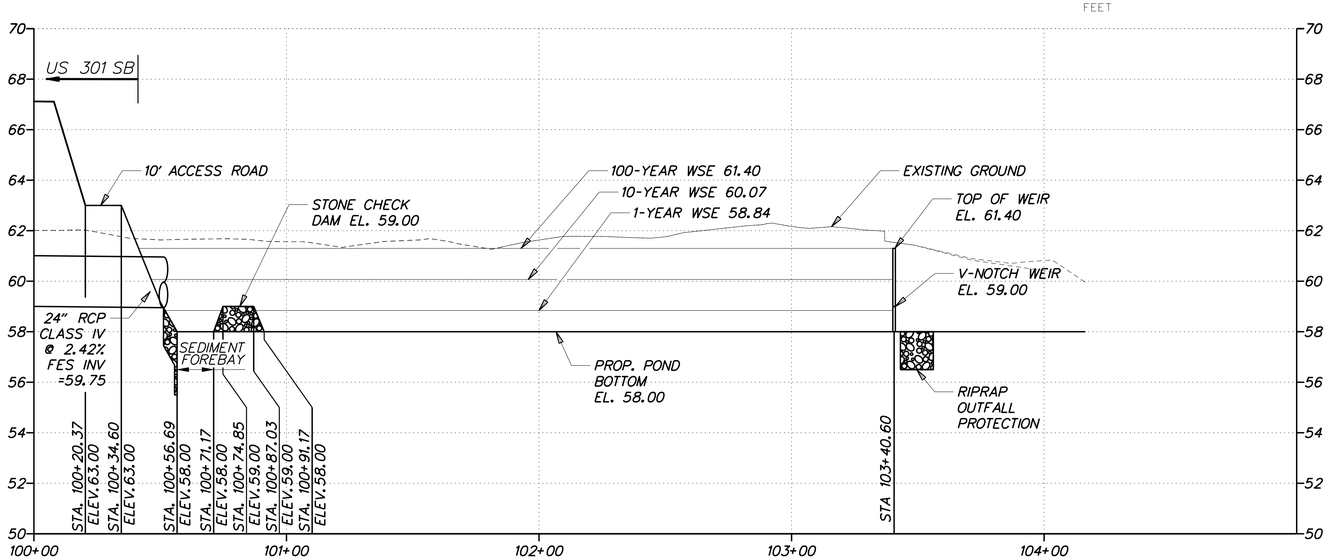

SPILLWAY PROFILE - BMP 663

HORIZONTAL SCALE: 1"=30'

0 30 60 90

FEET

VERTICAL SCALE: 1"=3'

0 3 6 9

FEET

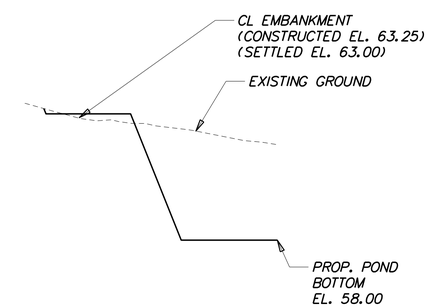

SECTION C-C FROM BASIN PLAN

SCALE: NONE

DELAWARE DEPARTMENT OF TRANSPORTATION	ADDENDUMS / REVISIONS	AS SHOWN	US 301 LEVELS ROAD TO SUMMIT BRIDGE ROAD	CONTRACT T200911303 / COUNTY NEW CASTLE	BRIDGE NO. / DESIGNED BY: BAS / CHECKED BY: JJW	STORMWATER MANAGEMENT DETAILS BMP 663 (BASIN 4)	SW38 / SHEET NO. 723 / TOTAL SHTS. 1256

11/13/2012
J:\BRIDGE_HIGHWAYS\9040_Deldot_301\Civil\Plans\2A\SWM\Pond 4\SW_4_03.dgn

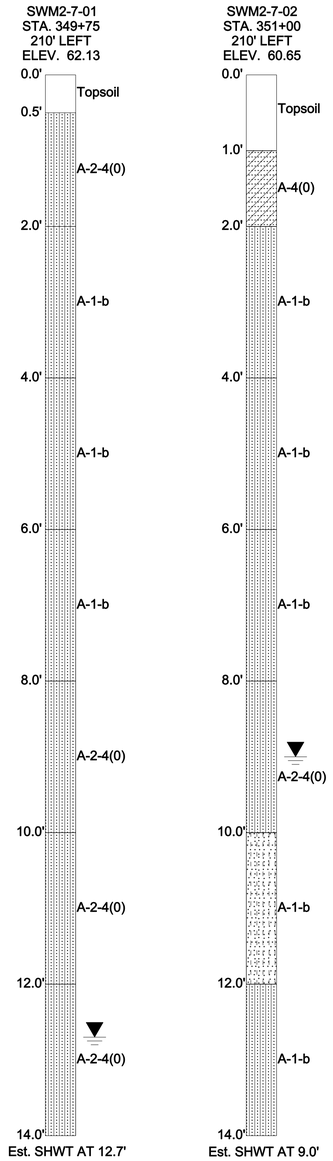

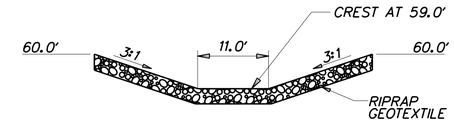

SECTION A-A FROM BASIN PLAN

SCALE: NONE

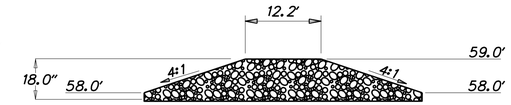

SECTION B-B FROM BASIN PLAN

SCALE: NONE

NOTES:

1. RIPRAP ITEM 712020
2. GEOTEXTILES, RIPRAP ITEM 713003
3. SEE STANDARD NO. E-10 FOR GEOTEXTILE PLACEMENT

STONE CHECK DAM

SCALE: NONE

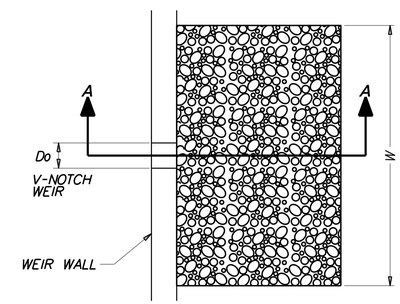

PLAN

SCALE: NONE

DATA

WEIR TOP WIDTH (Do) = 1.06'
APRON LENGTH (La) = 6'
APRON WIDTH (W) = 7'
RIPRAP SIZE (R No.) = R-5
WITH NO. 57 STONE

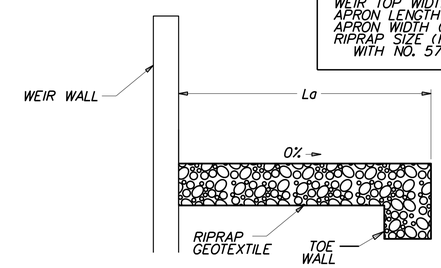

SECTION A-A

SCALE: NONE

NOTES:

1. RIPRAP ITEM 712006
2. GEOTEXTILES, RIPRAP ITEM 713003
3. DELEWARE NO. 57 STONE ITEM 302012
4. SEE STANDARD NO. E-10 FOR RIPRAP DEPTH AND GEOTEXTILE PLACEMENT.
5. DEPRESS CENTERLINE OF APRON SLIGHTLY TO PREVENT EDGE CUTTING

BASIN RIPRAP OUTLET PROTECTION

SCALE: NONE

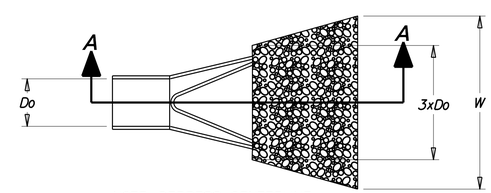

NOTE: DEPRESS CENTERLINE OF APRON SLIGHTLY TO PREVENT EDGE-CUTTING

PLAN

SCALE: NONE

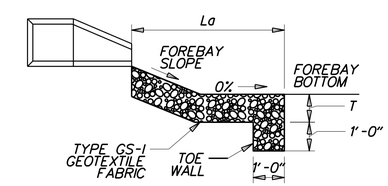

NOTE: KEY INTO EXIST.GDN

SECTION A-A

SCALE: NONE

NOTES:

1. RIPRAP ITEM 712005
2. GEOTEXTILES, RIPRAP ITEM 713003
3. DELEWARE NO. 57 STONE ITEM 302012
4. SEE STANDARD NO. E-10 FOR RIPRAP DEPTH AND GEOTEXTILE PLACEMENT.
5. DEPRESS CENTERLINE OF APRON SLIGHTLY TO PREVENT EDGE CUTTING

DATA

PIPE DIAMETER (Do)
APRON LENGTH (La)
APRON WIDTH (W)
RIPRAP SIZE (R No.)
RIPRAP THICKNESS (T)

FES ID	Do	La	W	R No.	T
23	1.75'	11.0'	6.0'	R-4	1.5'
24	2.0'	6.0'	4.0'	R-4	1.5'

INFLOW PIPE RIPRAP OUTLET PROTECTION

SCALE: NONE

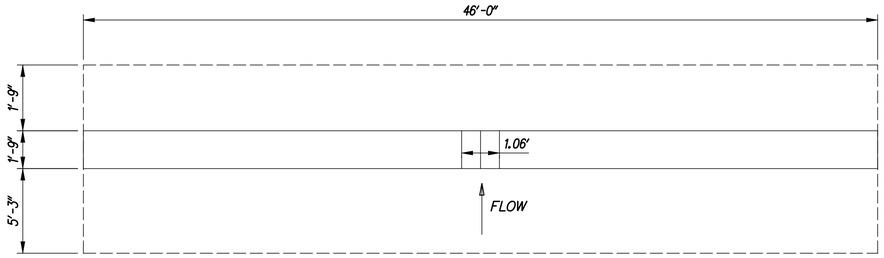

WEIR WALL PLAN

SCALE: NONE

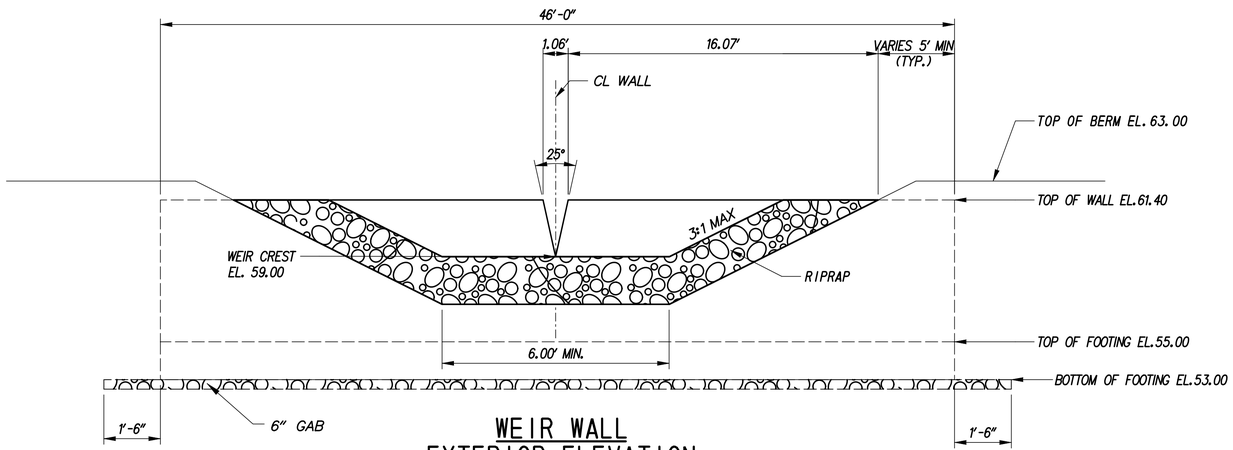

WEIR WALL EXTERIOR ELEVATION WITH RIPRAP APRON

SCALE: NONE

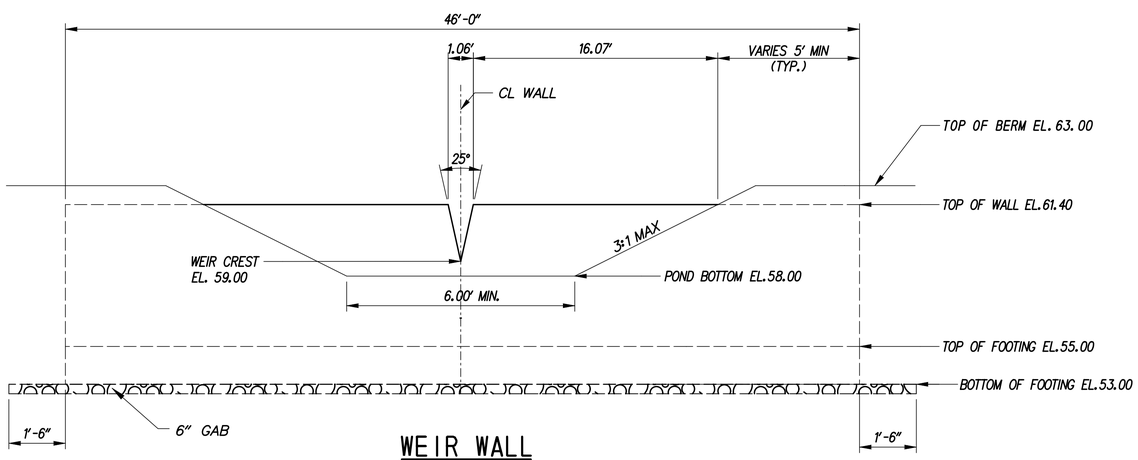

WEIR WALL INTERIOR ELEVATION

SCALE: NONE

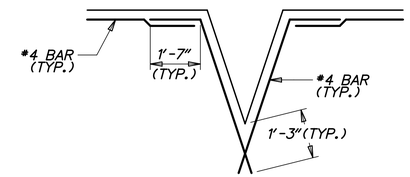

OPENING DETAILS

SCALE: NONE

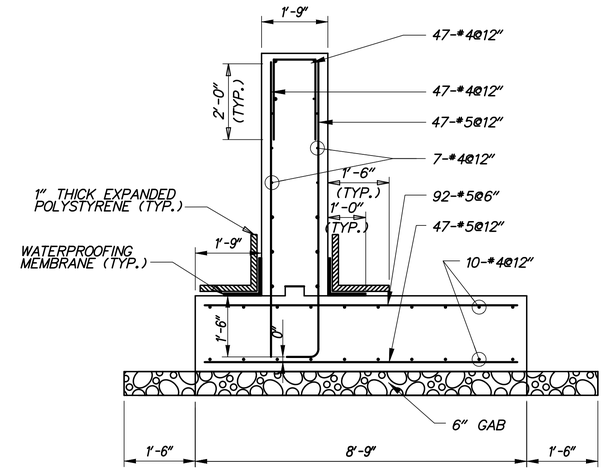

WEIR WALL SECTION

SCALE: 1/2"=1'-0"

GENERAL NOTES

1. DESIGN SPECIFICATIONS:

   AASHTO LRFD BRIDGE DESIGN SPECIFICATIONS, 4TH EDITION, 2007, INCLUDING 2008 AND 2009 INTERIM REVISIONS, AND AS SUPPLEMENTED BY DELAWARE DEPARTMENT OF TRANSPORTATION BRIDGE DESIGN MANUAL, MAY 2005, INCLUDING LATEST REVISIONS.

   PROVIDE MATERIALS AND PERFORM WORK IN ACCORDANCE WITH THE DELAWARE DEPARTMENT OF TRANSPORTATION STANDARD SPECIFICATIONS AND CONSTRUCTION DETAILS, AASHTO/AWS D1.5M/D1.5 BRIDGE WELDING CODE, AND CONTRACT SPECIAL PROVISIONS.

2. LOADING:

   UNIT WEIGHTS OF MATERIALS SHALL BE IN ACCORDANCE WITH THE DELAWARE DESIGN MANUAL.

3. PORTLAND CEMENT CONCRETE:

   PORTLAND CEMENT CONCRETE FOR CAST-IN-PLACE ELEMENTS SHALL BE AS FOLLOWS:
   (28 DAY COMPRESSIVE STRENGTH)
   (CLASS B, F'c=3000 PSI) - WEIR WALL FOOTING
   (CLASS A, F'c=4500 PSI) - WEIR WALL STEM

   WEIR WALLS MUST BE CAST-IN-PLACE.

   MIX REQUIREMENTS SHALL CONFORM TO SECTION 812 OF THE DELAWARE DEPARTMENT OF TRANSPORTATION STANDARD SPECIFICATIONS.

   ALL EXPOSED CORNERS OF CONCRETE SHALL BE CHAMFERED WITH ¾" X ¾" MILLED CHAMFER STRIPS EXCEPT ON UNEXPOSED FOOTINGS.

4. BAR REINFORCEMENT:

   REINFORCING STEEL SHALL CONFORM TO AASHTO M31 (ASTM A615), GRADE 60 AND IS TO BE EPOXY COATED. FUSION-BONDED EPOXY COATED REINFORCING STEEL SHALL CONFORM TO AASHTO M284 (ASTM D3963).

   PROVIDE 3" CONCRETE COVER ON REINFORCEMENT BARS, EXCEPT AS NOTED.

   LAP LENGTH OF #4 BARS TO BE 3'-0". STAGGER SPLICE LOCATIONS.

   DO NOT WELD GRADE 60 REINFORCING STEEL.

5. CONSTRUCTION JOINTS:

   KEYED CONSTRUCTION JOINTS SHALL BE 2" x 4" OR AS NOTED.

6. WATERPROOFING MEMBRANE:

   ADHESIVE BACKED WATERPROOFING MEMBRANE IS TO BE USED. SPLICING OF THE MEMBRANE IS PROHIBITED.

7. REFER TO SPECIFICATION SECTION 272501 FOR CONSTRUCTION SEQUENCE.

8. GAB IS INCIDENTAL TO WALL CONSTRUCTION.

G:\60049040 US301\CIVIL\PLANS\2A\CP\SW-40.DGN

DELAWARE DEPARTMENT OF TRANSPORTATION	ADDENDUMS / REVISIONS	AS SHOWN	US 301 LEVELS ROAD TO SUMMIT BRIDGE ROAD	CONTRACT T200911303	BRIDGE NO.	STORMWATER MANAGEMENT DETAILS BMP 663 (BASIN 4)	SW-40
				COUNTY NEW CASTLE	DESIGNED BY: BAS		SHEET NO. 725
					CHECKED BY: JJW		TOTAL SHTS. 1256

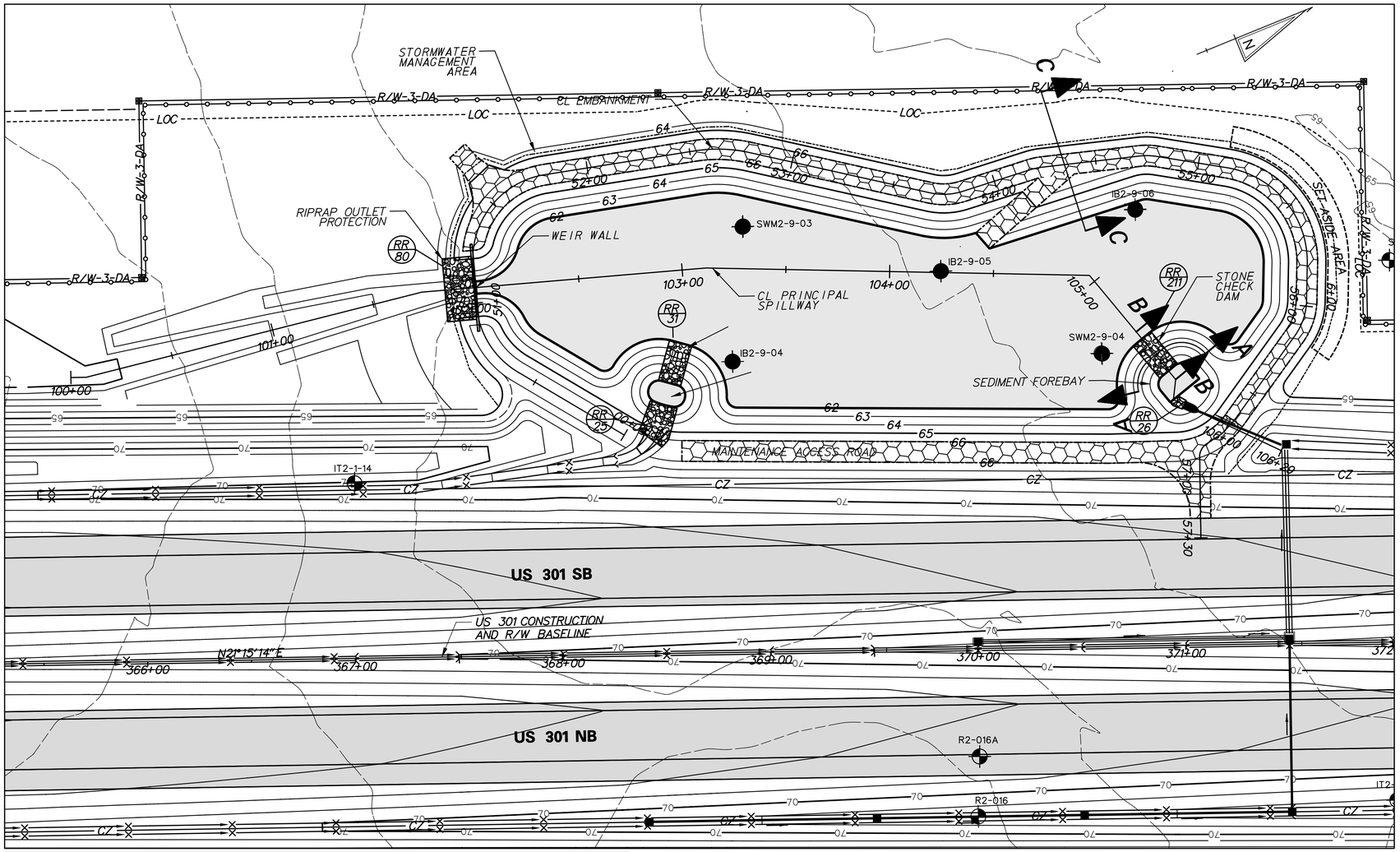

PLAN - BMP 664 (BASIN 5)

INFILTRATION BASIN CONSTRUCTION SEQUENCE

THE STORMWATER MANAGEMENT BASIN SHALL FUNCTION AS AN INFILTRATION FACILITY AND SHALL BE CONSTRUCTED IN ACCORDANCE WITH THE FOLLOWING SPECIFICATIONS:

SECTION 271 - STORMWATER MANAGEMENT POND
SECTION 272 - POND OUTLET STRUCTURE, CONCRETE

1. *PRIOR TO DISTURBANCE OF THE SITE UPSTREAM OF THE BASIN, INSTALL FENCE AROUND THE BASIN AREA TO PREVENT CONSTRUCTION EQUIPMENT AND STOCKPILED MATERIALS FROM ENTERING THE BASIN AREA AND COMPACTING THE SUBGRADE SOILS.*
2. *CONSTRUCT INFILTRATION BASIN AFTER ALL AREAS DRAINING TO THE BASIN HAVE BEEN PERMANENTLY STABILIZED AND THE ENGINEER HAS APPROVED THE CONSTRUCTION. IF BASIN CONSTRUCTION CANNOT BE DELAYED UNTIL ITS DRAINAGE AREA IS STABILIZED, DIVERSION BERMS OR OTHER SUITABLE MEASURES SHOULD BE PLACED AROUND THE BASIN'S PERIMETER DURING ALL PHASES OF CONSTRUCTION TO DIVERT ALL RUNOFF AND SEDIMENT AWAY FROM THE BASIN. THESE DIVERSION MEASURES SHOULD NOT BE REMOVED UNTIL ALL CONSTRUCTION WITHIN THE BASIN'S DRAINAGE AREA IS COMPLETED AND THE DRAINAGE AREA STABILIZED.*
3. *SEE CONSTRUCTION PLANS FOR EROSION AND SEDIMENT CONTROL MEASURES.*
4. *CONSTRUCT THE INFILTRATION BASIN WITHOUT COMPACTING THE BASINS SUBGRADE SOILS. EXCAVATION SHALL BE PERFORMED BY CONSTRUCTION EQUIPMENT PLACED OUTSIDE THE BASIN, WHERE POSSIBLE. ALL EXCAVATION SHALL BE PERFORMED WITH THE LIGHTEST PRACTICAL EXCAVATION EQUIPMENT.*
5. *CONSTRUCT WEIR WALL, RIPRAP ENERGY DISSIPATER AT THE END OF PRINCIPAL SPILLWAY AND PARTIAL EMBANKMENT AS NEEDED TO INSTALL WEIR WALL. DE-WATER FOUNDATION AS NEEDED IN ACCORDANCE WITH SECTION 111 AND USE SUMP PIT FOR DUMPING.*
6. *EXCAVATE THE POND AND COMPLETE THE EMBANKMENT, GRADES AND DETAILS SHOWN IN THE CONSTRUCTION PLANS. DURING EXCAVATION, THE CONTRACTOR SHALL SALVAGE AND STOCKPILE SOILS CLASSIFIED AS CH, CL, SC AND GG PER THE UNIFIED SOIL CLASSIFICATION SYSTEM TO BE USED TO CONSTRUCT EMBANKMENT. THE ABOVE CLASSIFIED SOILS MAY BE OBTAINED FROM ELSEWHERE WITHIN THE PROJECT LIMITS, IF NECESSARY.*
7. *STABILIZE BASIN EMBANKMENT AND BOTTOM WITH PERMANENT SEEDING.*
8. *REMOVE EROSION AND SEDIMENT CONTROLS, WATER DIVERSION PRACTICES AND FENCE UPON FINAL STABILIZATION AND APPROVAL FROM INSPECTOR.*
9. *THE CONTRACTOR SHALL PROVIDE 'AS-BUILT' DRAWINGS OF ALL STORMWATER MANAGEMENT FACILITIES SUCH AS PONDS, INFILTRATION BASINS, BIOFILTRATION SWALES, ETC. 'AS-BUILT'DRAWINGS SHALL SHOW THE ACTUAL FINISHED GROUND CONTOURS, OUTLET STRUCTURE DIMENSIONS AND ELEVATIONS, ETC. AS THEY EXIST AT THE COMPLETION OF THE PROJECT. THESE DRAWINGS SHALL BE SIGNED BY A PROFESSIONAL ENGINEER OR LAND SURVEYOR.*

PLANTING SCHEDULE

PERMANENT GRASS SEEDING - WET GROUND UP TO ELEVATION 63.0
PERMANENT GRASS SEEDING - DRY GROUND ABOVE ELEVATION 63.0
PLACE TOPSOIL ABOVE BASIN BOTTOM ELEVATION 62.0

POND QUANTITIES

ITEM NO.	ITEM	QTY.	UNITS.
202000	EXCAVATION AND EMBANKMENT	3730	CY
272501	POND OUTLET STRUCTURE, 8, SPECIAL	1	EACH
302011	DELAWARE NO. 3 STONE	325	TON
302012	DELAWARE NO. 57 STONE	12	TON
712005	R-4 RIPRAP	18	SY
712006	R-5 RIPRAP	50	SY
712020	R-4 RIPRAP	30	TON
713001	GEOTEXTILES, STABILIZATION	2190	SY
713003	GEOTEXTILES, RIPRAP	157	SY
733002	TOPSOILING, 6" DEPTH	6259	SY
734013	PERMANENT GRASS SEEDING, DRY GROUND	5752	SY
734015	PERMANENT GRASS SEEDING, WET GROUND	3645	SY

RIPRAP SCHEDULE

NO.	TYPE	AREA (SY)
80	R-5	50
25	R-4	14
26	R-4	4
31	R-4	25
211	R-4	25

CHECK CONSTRUCTION PLANS FOR SCHEDULE OF RIPRAP OUTSIDE OF THE BASIN AREA.

POND DESIGN SUMMARY

DESIGN STORM	FACILITY INFLOW (CFS)	FACILITY DISCHARGE (CFS)	WATER SURFACE ELEVATION (FT)	STORAGE VOLUME (AC. FT)
QUALITY STORM (1-YR)	6.21	0.00	62.22	0.16
10 - YEAR	19.89	0.38	63.25	0.93
100 - YEAR	44.34	2.31	64.16	1.69

HAZARD CLASSIFICATION: CLASS A AS PER POND CODE 378
DRAINAGE AREA TO FACILITY: 6.68 AC
MANAGEMENT PROVIDED BY FACILITY: WATER QUALITY BY INFILTRATION OF 1-YEAR STORM RUNOFF, WATER QUANTITY FOR 10 AND 100-YEAR STORMS.

P:\CADD2\60049040 US301\CIVIL\PLANS\2A\BALT-SWM\POND 5\SW_5_01.DGN

DELAWARE DEPARTMENT OF TRANSPORTATION

ADDENDUMS / REVISIONS

SCALE 0 30 60 90 FEET

US 301 LEVELS ROAD TO SUMMIT BRIDGE ROAD

CONTRACT	BRIDGE NO.	
T200911303	DESIGNED BY: BAS	
COUNTY		
NEW CASTLE	CHECKED BY: JJW	

STORMWATER MANAGEMENT DETAILS BMP 664 (BASIN 5)

SW41
SHEET NO.
726
TOTAL SHTS.
1256

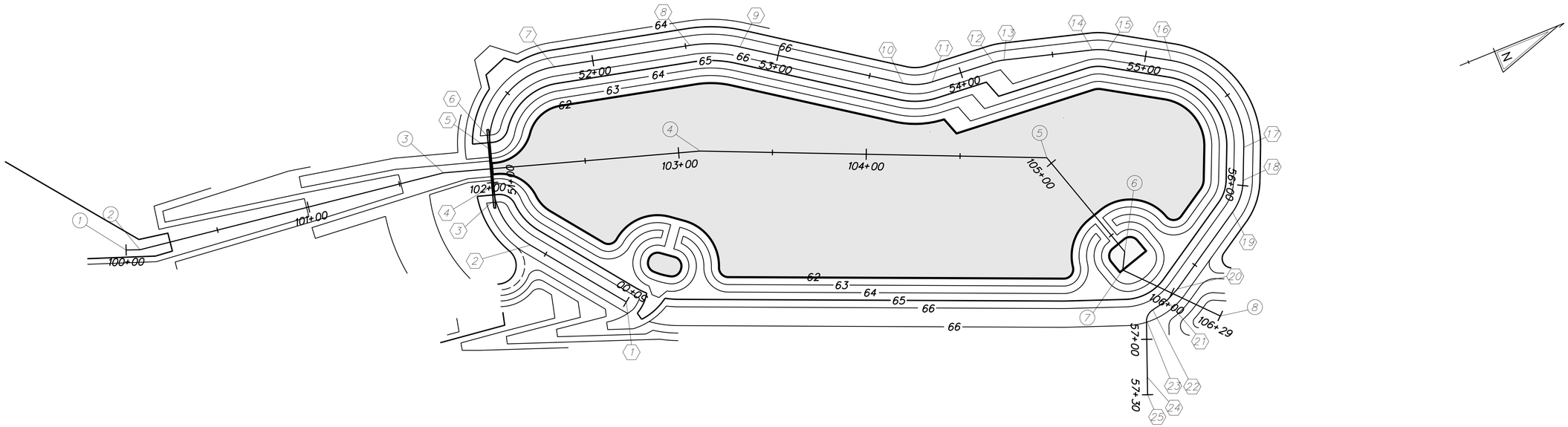

STAKEOUT - BMP 664 (BASIN 5)

CL PRINCIPAL SPILLWAY			
STATION		NORTHING	EASTING
1	POB STA. 100+00.00	564969.9778	532333.7210
2	PI STA. 100+07.41	564972.6478	532340.6382
3	PI STA. 101+74.18	564995.6675	532505.8039
4	PI STA. 103+11.53	565036.5288	532636.9398
5	PI STA. 104+96.26	565109.5171	532806.6370
6	PI STA. 105+61.33	565171.5775	532826.1870
7	PI STA. 105+71.13	565180.1907	532821.5001
8	POE STA. 106+28.57	565222.4706	532860.3800

CL EMBANKMENT			
STATION		NORTHING	EASTING
1	POB STA. 50+00.00	532570.1250	565096.1616
2	PC STA. 50+59.47	532534.1585	565048.7993
3	PI STA. 50+90.80	532525.3910	565019.2352
4	PI STA. 50+98.47	532527.6634	565011.8182
5	PT STA. 51+17.80	532533.4080	564993.3626
6	PC STA. 51+23.93	532535.1587	564987.4209
7	PT STA. 51+79.24	532581.8828	564965.6230
8	PC STA. 52+52.39	532653.1146	564982.2649
9	PT STA. 52+79.13	532677.4102	564993.0513
10	PC STA. 53+68.09	532750.5195	565043.7294
11	PT STA. 53+83.94	532765.2849	565048.9835
12	PC STA. 54+18.16	532799.3955	565051.6356
13	PT STA. 54+24.01	532805.1506	565052.6541
14	PC STA. 54+71.29	532850.6860	565065.3900
15	PT STA. 54+79.50	532858.1853	565068.6441
16	PC STA. 55+13.82	532887.5219	565086.4722
17	PT STA. 55+79.64	532905.8913	565143.9528
18	PC STA. 55+97.30	532898.9165	565160.1739
19	PT STA. 56+15.38	532887.3396	565173.7112
20	PI STA. 56+65.79	532844.6808	565200.5679
21	PI STA. 56+74.14	532837.1243	565204.1211
22	PC STA. 56+83.16	532828.2867	565205.9122
23	PT STA. 56+89.83	532823.1140	565209.7642
24	PI STA. 57+20.16	532812.0906	565238.0155
25	POE STA. 57+29.55	532808.6856	565246.7689

DELAWARE DEPARTMENT OF TRANSPORTATION

ADDENDUMS / REVISIONS

SCALE 0 30 60 90 FEET

US 301 LEVELS ROAD TO SUMMIT BRIDGE ROAD

CONTRACT T200911303 | COUNTY NEW CASTLE | BRIDGE NO. | DESIGNED BY: BAS | CHECKED BY: JJW

STORMWATER MANAGEMENT DETAILS BMP 664 (BASIN 5)

SW42 | SHEET NO. 727 | TOTAL SHTS. 1256

11/13/2012
J:\BRIDGE_HIGHWAYS\9040_Deldot_301\Civil\Plans\2A\SWM\Pond 5\SW_5_02.dgn

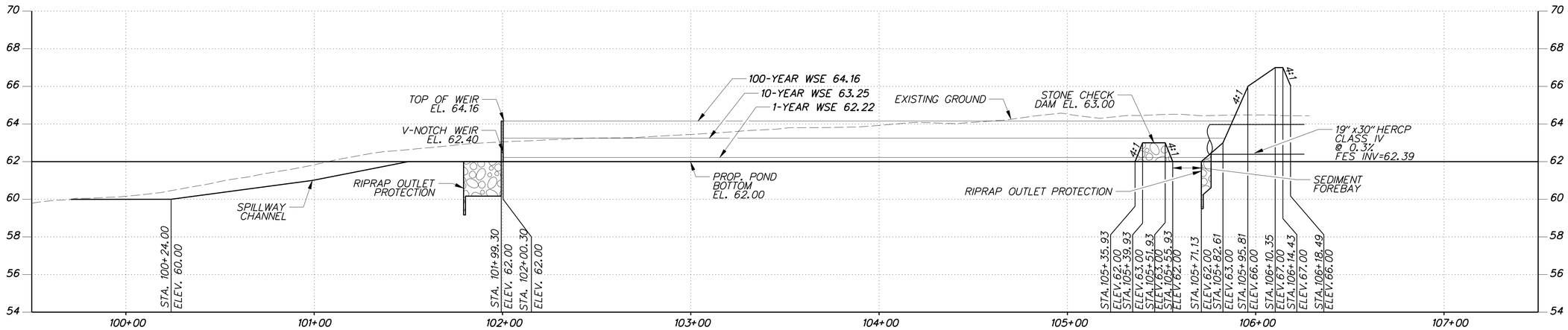

SPILLWAY PROFILE - BMP 664 (BASIN 5)

HORIZONTAL SCALE: 1" = 30'
0 30 60 90
FEET

VERTICAL SCALE: 1" = 3'
0 3 6 9
FEET

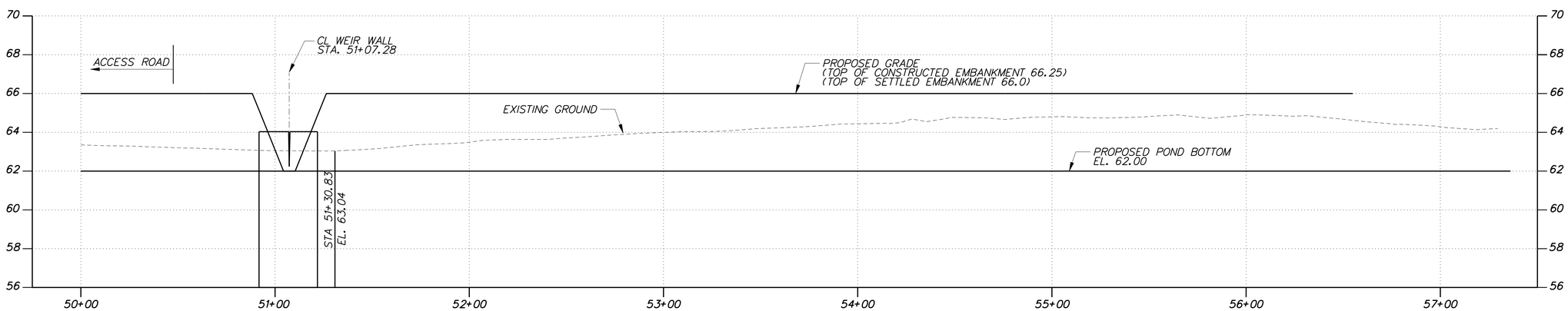

EMBANKMENT PROFILE FOR BMP 664

HORIZONTAL SCALE: 1" = 30'
0 30 60 90
FEET

VERTICAL SCALE: 1" = 3'
0 3 6 9
FEET

11/13/2012
J:\BRIDGE_HIGHWAYS\9040_Deldot_301\Civil\Plans\2A\SWM\Pond 5\SW_5_03.dgn

DELAWARE DEPARTMENT OF TRANSPORTATION	ADDENDUMS / REVISIONS	AS SHOWN	US 301 LEVELS ROAD TO SUMMIT BRIDGE ROAD	CONTRACT T200911303	BRIDGE NO.	STORMWATER MANAGEMENT DETAILS BMP 664 (BASIN 5)	SW43
				COUNTY NEW CASTLE	DESIGNED BY: BAS		SHEET NO. 728
					CHECKED BY: JJW		TOTAL SHTS. 1256

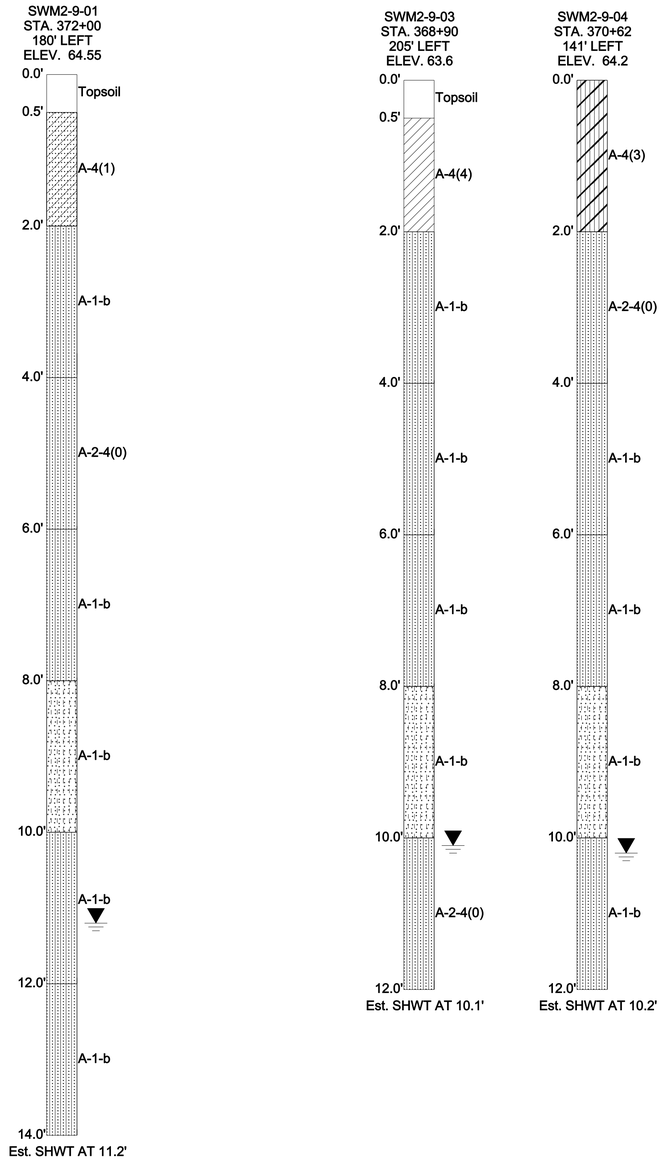

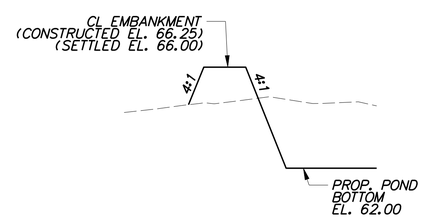

SECTION C-C FROM BASIN PLAN

SCALE: NONE

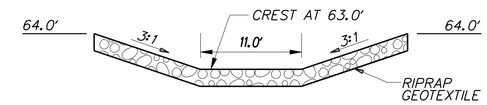

SECTION A-A FROM BASIN PLAN

SCALE: NONE

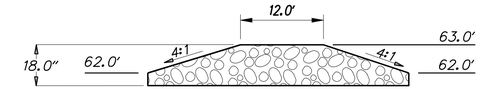

SECTION B-B FROM BASIN PLAN

SCALE: NONE

NOTES:

1. RIPRAP ITEM 712020
2. GEOTEXTILES, RIPRAP ITEM 713003
3. SEE STANDARD NO. E-10 FOR GEOTEXTILE PLACEMENT

STONE CHECK DAM

SCALE: NONE

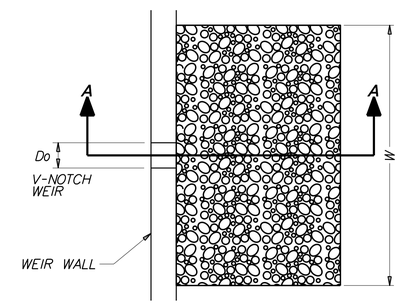

PLAN

SCALE: NONE

DATA

WEIR TOP WIDTH (Do)= 0.78'
APRON LENGTH (La) = 6'
APRON WIDTH (W) = 7'
RIPRAP SIZE (R No.) = R-5
WITH NO. 57 STONE

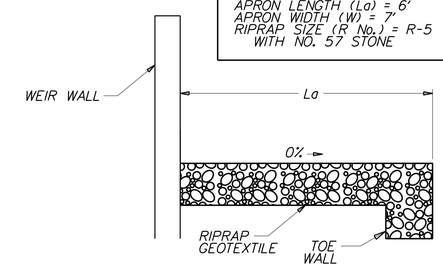

SECTION A-A

SCALE: NONE

NOTES:

1. RIPRAP ITEM 712006
2. GEOTEXTILES, RIPRAP ITEM 713003
3. DELEWARE NO. 57 STONE ITEM 302012
4. SEE STANDARD NO. E-10 FOR RIPRAP DEPTH AND GEOTEXTILE PLACEMENT.
5. DEPRESS CENTERLINE OF APRON SLIGHTLY TO PREVENT EDGE CUTTING

BASIN RIPRAP OUTLET PROTECTION

SCALE: NONE

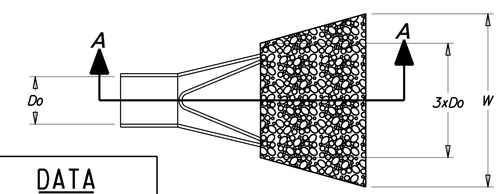

DATA

PIPE DIAMETER (Do)
APRON LENGTH (La)
APRON WIDTH (W)
RIPRAP SIZE (R No.)

PLAN

SCALE: NONE

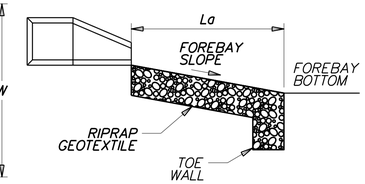

SECTION A-A

SCALE: NONE

NOTES:

1. RIPRAP ITEM 712005
2. GEOTEXTILES, RIPRAP ITEM 713003
3. DELEWARE NO. 57 STONE ITEM 302012
4. SEE STANDARD NO. E-10 FOR RIPRAP DEPTH AND GEOTEXTILE PLACEMENT.
5. DEPRESS CENTERLINE OF APRON SLIGHTLY TO PREVENT EDGE CUTTING

FES ID	Do	La	W	R No.
26	1.50'	10.0'	6.0'	R-4

RR ID	La	W	R No.
25*	18.0'	13.5'	R-4

*TO BE DESIGNED PER STANDARD NO. E-10

FOREBAY RIPRAP OUTLET PROTECTION

SCALE: NONE

11/13/2012
J:\BRIDGE_HIGHWAYS\9040_Deldot_301\Civil\Plans\2A\SWM\Pond 5\SW-5_04.dgn

DELAWARE
DEPARTMENT OF TRANSPORTATION

ADDENDUMS / REVISIONS

AS SHOWN

US 301
LEVELS ROAD
TO SUMMIT BRIDGE ROAD

CONTRACT: T200911303
COUNTY: NEW CASTLE
BRIDGE NO.
DESIGNED BY: BAS
CHECKED BY: JJW

STORMWATER
MANAGEMENT DETAILS
BMP 664 (BASIN 5)

SW44
SHEET NO. 729
TOTAL SHTS. 1256

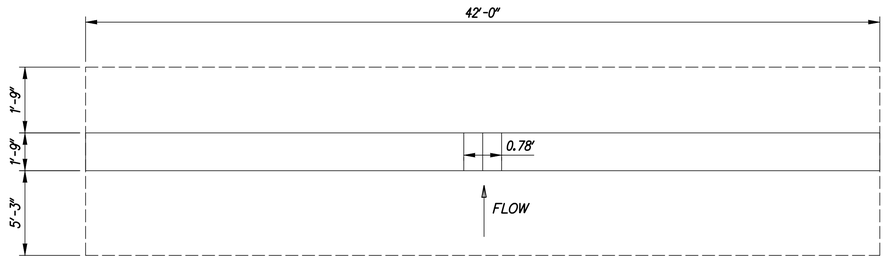

WEIR WALL PLAN

SCALE: NONE

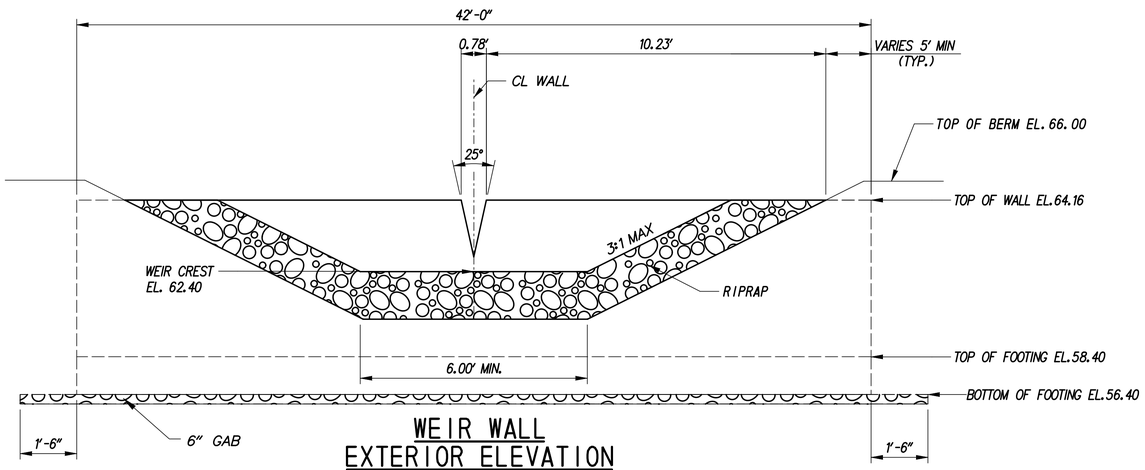

WEIR WALL EXTERIOR ELEVATION WITH RIPRAP APRON

SCALE: NONE

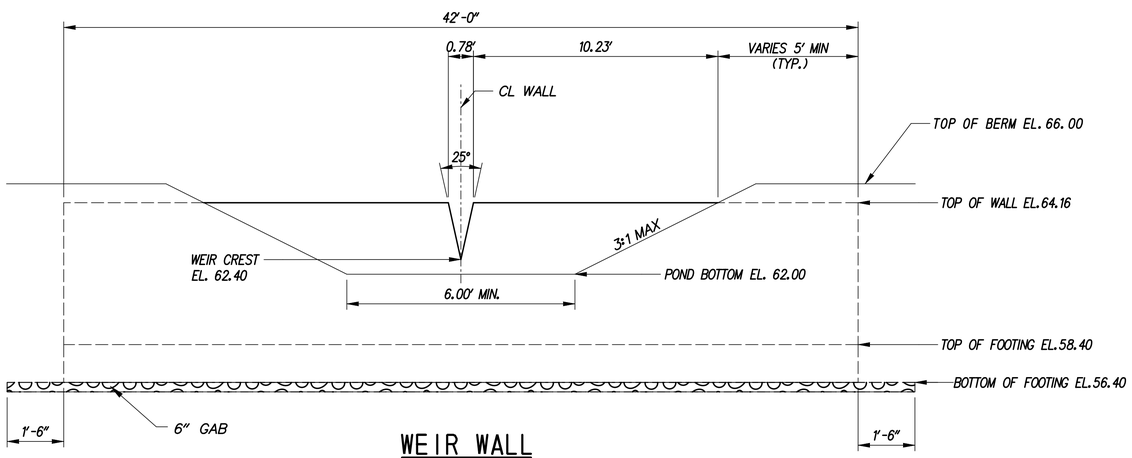

WEIR WALL INTERIOR ELEVATION

SCALE: NONE

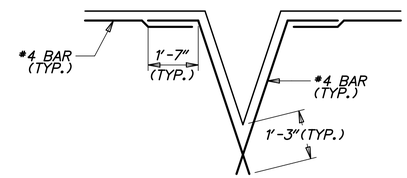

OPENING DETAILS

SCALE: NONE

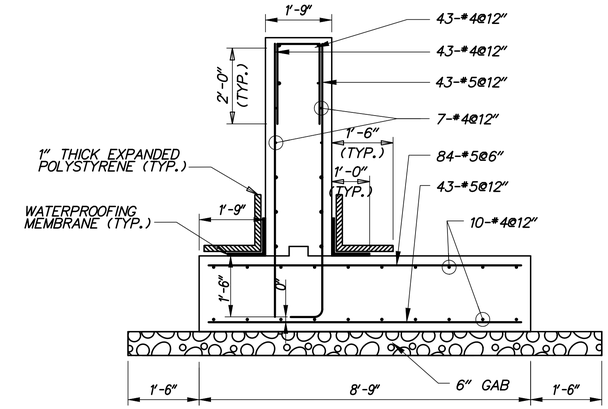

WEIR WALL SECTION

SCALE: 1/2" =1'-0"

GENERAL NOTES

1. DESIGN SPECIFICATIONS:

   AASHTO LRFD BRIDGE DESIGN SPECIFICATIONS, 4TH EDITION, 2007, INCLUDING 2008 AND 2009 INTERIM REVISIONS, AND AS SUPPLEMENTED BY DELAWARE DEPARTMENT OF TRANSPORTATION BRIDGE DESIGN MANUAL, MAY 2005, INCLUDING LATEST REVISIONS.

   PROVIDE MATERIALS AND PERFORM WORK IN ACCORDANCE WITH THE DELAWARE DEPARTMENT OF TRANSPORTATION STANDARD SPECIFICATIONS AND CONSTRUCTION DETAILS, AASHTO/AWS D1.5M/D1.5 BRIDGE WELDING CODE, AND CONTRACT SPECIAL PROVISIONS.

2. LOADING:

   UNIT WEIGHTS OF MATERIALS SHALL BE IN ACCORDANCE WITH THE DELAWARE DESIGN MANUAL.

3. PORTLAND CEMENT CONCRETE:

   PORTLAND CEMENT CONCRETE FOR CAST-IN-PLACE ELEMENTS SHALL BE AS FOLLOWS:
   (28 DAY COMPRESSIVE STRENGTH)
   (CLASS B, F'c=3000 PSI) - WEIR WALL FOOTING
   (CLASS A, F'c=4500 PSI) - WEIR WALL STEM

   WEIR WALLS MUST BE CAST-IN-PLACE.

   MIX REQUIREMENTS SHALL CONFORM TO SECTION 812 OF THE DELAWARE DEPARTMENT OF TRANSPORTATION STANDARD SPECIFICATIONS.

   ALL EXPOSED CORNERS OF CONCRETE SHALL BE CHAMFERED WITH ¾" X ¾" MILLED CHAMFER STRIPS EXCEPT ON UNEXPOSED FOOTINGS.

4. BAR REINFORCEMENT:

   REINFORCING STEEL SHALL CONFORM TO AASHTO M31 (ASTM A615), GRADE 60 AND IS TO BE EPOXY COATED. FUSION-BONDED EPOXY COATED REINFORCING STEEL SHALL CONFORM TO AASHTO M284 (ASTM D3963).

   PROVIDE 3" CONCRETE COVER ON REINFORCEMENT BARS, EXCEPT AS NOTED.

   LAP LENGTH OF #4 BARS TO BE 3'-0". STAGGER SPLICE LOCATIONS.

   DO NOT WELD GRADE 60 REINFORCING STEEL.

5. CONSTRUCTION JOINTS:

   KEYED CONSTRUCTION JOINTS SHALL BE 2" x 4" OR AS NOTED.

6. WATERPROOFING MEMBRANE:

   ADHESIVE BACKED WATERPROOFING MEMBRANE IS TO BE USED. SPLICING OF THE MEMBRANE IS PROHIBITED.

7. REFER TO SPECIFICATION SECTION 272501 FOR CONSTRUCTION SEQUENCE.

8. GAB IS INCIDENTAL TO WALL CONSTRUCTION.

G:\60049040 US301\CIVIL\PLANS\2A\CP\SW-45.DGN

DELAWARE DEPARTMENT OF TRANSPORTATION	ADDENDUMS / REVISIONS	AS SHOWN	US 301 LEVELS ROAD TO SUMMIT BRIDGE ROAD	CONTRACT T200911303	BRIDGE NO.	STORMWATER MANAGEMENT DETAILS BMP 664 (BASIN 5)	SW-45
				COUNTY NEW CASTLE	DESIGNED BY: BAS		SHEET NO. 730
					CHECKED BY: JJW		TOTAL SHTS. 1256

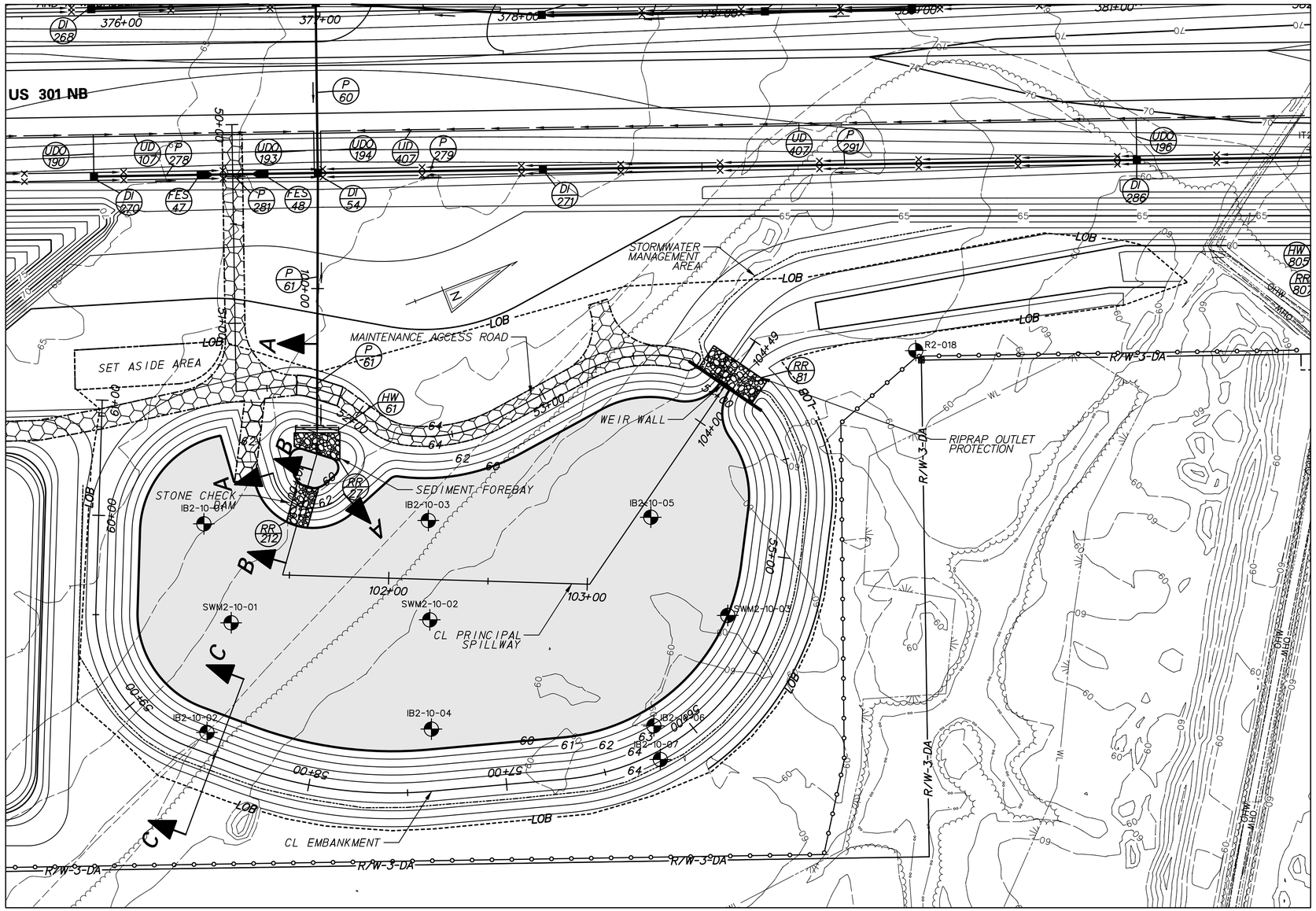

PLAN - BMP 665 (BASIN 6)

POND DESIGN SUMMARY				
DESIGN STORM	FACILITY INFLOW (CFS)	FACILITY DISCHARGE (CFS)	WATER SURFACE ELEVATION (FT)	STORAGE VOLUME (AC. FT)
QUALITY STORM (1-YR)	12.88	0.00	60.40	0.39
10 - YEAR	37.44	3.32	61.33	1.32
100 - YEAR	79.08	22.16	62.39	2.50

HAZARD CLASSIFICATION: CLASS A AS PER POND CODE 378
DRAINAGE AREA TO FACILITY: 11.54 AC
MANAGEMENT PROVIDED BY FACILITY: WATER QUALITY BY INFILTRATION OF 1-YEAR STORM RUNOFF, WATER QUANTITY FOR 10 AND 100-YEAR STORMS.

RIPRAP SCHEDULE

NO.	TYPE	AREA (SY)
81	R-5	50
27	R-4	29
212	R-4	25

CHECK CONSTRUCTION PLANS FOR SCHEDULE OF RIPRAP OUTSIDE OF THE BASIN AREA.

INFILTRATION BASIN CONSTRUCTION SEQUENCE

THE STORMWATER MANAGEMENT BASIN SHALL FUNCTION AS AN INFILTRATION FACILITY AND SHALL BE CONSTRUCTED IN ACCORDANCE WITH THE FOLLOWING SPECIFICATIONS:

SECTION 271 - STORMWATER MANAGEMENT POND
SECTION 272 - POND OUTLET STRUCTURE, CONCRETE

1. PRIOR TO DISTURBANCE OF THE SITE UPSTREAM OF THE BASIN, INSTALL FENCE AROUND THE BASIN AREA TO PREVENT CONSTRUCTION EQUIPMENT AND STOCKPILED MATERIALS FROM ENTERING THE BASIN AREA AND COMPACTING THE SUBGRADE SOILS.
2. CONSTRUCT INFILTRATION BASIN AFTER ALL AREAS DRAINING TO THE BASIN HAVE BEEN PERMANENTLY STABILIZED AND THE ENGINEER HAS APPROVED THE CONSTRUCTION. IF BASIN CONSTRUCTION CANNOT BE DELAYED UNTIL ITS DRAINAGE AREA IS STABILIZED, DIVERSION BERMS OR OTHER SUITABLE MEASURES SHOULD BE PLACED AROUND THE BASIN'S PERIMETER DURING ALL PHASES OF CONSTRUCTION TO DIVERT ALL RUNOFF AND SEDIMENT AWAY FROM THE BASIN. THESE DIVERSION MEASURES SHOULD NOT BE REMOVED UNTIL ALL CONSTRUCTION WITHIN THE BASIN'S DRAINAGE AREA IS COMPLETED AND THE DRAINAGE AREA STABILIZED.
3. SEE CONSTRUCTION PLANS FOR EROSION AND SEDIMENT CONTROL MEASURES.
4. CONSTRUCT THE INFILTRATION BASIN WITHOUT COMPACTING THE BASINS SUBGRADE SOILS. EXCAVATION SHALL BE PERFORMED BY CONSTRUCTION EQUIPMENT PLACED OUTSIDE THE BASIN, WHERE POSSIBLE. ALL EXCAVATION SHALL BE PERFORMED WITH THE LIGHTEST PRACTICAL EXCAVATION EQUIPMENT.
5. CONSTRUCT WEIR WALL, RIPRAP ENERGY DISSIPATER AT THE END OF PRINCIPAL SPILLWAY AND PARTIAL EMBANKMENT AS NEEDED TO INSTALL WEIR WALL. DE-WATER FOUNDATION AS NEEDED IN ACCORDANCE WITH SECTION 111 AND USE SUMP PIT FOR DUMPING.
6. EXCAVATE THE POND AND COMPLETE THE EMBANKMENT, GRADES AND DETAILS SHOWN IN THE CONSTRUCTION PLANS. DURING EXCAVATION, THE CONTRACTOR SHALL SALVAGE AND STOCKPILE SOILS CLASSIFIED AS CH, CL, SC AND GG PER THE UNIFIED SOIL CLASSIFICATION SYSTEM TO BE USED TO CONSTRUCT EMBANKMENT. THE ABOVE CLASSIFIED SOILS MAY BE OBTAINED FROM ELSEWHERE WITHIN THE PROJECT LIMITS, IF NECESSARY.
7. STABILIZE BASIN EMBANKMENT AND BOTTOM WITH PERMANENT SEEDING.
8. REMOVE EROSION AND SEDIMENT CONTROLS, WATER DIVERSION PRACTICES AND FENCE UPON FINAL STABILIZATION AND APPROVAL FROM INSPECTOR.
9. THE CONTRACTOR SHALL PROVIDE 'AS-BUILT' DRAWINGS OF ALL STORMWATER MANAGEMENT FACILITIES SUCH AS PONDS, INFILTRATION BASINS, BIOFILTRATION SWALES, ETC. 'AS-BUILT'DRAWINGS SHALL SHOW THE ACTUAL FINISHED GROUND CONTOURS, OUTLET STRUCTURE DIMENSIONS AND ELEVATIONS, ETC. AS THEY EXIST AT THE COMPLETION OF THE PROJECT. THESE DRAWINGS SHALL BE SIGNED BY A PROFESSIONAL ENGINEER OR LAND SURVEYOR.

PLANTING SCHEDULE

PERMANENT GRASS SEEDING - WET GROUND UP TO ELEVATION 61.00
PERMANENT GRASS SEEDING - DRY GROUND ABOVE ELEVATION 61.00
PLACE TOPSOIL ABOVE BASIN BOTTOM ELEVATION 60.0

POND QUANTITIES			
ITEM NO.	ITEM	QTY.	UNITS.
202000	EXCAVATION AND EMBANKMENT	1531	CY
272501	POND OUTLET STRUCTURE, 10, SPECIAL	1	EACH
302011	DELAWARE NO. 3 STONE	547	TON
302012	DELAWARE NO. 57 STONE	12	TON
712005	R-4 RIPRAP	29	SY
712006	R-5 RIPRAP	50	SY
712020	R-4 RIPRAP	15	TON
713001	GEOTEXTILES, STABILIZATION	3688	SY
713003	GEOTEXTILES, RIPRAP	139	SY
733002	TOPSOILING, 6" DEPTH	7207	SY
734013	PERMANENT GRASS SEEDING, DRY GROUND	6727	SY
734015	PERMANENT GRASS SEEDING, WET GROUND	4966	SY

P:\CADD2\60049040_US301\CIVIL\PLANS\2A\BALT\SWM\POND 6\SW_6_01.DGN

DELAWARE DEPARTMENT OF TRANSPORTATION

ADDENDUMS / REVISIONS

SCALE 0 30 60 90 FEET

US 301 LEVELS ROAD TO SUMMIT BRIDGE ROAD

CONTRACT	BRIDGE NO.	
T200911303	DESIGNED BY: BAS	
COUNTY		
NEW CASTLE	CHECKED BY: JJW	

STORMWATER MANAGEMENT DETAILS BMP 665 (BASIN 6)

SW46
SHEET NO.
731
TOTAL SHTS.
1256

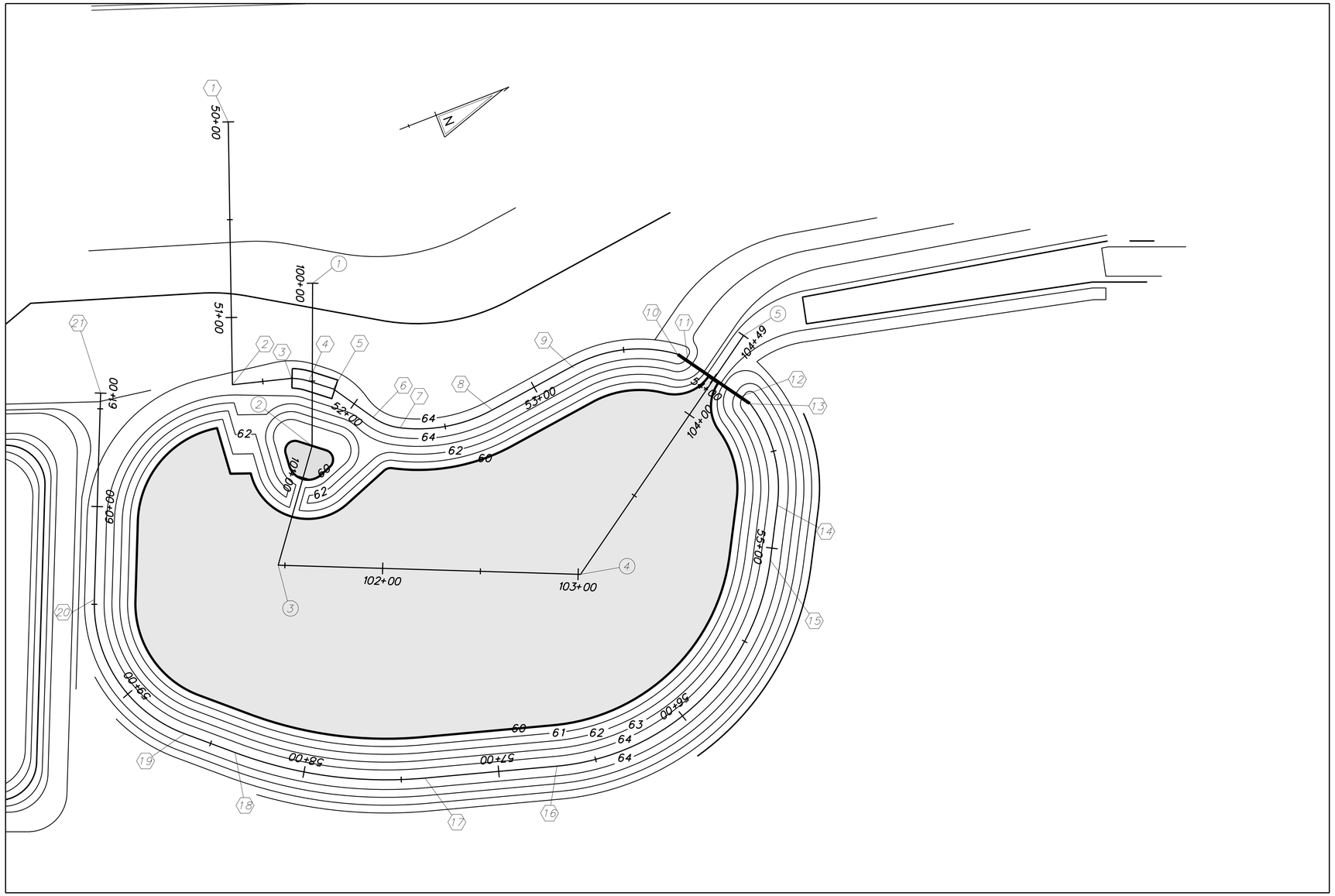

CL PRINCIPAL SPILLWAY			
	STATION	NORTHING	EASTING
1	POB STA. 100+00.00	533279.2228	565545.2292
2	PI STA. 100+83.11	533256.4529	565714.7616
3	PI STA. 101+46.56	533217.3659	565764.7424
4	PI STA. 103+01.23	533358.7742	565827.4016
5	POE STA. 104+49.08	533482.0320	565745.7411

CL EMBANKMENT			
	STATION	NORTHING	EASTING
1	POB STA. 50+00.00	533279.2228	565545.2292
2	PI STA. 51+34.40	533230.5035	565670.4843
3	PC STA. 51+64.73	533259.6671	565678.8436
4	PT STA. 51+73.76	533267.3630	565683.5009
5	PI STA. 51+86.91	533277.4621	565691.9162
6	PC STA. 52+11.85	533290.7919	565712.9936
7	PCC STA. 52+26.94	533301.6658	565723.2320
8	PT STA. 52+75.64	533348.6844	565732.5438
9	PC STA. 53+22.73	533395.3532	565728.3740
10	PT STA. 53+77.76	533447.1204	565741.8094
11	PI STA. 53+84.24	533450.6990	565747.2110
12	PI STA. 54+16.40	533468.4611	565774.0209
13	PC STA. 54+22.88	533472.0397	565779.4225
14	PT STA. 54+77.90	533465.3104	565832.6594
15	PC STA. 55+06.25	533451.3940	565857.3497
16	PT STA. 56+70.10	533310.6190	565913.6532
17	PC STA. 57+37.83	533245.8490	565893.8579
18	PT STA. 58+36.70	533160.7720	565845.1112
19	PC STA. 58+64.19	533140.5498	565826.4973
20	PT STA. 59+52.50	533123.7213	565745.4950
21	POE STA. 60+58.03	533166.4708	565649.0186

STAKEOUT - BMP 665 (BASIN 6)

11/13/2012
J:\BRIDGE_HIGHWAYS\9040_Deldot_301\Civil\Plans\2A\SWM\Pond 6\SW_6_02.dgn

DELAWARE DEPARTMENT OF TRANSPORTATION

ADDENDUMS / REVISIONS

SCALE 0 30 60 90 FEET

US 301 LEVELS ROAD TO SUMMIT BRIDGE ROAD

CONTRACT T200911303
COUNTY NEW CASTLE
BRIDGE NO.
DESIGNED BY: BAS
CHECKED BY: JJW

STORMWATER MANAGEMENT DETAILS BMP 665 (BASIN 6)

SW47
SHEET NO. 732
TOTAL SHTS. 1256

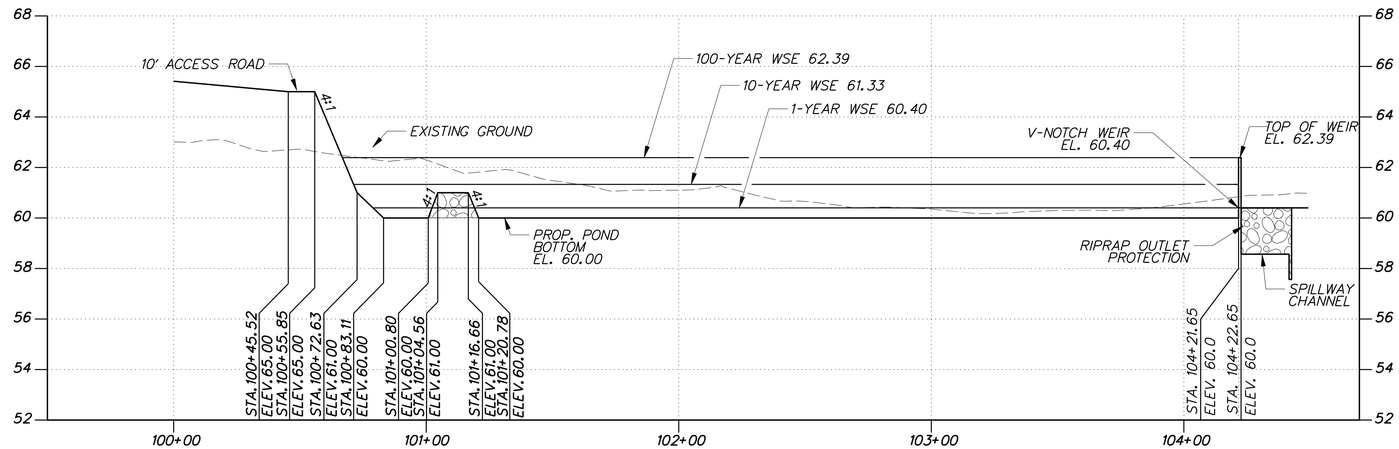

SPILLWAY PROFILE - BMP 665 (BASIN 6)

HORIZONTAL SCALE: 1" = 30'

0 30 60 90

FEET

VERTICAL SCALE: 1" = 3'

0 3 6 9

FEET

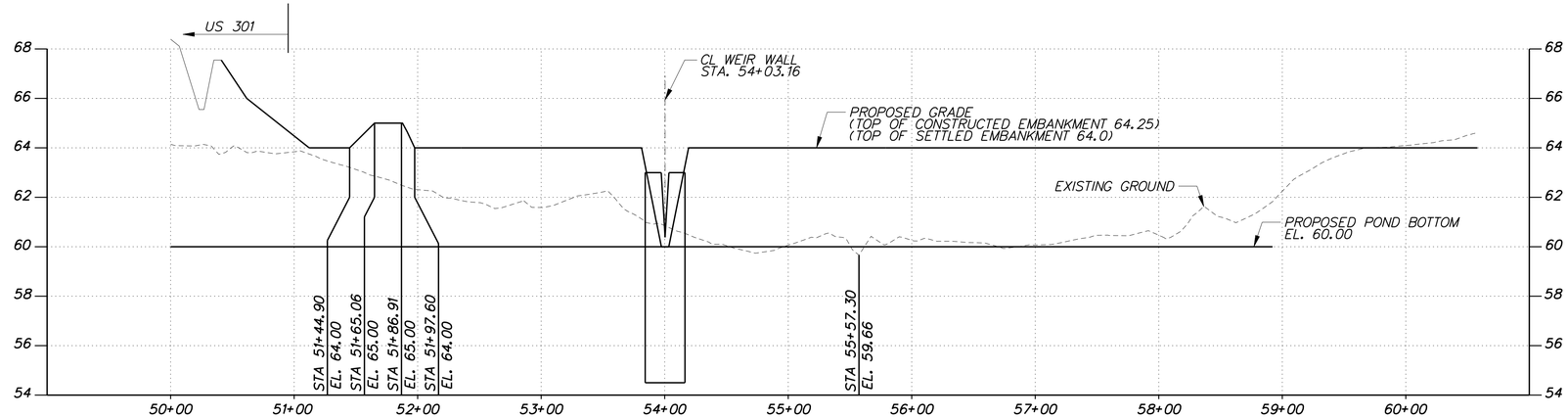

EMBANKMENT PROFILE FOR BMP 665

HORIZONTAL SCALE: 1" = 60'

0 60 120 180

FEET

VERTICAL SCALE: 1" = 3'

0 3 6 9

FEET

11/13/2012
J:\BRIDGE_HIGHWAYS\9040_Deldot_301\Civil\Plans\2A\SWM\Pond 6\SW_6_03.dgn

DELAWARE DEPARTMENT OF TRANSPORTATION	ADDENDUMS / REVISIONS	AS SHOWN	US 301 LEVELS ROAD TO SUMMIT BRIDGE ROAD	CONTRACT T200911303	BRIDGE NO.	STORMWATER MANAGEMENT DETAILS BMP 665 (BASIN 6)	SW48
				COUNTY NEW CASTLE	DESIGNED BY: BAS		SHEET NO. 733
					CHECKED BY: JJW		TOTAL SHTS. 1256

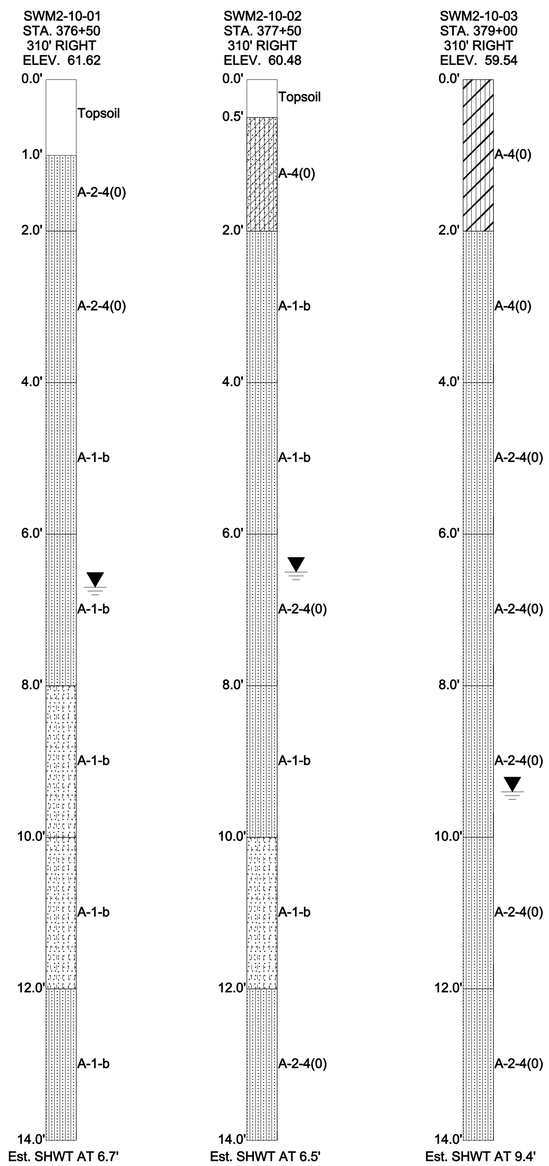

SECTION C-C FROM BASIN PLAN

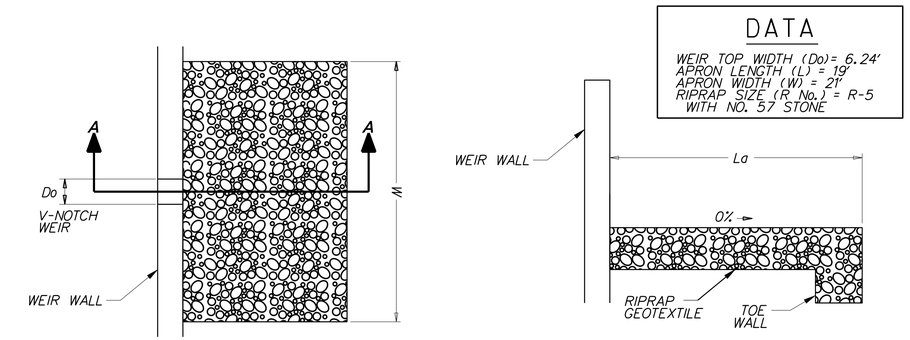

NOTES:
1. RIPRAP ITEM 712006
2. GEOTEXTILES, RIPRAP ITEM 713003
3. DELEWARE NO. 57 STONE ITEM 302012
4. SEE STANDARD NO. E-10 FOR RIPRAP DEPTH AND GEOTEXTILE PLACEMENT.
5. DEPRESS CENTERLINE OF APRON SLIGHTLY TO PREVENT EDGE CUTTING

PLAN
SCALE: NONE

SECTION A-A
SCALE: NONE

BASIN RIPRAP OUTLET PROTECTION
SCALE: NONE

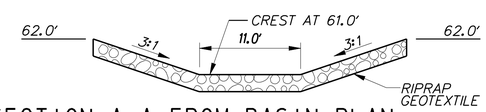

SECTION A-A FROM BASIN PLAN
SCALE: NONE

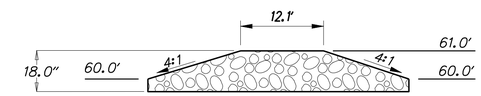

SECTION B-B FROM BASIN PLAN
SCALE: NONE

NOTES:
1. RIPRAP ITEM 712020
2. GEOTEXTILES, RIPRAP ITEM 713003
3. SEE STANDARD NO. E-10 FOR GEOTEXTILE PLACEMENT

STONE CHECK DAM
SCALE: NONE

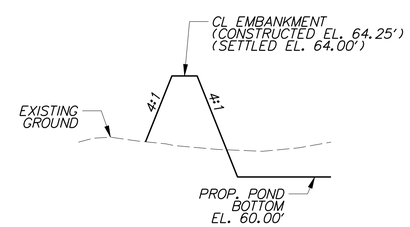

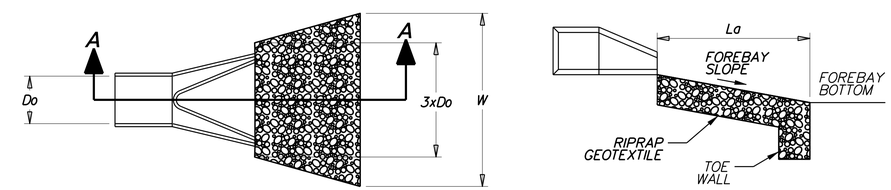

DATA
PIPE DIAMETER (Do)
APRON LENGTH (La)
APRON WIDTH (W)
RIPRAP SIZE (R No.)

PLAN
SCALE: NONE

SECTION A-A
SCALE: NONE

FES ID	Do	La	W	R No.
61	1.50'	14.0'	23.0'	R-4

NOTES:
1. RIPRAP ITEM 712005
2. GEOTEXTILES, RIPRAP ITEM 713003
3. DELEWARE NO. 57 STONE ITEM 302012
4. SEE STANDARD NO. E-10 FOR RIPRAP DEPTH AND GEOTEXTILE PLACEMENT.
5. DEPRESS CENTERLINE OF APRON SLIGHTLY TO PREVENT EDGE CUTTING

FOREBAY RIPRAP OUTLET PROTECTION
SCALE: NONE

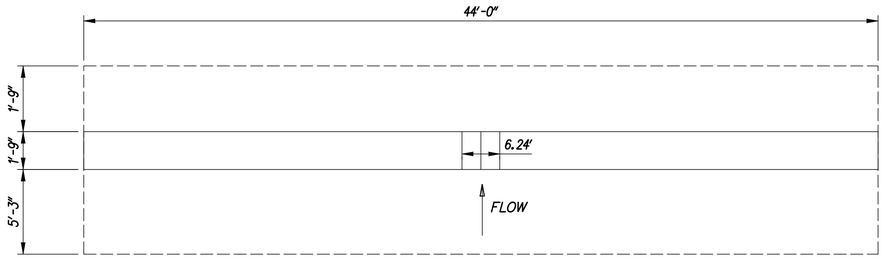

WEIR WALL PLAN

SCALE: NONE

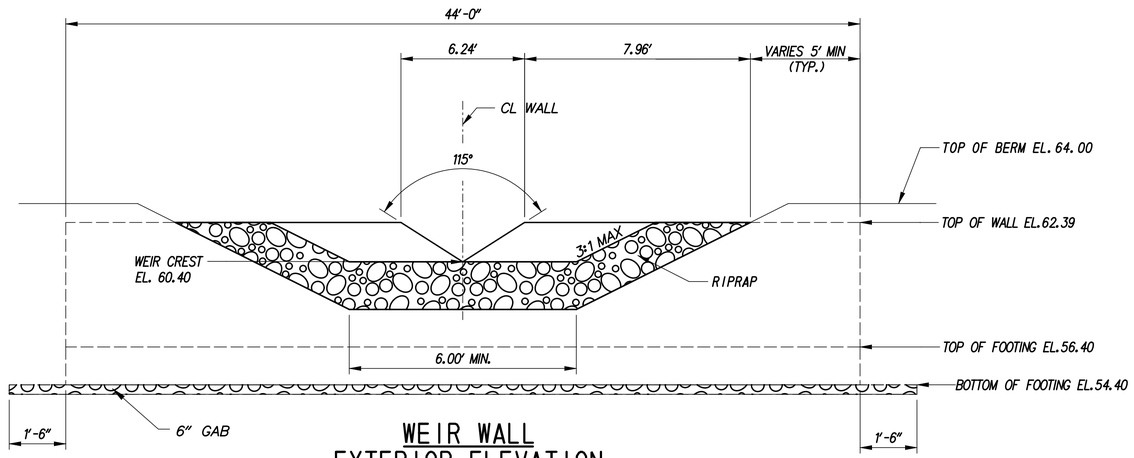

WEIR WALL EXTERIOR ELEVATION WITH RIPRAP APRON

SCALE: NONE

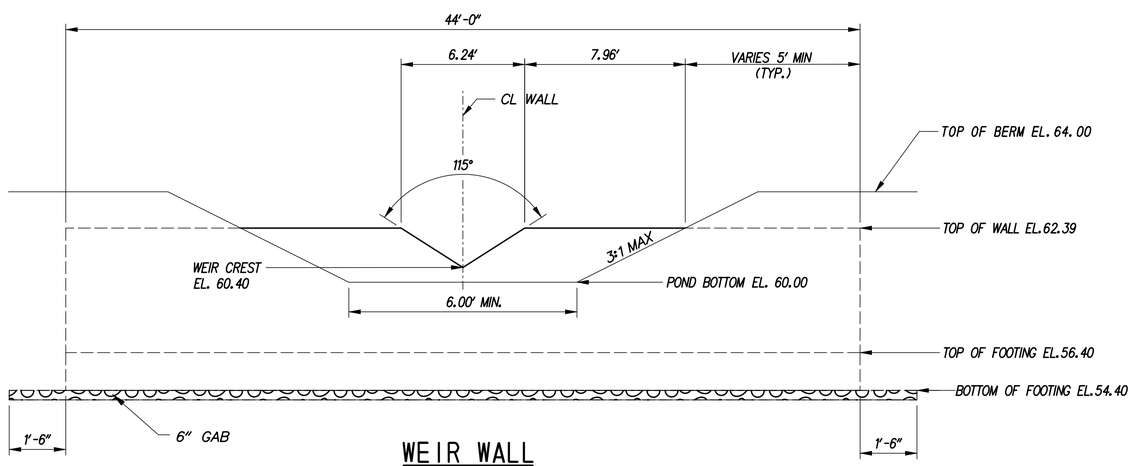

WEIR WALL INTERIOR ELEVATION

SCALE: NONE

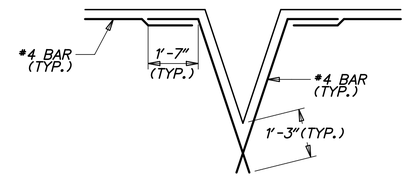

OPENING DETAILS

SCALE: NONE

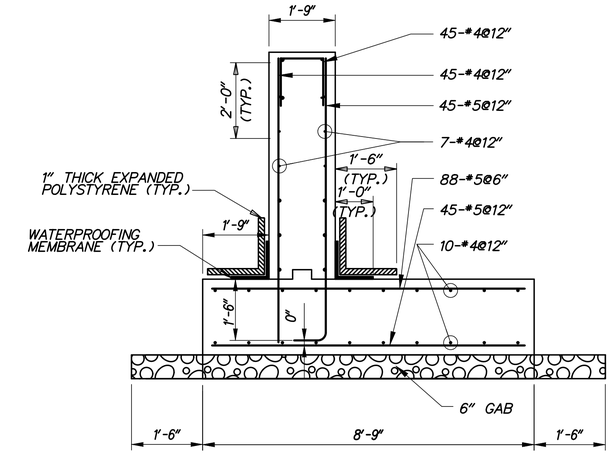

WEIR WALL SECTION

SCALE: 1/2"=1'-0"

GENERAL NOTES

1. DESIGN SPECIFICATIONS:

   AASHTO LRFD BRIDGE DESIGN SPECIFICATIONS, 4TH EDITION, 2007, INCLUDING 2008 AND 2009 INTERIM REVISIONS, AND AS SUPPLEMENTED BY DELAWARE DEPARTMENT OF TRANSPORTATION BRIDGE DESIGN MANUAL, MAY 2005, INCLUDING LATEST REVISIONS.

   PROVIDE MATERIALS AND PERFORM WORK IN ACCORDANCE WITH THE DELAWARE DEPARTMENT OF TRANSPORTATION STANDARD SPECIFICATIONS AND CONSTRUCTION DETAILS, AASHTO/AWS D1.5M/D1.5 BRIDGE WELDING CODE, AND CONTRACT SPECIAL PROVISIONS.

2. LOADING:

   UNIT WEIGHTS OF MATERIALS SHALL BE IN ACCORDANCE WITH THE DELAWARE DESIGN MANUAL.

3. PORTLAND CEMENT CONCRETE:

   PORTLAND CEMENT CONCRETE FOR CAST-IN-PLACE ELEMENTS SHALL BE AS FOLLOWS:
   (28 DAY COMPRESSIVE STRENGTH)
   (CLASS B, F'c=3000 PSI) - WEIR WALL FOOTING
   (CLASS A, F'c=4500 PSI) - WEIR WALL STEM

   WEIR WALLS MUST BE CAST-IN-PLACE.

   MIX REQUIREMENTS SHALL CONFORM TO SECTION 812 OF THE DELAWARE DEPARTMENT OF TRANSPORTATION STANDARD SPECIFICATIONS.

   ALL EXPOSED CORNERS OF CONCRETE SHALL BE CHAMFERED WITH ¾" X ¾" MILLED CHAMFER STRIPS EXCEPT ON UNEXPOSED FOOTINGS.

4. BAR REINFORCEMENT:

   REINFORCING STEEL SHALL CONFORM TO AASHTO M31 (ASTM A615), GRADE 60 AND IS TO BE EPOXY COATED. FUSION-BONDED EPOXY COATED REINFORCING STEEL SHALL CONFORM TO AASHTO M284 (ASTM D3963).

   PROVIDE 3" CONCRETE COVER ON REINFORCEMENT BARS, EXCEPT AS NOTED.

   LAP LENGTH OF #4 BARS TO BE 3'-0". STAGGER SPLICE LOCATIONS.

   DO NOT WELD GRADE 60 REINFORCING STEEL.

5. CONSTRUCTION JOINTS:

   KEYED CONSTRUCTION JOINTS SHALL BE 2" x 4" OR AS NOTED.

6. WATERPROOFING MEMBRANE:

   ADHESIVE BACKED WATERPROOFING MEMBRANE IS TO BE USED. SPLICING OF THE MEMBRANE IS PROHIBITED.

7. REFER TO SPECIFICATION SECTION 272501 FOR CONSTRUCTION SEQUENCE.

8. GAB IS INCIDENTAL TO WALL CONSTRUCTION.

G:\60049040 US301\CIVIL\PLANS\2A\CP\SW-50.DGN

DELAWARE DEPARTMENT OF TRANSPORTATION	ADDENDUMS / REVISIONS	AS SHOWN	US 301 LEVELS ROAD TO SUMMIT BRIDGE ROAD	CONTRACT T200911303	BRIDGE NO.	STORMWATER MANAGEMENT DETAILS BMP 665 (BASIN 6)	SW-50
				COUNTY NEW CASTLE	DESIGNED BY: BAS		SHEET NO. 735
					CHECKED BY: JJW		TOTAL SHTS. 1256

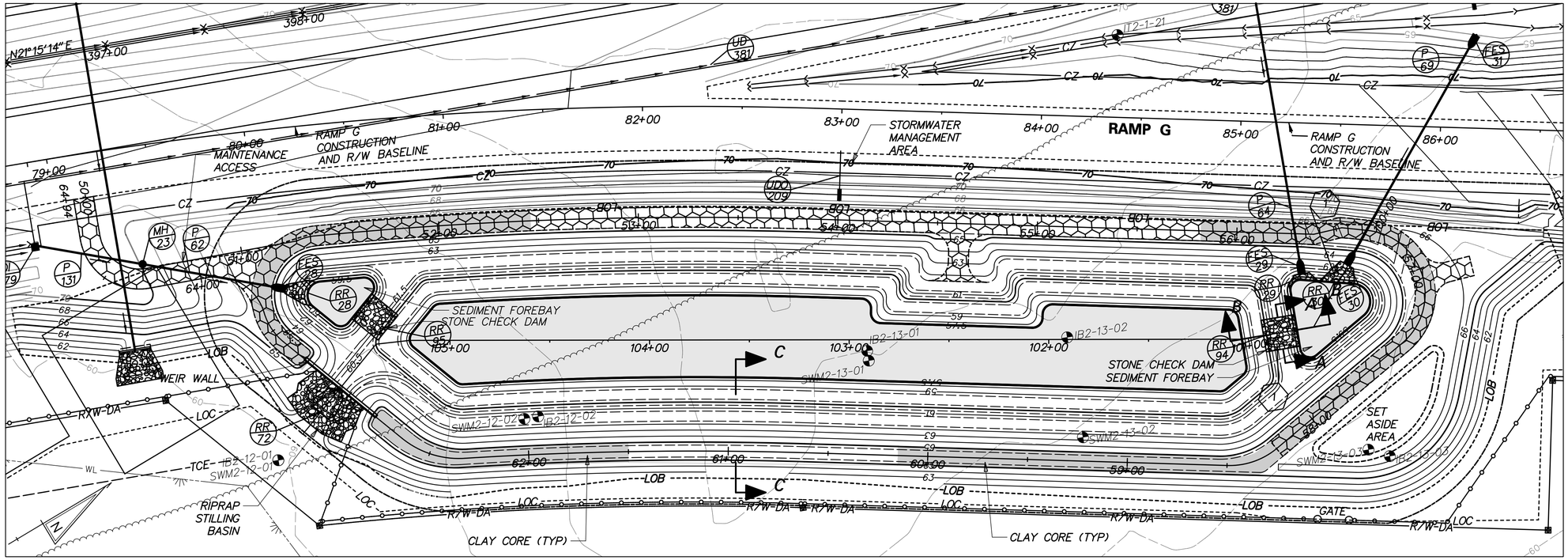

PLAN - BMP 666 (BASIN 7)

RIPRAP SCHEDULE		
NO.	TYPE	AREA (SY)
28	R-4	13
29	R-4	5
30	R-4	15
72	R-5	101
94	R-4	31
95	R-4	31

CHECK CONSTRUCTION PLANS FOR SCHEDULE OF RIPRAP OUTSIDE OF THE BASIN AREA.

POND CONSTRUCTION SEQUENCE AND NOTES

THE STORMWATER MANAGEMENT POND SHALL FUNCTION AS A SEDIMENT BASIN DURING ROADWAY CONSTRUCTION AND SHALL BE CONSTRUCTED IN ACCORDANCE WITH THE FOLLOWING SECTIONS OF THE STANDARD SPECIFICATIONS:

SECTION 271 - STORMWATER MANAGEMENT POND
SECTION 272 - POND OUTLET STRUCTURE, CONCRETE
SECTION 274 - CLAY BORROW, STORMWATER MANAGEMENT POND

1. INSTALL STABILIZED CONSTRUCTION ENTRANCE.
2. CLEAR AND GRUB FOR INSTALLATION OF PERIMETER EROSION AND SEDIMENT CONTROLS.
3. INSTALL PERIMETER SEDIMENT CONTROLS AS SHOWN.
4. CLEAR AND GRUB REMAINING AREA FOR POND CONSTRUCTION.
5. CONSTRUCT WEIR WALL, RIPRAP STILLING BASIN, CLAY CORE AND PARTIAL EMBANKMENT AS NEEDED TO INSTALL WEIR WALL. INSTALL SKIMMER AND DE-WATER FOUNDATION AS NEEDED IN ACCORDANCE WITH SECTION 111 AND USE SUMP PIT FOR PUMPING. (SEE EROSION AND SEDIMENT CONTROL DETAILS FOR SKIMMER DE-WATERING DEVICE INSTALLATION).
6. EXCAVATE THE POND AND COMPLETE THE EMBANKMENT, GRADES AND DETAILS SHOWN IN THE CONSTRUCTION PLANS. DURING EXCAVATION, THE CONTRACTOR SHALL SALVAGE AND STOCKPILE SOILS CLASSIFIED AS CH, CL, SC AND GG PER THE UNIFIED SOIL CLASSIFICATION SYSTEM TO BE USED TO CONSTRUCT EMBANKMENT. THE ABOVE CLASSIFIED SOILS MAY BE OBTAINED FROM ELSEWHERE WITHIN THE PROJECT LIMITS, IF NECESSARY.
7. STABILIZE ALL BARE AREAS.
   NOTE: SEE CONSTRUCTION SEQUENCE PLANS FOR LOCATION OF EROSION AND SEDIMENT CONTROL MEASURES.
8. THE CONTRACTOR SHALL PROVIDE 'AS-BUILT' DRAWINGS OF ALL STORMWATER MANAGEMENT FACILITIES SUCH AS PONDS, INFILTRATION BASINS, BIOFILTRATION SWALES, ETC. 'AS-BUILT' DRAWINGS SHALL SHOW THE ACTUAL FINISHED GROUND CONTOURS, OUTLET STRUCTURE DIMENSIONS AND ELEVATIONS, ETC. AS THEY EXIST AT THE COMPLETION OF THE PROJECT. THESE DRAWINGS SHALL BE SIGNED BY A PROFESSIONAL ENGINEER OR LAND SURVEYOR.

MAINTENANCE OF POND AS A SEDIMENT BASIN

1. CONTRACTOR SHALL INSPECT THE BASIN IMMEDIATELY AFTER EVERY RAIN AND MAKE REPAIRS AS NEEDED.
2. CONTRACTOR SHALL CLEARLY MARK THE CLEANOUT ELEVATION ON A STAKE DRIVEN INTO THE GROUND AT A LOCTATION CLEARLY VISIBLE FROM THE EMBANKMENT. SEDIMENT SHALL BE REMOVED WHEN CLEANOUT ELEVATION IS REACHED AND DISPOSED OF AT A LOCATION APPROVED BY THE ENGINEER. CLEANOUT ELEVATION IS 60.94 IN PHASE 1, AND 61.52 IN PHASE 2.

CONVERSION TO PERMANENT STORMWATER MANAGEMENT POND

1. CONVERT THE BASIN INTO THE PERMANENT STORMWATER MANAGEMENT POND AFTER ALL AREAS DRAINING TO THE POND HAVE BEEN PERMANENTLY STABILIZED AND THE ENGINEER HAS APPROVED THE CONVERSION.
2. REMOVE ACCUMULATED SEDIMENT TO ELEVATION 57.50 AND DISPOSE SEDIMENT AT A LOCATION APPROVED BY THE ENGINEER.
3. COMPLETE STABILIZATION OF ALL BARE AREAS. REMOVE EROSION AND SEDIMENT CONTROL MEASURES AND DEACTIVATE DE-WATERING DEVICE.

PLANTING SCHEDULE

PLACE PERMANENT GRASS SEEDING - WET GROUND UP TO ELEVATION 61.50
PLACE PERMANENT GRASS SEEDING - DRY GROUND ABOVE ELEVATION 61.50
PLACE TOPSOIL ON LOWER BENCH ELEVATION 59.50 AND ABOVE.

POND DESIGN SUMMARY				
DESIGN STORM	FACILITY INFLOW (CFS)	FACILITY DISCHARGE (CFS)	WATER SURFACE ELEVATION (FT)	STORAGE VOLUME (AC.FT.)*
QUALITY STORM (1 YR)	19.86	0.60	61.52	2.337
10 - YEAR	50.93	3.25	62.51	3.329
100 - YEAR	101.80	12.90	64.00	4.974

DRAINAGE AREA TO FACILITY: 13.07 ACRES

MANAGEMENT PROVIDED BY FACILITY: WATER QUALITY BY EXTENDED DETENTION OF 1 YEAR STORM RUNOFF, WATER QUANTITY FOR 10 AND 100 YEAR STORMS.

*INCLUDES NORMAL POOL VOLUME OF 1.538 AC-FT

SKIMMER DEVICE SUMMARY		
	PHASE 1	PHASE 2
SKIMMER ELEVATION	60.63	60.63
ORIFICE SIZE (IN)	1	1
BLOCK WEIR UP TO ELEVATION	61.25	62.22

POND QUANTITIES			
ITEM NO.	ITEM	QTY.	UNITS.
202000	EXCAVATION AND EMBANKMENT	5031	CY
272501	POND OUTLET STRUCTURE, 10, SPECIAL	1	EACH
274000	CLAY BORROW, STORMWATER MANAGEMENT POND, CUT-OFF TRENCH	1101	CY
302011	DELAWARE NO. 3 STONE	330	TON
302012	DELAWARE NO. 57 STONE	24	TON
712005	R-4 RIPRAP	33	SY
712006	R-5 RIPRAP	101	SY
712020	R-4 RIPRAP	44	TON
713001	GEOTEXTILES, STABILIZATION	2226	SY
713003	GEOTEXTILES, RIPRAP	251	SY
733002	TOPSOILING, 6" DEPTH	8323	SY
734013	PERMANENT GRASS SEEDING, DRY GROUND	6105	SY
734015	PERMANENT GRASS SEEDING, WET GROUND	4586	SY

P:\CADD2\60049040 US301\CIVIL PLANS\2A\CP\AET\SW-51.DGN

DELAWARE DEPARTMENT OF TRANSPORTATION

ADDENDUMS / REVISIONS

SCALE 0 30 60 90 FEET

US 301 LEVELS ROAD TO SUMMIT BRIDGE ROAD

CONTRACT T200911303
COUNTY NEW CASTLE
BRIDGE NO.
DESIGNED BY: DB JW
CHECKED BY: JZ SF

STORMWATER MANAGEMENT DETAILS BMP 666 (BASIN 7)

SW-51
SHEET NO. 736
TOTAL SHTS. 1256

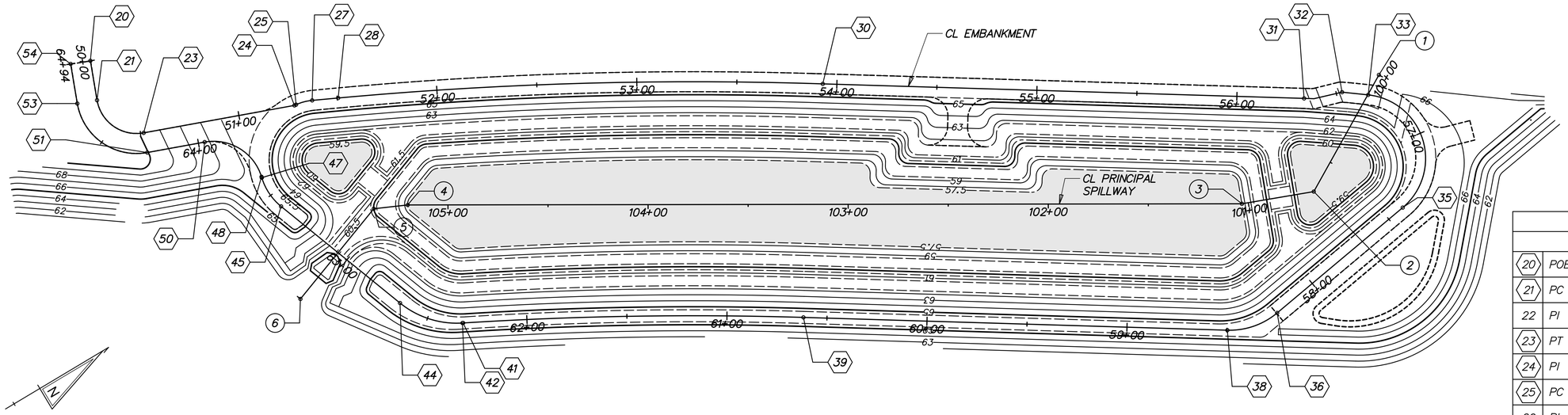

STAKEOUT - BMP 666 (BASIN 7)

CL EMBANKMENT				
	STATION		NORTHING	EASTING
20	POB	STA. 50+00.00	535161.5634	566295.8566
21	PC	STA. 50+19.95	535154.3311	566314.4509
22	PI	STA. 50+40.20	535146.9918	566333.3202
23	PT	STA. 50+51.61	535165.9496	566340.4279
24	PI	STA. 51+28.18	535237.6433	566367.3074
25	PC	STA. 51+29.10	535238.5605	566367.4118
26	PI	STA. 51+33.32	535242.7486	566367.8888
27	PT	STA. 51+37.45	535246.5487	566369.7127
28	PC	STA. 51+50.51	535258.3181	566375.3614
29	PI	STA. 52+68.95	535365.0987	566426.6110
30	PT	STA. 53+87.10	535464.8715	566490.4388
31	PI	STA. 56+38.55	535676.6822	566625.9408
32	PI	STA. 56+52.94	535690.3861	566630.3358
33	PC	STA. 56+66.08	535700.9059	566638.2071
34	PI	STA. 57+41.60	535761.3735	566683.4514
35	PT	STA. 57+40.96	535686.8078	566695.4241
36	PC	STA. 58+22.88	535605.9227	566708.4114
37	PI	STA. 58+36.98	535591.9979	566710.6472
38	PT	STA. 58+49.83	535580.1179	566703.0472
39	PC	STA. 60+61.79	535401.5648	566588.8212
40	PI	STA. 61+46.92	535329.8543	566542.9457
41	PT	STA. 62+31.93	535254.1886	566503.9372
42	PC	STA. 62+32.25	535253.8966	566503.7867
43	PI	STA. 62+49.85	535238.2577	566495.7243
44	PT	STA. 62+65.80	535232.2351	566479.1924
45	PC	STA. 63+42.41	535206.0116	566407.2091
46	PI	STA. 63+51.44	535202.9189	566398.7198
47	PT	STA. 63+59.94	535205.1109	566389.9546
48	PC	STA. 63+60.41	535205.2236	566389.5037
49	PI	STA. 63+82.72	535210.6358	566367.8614
50	PT	STA. 63+96.84	535189.7470	566360.0298
51	PC	STA. 64+26.00	535162.4390	566349.7915
52	PI	STA. 64+56.37	535134.0023	566339.1299
53	PT	STA. 64+73.49	535145.0112	566310.8259
54	POE	STA. 64+93.57	535152.2892	566292.1143

CL PRINCIPAL SPILLWAY				
	STATION		NORTHING	EASTING
1	POB	STA. 100+00.00	535710.6331	566632.3960
2	PI	STA. 100+66.79	535652.7677	566665.7506
3	PI	STA. 101+03.22	535618.8148	566652.5445
4	PI	STA. 105+20.14	535260.6872	566439.0774
5	PI	STA. 105+37.20	535245.1662	566432.0074
6	POE	STA. 105+95.30	535190.5713	566451.8964

G:\60049040 US301\CIVIL\PLANS\2A\CP\SW-52.DGN

DELAWARE DEPARTMENT OF TRANSPORTATION

ADDENDUMS / REVISIONS

SCALE 0 30 60 90 FEET

US 301 LEVELS ROAD TO SUMMIT BRIDGE ROAD

CONTRACT T200911303
COUNTY NEW CASTLE
BRIDGE NO.
DESIGNED BY: DB
CHECKED BY: JZ

STORMWATER MANAGEMENT DETAILS BMP 666 (BASIN 7)

SW-52
SHEET NO. 737
TOTAL SHTS. 1256

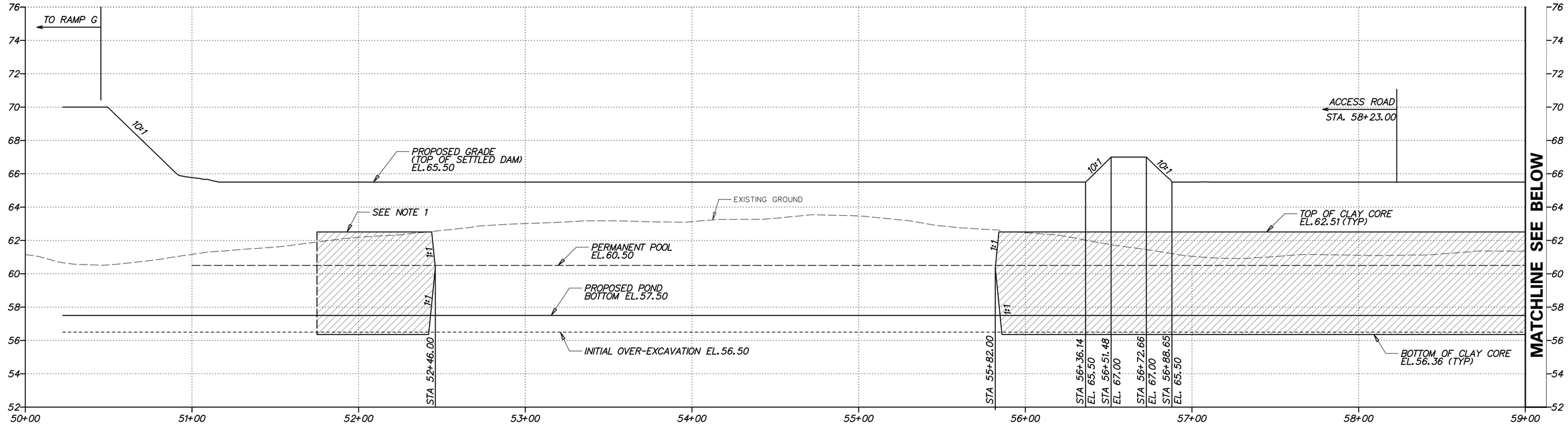

EMBANKMENT PROFILE FOR BMP 666 (BASIN 7)

HORIZONTAL SCALE: 1"=30' (0, 30, 60, 90 FEET)

VERTICAL SCALE: 1"=3' (0, 3, 6, 9 FEET)

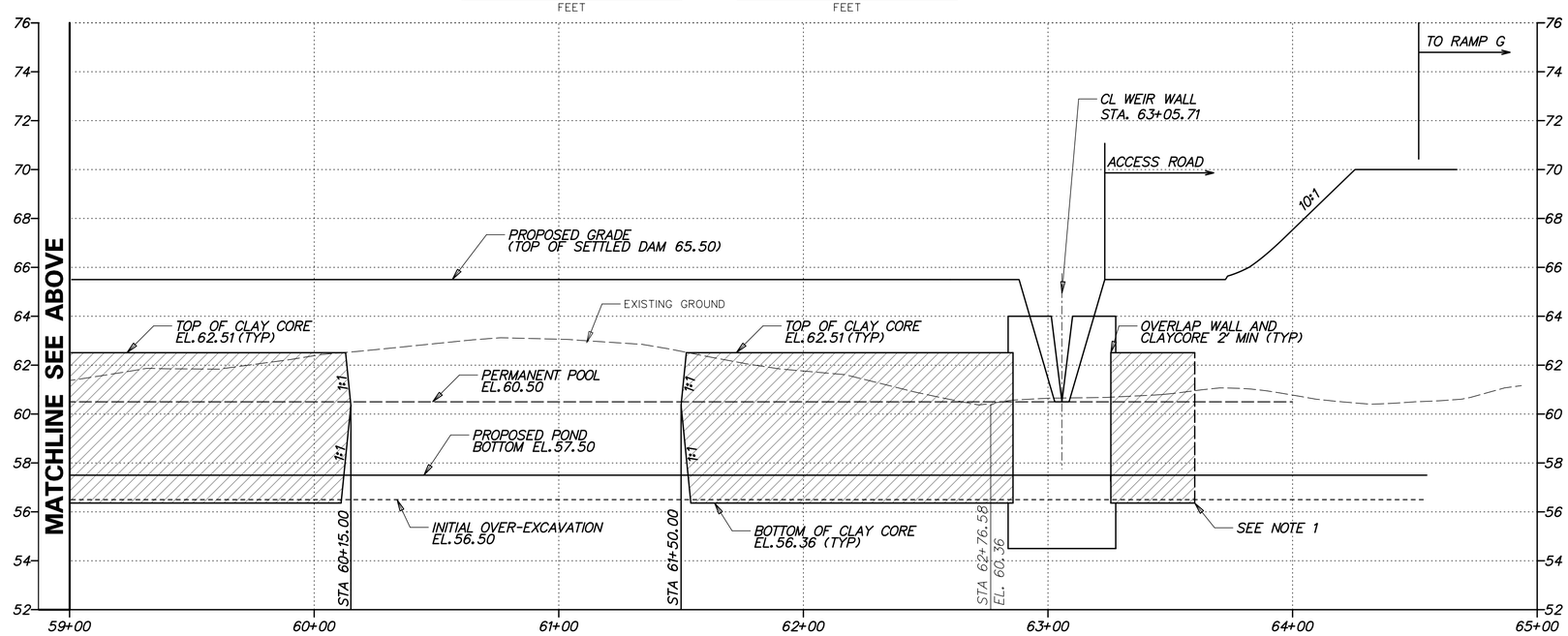

EMBANKMENT PROFILE FOR BMP 666 (BASIN 7)

HORIZONTAL SCALE: 1"=30' (0, 30, 60, 90 FEET)

VERTICAL SCALE: 1"=3' (0, 3, 6, 9 FEET)

NOTES:

1. ALIGNMENT DIVERTS FROM EMBANKMENT CENTERLINE. CLAY CORE IS CONTINUOUS BETWEEN STA. 52+46 AND WEIR WALL.

G:\60049040 US301\CIVIL\PLANS\2A\CP\SW-53.DGN

DELAWARE DEPARTMENT OF TRANSPORTATION	ADDENDUMS / REVISIONS	AS SHOWN	US 301 LEVELS ROAD TO SUMMIT BRIDGE ROAD	CONTRACT T200911303	BRIDGE NO.	STORMWATER MANAGEMENT DETAILS BMP 666 (BASIN 7)	SW-53
				COUNTY NEW CASTLE	DESIGNED BY: DB		SHEET NO. 738
					CHECKED BY: JZ		TOTAL SHTS. 1256

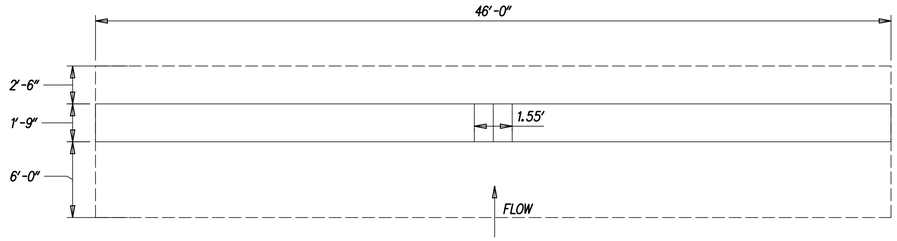

WEIR WALL PLAN

SCALE: NONE

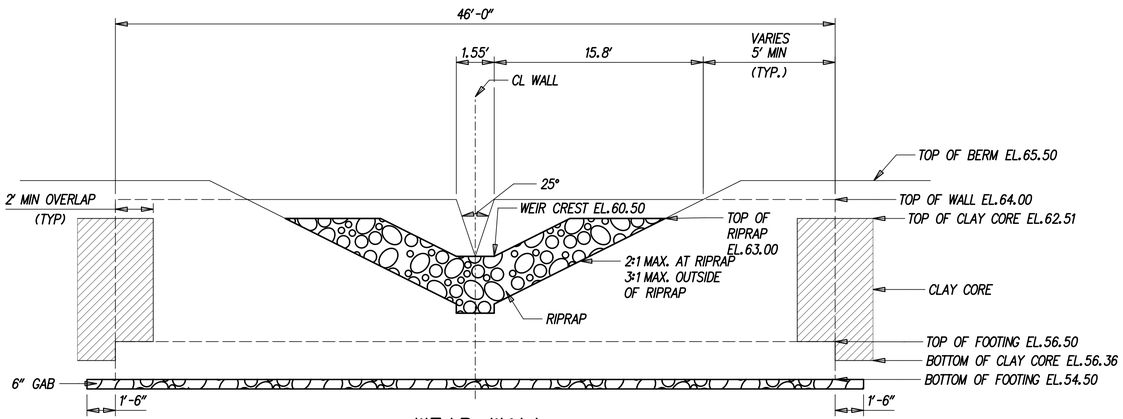

WEIR WALL EXTERIOR ELEVATION WITH RIPRAP STILLING BASIN

SCALE: NONE

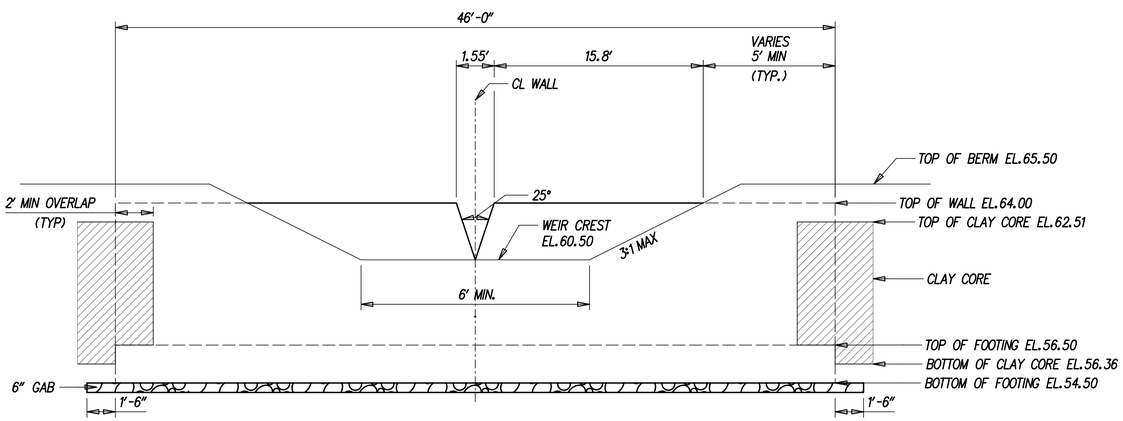

WEIR WALL INTERIOR ELEVATION

SCALE: NONE

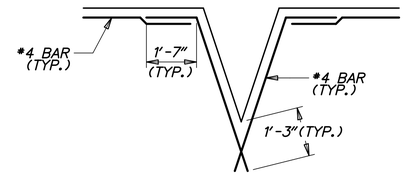

OPENING DETAILS

SCALE: NONE

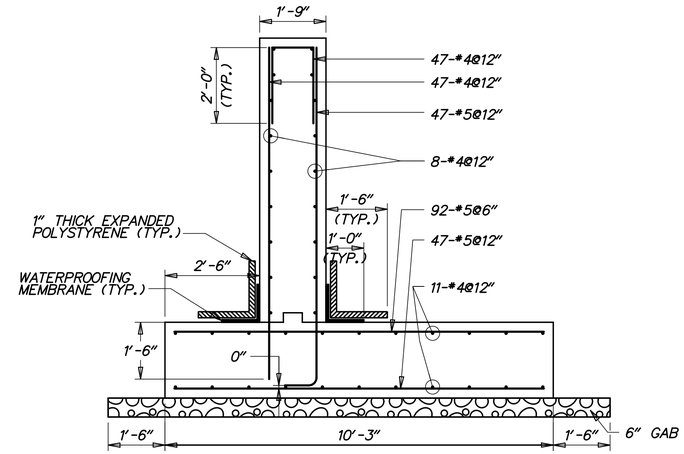

WEIR WALL SECTION

SCALE: 1/2"=1'-0"

GENERAL NOTES

1. DESIGN SPECIFICATIONS:

   AASHTO LRFD BRIDGE DESIGN SPECIFICATIONS, 4TH EDITION, 2007, INCLUDING 2008 AND 2009 INTERIM REVISIONS, AND AS SUPPLEMENTED BY DELAWARE DEPARTMENT OF TRANSPORTATION BRIDGE DESIGN MANUAL, MAY 2005, INCLUDING LATEST REVISIONS.

   PROVIDE MATERIALS AND PERFORM WORK IN ACCORDANCE WITH THE DELAWARE DEPARTMENT OF TRANSPORTATION STANDARD SPECIFICATIONS AND CONSTRUCTION DETAILS, AASHTO/AWS D1.5M/D1.5 BRIDGE WELDING CODE, AND CONTRACT SPECIAL PROVISIONS.

2. LOADING:

   UNIT WEIGHTS OF MATERIALS SHALL BE IN ACCORDANCE WITH THE DELAWARE DESIGN MANUAL.

3. PORTLAND CEMENT CONCRETE:

   PORTLAND CEMENT CONCRETE FOR CAST-IN-PLACE ELEMENTS SHALL BE AS FOLLOWS:
   (28 DAY COMPRESSIVE STRENGTH)
   (CLASS B, F'c=3000 PSI) - WEIR WALL FOOTING
   (CLASS A, F'c=4500 PSI) - WEIR WALL STEM

   WEIR WALLS MUST BE CAST-IN-PLACE.

   MIX REQUIREMENTS SHALL CONFORM TO SECTION 812 OF THE DELAWARE DEPARTMENT OF TRANSPORTATION STANDARD SPECIFICATIONS.

   ALL EXPOSED CORNERS OF CONCRETE SHALL BE CHAMFERED WITH ¾" X ¾" MILLED CHAMFER STRIPS EXCEPT ON UNEXPOSED FOOTINGS.

4. BAR REINFORCEMENT:

   REINFORCING STEEL SHALL CONFORM TO AASHTO M31 (ASTM A615), GRADE 60 AND IS TO BE EPOXY COATED. FUSION-BONDED EPOXY COATED REINFORCING STEEL SHALL CONFORM TO AASHTO M284 (ASTM D3963).

   PROVIDE 3" CONCRETE COVER ON REINFORCEMENT BARS, EXCEPT AS NOTED.

   LAP LENGTH OF #4 BARS TO BE 3'-0". STAGGER SPLICE LOCATIONS.

   DO NOT WELD GRADE 60 REINFORCING STEEL.

5. CONSTRUCTION JOINTS:

   KEYED CONSTRUCTION JOINTS SHALL BE 2" x 4" OR AS NOTED.

6. WATERPROOFING MEMBRANE:

   ADHESIVE BACKED WATERPROOFING MEMBRANE IS TO BE USED. SPLICING OF THE MEMBRANE IS PROHIBITED.

7. REFER TO SPECIFICATION SECTION 272501 FOR CONSTRUCTION SEQUENCE.

8. GAB IS INCIDENTAL TO WALL CONSTRUCTION.

G:\60049040 US301\CIVIL\PLANS\2A\CP\SW-54.DGN

DELAWARE DEPARTMENT OF TRANSPORTATION	ADDENDUMS / REVISIONS	AS SHOWN	US 301 LEVELS ROAD TO SUMMIT BRIDGE ROAD	CONTRACT T200911303	BRIDGE NO.	STORMWATER MANAGEMENT DETAILS BMP 666 (BASIN 7)	SW-54
				COUNTY NEW CASTLE	DESIGNED BY: DB		SHEET NO. 739
					CHECKED BY: JZ		TOTAL SHTS. 1256

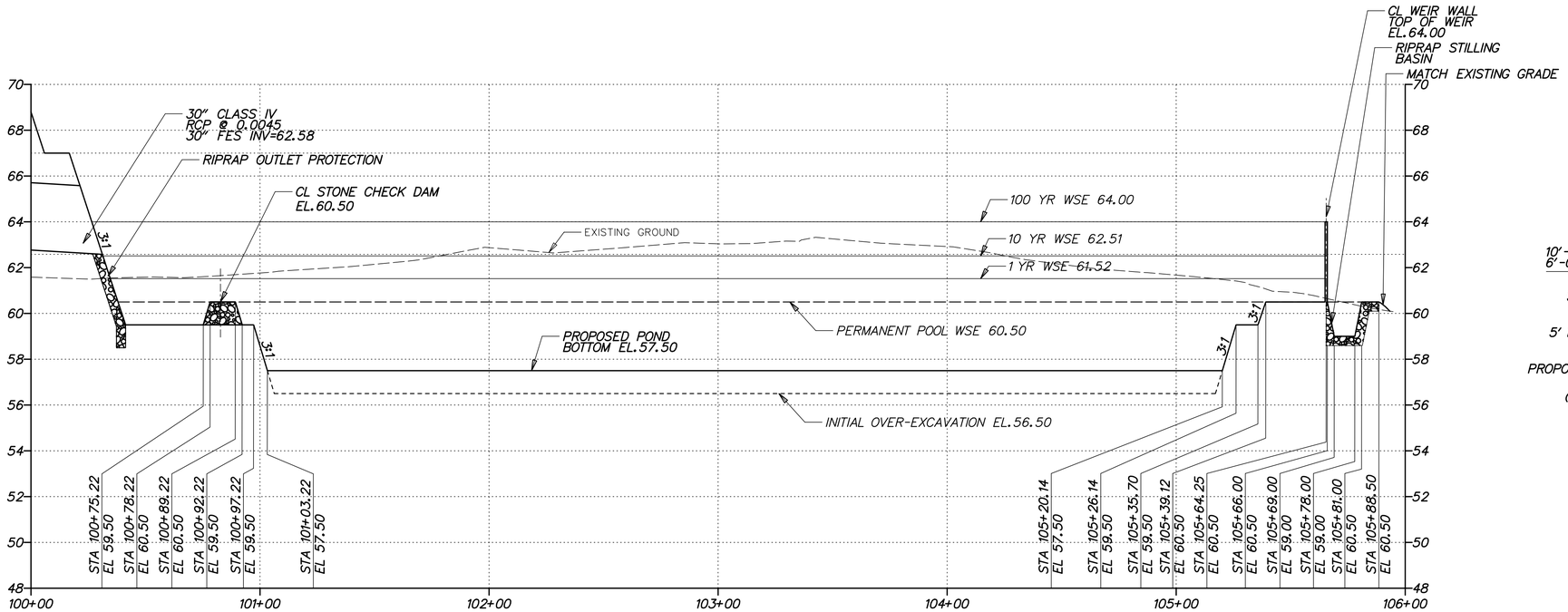

SPILLWAY PROFILE - BMP 666 (BASIN 7)

HORIZONTAL SCALE: 1"=30'
0 30 60 90
FEET

VERTICAL SCALE: 1"=3'
0 3 6 9
FEET

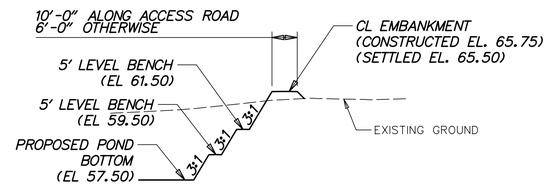

SECTION C-C FROM BASIN PLAN

SCALE: NONE

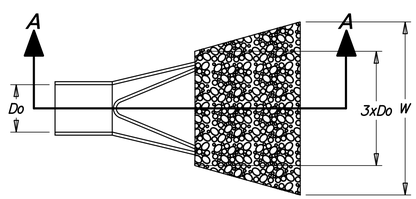

PLAN

SCALE: NONE

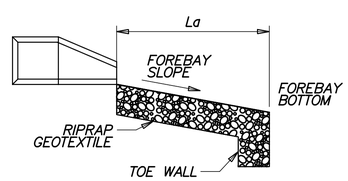

SECTION A-A

SCALE: NONE

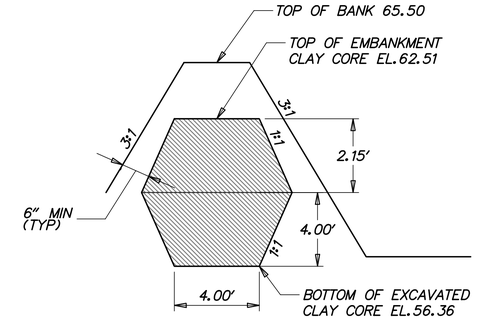

CLAY CORE TYPICAL SECTION

SCALE: NONE

DATA

PIPE DIAMETER (Do)
APRON LENGTH (La)
APRON WIDTH (W)
RIPRAP SIZE (R No.)

FES ID	Do	La	W	R No.
28	1.5'	9.2'	12.0'	R-4
29	2.5'	4.7'	15.0'	R-4
30	2.5'	9.3'	16.0'	R-4

FOREBAY RIPRAP OUTLET PROTECTION

SCALE: NONE

NOTES:
1. RIPRAP ITEM# 712005.
2. GEOTEXTILES, RIPRAP ITEM# 713003
3. SEE STANDARD NO. E-10 FOR RIPRAP DEPTH AND GEOTEXTILE PLACEMENT.
4. DEPRESS CENTERLINE OF APRON SLIGHTLY TO PREVENT EDGE CUTTING.

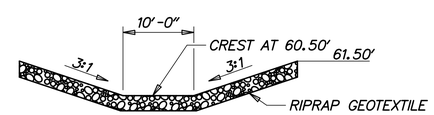

SECTION A-A FROM BASIN PLAN

SCALE: NONE

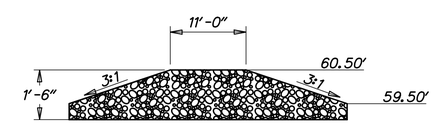

SECTION B-B FROM BASIN PLAN

SCALE: NONE

STONE CHECK DAM

SCALE: NONE

NOTES:
1. RIPRAP ITEM# 712020
2. GEOTEXTILE, RIPRAP ITEM# 713003
3. SEE STANDARD NO. E-10 FOR GEOTEXTILE PLACEMENT.

G:\60049040 US301\CIVIL\PLANS\2A\CP\SW-55.DGN

DELAWARE DEPARTMENT OF TRANSPORTATION	ADDENDUMS / REVISIONS	AS SHOWN	US 301 LEVELS ROAD TO SUMMIT BRIDGE ROAD	CONTRACT T200911303	BRIDGE NO.	STORMWATER MANAGEMENT DETAILS BMP 666 (BASIN 7)	SW-55
				COUNTY NEW CASTLE	DESIGNED BY: DB		SHEET NO. 740
					CHECKED BY: JZ		TOTAL SHTS. 1256

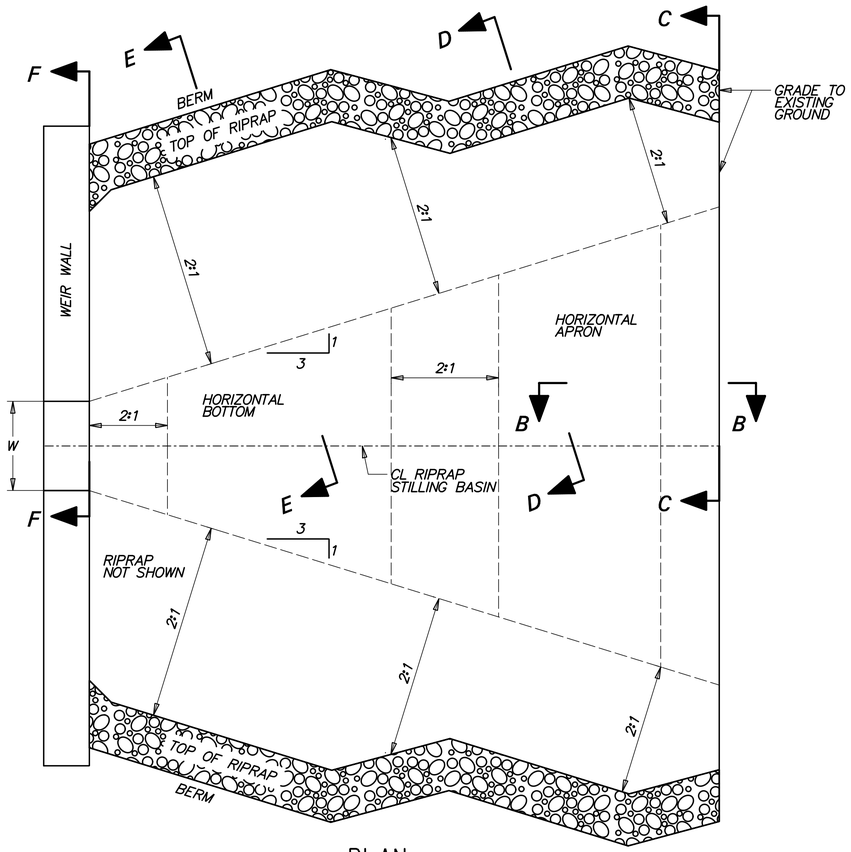

PLAN

SCALE: NONE

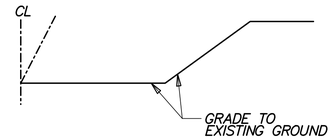

SECTION C-C

SCALE: NONE

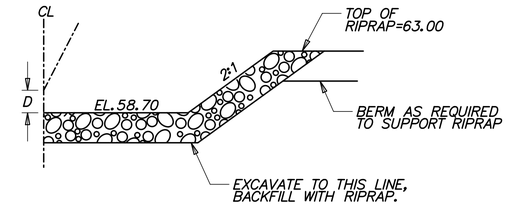

SECTION E-E

SCALE: NONE

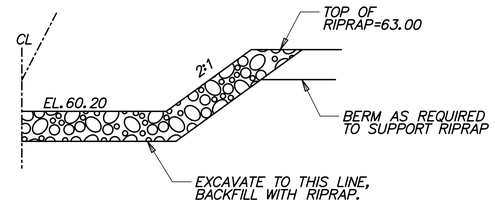

SECTION D-D

SCALE: NONE

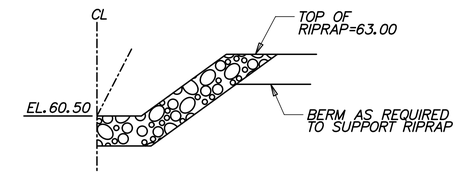

SECTION F-F

SCALE: NONE

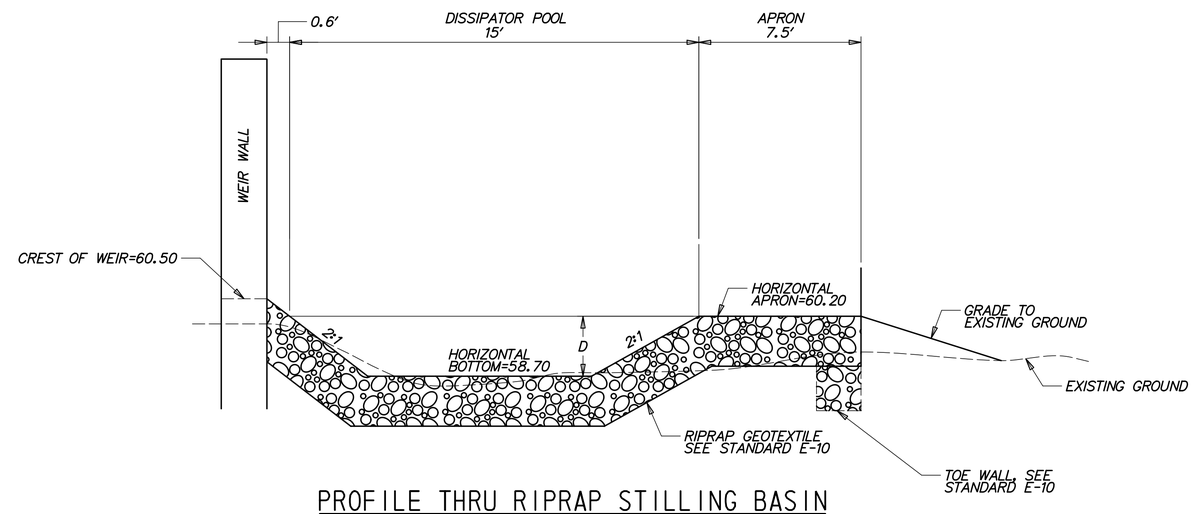

PROFILE THRU RIPRAP STILLING BASIN

SCALE: NONE

DATA

TOP OF V-NOTCH WEIR WIDTH W = 1.55'

DEPTH OF BASIN FROM WEIR CREST D = 1.50'

RIPRAP SIZE (R No.) = R-5 WITH NO. 57 STONE

NOTES:
1. RIPRAP ITEM# 712006.
2. GEOTEXTILES, RIPRAP ITEM# 713003
3. DELAWARE NO. 57 STONE ITEM# 302017
4. SEE STANDARD NO. E-10 FOR RIPRAP DEPTH AND GEOTEXTILE PLACEMENT.

RIPRAP STILLING BASIN

SCALE: NONE

G:\60049040 US301\CIVIL\PLANS\2A\CP\SW-56.DGN

DELAWARE DEPARTMENT OF TRANSPORTATION	ADDENDUMS / REVISIONS	AS SHOWN	US 301 LEVELS ROAD TO SUMMIT BRIDGE ROAD	CONTRACT T200911303	BRIDGE NO.	STORMWATER MANAGEMENT DETAILS BMP 666 (BASIN 7)	SW-56
				COUNTY NEW CASTLE	DESIGNED BY: DB		SHEET NO. 741
					CHECKED BY: JZ		TOTAL SHTS. 1256

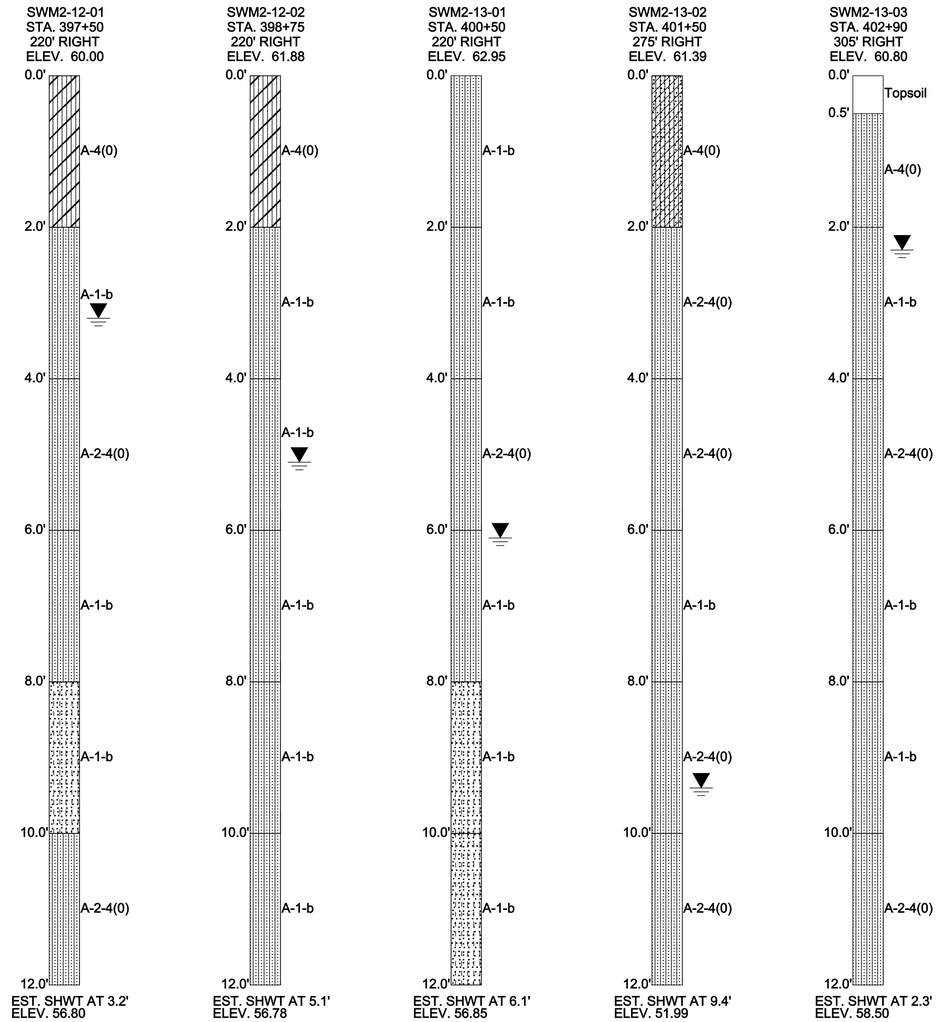

G:\60049040 US301\CIVIL\PLANS\2A\GP\SW-57.DGN

DELAWARE DEPARTMENT OF TRANSPORTATION

ADDENDUMS / REVISIONS

SCALE
0 30 60 90
FEET

US 301
LEVELS ROAD
TO SUMMIT BRIDGE ROAD

CONTRACT	BRIDGE NO.
T200911303	DESIGNED BY: DB
COUNTY	
NEW CASTLE	CHECKED BY: JZ

STORMWATER MANAGEMENT DETAILS
BMP 666 (BASIN 7)

SW-57
SHEET NO.
742
TOTAL SHTS.
1256

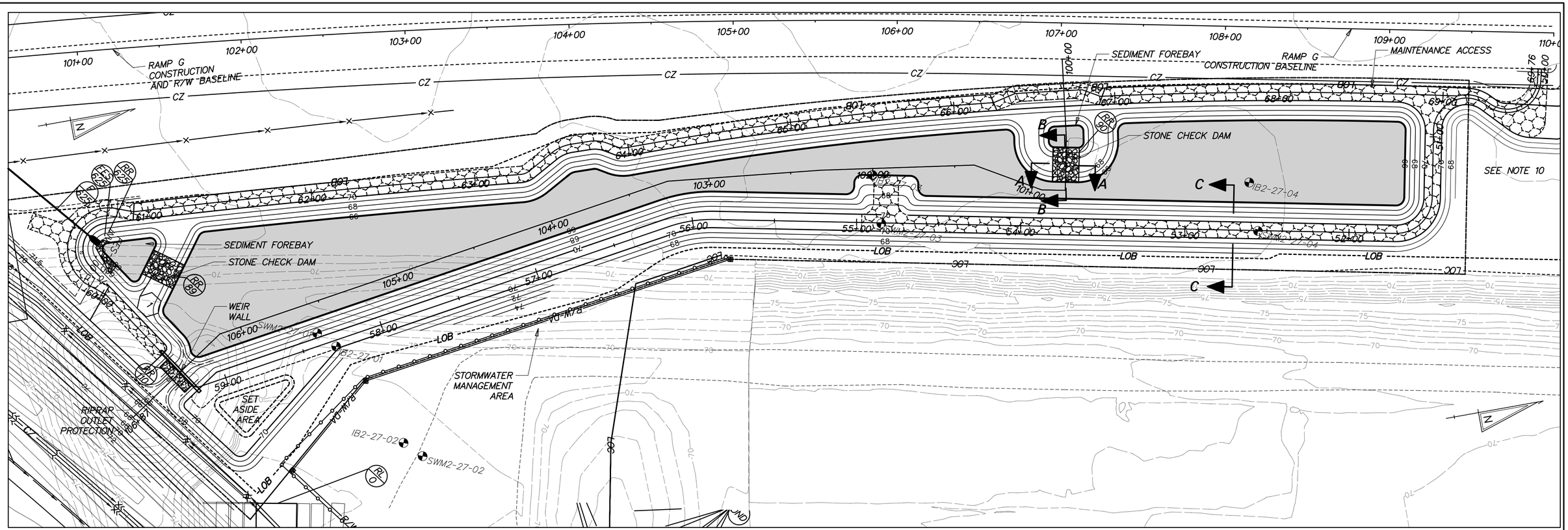

PLAN - BMP 670 (BASIN 9A)

INFILTRATION BASIN CONSTRUCTION SEQUENCE

THE STORMWATER MANAGEMENT BASIN SHALL FUNCTION AS AN INFILTRATION FACILITY AND SHALL BE CONSTRUCTED IN ACCORDANCE WITH THE FOLLOWING SPECIFICATIONS:

SECTION 271 - STORMWATER MANAGEMENT POND
SECTION 272 - POND OUTLET STRUCTURE, CONCRETE

1. PRIOR TO DISTURBANCE OF THE SITE UPSTREAM OF THE BASIN, INSTALL FENCE AROUND THE BASIN AREA TO PREVENT CONSTRUCTION EQUIPMENT AND STOCKPILED MATERIALS FROM ENTERING THE BASIN AREA AND COMPACTING THE SUBGRADE SOILS.

2. CONSTRUCT INFILTRATION BASIN AFTER ALL AREAS DRAINING TO THE BASIN HAVE BEEN PERMANENTLY STABILIZED AND THE ENGINEER HAS APPROVED THE CONSTRUCTION. IF BASIN CONSTRUCTION CANNOT BE DELAYED UNTIL ITS DRAINAGE AREA IS STABILIZED, INSTALL DIVERSION BERMS OR OTHER SUITABLE MEASURES AROUND THE BASIN'S PERIMETER DURING ALL PHASES OF CONSTRUCTION TO DIVERT ALL RUNOFF AND SEDIMENT AWAY FROM THE BASIN. MAINTAIN THESE DIVERSION MEASURES UNTIL ALL CONSTRUCTION WITHIN THE BASIN'S DRAINAGE AREA IS COMPLETED AND THE DRAINAGE AREA STABILIZED.

3. SEE CONSTRUCTION PLANS FOR EROSION AND SEDIMENT CONTROL MEASURES.

4. CONSTRUCT THE INFILTRATION BASIN WITHOUT COMPACTING THE BASIN'S SUBGRADE SOILS. EXCAVATION SHALL BE PERFORMED BY CONSTRUCTION EQUIPMENT PLACED OUTSIDE THE BASIN, WHERE POSSIBLE. ALL EXCAVATION SHALL BE PERFORMED WITH THE LIGHTEST PRACTICAL EXCAVATION EQUIPMENT.

5. CONSTRUCT WEIR WALL, RIPRAP ENERGY DISSIPATER AT END OF PRINCIPAL SPILLWAY AND PARTIAL EMBANKMENT AS NEEDED TO INSTALL WEIR WALL. DE-WATER FOUNDATION AS NEEDED IN ACCORDANCE WITH SECTION 111 AND USE SUMP PIT FOR PUMPING.

6. EXCAVATE THE POND AND COMPLETE THE EMBANKMENT, GRADES AND DETAILS SHOWN IN THE CONSTRUCTION PLANS. DURING EXCAVATION, THE CONTRACTOR SHALL SALVAGE AND STOCKPILE SOILS CLASSIFIED AS CH, CL, SC AND GG PER THE UNIFIED SOIL CLASSIFICATION SYSTEM TO BE USED TO CONSTRUCT EMBANKMENT. THE ABOVE CLASSIFIED SOILS MAY BE OBTAINED FROM ELSEWHERE WITHIN THE PROJECT LIMITS, IF NECESSARY.

7. STABILIZE BASIN EMBANKMENT AND BOTTOM WITH PERMANENT SEEDING.

8. REMOVE EROSION AND SEDIMENT CONTROLS, WATER DIVERSION PRACTICES AND FENCE UPON FINAL STABILIZATION AND APPROVAL FROM INSPECTOR.

9. THE CONTRACTOR SHALL PROVIDE 'AS-BUILT' DRAWINGS OF ALL STORMWATER MANAGEMENT FACILITIES SUCH AS PONDS, INFILTRATION BASINS, BIOFILTRATION SWALES, ETC. 'AS-BUILT' DRAWINGS SHALL SHOW THE ACTUAL FINISHED GROUND CONTOURS, OUTLET STRUCTURE DIMENSIONS AND ELEVATIONS, ETC. AS THEY EXIST AT THE COMPLETION OF THE PROJECT. THESE DRAWINGS SHALL BE SIGNED BY A PROFESSIONAL ENGINEER OR LAND SURVEYOR.

10. TEMPORARY GRADING AND RIPRAP TO BE REMOVED IN FUTURE PHASE OF CONSTRUCTION. EMBANKMENT TO BE GRADED TO FULL HEIGHT.

PLANTING SCHEDULE

PLACE PERMANENT GRASS SEEDING - WET GROUND UP TO ELEVATION 67.00.
PLACE PERMANENT GRASS SEEDING - DRY GROUND ABOVE ELEVATION 67.00.
PLACE TOPSOIL ABOVE BASIN BOTTOM ELEVATION 66.00.

RIPRAP SCHEDULE

NO.	TYPE	AREA (SY)
110	R-5	16
89	R-4	38
90	R-4	38
625	R-4	11

CHECK CONSTRUCTION PLANS FOR SCHEDULE OF RIPRAP OUTSIDE OF THE BASIN AREA.

POND DESIGN SUMMARY

DESIGN STORM	FACILITY INFLOW (CFS)	FACILITY DISCHARGE (CFS)	WATER SURFACE ELEVATION (FT)	STORAGE VOLUME (AC.FT.)
QUALITY STORM (1 YR)	7.04	0.00	66.28	0.212
10 - YEAR	22.15	0.00	67.55	1.239
100 - YEAR	49.11	0.85	68.46	2.110

DRAINAGE AREA TO FACILITY: 6.83 ACRES

MANAGEMENT PROVIDED BY FACILITY: WATER QUALITY BY INFILTRATION OF 1 YEAR STORM RUNOFF, WATER QUANTITY FOR 10 AND 100 YEAR STORMS.

POND QUANTITIES

ITEM NO.	ITEM	QTY.	UNITS.
202000	EXCAVATION AND EMBANKMENT	7991	CY
272501	POND OUTLET STRUCTURE, 11, SPECIAL	1	EACH
302011	DELAWARE NO. 3 STONE	538	TON
302012	DELAWARE NO. 57 STONE	4	TON
712005	R-4 RIPRAP	11	SY
712006	R-5 RIPRAP	16	SY
712020	R-4 RIPRAP	56	TON
713001	GEOTEXTILES, STABILIZATION	3630	SY
713003	GEOTEXTILES, RIPRAP	135	SY
733002	TOPSOILING, 6" DEPTH	12232	SY
734013	PERMANENT GRASS SEEDING, DRY GROUND	11234	SY
734015	PERMANENT GRASS SEEDING, WET GROUND	4288	SY

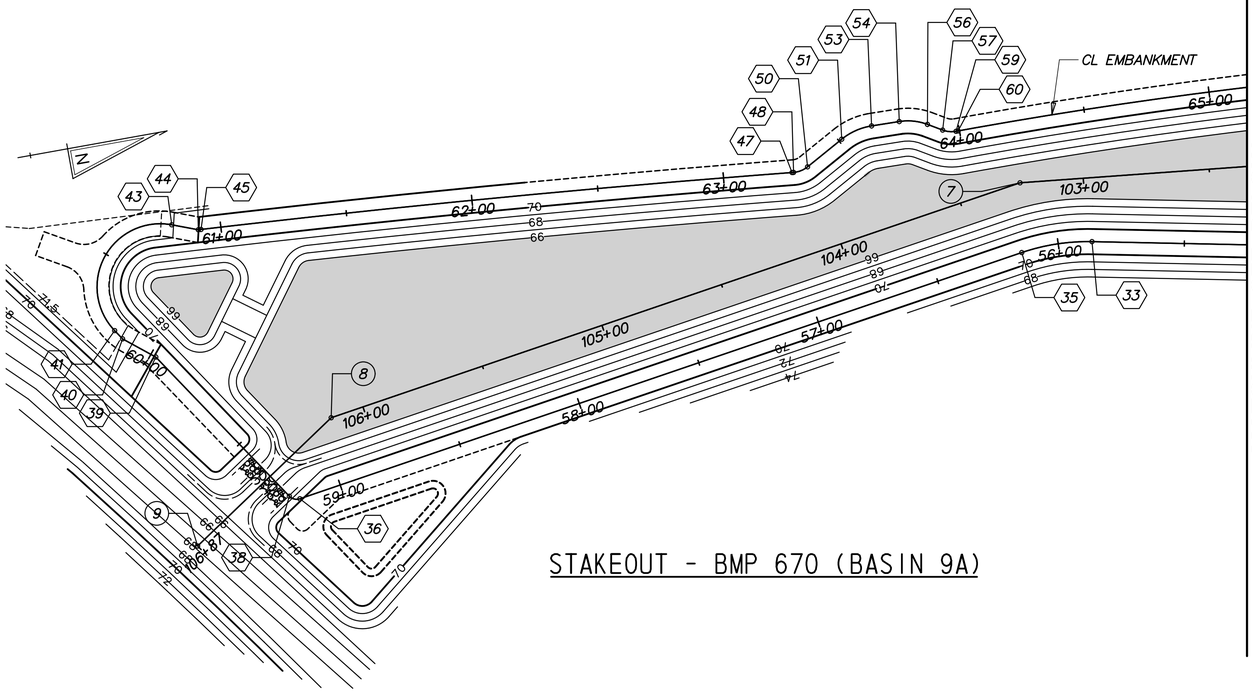

STAKEOUT - BMP 670 (BASIN 9A)

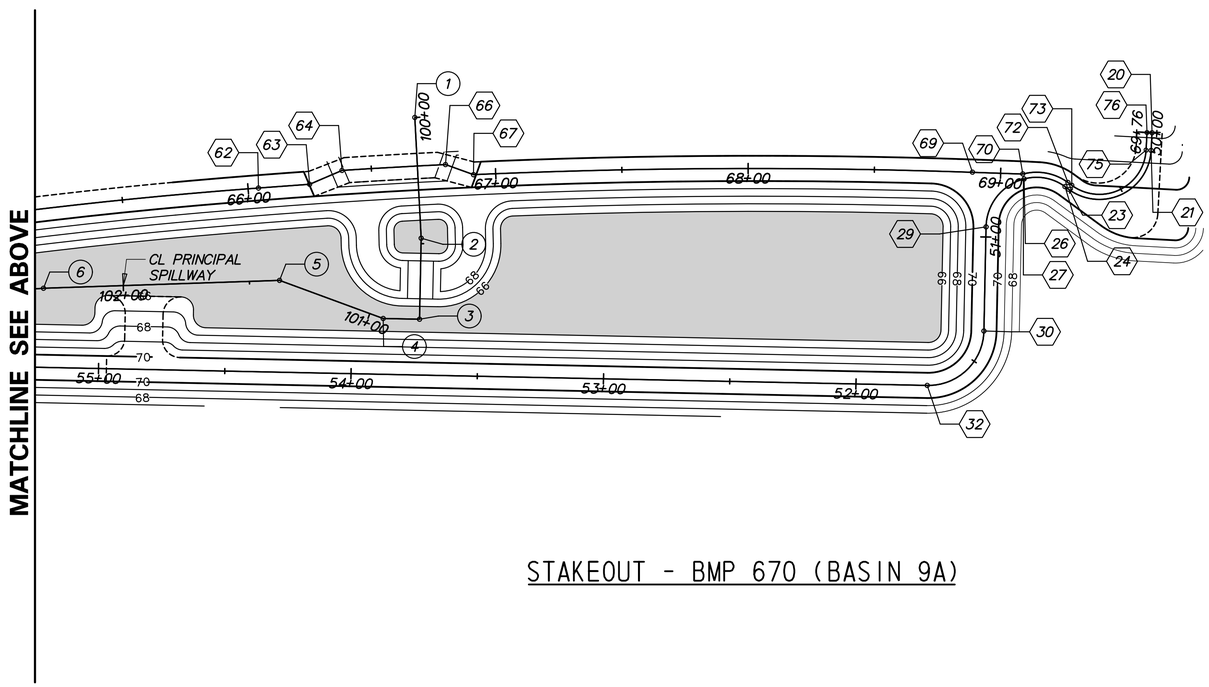

STAKEOUT - BMP 670 (BASIN 9A)

CL EMBANKMENT				
		STATION	NORTHING	EASTING
20	POB	STA. 50+00.00	538062.4072	567128.5293
21	PC	STA. 50+06.98	538060.8078	567135.3213
22	PI	STA. 50+44.88	538052.1192	567172.2184
23	PT	STA. 50+51.05	538025.9979	567144.7490
24	PC	STA. 50+52.93	538024.7053	567143.3897
25	PI	STA. 50+62.06	538018.4114	567136.7709
26	PT	STA. 50+69.96	538009.3113	567137.5523
27	PC	STA. 50+70.25	538009.0208	567137.5772
28	PI	STA. 50+85.25	537994.0745	567138.8605
29	PT	STA. 50+95.99	537991.1227	567153.5686
30	PC	STA. 51+37.22	537983.0111	567193.9872
31	PI	STA. 51+59.22	537978.6822	567215.5571
32	PT	STA. 51+71.77	537957.1123	567211.2282
33	PC	STA. 55+86.59	537550.4100	567129.6068
34	PI	STA. 56+00.87	537536.4067	567126.7965
35	PT	STA. 56+14.86	537522.2867	567128.9450
36	PC	STA. 59+16.87	537223.7111	567174.3776
37	PI	STA. 59+19.42	537221.1918	567174.7610
38	PT	STA. 59+21.41	537219.7797	567172.6397
39	PI	STA. 59+97.76	537177.4702	567109.0841
40	PI	STA. 60+12.76	537165.7942	567099.6655
41	PC	STA. 60+17.31	537163.2731	567095.8783
42	PI	STA. 60+95.18	537120.1198	567031.0552
43	PT	STA. 60+80.32	537192.9413	567058.6464
44	PI	STA. 60+91.01	537202.9387	567062.4343
45	PC	STA. 60+92.10	537204.0297	567062.5012
46	PI	STA. 62+09.68	537321.3843	567069.6929
47	PT	STA. 63+27.22	537438.3467	567081.6776
48	PC	STA. 63+27.83	537438.9520	567081.7396
49	PI	STA. 63+30.95	537442.0558	567082.0576
50	PT	STA. 63+33.88	537444.7897	567080.5543
51	PC	STA. 63+51.28	537460.0433	567072.1666
52	PI	STA. 63+57.98	537465.9132	567068.9389
53	PT	STA. 63+64.37	537472.6104	567069.0785
54	PC	STA. 63+75.47	537483.7017	567069.3098
55	PI	STA. 63+81.27	537489.5015	567069.4307
56	PT	STA. 63+86.81	537494.4876	567072.3957
57	PC	STA. 63+93.25	537500.0176	567075.6841
58	PI	STA. 63+96.01	537502.3904	567077.0951
59	PT	STA. 63+98.63	537505.1510	567077.0889

CL EMBANKMENT				
		STATION	NORTHING	EASTING
60	PC	STA. 63+99.45	537505.9706	567077.0871
61	PI	STA. 65+01.89	537608.4110	567076.8585
62	PT	STA. 66+04.14	537710.2958	567087.5145
63	PI	STA. 66+24.44	537730.4884	567089.6264
64	PC	STA. 66+38.38	537744.0703	567086.4988
65	PI	STA. 66+58.92	537764.4742	567088.8157
66	PT	STA. 66+79.45	537784.8380	567091.4625
67	PC	STA. 66+91.22	537795.0327	567097.3490
68	PI	STA. 67+90.07	537893.0029	567110.5290
69	PT	STA. 68+88.83	537989.6367	567131.3561
70	PC	STA. 69+08.78	538009.1402	567135.5596
71	PI	STA. 69+18.87	538019.1982	567134.6960
72	PT	STA. 69+27.60	538026.1546	567142.0115
73	PC	STA. 69+29.47	538027.4473	567143.3708
74	PI	STA. 69+63.68	538051.0201	567168.1603
75	PT	STA. 69+69.25	538058.8610	567134.8629
76	POE	STA. 69+76.23	538060.4604	567128.0708

CL PRINCIPAL SPILLWAY				
		STATION	NORTHING	EASTING
1	POB	STA. 100+00.00	537776.1411	567070.9579
2	PI	STA. 100+47.87	537770.1809	567118.4504
3	PI	STA. 100+79.95	537763.8683	567149.9052
4	PI	STA. 100+94.34	537749.7532	567147.0725
5	PI	STA. 101+38.06	537712.0345	567124.9745
6	PI	STA. 102+31.59	537619.4811	567111.5193
7	PI	STA. 103+25.11	537526.4760	567101.6398
8	PI	STA. 106+13.30	537241.5737	567144.9918
9	POE	STA. 106+86.61	537180.5562	567185.6298

G:\60049040 US301\CIVIL\PLANS\2A\CP\SW-59.DGN

DELAWARE DEPARTMENT OF TRANSPORTATION

ADDENDUMS / REVISIONS

SCALE 0 30 60 90 FEET

US 301 LEVELS ROAD TO SUMMIT BRIDGE ROAD

CONTRACT T200911303
COUNTY NEW CASTLE
BRIDGE NO.
DESIGNED BY: DB
CHECKED BY: JZ

STORMWATER MANAGEMENT DETAILS BMP 670 (BASIN 9A)

SW-59
SHEET NO. 744
TOTAL SHTS. 1256

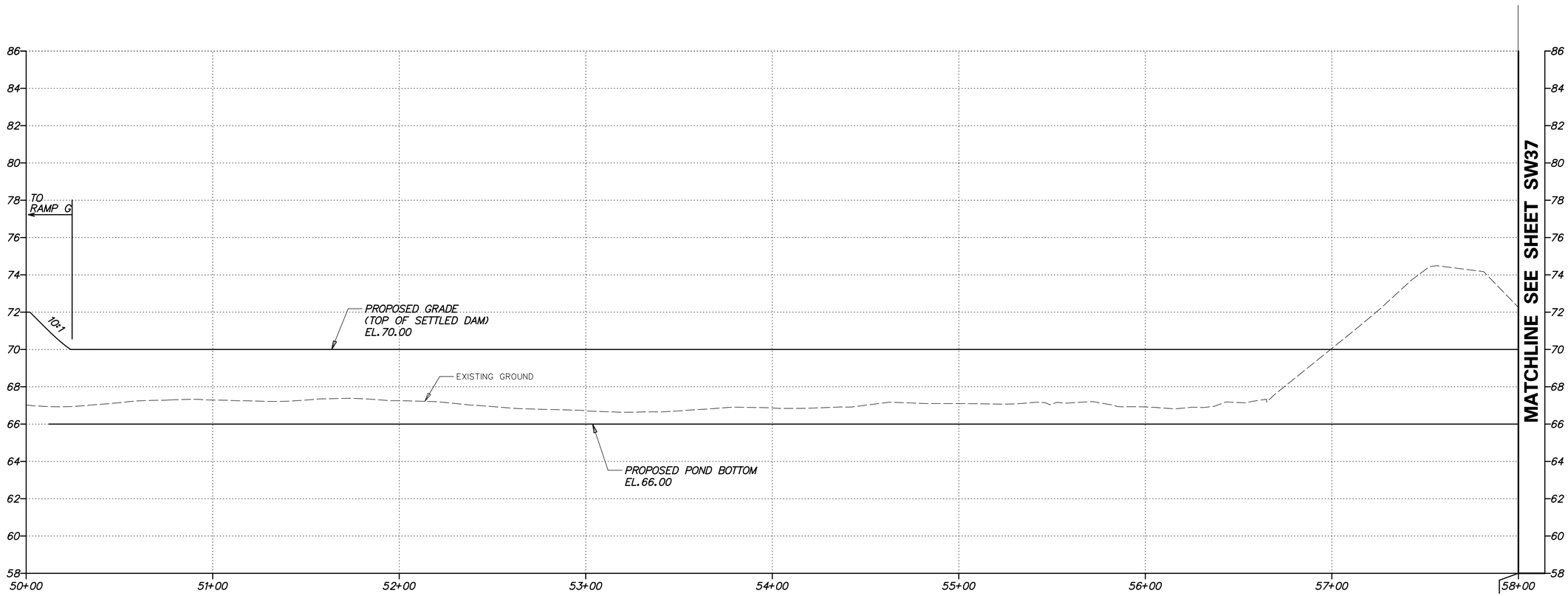

EMBANKMENT PROFILE FOR BMP 670 (BASIN 9A)

HORIZONTAL SCALE: 1"=30'
0 30 60 90
FEET

VERTICAL SCALE: 1"=3'
0 3 6 9
FEET

G:\60049040 US301\CIVIL\PLANS\2A\CP\SW-60.DGN

DELAWARE DEPARTMENT OF TRANSPORTATION	ADDENDUMS / REVISIONS	AS SHOWN	US 301 LEVELS ROAD TO SUMMIT BRIDGE ROAD	CONTRACT T200911303	BRIDGE NO.	STORMWATER MANAGEMENT DETAILS BMP 670 (BASIN 9A)	SW-60
				COUNTY NEW CASTLE	DESIGNED BY: DB		SHEET NO. 745
					CHECKED BY: JZ		TOTAL SHTS. 1256

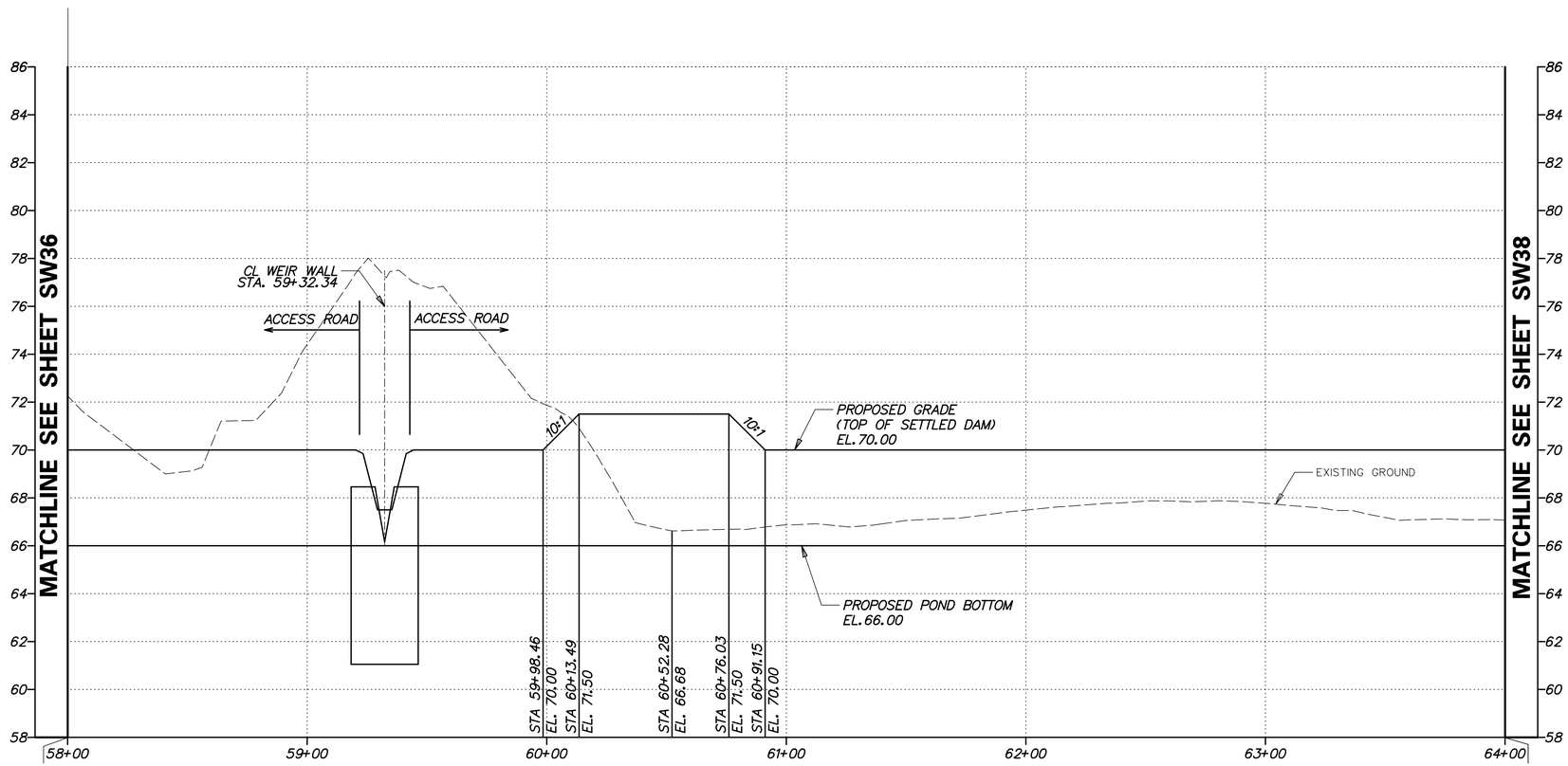

EMBANKMENT PROFILE FOR BMP 670 (BASIN 9A)

HORIZONTAL SCALE: 1"=30'
0 30 60 90
FEET

VERTICAL SCALE: 1"=3'
0 3 6 9
FEET

G:\60049040 US301\CIVIL\PLANS\2A\CP\SW-61.DGN

DELAWARE DEPARTMENT OF TRANSPORTATION	ADDENDUMS / REVISIONS	AS SHOWN	US 301 LEVELS ROAD TO SUMMIT BRIDGE ROAD	CONTRACT T200911303	BRIDGE NO.	STORMWATER MANAGEMENT DETAILS BMP 670 (BASIN 9A)	SW-61
				COUNTY NEW CASTLE	DESIGNED BY: DB		SHEET NO. 746
					CHECKED BY: JZ		TOTAL SHTS. 1256

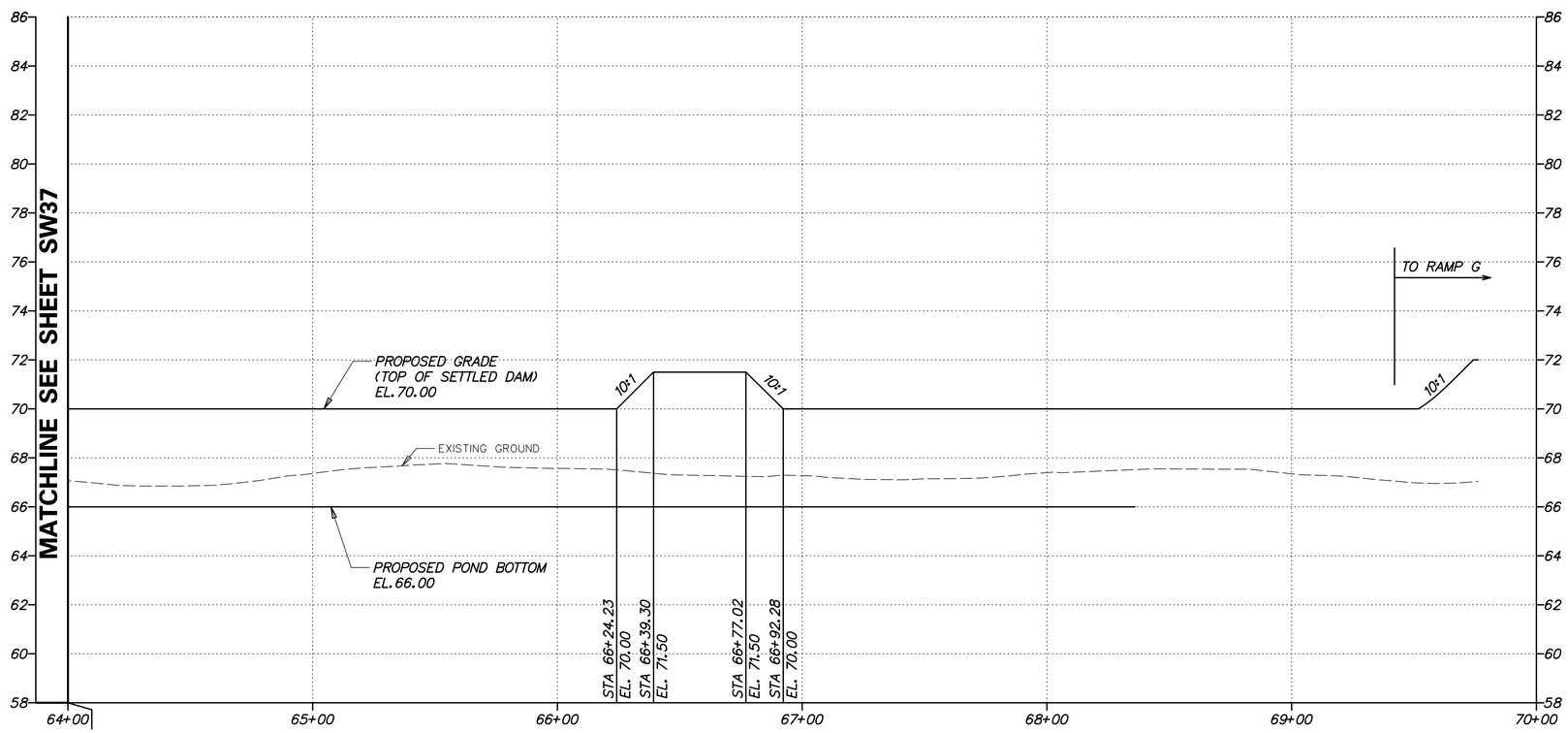

EMBANKMENT PROFILE FOR BMP 670 (BASIN 9A)

HORIZONTAL SCALE: 1"=30'
0 30 60 90
FEET

VERTICAL SCALE: 1"=3'
0 3 6 9
FEET

G:\60049040 US301\CIVIL\PLANS\2A\GP\SW-62.DGN

DELAWARE DEPARTMENT OF TRANSPORTATION	ADDENDUMS / REVISIONS	AS SHOWN	US 301 LEVELS ROAD TO SUMMIT BRIDGE ROAD	CONTRACT T200911303	BRIDGE NO.	STORMWATER MANAGEMENT DETAILS BMP 670 (BASIN 9A)	SW-62
				COUNTY NEW CASTLE	DESIGNED BY: DB		SHEET NO. 747
					CHECKED BY: JZ		TOTAL SHTS. 1256

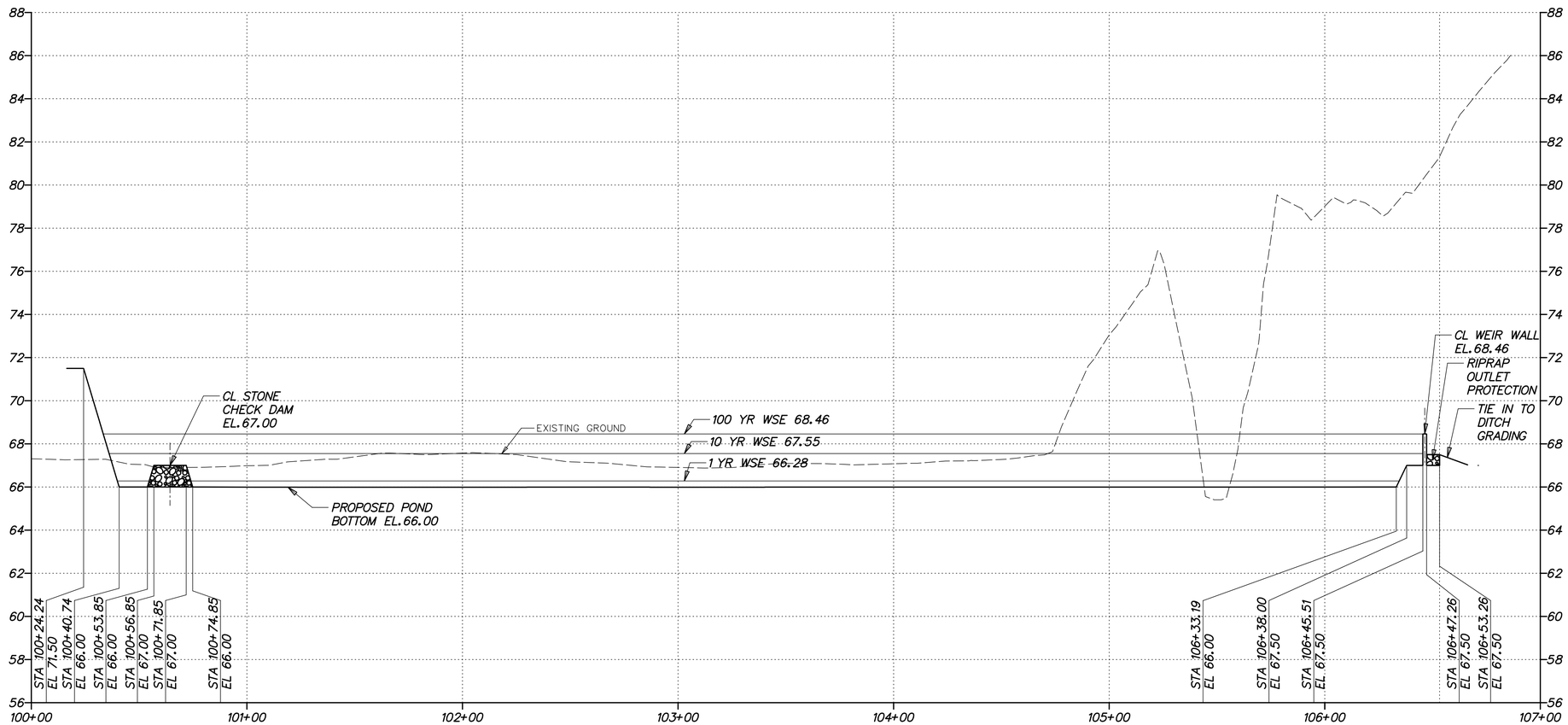

SPILLWAY PROFILE - BMP 670 (BASIN 9A)

HORIZONTAL SCALE: 1"=30'
0 30 60 90
FEET

VERTICAL SCALE: 1"=3'
0 3 6 9
FEET

G:\60049040 US301\CIVIL\PLANS\2A\CP\SW-63.DGN

DELAWARE DEPARTMENT OF TRANSPORTATION	ADDENDUMS / REVISIONS	AS SHOWN	US 301 LEVELS ROAD TO SUMMIT BRIDGE ROAD	CONTRACT T200911303	BRIDGE NO.	STORMWATER MANAGEMENT DETAILS BMP 670 (BASIN 9A)	SW-63
				COUNTY NEW CASTLE	DESIGNED BY: DB		SHEET NO. 748
					CHECKED BY: JZ		TOTAL SHTS. 1256

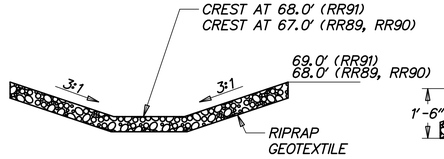

SECTION A-A FROM BASIN PLAN

SCALE: NONE

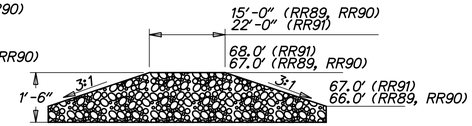

SECTION B-B FROM BASIN PLAN

SCALE: NONE

STONE CHECK DAM

SCALE: NONE

NOTES:
1. RIPRAP ITEM# 712020
2. GEOTEXTILE, RIPRAP ITEM# 713003
3. SEE STANDARD NO. E-10 FOR GEOTEXTILE PLACEMENT.

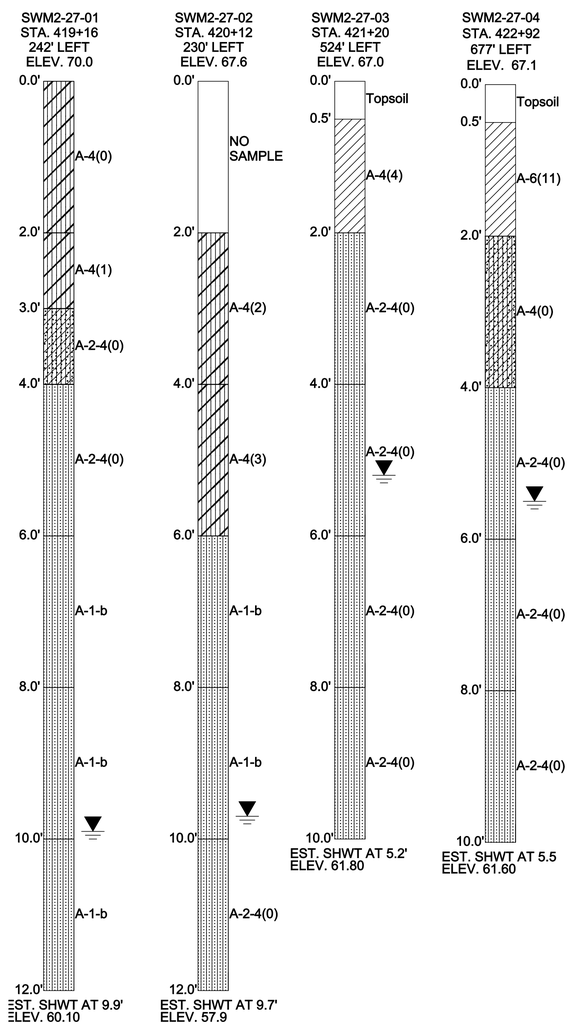

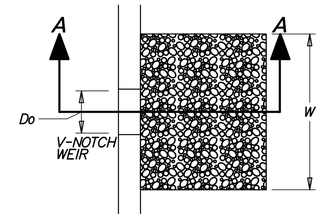

PLAN

SCALE: NONE

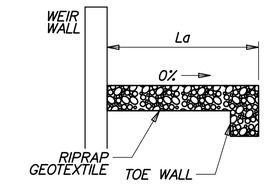

SECTION A-A

SCALE: NONE

DATA

WEIR TOP WIDTH (Do) = 0.70'
APRON LENGTH (La) = 6.0'
APRON WIDTH (W) = 18.0'
RIPRAP SIZE (R No.) = R-5 WITH NO.57 STONE

BASIN RIPRAP OUTLET PROTECTION

SCALE: NONE

NOTES:
1. RIPRAP ITEM# 712006.
2. GEOTEXTILES, RIPRAP ITEM# 713003
3. DELAWARE NO.57 STONE ITEM# 302012
4. SEE STANDARD NO. E-10 FOR RIPRAP DEPTH AND GEOTEXTILE PLACEMENT.
5. DEPRESS CENTERLINE OF APRON SLIGHTLY TO PREVENT EDGE CUTTING.

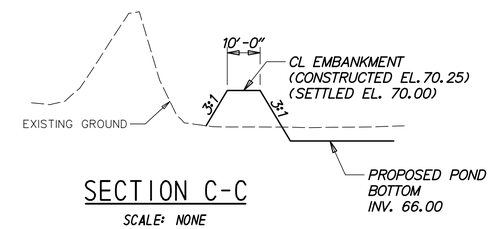

SECTION C-C

SCALE: NONE

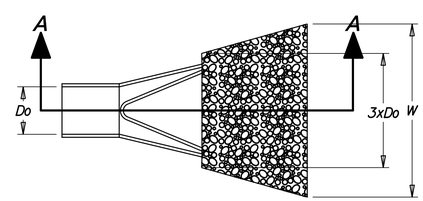

PLAN

SCALE: NONE

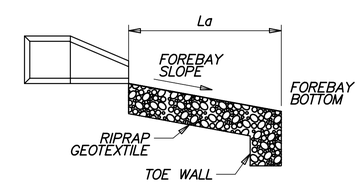

SECTION A-A

SCALE: NONE

DATA

PIPE DIAMETER (Do)
APRON LENGTH (La)
APRON WIDTH (W)
RIPRAP SIZE (R No.)

FES ID	Do	La	W	R No.
625	2.0'	3.0'	19.0'	R-4

FOREBAY RIPRAP OUTLET PROTECTION

SCALE: NONE

NOTES:
1. RIPRAP ITEM# 712005.
2. GEOTEXTILES, RIPRAP ITEM# 713003
3. SEE STANDARD NO. E-10 FOR RIPRAP DEPTH AND GEOTEXTILE PLACEMENT.
4. DEPRESS CENTERLINE OF APRON SLIGHTLY TO PREVENT EDGE CUTTING.

G:\60049040 US301\CIVIL\PLANS\2A\CP\SW-64.DGN

DELAWARE DEPARTMENT OF TRANSPORTATION	ADDENDUMS / REVISIONS	AS SHOWN	US 301 LEVELS ROAD TO SUMMIT BRIDGE ROAD	CONTRACT T200911303 / COUNTY NEW CASTLE	BRIDGE NO. / DESIGNED BY: DB / CHECKED BY: JZ	STORMWATER MANAGEMENT DETAILS BMP 670 (BASIN 9A)

SW-64
SHEET NO. 749
TOTAL SHTS. 1256

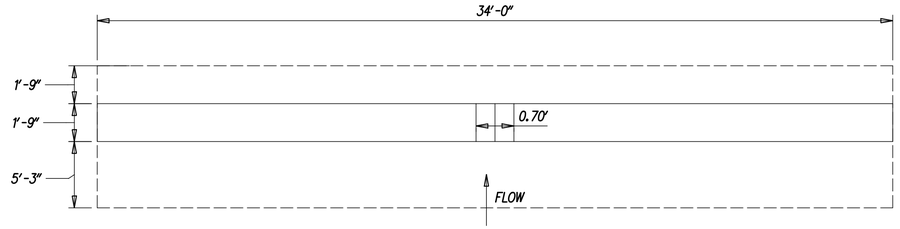

WEIR WALL PLAN

SCALE: NONE

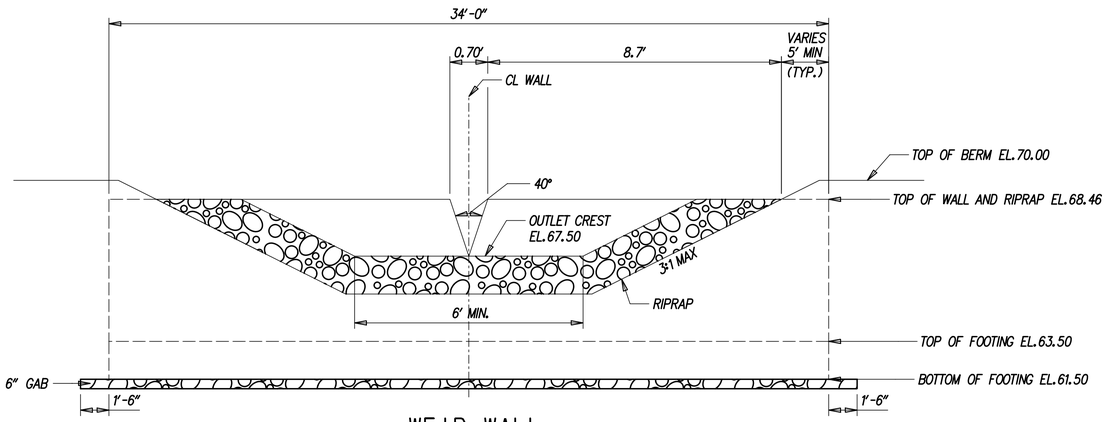

WEIR WALL EXTERIOR ELEVATION WITH RIPRAP APRON

SCALE: NONE

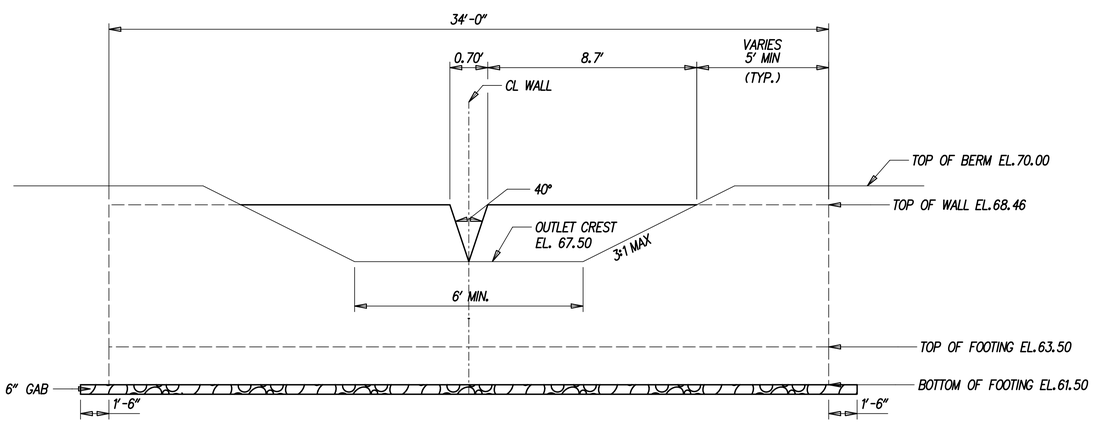

WEIR WALL INTERIOR ELEVATION

SCALE: NONE

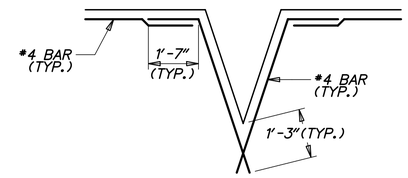

OPENING DETAILS

SCALE: NONE

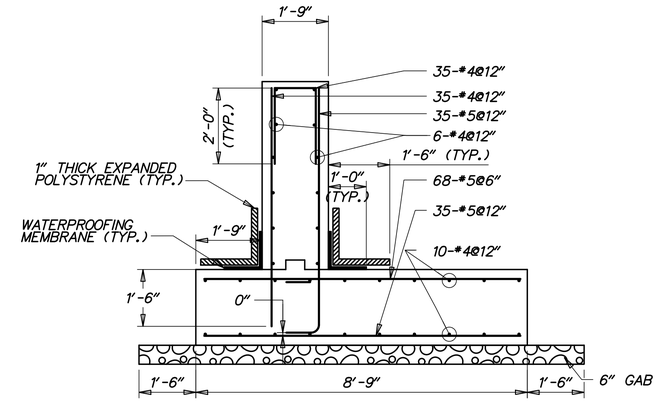

WEIR WALL SECTION

SCALE: 1/2"=1'-0"

GENERAL NOTES

1. DESIGN SPECIFICATIONS:

   AASHTO LRFD BRIDGE DESIGN SPECIFICATIONS, 4TH EDITION, 2007, INCLUDING 2008 AND 2009 INTERIM REVISIONS, AND AS SUPPLEMENTED BY DELAWARE DEPARTMENT OF TRANSPORTATION BRIDGE DESIGN MANUAL, MAY 2005, INCLUDING LATEST REVISIONS.

   PROVIDE MATERIALS AND PERFORM WORK IN ACCORDANCE WITH THE DELAWARE DEPARTMENT OF TRANSPORTATION STANDARD SPECIFICATIONS AND CONSTRUCTION DETAILS, AASHTO/AWS D1.5M/D1.5 BRIDGE WELDING CODE, AND CONTRACT SPECIAL PROVISIONS.

2. LOADING:

   UNIT WEIGHTS OF MATERIALS SHALL BE IN ACCORDANCE WITH THE DELAWARE DESIGN MANUAL.

3. PORTLAND CEMENT CONCRETE:

   PORTLAND CEMENT CONCRETE FOR CAST-IN-PLACE ELEMENTS SHALL BE AS FOLLOWS:
   (28 DAY COMPRESSIVE STRENGTH)
   (CLASS B, F'c=3000 PSI) - WEIR WALL FOOTING
   (CLASS A, F'c=4500 PSI) - WEIR WALL STEM

   WEIR WALLS MUST BE CAST-IN-PLACE.

   MIX REQUIREMENTS SHALL CONFORM TO SECTION 812 OF THE DELAWARE DEPARTMENT OF TRANSPORTATION STANDARD SPECIFICATIONS.

   ALL EXPOSED CORNERS OF CONCRETE SHALL BE CHAMFERED WITH ¾" X ¾" MILLED CHAMFER STRIPS EXCEPT ON UNEXPOSED FOOTINGS.

4. BAR REINFORCEMENT:

   REINFORCING STEEL SHALL CONFORM TO AASHTO M31 (ASTM A615), GRADE 60 AND IS TO BE EPOXY COATED. FUSION-BONDED EPOXY COATED REINFORCING STEEL SHALL CONFORM TO AASHTO M284 (ASTM D3963).

   PROVIDE 3" CONCRETE COVER ON REINFORCEMENT BARS, EXCEPT AS NOTED.

   LAP LENGTH OF #4 BARS TO BE 3'-0". STAGGER SPLICE LOCATIONS.

   DO NOT WELD GRADE 60 REINFORCING STEEL.

5. CONSTRUCTION JOINTS:

   KEYED CONSTRUCTION JOINTS SHALL BE 2" x 4" OR AS NOTED.

6. WATERPROOFING MEMBRANE:

   ADHESIVE BACKED WATERPROOFING MEMBRANE IS TO BE USED. SPLICING OF THE MEMBRANE IS PROHIBITED.

7. REFER TO SPECIFICATION SECTION 272501 FOR CONSTRUCTION SEQUENCE.

8. GAB IS INCIDENTAL TO WALL CONSTRUCTION.

G:\60049040 US301\CIVIL\PLANS\2A\CP\SW-65.DGN

DELAWARE DEPARTMENT OF TRANSPORTATION	ADDENDUMS / REVISIONS	AS SHOWN	US 301 LEVELS ROAD TO SUMMIT BRIDGE ROAD	CONTRACT T200911303	BRIDGE NO.	STORMWATER MANAGEMENT DETAILS BMP 670 (BASIN 9A)	SW-65
				COUNTY NEW CASTLE	DESIGNED BY: DB		SHEET NO. 750
					CHECKED BY: JZ		TOTAL SHTS. 1256

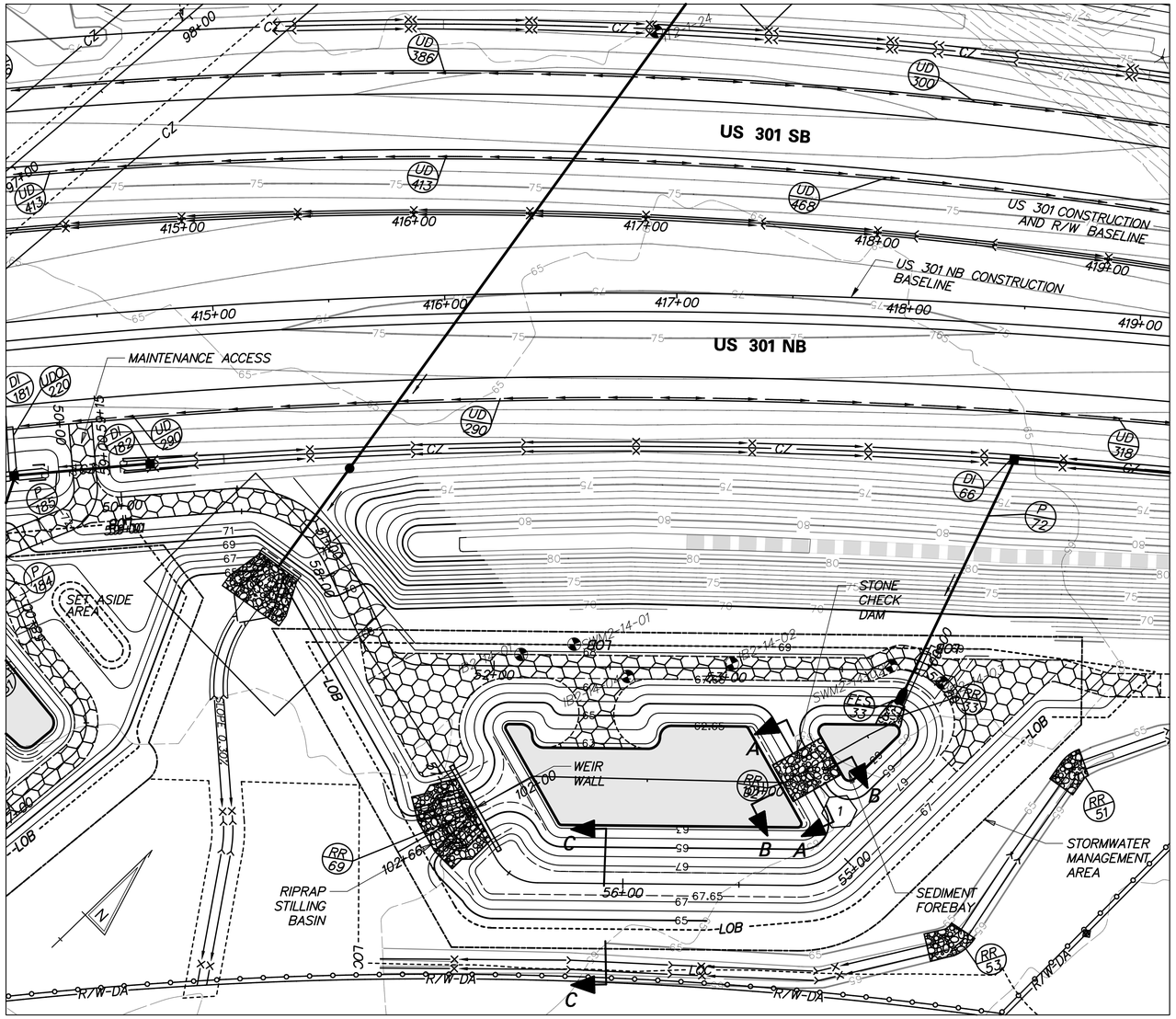

PLAN - BMP 671 (BASIN 9B)

POND DESIGN SUMMARY				
DESIGN STORM	FACILITY INFLOW (CFS)	FACILITY DISCHARGE (CFS)	WATER SURFACE ELEVATION (FT)	STORAGE VOLUME (AC.FT.)
QUALITY STORM (1 YR)	4.83	0.00	63.55	0.112
10 - YEAR	14.17	1.02	65.24	0.420
100 - YEAR	30.00	8.54	66.64	0.788

DRAINAGE AREA TO FACILITY: 3.85 ACRES

MANAGEMENT PROVIDED BY FACILITY: WATER QUALITY BY INFILTRATION OF 1 YEAR STORM RUNOFF, WATER QUANTITY FOR 10 AND 100 YEAR STORMS.

RIPRAP SCHEDULE

NO.	TYPE	AREA (SY)
33	R-4	11
69	R-5	105
92	R-4	48

CHECK CONSTRUCTION PLANS FOR SCHEDULE OF RIPRAP OUTSIDE OF THE BASIN AREA.

INFILTRATION BASIN CONSTRUCTION SEQUENCE

THE STORMWATER MANAGEMENT BASIN SHALL FUNCTION AS AN INFILTRATION FACILITY AND SHALL BE CONSTRUCTED IN ACCORDANCE WITH THE FOLLOWING SPECIFICATIONS:

SECTION 271 - STORMWATER MANAGEMENT POND
SECTION 272 - POND OUTLET STRUCTURE, CONCRETE

1. PRIOR TO DISTURBANCE OF THE SITE UPSTREAM OF THE BASIN, INSTALL FENCE AROUND THE BASIN AREA TO PREVENT CONSTRUCTION EQUIPMENT AND STOCKPILED MATERIALS FROM ENTERING THE BASIN AREA AND COMPACTING THE SUBGRADE SOILS.
2. CONSTRUCT INFILTRATION BASIN AFTER ALL AREAS DRAINING TO THE BASIN HAVE BEEN PERMANENTLY STABILIZED AND THE ENGINEER HAS APPROVED THE CONSTRUCTION. IF BASIN CONSTRUCTION CANNOT BE DELAYED UNTIL ITS DRAINAGE AREA IS STABILIZED, INSTALL DIVERSION BERMS OR OTHER SUITABLE MEASURES AROUND THE BASIN'S PERIMETER DURING ALL PHASES OF CONSTRUCTION TO DIVERT ALL RUNOFF AND SEDIMENT AWAY FROM THE BASIN. MAINTAIN THESE DIVERSION MEASURES UNTIL ALL CONSTRUCTION WITHIN THE BASIN'S DRAINAGE AREA IS COMPLETED AND THE DRAINAGE AREA STABILIZED.
3. SEE CONSTRUCTION PLANS FOR EROSION AND SEDIMENT CONTROL MEASURES.
4. CONSTRUCT THE INFILTRATION BASIN WITHOUT COMPACTING THE BASIN'S SUBGRADE SOILS. EXCAVATION SHALL BE PERFORMED BY CONSTRUCTION EQUIPMENT PLACED OUTSIDE THE BASIN, WHERE POSSIBLE. ALL EXCAVATION SHALL BE PERFORMED WITH THE LIGHTEST PRACTICAL EXCAVATION EQUIPMENT.
5. CONSTRUCT WEIR WALL, RIPRAP ENERGY DISSIPATER AT END OF PRINCIPAL SPILLWAY AND PARTIAL EMBANKMENT AS NEEDED TO INSTALL WEIR WALL. DE-WATER FOUNDATION AS NEEDED IN ACCORDANCE WITH SECTION 111 AND USE SUMP PIT FOR PUMPING.
6. EXCAVATE THE POND AND COMPLETE THE EMBANKMENT, GRADES AND DETAILS SHOWN IN THE CONSTRUCTION PLANS. DURING EXCAVATION, THE CONTRACTOR SHALL SALVAGE AND STOCKPILE SOILS CLASSIFIED AS CH, CL, SC AND GG PER THE UNIFIED SOIL CLASSIFICATION SYSTEM TO BE USED TO CONSTRUCT EMBANKMENT. THE ABOVE CLASSIFIED SOILS MAY BE OBTAINED FROM ELSEWHERE WITHIN THE PROJECT LIMITS, IF NECESSARY.
7. STABILIZE BASIN EMBANKMENT AND BOTTOM WITH PERMANENT SEEDING.
8. REMOVE EROSION AND SEDIMENT CONTROLS, WATER DIVERSION PRACTICES AND FENCE UPON FINAL STABILIZATION AND APPROVAL FROM INSPECTOR.
9. THE CONTRACTOR SHALL PROVIDE 'AS-BUILT' DRAWINGS OF ALL STORMWATER MANAGEMENT FACILITIES SUCH AS PONDS, INFILTRATION BASINS, BIOFILTRATION SWALES, ETC. 'AS-BUILT' DRAWINGS SHALL SHOW THE ACTUAL FINISHED GROUND CONTOURS, OUTLET STRUCTURE DIMENSIONS AND ELEVATIONS, ETC. AS THEY EXIST AT THE COMPLETION OF THE PROJECT. THESE DRAWINGS SHALL BE SIGNED BY A PROFESSIONAL ENGINEER OR LAND SURVEYOR.

PLANTING SCHEDULE

PLACE PERMANENT GRASS SEEDING - WET GROUND UP TO ELEVATION 63.65.
PLACE PERMANENT GRASS SEEDING - DRY GROUND ABOVE ELEVATION 63.65.
PLACE TOPSOIL ABOVE BASIN BOTTOM ELEVATION 62.65.

POND QUANTITIES			
ITEM NO.	ITEM	QTY.	UNITS.
202000	EXCAVATION AND EMBANKMENT	1758	CY
272501	POND OUTLET STRUCTURE, 12, SPECIAL	1	EACH
302011	DELAWARE NO. 3 STONE	254	TON
302012	DELAWARE NO. 57 STONE	25	TON
712005	R-4 RIPRAP	11	SY
712006	R-5 RIPRAP	105	SY
712020	R-4 RIPRAP	34	TON
713001	GEOTEXTILES, STABILIZATION	1694	SY
713003	GEOTEXTILES, RIPRAP	202	SY
733002	TOPSOILING, 6" DEPTH	5816	SY
734013	PERMANENT GRASS SEEDING, DRY GROUND	5575	SY
734015	PERMANENT GRASS SEEDING, WET GROUND	696	SY

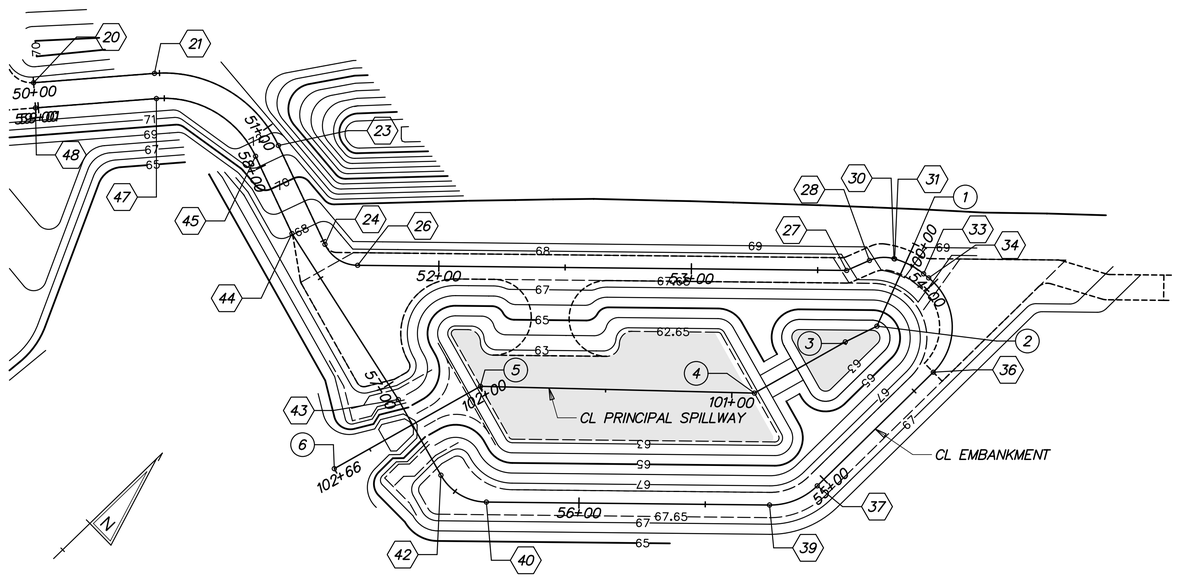

STAKEOUT - BMP 671 (BASIN 9B)

CL PRINCIPAL SPILLWAY				
	STATION		NORTHING	EASTING
1	POB	STA. 100+00.00	536927.7913	567355.1840
2	PI	STA. 100+35.76	536894.5140	567368.2814
3	PI	STA. 100+49.77	536881.1680	567364.0277
4	PI	STA. 100+91.07	536841.2281	567353.5286
5	PI	STA. 101+99.59	536765.2259	567276.0608
6	POE	STA. 102+65.99	536701.0060	567259.1792

CL EMBANKMENT				
	STATION		NORTHING	EASTING
20	POB	STA. 50+00.00	536721.9405	567066.5934
21	PC	STA. 50+48.00	536758.8587	567097.2638
22	PI	STA. 50+82.49	536785.3875	567119.3030
23	PT	STA. 51+08.38	536774.2083	567151.9301
24	PC	STA. 51+51.64	536760.1874	567192.8512
25	PI	STA. 51+60.71	536757.2454	567201.4378
26	PT	STA. 51+67.85	536763.6938	567207.8254
27	PI	STA. 53+61.47	536901.2534	567344.0865
28	PC	STA. 53+71.32	536910.4787	567347.5257
29	PI	STA. 53+76.50	536915.3296	567349.3340
30	PT	STA. 53+81.26	536917.9383	567353.8056
31	PC	STA. 53+81.54	536918.0799	567354.0484
32	PI	STA. 53+88.12	536921.3934	567359.7281
33	PT	STA. 53+94.51	536922.1987	567366.2542
34	PC	STA. 53+97.12	536922.5176	567368.8381
35	PI	STA. 54+25.26	536925.9640	567396.7662
36	PT	STA. 54+39.34	536897.8244	567396.8997
37	PC	STA. 55+03.65	536833.5142	567397.2047
38	PI	STA. 55+14.67	536822.4963	567397.2569
39	PT	STA. 55+24.54	536814.6684	567389.5030
40	PC	STA. 56+36.67	536735.0078	567310.5944
41	PI	STA. 56+48.74	536726.4289	567302.0965
42	PT	STA. 56+58.57	536729.4998	567290.4183
43	PI	STA. 56+92.93	536738.2378	567257.1893
44	PI	STA. 57+70.98	536753.7811	567180.6972
45	PC	STA. 58+04.82	536764.7482	567148.6887
46	PI	STA. 58+32.41	536773.6915	567122.5871
47	PT	STA. 58+53.13	536752.4685	567104.9557
48	POE	STA. 59+01.12	536715.5503	567074.2853

G:\60049040 US301\CIVIL\PLANS\2A\CP\SW-67.DGN

DELAWARE DEPARTMENT OF TRANSPORTATION

ADDENDUMS / REVISIONS

SCALE 0 30 60 90 FEET

US 301 LEVELS ROAD TO SUMMIT BRIDGE ROAD

CONTRACT T200911303
COUNTY NEW CASTLE
BRIDGE NO.
DESIGNED BY: DB
CHECKED BY: JZ

STORMWATER MANAGEMENT DETAILS BMP 671 (BASIN 9B)

SW-67
SHEET NO. 752
TOTAL SHTS. 1256

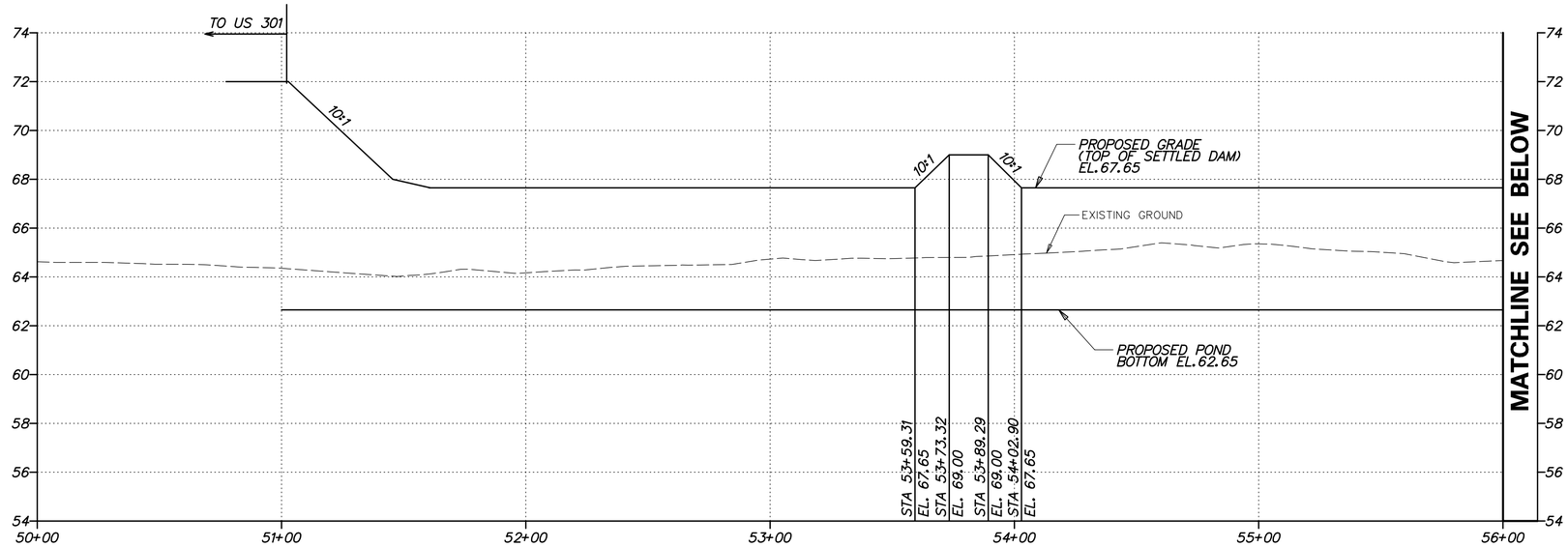

EMBANKMENT PROFILE FOR BMP 671 (BASIN 9B)

HORIZONTAL SCALE: 1"=30'
0 30 60 90
FEET

VERTICAL SCALE: 1"=3'
0 3 6 9
FEET

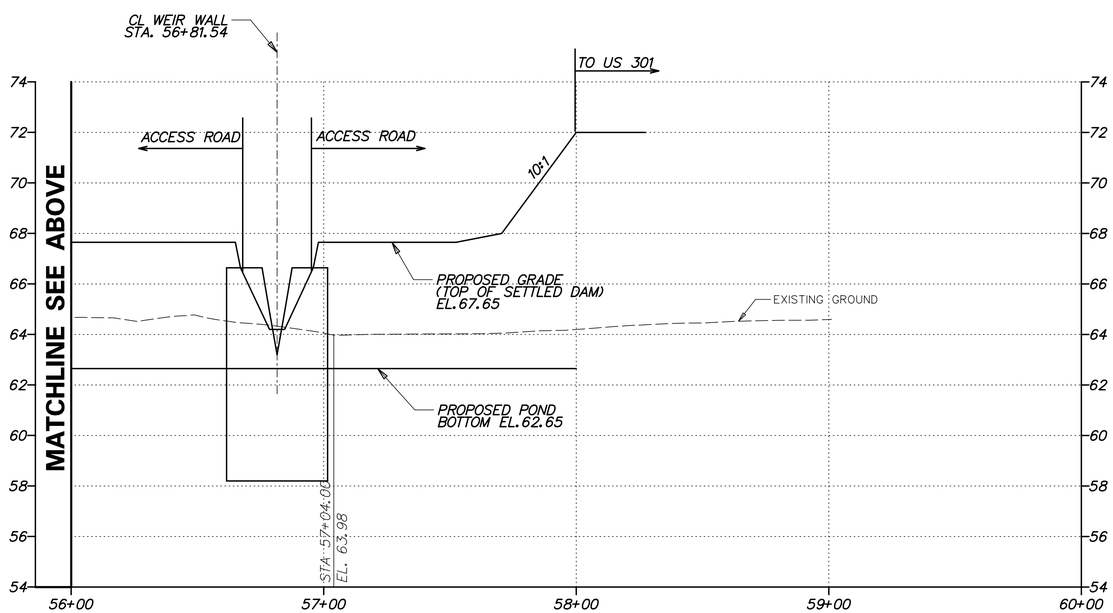

EMBANKMENT PROFILE FOR BMP 671 (BASIN 9B)

HORIZONTAL SCALE: 1"=30'
0 30 60 90
FEET

VERTICAL SCALE: 1"=3'
0 3 6 9
FEET

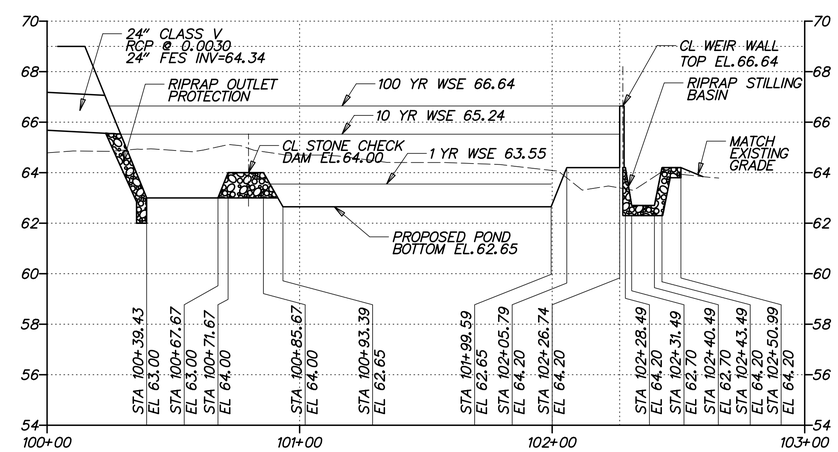

SPILLWAY PROFILE - BMP 671 (BASIN 9B)

HORIZONTAL SCALE: 1"=30'
0 30 60 90
FEET

VERTICAL SCALE: 1"=3'
0 3 6 9
FEET

G:\60049040 US301\CIVIL\PLANS\2A\CP\SW-68.DGN

DELAWARE DEPARTMENT OF TRANSPORTATION	ADDENDUMS / REVISIONS	AS SHOWN	US 301 LEVELS ROAD TO SUMMIT BRIDGE ROAD	CONTRACT T200911303	BRIDGE NO.	STORMWATER MANAGEMENT DETAILS BMP 671 (BASIN 9B)	SW-68
				COUNTY NEW CASTLE	DESIGNED BY: DB		SHEET NO. 753
					CHECKED BY: JZ		TOTAL SHTS. 1256

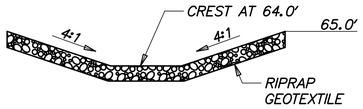

SECTION A-A FROM BASIN PLAN

SCALE: NONE

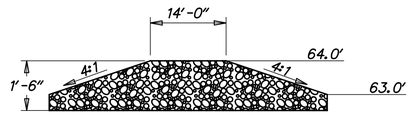

SECTION B-B FROM BASIN PLAN

SCALE: NONE

STONE CHECK DAM

SCALE: NONE

NOTES:
1. RIPRAP ITEM# 712020
2. GEOTEXTILE, RIPRAP ITEM# 713003
3. SEE STANDARD NO. E-10 FOR GEOTEXTILE PLACEMENT.

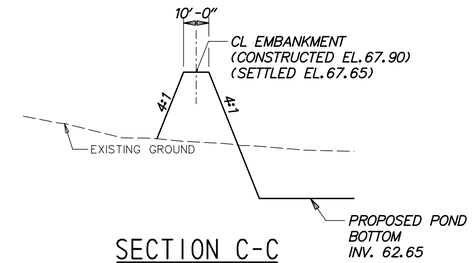

SECTION C-C

SCALE: NONE

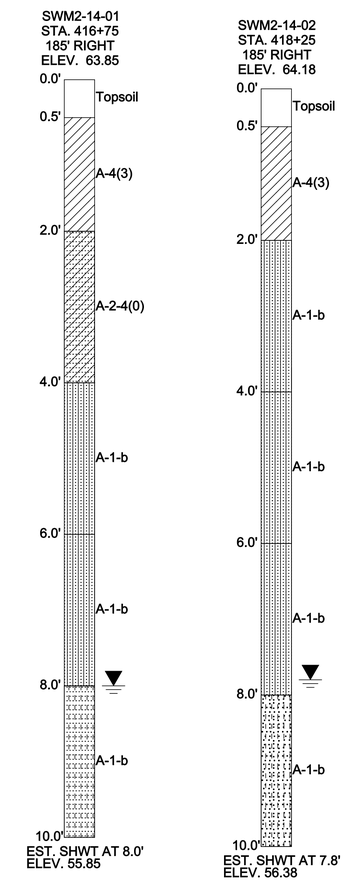

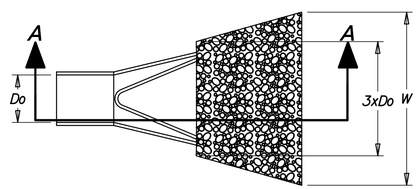

PLAN

SCALE: NONE

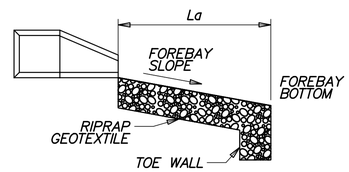

SECTION A-A

SCALE: NONE

DATA

PIPE DIAMETER (Do)
APRON LENGTH (La)
APRON WIDTH (W)
RIPRAP SIZE (R No.)

FES ID	Do	La	W	R No.
33	2.0'	4.9'	10.0'	R-4

FOREBAY RIPRAP OUTLET PROTECTION

SCALE: NONE

NOTES:
1. RIPRAP ITEM# 712005.
2. GEOTEXTILES, RIPRAP ITEM# 713003
3. SEE STANDARD NO. E-10 FOR RIPRAP DEPTH AND GEOTEXTILE PLACEMENT.
4. DEPRESS CENTERLINE OF APRON SLIGHTLY TO PREVENT EDGE CUTTING.

G:\60049040 US301\CIVIL\PLANS\2A\CP\SW-69.DGN

DELAWARE DEPARTMENT OF TRANSPORTATION	ADDENDUMS / REVISIONS	AS SHOWN	US 301 LEVELS ROAD TO SUMMIT BRIDGE ROAD	CONTRACT T200911303	BRIDGE NO.	STORMWATER MANAGEMENT DETAILS BMP 671 (BASIN 9B)	SW-69
				COUNTY NEW CASTLE	DESIGNED BY: DB		SHEET NO. 754
					CHECKED BY: JZ		TOTAL SHTS. 1256

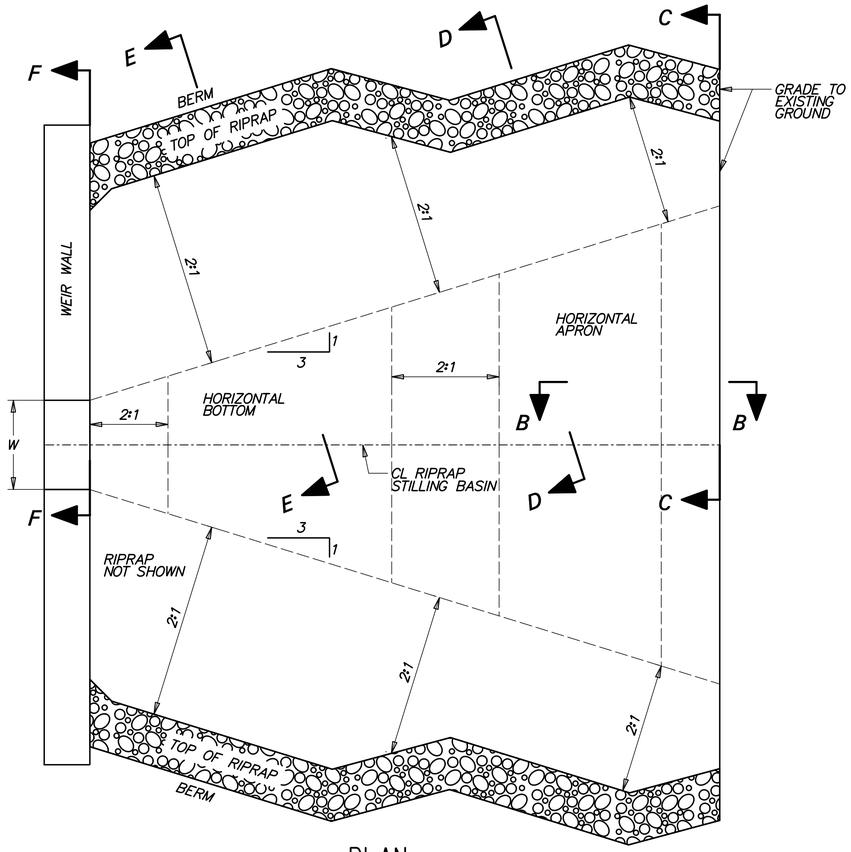

PLAN

SCALE: NONE

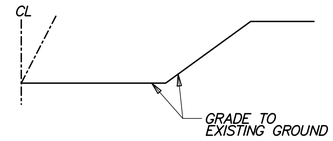

SECTION C-C

SCALE: NONE

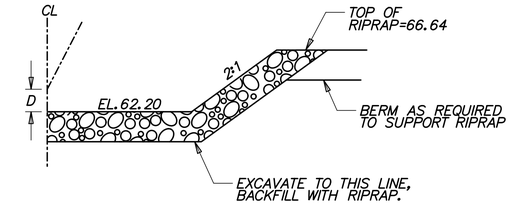

SECTION E-E

SCALE: NONE

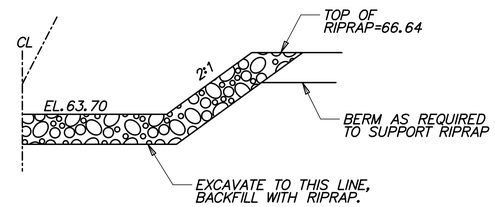

SECTION D-D

SCALE: NONE

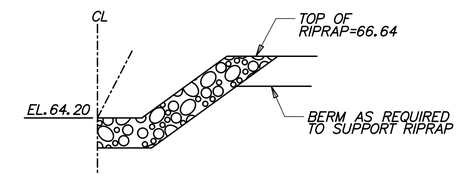

SECTION F-F

SCALE: NONE

DATA

TOP OF V-NOTCH WEIR WIDTH W = 1.78'

DEPTH OF BASIN FROM WEIR CREST D = 1.50'

RIPRAP SIZE (R No.) = R-5 WITH NO. 57 STONE

NOTES:
1. RIPRAP ITEM# 712006.
2. GEOTEXTILES, RIPRAP ITEM# 713003
3. DELAWARE NO. 57 STONE ITEM# 302012
4. SEE STANDARD NO. E-10 FOR RIPRAP DEPTH AND GEOTEXTILE PLACEMENT.

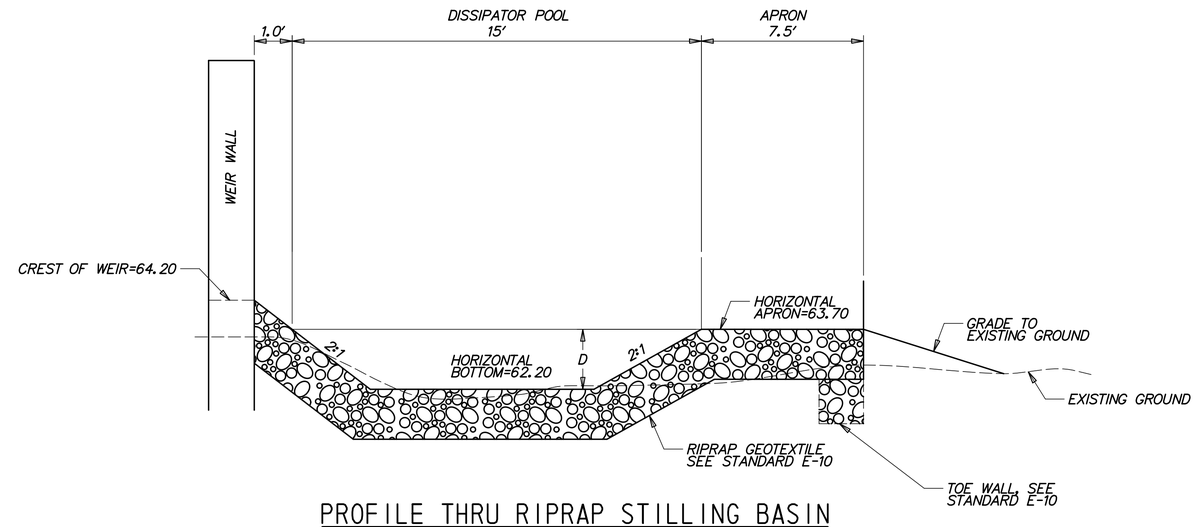

PROFILE THRU RIPRAP STILLING BASIN

SCALE: NONE

RIPRAP STILLING BASIN

SCALE: NONE

G:\60049040 US301\CIVIL\PLANS\2A\CP\SW-70.DGN

DELAWARE DEPARTMENT OF TRANSPORTATION	ADDENDUMS / REVISIONS	AS SHOWN	US 301 LEVELS ROAD TO SUMMIT BRIDGE ROAD	CONTRACT T200911303 / COUNTY NEW CASTLE	BRIDGE NO. / DESIGNED BY: DB / CHECKED BY: JZ	STORMWATER MANAGEMENT DETAILS BMP 671 (BASIN 9B)

SW-70
SHEET NO.
755
TOTAL SHTS.
1256

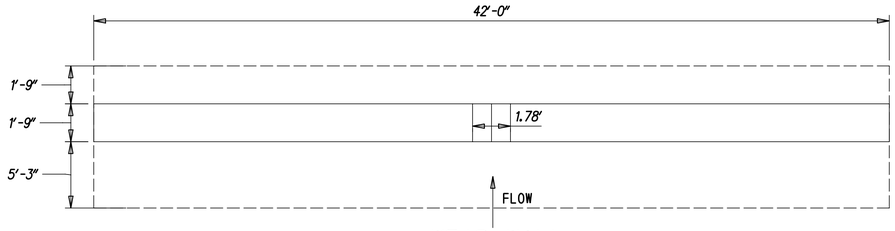

WEIR WALL PLAN

SCALE: NONE

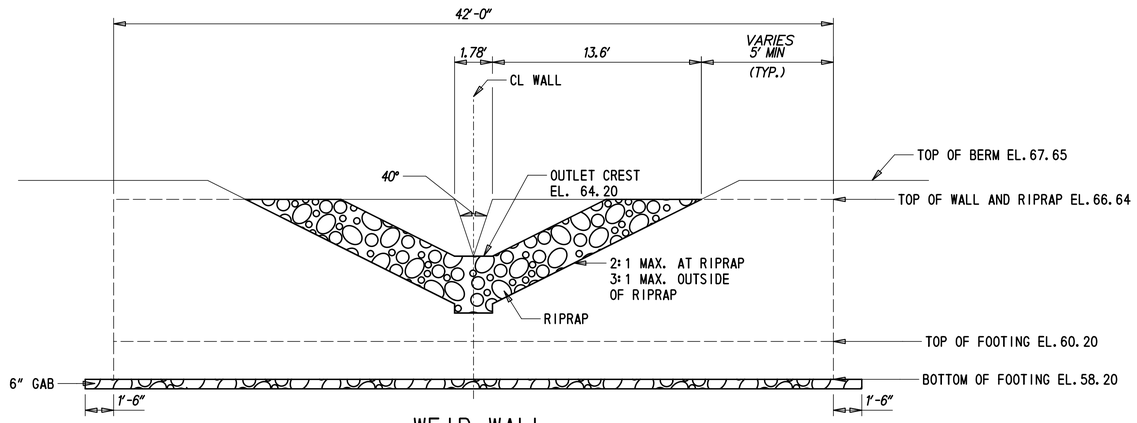

WEIR WALL EXTERIOR ELEVATION WITH RIPRAP STILLING BASIN

SCALE: NONE

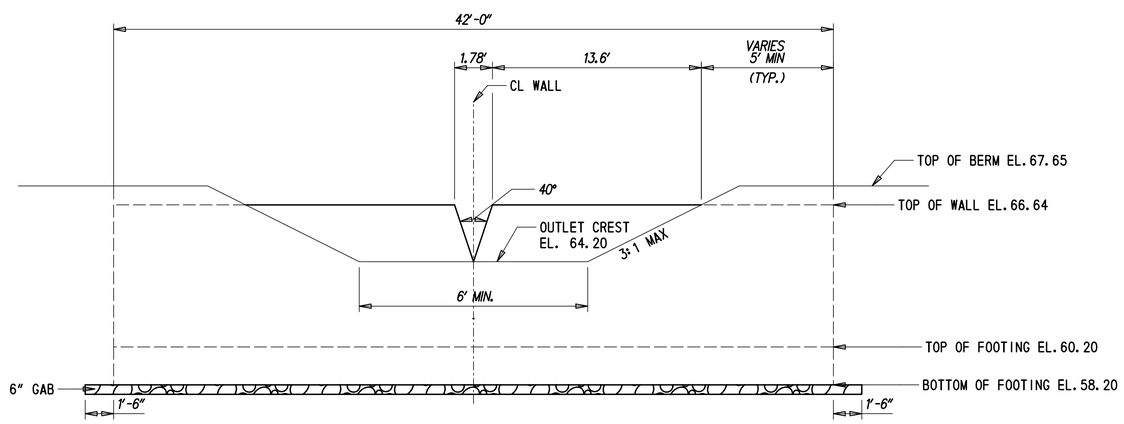

WEIR WALL INTERIOR ELEVATION

SCALE: NONE

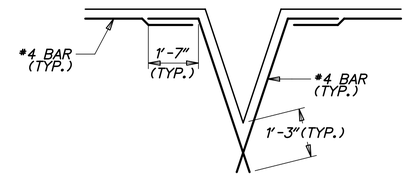

OPENING DETAILS

SCALE: NONE

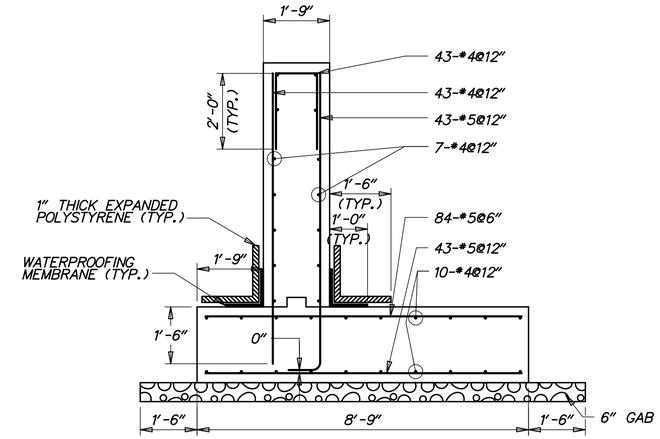

WEIR WALL SECTION

SCALE: 1/2" =1'-0"

GENERAL NOTES

1. DESIGN SPECIFICATIONS:

   AASHTO LRFD BRIDGE DESIGN SPECIFICATIONS, 4TH EDITION, 2007, INCLUDING 2008 AND 2009 INTERIM REVISIONS, AND AS SUPPLEMENTED BY DELAWARE DEPARTMENT OF TRANSPORTATION BRIDGE DESIGN MANUAL, MAY 2005, INCLUDING LATEST REVISIONS.

   PROVIDE MATERIALS AND PERFORM WORK IN ACCORDANCE WITH THE DELAWARE DEPARTMENT OF TRANSPORTATION STANDARD SPECIFICATIONS AND CONSTRUCTION DETAILS, AASHTO/AWS D1.5M/D1.5 BRIDGE WELDING CODE, AND CONTRACT SPECIAL PROVISIONS.

2. LOADING:

   UNIT WEIGHTS OF MATERIALS SHALL BE IN ACCORDANCE WITH THE DELAWARE DESIGN MANUAL.

3. PORTLAND CEMENT CONCRETE:

   PORTLAND CEMENT CONCRETE FOR CAST-IN-PLACE ELEMENTS SHALL BE AS FOLLOWS:
   (28 DAY COMPRESSIVE STRENGTH)
   (CLASS B, F'c=3000 PSI) - WEIR WALL FOOTING
   (CLASS A, F'c=4500 PSI) - WEIR WALL STEM

   WEIR WALLS MUST BE CAST-IN-PLACE.

   MIX REQUIREMENTS SHALL CONFORM TO SECTION 812 OF THE DELAWARE DEPARTMENT OF TRANSPORTATION STANDARD SPECIFICATIONS.

   ALL EXPOSED CORNERS OF CONCRETE SHALL BE CHAMFERED WITH ¾" X ¾" MILLED CHAMFER STRIPS EXCEPT ON UNEXPOSED FOOTINGS.

4. BAR REINFORCEMENT:

   REINFORCING STEEL SHALL CONFORM TO AASHTO M31 (ASTM A615), GRADE 60 AND IS TO BE EPOXY COATED. FUSION-BONDED EPOXY COATED REINFORCING STEEL SHALL CONFORM TO AASHTO M284 (ASTM D3963).

   PROVIDE 3" CONCRETE COVER ON REINFORCEMENT BARS, EXCEPT AS NOTED.

   LAP LENGTH OF #4 BARS TO BE 3'-0". STAGGER SPLICE LOCATIONS.

   DO NOT WELD GRADE 60 REINFORCING STEEL.

5. CONSTRUCTION JOINTS:

   KEYED CONSTRUCTION JOINTS SHALL BE 2" x 4" OR AS NOTED.

6. WATERPROOFING MEMBRANE:

   ADHESIVE BACKED WATERPROOFING MEMBRANE IS TO BE USED. SPLICING OF THE MEMBRANE IS PROHIBITED.

7. REFER TO SPECIFICATION SECTION 272501 FOR CONSTRUCTION SEQUENCE.

8. GAB IS INCIDENTAL TO WALL CONSTRUCTION.

G:\60049040 US301\CIVIL\PLANS\2A\CP\SW-71.DGN

DELAWARE DEPARTMENT OF TRANSPORTATION	ADDENDUMS / REVISIONS	AS SHOWN	US 301 LEVELS ROAD TO SUMMIT BRIDGE ROAD	CONTRACT T200911303	BRIDGE NO.	STORMWATER MANAGEMENT DETAILS BMP 671 (BASIN 9B)	SW-71
				COUNTY NEW CASTLE	DESIGNED BY: DB		SHEET NO. 756
					CHECKED BY: JZ		TOTAL SHTS. 1256

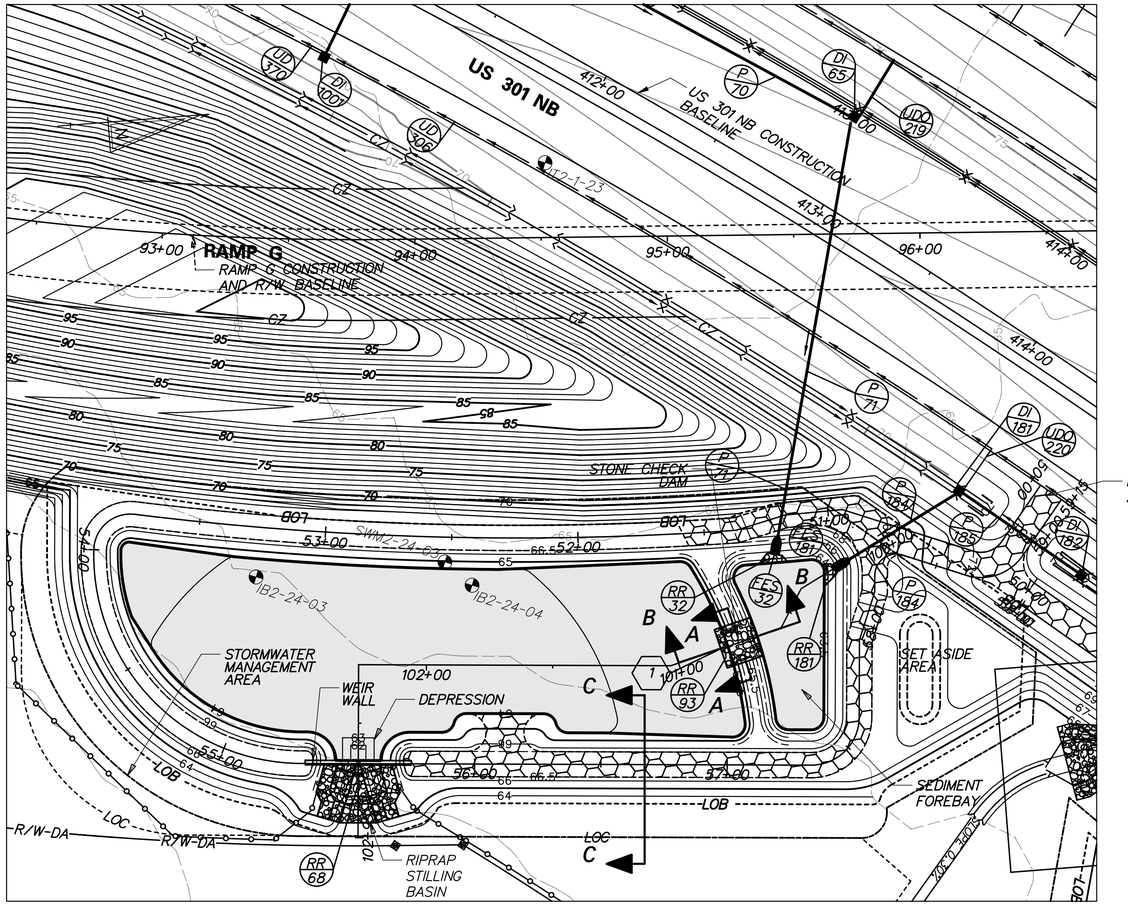

PLAN - BMP 672 (BASIN 9C)

POND CONSTRUCTION SEQUENCE AND NOTES

THE STORMWATER MANAGEMENT POND SHALL FUNCTION AS A SEDIMENT BASIN DURING ROADWAY CONSTRUCTION AND SHALL BE CONSTRUCTED IN ACCORDANCE WITH THE FOLLOWING SECTIONS OF THE STANDARD SPECIFICATIONS:

SECTION 271 - STORMWATER MANAGEMENT POND
SECTION 272 - POND OUTLET STRUCTURE, CONCRETE

1. INSTALL STABILIZED CONSTRUCTION ENTRANCE.
2. CLEAR AND GRUB FOR INSTALLATION OF PERIMETER EROSION AND SEDIMENT CONTROLS.
3. INSTALL PERIMETER SEDIMENT CONTROLS AS SHOWN.
4. CLEAR AND GRUB REMAINING AREA FOR POND CONSTRUCTION.
5. CONSTRUCT WEIR WALL, RIPRAP STILLING BASIN AND PARTIAL EMBANKMENT AS NEEDED TO INSTALL WEIR WALL. INSTALL SKIMMER AND DE-WATER FOUNDATION AS NEEDED IN ACCORDANCE WITH SECTION 111 AND USE SUMP PIT FOR PUMPING. (SEE EROSION AND SEDIMENT CONTROL DETAILS FOR SKIMMER DE-WATERING DEVICE INSTALLATION)
6. EXCAVATE THE POND AND COMPLETE THE EMBANKMENT, GRADES AND DETAILS SHOWN IN THE CONSTRUCTION PLANS. DURING EXCAVATION, THE CONTRACTOR SHALL SALVAGE AND STOCKPILE SOILS CLASSIFIED AS CH, CL, SC AND GG PER THE UNIFIED SOIL CLASSIFICATION SYSTEM TO BE USED TO CONSTRUCT EMBANKMENT. THE ABOVE CLASSIFIED SOILS MAY BE OBTAINED FROM ELSEWHERE WITHIN THE PROJECT LIMITS, IF NECESSARY.
7. STABILIZE ALL BARE AREAS.
   NOTE: SEE CONSTRUCTION SEQUENCE PLANS FOR LOCATION OF EROSION AND SEDIMENT CONTROL MEASURES.
8. THE CONTRACTOR SHALL PROVIDE 'AS-BUILT' DRAWINGS OF ALL STORMWATER MANAGEMENT FACILITIES SUCH AS PONDS, INFILTRATION BASINS, BIOFILTRATION SWALES, ETC. 'AS-BUILT' DRAWINGS SHALL SHOW THE ACTUAL FINISHED GROUND CONTOURS, OUTLET STRUCTURE DIMENSIONS AND ELEVATIONS, ETC. AS THEY EXIST AT THE COMPLETION OF THE PROJECT. THESE DRAWINGS SHALL BE SIGNED BY A PROFESSIONAL ENGINEER OR LAND SURVEYOR.

MAINTENANCE OF POND AS A SEDIMENT BASIN

1. CONTRACTOR SHALL INSPECT THE BASIN IMMEDIATELY AFTER EVERY RAIN AND MAKE REPAIRS AS NEEDED.
2. CONTRACTOR SHALL CLEARLY MARK THE CLEANOUT ELEVATION ON A STAKE DRIVEN INTO THE GROUND AT A LOCTATION CLEARLY VISIBLE FROM THE EMBANKMENT. SEDIMENT SHALL BE REMOVED WHEN CLEANOUT ELEVATION IS REACHED AND DISPOSED OF AT A LOCATION APPROVED BY THE ENGINEER. CLEANOUT ELEVATION IS 63.74 IN PHASE 1, AND 64.02 IN PHASE 2..

CONVERSION TO PERMANENT STORMWATER MANAGEMENT POND

1. CONVERT THE BASIN INTO THE PERMANENT STORMWATER MANAGEMENT POND AFTER ALL AREAS DRAINING TO THE POND HAVE BEEN PERMANENTLY STABILIZED AND THE ENGINEER HAS APPROVED THE CONVERSION.
2. REMOVE ACCUMULATED SEDIMENT TO FINAL GRADE AND DISPOSE SEDIMENT AT A LOCATION APPROVED BY THE ENGINEER.
3. COMPLETE STABILIZATION OF ALL BARE AREAS. REMOVE EROSION AND SEDIMENT CONTROL MEASURES AND DEACTIVATE DE-WATERING DEVICE.

PLANTING SCHEDULE

1. POND BOTTOM AND EMBANKMENT SHALL RECEIVE PERMANENT GRASS SEEDING - DRY GROUND .
2. EMBANKMENT SLOPE SHALL BE TOPSOILED AND MULCHED.

POND DESIGN SUMMARY

DESIGN STORM	FACILITY INFLOW (CFS)	FACILITY DISCHARGE (CFS)	WATER SURFACE ELEVATION (FT)	STORAGE VOLUME (AC.FT.)
QUALITY STORM (1YR)	3.97	0.52	63.90	0.087
10 - YEAR	13.27	2.12	64.58	0.304
100 - YEAR	29.68	6.67	65.49	0.688

DRAINAGE AREA TO FACILITY: 4.06 ACRES

MANAGEMENT PROVIDED BY FACILITY: WATER QUANTITY FOR 1, 10 AND 100 YEAR STORMS.

SKIMMER DEVICE SUMMARY

	PHASE 1	PHASE 2
SKIMMER ELEVATION	63.08	63.08
ORIFICE SIZE (IN)	2	2
BLOCK WEIR UP TO ELEVATION	64.18	64.48

RIPRAP SCHEDULE

NO.	TYPE	AREA (SY)
32	R-4	4
68	R-5	93
93	R-4	27
181	R-4	4

CHECK CONSTRUCTION PLANS FOR SCHEDULE OF RIPRAP OUTSIDE OF THE BASIN AREA.

POND QUANTITIES

ITEM NO.	ITEM	QTY.	UNITS.
202000	EXCAVATION AND EMBANKMENT	2003	CY
272501	POND OUTLET STRUCTURE, 13, SPECIAL	1	EACH
302011	DELAWARE NO. 3 STONE	182	TON
302012	DELAWARE NO. 57 STONE	22	TON
712005	R-4 RIPRAP	8	SY
712006	R-5 RIPRAP	93	SY
712020	R-4 RIPRAP	19	TON
713001	GEOTEXTILES, STABILIZATION	1225	SY
713003	GEOTEXTILES, RIPRAP	165	SY
733002	TOPSOILING, 6" DEPTH	6174	SY
734013	PERMANENT GRASS SEEDING, DRY GROUND	6174	SY

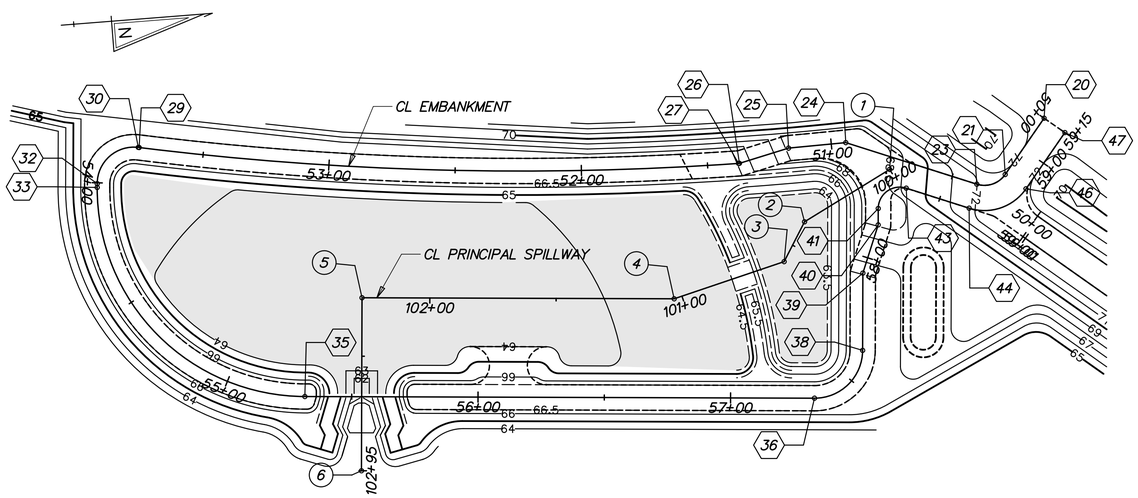

STAKEOUT - BMP 672 (BASIN 9C)

CL PRINCIPAL SPILLWAY				
	STATION		NORTHING	EASTING
1	POB	STA. 100+00.00	536665.0066	567043.5834
2	PI	STA. 100+39.57	536629.7800	567061.6091
3	PI	STA. 100+57.29	536620.4892	567076.6961
4	PI	STA. 101+03.25	536575.9204	567087.9418
5	PI	STA. 102+26.85	536452.7392	567077.8213
6	POE	STA. 102+95.35	536447.1303	567146.0895

CL EMBANKMENT				
	STATION		NORTHING	EASTING
20	POB	STA. 50+00.00	536727.5543	567028.1861
21	PC	STA. 50+27.07	536710.4569	567049.1765
22	PI	STA. 50+34.46	536705.7887	567054.9077
23	PT	STA. 50+39.80	536698.9402	567052.1260
24	PI	STA. 50+94.23	536648.5183	567031.6453
25	PI	STA. 51+16.99	536625.7560	567032.0287
26	PI	STA. 51+37.36	536605.8922	567036.5187
27	PC	STA. 51+37.70	536605.5526	567036.5158
28	PI	STA. 52+56.96	536486.2948	567035.4959
29	PT	STA. 53+75.48	536369.4545	567011.5836
30	PC	STA. 53+75.82	536369.1222	567011.5156
31	PI	STA. 53+92.17	536353.1028	567008.2371
32	PT	STA. 54+00.33	536351.7636	567024.5336
33	PC	STA. 54+01.85	536351.6393	567026.0463
34	PI	STA. 54+84.35	536344.8822	567108.2707
35	PT	STA. 55+31.44	536427.1068	567115.0262
36	PC	STA. 57+33.22	536628.2066	567131.5484
37	PI	STA. 57+52.22	536647.1427	567133.1042
38	PT	STA. 57+63.06	536648.6985	567114.1680
39	PI	STA. 57+93.66	536651.2040	567083.6730
40	PI	STA. 58+13.68	536658.7476	567065.1307
41	PC	STA. 58+20.16	536659.2783	567058.6696
42	PI	STA. 58+31.75	536660.2270	567047.1186
43	PT	STA. 58+36.11	536670.9591	567051.4946
44	PC	STA. 58+62.25	536695.1652	567061.3647
45	PI	STA. 58+77.05	536708.8738	567066.9544
46	PT	STA. 58+87.74	536718.2234	567055.4759
47	POE	STA. 59+14.79	536735.3077	567034.5015

G:\60049040 US301\CIVIL\PLANS\2A\CP\SW-73.DGN

DELAWARE DEPARTMENT OF TRANSPORTATION

ADDENDUMS / REVISIONS

SCALE 0 30 60 90 FEET

US 301 LEVELS ROAD TO SUMMIT BRIDGE ROAD

CONTRACT T200911303
COUNTY NEW CASTLE
BRIDGE NO.
DESIGNED BY: DB
CHECKED BY: JZ

STORMWATER MANAGEMENT DETAILS BMP 672 (BASIN 9C)

SW-73
SHEET NO. 758
TOTAL SHTS. 1256

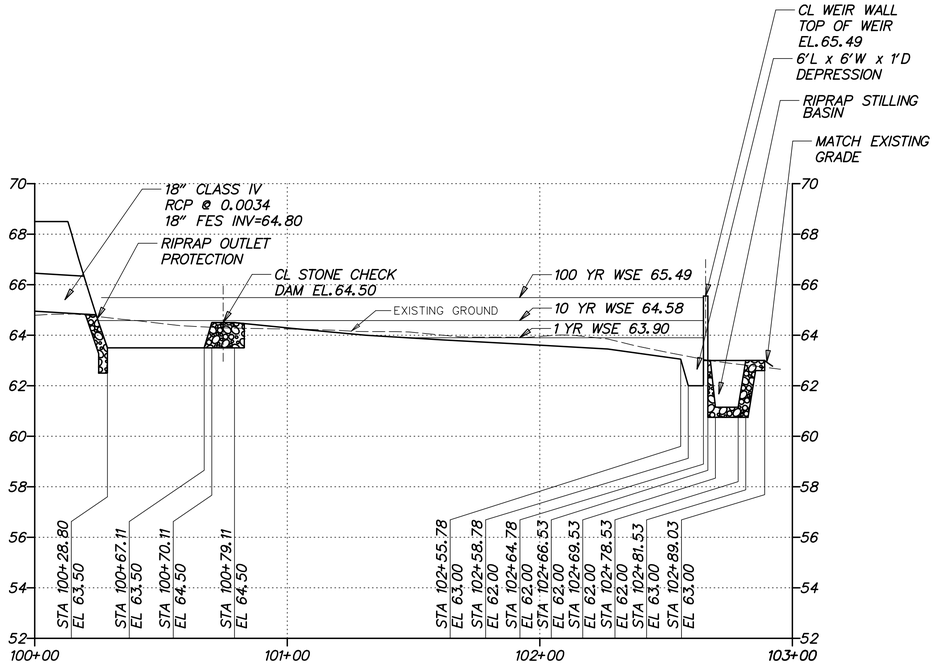

SPILLWAY PROFILE - BMP 672 (BASIN 9C)

HORIZONTAL SCALE: 1"=30'
0 30 60 90
FEET

VERTICAL SCALE: 1"=3'
0 3 6 9
FEET

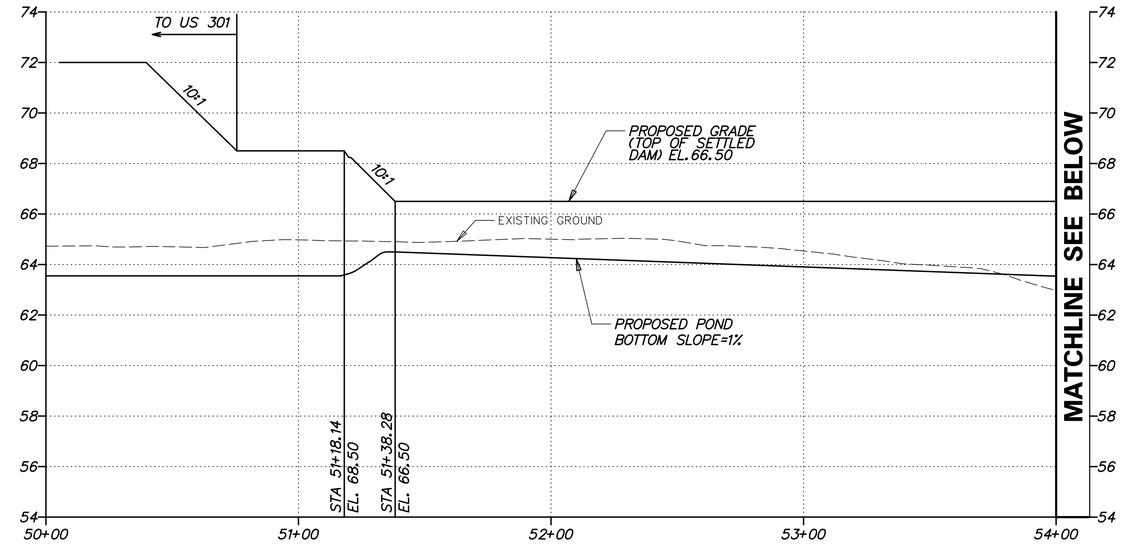

EMBANKMENT PROFILE FOR BMP 672 (BASIN 9C)

HORIZONTAL SCALE: 1"=30'
0 30 60 90
FEET

VERTICAL SCALE: 1"=3'
0 3 6 9
FEET

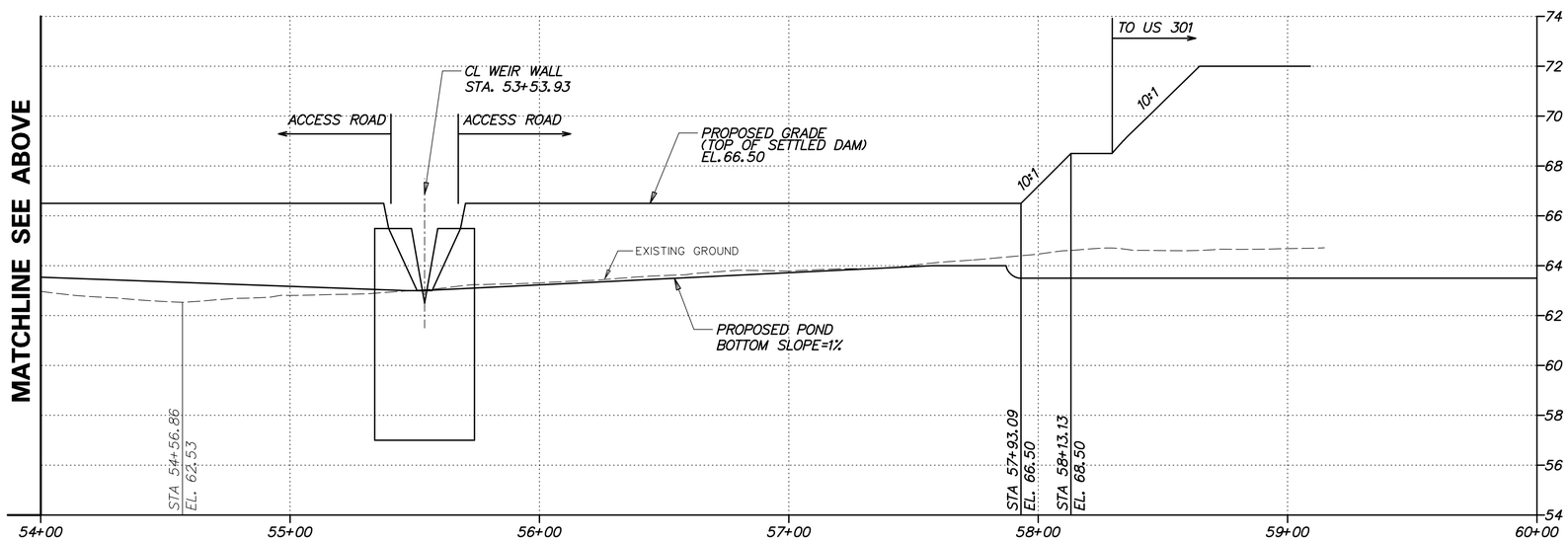

EMBANKMENT PROFILE FOR BMP 672 (BASIN 9C)

HORIZONTAL SCALE: 1"=30'
0 30 60 90
FEET

VERTICAL SCALE: 1"=3'
0 3 6 9
FEET

G:\60049040 US301\CIVIL\PLANS\2A\CP\SW-74.DGN

DELAWARE DEPARTMENT OF TRANSPORTATION	ADDENDUMS / REVISIONS	AS SHOWN	US 301 LEVELS ROAD TO SUMMIT BRIDGE ROAD	CONTRACT T200911303	BRIDGE NO.	STORMWATER MANAGEMENT DETAILS BMP 672 (BASIN 9C)	SW-74
				COUNTY NEW CASTLE	DESIGNED BY: DB		SHEET NO. 759
					CHECKED BY: JZ		TOTAL SHTS. 1256

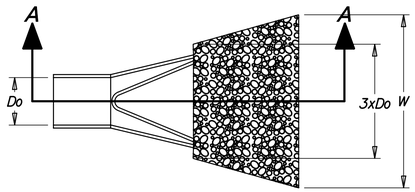

PLAN

SCALE: NONE

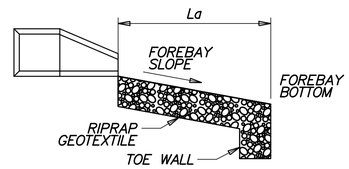

SECTION A-A

SCALE: NONE

DATA

PIPE DIAMETER (Do)
APRON LENGTH (La)
APRON WIDTH (W)
RIPRAP SIZE (R No.)

FES ID	Do	La	W	R No.
32	2.0'	3.0'	11.0'	R-4
181	1.5'	3.9'	8.0'	R-4

FOREBAY RIPRAP OUTLET PROTECTION

SCALE: NONE

NOTES:
1. RIPRAP ITEM# 712005.
2. GEOTEXTILES, RIPRAP ITEM# 713003
3. SEE STANDARD NO. E-10 FOR RIPRAP DEPTH AND GEOTEXTILE PLACEMENT.
4. DEPRESS CENTERLINE OF APRON SLIGHTLY TO PREVENT EDGE CUTTING.

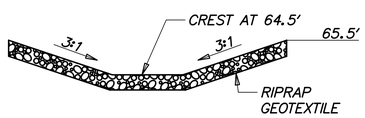

SECTION A-A FROM BASIN PLAN

SCALE: NONE

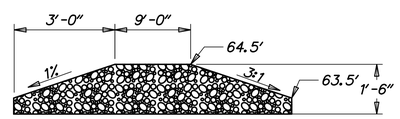

SECTION B-B FROM BASIN PLAN

SCALE: NONE

STONE CHECK DAM

SCALE: NONE

NOTES:
1. RIPRAP ITEM# 712020
2. GEOTEXTILE, RIPRAP ITEM# 713003
3. SEE STANDARD NO. E-10 FOR GEOTEXTILE PLACEMENT.

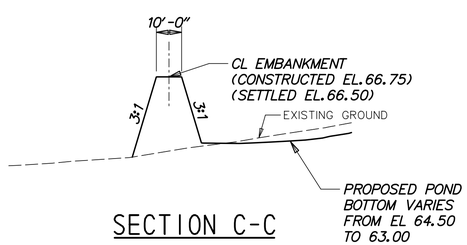

SECTION C-C

SCALE: NONE

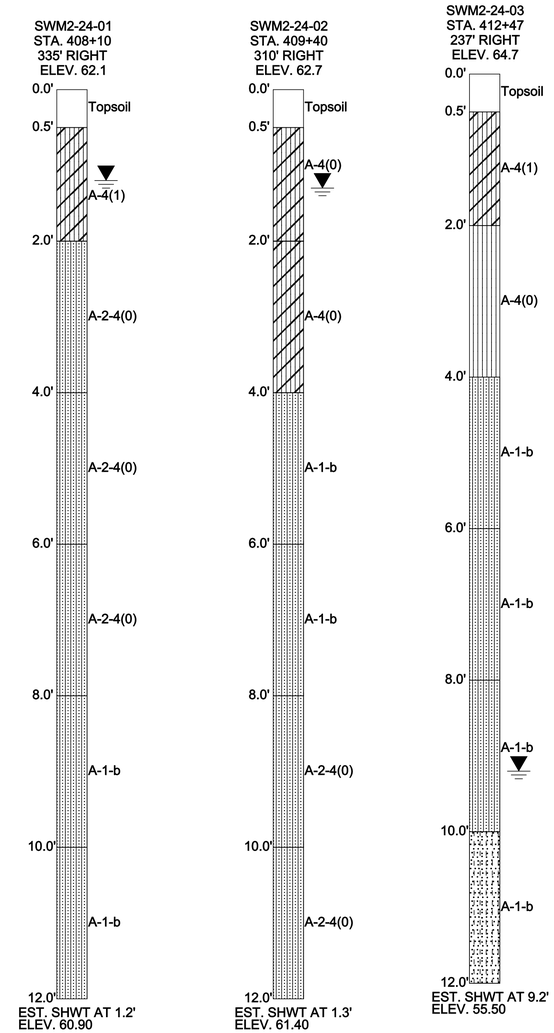

G:\60049040 US301\CIVIL\PLANS\2A\CP\SW-75.DGN

DELAWARE DEPARTMENT OF TRANSPORTATION	ADDENDUMS / REVISIONS	AS SHOWN	US 301 LEVELS ROAD TO SUMMIT BRIDGE ROAD	CONTRACT T200911303	BRIDGE NO.	STORMWATER MANAGEMENT DETAILS BMP 672 (BASIN 9C)	SW-75
				COUNTY NEW CASTLE	DESIGNED BY: DB		SHEET NO. 760
					CHECKED BY: JZ		TOTAL SHTS. 1256

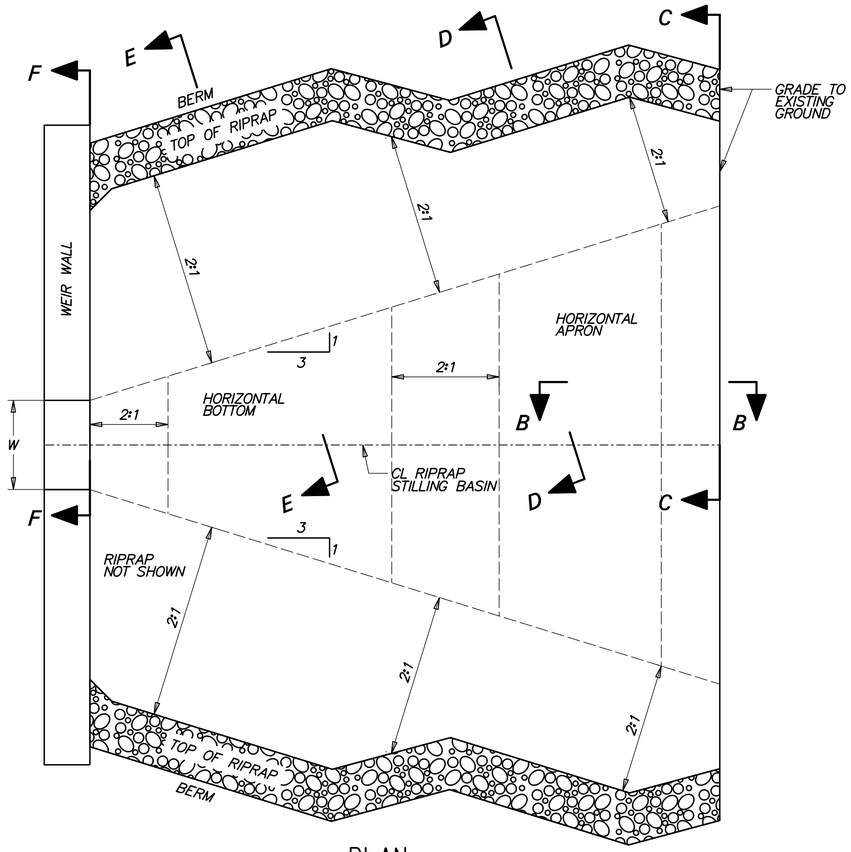

PLAN

SCALE: NONE

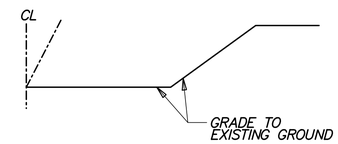

SECTION C-C

SCALE: NONE

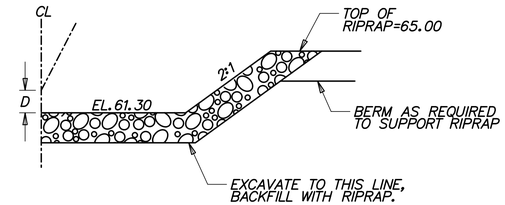

SECTION E-E

SCALE: NONE

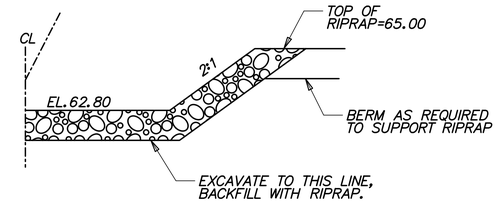

SECTION D-D

SCALE: NONE

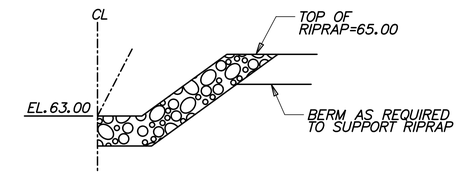

SECTION F-F

SCALE: NONE

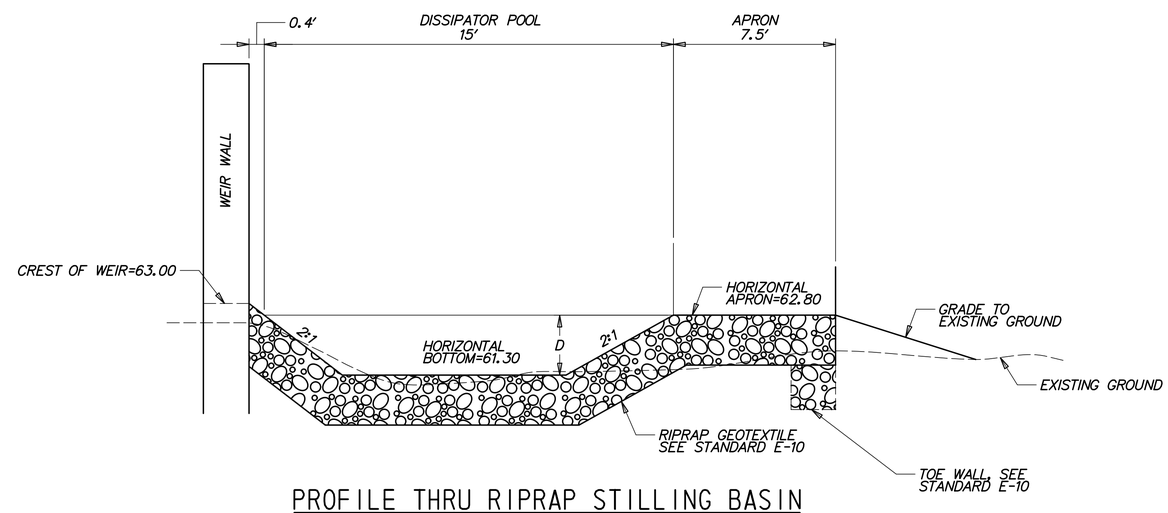

PROFILE THRU RIPRAP STILLING BASIN

SCALE: NONE

DATA

TOP OF V-NOTCH WEIR WIDTH W = 1.33'

DEPTH OF BASIN FROM WEIR CREST D = 1.50'

RIPRAP SIZE (R No.) = R-5 WITH NO. 57 STONE

NOTES:
1. RIPRAP ITEM# 712006.
2. GEOTEXTILES, RIPRAP ITEM# 713003
3. DELAWARE NO. 57 STONE ITEM# 302012
4. SEE STANDARD NO. E-10 FOR RIPRAP DEPTH AND GEOTEXTILE PLACEMENT.

RIPRAP STILLING BASIN

SCALE: NONE

G:\60049040 US301\CIVIL\PLANS\2A\CP\SW-76.DGN

DELAWARE DEPARTMENT OF TRANSPORTATION	ADDENDUMS / REVISIONS	AS SHOWN	US 301 LEVELS ROAD TO SUMMIT BRIDGE ROAD	CONTRACT T200911303	BRIDGE NO.	STORMWATER MANAGEMENT DETAILS BMP 672 (BASIN 9C)	SW-76
				COUNTY NEW CASTLE	DESIGNED BY: DB		SHEET NO. 761
					CHECKED BY: JZ		TOTAL SHTS. 1256

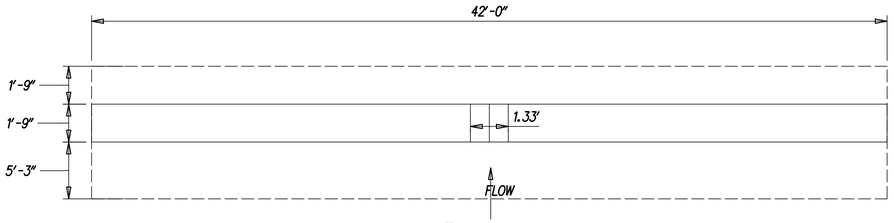

WEIR WALL PLAN

SCALE: NONE

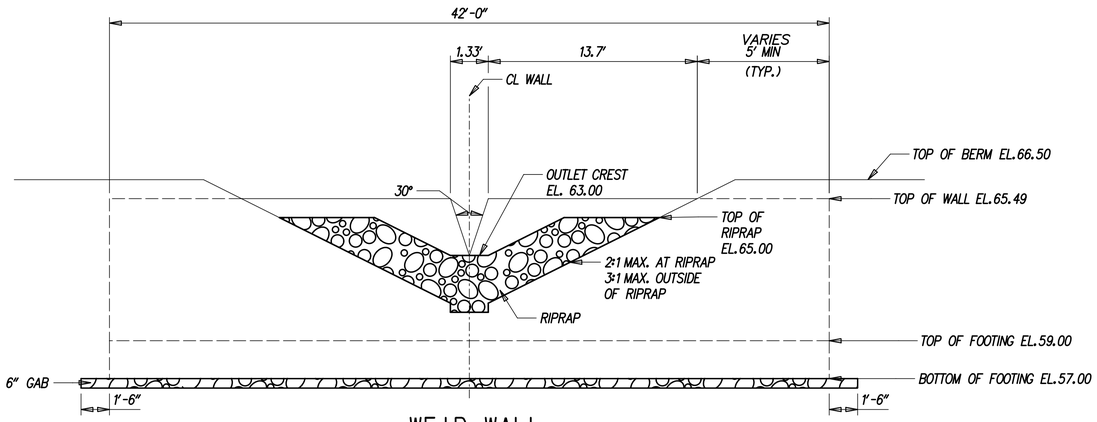

WEIR WALL EXTERIOR ELEVATION WITH RIPRAP STILLING BASIN

SCALE: NONE

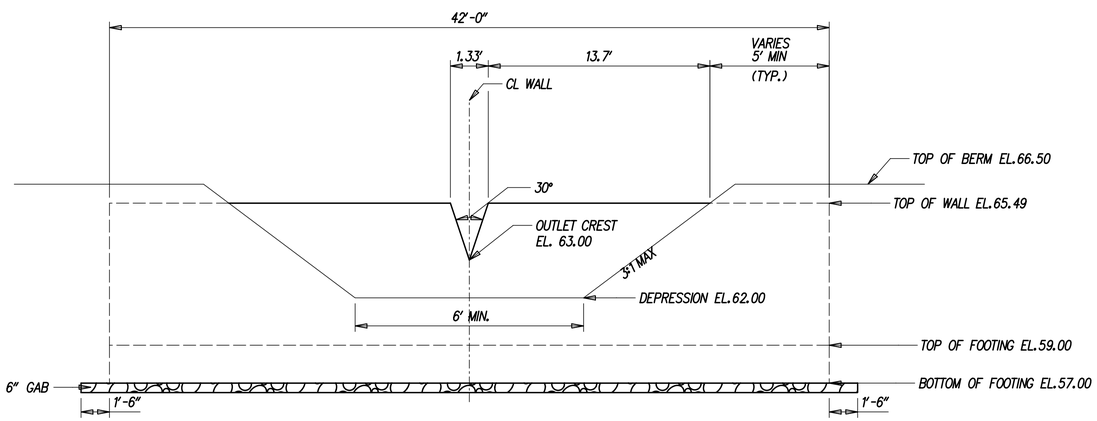

WEIR WALL INTERIOR ELEVATION

SCALE: NONE

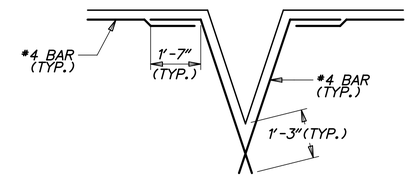

OPENING DETAILS

SCALE: NONE

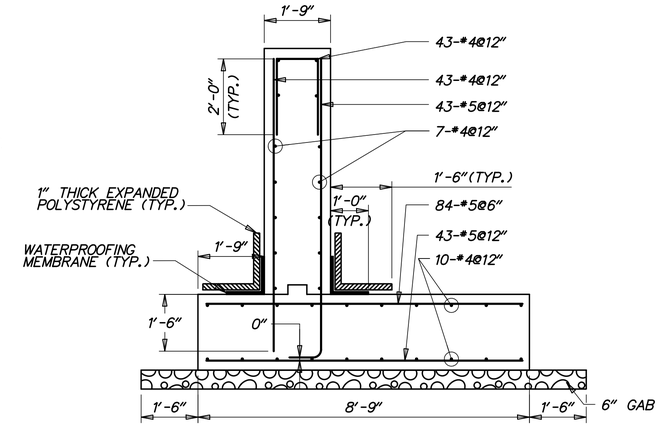

WEIR WALL SECTION

SCALE: 1/2" =1'-0"

GENERAL NOTES

1. DESIGN SPECIFICATIONS:

   AASHTO LRFD BRIDGE DESIGN SPECIFICATIONS, 4TH EDITION, 2007, INCLUDING 2008 AND 2009 INTERIM REVISIONS, AND AS SUPPLEMENTED BY DELAWARE DEPARTMENT OF TRANSPORTATION BRIDGE DESIGN MANUAL, MAY 2005, INCLUDING LATEST REVISIONS.

   PROVIDE MATERIALS AND PERFORM WORK IN ACCORDANCE WITH THE DELAWARE DEPARTMENT OF TRANSPORTATION STANDARD SPECIFICATIONS AND CONSTRUCTION DETAILS, AASHTO/AWS D1.5M/D1.5 BRIDGE WELDING CODE, AND CONTRACT SPECIAL PROVISIONS.

2. LOADING:

   UNIT WEIGHTS OF MATERIALS SHALL BE IN ACCORDANCE WITH THE DELAWARE DESIGN MANUAL.

3. PORTLAND CEMENT CONCRETE:

   PORTLAND CEMENT CONCRETE FOR CAST-IN-PLACE ELEMENTS SHALL BE AS FOLLOWS:
   (28 DAY COMPRESSIVE STRENGTH)
   (CLASS B, F'c=3000 PSI) - WEIR WALL FOOTING
   (CLASS A, F'c=4500 PSI) - WEIR WALL STEM

   WEIR WALLS MUST BE CAST-IN-PLACE.

   MIX REQUIREMENTS SHALL CONFORM TO SECTION 812 OF THE DELAWARE DEPARTMENT OF TRANSPORTATION STANDARD SPECIFICATIONS.

   ALL EXPOSED CORNERS OF CONCRETE SHALL BE CHAMFERED WITH ¾" X ¾" MILLED CHAMFER STRIPS EXCEPT ON UNEXPOSED FOOTINGS.

4. BAR REINFORCEMENT:

   REINFORCING STEEL SHALL CONFORM TO AASHTO M31 (ASTM A615), GRADE 60 AND IS TO BE EPOXY COATED. FUSION-BONDED EPOXY COATED REINFORCING STEEL SHALL CONFORM TO AASHTO M284 (ASTM D3963).

   PROVIDE 3" CONCRETE COVER ON REINFORCEMENT BARS, EXCEPT AS NOTED.

   LAP LENGTH OF #4 BARS TO BE 3'-0". STAGGER SPLICE LOCATIONS.

   DO NOT WELD GRADE 60 REINFORCING STEEL.

5. CONSTRUCTION JOINTS:

   KEYED CONSTRUCTION JOINTS SHALL BE 2" x 4" OR AS NOTED.

6. WATERPROOFING MEMBRANE:

   ADHESIVE BACKED WATERPROOFING MEMBRANE IS TO BE USED. SPLICING OF THE MEMBRANE IS PROHIBITED.

7. REFER TO SPECIFICATION SECTION 272501 FOR CONSTRUCTION SEQUENCE.

8. GAB IS INCIDENTAL TO WALL CONSTRUCTION.

G:\60049040 US301\CIVIL\PLANS\2A\CP\SW-77.DGN

DELAWARE DEPARTMENT OF TRANSPORTATION	ADDENDUMS / REVISIONS	AS SHOWN	US 301 LEVELS ROAD TO SUMMIT BRIDGE ROAD	CONTRACT T200911303	BRIDGE NO.	STORMWATER MANAGEMENT DETAILS BMP 672 (BASIN 9C)	SW-77
				COUNTY NEW CASTLE	DESIGNED BY: DB		SHEET NO. 762
					CHECKED BY: JZ		TOTAL SHTS. 1256

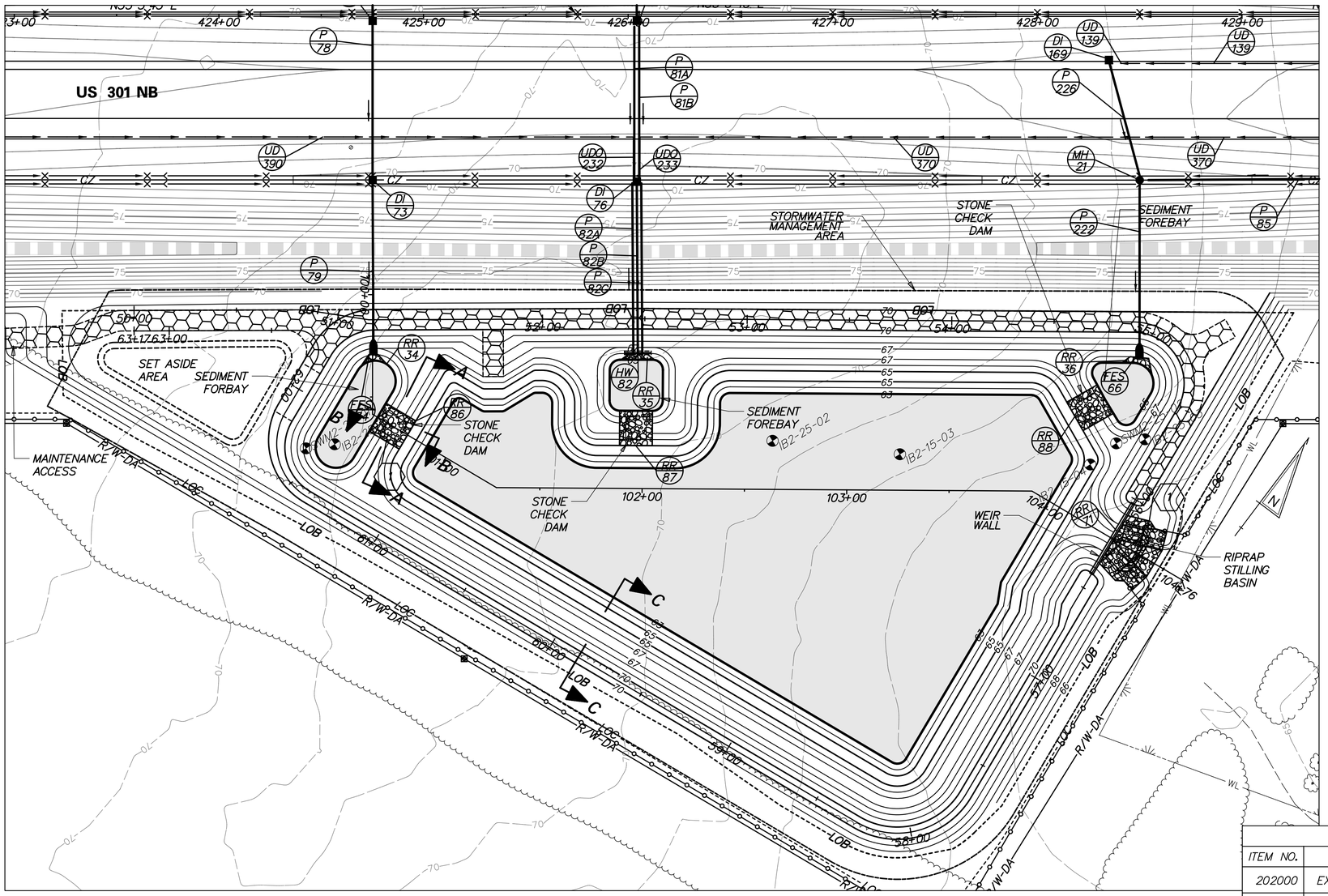

PLAN - BMP 676 (BASIN 10)

POND CONSTRUCTION SEQUENCE AND NOTES

THE STORMWATER MANAGEMENT POND SHALL FUNCTION AS A SEDIMENT BASIN DURING ROADWAY CONSTRUCTION AND SHALL BE CONSTRUCTED IN ACCORDANCE WITH THE FOLLOWING SECTIONS OF THE STANDARD SPECIFICATIONS:

SECTION 271 - STORMWATER MANAGEMENT POND
SECTION 272 - POND OUTLET STRUCTURE, CONCRETE

1. INSTALL STABILIZED CONSTRUCTION ENTRANCE.
2. CLEAR AND GRUB FOR INSTALLATION OF PERIMETER EROSION AND SEDIMENT CONTROLS.
3. INSTALL PERIMETER SEDIMENT CONTROLS AS SHOWN.
4. CLEAR AND GRUB REMAINING AREA FOR POND CONSTRUCTION.
5. CONSTRUCT WEIR WALL, RIPRAP STILLING BASIN AND PARTIAL EMBANKMENT AS NEEDED TO INSTALL WEIR WALL. INSTALL SKIMMER AND DE-WATER FOUNDATION AS NEEDED IN ACCORDANCE WITH SECTION 111 AND USE SUMP PIT FOR PUMPING. (SEE EROSION AND SEDIMENT CONTROL DETAILS FOR SKIMMER DE-WATERING DEVICE INSTALLATION)
6. EXCAVATE THE POND AND COMPLETE THE EMBANKMENT, GRADES AND DETAILS SHOWN IN THE CONSTRUCTION PLANS. DURING EXCAVATION, THE CONTRACTOR SHALL SALVAGE AND STOCKPILE SOILS CLASSIFIED AS CH, CL, SC AND GG PER THE UNIFIED SOIL CLASSIFICATION SYSTEM TO BE USED TO CONSTRUCT EMBANKMENT. THE ABOVE CLASSIFIED SOILS MAY BE OBTAINED FROM ELSEWHERE WITHIN THE PROJECT LIMITS, IF NECESSARY.
7. STABILIZE ALL BARE AREAS.
   NOTE: SEE CONSTRUCTION SEQUENCE PLANS FOR LOCATION OF EROSION AND SEDIMENT CONTROL MEASURES.
8. THE CONTRACTOR SHALL PROVIDE 'AS-BUILT' DRAWINGS OF ALL STORMWATER MANAGEMENT FACILITIES SUCH AS PONDS, INFILTRATION BASINS, BIOFILTRATION SWALES, ETC. 'AS-BUILT' DRAWINGS SHALL SHOW THE ACTUAL FINISHED GROUND CONTOURS, OUTLET STRUCTURE DIMENSIONS AND ELEVATIONS, ETC. AS THEY EXIST AT THE COMPLETION OF THE PROJECT. THESE DRAWINGS SHALL BE SIGNED BY A PROFESSIONAL ENGINEER OR LAND SURVEYOR.

MAINTENANCE OF POND AS A SEDIMENT BASIN

1. CONTRACTOR SHALL INSPECT THE BASIN IMMEDIATELY AFTER EVERY RAIN AND MAKE REPAIRS AS NEEDED.
2. CONTRACTOR SHALL CLEARLY MARK THE CLEANOUT ELEVATION ON A STAKE DRIVEN INTO THE GROUND AT A LOCTATION CLEARLY VISIBLE FROM THE EMBANKMENT. SEDIMENT SHALL BE REMOVED WHEN CLEANOUT ELEVATION IS REACHED AND DISPOSED OF AT A LOCATION APPROVED BY THE ENGINEER. CLEANOUT ELEVATION IS 66.59.

CONVERSION TO PERMANENT STORMWATER MANAGEMENT POND

1. CONVERT THE BASIN INTO THE PERMANENT STORMWATER MANAGEMENT POND AFTER ALL AREAS DRAINING TO THE POND HAVE BEEN PERMANENTLY STABILIZED AND THE ENGINEER HAS APPROVED THE CONVERSION.
2. REMOVE ACCUMULATED SEDIMENT TO ELEVATION 63.00 AND DISPOSE SEDIMENT AT A LOCATION APPROVED BY THE ENGINEER.
3. COMPLETE STABILIZATION OF ALL BARE AREAS. REMOVE EROSION AND SEDIMENT CONTROL MEASURES AND DEACTIVATE DE-WATERING DEVICE.

PLANTING SCHEDULE

PLACE PERMANENT GRASS SEEDING - WET GROUND UP TO ELEVATION 67.00
PLACE PERMANENT GRASS SEEDING - DRY GROUND ABOVE ELEVATION 67.00
PLACE TOPSOIL ON LOWER BENCH ELEVATION 65.00 AND ABOVE.

POND QUANTITIES

ITEM NO.	ITEM	QTY.	UNITS.
202000	EXCAVATION AND EMBANKMENT	14167	CY
272501	POND OUTLET STRUCTURE, 14, SPECIAL	1	EACH
302011	DELAWARE NO. 3 STONE	258	TON
302012	DELAWARE NO. 57 STONE	23	TON
712005	R-4 RIPRAP	14	SY
712006	R-5 RIPRAP	95	SY
712020	R-4 RIPRAP	66	TON
713001	GEOTEXTILES, STABILIZATION	1743	SY
713003	GEOTEXTILES, RIPRAP	256	SY
733002	TOPSOILING, 6" DEPTH	8585	SY
734013	PERMANENT GRASS SEEDING, DRY GROUND	6230	SY
734015	PERMANENT GRASS SEEDING, WET GROUND	6511	SY

POND DESIGN SUMMARY

DESIGN STORM	FACILITY INFLOW (CFS)	FACILITY DISCHARGE (CFS)	WATER SURFACE ELEVATION (FT)	STORAGE VOLUME (AC.FT.)*
QUALITY STORM (1 YR)	18.75	0.25	66.72	3.498
10 - YEAR	45.97	1.31	67.40	4.385
100 - YEAR	89.48	5.15	68.42	5.829

DRAINAGE AREA TO FACILITY: 10.43 ACRES

MANAGEMENT PROVIDED BY FACILITY: WATER QUALITY BY EXTENDED DETENTION OF 1 YEAR RUNOFF, WATER QUANTITY FOR 10 AND 100 YEAR STORMS.

*INCLUDES NORMAL POOL VOLUME OF 2.662 AC-FT

SKIMMER DEVICE SUMMARY

SKIMMER ELEVATION	66.08
ORIFICE SIZE (IN)	2
BLOCK WEIR UP TO ELEVATION	67.09

RIPRAP SCHEDULE

NO.	TYPE	AREA (SY)
34	R-4	4
35	R-4	5
36	R-4	5
71	R-5	95
86	R-4	31
87	R-4	31
88	R-4	31

CHECK CONSTRUCTION PLANS FOR SCHEDULE OF RIPRAP OUTSIDE OF THE BASIN AREA.

P:\CADD2\60049040 US301\CIVIL\PLANS\2A\CPYAETTSW-78.DGN

DELAWARE DEPARTMENT OF TRANSPORTATION

ADDENDUMS / REVISIONS

SCALE 0 30 60 90 FEET

US 301 LEVELS ROAD TO SUMMIT BRIDGE ROAD

CONTRACT T200911303
COUNTY NEW CASTLE
BRIDGE NO.
DESIGNED BY: DB JW
CHECKED BY: JZ SF

STORMWATER MANAGEMENT DETAILS BMP 676 (BASIN 10)

SW-78
SHEET NO. 763
TOTAL SHTS. 1256

CL PRINCIPAL SPILLWAY			
	STATION	NORTHING	EASTING
1	POB STA. 100+00.00	537334.5667	567830.8526
2	PI STA. 100+58.44	537287.8543	567865.9727
3	PI STA. 101+28.81	537295.6088	567935.9123
4	PI STA. 103+90.49	537451.5563	568146.0464
5	POE STA. 104+76.16	537460.9972	568231.1961

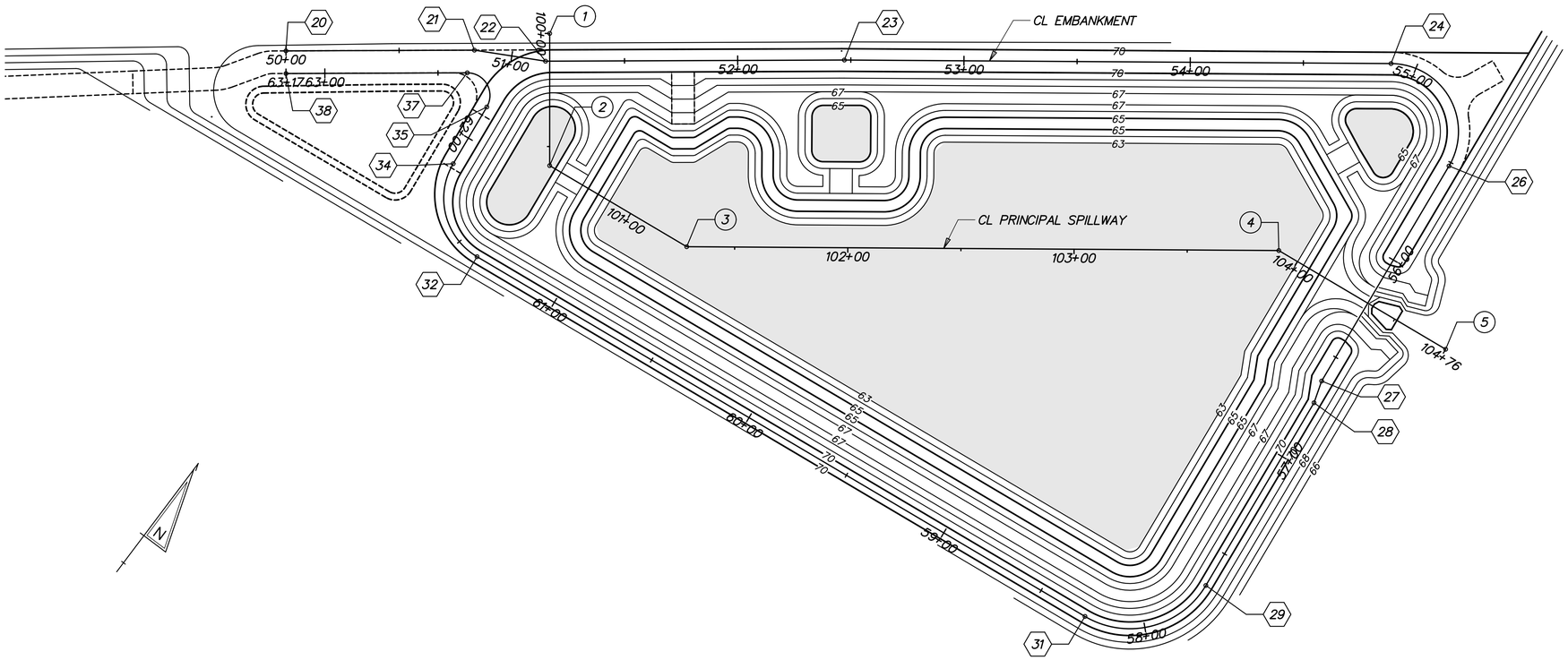

STAKEOUT - BMP 676 (BASIN 10)

CL EMBANKMENT			
	STATION	NORTHING	EASTING
20	POB STA. 50+00.00	537258.3343	567742.3490
21	PI STA. 50+83.27	537308.6503	567808.6928
22	PI STA. 51+15.08	537323.6511	567836.7459
23	PI STA. 52+47.15	537403.4484	567941.9817
24	PC STA. 54+88.74	537547.4254	568135.9865
25	PI STA. 55+40.97	537578.5506	568177.9268
26	PT STA. 55+51.70	537526.6407	568183.6822
27	PI STA. 56+62.18	537416.8339	568195.8570
28	PI STA. 56+72.38	537407.1152	568198.9468
29	PC STA. 57+66.22	537313.8455	568209.2879
30	PI STA. 58+05.22	537275.0830	568213.5857
31	PT STA. 58+27.48	537270.7853	568174.8232
32	PC STA. 61+39.68	537236.3813	567864.5249
33	PI STA. 61+69.68	537233.0753	567834.7076
34	PT STA. 61+86.81	537262.8926	567831.4016
35	PC STA. 62+15.97	537291.8818	567828.1875
36	PI STA. 62+33.60	537309.3957	567826.2457
37	PT STA. 62+37.07	537298.7475	567812.2056
38	POE STA. 63+17.17	537250.3429	567748.3819

G:\60049040 US301\CIVIL\PLANS\2A\CP\SW-79.DGN

DELAWARE DEPARTMENT OF TRANSPORTATION

ADDENDUMS / REVISIONS

SCALE 0 30 60 90 FEET

US 301 LEVELS ROAD TO SUMMIT BRIDGE ROAD

CONTRACT T200911303
COUNTY NEW CASTLE
BRIDGE NO.
DESIGNED BY: DB
CHECKED BY: JZ

STORMWATER MANAGEMENT DETAILS BMP 676 (BASIN 10)

SW-79
SHEET NO. 764
TOTAL SHTS. 1256

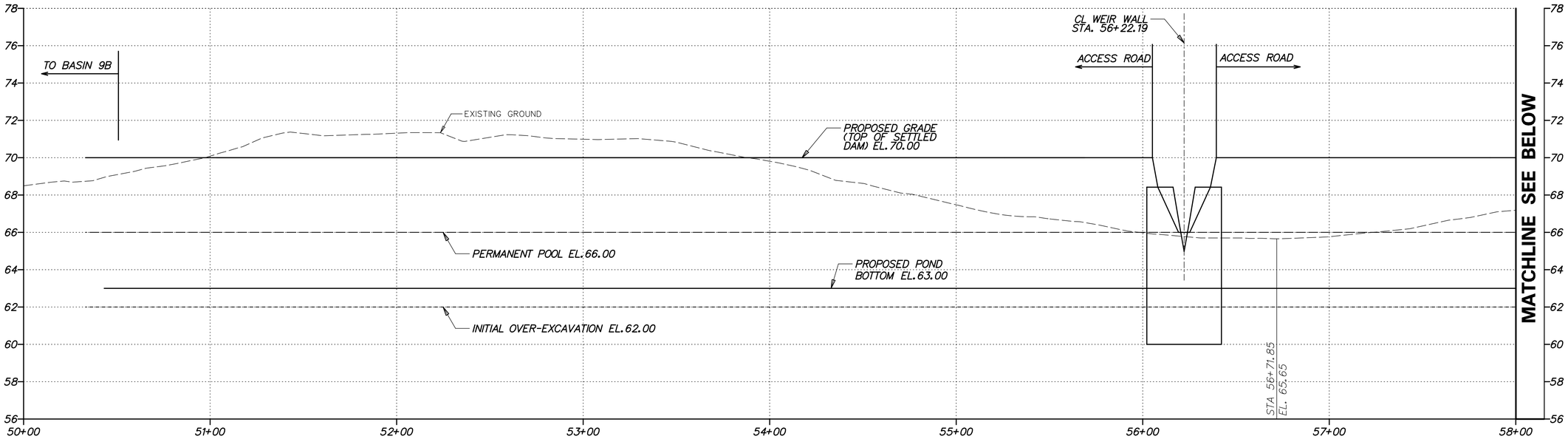

EMBANKMENT PROFILE FOR BMP 676 (BASIN 10)

HORIZONTAL SCALE: 1"-30' (0, 30, 60, 90 FEET)

VERTICAL SCALE: 1"-3' (0, 3, 6, 9 FEET)

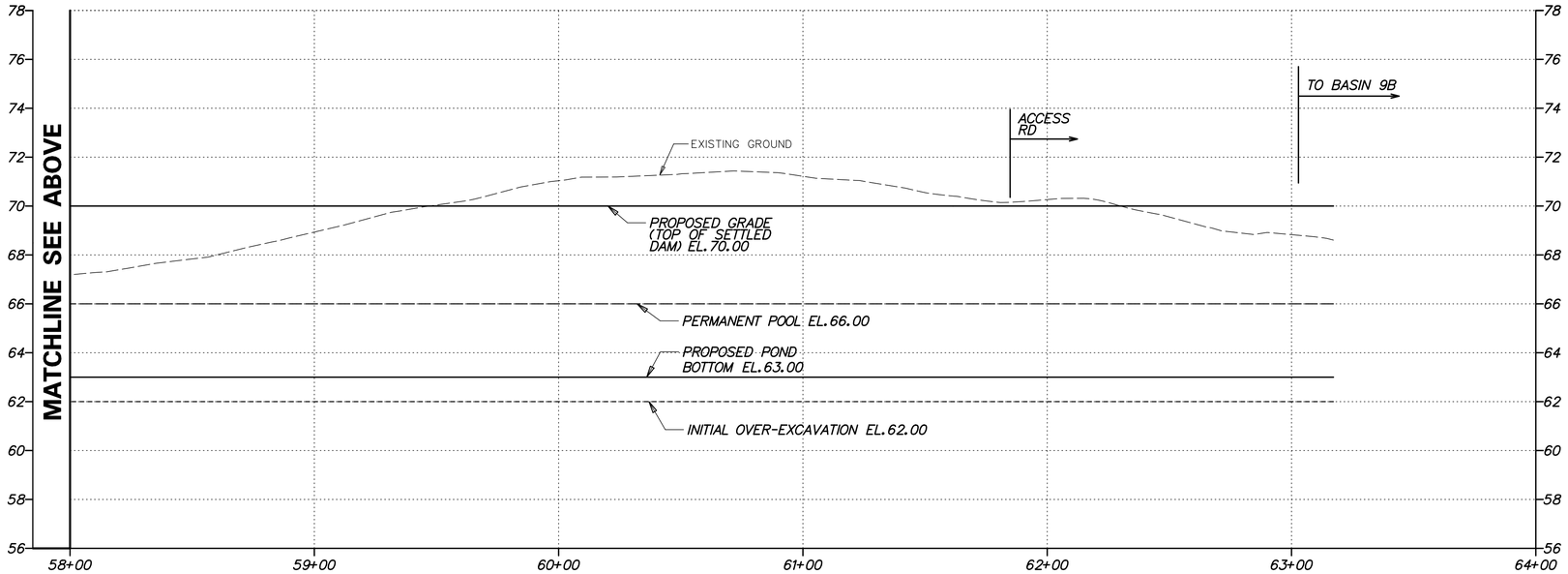

EMBANKMENT PROFILE FOR BMP 676 (BASIN 10)

HORIZONTAL SCALE: 1"-30' (0, 30, 60, 90 FEET)

VERTICAL SCALE: 1"-3' (0, 3, 6, 9 FEET)

G:\60049040 US301\CIVIL\PLANS\2A\CP\SW-80.DGN

DELAWARE DEPARTMENT OF TRANSPORTATION	ADDENDUMS / REVISIONS	AS SHOWN	US 301 LEVELS ROAD TO SUMMIT BRIDGE ROAD	CONTRACT T200911303	BRIDGE NO.	STORMWATER MANAGEMENT DETAILS BMP 676 (BASIN 10)	SW-80
				COUNTY NEW CASTLE	DESIGNED BY: DB		SHEET NO. 765
					CHECKED BY: JZ		TOTAL SHTS. 1256

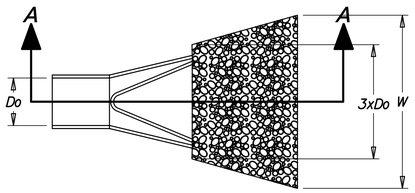

PLAN
SCALE: NONE

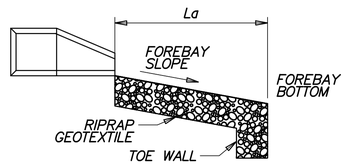

SECTION A-A
SCALE: NONE

DATA

PIPE DIAMETER (Do)
APRON LENGTH (La)
APRON WIDTH (W)
RIPRAP SIZE (R No.)

RR ID	Do	La	W	R No.
34	1.5'	3.0'	13.0'	R-4
35	*3.0'	3.0'	17.0'	R-4
36	*3.2'	2.9'	18.0'	R-4

*EQUIVALENT Do

FOREBAY RIPRAP OUTLET PROTECTION
SCALE: NONE

NOTES:
1. RIPRAP ITEM# 712005.
2. GEOTEXTILES, RIPRAP ITEM# 713003
3. SEE STANDARD NO. E-10 FOR RIPRAP DEPTH AND GEOTEXTILE PLACEMENT.
4. DEPRESS CENTERLINE OF APRON SLIGHTLY TO PREVENT EDGE CUTTING.

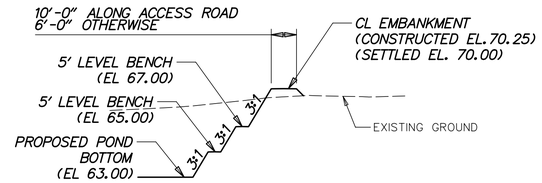

SECTION C-C
SCALE: NONE

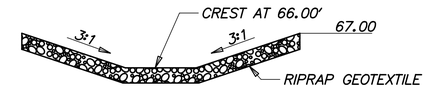

SECTION A-A FROM BASIN PLAN
SCALE: NONE

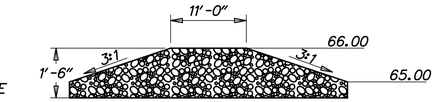

SECTION B-B FROM BASIN PLAN
SCALE: NONE

STONE CHECK DAM
SCALE: NONE

NOTES:
1. RIPRAP ITEM# 712020
2. GEOTEXTILE, RIPRAP ITEM# 713003
3. SEE STANDARD NO. E-10 FOR GEOTEXTILE PLACEMENT.

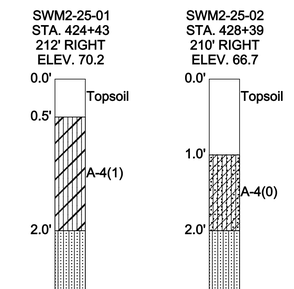

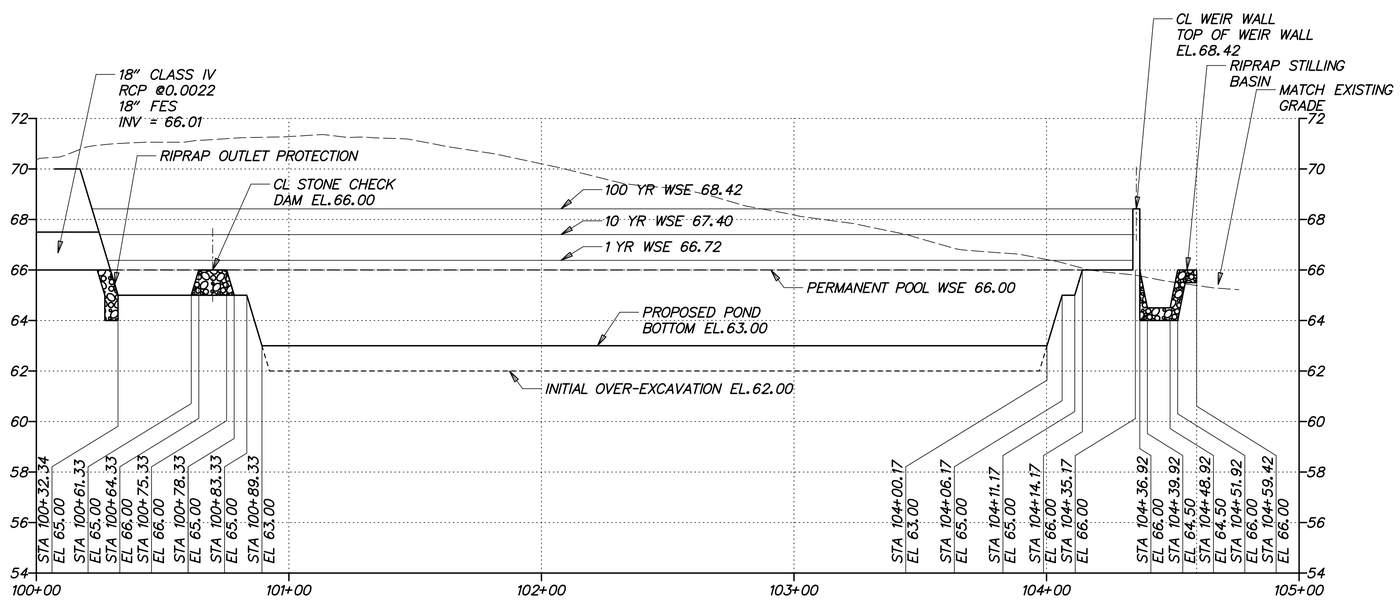

SPILLWAY PROFILE - BMP 676 (BASIN 10)

HORIZONTAL SCALE: 1"=30'
0 30 60 90
FEET

VERTICAL SCALE: 1"=3'
0 3 6 9
FEET

G:\60049040 US301\CIVIL\PLANS\2A\CP\SW-81.DGN

DELAWARE DEPARTMENT OF TRANSPORTATION	ADDENDUMS / REVISIONS	AS SHOWN	US 301 LEVELS ROAD TO SUMMIT BRIDGE ROAD	CONTRACT T200911303	BRIDGE NO.	STORMWATER MANAGEMENT DETAILS BMP 676 (BASIN 10)	SW-81
				COUNTY NEW CASTLE	DESIGNED BY: DB		SHEET NO. 766
					CHECKED BY: JZ		TOTAL SHTS. 1256

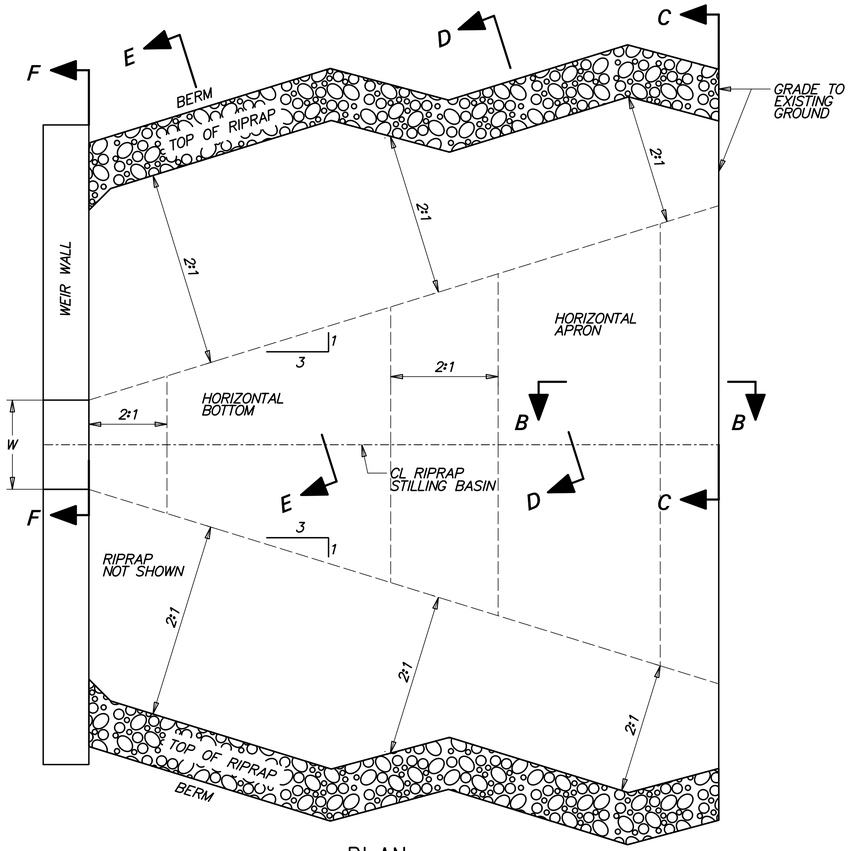

PLAN

SCALE: NONE

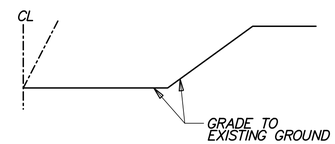

SECTION C-C

SCALE: NONE

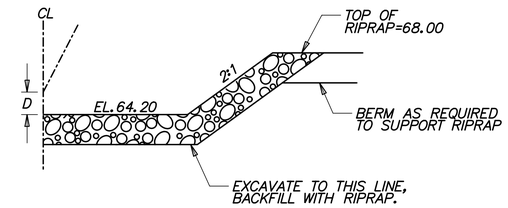

SECTION E-E

SCALE: NONE

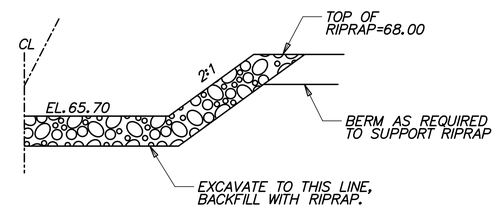

SECTION D-D

SCALE: NONE

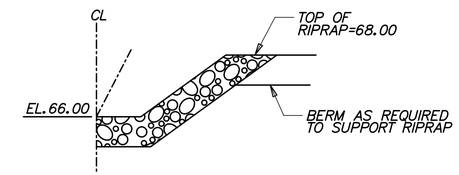

SECTION F-F

SCALE: NONE

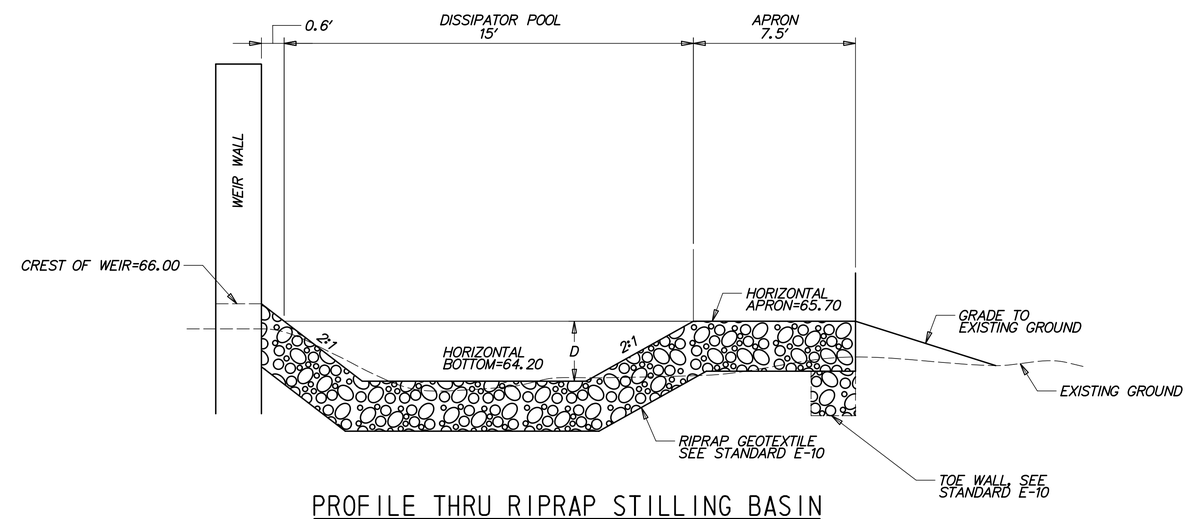

PROFILE THRU RIPRAP STILLING BASIN

SCALE: NONE

DATA

TOP OF V-NOTCH WEIR WIDTH W = 1.07'

DEPTH OF BASIN FROM WEIR CREST D = 1.50'

RIPRAP SIZE (R No.) = R-5 WITH NO. 57 STONE

NOTES:
1. RIPRAP ITEM# 712006.
2. GEOTEXTILES, RIPRAP ITEM# 713003
3. DELAWARE NO.57 STONE ITEM# 302012
4. SEE STANDARD NO. E-10 FOR RIPRAP DEPTH AND GEOTEXTILE PLACEMENT.

RIPRAP STILLING BASIN

SCALE: NONE

G:\60049040 US301\CIVIL\PLANS\2A\CP\SW-82.DGN

DELAWARE DEPARTMENT OF TRANSPORTATION	ADDENDUMS / REVISIONS	AS SHOWN	US 301 LEVELS ROAD TO SUMMIT BRIDGE ROAD	CONTRACT T200911303	BRIDGE NO.	STORMWATER MANAGEMENT DETAILS BMP 676 (BASIN 10)	SW-82
				COUNTY NEW CASTLE	DESIGNED BY: DB		SHEET NO. 767
					CHECKED BY: JZ		TOTAL SHTS. 1256

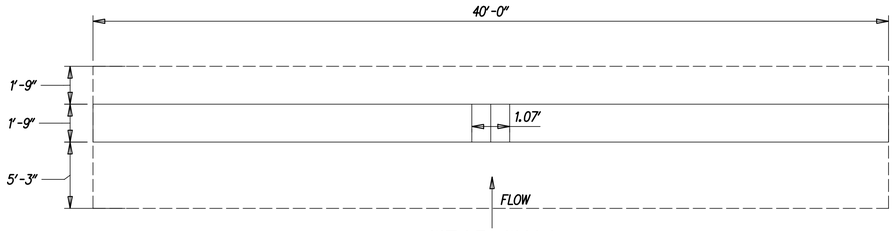

WEIR WALL PLAN

SCALE: NONE

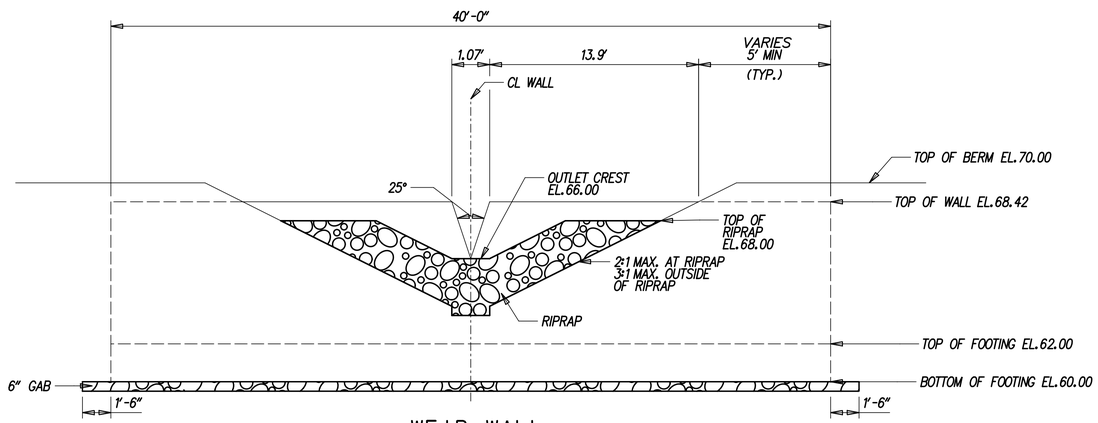

WEIR WALL EXTERIOR ELEVATION WITH RIPRAP STILLING BASIN

SCALE: NONE

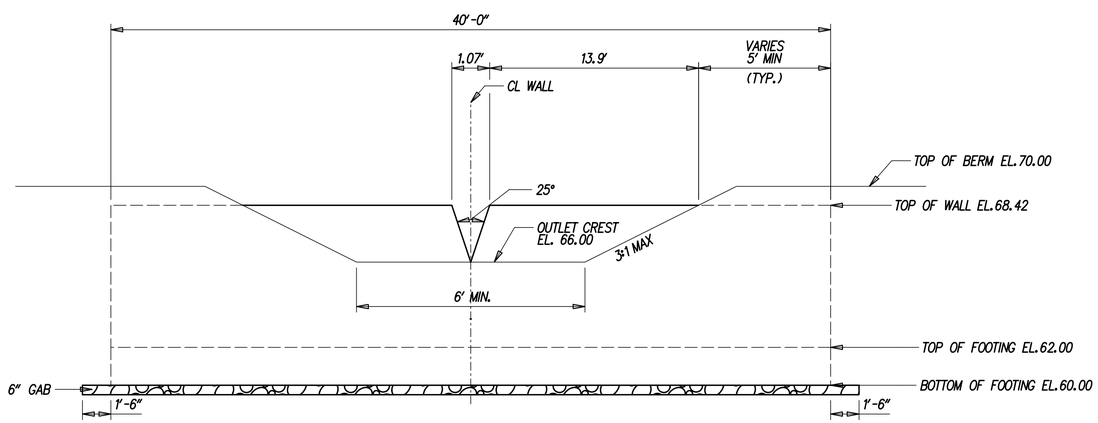

WEIR WALL INTERIOR ELEVATION

SCALE: NONE

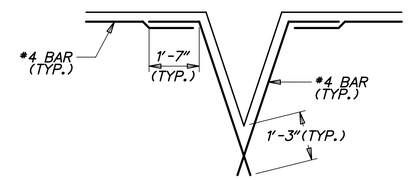

OPENING DETAILS

SCALE: NONE

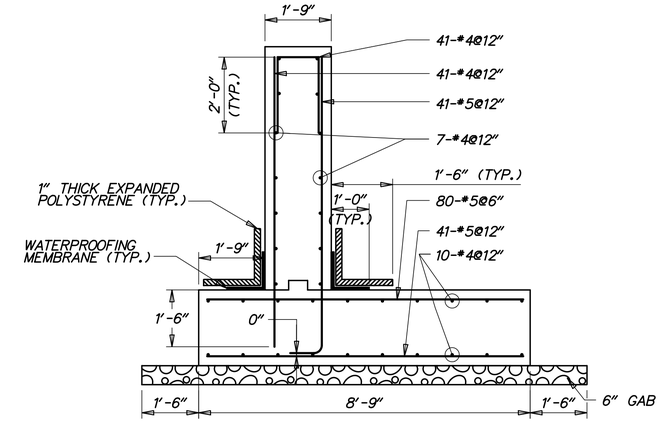

WEIR WALL SECTION

SCALE: 1/2"=1'-0"

GENERAL NOTES

1. DESIGN SPECIFICATIONS:

   AASHTO LRFD BRIDGE DESIGN SPECIFICATIONS, 4TH EDITION, 2007, INCLUDING 2008 AND 2009 INTERIM REVISIONS, AND AS SUPPLEMENTED BY DELAWARE DEPARTMENT OF TRANSPORTATION BRIDGE DESIGN MANUAL, MAY 2005, INCLUDING LATEST REVISIONS.

   PROVIDE MATERIALS AND PERFORM WORK IN ACCORDANCE WITH THE DELAWARE DEPARTMENT OF TRANSPORTATION STANDARD SPECIFICATIONS AND CONSTRUCTION DETAILS, AASHTO/AWS D1.5M/D1.5 BRIDGE WELDING CODE, AND CONTRACT SPECIAL PROVISIONS.

2. LOADING:

   UNIT WEIGHTS OF MATERIALS SHALL BE IN ACCORDANCE WITH THE DELAWARE DESIGN MANUAL.

3. PORTLAND CEMENT CONCRETE:

   PORTLAND CEMENT CONCRETE FOR CAST-IN-PLACE ELEMENTS SHALL BE AS FOLLOWS:
   (28 DAY COMPRESSIVE STRENGTH)
   (CLASS B, F'c=3000 PSI) - WEIR WALL FOOTING
   (CLASS A, F'c=4500 PSI) - WEIR WALL STEM

   WEIR WALLS MUST BE CAST-IN-PLACE.

   MIX REQUIREMENTS SHALL CONFORM TO SECTION 812 OF THE DELAWARE DEPARTMENT OF TRANSPORTATION STANDARD SPECIFICATIONS.

   ALL EXPOSED CORNERS OF CONCRETE SHALL BE CHAMFERED WITH ¾" X ¾" MILLED CHAMFER STRIPS EXCEPT ON UNEXPOSED FOOTINGS.

4. BAR REINFORCEMENT:

   REINFORCING STEEL SHALL CONFORM TO AASHTO M31 (ASTM A615), GRADE 60 AND IS TO BE EPOXY COATED. FUSION-BONDED EPOXY COATED REINFORCING STEEL SHALL CONFORM TO AASHTO M284 (ASTM D3963).

   PROVIDE 3" CONCRETE COVER ON REINFORCEMENT BARS, EXCEPT AS NOTED.

   LAP LENGTH OF #4 BARS TO BE 3'-0". STAGGER SPLICE LOCATIONS.

   DO NOT WELD GRADE 60 REINFORCING STEEL.

5. CONSTRUCTION JOINTS:

   KEYED CONSTRUCTION JOINTS SHALL BE 2" x 4" OR AS NOTED.

6. WATERPROOFING MEMBRANE:

   ADHESIVE BACKED WATERPROOFING MEMBRANE IS TO BE USED. SPLICING OF THE MEMBRANE IS PROHIBITED.

7. REFER TO SPECIFICATION SECTION 272501 FOR CONSTRUCTION SEQUENCE.

8. GAB IS INCIDENTAL TO WALL CONSTRUCTION.

G:\60049040 US301\CIVIL\PLANS\2A\CP\SW-83.DGN

DELAWARE DEPARTMENT OF TRANSPORTATION	ADDENDUMS / REVISIONS	AS SHOWN	US 301 LEVELS ROAD TO SUMMIT BRIDGE ROAD	CONTRACT T200911303	BRIDGE NO.	STORMWATER MANAGEMENT DETAILS BMP 676 (BASIN 10)	SW-83
				COUNTY NEW CASTLE	DESIGNED BY: DB		SHEET NO. 768
					CHECKED BY: JZ		TOTAL SHTS. 1256

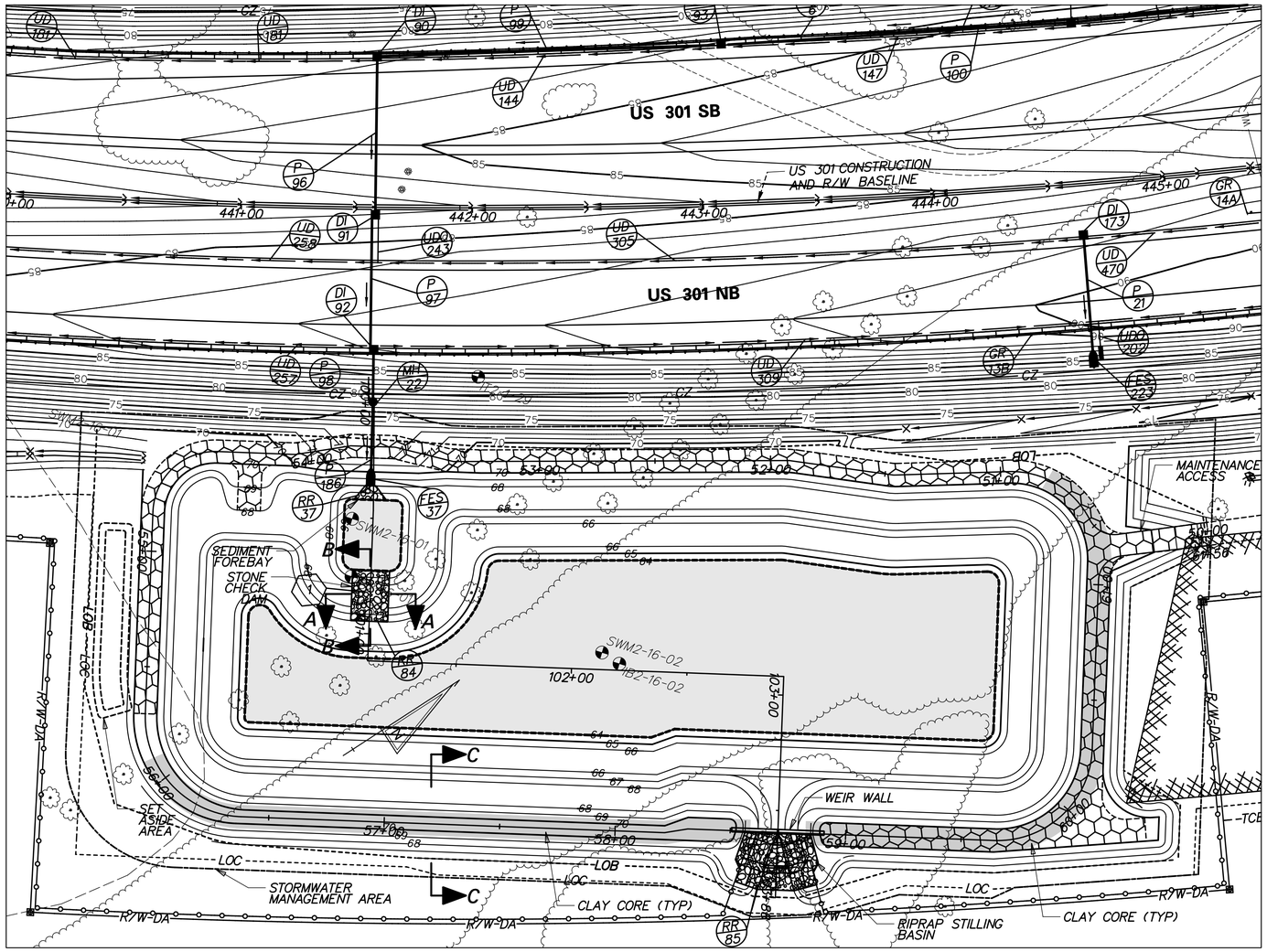

PLAN - BMP 683 (BASIN 11)

POND DESIGN SUMMARY				
DESIGN STORM	FACILITY INFLOW (CFS)	FACILITY DISCHARGE (CFS)	WATER SURFACE ELEVATION (FT)	STORAGE VOLUME (AC.FT.)*
QUALITY STORM (1YR)	11.32	0.14	67.57	1.768
10 - YEAR	24.64	0.66	68.06	2.241
100 - YEAR	45.43	2.06	68.68	3.010

DRAINAGE AREA TO FACILITY: 5.03 ACRES

MANAGEMENT PROVIDED BY FACILITY: WATER QUALITY BY EXTENDED DETENTION OF 1 YEAR STORM, WATER QUANTITY FOR 10 AND 100 YEAR STORMS.

*INCLUDES NORMAL POOL VOLUME OF 1.880 AC-FT.

SKIMMER DEVICE SUMMARY	
SKIMMER ELEVATION	65.50
ORIFICE SIZE (IN)	4
BLOCK WEIR UP TO ELEVATION	NONE

RIPRAP SCHEDULE		
NO.	TYPE	AREA (SY)
37	R-4	7
84	R-4	40
85	R-5	107

CHECK CONSTRUCTION PLANS FOR SCHEDULE OF RIPRAP OUTSIDE OF THE BASIN AREA.

POND CONSTRUCTION SEQUENCE AND NOTES

THE STORMWATER MANAGEMENT POND SHALL FUNCTION AS A SEDIMENT BASIN DURING ROADWAY CONSTRUCTION AND SHALL BE CONSTRUCTED IN ACCORDANCE WITH THE FOLLOWING SECTIONS OF THE STANDARD SPECIFICATIONS:

SECTION 271 - STORMWATER MANAGEMENT POND
SECTION 272 - POND OUTLET STRUCTURE, CONCRETE
SECTION 274 - CLAY BORROW, STORMWATER MANAGEMENT POND

1. INSTALL STABILIZED CONSTRUCTION ENTRANCE.
2. CLEAR AND GRUB FOR INSTALLATION OF PERIMETER EROSION AND SEDIMENT CONTROLS.
3. INSTALL PERIMETER SEDIMENT CONTROLS AS SHOWN.
4. CLEAR AND GRUB REMAINING AREA FOR POND CONSTRUCTION.
5. CONSTRUCT WEIR WALL, RIPRAP STILLING BASIN, CLAY CORE AND PARTIAL EMBANKMENT AS NEEDED TO INSTALL WEIR WALL. INSTALL SKIMMER AND DE-WATER FOUNDATION AS NEEDED IN ACCORDANCE WITH SECTION 111 AND USE SUMP PIT FOR PUMPING. (SEE EROSION AND SEDIMENT CONTROL DETAILS FOR SKIMMER DE-WATERING DEVICE INSTALLATION)
6. EXCAVATE THE POND AND COMPLETE THE EMBANKMENT, GRADES AND DETAILS SHOWN IN THE CONSTRUCTION PLANS. DURING EXCAVATION, THE CONTRACTOR SHALL SALVAGE AND STOCKPILE SOILS CLASSIFIED AS CH, CL, SC AND GC PER THE UNIFIED SOIL CLASSIFIED SYSTEM TO BE USED TO CONSTRUCT EMBANKMENT AND CLAY CORE. THE ABOVE CLASSIFIED SOILS MAY BE OBTAINED FROM ELSEWHERE WITHIN THE PROJECT LIMITS, IF NECESSARY.
7. STABILIZE ALL BARE AREAS.
   NOTE: SEE CONSTRUCTION SEQUENCE PLANS FOR LOCATION OF EROSION AND SEDIMENT CONTROL MEASURES.
8. THE CONTRACTOR SHALL PROVIDE 'AS-BUILT' DRAWINGS OF ALL STORMWATER MANAGEMENT FACILITIES SUCH AS PONDS, INFILTRATION BASINS, BIOFILTRATION SWALES, ETC. 'AS-BUILT' DRAWINGS SHALL SHOW THE ACTUAL FINISHED GROUND CONTOURS, OUTLET STRUCTURE DIMENSIONS AND ELEVATIONS, ETC. AS THEY EXIST AT THE COMPLETION OF THE PROJECT. THESE DRAWINGS SHALL BE SIGNED BY A PROFESSIONAL ENGINEER OR LAND SURVEYOR.

MAINTENANCE OF POND AS A SEDIMENT BASIN

1. CONTRACTOR SHALL INSPECT THE BASIN IMMEDIATELY AFTER EVERY RAIN AND MAKE REPAIRS AS NEEDED.
2. CONTRACTOR SHALL CLEARLY MARK THE CLEANOUT ELEVATION ON A STAKE DRIVEN INTO THE GROUND AT A LOCTATION CLEARLY VISIBLE FROM THE EMBANKMENT. SEDIMENT SHALL BE REMOVED WHEN CLEANOUT ELEVATION IS REACHED AND DISPOSED OF AT A LOCATION APPROVED BY THE ENGINEER. CLEANOUT ELEVATION IS 65.82.

CONVERSION TO PERMANENT STORMWATER MANAGEMENT POND

1. CONVERT THE BASIN INTO THE PERMANENT STORMWATER MANAGEMENT POND AFTER ALL AREAS DRAINING TO THE POND HAVE BEEN PERMANENTLY STABILIZED AND THE ENGINEER HAS APPROVED THE CONVERSION.
2. REMOVE ACCUMULATED SEDIMENT TO ELEVATION 63.00 AND DISPOSE SEDIMENT AT A LOCATION APPROVED BY THE ENGINEER.
3. COMPLETE STABILIZATION OF ALL BARE AREAS. REMOVE EROSION AND SEDIMENT CONTROL MEASURES, DEACTIVATE AND REMOVE DE-WATERING DEVICE, AND REPAIR HOLE IN WEIR WALL WITH NON-SHRINK GROUT.

PLANTING SCHEDULE

PLACE PERMANENT GRASS SEEDING - WET GROUND UP TO ELEVATION 68.00
PLACE PERMANENT GRASS SEEDING - DRY GROUND ABOVE ELEVATION 68.00
PLACE TOPSOIL ON LOWER BENCH ELEVATION 66.00 AND ABOVE.

POND QUANTITIES			
ITEM NO.	ITEM	QTY.	UNITS.
202000	EXCAVATION AND EMBANKMENT	3749	CY
272501	POND OUTLET STRUCTURE, 15, SPECIAL	1	EACH
274000	CLAY BORROW, STORMWATER MANAGEMENT POND, CUT-OFF TRENCH	1291	CY
302011	DELAWARE NO. 3 STONE	302	TON
302012	DELAWARE NO. 57 STONE	25	TON
712005	R-4 RIPRAP	7	SY
712006	R-5 RIPRAP	107	SY
712020	R-4 RIPRAP	29	TON
713001	GEOTEXTILES, STABILIZATION	2039	SY
713003	GEOTEXTILES, RIPRAP	191	SY
733002	TOPSOILING, 6" DEPTH	7145	SY
734013	PERMANENT GRASS SEEDING, DRY GROUND	4076	SY
734015	PERMANENT GRASS SEEDING, WET GROUND	5851	SY

P:\CADD2\60049040 US301\CIVIL\PLANS\2A\CP\AET\SW-84.DGN

DELAWARE DEPARTMENT OF TRANSPORTATION

ADDENDUMS / REVISIONS

SCALE 0 30 60 90 FEET

US 301 LEVELS ROAD TO SUMMIT BRIDGE ROAD

CONTRACT	BRIDGE NO.	
T200911303	DESIGNED BY: DB	JW
COUNTY	CHECKED BY: JZ	SF
NEW CASTLE		

STORMWATER MANAGEMENT DETAILS BMP 683 (BASIN 11)

SW-84
SHEET NO.
769
TOTAL SHTS.
1256

CL PRINCIPAL SPILLWAY			
	STATION	NORTHING	EASTING
1	POB STA. 100+00.00	538544.8742	569035.8655
2	PI STA. 100+46.68	538519.1123	569074.7878
3	PI STA. 101+11.73	538481.6408	569127.9634
4	PI STA. 102+91.93	538628.9447	569231.7647
5	POE STA. 103+87.74	538573.7583	569310.0794

CL EMBANKMENT			
	STATION	NORTHING	EASTING
20	POB STA. 50+00.00	538818.7572	569275.5605
21	PC STA. 50+38.67	538783.8083	569258.9979
22	PI STA. 50+47.18	538776.1218	569255.3552
23	PT STA. 50+53.47	538777.0135	569246.8960
24	PC STA. 50+53.53	538777.0189	569246.8450
25	PI STA. 50+77.55	538779.5370	569222.9558
26	PT STA. 50+96.35	538759.0079	569210.4822
27	PI STA. 51+46.29	538716.3261	569184.5486
28	PI STA. 51+91.87	538681.8965	569154.6795
29	PI STA. 53+37.26	538559.7439	569075.8262
30	PI STA. 53+63.28	538541.9503	569056.8486
31	PI STA. 53+82.38	538526.2565	569045.9626
32	PI STA. 54+06.69	538504.0736	569036.0092
33	PC STA. 54+40.38	538476.5379	569016.6055
34	PI STA. 54+67.38	538454.4672	569001.0528
35	PT STA. 54+82.79	538438.9145	569023.1236
36	PC STA. 55+70.39	538388.4543	569094.7316
37	PI STA. 56+13.39	538363.6854	569129.8812
38	PT STA. 56+37.93	538398.8349	569154.6502
39	PI STA. 58+21.45	538548.8494	569260.3617
40	PI STA. 58+31.65	538558.1758	569264.4870
41	PC STA. 59+64.26	538666.5769	569340.8746
42	PI STA. 60+05.28	538700.1080	569364.5031
43	PT STA. 60+28.68	538723.7202	569330.9605
44	PC STA. 61+01.94	538765.8897	569271.0559
45	PI STA. 61+11.34	538771.3016	569263.3680
46	PT STA. 61+17.50	538779.7384	569267.5166
47	POE STA. 61+56.21	538814.4747	569284.5971

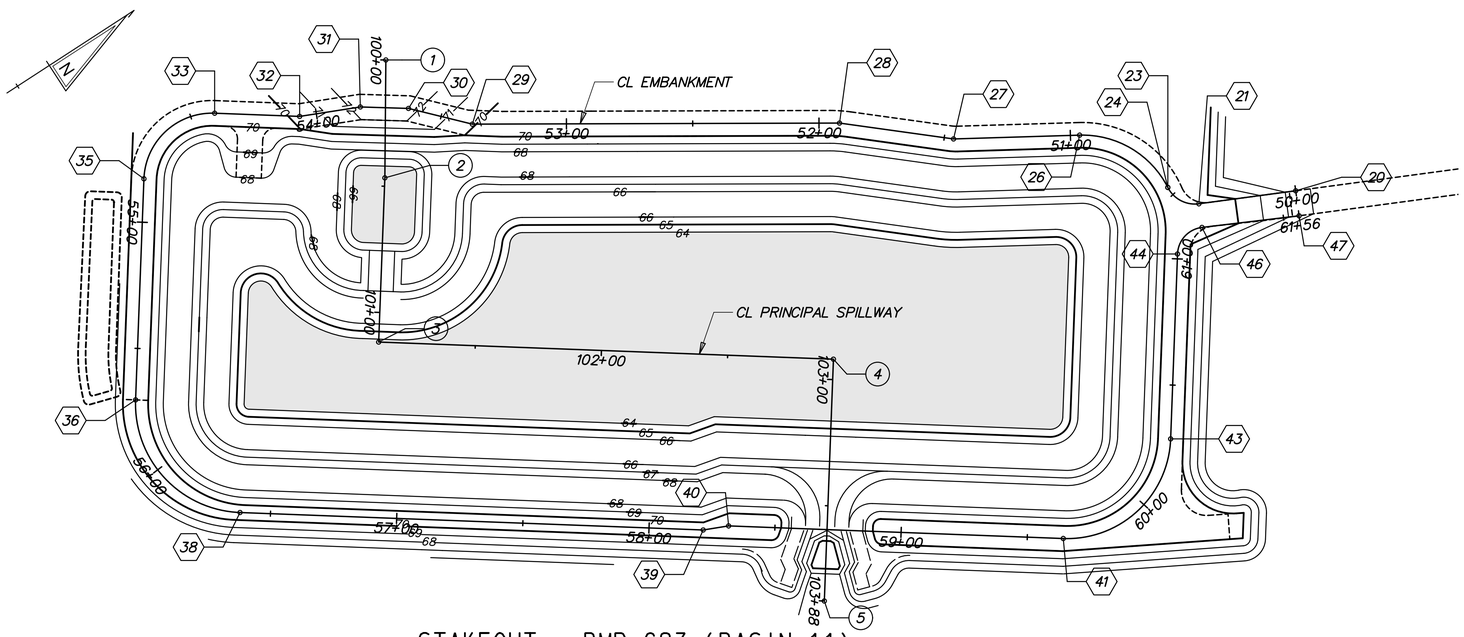

STAKEOUT - BMP 683 (BASIN 11)

G:\60049040 US301\CIVIL\PLANS\2A\CP\SW-85.DGN

DELAWARE DEPARTMENT OF TRANSPORTATION

ADDENDUMS / REVISIONS

SCALE 0 30 60 90 FEET

US 301 LEVELS ROAD TO SUMMIT BRIDGE ROAD

CONTRACT T200911303 | COUNTY NEW CASTLE | BRIDGE NO. | DESIGNED BY: DB | CHECKED BY: JZ

STORMWATER MANAGEMENT DETAILS BMP 683 (BASIN 11)

SW-85 | SHEET NO. 770 | TOTAL SHTS. 1256

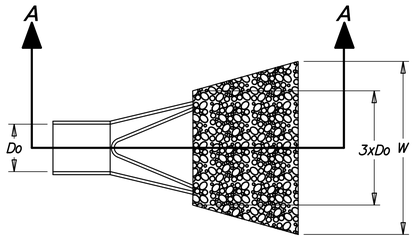

PLAN
SCALE: NONE

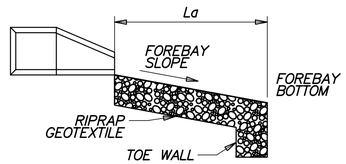

SECTION A-A
SCALE: NONE

DATA

PIPE DIAMETER (Do)
APRON LENGTH (La)
APRON WIDTH (W)
RIPRAP SIZE (R No.)

FES ID	Do	La	W	R No.
37	1.5'	6.2'	14.0'	R-4

FOREBAY RIPRAP OUTLET PROTECTION
SCALE: NONE

NOTES:
1. RIPRAP ITEM# 712005.
2. GEOTEXTILES, RIPRAP ITEM# 713003
3. SEE STANDARD NO. E-10 FOR RIPRAP DEPTH AND GEOTEXTILE PLACEMENT.
4. DEPRESS CENTERLINE OF APRON SLIGHTLY TO PREVENT EDGE CUTTING.

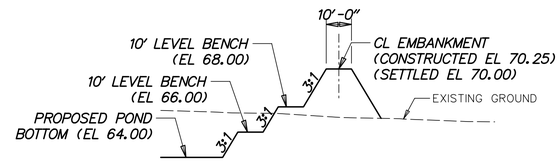

SECTION C-C
SCALE: NONE

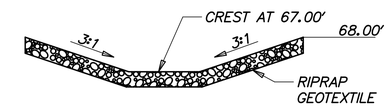

SECTION A-A FROM BASIN PLAN
SCALE: NONE

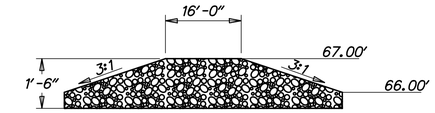

SECTION B-B FROM BASIN PLAN
SCALE: NONE

STONE CHECK DAM
SCALE: NONE

NOTES:
1. RIPRAP ITEM# 712020
2. GEOTEXTILE, RIPRAP ITEM# 713003
3. SEE STANDARD NO. E-10 FOR GEOTEXTILE PLACEMENT.

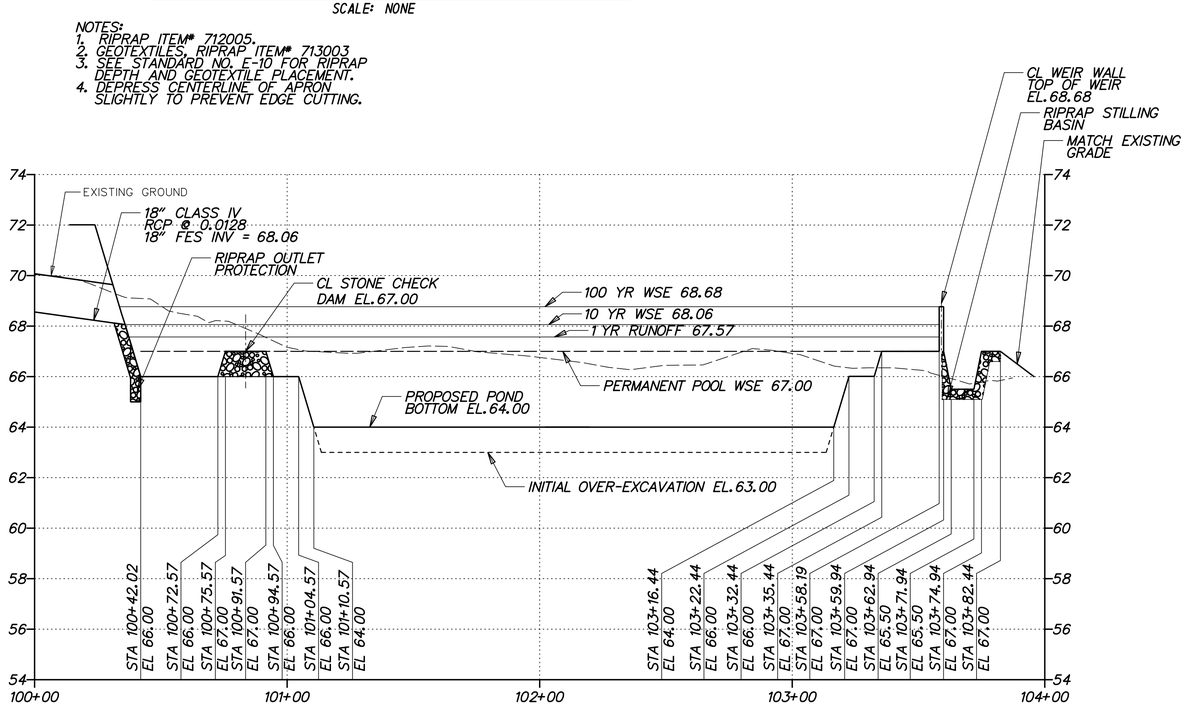

SPILLWAY PROFILE BMP 683 (BASIN 11)

HORIZONTAL SCALE: 1"-30'
0 30 60 90
FEET

VERTICAL SCALE: 1"-3'
0 3 6 9
FEET

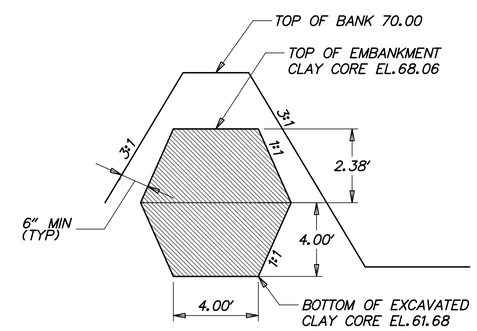

CLAY CORE TYPICAL SECTION
SCALE: NONE

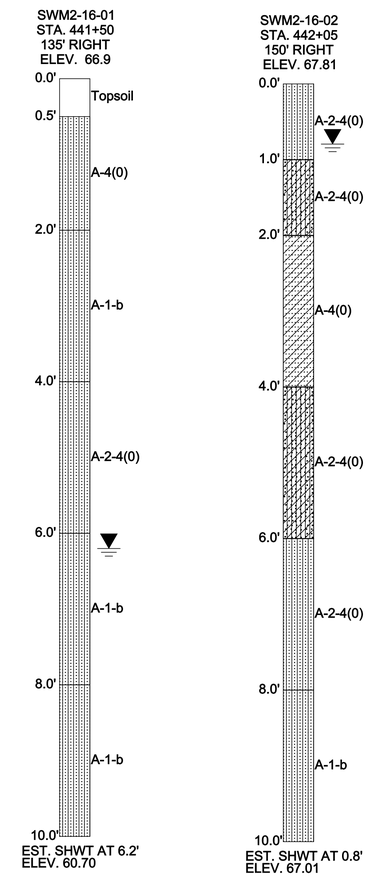

G:\60049040 US301\CIVIL\PLANS\2A\CP\SW-86.DGN

DELAWARE DEPARTMENT OF TRANSPORTATION	ADDENDUMS / REVISIONS	AS SHOWN	US 301 LEVELS ROAD TO SUMMIT BRIDGE ROAD	CONTRACT T200911303 / COUNTY NEW CASTLE	BRIDGE NO. / DESIGNED BY: DB / CHECKED BY: JZ	STORMWATER MANAGEMENT DETAILS BMP 683 (BASIN 11)	SW-86 / SHEET NO. 771 / TOTAL SHTS. 1256

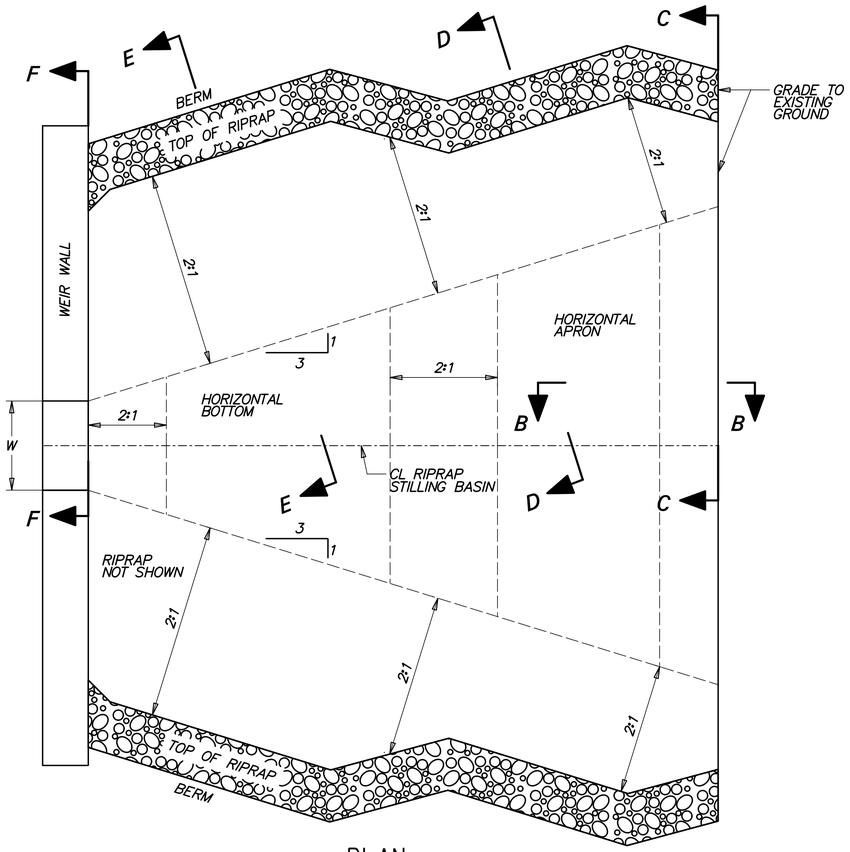

PLAN

SCALE: NONE

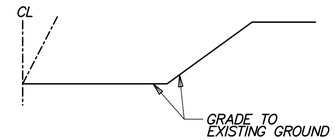

SECTION C-C

SCALE: NONE

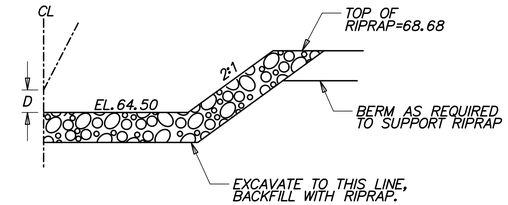

SECTION E-E

SCALE: NONE

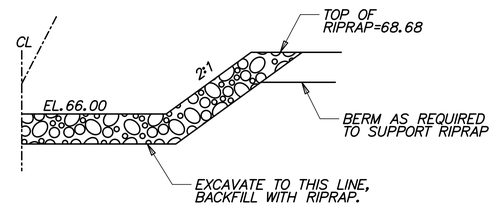

SECTION D-D

SCALE: NONE

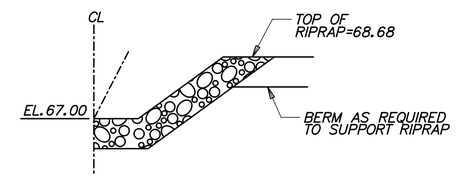

SECTION F-F

SCALE: NONE

DATA

TOP OF V-NOTCH WEIR WIDTH W = 0.74'

DEPTH OF BASIN FROM WEIR CREST D = 1.50'

RIPRAP SIZE (R No.) = R-5 WITH NO. 57 STONE

NOTES:
1. RIPRAP ITEM# 712006.
2. GEOTEXTILES, RIPRAP ITEM# 713003.
3. DELAWARE NO. 57 STONE ITEM# 302012
4. SEE STANDARD NO. E-10 FOR RIPRAP DEPTH AND GEOTEXTILE PLACEMENT.

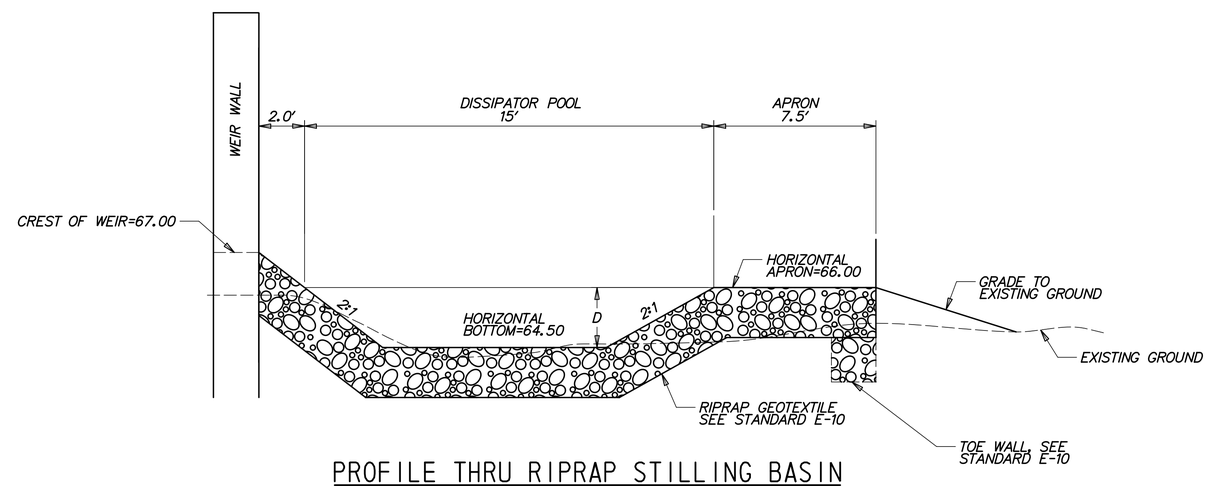

PROFILE THRU RIPRAP STILLING BASIN

SCALE: NONE

RIPRAP STILLING BASIN

SCALE: NONE

G:\60049040 US301\CIVIL\PLANS\2A\CP\SW-87.DGN

DELAWARE DEPARTMENT OF TRANSPORTATION	ADDENDUMS / REVISIONS	AS SHOWN	US 301 LEVELS ROAD TO SUMMIT BRIDGE ROAD	CONTRACT T200911303	BRIDGE NO.	STORMWATER MANAGEMENT DETAILS BMP 683 (BASIN 11)	SW-87
				COUNTY NEW CASTLE	DESIGNED BY: DB		SHEET NO. 772
					CHECKED BY: JZ		TOTAL SHTS. 1256

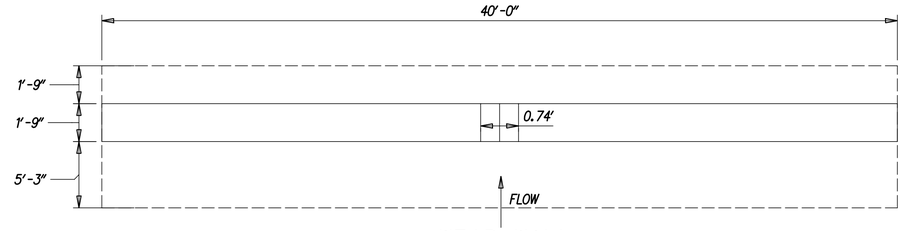

WEIR WALL PLAN

SCALE: NONE

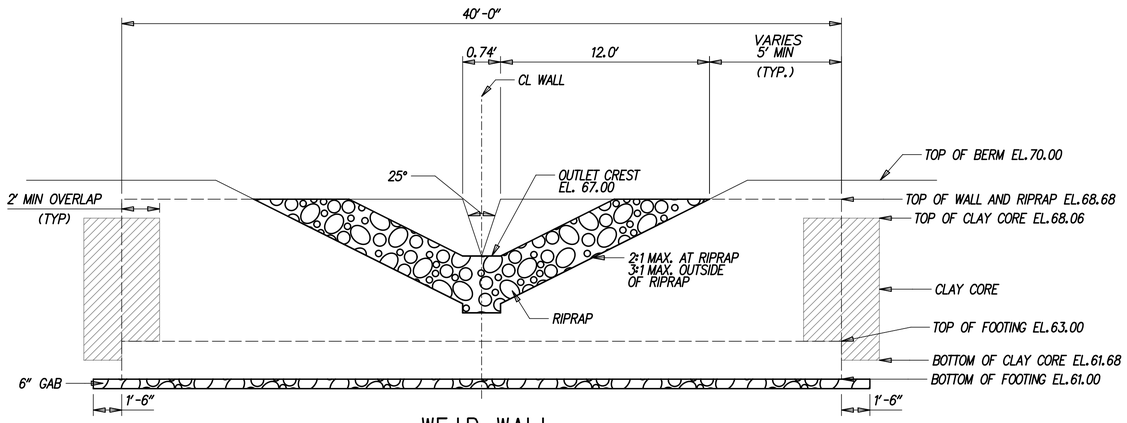

WEIR WALL EXTERIOR ELEVATION WITH RIPRAP STILLING BASIN

SCALE: NONE

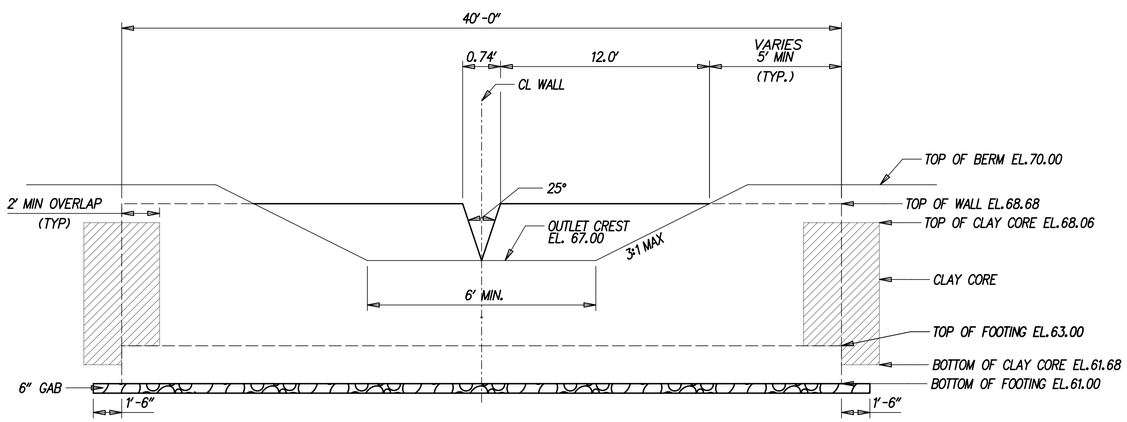

WEIR WALL INTERIOR ELEVATION

SCALE: NONE

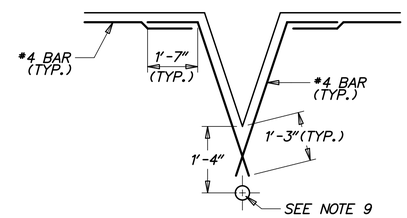

OPENING DETAILS

SCALE: NONE

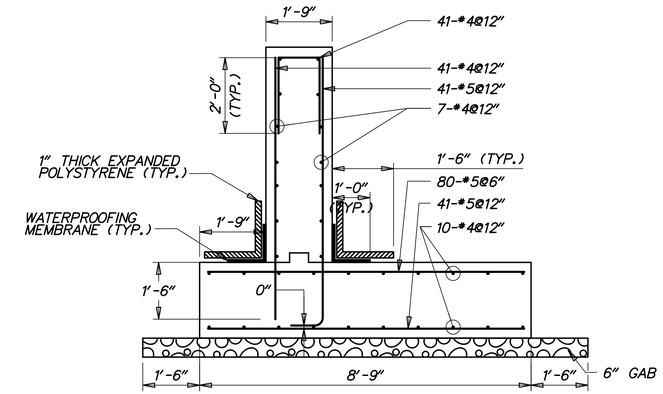

WEIR WALL SECTION

SCALE: 1/2"=1'-0"

GENERAL NOTES

1. DESIGN SPECIFICATIONS:

   AASHTO LRFD BRIDGE DESIGN SPECIFICATIONS, 4TH EDITION, 2007, INCLUDING 2008 AND 2009 INTERIM REVISIONS, AND AS SUPPLEMENTED BY DELAWARE DEPARTMENT OF TRANSPORTATION BRIDGE DESIGN MANUAL, MAY 2005, INCLUDING LATEST REVISIONS.

   PROVIDE MATERIALS AND PERFORM WORK IN ACCORDANCE WITH THE DELAWARE DEPARTMENT OF TRANSPORTATION STANDARD SPECIFICATIONS AND CONSTRUCTION DETAILS, AASHTO/AWS D1.5M/D1.5 BRIDGE WELDING CODE, AND CONTRACT SPECIAL PROVISIONS.

2. LOADING:

   UNIT WEIGHTS OF MATERIALS SHALL BE IN ACCORDANCE WITH THE DELAWARE DESIGN MANUAL.

3. PORTLAND CEMENT CONCRETE:

   PORTLAND CEMENT CONCRETE FOR CAST-IN-PLACE ELEMENTS SHALL BE AS FOLLOWS:
   (28 DAY COMPRESSIVE STRENGTH)
   (CLASS B, F'c=3000 PSI) - WEIR WALL FOOTING
   (CLASS A, F'c=4500 PSI) - WEIR WALL STEM

   WEIR WALLS MUST BE CAST-IN-PLACE.

   MIX REQUIREMENTS SHALL CONFORM TO SECTION 812 OF THE DELAWARE DEPARTMENT OF TRANSPORTATION STANDARD SPECIFICATIONS.

   ALL EXPOSED CORNERS OF CONCRETE SHALL BE CHAMFERED WITH ¾" X ¾" MILLED CHAMFER STRIPS EXCEPT ON UNEXPOSED FOOTINGS.

4. BAR REINFORCEMENT:

   REINFORCING STEEL SHALL CONFORM TO AASHTO M31 (ASTM A615), GRADE 60 AND IS TO BE EPOXY COATED. FUSION-BONDED EPOXY COATED REINFORCING STEEL SHALL CONFORM TO AASHTO M284 (ASTM D3963).

   PROVIDE 3" CONCRETE COVER ON REINFORCEMENT BARS, EXCEPT AS NOTED.

   LAP LENGTH OF #4 BARS TO BE 3'-0". STAGGER SPLICE LOCATIONS.

   DO NOT WELD GRADE 60 REINFORCING STEEL.

5. CONSTRUCTION JOINTS:

   KEYED CONSTRUCTION JOINTS SHALL BE 2" x 4" OR AS NOTED.

6. WATERPROOFING MEMBRANE:

   ADHESIVE BACKED WATERPROOFING MEMBRANE IS TO BE USED. SPLICING OF THE MEMBRANE IS PROHIBITED.

7. REFER TO SPECIFICATION SECTION 272501 FOR CONSTRUCTION SEQUENCE.

8. GAB IS INCIDENTAL TO WALL CONSTRUCTION.

9. HOLE TO BE CONICAL IN SHAPE. THE HOLE DIAMETERS AT FRONT AND REAR FACE OF THE WALL STEM ARE TO BE 5" AND 6", RESPECTIVELY.

G:\60049040 US301\CIVIL\PLANS\2A\CP\SW-88.DGN

DELAWARE DEPARTMENT OF TRANSPORTATION	ADDENDUMS / REVISIONS	AS SHOWN	US 301 LEVELS ROAD TO SUMMIT BRIDGE ROAD	CONTRACT T200911303	BRIDGE NO.	STORMWATER MANAGEMENT DETAILS BMP 683 (BASIN 11)	SW-88
				COUNTY NEW CASTLE	DESIGNED BY: DB		SHEET NO. 773
					CHECKED BY: JZ		TOTAL SHTS. 1256

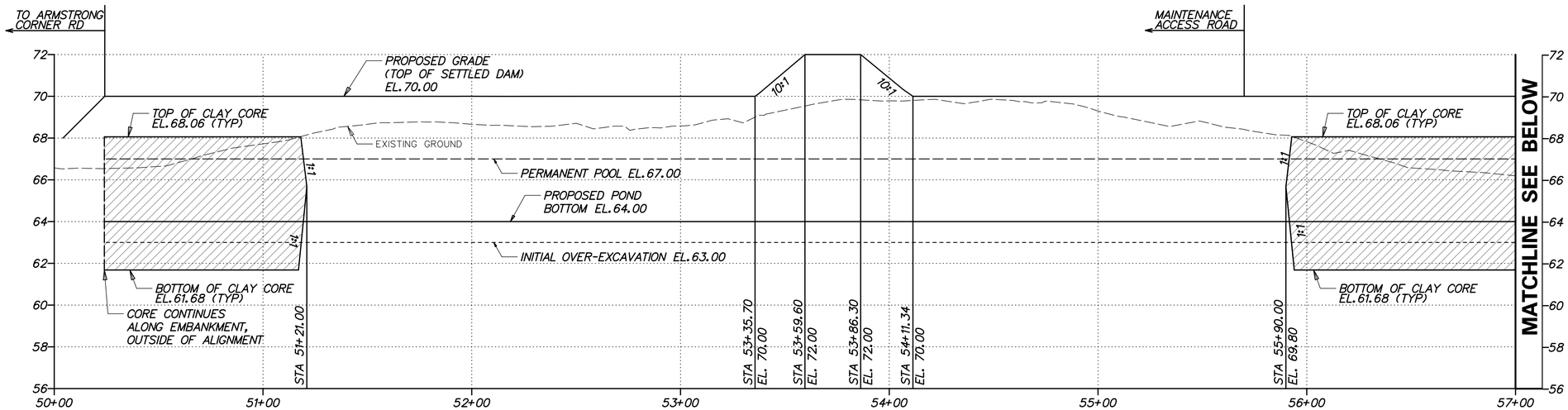

EMBANKMENT PROFILE FOR BMP 683 (BASIN 11)

HORIZONTAL SCALE: 1"=30' (0, 30, 60, 90 FEET)

VERTICAL SCALE: 1"=3' (0, 3, 6, 9 FEET)

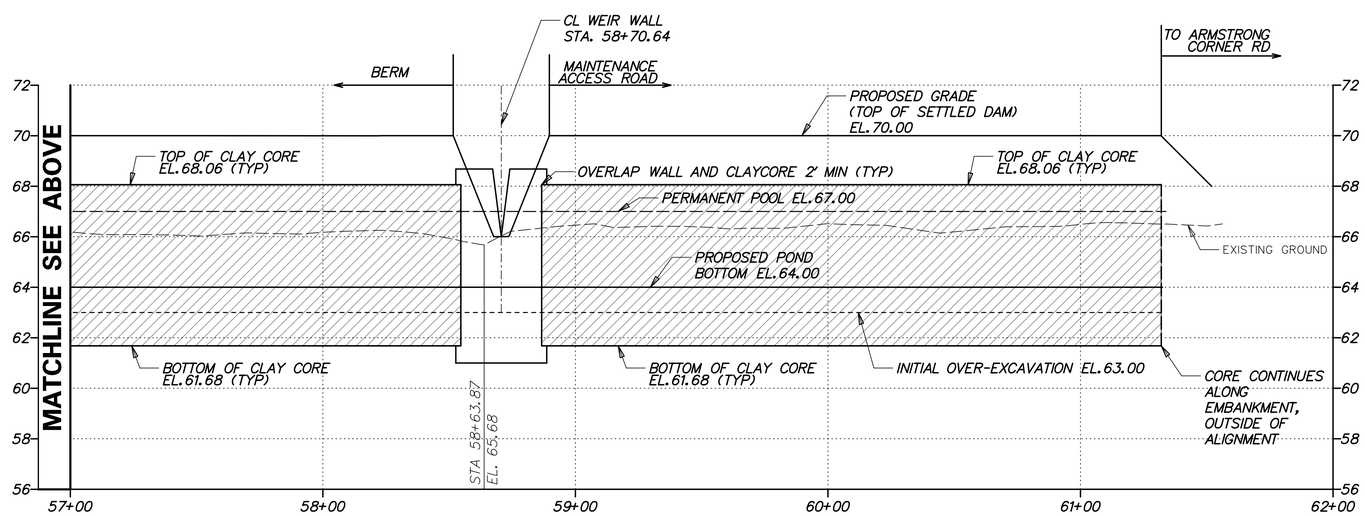

EMBANKMENT PROFILE FOR BMP 683 (BASIN 11)

HORIZONTAL SCALE: 1"=30' (0, 30, 60, 90 FEET)

VERTICAL SCALE: 1"=3' (0, 3, 6, 9 FEET)

G:\60049040 US301\CIVIL\PLANS\2A\CP\SW-89.DGN

DELAWARE DEPARTMENT OF TRANSPORTATION	ADDENDUMS / REVISIONS	AS SHOWN	US 301 LEVELS ROAD TO SUMMIT BRIDGE ROAD	CONTRACT T200911303	BRIDGE NO.	STORMWATER MANAGEMENT DETAILS BMP 683 (BASIN 11)	SW-89
				COUNTY NEW CASTLE	DESIGNED BY: DB		SHEET NO. 774
					CHECKED BY: JZ		TOTAL SHTS. 1256

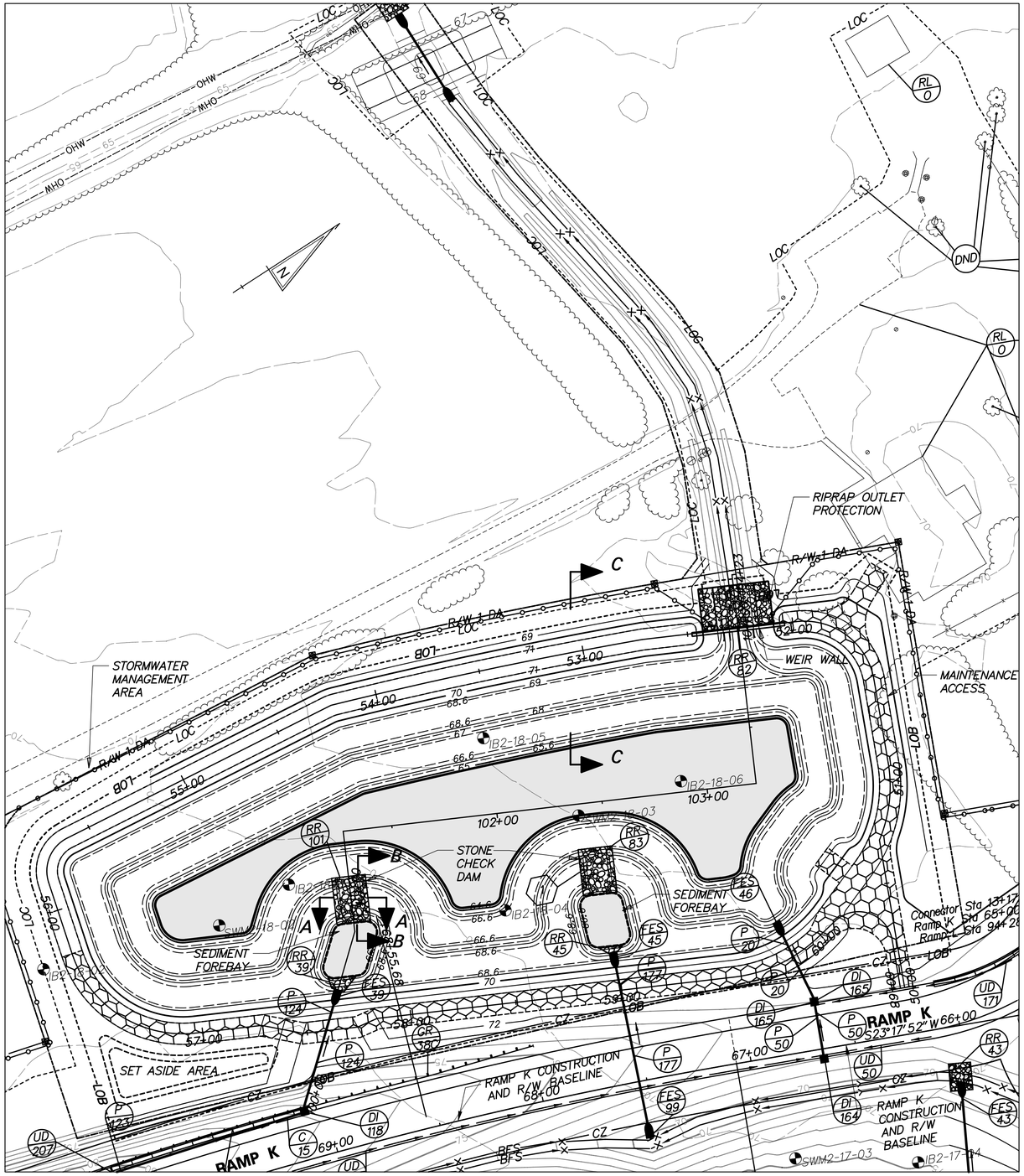

PLAN - BMP 684 (BASIN 15)

POND CONSTRUCTION SEQUENCE AND NOTES

THE STORMWATER MANAGEMENT POND SHALL FUNCTION AS A SEDIMENT BASIN DURING ROADWAY CONSTRUCTION AND SHALL BE CONSTRUCTED IN ACCORDANCE WITH THE FOLLOWING SECTIONS OF THE STANDARD SPECIFICATIONS:

SECTION 271 - STORMWATER MANAGEMENT POND
SECTION 272 - POND OUTLET STRUCTURE, CONCRETE

1. INSTALL STABILIZED CONSTRUCTION ENTRANCE.
2. CLEAR AND GRUB FOR INSTALLATION OF PERIMETER EROSIAND SEDIMENT CONTROLS.
3. INSTALL PERIMETER SEDIMENT CONTROLS AS SHOWN.
4. CLEAR AND GRUB REMAINING AREA FOR POND CONSTRUCTION.
5. CONSTRUCT WEIR WALL, RIPRAP OUTLET PROTECTION AND PARTIAL EMBANKMENT AS NEEDED TO INSTALL WEIR WALL. INSTALL SKIMMER AND DE-WATER FOUNDATION AS NEEDED IN ACCORDANCE WITH SECTION 111 AND USE SUMP PIT FOR PUMPING. (SEE EROSION AND SEDIMENT CONTROL DETAILS FOR SKIMMER DE-WATERING DEVICE INSTALLATION).
6. EXCAVATE THE POND AND COMPLETE THE EMBANKMENT, GRADES AND DETAILS SHOWN IN THE CONSTRUCTION PLANS. DURING EXCAVATION, THE CONTRACTOR SHALL SALVAGE AND STOCKPILE SOILS CLASSIFIED AS CH, CL, SC AND GG PER THE UNIFIED SOIL CLASSIFICATION SYSTEM TO BE USED TO CONSTRUCT EMBANKMENT. THE ABOVE CLASSIFIED SOILS MAY BE OBTAINED FROM ELSEWHERE WITHIN THE PROJECT LIMITS, IF NECESSARY.
7. STABILIZE ALL BARE AREAS.
   NOTE: SEE CONSTRUCTION SEQUENCE PLANS FOR LOCATION OF EROSION AND SEDIMENT CONTROL MEASURES.
8. THE CONTRACTOR SHALL PROVIDE 'AS-BUILT' DRAWINGS OF ALL STORMWATER MANAGEMENT FACILITIES SUCH AS PONDS, INFILTRATION BASINS, BIOFILTRATION SWALES, ETC. 'AS-BUILT' DRAWINGS SHALL SHOW THE ACTUAL FINISHED GROUND CONTOURS, OUTLET STRUCTURE DIMENSIONS AND ELEVATIONS, ETC. AS THEY EXIST AT THE COMPLETION OF THE PROJECT. THESE DRAWINGS SHALL BE SIGNED BY A PROFESSIONAL ENGINEER OR LAND SURVEYOR.

MAINTENANCE OF POND AS A SEDIMENT BASIN

1. CONTRACTOR SHALL INSPECT THE BASIN IMMEDIATELY AFTER EVERY RAIN AND MAKE REPAIRS AS NEEDED.
2. CONTRACTOR SHALL CLEARLY MARK THE CLEANOUT ELEVATION ON A STAKE DRIVEN INTO THE GROUND AT A LOCTATION CLEARLY VISIBLE FROM THE EMBANKMENT. SEDIMENT SHALL BE REMOVED WHEN CLEANOUT ELEVATION IS REACHED AND DISPOSED OF AT A LOCATION APPROVED BY THE ENGINEER. CLEANOUT ELEVATION IS 68.19.

CONVERSION TO PERMANENT STORMWATER MANAGEMENT POND

1. CONVERT THE BASIN INTO THE PERMANENT STORMWATER MANAGEMENT POND AFTER ALL AREAS DRAINING TO THE POND HAVE BEEN PERMANENTLY STABILIZED AND THE ENGINEER HAS APPROVED THE CONVERSION.
2. REMOVE ACCUMULATED SEDIMENT TO ELEVATION 64.60 AND DISPOSE SEDIMENT AT A LOCATION APPROVED BY THE ENGINEER.
3. COMPLETE STABILIZATION OF ALL BARE AREAS. REMOVE EROSION AND SEDIMENT CONTROL MEASURES AND DEACTIVATE DE-WATERING DEVICE.

PLANTING SCHEDULE

PLACE PERMANENT GRASS SEEDING - WET GROUND UP TO ELEVATION 68.60
PLACE PERMANENT GRASS SEEDING - DRY GROUND ABOVE ELEVATION 68.60
PLACE TOPSOIL ON LOWER BENCH ELEVATION 66.60 AND ABOVE.

SKIMMER DEVICE SUMMARY	
SKIMMER ELEVATION	67.64
ORIFICE SIZE (IN)	3
BLOCK WEIR UP TO ELEVATION	68.69

POND DESIGN SUMMARY

DESIGN STORM	FACILITY INFLOW (CFS)	FACILITY DISCHARGE (CFS)	WATER SURFACE ELEVATION (FT)	STORAGE VOLUME (AC.FT.)*
QUALITY STORM (1 YR)	11.46	0.22	68.28	1.757
10 - YEAR	29.95	1.16	68.94	2.326
100 - YEAR	60.93	4.39	69.87	3.303

DRAINAGE AREA TO FACILITY: 7.57 ACRES

MANAGEMENT PROVIDED BY FACILITY: WATER QUALITY BY EXTENDED DETENTION OF 1 YEAR STORM, WATER QUANTITY FOR 10 AND 100 YEAR STORMS.

*INCLUDES NORMAL POOL VOLUME OF 1.269 AC-FT.

RIPRAP SCHEDULE		
NO.	TYPE	AREA (SY)
39	R-4	7
45	R-4	3
82	R-5	79
83	R-4	40
101	R-4	40

CHECK CONSTRUCTION PLANS FOR SCHEDULE OF RIPRAP OUTSIDE OF THE BASIN AREA.

POND QUANTITIES

ITEM NO.	ITEM	QTY.	UNITS.
202000	EXCAVATION AND EMBANKMENT	6666	CY
272501	POND OUTLET STRUCTURE, 16, SPECIAL	1	EACH
302011	DELAWARE NO. 3 STONE	246	TON
302012	DELAWARE NO. 57 STONE	19	TON
712005	R-4 RIPRAP	10	SY
712006	R-5 RIPRAP	79	SY
712020	R-4 RIPRAP	58	TON
713001	GEOTEXTILES, STABILIZATION	1659	SY
713003	GEOTEXTILES, RIPRAP	214	SY
733002	TOPSOILING, 6" DEPTH	7947	SY
734013	PERMANENT GRASS SEEDING, DRY GROUND	4968	SY
734015	PERMANENT GRASS SEEDING, WET GROUND	4772	SY

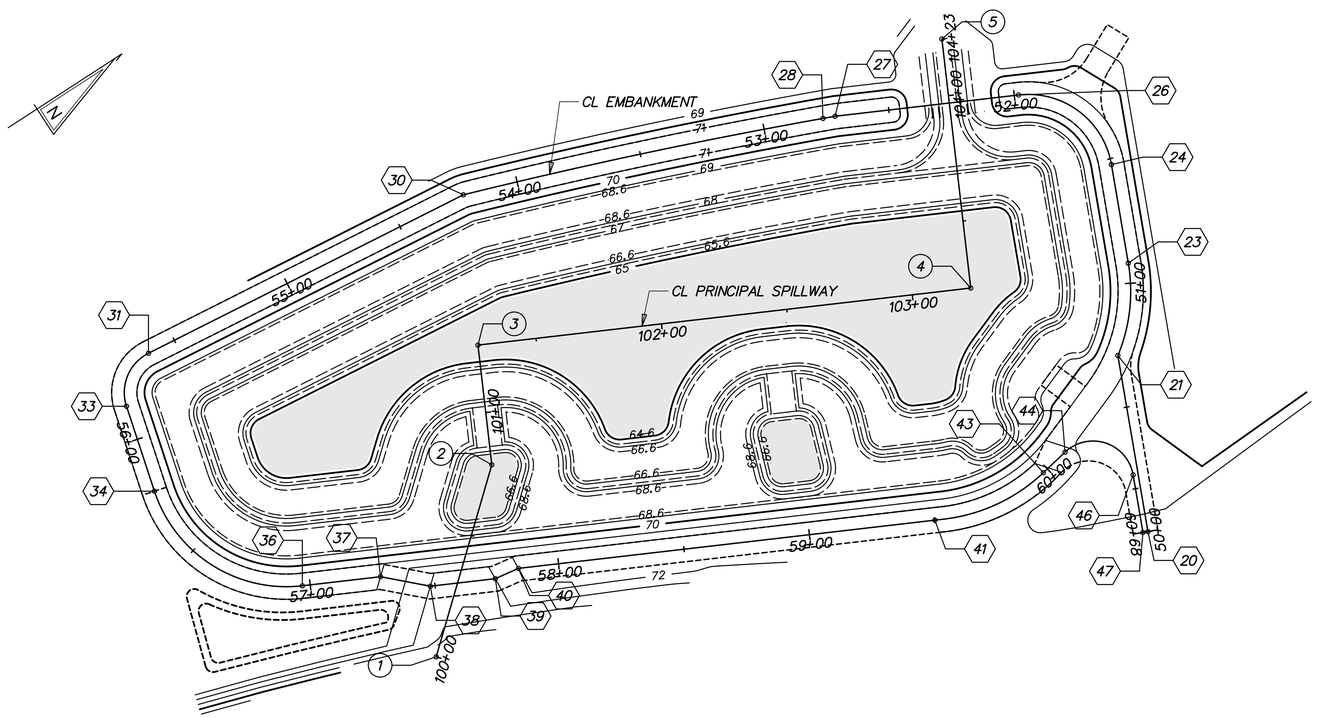

STAKEOUT - BMP 684 (BASIN 15)

CL PRINCIPAL SPILLWAY				
	STATION		NORTHING	EASTING
1	POB	STA. 100+00.00	540418.8220	569658.4757
2	PI	STA. 100+79.18	540478.7293	569606.7059
3	PI	STA. 101+26.87	540499.9414	569563.9889
4	PI	STA. 103+23.30	540675.8705	569651.3498
5	POE	STA. 104+22.55	540720.0010	569562.4488

CL EMBANKMENT				
	STATION		NORTHING	EASTING
20	POB	STA. 50+00.00	540682.1740	569770.4344
21	PC	STA. 50+70.70	540710.1476	569705.5064
22	PI	STA. 50+89.87	540725.9727	569694.6786
23	PT	STA. 51+08.02	540733.5565	569677.0673
24	PC	STA. 51+47.63	540749.2208	569640.6912
25	PI	STA. 51+79.27	540761.7351	569611.6301
26	PT	STA. 51+98.29	540733.3929	569597.5634
27	PI	STA. 52+71.43	540667.8812	569565.0489
28	PC	STA. 52+76.32	540663.3721	569563.1436
29	PI	STA. 53+49.13	540596.3064	569534.8047
30	PT	STA. 54+21.88	540527.5193	569510.9459
31	PC	STA. 55+61.47	540388.7799	569495.6264
32	PI	STA. 55+76.46	540373.8748	569493.9806
33	PT	STA. 55+86.22	540370.0467	569508.4795
34	PC	STA. 56+21.62	540361.0102	569542.7060
35	PI	STA. 56+66.46	540349.5629	569586.0633
36	PT	STA. 56+96.86	540389.7267	569606.0072
37	PI	STA. 57+28.01	540417.6248	569619.8603
38	PI	STA. 57+48.10	540432.1280	569633.7614
39	PI	STA. 57+73.98	540455.3096	569645.2727
40	PI	STA. 57+84.02	540465.2293	569646.8490
41	PC	STA. 59+53.59	540617.1008	569722.2641
42	PI	STA. 59+76.50	540637.6234	569732.4550
43	PT	STA. 59+97.83	540660.1592	569728.3110
44	PC	STA. 60+09.64	540671.7766	569726.1747
45	PI	STA. 60+39.76	540701.4016	569720.7270
46	PT	STA. 60+44.43	540689.4881	569748.3926
47	POE	STA. 60+67.57	540680.3371	569769.6434

G:\60049040 US301\CIVIL\PLANS\2A\CP\SW-91.DGN

DELAWARE DEPARTMENT OF TRANSPORTATION

ADDENDUMS / REVISIONS

SCALE 0 30 60 90 FEET

US 301 LEVELS ROAD TO SUMMIT BRIDGE ROAD

CONTRACT T200911303
COUNTY NEW CASTLE
BRIDGE NO.
DESIGNED BY: DB
CHECKED BY: JZ

STORMWATER MANAGEMENT DETAILS BMP 684 (BASIN 15)

SW-91
SHEET NO. 776
TOTAL SHTS. 1256

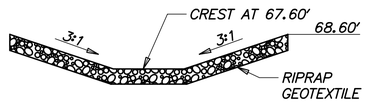

SECTION A-A FROM BASIN PLAN

SCALE: NONE

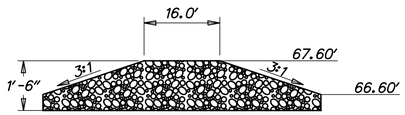

SECTION B-B FROM BASIN PLAN

SCALE: NONE

STONE CHECK DAM

SCALE: NONE

NOTES:
1. RIPRAP ITEM# 712020
2. GEOTEXTILE, RIPRAP ITEM# 713003
3. SEE STANDARD NO. E-10 FOR GEOTEXTILE PLACEMENT.

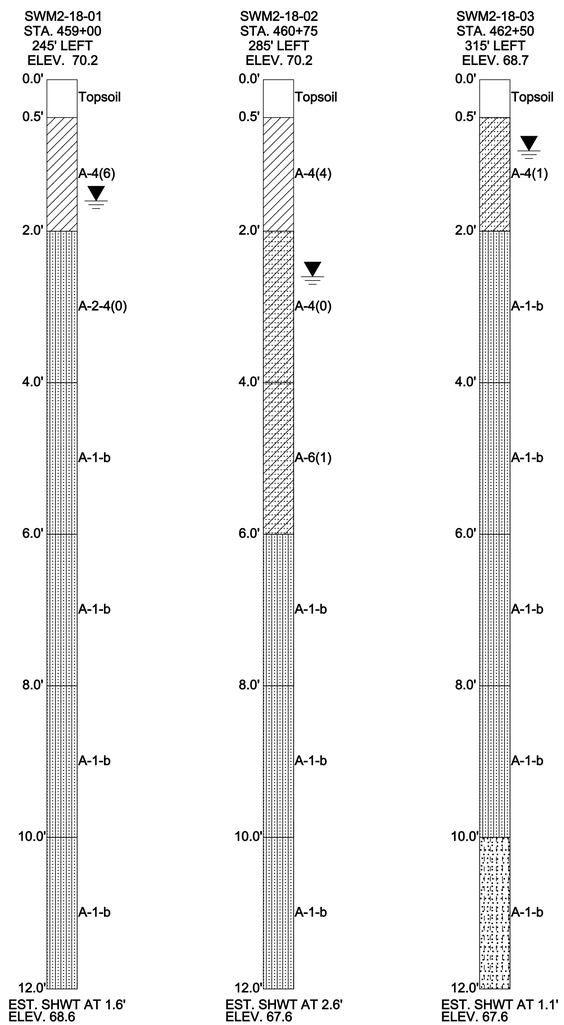

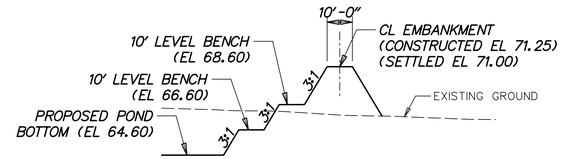

SECTION C-C

SCALE: NONE

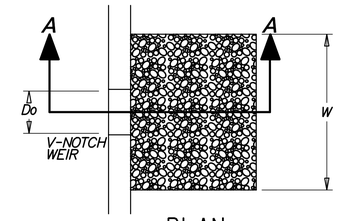

PLAN

SCALE: NONE

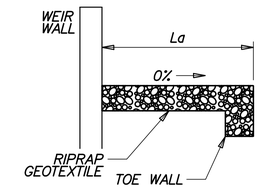

SECTION A-A

SCALE: NONE

DATA
WEIR TOP WIDTH (Do) = 1.01'
APRON LENGTH (La) = 20.0'
APRON WIDTH (W) = 23.0'
RIPRAP SIZE (R No.) = R-5 WITH NO. 57 STONE

BASIN RIPRAP OUTLET PROTECTION

SCALE: NONE

NOTES:
1. RIPRAP ITEM# 712006.
2. GEOTEXTILES, RIPRAP ITEM# 713003
3. DELAWARE NO. 57 STONE ITEM# 302012
4. SEE STANDARD NO. E-10 FOR RIPRAP DEPTH AND GEOTEXTILE PLACEMENT.
5. DEPRESS CENTERLINE OF APRON SLIGHTLY TO PREVENT EDGE CUTTING.

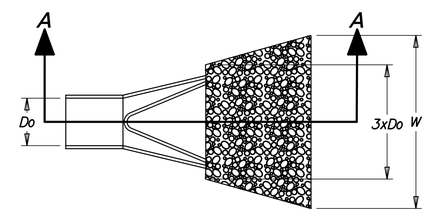

PLAN

SCALE: NONE

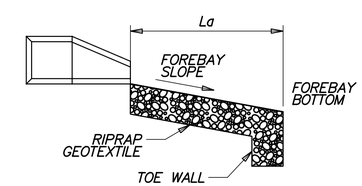

SECTION A-A

SCALE: NONE

DATA
PIPE DIAMETER (Do)
APRON LENGTH (Lg)
APRON WIDTH (W)
RIPRAP SIZE (R No.)

FES ID	Do	La	W	R No.
39	2.0'	7.5'	13'	R-4
45	1.5'	4.8'	12'	R-4

FOREBAY RIPRAP OUTLET PROTECTION

SCALE: NONE

NOTES:
1. RIPRAP ITEM# 712005.
2. GEOTEXTILES, RIPRAP ITEM# 713003
3 SEE STANDARD NO. E-10 FOR RIPRAP DEPTH AND GEOTEXTILE PLACEMENT.
4 DEPRESS CENTERLINE OF APRON SLIGHTLY TO PREVENT EDGE CUTTING.

G:\60049040 US301\CIVIL\PLANS\2A\CP\SW-92.DGN

DELAWARE DEPARTMENT OF TRANSPORTATION	ADDENDUMS / REVISIONS	AS SHOWN	US 301 LEVELS ROAD TO SUMMIT BRIDGE ROAD	CONTRACT T200911303	BRIDGE NO.	STORMWATER MANAGEMENT DETAILS BMP 684 (BASIN 15)
				COUNTY NEW CASTLE	DESIGNED BY: DB	
					CHECKED BY: JZ	

SW-92
SHEET NO.
777
TOTAL SHTS.
1256

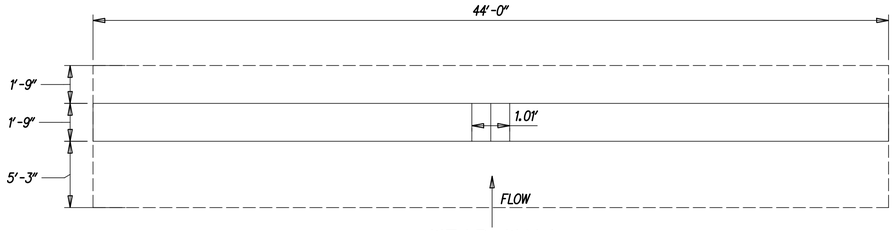

WEIR WALL PLAN

SCALE: NONE

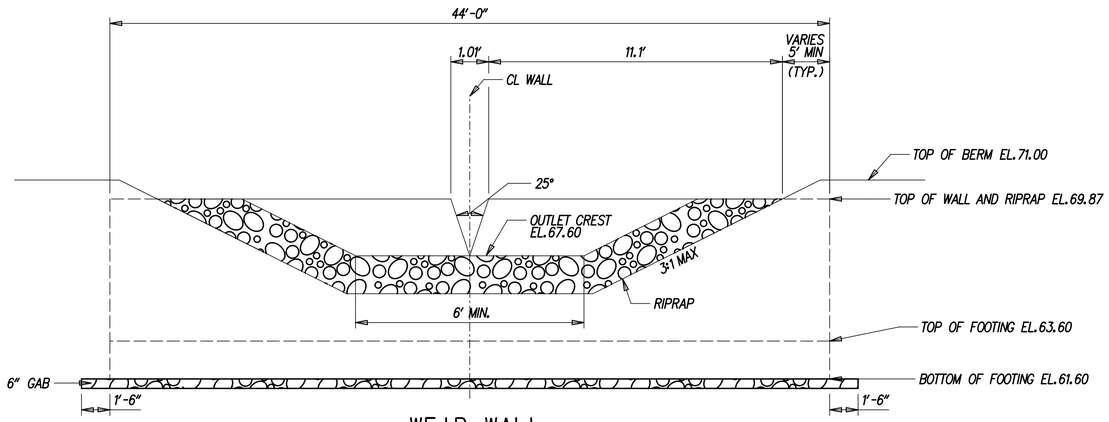

WEIR WALL EXTERIOR ELEVATION WITH RIPRAP APRON

SCALE: NONE

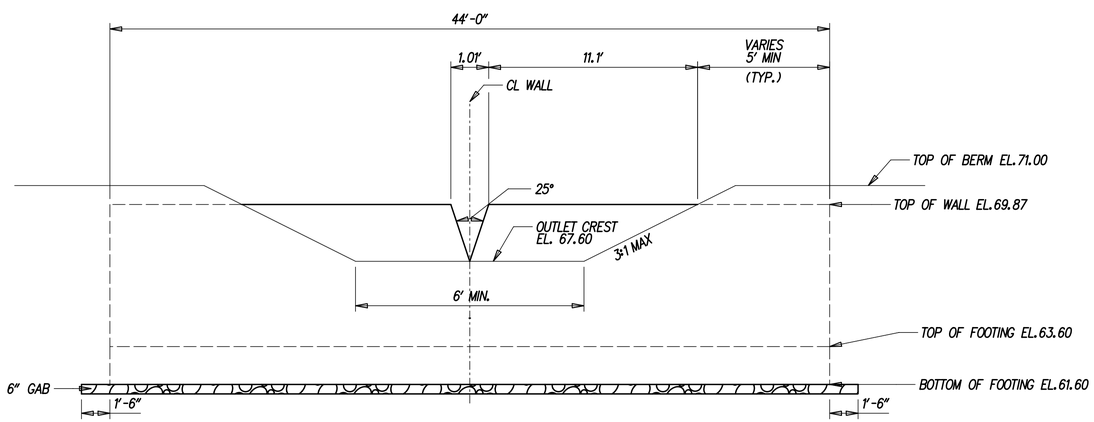

WEIR WALL INTERIOR ELEVATION

SCALE: NONE

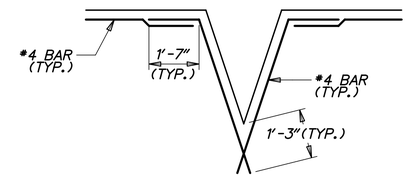

OPENING DETAILS

SCALE: NONE

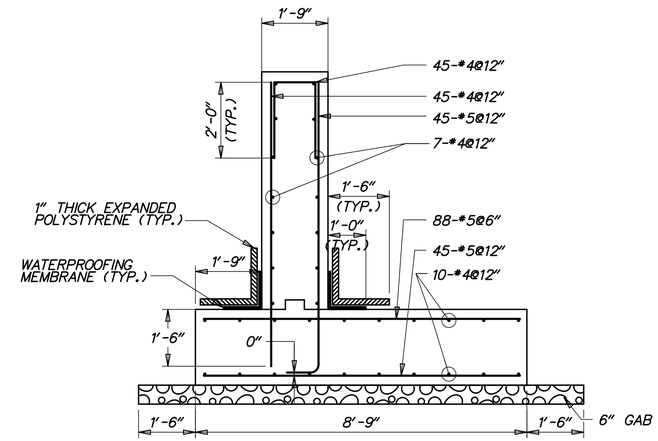

WEIR WALL SECTION

SCALE: 1/2"=1'-0"

GENERAL NOTES

1. DESIGN SPECIFICATIONS:

   AASHTO LRFD BRIDGE DESIGN SPECIFICATIONS, 4TH EDITION, 2007, INCLUDING 2008 AND 2009 INTERIM REVISIONS, AND AS SUPPLEMENTED BY DELAWARE DEPARTMENT OF TRANSPORTATION BRIDGE DESIGN MANUAL, MAY 2005, INCLUDING LATEST REVISIONS.

   PROVIDE MATERIALS AND PERFORM WORK IN ACCORDANCE WITH THE DELAWARE DEPARTMENT OF TRANSPORTATION STANDARD SPECIFICATIONS AND CONSTRUCTION DETAILS, AASHTO/AWS D1.5M/D1.5 BRIDGE WELDING CODE, AND CONTRACT SPECIAL PROVISIONS.

2. LOADING:

   UNIT WEIGHTS OF MATERIALS SHALL BE IN ACCORDANCE WITH THE DELAWARE DESIGN MANUAL.

3. PORTLAND CEMENT CONCRETE:

   PORTLAND CEMENT CONCRETE FOR CAST-IN-PLACE ELEMENTS SHALL BE AS FOLLOWS:
   (28 DAY COMPRESSIVE STRENGTH)
   (CLASS B, F'c=3000 PSI) - WEIR WALL FOOTING
   (CLASS A, F'c=4500 PSI) - WEIR WALL STEM

   WEIR WALLS MUST BE CAST-IN-PLACE.

   MIX REQUIREMENTS SHALL CONFORM TO SECTION 812 OF THE DELAWARE DEPARTMENT OF TRANSPORTATION STANDARD SPECIFICATIONS.

   ALL EXPOSED CORNERS OF CONCRETE SHALL BE CHAMFERED WITH ¾" X ¾" MILLED CHAMFER STRIPS EXCEPT ON UNEXPOSED FOOTINGS.

4. BAR REINFORCEMENT:

   REINFORCING STEEL SHALL CONFORM TO AASHTO M31 (ASTM A615), GRADE 60 AND IS TO BE EPOXY COATED. FUSION-BONDED EPOXY COATED REINFORCING STEEL SHALL CONFORM TO AASHTO M284 (ASTM D3963).

   PROVIDE 3" CONCRETE COVER ON REINFORCEMENT BARS, EXCEPT AS NOTED.

   LAP LENGTH OF #4 BARS TO BE 3'-0". STAGGER SPLICE LOCATIONS.

   DO NOT WELD GRADE 60 REINFORCING STEEL.

5. CONSTRUCTION JOINTS:

   KEYED CONSTRUCTION JOINTS SHALL BE 2" x 4" OR AS NOTED.

6. WATERPROOFING MEMBRANE:

   ADHESIVE BACKED WATERPROOFING MEMBRANE IS TO BE USED. SPLICING OF THE MEMBRANE IS PROHIBITED.

7. REFER TO SPECIFICATION SECTION 272501 FOR CONSTRUCTION SEQUENCE.

8. GAB IS INCIDENTAL TO WALL CONSTRUCTION.

G:\60049040 US301\CIVIL\PLANS\2A\CP\SW-93.DGN

DELAWARE DEPARTMENT OF TRANSPORTATION	ADDENDUMS / REVISIONS	AS SHOWN	US 301 LEVELS ROAD TO SUMMIT BRIDGE ROAD	CONTRACT T200911303	BRIDGE NO.	STORMWATER MANAGEMENT DETAILS BMP 684 (BASIN 15)	SW-93
				COUNTY NEW CASTLE	DESIGNED BY: DB		SHEET NO. 778
					CHECKED BY: JZ		TOTAL SHTS. 1256

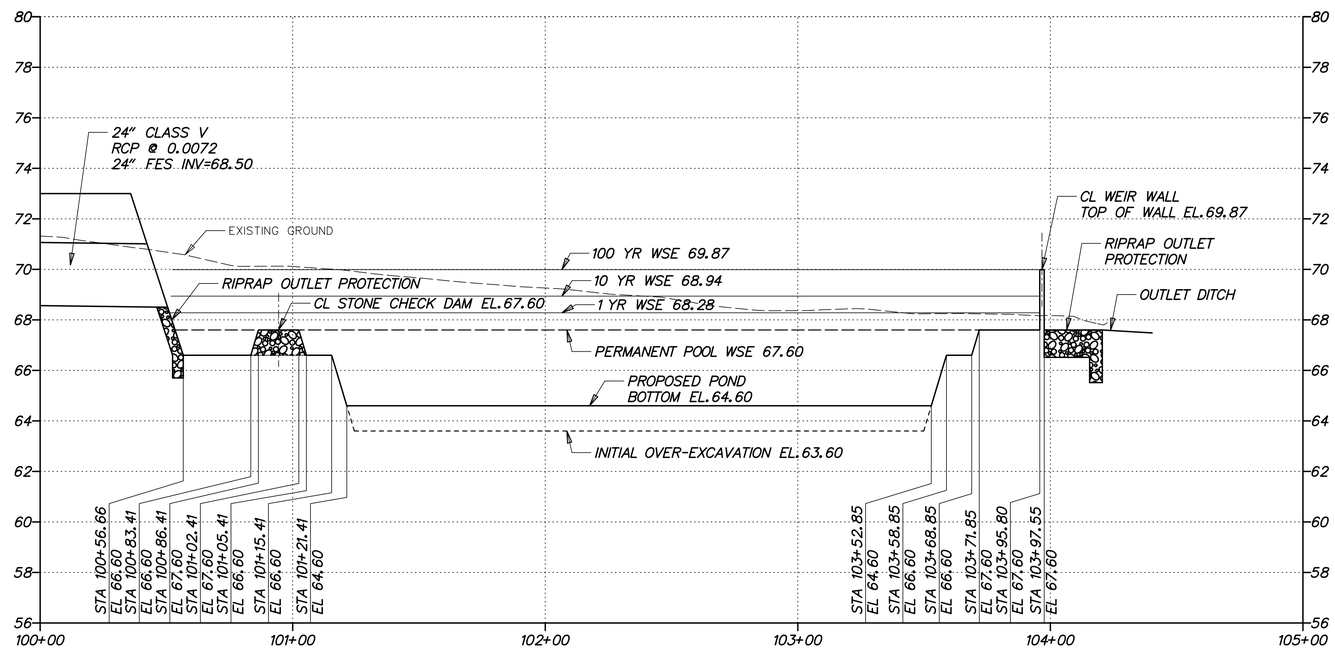

SPILLWAY PROFILE BMP 684 (BASIN 15)

HORIZONTAL SCALE: 1"=30'

0 30 60 90

FEET

VERTICAL SCALE: 1"=3'

0 3 6 9

FEET

G:\60049040 US301\CIVIL\PLANS\2A\CP\SW-94.DGN

DELAWARE DEPARTMENT OF TRANSPORTATION	ADDENDUMS / REVISIONS	AS SHOWN	US 301 LEVELS ROAD TO SUMMIT BRIDGE ROAD	CONTRACT T200911303	BRIDGE NO.	STORMWATER MANAGEMENT DETAILS BMP 684 (BASIN 15)	SW-94
				COUNTY NEW CASTLE	DESIGNED BY: DB		SHEET NO. 779
					CHECKED BY: JZ		TOTAL SHTS. 1256

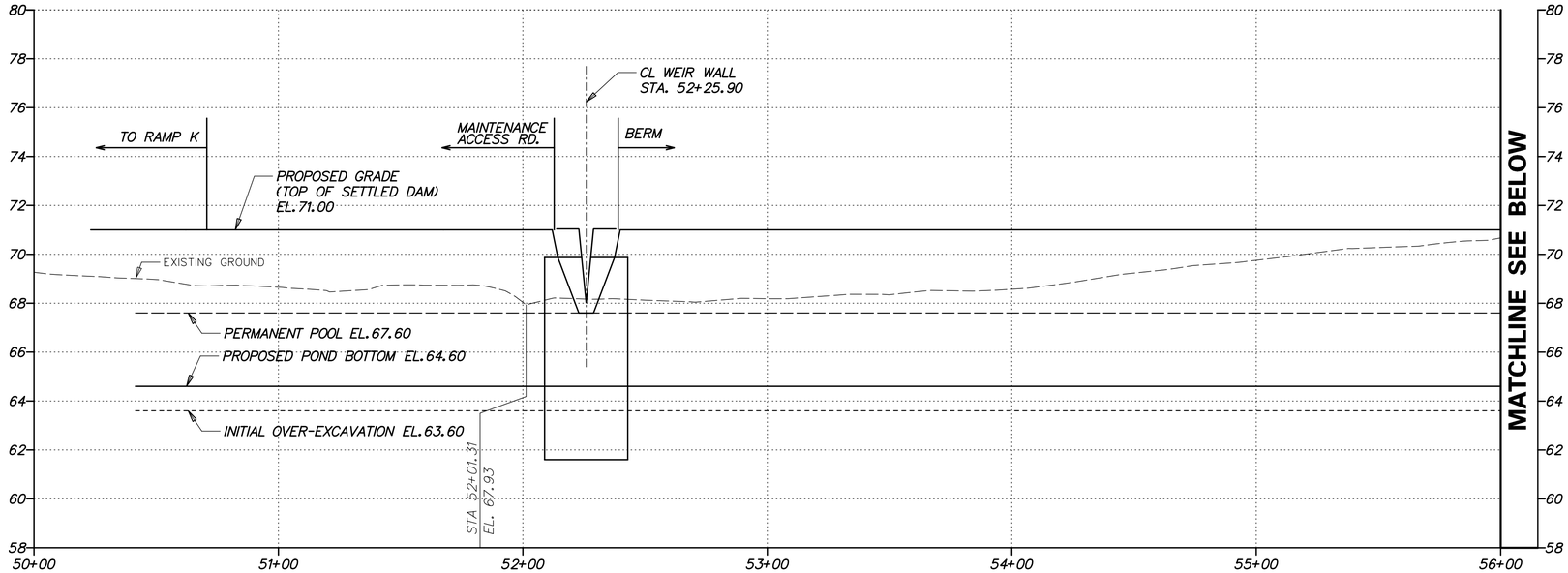

EMBANKMENT PROFILE FOR BMP 684 (BASIN 15)

HORIZONTAL SCALE: 1"-30' (0, 30, 60, 90 FEET)

VERTICAL SCALE: 1"-3' (0, 3, 6, 9 FEET)

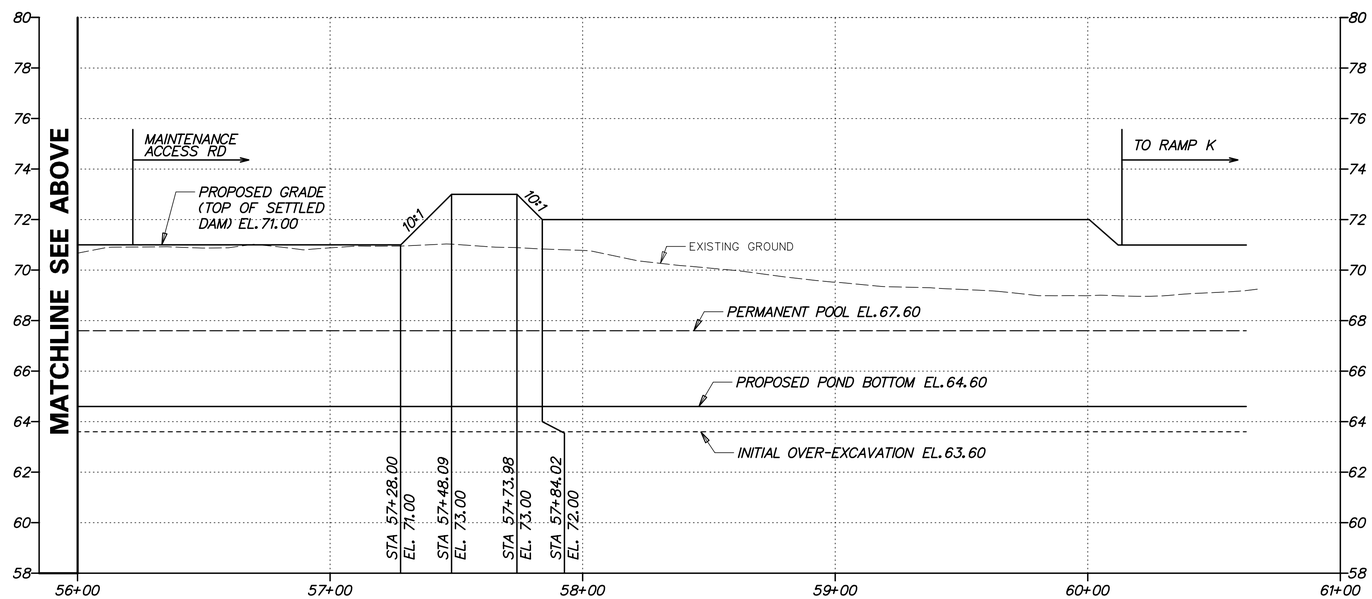

EMBANKMENT PROFILE FOR BMP 684 (BASIN 15)

HORIZONTAL SCALE: 1"-30' (0, 30, 60, 90 FEET)

VERTICAL SCALE: 1"-3' (0, 3, 6, 9 FEET)

G:\60049040 US301\CIVIL\PLANS\2A\CP\SW-95.DGN

DELAWARE DEPARTMENT OF TRANSPORTATION	ADDENDUMS / REVISIONS	AS SHOWN	US 301 LEVELS ROAD TO SUMMIT BRIDGE ROAD	CONTRACT T200911303	BRIDGE NO.	STORMWATER MANAGEMENT DETAILS BMP 684 (BASIN 15)	SW-95
				COUNTY NEW CASTLE	DESIGNED BY: DB		SHEET NO. 780
					CHECKED BY: JZ		TOTAL SHTS. 1256

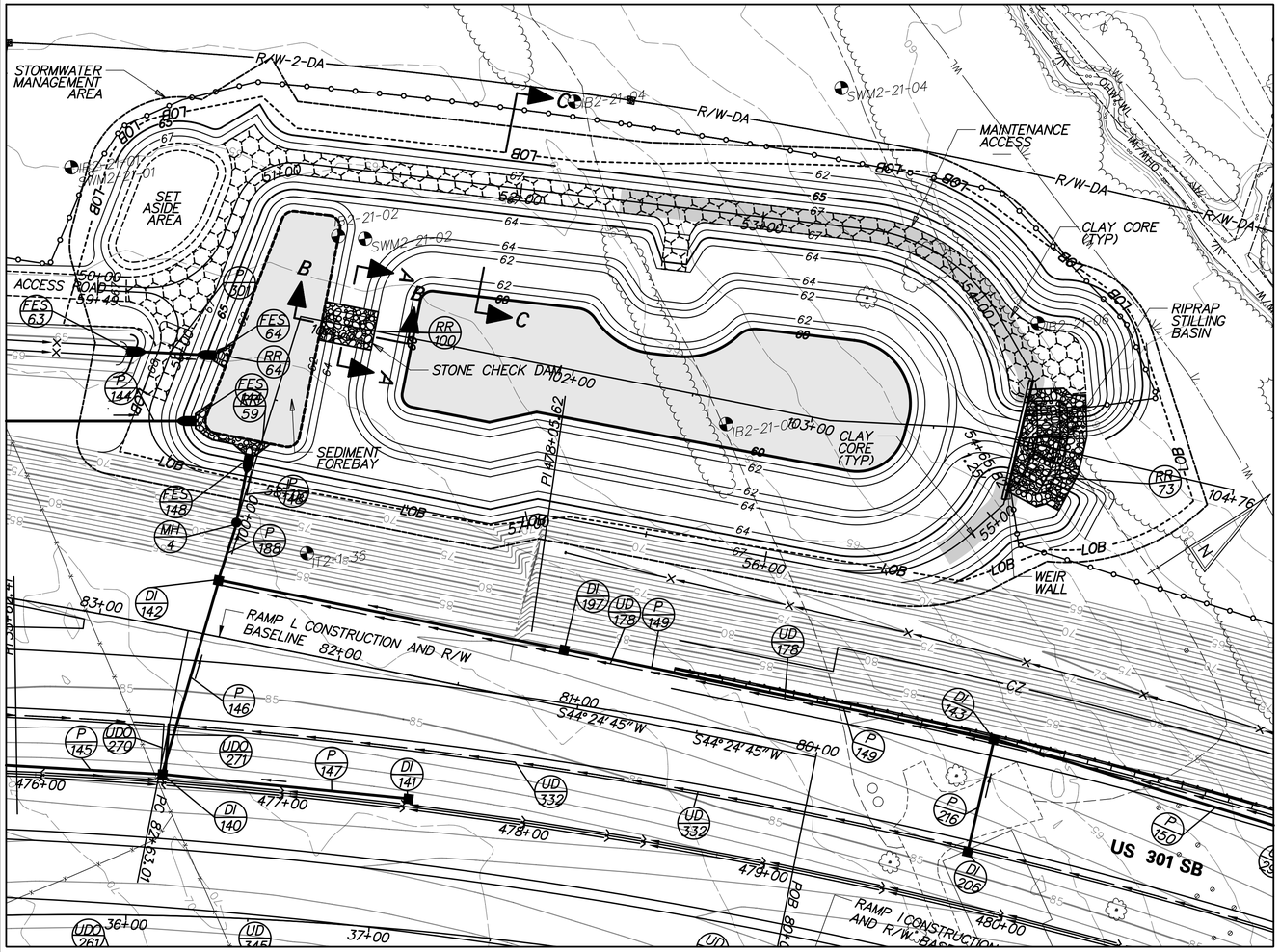

PLAN - BMP 686 (BASIN 18)

POND CONSTRUCTION SEQUENCE AND NOTES

THE STORMWATER MANAGEMENT POND SHALL FUNCTION AS A SEDIMENT BASIN DURING ROADWAY CONSTRUCTION AND SHALL BE CONSTRUCTED IN ACCORDANCE WITH THE FOLLOWING SECTIONS OF THE STANDARD SPECIFICATIONS:

SECTION 271 - STORMWATER MANAGEMENT POND
SECTION 272 - POND OUTLET STRUCTURE, CONCRETE
SECTION 274 - CLAY BORROW, STORMWATER MANAGEMENT POND

1. INSTALL STABILIZED CONSTRUCTION ENTRANCE.
2. CLEAR AND GRUB FOR INSTALLATION OF PERIMETER EROSION AND SEDIMENT CONTROLS.
3. INSTALL PERIMETER SEDIMENT CONTROLS AS SHOWN.
4. CLEAR AND GRUB REMAINING AREA FOR POND CONSTRUCTION.
5. CONSTRUCT WEIR WALL, RIPRAP STILLING BASIN, CLAY CORE AND PARTIAL EMBANKMENT AS NEEDED TO INSTALL WEIR WALL. INSTALL SKIMMER AND DE-WATER FOUNDATION AS NEEDED IN ACCORDANCE WITH SECTION 111 AND USE SUMP PIT FOR PUMPING. (SEE EROSION AND SEDIMENT CONTROL DETAILS FOR SKIMMER DE-WATERING DEVICE INSTALLATION).
6. EXCAVATE THE POND AND COMPLETE THE EMBANKMENT, GRADES AND DETAILS SHOWN IN THE CONSTRUCTION PLANS. DURING EXCAVATION, THE CONTRACTOR SHALL SALVAGE AND STOCKPILE SOILS CLASSIFIED AS CH, CL, SC AND GG PER THE UNIFIED SOIL CLASSIFICATION SYSTEM TO BE USED TO CONSTRUCT EMBANKMENT. THE ABOVE CLASSIFIED SOILS MAY BE OBTAINED FROM ELSEWHERE WITHIN THE PROJECT LIMITS, IF NECESSARY.
7. STABILIZE ALL BARE AREAS.
   NOTE: SEE CONSTRUCTION SEQUENCE PLANS FOR LOCATION OF EROSION AND SEDIMENT CONTROL MEASURES.
8. THE CONTRACTOR SHALL PROVIDE 'AS-BUILT' DRAWINGS OF ALL STORMWATER MANAGEMENT FACILITIES SUCH AS PONDS, INFILTRATION BASINS, BIOFILTRATION SWALES, ETC. 'AS-BUILT' DRAWINGS SHALL SHOW THE ACTUAL FINISHED GROUND CONTOURS, OUTLET STRUCTURE DIMENSIONS AND ELEVATIONS, ETC. AS THEY EXIST AT THE COMPLETION OF THE PROJECT. THESE DRAWINGS SHALL BE SIGNED BY A PROFESSIONAL ENGINEER OR LAND SURVEYOR.

MAINTENANCE OF POND AS A SEDIMENT BASIN

1. CONTRACTOR SHALL INSPECT THE BASIN IMMEDIATELY AFTER EVERY RAIN AND MAKE REPAIRS AS NEEDED.
2. CONTRACTOR SHALL CLEARLY MARK THE CLEANOUT ELEVATION ON A STAKE DRIVEN INTO THE GROUND AT A LOCTATION CLEARLY VISIBLE FROM THE EMBANKMENT. SEDIMENT SHALL BE REMOVED WHEN CLEANOUT ELEVATION IS REACHED AND DISPOSED OF AT A LOCATION APPROVED BY THE ENGINEER. CLEANOUT ELEVATION IS 64.09.

CONVERSION TO PERMANENT STORMWATER MANAGEMENT POND

1. CONVERT THE BASIN INTO THE PERMANENT STORMWATER MANAGEMENT POND AFTER ALL AREAS DRAINING TO THE POND HAVE BEEN PERMANENTLY STABILIZED AND THE ENGINEER HAS APPROVED THE CONVERSION.
2. REMOVE ACCUMULATED SEDIMENT TO ELEVATION 60.00 AND DISPOSE SEDIMENT AT A LOCATION APPROVED BY THE ENGINEER.
3. COMPLETE STABILIZATION OF ALL BARE AREAS. REMOVE EROSION AND SEDIMENT CONTROL MEASURES AND DEACTIVATE DE-WATERING DEVICE.

PLANTING SCHEDULE

PLACE PERMANENT GRASS SEEDING - WET GROUND UP TO ELEVATION 64.00.
PLACE PERMANENT GRASS SEEDING - DRY GROUND ABOVE ELEVATION 64.00.
PLACE TOPSOIL ON LOWER BENCH ELEVATION 62.00 AND ABOVE.

RIPRAP SCHEDULE

NO.	TYPE	AREA (SY)
59	R-4	17
64	R-4	5
73	R-5	162
100	R-4	40

CHECK CONSTRUCTION PLANS FOR SCHEDULE OF RIPRAP OUTSIDE OF THE BASIN AREA.

POND DESIGN SUMMARY

DESIGN STORM	FACILITY INFLOW (CFS)	FACILITY DISCHARGE (CFS)	WATER SURFACE ELEVATION (FT)	STORAGE VOLUME (AC.FT.)*
QUALITY STORM (1YR)	12.93	2.85	63.57	1.342
10 - YEAR	35.43	10.38	64.34	1.876
100 - YEAR	74.16	24.67	65.39	2.773

DRAINAGE AREA TO FACILITY: 10.97 ACRES

MANAGEMENT PROVIDED BY FACILITY: WATER QUALITY BY EXTENDED DETENTION OF 1 YEAR RUNOFF, WATER QUANTITY FOR 10 AND 100 YEAR STORMS.

*INCLUDES NORMAL POOL VOLUME OF 1.010 AC-FT

SKIMMER DEVICE SUMMARY

SKIMMER ELEVATION	63.08
ORIFICE SIZE (IN)	2
BLOCK WEIR UP TO ELEVATION	64.73

POND QUANTITIES

ITEM NO.	ITEM	QTY.	UNITS.
202000	EXCAVATION AND EMBANKMENT	5625	CY
272501	POND OUTLET STRUCTURE, 17, SPECIAL	1	EACH
274000	CLAY BORROW, STORMWATER MANAGEMENT POND, CUT-OFF TRENCH	559	CY
302011	DELAWARE NO. 3 STONE	212	TON
302012	DELAWARE NO. 57 STONE	38	TON
712005	R-4 RIPRAP	22	SY
712006	R-5 RIPRAP	162	SY
712020	R-4 RIPRAP	29	TON
713001	GEOTEXTILES, STABILIZATION	1421	SY
713003	GEOTEXTILES, RIPRAP	279	SY
733002	TOPSOILING, 6" DEPTH	7436	SY
734013	PERMANENT GRASS SEEDING, DRY GROUND	5016	SY
734015	PERMANENT GRASS SEEDING, WET GROUND	3790	SY

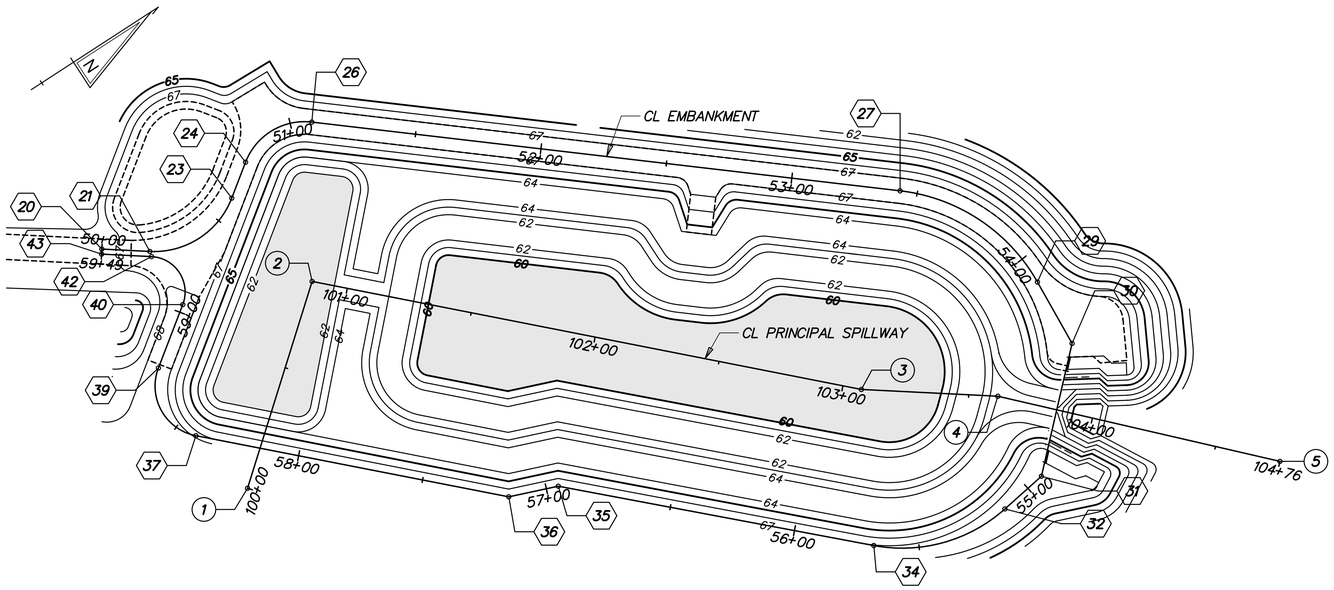

STAKEOUT - BMP 686 (BASIN 18)

CL PRINCIPAL SPILLWAY				
	STATION		NORTHING	EASTING
1	POB	STA. 100+00.00	541786.4785	570472.4760
2	PI	STA. 100+85.80	541852.5420	570417.7292
3	PI	STA. 103+07.45	542011.6208	570572.0761
4	PI	STA. 103+61.55	542055.4647	570603.7754
5	POE	STA. 104+76.19	542135.0883	570686.2502

CL EMBANKMENT				
	STATION		NORTHING	EASTING
20	POB	STA. 50+00.00	541789.7028	570361.6265
21	PC	STA. 50+19.02	541805.1190	570372.7695
22	PI	STA. 50+42.93	541824.4952	570386.7748
23	PT	STA. 50+60.40	541843.8407	570372.7270
24	PC	STA. 50+75.64	541856.1671	570363.7761
25	PI	STA. 50+95.05	541871.8748	570352.3699
26	PT	STA. 51+08.65	541886.8166	570364.7627
27	PC	STA. 53+43.20	542067.3548	570514.5028
28	PI	STA. 53+79.80	542095.5267	570537.8688
29	PT	STA. 54+10.93	542093.2506	570574.3990
30	PI	STA. 54+38.82	542091.5157	570602.2439
31	PI	STA. 54+92.82	542052.6664	570639.7503
32	PC	STA. 55+12.22	542033.5045	570642.7179
33	PI	STA. 55+42.27	542003.8007	570647.3181
34	PT	STA. 55+68.07	541982.0554	570626.5668
35	PI	STA. 56+95.17	541890.1053	570538.8194
36	PI	STA. 57+15.21	541871.3852	570531.6760
37	PC	STA. 58+41.45	541780.6763	570443.8729
38	PI	STA. 58+65.26	541763.5663	570427.3110
39	PT	STA. 58+76.34	541782.8348	570413.3191
40	PC	STA. 59+03.23	541804.5969	570397.5165
41	PI	STA. 59+22.56	541820.2334	570386.1620
42	PT	STA. 59+29.66	541804.5720	570374.8418
43	POE	STA. 59+49.45	541788.5312	570363.2474

G:\60049040 US301\CIVIL\PLANS\2A\CP\SW-97.DGN

DELAWARE
DEPARTMENT OF TRANSPORTATION

ADDENDUMS / REVISIONS

SCALE
0 30 60 90
FEET

US 301
LEVELS ROAD
TO SUMMIT BRIDGE ROAD

CONTRACT T200911303
COUNTY NEW CASTLE
BRIDGE NO.
DESIGNED BY: DB
CHECKED BY: JZ

STORMWATER
MANAGEMENT DETAILS
BMP 686 (BASIN 18)

SW-97
SHEET NO. 782
TOTAL SHTS. 1256

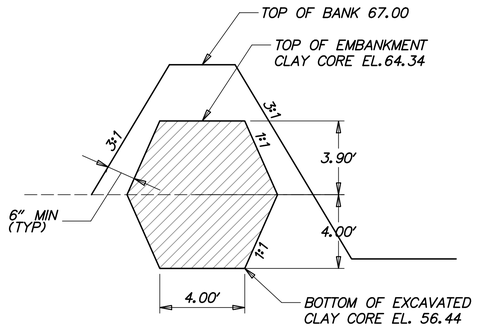

CLAY CORE SECTION

SCALE: NONE

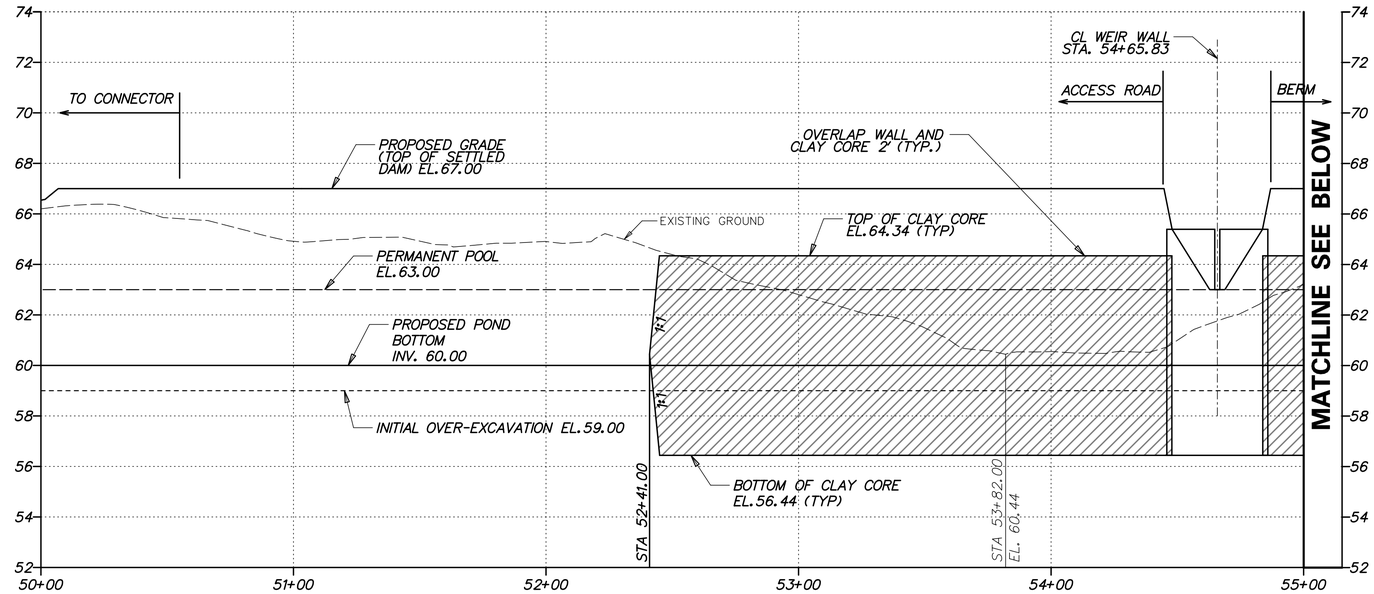

EMBANKMENT PROFILE FOR BMP 686 (BASIN 18)

HORIZONTAL SCALE: 1"=30'
0 30 60 90
FEET

VERTICAL SCALE: 1"=3'
0 3 6 9
FEET

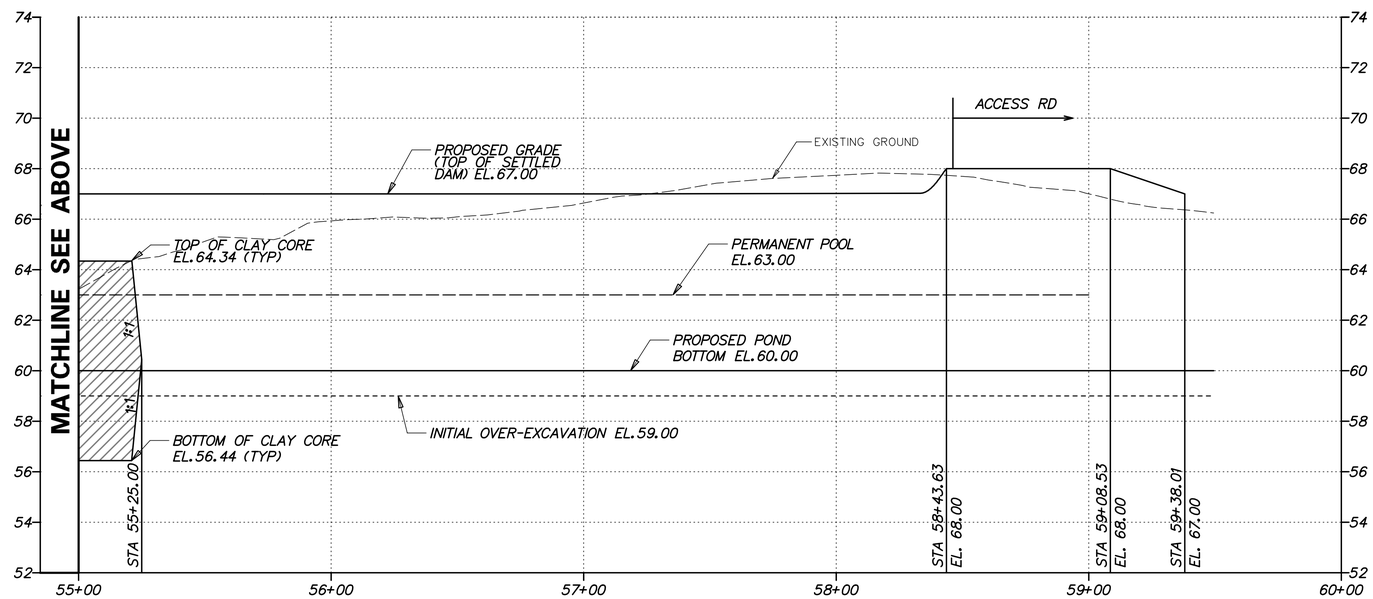

EMBANKMENT PROFILE FOR BMP 686 (BASIN 18)

HORIZONTAL SCALE: 1"=30'
0 30 60 90
FEET

VERTICAL SCALE: 1"=3'
0 3 6 9
FEET

G:\60049040 US301\CIVIL\PLANS\2A\CP\SW-98.DGN

DELAWARE DEPARTMENT OF TRANSPORTATION	ADDENDUMS / REVISIONS	AS SHOWN	US 301 LEVELS ROAD TO SUMMIT BRIDGE ROAD	CONTRACT T200911303	BRIDGE NO.	STORMWATER MANAGEMENT DETAILS BMP 686 (BASIN 18)	SW-98
				COUNTY NEW CASTLE	DESIGNED BY: DB		SHEET NO. 783
					CHECKED BY: JZ		TOTAL SHTS. 1256

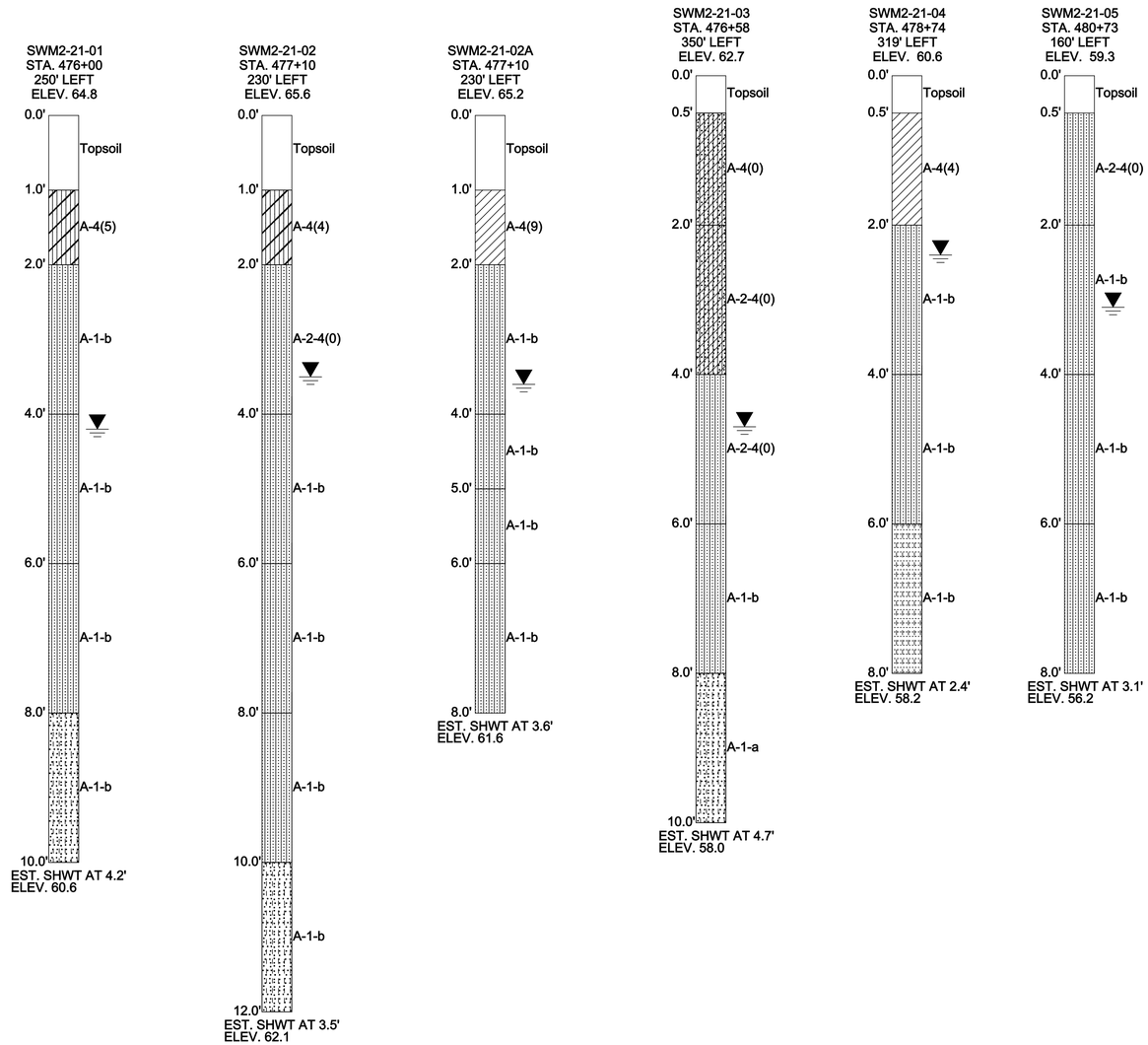

G:\60049040 US301\CIVIL\PLANS\2A\CP\SW-99.DGN

DELAWARE DEPARTMENT OF TRANSPORTATION

ADDENDUMS / REVISIONS	

AS SHOWN

US 301
LEVELS ROAD
TO SUMMIT BRIDGE ROAD

CONTRACT	BRIDGE NO.	
T200911303	DESIGNED BY:	DB
COUNTY		
NEW CASTLE	CHECKED BY:	JZ

STORMWATER MANAGEMENT DETAILS
BMP 686 (BASIN 18)

SW-99
SHEET NO.
784
TOTAL SHTS.
1256

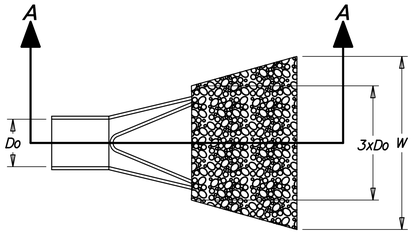

PLAN
SCALE: NONE

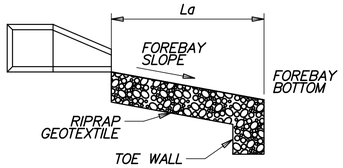

SECTION A-A
SCALE: NONE

DATA

PIPE DIAMETER (Do)
APRON LENGTH (La)
APRON WIDTH (W)
RIPRAP SIZE (R No.)

RR ID	Do	La	W	R No.
64	1.5'	5.3'	12.0'	R-4
59*	2.0'	3.0'/7.1'	13.0'/14.0'	R-4

*TWO COMBINED OUTFALLS, P-144/P-148

FOREBAY RIPRAP OUTLET PROTECTION
SCALE: NONE

NOTES:
1. RIPRAP ITEM# 712005.
2. GEOTEXTILES, RIPRAP ITEM# 713003
3. SEE STANDARD NO. E-10 FOR RIPRAP DEPTH AND GEOTEXTILE PLACEMENT.
4. DEPRESS CENTERLINE OF APRON SLIGHTLY TO PREVENT EDGE CUTTING.

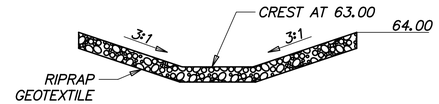

SECTION A-A FROM BASIN PLAN
SCALE: NONE

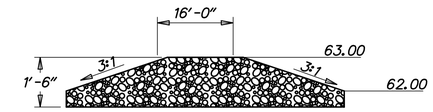

SECTION B-B FROM BASIN PLAN
SCALE: NONE

STONE CHECK DAM
SCALE: NONE

NOTES:
1. RIPRAP ITEM# 712020
2. GEOTEXTILE, RIPRAP ITEM# 713003
3. SEE STANDARD NO. E-10 FOR GEOTEXTILE PLACEMENT.

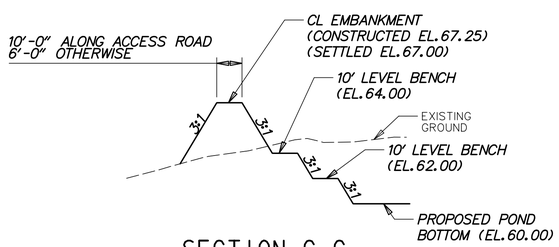

SECTION C-C
SCALE: NONE

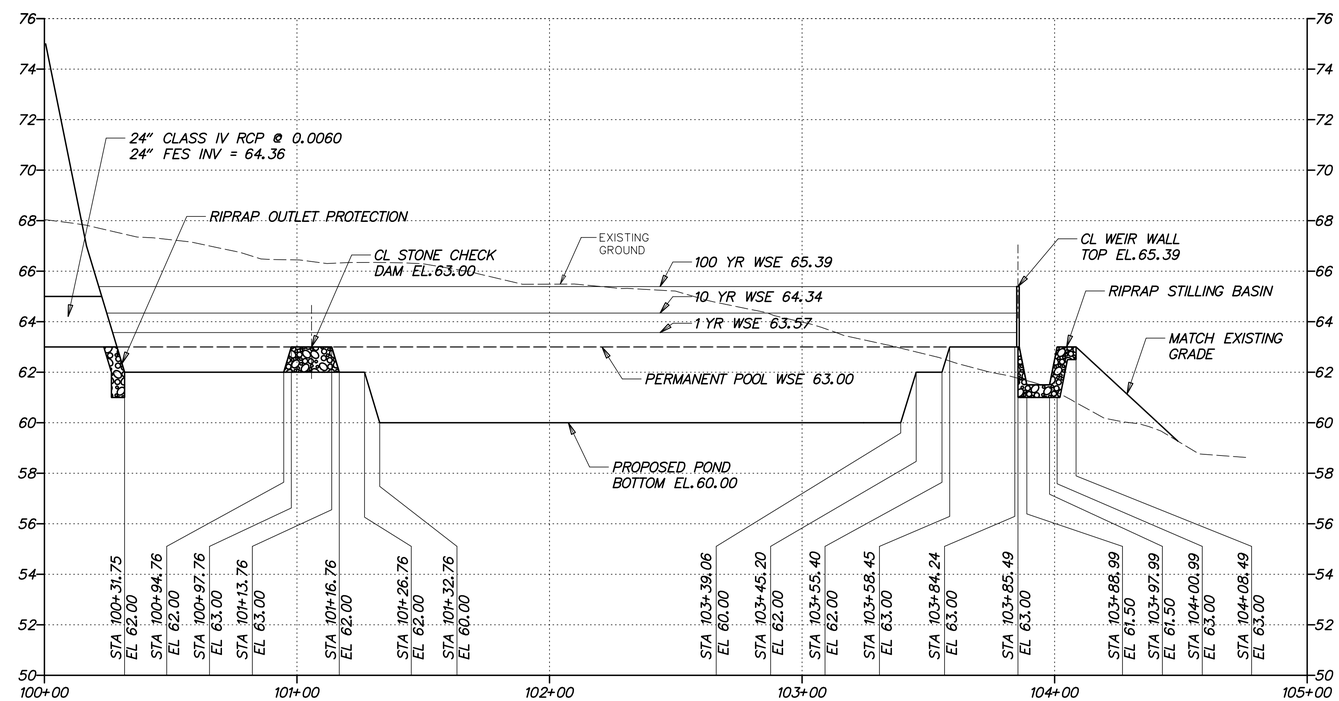

SPILLWAY PROFILE BMP 686 (BASIN 18)

HORIZONTAL SCALE: 1"=30'
0 30 60 90
FEET

VERTICAL SCALE: 1"=3'
0 3 6 9
FEET

G:\60049040 US301\CIVIL\PLANS\2A\CP\SW-100.DGN

DELAWARE DEPARTMENT OF TRANSPORTATION	ADDENDUMS / REVISIONS	AS SHOWN	US 301 LEVELS ROAD TO SUMMIT BRIDGE ROAD	CONTRACT T200911303	BRIDGE NO.	STORMWATER MANAGEMENT DETAILS BMP 686 (BASIN 18)	SW-100
				COUNTY NEW CASTLE	DESIGNED BY: DB		SHEET NO. 785
					CHECKED BY: JZ		TOTAL SHTS. 1256

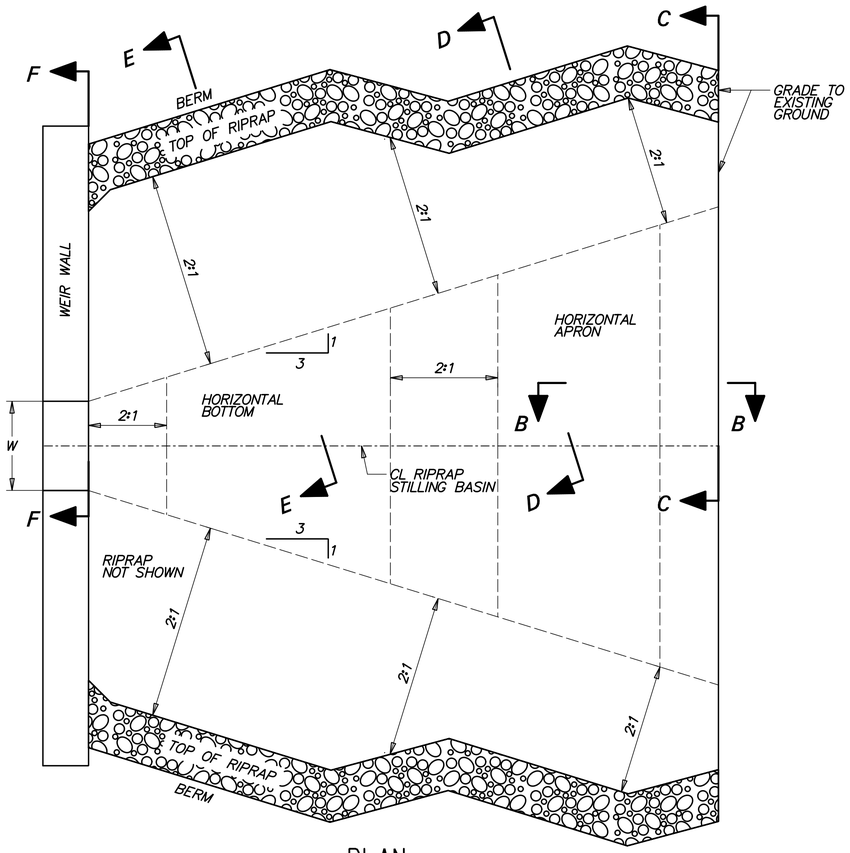

PLAN

SCALE: NONE

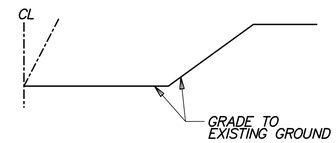

SECTION C-C

SCALE: NONE

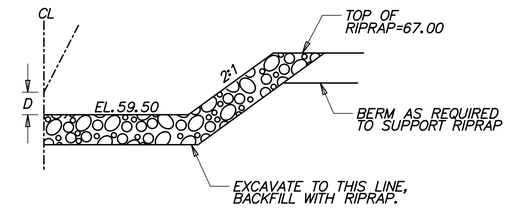

SECTION E-E

SCALE: NONE

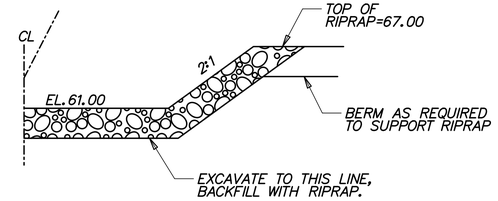

SECTION D-D

SCALE: NONE

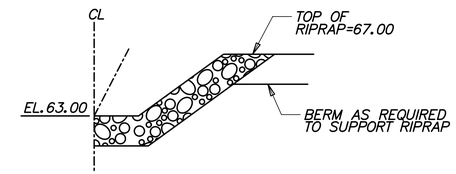

SECTION F-F

SCALE: NONE

DATA

TOP OF V-NOTCH WEIR WIDTH W = 2.0'

DEPTH OF BASIN FROM WEIR CREST D = 1.50'

RIPRAP SIZE (R No.) = R-5 WITH NO. 57 STONE

NOTES:
1. RIPRAP ITEM# 712006.
2. GEOTEXTILES, RIPRAP ITEM# 713003
3. DELAWARE NO. 57 STONE ITEM# 302012
4. SEE STANDARD NO. E-10 FOR RIPRAP DEPTH AND GEOTEXTILE PLACEMENT.

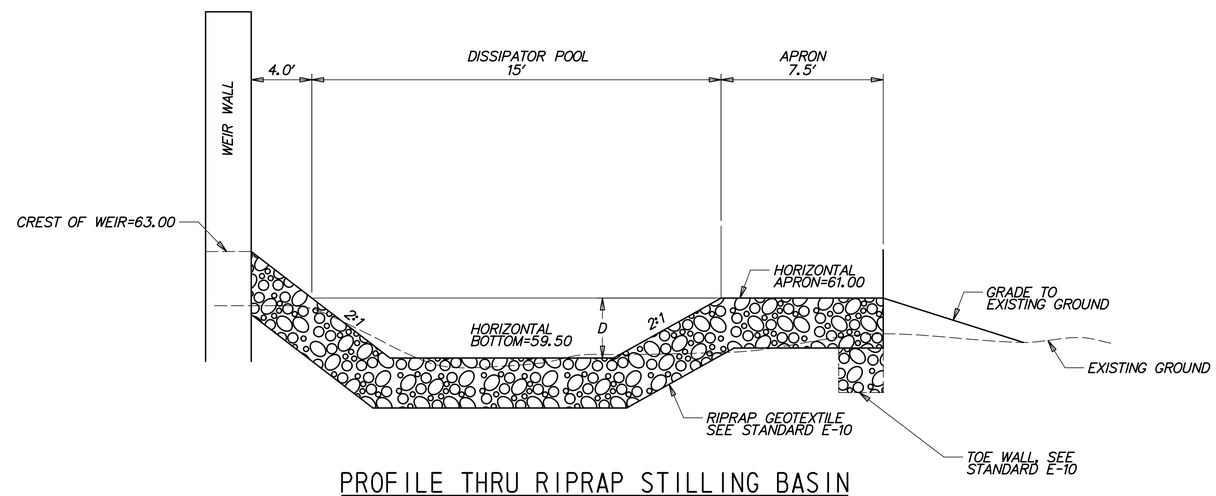

PROFILE THRU RIPRAP STILLING BASIN

SCALE: NONE

RIPRAP STILLING BASIN

SCALE: NONE

G:\60049040 US301\CIVIL\PLANS\2A\CP\SW-101.DGN

DELAWARE DEPARTMENT OF TRANSPORTATION	ADDENDUMS / REVISIONS	AS SHOWN	US 301 LEVELS ROAD TO SUMMIT BRIDGE ROAD	CONTRACT T200911303	BRIDGE NO.	STORMWATER MANAGEMENT DETAILS BMP 686 (BASIN 18)	SW-101
				COUNTY NEW CASTLE	DESIGNED BY: DB		SHEET NO. 786
					CHECKED BY: JZ		TOTAL SHTS. 1256

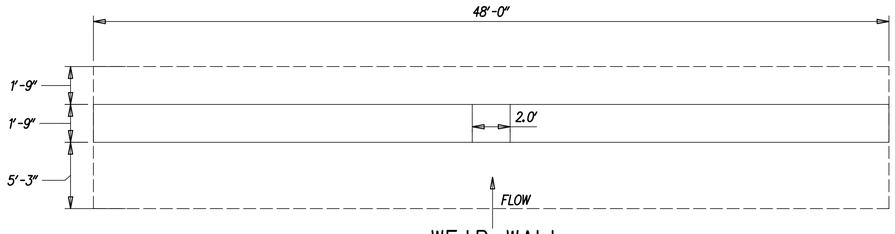

WEIR WALL PLAN

SCALE: NONE

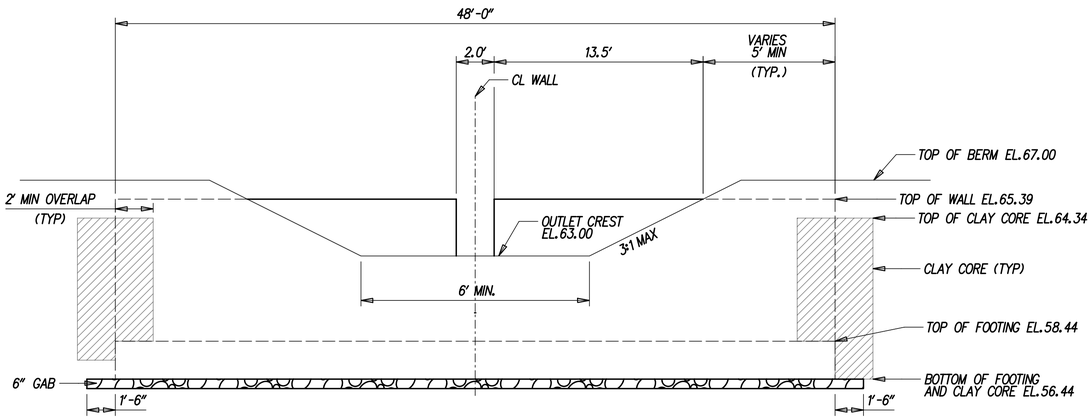

WEIR WALL INTERIOR ELEVATION

SCALE: NONE

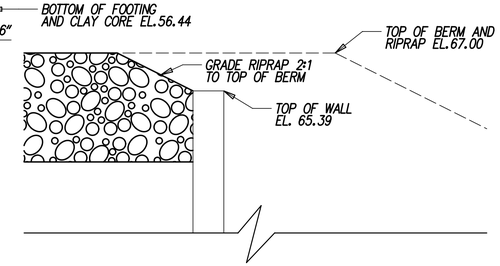

WEIR WALL SECTION A-A

SCALE: NONE

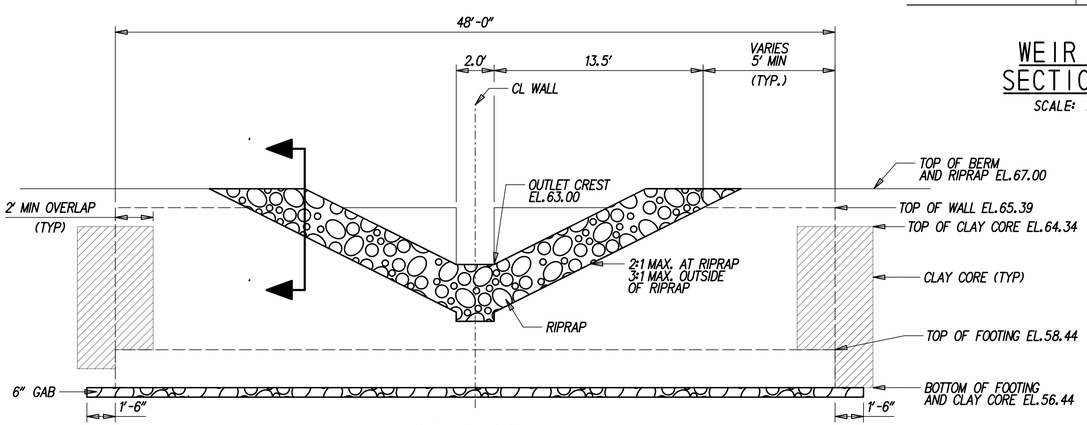

WEIR WALL EXTERIOR ELEVATION WITH RIPRAP STILLING BASIN

SCALE: NONE

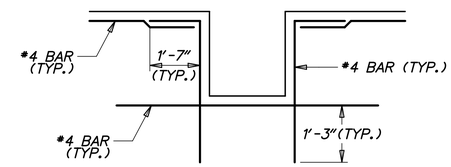

RECTANGULAR DETAIL

SCALE: NONE

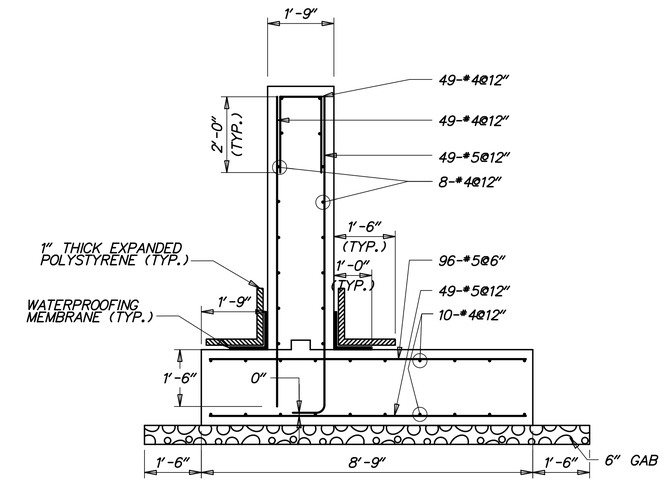

WEIR WALL SECTION

SCALE: 1/2"=1'-0"

GENERAL NOTES

1. DESIGN SPECIFICATIONS:

   AASHTO LRFD BRIDGE DESIGN SPECIFICATIONS, 4TH EDITION, 2007, INCLUDING 2008 AND 2009 INTERIM REVISIONS, AND AS SUPPLEMENTED BY DELAWARE DEPARTMENT OF TRANSPORTATION BRIDGE DESIGN MANUAL, MAY 2005, INCLUDING LATEST REVISIONS.

   PROVIDE MATERIALS AND PERFORM WORK IN ACCORDANCE WITH THE DELAWARE DEPARTMENT OF TRANSPORTATION STANDARD SPECIFICATIONS AND CONSTRUCTION DETAILS, AASHTO/AWS D1.5M/D1.5 BRIDGE WELDING CODE, AND CONTRACT SPECIAL PROVISIONS.

2. LOADING:

   UNIT WEIGHTS OF MATERIALS SHALL BE IN ACCORDANCE WITH THE DELAWARE DESIGN MANUAL.

3. PORTLAND CEMENT CONCRETE:

   PORTLAND CEMENT CONCRETE FOR CAST-IN-PLACE ELEMENTS SHALL BE AS FOLLOWS:
   (28 DAY COMPRESSIVE STRENGTH)
   (CLASS B, F'c=3000 PSI) - WEIR WALL FOOTING
   (CLASS A, F'c=4500 PSI) - WEIR WALL STEM

   WEIR WALLS MUST BE CAST-IN-PLACE.

   MIX REQUIREMENTS SHALL CONFORM TO SECTION 812 OF THE DELAWARE DEPARTMENT OF TRANSPORTATION STANDARD SPECIFICATIONS.

   ALL EXPOSED CORNERS OF CONCRETE SHALL BE CHAMFERED WITH ¾" X ¾" MILLED CHAMFER STRIPS EXCEPT ON UNEXPOSED FOOTINGS.

4. BAR REINFORCEMENT:

   REINFORCING STEEL SHALL CONFORM TO AASHTO M31 (ASTM A615), GRADE 60 AND IS TO BE EPOXY COATED. FUSION-BONDED EPOXY COATED REINFORCING STEEL SHALL CONFORM TO AASHTO M284 (ASTM D3963).

   PROVIDE 3" CONCRETE COVER ON REINFORCEMENT BARS, EXCEPT AS NOTED.

   LAP LENGTH OF #4 BARS TO BE 3'-0". STAGGER SPLICE LOCATIONS.

   DO NOT WELD GRADE 60 REINFORCING STEEL.

5. CONSTRUCTION JOINTS:

   KEYED CONSTRUCTION JOINTS SHALL BE 2" x 4" OR AS NOTED.

6. WATERPROOFING MEMBRANE:

   ADHESIVE BACKED WATERPROOFING MEMBRANE IS TO BE USED. SPLICING OF THE MEMBRANE IS PROHIBITED.

7. REFER TO SPECIFICATION SECTION 272501 FOR CONSTRUCTION SEQUENCE.

8. GAB IS INCIDENTAL TO WALL CONSTRUCTION.

G:\60049040 US301\CIVIL\PLANS\2A\CP\SW-102.DGN

DELAWARE DEPARTMENT OF TRANSPORTATION	ADDENDUMS / REVISIONS	AS SHOWN	US 301 LEVELS ROAD TO SUMMIT BRIDGE ROAD	CONTRACT T200911303	BRIDGE NO.	STORMWATER MANAGEMENT DETAILS BMP 686 (BASIN 18)	SW-102
				COUNTY NEW CASTLE	DESIGNED BY: DB		SHEET NO. 787
					CHECKED BY: JZ		TOTAL SHTS. 1256

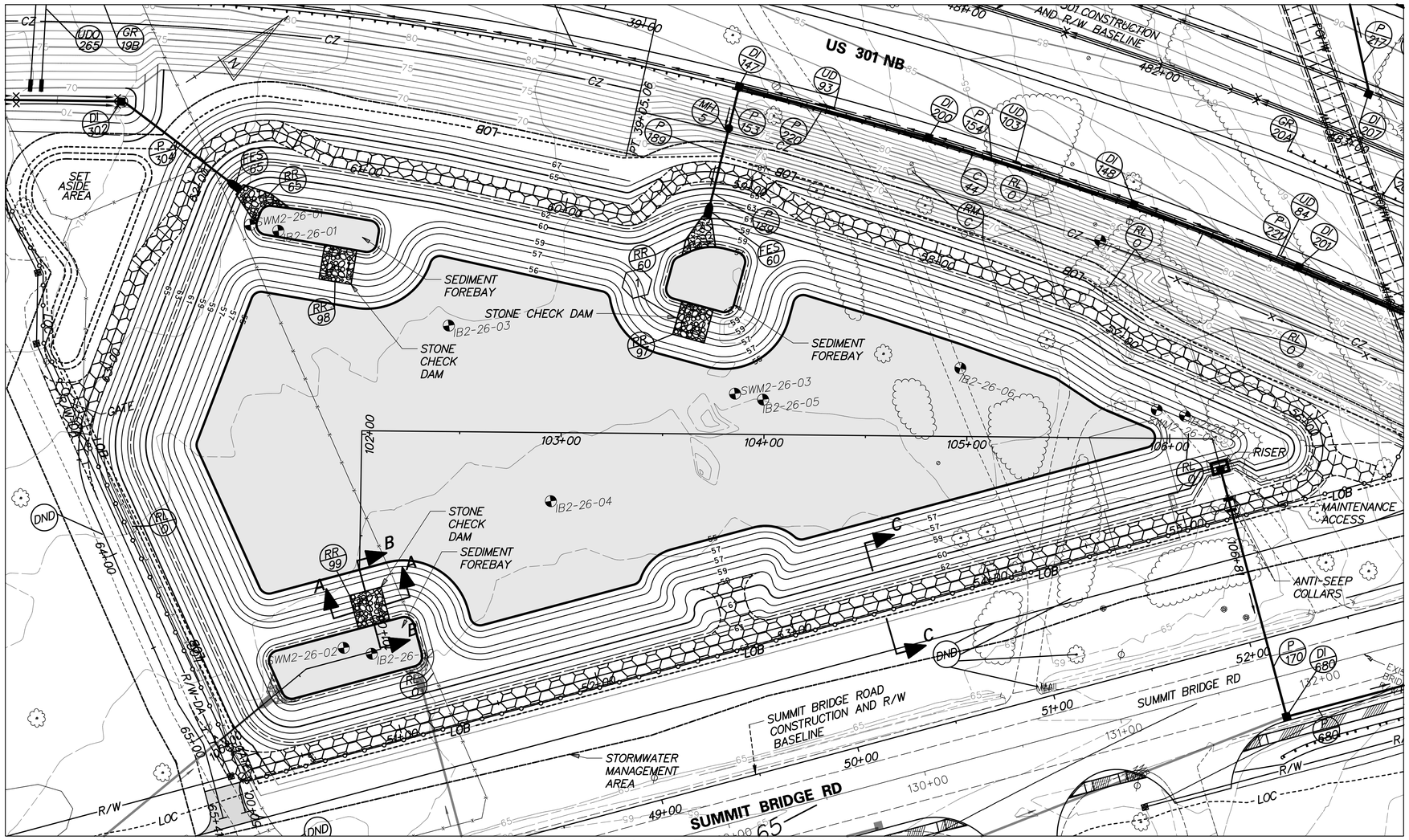

PLAN - BMP 690 (BASIN 20)

POND CONSTRUCTION SEQUENCE AND NOTES

THE STORMWATER MANAGEMENT POND SHALL BE CONSTRUCTED IN ACCORDANCE WITH THE FOLLOWING SECTIONS OF THE STANDARD SPECIFICATIONS:

SECTION 271 - STORMWATER MANAGEMENT POND
SECTION 272 - POND OUTLET STRUCTURE, CONCRETE

1. INSTALL STABILIZED CONSTRUCTION ENTRANCE.
2. CLEAR AND GRUB FOR INSTALLATION OF PERIMETER EROSIAND SEDIMENT CONTROLS.
3. INSTALL PERIMETER SEDIMENT CONTROLS AS SHOWN.
4. CLEAR AND GRUB REMAINING AREA FOR POND CONSTRUCTION.
5. CONSTRUCT OUTLET STRUCTURE, CLAY CORE AND PARTIAL EMBANKMENT AS NEEDED TO INSTALL OUTLET STRUCTURE. DE-WATER FOUNDATION AS NEEDED IN ACCORDANCE WITH SECTION 111 AND USE SUMP PIT FOR PUMPING.
6. EXCAVATE THE POND AND COMPLETE THE EMBANKMENT, GRADES AND DETAILS SHOWN IN THE CONSTRUCTION PLANS. DURING EXCAVATION, THE CONTRACTOR SHALL SALVAGE AND STOCKPILE SOILS CLASSIFIED AS CH, CL, SC AND GG PER THE UNIFIED SOIL CLASSIFICATION SYSTEM TO BE USED TO CONSTRUCT EMBANKMENT. THE ABOVE CLASSIFIED SOILS MAY BE OBTAINED FROM ELSEWHERE WITHIN THE PROJECT LIMITS, IF NECESSARY.
7. STABILIZE ALL BARE AREAS. REMOVE EROSION AND SEDIMENT CONTROL MEASURES AND DEACTIVATE DE-WATERING DEVICE.
NOTE: SEE CONSTRUCTION SEQUENCE PLANS FOR LOCATION OF EROSION AND SEDIMENT CONTROL MEASURES.
8. THE CONTRACTOR SHALL PROVIDE 'AS-BUILT' DRAWINGS OF ALL STORMWATER MANAGEMENT FACILITIES SUCH AS PONDS, INFILTRATION BASINS, BIOFILTRATION SWALES, ETC. 'AS-BUILT' DRAWINGS SHALL SHOW THE ACTUAL FINISHED GROUND CONTOURS, OUTLET STRUCTURE DIMENSIONS AND ELEVATIONS, ETC. AS THEY EXIST AT THE COMPLETION OF THE PROJECT. THESE DRAWINGS SHALL BE SIGNED BY A PROFESSIONAL ENGINEER OR LAND SURVEYOR.

PLANTING SCHEDULE

PLACE PERMANENT GRASS SEEDING - WET GROUND UP TO ELEVATION 59.00
PLACE PERMANENT GRASS SEEDING - DRY GROUND ABOVE ELEVATION 59.00
PLACE TOPSOIL ON LOWER BENCH ELEVATION 57.00 AND ABOVE.

RIPRAP SCHEDULE		
NO.	TYPE	AREA (SY)
60	R-4	21
65	R-4	24
97	R-4	31
98	R-4	31
99	R-4	31

CHECK CONSTRUCTION PLANS FOR SCHEDULE OF RIPRAP OUTSIDE OF THE BASIN AREA.

POND DESIGN SUMMARY				
DESIGN STORM	FACILITY INFLOW (CFS)	FACILITY DISCHARGE (CFS)	WATER SURFACE ELEVATION (FT)	STORAGE VOLUME (AC.FT.)*
QUALITY STORM (1 YR)	32.40	2.84	58.82	5.415
10 - YEAR	84.52	11.05	59.89	7.519
100 - YEAR	171.28	29.59	61.49	10.978

DRAINAGE AREA TO FACILITY: 29.77 ACRES

MANAGEMENT PROVIDED BY FACILITY: WATER QUALITY BY EXTENDED DETENTION OF 1 YEAR STORM RUNOFF, WATER QUANTITY FOR 10 AND 100 YEAR STORMS.

*INCLUDES NORMAL POOL VOLUME OF 4.007 AC-FT.

POND QUANTITIES			
ITEM NO.	ITEM	QTY.	UNITS.
202000	EXCAVATION AND EMBANKMENT	49713	CY
272000	POND OUTLET STRUCTURE, CONCRETE, #1	1	EACH
302011	DELAWARE NO. 3 STONE	501	TON
712005	R-4 RIPRAP	45	SY
712020	R-4 RIPRAP	66	TON
713001	GEOTEXTILES, STABILIZATION	3389	SY
713003	GEOTEXTILES, RIPRAP	168	SY
733002	TOPSOILING, 6" DEPTH	11615	SY
734013	PERMANENT GRASS SEEDING, DRY GROUND	8292	SY
734015	PERMANENT GRASS SEEDING, WET GROUND	9577	SY

P:\CADD2\60049040 US301\CIVIL\PLANS\2A\CP\AET\SW-103.DGN

DELAWARE DEPARTMENT OF TRANSPORTATION

ADDENDUMS / REVISIONS

SCALE 0 30 60 90 FEET

US 301 LEVELS ROAD TO SUMMIT BRIDGE ROAD

CONTRACT	BRIDGE NO.	
T200911303	DESIGNED BY: DB	JW
COUNTY	CHECKED BY: JZ	SF
NEW CASTLE		

STORMWATER MANAGEMENT DETAILS BMP 690 (BASIN 20)

SW-103
SHEET NO. 788
TOTAL SHTS. 1256

CL PRINCIPAL SPILLWAY			
	STATION	NORTHING	EASTING
1	POB STA. 100+00.00	541519.4854	570959.9459
2	PI STA. 100+54.64	541573.7686	570953.6937
3	PI STA. 100+92.69	541609.9469	570965.4817
4	PI STA. 101+33.20	541622.4948	570926.9714
5	PI STA. 102+01.75	541660.7794	570870.1085
6	PI STA. 106+21.03	542010.1743	571101.8947
7	POE STA. 106+80.82	541991.6516	571158.7425

CL EMBANKMENT			
	STATION	NORTHING	EASTING
20	POB STA. 50+00.00	541510.1704	570996.6022
21	PC STA. 50+10.00	541513.2682	570987.0948
22	PI STA. 50+20.00	541516.3662	570977.5868
23	PT STA. 50+25.71	541525.8742	570980.6848
24	PC STA. 55+53.88	542028.0636	571144.3126
25	PI STA. 56+14.53	542085.7274	571163.1011
26	PT STA. 56+07.69	542053.5207	571111.7119
27	PI STA. 56+33.18	542039.9840	571090.1128
28	PI STA. 56+93.53	542006.4621	571039.9274
29	PC STA. 57+15.57	541997.7249	571019.6921
30	PI STA. 57+20.75	541995.6701	571014.9330
31	PT STA. 57+25.88	541992.5302	571010.8084
32	PI STA. 57+73.97	541963.4022	570972.5457
33	PI STA. 58+16.83	541936.5494	570939.1500
34	PI STA. 58+68.70	541903.1268	570899.4768
35	PI STA. 58+99.20	541889.7977	570872.0459
36	PC STA. 59+09.26	541883.1567	570864.4827
37	PI STA. 59+23.41	541873.8196	570853.8488
38	PT STA. 59+36.84	541860.2944	570849.6856
39	PC STA. 59+62.02	541835.4510	570853.7871
40	PI STA. 59+67.20	541830.3457	570854.6299
41	PT STA. 59+71.57	541826.7089	570850.9493
42	PI STA. 60+62.45	541762.8323	570786.3038
43	PI STA. 61+17.65	541722.2614	570748.8849
44	PC STA. 61+47.89	541706.0947	570723.3312
45	PI STA. 61+79.38	541681.1267	570704.1325
46	PT STA. 62+01.93	541655.7026	570722.7230
47	PI STA. 62+19.44	541641.5753	570733.0531
48	PI STA. 62+49.47	541613.1366	570742.6987
49	PC STA. 63+22.95	541553.8166	570786.0747
50	PI STA. 63+48.30	541533.3590	570801.0337
51	PT STA. 63+71.07	541529.2377	570826.0397
52	PI STA. 64+80.24	541511.4838	570933.7602
53	PI STA. 65+03.73	541511.1072	570957.2431
54	POE STA. 65+41.37	541499.4473	570993.0282

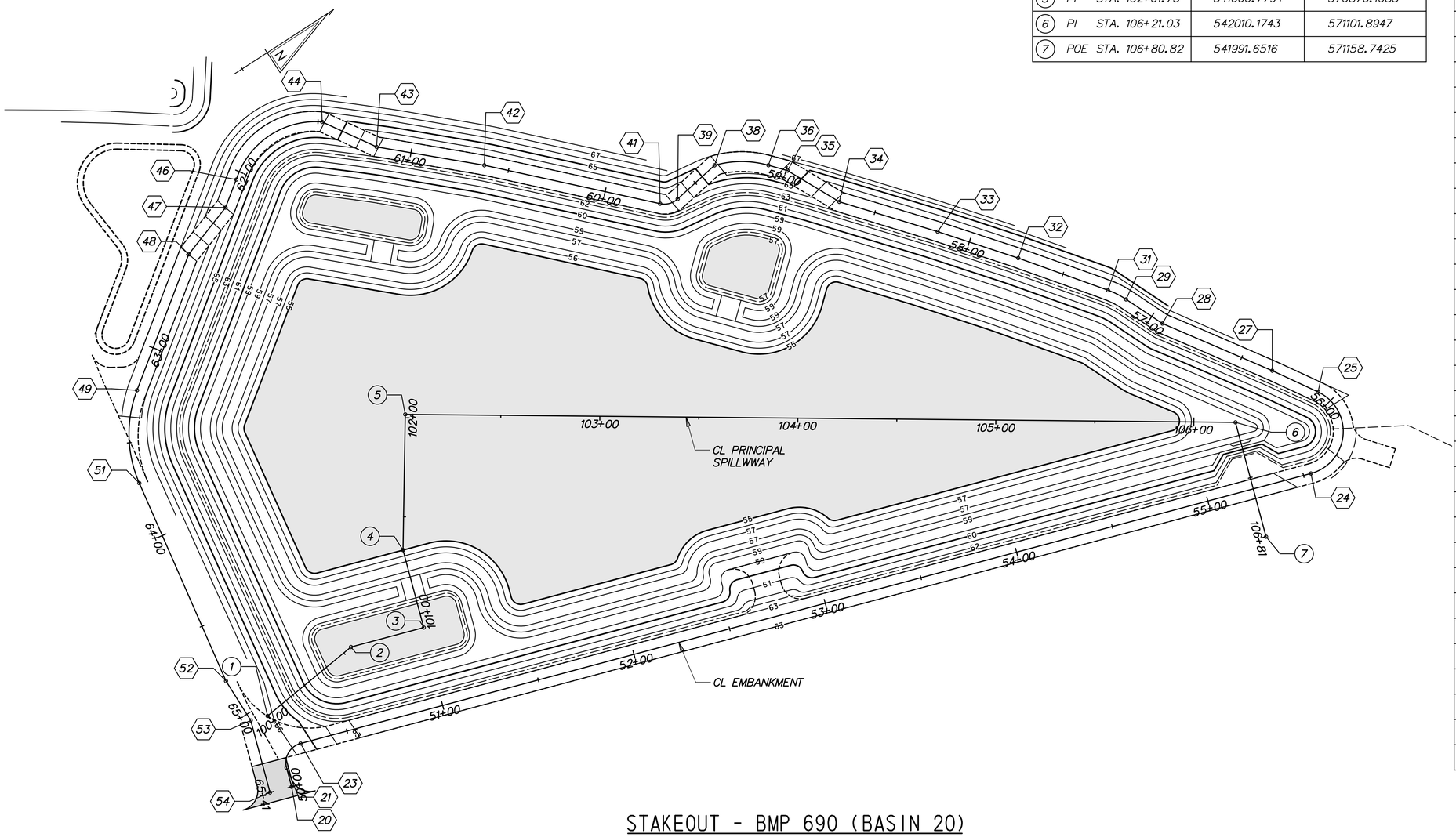

STAKEOUT - BMP 690 (BASIN 20)

G:\60049040 US301\CIVIL\PLANS\2A\CP\SW-104.DGN

DELAWARE DEPARTMENT OF TRANSPORTATION	ADDENDUMS / REVISIONS	SCALE 0 30 60 90 FEET	US 301 LEVELS ROAD TO SUMMIT BRIDGE ROAD	CONTRACT T200911303	BRIDGE NO.	STORMWATER MANAGEMENT DETAILS BMP 690 (BASIN 20)	SW-104 SHEET NO. 789 TOTAL SHTS. 1256
				COUNTY NEW CASTLE	DESIGNED BY: DB CHECKED BY: JZ		

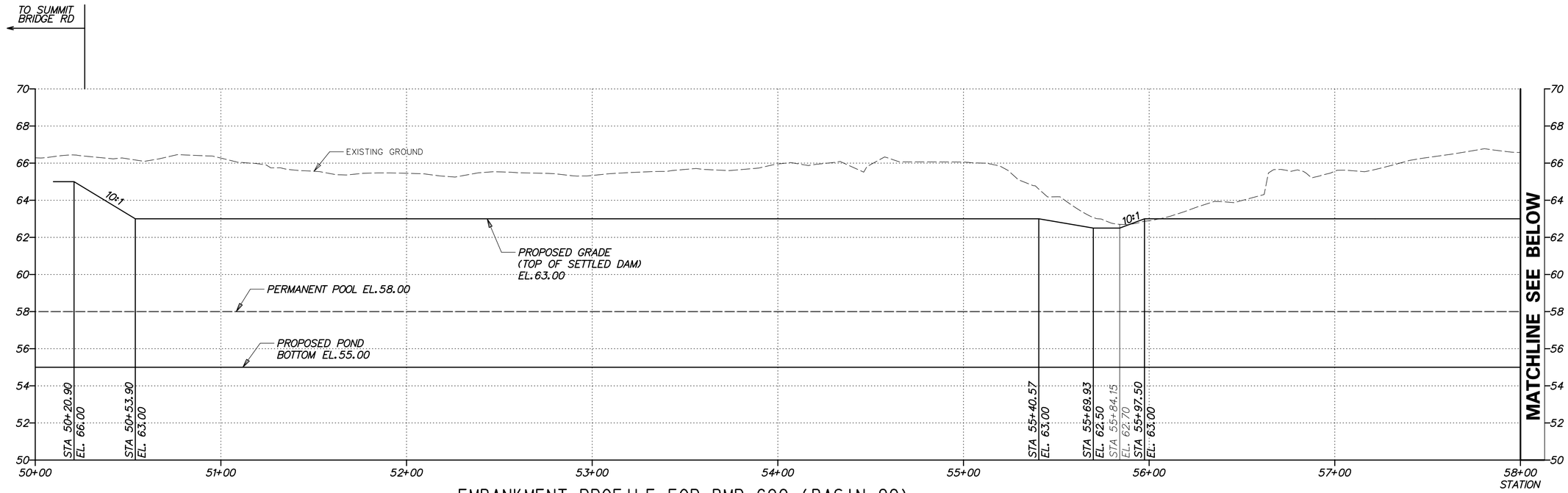

EMBANKMENT PROFILE FOR BMP 690 (BASIN 20)

HORIZONTAL SCALE: 1"=30'
0 30 60 90
FEET

VERTICAL SCALE: 1"=3'
0 3 6 9
FEET

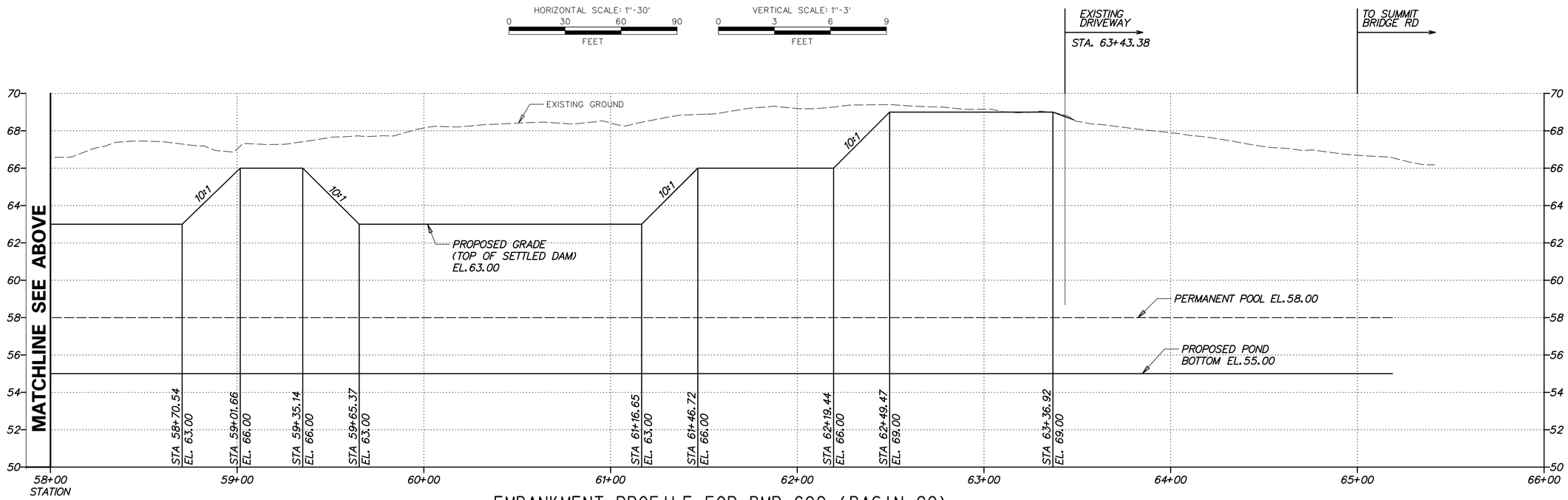

EMBANKMENT PROFILE FOR BMP 690 (BASIN 20)

HORIZONTAL SCALE: 1"=30'
0 30 60 90
FEET

VERTICAL SCALE: 1"=3'
0 3 6 9
FEET

G:\60049040 US301\CIVIL\PLANS\2A\CP\SW-105.DGN

DELAWARE DEPARTMENT OF TRANSPORTATION	ADDENDUMS / REVISIONS	AS SHOWN	US 301 LEVELS ROAD TO SUMMIT BRIDGE ROAD	CONTRACT T200911303	BRIDGE NO.	STORMWATER MANAGEMENT DETAILS BMP 690 (BASIN 20)
				COUNTY NEW CASTLE	DESIGNED BY: DB	
					CHECKED BY: JZ	

SW-105	
SHEET NO.	790
TOTAL SHTS.	1256

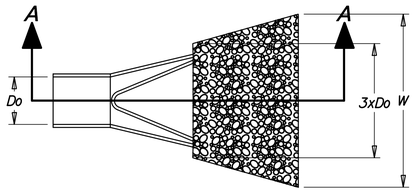

PLAN
SCALE: NONE

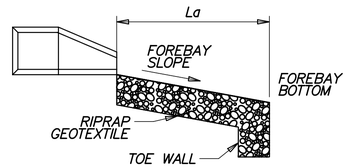

SECTION A-A
SCALE: NONE

DATA

PIPE DIAMETER (Do)
APRON LENGTH (La)
APRON WIDTH (W)
RIPRAP SIZE (R No.)

FES ID	Do	La	W	R No.
60	1.5'	9.8'	15.0'	R-4
65	2.0'	9.8'	15.0'	R-4

FOREBAY RIPRAP OUTLET PROTECTION

SCALE: NONE

NOTES:
1. RIPRAP ITEM# 712005.
2. GEOTEXTILES, RIPRAP ITEM# 713003
3. SEE STANDARD NO. E-10 FOR RIPRAP DEPTH AND GEOTEXTILE PLACEMENT.
4. DEPRESS CENTERLINE OF APRON SLIGHTLY TO PREVENT EDGE CUTTING.

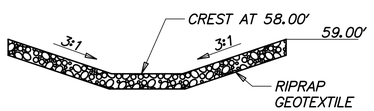

SECTION A-A FROM BASIN PLAN
SCALE: NONE

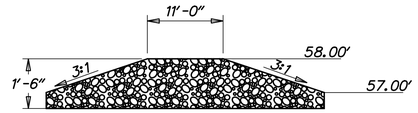

SECTION B-B FROM BASIN PLAN
SCALE: NONE

STONE CHECK DAM

SCALE: NONE

NOTES:
1. RIPRAP ITEM# 712020
2. GEOTEXTILE, RIPRAP ITEM# 713003
3. SEE STANDARD NO. E-10 FOR GEOTEXTILE PLACEMENT.

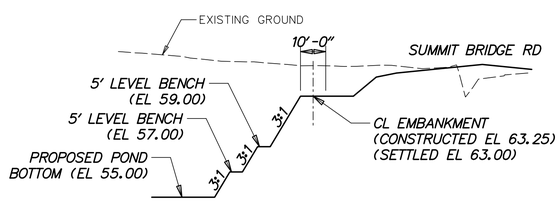

SECTION C-C FROM BASIN PLAN
SCALE: NONE

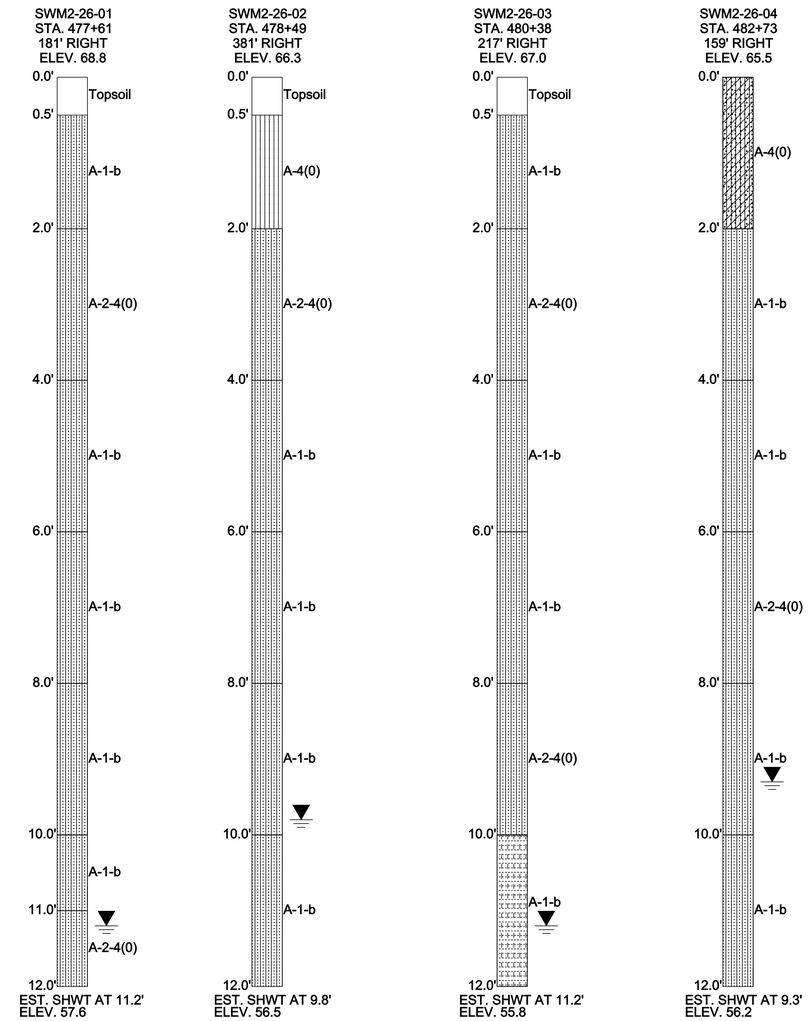

G:\60049040 US301\CIVIL\PLANS\2A\CP\SW-106.DGN

DELAWARE DEPARTMENT OF TRANSPORTATION	ADDENDUMS / REVISIONS	AS SHOWN	US 301 LEVELS ROAD TO SUMMIT BRIDGE ROAD	CONTRACT T200911303	BRIDGE NO.	STORMWATER MANAGEMENT DETAILS BMP 690 (BASIN 20)	SW-106
				COUNTY NEW CASTLE	DESIGNED BY: DB		SHEET NO. 791
					CHECKED BY: JZ		TOTAL SHTS. 1256

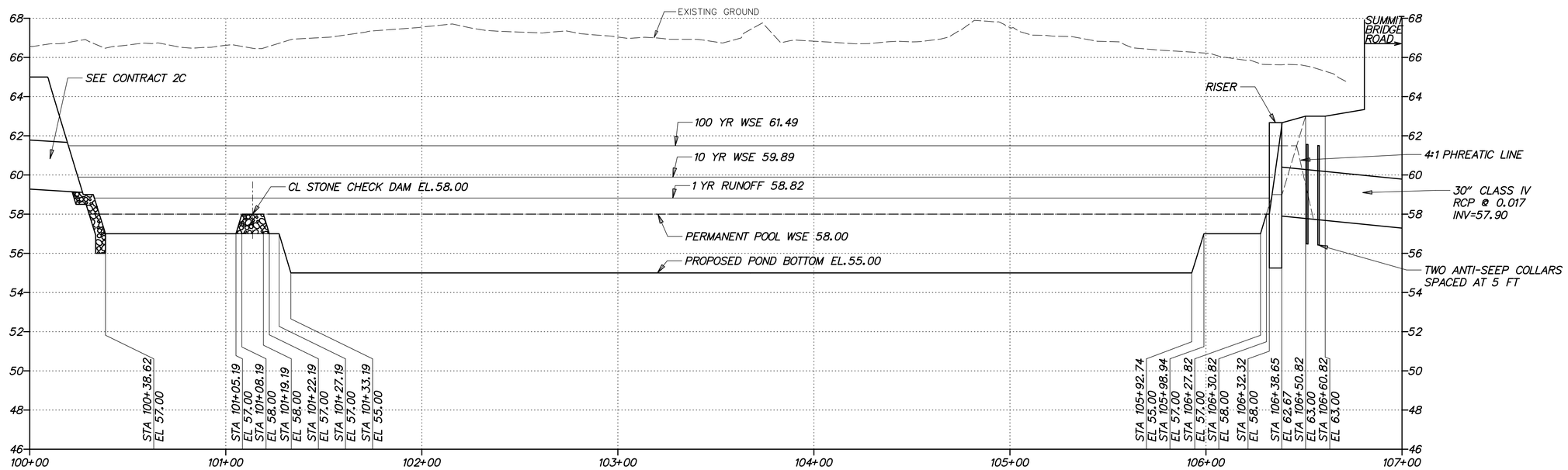

SPILLWAY PROFILE BMP 690 (BASIN 20)

HORIZONTAL SCALE: 1"=30'
0 30 60 90
FEET

VERTICAL SCALE: 1"=3'
0 3 6 9
FEET

G:\60049040 US301\CIVIL\PLANS\2A\CP\SW-107.DGN

DELAWARE DEPARTMENT OF TRANSPORTATION	ADDENDUMS / REVISIONS	AS SHOWN	US 301 LEVELS ROAD TO SUMMIT BRIDGE ROAD	CONTRACT T200911303	BRIDGE NO.	STORMWATER MANAGEMENT DETAILS BMP 690 (BASIN 20)	SW-107
				COUNTY NEW CASTLE	DESIGNED BY: DB		SHEET NO. 792
					CHECKED BY: JZ		TOTAL SHTS. 1256

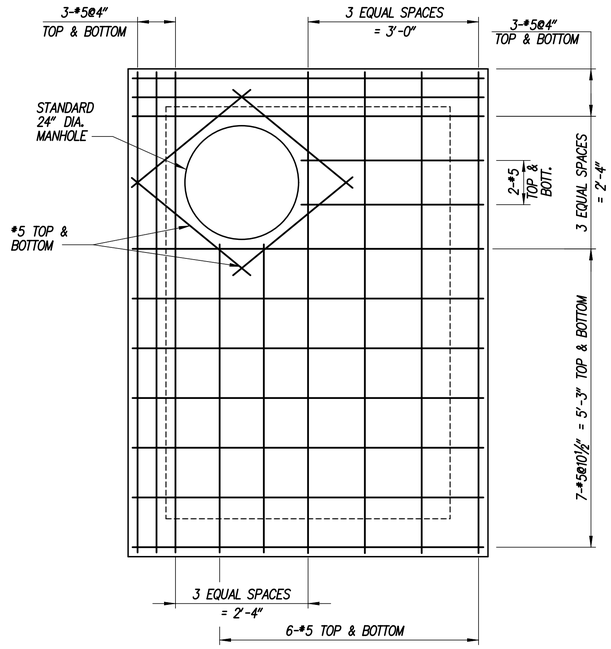

TOP SLAB - REINFORCEMENT PLAN

SCALE: ¾" = 1'-0"

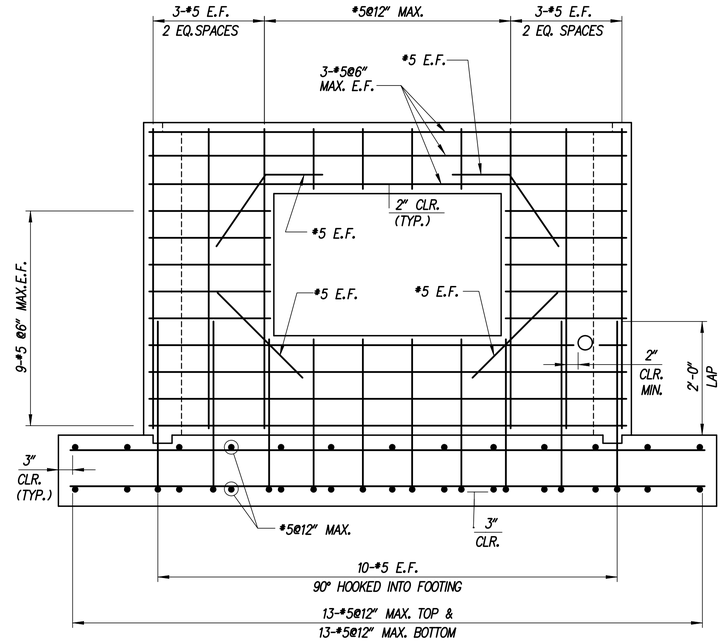

SECTION D-D

SCALE: ¾" = 1'-0"

NOTE:

1. TOP SLAB, TRASH RACKS, AND MANHOLE STEPS NOT SHOWN IN SECTION FOR CLARITY.
2. THE ORIFICE MUST BE PRE-CAST.

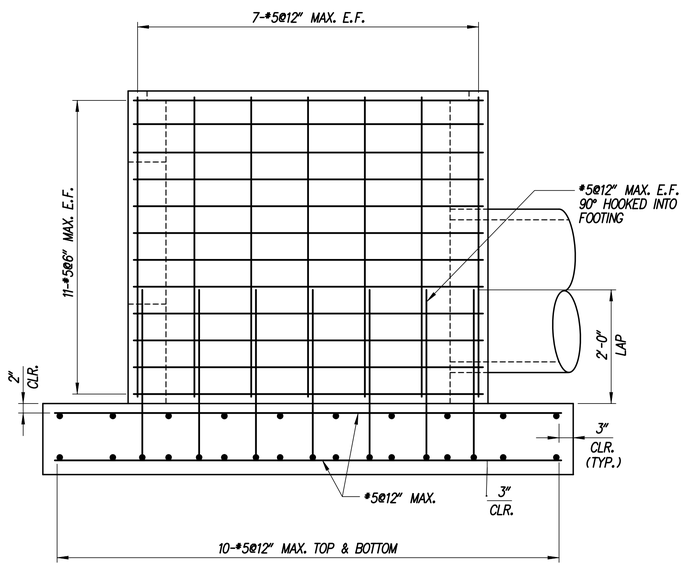

SECTION C-C

SCALE: ¾" = 1'-0"

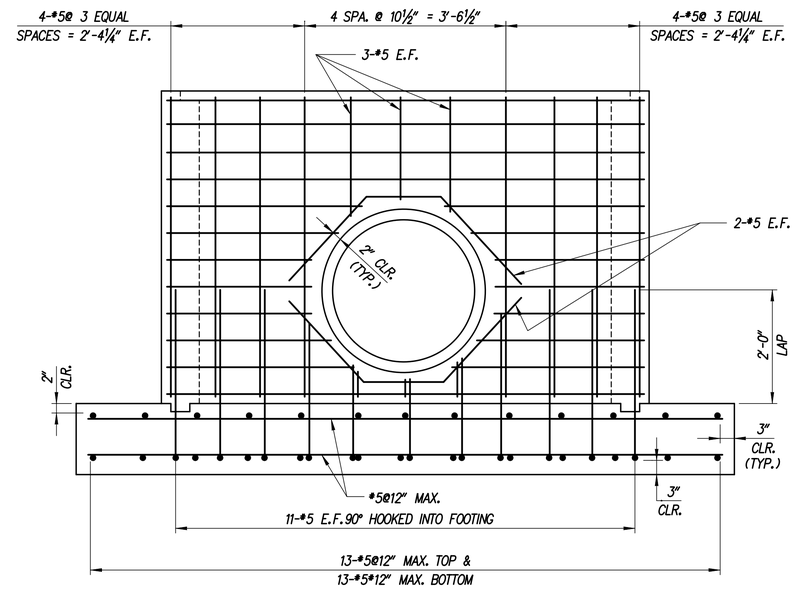

SECTION E-E

SCALE: ¾" = 1'-0"

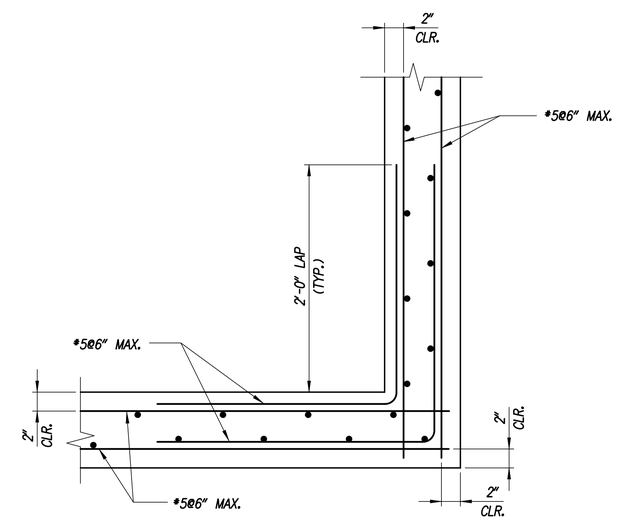

CORNER REINFORCEMENT DETAIL

SCALE: ¾" = 1'-0"

G:\60049040 US301\CIVIL\PLANS\2A\CP\SW-108.DGN

DELAWARE DEPARTMENT OF TRANSPORTATION	ADDENDUMS / REVISIONS	AS SHOWN	US 301 LEVELS ROAD TO SUMMIT BRIDGE ROAD	CONTRACT T200911303	BRIDGE NO.	STORMWATER MANAGEMENT DETAILS BMP 690 (BASIN 20)
				COUNTY NEW CASTLE	DESIGNED BY: DB	
					CHECKED BY: JZ	

SW-108
SHEET NO. 793
TOTAL SHTS. 1256

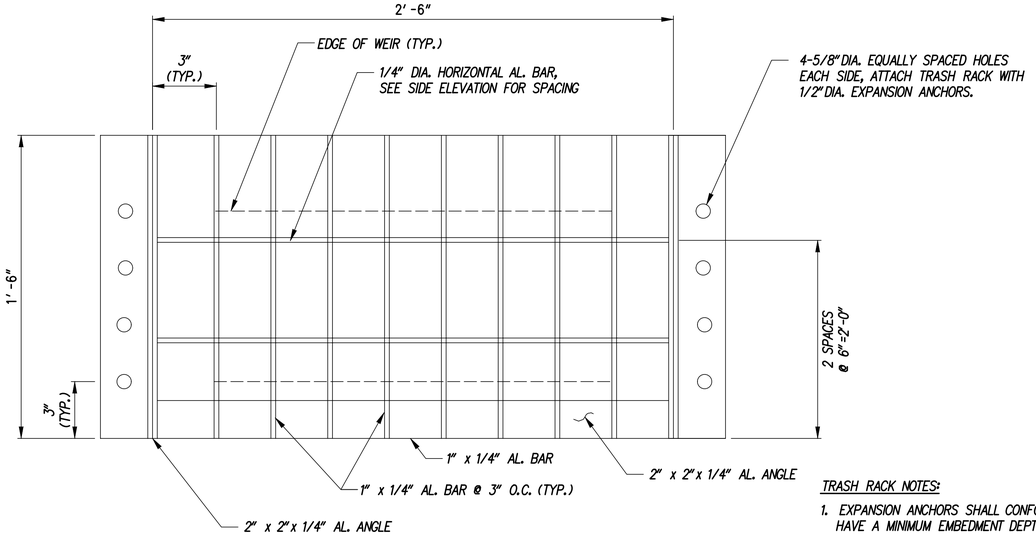

TRASH RACK - FRONT ELEVATION

SCALE: NONE

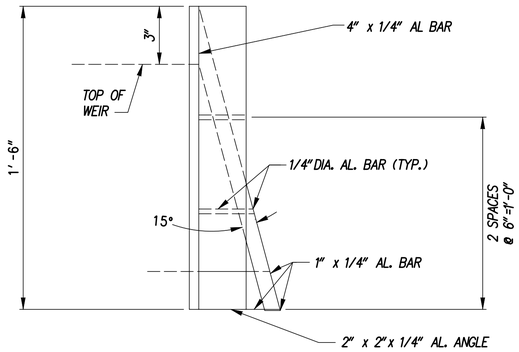

TRASH RACK - SIDE ELEVATION

SCALE: NONE

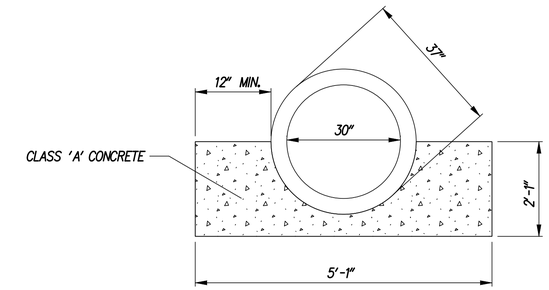

CONCRETE CRADLE

SCALE: NONE

TRASH RACK NOTES:

1. EXPANSION ANCHORS SHALL CONFORM TO ASTM A510 AND SHALL HAVE A MINIMUM EMBEDMENT DEPTH OF 4" UNLESS NOTED OTHERWISE.
2. EXPANSION ANCHORS SHALL BE ZINC PLATED IN CONFORMANCE WITH ASTM B633, TYPE III FE/ZN 5.
3. ALUMINUM ANGLES SHALL CONFORM TO ASTM B308 ALLOY 6061-T6. REMAINING ALUMINUM CONFORM TO ASTM B211 ALLOY 6061-T6.

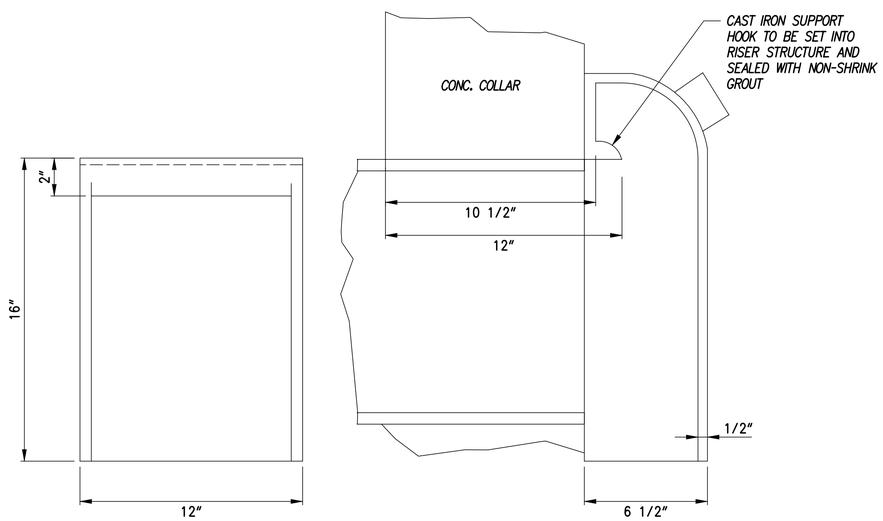

CATCH BASIN TRAP

N.T.S.

CATCH BASIN TRAP NOTES:

1. CATCH BASIN TRAP AND SUPPORT HOOKS SHALL BE FABRICATED FROM CAST IRON.
2. BOTTOM OF TRAP SHALL EXTEND A MINIMUM OF 6-INCHES BELOW THE BOTTOM OF THE COVERED ORIFICE.
3. THE COST OF ALL CATCH BASIN TRAPS SHALL BE INCIDENTAL TO THE CONTRACT UNIT COST FOR THE POND OUTLET STRUCTURE.

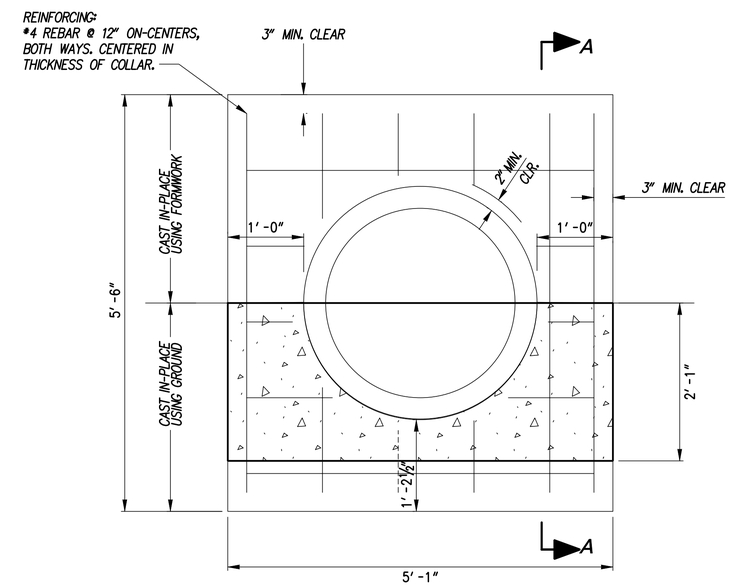

ELEVATION

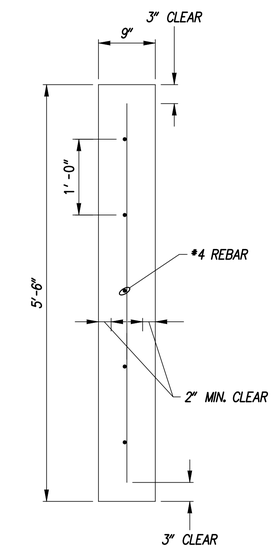

SECTION A-A

NOTES:

1. CAST ANTI-SEEP COLLAR IN TWO PARTS.

CONCRETE ANTI-SEEP COLLAR

SCALE: NONE

G:\60049040 US301\CIVIL\PLANS\2A\CP\SW-109.DGN

DELAWARE DEPARTMENT OF TRANSPORTATION	ADDENDUMS / REVISIONS	AS SHOWN	US 301 LEVELS ROAD TO SUMMIT BRIDGE ROAD	CONTRACT T200911303	BRIDGE NO.	STORMWATER MANAGEMENT DETAILS BMP 690 (BASIN 20)	SW-109
				COUNTY NEW CASTLE	DESIGNED BY: DB		SHEET NO. 794
					CHECKED BY: JZ		TOTAL SHTS. 1256

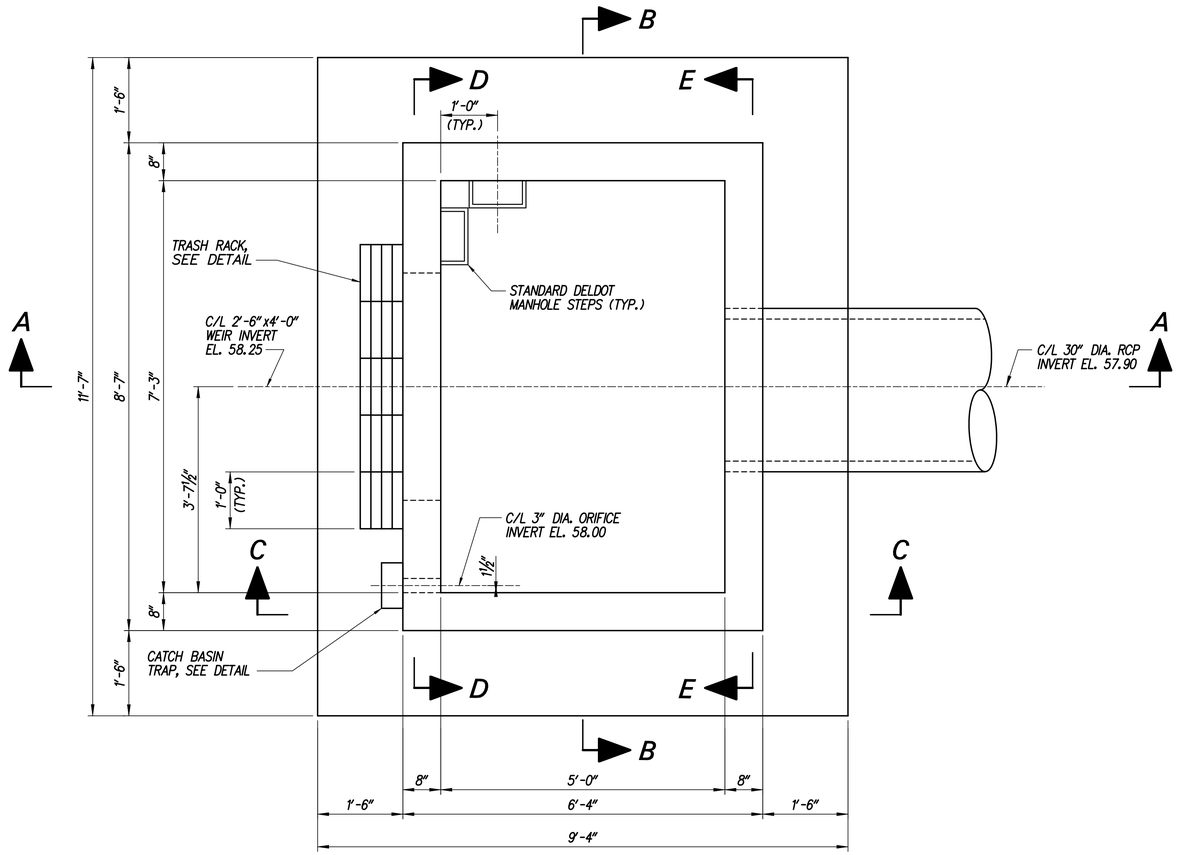

RISER PLAN

SCALE: ¾" = 1'-0"

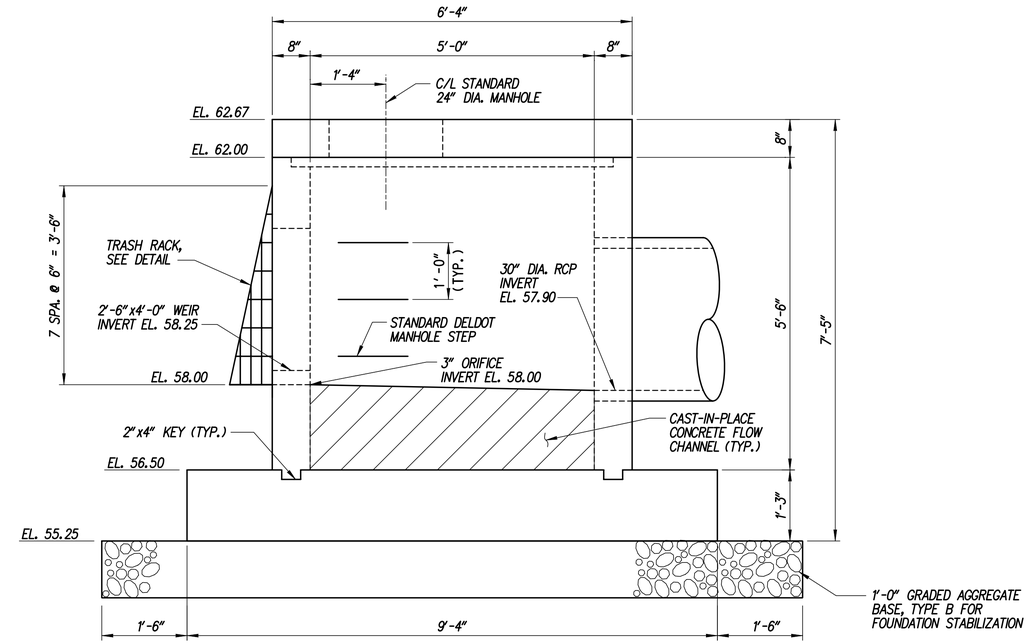

VIEW A-A

SCALE: ¾" = 1'-0"

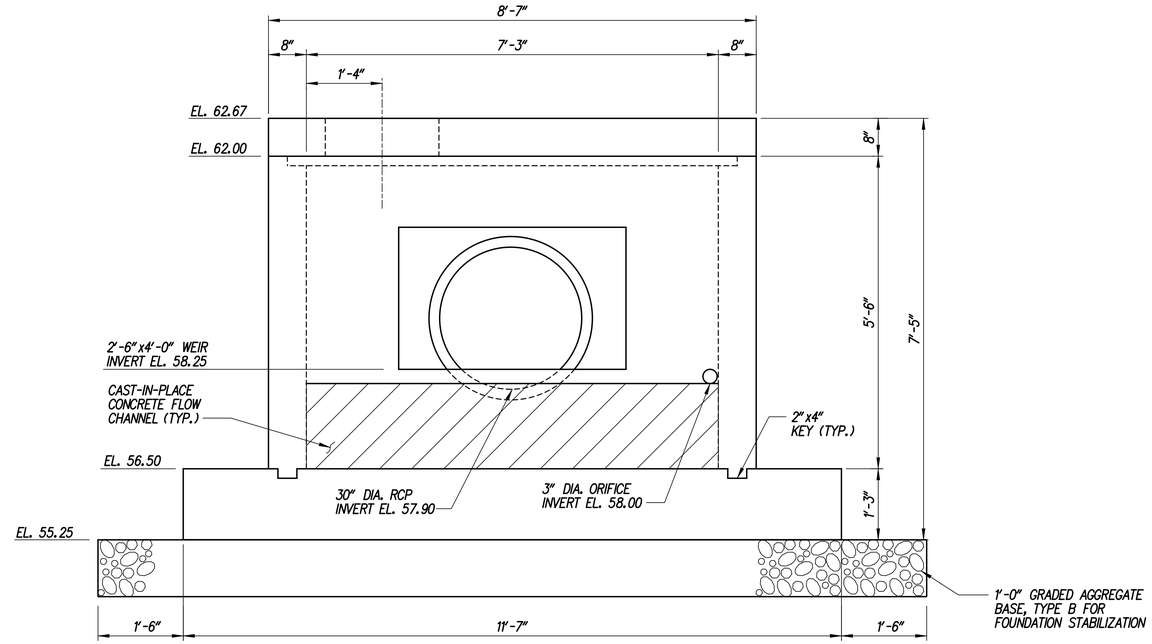

VIEW B-B

SCALE: ¾" = 1'-0"

NOTES:

1. SEE STANDARD CONSTRUCTION DETAILS FOR MANHOLE FRAME AND COVER DETAILS.
2. SEE STANDARD CONSTRUCTION DETAILS FOR MANHOLE STEP DETAILS.

CROSS REFERENCE NOTES:

1. FOR SECTIONS C-C, D-D AND E-E, SEE DWG. NO. SW-108.

G:\60049040 US301\CIVIL\PLANS\2A\CP\SW-110.DGN

DELAWARE DEPARTMENT OF TRANSPORTATION	ADDENDUMS / REVISIONS	AS SHOWN	US 301 LEVELS ROAD TO SUMMIT BRIDGE ROAD	CONTRACT T200911303	BRIDGE NO.	STORMWATER MANAGEMENT DETAILS BMP 690 (BASIN 20)	SW-110
				COUNTY NEW CASTLE	DESIGNED BY: DB		SHEET NO. 795
					CHECKED BY: JZ		TOTAL SHTS. 1256

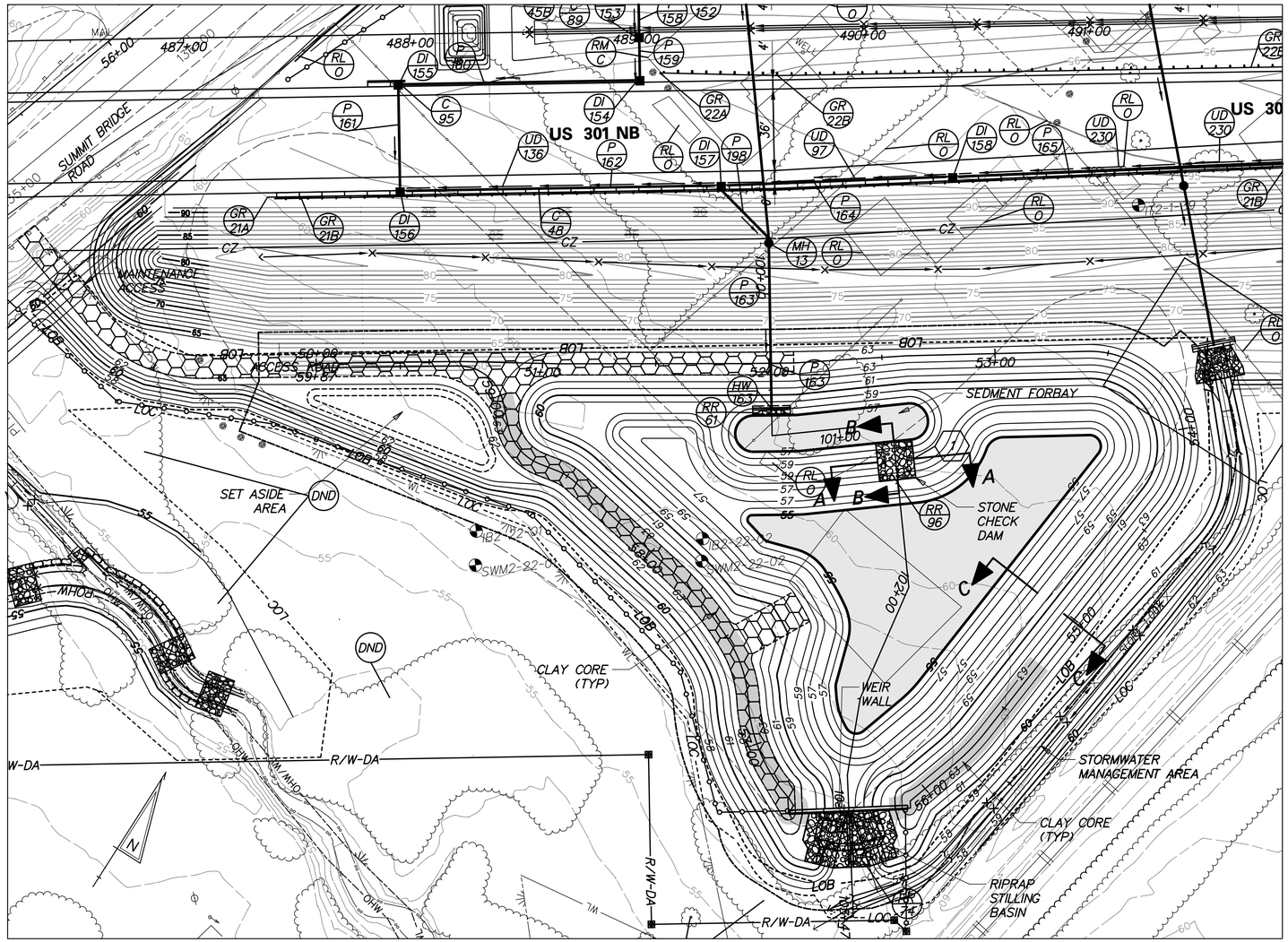

PLAN - BMP 687 (BASIN 21)

POND DESIGN SUMMARY				
DESIGN STORM	FACILITY INFLOW (CFS)	FACILITY DISCHARGE (CFS)	WATER SURFACE ELEVATION (FT)	STORAGE VOLUME (AC.FT.)*
QUALITY STORM (1 YR)	11.97	0.85	59.11	1.330
10 - YEAR	32.68	5.38	60.31	2.072
100 - YEAR	66.91	20.34	61.94	3.187

DRAINAGE AREA TO FACILITY: 11.55 ACRES

MANAGEMENT PROVIDED BY FACILITY: WATER QUALITY BY EXTENDED DETENTION OF 1 YEAR STORM RUNOFF, WATER QUANTITY FOR 10 AND 100 YEAR STORMS.

*INCLUDES NORMAL POOL VOLUME OF 0.814 AC-FT

RIPRAP SCHEDULE		
NO.	TYPE	AREA (SY)
61	R-4	4
74	R-5	125
96	R-4	31

CHECK CONSTRUCTION PLANS FOR SCHEDULE OF RIPRAP OUTSIDE OF THE BASIN AREA.

SKIMMER DEVICE SUMMARY	
SKIMMER ELEVATION	58.04
ORIFICE SIZE (IN)	3
BLOCK WEIR UP TO ELEVATION	58.78

POND CONSTRUCTION SEQUENCE AND NOTES

THE STORMWATER MANAGEMENT POND SHALL FUNCTION AS A SEDIMENT BASIN DURING ROADWAY CONSTRUCTION AND SHALL BE CONSTRUCTED IN ACCORDANCE WITH THE FOLLOWING SECTIONS OF THE STANDARD SPECIFICATIONS:

SECTION 271 - STORMWATER MANAGEMENT POND
SECTION 272 - POND OUTLET STRUCTURE, CONCRETE
SECTION 274 - CLAY BORROW, STORMWATER MANAGEMENT POND

1. INSTALL STABILIZED CONSTRUCTION ENTRANCE.
2. CLEAR AND GRUB FOR INSTALLATION OF PERIMETER EROSION AND SEDIMENT CONTROLS.
3. INSTALL PERIMETER SEDIMENT CONTROLS AS SHOWN.
4. CLEAR AND GRUB REMAINING AREA FOR POND CONSTRUCTION.
5. CONSTRUCT WEIR WALL, RIPRAP STILLING BASIN, CLAY CORE AND PARTIAL EMBANKMENT AS NEEDED TO INSTALL WEIR WALL. INSTALL SKIMMER AND DE-WATER FOUNDATION AS NEEDED IN ACCORDANCE WITH SECTION 111 AND USE SUMP PIT FOR PUMPING. (SEE EROSION AND SEDIMENT CONTROL DETAILS FOR SKIMMER DE-WATERING DEVICE INSTALLATION)
6. EXCAVATE THE POND AND COMPLETE THE EMBANKMENT, GRADES AND DETAILS SHOWN IN THE CONSTRUCTION PLANS. DURING EXCAVATION, THE CONTRACTOR SHALL SALVAGE AND STOCKPILE SOILS CLASSIFIED AS CH, CL, SC AND GG PER THE UNIFIED SOIL CLASSIFICATION SYSTEM TO BE USED TO CONSTRUCT EMBANKMENT. THE ABOVE CLASSIFIED SOILS MAY BE OBTAINED FROM ELSEWHERE WITHIN THE PROJECT LIMITS, IF NECESSARY.
7. STABILIZE ALL BARE AREAS.
   NOTE: SEE CONSTRUCTION SEQUENCE PLANS FOR LOCATION OF EROSION AND SEDIMENT CONTROL MEASURES.
8. THE CONTRACTOR SHALL PROVIDE 'AS-BUILT' DRAWINGS OF ALL STORMWATER MANAGEMENT FACILITIES SUCH AS PONDS, INFILTRATION BASINS, BIOFILTRATION SWALES, ETC. 'AS-BUILT' DRAWINGS SHALL SHOW THE ACTUAL FINISHED GROUND CONTOURS, OUTLET STRUCTURE DIMENSIONS AND ELEVATIONS, ETC. AS THEY EXIST AT THE COMPLETION OF THE PROJECT. THESE DRAWINGS SHALL BE SIGNED BY A PROFESSIONAL ENGINEER OR LAND SURVEYOR.

MAINTENANCE OF POND AS A SEDIMENT BASIN

1. CONTRACTOR SHALL INSPECT THE BASIN IMMEDIATELY AFTER EVERY RAIN AND MAKE REPAIRS AS NEEDED.
2. CONTRACTOR SHALL CLEARLY MARK THE CLEANOUT ELEVATION ON A STAKE DRIVEN INTO THE GROUND AT A LOCTATION CLEARLY VISIBLE FROM THE EMBANKMENT. SEDIMENT SHALL BE REMOVED WHEN CLEANOUT ELEVATION IS REACHED AND DISPOSED OF AT A LOCATION APPROVED BY THE ENGINEER. CLEANOUT ELEVATION IS 58.41.

CONVERSION TO PERMANENT STORMWATER MANAGEMENT POND

1. CONVERT THE BASIN INTO THE PERMANENT STORMWATER MANAGEMENT POND AFTER ALL AREAS DRAINING TO THE POND HAVE BEEN PERMANENTLY STABILIZED AND THE ENGINEER HAS APPROVED THE CONVERSION.
2. REMOVE ACCUMULATED SEDIMENT TO ELEVATION 55.0 AND DISPOSE SEDIMENT AT A LOCATION APPROVED BY THE ENGINEER.
3. COMPLETE STABILIZATION OF ALL BARE AREAS. REMOVE EROSION AND SEDIMENT CONTROL MEASURES AND DEACTIVATE DE-WATERING DEVICE.

PLANTING SCHEDULE

PLACE PERMANENT GRASS - WET GROUND UP TO ELEVATION 59.00.
PLACE PERMANENT GRASS - DRY GROUND ABOVE ELEVATION 59.00.
PLACE TOP SOIL ON LOWER BENCH ELEVATION 57.00 AND ABOVE.

POND QUANTITIES			
ITEM NO.	ITEM	QTY.	UNITS.
202000	EXCAVATION AND EMBANKMENT	4816	CY
272501	POND OUTLET STRUCTURE, 18, SPECIAL	1	EACH
274000	CLAY BORROW, STORMWATER MANAGEMENT POND, CUT-OFF TRENCH	782	CY
302011	DELAWARE NO. 3 STONE	234	TON
302012	DELAWARE NO. 57 STONE	29	TON
712005	R-4 RIPRAP	4	SY
712006	R-5 RIPRAP	125	SY
712020	R-4 RIPRAP	22	TON
713001	GEOTEXTILES, STABILIZATION	1575	SY
713003	GEOTEXTILES, RIPRAP	199	SY
733002	TOPSOILING, 6" DEPTH	6148	SY
734013	PERMANENT GRASS SEEDING, DRY GROUND	4597	SY
734015	PERMANENT GRASS SEEDING, WET GROUND	2780	SY

CL PRINCIPAL SPILLWAY			
	STATION	NORTHING	EASTING
1	POB STA. 100+00.00	542420.4066	571622.2594
2	PI STA. 100+70.17	542361.8733	571660.9629
3	PI STA. 101+23.35	542394.9044	571702.6354
4	PI STA. 101+96.16	542337.8391	571747.8673
5	PI STA. 102+49.58	542285.0536	571756.0717
6	PI STA. 102+84.04	542253.3237	571769.4951
7	POE STA. 103+46.74	542201.8964	571805.3615

CL EMBANKMENT			
	STATION	NORTHING	EASTING
20	POB STA. 50+00.00	542280.6702	571473.8889
21	PI STA. 50+63.17	542315.2687	571526.7446
22	PI STA. 51+07.29	542338.1101	571564.4924
23	PI STA. 51+86.85	542380.9123	571631.5568
24	PI STA. 52+10.99	542394.1093	571651.7644
25	PI STA. 52+61.00	542423.5945	571692.1600
26	PC STA. 53+40.73	542468.0754	571758.3331
27	PI STA. 54+30.09	542517.9276	571832.4969
28	PT STA. 54+35.77	542429.0146	571823.5527
29	PC STA. 55+63.15	542302.2788	571810.8037
30	PI STA. 55+73.18	542292.2981	571809.7997
31	PT STA. 55+83.14	542282.7340	571806.7745
32	PI STA. 56+08.52	542258.5362	571799.1205
33	PI STA. 56+11.61	542256.0051	571800.8857
34	PI STA. 56+65.55	542225.1447	571756.6363
35	PC STA. 56+72.73	542231.0331	571752.5296
36	PI STA. 56+97.12	542237.8675	571729.1139
37	PT STA. 57+19.74	542257.6125	571714.7913
38	PC STA. 57+20.19	542257.9820	571714.5233
39	PI STA. 57+31.83	542267.3980	571707.6931
40	PT STA. 57+43.11	542273.1668	571697.5919
41	PI STA. 57+44.87	542274.0407	571696.0616
42	PC STA. 57+48.62	542275.6620	571692.6799
43	PI STA. 57+68.70	542284.3415	571674.5770
44	PT STA. 57+88.53	542287.8490	571654.8097
45	PC STA. 58+45.92	542297.8763	571598.2982
46	PI STA. 58+50.58	542298.6899	571593.7134
47	PT STA. 58+55.13	542297.7982	571589.1431
48	PC STA. 58+63.11	542296.2703	571581.3123
49	PI STA. 58+75.43	542293.9098	571569.2138
50	PT STA. 58+85.74	542302.6772	571560.5490
51	PC STA. 58+96.98	542310.6753	571552.6445
52	PI STA. 59+13.34	542322.3070	571541.1488
53	PT STA. 59+24.40	542313.3503	571527.4657
54	POE STA. 59+87.13	542278.9968	571474.9842

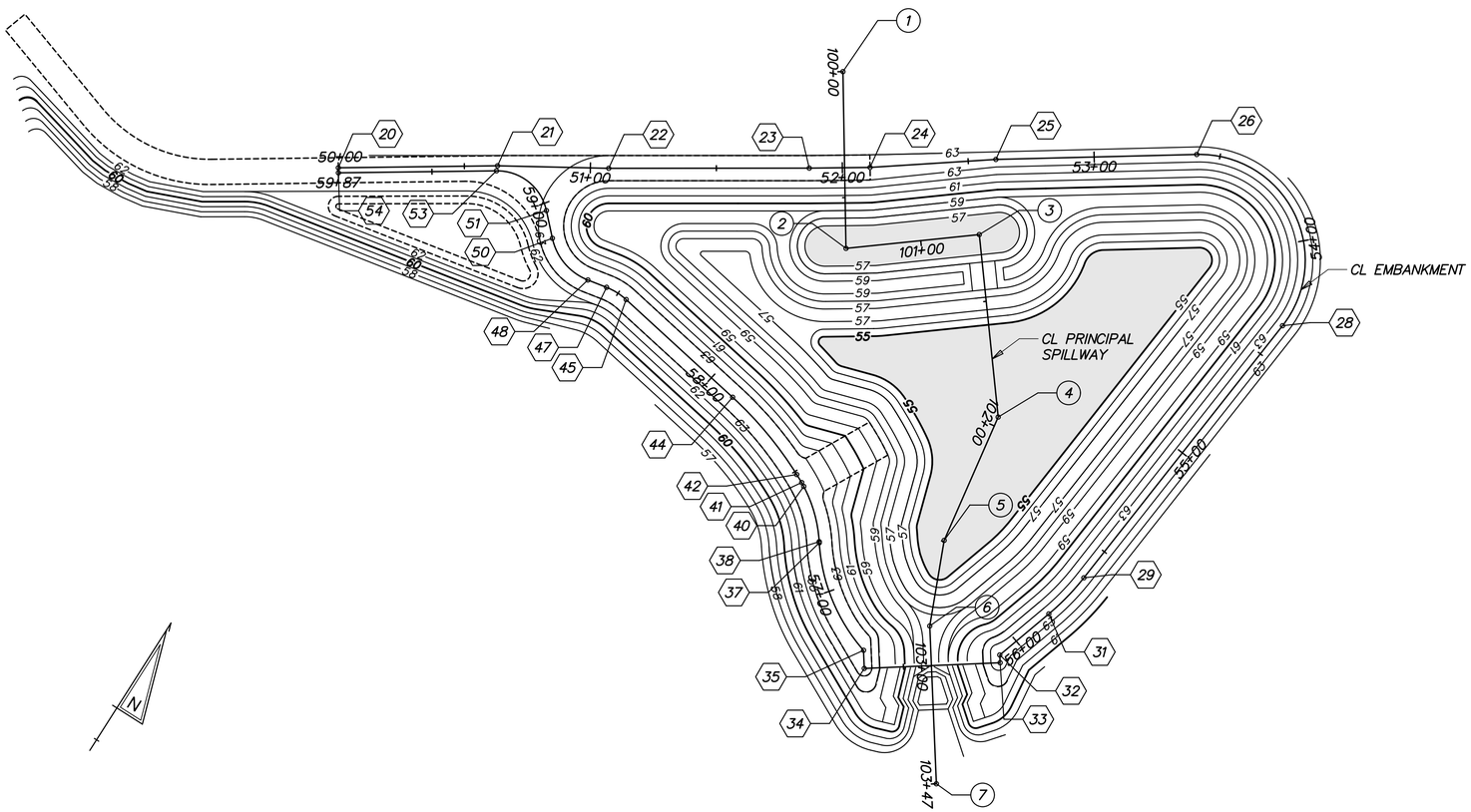

STAKEOUT - BMP 687 (BASIN 21)

G:\60049040 US301\CIVIL\PLANS\2A\CP\SW-112.DGN

DELAWARE DEPARTMENT OF TRANSPORTATION

ADDENDUMS / REVISIONS

SCALE 0 30 60 90 FEET

US 301 LEVELS ROAD TO SUMMIT BRIDGE ROAD

CONTRACT T200911303

COUNTY NEW CASTLE

BRIDGE NO.

DESIGNED BY: DB

CHECKED BY: JZ

STORMWATER MANAGEMENT DETAILS BMP 687 (BASIN 21)

SW-112

SHEET NO. 797

TOTAL SHTS. 1256

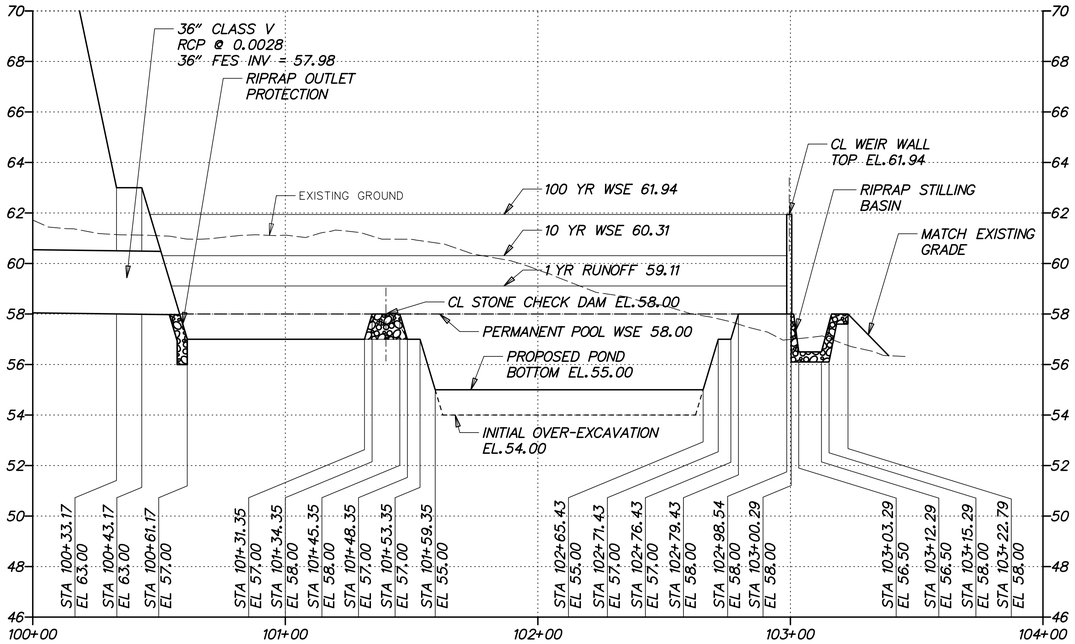

SPILLWAY PROFILE - BMP 687 (BASIN 21)

HORIZONTAL SCALE: 1"=30' 0 30 60 90 FEET

VERTICAL SCALE: 1"=3' 0 3 6 9 FEET

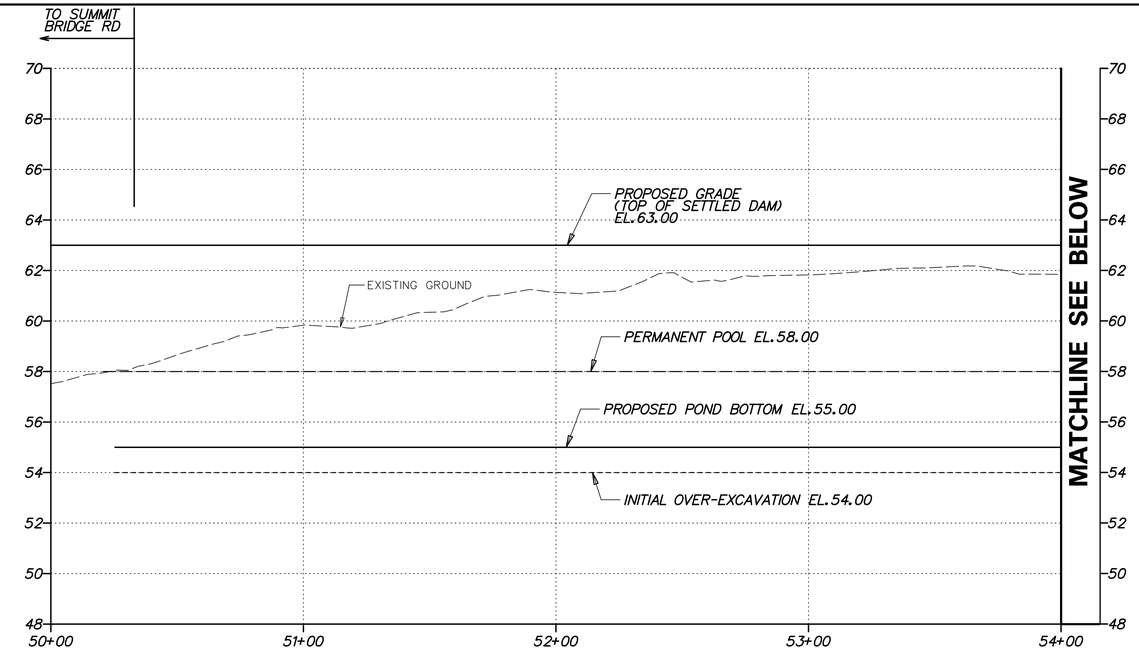

EMBANKMENT PROFILE FOR BMP 687 (BASIN 21)

HORIZONTAL SCALE: 1"=30' 0 30 60 90 FEET

VERTICAL SCALE: 1"=3' 0 3 6 9 FEET

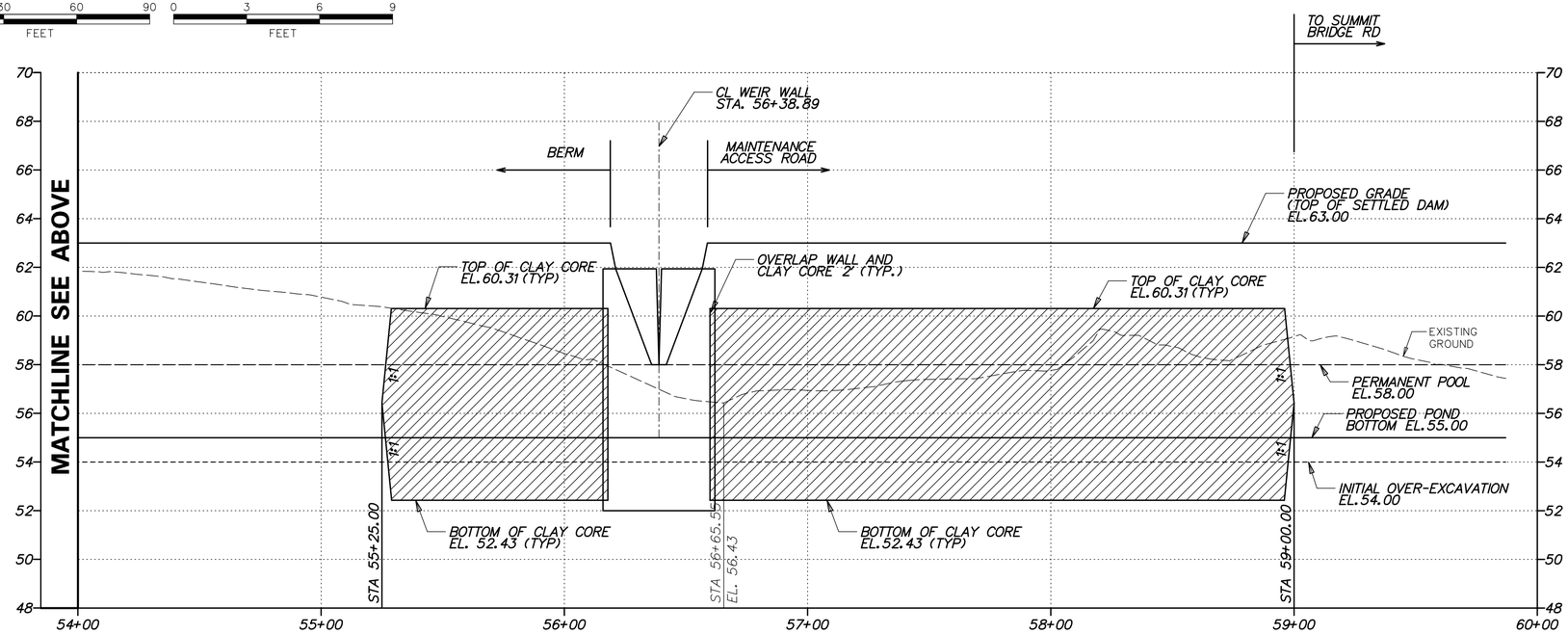

EMBANKMENT PROFILE FOR BMP 687 (BASIN 21)

HORIZONTAL SCALE: 1"=30' 0 30 60 90 FEET

VERTICAL SCALE: 1"=3' 0 3 6 9 FEET

G:\60049040 US301\CIVIL\PLANS\2A\CP\SW-113.DGN

DELAWARE DEPARTMENT OF TRANSPORTATION	ADDENDUMS / REVISIONS	AS SHOWN	US 301 LEVELS ROAD TO SUMMIT BRIDGE ROAD	CONTRACT T200911303	BRIDGE NO.	STORMWATER MANAGEMENT DETAILS BMP 687 (BASIN 21)
				COUNTY NEW CASTLE	DESIGNED BY: DB	
					CHECKED BY: JZ	

SW-113
SHEET NO.
798
TOTAL SHTS.
1256

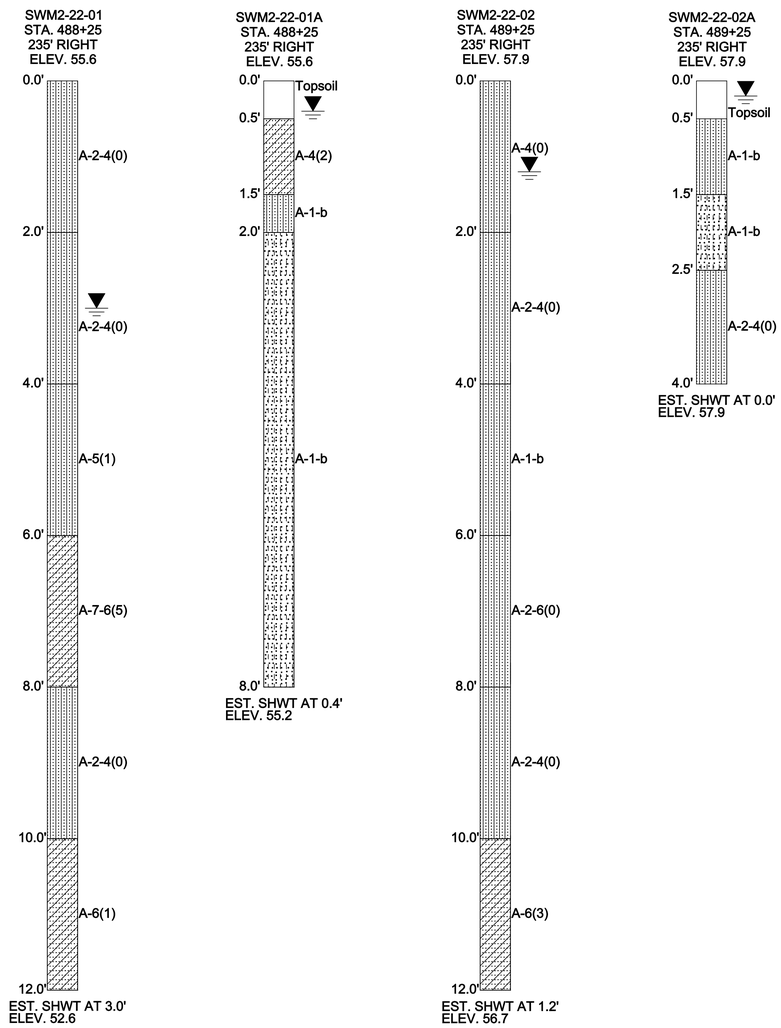

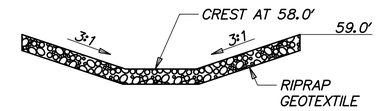

SECTION A-A FROM BASIN PLAN

SCALE: NONE

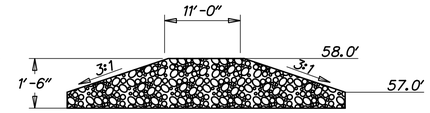

SECTION B-B FROM BASIN PLAN

SCALE: NONE

STONE CHECK DAM

SCALE: NONE

NOTES:
1. RIPRAP ITEM# 712020
2. GEOTEXTILE, RIPRAP ITEM# 713003
3. SEE STANDARD NO. E-10 FOR GEOTEXTILE PLACEMENT.

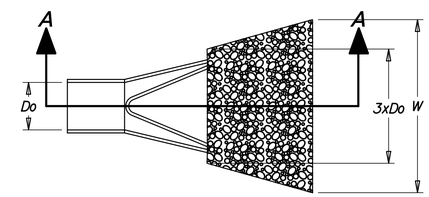

PLAN

SCALE: NONE

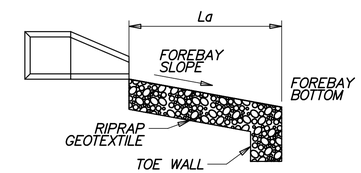

SECTION A-A

SCALE: NONE

DATA

PIPE DIAMETER (Do)
APRON LENGTH (La)
APRON WIDTH (W)
RIPRAP SIZE (R No.)

RR ID	Do	La	W	R No.
61	3.0'	3.0'	15.0'	R-4

FOREBAY RIPRAP OUTLET PROTECTION

SCALE: NONE

NOTES:
1. RIPRAP ITEM# 712005.
2. GEOTEXTILES, RIPRAP ITEM# 713003
3. SEE STANDARD NO. E-10 FOR RIPRAP DEPTH AND GEOTEXTILE PLACEMENT.
4. DEPRESS CENTERLINE OF APRON SLIGHTLY TO PREVENT EDGE CUTTING.

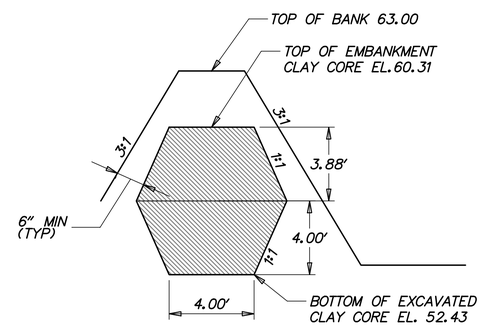

CLAY CORE SECTION

SCALE: NONE

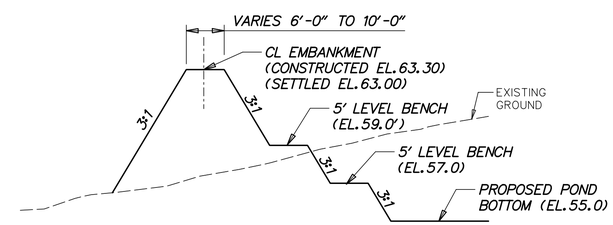

SECTION C-C

SCALE: NONE

G:\60049040 US301\CIVIL\PLANS\2A\CP\SW-114.DGN

DELAWARE DEPARTMENT OF TRANSPORTATION	ADDENDUMS / REVISIONS	AS SHOWN	US 301 LEVELS ROAD TO SUMMIT BRIDGE ROAD	CONTRACT T200911303	BRIDGE NO.	STORMWATER MANAGEMENT PLAN BMP 687 (BASIN 21)	SW-114
				COUNTY NEW CASTLE	DESIGNED BY: DB		SHEET NO. 799
					CHECKED BY: JZ		TOTAL SHTS. 1256

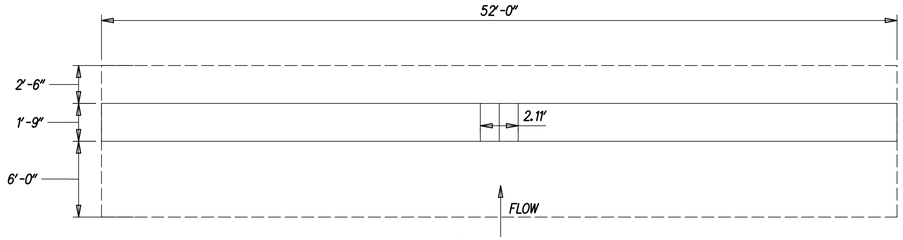

WEIR WALL PLAN

SCALE: NONE

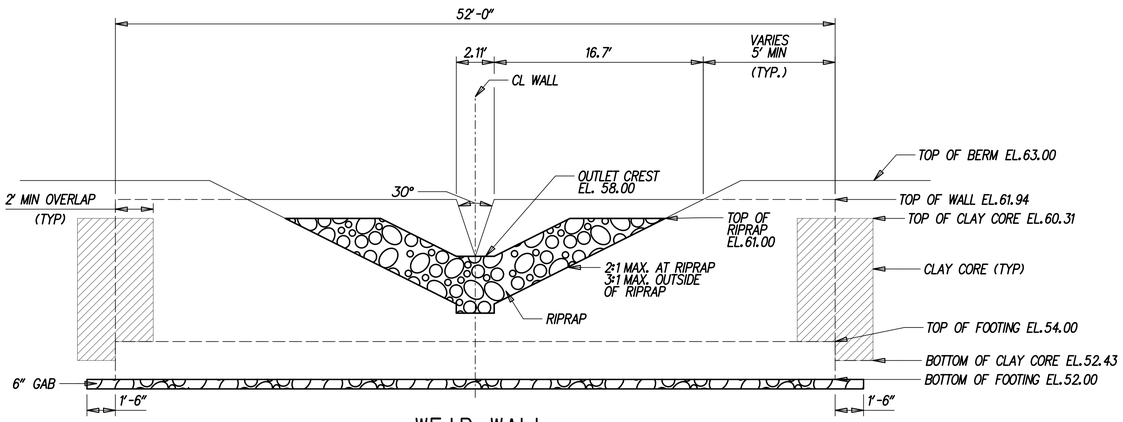

WEIR WALL EXTERIOR ELEVATION WITH RIPRAP STILLING BASIN

SCALE: NONE

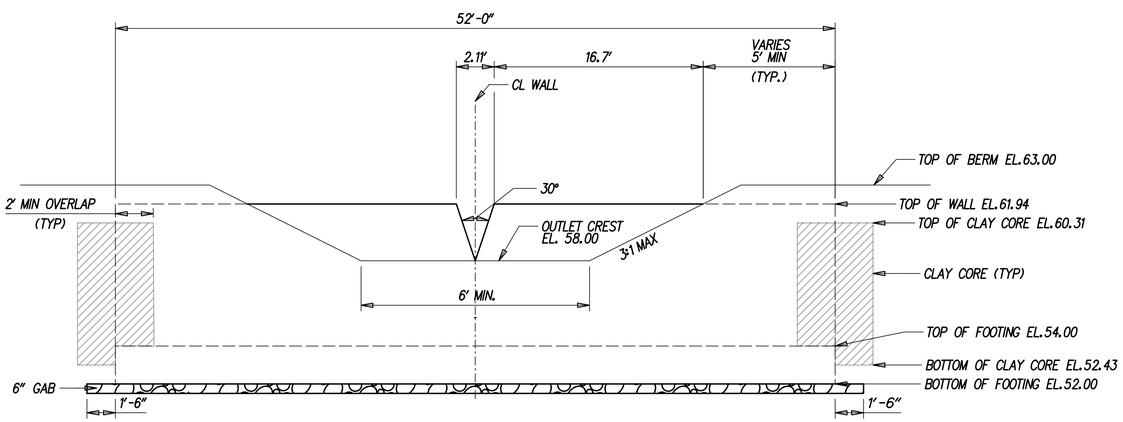

WEIR WALL INTERIOR ELEVATION

SCALE: NONE

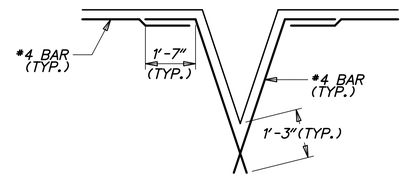

OPENING DETAILS

SCALE: NONE

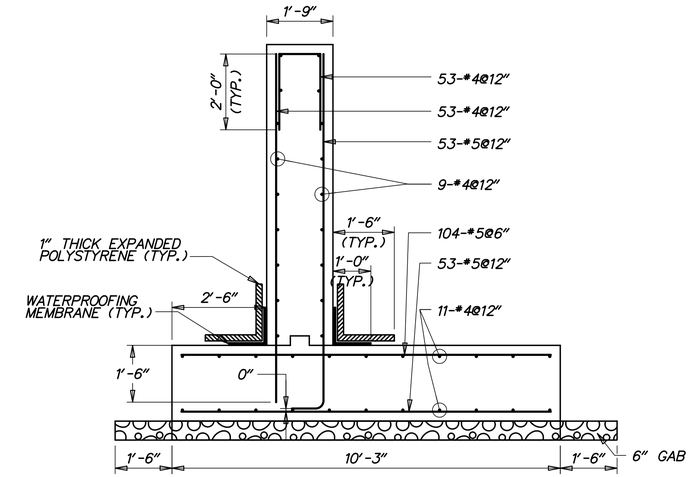

WEIR WALL SECTION

SCALE: 1/2" =1'-0"

GENERAL NOTES

1. DESIGN SPECIFICATIONS:

   AASHTO LRFD BRIDGE DESIGN SPECIFICATIONS, 4TH EDITION, 2007, INCLUDING 2008 AND 2009 INTERIM REVISIONS, AND AS SUPPLEMENTED BY DELAWARE DEPARTMENT OF TRANSPORTATION BRIDGE DESIGN MANUAL, MAY 2005, INCLUDING LATEST REVISIONS.

   PROVIDE MATERIALS AND PERFORM WORK IN ACCORDANCE WITH THE DELAWARE DEPARTMENT OF TRANSPORTATION STANDARD SPECIFICATIONS AND CONSTRUCTION DETAILS, AASHTO/AWS D1.5M/D1.5 BRIDGE WELDING CODE, AND CONTRACT SPECIAL PROVISIONS.

2. LOADING:

   UNIT WEIGHTS OF MATERIALS SHALL BE IN ACCORDANCE WITH THE DELAWARE DESIGN MANUAL.

3. PORTLAND CEMENT CONCRETE:

   PORTLAND CEMENT CONCRETE FOR CAST-IN-PLACE ELEMENTS SHALL BE AS FOLLOWS:
   (28 DAY COMPRESSIVE STRENGTH)
   (CLASS B, F'c=3000 PSI) - WEIR WALL FOOTING
   (CLASS A, F'c=4500 PSI) - WEIR WALL STEM

   WEIR WALLS MUST BE CAST-IN-PLACE.

   MIX REQUIREMENTS SHALL CONFORM TO SECTION 812 OF THE DELAWARE DEPARTMENT OF TRANSPORTATION STANDARD SPECIFICATIONS.

   ALL EXPOSED CORNERS OF CONCRETE SHALL BE CHAMFERED WITH ¾" X ¾" MILLED CHAMFER STRIPS EXCEPT ON UNEXPOSED FOOTINGS.

4. BAR REINFORCEMENT:

   REINFORCING STEEL SHALL CONFORM TO AASHTO M31 (ASTM A615), GRADE 60 AND IS TO BE EPOXY COATED. FUSION-BONDED EPOXY COATED REINFORCING STEEL SHALL CONFORM TO AASHTO M284 (ASTM D3963).

   PROVIDE 3" CONCRETE COVER ON REINFORCEMENT BARS, EXCEPT AS NOTED.

   LAP LENGTH OF #4 BARS TO BE 3'-0". STAGGER SPLICE LOCATIONS.

   DO NOT WELD GRADE 60 REINFORCING STEEL.

5. CONSTRUCTION JOINTS:

   KEYED CONSTRUCTION JOINTS SHALL BE 2" x 4" OR AS NOTED.

6. WATERPROOFING MEMBRANE:

   ADHESIVE BACKED WATERPROOFING MEMBRANE IS TO BE USED. SPLICING OF THE MEMBRANE IS PROHIBITED.

7. REFER TO SPECIFICATION SECTION 272501 FOR CONSTRUCTION SEQUENCE.

8. GAB IS INCIDENTAL TO WALL CONSTRUCTION.

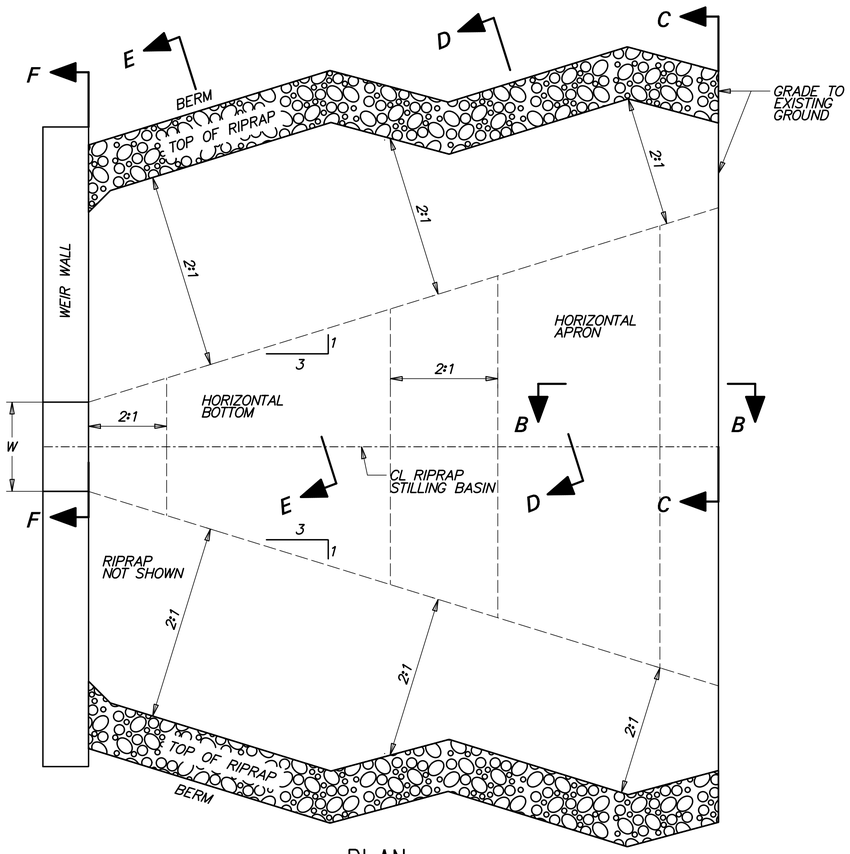

PLAN

SCALE: NONE

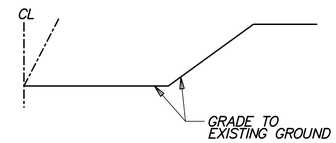

SECTION C-C

SCALE: NONE

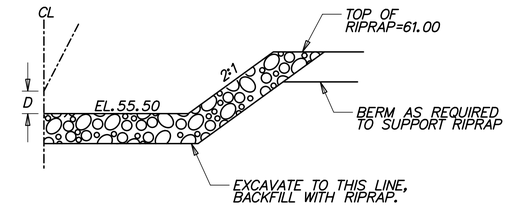

SECTION E-E

SCALE: NONE

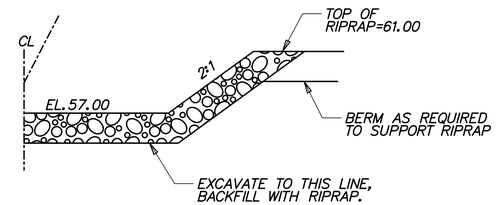

SECTION D-D

SCALE: NONE

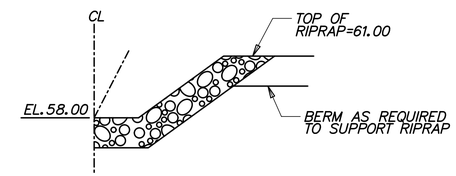

SECTION F-F

SCALE: NONE

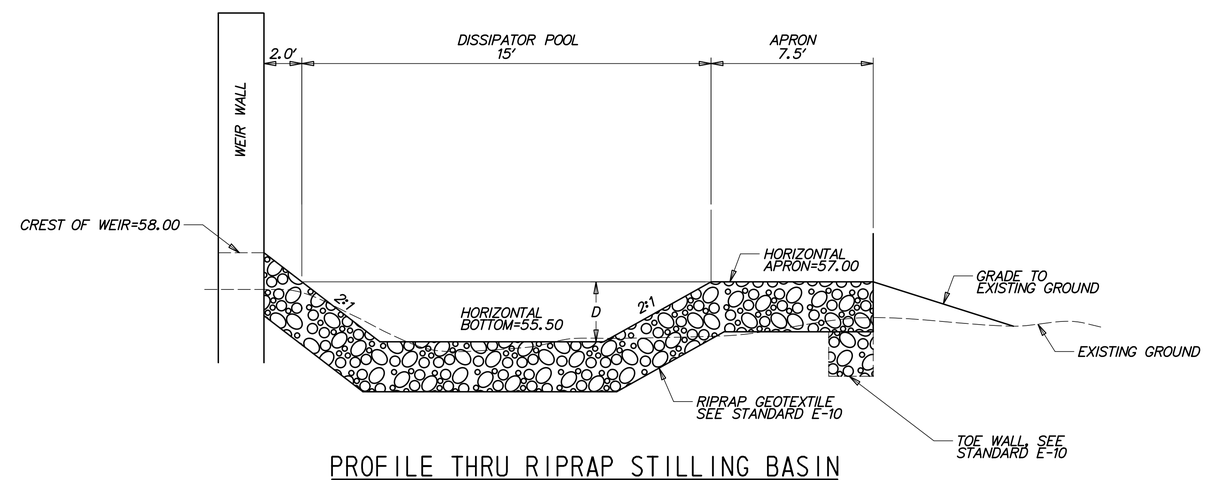

PROFILE THRU RIPRAP STILLING BASIN

SCALE: NONE

DATA

TOP OF V-NOTCH WEIR WIDTH W = 1.51'

DEPTH OF BASIN FROM WEIR CREST D = 1.50'

RIPRAP SIZE (R No.) = R-5 WITH NO. 57 STONE

NOTES:
1. RIPRAP ITEM# 712006.
2. GEOTEXTILES, RIPRAP ITEM# 713003
3. DELAWARE NO. 57 STONE ITEM# 302012
4. SEE STANDARD NO. E-10 FOR RIPRAP DEPTH AND GEOTEXTILE PLACEMENT.

RIPRAP STILLING BASIN

SCALE: NONE

G:\60049040 US301\CIVIL\PLANS\2A\CP\SW-116.DGN

DELAWARE DEPARTMENT OF TRANSPORTATION	ADDENDUMS / REVISIONS	AS SHOWN	US 301 LEVELS ROAD TO SUMMIT BRIDGE ROAD	CONTRACT T200911303	BRIDGE NO.	STORMWATER MANAGEMENT DETAILS BMP 687 (BASIN 21)	SW-116
				COUNTY NEW CASTLE	DESIGNED BY: DB		SHEET NO. 801
					CHECKED BY: JZ		TOTAL SHTS. 1256