THE STATE OF DELAWARE
DEPARTMENT OF TRANSPORTATION

U.S. CUSTOMARY UNITS

CONSTRUCTION & RIGHT -OF-WAY PLANS FOR:

BR. 1-366
ON N399 CHESAPEAKE CITY ROAD
OVER GUTHRIE RUN

CONTRACT NUMBER: T201007102

FEDERAL AID PROJECT NUMBER: BROS-N399(03)

COUNTY: NEW CASTLE **M.R. #:** N399

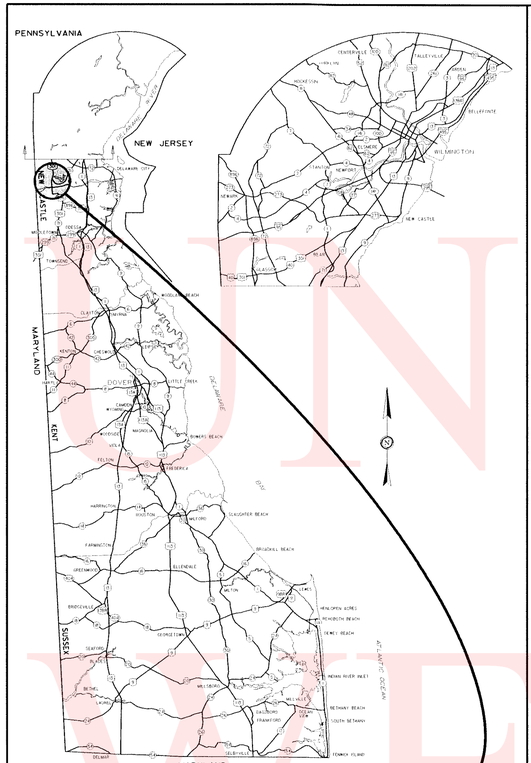

GENERAL LOCATION OF CONTRACT

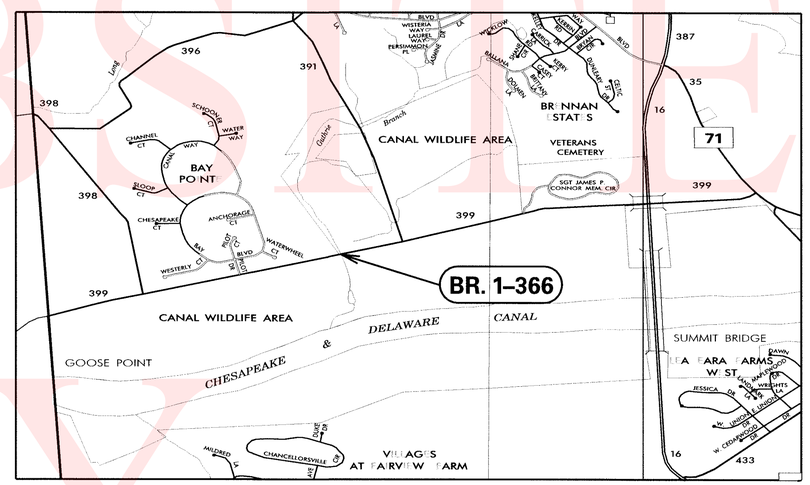

DESIGN DESIGNATION

FUNCTIONAL CLASS: RURAL COLLECTOR	D.H.V. PROJECTED: 230	YEAR: 2040
TYPE OF CONSTRUCTION: BRIDGE REPLACEMENT	DESIGN SPEED: 55 M.P.H.	
A.A.D.T. CURRENT: 1604 YEAR: 2008	TRUCKS: 6 %	
A.A.D.T. PROJECTED: 2700 YEAR: 2040	DIRECTION OF DISTRIBUTION: 65 %	

INDEX OF SHEETS

SHEET Nº	TABLE OF CONTENTS
1	TITLE SHEET
2	LEGEND SHEET
3	PROJECT NOTES
4	TYPICAL SECTIONS
5	HORIZONTOL & VERTICAL CONTROL
6	CONSTRUCTION PLAN
7	PROFILE
8	PLAN, SECTION AND ELEVATION
9	SUBFOUNDATION DETAILS
10	FRAMING PLANS
11	BEAM DETAILS
12	BRIDGE DETAILS
13	SOIL BORINGS
14	CONSTRUCTION SEQUENCE AND EROSION AND SEDIMENT CONTROL
15	ENVIRONMENTAL COMPLIANCE SHEET
16 & 17	DETOUR PLANS
18	UTILITY SHEET
19	RIGHT-OF-WAY SHEET
20	RIGHT-OF-WAY DATA SHEET
21	RIGHT-OF-WAY TABULATION SHEET
22	ABUTMENTS INSTRUMENTATION

TOTAL SHEETS: 22

APPROVED DESIGN EXCEPTIONS

DESIGN PARAMETER	REQUIRED	PROVIDED	DATE

ADDENDA & REVISIONS

DESCRIPTION	NAME & DATE

ASSOCIATED CONTRACTS

CONTRACT NO.	CONTRACT NAME
NONE	

RECOMMENDED

Thomas McLaughlin — 4/11/12
SQUAD MANAGER, CONSTRUCTION — DATE

Christopher Castle — 4/11/12
GROUP ENGINEER, CONSTRUCTION — DATE

ASSISTANT DIRECTOR, TRANSPORTATION SOLUTIONS (CONSTRUCTION) — DATE

FINAL PLANS

RECOMMENDED
Vincent W. Davis
STORMWATER ENGINEER
DATE 5 APR 2012
VINCENT W. DAVIS REGISTERED No. 12898 DELAWARE PROFESSIONAL ENGINEER — SEAL

RECOMMENDED
Jason McClusky
SQUAD MANAGER, TRANSPORTATION SOLUTIONS (PROJECT DEVELOPMENT OR BRIDGE DESIGN)
DATE 04.04.12
JASON K. MCCLUSKY LICENSED No. 16272 DELAWARE PROFESSIONAL ENGINEER — SEAL

RECOMMENDED
BRIDGE DESIGN ENGINEER
DATE APRIL 12, 2012
BARRY A. BENTON REGISTERED No. 10774 DELAWARE PROFESSIONAL ENGINEER — SEAL

RECOMMENDED
ASSISTANT DIRECTOR, TRANSPORTATION SOLUTIONS
DATE APRIL 12, 2012
BARRY A. BENTON REGISTERED No. 10774 DELAWARE PROFESSIONAL ENGINEER — SEAL

APPROVED
Natalie Barnhart
CHIEF ENGINEER
DATE 4/12/12
NATALIE M. BARNHART REGISTERED No. 9629 DELAWARE PROFESSIONAL ENGINEER — SEAL

LAST REVISED: 8/7/2008
Y:\NEWCASTL\399-BRIDGE\T201007102\PLANS\GRS-IBS\TCOLDON

UNOFFICIAL WEBSITE COPY

EXISTING SYMBOLS

DRAINAGE	
	DITCH OR STREAM CENTERLINE
	DIRECTIONAL STREAM FLOW ARROW
C.B.	DRAINAGE CATCH BASIN
J.B.	DRAINAGE JUNCTION BOX
D	DRAINAGE MANHOLE
SIZE/TYPE LABEL	DRAINAGE PIPE AND FLOW ARROW
	DRAINAGE PIPE HEADWALL
	RIPRAP - AREA FEATURE
	RIPRAP - LINEAR FEATURE

MANMADE ROADSIDE FEATURES	
(TYPE LABEL)	CURB
(TYPE LABEL)	CURB AND GUTTER
	FENCE - CHAINLINK OR STRANDED
	FENCE - STOCKADE OR SPLIT RAIL
FP	FLAG POLE
	GUARDRAIL - STEEL BEAM
	GUARDRAIL - WIRE ROPE
LAMP	LAMP AND POST - RESIDENTIAL
MB	MAILBOX
PM	PARKING METER AND POST
	PAVEMENT - FLEXIBLE
	PAVEMENT - RIGID
	PILE - BRIDGE
	PILLAR OR MISCELLANEOUS POST
	TRAFFIC SIGN AND POST
	WALL - BRICK OR BLOCK
	WALL - STONE

NATURAL ROADSIDE FEATURES	
	GRASS LAWN
	HEDGEROW OR THICKET
	MARSH BOUNDARY LINE
	TREE - CONIFEROUS
	TREE - DECIDUOUS
	TREE STUMP
	SHRUBBERY
WL	DELINEATED WETLAND BOUNDARY LINE
	WOODS LINE BOUNDARY

SURVEY CONTROL & MONUMENTATION	
B.M.	SURVEY BENCHMARK LOCATION
T.P.	SURVEY TIE POINT LOCATION
	SURVEY TRAVERSE POINT
	POINT OF CURVATURE OR TANGENCY
	POINT OF INTERSECTING TANGENTS
C.M.	PROPERTY MARKER - CONCRETE MON.
I.P.	PROPERTY MARKER - IRON PIPE

UTILITY	
	SOIL BORING LOCATION
	UTILITY TEST HOLE LOCATION
TV	CABLE TV DISTRIBUTION BOX
E	ELECTRIC MANHOLE
E	ELECTRIC TRANSFORMER
	POLE MOUNTED LUMINAIRE
G	GAS MANHOLE
G.M.	GAS METER
G.V.	GAS VALVE
G.P.	GAS PUMP - SERVICE STATION
	RAILROAD TRACKS
S	SANITARY SEWER MANHOLE
S.V.	SANITARY SEWER VALVE
VENT	SANITARY SEWER VENT OR CLEANOUT
S.D.F.	SEPTIC DRAIN FIELD
B	TELEPHONE BOOTH
T	TELEPHONE MANHOLE
T	TELEPHONE TEST POINT
J.W.	TRAFFIC - CONDUIT JUNCTION WELL
	TRAFFIC - LIGHT POLE AND BASE
	TRAFFIC - PEDESTRIAN POLE & BASE
	TRAFFIC - SIGNAL CABINET & BASE
	TRAFFIC - SIGNAL POLE AND BASE
U	UTILITY BOX
	UTILITY POLE GUY WIRE ANCHOR
	UTILITY POLE
F.H.	WATER - FIRE HYDRANT
W.M.	WATER METER
W.V.	WATER VALVE
WELL	WELL HEAD

UTILITY COMPANY FACILITIES	
AW-W	ARTESIAN WATER CO.
DP-E	DELMARVA POWER-ELECTRIC DISTRIBUTION
DP-E	DELMARVA POWER-ELECTRIC TRANSMISSION
VER-C	VERIZON

PROPOSED SYMBOLS

CONSTRUCTION	
	CONCRETE SAFETY BARRIER - PERMANENT
BFS	BIOFILTRATION SWALE
	BUTT JOINT
100+00	CONSTRUCTION BASELINE
	CURB, TYPE 1 & TYPE 3
	CURB, TYPE 2
	CURB & GUTTER, TYPE 1
	CURB & GUTTER, TYPE 2
	CURB & GUTTER, TYPE 3
	CURB & GUTTER, TYPE 4
CZ	CLEAR ZONE
	DRAINAGE INLET
	DITCH
	FENCE - METAL
	FENCE - WOOD
	FLARED END SECTION
	GUARDRAIL, TYPES 1 & 3
	GUARDRAIL, TYPE 2
	GUARDRAIL END TREATMENT - PARALLEL
	GUARDRAIL END TREATMENT - PARABOLIC
HC	HORIZONTAL CLEARANCE
	JUNCTION BOX - DRAINAGE
LOC	LIMIT OF CONSTRUCTION
	MANHOLE
	PAVEMENT PATCH
	PIPE & DIRECTIONAL FLOW ARROW
	RIPRAP
	P.C.C. SIDEWALK @ 4"
	P.C.C. SIDEWALK @ 6"
	UNDERDRAIN
	UNDERDRAIN OUTLET

CONSTRUCTION PHASING SYMBOLS	
	BARRICADE, TYPE 3
	CONCRETE SAFETY BARRIER - PORTABLE
	CONSTRUCTION WARNING SIGN LOCATION
END ROAD WORK	CONSTRUCTION WARNING SIGN
	CRASH CUSHION ARRAY
	DRUM - TRAFFIC CONTROL
	PHASING TRAFFIC FLOW ARROW

LANDSCAPING	
	SHRUBBERY
	CONIFEROUS TREE
	DECIDUOUS TREE

EROSION & SEDIMENT CONTROL	
DWB	DEWATERING BASIN
	EROSION CONTROL BLANKET
ED	EARTH DIKE
	INLET SEDIMENT CONTROL
	PERIMETER DIKE/SWALE
PST	PORTABLE SEDIMENT TANK
RSF	REINFORCED SILT FENCE
SBD	SANDBAG DIKE
SB	SANDBAG DIVERSION
	STONE CHECK DAM
SCE	STABILIZED CONSTRUCTION ENTRANCE
SF	SILT FENCE
SP-1	SUMP PIT, TYPE 1
SP-2	SUMP PIT, TYPE 2
ST	SEDIMENT TRAP
ST	SEDIMENT TRAP WITH INLET AS OUTLET
ST	SEDIMENT TRAP PIPE OUTLET
SW	STILLING WELL
	TEMPORARY SWALE
TSD	TEMPORARY SLOPE DRAIN

IDENTIFIERS	
A/C	ADJUST BY CONTRACTOR
A/O	ADJUST BY OTHERS
B	CONCRETE SAFETY BARRIER
C	CURB OR CURB & GUTTER
C/JB	CONVERT TO JUNCTION BOX
C/MH	CONVERT TO DRAINAGE MANHOLE
C/O	CURB OPENING
CR	CURB RAMP
CR-W	CURB RAMP - WITHOUT SIDEWALK SURFACE DETECTABLE WARNING SYSTEM
DI	DRAINAGE INLET
DND	DO NOT DISTURB
FES	FLARED END SECTION
FS	FILTRATION STRUCTURE
GR	GUARDRAIL
JB	JUNCTION BOX
LS	LANDSCAPE PLANTINGS
MH	MANHOLE
M	MONUMENT - RIGHT-OF-WAY
P	PIPE
RL/C	RELOCATE BY CONTRACTOR
RL/O	RELOCATE BY OTHERS
RM/C	REMOVE BY CONTRACTOR
RM/O	REMOVE BY OTHERS
ST	SEDIMENT TRAP
SF	SILT FENCE
UD	UNDERDRAIN

PAVEMENT SECTION(S)	
	MILL AND OVERLAY WITH 2" SUPERPAVE TYPE C, PG 64-22, 160 GYRATIONS
	2" SUPERPAVE, TYPE C HOT-MIX 160 GYRATIONS, PG 64-22 2 1/4"" SUPERPAVE, TYPE B HOT-MIX 160 GYRATIONS, PG 64-22 8" GABC TYPE B

RIGHT-OF-WAY SYMBOLS	
	PROPOSED RIGHT-OF-WAY MONUMENT
PL	EXISTING PROPERTY LINE
EASEMENT TYPE	EXISTING EASEMENT
	EXISTING RIGHT-OF-WAY
DA	PROPOSED DENIAL OF ACCESS
PE	PROPOSED PERMANENT EASEMENT
R/W	PROPOSED RIGHT-OF-WAY
R/W-DA	PROPOSED R/W & DENIAL OF ACCESS
TCE	TEMPORARY CONSTRUCTION EASEMENT
100+00	PROPOSED RIGHT-OF-WAY BASELINE
100+00	HISTORIC RIGHT-OF-WAY BASELINE

TRAFFIC	
ITMS-CON	ITMS CONDUIT
SIG-CON	SIGNAL CONDUIT
	CONDUIT JUNCTION WELL
	LUMINAIRE
	PAVEMENT MARKINGS
	PAVEMENT STRIPING
	TRAFFIC SIGN - BY STATE FORCES

UTILITY COMPANY FACILITIES	
AW-W	ARTESIAN WATER CO.
DP-E	DELMARVA POWER-ELECTRIC DISTRIBUTION
DP-E	DELMARVA POWER-ELECTRIC TRANSMISSION
VER-C	VERIZON

UNOFFICIAL WEBSITE COPY

DELAWARE DEPARTMENT OF TRANSPORTATION

ADDENDUMS / REVISIONS

NOT TO SCALE

BR. 1-366 ON N399 CHESAPEAKE CITY RD OVER GUTHRIE RUN

CONTRACT	BRIDGE NO. 1-366	LEGEND SHEET	SHEET NO.
T201007102	DESIGNED BY: PAM		2
COUNTY			TOTAL SHTS.
NEW CASTLE	CHECKED BY: BB		22

GENERAL NOTES

1. THIS PROJECT IS TO BE CONSTRUCTED IN ACCORDANCE WITH THE DELAWARE DEPARTMENT OF TRANSPORTATION "STANDARD SPECIFICATIONS", DATED AUGUST 2001 AND THE DELAWARE DEPARTMENT OF TRANSPORTATION "STANDARD CONSTRUCTION DETAILS", DATED 2001, INCLUDING ALL REVISIONS UP TO THE DATE OF ADVERTISEMENT.

2. THE CONTRACTOR SHALL GIVE TWO (2) WEEKS NOTICE TO THE PROPERTY OWNER WHEN ANY FIXTURE, SHRUB OR OTHER OBJECT MUST BE REMOVED FROM THE RIGHT OF WAY OR EASEMENT AREA. IF THE OWNER HAS NOT ATTEMPTED TO SALVAGE THIS PROPERTY, THE CONTRACTOR SHALL REMOVE IT WITHOUT OBLIGATION. COMPENSATION SHALL BE INCIDENTAL TO THE CONTRACT.

3. THE ENDS OF ALL CURBS SHALL BE DEPRESSED FLUSH WITH THE PAVEMENT AT A RATIO OF TWELVE TO ONE (12:1) UNLESS OTHERWISE DIRECTED BY THE ENGINEER.

4. THE CONTRACTOR SHALL PROVIDE AND INSTALL PVC SLEEVES (4" INSIDE MINIMUM DIAMETER, 6" INSIDE MAXIMUM DIAMETER) IN PROPOSED CONCRETE SIDEWALKS, ISLANDS, AND MEDIANS FOR FUTURE TRAFFIC SIGN POSTS AS DIRECTED BY THE ENGINEER. THE LOWER END OF THE SLEEVE SHALL SIT ON THE TOP OF THE SUBBASE MATERIAL. THE COST SHALL BE INCIDENTAL TO THE CONTRACT.

5. STAGING AREAS - PROPER EROSION AND SEDIMENT CONTROL MEASURES AS DETERMINED BY THE ENGINEER SHALL BE INSTALLED IN ALL STAGING AREAS. ALL AREAS USED BY THE CONTRACTOR FOR STAGING OPERATIONS SHALL BE FULLY RESTORED BY THE CONTRACTOR UPON COMPLETION OF THE CONTRACT. IF THE STAGING AREA IS PAVED, IT SHALL BE RESTORED TO ITS ORIGINAL CONDITION. IF THE AREA IS UNPAVED, IT SHALL BE RE-GRADED, TOPSOILED, SEEDED AND MULCHED IN ACCORDANCE WITH DELAWARE STANDARD SPECIFICATIONS 732, 734 AND 735, FOR TOPSOIL, SEED AND MULCH RESPECTIVELY, TO THE SATISFACTION OF THE ENGINEER. THE SEED SHALL ADHERE TO THE SPECIFICATIONS OF SECTION 734 FOR PERMANENT GRASS SEEDING - DRY GROUND. ALL COSTS ASSOCIATED WITH RESTORATION OF THE STAGING AREA SHALL BE AT THE CONTRACTOR'S EXPENSE. IF THE ENGINEER DETERMINES THAT A SATISFACTORY STAND OF GRASS DOE'S NOT EXIST AT THE TIME OF FINAL INSPECTION, ALL COSTS ASSOCIATED WITH REESTABLISHING A SATISFACTORY STAND OF GRASS SHALL BE AT THE CONTRACTOR'S EXPENSE.

6. SITE REVIEWER - AN EROSION CONTROL SITE REVIEWER SHALL BE A PERSON FROM THE CONTRACTOR'S STAFF ASSIGNED TO EROSION AND SEDIMENT CONTROL IMPLEMENTATION AND MAINTENANCE AND SHALL BE REQUIRED ON SPECIFIC PROJECTS. THE NAME AND DNREC CERTIFICATION NUMBER OF EACH SITE REVIEWER SO REQUIRED SHALL BE SUBMITTED TO THE DEPARTMENT. THE NAME OF THE DELAWARE REGISTERED PROFESSIONAL ENGINEER PROVIDING DIRECTION AND SUPERVISION OF THE SITE REVIEWER, AS REQUIRED IN SECTION 12.3 OF THE DELAWARE SEDIMENT AND STORMWATER REGULATIONS, SHALL ALSO BE SUBMITTED TO THE DEPARTMENT. THE SITE REVIEWER REQUIREMENTS IN EFFECT ON THIS PROJECT SHALL BE MARKED WITH AN "X" BELOW:

EROSION POTENTIAL FOR THIS PROJECT	SITE REVIEWER REQUIREMENT
( ) INSIGNIFICANT	NONE
( ) MINOR	CONTRACTOR CERTIFICATION COURSE TRAINING ONLY, AS DEFINED IN SECTION 1.3 OF THE DELAWARE SEDIMENT AND STORMWATER REGULATIONS.
(X) MEDIUM	AT THE TIME OF BID OF THE CONTRACT, EITHER THE SUPERINTENDENT OR A SEPARATE INDIVIDUAL FROM THE CONTRACTOR'S STAFF SHALL BE A CERTIFIED CONSTRUCTION REVIEWER (CCR), AS DEFINED IN SECTION 12 OF THE DELAWARE SEDIMENT AND STORMWATER REGULATIONS.
( ) MAJOR	SUPERINTENDENT AND AN INDIVIDUAL FROM CONTRACTOR'S STAFF SHALL BE CCR. ONE INDIVIDUAL FROM THE CONTRACTOR'S STAFF MUST BE A CCR AT THE TIME OF BID OF THE CONTRACT. THE SUPERINTENDENT MUST BECOME A CCR WITHIN ONE YEAR AFTER THE AWARD OF CONTRACT.

7. ELECTRONIC PROJECT FILES THAT WILL BE MADE AVAILABLE TO THE CONTRACTOR INCLUDE:

(X)	NONE
( )	ASCII DATA FILES WITH COORDINATES AND ELEVATIONS FOR PROPOSED POINTS AS SELECTED BY THE ENGINEER.
( )	RASTER FILES, IN .CAL FILE FORMAT, FOR ALL PLAN SHEETS.
( )	EXISTING DIGITAL TERRAIN MODEL, IN .DTM FILE FORMAT, COMPATIBLE WITH SOFTWARE CURRENTLY USED BY DELDOT.
( )	PROPOSED DIGITAL TERRAIN MODEL, IN .DTM FILE FORMAT, COMPATIBLE WITH SOFTWARE CURRENTLY USED BY DELDOT.
( )	DESIGN FILE, IN .DGN FILE FORMAT, CONTAINING ONLY THE PROPOSED 3D TRIANGLES OF THE PROPOSED DIGITAL TERRAIN MODEL (DTM).

8. AMERICAN TRAFFIC SAFETY SERVICES ASSOCIATION (ATSSA) CERTIFIED TRAFFIC CONTROL SUPERVISOR REQUIREMENT FOR THIS PROJECT.

( )	THE CONTRACTOR SHALL NOT BE REQUIRED TO HAVE AN ATSSA SUPERVISOR ASSIGNED TO THIS PROJECT.
(x)	THE CONTRACTOR SHALL HAVE AN ATSSA SUPERVISOR ASSIGNED TO THIS PROJECT. THE CONTRACTOR'S GENERAL SUPERINTENDENT FOR THIS PROJECT OR ANOTHER ATSSA CERTIFIED MEMBER OF THE CONTRACTOR'S PROJECT STAFF MAY BE THE ATSSA SUPERVISOR.
( )	THE CONTRACTOR SHALL HAVE AN ATSSA SUPERVISOR ASSIGNED TO THIS PROJECT. THE ATSSA SUPERVISOR'S SOLE JOB SHALL BE SUPERVISION OF THE INSTALLATION, OPERATION AND MAINTENANCE OF TRAFFIC CONTROL DEVICES FOR THIS PROJECT. THE CONTRACTOR'S GENERAL SUPERINTENDENT FOR THIS PROJECT SHALL NOT BE THE ATSSA SUPERVISOR.

9. THE DISTURBED AREA FOR THIS PROJECT IS 0.562 ACRES.

PROJECT NOTES

SECTION 200

1. SHORING SHALL BE REQUIRED FOR ANY EXCAVATION EXCEEDING 5 FEET IN HEIGHT, THE COST OF SHORING SHALL BE INCIDENTAL TO ITEM # 207000 - EXCAVATION AND BACKFILL FOR STRUCTURES. IN LIEU OF SHORING, THE CONTRACTOR MAY USE A 2:1 CUT SLOPE. NO PAYMENT SHALL BE MADE FOR ADDITIONAL EXCAVATION OR FILL OUTSIDE THE LIMITS AS DEFINED IN SECTION 207 OF THE STANDARD SPECIFICATIONS.

2. ITEMS TO BE REMOVED UNDER ITEM 211000 - REMOVAL OF STRUCTURES AND OBSTRUCTIONS SHALL INCLUDE, BUT NOT BE LIMITED TO THE FOLLOWING:
   - REMOVAL OF THE EXISTING STRUCTURE IN ITS ENTIRETY.
   - REMOVAL OF EXISTING ROADBOX ABOVE STRUCTURE AND GUARDRAILS

SECTION 600

3. STRUCTURAL ELEMENTS OF PORTLAND CEMENT CONCRETE SHALL BE AS NOTED:
   (F'c = 28 DAY COMPRESSIVE STRENGTH)
   (ITEM # 623002)-PRESTRESSED REINFORCED CONCRETE MEMBERS, BOX BEAMS (F'c = 6 KSI)
   CAST-IN-PLACE :
   CLASS C (ITEM # 602016)-P.C.C. MASONRY (F'c=2.00 ksi)
   MIX REQUIREMENTS SHALL CONFORM TO SECTION 812 OF THE SPECIFICATIONS. ALL EXPOSED EDGES SHALL BE CHAMFERED 3/4" UNLESS OTHERWISE NOTED.

4. REINFORCING STEEL SHALL CONFORM TO AASHTO M31 (ASTM A615), GRADE 60. ALL REINFORCING STEEL SHALL HAVE A CLEAR COVER OF 2" UNLESS OTHERWISE SPECIFIED ON THE PLANS. EPOXY COATED REINFORCING STEEL SHALL CONFORM TO AASHTO M284 (ASTM D3963), AND IS DENOTED WITH THE SUFFIX "E" IN BAR MARKS.

SECTION 700

5. ALL PAVED AREAS TO BE RECONSTRUCTED OR WIDENED SHALL BE SAWCUT AT THE POINT WHERE THE NEW PAVEMENT IS TO TIE INTO THE EXISTING PAVEMENT. ALL HOT-MIX SAW CUTTING SHALL BE FULL DEPTH, UNLESS OTHERWISE NOTED ON THE PLANS, OR AS DIRECTED BY THE ENGINEER.

6. VARIABLE MESSAGE SIGNS SHALL BE PLACED 10 DAYS PRIOR TO THE DETOUR. THE MESSAGE SHALL BE AS DIRECTED BY THE CHIEF OF TRAFFIC. PAYMENT SHALL BE UNDER ITEM # 743004-FURNISH AND MAINTAIN PORTABLE CHANGEABLE MESSAGE SIGN.

MISCELLANEOUS

7. THE CONTRACTOR SHALL CONTACT MICHAEL ELLER, THE CHIEF OF SCHEDULING FOR DART FIRST STATE, 14 DAYS PRIOR TO THE START OF CONSTRUCTION AT 302-576-6061.

8. DESIGN CRITERIA: 2010 AASHTO LRFD BRIDGE DESIGN SPECIFICATIONS, 5TH EDITION, USING AASHTO HL93 FOR LIVE LOAD, AND 25 PSF FOR FUTURE WEARING SURFACE.

9. HYDRAULIC DATA
   DRAINAGE AREA = 2.03 SQ. MILES
   DESIGN FREQUENCY = 50 YEARS — 50 YR FLOOD ELEVATION = 51.74 FT
   DESIGN DISCHARGE = 1084 CFS — PROPOSED OPENING = 472 SF

10. THE PROPOSED STRUCTURE HAS BEEN ANALYZED FOR THE EFFECTS OF SCOUR IN ACCORDANCE WITH HEC-18-'EVALUATING SCOUR AT BRIDGES' AND HEC-23-'BRIDGE SCOUR AND STREAM INSTABILITY COUNTERMEASURES.' SCOUR COUNTERMEASURES HAVE BEEN DESIGNED FOR THE WORST CASE OF THE OVERTOPPING FLOOD OR THE 500-YR FLOOD EVENT.
    DESIGN EVENT 500 YRS = OVERTOPPING — DESIGN VELOCITY = 7.84 FT/SEC
    DESIGN DISCHARGE = 2115 CFS — DESIGN DEPTH OF FLOW = 9.97 FT

11. CONSTRUCTION JOINTS: KEYED CONSTRUCTION JOINTS SHALL BE 2" X 4" OR AS NOTED. ALL EXPOSED CONSTRUCTION JOINT EDGES SHALL HAVE A 3/4" V-NOTCH.

12. ENVIRONMENTAL COMPLIANCE: SEE ENVIRONMENTAL COMPLIANCE PLAN FOR FURTHER RESTRICTIONS/GUIDANCE ASSOCIATED WITH THIS PROJECT.

13. ROAD WILL BE CLOSED DURING THE DURATION OF THE CONTRACT. MAINTENANCE OF TRAFFIC SHALL BE AS PER DETOUR PLAN. SPECIFICATION AND PAYMENT AS PER ITEM #763643-MAINTENANCE OF TRAFFIC, ALL INCLUSIVE

14. WATER PROOFING MEMBRANE
    MEMBRANE SHALL BE INSTALLED ACROSS TOP OF BEAMS AND LAPPED DOWN TO THE BOTTOM OF EACH BEAM. MEMBRANE SHALL ALSO EXTEND 2" UP INSIDE FACE OF DETAIL A OF FASCIA BEAMS. PAYMENT SHALL BE UNDER ITEM #602547 - WATERPROOFING BRIDGE DECKS.

15. COORDINATION AND COOPERATION BETWEEN THE CONTRACTOR AND PERSONNEL FROM THE UNIVERSITY OF DELAWARE (UD) IS OF UTMOST IMPORTANCE. UD WILL BE INSTALLING A VARIETY OF INSTRUMENTS ON THE STRUCTURE TO MONITOR ITS BEHAVIOR DURING CONSTRUCTION AND OPERATION. THE MAIN INSTRUMENTS THAT ARE EXPECTED TO BE INSTALLED IN THE GRS-IBS STRUCTURE CONSIST OF THE FOLLOWING BUT NOT LIMITED TO: INCLINOMETERS (1 INCLUDING 4 BIAXIAL SENSORS), PIEZOMETERS (3), EARTH PRESSURE CELLS (8), SETTLEMENT CELLS (1), TEMPERATURE SENSORS (2), BRIDGE STRAIN GAUGES (11 TO BE ATTACHED TO THE PRECAST PRESTRESSED VOIDED SLAB), GEOTEXTILE STRAIN GAUGES (50) AND TIME DOMAIN REFLECTOMETRY (5). FOR THE INSTALLATION OF THE INCLINOMETER, THE CONTRACTOR SHALL EXCAVATE TO THE ELEVATION OF THE ABUTMENT FOOTING AND STOP. UD SHALL THEN DRILL HOLES TO THE REQUIRED DEPTH AND INSTALL THE NECESSARY INSTRUMENTS. DRILLING SHALL BE DONE BY AN INDEPENDENT CONTRACTOR AT NO COST TO THE CONTRACTOR. AN ALLOWANCE OF TWO DAYS SHALL BE MADE BY THE CONTRACTOR FOR THE DRILLING AND INSTALLATION OF INSTRUMENTATIONS BY OTHERS. THE CONTRACTOR HAS THE OPTION TO START EXCAVATION ON THE SECOND ABUTMENT. AN ALLOWANCE OF ONE DAY SHALL BE ALLOWED AT THE COMPLETION OF THE EXCAVATION OF THE SECOND ABUTMENT FOR INSTRUMENTATION BY UD. SECTION A-A IN THE APPENDIX, SHOWS THE PROPOSED INSTRUMENTATION AND LOCATIONS. TWO (2) HOURS SHALL BE ALLOWED FOR THE INSTRUMENTATION OF EACH LAYER BY UD AS SHOWN. THE CONTRACTOR WILL BE REQUIRED TO DRILL SMALL HOLES THROUGH THE MASONRY BLOCKS TO FACILITATE INSTRUMENT WIRING ON THE LEVELS SHOWN IN THE APPENDIX. PAYMENT FOR DRILLING HOLES IN MASONRY BLOCKS IS INCIDENTAL TO THE CONTRACT. NO ADDITIONAL COMPENSATION SHALL BE MADE FOR THE STATED DELAYS OR ANY INCONVENIENCE RESULTED FROM THE UD INSTALLATION OPERATION. ALL COSTS ASSOCIATED WITH THE UD COORDINATION SHALL BE INCIDENTAL TO THE CONTRACT.

16. THE CONTRACTOR SHALL DELIVER ONE ROLL OF ITEM #713501-GEOSYNTHETIC REINFORCEMENT TO UD, NEWARK, DELAWARE SEVEN (7) DAYS AFTER THE AWARD OF THE CONTRACT TO ALLOW FOR INSTRUMENTATION WITH STRAIN GAUGES. THE CONTRACTOR SHALL INSTRUCT UD HOW TO CUT THE GEOSYNTHETIC REINFORCEMENT AS IT WOULD BE LAID IN THE FIELD. IT IS THE RESPONSIBILITY OF THE CONTRACTOR TO PICK-UP THE INSTRUMENTED GEOSYNTHETIC REINFORCEMENT FROM UD AND DELIVER IT CAREFULLY TO THE BRIDGE SITE FOR INSTALLATION. THE CONTACT PERSON AT UD IS MAJID TALEBI, TELEPHONE #302-419-4071 OR 302-831-8053. NO ADDITIONAL COMPENSATION WILL BE PAID FOR THIS OPERATION. ALL COSTS TO THE CONTRACTOR ASSOCIATED WITH DELIVERING AND TRANSPORTING GEOSYNTHETIC REINFORCEMENT SHALL BE INCIDENTAL TO THE CONTRACT.

17. AFTER THE ROADWAY APPROACHES ARE CONSTRUCTED AND THE BEAMS ARE INSTALLED AND READY TO RECEIVE HOTMIX, THE CONTRACTOR SHALL ALLOW THREE DAYS FOR UD TO INSTALL STRAIN GAUGES TO SUPERSTRUCTURE AND CALIBRATE THEIR INSTRUMENTS WITH TRUCK LOADING. MEANS AND METHODS OF INSTALLATION OF STRAIN GAUGES SHALL BE THE RESPONSIBILITY OF UD. TRUCK LOADING SHALL BE PROVIDED BY THE DEPARTMENT AT NO COST TO THE CONTRACTOR. THIS INSTALLATION AND CALIBRATION SHALL BE DONE PRIOR TO INSTALLING HOT-MIX. NO ADDITIONAL PAYMENT SHALL BE MADE TO THE CONTRACTOR FOR UD'S INSTALLATION AND CALIBRATION OF THE STRAIN GAUGES. ALL COSTS TO THE CONTRACTOR ASSOCIATED WITH THREE DAY ALLOWANCE FOR INSTALLATION AND CALIBRATION OF STRAIN GAUGES SHALL BE INCIDENTAL TO THE CONTRACT.

LRFR LOAD RATINGS

RATING VEHICLE	RATING TYPE	LOAD RATING FACTOR	LOAD RATING (tons)
HL-93 TRUCK	INVENTORY	1.04	N/A
HL-93 TANDEM	INVENTORY	1.00	N/A
HL-93 TRUCK	OPERATING	1.28	N/A
HL-93 TANDEM	OPERATING	1.23	N/A
S220	LEGAL	1.97	20
S335	LEGAL	1.07	35
S437	LEGAL	1.01	37
T330	LEGAL	1.89	30
T435	LEGAL	1.44	35
T540	LEGAL	1.36	40

UNOFFICIAL WEBSITE COPY

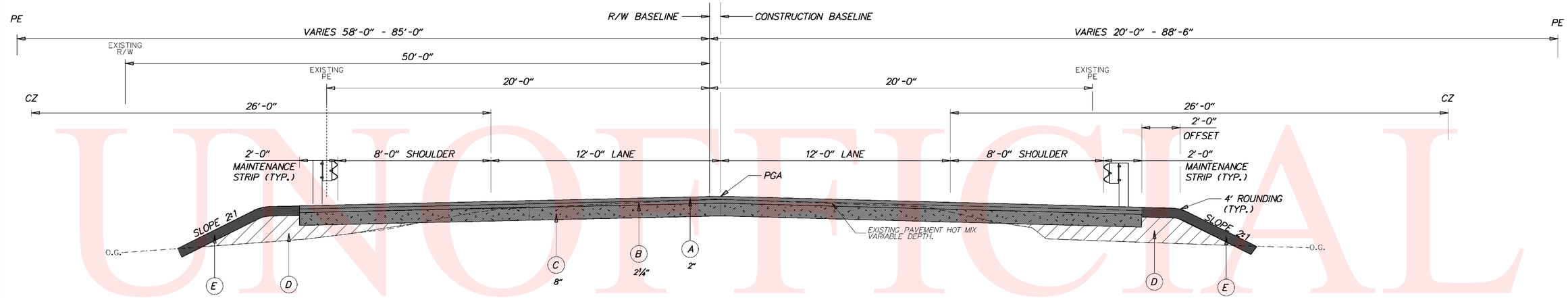

CHESAPEAKE CITY ROAD
FILL SECTION

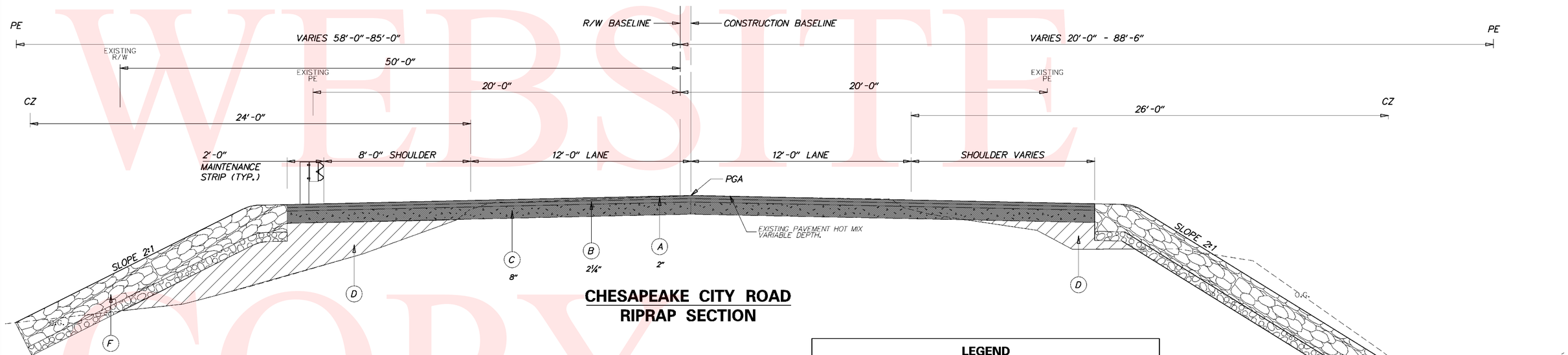

CHESAPEAKE CITY ROAD
RIPRAP SECTION

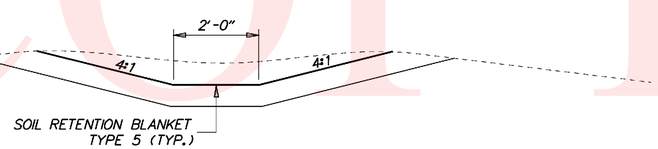

TYPICAL DITCH SECTION
N.T.S.

LEGEND

- (A) ITEM 401645-SUPERPAVE TYPE C, 160 GYRATION, PG 64-22
- (B) ITEM 401648-SUPERPAVE TYPE B, 160 GYRATION, PG 64-22
- (C) ITEM 302007-GRADED AGGREGATE BASE COURSE, TYPE B
- (D) ITEM 209001-BORROW, TYPE A
- (E) ITEM 732004-TOPSOIL (TON)
  ITEM 734013-PERMANENT SEEDING, DRY GROUND
- (F) ITEM 712021-RIPRAP, R-5 ON
  ITEM 302011-DELAWARE #3 STONE
  ITEM 732004-TOPSOIL (TON)
  ITEM 734013-PERMANENT SEEDING, DRY GROUND

UNOFFICIAL WEBSITE COPY

W:\MSV8\CELLS\PROJDEV\SB.CEL

DELAWARE DEPARTMENT OF TRANSPORTATION	ADDENDUMS / REVISIONS	SCALE 0 2.6667 5.3333 8 FEET	BR. 1-366 ON N399 CHESAPEAKE CITY ROAD OVER GUTHRIE RUN	CONTRACT T201007102	BRIDGE NO. 1-366	TYPICAL SECTIONS	SHEET NO. 4
				COUNTY NEW CASTLE	DESIGNED BY: PAM		TOTAL SHTS. 22
					CHECKED BY: BB		

-VERTICAL DATUM BASED ON NATIONAL GEODETIC SURVEY (N.A.V.D. 88)
-HORIZANTAL DATUM BASED ON NATIONAL GEODETIC SURVEY (N.A.D 83)
-NEGATIVE OFFSET DENOTES LEFT OF BASELINE
-* TRAVERSE POINT OUTSIDE SURVEY LIMITS.

HORIZONTAL / VERTICAL CONTROL DATA					
POINT	STATION	OFFSET	NORTHING	EASTING	ELEVATION
3	EAST OF TP4	-	563158.926	560309.178	59.92
4	8+98.29	-14.54	563059.090	559854.237	58.41
5	4+76.00	-10.20	562943.875	559447.937	57.94
6	2+64.15	-20.06	562897.688	559240.953	58.27
7	4+94.11	10.57	562928.598	559470.875	57.95
8	EAST OF PT	16.00	563032.212	559872.113	58.55
11	4+89.93	-73.11	563008.231	559444.837	51.01
12	4+87.04	70.53	562868.889	559479.819	59.73

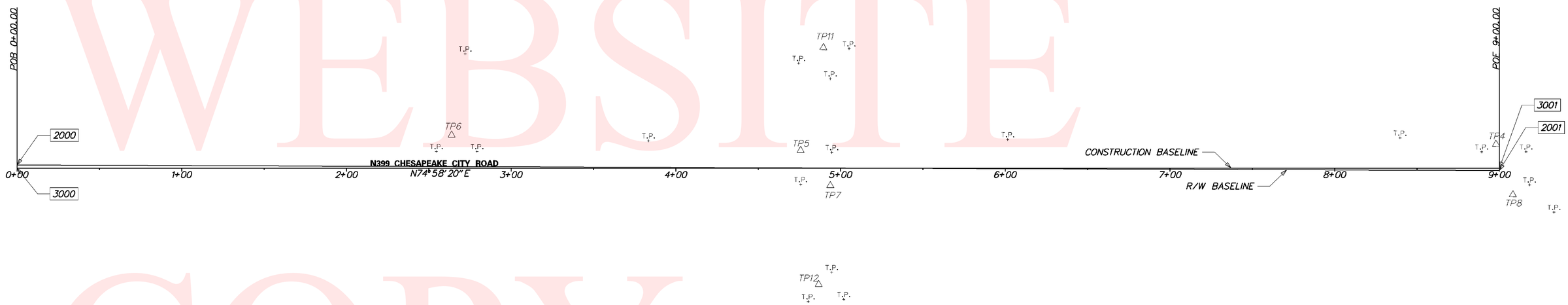

CONSTRUCTION ALIGNMENT CONTROL				
POINT	STATION	OFFSET	NORTHING	EASTING
3000	0+00.00	0.00	562808.877	558991.371
3001	9+00.00	0.00	563045.513	559859.704

R/W ALIGNMENT CONTROL				
POINT	STATION	OFFSET	NORTHING	EASTING
2000	0+00.00	0.00	562810.798	558990.847
2001	9+00.00	0.00	563044.159	559860.073

UNOFFICIAL WEBSITE COPY

Y:\NEWCASTL\399\BRIDGE\T201007102\PLANS\HV01.DGN

DELAWARE DEPARTMENT OF TRANSPORTATION

ADDENDUMS / REVISIONS

SCALE 0 30 60 90 FEET

BR 1-366 ON N399 CHESAPEAKE CITY ROAD OVER GUTHRIE RUN

CONTRACT	BRIDGE NO.	1-366
T201007102	DESIGNED BY: PAM	
COUNTY		
NEW CASTLE	CHECKED BY: BB	

HORIZONTAL AND VERTICAL CONTROL

SHEET NO. 5
TOTAL SHTS. 22

UNOFFICIAL WEB SITE COPY

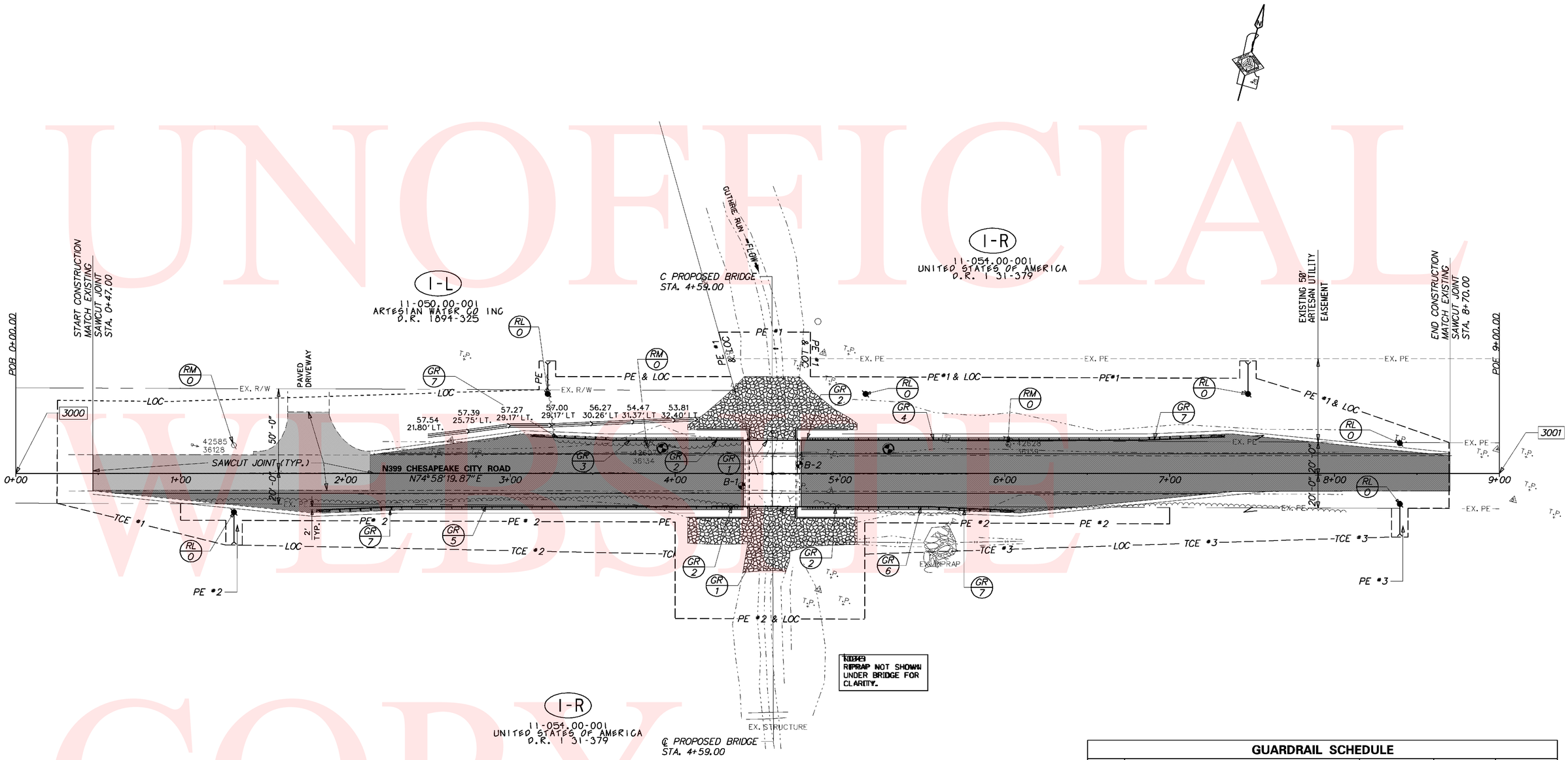

GUARDRAIL SCHEDULE

NO.	ITEM DESCRIPTION / TYPE	BEGIN STA.	OFFSET	LENGTH
GR1	720664-BRIDGE RAILING-GUARDRAIL TYPE	4+37.13	20.00 FT	43.75 FT
GR2	720665-BRIDGE RAILING, --TRANSITION UNIT-	-	20.00 FT	25.00 FT
GR3	720043-GUARDRAIL TYPE 1-27	3+62.13	20.00 FT	50.00 FT
GR4	720043-GUARDRAIL TYPE 1-27	5+05.88	20.00 FT	175.00 FT
GR5	720043-GUARDRAIL TYPE 1-27	2+37.13	20.00 FT	175.00 FT
GR6	720043-GUARDRAIL TYPE 1-27	5+05.88	20.00 FT	50.00 FT
GR7	720637-END TREATMENT ATTENUATOR TYPE1	-	20.00 FT	50.00 FT

Y:\NEWCASTL\399\BRIDGE\T201007102\PLANS\CP01.DGN

DELAWARE DEPARTMENT OF TRANSPORTATION

ADDENDUMS / REVISIONS

SCALE 0 30 60 90 FEET

BR 1-366 ON N399 CHESAPEAKE CITY ROAD OVER GUTHRIE RUN

CONTRACT	BRIDGE NO.	1-366
T201007102	DESIGNED BY: PAM	
COUNTY		
NEW CASTLE	CHECKED BY: BB	

CONSTRUCTION PLAN

SHEET NO. 6

TOTAL SHTS. 22

VERTICAL CURVE DATA

L.V.C. = 180.00
P.V.I. STA. = 3+99.93
P.V.I. ELEV. = 58.03
G_1 = -0.18
G_2 = 0.24
E = 0.09
K = 426.80

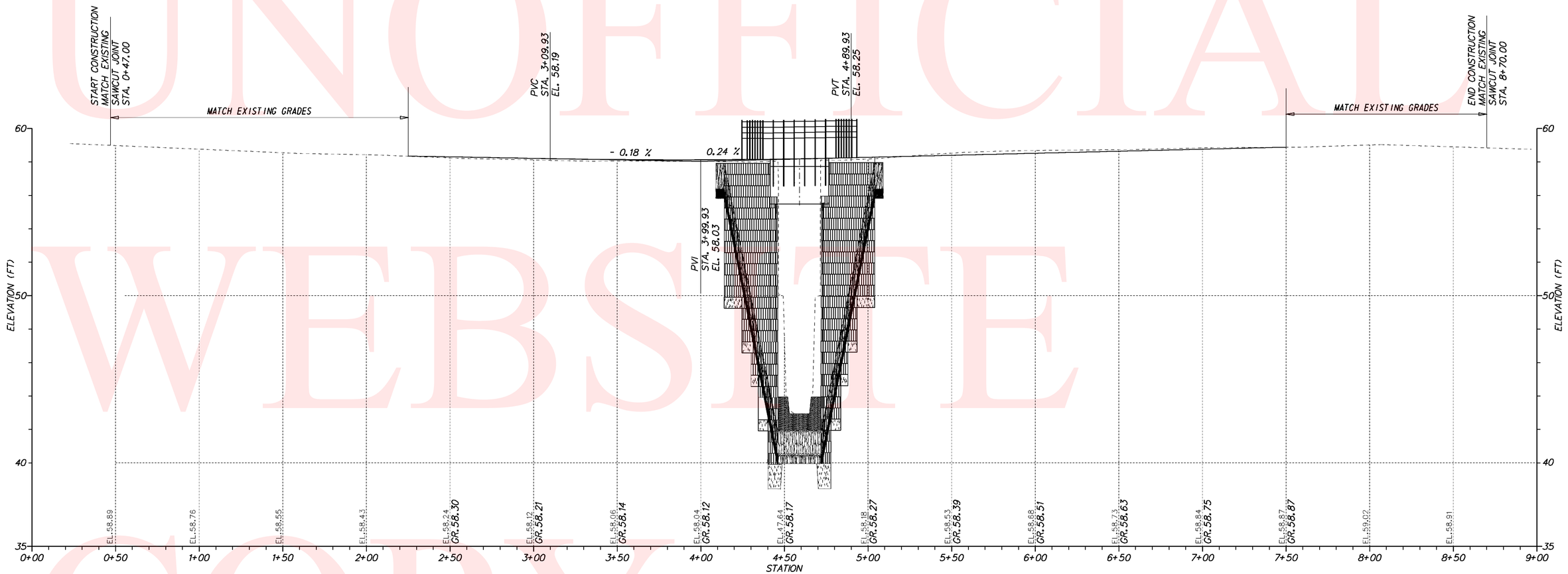

CHESAPEAKE CITY ROAD

PROFILE

UNOFFICIAL WEBSITE COPY

VERTICAL SCALE FEET 0 3 6 9

Y:\NEWCASTL\399\BRIDGE\T201007102\PLANS\GRS-IBS\PR.DGN

DELAWARE DEPARTMENT OF TRANSPORTATION	ADDENDUMS / REVISIONS	SCALE 0 30 60 90 FEET	**BR. 1-366 ON N399 CHESAPEAKE ROAD OVER GUTHRIE RUN**	CONTRACT T201007102	BRIDGE NO. 1-366	**PROFILE**	SHEET NO. 7
				COUNTY NEW CASTLE	DESIGNED BY: PAM		TOTAL SHTS. 22
					CHECKED BY: BB		

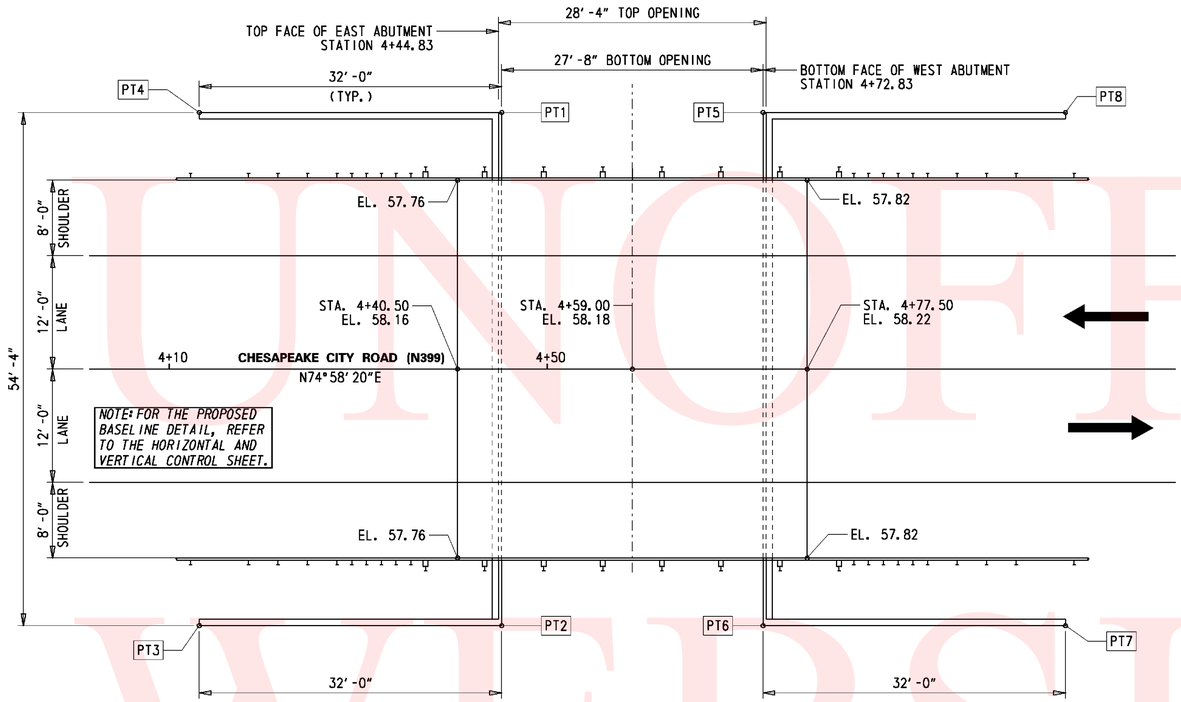

BRIDGE PLAN

1/8" = 1'-0"

SEE SHEET 9 FOR SECTIONS A-A AND B-B

WORKING POINTS				
PT.	STATION	OFFSET	NORTHING	EASTING
1	4+45.17	-27.17	562952.136	559413.733
2	4+45.17	27.17	562899.714	559428.019
3	4+13.17	27.17	562891.300	559397.144
4	4+13.17	-27.17	562943.722	559382.856
5	4+72.83	-27.17	562959.409	559440.423
6	4+72.83	27.17	562906.988	559454.709
7	5+04.83	27.17	562915.401	559485.583
8	5+04.83	-27.17	562967.823	559471.297

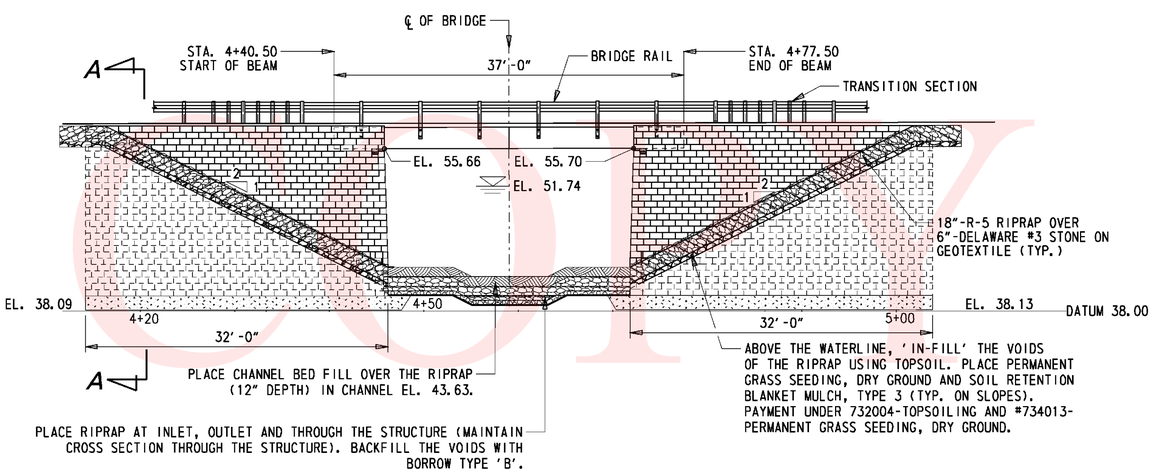

BRIDGE ELEVATION

1/8" = 1'-0"

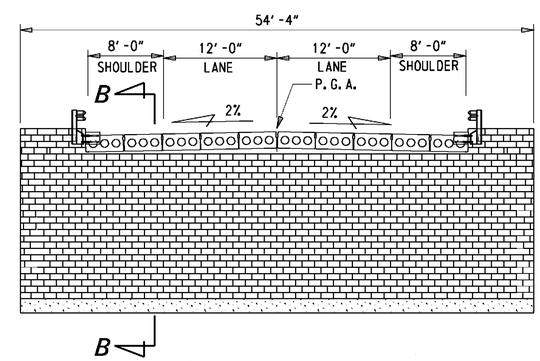

BRIDGE SECTION

1/8" = 1'-0"

UNOFFICIAL WEBSITE COPY

Y:\NEWCASTL\399\BRIDGE\T201007102\PLANS\GRS-IBS\PE01.DGN

DELAWARE DEPARTMENT OF TRANSPORTATION	ADDENDUMS / REVISIONS	SCALE AS NOTED	BR. 1-366 ON N399 CHESAPEAKE CITY ROAD OVER GUTHRIE RUN	CONTRACT T201007102	BRIDGE NO. 1-366	BRIDGE PLAN, SECTION AND ELEVATION	SHEET NO. 8
				COUNTY NEW CASTLE	DESIGNED BY: PAM		TOTAL SHTS. 22
					CHECKED BY: BB		

ITEM 602691: VOIDED CONCRETE MASONRY BLOCK - THIS ITEM SHALL CONSIST OF FURNISHING AND PLACING SPLITFACE HOLLOW CORE CONCRETE MASONRY UNITS (CMU). THIS BLOCK IS DESIGNATED TO BE USED IN ZONE B AS SHOWN ON THIS SHEET.

ITEM 602690: SOLID CONCRETE MASONRY BLOCK - THIS ITEM SHALL CONSIST OF FURNISHING AND PLACING SOLID CONCRETE MASONRY UNITS (CMU) COLORED RED. THIS BLOCK IS DESIGNATED TO BE USED IN ZONE A AS SHOWN ON THIS SHEET. THE 4"X8" SOLID CMU USED IN THE BEAM SEATS ARE ALSO MEASURED AND PAID FOR UNDER THIS ITEM. ALSO INCIDENTAL TO THIS ITEM ARE THE MATERIALS AND LABOR NECESSARY TO CONSTRUCT THE REMAINDER OF THE BEAM SEAT DETAIL, WHICH INCLUDES THE FOAM AND ALUMINUM FASCIA, AS SHOWN ON THIS SHEET.

ITEM 713501: GEOSYNTHETIC REINFORCEMENT - THE GEOSYNTHETIC REINFORCEMENT SHALL BE PLACED AS SHOWN ON THIS SHEET. THE WIDTH AND LENGTH VARY AS SHOWN ON THE DRAWING AND REINFORCEMENT SCHEDULE.

ITEM 302521: GRANULAR EMBANKMENT - THIS ITEM SHALL INCLUDE FURNISHING AND PLACING COARSE AGGREGATE. THE STONE BACKFILL SHALL BE PLACED BEHIND EACH LAYER OF CMU BLOCK IN A COMPACTED LIFT THICKNESS NOT TO EXCEED THE CMU BLOCK HEIGHT. PLACEMENT OF THE AGGREGATE SHALL BE FROM THE WALL FACE BACKWARD TO PREVENT THE FORMATION OF AND TO REMOVE ANY WRINKLES IN THE GOETEXTILE. FILL SHALL BE PLACED IN A MANNER TO AVOID WRINKLING OF THE GEOSYNTHETIC REINFORCEMENT. THE BACKFILL SHALL BE COMPLETELY COMPACTED AS PER 302.04.
THIS IS GENERALLY ACHIEVED BY :
1) RODDING THE AGGREGATE FILL BEHIND EACH CMU BLOCK APPROXIMATELY EVERY FOOT WHILE EXERTING DOWNWARD PRESSURE ON THE CMU BLOCK TO PREVENT LATERAL MOVEMENT
2) USING A VIBRATORY PLATE COMPACTOR (> 4 PASSES) DIRECTLY BEHIND THE CMU BLOCK WHILE EXERTING DOWNWARD PRESSURE ON THE CMU BLOCK TO PREVENT LATERAL MOVEMENT
3) LARGER VIBRATORY COMPACTORS MAY BE USED FOR THE BALANCE OF THE AREA MORE THAN 2' BEHIND THE CMU BLOCK. MULTIPLE PASSES OF A VIBRATORY PLATE COMPACTOR CAN ALSO ACHIEVE THE PROPER DENSITY
AT THE END OF A DAY'S OPERATIONS, SLOPE THE LAST LIFT OF BACKFILL AWAY FROM THE WALL FACE TO DIRECT SURFACE RUNOFF AWAY FROM THE WALL. DO NOT ALLOW SURFACE RUNOFF FROM ADJACENT AREAS TO ENTER THE WALL CONSTRUCTION AREA.

ITEM #302522: REINFORCED SOIL FOUNDATION - THIS ITEM SHALL INCLUDE FURNISHING AND PLACING COARSE AGGREGATE CONFORMING TO THE DELWARE #57 GRADATION. THE STONE BACKFILL SHALL BE PLACED IN COMPACTED LIFTS NOT TO EXCEED 6" AND SHALL BE COMPACTED AS PER 302.04. THE BOTTOM OF THE EXCAVATION SHALL BE SOUND SOIL AS DETERMINED BY THE ENGINEER. THIS ITEM SHALL BE PAID AS PLACED.

ITEM 602016: PCC MASONRY CLASS C - THIS ITEM SHALL INCLUDE PROVIDING AND PLACING CLASS C CONCRETE AS PER PLANS AND SPECIFICATIONS. ALL CMU BLOCKS IN THE TOP THREE ROWS SHALL HAVE THE FABRIC CUT OR REMOVED TO ALLOW THE VOIDS TO BE TIED TOGETHER. A PIECE OF #5 REBAR SHALL BE PLACED IN EACH VOID. THIS WILL LIKELY HAVE TO BE DONE IN AT LEAST 2 SEPARATE POURS AS THE VOIDS BELOW THE BEAMS MUST BE FILLED BEFORE BEAM PLACEMENT AND THE VOIDS IN THE BALANCE MUST BE POURED AFTER BEAM PLACEMENT. AFTER THE BLOCK VOID IS FILLED, A THIN LAYER OF THE SAME CONCRETE MIX SHALL BE PLACED ON TOP OF THE BLOCK TO FORM THE COPING. THE COPING IS THEN HAND-TROWELED EITHER SQUARE OR ROUND AND SLOPED TO DRAIN. PLACE 4" ALUMINUM FASCIA ALONG SLOPE OF ABUTMENT BETWEEN BOTTOM OF BEAMS AND FOAM BOARD ON ABUTMENT WALL. THE COST FOR THIS CONCRETE, FURNISHING AND PLACING REBAR AND ALUMINUM FASCIA, AND FABRIC PREPARATION SHALL BE INCLUDED IN THE UNIT PRICE BID FOR ITEM 602016-PCC MASONRY CLASS C.

BEAM SEAT PLACEMENT: THICKNESS OF THE BEAM SEAT IS APPROXIMATELY 20 INCHES AND CONSISTS OF A MINIMUM OF FIVE 4-INCH LIFTS OF WRAPPED-FACE GRS. PLACE PRECUT 3-INCH THICK FOAM BOARD ON TOP OF THE BEARING BED REINFORCEMENT BUT AGAINST THE FACE OF THE CMU BLOCK. SET HALF-HEIGHT CMU BLOCKS ON TOP OF THE FOAM BOARD. WRAP 4-INCH LIFTS ACROSS THE BEAM SEAT, BEFORE FOLDING THE FINAL WRAP, IT MAY BE NECESSARY TO GRADE THE SURFACE AGGREGATE OF THE BEAM SEAT SLIGHTLY HIGHER, TO ABOUT 0.5 INCHES, TO AID IN SEATING THE FOOTING AND TO MAXIMIZE CONTACT WITH THE BEARING AREA AND ENSURE THE PROPER CROWN IN THE BRIDGE.

POLYSTYRENE FOAM BOARD:
PROVIDE POLYSTYRENE FOAM BOARD CONFORMING TO AASHTO M230, TYPE V1. PAYMENT INCIDENTAL TO ITEM 602016-PCC MASONRY CLASS C.

INTEGRATED APPROACH PLACEMENT:
FOLLOWING THE PLACEMENT OF THE SUPERSTRUCTURE, GEOTEXTILE REINFORCEMENT LAYERS ARE PLACED ALONG THE BACK OF THE SUPERSTRUCTURE, BUILT IN MAXIMUM LIFT HEIGHTS OF 4-INCHES. THE TOP OF FINAL WRAP SHOULD ALLOW AT LEAST 2-INCHES OF AGGREGATE BASE COVER OVER THE GEOSYNTHETIC TO PROTECT IT FROM HOT MIX ASPHALT. PAYMENT UNDER THEIR RESPECTIVE ITEMS.

EQUIPMENT PLACEMENT:
EQUIPMENT CAN BE POSITIONED ON THE GRS ABUTMENT PROVIDED THE OUTRIGGER PADS ARE SIZED FOR LESS THAN 4000 PSF NEAR THE FACE OF THE ABUTMENT WALL.

COMPACTION:
COMPACT BACKFILL TO A MINIMUM OF 95 PERCENT OF THE MAXIMUM DRY DENSITY ACCORDING TO AASHTO-T-99 AND +/- 2 PERCENT OPTIMUM MOISTURE CONTENT. IN THE BEARING REINFORCEMENT ZONE, COMPACT TO 100 PERCENT OF THE MAXIMUM DRY DENSITY ACCORDING TO AASHTO-T-99. ONLY HAND-OPERATED EQUIPMENT IS ALLOWED WITHIN 3-FEET OF THE WALL FACE. BACKFILL SHALL COMPACT TO NON-MOVEMENT OR NO APPRECIABLE DISPLACEMENT AND ASSESS WITH VISUAL INSPECTION. ALL COMPACTED LIFTS SHALL BE APPROVED BY THE ENGINEER FOR COMPACTNESS BEFORE THE NEXT LIFT WILL BE PERMITTED TO START. REINFORCEMENT EXTENDS DIRECTLY BENEATH EACH LAYER OF CMU BLOCKS, COVERING > 85 PERCENT OF THE FULL WIDTH OF THE BLOCK FACE OF THE WALL.

GUARDRAIL POST:
THE CONTRACTOR SHALL PROPOSE A SAFE METHOD FOR INSTALLING THE GUARGRAIL POST THROUGH THE GEOTEXTILE, THAT WILL NOT CAUSE DAMAGE OR MIS-ALIGNMENT TO THE WALL FACING ELEMENTS. PAYMENT INCIDENTAL TO THE RESPECTIVE GUARDRAIL ITEM.

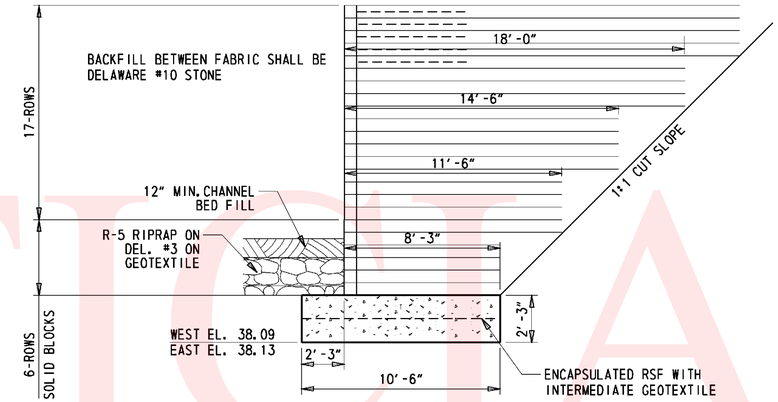

SECTION A-A
1/4" = 1'-0"

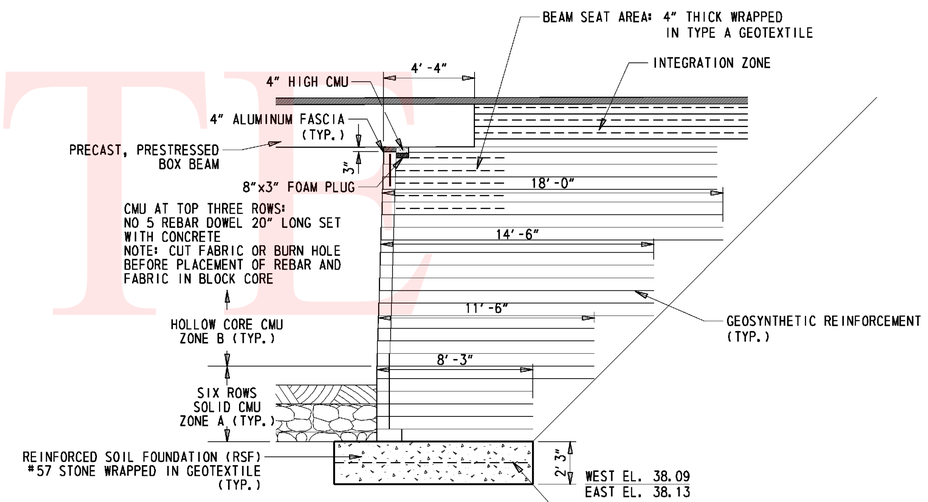

SECTION B-B
1/4" = 1'-0"

LEGEND

CMU - CONCRETE MASONRY UNIT
GRS - GEOSYNTHETIC REINFORCED SOIL
IBS - INTEGRATED BRIDGE SYSTEM

_____ TYPE A GEOTEXTILE (4800 LBS/FT) WIDE WIDTH TENSILE STRENGTH

- - - - INTERMEDIATE LAYER TYPE A GEOTEXTILE (4800 LBS/FT) WIDE WIDTH TENSILE STRENGTH

UNOFFICIAL WEBSITE COPY

DELAWARE DEPARTMENT OF TRANSPORTATION	ADDENDUMS / REVISIONS	Not To Scale	BR. 1-366 ON N399 CHESAPEAKE CITY ROAD OVER GUTHRIE RUN	CONTRACT T201007102	BRIDGE NO. 1-366	SUBFOUNDATION DETAILS	SHEET NO. 9
				COUNTY NEW CASTLE	DESIGNED BY: PAM		TOTAL SHTS. 22
					CHECKED BY: BB		

Y:\NEWCASTL\399\BRIDGE\T201007102\PLANS\PE01.DGN

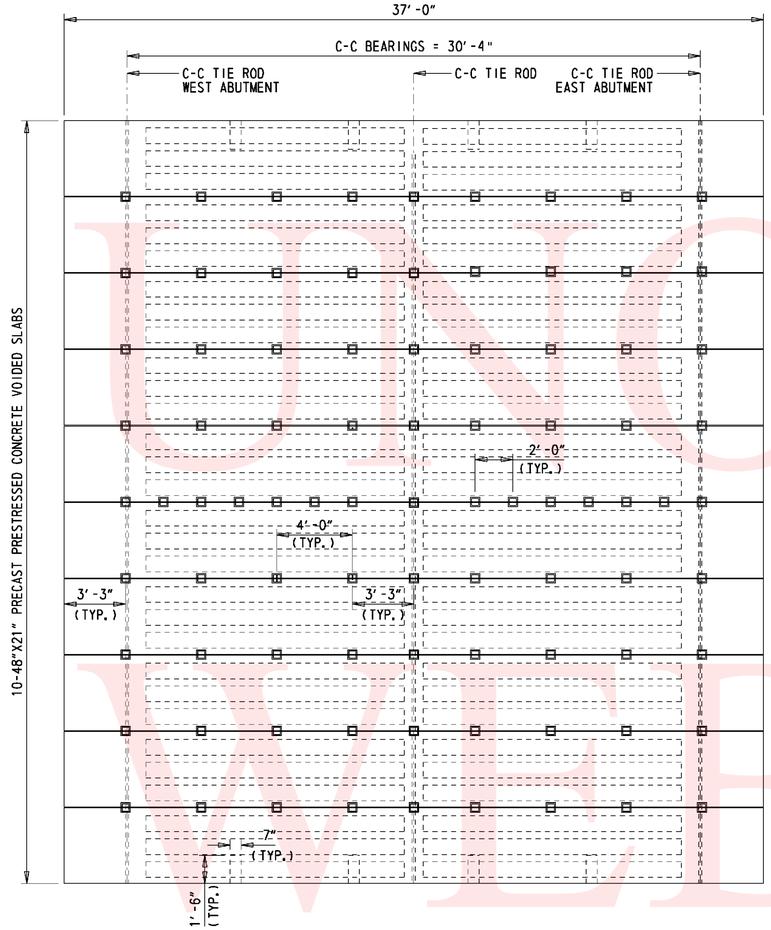

FRAMING PLAN

SCALE: 1/4" = 1'-0"

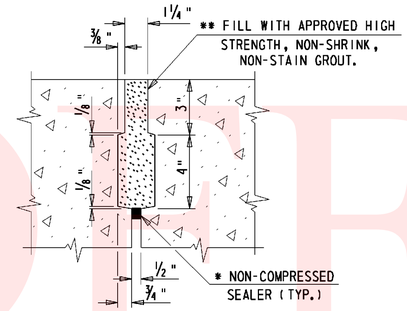

SHEAR KEY DETAIL

SCALE : N.T.S.

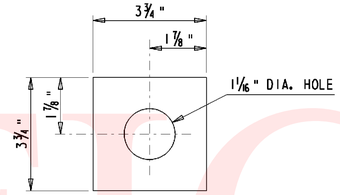

* 1/2" THK. PLATE WASHER (A572)

(PROTECTED WITH FUSION BONDED EPOXY).
SCALE : N.T.S.

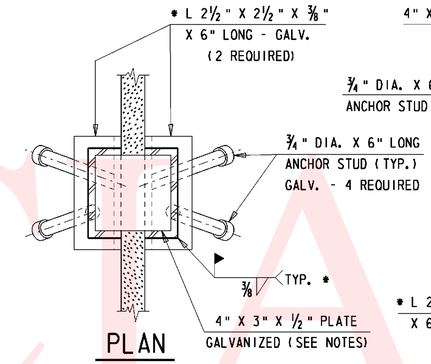

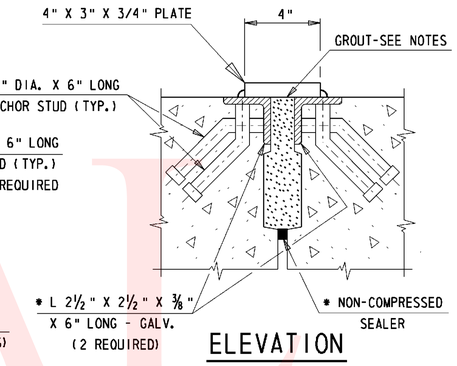

SHEAR CONNECTION

SCALE : N.T.S.

FRAMING PLAN NOTES

1. 87 SHEAR CONNECTORS ARE REQUIRED, SEE FRAMING PLAN FOR SPACING AND LOCATION.
2. ANGLES AND PLATES ARE TO BE STRUCTURAL STEEL COMFORMING TO AASHTO M270 GRADE 50 AND SHALL BE GALVANIZED. ANCHOR STUDS ARE TO BE AUTOMATIC END-WELDED TYPE.
3. INSTALL AND TIGHTEN TIE RODS IN ACCORDANCE WITH SPECIFICATIONS AFTER ERECTION OF PRESTRESSED BEAMS. FIELD WELD PLATE TO SHEAR CONNECTOR ANGLES AND GALVANIZE. FILL ALL KEYWAYS AND CAVITIES WITH APPROVED HIGH STRENGTH, NON-SHRINK, NON-STAIN GROUT **.
4. GROUTING BETWEEN BEAM SECTIONS SHALL BE DONE WHEN AIR TEMPERATURE IS ABOVE 40° F. NO TRAFFIC OR EQUIPMENT SHALL BE PERMITTED ON THE BRIDGE UNTIL THE GROUT HAS CURED FOR AT LEAST 72 HOURS.
5. ADJUST BAR SPACING TO CLEAR SHEAR CONNECTORS.
6. MEMBRANE SHALL BE INSTALLED ACROSS TOP OF BEAMS AND LAPPED DOWN TO THE BOTTOM OF EACH BEAM. MEMBRANE SHALL ALSO EXTEND 2" UP INSIDE FACE OF DETAIL A OF FASCIA BEAMS. PAYMENT SHALL BE UNDER ITEM #602547 - WATERPROOFING BRIDGE DECK

* PAYMENT FOR MATERIAL AND LABOR SHALL BE INCIDENTAL TO ITEM 623002 - PRECAST PRESTRESSED REINFORCED CONCRETE MEMBERS, BOX BEAMS.

** GROUT SHALL BE QUIKRETE OR L & M CRYSTEX OR APPROVED EQUAL.

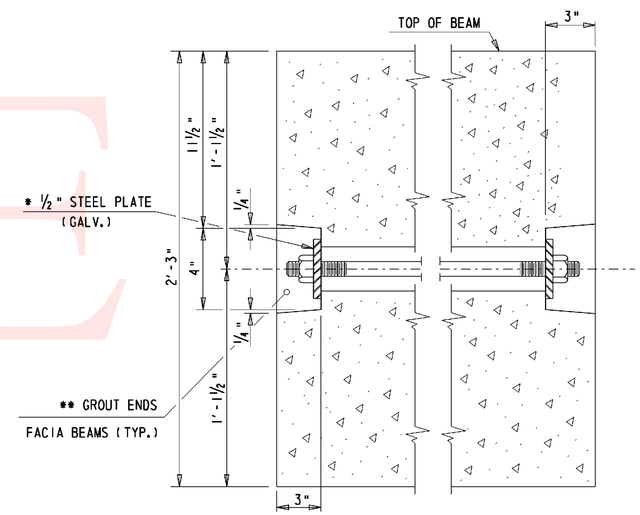

TIE ROD END DETAIL

SCALE : N.T.S.

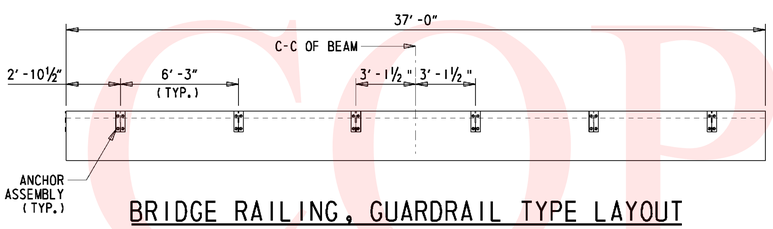

BRIDGE RAILING, GUARDRAIL TYPE LAYOUT

SCALE: 1/4" = 1'-0"

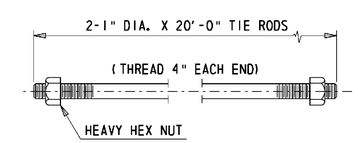

* 1" DIA. TIE ROD

TIE RODS TO BE A.S.T.M. A572 STEEL AND PROTECTED WITH FUSION BONDED EPOXY.
SCALE : N.T.S.

UNOFFICIAL WEBSITE COPY

DELAWARE DEPARTMENT OF TRANSPORTATION	ADDENDUMS / REVISIONS	Scale As Noted	BR 1-366 N399 CHESAPEAKE CITY ROAD OVER GUTHRIE RUN	CONTRACT T201007102	BRIDGE NO. 1-366	FRAMING PLAN	SHEET NO. 10
				COUNTY NEW CASTLE	DESIGNED BY: PAM		TOTAL SHTS. 22
					CHECKED BY: BB		

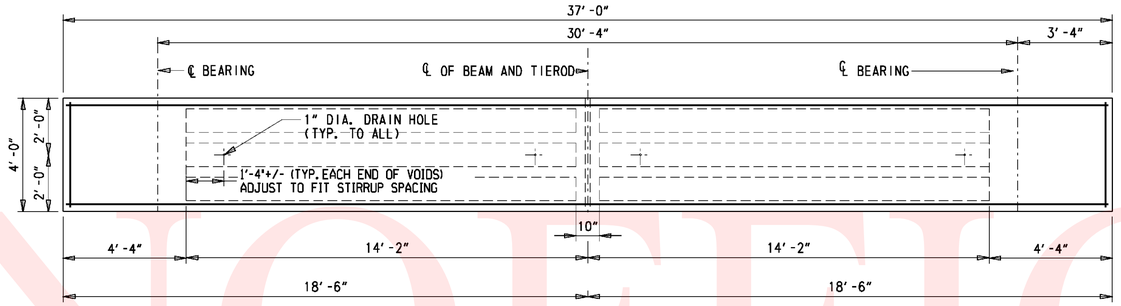

PLAN

3/8" = 1'-0"

NOTE:
PROPOSED END BLOCK STEEL IS NOT SHOWN IN THESE DETAILS.
REFER TO THE END BLOCK DETAILS BELOW FOR CLARIFICATION.

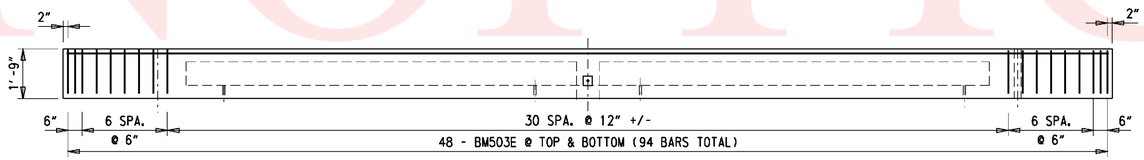

ELEVATION

3/8" = 1'-0"

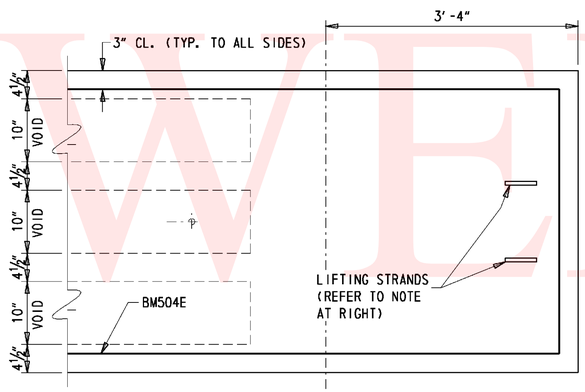

TYPICAL END BLOCK PLAN

1" = 1'-0"

NOTE TO PRECASTER:
BM505E BARS AND LIFTING STRANDS SHALL BE SPACED SO THAT THEY DO NOT INTERFERE WITH STRAND SPACING. THE PRECASTER SHALL INCLUDE DETAILS OF THE PLACEMENT OF THESE ITEMS IN THEIR SUBMITTED SHOP DRAWINGS.

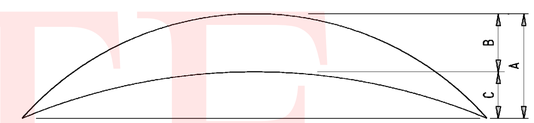

CAMBER DIAGRAM

A = ESTIMATED PRESTRESS CAMBER LESS DEFLECTION DUE TO DEAD LOAD OF BEAM AT TIME OF TRANSFER = 0.462"
B = DEFLECTION DUE TO DEAD LOAD OF SLAB AND PARAPET = 0.197"
C = A - B = NET CAMBER AT TIME OF CONSTRUCTION.

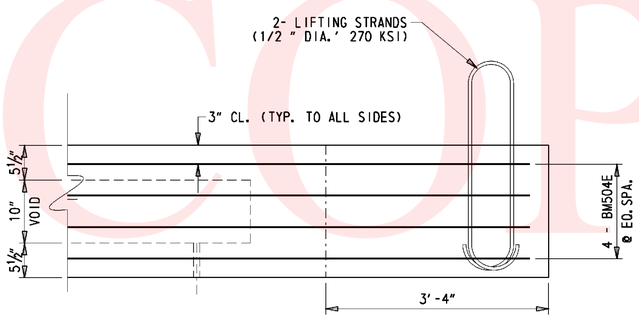

TYPICAL END BLOCK ELEVATION

1" = 1'-0"

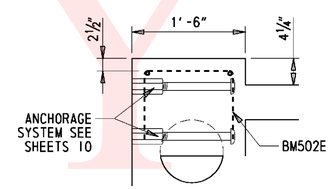

DETAIL A

1" = 1'-0"

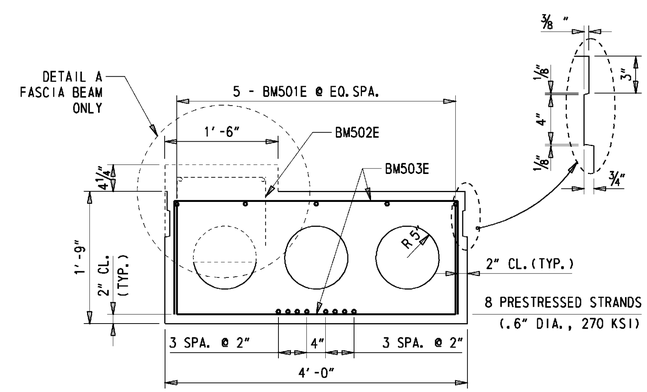

TYPICAL BEAM SECTION

1" = 1'-0"

REINFORCING BAR LIST

STRAIGHT BARS				BENT BARS			
MARK	SIZE	NUMBER	LENGTH	MARK	SIZE	NUMBER	LENGTH
BM501E	5	5	36'-8"	BM502E	5	36	3'-2"
				BM503E	5	94	7'-5 1/2"
				BM504E	5	8	13'-6"

BENDING DIAGRAMS

ALL DIMENSIONS ARE FROM OUT TO OUT.

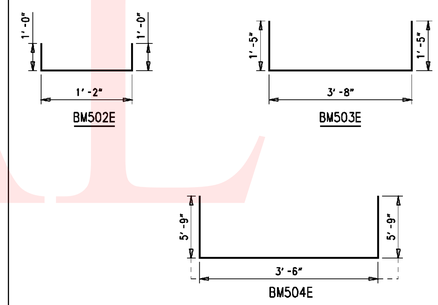

PRESTRESSED BEAM NOTES (48" x 21")

DESIGN PLANS - WORKING DRAWINGS

INFORMATION PERTAINING TO THE PRESTRESSED PRECAST REINFORCED CONCRETE BOX BEAMS IS INTENDED TO SERVE AS AN INDICATION OF THE TYPE OF CONSTRUCTION ACCEPTABLE FOR USE. THE CONTRACTOR WILL BE REQUIRED TO PREPARE AND SUBMIT, FOR APPROVAL, A COMPLETE SET OF DETAILED SHOP PLANS FOR THE PRESTRESSED PRECAST CONCRETE UNITS THEY PROPOSE TO FURNISH.

HANDLING

PRESTRESSED BEAMS SHALL BE HANDLED ONLY BY LIFTING STRANDS PROVIDED ESPECIALLY FOR THIS PURPOSE. THE APPROXIMATE DEAD WEIGHT OF EACH UNIT IS 14.30 tons.

CONCRETE STRESSES

THE MINIMUM COMPRESSIVE STRENGTH AT TIME OF INITIAL PRESTRESS EQUALS 4800 psi.
THE MINIMUM COMPRESSIVE STRENGTH AT 28 DAYS EQUALS 6000 psi.

BAR REINFORCEMENT

MATERIALS REQUIREMENT: ASTM M31 - GRADE 60
ALL BAR REINFORCEMENT TO HAVE 2" MINIMUM COVER EXCEPT AS NOTED OR DETAILED.
ALL BAR REINFORCEMENT AND CHAIR SUPPORTS SHALL BE PROTECTED WITH FUSION BONDED EPOXY.
PAYMENT FOR REINFORCING BARS IS INCIDENTAL TO ITEM 623002 - PRESTRESSED REINFORCED CONCRETE MEMBERS, BOX BEAMS.

STRAND

INITIAL PRESTRESSES ON EACH .6" DIA. 270 ksi LOW RELAXATION STRAND EQUALS 43940 lbs MINIMUM ULTIMATE STRENGTH EQUALS 58590 lbs PER STRAND.

CONCRETE FINISH

TOP OF BEAMS ARE TO HAVE A SMOOTH FINISH. BOTTOM AND SIDES OF BEAMS SHALL BE PROTECTED WITH A WATER MISCIBLE, PENETRATING ALKYL EPOXY SILANE SEALER. PAYMENT INCIDENTAL TO ITEM 623002 - PRESTRESSED REINFORCED CONCRETE MEMBERS, BOX BEAMS.

NOTE: 10 TOTAL REQUIRED:
10-4'0"X1'-9"

ANCHOR SYSTEM:

ANCHOR ASSEMBLIES CAST IN PRECAST PRESTRESSED CONCRETE BOX BEAM SHALL BE PRESET BY USE OF A TEMPLATE. PAYMENT INCIDENTAL TO ITEM #623002

UNOFFICIAL WEBSITE COPY

DELAWARE DEPARTMENT OF TRANSPORTATION	ADDENDUMS / REVISIONS	SCALE AS NOTED	BR. 1-366 ON N399 CHESAPEAKE CITY ROAD OVER GUTHRIE RUN	CONTRACT T201007102	BRIDGE NO. 1-366	BEAM DETAILS	SHEET NO. 11
				COUNTY NEW CASTLE	DESIGNED BY: PM		TOTAL SHTS. 22
					CHECKED BY: BB		

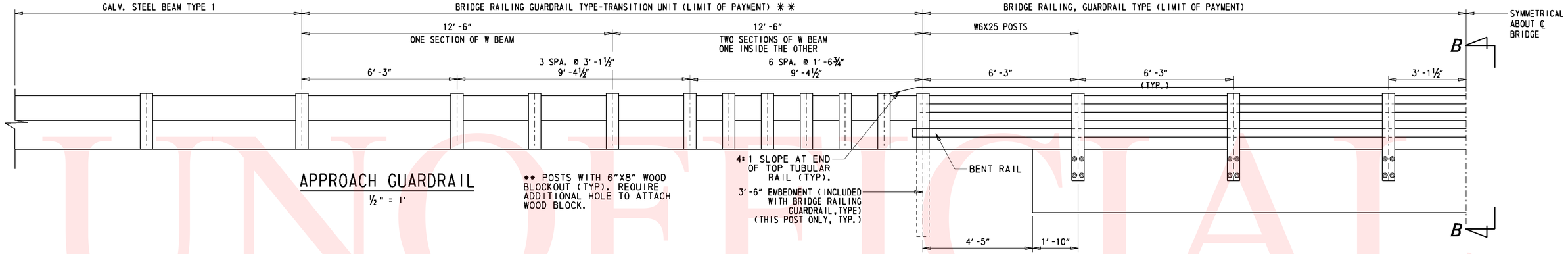

APPROACH GUARDRAIL

½" = 1'

** POSTS WITH 6"X8" WOOD BLOCKOUT (TYP). REQUIRE ADDITIONAL HOLE TO ATTACH WOOD BLOCK.

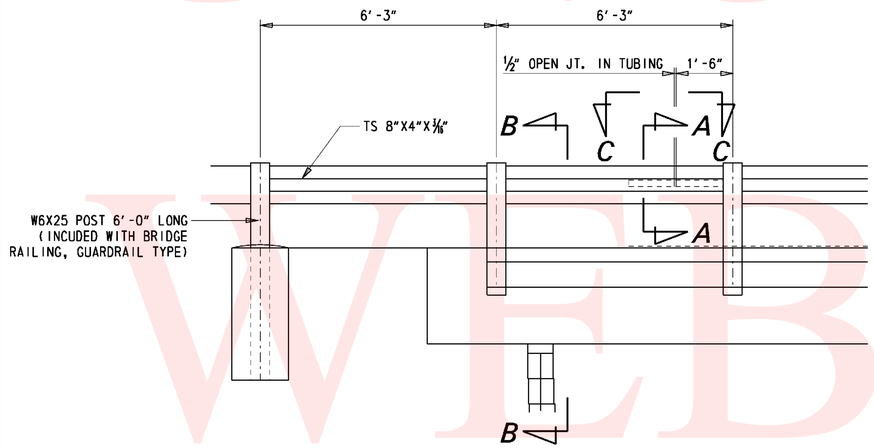

RAILING ELEVATION

½" = 1'

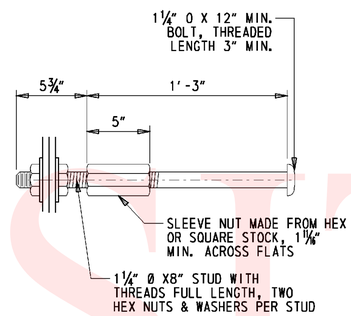

ANCHOR ASSEMBLY

2" = 1'-0"

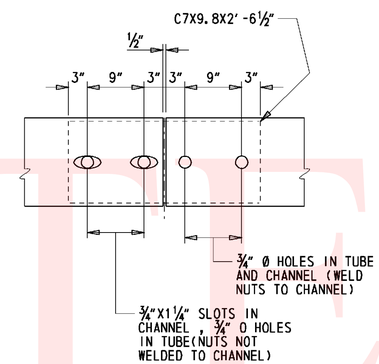

VIEW C-C

1" = 1'-0"

DETAILS SHOWN ARE IN ACCORDANCE WITH CURRENT AASHTO SPECIFICATIONS.

BRIDGE RAILING, GUARDRAIL TYPE WILL BE PAID FOR AT THE CONTRACT UNIT PRICE PER LINEAR FOOT, WHICH PRICE INCLUDES PAYMENT IN FULL FOR ALL WORK AND MATERIAL NECESSARY TO ERECT THE RAILING. PAYMENT FOR ANCHOR ASSEMBLES EMBEDDED IN BOX BEAMS IS INCLUDED IN ITEM 623002 - PRESTRESSED REINFORCED CONCRETE MEMBERS, BOX BEAMS.

STEEL BEAM GUARDRAIL ELEMENTS AND BACK-UP ELEMENTS SHALL BE IN ACCORDANCE WITH THE STANDARD SPECIFICATIONS AND STANDARD CONSTRUCTION DETAILS.

STEEL TUBE ELEMENTS SHALL MEET THE REQUIREMENTS OF A500 GRADE B, WITH SILICON CONTENT OF LESS THAN 0.06% OR BETWEEN 0.15% & 0.25% AND SHALL BE GALVANIZED IN ACCORDANCE WITH ASTM 123. STEEL TUBE ELEMENTS FROM ALL HEATS SUPPLIED SHALL BE TESTED PRIOR TO DELIVERY OF THE RAIL TO THE CONTRACTOR.

POST ASSEMBLIES AND CHANNELS SHALL MEET THE REQUIREMENTS OF ASTM A36, WITH A SILICON CONTENT OF LESS THAN 0.06% OR BETWEEN 0.15% & 0.25% AND SHALL BE GALVANIZED IN ACCORDANCE WITH ASTM A123.

POST ASSEMBLIES AND CHANNELS SHALL MEET THE CHARPY V-NOTCH REQUIREMENTS AS SPECIFIED IN 826.02 OF THE STANDARD SPECIFICATIONS AT A TEST TEMPERATURE OF 40°F (4°C).

EXCEPT WHERE NOTED, ALL BOLTS, NUTS, AND STUDS FOR BRIDGE RAILING GUARDRAIL TYPE SHALL COMFORM TO THE PHYSICAL REQUIREMENTS OF ASTM A325 EXCEPT THAT THE MINIMUMUM ELONGATION SHALL BE 10%. THE CHEMICAL PROPERTIES ARE WAIVED. WASHERS SHALL MEET THE MECHANICAL REQUIREMENTS OF ASTM F436. ALL HARDWARE SHALL BE GALVANIZED IN ACCORDANCE WITH ASTM A153. GALVANIZED NUTS SHALL BE TAPPED OVERSIZE PER THE REQUIREMENTS OF ASTM A563. ANCHOR ASSEMBLIES SHALL NOT COME INTO CONTACT WITH REINFORCING STEEL.

ANCHOR ASSEMBLIES CAST IN PRECAST PRESTRESSED CONCRETE BOX BEAM OR PRECAST PRESTRESSED CONCRETE SLAB BEAM SHALL BE PRESET BY USE OF A TEMPLATE. FOR PLACEMENT OF RAIL POSTS, SEE BRIDGE RAIL LAYOUT ON SHEET 10.

AT POSTS ADJACENT TO TUBE EXPANSION SPLICES, NUTS FOR ⅝" DIAMETER BOLTS SHALL BE INSTALLED FINGER TIGHT WITH THREADS BURRED.

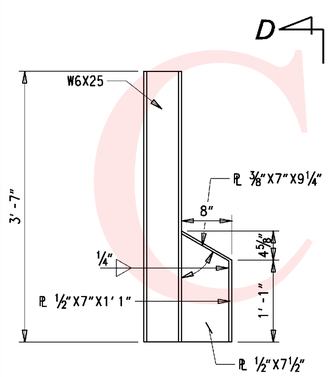

POST ELEVATION

1" = 1'-0"

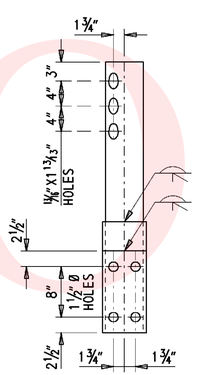

VIEW D-D

1" = 1'-0"

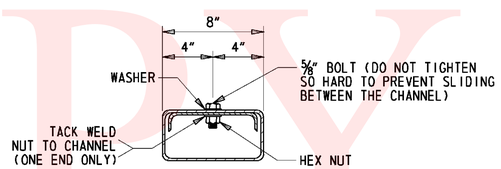

SECTION A-A

2" = 1'-0"

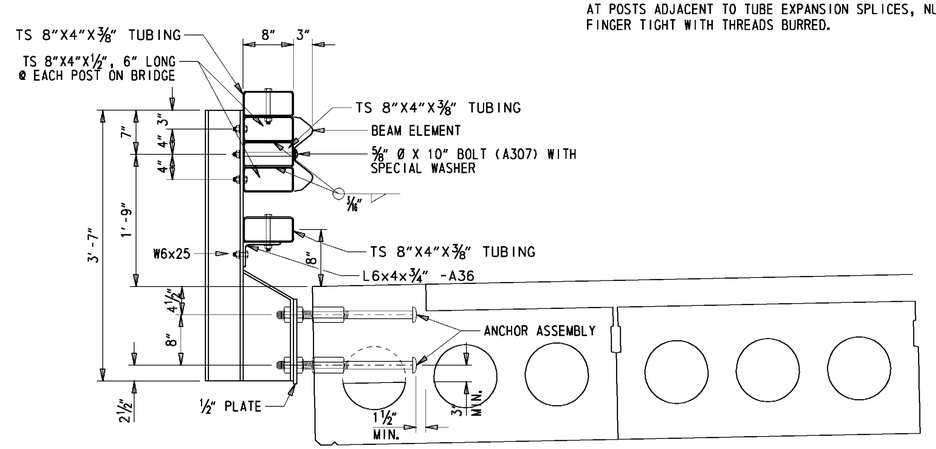

SECTION B-B

1" = 1'-0"

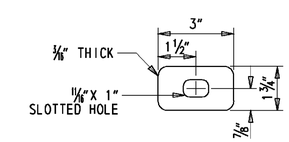

SPECIAL WASHER

8" = 1'-0"

UNOFFICIAL WEBSITE COPY

DELAWARE DEPARTMENT OF TRANSPORTATION	ADDENDUMS / REVISIONS	SCALE AS NOTED	BR 1-366 N399 CHESAPEAKE CITY ROAD OVER GUTHRIE RUN	CONTRACT T201007102 / COUNTY NEW CASTLE	BRIDGE NO. 1-366 / DESIGNED BY: PAM / CHECKED BY: BAB	BRIDGE DETAILS	SHEET NO. 12 / TOTAL SHTS. 22

W:\MSV8\CELLS\PROJDEV\SB.CEL

BORING# SB # 1 | **DATE DRILLED#** 12/23/2009
STATION# 4+40.47 | **OFFSET#** 7.74 FT | **ELEVATION#** 57.83 | **NORTHING#** 562834.524 | **EASTING#** 559302.998
COMMENTS# WATER LEVEL READINGS: 11.1' (12/23/09)
DRY (12/24/09)

DEPTH (FT.)	NO.	SAMPLE DEPTH	BLOWS/6"	SAMPLE DESCRIPTION	CLASS./G. I.	REMARKS
	1	0.0'		NO SAMPLE RECOVERY		ASPHALT - 6". 12" SUBGRADE.
		2.0'		0" RECOVERY		
2.53	2	2.0'	6 5 4	WET STIFF BROWN SILT W/ SOME FINE SAND, TRACE OF COARSE SAND AND FINE GRAVEL.	A-4(0)	
		4.0'	3	19" RECOVERY		
5.06	3	4.0'	2 2 3	WET FIRM BROWN CLAYEY SILT W/ TRACE OF FINE TO COARSE SAND.	A-4(7)	
		6.0'	3	18" RECOVERY		
7.59	4	6.0'	3 5 6	WET STIFF BROWN SILTY CLAY W/ TRACE OF FINE TO COARSE SAND.	A-6(11)	
		8.0'	8	20" RECOVERY		
	5	8.0'	5 6 7	WET MEDIUM DENSE BROWN SILTY FINE TO COARSE SAND W/ TRACE OF FINE GRAVEL.	A-2-4(0)	
		10.0'	7	15" RECOVERY		
10.12	6	10.0'	9 11 9	WET MEDIUM DENSE BROWN COARSE TO FINE SAND W/ SOME SILT, TRACE OF FINE GRAVEL.	A-1-b	
		12.0'	10	19" RECOVERY		
12.65	7	12.0'	8 7 9	WET MEDIUM DENSE BROWN COARSE SAND W/ SOME FINE SAND AND FINE GRAVEL, TRACE OF SILT.	A-1-b	
		14.0'	10	16" RECOVERY		
15.18	8	14.0'	5 6 6	WET MEDIUM DENSE BROWN COARSE TO FINE SAND W/ TRACE OF SILT AND FINE GRAVEL.	A-1-b	
		16.0'	8	16" RECOVERY		
17.71	9	16.0'	8 11 30	WET DENSE BROWN SILTY FINE SANDY FINE GRAVEL W/ TRACE OF COARSE SAND.	A-2-4(0)	
		18.0'	29	4" RECOVERY		
	10	18.0'	11 18 19	WET DENSE BROWN FINE GRAVEL W/ SOME FINE TO COARSE SAND AND SILT.	A-1-a	BOTTOM OF STONE BASE COARSE
		20.0'	14	4" RECOVERY		
20.24	11	20.0'	13 14 16	WET VERY STIFF ORANGE FINE SANDY SILT W/ TRACE OF COARSE SAND.	A-4(0)	
		22.0'	21	16" RECOVERY		
22.77	12	22.0'	4 5 9	WET MEDIUM DENSE ORANGE FINE TO COARSE SAND W/ SOME FINE GRAVEL AND SILT.	A-2-4(0)	
		24.0'	15	8" RECOVERY		
25.3	13	24.0'	6 15 22	NO SAMPLE RECOVERY.		TRAP BROKE IN SPOON.
		26.0'	23	0" RECOVERY		
				END OF BORING		

BORING# SB # 2 | **DATE DRILLED#** 1/05/2010
STATION# 4+75.33 | **OFFSET#** -7.50 FT | **ELEVATION#** 58.00 | **NORTHING#** 562864.341 | **EASTING#** 559444.120
COMMENTS# WATER LEVEL READINGS: 11.1' (1/05/10)
13.0' (1/06/10)

DEPTH (FT.)	NO.	SAMPLE DEPTH	BLOWS/6"	SAMPLE DESCRIPTION	CLASS./G. I.	REMARKS
	1	0.0'		NO SAMPLE RECOVERY		ASPHALT - 6". CONCRETE - 10".
		2.0'		0" RECOVERY		
2.53	2	2.0'	4 7 8	WET STIFF BROWN FINE SANDY SILT W/ TRACE OF COARSE SAND.	A-4(0)	
		4.0'	9	12" RECOVERY		
5.06	3	4.0'	4 6 7	WET MEDIUM DENSE BROWN SILTY FINE TO COARSE SAND W/ SOME CLAY.	A-2-4(0)	
		6.0'	7	16" RECOVERY		
7.59	4	6.0'	5 7 5	WET MEDIUM DENSE BROWN SILTY FINE SAND W/ TRACE OF COARSE SAND.	A-2-4(0)	
		8.0'	7	14" RECOVERY		
	5	8.0'	3 4 5	WET LOOSE BROWN SILTY FINE SAND W/ TRACE OF COARSE SAND.	A-2-4(0)	
		10.0'	8	12" RECOVERY		
10.12	6	10.0'	6 8 6	WET MEDIUM DENSE BROWN FINE TO COARSE SAND W/ TRACE OF FINE GRAVEL AND SILT.	A-1-b	
		12.0'	8	17" RECOVERY		
12.65	7	12.0'	2 4 6	WET LOOSE BROWN COARSE TO FINE SAND W/ SOME SILT AND FINE GRAVEL.	A-1-b	
		14.0'	6	14" RECOVERY		
15.18	8	14.0'	2 4 3	SATURATED LOOSE BROWN COARSE TO FINE SAND W/ SOME SILT, TRACE OF FINE GRAVEL.	A-1-b	
		16.0'	6	16" RECOVERY		
17.71	9	16.0'	9 8 18	SATURATED MEDIUM DENSE BROWN COARSE TO FINE SAND W/ SOME SILT, TRACE OF FINE GRAVEL.	A-1-b	
		18.0'	17	16" RECOVERY		
	10	18.0'	13 15 16	SATURATED DENSE BROWN COARSE SANDY FINE GRAVEL W/ SOME FINE SAND, TRACE OF SILT.	A-1-a	BOTTOM OF STONE BASE COARSE
		20.0'	20	16" RECOVERY		
20.24	11	20.0'	8 8 8	SATURATED MEDIUM DENSE TAN FINE SAND W/ SOME COARSE SAND, TRACE OF SILT AND FINE GRAVEL.	A-3	
		22.0'	8	7" RECOVERY		
22.77	12	22.0'	21 27 34	SATURATED VERY DENSE TAN SILTY FINE SAND W/ TRACE OF COARSE SAND.	A-2-4(0)	
		24.0'	40	12" RECOVERY		
25.3	13	24.0'	8 18 18	SATURATED DENSE TAN FINE TO COARSE SAND W/ SOME SILT.	A-2-4(0)	
		26.0'	18	16" RECOVERY		
27.83	14	26.0'	11 20 28	SATURATED DENSE TAN SILTY FINE TO COARSE SAND.	A-2-4(0)	
		28.0'	29	18" RECOVERY		
30.36	15	28.0'	19 21 26	SATURATED DENSE TAN COARSE TO FINE SAND W/ SOME SILT.	A-2-4(0)	
		30.0'	38	18" RECOVERY		
				END OF BORING		

BORING# SB # 3 | **DATE DRILLED#** 4/12/2010
STATION# 4+72.33 | **OFFSET#** -7.50 FT | **ELEVATION#** 58.00 | **NORTHING#** 562938.313 | **EASTING#** 559445.944
COMMENTS# WATER LEVEL READINGS: 16.0' (4/12/10)
8.0' (4/13/10)

DEPTH (FT.)	NO.	SAMPLE DEPTH	BLOWS/6"	SAMPLE DESCRIPTION	CLASS./G. I.	REMARKS
		0.0'		NO SAMPLING.		HOT-MIX & POSSIBLE FILL.
2.53		4.0'				
5.06	1	4.0'	1 2 2	WET SOFT DARK YELLOW SILTY CLAY W/ TRACE OF FINE TO COARSE SAND.	A-6(16)	
		6.0'	3	16" RECOVERY		
7.59						
10.12	2	9.0'	4 5 7	SATURATED MEDIUM DENSE YELLOWISH BROWN COARSE SAND W/ SOME FINE SAND AND FINE GRAVEL, TRACE OF SILT	A-1-b	
		11.0'	8	13" RECOVERY		
12.65						
15.18	3	14.0'	3 2 3	SATURATED LOOSE REDDISH BROWN COARSE TO FINE SAND W/ TRACE OF SILT AND FINE GRAVEL.	A-1-a	
		16.0'	4	14" RECOVERY		
17.71						
20.24	4	19.0'	22 17 12	SATURATED MEDIUM DENSE YELLOWISH BROWN COARSE SANDY FINE GRAVEL W/ TRACE OF FINE SAND AND SILT.	A-1-a	BOTTOM OF STONE BASE COARSE
		21.0'	12	8" RECOVERY		
22.77						
25.3	5	24.0'	8 15 13	SATURATED MEDIUM DENSE YELLOWISH BROWN FINE GRAVELLY FINE TO COARSE SAND W/ SOME SILT.	A-2-4(0)	
		26.0'	13	6" RECOVERY		
27.83						
30.36	6	29.0'	5 8 13	SATURATED MEDIUM DENSE BROWN SILTY FINE TO COARSE SAND W/ TRACE OF FINE GRAVEL.	A-2-4(0)	
		30.5'		10" RECOVERY		
	7	30.5'	22	SATURATED VERY STIFF LIGHT GRAY FINE SANDY SILT.	A-4(0)	
		31.0		5" RECOVERY		
	8	34.0'	5 7 10	SATURATED VERY STIFF LIGHT GRAY SILTY CLAY W/ TRACE OF FINE SAND.	A-7-6(23)	
		36.0'	12	14" RECOVERY		
	9	39.0'	8 10 13	SATURATED VERY STIFF GRAY SILTY CLAY W/ TRACE OF FINE SAND.	A-6(11)	
		41.0'	14	20" RECOVERY		
	10	44.0'	6 8 16	SATURATED VERY STIFF GRAY SILT W/ SOME FINE SAND AND CLAY.	A-4(2)	
		46.0'	15	20" RECOVERY		
	11	48.0'	8 13 15	SATURATED VERY STIFF GRAY SILT W/ SOME FINE SAND.	A-4(0)	
		50.0'	21	20" RECOVERY		
				END OF BORING		

UNOFFICIAL WEB SITE COPY

Y:\NEWCASTL\399\BRIDGE\T201007102\PLANS\GRS-IBS\B001.DGN

DELAWARE DEPARTMENT OF TRANSPORTATION

ADDENDUMS / REVISIONS

BR 1-366 ON N399 CHESAPEAKE CITY ROAD OVER GUTHRIE RUN

CONTRACT	BRIDGE NO.	BR. 1-366	BORING LOG	SHEET NO.
T201007102	DESIGNED BY: PAM			13
COUNTY				TOTAL SHTS.
NEW CASTLE	CHECKED BY: BB			22

UNOFFICIAL WEBSITE COPY

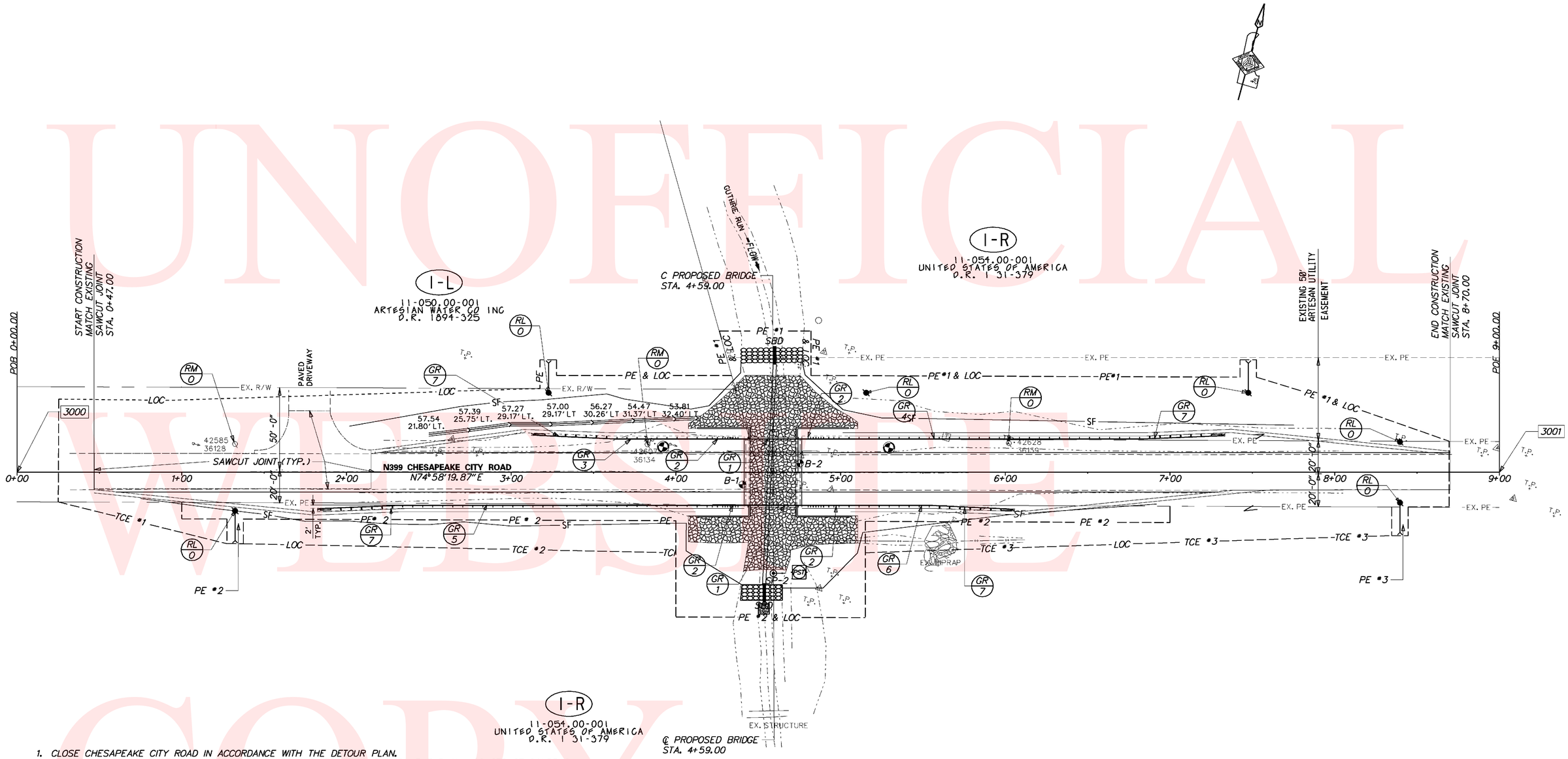

1. CLOSE CHESAPEAKE CITY ROAD IN ACCORDANCE WITH THE DETOUR PLAN.
2. PLACE SILT FENCE, EXCEPT CONNECTION TO SANDBAG DIKES, AS SHOWN ON THE PLAN. CONSTRUCT SANDBAG DIKES IN THE EXISTING CHANNEL AND CONNECT THE SILT FENCE TO THE SANDBAG DIKE TO ENCLOSE THE WORK AREA. INSTALL STABILIZED OUTFALL USING R-5 RIPRAP. INSTALL 3'-0" DIA. HDPE PIPE THROUGH THE CENTER OF THE EXISTING STRUCTURE TO MAINTAIN FLOW THROUGH THE WORK AREA. THE STREAM DIVERSION SHALL BE INSTALLED AS PER ITEM 265500-STREAM DIVERSIONS. INSTALL SUMP PIT AND DEWATERING BAG FOR USE IN DEWATERING THE WORK AREA. SEE SECTION 111 OF THE STANDARD SPECIFICATIONS FOR MORE INFORMATION ON DEWATERING OPERATIONS.
3. REMOVE THE EXISTING STRUCTURE AND WINGWALLS IN THEIR ENTIRETY.
4. EXCAVATE FOR PROPOSED GEOSYNTHETIC REINFORCED SLOPE-INTEGRATED BRIDGE SYSTEM FOUNDATION AS SHOWN ON PLAN. IF THE CONTRACTOR CHOOSES TO USE ON-SITE CHANNEL BED FILL, EXCAVATE AND STOCKPILE THE EXISTING STREAMBED MATERIAL IN ACCORDANCE WITH THE SPECIAL PROVISIONS OF ITM #712531-CHANNEL BED FILL. INSTALL FOUNDATION AND CONSTRUCT GRS-IBS ABUTMENTS AND WINGWALLS AS PER PLANS AND SPECIFICATIONS. INSTALL RIPRAP, CHANNEL BED FILL AND SLOPE STABILIZATION AS NOTED.
5. INSTALL PROPOSED SUPERSTRUCTURE ELEMENTS, GUARDRAIL AND PROPOSED ROADWORK. COMPLETE ANY OTHER REMAINING WORK.
6. REMOVE ALL EROSION AND SEDIMENT CONTROL DEVICES (INCLUDING RIPRAP USED AS STABILIZED OUTFALL) AND RESTORE THE STREAM TO EXISTING CONDITIONS AS OUTLINED IN THE ENVIRONMENTAL COMPLIANCE NOTES. REMOVE ALL MAINTENANCE OF TRAFFIC DEVICES.

Y:\NEWCASTL\399\BRIDGE\T201007102\PLANS\CP01.DGN

DELAWARE DEPARTMENT OF TRANSPORTATION	ADDENDUMS / REVISIONS	SCALE 0 30 60 90 FEET	BR 1-366 ON N399 CHESAPEAKE CITY ROAD OVER GUTHRIE RUN	CONTRACT T201007102	BRIDGE NO. 1-366	CONSTRUCTION SEQUENCE & EROSION AND SEDIMENT CONTROL PLAN	SHEET NO. 14
				COUNTY NEW CASTLE	DESIGNED BY: PAM		TOTAL SHTS. 22
					CHECKED BY: BB		

LEGEND

	PERMANENT IMPACT AREA
	TEMPORARY IMPACT AREA
-·-·-OHW-·-·-	ORDINARY HIGH WATER
XX / ?X	IMPACT AREA TYPE ID. (SEE BELOW) / IMPACT AREA ID. AND/OR NUMBER

O = OPEN WATER IMPACT

T = TEMPORARY IMPACT

ORIGINAL SHEET PREPARED BY P.A.McNeil DATED JUNE 2010. SHEET LAST UPDATED ON 04/12/12.

WETLANDS DELINEATED BY DelDOT ENVIRNMENT STUDIES SECTION DATED ON JUNE 2010 IN ACCORDANCE WITH THE US ARMY CORPS OF ENGINEERS "CORPS OF ENGINEERS WETLAND DELINEATION MANUAL (1987)". AND REGIONAL SUPPLEMENT. NO JURISDICTIONAL WETLANDS EXIST WITHIN THE PROJECT AREA.

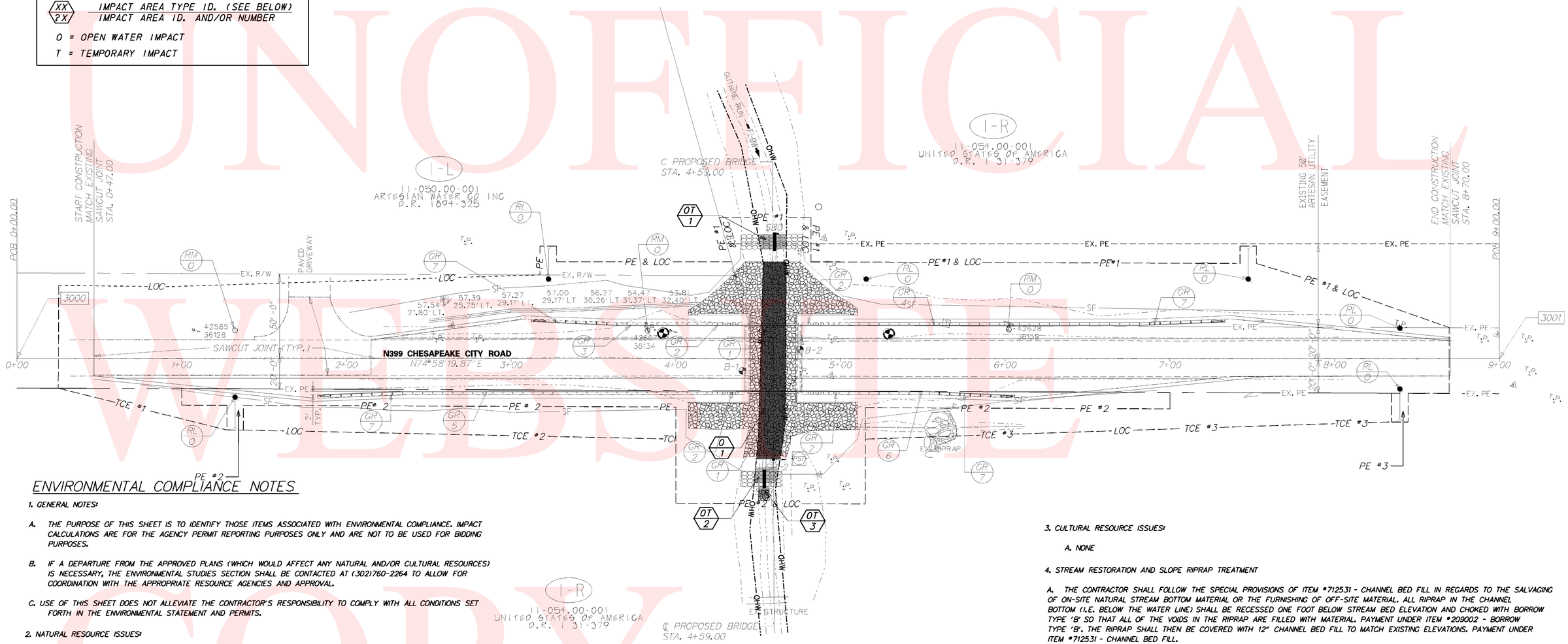

ENVIRONMENTAL COMPLIANCE NOTES

1. GENERAL NOTES:

A. THE PURPOSE OF THIS SHEET IS TO IDENTIFY THOSE ITEMS ASSOCIATED WITH ENVIRONMENTAL COMPLIANCE. IMPACT CALCULATIONS ARE FOR THE AGENCY PERMIT REPORTING PURPOSES ONLY AND ARE NOT TO BE USED FOR BIDDING PURPOSES.

B. IF A DEPARTURE FROM THE APPROVED PLANS (WHICH WOULD AFFECT ANY NATURAL AND/OR CULTURAL RESOURCES) IS NECESSARY, THE ENVIRONMENTAL STUDIES SECTION SHALL BE CONTACTED AT (302)760-2264 TO ALLOW FOR COORDINATION WITH THE APPROPRIATE RESOURCE AGENCIES AND APPROVAL.

C. USE OF THIS SHEET DOES NOT ALLEVIATE THE CONTRACTOR'S RESPONSIBILITY TO COMPLY WITH ALL CONDITIONS SET FORTH IN THE ENVIRONMENTAL STATEMENT AND PERMITS.

2. NATURAL RESOURCE ISSUES:

A. PERMIT REQUIREMENTS/APPROVALS*:
U.S. ARMY CORPS OF ENGINEERS (COE): NWP#3 (a&c) NOPCN
DNREC - WETLANDS & SUBAQUEOUS LANDS (WLSL): PROJECT CONSISTENT WITH DEL. CODE CH. 72
SECTION 7217(b), AS AMENDED BY SB186
(DRAINAGE AREA = 1300 ACRES)
DNREC - WATER QUALITY (WQC) & COASTAL ZONE CONSISTENCY (CZM): WAIVED (PROJECT NOT LOCATED IN CRITICAL RESOURCE WATER (CRW).
NEW CASTLE COUNTY FLOODPLAIN APPROVAL **

* THE PERMITS/APPROVALS LISTED ARE THOSE REQUIRED FOR THIS PROJECT. THE ENVIRONMENTAL STUDIES SECTION IS RESPONSIBLE FOR COORDINATING AND/OR OBTAINING THIS APPROVAL.
** THE CONTRACTOR MUST ENSURE THAT THESE PERMITS/APPROVALS ARE IN THEIR POSSESSION PRIOR TO BEGINNING CONSTRUCTION IN THE PERMITTED AREA(S) AND ENSURE IT IS DISPLAYED ON-SITE DURING THE ENTIRE CONSTRUCTION PERIOD.

B. CONSTRUCTION RESTRICTIONS:
FISHERIES - NONE
ENDANGERED SPECIES - NONE
MIGRATORY BIRDS - APRIL 15 - AUGUST 1. EITHER BEGIN WORK ON THE UNDERSIDE OF THE STRUCTURE PRIOR TO 4/15 (TO PREVENT BIRDS FROM NESTING) OR WAIT UNTIL AFTER THE 8/1(AFTER THE HATCHLINGS HAVE LEFT) TO BEGIN WORK TO UNDERSIDE. IF NEITHER OF THESE OPTIONS IS PRACTICABLE, THEN DETERRENT NESTING (OR SIMILAR DEVICE) SHALL BE INSTALLED PRIOR TO 4/15

PERMANENT OPEN WATER IMPACT AREA SCHEDULE

ID	IMPACT DESCRIPTION	AREA (SF)	AREA (AC)	VOLUME (CY)	JURISDICTION
O-1	RIPRAP AREA	1798.00	0.041	133.200	COE/DNREC
TOTAL PERMANENT OPEN WATER IMPACTS		1798.00	0.041	133.200	COE/DNREC

PERMANENT OPEN WATER IMPACT AREA SCHEDULE

ID	IMPACT DESCRIPTION	AREA (SF)	AREA (AC)	VOLUME (CY)	JURISDICTION
OT-1	SANDBAG AREA	149.00	0.003	11.370	COE/DNREC
OT-2	SANDBAG AREA	133.00	0.003	9.852	COE/DNREC
OT-3	RIPRAP AREA	44.00	0.001	0.815	COE/DNREC
TOTAL TEMPORARY OPEN WATER IMPACTS		326.00	0.007	22.037	COE/DNREC

3. CULTURAL RESOURCE ISSUES:

A. NONE

4. STREAM RESTORATION AND SLOPE RIPRAP TREATMENT

A. THE CONTRACTOR SHALL FOLLOW THE SPECIAL PROVISIONS OF ITEM #712531 - CHANNEL BED FILL IN REGARDS TO THE SALVAGING OF ON-SITE NATURAL STREAM BOTTOM MATERIAL OR THE FURNISHING OF OFF-SITE MATERIAL. ALL RIPRAP IN THE CHANNEL BOTTOM (I.E. BELOW THE WATER LINE) SHALL BE RECESSED ONE FOOT BELOW STREAM BED ELEVATION AND CHOKED WITH BORROW TYPE 'B' SO THAT ALL OF THE VOIDS IN THE RIPRAP ARE FILLED WITH MATERIAL. PAYMENT UNDER ITEM #209002 - BORROW TYPE 'B'. THE RIPRAP SHALL THEN BE COVERED WITH 12" CHANNEL BED FILL TO MATCH EXISTING ELEVATIONS. PAYMENT UNDER ITEM #712531 - CHANNEL BED FILL.

B. OTHER AREAS OF THE CHANNEL BOTTOM AFFECTED BY CONSTRUCTION (INCLUDING, BUT NOT LIMITED TO, THE LOCATION OF SUMP PITS, STABILIZED OUTFALLS, TEMPORARY PIPES AND/OR SANDBAG DIKES AND DIVERSIONS) SHALL BE RESTORED TO EXISTING CONDITIONS. ANY CAVITIES OR SCOUR HOLES RESULTING FROM CONSTRUCTION ACTIVITIES SHALL BE FILLED WITH CHANNEL BED FILL. PAYMENT UNDER ITEM #712531 - CHANNEL BED FILL.

C. WHEN ALL EROSION AND SEDIMENT CONTROL MEASURES ARE REMOVED AND THE STREAM RETURNS TO ITS NATURAL FLOW CONDITIONS, THE FLOW MUST REMAIN ABOVE GROUND AND ABOVE THE RIPRAP (I.E. THE FLOW CANNOT BE "LOST" IN THE RIPRAP OR BENEATH THE STRUCTURE). IF THIS IS NOT ACHIEVED, THE CONTRACTOR WILL BE REQUIRED TO TAKE CORRECTIVE ACTION AT THE CONTRACTOR'S EXPENSE.

D. ALL RIPRAP ON THE STREAM BANK, OUTSIDE THE CHANNEL BED, SHALL BE CHOKED WITH DELAWARE #57 STONE, FILLED WITH TOPSOIL, SEEDED AND MULCHED WITH SOIL RETENTION BLANKET MULCH, TYPE 3 (ITEM 732004). PLACE JUST ENOUGH CHOKE MATERIAL TO PREVENT THE LOSS OF TOPSOIL THROUGH THE RIPRAP, AND THEN FINISH FILLING THE VOIDS WITH TOPSOIL SO THAT THE RIPRAP PEAKS ARE BARELY VISIBLE. AN ADDITIONAL 4" TOPSOIL LAYER SHALL BE PLACED ON TOP OF THE RIPRAP. SEEDING SHALL BE PERMANENT GRASS SEEDING WET GROUND (ITEM NO. 734015) FROM STREAM BASE FLOW ELEVATION TO 2' UP THE SLOPE AND PERMANENT GRASS SEEDING DRY GROUND (ITEM NO. 734013) ON THE REMAINING SLOPE. ALL WORK, STARTING WITH THE INITIAL CHOKING WITH TOPSOIL THROUGH THE SEEDING AND MULCHING, SHALL BE COMPLETED PRIOR TO ANY RAIN EVENT. PAYMENT FOR RIPRAP AND DELAWARE #57 STONE SHALL BE PAID FOR UNDER THE RIPRAP ITEM. ALL OTHER ITEMS SHALL BE PAID FOR UNDER THEIR RESPECTIVE ITEMS.

UNOFFICIAL WEBSITE COPY

DELAWARE DEPARTMENT OF TRANSPORTATION	ADDENDUMS / REVISIONS	SCALE 0 30 60 90 FEET	BR 1-366 ON N399 CHESAPEAKE CITY ROAD OVER GUTHRIE RUN	CONTRACT T201007102 / COUNTY NEW CASTLE	BRIDGE NO. 1-366 / DESIGNED BY: PAM / CHECKED BY: BB	ENVIRONMENTAL COMPLIANCE PLAN	SHEET NO. 15 / TOTAL SHTS. 22

Y:\NEWCASTL\399\BRIDGE\T201007102\PLANS\CP01.DGN

CHANGEABLE MESSAGE BOARDS

CMS-1

PRIOR TO DETOUR
(10 DAYS PRIOR TO BEGINNING OF DETOUR)

CHESA- PEAKE CITY RD	TO CLOSE STARTING XX/XX/XX

CMS-1

DURING DETOUR
(TO BE REMOVED 5 DAYS AFTER IMPLEMENTATION OF DETOUR)

CHESA- PEAKE CITY RD	CLOSED FOLLOW DETOUR

CMS-2

PRIOR TO DETOUR
(10 DAYS PRIOR TO BEGINNING OF DETOUR)

XXXXXXXX XXXXXXXX XXXXXXXX	XXXXXXXX XXXXXXXX XXXXXXXX

CMS-2

DURING DETOUR

XXXXXXXX XXXXXXXX XXXXXXXX	XXXXXXXX XXXXXXXX XXXXXXXX

SPECIAL SIGNS

U

48" × 72"

Chesapeake	6"C
City Road	6"C
CLOSED EAST	5"C
OF Steel Rd	6"C
FOLLOW	6"C
DETOUR	6"C

V

48" × 72"

Chesapeake	6"C
City Road	6"C
CLOSED WEST	5"C
OF Frazer Rd	5"C
FOLLOW	6"C
DETOUR	6"C

* DETOUR SHALL BE IMPLEMENTED AFTER THE COMPLETION OF THE WORK ON KNIGHTS CORNER ROAD

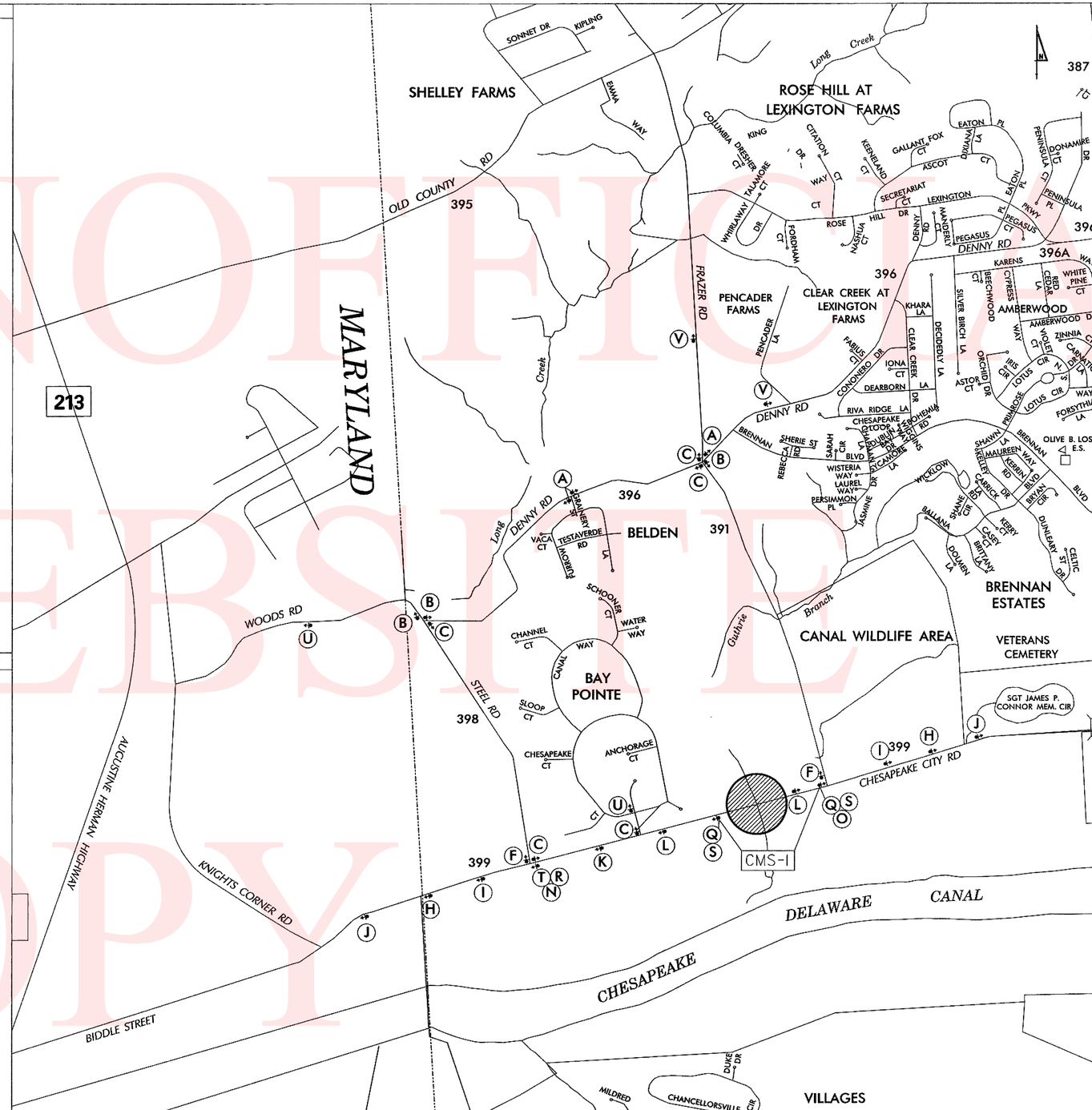

LEGEND

A DETOUR	B DETOUR	C DETOUR
D DETOUR	E DETOUR	F END DETOUR
G DETOUR AHEAD	H DETOUR 1000 FT	I DETOUR 500 FT
J ROAD CLOSED AHEAD	K ROAD CLOSED 1000 FT	L ROAD CLOSED 500 FT
M ROAD NAME	N DETOUR	O DETOUR
P ROAD CLOSED XX MILES AHEAD LOCAL TRAFFIC ONLY	Q ROAD CLOSED	R ROAD CLOSED TO THRU TRAFFIC
S	T	

GENERAL NOTES

1. ALL DETOUR SIGNING INCLUDING, TRAILBLAZERS, ARE TO BE SUPPLIED AND MAINTAINED BY THE GENERAL CONTRACTOR IN COMPLIANCE TO THE DE MANUAL OF UNIFORM TRAFFIC CONTROL DEVICES.
2. THE CONTRACTOR SHALL COMPLY WITH GUIDELINES IN "THE DELAWARE MANUAL ON UNIFORM TRAFFIC CONTROL DEVICES (DE- MUTCD PART 6) FOR LIGHTS, BARRICADES AND SIGNS.(AS PER LATEST REVISION)
3. FIELD CONDITIONS MAY DICTATE CHANGES AT SOME TIME DURING THE LIFE OF THE CONTRACT. IN THE EVENT OF OMISSIONS OR CORRECTIONS, THE SIGNING PROVISIONS OF THE DELAWARE MANUAL ON UNIFORM TRAFFIC CONTROL DEVICES WILL PREVAIL.
4. SIGNS J THROUGH L AND P THROUGH R ,THE WORD (ROAD) SHOULD BE CHANGED TO RAMP, R/R OR BRIDGE WHERE APPLICABLE.
5. WARNING SIGNS SHOULD BE MOUNTED ON BREAKAWAY POSTS AND HAVE RETROREFLECTIVE FLUORESCENT SHEETING.
6. "S" BARRICADES SHALL COMPLETELY RUN THE FULL WIDTH OF ROADWAY.
7. BARRICADES SHALL BE A MINIMUM OF 6 FEET WIDE UNLESS DIRECTED BY THE ENGINEER.

RECOMMENDED _____ DATE: _____

RECOMMENDED _____ DATE: _____

RECOMMENDED _____ DATE: 9/21/11

APPROVED CHIEF SAFETY OFFICER _____ DATE: 9-21-11

APPROVED TRAFFIC ENGINEER _____ DATE: 9/21/11

Z:\SAFETY\DETOUR MAPS\T201007102\T201007102_CHESAPEAKECITYDETOUR.DGN

DELAWARE DEPARTMENT OF TRANSPORTATION

ADDENDUM / REVISIONS

NOT TO SCALE

BR 1-366 ON N399 CHESAPEAKE CITY ROAD OVER GUTHRIE RUN

CONTRACT T201007102	PERMIT NO.	NA
COUNTY NC	DESIGNED BY: SKG	
	CHECKED BY: ASW	

DETOUR PLAN
CHESAPEAKE CITY ROAD

SHEET NO. 16
TOTAL SHTS. 22

UNOFFICIAL WEBSITE COPY

CHANGEABLE MESSAGE BOARDS

CMS-1

PRIOR TO DETOUR
(10 DAYS PRIOR TO BEGINNING OF DETOUR)

XXXXXXX XXXXXXX XXXXXXX	XXXXXXX XXXXXXX XXXXXXX

CMS-1

DURING DETOUR

CHESA- PEAKE CITY RD	CLOSED FOLLOW DETOUR

CMS-2

PRIOR TO DETOUR
(10 DAYS PRIOR TO BEGINNING OF DETOUR)

XXXXXXXX XXXXXXXX XXXXXXXX	XXXXXXXX XXXXXXXX XXXXXXXX

CMS-2

DURING DETOUR

CHESA- PEAKE CITY RD	CLOSED FOLLOW DETOUR

SPECIAL SIGNS

(U)

48"

Chesapeake	8"C
City Road	8"C
CLOSED EAST	7"C
OF Steel Rd	8"C
FOLLOW	8"C
DETOUR	8"C

96"

(V)

48"

Chesapeake	8"C
City Road	8"C
CLOSED WEST	7"C
OF Frazer Rd	7"C
FOLLOW	8"C
DETOUR	8"C

96"

(Z)

Chesapeake	8"C
City Rd	8"C

30" 30"

- DETOUR SHALL BE IMPLEMENTED AFTER THE COMPLETION OF THE WORK ON KNIGHTS CORNER ROAD
- (U) & (V) SIGNS SHALL BE MOUNTED ON TWO 4"× 6" WOOD POSTS. THE POSTS SHALL BE GROUND MOUNTED AND BREAKAWAY IN ACCORDANCE WUTH NCHRP REPORT 350

LEGEND

(A) DETOUR ↑

(B) DETOUR ←

(C) DETOUR →

(D) DETOUR ↖

(E) DETOUR ↗

(F) END DETOUR

(G) DETOUR AHEAD

(H) DETOUR 1000 FT

(I) DETOUR 500 FT

(J) ROAD CLOSED AHEAD

(K) ROAD CLOSED 1000 FT

(L) ROAD CLOSED 500 FT

(M)

(N) ← DETOUR

(O) DETOUR →

(P) ROAD CLOSED XX MILES AHEAD LOCAL TRAFFIC ONLY

(Q) ROAD CLOSED

(R) ROAD CLOSED TO THRU TRAFFIC

(S)

(T)

GENERAL NOTES

1. ALL DETOUR SIGNING INCLUDING, TRAILBLAZERS, ARE TO BE SUPPLIED AND MAINTAINED BY THE GENERAL CONTRACTOR IN COMPLIANCE TO THE DE MANUAL OF UNIFORM TRAFFIC CONTROL DEVICES.
2. THE CONTRACTOR SHALL COMPLY WITH GUIDELINES IN "THE DELAWARE MANUAL ON UNIFORM TRAFFIC CONTROL DEVICES (DE- MUTCD PART 6) FOR LIGHTS, BARRICADES AND SIGNS.(AS PER LATEST REVISION)
3. FIELD CONDITIONS MAY DICTATE CHANGES AT SOME TIME DURING THE LIFE OF THE CONTRACT. IN THE EVENT OF OMISSIONS OR CORRECTIONS, THE SIGNING PROVISIONS OF THE DELAWARE MANUAL ON UNIFORM TRAFFIC CONTROL DEVICES WILL PREVAIL.
4. SIGNS J THROUGH L AND P THROUGH R ,THE WORD (ROAD) SHOULD BE CHANGED TO RAMP, R/R OR BRIDGE WHERE APPLICABLE.
5. WARNING SIGNS SHOULD BE MOUNTED ON BREAKAWAY POSTS AND HAVE RETROREFLECTIVE FLUORESCENT SHEETING.
6. "S" BARRICADES SHALL COMPLETELY RUN THE FULL WIDTH OF ROADWAY.
7. BARRICADES SHALL BE A MINIMUM OF 6 FEET WIDE UNLESS DIRECTED BY THE ENGINEER.

RECOMMENDED _____ DATE: _____

RECOMMENDED _____ DATE: _____

RECOMMENDED _____ DATE: 9/21/11

APPROVED CHIEF SAFETY OFFICER _____ DATE: 9-21-11

APPROVED TRAFFIC ENGINEER _____ DATE: 9/21/11

DELAWARE DEPARTMENT OF TRANSPORTATION

ADDENDUM / REVISIONS

NOT TO SCALE

BR 1-366 ON N399 CHESAPEAKE CITY ROAD OVER GUTHRIE RUN

CONTRACT	PERMIT NO.	NA
T201007102	DESIGNED BY: SKG	
COUNTY		
NC	CHECKED BY: ASW	

ALTERNATE ROUTE PLAN

CHESAPEAKE CITY ROAD

SHEET NO.
17
TOTAL SHTS.
22

Z:\SAFETY\DETOUR MAPS\T201007102\T201007102_CHESAPEAKECITYDETOUR.DGN

UNOFFICIAL WEBSITE COPY

UNOFFICIAL WEBSITE COPY

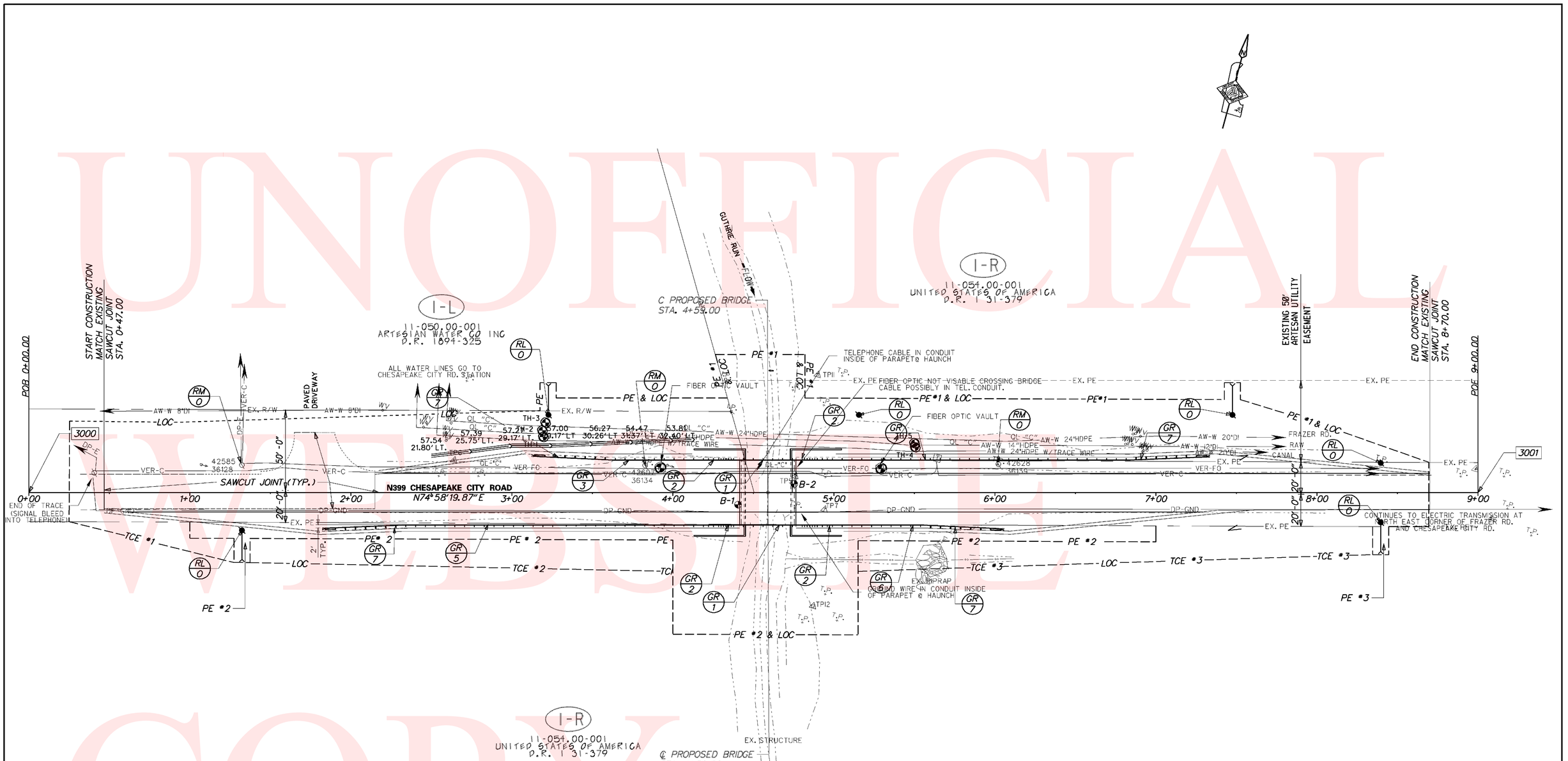

TEST HOLE	ACTUAL SIZE, MATERIAL, TYPE OF UTILITY	OWNER	UTILITY CONDITION GOOD	POOR	OTHER	REF. MARK ELEV.	UTILITY TOP EL.	UTILITY BOTTOM EL.	WIDTH	NORTHING	EASTING	SURFACE/DEPTH ASPHALT	CONC.	GENERALIZED SOIL TYPE SOIL	SELECT FILL	ROCK	SAND	CLAY	OTHER
1 4-19-10	24" HDPE PIPE W/TRACER WATER	ARTESIAN WATER CO.			NO VISUAL	HUB 57.83	44.41	N/A	N/A	562926.018	559290.632			X				X	WATER/MUD
2 4-19-10	14" HDPE PIPE WATER	ARTESIAN WATER CO.			NO VISUAL	HUB 57.89	41.92	N/A	N/A	562929.748	559289.024			X				X	WATER/MUD
3 4-19-10	24" HDPE PIPE WATER	ARTESIAN WATER CO.			NO VISUAL	HUB 58.11	40.99	N/A	N/A	562934.971	559289.655			X				X	WATER/MUD
4 4-22-10	24" HDPE PIPE W/TRACER WATER	ARTESIAN WATER CO.			NO VISUAL	HUB 54.65	38.61	N/A	N/A	562980.596	559515.136			X				X	WATER
5 4-23-10	NO UTILITY FOUND LOOKING FOR WATER SEE NOTE #2	ARTESIAN WATER CO.			NO VISUAL	HUB 54.49	N/A	N/A	N/A	562982.903	559514.110			X				X	VERY WET CLAY

NOTES:
1.) COULD NOT VERIFY PIPE SIZES AND MATERIAL DUE TO WATER AND MUD, QUALITY LEVEL "D" REPORTED.
2.) TEST HOLE #5 EXCAVATED TO 19' AND PROBED TO 23'. WET CLAY ENCOUNTERED AT 15'. EXCAVATION TERMINATED.

Checked By: WSR
Date: 04/28/10

CERTIFICATION OF WORK

I, WILLIAM S. RICHARDSON, P.L.S. CERTIFY THAT THE SUB SURFACE UTILITIES ON CAD FILE 40001I_UTL.DGN, WERE LOCATED BY VACUUM EXCAVATION, SURVEYED AND MAPPED TO PROJECT REQUIREMENTS DURING 04/19/10 THRU 04/23/10 BY UNDERGROUND SERVICES, INC. DESIGNATED UTILITIES MEET QUALITY LEVEL "B" STANDARDS UNLESS OTHERWISE NOTED. SIZE, MATERIAL, TYPE SHOWN ON DESIGNATED UTILITIES ARE FROM BEST AVAILABLE RECORDS (QUALITY LEVEL "D").

WILLIAM S. RICHARDSON, P.L.S.

NOTES: UNABLE TO LOCATE WATER LINES CLOSER TO GUTHRIE RUN DUE TO HEAVY UNDERBRUSH.

*SUE QUALITY LEVEL STANDARD DEFINITIONS:

QL "A" - PRECISE HORIZONTAL AND VERTICAL LOCATION OF UTILITIES OBTAINED BY THE ACTUAL EXPOSURE AND VERIFICATION OF PREVIOUSLY EXPOSED AND SURVEYED UTILITIES AND SUBSEQUENT MEASUREMENT OF SUBSURFACE UTILITIES, USUALLY AT A SPECIFIC POINT. (TEST HOLES USING MANUALLY INTRUSIVE EXCAVATION EQUIPMENT).

QL "B" - INFORMATION OBTAINED THROUGH THE APPLICATION OF APPROPRIATE SURFACE GEOPHYSICAL METHODS TO DETERMINE THE EXISTENCE AND APPROXIMATE HORIZONTAL POSITION OF SUBSURFACE UTILITIES.

QL "C" - INFORMATION OBTAINED BY SURVEYING AND PLOTTING VISIBLE ABOVE-GROUND UTILITY FEATURES AND BY USING PROFESSIONAL JUDGMENT IN CORRELATING THIS INFORMATION TO QUALITY LEVEL "D" INFORMATION.

QL "D" - INFORMATION DERIVED FROM EXISTING RECORDS OR ORAL RECOLLECTIONS.

NOTE:
UNDERGROUND SERVICES, INC. HAS EXPOSED ITS BEST PROFESSIONAL EXPERTISE AND GEOPHYSICAL PROSPECTING TECHNIQUES TO DESIGNATE SUBSURFACE UTILITIES.

UNDERGROUND SERVICES, INC. DOES NOT GUARANTEE THAT UTILITIES MARKED CONSTITUTE ALL UTILITIES WITHIN THE PROJECT AREA.

DESIGNATED UTILITIES MEET QUALITY LEVEL "B" STANDARDS UNLESS OTHERWISE NOTED. SIZE, MATERIAL, TYPE SHOWN ON DESIGNATED UTILITIES INDICATE QUALITY LEVEL "D" INFORMATION.

PLAN OF UTILITY
LOCATIONS AND DESIGNATION
DELDOT
BR I-366
ON N399 CHESAPEAKE CITY RD.
OVER GUTHRIE RUN
NEW CASTLE COUNTY - DELAWARE

SoftDig.
Corporate Offices - West Chester, PA

SCALE : 1" = 30'	DATE : 04/28/10
PREPARED BY : DV	DRAWING NAME: 40001I_UTL.DGN
PROJ NO.: 400010 & 40001	SHEET 1 OF 1

Y:\NEWCASTL\399\BRIDGE\T201007102\PLANS\CP01.DGN

DELAWARE
DEPARTMENT OF TRANSPORTATION

ADDENDUMS / REVISIONS

BR 1-366
ON N399 CHESAPEAKE CITY ROAD
OVER GUTHRIE RUN

CONTRACT	BRIDGE NO. 1-366
T201007102	DESIGNED BY: PAM
COUNTY	CHECKED BY: BB
NEW CASTLE	

UTILITY DESIGNATION

SHEET NO. 18
TOTAL SHTS. 22

UNOFFICIAL WEB SITE COPY

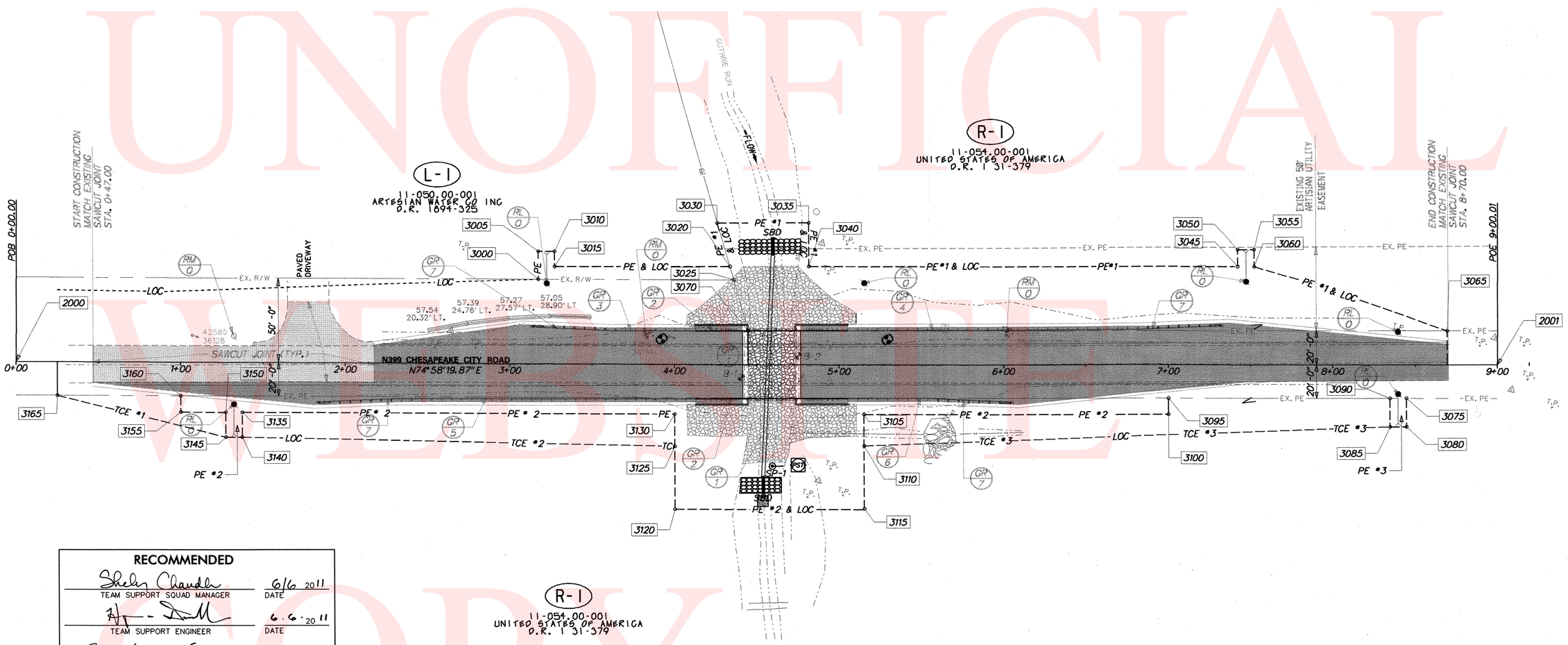

RECOMMENDED

Shelby Chandler — 6/6 2011
TEAM SUPPORT SQUAD MANAGER — DATE

6.6.2011
TEAM SUPPORT ENGINEER — DATE

Robert B. McKenna — 6/6 2011
ASSISTANT DIRECTOR, DESIGN — DATE

"AS-ACQUIRED" PLANS

I Certify that all proposed Right-of-Way has been acquired in the name of THE STATE OF DELAWARE and that these plans accurately depict the nature and extent of THE REAL ESTATE SECTION acquisition under this project.

CHIEF, REAL ESTATE — DATE 20

R/W SHEET 1 OF 3

8/11/2011 t201007102

Y:\NEWCASTL\399\BRIDGE\T201007102\PLANS\CP01.DGN

DELAWARE DEPARTMENT OF TRANSPORTATION	ADDENDUMS / REVISIONS	SCALE 0 30 60 90 FEET	BR 1-366 ON N399 CHESAPEAKE CITY ROAD OVER GUTHRIE RUN	CONTRACT T201007102	BRIDGE NO. 1-366	RIGHT-OF-WAY PLAN	SHEET NO. 19
				COUNTY NEW CASTLE	DESIGNED BY: PAM		TOTAL SHTS. 22
					CHECKED BY:		

ASSESSMENT NUMBER	OWNERSHIP OF RECORD	TYPE OF ACQUISITION	TITLE SOURCE	PARCEL AREA (ACRES)
11-054.00-001	(R-1) UNITED STATES OF AMERICA	TCE-3	D.R. I 31-379	145.500

ALIGNMENT NUMBER & DESCRIPTION: 3000 - R/W & CONSTRUCTION BASELINE

PT. NO.	ALIGN. NO.	STATION	OFFSET *	NORTH	EAST
3105	3000	5+15.00	30.00	562915.3577	559496.0129
3100	3000	7+00.00	30.00	562963.3260	559674.6859
3095	3000	7+00.00	20.00	562972.9840	559672.0930
3090	3000	8+34.70	20.00	563007.9101	559802.1863
3085	3000	8+34.70	37.50	562991.0086	559806.7238
3110	3000	5+15.00	49.00	562897.0075	559500.9393
3105	3000	5+15.00	30.00	562915.3577	559496.0129

BEARING	DISTANCE	CHORD BEARING	CHORD LENGTH	ARC LENGTH	RADIUS **
N 74°58'19.87" E	185.0000				
N 15°01'40.13" W	10.0000				
N 74°58'19.87" E	134.7000				
S 15°01'40.13" E	17.5000				
S 72°54'43.47" W	319.9068				
N 15°01'40.13" W	19.0000				

FIGURE 8060 AREA = 5583.0250 SQ. FT. (0.1282 ACRES)

ASSESSMENT NUMBER	OWNERSHIP OF RECORD	TYPE OF ACQUISITION	TITLE SOURCE	PARCEL AREA (ACRES)
11-054.00-001	(R-1) UNITED STATES OF AMERICA	TCE-2	D.R. I 31-379	145.500

ALIGNMENT NUMBER & DESCRIPTION: 3000 - R/W & CONSTRUCTION BASELINE

PT. NO.	ALIGN. NO.	STATION	OFFSET *	NORTH	EAST
3135	3000	1+37.50	30.00	562817.4765	559131.4233
3130	3000	4+00.00	30.00	562885.5396	559384.9458
3125	3000	4+00.00	49.00	562867.1894	559389.8723
3140	3000	1+37.50	45.00	562802.9895	559135.3126
3135	3000	1+37.50	30.00	562817.4765	559131.4233

BEARING	DISTANCE	CHORD BEARING	CHORD LENGTH	ARC LENGTH	RADIUS **
N 74°58'19.87" E	262.5000				
S 15°01'40.13" E	19.0000				
S 75°50'42.71" W	262.5305				
N 15°01'40.13" W	15.0000				

FIGURE 8050 AREA = 4462.5000 SQ. FT. (0.1024 ACRES)

ASSESSMENT NUMBER	OWNERSHIP OF RECORD	TYPE OF ACQUISITION	TITLE SOURCE	PARCEL AREA (ACRES)
11-054.00-001	(R-1) UNITED STATES OF AMERICA	TCE-1	D.R. I 31-379	145.500

ALIGNMENT NUMBER & DESCRIPTION: 3000 - R/W & CONSTRUCTION BASELINE

PT. NO.	ALIGN. NO.	STATION	OFFSET *	NORTH	EAST
3165	3000	0+25.00	20.00	562797.9646	559020.1779
3160	3000	1+00.00	20.00	562817.4112	559092.6129
3155	3000	1+00.00	30.00	562807.7532	559095.2058
3150	3000	1+27.50	30.00	562814.8836	559121.7653
3145	3000	1+27.50	45.00	562800.3966	559125.6546
3165	3000	0+25.00	20.00	562797.9646	559020.1779

BEARING	DISTANCE	CHORD BEARING	CHORD LENGTH	ARC LENGTH	RADIUS **
N 74°58'19.87" E	75.0000				
S 15°01'40.13" E	10.0000				
N 74°58'19.87" E	27.5000				
S 15°01'40.13" E	15.0000				
S 88°40'44.93" W	105.5047				

FIGURE 8040 AREA = 1006.2500 SQ. FT. (0.0231 ACRES)

ASSESSMENT NUMBER	OWNERSHIP OF RECORD	TYPE OF ACQUISITION	TITLE SOURCE	PARCEL AREA (ACRES)
11-054.00-001	(R-1) UNITED STATES OF AMERICA	P/E-3	D.R. I 31-379	145.500

ALIGNMENT NUMBER & DESCRIPTION: 3000 - R/W & CONSTRUCTION BASELINE

PT. NO.	ALIGN. NO.	STATION	OFFSET *	NORTH	EAST
3090	3000	8+34.70	20.00	563007.9101	559802.1863
3075	3000	8+44.70	20.00	563010.5030	559811.8443
3080	3000	8+44.70	37.50	562993.6015	559816.3818
3085	3000	8+34.70	37.50	562991.0086	559806.7238
3090	3000	8+34.70	20.00	563007.9101	559802.1863

BEARING	DISTANCE	CHORD BEARING	CHORD LENGTH	ARC LENGTH	RADIUS **
N 74°58'19.87" E	10.0000				
S 15°01'40.13" E	17.5000				
S 74°58'19.87" W	10.0000				
N 15°01'40.13" W	17.5000				

FIGURE 8030 AREA = 175.0000 SQ. FT. (0.0040 ACRES)

ASSESSMENT NUMBER	OWNERSHIP OF RECORD	TYPE OF ACQUISITION	TITLE SOURCE	PARCEL AREA (ACRES)
11-054.00-001	(R-1) UNITED STATES OF AMERICA	P/E-2	D.R. I 31-379	145.500

ALIGNMENT NUMBER & DESCRIPTION: 3000 - R/W & CONSTRUCTION BASELINE

PT. NO.	ALIGN. NO.	STATION	OFFSET *	NORTH	EAST
3160	3000	1+00.00	20.00	562817.4112	559092.6129
3095	3000	7+00.00	20.00	562972.9840	559672.0930
3100	3000	7+00.00	30.00	562963.3260	559674.6859
3105	3000	5+15.00	30.00	562915.3577	559496.0129
3115	3000	5+15.00	88.50	562858.8584	559511.1812
3120	3000	4+00.00	88.50	562829.0403	559400.1142
3130	3000	4+00.00	30.00	562885.5396	559384.9458
3135	3000	1+37.50	30.00	562817.4765	559131.4233
3140	3000	1+37.50	45.00	562802.9895	559135.3126
3145	3000	1+27.50	45.00	562800.3966	559125.6546
3150	3000	1+27.50	30.00	562814.8836	559121.7653
3155	3000	1+00.00	30.00	562807.7532	559095.2058
3160	3000	1+00.00	20.00	562817.4112	559092.6129

BEARING	DISTANCE	CHORD BEARING	CHORD LENGTH	ARC LENGTH	RADIUS **
N 74°58'19.87" E	600.0000				
S 15°01'40.13" E	10.0000				
S 74°58'19.87" W	185.0000				
S 15°01'40.13" E	58.5000				
S 74°58'19.87" W	115.0000				
N 15°01'40.13" W	58.5000				
S 74°58'19.87" W	262.5000				
S 15°01'40.13" E	15.0000				
S 74°58'19.87" W	10.0000				
N 15°01'40.13" W	15.0000				
S 74°58'19.87" W	27.5000				
N 15°01'40.13" W	10.0000				

FIGURE 8020 AREA = 12877.5000 SQ. FT. (0.2956 ACRES)

ASSESSMENT NUMBER	OWNERSHIP OF RECORD	TYPE OF ACQUISITION	TITLE SOURCE	PARCEL AREA (ACRES)
11-054.00-001	(R-1) UNITED STATES OF AMERICA	P/E-1	D.R. I 31-379	145.500

ALIGNMENT NUMBER & DESCRIPTION: 3000 - R/W & CONSTRUCTION BASELINE

PT. NO.	ALIGN. NO.	STATION	OFFSET *	NORTH	EAST
3070	3000	4+44.72	-20.00	562945.4250	559415.1720
3030	3000	4+26.34	-85.50	563003.9192	559380.4373
3035	3000	4+82.00	-85.50	563018.3511	559434.1937
3040	3000	4+82.00	-58.00	562991.7916	559441.3241
3045	3000	7+42.50	-58.00	563059.3361	559692.9150
3050	3000	7+42.50	-69.00	563069.9599	559690.0629
3055	3000	7+52.50	-69.00	563072.5528	559699.7209
3060	3000	7+52.50	-58.00	563061.9290	559702.5730
3065	3000	8+69.60	-20.00	563055.5912	559825.5212
3070	3000	4+44.72	-20.00	562945.4250	559415.1720

BEARING	DISTANCE	CHORD BEARING	CHORD LENGTH	ARC LENGTH	RADIUS **
N 30°42'09.01" W	68.0300				
N 74°58'19.87" E	55.6600				
S 15°01'40.13" E	27.5000				
N 74°58'19.87" E	260.5000				
N 15°01'40.13" W	11.0000				
N 74°58'19.87" E	10.0000				
S 15°01'40.13" E	11.0000				
S 87°02'56.77" E	123.1114				
S 74°58'19.87" W	424.8800				

FIGURE 8010 AREA = 15657.6850 SQ. FT. (0.3595 ACRES)

ASSESSMENT NUMBER	OWNERSHIP OF RECORD	TYPE OF ACQUISITION	TITLE SOURCE	PARCEL AREA (ACRES)
11-050.00-001	(L-1) ARTESIAN WATER CO. INC	P/E	D.R. 1894-325	46.750

ALIGNMENT NUMBER & DESCRIPTION: 3000 - R/W & CONSTRUCTION BASELINE

PT. NO.	ALIGN. NO.	STATION	OFFSET *	NORTH	EAST
3000	3000	3+17.50	-50.00	562941.4124	559284.5243
3005	3000	3+17.50	-67.50	562958.3139	559279.9868
3010	3000	3+27.50	-67.50	562960.9067	559289.6448
3015	3000	3+27.50	-58.00	562951.7316	559292.1080
3020	3000	4+34.00	-58.00	562979.3458	559394.9657
3025	3000	4+36.09	-50.00	562972.1612	559399.0580
3000	3000	3+17.50	-50.00	562941.4124	559284.5243

BEARING	DISTANCE	CHORD BEARING	CHORD LENGTH	ARC LENGTH	RADIUS **
N 15°01'40.13" W	17.5000				
N 74°58'19.87" E	10.0000				
S 15°01'40.13" E	9.5000				
N 74°58'19.87" E	106.5000				
S 29°39'56.68" E	8.2684				
S 74°58'19.87" W	118.5895				

FIGURE 8000 AREA = 1035.3580 SQ. FT. (0.0238 ACRES)

LEGEND

FEE	AREA OF ACQUISITION
R/W	AREA OCCUPIED BY EXISTING R/W
P/E	PERMANENT EASEMENT
TCE	TEMPORARY CONSTRUCTION EASEMENT
*	"-" OFFSET IS LEFT OF BASELINE
**	"-" CURVE TURNS TO THE LEFT

UNOFFICIAL WITNESS COPY

Y:\NEWCASTL\399\BRIDGE\T201007102\PLANS\GRS-IBS\RB01.DGN

DELAWARE DEPARTMENT OF TRANSPORTATION

ADDENDUMS / REVISIONS

BR 1-366 ON N399 CHESAPEAKE CITY ROAD OVER GUTHRIE RUN

CONTRACT	BRIDGE NO.	1-366
T201007102	DESIGNED BY: PAM	
COUNTY		
NEW CASTLE	CHECKED BY: BB	

RIGHT-OF-WAY DATA SHEET

SHEET NO. 20

TOTAL SHTS. 22

COUNTY ASSESSMENT PARCEL NUMBER	PLAN SHEET NUMBER	OWNERSHIP OF RECORD	TITLE SOURCE	PROPERTY AREA BEFORE ACQUISITION (ACRE) D=DEED C=CALCULATED A=ASSESMENT	ACQUISTITION CODE FEE, R/W, P/E, TCE	AREA TO BE ACQUIRED				PROPERTY AREA REMAINING (SQ. FEET /ACRES)	DEED RECORD OF ACQUISTITION	REMARKS
						ACQUISITION (SQ. FEET /ACRES)	AREA OCCUPIED BY EXISTING RIGHT OF WAY (SQ. FEET /ACRES)	EASEMENT				
								PERMANENT (SQ. FEET /ACRES)	TEMPORARY (SQ. FEET /ACRES)			
11-054.00-001	-	(R-1) UNITED STATES OF AMERICA	D.R. I 31-379	D - 145.50	TCE-3				5583.025 / 0.13			
					TCE-2				4462.50 / 0.10			
					TCE-1				1006.25 / 0.02			
					P/E-3			175.00 / 0.00				
					P/E-2			12877.50 / 0.30				
					P/E-1			15657.685 / 0.36		6337980.00 / 145.50		
11-050.00-001	-	(L-1) ARTESIAN WATER CO. INC	D.R.1894-325	D - 46.75	P/E			1035.358 / 0.02		2036430.00 / 46.75		

UNOFFICIAL WEBSITE COPY

ACQUISTITION CODES

FEE - ACQUISITION
R/W - AREA OCCUPIED BY EXISTING R/W
P/E - PERMANENT EASEMENT
TCE - TEMPORARY EASEMENT

DELAWARE DEPARTMENT OF TRANSPORTATION

ADDENDUMS / REVISIONS

BR 1-366 ON N399 CHESAPEAKE CITY ROAD OVER GUTHRIE RUN

CONTRACT	BRIDGE NO.	1-366
T2010-071-02	DESIGNED BY: PAM	
COUNTY		
NEW CASTLE	CHECKED BY: BB	

RIGHT-OF-WAY TABULATION SHEET

SHEET NO. 21
TOTAL SHTS. 22

Y:\NEWCASTL\399\BRIDGE\T201007102\PLANS\GRS-IBS\RT01.DGN

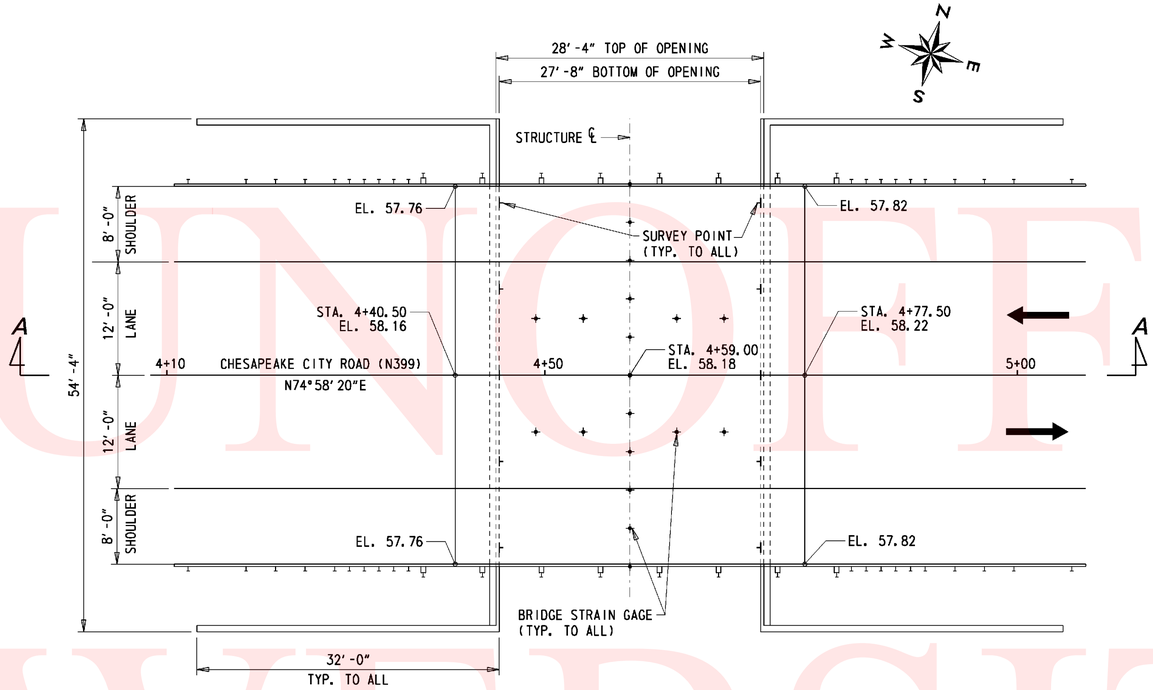

GAGE PLACEMENT PLAN

1/8" = 1'-0"

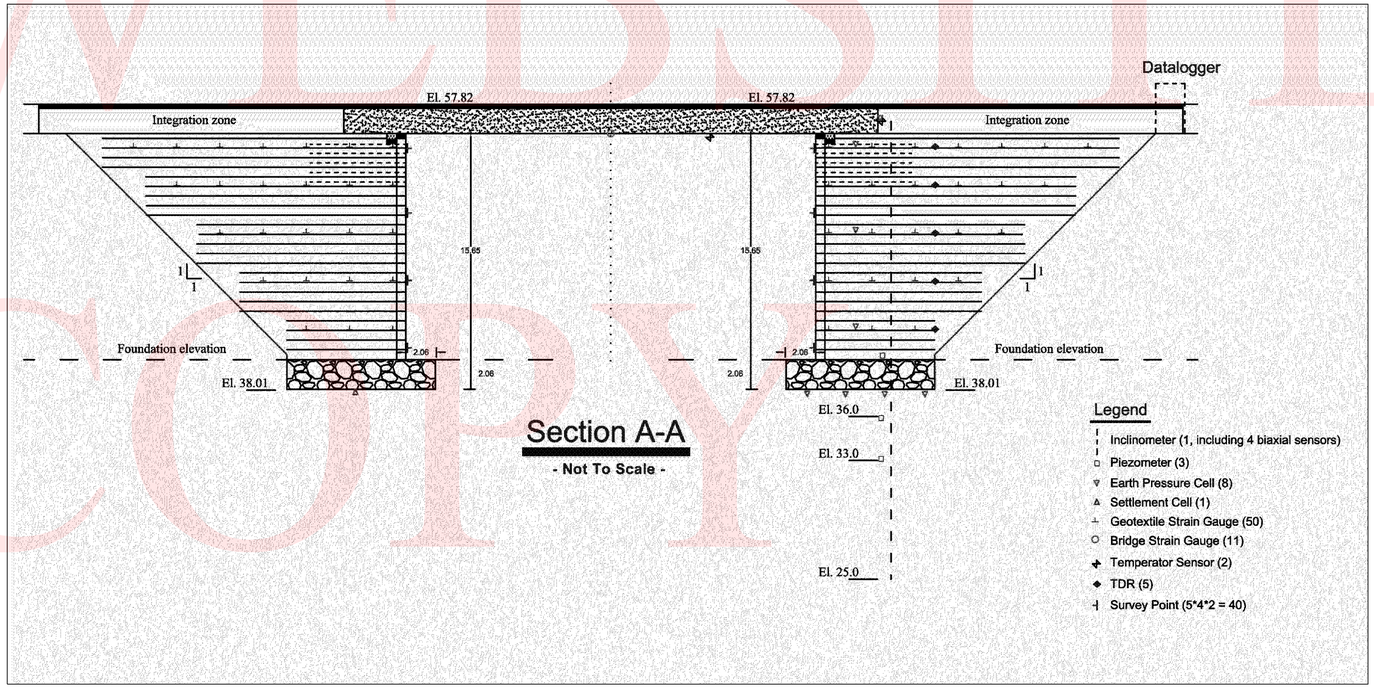

UNOFFICIAL WEBSITE COPY

DELAWARE DEPARTMENT OF TRANSPORTATION	ADDENDUMS / REVISIONS	NOT TO SCALE	BR. 1-366 ON N399 CHESAPEAKE CITY ROAD OVER GUTHRIE RUN	CONTRACT T201007102	BRIDGE NO. 1-366	ABUTMENTS INSTRUMENTATION	SHEET NO. 22
				COUNTY NEW CASTLE	DESIGNED BY: PAM		TOTAL SHTS. 22
					CHECKED BY: BB		

Y:\NEWCASTL\399\BRIDGE\T201007102\PLANS\GAGE_PLAN.DGN