FINAL CONSTRUCTION PLANS

THE STATE OF DELAWARE
DEPARTMENT OF TRANSPORTATION

U.S. CUSTOMARY UNITS

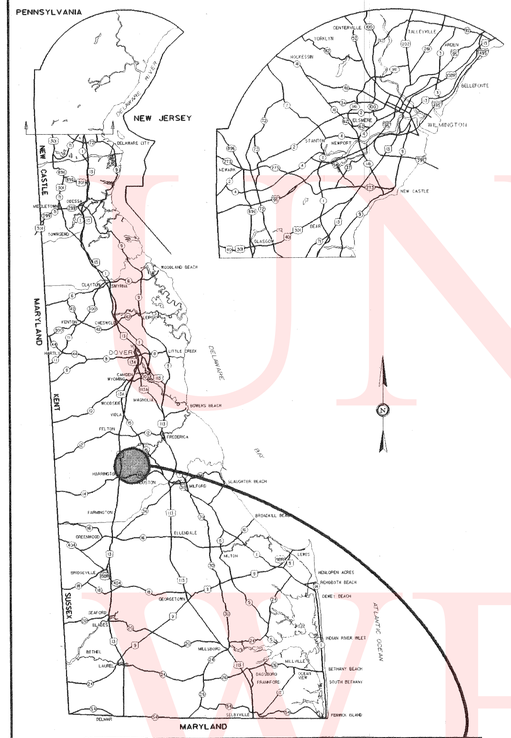

GENERAL LOCATION OF CONTRACT

CONSTRUCTION PLANS FOR:

BR 2-429A ON K429, JACKSON DITCH ROAD, OVER BROWNS BRANCH

CONTRACT NUMBER: T201007204

FEDERAL AID PROJECT NUMBER: EBROS-K429(1)

COUNTY: KENT M.R. #: 429

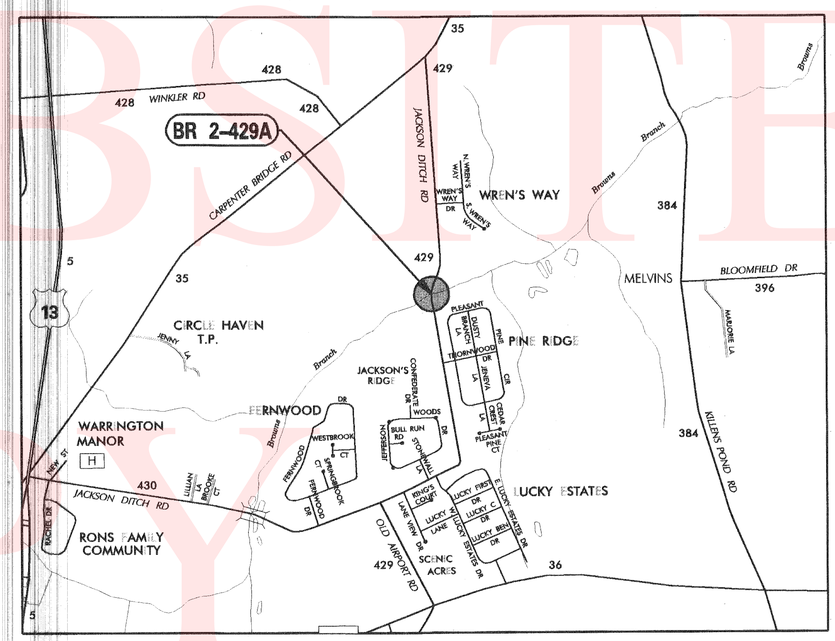

PREPARED BY THE CONSULTING FIRM OF

SEAL

RECOMMENDED DATE

RECOMMENDED

SQUAD MANAGER, CONSTRUCTION — DATE 10/25/11

GROUP ENGINEER, CONSTRUCTION — DATE 10/25/11

ASSISTANT DIRECTOR, TRANSPORTATION SOLUTIONS (CONSTRUCTION) — DATE

DESIGN DESIGNATION

FUNCTIONAL CLASS: LOCAL		D.H.V. PROJECTED: YEAR:
TYPE OF CONSTRUCTION: BRIDGE REPLACEMENT		DESIGN SPEED: 50 M.P.H.
A.A.D.T. CURRENT: 509	YEAR: 2008	TRUCKS: %
A.A.D.T. PROJECTED:	YEAR:	DIRECTION OF DISTRIBUTION: %

INDEX OF SHEETS

SHEET Nº	TABLE OF CONTENTS
1	TITLE SHEET
2	SYMBOLS LEGEND
3	GENERAL NOTES
4	HORIZONTAL & VERTICAL CONTROL
5	TYPICAL SECTION
6	CONSTRUCTION PLAN
7	PROFILE
8	BRIDGE PLAN, SECTION, & ELEVATION
9	BRIDGE DETAILS
10	ENVIRONMENTAL COMPLIANCE PLAN
11	CONSTRUCTION SEQUENCE, M.O.T., & E&S
12	UTILITY PLAN
13	RIGHT-OF-WAY PLAN
14	RIGHT-OF-WAY DATA SHEET
15	RIGHT-OF-WAY TABULATION SHEET
16	DETOUR PLAN

TOTAL SHEETS: 16

APPROVED DESIGN EXCEPTIONS

DESIGN PARAMETER	REQUIRED	PROVIDED	DATE

ADDENDA & REVISIONS

DESCRIPTION	NAME & DATE

ASSOCIATED CONTRACTS

CONTRACT NO.	CONTRACT NAME
1870	
64-01-070	

RECOMMENDED — STORMWATER ENGINEER — DATE 26 OCT 2011 — SEAL

RECOMMENDED — SQUAD MANAGER, TRANSPORTATION SOLUTIONS (PROJECT DEVELOPMENT OR BRIDGE DESIGN) — DATE 10.26.2011 — SEAL

RECOMMENDED — BRIDGE DESIGN ENGINEER (Acting) — DATE 10/26/11 — SEAL

RECOMMENDED — GROUP ENGINEER, PROJECT DEVELOPMENT — DATE — SEAL

RECOMMENDED — ASSISTANT DIRECTOR, TRANSPORTATION SOLUTIONS — DATE 10.26.11 — SEAL

APPROVED — CHIEF ENGINEER — DATE 10-27-11 — SEAL

UNOFFICIAL WEBSITE COPY

LAST REVISED: 8/7/2008
DOCUMENT: 429-BRIDGE-T201007204-PLANS-TC.DGN

EXISTING SYMBOLS

DRAINAGE	
	DITCH OR STREAM CENTERLINE
	DIRECTIONAL STREAM FLOW ARROW
C.B.	DRAINAGE CATCH BASIN
J.B.	DRAINAGE JUNCTION BOX
D	DRAINAGE MANHOLE
SIZE/TYPE LABEL	DRAINAGE PIPE AND FLOW ARROW
	DRAINAGE PIPE HEADWALL
	RIPRAP - AREA FEATURE
	RIPRAP - LINEAR FEATURE

MANMADE ROADSIDE FEATURES	
(TYPE LABEL)	CURB
(TYPE LABEL)	CURB AND GUTTER
	FENCE - CHAINLINK OR STRANDED
	FENCE - STOCKADE OR SPLIT RAIL
FP	FLAG POLE
	GUARDRAIL - STEEL BEAM
	GUARDRAIL - WIRE ROPE
LAMP	LAMP AND POST - RESIDENTIAL
MB	MAILBOX
PM	PARKING METER AND POST
	PAVEMENT - FLEXIBLE
	PAVEMENT - RIGID
	PILE - BRIDGE
	PILLAR OR MISCELLANEOUS POST
	TRAFFIC SIGN AND POST
	WALL - BRICK OR BLOCK
	WALL - STONE

NATURAL ROADSIDE FEATURES	
	GRASS LAWN
	HEDGEROW OR THICKET
	MARSH BOUNDARY LINE
	TREE - CONIFEROUS
	TREE - DECIDUOUS
	TREE STUMP
	SHRUBBERY
WL	DELINEATED WETLAND BOUNDARY LINE
	WOODS LINE BOUNDARY

SURVEY CONTROL & MONUMENTATION	
B.M.	SURVEY BENCHMARK LOCATION
T.P.	SURVEY TIE POINT LOCATION
	SURVEY TRAVERSE POINT
	POINT OF CURVATURE OR TANGENCY
	POINT OF INTERSECTING TANGENTS
C.M.	PROPERTY MARKER - CONCRETE MON.
I.P.	PROPERTY MARKER - IRON PIPE

UTILITY	
	SOIL BORING LOCATION
	UTILITY TEST HOLE LOCATION
TV	CABLE TV DISTRIBUTION BOX
E	ELECTRIC MANHOLE
E	ELECTRIC TRANSFORMER
	POLE MOUNTED LUMINAIRE
G	GAS MANHOLE
G.M.	GAS METER
G.V.	GAS VALVE
G.P.	GAS PUMP - SERVICE STATION
	RAILROAD TRACKS
S	SANITARY SEWER MANHOLE
S.V.	SANITARY SEWER VALVE
VENT	SANITARY SEWER VENT OR CLEANOUT
S.D.F.	SEPTIC DRAIN FIELD
B	TELEPHONE BOOTH
T	TELEPHONE MANHOLE
T	TELEPHONE TEST POINT
J.W.	TRAFFIC - CONDUIT JUNCTION WELL
	TRAFFIC - LIGHT POLE AND BASE
	TRAFFIC - PEDESTRIAN POLE & BASE
	TRAFFIC - SIGNAL CABINET & BASE
	TRAFFIC - SIGNAL POLE AND BASE
U	UTILITY BOX
	UTILITY POLE GUY WIRE ANCHOR
	UTILITY POLE
F.H.	WATER - FIRE HYDRANT
W.M.	WATER METER
W.V.	WATER VALVE
WELL	WELL HEAD

UTILITY COMPANY FACILITIES	
VER-C	EXISTING BURIED CABLE (VERIZON)

PROPOSED SYMBOLS

CONSTRUCTION	
	CONCRETE SAFETY BARRIER - PERMANENT
BFS	BIOFILTRATION SWALE
	BUTT JOINT
100+00	CONSTRUCTION BASELINE
	CURB, TYPE 1 & TYPE 3
	CURB, TYPE 2
	CURB & GUTTER, TYPE 1
	CURB & GUTTER, TYPE 2
	CURB & GUTTER, TYPE 3
	CURB & GUTTER, TYPE 4
CZ	CLEAR ZONE
	DRAINAGE INLET
	DITCH
	FENCE - METAL
	FENCE - WOOD
	FLARED END SECTION
	GUARDRAIL, TYPES 1 & 3
	GUARDRAIL, TYPE 2
	GUARDRAIL END TREATMENT - PARALLEL
	GUARDRAIL END TREATMENT - PARABOLIC
HC	HORIZONTAL CLEARANCE
	JUNCTION BOX - DRAINAGE
LOC	LIMIT OF CONSTRUCTION
	MANHOLE
	PAVEMENT PATCH
	PIPE & DIRECTIONAL FLOW ARROW
	RIPRAP
	P.C.C. SIDEWALK @ 4"
	P.C.C. SIDEWALK @ 6"
	UNDERDRAIN
	UNDERDRAIN OUTLET

CONSTRUCTION PHASING SYMBOLS	
	BARRICADE, TYPE 3
	CONCRETE SAFETY BARRIER - PORTABLE
	CONSTRUCTION WARNING SIGN LOCATION
END ROAD WORK	CONSTRUCTION WARNING SIGN
	CRASH CUSHION ARRAY
	DRUM - TRAFFIC CONTROL
	PHASING TRAFFIC FLOW ARROW

LANDSCAPING	
	SHRUBBERY
	CONIFEROUS TREE
	DECIDUOUS TREE

EROSION & SEDIMENT CONTROL	
DWB	DEWATERING BASIN
	EROSION CONTROL BLANKET
ED	EARTH DIKE
	INLET SEDIMENT CONTROL
	PERIMETER DIKE/SWALE
PST	PORTABLE SEDIMENT TANK
RSF	REINFORCED SILT FENCE
SBD	SANDBAG DIKE
SB	SANDBAG DIVERSION
	STONE CHECK DAM
SCE	STABILIZED CONSTRUCTION ENTRANCE
SF	SILT FENCE
SP-1	SUMP PIT, TYPE 1
SP-2	SUMP PIT, TYPE 2
ST	SEDIMENT TRAP
ST	SEDIMENT TRAP WITH INLET AS OUTLET
ST	SEDIMENT TRAP PIPE OUTLET
SW	STILLING WELL
	TEMPORARY SWALE
TSD	TEMPORARY SLOPE DRAIN

IDENTIFIERS	
A/C	ADJUST BY CONTRACTOR
A/O	ADJUST BY OTHERS
B	CONCRETE SAFETY BARRIER
C	CURB OR CURB & GUTTER
C/JB	CONVERT TO JUNCTION BOX
C/MH	CONVERT TO DRAINAGE MANHOLE
C/O	CURB OPENING
CR	CURB RAMP / TYPE
CR-W	CURB RAMP / TYPE - WITHOUT SIDEWALK SURFACE DETECTABLE WARNING SYSTEM
DI	DRAINAGE INLET
DND	DO NOT DISTURB
FES	FLARED END SECTION
FS	FILTRATION STRUCTURE
GR	GUARDRAIL
JB	JUNCTION BOX
LS	LANDSCAPE PLANTINGS
MH	MANHOLE
M	MONUMENT - RIGHT-OF-WAY
P	PIPE
RL/C	RELOCATE BY CONTRACTOR
RL/O	RELOCATE BY OTHERS
RM/C	REMOVE BY CONTRACTOR
RM/O	REMOVE BY OTHERS
ST	SEDIMENT TRAP
SF	SILT FENCE
UD	UNDERDRAIN

PAVEMENT SECTION(S)	
	OVERLAY PAVEMENT - SEE TYPICAL SECTIONS FOR MATERIALS AND DEPTHS
	RECONSTRUCTED PAVEMENT - SEE TYPICAL SECTIONS FOR MATERIALS AND DEPTHS
	DRIVEWAY AND ENTRANCE PAVEMENT - SEE TYPICAL SECTIONS FOR MATERIALS AND DEPTHS

RIGHT-OF-WAY SYMBOLS	
	PROPOSED RIGHT-OF-WAY MONUMENT
	EXISTING PROPERTY LINE
EASEMENT TYPE	EXISTING EASEMENT
	EXISTING RIGHT-OF-WAY
DA	PROPOSED DENIAL OF ACCESS
PE	PROPOSED PERMANENT EASEMENT
R/W	PROPOSED RIGHT-OF-WAY
R/W-DA	PROPOSED R/W & DENIAL OF ACCESS
TCE	TEMPORARY CONSTRUCTION EASEMENT
100+00	PROPOSED RIGHT-OF-WAY BASELINE
100+00	HISTORIC RIGHT-OF-WAY BASELINE

TRAFFIC	
ITMS-CON	ITMS CONDUIT
SIG-CON	SIGNAL CONDUIT
	CONDUIT JUNCTION WELL
	LUMINAIRE
	PAVEMENT MARKINGS
	PAVEMENT STRIPING
	TRAFFIC SIGN

UNOFFICIAL WEBSITE COPY

LAST REVISED: 3/12/2008
Y:\KENT\429\BRIDGE\T201007204\PLANS\LG.DGN

DELAWARE DEPARTMENT OF TRANSPORTATION

ADDENDUMS / REVISIONS

NOT TO SCALE

BR 2-249A ON K429, JACKSON DITCH ROAD, OVER BROWNS BRANCH

CONTRACT	BRIDGE NO.	2-429A
T201007204	DESIGNED BY: JKM	
COUNTY		
KENT	CHECKED BY: BAB	

LEGEND

SHEET NO. 2
TOTAL SHTS. 16

GENERAL NOTES

1. THIS PROJECT IS TO BE CONSTRUCTED IN ACCORDANCE WITH THE DELAWARE DEPARTMENT OF TRANSPORTATION "STANDARD SPECIFICATIONS", DATED AUGUST 2001 AND THE DELAWARE DEPARTMENT OF TRANSPORTATION "STANDARD CONSTRUCTION DETAILS", DATED 2001, INCLUDING ALL REVISIONS UP TO THE DATE OF ADVERTISEMENT.

2. THE CONTRACTOR SHALL GIVE TWO (2) WEEKS NOTICE TO THE PROPERTY OWNER WHEN ANY FIXTURE, SHRUB OR OTHER OBJECT MUST BE REMOVED FROM THE RIGHT OF WAY OR EASEMENT AREA. IF THE OWNER HAS NOT ATTEMPTED TO SALVAGE THIS PROPERTY, THE CONTRACTOR SHALL REMOVE IT WITHOUT OBLIGATION. COMPENSATION SHALL BE INCIDENTAL TO THE CONTRACT.

3. THE ENDS OF ALL CURBS SHALL BE DEPRESSED FLUSH WITH THE PAVEMENT AT A RATIO OF TWELVE TO ONE (12:1) UNLESS OTHERWISE DIRECTED BY THE ENGINEER.

4. THE CONTRACTOR SHALL PROVIDE AND INSTALL PVC SLEEVES (4" INSIDE MINIMUM DIAMETER, 6" INSIDE MAXIMUM DIAMETER) IN PROPOSED CONCRETE SIDEWALKS, ISLANDS, AND MEDIANS FOR FUTURE TRAFFIC SIGN POSTS AS DIRECTED BY THE ENGINEER. THE LOWER END OF THE SLEEVE SHALL SIT ON THE TOP OF THE SUBBASE MATERIAL. THE COST SHALL BE INCIDENTAL TO THE CONTRACT.

5. STAGING AREAS - PROPER EROSION AND SEDIMENT CONTROL MEASURES AS DETERMINED BY THE ENGINEER SHALL BE INSTALLED IN ALL STAGING AREAS. ALL AREAS USED BY THE CONTRACTOR FOR STAGING OPERATIONS SHALL BE FULLY RESTORED BY THE CONTRACTOR UPON COMPLETION OF THE CONTRACT. IF THE STAGING AREA IS PAVED, IT SHALL BE RESTORED TO ITS ORIGINAL CONDITION. IF THE AREA IS UNPAVED, IT SHALL BE RE-GRADED, TOPSOILED, SEEDED AND MULCHED IN ACCORDANCE WITH DELAWARE STANDARD SPECIFICATIONS 732, 734 AND 735, FOR TOPSOIL, SEED AND MULCH RESPECTIVELY, TO THE SATISFACTION OF THE ENGINEER. THE SEED SHALL ADHERE TO THE SPECIFICATIONS OF SECTION 734 FOR PERMANENT GRASS SEEDING - DRY GROUND. ALL COSTS ASSOCIATED WITH RESTORATION OF THE STAGING AREA SHALL BE AT THE CONTRACTOR'S EXPENSE. IF THE ENGINEER DETERMINES THAT A SATISFACTORY STAND OF GRASS DOES NOT EXIST AT THE TIME OF FINAL INSPECTION, ALL COSTS ASSOCIATED WITH REESTABLISHING A SATISFACTORY STAND OF GRASS SHALL BE AT THE CONTRACTOR'S EXPENSE.

6. SITE REVIEWER - AN EROSION CONTROL SITE REVIEWER SHALL BE A PERSON FROM THE CONTRACTOR'S STAFF ASSIGNED TO EROSION AND SEDIMENT CONTROL IMPLEMENTATION AND MAINTENANCE AND SHALL BE REQUIRED ON SPECIFIC PROJECTS. THE NAME AND DNREC CERTIFICATION NUMBER OF EACH SITE REVIEWER SO REQUIRED SHALL BE SUBMITTED TO THE DEPARTMENT THE NAME OF THE DELAWARE REGISTERED PROFESSIONAL ENGINEER PROVIDING DIRECTION AND SUPERVISION OF THE SITE REVIEWER, AS REQUIRED IN SECTION 12.3 OF THE DELAWARE SEDIMENT AND STORMWATER REGULATIONS, SHALL ALSO BE SUBMITTED TO THE DEPARTMENT THE SITE REVIEWER REQUIREMENTS IN EFFECT ON THIS PROJECT SHALL BE MARKED WITH AN "X" BELOW:

EROSION POTENTIAL FOR THIS PROJECT	SITE REVIEWER REQUIREMENT
( ) INSIGNIFICANT	NONE
( ) MINOR	CONTRACTOR CERTIFICATION COURSE TRAINING ONLY, AS DEFINED IN SECTION 1.3 OF THE DELAWARE SEDIMENT AND STORMWATER REGULATIONS.
(X) MEDIUM	AT THE TIME OF BID OF THE CONTRACT, EITHER THE SUPERINTENDENT OR A SEPARATE INDIVIDUAL FROM THE CONTRACTOR'S STAFF SHALL BE A CERTIFIED CONSTRUCTION REVIEWER (CCR), AS DEFINED IN SECTION 12 OF THE DELAWARE SEDIMENT AND STORMWATER REGULATIONS.
( ) MAJOR	SUPERINTENDENT AND AN INDIVIDUAL FROM CONTRACTOR'S STAFF SHALL BE CCR. ONE INDIVIDUAL FROM THE CONTRACTOR'S STAFF MUST BE A CCR AT THE TIME OF BID OF THE CONTRACT. THE SUPERINTENDENT MUST BECOME A CCR WITHIN ONE YEAR AFTER THE AWARD OF CONTRACT.

7. ELECTRONIC PROJECT FILES THAT WILL BE MADE AVAILABLE TO THE CONTRACTOR INCLUDE:

(X)	NONE
( )	ASCII DATA FILES WITH COORDINATES AND ELEVATIONS FOR PROPOSED POINTS AS SELECTED BY THE ENGINEER.
( )	RASTER FILES, IN .CAL FILE FORMAT, FOR ALL PLAN SHEETS.
( )	EXISTING DIGITAL TERRAIN MODEL, IN .DTM FILE FORMAT, COMPATIBLE WITH SOFTWARE CURRENTLY USED BY DELDOT.
( )	PROPOSED DIGITAL TERRAIN MODEL, IN .DTM FILE FORMAT, COMPATIBLE WITH SOFTWARE CURRENTLY USED BY DELDOT.
( )	DESIGN FILE, IN .DGN FILE FORMAT, CONTAINING ONLY THE PROPOSED 3D TRIANGLES OF THE PROPOSED DIGITAL TERRAIN MODEL (DTM).

8. AMERICAN TRAFFIC SAFETY SERVICES ASSOCIATION (ATSSA) CERTIFIED TRAFFIC CONTROL SUPERVISOR REQUIREMENT FOR THIS PROJECT.

(X)	THE CONTRACTOR SHALL NOT BE REQUIRED TO HAVE AN ATSSA SUPERVISOR ASSIGNED TO THIS PROJECT.
( )	THE CONTRACTOR SHALL HAVE AN ATSSA SUPERVISOR ASSIGNED TO THIS PROJECT. THE CONTRACTOR'S GENERAL SUPERINTENDENT FOR THIS PROJECT OR ANOTHER ATSSA CERTIFIED MEMBER OF THE CONTRACTOR'S PROJECT STAFF MAY BE THE ATSSA SUPERVISOR.
( )	THE CONTRACTOR SHALL HAVE AN ATSSA SUPERVISOR ASSIGNED TO THIS PROJECT. THE ATSSA SUPERVISOR'S SOLE JOB SHALL BE SUPERVISION OF THE INSTALLATION, OPERATION AND MAINTENANCE OF TRAFFIC CONTROL DEVICES FOR THIS PROJECT. THE CONTRACTOR'S GENERAL SUPERINTENDENT FOR THIS PROJECT SHALL NOT BE THE ATSSA SUPERVISOR.

9. THE DISTURBED AREA FOR THIS PROJECT IS 0.562 ACRES.

PROJECT NOTES

SECTION 100

1. UNLESS OTHERWISE NOTED ON THE PLANS, THE CONTRACTOR SHALL, AS PART OF HIS PROJECT SCHEDULE, SUBMIT TO THE ENGINEER AN ESTIMATE OF THE MONTHLY PAYMENTS EXPECTED TO BE RECEIVED ON THE CONTRACT. THIS WILL BE REFERENCED AS THE "MONTHLY PAYMENT CHART".

   A CHART IN MICROSOFT EXCEL, MICROSOFT WORD, OR HAND WRITTEN FORMAT WILL BE ACCEPTABLE FOR THIS PURPOSE. THE CHART SHOULD INCLUDE, AS A MINIMUM, COLUMNS FOR THE MONTH, YEAR AND ESTIMATED MONTHLY PAYMENTS. THE TOTAL OF ALL ESTIMATED MONTHLY PAYMENTS SHOULD EQUAL THE AWARDED CONTRACT TOTAL BID PRICE.

   THE ENGINEER MAY REQUEST AN UPDATED "MONTHLY PAYMENT CHART" AT HIS DISCRETION, DEPENDING ON THE ACCURACY OF THE INITIAL ESTIMATES AND ACCORDING TO THE OVERALL NEEDS OF THE DEPARTMENT.

   THE "MONTHLY PAYMENT CHART" WILL NOT BE CONSIDERED A BINDING DOCUMENT BY EITHER THE CONTRACTOR OR THE DEPARTMENT AND IS CONSIDERED SOLELY INFORMATIONAL.

   ON PROJECTS REQUIRING CPM SCHEDULES, THE CONTRACTOR MAY, BUT IS NOT REQUIRED TO, "COST LOAD" THE CPM SCHEDULE IN ORDER TO GENERATE THE MONTHLY SPEND PAYMENT CHART.

   COSTS TO PREPARE AND/OR UPDATE THE "MONTHLY PAYMENT CHART" ARE ADDRESSED AS FOLLOWS:

   A. ON CONTRACTS REQUIRING CPM SCHEDULES AND UPDATES, PREPARATION OF THE INITIAL CHART SHALL BE INCIDENTAL TO ITEM 763508. UPDATES SHALL BE INCIDENTAL TO ITEM 763509.

   B. ON CONTRACTS NOT REQUIRING CPM SCHEDULES, THE COST TO PREPARE AND UPDATE THE "MONTHLY PAYMENT CHART" SHALL BE INCLUDED IN ITEM 763000 - INITIAL EXPENSE.

SECTION 200

2. SHORING SHALL BE REQUIRED FOR ANY EXCAVATION EXCEEDING 5 FEET IN HEIGHT, THE COST OF SHORING SHALL BE INCIDENTAL TO ITEM # 207000 - EXCAVATION AND BACKFILL FOR STRUCTURES. IN LIEU OF SHORING, THE CONTRACTOR MAY USE A 2:1 CUT SLOPE. NO PAYMENT SHALL BE MADE FOR ADDITIONAL EXCAVATION OR FILL OUTSIDE THE LIMITS AS DEFINED IN SECTION 207 OF THE STANDARD SPECIFICATIONS.

3. ITEMS TO BE REMOVED UNDER ITEM 211000 - REMOVAL OF STRUCTURES AND OBSTRUCTIONS SHALL INCLUDE, BUT NOT BE LIMITED TO THE FOLLOWING:
   - REMOVAL OF THE EXISTING STRUCTURE IN ITS ENTIRETY.

4. CONTRACTOR SHALL ADHERE TO THE LIMITS ON CLEARING AND GRUBBING (ITEM #201000) IN WETLAND AREAS AS DICTATED ON THE ENVIORNMENTAL COMPLIANCE PLAN.

SECTION 600

5. STRUCTURAL ELEMENTS OF PORTLAND CEMENT CONCRETE SHALL BE AS NOTED:
   (F'c = 28 DAY COMPRESSIVE STRENGTH)
   PRECAST CONCRETE (F'c = 5 KSI)
   MIX REQUIREMENTS SHALL CONFORM TO SECTION 812 OF THE SPECIFICATIONS. ALL EXPOSED EDGES SHALL BE CHAMFERED 3/4" UNLESS OTHERWISE NOTED.

6. REINFORCING STEEL SHALL CONFORM TO AASHTO M31 (ASTM A615), GRADE 60. ALL REINFORCING STEEL SHALL HAVE A CLEAR COVER OF 2" UNLESS OTHERWISE SPECIFIED ON THE PLANS. EPOXY COATED REINFORCING STEEL SHALL CONFORM TO AASHTO M284 (ASTM D3963).

7. LIMITS OF COURSE AGGREGATE FOR FOUNDATION STABILIZATION AND SUBFOUNDATION BACKFILL (ITEM #608000) SHALL EXTEND 18" OUTSIDE OF THE NEAT LINE PERIMETER OF THE VERTICAL FACES OF THE FOOTING OR STRUCTURAL UNIT.

SECTION 700

8. ALL PAVED AREAS TO BE RECONSTRUCTED OR WIDENED SHALL BE SAWCUT AT THE POINT WHERE THE NEW PAVEMENT IS TO TIE INTO THE EXISTING PAVEMENT. ALL HOT-MIX SAW CUTTING SHALL BE FULL DEPTH, UNLESS OTHERWISE NOTED ON THE PLANS, OR AS DIRECTED BY THE ENGINEER.

9. REFER TO ENVIRONMENTAL COMPLIANCE PLAN FOR DIRECTIONS CONCERNING ITEM #737523 - PLANTING.

MISCELLANEOUS

10. THE CONTRACTOR SHALL CONTACT MICHAEL ELLER, THE CHIEF OF SCHEDULING FOR DART FIRST STATE, 14 DAYS PRIOR TO THE START OF CONSTRUCTION AT 302-576-6061.

11. DESIGN CRITERIA: 2010 AASHTO LRFD BRIDGE DESIGN SPECIFICATIONS, 5TH EDITION, USING AASHTO HL93 FOR LIVE LOAD, AND 25 PSF FOR FUTURE WEARING SURFACE.

12. HYDRAULIC DATA
    DRAINAGE AREA = 1.44 SQ. MILES
    DESIGN FREQUENCY = 50 YEARS 50 YR FLOOD ELEVATION = 45.29 FT
    DESIGN DISCHARGE = 627 CFS PROPOSED OPENING = 72 SF

13. THE PROPOSED STRUCTURE HAS BEEN ANALYZED FOR THE EFFECTS OF SCOUR IN ACCORDANCE WITH HEC-18-'EVALUATING SCOUR AT BRIDGES' AND HEC-23-'BRIDGE SCOUR AND STREAM INSTABILITY COUNTERMEASURES.' SCOUR COUNTERMEASURES HAVE BEEN DESIGNED FOR THE WORST CASE OF THE OVERTOPPING FLOOD OR THE 500-YR FLOOD EVENT.
    DESIGN EVENT = OVERTOPPING DESIGN VELOCITY = 10.09 FT/SEC
    DESIGN DISCHARGE = 724 CFS DESIGN DEPTH OF FLOW = 6.06 FT

14. CONSTRUCTION JOINTS: KEYED CONSTRUCTION JOINTS SHALL BE 2" X 4" OR AS NOTED. ALL EXPOSED CONSTRUCTION JOINT EDGES SHALL HAVE A 3/4" V-NOTCH.

15. ENVIRONMENTAL COMPLIANCE: SEE ENVIRONMENTAL COMPLIANCE PLAN FOR FURTHER RESTRICTIONS/GUIDANCE ASSOCIATED WITH THIS PROJECT.

16. ALL PROPOSED ROADWAY WORK SHALL INCORPORATE THE SAFETY EDGE DETAIL ON SHEET #5. PAYMENT FOR SAFETY EDGE DETAIL IS INCIDENTAL TO SUPERPAVE, TYPE C HOTMIX, 115 GYRATIONS, PG 64-22 (ITEM #401644). REFER TO SPECIAL PROVISION #401752 - SAFETY EDGE FOR ROADWAY PAVEMENT.

UNOFFICIAL WEBSITE COPY

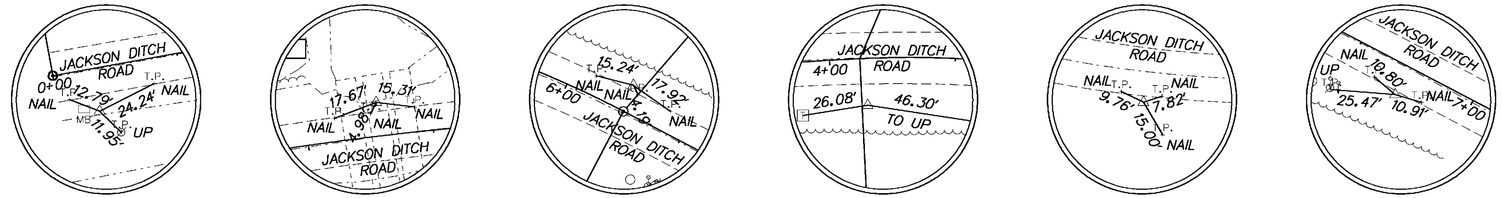

TRAVERSE POINT #3 DELDOT CAP | TRAVERSE POINT #4 DELDOT CAP | TRAVERSE POINT #5 DELDOT CAP | TRAVERSE POINT #6 DELDOT CAP | TRAVERSE POINT #9 DELDOT CAP | TRAVERSE POINT #10 DELDOT CAP

TRAVERSE POINTS

NOT TO SCALE

HORIZONTAL / VERTICAL CONTROL DATA					
POINT	STATION	OFFSET	NORTHING	EASTING	ELEVATION
TP-3	0+15.83	17.17	343123.9430	621419.7120	35.70
TP-4	3+28.72	-13.44	343427.6130	621336.2160	30.69
TP-5	6+23.66	-10.97	343721.6110	621377.5160	31.63
TP-6	4+14.43	18.61	343515.3960	621361.0810	29.97
TP-9	-	-	344000.6810	621516.0280	34.61
TP-10	6+71.55	12.24	343753.2920	621420.3100	31.47

- VERTICAL DATUM BASED ON NATIONAL GEODETIC SURVEY (N.A.V.D. 88)
- HORIZONTAL DATUM BASED ON NATIONAL GEODETIC SURVEY (N.A.V.D.83)
- NEGATIVE OFFSET DENOTES LEFT OF BASELINE
* TRAVERSE POINT OUTSIDE SURVEY LIMITS

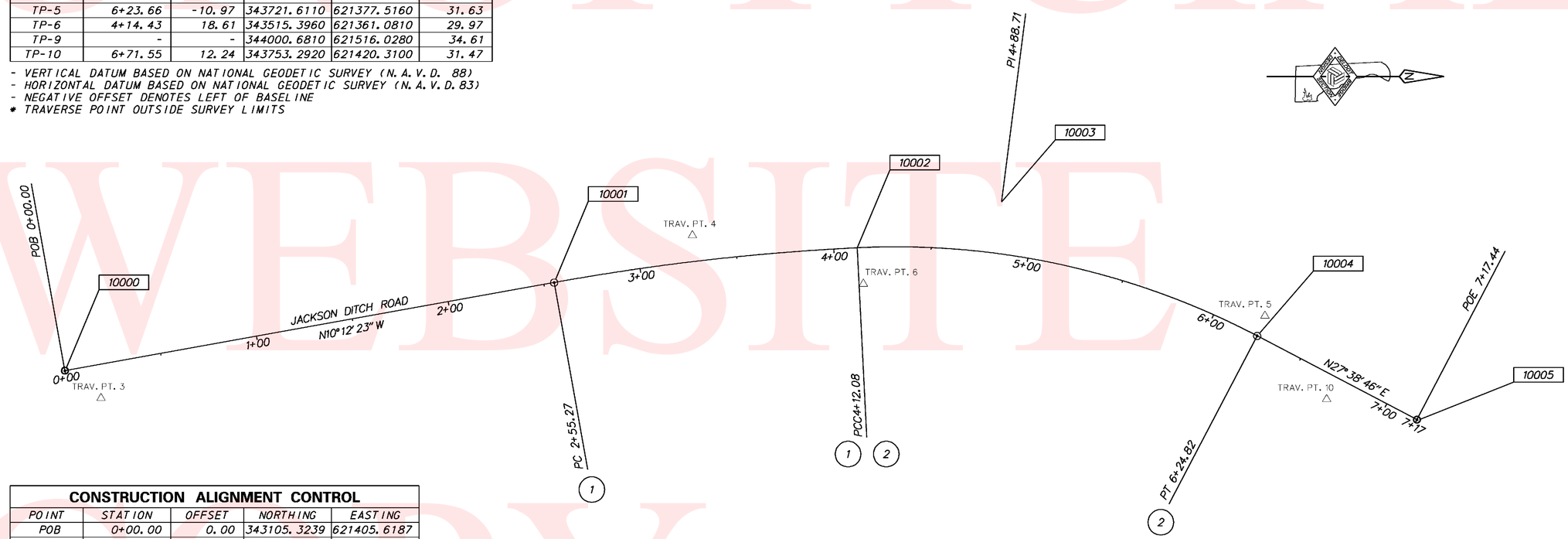

CONSTRUCTION ALIGNMENT CONTROL				
POINT	STATION	OFFSET	NORTHING	EASTING
POB	0+00.00	0.00	343105.3239	621405.6187
PC	2+55.27	0.00	343356.5578	621360.3861
PCC	4+12.08	0.00	343512.2427	621342.6023
PT	6+24.82	0.00	343717.5741	621387.7832
POE	7+17.44	0.00	343799.6145	621430.7569

CIRCULAR CURVE NO. 1

	STATION	NORTHING	EASTING
Element: Circular			
PC (10001)	2+55.27	343356.5578	621360.3861
PI ( )	3+33.78	343433.8268	621346.4745
CC ( )		343572.2901	622558.6206
PCC (10002)	4+12.08	343512.2427	621342.6023
Radius:	1217.5000		
Delta:	7° 22′ 45.5003″ Right		
Degree of Curvature(Arc):	4° 42′ 21.6679″		
Length:	156.8057		
Tangent:	78.5114		
Chord:	156.6973		
Middle Ordinate:	2.5236		
External:	2.5288		
Tangent Direction:	N 10° 12′ 22.6649″ W		
Radial Direction:	N 79° 47′ 37.3351″ E		
Chord Direction:	N 6° 30′ 59.9147″ W		
Radial Direction:	N 87° 10′ 22.8354″ E		
Tangent Direction:	N 2° 49′ 37.1646″ W		

CIRCULAR CURVE NO. 2

	STATION	NORTHING	EASTING
Element: Circular			
PCC (10002)	4+12.08	343512.2427	621342.6023
PI ( )	5+21.03	343621.0615	621337.2288
CC ( )		343531.9708	621742.1155
PT (10004)	6+24.82	343717.5741	621387.7832
Radius:	400.0000		
Delta:	30° 28′ 23.0011″ Right		
Degree of Curvature(Arc):	14° 19′ 26.2016″		
Length:	212.7421		
Tangent:	108.9515		
Chord:	210.2435		
Middle Ordinate:	14.0603		
External:	14.5726		
Tangent Direction:	N 2° 49′ 37.1646″ W		
Radial Direction:	N 87° 10′ 22.8354″ E		
Chord Direction:	N 12° 24′ 34.3360″ E		
Radial Direction:	S 62° 21′ 14.1634″ E		
Tangent Direction:	N 27° 38′ 45.8366″ E		

UNOFFICIAL WEBSITE COPY

W:\MSV8\CELLS\PROJDEV\SB.CEL

DELAWARE DEPARTMENT OF TRANSPORTATION

ADDENDUMS / REVISIONS

SCALE 0 30 60 90 FEET

BR 2-429A ON K429 JACKSON DITCH ROAD OVER BROWNS BRANCH

CONTRACT T201007204 | COUNTY KENT | BRIDGE NO. 2-429A | DESIGNED BY: JKM | CHECKED BY: BAB

HORIZONTAL AND VERTICAL CONTROL

SHEET NO. 4 | TOTAL SHTS. 16

LEGEND

1. SUPERPAVE, TYPE C HOTMIX, 115 GYRATIONS, PG 64-22 (ITEM #401644)
2. SUPERPAVE, TYPE B HOTMIX, 115 GYRATIONS, PG 64-22 (ITEM #401647)
3. GABC, TYPE B (ITEM #302007)
4. 6" TOPSOIL AND PERMANENT GRASS SEEDING DRY GROUND (ITEM #732004)
5. 'A' BORROW FILL (ITEM #209001)

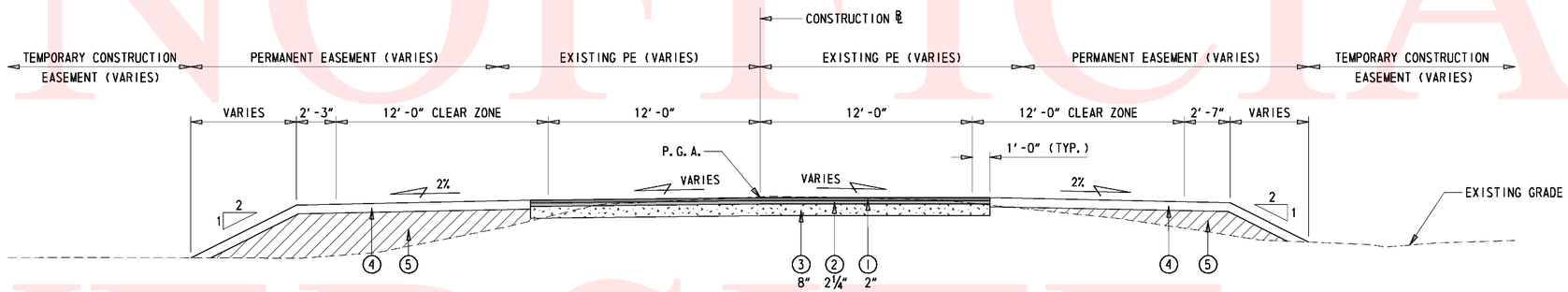

TYPICAL ROADWAY SECTION

SCALE: ¼" = 1'

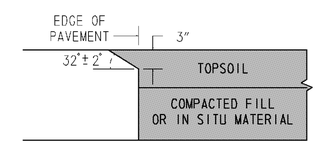

CONCRETE PAVEMENTS

NOT TO SCALE

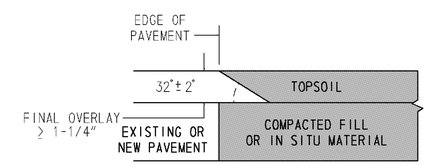

HOT-MIX PAVEMENTS AND OVERLAYS

NOT TO SCALE

SAFETY EDGE DETAIL

NOT TO SCALE

UNOFFICIAL WEBSITE COPY

Y:\KENT\429\BRIDGE\T201007204\PLANS\TS.DGN

DELAWARE DEPARTMENT OF TRANSPORTATION	ADDENDUMS / REVISIONS	BR 2-429A ON K429 JACKSON DITCH ROAD OVER BROWNS BRANCH	CONTRACT T201007204	BRIDGE NO. 2-429A	TYPICAL SECTION	SHEET NO. 5
			COUNTY KENT	DESIGNED BY: JKM		TOTAL SHTS. 16
				CHECKED BY: BAB		

UNOFFICIAL WEBSITE COPY

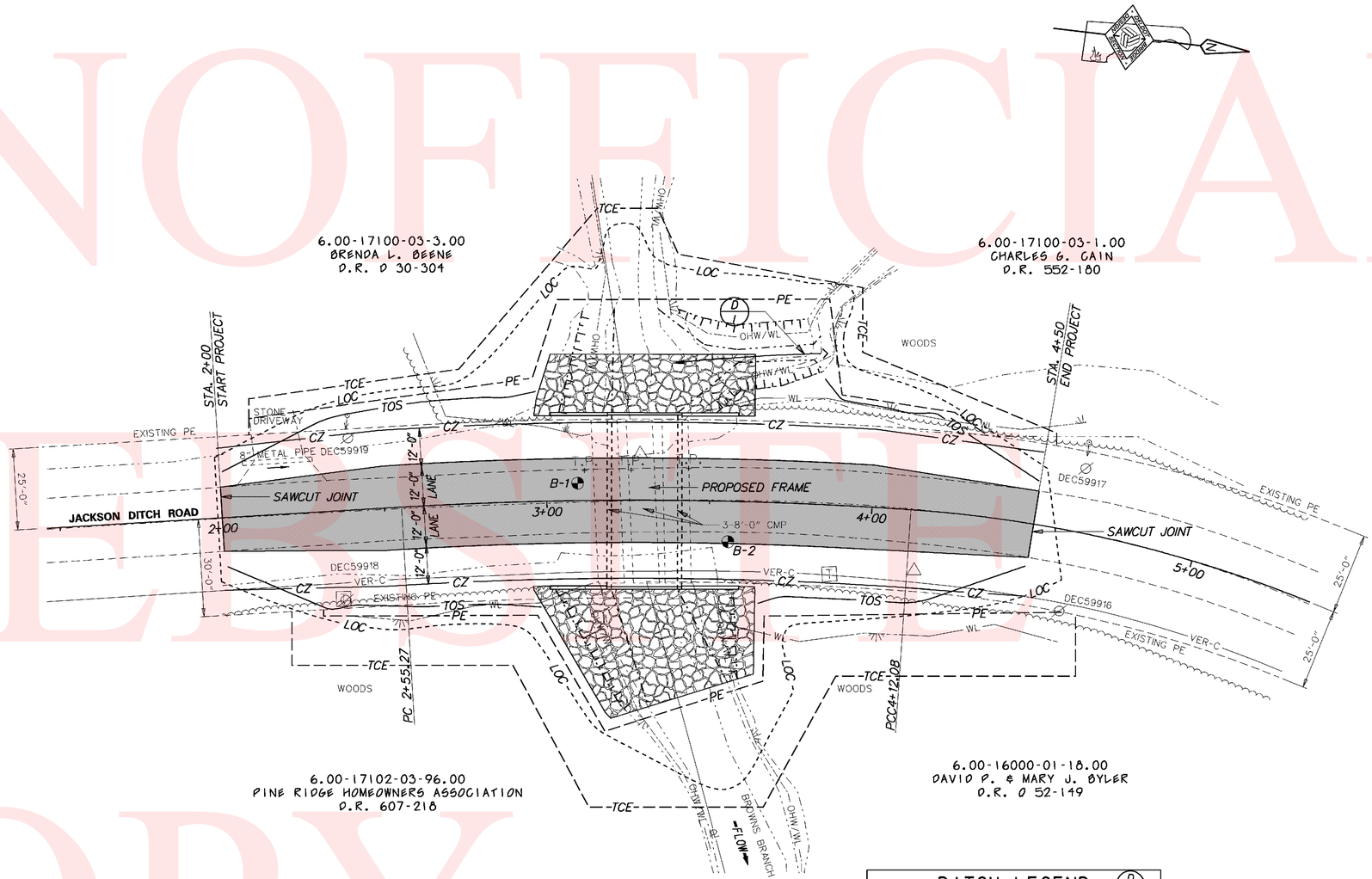

DITCH LEGEND (D/1)

STATION	ELEVATION	OFFSET	SLOPES
3+37	23.7	-42.1	4:1
3+50	24.5	-43.6	4:1
3+70	24.8	-45.5	4:1
3+84	MATCH	MATCH	MATCH

W:\MSV8\CELLS\PROJDEV\SB.CEL

DELAWARE DEPARTMENT OF TRANSPORTATION	ADDENDUMS / REVISIONS	SCALE 0 20 40 60 FEET	BR 2-429A ON K429, JACKSON DITCH ROAD, OVER BROWNS BRANCH	CONTRACT T201007204	BRIDGE NO. 2-429A	CONSTRUCTION PLAN	SHEET NO. 6
				COUNTY KENT	DESIGNED BY: JKM		TOTAL SHTS. 16
					CHECKED BY: BAB		

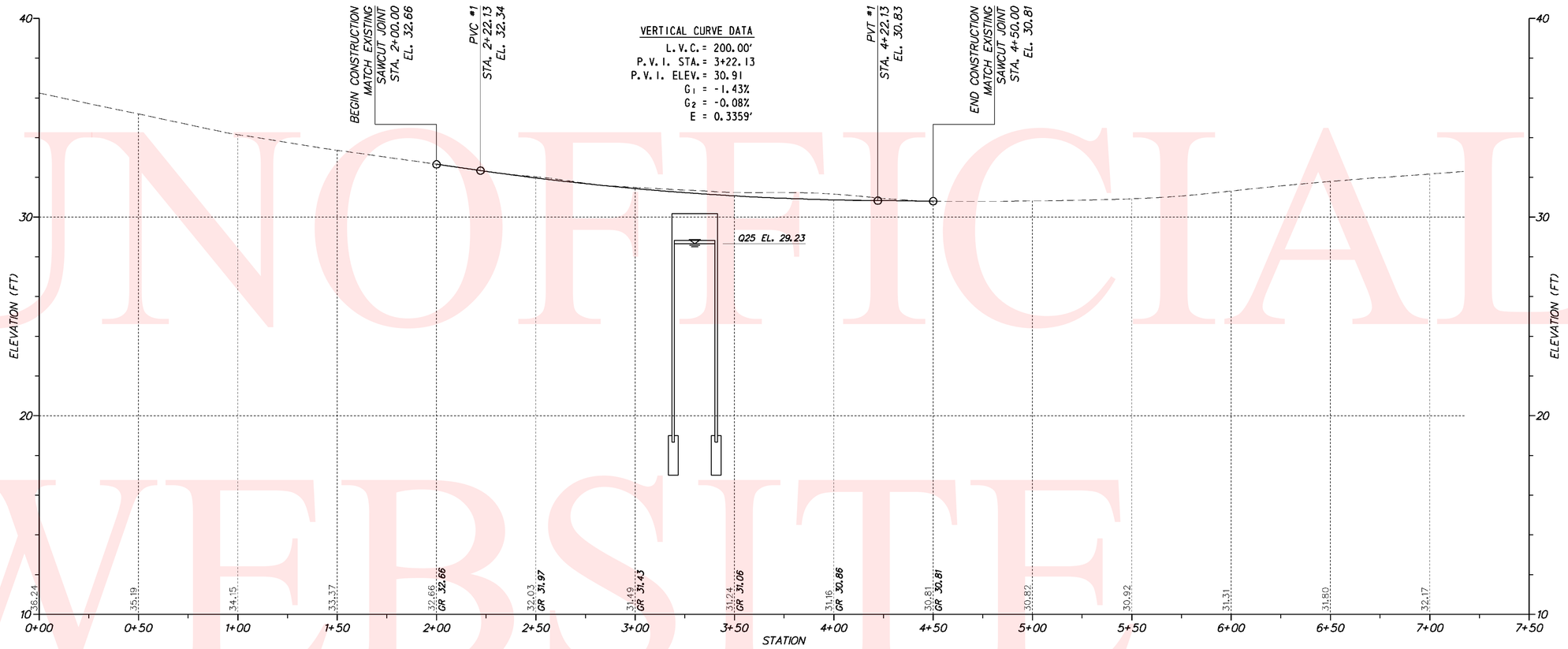

JACKSON DITCH ROAD (K429)

PLAN

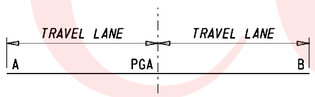

SUPERELEVATION APPLICATION

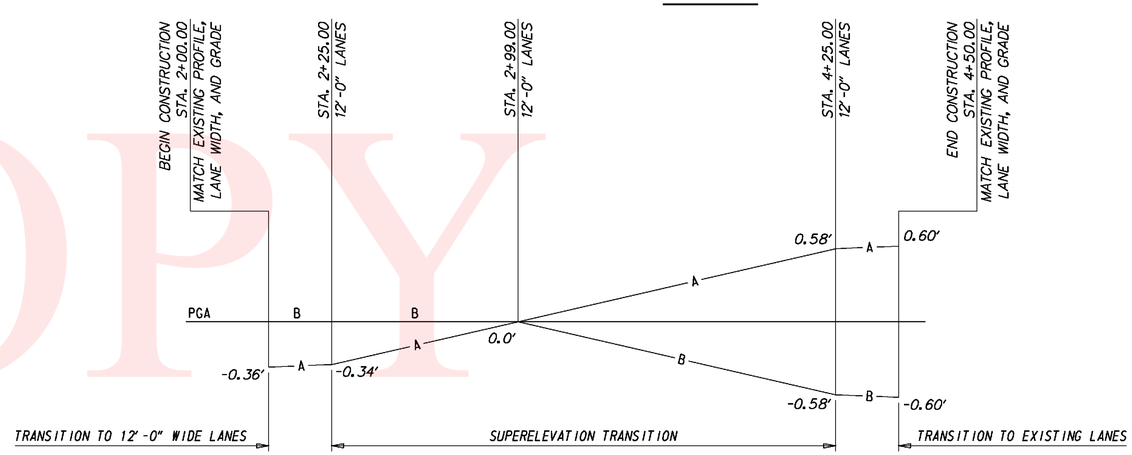

SUPERELEVATION DIAGRAM

VERTICAL SCALE FEET 0 3 6 9

W:\MSV8\CELLS\PROJDEV\SB.CEL

DELAWARE DEPARTMENT OF TRANSPORTATION	ADDENDUMS / REVISIONS	SCALE 0 30 60 90 FEET	**BR 2-429A ON K429 JACKSON DITCH ROAD, OVER BROWNS BRANCH**	CONTRACT T201007204	BRIDGE NO. **2-429A**	**PROFILES**	SHEET NO. 7
				COUNTY KENT	DESIGNED BY: JKM		TOTAL SHTS. 16
					CHECKED BY: BAB		

UNOFFICIAL WEBSITE COPY

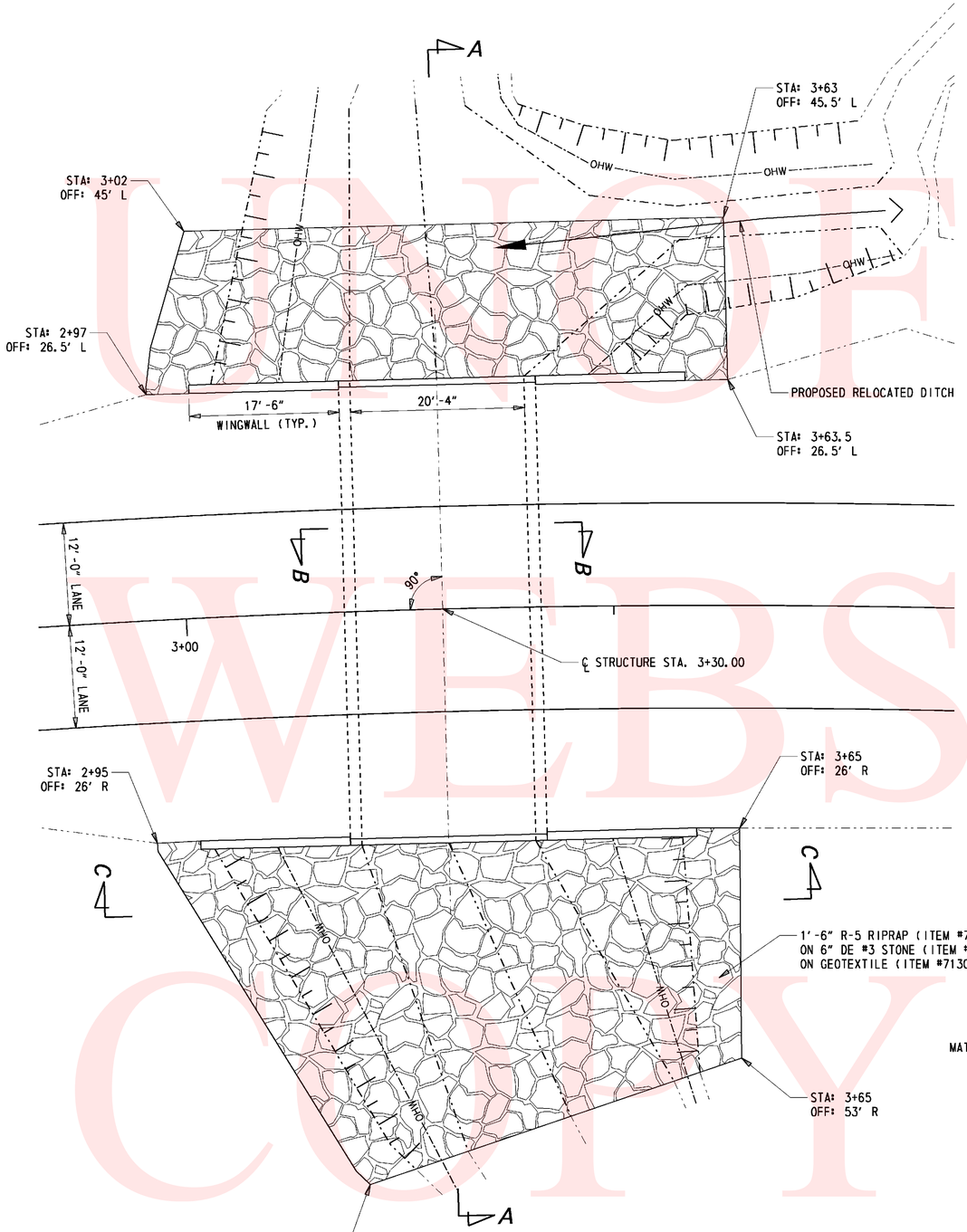

PLAN

SCALE
0 8 16 24
FEET

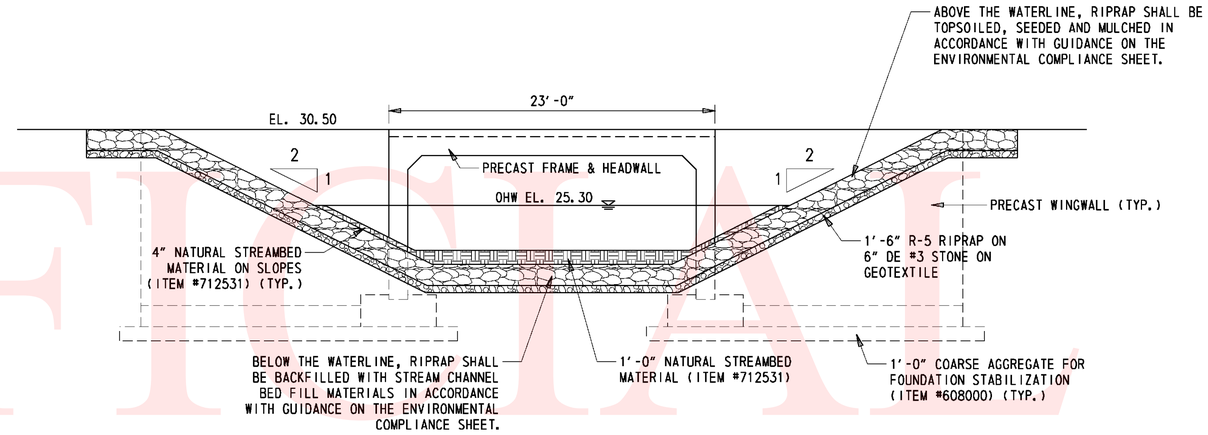

SECTION C-C

SCALE
0 12 24 36
FEET

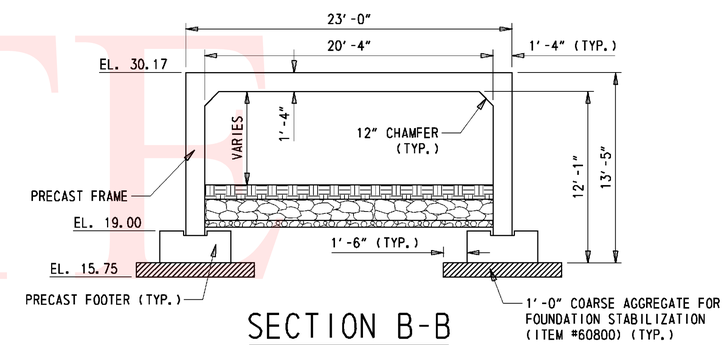

SECTION B-B

SCALE
0 12 24 36
FEET

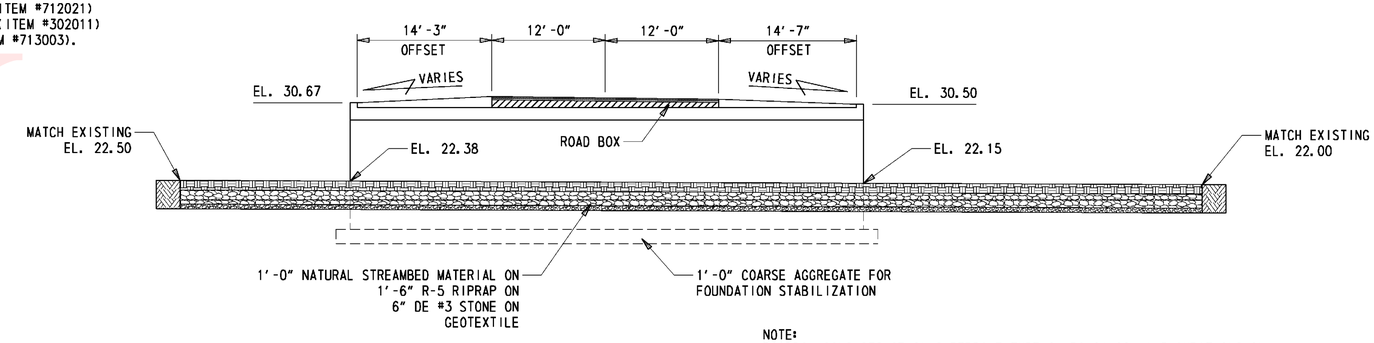

NOTE:
ROADBOX CONSISTS OF 2" SUPERPAVE TYPE C, PG 64-22, 115 GYRATIONS ON 2 ¼" SUPERPAVE TYPE B, PG 64-22, 115 GYRATIONS ON 8" GABC

SECTION A-A

SCALE
0 8 16 24
FEET

UNOFFICIAL WEBSITE COPY

Y:\KENT\429\BRIDGE\T201007204\PLANS\PE.DGN

DELAWARE DEPARTMENT OF TRANSPORTATION	ADDENDUMS / REVISIONS	BR 2-429A ON K429, JACKSON DITCH ROAD, OVER BROWNS BRANCH	CONTRACT T201007204	BRIDGE NO. 2-429A	BRIDGE PLAN, SECTION, & ELEVATION	SHEET NO. 8
			COUNTY KENT	DESIGNED BY: JKM		TOTAL SHTS. 16
				CHECKED BY: BAB		

NOTES FOR PRECAST ELEMENTS:

1. DESIGN PLANS/ WORKING DRAWINGS
   INFORMATION PERTAINING TO THE PRECAST REINFORCED CONCRETE FRAME AND WINGWALL SECTIONS IS INTENDED TO SERVE AS AN INDICATION OF THE TYPE OF CONSTRUCTION ACCEPTABLE FOR USE. THE CONTRACTOR WILL BE REQUIRED TO PREPARE AND SUBMIT FOR APPROVAL A COMPLETE SET OF DETAILED SHOP PLANS FOR THE PRECAST CONCRETE UNITS THEY PROPOSE TO FURNISH. THE PRECASTER SHALL INCLUDE A PLAN VIEW OF REINFORCEMENT FOR ANY IRREGULAR SHAPED (SKEWED, CURVED, ETC.) SECTIONS.

2. PRECAST ELEMENTS
   ALL PRECAST ELEMENTS (FRAME, WINGWALLS, & FOOTERS), REBAR COUPLERS AND ASSOCIATED BAR REINFORCEMENT SHALL BE PAID UNDER ITEM 602506 - PRECAST CONCRETE CULVERT.

3. CONCRETE STRENGTHS
   THE MINIMUM COMPRESSIVE STRENGTH AT 28 DAYS EQUALS 5000 psi. MIX REQUIREMENTS SHALL CONFORM TO SECTION 812 OF THE SPECIFICATIONS. ALL EXPOSED EDGES SHALL BE CHAMFERED ¾" UNLESS OTHERWISE NOTED.

4. BAR REINFORCEMENT
   MATERIALS REQUIREMENT: AASHTO M31 (ASTM A615) - GRADE 60. ALL BAR REINFORCEMENT TO HAVE 2" MINIMUM COVER EXCEPT AS NOTED OR DETAILED. ALL BAR REINFORCEMENT AND CHAIR SUPPORTS SHALL BE PROTECTED WITH FUSION BONDED EPOXY. EPOXY COATED REINFORCING STEEL SHALL CONFORM TO AASHTO M284 (ASTM D3963).

5. CONCRETE FINISH
   ALL EXPOSED SURFACES SHALL BE PROTECTED WITH WATER MISCIBLE, PENETRATING ALKYL ALKOXY SILANE SEALER. PAYMENT INCIDENTAL TO ITEM 602506 - PRECAST CONCRETE CULVERT.

6. FRAME POST TENSIONING
   PRECAST FRAME SECTIONS SHALL BE POST-TENSIONED TOGETHER WITH A MINIMUM OF FOUR 1/2 " DIA. 270 ksi LOW RELAXATION STEEL. EACH GREASED AND SHEATHED PRESTRESSING STRAND SHALL BE POST-TENSIONED TO 30875 lbs. MINIMUM ULTIMATE STRENGTH ON EACH STRAND EQUALS 41310 lbs. PAYMENT FOR FRAME POST-TENSIONING IS INCIDENTAL TO ITEM 602506-PRECAST CONCRETE CULVERT. POST-TENSIONING DETAILS SHALL BE SHOWN IN THE SUBMITTED SHOP DRAWINGS FOR THE FRAME. ALL POCKETS FOR POST-TENSIONING DUCTS IN ANY EXTERIOR SURFACE SHALL BE FILLED WITH NON-SHRINK GROUT. PAYMENT INCIDENTAL TO ITEM 602506.

7. WINGWALL POST TENSIONING
   THE PRECAST WINGWALL SECTIONS SHALL BE POST TENSIONED TOGETHER AND POSITIVELY CONNECTED TO THE FRAME WITH A MINIMUM OF FOUR 1/2 " DIA. 270 ksi LOW RELAXATION STEEL. EACH GREASED AND SHEATHED PRESTRESSING STRAND SHALL BE POST-TENSIONED TO 30875 lbs. MINIMUM ULTIMATE STRENGTH ON EACH STRAND EQUALS 41310 lbs. AT LOCATIONS WHERE POST TENSIONING OF THE WINGWALLS IS NOT FEASIBLE, A BOLTED CONNECTION MAY BE USED. PAYMENT FOR WINGWALL POST TENSIONING OR BOLTED CONNECTION IS INCIDENTAL TO ITEM #602506 - PRECAST CONCRETE CULVERT. POST-TENSIONING OR BOLTED CONNECTION DETAILS SHALL BE SHOWN IN THE SUBMITTED SHOP DRAWINGS FOR THE WINGWALLS.

8. JOINTS BETWEEN PRECAST SECTIONS
   NEOPRENE GASKETS SHALL BE PROVIDED AT THE JOINTS BETWEEN ALL PRECAST UNITS IN ORDER TO MAKE THE JOINTS WATERTIGHT. ALL WINGWALL TO WINGWALL, WINGWALL TO FRAME, AND FRAME TO FRAME JOINTS SHALL HAVE A SHEAR KEY. THE LOCATIONS OF THE JOINTS IN THE FRAME SHALL BE DETERMINED BY THE PRECASTER AND SUBMITTED IN THE SHOP DRAWINGS FOR APPROVAL. ALL FILL FACE JOINTS SHALL BE COVERED WITH A MINIMUM 9" WIDE WRAP CENTERED ON THE JOINT AS PER THE SPECIAL PROVISION FOR ITEM 602506.

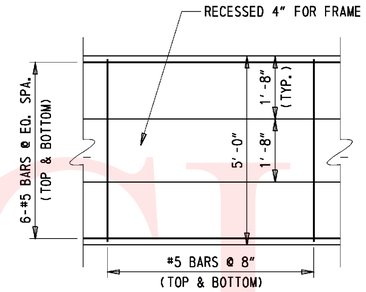

FOOTER PLAN

SCALE 0 2 4 6 FEET

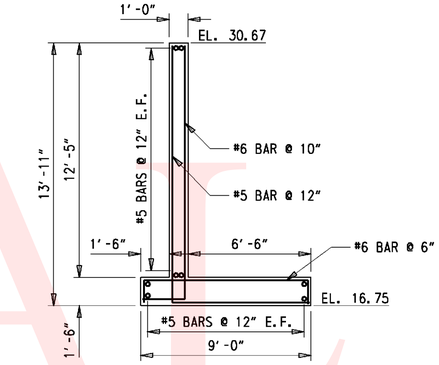

WINGWALL A & B SECTION

SCALE 0 4 8 12 FEET

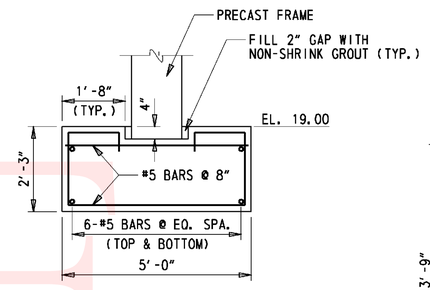

FOOTER SECTION

SCALE 0 2 4 6 FEET

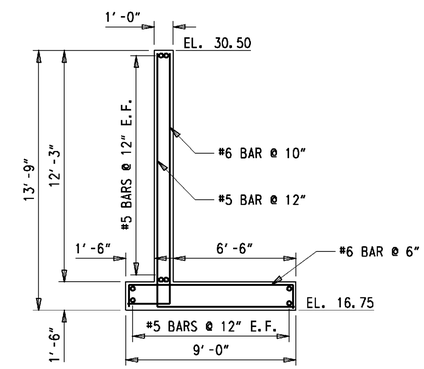

WINGWALL C & D SECTION

SCALE 0 4 8 12 FEET

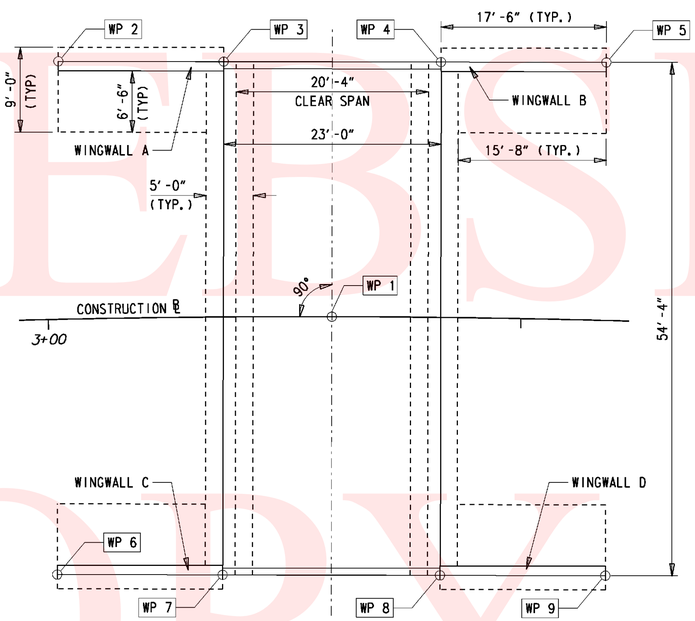

PLAN

SCALE 0 8 16 24 FEET

WORKING POINTS FOR PRECAST SECTIONS					
	STATION	OFFSET	ELEV.	NORTHING	EASTING
WP 1	3+30.00	0.00	-	343430.46	621349.41
WP 2	3+01.63	27.32' L	30.67	343398.52	621325.99
WP 3	3+18.75	27.03' L	30.67	343415.90	621323.95
WP 4	3+41.25	27.03' L	30.67	343438.74	621321.28
WP 5	3+58.37	27.32' L	30.67	343456.12	621319.24
WP 6	3+00.34	27.00' R	30.50	343404.85	621379.96
WP 7	3+18.24	27.30' R	30.50	343422.23	621377.92
WP 8	3+41.76	27.30' R	30.50	343445.07	621375.24
WP 9	3+59.66	27.00' R	30.50	343462.45	621373.20

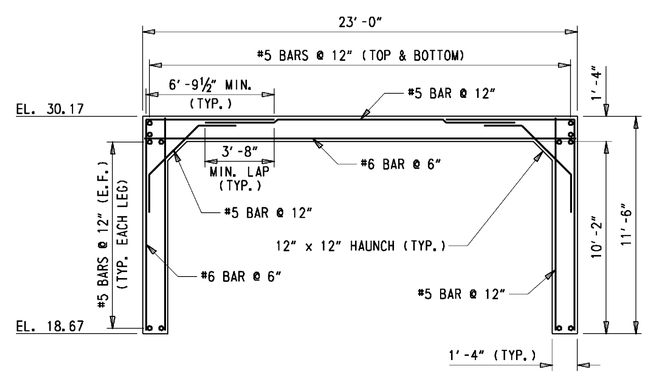

FRAME SECTION

SCALE 0 4 8 12 FEET

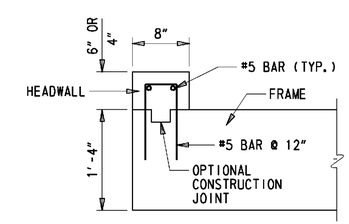

HEADWALL SECTION

SCALE 0 2 3 FEET

UNOFFICIAL WEBSITE COPY

Y:\KENT\429\BRIDGE\T201007204\PLANS\FR.DGN

DELAWARE DEPARTMENT OF TRANSPORTATION	ADDENDUMS / REVISIONS	BR 2-429A ON K429, JACKSON DITCH ROAD, OVER BROWNS BRANCH	CONTRACT T201007204	BRIDGE NO. 2-429A	BRIDGE DETAILS	SHEET NO. 9
			COUNTY KENT	DESIGNED BY: JKM		TOTAL SHTS. 16
				CHECKED BY: BAB		

ORIGINAL SHEET PREPARED BY: JASON K. MCCLUSKEY ON 11/17/2010. SHEET LAST UPDATED ON 6/22/2011.

TEMPORARY WETLAND IMPACT AREA SCHEDULE

ID	IMPACT DESCRIPTION	AREA (SF)	AREA (AC)	VOLUME (CY)	JURISDICTION
WT-1	SANDBAG AREA (INLET)	38.13	0.0009	N/A	COE
WT-2	SANDBAG AREA (INLET)	23.81	0.0005	N/A	COE
WT-3	SANDBAG AREA (OUTLET)	11.38	0.0003	N/A	COE
WT-4	SANDBAG AREA (OUTLET)	15.77	0.0004	N/A	COE
WT-5	SANDBAG AREA (INLET)	10.66	0.0002	N/A	COE
WT-6	SANDBAG AREA (INLET)	5.17	0.0001	N/A	COE
TOTAL TEMPORARY WETLAND IMPACTS		104.92	0.0024	N/A	COE

PERMANENT WETLAND IMPACT AREA SCHEDULE

ID	IMPACT DESCRIPTION	AREA (SF)	AREA (AC)	VOLUME (CY)	JURISDICTION
W-1	RIPRAP AREA (INLET)	278.39	0.0064	15.47	COE
W-2	RIPRAP AREA (INLET)	85.13	0.0020	4.73	COE
W-3	RIPRAP AREA (OUTLET)	476.75	0.0109	26.49	COE
W-4	RIPRAP AREA (OUTLET)	148.30	0.0034	8.24	COE
W-5	FILL AREA	274.86	0.0063	9.44	COE
W-6	FILL AREA	302.44	0.0069	10.46	COE
TOTAL PERMANENT WETLAND IMPACTS		1565.87	0.0359	74.83	COE

OPEN WATER CREATION AREA SCHEDULE

ID	IMPACT DESCRIPTION	AREA (SF)	AREA (AC)	VOLUME (CY)	JURISDICTION
OC-1	FRAME AREA	158.01	0.0036	35.11	COE/DNREC
TOTAL OPEN WATER CREATION AREAS		158.01	0.0036	35.11	COE/DNREC

TEMPORARY OPEN WATER IMPACT AREA SCHEDULE

ID	IMPACT DESCRIPTION	AREA (SF)	AREA (AC)	VOLUME (CY)	JURISDICTION
OT-1	STILLING WELL AREA	54.00	0.0012	N/A	COE/DNREC
OT-2	SANDBAG AREA (INLET)	160.77	0.0037	N/A	COE/DNREC
OT-3	FRAME AREA	946.77	0.0217	N/A	COE/DNREC
OT-4	SANDBAG AREA (OUTLET)	218.30	0.0050	N/A	COE/DNREC
OT-5	PUMP DISCHARGE AREA	30.00	0.0007	N/A	COE/DNREC
OT-6	SUMP PUMP AREA	12.57	0.0003	N/A	COE/DNREC
OT-7	SANDBAG AREA (INLET)	53.44	0.0012	N/A	COE/DNREC
OT-8	STILLING WELL AREA	8.27	0.0002	N/A	COE/DNREC
TOTAL TEMPORARY OPEN WATER IMPACTS		1475.85	0.0341	N/A	COE/DNREC

PERMANENT OPEN WATER IMPACT AREA SCHEDULE

ID	IMPACT DESCRIPTION	AREA (SF)	AREA (AC)	VOLUME (CY)	JURISDICTION
O-1	RIPRAP AREA (INLET)	802.08	0.0184	44.56	COE/DNREC
O-2	FRAME AREA	579.45	0.0133	128.77	COE/DNREC
O-3	RIPRAP AREA (OUTLET)	1176.99	0.0270	65.39	COE/DNREC
TOTAL PERMANENT OPEN WATER IMPACTS		2558.52	0.0587	238.72	COE/DNREC

LEGEND

- CREATION AREA
- PERMANENT IMPACT AREA
- TEMPORARY IMPACT AREA
- OHW — ORDINARY HIGH WATER
- WL — WETLAND BOUNDARY
- OHW/WL — ORD. HIGH WATER / WETLAND
- POHW — PROPOSED ORDINARY HIGH WATER
- XX / ?X — IMPACT AREA TYPE ID. (SEE BELOW) / IMPACT AREA ID. AND/OR NUMBER

C = CREATION AREA T = TEMPORARY IMPACT
O = OPEN WATER IMPACT W = WETLAND IMPACT

WETLANDS DELINEATED BY DELDOT IN OCTOBER 2010 IN ACCORDANCE WITH THE US ARMY CORPS OF ENGINEERS "CORPS OF ENGINEERS WETLAND DELINEATION MANUAL (1987)" AND REGIONAL SUPPLEMENT.

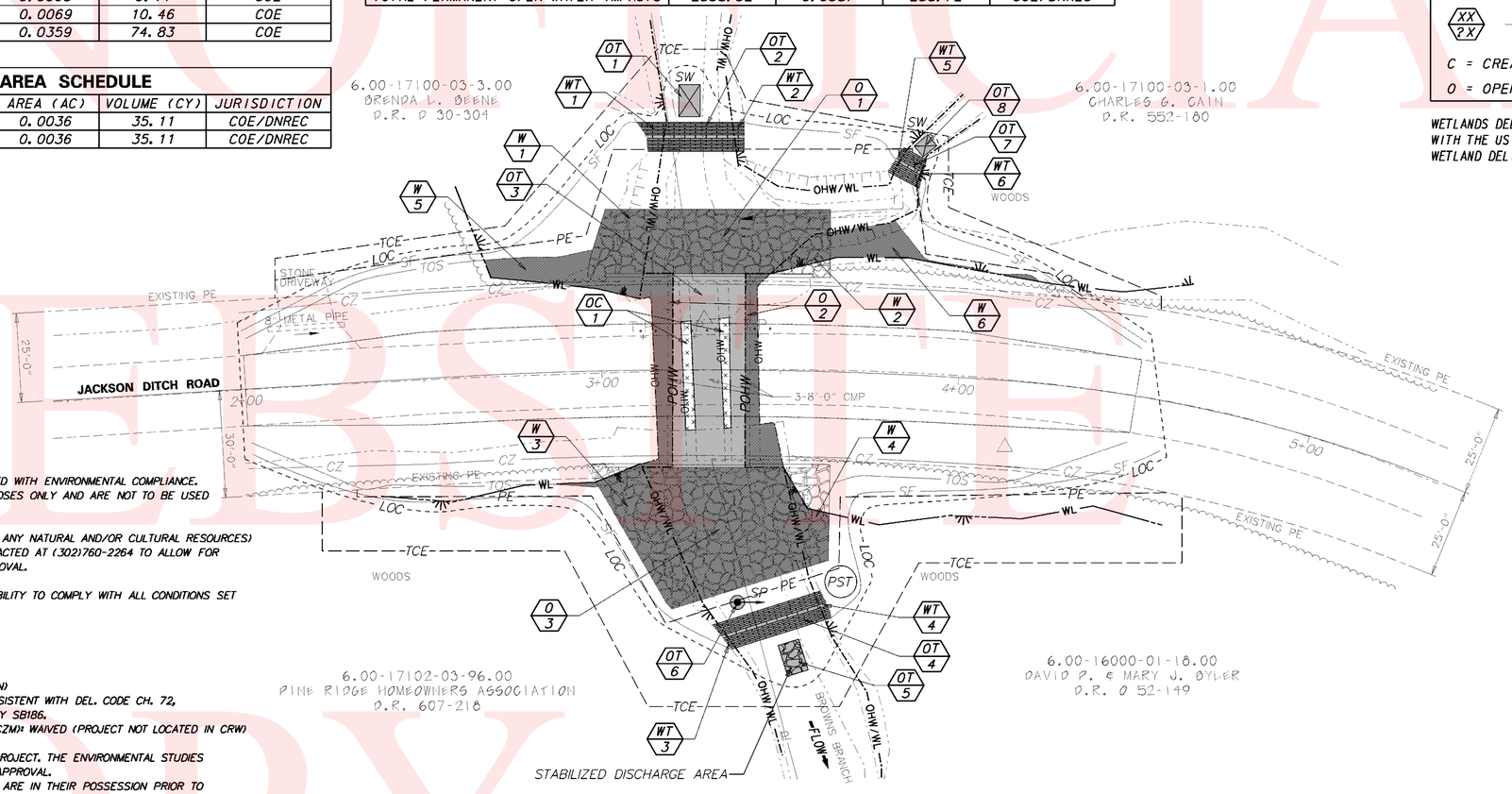

ENVIRONMENTAL COMPLIANCE NOTES

1. GENERAL NOTES:

A. THE PURPOSE OF THIS SHEET IS TO IDENTIFY THOSE ITEMS ASSOCIATED WITH ENVIRONMENTAL COMPLIANCE. IMPACT CALCULATIONS ARE FOR THE AGENCY PERMIT REPORTING PURPOSES ONLY AND ARE NOT TO BE USED FOR BIDDING PURPOSES.

B. IF A DEPARTURE FROM THE APPROVED PLANS (WHICH WOULD AFFECT ANY NATURAL AND/OR CULTURAL RESOURCES) IS NECESSARY, THE ENVIRONMENTAL STUDIES SECTION SHALL BE CONTACTED AT (302)760-2264 TO ALLOW FOR COORDINATION WITH THE APPROPRIATE RESOURCE AGENCIES AND APPROVAL.

C. USE OF THIS SHEET DOES NOT ALLEVIATE THE CONTRACTOR'S RESPONSIBILITY TO COMPLY WITH ALL CONDITIONS SET FORTH IN THE ENVIRONMENTAL STATEMENT AND PERMITS.

2. NATURAL RESOURCE ISSUES:

A. PERMIT REQUIREMENTS/APPROVALS*:
U.S. ARMY CORPS OF ENGINEERS (COE): NWP#3 (a) & (c) (NO PCN)
DNREC - WETLANDS & SUBAQUEOUS LANDS (WLSL): PROJECT CONSISTENT WITH DEL. CODE CH. 72, SECTION 7217, SPECIAL EXEMPTION (b) AS AMMENDED BY SB186.
DNREC - WATER QUALITY (WQC) & COASTAL ZONE CONSISTENCY (CZM): WAIVED (PROJECT NOT LOCATED IN CRW)

* THE PERMITS/APPROVALS LISTED ARE THOSE REQUIRED FOR THIS PROJECT. THE ENVIRONMENTAL STUDIES SECTION IS RESPONSIBLE FOR COORDINATING AND/OR OBTAINING THIS APPROVAL.
** THE CONTRACTOR MUST ENSURE THAT THESE PERMITS/APPROVALS ARE IN THEIR POSSESSION PRIOR TO BEGINNING CONSTRUCTION IN THE PERMITTED AREA(S) AND ENSURE IT IS DISPLAYED ON-SITE DURING THE ENTIRE CONSTRUCTION PERIOD.

B. CONSTRUCTION RESTRICTIONS:
FISHERIES - NONE
ENDANGERED SPECIES - AMERICAN BROOK LAMPREY - NO INSTREAM WORK MARCH 15 TO APRIL 30 (INCLUSIVE ANY CALENDAR YEAR)
MIGRATORY BIRDS - NONE

C. CLEARING IN WETLAND AREAS:
CLEARING IN WETLAND AREAS SHALL BE KEPT TO A MINIMUM ABSOLUTELY NECESSARY FOR CONSTRUCTION ACCESS. IN WETLAND AREAS THAT ARE CLEARED, THERE SHALL BE NO GRUBBING EXCEPT WHERE NECESSARY TO CONSTRUCT PROJECT COMPONENTS SUCH AS FOUNDATION AND RIPRAP PROTECTION. VEGETATION SHALL BE CUT FLUSH WITH THE GROUND (I.E. NO DISTURBANCE OF THE ROOT MAT).

D. WETLAND PLANTING:
NATURALIZE PLANTING OF RED MAPLE (1½ - 1¾" CAL., BB OR CONT.) ON 10' CENTER-SPACING (8' MIN. & 12' MAX.) WITHIN DISTURBED WETLAND AREAS (ALL WETLAND AREAS WITHIN LOC, EXCLUDING AREA WITHIN THE TOS AND RIPRAP PROTECTION. 30 RED MAPLE TREES (TOTAL) SHALL BE PLANTED IN DISTURBED WETLAND AREAS (PAYMENT UNDER ITEM #737523 - PLANTING). TEMPORARY GRASS SEEDING - DRY GROUND, SHALL BE PLACED IN DISTURBED WETLAND AREAS (PAYMENT UNDER ITEM #734017 - TEMPORARY GRASS SEEDING, DRY GROUND).

3. STREAM RESTORATION AND SLOPE RIPRAP TREATMENT

A. THE CONTRACTOR SHALL FOLLOW THE SPECIAL PROVISIONS OF ITEM #712531 - CHANNEL BED FILL IN REGARDS TO THE SALVAGING OF ON-SITE NATURAL STREAM BOTTOM MATERIAL OR THE FURNISHING OF OFF-SITE MATERIAL. ALL RIPRAP IN THE CHANNEL BOTTOM (I.E. BELOW THE WATER LINE) SHALL BE RECESSED ONE FOOT BELOW STREAM BED ELEVATION AND CHOKED WITH BORROW TYPE 'B' SO THAT ALL OF THE VOIDS IN THE RIPRAP ARE FILLED WITH MATERIAL. PAYMENT UNDER ITEM #209002 - BORROW TYPE 'B'. THE RIPRAP SHALL THEN BE COVERED WITH 12" CHANNEL BED FILL TO MATCH EXISTING UPSTREAM/DOWNSTREAM ELEVATIONS. PAYMENT UNDER ITEM #712531 - CHANNEL BED FILL.

B. OTHER AREAS OF THE CHANNEL BOTTOM AFFECTED BY CONSTRUCTION (INCLUDING, BUT NOT LIMITED TO, THE LOCATION OF SUMP PITS, STABILIZED OUTFALLS, TEMPORARY PIPES AND/OR SANDBAG DIKES AND DIVERSIONS) SHALL BE RESTORED TO EXISTING CONDITIONS. ANY CAVITIES OR SCOUR HOLES RESULTING FROM CONSTRUCTION ACTIVITIES SHALL BE FILLED WITH CHANNEL BED FILL. PAYMENT UNDER ITEM #712531 - CHANNEL BED FILL.

C. WHEN ALL EROSION AND SEDIMENT CONTROL MEASURES ARE REMOVED AND THE STREAM RETURNS TO ITS NATURAL FLOW CONDITIONS, THE FLOW MUST REMAIN ABOVE GROUND AND ABOVE THE RIPRAP (I.E. THE FLOW CANNOT BE "LOST" IN THE RIPRAP OR BENEATH THE STRUCTURE). IF THIS IS NOT ACHIEVED, THE CONTRACTOR WILL BE REQUIRED TO TAKE CORRECTIVE ACTION AT THE CONTRACTOR'S EXPENSE.

D. ALL RIPRAP ON THE STREAM BANK, OUTSIDE THE CHANNEL BED, SHALL BE CHOKED WITH DELAWARE #57 STONE, FILLED WITH TOPSOIL, SEEDED AND MULCHED WITH SOIL RETENTION BLANKET MULCH, TYPE 3 (ITEM 734013). PLACE JUST ENOUGH CHOKE MATERIAL TO PREVENT THE LOSS OF TOPSOIL THROUGH THE RIPRAP, AND THEN FINISH FILLING THE VOIDS WITH TOPSOIL SO THAT THE RIPRAP PEAKS ARE BARELY VISIBLE. AN ADDITIONAL 4" TOPSOIL LAYER SHALL BE PLACED ON TOP OF THE RIPRAP. SEEDING SHALL BE PERMANENT GRASS SEEDING DRY GROUND (ITEM NO. 734013) FROM STREAM BASE FLOW ELEVATION TO TOP OF RIPRAP SLOPE. ALL WORK, STARTING WITH THE INITIAL CHOKING WITH TOPSOIL THROUGH THE SEEDING AND MULCHING, SHALL BE COMPLETED PRIOR TO ANY RAIN EVENT. PAYMENT FOR RIPRAP AND DELAWARE #57 STONE SHALL BE PAID FOR UNDER THE RIPRAP ITEM. ALL OTHER ITEMS SHALL BE PAID FOR UNDER THEIR RESPECTIVE ITEMS.

4. CULTURAL RESOURCES

A. PROJECT IS CONSISTENT WITH STIPULATION II.B (1 AND 12) OF DELDOT'S PROGRAMMATIC AGREEMENT WITH FHWA, DE SHPO, AND ACHP.

B. CONTRACTOR'S ACCESS BEYOND THE LOC IS STRICTLY PROHIBITED.

UNOFFICIAL WEBSITE COPY

W:\MSV8\CELLS\PROJDEV\SB.CEL

DELAWARE DEPARTMENT OF TRANSPORTATION

ADDENDUMS / REVISIONS

SCALE 0 20 40 60 FEET

BR 2-429A ON K429, JACKSON DITCH ROAD, OVER BROWNS BRANCH

CONTRACT	BRIDGE NO.	2-429A
T201007204	DESIGNED BY: JKM	
COUNTY		
KENT	CHECKED BY: BAB	

ENVIRONMENTAL COMPLIANCE PLAN

SHEET NO. 10
TOTAL SHTS. 16

UNOFFICIAL WEBSITE COPY

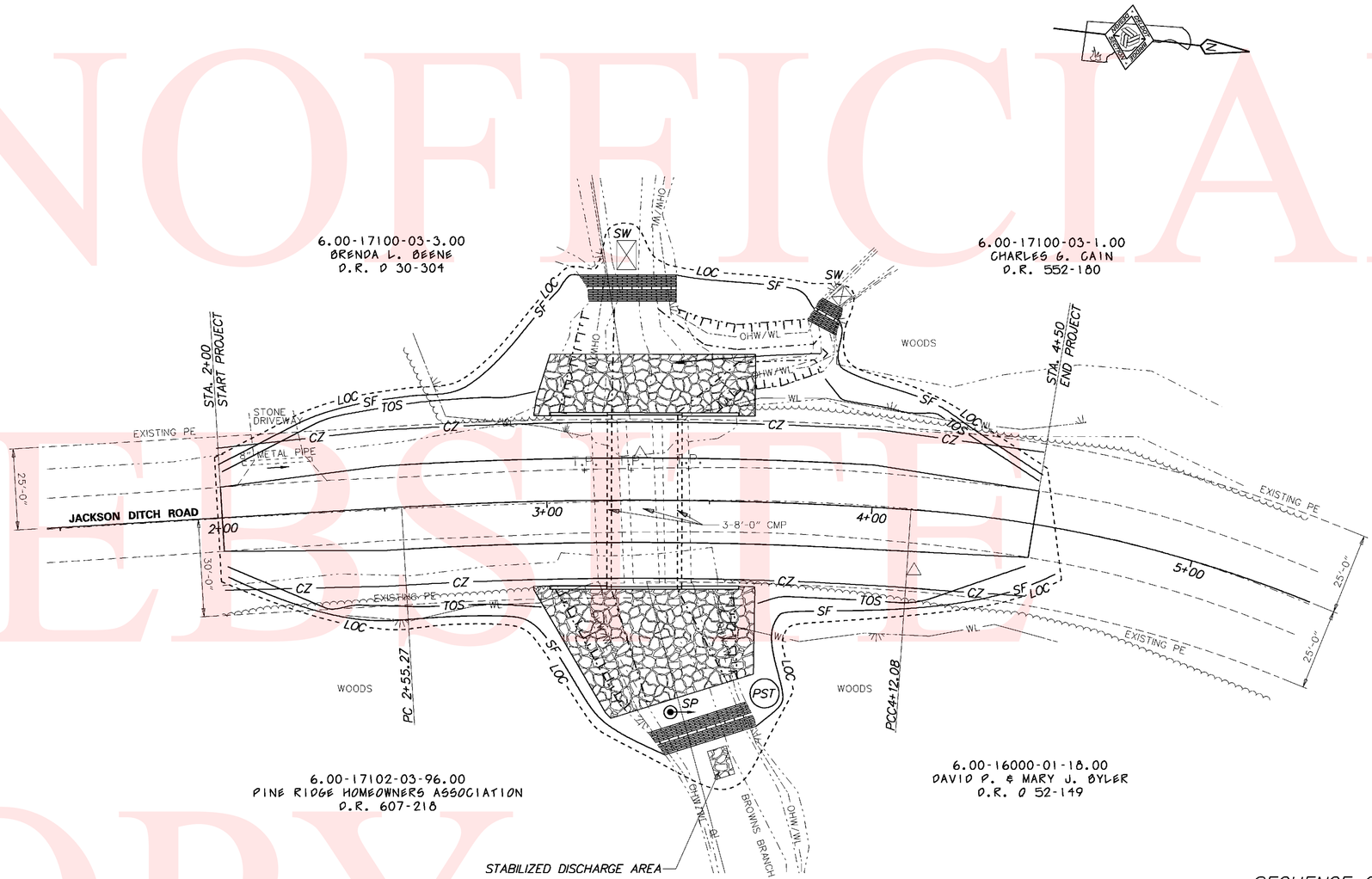

SEQUENCE OF CONSTRUCTION

1. INSTALL SILT FENCE EXCEPT CONNECTION TO SANDBAG DIKES.
2. INSTALL A 6' x 9' STILLING WELL JUST UPSTREAM OF THE PROPOSED UPSTREAM PUMP WITH THE TOP OF STONES LEVEL WITH THE EXISTING STREAM BOTTOM.
3. CONSTRUCT THE SANDBAG DIKES, AT THE LOCATIONS SHOWN, TO THE TOP OF STREAM BANK. CONNECT SILT FENCE TO SANDBAG DIKES TO COMPLETELY ENCLOSE THE WORK AREA. WHEN THE FLOW IS HIGHER THAN PUMP CAPACITY DURING RAINFALL EVENTS, THE STREAM FLOW IS ALLOWED TO FLOW OVER THE SANDBAG DIKE. THEREFORE, THE ENCLOSED AREA SHALL BE KEPT CLEAR OF DEBRIS AND OBSTRUCTIONS AT THE END OF EACH WORKDAY.
4. INSTALL SUMP PIT, TYPE 2, AND A PORTABLE SEDIMENT TANK AS A SEDIMENT TRAPPING DEVICE. DEWATER THE WORK AREA IN ACCORDANCE WITH SECTION 110.13 OF DELDOT STANDARD SPECIFICATIONS. DISCHARGE CLEAN EFFLUENT FROM THE APPROVED SEDIMENT TRAPPING DEVICE AT THE RIPRAPPED DISCHARGE AREA FOR THE DIVERSION PUMP OR ON OTHER STABLE OUTLET AS APPROVED BY THE ENGINEER.
5. REMOVE EXISTING PIPES AND DEBRIS.
6. EXCAVATE AND STOCKPILE THE EXISTING STREAMBED MATERIAL IN ACCORDANCE WITH THE SPECIAL PROVISIONS.
7. INSTALL PRECAST FOOTERS, FRAME, AND WINGWALLS.
8. CONSTRUCT PROPOSED DITCH, CONSTRUCT SLOPES, PLACE RIPRAP, PLACE CHANNEL BED FILL, AND COMPLETE ROADWAY AND OTHER REMAINING WORK.
9. RESTORE THE STREAM TO EXISTING CONDITIONS AS OUTLINED IN THE ENVIRONMENTAL COMPLIANCE NOTES.
10. REMOVE TEMPORARY EROSION AND SEDIMENT CONTROL DEVICES WHEN THEY ARE NO LONGER NEEDED. STABILIZE ALL DISTURBED AREAS IN ACCORDANCE WITH THESE PLANS AND AS DIRECTED BY THE ENGINEER.

W:\MSV8\CELLS\PROJDEV\SB.CEL

DELAWARE DEPARTMENT OF TRANSPORTATION	ADDENDUMS / REVISIONS	SCALE 0 20 40 60 FEET	BR 2-429A ON K429, JACKSON DITCH ROAD, OVER BROWNS BRANCH	CONTRACT T201007204	BRIDGE NO. 2-429A	CONSTRUCTION PHASING, M.O.T., AND EROSION CONTROL PLAN	SHEET NO. 11
				COUNTY KENT	DESIGNED BY: JKM		TOTAL SHTS. 16
					CHECKED BY: BAB		

UNOFFICIAL WEBSITE COPY

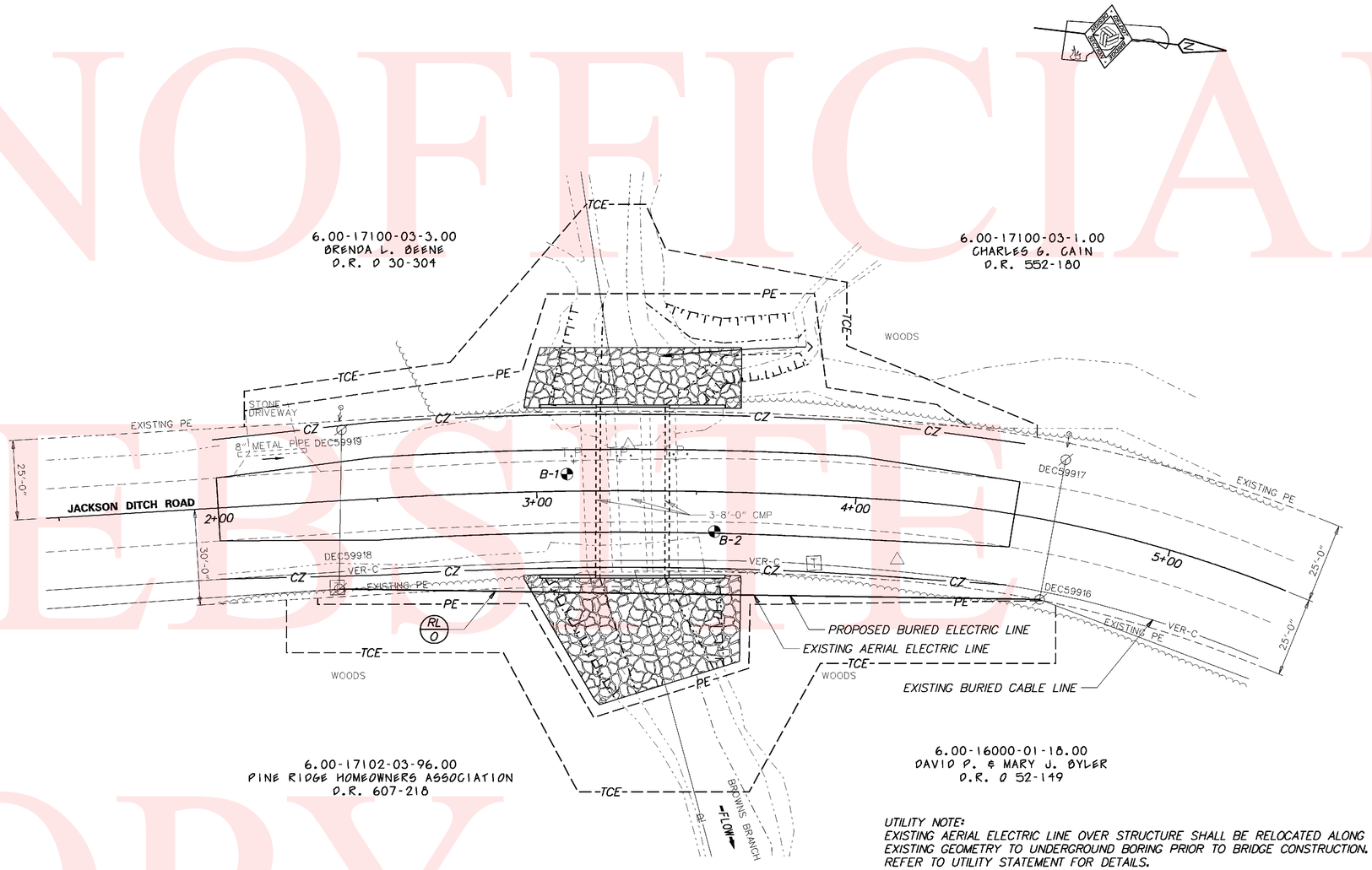

UTILITY NOTE:
EXISTING AERIAL ELECTRIC LINE OVER STRUCTURE SHALL BE RELOCATED ALONG EXISTING GEOMETRY TO UNDERGROUND BORING PRIOR TO BRIDGE CONSTRUCTION. REFER TO UTILITY STATEMENT FOR DETAILS.

W:\MSV8\CELLS\PROJDEV\SB.CEL

DELAWARE DEPARTMENT OF TRANSPORTATION	ADDENDUMS / REVISIONS	SCALE 0 20 40 60 FEET	BR 2-429A ON K429, JACKSON DITCH ROAD, OVER BROWNS BRANCH	CONTRACT T201007204	BRIDGE NO. 2-429A	UTILITY PLAN	SHEET NO. 12
				COUNTY KENT	DESIGNED BY: JKM		TOTAL SHTS. 16
					CHECKED BY: BAB		

UNOFFICIAL WEBSITE COPY

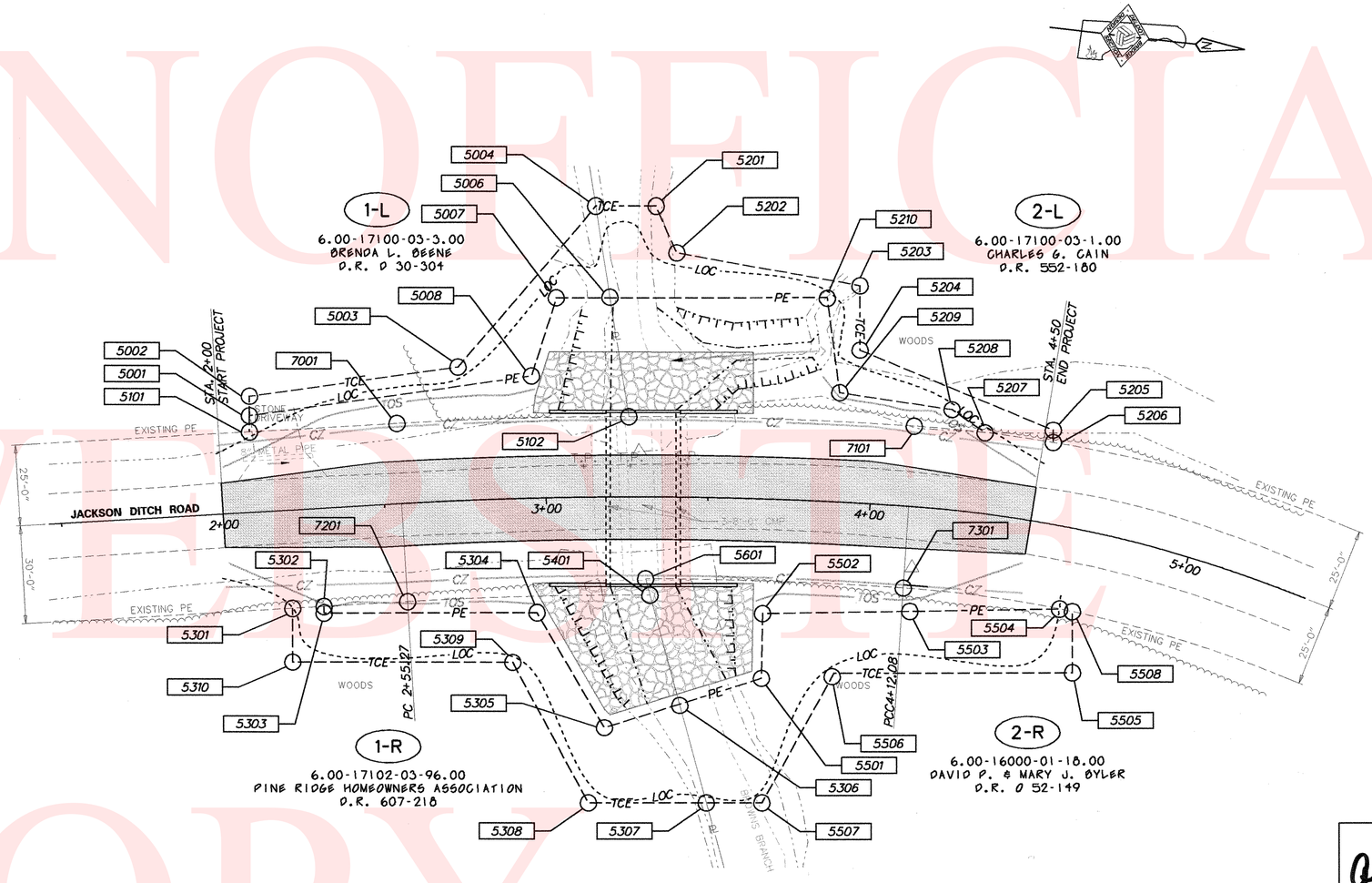

RECOMMENDED

TEAM SUPPORT SQUAD MANAGER — DATE 12/23/10

TEAM SUPPORT ENGINEER — DATE 12.23.10

ASSISTANT DIRECTOR, ENGINEERING SUPPORT — DATE 12/28/10

"AS-ACQUIRED" PLANS

I CERTIFY THAT ALL PROPOSED RIGHT-OF-WAY HAS BEEN ACQUIRED IN THE NAME OF THE STATE OF DELAWARE AND THAT THESE PLANS ACCURATELY DEPICT THE NATURE AND EXTENT OF THE REAL ESTATE SECTION ACQUISITION UNDER THIS PROJECT.

CHIEF, REAL ESTATE — DATE

12/22/2010 30-072-04

DELAWARE DEPARTMENT OF TRANSPORTATION	ADDENDUMS / REVISIONS	SCALE 0 20 40 60 FEET	BR 2-429A ON K429, JACKSON DITCH ROAD, OVER BROWNS BRANCH	CONTRACT T201007204	BRIDGE NO. 2-429A	RIGHT-OF-WAY PLAN	SHEET NO. 13
				COUNTY KENT	DESIGNED BY: JKM		TOTAL SHTS. 16
					CHECKED BY: BAB		

UNOFFICIAL WEBSITE COPY

ASSESSMENT NUMBER	OWNERSHIP OF RECORD	TYPE OF ACQUISITION	TITLE SOURCE	PARCEL AREA (ACRES)
6.00-17100-03-3.00	(1-L) BRENDA L. BEENE	P/E	D.R. D 30-304	1.700

ALIGNMENT NUMBER & DESCRIPTION: 1000 - JACKSON DITCH ROAD BASELINE

PT. NO.	ALIGN. NO.	STATION	OFFSET *	NORTH	EAST	BEARING	DISTANCE	CHORD BEARING	CHORD LENGTH	ARC LENGTH	RADIUS **
5101	1000	2+09.67	-25.00	343307.2435	621343.8628	S 83°11′30.97″ W	5.0088				
5001	1000	2+09.96	-30.00	343306.6497	621338.8893	N 14°56′56.96″ W	88.0688				
5008	1000	2+96.45	-38.00	343391.7378	621316.1710	N 79°09′35.35″ W	25.3710				
5007	1000	3+04.36	-62.00	343396.5093	621291.2527	N 7°31′28.66″ W	16.6045				
5006	1000	3+20.16	-62.00	343412.9708	621289.0783	N 74°16′53.21″ E	37.4300				
5102	1000	3+25.62	-25.00	343423.1111	621325.1086			S 8°33′03.72″ E	71.7811	71.7911	-1242.5000
7001	1000	2+55.27	-25.00	343352.1279	621335.7817	S 10°12′22.66″ E	45.6061				
5101	1000	2+09.67	-25.00	343307.2435	621343.8628						

FIGURE 5101 AREA = 1678.0133 SQ. FT. (0.0385 ACRES)

ASSESSMENT NUMBER	OWNERSHIP OF RECORD	TYPE OF ACQUISITION	TITLE SOURCE	PARCEL AREA (ACRES)
6.00-17100-03-3.00	(1-L) BRENDA L. BEENE	TCE	D.R. D 30-304	1.700

ALIGNMENT NUMBER & DESCRIPTION: 1000 - JACKSON DITCH ROAD BASELINE

PT. NO.	ALIGN. NO.	STATION	OFFSET *	NORTH	EAST	BEARING	DISTANCE	CHORD BEARING	CHORD LENGTH	ARC LENGTH	RADIUS **
5001	1000	2+09.96	-30.00	343306.6497	621338.8893	S 83°11′36.31″ W	6.0707				
5002	1000	2+10.32	-36.06	343305.9302	621332.8614	N 14°51′22.40″ W	65.0860				
5003	1000	2+74.54	-41.49	343368.8406	621316.1737	N 56°23′04.49″ W	65.0860				
5004	1000	3+15.82	-89.91	343404.8732	621261.9720	N 73°22′02.03″ E	28.2900				
5006	1000	3+20.16	-62.00	343412.9708	621289.0783	S 7°31′28.66″ E	16.6045				
5007	1000	3+04.36	-62.00	343396.5093	621291.2527	S 79°09′35.35″ E	25.3710				
5008	1000	2+96.45	-38.00	343391.7378	621316.1710	S 14°56′56.96″ E	88.0688				
5001	1000	2+09.96	-30.00	343306.6497	621338.8893						

FIGURE 5001 AREA = 1273.6325 SQ. FT. (0.0292 ACRES)

ASSESSMENT NUMBER	OWNERSHIP OF RECORD	TYPE OF ACQUISITION	TITLE SOURCE	PARCEL AREA (ACRES)
6.00-17100-03-1.00	(2-L) CHARLES G. CAIN	P/E	D.R. 552-180	67.800

ALIGNMENT NUMBER & DESCRIPTION: 1000 - JACKSON DITCH ROAD BASELINE

PT. NO.	ALIGN. NO.	STATION	OFFSET *	NORTH	EAST	BEARING	DISTANCE	CHORD BEARING	CHORD LENGTH	ARC LENGTH	RADIUS **
5102	1000	3+25.62	-25.00	343423.1111	621325.1086	S 74°16′53.21″ W	37.4300				
5006	1000	3+20.16	-62.00	343412.9708	621289.0783	N 6°29′59.76″ W	67.2357				
5210	1000	3+84.11	-63.00	343479.7744	621281.4671	N 75°50′51.64″ E	29.4588				
5209	1000	3+89.09	-34.00	343486.9771	621310.0318	N 1°57′16.11″ E	35.1106				
5208	1000	4+22.62	-31.00	343522.0672	621311.2293	N 28°14′37.58″ E	12.4413				
5207	1000	4+32.81	-25.00	343533.0273	621317.1168			S 1°20′32.20″ E	22.0237	22.0262	-425.0000
7101	1000	4+12.08	-25.00	343511.0096	621317.6327			S 4°51′40.97″ E	88.2159	88.2344	-1242.5000
5102	1000	3+25.62	-25.00	343423.1111	621325.1086						

FIGURE 5102 AREA = 2770.8599 SQ. FT. (0.0636 ACRES)

ASSESSMENT NUMBER	OWNERSHIP OF RECORD	TYPE OF ACQUISITION	TITLE SOURCE	PARCEL AREA (ACRES)
6.00-17100-03-1.00	(2-L) CHARLES G. CAIN	TCE	D.R. 552-180	67.800

ALIGNMENT NUMBER & DESCRIPTION: 1000 - JACKSON DITCH ROAD BASELINE

PT. NO.	ALIGN. NO.	STATION	OFFSET *	NORTH	EAST	BEARING	DISTANCE	CHORD BEARING	CHORD LENGTH	ARC LENGTH	RADIUS **
5004	1000	3+15.82	-89.91	343404.8732	621261.9720	N 6°48′33.14″ W	19.1216				
5201	1000	3+33.63	-89.87	343423.8599	621259.7048	N 58°55′37.98″ E	15.5239				
5202	1000	3+39.70	-75.77	343431.8722	621273.0012	N 3°27′25.99″ E	57.5729				
5203	1000	3+93.49	-67.33	343489.3403	621276.4731	N 83°11′31.82″ E	19.9027				
5204	1000	3+94.53	-47.46	343491.6996	621296.2354	N 15°50′06.45″ E	64.6228				
5205	1000	4+52.25	-28.81	343553.8700	621313.8691	N 83°11′51.37″ E	3.8621				
5206	1000	4+52.87	-25.00	343554.3274	621317.7039			S 1°34′44.05″ W	21.3082	21.3105	-425.0000
5207	1000	4+32.81	-25.00	343533.0273	621317.1168	S 28°14′37.58″ W	12.4413				
5208	1000	4+22.62	-31.00	343522.0672	621311.2293	S 1°57′16.11″ W	35.1106				
5209	1000	3+89.09	-34.00	343486.9771	621310.0318	S 75°50′51.64″ W	29.4588				
5210	1000	3+84.11	-63.00	343479.7744	621281.4671	S 6°29′59.76″ E	67.2357				
5006	1000	3+20.16	-62.00	343412.9708	621289.0783	S 73°22′02.03″ W	28.2900				
5004	1000	3+15.82	-89.91	343404.8732	621261.9720						

FIGURE 5201 AREA = 1860.4930 SQ. FT. (0.0427 ACRES)

ASSESSMENT NUMBER	OWNERSHIP OF RECORD	TYPE OF ACQUISITION	TITLE SOURCE	PARCEL AREA (ACRES)
6.00-17102-03-96.00	(1-R) PINE RIDGE HOMEOWNERS ASSOCIATION	P/E	D. R. 607-218	1.500

ALIGNMENT NUMBER & DESCRIPTION: 1000 - JACKSON DITCH ROAD BASELINE

PT. NO.	ALIGN. NO.	STATION	OFFSET *	NORTH	EAST	BEARING	DISTANCE	CHORD BEARING	CHORD LENGTH	ARC LENGTH	RADIUS **
5302	1000	2+29.42	30.00	343336.4245	621394.4933	N 10°12′22.66″ W	25.8582				
7201	1000	2+55.27	30.00	343361.8735	621389.9114			N 8°23′55.58″ W	74.9123	74.9248	1187.5000
5401	1000	3+32.09	30.00	343435.9825	621378.9696	N 68°07′15.09″ E	35.2862				
5306	1000	3+41.91	64.00	343449.1319	621411.7142	S 23°25′32.25″ E	24.3359				
5305	1000	3+17.24	71.00	343426.8018	621421.3891	S 53°01′35.08″ W	41.2346				
5304	1000	2+96.21	35.00	343402.0014	621388.4463	S 7°00′42.95″ E	65.8320				
5303	1000	2+29.30	32.00	343336.6618	621396.4828	S 83°11′55.64″ W	2.0035				
5302	1000	2+29.42	30.00	343336.4245	621394.4933						

FIGURE 5302 AREA = 1440.4242 SQ. FT. (0.0331 ACRES)

ASSESSMENT NUMBER	OWNERSHIP OF RECORD	TYPE OF ACQUISITION	TITLE SOURCE	PARCEL AREA (ACRES)
6.00-17102-03-96.00	(1-R) PINE RIDGE HOMEOWNERS ASSOCIATION	TCE	D. R. 607-218	1.500

ALIGNMENT NUMBER & DESCRIPTION: 1000 - JACKSON DITCH ROAD BASELINE

PT. NO.	ALIGN. NO.	STATION	OFFSET *	NORTH	EAST	BEARING	DISTANCE	CHORD BEARING	CHORD LENGTH	ARC LENGTH	RADIUS **
5301	1000	2+19.66	30.00	343326.8278	621396.2211	N 10°12′22.66″ W	9.7510				
5302	1000	2+29.42	30.00	343336.4245	621394.4933	N 83°11′55.64″ E	2.0035				
5303	1000	2+29.30	32.00	343336.6618	621396.4828	N 7°00′42.95″ W	65.8320				
5304	1000	2+96.21	35.00	343402.0014	621388.4463	N 53°01′35.08″ E	41.2346				
5305	1000	3+17.24	71.00	343426.8018	621421.3891	N 23°25′32.25″ W	24.3359				
5306	1000	3+41.91	64.00	343449.1319	621411.7142	N 68°07′18.58″ E	31.4084				
5307	1000	3+51.15	94.20	343460.8357	621440.8605	S 6°48′27.59″ E	36.4415				
5308	1000	3+11.65	94.31	343424.6511	621445.1802	S 55°03′38.67″ W	49.5050				
5309	1000	2+87.90	50.14	343396.2992	621404.5980	S 6°48′31.85″ E	67.9883				
5310	1000	2+18.68	46.53	343328.7904	621412.6585	S 83°11′27.81″ W	16.5541				
5301	1000	2+19.66	30.00	343326.8278	621396.2211						

FIGURE 5301 AREA = 2592.2899 SQ. FT. (0.0595 ACRES)

ASSESSMENT NUMBER	OWNERSHIP OF RECORD	TYPE OF ACQUISITION	TITLE SOURCE	PARCEL AREA (ACRES)
6.00-16000-01-18.00	(2-R) DAVID P. & MARY J. BYLER	P/E	D.R. Q 52-149	3.810

ALIGNMENT NUMBER & DESCRIPTION: 1000 - JACKSON DITCH ROAD BASELINE

PT. NO.	ALIGN. NO.	STATION	OFFSET *	NORTH	EAST	BEARING	DISTANCE	CHORD BEARING	CHORD LENGTH	ARC LENGTH	RADIUS **
5601	1000	3+30.70	25.00	343434.0512	621374.1603			N 4°44′31.00″ W	79.6972	79.7121	1192.5000
7301	1000	4+12.08	25.00	343513.4757	621367.5719			N 0°54′11.47″ E	48.7934	48.8279	375.0000
5504	1000	4+64.16	25.00	343562.2630	621368.3410	S 7°34′28.47″ E	46.3263				
5503	1000	4+14.82	32.00	343516.3410	621374.4476	S 7°34′28.47″ E	45.5230				
5502	1000	3+67.96	35.00	343471.2152	621380.4482	N 84°18′02.46″ E	20.0020				
5501	1000	3+68.25	55.00	343473.2015	621400.3513	S 25°16′16.25″ E	26.6170				
5306	1000	3+41.91	64.00	343449.1319	621411.7142	S 68°07′15.31″ W	40.4688				
5601	1000	3+30.70	25.00	343434.0512	621374.1603						

FIGURE 5601 AREA = 1664.9519 SQ. FT. (0.0382 ACRES)

ASSESSMENT NUMBER	OWNERSHIP OF RECORD	TYPE OF ACQUISITION	TITLE SOURCE	PARCEL AREA (ACRES)
6.00-16000-01-18.00	(2-R) DAVID P. & MARY J. BYLER	TCE	D.R. Q 52-149	3.810

ALIGNMENT NUMBER & DESCRIPTION: 1000 - JACKSON DITCH ROAD BASELINE

PT. NO.	ALIGN. NO.	STATION	OFFSET *	NORTH	EAST	BEARING	DISTANCE	CHORD BEARING	CHORD LENGTH	ARC LENGTH	RADIUS **
5306	1000	3+41.91	64.00	343449.1319	621411.7142	N 25°16′16.25″ W	26.6170				
5501	1000	3+68.25	55.00	343473.2015	621400.3513	S 84°18′02.46″ W	20.0020				
5502	1000	3+67.96	35.00	343471.2152	621380.4482	N 7°34′28.47″ W	45.5230				
5503	1000	4+14.82	32.00	343516.3410	621374.4476	N 7°34′28.47″ W	46.3263				
5504	1000	4+64.16	25.00	343562.2630	621368.3410			N 4°56′25.69″ E	4.0200	4.0200	375.0000
5508	1000	4+68.45	25.00	343566.2681	621368.6872	N 83°11′24.96″ E	18.8742				
5505	1000	4+72.87	43.44	343568.5060	621387.4282	S 6°48′32.47″ E	73.7484				
5506	1000	3+91.61	52.50	343495.2778	621396.1718	S 67°51′07.97″ E	46.0469				
5507	1000	3+69.79	93.73	343477.9183	621438.8212	S 6°48′28.35″ E	17.2039				
5307	1000	3+51.15	94.20	343460.8357	621440.8605	S 68°07′18.58″ W	31.4084				
5306	1000	3+41.91	64.00	343449.1319	621411.7142						

FIGURE 5501 AREA = 3033.7726 SQ. FT. (0.0696 ACRES)

LEGEND

FEE AREA OF ACQUISITION
R/W AREA OCCUPIED BY EXISTING R/W
P/E PERMANENT EASEMENT
TCE TEMPORARY CONSTRUCTION EASEMENT

* "-" OFFSET IS LEFT OF BASELINE
** "-" CURVE TURNS TO THE LEFT

DELAWARE DEPARTMENT OF TRANSPORTATION

ADDENDUMS / REVISIONS

BR 2-429A ON K429, JACKSON DITCH ROAD, OVER BROWNS BRANCH

CONTRACT	BRIDGE NO.	2-429A
T201007204	DESIGNED BY: JKM	
COUNTY	CHECKED BY: BAB	
KENT		

RIGHT-OF-WAY DATA SHEET

SHEET NO. 14 TOTAL SHTS. 16

Y:\KENT\429\BRIDGE\T201007204\RWPLOT\RB01.DGN

COUNTY ASSESSMENT PARCEL NUMBER	PLAN SHEET NUMBER	OWNERSHIP OF RECORD	TITLE SOURCE	PROPERTY AREA BEFORE ACQUISITION (ACRE) D=DEED C=CALCULATED A=ASSESMENT	ACQUISTITION CODE FEE, R/W, P/E, TCE	AREA TO BE ACQUIRED				PROPERTY AREA REMAINING (SQ. FEET /ACRES)	DEED RECORD OF ACQUISTITION	REMARKS
						ACQUISITION (SQ. FEET /ACRES)	AREA OCCUPIED BY EXISTING RIGHT OF WAY (SQ. FEET /ACRES)	EASEMENT PERMANENT (SQ. FEET /ACRES)	EASEMENT TEMPORARY (SQ. FEET /ACRES)			
6.00-17100-03-3.00	13	(1-L) BRENDA L. BEENE	D.R. D 30-304	D - 1.70	P/E			1678.0133 / 0.04				
					TCE				1273.6325 / 0.03	74052.00 / 1.70		
6.00-17100-03-1.00	13	(2-L) CHARLES G. CAIN	D.R. 552-180	D - 67.80	P/E			2770.8599 / 0.06				
					TCE				1860.493 / 0.04	2953368.00 / 67.80		
6.00-17102-03-96.00	13	(1-R) PINE RIDGE HOMEOWNERS ASSOCIATION	D. R. 607-218	D - 1.50	P/E			1440.4242 / 0.03				
					TCE				2592.2899 / 0.06	65340.00 / 1.50		
6.00-16000-01-18.00	13	(2-R) DAVID P. & MARY J. BYLER	D.R. Q 52-149	D - 3.81	P/E			1664.9519 / 0.04				
					TCE				3033.7726 / 0.07	165963.60 / 3.81		

UNOFFICIAL WEBSITE COPY

ACQUISTITION CODES

FEE - ACQUISITION
R/W - AREA OCCUPIED BY EXISTING R/W
P/E - PERMANENT EASEMENT
TCE - TEMPORARY EASEMENT

DELAWARE DEPARTMENT OF TRANSPORTATION

ADDENDUMS / REVISIONS

BR 2-429A ON K429, JACKSON DITCH ROAD, OVER BROWNS BRANCH

CONTRACT	BRIDGE NO.	2-429A
T201007204	DESIGNED BY: JKM	
COUNTY		
KENT	CHECKED BY: BAB	

RIGHT-OF-WAY TABULATION SHEET

SHEET NO. 15
TOTAL SHTS. 16

Y:\KENT\429\BRIDGE\T201007204\RWPLOT\RT01.DGN

CHANGEABLE MESSAGE BOARDS

PRIOR TO DETOUR
(10 DAYS PRIOR TO BEGINNING OF DETOUR)

CMS-I

JACKSON DITCH RD CLOSING	STARTING XX/XX/XX

DURING DETOUR
(TO BE REMOVED 5 DAYS AFTER IMPLEMENTATION)

CMS-I

JACKSON DITCH RD CLOSED	FOLLOW DETOUR

SPECIAL SIGNS

48" × 72"

JACKSON DITCH ROAD CLOSED	6"C 6"C 6"C
FOLLOW DETOUR	6"C 6"C

(U)

48" × 78"

JACKSON DITCH ROAD CLOSED EAST OF OLD AIRPORT RD	6"C 6"C 6"C 6"C
FOLLOW DETOUR	6"C 6"C

(V)

D/G ORANGE; BLACK LEGEND

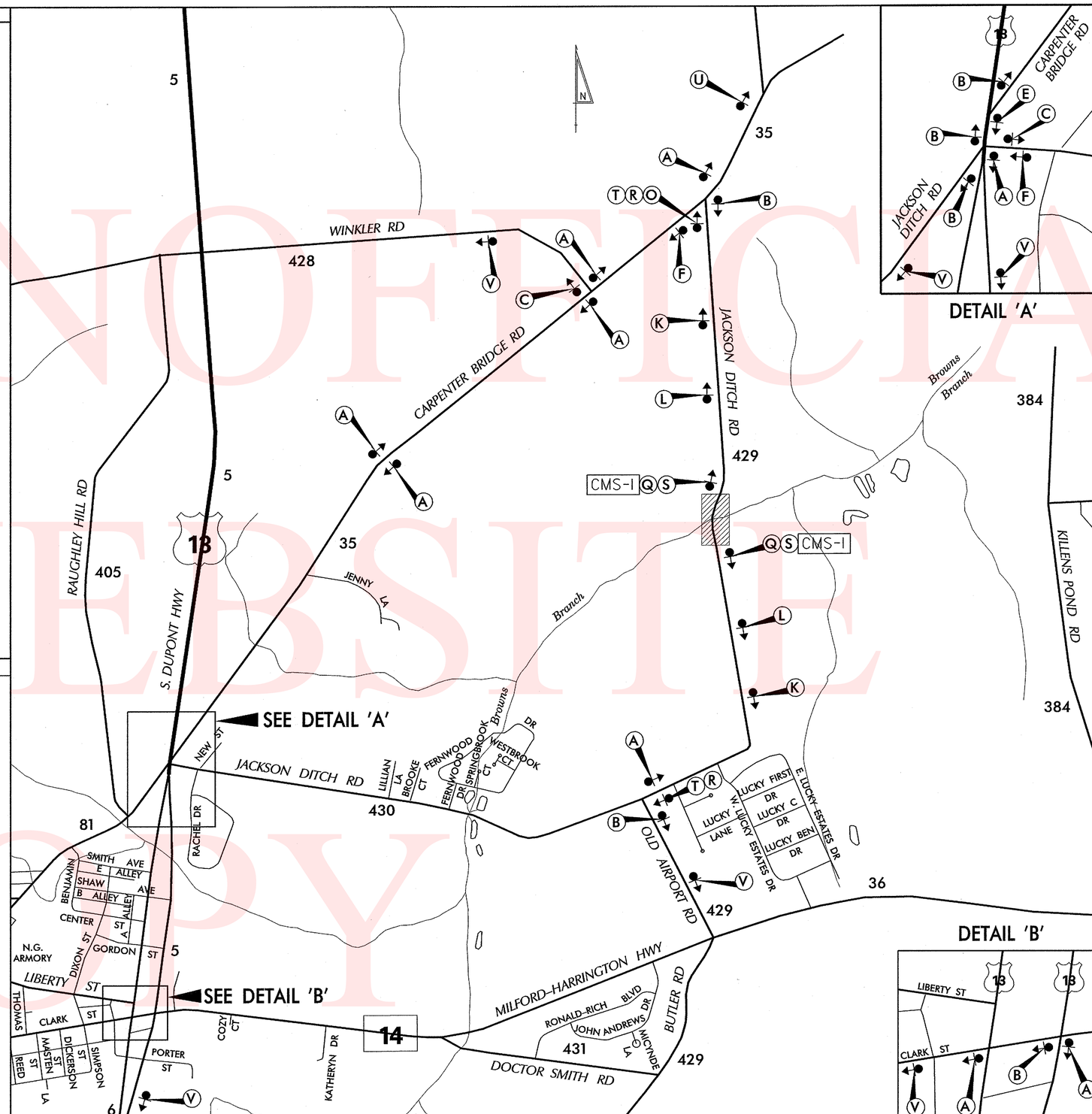

LEGEND

(A) DETOUR ↑	(B) DETOUR ←	(C) DETOUR →
(D) DETOUR ↖	(E) DETOUR ↗	(F) END DETOUR
(G) DETOUR AHEAD	(H) DETOUR 1000 FT	(I) DETOUR 500 FT
(J) ROAD CLOSED AHEAD	(K) ROAD CLOSED 1000 FT	(L) ROAD CLOSED 500 FT
(M) ROAD NAME	(N) ← DETOUR	(O) DETOUR →
(P) ROAD CLOSED XX MILES AHEAD LOCAL TRAFFIC ONLY	(Q) ROAD CLOSED	(R) ROAD CLOSED TO THRU TRAFFIC
(S)		(T)

GENERAL NOTES

1. ALL DETOUR SIGNING INCLUDING, TRAILBLAZERS, ARE TO BE SUPPLIED AND MAINTAINED BY THE GENERAL CONTRACTOR IN COMPLIANCE TO THE DE MANUAL OF UNIFORM TRAFFIC CONTROL DEVICES.
2. THE CONTRACTOR SHALL COMPLY WITH GUIDELINES IN "THE DELAWARE MANUAL ON UNIFORM TRAFFIC CONTROL DEVICES (DE- MUTCD PART 6) FOR LIGHTS, BARRICADES AND SIGNS.(AS PER LATEST REVISION)
3. FIELD CONDITIONS MAY DICTATE CHANGES AT SOME TIME DURING THE LIFE OF THE CONTRACT. IN THE EVENT OF OMISSIONS OR CORRECTIONS, THE SIGNING PROVISIONS OF THE DELAWARE MANUAL ON UNIFORM TRAFFIC CONTROL DEVICES WILL PREVAIL.
4. SIGNS J THROUGH L AND P THROUGH R ,THE WORD (ROAD) SHOULD BE CHANGED TO RAMP, R/R OR BRIDGE WHERE APPLICABLE.
5. WARNING SIGNS SHOULD BE MOUNTED ON BREAKAWAY POSTS AND HAVE RETROREFLECTIVE FLUORESCENT SHEETING.
6. "S" BARRICADES SHALL COMPLETELY RUN THE FULL WIDTH OF ROADWAY.
7. BARRICADES SHALL BE A MINIMUM OF 6 FEET WIDE UNLESS DIRECTED BY THE ENGINEER.

RECOMMENDED _____ DATE: _____

RECOMMENDED [signature] DATE: 4-14-10

RECOMMENDED [signature] DATE: 4/14/10

APPROVED CHIEF SAFETY OFFICER [signature] DATE: 4-14-10

APPROVED TRAFFIC ENGINEER [signature] DATE: 4/14/10

DELAWARE DEPARTMENT OF TRANSPORTATION

ADDENDUM / REVISIONS

NOT TO SCALE

BR 2-429A ON JACKSON DITCH ROAD OVER BROWNS BRANCH

CONTRACT	ROAD NO.	K429
30-072-04	DESIGNED BY:	SWN
COUNTY		
KENT	CHECKED BY:	ASW

DETOUR PLAN

SHEET NO. 1
TOTAL SHTS. 1

UNOFFICIAL WEBSITE COPY