THE STATE OF DELAWARE
DEPARTMENT OF TRANSPORTATION

U.S. CUSTOMARY UNITS

CONSTRUCTION PLANS FOR:

ROAD A /SR7 IMPROVEMENTS

CONTRACT NUMBER: T201009002
FEDERAL AID PROJECT NUMBER: ESTP-N336(08)

COUNTY: NEW CASTLE **M.R. #: 336A**

UNOFFICIAL WEBSITE COPY

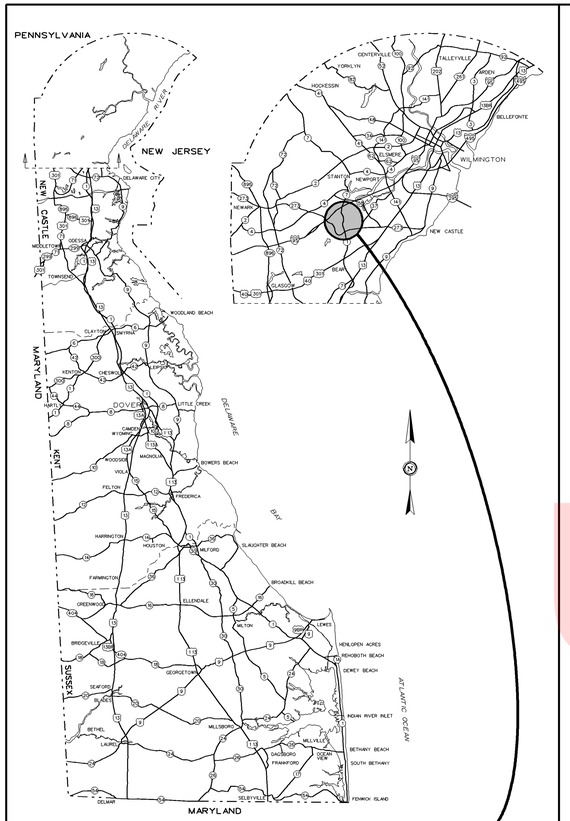

GENERAL LOCATION OF CONTRACT

LIMIT OF CONTRACT STATION 318+00.00

LIMIT OF CONTRACT STATION 1339+90.00

END CONTRACT STATION 121+57.00

BEGIN CONTRACT STATION 101+10.00

LIMIT OF CONTRACT STATION 301+00.00

LIMIT OF CONTRACT STATION 1342+94.00

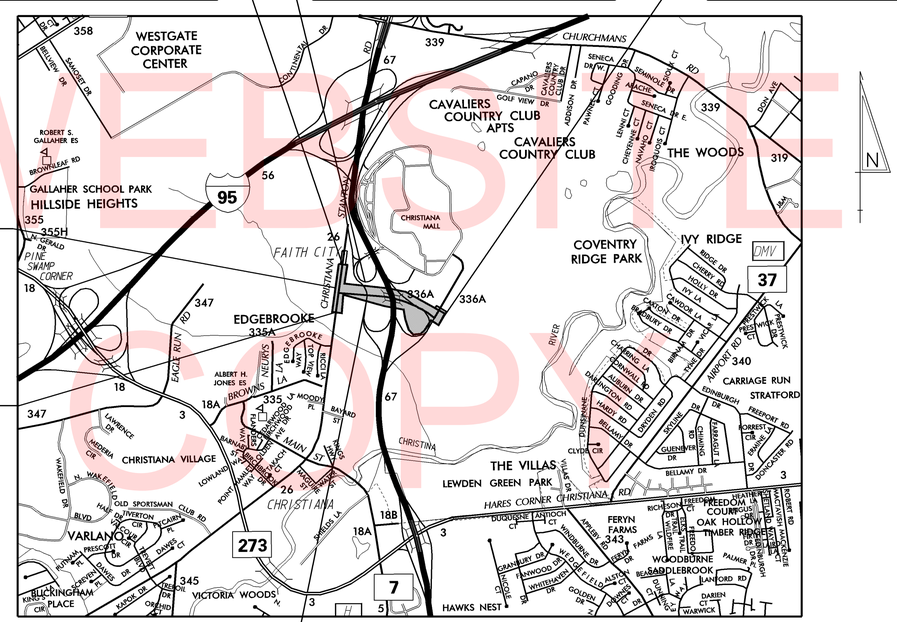

PREPARED BY
THE CONSULTING FIRM OF

RUMMEL, KLEPPER & KAHL, LLP

NANCY RUTH BERGERON LICENSE No. 16737 DELAWARE PROFESSIONAL ENGINEER

SEAL

Nancy R. Bergeron — 06/12/2018
RECOMMENDED — DATE

RECOMMENDED

06/18/2018
SQUAD MANAGER, CONSTRUCTION — DATE

06/20/2018
GROUP ENGINEER, CONSTRUCTION — DATE

06/20/2018
ASSISTANT DIRECTOR, TRANSPORTATION SOLUTIONS (CONSTRUCTION) — DATE

DESIGN DESIGNATION

FUNCTIONAL CLASS: MAJOR COLLECTOR		D.H.V. PROJECTED: 2,425	YEAR: 2040
TYPE OF CONSTRUCTION: NEW/WIDENING		DESIGN SPEED: 40 M.P.H.	
A.A.D.T. CURRENT: 9,000	YEAR: 2015	TRUCKS: 3 %	
A.A.D.T. PROJECTED: 22,500	YEAR: 2040	DIRECTION OF DISTRIBUTION: 55 %	

INDEX OF SHEETS

SHEET Nº	TABLE OF CONTENTS
1	TITLE
2	PLAN SHEET INDEX
3	LEGEND
4	NOTES
5-10	TYPICAL SECTIONS
11-13	HORIZONTAL AND VERTICAL CONTROL
14-18	CONSTRUCTION PLANS
19-21	PROFILES
22-24	GRADES AND GEOMETRICS
25-30	CONSTRUCTION DETAILS
31	STORMWATER MANAGEMENT PLAN
32	BRIDGE PROJECT NOTES
33	INDEX OF DRAWINGS
34	BRIDGE PLAN AND ELEVATION
35	BRIDGE TYPICAL SECTION
36	BRIDGE GEOMETRIC LAYOUT PLAN
37	BRIDGE PILE DETAILS
38-44	BRIDGE ABUTMENT DETAILS
45-48	BRIDGE WINGWALL DETAILS
49-53	BRIDGE PIER DETAILS
54	BRIDGE BEARING DETAILS
55-59	BRIDGE BEAM DETAILS
60	BRIDGE CAMBER TABLE
61-66	BRIDGE DECK PLANS
67-68	FINISHED BRIDGE DECK ELEVATIONS
69-71	EXPANSION JOINT DETAILS
72-77	APPROACH SLAB PLANS AND DETAILS
78-83	MOMENT SLAB DETAILS
84	ERECTION SEQUENCE
85-91	RETAINING WALL DETAILS
92-93	SIGN STRUCTURE DETAILS
94-95	HIGH MAST LIGHT STRUCTURE DETAILS
96-99	ENVIRONMENTAL COMPLIANCE PLANS
100-113	CONSTRUCTION PHASING, M.O.T. AND EROSION CONTROL PLANS
114-117	DETOUR PLANS
118-124	LIGHTING PLANS
125-129	UTILITY RELOCATION PLANS
130-143	SIGNING, STRIPING AND CONDUIT PLANS
144-147	SIGNALIZATION PLANS
148	RIGHT-OF-WAY MOSAIC SHEET
149-153	RIGHT-OF-WAY PLANS
154	RIGHT-OF-WAY DATA SHEET

TOTAL SHEETS: 154

APPROVED DESIGN EXCEPTIONS

DESIGN PARAMETER	REQUIRED	PROVIDED	DATE

ADDENDA & REVISIONS

DESCRIPTION	NAME & DATE

ASSOCIATED CONTRACTS

CONTRACT NO.	CONTRACT NAME
T200809003	SR 1 / I-95 INTERCHANGE
T201009004	SR 1 / I-95 INTERCHANGE - CHRISTIANA MALL ROAD BRIDGE
T201309003	ROAD A / SR 7 / CENTER BLVD INTERSECTION IMPROVEMENTS
T201309001	FASHION CENTER ENTRANCE, ROAD A AND CENTER BLVD
83-101-02	DELAWARE ROUTE 7

RECOMMENDED

Vincent W. Davis
STORMWATER ENGINEER
DATE 06/18/2018

VINCENT W. DAVIS REGISTERED No. 12898 DELAWARE PROFESSIONAL ENGINEER
SEAL

RECOMMENDED

SQUAD MANAGER, TRANSPORTATION SOLUTIONS (PROJECT/DEVELOPMENT OR BRIDGE DESIGN)
DATE 06/12/2018

JERRY K. LOVELL LICENSE No. 16257 DELAWARE PROFESSIONAL ENGINEER
SEAL

RECOMMENDED

BRIDGE DESIGN ENGINEER
DATE 06/14/2018

CRAIG A. STEVENS LICENSE No. 15250 DELAWARE PROFESSIONAL ENGINEER
SEAL

RECOMMENDED

GROUP ENGINEER, PROJECT DEVELOPMENT
DATE

SEAL

RECOMMENDED

Mark C. Tudor
ASSISTANT DIRECTOR, TRANSPORTATION SOLUTIONS
DATE

MARK CHRISTOPHER TUDOR REGISTERED No. 10803 DELAWARE PROFESSIONAL ENGINEER
SEAL

APPROVED

Robert Brian McCleary
CHIEF ENGINEER
DATE 06/29/2018

ROBERT BRIAN McCLEARY REGISTERED No. 8567 DELAWARE PROFESSIONAL ENGINEER
SEAL

4/6/2018 9:33:47 AM
\\BALSRV01\V2012\2012\12146_DELDOT1585\40-ROAD A CONNECTOR\CADD\CONTRACT\PLANS\TC01_RDA.DGN

PLAN SHEET INDEX CROSS REFERENCE					
CONSTRUCTION PLAN	14	15	16	17	18
PROFILES	19	19, 20, 21	21	-	-
GRADES AND GEOMETRICS	22	23	24	-	-
ENVIRONMENTAL COMPLIANCE	-	98	99	-	-
CONSTRUCTION PHASING, M.O.T. AND E&S	107, 111	102, 108, 112	103, 113	109	104, 110
LIGHTING PLAN	119	120	121	-	-
UTILITY RELOCATION PLAN	125	126	127	128	129
SIGNING, STRIPING AND CONDUIT PLAN	130	131	133	135	136
SIGNALIZATION PLAN	144	145	147	-	-

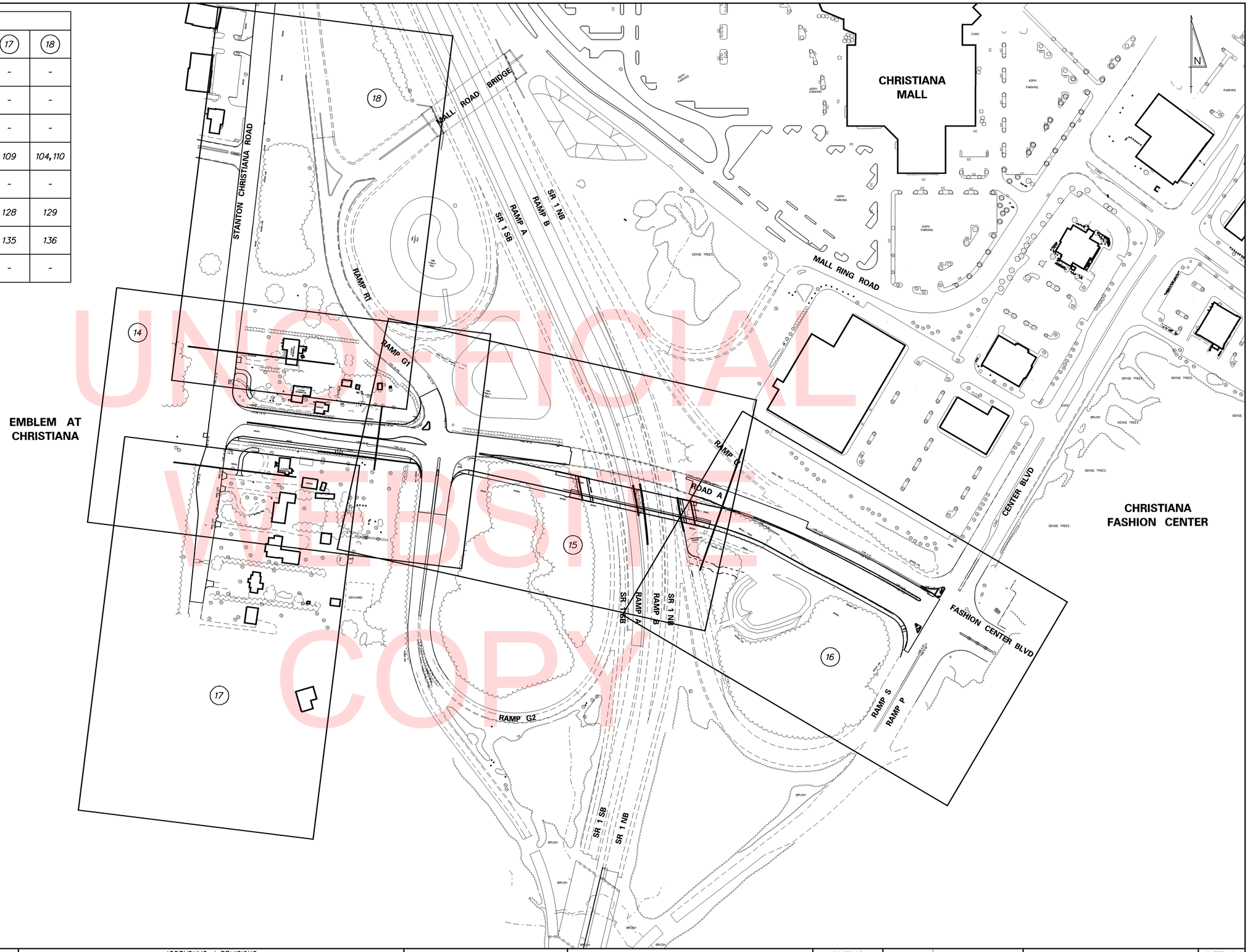

UNOFFICIAL WEBSITE COPY

4/3/2018 4:52:57 PM
\\BALSRV01\V2012\2012\12146_DELDOT1585\40-ROAD A CONNECTOR\CADD\CONTRACT\PLANS\IS01_RDA.DGN

DELAWARE DEPARTMENT OF TRANSPORTATION

ADDENDUMS / REVISIONS

SCALE 0 120 240 360 FEET

ROAD A /SR7 IMPROVEMENTS

CONTRACT	BRIDGE NO.	1-220
T201009002	DESIGNED BY:	MJV
COUNTY	CHECKED BY:	RLS
NEW CASTLE		

PLAN SHEET INDEX

SHEET NO. 2
TOTAL SHTS. 154

EXISTING SYMBOLS

DRAINAGE

	DITCH OR STREAM CENTERLINE
	DIRECTIONAL STREAM FLOW ARROW
C.B. / D.I.	DRAINAGE INLET
J.B.	DRAINAGE JUNCTION BOX
D	DRAINAGE MANHOLE
SIZE/TYPE LABEL	DRAINAGE PIPE AND FLOW ARROW
	DRAINAGE PIPE HEADWALL
	RIPRAP - AREA FEATURE
	RIPRAP - LINEAR FEATURE

MANMADE ROADSIDE FEATURES

	BOLLARD - STEEL POLE
	BOLLARD - WOOD POST
(TYPE LABEL)	CURB
(TYPE LABEL)	CURB AND GUTTER
	FENCE - CHAINLINK OR STRANDED
	FENCE - STOCKADE OR SPLIT RAIL
FP	FLAG POLE
	GUARDRAIL - STEEL BEAM
	GUARDRAIL - WIRE ROPE
LAMP	LAMP AND POST - RESIDENTIAL
MB	MAILBOX
PM	PARKING METER AND POST
	PAVEMENT - FLEXIBLE
	PAVEMENT - RIGID
	PILE - BRIDGE
	PILLAR OR MISCELLANEOUS POST
	TRAFFIC SIGN AND POST
	WALL - BRICK OR BLOCK
	WALL - STONE

NATURAL ROADSIDE FEATURES

	GRASS LAWN
	HEDGEROW OR THICKET
	MARSH BOUNDARY LINE
	TREE - CONIFEROUS
	TREE - DECIDUOUS
	TREE STUMP
	SHRUBBERY
WL	DELINEATED WETLAND BOUNDARY LINE
	WOODS LINE BOUNDARY

RIGHT-OF-WAY SYMBOLS

C.M.	PROPERTY MARKER - CONCRETE MON.
I.P.	PROPERTY MARKER - IRON PIPE
100+00	HISTORIC RIGHT-OF-WAY BASELINE
	EXISTING RIGHT-OF-WAY
	EXISTING PROPERTY LINE
EASEMENT TYPE	EXISTING EASEMENT
DA	EXISTING DENIAL OF ACCESS
R/W-DA	EXISTING R/W & DENIAL OF ACCESS

SURVEY CONTROL & MONUMENTATION

B.M.	SURVEY BENCHMARK LOCATION
T.P.	SURVEY TIE POINT LOCATION
	SURVEY TRAVERSE POINT
	POINT OF CURVATURE OR TANGENCY
	POINT OF INTERSECTING TANGENTS

UTILITY

	SOIL BORING LOCATION
	UTILITY TEST HOLE LOCATION
TV	CABLE TV DISTRIBUTION BOX
E	ELECTRIC MANHOLE
EM	ELECTRIC METER
E	ELECTRIC TRANSFORMER
	POLE MOUNTED LUMINAIRE
G	GAS MANHOLE
G.M.	GAS METER
G.V.	GAS VALVE
G.P.	GAS PUMP - SERVICE STATION
	RAILROAD TRACKS
S	SANITARY SEWER MANHOLE
S.V.	SANITARY SEWER VALVE
VENT	SANITARY SEWER VENT OR CLEANOUT
S.D.F.	SEPTIC DRAIN FIELD
B	TELEPHONE BOOTH
T	TELEPHONE MANHOLE
T	TELEPHONE TEST POINT
J.W.	TRAFFIC - CONDUIT JUNCTION WELL
	TRAFFIC - LIGHT POLE AND BASE
	TRAFFIC - PEDESTRIAN POLE & BASE
	TRAFFIC - SIGNAL CABINET & BASE
	TRAFFIC - SIGNAL POLE AND BASE
U	UTILITY BOX
	UTILITY POLE GUY WIRE ANCHOR
	UTILITY POLE
F.H.	WATER - FIRE HYDRANT
W.M.	WATER METER
W.V.	WATER VALVE
WELL	WELL HEAD
?	MANHOLE - UNDETERMINED OWNER

UTILITY COMPANY FACILITIES

-DOT-E-DUCT-	DELDOT ELECTRIC DUCT
AW-W	ARTESIAN WATER COMPANY
-DOT-TC-UG-	DELDOT TELECOMM
VER-C	VERIZON
DP-E	DELMARVA POWER - ELECTRIC
DP-G	DELMARVA POWER - GAS
EX-SIG	DELDOT SIGNAL CONDUIT - EXISTING
EX-CON	DELDOT MULTIDUCT CONDUIT - EXISTING

PROPOSED SYMBOLS

CONSTRUCTION

	CONCRETE SAFETY BARRIER - PERMANENT
BFS	BIOFILTRATION SWALE
	BRICK PATTERNED SURFACE
	BUTT JOINT
100+00	CONSTRUCTION BASELINE
CSF	CONSTRUCTION SAFETY FENCE
	CURB, TYPE 1 & TYPE 3
	CURB, TYPE 2
	CURB & GUTTER, TYPE 1
	CURB & GUTTER, TYPE 2
	CURB & GUTTER, TYPE 3
	CURB & GUTTER, TYPE 4
CZ	CLEAR ZONE
	DRAINAGE INLET
	DITCH
	FENCE - METAL
	FENCE - WOOD
	FLARED END SECTION
	GUARDRAIL, TYPE 1
	GUARDRAIL, TYPE 2
	GUARDRAIL, TYPE 3
	GUARDRAIL END ANCHORAGE
	GUARDRAIL END TREATMENT, TYPE 1
	GUARDRAIL END TREATMENT, TYPE 2
	GUARDRAIL END TREATMENT, TYPE 3
	IMPACT ATTENUATOR
	JUNCTION BOX - DRAINAGE
LO	LATERAL OFFSET
LOC	LIMIT OF CONSTRUCTION
MB	MAILBOX
	MANHOLE
	PAVEMENT PATCH
	PAVEMENT REMOVAL - TOPSOIL, SEED AND MULCH
	PIPE & DIRECTIONAL FLOW ARROW
	RIPRAP
	P.C.C. SIDEWALK - 4"
	P.C.C. SIDEWALK - 6" (USE 8" DEPTH FOR CHANNELIZATION ISLANDS.)
	UNDERDRAIN
	UNDERDRAIN OUTLET

RIGHT-OF-WAY SYMBOLS

	PROPOSED RIGHT-OF-WAY MONUMENT
DA	PROPOSED DENIAL OF ACCESS
PE	PROPOSED PERMANENT EASEMENT
R/W	PROPOSED RIGHT-OF-WAY
R/W-DA	PROPOSED R/W & DENIAL OF ACCESS
TCE	TEMPORARY CONSTRUCTION EASEMENT
100+00	PROPOSED RIGHT-OF-WAY BASELINE

IDENTIFIERS

A C	ADJUST BY CONTRACTOR
A O	ADJUST BY OTHERS
AB C	ABANDON BY CONTRACTOR
B	CONCRETE SAFETY BARRIER
C	CURB OR CURB & GUTTER
CJB	CONVERT TO JUNCTION BOX
CMH	CONVERT TO DRAINAGE MANHOLE
C O	CURB OPENING
CR	CURB RAMP / TYPE
CR-N	CURB RAMP / TYPE - WITHOUT SIDEWALK SURFACE DETECTABLE WARNING SYSTEM
CSF	CONSTRUCTION SAFETY FENCE
DI	DRAINAGE INLET
DND	DO NOT DISTURB
ED	ENERGY DISSIPATOR
F	FENCE
FES	FLARED END SECTION
FF C	FILL WITH FLOWABLE FILL
FS	FILTRATION STRUCTURE
GR	GUARDRAIL
JB	JUNCTION BOX
MH	MANHOLE
M	MONUMENT - RIGHT-OF-WAY
P	PIPE
RL C	RELOCATE BY CONTRACTOR
RL O	RELOCATE BY OTHERS
RM C	REMOVE BY CONTRACTOR
RM O	REMOVE BY OTHERS
UD	UNDERDRAIN / LENGTH
UOD	UNDERDRAIN OUTLET PIPE

LANDSCAPING

LS	LANDSCAPE PLANTINGS
	SHRUBBERY
	CONIFEROUS TREE
	DECIDUOUS TREE

TRAFFIC

ITMS-CON	ITMS CONDUIT
SIG-CON	SIGNAL CONDUIT
	CONDUIT JUNCTION WELL
	LUMINAIRE
	PAVEMENT MARKINGS
	PAVEMENT STRIPING
	TRAFFIC SIGN

PAVEMENT SECTION(S)

	OVERLAY PAVEMENT - SEE TYPICAL SECTIONS FOR MATERIALS AND DEPTHS
	RECONSTRUCTED PAVEMENT - SEE TYPICAL SECTIONS FOR MATERIALS AND DEPTHS
	DRIVEWAY AND ENTRANCE PAVEMENT - SEE TYPICAL SECTIONS FOR MATERIALS AND DEPTHS

UTILITY COMPANY FACILITIES

SG-CON	PROPOSED DelDOT SIGNAL CONDUIT
NCC-S	PROPOSED NEW CASTLE COUNTY SEWER

UNOFFICIAL WEBSITE COPY

GENERAL NOTES

1. THIS PROJECT IS TO BE CONSTRUCTED IN ACCORDANCE WITH THE DELAWARE DEPARTMENT OF TRANSPORTATION "STANDARD SPECIFICATIONS", DATED AUGUST 2016 AND THE DELAWARE DEPARTMENT OF TRANSPORTATION "STANDARD CONSTRUCTION DETAILS", DATED 2014, INCLUDING ALL REVISIONS UP TO THE DATE OF ADVERTISEMENT.

2. ELECTRONIC PROJECT FILES THAT WILL BE MADE AVAILABLE TO THE AWARDED CONTRACTOR, INCLUDE:

( )	NONE
( )	ASCII DATA FILES WITH COORDINATES AND ELEVATIONS FOR PROPOSED POINTS AS SELECTED BY THE ENGINEER.
( )	ALL PLAN SHEETS, IN PDF FORMAT.
(X)	EXISTING DIGITAL TERRAIN MODEL, IN .DTM FILE FORMAT, COMPATIBLE WITH SOFTWARE CURRENTLY USED BY DELDOT.
( )	PROPOSED DIGITAL TERRAIN MODEL, IN .DTM FILE FORMAT, COMPATIBLE WITH SOFTWARE CURRENTLY USED BY DELDOT.
( )	DESIGN FILE, IN .DGN FILE FORMAT, CONTAINING ONLY THE PROPOSED 3D TRIANGLES OF THE PROPOSED DIGITAL TERRAIN MODEL (DTM).

NOTE: THE DOCUMENT ENTITLED "RELEASE FOR DELIVERY OF DOCUMENTS IN ELECTRONIC FORM TO A CONTRACTOR" MUST BE SIGNED BY ALL PARTIES PRIOR TO THE DELIVERY OF ANY ELECTRONIC PROJECT FILES.

3. PROJECT FILES THAT WILL BE MADE AVAILABLE TO THE CONTRACTOR, INCLUDE:

(X)	CROSS SECTIONS
(X)	RIGHT-OF-WAY PLANS (WILL BE MADE AVAILABLE TO THE AWARDED CONTRACTOR)

PROJECT NOTES

DIVISION 100 - GENERAL PROVISIONS

1. ANY DAMAGE TO ITEMS NOTED TO BE RELOCATED OR RESET BY THE CONTRACTOR, AT THE DISCRETION OF THE ENGINEER, SHALL BE REPAIRED AND/OR REPLACED IN KIND AT THE CONTRACTOR'S EXPENSE.

2. THE CONTRACTOR WILL CONTACT THE DELAWARE TMC AT 302-659-4600 PRIOR TO ANY UNMANNED AIRCRAFT VEHICLE (UAV) FLIGHTS. THE CONTRACTOR WILL BE REQUIRED TO PROVIDE THE FOLLOWING INFORMATION: THE REGISTRATION NUMBER OF THE UAV, THE FLIGHT TIME, LOCATION OF THE FLIGHT, THE PILOT'S NAME AND THE PILOT'S CONTACT NUMBER DURING THE FLIGHT.

DIVISION 200 - EARTHWORK

2. THE CONTRACTOR SHALL REMOVE AND RESET ALL MAILBOXES TO MAINTAIN MAIL SERVICE AS DIRECTED BY THE ENGINEER. THE CONTRACTOR SHALL RELOCATE MAILBOXES AS REQUIRED BY THE PROPOSED GEOMETRICS AND AS DIRECTED BY THE ENGINEER. WHEN RELOCATING MAILBOXES IN CURBED SECTIONS, THE FACE OF THE MAILBOX SHALL BE FLUSH WITH THE BACK EDGE OF CURB. WHEN RELOCATING MAILBOXES IN OPEN SECTIONS, THE FACE OF THE MAILBOX SHALL SET BACK 8 INCHES FROM THE EDGE OF THE PAVED SHOULDER. THE BOTTOM OF THE MAILBOX SHALL BE SET 46 INCHES ABOVE THE ROADWAY SURFACE. MAILBOXES LOCATED AT DRIVEWAY ENTRANCES SHALL BE PLACED ON THE FAR SIDE OF THE DRIVEWAY IN THE DIRECTION OF TRAVEL. POSTS BEING RESET IN CONCRETE SIDEWALK SHALL BE PLACED IN AN APPROPRIATE SIZE PVC SLEEVE. ACCEPTABLE POST SHALL BE 4 INCH X 4 INCH WOOD POST OR 4 INCH DIAMETER WOOD POST. FOR RELOCATING MULTIPLE MAILBOXES TOGETHER ALL POST SHALL BE SEPARATED BY A DISTANCE OF NO LESS THAN 3/4 OF THEIR FULL HEIGHT ABOVE THE GROUND. MULTIPLE MAILBOXES ATTACHED TO A SINGLE HORIZONTAL BOARD SHALL NOT BE LOCATED INSIDE THE CLEARZONE. EACH MAIL BOX SHALL BE PLACED ON AN INDIVIDUAL POST MEETING THE CRITERIA ABOVE. ALL MAILBOXES SHALL BE SET NOT TO IMPEDE THE MINIMUM PAR (PEDESTRIAN ACCESS ROUTE) WIDTH AS DETERMINED BY THE CURRENT EDITION OF THE PEDESTRIAN ACCESSIBILITY STANDARDS FOR FACILITIES IN THE PUBLIC RIGHT OF WAY. IF MAILBOXES ARE NOT SET IN ACCORDANCE WITH THE ABOVE DIRECTIONS, RESETTING OF THE MAILBOXES WILL BE AT THE COST OF THE CONTRACTOR. COST FOR ALL WORK AND MATERIALS SHALL BE PAID UNDER ITEM 201000 - CLEARING AND GRUBBING.

3. ITEMS TO BE REMOVED UNDER ITEM 211000 - REMOVAL OF STRUCTURES AND OBSTRUCTIONS SHALL INCLUDE, BUT NOT BE LIMITED TO THE FOLLOWING:
   - DRAINAGE STRUCTURES
   - CONCRETE MONUMENTS
   - SIGN STRUCTURES
   - LIGHTING STRUCTURES
   - FENCES
   - GUARDRAIL

4. EXCAVATION FOR THE FOLLOWING SECTION(S) WILL NOT BE INCIDENTAL TO THEIR INDIVIDUAL CONSTRUCTION ITEMS AND WILL BE QUANTIFIED AND PAID UNDER ITEM 202000 - EXCAVATION AND EMBANKMENT:
   - PORTLAND CEMENT CONCRETE CURB, CURB AND GUTTER
   - CONCRETE SIDEWALK
   - CONCRETE BARRIER

DIVISION 400 - BITUMINOUS MATERIALS

5. THE PAVEMENT SECTION FOR FLEXIBLE PAVEMENT RESIDENTIAL DRIVEWAYS SHALL BE 2" WARM-MIX, TYPE 'C' OVER 8" GRADED AGGREGATE BASE COURSE, TYPE 'B', UNLESS OTHERWISE NOTED ON THE PLANS.

DIVISION 600 - STRUCTURES

6. DRAINAGE INLET GRATES ADJACENT TO THE ROAD, WITHIN THE PROJECT LIMITS, WHICH ARE NOT TYPE 1 OR TYPE 4 SHALL BE REPLACED. THE ACTUAL LOCATIONS, THE NEED FOR ANY GRATE MODIFICATIONS OR FOR NEW FRAMES SHALL BE DETERMINED BY THE ENGINEER. ALL REPLACED GRATES/FRAMES SHALL BE DELIVERED TO THE NEAREST DISTRICT MAINTENANCE YARD WITH THE COST OF DELIVERY INCIDENTAL TO ITEM 602100 - REPLACING DRAINAGE INLET GRATE(S). FINAL PAYMENT FOR REPLACED GRATES/FRAMES SHALL NOT BE MADE UNTIL RECEIPT OF DELIVERED MATERIALS IS PRODUCED, SIGNED BY A DELDOT MAINTENANCE YARD SUPERVISOR.

7. STATION AND ELEVATION DATA GIVEN FOR DRAINAGE STRUCTURES ARE TO BE APPLIED TO THE CENTER OF THE GRATE FOR INLETS, AND TO THE CENTER OF THE STRUCTURE FOR JUNCTION BOXES AND MANHOLES.

DIVISION 700 - MISCELLANEOUS CONSTRUCTION

8. IN AREAS WHERE PROPOSED CURB MEETS EXISTING CURB AND THE TWO CURB TYPES ARE NOT SIMILAR, THE PROPOSED CURB SHALL BE TRANSITIONED IN 10 LINEAR FEET, UNLESS OTHERWISE DIRECTED BY THE ENGINEER. PAYMENT FOR THIS WORK, INCLUDING SAW CUTTING EXISTING CURB SHALL BE INCIDENTAL TO THE PROPOSED CURB ITEM.

9. WHERE PROPOSED CONCRETE SIDEWALK IS CONSTRUCTED TO MEET EXISTING SIDEWALK, THE EXISTING SIDEWALK SHALL BE SAWCUT AT THE TIE-IN POINT OR MEET THE NEAREST EXISTING SIDEWALK JOINT. ALL SAW CUTTING SHALL BE FULL DEPTH, UNLESS OTHERWISE NOTED ON THE PLANS OR DIRECTED BY THE ENGINEER AND SHALL BE PAID FOR UNDER ITEM 762001 - SAWCUTTING, CONCRETE, FULL DEPTH.

10. PORTLAND CEMENT CONCRETE CHANNELIZING ISLANDS THAT ARE LESS THAN 75 SQ FT MAY BE POURED MONOLITHICALLY, OR AS DIRECTED BY THE ENGINEER.

11. THE NEW CASTLE COUNTY DEPARTMENT OF PUBLIC WORKS SHALL SUPPLY AND THE STATE'S CONTRACTOR SHALL INSTALL NEW SELF SEALING MANHOLE FRAMES AND COVERS ON ALL COUNTY SEWER MANHOLES THAT ARE NOT BEING RELOCATED, WITHIN THE PROJECT LIMITS IN ACCORDANCE WITH THE COUNTY'S STANDARD SPECIFICATIONS. THE EXISTING MANHOLE FRAMES AND COVERS THAT ARE REMOVED SHALL BECOME THE PROPERTY OF THE STATE'S CONTRACTOR. PAYMENT SHALL BE INCIDENTAL TO ITEM 711500 - ADJUST AND REPAIR EXISTING SANITARY SEWER MANHOLE.

12. ALL PAVED AREAS TO BE RECONSTRUCTED OR WIDENED SHALL BE SAWCUT AT THE POINT WHERE THE NEW PAVEMENT IS TO TIE INTO THE EXISTING PAVEMENT.

DIVISION 900 - EROSION, SEDIMENT AND STORMWATER MANAGEMENT PRACTICES

13. THIS PROJECT IS COVERED UNDER AN NPDES GENERAL PERMIT FOR CONSTRUCTION. UNDER THE GENERAL PERMIT, COMPLIANCE WITH DELDOT'S APPROVED SEDIMENT AND STORMWATER MANAGEMENT PLANS WILL CONSTITUTE COMPLIANCE WITH THE NPDES INDUSTRIAL PERMITTING REQUIREMENTS FOR THIS CONSTRUCTION PROJECT. A COPY OF THE NPDES GENERAL PERMIT AND NOI IS KEPT ON FILE IN EACH OF THE CONSTRUCTION OFFICES AND THE DEPARTMENT'S STORMWATER SECTION. A COPY OF THE GENERAL PERMIT OR THE NOI CAN BE OBTAINED UPON REQUEST FROM EITHER THE DEPARTMENT'S STORMWATER ENGINEER OR THE APPROPRIATE CONSTRUCTION ENGINEER.

MISCELLANEOUS NOTES

14. THE CONTRACTOR SHALL CONTACT THE CHIEF OF SCHEDULING FOR DART FIRST STATE, 14 DAYS TO THE START OF CONSTRUCTION AT 302-576-6191.

15. REFER TO THE CONSTRUCTION PLAN SHEETS FOR THE LOCATION OF THE CLEAR ZONE AREA LIMITS.

16. SEE ENVIRONMENTAL COMPLIANCE PLAN FOR FURTHER RESTRICTIONS/GUIDANCE ASSOCIATED WITH THIS PROJECT.

EARTHWORK SUMMARY

EXCAVATION	
EXCAVATION FROM CROSS SECTIONS	1,558 C.Y.
ROCK EXCAVATION FOR ROADWAY AND TRENCHES	0 C.Y.
TOPSOIL STRIPPING	1,519 C.Y.
TOTAL EXCAVATION	3,077 C.Y.
EXCAVATION AVAILABLE FOR EMBANKMENT	
EXCAVATION MEETING BORROW TYPE 'A'	0 C.Y.
EXCAVATION MEETING BORROW TYPE 'F'	747 C.Y.
EXCAVATION MEETING TOPSOIL	760 C.Y.
EMBANKMENT REQUIREMENTS	
BORROW TYPE 'A' REQUIRED (INCLUDING UNDERCUT)	1,654 C.Y.
BORROW TYPE 'F' REQUIRED	34,623 C.Y.
TOPSOIL REQUIRED	17,800 C.Y.
MATERIAL BALANCE ("+"= EXCESS, "-"= NEED)	
BORROW TYPE 'A'	-1,654 C.Y.
BORROW TYPE 'F'	-33,876 C.Y.
TOPSOIL	-17,040 C.Y.
UNSUITABLE MATERIAL	+1,570 C.Y.

NOTES:
1) THE VALUES LISTED IN THE EARTHWORK SUMMARY ARE APPROXIMATE AND ARE NOT TO BE USED AS A BASIS OF PAYMENT. THE EARTHWORK SUMMARY IS CONSIDERED FOR INFORMATIONAL PURPOSES ONLY.

2) OTHER SOURCES OF EXCAVATION MAY INCLUDE PIPE TRENCH EXCAVATION, STRUCTURE EXCAVATION, UNDERCUT EXCAVATION, STORMWATER MANAGEMENT POND EXCAVATION, ENVIRONMENTAL SITE EXCAVATION, MAINTENANCE OF TRAFFIC EXCAVATION, ETC.

3) UNSUITABLE MATERIALS INCLUDE UNDERCUT SOILS, BITUMINOUS PAVEMENT, ETC.

UNOFFICIAL WEBSITE COPY

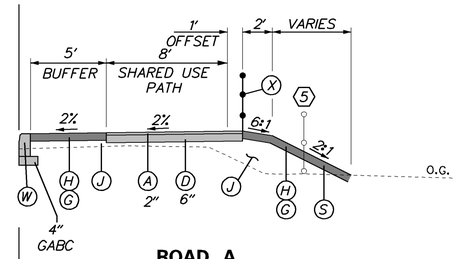

ROAD A
STA. 102+12.58 TO STA. 104+00.00

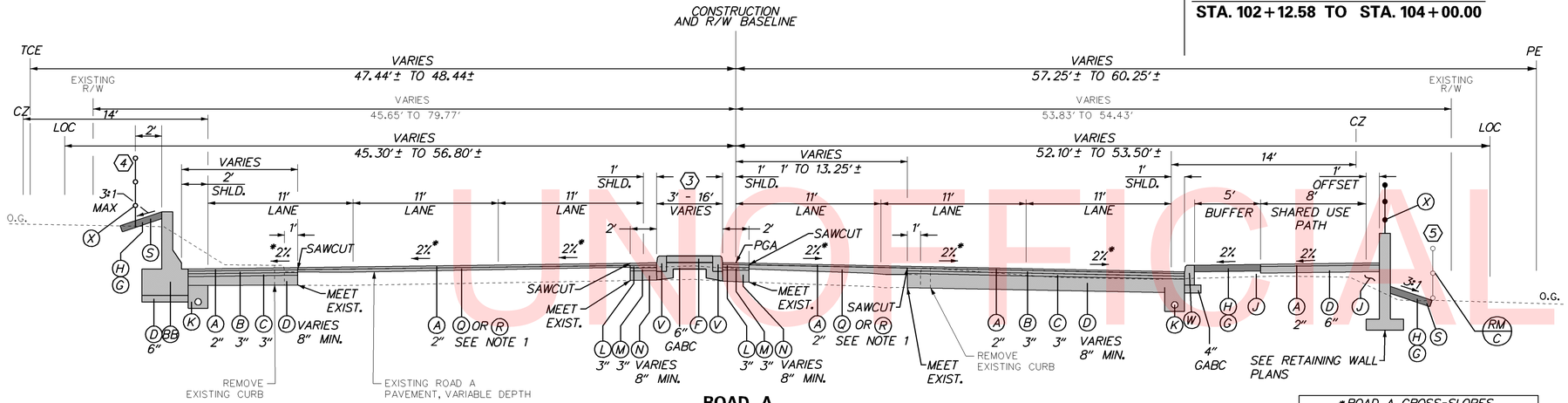

ROAD A
STA. 102+12.58 TO STA. 106+75.55

(3) MEDIAN WIDTH:
STA. 102+12.58 TO STA. 105+61.06, WIDTH= 3'
STA. 105+61.06 TO STA. 106+20.93, WIDTH VARIES
STA. 106+20.93 TO STA. 106+35.93, WIDTH= 16'
STA. 106+35.93 TO STA. 106+75.55, WIDTH VARIES

(4) CHAIN LINK FENCE:
STA. 102+13.89 TO STA. 104+65.06

(5) EXISTING CHAIN LINK FENCE:
STA. 101+75.54 STA. 104+65.06

*ROAD A CROSS-SLOPES		
STA.	EB LANES	WB LANES
101+64	-4.00%	4.00%
102+88	-2.00%	2.00%
104+12	-2.00%	0.00%
105+36	-2.00%	-2.00%

NOTE: A NEGATIVE CROSS SLOPE INDICATES SLOPE AWAY FROM THE CONSTRUCTION ℄

LEGEND

(A)	ITEM 401046	SUPERPAVE TYPE C, PG 76-22 (NON-CARBONATE STONE)
(B)	ITEM 401016	SUPERPAVE TYPE B, PG 76-22
(C)	ITEM 401021	SUPERPAVE TYPE BCBC, PG 64-22
(D)	ITEM 301001	GRADED AGGREGATE BASE COURSE, TYPE B
(E)	ITEM 705001	P.C.C. SIDEWALK, 4"
(F)	ITEM 705002	P.C.C. SIDEWALK, 6"
(G)	ITEM 908004	TOPSOIL, 6" DEPTH
(H)	ITEM 908014	PERMANENT GRASS SEEDING, DRY GROUND
(I)	ITEM 209001	BORROW, TYPE A
(J)	ITEM 209006	BORROW, TYPE F
(K)	ITEM 709001	PERFORATED PIPE UNDERDRAINS, 6"
(L)	ITEM 401030	SUPERPAVE TYPE B, PG 64-22, PATCHING
(M)	ITEM 401031	SUPERPAVE TYPE BCBC, PG 64-22, PATCHING
(N)	ITEM 301002	GRADED AGGREGATE BASE COURSE, TYPE B, PATCHING
(P)	ITEM 760010	PAVEMENT MILLING, BITUMINOUS CONCRETE
(Q)	ITEM 401036	SUPERPAVE TYPE C, PG 64-22, WEDGE
(R)	ITEM 401037	SUPERPAVE TYPE B, PG 64-22, WEDGE
(S)	ITEM 908020	EROSION CONTROL BLANKET MULCH
(U)	ITEM 723003	P.C.C. SAFETY BARRIER, PERMANENT, SINGLE FACE, 42"
(V)	ITEM 701011	PORTLAND CEMENT CONCRETE CURB, TYPE 1-4
(W)	ITEM 701012	PORTLAND CEMENT CONCRETE CURB, TYPE 1-6
(X)	ITEM 727000	CHAIN LINK FENCE
(AA)	ITEM 720021	GALVANIZED STEEL BEAM GUARDRAIL, TYPE 1-31
(BB)	ITEM 723500	P.C.C. SAFETY BARRIER, PERMANENT, SINGLE FACE, MODIFIED TYPE 2

MATERIAL	LIFT THICKNESS	
	MINIMUM	MAXIMUM
BITUMINOUS CONCRETE, TYPE 'C'	1.25"	2"
BITUMINOUS CONCRETE, TYPE 'B'	2.25"	4"
BITUMINOUS CONCRETE BASE COURSE	3"	6"
GRADED AGGREGATE BASE COURSE	3"	8"

NOTES:

1. TYPE B WEDGE (401037) SHALL BE PLACED TO A MINIMUM THICKNESS OF 2". TYPE C WEDGE (401036) SHALL BE PLACED WHERE WEDGE THICKNESS IS LESS THAN 2".

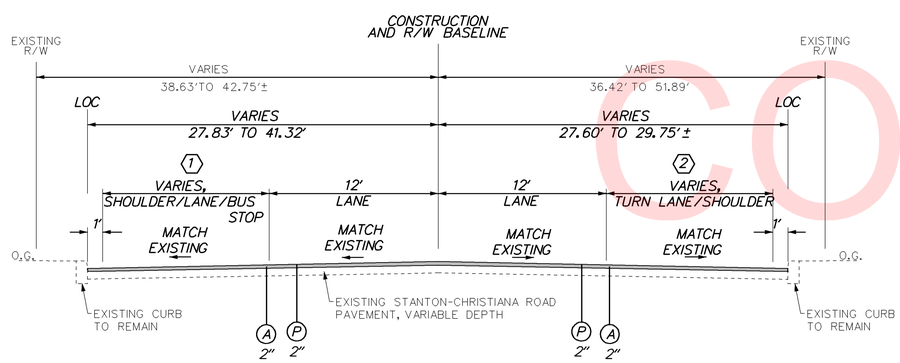

STANTON CHRISTIANA ROAD
STA. 301+00 TO STA. 318+00.00

LANE WIDTH:
(1) STA. 301+00 TO STA. 303+26.60 WIDTH VARIES, 6' MIN SHOULDER TO 11.3' LANE
STA. 303+26.60 TO STA. 304+98.37, WIDTH VARIES MIN 11.3' LANE TO 24' (12' LANE AND 12' BUS STOP)
STA. 304+98.37 TO STA. 315+62, WIDTH = 12' LANE

(2) STA. 301+00 TO STA. 305+00, WIDTH VARIES, 2' MIN SHOULDER TO 12' TURN LANE
STA. 306+50 TO STA. 318+00, WIDTH = 12'

UNOFFICIAL WEBSITE COPY

DELAWARE DEPARTMENT OF TRANSPORTATION

ADDENDUMS / REVISIONS

NOT TO SCALE

ROAD A /SR7 IMPROVEMENTS

CONTRACT	BRIDGE NO.	1-220
T201009002	DESIGNED BY:	MCK
COUNTY		
NEW CASTLE	CHECKED BY:	RLS

TYPICAL SECTIONS

SHEET NO. 5
TOTAL SHTS. 154

7/5/2018 10:12:15 AM
\\BALSRV01\V2012\2012\12146_DELDOT1585\40-ROAD A CONNECTOR\CADD\CONTRACT\PLANS\TS01_RDA.DGN

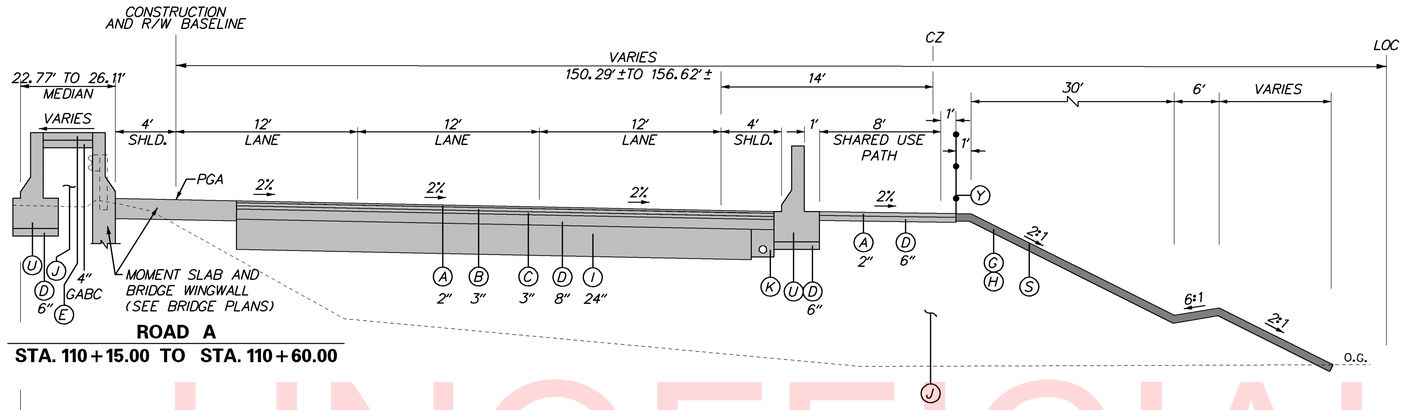

ROAD A

STA. 110+15.00 TO STA. 110+60.00

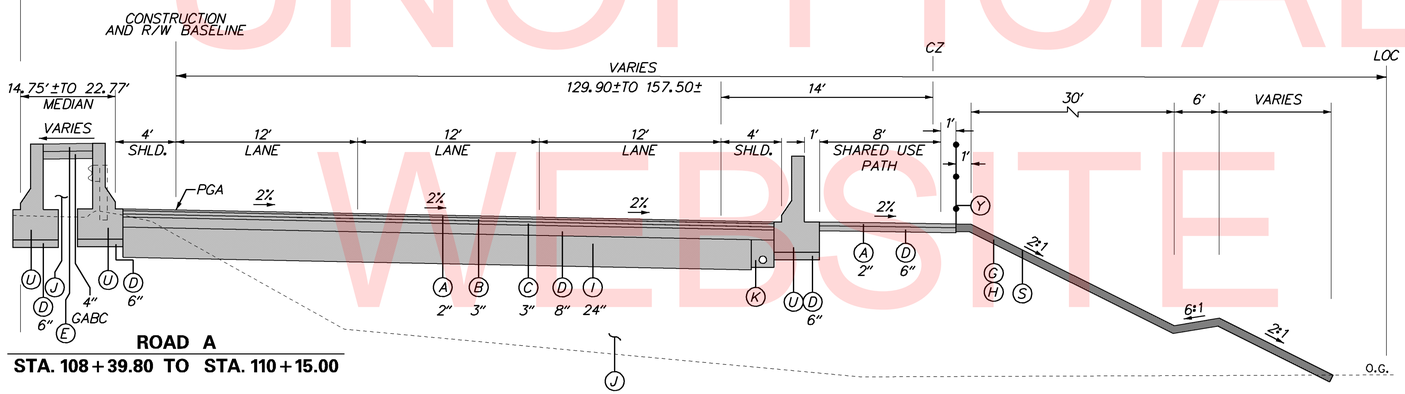

ROAD A

STA. 108+39.80 TO STA. 110+15.00

MATERIAL	LIFT THICKNESS	
	MINIMUM	MAXIMUM
BITUMINOUS CONCRETE, TYPE 'C'	1.25"	2"
BITUMINOUS CONCRETE, TYPE 'B'	2.25"	4"
BITUMINOUS CONCRETE BASE COURSE	3"	6"
GRADED AGGREGATE BASE COURSE	3"	8"

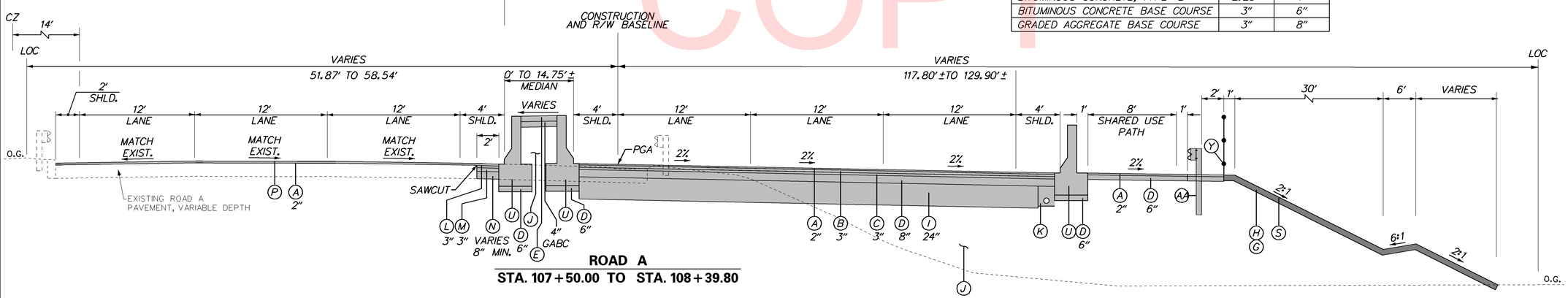

ROAD A

STA. 107+50.00 TO STA. 108+39.80

MATERIAL	LIFT THICKNESS	
	MINIMUM	MAXIMUM
BITUMINOUS CONCRETE, TYPE 'C'	1.25"	2"
BITUMINOUS CONCRETE, TYPE 'B'	2.25"	4"
BITUMINOUS CONCRETE BASE COURSE	3"	6"
GRADED AGGREGATE BASE COURSE	3"	8"

LEGEND

- (A) ITEM 401046 - SUPERPAVE TYPE C, PG 76-22 (NON-CARBONATE STONE)
- (B) ITEM 401016 - SUPERPAVE TYPE B, PG 76-22
- (C) ITEM 401021 - SUPERPAVE TYPE BCBC, PG 64-22
- (D) ITEM 301001 - GRADED AGGREGATE BASE COURSE, TYPE B
- (E) ITEM 705001 - P.C.C. SIDEWALK, 4"
- (F) ITEM 705002 - P.C.C. SIDEWALK, 6"
- (G) ITEM 908004 - TOPSOIL, 6" DEPTH
- (H) ITEM 908014 - PERMANENT GRASS SEEDING, DRY GROUND
- (I) ITEM 209001 - BORROW, TYPE A
- (J) ITEM 209006 - BORROW, TYPE F
- (K) ITEM 709001 - PERFORATED PIPE UNDERDRAINS, 6"
- (L) ITEM 401030 - SUPERPAVE TYPE B, PG 64-22, PATCHING
- (M) ITEM 401031 - SUPERPAVE TYPE BCBC, PG 64-22, PATCHING
- (N) ITEM 301002 - GRADED AGGREGATE BASE COURSE, TYPE B, PATCHING
- (P) ITEM 760010 - PAVEMENT MILLING, BITUMINOUS CONCRETE
- (Q) ITEM 401036 - SUPERPAVE TYPE C, PG 64-22, WEDGE
- (R) ITEM 401037 - SUPERPAVE TYPE B, PG 64-22, WEDGE
- (S) ITEM 908020 - EROSION CONTROL BLANKET MULCH
- (U) ITEM 723003 - P.C.C. SAFETY BARRIER, PERMANENT, SINGLE FACE, 42"
- (V) ITEM 701011 - PORTLAND CEMENT CONCRETE CURB, TYPE 1-4
- (W) ITEM 701012 - PORTLAND CEMENT CONCRETE CURB, TYPE 1-6
- (X) ITEM 727000 - CHAIN LINK FENCE
- (AA) ITEM 720021 - GALVANIZED STEEL BEAM GUARDRAIL, TYPE 1-31
- (BB) ITEM 723500 - P.C.C. SAFETY BARRIER, PERMANENT, SINGLE FACE, MODIFIED TYPE 2

NOTES:

1. TYPE B WEDGE (401037) SHALL BE PLACED TO A MINIMUM THICKNESS OF 2". TYPE C WEDGE (401036) SHALL BE PLACED WHERE WEDGE THICKNESS IS LESS THAN 2".

UNOFFICIAL WEBSITE COPY

7/5/2018 10:13:34 AM
\\BALSRV01\V2012\2012\12146_DELDOT1585\40-ROAD A CONNECTOR\CADD\CONTRACT\PLANS\TS02_RDA.DGN

DELAWARE DEPARTMENT OF TRANSPORTATION	ADDENDUMS / REVISIONS	NOT TO SCALE	ROAD A /SR7 IMPROVEMENTS	CONTRACT T201009002	BRIDGE NO. 1-220	TYPICAL SECTIONS	SHEET NO. 6
				COUNTY NEW CASTLE	DESIGNED BY: MCK		TOTAL SHTS. 154
					CHECKED BY: RLS		

LEGEND

A	ITEM 401046	-	SUPERPAVE TYPE C, PG 76-22 (NON-CARBONATE STONE)
B	ITEM 401016	-	SUPERPAVE TYPE B, PG 76-22
C	ITEM 401021	-	SUPERPAVE TYPE BCBC, PG 64-22
D	ITEM 301001	-	GRADED AGGREGATE BASE COURSE, TYPE B
E	ITEM 705001	-	P.C.C. SIDEWALK, 4"
F	ITEM 705002	-	P.C.C. SIDEWALK, 6"
G	ITEM 908004	-	TOPSOIL, 6" DEPTH
H	ITEM 908014	-	PERMANENT GRASS SEEDING, DRY GROUND
I	ITEM 209001	-	BORROW, TYPE A
J	ITEM 209006	-	BORROW, TYPE F
K	ITEM 709001	-	PERFORATED PIPE UNDERDRAINS, 6"
L	ITEM 401030	-	SUPERPAVE TYPE B, PG 64-22, PATCHING
M	ITEM 401031	-	SUPERPAVE TYPE BCBC, PG 64-22, PATCHING
N	ITEM 301002	-	GRADED AGGREGATE BASE COURSE, TYPE B, PATCHING
P	ITEM 760010	-	PAVEMENT MILLING, BITUMINOUS CONCRETE
Q	ITEM 401036	-	SUPERPAVE TYPE C, PG 64-22, WEDGE
R	ITEM 401037	-	SUPERPAVE TYPE B, PG 64-22, WEDGE
S	ITEM 908020	-	EROSION CONTROL BLANKET MULCH
U	ITEM 723003	-	P.C.C. SAFETY BARRIER, PERMANENT, SINGLE FACE, 42"
V	ITEM 701011	-	PORTLAND CEMENT CONCRETE CURB, TYPE 1-4
W	ITEM 701012	-	PORTLAND CEMENT CONCRETE CURB, TYPE 1-6
X	ITEM 727000	-	CHAIN LINK FENCE
AA	ITEM 720021	-	GALVANIZED STEEL BEAM GUARDRAIL, TYPE 1-31
BB	ITEM 723500	-	P.C.C. SAFETY BARRIER, PERMANENT, SINGLE FACE, MODIFIED TYPE 2

MATERIAL	LIFT THICKNESS	
	MINIMUM	MAXIMUM
BITUMINOUS CONCRETE, TYPE 'C'	1.25"	2"
BITUMINOUS CONCRETE, TYPE 'B'	2.25"	4"
BITUMINOUS CONCRETE BASE COURSE	3"	6"
GRADED AGGREGATE BASE COURSE	3"	8"

NOTES:

1. TYPE B WEDGE (401037) SHALL BE PLACED TO A MINIMUM THICKNESS OF 2". TYPE C WEDGE (401036) SHALL BE PLACED WHERE WEDGE THICKNESS IS LESS THAN 2".

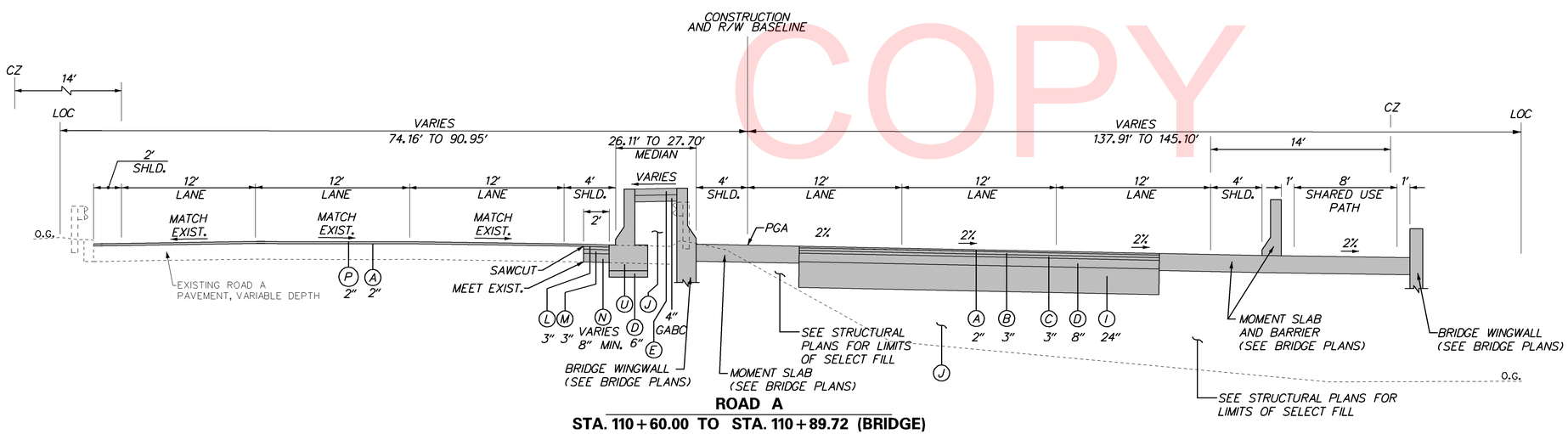

ROAD A

STA. 110+60.00 TO STA. 110+89.72 (BRIDGE)

UNOFFICIAL WEBSITE COPY

DELAWARE DEPARTMENT OF TRANSPORTATION	ADDENDUMS / REVISIONS	NOT TO SCALE	ROAD A /SR7 IMPROVEMENTS	CONTRACT T201009002 / COUNTY NEW CASTLE	BRIDGE NO. 1-220 / DESIGNED BY: MCK / CHECKED BY: RLS	TYPICAL SECTIONS	SHEET NO. 7 / TOTAL SHTS. 154

7/5/2018 10:17:08 AM
\\BALSRV01\V2012\2012\12146_DELDOT1585\40-ROAD A CONNECTOR\CADD\CONTRACT\PLANS\TS03_RDA.DGN

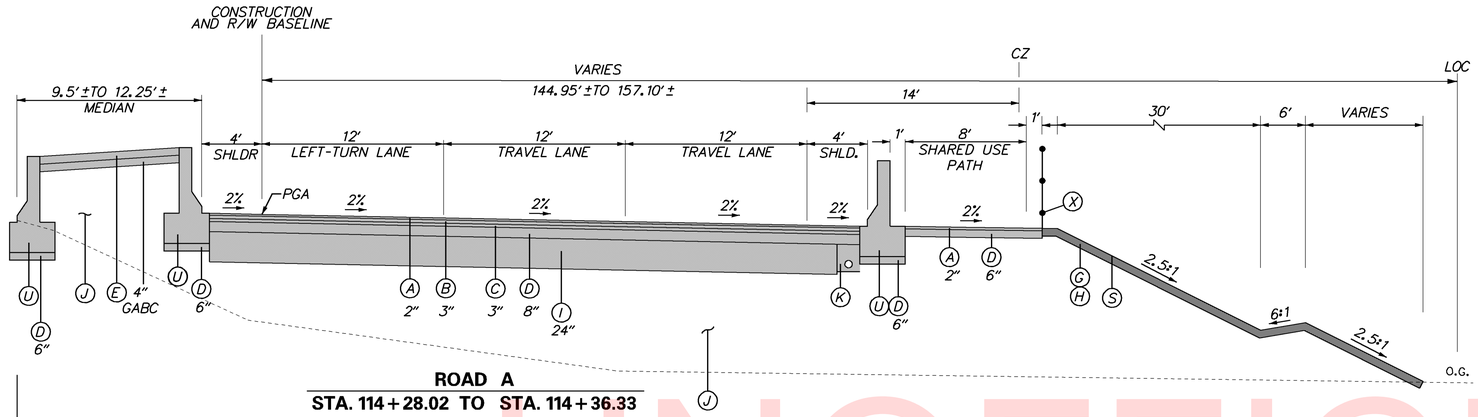

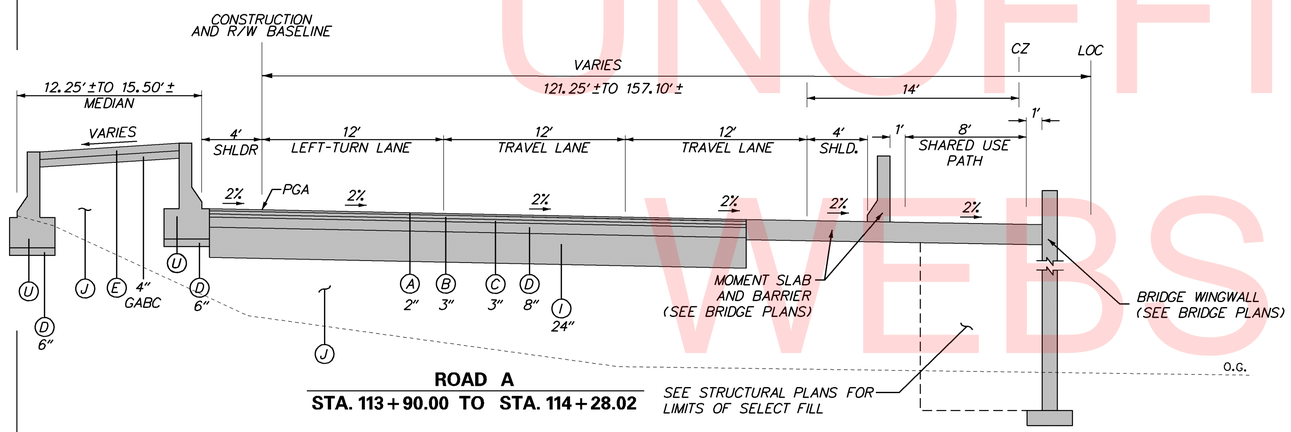

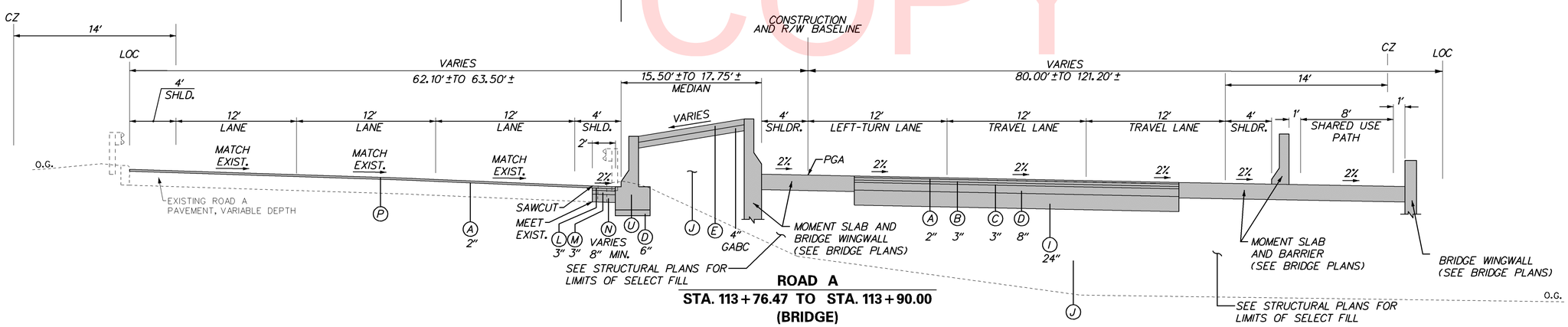

LEGEND

A	ITEM 401046	-	SUPERPAVE TYPE C, PG 76-22 (NON-CARBONATE STONE)
B	ITEM 401016	-	SUPERPAVE TYPE B, PG 76-22
C	ITEM 401021	-	SUPERPAVE TYPE BCBC, PG 64-22
D	ITEM 301001	-	GRADED AGGREGATE BASE COURSE, TYPE B
E	ITEM 705001	-	P.C.C. SIDEWALK, 4"
F	ITEM 705002	-	P.C.C. SIDEWALK, 6"
G	ITEM 908004	-	TOPSOIL, 6" DEPTH
H	ITEM 908014	-	PERMANENT GRASS SEEDING, DRY GROUND
I	ITEM 209001	-	BORROW, TYPE A
J	ITEM 209006	-	BORROW, TYPE F
K	ITEM 709001	-	PERFORATED PIPE UNDERDRAINS, 6"
L	ITEM 401030	-	SUPERPAVE TYPE B, PG 64-22, PATCHING
M	ITEM 401031	-	SUPERPAVE TYPE BCBC, PG 64-22, PATCHING
N	ITEM 301002	-	GRADED AGGREGATE BASE COURSE, TYPE B, PATCHING
P	ITEM 760010	-	PAVEMENT MILLING, BITUMINOUS CONCRETE
Q	ITEM 401036	-	SUPERPAVE TYPE C, PG 64-22, WEDGE
R	ITEM 401037	-	SUPERPAVE TYPE B, PG 64-22, WEDGE
S	ITEM 908020	-	EROSION CONTROL BLANKET MULCH
U	ITEM 723003	-	P.C.C. SAFETY BARRIER, PERMANENT, SINGLE FACE, 42"
V	ITEM 701011	-	PORTLAND CEMENT CONCRETE CURB, TYPE 1-4
W	ITEM 701012	-	PORTLAND CEMENT CONCRETE CURB, TYPE 1-6
X	ITEM 727000	-	CHAIN LINK FENCE
AA	ITEM 720021	-	GALVANIZED STEEL BEAM GUARDRAIL, TYPE 1-31
BB	ITEM 723500	-	P.C.C. SAFETY BARRIER, PERMANENT, SINGLE FACE, MODIFIED TYPE 2

MATERIAL	LIFT THICKNESS	
	MINIMUM	MAXIMUM
BITUMINOUS CONCRETE, TYPE 'C'	1.25"	2"
BITUMINOUS CONCRETE, TYPE 'B'	2.25"	4"
BITUMINOUS CONCRETE BASE COURSE	3"	6"
GRADED AGGREGATE BASE COURSE	3"	8"

NOTES:

1. TYPE B WEDGE (401037) SHALL BE PLACED TO A MINIMUM THICKNESS OF 2". TYPE C WEDGE (401036) SHALL BE PLACED WHERE WEDGE THICKNESS IS LESS THAN 2".

UNOFFICIAL WEBSITE COPY

7/5/2018 10:19:33 AM
\\BALSRV01\V2012\2012\12146_DELDOT1585.40-ROAD A CONNECTOR\CADD\CONTRACT\PLANS\TS04_RDA.DGN

DELAWARE DEPARTMENT OF TRANSPORTATION	ADDENDUMS / REVISIONS	NOT TO SCALE	ROAD A /SR7 IMPROVEMENTS	CONTRACT T201009002	BRIDGE NO. 1-220	TYPICAL SECTIONS
				COUNTY NEW CASTLE	DESIGNED BY: MCK	SHEET NO. 8
					CHECKED BY: RLS	TOTAL SHTS. 154

LEGEND

(A)	ITEM 401046	-	SUPERPAVE TYPE C, PG 76-22 (NON-CARBONATE STONE)
(B)	ITEM 401016	-	SUPERPAVE TYPE B, PG 76-22
(C)	ITEM 401021	-	SUPERPAVE TYPE BCBC, PG 64-22
(D)	ITEM 301001	-	GRADED AGGREGATE BASE COURSE, TYPE B
(E)	ITEM 705001	-	P.C.C. SIDEWALK, 4"
(F)	ITEM 705002	-	P.C.C. SIDEWALK, 6"
(G)	ITEM 908004	-	TOPSOIL, 6" DEPTH
(H)	ITEM 908014	-	PERMANENT GRASS SEEDING, DRY GROUND
(I)	ITEM 209001	-	BORROW, TYPE A
(J)	ITEM 209006	-	BORROW, TYPE F
(K)	ITEM 709001	-	PERFORATED PIPE UNDERDRAINS, 6"
(L)	ITEM 401030	-	SUPERPAVE TYPE B, PG 64-22, PATCHING
(M)	ITEM 401031	-	SUPERPAVE TYPE BCBC, PG 64-22, PATCHING
(N)	ITEM 301002	-	GRADED AGGREGATE BASE COURSE, TYPE B, PATCHING
(P)	ITEM 760010	-	PAVEMENT MILLING, BITUMINOUS CONCRETE
(Q)	ITEM 401036	-	SUPERPAVE TYPE C, PG 64-22, WEDGE
(R)	ITEM 401037	-	SUPERPAVE TYPE B, PG 64-22, WEDGE
(S)	ITEM 908020	-	EROSION CONTROL BLANKET MULCH
(U)	ITEM 723003	-	P.C.C. SAFETY BARRIER, PERMANENT, SINGLE FACE, 42"
(V)	ITEM 701011	-	PORTLAND CEMENT CONCRETE CURB, TYPE 1-4
(W)	ITEM 701012	-	PORTLAND CEMENT CONCRETE CURB, TYPE 1-6
(X)	ITEM 727000	-	CHAIN LINK FENCE
(AA)	ITEM 720021	-	GALVANIZED STEEL BEAM GUARDRAIL, TYPE 1-31
(BB)	ITEM 723500	-	P.C.C. SAFETY BARRIER, PERMANENT, SINGLE FACE, MODIFIED TYPE 2

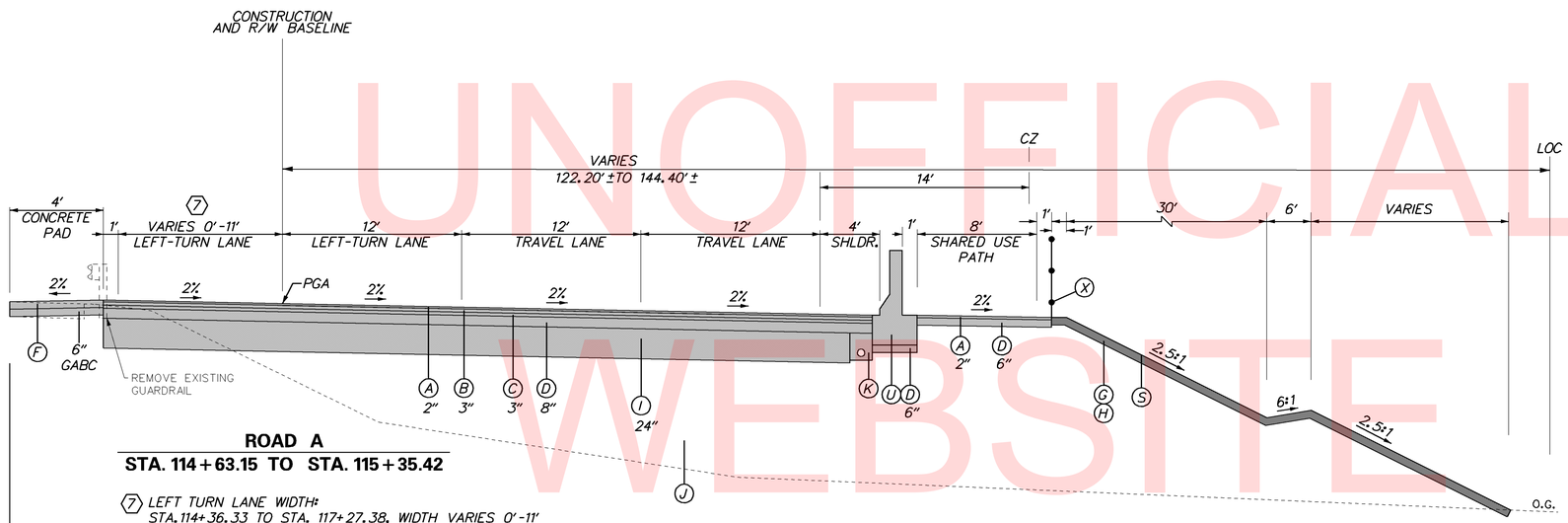

ROAD A

STA. 114+63.15 TO STA. 115+35.42

(7) LEFT TURN LANE WIDTH:
STA.114+36.33 TO STA. 117+27.38, WIDTH VARIES 0'-11'

MATERIAL	LIFT THICKNESS	
	MINIMUM	MAXIMUM
BITUMINOUS CONCRETE, TYPE 'C'	1.25"	2"
BITUMINOUS CONCRETE, TYPE 'B'	2.25"	4"
BITUMINOUS CONCRETE BASE COURSE	3"	6"
GRADED AGGREGATE BASE COURSE	3"	8"

NOTES:

1. TYPE B WEDGE (401037) SHALL BE PLACED TO A MINIMUM THICKNESS OF 2". TYPE C WEDGE (401036) SHALL BE PLACED WHERE WEDGE THICKNESS IS LESS THAN 2".

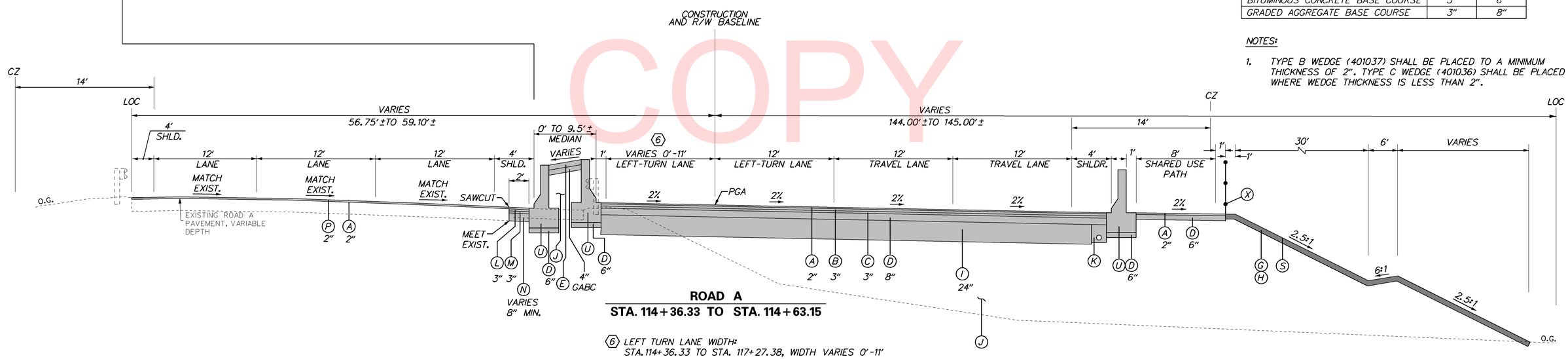

ROAD A

STA. 114+36.33 TO STA. 114+63.15

(6) LEFT TURN LANE WIDTH:
STA.114+36.33 TO STA. 117+27.38, WIDTH VARIES 0'-11'

UNOFFICIAL WEBSITE COPY

7/5/2018 10:19:56 AM
\\BALSRV01\V2012\2012\12146_DELDOT1585\40-ROAD A CONNECTOR\CADD\CONTRACT\PLANS\TS05_RDA.DGN

DELAWARE DEPARTMENT OF TRANSPORTATION	ADDENDUMS / REVISIONS	NOT TO SCALE	ROAD A /SR7 IMPROVEMENTS	CONTRACT T201009002	BRIDGE NO. 1-220	TYPICAL SECTIONS	SHEET NO. 9
				COUNTY NEW CASTLE	DESIGNED BY: MCK		TOTAL SHTS. 154
					CHECKED BY: RLS		

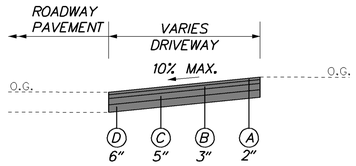

DRIVEWAY ENTRANCES

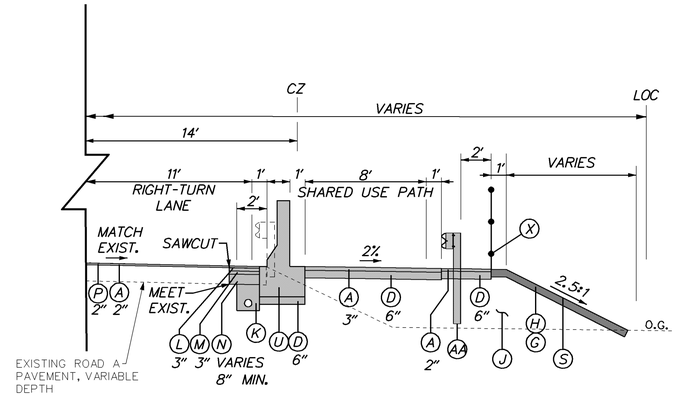

ROAD A
STA. 119+25.58 TO STA. 120+00.00

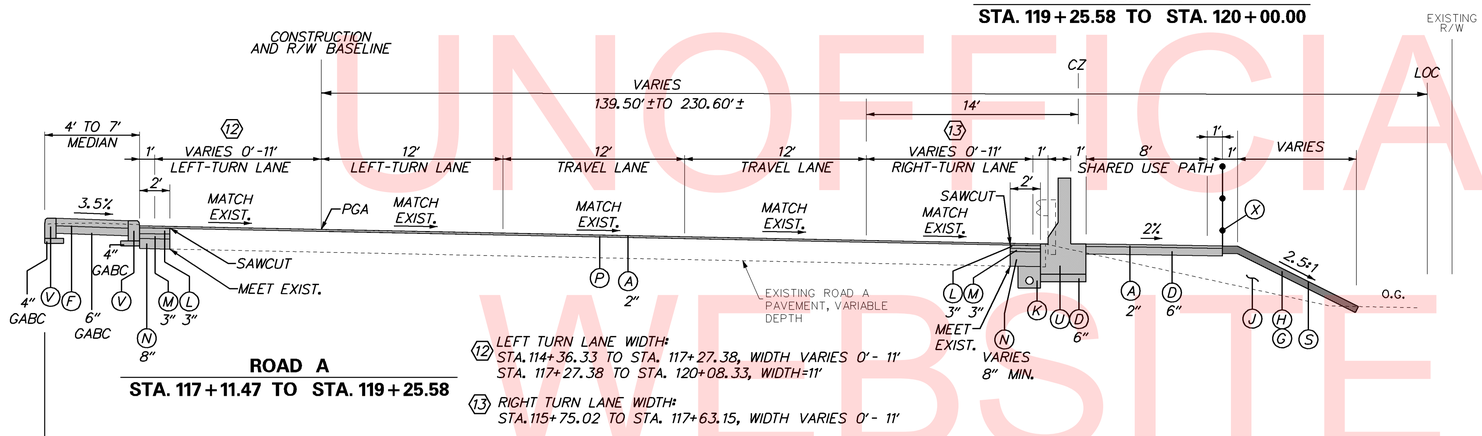

ROAD A
STA. 117+11.47 TO STA. 119+25.58

12 LEFT TURN LANE WIDTH:
STA.114+36.33 TO STA. 117+27.38, WIDTH VARIES 0'- 11'
STA. 117+27.38 TO STA. 120+08.33, WIDTH=11'

13 RIGHT TURN LANE WIDTH:
STA.115+75.02 TO STA. 117+63.15, WIDTH VARIES 0'- 11'

LEGEND

A	ITEM 401046	-	SUPERPAVE TYPE C, PG 76-22 (NON-CARBONATE STONE)
B	ITEM 401016	-	SUPERPAVE TYPE B, PG 76-22
C	ITEM 401021	-	SUPERPAVE TYPE BCBC, PG 64-22
D	ITEM 301001	-	GRADED AGGREGATE BASE COURSE, TYPE B
E	ITEM 705001	-	P.C.C. SIDEWALK, 4"
F	ITEM 705002	-	P.C.C. SIDEWALK, 6"
G	ITEM 908004	-	TOPSOIL, 6" DEPTH
H	ITEM 908014	-	PERMANENT GRASS SEEDING, DRY GROUND
I	ITEM 209001	-	BORROW, TYPE A
J	ITEM 209006	-	BORROW, TYPE F
K	ITEM 709001	-	PERFORATED PIPE UNDERDRAINS, 6"
L	ITEM 401030	-	SUPERPAVE TYPE B, PG 64-22, PATCHING
M	ITEM 401031	-	SUPERPAVE TYPE BCBC, PG 64-22, PATCHING
N	ITEM 301002	-	GRADED AGGREGATE BASE COURSE, TYPE B, PATCHING
P	ITEM 760010	-	PAVEMENT MILLING, BITUMINOUS CONCRETE
Q	ITEM 401036	-	SUPERPAVE TYPE C, PG 64-22, WEDGE
R	ITEM 401037	-	SUPERPAVE TYPE B, PG 64-22, WEDGE
S	ITEM 908020	-	EROSION CONTROL BLANKET MULCH
U	ITEM 723003	-	P.C.C. SAFETY BARRIER, PERMANENT, SINGLE FACE, 42"
V	ITEM 701011	-	PORTLAND CEMENT CONCRETE CURB, TYPE 1-4
W	ITEM 701012	-	PORTLAND CEMENT CONCRETE CURB, TYPE 1-6
X	ITEM 727000	-	CHAIN LINK FENCE
AA	ITEM 720021	-	GALVANIZED STEEL BEAM GUARDRAIL, TYPE 1-31
BB	ITEM 723500	-	P.C.C. SAFETY BARRIER, PERMANENT, SINGLE FACE, MODIFIED TYPE 2

MATERIAL	LIFT THICKNESS	
	MINIMUM	MAXIMUM
BITUMINOUS CONCRETE, TYPE 'C'	1.25"	2"
BITUMINOUS CONCRETE, TYPE 'B'	2.25"	4"
BITUMINOUS CONCRETE BASE COURSE	3"	6"
GRADED AGGREGATE BASE COURSE	3"	8"

NOTES:

1. TYPE B WEDGE (401037) SHALL BE PLACED TO A MINIMUM THICKNESS OF 2". TYPE C WEDGE (401036) SHALL BE PLACED WHERE WEDGE THICKNESS IS LESS THAN 2".

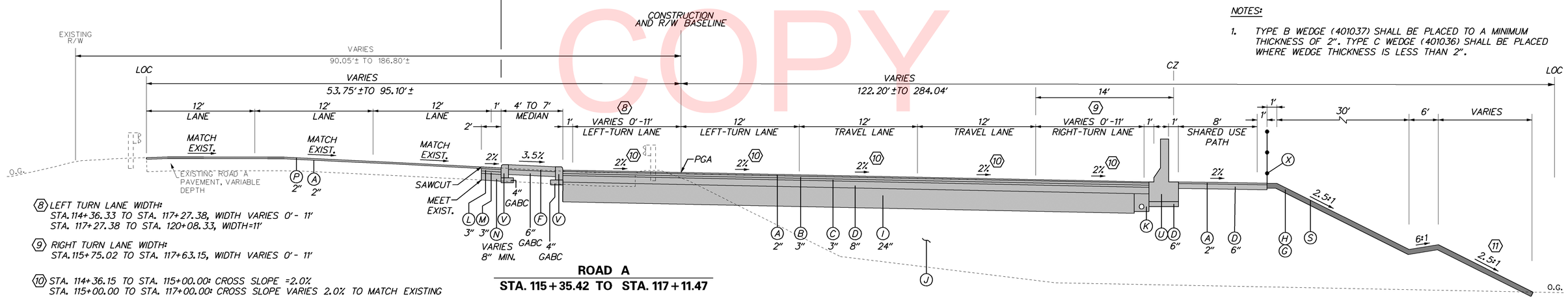

ROAD A
STA. 115+35.42 TO STA. 117+11.47

8 LEFT TURN LANE WIDTH:
STA.114+36.33 TO STA. 117+27.38, WIDTH VARIES 0'- 11'
STA. 117+27.38 TO STA. 120+08.33, WIDTH=11'

9 RIGHT TURN LANE WIDTH:
STA.115+75.02 TO STA. 117+63.15, WIDTH VARIES 0'- 11'

10 STA. 114+36.15 TO STA. 115+00.00: CROSS SLOPE =2.0%
STA. 115+00.00 TO STA. 117+00.00: CROSS SLOPE VARIES 2.0% TO MATCH EXISTING

11 STA. 116+32.63 TO STA. 117+18.45
GRADING TRANSITIONS FROM 2.5:1 TO 3:1
AT ELEVATION 39' DOWN TO STORMWATER BIORETENTION POND.

UNOFFICIAL WEBSITE COPY

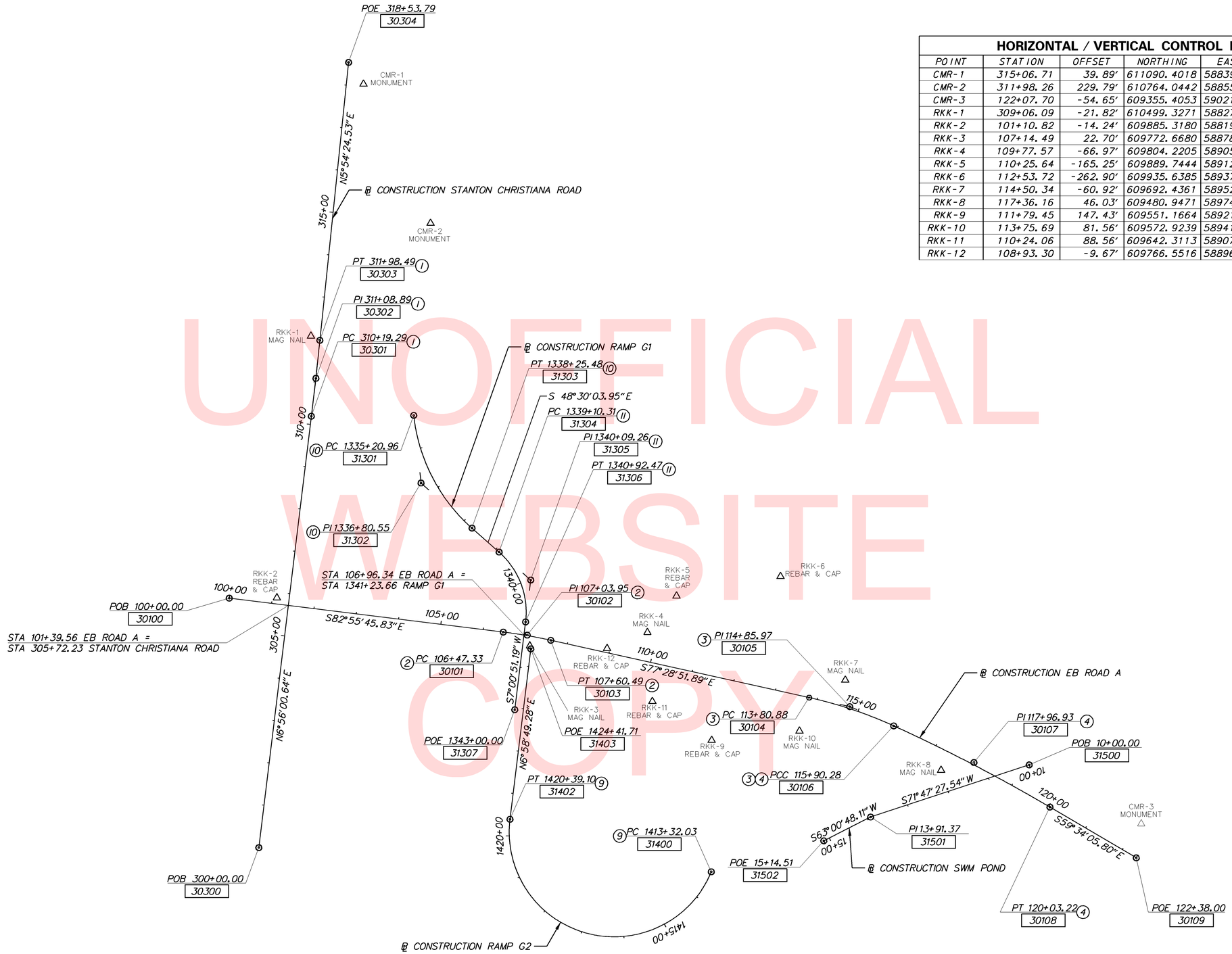

HORIZONTAL / VERTICAL CONTROL DATA

POINT	STATION	OFFSET	NORTHING	EASTING	ELEVATION
CMR-1	315+06.71	39.89'	611090.4018	588394.3350	63.71
CMR-2	311+98.26	229.79'	610764.0442	588551.4804	62.05
CMR-3	122+07.70	-54.65'	609355.4053	590217.5958	56.24
RKK-1	309+06.09	-21.82'	610499.3271	588271.1350	56.14
RKK-2	101+10.82	-14.24'	609885.3180	588191.2896	40.21
RKK-3	107+14.49	22.70'	609772.6680	588784.2893	51.96
RKK-4	109+77.57	-66.97'	609804.2205	589059.8679	60.58
RKK-5	110+25.64	-165.25'	609889.7444	589128.0956	38.52
RKK-6	112+53.72	-262.90'	609935.6385	589371.9252	49.33
RKK-7	114+50.34	-60.92'	609692.4361	589523.6025	66.04
RKK-8	117+36.16	46.03'	609480.9471	589748.2538	60.25
RKK-9	111+79.45	147.43'	609551.1664	589210.4745	35.14
RKK-10	113+75.69	81.56'	609572.9239	589416.3333	40.01
RKK-11	110+24.06	88.56'	609642.3113	589071.5391	26.58
RKK-12	108+93.30	-9.67'	609766.5516	588965.1823	57.36

UNOFFICIAL WEBSITE COPY

DATUM REFERENCE:

HORIZONTAL - THIS PROJECT IS REFERENCED TO THE DELAWARE STATE PLANE COORDINATE SYSTEM (NAD 83).

VERTICAL - THIS PROJECT IS REFERENCED TO NAVD 88.

4/3/2018 4:47:46 PM
\\BALSRV01\V2012\2012\12146_DELDOT1585\40-ROAD A CONNECTOR\CADD\CONTRACT\PLANS\HV01_RDA.DGN

DELAWARE DEPARTMENT OF TRANSPORTATION

ADDENDUMS / REVISIONS

SCALE 0 120 240 360 FEET

ROAD A /SR7 IMPROVEMENTS

CONTRACT	BRIDGE NO.	1-220
T201009002	DESIGNED BY: MCK	
COUNTY		
NEW CASTLE	CHECKED BY: RLS	

HORIZONTAL AND VERTICAL CONTROL

SHEET NO. 11

TOTAL SHTS. 154

STANTON CHRISTIANA ROAD

CIRCULAR CURVE NO. 1	STATION	NORTHING	EASTING
ELEMENT: CIRCULAR			
PC (30301)	310+19.29	610311.4370	588272.0226
PI (30302)	311+08.89	610400.3802	588282.8387
CC (30305)		611518.6116	578345.1535
PT (30303)	311+98.49	610489.5031	588292.0593
RADIUS:	10000.0000		
DELTA:	1.03 Left		
DEGREE OF CURVATURE (ARC):	0.57		
LENGTH:	179.1923		
TANGENT:	89.5985		
CHORD:	179.1899		
MIDDLE ORDINATE:	0.4014		
EXTERNAL:	0.4014		
TANGENT DIRECTION:	N 6°56'00.64" E		
RADIAL DIRECTION:	S 83°03'59.36" E		
CHORD DIRECTION:	N 6°25'12.59" E		
RADIAL DIRECTION:	S 84°05'35.47" E		
TANGENT DIRECTION:	N 5°54'24.53" E		

EB ROAD A

CIRCULAR CURVE NO. 2	STATION	NORTHING	EASTING
ELEMENT: CIRCULAR			
PC (30101)	106+47.33	609805.1357	588721.9654
PI (30102)	107+03.95	609798.1660	588778.1567
CC (30110)		608624.1854	588575.4855
PT (30103)	107+60.49	609785.8925	588833.4323
RADIUS:	1190.0000		
DELTA:	5.45 Right		
DEGREE OF CURVATURE (ARC):	4.81		
LENGTH:	113.1583		
TANGENT:	56.6218		
CHORD:	113.1157		
MIDDLE ORDINATE:	1.3448		
EXTERNAL:	1.3463		
TANGENT DIRECTION:	S 82°55'45.83" E		
RADIAL DIRECTION:	S 7°04'14.17" W		
CHORD DIRECTION:	S 80°12'18.86" E		
RADIAL DIRECTION:	S 12°31'08.11" W		
TANGENT DIRECTION:	S 77°28'51.89" E		

CIRCULAR CURVE NO. 3	STATION	NORTHING	EASTING
ELEMENT: CIRCULAR			
PC (30104)	113+80.88	609651.4151	589439.0743
PI (30105)	114+85.97	609628.6363	589541.6622
CC (30111)		608675.1906	589222.3123
PCC (30106)	115+90.28	609585.0295	589637.2740
RADIUS:	1000.0000		
DELTA:	12.00 Right		
DEGREE OF CURVATURE (ARC):	5.73		
LENGTH:	209.4044		
TANGENT:	105.0865		
CHORD:	209.0220		
MIDDLE ORDINATE:	5.4763		
EXTERNAL:	5.5064		
TANGENT DIRECTION:	S 77°28'51.89" E		
RADIAL DIRECTION:	S 12°31'08.11" W		
CHORD DIRECTION:	S 71°28'55.51" E		
RADIAL DIRECTION:	S 24°31'00.86" W		
TANGENT DIRECTION:	S 65°28'59.14" E		

CIRCULAR CURVE NO. 4	STATION	NORTHING	EASTING
ELEMENT: CIRCULAR			
PCC (30106)	115+90.28	609585.0295	589637.2740
PI (30107)	117+96.93	609499.2778	589825.2918
CC (30112)		605945.6740	587977.4271
PT (30108)	120+03.22	609394.6075	590003.4720
RADIUS:	4000.0000		
DELTA:	5.91 Right		
DEGREE OF CURVATURE (ARC):	1.43		
LENGTH:	412.9320		
TANGENT:	206.6496		
CHORD:	412.7487		
MIDDLE ORDINATE:	5.3273		
EXTERNAL:	5.3344		
TANGENT DIRECTION:	S 65°28'59.14" E		
RADIAL DIRECTION:	S 24°31'00.86" W		
CHORD DIRECTION:	S 62°31'32.47" E		
RADIAL DIRECTION:	S 30°25'54.20" W		
TANGENT DIRECTION:	S 59°34'05.80" E		

RAMP G2

CIRCULAR CURVE NO. 9	STATION	NORTHING	EASTING
ELEMENT: CIRCULAR			
PC (31400)	1413+32.03	609242.8946	589209.4847
PI (31401)	1416+85.57	607550.2329	588515.3703
CC (31404)		609336.2297	588981.8785
PT (31402)	1420+39.10	609366.1258	588737.7019
RADIUS:	246.0000		
DELTA:	164.68 Right		
DEGREE OF CURVATURE (ARC):	23.29		
LENGTH:	707.0688		
TANGENT:	1829.4531		
CHORD:	487.6114		
MIDDLE ORDINATE:	213.2163		
EXTERNAL:	1599.9183		
TANGENT DIRECTION:	S 22°17'49.91" W		
RADIAL DIRECTION:	N 67°42'10.09" W		
CHORD DIRECTION:	N 75°21'40.41" W		
RADIAL DIRECTION:	S 83°01'10.72" E		
TANGENT DIRECTION:	N 6°58'49.28" E		

RAMP G1

CIRCULAR CURVE NO. 10	STATION	NORTHING	EASTING
ELEMENT: CIRCULAR			
PC (31301)	1335+20.96	610313.4486	588512.0797
PI (31302)	1336+80.55	610154.7787	588529.1853
CC (31308)		610357.6088	588921.7062
PT (31303)	1338+25.48	610049.0339	588648.7126
RADIUS:	412.0000		
DELTA:	42.35 Left		
DEGREE OF CURVATURE (ARC):	13.91		
LENGTH:	304.5144		
TANGENT:	159.5893		
CHORD:	297.6302		
MIDDLE ORDINATE:	27.8151		
EXTERNAL:	29.8289		
TANGENT DIRECTION:	S 6°09'11.05" E		
RADIAL DIRECTION:	S 83°50'48.95" W		
CHORD DIRECTION:	S 27°19'37.50" E		
RADIAL DIRECTION:	S 41°29'56.05" W		
TANGENT DIRECTION:	S 48°30'03.95" E		

CIRCULAR CURVE NO. 11	STATION	NORTHING	EASTING
ELEMENT: CIRCULAR			
PC (31304)	1339+10.31	609992.8210	588712.2522
PI (31305)	1340+09.26	609927.2603	588786.3579
CC (31309)		609852.0149	588587.6823
PT (31306)	1340+92.47	609829.0572	588774.2753
RADIUS:	188.0000		
DELTA:	55.52 Right		
DEGREE OF CURVATURE (ARC):	30.48		
LENGTH:	182.1579		
TANGENT:	98.9437		
CHORD:	175.1155		
MIDDLE ORDINATE:	21.6340		
EXTERNAL:	24.4473		
TANGENT DIRECTION:	S 48°30'03.95" E		
RADIAL DIRECTION:	S 41°29'56.05" W		
CHORD DIRECTION:	S 20°44'36.38" E		
RADIAL DIRECTION:	N 82°59'08.81" W		
TANGENT DIRECTION:	S 7°00'51.19" W		

EB ROAD A

CONSTRUCTION ALIGNMENT CONTROL				
POINT	STATION	OFFSET	NORTHING	EASTING
30100	100+00.00	0	609884.8169	588079.5597
POT	105+00.00	0	609823.2707	588575.7573
POT	112+50.00	0	609679.7847	589311.3070
30109	122+38.00	0	609275.6864	590205.9111

STANTON CHRISTIANA ROAD

CONSTRUCTION ALIGNMENT CONTROL				
POINT	STATION	OFFSET	NORTHING	EASTING
30300	300+00.00	0	609299.5983	588148.9761
POT	305+00.00	0	609795.9417	588209.3348
POT	310+00.00	0	610292.2852	588269.6936
POT	317+00.00	0	610988.3552	588343.6706
30304	318+53.79	0	611141.3336	588359.4978

RAMP G1

CONSTRUCTION ALIGNMENT CONTROL				
POINT	STATION	OFFSET	NORTHING	EASTING
31307	1343+00.00	0	609623.0795	588748.9326

RAMP G2

CONSTRUCTION ALIGNMENT CONTROL				
POINT	STATION	OFFSET	NORTHING	EASTING
31403	1424+41.71	0	609765.7490	588786.6304

SWM POND

CONSTRUCTION ALIGNMENT CONTROL				
POINT	STATION	OFFSET	NORTHING	EASTING
31500	10+00.00	0	609493.6767	589957.8947
31501	13+91.37	0	609371.3784	589583.1194
31502	15+14.51	0	609315.5005	589473.3896

UNOFFICIAL WEBSITE COPY

SR-1

CIRCULAR CURVE NO. 12

	STATION	NORTHING	EASTING
ELEMENT: CIRCULAR			
POB (31601)	353+61.69	606518.6470	589211.7914
PI (31602)	362+64.95	607358.1941	588878.5528
CC (31603)		607575.5447	591874.4947
PT (31604)	371+11.69	608237.0486	589087.1242
RADIUS:	2864.7900		
DELTA:	35°00'00.0000" RIGHT		
DEGREE OF CURVATURE (ARC):	1°59'59.9974"		
LENGTH:	1750.0006		
TANGENT:	903.2648		
CHORD:	1722.9179		
MIDDLE ORDINATE:	132.5912		
EXTERNAL:	139.0258		
TANGENT DIRECTION:	N 21°38'58.0000" W		
RADIAL DIRECTION:	N 68°21'02.0000" E		
CHORD DIRECTION:	N 4°08'58.0000" W		
RADIAL DIRECTION:	S 76°38'58.0000" E		
TANGENT DIRECTION:	N 13°21'02.0000" E		

RAMP B

CIRCULAR CURVE NO. 13

	STATION	NORTHING	EASTING
ELEMENT: CIRCULAR			
PC (31701)	401+57.52	608947.8010	589264.0235
PI (31702)	403+71.55	609156.0443	589313.4441
CC (31703)		609548.1627	586734.2871
PCC (31704)	405+84.61	609369.5660	589328.1459
RADIUS:	2600.0000		
DELTA:	9°24'42.2899" LEFT		
DEGREE OF CURVATURE (ARC):	2°12'13.2618"		
LENGTH:	427.0915		
TANGENT:	214.0273		
CHORD:	426.6115		
MIDDLE ORDINATE:	8.7646		
EXTERNAL:	8.7943		
TANGENT DIRECTION:	N 13°21'02.0000" E		
RADIAL DIRECTION:	S 76°38'58.0000" E		
CHORD DIRECTION:	N 8°38'40.8551" E		
RADIAL DIRECTION:	S 86°03'40.2899" E		
TANGENT DIRECTION:	N 3°56'19.7101" E		

CIRCULAR CURVE NO. 14

	STATION	NORTHING	EASTING
ELEMENT: CIRCULAR			
PCC (31704)	405+84.61	609369.5660	589328.1459
PI (31705)	409+32.35	609716.4792	589352.0321
CC (31706)		609461.4059	587994.3039
PT (31707)	412+65.01	610031.0702	589203.8706
RADIUS:	1337.0000		
DELTA:	29°09'27.4757" LEFT		
DEGREE OF CURVATURE (ARC):	4°17'07.4350"		
LENGTH:	680.3949		
TANGENT:	347.7346		
CHORD:	673.0767		
MIDDLE ORDINATE:	43.0483		
EXTERNAL:	44.4805		
TANGENT DIRECTION:	N 3°56'19.7101" E		
RADIAL DIRECTION:	S 86°03'40.2899" E		
CHORD DIRECTION:	N 10°38'24.0277" W		
RADIAL DIRECTION:	N 64°46'52.2344" E		
TANGENT DIRECTION:	N 25°13'07.7656" W		

CIRCULAR CURVE NO. 15

	STATION	NORTHING	EASTING
ELEMENT: CIRCULAR			
PC (31708)	423+68.57	611029.4508	588733.6676
PI (31709)	432+05.12	611786.2657	588377.2339
CC (31710)		611807.0405	590384.7216
PCC (31711)	439+37.35	612550.2948	588717.9289
RADIUS:	1825.0000		
DELTA:	49°15'06.5419" RIGHT		
DEGREE OF CURVATURE (ARC):	3°08'22.1812"		
LENGTH:	1568.7816		
TANGENT:	836.5487		
CHORD:	1520.9254		
MIDDLE ORDINATE:	165.9878		
EXTERNAL:	182.5952		
TANGENT DIRECTION:	N 25°13'07.7656" W		
RADIAL DIRECTION:	N 64°46'52.2344" E		
CHORD DIRECTION:	N 0°35'34.4946" W		
RADIAL DIRECTION:	S 65°58'01.2236" E		
TANGENT DIRECTION:	N 24°01'58.7764" E		

RAMP B

CIRCULAR CURVE NO. 16

	STATION	NORTHING	EASTING
ELEMENT: CIRCULAR			
PCC (31711)	439+37.35	612550.2948	588717.9289
PI (31712)	443+83.11	612957.4048	588899.4669
CC (31713)		611084.1494	592005.8488
POE (31714)	448+24.34	613307.9429	589174.8168
RADIUS:	3600.0000		
DELTA:	14°07'00.7116" RIGHT		
DEGREE OF CURVATURE (ARC):	1°35'29.5780"		
LENGTH:	886.9887		
TANGENT:	445.7516		
CHORD:	884.7469		
MIDDLE ORDINATE:	27.2831		
EXTERNAL:	27.4915		
TANGENT DIRECTION:	N 24°01'58.7764" E		
RADIAL DIRECTION:	S 65°58'01.2236" E		
CHORD DIRECTION:	N 31°05'29.1321" E		
RADIAL DIRECTION:	S 51°51'00.5121" E		
TANGENT DIRECTION:	N 38°08'59.4879" E		

SR-1

CONSTRUCTION ALIGNMENT CONTROL

POINT	STATION	OFFSET	NORTHING	EASTING
POT	373+50.00	0	608468.9178	589142.1518
31605	13+91.37	0	608779.8423	589215.9410

RAMP B

CONSTRUCTION ALIGNMENT CONTROL

POINT	STATION	OFFSET	NORTHING	EASTING
31700	10+00.00	0	608777.9950	589223.7248
POT	415+00.00	0	610243.6638	589103.7463
POT	420+00.00	0	610696.0073	588890.7081

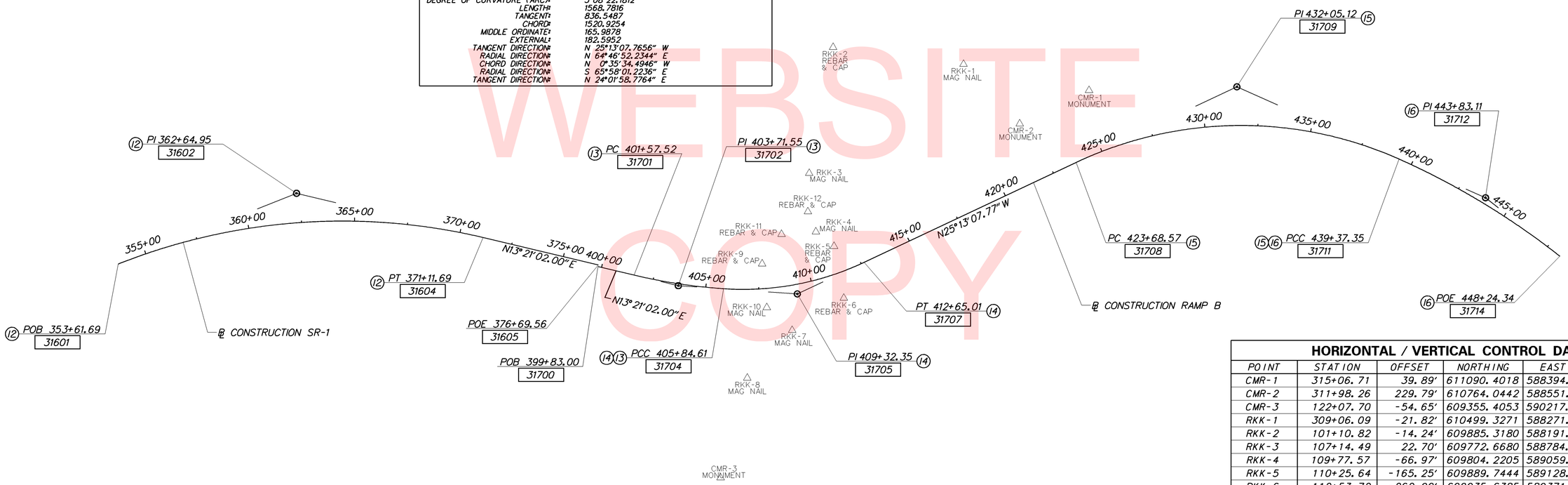

HORIZONTAL / VERTICAL CONTROL DATA

POINT	STATION	OFFSET	NORTHING	EASTING	ELEVATION
CMR-1	315+06.71	39.89'	611090.4018	588394.3350	63.71
CMR-2	311+98.26	229.79'	610764.0442	588551.4804	62.05
CMR-3	122+07.70	-54.65'	609355.4053	590217.5958	56.24
RKK-1	309+06.09	-21.82'	610499.3271	588271.1350	56.14
RKK-2	101+10.82	-14.24'	609885.3180	588191.2896	40.21
RKK-3	107+14.49	22.70'	609772.6680	588784.2893	51.96
RKK-4	109+77.57	-66.97'	609804.2205	589059.8679	60.58
RKK-5	110+25.64	-165.25'	609889.7444	589128.0956	38.52
RKK-6	112+53.72	-262.90'	609935.6385	589371.9252	49.33
RKK-7	114+50.34	-60.92'	609692.4361	589523.6025	66.04
RKK-8	117+36.16	46.03'	609480.9471	589748.2538	60.25
RKK-9	111+79.45	147.43'	609551.1664	589210.4745	35.14
RKK-10	113+75.69	81.56'	609572.9239	589416.3333	40.01
RKK-11	110+24.06	88.56'	609642.3113	589071.5391	26.58
RKK-12	108+93.30	-9.67'	609766.5516	588965.1823	57.36

DATUM REFERENCE:

HORIZONTAL - THIS PROJECT IS REFERENCED TO THE DELAWARE STATE PLANE COORDINATE SYSTEM (NAD 83).

VERTICAL - THIS PROJECT IS REFERENCED TO NAVD 88.

UNOFFICIAL WEBSITE COPY

FENCE SCHEDULE

NO.	QTY.	DESCRIPTION	NOTES
1	200 LF	CHAIN LINK FENCE, 6 FT. HIGH WITH SLATS (ITEM 727000)	STA. 101+75, 50' RT. TO STA. 104+00, 50' RT. (+/-)
2	290 LF	CHAIN LINK FENCE, 8 FT. HIGH WITH SLATS (ITEM 727000)	STA. 102+14, 43' LT. TO STA. 104+65, 43' LT. (+/-)
5	290 LF	CHAIN LINK FENCE, 42" WITH SLATS, WALL MOUNTED (ITEM 727000)	STA. 104+00, 50' RT. TO STA. 106+73, 80' RT. (+/-)

BARRIER SCHEDULE

NO.	ITEM DESCRIPTION / TYPE	LENGTH
1	P.C.C. SAFETY BARRIER PERMANENT, SINGLE FACE, MOD. TYPE 2***	470 LF

*** INCLUDES SLOPED CONCRETE END TREATMENT, SEE CONSTRUCTION DETAILS.

CURB SCHEDULE

NO.	ITEM DESCRIPTION / TYPE	LENGTH
1	PORTLAND CEMENT CONCRETE CURB, TYPE 1-6	6 LF
2	PORTLAND CEMENT CONCRETE CURB, TYPE 1-6**	92 LF
3	PORTLAND CEMENT CONCRETE CURB, TYPE 1-6	560 LF
4	PORTLAND CEMENT CONCRETE CURB, TYPE 1-4	936 LF
14	PORTLAND CEMENT CONCRETE CURB, TYPE 1-4	39 LF

** DEPRESS CURB AT DRIVEWAY ENTRANCES

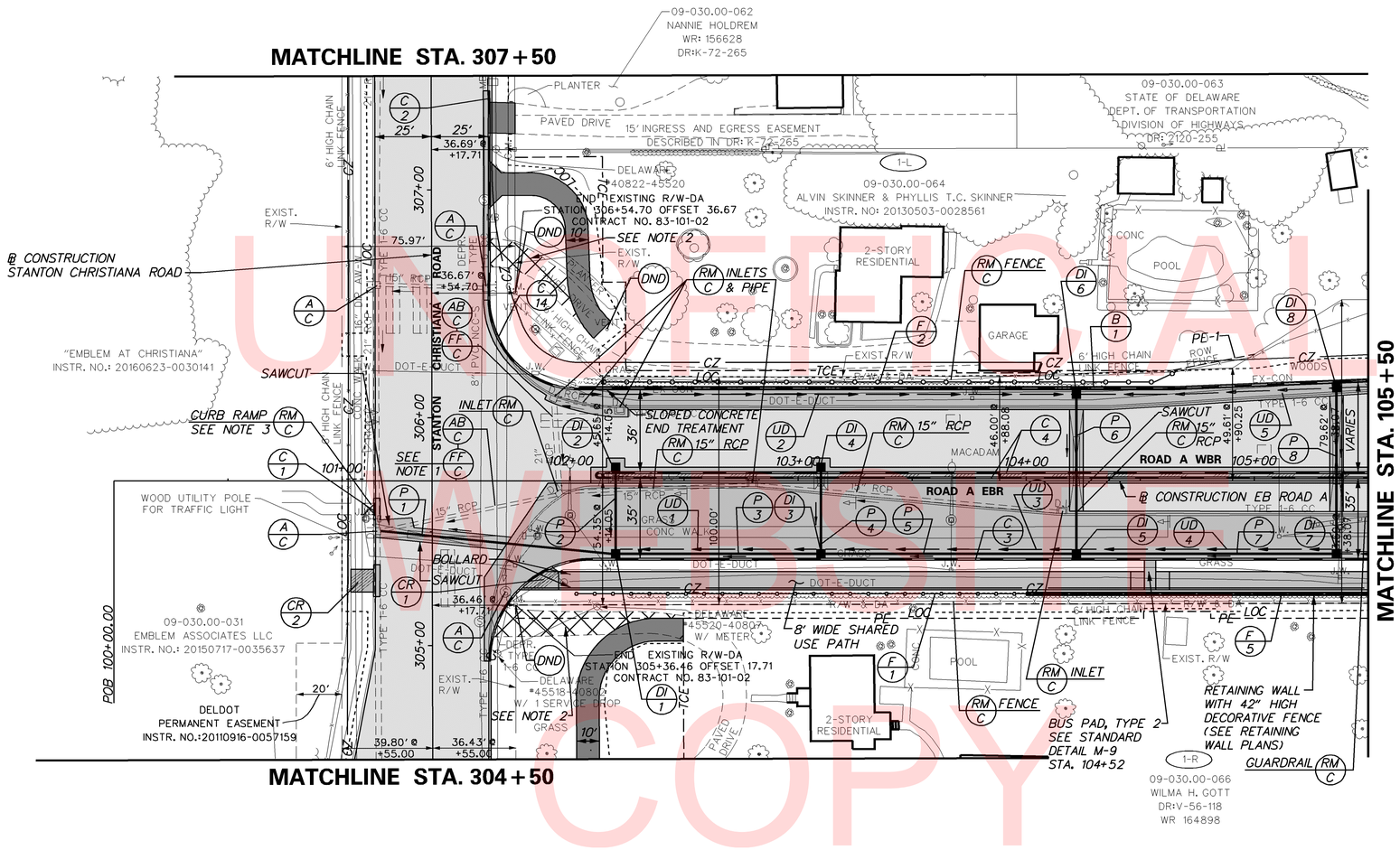

UNOFFICIAL WEBSITE COPY

DRAINAGE INLET SCHEDULE

NO.	STATION	OFFSET	BOX SIZE	GRATE	T.G. EL.	INV. EL.
1	102+20.00	++ RT.	72" X 48"	1	+	34.29
2	102+20.00	++ LT.	72" X 24"	1	+	35.26
3	103+10.00	++ RT.	72" X 48"	1	+	36.59
4	103+10.00	++ LT.	72" X 24"	1	+	37.70
5	104+22.00	++ RT.	72" X 48"	1	+	39.44
6	104+22.00	++ LT.	72" X 24"	1	+	41.62
7	105+36.00	++ RT.	72" X 48"	1	+	42.34
8	105+36.00	++ LT.	72" X 24"	1	+	44.34

\+ MATCH FLOWLINE OF PROPOSED CURB OR BARRIER
++ MATCH PROPOSED CURB LINE OR BARRIER

DRAINAGE PIPE SCHEDULE

NO.	SIZE / TYPE	CLASS	LENGTH	SLOPE	INT. EL.	DIS. EL.
1	18" RCP	III	100'	2.52%	34.29	31.77
2	18" RCP	III	36'	1.58%	35.26	34.69
3	18" RCP	III	84'	2.50%	36.59	34.49
4	18" RCP	III	36'	1.97%	37.70	36.99
5	18" RCP	III	106'	2.50%	39.44	36.79
6	18" RCP	III	72'	2.47%	41.62	39.84
7	18" RCP	III	108'	2.50%	42.34	39.64
8	18" RCP	III	72'	2.50%	44.34	42.54

UNDERDRAIN SCHEDULE

NO.	SIZE / TYPE	LENGTH	DIS. TYPE	DIS. EL.
1	6" PEP	86'	DI-1	*
2	6" PEP	216'	DI-6	*
3	6" PEP	108'	DI-3	*
4	6" PEP	115'	DI-5	*
5	6" PEP	111'	DI-6	*

* TO BE SET IN FIELD

NOTES

1. EXISTING DRAINAGE PIPE IS TO BE SAWCUT AND REMOVED SUCH THAT THE CONNECTION OF PIPE 1 TO THE EXISTING DRAINAGE INLET. THE REMAINING PORTION OF THE EXISTING PIPE IS TO BE ABANDONED IN PLACE AND FILLED WITH FLOWABLE FILL.
2. REMOVE EXISTING PAVEMENT. BACKFILL WITH BORROW TYPE F, TOPSOIL, PERMANENT GRASS SEEDING, DRY GROUND, AND EROSION CONTROL BLANKET MULCH.
3. REMOVE EXISTING CURB RAMP. BACKFILL WITH TOPSOIL, PERMANENT GRASS SEEDING, DRY GROUND, AND EROSION CONTROL BLANKET MULCH.

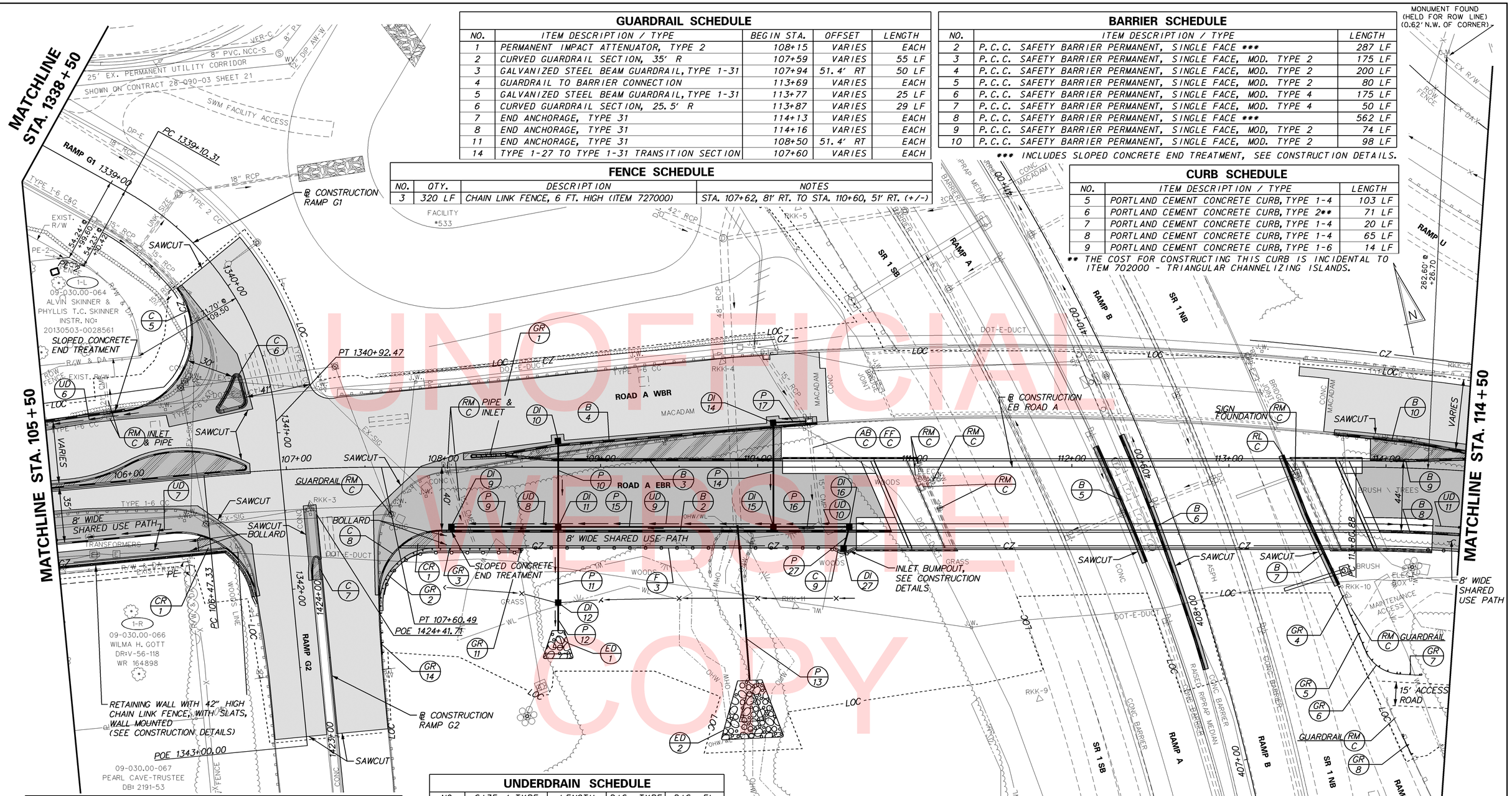

GUARDRAIL SCHEDULE

NO.	ITEM DESCRIPTION / TYPE	BEGIN STA.	OFFSET	LENGTH
1	PERMANENT IMPACT ATTENUATOR, TYPE 2	108+15	VARIES	EACH
2	CURVED GUARDRAIL SECTION, 35' R	107+59	VARIES	55 LF
3	GALVANIZED STEEL BEAM GUARDRAIL, TYPE 1-31	107+94	51.4' RT	50 LF
4	GUARDRAIL TO BARRIER CONNECTION	113+69	VARIES	EACH
5	GALVANIZED STEEL BEAM GUARDRAIL, TYPE 1-31	113+77	VARIES	25 LF
6	CURVED GUARDRAIL SECTION, 25.5' R	113+87	VARIES	29 LF
7	END ANCHORAGE, TYPE 31	114+13	VARIES	EACH
8	END ANCHORAGE, TYPE 31	114+16	VARIES	EACH
11	END ANCHORAGE, TYPE 31	108+50	51.4' RT	EACH
14	TYPE 1-27 TO TYPE 1-31 TRANSITION SECTION	107+60	VARIES	EACH

BARRIER SCHEDULE

NO.	ITEM DESCRIPTION / TYPE	LENGTH
2	P.C.C. SAFETY BARRIER PERMANENT, SINGLE FACE ***	287 LF
3	P.C.C. SAFETY BARRIER PERMANENT, SINGLE FACE, MOD. TYPE 2	175 LF
4	P.C.C. SAFETY BARRIER PERMANENT, SINGLE FACE, MOD. TYPE 2	200 LF
5	P.C.C. SAFETY BARRIER PERMANENT, SINGLE FACE, MOD. TYPE 2	80 LF
6	P.C.C. SAFETY BARRIER PERMANENT, SINGLE FACE, MOD. TYPE 4	175 LF
7	P.C.C. SAFETY BARRIER PERMANENT, SINGLE FACE, MOD. TYPE 4	50 LF
8	P.C.C. SAFETY BARRIER PERMANENT, SINGLE FACE ***	562 LF
9	P.C.C. SAFETY BARRIER PERMANENT, SINGLE FACE, MOD, TYPE 2	74 LF
10	P.C.C. SAFETY BARRIER PERMANENT, SINGLE FACE, MOD. TYPE 2	98 LF

*** INCLUDES SLOPED CONCRETE END TREATMENT, SEE CONSTRUCTION DETAILS.

FENCE SCHEDULE

NO.	QTY.	DESCRIPTION	NOTES
3	320 LF	CHAIN LINK FENCE, 6 FT. HIGH (ITEM 727000)	STA. 107+62, 81' RT. TO STA. 110+60, 51' RT. (+/-)

CURB SCHEDULE

NO.	ITEM DESCRIPTION / TYPE	LENGTH
5	PORTLAND CEMENT CONCRETE CURB, TYPE 1-4	103 LF
6	PORTLAND CEMENT CONCRETE CURB, TYPE 2**	71 LF
7	PORTLAND CEMENT CONCRETE CURB, TYPE 1-4	20 LF
8	PORTLAND CEMENT CONCRETE CURB, TYPE 1-4	65 LF
9	PORTLAND CEMENT CONCRETE CURB, TYPE 1-6	14 LF

** THE COST FOR CONSTRUCTING THIS CURB IS INCIDENTAL TO ITEM 702000 - TRIANGULAR CHANNELIZING ISLANDS.

DRAINAGE PIPE SCHEDULE

NO.	SIZE / TYPE	CLASS	LENGTH	SLOPE	INT. EL.	DIS. EL.
9	15" RCP	III	64'	3.00%	48.95	47.03
10	18" RCP	III	54'	3.00%	49.65	48.03
11	18" RCP	IV	44'	4.80%	40.31	38.20
12	18" RCP	IV	12'	1.67%	35.20	35.00
13	48" RCP	IV	88'	*	MATCH EX.	*
14	18" RCP	III	64'	2.00%	52.30	51.02
15	18" RCP	III	132'	4.50%	50.74	44.80
16	15" RCP	III	44'	3.00%	52.31	50.99
17	15" RCP	III	20'	3.00%	53.15	52.55
27	15" RCP	III	12'	3.25%	52.95	52.56

* TO BE VERIFIED IN FIELD

UNDERDRAIN SCHEDULE

NO.	SIZE / TYPE	LENGTH	DIS. TYPE	DIS. EL.
6	6" PEP	72'	DI-8	*
7	6" PEP	90'	DI-7	*
8	6" PEP	64'	DI-9	*
9	6" PEP	133'	DI-11	*
10	6" PEP	61'	DI-15	*
11	6" PEP	83'	DI-18	*

* TO BE SET IN FIELD

ENERGY DISSIPATOR SCHEDULE

NO.	STATION	OFFSET	RIPRAP SIZE	D (FT)	T1 (FT)	L (FT)	W1 (FT)	W2 (FT)
1	108+73.00	+112.00	R-4	0.75	1.13	6.8	2.0	6.5
2	109+94.70	+132.50	R-6	4.0	2.0	18.0	4.0	16.0

DRAINAGE INLET SCHEDULE

NO.	STATION	OFFSET	BOX SIZE	GRATE	T.G. EL.	INV. EL.
9	108+05.00	++ RT.	72" X 48"	1	+	48.95
10	108+73.00	++ LT.	72" X 48"	1	+	49.65
11	108+73.00	++ RT.	SPECIAL I	1	+	40.31
12	108+73.00	86.3' RT.	34" X 24"	2	41.15	35.20
14	110+10.00	++ LT.	72" X 48"	1	+	52.30
15	110+10.00	++ RT.	72" X 48"	1	+	50.74
16	110+58.00	++ RT.	72" X 48"	1	+	52.31
27	110+55.00	53.29' RT.	34" X 24"	1	61.40	52.95

+ MATCH FLOWLINE OF PROPOSED CURB OR BARRIER
++ MATCH PROPOSED CURB LINE OR BARRIER

DELAWARE DEPARTMENT OF TRANSPORTATION

ADDENDUMS / REVISIONS

SCALE 0 30 60 90 FEET

ROAD A /SR7 IMPROVEMENTS

CONTRACT	BRIDGE NO.	1-220
T201009002	DESIGNED BY:	MCK
COUNTY		
NEW CASTLE	CHECKED BY:	RLS

CONSTRUCTION PLAN

SHEET NO. 15
TOTAL SHTS. 154

7/9/2018 12:46:19 PM
\\balsrv01\v2012\2012\12146_DelDOT1585\40-Road A Connector\Cadd\Contract\Plans\cp02_RdA.dgn

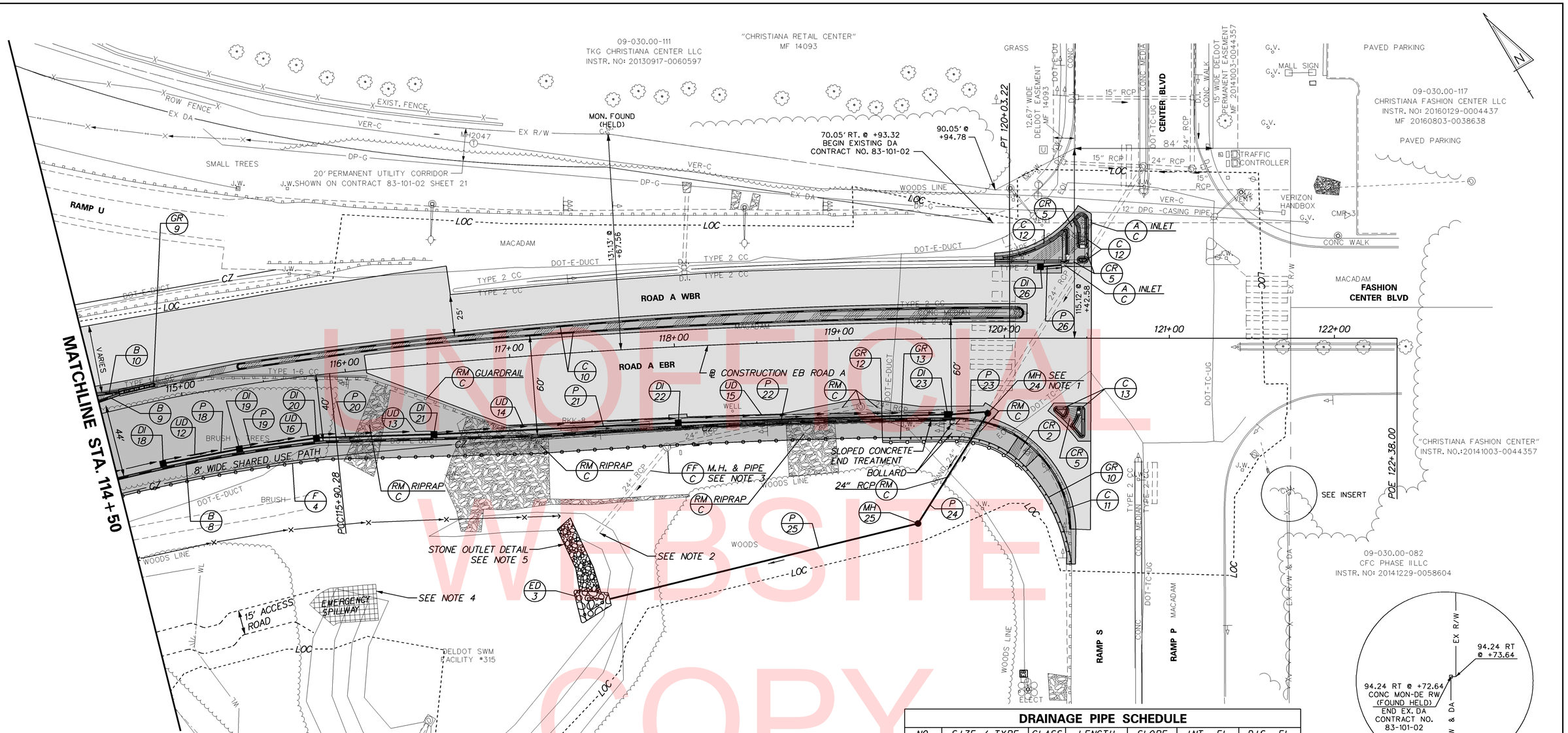

UNOFFICIAL WEBSITE COPY

MANHOLE SCHEDULE

NO.	STATION	OFFSET	TYPE/SIZE	T.G. EL.	INV. EL.
24	119+90	45.4' RT.	SPECIAL II	57.78	42.60
25	119+46	112' RT	48" ROUND	45.10	39.00

ENERGY DISSIPATOR SCHEDULE

NO.	STATION	OFFSET	RIPRAP SIZE	D (FT)	T1 (FT)	L (FT)	W1 (FT)	W2 (FT)
3	117+41.75	152' RT.	R-4	1.38	1.13	9.0	2.0	8.0

CURB SCHEDULE

NO.	ITEM DESCRIPTION / TYPE	LENGTH
10	PORTLAND CEMENT CONCRETE CURB, TYPE 1-4	964 LF
11	PORTLAND CEMENT CONCRETE CURB, TYPE 1-4	108 LF
12	PORTLAND CEMENT CONCRETE CURB, TYPE 2**	180 LF
13	PORTLAND CEMENT CONCRETE CURB, TYPE 2**	90 LF

** THE COST FOR CONSTRUCTING THIS CURB IS INCIDENTAL TO ITEM 702000 - TRIANGULAR CHANNELIZING ISLANDS.

UNDERDRAIN SCHEDULE

NO.	SIZE / TYPE	LENGTH	DIS. TYPE	DIS. EL.
12	6" PEP	43'	DI-19	*
13	6" PEP	68'	DI-21	*
14	6" PEP	145'	DI-22	*
15	6" PEP	160'	DI-23	*
16	6" PEP	43'	DI-20	*

* TO BE SET IN FIELD

GUARDRAIL SCHEDULE

NO.	ITEM DESCRIPTION / TYPE	BEGIN STA.	OFFSET	LENGTH
9	PERMANENT IMPACT ATTENUATOR, TYPE 2	114+63	10.0' LT	EACH
10	CURVED GUARDRAIL SECTION, 58.6' R TO 107' R	119+69	VARIES	120.5 LF
12	END ANCHORAGE, TYPE 31	119+25	59.4' RT	EACH
13	GALVANIZED STEEL BEAM GUARDRAIL, TYPE 1-31	119+31	59.4' RT	37.5 LF

FENCE SCHEDULE

NO.	QTY.	DESCRIPTION	NOTES
4	580 LF	CHAIN LINK FENCE, 6 FT. HIGH (ITEM 727000)	STA. 114+28, 51' RT. TO STA. 120+10, 80' RT. (+/-)

DRAINAGE PIPE SCHEDULE

NO.	SIZE / TYPE	CLASS	LENGTH	SLOPE	INT. EL.	DIS. EL.
18	15" RCP	III	44'	2.00%	60.23	59.35
19	15" RCP	III	44'	2.00%	59.15	58.27
20	15" RCP	III	68'	2.00%	58.07	56.71
21	15" RCP	III	144'	2.00%	56.51	53.63
22	15" RCP	III	160'	3.00%	53.43	48.63
23	15" RCP	III	20'	3.60%	48.00	47.28
24	24" RCP	III	76'	2.11%	42.60	41.00
25	24" RCP	III	192'	1.56%	39.00	36.00
26	15" RCP	III	12'	2.00%	56.35	56.11

DRAINAGE INLET SCHEDULE

NO.	STATION	OFFSET	BOX SIZE	GRATE	T.G. EL.	INV. EL.
18	114+80	++ RT.	72"X 48"	1	+	60.23
19	115+28	++ RT.	72"X 48"	1	+	59.15
20	115+78	++ RT.	72"X 48"	1	+	58.07
21	116+50	++ RT.	48"X 48"	1	+	56.51
22	118+00	++ RT.	72"X 48"	1	+	53.43
23	119+65	++ RT.	72"X 48"	1	+	48.00
26	120+22	++ LT.	34"X 24"	1	+	56.35

+ MATCH FLOWLINE OF PROPOSED CURB OR BARRIER
++ MATCH PROPOSED CURB LINE OR BARRIER

NOTES

1. EXISTING DRAINAGE PIPE IS TO BE SAWCUT AT PROPOSED MH-24. THE PORTION OF THE EXISTING PIPE SOUTHWEST OF MH-24 SHALL BE REMOVED. CONNECT THE REMAINING PORTION OF THE EXISTING 24" PIPE TO PROPOSED MH-24.
2. PLUG EXISTING PIPE. COST SHALL BE INCIDENTAL TO THE COST OF THE FLOWABLE FILL.
3. PLUG EXISTING OPENING FROM PIPE REMOVAL. COST SHALL BE INCIDENTAL TO THE COST OF THE FLOWABLE FILL.
4. PLACE EROSION CONTROL BLANKET FOR THE ENTIRE EXTENT OF THE EMERGENCY SPILLWAY. SEE STORMWATER MANAGEMENT PLAN FOR ADDITIONAL GRADING INFORMATION.
5. SEE DELDOT STANDARD NO. E-21 (2014)

DELAWARE DEPARTMENT OF TRANSPORTATION

ADDENDUMS / REVISIONS

SCALE 0 30 60 90 FEET

ROAD A /SR7 IMPROVEMENTS

CONTRACT	BRIDGE NO.	1-220
T201009002	DESIGNED BY: MCK	
COUNTY	CHECKED BY: RLS	
NEW CASTLE		

CONSTRUCTION PLAN

SHEET NO. 16
TOTAL SHTS. 154

7/9/2018 10:04:14 AM
\\balsrv01\v2012\2012\12146_DelDOT1585\40-Road A Connector\Cadd\Contract\Plans\cp03_RdA.dgn

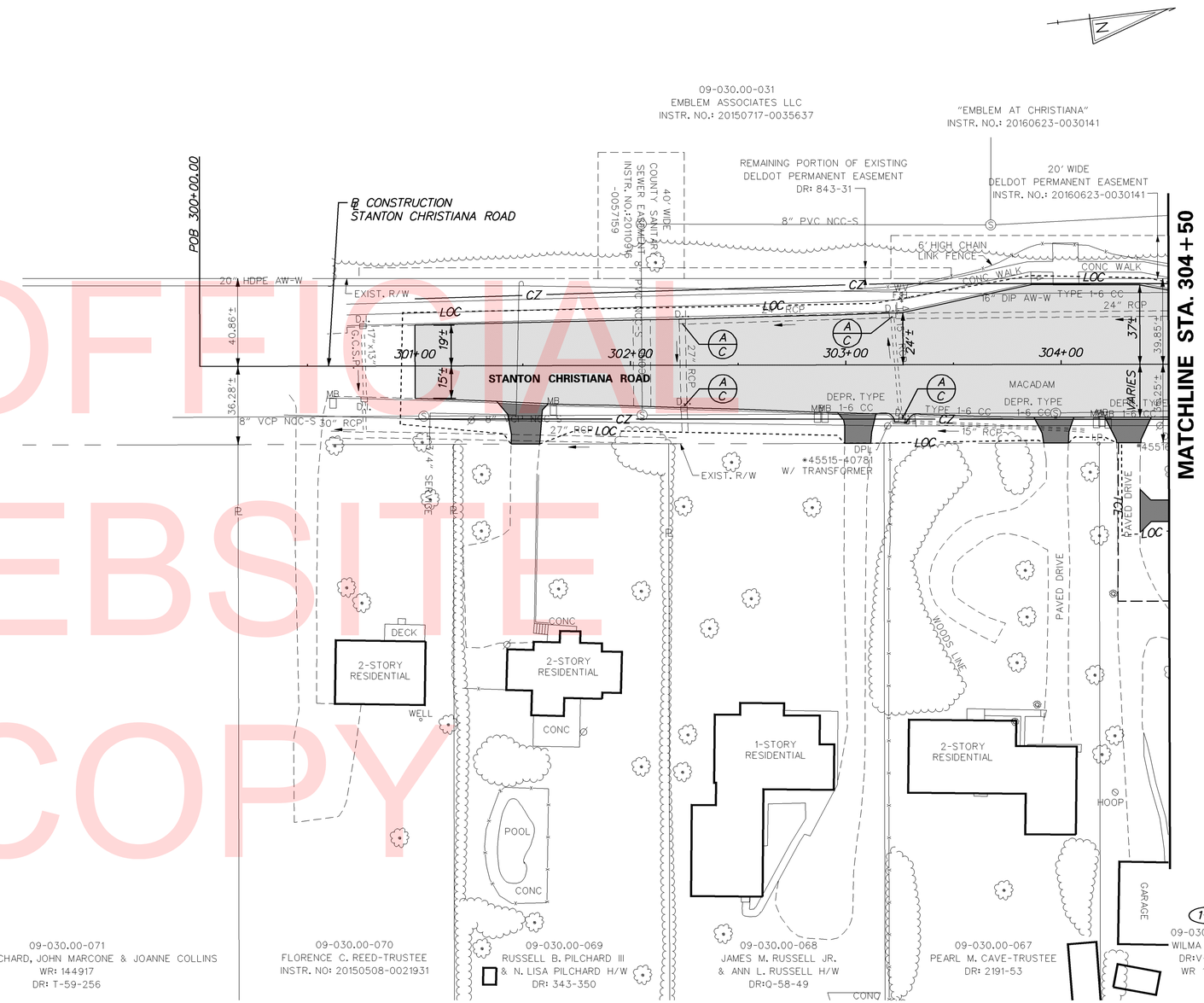

UNOFFICIAL WEBSITE COPY

7/9/2018 10:38:12 AM
\\balsrv01\v2012\2012\12146_DelDOT585\40-Road A Connector\Cadd\Contract\Plans\cp04_RdA.dgn

DELAWARE DEPARTMENT OF TRANSPORTATION

ADDENDUMS / REVISIONS

SCALE 0 30 60 90 FEET

ROAD A /SR7 IMPROVEMENTS

CONTRACT	BRIDGE NO.	1-220
T201009002	DESIGNED BY: MCK	
COUNTY		
NEW CASTLE	CHECKED BY: RLS	

CONSTRUCTION PLAN

SHEET NO. 17
TOTAL SHTS. 154

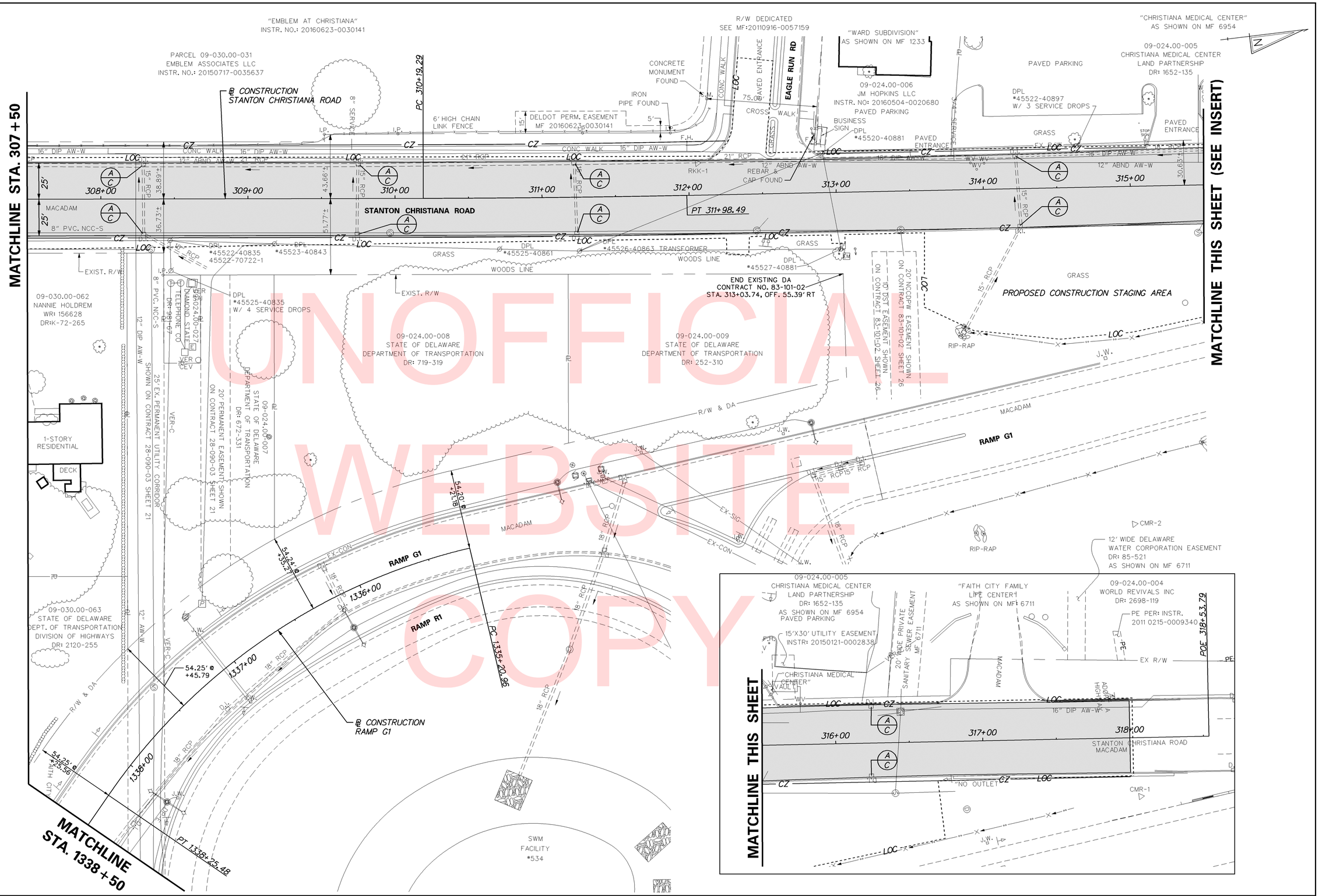

UNOFFICIAL WEBSITE COPY

7/9/2018 10:38:34 AM
\\balsrv01\v2012\2012\12146_DelDOT1585\40-Road A Connector\Cadd\Contract\Plans\cp05_RdAcdgn

DELAWARE DEPARTMENT OF TRANSPORTATION

ADDENDUMS / REVISIONS

SCALE 0 30 60 90 FEET

ROAD A /SR7 IMPROVEMENTS

CONTRACT	BRIDGE NO.	1-220
T201009002	DESIGNED BY:	MCK
COUNTY		
NEW CASTLE	CHECKED BY:	RLS

CONSTRUCTION PLAN

SHEET NO. 18
TOTAL SHTS. 154

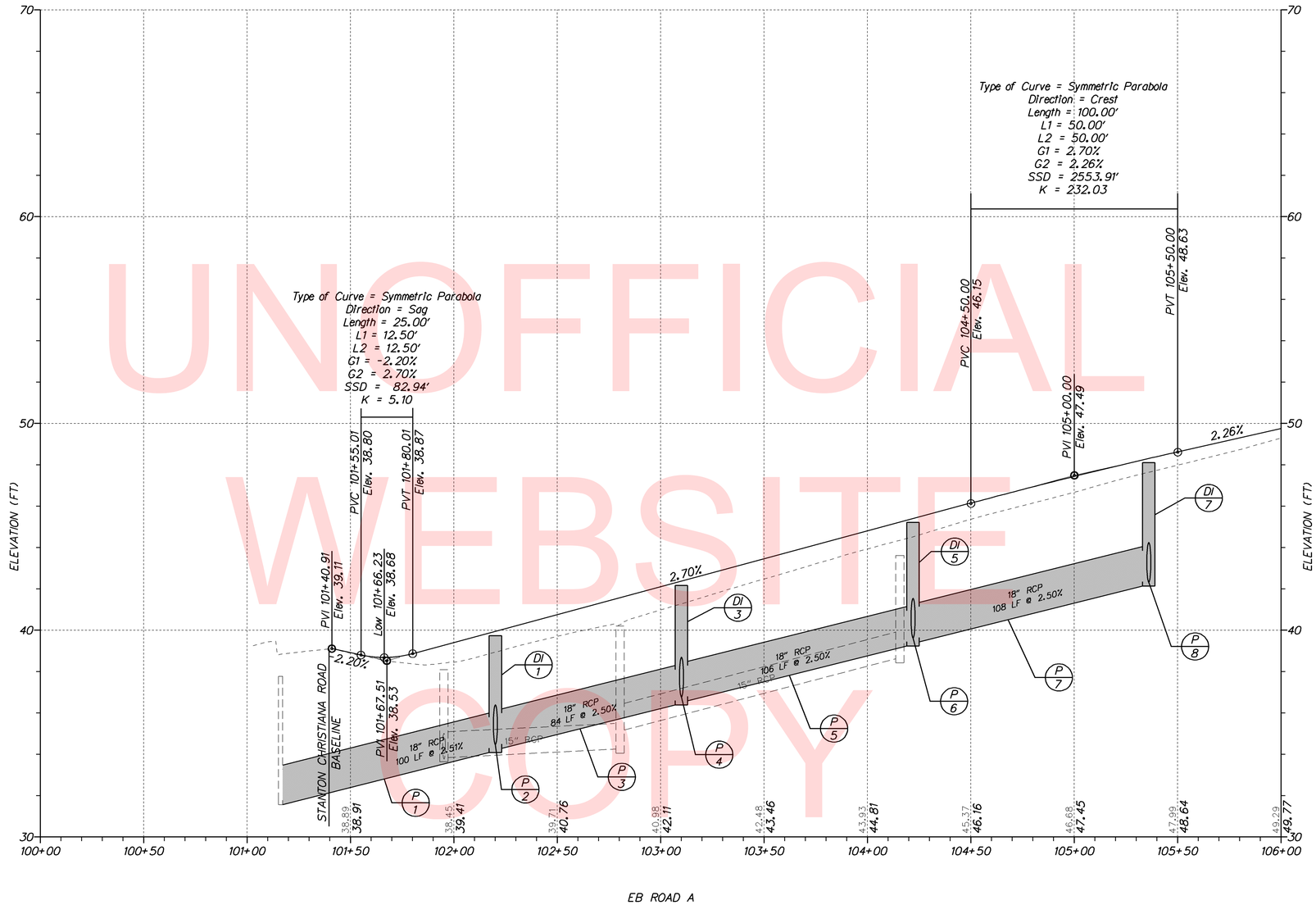

UNOFFICIAL WEBSITE COPY

VERTICAL SCALE FEET 0 3 6 9

4/3/2018 2:32:57 PM
\\BALSRV01\V2012\2012\12146_DELDOT1585\40-ROAD A CONNECTOR\CADD\CONTRACT\PLANS\PF01_RDA.DGN

DELAWARE DEPARTMENT OF TRANSPORTATION

ADDENDUMS / REVISIONS

HORIZONTAL SCALE 0 30 60 90 FEET

ROAD A /SR7 IMPROVEMENTS

CONTRACT	T201009002
COUNTY	NEW CASTLE
BRIDGE NO.	1-220
DESIGNED BY:	MCK
CHECKED BY:	RLS

PROFILES

SHEET NO.	19
TOTAL SHTS.	154

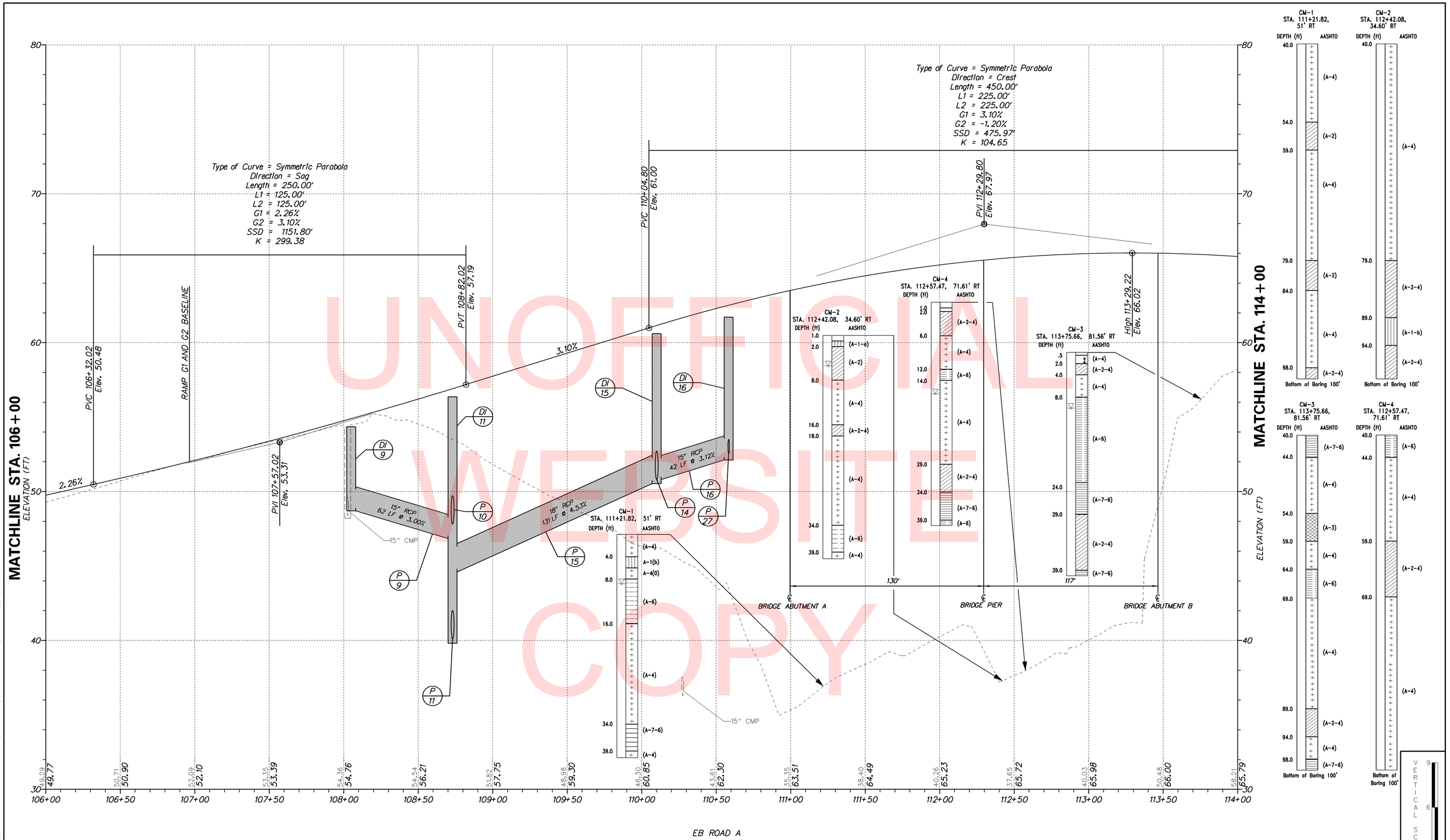

UNOFFICIAL WEBSITE COPY

NOTE: THE BORING DATA PROVIDED ON THE PROFILE SHEETS INDICATES THE SOIL CONDITION ONLY AT THE SPECIFIC LOCATION EACH BORING WAS PERFORMED AND ONLY TO THE DEPTH PENETRATED.

DELAWARE DEPARTMENT OF TRANSPORTATION

ADDENDUMS / REVISIONS

HORIZONTAL SCALE 0 30 60 90 FEET

ROAD A /SR7 IMPROVEMENTS

CONTRACT T201009002	BRIDGE NO.	1-220	
COUNTY NEW CASTLE	DESIGNED BY: MCK		
	CHECKED BY: RLS		

PROFILES

SHEET NO. 20
TOTAL SHTS. 154

4/3/2018 2:50:31 PM
\\BALSRV01\V2012\2012\12146_DELDOT1585\40-ROAD A CONNECTOR\CADD\CONTRACT\PLANS\PF02_RDA.DGN

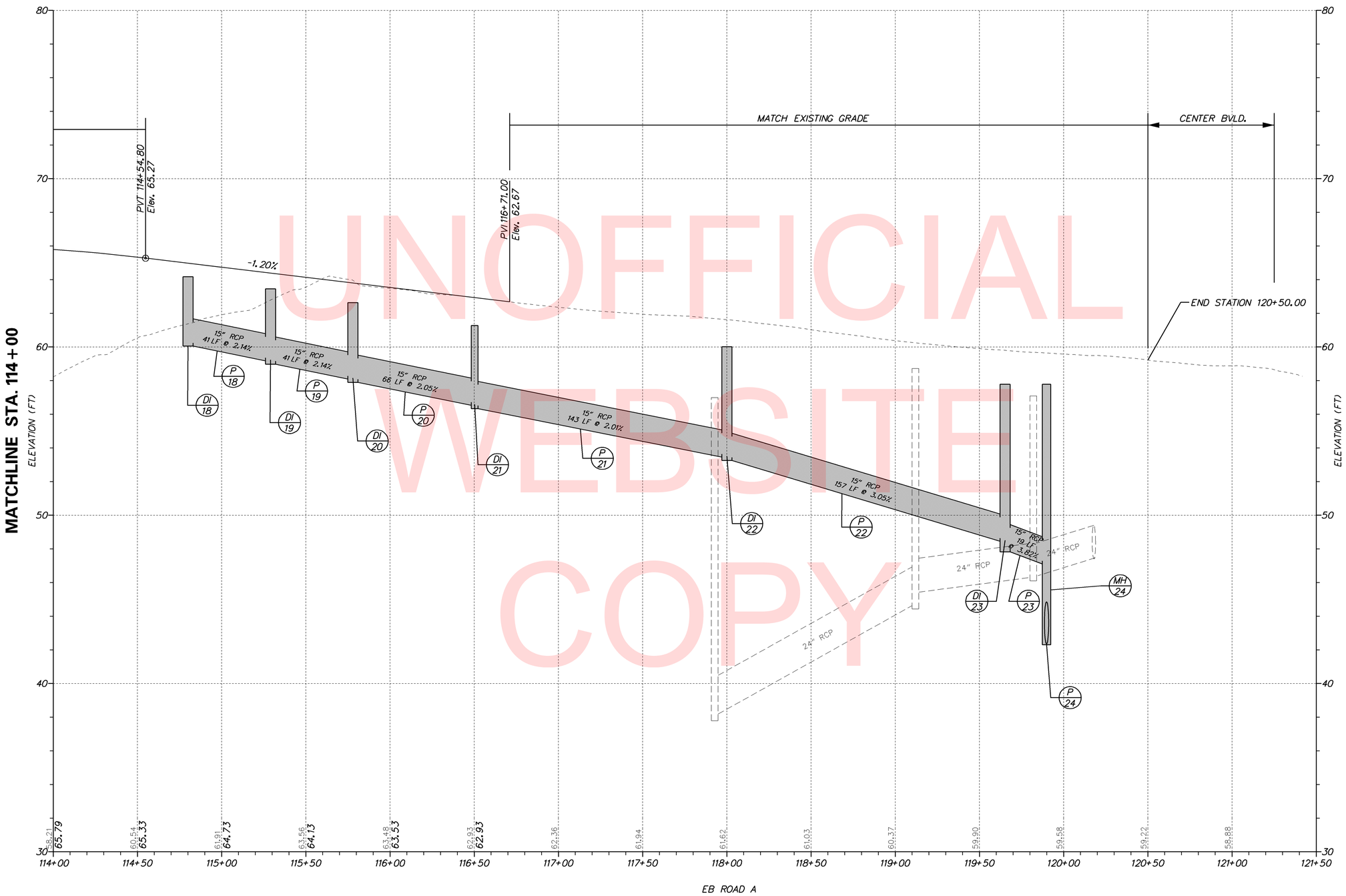

UNOFFICIAL WEBSITE COPY

VERTICAL SCALE FEET 0 3 6 9

4/3/2018 2:51:17 PM
\\BALSRV01\V2012\2012\12146_DELDOT1585\40-ROAD A CONNECTOR\CADD\CONTRACT\PLANS\PF03_RDA.DGN

DELAWARE DEPARTMENT OF TRANSPORTATION

ADDENDUMS / REVISIONS

HORIZONTAL SCALE 0 30 60 90 FEET

ROAD A /SR7 IMPROVEMENTS

CONTRACT	BRIDGE NO.	1-220
T201009002	DESIGNED BY: MCK	
COUNTY		
NEW CASTLE	CHECKED BY: RLS	

PROFILES

SHEET NO.
21
TOTAL SHTS.
154

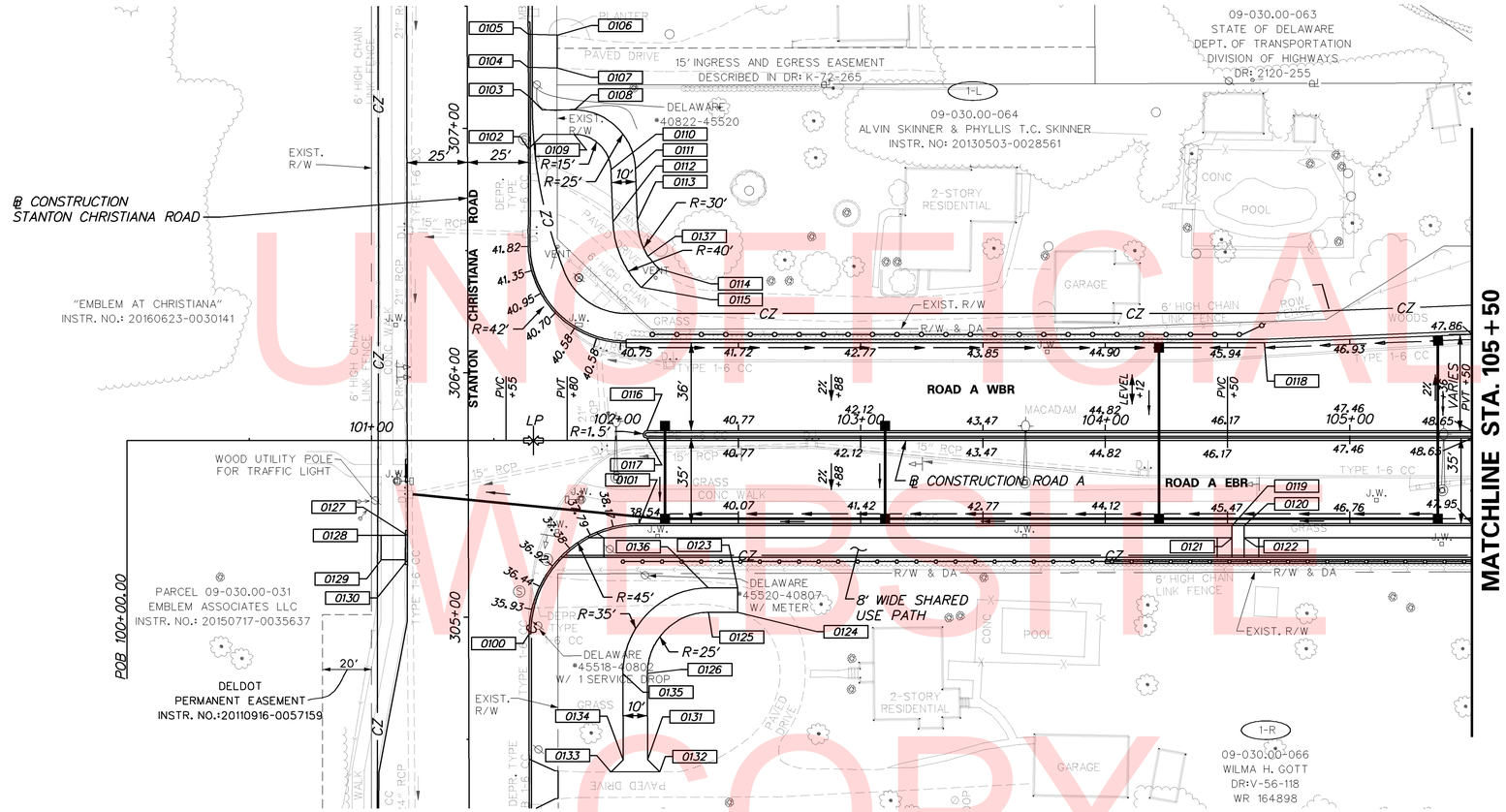

COORDINATE LIST

POINT NO.	STATION	OFFSET	NORTHING	EASTING	ELEVATION	NOTES
0100	101+64.40	79.0217	609786.1599	588232.9804	MEET EXIST.	PC
0101	102+09.40	34.0000	609825.3001	588283.1800	38.54	PT
0102	101+64.19	-119.4770	609983.1749	588257.2071	43.46	
0103	101+64.18	-141.0389	610004.5739	588259.8519	44.24	
0104	101+64.10	-152.7886	610016.2441	588261.2186	44.68	
0105	101+64.16	-166.2774	610029.6228	588262.9398	45.23	
0106	101+75.85	-165.8790	610027.7881	588274.4947	MEET EXIST.	
0107	101+75.88	-152.4363	610014.4443	588272.8673	MEET EXIST.	
0108	101+82.85	-135.3120	609996.5924	588277.6745	45.39	
0109	101+82.87	-125.3120	609986.6660	588276.4639	45.19	
0110	101+97.89	-110.8945	609970.5094	588289.5943	45.14	
0111	102+07.88	-111.2828	609969.6647	588299.5585	45.34	
0112	101+98.71	-89.6706	609949.3454	588287.8003	44.62	
0113	102+08.70	-90.2397	609948.6810	588297.7798	44.82	
0114	102+17.81	-70.2040	609927.6768	588304.3499	MEET EXIST.	
0115	102+10.28	-62.7483	609921.2043	588295.9625	MEET EXIST.	
0116	102+12.58	-4.0000	609862.6197	588291.0134	39.76	
0117	102+12.58	-1.0000	609859.6425	588290.6441	39.76	
0118	104+65.09	-40.0000	609867.2631	588546.0407	46.24	

COORDINATE LIST

POINT NO.	STATION	OFFSET	NORTHING	EASTING	ELEVATION	NOTES
0119	104+51.82	34.7500	609794.7154	588523.6676	46.01	BACK OF CURB
0120	104+56.82	34.7500	609794.0999	588528.6296	46.11	BACK OF CURB
0121	104+51.82	39.7500	609789.7534	588523.0522	46.09	
0122	104+56.82	39.7500	609789.1379	588528.0141	46.19	
0123	102+49.70	60.2600	609794.2790	588319.9430	MEET EXIST.	
0124	102+49.72	70.2500	609784.3620	588318.7370	MEET EXIST.	
0125	102+37.79	70.2500	609785.8314	588306.8906	MEET EXIST.	
0126	102+12.79	95.2500	609764.0988	588279.0034	MEET EXIST.	
0127	101+14.66	38.7500	609832.2472	588188.5827	MEET EXIST.	
0128	101+03.92	38.7500	609833.5695	588177.9222	MEET EXIST.	
0129	101+03.92	48.7500	609823.6455	588176.6912	MEET EXIST.	
0130	101+14.63	48.7500	609822.3272	588187.3199	MEET EXIST.	
0131	102+12.89	130.4980	609729.1062	588274.7664	MEET EXIST.	
0132	102+17.91	135.4895	609723.5342	588279.1383	MEET EXIST.	
0133	101+97.93	135.5235	609725.9604	588259.3022	MEET EXIST.	
0134	102+02.89	130.5311	609730.3043	588264.8384	MEET EXIST.	
0135	102+02.79	95.2500	609765.3297	588269.0795	MEET EXIST.	
0136	101+39.79	60.2500	609795.7553	588308.1215	MEET EXIST.	
0137	102+12.91	-75.5742	609933.6093	588300.1485	MEET EXIST.	

NOTE: ALL ELEVATIONS ARE GIVEN AT THE FACE OF CURB UNLESS OTHERWISE NOTED.

UNOFFICIAL WEBSITE COPY

DELAWARE DEPARTMENT OF TRANSPORTATION

ADDENDUMS / REVISIONS

SCALE 0 30 60 90 FEET

ROAD A /SR7 IMPROVEMENTS

CONTRACT T201009002 | COUNTY NEW CASTLE | BRIDGE NO. 1-220 | DESIGNED BY: MCK | CHECKED BY: RLS

GRADES AND GEOMETRICS

SHEET NO. 22 | TOTAL SHTS. 154

4/3/2018 2:53:39 PM
\\balsrv01\v2012\2012\12146_DelDOT1585\40-Road A Connector\Cadd\Contract\Plans\gg01_RdA.dgn

COORDINATE LIST

POINT NO.	STATION	OFFSET	NORTHING	EASTING	ELEVATION	NOTES
0200	105+61.06	-4.0000'	609819.7244	588636.8445	48.90	
0201	105+99.60	-11.7248'	609822.6465	588676.0417	49.78	PC
0202	106+09.71	-45.8128'	609855.9532	588681.6127	49.34	PRC
0203	106+22.21	-17.1030'	609825.2008	588699.1413	50.28	PT
0204	106+59.33	-43.4294'	609846.6417	588739.6458	50.84	PCC
0205	106+70.08	-61.2524'	609862.7514	588753.2123	50.89	
0206	106+42.13	-120.7494'	609925.6066	588731.6706	MEET EXIST.	
0207	106+80.34	-149.4945'	609948.4083	588777.1758	MEET EXIST.	PC
0208	106+75.47	-60.6338'	609861.3209	588758.7358	51.00	
0209	106+78.07	-46.3885'	609846.8314	588759.3147	51.39	
0210	106+74.12	-40.5586'	609841.6662	588754.4126	51.37	
0211	106+61.99	-38.5383'	609841.4246	588741.7232	51.02	
0212	106+73.90	-4.7255'	609806.2467	588748.9792	51.46	
0213	106+72.89	-0.9995'	609802.7061	588747.4408	51.46	
0214	106+23.76	34.0000'	609774.2951	588694.3932	49.62	PC
0215	106+45.38	39.7500'	609765.9273	588715.1428	50.05	

NOTE: ALL ELEVATIONS ARE GIVEN AT THE FACE OF CURB UNLESS OTHERWISE NOTED.

COORDINATE LIST

POINT NO.	STATION	OFFSET	NORTHING	EASTING	ELEVATION	NOTES
0216	106+57.51	47.7082	609756.5458	588725.7863	50.22	
0217	106+75.44	79.2883	609722.9128	588738.2075	MEET EXIST.	PT
0218	107+13.47	70.9634	609725.3451	588774.7090	MEET EXIST.	
0219	107+14.56	57.4988	609738.4099	588778.1245		
0220	107+18.44	57.8704	609737.3767	588781.6955	MEET EXIST.	
0221	106+81.38	171.2092	609631.2272	588729.7625	MEET EXIST.	
0222	107+19.89	169.6841	609627.2072	588762.5460	MEET EXIST.	
0223	107+27.18	169.2743	609626.4444	588768.7672	MEET EXIST.	
0224	107+64.62	166.5096	609622.4462	588801.3724	MEET EXIST.	
0225	107+58.51	81.3245	609706.8995	588814.0050	50.96	PC
0226	107+71.89	51.4375	609733.2063	588833.4142	52.40	
0227	107+98.93	40.0000	609738.5108	588862.2896	53.93	PT
0228	108+69.81	-4.0000	609766.0999	588941.0251	56.87	
0229	108+68.82	-14.4178	609776.4854	588942.3133	56.51	
0230	114+15.83	-17.6600	609660.3406	589477.4815	64.90	
0231	114+14.73	-4.0000	609647.3919	589472.9925	65.76	

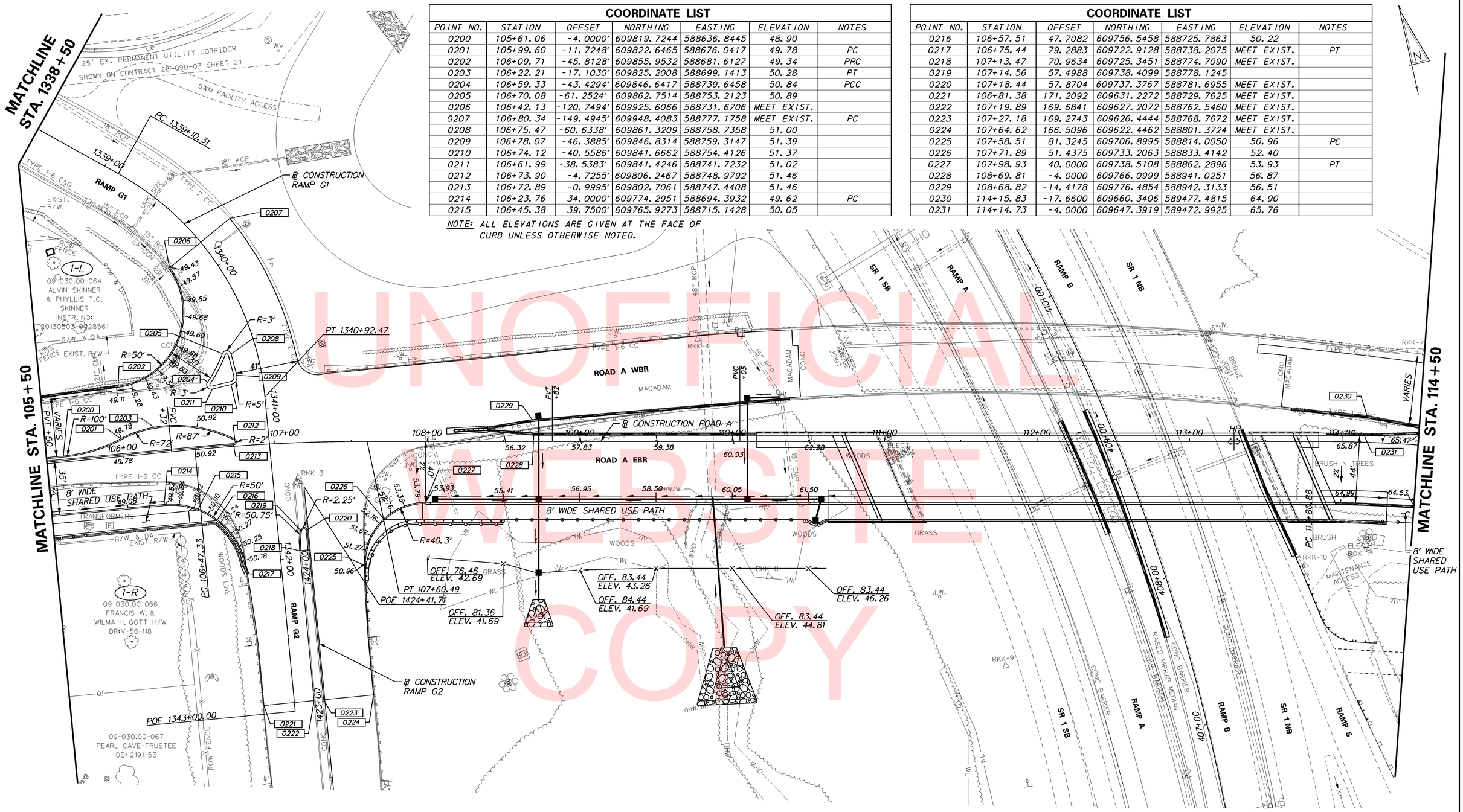

UNOFFICIAL WEBSITE COPY

DELAWARE DEPARTMENT OF TRANSPORTATION

ADDENDUMS / REVISIONS

SCALE 0 30 60 90 FEET

ROAD A /SR7 IMPROVEMENTS

CONTRACT	BRIDGE NO.	1-220
T201009002	DESIGNED BY:	MCK
COUNTY		
NEW CASTLE	CHECKED BY:	RLS

GRADES AND GEOMETRICS

SHEET NO. 23

TOTAL SHTS. 154

7/5/2018 9:53:11 AM
\\bdsrv01\v2012\2012\12146_DelDOT1585\40-Road A Connector\Cadd\Contract\Plans\gg02_RdA.dgn

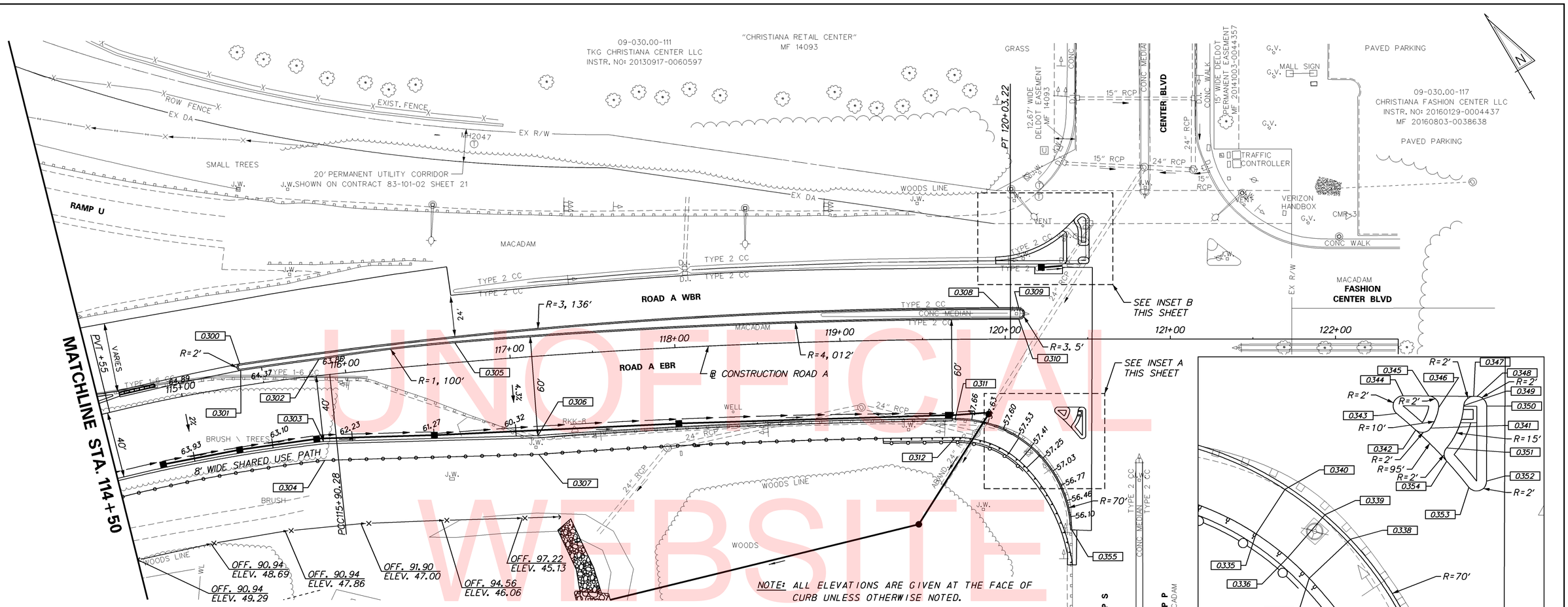

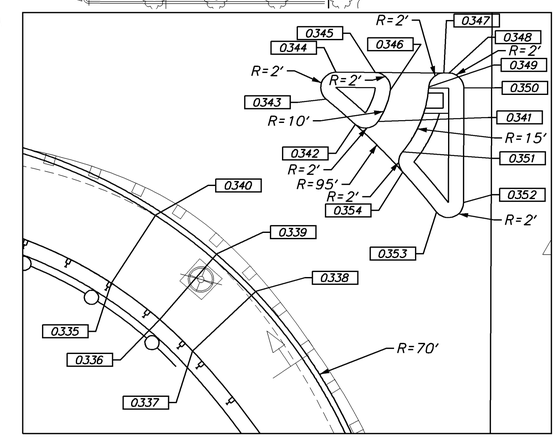

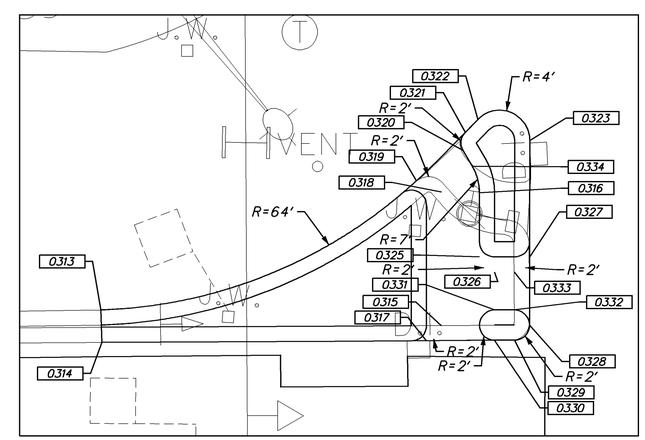

COORDINATE LIST

POINT NO.	STATION	OFFSET	NORTHING	EASTING	ELEVATION	NOTES
0300	115+37.46	-13.4000	609618.1369	589593.5693	64.47	PC
0301	115+37.43	-9.4002	609614.4282	589592.0707	64.47	
0302	115+84.76	-9.7373	609596.1893	589636.2337	63.90	PC
0303	115+82.03	40.0000	609551.8924	589613.4567	62.94	
0304	115+81.48	51.4332	609541.6661	589608.3163	63.56	
0305	116+67.48	-12.0000	609563.1408	589712.3847	63.26	PCC
0306	117+13.38	48.0000	609489.1959	589727.2146	60.16	
0307	117+13.16	59.4375	609479.0351	589721.9592	60.78	
0308	119+96.37	-19.0059	609414.4751	590007.1628	59.80	PT
0309	120+08.23	-19.0000	609408.4486	590017.4218	59.63	
0310	120+08.30	-11.9968	609402.3751	590013.9343	59.69	PT
0311	119+69.40	48.0000	609370.0199	589950.2827	57.73	PC
0312	119+69.40	59.4375	609360.1095	589944.5730	58.35	
0313	119+94.34	-49.7099	609442.0100	590020.9007	MEET EXIST.	
0314	119+94.46	-45.4165	609438.2418	590018.8394	MEET EXIST.	
0315	120+25.11	-45.5430	609422.7845	590045.4214	59.15	
0316	120+27.10	-47.5520	609423.5082	590048.1557	59.17	
0317	120+27.10	-49.5304	609425.2186	590049.1501	59.20	
0318	120+38.67	-63.7129	609431.5824	590066.3174	59.63	
0319	120+36.14	-66.8495	609435.5709	590065.7203	58.49	
0320	120+42.70	-69.9376	609434.9114	590072.9398	58.42	
0321	120+42.98	-73.8071	609438.1066	590075.1399	58.34	
0322	120+44.03	-74.8775	609438.4986	590076.5861	58.33	
0323	120+50.88	-72.1801	609432.6999	590081.1316	58.27	
0324	120+50.95	-69.6742	609430.5071	590079.9172	58.32	
0325	120+46.94	-66.7730	609430.0357	590074.9918	58.44	
0326	120+48.19	-61.3622	609424.7382	590073.3272	58.52	
0327	120+50.80	-58.4017	609420.8592	590074.0857	58.54	

COORDINATE LIST

POINT NO.	STATION	OFFSET	NORTHING	EASTING	ELEVATION	NOTES
0328	120+50.86	-47.6992	609411.6035	590068.7116	58.92	
0329	120+48.87	-45.6890	609410.8781	590065.9779	58.92	
0330	120+34.11	-45.5834	609418.2608	590053.2019	59.07	
0331	120+32.10	-47.5744	609420.9950	590052.4782	59.12	
0332	120+32.10	-49.5529	609422.7054	590053.4726	59.15	
0333	120+33.95	-53.4632	609425.1370	590057.0535	58.93	
0334	120+30.81	-57.3510	609430.0816	590056.3118	58.93	
0335	120+02.27	70.1397	609335.5653	589967.7136	58.01	
0336	120+08.69	73.8246	609328.1827	589970.7955	57.57	
0337	120+13.02	77.9746	609322.4096	589972.4298	57.47	
0338	120+21.34	69.0201	609324.9571	589983.5800	57.30	
0339	120+16.16	65.1699	609331.8577	589981.6266	57.40	
0340	120+08.11	60.0562	609340.3466	589977.2719	58.13	BACK OF CURB
0341	120+37.50	47.6766	609336.1358	590008.8810	58.40	
0342	120+34.50	48.0211	609337.3574	590006.1210	58.37	
0343	120+30.68	44.7152	609342.1404	590004.5058	58.46	
0344	120+31.97	41.1694	609344.5477	590007.4082	58.58	
0345	120+37.18	41.2062	609341.8769	590011.8823	58.54	
0346	120+39.14	43.5030	609338.9018	590012.4122	58.45	
0347	120+46.22	41.2699	609337.2418	590019.6468	58.53	
0348	120+46.87	41.2744	609336.9099	590020.2028	58.53	
0349	120+44.21	43.1226	609336.6617	590016.9764	58.47	
0350	120+48.85	43.2464	609334.2036	590020.9164	58.49	
0351	120+40.72	51.6847	609331.0464	590009.6313	58.30	
0352	120+48.81	58.3887	609321.1698	590013.2088	58.08	
0353	120+45.23	59.6149	609321.9234	590009.5048	58.04	
0354	120+40.77	54.3171	609328.7524	590008.3393	58.20	
0355	120+40.36	115.7359	609276.0029	589976.8762	MEET EXIST.	PT

UNOFFICIAL WEBSITE COPY

DELAWARE DEPARTMENT OF TRANSPORTATION

ADDENDUMS / REVISIONS

SCALE 0 30 60 90 FEET

ROAD A /SR7 IMPROVEMENTS

CONTRACT T201009002 | COUNTY NEW CASTLE | BRIDGE NO. 1-220 | DESIGNED BY: MCK | CHECKED BY: RLS

GRADES AND GEOMETRICS

SHEET NO. 24 | TOTAL SHTS. 154

7/5/2018 9:54:18 AM
\\balsrv01\v2012\2012\12146_DelDOT1585\40-Road A Connector\Cadd\Contract\Plans\gg03_RdA.dgn

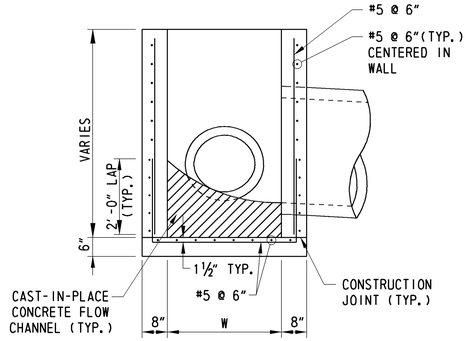

SECTION A-A

NOTES:

1. COVER SLAB SHALL FOLLOW DELDOT STANDARD CONSTRUCTION DETAIL D-5 AND MATCH OUTSIDE TO OUTSIDE DIMENSIONS OF SPECIAL DRAINAGE STRUCTURE. TYPE 3 JOINT DETAIL SHALL BE MODIFIED TO MATCH SPECIAL DRAINAGE STRUCTURE WALL THICKNESS.
2. OTHER DRAINAGE INLET STRUCTURAL COMPONENTS NOT INCLUDED SHALL FOLLOW DELDOT STANDARD CONSTRUCTION DETAILS D-4 AND D-5.
3. OTHER MANHOLE STRUCTURAL COMPONENTS NOT INCLUDED SHALL FOLLOW DELDOT STANDARD CONSTRUCTION DETAILS D-4 AND D-6.
4. REFER TO DRAINAGE INLET SCHEDULE ON DRAINAGE PLANS FOR TOP UNIT TYPE.

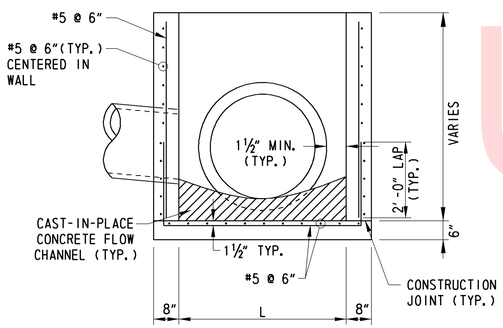

SECTION B-B

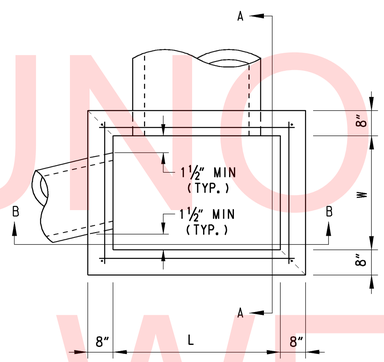

PLAN

STRUCTURE NO.	TYPE	ITEM NO.	W	L
DI-11	DRAINAGE INLET, SPECIAL	602012	72"	48"
MH-24	MANHOLE, SPECIAL	602036	48"	48"

SPECIAL DRAINAGE STRUCTURES - 8" WALL

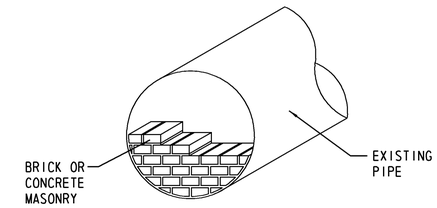

NOTE:
PIPE OPENINGS 24" IN DIAMETER AND SMALLER SHALL BE PLUGGED WITH A BRICK OR CONCRETE MASONRY BULKHEAD OF 8" MINIMUM THICKNESS. PIPE OPENINGS LARGER THAN 24" SHALL BE PLUGGED WITH A BRICK OR CONCRETE MASONRY BULKHEAD OF 12" MINIMUM THICKNESS. PAYMENT FOR BULKHEADS SHALL BE INCIDENTAL TO ITEM 202000, AS APPLICABLE.

PLUG EXISTING PIPE

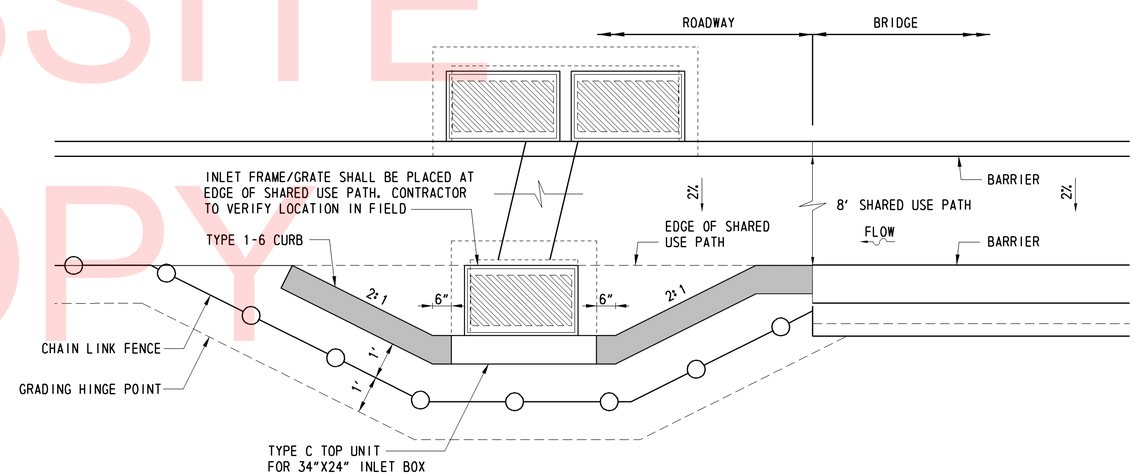

INLET BUMPOUT DETAIL

UNOFFICIAL WEBSITE COPY

7/5/2018 9:55:44 AM
\\BALSRV01\V2012\2012\12146_DELDOT1585\40-ROAD A CONNECTOR\CADD\CONTRACT\PLANS\DT01_RDA.DGN

DELAWARE DEPARTMENT OF TRANSPORTATION

ADDENDUMS / REVISIONS

NOT TO SCALE

ROAD A /SR7 IMPROVEMENTS

CONTRACT	BRIDGE NO. 1-220	CONSTRUCTION DETAILS	SHEET NO.
T201009002	DESIGNED BY: MCK		25
COUNTY			TOTAL SHTS.
NEW CASTLE	CHECKED BY: RLS		154

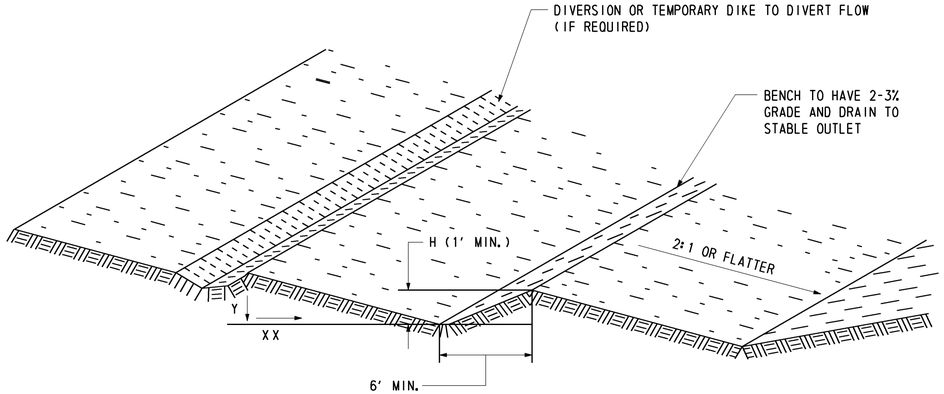

SLOPE X:1	Y (MAX.)
2	20'
3	30'
4	40'

DATA

SLOPE (X:1)
VERTICAL HEIGHT (Y)
BENCH HEIGHT (H)

SLOPE TREATMENT - BENCHING DETAIL

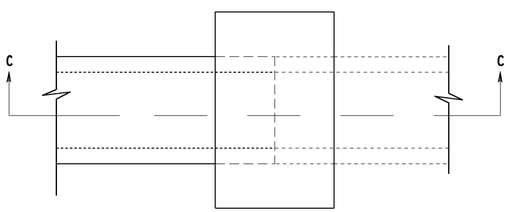

PLAN

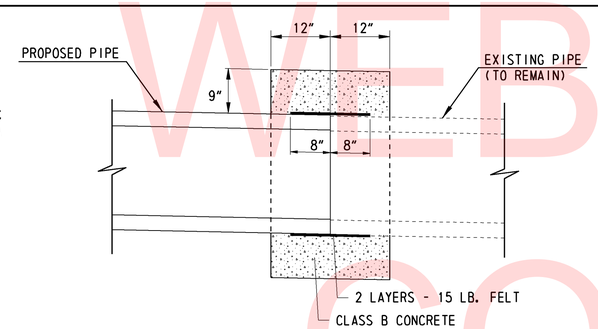

SECTION C-C

NOTES:

1. PIPE CONNECTION SHALL BE CONSTRUCTED OF PLAIN CONCRETE (CLASS B) SIZE, TYPE & DIRECTION OF CONNECTION WILL VARY TO SUIT CONDITIONS.
2. PIPE CONNECTION SHALL BE WRAPPED WITH DOUBLE LAYER OF 15 LB. FELT PRIOR TO PLACEMENT OF CONCRETE COLLAR.
3. NEW PIPE STUB SHALL MATCH THE SIZE, TYPE, DIRECTION AND SLOPE OF THE EXISTING PIPE AT THE PIPE CONNECTION.
4. PAYMENT SHALL BE INCIDENTAL TO PIPE ITEM BEING INSTALLED.

PIPE CONNECTION DETAIL

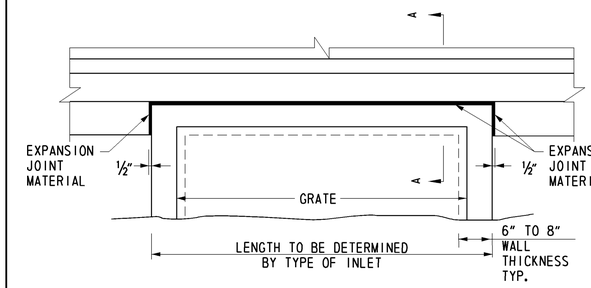

PLAN

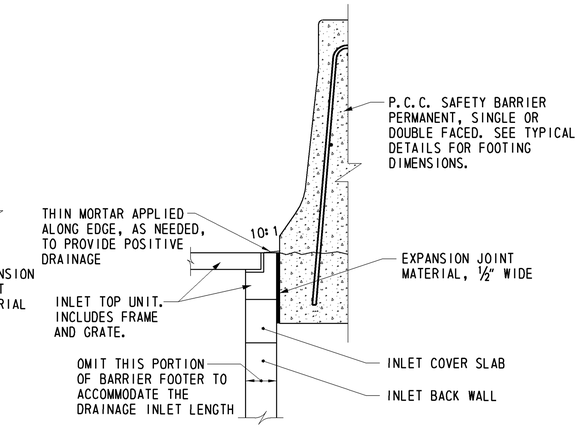

SECTION A-A

NOTE:
THE COST FOR THE THIN MORTAR AND EXPANSION JOINT MATERIAL SHALL BE INCLUDED IN THE UNIT PRICE BID FOR THE DRAINAGE INLET ITEM.

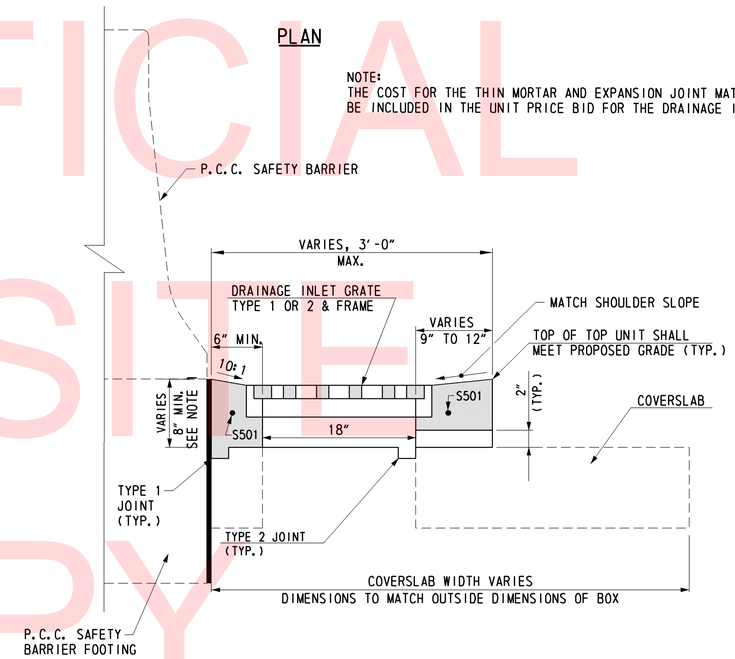

NOTES:

1. TOP UNIT HEIGHT TO BE 20" IN AREAS OF FULL-DEPTH PAVING, TO PREVENT REFLECTIVE CRACKING. IT IS INTENDED THAT THE TOP OF COVERSLAB BE FLUSH WITH THE BOTTOM OF THE LOWEST BITUMINOUS PAVEMENT LAYER. PROVIDE ADDITIONAL REINFORCING TO THE TOP UNIT AS DIRECTED BY THE ENGINEER. WHERE TOP UNIT PENETRATES A CONCRETE MOMENT SLAB; TOP UNIT TO BE AT LEAST 8" + M, WHERE M IS THE MOMENT SLAB THICKNESS, OR AS DIRECTED BY THE ENGINEER.
2. REFERENCE OFFSET AND ELEVATION FOR INLETS IS THE HYPOTHETICAL GUTTER FLOWLINE.
3. TOP UNIT TO BE INCLUDED IN UNIT PRICE BID FOR INLETS.
4. SEE STD. NO. D-5 FOR ADDITIONAL INFORMATION.
5. RELOCATE ENCROACHING COVERSLAB REINFORCING BARS TO ACCOMMODATE REDUCED DISTANCE BETWEEN FRAME AND BACK EDGE OF COVERSLAB.

MODIFIED TYPE A TOP UNIT

DRAINAGE INLET DETAIL AT BARRIER

UNOFFICIAL WEBSITE COPY

4/3/2018 3:06:40 PM
\\BALSRV01\V2012\2012\12146_DELDOT585\40-ROAD A CONNECTOR\CADD\CONTRACT\PLANS\DT02_RDA.DGN

DELAWARE DEPARTMENT OF TRANSPORTATION	ADDENDUMS / REVISIONS	NOT TO SCALE	ROAD A /SR7 IMPROVEMENTS	CONTRACT T201009002	BRIDGE NO. 1-220	CONSTRUCTION DETAILS	SHEET NO. 26
				COUNTY NEW CASTLE	DESIGNED BY: MCK		TOTAL SHTS. 154
					CHECKED BY: RLS		

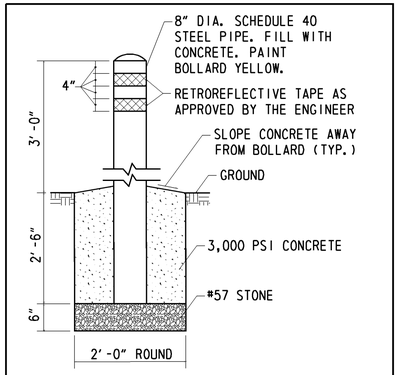

BOLLARD, STEEL
(720557)

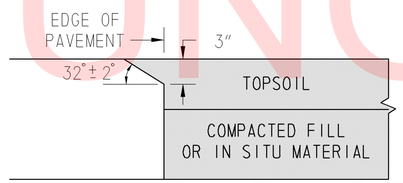

CONCRETE PAVEMENTS
NOT TO SCALE

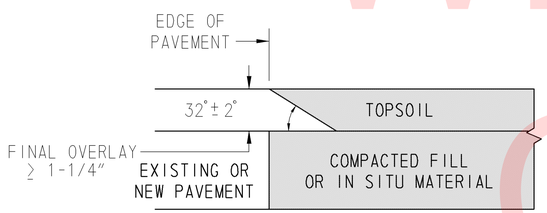

HOT-MIX PAVEMENTS AND OVERLAYS
NOT TO SCALE

SAFETY EDGE DETAIL
NOT TO SCALE

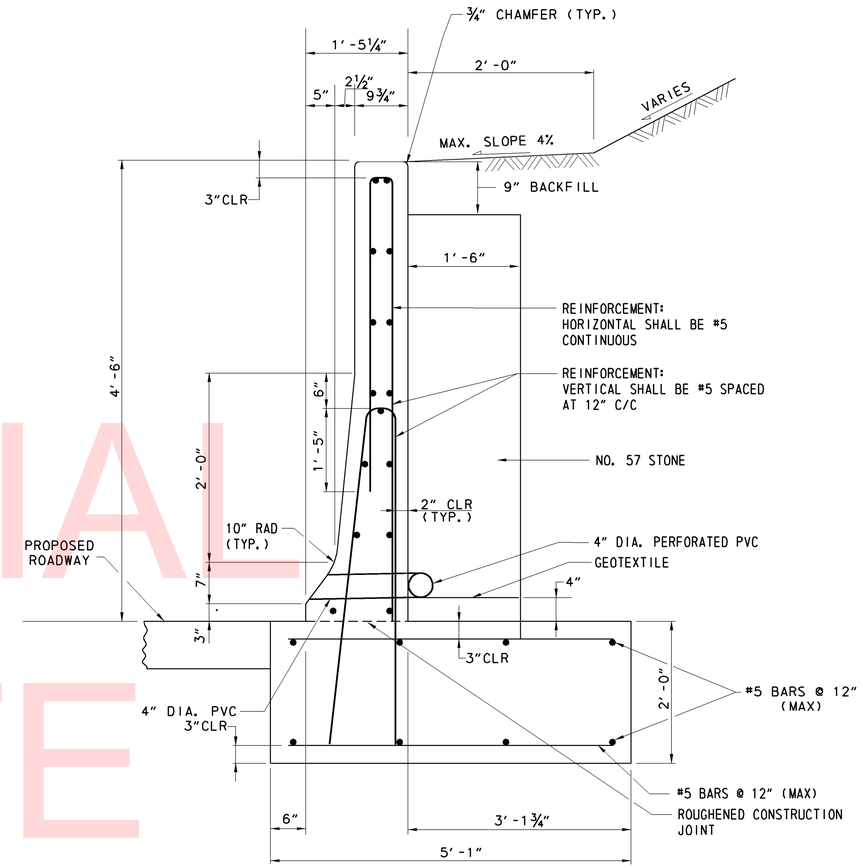

PCC SAFETY BARRIER NOTES:

1. ALL CONCRETE SHALL BE 4500 PSI. BARRIER AND FOOTING SHALL BE CAST SEPARATELY.
2. ALL REINFORCING BARS SHALL BE ASTM A615, GRADE 60. ALL BARS SHALL BE EPOXY COATED.
3. ALL REINFORCING BAR LAP SPLICES SHALL BE 24" MINIMUM.
4. CONTRACTION JOINTS SHALL BE SPACED AT 20'-0".
5. BARRIER FOOTER AND BARRIER FORMS SHALL BE REMOVED PRIOR TO PLACING PAVEMENT.
6. OUTLET 4" DIA PVC DRAIN INTO INLET WHERE POSSIBLE.
7. 4" DIA. PVC DRAINS SHALL BE SPACED AT 15'-0" C/C.

PCC SAFETY BARRIER PERMANENT, SINGLE FACE, MODIFIED TYPE 2
(723500)
NOT TO SCALE

UNOFFICIAL WEBSITE COPY

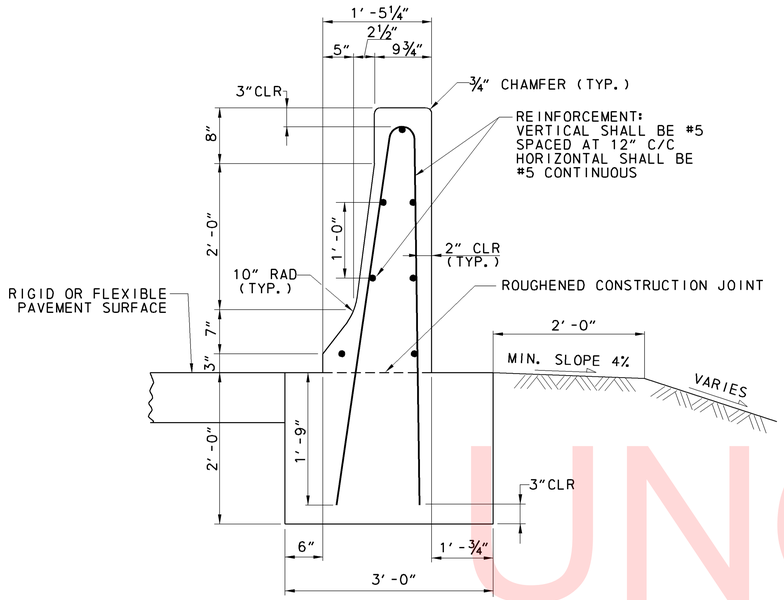

42 INCH F-SHAPE (FREE STANDING - FILL)

PCC SAFETY BARRIER PERMANENT, SINGLE FACE (723003)

NOT TO SCALE

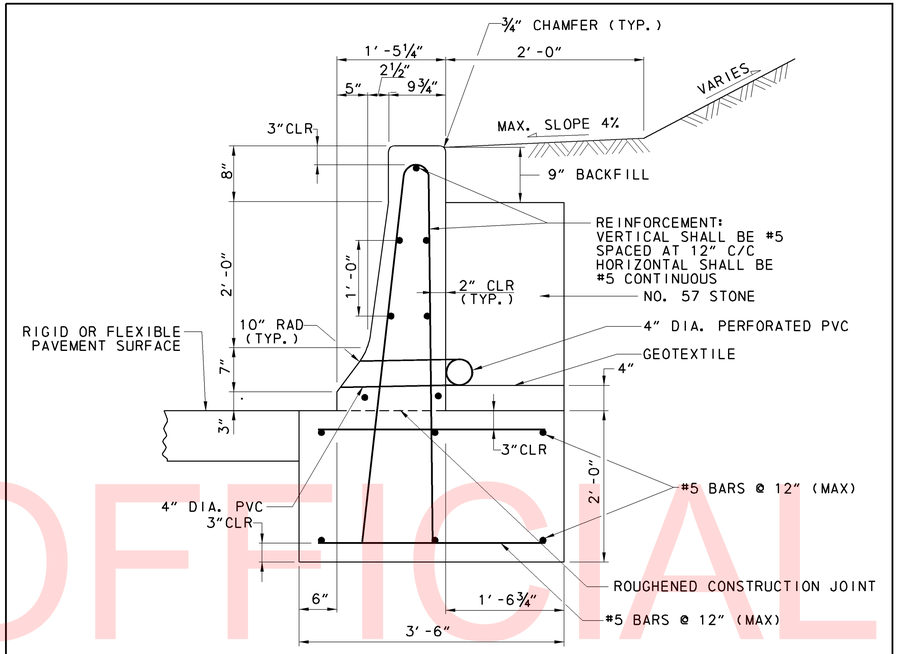

42 INCH F-SHAPE
(BOTTOM OF CUT OR TOE OF FILL)

PCC SAFETY BARRIER PERMANENT, SINGLE FACE, MODIFIED TYPE 4 (723501)

NOT TO SCALE

PCC SAFETY BARRIER NOTES:

1. ALL CONCRETE SHALL BE 4500 PSI. BARRIER AND FOOTING SHALL BE CAST SEPARATELY.
2. ALL REINFORCING BARS SHALL BE ASTM A615, GRADE 60. ALL BARS SHALL BE EPOXY COATED.
3. ALL REINFORCING BAR LAP SPLICES SHALL BE 24″ MINIMUM.
4. CONTRACTION JOINTS SHALL BE SPACED AT 20′-0″.
5. BARRIER FOOTER AND BARRIER FORMS SHALL BE REMOVED PRIOR TO PLACING PAVEMENT.
6. OUTLET 4″ DIA PVC DRAIN INTO INLET WHERE POSSIBLE.
7. 4″ DIA. PVC DRAINS SHALL BE SPACED AT 15′-0″ C/C.

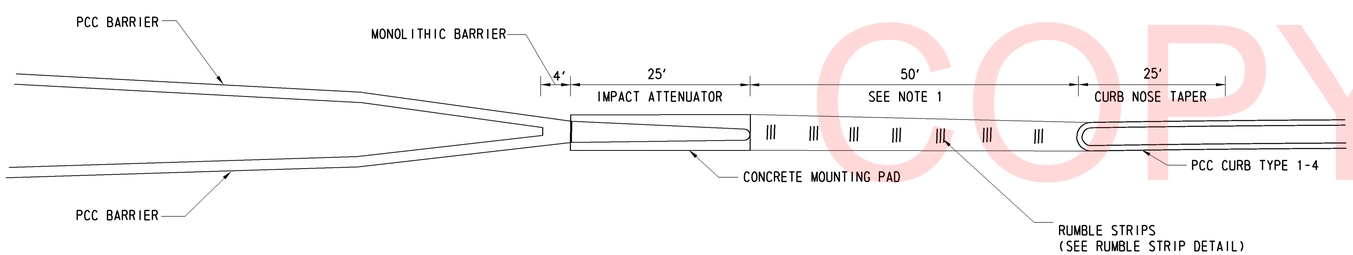

1. A 50′ CLEAR AREA IS REQUIRED IN ADVANCE OF THE ATTENUATOR. THIS CLEAR AREA IS TO BE COMPOSED OF PCC CONCRETE LAID FLUSH WITH THE PROPOSED PAVEMENT GRADE. RUMBLE STRIPS SHALL BE INSTALLED AS PART OF THIS CONCRETE CLEAR ZONE INSTALLATION.

PERMANENT IMPACT ATTENUATOR, TYPE 2 (724002)

NOT TO SCALE

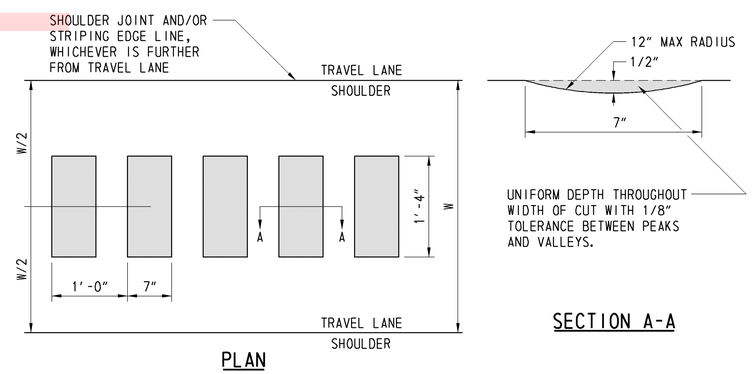

RUMBLE STRIP DETAIL

NOT TO SCALE

STA. 114+88 TO STA. 115+35

NOTES:
- ALL WORK REQUIRED TO COMPLETE THE INSTALLATION OF EDGELINE RUMBLE STRIPS SHALL BE INCIDENTAL TO ITEM 760007 - RUMBLE STRIPS, CONCRETE.

UNOFFICIAL WEBSITE COPY

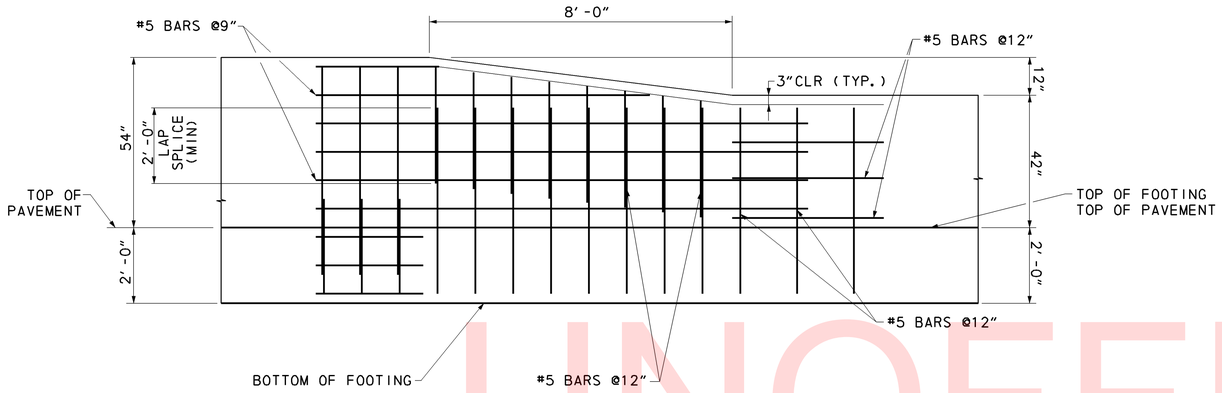

BARRIER TRANSITION DETAIL

NOT TO SCALE

NOTE: TRANSITION INCIDENTAL TO ITEM 723500 - P.C.C. SAFETY BARRIER, PERMANENT, SINGLE FACE, MODIFIED TYPE 2

UNOFFICIAL WEBSITE COPY

NOTES:

1. PLAN DIMENSIONS SHOWN ARE MEASURED IN THE RESPECTIVE HORIZONTAL AND VERTICAL PLANES.
2. THE CONTRACTOR SHALL DETERMINE ALL DIMENSIONS AND DETAILS NECESSARY FOR INSTALLATION.
3. ALL BEVELS FOR CONCRETE SHALL BE 3/4".
4. BARS SHALL BE CUT AT EVERY JOINT IF MADE USING CONTINUOUS SLIP-FORM CONSTRUCTION.
5. REBAR SHALL BE MODIFIED ACCORDINGLY WITHIN TAPER AREAS.
6. ALL COSTS ASSOCIATED WITH THE SLOPED CONCRETE END TREATEMENT, INCLUDING HORIZONTAL AND VERTICAL TAPERS, SHALL BE PAID UNDER ITEM 723501.

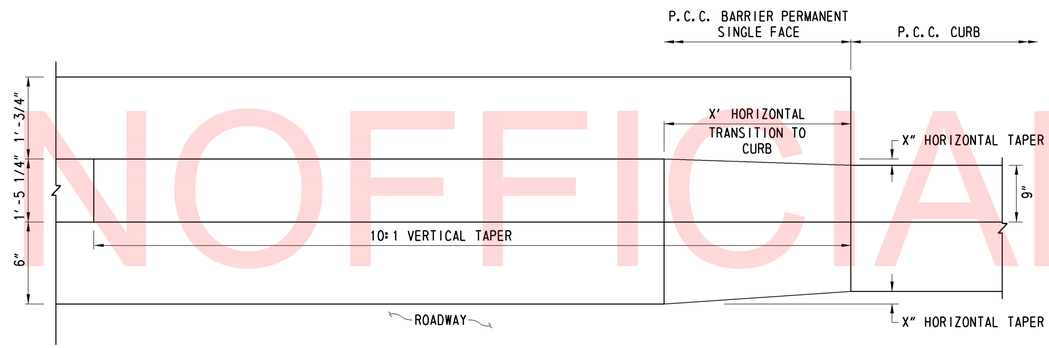

TAPER PLAN

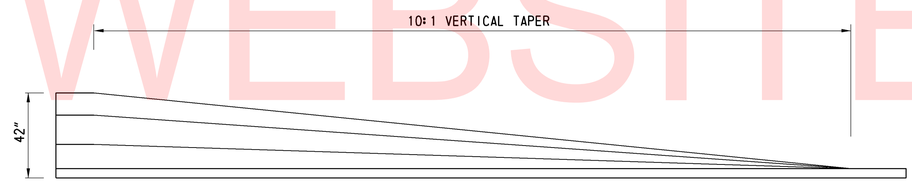

TAPER ELEVATION

UNOFFICIAL WEBSITE COPY

SLOPED CONCRETE END TREATMENT

DELAWARE DEPARTMENT OF TRANSPORTATION	ADDENDUMS / REVISIONS	NOT TO SCALE	ROAD A /SR7 IMPROVEMENTS	CONTRACT T201009002	BRIDGE NO. 1-220	CONSTRUCTION DETAILS	SHEET NO. 30
				COUNTY NEW CASTLE	DESIGNED BY: MCK		TOTAL SHTS. 154
					CHECKED BY: RLS		

7/6/2018 9:44:57 AM
\\BALSRV01\V2012\2012\12146_DELDOT1585\40-ROAD A CONNECTOR\CADD\CONTRACT\PLANS\DT06_RDA.DGN

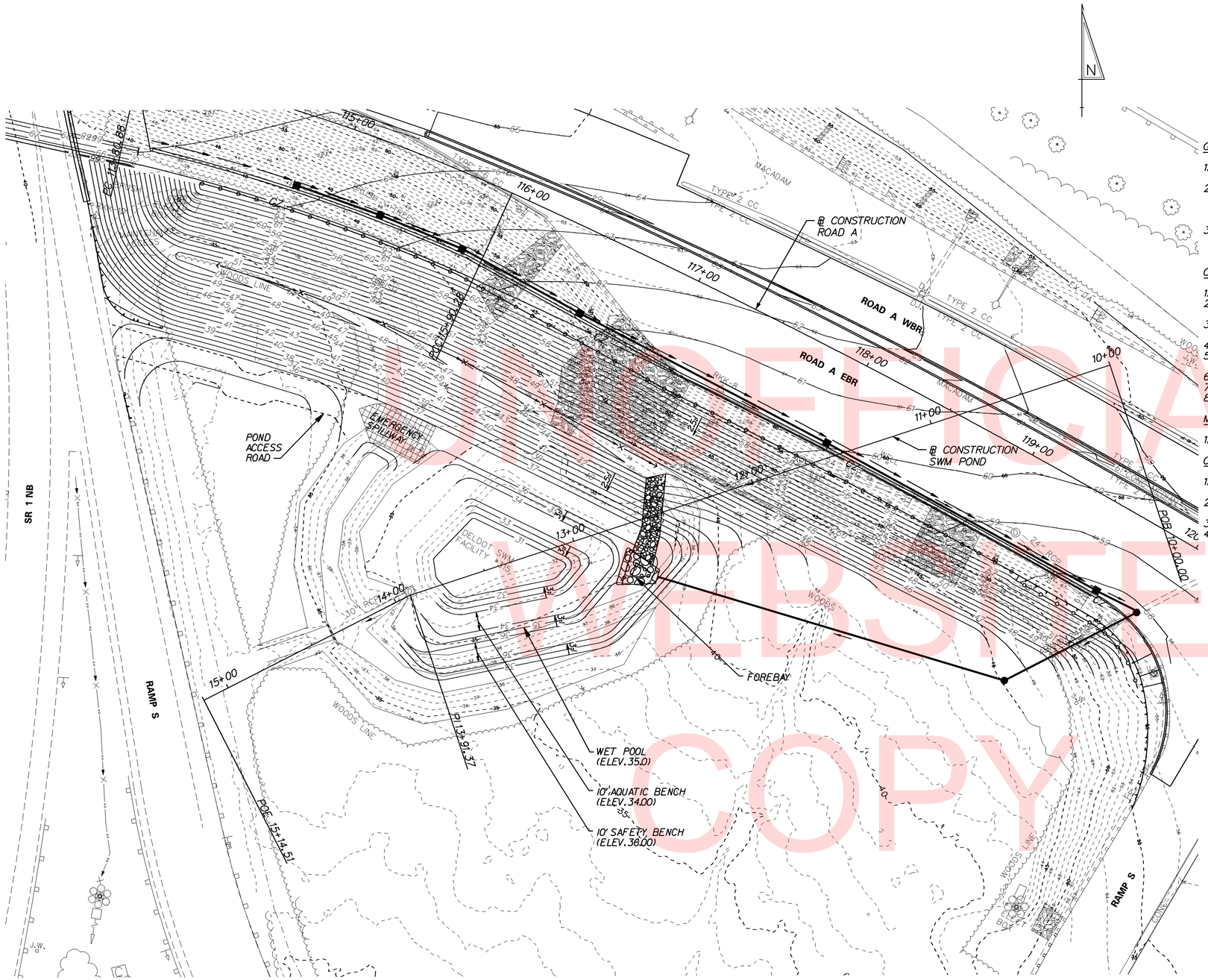

POND LINING:
POND MUST BE LINED WITH A CLAY LINER AS IN ACCORDNACE WITH SECTION 910 FROM ELEVATION 31.00 TO ELEVATION 35.00. EXCAVATED MATERIAL SHALL BE USED IF DETERMINED SUITABLE BY ENGINEER IN FIELD.

SEDIMENT CLEANOUT:
WHEN POND IS FUNCTIONING AS A SEDIMENT BASIN, CLEANOUT SHALL OCCUR WHEN SEDIMENT HAS FILLED UP TO ELEVATION 33.00.

EROSION CONTROL BLANKET NOTES:
INSTALL EROSION CONTROL BLANKET AT EMERGENCY SPILLWAY.

GENERAL

1. THE STORMWATER MANAGEMENT POND SHALL FUNCTION AS A SEDIMENT BASIN DURING CONSTRUCTION.
2. POND AREA ABOVE ELEVATION 35.00 SHALL BE 6" TOPSOIL (AND/OR TOPSOILING), EROSION CONTROL BLANKET AND SEEDING AS FOLLOWS: PERMANENT SEED, WET GROUND < ELEVATION 36.00 > PERMANENT SEED, DRY GROUND.
3. UPON COMPLETION OF POND CONSTRUCTION, AS-BUILT PLANS SHALL BE SUBMITTED TO THE DELDOT STORMWATER ENGINEER AS COMPLETED BY THE CONTRACTOR AND SIGNED AND SEALED BY A DELAWARE LICENSED P.E. OR P.L.S.

CONSTRUCTION SEQUENCE

1. INSTALL STABILIZED CONSTRUCTION ENTRANCE AS SHOWN ON THE CONSTRUCTION PHASING PLANS.
2. CLEAR AND GRUB FOR INSTALLATION OF PERIMETER EROSION AND SEDIMENT CONTROLS, AS SHOWN ON THE CONSTRUCTION PHASING STAGE 1 SHEETS.
3. INSTALL PERIMETER SEDIMENT CONTROLS AS SHOWN ON THE CONSTRUCTION PHASING PLANS, SURROUNDING THE POND GRADING.
4. INSTALL SKIMMER DEWATERING DEVICE.
5. CLEAR AND GRUB REMAINING AREA FOR POND GRADING. DEWATER THE EXISTING FACILITY AS NEEDED IN ACCORDANCE WITH SECTION 902 OF THE STANDARD SPECIFICATIONS.
6. EXCAVATE POND BASIN AND CONSTRUCT CLAY LINER.
7. COMPLETE OVERFLOW SPILLWAY AND BASIN TO LINES AND GRADES AND DETAILS.
8. STABILIZE ALL BARE AREAS.

MAINTENANCE OF POND AS A SEDIMENT BASIN

1. INSPECT THE BASIN IMMEDIATELY AFTER EVERY RAIN AND MAKE REPAIRS AS NECESSARY.

CONVERSION TO PERMANENT STORMWATER MANAGEMENT POND

1. CONVERT THE BASIN INTO THE PERMANENT STORMWATER MANAGEMENT POND AFTER ALL AREAS DRAINING TO THE POND HAVE BEEN PERMANENTLY STABILIZED AND THE ENGINEER HAS APPROVED THE CONVERSION.
2. REMOVE EXCESS ACCUMULATED SEDIMENT, IF ANY, TO THE SPECIFIED FINISHED LINES AND GRADES SHOWN IN THE PLAN AND DISPOSE SEDIMENT AT A LOCATION APPROVED BY THE ENGINEER.
3. COMPLETE STABILIZATION OF ALL BARE AREAS.
4. REMOVE EROSION AND SEDIMENT CONTROL MEASURES AND DE-ACTIVATE SKIMMER DEWATERING DEVICE WITH CONCURRENCE FROM THE STORMWATER ENGINEER.

SWM POND BASELINE COORDINATES

℄ SWM NO. 315 STA.	NORTHING	EASTING
10+00.00	609493.6767	589954.8947
13+91.37	609371.3784	589583.1194
15+14.51	609315.5005	589473.3896

SWM POND BASELINE STAKEOUT

POND ELEV.	EXIST. GROUND ELEV.	BOTTOM OF POND LEFT OFFSET	℄ SWM NO. 315 STA.	BOTTOM OF POND RIGHT OFFSET	EXIST. GROUND ELEV.	POND ELEV.
35.00	32.93	0.00'	12+86.04	0.00'	32.93	35.00
35.00	35.28	32.24'	13+00.00	13.86'	32.17	35.00
32.00	34.00	18.33'	13+20.00	6.88'	32.00	32.00
35.00	35.70	37.47'	13+20.00	33.39'	32.00	35.00
32.00	34.00	15.93'	13+40.00	26.32'	32.00	32.00
35.00	35.21	35.07'	13+40.00	52.79'	34.00	35.00
32.00	34.00	13.52'	13+60.00	25.21'	32.00	32.00
35.00	34.87	32.66'	13+60.00	56.58'	35.00	35.00
32.00	32.00	0.00	13+76.74	0.00	32.00	32.00
35.00	34.90	30.25'	13+80.00	49.58'	35.00	35.00
35.00	35.00	0.00	13+91.01	38.89'	35.00	35.00
-	-	-	14+00.00	26.57'	35.00	35.00

UNOFFICIAL WEBSITE COPY

SECTION 200

1. REMOVAL OF STRUCTURES AND OBSTRUCTIONS:
ITEMS TO BE REMOVED UNDER ITEM #211000 - REMOVAL OF STRUCTURES AND OBSTRUCTIONS ASSOCIATING WITH BRIDGE 1-220 SHALL INCLUDE, BUT NOT BE LIMITED TO, THE FOLLOWING: - MEDIAN BARRIER AT PIER, TRAFFIC BARRIER AT ABUTMENT AND SIGN STRUCTURE FOUNDATION AT ABUTMENT.

SECTION 600

2. PORTLAND CEMENT CONCRETE:
USE PORTLAND CEMENT CONCRETE FOR CAST-IN-PLACE ELEMENTS AS FOLLOWS:
(f'c = 28-DAY COMPRESSIVE STRENGTH)
CLASS A - BARRIERS, ABUTMENTS, PIER ABOVE FOOTING, (f'c = 4.5 ksi)
CLASS B - PIER FOOTINGS, (f'c = 3.0 ksi)
CLASS D - DECK, APPPROACH SLABS, SLEEPER SLAB, MOMENT SLABS (f'c = 4.5 ksi)
A HIGHER CLASS CONCRETE MAY BE SUBSTITUTED FOR A LOWER CLASS CONCRETE AT NO ADDITIONAL COST TO DELDOT WITH APPROVAL OF THE BRIDGE DESIGN ENGINEER.
- CHAMFER ALL EXPOSED EDGES ¾"x¾" UNLESS OTHERWISE NOTED.
- DO NOT SLIP-FORM BARRIERS UNLESS OTHERWISE APPROVED BY THE DEPARTMENT.
- PREVENT-C CONCRETE ADMIXTURE SHALL BE USED FOR BARRIERS AS WELL AS CLASS D CONCRETE ITEM. COST SHALL BE INCIDENTAL TO RESPECTIVE CONCRETE ITEM.

3. DECK SLAB:
THE 8½" DECK SLAB THICKNESS INCLUDES ½" INTEGRAL WEARING SURFACE.

4. BAR REINFORCEMENT:
-REINFORCING STEEL SHALL CONFORM TO AASHTO M31 (ASTM A615), GRADE 60.
-REINFORCING STEEL SHALL HAVE A 3" CLEAR COVER IF CAST AGAINST EARTH OR A 2" CLEAR COVER ELSEWHERE, UNLESS OTHERWISE SPECIFIED ON THE PLANS.
-ALL REINFORCING STEEL SHALL BE PROTECTED WITH FUSION BONDED EPOXY. EPOXY COATED REINFORCING STEEL SHALL CONFORM TO AASHTO M284 (D3963).
-ANY FIELD CUTTING OR FIELD BENDING MUST BE APPROVED BY THE ENGINEER. PAYMENT SHALL BE INCIDENTAL TO THE BAR REINFORCEMENT ITEM.
-GALVANIZED REINFORCING STEEL MAY BE SUBSTITUTED FOR EPOXY-COATED REINFORCING STEEL AT NO ADDITIONAL COST TO DELDOT WITH APPROVAL OF THE BRIDGE DESIGN ENGINEER.
-WELDING OF REINFORCEMENT DURING FABRICATION OR CONSTRUCTION IS NOT PERMITTED UNLESS SPECIFIED.

5. STRUCTURAL STEEL:
PROVIDE STRUCTURAL STEEL CONFORMING TO AASHTO M270, GRADE 50W (ASTM A709, GRADE 50W) DESIGNATION, EXCEPT WHEN NOTED OTHERWISE. THE ADDITIONAL REQUIREMENTS FOR CHARPY V-NOTCH TESTING (DENOTED AS 'CVN' ON PLANS) OF AASHTO M270 FOR PRIMARY LOAD CARRYING MEMBERS SHALL BE INCLUDED. SUPPLEMENTAL NOTCH TOUGHNESS REQUIREMENTS ARE MANDATORY FOR:
-TOP AND BOTTOM GIRDER FLANGES AS SHOWN ON PLANS
-GIRDER WEB PLATES
-GIRDER FIELD SPLICE PLATES
-ALL DIAPHRAGM MEMBERS AND DIAPHRAGM CONNECTION PLATES

ALL FASTENERS ARE ⅞" DIAMETER ASTM A325 HIGH STRENGTH BOLTS, TYPE 3, UNLESS OTHERWISE NOTED. REAM SUBDRILLED or SUBPUNCHED HOLES FOR FIELD SPLICES IN THE FABRICATION SHOP.

IF GIRDERS CAN BE FABRICATED IN LENGTHS LONGER THAN THE SECTIONS SHOWN ON THE PLANS BY ELIMINATING FIELD SPLICES, FIELD SPLICES MAY BE OMITTED AT THE REQUEST OF THE CONTRACTOR. THE CONTRACTOR ASSUMES FULL RESPONSIBILITY FOR SECURING A HAULING PERMIT. APPROVAL FOR ELIMINATION OF A FIELD SPLICE AT THE SHOP DRAWING STAGE DOES NOT OBLIGATE THE DEPARTMENT TO ISSUE A HAULING PERMIT.

IF GIRDERS CANNOT BE SHIPPED IN THE LENGTHS SHOWN ON THE PLANS, THE CONTRACTOR MAY SUBMIT FOR APPROVAL A WORKING DRAWING OF ADDITIONAL FIELD SPLICE(S) WITH A PRIOR APPROVAL OF THE BRIDGE DESIGN ENGINEER. THE WORKING DRAWING MUST SHOW AT THE MINIMUM THE LOCATIONS OF THE FIELD SPLICES AND SPLICE DETAILS, AND MUST BE STAMPED BY A PROFESSIONAL ENGINEER REGISTERED BY THE STATE OF DELAWARE. NO COMPENSATION WILL BE ALLOWED FOR ANY ADDITIONAL FIELD SPLICES.

PROVIDE MATERIALS AND PERFORM WORK IN ACCORDANCE WITH AASHTO/AWS D1.5M/D1.5 ••BRIDGE WELDING CODE, AND CONTRACT DOCUMENTS. MAKE TACK WELDS WITH THE SAME TYPE OF ELECTRODE AND INCORPORATE IN THE FINAL WELD. NO OTHER TACK WELDING WILL BE PERMITTED.

DO NOT MAKE WELDS BY MANUAL SHIELDED METAL ARC PROCESS FOR PRIMARY GIRDER WELDS SUCH AS FLANGE TO WEB WELDS OR FOR SHOP SPLICES OF WEB AND FLANGES.

DO NOT USE FORM SUPPORT SYSTEMS THAT WILL CAUSE UNACCEPTABLE OVERSTRESS OR DEFORMATION TO PERMANENT BRIDGE MEMBERS.

THE FASCIA GIRDERS ARE DESIGNED FOR A TEMPORARY CONSTRUCTION LOAD APPLIED TO THE WEB WITHIN 6" OF THE BOTTOM FLANGE AT APPROXIMATELY 4'-0" INTERVALS. THIS LOAD APPROXIMATES THE HORIZONTAL COMPONENT OF A DECK SLAB OVERHANG FORM SUPPORT BRACKET AND CONSISTS OF A 1.0 kip/ft ALLOWANCE FOR THE WEIGHT OF THE CONCRETE, FORMS, AND DECK FINISHING MACHINE.

GIRDER WEBS SHALL BE ERECTED IN THE TOTAL DEAD LOAD FIT CONDITION AS DESCRIBED IN SECTION 106.8.9.1.3 OF THE DELDOT BRIDGE DESIGN MANUAL.

SHOP ASSEMBLE THE ENTIRE STEEL SUPERSTRUCTURE FOLLOWING THE SAME ERECTION PROCEDURES AND SUPPORT CONDITIONS TO ENSURE THE PROPER FIT FOR ALL STRUCTURAL STEEL COMPONENTS PRIOR TO REAMING OF BOLT HOLES FOR SPLICES AND DIAPHRAGM CONNECTION PLATES.

DO NOT WELD PERMANENT METAL DECK FORMS OR OTHER ATTACHMENTS TO GIRDER TOP FLANGES IN TENSION ZONES. TENSION ZONES OF TOP FLANGE ARE DESIGNATED ON THE PLANS. THREADED STUDS FOR THE SUPPORT OF THE DECK OVERHANG FORMING BRACKET ARE PERMITTED PROVIDED THE THREADED STUD IS ATTACHED WITH THE SAME WELDING PROCESSING AS THE SHEAR STUDS.

VERTICALLY ADJUST STAY-IN-PLACE FORMS TO ATTAIN FINISHED LINES AND GRADES REQUIRED ON THE PLANS.

SECTION 600 (CONTINUED)

5. STRUCTURAL STEEL (CONTINUED):

USE OVERSIZED HOLES ON DIAPHRAGM CONNECTORS. ALL BOLTS ON DIAPHRAGMS MUST BE FINGER TIGHT AT ERECTION. BOLTS ARE TO BE TORQUED BEFORE CONCRETE DECK IS POURED.

SET ANCHOR BOLTS TO TEMPLATE OR IN PRE-FORMED HOLES. DO NOT DRILL UNLESS SPECIFICALLY INDICATED ON PLANS. FILL THE PRE-FORMED HOLES WITH NON-SHRINK GROUT. IN MASONRY PLATES, FILL THE CLEARANCE BETWEEN ANCHOR BOLTS AND HOLES WITH APPROVED NON-HARDENING CAULKING COMPOUND.

STABILITY OF PARTIAL GIRDERS AND COMPLETED GIRDERS IS TO BE MAINTAINED BY THE CONTRACTOR DURING ERECTION UNTIL ALL GIRDERS AND DIAPHRAGMS ARE IN-PLACE AND ALL BOLTS ARE PROPERLY INSTALLED. ERECTION LOADS INCLUDING SELF-WEIGHT OF THE STEEL MEMBERS, WIND LOADING AND CONSTRUCTION LIVE LOAD EFFECTS ARE TO BE EVALUATED BY THE CONTRACTOR FOR STABILITY, STRESSES AND DEFLECTIONS ON THE STEEL MEMBERS DURING ANY STAGE OF ERECTION.

AN ALTERNATE SLAB PLACEMENT SEQUENCE MAY BE PERMITTED AT THE REQUEST OF THE CONTRACTOR. SUBMIT FOR REVIEW AND APPROVAL TO THE DEPARTMENT A REVISED SLAB PLACEMENT SEQUENCE WITH SUPPORT CALCULATIONS AND COMPUTER STRESS ANALYSIS. SATISFY THE REQUIREMENTS OF THE ORIGINAL SLAB PLACEMENT SEQUENCE. OBTAIN WRITTEN APPROVAL PRIOR TO THE USE OF THE REVISED SLAB PLACEMENT SEQUENCE AND/OR CAMBER VALUES. NO COMPENSATION WILL BE ALLOWED FOR THE DEVELOPMENT AND APPROVAL OF THE REVISED SLAB PLACEMENT SEQUENCE AND CAMBER VALUES. THE DEPARTMENT WILL BE THE SOLE JUDGE OF THE ACCEPTABILITY OF THE REVISED SLAB PLACEMENT SEQUENCE AND CAMBER VALUES.

BLAST CLEAN THE FAYING SURFACES OF SPLICES AND CONNECTIONS THAT REMAIN UNASSEMBLED FOR A PERIOD OF 12 MONTHS OR MORE FOLLOWING THE INITIAL CLEANING.

6. BEARINGS:
ALL ELASTOMERIC BEARINGS SHALL BE STEEL LAMINATED ELASTOMERIC DESIGNED AS PER AASHTO 14.7.5, METHOD B, AND SHALL CONFORM TO SECTION 623 OF THE STANDARD SPECIFICATIONS. PAYMENT SHALL BE INCIDENTAL TO ITEM #623000.

7. PERFORATED PIPE UNDERDRAINS:
MINIMUM INSTALLATION SLOPE SHALL BE 0.02 FT./FT. CAP FREE ENDS.

MISCELLANEOUS

8. DESIGN SPECIFICATIONS:
(A) DELDOT BRIDGE DESIGN MANUAL, 2016 EDITION.
(B) AASHTO LRFD BRIDGE SPECIFICATIONS 2014, 7TH EDITION, CUSTOMARY U.S. UNITS INCLUDING 2015 AND 2016 INTERIMS.
(C) PROVIDE MATERIALS AND PERFORM WORK IN ACCORDANCE WITH THE DELDOT STANDARD SPECIFICATIONS, AUGUST 2016.

9. LOADING:
-DEAD LOADS INCLUDE 25 PSF FOR FUTURE WEARING SURFACE ON DECK SLAB AND 15 PSF FOR STAY-IN-PLACE FORMS (INCLUDES CONCRETE IN FORM CORRUGATIONS).
-BARRIER AND FENCE LOADS:
3'-0" FASCIA TRAFFIC BARRIER = 0.42 K/FT
3'-8" PEDESTRIAN TRAFFIC BARRIER = 0.54 K/FT
2'-3" FASCIA PEDESTRIAN BARRIER WITH FENCE = 0.44 K/FT
DISTRIBUTION OF FASCIA BARRIERS IS 75% TO EXTERIOR GIRDER AND 25% TO ADJACENT INTERIOR GIRDER.
USE SIMPLE SPAN DISTRIBUTION FOR PEDESTRIAN TRAFFIC BARRIER.
-DESIGN LIVE LOADS INCLUDE HL-93 LOADING.
-FATIGUE DESIGN IS BASED ON THE FOLLOWING ONE DIRECTIONAL TRAFFIC VOLUMES: ADTT = 675.
-LIVE LOAD DISTRIBUTION TO THE GIRDERS IS BASED ON THE AASHTO SIMPLIFIED METHOD
-THERMAL LOADS AND MOVEMENTS ARE BASED ON THE MODERATE TEMPERATURE RANGE AS STIPULATED IN THE AASHTO LRFD DESIGN SPECIFICATIONS AS 0° TO 120°F.
THE NORMAL TEMPERATURE SHALL BE CONSIDERED TO BE 68° F.
-LIVE LOAD DEFLECTION SHALL BE LIMITED TO L/1,000.
-FOR SEISMIC LOADS, CONSIDER SEISMIC PERFORMANCE ZONE 1, WITH A SITE CLASS = D AND OPERATIONAL CATEGORY = ESSENTIAL.
-FOR REINFORCEMENT DISTRIBUTION REQUIREMENTS, CONSIDER CLASS 2 EXPOSURE CRITERIA FOR DECKS.
-TRAFFIC BARRIERS HAVE BEEN DESIGNED FOR NCHRP 350 TEST LEVEL TL-4.

10. EXISTING CONDITIONS:
-ALL EXISTING DIMENSIONS AND ELEVATIONS SHOWN ARE BASED ON THE BEST AVAILABLE INFORMATION AND ARE APPROXIMATE ONLY. THE CONTRACTOR SHALL FIELD VERIFY ALL EXISTING DIMENSIONS, GEOMETRY, AND ELEVATIONS AS NECESSARY PRIOR TO ORDERING ANY MATERIALS AND COMMENCING CONSTRUCTION TO ENSURE PROPER FIT OF THE PROPOSED CONSTRUCTION. PAYMENT SHALL BE INCIDENTAL TO ITEM #763501 - CONSTRUCTION ENGINEERING.
-THE CONTRACTOR SHALL NOT CONSIDER ANY OF THE DATA ON THE EXISTING STRUCTURE SUPPLIED IN THE ORIGINAL DESIGN DRAWINGS OR MADE AVAILABLE BY THE DEPARTMENT OR ITS AUTHORIZED AGENTS AS POSITIVE REPRESENTATIONS OF ANY OF THE CONDITIONS THAT WILL BE ENCOUNTERED IN THE FIELD.

11. ROADWAY CLEARANCES:
A MINIMUM OF 16'-6" SHALL BE MAINTAINED ABOVE ALL ROADWAYS.

12. UTILITIES:
SEE UTILITY STATEMENT AND UTILITY RELOCATION PLAN SHEETS FOR FURTHER INFORMATION ON UTILITY COORDINATION.

13. ENVIRONMENTAL COMPLIANCE:
REFER TO THE ENVIRONMENTAL COMPLIANCE PLAN FOR RESTRICTIONS AND ADDITIONAL GUIDANCE THAT MAY BE ASSOCIATED TO THIS PROJECT.

LOAD RATING SUMMARY

VEHICLE TYPE	RATING FACTOR	RATING WEIGHT (TONS)	CONTROLLING MEMBER	CONTROLLING POINT	LOAD EFFECT
HL-93 TRUCK (INVENTORY)	1.35	N/A	SPAN 1: GIRDER G2	110	SHEAR
HL-93 TANDEM (INVENTORY)	1.65	N/A	SPAN 1: GIRDER G2	110	SHEAR
HL-93 TRUCK TRAIN (INVENTORY)	1.38	N/A	SPAN 1: GIRDER G1	110	FLEXURE
HS-20 (INVENTORY)	2.12	N/A	SPAN 1: GIRDER G2	110	SHEAR
HL-93 TRUCK (OPERATING)	1.75	N/A	SPAN 1: GIRDER G2	110	SHEAR
HL-93 TANDEM (OPERATING)	2.14	N/A	SPAN 1: GIRDER G2	110	SHEAR
HL-93 TRUCK TRAIN (OPERATING)	1.79	N/A	SPAN 1: GIRDER G1	110	FLEXURE
HS-20 (OPERATING)	2.74	N/A	SPAN 1: GIRDER G2	110	SHEAR
DE S220 & LEGAL-LANE	3.21	64.13	SPAN 1: GIRDER G2	110	SHEAR
DE S335 & LEGAL-LANE	2.04	71.27	SPAN 1: GIRDER G2	110	SHEAR
DE S437 & LEGAL-LANE	1.96	71.94	SPAN 1: GIRDER G2	110	SHEAR
DE T330 & LEGAL-LANE	2.43	72.78	SPAN 1: GIRDER G2	110	SHEAR
DE T435 & LEGAL-LANE	2.11	73.92	SPAN 1: GIRDER G2	110	SHEAR
DE T540 & LEGAL-LANE	1.93	77.18	SPAN 1: GIRDER G2	110	SHEAR
AC2 & PERMIT LANE	2.76	77.28	SPAN 1: GIRDER G1	110	SHEAR
AC3 & PERMIT LANE	1.96	82.46	SPAN 1: GIRDER G1	110	SHEAR
AC4 & PERMIT LANE	1.55	86.53	SPAN 1: GIRDER G1	110	SHEAR
AC5 & PERMIT LANE	1.47	88.32	SPAN 1: GIRDER G1	110	SHEAR

NOTE: LIVE LOAD RATING INCLUDES FUTURE WEARING SURFACE AS NOTED IN THE PLANS

UNOFFICIAL WEBSITE COPY

LEWISRI 4/3/2018 U:\Projects\D\DelDOT\20837280\CAD\Bridge\pn01_RoadA.dgn

INDEX OF BRIDGE SHEETS

DWG. NO.	TABLE OF CONTENTS
S-1	BRIDGE PROJECT NOTES
S-2	INDEX OF DRAWINGS
S-3	BRIDGE PLAN AND ELEVATION
S-4	TYPICAL SECTION
S-5	GEOMETRIC LAYOUT PLAN
S-6	STEEL H-PILE DETAILS
S-7	ABUTMENT FOUNDATION PLANS
S-8	ABUTMENT A PLAN AND ELEVATION
S-9	ABUTMENT B PLAN AND ELEVATION
S-10	TYPICAL ABUTMENT SECTION
S-11	ABUTMENT A REINFORCEMENT
S-12	ABUTMENT B REINFORCEMENT
S-13	ABUTMENT A & B BAR SCHEDULE
S-14	WINGWALL 1 & 2 PLAN AND ELEVATION
S-15	WINGWALL 3 & 4 PLAN AND ELEVATION
S-16	WINGWALL DETAILS 1
S-17	WINGWALL DETAILS 2
S-18	PIER FOUNDATION PLAN
S-19	PIER PLAN AND ELEVATION
S-20	PIER REINFORCEMENT 1
S-21	PIER REINFORCEMENT 2
S-22	PIER BAR SCHEDULE
S-23	ELASTOMERIC BEARING DETAILS
S-24	FRAMING PLAN
S-25	GIRDER ELEVATION
S-26	GIRDER DETAILS 1
S-27	GIRDER DETAILS 2
S-28	CROSS FRAME DETAILS
S-29	CAMBER TABLE
S-30	BRIDGE DECK POURING SEQUENCE
S-31	BRIDGE DECK REINFORCEMENT PLAN
S-32	BRIDGE DECK & BARRIER REINFORCEMENT 1
S-33	BRIDGE DECK & BARRIER REINFORCEMENT 2
S-34	BRIDGE DECK & BARRIER REINFORCEMENT 3
S-35	BRIDGE DECK BAR SCHEDULE
S-36	FINISHED DECK ELEVATIONS 1
S-37	FINISHED DECK ELEVATIONS 2
S-38	EXPANSION JOINT DETAILS 1
S-39	EXPANSION JOINT DETAILS 2
S-40	EXPANSION JOINT DETAILS 3
S-41	APPROACH SLAB PLANS
S-42	APPROACH SLAB SECTIONS
S-43	APPROACH SLAB REINFORCEMENT PLAN 1
S-44	APPROACH SLAB REINFORCEMENT PLAN 2
S-45	APPROACH SLAB REINFORCEMENT 1
S-46	APPROACH SLAB REINFORCEMENT 2
S-47	MOMENT SLAB REINFORCEMENT PLAN 1
S-48	MOMENT SLAB REINFORCEMENT PLAN 2
S-49	MOMENT SLAB REINFORCEMENT 1
S-50	MOMENT SLAB REINFORCEMENT 2
S-51	APPROACH & MOMENT SLAB BAR SCHEDULE 1
S-52	APPROACH & MOMENT SLAB BAR SCHEDULE 2
S-53	ERECTION SEQUENCE
S-54	RETAINING WALL AT ROAD A - PLAN AND ELEVATION
S-55	RETAINING WALL AT ROAD A - WALL REINFORCEMENT 1
S-56	RETAINING WALL AT ROAD A - WALL REINFORCEMENT 2
S-57	RETAINING WALL AT ROAD A - WALL REINFORCEMENT 3
S-58	RETAINING WALL AT ROAD A - WALL REINFORCEMENT 4
S-59	RETAINING WALL AT ROAD A - WALL SECTIONS
S-60	RETAINING WALL AT ROAD A - BAR SCHEDULE
S-61	CANTILEVER SIGN STRUCTURE AT ROAD A - DETAILS 1
S-62	CANTILEVER SIGN STRUCTURE AT ROAD A - DETAILS 2
S-63	HIGH MAST LIGHTING STRUCTURE AT ROAD A - DETAILS 1
S-64	HIGH MAST LIGHTING STRUCTURE AT ROAD A - DETAILS 2

ESTIMATED BRIDGE QUANTITIES

ITEM NO.	DESCRIPTION	UNIT	QUANTITY
207000	STRUCTURAL EXCAVATION	CY	310
302005	DELAWARE NO. 57 STONE	TON	33
604003	SHORING	LS	1
605021	FURNISH STEEL H PILES, HP 12X53	LF	2500
605071	FURNISH STEEL H INDICATOR OR TEST PILES, HP 12X53	LF	235
605121	INSTALL STEEL H PILES, HP 12X53	LF	2500
605171	INSTALL STEEL H INDICATOR OR TEST PILES, HP 12X53	LF	235
605200	PILE RESTRIKE	EA	6
605201	DYNAMIC PILE TESTING BY CONTRACTOR	EA	8
606004	DRILLED SHAFT, 60" (CANT. SIGN AND HIGH MAST LIGHT POLE FOUND.)	LF	50
607001	MECHANICALLY STABILIZED EARTH WALLS	LS	1
610002	PORTLAND CONCRETE MASONRY, ABUTMENT ABOVE FOOTING, CLASS A	CY	125
610004	PORTLAND CONCRETE MASONRY, PIER ABOVE FOOTING, CLASS A	CY	72
610008	PORTLAND CONCRETE MASONRY, PARAPET, CLASS A	CY	118
610012	PORTLAND CONCRETE MASONRY, PIER FOOTING, CLASS B	CY	52
610017	PORTLAND CONCRETE MASONRY, SUPERSTRUCTURE, CLASS D	CY	430
610018	PORTLAND CONCRETE MASONRY, APPROACH SLAB, CLASS D	CY	270
611001	BAR REINFORCEMENT, EPOXY COATED	LB	210000
613001	SILICONE-BASED ACRYLIC CONCRETE SEALER	SF	9400
615003	STEEL STRUCTURES	LS	1
617500	RELOCATING SIGN SUPPORT STRUCTURE	LS	1
623000	ELASTOMERIC BRIDGE BEARING PAD	EA	18
624000	PREFABRICATED EXPANSION JOINT SYSTEM, 3"	LF	126
727000	CHAIN LINK FENCE	LF	728
850500	RELOCATING HIGH MAST LIGHT TOWER	LS	1

ESTIMATED RETAINING WALL QUANTITIES

ITEM NO.	DESCRIPTION	UNIT	QUANTITY
207000	STRUCTURAL EXCAVATION	CY	645
301001	GRADED AGGREGATE COARSE AGGREGATE, TYPE B	CY	85
302005	DELAWARE NO. 57 STONE	TON	43
610005	PORTLAND CONCRETE MASONRY, SUBSTRUCTURE, CLASS A	CY	121
610014	PORTLAND CONCRETE MASONRY, SUBSTRUCTURE, CLASS B	CY	95
611001	BAR REINFORCEMENT, EPOXY COATED	LB	32000
709000	PERFORATED PIPE UNDERDRAINS, 4"	LF	290
709010	UNDERDRAIN OUTLET PIPE, 4"	LF	36
709017	UNDERDRAIN OUTLET	EACH	18
727000	CHAIN LINK FENCE	LF	290

NOTES:

1. ITEM NO. 610018 INCLUDES APPROACH SLAB, SLEEPER SLAB AND MOMENT SLAB CONCRETE.
2. ITEM NO. 610008 INCLUDES CONCRETE FOR PARAPET ON DECK SLAB, APPROACH SLAB AND MOMENT SLAB.

UNOFFICIAL WEBSITE COPY

6/28/2018 U:\Projects\D\DelDOT\20837280\CAD\Bridge\p101_RoadA.dgn
lewisrl

DELAWARE DEPARTMENT OF TRANSPORTATION	ADDENDUMS / REVISIONS	NOT TO SCALE	ROAD A /SR7 IMPROVEMENTS	CONTRACT T201009002	BRIDGE NO. 1-220	ROAD A OVER SR 1	S-2
				COUNTY NEW CASTLE	DESIGNED BY: R. F. KIRCHNER	INDEX OF DRAWINGS	SHEET NO. 33
					CHECKED BY: P. M. DALONI		TOTAL SHTS. 154

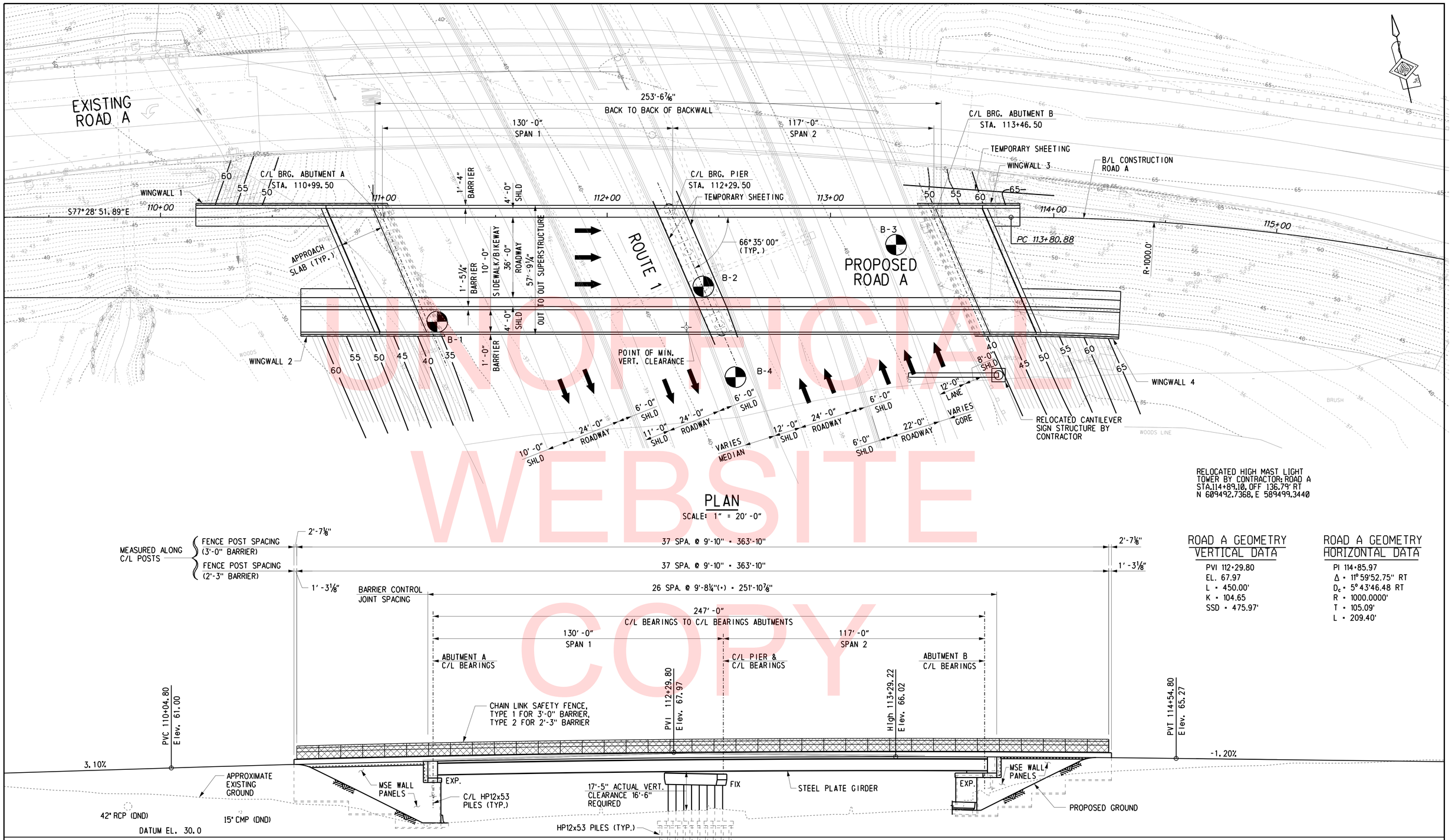

RELOCATED HIGH MAST LIGHT TOWER BY CONTRACTOR; ROAD A STA.114+89.10, OFF 136.79' RT N 609492.7368, E 589499.3440

PLAN

SCALE: 1" = 20'-0"

ELEVATION

SCALE: 1" = 20'-0"

ROAD A GEOMETRY VERTICAL DATA

PVI 112+29.80
EL. 67.97
L = 450.00'
K = 104.65
SSD = 475.97'

ROAD A GEOMETRY HORIZONTAL DATA

PI 114+85.97
Δ = 11°59'52.75" RT
D_c = 5°43'46.48 RT
R = 1000.0000'
T = 105.09'
L = 209.40'

UNOFFICIAL WEBSITE COPY

U:\Projects\D\DelDOT\20837280\CAD\Bridge\pe01_RoadA.dgn 4/3/2018 LEWISRI

DELAWARE DEPARTMENT OF TRANSPORTATION	ADDENDUMS / REVISIONS	SCALE 0 20 40 60 FEET	ROAD A /SR7 IMPROVEMENTS	CONTRACT T201009002	BRIDGE NO. 1-220	ROAD A OVER SR 1	S-3 SHEET NO. 34
				COUNTY NEW CASTLE	DESIGNED BY: R. F. KIRCHNER	BRIDGE PLAN AND ELEVATION	TOTAL SHTS. 154
					CHECKED BY: P. M. DALONI		

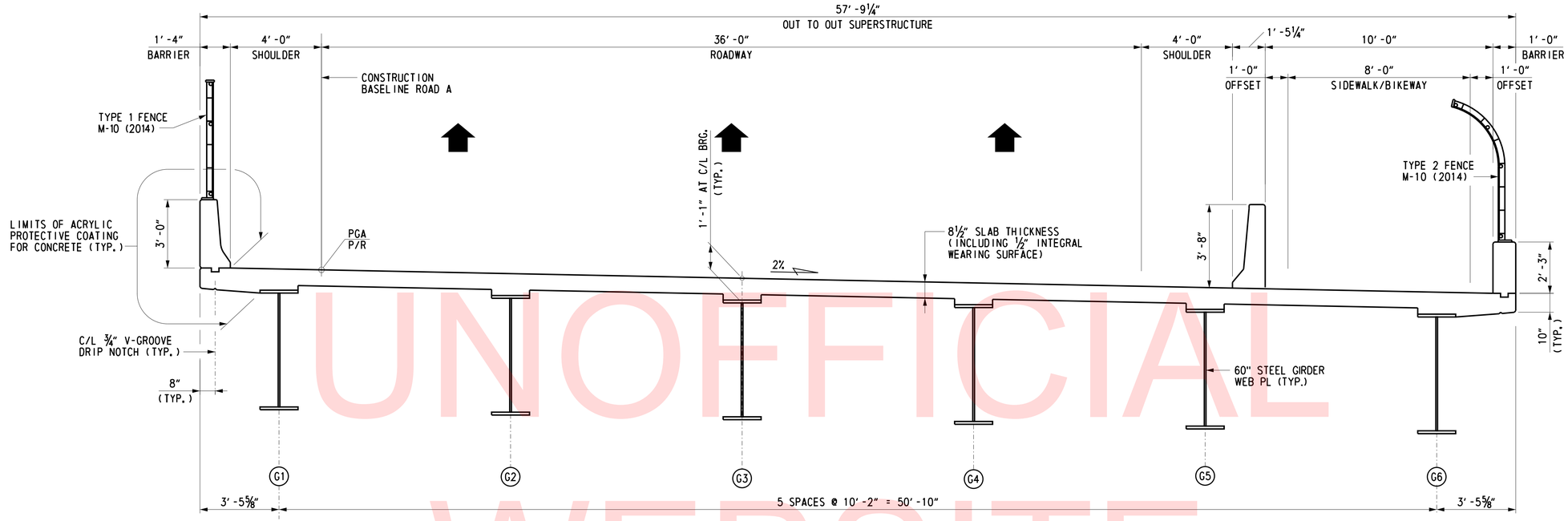

TYPICAL SECTION

(LOOKING STATION AHEAD)
SCALE: ⅜" = 1'-0"

UNOFFICIAL WEBSITE COPY

CROSS REFERENCE NOTES:

1. FOR FRAMING PLAN, SEE DWG. NO. S-24.
2. FOR DECK AND BARRIER REINFORCEMENT, SEE DWG. NO. S-31 TO S-34.

U:\Projects\D\DelDOT\20837280\CAD\Bridge\ts01_RoadA.dgn
4/3/2018
LEWISRI

DELAWARE DEPARTMENT OF TRANSPORTATION	ADDENDUMS / REVISIONS	SCALE 0 2 4 6 8 FEET	ROAD A /SR7 IMPROVEMENTS	CONTRACT T201009002	BRIDGE NO. 1-220	ROAD A OVER SR 1	S-4
				COUNTY NEW CASTLE	DESIGNED BY: R. F. KIRCHNER		SHEET NO. 35
					CHECKED BY: T. B. CUSTER	TYPICAL SECTION	TOTAL SHTS. 154

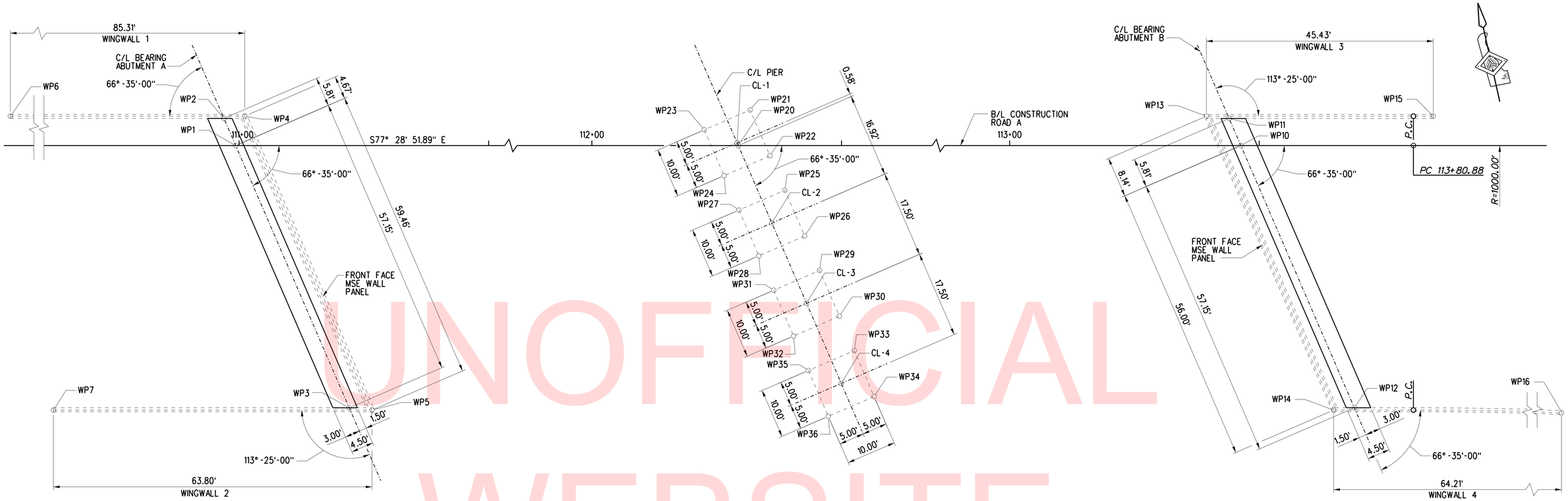

GEOMETRIC LAYOUT PLAN

SCALE: 1" = 10'

WORKING POINTS				
NO.	STATION	OFFSET	COORDINATES	
			NORTHING	EASTING
WP1	110+99.50	0.00	609,712.4080	589,164.3822
WP2	110+97.19	5.33' LT	609,718.1157	589,163.2833
WP3	111+22.21	52.44' RT	609,656.2928	589,175.1860
WP4	111+01.31	5.88' LT	609,717.7500	589,167.4271
WP5	111+26.80	52.98' RT	609,654.7701	589,179.5526
WP6	110+16.00	5.88' LT	609,736.2425	589,084.1430
WP7	110+63.00	52.98' RT	609,668.6000	589,117.2675
WP10	113+46.50	0.00	609,658.8678	589,405.5096
WP11	113+44.19	5.33' LT	609,664.5755	589,404.4107
WP12	113+69.21	52.44' RT	609,602.7526	589,416.3135
WP13	113+39.60	5.88 ' LT	609,666.0995	589,400.0438
WP14	113+65.09	52.98' RT	609,603.1196	589,412.1693
WP15	113+85.00	5.88' LT	609,656.2443	589,444.3895
WP16	114+32.00	52.98' RT	609,587.9991	589,474.5604

WORKING POINTS				
WP20	112+29.50	0.00	609,684.2290	589,291.2914
WP21	112+31.87	7.11' LT	609,690.6569	589,295.1456
WP22	112+35.84	2.07' RT	609,680.8372	589,297.0362
WP23	112+22.69	3.14' LT	609,688.7663	589,285.3259
WP24	112+26.67	6.04' RT	609,678.9467	589,287.2165
WP25	112+38.82	8.95' RT	609,673.4725	589,298.4541
WP26	112+42.80	18.12' RT	609,663.6528	589,300.3447
WP27	112+29.65	12.92' RT	609,671.5819	589,288.6345
WP28	112+33.62	22.10' RT	609,661.7623	589,290.5251
WP29	112+45.78	25.01' RT	609,656.2881	589,301.7626
WP30	112+49.75	34.18' RT	609,646.4684	589,303.6532
WP31	112+36.60	28.98' RT	609,654.3975	589,291.9430
WP32	112+40.58	38.16' RT	609,644.5779	589,293.8336
WP33	112+52.73	41.07' RT	609,639.1037	589,305.0712
WP34	112+56.71	50.24' RT	609,629.2840	589,306.9617
WP35	112+43.56	45.04' RT	609,637.2131	589,295.2515
WP36	112+47.53	54.22' RT	609,627.3935	589,297.1421
CL-1	112+29.27	0.54' LT	609,684.8018	589,291.1811
CL-2	112+36.22	15.52' RT	609,667.6174	589,294.4896
CL-3	112+43.18	31.58' RT	609,650.4330	589,297.7981
CL-4	112+50.13	47.64' RT	609,633.2485	589,301.1066

NOTES:

1. FOUR DECIMAL POINT COORDINATES ARE FOR COMPUTATIONAL PURPOSES ONLY AND DO NOT IMPLY A PRECISION BEYOND TWO DECIMAL POINTS.

CROSS REFERENCE NOTES:

1. FOR BRIDGE PLAN AND ELEVATION, SEE DWG. NO. S-3.
2. FOR ABUTMENT A & B PLAN AND ELEVATION, SEE DWG. NO. S-8 & S-9.
3. FOR MSE WINGWALL PLAN AND ELEVATION, SEE DWG. NO. S-14 & S-15.
4. FOR PIER FOUNDATION PLAN, SEE DWG. NO. S-18.

UNOFFICIAL WEBSITE COPY

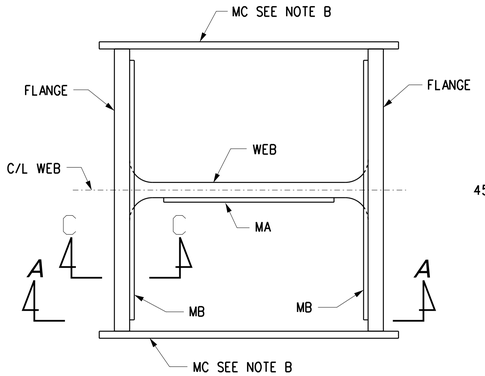

PLAN

SCALE: NTS

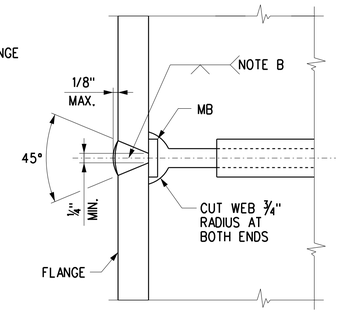

SECTION C-C
ALTERNATE FLANGE WELD

SCALE: NTS

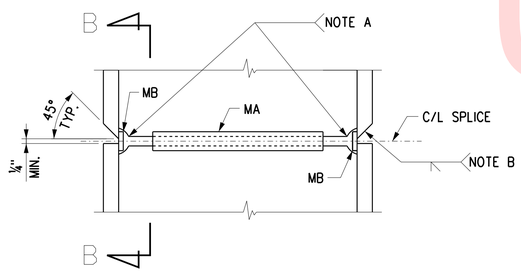

SECTION A-A

SCALE: NTS

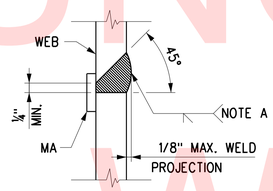

SECTION B-B

SCALE: NTS

SPLICE MATERIAL REQUIREMENTS		
HP 10"	HP 12"	HP 14"
1 BAR MA 1" x ¼" x 7¼"	1 BAR MA 1" x ¼" x 9⅜"	1 BAR MA 1" x ¼" x 1'-0""
2 BARS MB 1" x ¼" x 10"	2 BARS MB 1" x ¼" x 1'-0"	2 BARS MB 1" x ¼" x 1'-2½"
2 BARS MC 3" x ⅜" x 11"	2 BARS MC 3" x ⅜" x 1'-1"	2 BARS MC 3" x ⅜" x 1'-3"

NOTE A: END OF WELD SHALL BE SMOOTH AND FLUSH WITH WEB CUT, ¼" MIN. EFFECTIVE THROAT.

NOTE B: BAR MC SHALL BE TACK WELDED TO FLANGE AT SPLICE TO BACK UP END OF FLANGE WELD, REMOVE MC AFTER WELD IS COMPLETED. END OF WELD MUST BE SMOOTH AND FLUSH WITH EDGE OF FLANGE. GRIND WELD SMOOTH WITH EDGE OF FLANGE IF PILE IS UNSUPPORTED IN WELD AREA SUCH AS: IN AIR, WATER, OR SOFT MUD, ¼" MIN. EFFECTIVE THROAT.

NOTE C: LET WELDS COOL TO AIR TEMPERATURE BEFORE RESUMING THE PILE DRIVING.

NOTE D: NO PILE SPLICING SHALL BE ALLOWED ON ANY PORTION OF PILE THAT IS TO REMAIN EXPOSED OR TO BE ABOVE FINISHED GROUNDLINE IN COMPLETED STRUCTURE.

NOTE E: ALL SPLICE MATERIALS SHALL BE ASTM A709, GRADE 50.

NOTE F: THE 0.25-INCH THICKNESS FOR MA AND MB BARS SPECIFIED IN THE 'SPLICE MATERIAL REQUIREMENTS' TABLE MAY BE REDUCED TO A MINIMUM OF 0.203-INCH THICK.

STEEL H-PILE SPLICE DETAILS

SCALE: NTS

PILE INSTALLATION DATA					
SUBSTRUCTURE UNIT	DESIGN DATA		ACTUAL FIELD DATA		
	MINIMUM TIP ELEVATION	ESTIMATED PILE TIP ELEVATION	ACTUAL MINIMUM TIP ELEVATION	ACTUAL AVERAGE TIP ELEVATION	ACTUAL MAXIMUM TIP ELEVATION
ABUTMENT A	N/A	-5.0			
PIER	N/A	-7.0			
ABUTMENT B	N/A	5.0			

TYPICAL H-PILE SIZES	
SECTION	WEIGHT (LB/FT)
HP 8"	36
HP 10"	42
	57
HP 12"	53
	63
	74
	84
	89
	102
	117
HP 14"	73
	89
	102
	117
HP 16"	88
	101
	121
	141
	162
	183
HP 18"	135
	157
	181
	204

PROJECT SPECIFIC PILE NOTES

1. PILE TYPE:
   THIS PROJECT SHALL UTILIZE HP12x53 PILES CONFORMING TO ASTM A709, GRADE 50.
2. ESTIMATED PRODUCTION PILE LENGTH IS 59 FT. AT ABUTMENT A, 41 FT. AT PIER AND 51 FT. AT ABUTMENT B.
3. REQUIRED TEST PILE LENGTH IS 10' LONGER THAN THE ESTIMATED PRODUCTION PILE LENGTH.
4. PILES SHALL BE DRIVEN TO A BEARING RESISTANCE OF 240 KIPS AT ABUTMENTS A & B AND 315 KIPS AT THE PIER USING A RESISTANCE FACTOR OF 0.65.
5. REFER TO THE PILE INSTALLATION DATA TABLE FOR MINIMUM TIP ELEVATION.

GENERAL PILE NOTES

1. FOR MORE INFORMATION REGARDING PILE DRIVING, INSTALLATION, MATERIALS, AND FABRICATION, REFER TO SECTION 605 - DRIVEN PILES OF THE STANDARD SPECIFICATIONS.
2. EACH TEST PILE SHALL BE DYNAMICALLY TESTED BY THE CONTRACTOR IN ACCORDANCE WITH ITEM #605201 - DYNAMIC PILE TESTING BY CONTRACTOR. THE QUANTITY FOR DYNAMIC PILE TESTING SHALL INCLUDE ONE FOR THE INITIAL DRIVE AND ONE FOR THE RE-STRIKE OF EACH TEST PILE. THE NEED TO RESTRIKE EITHER A TEST PILE OR A PRODUCTION PILE SHALL BE THE SOLE DECISION OF THE ENGINEER.
3. WAVE EQUATION ANALYSIS SHALL BE SUBMITTED BY THE CONTRACTOR FOR REVIEW BY THE ENGINEER (ELECTRONIC PREFERRED, OTHERWISE 8 COPIES MINIMUM).
4. TEST PILES SHALL BE DRIVEN AT EACH LOCATION SHOWN ON THE PLANS. PRODUCTION PILES SHALL BE ORDERED BASED ON THE RESULTS OF THE TEST PILE DRIVING.

STEEL H-PILE NOTES

1. STEEL H-PILE SPLICE DETAILS APPLIES ONLY TO HP 10", HP 12", AND HP 14" PILES.
2. THE CONTRACTOR MAY CONSIDER USING ALTERNATIVE STEEL H-PILE SPLICE DETAILS. ALL ALTERNATIVE DETAILS FOR STEEL H-PILE SPLICING SHALL BE SUBMITTED TO THE DEPARTMENT FOR APPROVAL.

UNOFFICIAL WEBSITE COPY

U:\Projects\D\DelDOT\20837280\CAD\Bridge\ab01_Road A.dgn
4/3/2018
LEWISRI

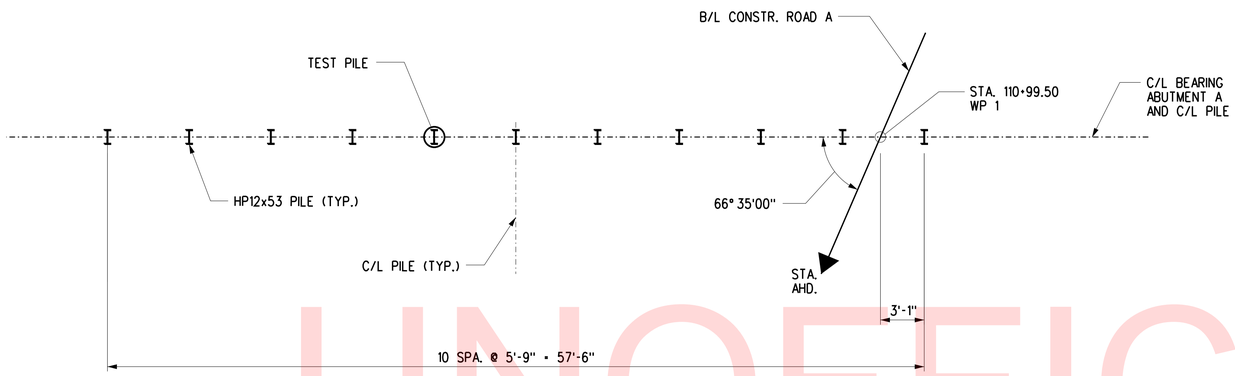

ABUTMENT A PILE PLAN

SCALE: 3/16" = 1'-0"

LEGEND

I DENOTES HP12x53 STEEL PILES

(I) DENOTES TEST PILE

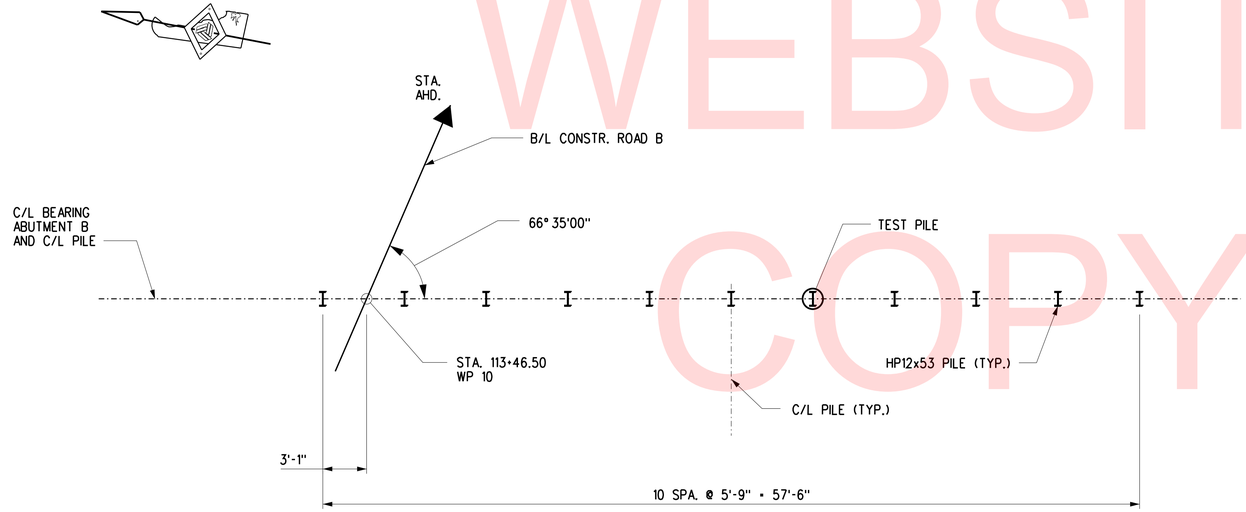

ABUTMENT B PILE PLAN

SCALE: 3/16" = 1'-0"

REFERENCE NOTES:

1. FOR BRIDGE PLAN AND ELEVATION, SEE SHEET NO. S-3.
2. FOR ABUTMENT A PLAN AND ELEVATION, SEE SHEET NO. S-8.
3. FOR ABUTMENT B PLAN AND ELEVATION, SEE DWG. NO. S-9.
4. FOR WORKING POINT GEOMETRY, SEE DWG. NO. S-5.
5. FOR PILE SPLICE DETAILS AND INSTALLATION DATA, SEE DWG. NO. S-6.

UNOFFICIAL WEBSITE COPY

U:\Projects\D\DelDOT\20837280\CAD\Bridge\ab02_RoadA.dgn
4/3/2018
LEWISRI

DELAWARE DEPARTMENT OF TRANSPORTATION	ADDENDUMS / REVISIONS	SCALE 0 2 8 1 4 FEET	ROAD A /SR7 IMPROVEMENTS	CONTRACT T201009002	BRIDGE NO. 1-220	ROAD A OVER SR 1	S-7 SHEET NO.
				COUNTY NEW CASTLE	DESIGNED BY: D. W. HITCHKO	ABUTMENT FOUNDATION PLANS	38 TOTAL SHTS.
					CHECKED BY: R. F. KIRCHNER		154

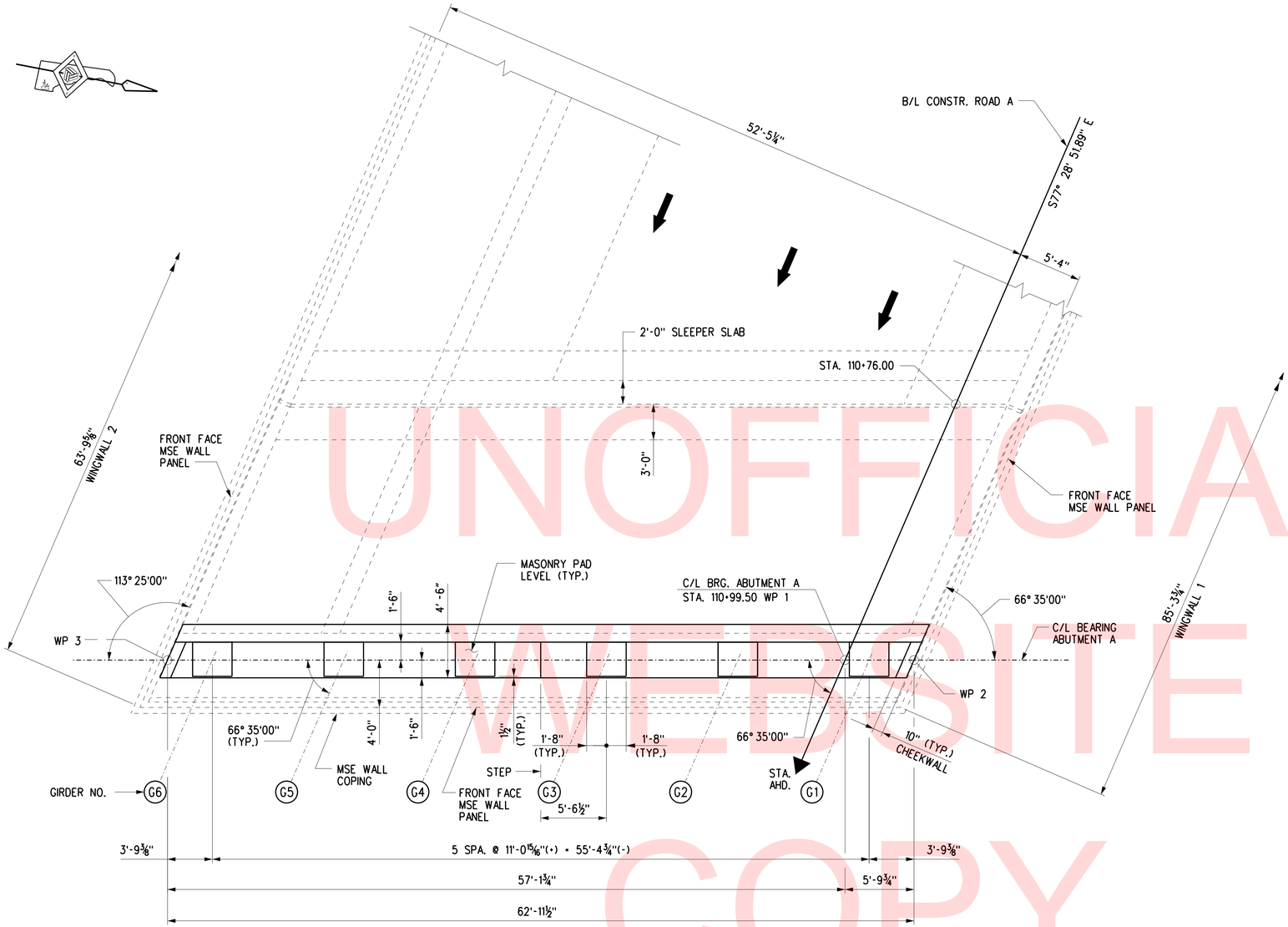

PLAN - ABUTMENT A

SCALE: 3/16" = 1'-0"

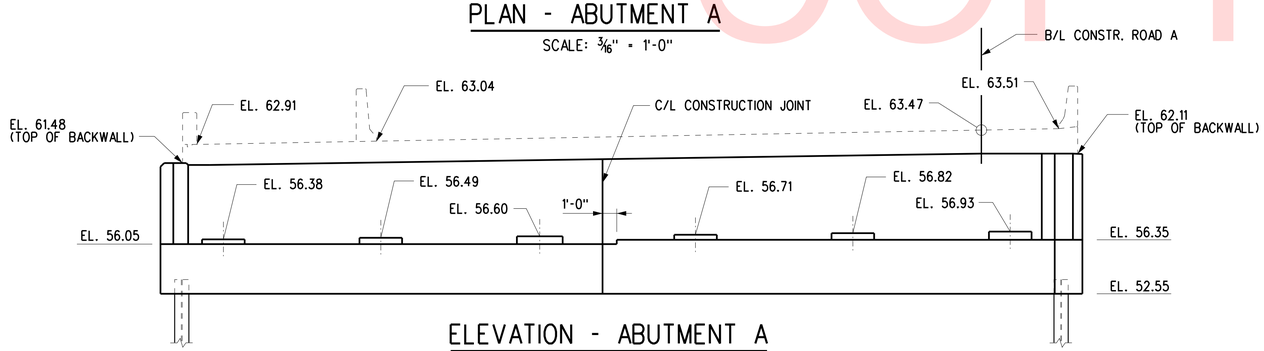

ELEVATION - ABUTMENT A

(LOOKING BACK STATIONS)
SCALE: 3/16" = 1'-0"

NOTES:

1. BEAM SEAT ELEVATIONS ARE AT FRONT FACE OF BACKWALL.
2. BACKWALL ELEVATIONS AND TOP OF DECK ELEVATIONS SHOWN ARE AT THE FRONT FACE OF BACKWALL.
3. MSE WALL AND COPING NOT SHOWN IN ELEVATION VIEW.

REFERENCE NOTES:

1. FOR BRIDGE PLAN AND ELEVATION, SEE DWG. NO. S-3.
2. FOR TYPICAL ABUTMENT SECTION, SEE DWG. NO. S-10.
3. FOR MSE AND WINGWALL DETAILS, SEE DWG. NO. S-14 TO S-17.
4. FOR APPROACH SLAB DETAILS, SEE DWG. NO. S-41 TO S-46.
5. FOR ABUTMENT STRAP ANCHOR DETAIL, SEE DWG. NO. S-10.
6. FOR WORKING POINT GEOMETRY, SEE DWG. NO. S-5.

UNOFFICIAL WEBSITE COPY

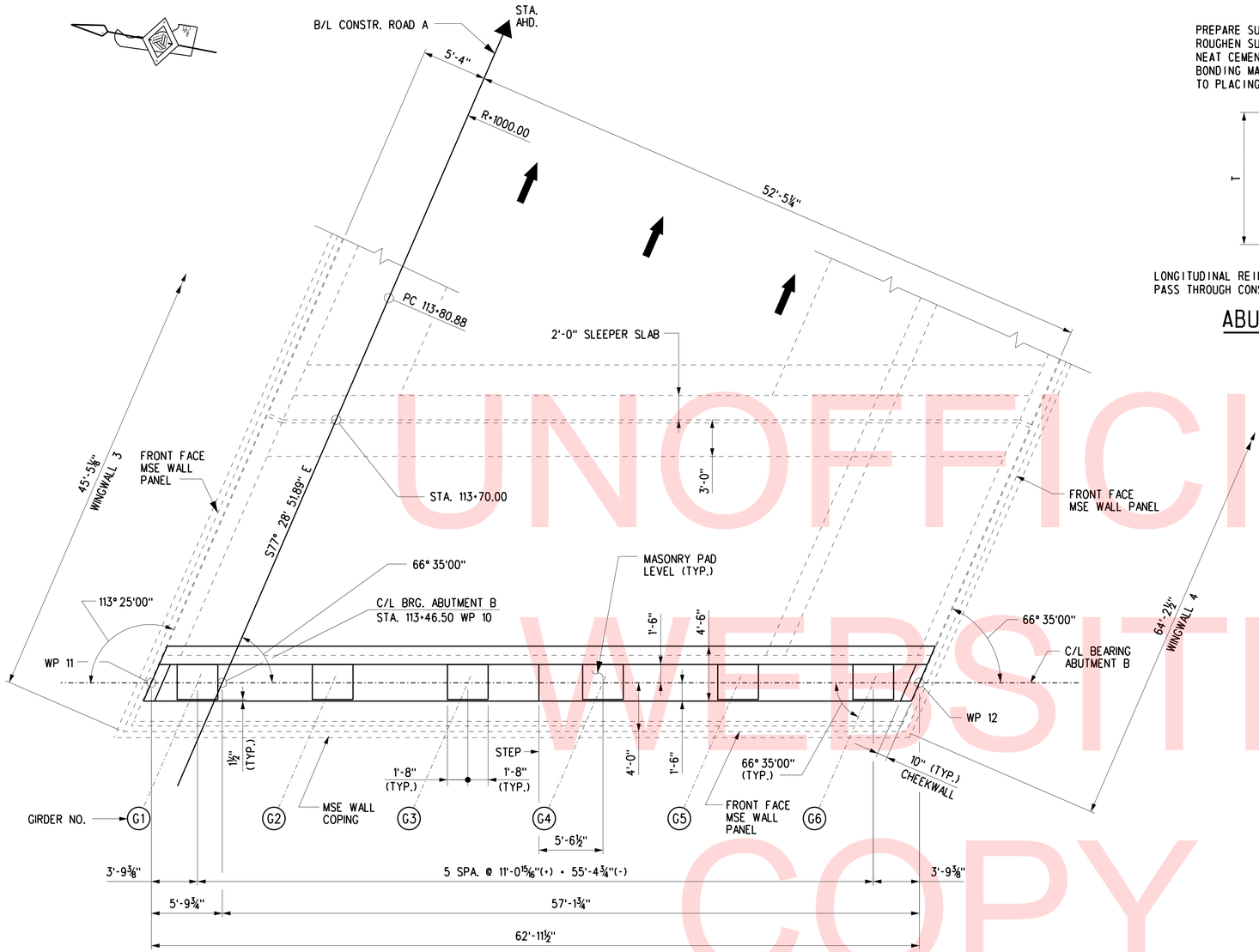

PLAN - ABUTMENT B

SCALE: 3/16" = 1'-0"

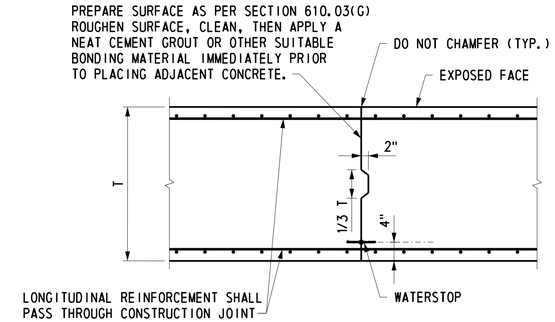

ABUTMENT CONSTRUCTION JOINT DETAIL

NOT TO SCALE

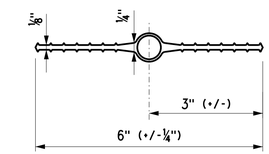

PVC WATERSTOP DETAIL

NOT TO SCALE

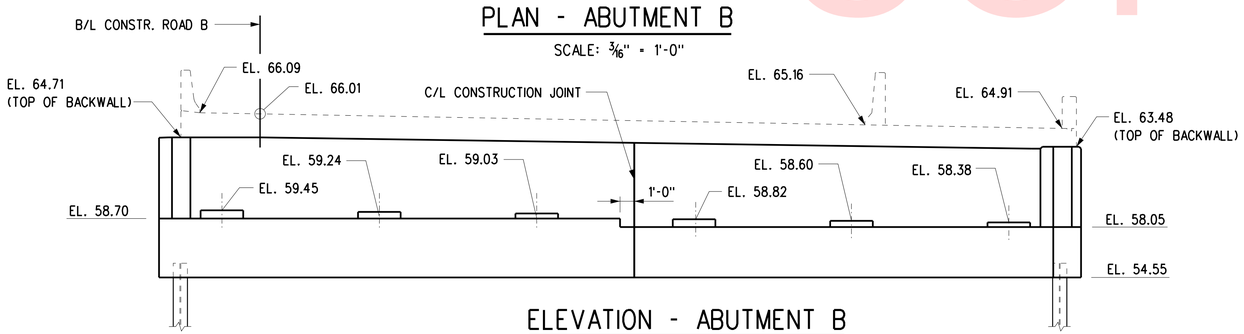

ELEVATION - ABUTMENT B

SCALE: 3/16" = 1'-0"

NOTES:

1. BEAM SEAT ELEVATIONS ARE AT FRONT FACE OF BACKWALL.
2. BACKWALL ELEVATIONS AND TOP OF DECK ELEVATIONS SHOWN ARE AT FRONT FACE BACKWALL.
3. MSE WALL AND COPING NOT SHOWN IN ELEVATION VIEW.

REFERENCE NOTES:

1. FOR BRIDGE PLAN AND ELEVATION, SEE DWG. NO. S-3.
2. FOR TYPICAL ABUTMENT SECTION, SEE DWG. NO. S-10.
3. FOR MSE AND WINGWALL DETAILS, SEE DWG. NO. S-14 TO S-17.
4. FOR APPROACH SLAB DETAILS, SEE DWG. NO. S-41 TO S-46.
5. FOR ABUTMENT STRAP ANCHOR DETAIL, SEE DWG. NO. S-10.
6. FOR WORKING POINT GEOMETRY, SEE DWG. NO. S-5.

UNOFFICIAL WEBSITE COPY

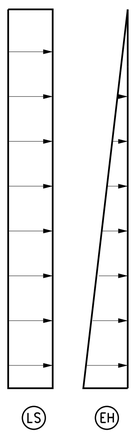

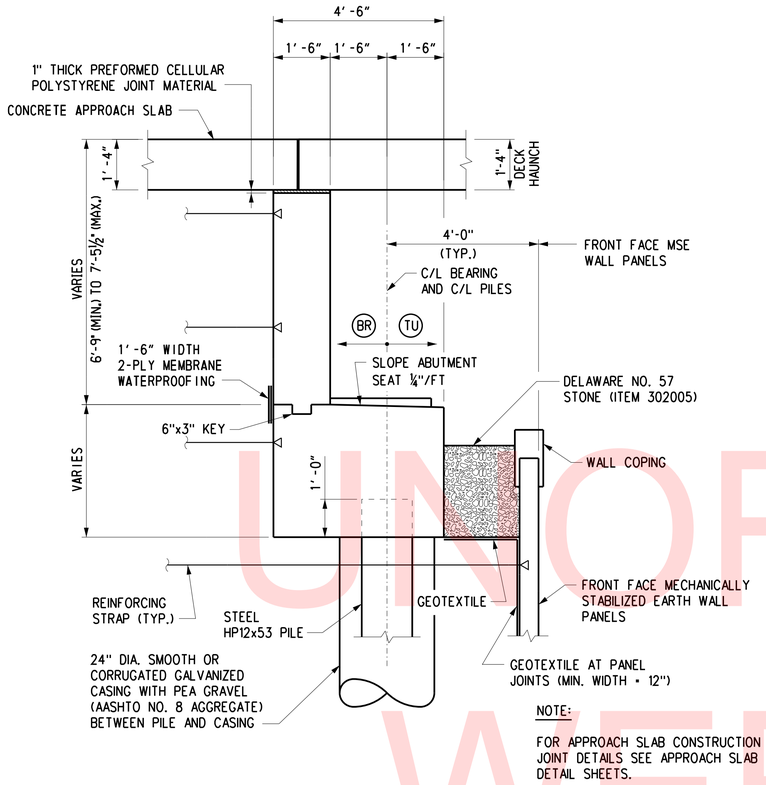

NOTE:

FOR APPROACH SLAB CONSTRUCTION JOINT DETAILS SEE APPROACH SLAB DETAIL SHEETS.

TYPICAL ABUTMENT SECTION

SCALE: ½" = 1'-0"

ABUTMENT LATERAL LOADS	
TYPE	SERVICE LOAD (KIPS/FT.)
EH	1.90
LS	1.05
BR	0.20
TU	1.10

ABUTMENT LATERAL LOADS:

1. CONTRACTOR SHALL DESIGN THE SOIL REINFORCING STRAPS IN THE ABUTMENT STEM AND BACKWALL TO RESIST LATERAL LOADS "EH", "LS", "BR" AND "TU".
2. LOAD "EH" IS THE HORIZONTAL EARTH PRESSURE RESULTANT EXERTED ON THE ABUTMENT.
3. LOAD "LS" IS THE ADDITIONAL HORIZONTAL SOIL PRESSURE RESULTANT DUE TO AN EQUIVALENT HEIGHT OF THREE (3) FEET OF SOIL TO ACCOUNT FOR VEHICULAR LOADING. CONTRACTOR IS RESPONSIBLE FOR PROVIDING MSE WALL DESIGNER WITH OTHER CONSTRUCTION LOADS WHICH WILL BE IN EXCESS OF THREE (3) FEET OF SOIL SURCHARGE.
4. LOAD "BR" IS THE HORIZONTAL LOAD DUE TO BRAKING FORCE ON THE SUPERSTRUCTURE.
5. LOAD "TU" IS THE HORIZONTAL LOAD DUE TO BRIDGE EXPANSION AND CONTRACTION.
6. THE POINT OF APPLICATION OF THE LOADS "EH" AND "LS" ARE AT THE CENTROID OF THE PRESSURE DIAGRAM. THE LOADS "BR" AND "TU" ARE APPLIED AT THE CENTER OF THE BEARINGS. THE LOADS "BR" AND "TU" MAY ACT TOGETHER IN EITHER DIRECTION.

NOTES:

1. MSE WALL COPING AND GEOTEXTILE SHALL BE INCIDENTAL TO ITEM NO. 607001 - MECHANICALLY STABILIZED EARTH WALLS.
2. METAL CASING FOR PILES SHALL EXTEND FROM BOTTOM OF ABUTMENT TO BOTTOM OF MSE WALL LEVELING PAD. COST OF METAL CASING AND AGGREGATE IN CASING SHALL BE INCIDENTAL TO FURNISHING PILE ITEM.
3. REINFORCING STRAPS SHALL BE PROVIDED FOR THE ABUTMENT STEM AND BACKWALL TO RESIST THE LONGITUDINAL FORCES ON THE SUPERSTRUCTURE.
4. MEMBRANE WATERPROOFING SHALL BE INCIDENTAL TO ITEM NO. 610002 - PORTLAND CONCRETE MASONRY, ABUTMENT ABOVE FOOTING, CLASS A.
5. PREFORMED CELLULAR POLYSTYRENE SHALL BE INCIDENTAL TO ITEM 610018 - PORTLAND CONCRETE MASONRY, APPROACH SLAB, CLASS D.

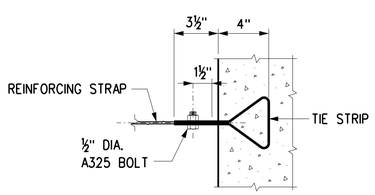

ABUTMENT STRAP ANCHOR DETAIL

NOT TO SCALE

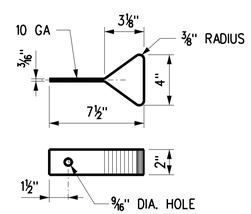

TIE STRIP DETAIL

NOT TO SCALE

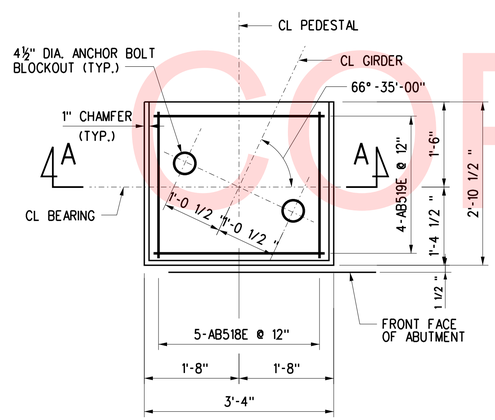

PEDESTAL PLAN

SCALE: ¾" = 1'-0"

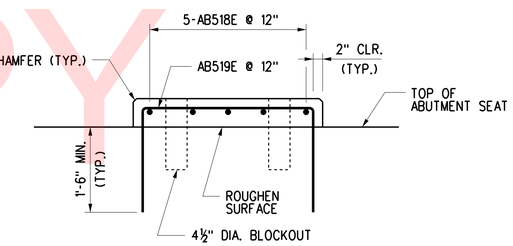

SECTION A-A

SCALE: ¾" = 1'-0"

REFERENCE NOTES:

1. FOR ABUTMENT A PLAN AND ELEVATION, SEE SHEET NO. S-8.
2. FOR ABUTMENT B PLAN AND ELEVATION, SEE SHEET NO. S-9.

UNOFFICIAL WEBSITE COPY

U:\Projects\D\DelDOT\20837280\CAD\Bridge\ab05_Road A.dgn
4/3/2018
LEWISRI

DELAWARE DEPARTMENT OF TRANSPORTATION	ADDENDUMS / REVISIONS	SCALE AS NOTED	ROAD A /SR7 IMPROVEMENTS	CONTRACT T201009002	BRIDGE NO. 1–220	ROAD A OVER SR 1 TYPICAL ABUTMENT SECTION	S-10 SHEET NO. 41
				COUNTY NEW CASTLE	DESIGNED BY: D.W. HITCHKO		TOTAL SHTS. 154
					CHECKED BY: R. F. KIRCHNER		

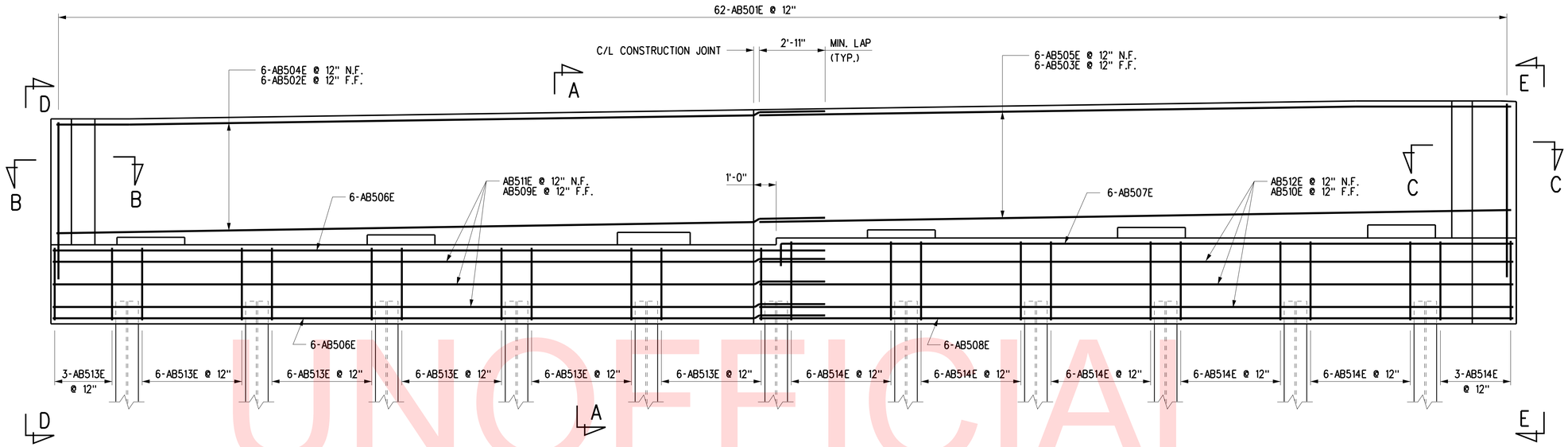

ABUTMENT A ELEVATION

SCALE: 3/8" = 1'-0"

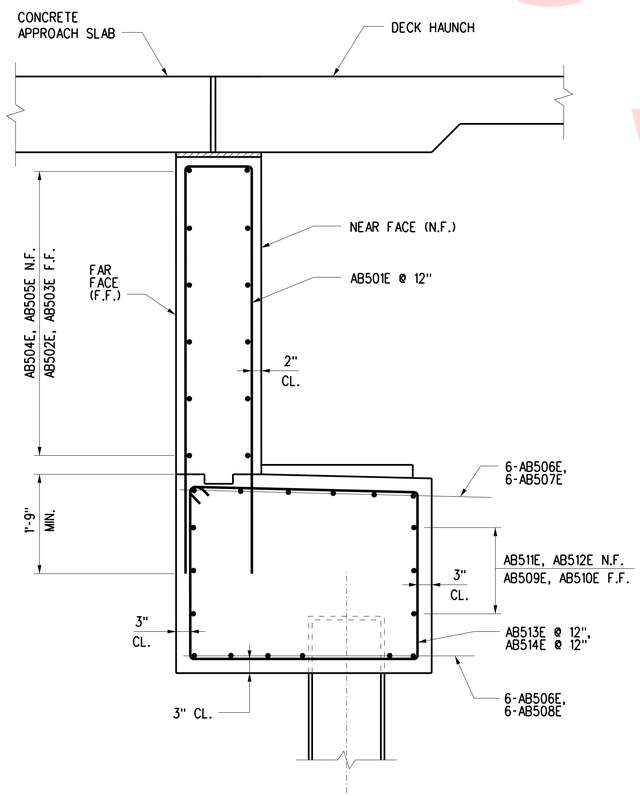

SECTION A-A

SCALE: 3/4" = 1'-0"

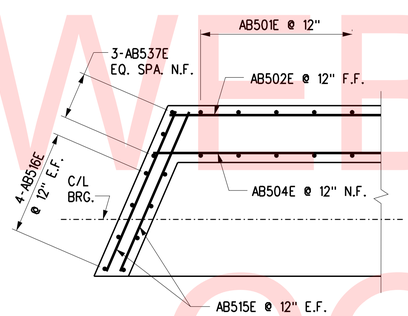

SECTION B-B

SCALE: 1/2" = 1'-0"

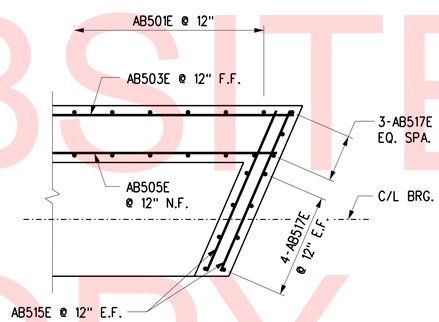

SECTION C-C

SCALE: 1/2" = 1'-0"

CROSS REFERENCE NOTES:

1. FOR BRIDGE PLAN AND ELEVATION, SEE DWG. NO. S-3.
2. FOR ABUTMENT A PLAN AND ELEVATION, SEE DWG. NO. S-8.
3. FOR TYPICAL ABUTMENT SECTION, SEE DWG. NO. S-10.
4. FOR ABUTMENT REINFORCEMENT BAR SCHEDULE, SEE DGW. NO. S-13.
5. FOR MASONRY PAD REINFORCEMENT, SEE DWG. NO. S-10.

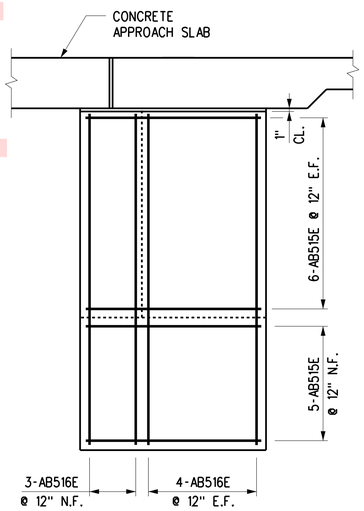

VIEW D-D

SCALE: 1/2" = 1'-0"

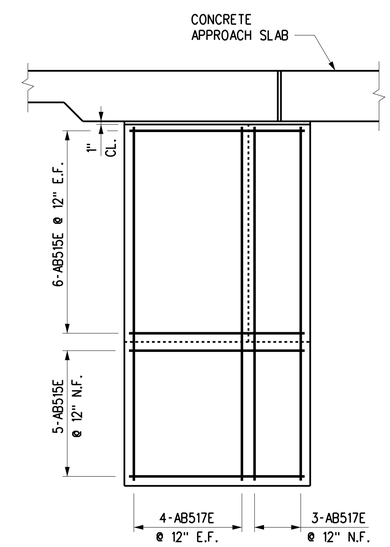

VIEW E-E

SCALE: 1/2" = 1'-0"

UNOFFICIAL WEBSITE COPY

U:\Projects\D\DelDOT\20837280\CAD\Bridge\abl0_RoadA.dgn
4/3/2018
LEWISRI

DELAWARE DEPARTMENT OF TRANSPORTATION	ADDENDUMS / REVISIONS	SCALE AS NOTED	ROAD A /SR7 IMPROVEMENTS	CONTRACT T201009002	BRIDGE NO. 1–220	ROAD A OVER SR 1
				COUNTY NEW CASTLE	DESIGNED BY: D.W. HITCHKO	ABUTMENT A REINFORCEMENT
					CHECKED BY: R.F. KIRCHNER	

S-11
SHEET NO. 42
TOTAL SHTS. 154

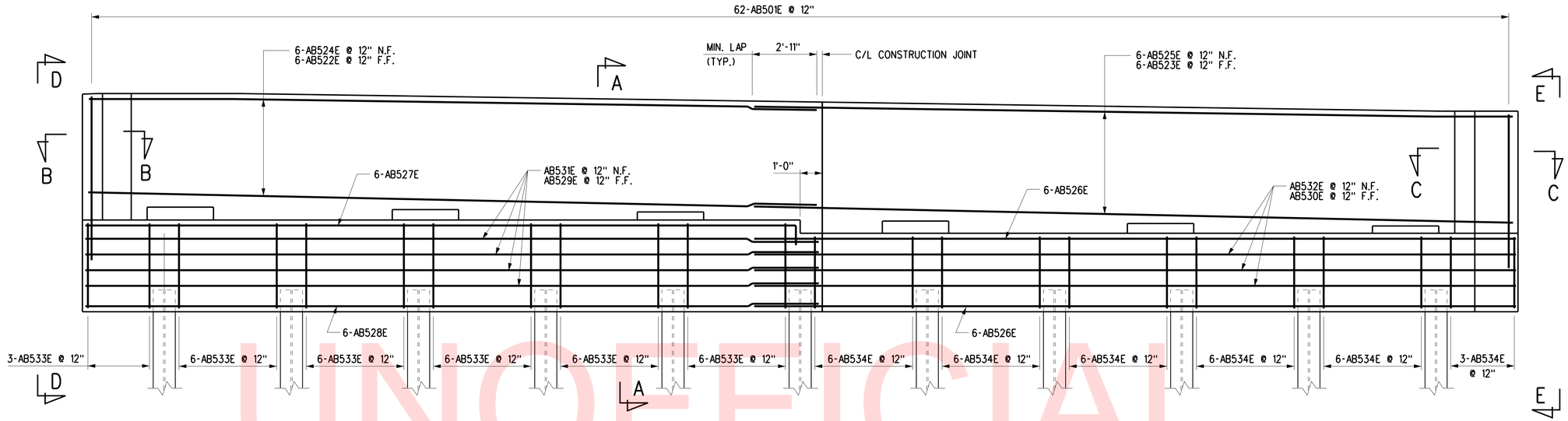

ABUTMENT B ELEVATION

SCALE: 3/8" = 1'-0"

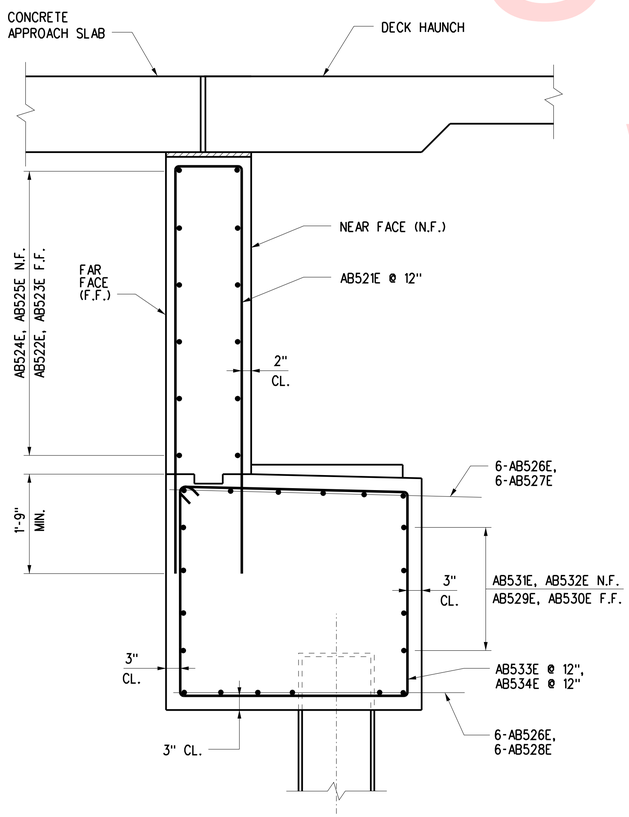

SECTION A-A

SCALE: 3/4" = 1'-0"

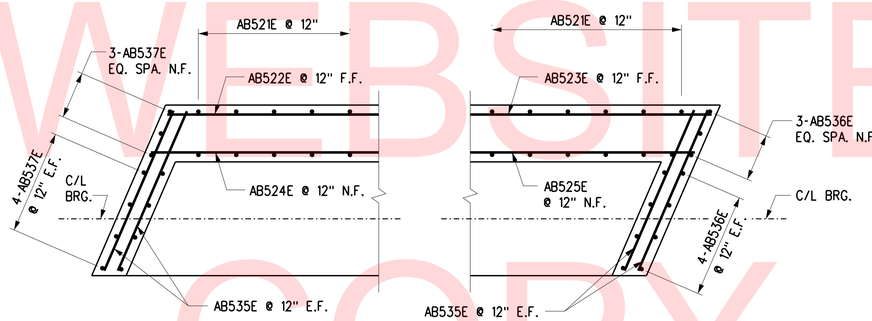

SECTION B-B

SCALE: 1/2" = 1'-0"

SECTION C-C

SCALE: 1/2" = 1'-0"

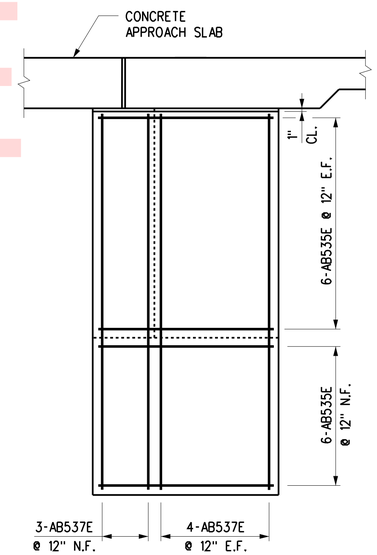

VIEW D-D

SCALE: 1/2" = 1'-0"

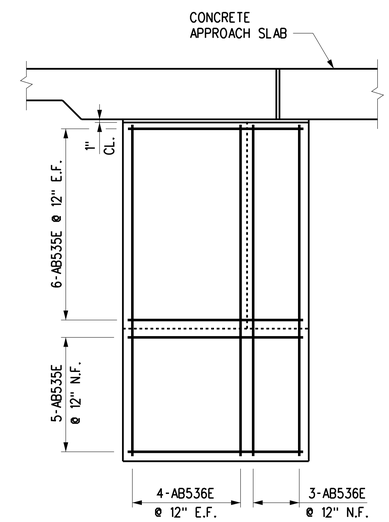

VIEW E-E

SCALE: 1/2" = 1'-0"

CROSS REFERENCE NOTES:

1. FOR BRIDGE PLAN AND ELEVATION, SEE DWG. NO. S-3.
2. FOR ABUTMENT B PLAN AND ELEVATION, SEE DWG. NO. S-9.
3. FOR TYPICAL ABUTMENT SECTION, SEE DWG. NO. S-10.
4. FOR ABUTMENT REINFORCEMENT BAR SCHEDULE, SEE DGW. NO. S-13.
5. FOR MASONRY BAD REINFORCEMENT, SEE DWG. NO. S-10.

UNOFFICIAL WEBSITE COPY

DELAWARE DEPARTMENT OF TRANSPORTATION	ADDENDUMS / REVISIONS	SCALE AS NOTED	ROAD A /SR7 IMPROVEMENTS	CONTRACT T201009002	BRIDGE NO. 1–220	ROAD A OVER SR 1	S-12 SHEET NO.
				COUNTY NEW CASTLE	DESIGNED BY: D.W. HITCHKO	ABUTMENT B REINFORCEMENT	43 TOTAL SHTS.
					CHECKED BY: R.F. KIRCHNER		154

U:\Projects\D\DelDOT\20837280\CAD\Bridge\abll_RoadA.dgn
4/3/2018
LEWISRI

ABUTMENT A REINFORCEMENT BAR SCHEDULE

	MARK	LENGTH	NO. BARS	TYPE	A	B	C	D	E	F	G	H	I	J	K	O	REMARKS
ABUTMENT A	AB501E	15'-9"	62	17		7'-4"	1'-1"	7'-4"									
	AB502E	32'-3"	6	STR													
	AB503E	33'-4"	6	STR													
	AB504E	32'-8"	6	STR													
	AB505E	32'-11"	6	STR													
	AB506E	32'-2 1/2" to 33'-9 1/4"	12	STR													2 SETS OF 6 Δ = 3 3/4"
	AB507E	31'-5 1/4" to 33'-0"	6	2	0'-10"	30'-7 1/4" to 32'-2"											Δ = 3 3/4"
	AB508E	31'-7 1/4" to 33'-2"	6	STR													Δ = 3 3/4"
	AB509E	32'-2"	3	STR													
	AB510E	33'-2 1/2"	3	STR													
	AB511E	33'-10"	3	STR													
	AB512E	31'-6 1/2"	3	STR													
	AB513E	15'-1"	33	T1	0'-5 1/2"	4'-0"	3'-1"	4'-0"	3'-1"		0'-5 1/2"						
	AB514E	15'-8 1/4"	33	T1	0'-5 1/2"	4'-0"	3'-4 5/8"	4'-0"	3'-4 5/8"		0'-5 1/2"						
	AB515E	4'-6"	34	STR													
	AB516E	8'-6"	11	STR													
	AB517E	9'-1"	11	STR													
	AB518E	6'-8 1/2"	30	17		2'-1"	2'-6 1/2"	2'-1"									
	AB519E	7'-2"	24	17		2'-1"	3'-0"	2'-1"									

ABUTMENT B REINFORCEMENT BAR SCHEDULE

	MARK	LENGTH	NO. BARS	TYPE	A	B	C	D	E	F	G	H	I	J	K	O	REMARKS
ABUTMENT B	AB518E	6'-8 1/2"	30	17		2'-1"	2'-6 1/2"	2'-1"									
	AB519E	7'-2"	24	17		2'-1"	3'-0"	2'-1"									
	AB521E	16'-5"	62	17		7'-8"	1'-1"	7'-8"									
	AB522E	31'-0"	6	STR													
	AB523E	34'-7"	6	STR													
	AB524E	31'-4 1/2"	6	STR													
	AB525E	34'-2"	6	STR													
	AB526E	32'-10 1/2" to 34'-5 1/4"	12	STR													2 SETS OF 6 Δ = 3 3/4"
	AB527E	30'-9 1/4" to 32'-4"	6	2	0'-10"	29'-11 1/4" to 31'-6"											Δ = 3 3/4"
	AB528E	30'-11 3/8" to 32'-6 1/8"	6	STR													Δ = 3 3/4"
	AB529E	30'-11"	4	STR													
	AB530E	34'-6"	3	STR													
	AB531E	32'-7"	4	STR													
	AB532E	32'-10"	3	STR													
	AB533E	16'-4 1/2"	33	T1	0'-5 1/2"	4'-0"	3'-8 3/4"	4'-0"	3'-8 3/4"		0'-5 1/2"						
	AB534E	15'-1"	33	T1	0'-5 1/2"	4'-0"	3'-1"	4'-0"	3'-1"		0'-5 1/2"						
	AB535E	4'-6"	35	STR													
	AB536E	8'-6"	11	STR													
	AB537E	9'-8 1/2"	11	STR													

STANDARD BAR BENDS

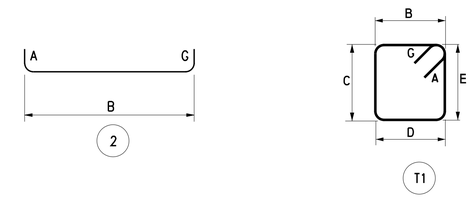

UNOFFICIAL WEBSITE COPY

U:\Projects\D\DelDOT\20837280\CAD\Bridge\abl2_RoadA.dgn
4/3/2018
LEWISRI

DELAWARE DEPARTMENT OF TRANSPORTATION

ADDENDUMS / REVISIONS

NOT TO SCALE

ROAD A /SR7 IMPROVEMENTS

CONTRACT T201009002
COUNTY NEW CASTLE
BRIDGE NO. 1–220
DESIGNED BY: T.B. CUSTER
CHECKED BY: R. F. KIRCHNER

ROAD A OVER SR 1
ABUTMENT A & B BAR SCHEDULE

S-13
SHEET NO. 44
TOTAL SHTS. 154

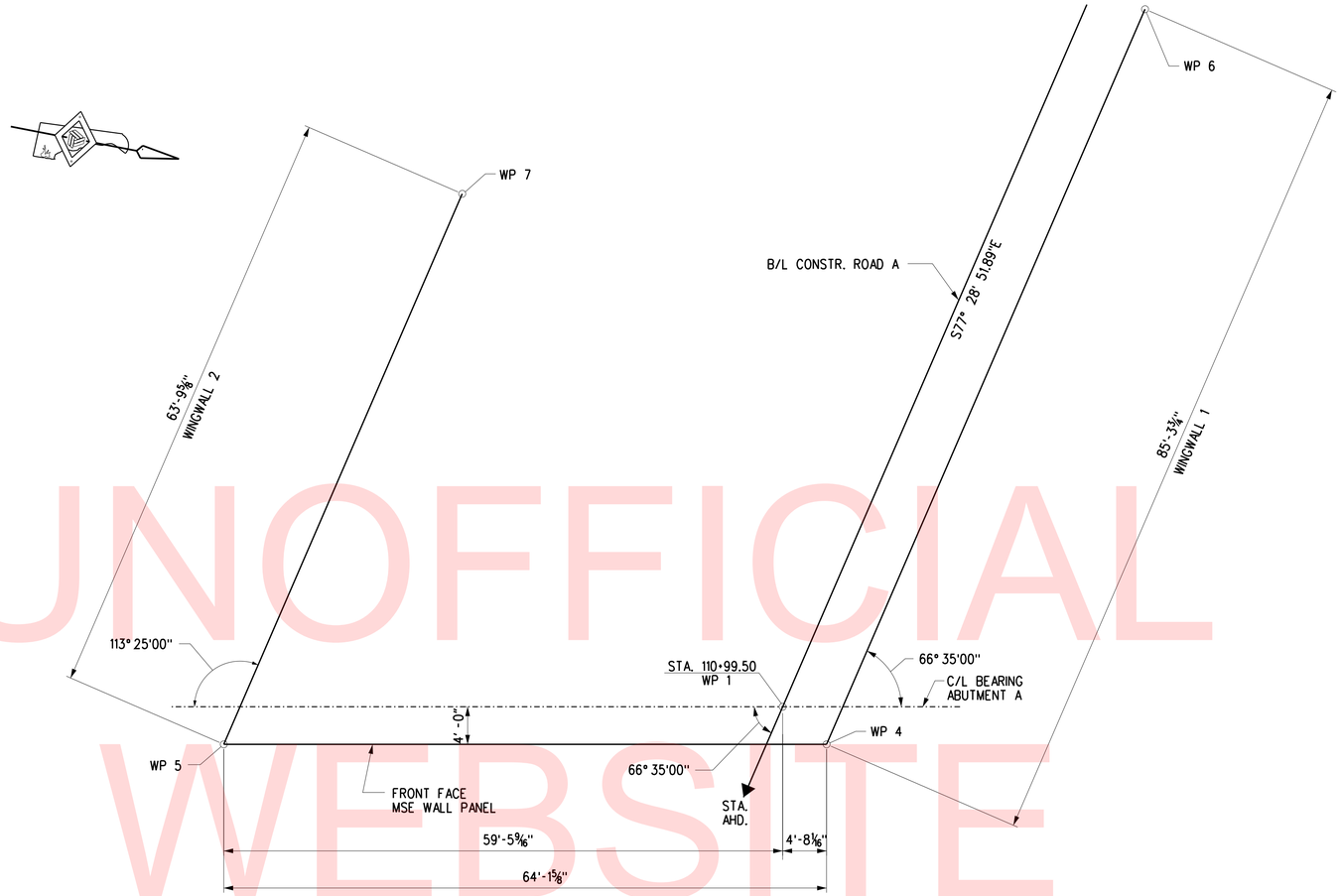

MSE WALL PLAN AT ABUTMENT A

SCALE: ⅛" = 1'-0"

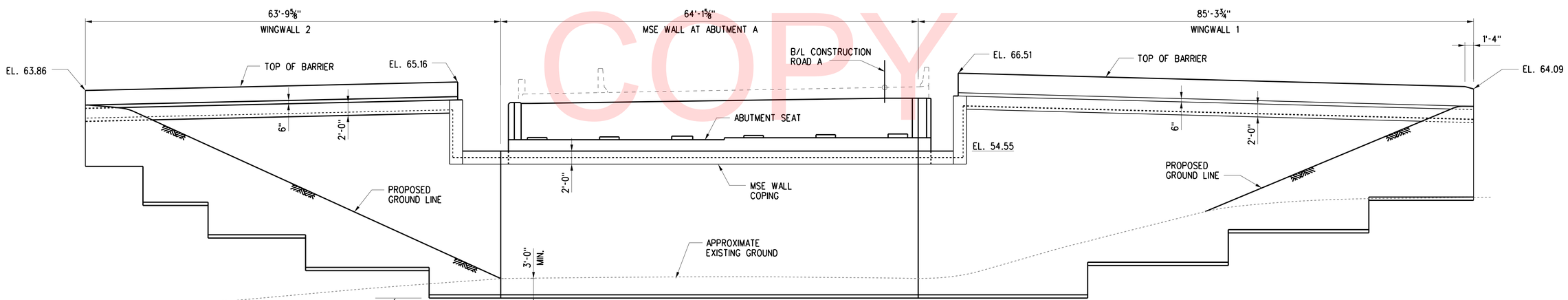

DEVELOPED ELEVATION AT ABUTMENT A

(LOOKING BACK STATIONS)
SCALE: ⅛" = 1'-0"

CROSS REFERENCE NOTES:

1. FOR BRIDGE PLAN AND ELEVATION, DWG. NO. S-3.
2. FOR ABUTMENT A PLAN AND ELEVATION, SEE DWG. NO. S-8.
3. FOR MSE WINGWALL DETAILS, SEE DWG NO. S-16 & S-17.
4. FOR WORKING POINT GEOMETRY, SEE DWG. NO. S-5.

UNOFFICIAL WEBSITE COPY

U:\Projects\D\DelDOT\20837280\CAD\Bridge\ww01_RoadA.dgn
4/3/2018
LEWISRI

DELAWARE DEPARTMENT OF TRANSPORTATION	ADDENDUMS / REVISIONS	SCALE 0 2 4 8 16 FEET	ROAD A /SR7 IMPROVEMENTS	CONTRACT T201009002	BRIDGE NO. 1–220	ROAD A OVER SR 1	S-14
				COUNTY NEW CASTLE	DESIGNED BY: R. F. KIRCHNER	WINGWALL 1 & 2 PLAN AND ELEVATION	SHEET NO. 45
					CHECKED BY: P. M. DALONI		TOTAL SHTS. 154

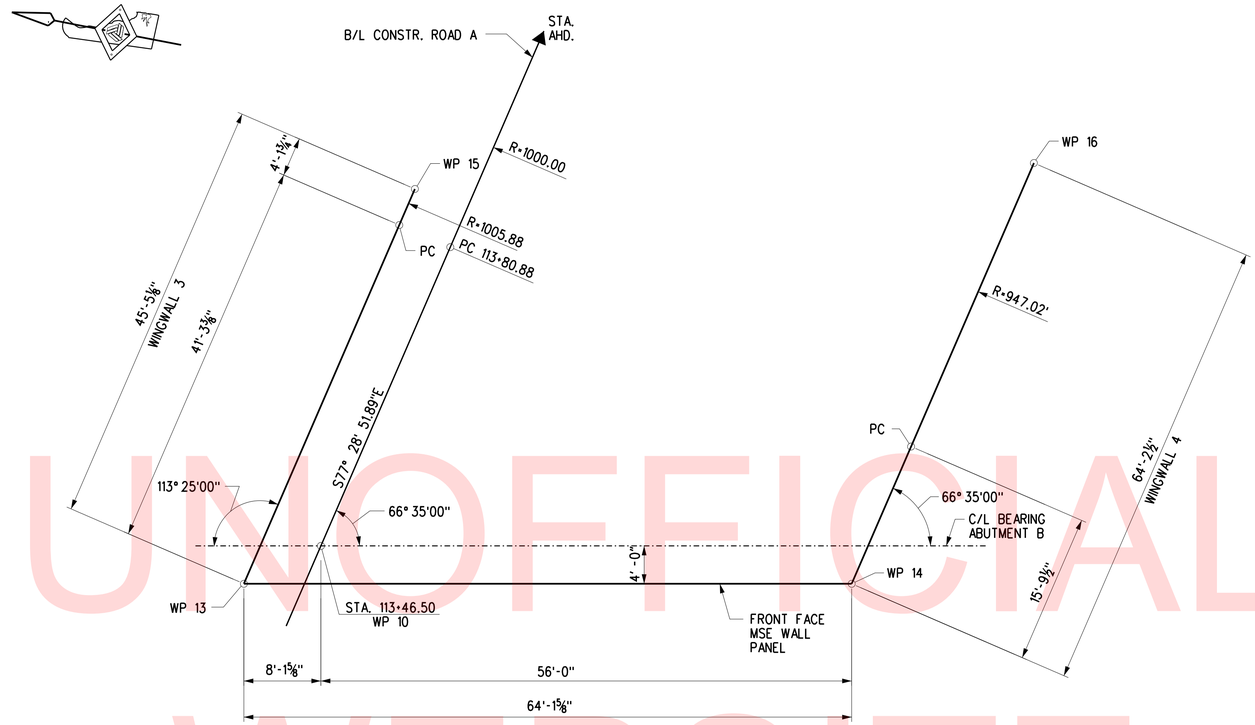

MSE WALL PLAN AT ABUTMENT B

SCALE: ⅛" = 1'-0"

NOTE:

WINGWALL LENGTHS ARE MEASURED ALONG FRONT FACE MSE WALLS.

CROSS REFERENCE NOTES:

1. FOR BRIDGE PLAN AND ELEVATION, DWG. NO. S-3.
2. FOR ABUTMENT B PLAN AND ELEVATION, SEE DWG. NO. S-9.
3. FOR MSE WINGWALL DETAILS, SEE DWG NO. S-16 & S-17.
4. FOR WORKING POINT GEOMETRY, SEE DWG. NO. S-5.

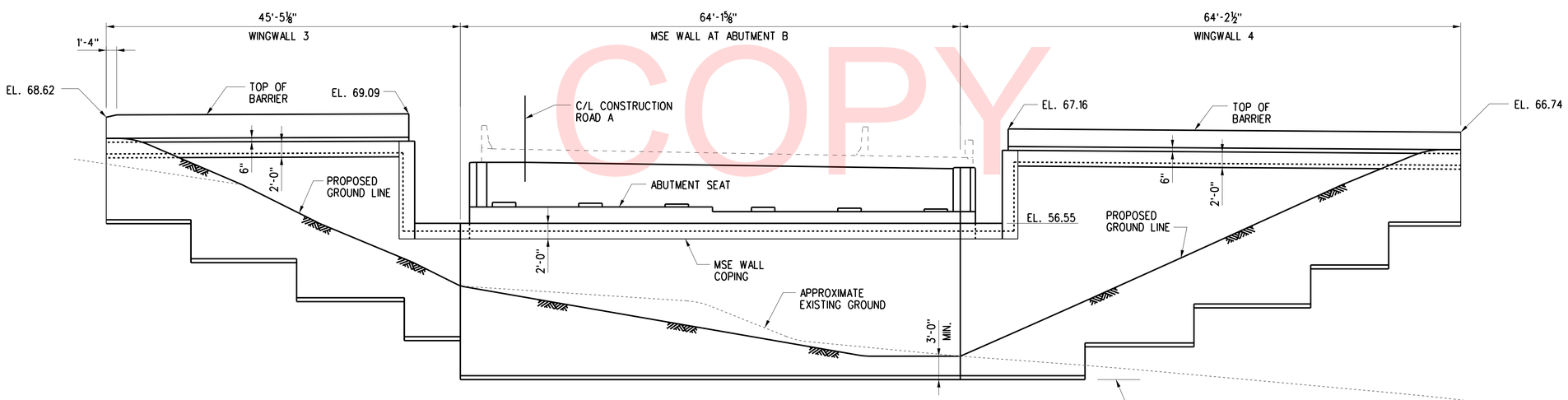

DEVELOPED ELEVATION AT ABUTMENT B

SCALE: ⅛" = 1'-0"

UNOFFICIAL WEBSITE COPY

U:\Projects\D\DelDOT\20837280\CAD\Bridge\ww02_RoadA.dgn
4/3/2018
LEWISRI

DELAWARE DEPARTMENT OF TRANSPORTATION	ADDENDUMS / REVISIONS	SCALE 0 2 4 8 16 FEET	ROAD A /SR7 IMPROVEMENTS	CONTRACT T201009002	BRIDGE NO. 1-220	ROAD A OVER SR 1	S-15 SHEET NO.
				COUNTY NEW CASTLE	DESIGNED BY: R. F. KIRCHNER	WINGWALL 3 & 4 PLAN AND ELEVATION	46 TOTAL SHTS.
					CHECKED BY: P. M. DALONI		154

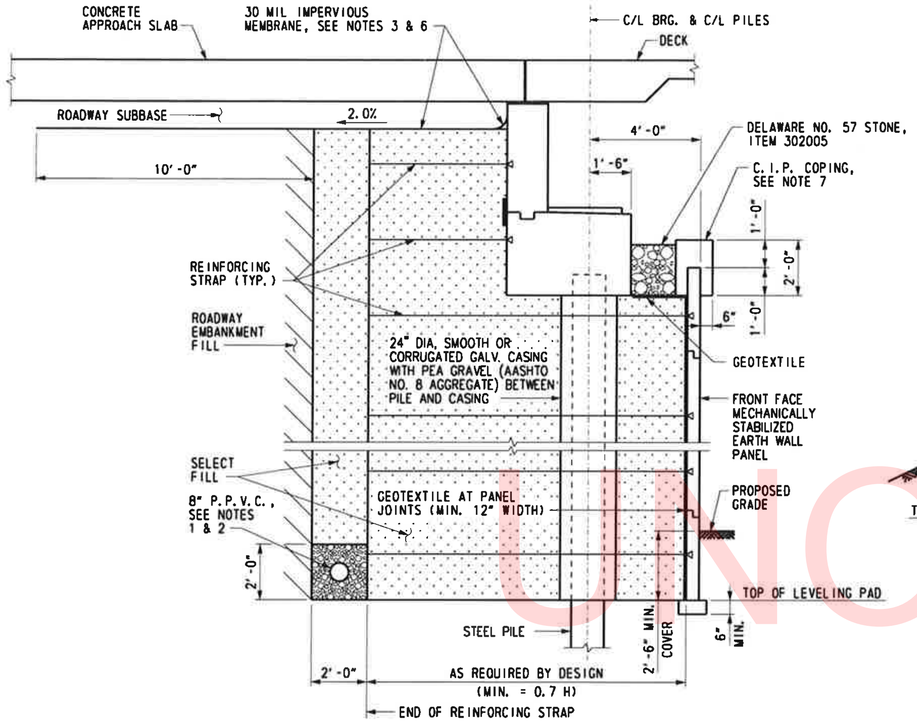

TYPICAL MSE WALL SECTION AT ABUTMENT

SCALE: 3/8" = 1'-0"

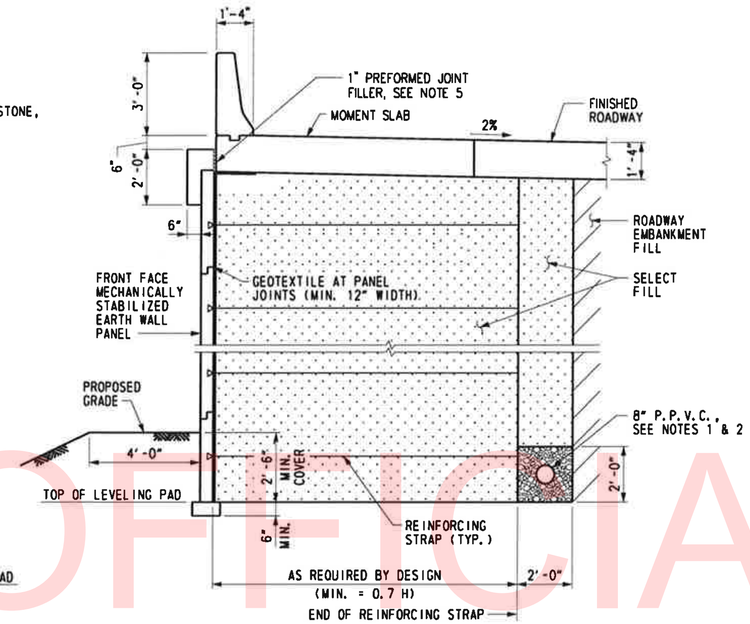

TYPICAL WINGWALL SECTION WITH BARRIER ON MOMENT SLAB

SCALE: 3/8" = 1'-0"

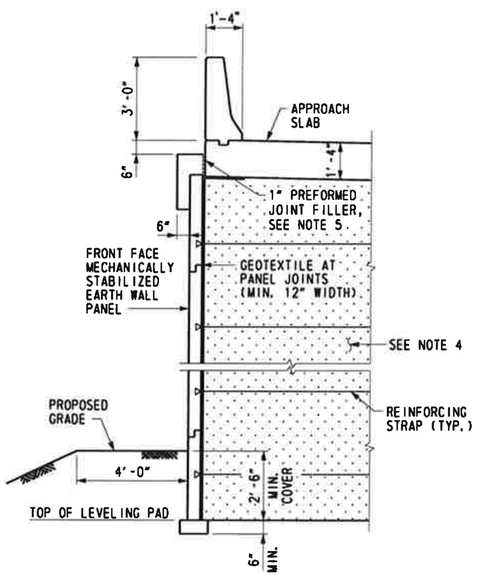

TYPICAL WINGWALL SECTION WITH BARRIER ON APPROACH SLAB

SCALE: 3/8" = 1'-0"

NOTES:

1. DRAIN PERFORATED POLYVINYLCHLORIDE PIPE (P.P.V.C.) TO DAYLIGHT.
2. SURROUND PPVC WITH CONTINUOUS 2'-0" X 2'-0" OF DELAWARE NO. 57 STONE ENCLOSED IN GEOTEXTILE. COST OF P.P.V.C. PIPE, AS WELL AS NO. 57 STONE SURROUNDING P.P.V.C. PIPE, SHALL BE INCIDENTAL TO MSE WALL ITEM NO. 607001.
3. SLOPE MEMBRANE A MINIMUM OF 2% AWAY FROM THE BACKWALL.
4. FOR DRAINAGE SYSTEM, BACKFILL AND ADDITIONAL INFORMATION, SEE TYPICAL WINGWALL SECTION WITH BARRIER ON MOMENT SLAB.
5. COST OF PREFORMED JOINT FILLER SHALL BE INCIDENTAL TO MSE WALL ITEM.
6. COST OF IMPERVIOUS MEMBRANE UNDER SUBBASE SHALL BE INCIDENTAL TO MSE WALL ITEM.
7. REINFORCEMENT FOR CAST IN PLACE COPING INCLUDING CONNECTION TO MSE WALL PANELS SHALL BE DEVELOPED BY MSE WALL SUPPLIER. COST OF COPING AND REINFORCEMENT SHALL BE INCIDENTAL TO MSE WALL ITEM NO.607001.

MSE WALL NOTES

SPECIFICATIONS: PROPRIETARY MSE WALLS SHALL BE DESIGNED IN ACCORDANCE WITH THE FOLLOWING:
- AASHTO LRFD BRIDGE DESIGN SPECIFICATIONS, 7TH EDITION WITH ALL CURRENT REVISIONS.
- FEDERAL HIGHWAY ADMINISTRATION PUBLICATION NOS. FHWA-NHI-10-024 AND FHWA-NHI-025, "DESIGN AND CONSTRUCTION OF MECHANICALLY STABILIZED EARTH WALLS AND REINFORCED SOIL SLOPES", VOLUME I AND VOLUME II.

CONCRETE DESIGN SHALL BE PERFORMED USING THE LOAD AND RESISTANCE FACTOR DESIGN METHOD.

CONCRETE: ALL CONCRETE FOR BARRIERS, MOMENT SLABS, AND ROADWAY BARRIERS SHALL BE 4,500 PSI. LEVELING PAD CONCRETE SHALL BE 3,500 PSI. MIX REQUIREMENTS SHALL CONFORM TO SECTION 1022 OF THE DELAWARE DEPARTMENT OF TRANSPORTATION STANDARD SPECIFICATIONS.

CHAMFERS: ALL EXPOSED CORNERS OF CONCRETE SHALL BE CHAMFERED WITH 3/4" x 3/4" MILLED CHAMFER STRIPS, UNLESS OTHERWISE NOTED, EXCEPT ON UNEXPOSED FOOTINGS OR WHERE INDICATED BY THE FOLLOWING NOTATION ON THE PLANS: "DO NOT CHAMFER".

REINFORCING STEEL: REINFORCING STEEL SHALL CONFORM TO ASTM A 615, GRADE 60. ALL SPLICES, NOT SHOWN, SHALL BE LAPPED AS PER THE LRFD BRIDGE DESIGN SPECIFICATIONS. MINIMUM COVER FOR ANY BAR SHALL BE 2" UNLESS OTHERWISE NOTED.

FOR TIES AND STIRRUPS, STANDARD ACI BENDING TOLERANCES ARE MODIFIED TO PLUS (+) ZERO INCHES, MINUS (-) NORMAL ACI BENDING TOLERANCE.

ONLY GRADE 60 CAN BE USED ON THIS PROJECT.

ALL REINFORCING STEEL IN THE BARRIER AND MOMENT SLAB SHALL BE FUSION-BONDED EPOXY COATED, AND SHALL CONFORM TO ASTM D3963.

ALL KEYS ARE NOMINAL SIZE.

THE MSE WALL MANUFACTURER MAY SUBSTITUTE ALTERNATE REINFORCING CONFIGURATIONS AND SUBMIT FOR APPROVAL.

EXPANSION AND CONTRACTION JOINTS: THE LOCATION OF THE EXPANSION AND CONTRACTION JOINTS IN THE BARRIER/MOMENT SLAB SHOWN ON THE PLANS MAY BE ADJUSTED TO ACCOMMODATE THE PANEL TYPE USED IN THE PROJECT. ANY CHANGE TO THESE JOINT LOCATIONS SHALL BE SUBMITTED TO THE ENGINEER FOR APPROVAL.

LEVELING PAD: THE PROPRIETARY WALL MANUFACTURER MAY RELOCATE THE LEVELING PAD STEPS AT THEIR DISCRETION PROVIDED THAT THE MINIMUM EMBEDMENT IS MAINTAINED. ANY CHANGE TO THE STEP LOCATIONS SHALL BE SUBMITTED TO THE ENGINEER FOR APPROVAL.

ROADWAY LIMITS: THE PROPRIETARY WALL MANUFACTURER SHALL ASSURE THAT PROPOSED PROPRIETARY WALL COMPONENTS ARE POSITIONED SUCH THAT THE DESIGNATED ROADWAY LIMITS ARE NOT ENCROACHED UPON.

MOMENT SLAB: THE MOMENT SLAB IS DESIGNED IN ACCORDANCE WITH THE SAME CRITERIA SPECIFIED FOR MECHANICALLY STABILIZED EARTH WALLS IN SECTION 11.10.10.2 OF AASHTO LRFD BRIDGE DESIGN SPECIFICATIONS, 7TH. EDITION.

TRAFFIC BARRIER JOINTS: TRAFFIC BARRIER FOOTING/ MOMENT SLAB SHALL HAVE CONSTRUCTION JOINTS TO COINCIDE WITH THE BARRIER JOINTS.

COORDINATION: CONTRACTOR AND PROPRIETARY WALL MANUFACTURER SHALL COORDINATE LOCATIONS OF INLETS AND PIPES WITH LOCATIONS OF PROPRIETARY WALL TIE BACK SYSTEM AND MOMENT SLAB.

ARCHITECTURAL FINISH: THE MSE WALL PANELS SHALL RECEIVE AN ARCHITECTURAL FINISH.

SERVICE LIFE: ALL RETAINING WALL COMPONENTS SHALL BE DESIGNED FOR A MINIMUM SERVICE LIFE OF 100 YEARS.

WALL SYSTEM: ONLY ONE MSE WALL SYSTEM MAY BE USED ON THIS PROJECT.

ROADWAY SUPERELEVATION: FOR ROADWAY SUPERELEVATION, SEE SUPERELEVATION TABLES.

MSE WALL BACKFILL: MSE WALL BACKFILL SHALL CONSIST OF SELECT FILL CONFORMING TO THE REQUIREMENTS OF SECTION 607 OF THE DELAWARE DEPARTMENT OF TRANSPORTATION STANDARD SPECIFICATIONS.

REINFORCING STRAPS: SET REINFORCING STRAPS TO CLEAR PILE CASING, 2" MIN. CLEARANCE. MAXIMUM IN-FIELD SKEW OF 15 DEGREES. IF GREATER SKEW ANGLE IS REQUIRED, CONTACT MSE WALL FIELD REPRESENTATIVE PRIOR TO INSTALLATION.

WALLS ON FILL: CONTRACTOR SHALL UTILIZE EROSION CONTROL BLANKETS TO PROTECT SLOPE IN FILL AREAS. COST SHALL BE INCIDENTAL TO MSE WALL ITEM.

CROSS REFERENCE NOTES:

1. FOR BRIDGE PLAN AND ELEVATION, SEE DWG. S-3.
2. FOR MSE WINGWALLS PLAN AND ELEVATION, SEE DWG. S-14 & S-15.
3. FOR TYPICAL MSE WINGWALL SECTION ON FILL, SEE DWG. S-17.
4. FOR SOIL PROPERTIES AND FOUNDATION NOTES, SEE DWG. S-17.
5. FOR MOMENT SLAB DETAILS, SEE DWG. S-47 TO S-50.

UNOFFICIAL WEBSITE COPY

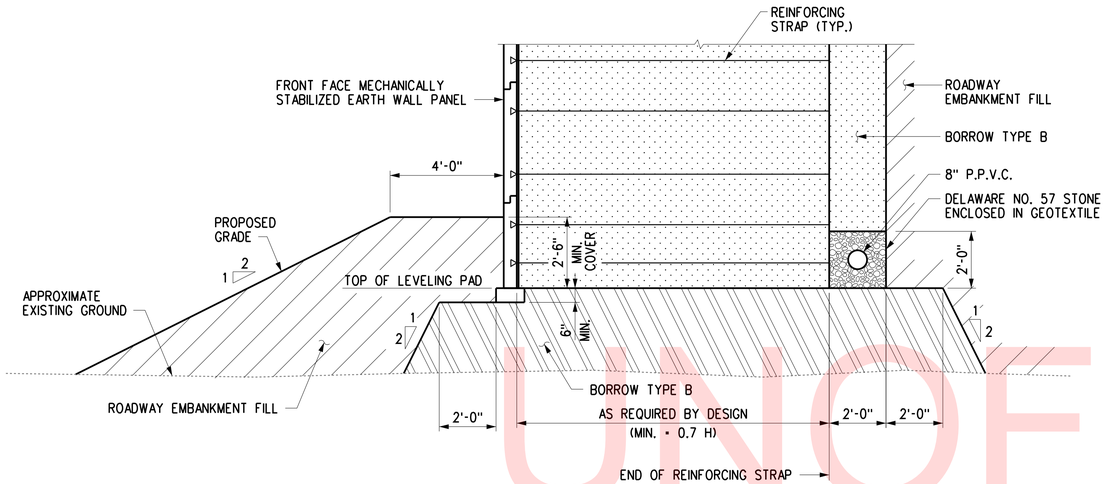

TYPICAL WINGWALL SECTION ON FILL

SCALE: 3/8" = 1'-0"

SOIL PROPERTIES			
SOIL TYPE	UNIT WEIGHT (PCF)	DRAINED ANGLE OF FRICTION (DEGREES)	FACTORED BEARING RESISTANCE (KSF)
SELECT FILL	125	34	-
FOUNDATION SOIL			
ABUTMENT A	110	29	5.0
ABUTMENT B	110	29	5.0

MSE WALL FOUNDATION NOTES:

1. THE FACTORED BEARING RESISTANCE SHALL BE VERIFIED PRIOR TO THE CONSTRUCTION OF THE MSE WALL.
2. THE INTERNAL STABILITY OF THE MSE WALL SHALL BE DESIGNED BY THE CONTRACTOR USING THE SOIL PARAMETERS PROVIDED FOR EACH STRUCTURE LOCATION. THE INTERNAL STABILITY CALCULATIONS SHALL BE SIGNED AND SEALED BY A PROFESSIONAL ENGINEER LICENSED IN THE STATE OF DELAWARE AS INDICATED IN THE PROJECT SPECIFICATIONS.
3. THE MINIMUM REINFORCED ZONE WIDTH SHALL BE AT LEAST 70% OF THE WALL HEIGHT.
4. THE CONTRACTOR IS RESPONSIBLE FOR DEVELOPING MEANS AND METHODS, IN CONSULTATION WITH THE MSE WALL MANUFACTURER, FOR CONSTRUCTING THE MSE WALLS TO THE LINES, GRADES AND DIMENSIONS SHOWN ON THE PLANS.
5. FOR THE WINGWALL SECTION ON FILL, THE CONTRACTOR MAY LOWER THE ELEVATION OF THE LEVELING PAD BY PROVIDING 2'-6" MIN. EMBEDMENT INTO THE EXISTING GROUND AND THEREBY ELIMINATE THE USE OF BORROW TYPE B FILL. THIS OPTION SHALL BE AT NO ADDITIONAL COST TO THE DEPARTMENT.
6. TYPE B BORROW FOR WINGWALL SECTION ON FILL SHALL BE INCIDENTAL TO ITEM 607001 - MECHANICALLY STABILIZED EARTH WALLS.

NOTE:

1. FOR DRAINAGE SYSTEM, BACKFILL AND ADDITIONAL INFORMATION, SEE TYPICAL MSE WALL SECTION AT ABUTMENT.

CROSS REFERENCE NOTES:

1. FOR BRIDGE PLAN AND ELEVATION, SEE DWG. S-3.
2. FOR MSE WINGWALLS PLAN AND ELEVATION, SEE DWG. S-14 & S-15.
3. FOR TYPICAL MSE WALL SECTION AT ABUTMENT, SEE DWG. S-16.

UNOFFICIAL WEBSITE COPY

U:\Projects\D\DelDOT\20837280\CAD\Bridge\ww04_RoadA.dgn 4/3/2018 LEWISRI

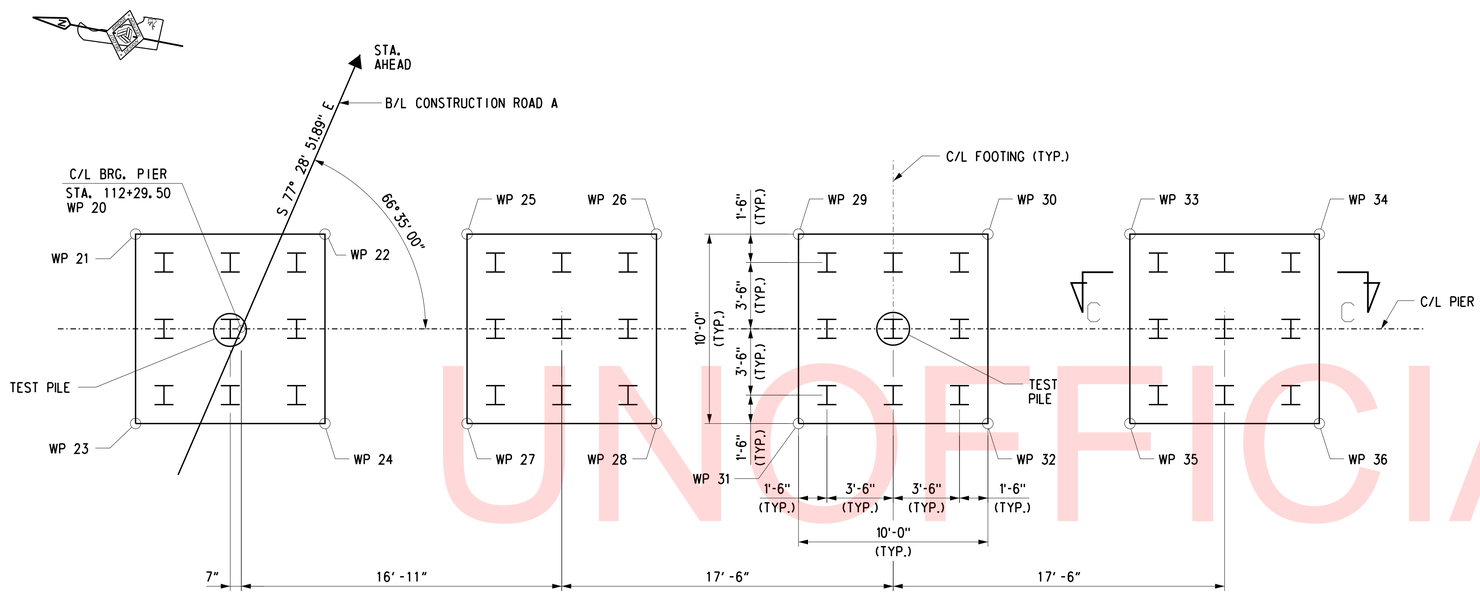

LEGEND

DENOTES HP12x53 PILES

DENOTES TEST PILE

PIER FOUNDATION PLAN

SCALE: ¼" = 1'-0"

UNOFFICIAL WEBSITE COPY

CROSS REFERENCE NOTES:

1. FOR BRIDGE PLAN AND ELEVATION, SEE DWG. S-3.
2. FOR PIER PLAN AND ELEVATION, SEE DWG. S-19.
3. FOR SECTION C-C AND FOOTING REINFORCING DETAILS, SEE DWG. S-21.
4. FOR PILE SPLICE DETAIL, SEE DWG. S-6.
5. FOR PILE INSTALLATION DATA, SEE DWG. NO. S-6.
6. FOR STEEL H-PILE DETAILS, SEE DWG. NO. S-6.
7. FOR WORKING POINT GEOMETRY, SEE DWG. NO. S-5.

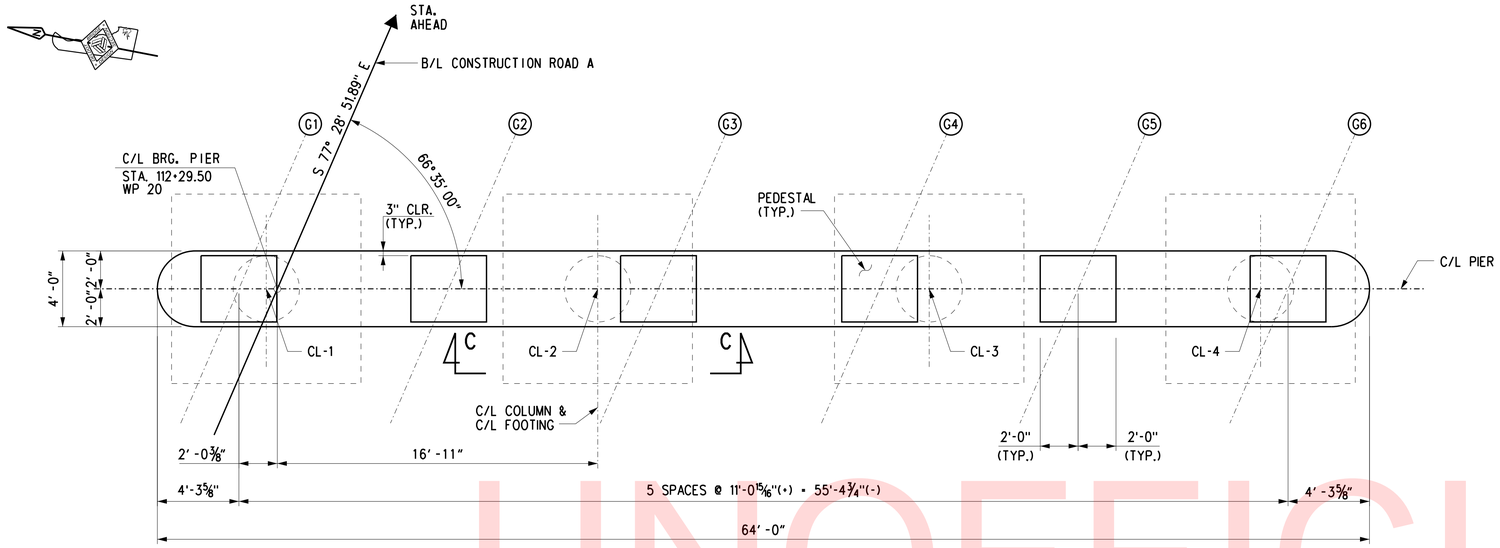

PLAN

SCALE: 1/4" = 1'-0"

PEDESTAL ELEVATIONS	
GIRDER	ELEVATION
G1	58.83
G2	58.67
G3	58.50
G4	58.34
G5	58.17
G6	58.00

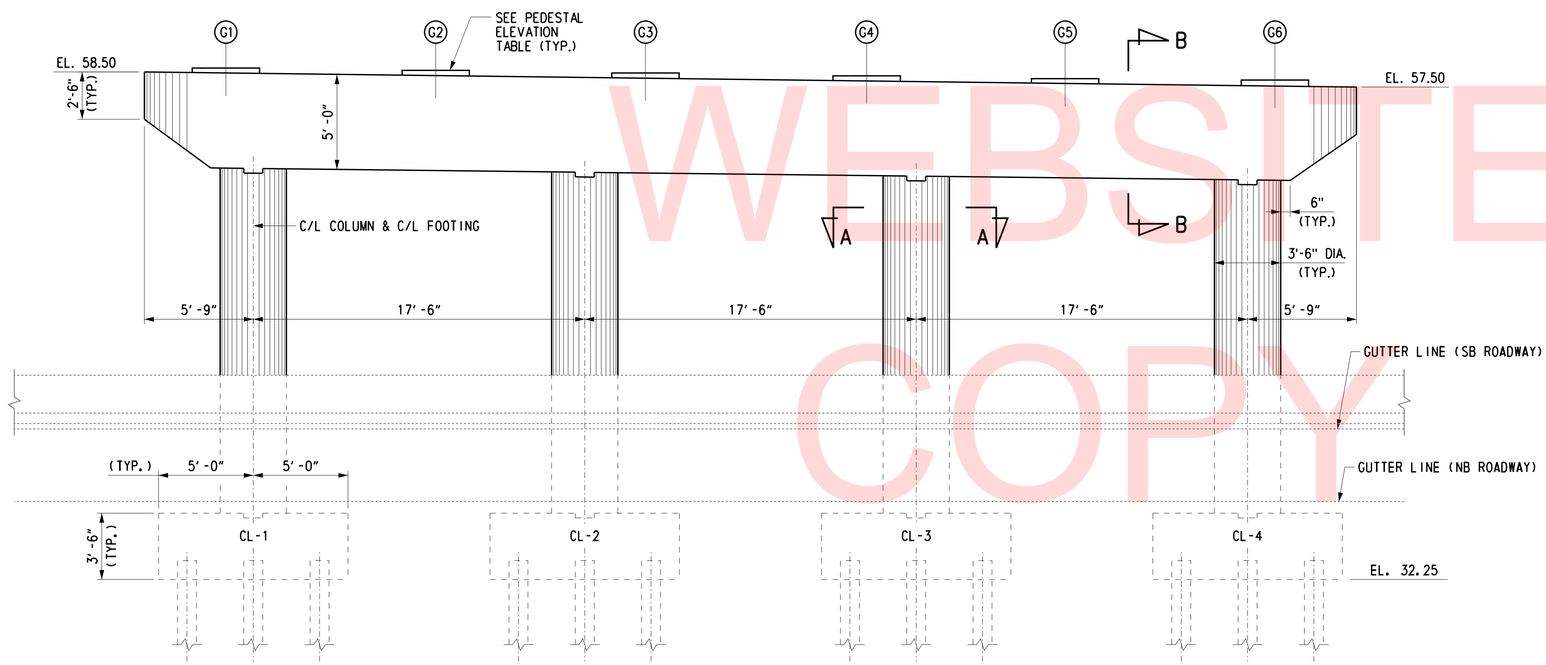

ELEVATION

SCALE: 1/4" = 1'-0"

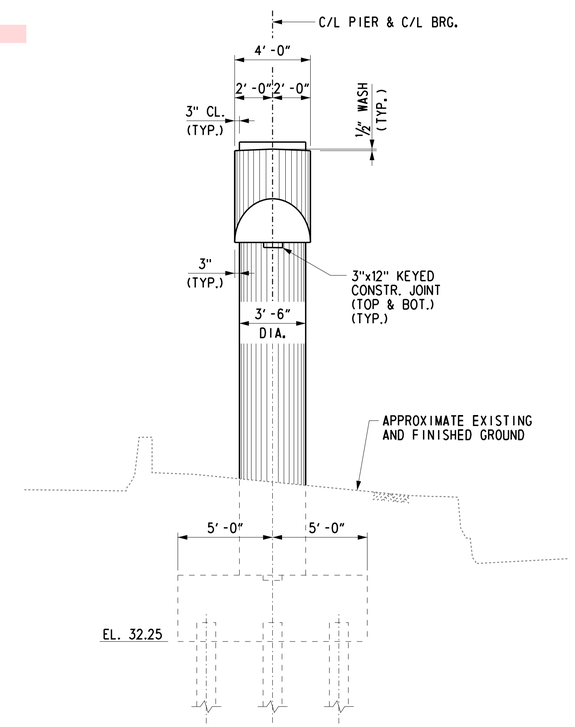

END VIEW

SCALE: 1/4" = 1'-0"

CROSS REFERENCE NOTES:

1. FOR BRIDGE PLAN AND ELEVATION, SEE DWG. S-3.
2. FOR PIER FOUNDATION PLAN, SEE DWG. S-18.
3. FOR SECTIONS AND PIER REINFORCEMENT DETAILS, SEE DWG. S-20 & 21.
4. FOR WORKING POINT GEOMETRY, SEE DWG. NO. S-5.

UNOFFICIAL WEBSITE COPY

U:\Projects\D\DelDOT\20837280\CAD\Bridge\pr02_RoadA.dgn
4/3/2018
LEWISRI

DELAWARE DEPARTMENT OF TRANSPORTATION

ADDENDUMS / REVISIONS

SCALE 0 1 2 4 8 FEET

ROAD A /SR7 IMPROVEMENTS

CONTRACT	BRIDGE NO.	1-220
T201009002	DESIGNED BY: M.A. SULLIVAN	
COUNTY		
NEW CASTLE	CHECKED BY: R.F. KIRCHNER	

ROAD A OVER SR 1

PIER PLAN AND ELEVATION

S-19
SHEET NO.
50
TOTAL SHTS.
154

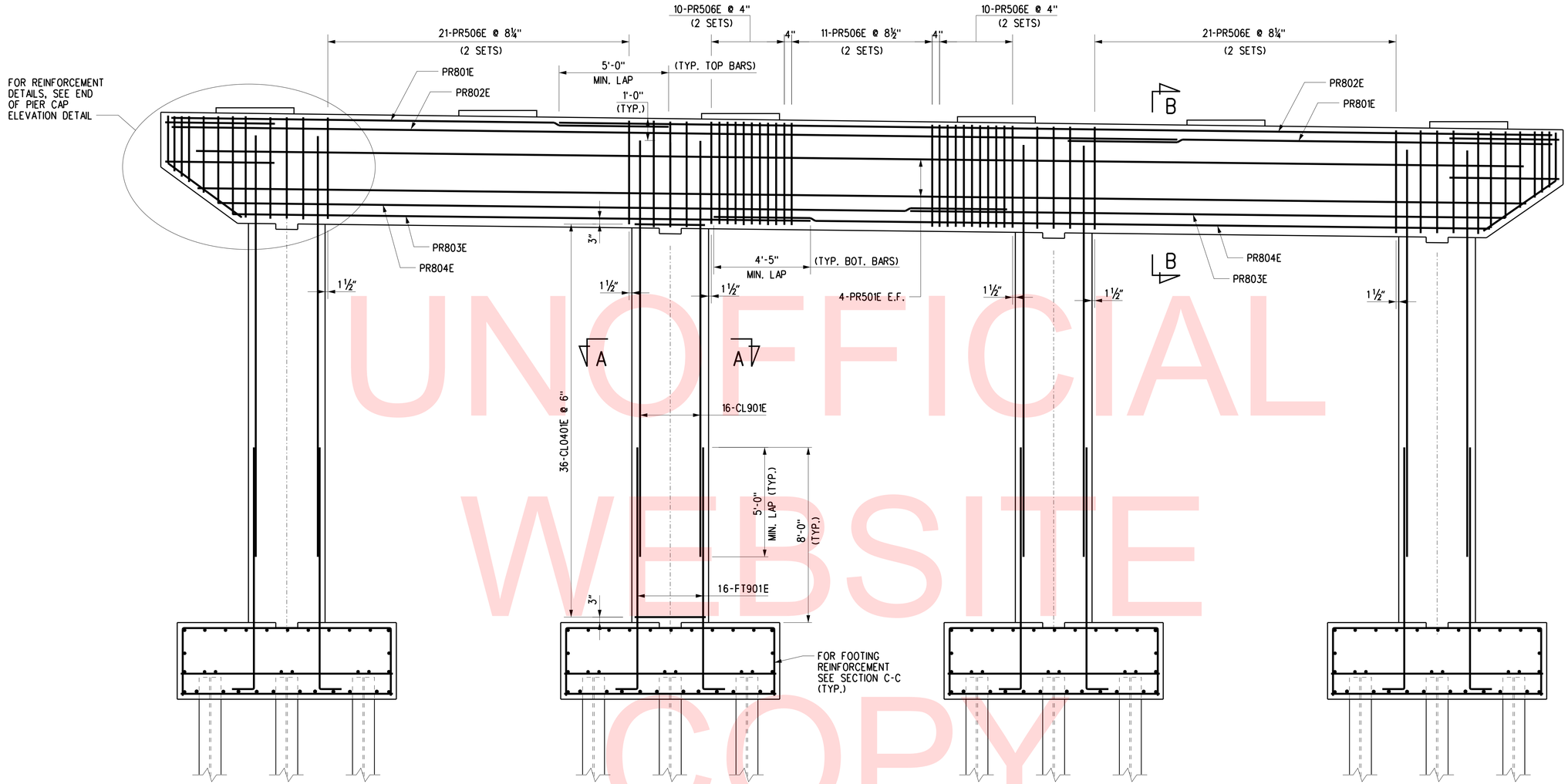

PIER ELEVATION

SCALE: ⅜" = 1'-0"

CROSS REFERENCE NOTES:

1. FOR BRIDGE PLAN AND ELEVATION, SEE DWG. NO. S-3.
2. FOR PIER FOUNDATION PLAN, SEE DWG. NO. S-18.
3. FOR PIER PLAN AND ELEVATION, SEE DWG. NO. S-19.
4. FOR PIER REINFORCEMENT SECTIONS, SEE DWG. NO. S-21.
5. FOR PIER REINFORCEMENT BAR SCHEDULE, SEE DWG. NO. S-22.

UNOFFICIAL WEBSITE COPY

LEWISRI 4/3/2018 U:\Projects\D\DelDOT\20837280\CAD\Bridge\pr07_RoadA.dgn

DELAWARE DEPARTMENT OF TRANSPORTATION	ADDENDUMS / REVISIONS	SCALE 0 1 2 4 8 FEET	ROAD A /SR7 IMPROVEMENTS	CONTRACT T201009002	BRIDGE NO. 1-220	ROAD A OVER SR 1	S-20 SHEET NO.
				COUNTY NEW CASTLE	DESIGNED BY: M.A. SULLIVAN	PIER REINFORCEMENT 1	51 TOTAL SHTS.
					CHECKED BY: R. F. KIRCHNER		154

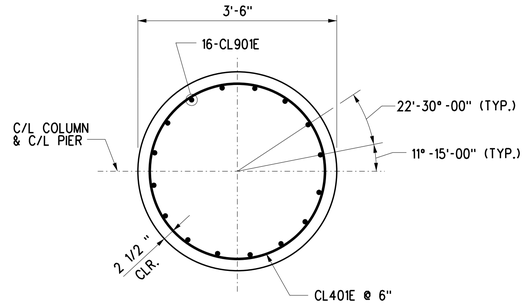

SECTION A-A

SCALE: ¾" = 1'-0"

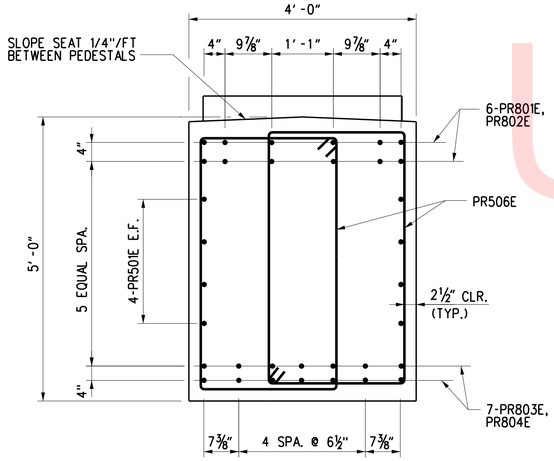

SECTION B-B

SCALE: ¾" = 1'-0"

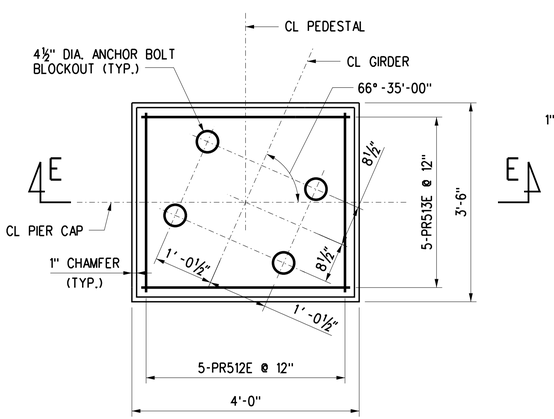

PEDESTAL PLAN

SCALE: ¾" = 1'-0"

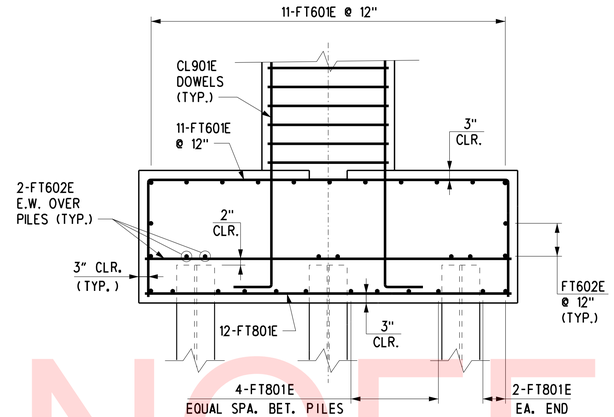

SECTION C-C

SCALE: ½" = 1'-0"

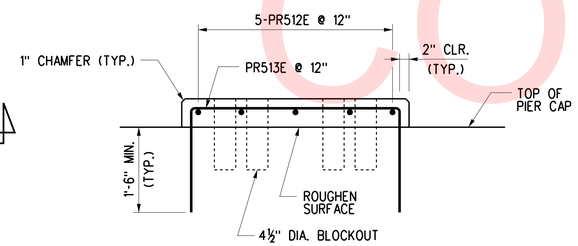

SECTION E-E

SCALE: ¾" = 1'-0"

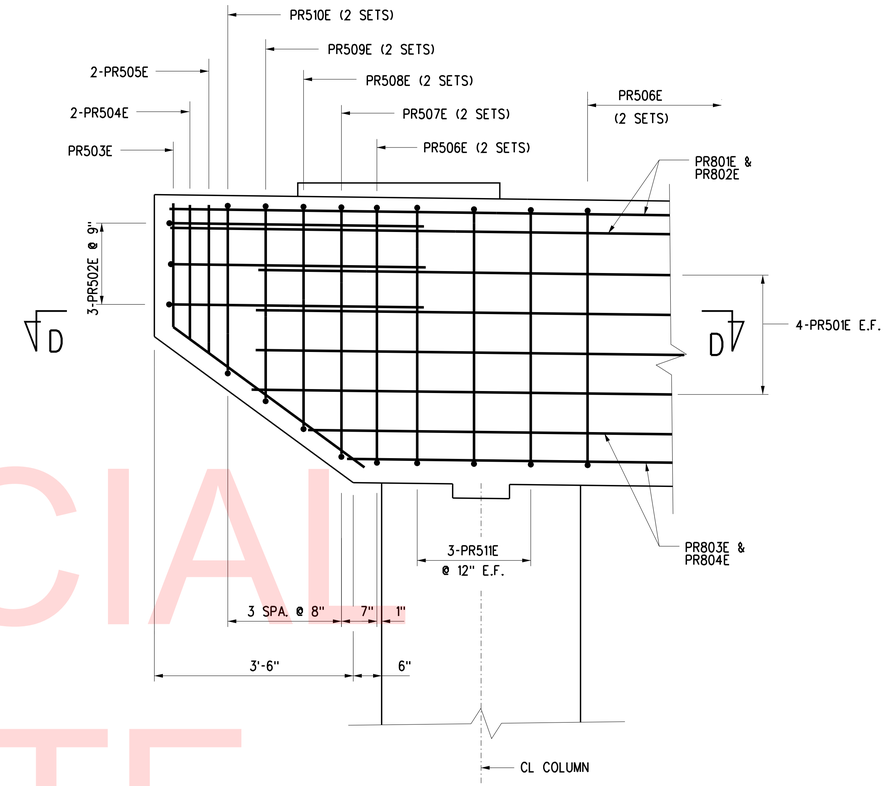

END OF PIER CAP ELEVATION

SCALE: ¾" = 1'-0"

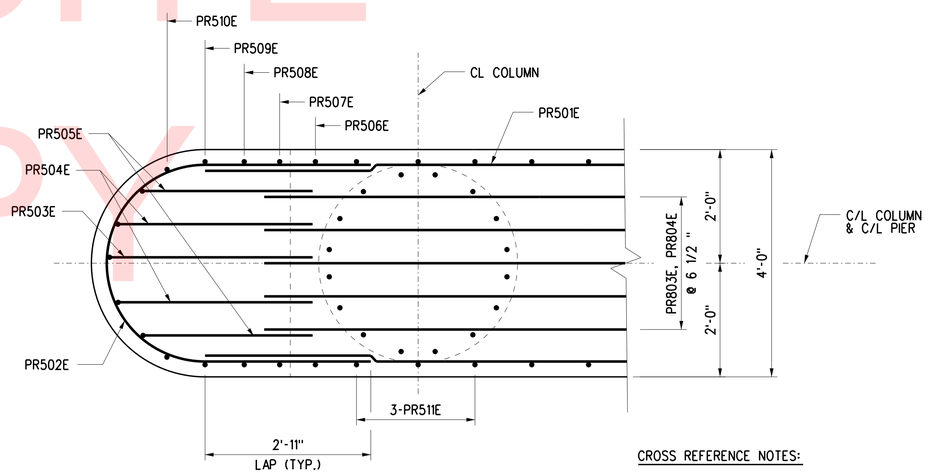

SECTION D-D

SCALE: ¾" = 1'-0"

CROSS REFERENCE NOTES:

1. FOR BRIDGE PLAN AND ELEVATION, SEE DWG. NO. S-3.
2. FOR PIER FOUNDATION PLAN, SEE DWG. NO. S-18.
3. FOR PIER PLAN AND ELEVATION, SEE DWG. NO. S-19.
4. FOR PIER REINFORCEMENT BAR SCHEDULE, SEE DWG. NO. S-22.

UNOFFICIAL WEBSITE COPY

U:\Projects\D\DelDOT\20837280\CAD\Bridge\pr03_RoadA.dgn
4/3/2018
LEWISRI

DELAWARE DEPARTMENT OF TRANSPORTATION	ADDENDUMS / REVISIONS	SCALE AS NOTED	ROAD A /SR7 IMPROVEMENTS	CONTRACT T201009002	BRIDGE NO. 1-220	ROAD A OVER SR 1	S-21 SHEET NO. 52
				COUNTY NEW CASTLE	DESIGNED BY: M.A. SULLIVAN	PIER REINFORCEMENT 2	TOTAL SHTS. 154
					CHECKED BY: R.F. KIRCHNER		

PIER REINFORCEMENT BAR SCHEDULE

MARK	LENGTH	NO. BARS	TYPE	A	B	C	D	E	F	G	H	J	K	O	R	REMARKS
FT601E	15'-4"	88	17		2'-11"	9'-6"	2'-11"									
FT602E	9'-6"	80	STR													
FT801E	9'-6"	96	STR													
FT901E	12'-8"	64	2	1'-7"	11'-1"											
CL401E	11'-6"	144	T3			9'-8"				1'-10"				3'-1"		
CL901E	18'-8"	64	STR													
PR501E	60'-0"	8	STR													
PR502E	11'-3 1/2"	6	10		5'-5 1/2"	2'-11"	2'-11"							3'-5 3/4"	1'-8 7/8"	
PR503E	6'-3"	2	4			4'-1"	2'-2"				3'-4"		2'-4 1/2"			
PR504E	6'-2 1/2"	4	4			4'-0"	2'-2 1/2"				3'-3"		2'-4"			
PR505E	6'-1 1/2"	4	4			3'-7 1/4"	2'-5 1/4"				2'-11 1/4"		2'-1 1/4"			
PR506E	14'-11 1/2"	150	T2	6"	2'-5 1/4"	4'-6 1/2"	2'-5 1/4"	4'-6 1/2"		6"						
PR507E	14'-7 1/2"	4	T2	6"	2'-5 1/4"	4'-4 1/2"	2'-5 1/4"	4'-4 1/2"		6"						
PR508E	13'-8"	4	T2	6"	2'-5 1/4"	3'-10 3/4"	2'-5 1/4"	3'-10 3/4"		6"						
PR509E	12'-8 1/2"	4	T2	6"	2'-5 1/4"	3'-5"	2'-5 1/4"	3'-5"		6"						
PR510E	11'-5 1/2"	4	T2	6"	2'-3 1/2"	2'-11 1/4"	2'-3 1/2"	2'-11 1/4"		6"						
PR511E	11'-0 1/2"	24	17		3'-3"	4'-6 1/2"	3'-3"									
PR512E	6'-8"	30	17		1'-9"	3'-2"	1'-9"									
PR513E	7'-2"	30	17		1'-9"	3'-8"	1'-9"									
PR801E	23'-3"	12	STR													
PR802E	45'-5"	12	STR													
PR803E	24'-5"	14	STR													
PR804E	38'-4"	14	STR													

STANDARD BAR BENDS

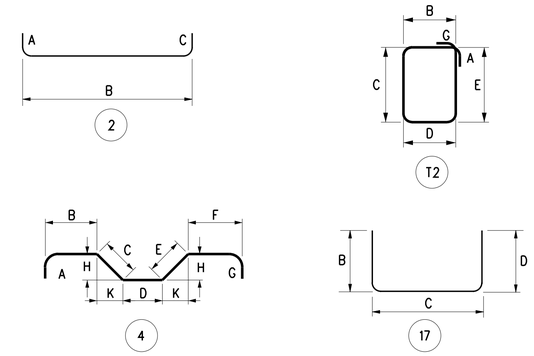

UNOFFICIAL WEBSITE COPY

U:\Projects\D\DelDOT\20837280\CAD\Bridge\pr08_RoadA.dgn
4/3/2018
LEWISRI

DELAWARE DEPARTMENT OF TRANSPORTATION

ADDENDUMS / REVISIONS

NOT TO SCALE

ROAD A /SR7 IMPROVEMENTS

CONTRACT	BRIDGE NO.	1-220
T201009002	DESIGNED BY: T.B. CUSTER	
COUNTY		
NEW CASTLE	CHECKED BY: R.F. KIRCHNER	

ROAD A OVER SR 1

PIER BAR SCHEDULE

STEEL REINFORCED ELASTOMERIC BEARING NOTES:

1. PROVIDE ALL STEEL REINFORCED ELASTOMERIC BEARINGS IN ACCORDANCE WITH SECTION 623 - 'BEARING DEVICES' OF THE STANDARD SPECIFICATIONS.
2. THE ELASTOMERIC COMPOUND FOR BRIDGES IN DELAWARE ARE CLASSIFIED AS BEING OF LOW TEMPERATURE GRADE 3, WHICH TRANSLATES TO HARDNESS (SHORE A) OF 60. THE USE OF ANY OTHER GRADE IS NOT ALLOWED.
3. ANCHOR BOLTS AND WASHERS SHALL BE UNPAINTED A709 GRADE 36 GALVANIZED STEEL. ALL NUTS SHALL BE UNPAINTED A307 GALVANIZED STEEL. SET NUTS 1/4-INCH CLEAR OF SOLE PLATES AND BURR THREADS ABOVE AND BELOW NUTS.
4. USE SWEDGED ANCHOR BOLTS. BOLTS MAY BE CAST-IN-PLACE OR GROUTED IN PREFORMED (SLEEVED OR DRILLED) HOLES. SLEEVED HOLES SHALL BE CORRUGATED TO PREVENT SLIPPAGE. THE PREFORMED HOLES SHALL HAVE A DIAMETER OF 4½-INCH. WHEN DRILLING HOLES, DO NOT COME INTO CONTACT WITH THE REINFORCING BARS.
5. SOLE PLATES SHALL BE ASTM A 709 GRADE 50W AND TO BE BEVELED TO MATCH GRADE WHEN GRADE EXCEEDS ONE PERCENT. STEEL SURFACES OF SOLE PLATES TO BE MACHINE FINISHED AS SHOWN IN THE DETAILS, MEASURED IN ACCORDANCE WITH ANSI B46.1.
6. SOLE PLATES SHALL MEET A FLATNESS REQUIREMENT OF 0.5 PERCENT IN THE DIRECTION BEING MEASURED (WIDTH, LENGTH AND DIAGONALS) MAXIMUM, BUT NOT TO EXCEED 1/8-INCH.
7. BEARING SHALL BE PLACED NORMAL TO CENTERLINE OF BEAM.
8. FILL SLOTS AND HOLES AROUND ANCHOR BOLTS WITH AN APPROVED NON-HARDENING CAULKING COMPOUND OR ELASTIC JOINT SEALER.
9. FOR EXPANSION BEARINGS: USE 1⅜" x 3" SLOTS IN SOLE PLATE AND ⅜" x 3" x 5½" WASHERS WITH 1 1/16" DIA. HOLE IN WASHERS.
   FOR FIXED BEARINGS: USE 2" DIA. HOLES IN SOLE PLATE AND ⅜" x 3" DIA. WASHERS WITH 1 7/16" DIA. HOLE IN WASHERS.
10. REINFORCED ELASTOMERIC BEARINGS SHALL BE ATTACHED TO THE TOP OF CONCRETE PEDESTAL WITH AN APPROVED EPOXY ADHESIVE IN ACCORDANCE WITH SECTION 623.03(C) OF THE STANDARD SPECIFICATIONS IN SUCH AS WAY THAT VISIBLE CONCRETE SURFACES WILL NOT BE STAINED. ENSURE THE EPOXY ADHESIVE HAS SET PRIOR TO PLACEMENT OF BEAMS.
11. ALL BEARINGS SHALL BE MARKED PRIOR TO SHIPPING. THE MARKS SHALL INCLUDE THE BEARING LOCATION ON THE BRIDGE, AND A DIRECTION ARROW THAT POINTS UP-STATION. ALL MARKS SHALL BE PERMANENT AND VISIBLE AFTER THE BEARING IS INSTALLED.
12. PAYMENT FOR FABRICATION AND INSTALLATION OF STEEL REINFORCED ELASTOMERIC BEARINGS, ANCHOR BOLTS, NUTS, WASHERS, AND SOLE PLATES SHALL BE INCIDENTAL TO ITEM 623000.

STEEL REINFORCED ELASTOMERIC BEARING TABLE

LOCATION	BEARING DESIGNATION				CAPACITY PER PAD		LAMINATED ELASTOMERIC BEARING					
							DIMENSION					TOTAL PAD THICKNESS 'T' (IN)
	MARK	TYPE	NEOPRENE HARDNESS (SHORE A)	TOTAL NO. REQD.	REACTION ○ (KIPS)	MOVEMENT □ (IN)	'L' (IN)	'W' (IN)	SHAPE FACTOR	AREA (IN^2)	INTERIOR LAYERS	
ABUTMENT A	EX 1	EXP.	60 ± 5 DURO	6	200.0	1.25	12	18	7.200	216	4	3.125
PIER	FX 1	FIX.	60 ± 5 DURO	6	520.0	N/A	20	20	10.000	400	6	4.375
ABUTMENT B	EX 1	EXP.	60 ± 5 DURO	6	200.0	1.25	12	18	7.200	216	4	3.125

LEGEND:

○ MAXIMUM UNFACTORED SERVICE I REACTION (W/O DYNAMIC LOAD ALLOWANCE).

□ TEMPERATURE MOVEMENT

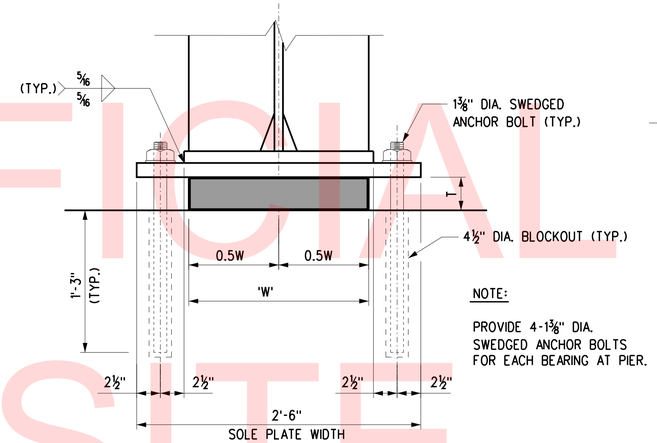

NOTE:

PROVIDE 4-1⅜" DIA. SWEDGED ANCHOR BOLTS FOR EACH BEARING AT PIER.

PIER BEARING ELEVATION

SCALE: 1½" = 1'-0"

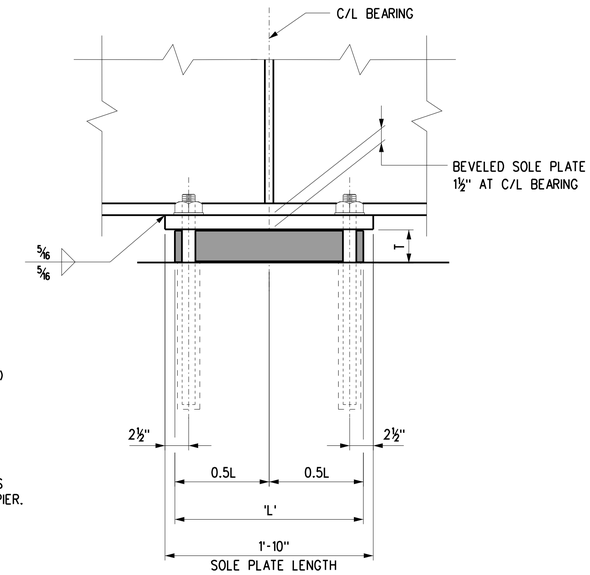

PIER BEARING SIDE ELEVATION

SCALE: 1½" = 1'-0"

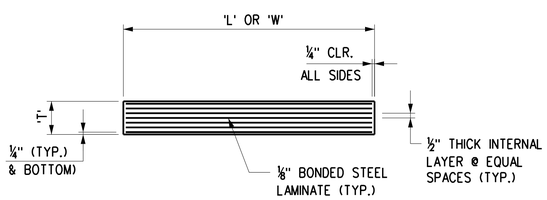

STEEL REINFORCED ELASTOMERIC BEARING ELEVATION

NOT TO SCALE

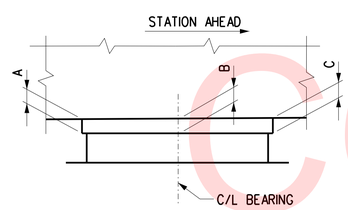

SOLE PLATE BEVEL DETAIL

SCALE: 1½" = 1'-0"

LOCATION	SOLE PLATE THICKNESS (IN_1)		
	A	B	C
ABUTMENT A	1.375	1.500	1.625
PIER	1.375	1.500	1.625
ABUTMENT B	1.500	1.500	1.500

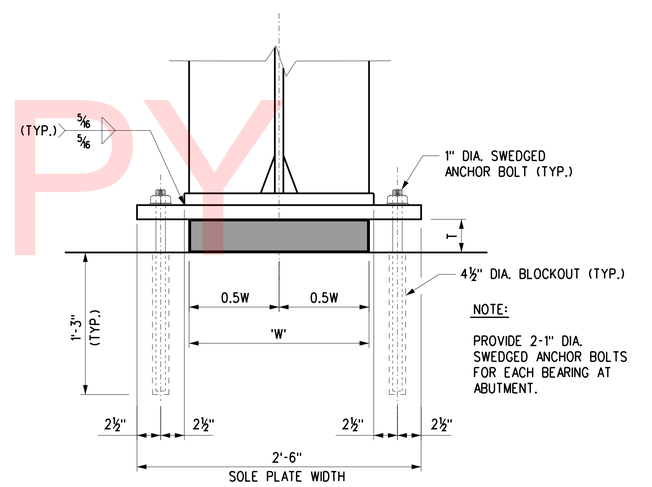

NOTE:

PROVIDE 2-1" DIA. SWEDGED ANCHOR BOLTS FOR EACH BEARING AT ABUTMENT.

ABUTMENT BEARING ELEVATION

SCALE: 1½" = 1'-0"

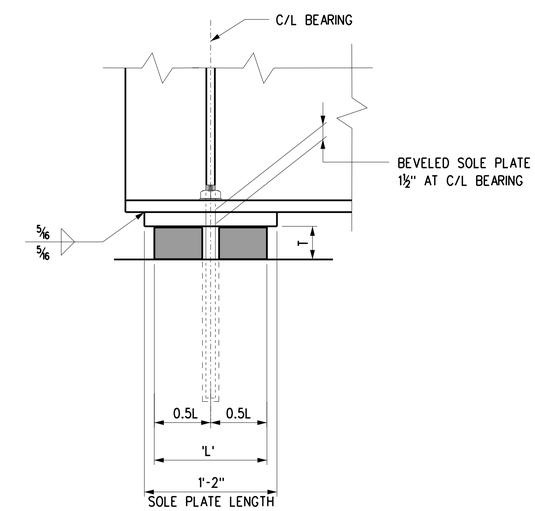

ABUTMENT BEARING SIDE ELEVATION

SCALE: 1½" = 1'-0"

UNOFFICIAL WEBSITE COPY

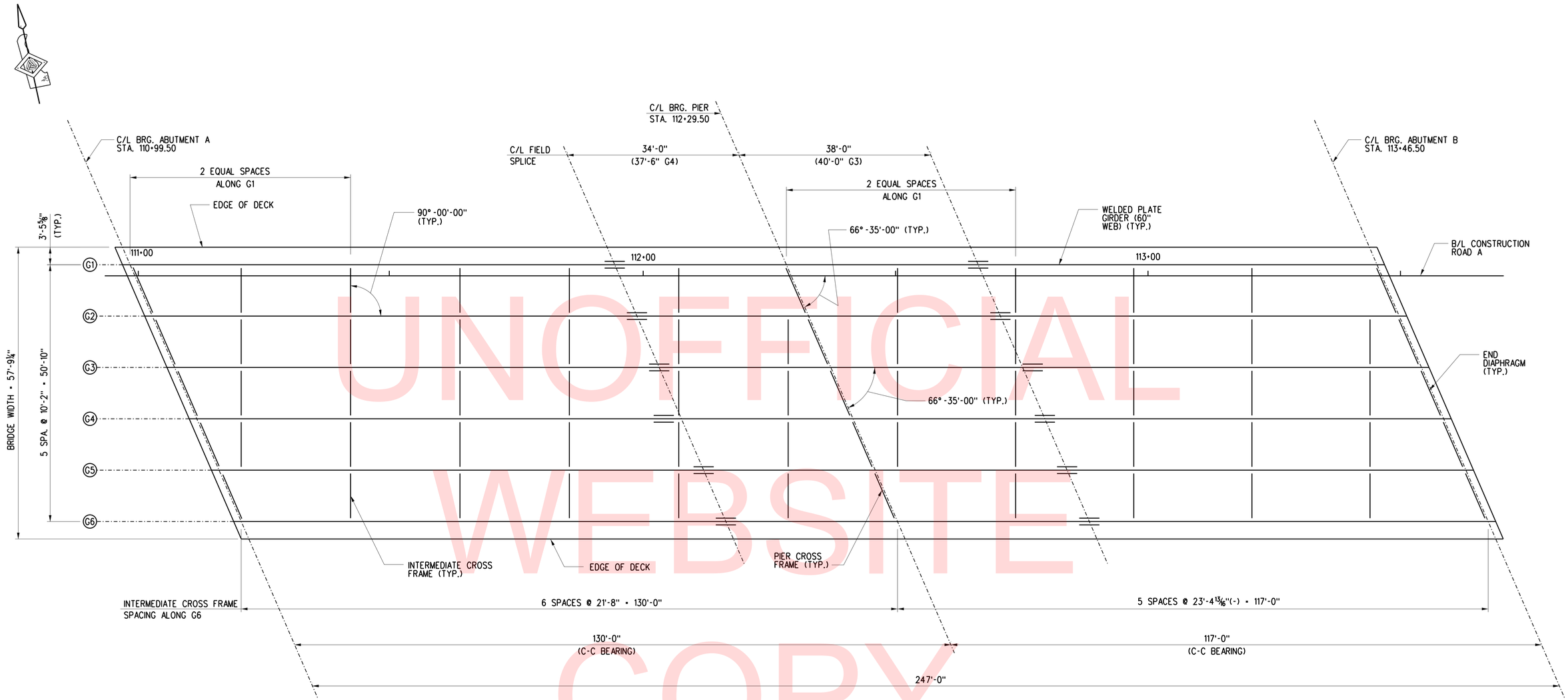

FRAMING PLAN

SCALE: 1" = 10'

NOTE:

1. ALL INTERMEDIATE CROSS FRAMES SHALL BE NORMAL TO GIRDERS.

CROSS REFERENCE NOTES

1. FOR BRIDGE PROJECT NOTES, SEE DWG. NO. S-3.
2. FOR TYPICAL SECTION, SEE DWG. NO. S-4.
3. FOR GIRDER ELEVATION, SEE DWG. NO. S-25.
4. FOR CROSS FRAME AND DIAPHRAGM DETAILS, SEE DWG. NO. S-28.
5. FOR FIELD SPLICE DETAILS, SEE DWG. NO. S-26.
6. FOR GIRDER DETAILS, SEE DWG. NO. S-26 & S-27.
7. FOR BEARING DETAILS, SEE DWG. NO. S-23.

UNOFFICIAL WEBSITE COPY

U:\Projects\D\DelDOT\20837280\CAD\Bridge\fr01_RoadA.dgn
4/3/2018
LEWISRI

DELAWARE DEPARTMENT OF TRANSPORTATION	ADDENDUMS / REVISIONS	SCALE 0 10 20 30 FEET	ROAD A /SR7 IMPROVEMENTS	CONTRACT T201009002	BRIDGE NO. 1-220	ROAD A OVER SR 1	S-24
				COUNTY NEW CASTLE	DESIGNED BY: R. F. KIRCHNER	FRAMING PLAN	SHEET NO. 55
					CHECKED BY: T.B. CUSTER		TOTAL SHTS. 154

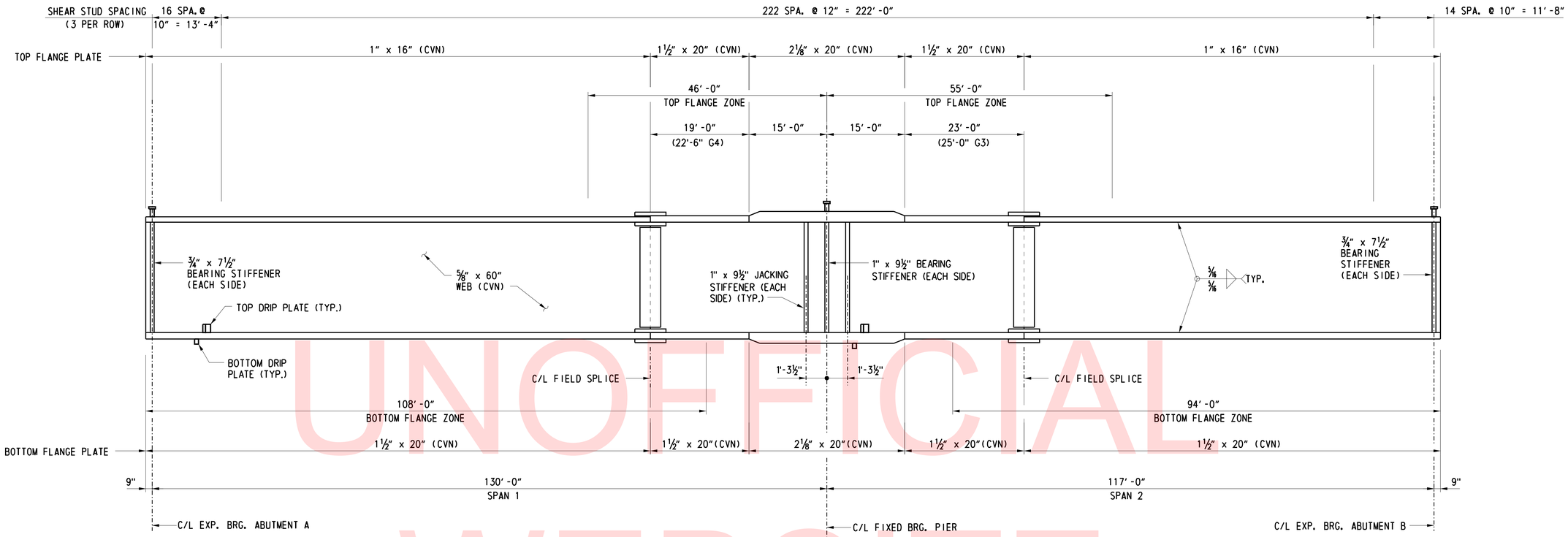

GIRDER ELEVATION

NOT TO SCALE

NOTE:
X = ¼" +/- ⅛"
Y = ½" +/-¼"
Z = 3½"

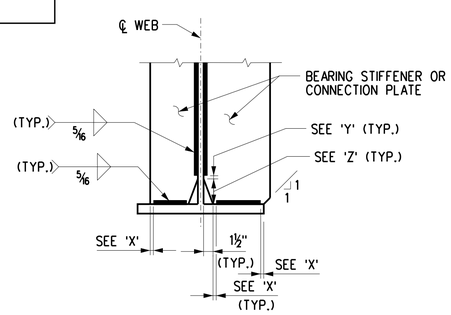

WELD TERMINATION AND CORNER CHAMFER DETAIL

SCALE: 1" = 1'-0"

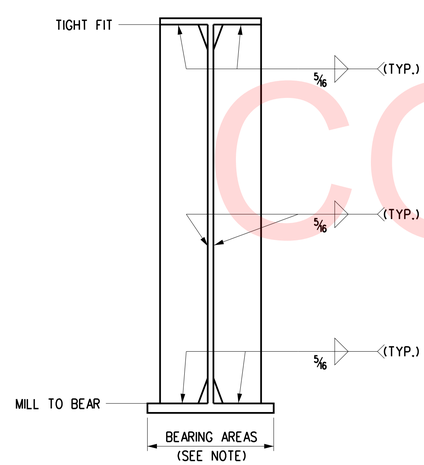

BEARING AND JACKING STIFFENER DETAIL

SCALE: 1" = 1'-0"

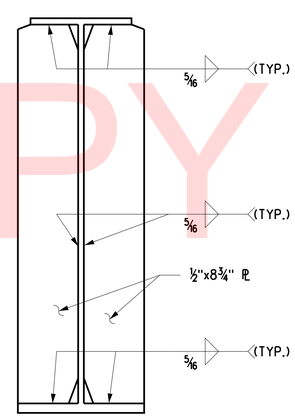

CONNECTION PLATE DETAIL FOR INTERMEDIATE CROSS FRAMES

SCALE: 1" = 1'-0"

BEARING AREA NOTE:

PROVIDE BOTTOM FLANGE IN A TRUE HORIZONTAL PLANE IN TRANSVERSE DIRECTION AND IN A TRUE PLANE LONGITUDINALLY OVER DIMENSION "L", WHERE L = WIDTH OF SOLE PLATE + 2" AHEAD AND BACK, WHERE APPLICABLE. IF THE SOLE PLATE IS WELDED TO THE BOTTOM FLANGE, PROVIDE THE SOLE PLATE MEETING THE SAME FLATNESS REQUIREMENTS. ENSURE THE SOLE PLATES AND BEARINGS ARE IN FULL CONTACT WITH ONE OTHER AND LOADED UNIFORMLY AFTER ALL DEAD LOAD IS PLACED. MAKE NECESSARY SHOP AND/OR FIELD ADJUSTMENTS TO PROVIDE UNIFORM BEARING STRESS UNDER ALL DEAD LOADS.

NOTE:

CONNECTION PLATES NOT NEEDED ON EXTERIOR SIDE OF THE FASICA GIRDER.

NOTES:

1. THE ESTIMATED NUMBER OF SHEAR CONNECTORS IS 4754.
2. STUDS SHALL BE SPACED TO CLEAR SPLICE BOLTS.
3. CVN DENOTES CHARPY V-NOTCH TESTING. FOR REQUIRED TESTING LOCATIONS, SEE PROJECT NOTES.

CROSS REFERENCE NOTES

1. FOR BRIDGE PROJECT NOTES, SEE DWG. NO. S-3.
2. FOR FRAMING PLAN, SEE DWG. NO. S-24.
3. FOR GIRDER DETAILS, SEE DWG. NO. S-26 & S-27.
4. FOR BEARING DETAILS, SEE DWG. NO. S-23.
5. FOR CAMBER TABLE, SEE DWG. NO. S-29.

UNOFFICIAL WEBSITE COPY

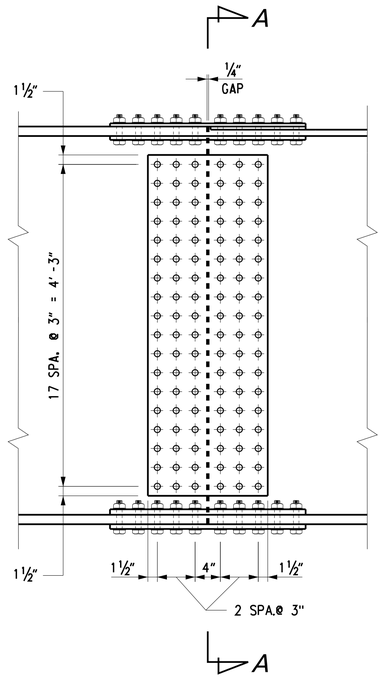

WEB SPLICE DETAIL

SCALE: 1" = 1'-0"

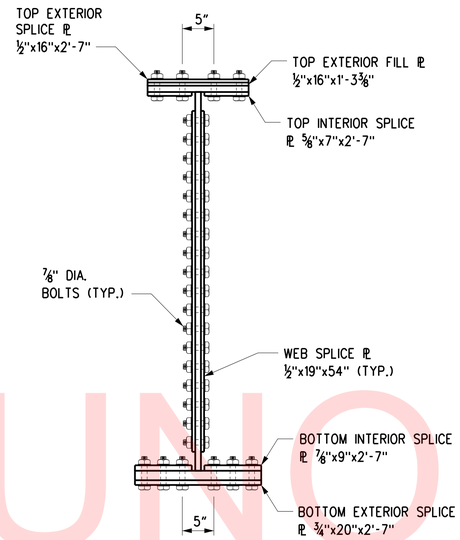

SECTION A-A

SCALE: 1" = 1'-0"

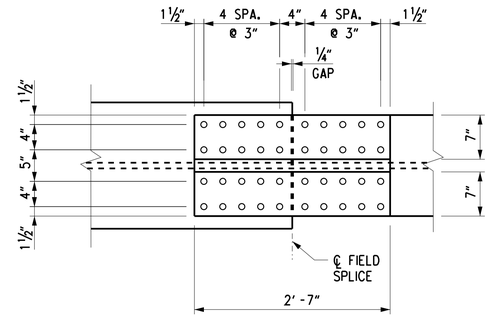

TOP FLANGE DETAIL

SCALE: 1" = 1'-0"

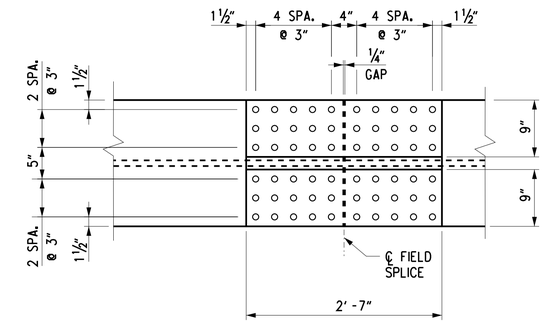

BOTTOM FLANGE DETAIL

SCALE: 1" = 1'-0"

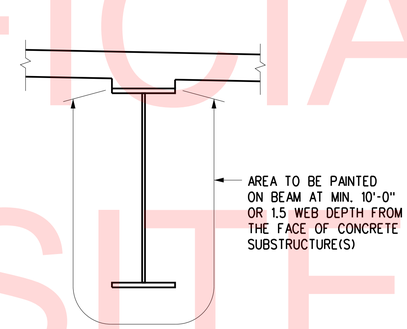

PAINTING DETAIL

SCALE: ½" = 1'-0"

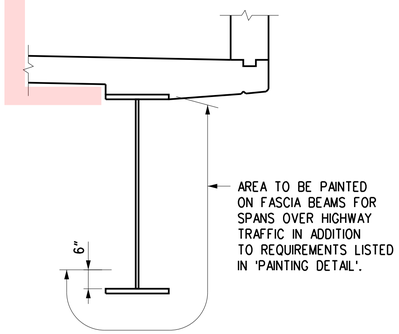

FASCIA BEAM PAINTING DETAIL

SCALE: ½" = 1'-0"

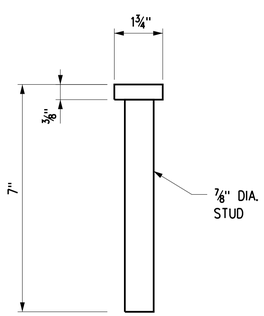

STUD DETAIL

SCALE: NONE

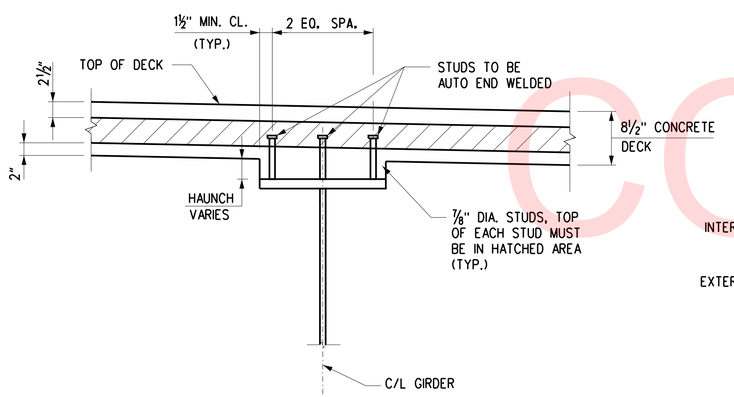

SHEAR STUD DETAIL

SCALE: 1" = 1'-0"

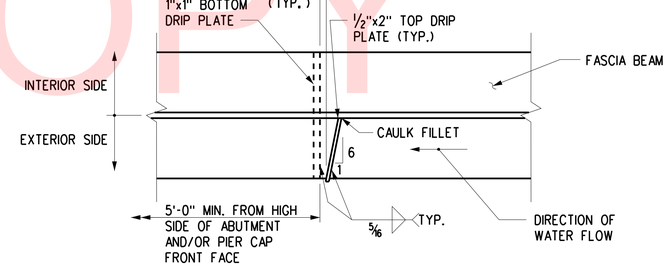

DRIP PLATE

SCALE: 1" = 1'-0"

CROSS REFERENCE NOTES

1. FOR BRIDGE PROJECT NOTES, SEE DWG. NO. S-3.
2. FOR FRAMING PLAN, SEE DWG. NO. S-24.
3. FOR GIRDER ELEVATION, SEE DWG. NO. S-25.

UNOFFICIAL WEBSITE COPY

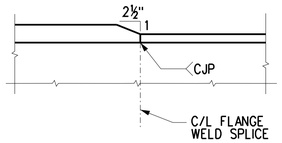

FLANGE PLATE THICKNESS TRANSITION

NOT TO SCALE

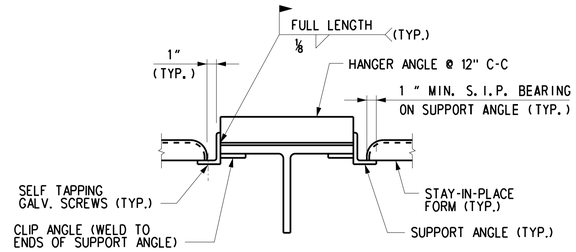

TENSION FLANGE STAY-IN-PLACE FORM CONNECTION DETAIL

SCALE: 1" = 1'-0"

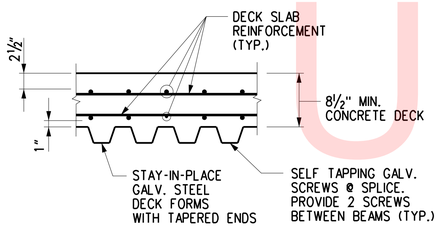

STAY-IN-PLACE STEEL FORM DETAIL

SCALE: 1" = 1'-0"

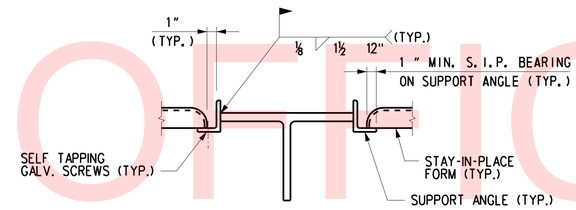

COMPRESSION FLANGE STAY-IN-PLACE FORM CONNECTION DETAIL

SCALE: 1" = 1'-0"

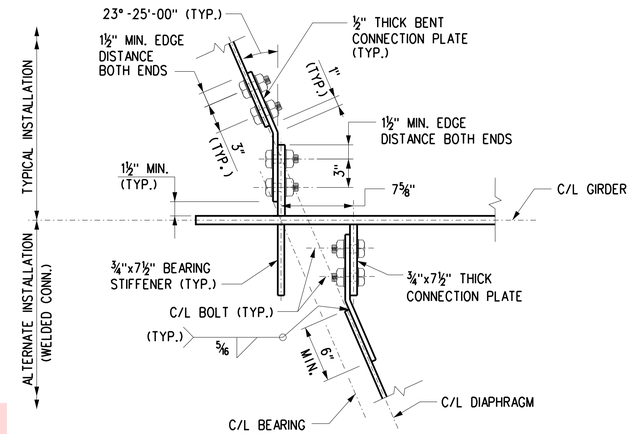

CONNECTION PLATE DETAIL FOR END DIAPHRAGMS

SCALE: 1½" = 1'-0"

NOTES:

1. THE WELDING IN 'ALTERNATE INSTALLATION' MUST BE DONE BY THE FABRICATOR.

STAY-IN-PLACE FORM NOTES

1. THESE FORMS SHALL BE VERTICALLY ADJUSTED TO ATTAIN LINE AND GRADE REQUIRED ON THE PLANS.
2. THE CONTRACTOR SHALL SUBMIT SHOP DRAWINGS FOR APPROVAL. METAL FORMS MUST BE GALVANIZED AND MORTAR TIGHT. STEEL METAL SCREWS MUST BE NON-CORROSIVE. SELF TAPPING SCREWS SHALL BE INSTALLED AT THE SIDE LAP OF THE SHEETS AT MID-SPAN SUPPORTS. ALL ANGLES, WELDS, AND INSERTS MUST BE DESIGNED BY THE CONTRACTOR.
3. ALL MATERIALS AND LABOR NEEDED FOR FORMS SHALL BE INCIDENTAL TO ITEM 610017-P.C.C. MASONRY, SUPERSTRUCTURE, CLASS D.
4. TENSION FLANGE DETAIL IS IN THE AREA ALONG THE BEAM BETWEEN SPLICES.
5. WELDING TO STEEL BEAM FLANGES IN TENSION ZONE IS STRICTLY PROHIBITED.

CROSS REFERENCE NOTES

1. FOR BRIDGE PROJECT NOTES, SEE DWG. NO. S-3.
2. FOR FRAMING PLAN, SEE DWG. NO. S-24.
3. FOR GIRDER ELEVATION, SEE DWG. NO. S-25.

UNOFFICIAL WEBSITE COPY

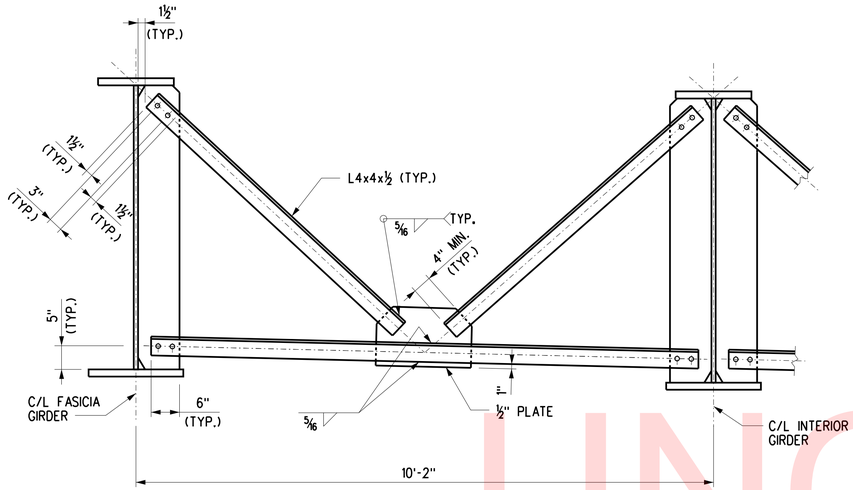

INTERMEDIATE CROSS-FRAME DETAIL

SCALE: ¾" = 1'-0"

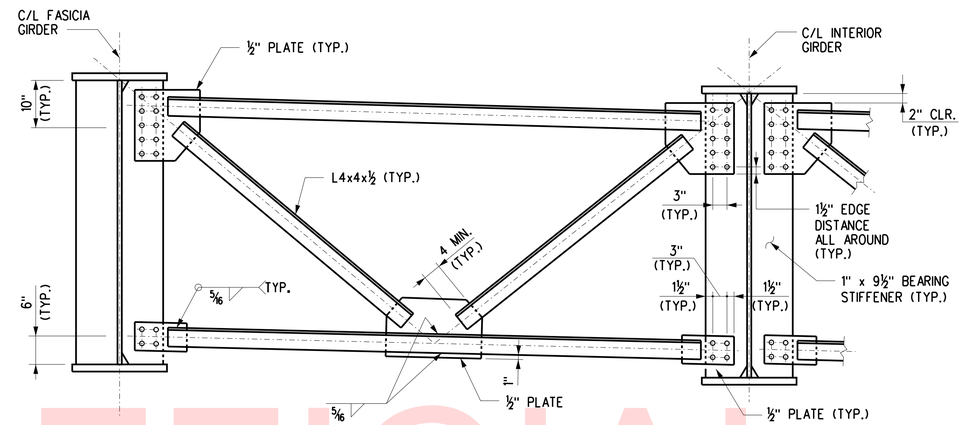

PIER CROSS-FRAME DETAIL

SCALE: ¾" = 1'-0"

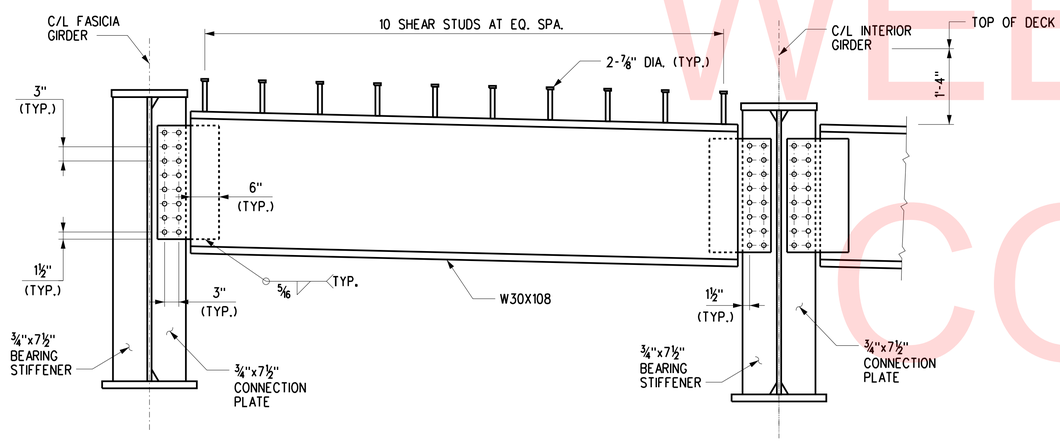

END DIAPHRAGM DETAIL

SCALE: ¾" = 1'-0"

NOTE:

1. CROSS FRAME SHALL BE DETAILED TO FIT IN THE TOTAL DEAD LOAD FIT CONDITION.

CROSS REFERENCE NOTES

1. FOR BRIDGE PROJECT NOTES, SEE DWG. NO. S-3.
2. FOR FRAMING PLAN, SEE DWG. NO. S-24.
3. FOR GIRDER DETAILS, SEE DWG. NO. S-26 & S-27.

UNOFFICIAL WEBSITE COPY

U:\Projects\D\DelDOT\20837280\CAD\Bridge\gd03_RoadA.dgn 4/3/2018 LEWISRI

DELAWARE DEPARTMENT OF TRANSPORTATION	ADDENDUMS / REVISIONS	SCALE 0 ½ 1 2 4 FEET	ROAD A /SR7 IMPROVEMENTS	CONTRACT T201009002	BRIDGE NO. 1-220	ROAD A OVER SR 1	S-28 SHEET NO.
				COUNTY NEW CASTLE	DESIGNED BY: R. F. KIRCHNER	CROSS FRAME DETAILS	59 TOTAL SHTS.
					CHECKED BY: T. B. CUSTER		154

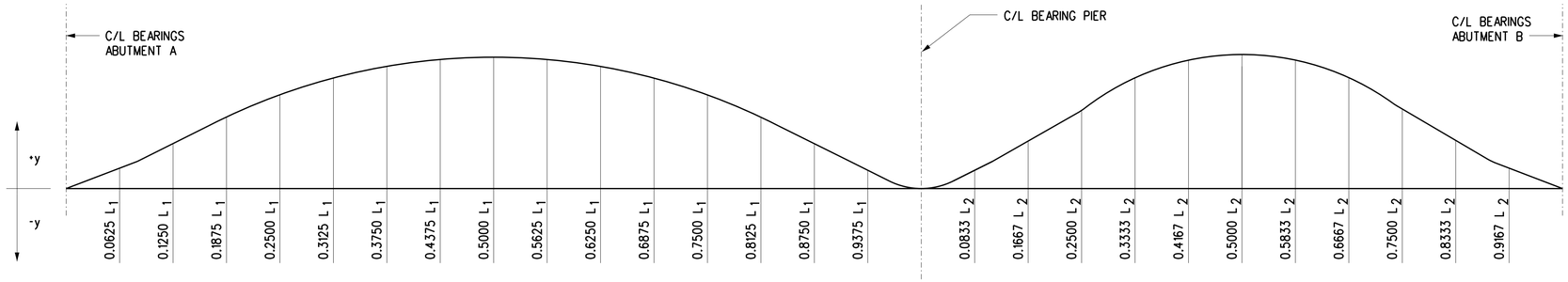

STEEL BEAM CAMBER NOTES:

1. ALL GIRDERS SHALL BE CAMBERED FOR DEAD LOAD ORDINATES TO THE DIMENSIONS SHOWN ON THESE PLANS. THE CAMBER TOLERANCE IS ZERO UNDER TO ¾ INCH OVER.
2. AFTER THE ERECTION OF STEEL AND THE CONNECTIONS OF THE STEEL CROSS FRAMES ARE COMPLETE, THE CONTRACTOR SHALL OBTAIN ELEVATIONS AT DIVISIONS SHOWN IN TABLE ON THE TOP FLANGES OF ALL GIRDERS TO DETERMINE THE REQUIRED HAUNCH THICKNESS. ALL OF THE DATA SHALL BE SUBMITTED WITH DETAILS OF STAY-IN-PLACE FORMS FOR REVIEW AND APPROVAL BY THE ENGINEER IN THE FIELD.
3. AFTER THE ERECTION OF STEEL AND THE CONNECTIONS OF THE STEEL CROSS FRAMES ARE COMPLETE, THE CONTRACTOR SHALL VERIFY THAT ALL UNDERCLEARANCES ARE SUFFICIENT AFTER SUBTRACTING THE CALCULATED TOTAL DEAD LOAD DEFLECTION.
4. VARY THICKNESS OF HAUNCH TO ACCOUNT FOR ANY INACCURACIES IN CAMBER.

LEGEND

DLS - DENOTES DEFLECTION DUE TO STRUCTURAL STEEL.

DLC - DENOTES DEFLECTION DUE TO CONCRETE DECK SLAB, HAUNCH, & S.I.P. FORMS.

SDL - DENOTES DEFLECTION DUE TO BARRIER, SAFETY FENCE & FUTURE WEARING SURFACE.

TD&C - DENOTES TOTAL DEAD LOAD DEFLECTION & CAMBER.

VCO - DENOTES CAMBER FOR VERTICAL CURVE ORDINATE DUE TO ROADWAY PROFILE.

UNOFFICIAL WORKING DRAFT

DEFLECTION AND TOTAL CAMBER (INCHES)

PROPOSED GIRDERS		C/L BRG. ABUT. A	0.0625 L_1	0.1250 L_1	0.1875 L_1	0.2500 L_1	0.3125 L_1	0.3750 L_1	0.4375 L_1	0.5000 L_1	0.5625 L_1	0.6250 L_1	0.6875 L_1	0.7500 L_1	0.8125 L_1	0.8750 L_1	0.9375 L_1	C/L BRG. PIER	0.0883 L_2	0.1667 L_2	0.2500 L_2	0.3333 L_2	0.4167 L_2	0.5000 L_2	0.5833 L_2	0.6667 L_2	0.7500 L_2	0.8333 L_2	0.9167 L_2	C/L BRG. ABUT. B
GIRDER 1	DLS	0	1/8	1/4	3/8	7/16	1/2	9/16	9/16	9/16	1/2	7/16	3/8	1/4	3/16	1/16	1/16	0	0	0	1/16	1/8	3/16	1/4	1/4	1/4	1/4	3/16	1/16	0
	DLC	0	7/16	7/8	1 3/16	1 1/2	1 11/16	1 13/16	1 13/16	1 3/4	1 5/8	1 3/8	1 1/8	13/16	9/16	5/16	1/8	0	0	1/16	1/4	7/16	5/8	3/4	13/16	13/16	3/4	9/16	5/16	0
	SDL	0	1/8	1/4	3/8	7/16	1/2	9/16	9/16	9/16	1/2	7/16	3/8	1/4	3/16	1/8	1/16	0	0	0	1/16	1/8	3/16	1/4	1/4	1/4	1/4	3/16	1/16	0
	TD & C	0	11/16	1 3/8	1 15/16	2 7/16	2 3/4	2 15/16	2 15/16	2 7/8	2 5/8	2 1/4	1 13/16	1 3/8	15/16	1/2	3/16	0	0	1/8	3/8	11/16	1	1 1/4	1 3/8	1 5/16	1 3/16	7/8	1/2	0
	VCO	0	9/16	1 1/16	1 1/2	1 13/16	2 1/16	2 1/4	2 3/8	2 7/16	2 3/8	2 1/4	2 1/16	1 13/16	1 1/2	1 1/16	9/16	0	5/8	1 1/16	1 1/2	1 3/4	1 15/16	1 15/16	1 15/16	1 3/4	1 1/2	1 1/16	5/8	0
	TD & C + VCO	0	1 5/16	2 7/16	3 7/16	4 1/4	4 13/16	5 3/16	5 3/8	5 1/4	5	4 9/16	3 15/16	3 3/16	2 3/8	1 9/16	3/4	0	9/16	1 3/16	1 7/8	2 7/16	2 7/8	3 3/16	3 1/4	3 1/16	2 5/8	2	1 1/16	0
GIRDER 2	DLS	0	1/8	1/4	3/8	7/16	1/2	9/16	9/16	9/16	1/2	7/16	3/8	1/4	3/16	1/16	1/16	0	0	0	1/16	1/8	3/16	1/4	1/4	1/4	1/4	3/16	1/16	0
	DLC	0	1/2	1	1 7/16	1 3/4	2	2 1/8	2 1/8	2 1/16	1 7/8	1 5/8	1 5/16	1	5/8	3/8	1/8	0	0	1/16	1/4	1/2	11/16	7/8	1	15/16	7/8	5/8	5/16	0
	SDL	0	1/16	1/8	3/16	1/4	5/16	5/16	5/16	5/16	5/16	1/4	3/16	1/8	1/8	1/16	0	0	0	0	1/16	1/16	1/8	1/8	1/8	1/8	1/8	1/8	1/16	0
	TD & C	0	3/4	1 3/8	2	2 1/2	2 13/16	3	3 1/16	2 15/16	2 11/16	2 5/16	1 7/8	1 3/8	15/16	1/2	3/16	0	0	1/8	3/8	11/16	1	1 1/4	1 3/8	1 3/8	1 3/16	7/8	1/2	0
	VCO	0	9/16	1 1/16	1 1/2	1 13/16	2 1/16	2 1/4	2 3/8	2 7/16	2 3/8	2 1/4	2 1/16	1 13/16	1 1/2	1 1/16	9/16	0	5/8	1 1/16	1 1/2	1 3/4	1 15/16	1 15/16	1 15/16	1 3/4	1 1/2	1 1/16	5/8	0
	TD & C + VCO	0	1 5/16	2 7/16	3 1/2	4 5/16	4 7/8	5 1/4	5 7/16	5 5/16	5 1/16	4 9/16	3 15/16	3 3/16	2 3/8	1 9/16	3/4	0	9/16	1 3/16	1 7/8	2 7/16	2 15/16	3 1/4	3 5/16	3 1/8	2 11/16	2	1 1/16	0
GIRDER 3	DLS	0	1/8	1/4	3/8	7/16	1/2	9/16	9/16	9/16	1/2	7/16	3/8	1/4	3/16	1/16	1/16	0	0	0	1/16	1/8	3/16	1/4	1/4	1/4	1/4	3/16	1/16	0
	DLC	0	1/2	1	1 7/16	1 3/4	2	2 1/8	2 1/8	2 1/16	1 7/8	1 5/8	1 5/16	1	5/8	3/8	1/8	0	0	1/16	1/4	1/2	11/16	7/8	1	15/16	7/8	5/8	5/16	0
	SDL	0	1/16	1/8	1/8	3/16	3/16	3/16	1/4	3/16	3/16	3/16	1/8	1/8	1/16	1/16	0	0	0	0	1/16	1/16	1/16	1/8	1/8	1/8	1/16	1/16	1/16	0
	TD & C	0	11/16	1 3/8	1 15/16	2 3/8	2 3/4	2 7/8	2 15/16	2 13/16	2 9/16	2 1/4	1 13/16	1 5/16	7/8	1/2	3/16	0	0	1/8	3/8	11/16	1	1 1/4	1 3/8	1 5/16	1 3/16	7/8	7/16	0
	VCO	0	9/16	1 1/16	1 1/2	1 13/16	2 1/16	2 1/4	2 3/8	2 7/16	2 3/8	2 1/4	2 1/16	1 13/16	1 8/16	1 1/16	9/16	0	5/8	1 1/16	1 1/2	1 3/4	1 15/16	1 15/16	1 15/16	1 3/4	1 1/2	1 1/16	5/8	0
	TD & C + VCO	0	1 1/4	2 7/16	3 7/16	4 3/16	4 13/16	5 3/16	5 5/16	5 1/4	4 15/16	4 1/2	3 7/8	3 1/8	2 3/8	1 9/16	3/4	0	9/16	1 3/16	1 7/8	2 7/16	2 7/8	3 3/16	3 1/4	3 1/16	2 5/8	1 15/16	1 1/16	0
GIRDER 4	DLS	0	1/8	1/4	3/8	7/16	1/2	9/16	9/16	9/16	1/2	7/16	3/8	1/4	3/16	1/16	1/16	0	0	0	1/16	1/8	3/16	1/4	1/4	1/4	1/4	3/16	1/16	0
	DLC	0	1/2	1	1 7/16	1 3/4	2	2 1/8	2 1/8	2 1/16	1 7/8	1 5/8	1 5/16	1	5/8	3/8	1/8	0	0	1/16	1/4	1/2	11/16	7/8	1	15/16	7/8	5/8	5/16	0
	SDL	0	1/16	1/8	1/8	3/16	3/16	3/16	1/4	3/16	3/16	3/16	1/8	1/8	1/16	1/16	0	0	0	0	1/16	1/16	1/16	1/8	1/8	1/8	1/16	1/16	1/16	0
	TD & C	0	11/16	1 3/8	1 15/16	2 3/8	2 3/4	2 7/8	2 15/16	2 13/16	2 9/16	2 1/4	1 13/16	1 5/16	7/8	1/2	3/16	0	0	1/8	3/8	11/16	1	1 1/4	1 3/8	1 5/16	1 3/16	7/8	7/16	0
	VCO	0	9/16	1 1/16	1 1/2	1 13/16	2 1/16	2 1/4	2 3/8	2 7/16	2 3/8	2 1/4	2 1/16	1 13/16	1 1/2	1 1/16	9/16	0	5/8	1 1/16	1 1/2	1 3/4	1 15/16	1 15/16	1 15/16	1 3/4	1 1/2	1 1/16	5/8	0
	TD & C + VCO	0	1 1/4	2 7/16	3 7/16	4 3/16	4 13/16	5 3/16	5 5/16	5 1/4	4 15/16	4 1/2	3 7/8	3 1/8	2 3/8	1 9/16	3/4	0	9/16	1 3/16	1 7/8	2 7/16	2 7/8	3 3/16	3 1/4	3 1/16	2 5/8	1 15/16	1 1/16	0
GIRDER 5	DLS	0	1/8	1/4	3/8	7/16	1/2	9/16	9/16	9/16	1/2	7/16	3/8	1/4	3/16	1/16	1/16	0	0	0	1/16	1/8	3/16	1/4	1/4	1/4	1/4	3/16	1/16	0
	DLC	0	1/2	1	1 7/16	1 3/4	2	2 1/8	2 1/8	2 1/16	1 7/8	1 5/8	1 5/16	1	5/8	3/8	1/8	0	0	1/16	1/4	1/2	11/16	7/8	1	15/16	7/8	5/8	5/16	0
	SDL	0	3/16	5/16	1/2	5/8	11/16	3/4	3/4	11/16	11/16	9/16	1/2	3/8	1/4	1/8	1/16	0	0	1/16	1/8	3/16	1/4	5/16	3/8	5/16	5/16	1/4	1/8	0
	TD & C	0	13/16	1 9/16	2 1/4	2 13/16	3 3/16	3 7/16	3 7/16	3 5/16	3 1/16	2 5/8	2 1/8	1 9/16	1 1/16	9/16	1/4	0	0	1/8	7/16	13/16	1 3/16	1 7/16	1 9/16	1 9/16	1 3/8	1	9/16	0
	VCO	0	9/16	1 1/16	1 1/2	1 13/16	2 1/16	2 1/4	2 3/8	2 7/16	2 3/8	2 1/4	2 1/16	1 13/16	1 1/2	1 1/16	9/16	0	5/8	1 1/16	1 1/2	1 3/4	1 15/16	1 15/16	1 15/16	1 3/4	1 1/2	1 1/16	5/8	0
	TD & C + VCO	0	1 3/8	2 5/8	3 3/4	4 5/8	5 1/4	5 11/16	5 13/16	5 3/4	5 7/16	4 15/16	4 3/16	3 3/8	2 9/16	1 5/8	13/16	0	9/16	1 1/4	1 15/16	2 9/16	3 1/16	3 7/16	3 1/2	3 5/16	2 7/8	2 1/8	1 1/8	0
GIRDER 6	DLS	0	1/8	1/4	3/8	7/16	1/2	9/16	9/16	9/16	1/2	7/16	3/8	1/4	3/16	1/16	1/16	0	0	0	1/16	1/8	3/16	1/4	1/4	1/4	1/4	3/16	1/16	0
	DLC	0	7/16	7/8	1 3/16	1 1/2	1 11/16	1 13/16	1 13/16	1 3/4	1 5/8	1 3/8	1 1/8	13/16	9/16	5/16	1/8	0	0	1/16	1/4	7/16	5/8	3/4	13/16	13/16	3/4	9/16	5/16	0
	SDL	0	3/16	5/16	7/16	9/16	5/8	11/16	11/16	11/16	5/8	9/16	7/16	5/16	1/4	1/8	1/16	0	0	1/16	1/8	3/16	1/4	5/16	5/16	5/16	1/4	3/16	1/8	0
	TD & C	0	3/4	1 7/16	2 1/16	2 1/2	2 7/8	3 1/16	3 1/8	3	2 3/4	2 3/8	1 15/16	1 7/16	15/16	1/2	3/16	0	0	1/8	7/16	3/4	1 1/16	1 5/16	1 7/16	1 3/8	1 1/4	15/16	1/2	0
	VCO	0	9/16	1 1/16	1 1/2	1 13/16	2 1/16	2 1/4	2 3/8	2 7/16	2 3/8	2 1/4	2 1/16	1 13/16	1 1/2	1 1/16	9/16	0	5/8	1 1/16	1 1/2	1 3/4	1 15/16	1 15/16	1 15/16	1 3/4	1 1/2	1 1/16	5/8	0
	TD & C + VCO	0	1 5/16	2 1/2	3 1/2	4 5/16	4 15/16	5 5/16	5 1/2	5 3/8	5 1/8	4 5/8	4	3 1/4	2 7/16	1 9/16	3/4	0	9/16	1 1/4	1 7/8	2 7/16	2 15/16	3 1/4	3 5/16	3 1/8	2 11/16	2	1 1/8	0

U:\Projects\D\DelDOT\20837280\CAD\Bridge\ct01_RoadA.dgn
4/3/2018
LEWISRI

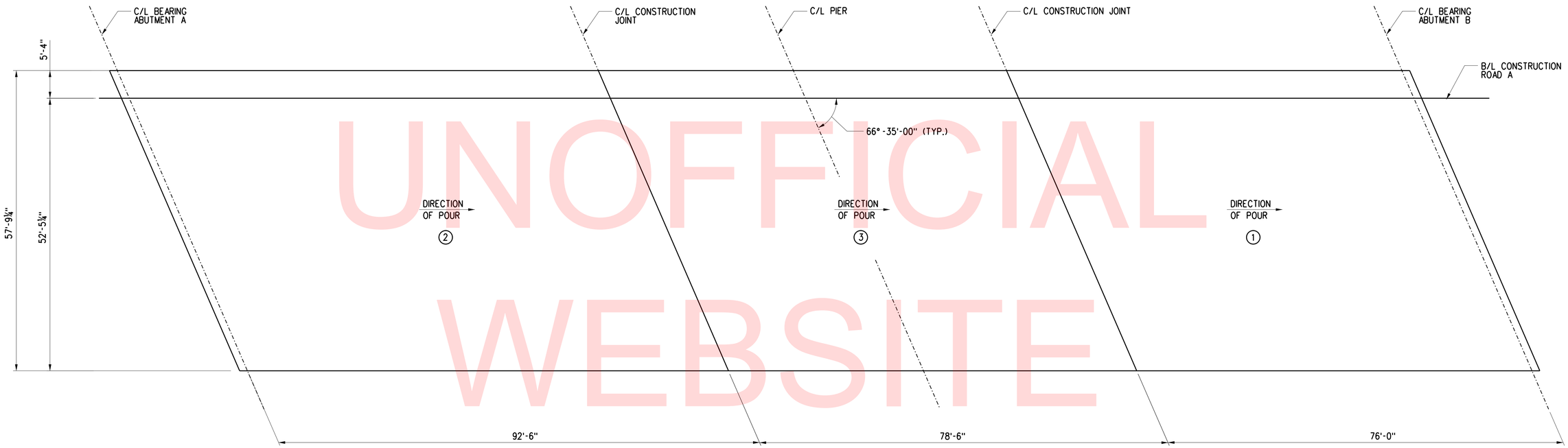

DECK SLAB POURING SEQUENCE

SCALE: 1" = 10'

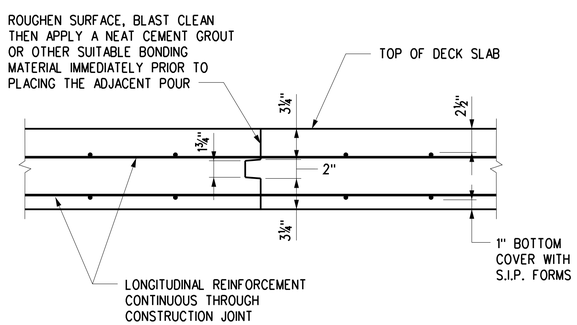

DECK SLAB CONSTRUCTION JOINT

SCALE: 1½" = 1'-0"

NOTES:

1. THE POURING SEQUENCE FOR THE BRIDGE DECK SLAB SHALL BE MADE IN THE NUMBERED ORDER INDICATED. BEFORE PLACEMENT, A MINIMUM CONCRETE STRENGTH OF 0.5 fc' SHALL BE ACHIEVED IN THE PREVIOUSLY PLACED SECTION OF DECK.
2. AS AN ALTERNATE, THE CONTRACTOR MAY UTILIZE TWO CREWS AND TWO SETS OF EQUIPMENT TO CONSTRUCT POURS NUMBER 1 AND 2 SIMULTANEOUSLY AT NO ADDITIONAL COST TO THE DEPARTMENT.
3. ALTERNATIVE DECK PLACEMENT SEQUENCES PROPOSED BY THE CONTRACTOR DURING CONSTRUCTION MUST BE SUBMITTED FOR APPROVAL. THE SUBMITTAL SHALL BE SIGNED AND SEALED BY A PROFESSIONAL ENGINEER LICENSED IN THE STATE OF DELAWARE. THE SUBMITTAL SHALL INCLUDE CALCULATIONS FOR THE REVISED DECK PLACEMENT ANALYSIS DETERMINING THE EFFECTS ON DEAD LOAD STRESSES, BRACING AND CAMBER.

UNOFFICIAL WEBSITE COPY

U:\Projects\D\DelDOT\20837280\CAD\Bridge\dk01_RoadA.dgn 4/3/2018 LEWISRI

DELAWARE DEPARTMENT OF TRANSPORTATION	ADDENDUMS / REVISIONS	SCALE AS NOTED	ROAD A /SR7 IMPROVEMENTS	CONTRACT T201009002	BRIDGE NO. 1-220	ROAD A OVER SR 1	S-30 SHEET NO.
				COUNTY NEW CASTLE	DESIGNED BY: R. F. KIRCHNER	BRIDGE DECK POURING SEQUENCE	61 TOTAL SHTS.
					CHECKED BY: T.B. CUSTER		154

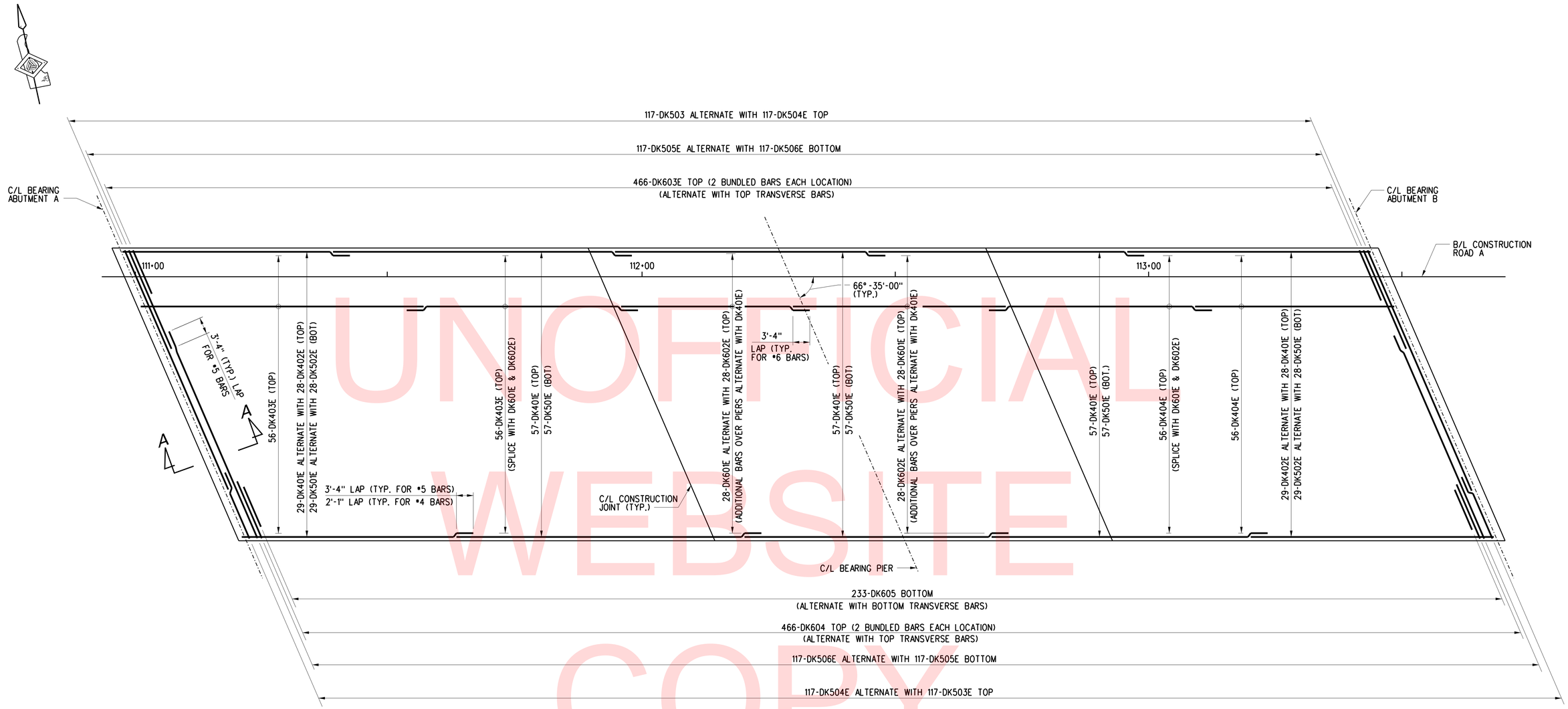

DECK REINFORCING PLAN

SCALE: 1" = 10'

UNOFFICIAL WEBSITE COPY

NOTES:

1. REINFORCEMENT FOR BARRIERS CAST IN THE DECK IS NOT SHOWN FOR CLARITY. SEE BARRIER REINFORCING DETAILS.
2. REINFORCEMENT FOR CONCRETE DECK END HAUNCH NOT SHOWN FOR CLARITY. SEE CONCRETE END HAUNCH DETAILS.

CROSS REFERENCE NOTES:

1. FOR SECTION A-A, SEE DWG. NO. S-33.

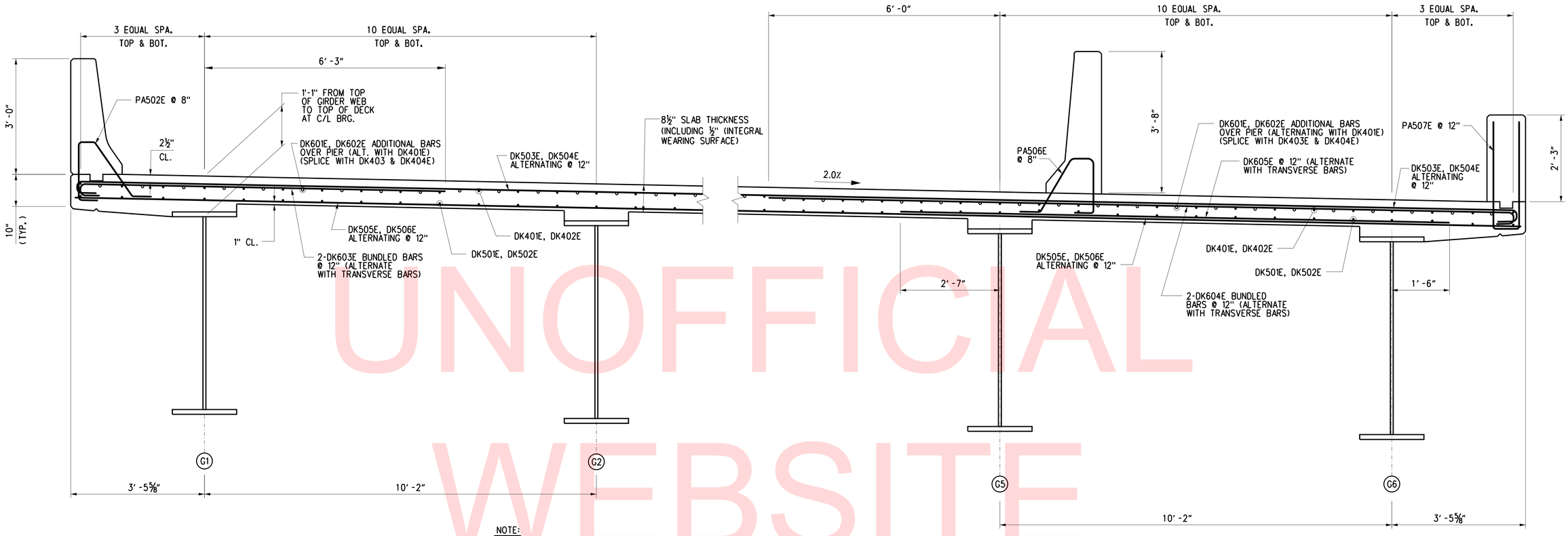

NOTE:

S.I.P. FORMS NOT SHOWN FOR CLARITY.

TYPICAL DECK REINFORCING SECTION

SCALE: ¾″ = 1′-0″

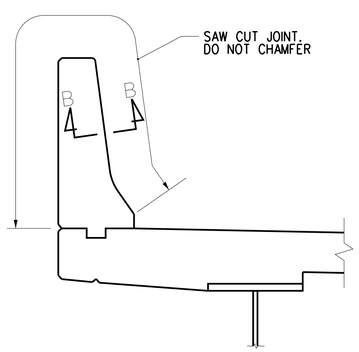

BARRIER CONTROL JOINT DETAIL

SCALE: ¾″ = 1′-0″

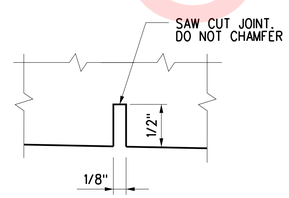

SECTION B-B

SCALE: NTS

NOTES:

1. TRANSVERSE REINFORCEMENT SHALL BE PLACED PARALLEL TO SKEWED SUPPORTS WITH BAR SPACING MEASURED NORMAL TO REINFORCING BARS.
2. TRANSVERSE DIMENSIONS SHOWN ARE MEASURED NORMAL TO GIRDERS.

CROSS REFERENCE NOTES

1. FOR BRIDGE PROJECT NOTES, SEE DWG. NO. S-1.
2. FOR TYPICAL SECTION, SEE DWG. NO. S-4.
3. FOR DECK REINFORCEMENT PLAN, SEE DWG. NO. S-31.
4. FOR REINFORCEMENT BAR SCHEDULE, SEE DWG. NO. S-35.

UNOFFICIAL WEBSITE COPY

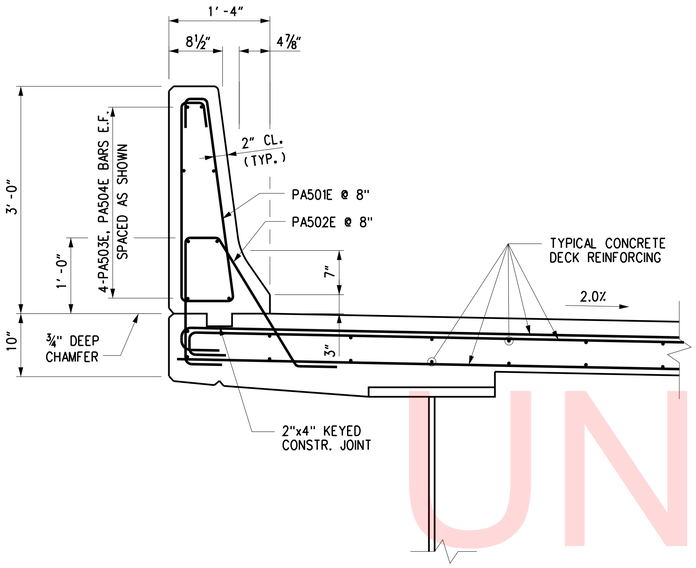

3'-0" BARRIER REINFORCEMENT SECTION

SCALE: 1" = 1'-0"

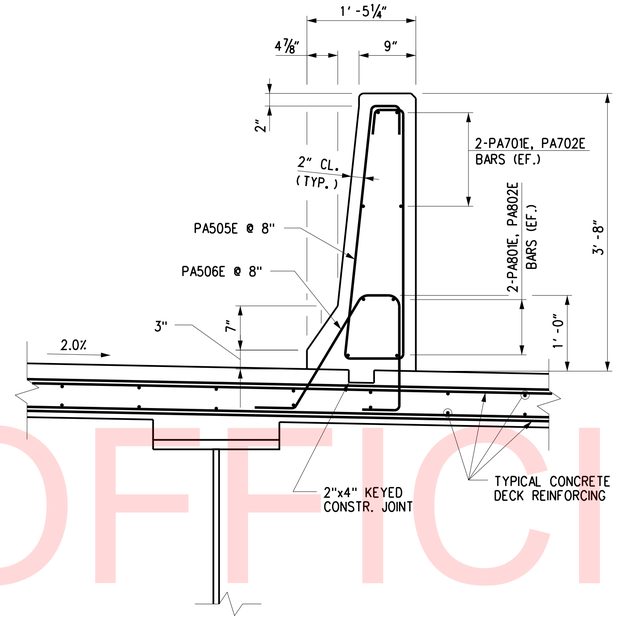

3'-8" BARRIER REINFORCEMENT SECTION

SCALE: 1" = 1'-0"

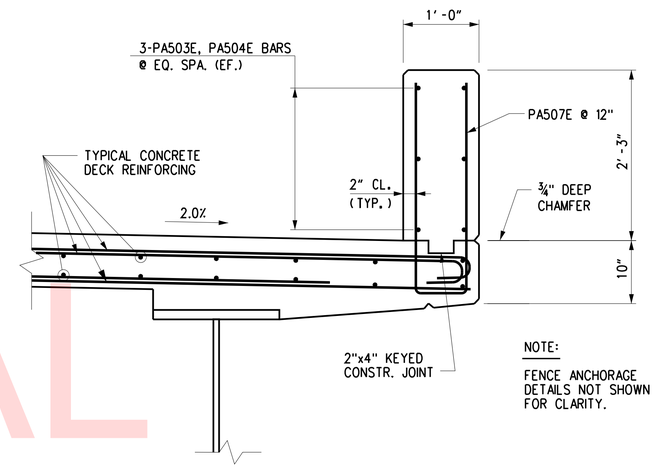

NOTE:

FENCE ANCHORAGE DETAILS NOT SHOWN FOR CLARITY.

2'-3" BARRIER REINFORCEMENT SECTION

SCALE: 1" = 1'-0"

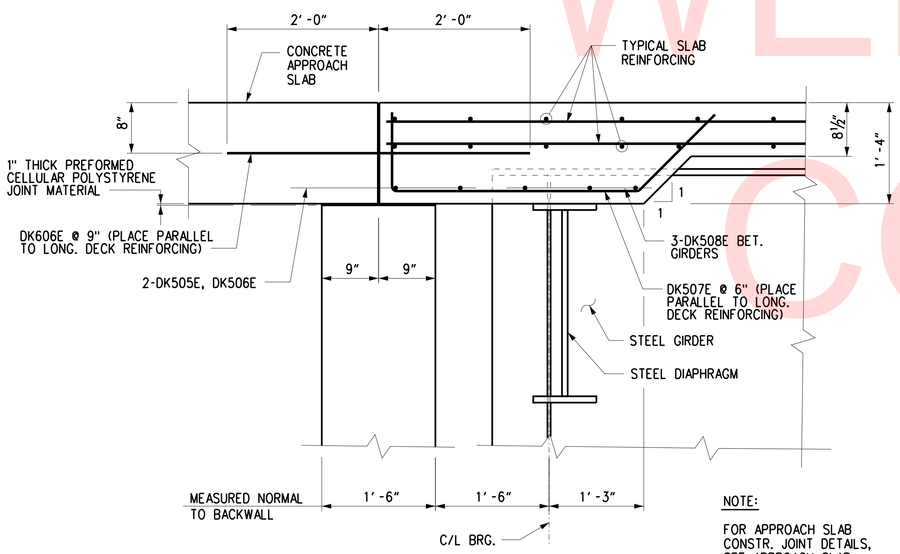

NOTE:

FOR APPROACH SLAB CONSTR. JOINT DETAILS, SEE APPROACH SLAB DETAIL SHEETS.

SECTION A-A

SCALE: 1" = 1'-0"

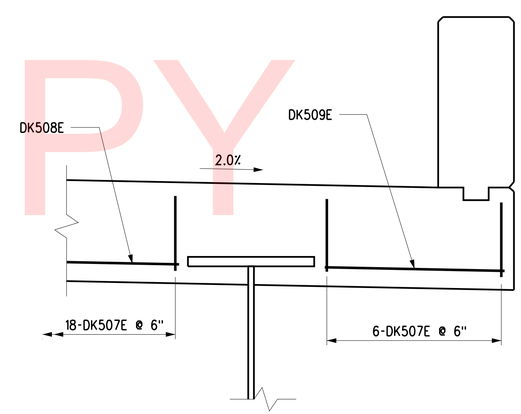

TYPICAL CONCRETE END HAUNCH SECTION

SCALE: 1" = 1'-0"

CROSS REFERENCE NOTES

1. FOR BRIDGE PROJECT NOTES, SEE DWG. NO. S-1.
2. FOR TYPICAL SECTION, SEE DWG. NO. S-4.
3. FOR DECK REINFORCEMENT PLAN, SEE DWG. NO. S-31
4. FOR DECK REINFORCEMENT SECTION, SEE DWG. NO. S-32.
5. FOR APPROACH SLAB CONSTRUCTION JOINT DETAIL, SEE DWG. NO. S-42.

UNOFFICIAL WEBSITE COPY

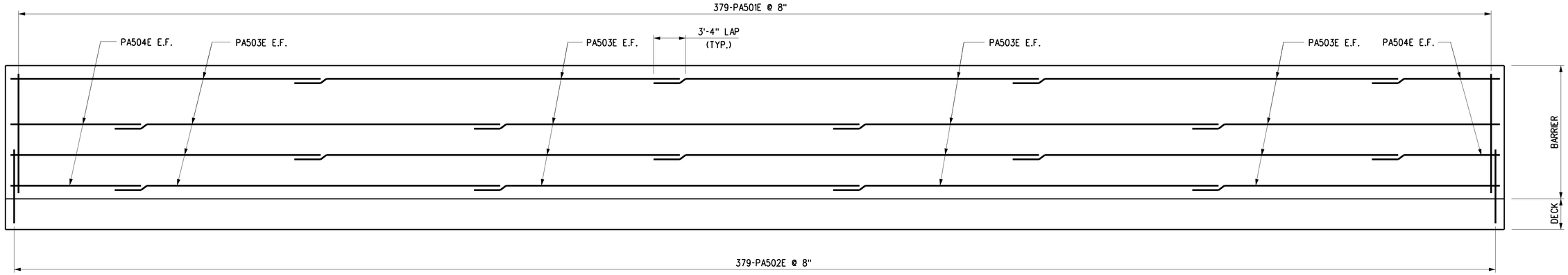

3'-0" BARRIER REINFORCEMENT

N.T.S.

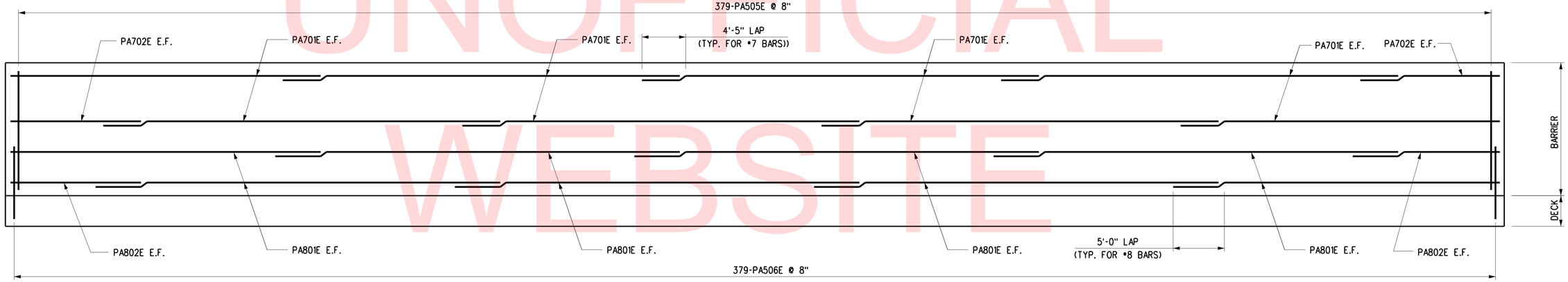

3'-8" BARRIER REINFORCEMENT

N.T.S.

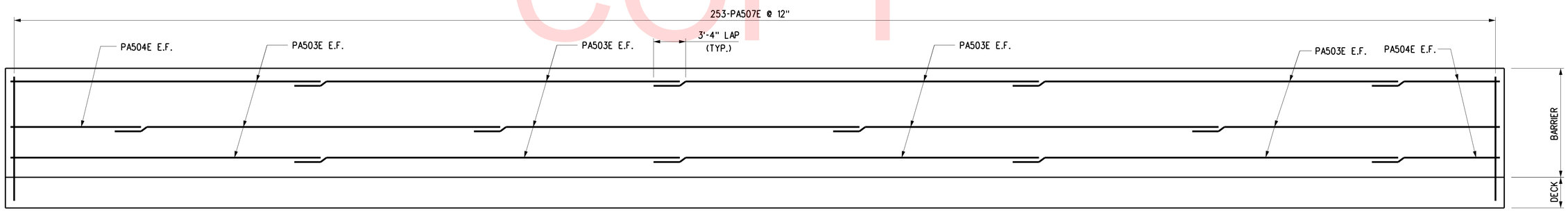

2'-3" BARRIER REINFORCEMENT

N.T.S.

UNOFFICIAL WEBSITE COPY

U:\Projects\DVDelDOT\20837280\CAD\Bridge\dk05_RoadA.dgn
4/3/2018
LEWISRI

DELAWARE DEPARTMENT OF TRANSPORTATION	ADDENDUMS / REVISIONS	NOT TO SCALE	ROAD A /SR7 IMPROVEMENTS	CONTRACT T201009002	BRIDGE NO. 1–220	ROAD A OVER SR 1	S-34 SHEET NO. 65
				COUNTY NEW CASTLE	DESIGNED BY: T.B. CUSTER	BRIDGE DECK & BARRIER REINFORCEMENT 3	TOTAL SHTS. 154
					CHECKED BY: R. F. KIRCHNER		

DECK REINFORCEMENT BAR SCHEDULE

	MARK	LENGTH	NO. BARS	TYPE	A	B	C	D	E	F	G	H	I	J	K	O	REMARKS
BRIDGE DECK	DK401E	55'-0"	228	STR													
	DK402E	40'-0"	57	STR													
	DK403E	47'-9"	112	STR													
	DK404E	41'-6"	112	STR													
	DK501E	55'-0"	228	STR													
	DK502E	44'-10"	57	STR													
	DK503E	44'-7"	234	18	0'-7"	44'-0"								0'-5"			
	DK504E	22'-5"	234	18	0'-7"	21'-10"								0'-5"			
	DK505E	27'-5"	238	STR													
	DK506E	38'-6"	238	STR													
	DK507E	6'-2 5/8"	204	16		0'-11 1/2"	3'-10 1/8"	1'-5"				0'-11 1/2"			1'-0 1/2 "		
	DK508E	9'-3 1/2"	30	STR													
	DK509E	2'-8 1/2"	12	STR													
	DK601E	60'-0"	56	STR													
	DK602E	20'-10"	56	STR													
	DK603E	11'-1"	466	18	0'-8"	10'-5"								0'-6"			
	DK604E	21'-11"	466	18	0'-8"	21'-3"								0'-6"			
	DK605E	15'-7"	233	STR													
	DK606E	4'-0"	156	STR													
PARAPET	PA501E	7'-9 5/8"	379	T7A	0'-6"	2'-8"	0'-8"	2'-8 1/8"	0'-4 3/4"		0'-6"	2'-8"			0'-3 1/4"		
	PA502E	5'-3 1/8"	379	T15	0'-6"	1'-6 1/2"	0'-5 7/8"	1'-8 3/4"		1'-0"				0'-9 7/16"		1'-3 5/16"	
	PA503E	60'-0"	56	STR													
	PA504E	25'-0"	14	STR													
	PA505E	9'-3 3/16"	379	T7A	0'-6"	3'-4"	0'-9"	3'-4 3/16"	0'-5"		0'-6"	3'-4"			0'-4"		
	PA506E	5'-4 3/8"	379	T15	0'-6"	1'-6 1/2"	0'-7 1/8"	1'-8 3/4"		1'-0"				0'-9 7/16"		1'-4 9/16"	
	PA507E	5'-11"	253	17		2'-7 1/2"	0'-8"	2'-7 1/2"									
	PA701E	60'-0"	16	STR													
	PA702E	29'-3"	4	STR													
	PA801E	60'-0"	16	STR													
	PA802E	31'-7"	4	STR													

STANDARD BAR BENDS

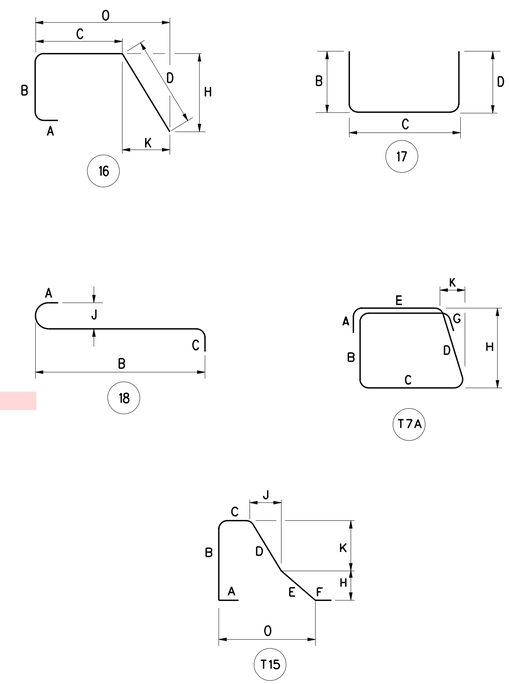

UNOFFICIAL WEBSITE COPY

U:\Projects\D\DelDOT\20837280\CAD\Bridge\dk06_RoadA.dgn 4/3/2018 LEWISRI

DELAWARE DEPARTMENT OF TRANSPORTATION

ADDENDUMS / REVISIONS

NOT TO SCALE

ROAD A /SR7 IMPROVEMENTS

CONTRACT T201009002 | COUNTY NEW CASTLE | BRIDGE NO. 1-220 | DESIGNED BY: T.B. CUSTER | CHECKED BY: R. F. KIRCHNER

ROAD A OVER SR 1

BRIDGE DECK BAR SCHEDULE

S-35 | SHEET NO. 66 | TOTAL SHTS. 154

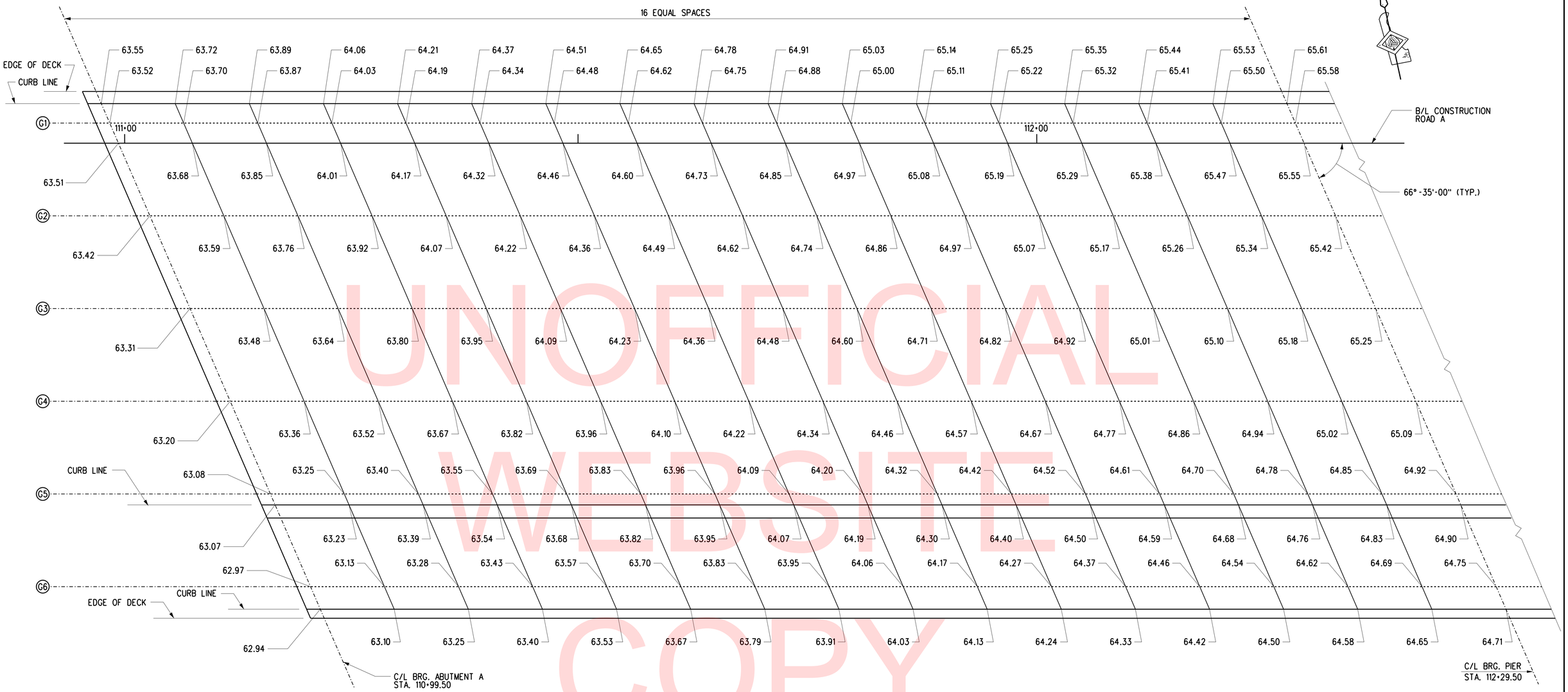

FINISHED DECK SLAB ELEVATIONS

SCALE: 3/16" = 1'-0"

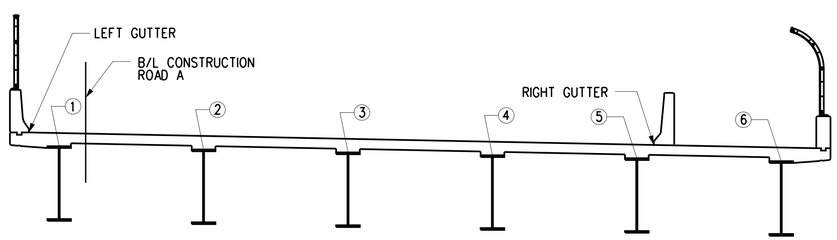

TYPICAL SECTION

SCALE: 3/16" = 1'-0"

NOTE:

THE FINISHED DECK ELEVATIONS SHOWN ARE TO TOP OF CONCRETE DECK.

CROSS REFERENCE NOTES:

1. FOR VERTICAL CURVE DATA, SEE DWG. NO. S-3.
2. FOR TYPICAL SECTION, SEE DWG. NO. S-4.

UNOFFICIAL WEBSITE COPY

U:\Projects\D\DelDOT\20837280\CAD\Bridge\fd01_RoadA.dgn
4/3/2018
LEWISRI

DELAWARE DEPARTMENT OF TRANSPORTATION	ADDENDUMS / REVISIONS	SCALE AS NOTED	ROAD A /SR7 IMPROVEMENTS	CONTRACT T201009002	BRIDGE NO. 1-220	ROAD A OVER SR 1	S-36
				COUNTY NEW CASTLE	DESIGNED BY: D.W. HITCHKO	FINISHED DECK ELEVATIONS 1	SHEET NO. 67
					CHECKED BY: R.F. KIRCHNER		TOTAL SHTS. 154

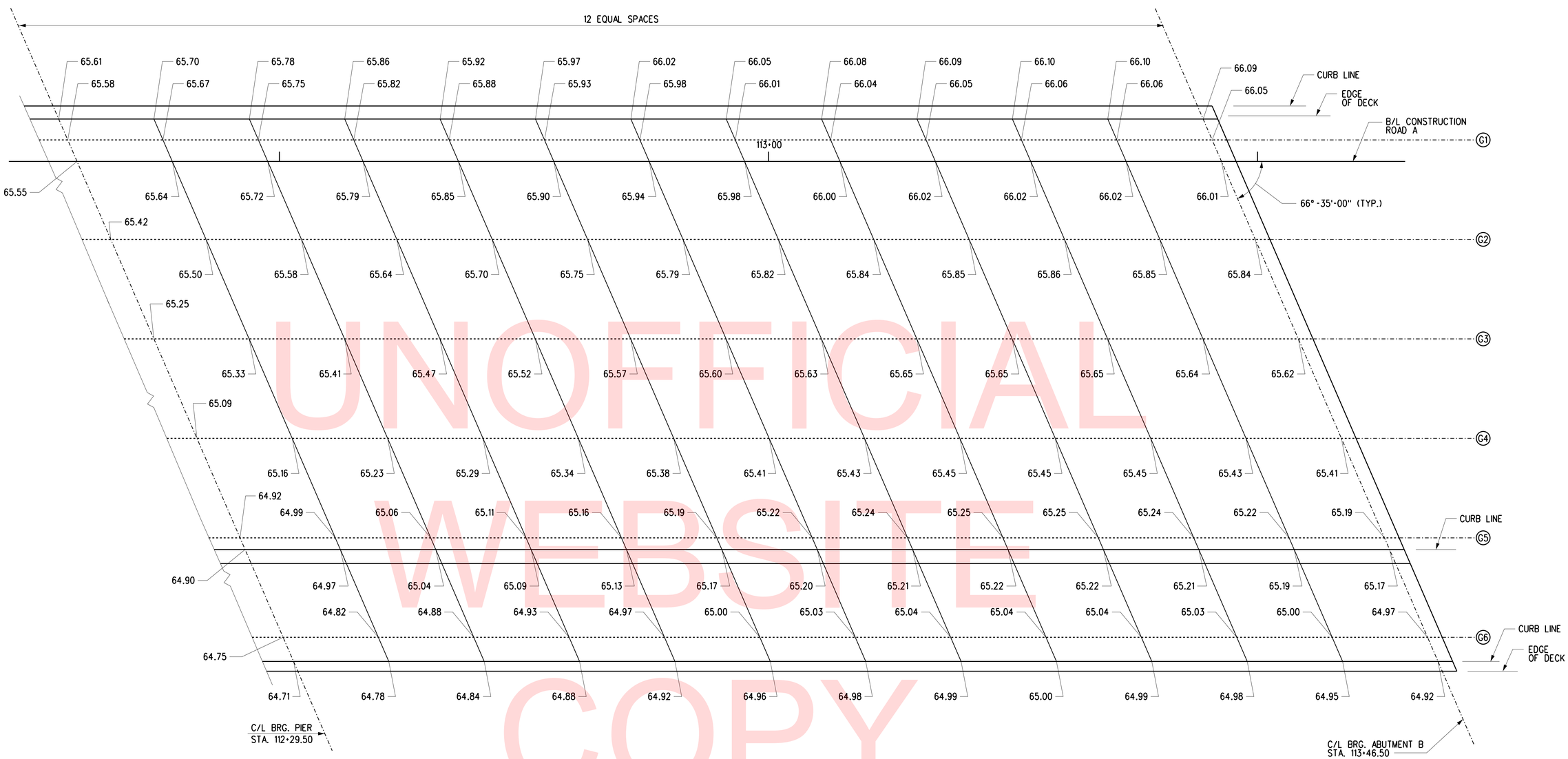

FINISHED DECK SLAB ELEVATIONS

SCALE: 3/16" = 1'-0"

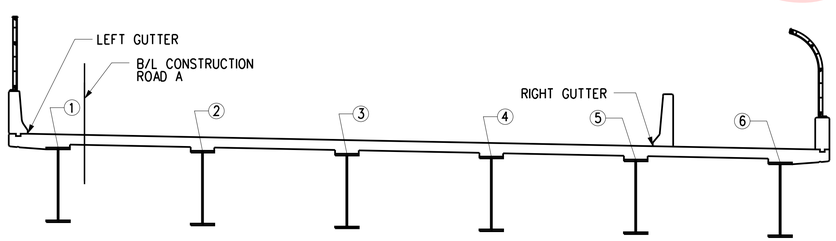

TYPICAL SECTION

SCALE: 3/16" = 1'-0"

NOTE:

THE FINISHED DECK ELEVATIONS SHOWN ARE TO TOP OF CONCRETE DECK.

CROSS REFERENCE NOTES:

1. FOR VERTICAL CURVE DATA, SEE DWG. NO. S-3.

2. FOR TYPICAL SECTION, SEE DWG. NO. S-4.

UNOFFICIAL WEBSITE COPY

U:\Projects\D\DelDOT\20837280\CAD\Bridge\fd02_RoadA.dgn 4/3/2018 LEWISRI

DELAWARE DEPARTMENT OF TRANSPORTATION	ADDENDUMS / REVISIONS	SCALE AS NOTED	ROAD A /SR7 IMPROVEMENTS	CONTRACT T201009002	BRIDGE NO. 1-220	ROAD A OVER SR 1	S-37
				COUNTY NEW CASTLE	DESIGNED BY: D.W. HITCHKO	FINISHED DECK ELEVATIONS 2	SHEET NO. 68
					CHECKED BY: R.F. KIRCHNER		TOTAL SHTS. 154

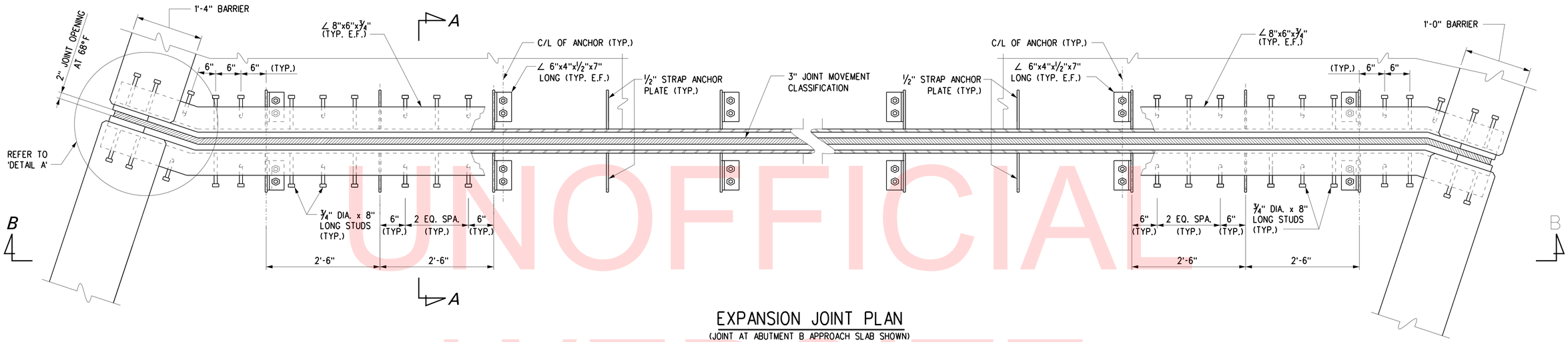

EXPANSION JOINT PLAN

(JOINT AT ABUTMENT B APPROACH SLAB SHOWN)

SCALE: NTS

NOTE: SHARED USER PATH UTILIZING INTERIOR BARRIER NOT SHOWN FOR CLARITY. REFER TO SECTION B-B.

CROSS REFERENCE NOTES

1. FOR BRIDGE PLAN AND ELEVATION, SEE DWG. NO. S-3.
2. FOR APPROACH SLAB PLAN AND SECTIONS, SEE DWG. NO. S-41 & S-42.
3. FOR DETAIL A, SEE DWG. NO. S-40.
4. FOR SECTION A-A AND B-B, SEE DWG. NO. S-39.

UNOFFICIAL WEBSITE COPY

U:\Projects\D\DelDOT\20837280\CAD\Bridge\ej01_RoadA.dgn 4/3/2018 LEWISRI

DELAWARE DEPARTMENT OF TRANSPORTATION	ADDENDUMS / REVISIONS	NOT TO SCALE	ROAD A /SR7 IMPROVEMENTS	CONTRACT T201009002	BRIDGE NO. 1–220	ROAD A OVER SR 1	S-38 SHEET NO. 69
				COUNTY NEW CASTLE	DESIGNED BY: R. F. KIRCHNER	EXPANSION JOINT DETAILS 1	TOTAL SHTS. 154
					CHECKED BY: P. M. DALONI		

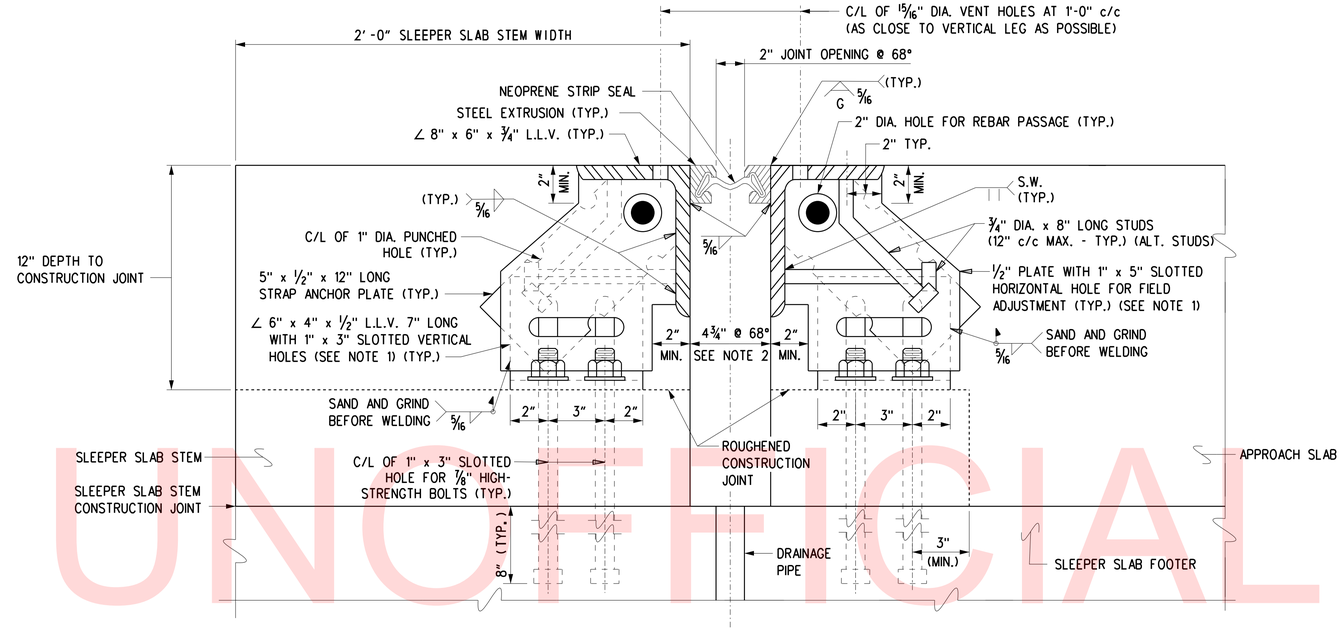

SECTION A-A (APPROACH SLAB TO SLEEPER SLAB)

SCALE: NTS

NOTE: SLEEPER SLAB AND APPROACH SLAB REINFORCEMENT NOT SHOWN FOR CLARITY.

NOTES:

1. IF WELD OPTION IS PROPOSED, SLOTTED HOLES IN 1/2" PLATE AND 6"x4"x1/2" L.L.V. MAY BE OMITTED.
2. THE CONTRACTOR SHALL ADJUST THE OPEN JOINT AS REQUIRED BY THE WIDTH OF THE STEEL EXTRUSION USED SO AS TO PROVIDE A 2" JOINT OPENING AT 68° F.

CROSS REFERENCE NOTES

1. FOR BRIDGE PLAN AND ELEVATION, SEE DWG. NO. S-3.
2. FOR APPROACH SLAB PLAN AND SECTIONS, SEE DWG. NO. S-41 & S-42.
3. FOR LOCATION OF SECTIONS A-A AND B-B, SEE DWG. NO. S-38.
4. FOR SECTION C-C, SEE DWG. NO. S-40.

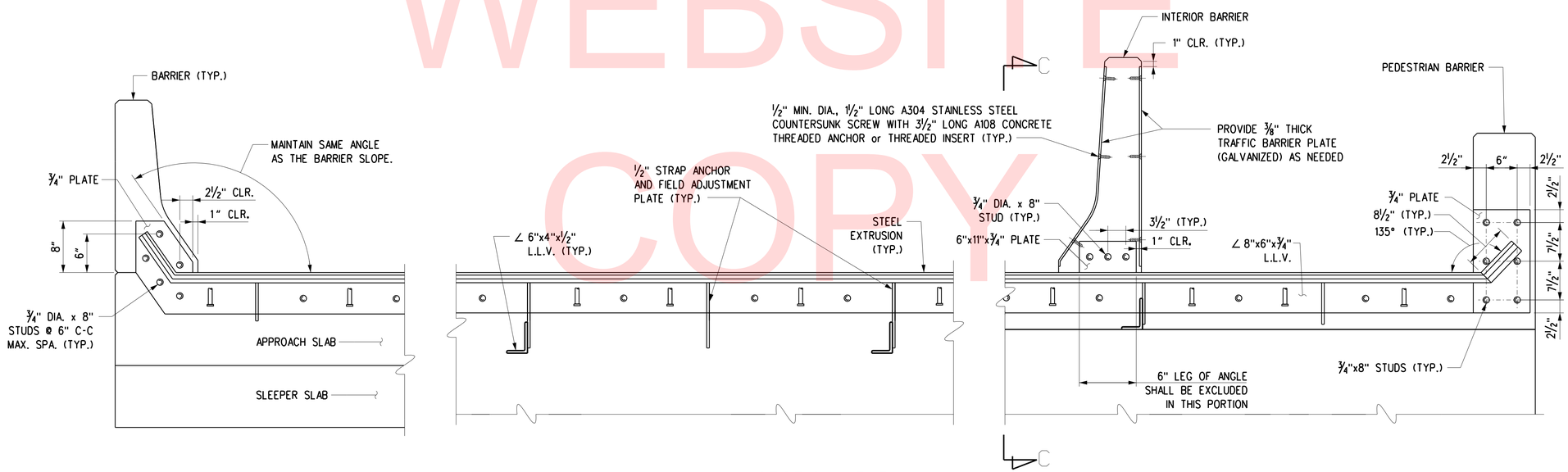

SECTION (B-B)

SCALE: NTS

NOTE: CROSS SLOPE AND ANCHOR BOLTS NOT SHOWN FOR CLARITY. TRAFFIC BARRIER PLATES SHOWN ONLY AT INTERIOR BARRIER FOR CLARITY.

UNOFFICIAL WEBSITE COPY

DELAWARE DEPARTMENT OF TRANSPORTATION	ADDENDUMS / REVISIONS	NOT TO SCALE	ROAD A /SR7 IMPROVEMENTS	CONTRACT T201009002	BRIDGE NO. 1-220	ROAD A OVER SR 1	S-39
				COUNTY NEW CASTLE	DESIGNED BY: R. F. KIRCHNER	EXPANSION JOINT DETAILS 2	SHEET NO. 70
					CHECKED BY: P. M. DALONI		TOTAL SHTS. 154

U:\Projects\D\DelDOT\20837280\CAD\Bridge\ej02_RoadA.dgn 4/3/2018 LEWISRI

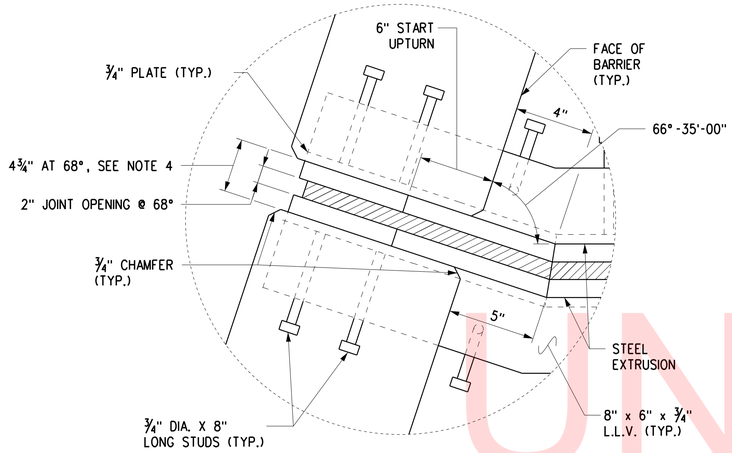

DETAIL A

SCALE: NTS

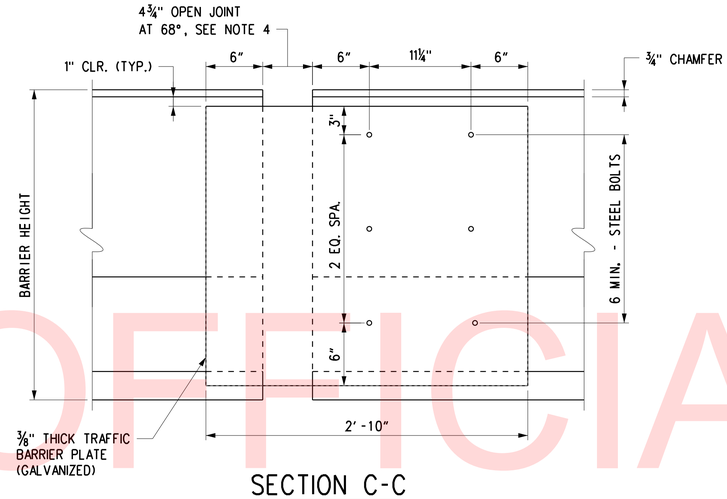

SECTION C-C

SCALE: NTS

NOTE: STRUCTURAL COMPONENTS BELOW BARRIER NOT SHOWN FOR CLARITY.

STRIP SEAL EXPANSION JOINT NOTES

1. STEEL FOR DECK JOINTS AND STEEL EXTRUSIONS SHALL BE AASHTO M270, GR. 36 (ASTM A36) AT MINIMUM.
2. NEOPRENE EXTRUSION TO MEET D-2628-81 MODIFIED, (RECOVERY TESTS EXCLUDED).
3. THE EXPANSION JOINT SHALL BE CAPABLE OF SEALING THE DECK TO PREVENT MOISTURE AND OTHER CONTAMINANTS FROM DESCENDING THROUGH THE JOINT.
4. THE CONTRACTOR SHALL ADJUST THE OPEN JOINT AS REQUIRED BY THE WIDTH OF THE STEEL EXTRUSION USED SO AS TO PROVIDE A 2" JOINT OPENING AT 68°F.
5. THE STRIP SEAL SHALL BE INSTALLED IN ONE PIECE ACROSS THE BRIDGE WIDTH. SPLICING OF THE STRIP SEAL IS NOT PERMITTED.
6. THE EXPANSION JOINT SYSTEM IS PAID FOR UNDER ITEM 624000.
7. ENTIRE EXPANSION DAM SHALL BE PAINTED AFTER FABRICATION USING URETHANE SYSTEM, EXCEPT AS NOTED IN ACCORDANCE WITH ITEM 624000.
8. LUBRICANT-ADHESIVE FOR USE IN INSTALLING AND BONDING NEOPRENE SEAL ELEMENTS TO STEEL JOINT COMPONENTS SHALL BE A ONE QUART MOISTURE-CURING POLYURETHANE AND HYDROCARBON SOLVENT MIXTURE HAVING THE FOLLOWING PHYSICAL PROPERTIES:

AVERAGE WEIGHT, POUNDS PER GALLON	8 +/- 10%
SOLIDS CONTENT	65%
ADHESIVE SHALL REMAIN LIQUID FROM	5°F TO 120°F
FILM STRENGTH, AS PER ASTM D-412	2,000 PSI
ELONGATION	250%

9. HOLES SHALL BE PLACED IN THE RIB PLATES AND STRAP ANCHOR PLATES FOR BAR REINFORCEMENT. IF THIS IS DONE IN THE FIELD AN APPROVED EPOXY-BONDED PAINT SHALL BE USED TO TOUCH-UP THE HOLES. PAYMENT INCIDENTAL TO ITEM 624000.
10. ANCHOR PLATE AND STEEL EXTRUSION SHALL BE WELDED TO BE WATERTIGHT AT CONSTRUCTION JOINTS. PAYMENT INCIDENTAL TO ITEM 624000.
11. WHERE TRAFFIC BARRIER PLATES ARE USED:
    -SUCH BARRIERS ARE REQUIRED WHERE THE OPEN JOINT AS DESCRIBED IN NOTE 4 IS FOUR INCHES OR WIDER.
    -BOLTS SHALL BE A304 STAINLESS STEEL COUNTERSUNK SCREW WITH A108 CONCRETE THREADED ANCHOR or THREADED INSERT.
    -HEAD OF BOLTS SHALL BE FLUSH WITH FACE OF STEEL PLATE.
    -THE CONTRACTOR SHALL SUBMIT WORKING DRAWINGS OF TRAFFIC BARRIER PLATES FOR APPROVAL.
12. AT AREAS WHERE STEEL MEMBERS ARE TO BE SPLICED, USE OF COMPLETE JOINT PENETRATION (CJP) AND PARTIAL JOINT PENETRATION (PJP) WELD ARE BOTH PERMITTED. THE THICKNESS OF PJP WELD MUST BE MINIMUM HALF OF THE STEEL MEMBER THICKNESS.

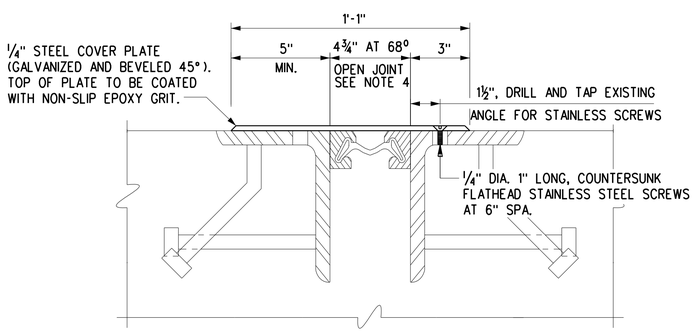

JOINT SECTION IN SIDEWALK/BIKEWAY REGION

SCALE: NTS

NOTE:
-ALL STEEL MUST BE ASTM A709, GRADE 36 or 50 AND HOT-DIPPED GALVANIZED IN ACCORDANCE WITH ASTM A123.
-APPLY EPOXY COATING ON BOTH SIDES OF THE STEEL COVER PLATE. THE TOP OF PLATE (WALKING SURFACE) MUST RECEIVE NON-SLIP EPOXY GRIT COATING IN ACCORDANCE WITH ADA A4.5.

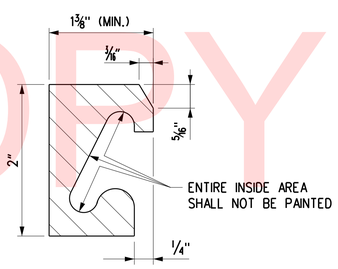

STEEL EXTRUSION DETAIL

SCALE: NTS

JOINT OPENING (INCH)						
LOCATION	TEMPERATURE (°F)					MOVEMENT CLASSIFICATION
	10	30	50	70	90	
ABUTMENT A	2 9/16"	2 3/8"	2 3/16"	2"	1 13/16"	3"
ABUTMENT B	2 9/16"	2 3/8"	2 3/16"	2"	1 13/16"	3"

CROSS REFERENCE NOTES

1. FOR BRIDGE PLAN AND ELEVATION, SEE DWG. NO. S-3.
2. FOR APPROACH SLAB PLAN AND DETAILS, SEE DWG. NO. S-41 AND S-42.
3. FOR EXPANSION JOINT PLAN AND SECTIONS, SEE DWG. NO. S-38 AND S-39.

UNOFFICIAL WEBSITE COPY

U:\Projects\D\DelDOT\20837280\CAD\Bridge\ej03_RoadA.dgn 4/3/2018 LEWISRI

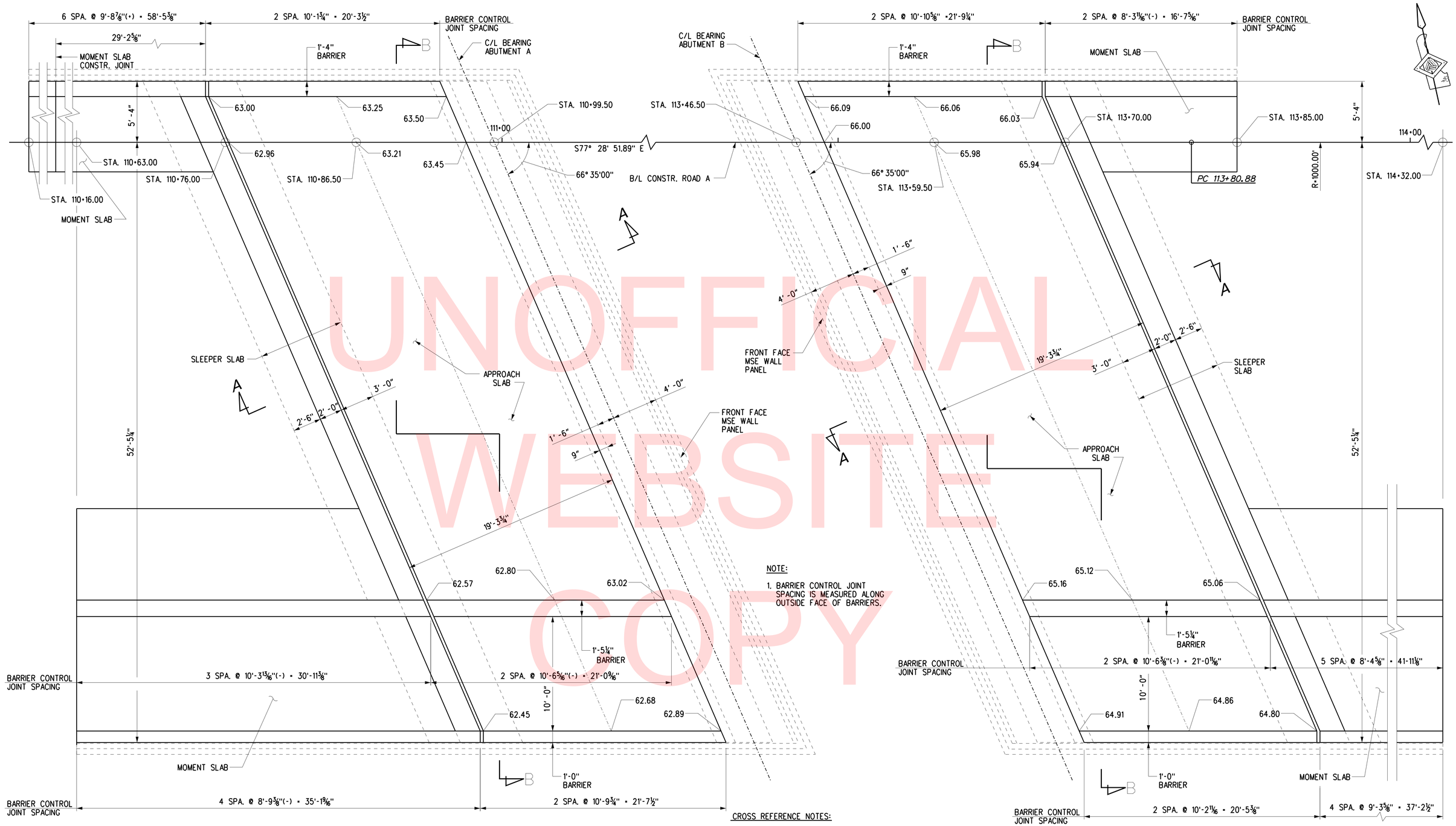

NOTE:

1. BARRIER CONTROL JOINT SPACING IS MEASURED ALONG OUTSIDE FACE OF BARRIERS.

CROSS REFERENCE NOTES:

1. FOR BRIDGE PLAN AND ELEVATION, SEE DWG. NO. S-3.
2. FOR ABUTMENT A & B PLAN AND ELEVATION, SEE DWG. NO. S-8 AND S-9.
3. FOR MSE WING WALL PLAN AND ELEVATION, SEE DWG. NO. S-14 AND S-15.
4. FOR APPROACH SLAB LONGITUDINAL SECTION, SEE DWG. NO. S-42.
5. FOR APPROACH SLAB REINFORCEMENT DETAILS, SEE DWG. NO. S-43 TO S-46.

APPROACH SLAB AT ABUTMENT A

SCALE: ¼" = 1'-0"

APPROACH SLAB AT ABUTMENT B

SCALE: ¼" = 1'-0"

UNOFFICIAL WEBSITE COPY

DELAWARE DEPARTMENT OF TRANSPORTATION	ADDENDUMS / REVISIONS	SCALE 0 1 2 4 8 FEET	ROAD A /SR7 IMPROVEMENTS	CONTRACT T201009002 / COUNTY NEW CASTLE	BRIDGE NO. 1–220 / DESIGNED BY: T.M. SENKEWICZ / CHECKED BY: R. F. KIRCHNER	ROAD A OVER SR 1 / APPROACH SLAB PLANS	S-41 / SHEET NO. 72 / TOTAL SHTS. 154

U:\Projects\D\DelDOT\20837280\CAD\Bridge\ab06_RoadA.dgn 4/3/2018 LEWISRI

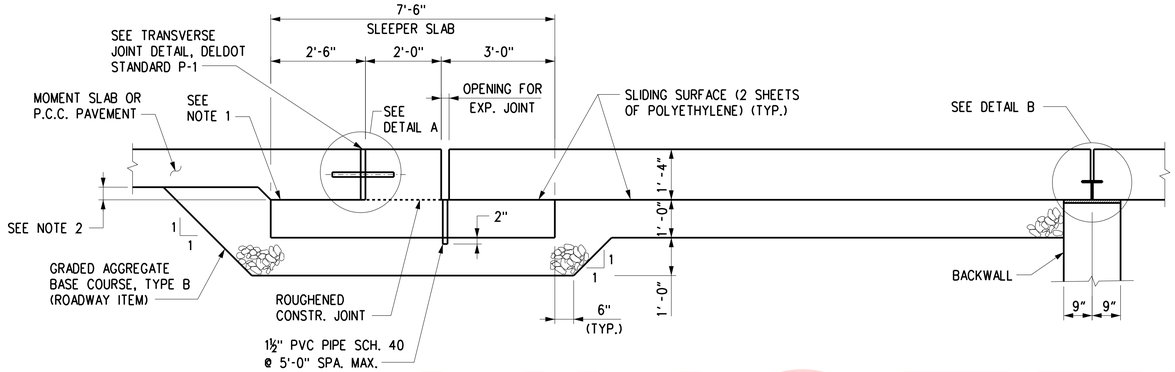

BRIDGE APPROACH SLAB - LONGITUDINAL SECTION

SCALE: ½" = 1'-0"

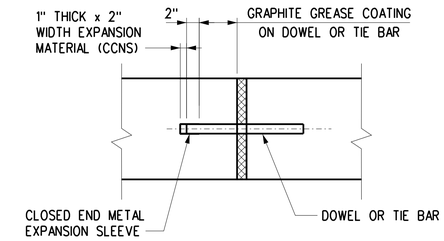

DETAIL A

SCALE: 1" = 1'-0"

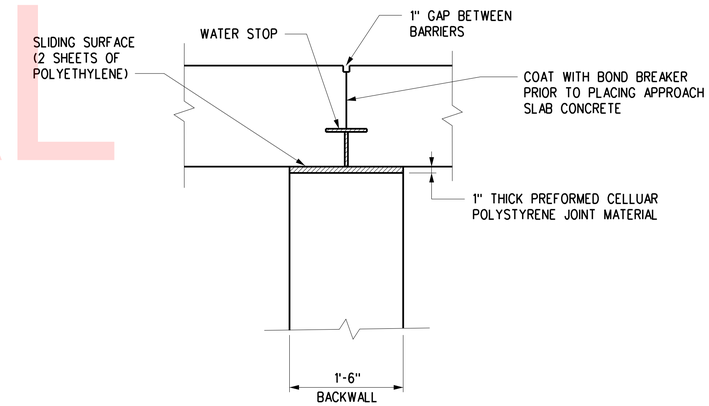

DETAIL B

SCALE: 1" = 1'-0"

NOTES:

1. PROVIDE SLIDING SURFACE BETWEEN BOTTOM OF P.C.C. PAVEMENT OR MOMENT SLAB AND TOP OF SLEEPER SLAB FOOTER.
2. IF P.C.C. PAVEMENT IS USED, HAUNCH AS NEEDED TO ACCOMMODATE THE DIFFERENCE IN THICKNESS VERSUS THE APPROACH SLAB THICKNESS.
3. EXPANSION JOINT DETAILS NOT SHOWN FOR CLARITY.
4. PAYMENT FOR POLYETHYLENE SHEETING SHALL BE INCIDENTAL TO ITEM 610018 - PORTLAND CONCRETE MASONRY, APPROACH SLAB, CLASS D.

CROSS REFERENCE NOTES:

1. FOR BRIDGE PLAN AND ELEVATION, SEE DWG. NO. S-3.
2. FOR APPROACH SLAB PLAN, SEE DWG. NO. S-41.

UNOFFICIAL WEBSITE COPY

LEWISRI 4/3/2018 U:\Projects\D\DelDOT\20837280\CAD\Bridge\ab07_RoadA.dgn

DELAWARE DEPARTMENT OF TRANSPORTATION	ADDENDUMS / REVISIONS	SCALE AS NOTED	ROAD A /SR7 IMPROVEMENTS	CONTRACT T201009002	BRIDGE NO. 1-220	ROAD A OVER SR 1	S-42 SHEET NO.
				COUNTY NEW CASTLE	DESIGNED BY: T.M. SENKEWICZ	APPROACH SLAB SECTIONS	73 TOTAL SHTS.
					CHECKED BY: R. F. KIRCHNER		154

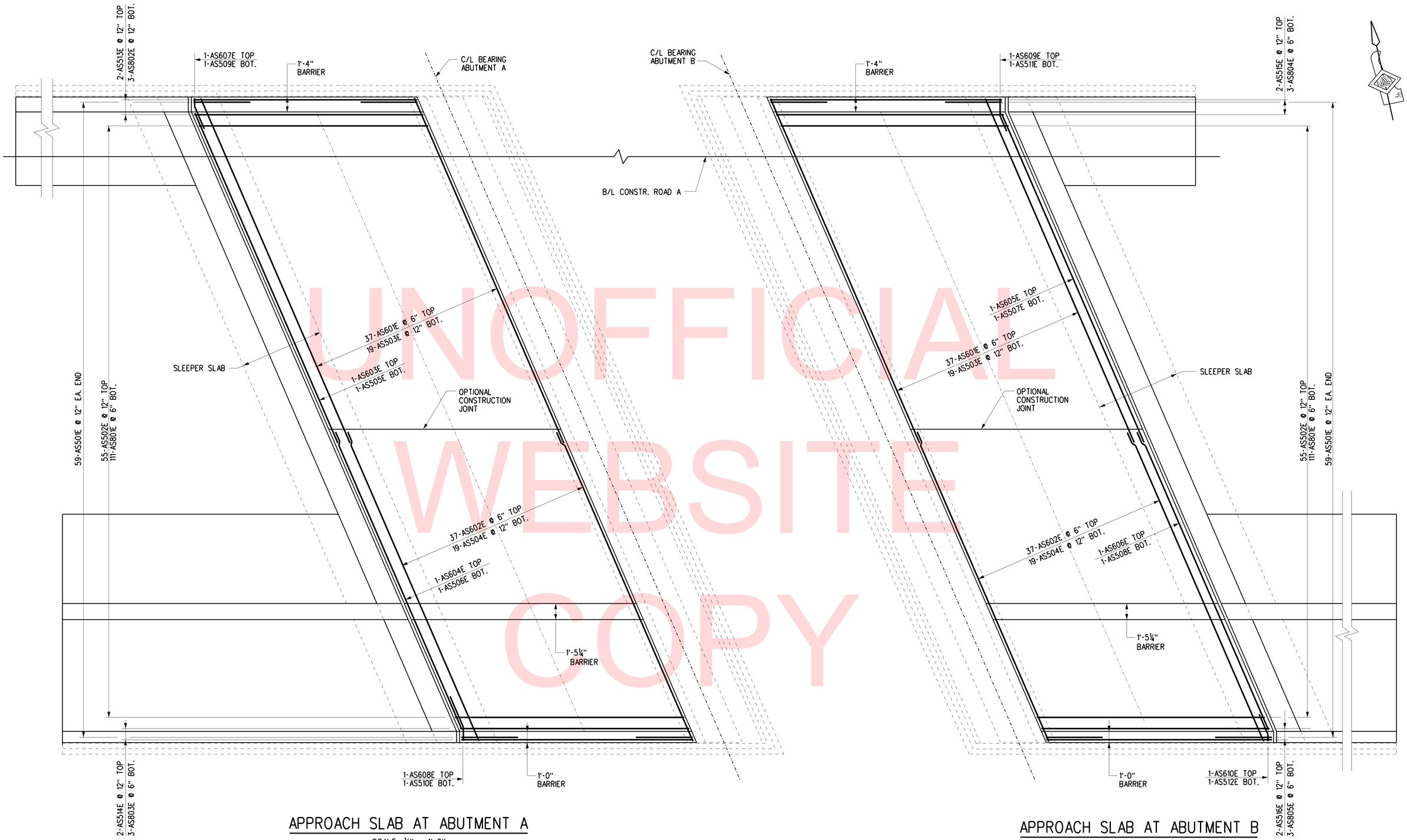

APPROACH SLAB AT ABUTMENT A

SCALE: ¼" = 1'-0"

APPROACH SLAB AT ABUTMENT B

SCALE: ¼" = 1'-0"

UNOFFICIAL WEBSITE COPY

U:\Projects\D\DelDOT\20837280\CAD\Bridge\ab15_RoadA.dgn

4/3/2018

LEWISRI

DELAWARE DEPARTMENT OF TRANSPORTATION	ADDENDUMS / REVISIONS	SCALE 0 2 8 1 4 FEET	ROAD A /SR7 IMPROVEMENTS	CONTRACT T201009002	BRIDGE NO. 1–220	ROAD A OVER SR 1	S-43 SHEET NO.	
				COUNTY NEW CASTLE	DESIGNED BY: T.M. SENKEWICZ	APPROACH SLAB REINFORCEMENT PLAN 1	74 TOTAL SHTS.	
					CHECKED BY: R. F. KIRCHNER		154	

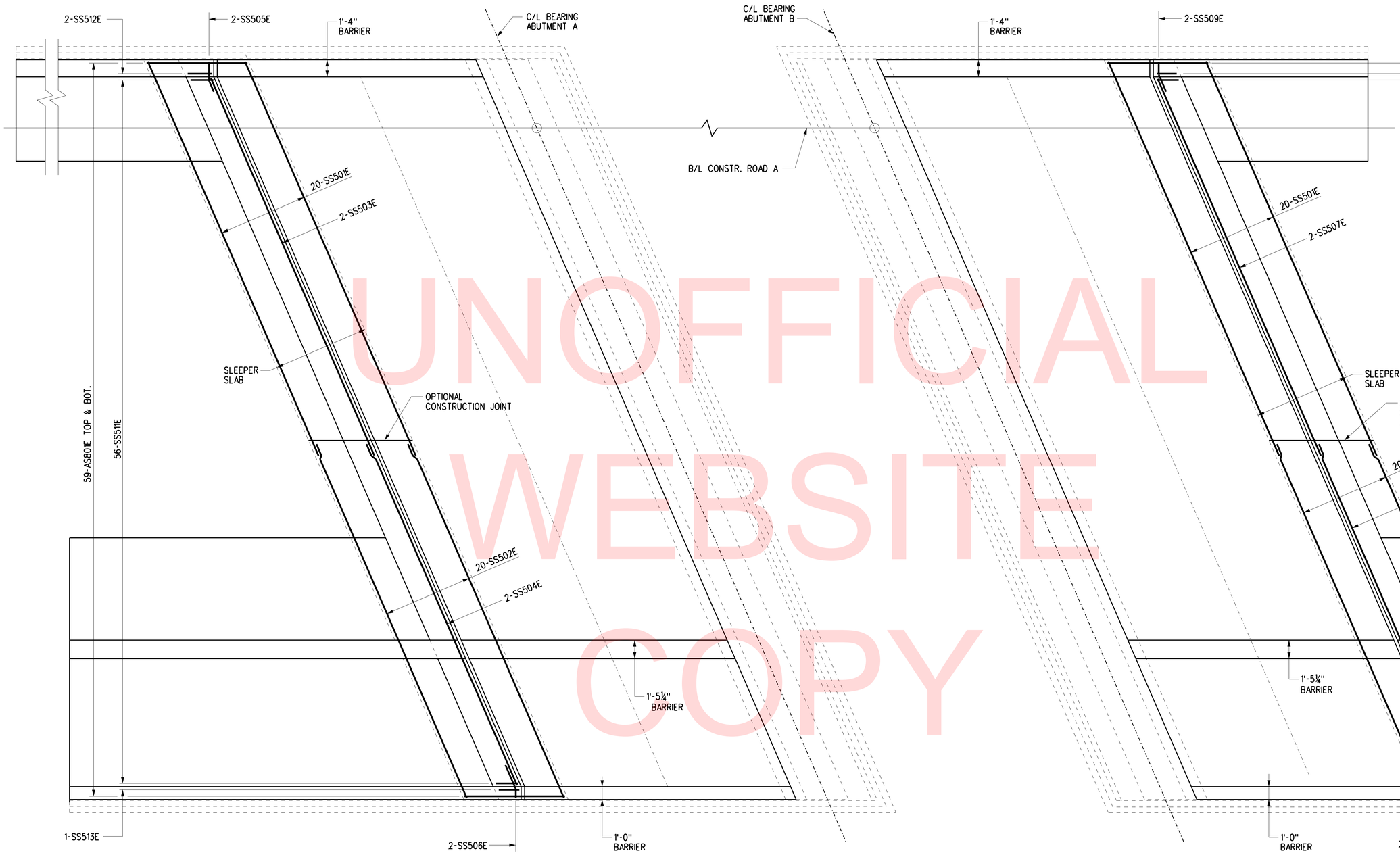

SLEEPER SLAB AT ABUTMENT A

SCALE: ¼" = 1'-0"

SLEEPER SLAB AT ABUTMENT B

SCALE: ¼" = 1'-0"

UNOFFICIAL WEBSITE COPY

U:\Projects\D\DelDOT\20837280\CAD\Bridge\abl6_RoadA.dgn 4/3/2018 LEWISRI

DELAWARE DEPARTMENT OF TRANSPORTATION	ADDENDUMS / REVISIONS	SCALE 0 1 2 4 8 FEET	ROAD A /SR7 IMPROVEMENTS	CONTRACT T201009002	BRIDGE NO. 1-220	ROAD A OVER SR 1	S-44
				COUNTY NEW CASTLE	DESIGNED BY: T.M. SENKEWICZ	APPROACH SLAB REINFORCEMENT PLAN 2	SHEET NO. 75
					CHECKED BY: R.F. KIRCHNER		TOTAL SHTS. 154

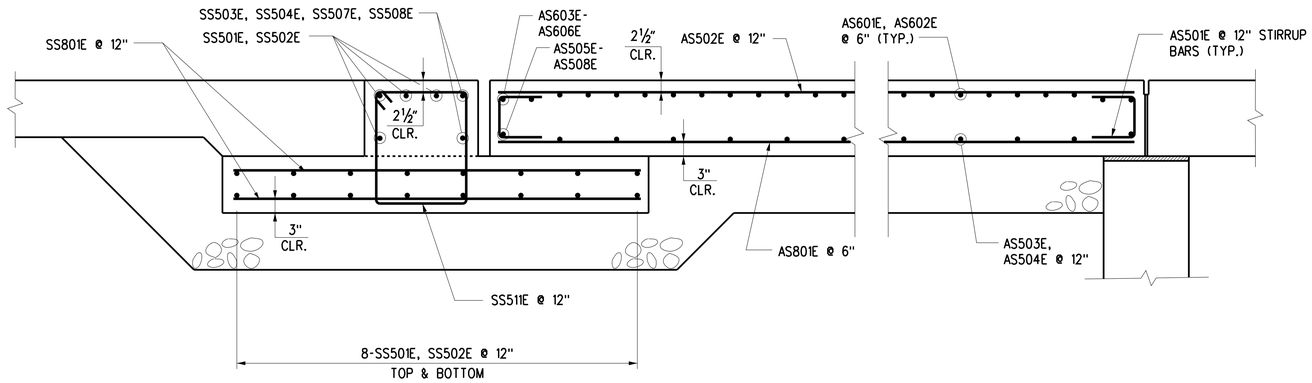

SECTION A-A

SCALE: ¾" = 1'-0"

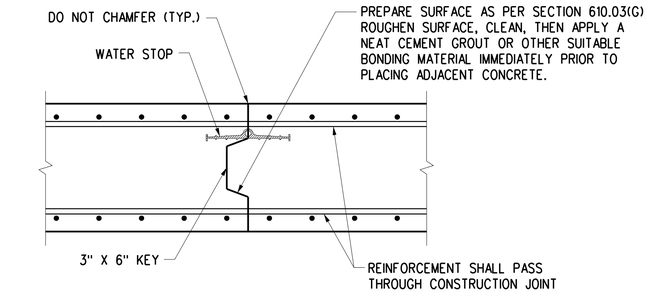

OPTIONAL CONSTRUCTION JOINT DETAIL

NOT TO SCALE

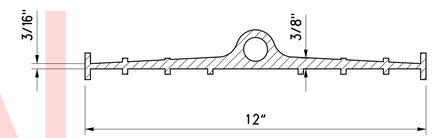

PVC WATER STOP DETAIL

NOT TO SCALE

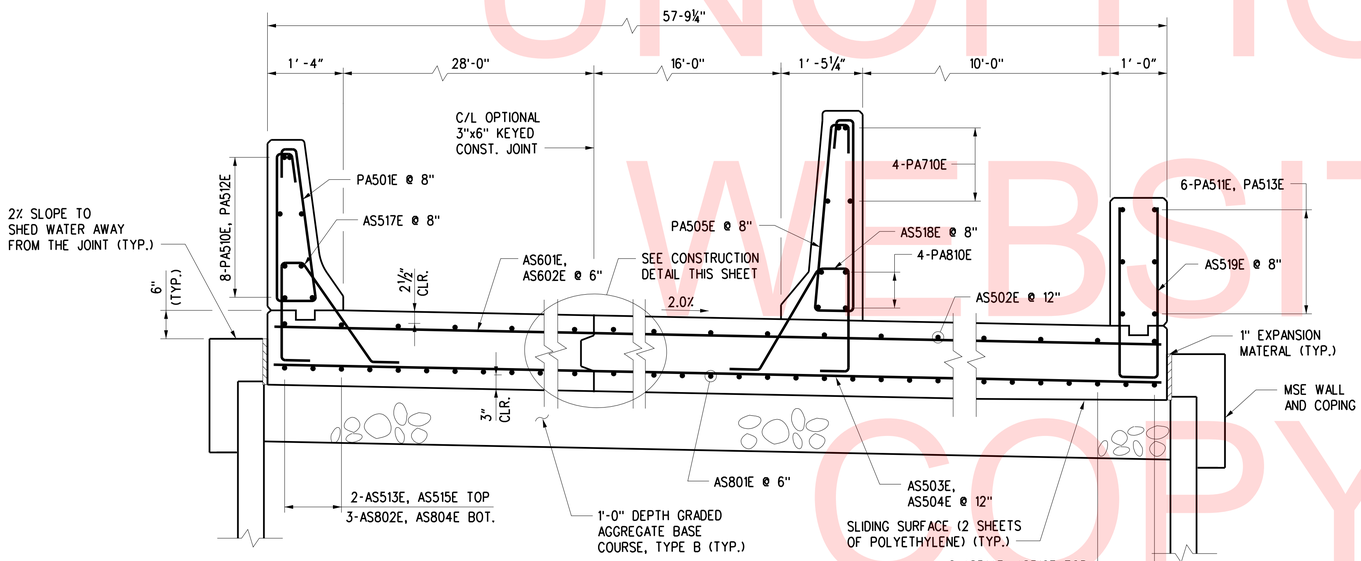

SECTION B-B

SCALE: ¾" = 1'-0"

UNOFFICIAL WEBSITE COPY

CROSS REFERENCE NOTES:

1. FOR BRIDGE PLAN AND ELEVATION, SEE DWG. NO. S-3.
2. FOR APPROACH SLAB PLAN, SEE DWG. NO. S-41.
3. FOR APPROACH SLAB LONGITUDINAL SECTION, SEE DWG. NO. S-42.
4. FOR REINFORCEMENT BAR SCHEDULE, SEE DWG. NO. S-51 & S-52.

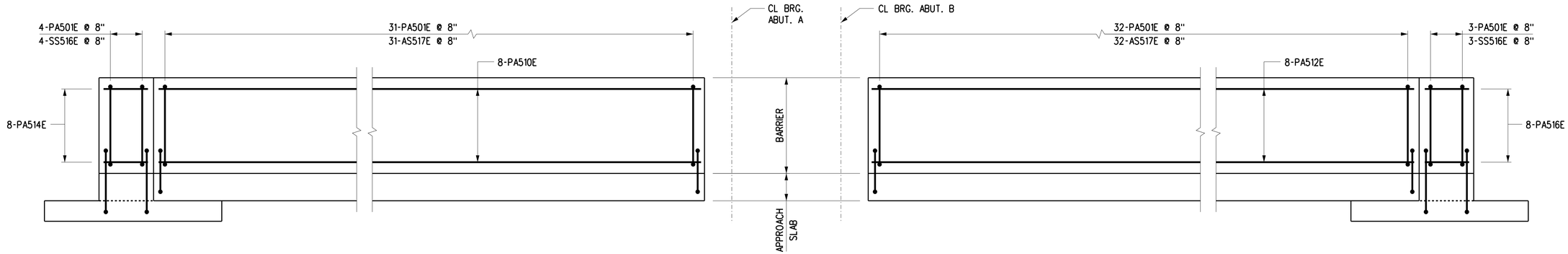

ELEVATION - 3'-0" BARRIER ON APPROACH SLAB

(LOOKING NORTH)
N.T.S.

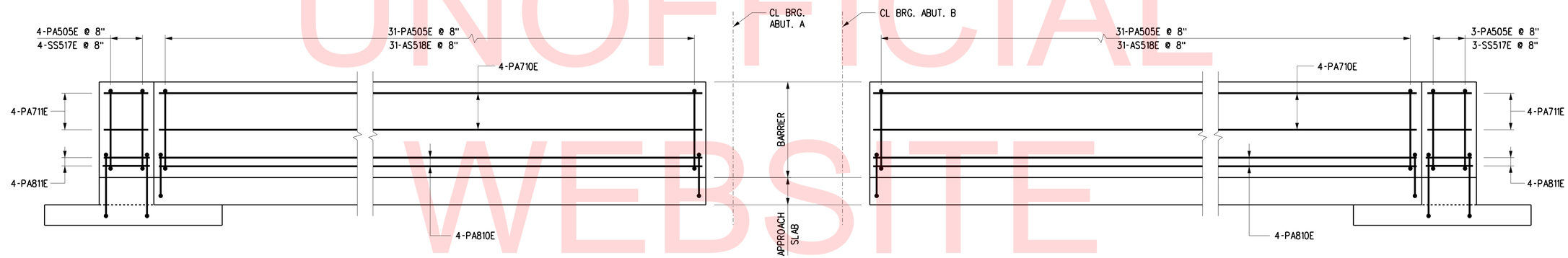

ELEVATION - 3'-8" BARRIER ON APPROACH SLAB

(LOOKING NORTH)
N.T.S.

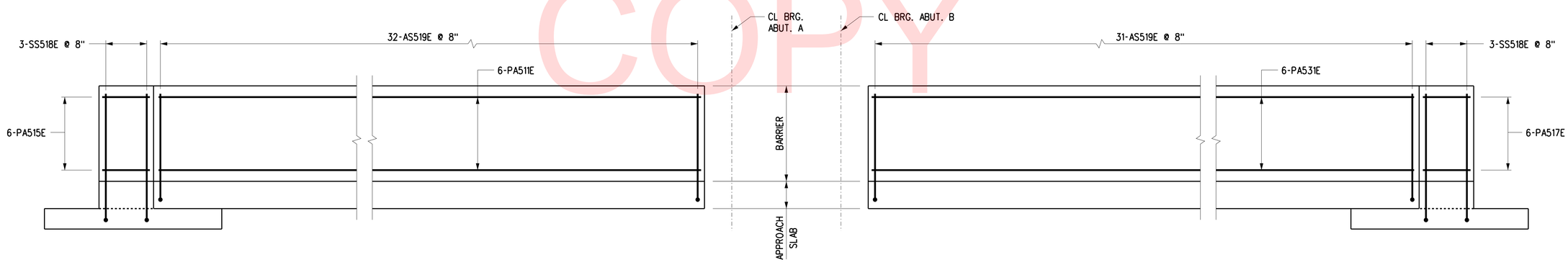

ELEVATION - 2'-3" BARRIER ON APPROACH SLAB

(LOOKING NORTH)
N.T.S.

UNOFFICIAL WEBSITE COPY

U:\Projects\D\DelDOT\20837280\CAD\Bridge\abl9_RoadA.dgn
4/3/2018
LEWISRI

DELAWARE DEPARTMENT OF TRANSPORTATION	ADDENDUMS / REVISIONS	NOT TO SCALE	ROAD A /SR7 IMPROVEMENTS	CONTRACT T201009002	BRIDGE NO. 1–220	ROAD A OVER SR 1	S-46
				COUNTY NEW CASTLE	DESIGNED BY: T.M. SENKEWCZ	APPROACH SLAB REINFORCEMENT 2	SHEET NO. 77
					CHECKED BY: R.F. KIRCHNER		TOTAL SHTS. 154

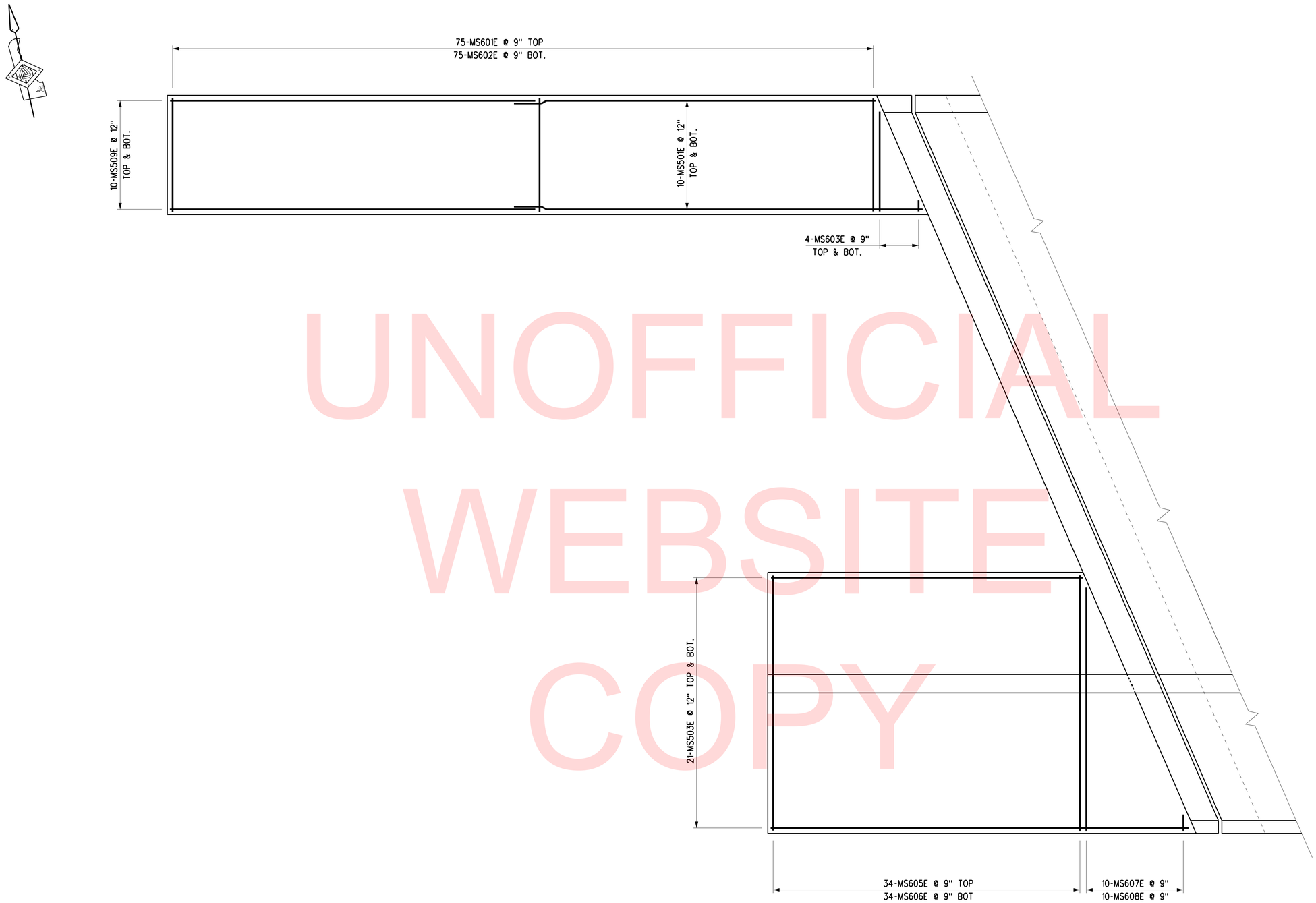

UNOFFICIAL WEBSITE COPY

MOMENT SLABS AT ABUTMENT A APPROACH SLAB

SCALE: ¼" = 1'-0"

CROSS REFERENCE NOTES:

1. FOR MOMENT SLAB PLAN, SEE DWG. NO. S-41.
2. FOR MOMENT SLAB SECTIONS, SEE DWG. NO. S-49.

DELAWARE DEPARTMENT OF TRANSPORTATION	ADDENDUMS / REVISIONS	SCALE 0 1 2 4 8 FEET	ROAD A /SR7 IMPROVEMENTS	CONTRACT T201009002	BRIDGE NO. 1–220	ROAD A OVER SR 1	S-47 SHEET NO.
				COUNTY NEW CASTLE	DESIGNED BY: T.M. SENKEWICZ	MOMENT SLAB REINFORCEMENT PLAN 1	78 TOTAL SHTS.
					CHECKED BY: R. F. KIRCHNER		154

U:\Projects\D\DelDOT\20837280\CAD\Bridge\abl7_RoadA.dgn 4/3/2018 LEWISRI

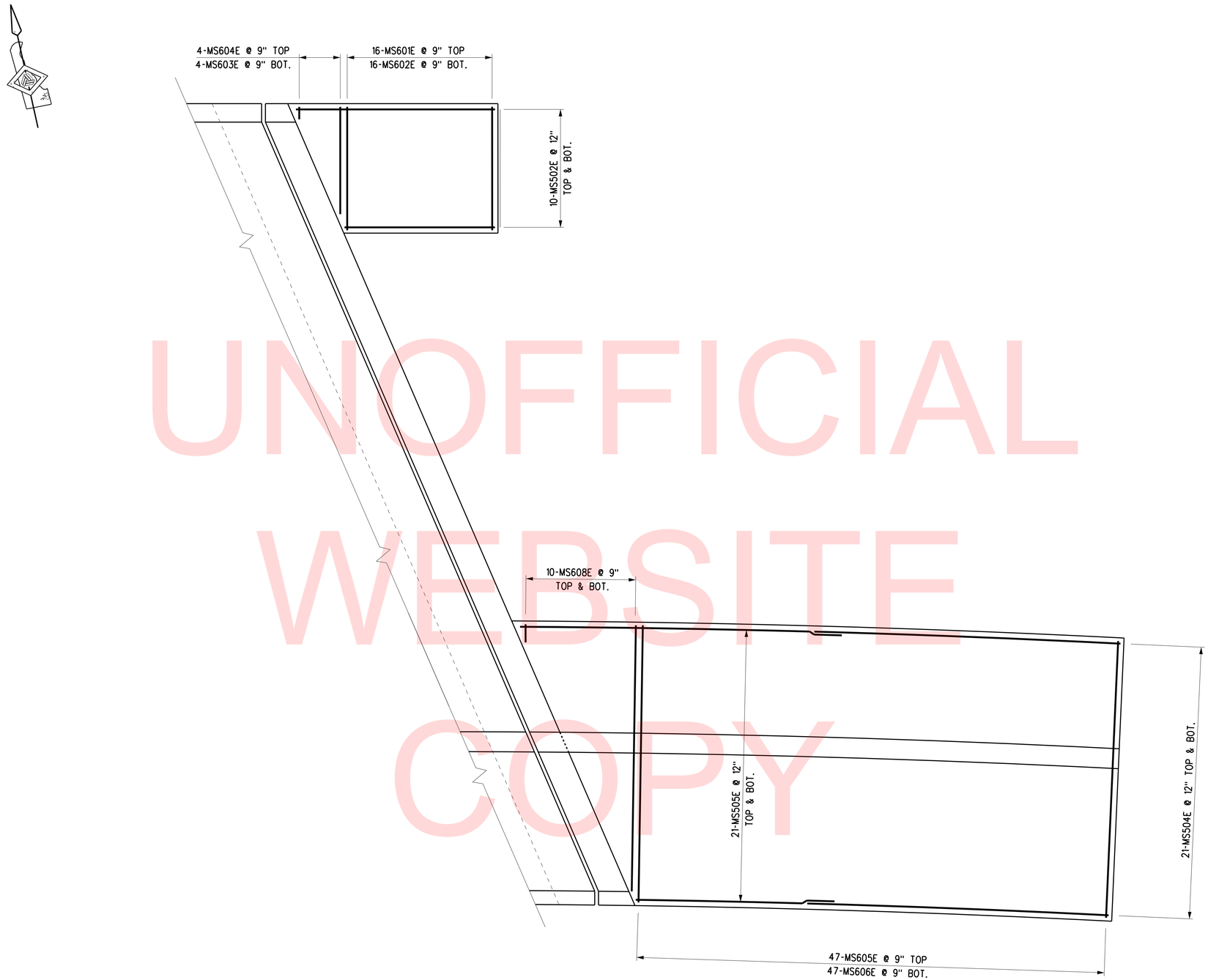

UNOFFICIAL WEBSITE COPY

MOMENT SLABS AT ABUTMENT B APPROACH SLAB

SCALE: ¼" = 1'-0"

CROSS REFERENCE NOTES:

1. FOR MOMENT SLAB PLAN, SEE DWG. NO. S-41.
2. FOR MOMENT SLAB SECTIONS, SEE DWG. NO. S-49.

U:\Projects\D\DelDOT\20837280\CAD\Bridge\abi8_RoadA.dgn
4/3/2018
LEWISRI

DELAWARE DEPARTMENT OF TRANSPORTATION	ADDENDUMS / REVISIONS	SCALE 0 2 8 / 1 4 FEET	ROAD A /SR7 IMPROVEMENTS	CONTRACT T201009002	BRIDGE NO. 1-220	ROAD A OVER SR 1	S-48
				COUNTY NEW CASTLE	DESIGNED BY: T.M. SENKEWICZ	MOMENT SLAB REINFORCEMENT PLAN 2	SHEET NO. 79
					CHECKED BY: R. F. KIRCHNER		TOTAL SHTS. 154

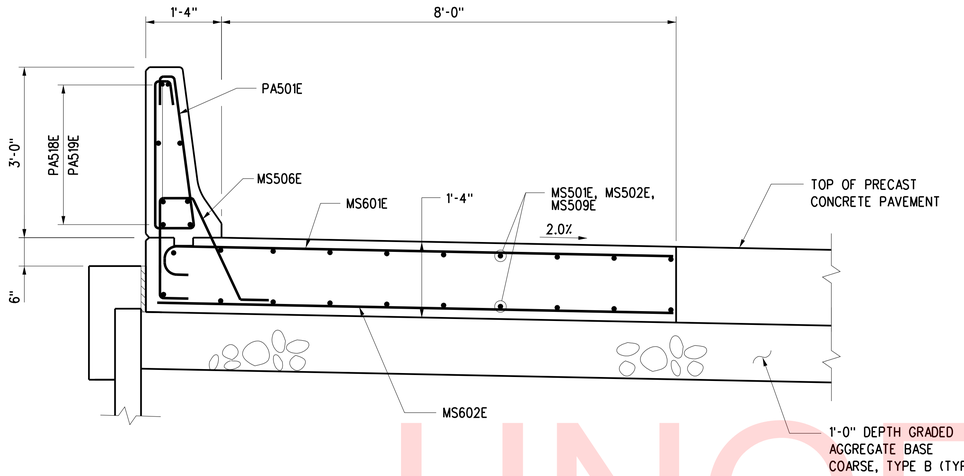

MOMENT SLAB WITH P.C.C. PAVEMENT (AT-GRADE)

SCALE: ¾" = 1'-0"

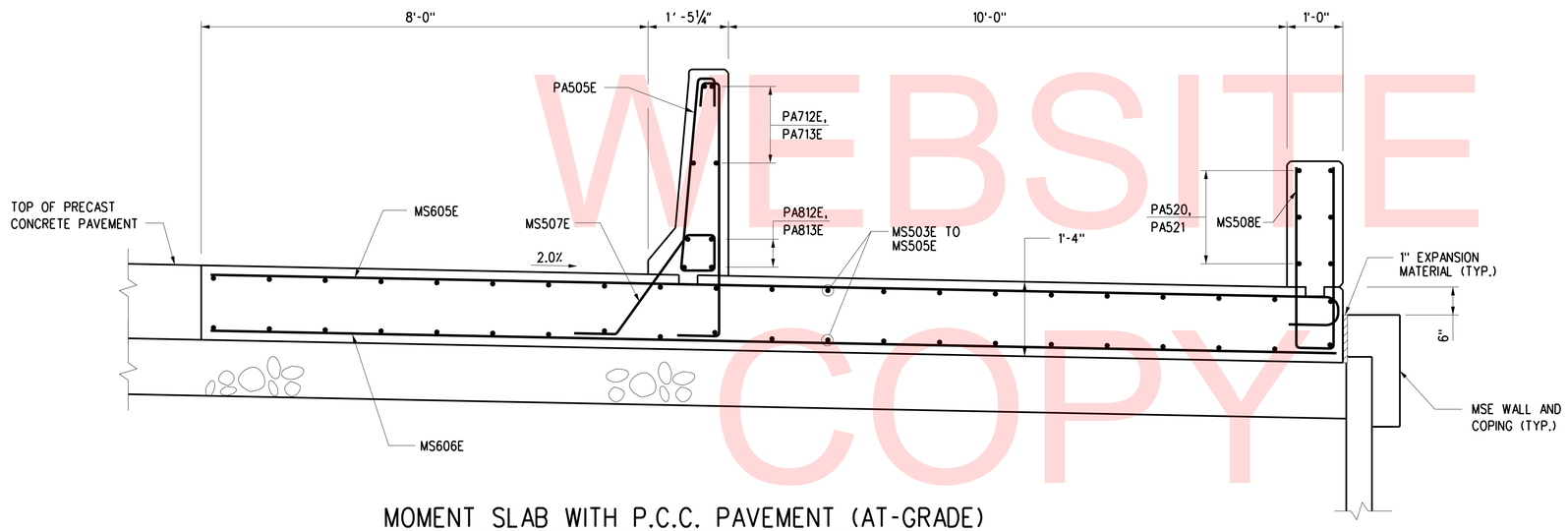

MOMENT SLAB WITH P.C.C. PAVEMENT (AT-GRADE)

SCALE: ¾" = 1'-0"

UNOFFICIAL WEBSITE COPY

CROSS REFERENCE NOTES:

1. FOR BRIDGE PLAN AND ELEVATION, SEE DWG. NO. S-3.
2. FOR APPROACH SLAB PLANS, SEE DWG. NO. S-41.
3. FOR MOMENT SLAB REINFORCEMENT PLANS, SEE DWG. NO. S-47 & S-48.
4. FOR REINFORCEMENT BAR SCHEDULE, SEE DWG. NO. S-52.

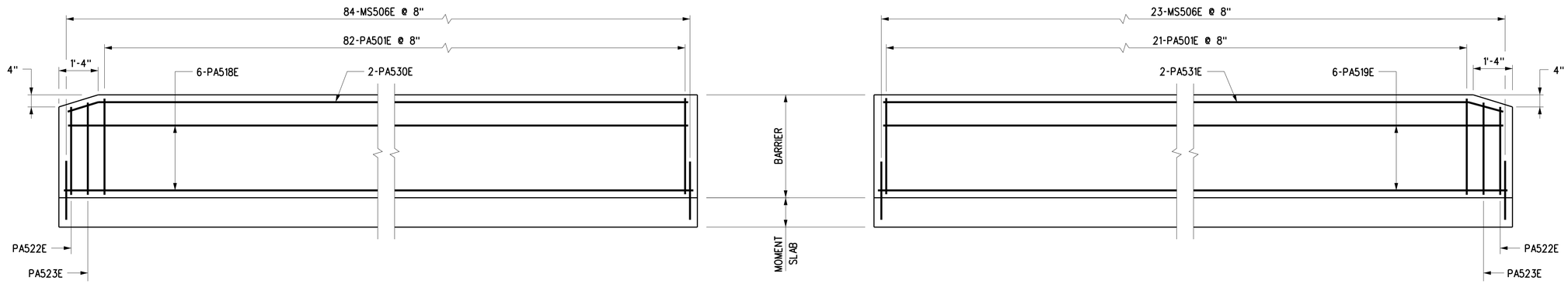

ELEVATION - 3'-0" BARRIER ON MOMENT SLAB

(LOOKING NORTH)
N.T.S.

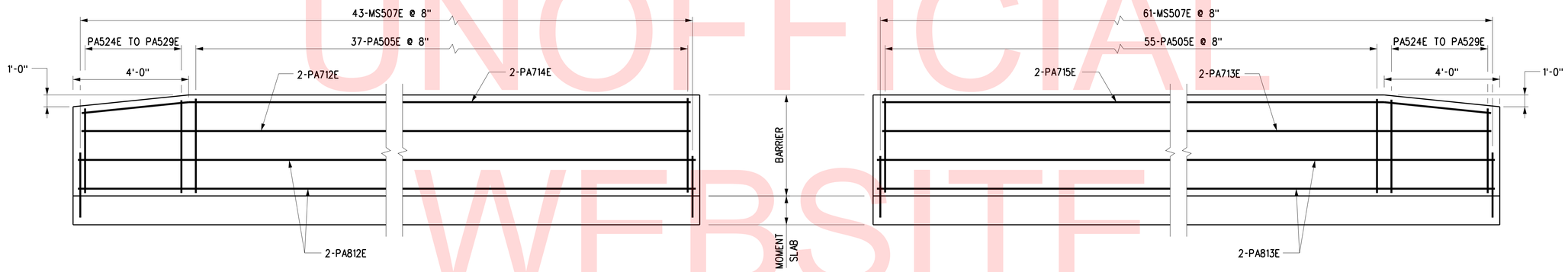

ELEVATION - 3'-8" BARRIER ON MOMENT SLAB

(LOOKING NORTH)
N.T.S.

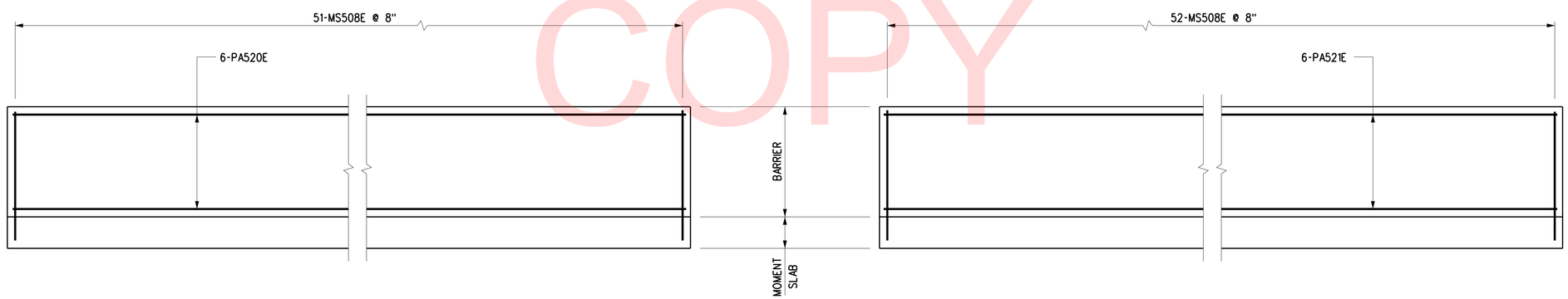

ELEVATION - 2'-3" BARRIER ON MOMENT SLAB

(LOOKING NORTH)
N.T.S.

UNOFFICIAL WEBSITE COPY

U:\Projects\D\DelDOT\20837280\CAD\Bridge\ab20_RoadA.dgn
4/3/2018
LEWISRI

DELAWARE DEPARTMENT OF TRANSPORTATION	ADDENDUMS / REVISIONS	NOT TO SCALE	ROAD A /SR7 IMPROVEMENTS	CONTRACT T201009002	BRIDGE NO. 1-220	ROAD A OVER SR 1	S-50
				COUNTY NEW CASTLE	DESIGNED BY: T.M. SENKEWCZ	MOMENT SLAB REINFORCEMENT 2	SHEET NO. 81
					CHECKED BY: R. F. KIRCHNER		TOTAL SHTS. 154

APPROACH SLAB & SLEEPER SLAB REINFORCEMENT BAR SCHEDULE

	MARK	LENGTH	NO. BARS	TYPE	A	B	C	D	E	F	G	H	J	K	O	R	REMARKS
APPROACH SLAB	AS501E	6'-0 1/2"	118	17		2'-7"	10 1/2"	2'-7"									
	AS502E	20'-1"	55	STR													
	AS503E	34'-7"	19	STR													
	AS504E	30'-6"	19	STR													
	AS505E	33'-0"	1	STR													
	AS506E	29'-3"	1	STR													
	AS507E	32'-11"	1	STR													
	AS508E	29'-4"	1	STR													
	AS509E	4'-0"	1	16			2'-7"	1'-5"				6 3/4"		1'-3 5/8"	3'-10 5/8"		
	AS510E	3'-9"	1	16			2'-7"	1'-2"				5 1/2"		1'-0 7/8"	3'-7 7/8"		
	AS511E	4'-1"	1	16			2'-7"	1'-6"				7 1/8"		1'-4 1/2"	3'-11 1/2"		
	AS512E	3'-8"	1	16			2'-7"	1'-1"				5 1/8"		1'-0"	3'-7"		
	AS513E	19'-6 1/2" TO 19'-11 1/2"	2	STR													Δ = 5"
	AS514E	20'-2" TO 20'-7"	2	STR													Δ = 5"
	AS515E	20'-4" TO 20'-9"	2	STR													Δ = 5"
	AS516E	19'-8" TO 20'-1"	2	STR													Δ = 5"
	AS517E	6'-1 1/4"	63	T15	6"	1'-11 1/4"	5 7/8"	2'-2 1/8"	0	1'-0"		0	11 7/8"	1'-11 1/4"	1'-5 3/4"		
	AS518E	6'-2 1/2"	62	T15	6"	1'-11 1/4"	7 1/8"	2'-2 1/8"	0	1'-0"		0	11 7/8"	1'-11 1/4"	1'-7"		
	AS519E	6'-8 1/2"	63	17		3'-0 1/4"	8"	3'-0 1/4"									
	AS601E	35'-6"	37	STR													
	AS602E	30'-6"	37	STR													
	AS603E	33'-11"	1	STR													
	AS604E	29'-3"	1	STR													
	AS605E	33'-10"	1	STR													
	AS606E	29'-4"	1	STR													
	AS607E	4'-11"	1	16			3'-6"	1'-5"				6 3/4"		1'-3 5/8"	4'-9 5/8"		
	AS608E	4'-8"	1	16			3'-6"	1'-2"				5 1/2"		1'-0 7/8"	4'-6 7/8"		
	AS609E	5'-0"	1	16			3'-6"	1'-6"				7 1/8"		1'-4 1/2"	4'-10 1/2"		
	AS610E	4'-7"	1	16			3'-6"	1'-1"				5 1/8"		1'-0"	4'-6"		
	AS801E	20'-1'	111	STR													
	AS802E	19'-6 1/2" TO 19'-11 1/2"	3	STR													Δ = 2 1/2"
	AS803E	20'-2" TO 20'-7"	3	STR													Δ = 2 1/2"
	AS804E	20'-4" TO 20'-9"	3	STR													Δ = 2 1/2"
	AS805E	19'-8" TO 20'-1"	3	STR													Δ = 2 1/2"
SLEEPER SLAB																	
	SS501E	34'-11"	40	STR													
	SS502E	30'-6"	40	STR													
	SS503E	33'-3"	2	STR													
	SS504E	29'-4"	2	STR													
	SS505E	4'-5"	2	16			2'-11"	1'-6"				7 1/8"		1'-4 1/2"	4'-3 1/2"		
	SS506E	4'-0"	2	16			2'-11"	1'-1"				5 1/8"		1'-0"	3'-11"		
	SS507E	33'-4"	2	STR													
	SS508E	29'-3"	2	STR													
	SS509E	4'-4"	2	16			2'-11"	1'-5"				6 3/4"		1'-3 5/8"	4'-2 5/8"		
	SS510E	4'-1"	2	16			2'-11"	1'-2"				5 1/2"		1'-0 7/8"	3'-11 7/8"		
	SS511E	7'-11"	112	T1	5 1/2"	1'-7 1/2"	1'-10 1/2"	1'-7 1/2"	1'-10 1/2"		5 1/2"						
	SS512E	8'-4" TO 9'-2"	2	T1	5 1/2"	1'-10" TO 2'-3"	1'-10 1/2"	1'-10" TO 2'-3"	1'-10 1/2"		5 1/2"						Δ = 10"
	SS513E	7'-2"	1	T1	5 1/2"	1'-3"	1'-10 1/2"	1'-3"	1'-10 1/2"		5 1/2"						
	SS514E	6'-10" TO 7'-8"	2	T1	5 1/2"	1'-1" TO 1'-6"	1'-10 1/2"	1'-1" TO 1'-6"	1'-10 1/2"		5 1/2"						Δ = 10"
	SS515E	8'-11"	1	T1	5 1/2"	2'-1 1/2"	1'-10 1/2"	2'-1 1/2"	1'-10 1/2"		5 1/2"						
	SS516E	8'-2 5/8"	7	T15	6"	2'-11 1/4"	5 7/8"	3'-3 1/2"		1'-0"			1'-6"	2'-11 1/4"	1'-11 7/8"		
	SS517E	8'-3 7/8"	6	T15	6"	2'-11 1/4"	7 1/8"	3'-3 1/2"		1'-0"			1'-6"	2'-11 1/4"	2'-1 1/8"		
	SS518E	8'-8"	7	17		4'-0"	8"	4'-0"									
	SS801E	7'-7 1/2"	236	STR													

STANDARD BAR BENDS

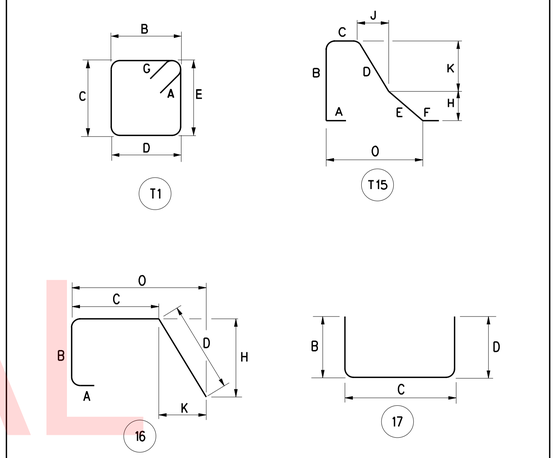

UNOFFICIAL WEBSITE COPY

U:\Projects\D\DelDOT\20837280\CAD\Bridge\abl3_RoadA.dgn
4/3/2018
LEWISRI

DELAWARE DEPARTMENT OF TRANSPORTATION

ADDENDUMS / REVISIONS

NOT TO SCALE

ROAD A /SR7 IMPROVEMENTS

CONTRACT	BRIDGE NO.	1–220
T201009002	DESIGNED BY: T.B. CUSTER	
COUNTY		
NEW CASTLE	CHECKED BY: R. F. KIRCHNER	

ROAD A OVER SR 1

APPROACH & MOMENT SLAB BAR SCHEDULE 1

SHEET NO.	TOTAL SHTS.
S-51	
82	
154	

MOMENT SLAB & BARRIER REINFORCEMENT BAR SCHEDULE

MOMENT SLAB	MS501E	29'-4" TO 33'-1"	20	STR													Δ = 5" 2 SETS OF 10
	MS502E	10'-8" TO 14'-5"	20	STR													Δ = 5" 2 SETS OF 10
	MS503E	24'-2" TO 32'-11"	42	STR													Δ = 5 1/4" 2 SETS OF 21
	MS504E	20'-0"	42	STR													
	MS505E	17'-0" TO 26'-7"	42	STR													Δ = 5 3/4" 2 SETS OF 21
	MS506E	6'-1 1/4"	107	T15	6"	1'-11 1/4"	5 7/8"	2'-2 1/8"	0	1'-0"		0	11 7/8"	1'-11 1/4"	1'-5 3/4"		
	MS507E	6'-2 1/2"	104	T15	6"	1'-11 1/4"	7 1/8"	2'-2 1/8"	0	1'-0"		0	11 7/8"	1'-11 1/4"	1'-7"		
	MS508E	6'-8 1/2"	103	17		3'-0 1/4"	8"	3'-0 1/4"									
	MS509E	28'-9"	20	STR													
	MS601E	9'-6"	91	1	8"	8'-10"											
	MS602E	8'-10"	91	STR													
	MS603E	2'-1" TO 7'-4"	12	STR													Δ = 1'-9" 3 SETS OF 4
	MS604E	2'-9" TO 8'-0"	4	1	8"	2'-1" TO 7'-4"											Δ = 1'-9"
	MS605E	20'-7"	81	1	8"	19'-11"											
	MS606E	19'-11"	81	STR													
	MS607E	3'-4" TO 19'-1"	10	1	8"	2'-8" TO 18'-5"											Δ = 1'-9"
	MS608E	2'-8" TO 18'-5"	30	STR													Δ = 1'-9" 3 SETS OF 10
BARRIERS	PA501E	7'-9 5/8"	173	T7A	6"	2'-8"	8"	2'-8 1/8"	4 3/4"		6"	2'-8"		3 1/4"			
	PA505E	9'-3 3/16"	160	T7A	6"	3'-4"	9"	3'-4 3/16"	5"		6"	3'-4"		4"			
	PA510E	19'-8"	8	STR													
	PA511E	20'-7"	6	STR													
	PA512E	20'-8"	8	STR													
	PA513E	19'-10"	6	STR													
	PA514E	2'-2"	8	STR													
	PA515E	1'-4"	6	STR													
	PA516E	1'-2"	8	STR													
	PA517E	2'-1"	6	STR													
	PA518E	55'-3"	6	STR													
	PA519E	14'-5"	6	STR													
	PA520E	32'-10"	6	STR													
	PA521E	34'-2"	6	STR													
	PA522E	7'-3 3/4"	2	T7A	6"	2'-4 3/4"	8"	2'-4 7/8"	5 1/16"		6"	2'-4 3/4"		2 15/16			
	PA523E	7'-7 7/16"	2	T7A	6"	2'-6 3/4"	8"	2'-6 15/16"	4 7/8"		6"	2'-6 3/4"		3 1/8"			
	PA524E	7'-6 7/8"	2	T7A	6"	2'-4 3/4"	9"	2'-4 7/8"	6 1/8"		6"	2'-4 3/4"		2 7/8"			
	PA525E	7'-10 1/2"	2	T7A	6"	2'-6 3/4"	9"	2'-6 7/8"	5 15/16"		6"	2'-6 3/4"		3 1/16"			
	PA526E	8'-2 3/16"	2	T7A	6"	2'-8 3/4"	9"	2'-8 15/16"	5 3/4"		6"	2'-8 3/4"		3 1/4"			
	PA527E	8'-5 11/16"	2	T7A	6"	2'-10 3/4"	9"	2'-10 15/16"	5 1/2"		6"	2'-10 3/4"		3 1/2"			
	PA528E	8'-9 5/16"	2	T7A	6"	3'-0 3/4"	9"	3'-0 15/16"	5 5/16"		6"	3'-0 3/4"		3 11/16"			
	PA529E	9'-0 15/16"	2	T7A	6"	3'-2 3/4"	9"	3'-2 15/16"	5 1/8"		6"	3'-2 3/4"		3 7/8"			
	PA530E	55'-3 1/2"	2	16			54'-0 3/4"	1'-2 3/4"				3 9/16"		1'-2 5/16"	55'-3 1/16"		
	PA531E	14'-5 1/2"	2	16			13'-2 3/4"	1'-2 3/4"				3 9/16"		1'-2 5/16"	14'-5 1/16"		
	PA710E	20'-3"	8	STR													
	PA711E	1'-9 1/2"	8	STR													
	PA712E	27'-11"	2	STR													
	PA713E	39'-7"	2	STR													
	PA714E	28'-0 1/2"	2	16			24'-0 3/4"	3'-11 3/4"				11 9/16"		3'-10 5/16	27'-11 1/16"		
	PA715E	39'-8 1/2"	2	16			35'-8 3/4"	3'-11 3/4"				11 9/16"		3'-10 5/16	39'-7 1/16"		
	PA810E	20'-3"	8	STR													
	PA811E	1'-9 1/2"	8	STR													
	PA812E	27'-11"	4	STR													
	PA813E	39'-7"	4	STR													

STANDARD BAR BENDS

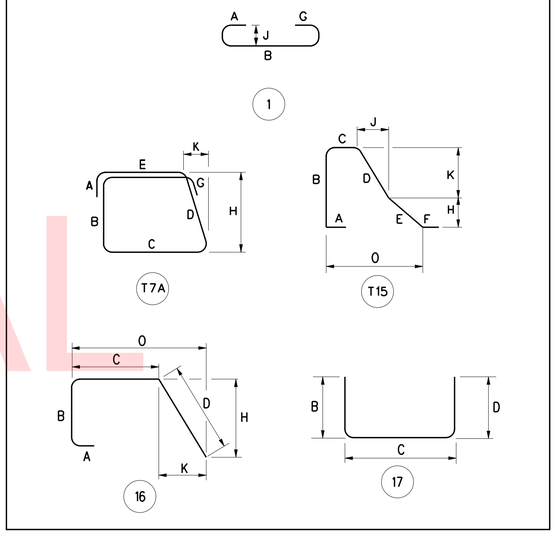

UNOFFICIAL WEBSITE COPY

U:\Projects\D\DelDOT\20837280\CAD\Bridge\ab14_RoadA.dgn 4/3/2018 LEWISRI

DELAWARE DEPARTMENT OF TRANSPORTATION

ADDENDUMS / REVISIONS

NOT TO SCALE

ROAD A /SR7 IMPROVEMENTS

CONTRACT	BRIDGE NO.	1–220
T201009002	DESIGNED BY: T.B. CUSTER	
COUNTY		
NEW CASTLE	CHECKED BY: R. F. KIRCHNER	

ROAD A OVER SR 1

APPROACH & MOMENT SLAB BAR SCHEDULE 2

SHEET NO.	TOTAL SHTS.
S-52	
83	
154	

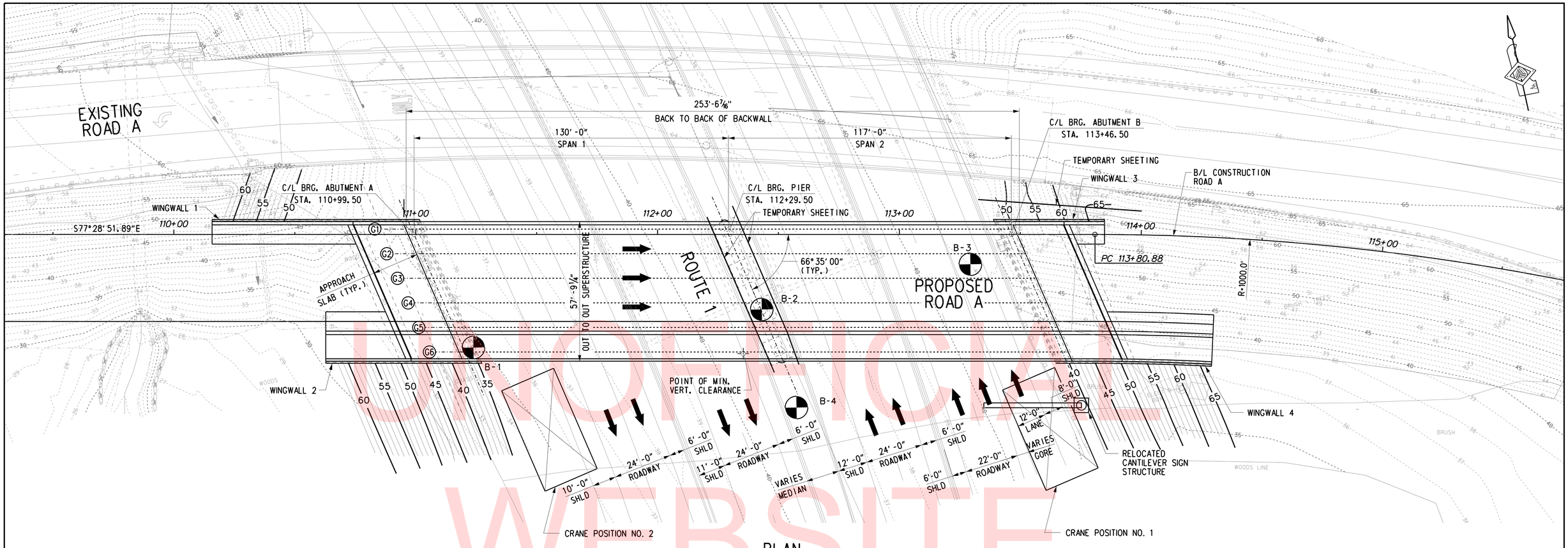

PLAN

SCALE: 1" = 20'-0"

GIRDER ERECTION SEQUENCE NOTES:

THE ERECTION OF THE GIRDERS FOR ROAD 'A' SHALL BE A NIGHT-TIME OPERATION, WITH SOME OF THE TRAFFIC LANES TEMPORARILY CLOSED DURING EACH STAGE. THE CANTILEVER SIGN STRUCTURE ADJACENT TO ABUTMENT B WILL ALSO NEED TO BE REMOVED DURING THE ERECTION OF THE GIRDERS FOR STAGE 1.

STAGE 1:

1. TEMPORARILY CLOSE NB SR 1 ENTRANCE RAMP TO TRAFFIC AS A NIGHT-TIME CLOSURE.
2. MOBILIZE CRANE IN POSITION NO. 1 ON NB SR 1 ENTRANCE RAMP AND ADJACENT RAMP SHOULDER, SOUTH OF PROPOSED BRIDGE. A GROVE GMK5250L CRANE WOULD BE SUFFICIENT TO PLACE THE GIRDERS AT THE SUGGESTED LOCATION.
3. PRE-ASSEMBLE TWO SECTIONS FOR GIRDER G1 FROM THE FIELD SPLICE IN SPAN 1 TO ABUTMENT B.
4. ERECT PRE-ASSEMBLED PORTION OF GIRDER G1 AND SUPPORT ON THE PIER AND ABUTMENT B. THE APPROXIMATE WEIGHT OF EACH GIRDER PICK IS 44 KIPS.
5. TIE-DOWN AND STABILIZE GIRDER.
6. REPEAT STEPS 3 TO 5 FOR EACH REMAINING GIRDER, INSTALLING CROSS FRAMES AFTER EACH GIRDER IS ERECTED.

STAGE 2:

1. MOBILIZE CRANE IN POSITION NO. 2 ON SB SR 1 SHOULDER AND GROUND SURFACE, SOUTH OF PROPOSED BRIDGE. A GROVE GMK5250L CRANE WOULD ALSO BE SUFFICIENT TO PLACE THE GIRDERS AT THE SUGGESTED LOCATION.
2. ERECT REMAINING PORTION OF GIRDER G1 AND SUPPORT ON ABUTMENT A, WHILE HOLDING AND MAKING FIELD SPLICE CONNECTION. THE APPROXIMATE WEIGHT OF EACH GIRDER PICK IS 31 KIPS.
3. STABILIZE GIRDER AS NECESSARY.
4. REPEAT STEP 2 FOR EACH REMAINING GIRDERS, INSTALLING CROSS FRAMES AFTER EACH GIRDER IS ERECTED.

NOTES TO CONTRACTOR

THE SUGGESTED ERECTION SEQUENCE SHOWN IS ONE POSSIBLE METHOD OF ERECTION. THE CONTRACTOR SHALL BE RESPONSIBLE FOR THE STRUCTURE DURING ALL STAGES OF CONSTRUCTION, INCLUDING CONDITIONS WHERE MEMBERS AND/OR CONNECTIONS ARE PARTIALLY CONSTRUCTED. THE CONTRACTOR SHALL SUBMIT ERECTION DRAWINGS FOR APPROVAL IN ACCORDANCE WITH THE STANDARD SPECIFICATIONS, SIGNED AND SEALED BY A PROFESSIONAL ENGINEER LICENSED IN THE STATE OF DELAWARE. THE ERECTION SUBMITTAL SHALL INCLUDE THE FOLLOWING ITEMS:

1. ERECTION PLAN AND SEQUENCE FOR THE SEQUENTIAL ERECTION OF THE FIELD SECTIONS.
2. PLACEMENT AND SIZE OF CRANE FOR ERECTION OF FIELD SECTIONS ASSOCIATED WITH THE SUGGESTED ERECTION PLAN.
3. CRANE PICKS SHALL BE INDICATED, ALONG WITH A TABLE OF PICK WEIGHTS. CRANE CHARTS SHALL BE SUBMITTED FOR REVIEW AND CORRELATION.
4. DESIGN OF TEMPORARY SUPPORT SYSTEMS SHALL BE IN ACCORDANCE WITH GUIDE DESIGN SPECIFICATIONS FOR BRIDGE TEMPORARY WORKS.
5. REQUIREMENTS FOR STABILITY/BRACING OF GIRDERS DURING ERECTION. IF THE CONTRACTOR INTENDS TO PARTIALLY COMPLETE BOLTED CONNECTIONS DURING ERECTION STAGES, CALCULATIONS SHALL BE PROVIDED TO SUPPORT THE TEMPORARY CONDITIONS.
6. LIMITS OF RIGHT OF WAY, MEANS OF CONSTRUCTION ACCESS, STAGING AREAS AND LIMITS OF TEMPORARY EASEMENTS, AS REQUIRED.
7. SHOW MAINTENANCE OF TRAFFIC DURING ERECTION OF FIELD SECTIONS, INCLUDING ANY REQUIREMENTS FOR DETOURS OR TRAFFIC STOPS. PROVIDE LIST OF OUTAGES IN TERMS OF NUMBER OF OUTAGES AND REQUIREMENTS FOR OVERNIGHT AND/OR TIME DURATION OF EACH OUTAGE.
8. LOCATIONS OF POTENTIAL CONFLICTS ASSOCIATED WITH UNDERGROUND OR OVERHEAD UTILITIES, SPECIFYING MEANS FOR AVOIDANCE, MITIGATING RISK OR INTERFERENCE, AND/OR TEMPORARY OR PERMANENT RELOCATIONS.
9. THE CONTRACTOR SHALL NOT PERFORM THE ERECTION UNTIL REVIEW AND APPROVAL OF THE ERECTION SUBMITTAL IS RECEIVED.
10. FOR MAINTENANCE OF TRAFFIC REQUIREMENTS, REFER TO THE APPROPRIATE SHEETS.
11. THE COST OF ERECTION IS INCIDENTAL TO THE "STEEL STRUCTURES" ITEM NO. 615003.

UNOFFICIAL WEBSITE COPY

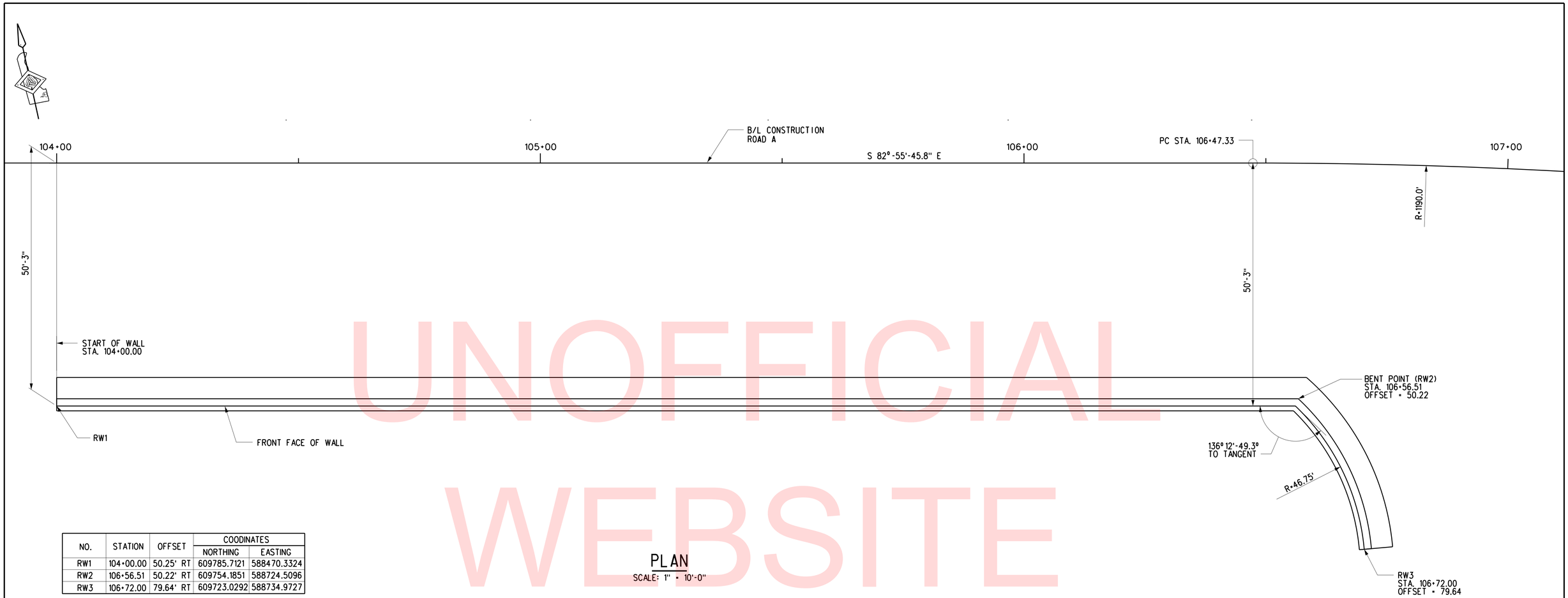

NO.	STATION	OFFSET	COODINATES	
			NORTHING	EASTING
RW1	104+00.00	50.25' RT	609785.7121	588470.3324
RW2	106+56.51	50.22' RT	609754.1851	588724.5096
RW3	106+72.00	79.64' RT	609723.0292	588734.9727

PLAN

SCALE: 1" = 10'-0"

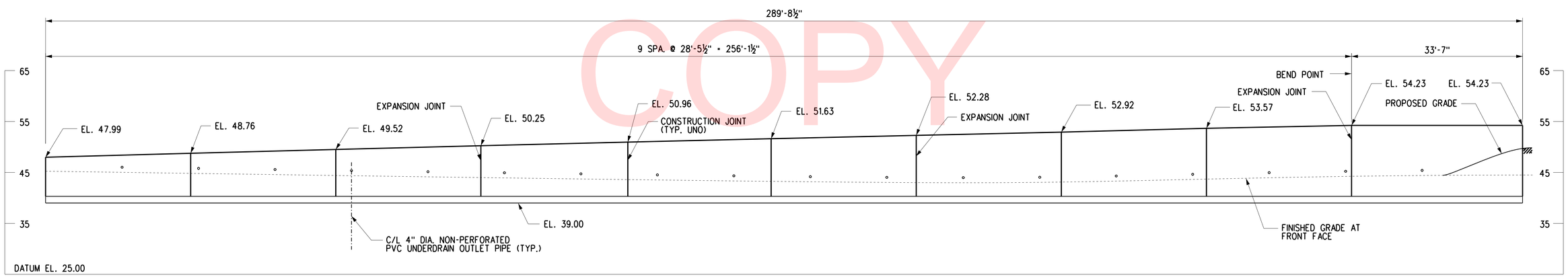

DEVELOPED ELEVATION

SCALE: 1" = 10'-0"

NOTE:

1. FENCE ON WALL NOT SHOWN.

CROSS REFERENCE NOTES:

1. FOR RETAINING WALL NOTES, SEE DWG. NO. S-59.
2. FOR SECTIONS, SEE DWG. NO. S-59.

UNOFFICIAL WEBSITE COPY

U:\Projects\D\DelDOT\20837280\CAD\Bridge\rw01_RoadA.dgn
4/3/2018
LEWISRI

DELAWARE DEPARTMENT OF TRANSPORTATION	ADDENDUMS / REVISIONS	SCALE 0 10 20 30 FEET	ROAD A /SR7 IMPROVEMENTS	CONTRACT T201009002 / COUNTY NEW CASTLE	BRIDGE NO. 1-220 / DESIGNED BY: T.M. SENKEWICZ / CHECKED BY: R. F. KIRCHNER

RETAINING WALL AT ROAD A

PLAN AND ELEVATION

S-54

SHEET NO. 85

TOTAL SHTS. 154

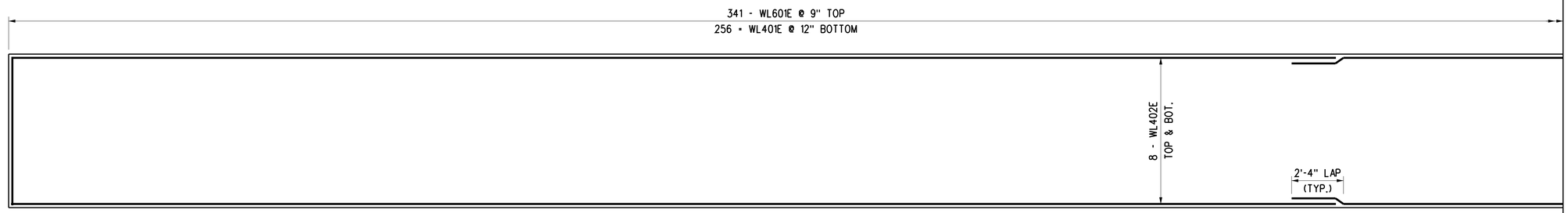

PLAN

SCALE: 3/8" = 1'-0"

UNOFFICIAL WEBSITE COPY

MATCHLINE A-A

CROSS REFERENCE NOTES:

1. FOR RETAINING WALL PLAN AND ELEVATION SEE DWG. NO. S-54.
2. FOR SECTIONS, SEE DWG. NO. S-59.

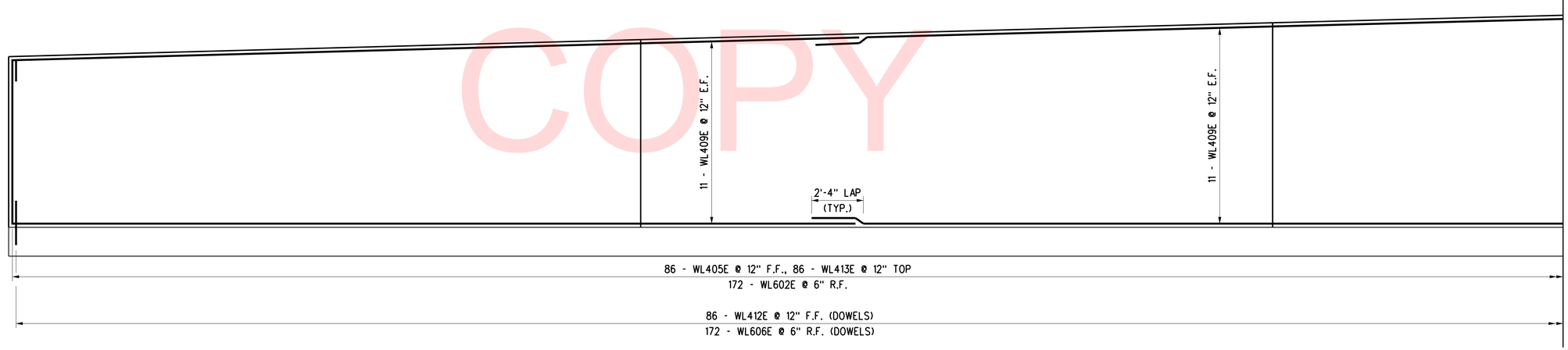

WALL ELEVATION

SCALE: 3/8" = 1'-0"

DELAWARE DEPARTMENT OF TRANSPORTATION	ADDENDUMS / REVISIONS	SCALE 0 1 2 4 8 FEET	ROAD A /SR7 IMPROVEMENTS	CONTRACT T201009002	BRIDGE NO. 1-220	RETAINING WALL AT ROAD A	S-55 SHEET NO. 86
				COUNTY NEW CASTLE	DESIGNED BY: T.M. SENKEWICZ	WALL REINFORCEMENT 1	TOTAL SHTS. 154
					CHECKED BY: R.F. KIRCHNER		

U:\Projects\D\DelDOT\20837280\CAD\Bridge\rw03_RoadA.dgn 4/3/2018 LEWISRI

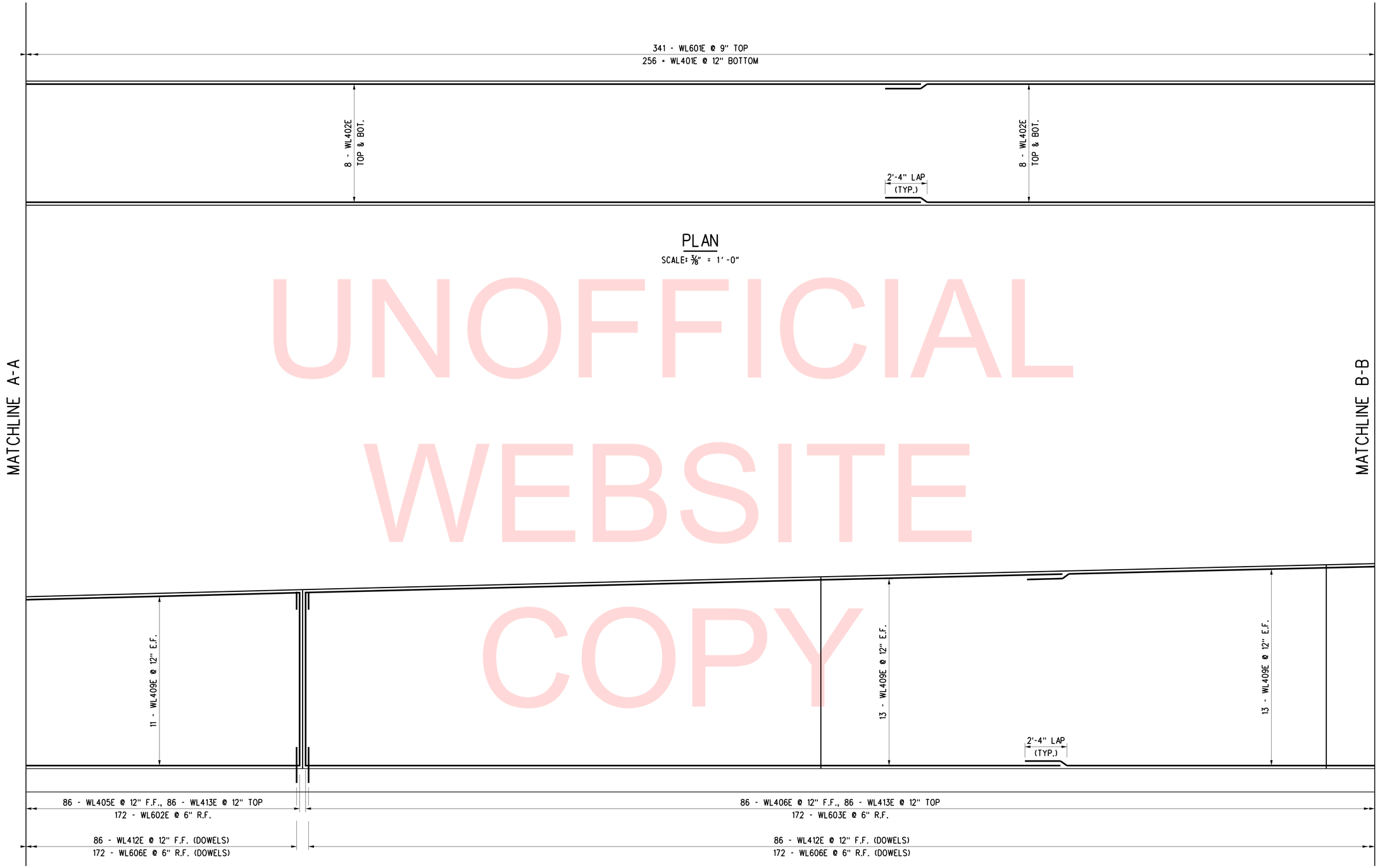

UNOFFICIAL WEBSITE COPY

U:\Projects\D\DelDOT\20837280\CAD\Bridge\rw04_RoadA.dgn 4/3/2018 LEWISRI

DELAWARE DEPARTMENT OF TRANSPORTATION	ADDENDUMS / REVISIONS	SCALE 0 1 2 4 8 FEET	ROAD A /SR7 IMPROVEMENTS	CONTRACT T201009002	BRIDGE NO. 1-220	RETAINING WALL AT ROAD A	S-56 SHEET NO. 87
				COUNTY NEW CASTLE	DESIGNED BY: T.M. SENKEWICZ	WALL REINFORCEMENT 2	TOTAL SHTS. 154
					CHECKED BY: R. F. KIRCHNER		

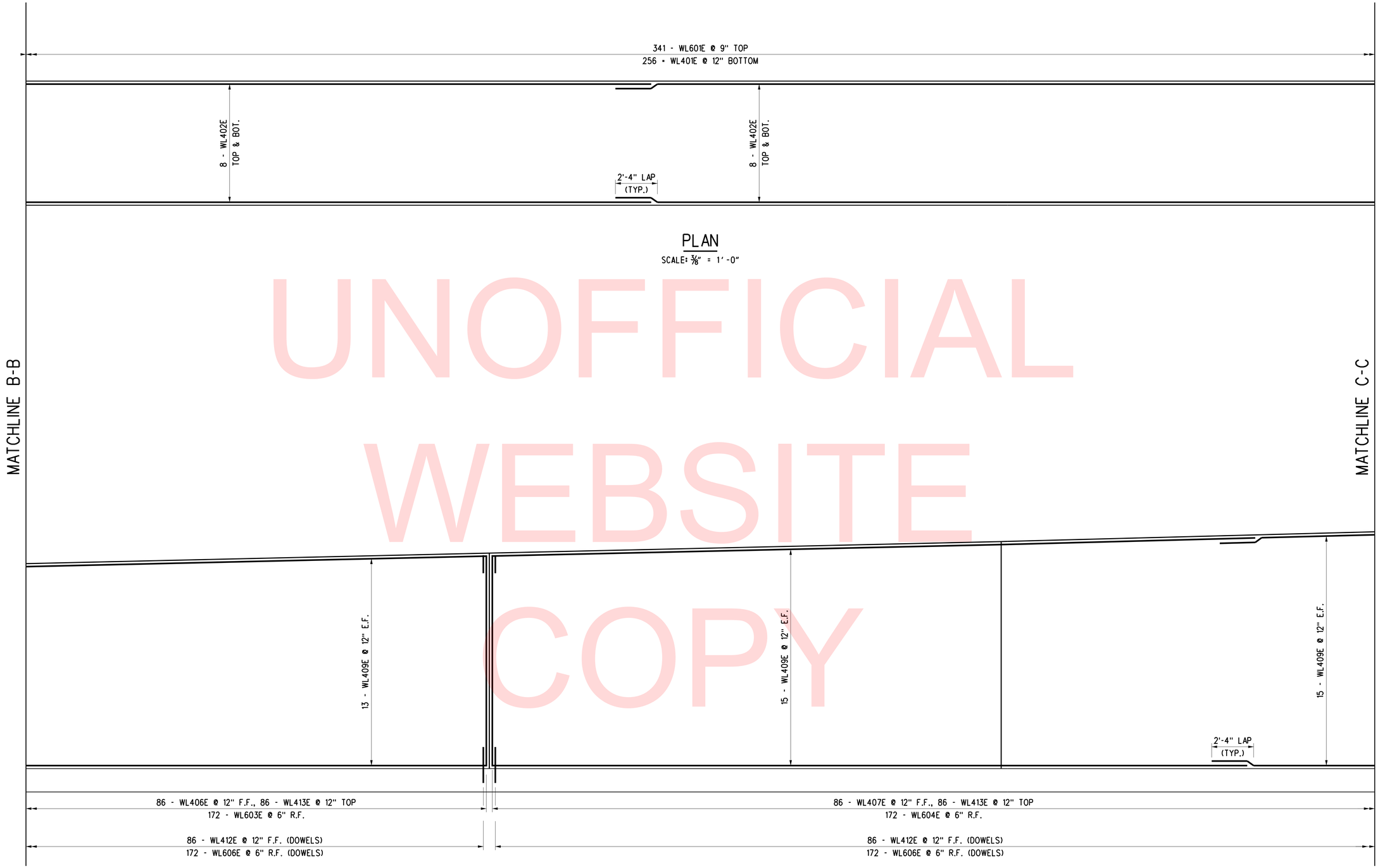

PLAN

SCALE: 3/8" = 1'-0"

WALL ELEVATION

SCALE: 3/8" = 1'-0"

UNOFFICIAL WEBSITE COPY

U:\Projects\D\DelDOT\20837280\CAD\Bridge\rw05_RoadA.dgn 4/3/2018 LEWISRI

DELAWARE DEPARTMENT OF TRANSPORTATION	ADDENDUMS / REVISIONS	SCALE 0 1 2 4 8 FEET	ROAD A /SR7 IMPROVEMENTS	CONTRACT T201009002	BRIDGE NO. 1-220	RETAINING WALL AT ROAD A	S-57 SHEET NO. 88
				COUNTY NEW CASTLE	DESIGNED BY: T.M. SENKEWICZ	WALL REINFORCEMENT 3	TOTAL SHTS. 154
					CHECKED BY: R.F. KIRCHNER		

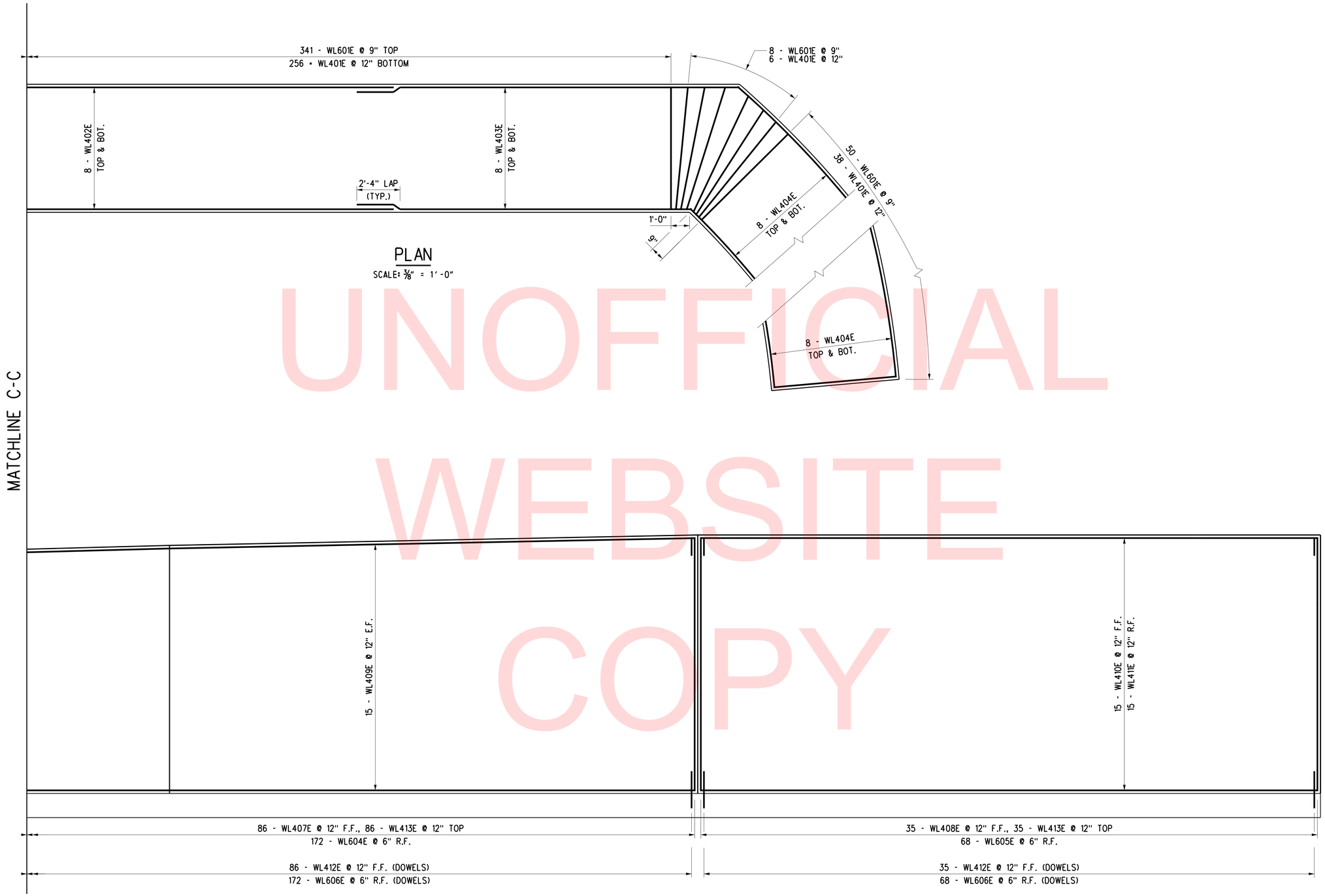

UNOFFICIAL WEBSITE COPY

U:\Projects\D\DelDOT\20837280\CAD\Bridge\rw06_RoadA.dgn
4/3/2018
LEWISRI

DELAWARE DEPARTMENT OF TRANSPORTATION	ADDENDUMS / REVISIONS	SCALE 0 1 2 4 8 FEET	ROAD A /SR7 IMPROVEMENTS	CONTRACT T201009002	BRIDGE NO. 1-220	RETAINING WALL AT ROAD A	S-58 SHEET NO. 89
				COUNTY NEW CASTLE	DESIGNED BY: T.M. SENKEWICZ	WALL REINFORCEMENT 4	TOTAL SHTS. 154
					CHECKED BY: R. F. KIRCHNER		

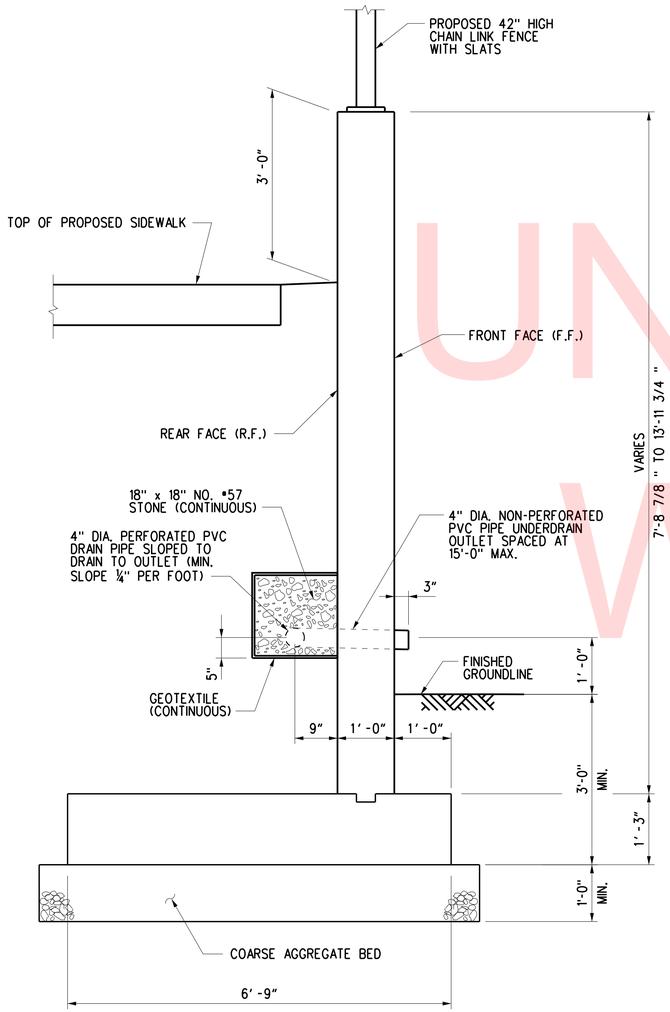

RETAINING WALL TYPICAL SECTION

SCALE: ¾" = 1'-0"

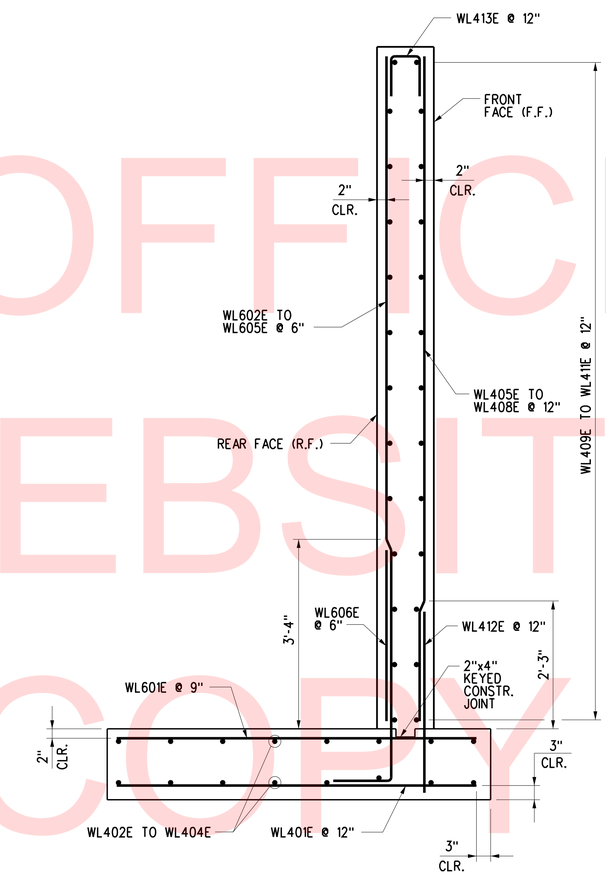

RETAINING WALL REINFORCEMENT SECTION

SCALE: ¾" = 1'-0"

RETAINING WALL NOTES:

1. DESIGN SPECIFICATIONS:

   (A) DELDOT BRIDGE DESIGN MANUAL, 2016 EDITION

   (B) 2014 AASHTO LRFD BRIDGE SPECIFICATIONS, 7TH EDITION, CUSTOMARY U.S. UNITS INCLUDING 2015 AND 2016 INTERIMS.

   (C) PROVIDE MATERIALS AND PERFORM WORK IN ACCORDANCE WITH THE DELDOT STANDARD SPECIFICATIONS, AUGUST 2016.

2. PORTLAND CEMENT CONCRETE:

   USE PORTLAND CEMENT CONCRETE FOR CAST-IN-PLACE ELEMENTS AS FOLLOWS:
   (fc' = 28 DAY COMPRESSIVE STRENGTH)
   CLASS A - RETAINING WALL STEM (fc' = 4.5 ksi)
   CLASS B - RETAINING WALL FOOTING (fc' = 3.0 ksi)
   A HIGHER CLASS CONCRETE MAY BE SUBSTITUTED FOR A LOWER CLASS CONCRETE AT NO ADDITIONAL COST TO DELDOT WITH APPROVAL OF THE BRIDGE DESIGN ENGINEER.

3. BAR REINFORCEMENT:

   REINFORCING STEEL SHALL CONFORM TO ASTM A 615, GRADE 60. ALL SPLICES, NOT SHOWN, SHALL BE LAPPED AS PER THE LRFD BRIDGE DESIGN SPECIFICATIONS. MINIMUM COVER FOR ANY BAR SHALL BE 2" UNLESS OTHERWISE NOTED.

   FOR TIES AND STIRRUPS, STANDARD ACI BENDING TOLERANCES ARE MODIFIED TO PLUS (+) ZERO INCHES, MINUS (-) NORMAL ACI BENDING TOLERANCE.

   ONLY GRADE 60 CAN BE USED ON THIS PROJECT.

   ALL REINFORCING STEEL IN THE BARRIER AND MOMENT SLAB SHALL BE FUSION-BONDED EPOXY COATED, AND SHALL CONFORM TO ASTM D3963.

   ALL KEYS ARE NOMINAL SIZE.

4. DESIGN BEARING PRESSURE:

   MAX. FACTORED BEARING PRESSURE = 3.7 ksf.
   BEARING RESISTANCE IS 3.75 ksf USING A RESISTANCE FACTOR OF 0.45.

CROSS REFERENCE NOTES:

1. FOR RETAINING WALL PLAN AND ELEVATION, SEE DWG. NO. S-54.
2. FOR REINFORCEMENT BAR SCHEDULE, SEE DWG. NO. S-60.

UNOFFICIAL WEBSITE COPY

U:\Projects\D\DelDOT\20837280\CAD\BridgeVrw02_RoadA.dgn 4/3/2018 LEWISRI

DELAWARE DEPARTMENT OF TRANSPORTATION	ADDENDUMS / REVISIONS	SCALE 0 1 2 4 ½ FEET	ROAD A /SR7 IMPROVEMENTS	CONTRACT T201009002	BRIDGE NO. 1–220	RETAINING WALL AT ROAD A WALL SECTIONS	S-59 SHEET NO. 90
				COUNTY NEW CASTLE	DESIGNED BY: T.M. SENKEWICZ		TOTAL SHTS. 154
					CHECKED BY: R.F. KIRCHNER		

RETAINING WALL REINFORCEMENT BAR SCHEDULE

MARK	LENGTH	NO. BARS	TYPE	A	B	C	D	E	F	G	H	J	K	O	R	REMARKS
WL401E	6'-3"	300	STR													
WL402E	60'-0"	64	STR													
WL403E	24'-10 1/2" TO 27'-6"	16	STR													2 SETS OF 8 Δ = 4 1/2"
WL404E	32'-6" TO 39'-8"	16	9		32'-6" TO 39'-8"						2'-10" TO 3'-8"			31'-10" TO 38'-8"	46'-0" TO 52'-3"	2 SETS OF 8 Δ = 1'-0 1/4"
WL405E	7'-7" TO 9'-10"	86	STR													Δ = 5/16"
WL406E	9'-10" TO 11'-10"	86	STR													Δ = 5/16"
WL407E	11'-10" TO 13'-9 1/2"	86	STR													Δ = 1/4"
WL408E	13'-9 1/2"	35	STR													
WL409E	43'-8"	156	STR													
WL410E	33'-7 1/4"	15	9		33'-7 1/4"						2'-11 5/8"			32'-10 5/8"	46'-11 1/2"	
WL411E	34'-7"	15	9		34'-7"						3'-1 3/8"			33'-9 7/8"	47'-6 1/2"	
WL412E	3'-4"	293	STR													
WL413E	2'-8"	293	17		1'-0"	8"	1'-0"									
WL601E	6'-3"	399	STR													
WL602E	7'-7" TO 9'-10"	172	STR													Δ = 1/8"
WL603E	9'-10" TO 11'-10"	172	STR													Δ = 1/8"
WL604E	11'-10" TO 13'-9 1/2"	172	STR													Δ = 1/8"
WL605E	13'-9 1/2"	68	STR													
WL606E	5'-4"	584	17		1'-0"	4'-4"										

STANDARD BAR BENDS

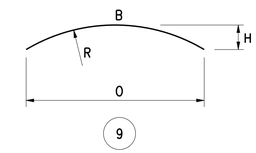

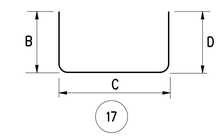

UNOFFICIAL WEBSITE COPY

U:\Projects\D\DelDOT\20837280\CAD\Bridge\rw07_RoadA.dgn
4/3/2018
LEWISRI

DELAWARE DEPARTMENT OF TRANSPORTATION

ADDENDUMS / REVISIONS

NOT TO SCALE

ROAD A /SR7 IMPROVEMENTS

CONTRACT T201009002	BRIDGE NO. 1–220	RETAINING WALL AT ROAD A RETAINING WALL BAR SCHEDULE
COUNTY NEW CASTLE	DESIGNED BY: T.M. SENKEWICZ	
	CHECKED BY: R.F. KIRCHNER	

S-60

SHEET NO. 91

TOTAL SHTS. 154

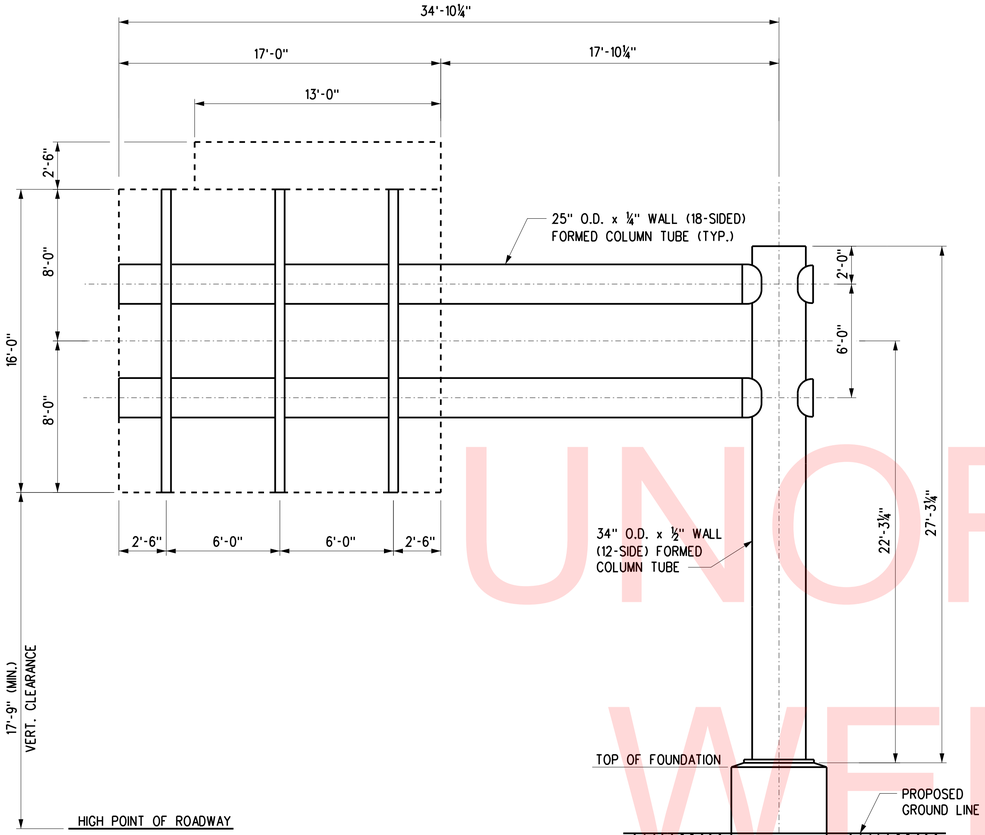

SIGN DESIGNATION C-6

SCALE: ¼" = 1'-0"

DESIGN SIGN = 448.5 SF
DESIGN SIGN: 26'(W)x16'(H)+2.5'x13' (EXIT PANEL)

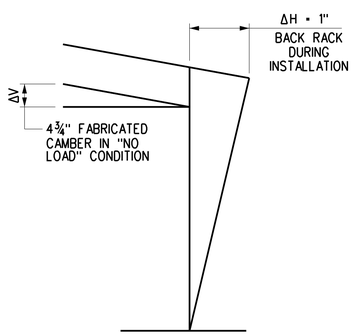

CAMBER DIAGRAM

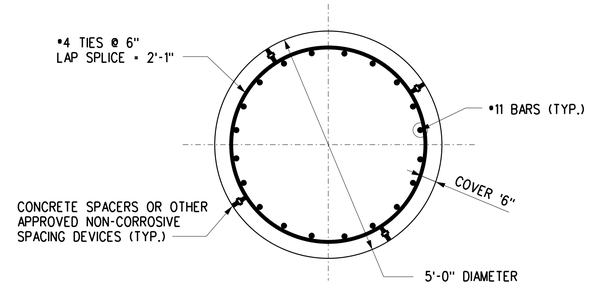

SECTION C-C

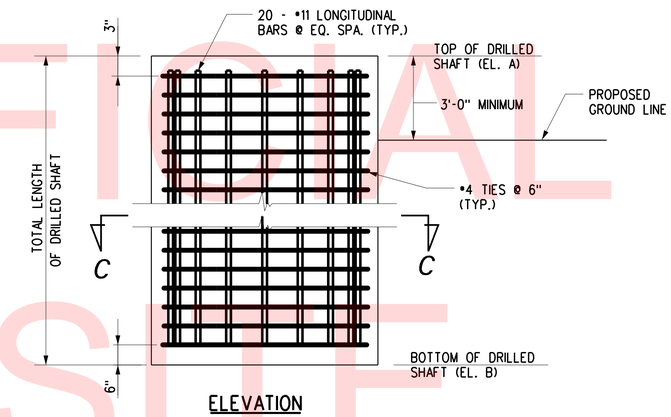

ELEVATION

NOTE: POTENTIAL SPACERS NOT SHOWN FOR CLARITY.

DRILLED SHAFT DETAILS FOR SIGN STRUCTURES

SCALE: ½" = 1'-0"

DRILLED SHAFT INSTALLATION DATA			
SHAFT NO. or SUBSTRUCTURE UNIT	DESIGN DATA		ACTUAL FIELD DATA
	EL. A	ESTIMATED EL. B	ACTUAL EL. B
S-6	43.75	18.75	

GENERAL DRILLED SHAFT NOTES

1. FOR MORE INFORMATION REGARDING PLACEMENT, MATERIALS, AND FABRICATON OF DRILLED SHAFTS, REFER TO SECTION 606 - DRILLED SHAFTS OF THE STANDARD SPECIFICATIONS.
2. ALL ELEVATIONS SHALL BE VERIFIED IN THE FIELD PRIOR TO FABRICATION AND CONSTRUCTION.
3. COST OF REINFORCING BARS INSIDE THE DRILLED SHAFT IS INCLUDED IN THE BID PRICE FOR THE APPROPRIATE DRILLED SHAFT ITEMS.
4. CONCRETE SPACERS OR OTHER APPROVED NON-CORROSIVE SPACING DEVICES SHALL BE INSTALLED IN ACCORDANCE WITH SUBSECTION 606.03(9) OF THE STANDARD SPECIFICATIONS.
5. ACCESS TUBES FOR CROSSHOLE SONIC LOG (CSL) TESTING SHALL BE INSTALLED IN ACCORDANCE WITH SUBSECTION 606.03(13) OF THE STANDARD SPECIFICATIONS.

PROJECT SPECIFIC NOTES

1. THE EXISTING SIGN STRUCTURE 'C-6' WAS DESIGNED AND FABRICATED IN ACCORDANCE WITH "AASHTO STANDARD SPECIFICATIONS FOR STRUCTURAL SUPPORTS FOR HIGHWAY SIGNS, LUMINAIRES AND TRAFFIC SIGNALS" 2001, 4TH ED., FOR A WIND SPEED OF 110 MPH AND FOR AN ICE LOAD OF 3.0 PSF.
2. THE EXISTING SIGN STRUCTURE IS TO BE RELOCATED AND CONSTRUCTED ON THE DRILLED SHAFT SHOWN ON THESE PLANS. SIGN STRUCTURE HEIGHTS, SPAN, MEMBER SIZES, CAMBER AND POSITION OF SIGNS ARE PER SHOP DRAWINGS.
3. RELOCATE SIGN STRUCTURE IN ACCORDANCE WITH SPECIAL PROVISION NO. 617500. CONSTRUCT DRILLED SHAFT IN ACCORDANCE WITH SECTION 606 OF THE DELDOT STANDARD SPECIFICATIONS.
4. ANCHOR BOLTS SHALL CONFORM TO AASHTO M314, GRADE 55. ANCHOR NUTS SHALL CONFORM TO ASTM A563, WASHERS SHALL CONFORM TO ASTM F436.
5. STEEL TEMPLATES SHALL BE USED TO SET ANCHOR BOLTS PLUMB WHEN POURING THE FOUNDATION.
6. ALL HARDWARE SHALL BE GALVANIZED IN ACCORDANCE WITH AASHTO M232.
7. BASE PLATES SHALL BE IN FULL CONTACT WITH ALL FLAT WASHERS.
8. SEAL GAP BETWEEN BASE PLATE AND CONCRETE DRILLED SHAFT WITH GALVANIZED STEEL SCREEN, TO PREVENT ENTRY OF RODENTS. SCREEN IS TO BE REMOVABLE AND ATTACHED TO BASE PLATE WITH STAINLESS STEEL HARDWARE. SCREEN IS TO BE OF SUFFICIENT STIFFNESS TO PREVENT ENTRY BETWEEN SCREEN AND FOUNDATION WHILE PERMITTING DRAINAGE.
9. ALL EXPOSED EDGES OF CONCRETE SHALL BE CHAMFERED ¾" UNLESS OTHERWISE NOTED.
10. REINFORCING STEEL SHALL CONFORM TO AASHTO M31, GRADE 60. ALL REINFORCING STEEL SHALL BE PROTECTED WITH FUSION BONDED EPOXY. EPOXY COATED REINFORCING STEEL SHALL CONFORM TO M284 (ASTM D3963).
11. THIS PROJECT SHALL UTILIZE 60" DIA. DRILLED SHAFTS. THE LONGITUDINAL BARS SHALL BE #11 BARS AND SHALL NOT BE BUNDLED. THE TRANSVERSE BARS SHALL BE #4 TIES AND SHALL NOT BE BUNDLED. THE MINIMUM CONCRETE COVER SHALL BE 6".
12. ESTIMATED DRILLED SHAFT LENGTH IS 25'-0".
13. DRILLED SHAFTS SHALL UTILIZE CLASS A CONCRETE.
14. DRILLED SHAFTS SHALL NOT REQUIRE PERMANENT CASING.
15. EXPLORATORY DRILLING SHALL NOT BE REQUIRED. PAYMENT UNDER ITEM #606031.
16. TOTAL OF 1 DRILLED SHAFT SHALL BE LOAD TESTED BY THE CONTRACTOR IN ACCORDANCE WITH ITEM #606030 - LOAD TESTING OF DRILLED SHAFTS.
17. COST OF RELOCATION SIGN STRUCTURE INCLUDING NEW ANCHOR BOLTS AND ALL INCIDENTALS NECESSARY TO COMPLETE THE WORK SHALL BE INCIDENTAL TO RELOCATING SIGN SUPPORT STRUCTURE ITEM 617500. COST OF DRILLED SHAFT FOUNDATION SHALL BE PAID UNDER DRILLED SHAFT ITEM 606004.
18. EXISTING SIGN SUPPORT FOUNDATION SHALL BE REMOVED ENTIRELY TO ALLOW CONSTRUCTION OF ABUTMENT B, PAYMENT SHALL BE UNDER ITEM 211000. REMOVAL OF STRUCTURES AND OBSTRUCTIONS.

CROSS REFERENCE NOTES:

1. FOR BASE PLATE CONNECTION DETAILS, SEE DWG. NO. S-62.

UNOFFICIAL WEBSITE COPY

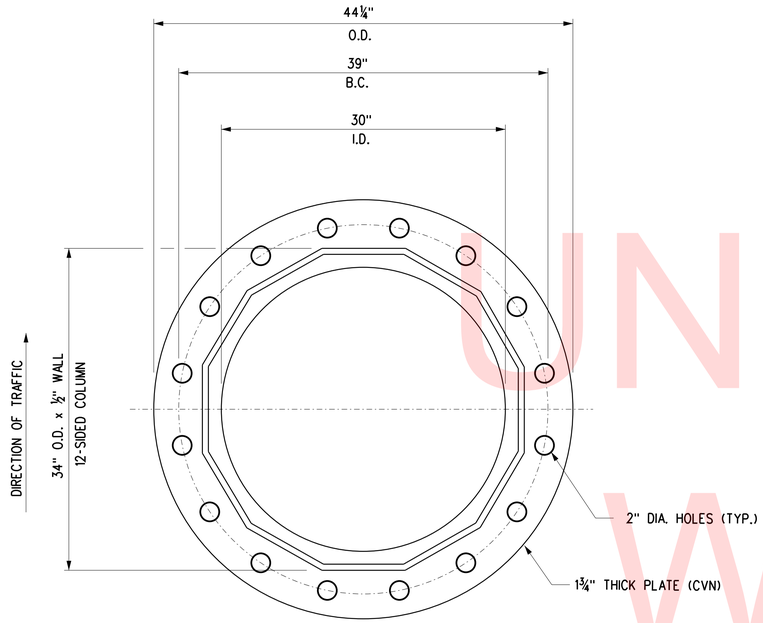

SECTION
SCALE: 1½" = 1'-0"

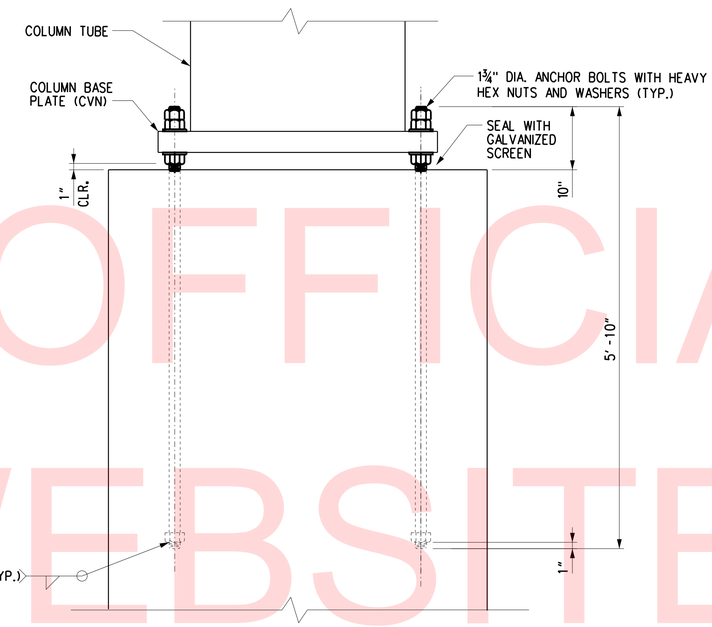

ELEVATION
SCALE: 1" = 1'-0"

UNOFFICIAL WEBSITE COPY

CANTILEVER STRUCTURE BASE CONNECTION DETAILS

REINFORCING BAR LIST										BENDING DIAGRAMS
MARK	LENGTH	NO. BARS	TYPE	A	B	C	D	G	O	LAP = (G)
DS401E	14'-8"	50	T3					2'-1"	4'-0"	O (T3)
DS1101E	24'-3"	20	STR							

NOTE: ALL DIMENSIONS ARE FROM OUT TO OUT.

CROSS REFERENCE NOTES:

1. FOR CANTILEVER SIGN AND DRILLED SHAFT NOTES, SEE DWG. NO. S-61.
2. FOR DRILLED SHAFT REINFORCEMENT, SEE DWG. NO. S-61.

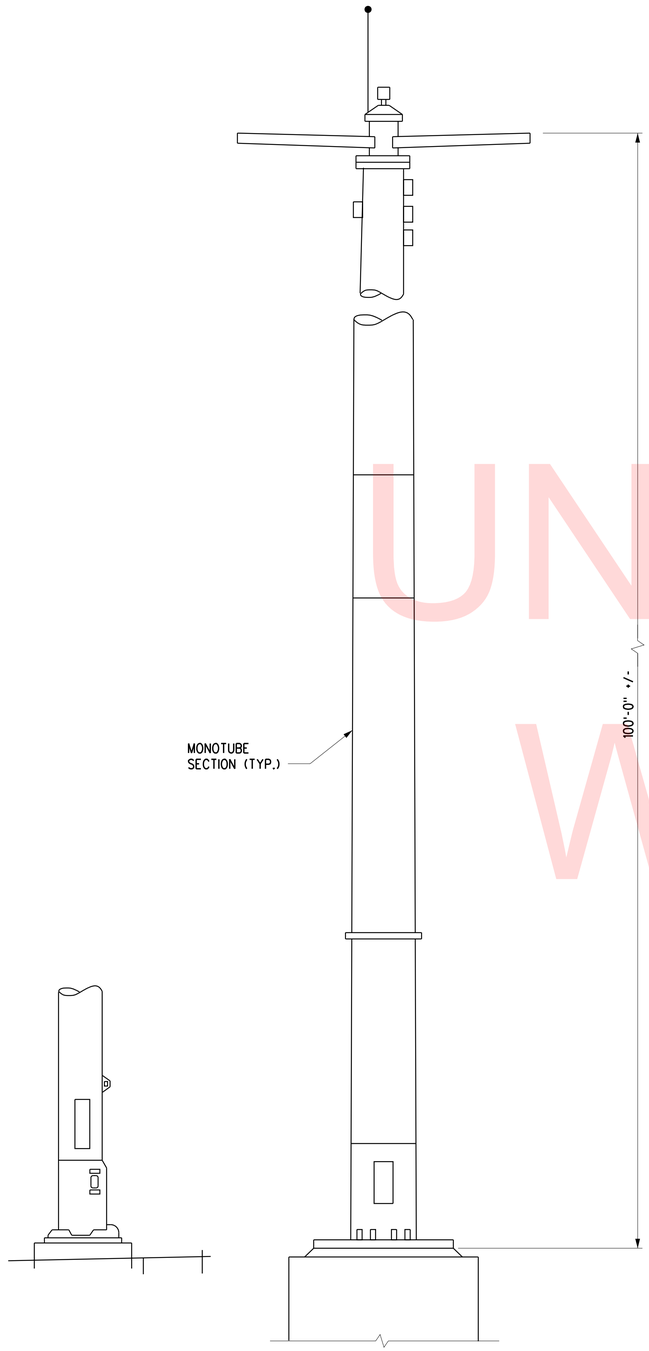

STEEL FLOODLIGHT POLE WITH ABACUS BASE SYSTEM

N.T.S.

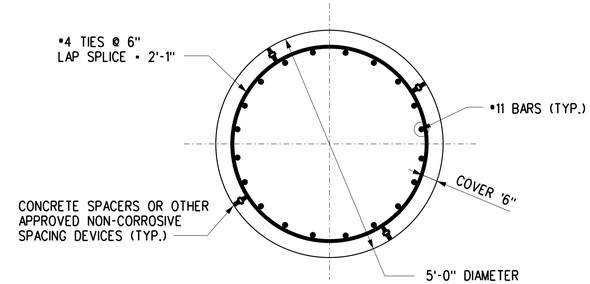

SECTION C-C

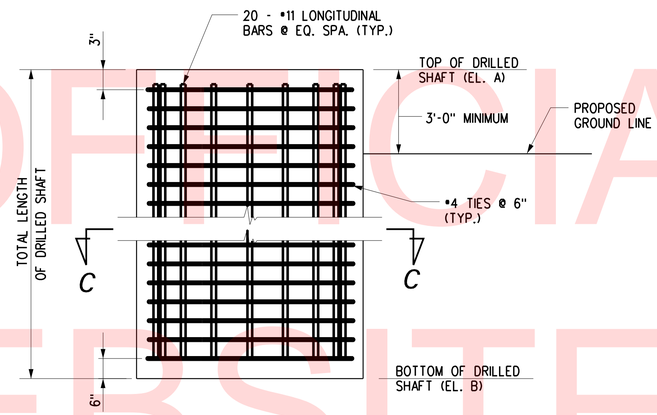

ELEVATION

NOTE: POTENTIAL SPACERS NOT SHOWN FOR CLARITY.

DRILLED SHAFT DETAILS

SCALE: ½" = 1'-0"

DRILLED SHAFT INSTALLATION DATA

SHAFT NO. or SUBSTRUCTURE UNIT	DESIGN DATA		ACTUAL FIELD DATA
	EL. A	ESTIMATED EL. B	ACTUAL EL. B
POLE	37.5	12.5	

PROJECT SPECIFIC NOTES

1. THE EXISTING HIGH-MAST LIGHTING STRUCTURE WAS DESIGNED IN ACCORDANCE WITH 1985 AASHTO FOR A WIND SPEED OF 90 MPH TO SUPPORT EIGHT (8) LUMINAIRES 60 LB. EACH, 2.0 SQ. FT. E.P.A..
2. THE EXISTING LIGHTING STRUCTURE IS TO BE RELOCATED AND ANCHORED ON THE DRILLED SHAFT SHOWN ON THESE PLANS. THE LIGHTING STRUCTURE HEIGHT IS FROM THE ORIGINAL PLANS.
3. CONSTRUCT DRILLED SHAFT IN ACCORDANCE WITH SECTION 606 OF THE DELDOT STANDARD SPECIFICATIONS.
4. ANCHOR BOLTS SHALL CONFORM TO AASHTO M314, GRADE 105. ANCHOR NUTS SHALL CONFORM TO ASTM A563. WASHERS SHALL CONFORM TO ASTM F436.
5. STEEL TEMPLATES SHALL BE USED TO SET ANCHOR BOLTS PLUMB WHEN POURING THE FOUNDATION.
6. ALL HARDWARE SHALL BE GALVANIZED IN ACCORDANCE WITH AASHTO M232.
7. BASE PLATES SHALL BE IN FULL CONTACT WITH ALL FLAT WASHERS.
8. SEAL GAP BETWEEN BASE PLATE AND CONCRETE DRILLED SHAFT WITH GALVANIZED SCREEN, TO PREVENT ENTRY OF RODENTS. SCREEN IS TO BE REMOVABLE AND ATTACHED TO BASE PLATE WITH STAINLESS STEEL HARDWARE. SCREEN IS TO BE OF SUFFICIENT STIFFNESS TO PREVENT ENTRY BETWEEN SCREEN AND FOUNDATION WHILE PERMITTING DRAINAGE.
9. ALL EXPOSED EDGES OF CONCRETE SHALL BE CHAMFERED ¾" UNLESS OTHERWISE NOTED.
10. REINFORCING STEEL SHALL CONFORM TO AASHTO M31, GRADE 60. ALL REINFORCING STEEL SHALL BE PROTECTED WITH FUSION BONDED EPOXY. EPOXY COATED REINFORCING STEEL SHALL CONFORM TO M284 (ASTM D3963).
11. THIS PROJECT SHALL UTILIZE 60" DIA. DRILLED SHAFTS. THE LONGITUDINAL BARS SHALL BE #11 BARS AND SHALL NOT BE BUNDLED. THE TRANSVERSE BARS SHALL BE #4 TIES AND SHALL NOT BE BUNDLED. THE MINIMUM CONCRETE COVER SHALL BE 6".
12. ESTIMATED DRILLED SHAFT LENGTH IS 25'-0".
13. DRILLED SHAFTS SHALL UTILIZE CLASS A CONCRETE.
14. DRILLED SHAFTS SHALL NOT REQUIRE PERMANENT CASING.
15. EXPLORATORY DRILLING SHALL NOT BE REQUIRED. PAYMENT UNDER ITEM #606031.
16. TOTAL OF 1 DRILLED SHAFT SHALL BE LOAD TESTED BY THE CONTRACTOR IN ACCORDANCE WITH ITEM #606030 - LOAD TESTING OF DRILLED SHAFTS.
17. COST OF RELOCATING HIGH MAST LIGHTING STRUCTURE INCLUDING NEW ANCHOR BOLTS AND ALL INCIDENTALS NECESSARY TO COMPLETE THE WORK SHALL BE INCIDENTAL TO RELOCATING HIGH MAST LIGHT TOWER ITEM 850500. COST OF DRILLED SHAFT FOUNDATION SHALL BE PAID UNDER DRILLED SHAFT ITEM 606004.

GENERAL DRILLED SHAFT NOTES

1. FOR MORE INFORMATION REGARDING PLACEMENT, MATERIALS, AND FABRICATON OF DRILLED SHAFTS, REFER TO SECTION 606 - DRILLED SHAFTS OF THE STANDARD SPECIFICATIONS.
2. ALL ELEVATIONS SHALL BE VERIFIED IN THE FIELD PRIOR TO FABRICATION AND CONSTRUCTION.
3. COST OF REINFORCING BARS INSIDE THE DRILLED SHAFT IS INCLUDED IN THE BID PRICE FOR THE APPROPRIATE DRILLED SHAFT ITEMS.
4. CONCRETE SPACERS OR OTHER APPROVED NON-CORROSIVE SPACING DEVICES SHALL BE INSTALLED IN ACCORDANCE WITH SUBSECTION 606.03(9) OF THE STANDARD SPECIFICATIONS.
5. ACCESS TUBES FOR CROSSHOLE SONIC LOG (CSL) TESTING SHALL BE INSTALLED IN ACCORDANCE WITH SUBSECTION 606.03(13) OF THE STANDARD SPECIFICATIONS.

UNOFFICIAL WEBSITE COPY

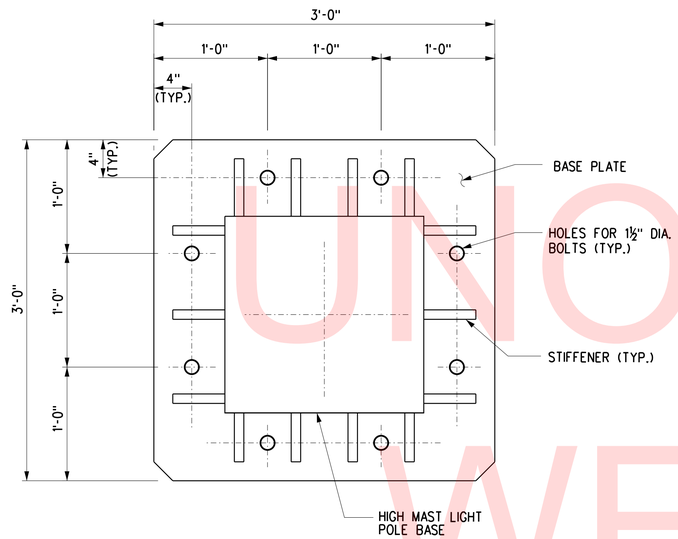

PLAN
SCALE: 1½" = 1'-0"

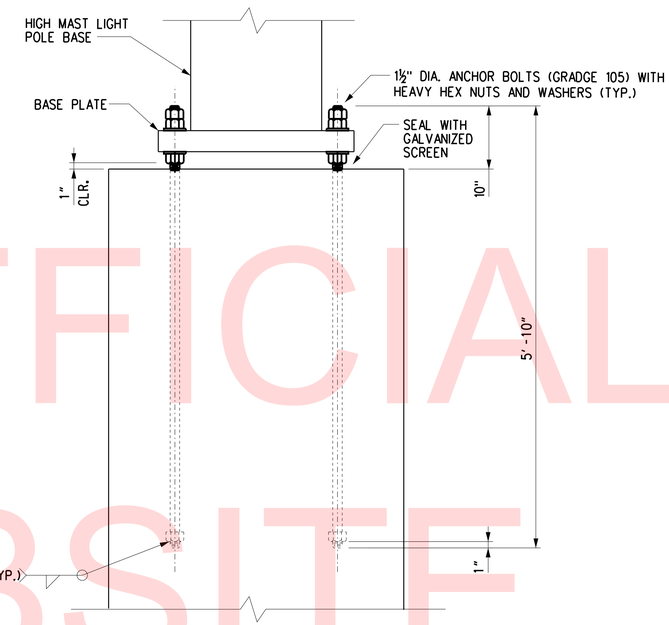

ELEVATION
SCALE: 1" = 1'-0"

HIGH MAST LIGHTING STRUCTURE BASE CONNECTION DETAILS

UNOFFICIAL WEBSITE COPY

REINFORCING BAR LIST									
MARK	LENGTH	NO. BARS	TYPE	A	B	C	D	G	O
DS402E	14'-8"	50	T3					2'-1"	4'-0"
DS1102E	24'-3"	20	STR						

BENDING DIAGRAMS

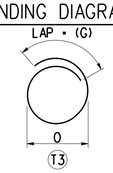

NOTE: ALL DIMENSIONS ARE FROM OUT TO OUT.

CROSS REFERENCE NOTES:

1. FOR LIGHTING STRUCTURE AND DRILLED SHAFT NOTES, SEE DWG. NO. S-63.
2. FOR DRILLED SHAFT REINFORCEMENT, SEE DWG. NO. S-63.

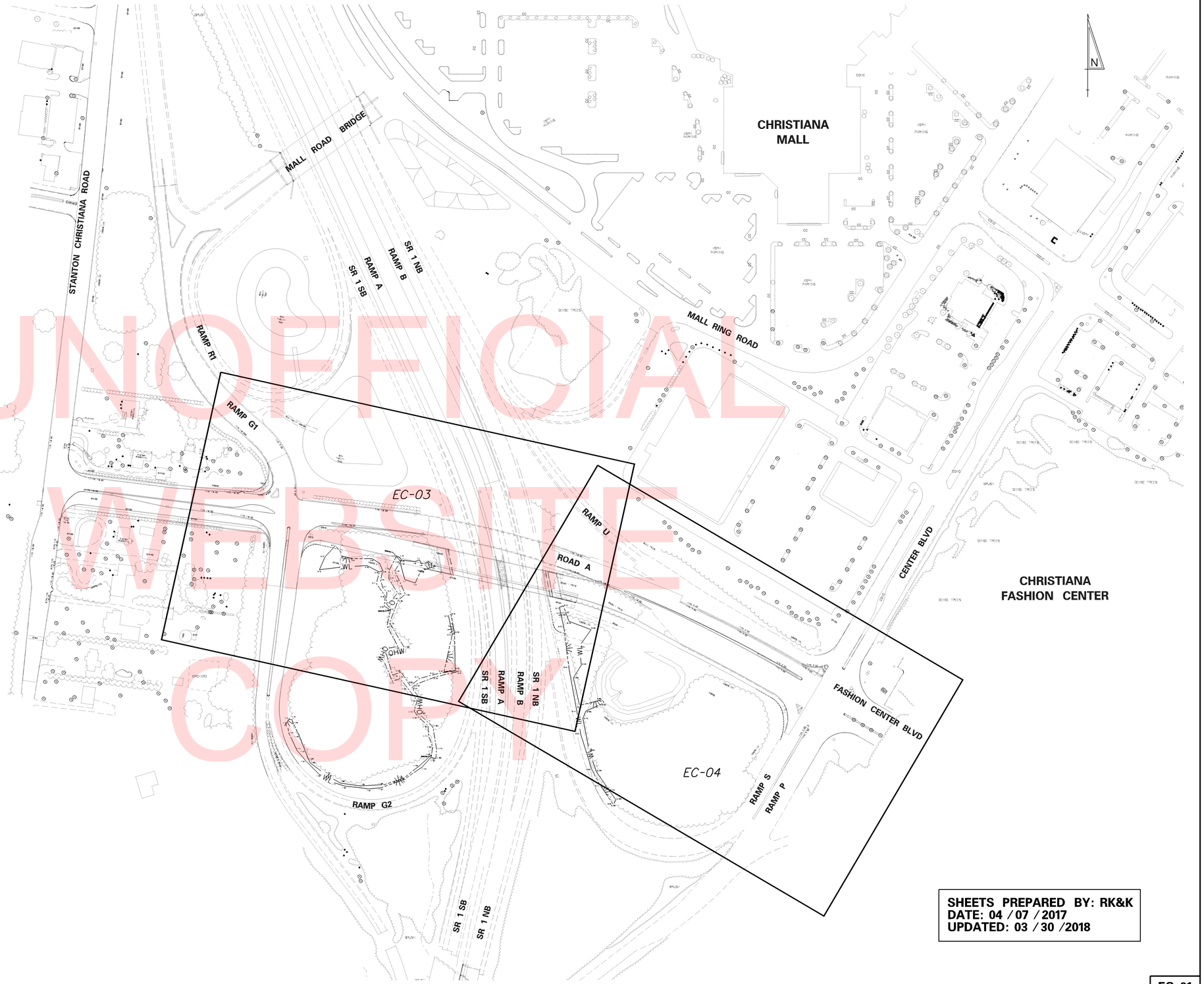

UNOFFICIAL WEBSITE COPY

SHEETS PREPARED BY: RK&K
DATE: 04 / 07 / 2017
UPDATED: 03 / 30 /2018

4/3/2018 3:19:00 PM
\\BALSRV01\V2012\2012\12146_DELDOT585\40-ROAD A CONNECTOR\CADD\CONTRACT\PLANS\EC01_RDA.DGN

DELAWARE DEPARTMENT OF TRANSPORTATION	ADDENDUMS / REVISIONS	SCALE 0 120 240 360 FEET	ROAD A /SR7 IMPROVEMENTS	CONTRACT T201009002	BRIDGE NO. 1–220	ENVIRONMENTAL COMPLIANCE PLAN	EC–01
				COUNTY NEW CASTLE	DESIGNED BY: KH		SHEET NO. 96
					CHECKED BY: JTR		TOTAL SHTS. 154

ENVIRONMENTAL COMPLIANCE NOTES

1. GENERAL NOTES:

A. THE PURPOSE OF THESE ENVIRONMENTAL COMPLIANCE SHEETS IS TO IDENTIFY THOSE ITEMS ASSOCIATED WITH ENVIRONMENTAL COMPLIANCE. IMPACT CALCULATIONS ARE FOR AGENCY REPORTING PURPOSES ONLY AND ARE NOT TO BE USED FOR BIDDING PURPOSES.

B. IF A DEPARTURE FROM THE APPROVED PLANS (WHICH WOULD AFFECT ANY NATURAL AND/OR CULTURAL RESOURCES) IS NECESSARY, THE ENVIRONMENTAL STUDIES SECTION SHALL BE CONTACTED AT (302) 760-2264 TO ALLOW THEM TO COORDINATE WITH THE APPROPRIATE RESOURCE AGENCIES FOR APPROVAL.

C. USE OF THESE SHEETS DOES NOT ALLEVIATE THE CONTRACTOR'S RESPONSIBILITY TO COMPLY WITH ALL CONDITIONS SET FORTH IN THE ENVIRONMENTAL STATEMENT AND PERMITS.

D. THE IDENTIFIED PERMANENT AND TEMPORARY IMPACTS TO JURISDICTIONAL RESOURCES SHOWN ON THE ENVIROMENTAL COMPLIANCE SHEETS ARE THE ONLY AUTHORIZED IMPACTS.

2. NATURAL RESOURCE ISSUES:

A. PERMIT REQUIREMENTS / APPROVALS*:
USACE NWP23 - CENAP-OP-R-2018-802-85, EXPIRES 3/12/2022**
DNREC SUBAQUEOUS LAND PERMIT - EXEMPT UNDER DEL. CODE § 7217 (a).
DNREC WQC - ISSUED FOR USACE NWP 23
DNREC CZM - ISSUED FOR USACE NWP 23
NCC DEPARTMENT OF LAND USE - NONE (NO MAPPED FLOODPLAIN)

* THE PERMITS/APPROVALS LISTED ARE THOSE REQUIRED FOR THIS PROJECT. THE ENVIRONMENTAL STUDIES SECTION IS RESPONSIBLE FOR COORDINATING/OBTAINING THESE PERMITS/APPROVALS.

** THE CONTRACTOR MUST ENSURE THAT THESE PERMITS/APPROVALS ARE IN THEIR POSSESSION PRIOR TO THE BEGINNING OF CONSTRUCTION AND ENSURE THESE PERMITS/APPROVALS ARE DISPLAYED ON-SITE DURING THE ENTIRE CONSTRUCTION PERIOD.

B. CONSTRUCTION RESTRICTIONS:
ENDANGERED SPECIES: NONE
FISHERIES: NONE
MIGRATORY BIRDS: NONE

3. CULTURAL RESOURCE ISSUES:
A. IF ANY UNANTICIPATED DISCOVERIES OF ARCHAEOLOGICAL OR HUMAN REMAINS OCCUR DURING CONSTRUCTION, ALL WORK SHALL BE IMMEDIATELY SUSPENDED IN THE AREA OF THE DISCOVERY AND THE ENGINEER SHALL BE CONTACTED. THE ENGINEER WILL CONTACT DELDOT CULTURAL RESOURCES, SHPO AND USACE TO COMMENCE THE NECESSARY FEDERAL AND STATE COORDINATION. WORK SHALL NOT RESUME UNTIL APPROPRIATE RESOURCE AGENCY COORDINATION, INVESTIGATION AND/OR RECOVERY IS COMPLETE.

4. PROTECTION OF RESOURCES:

A. KEEP CLEARING IN WETLAND AREAS TO A MINIMUM ABSOLUTELY NECESSARY FOR CONSTRUCTION ACCESS. SUPPORT ALL EQUIPMENT TRAVERSING WETLANDS AND SUBAQUEOUS LAND ON MATS. PAYMENT FOR MATS WILL BE MADE UNDER ITEM 621500 - TEMPORARY TIMBER MAT. IN WETLAND AREAS THAT ARE CLEARED, NO GRUBBING EXCEPT WHERE NECESSARY TO CONSTRUCT PROJECT COMPONENTS SUCH AS FOUNDATIONS AND RIPRAP PROTECTION IS PERMITTED. CUT VEGETATION FLUSH WITH THE GROUND (I.E. NO DISTURBANCE OF THE ROOT MAT). RESTORE TEMPORARILY DISTURBED WETLAND AREAS TO GRADE AND SEED WITH ITEM 908017 - TEMPORARY GRASS SEEDING (ANNUAL RYEGRASS).

B. USE SILT FENCE ALONG THE LIMITS OF CONSTRUCTION IN ALL AREAS WHERE WATER/WETLANDS ARE BEING IMPACTED (AS SHOWN ON ENVIRONMENTAL COMPLIANCE SHEETS), AND ALSO IN ANY AREA WHERE WATER/WETLANDS EXIST WITHIN 20 FEET OF THE LIMIT OF CONSTRUCTION (AS SHOWN ON CONSTRUCTION PLAN SHEETS). ANY CONTRACTOR ACCESS BEYOND THE LIMIT OF CONSTRUCTION IS STRICTLY PROHIBITED.

C. USE SANDBAGS TO SECURE SILT FENCE AT AREAS ADJACENT TO WOODED UPLANDS/ ALL WETLANDS IN LIEU OF TRENCHING UNLESS PROPER EROSION AND SEDIMENT CONTROL CANNOT BE MAINTAINED. SANDBAGS USED TO SECURE THE SILT FENCE IS INCIDENTAL TO ITEM 905001 - SILT FENCE. THE ENVIRONMENTAL STUDIES SECTION (CAROL SULLIVAN, 302- 760-2129) CAN PROVIDE FURTHER GUIDANCE REGARDING THIS METHOD OF INSTALLATION.

D. STAGING, STOCKPILING AND DISPOSAL:

I. NO STOCKPILING OR STORAGE OF EQUIPMENT, MATERIALS OR STRUCTURAL STEEL; NO STAGING AREA; AND NO INSTALLATION OF ANCILLARY FACILITIES SUCH AS CONCRETE OR ASPHALT PLANTS OR CONSTRUCTION TRAILERS SHALL BE PERMITTED ON ANY CULTURAL RESOURCE SITE OR WITHIN WETLANDS OR STREAMS OUTSIDE OF IDENTIFIED STORAGE AREAS APPROVED BY THE SHPO OR THE USACE. NO CONSTRUCTION MATERIALS, AGGREGATES, OR EARTH SHALL BE STOCKPILED OR STORED IN A MANNER THAT WOULD AFFECT WETLANDS OR STREAMS. STOCKPILES SHALL HAVE EROSION AND SEDIMENT CONTROLS APPROVED BY DELDOT.

II. ALL EXCESS EXCAVATED MATERIALS NOT USED IN CONSTRUCTION SHALL BE DISPOSED OF IN UPLAND, NON-WETLAND, NON-CULTURAL RESOURCE SITE(S). THE EXCAVATED MATERIAL SHALL BE PROPERLY CONTAINED AND STABILIZED TO PREVENT ITS ENTRY INTO ANY ADJACENT WETLANDS OR WATERWAYS. OUTSIDE OF ANY LOCATION DESIGNATED ON PLANS FOR DISPOSAL, NO DISPOSAL/WASTING OPERATION SHALL COMMENCE UNTIL WRITTEN APPROVAL OF THE DISPOSAL SITE(S) IS OBTAINED BY THE ENGINEER FROM THE USACE AND THE SHPO. THE CONTRACTOR SHALL SUBMIT THE PROPOSED DISPOSAL SITE LOCATIONS(S) TO THE ENGINEER. THE ENGINEER WILL SUBMIT THE PROPOSED DISPOSAL SITE INFORMATION TO THE SHPO AND USACE FOR APPROVAL. THE DEPARTMENT WILL NOT CONSIDER ANY DELAYS OR MONETARY CLAIMS OF ANY NATURE RESULTING FROM DELAYS IN APPROVAL OR REJECTION OF DISPOSAL SITES OR FROM THE CONTRACTOR'S FAILURE OR DIFFICULTY IN FINDING ACCEPTABLE DISPOSAL SITES TO MEET THE TIME FRAMES AND CAPACITIES REQUIRED. THE CONTRACTOR SHALL BE RESPONSIBLE FOR ALL PLANS, EROSION AND SEDIMENTATION CONTROL MEASURES, ETC. REQUIRED BY THE APPROPRIATE REGULATORY AGENCY FOR UTILIZING OFF-SITE SPOIL AREAS.

5. WETLAND MITIGATION:

DUE TO THE QUANTITY OF PERMANENT WETLANDS/WATERS IMPACT (GREATER THAN 1/10 ACRE), COMPENSATORY MITIGATION IS REQUIRED AND WILL OCCUR AT A 1:1 RATIO FOR EMERGENT WETLANDS AND A 2:1 RATIO FOR SHRUB AND FORESTED WETLANDS. IMPACTS WILL BE MITIGATED AT THE GLENVILLE WETLAND MITIGATION SITE, FOR A TOTAL OF 0.360 ACRES.

PERMANENT WATERS IMPACT AREA SCHEDULE

ID	IMPACT DESCRIPTION	AREA (SF)	AREA (AC)	VOLUME (CY)	JURISDICTION
3-01	FILL	1,834.02	0.0421	67.9266	USACE/DNREC
3-02	RIPRAP	338.80	0.0078	12.5481	USACE/DNREC
3-03	FILL	60.50	0.0014	2.2407	USACE/DNREC
3-04	RIPRAP	90.07	0.0021	3.3359	USACE/DNREC
3-05	HYDROLOGY LOSS	112.00	0.0026	N/A	USACE/DNREC
3-06	FILL	476.07	0.0109	17.6322	USACE/DNREC
TOTAL DNREC IMPACT AREAS		2,911.46	0.0668	103.6835	DNREC
TOTAL USACE IMPACT AREAS		2,911.46	0.0668	103.6835	USACE

PERMANENT WETLAND IMPACT AREA SCHEDULE

ID	IMPACT DESCRIPTION	AREA (SF)	AREA (AC)	VOLUME (CY)	JURISDICTION	CLASSIFICATION
4-W1	FILL	1,639.00	0.0376	N/A	USACE	PFO
4-W2	FILL	64.07	0.0015	N/A	USACE	PEM
3-W1	FILL	2,128.84	0.0489	N/A	USACE	PEM
3-W2	FILL	1,708.92	0.0392	N/A	USACE	PFO
3-W3	FILL	1,625.20	0.0373	N/A	USACE	PFO
3-W4	FILL	821.72	0.0189	N/A	USACE	PEM
3-W5	FILL	848.80	0.0195	N/A	USACE	PFO
3-W6	FILL	1,047.60	0.0240	N/A	USACE	PEM
TOTAL DNREC IMPACT AREAS		0.00	0.00	N/A	DNREC	
TOTAL USACE IMPACT AREAS		9,884.15	0.2269	N/A	USACE	

WETLANDS DELINEATED BY RUMMEL, KLEPPER, & KAHL, LLP. IN OCTOBER 2015 AND NOVEMBER 2015 IN ACCORDANCE WITH THE 1987 USACE WETLAND DELINEATION MANUAL AND THE ATLANTIC AND GULF COASTAL PLAIN REGIONAL SUPPLEMENT.

UNOFFICIAL WEBSITE COPY

UNOFFICIAL WEBSITE COPY

LEGEND

	PERMANENT IMPACT AREA
OHW	ORDINARY HIGH WATER
OHW/WL	ORD. HIGH WATER / WETLAND
WL	WETLAND BOUNDARY
XX / ?X	IMPACT AREA TYPE ID. (SEE BELOW) / IMPACT AREA ID. AND/OR NUMBER

O = OPEN WATER IMPACT

W = WETLAND IMPACT

T = TEMPORARY IMPACT

LOC — LIMIT OF CONSTRUCTION

PERMANENT WETLAND IMPACT AREA SCHEDULE

ID	IMPACT DESCRIPTION	AREA (SF)	AREA (AC)	VOLUME (CY)	JURISDICTION
3-W1	FILL	2,128.84	0.0489	N/A	USACE
3-W2	FILL	1,708.92	0.0392	N/A	USACE
3-W3	FILL	1,625.20	0.0373	N/A	USACE
3-W4	FILL	821.72	0.0189	N/A	USACE
3-W5	FILL	848.80	0.0195	N/A	USACE
3-W6	FILL	1,047.60	0.0240	N/A	USACE
TOTAL FOR THIS SHEET		8,181.08	0.1878	N/A	USACE

PERMANENT WATERS IMPACT AREA SCHEDULE

ID	IMPACT DESCRIPTION	AREA (SF)	AREA (AC)	VOLUME (CY)	JURISDICTION
3-01	FILL	1,834.02	0.0421	67.9266	USACE/DNREC
3-02	RIPRAP	338.80	0.0078	12.5481	USACE/DNREC
3-03	FILL	60.50	0.0014	2.2407	USACE/DNREC
3-04	RIPRAP	90.07	0.0021	3.3359	USACE/DNREC
3-05	HYDROLOGY LOSS	112.00	0.0026	N/A	USACE/DNREC
3-06	FILL	476.07	0.0109	17.6322	USACE/DNREC
TOTAL DNREC IMPACT AREAS		2,911.46	0.0668	103.6835	DNREC
TOTAL USACE IMPACT AREAS		2,911.46	0.0668	103.6835	USACE

DELAWARE DEPARTMENT OF TRANSPORTATION

ADDENDUMS / REVISIONS

SCALE 0 30 60 90 FEET

ROAD A /SR7 IMPROVEMENTS

CONTRACT T201009002 | COUNTY NEW CASTLE | BRIDGE NO. 1-220 | DESIGNED BY: KH | CHECKED BY: JTR

ENVIRONMENTAL COMPLIANCE PLAN

EC-03 | SHEET NO. 98 | TOTAL SHTS. 154

4/3/2018 3:21:20 PM
\\bdlsrv01\v2012\2012\12146_DelDOT1585\40-Road A Connector\Cadd\Contract\Plans\ec03_RdA.dgn

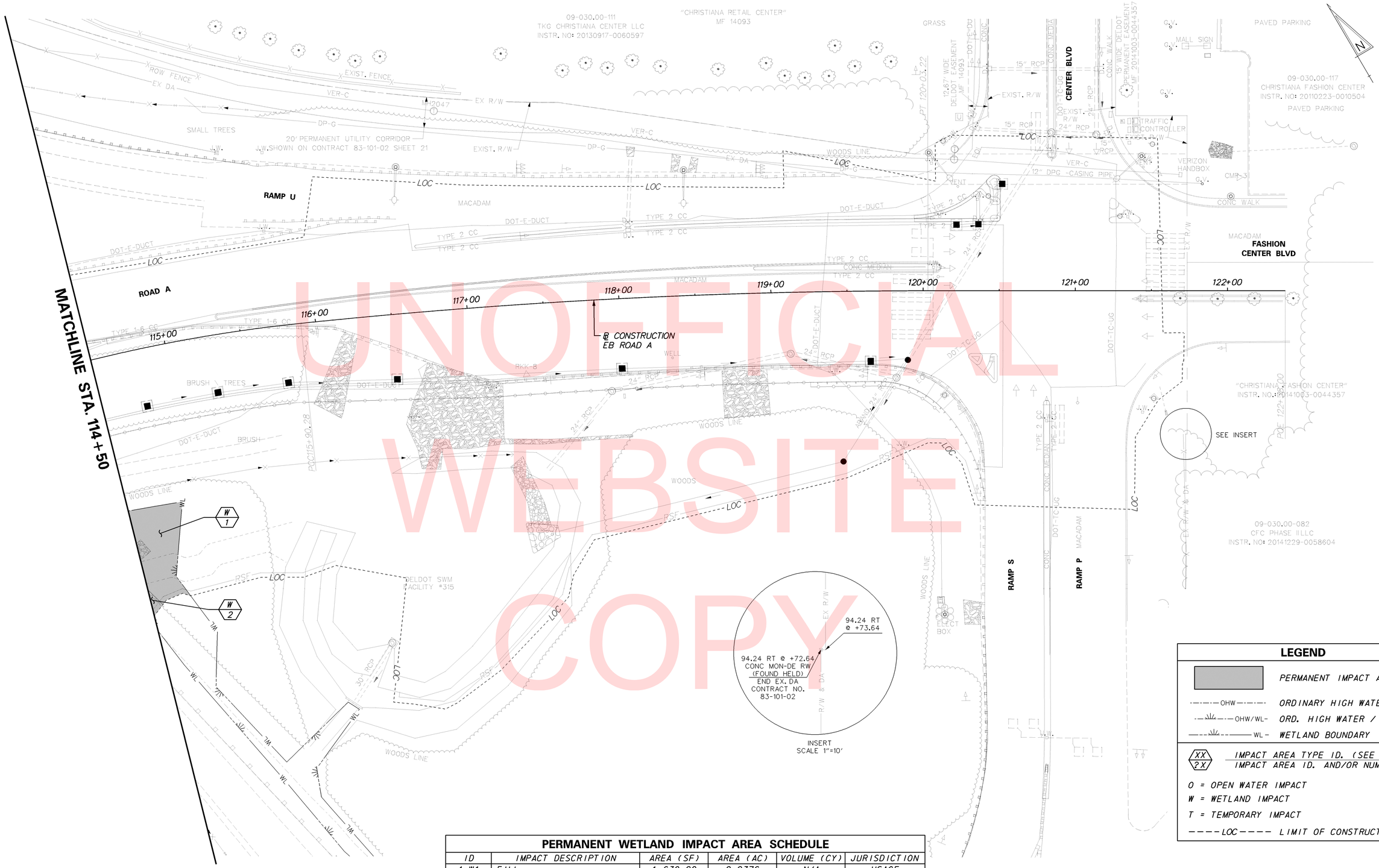

UNOFFICIAL WEBSITE COPY

LEGEND

	PERMANENT IMPACT AREA
OHW	ORDINARY HIGH WATER
OHW/WL	ORD. HIGH WATER / WETLAND
WL	WETLAND BOUNDARY
XX / ?X	IMPACT AREA TYPE ID. (SEE BELOW) / IMPACT AREA ID. AND/OR NUMBER

O = OPEN WATER IMPACT
W = WETLAND IMPACT
T = TEMPORARY IMPACT
---- LOC ---- LIMIT OF CONSTRUCTION

PERMANENT WETLAND IMPACT AREA SCHEDULE

ID	IMPACT DESCRIPTION	AREA (SF)	AREA (AC)	VOLUME (CY)	JURISDICTION
4-W1	FILL	1,639.00	0.0376	N/A	USACE
4-W2	FILL	64.07	0.0015	N/A	USACE
TOTAL FOR THIS SHEET		1,703.07	0.0391	N/A	USACE

4/3/2018 3:22:15 PM
\\balsrv01\v2012\2012\12146_DelDOT1585\40-Road A Connector\Cadd\Contract\Plans\ec04_RdA.dgn

DELAWARE DEPARTMENT OF TRANSPORTATION

ADDENDUMS / REVISIONS

SCALE 0 30 60 90 FEET

ROAD A /SR7 IMPROVEMENTS

CONTRACT	BRIDGE NO.	1-220
T201009002	DESIGNED BY: KH	
COUNTY		
NEW CASTLE	CHECKED BY: JTR	

ENVIRONMENTAL COMPLIANCE PLAN

EC-04
SHEET NO. 99
TOTAL SHTS. 154

WARNING SIGN LEGEND

ROAD WORK AHEAD	ROAD WORK 500 FT	ROAD WORK 1000 FT	ROAD WORK 1500 FT	END ROAD WORK	BEGIN HIGHER FINES ZONE	END HIGHER FINES ZONE		ROAD WORK 1 MILE
W20-1 48" X 48"	W20-1 48" X 48"	W20-1 48" X 48"	W20-1 48" X 48"	G20-2A 48" X 24"	R2-10 48" X 60"	R2-11 48" X 60"	W11-10 48" X 48"	W20-1 48" X 48"
1	2	3	4	5	6	7	8	9

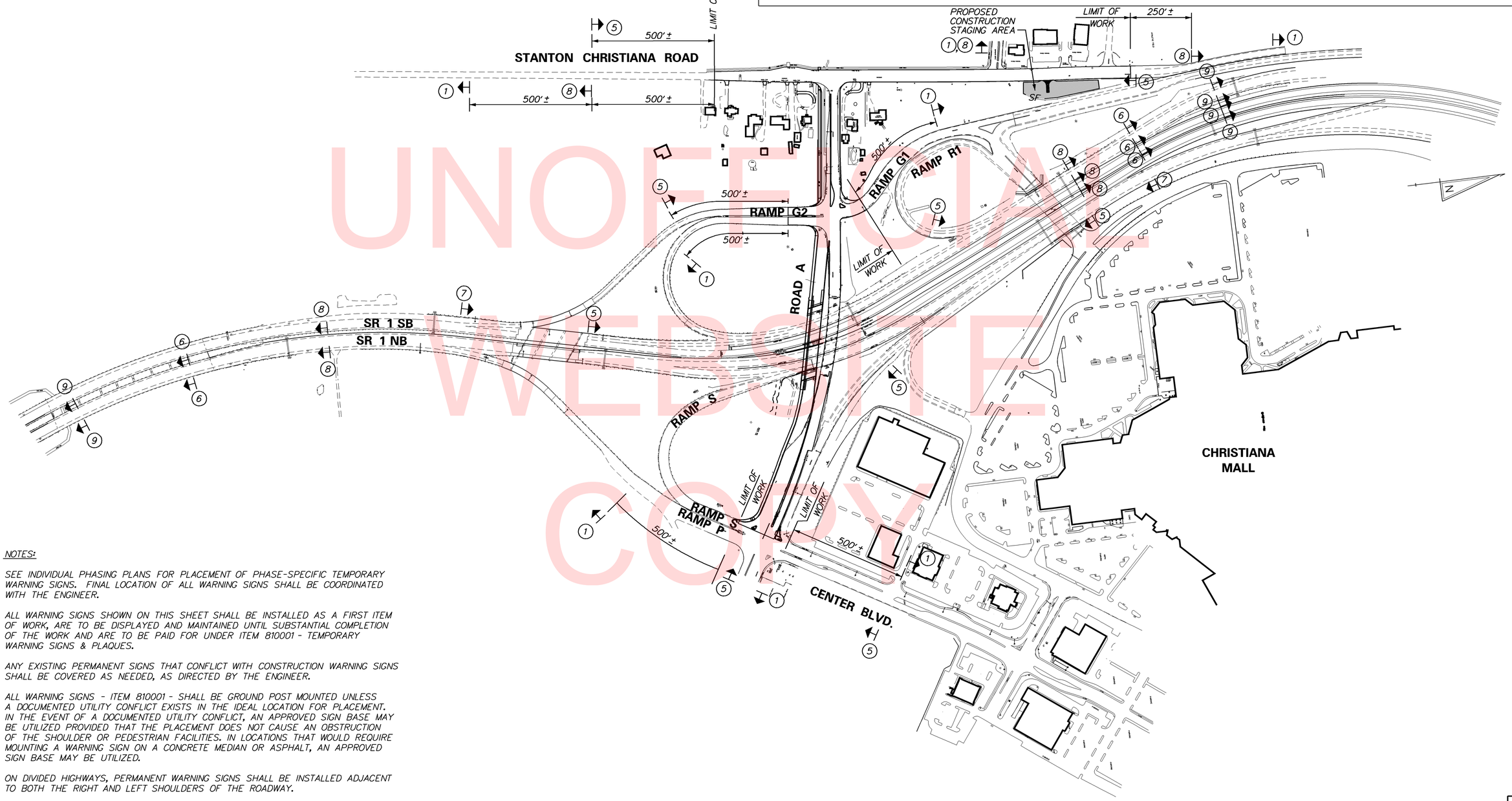

UNOFFICIAL WEBSITE COPY

NOTES:

1. SEE INDIVIDUAL PHASING PLANS FOR PLACEMENT OF PHASE-SPECIFIC TEMPORARY WARNING SIGNS. FINAL LOCATION OF ALL WARNING SIGNS SHALL BE COORDINATED WITH THE ENGINEER.
2. ALL WARNING SIGNS SHOWN ON THIS SHEET SHALL BE INSTALLED AS A FIRST ITEM OF WORK, ARE TO BE DISPLAYED AND MAINTAINED UNTIL SUBSTANTIAL COMPLETION OF THE WORK AND ARE TO BE PAID FOR UNDER ITEM 810001 - TEMPORARY WARNING SIGNS & PLAQUES.
3. ANY EXISTING PERMANENT SIGNS THAT CONFLICT WITH CONSTRUCTION WARNING SIGNS SHALL BE COVERED AS NEEDED, AS DIRECTED BY THE ENGINEER.
4. ALL WARNING SIGNS - ITEM 810001 - SHALL BE GROUND POST MOUNTED UNLESS A DOCUMENTED UTILITY CONFLICT EXISTS IN THE IDEAL LOCATION FOR PLACEMENT. IN THE EVENT OF A DOCUMENTED UTILITY CONFLICT, AN APPROVED SIGN BASE MAY BE UTILIZED PROVIDED THAT THE PLACEMENT DOES NOT CAUSE AN OBSTRUCTION OF THE SHOULDER OR PEDESTRIAN FACILITIES. IN LOCATIONS THAT WOULD REQUIRE MOUNTING A WARNING SIGN ON A CONCRETE MEDIAN OR ASPHALT, AN APPROVED SIGN BASE MAY BE UTILIZED.
5. ON DIVIDED HIGHWAYS, PERMANENT WARNING SIGNS SHALL BE INSTALLED ADJACENT TO BOTH THE RIGHT AND LEFT SHOULDERS OF THE ROADWAY.

4/3/2018 3:23:09 PM
\\BALSRV01\V2012\2012\12146_DELDOT1585\40-ROAD A CONNECTOR\CADD\CONTRACT\PLANS\CS01_RDA.DGN

DELAWARE DEPARTMENT OF TRANSPORTATION	ADDENDUMS / REVISIONS	SCALE 0 200 400 600 FEET	ROAD A /SR7 IMPROVEMENTS	CONTRACT T201009002	BRIDGE NO. 1-220	CONSTRUCTION PHASING, PERMANENT WARNING SIGN LAYOUT	CS-01
				COUNTY NEW CASTLE	DESIGNED BY: MCK		SHEET NO. 100
					CHECKED BY: BAH		TOTAL SHTS. 154

TRAFFIC CONTROL- GENERAL NOTES

1. MAINTENANCE OF TRAFFIC DURING LANE CLOSURES AND LANE SHIFTS SHALL CONFORM TO TYPICAL APPLICATIONS TA-10, TA-21, TA-23, TA-29, TA-33, TA-35, AND TA-35B OF THE DELAWARE MUTCD.

2. THIS PROJECT IS CONSIDERED A SIGNIFICANT PROJECT AS DEFINED BY DELDOT'S WORK ZONE MOBILITY PROCEDURES AND GUIDELINES. A TYPE B TRANSPORTATION MANAGEMENT PLAN (TMP) HAS BEEN PREPARED AND IS AVAILABLE FOR VIEWING BY CONTACTING THE DEPARTMENT'S SAFETY PROGRAMS MANAGER AT (302)659-4060. ALL MONITORING REQUIREMENTS OF THE TMP SHALL BE CONDUCTED BY DELDOT FORCES UNLESS OTHERWISE DIRECTED BY THE ENGINEER. MODIFICATIONS TO THE TMP SHALL BE COMPLETED BY THE CONTRACTOR IF CHANGES TO THE TIME RESTRICTIONS OR THE TRAFFIC CONTROL PLAN ARE DESIRED. THE MODIFIED TMP SHALL BE PREPARED BY A PROFESSIONAL ENGINEER, REGISTERED IN THE STATE OF DELAWARE.

3. THE USE OF MILLINGS AND GRADED AGGREGATE BASE COURSE (GABC) IN THE TRAVEL WAY, TEMPORARY TRAVEL WAY, HIGH VOLUME ENTRANCES AND ACCESS RAMP FOR THE PURPOSE OF PROVIDING A TEMPORARY ROADWAY SURFACE, POTHOLE REPAIR, TAPERED EDGE FOR UTILITIES, BUTT JOINTS AND LONGITUDINAL DROP-OFFS (MILLING AND PAVING OPERATIONS) IS PROHIBITED UNLESS IT IS OTHERWISE DESIGNATED TO BE USED IN THE CONTRACT PLANS. USE COLD PATCH, BITUMINOUS CONCRETE, BITUMINOUS CONCRETE WEDGE, OR TAPER MILL, AS NOTED IN THE CONTRACT DOCUMENTS OR APPROVED BY THE ENGINEER. PAYMENT FOR COLD PATCH, BITUMINOUS CONCRETE OR BITUMINOUS CONCRETE WEDGE SHALL BE PAID AS NOTED IN THE CONTRACT DOCUMENTS. TAPER MILL BITUMINOUS CONCRETE SHALL BE PAID UNDER THE BITUMINOUS CONCRETE MILLING ITEM.

   MILLINGS OR GABC SHALL BE USED AT THE FOLLOWING LOCATIONS WHERE ACCESS TO A BUSINESS, RESIDENCE, OR EDGE DROP OFF NEEDS TO BE MAINTAINED UNLESS OTHERWISE NOTED IN THE PLANS OR DIRECTED BY THE ENGINEER TO USE BITUMINOUS CONCRETE OR COLD PATCH. ALL MILLINGS AND GABC WILL BE ROLLED AND COMPACTED TO HELP PREVENT THE MATERIAL FROM UNRAVELIING:
   - A. DRIVEWAYS
   - B. ENTRANCES
   - C. LOW VOLUME ACCESS RAMPS (IDENTIFIED IN THE CONTRACT DOCUMENTS)
   - D. EDGE DROP OFFS ADJACENT TO LIVE ROADWAY (LANES AND SHOULDER) AND THE PROPOSED ROAD CONSTRUCTION
   - E. EDGE OF ROADWAY DROP-OFF

   GRADING AND MAINTAINING BASE COURSE THAT IS BEING USED FOR ROADWAY WEDGE/FILLET BETWEEN TRAVEL LANES AND PAVEMENT BOX, EDGE OF TRAVELWAY, DRIVEWAY OR ENTRANCE ACCESS SHALL BE INCIDENTAL TO ITEM NO. 801000 - MAINTENANCE OF TRAFFIC. THE BASE COURSE MATERIAL SHALL BE PLACED AT NO GREATER THAN THE SLOPE SPECIFIED IN TABLE 6G-1 AND SHALL BE COMPACTED. EXCESS BASE COURSE MATERIAL SHALL BE PUSHED AHEAD AND USED IN THE NEXT SEGMENT AND SHALL BE INCIDENTAL TO THE PARTICULAR BASE COURSE PAY ITEM. NO SEPARATE PAYMENT SHALL BE MADE FOR MILLINGS OR GABC TEMPORARY ROADWAY MATERIAL (TRM) USED TO PROTECT EDGE DROP-OFFS, UNLESS THE MATERIAL IS EVENTUALLY UTILIZED AS PART OF A RESPECTIVE CONTRACT MATERIAL ITEM.

   VERTICAL DIFFERENCES SHALL BE CORRECTED IN ACCORDANCE WITH TABLE 6G-1 OF THE DELAWARE MUTCD.

4. ACCEPTABLE MATERIALS FOR TEMPORARY PEDESTRIAN PATHS SHALL INCLUDE HOT-MIX, COMPACTED MILLINGS OR PLYWOOD WALKWAY STRUCTURE. PLYWOOD WALKWAY STRUCTURES SHALL ALSO INCLUDE DETECTABLE EDGING AND RAILINGS IN ACCORDANCE WITH ADA GUIDELINES AND THE DELAWARE MUTCD. TEMPORARY PEDESTRIAN PATHS SHALL BE INCIDENTAL TO ITEM 801000 UNLESS OTHERWISE SPECIFIED IN THE PLANS. STONE OR GRADED AGGREGATE BASE COURSE SHALL NOT BE USED FOR TEMPORARY PEDESTRIAN PATHS.

5. ALL NECESSARY SIGNS, PAVEMENT MARKINGS AND ROADSIDE APPURTENANCES SHALL BE INSTALLED PRIOR TO THE OPENING/REOPENING OF A ROADWAY OR RAMP. A WALKTHROUGH WITH THE ENGINEER, TRAFFIC SAFETY, TRAFFIC CONSTRUCTION AND OTHER PERSONNEL SHALL OCCUR NO LESS THAN 48 HOURS PRIOR TO THE OPENING/REOPENING OF ANY ROAD OR RAMP.

6. FOR NIGHT-TIME CLOSURES OF ANY ROAD OR RAMP, PROVIDE ONE TRAFFIC OFFICER AT EACH CLOSURE POINT SHOWN IN THE APPLICABLE DETOUR PLANS. TRAFFIC OFFICER SHALL BE PLACED BEHIND THE CLOSURE BARRICADE WITH THE FRONT OF THE VEHICLE FACING APPROACHING TRAFFIC AND ALL EMERGENCY LIGHTS SHALL BE ACTIVATED. TRAFFIC OFFICER SHALL PROVIDE A REPORT TO THE CONTRACTOR AT THE END OF THE DAY'S ACTIVITY IDENTIFING THE NUMBER OF VEHICLES THAT ATTEMPTED NOT TO FOLLOW THE DETOUR.

7. THE CONTRACTOR SHALL PROVIDE ONE TRAFFIC OFFICER FOR ANY OPERATION WHERE AN EXISTING SIGNALIZED INTERSECTION IS PLACED IN FLASH-MODE. THE TRAFFIC OFFICER IS THE ONLY INDIVIDUAL THAT CAN PLACE A TRAFFIC SIGNAL IN FLASH-MODE AND THE TRAFFIC OFFICER MUST STAY ON LOCATION UNTIL THE SIGNAL IS PLACED BACK IN STOP-AND-GO OPERATION IN ACCORDANCE WITH DELDOT'S TEMPORARY TRAFFIC CONTROL WITHIN INTERSECTIONS MEMORANDUM (WWW.MUTCD.DELDOT.GOV).

8. ADDITIONAL USAGE OF TRAFFIC OFFICERS OUTSIDE OF THE ABOVE REQUIREMENTS SHALL BE APPROVED BY THE ENGINEER IN CONSULTATION WITH THE TRAFFIC SAFETY SECTION.

9. ALL NECESSARY SIGNS, PAVEMENT MARKINGS AND ROADSIDE APPURTENANCES SHALL BE INSTALLED PRIOR TO THE OPENING/REOPENING OF A ROADWAY OR RAMP. A WALKTHROUGH WITH THE ENGINEER, TRAFFIC SAFETY, TRAFFIC CONSTRUCTION AND OTHER PERSONNEL SHALL OCCUR NO LESS THAN 48 HOURS PRIOR TO THE OPENING/REOPENING OF ANY ROAD OR RAMP.

10. AMERICAN TRAFFIC SAFETY SERVICES ASSOCIATION (ATSSA) CERTIFIED TRAFFIC CONTROL SUPERVISOR REQUIREMENT FOR THIS PROJECT.

( )	THE CONTRACTOR SHALL NOT BE REQUIRED TO HAVE AN ATSSA SUPERVISOR ASSIGNED TO THIS PROJECT.
(X)	THE CONTRACTOR SHALL HAVE AN ATSSA SUPERVISOR ASSIGNED TO THIS PROJECT. THE CONTRACTOR'S GENERAL SUPERINTENDENT FOR THIS PROJECT OR ANOTHER ATSSA CERTIFIED MEMBER OF THE CONTRACTOR'S PROJECT STAFF MAY BE THE ATSSA SUPERVISOR. PAYMENT FOR ATSSA SUPERVISOR IS INCIDENTAL TO ITEM 801000.

11. DRIVEWAYS SHALL BE EXCAVATED, CONSTRUCTED, AND STABILIZED IN ONE WORK DAY.

EROSION CONTROL - GENERAL NOTES

1.

EROSION POTENTIAL FOR THIS PROJECT	CONTRACTOR ESC SUPERVISOR REQUIREMENT
( ) INSIGNIFICANT	NONE
( ) MINOR	CONTRACTOR TRAINING PROGRAM, AS DEFINED IN SECTION 6.2 OF THE DELAWARE SEDIMENT AND STORMWATER REGULATIONS.
(X) MAJOR	CERTIFIED CONSTRUCTION REVIEWER (CCR), AS DEFINED IN SECTION 6.3 OF THE DELAWARE SEDIMENT AND STORMWATER REGULATIONS.

2. THE DISTURBED AREA FOR THIS PROJECT IS 11.97 ACRES.

3. THE SEDIMENT AND STORMWATER MANAGEMENT PLANS HAVE BEEN APPROVED BY DELDOT'S STORMWATER ENGINEER UNDER DELDOT'S DELEGATED AUTHORITY. THE SEDIMENT AND STORMWATER MANAGEMENT PLANS ARE VALID FOR A FIVE YEAR PERIOD, BEGINNING ON THE DATE THE STORMWATER ENGINEER SIGNED THE CONSTRUCTION TITLE SHEET. IF THE FINAL ACCEPTANCE OF THE PROJECT IS ANTICIPATED TO EXTEND BEYOND THE FIVE YEARS, THE CONTRACTOR WILL INFORM THE ENGINEER THREE MONTHS PRIOR TO THE EXPIRATION OF THE APPROVED SEDIMENT AND STORMWATER MANAGEMENT PLANS. THE STORMWATER ENGINEER WILL REVIEW THE CURRENT SEDIMENT AND STORMWATER MANAGEMENT PLAN AND ISSUE AND EXTENSION WITH ANY APPROPRIATE MODIFICATIONS.

TRAFFIC RESTRICTIONS

1. RAMP CLOSURES OR DETOURS TO OR FROM THE MALL OR ROAD A SHALL NOT BE ALLOWED BETWEEN WEDNESDAY PRIOR TO THANKSGIVING AND JANUARY 3. THERE SHALL BE NO LANE CLOSURES ON ROAD A OR ALONG THE RAMPS DURING THE SAME TIME PERIOD.

2. IN ADDITION TO THE HOLIDAY AND EVENT RESTRICTIONS LISTED IN SECTION 801 OF THE STANDARD SPECIFICATIONS, LANE CLOSURES AND ROAD CLOSURES ON SR1/SR7 ARE PROHIBITED FROM OCCURRING DURING THE FIREFLY MUSIC FESTIVAL EVENT IN DOVER, DE FROM 12:00 AM WEDNESDAY PRIOR TO THE EVENT THROUGH 12:00 AM TUESDAY FOLLOWING THE EVENT, AND DURING DOVER INTERNATIONAL SPEEDWAY RACE WEEKENDS IN DOVER, DE FROM THE THURSDAY PRIOR TO THE EVENT THROUGH THE DAY FOLLOWING THE EVENT. THE ENGINEER WILL PROVIDE THE DATES OF THE EVENTS TWO WEEKS PRIOR TO THE RESTRICTION BEING IMPLEMENTED.

3. THE FOLLOWING SCHEDULES INDICATE THE ALLOWABLE TIMES DURING WHICH TRAFFIC MAY BE DETOURED OR THE NUMBER OF LANES REDUCED. THE BEGIN SET UP TO END TIMES ARE THE ENTIRE DURATION THAT LANE CLOSURES MAY BE IN EFFECT. THE END TIME REPRESENTS THE TIME AT WHICH ALL LANES OF TRAFFIC MUST BE FULLY OPERATIONAL.

LANE CLOSURE MATRIX FOR NORTHBOUND SR 1/7 OCTOBER 1 TO APRIL 30

Hour	SUNDAY	MONDAY	TUESDAY	WEDNESDAY	THURSDAY	FRIDAY	SATURDAY
1							
2							
3							
4							
5							
6							
7							
8							
9							
10							
11							
12							
13							
14							
15							
16							
17							
18							
19							
20							
21							
22							
23							
24							

LANES CLOSURES PERMITTED
LANE CLOSURES NOT PERMITTED

LANE CLOSURE MATRIX FOR SOUTHBOUND SR 1/7 OCTOBER 1 TO APRIL 30

Hour	SUNDAY	MONDAY	TUESDAY	WEDNESDAY	THURSDAY	FRIDAY	SATURDAY
1							
2							
3							
4							
5							
6							
7							
8							
9							
10							
11							
12							
13							
14							
15							
16							
17							
18							
19							
20							
21							
22							
23							
24							

LANES CLOSURES PERMITTED
LANE CLOSURES NOT PERMITTED

LANE CLOSURE MATRIX FOR NORTHBOUND SR 1/7 MAY 1 TO SEPTEMBER 30

Hour	SUNDAY	MONDAY	TUESDAY	WEDNESDAY	THURSDAY	FRIDAY	SATURDAY
1							
2							
3							
4							
5							
6							
7							
8							
9							
10							
11							
12							
13							
14							
15							
16							
17							
18							
19							
20							
21							
22							
23							
24							

LANES CLOSURES PERMITTED
LANE CLOSURES NOT PERMITTED

LANE CLOSURE MATRIX FOR SOUTHBOUND SR 1/7 MAY 1 TO SEPTEMBER 30

Hour	SUNDAY	MONDAY	TUESDAY	WEDNESDAY	THURSDAY	FRIDAY	SATURDAY
1							
2							
3							
4							
5							
6							
7							
8							
9							
10							
11							
12							
13							
14							
15							
16							
17							
18							
19							
20							
21							
22							
23							
24							

LANES CLOSURES PERMITTED
LANE CLOSURES NOT PERMITTED

4. ACCESS TO ALL DELDOT MAINTENANCE ENTRANCES MUST BE MAINTAINED AT ALL TIMES.

5. THE EXISTING MALL RING ROAD IS A PRIVATE ROAD AND IS NOT AVAILABLE FOR CONSTRUCTION VEHICLES OR PUBLIC DETOURS.

EROSION & SEDIMENT CONTROL

CFL	COMPOST FILTER LOG
DWBAG	DEWATERING BAG
DWB	DEWATERING BASIN
ED	EARTH DIKE
	INLET SEDIMENT CONTROL
	PERIMETER DIKE/SWALE
PST	PORTABLE SEDIMENT TANK
SBD	SANDBAG DIKE
SB	SANDBAG DIVERSION
	STONE CHECK DAM
SCE	STABILIZED CONSTRUCTION ENTRANCE
SF	SILT FENCE / LENGTH
SF	SILT FENCE
RSF	SILT FENCE - REINFORCED
SP	SUMP PIT
ST	SEDIMENT TRAP / NUMBER
ST	SEDIMENT TRAP
ST	SEDIMENT TRAP WITH INLET AS OUTLET
ST	SEDIMENT TRAP PIPE OUTLET
SW	STILLING WELL
	TEMPORARY SWALE
TSD	TEMPORARY SLOPE DRAIN
XXX	TURBIDITY CURTAIN / LENGTH
T	TURBIDITY CURTAIN

CONSTRUCTION PHASING & M.O.T

	BARRICADE, TYPE 3
	CONCRETE SAFETY BARRIER - PORTABLE
CSF XXX	CONSTRUCTION SAFETY FENCE / LENGTH
CSF	CONSTRUCTION SAFETY FENCE
	CONSTRUCTION WARNING SIGN LOCATION
END ROAD WORK	CONSTRUCTION WARNING SIGN
	CRASH CUSHION ARRAY
	DRUM - TRAFFIC CONTROL
	FLAGGER LOCATION
PHASE	PHASING TRAFFIC FLOW ARROW
	TEMPORARY CONSTRUCTION
	TEMPORARY PAVEMENT MARKING ARROW
TMA	TRUCK WITH MOUNTED ATTENUATOR
	WORK AREA - ACTIVE PHASE
	PREVIOUSLY CONSTRUCTED PAVEMENT

UNOFFICIAL WEBSITE COPY

7/5/2018 12:49:58 PM
\\BALSRV01\V2012\2012\12146_DELDOT1585\40-ROAD A CONNECTOR\CADD\CONTRACT\PLANS\CS02_RDA.DGN

DELAWARE DEPARTMENT OF TRANSPORTATION

ADDENDUMS / REVISIONS

NOT TO SCALE

ROAD A /SR7 IMPROVEMENTS

CONTRACT	BRIDGE NO. 1-220
T201009002	DESIGNED BY: MCK
COUNTY	CHECKED BY: BAH
NEW CASTLE	

CONSTRUCTION PHASING, GENERAL M.O.T. NOTES

CS-02

SHEET NO. 101

TOTAL SHTS. 154

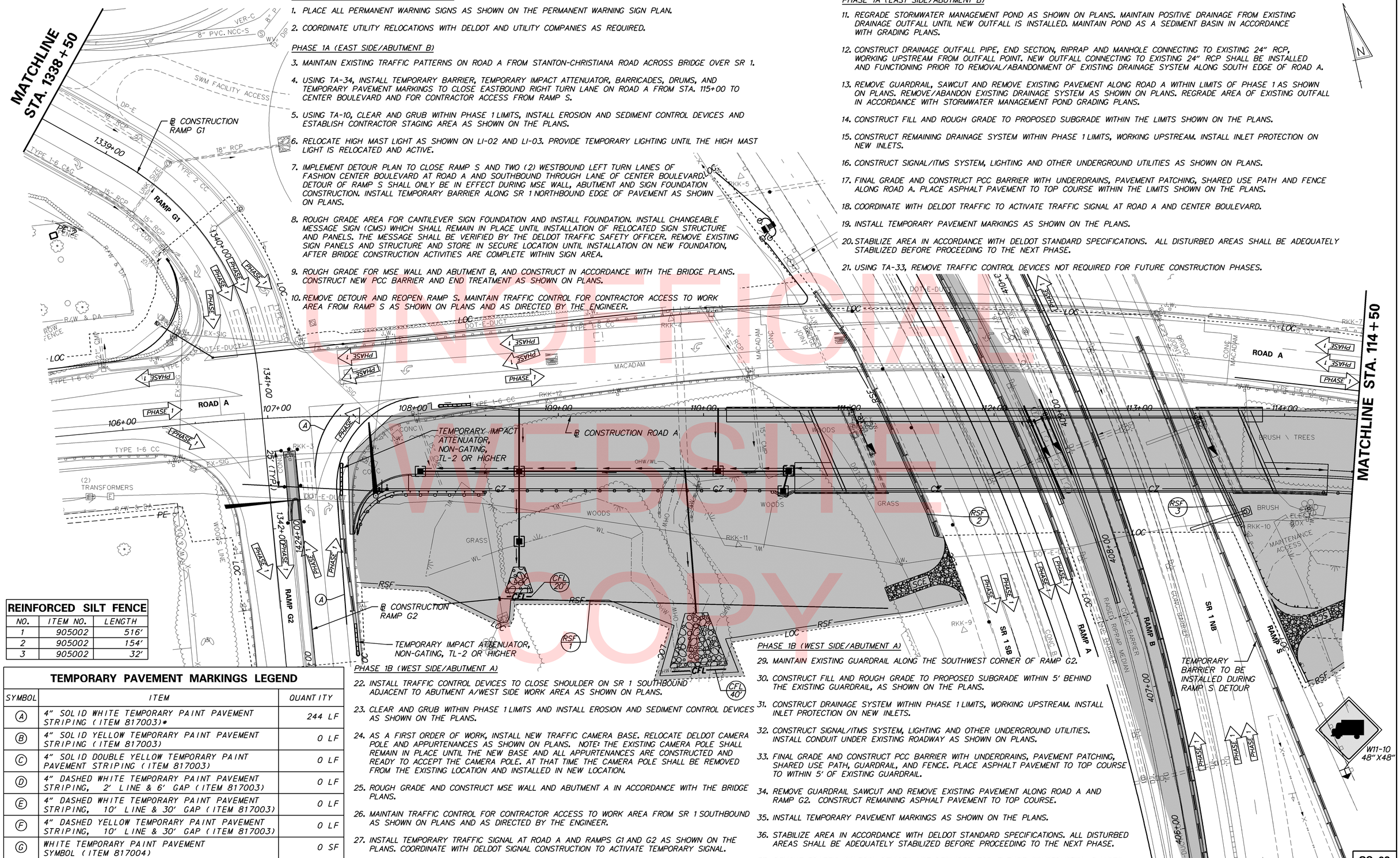

UNOFFICIAL WEBSITE COPY

SEQUENCE OF CONSTRUCTION PHASE 1

1. PLACE ALL PERMANENT WARNING SIGNS AS SHOWN ON THE PERMANENT WARNING SIGN PLAN.
2. COORDINATE UTILITY RELOCATIONS WITH DELDOT AND UTILITY COMPANIES AS REQUIRED.

PHASE 1A (EAST SIDE/ABUTMENT B)

3. MAINTAIN EXISTING TRAFFIC PATTERNS ON ROAD A FROM STANTON-CHRISTIANA ROAD ACROSS BRIDGE OVER SR 1.
4. USING TA-34, INSTALL TEMPORARY BARRIER, TEMPORARY IMPACT ATTENUATOR, BARRICADES, DRUMS, AND TEMPORARY PAVEMENT MARKINGS TO CLOSE EASTBOUND RIGHT TURN LANE ON ROAD A FROM STA. 115+00 TO CENTER BOULEVARD AND FOR CONTRACTOR ACCESS FROM RAMP S.
5. USING TA-10, CLEAR AND GRUB WITHIN PHASE 1 LIMITS, INSTALL EROSION AND SEDIMENT CONTROL DEVICES AND ESTABLISH CONTRACTOR STAGING AREA AS SHOWN ON THE PLANS.
6. RELOCATE HIGH MAST LIGHT AS SHOWN ON LI-02 AND LI-03. PROVIDE TEMPORARY LIGHTING UNTIL THE HIGH MAST LIGHT IS RELOCATED AND ACTIVE.
7. IMPLEMENT DETOUR PLAN TO CLOSE RAMP S AND TWO (2) WESTBOUND LEFT TURN LANES OF FASHION CENTER BOULEVARD AT ROAD A AND SOUTHBOUND THROUGH LANE OF CENTER BOULEVARD. DETOUR OF RAMP S SHALL ONLY BE IN EFFECT DURING MSE WALL, ABUTMENT AND SIGN FOUNDATION CONSTRUCTION. INSTALL TEMPORARY BARRIER ALONG SR 1 NORTHBOUND EDGE OF PAVEMENT AS SHOWN ON PLANS.
8. ROUGH GRADE AREA FOR CANTILEVER SIGN FOUNDATION AND INSTALL FOUNDATION. INSTALL CHANGEABLE MESSAGE SIGN (CMS) WHICH SHALL REMAIN IN PLACE UNTIL INSTALLATION OF RELOCATED SIGN STRUCTURE AND PANELS. THE MESSAGE SHALL BE VERIFIED BY THE DELDOT TRAFFIC SAFETY OFFICER. REMOVE EXISTING SIGN PANELS AND STRUCTURE AND STORE IN SECURE LOCATION UNTIL INSTALLATION ON NEW FOUNDATION, AFTER BRIDGE CONSTRUCTION ACTIVITIES ARE COMPLETE WITHIN SIGN AREA.
9. ROUGH GRADE FOR MSE WALL AND ABUTMENT B, AND CONSTRUCT IN ACCORDANCE WITH THE BRIDGE PLANS. CONSTRUCT NEW PCC BARRIER AND END TREATMENT AS SHOWN ON PLANS.
10. REMOVE DETOUR AND REOPEN RAMP S. MAINTAIN TRAFFIC CONTROL FOR CONTRACTOR ACCESS TO WORK AREA FROM RAMP S AS SHOWN ON PLANS AND AS DIRECTED BY THE ENGINEER.

PHASE 1A (EAST SIDE/ABUTMENT B)

11. REGRADE STORMWATER MANAGEMENT POND AS SHOWN ON PLANS. MAINTAIN POSITIVE DRAINAGE FROM EXISTING DRAINAGE OUTFALL UNTIL NEW OUTFALL IS INSTALLED. MAINTAIN POND AS A SEDIMENT BASIN IN ACCORDANCE WITH GRADING PLANS.
12. CONSTRUCT DRAINAGE OUTFALL PIPE, END SECTION, RIPRAP AND MANHOLE CONNECTING TO EXISTING 24" RCP, WORKING UPSTREAM FROM OUTFALL POINT. NEW OUTFALL CONNECTING TO EXISTING 24" RCP SHALL BE INSTALLED AND FUNCTIONING PRIOR TO REMOVAL/ABANDONMENT OF EXISTING DRAINAGE SYSTEM ALONG SOUTH EDGE OF ROAD A.
13. REMOVE GUARDRAIL, SAWCUT AND REMOVE EXISTING PAVEMENT ALONG ROAD A WITHIN LIMITS OF PHASE 1 AS SHOWN ON PLANS. REMOVE/ABANDON EXISTING DRAINAGE SYSTEM AS SHOWN ON PLANS. REGRADE AREA OF EXISTING OUTFALL IN ACCORDANCE WITH STORMWATER MANAGEMENT POND GRADING PLANS.
14. CONSTRUCT FILL AND ROUGH GRADE TO PROPOSED SUBGRADE WITHIN THE LIMITS SHOWN ON THE PLANS.
15. CONSTRUCT REMAINING DRAINAGE SYSTEM WITHIN PHASE 1 LIMITS, WORKING UPSTREAM. INSTALL INLET PROTECTION ON NEW INLETS.
16. CONSTRUCT SIGNAL/ITMS SYSTEM, LIGHTING AND OTHER UNDERGROUND UTILITIES AS SHOWN ON PLANS.
17. FINAL GRADE AND CONSTRUCT PCC BARRIER WITH UNDERDRAINS, PAVEMENT PATCHING, SHARED USE PATH AND FENCE ALONG ROAD A. PLACE ASPHALT PAVEMENT TO TOP COURSE WITHIN THE LIMITS SHOWN ON THE PLANS.
18. COORDINATE WITH DELDOT TRAFFIC TO ACTIVATE TRAFFIC SIGNAL AT ROAD A AND CENTER BOULEVARD.
19. INSTALL TEMPORARY PAVEMENT MARKINGS AS SHOWN ON THE PLANS.
20. STABILIZE AREA IN ACCORDANCE WITH DELDOT STANDARD SPECIFICATIONS. ALL DISTURBED AREAS SHALL BE ADEQUATELY STABILIZED BEFORE PROCEEDING TO THE NEXT PHASE.
21. USING TA-33, REMOVE TRAFFIC CONTROL DEVICES NOT REQUIRED FOR FUTURE CONSTRUCTION PHASES.

PHASE 1B (WEST SIDE/ABUTMENT A)

22. INSTALL TRAFFIC CONTROL DEVICES TO CLOSE SHOULDER ON SR 1 SOUTHBOUND ADJACENT TO ABUTMENT A/WEST SIDE WORK AREA AS SHOWN ON PLANS.
23. CLEAR AND GRUB WITHIN PHASE 1 LIMITS AND INSTALL EROSION AND SEDIMENT CONTROL DEVICES AS SHOWN ON THE PLANS.
24. AS A FIRST ORDER OF WORK, INSTALL NEW TRAFFIC CAMERA BASE. RELOCATE DELDOT CAMERA POLE AND APPURTENANCES AS SHOWN ON PLANS. NOTE: THE EXISTING CAMERA POLE SHALL REMAIN IN PLACE UNTIL THE NEW BASE AND ALL APPURTENANCES ARE CONSTRUCTED AND READY TO ACCEPT THE CAMERA POLE. AT THAT TIME THE CAMERA POLE SHALL BE REMOVED FROM THE EXISTING LOCATION AND INSTALLED IN NEW LOCATION.
25. ROUGH GRADE AND CONSTRUCT MSE WALL AND ABUTMENT A IN ACCORDANCE WITH THE BRIDGE PLANS.
26. MAINTAIN TRAFFIC CONTROL FOR CONTRACTOR ACCESS TO WORK AREA FROM SR 1 SOUTHBOUND AS SHOWN ON PLANS AND AS DIRECTED BY THE ENGINEER.
27. INSTALL TEMPORARY TRAFFIC SIGNAL AT ROAD A AND RAMPS G1 AND G2 AS SHOWN ON THE PLANS. COORDINATE WITH DELDOT SIGNAL CONSTRUCTION TO ACTIVATE TEMPORARY SIGNAL.
28. INSTALL TEMPORARY BARRIER BETWEEN RAMP G2 AND WORK AREA AS SHOWN ON PLANS.

PHASE 1B (WEST SIDE/ABUTMENT A)

29. MAINTAIN EXISTING GUARDRAIL ALONG THE SOUTHWEST CORNER OF RAMP G2.
30. CONSTRUCT FILL AND ROUGH GRADE TO PROPOSED SUBGRADE WITHIN 5' BEHIND THE EXISTING GUARDRAIL, AS SHOWN ON THE PLANS.
31. CONSTRUCT DRAINAGE SYSTEM WITHIN PHASE 1 LIMITS, WORKING UPSTREAM. INSTALL INLET PROTECTION ON NEW INLETS.
32. CONSTRUCT SIGNAL/ITMS SYSTEM, LIGHTING AND OTHER UNDERGROUND UTILITIES. INSTALL CONDUIT UNDER EXISTING ROADWAY AS SHOWN ON PLANS.
33. FINAL GRADE AND CONSTRUCT PCC BARRIER WITH UNDERDRAINS, PAVEMENT PATCHING, SHARED USE PATH, GUARDRAIL, AND FENCE. PLACE ASPHALT PAVEMENT TO TOP COURSE TO WITHIN 5' OF EXISTING GUARDRAIL.
34. REMOVE GUARDRAIL SAWCUT AND REMOVE EXISTING PAVEMENT ALONG ROAD A AND RAMP G2. CONSTRUCT REMAINING ASPHALT PAVEMENT TO TOP COURSE.
35. INSTALL TEMPORARY PAVEMENT MARKINGS AS SHOWN ON THE PLANS.
36. STABILIZE AREA IN ACCORDANCE WITH DELDOT STANDARD SPECIFICATIONS. ALL DISTURBED AREAS SHALL BE ADEQUATELY STABILIZED BEFORE PROCEEDING TO THE NEXT PHASE.
37. REMOVE TRAFFIC CONTROL DEVICES NOT REQUIRED FOR FUTURE CONSTRUCTION PHASES.

REINFORCED SILT FENCE

NO.	ITEM NO.	LENGTH
1	905002	516'
2	905002	154'
3	905002	32'

TEMPORARY PAVEMENT MARKINGS LEGEND

SYMBOL	ITEM	QUANTITY
(A)	4" SOLID WHITE TEMPORARY PAINT PAVEMENT STRIPING (ITEM 817003)*	244 LF
(B)	4" SOLID YELLOW TEMPORARY PAINT PAVEMENT STRIPING (ITEM 817003)	0 LF
(C)	4" SOLID DOUBLE YELLOW TEMPORARY PAINT PAVEMENT STRIPING (ITEM 817003)	0 LF
(D)	4" DASHED WHITE TEMPORARY PAINT PAVEMENT STRIPING, 2' LINE & 6' GAP (ITEM 817003)	0 LF
(E)	4" DASHED WHITE TEMPORARY PAINT PAVEMENT STRIPING, 10' LINE & 30' GAP (ITEM 817003)	0 LF
(F)	4" DASHED YELLOW TEMPORARY PAINT PAVEMENT STRIPING, 10' LINE & 30' GAP (ITEM 817003)	0 LF
(G)	WHITE TEMPORARY PAINT PAVEMENT SYMBOL (ITEM 817004)	0 SF

DELAWARE DEPARTMENT OF TRANSPORTATION

ADDENDUMS / REVISIONS

SCALE 0 30 60 90 FEET

ROAD A /SR7 IMPROVEMENTS

CONTRACT	BRIDGE NO.	1-220
T201009002	DESIGNED BY:	MCK
COUNTY		
NEW CASTLE	CHECKED BY:	BAH

CONSTRUCTION PHASING, M.O.T., AND EROSION CONTROL PLAN – PHASE 1

CS-03

SHEET NO. 102

TOTAL SHTS. 154

7/5/2018 1:20:15 PM
\\balsrv01\v2012\2012\12146_DelDOT1585\40-Road A Connector\Cadd\Contract\Plans\cs03_RdA.dgn

TEMPORARY PAVEMENT MARKINGS LEGEND

SYMBOL	ITEM	QUANTITY
A	4" SOLID WHITE TEMPORARY PAINT PAVEMENT STRIPING (ITEM 817003)	1,361 LF
B	4" SOLID YELLOW TEMPORARY PAINT PAVEMENT STRIPING (ITEM 817003)	0 LF
C	4" SOLID DOUBLE YELLOW TEMPORARY PAINT PAVEMENT STRIPING (ITEM 817003)	0 LF
D	4" DASHED WHITE TEMPORARY PAINT PAVEMENT STRIPING, 2' LINE & 6' GAP (ITEM 817003)	92 LF
E	4" DASHED WHITE TEMPORARY PAINT PAVEMENT STRIPING, 10' LINE & 30' GAP (ITEM 817003)	0 LF
F	4" DASHED YELLOW TEMPORARY PAINT PAVEMENT STRIPING, 10' LINE & 30' GAP (ITEM 817003)	0 LF
G	WHITE TEMPORARY PAINT PAVEMENT SYMBOL (ITEM 817004)	18 SF

REINFORCED SILT FENCE

NO.	ITEM NO.	LENGTH
4	905002	678'

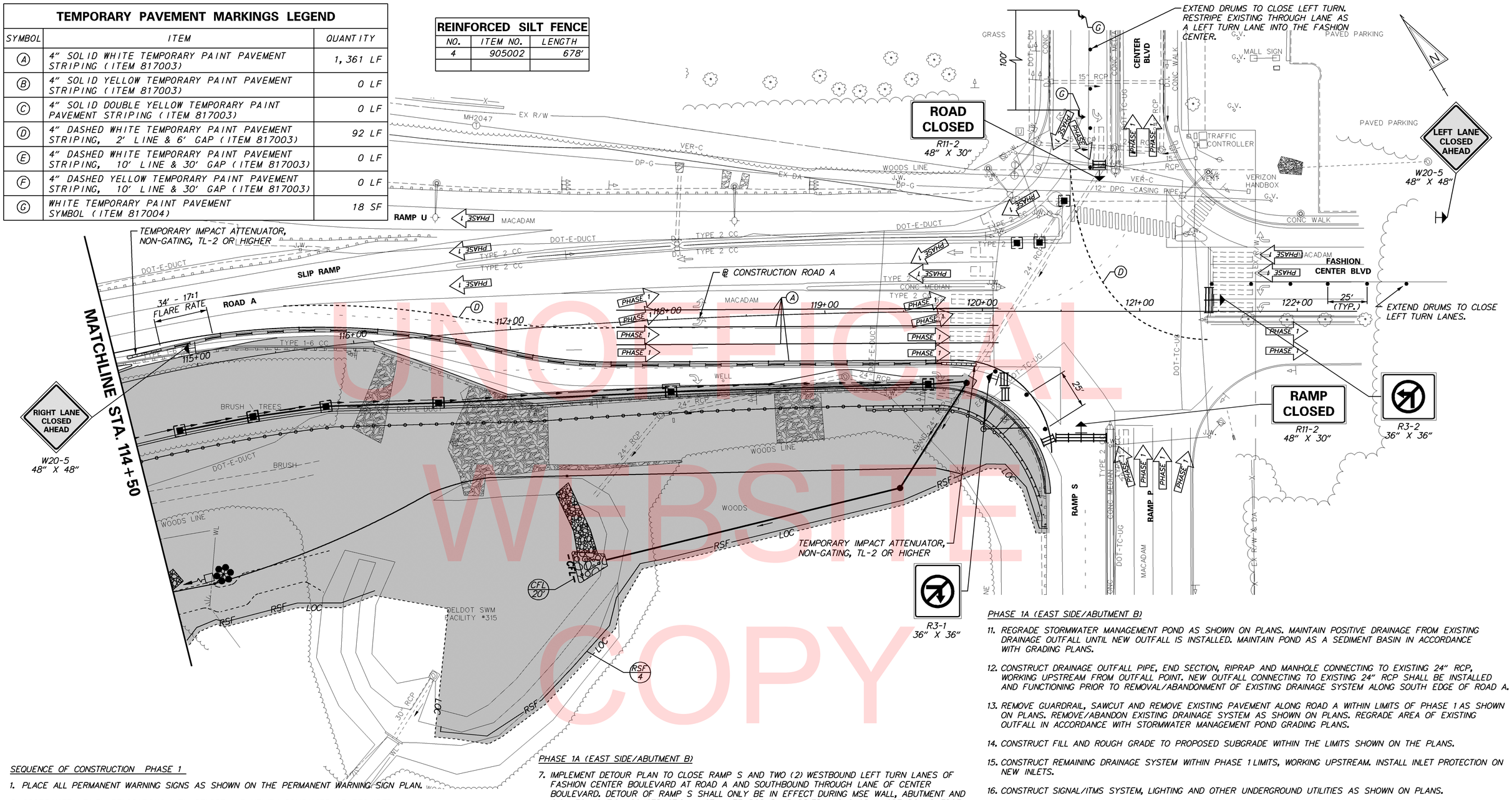

UNOFFICIAL WEBSITE COPY

SEQUENCE OF CONSTRUCTION PHASE 1

1. PLACE ALL PERMANENT WARNING SIGNS AS SHOWN ON THE PERMANENT WARNING SIGN PLAN.

2. COORDINATE UTILITY RELOCATIONS WITH DELDOT AND UTILITY COMPANIES AS REQUIRED.

PHASE 1A (EAST SIDE/ABUTMENT B)

3. MAINTAIN EXISTING TRAFFIC PATTERNS ON ROAD A FROM STANTON-CHRISTIANA ROAD ACROSS BRIDGE OVER SR 1.

4. USING TA-34, INSTALL TEMPORARY BARRIER, TEMPORARY IMPACT ATTENUATOR, BARRICADES, DRUMS, AND TEMPORARY PAVEMENT MARKINGS TO CLOSE EASTBOUND RIGHT TURN LANE ON ROAD A FROM STA. 115+00 TO CENTER BOULEVARD AND FOR CONTRACTOR ACCESS FROM RAMP S.

5. USING TA-10, CLEAR AND GRUB WITHIN PHASE 1 LIMITS, INSTALL EROSION AND SEDIMENT CONTROL DEVICES AND ESTABLISH CONTRACTOR STAGING AREA AS SHOWN ON THE PLANS.

6. RELOCATE HIGH MAST LIGHT AS SHOWN ON LI-02 AND LI-03. PROVIDE TEMPORARY LIGHTING UNITL THE HIGH MAST LIGHT IS RELOCATED AND ACTIVE.

PHASE 1A (EAST SIDE/ABUTMENT B)

7. IMPLEMENT DETOUR PLAN TO CLOSE RAMP S AND TWO (2) WESTBOUND LEFT TURN LANES OF FASHION CENTER BOULEVARD AT ROAD A AND SOUTHBOUND THROUGH LANE OF CENTER BOULEVARD. DETOUR OF RAMP S SHALL ONLY BE IN EFFECT DURING MSE WALL, ABUTMENT AND SIGN FOUNDATION CONSTRUCTION. INSTALL TEMPORARY BARRIER ALONG SR 1 NORTHBOUND EDGE OF PAVEMENT AS SHOWN ON PLANS.

8. ROUGH GRADE AREA FOR CANTILEVER SIGN FOUNDATION AND INSTALL FOUNDATION. INSTALL CHANGEABLE MESSAGE SIGN (CMS) WHICH SHALL REMAIN IN PLACE UNTIL INSTALLATION OF RELOCATED SIGN STRUCTURE AND PANELS. THE MESSAGE SHALL BE VERIFIED BY THE DELDOT TRAFFIC SAFETY OFFICER. REMOVE EXISTING SIGN PANELS AND STRUCTURE AND STORE IN SECURE LOCATION UNTIL INSTALLATION ON NEW FOUNDATION, AFTER BRIDGE CONSTRUCTION ACTIVITIES ARE COMPLETE WITHIN SIGN AREA.

9. ROUGH GRADE FOR MSE WALL AND ABUTMENT B, AND CONSTRUCT IN ACCORDANCE WITH THE BRIDGE PLANS. CONSTRUCT NEW PCC BARRIER AND END TREATMENT AS SHOWN ON PLANS.

10. REMOVE DETOUR AND REOPEN RAMP S. MAINTAIN TRAFFIC CONTROL FOR CONTRACTOR ACCESS TO WORK AREA FROM RAMP S AS SHOWN ON PLANS AND AS DIRECTED BY THE ENGINEER.

PHASE 1A (EAST SIDE/ABUTMENT B)

11. REGRADE STORMWATER MANAGEMENT POND AS SHOWN ON PLANS. MAINTAIN POSITIVE DRAINAGE FROM EXISTING DRAINAGE OUTFALL UNTIL NEW OUTFALL IS INSTALLED. MAINTAIN POND AS A SEDIMENT BASIN IN ACCORDANCE WITH GRADING PLANS.

12. CONSTRUCT DRAINAGE OUTFALL PIPE, END SECTION, RIPRAP AND MANHOLE CONNECTING TO EXISTING 24" RCP, WORKING UPSTREAM FROM OUTFALL POINT. NEW OUTFALL CONNECTING TO EXISTING 24" RCP SHALL BE INSTALLED AND FUNCTIONING PRIOR TO REMOVAL/ABANDONMENT OF EXISTING DRAINAGE SYSTEM ALONG SOUTH EDGE OF ROAD A.

13. REMOVE GUARDRAIL, SAWCUT AND REMOVE EXISTING PAVEMENT ALONG ROAD A WITHIN LIMITS OF PHASE 1 AS SHOWN ON PLANS. REMOVE/ABANDON EXISTING DRAINAGE SYSTEM AS SHOWN ON PLANS. REGRADE AREA OF EXISTING OUTFALL IN ACCORDANCE WITH STORMWATER MANAGEMENT POND GRADING PLANS.

14. CONSTRUCT FILL AND ROUGH GRADE TO PROPOSED SUBGRADE WITHIN THE LIMITS SHOWN ON THE PLANS.

15. CONSTRUCT REMAINING DRAINAGE SYSTEM WITHIN PHASE 1 LIMITS, WORKING UPSTREAM. INSTALL INLET PROTECTION ON NEW INLETS.

16. CONSTRUCT SIGNAL/ITMS SYSTEM, LIGHTING AND OTHER UNDERGROUND UTILITIES AS SHOWN ON PLANS.

17. FINAL GRADE AND CONSTRUCT PCC BARRIER WITH UNDERDRAINS, PAVEMENT PATCHING, SHARED USE PATH AND FENCE ALONG ROAD A. PLACE ASPHALT PAVEMENT TO TOP COURSE WITHIN THE LIMITS SHOWN ON THE PLANS.

18. COORDINATE WITH DELDOT TRAFFIC TO ACTIVATE TRAFFIC SIGNAL AT ROAD A AND CENTER BOULEVARD.

19. INSTALL TEMPORARY PAVEMENT MARKINGS AS SHOWN ON THE PLANS.

20. STABILIZE AREA IN ACCORDANCE WITH DELDOT STANDARD SPECIFICATIONS. ALL DISTURBED AREAS SHALL BE ADEQUATELY STABILIZED BEFORE PROCEEDING TO THE NEXT PHASE.

21. USING TA-33, REMOVE TRAFFIC CONTROL DEVICES NOT REQUIRED FOR FUTURE CONSTRUCTION PHASES.

PHASE 1B (WEST SIDE/ABUTMENT A) - (SEE CS-03)

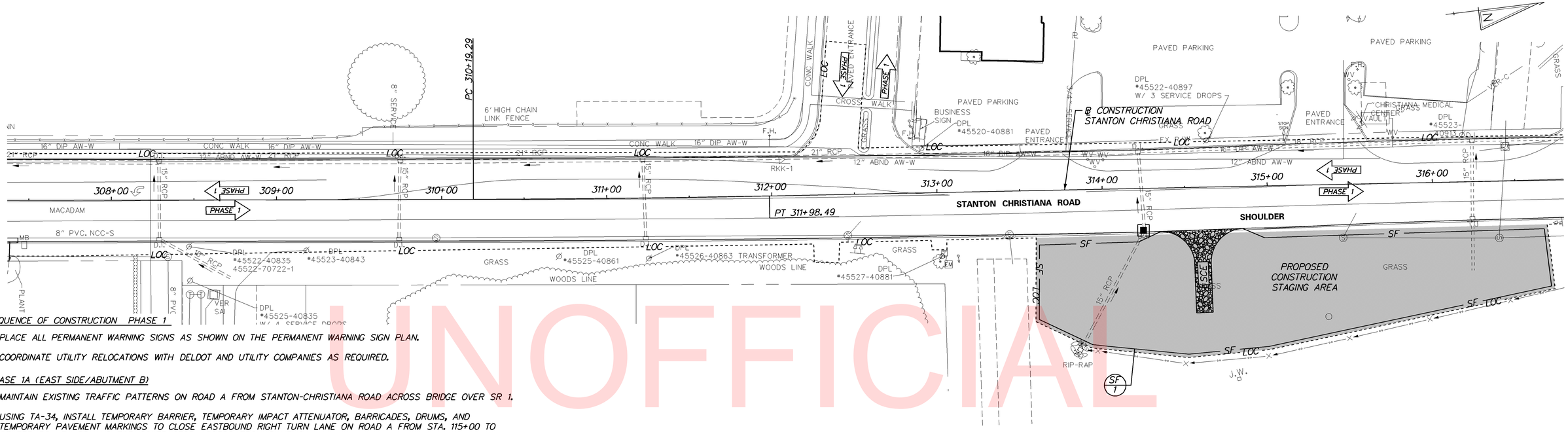

UNOFFICIAL WEBSITE COPY

SEQUENCE OF CONSTRUCTION PHASE 1

1. PLACE ALL PERMANENT WARNING SIGNS AS SHOWN ON THE PERMANENT WARNING SIGN PLAN.

2. COORDINATE UTILITY RELOCATIONS WITH DELDOT AND UTILITY COMPANIES AS REQUIRED.

PHASE 1A (EAST SIDE/ABUTMENT B)

3. MAINTAIN EXISTING TRAFFIC PATTERNS ON ROAD A FROM STANTON-CHRISTIANA ROAD ACROSS BRIDGE OVER SR 1.

4. USING TA-34, INSTALL TEMPORARY BARRIER, TEMPORARY IMPACT ATTENUATOR, BARRICADES, DRUMS, AND TEMPORARY PAVEMENT MARKINGS TO CLOSE EASTBOUND RIGHT TURN LANE ON ROAD A FROM STA. 115+00 TO CENTER BOULEVARD AND FOR CONTRACTOR ACCESS FROM RAMP S.

5. USING TA-10, CLEAR AND GRUB WITHIN PHASE 1 LIMITS, INSTALL EROSION AND SEDIMENT CONTROL DEVICES AND ESTABLISH CONTRACTOR STAGING AREA AS SHOWN ON THE PLANS.

6. RELOCATE HIGH MAST LIGHT AS SHOWN ON LI-02 AND LI-03. PROVIDE TEMPORARY LIGHTING UNTIL THE HIGH MAST LIGHT IS RELOCATED AND ACTIVE.

7. IMPLEMENT DETOUR PLAN TO CLOSE RAMP S AND TWO (2) WESTBOUND LEFT TURN LANES OF FASHION CENTER BOULEVARD AT ROAD A AND SOUTHBOUND THROUGH LANE OF CENTER BOULEVARD. DETOUR OF RAMP S SHALL ONLY BE IN EFFECT DURING MSE WALL, ABUTMENT AND SIGN FOUNDATION CONSTRUCTION. INSTALL TEMPORARY BARRIER ALONG SR 1 NORTHBOUND EDGE OF PAVEMENT AS SHOWN ON PLANS.

8. ROUGH GRADE AREA FOR CANTILEVER SIGN FOUNDATION AND INSTALL FOUNDATION. INSTALL CHANGEABLE MESSAGE SIGN (CMS) WHICH SHALL REMAIN IN PLACE UNTIL INSTALLATION OF RELOCATED SIGN STRUCTURE AND PANELS. THE MESSAGE SHALL BE VERIFIED BY THE DELDOT TRAFFIC SAFETY OFFICER. REMOVE EXISTING SIGN PANELS AND STRUCTURE AND STORE IN SECURE LOCATION UNTIL INSTALLATION ON NEW FOUNDATION, AFTER BRIDGE CONSTRUCTION ACTIVITIES ARE COMPLETE WITHIN SIGN AREA.

9. ROUGH GRADE FOR MSE WALL AND ABUTMENT B, AND CONSTRUCT IN ACCORDANCE WITH THE BRIDGE PLANS. CONSTRUCT NEW PCC BARRIER AND END TREATMENT AS SHOWN ON PLANS.

10. REMOVE DETOUR AND REOPEN RAMP S. MAINTAIN TRAFFIC CONTROL FOR CONTRACTOR ACCESS TO WORK AREA FROM RAMP S AS SHOWN ON PLANS AND AS DIRECTED BY THE ENGINEER.

11. REGRADE STORMWATER MANAGEMENT POND AS SHOWN ON PLANS. MAINTAIN POSITIVE DRAINAGE FROM EXISTING DRAINAGE OUTFALL UNTIL NEW OUTFALL IS INSTALLED. MAINTAIN POND AS A SEDIMENT BASIN IN ACCORDANCE WITH GRADING PLANS.

12. CONSTRUCT DRAINAGE OUTFALL PIPE, END SECTION, RIPRAP AND MANHOLE CONNECTING TO EXISTING 24" RCP, WORKING UPSTREAM FROM OUTFALL POINT. NEW OUTFALL CONNECTING TO EXISTING 24" RCP SHALL BE INSTALLED AND FUNCTIONING PRIOR TO REMOVAL/ABANDONMENT OF EXISTING DRAINAGE SYSTEM ALONG SOUTH EDGE OF ROAD A.

13. REMOVE GUARDRAIL, SAWCUT AND REMOVE EXISTING PAVEMENT ALONG ROAD A WITHIN LIMITS OF PHASE 1 AS SHOWN ON PLANS. REMOVE/ABANDON EXISTING DRAINAGE SYSTEM AS SHOWN ON PLANS. REGRADE AREA OF EXISTING OUTFALL IN ACCORDANCE WITH STORMWATER MANAGEMENT POND GRADING PLANS.

14. CONSTRUCT FILL AND ROUGH GRADE TO PROPOSED SUBGRADE WITHIN THE LIMITS SHOWN ON THE PLANS.

15. CONSTRUCT REMAINING DRAINAGE SYSTEM WITHIN PHASE 1 LIMITS, WORKING UPSTREAM. INSTALL INLET PROTECTION ON NEW INLETS.

16. CONSTRUCT SIGNAL/ITMS SYSTEM, LIGHTING AND OTHER UNDERGROUND UTILITIES AS SHOWN ON PLANS.

17. FINAL GRADE AND CONSTRUCT PCC BARRIER WITH UNDERDRAINS, PAVEMENT PATCHING, SHARED USE PATH AND FENCE ALONG ROAD A. PLACE ASPHALT PAVEMENT TO TOP COURSE WITHIN THE LIMITS SHOWN ON THE PLANS.

18. COORDINATE WITH DELDOT TRAFFIC TO ACTIVATE TRAFFIC SIGNAL AT ROAD A AND CENTER BOULEVARD.

19. INSTALL TEMPORARY PAVEMENT MARKINGS AS SHOWN ON THE PLANS.

20. STABILIZE AREA IN ACCORDANCE WITH DELDOT STANDARD SPECIFICATIONS. ALL DISTURBED AREAS SHALL BE ADEQUATELY STABILIZED BEFORE PROCEEDING TO THE NEXT PHASE.

21. USING TA-33, REMOVE TRAFFIC CONTROL DEVICES NOT REQUIRED FOR FUTURE CONSTRUCTION PHASES.

PHASE 1B (WEST SIDE/ABUTMENT A)

22. INSTALL TRAFFIC CONTROL DEVICES TO CLOSE SHOULDER ON SR 1 SOUTHBOUND ADJACENT TO ABUTMENT A/WEST SIDE WORK AREA AS SHOWN ON PLANS.

23. CLEAR AND GRUB WITHIN PHASE 1 LIMITS AND INSTALL EROSION AND SEDIMENT CONTROL DEVICES AS SHOWN ON THE PLANS.

24. AS A FIRST ORDER OF WORK, INSTALL NEW TRAFFIC CAMERA BASE. RELOCATE DELDOT CAMERA POLE AND APPURTENANCES AS SHOWN ON PLANS.
NOTE: THE EXISTING CAMERA POLE SHALL REMAIN IN PLACE UNTIL THE NEW BASE AND ALL APPURTENANCES ARE CONSTRUCTED AND READY TO ACCEPT THE CAMERA POLE. AT THAT TIME THE CAMERA POLE SHALL BE REMOVED FROM THE EXISTING LOCATION AND INSTALLED IN NEW LOCATION.

25. ROUGH GRADE AND CONSTRUCT MSE WALL AND ABUTMENT A IN ACCORDANCE WITH THE BRIDGE PLANS.

26. MAINTAIN TRAFFIC CONTROL FOR CONTRACTOR ACCESS TO WORK AREA FROM SR 1 SOUTHBOUND AS SHOWN ON PLANS AND AS DIRECTED BY THE ENGINEER.

27. INSTALL TEMPORARY TRAFFIC SIGNAL AT ROAD A AND RAMPS G1 AND G2 AS SHOWN ON THE PLANS. COORDINATE WITH DELDOT SIGNAL CONSTRUCTION TO ACTIVATE TEMPORARY SIGNAL.

28. INSTALL TEMPORARY BARRIER BETWEEN RAMP G2 AND WORK AREA AS SHOWN ON PLANS.

29. MAINTAIN EXISTING GUARDRAIL ALONG THE SOUTHWEST CORNER OF RAMP G2.

30. CONSTRUCT FILL AND ROUGH GRADE TO PROPOSED SUBGRADE WITHIN 5' BEHIND THE EXISTING GUARDRAIL, AS SHOWN ON THE PLANS.

31. CONSTRUCT DRAINAGE SYSTEM WITHIN PHASE 1 LIMITS, WORKING UPSTREAM. INSTALL INLET PROTECTION ON NEW INLETS.

32. CONSTRUCT SIGNAL/ITMS SYSTEM, LIGHTING AND OTHER UNDERGROUND UTILITIES. INSTALL CONDUIT UNDER EXISTING ROADWAY AS SHOWN ON PLANS.

33. FINAL GRADE AND CONSTRUCT PCC BARRIER WITH UNDERDRAINS, PAVEMENT PATCHING, SHARED USE PATH, GUARDRAIL, AND FENCE. PLACE ASPHALT PAVEMENT TO TOP COURSE TO WITHIN 5' OF EXISTING GUARDRAIL.

34. REMOVE GUARDRAIL SAWCUT AND REMOVE EXISTING PAVEMENT ALONG ROAD A AND RAMP G2. CONSTRUCT REMAINING ASPHALT PAVEMENT TO TOP COURSE.

35. INSTALL TEMPORARY PAVEMENT MARKINGS AS SHOWN ON THE PLANS.

36. STABILIZE AREA IN ACCORDANCE WITH DELDOT STANDARD SPECIFICATIONS. ALL DISTURBED AREAS SHALL BE ADEQUATELY STABILIZED BEFORE PROCEEDING TO THE NEXT PHASE.

37. REMOVE TRAFFIC CONTROL DEVICES NOT REQUIRED FOR FUTURE CONSTRUCTION PHASES.

SILT FENCE		
NO.	ITEM NO.	LENGTH
1	905001	657'

TEMPORARY PAVEMENT MARKINGS LEGEND		
SYMBOL	ITEM	QUANTITY
A	4" SOLID WHITE TEMPORARY PAINT PAVEMENT STRIPING (ITEM 817003)	0 LF
B	4" SOLID YELLOW TEMPORARY PAINT PAVEMENT STRIPING (ITEM 817003)	0 LF
C	4" SOLID DOUBLE YELLOW TEMPORARY PAINT PAVEMENT STRIPING (ITEM 817003)	0 LF
D	4" DASHED WHITE TEMPORARY PAINT PAVEMENT STRIPING, 2' LINE & 6' GAP (ITEM 817003)	0 LF
E	4" DASHED WHITE TEMPORARY PAINT PAVEMENT STRIPING, 10' LINE & 30' GAP (ITEM 817003)	0 LF
F	4" DASHED YELLOW TEMPORARY PAINT PAVEMENT STRIPING, 10' LINE & 30' GAP (ITEM 817003)	0 LF
G	WHITE TEMPORARY PAINT PAVEMENT SYMBOL (ITEM 817004)	0 LF

DELAWARE DEPARTMENT OF TRANSPORTATION

ADDENDUMS / REVISIONS

SCALE 0 30 60 90 FEET

ROAD A /SR7 IMPROVEMENTS

CONTRACT	BRIDGE NO.	1-220
T201009002	DESIGNED BY:	MCK
COUNTY		
NEW CASTLE	CHECKED BY:	RLS

CONSTRUCTION PHASING, M.O.T., AND EROSION CONTROL PLAN – PHASE 1

CS-05

SHEET NO. 104

TOTAL SHTS. 154

7/5/2018 1:24:12 PM
\\balsrv01\v2012\2012\12146_DelDOT1585\40-Road A Connector\Cadd\Contract\Plans\cs05_RdA.dgn

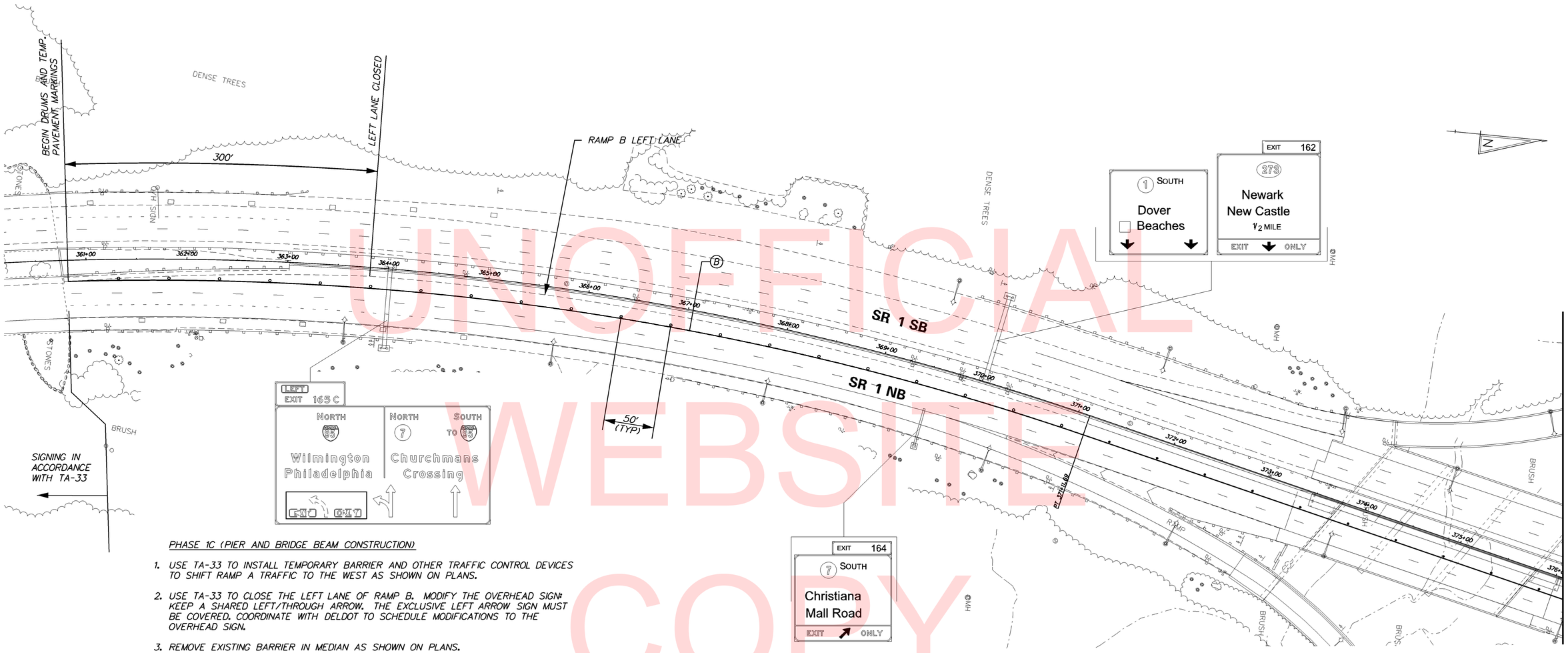

UNOFFICIAL WEBSITE COPY

PHASE 1C (PIER AND BRIDGE BEAM CONSTRUCTION)

1. USE TA-33 TO INSTALL TEMPORARY BARRIER AND OTHER TRAFFIC CONTROL DEVICES TO SHIFT RAMP A TRAFFIC TO THE WEST AS SHOWN ON PLANS.
2. USE TA-33 TO CLOSE THE LEFT LANE OF RAMP B. MODIFY THE OVERHEAD SIGN: KEEP A SHARED LEFT/THROUGH ARROW. THE EXCLUSIVE LEFT ARROW SIGN MUST BE COVERED. COORDINATE WITH DELDOT TO SCHEDULE MODIFICATIONS TO THE OVERHEAD SIGN.
3. REMOVE EXISTING BARRIER IN MEDIAN AS SHOWN ON PLANS.
4. CONSTRUCT BRIDGE PIER IN ACCORDANCE WITH THE BRIDGE PLANS.
5. IMPLEMENT DETOUR PLAN TO CLOSE NORTHBOUND SR 1 FOR NIGHT WORK ONLY, DURING ALLOWABLE CLOSURE TIMES, AS SHOWN ON SHEET CS-02. COORDINATE CLOSURE WITH DELDOT TRAFFIC SAFETY. INSTALL SPAN 2 GIRDERS IN ACCORDANCE WITH BRIDGE PLANS. INSTALL RELOCATED CANTILEVER SIGN ON NEW FOUNDATION. REMOVE DETOUR AND REOPEN SR 1 NORTHBOUND EACH NIGHT UNTIL COMPLETION OF SPAN 2 GIRDER INSTALLATION.
6. IMPLEMENT DETOUR PLAN TO CLOSE SOUTHBOUND SR 1 FOR NIGHT WORK ONLY, DURING ALLOWABLE CLOSURE TIMES, AS SHOWN ON SHEET CS-02. COORDINATE CLOSURE WITH DELDOT TRAFFIC SAFETY. INSTALL SPAN 1 GIRDERS IN ACCORDANCE WITH BRIDGE PLANS. REMOVE DETOUR AND REOPEN SOUTHBOUND SR 1 EACH NIGHT UNTIL INSTALLATION AND SPLICING OF ALL GIRDERS.
7. CONSTRUCT PCC BARRIER IN MEDIAN AS SHOWN ON PLANS. REMOVE TEMPORARY TRAFFIC CONTROL DEVICES ON RAMP A AND SHIFT TRAFFIC TO ORIGINAL CONFIGURATION. REMOVE TEMPORARY TRAFFIC CONTROL DEVICES ON NORTHBOUND SR 1/RAMP B AND REOPEN RAMP B LEFT LANE.
8. STABILIZE AREA IN ACCORDANCE WITH DELDOT STANDARD SPECIFICATIONS. ALL DISTURBED AREAS SHALL BE ADEQUATELY STABILIZED BEFORE PROCEEDING TO THE NEXT PHASE.
9. REMOVE TRAFFIC CONTROL DEVICES NOT REQUIRED FOR FUTURE PHASES.

SIGN NUMBER	QUANTITY	LEGEND	SIZE AREA	SIZE HEIGHT	SIZE WIDTH	COLOR LEGEND	COLOR BACKGRND	BORDER WIDTH	BORDER RADIUS	ARROW	SHIELD	REMARKS
	2	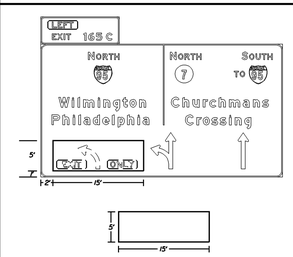	75"	5'-0"	15'-0"	--	G	--	--	--	--	- SHEET ALUMINUM OVERLAY

TEMPORARY PAVEMENT MARKINGS LEGEND

SYMBOL	ITEM	QUANTITY
A	4" SOLID WHITE TEMPORARY PAINT PAVEMENT STRIPING (ITEM 817003)	0 LF
B	4" SOLID YELLOW TEMPORARY PAINT PAVEMENT STRIPING (ITEM 817003)	1,525 LF
C	4" SOLID DOUBLE YELLOW TEMPORARY PAINT PAVEMENT STRIPING (ITEM 817003)	0 LF
D	4" DASHED WHITE TEMPORARY PAINT PAVEMENT STRIPING, 2' LINE & 6' GAP (ITEM 817003)	0 LF
E	4" DASHED WHITE TEMPORARY PAINT PAVEMENT STRIPING, 10' LINE & 30' GAP (ITEM 817003)	0 LF
F	4" DASHED YELLOW TEMPORARY PAINT PAVEMENT STRIPING, 10' LINE & 30' GAP (ITEM 817003)	0 LF
G	WHITE TEMPORARY PAINT PAVEMENT SYMBOL (ITEM 817004)	0 SF

7/5/2018 1:25:18 PM
\\BALSRV01\V2012\2012\12146_DELDOT1585\40-ROAD A CONNECTOR\CADD\CONTRACT\PLANS\CS06_RDA.DGN

DELAWARE DEPARTMENT OF TRANSPORTATION

ADDENDUMS / REVISIONS

SCALE 0 50 100 150 FEET

ROAD A /SR7 IMPROVEMENTS

CONTRACT	BRIDGE NO.	1-220
T201009002	DESIGNED BY:	MCK
COUNTY		
NEW CASTLE	CHECKED BY:	BAH

CONSTRUCTION PHASING, M.O.T., AND EROSION CONTROL PLAN – PHASE 1

CS-06

SHEET NO. 105

TOTAL SHTS. 154

PHASE 1C (PIER AND BRIDGE BEAM CONSTRUCTION)

1. USE TA-33 TO INSTALL TEMPORARY BARRIER AND OTHER TRAFFIC CONTROL DEVICES TO SHIFT RAMP A TRAFFIC TO THE WEST AS SHOWN ON PLANS.
2. USE TA-33 TO CLOSE THE LEFT LANE OF RAMP B. MODIFY THE OVERHEAD SIGN: KEEP A SHARED LEFT/THROUGH ARROW. THE EXCLUSIVE LEFT ARROW SIGN MUST BE COVERED. COORDINATE WITH DELDOT TO SCHEDULE MODIFICATIONS TO THE OVERHEAD SIGN.
3. REMOVE EXISTING BARRIER IN MEDIAN AS SHOWN ON PLANS.
4. CONSTRUCT BRIDGE PIER IN ACCORDANCE WITH THE BRIDGE PLANS.
5. IMPLEMENT DETOUR PLAN TO CLOSE NORTHBOUND SR 1 FOR NIGHT WORK ONLY, DURING ALLOWABLE CLOSURE TIMES, AS SHOWN ON SHEET CS-02. COORDINATE CLOSURE WITH DELDOT TRAFFIC SAFETY. INSTALL SPAN 2 GIRDERS IN ACCORDANCE WITH BRIDGE PLANS. INSTALL RELOCATED CANTILEVER SIGN ON NEW FOUNDATION. REMOVE DETOUR AND REOPEN SR 1 NORTHBOUND EACH NIGHT UNTIL COMPLETION OF SPAN 2 GIRDER INSTALLATION.
6. IMPLEMENT DETOUR PLAN TO CLOSE SOUTHBOUND SR 1 FOR NIGHT WORK ONLY, DURING ALLOWABLE CLOSURE TIMES, AS SHOWN ON SHEET CS-02. COORDINATE CLOSURE WITH DELDOT TRAFFIC SAFETY. INSTALL SPAN 1 GIRDERS IN ACCORDANCE WITH BRIDGE PLANS. REMOVE DETOUR AND REOPEN SOUTHBOUND SR 1 EACH NIGHT UNTIL INSTALLATION AND SPLICING OF ALL GIRDERS.
7. CONSTRUCT PCC BARRIER IN MEDIAN AS SHOWN ON PLANS. REMOVE TEMPORARY TRAFFIC CONTROL DEVICES ON RAMP A AND SHIFT TRAFFIC TO ORIGINAL CONFIGURATION. REMOVE TEMPORARY TRAFFIC CONTROL DEVICES ON NORTHBOUND SR 1/RAMP B AND REOPEN RAMP B LEFT LANE.
8. STABILIZE AREA IN ACCORDANCE WITH DELDOT STANDARD SPECIFICATIONS. ALL DISTURBED AREAS SHALL BE ADEQUATELY STABILIZED BEFORE PROCEEDING TO THE NEXT PHASE.
9. REMOVE TRAFFIC CONTROL DEVICES NOT REQUIRED FOR FUTURE PHASES.

BARRIER LENGTH OF NEED (RAMP S)

$L_A = 24'$, $L_R = 360$, $L_2 = 2'$

$X = \frac{24-2}{24/360} = 330'$

BARRIER LENGTH OF NEED (RAMP A MEDIAN)

$L_A = 21'$, $L_R = 360$, $L_2 = 1'$

$X = \frac{21-1}{21/360} = 343'$

BARRIER LENGTH OF NEED (RAMP B MEDIAN)

$L_A = 34'$, $L_R = 360$, $L_2 = 2'$

$X = \frac{34-2}{34/360} = 339'$

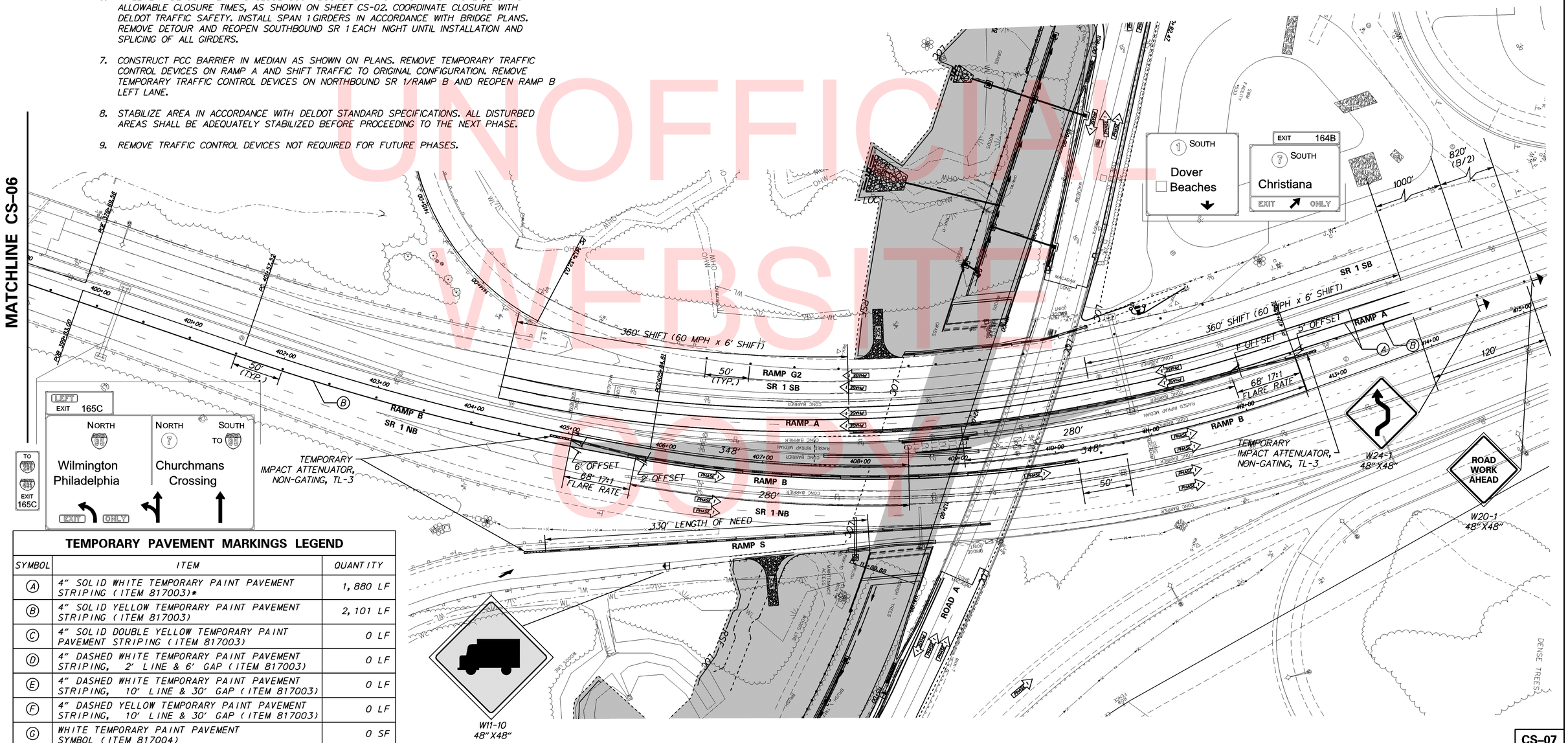

TEMPORARY PAVEMENT MARKINGS LEGEND

SYMBOL	ITEM	QUANTITY
A	4" SOLID WHITE TEMPORARY PAINT PAVEMENT STRIPING (ITEM 817003)*	1,880 LF
B	4" SOLID YELLOW TEMPORARY PAINT PAVEMENT STRIPING (ITEM 817003)	2,101 LF
C	4" SOLID DOUBLE YELLOW TEMPORARY PAINT PAVEMENT STRIPING (ITEM 817003)	0 LF
D	4" DASHED WHITE TEMPORARY PAINT PAVEMENT STRIPING, 2' LINE & 6' GAP (ITEM 817003)	0 LF
E	4" DASHED WHITE TEMPORARY PAINT PAVEMENT STRIPING, 10' LINE & 30' GAP (ITEM 817003)	0 LF
F	4" DASHED YELLOW TEMPORARY PAINT PAVEMENT STRIPING, 10' LINE & 30' GAP (ITEM 817003)	0 LF
G	WHITE TEMPORARY PAINT PAVEMENT SYMBOL (ITEM 817004)	0 SF

DELAWARE DEPARTMENT OF TRANSPORTATION

ADDENDUMS / REVISIONS

SCALE 0 50 100 150 FEET

ROAD A /SR7 IMPROVEMENTS

CONTRACT	BRIDGE NO.	1-220
T201009002	DESIGNED BY:	MCK
COUNTY		
NEW CASTLE	CHECKED BY:	RLS

CONSTRUCTION PHASING, M.O.T., AND EROSION CONTROL PLAN – PHASE 1

CS-07

SHEET NO. 106

TOTAL SHTS. 154

7/5/2018 1:26:37 PM
\\bdlsrv01\v2012\2012\12146_DelDOT1585\40-Road A Connector\Cadd\Contract\Plans\cs07_RdA.dgn

TEMPORARY PAVEMENT MARKINGS LEGEND		
SYMBOL	ITEM	QUANTITY
(A)	4" SOLID WHITE TEMPORARY PAINT PAVEMENT STRIPING (ITEM 817003)	540 LF
(B)	4" SOLID YELLOW TEMPORARY PAINT PAVEMENT STRIPING (ITEM 817003)	0 LF
(C)	4" SOLID DOUBLE YELLOW TEMPORARY PAINT PAVEMENT STRIPING (ITEM 817003)	0 LF
(D)	4" DASHED WHITE TEMPORARY PAINT PAVEMENT STRIPING, 2' LINE & 6' GAP (ITEM 817003)	23 LF
(E)	4" DASHED WHITE TEMPORARY PAINT PAVEMENT STRIPING, 10' LINE & 30' GAP (ITEM 817003)	0 LF
(F)	4" DASHED YELLOW TEMPORARY PAINT PAVEMENT STRIPING, 10' LINE & 30' GAP (ITEM 817003)	0 LF
(G)	WHITE TEMPORARY PAINT PAVEMENT SYMBOL (ITEM 817004)	0 SF

SILT FENCE		
NO.	ITEM NO.	LENGTH
2	905001	317'
4	905001	102'

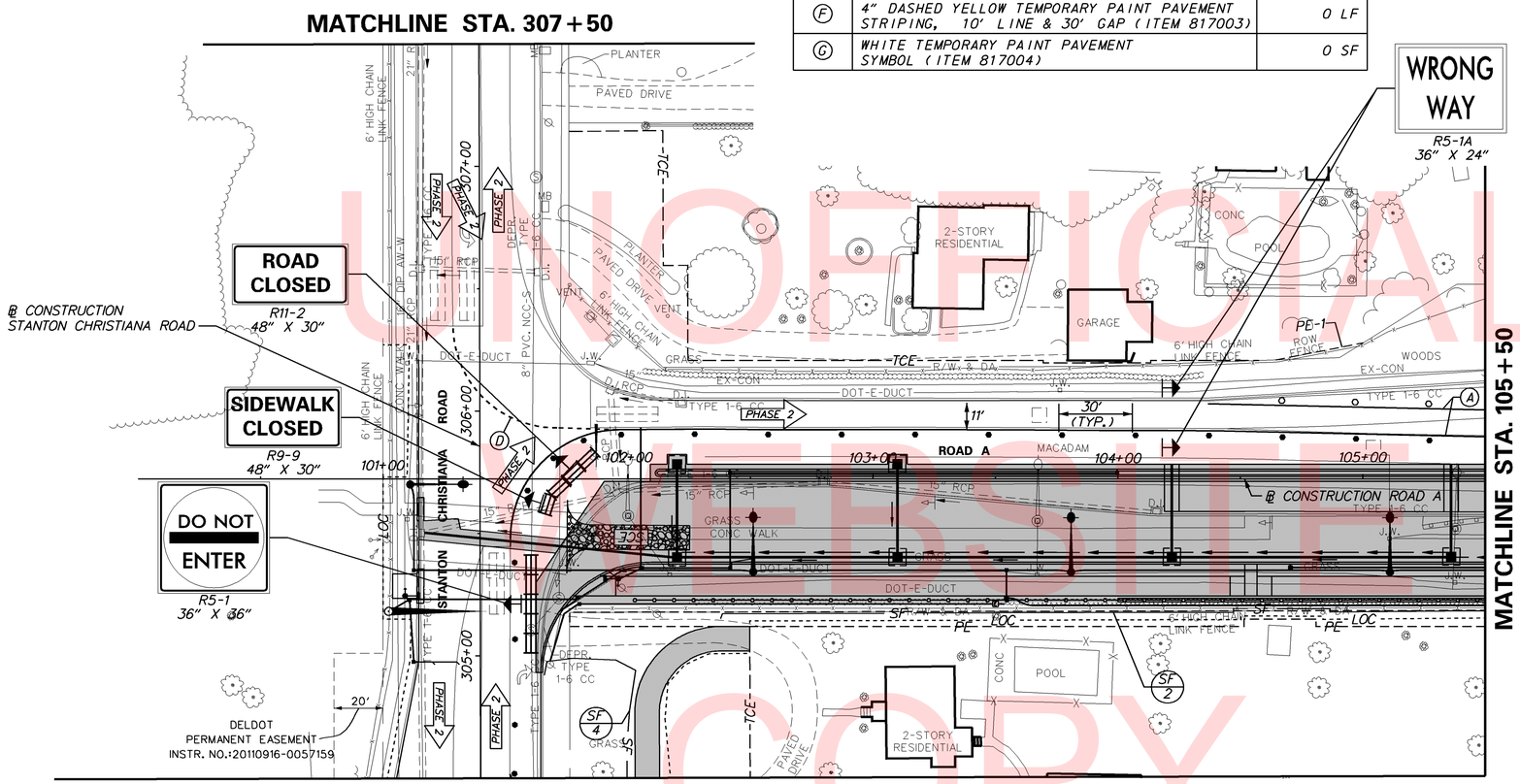

SEQUENCE OF CONSTRUCTION PHASE 2

1. INSPECT AND MAINTAIN ALL EROSION AND SEDIMENT CONTROL DEVICES INSTALLED IN PREVIOUS PHASE AS REQUIRED.
2. MAINTAIN TEMPORARY TRAFFIC CONTROL DEVICES FROM PREVIOUS PHASE AS REQUIRED.
3. COORDINATE UTILITY RELOCATIONS WITH DELDOT AND UTILITY COMPANIES AS REQUIRED.
4. COORDINATE WITH DTC TO TEMPORARILY RELOCATE EXISTING BUS STOP AT ROAD A STA. 104+53 RT.
5. INSTALL TRAFFIC CONTROL DEVICES TO CLOSE THE RIGHT TURN LANES OF RAMP G1, RAMP G2 AND NORTHBOUND STANTON CHRISTIANA ROAD AS SHOWN ON THE PLANS.
6. IMPLEMENT DETOUR PLAN TO CLOSE WESTBOUND ROAD A BETWEEN STANTON CHRISTIANA ROAD AND RAMPS G1/G2.
7. INSTALL TEMPORARY TRAFFIC BARRIER AND OTHER TRAFFIC CONTROL DEVICES AS SHOWN ON THE PLANS.
8. COORDINATE WITH DELDOT SIGNAL CONSTRUCTION TO ADJUST TEMPORARY SIGNAL AND DETECTION AS REQUIRED FOR PHASE 2 TRAFFIC CONFIGURATION.
9. SHIFT EASTBOUND ROAD A TRAFFIC TO THE NORTH (WESTBOUND) SIDE AS SHOWN ON THE PLANS. PROVIDE TEMPORARY DOUBLE LEFT TURN FROM WESTBOUND ROAD A TO SOUTHBOUND RAMP G2.
10. CLEAR AND GRUB PHASE 2 WORK AREA AND INSTALL ADDITIONAL EROSION AND SEDIMENT CONTROL DEVICES AS SHOWN ON PLANS.
11. SAWCUT AND REMOVE EXISTING PAVEMENT, DRAINAGE, CURB, GUARDRAIL AND LIGHTING AS SHOWN ON THE PLANS.
12. CONSTRUCT RETAINING WALL ALONG THE SOUTH SIDE OF ROAD A. CONSTRUCT FILL AND ROUGH GRADE TO PROPOSED SUBGRADE AS SHOWN ON THE PLANS.
13. CONSTRUCT SIGNAL/ITMS SYSTEM, LIGHTING AND OTHER UNDERGROUND UTILITIES AS SHOWN ON PLANS.
14. CONSTRUCT DRAINAGE SYSTEM, WORKING UPSTREAM FROM OUTFALL POINTS WITHIN THE LIMITS SHOWN ON THE PLANS. USE TA-10 TO CONSTRUCT PIPE CROSSING STANTON CHRISTIANA ROAD. INSTALL INLET PROTECTION ON NEW INLETS.
15. FINAL GRADE AND CONSTRUCT MEDIAN, CURB WITH UNDERDRAINS, FULL DEPTH PATCHING, SHARED USE PATH AND FENCE WITHIN THE LIMITS SHOWN ON THE PLANS. USE TA-10 TO CONSTRUCT DRIVEWAY TIE-INS.
16. CONSTRUCT FULL DEPTH AND WEDGE AND LEVEL PAVEMENT TO THE LIMITS SHOWN ON THE PLANS.
17. COORDINATE WITH DELDOT SIGNAL CONSTRUCTION TO ADJUST TEMPORARY SIGNAL AND ACTIVATE PERMANENT SIGNALS AT ROAD A AND STANTON CHRISTIANA ROAD AS SHOWN ON THE PLANS.
18. COORDINATE WITH DELMARVA AND DELDOT TO ACTIVATE NEW ROADWAY LIGHTING AS SHOWN ON THE PLANS.
19. INSTALL TEMPORARY PAVEMENT MARKINGS AS SHOWN ON THE PLANS.
20. REMOVE ALL TRAFFIC CONTROL DEVICES NOT REQUIRED FOR FUTURE CONSTRUCTION PHASES.
21. STABILIZE AREA IN ACCORDANCE WITH DELDOT STANDARD SPECIFICATIONS. ALL DISTURBED AREAS SHALL BE ADEQUATELY STABILIZED BEFORE PROCEEDING TO THE NEXT PHASE.
22. REMOVE TRAFFIC CONTROL DEVICES NOT REQUIRED FOR FUTURE CONSTRUCTION PHASES.

UNOFFICIAL WEBSITE COPY

DELAWARE DEPARTMENT OF TRANSPORTATION

ADDENDUMS / REVISIONS

SCALE 0 30 60 90 FEET

ROAD A /SR7 IMPROVEMENTS

CONTRACT	BRIDGE NO.	1-220
T201009002	DESIGNED BY:	MCK
COUNTY		
NEW CASTLE	CHECKED BY:	RLS

CONSTRUCTION PHASING, M.O.T., AND EROSION CONTROL PLAN – PHASE 2

CS-08

SHEET NO. 107

TOTAL SHTS. 154

7/5/2018 1:28:10 PM
\\balsrv01\v2012\2012\12146_DelDOT1585\40-Road A Connector\Cadd\Contract\Plans\cs08_RdA.dgn

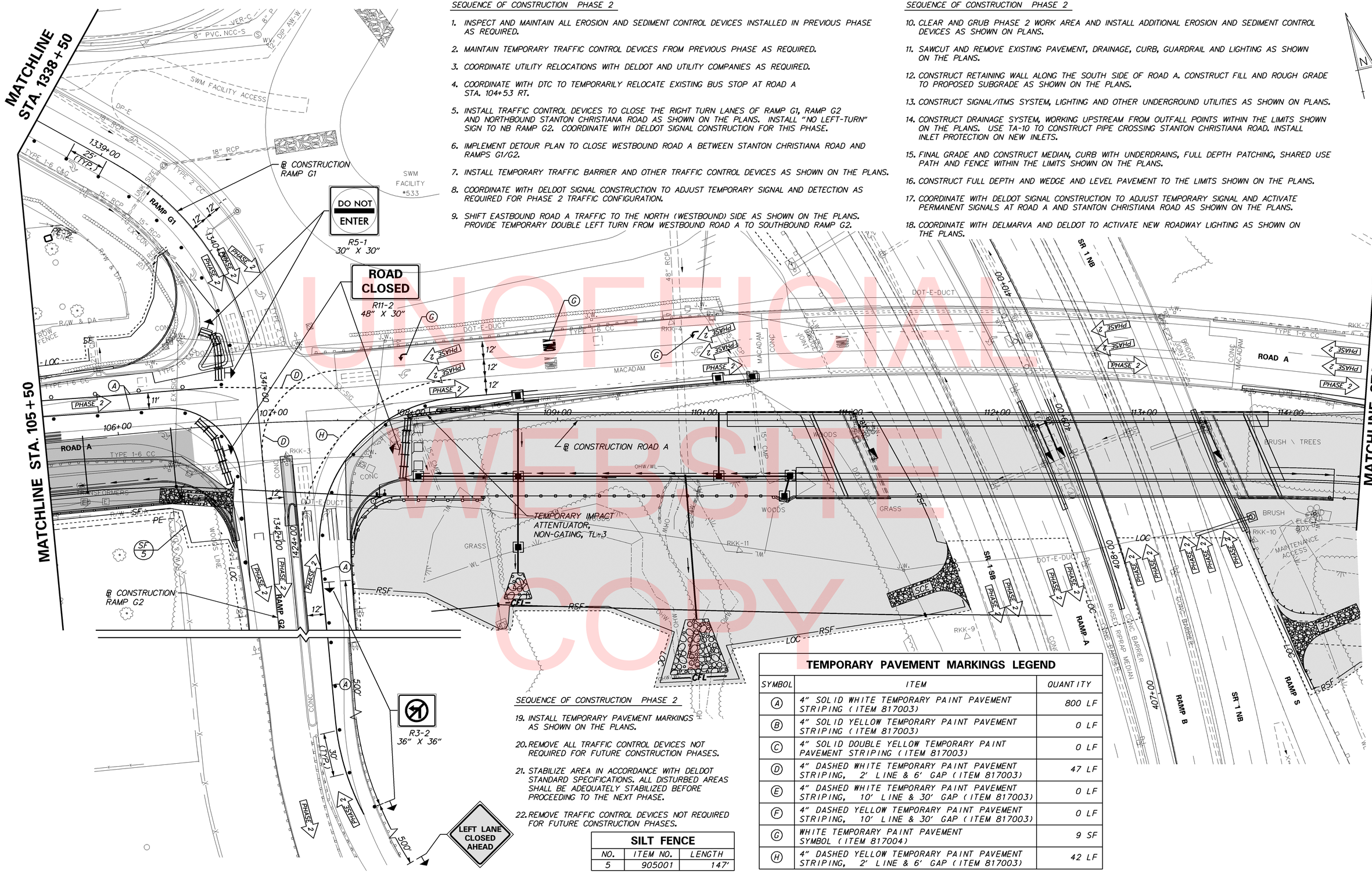

UNOFFICIAL WEBSITE COPY

SEQUENCE OF CONSTRUCTION PHASE 2

1. INSPECT AND MAINTAIN ALL EROSION AND SEDIMENT CONTROL DEVICES INSTALLED IN PREVIOUS PHASE AS REQUIRED.
2. MAINTAIN TEMPORARY TRAFFIC CONTROL DEVICES FROM PREVIOUS PHASE AS REQUIRED.
3. COORDINATE UTILITY RELOCATIONS WITH DELDOT AND UTILITY COMPANIES AS REQUIRED.
4. COORDINATE WITH DTC TO TEMPORARILY RELOCATE EXISTING BUS STOP AT ROAD A STA. 104+53 RT.
5. INSTALL TRAFFIC CONTROL DEVICES TO CLOSE THE RIGHT TURN LANES OF RAMP G1, RAMP G2 AND NORTHBOUND STANTON CHRISTIANA ROAD AS SHOWN ON THE PLANS. INSTALL "NO LEFT-TURN" SIGN TO NB RAMP G2. COORDINATE WITH DELDOT SIGNAL CONSTRUCTION FOR THIS PHASE.
6. IMPLEMENT DETOUR PLAN TO CLOSE WESTBOUND ROAD A BETWEEN STANTON CHRISTIANA ROAD AND RAMPS G1/G2.
7. INSTALL TEMPORARY TRAFFIC BARRIER AND OTHER TRAFFIC CONTROL DEVICES AS SHOWN ON THE PLANS.
8. COORDINATE WITH DELDOT SIGNAL CONSTRUCTION TO ADJUST TEMPORARY SIGNAL AND DETECTION AS REQUIRED FOR PHASE 2 TRAFFIC CONFIGURATION.
9. SHIFT EASTBOUND ROAD A TRAFFIC TO THE NORTH (WESTBOUND) SIDE AS SHOWN ON THE PLANS. PROVIDE TEMPORARY DOUBLE LEFT TURN FROM WESTBOUND ROAD A TO SOUTHBOUND RAMP G2.

SEQUENCE OF CONSTRUCTION PHASE 2

10. CLEAR AND GRUB PHASE 2 WORK AREA AND INSTALL ADDITIONAL EROSION AND SEDIMENT CONTROL DEVICES AS SHOWN ON PLANS.
11. SAWCUT AND REMOVE EXISTING PAVEMENT, DRAINAGE, CURB, GUARDRAIL AND LIGHTING AS SHOWN ON THE PLANS.
12. CONSTRUCT RETAINING WALL ALONG THE SOUTH SIDE OF ROAD A. CONSTRUCT FILL AND ROUGH GRADE TO PROPOSED SUBGRADE AS SHOWN ON THE PLANS.
13. CONSTRUCT SIGNAL/ITMS SYSTEM, LIGHTING AND OTHER UNDERGROUND UTILITIES AS SHOWN ON PLANS.
14. CONSTRUCT DRAINAGE SYSTEM, WORKING UPSTREAM FROM OUTFALL POINTS WITHIN THE LIMITS SHOWN ON THE PLANS. USE TA-10 TO CONSTRUCT PIPE CROSSING STANTON CHRISTIANA ROAD. INSTALL INLET PROTECTION ON NEW INLETS.
15. FINAL GRADE AND CONSTRUCT MEDIAN, CURB WITH UNDERDRAINS, FULL DEPTH PATCHING, SHARED USE PATH AND FENCE WITHIN THE LIMITS SHOWN ON THE PLANS.
16. CONSTRUCT FULL DEPTH AND WEDGE AND LEVEL PAVEMENT TO THE LIMITS SHOWN ON THE PLANS.
17. COORDINATE WITH DELDOT SIGNAL CONSTRUCTION TO ADJUST TEMPORARY SIGNAL AND ACTIVATE PERMANENT SIGNALS AT ROAD A AND STANTON CHRISTIANA ROAD AS SHOWN ON THE PLANS.
18. COORDINATE WITH DELMARVA AND DELDOT TO ACTIVATE NEW ROADWAY LIGHTING AS SHOWN ON THE PLANS.

SEQUENCE OF CONSTRUCTION PHASE 2

19. INSTALL TEMPORARY PAVEMENT MARKINGS AS SHOWN ON THE PLANS.
20. REMOVE ALL TRAFFIC CONTROL DEVICES NOT REQUIRED FOR FUTURE CONSTRUCTION PHASES.
21. STABILIZE AREA IN ACCORDANCE WITH DELDOT STANDARD SPECIFICATIONS. ALL DISTURBED AREAS SHALL BE ADEQUATELY STABILIZED BEFORE PROCEEDING TO THE NEXT PHASE.
22. REMOVE TRAFFIC CONTROL DEVICES NOT REQUIRED FOR FUTURE CONSTRUCTION PHASES.

SILT FENCE

NO.	ITEM NO.	LENGTH
5	905001	147'

TEMPORARY PAVEMENT MARKINGS LEGEND

SYMBOL	ITEM	QUANTITY
(A)	4" SOLID WHITE TEMPORARY PAINT PAVEMENT STRIPING (ITEM 817003)	800 LF
(B)	4" SOLID YELLOW TEMPORARY PAINT PAVEMENT STRIPING (ITEM 817003)	0 LF
(C)	4" SOLID DOUBLE YELLOW TEMPORARY PAINT PAVEMENT STRIPING (ITEM 817003)	0 LF
(D)	4" DASHED WHITE TEMPORARY PAINT PAVEMENT STRIPING, 2' LINE & 6' GAP (ITEM 817003)	47 LF
(E)	4" DASHED WHITE TEMPORARY PAINT PAVEMENT STRIPING, 10' LINE & 30' GAP (ITEM 817003)	0 LF
(F)	4" DASHED YELLOW TEMPORARY PAINT PAVEMENT STRIPING, 10' LINE & 30' GAP (ITEM 817003)	0 LF
(G)	WHITE TEMPORARY PAINT PAVEMENT SYMBOL (ITEM 817004)	9 SF
(H)	4" DASHED YELLOW TEMPORARY PAINT PAVEMENT STRIPING, 2' LINE & 6' GAP (ITEM 817003)	42 LF

DELAWARE DEPARTMENT OF TRANSPORTATION

ADDENDUMS / REVISIONS

SCALE 0 30 60 90 FEET

ROAD A /SR7 IMPROVEMENTS

CONTRACT	BRIDGE NO.	1-220
T201009002	DESIGNED BY: MCK	
COUNTY	CHECKED BY: RLS	
NEW CASTLE		

CONSTRUCTION PHASING, M.O.T., AND EROSION CONTROL PLAN – PHASE 2

SHEET NO. 108
TOTAL SHTS. 154

7/5/2018 1:29:00 PM
\\balsrv01\v2012\2012\12146_DelDOT1585\40-Road A Connector\Cadd\Contract\Plans\cs09_RdA.dgn

TEMPORARY PAVEMENT MARKINGS LEGEND		
SYMBOL	ITEM	QUANTITY
(A)	4" SOLID WHITE TEMPORARY PAINT PAVEMENT STRIPING (ITEM 817003)	262 LF
(B)	4" SOLID YELLOW TEMPORARY PAINT PAVEMENT STRIPING (ITEM 817003)	0 LF
(C)	4" SOLID DOUBLE YELLOW TEMPORARY PAINT PAVEMENT STRIPING (ITEM 817003)	0 LF
(D)	4" DASHED WHITE TEMPORARY PAINT PAVEMENT STRIPING, 2' LINE & 6' GAP (ITEM 817003)	0 LF
(E)	4" DASHED WHITE TEMPORARY PAINT PAVEMENT STRIPING, 10' LINE & 30' GAP (ITEM 817003)	0 LF
(F)	4" DASHED YELLOW TEMPORARY PAINT PAVEMENT STRIPING, 10' LINE & 30' GAP (ITEM 817003)	0 LF
(G)	WHITE TEMPORARY PAINT PAVEMENT SYMBOL (ITEM 817004)	0 SF

SEQUENCE OF CONSTRUCTION PHASE 2

1. INSPECT AND MAINTAIN ALL EROSION AND SEDIMENT CONTROL DEVICES INSTALLED IN PREVIOUS PHASE AS REQUIRED.
2. MAINTAIN TEMPORARY TRAFFIC CONTROL DEVICES FROM PREVIOUS PHASE AS REQUIRED.
3. COORDINATE UTILITY RELOCATIONS WITH DELDOT AND UTILITY COMPANIES AS REQUIRED.
4. COORDINATE WITH DTC TO TEMPORARILY RELOCATE EXISTING BUS STOP AT ROAD A STA. 104+53 RT.
5. INSTALL TRAFFIC CONTROL DEVICES TO CLOSE THE RIGHT TURN LANES OF RAMP G1, RAMP G2 AND NORTHBOUND STANTON CHRISTIANA ROAD AS SHOWN ON THE PLANS.
6. IMPLEMENT DETOUR PLAN TO CLOSE WESTBOUND ROAD A BETWEEN STANTON CHRISTIANA ROAD AND RAMPS G1/G2.
7. INSTALL TEMPORARY TRAFFIC BARRIER AND OTHER TRAFFIC CONTROL DEVICES AS SHOWN ON THE PLANS.
8. COORDINATE WITH DELDOT SIGNAL CONSTRUCTION TO ADJUST TEMPORARY SIGNAL AND DETECTION AS REQUIRED FOR PHASE 2 TRAFFIC CONFIGURATION.
9. SHIFT EASTBOUND ROAD A TRAFFIC TO THE NORTH (WESTBOUND) SIDE AS SHOWN ON THE PLANS. PROVIDE TEMPORARY DOUBLE LEFT TURN FROM WESTBOUND ROAD A TO SOUTHBOUND RAMP G2.
10. CLEAR AND GRUB PHASE 2 WORK AREA AND INSTALL ADDITIONAL EROSION AND SEDIMENT CONTROL DEVICES AS SHOWN ON PLANS.
11. SAWCUT AND REMOVE EXISTING PAVEMENT, DRAINAGE, CURB, GUARDRAIL AND LIGHTING AS SHOWN ON THE PLANS.
12. CONSTRUCT RETAINING WALL ALONG THE SOUTH SIDE OF ROAD A. CONSTRUCT FILL AND ROUGH GRADE TO PROPOSED SUBGRADE AS SHOWN ON THE PLANS.
13. CONSTRUCT SIGNAL/ITMS SYSTEM, LIGHTING AND OTHER UNDERGROUND UTILITIES AS SHOWN ON PLANS.
14. CONSTRUCT DRAINAGE SYSTEM, WORKING UPSTREAM FROM OUTFALL POINTS WITHIN THE LIMITS SHOWN ON THE PLANS. USE TA-10 TO CONSTRUCT PIPE CROSSING STANTON CHRISTIANA ROAD. INSTALL INLET PROTECTION ON NEW INLETS.
15. FINAL GRADE AND CONSTRUCT MEDIAN, CURB WITH UNDERDRAINS, FULL DEPTH PATCHING, SHARED USE PATH AND FENCE WITHIN THE LIMITS SHOWN ON THE PLANS.
16. CONSTRUCT FULL DEPTH AND WEDGE AND LEVEL PAVEMENT TO THE LIMITS SHOWN ON THE PLANS.
17. COORDINATE WITH DELDOT SIGNAL CONSTRUCTION TO ADJUST TEMPORARY SIGNAL AND ACTIVATE PERMANENT SIGNALS AT ROAD A AND STANTON CHRISTIANA ROAD AS SHOWN ON THE PLANS.
18. COORDINATE WITH DELMARVA AND DELDOT TO ACTIVATE NEW ROADWAY LIGHTING AS SHOWN ON THE PLANS.
19. INSTALL TEMPORARY PAVEMENT MARKINGS AS SHOWN ON THE PLANS.
20. REMOVE ALL TRAFFIC CONTROL DEVICES NOT REQUIRED FOR FUTURE CONSTRUCTION PHASES.
21. STABILIZE AREA IN ACCORDANCE WITH DELDOT STANDARD SPECIFICATIONS. ALL DISTURBED AREAS SHALL BE ADEQUATELY STABILIZED BEFORE PROCEEDING TO THE NEXT PHASE.
22. REMOVE TRAFFIC CONTROL DEVICES NOT REQUIRED FOR FUTURE CONSTRUCTION PHASES.

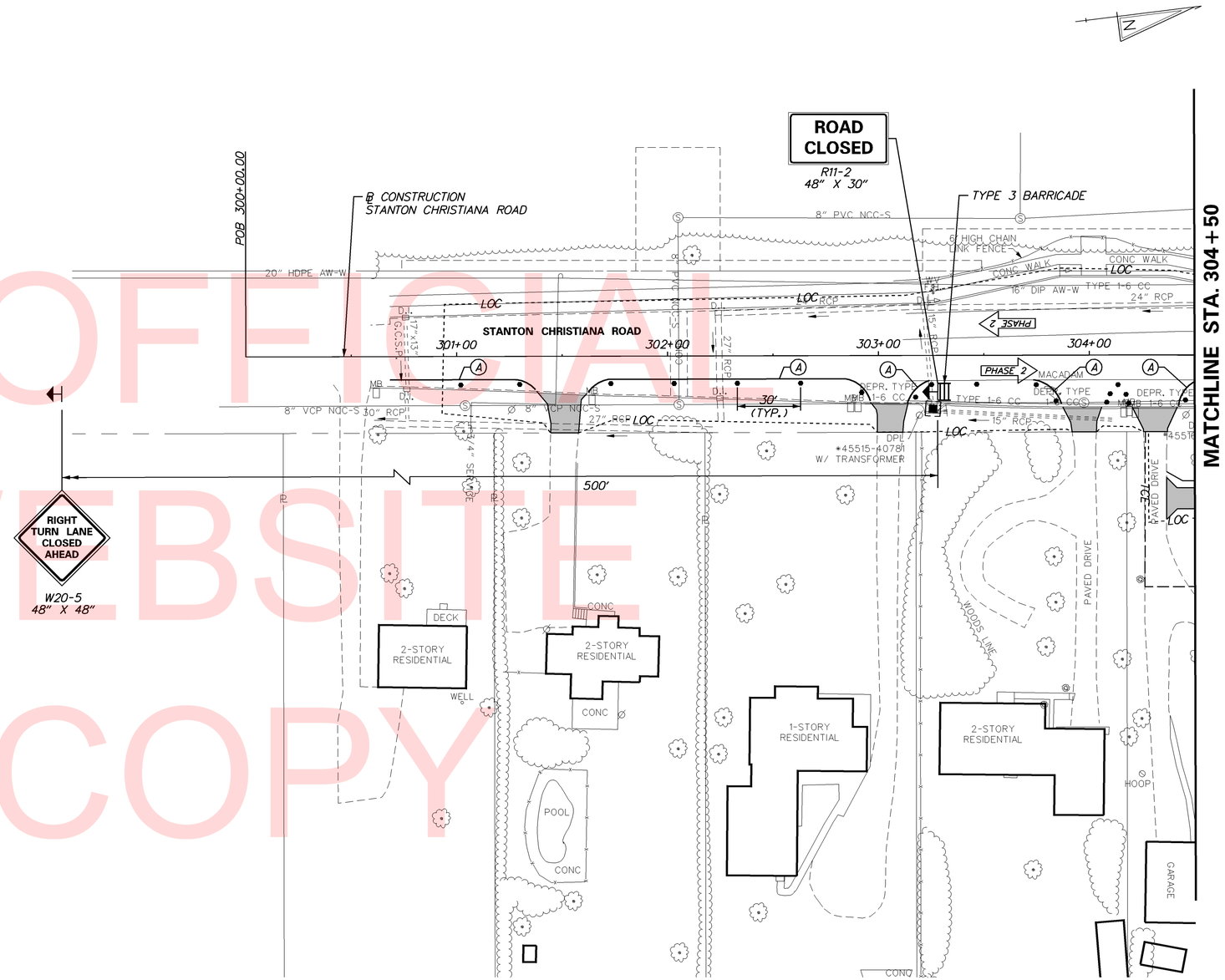

UNOFFICIAL WEBSITE COPY

7/5/2018 1:30:08 PM
\\balsrv01\v2012\2012\12146_DelDOT1585\40-Road A Connector\Cadd\Contract\Plans\cs10_RdA.dgn

DELAWARE DEPARTMENT OF TRANSPORTATION

ADDENDUMS / REVISIONS

SCALE 0 30 60 90 FEET

ROAD A /SR7 IMPROVEMENTS

CONTRACT	BRIDGE NO.	1-220
T201009002	DESIGNED BY: MCK	
COUNTY		
NEW CASTLE	CHECKED BY: RLS	

CONSTRUCTION PHASING, M.O.T., AND EROSION CONTROL PLAN – PHASE 2

CS-10

SHEET NO. 109

TOTAL SHTS. 154

SEQUENCE OF CONSTRUCTION PHASE 2

1. INSPECT AND MAINTAIN ALL EROSION AND SEDIMENT CONTROL DEVICES INSTALLED IN PREVIOUS PHASE AS REQUIRED.
2. MAINTAIN TEMPORARY TRAFFIC CONTROL DEVICES FROM PREVIOUS PHASE AS REQUIRED.
3. COORDINATE UTILITY RELOCATIONS WITH DELDOT AND UTILITY COMPANIES AS REQUIRED.
4. COORDINATE WITH DTC TO TEMPORARILY RELOCATE EXISTING BUS STOP AT ROAD A STA. 104+53 RT.

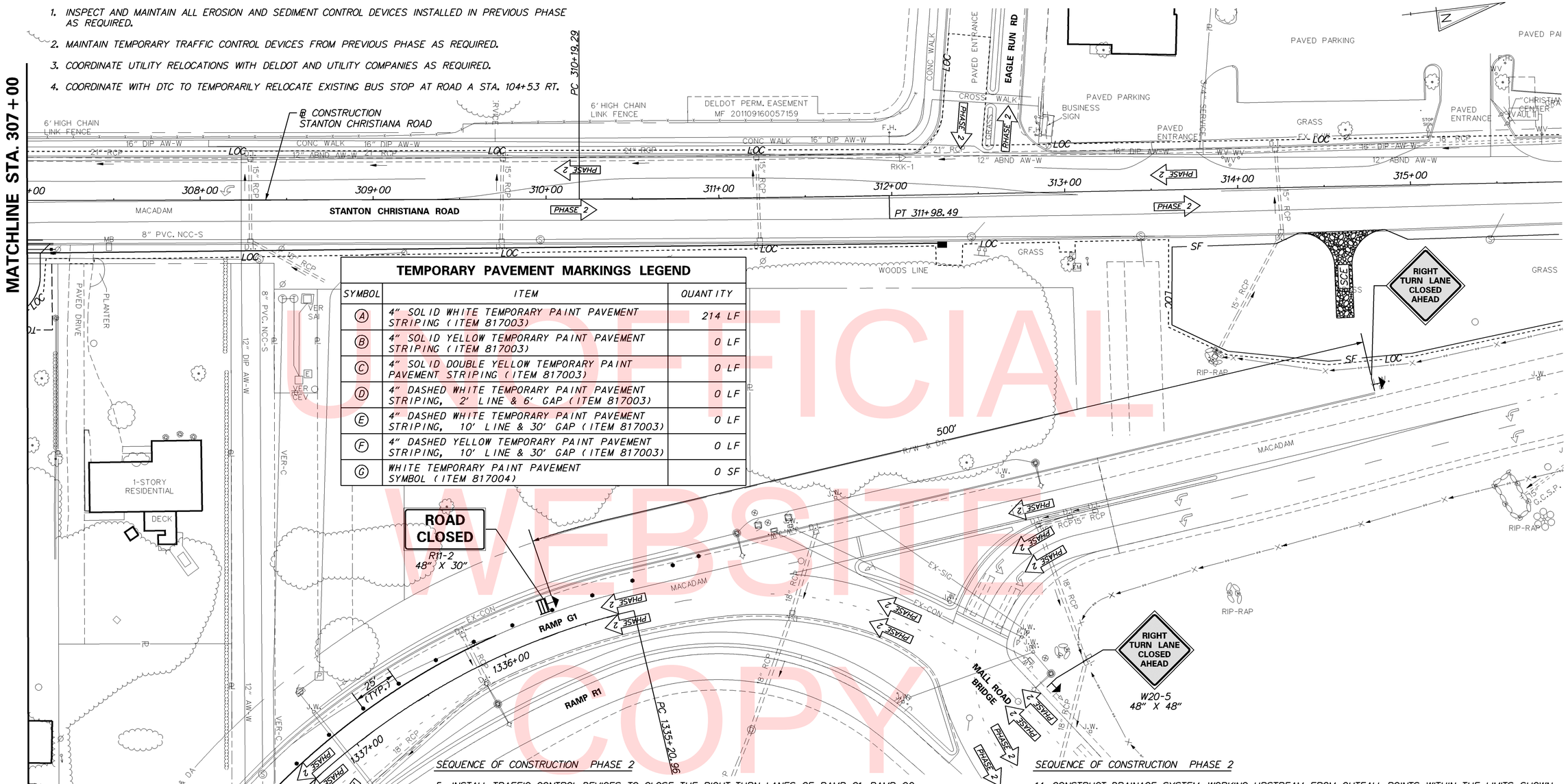

TEMPORARY PAVEMENT MARKINGS LEGEND

SYMBOL	ITEM	QUANTITY
A	4" SOLID WHITE TEMPORARY PAINT PAVEMENT STRIPING (ITEM 817003)	214 LF
B	4" SOLID YELLOW TEMPORARY PAINT PAVEMENT STRIPING (ITEM 817003)	0 LF
C	4" SOLID DOUBLE YELLOW TEMPORARY PAINT PAVEMENT STRIPING (ITEM 817003)	0 LF
D	4" DASHED WHITE TEMPORARY PAINT PAVEMENT STRIPING, 2' LINE & 6' GAP (ITEM 817003)	0 LF
E	4" DASHED WHITE TEMPORARY PAINT PAVEMENT STRIPING, 10' LINE & 30' GAP (ITEM 817003)	0 LF
F	4" DASHED YELLOW TEMPORARY PAINT PAVEMENT STRIPING, 10' LINE & 30' GAP (ITEM 817003)	0 LF
G	WHITE TEMPORARY PAINT PAVEMENT SYMBOL (ITEM 817004)	0 SF

SEQUENCE OF CONSTRUCTION PHASE 2

5. INSTALL TRAFFIC CONTROL DEVICES TO CLOSE THE RIGHT TURN LANES OF RAMP G1, RAMP G2 AND NORTHBOUND STANTON CHRISTIANA ROAD AS SHOWN ON THE PLANS.
6. IMPLEMENT DETOUR PLAN TO CLOSE WESTBOUND ROAD A BETWEEN STANTON CHRISTIANA ROAD AND RAMPS G1/G2.
7. INSTALL TEMPORARY TRAFFIC BARRIER AND OTHER TRAFFIC CONTROL DEVICES AS SHOWN ON THE PLANS.
8. COORDINATE WITH DELDOT SIGNAL CONSTRUCTION TO ADJUST TEMPORARY SIGNAL AND DETECTION AS REQUIRED FOR PHASE 2 TRAFFIC CONFIGURATION.
9. SHIFT EASTBOUND ROAD A TRAFFIC TO THE NORTH (WESTBOUND) SIDE AS SHOWN ON THE PLANS. PROVIDE TEMPORARY DOUBLE LEFT TURN FROM WESTBOUND ROAD A TO SOUTHBOUND RAMP G2.
10. CLEAR AND GRUB PHASE 2 WORK AREA AND INSTALL ADDITIONAL EROSION AND SEDIMENT CONTROL DEVICES AS SHOWN ON PLANS.
11. SAWCUT AND REMOVE EXISTING PAVEMENT, DRAINAGE, CURB, GUARDRAIL AND LIGHTING AS SHOWN ON THE PLANS.
12. CONSTRUCT RETAINING WALL ALONG THE SOUTH SIDE OF ROAD A. CONSTRUCT FILL AND ROUGH GRADE TO PROPOSED SUBGRADE AS SHOWN ON THE PLANS.
13. CONSTRUCT SIGNAL/ITMS SYSTEM, LIGHTING AND OTHER UNDERGROUND UTILITIES AS SHOWN ON PLANS.

SEQUENCE OF CONSTRUCTION PHASE 2

14. CONSTRUCT DRAINAGE SYSTEM, WORKING UPSTREAM FROM OUTFALL POINTS WITHIN THE LIMITS SHOWN ON THE PLANS. USE TA-10 TO CONSTRUCT PIPE CROSSING STANTON CHRISTIANA ROAD. INSTALL INLET PROTECTION ON NEW INLETS.
15. FINAL GRADE AND CONSTRUCT MEDIAN, CURB WITH UNDERDRAINS, FULL DEPTH PATCHING, SHARED USE PATH AND FENCE WITHIN THE LIMITS SHOWN ON THE PLANS.
16. CONSTRUCT FULL DEPTH AND WEDGE AND LEVEL PAVEMENT TO THE LIMITS SHOWN ON THE PLANS.
17. COORDINATE WITH DELDOT SIGNAL CONSTRUCTION TO ADJUST TEMPORARY SIGNAL AND ACTIVATE PERMANENT SIGNALS AT ROAD A AND STANTON CHRISTIANA ROAD AS SHOWN ON THE PLANS.
18. COORDINATE WITH DELMARVA AND DELDOT TO ACTIVATE NEW ROADWAY LIGHTING AS SHOWN ON THE PLANS.
19. INSTALL TEMPORARY PAVEMENT MARKINGS AS SHOWN ON THE PLANS.
20. REMOVE ALL TRAFFIC CONTROL DEVICES NOT REQUIRED FOR FUTURE CONSTRUCTION PHASES.
21. STABILIZE AREA IN ACCORDANCE WITH DELDOT STANDARD SPECIFICATIONS. ALL DISTURBED AREAS SHALL BE ADEQUATELY STABILIZED BEFORE PROCEEDING TO THE NEXT PHASE.
22. REMOVE TRAFFIC CONTROL DEVICES NOT REQUIRED FOR FUTURE CONSTRUCTION PHASES.

UNOFFICIAL WEBSITE COPY

DELAWARE DEPARTMENT OF TRANSPORTATION

ADDENDUMS / REVISIONS

SCALE 0 30 60 90 FEET

ROAD A /SR7 IMPROVEMENTS

CONTRACT	BRIDGE NO.	1-220
T201009002	DESIGNED BY:	MCK
COUNTY		
NEW CASTLE	CHECKED BY:	RLS

CONSTRUCTION PHASING, M.O.T., AND EROSION CONTROL PLAN – PHASE 2

CS-11

SHEET NO. 110

TOTAL SHTS. 154

7/5/2018 1:30:49 PM
\\bdsrv01\v2012\2012\12146_DelDOT1585\40-Road A Connector\Cadd\Contract\Plans\cs11_RdA.dgn

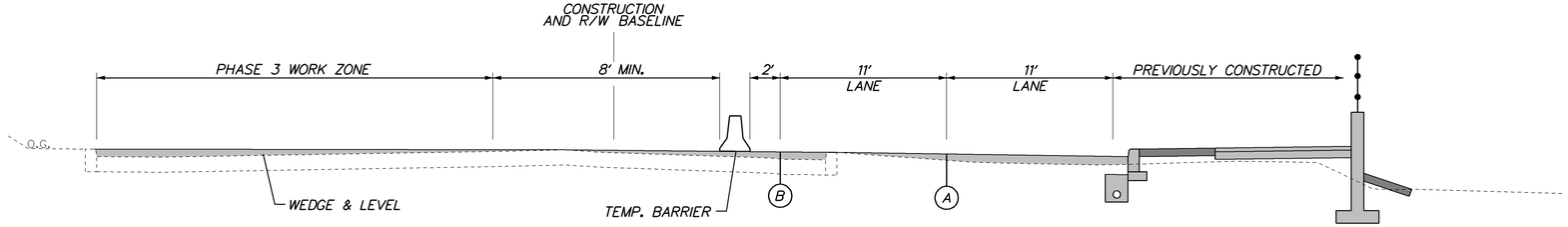

TYPICAL SECTION
LOOKING EAST

TEMPORARY PAVEMENT MARKINGS LEGEND		
SYMBOL	ITEM	QUANTITY
A	4" SOLID WHITE TEMPORARY PAINT PAVEMENT STRIPING (ITEM 817003)	676 LF
B	4" SOLID YELLOW TEMPORARY PAINT PAVEMENT STRIPING (ITEM 817003	374 LF
C	4" SOLID DOUBLE YELLOW TEMPORARY PAINT PAVEMENT STRIPING (ITEM 817003)	0 LF
D	4" DASHED WHITE TEMPORARY PAINT PAVEMENT STRIPING, 2' LINE & 6' GAP (ITEM 817003)	34 LF
E	4" DASHED WHITE TEMPORARY PAINT PAVEMENT STRIPING, 10' LINE & 30' GAP (ITEM 817003)	0 LF
F	4" DASHED YELLOW TEMPORARY PAINT PAVEMENT STRIPING, 10' LINE & 30' GAP (ITEM 817003)	0 LF
G	WHITE TEMPORARY PAINT PAVEMENT SYMBOL (ITEM 817004)	0 SF

SILT FENCE		
NO.	ITEM NO.	LENGTH
13	905001	475'

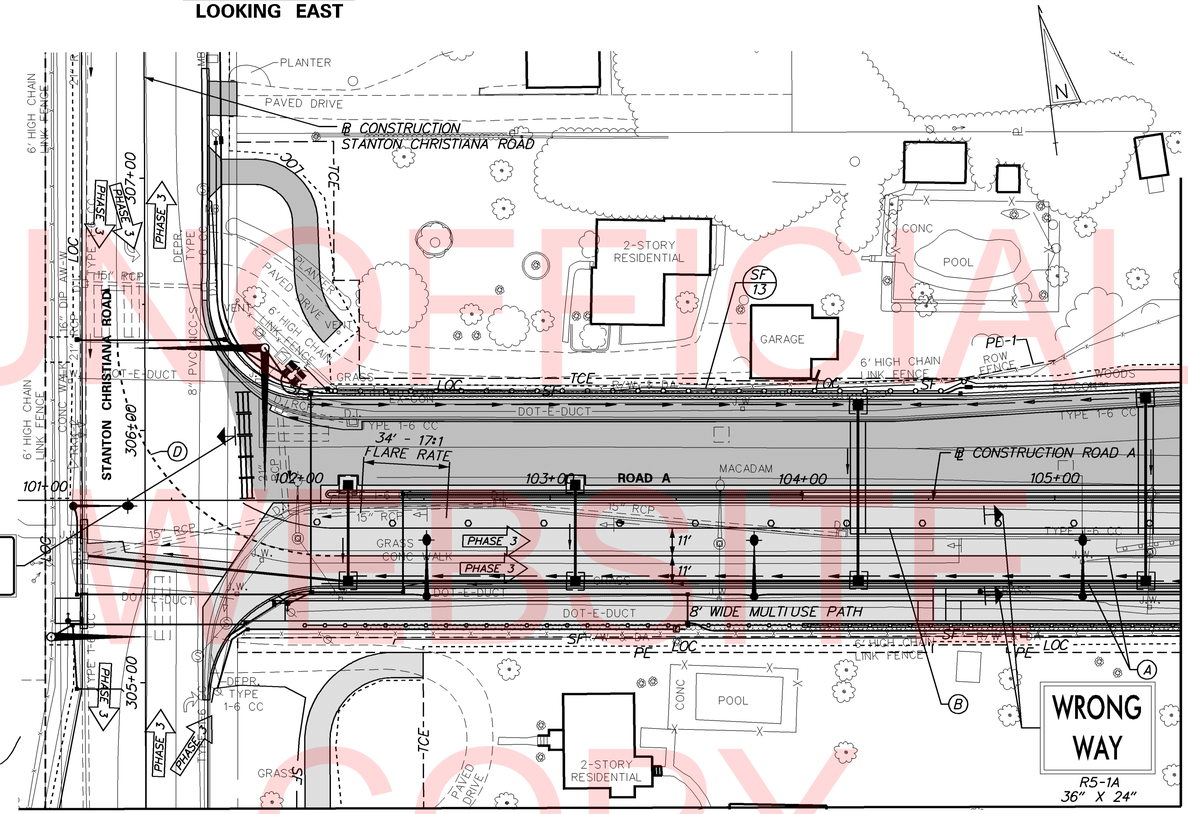

SEQUENCE OF CONSTRUCTION PHASE 3

1. INSPECT AND MAINTAIN ALL EROSION AND SEDIMENT CONTROL DEVICES INSTALLED IN PREVIOUS PHASES AS REQUIRED.
2. COORDINATE UTILITY RELOCATIONS WITH DELDOT AND UTILITY COMPANIES AS REQUIRED.

PHASE 3A

3. MAINTAIN TRAFFIC PATTERNS ON WESTBOUND ROAD A AND RAMPS G1/G2 FROM PREVIOUS PHASE.
4. INSTALL/RELOCATE TRAFFIC CONTROL DEVICES ON ROAD A STA. 101+50 TO STA. 106+75 AS SHOWN ON THE PLANS.
5. COORDINATE WITH DELDOT SIGNAL CONSTRUCTION TO ADJUST TEMPORARY AND PERMANENT SIGNALS AS SHOWN ON THE PLANS.
6. SHIFT EASTBOUND ROAD A TRAFFIC TO NEWLY CONSTRUCTED ROADWAY AS SHOWN ON THE PLANS, PROVIDING TWO (2) EASTBOUND LANES ACROSS BRIDGE.
7. REMOVE DRUMS ALONG NORTHBOUND STANTON CHRISTIANA ROAD AND RE-OPEN RIGHT TURN LANE.
8. CLEAR AND GRUB PHASE 3 WORK AREA AND INSTALL ADDITIONAL EROSION AND SEDIMENT CONTROL DEVICES AS SHOWN ON PLANS.
9. SAWCUT AND REMOVE EXISTING PAVEMENT, DRAINAGE AND CURB ON ROAD A STA. 101+50 TO STA. 106+75 AS SHOWN ON THE PLANS.
10. EXCAVATE AND CONSTRUCT PCC BARRIER. ROUGH GRADE TO PROPOSED SUBGRADE WITHIN THE LIMITS SHOWN ON THE PLANS.
11. CONSTRUCT DRAINAGE SYSTEM, WORKING UPSTREAM FROM OUTFALL POINTS WITHIN THE LIMITS SHOWN ON THE PLANS. INSTALL INLET PROTECTION ON NEW INLETS.
12. CONSTRUCT SIGNAL/ITMS SYSTEM, LIGHTING AND OTHER UNDERGROUND UTILITIES AS SHOWN ON PLANS.
13. FINAL GRADE AND CONSTRUCT MEDIAN, UNDERDRAINS, FULL DEPTH AND WEDGE AND LEVEL PAVEMENT AND FENCE ON ROAD A FROM STA. 101+50 TO STA. 106+75.
14. USE TA-21 TO CLOSE RIGHT LANE OF RAMP G1 TO CONSTRUCT ISLAND ON NORTHWEST CORNER OF INTERSECTION.
15. COORDINATE WITH DELDOT SIGNAL CONSTRUCTION TO REMOVE TEMPORARY SIGNAL AND COMPLETE ACTIVATION OF PERMANENT SIGNAL AT ROAD A AND STANTON CHRISTIANA ROAD.
16. INSTALL TEMPORARY PAVEMENT MARKINGS AS SHOWN ON THE PLANS.
17. REMOVE DETOUR AND REOPEN WESTBOUND ROAD A. REMOVE ALL TRAFFIC CONTROL DEVICES NOT REQUIRED FOR FUTURE CONSTRUCTION PHASES.

PHASE 3B

18. INSTALL TRAFFIC CONTROL DEVICES AS SHOWN ON THE PLANS TO CLOSE THE LEFT-MOST LEFT-TURN LANE OF RAMP P AND THE LEFT THROUGH LANE OF FASHION CENTER BLVD.
19. INSTALL TRAFFIC CONTROL DEVICES AS SHOWN ON THE PLANS TO CLOSE THE LEFT LANE OF WESTBOUND ROAD A FROM RAMPS G1/G2 TO CENTER BOULEVARD.
20. SAWCUT AND REMOVE EXISTING PAVEMENT AND CURB ON ROAD A AS SHOWN ON PLANS. ROUGH GRADE WITHIN THE LIMITS SHOWN ON PLANS.
21. FINAL GRADE AND CONSTRUCT PCC BARRIER, CURB AND MEDIAN WITHIN THE LIMITS SHOWN ON THE PLANS.
22. REMOVE TRAFFIC CONTROL DEVICES ON WESTBOUND ROAD A BETWEEN RAMPS G1/G2 AND CENTER BOULEVARD AND REOPEN LEFT WESTBOUND ROAD A LANE TO TRAFFIC. REMOVE TRAFFIC CONTROL DEVICES ON FASHION CENTER BOULEVARD AND RAMP P AND REOPEN ALL LANES TO TRAFFIC.
23. USE DRUMS AND RIGHT TURN LANE CLOSED AHEAD SIGN TO CLOSE THE RIGHT TURN LANE OF CENTER BOULEVARD TO CONSTRUCT NORTHWEST ISLAND AT NIGHT. USE TA-29 TO MAINTAIN PEDESTRIAN TRAFFIC. CONSTRUCTION OF THIS ISLAND SHALL NOT BE PERFORMED CONCURRENTLY WITH CONSTRUCTION OF THE MEDIAN OR OTHER ISLAND.
24. SAWCUT AND REMOVE EXISTING PAVEMENT, CURB AND SIDEWALK. ROUGH GRADE TO PROPOSED SUBGRADE.
25. CONSTRUCT DRAINAGE SYSTEM, WORKING UPSTREAM FROM OUTFALL POINTS WITHIN THE LIMITS SHOWN ON THE PLANS. INSTALL INLET PROTECTION ON NEW INLET.
26. CONSTRUCT SIGNAL/ITMS SYSTEM AND OTHER UNDERGROUND UTILITIES AS SHOWN ON PLANS.
27. FINAL GRADE AND CONSTRUCT CURB AND SIDEWALK WITHIN THE LIMITS SHOWN ON THE PLANS.
28. REMOVE TRAFFIC CONTROL DEVICES ON ROAD A AND FASHION CENTER BOULEVARD. REOPEN ALL LANES TO TRAFFIC.
29. USE DRUMS AND RIGHT TURN LANE CLOSED AHEAD SIGN TO CLOSE THE RIGHT TURN LANE OF EASTBOUND ROAD A TO CONSTRUCT SOUTHWEST ISLAND AT NIGHT. CONSTRUCTION OF THIS ISLAND SHALL NOT BE PERFORMED CONCURRENTLY WITH CONSTRUCTION OF THE MEDIAN OR OTHER ISLAND.
30. SAWCUT AND REMOVE EXISTING PAVEMENT. FINAL GRADE AND CONSTRUCT CURB AND SIDEWALK WITHIN THE LIMITS SHOWN ON THE PLANS.
31. REMOVE ALL TRAFFIC CONTROL DEVICES NOT REQUIRED FOR FUTURE CONSTRUCTION PHASES.

UNOFFICIAL WEBSITE COPY

SEQUENCE OF CONSTRUCTION PHASE 3

1. INSPECT AND MAINTAIN ALL EROSION AND SEDIMENT CONTROL DEVICES INSTALLED IN PREVIOUS PHASES AS REQUIRED.
2. COORDINATE UTILITY RELOCATIONS WITH DELDOT AND UTILITY COMPANIES AS REQUIRED.

PHASE 3A

3. MAINTAIN TRAFFIC PATTERNS ON WESTBOUND ROAD A AND RAMPS G1/G2 FROM PREVIOUS PHASE.
4. INSTALL/RELOCATE TRAFFIC CONTROL DEVICES ON ROAD A STA. 101+50 TO STA. 106+75 AS SHOWN ON THE PLANS.
5. COORDINATE WITH DELDOT SIGNAL CONSTRUCTION TO ADJUST TEMPORARY AND PERMANENT SIGNALS AS SHOWN ON THE PLANS.
6. SHIFT EASTBOUND ROAD A TRAFFIC TO NEWLY CONSTRUCTED ROADWAY AS SHOWN ON THE PLANS, PROVIDING TWO (2) EASTBOUND LANES ACROSS BRIDGE.
7. REMOVE DRUMS ALONG NORTHBOUND STANTON CHRISTIANA ROAD AND RE-OPEN RIGHT TURN LANE.
8. CLEAR AND GRUB PHASE 3 WORK AREA AND INSTALL ADDITIONAL EROSION AND SEDIMENT CONTROL DEVICES AS SHOWN ON PLANS.
9. SAWCUT AND REMOVE EXISTING PAVEMENT, DRAINAGE AND CURB ON ROAD A STA. 101+50 TO STA. 106+75 AS SHOWN ON THE PLANS.
10. EXCAVATE AND CONSTRUCT PCC BARRIER. ROUGH GRADE TO PROPOSED SUBGRADE WITHIN THE LIMITS SHOWN ON THE PLANS.
11. CONSTRUCT DRAINAGE SYSTEM, WORKING UPSTREAM FROM OUTFALL POINTS WITHIN THE LIMITS SHOWN ON THE PLANS. INSTALL INLET PROTECTION ON NEW INLETS.
12. CONSTRUCT SIGNAL/ITMS SYSTEM, LIGHTING AND OTHER UNDERGROUND UTILITIES AS SHOWN ON PLANS.
13. FINAL GRADE AND CONSTRUCT MEDIAN, UNDERDRAINS, FULL DEPTH AND WEDGE AND LEVEL PAVEMENT AND FENCE ON ROAD A FROM STA. 101+50 TO STA. 106+75.
14. USE TA-21 TO CLOSE RIGHT LANE OF RAMP G1 TO CONSTRUCT ISLAND ON NORTHWEST CORNER OF INTERSECTION.
15. COORDINATE WITH DELDOT SIGNAL CONSTRUCTION TO REMOVE TEMPORARY SIGNAL AND COMPLETE ACTIVATION OF PERMANENT SIGNAL AT ROAD A AND STANTON CHRISTIANA ROAD.
16. INSTALL TEMPORARY PAVEMENT MARKINGS AS SHOWN ON THE PLANS.
17. REMOVE DETOUR AND REOPEN WESTBOUND ROAD A. REMOVE ALL TRAFFIC CONTROL DEVICES NOT REQUIRED FOR FUTURE CONSTRUCTION PHASES.

SILT FENCE		
NO.	ITEM NO.	LENGTH
16	905001	142

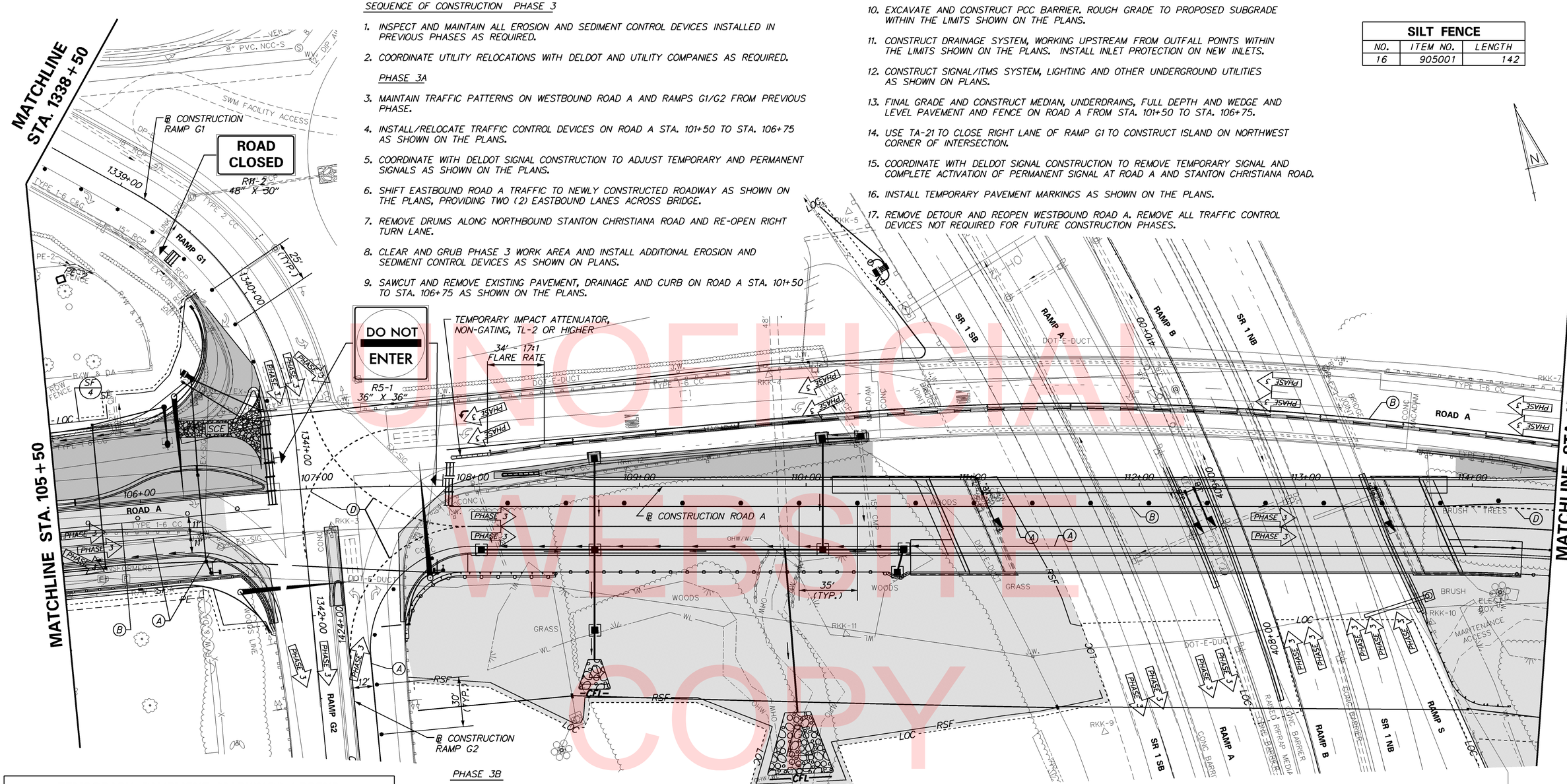

UNOFFICIAL WEBSITE COPY

PHASE 3B

18. INSTALL TRAFFIC CONTROL DEVICES AS SHOWN ON THE PLANS TO CLOSE THE LEFT-MOST LEFT-TURN LANE OF RAMP P AND THE LEFT THROUGH LANE OF FASHION CENTER BLVD.
19. INSTALL TRAFFIC CONTROL DEVICES AS SHOWN ON THE PLANS TO CLOSE THE LEFT LANE OF WESTBOUND ROAD A FROM RAMPS G1/G2 TO CENTER BOULEVARD.
20. SAWCUT AND REMOVE EXISTING PAVEMENT AND CURB ON ROAD A AS SHOWN ON PLANS. ROUGH GRADE WITHIN THE LIMITS SHOWN ON PLANS.
21. FINAL GRADE AND CONSTRUCT PCC BARRIER, CURB AND MEDIAN WITHIN THE LIMITS SHOWN ON THE PLANS.
22. REMOVE TRAFFIC CONTROL DEVICES ON WESTBOUND ROAD A BETWEEN RAMPS G1/G2 AND CENTER BOULEVARD AND REOPEN LEFT WESTBOUND ROAD A LANE TO TRAFFIC. REMOVE TRAFFIC CONTROL DEVICES ON FASHION CENTER BOULEVARD AND RAMP P AND REOPEN ALL LANES TO TRAFFIC.
23. USE DRUMS AND RIGHT TURN LANE CLOSED AHEAD SIGN TO CLOSE THE RIGHT TURN LANE OF CENTER BOULEVARD TO CONSTRUCT NORTHWEST ISLAND AT NIGHT. USE TA-29 TO MAINTAIN PEDESTRIAN TRAFFIC. CONSTRUCTION OF THIS ISLAND SHALL NOT BE PERFORMED CONCURRENTLY WITH CONSTRUCTION OF THE MEDIAN OR OTHER ISLAND.
24. SAWCUT AND REMOVE EXISTING PAVEMENT, CURB AND SIDEWALK. ROUGH GRADE TO PROPOSED SUBGRADE.
25. CONSTRUCT DRAINAGE SYSTEM, WORKING UPSTREAM FROM OUTFALL POINTS WITHIN THE LIMITS SHOWN ON THE PLANS. INSTALL INLET PROTECTION ON NEW INLET.
26. CONSTRUCT SIGNAL/ITMS SYSTEM AND OTHER UNDERGROUND UTILITIES AS SHOWN ON PLANS.
27. FINAL GRADE AND CONSTRUCT CURB AND SIDEWALK WITHIN THE LIMITS SHOWN ON THE PLANS.
28. REMOVE TRAFFIC CONTROL DEVICES ON ROAD A AND FASHION CENTER BOULEVARD. REOPEN ALL LANES TO TRAFFIC.
29. USE DRUMS AND RIGHT TURN LANE CLOSED AHEAD SIGN TO CLOSE THE RIGHT TURN LANE OF EASTBOUND ROAD A TO CONSTRUCT SOUTHWEST ISLAND AT NIGHT. CONSTRUCTION OF THIS ISLAND SHALL NOT BE PERFORMED CONCURRENTLY WITH CONSTRUCTION OF THE MEDIAN OR OTHER ISLAND.
30. SAWCUT AND REMOVE EXISTING PAVEMENT. FINAL GRADE AND CONSTRUCT CURB AND SIDEWALK WITHIN THE LIMITS SHOWN ON THE PLANS.
31. REMOVE ALL TRAFFIC CONTROL DEVICES NOT REQUIRED FOR FUTURE CONSTRUCTION PHASES.

TEMPORARY PAVEMENT MARKINGS LEGEND		
SYMBOL	ITEM	QUANTITY
(A)	4" SOLID WHITE TEMPORARY PAINT PAVEMENT STRIPING (ITEM 817003)	1,679 LF
(B)	4" SOLID YELLOW TEMPORARY PAINT PAVEMENT STRIPING (ITEM 817003)	1,461 LF
(C)	4" SOLID DOUBLE YELLOW TEMPORARY PAINT PAVEMENT STRIPING (ITEM 817003)	0 LF
(D)	4" DASHED WHITE TEMPORARY PAINT PAVEMENT STRIPING, 2' LINE & 6' GAP (ITEM 817003)	106 LF
(E)	4" DASHED WHITE TEMPORARY PAINT PAVEMENT STRIPING, 10' LINE & 30' GAP (ITEM 817003)	0 LF
(F)	4" DASHED YELLOW TEMPORARY PAINT PAVEMENT STRIPING, 10' LINE & 30' GAP (ITEM 817003)	0 LF
(G)	WHITE TEMPORARY PAINT PAVEMENT SYMBOL (ITEM 817004)	0 SF

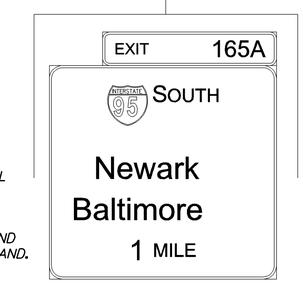

DELAWARE DEPARTMENT OF TRANSPORTATION

ADDENDUMS / REVISIONS

SCALE 0 30 60 90 FEET

ROAD A /SR7 IMPROVEMENTS

CONTRACT	BRIDGE NO.	1-220
T201009002	DESIGNED BY: MCK	
COUNTY	CHECKED BY: RLS	
NEW CASTLE		

CONSTRUCTION PHASING, M.O.T., AND EROSION CONTROL PLAN – PHASE 3

CS-13

SHEET NO. 112

TOTAL SHTS. 154

7/5/2018 1:33:29 PM
\\balsrv01\v2012\2012\12146_DelDOT1585\40-Road A Connector\Cadd\Contract\Plans\cs13_RdA.dgn

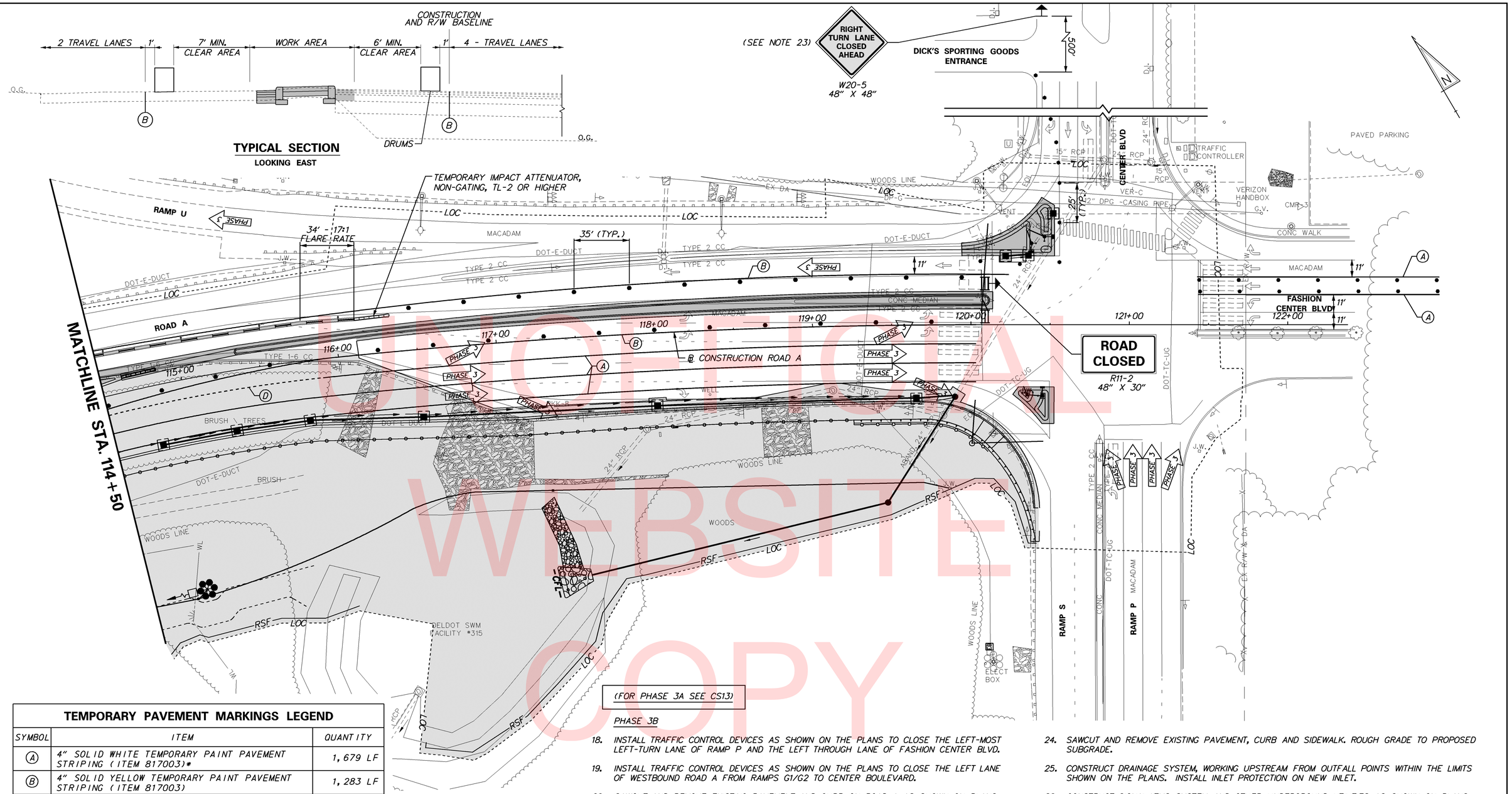

TEMPORARY PAVEMENT MARKINGS LEGEND

SYMBOL	ITEM	QUANTITY
Ⓐ	4" SOLID WHITE TEMPORARY PAINT PAVEMENT STRIPING (ITEM 817003)*	1,679 LF
Ⓑ	4" SOLID YELLOW TEMPORARY PAINT PAVEMENT STRIPING (ITEM 817003)	1,283 LF
Ⓒ	4" SOLID DOUBLE YELLOW TEMPORARY PAINT PAVEMENT STRIPING (ITEM 817003)	0 LF
Ⓓ	4" DASHED WHITE TEMPORARY PAINT PAVEMENT STRIPING, 2' LINE & 6' GAP (ITEM 817003)	34 LF
Ⓔ	4" DASHED WHITE TEMPORARY PAINT PAVEMENT STRIPING, 10' LINE & 30' GAP (ITEM 817003)	0 LF
Ⓕ	4" DASHED YELLOW TEMPORARY PAINT PAVEMENT STRIPING, 10' LINE & 30' GAP (ITEM 817003)	0 LF
Ⓖ	WHITE TEMPORARY PAINT PAVEMENT SYMBOL (ITEM 817004)	0 LF

(FOR PHASE 3A SEE CS13)

PHASE 3B

18. INSTALL TRAFFIC CONTROL DEVICES AS SHOWN ON THE PLANS TO CLOSE THE LEFT-MOST LEFT-TURN LANE OF RAMP P AND THE LEFT THROUGH LANE OF FASHION CENTER BLVD.
19. INSTALL TRAFFIC CONTROL DEVICES AS SHOWN ON THE PLANS TO CLOSE THE LEFT LANE OF WESTBOUND ROAD A FROM RAMPS G1/G2 TO CENTER BOULEVARD.
20. SAWCUT AND REMOVE EXISTING PAVEMENT AND CURB ON ROAD A AS SHOWN ON PLANS. ROUGH GRADE WITHIN THE LIMITS SHOWN ON PLANS.
21. FINAL GRADE AND CONSTRUCT PCC BARRIER, CURB AND MEDIAN WITHIN THE LIMITS SHOWN ON THE PLANS.
22. REMOVE TRAFFIC CONTROL DEVICES ON WESTBOUND ROAD A BETWEEN RAMPS G1/G2 AND CENTER BOULEVARD AND REOPEN LEFT WESTBOUND ROAD A LANE TO TRAFFIC. REMOVE TRAFFIC CONTROL DEVICES ON FASHION CENTER BOULEVARD AND RAMP P AND REOPEN ALL LANES TO TRAFFIC.
23. USE DRUMS AND RIGHT TURN LANE CLOSED AHEAD SIGN TO CLOSE THE RIGHT TURN LANE OF CENTER BOULEVARD TO CONSTRUCT NORTHWEST ISLAND AT NIGHT. USE TA-29 TO MAINTAIN PEDESTRIAN TRAFFIC. CONSTRUCTION OF THIS ISLAND SHALL NOT BE PERFORMED CONCURRENTLY WITH CONSTRUCTION OF THE MEDIAN OR OTHER ISLAND.
24. SAWCUT AND REMOVE EXISTING PAVEMENT, CURB AND SIDEWALK. ROUGH GRADE TO PROPOSED SUBGRADE.
25. CONSTRUCT DRAINAGE SYSTEM, WORKING UPSTREAM FROM OUTFALL POINTS WITHIN THE LIMITS SHOWN ON THE PLANS. INSTALL INLET PROTECTION ON NEW INLET.
26. CONSTRUCT SIGNAL/ITMS SYSTEM AND OTHER UNDERGROUND UTILITIES AS SHOWN ON PLANS.
27. FINAL GRADE AND CONSTRUCT CURB AND SIDEWALK WITHIN THE LIMITS SHOWN ON THE PLANS.
28. REMOVE TRAFFIC CONTROL DEVICES ON ROAD A AND FASHION CENTER BOULEVARD. REOPEN ALL LANES TO TRAFFIC.
29. USE DRUMS AND RIGHT TURN LANE CLOSED AHEAD SIGN TO CLOSE THE RIGHT TURN LANE OF EASTBOUND ROAD A TO CONSTRUCT SOUTHWEST ISLAND AT NIGHT. CONSTRUCTION OF THIS ISLAND SHALL NOT BE PERFORMED CONCURRENTLY WITH CONSTRUCTION OF THE MEDIAN OR OTHER ISLAND.
30. SAWCUT AND REMOVE EXISTING PAVEMENT. FINAL GRADE AND CONSTRUCT CURB AND SIDEWALK WITHIN THE LIMITS SHOWN ON THE PLANS.
31. REMOVE ALL TRAFFIC CONTROL DEVICES NOT REQUIRED FOR FUTURE CONSTRUCTION PHASES.

UNOFFICIAL WEBSITE COPY

DELAWARE DEPARTMENT OF TRANSPORTATION

ADDENDUMS / REVISIONS

SCALE 0 30 60 90 FEET

ROAD A /SR7 IMPROVEMENTS

CONTRACT	BRIDGE NO.	1-220
T201009002	DESIGNED BY: MCK	
COUNTY		
NEW CASTLE	CHECKED BY: RLS	

CONSTRUCTION PHASING, M.O.T., AND EROSION CONTROL PLAN – PHASE 3

CS-14

SHEET NO. 113

TOTAL SHTS. 154

7/5/2018 1:34:52 PM
\\balsrv01\v2012\2012\12146_DelDOT1585\40-Road A Connector\Cadd\Contract\Plans\cs14_RdA.dgn

PORTABLE CHANGEABLE MESSAGE SIGNS

PRIOR TO DETOUR
(10 DAYS PRIOR TO BEGINNING OF DETOUR)

PCMS-1

RAMP TO SR 1N TO CLOSE

STARTING XX/XX

SPECIAL SIGNS

(Y) NORTH — 24" × 12", M3-1

(Z) H — 24" × 24", D9-2, WHITE TEXT ON BLUE BACKGROUND

(BB) RAMP TO NORTH 1 CLOSED / FOLLOW DETOUR — 48" × 90"; 5.75", 6"C, 4.5", 6"C, 4.5", 24"C, 4.5", 6"C, 3.25", 6"C, 4.5", 6"C, 5.75"

STARTING XX/XX/XX — 48" × 24"; 3", 6"C, 4.5", 6"C, 4.5"

PLAQUE

ADDITIONAL NOTES:

1. SIGNS PLACED ON ROADWAYS WITH MORE THAN ONE LANE IN ONE DIRECTION SHALL BE POSTED ON BOTH THE LEFT AND RIGHT SHOULDERS.
2. PLAQUE TO BE OVERLAYED ON TOP OF "FOLLOW DETOUR" PORTION OF SIGN.
3. "STARTING XX/XX/XX" PLAQUE TO BE PLACED WITH "RAMP TO NB SR1 CLOSED" SIGN 10 DAYS PRIOR TO BEGINNING OF DETOUR.
4. "FOLLOW DETOUR" PORTION OF SIGN TO BE UNCOVERED 5 DAYS AFTER IMPLEMENTATION OF DETOUR.

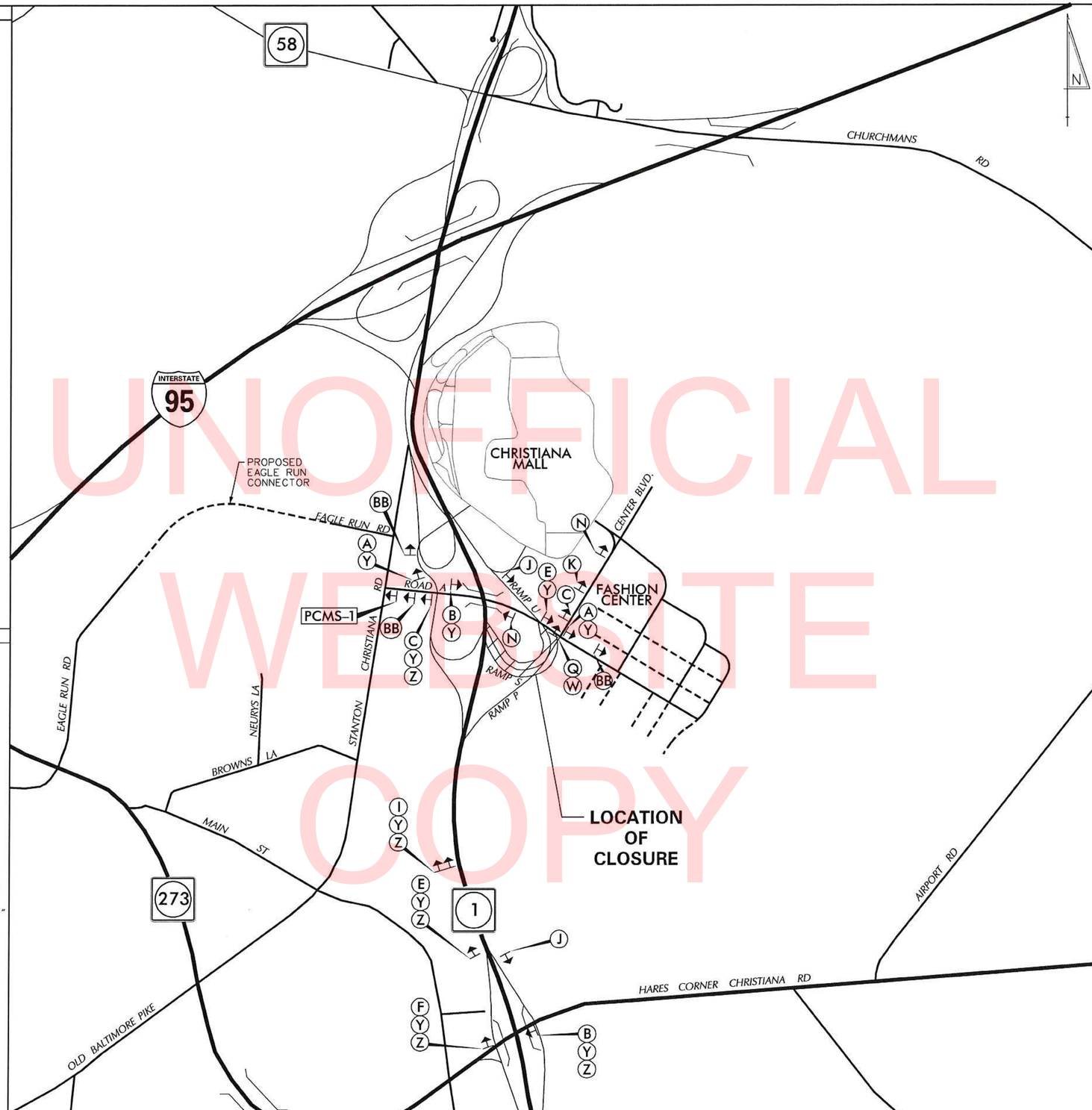

UNOFFICIAL WEBSITE COPY

LEGEND

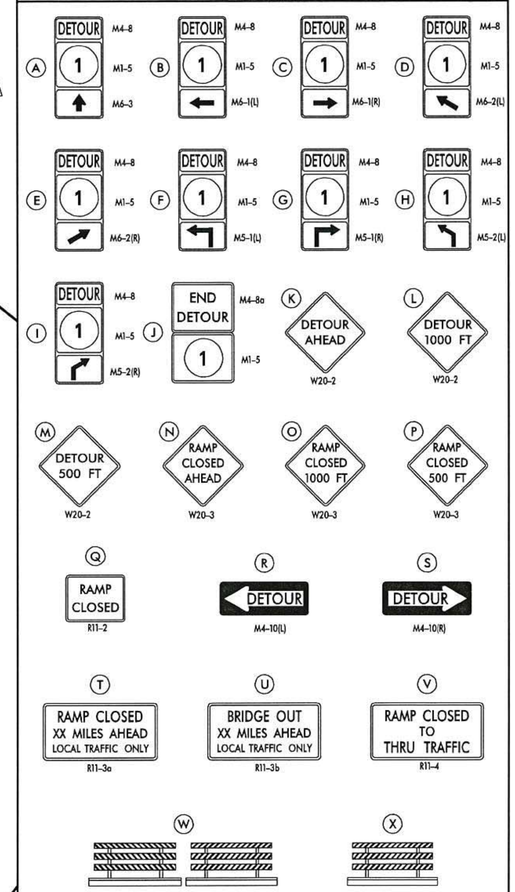

GENERAL NOTES

1. ALL DETOUR SIGNING, INCLUDING TRAILBLAZERS, ARE TO BE SUPPLIED AND MAINTAINED BY THE GENERAL CONTRACTOR IN COMPLIANCE WITH "THE DELAWARE MANUAL ON UNIFORM TRAFFIC CONTROL DEVICES" (DE MUTCD.)
2. THE CONTRACTOR SHALL COMPLY WITH GUIDELINES IN "THE DELAWARE MANUAL ON UNIFORM TRAFFIC CONTROL DEVICES" (DE MUTCD PART 6) FOR BARRICADES AND SIGNS (AS PER LATEST REVISION.)
3. DESIGN OF ALL SIGNS SHALL BE IN ACCORDANCE WITH THE FHWA STANDARD HIGHWAY SIGNS BOOK.
4. SIZES OF ALL SIGNS SHALL BE IN ACCORDANCE WITH THE DELAWARE MANUAL ON UNIFORM TRAFFIC CONTROL DEVICES" (DE MUTCD.) SIZE OF SIGN SHALL BE BASED ON TYPE OF ROADWAY ON WHICH THE SIGN IS INSTALLED.
5. THE COLORS, DIMENSIONS, AND CHARACTERISTICS OF ALL INTERSTATE, U.S ROUTE, AND STATE ROUTE SHIELD SIGNS SHALL BE IN ACCORDANCE WITH SECTION 2D.11 OF "THE DELAWARE MANUAL ON UNIFORM TRAFFIC CONTROL DEVICES" (DE MUTCD.)
6. SIGNS NO LONGER IN USE SHALL BE COMPLETELY COVERED WITH NO RETROREFLECTIVE MATERIAL SHOWING, OR SHALL BE REMOVED, AS DIRECTED BY THE ENGINEER.
7. FIELD CONDITIONS MAY DICTATE CHANGES AT SOME TIME DURING THE LIFE OF THE CONTRACT. IN THE EVENT OF OMISSIONS OR CORRECTIONS, THE SIGNING PROVISIONS OF "THE DELAWARE MANUAL ON UNIFORM TRAFFIC CONTROL DEVICES" (DE MUTCD) WILL PREVAIL.
8. SIGNS "N" THROUGH "Q" AND "T" AND "V", THE WORD "ROAD" SHOULD BE CHANGED TO "RAMP", "RR XING", OR "BRIDGE" WHERE APPLICABLE.
9. WARNING SIGNS AND DETOUR TRAILBLAZERS SHALL BE MOUNTED ON BREAKAWAY POSTS AND HAVE RETROREFLECTIVE FLUORESCENT ORANGE SHEETING.
10. "W" BARRICADES SHALL COMPLETELY RUN THE FULL WIDTH OF THE ROADWAY.
11. BARRICADES SHALL BE A MINIMUM OF 6 FEET WIDE UNLESS DIRECTED BY THE ENGINEER.

RECOMMENDED _____ DATE: _____

RECOMMENDED [signature] DATE: 3/13/18

RECOMMENDED _____ DATE: _____

APPROVED CHIEF SAFETY OFFICER [signature] DATE: 3-13-18

APPROVED TRAFFIC ENGINEER [signature] DATE: 3/13/18

DELAWARE DEPARTMENT OF TRANSPORTATION

ADDENDUM / REVISIONS

NOT TO SCALE

ROAD A / SR 7 IMPROVEMENTS

CONTRACT	PERMIT NO.	X
T201009002	DESIGNED BY: SJS	
COUNTY		
NEW CASTLE	CHECKED BY: BAH	

VEHICULAR DETOUR PLAN
RAMP S CLOSURE

SHEET NO. 114
TOTAL SHTS. 154

\\BALSRV01\V2012\2012\12146_DELDOT585\40-ROAD A CONNECTOR\CADD\CONTRACT\PLANS\DP01_RDA.DGN

PORTABLE CHANGEABLE MESSAGE SIGNS

PRIOR TO DETOUR
(10 DAYS PRIOR TO BEGINNING OF DETOUR)

PCMS-1

SR 1 NB CLOSING AT MALL	STARTING XX/XX/XX XXPM-XAM

DURING DETOUR
(DISPLAY FOR DURATION OF DETOUR)

PCMS-1

SR 1 NB CLOSED AT MALL	FOLLOW SR 273 DETOUR

ADDITIONAL NOTES:

1. SIGNS PLACED ON ROADWAYS WITH MORE THAN ONE LANE IN ONE DIRECTION SHALL BE POSTED ON BOTH THE LEFT AND RIGHT SHOULDERS.
2. USE TA-33 OF THE DE MUTCD TO CLOSE LANES PRIOR TO ROAD CLOSURES.
3. MAINTAIN A SINGLE LANE ON NORTHBOUND SR 1 BETWEEN SR 273 AND MALL ROAD.

SPECIAL SIGNS

(Y) NORTH — 24" × 12" — M3-1

(Z) H — 24" × 24" — D9-2 WHITE TEXT ON BLUE BACKGROUND

(MM) NORTH

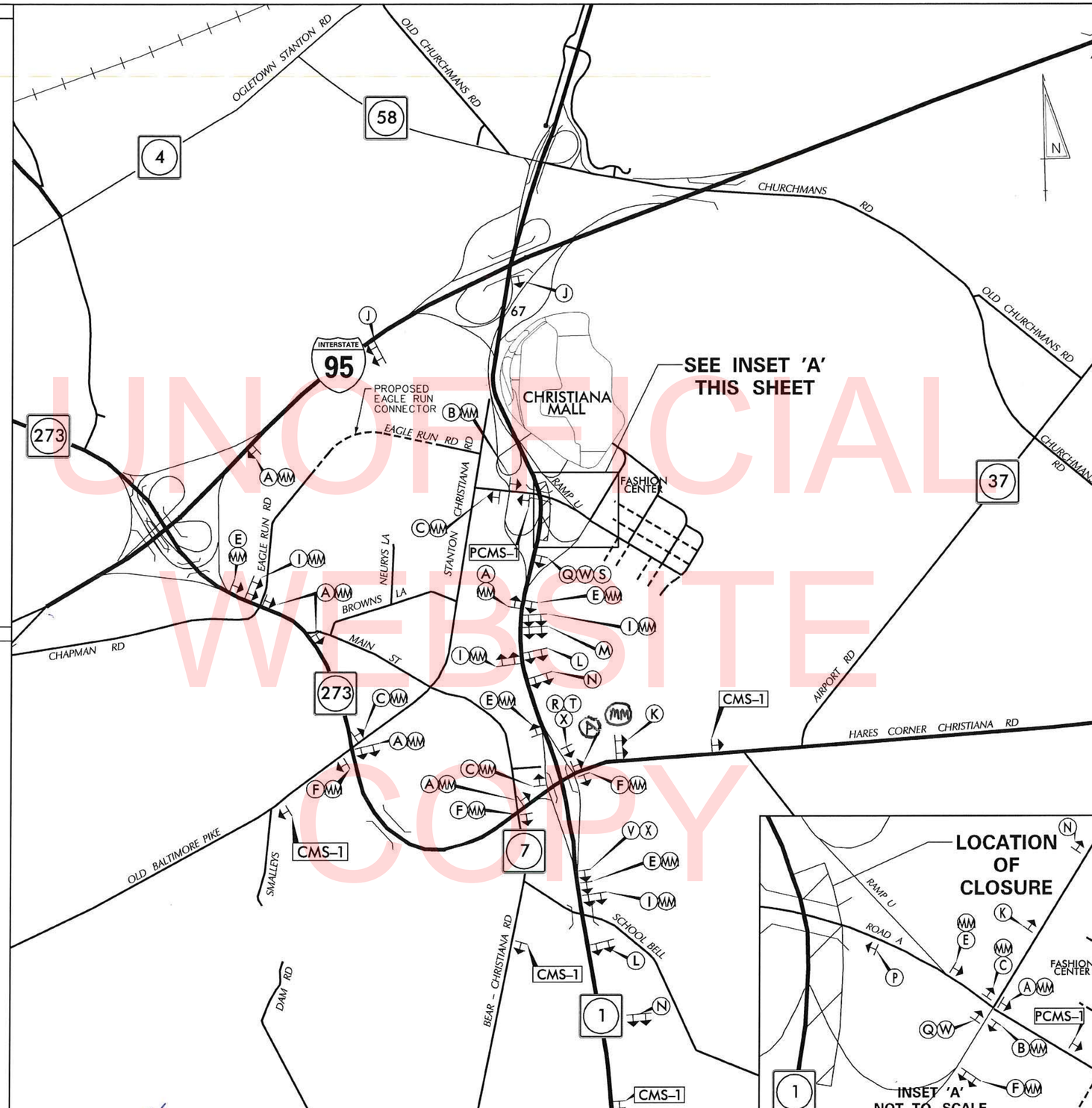

LEGEND

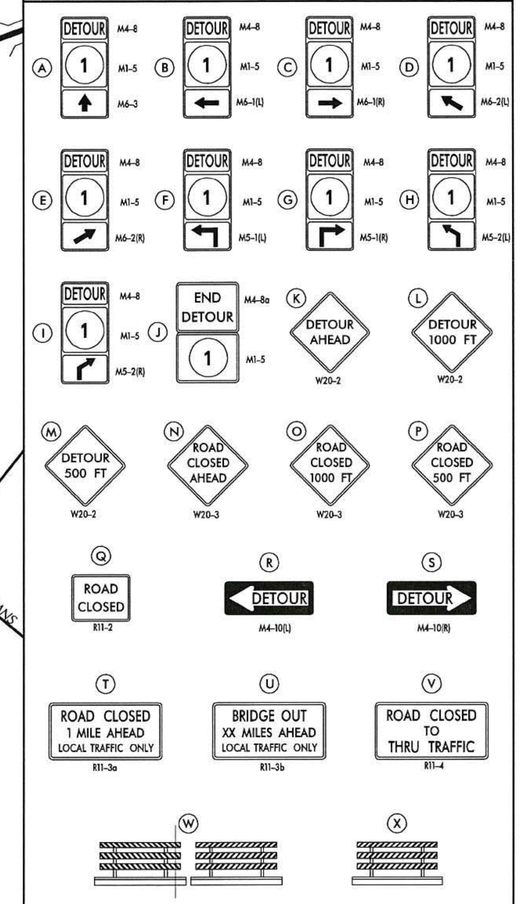

GENERAL NOTES

1. ALL DETOUR SIGNING, INCLUDING TRAILBLAZERS, ARE TO BE SUPPLIED AND MAINTAINED BY THE GENERAL CONTRACTOR IN COMPLIANCE WITH "THE DELAWARE MANUAL ON UNIFORM TRAFFIC CONTROL DEVICES" (DE MUTCD.)
2. THE CONTRACTOR SHALL COMPLY WITH GUIDELINES IN "THE DELAWARE MANUAL ON UNIFORM TRAFFIC CONTROL DEVICES" (DE MUTCD PART 6) FOR BARRICADES AND SIGNS (AS PER LATEST REVISION.)
3. DESIGN OF ALL SIGNS SHALL BE IN ACCORDANCE WITH THE FHWA STANDARD HIGHWAY SIGNS BOOK.
4. SIZES OF ALL SIGNS SHALL BE IN ACCORDANCE WITH THE DELAWARE MANUAL ON UNIFORM TRAFFIC CONTROL DEVICES" (DE MUTCD.) SIZE OF SIGN SHALL BE BASED ON TYPE OF ROADWAY ON WHICH THE SIGN IS INSTALLED.
5. THE COLORS, DIMENSIONS, AND CHARACTERISTICS OF ALL INTERSTATE, U.S ROUTE, AND STATE ROUTE SHIELD SIGNS SHALL BE IN ACCORDANCE WITH SECTION 2D.11 OF "THE DELAWARE MANUAL ON UNIFORM TRAFFIC CONTROL DEVICES" (DE MUTCD.)
6. SIGNS NO LONGER IN USE SHALL BE COMPLETELY COVERED WITH NO RETROREFLECTIVE MATERIAL SHOWING, OR SHALL BE REMOVED, AS DIRECTED BY THE ENGINEER.
7. FIELD CONDITIONS MAY DICTATE CHANGES AT SOME TIME DURING THE LIFE OF THE CONTRACT. IN THE EVENT OF OMISSIONS OR CORRECTIONS, THE SIGNING PROVISIONS OF "THE DELAWARE MANUAL ON UNIFORM TRAFFIC CONTROL DEVICES" (DE MUTCD) WILL PREVAIL.
8. SIGNS "N" THROUGH "Q" AND "T" AND "V", THE WORD "ROAD" SHOULD BE CHANGED TO "RAMP", "RR XING", OR "BRIDGE" WHERE APPLICABLE.
9. WARNING SIGNS AND DETOUR TRAILBLAZERS SHALL BE MOUNTED ON BREAKAWAY POSTS AND HAVE RETROREFLECTIVE FLUORESCENT ORANGE SHEETING.
10. "W" BARRICADES SHALL COMPLETELY RUN THE FULL WIDTH OF THE ROADWAY.
11. BARRICADES SHALL BE A MINIMUM OF 6 FEET WIDE UNLESS DIRECTED BY THE ENGINEER.

UNOFFICIAL WEBSITE COPY

RECOMMENDED _____ DATE: _____

RECOMMENDED [signature] DATE: 3/13/18

RECOMMENDED _____ DATE: _____

APPROVED CHIEF SAFETY OFFICER [signature] DATE: 3-13-18

APPROVED TRAFFIC ENGINEER [signature] DATE: 3/13/18

DELAWARE DEPARTMENT OF TRANSPORTATION

ADDENDUM / REVISIONS

NOT TO SCALE

ROAD A / SR 7 IMPROVEMENTS

CONTRACT	PERMIT NO.	X
T201009002	DESIGNED BY: SJS	
COUNTY		
NEW CASTLE	CHECKED BY: BAH	

DETOUR PLAN
SR 1 NB CLOSURE

SHEET NO. 115
TOTAL SHTS. 154

\\BALSRV01\V2012\2012\12146_DELDOT1585\40-ROAD A CONNECTOR\CADD\CONTRACT\PLANS\DP02_RDA.DGN

PORTABLE CHANGEABLE MESSAGE SIGNS

PRIOR TO DETOUR
(10 DAYS PRIOR TO BEGINNING OF DETOUR)

PCMS-1

SR 1 SB TO CLOSE AT MALL	STARTING XX/XX/XX XXPM-XAM

DURING DETOUR
(DISPLAY FOR DURATION OF DETOUR)

PCMS-1

SR 1 SB CLOSED AT MALL	FOLLOW DETOUR EXIT 3

ADDITIONAL NOTES:

1. SIGNS PLACED ON ROADWAYS WITH MORE THAN ONE LANE IN ONE DIRECTION SHALL BE POSTED ON BOTH THE LEFT AND RIGHT SHOULDERS.
2. USE TA-33 OF THE DE MUTCD TO CLOSE LANES PRIOR TO ROAD CLOSURES.
3. MAINTAIN A SINGLE LANE ON NORTHBOUND SR 1 BETWEEN SR 273 AND MALL ROAD.

SPECIAL SIGNS

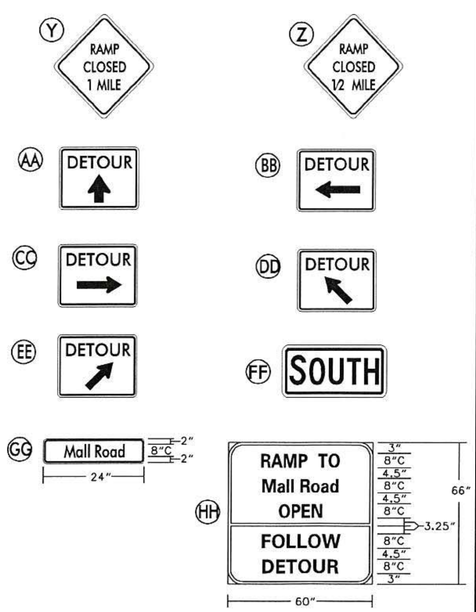

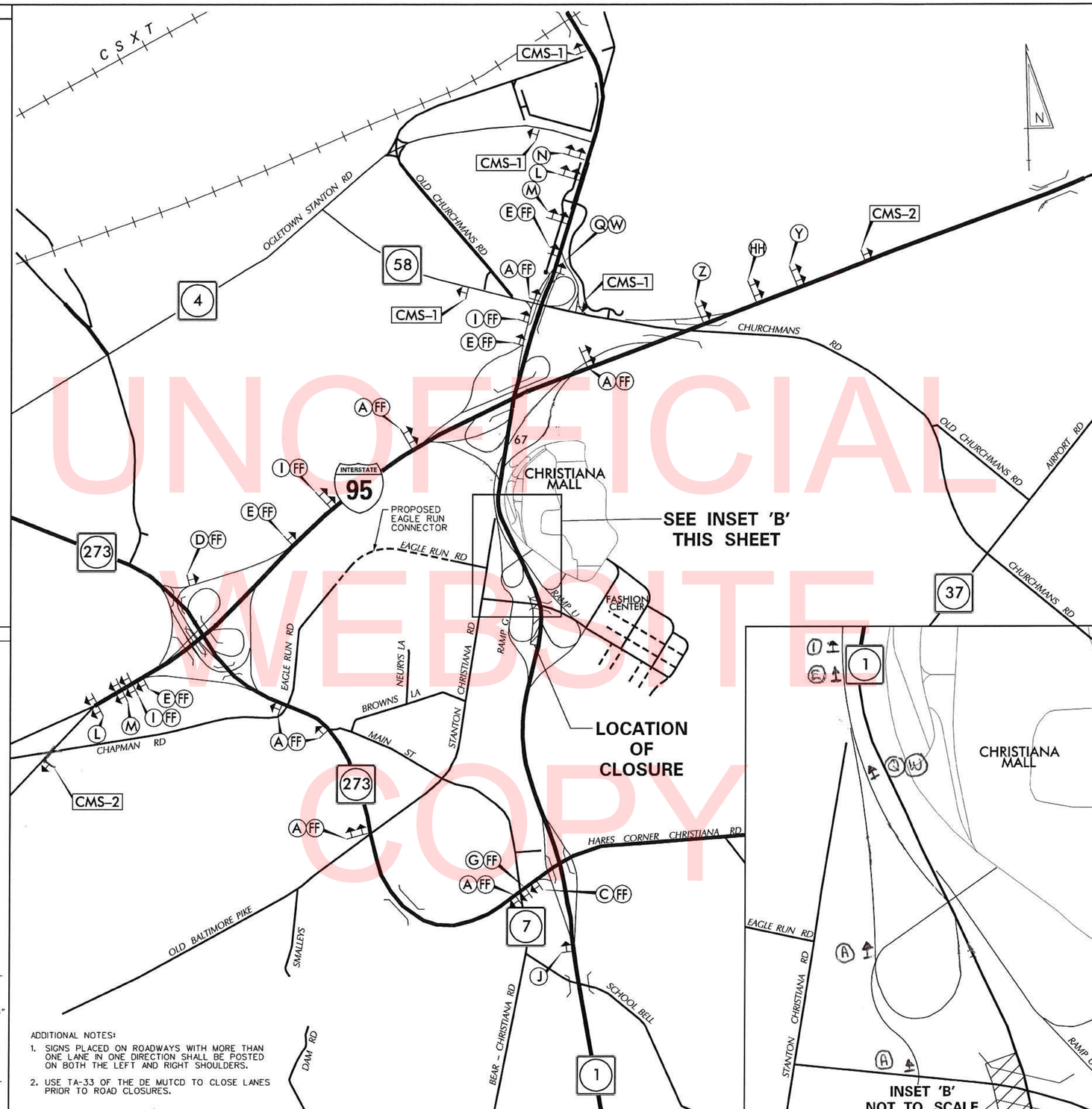

ADDITIONAL NOTES:

1. SIGNS PLACED ON ROADWAYS WITH MORE THAN ONE LANE IN ONE DIRECTION SHALL BE POSTED ON BOTH THE LEFT AND RIGHT SHOULDERS.
2. USE TA-33 OF THE DE MUTCD TO CLOSE LANES PRIOR TO ROAD CLOSURES.

INSET 'B'
NOT TO SCALE

LEGEND

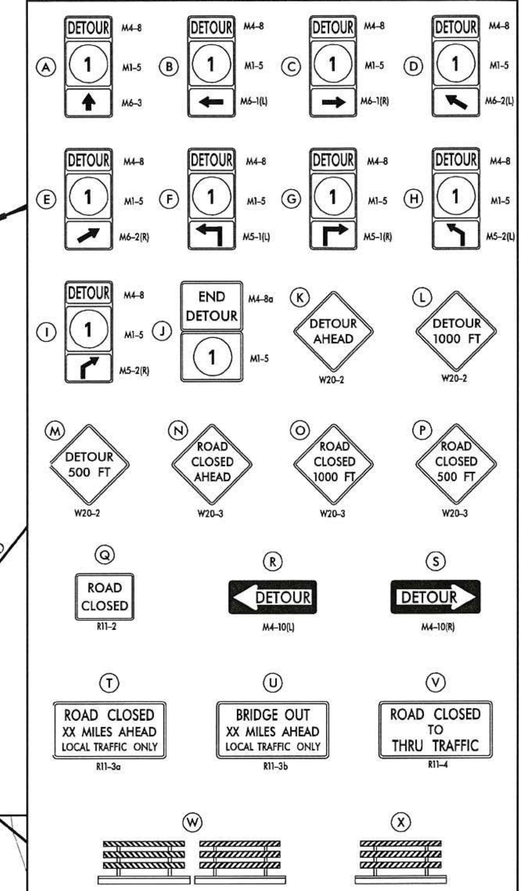

GENERAL NOTES

1. ALL DETOUR SIGNING, INCLUDING TRAILBLAZERS, ARE TO BE SUPPLIED AND MAINTAINED BY THE GENERAL CONTRACTOR IN COMPLIANCE WITH "THE DELAWARE MANUAL ON UNIFORM TRAFFIC CONTROL DEVICES" (DE MUTCD.)
2. THE CONTRACTOR SHALL COMPLY WITH GUIDELINES IN "THE DELAWARE MANUAL ON UNIFORM TRAFFIC CONTROL DEVICES" (DE MUTCD PART 6) FOR BARRICADES AND SIGNS (AS PER LATEST REVISION.)
3. DESIGN OF ALL SIGNS SHALL BE IN ACCORDANCE WITH THE FHWA STANDARD HIGHWAY SIGNS BOOK.
4. SIZES OF ALL SIGNS SHALL BE IN ACCORDANCE WITH THE DELAWARE MANUAL ON UNIFORM TRAFFIC CONTROL DEVICES" (DE MUTCD.) SIZE OF SIGN SHALL BE BASED ON TYPE OF ROADWAY ON WHICH THE SIGN IS INSTALLED.
5. THE COLORS, DIMENSIONS, AND CHARACTERISTICS OF ALL INTERSTATE, U.S ROUTE, AND STATE ROUTE SHIELD SIGNS SHALL BE IN ACCORDANCE WITH SECTION 2D.11 OF "THE DELAWARE MANUAL ON UNIFORM TRAFFIC CONTROL DEVICES" (DE MUTCD.)
6. SIGNS NO LONGER IN USE SHALL BE COMPLETELY COVERED WITH NO RETROREFLECTIVE MATERIAL SHOWING, OR SHALL BE REMOVED, AS DIRECTED BY THE ENGINEER.
7. FIELD CONDITIONS MAY DICTATE CHANGES AT SOME TIME DURING THE LIFE OF THE CONTRACT. IN THE EVENT OF OMISSIONS OR CORRECTIONS, THE SIGNING PROVISIONS OF "THE DELAWARE MANUAL ON UNIFORM TRAFFIC CONTROL DEVICES" (DE MUTCD) WILL PREVAIL.
8. SIGNS "N" THROUGH "O" AND "T" AND "V", THE WORD "ROAD" SHOULD BE CHANGED TO "RAMP", "RR XING", OR "BRIDGE" WHERE APPLICABLE.
9. WARNING SIGNS AND DETOUR TRAILBLAZERS SHALL BE MOUNTED ON BREAKAWAY POSTS AND HAVE RETROREFLECTIVE FLUORESCENT ORANGE SHEETING.
10. "W" BARRICADES SHALL COMPLETELY RUN THE FULL WIDTH OF THE ROADWAY.
11. BARRICADES SHALL BE A MINIMUM OF 6 FEET WIDE UNLESS DIRECTED BY THE ENGINEER.

UNOFFICIAL WEBSITE COPY

RECOMMENDED _____ DATE: _____

RECOMMENDED [signature] DATE: 2/9/18

RECOMMENDED _____ DATE: _____

APPROVED CHIEF SAFETY OFFICER [signature] DATE: 2-15-18

APPROVED TRAFFIC ENGINEER [signature] DATE: 2/15/18

DELAWARE DEPARTMENT OF TRANSPORTATION

ADDENDUM / REVISIONS

NOT TO SCALE

ROAD A / SR 7 IMPROVEMENTS

CONTRACT	PERMIT NO.	X
T201009002	DESIGNED BY: SJS	
COUNTY		
NEW CASTLE	CHECKED BY: BAH	

DETOUR PLAN
SR 1 SB CLOSURE

SHEET NO. 116
TOTAL SHTS. 154

\\BALSRV01\V2012\2012\12146_DELDOT1585\40-ROAD A CONNECTOR\CADD\CONTRACT\PLANS\DP03_RDA.DGN

PORTABLE CHANGEABLE MESSAGE SIGNS

PRIOR TO DETOUR
(10 DAYS PRIOR TO BEGINNING OF DETOUR)

PCMS-1

ROAD A WB TO CLOSE	STARTING XX/XX

DURING DETOUR
(DISPLAY FOR 5 DAYS AFTER IMPLEMENTATION OF DETOUR)

PCMS-1

ROAD A WB CLOSED	FOLLOW DETOUR

SPECIAL SIGNS

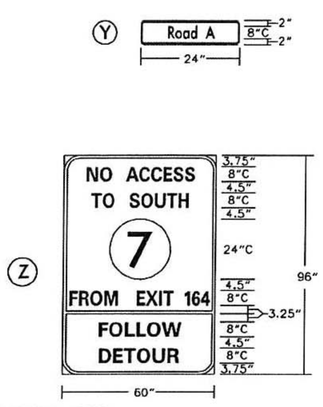

ADDITIONAL NOTES:

1. SIGNS PLACED ON ROADWAYS WITH MORE THAN ONE LANE IN ONE DIRECTION SHALL BE POSTED ON BOTH THE LEFT AND RIGHT SHOULDERS.
2. "FOLLOW DETOUR" PORTION OF SIGN TO BE UNCOVERED 5 DAYS AFTER IMPLEMENTATION OF DETOUR.

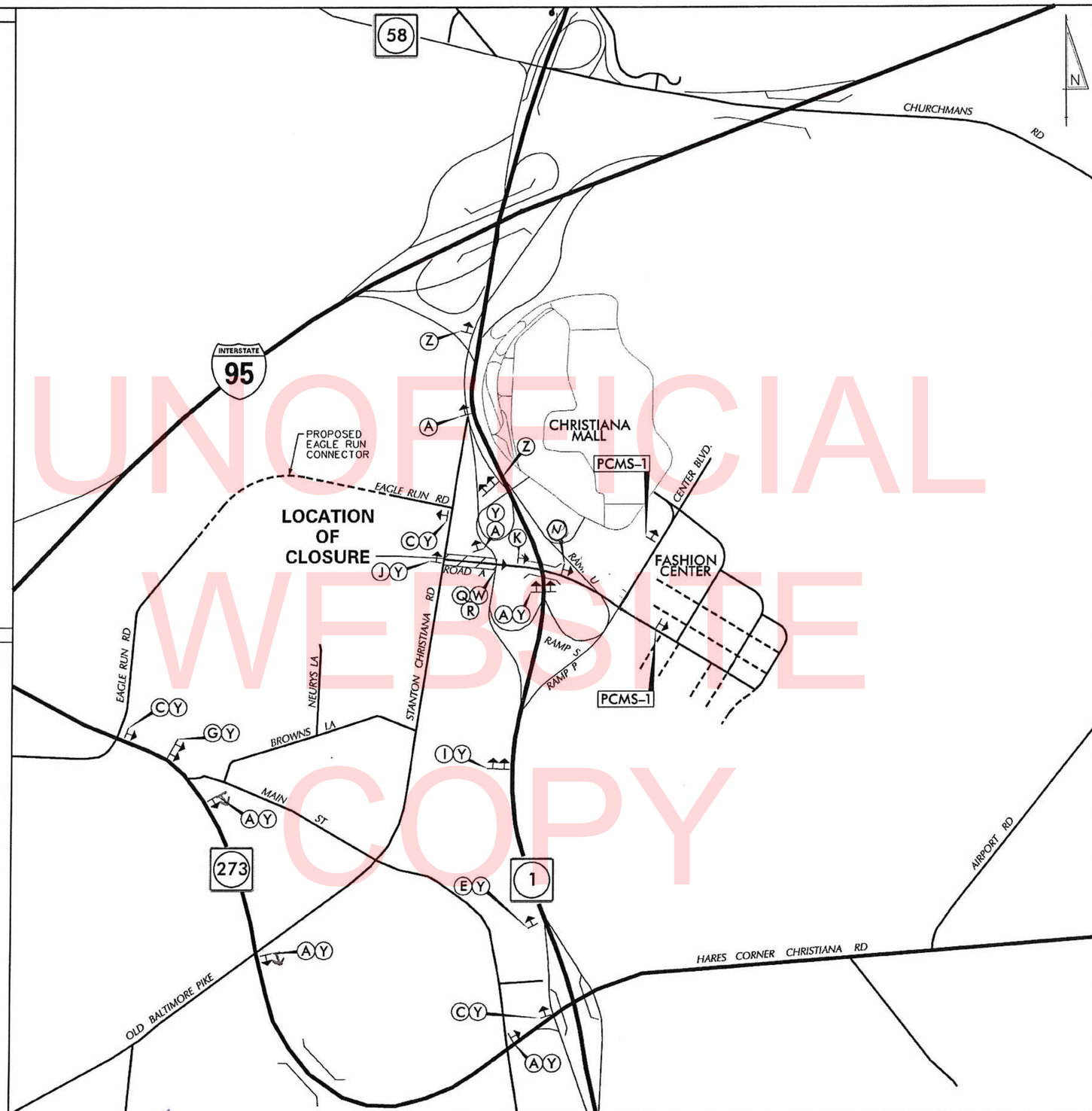

UNOFFICIAL WEBSITE COPY

LEGEND

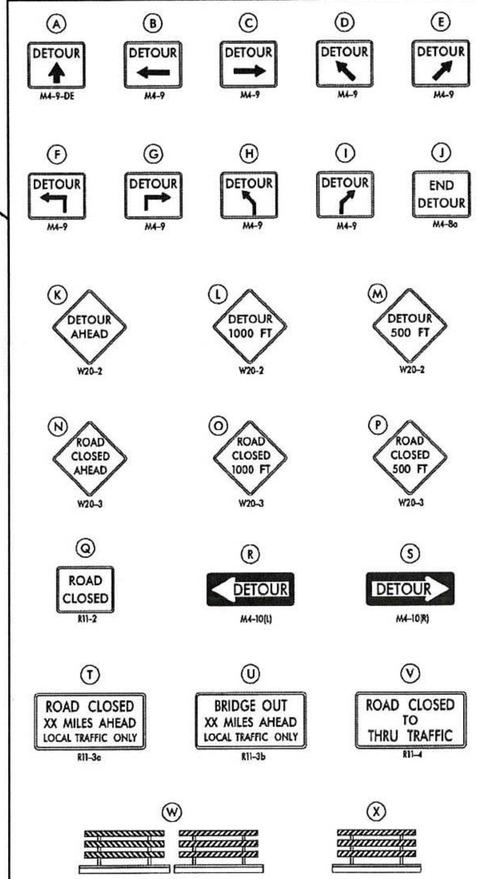

GENERAL NOTES

1. ALL DETOUR SIGNING, INCLUDING TRAILBLAZERS, ARE TO BE SUPPLIED AND MAINTAINED BY THE GENERAL CONTRACTOR IN COMPLIANCE WITH "THE DELAWARE MANUAL ON UNIFORM TRAFFIC CONTROL DEVICES" (DE MUTCD.)
2. THE CONTRACTOR SHALL COMPLY WITH GUIDELINES IN "THE DELAWARE MANUAL ON UNIFORM TRAFFIC CONTROL DEVICES" (DE MUTCD PART 6) FOR BARRICADES AND SIGNS (AS PER LATEST REVISION.)
3. DESIGN OF ALL SIGNS SHALL BE IN ACCORDANCE WITH THE FHWA STANDARD HIGHWAY SIGNS BOOK.
4. SIZES OF ALL SIGNS SHALL BE IN ACCORDANCE WITH "THE DELAWARE MANUAL ON UNIFORM TRAFFIC CONTROL DEVICES" (DE MUTCD.) SIZE OF SIGN SHALL BE BASED ON TYPE OF ROADWAY ON WHICH THE SIGN IS INSTALLED.
5. SIGNS NO LONGER IN USE SHALL BE COMPLETELY COVERED WITH NO RETROREFLECTIVE MATERIAL SHOWING, OR SHALL BE REMOVED, AS DIRECTED BY THE ENGINEER.
6. FIELD CONDITIONS MAY DICTATE CHANGES AT SOME TIME DURING THE LIFE OF THE CONTRACT. IN THE EVENT OF OMISSIONS OR CORRECTIONS, THE SIGNING PROVISIONS OF "THE DELAWARE MANUAL ON UNIFORM TRAFFIC CONTROL DEVICES" (DE MUTCD) WILL PREVAIL.
7. SIGNS "N" THROUGH "O" AND "T" AND "V", THE WORD "ROAD" SHOULD BE CHANGED TO "RAMP", "RR XING", OR "BRIDGE" WHERE APPLICABLE.
8. WARNING SIGNS AND DETOUR TRAILBLAZERS SHALL BE MOUNTED ON BREAKAWAY POSTS AND HAVE RETROREFLECTIVE FLUORESCENT ORANGE SHEETING.
9. "W" BARRICADES SHALL COMPLETELY RUN THE FULL WIDTH OF THE ROADWAY.
10. BARRICADES SHALL BE A MINIMUM OF 6 FEET WIDE UNLESS DIRECTED BY THE ENGINEER.

RECOMMENDED _____ DATE: _____

RECOMMENDED [signature] DATE: 3/13/18

RECOMMENDED _____ DATE: _____

APPROVED CHIEF SAFETY OFFICER [signature] DATE: 3-13-18

APPROVED TRAFFIC ENGINEER [signature] DATE: 3/13/18

DELAWARE DEPARTMENT OF TRANSPORTATION

ADDENDUM / REVISIONS

NOT TO SCALE

ROAD A / SR 7 IMPROVEMENTS

CONTRACT	PERMIT NO.	X
T201009002	DESIGNED BY: SJS	
COUNTY		
NEW CASTLE	CHECKED BY: BAH	

VEHICULAR DETOUR PLAN
ROAD A WB CLOSURE

SHEET NO. 117
TOTAL SHTS. 154

\\RAI\SRV01\V2012\2012\12146_DELDOT\585\40-ROAD A CONNECTOR\CADD\CONTRACT\PLANS\DP04_ROADGN

GENERAL NOTES

1. ALL ELECTRICAL WORK SHALL BE PERFORMED AND ALL MATERIAL PROVIDED SHALL BE IN ACCORDANCE WITH THE NATIONAL ELECTRIC CODE OF THE NATIONAL FIRE PROTECTION ASSOCIATION, TO ALL LOCAL AND SPECIAL LAWS, AND/OR TO ORDINANCES GOVERNING SUCH MATERIAL. CODE SHALL BE CONSIDERED THE MINIMUM REQUIREMENTS FOR THE ELECTRICAL WORK AND IF THERE IS A CONFLICT BETWEEN THE REQUIREMENTS SPECIFIED IN THE CONTRACT DOCUMENTS AND THE CODE, THE MORE STRINGENT REQUIREMENT WILL APPLY AS DETERMINED AND APPROVED BY THE ENGINEER. WHEN THESE REQUIREMENTS DO NOT GOVERN, AND WHERE NOT OTHERWISE SPECIFIED, ELECTRICAL MATERIALS SHALL CONFORM TO THE STANDARDIZATION RULES OF THE INSTITUTE OF ELECTRICAL ENGINEERS.

2. THE CONTRACTOR SHALL PROVIDE AND SECURE ALL ELECTRICAL INSPECTIONS AS REQUIRED AND PAY FOR THE SAME. THE ELECTRICAL CONTRACTOR SHALL OBTAIN AT HIS EXPENSE ALL NECESSARY PERMITS AND CERTIFICATES AS REQUIRED.

3. THE ELECTRICAL CONTRACTOR SHALL COORDINATE HIS WORK WITH ALL THE CONTRACTORS INVOLVED ON THIS PROJECT. THE ELECTRICAL CONTRACTOR SHALL COORDINATE WITH THE ENGINEER AND THE GENERAL SUPERINTENDENT ON THE LOCATIONS OF ALL CONDUIT AND POLE BASES TO ELIMINATE CONSTRUCTION CONFLICTS.

4. BURIED ELECTRICAL CABLE AND CONDUIT, AND OTHER UTILITIES MAY EXIST THROUGHOUT THIS PROJECT. THE EXISTING UTILITY LOCATIONS SHOWN ON THE PLANS ARE APPROXIMATE. THE CONTRACTOR SHALL BE RESPONSIBLE FOR LOCATING AND PREVENTING DAMAGE TO THEM, AND MAINTAINING THEM IN SERVICE WHEN AND WHERE REQUIRED. THE CONTRACTOR SHALL VERIFY THE EXACT LOCATIONS PRIOR TO COMMENCING WORK. THE CONTRACTOR SHALL VERIFY THE LOCATION OF ALL EXISTING UTILITIES BY HAND EXCAVATION PRIOR TO TRENCHING BY MACHINE.

5. THE ELECTRICAL CONTRACTOR SHALL GUARANTEE ALL WORK MATERIAL AND LABOR TO BE FREE FROM DEFECTS FOR A ONE YEAR PERIOD FROM THE TIME OF OWNER ACCEPTANCE. ANY DEFECTS OCCURRING DURING THIS PERIOD SHALL BE CORRECTED BY THE ELECTRICAL CONTRACTOR AT NO ADDITIONAL COST TO THE OWNER.

6. SERVICE RUNS ARE SHOWN IN APPROXIMATE LOCATIONS. THE CONTRACTOR SHALL LOCATE THE SERVICE RUNS IN A MANNER THAT AVOIDS CONFLICTS WITH ALL EXISTING AND PROPOSED FEATURES AS FIELD CONDITIONS DICTATE AND AS APPROVED BY THE ENGINEER.

7. TERMINATE ALL CONDUITS WHEN ENTERING ENCLOSURES WITH LOCKNUT AND BONDING BUSHINGS. ALL OTHER CONDUITS SHALL BE PROVIDED WITH BONDING BUSHINGS. ALL CONDUITS SHALL BE BONDED WITH THE GROUND WIRE.

8. COLOR CODING SHALL BE PROVIDED THROUGHOUT THE ENTIRE NETWORK FOR SERVICE, FEEDER, BRANCH, AND CONTROL CONDUCTORS. EACH PHASE SHALL BE AN INDEPENDENT COLOR. CONDUCTORS SHALL HAVE FACTORY IMPREGNATED COLOR THROUGHOUT THEIR ENTIRE LENGTH. PHASE TAPING IS NOT PERMITTED.

9. EXISTING LIGHT POLES, JUNCTION WELLS, AND CABINETS TO BE REMOVED SHALL BE SALVAGED AND DELIVERED TO DELDOT NORTH DISTRICT MAINTENANCE SHOP, 39 EAST REGAL BLVD, NEWARK, DELAWARE.

10. ALL LIGHTING POLE BASES TO BE REMOVED SHALL BE REMOVED TO A MINIMUM OF 6 INCHES BELOW GRADE.

11. THE CONTRACTOR SHALL NOTIFY DELMARVA POWER TWO WEEKS IN ADVANCE TO ARRANGE FINAL POWER CONNECTIONS.CONTACT: MR. TOM SMITH 302-283-5757.

12. ALL FUSED CONNECTIONS SHALL BE MADE IN THE POLE BASE. SPLICES IN JUNCTION WELLS, JUNCTION BOXES AND PULL BOXES SHALL NOT BE FUSED.

13. THE CONTRACTOR SHALL VERIFY ALL DIMENSIONS AND CONDITIONS AT SITE PRIOR TO WORK.

14. WORK INCLUDES FURNISHING LABOR, MATERIAL, EQUIPMENT, AND SERVICE NECESSARY AND INCIDENTAL TO PROPER COMPLETION OF THE ELECTRICAL WORK AS SHOWN. MINOR ITEMS, ACCESSORIES, OR DEVICES NECESSARY FOR COMPLETION AND PROPER OPERATION OF ANY SYSTEM SHALL BE PROVIDED WHETHER OR NOT THEY ARE SPECIFICALLY CALLED FOR BY SPECIFICATIONS OR DRAWINGS.

15. USE CAUTION WHEN INSTALLING CONDUITS UNDER EXISTING STORM WATER MANAGEMENT FACILITIES. WHEN COMPLETE, ENSURE ALL STORM WATER MANAGEMENT FACILITIES ARE RESTORED TO EXISTING CONDITIONS.

16. ALL CONDUITS, JUNCTION WELLS, LIGHTING STANDARDS, ETC. SHALL BE STAKED OUT AND EVERY LOCATION APPROVED BY THE ENGINEER BEFORE ANY WORK IS DONE.

17. ALL GROUNDING CONDUCTORS IN PROPOSED UNDERGROUND CONDUITS SHALL BE STRANDED COPPER WITH SIZE AS NOTED IN THE LIGHTING SERVICE SCHEDULE.

18. THE CONTRACTOR SHALL VERIFY THE OPERATING VOLTAGE OF ALL CIRCUITS OF THE EXISTING LIGHTING SYSTEMS THAT ARE BEING TIED INTO TO ENSURE COMPATIBILITY WITH PROPOSED LUMINAIRES.

19. THE CONTRACTOR SHALL VERIFY THE OPERATING CIRCUIT AND PHASE OF ALL EXISTING ROADWAY LIGHTING EQUIPMENT WHERE THE ELECTRICAL SERVICE IS BEING INTERRUPTED. THE EXISTING ROADWAY EQUIPMENT SHALL BE RECONNECTED TO THE SAME CIRCUIT AND PHASE AS IS EXISTING UNLESS OTHERWISE NOTED ON THE PLANS.

20. ALL STATION, OFFSET, AND DIMENSION INFORMATION SHOWN FOR PROPOSED LIGHTING STANDARDS IS TO THE CENTER OF THE POLE BASE.

21. THE ELECTRICAL CONTRACTOR SHALL COORDINATE THE INSTALLATION OF LIGHTING CONDUITS WITH ITMS CONDUITS. ITMS AND LIGHTING CONDUITS MAY SHARE A COMMON TRENCH BUT SHALL NOT SHARE COMMON JUNCTION WELLS.

22. EXISTING ROADWAY LIGHTING CONDUITS SHALL BE EXISTING TO REMAIN UNLESS NOTED OTHERWISE ON THE PLANS.

23. SPLICES FOR ALL ROADWAY LIGHTING ELECTRICAL CABLES, INCLUDING RE-CONNECTION OF EXISTING IMPACTED ELECTRICAL CABLES, SHALL BE COMPLETE USING APPROVED SPLICE KITS OR METHODS APPROVED BY THE ENGINEER AND SHALL BE INCIDENTAL TO THE SUPPLY AND INSTALLATION OF VARIOUS ROADWAY LIGHTING ELECTRICAL CABLES.

24. ALL PROPOSED ALUMINUM LIGHTING STANDARD WITH SINGLE DAVIT ARM SHALL BE INSTALLED ON STANDARD POLE BASE TYPE 6 ITEM 830006, UNLESS OTHERWISE NOTED.

25. ALL PROPOSED DAVIT ARM LIGHTING STANDARDS SHALL BE INSTALLED WITH BREAKAWAY TRANSFORMER BASES, WHETHER PROTECTED OR UNPROTECTED, UNLESS OTHERWISE NOTED.

26. REMOVAL OF AN EXISTING LIGHTING STANDARD SHALL INCLUDE THE REMOVAL OF THE EXISTING LIGHTING STANDARD AND FOUNDATION, UNLESS OTHERWISE NOTED. PAYMENT FOR REMOVAL OF EXISTING LIGHT POLES AND POLL BASES SHALL BE MADE UNDER ITEM 211000 - REMOVAL OF STRUCTURES AND OBSTRUCTIONS.

27. PAYMENT FOR REMOVAL OF EXISTING JUNCTION WELLS SHALL BE MADE UNDER ITEM 211000.

28. PAYMENT FOR RELOCATION OF EXISTING HIGH MAST LIGHT TOWERS AND ASSOCIATED ELECTRICAL EQUIPMENT SHALL BE MADE UNDER ITEM 847502.

29. PAYMENT FOR THE REMOVAL OF EXISTING HIGH MAST LIGHT TOWER FOUNDATION AND CABINET FOUNDATION SHALL BE MADE UNDER ITEM 211000 - REMOVAL OF STRUCTURES AND OBSTRUCTIONS. PAYMENT FOR REMOVAL OF THE EXISTING HIGH MAST ELECTRICAL CABINET AND EQUIPMENT SHALL BE PAID FOR UNDER ITEM 847502.

30. POLE NUMBERS, CIRCUITS, AND CABLE SIZES FOR EXISTING ROADWAY LIGHTING OBTAINED FROM DELDOT CONTRACT NOS. 93-101-01, 91-101-04, AND 7072.

31. THE ELECTRICAL CONTRACTOR SHALL FAMILIARIZE HIMSELF WITH ALL THE ELECTRICAL/LIGHTING WORK BEING PERFORMED UNDER CONTRACT T201009002. ALL WORK SHALL BE COORDINATED TO ENSURE NO PROLONGER OUTAGES TO THE EXISTING OR PROPOSED LIGHTING SYSTEM.

32. UNDERGROUND CONDUITS SHALL BE SLOPED TO DRAIN TO THE NEAREST JUNCTION WELL. IF THIS CANNOT BE ACCOMPLISHED, PROVIDE A DRAINAGE TEE AT LOW POINT OF CONDUIT RUN.DRAINAGE TEES SHALL BE INCIDENTAL TO ITEM 745602 FOR BORED CONDUIT, AND 745604 FOR TRENCHED CONDUIT.

33. EXACT CONDUIT ROUTING TO UNDERPASS LIGHTS SHALL BE DETERMINED IN THE FIELD. INSTALLATIONS SHALL MEET THE REQUIREMENTS OF THE NATIONAL ELECTRIC CODE. INSTALLATION OF ALL CONDUITS ASSOCIATED WITH UNDERPASS LIGHTING SHALL BE PAID FOR UNDER ITEM 745609 - FURNISH & INSTALL UP TO 4" GALVANIZED STEEL CONDUIT (ON STRUCTURE). ANCHORS, BOLTS, CLAMPS, EXPANSION COUPLINGS, CONDUIT FITTINGS, FLEXIBLE CONDUIT AND ANY OTHER INCIDENTALS NECESSARY TO INSTALL THE CONDUIT AND CONNECT TO THE UNDERPASS LIGHT SHALL BE INCIDENTAL TO THIS ITEM.

34. EXISTING ROADWAY LIGHTING WILL BE IMPACTED DURING VARIOUS PHASES OF CONSTRUCTION. THE CONTRACTOR IS ENCOURAGED TO MAKE OPERATIONAL THE PERMANENT LIGHTING AS SOON AS POSSIBLE. LIGHTING WIL BE PROVIDED AD DESIGNED ONCE THE CONSTUCTION IS COMPLETE.

35. USE OF PORTABLE LIGHT ASSEMBLIES MAY BE REQUIRED AS DETERMINED BY THE SAFTEY SECTION.

LEGEND

- LST X — LIGHTING STANDARD IDENTIFIER (EXISTING AND PROPOSED)
- LSR X — LIGHTING SERVICE RUN IDENTIFIER (EXISTING AND PROPOSED)
- JW X — JUNCTION WELL & TYPE (EXISTING AND PROPOSED)
- JB X — JUNCTION BOX & TYPE (EXISTING AND PROPOSED)
- HM X — HIGH MAST TOWER AND LUMINAIRES (EXISTING AND PROPOSED)
- UP X — UNDERPASS LUMINAIRE (EXISTING AND PROPOSED)
- CA X — LIGHTING CONTROL CENTER & TYPE (EXISTING AND PROPOSED)
- EXISTING OFFSET LUMINAIRE
- EXISTING LIGHTING STANDARD
- PROPOSED COBRAHEAD LUMINAIRE, SINGLE DAVIT ARM
- CONCRETE SLAB — EXISTING HIGH MAST TOWER, (6) 1000W HPS LUMINAIRES — DIRECTION FOR LOWERING POLE
- CONCRETE SLAB — PROPOSED HIGH MAST TOWER, (6) 1000W HPS LUMINAIRES — DIRECTION FOR LOWERING POLE
- EB — EXISTING HIGH MAST TOWER ELECTRICAL CABINET
- EB — PROPOSED HIGH MAST TOWER ELECTRICAL CABINET
- PROPOSED UNDERPASS LUMINAIRE
- PROPOSED UNDERPASS LUMINAIRE
- EXISTING LIGHTING CONTROL CABINET
- PROPOSED LIGHTING CONTROL CABINET
- PROPOSED LIGHTING CONDUIT
- J.W. — EXISTING JUNCTION WELL
- J.W. — PROPOSED JUNCTION WELL, TYPE 1
- PROPOSED JUNCTION WELL, TYPE 4
- J.B. — EXISTING STRUCTURE MOUNTED JUNCTION BOX
- J.B. — PROPOSED STRUCTURE MOUNTED JUNCTION BOX
- JB — JUNCTION BOX IN CONCRETE BARRIER
- P — EXISTING SERVICE PEDESTAL - ELECTRIC SERVICE METER
- P — PROPOSED SERVICE PEDESTAL - ELECTRIC SERVICE METER
- E — EXISTING DELMARVA TRANSFORMER
- E — PROPOSED DELMARVA TRANSFORMER
- RM O — REMOVE BY OTHERS
- RM C — REMOVE BY CONTRACTOR
- RL C — RELOCATE BY CONTRACTOR
- AB — ABANDON

UNOFFICIAL WEBSITE COPY

NOTES:

1. MITIGATION OF HIGH MAST LIGHTING SYSTEM SHALL OCCUR PRIOR TO START OF ANY WORK. THIS WILL ENSURE LIGHTING IS MAINTAINED AT ALL CRITICAL DECISION POINTS. FAILURE TO DO SO IS THE SOLE RESPONSIBILITY OF THE CONTRACTOR.
2. INSTALL TRANSFORMER PAD AND TYPE R CABINET BASE. RELOCATE EXISTING 100 KVA TRANSFORMER AND 240/480V LIGHTING CONTROL CABINET (LOAD CENTER 2-2 CONTRACT 93-101-01).
3. MAINTAIN EXISTING CIRCUIT CONFIGURATION TO MAINTAIN SYSTEM CONSISTENCIE OF LIGHTING SYSTEM.

LIGHTING STANDARD SCHEDULE

NO.	STATION	OFFSET	HEIGHT	ARM	LIGHT STANDARD	DISTR. TYPE	LAMP TYPE/WATTAGE	CIRCUIT NO.
LST-1	101+12	2.2' RT	40'	20'	COBRAHEAD, DAVIT ARM POLE	TYPE III	LED LUMINAIRE, 400 WATT HPS EQUIVALENT	H
LST-2	102+51	39.0' RT	40'	20'	COBRAHEAD, DAVIT ARM POLE	TYPE III	LED LUMINAIRE, 250 WATT HPS EQUIVALENT	G
LST-3	103+81	39.0' RT	40'	20'	COBRAHEAD, DAVIT ARM POLE	TYPE III	LED LUMINAIRE, 250 WATT HPS EQUIVALENT	H
LST-4	105+11	39.0' RT	40'	20'	COBRAHEAD, DAVIT ARM POLE	TYPE III	LED LUMINAIRE, 250 WATT HPS EQUIVALENT	G

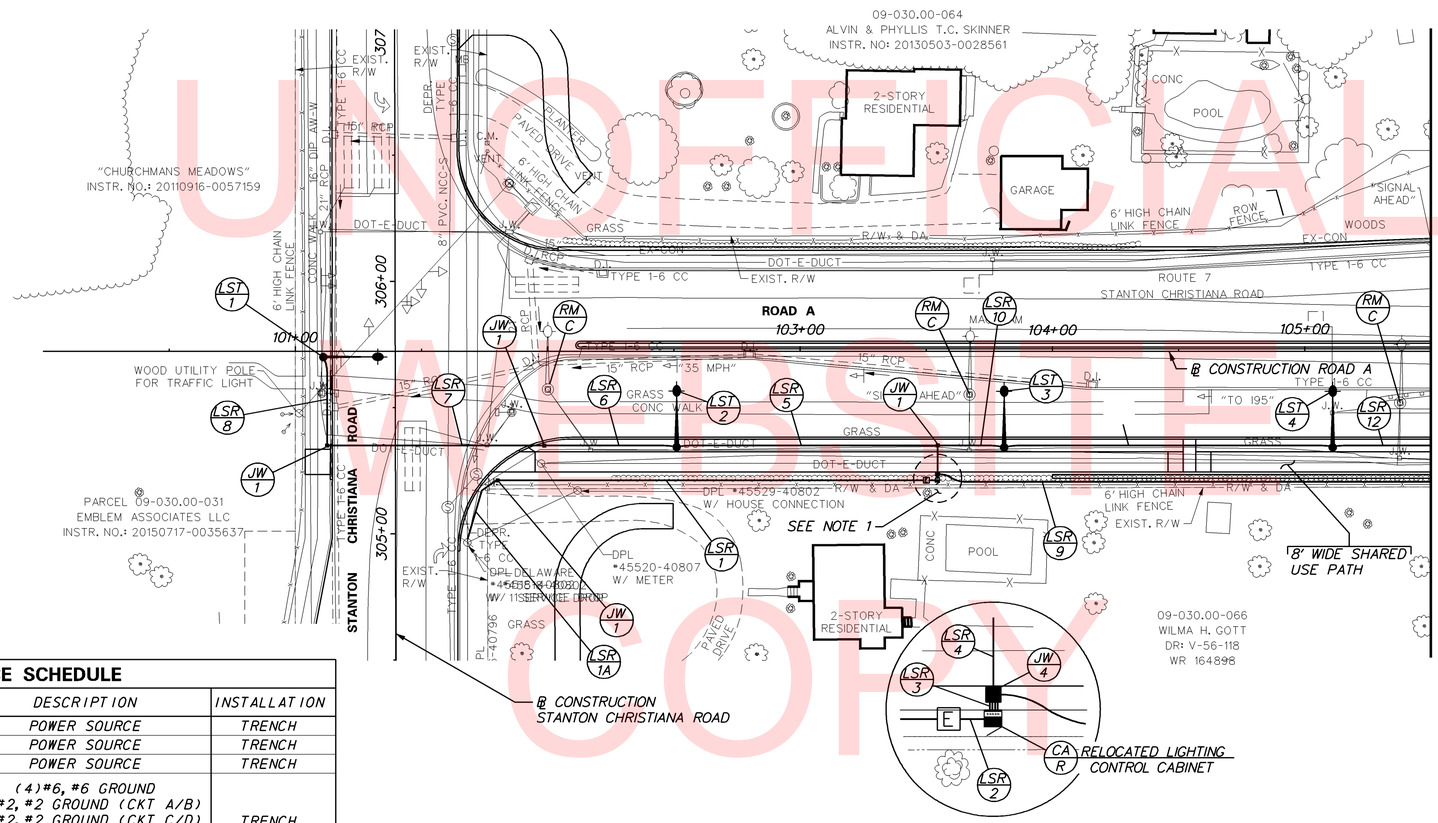

MATCHLINE STA. 105 + 50 (LI-03)

LIGHTING SERVICE SCHEDULE

SERVICE RUN	DISTANCE (L.F.)	# OF CONDUITS	SIZE	DESCRIPTION	INSTALLATION
1	155'	1	4"GRS	POWER SOURCE	TRENCH
1A	50'	1	4"GRS	POWER SOURCE	TRENCH
2	5'	1	4"GRS	POWER SOURCE	TRENCH
3	5'	4	4"	(4)#6, #6 GROUND (3)#2, #2 GROUND (CKT A/B) (3)#2, #2 GROUND (CKT C/D) (3)#2, #2 GROUND (CKT E/F) (3)#2, #2 GROUND (CKT G/H)	TRENCH
4	15'	1	3"	(4)#6, #6 GROUND	TRENCH
5	105'	1	3"	(4)#6, #6 GROUND	TRENCH
6	55'	1	3"	(2)#6, #6 GROUND	TRENCH
7	85'	1	3"	(2)#6, #6 GROUND	BORE
8	35'	1	3"	(2)#6, #6 GROUND	TRENCH
9	*240'	3	3.0"	(3)#2, #2 GROUND (CKT A/B) (3)#2, #2 GROUND (CKT C/D) (3)#2, #2 GROUND (CKT E/F) (3)#2, #2 GROUND (CKT G/H)	TRENCH
10	25'	1	3.0"	(4)#6, #6 GROUND	TRENCH
11	135'	1	3.0"	(4)#6, #6 GROUND	TRENCH
12	*65'	1	3.0"	(2)#6, #6 GROUND	TRENCH

*DISTANCE CONTINUES ON ADJACENT PLAN SHEET.

UNOFFICIAL WEBSITE COPY

DELAWARE DEPARTMENT OF TRANSPORTATION

ADDENDUMS / REVISIONS

SCALE 0 30 60 90 FEET

ROAD A /SR7 IMPROVEMENTS

CONTRACT T201009002 | COUNTY NEW CASTLE | BRIDGE NO. 1-220 | DESIGNED BY: NT | CHECKED BY: DZ

LIGHTING PLAN

LI-02 | SHEET NO. 119 | TOTAL SHTS. 154

7/9/2018 12:23:36 PM
\\balsrv01\V2012\2012\12146_DelDOT1585\40-Road A Connector\Cadd\Contract\Plans\LI02_RdA.dgn

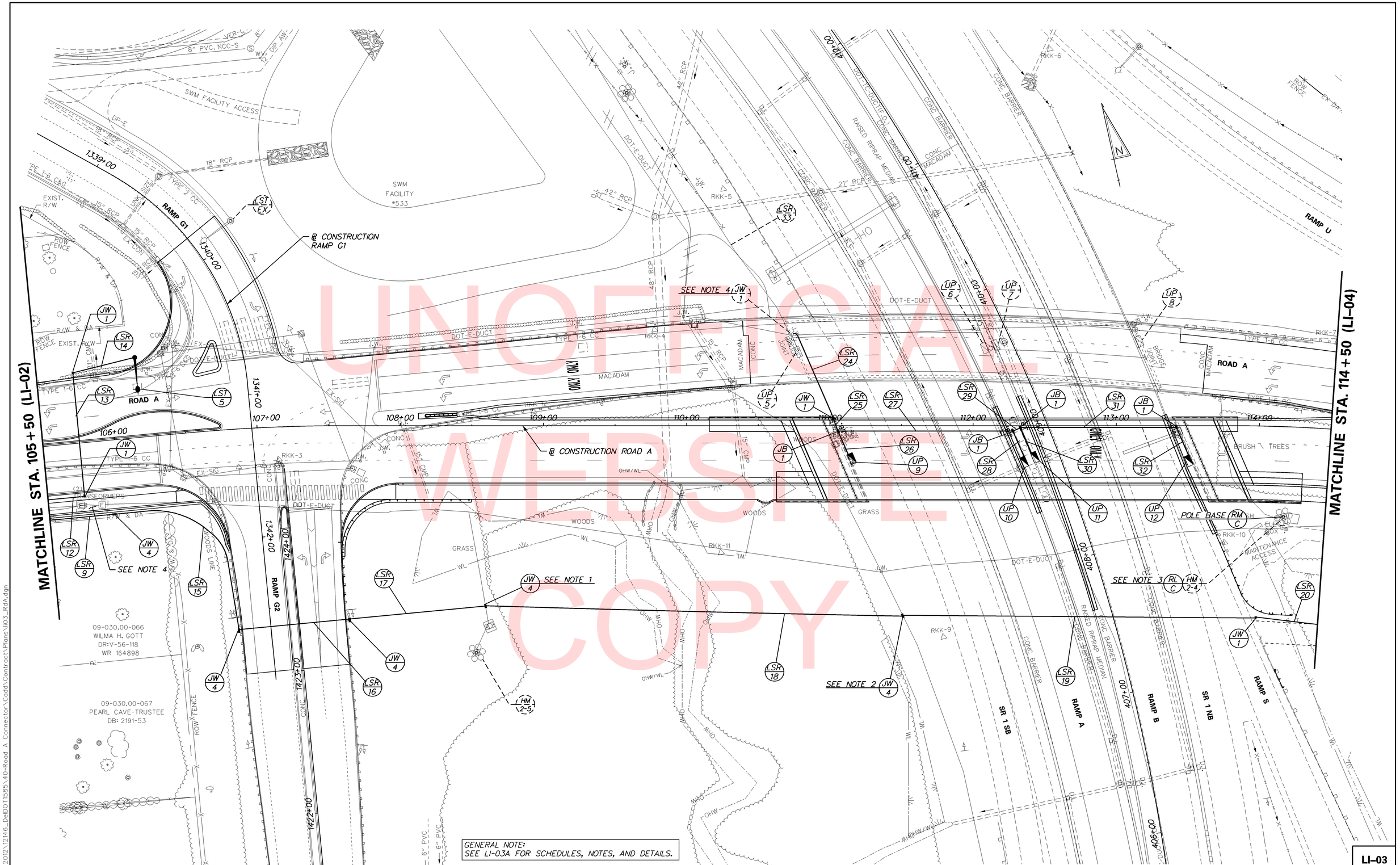

UNOFFICIAL WEBSITE COPY

DELAWARE DEPARTMENT OF TRANSPORTATION

ADDENDUMS / REVISIONS

SCALE 0 30 60 90 FEET

ROAD A /SR7 IMPROVEMENTS

CONTRACT	BRIDGE NO.	1-220
T201009002	DESIGNED BY: KJA	
COUNTY	CHECKED BY: J.Rashid	
NEW CASTLE		

LIGHTING PLAN

LI-03

SHEET NO.
120
TOTAL SHTS.
154

7/9/2018 7:57:24 AM
\\balsrv01\v2012\2012\12146_DelDOT1585\40-Road A Connector\Cadd\Contract\Plans\li03_RdA.dgn

LIGHTING SERVICE SCHEDULE

SERVICE RUN	DISTANCE (L.F.)	# OF CONDUITS	SIZE	DESCRIPTION	INSTALLATION
*9	SERVICE INFORMATION SHOWN ON SHEET LI-02				
*12	SERVICE INFORMATION SHOWN ON SHEET LI-02				
13	90	1	3.0"	(2) #6, (1) #6 GROUND	BORE
14	45	1	3.0"	(2) #6, (1) #6 GROUND	TRENCH
15	145	3	3.0"	(3)#2, #2 GROUND (CKT A/B) (3)#2, #2 GROUND (CKT C/D) (3)#2, #2 GROUND (CKT E/F) (3)#2, #2 GROUND (CKT G/H)	TRENCH
16	80	3	3.0"	(3)#2, #2 GROUND (CKT A/B) (3)#2, #2 GROUND (CKT C/D) (3)#2, #2 GROUND (CKT E/F) (3)#2, #2 GROUND (CKT G/H)	BORE
17	95	3	3.0"	(3)#2, #2 GROUND (CKT A/B) (3)#2, #2 GROUND (CKT C/D) (3)#2, #2 GROUND (CKT E/F) (3)#2, #2 GROUND (CKT G/H)	TRENCH
18	300	2	3.0"	(3)#2, #2 GROUND (CKT A/B) (3)#2, #2 GROUND (CKT C/D) (3)#2, #2 GROUND (CKT E/F)	BORE
19	250	1	3.0"	(3)#2, #2 GROUND (CKT E/F)	BORE
20	70	1	3.0"	(3)#2, #2 GROUND (CKT E/F)	TRENCH
24	65	1	4.0"	(3) #6, (1) #6 GROUND	TRENCH
**25	40	1	1.0"	(3) #8, (1) #8 GROUND	TRENCH/ON STR.
**26	20	1	0.75"	(2) #10, (1) #10 GROUND	ON STRUCTURE
**27	125	1	1.0"	(3) #8, (1) #8 GROUND	ON STRUCTURE
**28	20	1	0.75"	(2) #10, (1) #10 GROUND	ON STRUCTURE
**29	10	1	1.0"	(3) #8, (1) #8 GROUND	ON STRUCTURE
**30	20	1	0.75"	(2) #10, (1) #10 GROUND	ON STRUCTURE
**31	110	1	1.0"	(2) #8, (1) #8 GROUND	ON STRUCTURE
**32	20	1	0.75"	(2) #10, (1) #10 GROUND	ON STRUCTURE
33	--	--	--	--	--

*CONTINUED FROM ADJACENT PLAN SHEET.
**RIGID GALVANIZED STEEL CONDUIT

LIGHTING STANDARD SCHEDULE

NO.	STATION	OFFSET	HEIGHT	ARM	LIGHT STANDARD	DISTR. TYPE	LAMP TYPE/WATTAGE	CIRCUIT NO.
LST-5	106+25	58.0' LT	40'	20'	COBRAHEAD, DAVIT ARM POLE	TYPE III	LED LUMINAIRE, 250 WATT HPS EQUIVALENT	H
UP-9	111+15	22.3' RT	16'	N/A	UNDERPASS LIGHT, WALLPACK	TYPE IV	LED LUMINAIRE, 70 WATT HPS EQUIVALENT	2
UP-10	112+35	24.5' RT	16'	N/A	UNDERPASS LIGHT, WALLPACK	TYPE IV	LED LUMINAIRE, 70 WATT HPS EQUIVALENT	4
UP-11	112+43	21.9' RT	16'	N/A	UNDERPASS LIGHT, WALLPACK	TYPE IV	LED LUMINAIRE, 70 WATT HPS EQUIVALENT	2
UP-12	113+51	24.3' RT	16'	N/A	UNDERPASS LIGHT, WALLPACK	TYPE IV	LED LUMINAIRE, 70 WATT HPS EQUIVALENT	4

NOTE:
UP-9, UP-10, UP-11, UP-12 ARE CONNECTED TO 270/480V THREE PHASE LIGHTING LOAD CENTER ALONG RAMP R1 INSTALLED UNDER CONTRACT 30-090-04

UNOFFICIAL WEBSITE COPY

NOTES:

1. LOCATE AND INTERCEPT EXISTING CONDUIT WITH A TYPE 4 JUNCTION WELL. CUT AND/OR PULL BACK THE EXISTING CABLES IN THE CONDUIT TO THE PROPOSED JUNCTION WELL SO THAT THE ELECTRICAL SERVICE CAN BE MAINTAINED FOR EXISTING CIRCUITS G AND H. ENSURE SUFFICIENT CABLE LENGTH IS AVAILABLE FOR SPLICING TO NEW CABLES IN THE PROPOSED CONDUIT RUNS THAT ENTER THIS JUNCTION WELL. SPLICE PROPOSED ELECTRICAL CABLES TO EXISTING CIRCUITS G AND H IN THE PROPOSED JUNCTION WELL TO MAINTAIN SERVICE TO THE EXISTING HIGH MAST LIGHT
2. LOCATE AND INTERCEPT EXISTING CONDUIT WITH A TYPE 4 JUNCTION WELL. CUT AND/OR PULL BACK THE EXISTING CABLES IN THE CONDUIT TO THE PROPOSED JUNCTION WELL SO THAT THE ELECTRICAL SERVICE CAN BE MAINTAINED FOR EXISTING CIRCUITS A, B, C, AND D. ENSURE SUFFICIENT CABLE LENGTH IS AVAILABLE FOR SPLICING TO NEW CABLES IN THE PROPOSED CONDUIT RUNS THAT ENTER THIS JUNCTION WELL.
3. RELOCATION OF EXISTING LIGHT TOWER (847502) TO NEW FOUNDATION SEE BRIDGE SHEET SS-63 AND SS-64 FOR DETAILS PRIOR ANY CONSTRUCTION. THE CONTRACTOR SHALL VERIFY THE REQUIRED BOLT PATTERN AND BOLT SIZE OF THE EXISTING HIGH MAST LIGHT TOWER DESIGNATED TO BE RELOCATED AND APPLY TO THE NEW FOUNDATION. RELOCATE EXISTING TOWER CONTROL CABINET AS NEEDED. CONNECT PROPOSED CONDUITS AND CABLES TO THE RELOCATED CONTROL CABINET AND HIGH MAST TOWERS.
4. SPLICE PROPOSED ELECTRICAL CABLES IN THE EXISTING JUNCTION WELL.
5. UNDERPASS LIGHTS SHALL BE MOUNTED TO THE EXISTING BRIDGE ABUTMENT AND PIER. OFFSETS PROVIDED IN THE LIGHTING STANDARD SCHEDULE ARE APPROXIMATE.
6. JUNCTION BOXES INSTALLED ON THE STRUCTURE FOR THE PURPOSE OF SPLICING CABLE FOR THE UNDERPASS LIGHTS SHALL BE MINIMUM 8"X8"X4", RATED NEMA 4.
7. PROVIDE CONDUIT EXPANSION/DEFLECTION FITTINGS ON ALL CONDUITS CROSSING OPEN JOINTS ON THE BRIDGE. PROVIDE CONDUIT EXPANSION FITTINGS ON ALL CONDUITS CROSSING EXPANSION JOINTS ON THE BRIDGE.

EXISTING LOAD CENTER 2-2

20P - 240/480V
400A, 1 PHASE, 3 WIRE PANEL
250 AMP, 2P MAIN BREAKER
LUMINAIRE VOLTAGE: 240 VOLTS

CKT. NO.	EQUIPMENT SERVED	CONNECTED LOAD KW	CONNECTED LOAD AMPS	PHASE AND VOLTS	BRANCH CIRCUIT BREAKERS NUMBER OF POLES	BRANCH CIRCUIT BREAKERS FRAME SIZE	BRANCH CIRCUIT BREAKERS TRIP SIZE	REMARKS	CKT. NO.	EQUIPMENT SERVED	CONNECTED LOAD KW	CONNECTED LOAD AMPS	PHASE AND VOLTS	BRANCH CIRCUIT BREAKERS NUMBER OF POLES	BRANCH CIRCUIT BREAKERS FRAME SIZE	BRANCH CIRCUIT BREAKERS TRIP SIZE	REMARKS
A	EX. LST: A-1, A-2, A-3, A-4, A-6, A-7			1/240	2		40A	6 - 250W HPS	C	EX. HM: 2-1 (C-4,C-5,C-6) 2-2 (C-1,C-2,C-3)			1/240	2		40A	6 - 1000W HPS
B	EX. LST: B-1, B-2, B-3, B-4, B-6, B-7			1/240				6 - 250W HPS	D	EX. HM: 2-1 (D-4,D-5,D-6) 2-2 (D-1,D-2,D-3)			1/240				6 - 1000W HPS
E	EX. HM: 2-3 (E-4,E-5,E-6) 2-4 (E-1,E-2,E-3) EX. LST: E-9,E-10,E-11,E-12			1/240	2		50A	6 - 1000W HPS 2 - 250W HPS 2 - 200W HPS	G	EX. HM: 2-5 (G-3,G-4,G-5) PROP. LST: G-2, G-4			1/240	2		50A	2 - 250W HPS 3 - 1000W HPS
F	EX. HM: 2-3 (F-4,F-5,F-6) 2-4 (F-1,F-2,F-3) EX. LST: F-7,F-9,F-10, F-11,F-12			1/240				6 - 1000W HPS 2 - 250W HPS 2 - 200W HPS	H	EX. HM: 2-5 (H-2,H-3,H-4) PROP. LST: H-1, H-3, H-5			1/240				3 - 250W HPS 3 - 1000W HPS
J	EX. HM: 2-7 (J-1,J-2,J-3)			1/240	2		40A	3 - 1000W HPS	L				1/240	2		40A	
K	EX. HM: 2-7 (K-1,K-2,K-3)			1/240				3 - 1000W HPS	M				1/240				
										SPARE				2		40A	

LI-03A

DELAWARE DEPARTMENT OF TRANSPORTATION

ADDENDUMS / REVISIONS

NOT TO SCALE

ROAD A /SR7 IMPROVEMENTS

CONTRACT T201009002
COUNTY NEW CASTLE
BRIDGE NO. 1-220
DESIGNED BY: NT
CHECKED BY: DZ

LIGHTING PLAN

SHEET NO. 121
TOTAL SHTS. 154

7/9/2018 12:28:05 PM
\\bdlsrv01\v2012\2012\12146_DelDOT1585\40-Road A Connector\Cadd\Contract\Plans\LI03A_RdA.dgn

LIGHTING STANDARD SCHEDULE

NO.	STATION	OFFSET	HEIGHT	ARM	LIGHT STANDARD	DISTR. TYPE	LAMP TYPE/WATTAGE	CIRCUIT NO.
HM 2-4	115+16	136.0' RT	100'	N/A	RELOCATED HIGH MAST	TYPE V	LED LUMINAIRE, 250 WATT HPS EQUIVALENT	E/F
HM 2-3	--	--	100'	N/A	HIGH MAST	TYPE V	LED LUMINAIRE, 250 WATT HPS EQUIVALENT	E/F

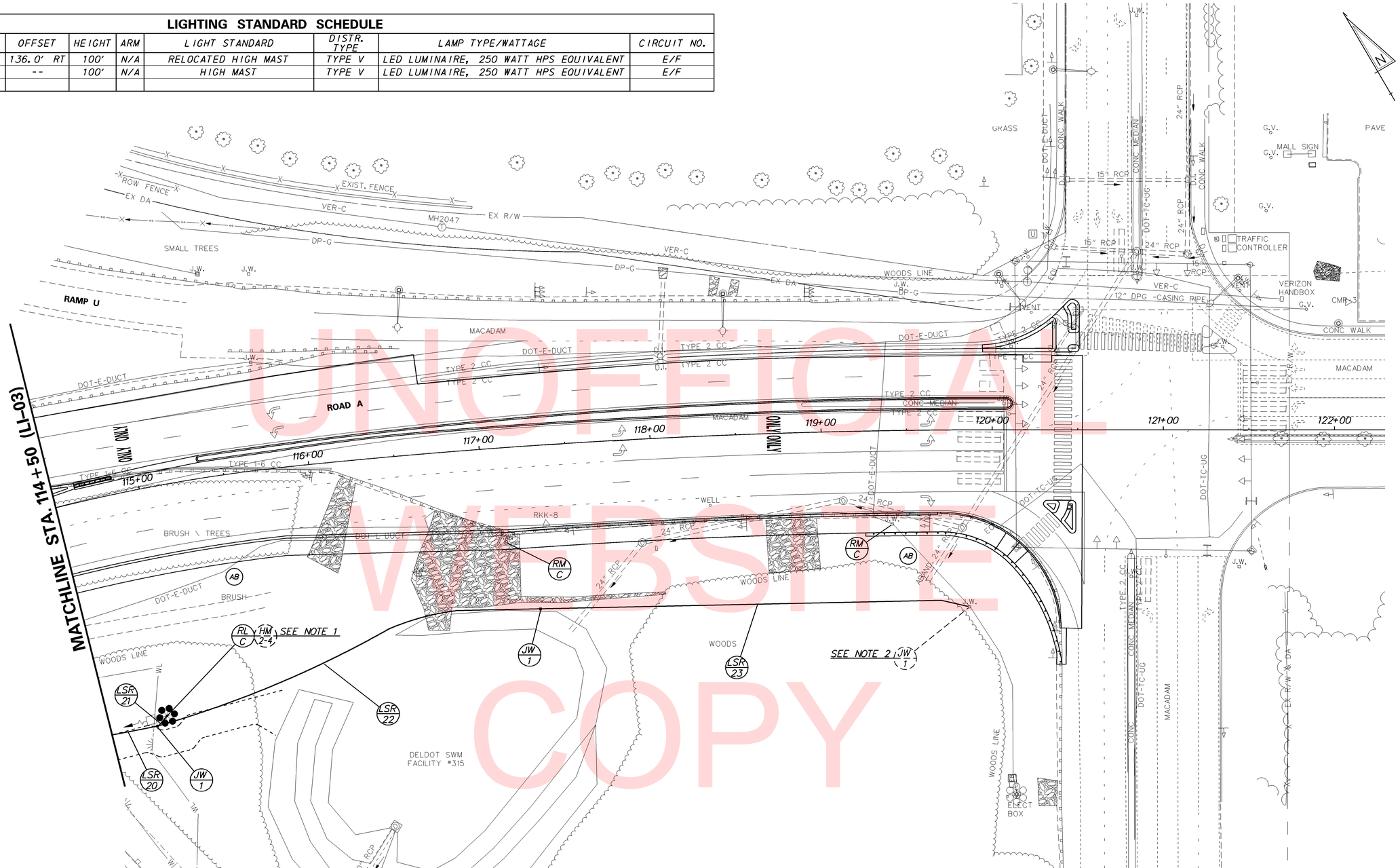

UNOFFICIAL WEBSITE COPY

NOTES:

1. RELOCATED EXISTING HIGH MAST LIGHT TOWER (LI-03) TO NEW FOUNDATION PRIOR ANY CONSTRUCTION. THE CONTRACTOR SHALL VERIFY THE REQUIRED BOLT PATTERN AND BOLT SIZE OF THE EXISTING HIGH MAST LIGHT TOWER DESIGNATED TO BE RELOCATED AND APPLY TO THE NEW FOUNDATION. RELOCATE EXISTING TOWER CONTROL CABINET AS NEEDED. CONNECT PROPOSED CONDUITS AND CABLES TO THE RELOCATED CONTROL CABINET AND HIGH MAST TOWERS.

2. SPLICE PROPOSED ELECTRICAL CABLES TO EXISTING CIRCUITS E AND F IN THE EXISTING JUNCTION WELL TO MAINTAIN SERVICE TO EXISTING HIGH MAST LIGHTS.

3. ALL EXISTING LIGHTING STANDARDS SHOW FOR IMFORMATION PURPOSES ONLY AND SHALL NOT BE DISTURBED.

4. UPON COMPLETETION OF NEW LIGHTING PATHWAY EXISTING FACILITY TO BE REMOVED OR ABANDON. COST FOR REMOVAL INCIDENTAIL TO CLEARING AND GRUBBING.

LIGHTING SERVICE SCHEDULE

SERVICE RUN	DISTANCE (L.F.)	# OF CONDUITS	SIZE	DESCRIPTION	INSTALLATION
*20	SERVICE INFORMATION SHWON ON SHEET LI-03A				
21	10	1	3.0"	(3) #2, (1) #2 GROUND	TRENCH
22	240	1	3.0"	(3) #2, (1) #2 GROUND	TRENCH
23	250	1	3.0"	(3) #2, (1) #2 GROUND	TRENCH

*CONTINUED FROM ADJACENT PLAN SHEET.

7/9/2018 12:59:59 PM

DELAWARE DEPARTMENT OF TRANSPORTATION

ADDENDUMS / REVISIONS

SCALE 0 30 60 90 FEET

ROAD A /SR7 IMPROVEMENTS

CONTRACT T201009002
COUNTY NEW CASTLE

BRIDGE NO. 1-220
DESIGNED BY: KJA
CHECKED BY: J.Rashid

LIGHTING PLAN

LI-04
SHEET NO. 122
TOTAL SHTS. 154

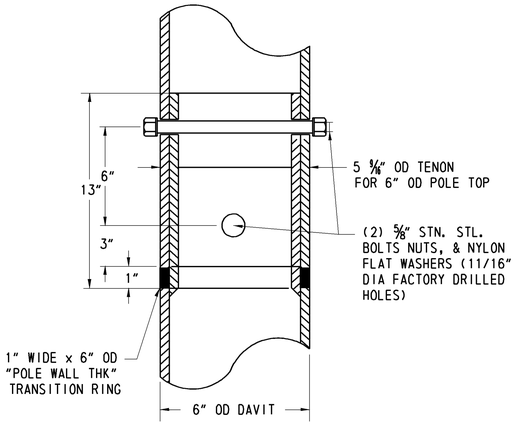

FLUSH JOINT DETAIL

NOT TO SCALE

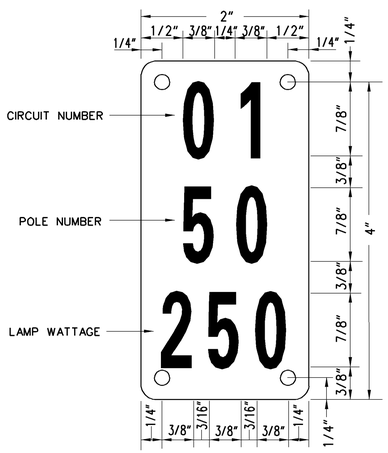

TYPICAL POLE I.D. TAG

NOT TO SCALE

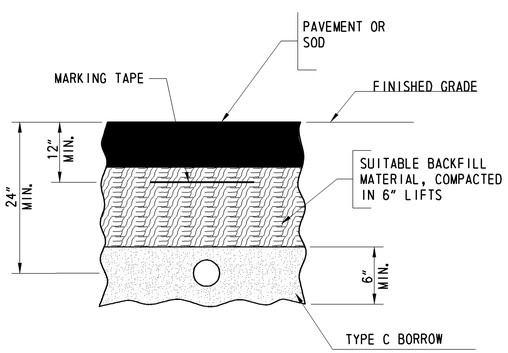

BURIED CONDUIT DETAIL

NOT TO SCALE

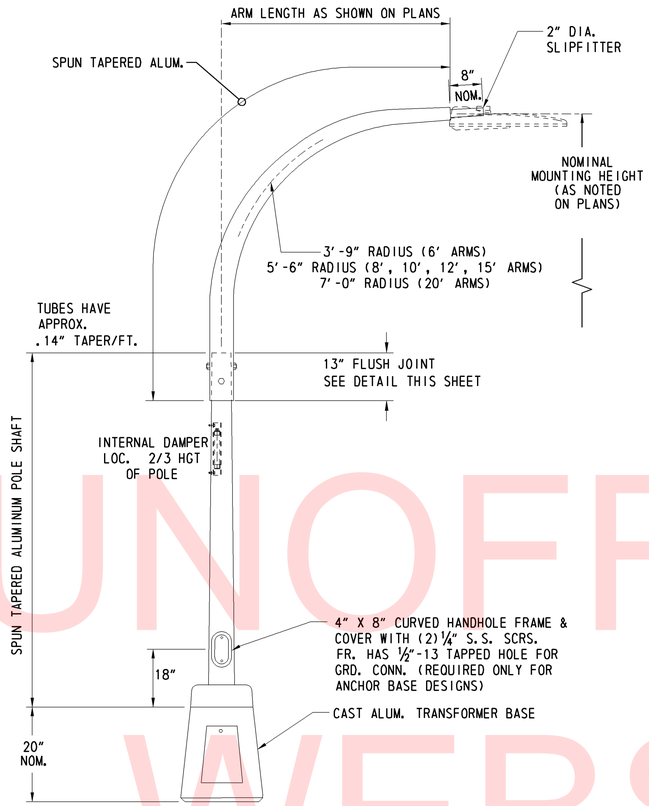

DAVIT ARM LIGHT POLE DETAIL

NOT TO SCALE

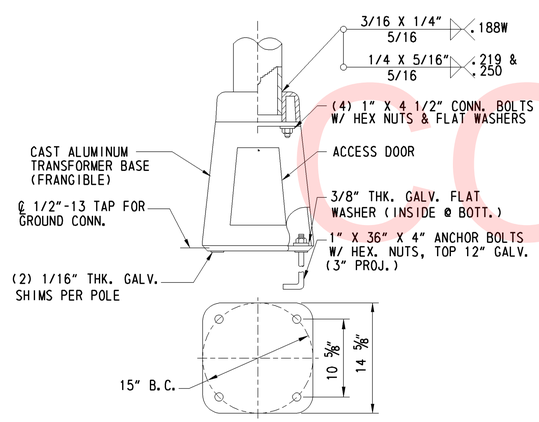

TRANSFORMER BASE DETAIL

NOT TO SCALE

NOTE: TRANSFORMER BASE SHALL BE PROVIDED WITH ALL LIGHT POLES, WHETHER PROTECTED OR UNPROTECTED, UNLESS OTHERWISE NOTED.

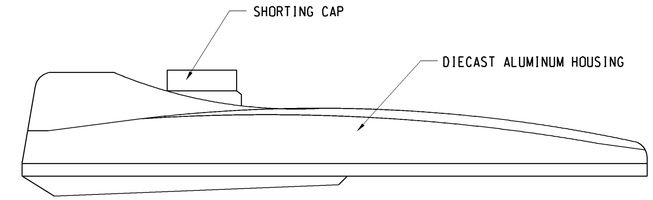

COBRAHEAD LED LUMINAIRE DETAIL

NOT TO SCALE

NOTES: COBRAHEAD STYLE ROADWAY LUMINAIRES SHALL BE 4000K CCT LED WITH CUTOFF OPTICS. HORIZONTAL DISTRIBUTION TYPE AND WATTAGE SHALL BE AS SPECIFIED ON PLANS. ALL LUMINAIRES SHALL BE MOUNTED AT A ZERO DEGREE TILT ANGLE.

STRUCTURAL DETAILS, EXCLUDING CONCRETE FOUNDATION, ARE FOR BIDDING PURPOSES ONLY. UPON AWARD, THE CONTRACTOR SHALL SUBMIT COMPLETE CONSTRUCTION DETAILS FOR THE STRUCTURAL ITEMS. THE DETAILS SHALL BE SUBSTANTIATED WITH DESIGN CALCULATIONS SIGNED AND SEALED BY A PROFESSIONAL ENGINEER LICENSED IN THE STATE OF DELAWARE.

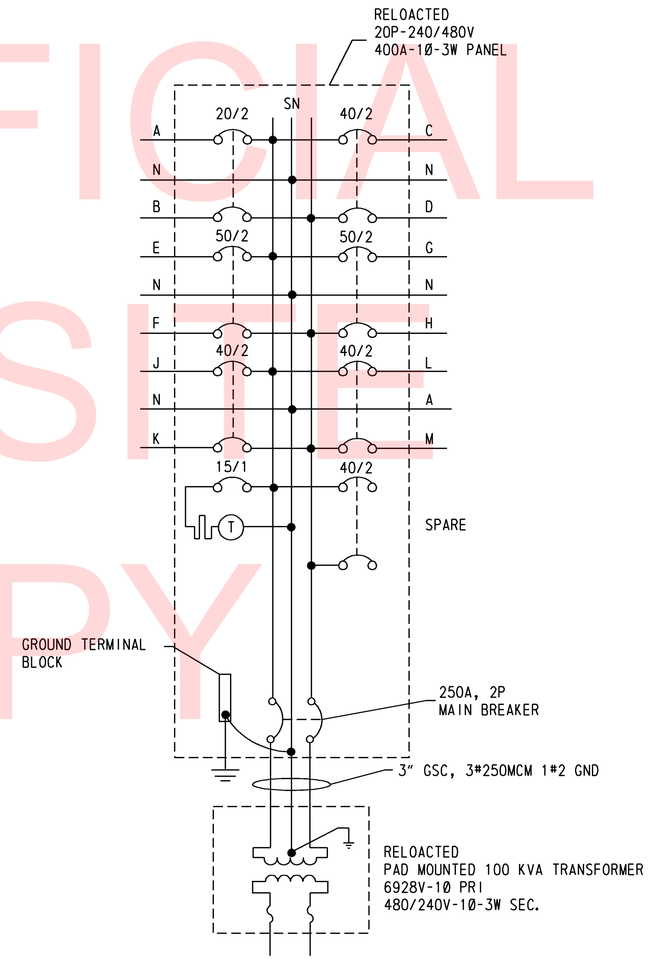

LIGHTING CONTROL CENTER WIRING DIAGRAM

NOT TO SCALE

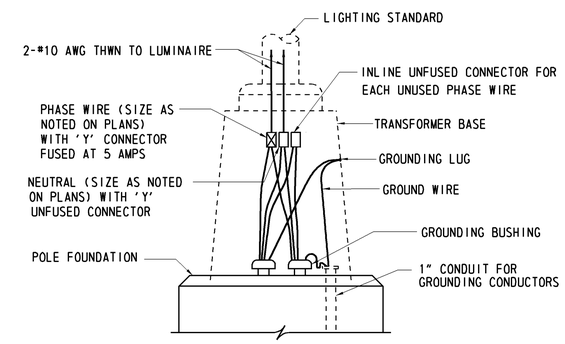

TYPICAL LUMINAIRE CONNECTION 240/480V

NOT TO SCALE

UNOFFICIAL WEBSITE COPY

7/9/2018 8:01:16 AM
\\BALSRV01\V2012\2012\12146_DELDOT1585\40-ROAD A CONNECTOR\CADD\CONTRACT\PLANS\LI05_RDA.DGN

DELAWARE DEPARTMENT OF TRANSPORTATION	ADDENDUMS / REVISIONS	NOT TO SCALE	ROAD A /SR7 IMPROVEMENTS	CONTRACT T201009002 / COUNTY NEW CASTLE	BRIDGE NO. 1-220 / DESIGNED BY: KJA / CHECKED BY: JCR	LIGHTING DETAILS

LI-05

SHEET NO. 123 / TOTAL SHTS. 154

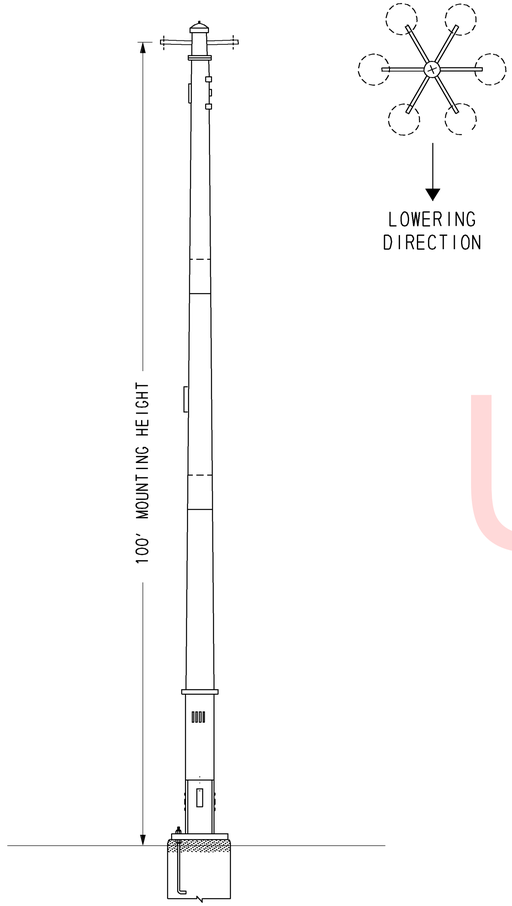

EXISTING HIGH MAST TOWER WITH ABACUS BASE SYSTEM

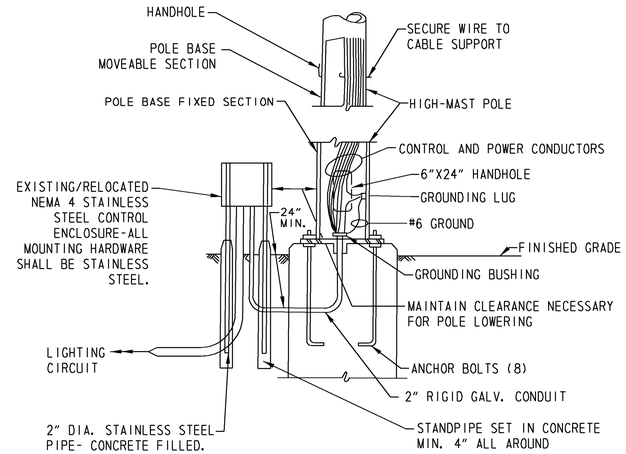

HIGH-MAST INSTALLATION DETAIL

NOTE: RELOCATION OF CONTROL ENCLOSURE AND ALL RELATED ITEMS SHALL BE INCIDENTAL TO THE RELOCATION OF THE EXISTING LIGHT TOWER AND CABINET PAID FOR UNDER ITEM # 847502. MODIFICATION OF THE CONTROL ENCLOSURE EQUIPMENT FOR 277/480V THREE PHASE SERVICE SHALL BE PAID FOR UNDER ITEM 847501. LOCATE JUNCTION WELLS ADJACENT TO POLE FOUNDATIONS AS NECESSARY FOR EASE OF CONDUIT INSTALLATION AND AVOIDABLE OF UTILITIES. FINAL LOCATIONS SHALL BE APPROVED BY THE ENGINEER PRIOR EXCAVATION.

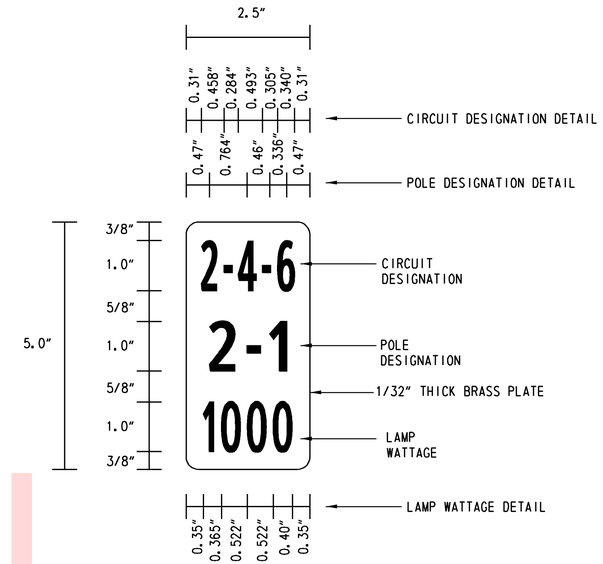

HIGH-MAST POLE IDENTIFICATION TAG

1. TAGS SHALL BE LOCATED IN APPROXIMATELY THE SAME LOCATION AS THE EXISTING TAG.
2. STROKE OF CHARACTERS SHALL BE 3/32" WIDE AND 1/64" DEEP PRESSED INTO BRASS PLATE.
3. SPACING IS FROM START OF NUMBER/SYMBOL TO START OF NEXT NUMBER/SYMBOL.

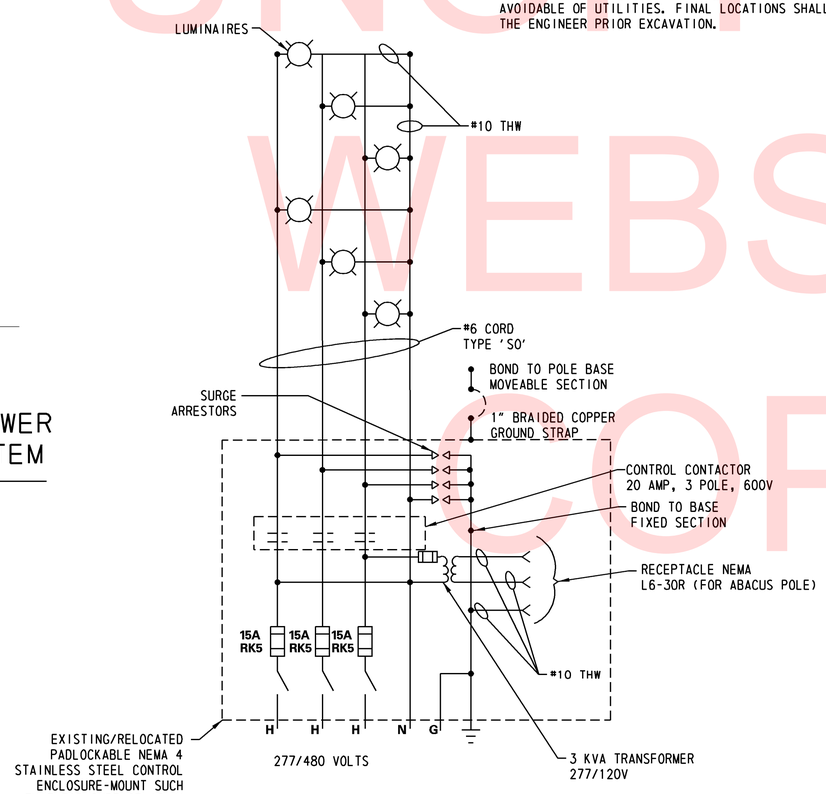

WIRING ARRANGEMENT AT HIGH-MAST TOWERS

UNOFFICIAL WEBSITE COPY

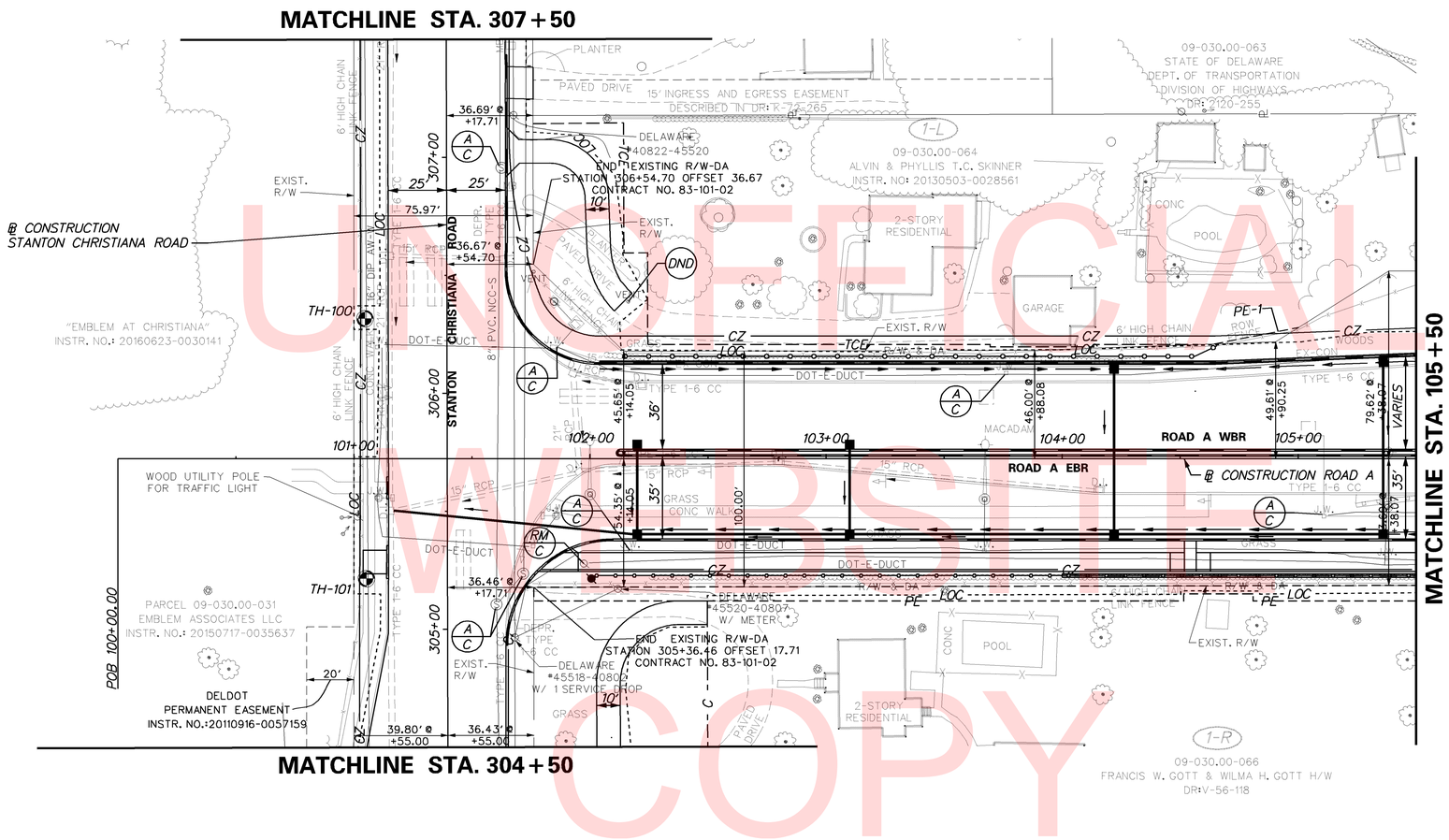

UTILITY TEST HOLE SCHEDULE

NO.	UTILITY	STATION	OFFSET	GRND EL.	COVER	O.D. & MATERIAL
TH-100	AW-W	101+04.7	59.4' LT	41.63	3.48'	16" DUCTILE IRON
TH-101	AW-W	101+05.3	50.8' RT	38.09	3.54'	16" DUCTILE IRON

WEBSITE COPY

DELAWARE DEPARTMENT OF TRANSPORTATION

ADDENDUMS / REVISIONS

SCALE 0 30 60 90 FEET

ROAD A /SR7 IMPROVEMENTS

CONTRACT	BRIDGE NO.	1-220
T201009002	DESIGNED BY: MCK	
COUNTY	CHECKED BY: RLS	
NEW CASTLE		

UTILITY RELOCATION PLAN

SHEET NO. 125

TOTAL SHTS. 154

4/3/2018 5:01:32 PM
\\balsrv01\v2012\2012\12146_DelDOT1585\40-Road A Connector\Cadd\Contract\Plans\ut01_RdA.dgn

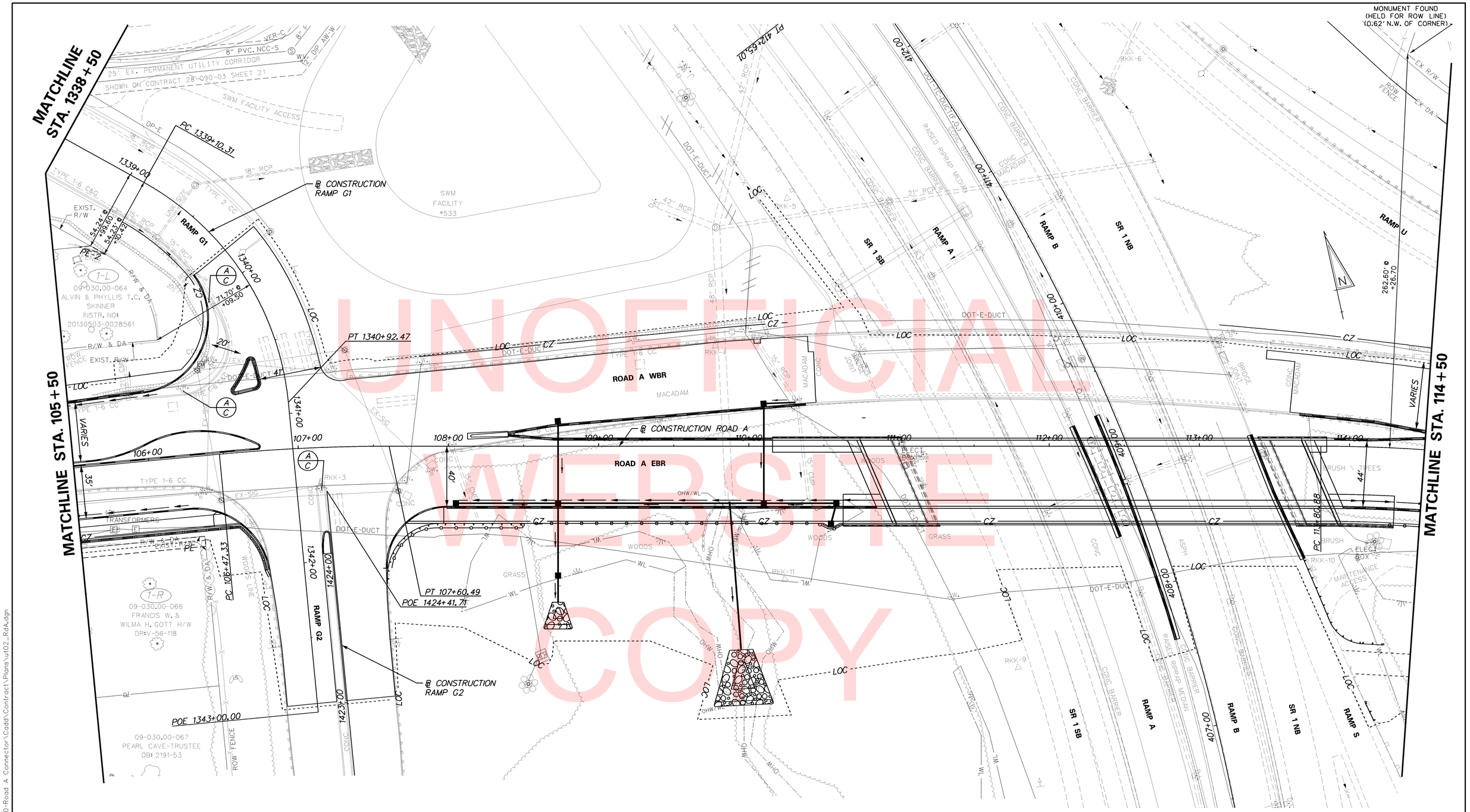

DELAWARE DEPARTMENT OF TRANSPORTATION	ADDENDUMS / REVISIONS	SCALE 0 30 60 90 FEET	ROAD A /SR7 IMPROVEMENTS	CONTRACT T201009002	BRIDGE NO. 1-220	UTILITY RELOCATION PLAN	SHEET NO. 126
				COUNTY NEW CASTLE	DESIGNED BY: MCK		TOTAL SHTS. 154
					CHECKED BY: RLS		

4/4/2018 11:49:35 AM
\\balsrv01\v2012\2012\12146_DelDOT1585\40-Road A Connector\Cadd\Contract\Plans\ut02_RdA.dgn

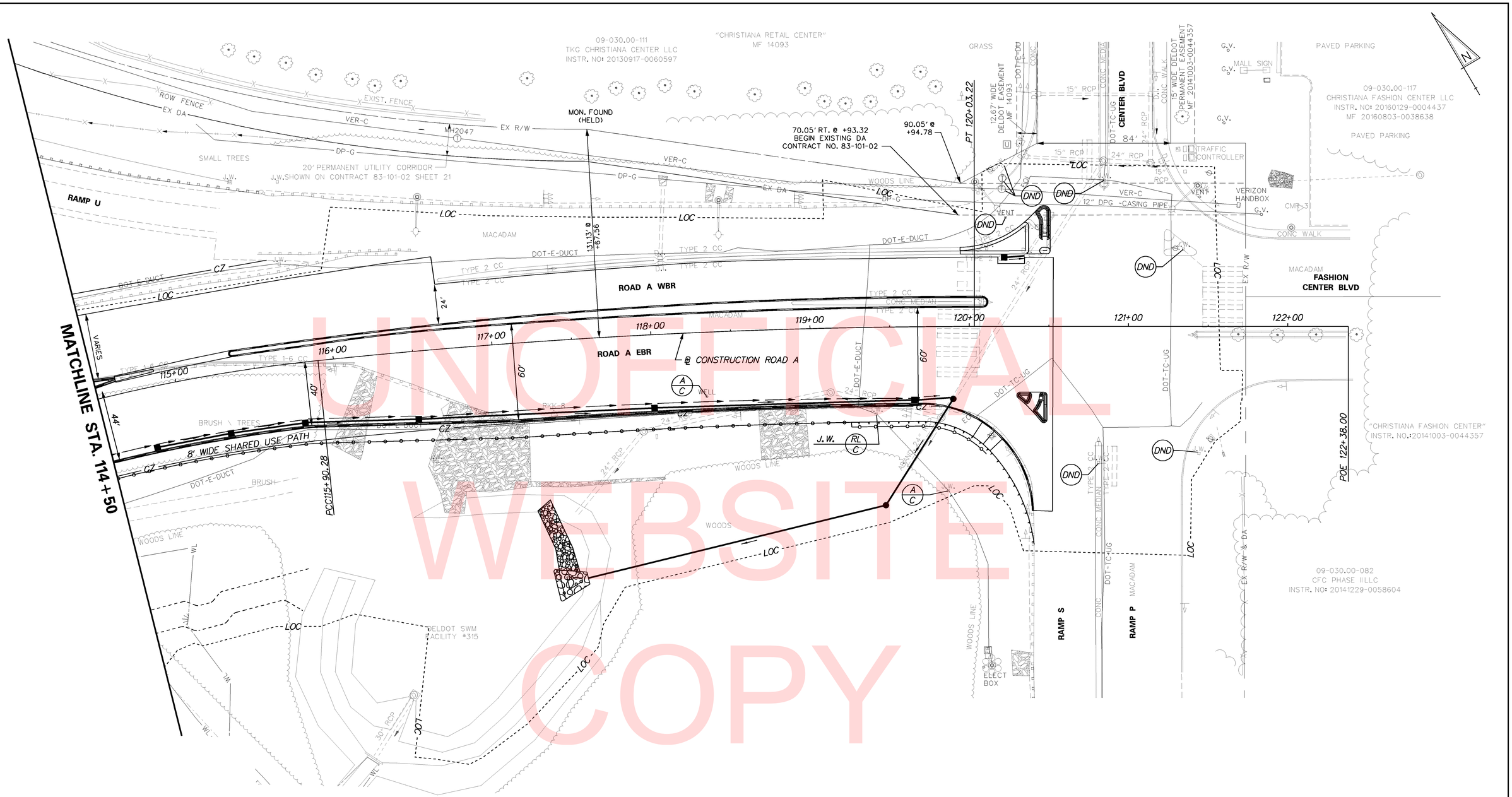

UNOFFICIAL WEBSITE COPY

4/3/2018 5:10:54 PM
\\balsrv01\v2012\2012\12146_DelDOT1585\40-Road A Connector\Cadd\Contract\Plans\ut03_RdA.dgn

DELAWARE DEPARTMENT OF TRANSPORTATION

ADDENDUMS / REVISIONS

SCALE 0 30 60 90 FEET

ROAD A /SR7 IMPROVEMENTS

CONTRACT	BRIDGE NO.	1-220
T201009002	DESIGNED BY:	MCK
COUNTY	CHECKED BY:	RLS
NEW CASTLE		

UTILITY RELOCATION PLAN

SHEET NO.
127
TOTAL SHTS.
154

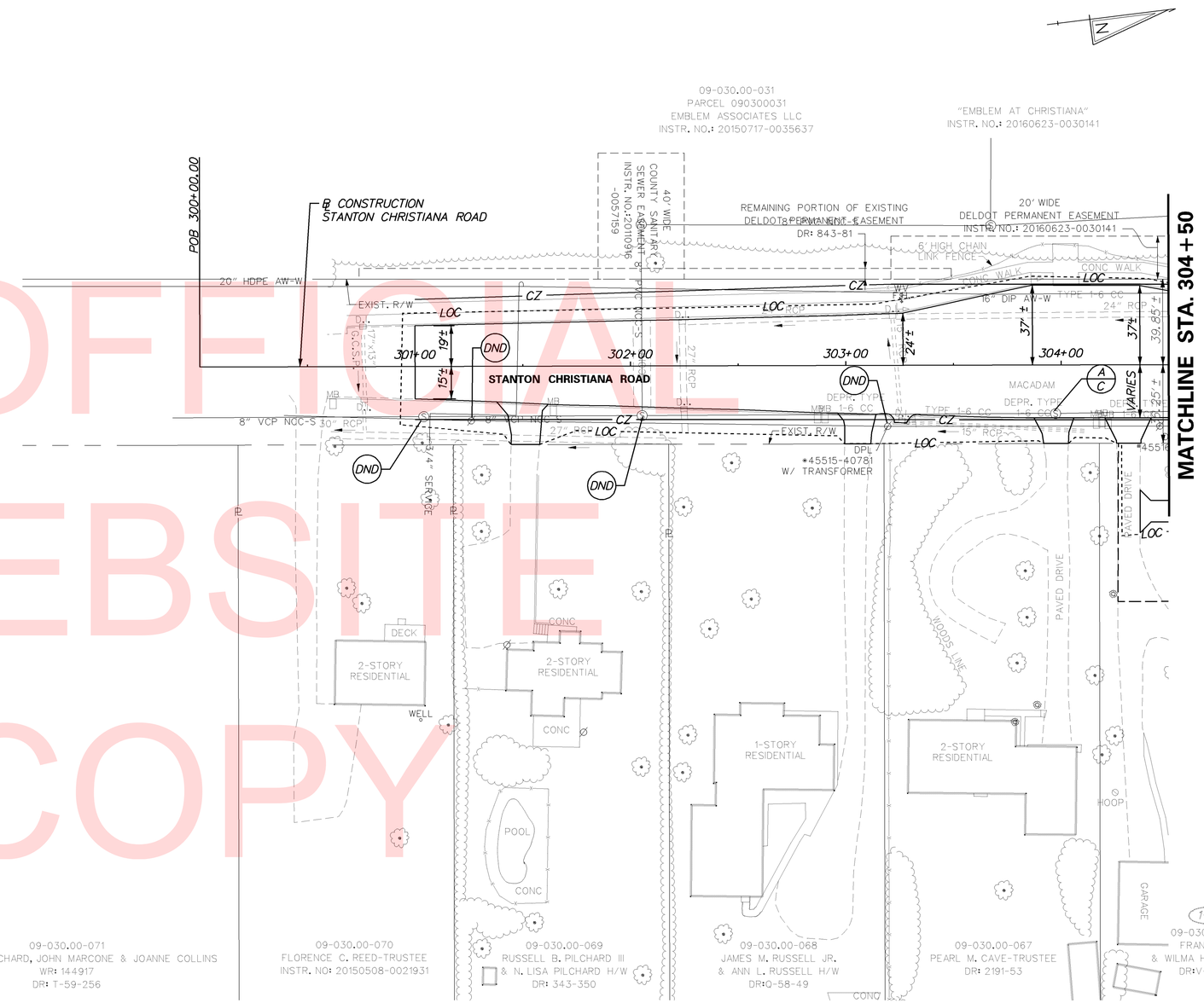

UNOFFICIAL WEBSITE COPY

4/3/2018 5:12:44 PM
\\balsrv01\v2012\2012\12146_DelDOT1585\40-Road A Connector\Cadd\Contract\Plans\ut04_RdA.dgn

DELAWARE DEPARTMENT OF TRANSPORTATION

ADDENDUMS / REVISIONS

SCALE 0 30 60 90 FEET

ROAD A /SR7 IMPROVEMENTS

CONTRACT	BRIDGE NO.	1-220
T201009002	DESIGNED BY: MCK	
COUNTY		
NEW CASTLE	CHECKED BY: RLS	

UTILITY RELOCATION PLAN

SHEET NO.
128
TOTAL SHTS.
154

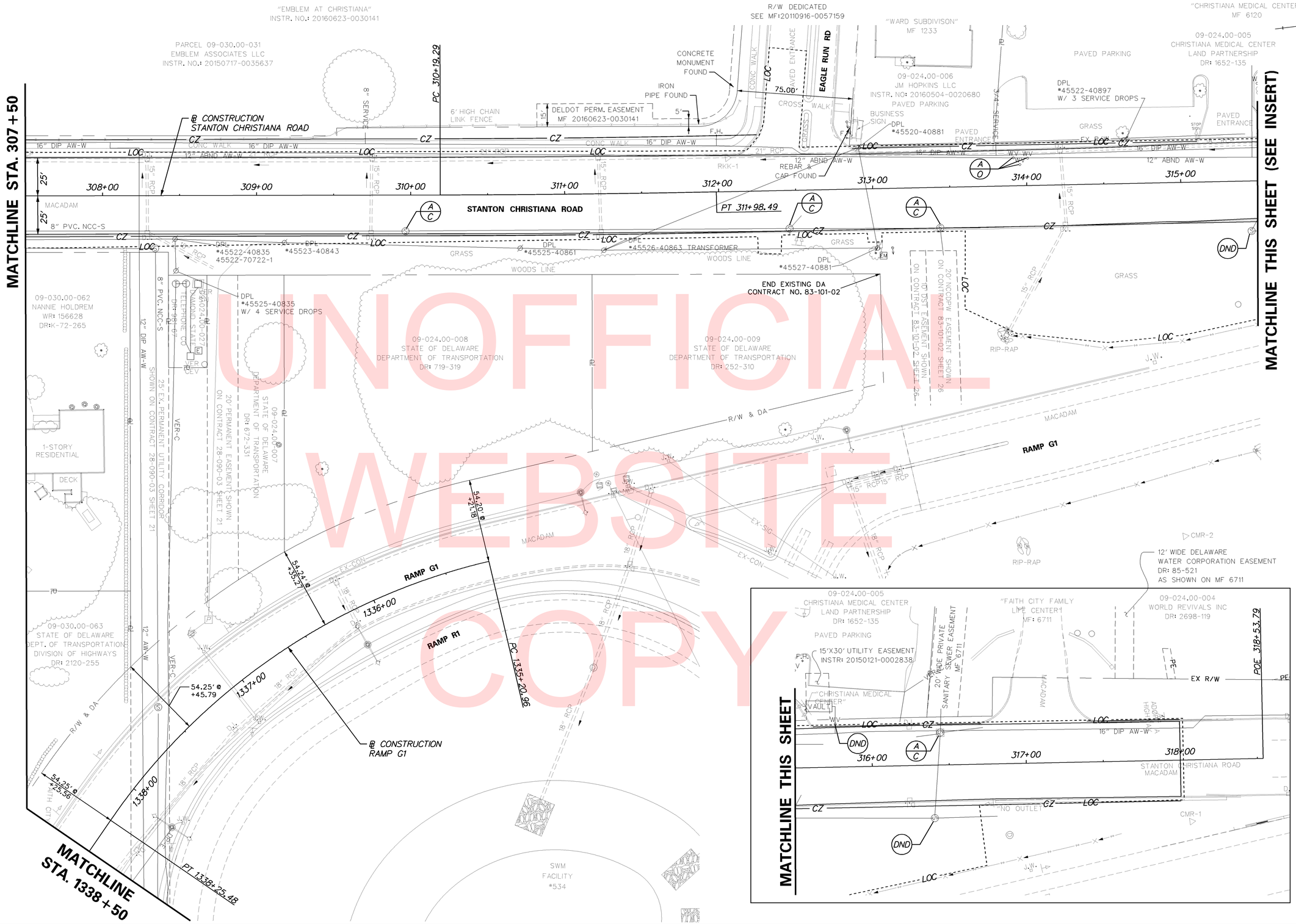

UNOFFICIAL WEBSITE COPY

DELAWARE DEPARTMENT OF TRANSPORTATION

ADDENDUMS / REVISIONS

SCALE 0 30 60 90 FEET

ROAD A /SR7 IMPROVEMENTS

CONTRACT	BRIDGE NO.	1-220
T201009002	DESIGNED BY:	MCK
COUNTY	CHECKED BY:	RLS
NEW CASTLE		

UTILITY RELOCATION PLAN

SHEET NO. 129
TOTAL SHTS. 154

4/3/2018 5:13:28 PM
\\balsrv01\v2012\2012\12146_DelDOT1585\40-Road A Connector\Cadd\Contract\Plans\ut05_RdA.dgn

PAVEMENT MARKINGS LEGEND

SYMBOL	ITEM	QUANTITY
A	EPOXY RESIN PAINT PAVEMENT STRIPING, WHITE 5" SOLID (ITEM 817013)	1,540 LF
B	EPOXY RESIN PAINT PAVEMENT STRIPING, YELLOW 5" SOLID (ITEM 817013)	800 LF
C	EPOXY RESIN PAINT PAVEMENT STRIPING, YELLOW 5" SOLID DOUBLE LINE (ITEM 817013)	135 LF
D	EPOXY RESIN PAINT PAVEMENT STRIPING, WHITE 10" SOLID (ITEM 817014)	300 LF
E	EPOXY RESIN PAINT PAVEMENT STRIPING, WHITE 5" DOTTED - 2' LINE & 6' GAP (ITEM 817013)	30 LF
F	ALKYD-THERMOPLASTIC PAVEMENT STRIPING, WHITE 5" DOTTED - 2' LINE & 6' GAP (ITEM 817005)	35 LF
G	EPOXY RESIN PAINT PAVEMENT STRIPING, WHITE 10" DOTTED - 2' LINE & 6' GAP (ITEM 817014)	32 LF
H	EPOXY RESIN PAINT PAVEMENT STRIPING, WHITE 5" BROKEN - 10' LINE & 30' GAP (ITEM 817013)	188 LF
J	ALKYD-THERMOPLASTIC PAVEMENT STRIPING, WHITE 12" SOLID (ITEM 817006)	-- SF
K	ALKYD-THERMOPLASTIC PAVEMENT STRIPING, WHITE 16" SOLID (ITEM 817548)	104 SF
L	ALKYD-THERMOPLASTIC PAVEMENT STRIPING, WHITE 24" SOLID (ITEM 817006)	330 SF
M	ALKYD-THERMOPLASTIC PAVEMENT STRIPING, WHITE SYMBOL/LEGEND, (ITEM 817002)	249 SF

PAVEMENT MARKINGS LEGEND

SYMBOL	ITEM	QUANTITY
N	EPOXY RESIN PAINT PAVEMENT STRIPING, WHITE 5" SOLID (ITEM 817013)	-- LF
	EPOXY RESIN PAINT PAVEMENT STRIPING, BLACK 3" SOLID (ITEM 817018)	-- LF
P	EPOXY RESIN PAINT PAVEMENT STRIPING, WHITE 10" DOTTED - 2' LINE & 6' GAP (ITEM 817014)	-- LF
	EPOXY RESIN PAINT PAVEMENT STRIPING, BLACK 14" DOTTED - 2' LINE & 6' GAP (ITEM 817025)	-- LF
R	EPOXY RESIN PAINT PAVEMENT STRIPING, WHITE 5" BROKEN - 10' LINE & 30' GAP (ITEM 817013)	-- LF
	EPOXY RESIN PAINT PAVEMENT STRIPING, BLACK 5" BROKEN - 10' LINE & 30' GAP (ITEM 817019)	-- LF
S	PREFORMED PATTERNED TAPE MARKINGS, WHITE SYMBOL/LEGEND (ITEM 817012)	-- SF

GENERAL NOTES:

1. ALL PROPOSED ITMS CONNECTIONS AND TERMINATIONS SHALL BE COMPLETED BY DELDOT TRAFFIC FORCES. THE CONTRACTOR SHALL CONTACT DELDOT'S SIGNAL CONSTRUCTION MANAGER AT 302-222-5920 TEN (10) DAYS PRIOR TO ANY REQUIRED CONNECTION AND TERMINATION WORK.
2. ALL UNDERGROUND ITMS FACILITIES TO BE INSTALLED BY THE CONTRACTOR. PRIOR TO COMPLETION OF UNDERGROUND PATHWAY, FACILITIES AND/OR SITE AREA THE CONTRACTOR SHALL CONTACT DELDOT'S SIGNAL CONSTRUCTION MANAGER AT 302-222-5920 TEN (10) DAYS PRIOR TO COMPLETION.
3. ALL PROPOSED ITMS DEVICES TO BE FURNISHED AND INSTALLED BY DELDOT TRAFFIC FORCES. UPON NOTIFICATION OF COMPLETION OF ITMS FACILITIES AND/OR SITE AREA BY THE CONTRACTOR. DELDOT TRAFFIC FORCES WILL DEVELOP A SCHEDULE OF WHEN WORK CAN BE PERFORMED TO BOTH AVOID AND WORK WITHIN THE CONTRACTOR PROPOSED SCHEDULE OF WORK.
4. ALL GALVANIZED CONDUIT (GRC) SHALL BE REAMED AND THREADED. ALL GRC SHALL BE THREADED TOGETHER WITH APPROVED COUPLINGS.SET SCREW, BOLTED, AND COMPRESSION FITTING ARE NOT ACCEPTABLE.
5. ALL UNDERGROUND AND OVERHEAD UTILITIES SHOWN ON THESE PLANS ARE SCHEMATIC ONLY AND MAY NOT BE COMPLETE. THE CONTRACTOR SHALL BE RESPONSIBLE FOR NOTIFYING MISS UTILITY, AND/OR THE APPROPRIATE UTILITY PRIOR TO THE BEGINNING OF CONSTRUCTION FOR THE UTILITY MARKOUTS. IF THE CONTRACTOR PERCEIVES THAT A CONFLICT BETWEEN UTILITIES AND THE ITMS SYSTEM WILL OCCUR, THE CONTRACTOR SHALL NOTIFY DELDOT TRAFFIC IMMEDIATELY BEFORE ANY CONSTRUCTION.
6. PROPOSED POLE MOUNTED CCTV CAMERA, SIGNAL POLE CAMERA ARM, CABINET, AND CABLE TO BE FURNISHED AND INSTALLED BY DELDOT TRAFFIC FORCES.
7. POWER FEED INFORMATION SEE SIGNAL PLANS.
8. THE CONTRACTOR SHALL INSTALL AND REMOVE THE REGULATORY, WARNING, AND SPECIAL SIGNS AND POST WITHIN THE CONTRACT LIMITS, AS SHOWN. DELDOT SHALL FABRICATE AND SUPPLY THE REGULATORY, WARNING, AND SPECIAL SIGNS AND POST TO THE CONTRACTOR. FOR COORDINATION AND PICK UP OF ALL SIGNS AND POST, THE CONTRACTOR SHALL CONTACT DELDOT'S SIGN SHOP AT 302-760-2581. ALLOW FOUR (4) WEEKS FOR DELIVERY. ALL SIGNING MATERIALS REMOVED FROM THE PROJECT SHALL BE RETURNED TO DELDOT'S SIGN SHOP.
9. THE CONTRACTOR SHALL BE RESPONSIBLE FOR ALL INSTALLATION AND REMOVAL OF ALL PROPOSED, TEMPORARY, AND EXISTING MARKINGS AS REQUIRED. ALL PROPOSED MARKINGS SHALL TIE INTO EXISTING MARKINGS IN ACCORDANCE WITH THE DE-MUTCD AS DIRECTED BY DELDOT'S CONSTRUCTION ENGINEER.

UNOFFICIAL WEBSITE COPY

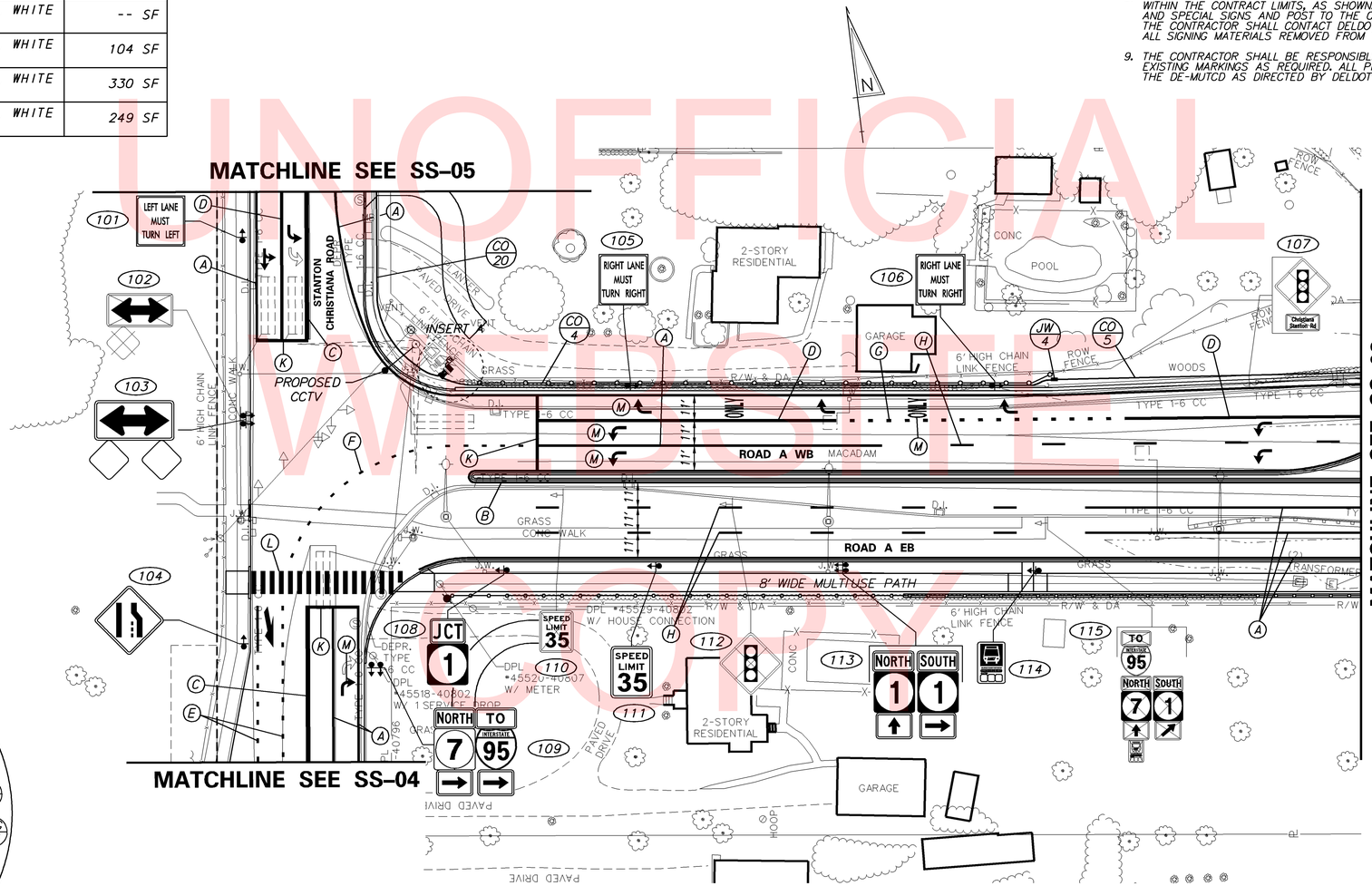

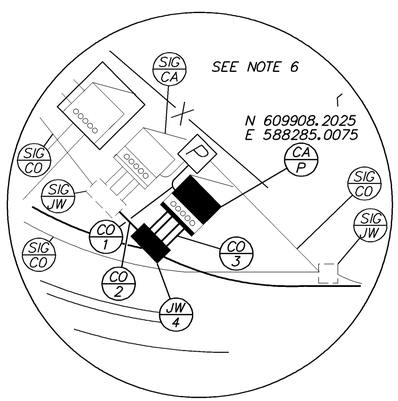

INSET A
NOT TO SCALE

CONDUIT RUN SCHEDULE

CR*	*OF CON	SIZE	LENGTH	B/T/O	AMOUNT AND TYPE OF CABLE/ WIRE
1	1	2.0"	5'	T	(1) #8/2 U.F. W/ GROUND
2	1	4.0"	5'	T	Camera Cable, DelDOT Comm Cable
3	4	4.0"	5'	T	Camera Cable, DelDOT Comm Cable
4	1	4.0"	275'	T	Comm Cable
*5	4	4.0"	235'	T	Comm Cable
*20	1	4.0"	110'	T/B	Comm Cable

* QUANTITY INCLUDES CONTINUATION OF CONDUIT RUN SHOWN ON ADJACENT PLAN SHEET.
B = BORE, T = TRENCH, O = OPEN CUT.

SSC-01

DELAWARE DEPARTMENT OF TRANSPORTATION

ADDENDUMS / REVISIONS

SCALE 0 30 60 90 FEET

ROAD A /SR7 IMPROVEMENTS

CONTRACT	BRIDGE NO.	1-220
T201009002	DESIGNED BY: NT	
COUNTY		
NEW CASTLE	CHECKED BY: DZ	

SIGNING, STRIPING, AND CONDUIT PLAN

SHEET NO. 130
TOTAL SHTS. 154

7/9/2018 8:06:18 AM
\\balsrv01\v2012\2012\12146_DelDOT585\40-Road A Connector\Cadd\Contract\Plans\ssc01_RdA.dgn

CONDUIT RUN SCHEDULE

CR*	*OF CON	SIZE	LENGTH	B/T/O	AMOUNT AND TYPE OF CABLE/ WIRE
5	PATHWAY INFORMATION SHOWN ON SHEET SS-01				
6	1	4.0"	45'	T	DelDOT Comm Cable
*7	1	4.0"	--	--	DelDOT Comm Cable
8	1	4.0"	45'	B	(3)#2 AWG, (1)#2 Ground
9	1	4.0"	90'	B	(3)#2 AWG, (1)#2 Ground
10	1	4.0"	250'	T	(3)#2 AWG, (1)#2 Ground
11	1	4.0"	150'	T	(3)#2 AWG, (1)#2 Ground
12	1	4.0"	5'	T	(3)#2 AWG, (1)#2 Ground

*DENOTES EXISTING B = BORE, T = TRENCH, O = OPEN CUT.

CONDUIT RUN SCHEDULE

CR*	*OF CON	SIZE	LENGTH	B/T/O	AMOUNT AND TYPE OF CABLE/ WIRE
13	1	4.0"	5'	T	(3)#2 AWG, (1)#2 Ground
14	4	4.0"	5'	T	Comm Cable
15	2	3.0"	10'	T	Comm Cable
16	2	3.0"	10'	T	Comm Cable
17	1	4.0"	55'	T	Comm Cable
*18	1	4.0"	--	--	Comm Cable
*19	1	4.0"	--	--	Comm Cable

*DENOTES EXISTING B = BORE, T = TRENCH, O = OPEN CUT.

MAST ARM SCHEDULE

MA NO.	LENGTH OF ARM	NO. OF HEADS	S.F. OF SIGNING
1	45'	--	108

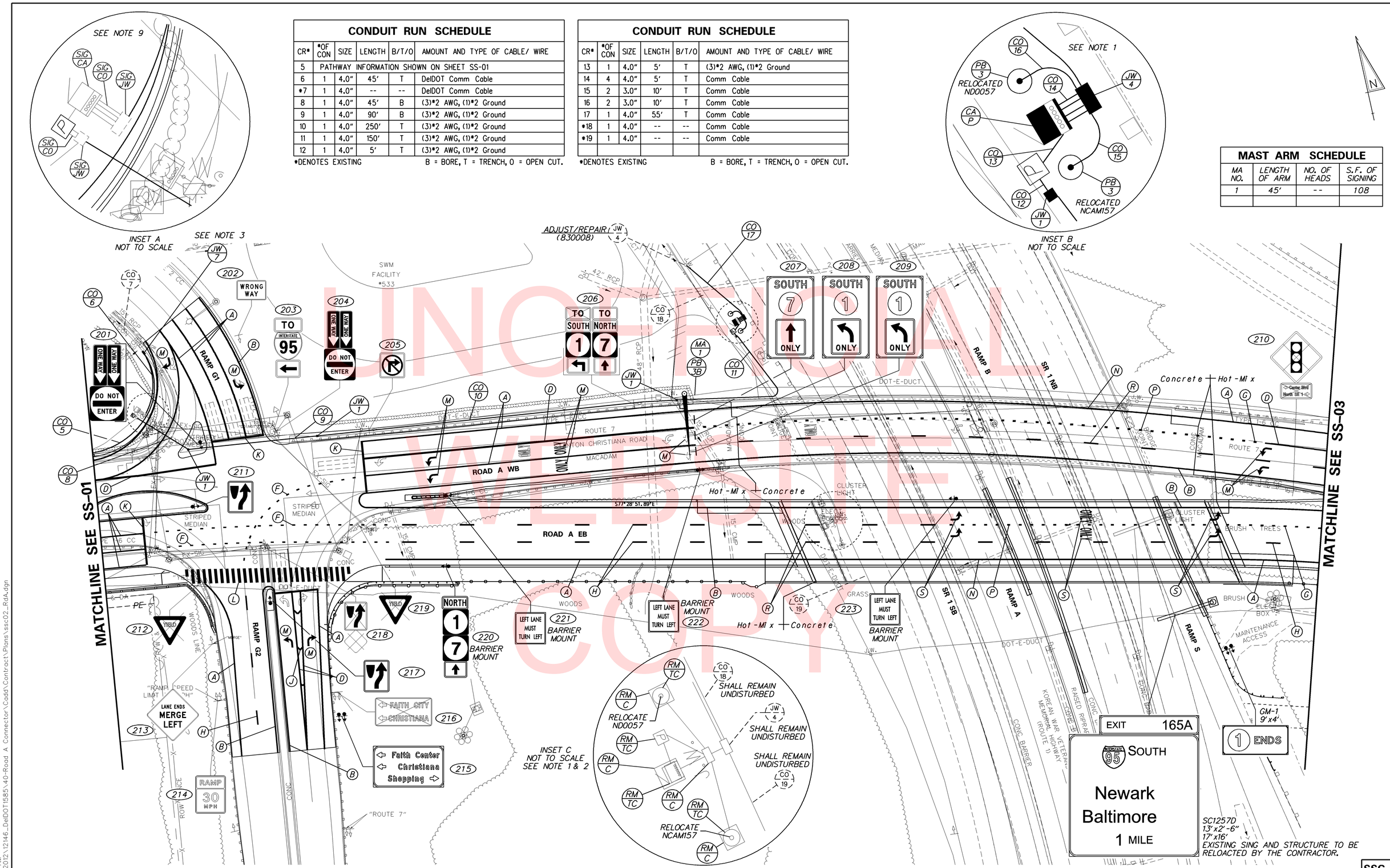

UNOFFICIAL WEBSITE COPY

DELAWARE DEPARTMENT OF TRANSPORTATION

ADDENDUMS / REVISIONS

SCALE 0 30 60 90 FEET

ROAD A /SR7 IMPROVEMENTS

CONTRACT	BRIDGE NO.	1-220
T201009002	DESIGNED BY:	NT
COUNTY		
NEW CASTLE	CHECKED BY:	DZ

SIGNING, STRIPING, AND CONDUIT PLAN

SSC-02

SHEET NO. 131

TOTAL SHTS. 154

7/9/2018 8:06:57 AM
\\balsrv01\v2012\2012\12146_DelDOT1585\40-Road A Connector\Cadd\Contract\Plans\ssc02_RdA.dgn

PAVEMENT MARKINGS LEGEND

SYMBOL	ITEM	QUANTITY
A	EPOXY RESIN PAINT PAVEMENT STRIPING, WHITE 5" SOLID (ITEM 817013)	1,870 LF
B	EPOXY RESIN PAINT PAVEMENT STRIPING, YELLOW 5" SOLID (ITEM 817013)	1,750 LF
C	EPOXY RESIN PAINT PAVEMENT STRIPING, YELLOW 5" SOLID DOUBLE LINE (ITEM 817013)	-- LF
D	EPOXY RESIN PAINT PAVEMENT STRIPING, WHITE 10" SOLID (ITEM 817014)	580 LF
E	EPOXY RESIN PAINT PAVEMENT STRIPING, WHITE 5" DOTTED - 2' LINE & 6' GAP (ITEM 817013)	-- LF
F	ALKYD-THERMOPLASTIC PAVEMENT STRIPING, WHITE 5" DOTTED - 2' LINE & 6' GAP (ITEM 817005)	115 LF
G	EPOXY RESIN PAINT PAVEMENT STRIPING, WHITE 10" DOTTED - 2' LINE & 6' GAP (ITEM 817014)	36 LF
H	EPOXY RESIN PAINT PAVEMENT STRIPING, WHITE 5" BROKEN - 10' LINE & 30' GAP (ITEM 817013)	218 LF
J	ALKYD-THERMOPLASTIC PAVEMENT STRIPING, WHITE 12" SOLID (ITEM 817006)	20 SF
K	ALKYD-THERMOPLASTIC PAVEMENT STRIPING, WHITE 16" SOLID (ITEM 817548)	136 SF
L	ALKYD-THERMOPLASTIC PAVEMENT STRIPING, WHITE 24" SOLID (ITEM 817006)	560 SF
M	ALKYD-THERMOPLASTIC PAVEMENT STRIPING, WHITE SYMBOL/LEGEND, (ITEM 817002)	166 SF
N	EPOXY RESIN PAINT PAVEMENT STRIPING, WHITE 5" SOLID (ITEM 817013)	625 LF
	EPOXY RESIN PAINT PAVEMENT STRIPING, BLACK 3" SOLID (ITEM 817018)	625 LF
P	EPOXY RESIN PAINT PAVEMENT STRIPING, WHITE 10" DOTTED - 2' LINE & 6' GAP (ITEM 817014)	130 LF
	EPOXY RESIN PAINT PAVEMENT STRIPING, BLACK 14" DOTTED - 2' LINE & 6' GAP (ITEM 817025)	130 LF

PAVEMENT MARKINGS LEGEND

SYMBOL	ITEM	QUANTITY
R	EPOXY RESIN PAINT PAVEMENT STRIPING, WHITE 5" BROKEN - 10' LINE & 30' GAP (ITEM 817013)	185 LF
	EPOXY RESIN PAINT PAVEMENT STRIPING, BLACK 5" BROKEN - 10' LINE & 30' GAP (ITEM 817019)	185 LF
S	PREFORMED PATTERNED TAPE MARKINGS, WHITE SYMBOL/LEGEND (ITEM 817012)	104 SF

PANEL DESIGNATION	SHEET NUMBER	QUANTITY	LEGEND	SIZE AREA	SIZE HEIGHT	SIZE WIDTH	COLOR LEGEND	COLOR BCKGRND	BORDER WIDTH	BORDER RADIUS	ARROW	SHIELD	REMARKS
207	SSC-02	1	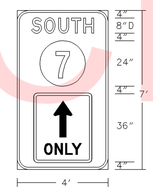	36 ¤	7'-0"	4'-0"	W	G	1.125"	6"	--	M1-5 24"	- D15-1 MODIFIED - SHEET ALUMINUM - SUPPLIED BY DELDOT FORCES
208 209	SSC-02	2	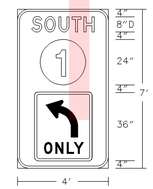	36 ¤	7'-0"	4'-0"	W	G	1.125"	6"	--	M1-5 24"	- D15-1 MODIFIED - SHEET ALUMINUM - SUPPLIED BY DELDOT FORCES
215	SSC-02	1		21 ¤	3'-6"	6'-0"	W	G	1.125"	6"	--	--	- D1-3 - SHEET ALUMINUM - SUPPLIED BY DELDOT FORCES

GENERAL NOTES:

1. PROPOSED FOUNDATION AND CONDUIT TIE IN FOR RELOCATED NCAM157 & ND0057 SHALL BE INSTALLED AS FIRST ORDER OF CONSTRUCTION. UPON COMPETITION DELDOT SIGNAL CONSTRUCTION FORCES WILL RELOCATE CAMERA AND RTMS POLE, CABINET AND ASSOCIATED EQUIPMENT TO PROPOSED LOCATION. CONTRACTOR SHALL CONTACT DELDOT'S SIGNAL CONSTRUCTION MANAGER AT 302-222-5920 TEN (10) DAYS PRIOR TO COMPLETION. OF ABOVE UNDERGROUND WORK.
2. CONDUIT RUN 18 AND 19 SHALL REMAIN AND BE UNDISTURBED. IF CONFLICT OCCURS CONTRACTOR SHALL NOTIFY DELDOT TRAFFIC IMMEDIATELY BEFORE ANY CONSTRUCTION OR DISRUPTION OCCURS.
3. INTERCEPT EXISTING ITMS PATHWAY WITH NEW TYPE 7 JUNCTION WELL AND TIE IN PROPSED CONDUIT RUN 6 & 5 TO FACILITAT REMAINING PATHWAY INSTALLATION. CONTRACTOR SHALL CONTACT DELDOT TRAFFIC 10 DAYS PRIOR TO BEGING NEW FACILITY INSTALLATION.
4. ALL PROPOSED ITMS CONNECTIONS AND TERMINATIONS SHALL BE COMPLETED BY DELDOT TRAFFIC FORCES. THE CONTRACTOR SHALL CONTACT DELDOT'S SIGNAL CONSTRUCTION MANAGER AT 302-222-5920 TEN (10) DAYS PRIOR TO ANY REQUIRED CONNECTION AND TERMINATION WORK.
5. ALL UNDERGROUND ITMS FACILITIES TO BE INSTALLED BY THE CONTRACTOR. PRIOR TO COMPLETION OF UNDERGROUND PATHWAY, FACILITIES AND/OR SITE AREA THE CONTRACTOR SHALL CONTACT DELDOT'S SIGNAL CONSTRUCTION MANAGER AT 302-222-5920 TEN (10) DAYS PRIOR TO COMPLETION.
6. ALL PROPOSED ITMS DEVICES TO BE FURNISHED AND INSTALLED BY DELDOT TRAFFIC FORCES. UPON NOTIFICATION OF COMPLETION OF ITMS FACILITIES AND/OR SITE AREA BY THE CONTRACTOR. DELDOT TRAFFIC FORCES WILL DEVELOP A SCHEDULE OF WHEN WORK CAN BE PERFORMED TO BOTH AVOID AND WORK WITHIN THE CONTRACTOR PROPOSED SCHEDULE OF WORK.
7. ALL GALVANIZED CONDUIT (GRC) SHALL BE REAMED AND THREADED. ALL GRC SHALL BE THREADED TOGETHER WITH APPROVED COUPLINGS. SET SCREW, BOLTED, AND COMPRESSION FITTING ARE NOT ACCEPTABLE.
8. ALL UNDERGROUND AND OVERHEAD UTILITIES SHOWN ON THESE PLANS ARE SCHEMATIC ONLY AND MAY NOT BE COMPLETE. THE CONTRACTOR SHALL BE RESPONSIBLE FOR NOTIFYING MISS UTILITY, AND/OR THE APPROPRIATE UTILITY PRIOR TO THE BEGINNING OF CONSTRUCTION FOR THE UTILITY MARKOUTS. IF THE CONTRACTOR PERCEIVES THAT A CONFLICT BETWEEN UTILITIES AND THE ITMS SYSTEM WILL OCCUR, THE CONTRACTOR SHALL NOTIFY DELDOT TRAFFIC IMMEDIATELY BEFORE ANY CONSTRUCTION.
9. POWER FEED INFORMATION SEE SIGNAL PLANS.
10. THE CONTRACTOR SHALL INSTALL AND REMOVE THE REGULATORY, WARNING, AND SPECIAL SIGNS AND POST WITHIN THE CONTRACT LIMITS, AS SHOWN. DELDOT SHALL FABRICATE AND SUPPLY THE REGULATORY, WARNING, AND SPECIAL SIGNS AND POST TO THE CONTRACTOR. FOR COORDINATION AND PICK UP OF ALL SIGNS AND POST, THE CONTRACTOR SHALL CONTACT DELDOT'S SIGN SHOP AT 302-760-2581. ALLOW FOUR (4) WEEKS FOR DELIVERY. ALL SIGNING MATERIALS REMOVED FROM THE PROJECT SHALL BE RETURNED TO DELDOT'S SIGN SHOP.
11. THE CONTRACTOR SHALL BE RESPONSIBLE FOR ALL INSTALLATION AND REMOVAL OF ALL PROPOSED, TEMPORARY, AND EXISTING MARKINGS AS REQUIRED. ALL PROPOSED MARKINGS SHALL TIE INTO EXISTING MARKINGS IN ACCORDANCE WITH THE DE-MUTCD AS DIRECTED BY DELDOT'S CONSTRUCTION ENGINEER.

UNOFFICIAL WEBSITE COPY

7/9/2018 8:07:30 AM
\\bdsrv01\v2012\2012\12146_DelDOT1585\40-Road A Connector\Cadd\Contract\Plans\ssc02a_RdA.dgn

MAST ARM SCHEDULE			
MA NO.	LENGTH OF ARM	NO. OF HEADS	S.F. OF SIGNING
2	55'	--	96

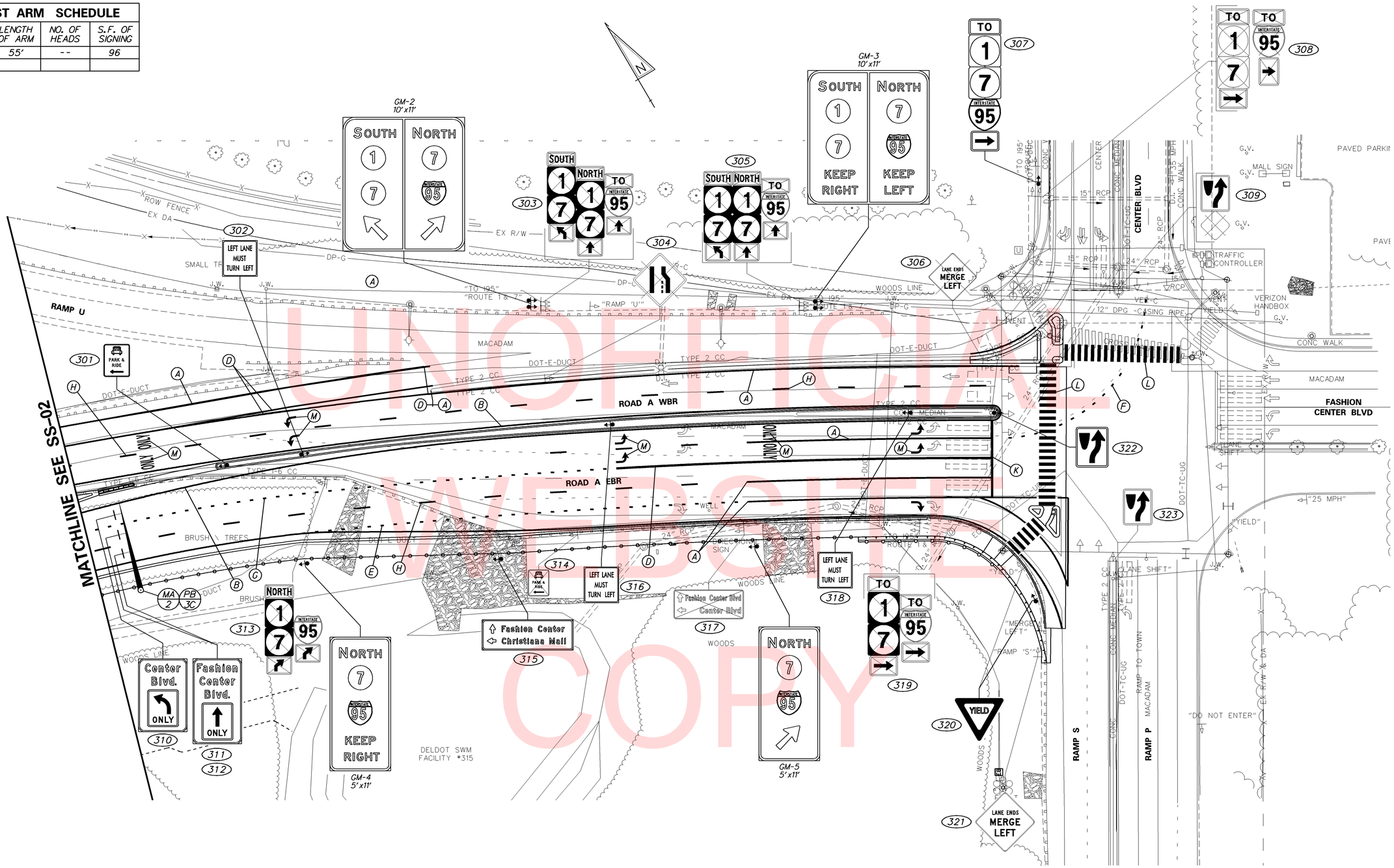

UNOFFICIAL WEBSITE COPY

GENERAL NOTES:

1. THE CONTRACTOR SHALL INSTALL AND REMOVE THE REGULATORY, WARNING, AND SPECIAL SIGNS AND POST WITHIN THE CONTRACT LIMITS, AS SHOWN. DELDOT SHALL FABRICATE AND SUPPLY THE REGULATORY, WARNING, AND SPECIAL SIGNS AND POST TO THE CONTRACTOR. FOR COORDINATION AND PICK UP OF ALL SIGNS AND POST, THE CONTRACTOR SHALL CONTACT DELDOT'S SIGN SHOP AT 302-760-2581. ALLOW FOUR (4) WEEKS FOR DELIVERY. ALL SIGNING MATERIALS REMOVED FROM THE PROJECT SHALL BE RETURNED TO DELDOT'S SIGN SHOP.

2. THE CONTRACTOR SHALL BE RESPONSIBLE FOR ALL INSTALLATION AND REMOVAL OF ALL PROPOSED, TEMPORARY, AND EXISTING MARKINGS AS REQUIRED. ALL PROPOSED MARKINGS SHALL TIE INTO EXISTING MARKINGS IN ACCORDANCE WITH THE DE-MUTCD AS DIRECTED BY DELDOT'S CONSTRUCTION ENGINEER.

7/9/2018 8:08:06 AM
\\balsrv01\v2012\2012\12146_DelDOT1585\40-Road A Connector\Cadd\Contract\Plans\ssc03_RdA.dgn

DELAWARE DEPARTMENT OF TRANSPORTATION

ADDENDUMS / REVISIONS

SCALE 0 30 60 90 FEET

ROAD A /SR7 IMPROVEMENTS

CONTRACT	BRIDGE NO.	1-220
T201009002	DESIGNED BY: NT	
COUNTY		
NEW CASTLE	CHECKED BY: DZ	

SIGNING, STRIPING, AND CONDUIT PLAN

SSC-03
SHEET NO. 133
TOTAL SHTS. 154

PAVEMENT MARKINGS LEGEND

SYMBOL	ITEM	QUANTITY
A	EPOXY RESIN PAINT PAVEMENT STRIPING, WHITE 5" SOLID (ITEM 817013)	1,875 LF
B	EPOXY RESIN PAINT PAVEMENT STRIPING, YELLOW 5" SOLID (ITEM 817013)	1,200 LF
C	EPOXY RESIN PAINT PAVEMENT STRIPING, YELLOW 5" SOLID DOUBLE LINE (ITEM 817013)	-- LF
D	EPOXY RESIN PAINT PAVEMENT STRIPING, WHITE 10" SOLID (ITEM 817014)	635 LF
E	EPOXY RESIN PAINT PAVEMENT STRIPING, WHITE 5" DOTTED - 2' LINE & 6' GAP (ITEM 817013)	70 LF
F	ALKYD-THERMOPLASTIC PAVEMENT STRIPING, WHITE 5" DOTTED - 2' LINE & 6' GAP (ITEM 817005)	35 LF
G	EPOXY RESIN PAINT PAVEMENT STRIPING, WHITE 10" DOTTED - 2' LINE & 6' GAP (ITEM 817014)	82 LF
H	EPOXY RESIN PAINT PAVEMENT STRIPING, WHITE 5" BROKEN - 10' LINE & 30' GAP (ITEM 817013)	288 LF
J	ALKYD-THERMOPLASTIC PAVEMENT STRIPING, WHITE 12" SOLID (ITEM 817006)	-- SF
K	ALKYD-THERMOPLASTIC PAVEMENT STRIPING, WHITE 16" SOLID (ITEM 817548)	62 SF
L	ALKYD-THERMOPLASTIC PAVEMENT STRIPING, WHITE 24" SOLID (ITEM 817006)	920 SF
M	ALKYD-THERMOPLASTIC PAVEMENT STRIPING, WHITE SYMBOL/LEGEND, (ITEM 817002)	152 SF
N	EPOXY RESIN PAINT PAVEMENT STRIPING, WHITE 5" SOLID (ITEM 817013)	-- LF
	EPOXY RESIN PAINT PAVEMENT STRIPING, BLACK 3" SOLID (ITEM 817018)	-- LF
P	EPOXY RESIN PAINT PAVEMENT STRIPING, WHITE 10" DOTTED - 2' LINE & 6' GAP (ITEM 817014)	-- LF
	EPOXY RESIN PAINT PAVEMENT STRIPING, BLACK 14" DOTTED - 2' LINE & 6' GAP (ITEM 817025)	-- LF
R	EPOXY RESIN PAINT PAVEMENT STRIPING, WHITE 5" BROKEN - 10' LINE & 30' GAP (ITEM 817013)	-- LF
	EPOXY RESIN PAINT PAVEMENT STRIPING, BLACK 5" BROKEN - 10' LINE & 30' GAP (ITEM 817019)	-- LF
S	PREFORMED PATTERNED TAPE MARKINGS, WHITE SYMBOL/LEGEND (ITEM 817012)	-- SF

PANEL DESIGNATION	SHEET NUMBER	QUANTITY	LEGEND	SIZE AREA	SIZE HEIGHT	SIZE WIDTH	COLOR LEGEND	COLOR BCKGRND	BORDER WIDTH	BORDER RADIUS	ARROW	SHIELD	REMARKS
310	SSC-03	1	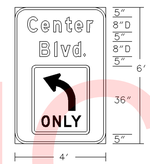	24 ☐"	6'-0"	4'-0"	W	G	1.125"	6"	--	--	- D15-1 MODIFIED - SHEET ALUMINUM - SUPPLIED BY DELDOT FORCES
311 312	SSC-03	2	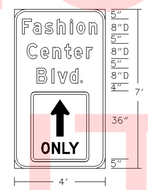	36 ☐"	7'-0"	4'-0"	W	G	1.125"	6"	--	--	- D15-1 MODIFIED - SHEET ALUMINUM - SUPPLIED BY DELDOT FORCES
315	SSC-03	1		18.75 ☐"	2'-6"	7'-6"	W	G	1.125"	3"	--	--	- D1-2 - SHEET ALUMINUM - SUPPLIED BY DELDOT FORCES

UNOFFICIAL WEBSITE COPY

7/9/2018 8:08:47 AM
\\balsrv01\v2012\2012\12146_DelDOT1585\40-Road A Connector\Cadd\Contract\Plans\ssc03a_RdA.dgn

DELAWARE DEPARTMENT OF TRANSPORTATION

ADDENDUMS / REVISIONS

NOT TO SCALE

ROAD A /SR7 IMPROVEMENTS

CONTRACT	BRIDGE NO. 1-220
T201009002	DESIGNED BY: NT
COUNTY	
NEW CASTLE	CHECKED BY: DZ

SIGNING, STRIPING, AND CONDUIT PLAN

SSC-03A

SHEET NO. 134

TOTAL SHTS. 154

PAVEMENT MARKINGS LEGEND

SYMBOL	ITEM	QUANTITY
(A)	EPOXY RESIN PAINT PAVEMENT STRIPING, WHITE 5" SOLID (ITEM 817013)	645 LF
(B)	EPOXY RESIN PAINT PAVEMENT STRIPING, YELLOW 5" SOLID (ITEM 817013)	-- LF
(C)	EPOXY RESIN PAINT PAVEMENT STRIPING, YELLOW 5" SOLID DOUBLE LINE (ITEM 817013)	350 LF
(D)	EPOXY RESIN PAINT PAVEMENT STRIPING, WHITE 10" SOLID (ITEM 817014)	-- LF
(E)	EPOXY RESIN PAINT PAVEMENT STRIPING, WHITE 5" DOTTED - 2' LINE & 6' GAP (ITEM 817013)	110 LF
(F)	ALKYD-THERMOPLASTIC PAVEMENT STRIPING, WHITE 5" DOTTED - 2' LINE & 6' GAP (ITEM 817005)	-- LF
(G)	EPOXY RESIN PAINT PAVEMENT STRIPING, WHITE 10" DOTTED - 2' LINE & 6' GAP (ITEM 817014)	-- LF
(H)	EPOXY RESIN PAINT PAVEMENT STRIPING, WHITE 5" BROKEN - 10' LINE & 30' GAP (ITEM 817013)	-- LF
(J)	ALKYD-THERMOPLASTIC PAVEMENT STRIPING, WHITE 12" SOLID (ITEM 817006)	-- SF
(K)	ALKYD-THERMOPLASTIC PAVEMENT STRIPING, WHITE 16" SOLID (ITEM 817548)	-- SF
(L)	ALKYD-THERMOPLASTIC PAVEMENT STRIPING, WHITE 24" SOLID (ITEM 817006)	-- SF
(M)	ALKYD-THERMOPLASTIC PAVEMENT STRIPING, WHITE SYMBOL/LEGEND, (ITEM 817002)	59 SF
(N)	EPOXY RESIN PAINT PAVEMENT STRIPING, WHITE 5" SOLID (ITEM 817013)	-- LF
	EPOXY RESIN PAINT PAVEMENT STRIPING, BLACK 3" SOLID (ITEM 817018)	-- LF
(P)	EPOXY RESIN PAINT PAVEMENT STRIPING, WHITE 10" DOTTED - 2' LINE & 6' GAP (ITEM 817014)	-- LF
	EPOXY RESIN PAINT PAVEMENT STRIPING, BLACK 14" DOTTED - 2' LINE & 6' GAP (ITEM 817025)	-- LF
(R)	EPOXY RESIN PAINT PAVEMENT STRIPING, WHITE 5" BROKEN - 10' LINE & 30' GAP (ITEM 817013)	-- LF
	EPOXY RESIN PAINT PAVEMENT STRIPING, BLACK 5" BROKEN - 10' LINE & 30' GAP (ITEM 817019)	-- LF
(S)	PREFORMED PATTERNED TAPE MARKINGS, WHITE SYMBOL/LEGEND (ITEM 817012)	-- SF

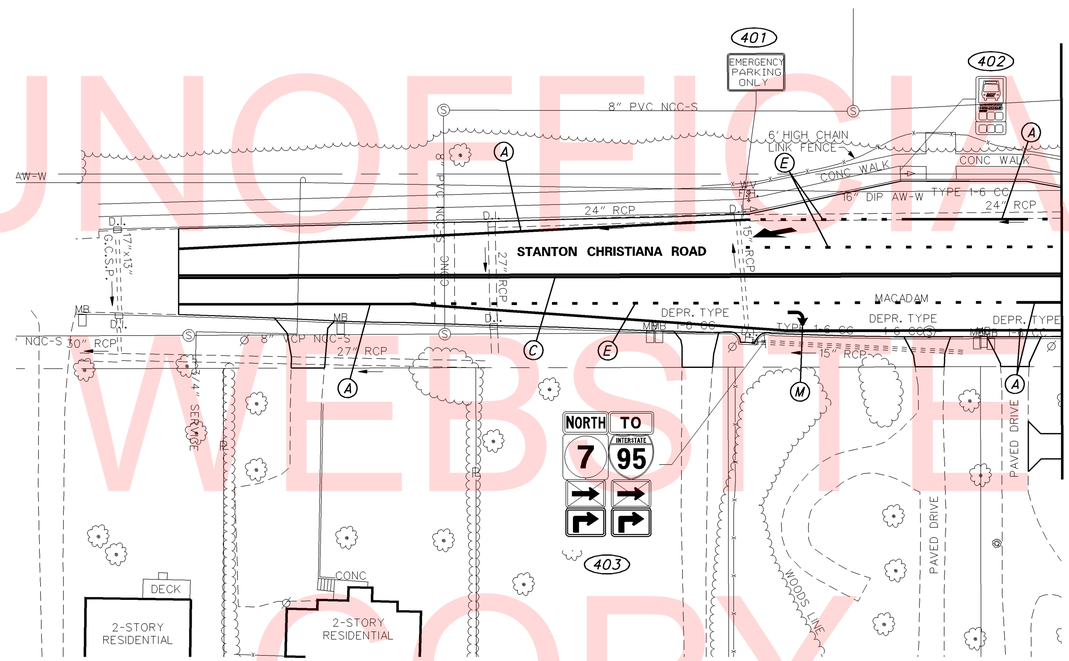

UNOFFICIAL WEBSITE COPY

GENERAL NOTES:

1. THE CONTRACTOR SHALL INSTALL AND REMOVE THE REGULATORY, WARNING, AND SPECIAL SIGNS AND POST WITHIN THE CONTRACT LIMITS, AS SHOWN. DELDOT SHALL FABRICATE AND SUPPLY THE REGULATORY, WARNING, AND SPECIAL SIGNS AND POST TO THE CONTRACTOR. FOR COORDINATION AND PICK UP OF ALL SIGNS AND POST, THE CONTRACTOR SHALL CONTACT DELDOT'S SIGN SHOP AT 302-760-2581. ALLOW FOUR (4) WEEKS FOR DELIVERY. ALL SIGNING MATERIALS REMOVED FROM THE PROJECT SHALL BE RETURNED TO DELDOT'S SIGN SHOP.

2. THE CONTRACTOR SHALL BE RESPONSIBLE FOR ALL INSTALLATION AND REMOVAL OF ALL PROPOSED, TEMPORARY, AND EXISTING MARKINGS AS REQUIRED. ALL PROPOSED MARKINGS SHALL TIE INTO EXISTING MARKINGS IN ACCORDANCE WITH THE DE-MUTCD AS DIRECTED BY DELDOT'S CONSTRUCTION ENGINEER.

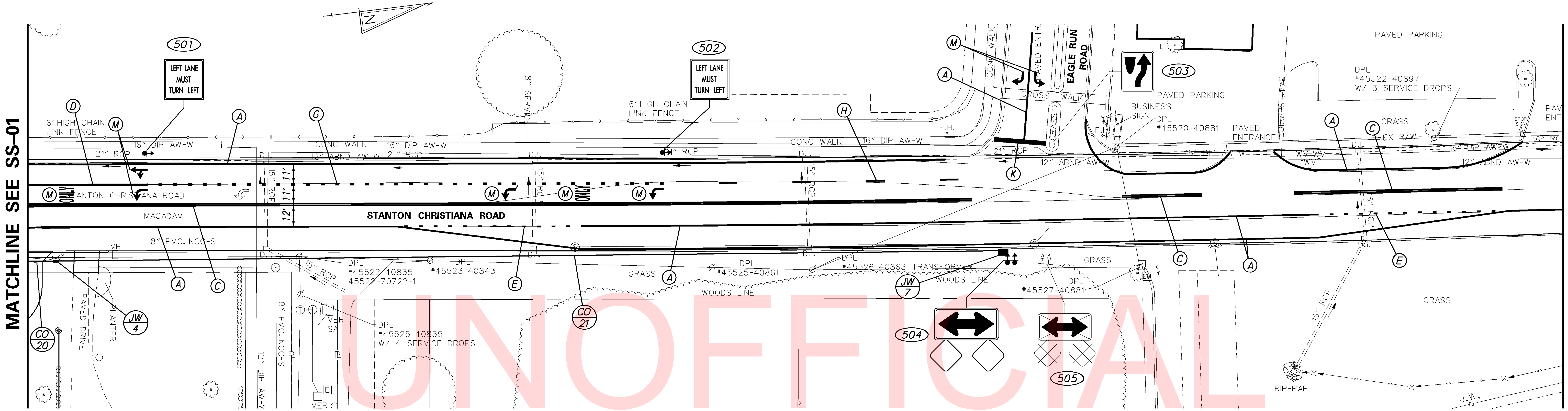

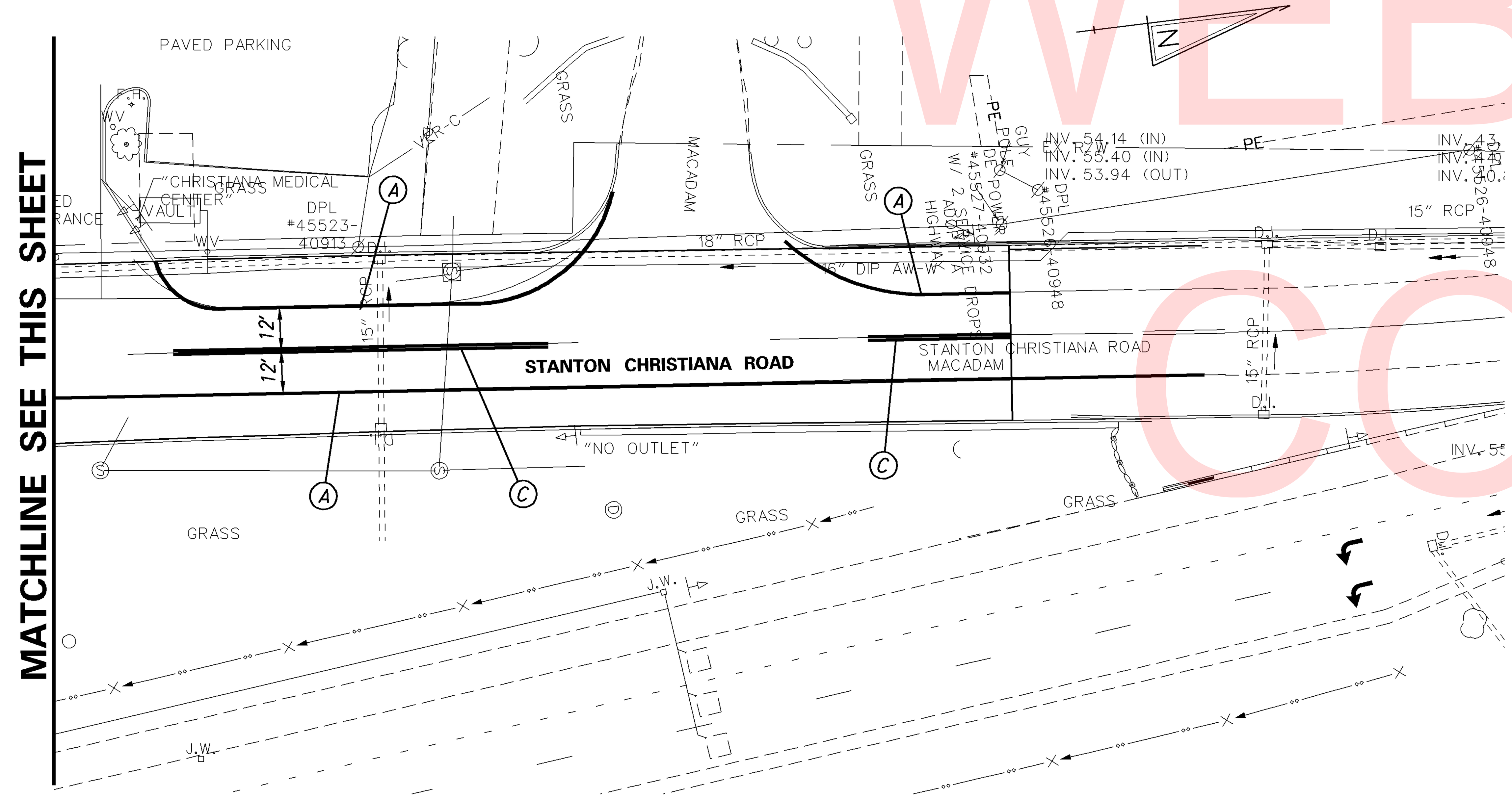

UNOFFICIAL WEBSITE COPY

PAVEMENT MARKINGS LEGEND

SYMBOL	ITEM	QUANTITY
(A)	EPOXY RESIN PAINT PAVEMENT STRIPING, WHITE 5" SOLID (ITEM 817013)	2,180 LF
(B)	EPOXY RESIN PAINT PAVEMENT STRIPING, YELLOW 5" SOLID (ITEM 817013)	-- LF
(C)	EPOXY RESIN PAINT PAVEMENT STRIPING, YELLOW 5" SOLID DOUBLE LINE (ITEM 817013)	820 LF
(D)	EPOXY RESIN PAINT PAVEMENT STRIPING, WHITE 10" SOLID (ITEM 817014)	70 LF
(E)	EPOXY RESIN PAINT PAVEMENT STRIPING, WHITE 5" DOTTED - 2' LINE & 6' GAP (ITEM 817013)	-- LF
(F)	ALKYD-THERMOPLASTIC PAVEMENT STRIPING, WHITE 5" DOTTED - 2' LINE & 6' GAP (ITEM 817005)	-- LF
(G)	EPOXY RESIN PAINT PAVEMENT STRIPING, WHITE 10" DOTTED - 2' LINE & 6' GAP (ITEM 817014)	80 LF
(H)	EPOXY RESIN PAINT PAVEMENT STRIPING, WHITE 5" BROKEN - 10' LINE & 30' GAP (ITEM 817013)	42 LF
(J)	ALKYD-THERMOPLASTIC PAVEMENT STRIPING, WHITE 12" SOLID (ITEM 817006)	-- SF
(K)	ALKYD-THERMOPLASTIC PAVEMENT STRIPING, WHITE 16" SOLID (ITEM 817548)	40 SF
(L)	ALKYD-THERMOPLASTIC PAVEMENT STRIPING, WHITE 24" SOLID (ITEM 817006)	-- SF
(M)	ALKYD-THERMOPLASTIC PAVEMENT STRIPING, WHITE SYMBOL/LEGEND, (ITEM 817002)	142 SF
(N)	EPOXY RESIN PAINT PAVEMENT STRIPING, WHITE 5" SOLID (ITEM 817013)	-- LF
	EPOXY RESIN PAINT PAVEMENT STRIPING, BLACK 3" SOLID (ITEM 817018)	-- LF
(P)	EPOXY RESIN PAINT PAVEMENT STRIPING, WHITE 10" DOTTED - 2' LINE & 6' GAP (ITEM 817014)	-- LF
	EPOXY RESIN PAINT PAVEMENT STRIPING, BLACK 14" DOTTED - 2' LINE & 6' GAP (ITEM 817025)	-- LF
(R)	EPOXY RESIN PAINT PAVEMENT STRIPING, WHITE 5" BROKEN - 10' LINE & 30' GAP (ITEM 817013)	-- LF
	EPOXY RESIN PAINT PAVEMENT STRIPING, BLACK 5" BROKEN - 10' LINE & 30' GAP (ITEM 817019)	-- LF
(S)	PREFORMED PATTERNED TAPE MARKINGS, WHITE SYMBOL/LEGEND (ITEM 817012)	-- SF

GENERAL NOTES:

1. ALL PROPOSED ITMS CONNECTIONS AND TERMINATIONS SHALL BE COMPLETED BY DELDOT TRAFFIC FORCES. THE CONTRACTOR SHALL CONTACT DELDOT'S SIGNAL CONSTRUCTION MANAGER AT 302-222-5920 TEN (10) DAYS PRIOR TO ANY REQUIRED CONNECTION AND TERMINATION WORK.
2. ALL UNDERGROUND ITMS FACILITIES TO BE INSTALLED BY THE CONTRACTOR. PRIOR TO COMPLETION OF UNDERGROUND PATHWAY, FACILITIES AND/OR SITE AREA THE CONTRACTOR SHALL CONTACT DELDOT'S SIGNAL CONSTRUCTION MANAGER AT 302-222-5920 TEN (10) DAYS PRIOR TO COMPLETION.
3. ALL GALVANIZED CONDUIT (GRC) SHALL BE REAMED AND THREADED. ALL GRC SHALL BE THREADED TOGETHER WITH APPROVED COUPLINGS.SET SCREW, BOLTED, AND COMPRESSION FITTING ARE NOT ACCEPTABLE.
4. ALL UNDERGROUND AND OVERHEAD UTILITIES SHOWN ON THESE PLANS ARE SCHEMATIC ONLY AND MAY NOT BE COMPLETE. THE CONTRACTOR SHALL BE RESPONSIBLE FOR NOTIFYING MISS UTILITY, AND/OR THE APPROPRIATE UTILITY PRIOR TO THE BEGINNING OF CONSTRUCTION FOR THE UTILITY MARKOUTS. IF THE CONTRACTOR PERCEIVES THAT A CONFLICT BETWEEN UTILITIES AND THE ITMS SYSTEM WILL OCCUR, THE CONTRACTOR SHALL NOTIFY DELDOT TRAFFIC IMMEDIATELY BEFORE ANY CONSTRUCTION.
5. THE CONTRACTOR SHALL INSTALL AND REMOVE THE REGULATORY, WARNING, AND SPECIAL SIGNS AND POST WITHIN THE CONTRACT LIMITS, AS SHOWN. DELDOT SHALL FABRICATE AND SUPPLY THE REGULATORY, WARNING, AND SPECIAL SIGNS AND POST TO THE CONTRACTOR. FOR COORDINATION AND PICK UP OF ALL SIGNS AND POST, THE CONTRACTOR SHALL CONTACT DELDOT'S SIGN SHOP AT 302-760-2581. ALLOW FOUR (4) WEEKS FOR DELIVERY. ALL SIGNING MATERIALS REMOVED FROM THE PROJECT SHALL BE RETURNED TO DELDOT'S SIGN SHOP.
6. THE CONTRACTOR SHALL BE RESPONSIBLE FOR ALL INSTALLATION AND REMOVAL OF ALL PROPOSED, TEMPORARY, AND EXISTING MARKINGS AS REQUIRED. ALL PROPOSED MARKINGS SHALL TIE INTO EXISTING MARKINGS IN ACCORDANCE WITH THE DE-MUTCD AS DIRECTED BY DELDOT'S CONSTRUCTION ENGINEER.

CONDUIT RUN SCHEDULE

CR*	*OF CON	SIZE	LENGTH	B/T/O	AMOUNT AND TYPE OF CABLE/ WIRE
*20	PATHWAY INFORMATION SHOWN ON SHEET SS-01				
21	1	4.0"	520'	T	Empty

* QUANTITY INCLUDES CONTINUATION OF CONDUIT RUN SHOWN ON ADJACENT PLAN SHEET.
B = BORE, T = TRENCH, O = OPEN CUT.

SSC-05

PANEL DESIGNATION	SHEET NUMBER	QUANTITY	LEGEND	SIZE AREA	SIZE HEIGHT	SIZE WIDTH	COLOR LEGEND	COLOR BCKGRND	BORDER WIDTH	BORDER RADIUS	ARROW	SHIELD	REMARKS
GM-1	SS-02	1		36 ¤	4'-0"	9'-0"	W	G	1.125"	6"	TYPE A	M1-5 36"	- EXTRUDED ALUMINUM
GM-2	SS-03	1	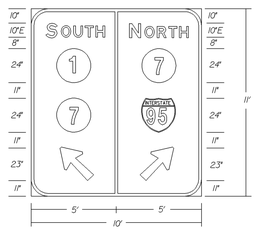	110 ¤	11'-0"	10'-0"	W	G	2"	12"	TYPE A	(1) M1-1 24" (3) M1-5 24"	- EXTRUDED ALUMINUM
GM-3	SS-03	1	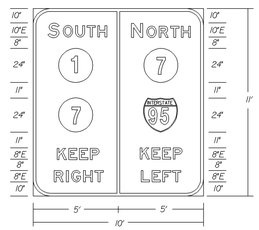	110 ¤	11'-0"	10'-0"	W	G	2"	12"	--	(1) M1-1 24" (3) M1-5 24"	- EXTRUDED ALUMINUM
GM-4	SS-03	1		55 ¤	11'-0"	5'-0"	W	G	2"	6"	--	M1-1 24" M1-5 24"	- EXTRUDED ALUMINUM
GM-5	SS-03	1	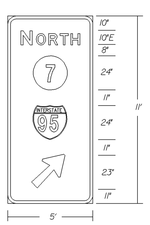	55 ¤	11'-0"	5'-0"	W	G	2"	6"	TYPE A	M1-1 24" M1-5 24"	- EXTRUDED ALUMINUM

GROUND MOUNTED SIGN DETAIL

SIGN CLEARANCE

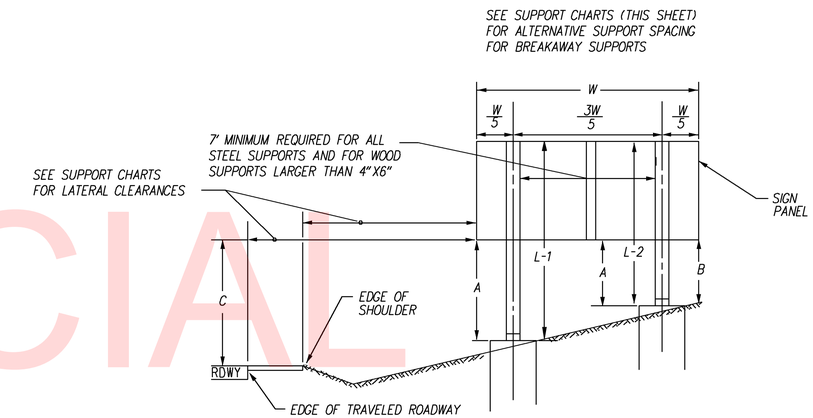

VERTICAL CLEARANCE OF SIGNS

A. 7'6" MINIMUM FOR BREAKAWAY SUPPORTS OR 5'-6" FOR NON-BREAKAWAY SUPPORTS.
B. 2.0' MINIMUM
C. 7'6" MINIMUM & PREFERABLE. THIS DIMENSION IS TO BE INCREASED ONLY WHEN REQUIRED TO MEET A = 7'-6" FOR BREAKAWAY OR A (MIN.) = 5'-6" FOR NON-BREAKAWAY AND B (MIN) 2'-0"

ALL DIMENSIONS ARE TO BOTTOM OF SIGN

*TOTAL WEIGHT BELOW THE HINGES SHOULD BE LESS THAN 600 POUNDS

LATERAL CLEARANCE

SEE SUPPORT CHARTS

** OBJECT CODES

W = FACE OF W-BEAM TRAFFIC BARRIER
FOC = FACE OF CURB
ES = EDGE OF SHOULDER
ETR = EDGE OF TRAVELED ROADWAY
CM = CENTERED IN MEDIAN
CG = CENTERED IN GORE (6' MINIMUM FROM EDGE OF PAVEMENT)
EF = EDGE OF FENCE

GUIDE SIGN STEEL SUPPORT CHART

SIGN NO.	SHEET NO.	POST SIZE	*BW OR NBW	SUPPORT L - 1	SUPPORT L - 2	SUPPORT L - 3	LATERAL CLEARANCE OFFSET	LATERAL CLEARANCE OBJECT **	SUPPORT SPACING FROM LEFT EDGE OF SIGN
GM-1	SS-02	W6x9	BW	12'-0"	12'-0"	-	2'	W	1.8'-5.4'-1.8'
GM-2	SS-03	W8x18	BW	22'-0"	23'-6"	-	2'	W	2'-6'-2'
GM-3	SS-03	W8x18	BW	20'-6"	23'-0"	-	2'	W	2'-6'-2'
GM-4	SS-03	W8x18	BW	23'-0"	-	-	2'	EF	2.5'
GM-5	SS-03	W8x18	BW	23'-0"	-	-	2'	EF	2.5'

*BW = BREAKAWAY NBW = NON-BREAKAWAY

NOTES: 1. COLORS: B=BLACK, BL=BLUE, BR=BROWN, G=GREEN, W=WHITE/SILVER, Y=YELLOW.
2. THE CONTRACTOR WILL FURNISH AND INSTALL ALL SIGNS SHOWN ON THIS SHEET.

UNOFFICIAL WEBSITE COPY

THIS SHEET BLANK
INTENTIONALLY

UNOFFICIAL
WEBSITE
COPY

7/9/2018 8:10:48 AM
\\balsrv01\v2012\2012\12146_DelDOT1585\40-Road A Connector\Cadd\Contract\Plans\ssc07_RdA.dgn

SSC-07

DELAWARE DEPARTMENT OF TRANSPORTATION	ADDENDUMS / REVISIONS	NOT TO SCALE	ROAD A /SR7 IMPROVEMENTS	CONTRACT T201009002	BRIDGE NO. 1-220	SIGN DETAILS	SHEET NO. 138
				COUNTY NEW CASTLE	DESIGNED BY: NT		TOTAL SHTS. 154
					CHECKED BY: DZ		

PERMANENT SIGN SCHEDULE

SHEET NO.	PLAN IDENTIFIER	SIGN DESIGNATION	QTY.	DESCRIPTION	SIGN WIDTH (IN)	SIGN HEIGHT (IN)	SIGN AREA (SF)	ITEM 819018 SINGLE POST (EACH)			ITEM 819019 INSTALLATION OR REMOVAL OF TRAFFIC SIGN(S) ON MULTIPLE SIGN POSTS (SF)			POST INSTALLATION TYPE	Code X11 12' Post (W/ Basepost)	ITEM 819016 4" HOLE, 0-6" (EACH)	ITEM 819017 4" HOLE, >6" (EACH)	REMARKS
								SIGN DISPOSITION	REMOVE	INSTALL	SIGN DISPOSITION	REMOVE	INSTALL					
SSC-01																		
SSC-01	101	R3-7_L(36)	1	LEFT LANE MUST TURN LEFT - 36"x36"	36"	36"	9.0				NEW		9.0	SOIL	2			
SSC-01	102	W1-7(48)	1	TWO DIRECTIONAL LARGE ARROW - 48x24	48"	24"		REMOVE	1									
		OM4-3	1	END OF ROAD OBJECT MARKER	18"	18"		REMOVE	1									
SSC-01	103	W1-7(48)	1	TWO DIRECTIONAL LARGE ARROW - 48x24	48"	24"	8.0				NEW		12.6	SOIL	2			
		OM4-3	1	END OF ROAD OBJECT MARKER	18"	18"	2.3											
		OM4-3	1	END OF ROAD OBJECT MARKER	18"	18"	2.3											
SSC-01	104	W4-2_R(36)	1	LANE ENDS (Right) - 36x36	36"	36"	9.0	NEW		1				SOIL	1			
SSC-01	105	R3-7_R(36)	1	RIGHT LANE MUST TURN RIGHT - 36"x36"	36"	36"	9.0				NEW		9.0	SOIL	2			
SSC-01	106	R3-7_R(36)	1	RIGHT LANE MUST TURN RIGHT - 36"x36"	36"	36"	9.0				NEW		9.0	SOIL	2			
SSC-01	107	W3-3(30)	1	SIGNAL AHEAD (Symbol) - 30x30	30"	30"		REMOVE	1									
		W16-8aP	1	ADVANCE STREET NAME (2 - line plaque)	24"	18"		REMOVE	1									
SSC-01	108	M2-1(21)	1	JUNCTION - 21x15	21"	15"	2.2	NEW		1				SOIL	1			
		M1-5(24)	1	STATE ROUTE (2 - Digit Sign) - 24x24	24"	24"	4.0	NEW		1				SOIL				**1**
SSC-01	109	M3-1(24)	1	CARDINAL DIRECTION - NORTH - 24x12	24"	12"	2.0	NEW		1	NEW			SOIL	3			
		M1-5(24)	1	STATE ROUTE (2 - Digit Sign) - 24x24	24"	24"	4.0	NEW		1								**7**
		M6-1_R(21)	1	DIRECTIONAL ARROW (Right) - 21x15	21"	15"	2.2	NEW		1								
		M4-5(24)	1	TO - 24x12	24"	12"	2.0	NEW		1								
		M1-1(24)	1	INTERSTATE ROUTE (2 - Digit Sign) - 24x24	24"	24"	4.0	NEW		1								**95**
		M6-1_R(21)	1	DIRECTIONAL ARROW (Right) - 21x15	21"	15"	2.2	NEW		1								
SSC-01	110	R2-1-35(24)	1	SPEED LIMIT (35 MPH - 24x30)	24"	30"		REMOVE	1									
SSC-01	111	R2-1-35(30)	1	SPEED LIMIT (35 MPH - 30x36)	30"	36"	7.5	NEW		1				SOIL	1			
SSC-01	112	W3-3(30)	1	SIGNAL AHEAD (Symbol) - 30x30	30"	30"		REMOVE	1									
SSC-01	113	M3-1(24)	1	CARDINAL DIRECTION - NORTH - 24x12	24"	12"	2.0	NEW		1	NEW			SOIL	3			
		M1-5(24)	1	STATE ROUTE (2 - Digit Sign) - 24x24	24"	24"	4.0	NEW		1								**1**
		M6-3(21)	1	DIRECTIONAL ARROW (Up) - 21x15	21"	15"	2.2	NEW		1								
		M3-3(24)	1	CARDINAL DIRECTION - SOUTH - 24x12	24"	12"	2.0	NEW		1								
		M1-5(24)	1	STATE ROUTE (2 - Digit Sign) - 24x24	24"	24"	4.0	NEW		1								**1**
		M6-1_R(21)	1	DIRECTIONAL ARROW (Right) - 21x15	21"	15"	2.2	NEW		1								
SSC-01	114	D4-3-DE	1	BUS STOP (DART)	12"	18"	1.5	NEW		1				SOIL	1			
SSC-01	115	M4-5(24)	1	TO - 24x12	24"	12"		REMOVE	1									
		M1-1(36)	1	INTERSTATE ROUTE (2 - Digit Sign) - 36x36	36"	36"		REMOVE	1									
		M3-1(24)	1	CARDINAL DIRECTION - NORTH - 24x12	24"	12"		REMOVE	1									
		M1-5(24)	1	STATE ROUTE (2 - Digit Sign) - 24x24	24"	24"		REMOVE	1									
		M6-3(21)	1	DIRECTIONAL ARROW (Up) - 21x15	21"	15"		REMOVE	1									
		D4-3-DE	1	BUS STOP (DART)	12"	18"		REMOVE	1									
		M3-3(24)	1	CARDINAL DIRECTION - SOUTH - 24x12	24"	12"		REMOVE	1									
		M1-5(24)	1	STATE ROUTE (2 - Digit Sign) - 24x24	24"	24"		REMOVE	1									
		M6-2_R(21)	1	DIRECTIONAL ARROW (Right - upward 45) - 21x15	21"	15"		REMOVE	1									
				PAGE TOTALS			96		15	17		0	40		18	0	0	

UNOFFICIAL WEB SITE COPY

PERMANENT SIGN SCHEDULE

SHEET NO.	PLAN IDENTIFIER	CODE	QTY.	DISCRIPTION	SIGN WIDTH (IN)	SIGN HEIGHT (IN)	SIGN AREA (SF)	ITEM 819018 SINGLE POST (EACH)			ITEM 819019 INSTALLATION OR REMOVAL OF TRAFFIC SIGN(S) ON MULTIPLE SIGN POSTS (SF)			POST INSTALLATION TYPE	Code X11 12' Post (W/ Basepost)	ITEM 819016 4" HOLE, 0-6" (EACH)	ITEM 819017 4" HOLE, >6" (EACH)	REMARKS
								SIGN DISPOSITION	REMOVE	INSTALL	SIGN DISPOSITION	REMOVE	INSTALL					
SSC-02																		
SSC-02	201	R6-1_R(36)	1	ONE WAY (ENCLOSED IN RIGHT ARROW) - 36x12	36"	12"	3.0				NEW		15.0	CONCRETE	2	2		
		R6-1_L(36)	1	ONE WAY (ENCLOSED IN LEFT ARROW) - 36x12	36"	12"	3.0											
		R5-1(36)	1	DO NOT ENTER - 36x36	36"	36"	9.0											
SSC-02	202	R5-1a(30)	1	WRONG WAY - 30x18	30"	18"		REMAIN										
SSC-02	203	M4-5(24)	1	TO - 24x12	24"	12"		REMAIN										
		M1-1(36)	1	INTERSTATE ROUTE (2 - Digit Sign) - 36x36	36"	36"												
		M6-1_L(21)	1	DIRECTIONAL ARROW (Left) - 21x15	21"	15"												
SSC-02	204	R6-1_R(36)	1	ONE WAY (ENCLOSED IN RIGHT ARROW) - 36x12	36"	12"	3.0				RENEW	15.0	15.0	SOIL	2			
		R6-1_L(36)	1	ONE WAY (ENCLOSED IN LEFT ARROW) - 36x12	36"	12"	3.0											
		R5-1(36)	1	DO NOT ENTER - 36x36	36"	36"	9.0											
SSC-02	205	R3-1(36)	1	RIGHT TURN PROHIBITION (Symbol) - 36x36	36"	36"	9.0	RENEW	1	1				SOIL	1			
SSC-02	206	M4-5(24)	1	TO - 24x12	24"	12"		REMOVE	1					SOIL	2			
		M1-5(24)	1	STATE ROUTE (2 - Digit Sign) - 24x24	24"	24"	4.0	RENEW	1	1								1
		M6-2_L(21)	1	DIRECTIONAL ARROW (Left - upward 45) - 21x15	21"	15"	2.2		1	1								
		M4-5(24)	1	TO - 24x12	24"	12"	2.0		1	1								
		M1-5(24)	1	STATE ROUTE (2 - Digit Sign) - 24x24	24"	24"	4.0		1									7
		M6-3(21)	1	DIRECTIONAL ARROW (Up) - 21x15	21"	15"	2.2		1	1								
SSC-02	207	D15-1	1	COMBINATION LANE USE/DESTINATION	48"	84"	28.0											**Install on Mast Arm (DelDOT Traffic Signal Forces)**
SSC-02	208	D15-1	1	COMBINATION LANE USE/DESTINATION	48"	84"	28.0											**Install on Mast Arm (DelDOT Traffic Signal Forces)**
SSC-02	209	D15-1	1	COMBINATION LANE USE/DESTINATION	48"	84"	28.0											**Install on Mast Arm (DelDOT Traffic Signal Forces)**
SSC-02	210	W3-3(30)	1	SIGNAL AHEAD (Symbol) - 30x30	30"	30"		REMOVE	1									
		W16-8aP	1	ADVANCE STREET NAME (2 - line plaque)	24"	18"		REMOVE	1									
SSC-02	211	R4-7(24)	1	KEEP RIGHT (Symbol) - 24x30	24"	30"	5.0	NEW		1				CONCRETE	1	1		
SSC-02	212	R1-2(36)	1	YIELD	36"	36"		REMOVE	1									
SSC-02	213	W9-2_L(36)	1	LANE ENDS MERGE LEFT - 36x36	36"	36"	9.0				RENEW	9.0	9.0	SOIL	1			
SSC-02	214	W13-3(24)	1	ADVISORY RAMP SPEED - 24x30	24"	30"	5.0	RENEW	1	1				SOIL	1			**30**
SSC-02	215	D1-3	1	DESTINATION (3 Line)	72"	42"	21.0				NEW		21.0	SOIL	2			**<— Faith Center <— Christiana Shopping —>**
SSC-02	216	D1-2	1	DESTINATION (2 Line)	72"	30"					REMOVE	15.0						
SSC-02	217	R4-7(24)	1	KEEP RIGHT (Symbol) - 24x30	24"	30"	5.0	NEW		1				CONCRETE	1	1		
SSC-02	218	R4-7(24)	1	KEEP RIGHT (Symbol) - 24x30	24"	30"		REMOVE	1									
		OM1-3	1	TYPE 1 OBJECT MARKER	18"	18"		REMOVE	1									
SSC-02	219	R1-2(36)	1	YIELD	36"	36"		REMOVE	1									
SSC-02	220	M3-1(36)	1	CARDINAL DIRECTION - NORTH - 36x18	36"	18"	4.5											**Sign to be installed on barrier I-Beam mount. Installation paid under other item in contract. Shield route number 1 & 7**
		M1-5(36)	1	STATE ROUTE (2 - Digit Sign) - 36x36	36"	36"	9.0											
		M1-5(36)	1	STATE ROUTE (2 - Digit Sign) - 36x36	36"	36"	9.0											
		M6-3(30)	1	DIRECTIONAL ARROW (Up) - 30x21	30"	21"	4.4											
SSC-02	221	R3-7_L(36)	1	LEFT LANE MUST TURN LEFT - 36"x36"	36"	36"	9.0											**Sign to be installed on barrier I-Beam mount. Installation paid**
SSC-02	222	R3-7_L(36)	1	LEFT LANE MUST TURN LEFT - 36"x36"	36"	36"	9.0											**Sign to be installed on barrier I-Beam mount. Installation paid under other item in contract.**
SSC-02	223	R3-7_L(36)	1	LEFT LANE MUST TURN LEFT - 36"x36"	36"	36"	9.0											**Sign to be installed on barrier I-Beam mount. Installation paid under other item in contract.**
PAGE TOTALS							236		14	8		39	60		13	4	0	

UNOFFICIAL WEBSITE COPY

7/9/2018 8:11:52 AM \\balsrv01\v2012\2012\12146_DelDOT1585\40-Road A Connector\Cadd\Contract\Plans\ssc09_RdA.dgn

PERMANENT SIGN SCHEDULE

SHEET NO.	PLAN IDENTIFIER	CODE	QTY.	DISCRIPTION	SIGN WIDTH (IN)	SIGN HEIGHT (IN)	SIGN AREA (SF)	ITEM 819018 SINGLE POST (EACH)			ITEM 819019 INSTALLATION OR REMOVAL OF TRAFFIC SIGN(S) ON MULTIPLE SIGN POSTS (SF)			POST INSTALLATION TYPE	Code X11 12' Post (W/ Basepost)	ITEM 819016 4" HOLE, 0-6" (EACH)	ITEM 819017 4" HOLE, >6" (EACH)	REMARKS
								SIGN DISPOSITION	REMOVE	INSTALL	SIGN DISPOSITION	REMOVE	INSTALL					
SSC-03																		
SSC-03	301	D4-2(30)	1	PARK & RIDE - 30x36	30"	36"	7.5	NEW		1				CONCRETE	1	1		
SSC-03	302	R3-7_L(36)	1	LEFT LANE MUST TURN LEFT - 36"x36"	36"	36"	9.0				NEW		9.0	CONCRETE	2	2		
SSC-03	303	M3-3(24)	1	CARDINAL DIRECTION - SOUTH - 24x12	24"	12"		REMOVE	1									
		M1-5(24)	1	STATE ROUTE (2 - Digit Sign) - 24x24	24"	24"		REMOVE	1									
		M1-5(24)	1	STATE ROUTE (2 - Digit Sign) - 24x24	24"	24"		REMOVE	1									
		M6-2_L(21)	1	DIRECTIONAL ARROW (Left - upward 45) - 21x15	21"	15"		REMOVE	1									
		M3-1(24)	1	CARDINAL DIRECTION - NORTH - 24x12	24"	12"		REMOVE	1									
		M1-5(24)	1	STATE ROUTE (2 - Digit Sign) - 24x24	24"	24"		REMOVE	1									
		M1-5(24)	1	STATE ROUTE (2 - Digit Sign) - 24x24	24"	24"		REMOVE	1									
		M6-3(21)	1	DIRECTIONAL ARROW (Up) - 21x15	21"	15"		REMOVE	1									
		M4-5(24)	1	TO - 24x12	24"	12"		REMOVE	1									
		M1-1(24)	1	INTERSTATE ROUTE (2 - Digit Sign) - 24x24	24"	24"		REMOVE	1									
		M6-3(21)	1	DIRECTIONAL ARROW (Up) - 21x15	21"	15"		REMOVE	1									
SSC-03	304	W4-2_R(30)	1	LANE ENDS (Right) - 30x30	30"	30"		REMOVE	1									
SSC-03	305	M3-3(24)	1	CARDINAL DIRECTION - SOUTH - 24x12	24"	12"		REMOVE	1									
		M1-5(24)	1	STATE ROUTE (2 - Digit Sign) - 24x24	24"	24"		REMOVE	1									
		M1-5(24)	1	STATE ROUTE (2 - Digit Sign) - 24x24	24"	24"		REMOVE	1									
		M6-2_L(21)	1	DIRECTIONAL ARROW (Left - upward 45) - 21x15	21"	15"		REMOVE	1									
		M3-1(24)	1	CARDINAL DIRECTION - NORTH - 24x12	24"	12"		REMOVE	1									
		M1-5(24)	1	STATE ROUTE (2 - Digit Sign) - 24x24	24"	24"		REMOVE	1									
		M1-5(24)	1	STATE ROUTE (2 - Digit Sign) - 24x24	24"	24"		REMOVE	1									
		M6-3(21)	1	DIRECTIONAL ARROW (Up) - 21x15	21"	15"		REMOVE	1									
		M4-5(24)	1	TO - 24x12	24"	12"		REMOVE	1									
		M1-1(24)	1	INTERSTATE ROUTE (2 - Digit Sign) - 24x24	24"	24"		REMOVE	1									
		M6-3(21)	1	DIRECTIONAL ARROW (Up) - 21x15	21"	15"		REMOVE	1									
SSC-03	306	W9-2_L(36)	1	LANE ENDS MERGE LEFT - 36x36	36"	36"		REMOVE	1									
SSC-03	307	M4-5(36)	1	TO - 36x18	36"	18"	4.5				NEW		35.9	SOIL	2			
		M1-5(36)	1	STATE ROUTE (2 - Digit Sign) - 36x36	36"	36"	9.0											**1**
		M1-5(36)	1	STATE ROUTE (2 - Digit Sign) - 36x36	36"	36"	9.0											**7**
		M1-1(36)	1	INTERSTATE ROUTE (2 - Digit Sign) - 36x36	36"	36"	9.0											**95**
		M6-1_R(30)	1	DIRECTIONAL ARROW (Right) - 30x21	30"	21"	4.4											
SSC-03	308	M4-5(24)	1	TO - 24x12	24"	12"		REMOVE	1									
		M1-5(24)	1	STATE ROUTE (2 - Digit Sign) - 24x24	24"	24"		REMOVE	1									
		M1-5(24)	1	STATE ROUTE (2 - Digit Sign) - 24x24	24"	24"		REMOVE	1									
		M6-1_R(21)	1	DIRECTIONAL ARROW (Right) - 21x15	21"	15"		REMOVE	1									
		M4-5(24)	1	TO - 24x12	24"	12"		REMOVE	1									
		M1-1(24)	1	INTERSTATE ROUTE (2 - Digit Sign) - 24x24	24"	24"		REMOVE	1									
		M6-3(21)	1	DIRECTIONAL ARROW (Up) - 21x15	21"	15"		REMOVE	1									
PAGE TOTALS							52		31	1		0	45		5	3	0	

UNOFFICIAL WEBSITE COPY

PERMANENT SIGN SCHEDULE

SHEET NO.	PLAN IDENTIFIER	CODE	QTY.	DISCRIPTION	SIGN WIDTH (IN)	SIGN HEIGHT (IN)	SIGN AREA (SF)	ITEM 819018 SINGLE POST (EACH)			ITEM 819019 INSTALLATION OR REMOVAL OF TRAFFIC SIGN(S) ON MULTIPLE SIGN POSTS (SF)			POST INSTALLATION TYPE	Code X11 12' Post (W/ Basepost)	ITEM 819016 4" HOLE, 0-6" (EACH)	ITEM 819017 4" HOLE, >6" (EACH)	REMARKS
								SIGN DISPOSITION	REMOVE	INSTALL	SIGN DISPOSITION	REMOVE	INSTALL					
SSC-03 Cont.																		
SSC-03	309	R4-7(24)	1	KEEP RIGHT (Symbol) - 24x30	24"	30"		REMOVE	1									
		OM1-3	1	TYPE 1 OBJECT MARKER	18"	18"		REMOVE	1									
SSC-03	310	D15-1	1	COMBINATION LANE USE/DESTINATION	48"	72"	24.0											**Install on Mast Arm (DelDOT Traffic Signal Forces)**
SSC-03	311	D15-1	1	COMBINATION LANE USE/DESTINATION	48"	96"	32.0											**Install on Mast Arm (DelDOT Traffic Signal Forces)**
SSC-03	312	D15-1	1	COMBINATION LANE USE/DESTINATION	48"	96"	32.0											**Install on Mast Arm (DelDOT Traffic Signal Forces)**
SSC-03	313	M6-2_L(21)	1	DIRECTIONAL ARROW (Left - upward 45) - 21x15	21"	15"		REMOVE	1									
		M1-5(24)	1	STATE ROUTE (2 - Digit Sign) - 24x24	24"	24"		REMOVE	1									
		M1-5(24)	1	STATE ROUTE (2 - Digit Sign) - 24x24	24"	24"		REMOVE	1									
		M6-2_R(21)	1	DIRECTIONAL ARROW (Right - upward 45) - 21x15	21"	15"		REMOVE	1									
		M1-1(24)	1	INTERSTATE ROUTE (2 - Digit Sign) - 24x24	24"	24"		REMOVE	1									
		M6-2_R(21)	1	DIRECTIONAL ARROW (Right - upward 45) - 21x15	21"	15"		REMOVE	1									
SSC-03	314	D4-2(30)	1	PARK & RIDE - 30x36	30"	36"		REMOVE	1									
SSC-03	315	D1-2	1	DESTINATION (2 Line)	90"	30"	18.8				NEW		18.8	SOIL	2			**^ Fashion Center <– Christiana Mall**
SSC-03	316	R3-7_L(36)	1	LEFT LANE MUST TURN LEFT - 36"x36"	36"	36"	9.0				NEW		9.0	CONCRETE	2	2		
SSC-03	317	D1-2	1	DESTINATION (2 Line)	72"	30"					REMOVE	15.0						
SSC-03	318	R3-7_L(36)	1	LEFT LANE MUST TURN LEFT - 36"x36"	36"	36"	9.0				NEW		9.0	CONCRETE	2	2		
SSC-03	319	M4-5(24)	1	TO - 24x12	24"	12"		REMOVE	1									
		M1-5(24)	1	STATE ROUTE (2 - Digit Sign) - 24x24	24"	24"		REMOVE	1									
		M1-5(24)	1	STATE ROUTE (2 - Digit Sign) - 24x24	24"	24"		REMOVE	1									
		M6-1_R(21)	1	DIRECTIONAL ARROW (Right) - 21x15	21"	15"		REMOVE	1									
		M4-5(24)	1	TO - 24x12	24"	12"		REMOVE	1									
		M1-1(24)	1	INTERSTATE ROUTE (2 - Digit Sign) - 24x24	24"	24"		REMOVE	1									
		M6-1_R(21)	1	DIRECTIONAL ARROW (Right) - 21x15	21"	15"		REMOVE	1									
SSC-03	320	R1-2(36)	1	YIELD	36"	36"	4.5	RENEW	1	1				SOIL	1			
SSC-03	321	W9-2_L(36)	1	LANE ENDS MERGE LEFT - 36x36	36"	36"	9.0	RENEW	1	1				SOIL	1			
SSC-03	322	R4-7(24)	1	KEEP RIGHT (Symbol) - 24x30	24"	30"	5.0	NEW		1				CONCRETE	1	1		
SSC-03	323	R4-7(24)	1	KEEP RIGHT (Symbol) - 24x30	24"	30"	5.0	RENEW	1	1				CONCRETE	1	1		
SSC-04																		
SSC-04	401	R8-4(30)	1	EMERGENCY PARKING ONLY - 30x24	30"	24"	5.0	RENEW	1	1				SOIL				
SSC-04	402	D4-3-DE	1	BUS STOP (DART)	12"	18"		REMAIN										
SSC-04	403	M3-1(24)	1	CARDINAL DIRECTION - NORTH - 24x12	24"	12"	2.0	RENEW	1	1								
		M1-5(24)	1	STATE ROUTE (2 - Digit Sign) - 24x24	24"	24"	4.0	RENEW	1	1				SOIL	2			**7**
		M6-1_R(21)	1	DIRECTIONAL ARROW (Right) - 21x15	21"	15"		REMOVE	1									
		M5-1_R	1	ADVANCE TURN ARROW (Right - 90)	21"	15"	2.2	NEW		1								
		M4-5(24)	1	TO - 24x12	24"	12"	2.0	RENEW	1	1								
		M1-1(24)	1	INTERSTATE ROUTE (2 - Digit Sign) - 24x24	24"	24"	4.0	RENEW	1	1								**95**
		M6-1_R(21)	1	DIRECTIONAL ARROW (Right) - 21x15	21"	15"		REMOVE	1									
		M5-1_R	1	ADVANCE TURN ARROW (Right - 90)	21"	15"	2.2	NEW		1								
PAGE TOTALS							170		26	11		15	37		12	6	0	

UNOFFICIAL WEBSITE COPY

PERMANENT SIGN SCHEDULE

SHEET NO.	PLAN IDENTIFIER	CODE	QTY.	DISCRIPTION	SIGN WIDTH (IN)	SIGN HEIGHT (IN)	SIGN AREA (SF)	ITEM 819018 SINGLE POST (EACH)			ITEM 819019 INSTALLATION OR REMOVAL OF TRAFFIC SIGN(S) ON MULTIPLE SIGN POSTS (SF)			POST INSTALLATION TYPE	Code X11 12' Post (W/ Basepost)	ITEM 819016 4" HOLE, 0-6" (EACH)	ITEM 819017 4" HOLE, >6" (EACH)	REMARKS
								SIGN DISPOSITION	REMOVE	INSTALL	SIGN DISPOSITION	REMOVE	INSTALL					
SSC-05																		
SSC-05	501	R3-7_L(36)	1	LEFT LANE MUST TURN LEFT - 36"x36"	36"	36"	9.0				NEW		9.0	SOIL	2			
SSC-05	502	R3-7_L(36)	1	LEFT LANE MUST TURN LEFT - 36"x36"	36"	36"	9.0				NEW		9.0	SOIL	2			
SSC-05	503	R4-7(24)	1	KEEP RIGHT (Symbol) - 24x30	24"	30"	5.0	RENEW	1	1				SOIL	1			
SSC-05	504	W1-7(48)	1	TWO DIRECTIONAL LARGE ARROW - 48x24	48"	24"	8.0				NEW		12.6	SOIL	2			
		OM4-3	1	END OF ROAD OBJECT MARKER	18"	18"	2.3											
		OM4-3	1	END OF ROAD OBJECT MARKER	18"	18"	2.3											
SSC-05	505	W1-7(48)	1	TWO DIRECTIONAL LARGE ARROW - 48x24	48"	24"					REMOVE	12.6						
		OM4-3	1	END OF ROAD OBJECT MARKER	18"	18"	2.3											
		OM4-3	1	END OF ROAD OBJECT MARKER	18"	18"	2.3											
PAGE TOTALS							40		1	1		13	31		7	0	0	
JOB TOTALS							595		87	38		67	212		55	13	0	

UNOFFICIAL WEBSITE COPY

7/9/2018 8:13:13 AM
\\bdsrv01\v2012\2012\12146_DelDOT1585\40-Road A Connector\Cadd\Contract\Plans\ssc12_RdA.dgn

SIGNAL AND SIGN DISPLAY

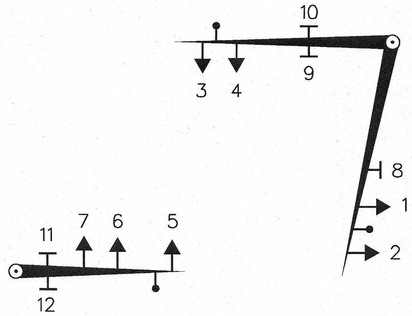

NOT TO SCALE

SIGN DETAILS

8
D3-1
120"x18"

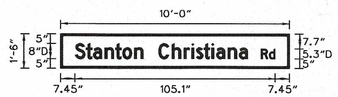

9,10,11,12
D3-1
54"x18"

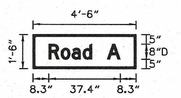

PEDESTRIAN SIGNAL NOTE:

1. DELDOT TRAFFIC SHALL INSTALL PEDESTRIAN COUNTDOWN SIGNAL HEADS.
2. DELDOT TRAFFIC SHALL INSTALL COUNTDOWN PEDESTRIAN SIGNS (R10-3e) TO ALL PEDESTRIAN POLE PARALLEL TO THE RELEVANT CROSSING.
3. PROPOSED POLE BASE SUPPORTING POLES WITH PEDESTRIAN PUSH BUTTONS SHALL BE CONSTRUCTED IMMEDIATELY ADJACENT TO THE FLAT (5:01 OF FLATTER) LANDING AREA OF THE CURB RAMP IN ACCORDANCE WITH CURRENT ADA BEST PRACTICES. THESE POLE BASES SHALL BE FLUSH WITH THE ADJOINING LANDING AREA. THE PEDESTRIAN PUSH BUTTON SHOULD BE INSTALLED AT A HEIGHT OF 42 INCHES TO 48 INCHES ABOVE LANDING AREA AND SHALL BE LOCATED SUCH THAT MAXIMUM REACH DISTANCE DOES NOT EXCEED 10 INCHES FROM THE LANDING AREA TO THE FACE OF THE PUSHBUTTON. PEDESTRIAN SIGNAL HEADS SHOULD BE MOUNTED WITH THE BOTTOM OF THE SIGNAL HOUSING, INCLUDING BRACKETS, NOT LESS THAN 7 FEET OR MORE THAN 10 FEET ABOVE LANDING AREA OR SIDEWALK LEVEL.

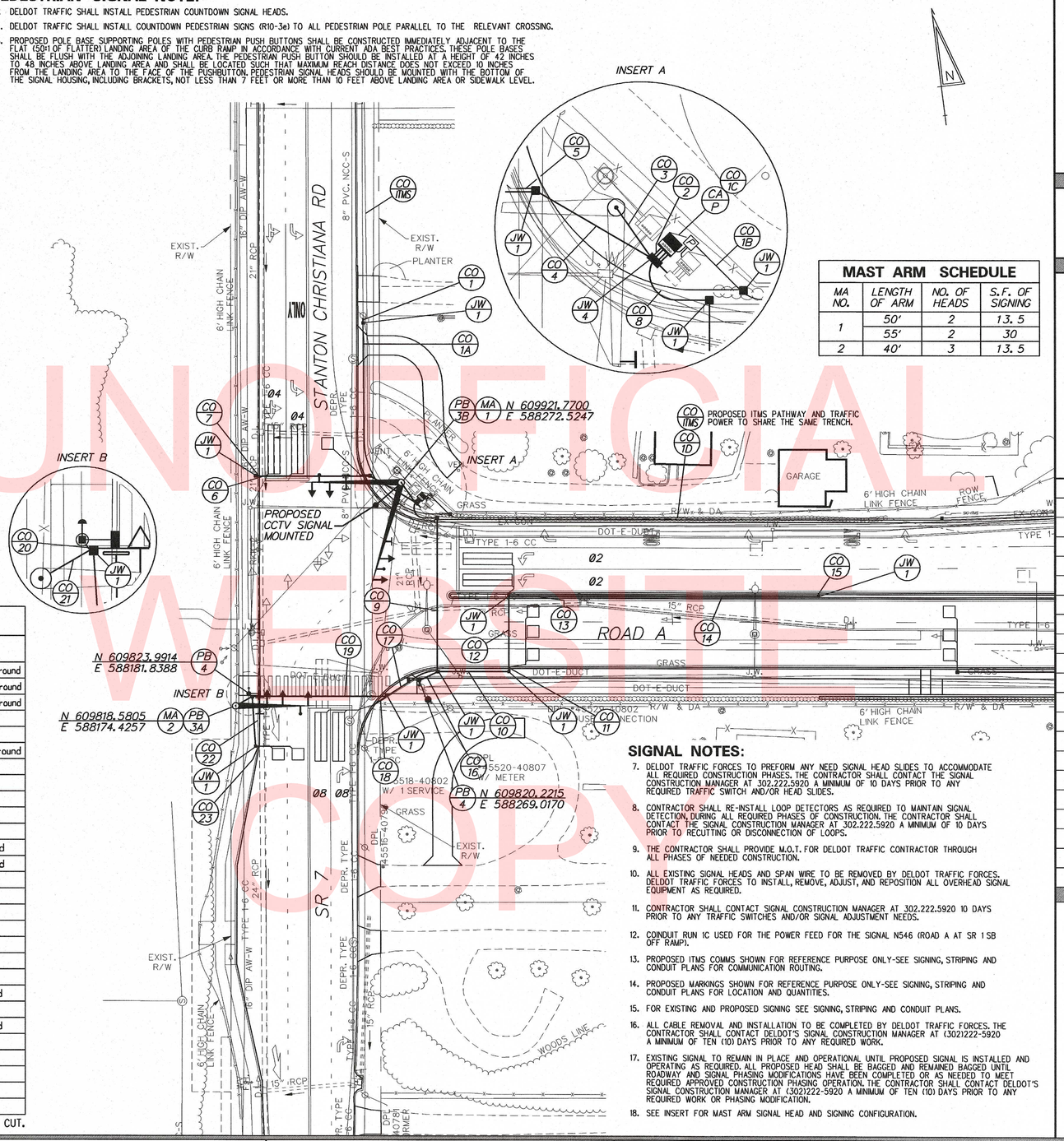

MAST ARM SCHEDULE

MA NO.	LENGTH OF ARM	NO. OF HEADS	S.F. OF SIGNING
1	50'	2	13.5
	55'	2	30
2	40'	3	13.5

CONDUIT RUN SCHEDULE

CR*	*OF CON	SIZE	LENGTH	B/T/O	AMOUNT AND TYPE OF CABLE/ WIRE
1	1	4.0"	5'	T	(1) #8/2 U.F. W/ GROUND, (3) #2AWG Stranded Copper, (1) #6 Ground
1A	1	4.0"	125'	T	(1) #8/2 U.F. W/ GROUND, (3) #2AWG Stranded Copper, (1) #6 Ground
1B	1	2.0"	15'	T	(1) #8/2 U.F. W/ GROUND, (3) #2AWG Stranded Copper, (1) #6 Ground
1C	1	2.0"	5'	T	(1) #8/2 U.F. W/ GROUND, (1) #6 Ground
1D	1	2.0"	250'	T	(3) #2AWG Stranded Copper, (1) #6 Ground
2	4	4.0"	5'	T	(1) #14/16, (1) #14/9, (3) #18/4, (2) #14/5, (12) #14/2, (1) #6 Ground
3	1	3.0"	15'	T	(1) #14/16, (2) #18/4, (1) COAX CABLE (1) #6 Ground
4	1	4.0"	25'	T	(3) #14/2 (1) #6 Ground
5	1	1.5"	5'	T	(1) #14/1, (1) #6 Ground
6	1	4.0"	60'	B	(2) #14/2, (1) #6 Ground
7	1	1.5"	5'	T	(2) #14/1 (1) #6 Ground
8	1	4.0"	15'	T	(1) #14/9, (1) #18/4, (2) #14/5, (9) #14/2, (1) #6 Ground
9	1	4.0"	80'	B	(1) #14/9, (1) #18/4, (2) #14/5, (9) #14/2, (1) #6 Ground
10	1	4.0"	35'	T	(5) #14/2, (1) #6 Ground
11	1	1.5"	5'	T	(3) #14/1, (1) #6 Ground
12	1	4.0"	40'	T	(2) #14/2, (1) #6 Ground
13	1	1.5"	5'	T	(4) #14/1, (1) #6 Ground
14	1	4.0"	160'	T	Empty
15	1	1.5"	5'	T	Empty
16	1	3.0"	10'	T	(1) #14/5, (1) #6 Ground
17	1	4.0"	30'	T	(1) #14/9, (1) #18/4, (1) #14/5, (4) #14/2, (1) #6 Ground
18	1	1.5"	10'	T	(2) #14/1, (1) #6 Ground
19	1	4.0"	70'	B	(1) #14/9, (1) #18/4, (1) #14/5, (2) #14/2, (1) #6 Ground
20	1	3.0"	5'	T	(1) #14/5, (1) #6 Ground
21	1	3.0"	10'	T	(1) #14/9, (1) #18/4, (1) #6 Ground
22	1	4.0"	25'	T	(2) #14/2, (1) #6 Ground
23	1	1.5"	5'	T	(2) #14/1, (1) #6 Ground

* DENOTES EXISTING

B = BORE, T = TRENCH, O = OPEN CUT.

SIGNAL NOTES:

7. DELDOT TRAFFIC FORCES TO PREFORM ANY NEED SIGNAL HEAD SLIDES TO ACCOMMODATE ALL REQUIRED CONSTRUCTION PHASES. THE CONTRACTOR SHALL CONTACT THE SIGNAL CONSTRUCTION MANAGER AT 302.222.5920 A MINIMUM OF 10 DAYS PRIOR TO ANY REQUIRED TRAFFIC SWITCH AND/OR HEAD SLIDES.
8. CONTRACTOR SHALL RE-INSTALL LOOP DETECTORS AS REQUIRED TO MAINTAIN SIGNAL DETECTION, DURING ALL REQUIRED PHASES OF CONSTRUCTION. THE CONTRACTOR SHALL CONTACT THE SIGNAL CONSTRUCTION MANAGER AT 302.222.5920 A MINIMUM OF 10 DAYS PRIOR TO RECUTTING OR DISCONNECTION OF LOOPS.
9. THE CONTRACTOR SHALL PROVIDE M.O.T. FOR DELDOT TRAFFIC CONTRACTOR THROUGH ALL PHASES OF NEEDED CONSTRUCTION.
10. ALL EXISTING SIGNAL HEADS AND SPAN WIRE TO BE REMOVED BY DELDOT TRAFFIC FORCES. DELDOT TRAFFIC FORCES TO INSTALL, REMOVE, ADJUST, AND REPOSITION ALL OVERHEAD SIGNAL EQUIPMENT AS REQUIRED.
11. CONTRACTOR SHALL CONTACT SIGNAL CONSTRUCTION MANAGER AT 302.222.5920 10 DAYS PRIOR TO ANY TRAFFIC SWITCHES AND/OR SIGNAL ADJUSTMENT NEEDS.
12. COINDUIT RUN 1C USED FOR THE POWER FEED FOR THE SIGNAL N546 (ROAD A AT SR 1 SB OFF RAMP).
13. PROPOSED ITMS COMMS SHOWN FOR REFERENCE PURPOSE ONLY-SEE SIGNING, STRIPING AND CONDUIT PLANS FOR COMMUNICATION ROUTING.
14. PROPOSED MARKINGS SHOWN FOR REFERENCE PURPOSE ONLY-SEE SIGNING, STRIPING AND CONDUIT PLANS FOR LOCATION AND QUANTITIES.
15. FOR EXISTING AND PROPOSED SIGNING SEE SIGNING, STRIPING AND CONDUIT PLANS.
16. ALL CABLE REMOVAL AND INSTALLATION TO BE COMPLETED BY DELDOT TRAFFIC FORCES. THE CONTRACTOR SHALL CONTACT DELDOT'S SIGNAL CONSTRUCTION MANAGER AT (302)222-5920 A MINIMUM OF TEN (10) DAYS PRIOR TO ANY REQUIRED WORK.
17. EXISTING SIGNAL TO REMAIN IN PLACE AND OPERATIONAL UNTIL PROPOSED SIGNAL IS INSTALLED AND OPERATING AS REQUIRED. ALL PROPOSED HEAD SHALL BE BAGGED AND REMAINED BAGGED UNTIL ROADWAY AND SIGNAL PHASING MODIFICATIONS HAVE BEEN COMPLETED OR AS NEEDED TO MEET REQUIRED APPROVED CONSTRUCTION PHASING OPERATION. THE CONTRACTOR SHALL CONTACT DELDOT'S SIGNAL CONSTRUCTION MANAGER AT (302)222-5920 A MINIMUM OF TEN (10) DAYS PRIOR TO ANY REQUIRED WORK OR PHASING MODIFICATION.
18. SEE INSERT FOR MAST ARM SIGNAL HEAD AND SIGNING CONFIGURATION.

SIGNAL PHASING

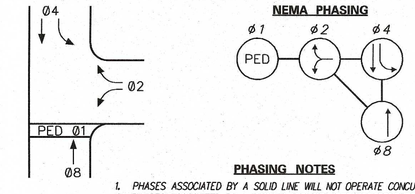

PHASING NOTES

1. PHASES ASSOCIATED BY A SOLID LINE WILL NOT OPERATE CONCURRENTLY.
2. PHASES ASSOCIATED BY A DASHED LINE WILL OPERATE CONCURRENTLY.

SIGNAL HEAD DIAGRAM

LEGEND

AB	ABANDON	OH	EXISTING OVERHEAD RUN IDENTIFIER (* OF OVERHEAD RUN)
CA X	EXISTING CABINET IDENTIFIER (TYPE OF CABINET)	OH *	PROPOSED OVERHEAD RUN IDENTIFIER (* OF OVERHEAD RUN)
CA X	PROPOSED CABINET IDENTIFIER (TYPE OF CABINET)	PB X	EXISTING POLE BASE IDENTIFIER (TYPE OF POLE BASE)
CO *	EXISTING CONDUIT RUN IDENTIFIER (* OF CONDUIT RUN)	PB X	PROPOSED POLE BASE IDENTIFIER (TYPE OF POLE BASE)
CO *	PROPOSED CONDUIT RUN IDENTIFIER (* OF CONDUIT RUN)	PL X	EXISTING POLE IDENTIFIER (* OF POLE)
JW X	EXISTING JUNCTION WELL IDENTIFIER (TYPE OF JUNCTION WELL)	PL X	PROPOSED POLE IDENTIFIER (* OF POLE)
JW X	PROPOSED JUNCTION WELL IDENTIFIER (TYPE OF JUNCTION WELL)	RM C	REMOVE BY CONTRACTOR
MA XX	EXISTING MAST ARM IDENTIFIER (LENGTH OF ARM)	RM O	REMOVE BY OTHERS
MA XX	PROPOSED MAST ARM IDENTIFIER (LENGTH OF ARM)	RM TC	REMOVE BY TRAFFIC CONTRACTOR

	EXISTING SYMBOL	PROPOSED SYMBOL
JUNCTION WELL	J.W.	
LOOP DETECTOR, TYPE 1		
LOOP DETECTOR, TYPE 2		
LUMINAIRE		
MAST ARM		
MICROWAVE DETECTION		
OPTICOM RECEIVER		
OVERHEAD SIGNING		
PEDESTRIAN POLE/BASE		
PEDESTRIAN PUSHBUTTON		
PEDESTRIAN SIGNAL HEAD		
RIGHT-OF-WAY		R/W
SERVICE PEDESTAL		P
SIGNAL CABINET		
SIGNAL HEAD		
SIGNAL POLE/BASE		
SPAN INSULATOR		
SPAN WIRE	XX	
UTILITY POLE		
VIDEO DETECTION		

GENERAL SIGNAL NOTES

1. LOOP DETECTORS:
   TYPE #1 - 6'x 6' - TO BE INSTALLED ON MAIN STREET THROUGH MOVEMENTS.
   TYPE #2 - 6'x 25' - TO BE INSTALLED ON MAIN STREET LEFT TURN MOVEMENTS.
   TYPE #2 - 6'x 25' - TO BE INSTALLED ON SIDE STREET THROUGH AND LEFT TURN MOVEMENTS.
2. ALL SIGNAL POLES WILL BE MAST ARMS SIZE SHOWN IN SCHEDULE.
3. ALL SIGNAL EQUIPMENT REMOVED FROM A PROJECT IS TO BE RETURNED TO DELDOT TRAFFIC DOVER, DELAWARE.
4. POLE BASES, CABINET BASE AND CONDUIT JUNCTION WELLS TO BE REMOVED IN ACCORDANCE WITH SECTION 201 AND 202 OF THE STANDARD SPECIFICATIONS OR AS DIRECTED BY ENGINEER. EXISTING CONDUIT IS TO BE ABANDONED.
5. ALL GALVANIZED CONDUIT (GRC) SHALL BE REAMED AND THREADED. ALL GRC SHALL BE THREADED TOGETHER WITH APPROVED COUPLINGS.SET SCREW, BOLTED, AND COMPRESSION FITTING ARE NOT ACCEPTABLE.
6. ALL UNDERGROUND AND OVERHEAD UTILITIES SHOWN ON THESE PLANS ARE SCHEMATIC ONLY AND MAY NOT BE COMPLETE. THE CONTRACTOR SHALL BE RESPONSIBLE FOR NOTIFYING MISS UTILITY, AND/OR THE APPROPRIATE UTILITY PRIOR TO THE BEGINNING OF CONSTRUCTION FOR THE UTILITY MARKOUTS. IF THE CONTRACTOR PERCEIVES THAT A CONFLICT BETWEEN UTILITIES AND THE TRAFFIC SIGNAL WILL OCCUR, THE CONTRACTOR SHALL NOTIFY DELDOT TRAFFIC IMMEDIATELY BEFORE CONSTRUCTION.

UNOFFICIAL WEBSITE COPY

RECOMMENDED _____ DATE: 7.10.18 | RECOMMENDED _____ DATE: _____ | RECOMMENDED _____ DATE: _____ | APPROVED TRAFFIC ENGINEER _____ DATE: 07/10/2018 | APPROVED FOR INSTALLATION CHIEF TRAFFIC ENGINEER _____ DATE: 7/10/18

DELAWARE DEPARTMENT OF TRANSPORTATION

ADDENDUM / REVISIONS

SCALE 0 30 60 90 FEET

ROAD A /SR7 IMPROVEMENTS

CONTRACT	PERMIT NO.	N533
T201009002	DESIGNED BY: KJA	
COUNTY: New Castle	CHECKED BY: DZ	

SIGNAL PLAN ROAD A AT SR 7 / STANTON CHRISTIANA RD

SHEET NO. 144 / TOTAL SHTS. 154

\\BALSRV01\V2012\2012\12146_DELDOT1585\40-ROAD A CONNECTOR\CADD\CONTRACT\PLANS\SG01_RDA.DGN

MAST ARM SCHEDULE

MA NO.	LENGTH OF ARM	NO. OF HEADS	S.F. OF SIGNING
1	60'	5	13.5
2	70'	4	21
3	35'	2	13.5
4	70'	3	21

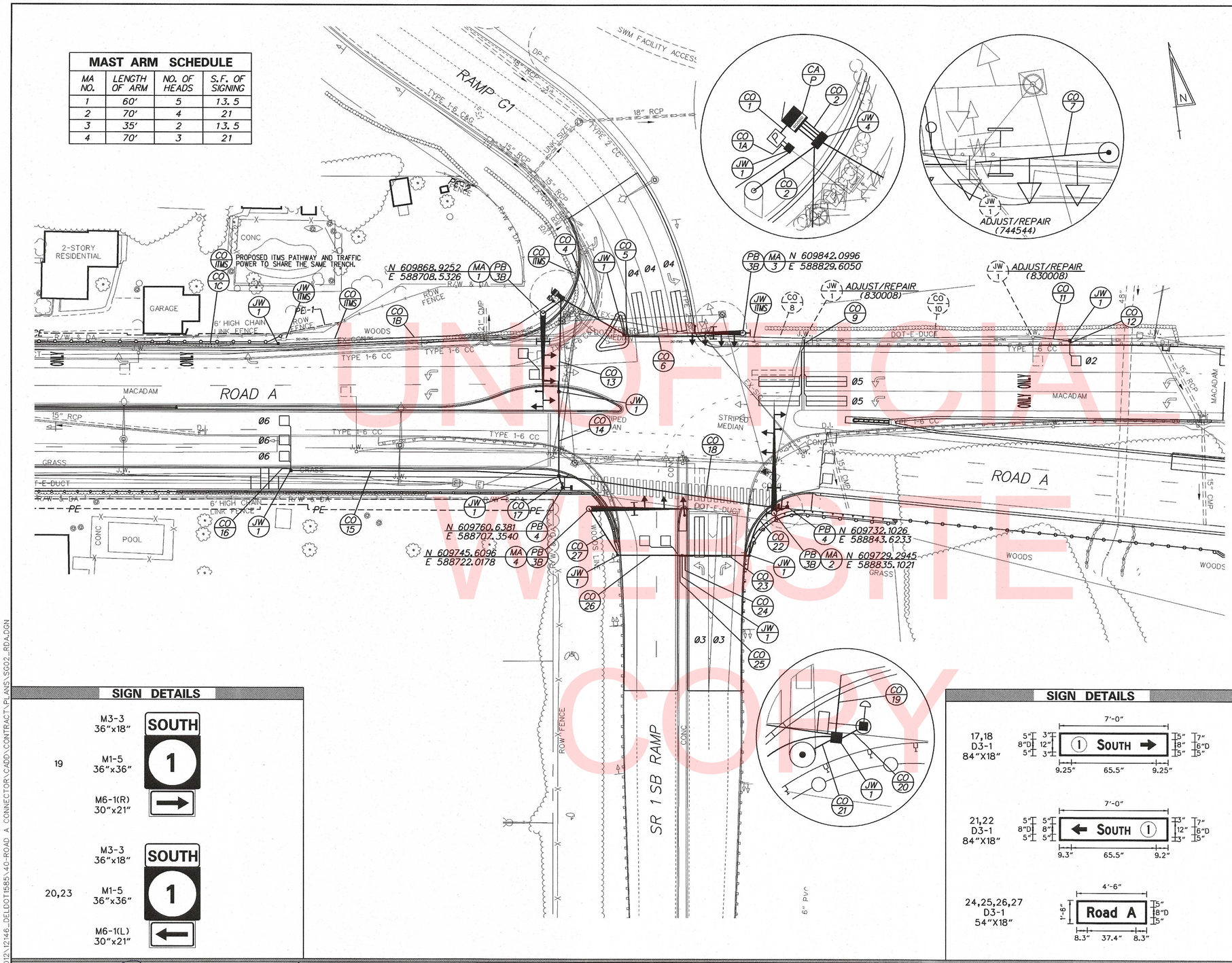

SIGN DETAILS

SIGN DETAILS

SIGNAL PHASING

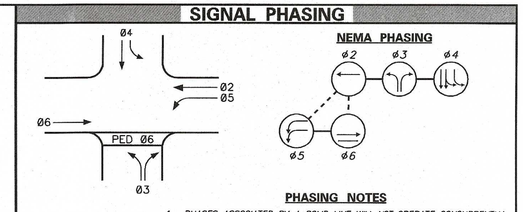

PHASING NOTES

1. PHASES ASSOCIATED BY A SOLID LINE WILL NOT OPERATE CONCURRENTLY.
2. PHASES ASSOCIATED BY A DASHED LINE WILL OPERATE CONCURRENTLY.

SIGNAL HEAD DIAGRAM

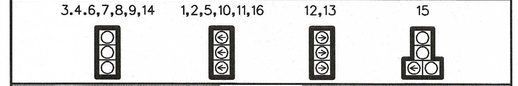

LEGEND

AB	ABANDON	OH	EXISTING OVERHEAD RUN IDENTIFIER (# OF OVERHEAD RUN)
CA X	EXISTING CABINET IDENTIFIER (TYPE OF CABINET)	OH #	PROPOSED OVERHEAD RUN IDENTIFIER (# OF OVERHEAD RUN)
CA X	PROPOSED CABINET IDENTIFIER (TYPE OF CABINET)	PB X	EXISTING POLE BASE IDENTIFIER (TYPE OF POLE BASE)
CO #	EXISTING CONDUIT RUN IDENTIFIER (# OF CONDUIT RUN)	PB X	PROPOSED POLE BASE IDENTIFIER (TYPE OF POLE BASE)
CO #	PROPOSED CONDUIT RUN IDENTIFIER (# OF CONDUIT RUN)	PL X	EXISTING POLE IDENTIFIER (# OF POLE)
JW X	EXISTING JUNCTION WELL IDENTIFIER (TYPE OF JUNCTION WELL)	PL X	PROPOSED POLE IDENTIFIER (# OF POLE)
JW X	PROPOSED JUNCTION WELL IDENTIFIER (TYPE OF JUNCTION WELL)	RM C	REMOVE BY CONTRACTOR
MA XX	EXISTING MAST ARM IDENTIFIER (LENGTH OF ARM)	RM O	REMOVE BY OTHERS
MA XX	PROPOSED MAST ARM IDENTIFIER (LENGTH OF ARM)	RM TC	REMOVE BY TRAFFIC CONTRACTOR

	EXISTING SYMBOL	PROPOSED SYMBOL
JUNCTION WELL	J.W.	
LOOP DETECTOR, TYPE 1		
LOOP DETECTOR, TYPE 2		
LUMINAIRE		
MAST ARM		
MICROWAVE DETECTION		
OPTICOM RECEIVER		
OVERHEAD SIGNING		
PEDESTRIAN POLE/BASE		
PEDESTRIAN PUSHBUTTON		
PEDESTRIAN SIGNAL HEAD		
RIGHT-OF-WAY		R/W
SERVICE PEDESTAL		P
SIGNAL CABINET		
SIGNAL HEAD		
SIGNAL POLE/BASE		
SPAN INSULATOR		
SPAN WIRE	XX	
UTILITY POLE		
VIDEO DETECTION		

GENERAL SIGNAL NOTES

1. DETECTION - 35 M.P.H. - 5 SECONDS PASSAGE TIME AT 160 FEET FROM STOP BAR.
2. LOOP DETECTORS:
   TYPE #1 - 6' x 6' - TO BE INSTALLED ON MAIN STREET THROUGH MOVEMENTS.
   TYPE #2 - 6' x 25' - TO BE INSTALLED ON MAIN STREET LEFT TURN MOVEMENTS.
   TYPE #2 - 6' x 25' - TO BE INSTALLED ON SIDE STREET THROUGH AND LEFT TURN MOVEMENTS.
3. ALL SIGNAL POLES WILL BE MAST ARMS SIZE SHOWN IN SCHEDULE.
4. ALL SIGNAL EQUIPMENT REMOVED FROM A PROJECT IS TO BE RETURNED TO DELDOT TRAFFIC DOVER, DELAWARE.
5. POLE BASES, CABINET BASE AND CONDUIT JUNCTION WELLS TO BE REMOVED IN ACCORDANCE WITH SECTION 201 AND 202 OF THE STANDARD SPECIFICATIONS OR AS DIRECTED BY ENGINEER. EXISTING CONDUIT IS TO BE ABANDONED.
6. ALL GALVANIZED CONDUIT (GRC) SHALL BE REAMED AND THREADED. ALL GRC SHALL BE THREADED TOGETHER WITH APPROVED COUPLINGS.SET SCREW, BOLTED, AND COMPRESSION FITTING ARE NOT ACCEPTABLE.
7. ALL UNDERGROUND AND OVERHEAD UTILITIES SHOWN ON THESE PLANS ARE SCHEMATIC ONLY AND MAY NOT BE COMPLETE. THE CONTRACTOR SHALL BE RESPONSIBLE FOR NOTIFYING MISS UTILITY, AND/OR THE APPROPRIATE UTILITY PRIOR TO THE BEGINNING OF CONSTRUCTION FOR THE UTILITY MARKOUTS. IF THE CONTRACTOR PERCEIVES THAT A CONFLICT BETWEEN UTILITIES AND THE TRAFFIC SIGNAL WILL OCCUR, THE CONTRACTOR SHALL NOTIFY DELDOT TRAFFIC IMMEDIATELY BEFORE CONSTRUCTION.

RECOMMENDED _____ DATE: 7.10.18

RECOMMENDED _____ DATE: _____

RECOMMENDED _____ DATE: _____

APPROVED TRAFFIC ENGINEER _____ DATE: 07/09/2018

APPROVED FOR INSTALLATION
CHIEF TRAFFIC ENGINEER _____ DATE: 7/10/18

DELAWARE DEPARTMENT OF TRANSPORTATION

ADDENDUM / REVISIONS

SCALE 0 30 60 90 FEET

ROAD A /SR7 IMPROVEMENTS

CONTRACT	T201009002
COUNTY	New Castle
PERMIT NO.	N546
DESIGNED BY:	KJA
CHECKED BY:	J.Roshid

SIGNAL PLAN ROAD A AT SR 1 SB OFF RAMP

SHEET NO. 145
TOTAL SHTS. 154

\\BALSRV01\V2012\2012\12146_DELDOT585\40-ROAD A CONNECTOR\CADD\CONTRACT\PLANS\SG02_RDA.DGN

UNOFFICIAL WEBSITE COPY

CONDUIT RUN SCHEDULE

CR*	*OF CON	SIZE	LENGTH	B/T/O	AMOUNT AND TYPE OF CABLE/ WIRE
1	1	2.0"	5'	T	(1)*8/2 U.F. w/GROUND
1A	1	2.0"	5'	T	(3) *2AWG Stranded Copper, (1) *6 Ground
1B	1	2.0"	175'	T	(3) *2AWG Stranded Copper, (1) *6 Ground
** 1C	(3) *2AWG Stranded Copper (See N533 Sheet 137 for Additional Information)				
2	4	4.0"	5'	T	(2) *14/16, (2) *14/9, (4) *18/4, (2) *14/5, (20) *14/2, (1) *6 Ground
3	1	3.0"	15'	T	(1) *14/16, (1) *18/4, (1) *6 Ground
4	1	4.0"	45'	B	(1) *14/9, (1) *18/4, (8) *14/2, (1) *6 Ground
5	1	1.5"	5'	T	(3) *14/1, (1) *6 Ground
6	1	4.0"	50'	B	(1) *14/9, (1) *18/4, (5) *14/2, (1) *6 Ground
7	1	3.0"	25'	T	(1) *14/9, (1) *18/4, (1) *6 Ground
*8	1	2.5"	60'	--	Remove - (2) *18/4, Install - (5) *14/2, (1) *6 Ground
9	1	1.5"	5'	T	(4) *14/1, (1) *6 Ground
*10	1	2.5"	140'	--	Remove - (2) *18/4, Install - (1) *14/2, (1) *6 Ground
11	1	4.0"	25'	T	(1) *14/2, (1) *6 Ground
12	1	1.5"	5'	T	(1) *14/1, (1) *6 Ground
13	1	4.0"	60'	B	(1) *14/16, (1) *14/9, (2) *18/4, (2) *14/5, (12) *14/2, (1) *6 Ground
14	1	4.0"	55'	T	(1) *14/16, (1) *14/9, (2) *18/4, (2) *14/5, (10) *14/2, (1) *6 Ground
15	1	4.0"	165'	T	(3) *14/2, (1) *6 Ground
16	1	1.5"	5'	T	(3) *14/1, (1) *6 Ground
17	1	3.0"	10'	T	(1) *14/5, (1) *6 Ground
18	1	4.0"	140'	B	(1) *14/16, (1) *14/9, (2) *18/4, (1) *14/5, (7) *14/2, (1) *6 Ground
19	1	1.5"	5'	T	(3) *14/1, (1) *6 Ground
20	1	3.0"	5'	T	(1) *14/5, (1) *6 Ground
21	1	3.0"	5'	T	(1) *14/9, (1) *18/4, (1) *6 Ground
22	1	4.0"	40'	T	(1) *14/9, (1) *18/4, (4) *14/2, (1) *6 Ground
23	1	4.0"	40'	B	(1) *14/9, (1) *18/4, (4) *14/2, (1) *6 Ground
24	1	1.5"	5'	B	(2) *14/1, (1) *6 Ground
25	1	1.5"	5'	B	(2) *14/1, (1) *6 Ground
26	1	4.0"	40'	B	(1) *14/9, (1) *18/4, (1) *6 Ground
27	1	3.0"	40'	T	(1) *14/9, (1) *18/4, (1) *6 Ground
28	1	1.5"	5'	T	(2) *14/1, (1) *6 Ground

*DENOTES EXISTING

B = BORE, T = TRENCH, O = OPEN CUT.

PEDESTRIAN SIGNAL NOTE:

1. DELDOT TRAFFIC SHALL INSTALL PEDESTRIAN COUNTDOWN SIGNAL HEADS.
2. DELDOT TRAFFIC SHALL INSTALL COUNTDOWN PEDESTRIAN SIGNS (R10-3e) TO ALL PEDESTRIAN POLE PARALLEL TO THE RELEVANT CROSSING.
3. PROPOSED POLE BASE SUPPORTING POLES WITH PEDESTRIAN PUSH BUTTONS SHALL BE CONSTRUCTED IMMEDIATELY ADJACENT TO THE FLAT (50:1 OF FLATTER) LANDING AREA OF THE CURB RAMP IN ACCORDANCE WITH CURRENT ADA BEST PRACTICES. THESE POLE BASES SHALL BE FLUSH WITH THE ADJOINING LANDING AREA. THE PEDESTRIAN PUSH BUTTON SHOULD BE INSTALLED AT A HEIGHT OF 42 INCHES TO 48 INCHES ABOVE LANDING AREA AND SHALL BE LOCATED SUCH THAT MAXIMUM REACH DISTANCE DOES NOT EXCEED 10 INCHES FROM THE LANDING AREA TO THE FACE OF THE PUSHBUTTON. PEDESTRIAN SIGNAL HEADS SHOULD BE MOUNTED WITH THE BOTTOM OF THE SIGNAL HOUSING, INCLUDING BRACKETS, NOT LESS THAN 7 FEET OR MORE THAN 10 FEET ABOVE LANDING AREA OR SIDEWALK LEVEL.

SIGNAL NOTES:

7. DELDOT TRAFFIC FORCES TO PREFORM ANY NEED SIGNAL HEAD SLIDES TO ACCOMMODATE ALL REQUIRED CONSTRUCTION PHASES. THE CONTRACTOR SHALL CONTACT THE SIGNAL CONSTRUCTION MANAGER AT 302.222.5920 A MINIMUM OF 10 DAYS PRIOR TO ANY REQUIRED TRAFFIC SWITCH AND/OR HEAD SLIDES.
8. CONTRACTOR SHALL RE-INSTALL LOOP DETECTORS AS REQUIRED TO MAINTAIN SIGNAL DETECTION, DURING ALL REQUIRED PHASES OF CONSTRUCTION. THE CONTRACTOR SHALL CONTACT THE SIGNAL CONSTRUCTION MANAGER AT 302.222.5920 A MINIMUM OF 10 DAYS PRIOR TO RECUTTING OR DISCONNECTION OF LOOPS.
9. THE CONTRACTOR SHALL PROVIDE M.O.T. FOR DELDOT TRAFFIC CONTRACTOR THROUGH ALL PHASES OF NEEDED CONSTRUCTION.
10. ALL EXISTING SIGNAL HEADS AND SPAN WIRE TO BE REMOVED BY DELDOT TRAFFIC FORCES. DELDOT TRAFFIC FORCES TO INSTALL, REMOVE, ADJUST, AND REPOSITION ALL OVERHEAD SIGNAL EQUIPMENT AS REQUIRED.
11. CONTRACTOR SHALL CONTACT SIGNAL CONSTRUCTION MANAGER AT 302.222.5920 10 DAYS PRIOR TO ANY TRAFFIC SWITCHES AND/OR SIGNAL ADJUSTMENT NEEDS.
12. COINDUIT RUN 1C COMES FROM STANTON CHRISTIANA POLE LINE.
13. PROPOSED ITMS COMMS SHOWN FOR REFERENCE PURPOSE ONLY-SEE SIGNING, STRIPING AND CONDUIT PLANS FOR COMMUNICATION ROUTING.
14. PROPOSED MARKINGS SHOWN FOR REFERENCE PURPOSE ONLY-SEE SIGNING, STRIPING AND CONDUIT PLANS FOR LOCATION AND QUANTITIES.
15. FOR EXISTING AND PROPOSED SIGNING SEE SIGNING, STRIPING AND CONDUIT PLANS.
16. ALL CABLE REMOVAL AND INSTALLATION TO BE COMPLETED BY DELDOT TRAFFIC FORCES. THE CONTRACTOR SHALL CONTACT DELDOT'S SIGNAL CONSTRUCTION MANAGER AT (302)222-5920 A MINIMUM OF TEN (10) DAYS PRIOR TO ANY REQUIRED WORK.
17. EXISTING SIGNAL TO REMAIN IN PLACE AND OPERATIONAL UNTIL PROPOSED SIGNAL IS INSTALLED AND OPERATING AS REQUIRED. ALL PROPOSED HEAD SHALL BE BAGGED AND REMAINED BAGGED UNTIL ROADWAY AND SIGNAL PHASING MODIFICATIONS HAVE BEEN COMPLETED OR AS NEEDED TO MEET REQUIRED APPROVED CONSTRUCTION PHASING OPERATION. THE CONTRACTOR SHALL CONTACT DELDOT'S SIGNAL CONSTRUCTION MANAGER AT (302)222-5920 A MINIMUM OF TEN (10) DAYS PRIOR TO ANY REQUIRED WORK OR PHASING MODIFICATION.
18. SEE INSERT FOR MAST ARM SIGNAL HEAD AND SIGNING CONFIGURATION.

SIGNAL AND SIGN DISPLAY

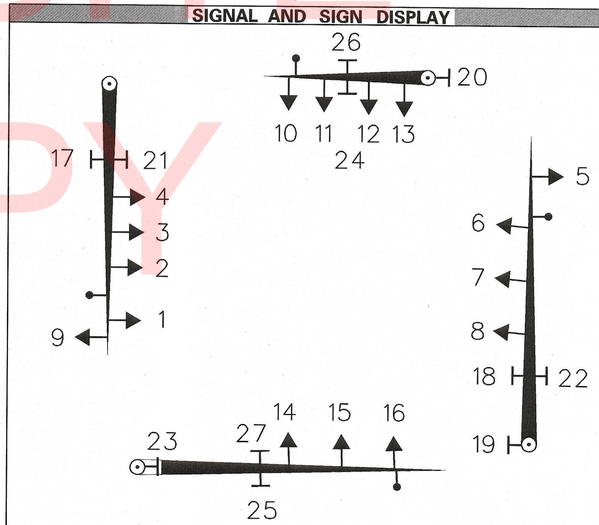

SIGNAL PHASING

SIGNAL HEAD DIAGRAM

LEGEND

AB	ABANDON	OH/*	EXISTING OVERHEAD RUN IDENTIFIER (# OF OVERHEAD RUN)
CA/X	EXISTING CABINET IDENTIFIER (TYPE OF CABINET)	OH/*	PROPOSED OVERHEAD RUN IDENTIFIER (# OF OVERHEAD RUN)
CA/X	PROPOSED CABINET IDENTIFIER (TYPE OF CABINET)	PB/X	EXISTING POLE BASE IDENTIFIER (TYPE OF POLE BASE)
CO/*	EXISTING CONDUIT RUN IDENTIFIER (# OF CONDUIT RUN)	PB/X	PROPOSED POLE BASE IDENTIFIER (TYPE OF POLE BASE)
CO/*	PROPOSED CONDUIT RUN IDENTIFIER (# OF CONDUIT RUN)	PL/X	EXISTING POLE IDENTIFIER (# OF POLE)
JW/X	EXISTING JUNCTION WELL IDENTIFIER (TYPE OF JUNCTION WELL)	PL/X	PROPOSED POLE IDENTIFIER (# OF POLE)
JW/X	PROPOSED JUNCTION WELL IDENTIFIER (TYPE OF JUNCTION WELL)	RM/C	REMOVE BY CONTRACTOR
MA/XX	EXISTING MAST ARM IDENTIFIER (LENGTH OF ARM)	RM/O	REMOVE BY OTHERS
MA/XX	PROPOSED MAST ARM IDENTIFIER (LENGTH OF ARM)	RM/TC	REMOVE BY TRAFFIC CONTRACTOR

	EXISTING SYMBOL	PROPOSED SYMBOL
JUNCTION WELL	J.W.	
LOOP DETECTOR, TYPE 1		
LOOP DETECTOR, TYPE 2		
LUMINAIRE		
MAST ARM		
MICROWAVE DETECTION		
OPTICOM RECEIVER		
OVERHEAD SIGNING		
PEDESTRIAN POLE/BASE		
PEDESTRIAN PUSHBUTTON		
PEDESTRIAN SIGNAL HEAD		
RIGHT-OF-WAY		R/W
SERVICE PEDESTAL		P
SIGNAL CABINET		
SIGNAL HEAD		
SIGNAL POLE/BASE		
SPAN INSULATOR		
SPAN WIRE	XX	
UTILITY POLE		
VIDEO DETECTION		

GENERAL SIGNAL NOTES

RECOMMENDED _____ DATE: 7.10.18

RECOMMENDED _____ DATE: _____

RECOMMENDED _____ DATE: _____

APPROVED TRAFFIC ENGINEER _____ DATE: 07/09/2018

APPROVED FOR INSTALLATION CHIEF TRAFFIC ENGINEER _____ DATE: 7/10/18

DELAWARE DEPARTMENT OF TRANSPORTATION

ADDENDUM / REVISIONS

ROAD A /SR7 IMPROVEMENTS

CONTRACT	PERMIT NO.	N546
T201009002	DESIGNED BY:	KJA
COUNTY	CHECKED BY:	J.Roshid
New Castle		

SIGNAL PLAN ROAD A AT SR 1 SB OFF RAMP

SHEET NO. 146

TOTAL SHTS. 154

\\BALSRV01\V2012\2012\12146_DELDOT1585\40-ROAD A CONNECTOR\CADD\CONTRACT\PLANS\SG02A_RDA.DGN

UNOFFICIAL WEBSITE COPY

SIGN DETAILS

EXISTING OVERHEAD SIGNING

13,14 D3-1 — Road A ⇨ / Road A ⇨

17,18 D3-1 — North ⓘ ⇨ / North ⓘ ⇨

PROPOSED OVERHEAD SIGNING

15 D3-1 78"X18" — Center Blvd ⇨ (5" / 8"D 18" / 5", 6'-6")

16 D3-1 78"X18" — ⇦ Center Blvd (5" / 8"D 18" / 5", 6'-6")

19 D3-1 78"X18" — ⇦ Fashion Center Blvd (5" / 8"D 18" / 5", 10'-0")

20 D3-1 78"X18" — Fashion Center Blvd ⇨ (5" / 8"D 18" / 5", 10'-0")

SPAN WIRE SCHEDULE

SPAN	LENGTH	SPAN MOUNT HEIGHT	SAG	SPAN LOW POINT	BOTTOM OF LOWEST HEAD
NW - NE	137 FT	--	--	--	--
NW - SW	174 FT	29 FT	8.7 FT @ 5%	20 FT	16 FT
NW - SW	150 FT	28 FT	7.5 FT @ 5%	20 FT	16 FT
NW - SW	167 FT	--	--	--	--

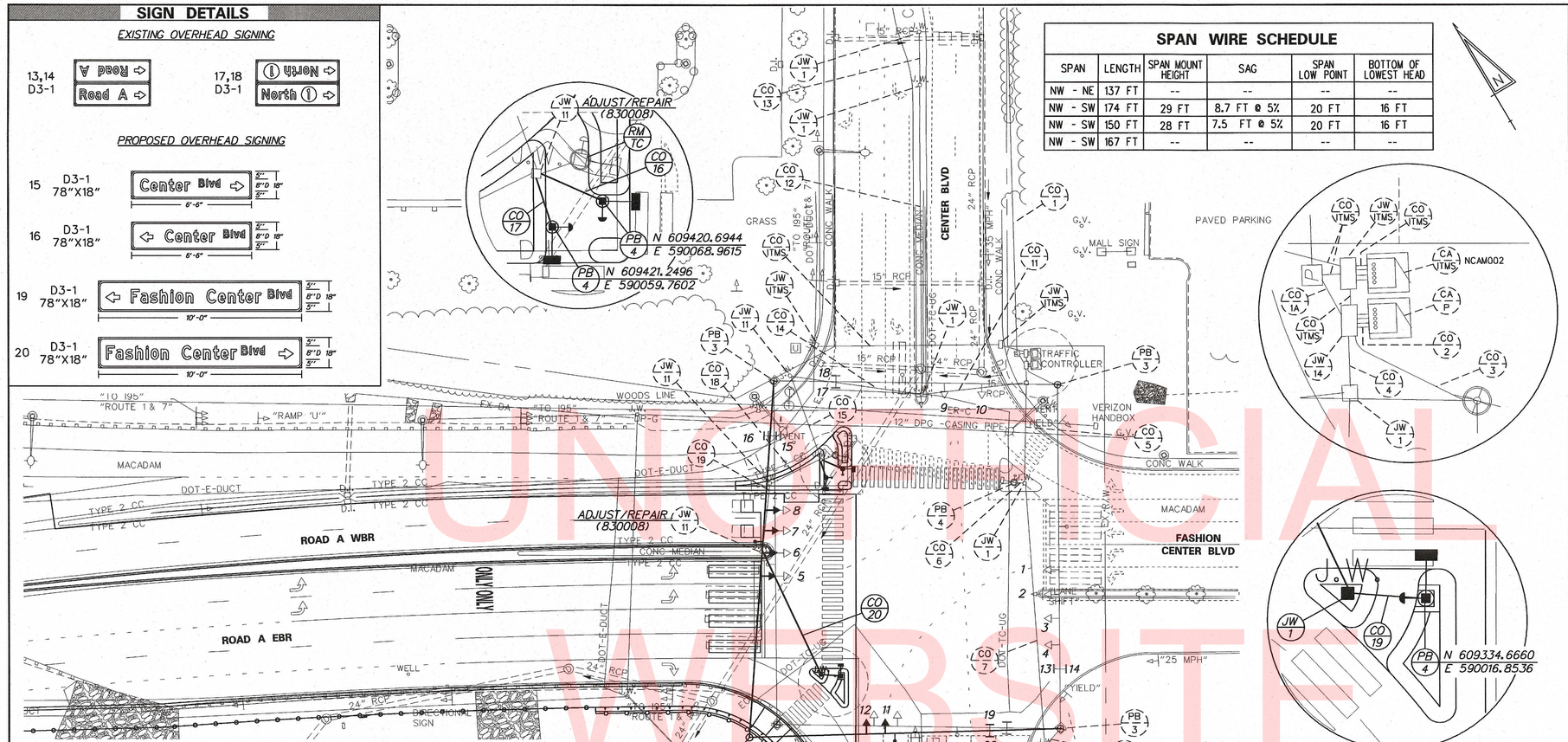

CONDUIT RUN SCHEDULE

CR NO.	NO. OF CONDUITS	SIZE	LENGTH	B/T/O	AMOUNT AND TYPE OF CABLE / WIRE
*1	1	2"	250'	--	(2)#6 AWG, (1)#6 Bare Copper Ground
*1A	1	2"	5'	--	(2)#6 AWG, (1)#6 Bare Copper Ground
*2	4	4"	5'	--	(20)#14/2, (1)#14/5, Coax Cable, (1)#6 Ground. Remove-(2)#14/16, (4)#18/4 Install-(2)#14/16, (4)#18/4, (3)#14/5
*3	1	3"	20'	--	Coax Cable, (1)#6 Ground. Remove-(2)#14/16, (4)#18/4. Install-(2)#14/16, (4)#18/4
*4	1	4"	10'	--	(20)#14/2, (1)#14/5, (1)#6 Ground. Install-(3)#14/5
*5	1	4"	50'	--	(9)#14/2, (1)#14/5, (1)#6 Ground
*6	1	2.5"	5'	--	(1)#14/5, (1)#6 Ground
*7	1	4"	128'	--	(5)#14/2, (1)#6 Ground
*8	1	3"	10'	--	Empty
*9	1	4"	65'	--	(5)#14/2, (1)#6 Ground
*10	1	3"	200'	--	(4)#14/2, (1)#6 Ground
*11	1	4"	50'	--	(11)#14/2, (1)#6 Ground. Install-(3)#14/5
*12	1	1.5"	150'	--	(3)#14/2, (1)#6 Ground
*13	1	1.5"	25'	--	(3)#14/2, (1)#6 Ground
*14	1	4"	65'	--	(7)#14/2, (1)#6 Ground. Install-(3)#14/5
*15	1	3"	45'	--	(7)#14/2, (1)#6 Ground. Install-(3)#14/5
16	1	3"	10'	T	(1)#14/5, (1)#6 Ground
17	1	3"	10'	T	(1)#14/5, (1)#6 Ground
*18	1	4"	30'	--	(7)#14/2, (1)#6 Ground. Install-(1)#14/5
*19	1	4"	35'	--	(6)#14/2, (1)#6 Ground. Install-(1)#14/5
20	1	4"	65'	B	(1)#14/5, (1)#6 Ground
21	1	3"	10'	T	(1)#14/5, (1)#6 Ground

*DENOTES EXISTING

B = BORE, T = TRENCH, O = OPEN CUT

PEDESTRIAN SIGNAL NOTES:

8. DELDOT TRAFFIC SHALL INSTALL PEDESTRIAN COUNTDOWN SIGNAL HEADS.
9. DELDOT TRAFFIC SHALL INSTALL COUNTDOWN PEDESTRIAN SIGNS (R10-3e) TO ALL PEDESTRIAN POLE PARALLEL TO THE RELEVANT CROSSING.
10. PROPOSED POLE BASE SUPPORTING POLES WITH PEDESTRIAN PUSH BUTTONS SHALL BE CONSTRUCTED IMMEDIATELY ADJACENT TO THE FLAT (50:1 OF FLATTER) LANDING AREA OF THE CURB RAMP IN ACCORDANCE WITH CURRENT ADA BEST PRACTICES. THESE POLE BASES SHALL BE FLUSH WITH THE ADJOINING LANDING AREA. THE PEDESTRIAN PUSH BUTTON SHOULD BE INSTALLED AT A HEIGHT OF 42 INCHES TO 48 INCHES ABOVE LANDING AREA AND SHALL BE LOCATED SUCH THAT MAXIMUM REACH DISTANCE DOES NOT EXCEED 10 INCHES FROM THE LANDING AREA TO THE FACE OF THE PUSHBUTTON. PEDESTRIAN SIGNAL HEADS SHOULD BE MOUNTED WITH THE BOTTOM OF THE SIGNAL HOUSING, INCLUDING BRACKETS, NOT LESS THAN 7 FEET OR MORE THAN 10 FEET ABOVE LANDING AREA OR SIDEWALK LEVEL.

SIGNAL NOTES:

8. DELDOT TRAFFIC FORCES TO INSTALL, REMOVE, ADJUST AND REPOSITION ALL OVERHEAD SIGNAL EQUIPMENT AS REQUIRED.
9. CONTRACTOR SHALL RE-INSTALL LOOP DETECTORS AS REQUIRED TO MAINTAIN SIGNAL DETECTION, DURING ALL REQUIRED PHASES OF CONSTRUCTION. THE CONTRACTOR SHALL CONTACT THE SIGNAL CONSTRUCTION MANAGER AT 302.222.5920 A MINIMUM OF 10 DAYS PRIOR TO RECUTTING OR DISCONNECTION OF LOOPS.
10. THE CONTRACTOR SHALL PROVIDE M.O.T. FOR DELDOT TRAFFIC CONTRACTOR THROUGH ALL PHASES OF NEEDED CONSTRUCTION.
11. CONTRACTOR SHALL CONTACT THE SIGNAL CONSTRUCTION MANAGER AT 302.222.5920 10 DAYS PRIOR TO ANY TRAFFIC SWITCHES AND/OR SIGNAL ADJUSTMENT NEEDS.
12. MARKINGS AND ITMS SHOWN FOR INFORMATIONAL PROPOSES ONLY SEE SSC FOR ADDITIONAL INFORMATION.
13. NEW SPAN, SIGNAL HEADS, SIGNS AND CABLES SHALL BE INSTALLED. PRIOR TO THE REMOVAL OF EXISTING EQUIPMENT.

SIGNAL PHASING

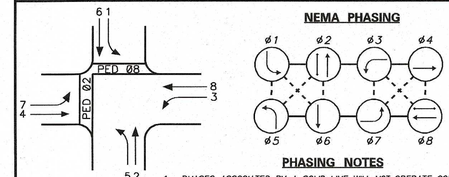

PHASING NOTES

1. PHASES ASSOCIATED BY A SOLID LINE WILL NOT OPERATE CONCURRENTLY.
2. PHASES ASSOCIATED BY A DASHED LINE WILL OPERATE CONCURRENTLY.

SIGNAL HEAD DIAGRAM

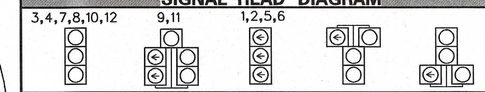

LEGEND

AB	ABANDON	OH	EXISTING OVERHEAD RUN IDENTIFIER (# OF OVERHEAD RUN)
CA X	EXISTING CABINET IDENTIFIER (TYPE OF CABINET)	OH	PROPOSED OVERHEAD RUN IDENTIFIER (# OF OVERHEAD RUN)
CA X	PROPOSED CABINET IDENTIFIER (TYPE OF CABINET)	PB X	EXISTING POLE BASE IDENTIFIER (TYPE OF POLE BASE)
CO #	EXISTING CONDUIT RUN IDENTIFIER (# OF CONDUIT RUN)	PB X	PROPOSED POLE BASE IDENTIFIER (TYPE OF POLE BASE)
CO #	PROPOSED CONDUIT RUN IDENTIFIER (# OF CONDUIT RUN)	PL X	EXISTING POLE IDENTIFIER (# OF POLE)
JW X	EXISTING JUNCTION WELL IDENTIFIER (TYPE OF JUNCTION WELL)	PL X	PROPOSED POLE IDENTIFIER (# OF POLE)
JW X	PROPOSED JUNCTION WELL IDENTIFIER (TYPE OF JUNCTION WELL)	RM C	REMOVE BY CONTRACTOR
MA XX	EXISTING MAST ARM IDENTIFIER (LENGTH OF ARM)	RM O	REMOVE BY OTHERS
MA XX	PROPOSED MAST ARM IDENTIFIER (LENGTH OF ARM)	RM TC	REMOVE BY TRAFFIC CONTRACTOR

	EXISTING SYMBOL	PROPOSED SYMBOL
JUNCTION WELL	J.W.	
LOOP DETECTOR, TYPE 1		
LOOP DETECTOR, TYPE 2		
LUMINAIRE		
MAST ARM		
MICROWAVE DETECTION		
OPTICOM RECEIVER		
OVERHEAD SIGNING		
PEDESTRIAN POLE/BASE		
PEDESTRIAN PUSHBUTTON		
PEDESTRIAN SIGNAL HEAD		
RIGHT-OF-WAY		R/W
SERVICE PEDESTAL		P
SIGNAL CABINET		
SIGNAL HEAD		
SIGNAL POLE/BASE		
SPAN INSULATOR		
SPAN WIRE	XX	
UTILITY POLE		
VIDEO DETECTION		

GENERAL SIGNAL NOTES

1. DETECTION - 35 M.P.H. - 5 SECONDS PASSAGE TIME AT 160 FEET FROM STOP BAR.
2. LOOP DETECTORS:
   TYPE #1 - 6'x 6' - TO BE INSTALLED ON MAIN STREET THROUGH MOVEMENTS.
   TYPE #2 - 6'x 25' - TO BE INSTALLED ON MAIN STREET LEFT TURN MOVEMENTS.
   TYPE #2 - 6'x 25' - TO BE INSTALLED ON SIDE STREET THROUGH AND LEFT TURN MOVEMENTS.
3. PROPOSED SIGNAL POLES WILL BE 32' STRAIN POLE.
4. ALL SIGNAL EQUIPMENT REMOVED FROM A PROJECT IS TO BE RETURNED TO DELDOT TRAFFIC DOVER, DELAWARE.
5. POLE BASES, CABINET BASE AND CONDUIT JUNCTION WELLS TO BE REMOVED IN ACCORDANCE WITH SECTION 201 AND 202 OF THE STANDARD SPECIFICATIONS OR AS DIRECTED BY ENGINEER. EXISTING CONDUIT IS TO BE ABANDONED.
6. ALL GALVANIZED CONDUIT (GRC) SHALL BE REAMED AND THREADED. ALL GRC SHALL BE THREADED TOGETHER WITH APPROVED COUPLINGS.SET SCREW, BOLTED, AND COMPRESSION FITTING ARE NOT ACCEPTABLE.
7. ALL UNDERGROUND AND OVERHEAD UTILITIES SHOWN ON THESE PLANS ARE SCHEMATIC ONLY AND MAY NOT BE COMPLETE. THE CONTRACTOR SHALL BE RESPONSIBLE FOR NOTIFYING MISS UTILITY AND/OR THE APPROPRIATE UTILITY PRIOR TO THE BEGINNING OF CONSTRUCTION FOR THE UTILITY MARKOUTS. IF THE CONTRACTOR PERCEIVES THAT A CONFLICT BETWEEN UTILITIES AND THE TRAFFIC SIGNAL WILL OCCUR, THE CONTRACTOR SHALL NOTIFY DELDOT TRAFFIC IMMEDIATELY BEFORE CONSTRUCTION.

RECOMMENDED _____ DATE: 7.10.18

RECOMMENDED _____ DATE: _____

RECOMMENDED _____ DATE: _____

APPROVED TRAFFIC ENGINEER _____ DATE: 07/09/2018

APPROVED FOR INSTALLATION
CHIEF TRAFFIC ENGINEER _____ DATE: 7/10/18

DELAWARE DEPARTMENT OF TRANSPORTATION

ADDENDUM / REVISIONS

SCALE 0 30 60 90 FEET

ROAD A /SR7 IMPROVEMENTS

CONTRACT	T201009002	PERMIT NO.	N538
COUNTY	New Castle	DESIGNED BY:	KJA
		CHECKED BY:	J.Rashid

SIGNAL PLAN ROAD A AT CENTER BLVD

SHEET NO. 147

TOTAL SHTS. 154

UNOFFICIAL WEBSITE COPY

\\BALSRV01\V2012\2012\12146_DELDOT1585\40-ROAD A CONNECTOR\CADD\CONTRACT_PLANS\SG03_RDA.DGN

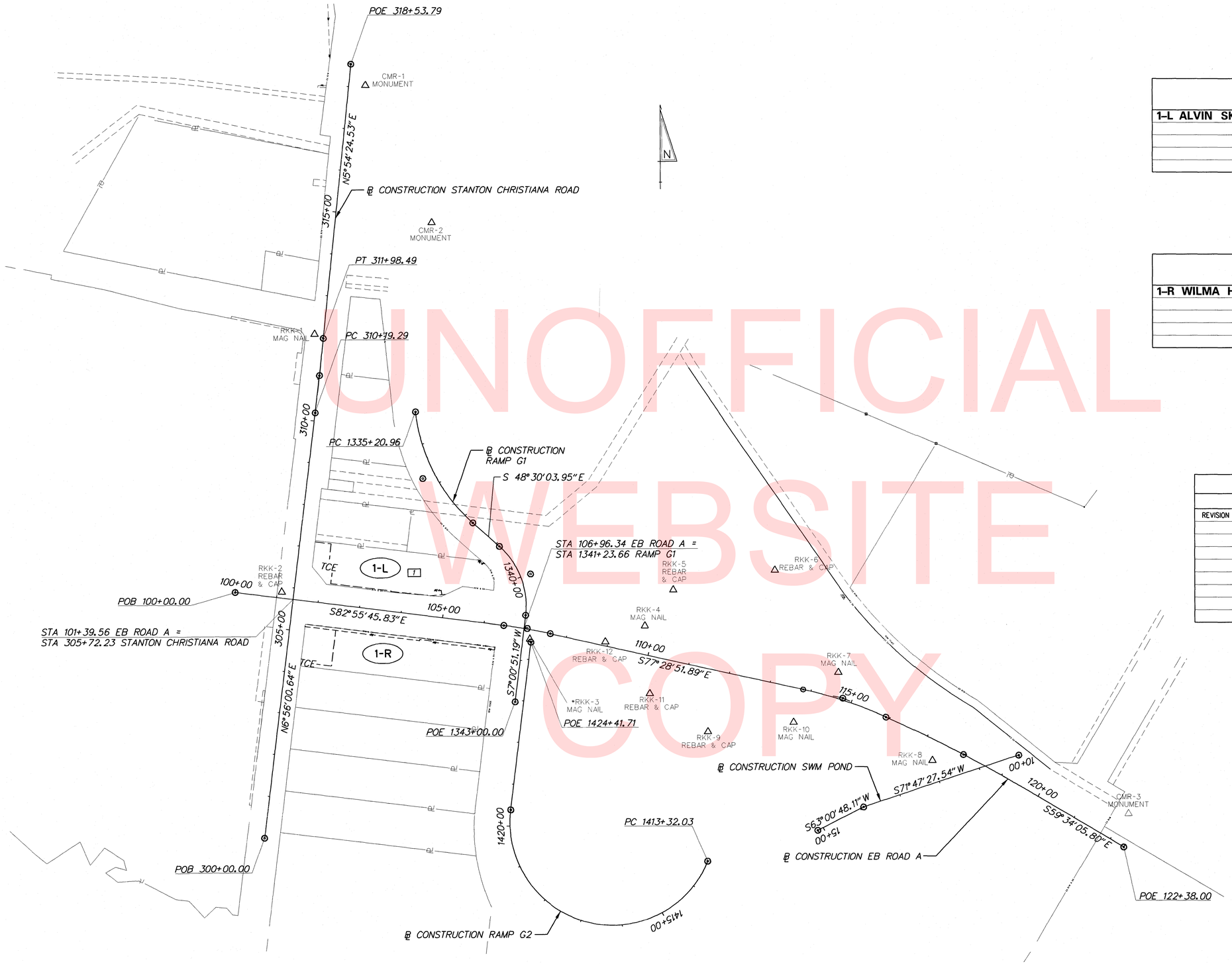

UNOFFICIAL WEBSITE COPY

OWNERSHIP OF RECORD
1-L ALVIN SKINNER & PHYLLIS T.C. SKINNER

OWNERSHIP OF RECORD
1-R WILMA H. GOTT

ADDENDA & REVISIONS

DESCRIPTION	NAME & DATE
REVISION 7 : REVISED PE-1 AND TCE ON PARCEL 1-L; REVISED DATA AND TABULATION SHEET TO REFLECT CHANGES	JKL 1/24/18

PREPARED BY
THE CONSULTING FIRM OF

RUMMEL, KLEPPER & KAHL, LLP

NANCY RUTH BERGERON LICENSE No. 16737 DELAWARE PROFESSIONAL ENGINEER

SEAL

Nancy R. Bergeron — RECOMMENDED — 01/24/2018 DATE

RECOMMENDED AS PER REVISION 1

GROUP ENGINEER, ROW ENGINEERING — 1/12/18 DATE

PROGRAM MANAGER, TEAM SUPPORT — 1/12/18 DATE

TECHNICAL REVIEWER, TEAM SUPPORT — 1/12/18 DATE

ORIGINAL SIGNATURE DATE: 8/14/17

DELAWARE DEPARTMENT OF TRANSPORTATION

ADDENDUMS / REVISIONS

7 PARCEL 1-L: REVISED TCE & PE-1, RLS	
1/24/2018	

SCALE 0 120 240 360 FEET

ROAD A /SR7 IMPROVEMENTS

CONTRACT	T201009002	BRIDGE NO.	1-220
COUNTY	NEW CASTLE	DESIGNED BY:	JCF
		CHECKED BY:	FG

RIGHT OF WAY MOSAIC

SHEET NO. 148
TOTAL SHTS. 154

2/6/2018 1:14:33 PM
\\BALSRV01\V2012\2012\12146_DELDOT585\40-ROAD A CONNECTOR\CADD\CONTRACT\PLANS\RM01_RDA.DGN

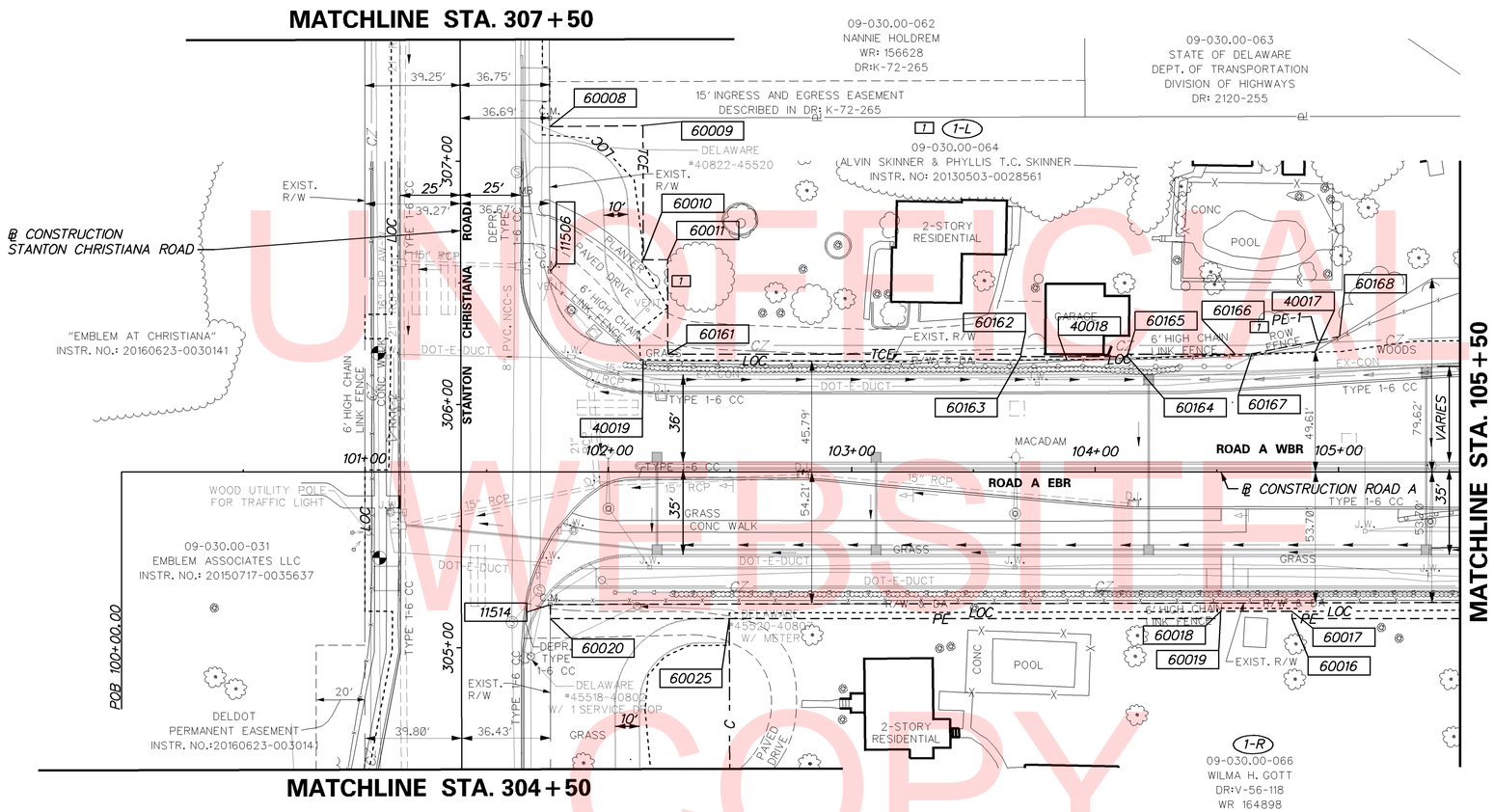

UNOFFICIAL WEBSITE COPY

NOTE:
STORMWATER MANAGEMENT FACILITIES, INCLUDING BEST MANAGEMENT PRACTICE (BMP) FACILITIES, MAY BE PRESENT WITHIN THE LIMITS OF THIS PROJECT. PLEASE CONSULT THE CONSTRUCTION PLANS FOR THIS PROJECT TO DETERMINE THE TYPE AND LOCATION OF THESE FACILITIES.

DELAWARE DEPARTMENT OF TRANSPORTATION	ADDENDUMS / REVISIONS	SCALE 0 30 60 90 FEET	ROAD A /SR7 IMPROVEMENTS	CONTRACT T201009002	BRIDGE NO. 1-220	RIGHT-OF-WAY PLAN	SHEET NO. 149
	1 PARCEL 1-L, REVISED TCE & PE-1; RLS 1/24/18			COUNTY NEW CASTLE	DESIGNED BY: JCF		TOTAL SHTS. 154
					CHECKED BY: FG		

4/5/2018 5:25:17 PM
\\balsrv01\v2012\2012\12146_DelDOT1585\40-Road A Connector\Cadd\Contract\Plans\rw01_RdA.dgn

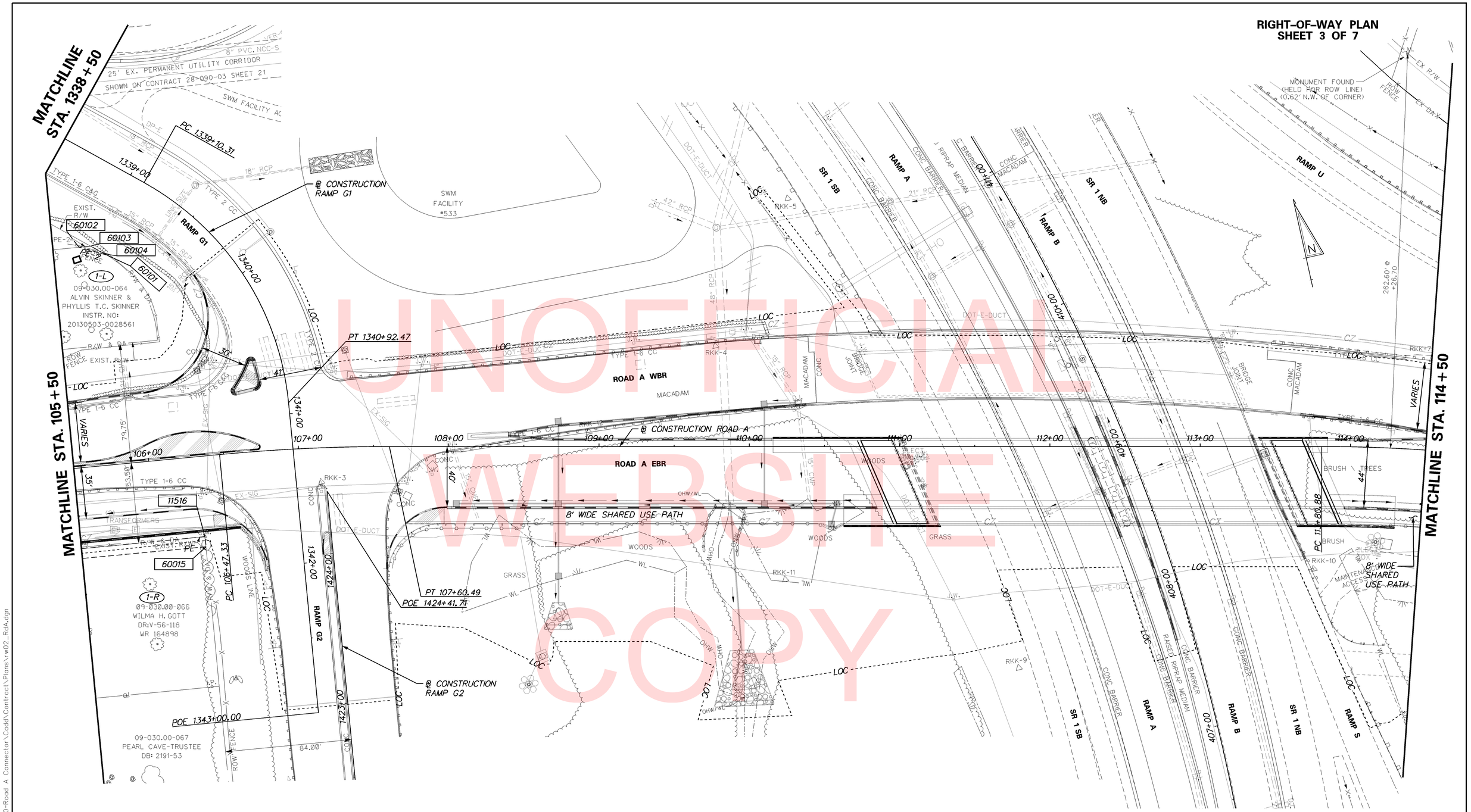

NOTE:
STORMWATER MANAGEMENT FACILITIES, INCLUDING BEST MANAGEMENT PRACTICE (BMP) FACILITIES, MAY BE PRESENT WITHIN THE LIMITS OF THIS PROJECT. PLEASE CONSULT THE CONSTRUCTION PLANS FOR THIS PROJECT TO DETERMINE THE TYPE AND LOCATION OF THESE FACILITIES.

DELAWARE DEPARTMENT OF TRANSPORTATION	ADDENDUMS / REVISIONS	SCALE 0 30 60 90 FEET	ROAD A /SR7 IMPROVEMENTS	CONTRACT T201009002	BRIDGE NO. 1-220	RIGHT-OF-WAY PLAN	SHEET NO. 150
				COUNTY NEW CASTLE	DESIGNED BY: JCF		TOTAL SHTS. 154
					CHECKED BY: FG		

4/5/2018 5:24:31 PM
\\balsrv01\v2012\2012\12146_DelDOT1585\40-Road A Connector\Cadd\Contract\Plans\rw02_RdA.dgn

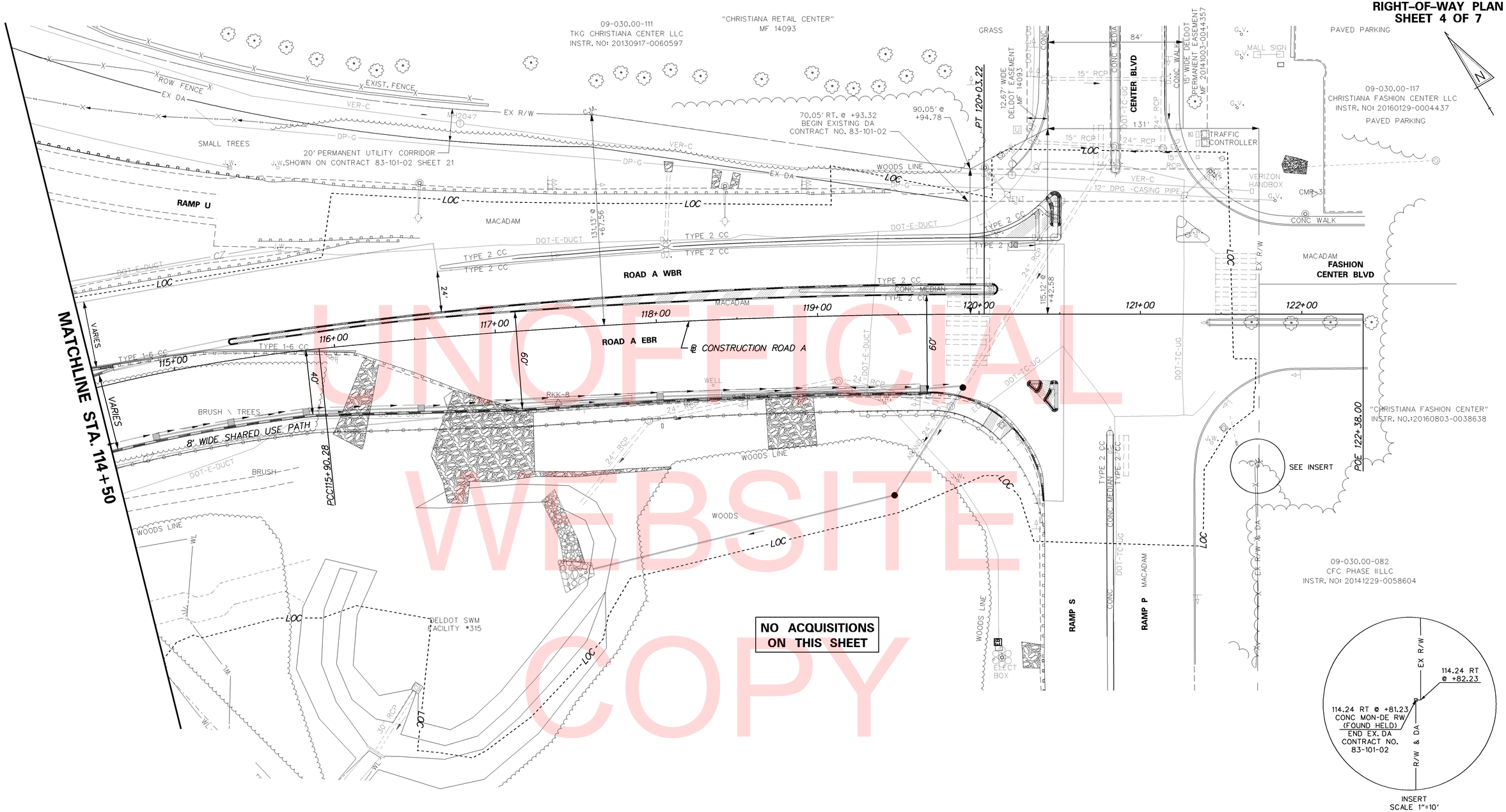

UNOFFICIAL WEBSITE COPY

NOTE:
STORMWATER MANAGEMENT FACILITIES, INCLUDING BEST MANAGEMENT PRACTICE (BMP) FACILITIES, MAY BE PRESENT WITHIN THE LIMITS OF THIS PROJECT. PLEASE CONSULT THE CONSTRUCTION PLANS FOR THIS PROJECT TO DETERMINE THE TYPE AND LOCATION OF THESE FACILITIES.

DELAWARE DEPARTMENT OF TRANSPORTATION	ADDENDUMS / REVISIONS	SCALE 0 30 60 90 FEET	ROAD A /SR7 IMPROVEMENTS	CONTRACT T201009002	BRIDGE NO. 1-220	RIGHT-OF-WAY PLAN
				COUNTY NEW CASTLE	DESIGNED BY: JCF	SHEET NO. 151
					CHECKED BY: FG	TOTAL SHTS. 154

4/5/2018 5:25:41 PM
\\balsrv01\v2012\2012\12146_DelDOT1585\40-Road A Connector\Cadd\Contract\Plans\rw03_RdA.dgn

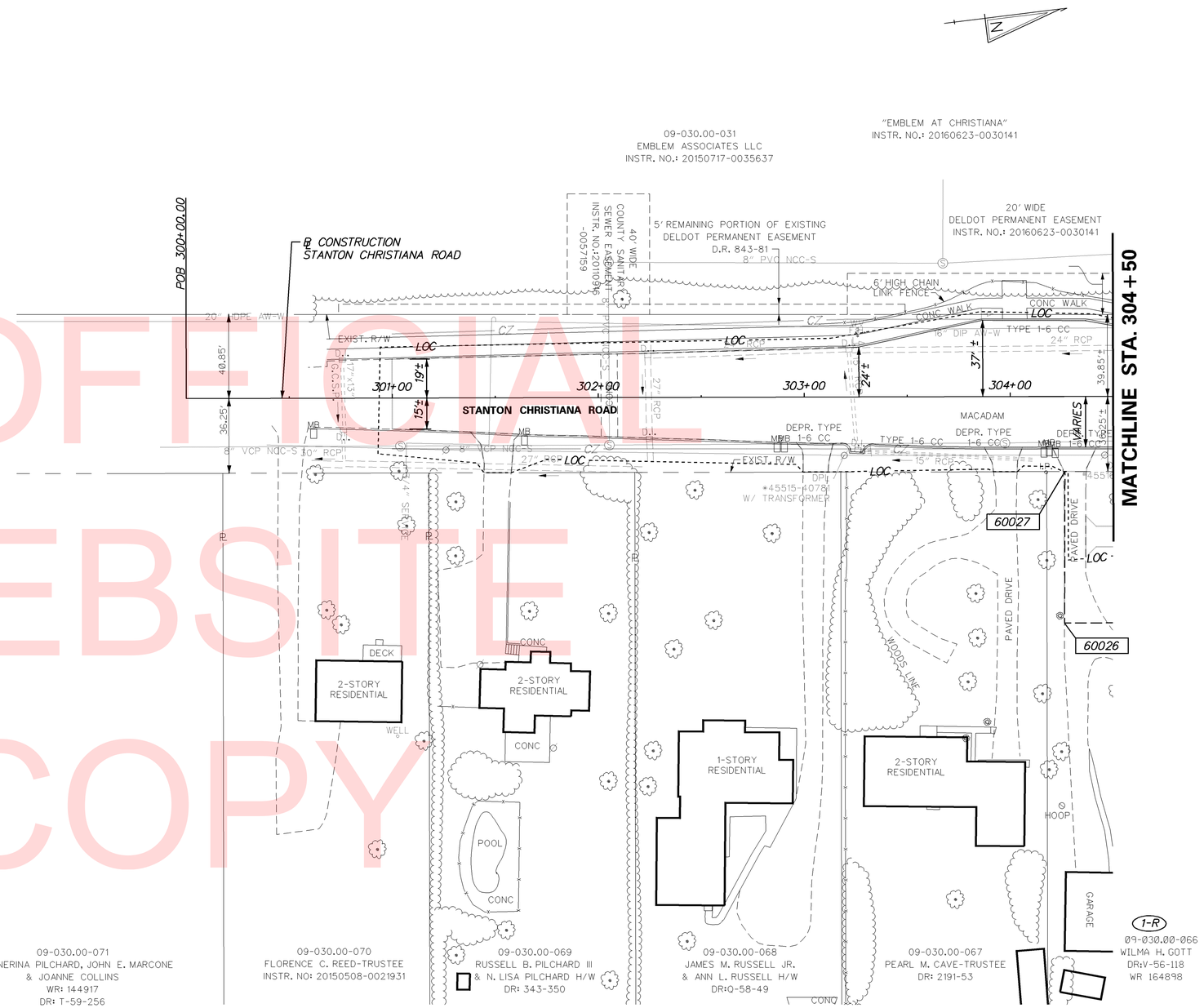

UNOFFICIAL WEBSITE COPY

NOTE:
STORMWATER MANAGEMENT FACILITIES, INCLUDING BEST MANAGEMENT PRACTICE (BMP) FACILITIES, MAY BE PRESENT WITHIN THE LIMITS OF THIS PROJECT. PLEASE CONSULT THE CONSTRUCTION PLANS FOR THIS PROJECT TO DETERMINE THE TYPE AND LOCATION OF THESE FACILITIES.

DELAWARE DEPARTMENT OF TRANSPORTATION	ADDENDUMS / REVISIONS	SCALE 0 30 60 90 FEET	**ROAD A /SR7 IMPROVEMENTS**	CONTRACT T201009002	BRIDGE NO. **1-220**	**RIGHT-OF-WAY PLAN**	SHEET NO. 152
				COUNTY NEW CASTLE	DESIGNED BY: JCF		TOTAL SHTS. 154
					CHECKED BY: FG		

4/5/2018 5:26:15 PM
\\bdsrv01\v2012\2012\12146_DelDOT1585\40-Road A Connector\Cadd\Contract\Plans\rw04_RdA.dgn

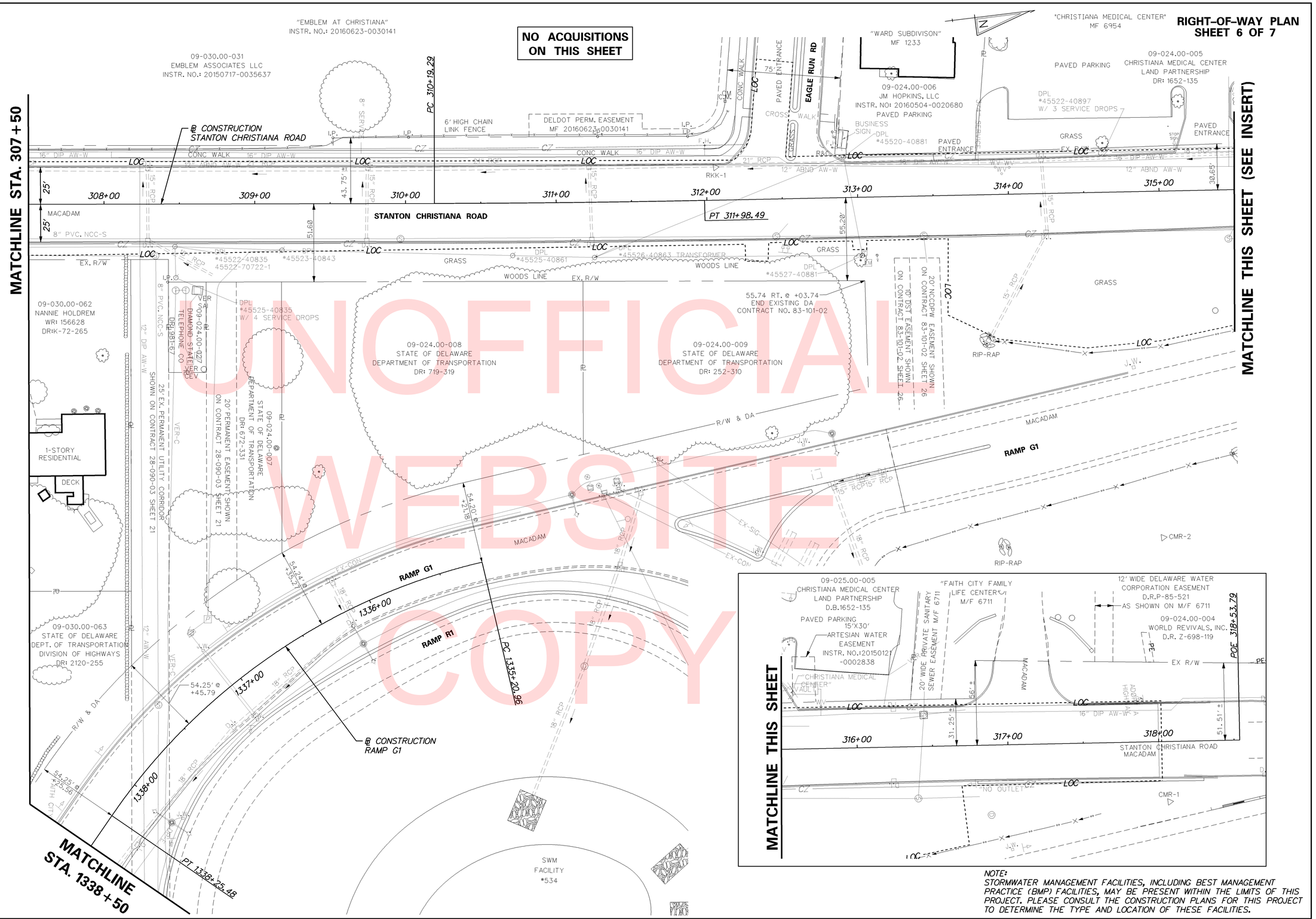

UNOFFICIAL WEBSITE COPY

NOTE:
STORMWATER MANAGEMENT FACILITIES, INCLUDING BEST MANAGEMENT PRACTICE (BMP) FACILITIES, MAY BE PRESENT WITHIN THE LIMITS OF THIS PROJECT. PLEASE CONSULT THE CONSTRUCTION PLANS FOR THIS PROJECT TO DETERMINE THE TYPE AND LOCATION OF THESE FACILITIES.

DELAWARE DEPARTMENT OF TRANSPORTATION	ADDENDUMS / REVISIONS	SCALE 0 30 60 90 FEET	ROAD A /SR7 IMPROVEMENTS	CONTRACT T201009002 / COUNTY NEW CASTLE	BRIDGE NO. 1-220 / DESIGNED BY: JCF / CHECKED BY: FG	RIGHT-OF-WAY PLAN	SHEET NO. 153 / TOTAL SHTS. 154

4/5/2018 5:26:51 PM
\\balsrv01\v2012\2012\12146_DelDOT1585\40-Road A Connector\Cadd\Contract\Plans\rw05_RdA.dgn

ASSESSMENT NUMBER	OWNERSHIP OF RECORD	TYPE OF ACQUISITION	TITLE SOURCE	PARCEL AREA (ACRES)
09-030.00-064	(1-L) ALVIN SKINNER AND PHYLLIS T.C. SKINNER	PE-1	20130503-0028561	0.890

ALIGNMENT NUMBER & DESCRIPTION: 30100 - EB ROAD A 7

PT. NO.	ALIGN. NO.	STATION	OFFSET *	NORTH	EAST	BEARING	DISTANCE	CHORD BEARING	CHORD LENGTH	ARC LENGTH	RADIUS **
40017	30100	104+90.52	-49.61	609873.6747	588572.4590	N 84°57'15.00" W	26.12				
60167	30100	104+64.42	-48.69	609875.9716	588546.4450	N 85°55'15.46" E	36.60				
60168	30100	105+00.33	-55.77	609878.5750	588582.9515	S 64°57'58.00" W	11.58				
40017	30100	104+90.52	-49.61	609873.6747	588572.4590						

FIGURE 60103 AREA = 75.7883 SQ. FT. (0.0017 ACRES)

ASSESSMENT NUMBER	OWNERSHIP OF RECORD	TYPE OF ACQUISITION	TITLE SOURCE	PARCEL AREA (ACRES)
09-030.00-064	(1-L) ALVIN SKINNER AND PHYLLIS T.C. SKINNER	PE-2	20130503-0028561	0.890

ALIGNMENT NUMBER & DESCRIPTION: 30300 - STANTON CHRISTIANA ROAD, 30100 - EB ROAD A

PT. NO.	ALIGN. NO.	STATION	OFFSET *	NORTH	EAST	BEARING	DISTANCE	CHORD BEARING	CHORD LENGTH	ARC LENGTH	RADIUS **
60101	30100	105+85.16	-139.46	609951.1890	588677.4383	N 61°43'30.25" W	19.10				
60102	30100	105+67.36	-146.37	609960.2362	588660.6182	S 83°02'48.45" E	7.73				
60103	30100	105+75.08	-146.39	609959.3008	588668.2882	S 48°30'47.84" E	10.79				
60104	30100	105+45.55	-140.29	609952.1522	588676.3720			S 47°54'29.39" E	1.44	1.44	68.00
60101	30100	105+85.16	-139.46	609951.1890	588677.4383						

FIGURE 60101 AREA = 27.00 SQ. FT. (0.0006 ACRES)

ASSESSMENT NUMBER	OWNERSHIP OF RECORD	TYPE OF ACQUISITION	TITLE SOURCE	PARCEL AREA (ACRES)
09-030.00-064	(1-L) ALVIN SKINNER AND PHYLLIS T.C. SKINNER	TCE	20130503-0028561	0.890

ALIGNMENT NUMBER & DESCRIPTION: 30300 - STANTON CHRISTIANA ROAD, 30100 - EB ROAD A

PT. NO.	ALIGN. NO.	STATION	OFFSET *	NORTH	EAST	BEARING	DISTANCE	CHORD BEARING	CHORD LENGTH	ARC LENGTH	RADIUS **
60008	30300	307+14.15	36.69	610004.0940	588271.6050	S 83°30'16.10" E	38.31				
60009	30300	307+14.44	75.00	609999.7597	588309.6730	S 6°56'00.65" W	55.12				
60010	30300	306+59.32	75.00	609945.0428	588303.0191	S 83°03'59.35" E	10.00				
60011	30300	306+59.32	85.00	609943.8356	588312.9460	S 6°56'00.43" W	38.86				
60161	30100	102+24.44	-48.44	609905.2597	588308.2549	S 82°55'56.08" E	145.01				
60162	30100	103+69.45	-48.45	609887.4172	588452.1633	S 7°04'08.98" W	1.01				
60163	30100	103+69.45	-47.44	609886.4197	588452.0396	S 82°55'45.40" E	43.98				
60164	30100	104+13.43	-47.44	609881.0060	588495.6852	N 7°04'11.98" E	1.01				
60165	30100	104+13.43	-48.45	609882.0058	588495.8092	S 82°55'55.98" E	44.14				
60166	30100	104+57.57	-48.45	609876.5744	588539.6159	N 84°57'14.57" W	69.26				
40018	30100	103+88.35	-46.00	609882.6664	588470.6215	N 83°02'47.00" W	174.03				
40019	30100	102+14.32	-45.65	609903.7355	588297.8715	N 38°59'08.00" W	53.19				
11506	30300	306+54.70	36.67	609945.0813	588264.4076	N 6°57'13.00" E	59.45				
60008	30300	307+14.15	36.69	610004.0940	588271.6050						

FIGURE 60102 AREA = 3879.3476 SQ. FT. (0.0891 ACRES)

ASSESSMENT NUMBER	OWNERSHIP OF RECORD	TYPE OF ACQUISITION	TITLE SOURCE	PARCEL AREA (ACRES)
09-030.00-066	(1-R) WILMA H. GOTT	PE	V-56-118 WR 164898	1.048

ALIGNMENT NUMBER & DESCRIPTION: 30100 - EB ROAD A, 30300 - STANTON CHRISTIANA ROAD

PT. NO.	ALIGN. NO.	STATION	OFFSET *	NORTH	EAST	BEARING	DISTANCE	CHORD BEARING	CHORD LENGTH	ARC LENGTH	RADIUS **
60015	30100	106+32.55	60.26	609747.1536	588699.8778	N 82°55'45.91" W	151.65				
60016	30100	104+80.90	60.26	609765.8200	588549.3850	N 7°04'12.87" E	3.01				
60017	30100	104+80.90	57.25	609768.8072	588549.7555	N 82°55'45.94" W	29.37				
60018	30100	104+51.53	57.25	609772.4224	588520.6089	S 7°04'13.72" W	3.01				
60019	30100	104+51.53	60.26	609769.4353	588520.2384	N 82°55'45.81" W	275.38				
60020	30300	305+11.88	36.45	609803.3321	588246.9557	N 6°57'11.93" E	5.83				
11514	30300	305+17.71	36.46	609809.1210	588247.6617	S 83°02'46.91" E	456.41				
11516	30100	106+32.55	53.50	609753.8657	588700.7105	S 7°04'19.04" W	6.76				
60015	30100	106+32.55	60.26	609747.1536	588699.8778						

FIGURE 60015 AREA = 2785.8500 SQ. FT. (0.0640 ACRES)

ASSESSMENT NUMBER	OWNERSHIP OF RECORD	TYPE OF ACQUISITION	TITLE SOURCE	PARCEL AREA (ACRES)
09-030.00-066	(1-R) WILMA H. GOTT	TCE	V-56-118 WR 164898	1.048

ALIGNMENT NUMBER & DESCRIPTION: 30300 - STANTON CHRISTIANA ROAD, 30100 - EB ROAD A

PT. NO.	ALIGN. NO.	STATION	OFFSET *	NORTH	EAST	BEARING	DISTANCE	CHORD BEARING	CHORD LENGTH	ARC LENGTH	RADIUS **
60020	30300	305+11.88	36.45	609803.3321	588246.9557	S 82°55'45.91" E	73.55				
60025	30100	102+49.70	60.26	609794.2790	588319.9430	S 6°57'01.76" W	85.57				
60026	30300	304+26.17	100.00	609709.3708	588309.6176	N 82°47'34.10" W	73.55				
60027	30300	304+26.48	36.42	609718.5620	588236.6169	N 6°57'13.00" E	85.40				
60020	30300	305+11.88	36.45	609803.3321	588246.9557						

FIGURE 60020 AREA = 6287.3700 SQ. FT. (0.1443 ACRES)

COUNTY ASSESSMENT PARCEL NUMBER	PLAN SHEET NUMBER	OWNERSHIP OF RECORD	TITLE SOURCE	PROPERTY AREA BEFORE ACQUISITION (ACRE) D=DEED C=CALCULATED A=ASSESMENT	ACQUISITION CODE FEE, R/W, P/E, TCE	AREA TO BE ACQUIRED: ACQUISITION (SQ. FEET /ACRES)	AREA TO BE ACQUIRED: AREA OCCUPIED BY EXISTING RIGHT OF WAY (SQ. FEET /ACRES)	AREA TO BE ACQUIRED: EASEMENT: PERMANENT (SQ. FEET /ACRES)	AREA TO BE ACQUIRED: EASEMENT: TEMPORARY (SQ. FEET /ACRES)	PROPERTY AREA REMAINING (SQ. FEET /ACRES)	DEED RECORD OF ACQUISITION	REMARKS
09-030.00-064	115 & 116	(1-L) ALVIN SKINNER AND PHYLLIS T.C. SKINNER	20130503-0028561	C-0.89	PE-1			75.7883 / 0.00 7				
					PE-2			27.00 / 0.001				
					TCE				3879.3476 / 0.09 7	38788.82 / 0.89		
09-030.00-066	115,116,&118	(1-R) WILMA H. GOTT	V-56-118	C-1.05	PE			2785.85 / 0.064				
			WR 164898		TCE				6287.37 / 0.144	45630.17 / 1.05		

LEGEND

FEE AREA OF ACQUISITION
R/W AREA OCCUPIED BY EXISTING R/W
P/E PERMANENT EASEMENT
TCE TEMPORARY CONSTRUCTION EASEMENT

* "-" OFFSET IS LEFT OF BASELINE
** "-" CURVE TURNS TO THE LEFT

DELAWARE DEPARTMENT OF TRANSPORTATION

ADDENDUMS / REVISIONS
7 PARCEL 1-L: REVISED PE-1 & TCE; RLS 1/24/18

ROAD A /SR7 IMPROVEMENTS

CONTRACT T201009002
COUNTY NEW CASTLE
BRIDGE NO. 1-220
DESIGNED BY: JCF
CHECKED BY: FG

RIGHT-OF-WAY DATA SHEET

SHEET NO. 154
TOTAL SHTS. 154

UNOFFICIAL WEBSITE COPY

\\BALSRV01\V2012\2012\12146_DELDOT585\40-ROAD A CONNECTOR\CADD\CONTRACT\PLANS\RB01_RDA.DGN