THE STATE OF DELAWARE
DEPARTMENT OF TRANSPORTATION

U.S. CUSTOMARY UNITS

CONSTRUCTION PLANS FOR:

US 13 & PORT PENN ROAD INTERSECTION

CONTRACT NUMBER: T201011302
FEDERAL AID PROJECT NUMBER: NH-2015(26)

COUNTY: NEW CASTLE M.R. #: 84

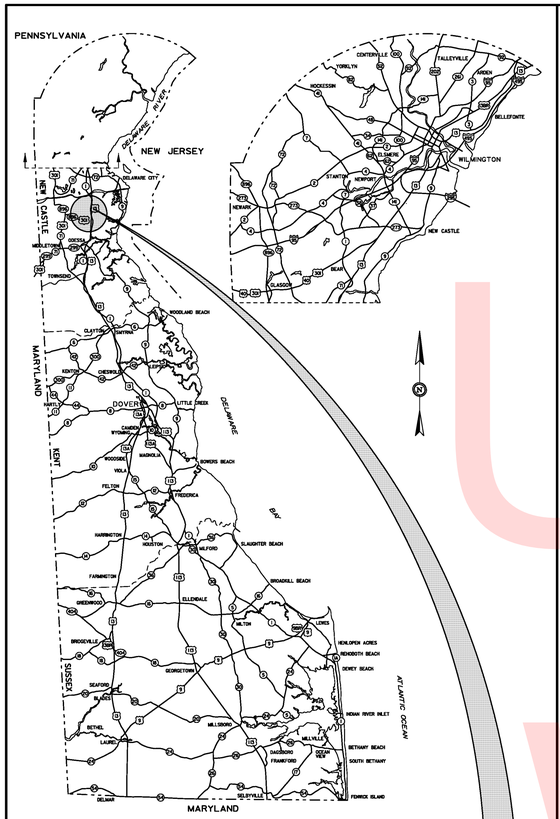

GENERAL LOCATION OF CONTRACT

LIMIT OF CONSTRUCTION
RAMP R
STATION 317+76

LIMIT OF CONSTRUCTION
PORT PENN ROAD
STATION 4012+00

END
CONTRACT T201011302
STATION 144+67

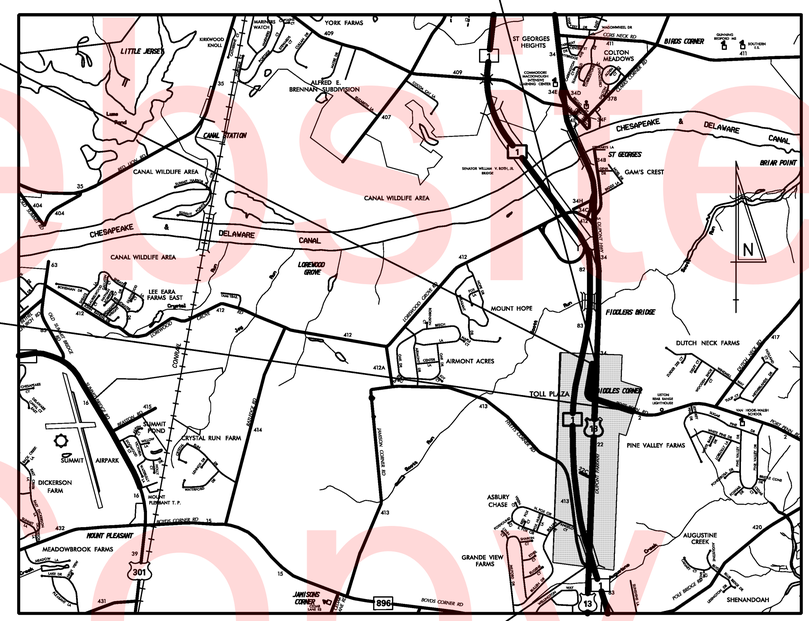

LOCATION MAP
SCALE: 1" = 3000'

BEGIN
CONTRACT T201011302
STATION 80+50

DESIGN DESIGNATION - US 13 (N22)

FUNCTIONAL CLASS: MINOR ARTERIAL	D.H.V. PROJECTED: 4,360	YEAR: 2030
TYPE OF CONSTRUCTION: WIDENING	DESIGN SPEED: 65 M.P.H.	
A.A.D.T. CURRENT: 24,318 YEAR: 2008	TRUCKS: 7 %	
A.A.D.T. PROJECTED: 43,600 YEAR: 2030	DIRECTION OF DISTRIBUTION: 50 %	

SEE SHEET PN-02 FOR PORT PENN ROAD & RAMP R DESIGN DESIGNATIONS

INDEX OF SHEETS

SHEET Nº	TABLE OF CONTENTS
1	TITLE
2-3	PLAN SHEET INDEX
4	LEGEND
5-6	NOTES
7-10	EARTHWORK SUMMARY
11-20	TYPICAL SECTIONS
21-23	HORIZONTAL AND VERTICAL CONTROL
24-36	CONSTRUCTION PLANS
37-49	PROFILES
50-61	GRADES AND GEOMETRICS
62-64	PAVEMENT JOINT LAYOUT PLANS
65-76	CONSTRUCTION DETAILS
77-82	STRUCTURAL SLAB DETAILS
83-95	STORMWATER MANAGEMENT PLANS
96-99	ENVIRONMENTAL COMPLIANCE PLANS
100-143	CONSTRUCTION PHASING, M.O.T., AND EROSION CONTROL PLANS
144-146	DETOUR PLANS
147-155	LIGHTING PLANS
156-159	UTILITY RELOCATION PLANS
160-178	SIGNING, STRIPING AND CONDUIT PLANS
179	TRAFFIC SIGNAL PLAN

TOTAL SHEETS: 182

APPROVED DESIGN EXCEPTIONS

DESIGN PARAMETER	REQUIRED	PROVIDED	DATE
SUPERELEVATION RATE - PORT PENN ROAD	6%	3.9%	8/8/2013

ADDENDA & REVISIONS

DESCRIPTION	NAME & DATE

ASSOCIATED CONTRACTS

CONTRACT NO.	CONTRACT NAME
T200911308	US 301 SR 896 TO SR 1
T200911302	US 301 & SR 1 INTERCHANGE

PREPARED BY
THE CONSULTING FIRM OF
WR&A
WHITMAN, REQUARDT & ASSOCIATES, LLP
ENGINEERS · ARCHITECTS · PLANNERS EST. 1915

JOSEPH STEPHEN MAKAR REGISTERED No. 7974 DELAWARE PROFESSIONAL ENGINEER
SEAL

RECOMMENDED 08/11/2015 DATE

RECOMMENDED

SQUAD MANAGER, CONSTRUCTION DATE

GROUP ENGINEER, CONSTRUCTION 08/31/2015 DATE

ASSISTANT DIRECTOR, TRANSPORTATION SOLUTIONS (CONSTRUCTION) 09/01/2015 DATE

RECOMMENDED
STORMWATER ENGINEER
DATE 09/04/2015
VINCENT W. DAVIS REGISTERED No. 12898 DELAWARE PROFESSIONAL ENGINEER
SEAL

RECOMMENDED
SQUAD MANAGER, TRANSPORTATION SOLUTIONS (PROJECT DEVELOPMENT OR BRIDGE DESIGN)
DATE 09/04/2015
DIANE MARIE GUNN LICENSE No. 8008 DELAWARE PROFESSIONAL ENGINEER
SEAL

RECOMMENDED
BRIDGE DESIGN ENGINEER
DATE 09/01/2015
JASON N. HASTINGS REGISTERED No. 13545 DELAWARE PROFESSIONAL ENGINEER
SEAL

RECOMMENDED
GROUP ENGINEER, PROJECT DEVELOPMENT
DATE 09/04/2015
JOSEPH A. HOFSTEE REGISTERED No. 14581 DELAWARE PROFESSIONAL ENGINEER
SEAL

RECOMMENDED
ASSISTANT DIRECTOR, TRANSPORTATION SOLUTIONS
DATE 09/11/2015
MARK CHRISTOPHER TUDOR REGISTERED No. 10803 DELAWARE PROFESSIONAL ENGINEER
SEAL

APPROVED
CHIEF ENGINEER
DATE 11/23/2015
ROBERT BRIAN McCLEARY REGISTERED No. 8567 DELAWARE PROFESSIONAL ENGINEER
SEAL

LAST REVISED: 8/7/2008
N:\31653-111\CONTRACT 1B\CADD\TC001U301.1B.DGN

Unofficial Website Copy

PLAN SHEET INDEX CROSS REFERENCE						
CONSTRUCTION PLAN	N/A	N/A	24	25	26	27
PROFILES	N/A	N/A	N/A	N/A	44	45
GRADES AND GEOMETRICS	N/A	N/A	N/A	N/A	50	51
STORMWATER MANAGEMENT	N/A	N/A	N/A	N/A	N/A	83, 87
ENVIRONMENTAL COMPLIANCE PLAN	N/A	N/A	N/A	N/A	N/A	N/A
CONSTRUCTION PHASING, M.O.T. AND E&S PLAN	142	N/A	127, 142	128, 142	129, 142	105, 114, 130, 142
DETOUR PLAN	145, 146	145, 146	145, 146	145, 146	145, 146	145, 146
LIGHTING PLAN	N/A	N/A	N/A	N/A	N/A	N/A
SIGNING, STRIPING AND CONDUIT PLAN	160	161	162	163	164	165
PAVEMENT JOINT PLAN	N/A	N/A	N/A	N/A	N/A	N/A
SIGNALIZATION PLAN	N/A	N/A	N/A	N/A	N/A	N/A

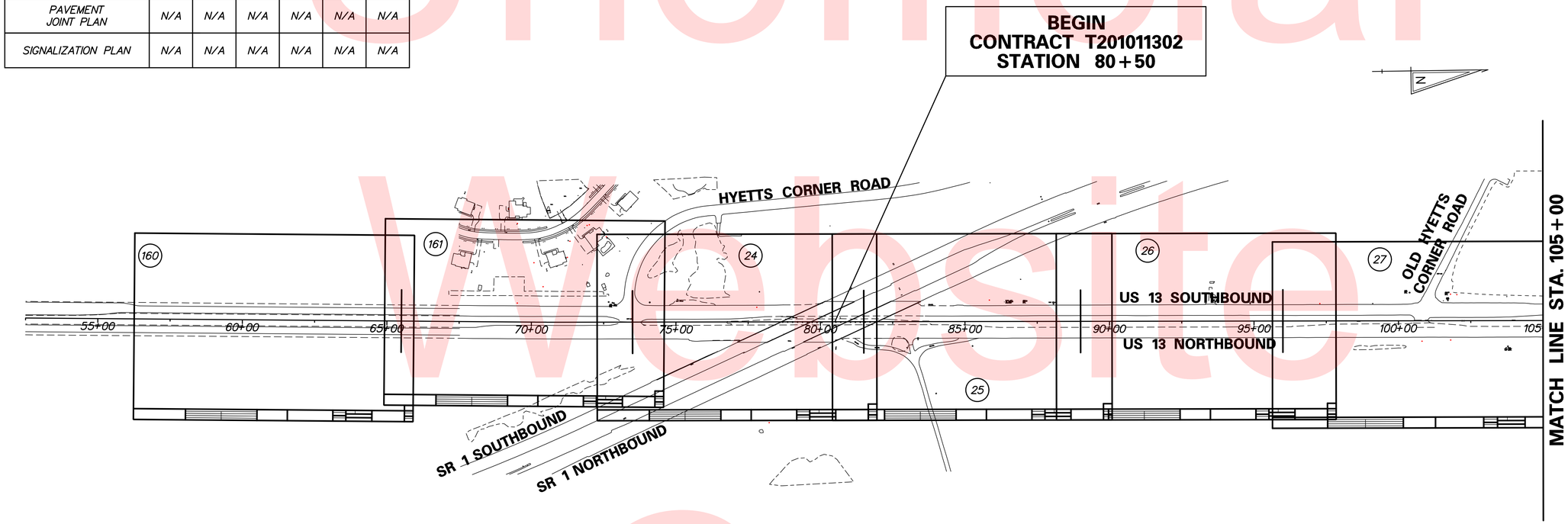

Unofficial Website Copy

N:\31653-000\CONTRACT 1D:\CADD\S001U301_1D.dgn
7/9/2015 3:11:54 PM

DELAWARE DEPARTMENT OF TRANSPORTATION

ADDENDUMS / REVISIONS

SCALE 0 200 400 600 FEET

US 13 & PORT PENN RD INTERSECTION

CONTRACT	BRIDGE NO.
T201011302	DESIGNED BY: N.S.P.
COUNTY	CHECKED BY: B.R.T.
NEW CASTLE	

PLAN SHEET INDEX

IS-01

SHEET NO. 2

TOTAL SHTS. 179

PLAN SHEET INDEX CROSS REFERENCE										
CONSTRUCTION PLAN	28	29	30	31	33	34	35	36	N/A	N/A
PROFILES	46	47	48	37, 40 41, 42 49	37, 38 40, 41	38, 39	42, 43	43	39	N/A
GRADES AND GEOMETRICS	52	53	54	55, 60 61	56	57	58	59	N/A	N/A
STORMWATER MANAGEMENT	N/A	N/A	N/A	N/A	91	91	N/A	N/A	N/A	N/A
ENVIRONMENTAL COMPLIANCE PLAN	N/A	N/A	N/A	N/A	98	99	N/A	N/A	N/A	N/A
CONSTRUCTION PHASING, M.O.T. AND E&S PLAN	105, 115 131	106, 116 132	107, 117, 113, 143	108, 118 122, 134 139, 140 143	109, 119 123, 125 135, 143	110, 120 124, 136, 143	112, 121 137, 141	113, 138 143	111 120, 124	N/A
DETOUR PLAN	145, 146	145, 146	145, 146	145, 146	145, 146	145, 146	144	144	145, 146	N/A
LIGHTING PLAN	N/A	147	148	149	150	151	152	N/A	N/A	N/A
SIGNING, STRIPING AND CONDUIT PLAN	166	167	168	169, 175	170, 175	171	172	173	N/A	174
PAVEMENT JOINT PLAN	N/A	N/A	N/A	62	63	64	N/A	N/A	N/A	N/A
SIGNALIZATION PLAN	N/A	N/A	N/A	179	N/A	N/A	N/A	N/A	N/A	N/A

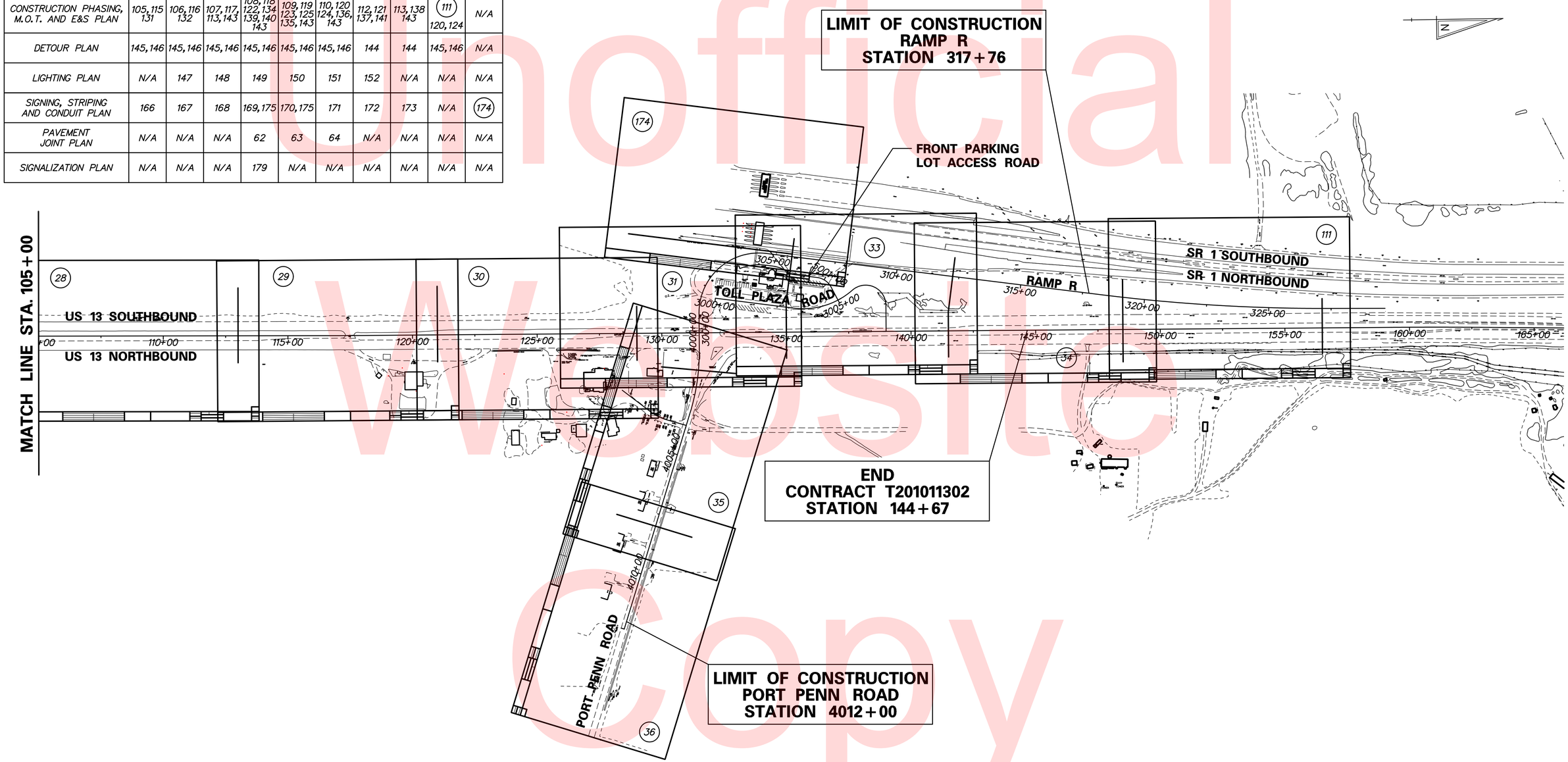

Unofficial Website Copy

N:\31653-000\CONTRACT 1D\CADD\IS0021301_1D.dgn
7/9/2015 3:13:55 PM

DELAWARE DEPARTMENT OF TRANSPORTATION

ADDENDUMS / REVISIONS

SCALE 0 200 400 600 FEET

US 13 & PORT PENN RD INTERSECTION

CONTRACT	BRIDGE NO.
T201011302	DESIGNED BY: N.S.P.
COUNTY	
NEW CASTLE	CHECKED BY: B.R.T.

PLAN SHEET INDEX

IS–02

SHEET NO. 3

TOTAL SHTS. 179

EXISTING SYMBOLS

DRAINAGE

—∞—	DITCH OR STREAM CENTERLINE
	DIRECTIONAL STREAM FLOW ARROW
C.B.	DRAINAGE CATCH BASIN
J.B.	DRAINAGE JUNCTION BOX
D	DRAINAGE MANHOLE
SIZE/TYPE LABEL	DRAINAGE PIPE AND FLOW ARROW
	DRAINAGE PIPE HEADWALL
	RIPRAP - AREA FEATURE
	RIPRAP - LINEAR FEATURE

MANMADE ROADSIDE FEATURES

(TYPE LABEL)	CURB
(TYPE LABEL)	CURB AND GUTTER
—x—	FENCE - CHAINLINK OR STRANDED
	FENCE - STOCKADE OR SPLIT RAIL
F.P.	FLAG POLE
	GUARDRAIL - STEEL BEAM
	GUARDRAIL - WIRE ROPE
LAMP	LAMP AND POST - RESIDENTIAL
MB	MAILBOX
P.M.	PARKING METER AND POST
	PAVEMENT - FLEXIBLE
	PAVEMENT - RIGID
	PILE - BRIDGE
	PILLAR OR MISCELLANEOUS POST
	TRAFFIC SIGN AND POST
	WALL - BRICK OR BLOCK
	WALL - STONE

NATURAL ROADSIDE FEATURES

	GRASS LAWN
	HEDGEROW OR THICKET
	MARSH BOUNDARY LINE
	TREE - CONIFEROUS
	TREE - DECIDUOUS
	TREE STUMP
	SHRUBBERY
—WL—	DELINEATED WETLAND BOUNDARY LINE
	WOODS LINE BOUNDARY
—OHW—	ORDINARY HIGH WATER
—OHW/WL—	ORDINARY HIGH WATER / WETLAND

RIGHT-OF-WAY SYMBOLS

C.M.	PROPERTY MARKER - CONCRETE MON.
I.P.	PROPERTY MARKER - IRON PIPE
100+00	HISTORIC RIGHT-OF-WAY BASELINE
	EXISTING RIGHT-OF-WAY
	EXISTING PROPERTY LINE
—EASEMENT TYPE—	EXISTING EASEMENT
—DA—	EXISTING DENIAL OF ACCESS
—R/W-DA—	EXISTING R/W & DENIAL OF ACCESS

SURVEY CONTROL & MONUMENTATION

B.M.	SURVEY BENCHMARK LOCATION
T.P.	SURVEY TIE POINT LOCATION
△	SURVEY TRAVERSE POINT
	POINT OF CURVATURE OR TANGENCY
	POINT OF INTERSECTING TANGENTS

UTILITY

	SOIL BORING LOCATION
	UTILITY TEST HOLE LOCATION
TV	CABLE TV DISTRIBUTION BOX
E	ELECTRIC MANHOLE
EM	ELECTRIC METER
E	ELECTRIC TRANSFORMER
	POLE MOUNTED LUMINAIRE
G	GAS MANHOLE
G.M.	GAS METER
G.V.	GAS VALVE
G.P.	GAS PUMP - SERVICE STATION
	RAILROAD TRACKS
S	SANITARY SEWER MANHOLE
S.V.	SANITARY SEWER VALVE
VENT	SANITARY SEWER VENT OR CLEANOUT
S.D.F.	SEPTIC DRAIN FIELD
B	TELEPHONE BOOTH
T	TELEPHONE MANHOLE
T	TELEPHONE TEST POINT
J.W.	TRAFFIC - CONDUIT JUNCTION WELL
	TRAFFIC - LIGHT POLE AND BASE
	TRAFFIC - PEDESTRIAN POLE & BASE
	TRAFFIC - SIGNAL CABINET & BASE
	TRAFFIC - SIGNAL POLE AND BASE
U	UTILITY BOX
	UTILITY POLE GUY WIRE ANCHOR
	UTILITY POLE
F.H.	WATER - FIRE HYDRANT
W.M.	WATER METER
W.V.	WATER VALVE
WELL	WELL HEAD
?	MANHOLE - UNDETERMINED OWNER

UTILITY COMPANY FACILITIES

—ESNG-G—	EASTERN SHORE NATURAL GAS
—EX-CON—	DELDOT MULTIDUCT CONDUIT - EXISTING
—EX-ITS—	DELDOT ITMS CONDUIT - EXISTING
—VER-C—	VERIZON CONDUIT
—DP-E—	DELMARVA POWER - ELECTRIC
—DP-G—	DELMARVA POWER - GAS
—ATLANTIC-C—	DELDOT ITMS CONDUIT - EXISTING
—AW-W—	ARTESIAN WATER COMPANY

PROPOSED SYMBOLS

CONSTRUCTION

	CONCRETE SAFETY BARRIER - PERMANENT
	BOLLARD - WOOD POST
	BOLLARD - STEEL POLE
—BFS—	BIOFILTRATION SWALE
	BRICK PATTERNED SURFACE
	BUTT JOINT
100+00	CONSTRUCTION BASELINE
	CURB, TYPE 1 & TYPE 3
	CURB, TYPE 2
	CURB & GUTTER, TYPE 1
	CURB & GUTTER, TYPE 2
	CURB & GUTTER, TYPE 3
	CURB & GUTTER, TYPE 4
—CZ—	CLEAR ZONE
	DRAINAGE INLET
	DITCH
	FENCE - METAL
	FENCE - WOOD
	FLARED END SECTION
	GUARDRAIL, TYPE 1
	GUARDRAIL, TYPE 2
	GUARDRAIL, TYPE 3
	GUARDRAIL END ANCHORAGE
	GUARDRAIL END TREATMENT, TYPE 1
	GUARDRAIL END TREATMENT, TYPE 2
	GUARDRAIL END TREATMENT, TYPE 3
	IMPACT ATTENUATOR
	PAVEMENT REMOVAL - TOPSOIL, SEED AND MULCH
—HC—	HORIZONTAL CLEARANCE
	JUNCTION BOX - DRAINAGE
—LOC—	LIMIT OF CONSTRUCTION
	MANHOLE
	PAVEMENT PATCH
	PIPE & DIRECTIONAL FLOW ARROW
	CULVERT & DIRECTIONAL FLOW ARROW
	RIPRAP
	P.C.C. SIDEWALK @ 4"
	P.C.C. SIDEWALK @ 6"
	UNDERDRAIN
	UNDERDRAIN OUTLET

RIGHT-OF-WAY SYMBOLS

	PROPOSED RIGHT-OF-WAY MONUMENT
—DA—	PROPOSED DENIAL OF ACCESS
—PE—	PROPOSED PERMANENT EASEMENT
—R/W—	PROPOSED RIGHT-OF-WAY
—R/W-DA—	PROPOSED R/W & DENIAL OF ACCESS
—TCE—	TEMPORARY CONSTRUCTION EASEMENT
100+00	PROPOSED RIGHT-OF-WAY BASELINE

IDENTIFIERS

A/C	ADJUST BY CONTRACTOR
A/O	ADJUST BY OTHERS
B	CONCRETE SAFETY BARRIER
C	CURB OR CURB & GUTTER
C.J.B.	CONVERT TO JUNCTION BOX
C.M.H.	CONVERT TO DRAINAGE MANHOLE
C/O	CURB OPENING
CR	CURB RAMP / TYPE
CR-N	CURB RAMP / TYPE - WITHOUT SIDEWALK SURFACE DETECTABLE WARNING SYSTEM
C.S.F.	CONSTRUCTION SAFETY FENCE
DI	DRAINAGE INLET
D.N.D.	DO NOT DISTURB
E.D.	ENERGY DISSIPATOR
F	FENCE
F.E.S.	FLARED END SECTION
F.F./C	FILL WITH FLOWABLE FILL
F.S.	FILTRATION STRUCTURE
G.R.	GUARDRAIL
J.B.	JUNCTION BOX
M.H.	MANHOLE
M	MONUMENT - RIGHT-OF-WAY
P	PIPE
R.L./C	RELOCATE BY CONTRACTOR
R.L./O	RELOCATE BY OTHERS
R.M./C	REMOVE BY CONTRACTOR
R.M./O	REMOVE BY OTHERS
U.D.	UNDERDRAIN / LENGTH
U.D.O.	UNDERDRAIN OUTLET PIPE

TRAFFIC

—ITMS-CON—	ITMS CONDUIT
—SIG-CON—	SIGNAL CONDUIT
	ITMS CONDUIT JUNCTION WELL
	LUMINAIRE
	PAVEMENT MARKINGS
	PAVEMENT STRIPING
	TRAFFIC SIGN

PAVEMENT SECTION(S)

	OVERLAY PAVEMENT - SEE TYPICAL SECTIONS FOR MATERIALS AND DEPTHS
	FULL DEPTH PAVEMENT - SEE TYPICAL SECTIONS FOR MATERIALS AND DEPTHS
	DRIVEWAY, ENTRANCE AND MISC. PAVEMENT - SEE TYPICAL SECTIONS FOR MATERIALS AND DEPTHS

MISCELLANEOUS SYMBOLS

	PAVEMENT REMOVAL OUTSIDE OF ROADWAY TEMPLATE
	POND MAINTENANCE ACCESS ROAD
	42" F-SHAPE CONCRETE SINGLE FACE BARRIER
	EXISTING OVERHEAD SIGN STRUCTURE
	EXISTING OVERHEAD SIGN STRUCTURE
—RPF—	RESOURCE PROTECTION FENCING
JW	ITMS CONDUIT JUNCTION WELL
CO	ITMS CONDUIT
CA	TRAFFIC CABINET
PB	POLE BASE
EW	ENDWALL
ST	SEDIMENT TRAP
SF	SILT FENCE

EROSION & SEDIMENT CONTROL

DWB	DEWATERING BASIN
	EROSION CONTROL BLANKET
ED	EARTH DIKE
	INLET SEDIMENT CONTROL
	PERIMETER DIKE/SWALE
PST	PORTABLE SEDIMENT TANK
—RSF—	REINFORCED SILT FENCE
SBD	SANDBAG DIKE
SB	SANDBAG DIVERSION
	STONE CHECK DAM
SCE	STABILIZED CONSTRUCTION ENTRANCE
—SF—	SILT FENCE
SP-1	SUMP PIT, TYPE 1
SP-2	SUMP PIT, TYPE 2
ST	SEDIMENT TRAP
ST	SEDIMENT TRAP WITH INLET AS OUTLET
ST	SEDIMENT TRAP PIPE OUTLET
SW	STILLING WELL
	TEMPORARY SWALE
TSD	TEMPORARY SLOPE DRAIN

Unofficial Website Copy

N:\31653-000\Contract ID\CADD\lg001U301_1D.dgn
6/17/2015 9:22:34 AM

DELAWARE DEPARTMENT OF TRANSPORTATION

ADDENDUMS / REVISIONS

NOT TO SCALE

US 13 & PORT PENN RD INTERSECTION

CONTRACT	BRIDGE NO.	
T201011302	DESIGNED BY: J.A.D.	
COUNTY		
NEW CASTLE	CHECKED BY: B.R.T.	

LEGEND

LG-01

SHEET NO. 4

TOTAL SHTS. 179

GENERAL NOTES

1. THIS PROJECT IS TO BE CONSTRUCTED IN ACCORDANCE WITH THE DELAWARE DEPARTMENT OF TRANSPORTATION "STANDARD SPECIFICATIONS", DATED AUGUST 2001 AND THE DELAWARE DEPARTMENT OF TRANSPORTATION "STANDARD CONSTRUCTION DETAILS", DATED 2001, INCLUDING ALL REVISIONS UP TO THE DATE OF ADVERTISEMENT.

2.

EROSION POTENTIAL FOR THIS PROJECT	CONTRACTOR ESC SUPERVISOR REQUIREMENT
( ) INSIGNIFICANT	NONE
( ) MINOR	CONTRACTOR TRAINING PROGRAM, AS DEFINED IN SECTION 6.2 OF THE DELAWARE SEDIMENT AND STORMWATER REGULATIONS.
( ) MEDIUM	CONTRACTOR TRAINING PROGRAM, AS DEFINED IN SECTION 6.2 OF THE DELAWARE SEDIMENT AND STORMWATER REGULATIONS.
(X) MAJOR	CERTIFIED CONSTRUCTION REVIEWER (CCR), AS DEFINED IN SECTION 6.3 OF THE DELAWARE SEDIMENT AND STORMWATER REGULATIONS.

3. ELECTRONIC PROJECT FILES THAT WILL BE MADE AVAILABLE TO THE AWARDED CONTRACTOR, INCLUDE:

( )	NONE
(X)	ASCII DATA FILES WITH COORDINATES AND ELEVATIONS FOR PROPOSED POINTS AS SELECTED BY THE ENGINEER.
(X)	ALL PLAN SHEETS, IN PDF FORMAT.
(X)	EXISTING DIGITAL TERRAIN MODEL, IN .DTM FILE FORMAT, COMPATIBLE WITH SOFTWARE CURRENTLY USED BY DELDOT.
(X)	PROPOSED DIGITAL TERRAIN MODEL, IN .DTM FILE FORMAT, COMPATIBLE WITH SOFTWARE CURRENTLY USED BY DELDOT.
(X)	DESIGN FILE, IN .DGN FILE FORMAT, CONTAINING ONLY THE PROPOSED 3D TRIANGLES OF THE PROPOSED DIGITAL TERRAIN MODEL (DTM).

4. PROJECT FILES THAT WILL BE MADE AVAILABLE TO THE CONTRACTOR, INCLUDE:

(X)	CROSS SECTIONS
(X)	RIGHT-OF-WAY PLANS (WILL BE MADE AVAILABLE TO THE AWARDED CONTRACTOR)

5. AMERICAN TRAFFIC SAFETY SERVICES ASSOCIATION (ATSSA) CERTIFIED TRAFFIC CONTROL SUPERVISOR REQUIREMENT FOR THIS PROJECT.

( )	THE CONTRACTOR SHALL NOT BE REQUIRED TO HAVE AN ATSSA SUPERVISOR ASSIGNED TO THIS PROJECT.
( )	THE CONTRACTOR SHALL HAVE AN ATSSA SUPERVISOR ASSIGNED TO THIS PROJECT. THE CONTRACTOR'S GENERAL SUPERINTENDENT FOR THIS PROJECT OR ANOTHER ATSSA CERTIFIED MEMBER OF THE CONTRACTOR'S PROJECT STAFF MAY BE THE ATSSA SUPERVISOR. PAYMENT FOR ATSSA SUPERVISOR IS INCIDENTAL TO ITEM 743000.
( )	THE CONTRACTOR SHALL HAVE AN ATSSA SUPERVISOR ASSIGNED TO THIS PROJECT. THE ATSSA SUPERVISOR'S SOLE JOB SHALL BE SUPERVISION OF THE INSTALLATION, OPERATION AND MAINTENANCE OF TRAFFIC CONTROL DEVICES FOR THIS PROJECT. THE CONTRACTOR'S GENERAL SUPERINTENDENT FOR THIS PROJECT SHALL NOT BE THE ATSSA SUPERVISOR. PAYMENT FOR ATSSA SUPERVISOR SHALL BE PAID FOR UNDER ITEM 743031.

6. THE DISTURBED AREA FOR THIS PROJECT IS 28.33 ACRES.

7. THE SEDIMENT AND STORMWATER MANAGEMENT PLANS HAVE BEEN APPROVED BY DELDOT'S STORMWATER ENGINEER UNDER DELDOT'S DELEGATED AUTHORITY. THE SEDIMENT AND STORMWATER MANAGEMENT PLANS ARE VALID FOR A THREE YEAR PERIOD, BEGINNING ON THE DATE THE STORMWATER ENGINEER SIGNED THE CONSTRUCTION TITLE SHEET. IF THE FINAL ACCEPTANCE OF THE PROJECT IS ANTICIPATED TO EXTEND BEYOND THE THREE YEARS, THE CONTRACTOR SHALL INFORM THE ENGINEER THREE MONTHS PRIOR TO THE EXPIRATION OF THE SEDIMENT AND STORMWATER MANAGEMENT PLAN APPROVAL. THE STORMWATER ENGINEER WILL REVIEW THE CURRENT SEDIMENT AND STORMWATER MANAGEMENT PLAN AND ISSUE AN EXTENSION WITH ANY APPROPRIATE MODIFICATIONS.

PROJECT NOTES

SECTION 100

1. ANY DAMAGE TO ITEMS NOTED TO BE RELOCATED OR RESET BY THE CONTRACTOR, AT THE DISCRETION OF THE ENGINEER, SHALL BE REPAIRED AND/OR REPLACED IN KIND AT THE CONTRACTOR'S EXPENSE.

2. PRIOR TO PERFORMING ANY WORK ON THE PROJECT, THE CONTRACTOR AND THE ENGINEER'S REPRESENTATIVE SHALL JOINTLY PERFORM SUFFICIENT FIELD SURVEYS TO VERIFY THE ADVERTISED CROSS SECTIONS AND ELECTRONIC PROJECT FILES AND AGREE ON THE RESULTS TO ESTABLISH INITIAL GROUND ELEVATIONS THAT SHALL BE USED IN CALCULATING QUANTITIES. ANY DISCREPANCIES FOUND SHALL BE AGREED UPON PRIOR TO BEGINNING EARTHWORK OPERATIONS. ALL COSTS SHALL BE INCLUDED IN ITEM 763501 - CONSTRUCTION ENGINEERING.

3. PRIOR TO PERFORMING ANY WORK IN AREAS WHERE ADVANCE GRADING HAS BEEN PERFORMED UNDER OTHER CONTRACTS, THE CONTRACTOR AND THE ENGINEER'S REPRESENTATIVE SHALL JOINTLY PERFORM FIELD SURVEYS AND AGREE ON THE RESULTS TO ESTABLISH INITIAL GROUND ELEVATIONS THAT SHALL BE USED IN CALCULATING QUANTITIES. ALL COSTS SHALL BE INCLUDED IN ITEM 763501 - CONSTRUCTION ENGINEERING.

4. DELETE IN ITS ENTIRETY STANDARD SPECIFICATION SUBSECTION 104.10 "RIGHTS IN AND USE OF MATERIALS FOUND ON THE WORK" AND REPLACE WITH THE FOLLOWING: THE CONTRACTOR CAN EXPECT TO ENCOUNTER HORIZONTAL AND VERTICAL DEPOSITS OF MATERIAL IN THE ROADWAY EXCAVATIONS OR EXCAVATION FROM OTHER WORK ITEMS THAT WILL MEET THE REQUIREMENTS FOR BORROW TYPES A, C, D, F AND/OR FURNISHING BORROW, TYPE C AS WELL AS UNSUITABLE MATERIALS. ALL REFERENCES TO THESE VARIOUS BORROW TYPES IN THE PLANS AND SPECIAL PROVISIONS SHALL BE INTERPRETED TO MEAN MATERIALS OBTAINED FROM ON-SITE EXCAVATIONS MEETING THE GRADATION REQUIREMENTS OF THE BORROW TYPE STATED IN THE PLANS OR SPECIAL PROVISIONS. THE CONTRACTOR SHALL PERFORM THE EXCAVATIONS IN A METHOD APPROVED BY THE ENGINEER SO THAT THESE DEPOSITS OF MATERIAL ARE MADE AVAILABLE TO MEET THE PROJECT NEEDS. EXCESSIVE OR INSUFFICIENT MOISTURE CONTENT SHALL NOT BE CRITERIA FOR CLASSIFYING MATERIAL AS UNSUITABLE FOR USE. PAYMENT FOR ALL OF THESE BORROW TYPES INCORPORATED INTO THE PROJECT WILL BE MADE USING THE BID ITEM UNDER WHICH THE MATERIAL WAS ORIGINALLY EXCAVATED ON SITE. UNLESS APPROVED OR SPECIFIED OTHERWISE BORROW, TYPE A AND BORROW, TYPE C MAY NOT BE AVAILABLE WITHIN THE PROJECT LIMITS: IF UNAVAILABLE, BORROW, TYPE A AND BORROW, TYPE C SHALL BE FURNISHED FROM A SOURSE OUTSIDE THE PROJECT LIMITS AND PAID FOR UNDER THEIR RESPECTIVE PAY ITEMS PLACEMENT, HAULING, STORING, AND COMPACTING OF ALL BORROW MATERIAL EXCAVATED ON SITE TO BE USED AS THE STATED BORROW TYPES A, C, D, F, AND OR /FURNISHING BORROW, TYPE C AS NOTED IN THE PLANS OR SPECIAL PROVISIONS IS INCIDENTAL TO THE ITEM UNDER WHICH IT WAS EXCAVATED (FOR EXAMPLE, ITEMS 202000, 207000, 208000, OR OTHERS AS APPLICABLE). THE MATERIALS SHALL BE PLACED IN ACCORDANCE WITH THEIR INTENDED USE BUT NO PAYMENT WILL BE MADE UNDER THE ITEMS FOR WHICH THE EXCAVATED MATERIALS ARE USED. THE CONTRACTOR IS RESPONSIBLE FOR MANAGING THE ON-SITE EXCAVATIONS TO INCLUDE LOCATING THE TYPES OF BORROW REQUIRED TO MEET THE PLAN NEEDS, STOCKPILING, HAULING, WETTING OR DRYING THE MATERIAL TO MEET STANDARD SPECIFICATION 202.05(F), AND MULTIPLE HANDLING IF NEEDED, WITH ALL COSTS INCIDENTAL TO THE ITEM UNDER WHICH THE MATERIAL WAS INITIALLY EXCAVATED. ALL REQUIRED EROSION AND SEDIMENT CONTROL WILL BE PAID SEPARATELY USING THE APPLICABLE BID ITEMS.

SECTION 200

5. THE CONTRACTOR SHALL REMOVE AND RESET ALL MAILBOXES TO MAINTAIN MAIL SERVICE AS DIRECTED BY THE ENGINEER. THE CONTRACTOR SHALL RELOCATE MAILBOXES AS REQUIRED BY THE PROPOSED GEOMETRICS AND AS DIRECTED BY THE ENGINEER. WHEN RELOCATING MAILBOXES IN CURBED SECTIONS, THE FACE OF THE MAILBOX SHALL BE FLUSH WITH THE BACK EDGE OF CURB. WHEN RELOCATING MAILBOXES IN OPEN SECTIONS, THE FACE OF THE MAILBOX SHALL SET BACK 8 INCHES FROM THE EDGE OF THE PAVED SHOULDER. THE BOTTOM OF THE MAILBOX SHALL BE SET 46 INCHES ABOVE THE ROADWAY SURFACE. MAILBOXES LOCATED AT DRIVEWAY ENTRANCES SHALL BE PLACED ON THE FAR SIDE OF THE DRIVEWAY IN THE DIRECTION OF TRAVEL. POSTS BEING RESET IN CONCRETE SIDEWALK SHALL BE PLACED IN AN APPROPRIATE SIZE PVC SLEEVE. COST FOR ALL WORK AND MATERIALS SHALL BE PAID UNDER ITEM 201000 - CLEARING AND GRUBBING.

6. IN AREAS WHERE TREES OR SHRUBS WILL BE OVERHANGING THE PROPOSED SIDEWALK, PRUNING MAY BE NECESSARY TO ACHIEVE A VERTICAL CLEAR SPACE OF 10 FEET ABOVE THE PROPOSED SIDEWALK ELEVATION. THE CONTRACTOR SHALL PRUNE EXISTING TREE AND SHRUB BRANCHES, WHICH OVERHANG THE SIDEWALK, IN ACCORDANCE WITH I.S.A. STANDARDS. THE CONTRACTOR SHALL NOTIFY DELDOT'S ROADSIDE ENVIRONMENTALIST ADMINISTRATOR, EUGENE 'CHIP' ROSAN, JR. (302) 760-2185 AND/OR HIS DESIGNEE, AT LEAST TWO (2) DAYS PRIOR TO THE PRUNING OPERATION. ALL COSTS ASSOCIATED WITH THE ABOVE WORK TO BE PAID UNDER ITEM 201000 - CLEARING AND GRUBBING.

7. THE ENGINEER MAY REQUIRE THE CONTRACTOR TO EXCAVATE TEST PITS ALONG PROPOSED DRAINAGE RUNS, AT POINTS OF POSSIBLE UTILITY CONFLICTS, TO DETERMINE IF A CONFLICT EXISTS. ANY CONFLICTS SHALL BE COORDINATED BY THE CONTRACTOR, WITH THE ENGINEER AND THE UTILITY COMPANY INVOLVED. THE ENGINEER SHALL ULTIMATELY DETERMINE THE SOLUTION TO THE UTILITY CONFLICT. TEST HOLES SHALL BE MEASURED AND PAID FOR IN ACCORDANCE WITH ITEM 208000, BUT ONLY TO THE ACTUAL DEPTH EXCAVATED.

8. ITEMS TO BE REMOVED UNDER ITEM 211000 - REMOVAL OF STRUCTURES AND OBSTRUCTIONS SHALL INCLUDE, BUT NOT BE LIMITED TO THE FOLLOWING:
   A. CONCRETE SUPPORT FOUNDATIONS FOR TRAFFIC POLES, SIGN STRUCTURES, GROUND MOUNT SIGNS, CABINETS AND LIGHT POLES; JUNCTION WELLS; ELECTRICAL SERVICES AND EQUIPMENT; LIGHT POLES AND POLES FOR OTHER TRAFFIC CONTROL DEVICES; AND OTHER MISCELLANEOUS TRAFFIC CONTROL DEVICE STRUCTURES NOT COVERED UNDER OTHER PAY ITEMS.

   B. MISCELLANEOUS SMALL STRUCTURES NOT COVERED UNDER OTHER PAY ITEMS, INCLUDING DISPOSAL OF ALL MATERIALS.

9. UNLESS OTHERWISE INDICATED IN THE PLANS, UNDER ITEM 201000-CLEARING AND GRUBBING, ALL VEGETATION, TREES, STUMPS, ROOTMAT, ETC. SHALL BE REMOVED IN THEIR ENTIRETY WITHIN THE LIMITS OF CONSTRUCTION REGARDLESS OF THE EMBANKMENT HEIGHT EXCEPT SUCH OBJECTS AS ARE DESIGNATED TO REMAIN OR ARE TO BE REMOVED IN ACCORDANCE WITH OTHER SECTIONS OF THE CONTRACT DOCUMENTS. WORK UNDER ITEM 201000 IS TO BE PERFORMED IN ITS ENTIRETY EITHER BY THE PRIME CONTRACTOR OR AN APPROVED SUBCONTRACTOR. CUTTING OF FIREWOOD BY PRIVATE CITIZENS OR OTHER PARTIES SHALL NOT BE PERMITTED.

10. RIGHT-OF-WAY FENCING IS TO BE INSTALLED ALONG THE DENIAL OF ACCESS THROUGHOUT THE PROJECT LIMITS AS SHOWN ON THE PLANS. CLEARING OUTSIDE OF THE LIMITS OF CONSTRUCTION LINE FOR INSTALLATION OF THE RIGHT-OF-WAY FENCE, UTILITY RELOCATIONS DESCRIBED IN THE UTILITY STATEMENT, OR OTHER NECESSARY CONSTRUCTION SHALL BE KEPT TO A MINIMUM AND SHALL BE INCLUDED IN ITEM 201000 - CLEARING AND GRUBBING. THERE SHALL BE NO GRUBBING OUTSIDE THE LIMITS OF CONSTRUCTION.

11. DELETE THE FIRST SENTENCE OF STANDARD SPECIFICATION SUBSECTION 202.03 (C) AND REPLACE WITH THE FOLLOWING: "ALL TOPSOIL, IF PRESENT, SHALL BE REMOVED IN ITS ENTIRETY IN BOTH CUT AND FILL SECTIONS, REGARDLESS OF EMBANKMENT HEIGHT."

12. EXISTING MATERIALS ALONG THE PROPOSED ROADWAY ALIGNMENTS HAVE THE POTENTIAL TO MEET THE REQUIREMENTS OF THE BORROW, TYPE A PORTION OF THE PROPOSED PAVEMENT SECTIONS. THE CONTRACTOR SHALL EXCAVATE TO THE TOP OF THE BORROW, TYPE A PORTION OF THE PROPOSED PAVEMENT SECTIONS AT WHICH TIME THE MATERIALS SHALL BE EVALUATED BY THE ENGINEER. IF THE MATERIALS ARE DEEMED SUITABLE FOR THE BORROW, TYPE A PORTION OF THE PROPOSED PAVEMENT SECTION, THEN ITEM 202515 - COMPACTING IN-SITU MATERIAL SHALL BE USED AS DIRECTED BY THE ENGINEER. IF THE MATERIALS ARE NOT DEEMED SUITABLE, THEN THE MATERIALS SHALL BE REMOVED WITH PAYMENT MADE UNDER ITEM 202000-EXCAVATION AND EMBANKMENT AS DIRECTED BY THE ENGINEER AND MATERIAL MEETING THE REQUIREMENTS OF BORROW, TYPE A SHALL BE PLACED.

13. APPROVED COVERS SHALL BE INSTALLED OVER ALL LOADED TRUCKS OR TRAILERS HAULING BORROW, EXCAVATED MATERIALS, AGGREGATES, ETC. TO OR FROM THE PROJECT SITE OVER STATE MAINTAINED ROADS. THE COVERS SHALL BE INSTALLED TO PREVENT MATERIAL FROM LEAVING THE TRUCKS OR TRAILERS. THE MATERIAL SHALL BE FULLY COVERED AND THE COVERS TIED ON THE REAR AND BOTH SIDES. ANY MATERIALS DELIVERED, TRANSPORTED, OR REMOVED IN UNCOVERED TRUCKS OR TRAILERS WILL BE INCORPORATED INTO THE PROJECT, OR REMOVED FROM THE SITE, WITH NO PAYMENT TO THE CONTRACTOR FOR FURNISHING, REMOVING, OR PLACING THE MATERIALS.

14. WHEN PERFORMING ANY EXCAVATION OR BACKFILLING OPERATION, THE CONTRACTOR SHALL PROVIDE DEWATERING MEASURES AT ALL TIMES TO KEEP THE GROUNDWATER LEVEL AT LEAST ONE FOOT BELOW THE EXCAVATION ELEVATION, IN COMPLIANCE WITH DELDOT STANDARD SPECIFICATIONS, SECTION 111 - DEWATERING OPERATIONS. THE CONTRACTOR SHALL ALSO PROVIDE NECESSARY DEWATERING TO STABILIZE EXCAVATED SLOPES DURING CONSTRUCTION AND UNTIL THE SLOPES ARE STABILIZED AS DETERMINED BY THE ENGINEER. ALL COSTS SHALL BE INCIDENTAL TO THE APPLICABLE EXCAVATION OR BACKFILLING ITEM.

PROJECT NOTES (CONT.)

SECTION 200 (CONT.)

15. AS NOTED IN THE CONTRACT DOCUMENTS AND AS DIRECTED BY THE ENGINEER, MATERIALS ARE TO BE STOCKPILED FOR LATER USE IN THE PROJECT. THE TOPSOIL FROM THESE STOCKPILE AREAS SHALL BE REMOVED IN ITS ENTIRETY AND STOCKPILED FOR REPLACEMENT IN THE AREA WHERE IT WAS EXCAVATED. THE EXCAVATION AND STOCKPILING OF THE TOPSOIL SHALL BE MEASURED FOR PAYMENT UNDER ITEM 202000 - EXCAVATION AND EMBANKMENT. THE TOPSOIL SHALL BE REPLACED IN REASONABLY CLOSE CONFORMITY TO THE ORIGINAL LINES, GRADES AND ELEVATIONS AS DIRECTED BY THE ENGINEER. ALL COSTS ASSOCIATED WITH REPLACING THE FULL DEPTH OF THE TOPSOIL REMOVED SHALL BE PAID UNDER ITEM 733002-TOPSOILING, 6". THE AREA OF TOPSOIL REPLACED SHALL ONLY BE MEASURED ONCE FOR PAYMENT UNDER ITEM 733002 - TOPSOILING 6" DEPTH REGARDLESS OF THE FULL DEPTH OF TOPSOIL PLACED. SEEDING AND MULCHING OF THE REPLACED TOPSOIL SHALL BE PERFORMED UNDER THE APPLICABLE BID ITEMS.

16. FOR ESTIMATING PAYMENT FOR ALL EARTHWORK ITEMS, TWO-THIRDS OF THE FACTORY RATED CAPACITY OF THE EARTHWORK MOVING EQUIPMENT SHALL BE USED. FOR TEN-WHEEL DUMP TRUCKS, TEN (10) CUBIC YARDS SHALL BE USED.

17. STORMWATER MANAGEMENT POND EXCAVATION:
   A. CLEARING AND GRUBBING OF STORMWATER POND AREAS IS TO BE INCLUDED IN THE LUMP SUM PRICE FOR ITEM 201000.

   B. ALL EXCAVATION AND EMBANKMENT REQUIRED FOR CONSTRUCTION OF STORMWATER PONDS WILL BE PERFORMED, MEASURED AND PAID FOR UNDER ITEM 202000, EXCAVATION AND EMBANKMENT. THE WORK WILL INCLUDE MEASUREMENT FOR:
      I. GENERAL POND EXCAVATION TO THE LINES AND GRADES SHOWN ON THE PLANS, INCLUDING THE INITIAL OVEREXCAVATION FOR USE OF THE SWM FACILITY AS A SEDIMENT BASIN IF INDICATED ON THE PLANS.
      II. EXCAVATION FOR FOREBAYS, CUT-OFF TRENCHES, AND / OR CORE TRENCHES AS SHOWN ON THE PLANS.

   C. EXCAVATION BELOW THE DESIGNED POND FINISHED GRADE OR SUBGRADE ELEVATION FOR RIP-RAP PLACEMENT AND OUTLET STRUCTURE FOUNDATIONS WILL BE INCIDENTAL TO THOSE RESPECTIVE PAY ITEMS.

   D. INITIAL EXCAVATION OF SWM PONDS THAT FUNCTION AS INFILTRATION BASINS SHALL ONLY BE COMPLETED TO TWO (2) FEET ABOVE THE PERMANENT BOTTOMOF THE INFILTRATION BASIN OR AS NOTED ON THE SWM PLANS. AFTER ALL AREAS CONTRIBUTING DRAINAGE TO THE INFILTRATION BASINHAVE BEEN STABILIZED AS APPROVED BY THE ENGINEER, EXCAVATION TO THE PERMANENT BOTTOM ELEVATION OF THE INFILTRATION BASIN SHALL BE PERFORMED.

   E. EXCEPT AS NEEDED FOR CONSTRUCTION OF DAM FOUNDATIONS, CUTOFF TRENCHES, AND OUTLET STRUCTURES, EXCAVATED SUBGRADES WITHIN THE SWM PONDS SHALL NOT BE TEST ROLLED PER SUBSECTION 202.02 OR COMPACTED PER SUBSECTION 202.06.A.

   F. ALL REQUIREMENTS OF STANDARD SPECIFICATION SECTION 271 FOR CONSTRUCTION OF THE SWM FACILITY SHALL APPLY. IF THERE ARE CONFLICTS BETWEEN THE REQUIREMENTS IN STANDARD SPECIFICATION SECTION 271 AND STANDARD SPECIFICATION SECTION 202, THEN THE MORE STRINGENT REQUIREMENT SHALL BE FOLLOWED.

18. SEDIMENT BASIN CONSTRUCTION AND MAINTENANCE:
   A. CLEARING AND GRUBBING OF SEDIMENT BASIN POND AREAS IS TO BE INCLUDED IN THE LUMP SUM PRICE FOR ITEM 201000.

   B. ALL EXCAVATION AND EMBANKMENT REQUIRED FOR CONSTRUCTION OF SEDIMENT BASINS WILL BE PERFORMED, MEASURED AND PAID FOR UNDER ITEM 202000, EXCAVATION AND EMBANKMENT.

   C. REMOVAL OF SEDIMENT FROM THE SEDIMENT BASIN SHALL BE PERFORMED WHEN THE CLEANOUT ELEVATION IS REACHED AS NOTED ON THE PLANS.

   D. SEDIMENT REMOVAL FROM THE SEDIMENT BASIN SHALL BE MEASURED FOR PAYMENT UNDER ITEM 202000. ONLY REMOVAL OF SEDIMENT FROM A SEDIMENT BASIN SHALL BE MEASURED FOR PAYMENT UNDER ITEM 202000.

   E. REMOVAL OF SEDIMENT FROM ALL OTHER EROSION AND SEDIMENT CONTROL DEVICES AND REMOVAL OF SEDIMENT THAT HAS BYPASSED OR OTHERWISE NOT BEEN TRAPPED BY ANY SEDIMENT CONTROL DEVICE SHALL BE INCLUDED IN THE PAYMENT FOR THE SEDIMENT CONTROL ITEM PER SECTION 900.

SECTION 300

19. A. THE CONTRACTOR MAY ELECT TO USE ANY OF THE FOLLOWING MATERIALS TO MEET THE REQUIREMENTS OF ITEM 302007 - GRADED AGGREGATE BASE COURSE, TYPE 'B':
   a. CRUSHED STONE (PER STANDARD SPECIFICATION 821)
   b. CRUSHED CONCRETE (PER STANDARD SPECIFICATION 821)
   c. HOT-MIX MILLINGS (PER SPECIAL PROVISION 302514 MILLED HOT-MIX BASE COURSE)

   THE CONTRACTOR WILL NOT BE ALLOWED TO MIX DIFFERENT MATERIALS (OR SIMILAR MATERIALS FROM DIFFERENT SOURCES) TO MEET THE REQUIREMENTS OF ITEM 302007 - GRADED AGGREGATE BASE COURSE, TYPE 'B'.

   ALL OF THE ABOVE LISTED MATERIALS ARE PERMITTED FOR USE ON THE JOB, PROVIDED THEY ARE SEPARATED INTO APPROVED AREAS. EACH AREA OF BASE COURSE MUST BE CONSTRUCTED USING MATERIALS FROM A SINGULAR SOURCE, FULL DEPTH, IN ORDER THAT PROPER TESTING MAY BE ACCOMPLISHED. THE CONTRACTOR AND DELDOT'S PROJECT ENGINEER SHALL AGREE ON THE LIMITS OF EACH SOURCE OF MATERIAL PRIOR TO PLACEMENT.

   B. THE QUANTITY USED FOR BASE OF EACH OF THE ABOVE LISTED MATERIALS WILL BE THE CONTRACTOR'S CHOICE, WITH THE TOTAL MEETING THE ADVERTISED QUANTITY OF ITEM 302007 - GRADED AGGREGATE BASE COURSE, TYPE 'B'.

   C. THE CONTRACTOR MAY ALSO ELECT TO RECYCLE MILLINGS FOR USE IN WARM-MIX AS PERMITTED BY THE STANDARD SPECIFICATIONS. THE CHOICE OF THE QUANTITY OF MILLINGS USED FOR THIS PURPOSE, OR FOR BASE COURSE, LIES WITH THE CONTRACTOR. ALL MILLING MATERIAL SHALL BECOME PROPERTY OF THE CONTRACTOR.

   D. HOT-MIX MILLINGS MAY BE GENERATED FROM THE FOLLOWING SOURCES:
   a. MATERIAL MADE AVAILABLE WHEN MILLED ON THIS CONTRACT UNDER SECTION 760 - PAVEMENT MILLING.
   b.. MATERIAL MILLED ON THIS CONTRACT AT THE CONTRACTOR'S CHOICE UNDER ITEM 202000.
   c. MILLED MATERIAL FURNISHED ON THE JOB FROM THE CONTRACTOR'S YARD OR OTHER OUTSIDE SOURCE.

   ALL MILLED MATERIALS SHALL MEET THE MATERIAL REQUIREMENTS OF ITEM 302514 - MILLED HOT-MIX BASE COURSE.

   E. PAYMENT CLARIFICATION:
   a. SHOULD THE CONTRACTOR ELECT TO MILL PORTIONS OF HOT-MIX SHOWN ON THE PLANS TO BE REMOVED UNDER ITEM 202000 - EXCAVATION AND EMBANKMENT THE COST OF MILLING THIS HOT-MIX WILL BE PAID AS ITEM 202000 - EXCAVATION AND EMBANKMENT. THE MILLINGS GENERATED MAY BE RECYCLED INTO WARM-MIX, UTILIZED FOR BASE COURSE, OR DISPOSED OF TO AN APPROVED SITE. HAULING COSTS FOR DISPOSAL AND/OR RECYCLING ARE INCIDENTAL TO ITEM 202000 - EXCAVATION AND EMBANKMENT.

   b. MILLINGS GENERATED UNDER SECTION 760 - PAVEMENT MILLING MAY BE RECYCLED INTO WARM-MIX, UTILIZED FOR BASE COURSE OR DISPOSED OF BY THE CONTRACTOR TO AN APPROVED SITE. NO SEPARATE PAYMENT WILL BE MADE FOR TRANSPORTING MILLINGS ON SITE OR TO AN APPROVED DISPOSAL SITE.

   c. SHOULD THE CONTRACTOR ELECT TO TEMPORARILY STOCKPILE MILLINGS ON THE JOB SITE FOR LATER USE, ALL COSTS FOR STOCKPILING AND SUBSEQUENT REHANDLING SHALL BE INCIDENTAL TO ITEM 202000 - EXCAVATION AND EMBANKMENT.

   d. MILLINGS USED FOR BASE COURSE SHALL BE PLACED IN ACCORDANCE WITH THE REQUIREMENTS OF SPECIAL PROVISION 302514 - MILLED HOT-MIX BASE COURSE. NO SEPARATE PAYMENT WILL BE MADE TO FURNISH MILLINGS FROM AN OUTSIDE SOURCE OR TRANSPORT MILLINGS WITHIN THE PROJECT LIMITS. MILLINGS USED FOR BASE COURSE WILL BE PAID IN PLACE AT THE UNIT BID PRICE FOR ITEM 302007 - GRADED AGGREGATE BASE COURSE, TYPE 'B'.

Unofficial Website Copy

PROJECT NOTES (CONT.)

SECTION 300 (CONT.)

e. ALL COSTS TO UTILIZE MILLINGS IN RECYCLED WARM-MIX WILL BE INCIDENTAL TO THE UNIT PRICE BID FOR THE WARM-MIX ITEM USING THE RECYCLED MATERIAL.

f. SPECIAL PROVISION 302514 - MILLED HOT-MIX BASE COURSE IS PROVIDED TO SPECIFY THE MEANS OF LAY DOWN AND COMPACTION AS WELL AS THE MATERIAL REQUIREMENTS FOR MILLINGS USED AS BASE COURSE. ALL COSTS TO BRING THE MILLINGS INTO COMPLIANCE WITH THE REQUIREMENTS OF ITEM 302514 - MILLED HOT-MIX BASE COURSE ARE INCIDENTAL TO ITEM 302007 - GRADED AGGREGATE BASE COURSE, TYPE 'B'. NO PAYMENT WILL BE MADE FOR ITEM 302514 - MILLED HOT-MIX BASE COURSE. THE QUANTITY OF MILLINGS USED FOR BASE COURSE WILL BE PAID FOR UNDER ITEM 302007 - GRADED AGGREGATE BASE COURSE.

SECTION 400

20. THE PAVEMENT SECTION FOR AGRICULTURAL LAND USE ENTRANCE SHALL BE 2" WARM-MIX, TYPE 'C' OVER 8" GRADED AGGREGATE BASE COURSE, TYPE 'B', UNLESS OTHERWISE NOTED IN THE PLANS.

21. MEASURES FOR MAINTAINING PUBLIC TRAFFIC, SUCH AS TEMPORARY ROADS, DETOURS, RUN-AROUNDS, ETC, SHALL BE CONSTRUCTED UTILIZING THE APPLICABLE STANDARD BID ITEMS, NOT TEMPORARY ROADWAY MATERIAL (TRM). TRM IS INTENDED FOR MAINTAINING INGRESS AND EGRESS TO PROPERTIES OR BUSINESSES AS WELL AS MAINTENANCE OF EXISTING PUBLIC ROADWAYS. TRM SHALL ALSO BE USED TO MAINTAIN DETOUR ROADS, ETC. AFTER THEIR INITIAL CONSTRUCTION.

22. PRIOR TO PLACEMENT OF ANY SECTION OF PCC PAVEMENT, THE UNDERLYING BASE COURSES OF SOIL CEMENT AND PERMEABLE TREATED BASE SHALL BE COMPLETED TO THEIR FULL WIDTH (OUTSIDE OF SHOULDER TO OUTSIDE OF SHOULDER) AND THE UNDERDRAIN AND UNDERDRAIN OUTLETS INSTALLED FOR THE ENTIRE SECTION OF PAVING BEING CONSIDERED BY THE CONTRACTOR.

23. THE CONTRACTOR SHALL SCHEDULE HIS WORK SO THAT ALL PERMEABLE TREATED BASE (PTB) PLACED DURING ANY ONE CONSTRUCTION SEASON IS COVERED WITH PCC OR WARM MIX PAVEMENT, AS APPLICABLE, BY THE END OF THE CONSTRUCTION SEASON. ANY PTB WHICH HAS NOT BEEN PAVED OVER AT THE END OF THE SEASON MUST BE ENTIRELY COVERED WITH POLYETHYLENE SHEETING, PROPERLY ANCHORED AND OVERLAPPED AT LEAST EIGHTEEN INCHES FOR THE WINTER AND UNTIL PAVING OPERATIONS RESUME. NO CONSTRUCTION TRAFFIC OF ANY KIND WILL BE PERMITTED TO TRAVERSE OVER PTB AT ANY TIME, EITHER UNCOVERED OR COVERED WITH POLYETHYLENE, EXCEPT FOR NECESSARY EQUIPMENT UTILIZED DURING PAVING OPERATIONS. THE COST OF FURNISHING, INSTALLING AND MAINTAINING THE POLYETHYLENE SHEETING SHALL BE INCIDENTAL TO THE UNIT PRICE BID FOR THE PTB.

24. EXCEPT FOR NECESSARY EQUIPMENT UTILIZED DURING PAVING OPERATIONS, NO CONSTRUCTION TRAFFIC OF ANY KIND SHALL BE PERMITTED TO RUN ON THE SOIL CEMENT BASE COURSE.

SECTION 600

25. THE DEPARTMENT AND THE CONTRACTOR SHALL REVIEW VIDEO INSPECTION OF ALL EXISTING PIPES AND DRAINAGE STRUCTURES TO BE USED IN THE FINAL DRAINAGE SYSTEM AND AGREE ON THE CONDITION PRIOR TO THE START OF CONSTRUCTION. EXISTING PIPES AND DRAINAGE STRUCTURES DAMAGED DUE TO CONTRACTOR OPERATIONS SHALL BE REPAIRED OR REPLACED IN-KIND AT THE CONTRACTOR'S EXPENSE. THE DEPARTMENT OR ITS REPRESENTATIVE WILL INSPECT NEW PIPE RUNS TO CONFIRM CONDITION PRIOR TO ACCEPTANCE.

26. ITEM 602002-P.C.C. MASONRY, CLASS B SHALL BE USED TO CONSTRUCT MISCELLANEOUS TYPES OF STRUCTURES SUCH AS PADS, WHEEL STOPS, BOLLARDS, ENCASEMENTS, ETC. AS DIRECTED BY THE ENGINEER UNLESS THE WORK IS TO BE PAID OTHERWISE AS INDICATED IN THE CONTRACT DOCUMENTS. THESE MISCELLANEOUS TYPES OF STRUCTURES ARE ANTICIPATED TO INVOLVE LESS THAN FIVE CUBIC YARDS PER SITE. THE VOLUME MEASURED FOR PAYMENT SHALL BE THE VOLUME OF P.C.C. MASONRY ACTUALLY PLACED TO CONSTRUCT THE MISCELLANEOUS STRUCTURE WITHIN THE LIMITS APPROVED BY THE ENGINEER. ALL COSTS ASSOCIATED WITH FURNISHING ALL LABOR, EQUIPMENT, TOOLS AND INCIDENTALS NECESSARY TO COMPLETE THE WORK INCLUDING CONCRETE, REINFORCING STEEL, EXCAVATION, BACKFILL, BACKFILLING, ETC. SHALL BE INCLUDED IN THE UNIT PRICE BID FOR ITEM 602002 - P.C.C. MASONRY, CLASS B.

27. DRAINAGE INLETS TO BE ATTACHED TO EXISTING PIPES SHALL BE CAST IN PLACE. CAST IN PLACE CONSTRUCTION SHALL BE INCIDENTAL TO THE APPLICABLE BID ITEM FOR THE SUBJET INLET.

SECTION 700

28. IN AREAS WHERE PROPOSED CURB MEETS EXISTING CURB AND THE TWO CURB TYPES ARE NOT SIMILAR, THE PROPOSED CURB SHALL BE TRANSITIONED IN 10 LINEAR FEET, UNLESS OTHERWISE DIRECTED BY THE ENGINEER. PAYMENT FOR THIS WORK, INCLUDING SAW CUTTING EXISTING CURB SHALL BE INCIDENTAL TO THE PROPOSED CURB ITEM.

29. WHERE PROPOSED CONCRETE SIDEWALK IS CONSTRUCTED TO MEET EXISTING SIDEWALK, THE EXISTING SIDEWALK SHALL BE SAWCUT AT THE TIE-IN POINT OR MEET THE NEAREST EXISTING SIDEWALK JOINT. ALL SAW CUTTING SHALL BE FULL DEPTH, UNLESS OTHERWISE NOTED ON THE PLANS OR DIRECTED BY THE ENGINEER AND SHALL BE PAID FOR UNDER ITEM 762002 - SAWCUTTING, CONCRETE, FULL DEPTH.

30. STATION, OFFSET, AND ELEVATION DATA GIVEN FOR DRAINAGE STRUCTURES ARE TO BE APPLIED TO THE CENTER OF THE GRATE ALONG THE FLOWLINE FOR INLETS, AND TO THE CENTER OF THE STRUCTURE FOR JUNCTION BOXES AND MANHOLES.

31. WHERE SPECIFIED ON THE PLANS, DRAINAGE INLET GRATES ADJACENT TO THE ROAD, WITHIN THE PROJECT LIMITS, WHICH ARE NOT TYPE 1 SHALL BE REPLACED. THE ACTUAL LOCATIONS, THE NEED FOR ANY GRATE MODIFICATIONS OR FOR NEW FRAMES SHALL BE DETERMINED BY THE ENGINEER. ALL REPLACED GRATES/FRAMES SHALL BE DELIVERED TO THE NEAREST DISTRICT MAINTENANCE YARD WITH THE COST OF DELIVERY INCIDENTAL TO ITEM 708500 - REPLACING CATCH BASIN GRATES. FINAL PAYMENT FOR REPLACED GRATES/FRAMES SHALL NOT BE MADE UNTIL RECEIPT OF DELIVERED MATERIALS IS PRODUCED, SIGNED BY A DELDOT MAINTENANCE YARD SUPERVISOR.

32. ALL PAVED AREAS TO BE RECONSTRUCTED OR WIDENED SHALL BE SAWCUT AT THE POINT WHERE THE NEW PAVEMENT IS TO TIE INTO THE EXISTING PAVEMENT.

33. RAISED/RECESSED PAVEMENT MARKERS (RPM) SHALL BE INSTALLED IN ACCORDANCE WITH THE LATEST EDITION OF THE MANUAL TITLED "DELAWARE DEPARTMENT OF TRANSPORTATION MANUAL ON UNIFORM TRAFFIC CONTROL DEVICES (MUTCD) FOR STREETS AND HIGHWAYS" (PART 3) AND THE LATEST RPM GUIDELINES. PAYMENT FOR RPM INSTALLATION SHALL BE MADE UNDER ITEM 748502 - RAISED/RECESSED PAVEMENT MARKER.

34. ALL UNDERDRAIN OUTLETS, CATCH BASINS, PIPES, CONDUITS, JUNCTION WELLS, ETC. IN GUARDRAIL AREAS OR NEAR OTHER CONSTRUCTION YET TO BE PERFORMED SHALL BE VISIBLY MARKED BY THE CONTRACTOR AT THE TIME OF INSTALLATION IN ORDER TO AVOID FUTURE DAMAGE DURING DRIVING OF THE GUARDRAIL POSTS OR PERFORMANCE OF OTHER CONSTRUCTION. THE LOCATION OF GUARDRAIL POSTS AND OTHER CONSTRUCTION SHALL BE STAKED IN THE FIELD PRIOR TO PLACING THESE ITEMS. THE LOCATION OF THESE ITEMS SHALL BE ADJUSTED TO AVOID CONFLICTS WITH THE GUARDRAIL OR OTHER CONSTRUCTION. ALTERATIONS TO THE GUARDRAIL POST SPACING WILL NOT BE ALLOWED. ANY WORK REQUIRED TO RELOCATE THESE ITEMS DUE TO CONFLICTS WITH GUARDRAIL OR OTHER CONSTRUCTION SHALL BE PERFORMED TO THE SATISFACTION OF THE ENGINEER AND SHALL BE AT THE CONTRACTOR'S EXPENSE, INCLUDING ANY REMOVAL AND REPLACEMENT OF PAVEMENT.

35. DELDOT OR ITS REPRESENTATIVE SHALL FURNISH AND INSTALL RIGHT-OF-WAY MONUMENTS AFTER THE COMPLETION OF THE PROJECT. LOCATIONS OF RIGHT-OF-WAY MONUMENTS ARE PROVIDED ON THE PLANS FOR INFORMATION ONLY.

36. THE DELDOT FIELD OFFICE (759506 - FIELD OFFICE, TYPE II.22 SPECIAL COMPLEX) WILL BE PROVIDED IN CONTRACT T200911302 AND WILL BE LOCATED ON THE DELDOT OWNED PARCEL EAST OF US 13 AT APPROXIMATE SR 1 STATION 1832+00 RT.

37. THE COST OF ANY FLOODLIGHTING NECESSARY DUE TO WORK BY THE CONTRACTOR ON ANY ITEM OCCURRING AFTER DARK SHALL BE INCIDENTAL TO THE BID PRICE OF THE ITEM BEING CONSTRUCTED AFTER DARK. DURING ALL CONSTRUCTION, ALL PERSONS WITHIN THE WORK ZONE SHALL HAVE SAFETY WEAR IN ACCORDANCE WITH THE DEMUTCD.

PROJECT NOTES (CONT.)

SECTION 700 (CONT.)

38. NO LESPEDEZA, ERAGROSTIS CURVULA, OR CORONILLA VARIA SHALL BE SEEDED. SECTION 734 - SEEDING HAS BEEN MODIFIED TO REMOVE LESPEDEZA, ERAGROSTIS CURVULA, AND CORONILLA VARIA.

39. INSTALLATION OF RIPRAP OUTLET PROTECTION (ITEMS 712005 AND 712006) SHALL BE IN ACCORDANCE WITH DIMENSIONS AND QUANTITIES INDICATED ON THE CONSTRUCTION PLANS. THE SPECIFIED DIMENSIONS ARE MINIMUM DIMENSIONS NECESSARY TO PROVIDE SUFFICIENT EROSION CONTROL. THE QUANTITY LISTED REPRESENTS THE SQUARE YARDAGE BASED UPON THE PLAN DEPICTION OF THE RIPRAP. DUE TO THE IRREGULAR CONFIGURATION OF SOME RIPRAP PADS, THE NOTED QUANTITY MAY NOT BE ACHIEVED BY A NOMINAL AMOUNT NOT TO EXCEED 5% LESS THAN THE NOTED QUANTITY. THE ENGINEER SHALL APPROVE ALL RIPRAP INSTALLATION. THE COST FOR SUPPLY AND INSTALLATION OF ALL STONE BEDDING BELOW PROPOSED RIPRAP SHALL BE INCIDENTAL TO THE ASSOCIATED RIPRAP ITEM.

40. ITEM 727000-RIGHT-OF-WAY FENCE SHALL BE INSTALLED BY HAND IN SENSITIVE AREAS. SENSITIVE AREAS INCLUDE WOODS, WETLANDS, STREAMS, CULTURAL RESOURCE AREAS AND OTHER AREAS AS SHOWN ON THE PLANS AND AS DETERMINED BY THE ENGINEER. THERE SHALL BE NO VEHICLE ACCESS AND GRUBBING FOR THE PURPOSES OF INSTALLING RIGHT-OF-WAY FENCE IN SENSITIVE AREAS. CLEARING OF VEGETATION FOR THE PURPOSE OF INSTALLING RIGHT-OF-WAY FENCE SHALL BE KEPT TO A MINIMUM IN SENSITIVE AREAS. IF REMOVAL OF VEGETATION CANNOT BE AVOIDED, THE VEGETATION SHALL BE CUT FLUSH WITH THE GROUND SURFACE (I.E., NO DISTURBANCE OF THE ROOT MAT). HAND-MIXED CONCRETE SHALL BE USED FOR CONCRETE FOOTINGS IN SENSITIVE AREAS. POST SPACING SHALL BE ADJUSTED AS APPROVED BY THE ENGINEER TO COMPLY WITH THE MINIMUM AND MAXIMUM CLEARANCE OF THE BOTTOM OF THE FABRIC. NO EXCAVATION OR BACKFILLING OF THE EXISTING GROUND SHALL BE CONDUCTED TO COMPLY WITH THE MINIMUM AND MAXIMUM CLEARANCE OF THE BOTTOM OF FABRIC OVER GROUND IN SENSITIVE AREAS. EXCAVATIONS FOR POSTS AND FOOTERS WITHIN SENSITIVE AREAS THAT WILL BE USED FOR BACKFILLING OF THE POSTS AND FOOTERS SHALL BE PLACED ON PLASTIC AND ANY EXCESS EXCAVATIONS SHALL BE REMOVED AND DISPOSED OF IN NON-SENSITIVE AREAS AS APPROVED BY THE ENGINEER.

SECTION 900

41. THIS PROJECT IS COVERED UNDER AN NPDES GENERAL PERMIT FOR CONSTRUCTION. UNDER THE GENERAL PERMIT, COMPLIANCE WITH DELDOT'S APPROVED SEDIMENT AND STORMWATER MANAGEMENT PLANS WILL CONSTITUTE COMPLIANCE WITH THE NPDES INDUSTRIAL PERMITTING REQUIREMENTS FOR THIS CONSTRUCTION PROJECT. A COPY OF THE NPDES GENERAL PERMIT AND NOI IS KEPT ON FILE IN EACH OF THE CONSTRUCTION OFFICES AND THE DEPARTMENT'S STORMWATER SECTION. A COPY OF THE GENERAL PERMIT OR THE NOI CAN BE OBTAINED UPON REQUEST FROM EITHER THE DEPARTMENT'S STORMWATER ENGINEER OR THE APPROPRIATE CONSTRUCTION ENGINEER.

MISCELLANEOUS

42. THE CONTRACTOR SHALL CONTACT MICHAEL ELLER, THE CHIEF OF SCHEDULING FOR DART FIRST STATE, 14 DAYS PRIOR TO THE START OF CONSTRUCTION AT 302-576-6061.

43. ANY CHANGES TO OR DEVIATIONS FROM THESE PLANS REQUESTED BY THE CONTRACTOR MUST BE REVIEWED AND APPROVED BY THE ENGINEER AND ENVIRONMENTAL MONITOR PRIOR TO CONDUCTING ANY WORK. APPROVAL MAY TAKE A SIGNIFICANT AMOUNT OF TIME TO COMPLETE AND ALL CHANGES MAY NOT BE APPROVED. THE CONTRACTOR SHALL HAVE NO CLAIM AGAINST THE DEPARTMENT FOR COSTS OR DELAYS ASSOCIATED WITH THE APPROVAL OR REJECTION OF REQUESTED CHANGES OR DEVIATIONS FROM THESE PLANS.

44. RESTORATION OF TEMPORARY IMPACTS

A. PRIOR TO PERFORMING ANY WORK ASSOCIATED WITH TEMPORARY IMPACTS TO DELINEATED WETLANDS, THE CONTRACTOR SHALL STAKE THE LIMITS OF TEMPORARY DISTURBANCE WITHIN THE WETLANDS AND ALLOW 14 CALENDAR DAYS FOR DELDOT TO OBTAIN EXISTING TOPOGRAPHY SURVEY WITHIN THE TEMPORARY DISTURBANCE. THIS EXISTING SURFACE SHALL BE PROVIDED TO AND ACCEPTED BY THE CONTRACTOR BEFORE ANY WORK IS PERFORMED WITHIN THE WETLANDS. THE CONTRACTOR SHALL HAVE 5 CALENDAR DAYS TO RESPOND TO THE EXISTING SURFACE INFORMATION OR OTHERWISE IT SHALL BE CONSIDERED ACCEPTED. THE EXISTING SURFACE PLAN SHALL BE PROVIDED IN BOTH DIGITAL AND PAPER COPIES CONFORMING TO DELDOT CADD STANDARDS AT THE SAME SCALE AS THE CONTRACT PLANS.

B. UPON MUTUAL ACCEPTANCE OF THE EXISTING SURFACE TOPOGRAPHY PLAN, THE CONTRACTOR SHALL FIRST INSTALL THE RESOURCE PROTECTION FENCE, AND THEN INSTALL THE NECESSARY EROSION AND SEDIMENT CONTROL DEVICES AS SHOWN ON THE PLANS AND DIRECTED BY THE ENGINEER. THE AREA OF THE TEMPORARY DISTURBANCE MAY BE CLEARED OF VEGETATION AS NECESSARY. VEGETATION SHALL NOT BE GRUBBED, AND SHALL BE CUT FLUSH WITH THE GROUND (I.E., NO DISTURBANCE OF THE ROOT MAT).

C. INSTALL THE TEMPORARY ACCESS ROAD OR OTHER NEEDED TEMPORARY DISTURBANCE AS SHOWN ON THE PLANS OR APPROVED BY THE ENGINEER. GEOTEXTILE SHALL BE PLACED ON TOP OF THE EXISTING GROUND TO PROVIDE SEPARATION BETWEEN THE EXISTING GROUND AND ANY PLACED MATERIALS.

D. WHEN THE CONTRACTOR HAS COMPLETED THE WORK REQUIRING THE TEMPORARY WETLAND DISTURBANCE, ALL MATERIALS THAT WERE PLACED BY THE CONTRACTOR SHALL BE REMOVED IN THEIR ENTIRETY. ONCE ALL MATERIALS HAVE BEEN REMOVED, THE CONTRACTOR SHALL ALLOW 14 CALENDAR DAYS FOR DELDOT TO OBTAIN EXISTING SURFACE ELEVATIONS OF THE DISTURBED AREA FOLLOWING THE SAME PROCEDURE DESCRIBED ABOVE FOR OBTAINING ORIGINAL ELEVATIONS. THESE EXISTING SURFACE ELEVATIONS SHALL BE PROVIDED TO THE CONTRACTOR AND INCLUDE A PLAN SHOWING THE ELEVATION DIFFERENCES BETWEEN THE ORIGINAL AND EXISTING SURFACES.

E. THE CONTRACTOR SHALL BE RESPONSIBLE FOR RESTORING THE TEMPORARY DISTURBED AREA TO ORIGINAL ELEVATIONS WITH A GRADING TOLERANCE OF PLUS OR MINUS 0.1 FEET. RESTORATION OF THE DISTURBED AREA SHALL BE ACCOMPLISHED IN THE FOLLOWING MANNER:

I. TILL THE GROUND WITHIN THE DISTURBED AREA TO LOOSEN UP THE SOILS DUE TO COMPACTION DURING CONSTRUCTION IN ACCORDANCE WITH THE SPECIFICATIONS OF ITEM 202555 - SUBSOIL TILLAGE. MINIMUM VERTICAL TILLAGE DEPTH SHALL BE 24 INCHES AS MEASURED BY FIELD PERFORMANCE.

II. PLACE TOPSOIL TO FILL DEPRESSIONS TO THE ORIGINAL GROUND ELEVATIONS. TOPSOIL SHALL BE THE TOP 9 INCHES OF SOIL OBTAINED FROM AN ACTIVE OR RECENTLY (LESS THAN TWO YEARS) FALLOW OR ABANDONED CROP PRODUCING FARM FIELD OR A SANDY LOAM WITH A MINIMUM OF 4% ORGANIC MATTER. MAXIMUM DEPTH OF A SINGLE LIFT OF TOPSOIL PLACED SHALL BE 6 INCHES AND SHALL BE PLACED IN ACCORDANCE WITH SECTION 732.

III. DISK THE FINAL TOPSOIL SURFACE WITHIN THE DISTURBED AREA TO PREPARE THE AREA FOR SEED. USE A MINIMUM OF 3 PASSES OF A DISK USING LOW GROUND PRESSURE EQUIPMENT TO A MINIMUM DEPTH OF 4 INCHES.

IV. WHEN THE CONTRACTOR BELIEVES THAT RESTORATION OF THE ORIGINAL ELEVATIONS HAS BEEN ACHIEVED, 7 CALENDAR DAYS SHALL BE ALLOWED FOR THE AREA TO AGAIN BE SURVEYED BY DELDOT UNDER THE SAME CONDITIONS DESCRIBED ABOVE AND THE SURVEY PLAN OF THE RESTORED ELEVATIONS WILL BE PROVIDED TO THE CONTRACTOR. DELDOT SHALL ADVISE THE CONTRACTOR IF ADDITIONAL RESTORATION WORK IS REQUIRED AND THE CONTRACTOR SHALL ADDRESS THOSE AREAS AND ALLOW FOR 7 CALENDAR DAYS FOR NEW SURVEY INFORMATION TO BE OBTAINED UNTIL THE RESTORATION IS APPROVED BY DELDOT.

F. UPON ACCEPTANCE OF THE RESTORED ELEVATIONS, THE CONTRACTOR SHALL APPLY SEED TO THE DISTURBED WETLAND. SEEDING SHALL VARY BASED ON THE SLOPE TO BE SEEDED. ON SLOPES 5:1 OR FLATTER, SEEDING SHALL BE CONDUCTED UNDER ITEM 734552 - WET GROUND EROSION CONTROL GRASS SEEDING - FLATS. ON SLOPES GREATER THAN 5:1, SEEDING SHALL BE CONDUCTED UNDER ITEM 734013 - PERMANENT GRASS SEEDING, DRY GROUND.

G. THE RESTORED AREAS WITHIN THE LIMITS OF THE DELINEATED WETLANDS SHALL BE PLANTED IN ACCORDANCE WITH ITEM 737523 - PLANTING. SMOOTH ALDER SHALL BE PLANTED 10 FOOT ON CENTER ON SLOPES FLATTER THAN 5:1 AND SOUTHERN ARROWWOOD SHALL BE PLANTED 10 FOOT ON CENTER ON SLOPES STEEPER THAN 5:1. PLANTS SHALL BE INSTALLED DURING THE FIRST AVAILABLE PLANTING WINDOW PER THE STANDARD SPECIFICATIONS. SHRUBS SHALL NOT BE PLANTED UNDER BRIDGES. BEGIN SHRUB PLANTING 10 FEET OUTSIDE OF THE BRIDGE PARAPETS.

H. UPON FINAL ACCEPTANCE OF THE PLANTING, THE CONTRACTOR SHALL REMOVE THE RESOURCE PROTECTION FENCING AND THE EROSION AND SEDIMENT CONTROL MEASURES.

PROJECT NOTES (CONT.)

MISCELLANEOUS (CONT.)

44. I. ALL COSTS FOR MAINTENANCE OF STREAM FLOW AND RESTORING THE TEMPORARY WETLAND IMPACTS SHALL BE INCLUDED IN THE LUMP SUM PRICE BID FOR ITEM 743000 - MAINTENANCE OF TRAFFIC, WITH THE EXCEPTION OF THE RESOURCE PROTECTION FENCE, WHICH SHALL BE PAID UNDER ITEM 727552.

45. THE CONTRACTOR SHALL FOLLOW ALL STATE AND LOCAL ORDINANCES CONCERNING CONSTRUCTION NOISE DURING THE DURATION OF THE CONSTRUCTION ACTIVITIES.

46. EXCAVATION WITHIN WOODED AREAS SHALL BE INCIDENTAL TO ITEM 201000 - CLEARING AND GRUBBING. ALL OTHER EXCAVATION SHALL BE PAID FOR UNDER ITEM 202000 - EXCAVATION AND EMBANKMENT.

DESIGN DESIGNATION - PORT PENN ROAD (N2)

FUNCTIONAL CLASS: MINOR COLLECTOR		D.H.V. PROJECTED: 675	YEAR: 2030
TYPE OF CONSTRUCTION: WIDENING		DESIGN SPEED: 50 M.P.H.	
A.A.D.T. CURRENT: 1600	YEAR: 2009	TRUCKS: 2 %	
A.A.D.T. PROJECTED: 6,750	YEAR: 2030	DIRECTION OF DISTRIBUTION: 50 %	

DESIGN DESIGNATION - RAMP R

FUNCTIONAL CLASS: N/A		D.H.V. PROJECTED: 1,200	YEAR: 2030
TYPE OF CONSTRUCTION: NEW CONSTRUCTION		DESIGN SPEED: 50 M.P.H.	
A.A.D.T. CURRENT: N/A	YEAR: N/A	TRUCKS: 6 %	
A.A.D.T. PROJECTED: 14,000	YEAR: 2030	DIRECTION OF DISTRIBUTION: N/A	

RIGHT-OF-WAY MONUMENT SCHEDULE

NO.	STATION	OFFSET	NORTHING	EASTING
1	96+05.00	100.00	551883.6387	590690.9517
2	96+05.00	215.00	551882.1201	590805.9417
3	97+75.00	280.00	552051.2469	590873.1809
4	99+15.00	280.00	552191.2347	590875.0296
5	99+15.00	99.70	552193.6157	590694.7416
6	102+14.11	-235.00	552497.1244	590364.0244
7	104+60.00	-235.00	552742.9879	590367.2714
8	104+60.00	-84.58	552741.0015	590517.6826
9	110+38.08	-166.00	553320.1025	590443.8990
10	111+05.00	-166.00	553387.0206	590444.7828
11	111+44.00	-146.00	553425.7530	590465.2960
12	117+12.79	-146.00	553994.4898	590472.8070
13	118+60.00	-146.00	554140.7874	590473.8247
14	118+60.00	-171.00	554140.9613	590448.8253
15	118+80.00	-171.00	554160.9609	590448.9644
16	118+80.00	-146.00	554160.7870	590473.9638
17	122+26.00	-146.00	554506.7786	590476.3706
18	125+72.00	-146.00	554852.7702	590478.7773
19	129+19.56	-146.00	555200.3190	590481.1949
20	129+39.40	87.50	555218.5377	590714.8273
21	129+19.56	-90.00	555199.9291	590537.1936
22	131+25.00	-90.00	555405.3673	590538.6226
23	132+38.10	-90.00	555518.4651	590539.4094
24	132+38.10	-81.00	555518.4025	590548.4091
25	130+58.00	87.50	555337.1342	590715.6522
26	4001+23.00	60.00	555367.3015	590747.4523
27	4001+14.25	-119.45	555546.9547	590750.2966
28	138+57.99	-81.00	556138.2741	590552.7210
29	139+61.31	-81.00	556241.5975	590553.4398
30	139+80.60	-85.00	556260.9103	590549.5729
31	4002+50.00	-85.00	555491.3418	590896.1184
32	4005+50.00	-70.00	555386.4228	591185.1430
33	4002+50.00	60.00	555349.9648	590863.9071
34	4003+22.14	52.00	555339.9058	590930.8948
35	4003+50.00	36.91	555345.7557	590962.0370
36	4003+22.14	-78.57	555464.2303	590970.8034
37	4010+50.00	-70.00	555233.6016	591661.2162
38	4011+50.00	-30.32	555165.2592	591744.3039

Unofficial Website Copy

EARTHWORK SUMMARY – TOTALS

EXCAVATION - ALIGNMENT	
FROM CROSS-SECTIONS	
PLUS EXCAVATION FROM US 13 SB INSIDE SHOULDER	898 C.Y.
PLUS EXCAVATION FROM US 13 ACCELERATION LANE	12,007 C.Y.
PLUS EXCAVATION FROM US 13 DECELERATION LANE	3,685 C.Y.
PLUS EXCAVATION FROM US 13 NORTHBOUND RIGHT TURN LANE	782 C.Y.
PLUS EXCAVATION FROM US 13 LEFT TURN LANE	10,504 C.Y.
PLUS EXCAVATION FROM RAMP R	7,920 C.Y.
PLUS EXCAVATION FROM PORT PENN ROAD	3,872 C.Y.
PLUS EXCAVATION FROM TOLL PLAZA ENTRANCE	2,744 C.Y.
PLUS EXCAVATION FROM TOLL PLAZA FRONT PARKING ACCESS	1,011 C.Y.
PLUS EXCAVATION FROM US 13 SB TEMPORARY SHOULDER REMOVAL	151 C.Y.
PLUS EXCAVATION FROM CHES DEL DRIVEWAY	492 C.Y.
SUBTOTAL - EXCAVATION FROM CROSS-SECTIONS	44,067 C.Y.
PLUS TOPSOIL REMOVED UNDER FILL	1,415 C.Y.
PLUS TOPSOIL PLACED IN CUT:	5,649 C.Y.
PLUS EXCAVATION FROM UTILITY RELOCATION (OUTSIDE OF CROSS SECTION TEMPLATES)	6,246 C.Y.
PLUS BITUMINOUS PAVEMENT REMOVED UNDER FILL	543 C.Y.
LESS ROOTMAT REMOVED IN CUT	1,987 C.Y.
LESS REMOVAL OF EXISTING PCC PAVEMENT, ETC.	2,301 C.Y.
LESS ROCK EXCAVATION	0 C.Y.
PLUS STORMWATER MANAGEMENT EXCAVATION	15,849 C.Y.
=TOTAL ITEM 202000-EXCAVATION AND EMBANKMENT	69,480 C.Y.

STORMWATER MANAGEMENT POND EXCAVATION	
FROM GRID ANALYSIS:	
SWM POND NO. 756	3,328 C.Y.
SWM POND NO. 757	3,241 C.Y.
SWM POND NO. 758	7,307 C.Y.
SUBTOTAL - EXCAVATION FROM GRID ANALYSIS	13,875 C.Y.
PLUS TOPSOIL REMOVED UNDER FILL	364 C.Y.
PLUS TOPSOIL PLACED IN CUT SECTIONS	2,775 C.Y.
LESS ROOTMAT REMOVED IN CUT	1,165 C.Y.
LESS ROCK EXCAVATION	0 C.Y.
=TOTAL STORMWATER MANAGEMENT POND	15,849 C.Y.
LESS MATERIAL REQUIRED FOR SWM EMBANKMENT	837 C.Y.
=TOTAL SWM POND EXCAVATION AVAILABLE FOR EMBANKMENT	15,012 C.Y.
*INCLUDES 2' OF OVEREXCAVATION OF SWM PONDS FOR USE AS SEDIMENT BASIN	

EXCAVATION AVAILABLE FOR EMBANKMENT	
TOTAL EXCAVATION AND EMBANKMENT QUANTITY (ITEM 202000)	69,480 C.Y.
PLUS EXCAVATION AND BACKFILLING FOR STRUCTURES	75 C.Y.
PLUS EXCAVATION AND BACKFILLING FOR PIPE TRENCHES	1,425 C.Y.
PLUS CHANNEL EXCAVATION	0 C.Y.
PLUS EXCAVATION FROM LATERAL OR LONGITUDINAL DITCHES	0 C.Y.
PLUS EXCAVATION FROM INSTALLATION OF UNDERDRAINS	1,579 C.Y.
PLUS STOCKPILED MATERIAL FROM PREVIOUS PHASES	
LESS TOPSOIL REMOVED IN CUT AND FILL	8,537 C.Y.
LESS TOPSOIL REMOVED FROM STORMWATER MANAGEMENT PONDS	3,139 C.Y.
LESS TOPSOIL REMOVED OUTSIDE OF CROSS-SECTION TEMPLATES (UTILITY RELOCATION)	5,777 C.Y.
LESS UNSUITABLE EXCAVATION	855 C.Y.
LESS MATERIAL REQUIRED FOR SWM EMBANKMENT	837 C.Y.
=TOTAL EXCAVATION AVAILABLE FOR BORROW, TYPE F	53,416 C.Y.

BORROW, TYPE A CAPPING REQUIRED	
BORROW, TYPE A FOR CAPPING	11,405 C.Y.
LESS TOPSOIL PLACED ON FILL SLOPES	1,558 C.Y.
=SUBTOTAL BORROW, TYPE A CAPPING REQUIRED	9,847 C.Y.
PLUS CAPPING REQUIRED X ADJUSTMENT FACTOR (0.20)	1,969 C.Y.
=SUBTOTAL ADJUSTED BORROW, TYPE A REQUIRED	11,816 C.Y.
LESS EXCAVATION AVAILABLE FOR BORROW, TYPE A	0 C.Y.
=TOTAL ADJUSTED BORROW, TYPE A REQUIRED	11,816 C.Y.

BORROW, TYPE C REQUIRED	
TEST HOLE EXCAVATION BACKFILL REQUIRED	104 C.Y.
PIPE/UTILITY BACKFILL REQUIRED	5,100 C.Y.
PLUS BORROW, TYPE C REQUIRED X ADJUSTMENT FACTOR (0.20)	1,041 C.Y.
=SUBTOTAL ADJUSTED BORROW, TYPE C REQUIRED	6,244 C.Y.
LESS EXCAVATION AVAILABLE FOR BORROW, TYPE C	0 C.Y.
=TOTAL ADJUSTED BORROW, TYPE C REQUIRED	6,244 C.Y.

BORROW, TYPE D REQUIRED	
SOIL CEMENT BASE COURSE (SY)	4,643 S.Y.
VOLUME OF TYPE D, CY (6" DEPTH)	774 C.Y.
PLUS BORROW, TYPE D REQUIRED X ADJUSTMENT FACTOR (0.20)	155 C.Y.
=SUBTOTAL ADJUSTED BORROW, TYPE D REQUIRED	929 C.Y.
LESS EXCAVATION AVAILABLE FOR BORROW, TYPE D	0 C.Y.
=TOTAL ADJUSTED BORROW, TYPE D REQUIRED	929 C.Y.

BORROW, TYPE B REQUIRED	
BACKFILL FOR UNSTABLE SUBGRADES AFTER ROOTMAT REMOVED UNDER FILL	0 C.Y.
PLUS BACKFILL X ADJUSTMENT FACTOR (0.20)	0 C.Y.
=SUBTOTAL ADJUSTED BORROW, TYPE B REQUIRED	0 C.Y.
LESS EXCAVATION AVAILABLE FOR BORROW, TYPE B	0 C.Y.
=TOTAL ADJUSTED BORROW, TYPE B REQUIRED	0 C.Y.

EMBANKMENT AND BORROW, TYPE F REQUIRED	
EMBANKMENT REQUIRED BELOW CAPPING	22,445 C.Y.
PLUS TOPSOIL REMOVED UNDER FILL	1,415 C.Y.
PLUS ROOTMAT REMOVED UNDER FILL NOT BACKFILLED WITH BORROW, TYPE B	1,235 C.Y.
PLUS UNDERCUT MATERIAL REMOVED UNDER FILL	0 C.Y.
PLUS PCC AND BITUMINOUS PAVEMENT REMOVED UNDER FILL	785 C.Y.
PLUS EMBANKMENT FOR PIPE BACKFILL (TYPE F)	417 C.Y.
LESS TOPSOIL PLACED ON FILL SLOPES	995 C.Y.
LESS MSE WALL OR OTHER RETAINING WALL & BACKFILL	0 C.Y.
LESS BORROW, TYPE B PLACED ABOVE ORIGINAL GROUND	0 C.Y.
=SUBTOTAL EMBANKMENT REQUIRED BELOW CAPPING	25,301 C.Y.
PLUS EMBANKMENT REQUIRED X ADJUSTMENT FACTOR (0.20)	5,060 C.Y.
=SUBTOTAL ADJUSTED EMBANKMENT REQUIRED	30,361 C.Y.
LESS TOTAL EXCAVATION AVAILABLE FOR BORROW, TYPE F	53,416 C.Y.
SURPLUS BORROW, TYPE F	23,054 C.Y.
THEREFORE, TOTAL ADJUSTED BORROW, TYPE F REQUIRED	0 C.Y.

TOPSOIL SUMMARY	
TOPSOIL SALVAGED FROM CUT AND FILL	8,537 C.Y.
PLUS TOPSOIL FROM STORMWATER MANAGEMENT POND	3,139 C.Y.
PLUS TOPSOIL REMOVED OUTSIDE OF CROSS-SECTION TEMPLATES (UTILITY RELOCATION)	5,777 C.Y.
=SUBTOTAL TOPSOIL AVAILABLE	17,452 C.Y.
LESS TOPSOIL PLACED ON FILL SLOPES	2,553 C.Y.
LESS TOPSOIL PLACED ON CUT SLOPES	5,649 C.Y.
LESS TOPSOIL PLACED OUTSIDE OF CROSS-SECTION TEMPLATES	5,868 C.Y.
LESS TOPSOIL PLACED IN SWM FACILITIES	3,202 C.Y.
=SUBTOTAL EXCESS (+) TOPSOIL OR TOPSOIL NEED (-)	179 C.Y.
LESS EXCESS TOPSOIL PLACED IN OUTER EMBANKMENTS	0 C.Y.
LESS CULTIVATED SOIL UNSUITABLE FOR EMBANKMENT	0 C.Y.
=TOTAL EXCESS TOPSOIL	179 C.Y.

PROPOSAL QUANTITIES	
ITEM NO. 202000 EXCAVATION AND EMBANKMENT*	73,680 C.Y.
ITEM NO. 207000 EXCAVATION AND BACKFILL FOR STRUCTURES	75 C.Y.
ITEM NO. 208000 EXCAVATION AND BACKFILL FOR PIPE TRENCHES	1,425 C.Y.
ITEM NO. 209001 BORROW, TYPE A	11,816 C.Y.
ITEM NO. 209002 BORROW, TYPE B	0 C.Y.
ITEM NO. 209004 BORROW, TYPE D	929 C.Y.
ITEM NO. 210000 FURNISHING BORROW TYPE C FOR PIPE, UTILITY TRENCH, AND STRUCTURE BACKFILL	6,244 C.Y.
ITEM NO,. 732002 TOPSOIL, 6" DEPTH	0 S.Y.
ITEM NO. 733002 TOPSOILING (6" DEPTH)	103,639 S.Y.

*INCLUDES 4,200 CY OF SEDIMENT REMOVAL

NOTE: ALL MATERIALS EXCAVATED AND NOT REQUIRED FOR EMBANKMENT, SUBGRADE, ETC. ON THE PROJECT SHALL BE REMOVED FROM THE PROJECT LIMITS BY THE CONTRACTOR BEFORE THE COMPLETION OF CONSTRUCTION, UNLESS OTHERWISE DIRECTED BY THE ENGINEER. THESE MATERIALS SHALL BECOME PROPERTY OF THE CONTRACTOR.

Unofficial Website Copy

EARTHWORK SUMMARY – PRE PHASE 1

EXCAVATION - ALIGNMENT	
FROM CROSS-SECTIONS	
PLUS EXCAVATION FROM US 13 SB INSIDE SHOULDER	898 C.Y.
PLUS EXCAVATION FROM US 13 ACCELERATION LANE	4,849 C.Y.
PLUS EXCAVATION FROM US 13 DECELERATION LANE	402 C.Y.
PLUS EXCAVATION FROM US 13 NORTHBOUND RIGHT TURN LANE	177 C.Y.
PLUS EXCAVATION FROM US 13 LEFT TURN LANE	0 C.Y.
PLUS EXCAVATION FROM RAMP R	2,448 C.Y.
PLUS EXCAVATION FROM PORT PENN ROAD	742 C.Y.
PLUS EXCAVATION FROM TOLL PLAZA ENTRANCE	350 C.Y.
PLUS EXCAVATION FROM TOLL PLAZA FRONT PARKING ACCESS	122 C.Y.
PLUS EXCAVATION FROM US 13 SB TEMPORARY SHOULDER REMOVAL	0 C.Y.
PLUS EXCAVATION FROM CHES DEL DRIVEWAY	492 C.Y.
SUBTOTAL - EXCAVATION FROM CROSS-SECTIONS	10,480 C.Y.
PLUS TOPSOIL REMOVED UNDER FILL	1,378 C.Y.
PLUS TOPSOIL PLACED IN CUT:	3 C.Y.
PLUS TOPSOIL/ROOTMAT EXCAVATION FOR UTILITY RELOCATION (OUTSIDE OF CROSS SECTION TEMPLATES)	6,246 C.Y.
PLUS BITUMINOUS PAVEMENT REMOVED UNDER FILL	15 C.Y.
LESS ROOTMAT REMOVED IN CUT	1,987 C.Y.
LESS REMOVAL OF EXISTING PCC PAVEMENT, ETC.	0 C.Y.
LESS ROCK EXCAVATION	0 C.Y.
PLUS STORMWATER MANAGEMENT EXCAVATION	0 C.Y.
=TOTAL ITEM 202000-EXCAVATION AND EMBANKMENT	16,135 C.Y.

STORMWATER MANAGEMENT POND EXCAVATION	
FROM GRID ANALYSIS:	
SWM POND NO. 756	0 C.Y.
SWM POND NO. 757	0 C.Y.
SWM POND NO. 758	0 C.Y.
SUBTOTAL - EXCAVATION FROM GRID ANALYSIS	0 C.Y.
PLUS TOPSOIL REMOVED UNDER FILL	0 C.Y.
PLUS TOPSOIL PLACED IN CUT SECTIONS	0 C.Y.
LESS ROOTMAT REMOVED IN CUT	0 C.Y.
LESS ROCK EXCAVATION	0 C.Y.
=TOTAL STORMWATER MANAGEMENT POND	0 C.Y.
LESS MATERIAL REQUIRED FOR SWM EMBANKMENT	0 C.Y.
=TOTAL SWM POND EXCAVATION AVAILABLE FOR EMBANKMENT	0 C.Y.
*INCLUDES 2' OF OVEREXCAVATION OF SWM PONDS FOR USE AS SEDIMENT BASIN	

EXCAVATION AVAILABLE FOR EMBANKMENT	
TOTAL EXCAVATION AND EMBANKMENT QUANTITY (ITEM 202000)	**16,135** C.Y.
PLUS EXCAVATION AND BACKFILLING FOR STRUCTURES	0 C.Y.
PLUS EXCAVATION AND BACKFILLING FOR PIPE TRENCHES	18 C.Y.
PLUS CHANNEL EXCAVATION	0 C.Y.
PLUS EXCAVATION FROM LATERAL OR LONGITUDINAL DITCHES	0 C.Y.
PLUS EXCAVATION FROM INSTALLATION OF UNDERDRAINS	0 C.Y.
PLUS STOCKPILED MATERIAL FROM PREVIOUS PHASES	0 C.Y.
LESS TOPSOIL REMOVED IN CUT AND FILL	5,900 C.Y.
LESS TOPSOIL REMOVED FROM STORMWATER MANAGEMENT PONDS	0 C.Y.
LESS TOPSOIL REMOVED OUTSIDE OF CROSS-SECTION TEMPLATES (UTILITY RELOCATION)	5,777 C.Y.
LESS UNSUITABLE EXCAVATION	0 C.Y.
LESS MATERIAL REQUIRED FOR SWM EMBANKMENT	0 C.Y.
=TOTAL EXCAVATION AVAILABLE FOR BORROW, TYPE F	4,475 C.Y.

BORROW, TYPE A CAPPING REQUIRED	
BORROW, TYPE A FOR CAPPING	346 C.Y.
LESS TOPSOIL PLACED ON FILL SLOPES	0 C.Y.
=SUBTOTAL BORROW, TYPE A CAPPING REQUIRED	346 C.Y.
PLUS CAPPING REQUIRED X ADJUSTMENT FACTOR (0.20)	69 C.Y.
=SUBTOTAL ADJUSTED BORROW, TYPE A REQUIRED	415 C.Y.
LESS EXCAVATION AVAILABLE FOR BORROW, TYPE A	0 C.Y.
=TOTAL ADJUSTED BORROW, TYPE A REQUIRED	415 C.Y.

BORROW, TYPE C REQUIRED	
TEST HOLE EXCAVATION BACKFILL REQUIRED	0 C.Y.
PIPE/UTILITY BACKFILL REQUIRED	18 C.Y.
PLUS BORROW, TYPE C REQUIRED X ADJUSTMENT FACTOR (0.20)	4 C.Y.
=SUBTOTAL ADJUSTED BORROW, TYPE C REQUIRED	22 C.Y.
LESS EXCAVATION AVAILABLE FOR BORROW, TYPE C	0 C.Y.
=TOTAL ADJUSTED BORROW, TYPE C REQUIRED	22 C.Y.

BORROW, TYPE D REQUIRED	
SOIL CEMENT BASE COURSE (SY)	0 S.Y.
VOLUME OF TYPE D, CY (6" DEPTH)	0 C.Y.
PLUS BORROW, TYPE D REQUIRED X ADJUSTMENT FACTOR (0.20)	0 C.Y.
=SUBTOTAL ADJUSTED BORROW, TYPE D REQUIRED	0 C.Y.
LESS EXCAVATION AVAILABLE FOR BORROW, TYPE D	0 C.Y.
=TOTAL ADJUSTED BORROW, TYPE D REQUIRED	0 C.Y.

BORROW, TYPE B REQUIRED	
BACKFILL FOR UNSTABLE SUBGRADES AFTER ROOTMAT REMOVED UNDER FILL	0 C.Y.
PLUS BACKFILL X ADJUSTMENT FACTOR (0.20)	0 C.Y.
=SUBTOTAL ADJUSTED BORROW, TYPE B REQUIRED	0 C.Y.
LESS EXCAVATION AVAILABLE FOR BORROW, TYPE B	0 C.Y.
=TOTAL ADJUSTED BORROW, TYPE B REQUIRED	0 C.Y.

EMBANKMENT AND BORROW, TYPE F REQUIRED	
EMBANKMENT REQUIRED BELOW CAPPING	244 C.Y.
PLUS TOPSOIL REMOVED UNDER FILL	0 C.Y.
PLUS ROOTMAT REMOVED UNDER FILL NOT BACKFILLED WITH BORROW, TYPE B	0 C.Y.
PLUS UNDERCUT MATERIAL REMOVED UNDER FILL	0 C.Y.
PLUS PCC AND BITUMINOUS PAVEMENT REMOVED UNDER FILL	15 C.Y.
PLUS EMBANKMENT FOR PIPE BACKFILL (TYPE F)	0 C.Y.
LESS TOPSOIL PLACED ON FILL SLOPES	91 C.Y.
LESS MSE WALL OR OTHER RETAINING WALL & BACKFILL	0 C.Y.
LESS BORROW, TYPE B PLACED ABOVE ORIGINAL GROUND	0 C.Y.
=SUBTOTAL EMBANKMENT REQUIRED BELOW CAPPING	168 C.Y.
PLUS EMBANKMENT REQUIRED X ADJUSTMENT FACTOR (0.20)	34 C.Y.
=SUBTOTAL ADJUSTED EMBANKMENT REQUIRED	201 C.Y.
LESS TOTAL EXCAVATION AVAILABLE FOR BORROW, TYPE F	4,475 C.Y.
SURPLUS BORROW, TYPE F	4,274 C.Y.
THEREFORE, TOTAL ADJUSTED BORROW, TYPE F REQUIRED	0 C.Y.

TOPSOIL SUMMARY	
TOPSOIL SALVAGED FROM CUT AND FILL	5,900 C.Y.
PLUS TOPSOIL FROM STORMWATER MANAGEMENT POND	0 C.Y.
PLUS TOPSOIL REMOVED OUTSIDE OF CROSS-SECTION TEMPLATES (UTILITY RELOCATION)	5,777 C.Y.
=SUBTOTAL TOPSOIL AVAILABLE	11,677 C.Y.
LESS TOPSOIL PLACED ON FILL SLOPES	91 C.Y.
LESS TOPSOIL PLACED ON CUT SLOPES	3 C.Y.
LESS TOPSOIL PLACED OUTSIDE OF CROSS-SECTION TEMPLATES	0 C.Y.
LESS TOPSOIL PLACED IN SWM FACILITIES	0 C.Y.
=SUBTOTAL EXCESS (+) TOPSOIL OR TOPSOIL NEED (-)	11,584 C.Y.
LESS EXCESS TOPSOIL PLACED IN OUTER EMBANKMENTS	0 C.Y.
LESS CULTIVATED SOIL UNSUITABLE FOR EMBANKMENT	0 C.Y.
=TOTAL EXCESS TOPSOIL	11,584 C.Y.

PROPOSAL QUANTITIES		
ITEM NO. 202000 EXCAVATION AND EMBANKMENT	SEE	PN-03
ITEM NO. 207000 EXCAVATION AND BACKFILL FOR STRUCTURES	SEE	PN-03
ITEM NO. 208000 EXCAVATION AND BACKFILL FOR PIPE TRENCHES	SEE	PN-03
ITEM NO. 209001 BORROW, TYPE A	SEE	PN-03
ITEM NO. 209002 BORROW, TYPE B	SEE	PN-03
ITEM NO. 209004 BORROW, TYPE D	SEE	PN-03
ITEM NO. 210000 FURNISHING BORROW TYPE C FOR PIPE, UTILITY TRENCH, AND STRUCTURE BACKFILL	SEE	PN-03
ITEM NO,. 732002 TOPSOIL, 6" DEPTH	SEE	PN-03
ITEM NO. 733002 TOPSOILING (6" DEPTH)	SEE	PN-03

Unofficial Website Copy

EARTHWORK SUMMARY – PHASE 1

EXCAVATION - ALIGNMENT	
FROM CROSS-SECTIONS	
PLUS EXCAVATION FROM US 13 SB INSIDE SHOULDER	0 C.Y.
PLUS EXCAVATION FROM US 13 ACCELERATION LANE	7,158 C.Y.
PLUS EXCAVATION FROM US 13 DECELERATION LANE	3,283 C.Y.
PLUS EXCAVATION FROM US 13 NORTHBOUND RIGHT TURN LANE	605 C.Y.
PLUS EXCAVATION FROM US 13 LEFT TURN LANE	0 C.Y.
PLUS EXCAVATION FROM RAMP R	5,472 C.Y.
PLUS EXCAVATION FROM PORT PENN ROAD	653 C.Y.
PLUS EXCAVATION FROM TOLL PLAZA ENTRANCE	2,394 C.Y.
PLUS EXCAVATION FROM TOLL PLAZA FRONT PARKING ACCESS	888 C.Y.
PLUS EXCAVATION FROM US 13 SB TEMPORARY SHOULDER REMOVAL	0 C.Y.
PLUS EXCAVATION FROM CHES DEL DRIVEWAY	0 C.Y.
SUBTOTAL - EXCAVATION FROM CROSS-SECTIONS	20,454 C.Y.
PLUS TOPSOIL REMOVED UNDER FILL	0 C.Y.
PLUS TOPSOIL PLACED IN CUT:	4,042 C.Y.
PLUS TOPSOIL/ROOTMAT EXCAVATION FOR UTILITY RELOCATION (OUTSIDE OF CROSS SECTION TEMPLATES)	0 C.Y.
PLUS BITUMINOUS PAVEMENT REMOVED UNDER FILL	211 C.Y.
LESS ROOTMAT REMOVED IN CUT	0 C.Y.
LESS REMOVAL OF EXISTING PCC PAVEMENT, ETC.	1,212 C.Y.
LESS ROCK EXCAVATION	0 C.Y.
PLUS STORMWATER MANAGEMENT EXCAVATION	6,730 C.Y.
=TOTAL ITEM 202000-EXCAVATION AND EMBANKMENT	30,225 C.Y.

STORMWATER MANAGEMENT POND EXCAVATION	
FROM GRID ANALYSIS:	
SWM POND NO. 756	0 C.Y.
SWM POND NO. 757	0 C.Y.
SWM POND NO. 758	7,307 C.Y.
SUBTOTAL - EXCAVATION FROM GRID ANALYSIS	7,307 C.Y.
PLUS TOPSOIL REMOVED UNDER FILL	0 C.Y.
PLUS TOPSOIL PLACED IN CUT SECTIONS	588 C.Y.
LESS ROOTMAT REMOVED IN CUT	1,165 C.Y.
LESS ROCK EXCAVATION	0 C.Y.
=TOTAL STORMWATER MANAGEMENT POND	6,730 C.Y.
LESS MATERIAL REQUIRED FOR SWM EMBANKMENT	0 C.Y.
=TOTAL SWM POND EXCAVATION AVAILABLE FOR EMBANKMENT	6,730 C.Y.
*INCLUDES 2' OF OVEREXCAVATION OF SWM PONDS FOR USE AS SEDIMENT BASIN	

EXCAVATION AVAILABLE FOR EMBANKMENT	
TOTAL EXCAVATION AND EMBANKMENT QUANTITY (ITEM 202000)	30,225 C.Y.
PLUS EXCAVATION AND BACKFILLING FOR STRUCTURES	75 C.Y.
PLUS EXCAVATION AND BACKFILLING FOR PIPE TRENCHES	1,046 C.Y.
PLUS CHANNEL EXCAVATION	0 C.Y.
PLUS EXCAVATION FROM LATERAL OR LONGITUDINAL DITCHES	0 C.Y.
PLUS EXCAVATION FROM INSTALLATION OF UNDERDRAINS	625 C.Y.
PLUS STOCKPILED MATERIAL FROM PREVIOUS PHASES	4,274 C.Y.
LESS TOPSOIL REMOVED IN CUT AND FILL	0 C.Y.
LESS TOPSOIL REMOVED FROM STORMWATER MANAGEMENT PONDS	588 C.Y.
LESS TOPSOIL REMOVED OUTSIDE OF CROSS-SECTION TEMPLATES (UTILITY RELOCATION)	0 C.Y.
LESS UNSUITABLE EXCAVATION	845 C.Y.
LESS MATERIAL REQUIRED FOR SWM EMBANKMENT	0 C.Y.
=TOTAL EXCAVATION AVAILABLE FOR BORROW, TYPE F	34,813 C.Y.

BORROW, TYPE A CAPPING REQUIRED	
BORROW, TYPE A FOR CAPPING	7,058 C.Y.
LESS TOPSOIL PLACED ON FILL SLOPES	1,558 C.Y.
=SUBTOTAL BORROW, TYPE A CAPPING REQUIRED	5,500 C.Y.
PLUS CAPPING REQUIRED X ADJUSTMENT FACTOR (0.20)	1,100 C.Y.
=SUBTOTAL ADJUSTED BORROW, TYPE A REQUIRED	6,600 C.Y.
LESS EXCAVATION AVAILABLE FOR BORROW, TYPE A	0 C.Y.
=TOTAL ADJUSTED BORROW, TYPE A REQUIRED	6,600 C.Y.

BORROW, TYPE C REQUIRED	
TEST HOLE EXCAVATION BACKFILL REQUIRED	104 C.Y.
PIPE/UTILITY BACKFILL REQUIRED	4,880 C.Y.
PLUS BORROW, TYPE C REQUIRED X ADJUSTMENT FACTOR (0.20)	997 C.Y.
=SUBTOTAL ADJUSTED BORROW, TYPE C REQUIRED	5,980 C.Y.
LESS EXCAVATION AVAILABLE FOR BORROW, TYPE C	0 C.Y.
=TOTAL ADJUSTED BORROW, TYPE C REQUIRED	5,980 C.Y.

BORROW, TYPE D REQUIRED	
SOIL CEMENT BASE COURSE (SY)	4,643 S.Y.
VOLUME OF TYPE D, CY (6" DEPTH)	774 C.Y.
PLUS BORROW, TYPE D REQUIRED X ADJUSTMENT FACTOR (0.20)	155 C.Y.
=SUBTOTAL ADJUSTED BORROW, TYPE D REQUIRED	929 C.Y.
LESS EXCAVATION AVAILABLE FOR BORROW, TYPE D	0 C.Y.
=TOTAL ADJUSTED BORROW, TYPE D REQUIRED	929 C.Y.

BORROW, TYPE B REQUIRED	
BACKFILL FOR UNSTABLE SUBGRADES AFTER ROOTMAT REMOVED UNDER FILL	0 C.Y.
PLUS BACKFILL X ADJUSTMENT FACTOR (0.20)	0 C.Y.
=SUBTOTAL ADJUSTED BORROW, TYPE B REQUIRED	0 C.Y.
LESS EXCAVATION AVAILABLE FOR BORROW, TYPE B	0 C.Y.
=TOTAL ADJUSTED BORROW, TYPE B REQUIRED	0 C.Y.

EMBANKMENT AND BORROW, TYPE F REQUIRED	
EMBANKMENT REQUIRED BELOW CAPPING	21,808 C.Y.
PLUS TOPSOIL REMOVED UNDER FILL	1,378 C.Y.
PLUS ROOTMAT REMOVED UNDER FILL NOT BACKFILLED WITH BORROW, TYPE B	1,235 C.Y.
PLUS UNDERCUT MATERIAL REMOVED UNDER FILL	0 C.Y.
PLUS PCC AND BITUMINOUS PAVEMENT REMOVED UNDER FILL	227 C.Y.
PLUS EMBANKMENT FOR PIPE BACKFILL (TYPE F)	295 C.Y.
LESS TOPSOIL PLACED ON FILL SLOPES	713 C.Y.
LESS MSE WALL OR OTHER RETAINING WALL & BACKFILL	0 C.Y.
LESS BORROW, TYPE B PLACED ABOVE ORIGINAL GROUND	0 C.Y.
=SUBTOTAL EMBANKMENT REQUIRED BELOW CAPPING	24,231 C.Y.
PLUS EMBANKMENT REQUIRED X ADJUSTMENT FACTOR (0.20)	4,846 C.Y.
=SUBTOTAL ADJUSTED EMBANKMENT REQUIRED	29,077 C.Y.
LESS TOTAL EXCAVATION AVAILABLE FOR BORROW, TYPE F	34,813 C.Y.
SURPLUS BORROW, TYPE F	5,736 C.Y.
THEREFORE, TOTAL ADJUSTED BORROW, TYPE F REQUIRED	0 C.Y.

TOPSOIL SUMMARY	
TOPSOIL SALVAGED FROM CUT AND FILL	0 C.Y.
PLUS TOPSOIL FROM STORMWATER MANAGEMENT POND	588 C.Y.
PLUS TOPSOIL REMOVED OUTSIDE OF CROSS-SECTION TEMPLATES (UTILITY RELOCATION)	0 C.Y.
PLUS TOPSOIL FROM PREVIOUS PHASE	11,584 CY
=SUBTOTAL TOPSOIL AVAILABLE	12,171 C.Y.
LESS TOPSOIL PLACED ON FILL SLOPES	2,271 C.Y.
LESS TOPSOIL PLACED ON CUT SLOPES	4,042 C.Y.
LESS TOPSOIL PLACED OUTSIDE OF CROSS-SECTION TEMPLATES	4,418 C.Y.
LESS TOPSOIL PLACED IN SWM FACILITIES	651 C.Y.
=SUBTOTAL EXCESS (+) TOPSOIL OR TOPSOIL NEED (-)	788 C.Y.
LESS EXCESS TOPSOIL PLACED IN OUTER EMBANKMENTS	0 C.Y.
LESS CULTIVATED SOIL UNSUITABLE FOR EMBANKMENT	0 C.Y.
=TOTAL EXCESS TOPSOIL	788 C.Y.

PROPOSAL QUANTITIES		
ITEM NO. 202000 EXCAVATION AND EMBANKMENT	SEE	PN-03
ITEM NO. 207000 EXCAVATION AND BACKFILL FOR STRUCTURES	SEE	PN-03
ITEM NO. 208000 EXCAVATION AND BACKFILL FOR PIPE TRENCHES	SEE	PN-03
ITEM NO. 209001 BORROW, TYPE A	SEE	PN-03
ITEM NO. 209002 BORROW, TYPE B	SEE	PN-03
ITEM NO. 209004 BORROW, TYPE D	SEE	PN-03
ITEM NO. 210000 FURNISHING BORROW TYPE C FOR PIPE, UTILITY TRENCH, AND STRUCTURE BACKFILL	SEE	PN-03
ITEM NO,. 732002 TOPSOIL, 6" DEPTH	SEE	PN-03
ITEM NO. 733002 TOPSOILING (6" DEPTH)	SEE	PN-03

Unofficial Website Copy

EARTHWORK SUMMARY – PHASE 2

EXCAVATION - ALIGNMENT	
FROM CROSS-SECTIONS	
PLUS EXCAVATION FROM US 13 SB INSIDE SHOULDER	0 C.Y.
PLUS EXCAVATION FROM US 13 ACCELERATION LANE	0 C.Y.
PLUS EXCAVATION FROM US 13 DECELERATION LANE	0 C.Y.
PLUS EXCAVATION FROM US 13 NORTHBOUND RIGHT TURN LANE	0 C.Y.
PLUS EXCAVATION FROM US 13 LEFT TURN LANE	10,504 C.Y.
PLUS EXCAVATION FROM RAMP R	0 C.Y.
PLUS EXCAVATION FROM PORT PENN ROAD	2,477 C.Y.
PLUS EXCAVATION FROM TOLL PLAZA ENTRANCE	0 C.Y.
PLUS EXCAVATION FROM TOLL PLAZA FRONT PARKING ACCESS	0 C.Y.
PLUS EXCAVATION FROM US 13 SB TEMPORARY SHOULDER REMOVAL	151 C.Y.
PLUS EXCAVATION FROM CHES DEL DRIVEWAY	0 C.Y.
SUBTOTAL - EXCAVATION FROM CROSS-SECTIONS	13,133 C.Y.
PLUS TOPSOIL REMOVED UNDER FILL	36 C.Y.
PLUS TOPSOIL PLACED IN CUT:	1,605 C.Y.
PLUS TOPSOIL/ROOTMAT EXCAVATION FOR UTILITY RELOCATION (OUTSIDE OF CROSS SECTION TEMPLATES)	0 C.Y.
PLUS BITUMINOUS PAVEMENT REMOVED UNDER FILL	317 C.Y.
LESS ROOTMAT REMOVED IN CUT	0 C.Y.
LESS REMOVAL OF EXISTING PCC PAVEMENT, ETC.	1,089 C.Y.
LESS ROCK EXCAVATION	0 C.Y.
PLUS STORMWATER MANAGEMENT EXCAVATION	9,119 C.Y.
=TOTAL ITEM 202000-EXCAVATION AND EMBANKMENT	23,121 C.Y.

STORMWATER MANAGEMENT POND EXCAVATION	
FROM GRID ANALYSIS:	
SWM POND NO. 756	3,328 C.Y.
SWM POND NO. 757	3,241 C.Y.
SWM POND NO. 758	0 C.Y.
SUBTOTAL - EXCAVATION FROM GRID ANALYSIS	6,568 C.Y.
PLUS TOPSOIL REMOVED UNDER FILL	364 C.Y.
PLUS TOPSOIL PLACED IN CUT SECTIONS	2,187 C.Y.
LESS ROOTMAT REMOVED IN CUT	0 C.Y.
LESS ROCK EXCAVATION	0 C.Y.
=TOTAL STORMWATER MANAGEMENT POND	9,119 C.Y.
LESS MATERIAL REQUIRED FOR SWM EMBANKMENT	837 C.Y.
=TOTAL SWM POND EXCAVATION AVAILABLE FOR EMBANKMENT	8,282 C.Y.
*INCLUDES 2' OF OVEREXCAVATION OF SWM PONDS FOR USE AS SEDIMENT BASIN	

EXCAVATION AVAILABLE FOR EMBANKMENT	
TOTAL EXCAVATION AND EMBANKMENT QUANTITY (ITEM 202000)	23,121 C.Y.
PLUS EXCAVATION AND BACKFILLING FOR STRUCTURES	0 C.Y.
PLUS EXCAVATION AND BACKFILLING FOR PIPE TRENCHES	361 C.Y.
PLUS CHANNEL EXCAVATION	0 C.Y.
PLUS EXCAVATION FROM LATERAL OR LONGITUDINAL DITCHES	0 C.Y.
PLUS EXCAVATION FROM INSTALLATION OF UNDERDRAINS	954 C.Y.
PLUS STOCKPILED MATERIAL FROM PREVIOUS PHASES	5,736 CY
LESS TOPSOIL REMOVED IN CUT AND FILL	2,636 C.Y.
LESS TOPSOIL REMOVED FROM STORMWATER MANAGEMENT PONDS	2,551 C.Y.
LESS TOPSOIL REMOVED OUTSIDE OF CROSS-SECTION TEMPLATES (UTILITY RELOCATION)	0 C.Y.
LESS UNSUITABLE EXCAVATION	10 C.Y.
LESS MATERIAL REQUIRED FOR SWM EMBANKMENT	837 C.Y.
=TOTAL EXCAVATION AVAILABLE FOR BORROW, TYPE F	24,137 C.Y.

BORROW, TYPE A CAPPING REQUIRED	
BORROW, TYPE A FOR CAPPING	4,002 C.Y.
LESS TOPSOIL PLACED ON FILL SLOPES	0 C.Y.
=SUBTOTAL BORROW, TYPE A CAPPING REQUIRED	4,002 C.Y.
PLUS CAPPING REQUIRED X ADJUSTMENT FACTOR (0.20)	800 C.Y.
=SUBTOTAL ADJUSTED BORROW, TYPE A REQUIRED	4,802 C.Y.
LESS EXCAVATION AVAILABLE FOR BORROW, TYPE A	0 C.Y.
=TOTAL ADJUSTED BORROW, TYPE A REQUIRED	4,802 C.Y.

BORROW, TYPE C REQUIRED	
TEST HOLE EXCAVATION BACKFILL REQUIRED	0 C.Y.
PIPE/UTILITY BACKFILL REQUIRED	202 C.Y.
PLUS BORROW, TYPE C REQUIRED X ADJUSTMENT FACTOR (0.20)	40 C.Y.
=SUBTOTAL ADJUSTED BORROW, TYPE C REQUIRED	242 C.Y.
LESS EXCAVATION AVAILABLE FOR BORROW, TYPE C	0 C.Y.
=TOTAL ADJUSTED BORROW, TYPE C REQUIRED	242 C.Y.

BORROW, TYPE D REQUIRED	
SOIL CEMENT BASE COURSE (SY)	0 S.Y.
VOLUME OF TYPE D, CY (6" DEPTH)	0 C.Y.
PLUS BORROW, TYPE D REQUIRED X ADJUSTMENT FACTOR (0.20)	0 C.Y.
=SUBTOTAL ADJUSTED BORROW, TYPE D REQUIRED	0 C.Y.
LESS EXCAVATION AVAILABLE FOR BORROW, TYPE D	0 C.Y.
=TOTAL ADJUSTED BORROW, TYPE D REQUIRED	0 C.Y.

BORROW, TYPE B REQUIRED	
BACKFILL FOR UNSTABLE SUBGRADES AFTER ROOTMAT REMOVED UNDER FILL	0 C.Y.
PLUS BACKFILL X ADJUSTMENT FACTOR (0.20)	0 C.Y.
=SUBTOTAL ADJUSTED BORROW, TYPE B REQUIRED	0 C.Y.
LESS EXCAVATION AVAILABLE FOR BORROW, TYPE B	0 C.Y.
=TOTAL ADJUSTED BORROW, TYPE B REQUIRED	0 C.Y.

EMBANKMENT AND BORROW, TYPE F REQUIRED	
EMBANKMENT REQUIRED BELOW CAPPING	393 C.Y.
PLUS TOPSOIL REMOVED UNDER FILL	36 C.Y.
PLUS ROOTMAT REMOVED UNDER FILL NOT BACKFILLED WITH BORROW, TYPE B	0 C.Y.
PLUS UNDERCUT MATERIAL REMOVED UNDER FILL	0 C.Y.
PLUS PCC AND BITUMINOUS PAVEMENT REMOVED UNDER FILL	542 C.Y.
PLUS EMBANKMENT FOR PIPE BACKFILL (TYPE F)	122 C.Y.
LESS TOPSOIL PLACED ON FILL SLOPES	191 C.Y.
LESS MSE WALL OR OTHER RETAINING WALL & BACKFILL	0 C.Y.
LESS BORROW, TYPE B PLACED ABOVE ORIGINAL GROUND	0 C.Y.
=SUBTOTAL EMBANKMENT REQUIRED BELOW CAPPING	902 C.Y.
PLUS EMBANKMENT REQUIRED X ADJUSTMENT FACTOR (0.20)	180 C.Y.
=SUBTOTAL ADJUSTED EMBANKMENT REQUIRED	1,083 C.Y.
LESS TOTAL EXCAVATION AVAILABLE FOR BORROW, TYPE F	24,137 C.Y.
SURPLUS BORROW, TYPE F	23,054 C.Y.
THEREFORE, TOTAL ADJUSTED BORROW, TYPE F REQUIRED	0 C.Y.

TOPSOIL SUMMARY	
TOPSOIL SALVAGED FROM CUT AND FILL	2,636 C.Y.
PLUS TOPSOIL FROM STORMWATER MANAGEMENT POND	2,551 C.Y.
PLUS TOPSOIL REMOVED OUTSIDE OF CROSS-SECTION TEMPLATES (UTILITY RELOCATION)	0 C.Y.
PLUS TOPSOIL FROM PREVIOUS PHASE	788 CY
=SUBTOTAL TOPSOIL AVAILABLE	5,976 C.Y.
LESS TOPSOIL PLACED ON FILL SLOPES	191 C.Y.
LESS TOPSOIL PLACED ON CUT SLOPES	1,605 C.Y.
LESS TOPSOIL PLACED OUTSIDE OF CROSS-SECTION TEMPLATES	1,450 C.Y.
LESS TOPSOIL PLACED IN SWM FACILITIES	2,551 C.Y.
=SUBTOTAL EXCESS (+) TOPSOIL OR TOPSOIL NEED (-)	179 C.Y.
LESS EXCESS TOPSOIL PLACED IN OUTER EMBANKMENTS	0 C.Y.
LESS CULTIVATED SOIL UNSUITABLE FOR EMBANKMENT	0 C.Y.
=TOTAL EXCESS TOPSOIL	179 C.Y.

PROPOSAL QUANTITIES		
ITEM NO. 202000 EXCAVATION AND EMBANKMENT	SEE	PN-03
ITEM NO. 207000 EXCAVATION AND BACKFILL FOR STRUCTURES	SEE	PN-03
ITEM NO. 208000 EXCAVATION AND BACKFILL FOR PIPE TRENCHES	SEE	PN-03
ITEM NO. 209001 BORROW, TYPE A	SEE	PN-03
ITEM NO. 209002 BORROW, TYPE B	SEE	PN-03
ITEM NO. 209004 BORROW, TYPE D	SEE	PN-03
ITEM NO. 210000 FURNISHING BORROW TYPE C FOR PIPE, UTILITY TRENCH, AND STRUCTURE BACKFILL	SEE	PN-03
ITEM NO,. 732002 TOPSOIL, 6" DEPTH	SEE	PN-03
ITEM NO. 733002 TOPSOILING (6" DEPTH)	SEE	PN-03

Unofficial Website Copy

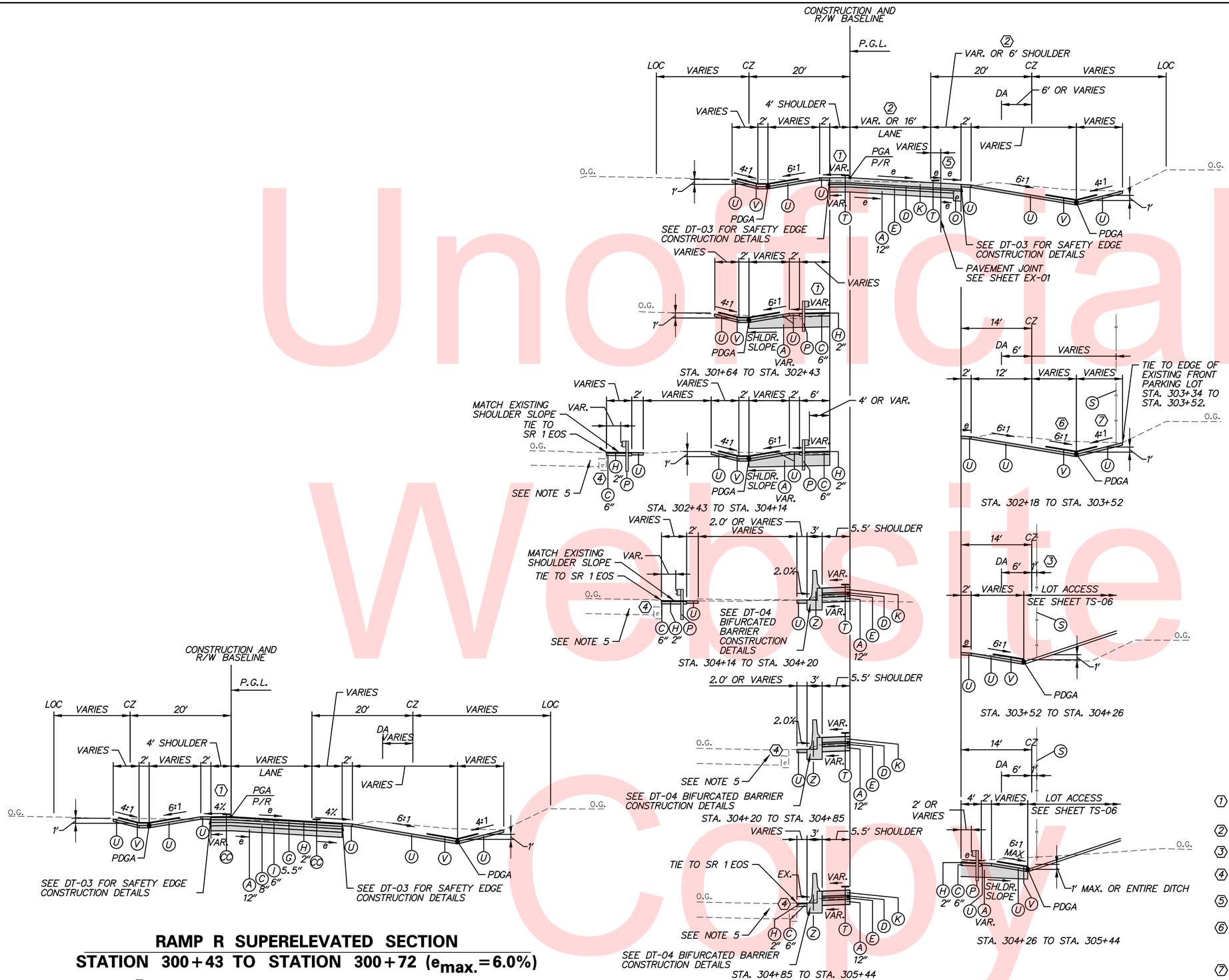

RAMP R SUPERELEVATED SECTION

STATION 300+43 TO STATION 300+72 ($e_{max.}$=6.0%)

(1) TRANSITION SLOPE FROM -4.0% TO -2.83% STA. 300+43 TO STA. 300+72.

RAMP R SUPERELEVATED SECTION

STATION 300+72 TO STATION 305+44 ($e_{max.}$=6.0%)

LEGEND

- (A) ITEM 209001 - BORROW, TYPE A
- (B) ITEM 209006 - BORROW, TYPE F
- (C) ITEM 302007 - GRADED AGGREGATE BASE COURSE, TYPE B
- (D) ITEM 304501 - PERMEABLE TREATED BASE, 4"
- (E) ITEM 304502 - SOIL CEMENT BASE COURSE, 6"
- (G) ITEM 401813 - WMA, SUPERPAVE, TYPE B, 160 GYRATIONS, PG 70-22
- (H) ITEM 401830 - WMA, SUPERPAVE,TYPE C, 160 GYRATIONS, PG 70-22 (NON-CARBONATE STONE)
- (I) ITEM 401819 - WMA, SUPERPAVE, BITUMINOUS CONCRETE BASE COURSE, 160 GYRATIONS, PG 64-22
- (J) ITEM 401824- WMA, SUPERPAVE, TYPE C, 160 GYRATIONS, PG 64-22, WEDGE
- (K) ITEM 501006 - PORTLAND CEMENT CONCRETE PAVEMENT, 12"
- (L) ITEM 701010 - PCC CURB, TYPE 1-8
- (N) ITEM 701016 - PCC CURB AND GUTTER TYPE 1-4
- (O) ITEM 715001 - PERFORATED PIPE UNDERDRAINS, 6"
- (P) ITEM 720050 - GALVANIZED STEEL BEAM GUARDRAIL, TYPE 1-31
- (Q) ITEM 720052 - GALVANIZED STEEL BEAM GUARDRAIL, TYPE 3-31
- (S) ITEM 727000 - RIGHT OF WAY FENCE
- (T) ITEM 760017 - RUMBLE STRIPS, CONCRETE
- (U) ITEM 733002 - TOPSOILING, 6" DEPTH
  ITEM 734013 - PERMANENT GRASS SEEDING, DRY GROUND
- (V) ITEM 735535 - SOIL RETENTION BLANKET MULCH, TYPE 5
- (X) ITEM 760006 - PAVEMENT MILLING, HOTMIX, 2" DEPTH
- (Z) ITEM 720629 - BIFURCATED CONCRETE MEDIAN BARRIER
- (AA) ITEM 701011 - PCC CURB TYPE 2
- (BB) ITEM 705001 - PCC SIDEWALK, 4"
- (CC) ITEM 760016 - RUMBLE STRIPS, HOTMIX
- (DD) ITEM 760003 - PAVEMENT MILLING, HOT MIX, VARIABLE DEPTH

TYPICAL SECTION NOTES:

1. THE MAXIMUM ALGEBRAIC DIFFERENCE BETWEEN THE TRAVELED WAY SLOPE AND THE SHOULDER SHALL NOT EXCEED 8%.
2. SHOULDER SLOPE ON THE LOW SIDE SHALL BE THE SAME AS THE TRAVELED WAY SLOPE WHEN SUPERELEVATION IS GREATER THAN 4%.
3. P.G.L. - PROFILE GRADE LINE
   PGA - POINT OF GRADE APPLICATION
   PDGA - POINT OF DITCH GRADE APPLICATION
   P/R - POINT OF ROTATION
   EOS - EDGE OF SHOULDER
   EOR - EDGE OF ROAD
4. EXISTING SR 1 ROADWAY PAVEMENT SECTION
   12" PCC PAVEMENT
   4" PERMEABLE ASPHALT TREATED BASE
   6" SOIL CEMENT TREATED BASE
   14" BORROW TYPE A
5. EXISTING SR 1 SHOULDER ADJACENT SECTION
   2" HOT MIX, HOT LAID BITUMINOUS CONCRETE PAVEMENT, TYPE C
   10" MAX. BITUMINOUS CONCRETE BASE COURSE
   4" PERMEABLE ASPHALT TREATED BASE
   6" SOIL CEMENT TREATED BASE
   14" BORROW TYPE A
6. SEE CONSTRUCTION DETAIL AS-04 FOR RAMP R OVER TOLL PLAZA PEDESTRIAN ACCESS TUNNEL (STA. 304+14 TO STA. 304+44).

(1) TRANSITION SLOPE FROM -2.83 TO +0.25% STA. 300+72 TO STA. 301+48.
TRANSITON SLOPE FROM +0.25% TO -2.0% STA. 301+48 TO STA. 302+03.

(2) VARIES FROM STA. 300+72 TO STA. 301+50.

(3) FENCE VARIES FROM STA. 302+52 TO STA. 303+54.

(4) CONTRACTOR SHALL PROTECT EXISTING SR1 UNDERDRAIN DURING ALL EXCAVATION AND CONSTRUCTION ACTIVITIES.

(5) SLOPE -4% STA. 300+72 TO STA. 301+03.
TRANSITION SLOPE FROM -4% TO -6% STA. 301+03 TO 301+51.

(6) TRANSITION SLOPE FROM -6:1 TO -4:1 STA. 302+18 TO 302+42.
HOLD SLOPE -4:1 STA. 302+42 TO STA. 302+60.
TRANSITION SLOPE FROM -4:1 TO -6:1 STA. 302+60 TO STA. 302+85.

(7) SLOPE VARIES (3:1 MAX) STA. 303+34 TO STA. 303+52.

Unofficial Website Copy

N:\31653-000\Contract 1D\CADD\TS001\J01_1D.dgn
6/17/2015 9:42:11 AM

DELAWARE DEPARTMENT OF TRANSPORTATION	ADDENDUMS / REVISIONS	NOT TO SCALE	US 13 & PORT PENN RD INTERSECTION	CONTRACT T201011302 / COUNTY NEW CASTLE	BRIDGE NO. / DESIGNED BY: S.E.S. / CHECKED BY: B.R.T.	TYPICAL SECTIONS

TS-01

SHEET NO. 11 / TOTAL SHTS. 179

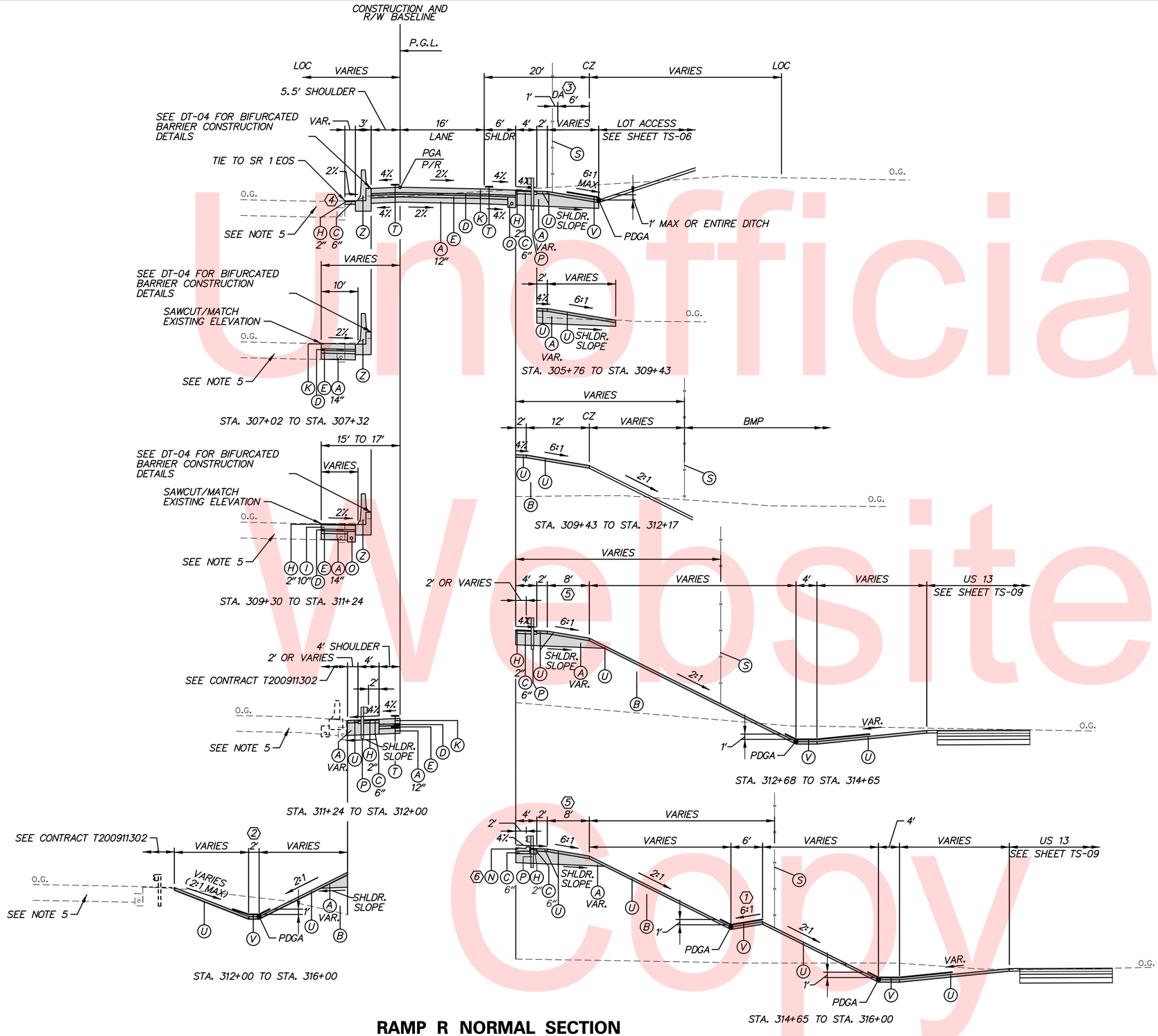

RAMP R NORMAL SECTION
STATION 305+44 TO STATION 316+00

LEGEND

- (A) ITEM 209001 - BORROW, TYPE A
- (B) ITEM 209006 - BORROW, TYPE F
- (C) ITEM 302007 - GRADED AGGREGATE BASE COURSE, TYPE B
- (D) ITEM 304501 - PERMEABLE TREATED BASE, 4"
- (E) ITEM 304502 - SOIL CEMENT BASE COURSE, 6"
- (G) ITEM 401813 - WMA, SUPERPAVE, TYPE B, 160 GYRATIONS, PG 70-22
- (H) ITEM 401830 - WMA, SUPERPAVE,TYPE C, 160 GYRATIONS, PG 70-22 (NON-CARBONATE STONE)
- (I) ITEM 401819 - WMA, SUPERPAVE, BITUMINOUS CONCRETE BASE COURSE, 160 GYRATIONS, PG 64-22
- (J) ITEM 401824- WMA, SUPERPAVE, TYPE C, 160 GYRATIONS, PG 64-22, WEDGE
- (K) ITEM 501006 - PORTLAND CEMENT CONCRETE PAVEMENT, 12"
- (L) ITEM 701010 - PCC CURB, TYPE 1-8
- (N) ITEM 701016 - PCC CURB AND GUTTER TYPE 1-4
- (O) ITEM 715001 - PERFORATED PIPE UNDERDRAINS, 6"
- (P) ITEM 720050 - GALVANIZED STEEL BEAM GUARDRAIL, TYPE 1-31
- (Q) ITEM 720052 - GALVANIZED STEEL BEAM GUARDRAIL, TYPE 3-31
- (S) ITEM 727000 - RIGHT OF WAY FENCE
- (T) ITEM 760017 - RUMBLE STRIPS, CONCRETE
- (U) ITEM 733002 - TOPSOILING, 6" DEPTH
ITEM 734013 - PERMANENT GRASS SEEDING, DRY GROUND
- (V) ITEM 735535 - SOIL RETENTION BLANKET MULCH, TYPE 5
- (X) ITEM 760006 - PAVEMENT MILLING, HOTMIX, 2" DEPTH
- (Z) ITEM 720629 - BIFURCATED CONCRETE MEDIAN BARRIER
- (AA) ITEM 701011 - PCC CURB TYPE 2
- (BB) ITEM 705001 - PCC SIDEWALK, 4"
- (CC) ITEM 760016 - RUMBLE STRIPS, HOTMIX
- (DD) ITEM 760003 - PAVEMENT MILLING, HOT MIX, VARIABLE DEPTH

TYPICAL SECTION NOTES:

1. THE MAXIMUM ALGEBRAIC DIFFERENCE BETWEEN THE TRAVELED WAY SLOPE AND THE SHOULDER SHALL NOT EXCEED 8%.
2. SHOULDER SLOPE ON THE LOW SIDE SHALL BE THE SAME AS THE TRAVELED WAY SLOPE WHEN SUPERELEVATION IS GREATER THAN 4%.
3. P.G.L. - PROFILE GRADE LINE
PGA - POINT OF GRADE APPLICATION
PDGA - POINT OF DITCH GRADE APPLICATION
P/R - POINT OF ROTATION
EOS - EDGE OF SHOULDER
EOR - EDGE OF ROAD
4. EXISTING SR 1 ROADWAY PAVEMENT SECTION
12" PCC PAVEMENT
4" PERMEABLE ASPHALT TREATED BASE
6" SOIL CEMENT TREATED BASE
14" BORROW TYPE A
5. EXISTING SR 1 SHOULDER ADJACENT SECTION
2" HOT MIX, HOT LAID BITUMINOUS CONCRETE PAVEMENT, TYPE C
10" MAX. BITUMINOUS CONCRETE BASE COURSE
4" PERMEABLE ASPHALT TREATED BASE
6" SOIL CEMENT TREATED BASE
14" BORROW TYPE A

(1) TRANSITION BENCH SLOPE -2:1 TO +6:1 STA. 314+64 TO STA. 314+95.

(2) WIDTH VARIES 0' TO 2' STA. 312+00 TO STA. 312+50.

(3) DENIAL OF ACCESS/ FENCE VARIES FROM STA. 305+44 TO STA. 305+74.
DENIAL OF ACCESS/ FENCE VARIES FROM STA. 309+50 TO STA. 316+00.

(4) CONTRACTOR SHALL PROTECT EXISTING SR1 UNDERDRAIN DURING ALL EXCAVATION AND CONSTRUCTION ACTIVITIES.

(5) WIDTH VARIES 8' TO 0' STA. 314+75 TO STA. 315+00.
WIDTH 0' STA. 315+00 TO STA. 316+00.

(6) CURB AND GUTTER STA. 315+85 to STA. 316+00.

Unofficial Website Copy

DELAWARE DEPARTMENT OF TRANSPORTATION	ADDENDUMS / REVISIONS	NOT TO SCALE	US 13 & PORT PENN RD INTERSECTION	CONTRACT T201011302	BRIDGE NO.	TYPICAL SECTIONS	TS-02
				COUNTY NEW CASTLE	DESIGNED BY: S.E.S.		SHEET NO. 12
					CHECKED BY: B.R.T.		TOTAL SHTS. 179

n:\31653-000\contract t4\cadd\TS002U301_1D.dgn
6/17/2015 9:40:43 AM

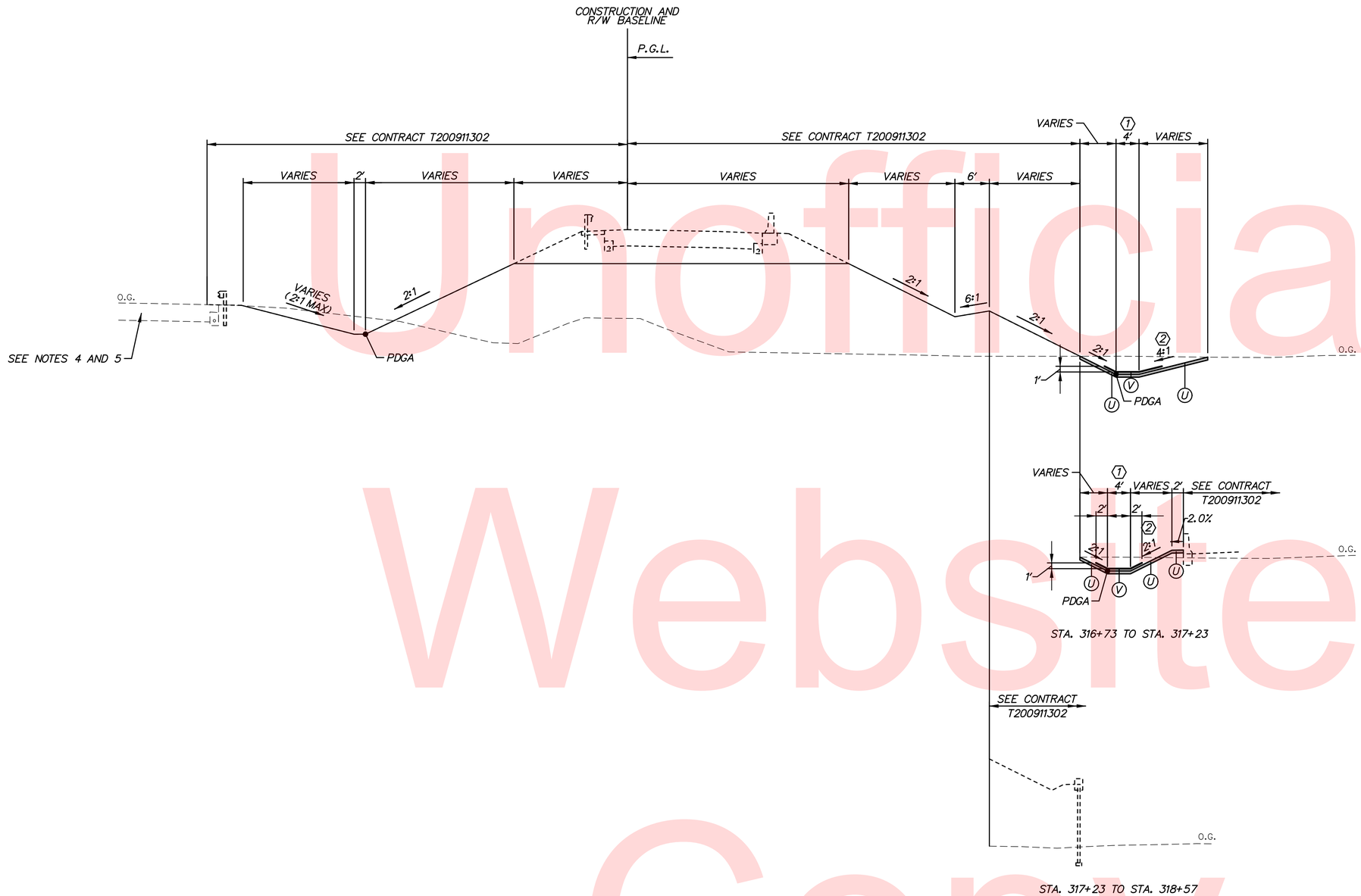

RAMP R SECTION (SEE CONTRACT T200911302)
STATION 316+00 TO STATION 317+76

NOTE: SEE DT-01 FOR PAVEMENT DETAIL AT LIMIT OF CONSTRUCTION.

NOTE: IF THIS CONTRACT IS THE FIRST WORK TO BE PERFORMED IN THIS AREA, CONTRACTOR SHALL CONSTRUCT THE GRADING AS SHOWN SOLID ABOVE OR AT THE DIRECTION OF THE ENGINEER. OTHERWISE SECTION ONLY APPLIES FOR DITCH CONSTRUCTION RIGHT AND LEFT.

LEGEND

- (A) ITEM 209001 - BORROW, TYPE A
- (B) ITEM 209006 - BORROW, TYPE F
- (C) ITEM 302007 - GRADED AGGREGATE BASE COURSE, TYPE B
- (D) ITEM 304501 - PERMEABLE TREATED BASE, 4"
- (E) ITEM 304502 - SOIL CEMENT BASE COURSE, 6"
- (G) ITEM 401813 - WMA, SUPERPAVE, TYPE B, 160 GYRATIONS, PG 70-22
- (H) ITEM 401830 - WMA, SUPERPAVE,TYPE C, 160 GYRATIONS, PG 70-22 (NON-CARBONATE STONE)
- (I) ITEM 401819 - WMA, SUPERPAVE, BITUMINOUS CONCRETE BASE COURSE, 160 GYRATIONS, PG 64-22
- (J) ITEM 401824- WMA, SUPERPAVE, TYPE C, 160 GYRATIONS, PG 64-22, WEDGE
- (K) ITEM 501006 - PORTLAND CEMENT CONCRETE PAVEMENT, 12"
- (L) ITEM 701010 - PCC CURB, TYPE 1-8
- (N) ITEM 701016 - PCC CURB AND GUTTER TYPE 1-4
- (O) ITEM 715001 - PERFORATED PIPE UNDERDRAINS, 6"
- (P) ITEM 720050 - GALVANIZED STEEL BEAM GUARDRAIL, TYPE 1-31
- (Q) ITEM 720052 - GALVANIZED STEEL BEAM GUARDRAIL, TYPE 3-31
- (S) ITEM 727000 - RIGHT OF WAY FENCE
- (T) ITEM 760017 - RUMBLE STRIPS, CONCRETE
- (U) ITEM 733002 - TOPSOILING, 6" DEPTH
ITEM 734013 - PERMANENT GRASS SEEDING, DRY GROUND
- (V) ITEM 735535 - SOIL RETENTION BLANKET MULCH, TYPE 5
- (X) ITEM 760006 - PAVEMENT MILLING, HOTMIX, 2" DEPTH
- (Z) ITEM 720629 - BIFURCATED CONCRETE MEDIAN BARRIER
- (AA) ITEM 701011 - PCC CURB TYPE 2
- (BB) ITEM 705001 - PCC SIDEWALK, 4"
- (CC) ITEM 760016 - RUMBLE STRIPS, HOTMIX
- (DD) ITEM 760003 - PAVEMENT MILLING, HOT MIX, VARIABLE DEPTH

TYPICAL SECTION NOTES:

1. THE MAXIMUM ALGEBRAIC DIFFERENCE BETWEEN THE TRAVELED WAY SLOPE AND THE SHOULDER SHALL NOT EXCEED 8%.
2. SHOULDER SLOPE ON THE LOW SIDE SHALL BE THE SAME AS THE TRAVELED WAY SLOPE WHEN SUPERELEVATION IS GREATER THAN 4%.
3. P.G.L. - PROFILE GRADE LINE
PGA - POINT OF GRADE APPLICATION
PDGA - POINT OF DITCH GRADE APPLICATION
P/R - POINT OF ROTATION
EOS - EDGE OF SHOULDER
EOR - EDGE OF ROAD
4. EXISTING SR 1 ROADWAY PAVEMENT SECTION
12" PCC PAVEMENT
4" PERMEABLE ASPHALT TREATED BASE
6" SOIL CEMENT TREATED BASE
14" BORROW TYPE A
5. EXISTING SR 1 SHOULDER ADJACENT SECTION
2" HOT MIX, HOT LAID BITUMINOUS CONCRETE PAVEMENT, TYPE C
10" MAX. BITUMINOUS CONCRETE BASE COURSE
4" PERMEABLE ASPHALT TREATED BASE
6" SOIL CEMENT TREATED BASE
14" BORROW TYPE A

(1) TRANSITION DITCH WIDTH 4' TO 0' STA. 316+55 TO STA. 317+00. HOLD DITCH WIDTH 0' STA. 317+00 TO STA. 317+23.

(2) TRANSITION SLOPE +8.8% TO +4:1 STA. 316+00 TO STA. 316+50. TRANSITION SLOPE +4:1 TO +2:1 STA. 316+50 TO STA. 317+00.

Unofficial Website Copy

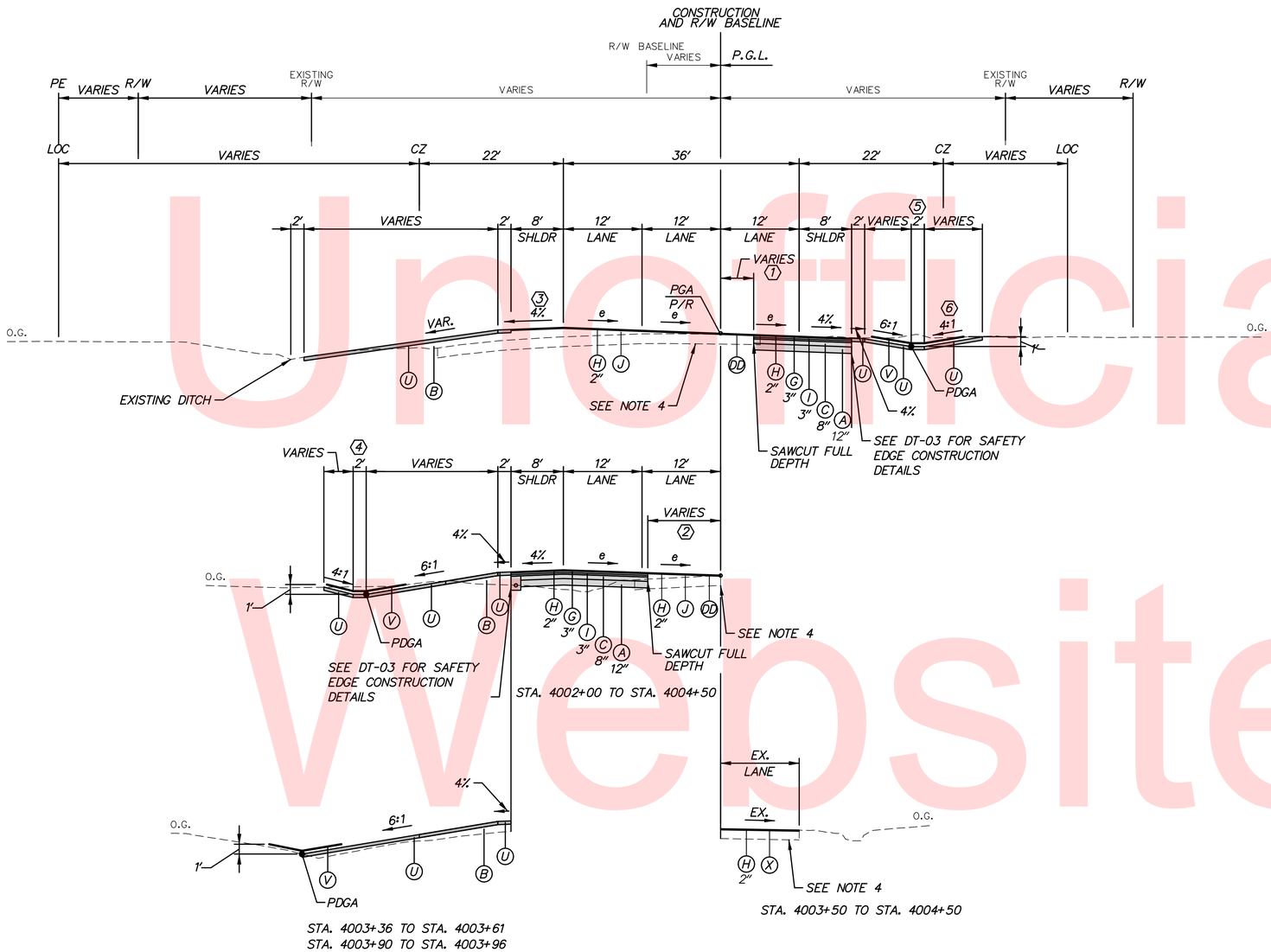

PORT PENN SUPERELEVATED SECTION

STATION 4000+47 TO STATION 4004+50 ($e_{max.}$=3.9%)

(1) WIDTH 35' STA. 4000+47 TO STA. 4000+62.
WIDTH VARIES 18' TO -4' STA. 4000+62 TO STA. 4000+80.
WIDTH -4' STA. 4000+80 TO STA. 4001+10.
WIDTH VARIES -1.86' TO 10.56' STA. 4001+10 TO STA. 4003+56.

(2) WIDTH VARIES 24' TO 11' STA. 4001+75 TO STA. 4004+50.

(3) TRANSITION SLOPE FROM EX. TO -1.50% STA. 4000+47 TO STA. 4000+54.
HOLD -1.50% STA. 4000+54 TO STA. 4001+08. TRANSITION SLOPE FROM -1.50% TO -4.0% STA. 4001+08 TO STA. 4001+77.

(4) DITCH WIDTH 0' FROM STA. 4002+00 TO STA. 4002+50.
WIDTH VARIES 0' TO 2' STA. 4002+50 TO STA. 4003+00.

(5) DITCH WIDTH 0' FROM STA. 4000+47 TO STA. 4000+99.
WIDTH VARIES 0' TO 2' STA. 4000+99 TO STA. 4001+34.

(6) TRANSITION SLOPE +4:1 TO +2:1 STA. 4001+50 TO STA. 4002+00.
HOLD +2:1 SLOPE STA. 4002+00 TO STA. 4003+50.

LEGEND

- (A) ITEM 209001 - BORROW, TYPE A
- (B) ITEM 209006 - BORROW, TYPE F
- (C) ITEM 302007 - GRADED AGGREGATE BASE COURSE, TYPE B
- (D) ITEM 304501 - PERMEABLE TREATED BASE, 4"
- (E) ITEM 304502 - SOIL CEMENT BASE COURSE, 6"
- (G) ITEM 401813 - WMA, SUPERPAVE, TYPE B, 160 GYRATIONS, PG 70-22
- (H) ITEM 401830 - WMA, SUPERPAVE,TYPE C, 160 GYRATIONS, PG 70-22 (NON-CARBONATE STONE)
- (I) ITEM 401819 - WMA, SUPERPAVE, BITUMINOUS CONCRETE BASE COURSE, 160 GYRATIONS, PG 64-22
- (J) ITEM 401824- WMA, SUPERPAVE, TYPE C, 160 GYRATIONS, PG 64-22, WEDGE
- (K) ITEM 501006 - PORTLAND CEMENT CONCRETE PAVEMENT, 12"
- (L) ITEM 701010 - PCC CURB, TYPE 1-8
- (N) ITEM 701016 - PCC CURB AND GUTTER TYPE 1-4
- (O) ITEM 715001 - PERFORATED PIPE UNDERDRAINS, 6"
- (P) ITEM 720050 - GALVANIZED STEEL BEAM GUARDRAIL, TYPE 1-31
- (Q) ITEM 720052 - GALVANIZED STEEL BEAM GUARDRAIL, TYPE 3-31
- (S) ITEM 727000 - RIGHT OF WAY FENCE
- (T) ITEM 760017 - RUMBLE STRIPS, CONCRETE
- (U) ITEM 733002 - TOPSOILING, 6" DEPTH
  ITEM 734013 - PERMANENT GRASS SEEDING, DRY GROUND
- (V) ITEM 735535 - SOIL RETENTION BLANKET MULCH, TYPE 5
- (X) ITEM 760006 - PAVEMENT MILLING, HOTMIX, 2" DEPTH
- (Z) ITEM 720629 - BIFURCATED CONCRETE MEDIAN BARRIER
- (AA) ITEM 701011 - PCC CURB TYPE 2
- (BB) ITEM 705001 - PCC SIDEWALK, 4"
- (CC) ITEM 760016 - RUMBLE STRIPS, HOTMIX
- (DD) ITEM 760003 - PAVEMENT MILLING, HOT MIX, VARIABLE DEPTH

TYPICAL SECTION NOTES:

1. THE MAXIMUM ALGEBRAIC DIFFERENCE BETWEEN THE TRAVELED WAY SLOPE AND THE SHOULDER SHALL NOT EXCEED 8%.
2. SHOULDER SLOPE ON THE LOW SIDE SHALL BE THE SAME AS THE TRAVELED WAY SLOPE WHEN SUPERELEVATION IS GREATER THAN 4%.
3. P.G.L. - PROFILE GRADE LINE
   PGA - POINT OF GRADE APPLICATION
   PDGA - POINT OF DITCH GRADE APPLICATION
   P/R - POINT OF ROTATION
   EOS - EDGE OF SHOULDER
   EOR - EDGE OF ROAD
4. EXISTING PORT PENN ROAD PAVEMENT SECTION (MAY NOT REPRESENT FULL PAVEMENT WIDTH)
   6" HMA PAVEMENT
   6.5" PCC BASE

Unofficial Website Copy

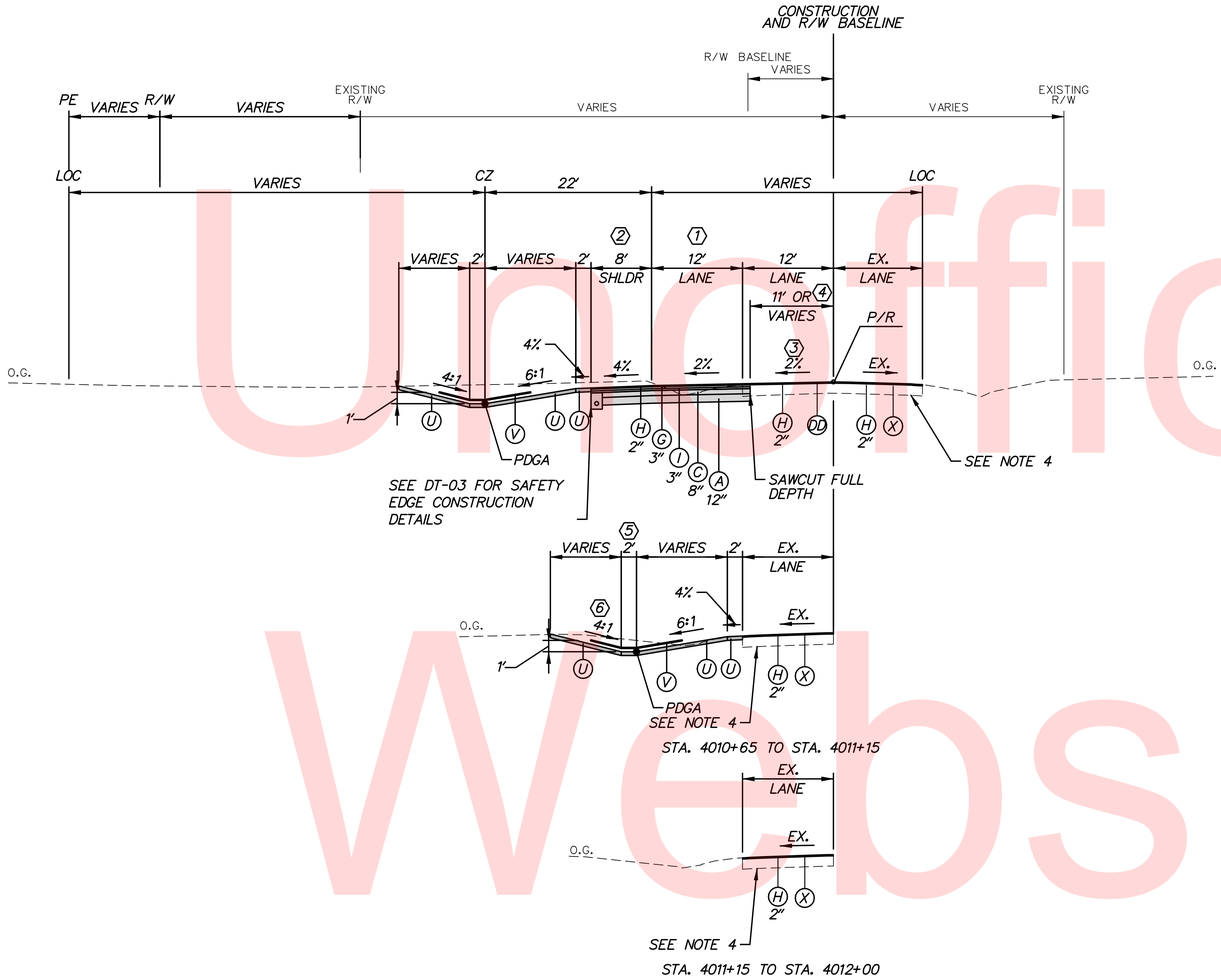

PORT PENN ROAD NORMAL SECTION
STATION 4004+50 TO STATION 4012+00

1. VARY LANE WIDTH 12' TO 0' STA. 4008+85 TO STA. 4010+65.
2. VARY SHOULDER WIDTH 8' TO 2' STA. 4008+85 TO STA. 4010+65.
3. TRANSITION SLOPE FROM -2% TO EX. FROM STA. 4010+35 TO STA. 4010+65.
4. WIDTH VARIES 11' TO 10.08' STA. 4010+50 TO STA. 4010+65.
5. WIDTH VARIES 2' TO 0' STA. 4010+65 TO STA. 4011+15.
6. TRANSITION SLOPE FROM 4:1 TO 2:1 STA. 4010+65 TO STA. 4011+15.

LEGEND

- (A) ITEM 209001 - BORROW, TYPE A
- (B) ITEM 209006 - BORROW, TYPE F
- (C) ITEM 302007 - GRADED AGGREGATE BASE COURSE, TYPE B
- (D) ITEM 304501 - PERMEABLE TREATED BASE, 4"
- (E) ITEM 304502 - SOIL CEMENT BASE COURSE, 6"
- (G) ITEM 401813 - WMA, SUPERPAVE, TYPE B, 160 GYRATIONS, PG 70-22
- (H) ITEM 401830 - WMA, SUPERPAVE,TYPE C, 160 GYRATIONS, PG 70-22 (NON-CARBONATE STONE)
- (I) ITEM 401819 - WMA, SUPERPAVE, BITUMINOUS CONCRETE BASE COURSE, 160 GYRATIONS, PG 64-22
- (J) ITEM 401824- WMA, SUPERPAVE, TYPE C, 160 GYRATIONS, PG 64-22, WEDGE
- (K) ITEM 501006 - PORTLAND CEMENT CONCRETE PAVEMENT, 12"
- (L) ITEM 701010 - PCC CURB, TYPE 1-8
- (N) ITEM 701016 - PCC CURB AND GUTTER TYPE 1-4
- (O) ITEM 715001 - PERFORATED PIPE UNDERDRAINS, 6"
- (P) ITEM 720050 - GALVANIZED STEEL BEAM GUARDRAIL, TYPE 1-31
- (Q) ITEM 720052 - GALVANIZED STEEL BEAM GUARDRAIL, TYPE 3-31
- (S) ITEM 727000 - RIGHT OF WAY FENCE
- (T) ITEM 760017 - RUMBLE STRIPS, CONCRETE
- (U) ITEM 733002 - TOPSOILING, 6" DEPTH
ITEM 734013 - PERMANENT GRASS SEEDING, DRY GROUND
- (V) ITEM 735535 - SOIL RETENTION BLANKET MULCH, TYPE 5
- (X) ITEM 760006 - PAVEMENT MILLING, HOTMIX, 2" DEPTH
- (Z) ITEM 720629 - BIFURCATED CONCRETE MEDIAN BARRIER
- (AA) ITEM 701011 - PCC CURB TYPE 2
- (BB) ITEM 705001 - PCC SIDEWALK, 4"
- (CC) ITEM 760016 - RUMBLE STRIPS, HOTMIX
- (DD) ITEM 760003 - PAVEMENT MILLING, HOT MIX, VARIABLE DEPTH

TYPICAL SECTION NOTES:

1. THE MAXIMUM ALGEBRAIC DIFFERENCE BETWEEN THE TRAVELED WAY SLOPE AND THE SHOULDER SHALL NOT EXCEED 8%.
2. SHOULDER SLOPE ON THE LOW SIDE SHALL BE THE SAME AS THE TRAVELED WAY SLOPE WHEN SUPERELEVATION IS GREATER THAN 4%.
3. P.G.L. - PROFILE GRADE LINE
PGA - POINT OF GRADE APPLICATION
PDGA - POINT OF DITCH GRADE APPLICATION
P/R - POINT OF ROTATION
EOS - EDGE OF SHOULDER
EOR - EDGE OF ROAD
4. EXISTING PORT PENN ROAD PAVEMENT SECTION (MAY NOT REPRESENT FULL PAVEMENT WIDTH)
6" HMA PAVEMENT
6.5" PCC BASE

Unofficial Website Copy

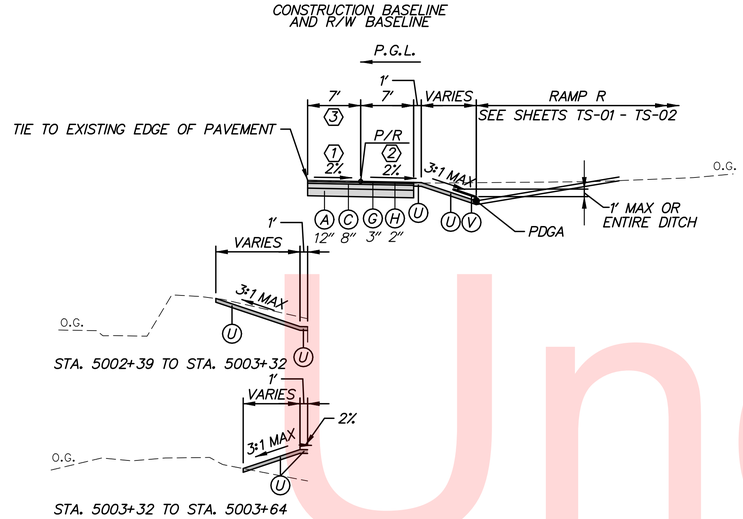

FRONT PARKING LOT ACCESS ROAD NORMAL SECTION
STATION 5002+39 TO STATION 5004+35

(1) TRANSITION SLOPE FROM EX. (+3.77%) TO +2.0% STA. 5002+39 TO STA. 5002+75.

(2) TRANSITION SLOPE FROM EX. (-3.77%) TO -2.0% STA. 5002+39 TO STA. 5002+75.

(3) VARY WIDTH 7' TO 19.2' STA. 5003+49 TO STA. 5003+64.
VARY WIDTH 19.2' TO 0' STA. 5003+64 TO STA. 5004+35.

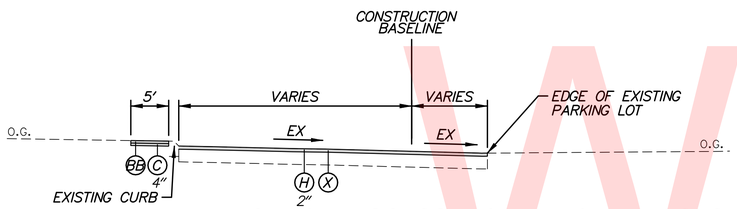

FRONT PARKING LOT ACCESS ROAD NORMAL SECTION
STATION 5001+65 TO STATION 5002+39

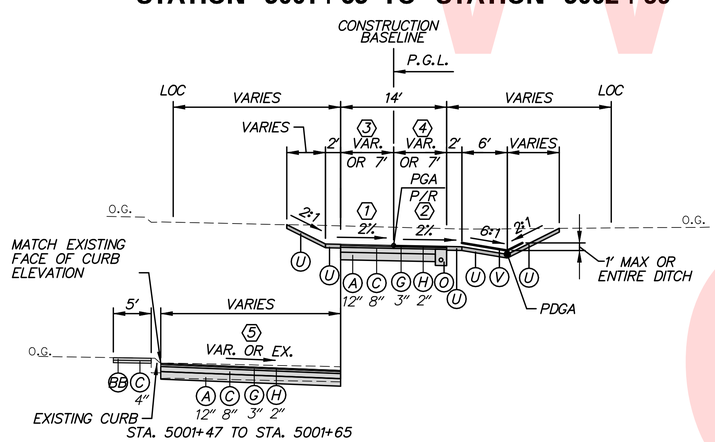

FRONT PARKING LOT ACCESS ROAD NORMAL SECTION
STATION 5000+12 TO STATION 5001+65

(1) TRANSITION SLOPE FROM +2.7% TO +2.0% STA. 5000+12 TO STA. 5000+23.
TRANSITION SLOPE FROM +2.0% TO EX. STA. 5001+15 TO STA. 5001+65.

(2) TRANSITION SLOPE FROM -2.7% TO -2.0% STA. 5000+12 TO STA. 5000+23.
TRANSITION SLOPE FROM -2.0% TO EX. STA. 5001+15 TO STA. 5001+65.

(3) WIDTH VARIES STA. 5000+12 TO STA. 5000+23.

(4) WIDTH VARIES STA. 5000+12 TO STA. 5000+78.

(5) MATCH EXISTING SLOPE STA. 5001+65.

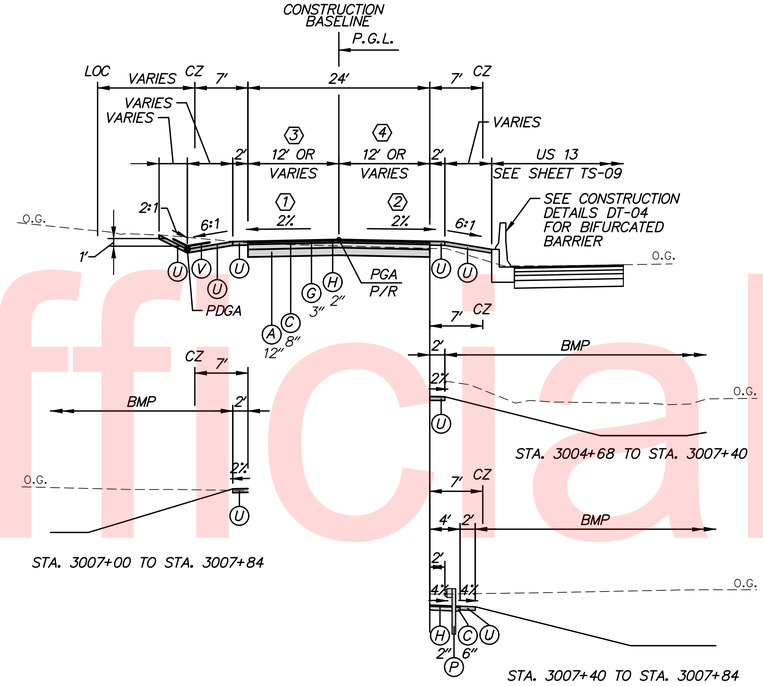

TOLL PLAZA ROAD NORMAL SECTION
STATION 3003+08 TO STATION 3007+87

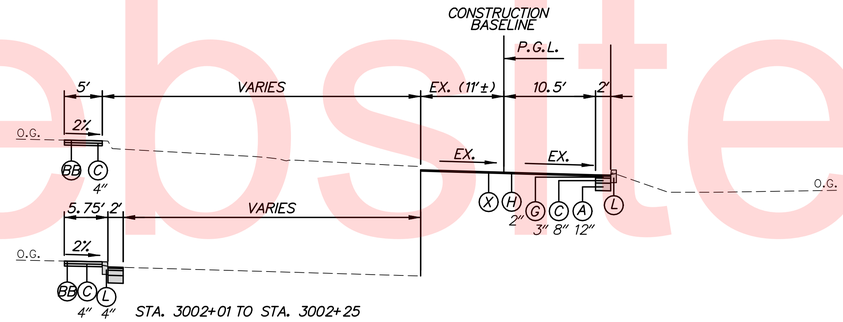

TOLL PLAZA ROAD NORMAL SECTION
STATION 3001+75 TO STATION 3003+08

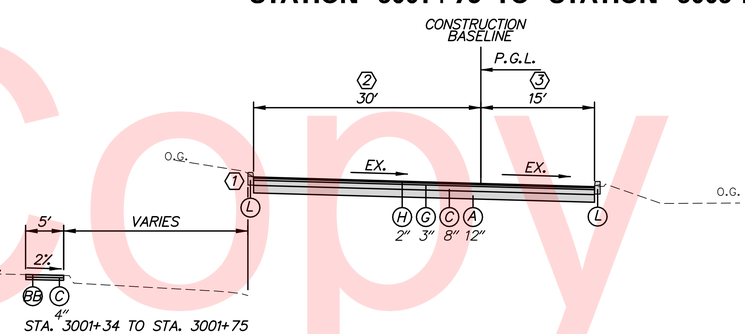

TOLL PLAZA ROAD NORMAL SECTION
STATION 3000+17 TO STATION 3001+75

LEGEND

- (A) ITEM 209001 - BORROW, TYPE A
- (B) ITEM 209006 - BORROW, TYPE F
- (C) ITEM 302007 - GRADED AGGREGATE BASE COURSE, TYPE B
- (D) ITEM 304501 - PERMEABLE TREATED BASE, 4"
- (E) ITEM 304502 - SOIL CEMENT BASE COURSE, 6"
- (G) ITEM 401813 - WMA, SUPERPAVE, TYPE B, 160 GYRATIONS, PG 70-22
- (H) ITEM 401830 - WMA, SUPERPAVE,TYPE C, 160 GYRATIONS, PG 70-22 (NON-CARBONATE STONE)
- (I) ITEM 401819 - WMA, SUPERPAVE, BITUMINOUS CONCRETE BASE COURSE, 160 GYRATIONS, PG 64-22
- (J) ITEM 401824- WMA, SUPERPAVE, TYPE C, 160 GYRATIONS, PG 64-22, WEDGE
- (K) ITEM 501006 - PORTLAND CEMENT CONCRETE PAVEMENT, 12"
- (L) ITEM 701010 - PCC CURB, TYPE 1-8
- (N) ITEM 701016 - PCC CURB AND GUTTER TYPE 1-4
- (O) ITEM 715001 - PERFORATED PIPE UNDERDRAINS, 6"
- (P) ITEM 720050 - GALVANIZED STEEL BEAM GUARDRAIL, TYPE 1-31
- (Q) ITEM 720052 - GALVANIZED STEEL BEAM GUARDRAIL, TYPE 3-31
- (S) ITEM 727000 - RIGHT OF WAY FENCE
- (T) ITEM 760017 - RUMBLE STRIPS, CONCRETE
- (U) ITEM 733002 - TOPSOILING, 6" DEPTH
  ITEM 734013 - PERMANENT GRASS SEEDING, DRY GROUND
- (V) ITEM 735535 - SOIL RETENTION BLANKET MULCH, TYPE 5
- (X) ITEM 760006 - PAVEMENT MILLING, HOTMIX, 2" DEPTH
- (Z) ITEM 720629 - BIFURCATED CONCRETE MEDIAN BARRIER
- (AA) ITEM 701011 - PCC CURB TYPE 2
- (BB) ITEM 705001 - PCC SIDEWALK, 4"
- (CC) ITEM 760016 - RUMBLE STRIPS, HOTMIX
- (DD) ITEM 760003 - PAVEMENT MILLING, HOT MIX, VARIABLE DEPTH

(1) HOLD EX (+1.61%) SLOPE STA. 3003+08 TO STA. 3002+17.
TRANSITION SLOPE FROM EX. (+1.61%) TO -2.0% STA. 3003+17 TO STA. 3003+75.
TRANSITION SLOPE FROM -2.0% TO -1.12% STA. 3007+40 TO STA.3007+55.
HOLD -1.12% STA. 3007+55 TO STA. 3007+87.

(2) HOLD EX (-1.61%) SLOPE STA. 3003+08 TO STA. 3002+17.
TRANSITION SLOPE FROM EX. (-1.61%) TO -2.0% STA. 3003+17 TO STA. 3003+75.
TRANSITION SLOPE FROM -2.0% TO +1.12% STA. 3007+04 TO STA.3007+55.
HOLD +1.12% STA. 3007+55 TO STA. 3007+87.

(3) WIDTH VARIES STA. 3007+47 TO STA. 3007+87.

(4) WIDTH VARIES STA. 3007+53 TO STA. 3007+87.

TYPICAL SECTION NOTES:

1. THE MAXIMUM ALGEBRAIC DIFFERENCE BETWEEN THE TRAVELED WAY SLOPE AND THE SHOULDER SHALL NOT EXCEED 8%.
2. SHOULDER SLOPE ON THE LOW SIDE SHALL BE THE SAME AS THE TRAVELED WAY SLOPE WHEN SUPERELEVATION IS GREATER THAN 4%.
3. P.G.L. - PROFILE GRADE LINE
   PGA - POINT OF GRADE APPLICATION
   PDGA - POINT OF DITCH GRADE APPLICATION
   P/R - POINT OF ROTATION
   EOS - EDGE OF SHOULDER
   EOR - EDGE OF ROAD

(1) SEE PLAN SHEETS FOR LIMITS OF CURB AND GUTTER.

(2) WIDTH 74.35' STA. 3000+35 TO STA. 3000+37. WIDTH 34' STA .3000+37 TO STA. 3000+64. MATCH EXISITING WIDTH STA. 3000+64 TO STA. 3001+75.

(3) WIDTH 15' STA. 3000+17 TO STA. 3000+57. WIDTH VARIES 15' TO 33' STA. 3000+57 TO STA. 3000+75. WIDTH 33' STA. 3000+75 TO STA. 3001+59. WIDTH 12.5' STA. 3001+59 TO STA. 3001+75

Unofficial Website Copy

DELAWARE DEPARTMENT OF TRANSPORTATION	ADDENDUMS / REVISIONS	NOT TO SCALE	US 13 & PORT PENN RD INTERSECTION	CONTRACT T201011302 / COUNTY NEW CASTLE	BRIDGE NO. / DESIGNED BY: S.E.S. / CHECKED BY: B.R.T.
TYPICAL SECTIONS	TS-06	SHEET NO. 16	TOTAL SHTS. 179		

n:\36153-000\contract 1d\cadd\TS006U301_1D.dgn 6/17/2016 9:40:48 AM

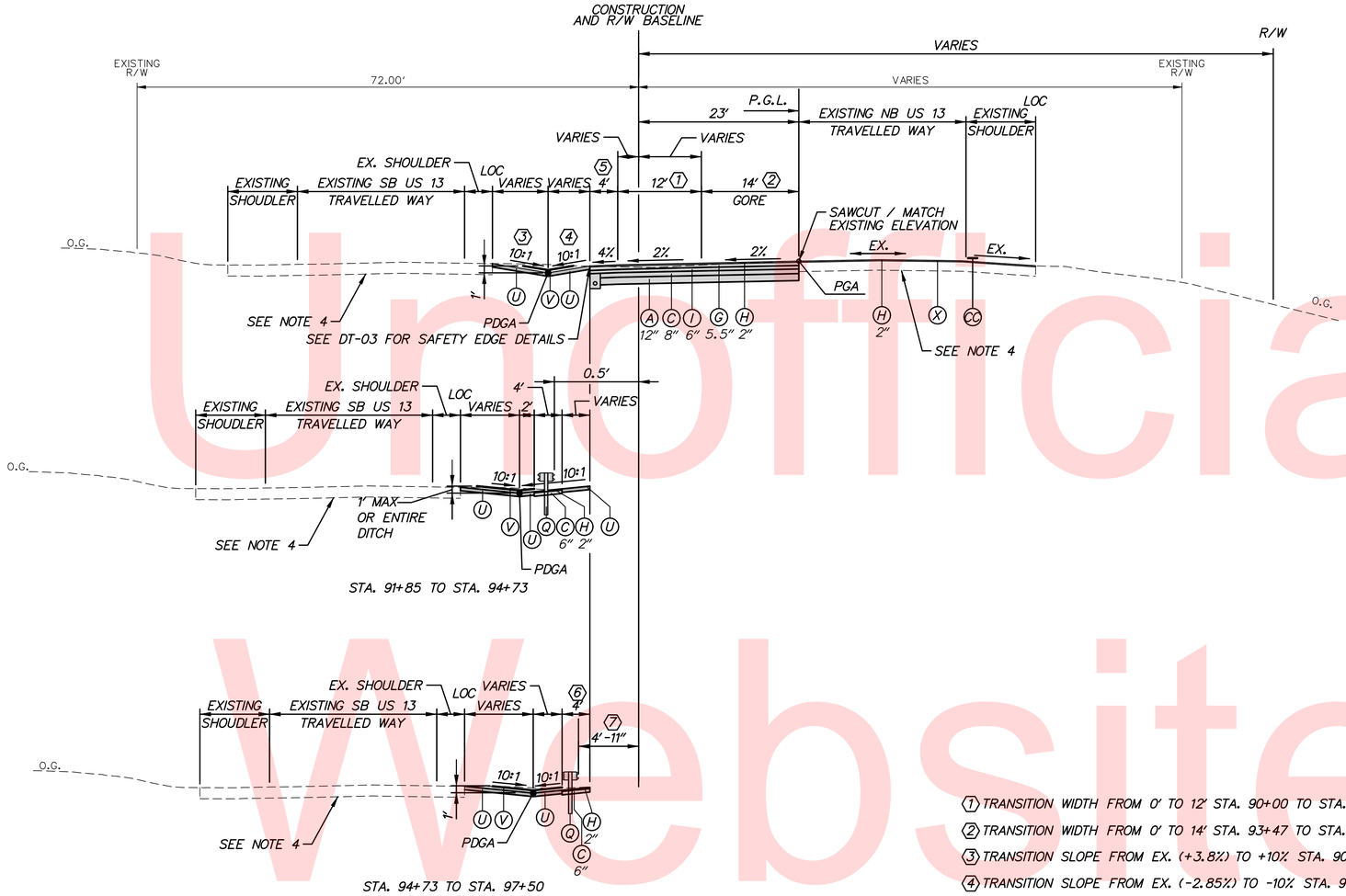

US 13 – NORMAL SECTION
STATION 90+00 TO STATION 97+50

1. TRANSITION WIDTH FROM 0' TO 12' STA. 90+00 TO STA. 93+47.
2. TRANSITION WIDTH FROM 0' TO 14' STA. 93+47 TO STA. 97+50.
3. TRANSITION SLOPE FROM EX. (+3.8%) TO +10% STA. 90+00 TO STA. 90+50.
4. TRANSITION SLOPE FROM EX. (-2.85%) TO -10% STA. 90+00 TO STA. 90+50.
5. VARY WIDTH 4' TO 0' STA. 96+35 TO STA. 97+50.
6. VARY WIDTH 6' TO 4' STA. 94+73 TO STA. 95+31.
7. WIDTH 0.5' STA. 94+73 TO STA. 95+05.
   VARY WIDTH 0.5' TO 4'-11" STA. 95+05 TO STA. 96+35.

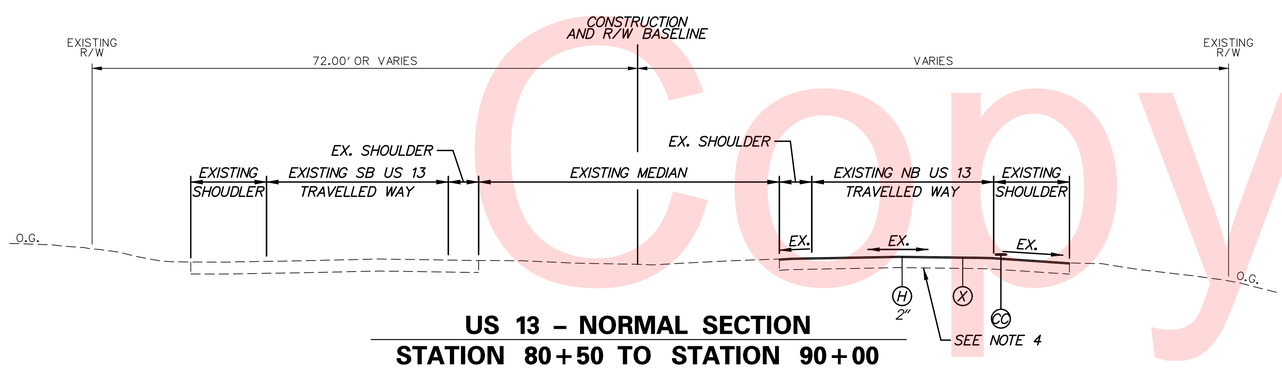

US 13 – NORMAL SECTION
STATION 80+50 TO STATION 90+00

LEGEND

- (A) ITEM 209001 - BORROW, TYPE A
- (B) ITEM 209006 - BORROW, TYPE F
- (C) ITEM 302007 - GRADED AGGREGATE BASE COURSE, TYPE B
- (D) ITEM 304501 - PERMEABLE TREATED BASE, 4"
- (E) ITEM 304502 - SOIL CEMENT BASE COURSE, 6"
- (G) ITEM 401813 - WMA, SUPERPAVE, TYPE B, 160 GYRATIONS, PG 70-22
- (H) ITEM 401830 - WMA, SUPERPAVE,TYPE C, 160 GYRATIONS, PG 70-22 (NON-CARBONATE STONE)
- (I) ITEM 401819 - WMA, SUPERPAVE, BITUMINOUS CONCRETE BASE COURSE, 160 GYRATIONS, PG 64-22
- (J) ITEM 401824- WMA, SUPERPAVE, TYPE C, 160 GYRATIONS, PG 64-22, WEDGE
- (K) ITEM 501006 - PORTLAND CEMENT CONCRETE PAVEMENT, 12"
- (L) ITEM 701010 - PCC CURB, TYPE 1-8
- (N) ITEM 701016 - PCC CURB AND GUTTER TYPE 1-4
- (O) ITEM 715001 - PERFORATED PIPE UNDERDRAINS, 6"
- (P) ITEM 720050 - GALVANIZED STEEL BEAM GUARDRAIL, TYPE 1-31
- (Q) ITEM 720052 - GALVANIZED STEEL BEAM GUARDRAIL, TYPE 3-31
- (S) ITEM 727000 - RIGHT OF WAY FENCE
- (T) ITEM 760017 - RUMBLE STRIPS, CONCRETE
- (U) ITEM 733002 - TOPSOILING, 6" DEPTH
  ITEM 734013 - PERMANENT GRASS SEEDING, DRY GROUND
- (V) ITEM 735535 - SOIL RETENTION BLANKET MULCH, TYPE 5
- (X) ITEM 760006 - PAVEMENT MILLING, HOTMIX, 2" DEPTH
- (Z) ITEM 720629 - BIFURCATED CONCRETE MEDIAN BARRIER
- (AA) ITEM 701011 - PCC CURB TYPE 2
- (BB) ITEM 705001 - PCC SIDEWALK, 4"
- (CC) ITEM 760016 - RUMBLE STRIPS, HOTMIX
- (DD) ITEM 760003 - PAVEMENT MILLING, HOT MIX, VARIABLE DEPTH

TYPICAL SECTION NOTES:

1. THE MAXIMUM ALGEBRAIC DIFFERENCE BETWEEN THE TRAVELED WAY SLOPE AND THE SHOULDER SHALL NOT EXCEED 8%.
2. SHOULDER SLOPE ON THE LOW SIDE SHALL BE THE SAME AS THE TRAVELED WAY SLOPE WHEN SUPERELEVATION IS GREATER THAN 4%.
3. P.G.L. - PROFILE GRADE LINE
   PGA - POINT OF GRADE APPLICATION
   PDGA - POINT OF DITCH GRADE APPLICATION
   P/R - POINT OF ROTATION
   EOS - EDGE OF SHOULDER
   EOR - EDGE OF ROAD
4. EXISTING US 13 TRAVEL LANE PAVEMENT SECTION
   (23' LT TO 45' LT; 23' RT TO 47' RT)
   10" HOT MIX PAVEMENT
   8" PCC BASE

Unofficial Website Copy

n:\31653-000\contract td\cadd\TS0071J301_1D.dgn
6/17/2015 9:46:49 AM

DELAWARE DEPARTMENT OF TRANSPORTATION	ADDENDUMS / REVISIONS	NOT TO SCALE	US 13 & PORT PENN RD INTERSECTION	CONTRACT T201011302	BRIDGE NO.	TYPICAL SECTIONS	TS-07 SHEET NO. 17
				COUNTY NEW CASTLE	DESIGNED BY: J.A.D.		TOTAL SHTS. 179
					CHECKED BY: B.R.T.		

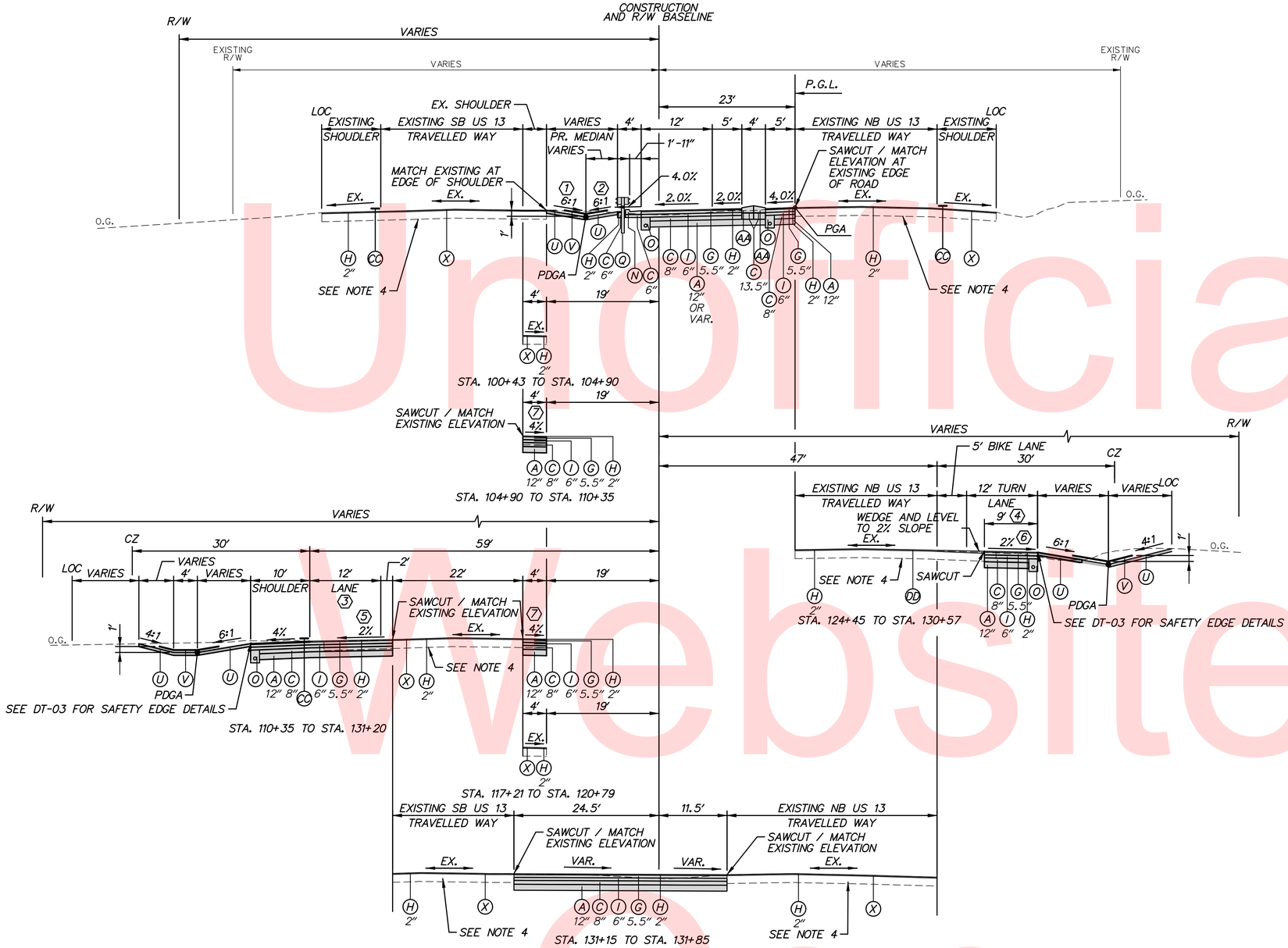

US 13 – NORMAL SECTION

STATION 97+50 TO STATION 131+85

(1) TRANSITION SLOPE FROM +10:1 TO +6:1 STA. 97+50 TO STA. 97+75.

(2) TRANSITION SLOPE FROM -10:1 TO -6:1 STA. 97+50 TO STA. 97+75.

(3) TRANSITION WIDTH FROM 0' TO 12' STA. 110+35 TO STA. 118+15.

(4) WIDTH 4' STA. 124+45 TO STA. 125+05. TRANSITION WIDTH FROM 4' TO 9' STA. 125+05 TO STA. 125+80.

(5) TRANSITION SLOPE -2% TO -0.69% STA. 130+65 TO STA. 131+20.

(6) TRANSTION SLOPE -2% TO -3.65% STA. 130+07 TO STA. 130+57.

(7) SEE CONSTRUCTION PHASING, M.O.T., AND EROSION CONTROL PLANS FOR WIDTH TO BE CONSTRUCTED FOR MAINTENANCE OF TRAFFIC.

LEGEND

- (A) ITEM 209001 - BORROW, TYPE A
- (B) ITEM 209006 - BORROW, TYPE F
- (C) ITEM 302007 - GRADED AGGREGATE BASE COURSE, TYPE B
- (D) ITEM 304501 - PERMEABLE TREATED BASE, 4"
- (E) ITEM 304502 - SOIL CEMENT BASE COURSE, 6"
- (G) ITEM 401813 - WMA, SUPERPAVE, TYPE B, 160 GYRATIONS, PG 70-22
- (H) ITEM 401830 - WMA, SUPERPAVE,TYPE C, 160 GYRATIONS, PG 70-22 (NON-CARBONATE STONE)
- (I) ITEM 401819 - WMA, SUPERPAVE, BITUMINOUS CONCRETE BASE COURSE, 160 GYRATIONS, PG 64-22
- (J) ITEM 401824- WMA, SUPERPAVE, TYPE C, 160 GYRATIONS, PG 64-22, WEDGE
- (K) ITEM 501006 - PORTLAND CEMENT CONCRETE PAVEMENT, 12"
- (L) ITEM 701010 - PCC CURB, TYPE 1-8
- (N) ITEM 701016 - PCC CURB AND GUTTER TYPE 1-4
- (O) ITEM 715001 - PERFORATED PIPE UNDERDRAINS, 6"
- (P) ITEM 720050 - GALVANIZED STEEL BEAM GUARDRAIL, TYPE 1-31
- (Q) ITEM 720052 - GALVANIZED STEEL BEAM GUARDRAIL, TYPE 3-31
- (S) ITEM 727000 - RIGHT OF WAY FENCE
- (T) ITEM 760017 - RUMBLE STRIPS, CONCRETE
- (U) ITEM 733002 - TOPSOILING, 6" DEPTH
  ITEM 734013 - PERMANENT GRASS SEEDING, DRY GROUND
- (V) ITEM 735535 - SOIL RETENTION BLANKET MULCH, TYPE 5
- (X) ITEM 760006 - PAVEMENT MILLING, HOTMIX, 2" DEPTH
- (Z) ITEM 720629 - BIFURCATED CONCRETE MEDIAN BARRIER
- (AA) ITEM 701011 - PCC CURB TYPE 2
- (BB) ITEM 705001 - PCC SIDEWALK, 4"
- (CC) ITEM 760016 - RUMBLE STRIPS, HOTMIX
- (DD) ITEM 760003 - PAVEMENT MILLING, HOT MIX, VARIABLE DEPTH

TYPICAL SECTION NOTES:

1. THE MAXIMUM ALGEBRAIC DIFFERENCE BETWEEN THE TRAVELED WAY SLOPE AND THE SHOULDER SHALL NOT EXCEED 8%.
2. SHOULDER SLOPE ON THE LOW SIDE SHALL BE THE SAME AS THE TRAVELED WAY SLOPE WHEN SUPERELEVATION IS GREATER THAN 4%.
3. P.G.L. - PROFILE GRADE LINE
   PGA - POINT OF GRADE APPLICATION
   PDGA - POINT OF DITCH GRADE APPLICATION
   P/R - POINT OF ROTATION
   EOS - EDGE OF SHOULDER
   EOR - EDGE OF ROAD
4. EXISTING US 13 TRAVEL LANE PAVEMENT SECTION (23' LT TO 45' LT; 23' RT TO 47' RT)
   10" HOT MIX PAVEMENT
   8" PCC BASE

Unofficial Website Copy

DELAWARE DEPARTMENT OF TRANSPORTATION	ADDENDUMS / REVISIONS	NOT TO SCALE	US 13 & PORT PENN RD INTERSECTION	CONTRACT T201011302 / COUNTY NEW CASTLE	BRIDGE NO. / DESIGNED BY: J.A.D. / CHECKED BY: B.R.T.	TYPICAL SECTIONS

TS-08

SHEET NO. 18 / TOTAL SHTS. 179

r:\31653-000\contract td\cadd\TS008U301_1D.dgn 6/17/2015 9:40:51 AM

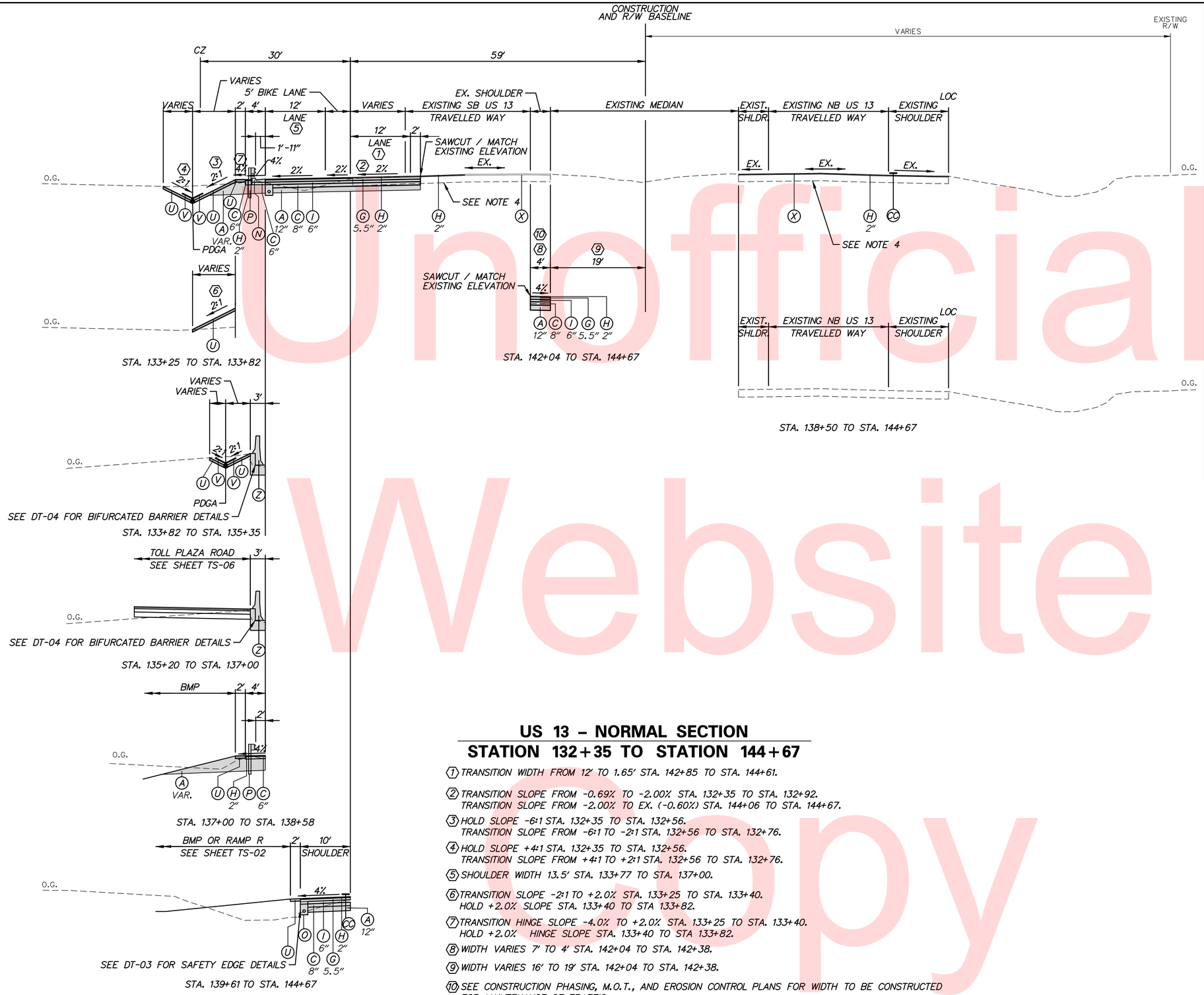

US 13 – NORMAL SECTION
STATION 132+35 TO STATION 144+67

1. TRANSITION WIDTH FROM 12' TO 1.65' STA. 142+85 TO STA. 144+61.
2. TRANSITION SLOPE FROM -0.69% TO -2.00% STA. 132+35 TO STA. 132+92.
   TRANSITION SLOPE FROM -2.00% TO EX. (-0.60%) STA. 144+06 TO STA. 144+67.
3. HOLD SLOPE -6:1 STA. 132+35 TO STA. 132+56.
   TRANSITION SLOPE FROM -6:1 TO -2:1 STA. 132+56 TO STA. 132+76.
4. HOLD SLOPE +4:1 STA. 132+35 TO STA. 132+56.
   TRANSITION SLOPE FROM +4:1 TO +2:1 STA. 132+56 TO STA. 132+76.
5. SHOULDER WIDTH 13.5' STA. 133+77 TO STA. 137+00.
6. TRANSITION SLOPE -2:1 TO +2.0% STA. 133+25 TO STA. 133+40.
   HOLD +2.0% SLOPE STA. 133+40 TO STA 133+82.
7. TRANSITION HINGE SLOPE -4.0% TO +2.0% STA. 133+25 TO STA. 133+40.
   HOLD +2.0% HINGE SLOPE STA. 133+40 TO STA 133+82.
8. WIDTH VARIES 7' TO 4' STA. 142+04 TO STA. 142+38.
9. WIDTH VARIES 16' TO 19' STA. 142+04 TO STA. 142+38.
10. SEE CONSTRUCTION PHASING, M.O.T., AND EROSION CONTROL PLANS FOR WIDTH TO BE CONSTRUCTED FOR MAINTENANCE OF TRAFFIC.

LEGEND

- (A) ITEM 209001 - BORROW, TYPE A
- (B) ITEM 209006 - BORROW, TYPE F
- (C) ITEM 302007 - GRADED AGGREGATE BASE COURSE, TYPE B
- (D) ITEM 304501 - PERMEABLE TREATED BASE, 4"
- (E) ITEM 304502 - SOIL CEMENT BASE COURSE, 6"
- (G) ITEM 401813 - WMA, SUPERPAVE, TYPE B, 160 GYRATIONS, PG 70-22
- (H) ITEM 401830 - WMA, SUPERPAVE,TYPE C, 160 GYRATIONS, PG 70-22 (NON-CARBONATE STONE)
- (I) ITEM 401819 - WMA, SUPERPAVE, BITUMINOUS CONCRETE BASE COURSE, 160 GYRATIONS, PG 64-22
- (J) ITEM 401824- WMA, SUPERPAVE, TYPE C, 160 GYRATIONS, PG 64-22, WEDGE
- (K) ITEM 501006 - PORTLAND CEMENT CONCRETE PAVEMENT, 12"
- (L) ITEM 701010 - PCC CURB, TYPE 1-8
- (N) ITEM 701016 - PCC CURB AND GUTTER TYPE 1-4
- (O) ITEM 715001 - PERFORATED PIPE UNDERDRAINS, 6"
- (P) ITEM 720050 - GALVANIZED STEEL BEAM GUARDRAIL, TYPE 1-31
- (Q) ITEM 720052 - GALVANIZED STEEL BEAM GUARDRAIL, TYPE 3-31
- (S) ITEM 727000 - RIGHT OF WAY FENCE
- (T) ITEM 760017 - RUMBLE STRIPS, CONCRETE
- (U) ITEM 733002 - TOPSOILING, 6" DEPTH
  ITEM 734013 - PERMANENT GRASS SEEDING, DRY GROUND
- (V) ITEM 735535 - SOIL RETENTION BLANKET MULCH, TYPE 5
- (X) ITEM 760006 - PAVEMENT MILLING, HOTMIX, 2" DEPTH
- (Z) ITEM 720629 - BIFURCATED CONCRETE MEDIAN BARRIER
- (AA) ITEM 701011 - PCC CURB TYPE 2
- (BB) ITEM 705001 - PCC SIDEWALK, 4"
- (CC) ITEM 760016 - RUMBLE STRIPS, HOTMIX
- (DD) ITEM 760003 - PAVEMENT MILLING, HOT MIX, VARIABLE DEPTH

TYPICAL SECTION NOTES:

1. THE MAXIMUM ALGEBRAIC DIFFERENCE BETWEEN THE TRAVELED WAY SLOPE AND THE SHOULDER SHALL NOT EXCEED 8%.
2. SHOULDER SLOPE ON THE LOW SIDE SHALL BE THE SAME AS THE TRAVELED WAY SLOPE WHEN SUPERELEVATION IS GREATER THAN 4%.
3. P.G.L. - PROFILE GRADE LINE
   PGA - POINT OF GRADE APPLICATION
   PDGA - POINT OF DITCH GRADE APPLICATION
   P/R - POINT OF ROTATION
   EOS - EDGE OF SHOULDER
   EOR - EDGE OF ROAD
4. EXISTING US 13 TRAVEL LANE PAVEMENT SECTION (23' LT TO 45' LT; 23' RT TO 47' RT)
   10" HOT MIX PAVEMENT
   8" PCC BASE

Unofficial Website Copy

n:\31653-000\contract t4\cadd\TS009U301_1D.dgn
6/17/2015 9:40:52 AM

DELAWARE DEPARTMENT OF TRANSPORTATION	ADDENDUMS / REVISIONS	NOT TO SCALE	US 13 & PORT PENN RD INTERSECTION	CONTRACT T201011302	BRIDGE NO.	TYPICAL SECTIONS	TS-09
				COUNTY NEW CASTLE	DESIGNED BY: J.A.D.		SHEET NO. 19
					CHECKED BY: B.R.T.		TOTAL SHTS. 179

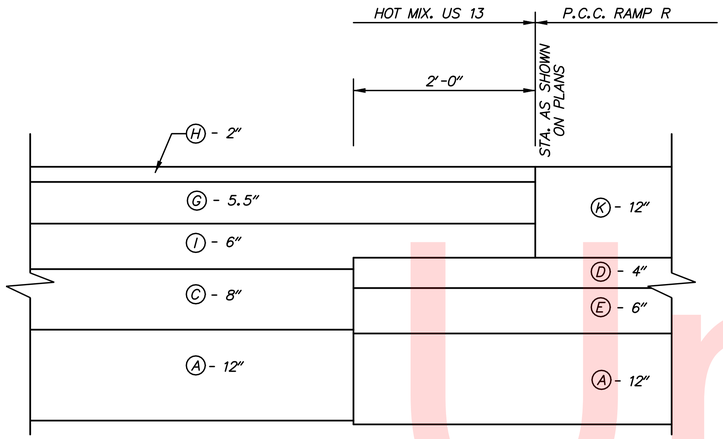

P.C.C. RAMP R/HOT MIX US 13 INTERFACE DETAIL

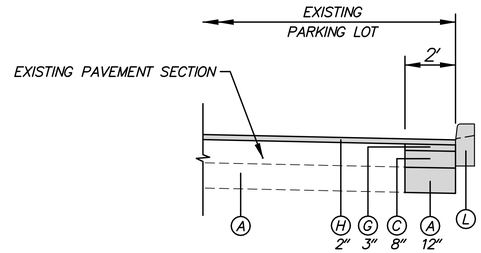

WARM MIX ASPHALT PAVEMENT PATCH EXISTING PAVEMENT WITH PROPOSED CURB

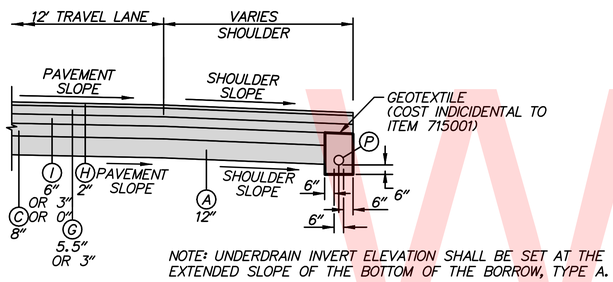

NOTE: UNDERDRAIN INVERT ELEVATION SHALL BE SET AT THE EXTENDED SLOPE OF THE BOTTOM OF THE BORROW, TYPE A.

WARM MIX ASPHALT PAVEMENT UNDERDRAIN DETAIL NOT TO SCALE

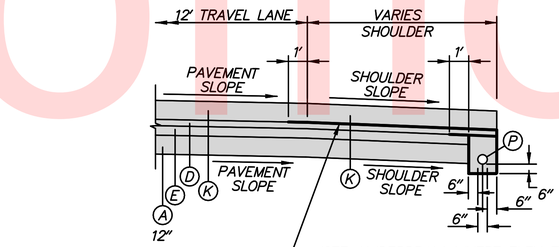

GEOTEXTILE CONTINUE TO 1'-0" UNDER TRAVELED WAY PAVING (COST INCIDENTAL TO ITEM 715001)

NOTE: UNDERDRAIN INVERT ELEVATION SHALL BE SET AT THE EXTENDED SLOPE OF THE BOTTOM OF THE BORROW, TYPE A.

PCC PAVEMENT UNDERDRAIN DETAIL NOT TO SCALE

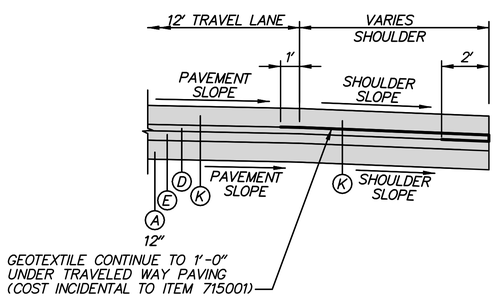

GEOTEXTILE CONTINUE TO 1'-0" UNDER TRAVELED WAY PAVING (COST INCIDENTAL TO ITEM 715001)

PCC PAVEMENT WITHOUT UNDERDRAIN DETAIL NOT TO SCALE

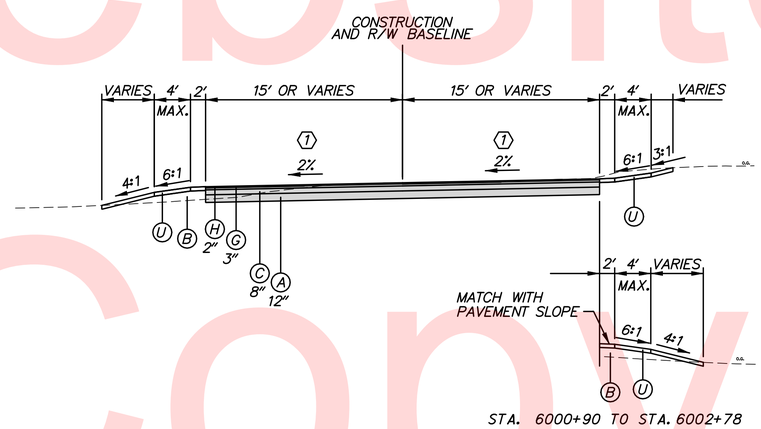

STA. 6000+90 TO STA. 6002+78

CHES-DEL DRIVEWAY TYPICAL SECTION

(1) TRANSITION SLOPE FROM EX. TO -2.0% STA. 6000+20 TO STA. 6000+50. HOLD -2.0% STA. 6000+50 TO STA. 6002+55. TRANSITION SLOPE FROM -2.0% TO -1.4% STA. 6002+55 TO STA. 6002+78.

LEGEND

- (A) ITEM 209001 - BORROW, TYPE A
- (B) ITEM 209006 - BORROW, TYPE F
- (C) ITEM 302007 - GRADED AGGREGATE BASE COURSE, TYPE B
- (D) ITEM 304501 - PERMEABLE TREATED BASE, 4"
- (E) ITEM 304502 - SOIL CEMENT BASE COURSE, 6"
- (G) ITEM 401813 - WMA, SUPERPAVE, TYPE B, 160 GYRATIONS, PG 70-22
- (H) ITEM 401830 - WMA, SUPERPAVE,TYPE C, 160 GYRATIONS, PG 70-22 (NON-CARBONATE STONE)
- (I) ITEM 401819 - WMA, SUPERPAVE, BITUMINOUS CONCRETE BASE COURSE, 160 GYRATIONS, PG 64-22
- (J) ITEM 401824- WMA, SUPERPAVE, TYPE C, 160 GYRATIONS, PG 64-22, WEDGE
- (K) ITEM 501006 - PORTLAND CEMENT CONCRETE PAVEMENT, 12"
- (L) ITEM 701010 - PCC CURB, TYPE 1-8
- (N) ITEM 701016 - PCC CURB AND GUTTER TYPE 1-4
- (O) ITEM 715001 - PERFORATED PIPE UNDERDRAINS, 6"
- (P) ITEM 720050 - GALVANIZED STEEL BEAM GUARDRAIL, TYPE 1-31
- (Q) ITEM 720052 - GALVANIZED STEEL BEAM GUARDRAIL, TYPE 3-31
- (S) ITEM 727000 - RIGHT OF WAY FENCE
- (T) ITEM 760017 - RUMBLE STRIPS, CONCRETE
- (U) ITEM 733002 - TOPSOILING, 6" DEPTH
ITEM 734013 - PERMANENT GRASS SEEDING, DRY GROUND
- (V) ITEM 735535 - SOIL RETENTION BLANKET MULCH, TYPE 5
- (X) ITEM 760006 - PAVEMENT MILLING, HOTMIX, 2" DEPTH
- (Z) ITEM 720629 - BIFURCATED CONCRETE MEDIAN BARRIER
- (AA) ITEM 701011 - PCC CURB TYPE 2
- (BB) ITEM 705001 - PCC SIDEWALK, 4"
- (CC) ITEM 760016 - RUMBLE STRIPS, HOTMIX
- (DD) ITEM 760003 - PAVEMENT MILLING, HOT MIX, VARIABLE DEPTH

Unofficial Website Copy

N:\31653-000\Contract 1D\CADD\TS010U301_1D.dgn
7/9/2015 3:50:32 PM

DELAWARE DEPARTMENT OF TRANSPORTATION	ADDENDUMS / REVISIONS	NOT TO SCALE	US 13 & PORT PENN RD INTERSECTION	CONTRACT T201011302	BRIDGE NO.	TYPICAL SECTIONS	TS-10 SHEET NO. 20
				COUNTY NEW CASTLE	DESIGNED BY: KAH		TOTAL SHTS. 179
					CHECKED BY: BRT		

CONSTRUCTION ALIGNMENT CONTROL

POINT	STATION	OFFSET	NORTHING	EASTING
12020	41+45.56	0.00'	546426.5076	590490.4833
12050	45+00.00	0.00'	546780.8543	590498.6193
12051	50+00.00	0.00'	547280.7225	590510.0966
12052	55+00.00	0.00'	547780.5908	590521.5739
12053	60+00.00	0.00'	548280.4590	590533.0513
12054	65+00.00	0.00'	548780.3273	590544.5286
12055	75+00.00	0.00'	549780.1428	590563.1633
12056	80+00.00	0.00'	550280.0992	590569.7660
12057	85+00.00	0.00'	550780.0556	590576.3686
12058	90+00.00	0.00'	551280.0120	590582.9712
12059	95+00.00	0.00'	551779.9684	590589.5739

CIRCULAR CURVE NO. 5 – US 13

	STATION	NORTHING	EASTING
PC (12022)	70+01.22	549281.4198	590556.0340
PI (12021)	70+56.91	549337.0893	590557.3122
CC (12023)		549543.5880	579137.8833
PT (12024)	71+12.59	549392.7686	590558.0475

Radius:	11421.1600
Design Speed(mph):	65.0000
Superelevation:	N/A
Delta:	0° 33' 31.2819" Left
Degree of Curvature(Arc):	0° 30' 05.9882"
Length:	111.3674
Tangent:	55.6841
Chord:	111.3669
Middle Ordinate:	0.1357
External:	0.1357
Tangent Direction:	N 1° 18' 55.1430" E
Radial Direction:	S 88° 41' 04.8570" E
Chord Direction:	N 1° 02' 09.5021" E
Radial Direction:	S 89° 14' 36.1389" E
Tangent Direction:	N 0° 45' 23.8611" E

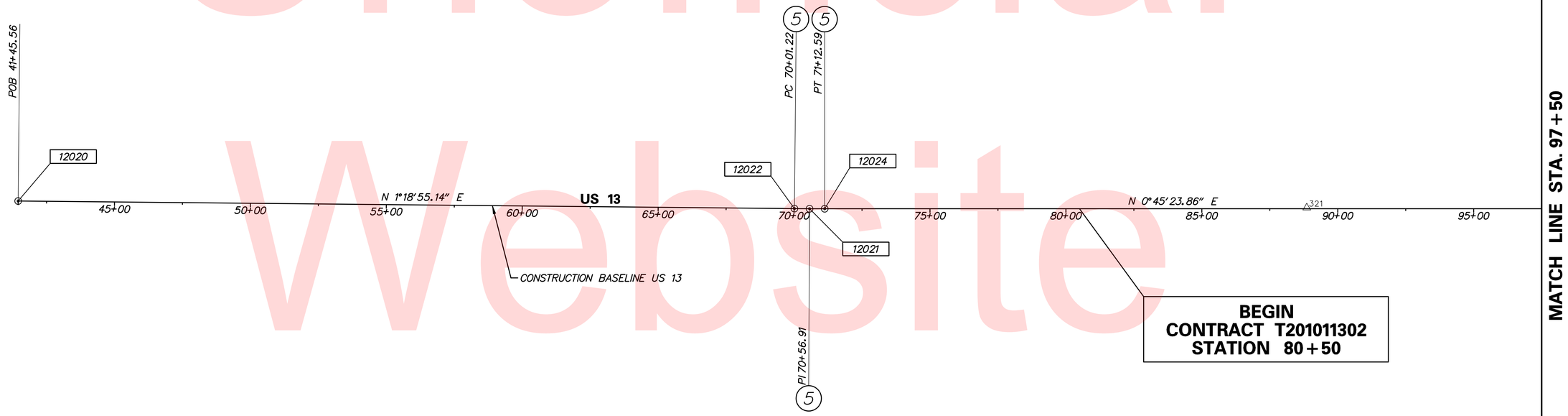

TRAVERSE POINT #321
MAG. NAIL

HORIZONTAL / VERTICAL CONTROL DATA

POINT	STATION	OFFSET	NORTHING	EASTING	ELEVATION
321	88+85.96	3.78' LT	551166.0341	590577.6840	50.85

DATUM REFERENCE:
HORIZONTAL - THIS PROJECT IS REFERENCED TO THE DELAWARE STATE PLANE COORDINATE SYSTEM (NAD 83/91).
VERTICAL - THIS PROJECT IS REFERENCED TO NAVD 88, BASED ON STATE OF DELAWARE BENCHMARK JU2197 - ELEV. 27.71 FEET.

Unofficial Website Copy

N:\36653-000\Contract 1D\CADD\HV001U301_1D.dgn
6/17/2015 9:45:47 AM

HV-01

DELAWARE DEPARTMENT OF TRANSPORTATION

ADDENDUMS / REVISIONS

SCALE 0 200 400 600 FEET

US 13 & PORT PENN RD INTERSECTION

CONTRACT	BRIDGE NO.
T201011302	DESIGNED BY: KAH
COUNTY	
NEW CASTLE	CHECKED BY: BRT

HORIZONTAL AND VERTICAL CONTROL

SHEET NO. 21
TOTAL SHTS. 179

CONSTRUCTION ALIGNMENT CONTROL

POINT	STATION	OFFSET	NORTHING	EASTING
11002	117+13.24	0.00′	553993.0180	590618.8003
11017	318+31.09	0.00′	557050.4700	590500.7698
12000	3000+00.00	0.00′	555496.9430	590490.8712
12003	3008+60.32	0.00′	556179.7225	590634.0113
12010	4000+00.00	0.00′	555429.7407	590628.7944
12012	4012+31.47	0.00′	555111.4859	591812.6086
12095	6000+00.00	0.00′	555117.6940	590854.3797
12099	6002+97.25	0.00′	555372.5007	590999.4877
12030	299+84.36	0.00′	555429.7407	590628.7944
12060	100+00.00	0.00′	552279.9248	590596.1765
12061	105+00.00	0.00′	552779.8812	590602.7791
12062	110+00.00	0.00′	553279.8376	590609.3818
12063	115+00.00	0.00′	553779.7940	590615.9844

CONSTRUCTION ALIGNMENT CONTROL

POINT	STATION	OFFSET	NORTHING	EASTING
12064	120+00.00	0.00′	554279.7685	590620.7950
12065	125+00.00	0.00′	554779.7564	590624.2730
12066	130+00.00	0.00′	555279.7443	590627.7510
12067	135+00.00	0.00′	555779.7322	590631.2289
12068	140+00.00	0.00′	556279.7201	590634.7069
12069	145+00.00	0.00′	556779.7080	590638.1849
12070	150+00.00	0.00′	557279.6959	590641.6629
12071	155+00.00	0.00′	557779.6838	590645.1409
12076	5000+00.00	0.00′	555988.5073	590505.7268
12092	5004+50.22	0.00′	555596.9683	590373.4440

HORIZONTAL / VERTICAL CONTROL DATA

POINT	STATION	OFFSET	NORTHING	EASTING	ELEVATION
62	129+82.42	-742.72′	555267.3327	589884.9312	42.67′
63	145+71.92	-445.32′	556854.7204	590193.3789	34.15′
320	100+78.73	259.97′	552355.2167	590657.1617	45.65′
322	101+55.04	-68.66′	552435.8595	590529.5694	44.96′
354	113+00.68	66.81′	553579.6126	590680.1551	59.98′
355	122+34.43	69.48′	554513.7049	590691.9064	51.20′
356	132+48.96	-67.56′	555529.1717	590561.9288	33.36′
357	128+11.82	1202.62′	555083.2007	591829.0338	47.31′
359	4009+67.91	-14.62′	555206.2078	591566.1988	45.20′
360	4002+03.79	-36.83′	555453.7811	590838.0980	33.28′
361	136+39.60	-77.04′	555919.8710	590555.1580	29.48′
362	144+35.70	-63.23′	556715.8453	590574.5225	26.21′
363	151+54.64	-1.04′	557434.3376	590641.7036	20.43′
13470	139+14.44	-65.27′	556194.6167	590568.8390	26.91′
13471	145+84.49	-73.89′	556864.7126	590564.8899	25.72′

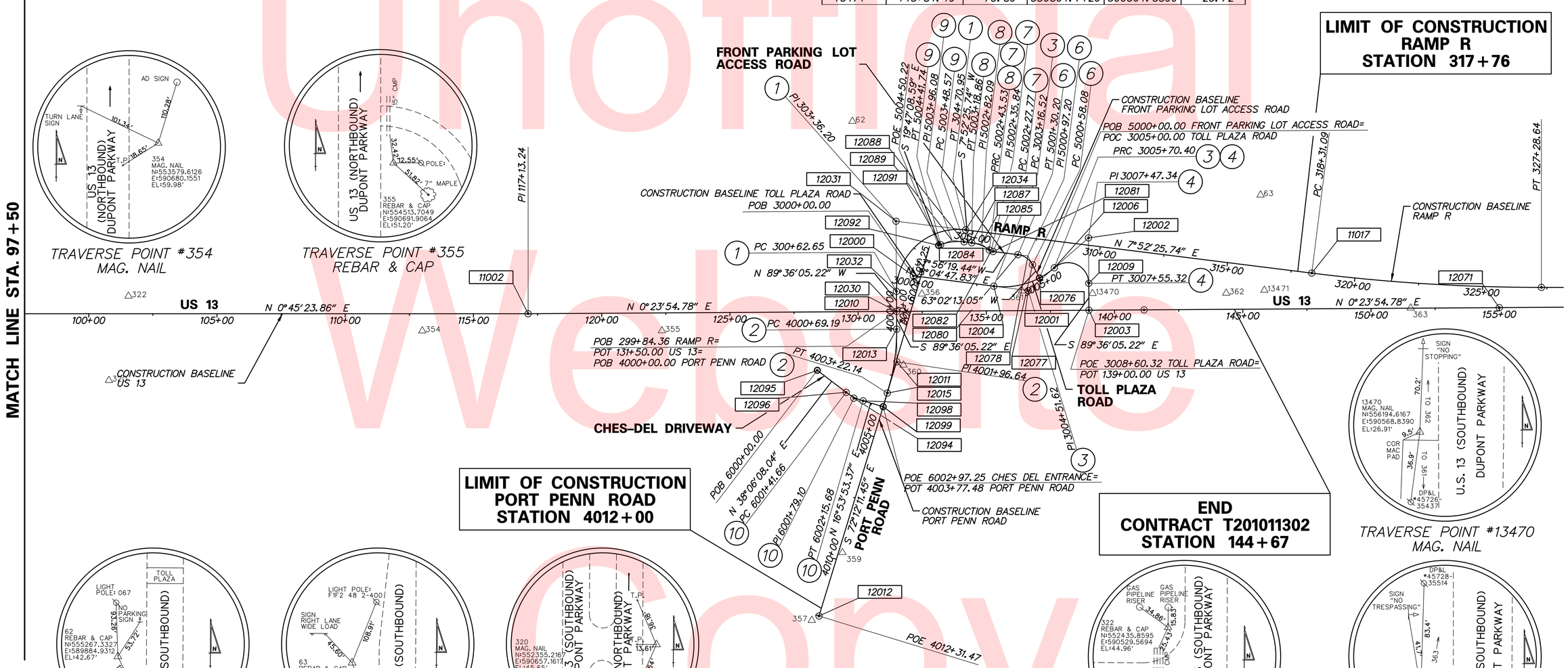

Unofficial Web Copy

DELAWARE DEPARTMENT OF TRANSPORTATION	ADDENDUMS / REVISIONS	SCALE 0 200 400 600 FEET	US 13 & PORT PENN RD INTERSECTION	CONTRACT T201011302	BRIDGE NO.	HORIZONTAL AND VERTICAL CONTROL	HV-02
				COUNTY NEW CASTLE	DESIGNED BY: KAH		SHEET NO. 22
					CHECKED BY: BRT		TOTAL SHTS. 179

N:\31653-000\Contract 1D\CADD\HV\0022U301_1D.dgn
12/22/2015 10:36:16 AM

CIRCULAR CURVE NO. ① – RAMP R

	STATION	NORTHING	EASTING
PC (12032)	300+62.65	555430.2852	590550.5101
PI (12031)	303+36.20	555432.1880	590276.9683
CC (12033)		555670.2794	590552.1795
PT (12034)	304+70.95	555703.1575	590314.4422

Radius: 240.0000
Design Speed(mph): 30.0000
Superelevation: 5.9000%
Delta: 97° 28′ 30.9613″ Right
Degree of Curvature(Arc): 23° 52′ 23.6693″
Length: 408.3034
Tangent: 273.5484
Chord: 360.8148
Middle Ordinate: 81.7181
External: 123.9076
Tangent Direction: N 89° 36′ 05.2175″ W
Radial Direction: N 0° 23′ 54.7825″ E
Chord Direction: N 40° 51′ 49.7368″ W
Radial Direction: S 82° 07′ 34.2561″ E
Tangent Direction: N 7° 52′ 25.7438″ E

CIRCULAR CURVE NO. ② – PORT PENN ROAD

	STATION	NORTHING	EASTING
PC (12013)	4000+69.19	555429.2594	590697.9823
PI (12011)	4001+96.64	555428.3728	590825.4333
CC (12014)		554596.2795	590692.1880
PT (12015)	4003+22.14	555389.4175	590946.7882

Radius: 833.0000
Design Speed(mph): 60.0000
Superelevation: 2.0000%
Delta: 17° 23′ 53.7659″ Right
Degree of Curvature(Arc): 6° 52′ 41.6814″
Length: 252.9463
Tangent: 127.4540
Chord: 251.9756
Middle Ordinate: 9.5827
External: 9.6942
Tangent Direction: S 89° 36′ 05.2174″ E
Radial Direction: S 0° 23′ 54.7826″ W
Chord Direction: S 80° 54′ 08.3345″ E
Radial Direction: S 17° 47′ 48.5483″ W
Tangent Direction: S 72° 12′ 11.4515″ E

CIRCULAR CURVE NO. ③ – TOLL PLAZA

	STATION	NORTHING	EASTING
PC (12004)	3003+16.52	555810.3162	590535.3590
PI (12001)	3004+51.62	555944.0760	590554.3481
CC (12005)		555852.4826	590238.3371
PRC (12006)	3005+70.40	556046.9489	590466.7728

Radius: 300.0000
Design Speed(mph): 20.0000
Superelevation: N/A
Delta: 48° 29′ 15.2182″ Left
Degree of Curvature(Arc): 19° 05′ 54.9353″
Length: 253.8803
Tangent: 135.1010
Chord: 246.3719
Middle Ordinate: 26.4580
External: 29.0171
Tangent Direction: N 8° 04′ 47.8328″ E
Radial Direction: S 81° 55′ 12.1671″ E
Chord Direction: N 16° 09′ 49.7764″ W
Radial Direction: N 49° 35′ 32.6144″ E
Tangent Direction: N 40° 24′ 27.3854″ W

CIRCULAR CURVE NO. ④ – TOLL PLAZA

	STATION	NORTHING	EASTING
PRC (12006)	3005+70.40	556046.9489	590466.7728
PI (12002)	3007+47.34	556181.6837	590352.0736
CC (12008)		556099.4549	590528.4504
PT (12009)	3007+55.32	556180.4529	590529.0138

Radius: 81.0000
Design Speed(mph): 20.0000
Superelevation: N/A
Delta: 130° 48′ 22.1812″ Right
Degree of Curvature(Arc): 70° 44′ 07.9089″
Length: 184.9229
Tangent: 176.9445
Chord: 147.2999
Middle Ordinate: 47.2852
External: 113.6031
Tangent Direction: N 40° 24′ 27.3986″ W
Radial Direction: N 49° 35′ 32.6014″ E
Chord Direction: N 24° 59′ 43.6919″ E
Radial Direction: S 0° 23′ 54.7826″ W
Tangent Direction: S 89° 36′ 05.2174″ E

CIRCULAR CURVE NO. ⑥ – FRONT PARKING LOT ACCESS ROAD

	STATION	NORTHING	EASTING
PC (12077)	5000+58.08	555962.1728	590453.9599
PI (12078)	5000+97.20	555944.4332	590419.0885
CC (12079)		555895.3254	590487.9661
PT (12080)	5001+30.20	555905.6839	590413.6848

Radius: 75.0000
Design Speed(mph): 20.0000
Superelevation: N/A
Delta: 55° 05′ 53.6105″ Left
Degree of Curvature(Arc): 76° 23′ 39.7417″
Length: 72.1234
Tangent: 39.1243
Chord: 69.3763
Middle Ordinate: 8.5039
External: 9.5914
Tangent Direction: S 63° 02′ 13.0474″ W
Radial Direction: N 26° 57′ 46.9526″ W
Chord Direction: S 35° 29′ 16.2421″ W
Radial Direction: N 82° 03′ 40.5632″ W
Tangent Direction: S 7° 56′ 19.4368″ W

CIRCULAR CURVE NO. ⑦ – FRONT PARKING LOT ACCESS ROAD

	STATION	NORTHING	EASTING
PC (12081)	5002+27.77	555809.0567	590400.2101
PI (12082)	5002+35.84	555801.0630	590399.0954
CC (12083)		555813.2002	590370.4976
PRC (12084)	5002+43.53	555794.7076	590394.1202

Radius: 30.0000
Design Speed(mph): 20.0000
Superelevation: N/A
Delta: 30° 06′ 58.7806″ Right
Degree of Curvature(Arc): 190° 59′ 09.3542″
Length: 15.7689
Tangent: 8.0711
Chord: 15.5880
Middle Ordinate: 1.0301
External: 1.0668
Tangent Direction: S 7° 56′ 19.4368″ W
Radial Direction: N 82° 03′ 40.5632″ W
Chord Direction: S 22° 59′ 48.8272″ W
Radial Direction: N 51° 56′ 41.7825″ W
Tangent Direction: S 38° 03′ 18.2175″ W

CIRCULAR CURVE NO. ⑧ – FRONT PARKING LOT ACCESS ROAD

	STATION	NORTHING	EASTING
PC (12084)	5002+43.53	555794.7076	590394.1202
PI (12085)	5002+82.09	555764.3453	590370.3516
CC (12086)		555706.5598	590506.7211
PT (12087)	5003+18.86	555726.1496	590365.0693

Radius: 143.0000
Design Speed(mph): 20.0000
Superelevation: N/A
Delta: 30° 10′ 52.4736″ Left
Degree of Curvature(Arc): 40° 04′ 01.1233″
Length: 75.3270
Tangent: 38.5593
Chord: 74.4591
Middle Ordinate: 4.9313
External: 5.1074
Tangent Direction: S 38° 03′ 18.2175″ W
Radial Direction: N 51° 56′ 41.7825″ W
Chord Direction: S 22° 57′ 51.9807″ W
Radial Direction: N 82° 07′ 34.2561″ W
Tangent Direction: S 7° 52′ 25.7439″ W

CIRCULAR CURVE NO. ⑨ – FRONT PARKING LOT ACCESS ROAD

	STATION	NORTHING	EASTING
PC (12088)	5003+48.57	555696.7188	590360.9991
PI (12089)	5003+96.08	555649.6551	590354.4904
CC (12090)		555670.2794	590552.1795
PT (12091)	5004+41.74	555604.9483	590370.5733

Radius: 193.0000
Design Speed(mph): 20.0000
Superelevation: N/A
Delta: 27° 39′ 34.3276″ Left
Degree of Curvature(Arc): 29° 41′ 12.9566″
Length: 93.1707
Tangent: 47.5117
Chord: 92.2687
Middle Ordinate: 5.5950
External: 5.7621
Tangent Direction: S 7° 52′ 25.7426″ W
Radial Direction: N 82° 07′ 34.2574″ W
Chord Direction: S 5° 57′ 21.4212″ E
Radial Direction: N 70° 12′ 51.4150″ W
Tangent Direction: S 19° 47′ 08.5850″ E

CIRCULAR CURVE NO. ⑩ – CHES–DEL DRIVEWAY

	STATION	NORTHING	EASTING
PC (12096)	6001+41.66	555229.1679	590941.7935
PI (12094)	6001+79.10	555258.6270	590964.8942
CC (12097)		555352.5812	590784.4113
PT (12098)	6002+15.68	555294.4469	590975.7759

Radius: 200.0000
Design Speed(mph): 25.0000
Superelevation: N/A
Delta: 21° 12′ 14.6701″ Left
Degree of Curvature(Arc): 28° 38′ 52.4031″
Length: 74.0162
Tangent: 37.4363
Chord: 73.5945
Middle Ordinate: 3.4142
External: 3.4735
Tangent Direction: N 38° 06′ 08.0425″ E
Radial Direction: S 51° 53′ 51.9575″ E
Chord Direction: N 27° 30′ 00.7075″ E
Radial Direction: S 73° 06′ 06.6276″ E
Tangent Direction: N 16° 53′ 53.3724″ E

TRAVERSE POINT #356
REBAR & CAP

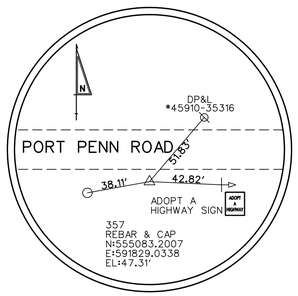

TRAVERSE POINT #357
REBAR & CAP

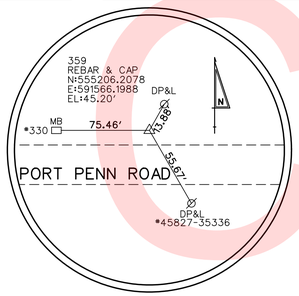

TRAVERSE POINT #359
REBAR AND CAP

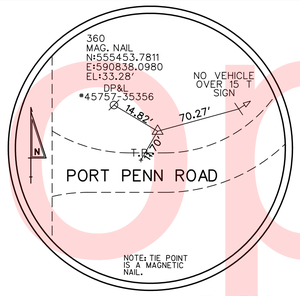

TRAVERSE POINT #360
MAG. NAIL

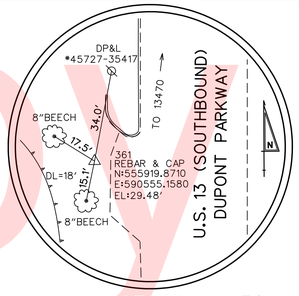

TRAVERSE POINT #361
REBAR AND CAP

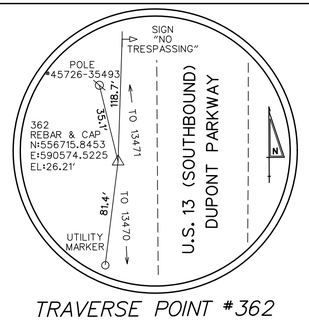

TRAVERSE POINT #362
REBAR AND CAP

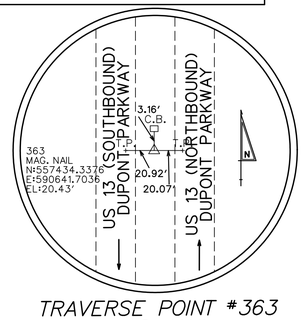

TRAVERSE POINT #363
MAG. NAIL

Unofficial Website Copy

N:\3853-000\Contract 1D\CADD\HV003U301_1D.dgn
12/22/2015 10:37:55 AM

DELAWARE DEPARTMENT OF TRANSPORTATION

ADDENDUMS / REVISIONS

NOT TO SCALE

US 13 & PORT PENN RD INTERSECTION

CONTRACT	BRIDGE NO.
T201011302	DESIGNED BY: KAH
COUNTY	CHECKED BY: BRT
NEW CASTLE	

HORIZONTAL AND VERTICAL CONTROL

HV-03

SHEET NO. 23
TOTAL SHTS. 179

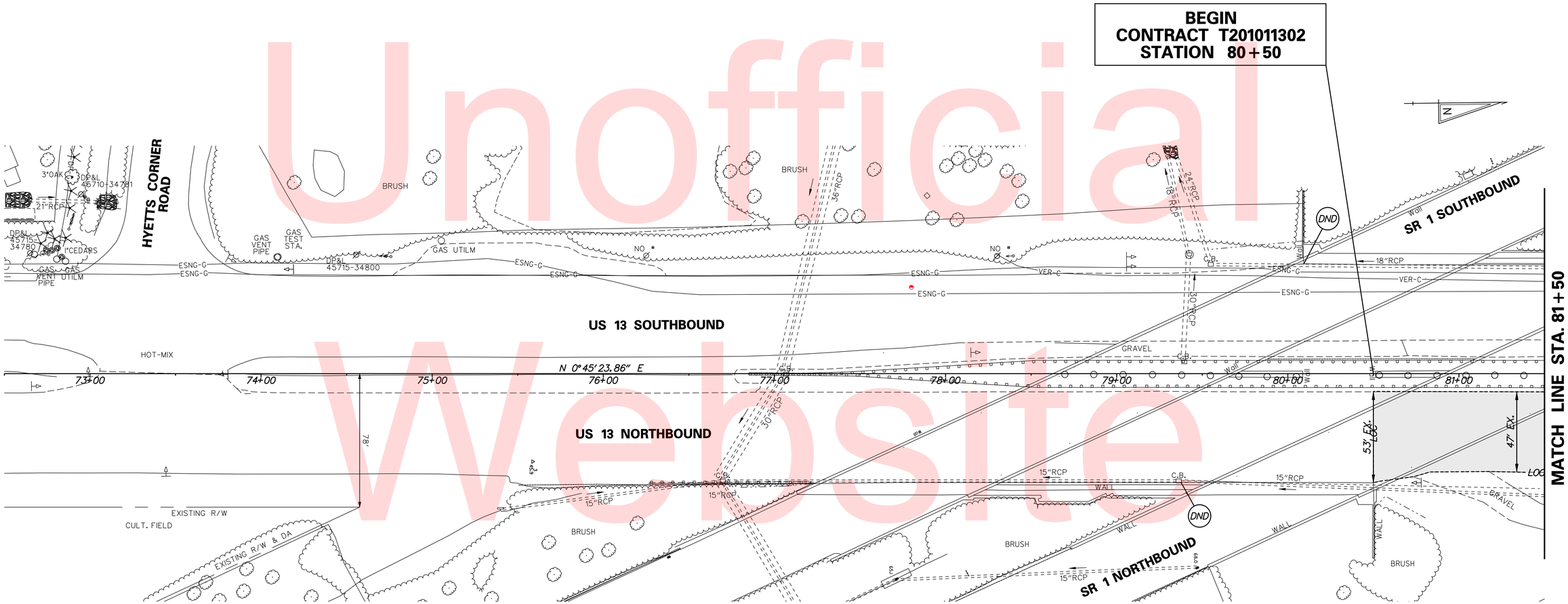

Unofficial Website Copy

N:\31653-000\CONTRACT ID\CADD\CP001U301_1D.dgn
6/17/2015 8:04:53 AM

DELAWARE DEPARTMENT OF TRANSPORTATION	ADDENDUMS / REVISIONS	SCALE 0 30 60 90 FEET	US 13 & PORT PENN RD INTERSECTION	CONTRACT T201011302	BRIDGE NO.	CONSTRUCTION PLAN	CP-01
				COUNTY NEW CASTLE	DESIGNED BY: A.M.S.		SHEET NO. 24
					CHECKED BY: B.R.T.		TOTAL SHTS. 179

ROADWAY CORE SCHEDULE			
NO.	STATION	OFFSET	DESCRIPTION
PC-230	85+00.00	50.00'	5.5" HMA, 0.75" ST

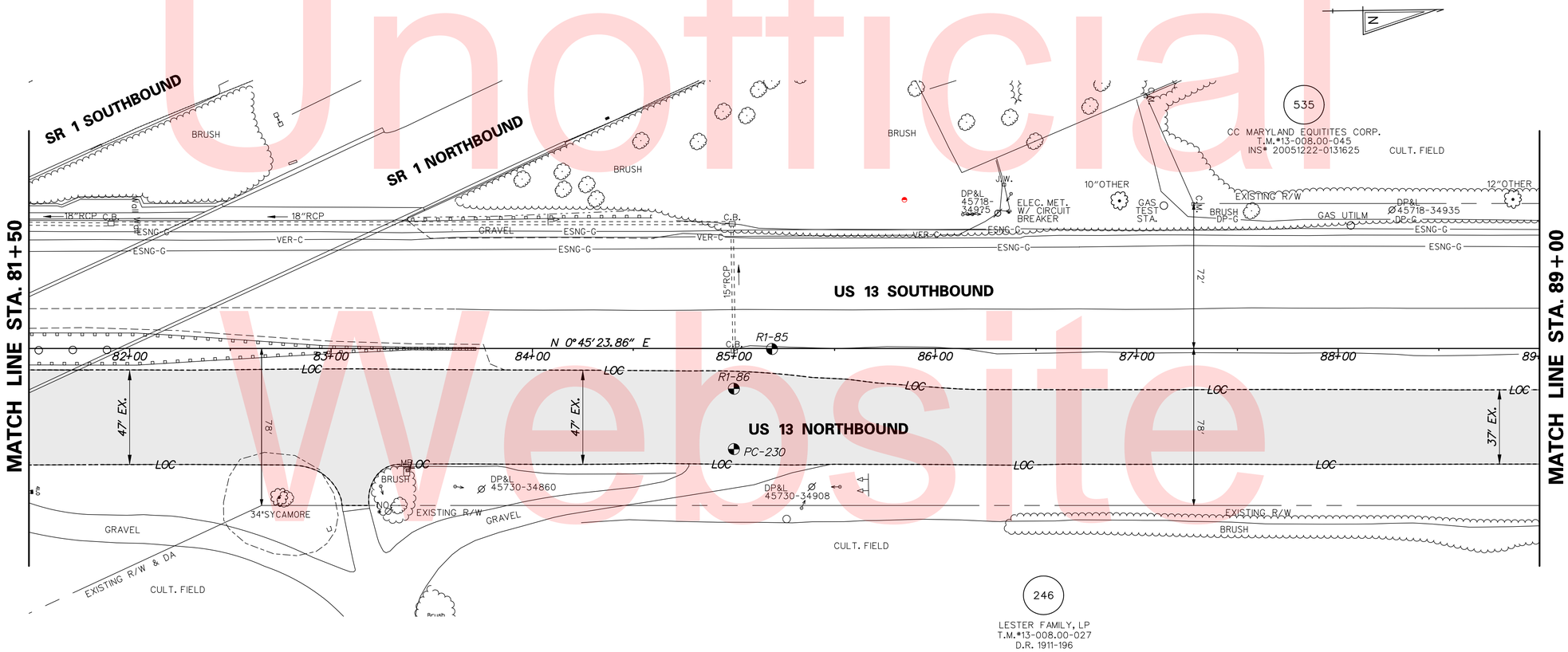

Unofficial Website Copy

N:\31653-000\CONTRACT 1D\CADD\CP002U301_1D.dgn
6/17/2015 8:05:42 AM

DELAWARE DEPARTMENT OF TRANSPORTATION	ADDENDUMS / REVISIONS	SCALE 0 30 60 90 FEET	US 13 & PORT PENN RD INTERSECTION	CONTRACT T201011302 / COUNTY NEW CASTLE	BRIDGE NO. / DESIGNED BY: A.M.S. / CHECKED BY: B.R.T.	CONSTRUCTION PLAN

CP-02
SHEET NO. 25
TOTAL SHTS. 179

GUARDRAIL SCHEDULE				
NO.	ITEM DESCRIPTION / TYPE	BEGIN STA.	OFFSET	LENGTH
001	GUARDRAIL END TREATMENT ATTENUATOR, TYPE 3-31	91+83.79	-1.42	50.00
002	GALVANIZED STEEL BEAM GUARDRAIL, TYPE 3-31	92+35.36	-1.42	364.70

UNDERDRAIN OUTLETS		
NO.	LENGTH	DIS. EL.
001	15.48'	44.66
012	20.35'	47.86

NOTE: UNDERDRAIN OUTLET DISCHARGE ELEVATION GIVEN AT THE DOWNSTREAM SIDE OF THE HEADWALL.

DRAINAGE INLET SCHEDULE						
NO.	STATION	OFFSET	BOX SIZE	GRATE	T.G. EL.	INV. EL.
536	91+00.00	-2.21	34" x 18"	2	48.94	45.10
537	92+65.33	-5.32	34" x 18"	2	47.30	43.90
538	94+00.00	-7.46	34" x 18"	2	46.06	42.50
539	95+50.58	-8.66	34" x 18"	2	45.23	40.85

ROADWAY CORE SCHEDULE			
NO.	STATION	OFFSET	DESCRIPTION
PC-232	95+00.00	50.00'	5.25" HMA, 0.5" ST

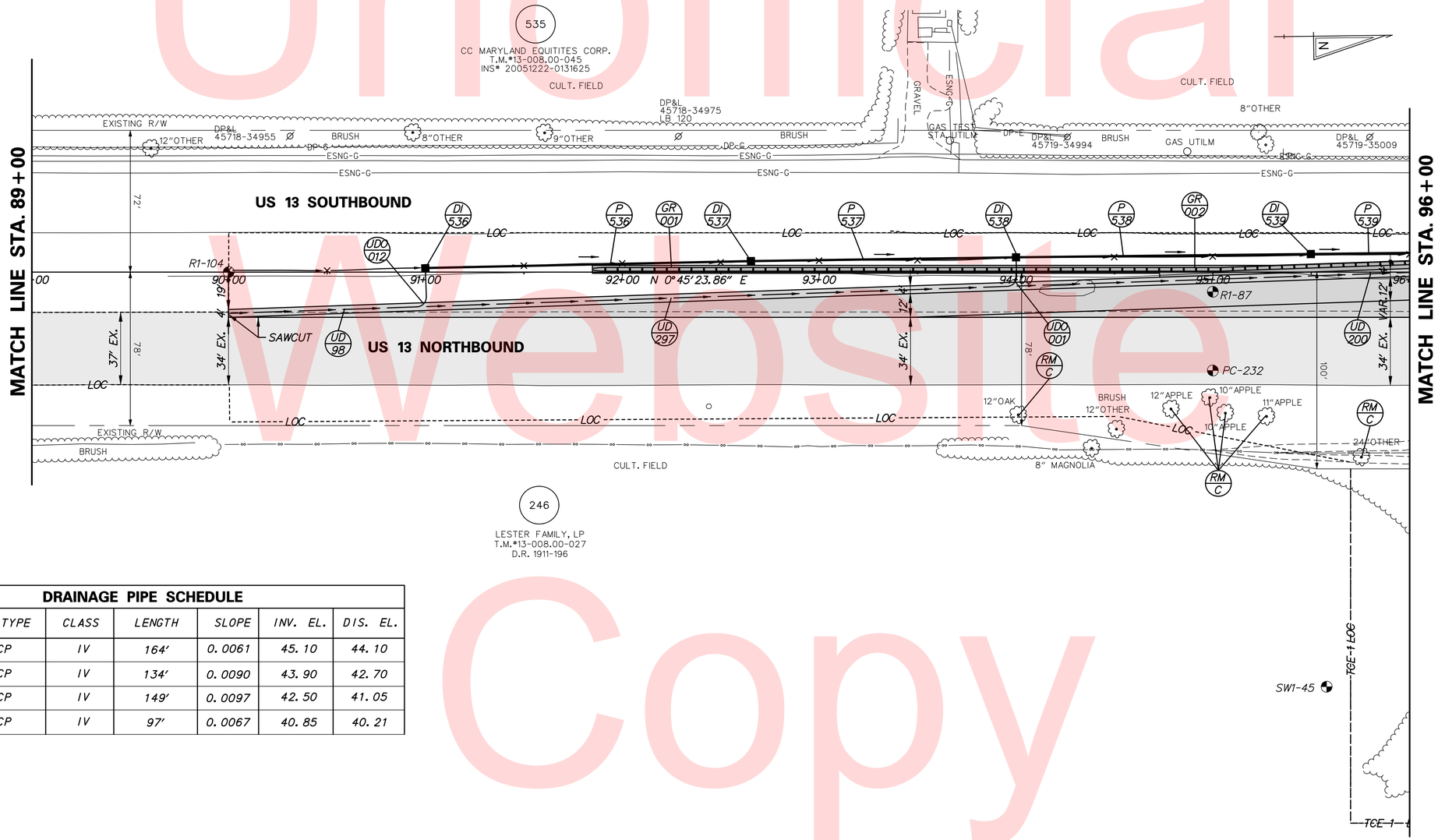

DRAINAGE PIPE SCHEDULE						
NO.	SIZE / TYPE	CLASS	LENGTH	SLOPE	INV. EL.	DIS. EL.
536	15" RCP	IV	164'	0.0061	45.10	44.10
537	15" RCP	IV	134'	0.0090	43.90	42.70
538	15" RCP	IV	149'	0.0097	42.50	41.05
539	18" RCP	IV	97'	0.0067	40.85	40.21

Unofficial Website Copy

N:\31653-000\CONTRACT 1D:\CADD\CP003U301_1D.dgn
6/17/2015 8:06:24 AM

DELAWARE DEPARTMENT OF TRANSPORTATION

ADDENDUMS / REVISIONS

SCALE 0 30 60 90 FEET

US 13 & PORT PENN RD INTERSECTION

CONTRACT	BRIDGE NO.
T201011302	DESIGNED BY: A.M.S.
COUNTY	CHECKED BY: B.R.T.
NEW CASTLE	

CONSTRUCTION PLAN

CP-03

SHEET NO. 26

TOTAL SHTS. 179

UTILITY TEST HOLE SCHEDULE

NO.	UTILITY	STATION	OFFSET	GRND EL.	COVER	O.D. & MATERIAL
101	DP-G	101+81.20	-149.6′	44.47	3.75	8″ YELLOW PLASTIC PIPE
102	DP-G	102+01.73	-92.8′	44.68	4.09	8″ YELLOW PLASTIC PIPE
103	DP-G	103+92.34	-70.1′	46.28	4.52	8″ ORANGE PLASTIC PIPE
104	ESNG-G	103+91.63	-58.5′	47.49	3.38	10″ BLACK COATED STEEL PIPE
105	ESNG-G	103+91.48	-53.6′	47.67	3.89	16″ PLASTIC COATED STEEL PIPE

MANHOLE SCHEDULE

NO.	STATION	OFFSET	SIZE	T.S. EL.	INV. EL.
528	101+50.00	-3.76	48″X30″	46.16	42.39
543	103+90.04	-69.51	48″X48″	46.50	41.12
544	96+50.00	59.18	48″X48″	45.40	39.23

GUARDRAIL SCHEDULE

NO.	ITEM DESCRIPTION / TYPE	BEGIN STA.	OFFSET	LENGTH
003	GALVANIZED STEEL BEAM GUARDRAIL, TYPE 3-31	96+00.00	-5.83	260.18
004	GUARDRAIL OVER CULVERTS, TYPE 3-31	98+54.04	-5.83	75.00
005	GALVANIZED STEEL BEAM GUARDRAIL, TYPE 3-31	99+27.61	-5.83	564.84

CONVERT TO JUNCTION BOX SCHEDULE

NO.	STATION	OFFSET	T.S. EL.	INV. EL.
506	98+98.85	0.00	43.95	40.31

DRAINAGE PIPE SCHEDULE

NO.	SIZE / TYPE	CLASS	LENGTH	SLOPE	INV. EL.	DIS. EL.
523	18″ RCP	IV	267′	0.0184	46.40	41.48
524	18″ RCP	IV	21′	0.0127	43.16	42.90
525	18″ RCP	IV	5′	0.0200	41.58	41.48

CURB AND GUTTER SCHEDULE

NO.	ITEM DESCRIPTION / TYPE	LENGTH
001	PCC CURB, TYPE 2	750.00′
002	PCC CURB, TYPE 2	750.00′
003	PCC CURB AND GUTTER, TYPE 1-4	750.11′

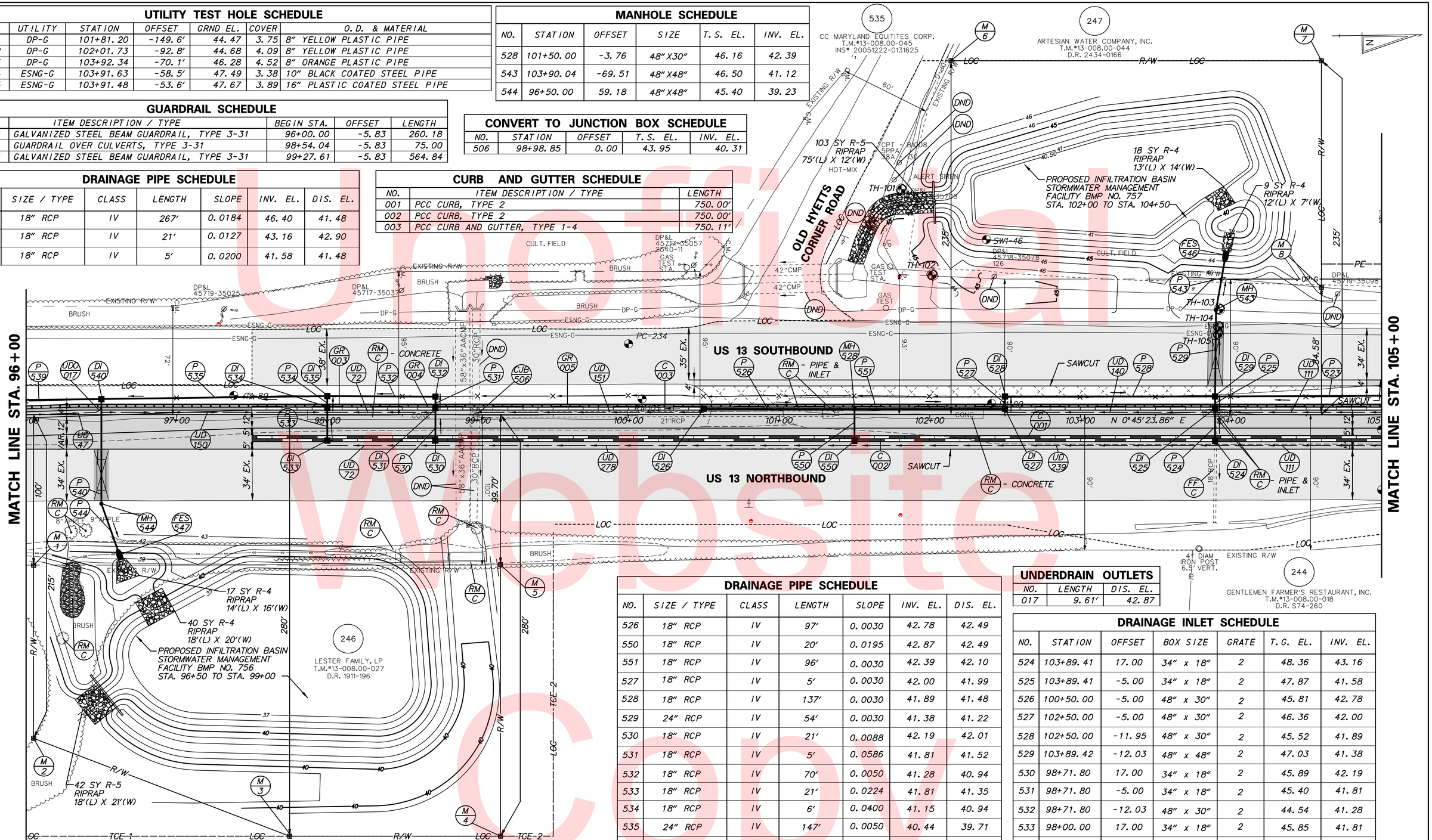

UNDERDRAIN OUTLETS

NO.	LENGTH	DIS. EL.
017	9.61′	42.87

DRAINAGE PIPE SCHEDULE

NO.	SIZE / TYPE	CLASS	LENGTH	SLOPE	INV. EL.	DIS. EL.
526	18″ RCP	IV	97′	0.0030	42.78	42.49
550	18″ RCP	IV	20′	0.0195	42.87	42.49
551	18″ RCP	IV	96′	0.0030	42.39	42.10
527	18″ RCP	IV	5′	0.0030	42.00	41.99
528	18″ RCP	IV	137′	0.0030	41.89	41.48
529	24″ RCP	IV	54′	0.0030	41.38	41.22
530	18″ RCP	IV	21′	0.0088	42.19	42.01
531	18″ RCP	IV	5′	0.0586	41.81	41.52
532	18″ RCP	IV	70′	0.0050	41.28	40.94
533	18″ RCP	IV	21′	0.0224	41.81	41.35
534	18″ RCP	IV	6′	0.0400	41.15	40.94
535	24″ RCP	IV	147′	0.0050	40.44	39.71
540	24″ RCP	IV	66′	0.0030	39.53	39.33
543	24″ RCP	IV	32′	0.0030	41.12	41.02
544	24″ RCP	IV	32′	0.0030	39.23	39.14

DRAINAGE INLET SCHEDULE

NO.	STATION	OFFSET	BOX SIZE	GRATE	T.G. EL.	INV. EL.
524	103+89.41	17.00	34″ x 18″	2	48.36	43.16
525	103+89.41	-5.00	34″ x 18″	2	47.87	41.58
526	100+50.00	-5.00	48″ x 30″	2	45.81	42.78
527	102+50.00	-5.00	48″ x 30″	2	46.36	42.00
528	102+50.00	-11.95	48″ x 30″	2	45.52	41.89
529	103+89.42	-12.03	48″ x 48″	2	47.03	41.38
530	98+71.80	17.00	34″ x 18″	2	45.89	42.19
531	98+71.80	-5.00	34″ x 18″	2	45.40	41.81
532	98+71.80	-12.03	48″ x 30″	2	44.54	41.28
533	98+00.00	17.00	34″ x 18″	2	45.85	41.81
534	98+00.00	-5.00	34″ x 18″	2	45.37	41.15
535	98+00.00	-12.28	48″ x 30″	2	44.48	40.44
540	96+50.00	-10.31	48″ x 48″	2	44.97	39.53
550	101+50.00	17.00	34″ x 18″	2	46.54	42.87

FLARED END SECTION SCHEDULE

NO.	STATION	OFFSET	SIZE / TYPE	SLOPE	SAFETY GRATE
546	103+97.14	-109.77	24″ RCP	0.0030	NO
547	96+60.47	88.80	24″ RCP	0.0030	NO

ROADWAY CORE SCHEDULE

NO.	STATION	OFFSET	DESCRIPTION
PC-234	100+00.00	-47.00′	8.5″ HMA

Unofficial Website Copy

N:\31653-000\CONTRACT 1D\CADD\CP004U301_1D.dgn
6/17/2015 8:06:59 AM

DELAWARE DEPARTMENT OF TRANSPORTATION

ADDENDUMS / REVISIONS

SCALE 0 30 60 90 FEET

US 13 & PORT PENN RD INTERSECTION

CONTRACT T201011302 | COUNTY NEW CASTLE | BRIDGE NO. | DESIGNED BY: A.M.S. | CHECKED BY: B.R.T.

CONSTRUCTION PLAN

CP-04 | SHEET NO. 27 | TOTAL SHTS. 179

DRAINAGE PIPE SCHEDULE

NO.	SIZE / TYPE	CLASS	LENGTH	SLOPE	INV. EL.	DIS. EL.
515	18" RCP	IV	20'	0.0200	54.41	54.01
516	18" RCP	IV	6'	0.0593	53.80	53.48
517	18" RCP	IV	287'	0.0097	53.25	50.45
518	18" RCP	IV	20'	0.0125	51.10	50.85
519	18" RCP	IV	6'	0.0335	50.65	50.45
552	18" RCP	IV	288'	0.0127	50.25	46.60
521	18" RCP	IV	20'	0.0167	47.25	46.92
522	18" RCP	IV	7'	0.0200	46.72	46.60

DRAINAGE INLET SCHEDULE

NO.	STATION	OFFSET	BOX SIZE	GRATE	T.G. EL.	INV. EL.
515	112+39.40	17.00	34" x 18"	2	58.99	54.41
516	112+39.40	-5.00	2-72" x 24"	2	58.50	53.80
517	112+39.40	-12.31	48" x 30"	2	57.60	53.25
518	109+50.00	17.00	34" x 18"	2	56.00	51.10
519	109+50.00	-5.00	2-72" x 24"	2	55.52	50.65
521	106+59.40	17.00	34" x 18"	2	52.12	47.25
522	106+59.40	-5.00	2-72" x 24"	2	51.63	46.72
523	106+59.40	-13.11	48" x 30"	2	50.61	46.40
520	109+50.00	-12.97	48" x 30"	2	54.51	50.25

GUARDRAIL SCHEDULE

NO.	ITEM DESCRIPTION / TYPE	BEGIN STA.	OFFSET	LENGTH
006	GALVANIZED STEEL BEAM GUARDRAIL, TYPE 3-31	105+00.00	-5.83	800.00

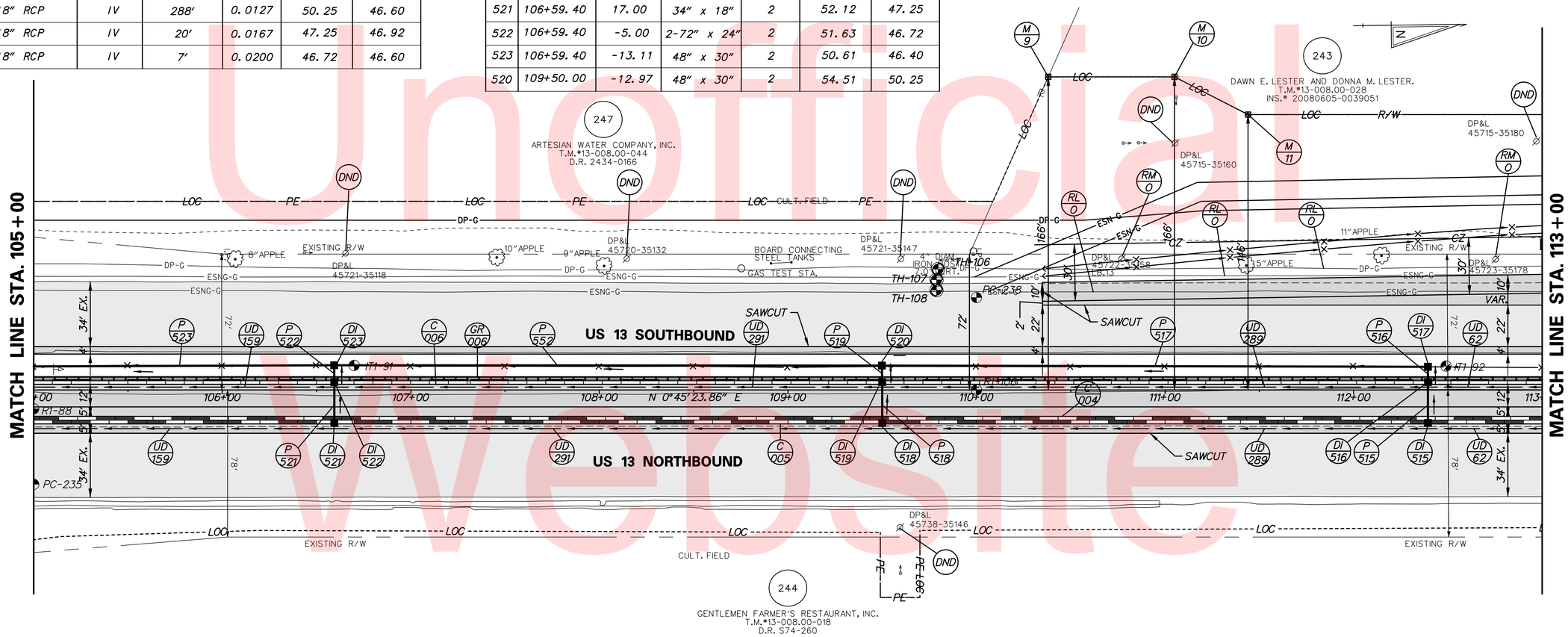

CURB AND GUTTER SCHEDULE

NO.	ITEM DESCRIPTION / TYPE	LENGTH
004	PCC CURB, TYPE 2	800.00'
005	PCC CURB, TYPE 2	800.00'
006	PCC CURB AND GUTTER, TYPE 4	800.00'

UTILITY TEST HOLE SCHEDULE

NO.	UTILITY	STATION	OFFSET	GRND EL.	COVER	O.D. & MATERIAL
106	DP-G	109+79.61	-64.0'	56.10	4.99	8" ORANGE PLASTIC PIPE
107	ESNG-G	109+78.81	-58.4'	55.66	3.70	10" BLACK COATED STEEL PIPE
108	ESNG-G	109+78.78	-52.9'	55.66	3.50	10" BLACK PLASTIC COATED STEEL PIPE

ROADWAY CORE SCHEDULE

NO.	STATION	OFFSET	DESCRIPTION
PC-235	105+00.00	50.00'	5.5 HMA
PC-238	110+00.00	-49.00'	10" HMA

Unofficial Website Copy

N:\31653-000\CONTRACT 1D:\CADD\CP005U301_1D.dgn
6/17/2015 8:07:34 AM

CP-05

DELAWARE DEPARTMENT OF TRANSPORTATION

ADDENDUMS / REVISIONS

SCALE 0 30 60 90 FEET

US 13 & PORT PENN RD INTERSECTION

CONTRACT	BRIDGE NO.
T201011302	DESIGNED BY: A.M.S.
COUNTY	CHECKED BY: B.R.T.
NEW CASTLE	

CONSTRUCTION PLAN

SHEET NO. 28
TOTAL SHTS. 179

GUARDRAIL SCHEDULE				
NO.	ITEM DESCRIPTION / TYPE	BEGIN STA.	OFFSET	LENGTH
007	GALVANIZED STEEL BEAM GUARDRAIL, TYPE 3-31	113+00.00	-5.83	799.96

CURB AND GUTTER SCHEDULE		
NO.	ITEM DESCRIPTION / TYPE	LENGTH
007	PCC CURB, TYPE 2	800.04′
008	PCC CURB, TYPE 2	800.14′
009	PCC CURB AND GUTTER, TYPE 4	799.98′

ROADWAY CORE SCHEDULE			
NO.	STATION	OFFSET	DESCRIPTION
PC-239	114+99.51	50.00′ RT.	6.5″ HMA
PC-241	115+00.00	48.00′ LT.	10″ HMA

UNDERDRAIN OUTLETS			
NO.	LENGTH	DIS. EL.	
002	18.71′	55.77	6:1
003	19.51′	54.12	6:1

NOTE: UNDERDRAIN OUTLET DISCHARGE ELEVATION GIVEN AT THE DOWNSTREAM SIDE OF THE HEADWALL.

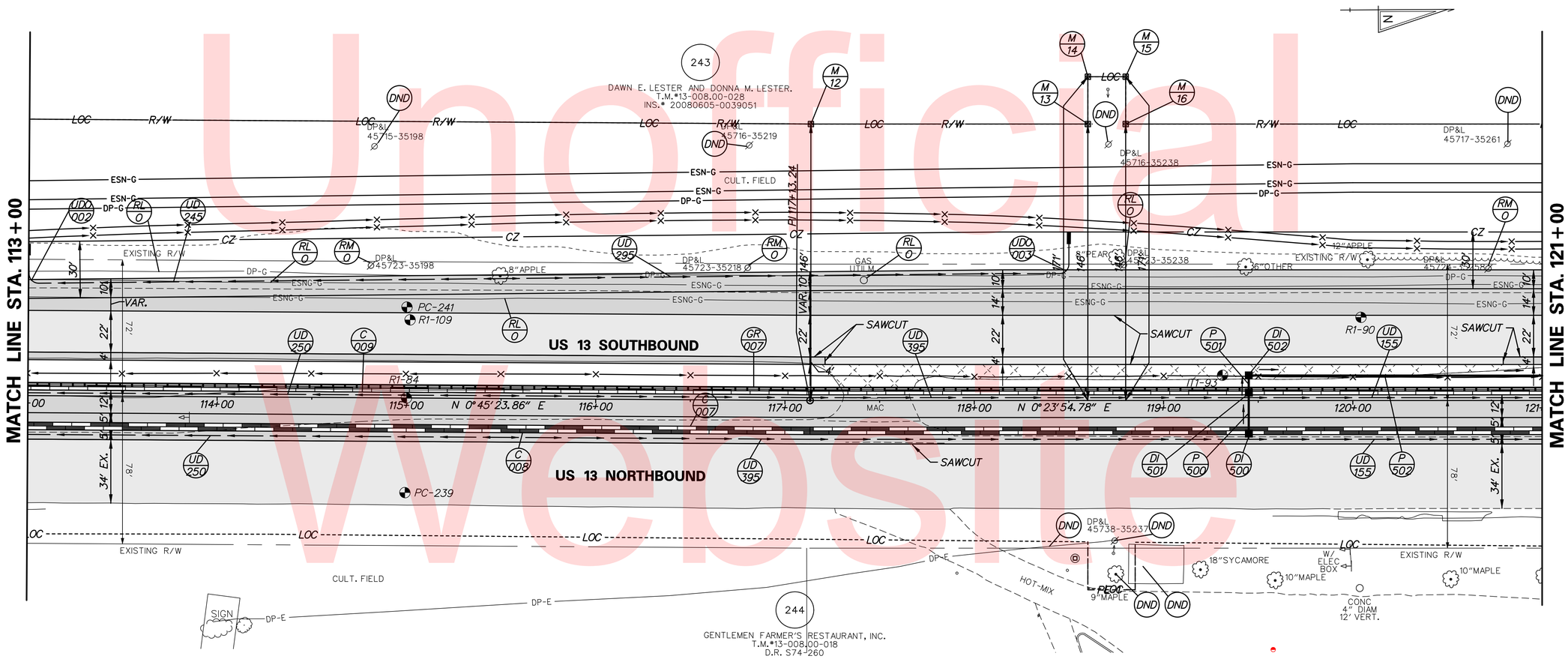

DRAINAGE INLET SCHEDULE						
NO.	STATION	OFFSET	BOX SIZE	GRATE	T.G. EL.	INV. EL.
500	119+45.00	17.00	34″ x 18″	2	56.86	52.03
501	119+45.00	-5.00	2-72″ x 24″	2	56.37	51.20
502	119+45.00	-12.71	48″ x 30″	2	55.41	50.80

DRAINAGE PIPE SCHEDULE						
NO.	SIZE / TYPE	CLASS	LENGTH	SLOPE	INV. EL.	DIS. EL.
500	18″ RCP	IV	20′	0.0325	52.03	51.38
501	18″ RCP	IV	6′	0.0319	51.20	51.02
502	18″ RCP	IV	288′	0.0149	50.80	46.50

Unofficial Website Copy

N:\31653-000\CONTRACT 6/17/2015 8:25:00 AM ID:\CADD\CP006U301_1D.dgn

DELAWARE DEPARTMENT OF TRANSPORTATION

ADDENDUMS / REVISIONS

SCALE 0 30 60 90 FEET

US 13 & PORT PENN RD INTERSECTION

CONTRACT	BRIDGE NO.
T201011302	DESIGNED BY: A.M.S.
COUNTY	CHECKED BY: B.R.T.
NEW CASTLE	

CONSTRUCTION PLAN

CP-06

SHEET NO. 29

TOTAL SHTS. 179

CURB AND GUTTER SCHEDULE		
NO.	ITEM DESCRIPTION / TYPE	LENGTH
010	PCC CURB, TYPE 2	800.00'
011	PCC CURB, TYPE 2	800.00'
012	PCC CURB AND GUTTER, TYPE 4	800.00'

GUARDRAIL SCHEDULE				
NO.	ITEM DESCRIPTION / TYPE	BEGIN STA.	OFFSET	LENGTH
008	GALVANIZED STEEL BEAM GUARDRAIL, TYPE 3-31	121+00.00	-5.83	800.00

FLARED END SECTION SCHEDULE			
NO.	SIZE/TYPE	SLOPE	SAFETY GRATE
502	14"X23" HERCP	0.0175	NO
503	14"X23" HERCP	0.0175	NO
548	15" RCP	0.0263	NO
549	15" RCP	0.0263	NO

ROADWAY CORE SCHEDULE			
NO.	STATION	OFFSET	DESCRIPTION
PC-243	125+00.00	50.00'	8" HMA

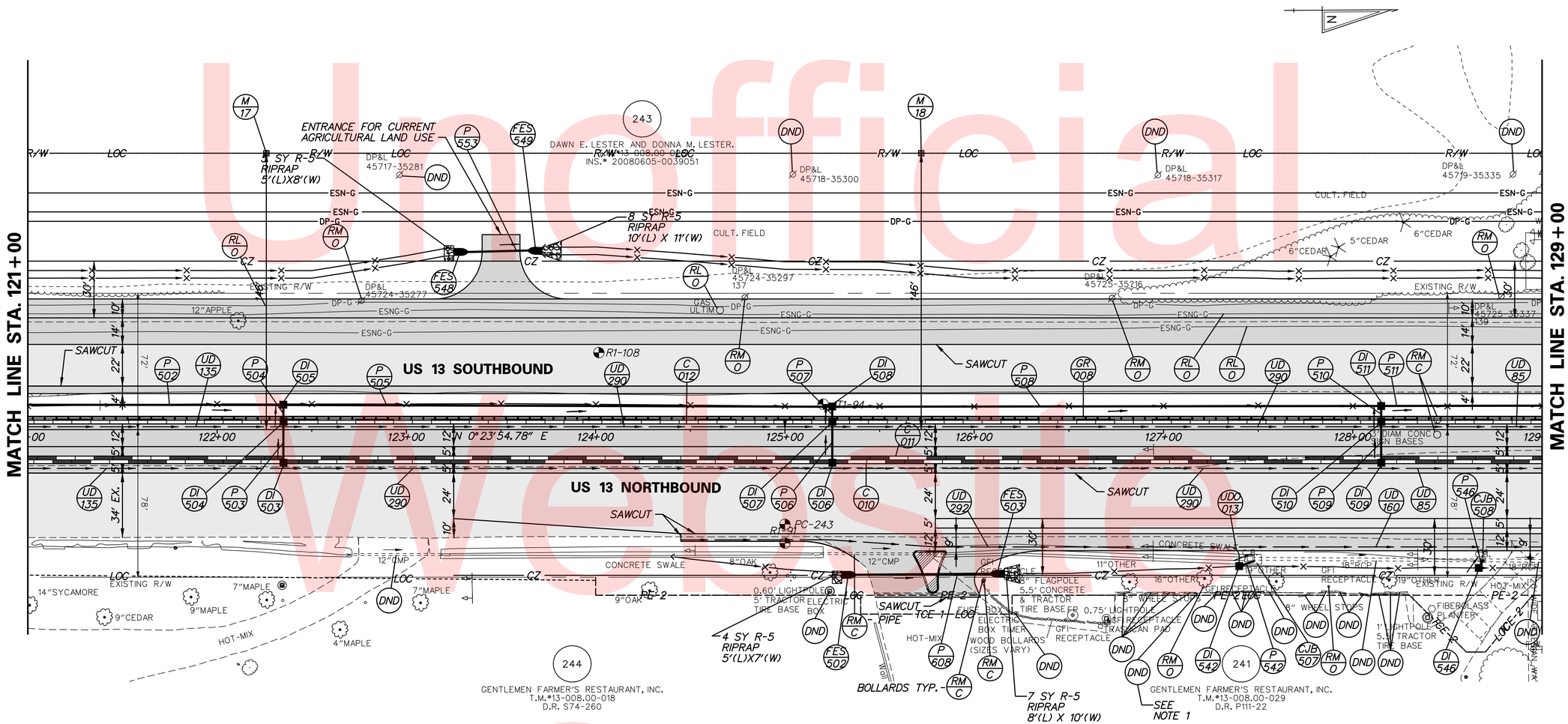

DRAINAGE PIPE SCHEDULE						
NO.	SIZE / TYPE	CLASS	LENGTH	SLOPE	INV. EL.	DIS. EL.
503	18" RCP	IV	20'	0.0300	47.52	46.91
504	18" RCP	IV	7'	0.0300	46.70	46.50
505	18" RCP	IV	288'	0.0177	46.30	41.20
506	18" RCP	IV	20'	0.0200	41.91	41.51
507	18" RCP	IV	5'	0.0200	41.30	41.20
508	18" RCP	IV	288'	0.0194	41.00	35.40
509	18" RCP	IV	20'	0.0300	36.38	35.77
510	18" RCP	IV	6'	0.0300	35.56	35.40
511	18" RCP	IV	288'	0.0153	35.20	30.80
542	18" RCP	IV	6'	0.0109	37.51	37.45
546	15" RCP	IV	2'	0.0730	35.00	34.87
553	15" RCP	IV	31'	0.0263	45.30	44.49
608	14"X23" HERCP	V	86'	0.0175	43.69	42.19

DRAINAGE INLET SCHEDULE						
NO.	STATION	OFFSET	BOX SIZE	GRATE	T.G. EL.	INV. EL.
503	122+35.00	17.00	34" x 18"	2	51.73	47.52
504	122+35.00	-5.00	2-72" x 24"	2	51.24	46.70
505	122+35.00	-13.64	48" x 30"	2	50.21	46.30
506	125+25.00	17.00	34" x 18"	2	46.41	41.91
507	125+25.00	-5.00	2-72" x 24"	2	45.92	41.30
508	125+25.00	-11.94	48" x 30"	2	45.12	41.00
509	128+15.00	17.00	34" x 18"	2	41.07	36.38
510	128+15.00	-5.00	2-72" x 24"	2	40.58	35.56
511	128+15.00	-12.40	48" x 30"	2	39.68	35.20
542*	127+40.00	72.11	34" x 24"	2	40.76	37.51
546*	128+66.51	74.02	34" x 24"	2	38.65	35.00

* CONTRACTOR SHALL VERIFY LOCATIONS OF EXISTING INLETS AND ADJUST FLOW LINE AND PROPOSED INLETS AS NECESSARY.

CONVERT TO JUNCTION BOX SCHEDULE				
NO.	STATION	OFFSET	T.S. EL.	INV. EL.
507	127+47.83	68.26	41.06	37.45
508	128+68.72	69.10	39.05	34.63

UNDERDRAIN OUTLETS		
NO.	LENGTH	DIS. EL.
013	10.96'	39.13

NOTE: UNDERDRAIN OUTLET DISCHARGE ELEVATION GIVEN AT THE DOWNSTREAM SIDE OF THE HEADWALL.

NOTES:
1. DO NOT DISTURB PARKING LOT PAVEMENT.

Unofficial Website Copy

N:\3653-000\Contract 1D\CADD\CP0071301_1D.dgn
6/17/2015 8:35:57 AM

DELAWARE DEPARTMENT OF TRANSPORTATION

ADDENDUMS / REVISIONS

SCALE 0 30 60 90 FEET

US 13 & PORT PENN RD INTERSECTION

CONTRACT	BRIDGE NO.	
T201011302	DESIGNED BY: A.M.S.	
COUNTY		
NEW CASTLE	CHECKED BY: B.R.T.	

CONSTRUCTION PLAN

CP-07

SHEET NO. 30

TOTAL SHTS. 179

NOTES:

1. SEE CONSTRUCTION DETAIL DT-06 FOR TRASH ENCLOSURE. FOR ENTRANCE DETAIL, SEE DELDOT STANDARD CONSTRUCTION DETAIL C-3, ENTRANCES. (MATCH SIDEWALK PAVEMENT SECTION)
2. SEE CONSTRUCTION DETAIL DT-06 FOR BOLLARD.
3. DELDOT STANDARD RIGHT-OF-WAY FENCE POST SPACING SHALL SPAN THE EXISTING PEDESTRIAN TUNNEL.
4. SEE CONSTRUCTION DETAIL DT-02 FOR CURB RAMP.
5. SEE CONSTRUCITON DETAIL DT-02 AND UR-01 FOR 2" PVC SCH. 40 FORCE MAIN.
6. CONTRACTOR SHALL INSTALL NEW 8" WATER SERVICE, (SEE SHEETS UR-01, UR-02, UR-03.)

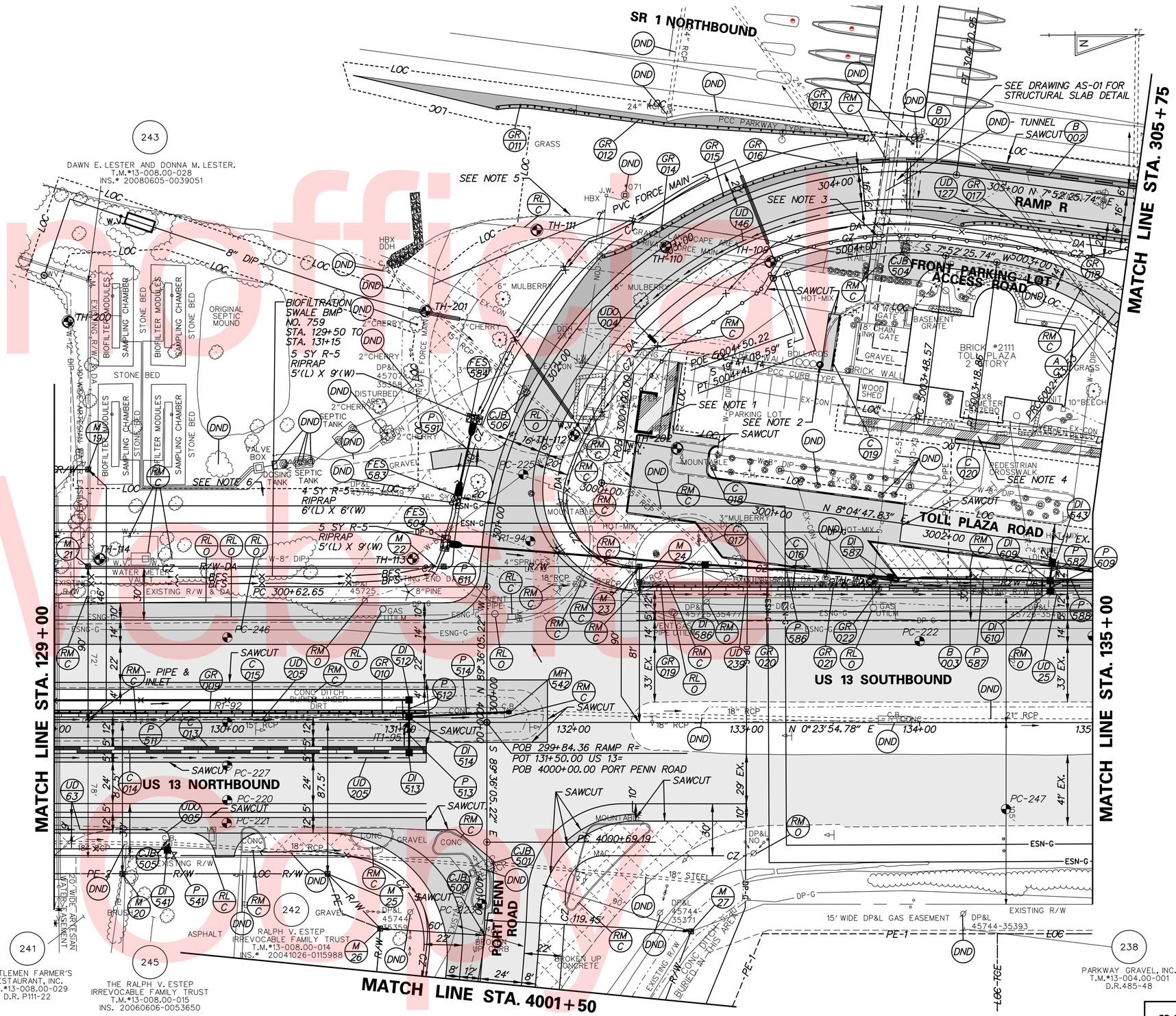

Unofficial Website

DELAWARE DEPARTMENT OF TRANSPORTATION

ADDENDUMS / REVISIONS

SCALE 0 30 60 90 FEET

US 13 & PORT PENN RD INTERSECTION

CONTRACT	BRIDGE NO.
T201011302	DESIGNED BY: A.M.S.
COUNTY	CHECKED BY: B.R.T.
NEW CASTLE	

CONSTRUCTION PLAN

CP-08

SHEET NO.
31
TOTAL SHTS.
179

N:\31653-000\Contract 1D\CADD\CP008U301_1D.dgn
12/23/2015 11:14:07 AM

DRAINAGE INLET SCHEDULE

NO.	STATION	OFFSET	BOX SIZE	GRATE	T.G. EL.	INV. EL.
512	131+05.00	-12.90	48" x 30"	2	34.61	30.60
513	131+05.00	17.00	34" x 18"	2	35.90	31.16
514	131+05.00	-5.00	2-72" x 48"	2	35.41	30.28
541*	129+65.42	73.82	34" x 24"	2	36.67	32.94
543	134+76.37	-90.69	34" x 24"	2	29.90	25.30
586	132+75.37	-90.99	34" x 18"	2	30.31	26.36
587	133+81.36	-83.06	48" x 48"	1	30.67	25.62
609	134+75.45	-82.52	48" x 48"	2	29.55	24.88
610	134+75.48	-78.00	2-72" x 24"	1	30.61	25.70

* CONTRACTOR SHALL VERIFY LOCATIONS OF EXISTING INLETS AND ADJUST FLOW LINE AND PROPOSED INLETS AS NECESSARY.

DRAINAGE PIPE SCHEDULE

NO.	SIZE / TYPE	CLASS	LENGTH	SLOPE(FT/FT)	INT. EL.	DIS. EL.
586	24" RCP	IV	104'	0.0051	26.36	25.84
587	24" RCP	IV	90'	0.0049	25.62	25.18
588	24" RCP	IV	217'	0.0062	24.88	23.53
512	18" RCP	IV	6'	0.0153	30.60	30.51
513	18" RCP	IV	18'	0.0200	31.16	30.80
514	18" RCP	IV	54'	0.0193	30.28	29.25
541	15" RCP	IV	1'	0.0400	32.94	32.91
591	15" RCP	IV	43'	0.0091	33.00	32.61
609	18" RCP	IV	3'	0.0098	25.70	25.68
611	19"x30" HERCP	IV	135'	0.0348	31.26	26.57
582	18" RCP	IV	7'	0.0200	25.30	25.18

CONVERT TO JUNCTION BOX SCHEDULE

NO.	STATION	OFFSET	T.S. EL.	INV. EL.
500	4000+87.06	8.23'	33.83	30.24
501	4000+81.98	-1.20'	33.60	30.01
504	5004+27.95	-3.96'	40.58	37.05
505	129+66.49	70.10'	36.52	32.63
506	301+77.78	-4.19'	33.40	31.27

UNDERDRAIN OUTLETS

NO.	LENGTH	DIS. EL.
004	19.09'	34.75
005	9.62'	35.32

NOTE: UNDERDRAIN OUTLET DISCHARGE ELEVATION GIVEN AT THE DOWNSTREAM SIDE OF THE HEADWALL.

MANHOLE SCHEDULE

NO.	STATION	OFFSET	SIZE	T.S. EL.	INV. EL.
542	131+62.71	-5.99'	48"X30"	34.75	28.77

FLARED END SECTION SCHEDULE

NO.	SIZE / TYPE	SLOPE	SAFETY GRATE
504	19 x 30 HERCP	0.0348	YES
583	15" RCP	0.0091	NO
584	15" RCP	0.0091	NO

UTILITY TEST HOLE SCHEDULE

NO.	UTILITY	STATION	OFFSET	GRND EL.	COVER	O.D. & MATERIAL
109	PRIVATE FM	303+47.09	37.4'	43.73	4.23	2" WHITE PLASTIC PIPE
110	PRIVATE FM	302+93.71	0.8'	43.08	4.75	2" WHITE PLASTIC PIPE
111	PRIVATE FM	302+48.13	-55.1'	40.21	4.32	2" WHITE PLASTIC PIPE
112	AW-W	301+66.40	31.2'	35.26	5.19	8" DUCTILE IRON PIPE
113	AW-W	300+76.47	-43.4'	34.66	4.06	8" DUCTILE IRON PIPE
114	AW-W	129+26.28	-94.2'	41.80	5.30	8" DUCTILE IRON PIPE
115	DP-G	133+72.51	-82.3'	31.36	3.53	1" ORANGE PLASTIC PIPE
200	AW-W	129+08.00	-231.3'	43.73	3.80	12" BLACK DUCTILE IRON PIPE
201	PRIVATE FM	301+88.49	-78.1'	37.64	3.91	2" WHITE PLASTIC PIPE
202	PRIVATE W	301+94.78	87.4'	34.76	5.62	8" BLACK DUCTILE IRON PIPE

GUARDRAIL SCHEDULE

NO.	ITEM DESCRIPTION / TYPE	BEGIN STA.	OFFSET	LENGTH
009	GALVANIZED STEEL BEAM GUARDRAIL, TYPE 3-31	129+00.00	-5.83	164.53
010	GUARDRAIL END TREATMENT ATTENUATOR, TYPE 3-31	130+64.53	-5.83	50.00
011	GUARDRAIL END TREATMENT ATTENUATOR, TYPE 2-31	302+71.39	-123.27	50.00
012	GALVANIZED STEEL BEAM GUARDRAIL, TYPE 1-31	302+98.12	-89.91	150.00
013	END ANCHORAGE, TYPE 31	304+08.54	-23.65	12.50
014	GUARDRAIL END TREATMENT ATTENUATOR, TYPE 2-31	302+62.50	-16.76	50.00
015	GALVANIZED STEEL BEAM GUARDRAIL, TYPE 1-31	303+10.37	-8.00	87.50
016	GUARDRAIL TO BARRIER CONN., APPROACH TYPE 1-31	303+95.06	-6.79	19.75
017	GUARDRAIL END TREATMENT ATTENUATOR, TYPE 2-31	304+71.57	27.24	50.00
018	GALVANIZED STEEL BEAM GUARDRAIL, TYPE 1-31	305+28.40	24.00	46.55
019	END ANCHORAGE, TYPE 31	132+38.10	-78.00	12.50
020	GALVANIZED STEEL BEAM GUARDRAIL, TYPE 1-31	132+52.25	-78.00	68.75
021	GALVANIZED STEEL BEAM GUARDRAIL, TYPE 2-31	133+21.00	-78.00	50.00
022	GUARDRAIL TO BARRIER CONN., EXIT TYPE	133+71.00	-78.00	11.50

BARRIER SCHEDULE

NO.	ITEM DESCRIPTION / TYPE	LENGTH
001	* BIFURCATED CONCRETE MEDIAN BARRIER	58.32
002	BIFURCATED CONCRETE MEDIAN BARRIER	104.07
003	BIFURCATED CONCRETE MEDIAN BARRIER	117.50

* EXTREME CAUTION SHALL BE USED TO AVOID DAMAGING THE COMPOSITE WATERPROOFING MEMBRANE OF THE EXISTING PEDESTRIAN TUNNEL. NON-MECHANIZED EXCAVATION WILL BE REQUIRED WITHIN 1' OF THE TOP OF TUNNEL. BARRIER FOOTING SHALL NOT BE PLACED DIRECTLY ON TOP OF TUNNEL. IF THE TUNNEL IS EXPOSED DURING EXCAVATION, A BOND BREAKER SHALL BE PLACED BETWEEN TOP OF TUNNEL AND BOTTOM OF BARRIER FOOTING.

CURB SCHEDULE

NO.	ITEM DESCRIPTION / TYPE	LENGTH
013	PCC CURB, TYPE 2	215.00
014	PCC CURB, TYPE 2	215.00
017	PCC CURB, TYPE 1-8	435.80
018	PCC CURB, TYPE 1-8	136.16
019	PCC CURB, TYPE 1-8	32.69
020	PCC CURB, TYPE 1-8	25.91

CURB AND GUTTER SCHEDULE

NO.	ITEM DESCRIPTION / TYPE	LENGTH
015	PCC CURB AND GUTTER, TYPE 1-4	215.00'
016	PCC CURB AND GUTTER, TYPE 1-4	144.40'

ROADWAY CORE SCHEDULE

NO.	STATION	OFFSET	DESCRIPTION
PC-220	130+00.00	45.00'	10.25" HMA, 8.25" PCC
PC-221	130+00.00	58.22'	11.5" HMA
PC-222	134+00.00	-47.00'	4" HMA
PC-223	4001+04.89	2.13'	4" PCC, 6" CR
PC-225	301+30.00	11.58'	5.25" HMA, 6" CR
PC-227	130+00.00	25.00'	10" HMA, 8.25" PCC
PC-246	130+00.00	-25.00'	10.5" HMA
PC-247	134+50.00	50.00'	7" HMA

Unofficial Website Copy

DRAINAGE INLET SCHEDULE

NO.	STATION	OFFSET	BOX SIZE	GRATE	T.G. EL.	INV. EL.
*576	307+17.77	-8.00	2-72" x 24"	2	40.16	35.39
*577	307+17.78	-6.00	34" x 18"	2	40.87	35.44
579	309+35.81	-8.00	2-72" x 48"	2	39.17	34.25
580	311+19.26	-10.06	2-72" x 48"	2	37.73	32.26
581	311+19.37	-6.00	48" x 30"	2	37.26	32.02
589	136+96.27	-78.00	2-72" x 24"	1	28.45	24.13
590	307+89.67	110.80	48" x 30"	2	29.63	26.19

* INLET SHALL BE CAST-IN-PLACE TO CONNECT TO EXISTING STORMDRAIN

DRAINAGE PIPE SCHEDULE

NO.	SIZE / TYPE	CLASS	LENGTH	SLOPE(FT/FT)	INT. EL.	DIS. EL.
576	24" RCP	IV	2'	0.0298	35.44	35.38
579	18" RCP	IV	178'	0.0100	34.24	32.47
580	18" RCP	IV	4'	0.0100	32.26	32.22
589	24" RCP	IV	50'	0.0059	23.33	23.04
590	18" RCP	IV	58'	0.0379	26.19	24.00
596	18" RCP	IV	66'	0.0457	23.00	20.00
610	18" RCP	IV	141'	0.0138	32.02	30.08
612	18" RCP	IV	53'	0.0361	28.33	26.44
554	18" RCP	IV	6'	0.0166	24.13	24.03

GUARDRAIL SCHEDULE

NO.	ITEM DESCRIPTION / TYPE	BEGIN STA.	OFFSET	LENGTH
023	GALVANIZED STEEL BEAM GUARDRAIL, TYPE 1-31	306+75.00	24.00	353.45
024	END ANCHORAGE, TYPE 31	309+28.40	24.00	12.50
025	GUARDRAIL TO BARRIER CONN., APPROACH TYPE 1-31	137+00.00	-78.00	19.75
026	GALVANIZED STEEL BEAM GUARDRAIL, TYPE 1-31	137+19.75	-78.00	131.25
027	CURVED GUARDRAIL SECTION	138+51.00	-78.00	56.25
028	ENTRANCE SPECIAL END ANCHORAGE	3007+47.73	17.00	6.25
029	GALVANIZED STEEL BEAM GUARDRAIL, TYPE 1-31	311+32.90	-6.00	29.25
030	GALVANIZED STEEL BEAM GUARDRAIL, TYPE 2-31	311+62.15	-6.00	50.00
031	GALVANIZED STEEL BEAM GUARDRAIL, TYPE 1-31	312+12.15	-6.00	12.78
032	GUARDRAIL TO BARRIER CONN., EXIT TYPE	311+21.40	-6.00	11.50

MANHOLE SCHEDULE

NO.	STATION	OFFSET	SIZE	T.S. EL.	INV. EL.
529	3004+73.71	32.23	48" X 48"	27.54	23.33

UTILITY TEST HOLE SCHEDULE

NO.	UTILITY	STATION	OFFSET	GRND EL.	COVER	O.D. & MATERIAL
119	EX-CON	306+01.44	-5.5'	40.85	4.19	3" METAL CONDUITS

CURB SCHEDULE

NO.	ITEM DESCRIPTION / TYPE	LENGTH
021	PCC CURB, TYPE 1-8	20.11
022	PCC CURB, TYPE 1-8	7.65
023	PCC CURB, TYPE 1-8	22.00

ROADWAY CORE SCHEDULE

NO.	STATION	OFFSET	DESCRIPTION
R1-93	135+00.00	-50.00'	8" HMA
R1-95	306+00.00	0.00'	3" GRAVEL
R1-96	311+00.00	0.00'	4" TOPSOIL
R1-97	140+00.00	-50.00'	5" HMA, 5" CRUSHED STONE

BARRIER SCHEDULE

NO.	ITEM DESCRIPTION / TYPE	LENGTH
004	BIFURCATED CONCRETE MEDIAN BARRIER	522.50
005	BIFURCATED CONCRETE MEDIAN BARRIER	23.88
006	BIFURCATED CONCRETE MEDIAN BARRIER	23.77
007	BIFURCATED CONCRETE MEDIAN BARRIER	200.00

UNDERDRAIN OUTLETS

NO.	LENGTH	DIS. EL.
006	37.14'	25.92
007	35.80'	25.50
008	35.80'	25.50
009	14.44'	28.16
010	21.20'	23.50
014	37.00'	36.40

NOTE: UNDERDRAIN OUTLET DISCHARGE ELEVATION GIVEN AT THE DOWNSTREAM SIDE OF THE HEADWALL.

FLARED END SECTION SCHEDULE

NO.	SIZE / TYPE	SLOPE	SAFETY GRATE
603	18" RCP	0.0361	YES
604	24" RCP	0.0059	NO
605	18" RCP	0.0379	NO
606	18" RCP	0.0457	NO
607	18" RCP	0.0457	NO

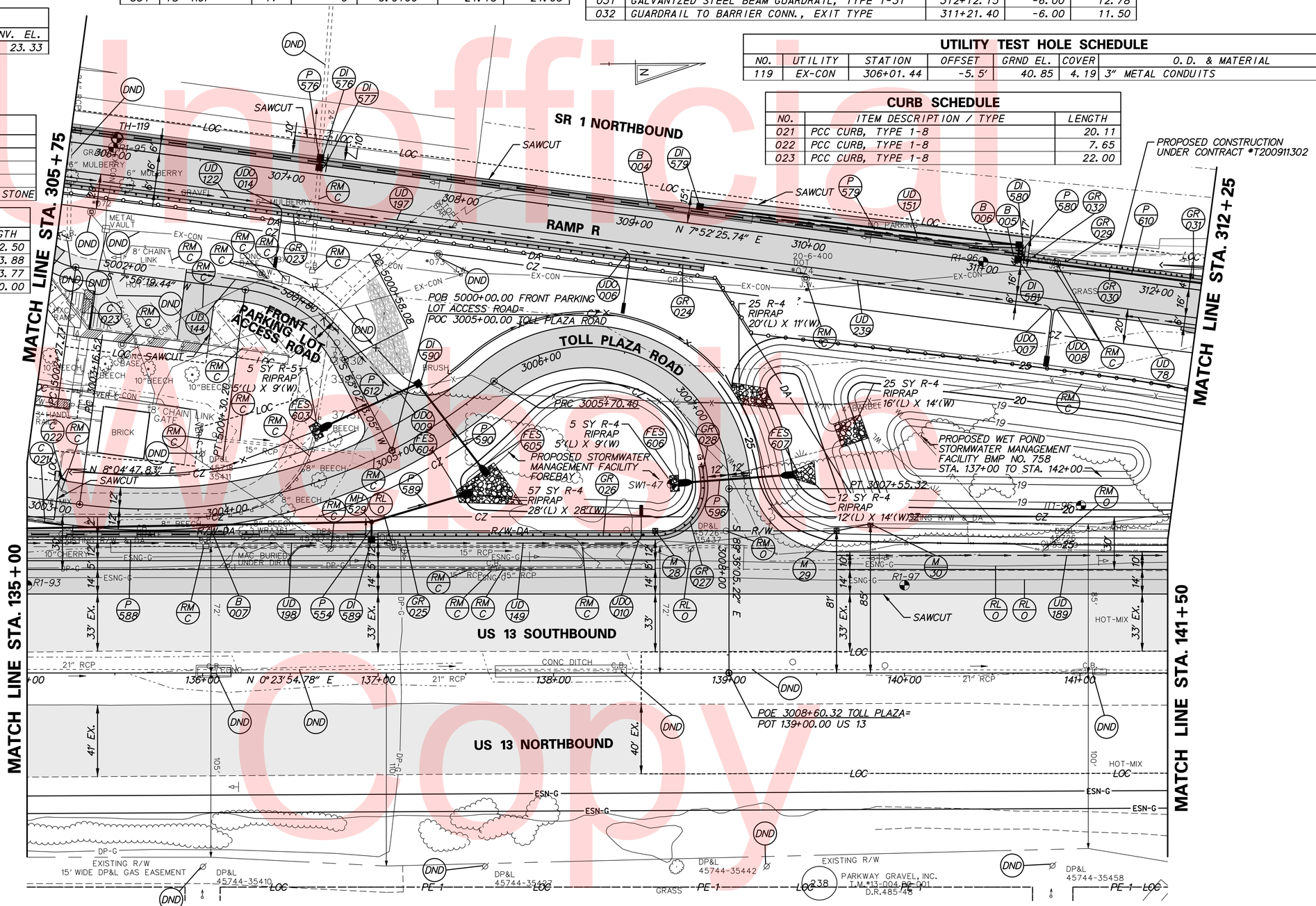

Unofficial Copy

N:\31653-000\Contract 1D:\CADD\CP010U301_1D.dgn
6/17/2015 8:51:03 AM

DELAWARE DEPARTMENT OF TRANSPORTATION

ADDENDUMS / REVISIONS

SCALE 0 30 60 90 FEET

US 13 & PORT PENN RD INTERSECTION

CONTRACT	BRIDGE NO.
T201011302	DESIGNED BY: A.M.S.
COUNTY	
NEW CASTLE	CHECKED BY: B.R.T.

CONSTRUCTION PLAN

CP-10

SHEET NO. 33

TOTAL SHTS. 179

GUARDRAIL SCHEDULE

NO.	ITEM DESCRIPTION / TYPE	BEGIN STA.	OFFSET	LENGTH
033	GALVANIZED STEEL BEAM GUARDRAIL, TYPE 1-31	312+25.00	-8.00	375.07
034	GUARDRAIL END TREATMENT ATTENUATOR, TYPE 2-31	312+67.88	27.24	50.00
035	GALVANIZED STEEL BEAM GUARDRAIL, TYPE 1-31	313+18.75	24.00	281.25
036	GUARDRAIL TO BARRIER CONN., EXIT TYPE	316+00.00	24.00	11.50

JUNCTION BOX SCHEDULE

NO.	STATION	OFFSET	BOX SIZE	INV. EL.
500	141+86.45	-69.50'	48" x 30"	19.92

DRAINAGE INLET SCHEDULE

NO.	STATION	OFFSET	BOX SIZE	GRATE	T.G. EL.	INV. EL.
478	316+00.00	24.00	34" x 18"	2	47.44	36.92
*SW-5	141+79.26	-86.61	66" x 48"	N/A	25.00	20.00

* REFER TO SW SHEETS FOR STORMWATER MANAGEMENT OUTLET STRUCTURE, SW-5 DETAILS.

FLARED END SECTION SCHEDULE

NO.	SIZE / TYPE	SLOPE	SAFETY GRATE
581	18" RCP	0.0704	NO
404	18" RCP	0.0100	NO

DRAINAGE PIPE SCHEDULE

NO.	SIZE / TYPE	CLASS	LENGTH	SLOPE(FT/FT)	INT. EL.	DIS. EL.
581	18" RCP	IV	59'	0.0704	26.75	22.61
584	18" RCP	IV	20'	0.1000	36.92	35.00
613	36" RCP	IV	15'	0.0050	20.00	19.93
585	18" RCP	IV	19'	0.0100	29.21	29.03
446	18" RCP	IV	60'	0.0468	44.91	42.10

MANHOLE SCHEDULE

NO.	STATION	OFFSET	BOX SIZE	T.S. EL.	INV. EL.
546	312+64.36	-4.00'	48" x 48"	38.00	26.75
420	315+97.36	-45.22'	48" x 48"	38.64	29.21

UTILITY TEST HOLE SCHEDULE

NO.	UTILITY	STATION	OFFSET	GRND EL.	COVER	O.D. & MATERIAL
36	ESNG-G	148+29.43	-63.0'	23.71	3.14	10" COATED METAL PIPE
37	ESNG-G	148+29.90	-55.2'	23.93	2.78	16" WRAPPED METAL PIPE

ROADWAY CORE SCHEDULE

NO.	STATION	OFFSET	DESCRIPTION
PC-201	148+00.84	-28.72'	7.25" HMA, 8" PCC
PC-202	148+01.21	-53.41'	11.5" HMA

CURB SCHEDULE

NO.	ITEM DESCRIPTION / TYPE	LENGTH
024	PCC CURB AND GUTTER, TYPE 1-4	15.00

UNDERDRAIN OUTLETS

NO.	LENGTH	DIS. EL.
015	43.82'	25.92

NOTE: UNDERDRAIN OUTLET DISCHARGE ELEVATION GIVEN AT THE DOWNSTREAM SIDE OF THE HEADWALL.

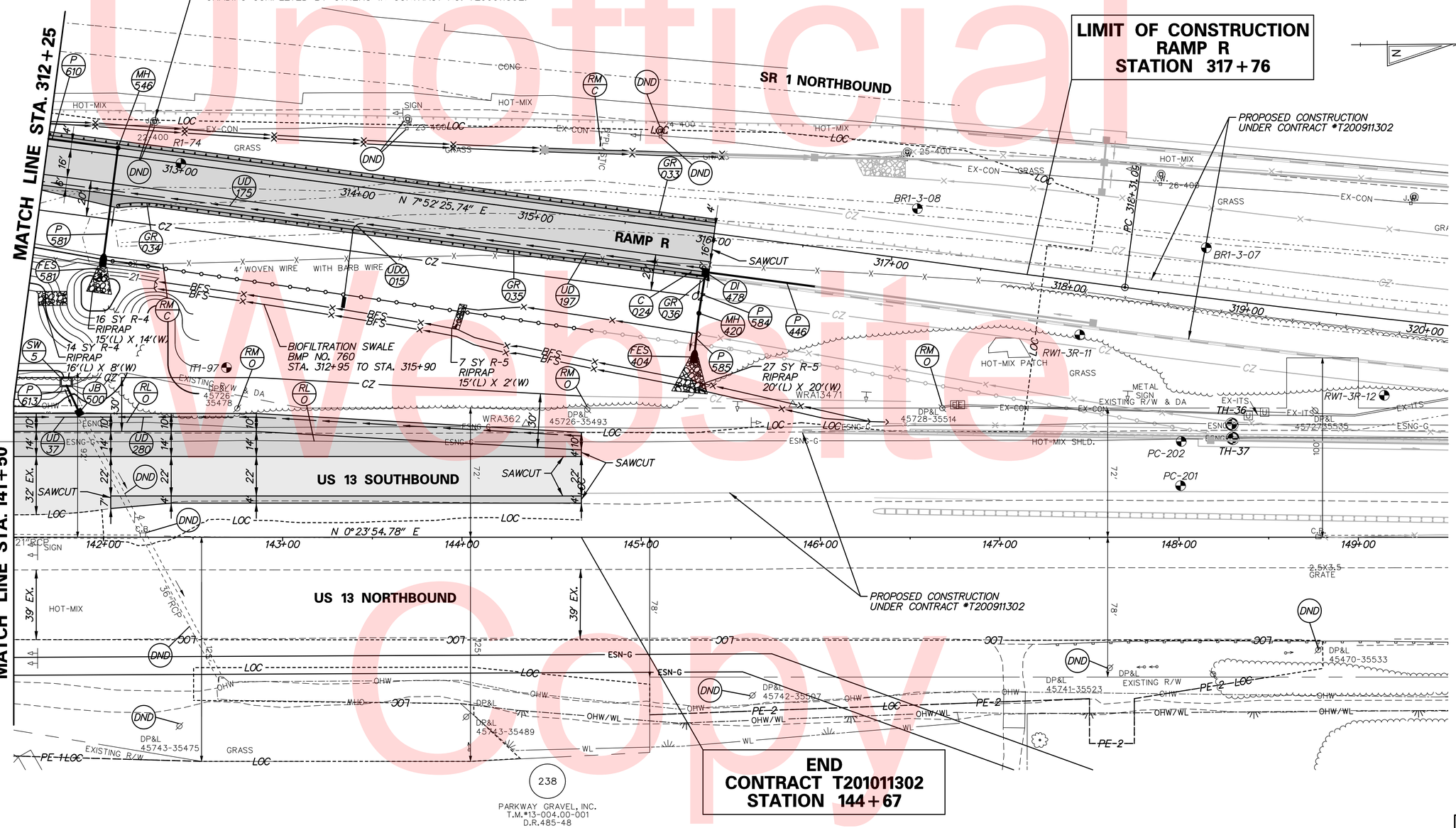

Unofficial Website Copy

DELAWARE DEPARTMENT OF TRANSPORTATION	ADDENDUMS / REVISIONS	SCALE 0 30 60 90 FEET	US 13 & PORT PENN RD INTERSECTION	CONTRACT T201011302	BRIDGE NO.	CONSTRUCTION PLAN	CP-11
				COUNTY NEW CASTLE	DESIGNED BY: A.M.S.		SHEET NO. 34
					CHECKED BY: B.R.T.		TOTAL SHTS. 179

N:\33653-000\Contract 1D\CADD\CP01NJ301_1D.dgn
6/17/2015 8:57:03 AM

DRAINAGE PIPE SCHEDULE

NO.	SIZE / TYPE	CLASS	LENGTH	SLOPE	INV. EL.	DIS. EL.
598	4' X2' BOX RCP	*	81'	0.0068	31.00	30.45
600	4' X2' BOX RCP	*	81'	0.0068	31.00	30.45
601	4' X2' BOX RCP	*	81'	0.0068	31.00	30.45
603	18" RCP	IV	80'	0.0150	35.00	33.80
604	18" RCP	IV	73'	0.0156	33.83	32.70
614	36" RCP	IV	71'	0.0126	36.23	35.34

* SEE CONTRACT SPECIAL PROVISIONS

ROADWAY CORE SCHEDULE

NO.	STATION	OFFSET	DESCRIPTION
PC-224	4001+79.61	-24.91'	9" HMA

FLARED END SECTION SCHEDULE

NO.	STATION	OFFSET	SIZE / TYPE	SLOPE	SAFETY GRATE
589	4003+10.38	-60.26	18" RCP	0.0156	NO
590	4003+24.15	34.87	18" RCP	0.0338	NO
593	4003+96.67	-56.05	18" RCP	0.0156	NO
594	4004+03.74	20.19	18" RCP	0.0150	NO
595	4004+09.32	130.55	36" RCP	0.0126	NO
596	4003+40.83	120.61	36" RCP	0.0126	NO

ENDWALL SCHEDULE

NO.	SIZE / TYPE	INVERT
501	4' X2' BOX RCP	31.00
502	4' X2' BOX RCP	30.45

ENDWALLS SHALL BE PAID UNDER ITEM NO. 617515 HEADWALL.

UNDERDRAIN OUTLETS

NO.	LENGTH	DIS. EL.
011	25.91'	31.11
016	17.00'	35.12'

NOTE: UNDERDRAIN OUTLET DISCHARGE ELEVATION GIVEN AT THE DOWNSTREAM SIDE OF THE HEADWALL.

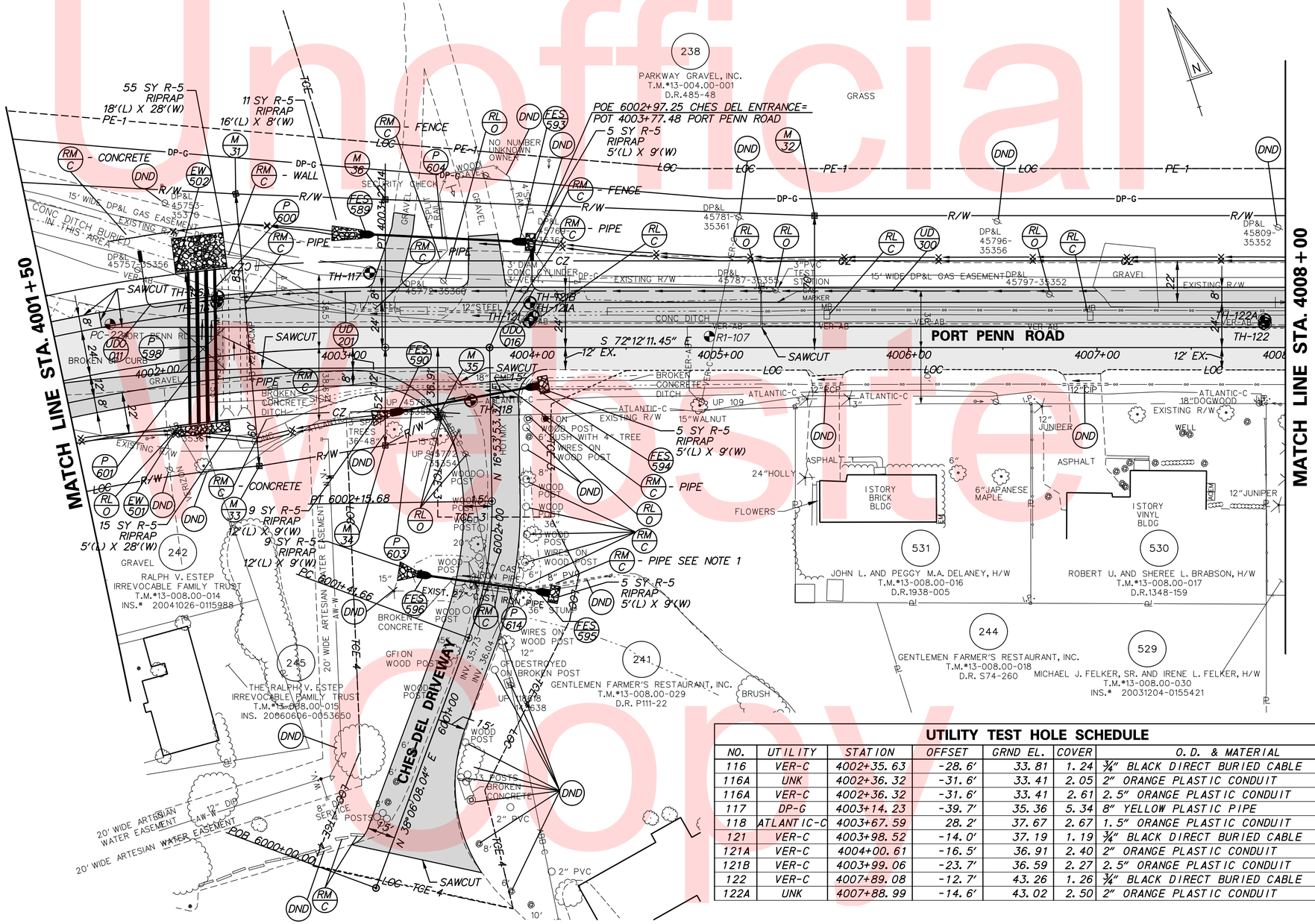

UTILITY TEST HOLE SCHEDULE

NO.	UTILITY	STATION	OFFSET	GRND EL.	COVER	O.D. & MATERIAL
116	VER-C	4002+35.63	-28.6'	33.81	1.24	¾" BLACK DIRECT BURIED CABLE
116A	UNK	4002+36.32	-31.6'	33.41	2.05	2" ORANGE PLASTIC CONDUIT
116A	VER-C	4002+36.32	-31.6'	33.41	2.61	2.5" ORANGE PLASTIC CONDUIT
117	DP-G	4003+14.23	-39.7'	35.36	5.34	8" YELLOW PLASTIC PIPE
118	ATLANTIC-C	4003+67.59	28.2'	37.67	2.67	1.5" ORANGE PLASTIC CONDUIT
121	VER-C	4003+98.52	-14.0'	37.19	1.19	¾" BLACK DIRECT BURIED CABLE
121A	VER-C	4004+00.61	-16.5'	36.91	2.40	2" ORANGE PLASTIC CONDUIT
121B	VER-C	4003+99.06	-23.7'	36.59	2.27	2.5" ORANGE PLASTIC CONDUIT
122	VER-C	4007+89.08	-12.7'	43.26	1.26	¾" BLACK DIRECT BURIED CABLE
122A	UNK	4007+88.99	-14.6'	43.02	2.50	2" ORANGE PLASTIC CONDUIT

NOTES:

1. TRIM 8" PVC TO OUTFALL PIPE TO RIPRAP AT FES-595.

Unofficial Website Copy

N:\31653-000\Contract 1D\CADD\CP012U301_1D.dgn
12/23/2015 11:15:58 AM

DELAWARE DEPARTMENT OF TRANSPORTATION

ADDENDUMS / REVISIONS

SCALE 0 30 60 90 FEET

US 13 & PORT PENN RD INTERSECTION

CONTRACT	BRIDGE NO.
T201011302	DESIGNED BY: A.M.S.
COUNTY	CHECKED BY: B.R.T.
NEW CASTLE	

CONSTRUCTION PLAN

CP-12

SHEET NO. 35

TOTAL SHTS. 179

Unofficial Website Copy

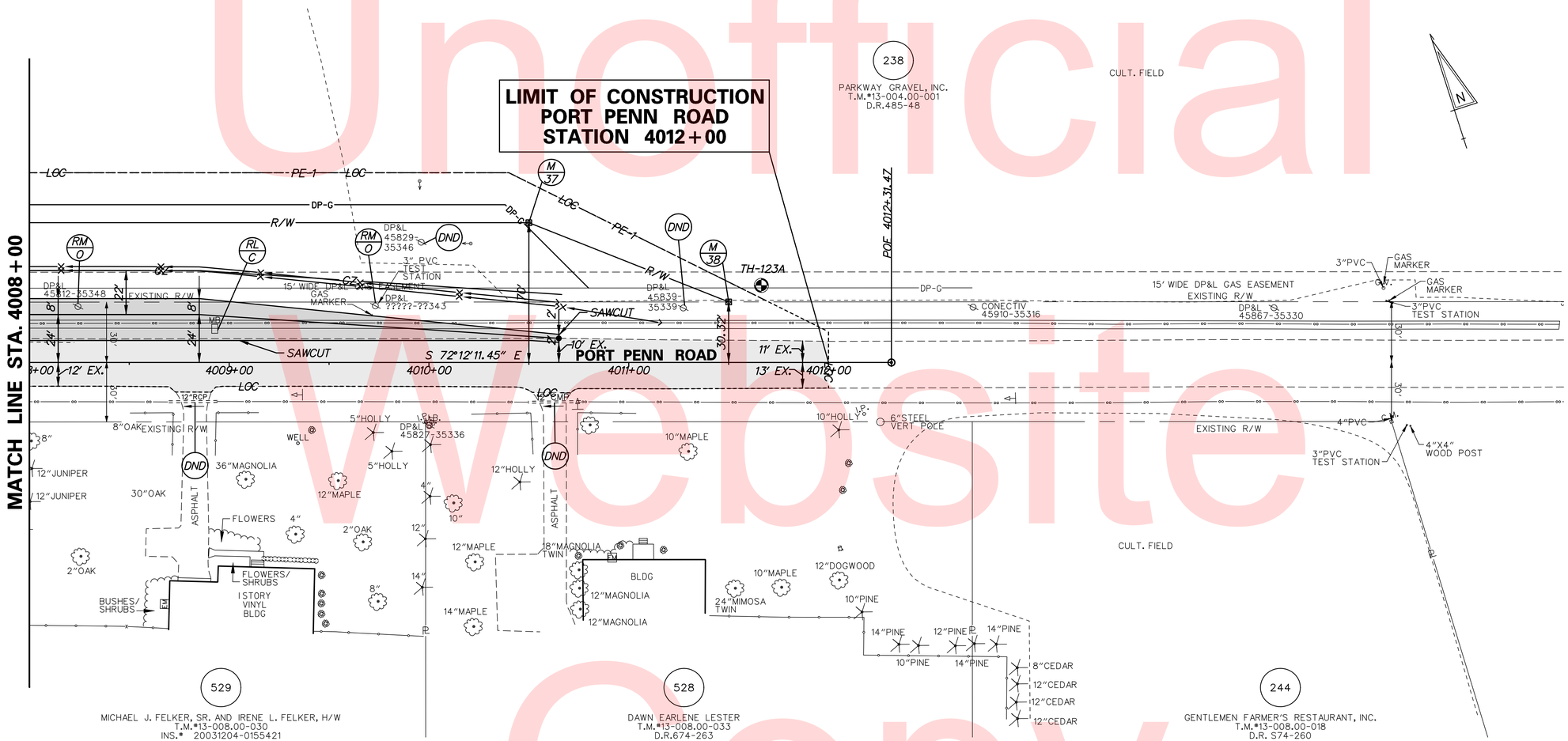

UTILITY TEST HOLE SCHEDULE

NO.	UTILITY	STATION	OFFSET	GRND EL.	COVER	O.D. & MATERIAL
123A	DP-G	4011+66.36	-38.6'	50.05	6.31	8" YELLOW PLASTIC PIPE

N:\31653-000\Contract 1D\CADD\CP013U301_1D.dgn
12/23/2015 11:16:35 AM

DELAWARE DEPARTMENT OF TRANSPORTATION

ADDENDUMS / REVISIONS

SCALE 0 30 60 90 FEET

US 13 & PORT PENN RD INTERSECTION

CONTRACT	BRIDGE NO.
T201011302	DESIGNED BY: A.M.S.
COUNTY	
NEW CASTLE	CHECKED BY: B.R.T.

CONSTRUCTION PLAN

CP-13

SHEET NO. 36

TOTAL SHTS. 179

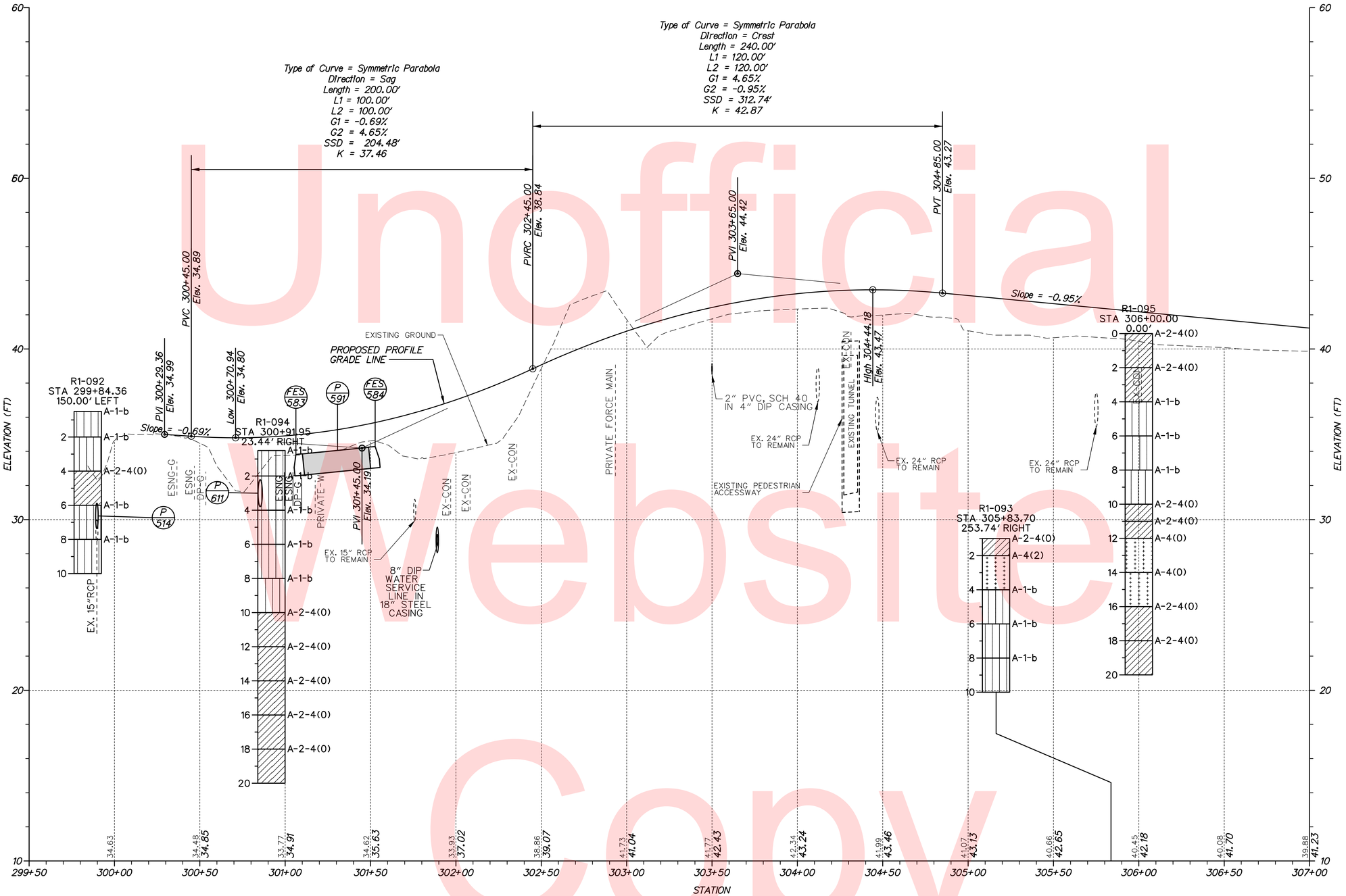

RAMP R

NOTE: BORINGS ARE PROVIDED FOR INFORMATIONAL PURPOSES ONLY. MATERIALS ENCOUNTERED MAY NOT CORRESPOND TO BORING DATA PROVIDED HEREIN.

PF-01

Unofficial Website Copy

N:\31653-000\CONTRACT 1D\CADD\PF001U301_1D.dgn
12/4/2015 8:57:13 PM

DELAWARE DEPARTMENT OF TRANSPORTATION

ADDENDUMS / REVISIONS

SCALE 0 30 60 90 FEET

US 13 & PORT PENN RD INTERSECTION

CONTRACT	BRIDGE NO.
T201011302	DESIGNED BY: SES
COUNTY	
NEW CASTLE	CHECKED BY: BRT

PROFILES

SHEET NO.
37
TOTAL SHTS.
179

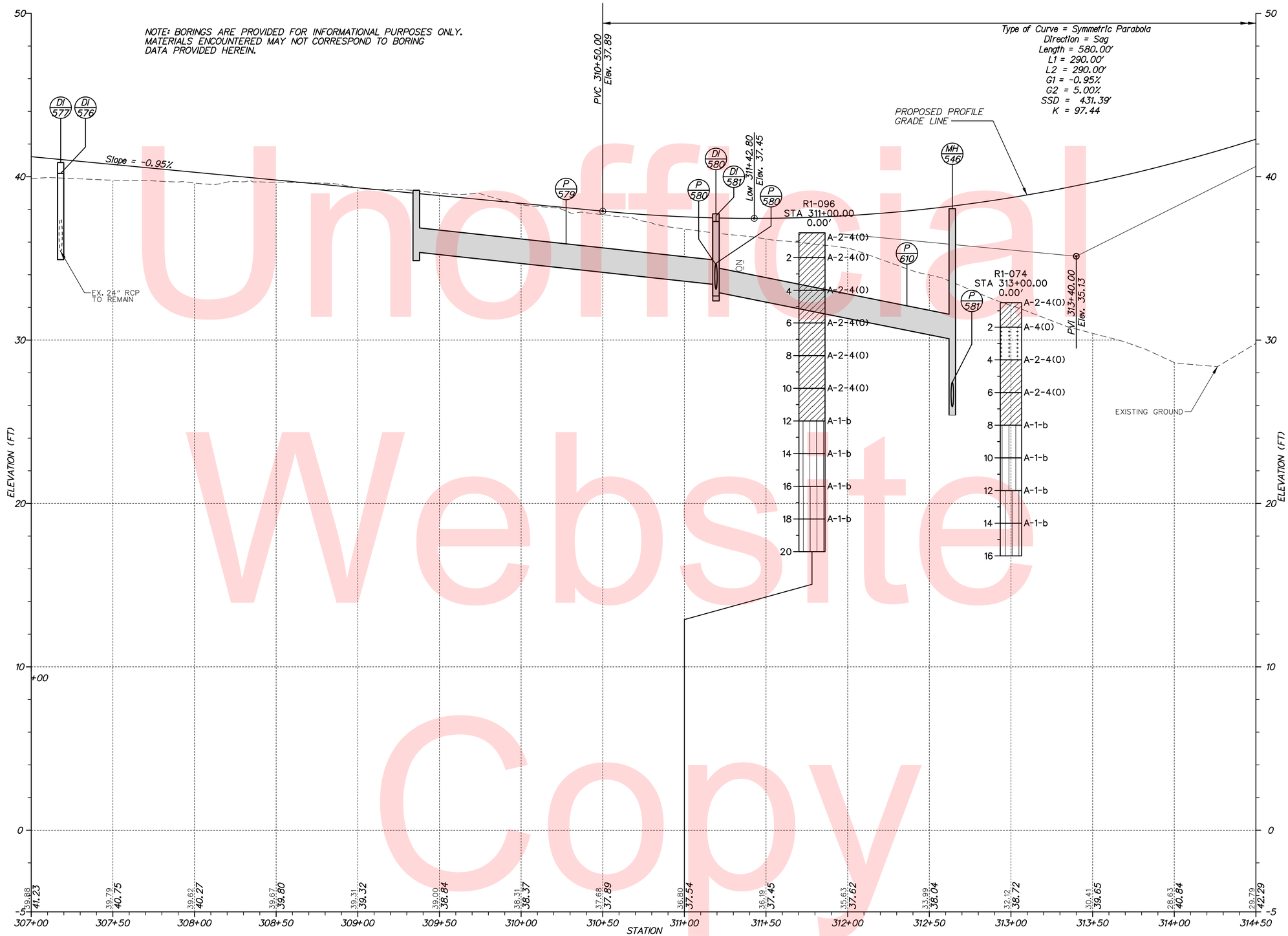

Unofficial Website Copy

RAMP R

PF-02

DELAWARE DEPARTMENT OF TRANSPORTATION

ADDENDUMS / REVISIONS

SCALE 0 30 60 90 FEET

US 13 & PORT PENN RD INTERSECTION

CONTRACT	BRIDGE NO.
T201011302	DESIGNED BY: SES
COUNTY	
NEW CASTLE	CHECKED BY: BRT

PROFILES

SHEET NO. 38

TOTAL SHTS. 179

n:\31653-000\contract 1d\cadd\PF002U301_1D.dgn
6/17/2015 9:54:12 AM

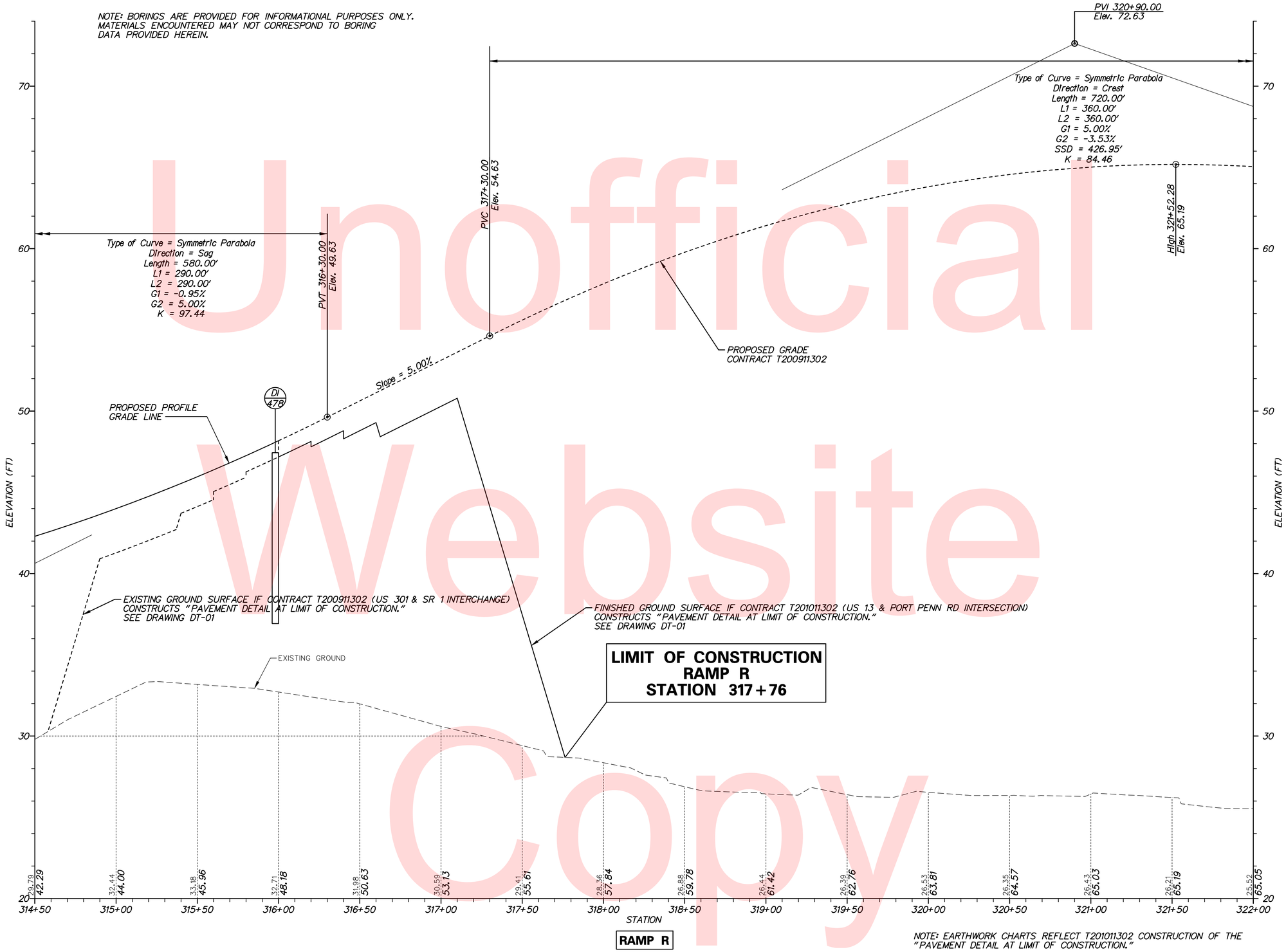

Unofficial Website Copy

PF-03

DELAWARE DEPARTMENT OF TRANSPORTATION	ADDENDUMS / REVISIONS	SCALE 0 30 60 90 FEET	US 13 & PORT PENN RD INTERSECTION	CONTRACT T201011302	BRIDGE NO.	PROFILES	SHEET NO. 39
				COUNTY NEW CASTLE	DESIGNED BY: SES		TOTAL SHTS. 179
					CHECKED BY: BRT		

p:\31653-000\contract 1d\cadd\PF003U301_1D.dgn
6/17/2015 9:54:13 AM

NOTE: BORINGS ARE PROVIDED FOR INFORMATIONAL PURPOSES ONLY. MATERIALS ENCOUNTERED MAY NOT CORRESPOND TO BORING DATA PROVIDED HEREIN.

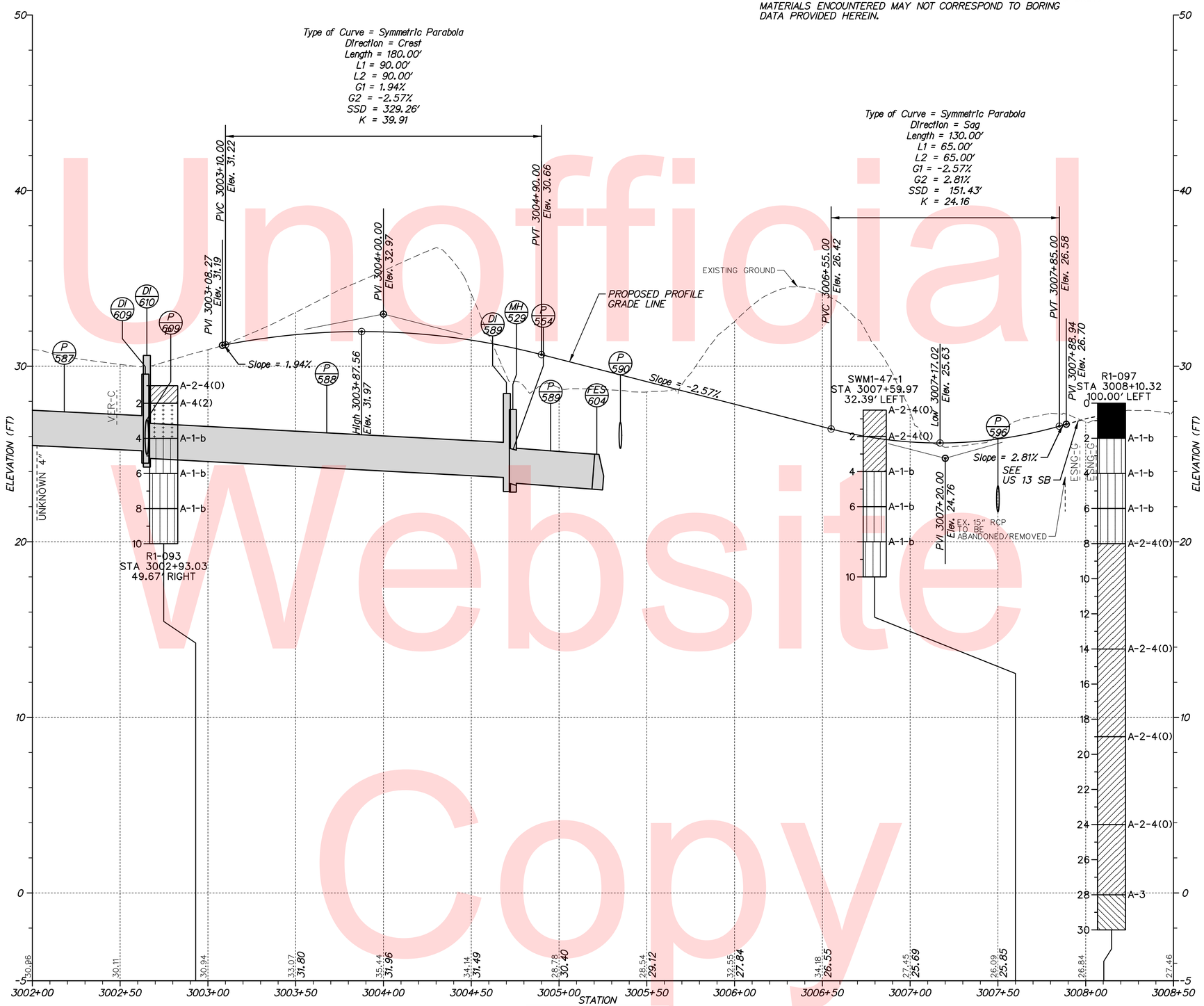

TOLL PLAZA ROAD

VERTICAL SCALE FEET 0 3 6 9

PF-04

Unofficial Website Copy

n:\31653-000\contract 1d\cadd\PF0041301_10.dgn
6/17/2015 9:54:14 AM

DELAWARE DEPARTMENT OF TRANSPORTATION

ADDENDUMS / REVISIONS

SCALE 0 30 60 90 FEET

US 13 & PORT PENN RD INTERSECTION

CONTRACT	BRIDGE NO.
T201011302	DESIGNED BY: SES
COUNTY	
NEW CASTLE	CHECKED BY: BRT

PROFILES

SHEET NO. 40

TOTAL SHTS. 179

NOTE: BORINGS ARE PROVIDED FOR INFORMATIONAL PURPOSES ONLY. MATERIALS ENCOUNTERED MAY NOT CORRESPOND TO BORING DATA PROVIDED HEREIN.

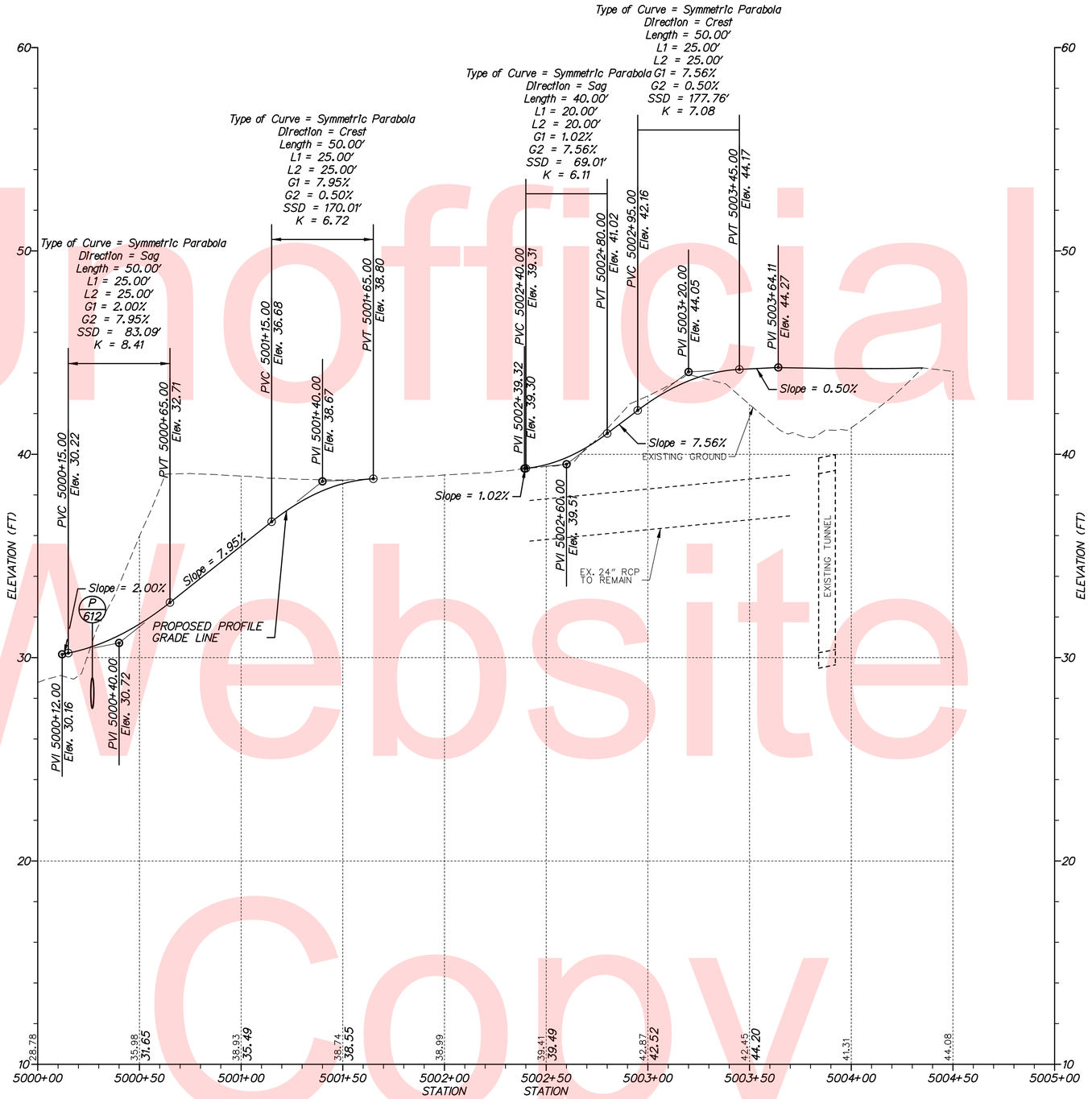

FRONT PARKING LOT ACCESS ROAD

VERTICAL SCALE FEET 9 6 3 0

PF-05

Unofficial Website Copy

n:\31653-000\contract 1d\cadd\PF005U301_1D.dgn
6/17/2015 9:54:15 AM

DELAWARE DEPARTMENT OF TRANSPORTATION	ADDENDUMS / REVISIONS	SCALE 0 30 60 90 FEET	US 13 & PORT PENN RD INTERSECTION	CONTRACT T201011302	BRIDGE NO.	PROFILES
				COUNTY NEW CASTLE	DESIGNED BY: SES	
					CHECKED BY: BRT	

SHEET NO. 41
TOTAL SHTS. 179

Unofficial Website Copy

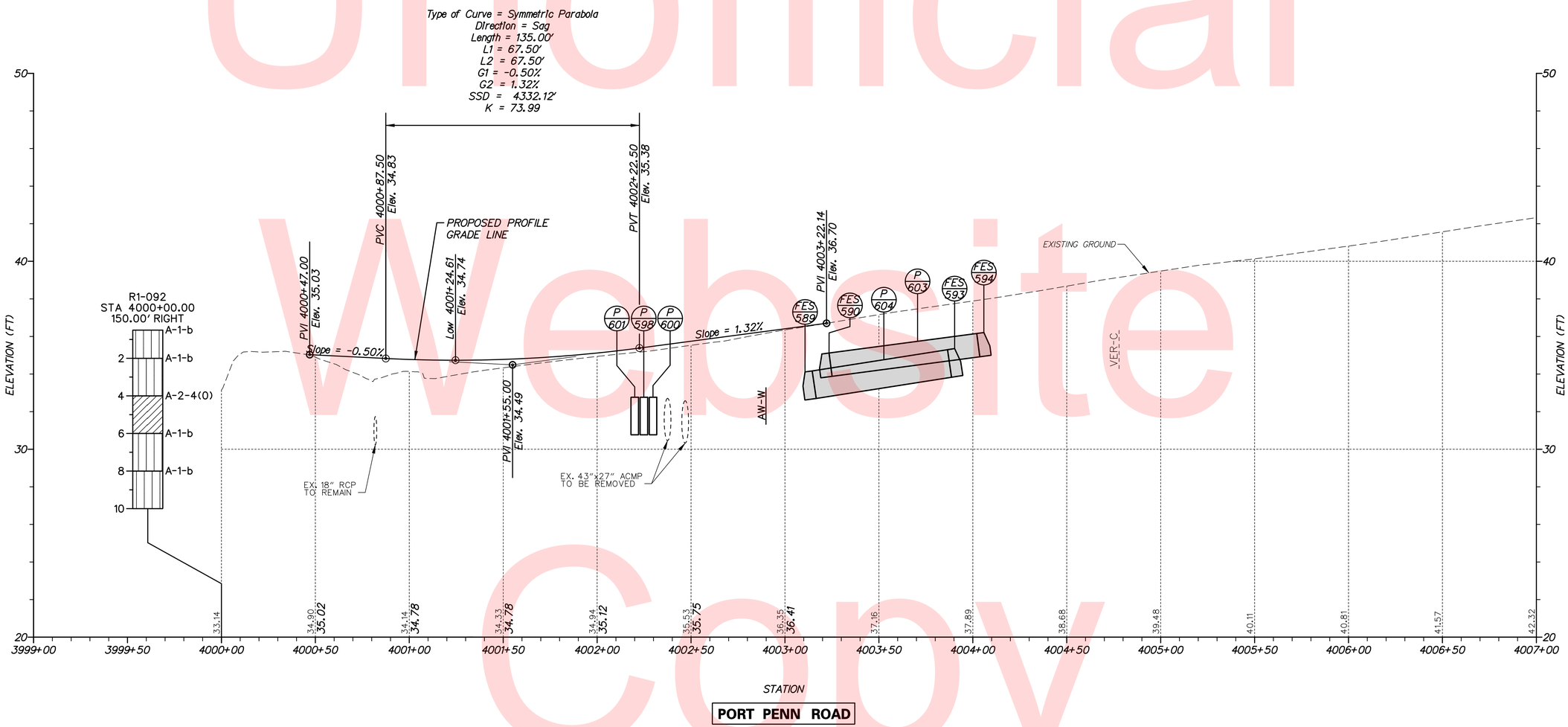

PORT PENN ROAD

NOTE: BORINGS ARE PROVIDED FOR INFORMATIONAL PURPOSES ONLY. MATERIALS ENCOUNTERED MAY NOT CORRESPOND TO BORING DATA PROVIDED HEREIN.

VERTICAL SCALE FEET 0 3 6 9

PF-06

n:\31653-000\contract td\cadd\PF006U301_1D.dgn
6/17/2015 9:54:16 AM

DELAWARE DEPARTMENT OF TRANSPORTATION

ADDENDUMS / REVISIONS

SCALE 0 30 60 90 FEET

US 13 & PORT PENN RD INTERSECTION

CONTRACT	BRIDGE NO.
T201011302	DESIGNED BY: SES
COUNTY	
NEW CASTLE	CHECKED BY: BRT

PROFILES

SHEET NO. 42

TOTAL SHTS. 179

Unofficial Website Copy

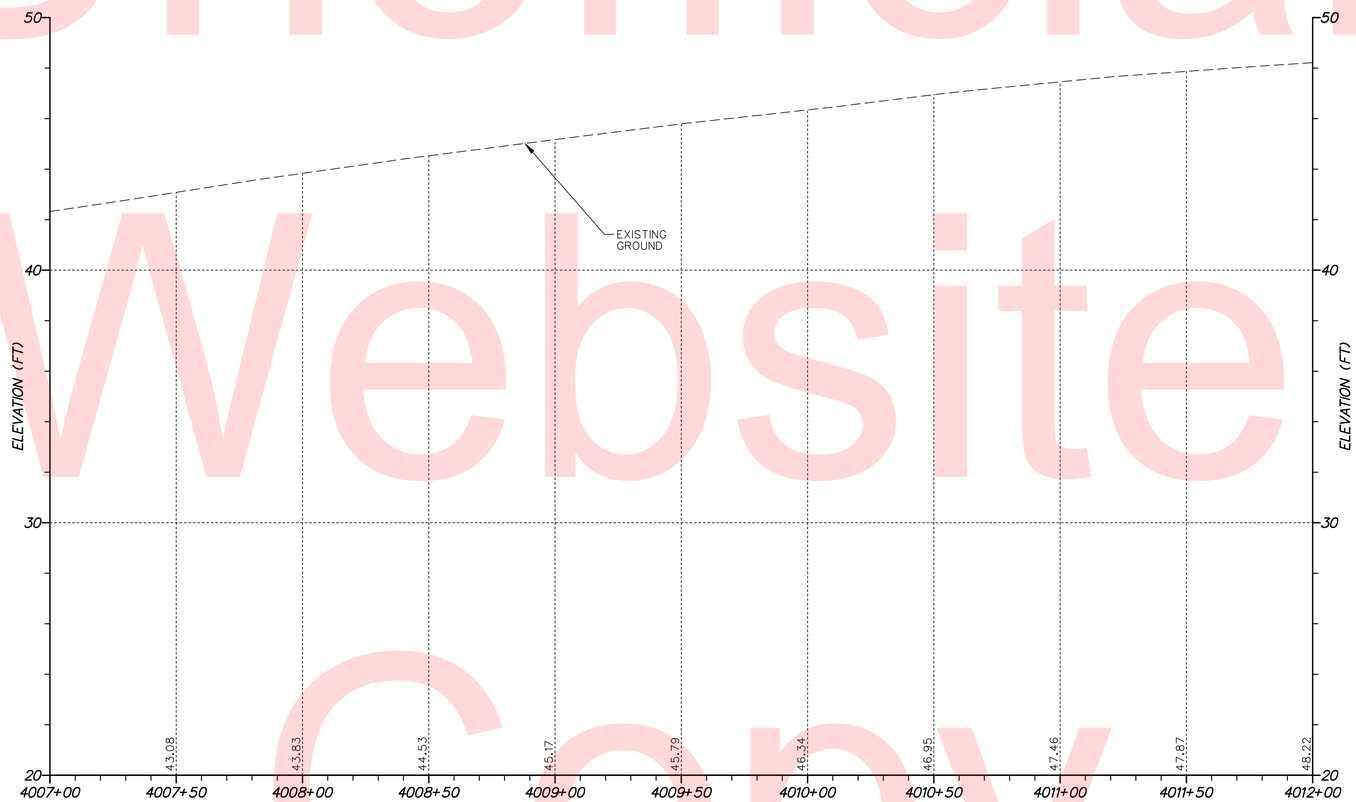

PORT PENN ROAD

NOTE: BORINGS ARE PROVIDED FOR INFORMATIONAL PURPOSES ONLY. MATERIALS ENCOUNTERED MAY NOT CORRESPOND TO BORING DATA PROVIDED HEREIN.

VERTICAL SCALE FEET 0 3 6 9

PF-07

n:\31653-000\contract t4\cadd\PF0071301_1D.dgn
6/17/2015 9:54:17 AM

DELAWARE DEPARTMENT OF TRANSPORTATION

ADDENDUMS / REVISIONS	

SCALE 0 30 60 90 FEET

US 13 & PORT PENN RD INTERSECTION

CONTRACT	BRIDGE NO.	
T201011302	DESIGNED BY: SES	
COUNTY		
NEW CASTLE	CHECKED BY: BRT	

PROFILES

SHEET NO.
43
TOTAL SHTS.
179

NOTE: BORINGS ARE PROVIDED FOR INFORMATIONAL PURPOSES ONLY. MATERIALS ENCOUNTERED MAY NOT CORRESPOND TO BORING DATA PROVIDED HEREIN.

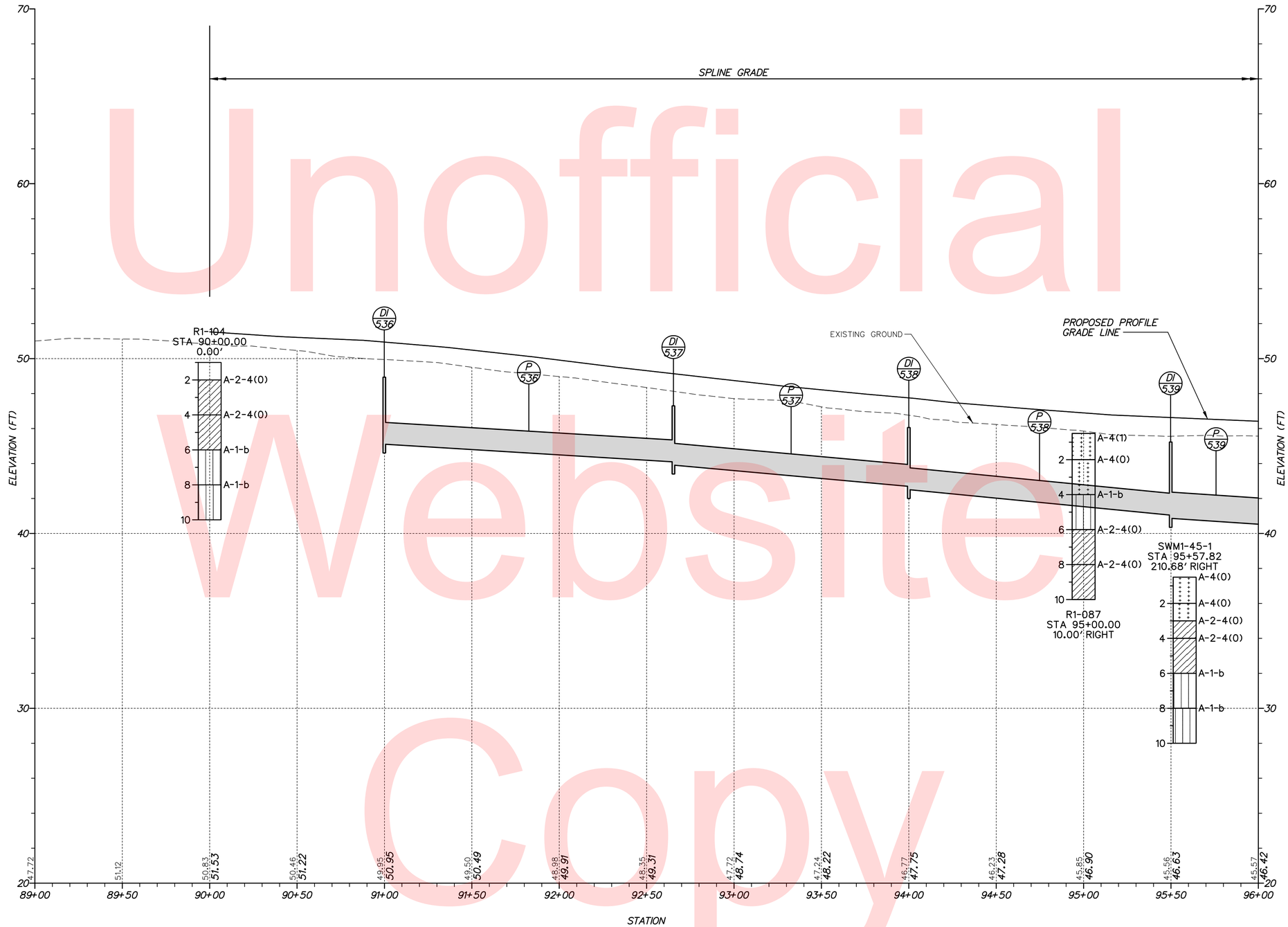

US 13 LEFT TURN LANE

VERTICAL SCALE FEET 0 3 6 9

PF-08

Unofficial Website Copy

n:\31653-000\contract td\cadd\PF008U301_1D.dgn
6/17/2015 9:54:17 AM

DELAWARE DEPARTMENT OF TRANSPORTATION	ADDENDUMS / REVISIONS	SCALE 0 30 60 90 FEET	US 13 & PORT PENN RD INTERSECTION	CONTRACT T201011302	BRIDGE NO.	PROFILES
				COUNTY NEW CASTLE	DESIGNED BY: JAD	
					CHECKED BY: BRT	

SHEET NO. 44
TOTAL SHTS. 179

NOTE: BORINGS ARE PROVIDED FOR INFORMATIONAL PURPOSES ONLY. MATERIALS ENCOUNTERED MAY NOT CORRESPOND TO BORING DATA PROVIDED HEREIN.

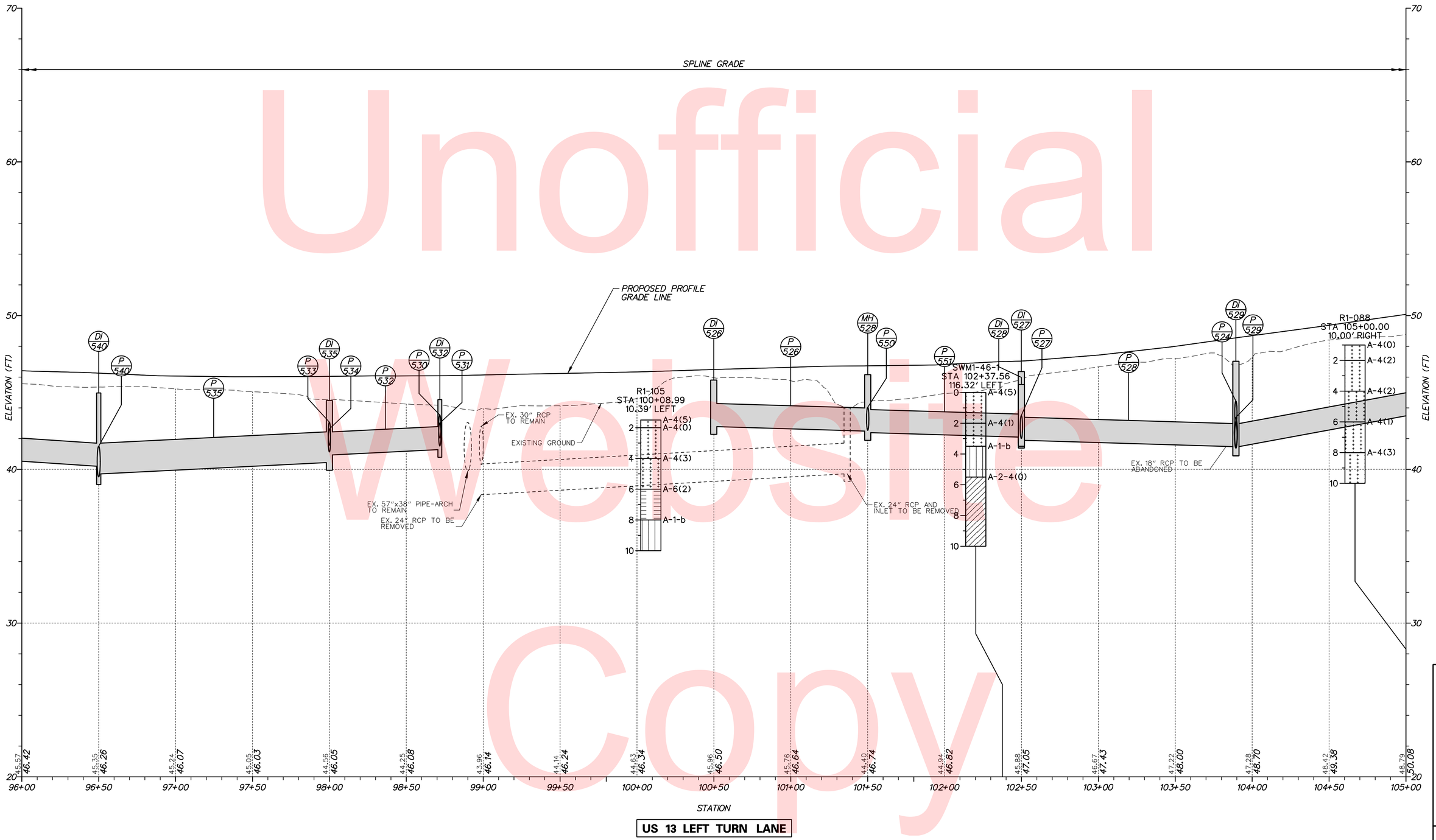

Unofficial Website Copy

US 13 LEFT TURN LANE

PF-09

DELAWARE DEPARTMENT OF TRANSPORTATION	ADDENDUMS / REVISIONS	SCALE 0 30 60 90 FEET	US 13 & PORT PENN RD INTERSECTION	CONTRACT T201011302 / COUNTY NEW CASTLE	BRIDGE NO. / DESIGNED BY: JAD / CHECKED BY: BRT	PROFILES	SHEET NO. 45 / TOTAL SHTS. 179

n:\31653-000\contract 1d\cadd\PF009U301_1D.dgn
6/17/2015 9:54:18 AM

NOTE: BORINGS ARE PROVIDED FOR INFORMATIONAL PURPOSES ONLY. MATERIALS ENCOUNTERED MAY NOT CORRESPOND TO BORING DATA PROVIDED HEREIN.

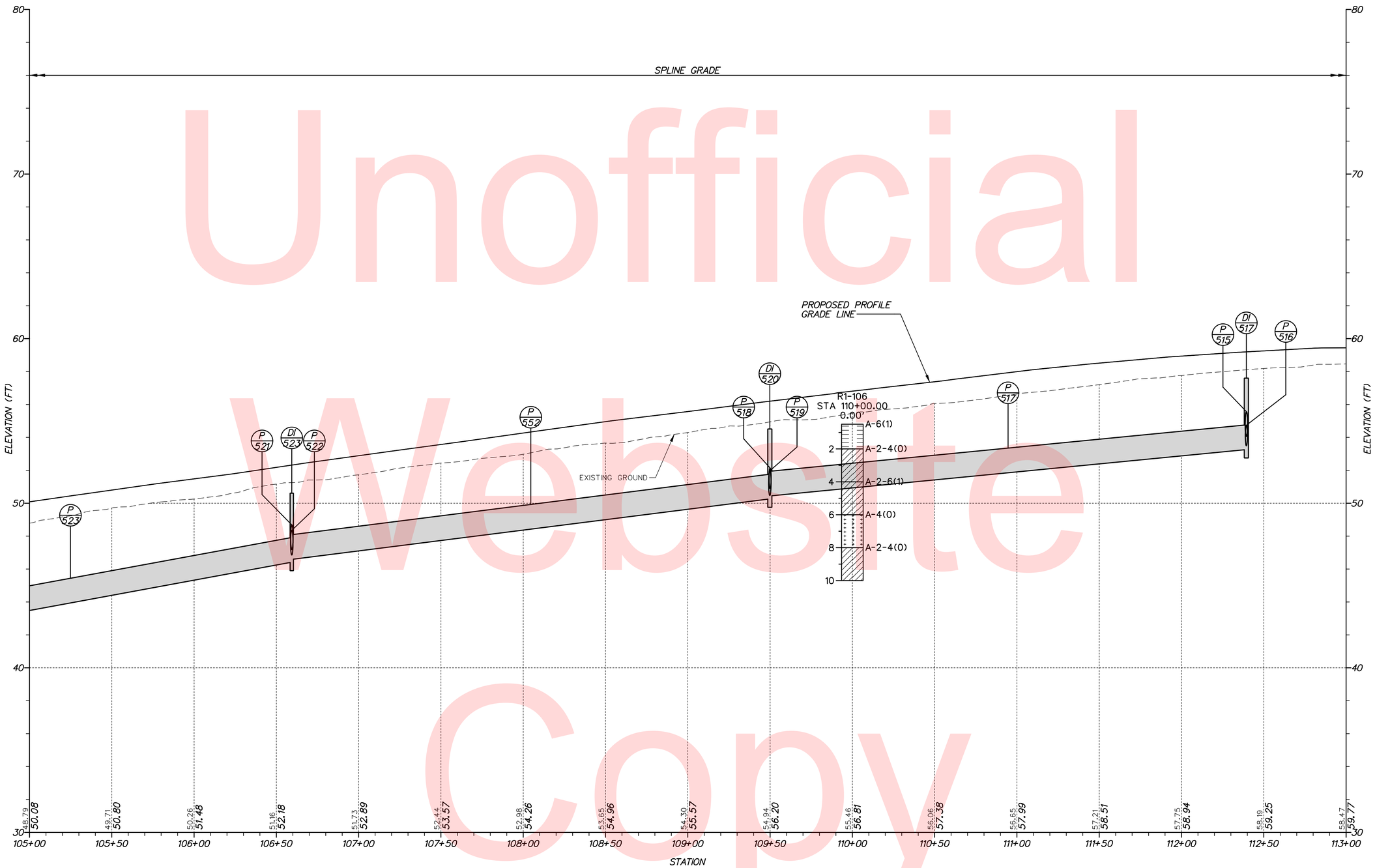

US 13 LEFT TURN LANE

Unofficial Website Copy

VERTICAL SCALE FEET 0 3 6 9

PF-10

DELAWARE DEPARTMENT OF TRANSPORTATION

ADDENDUMS / REVISIONS

SCALE 0 30 60 90 FEET

US 13 & PORT PENN RD INTERSECTION

CONTRACT	BRIDGE NO.
T201011302	DESIGNED BY: JAD
COUNTY	
NEW CASTLE	CHECKED BY: BRT

PROFILES

SHEET NO. 46

TOTAL SHTS. 179

r:\31653-000\contract 16\cadd\PF010U301_1D.dgn
6/17/2015 9:54:19 AM

NOTE: BORINGS ARE PROVIDED FOR INFORMATIONAL PURPOSES ONLY. MATERIALS ENCOUNTERED MAY NOT CORRESPOND TO BORING DATA PROVIDED HEREIN.

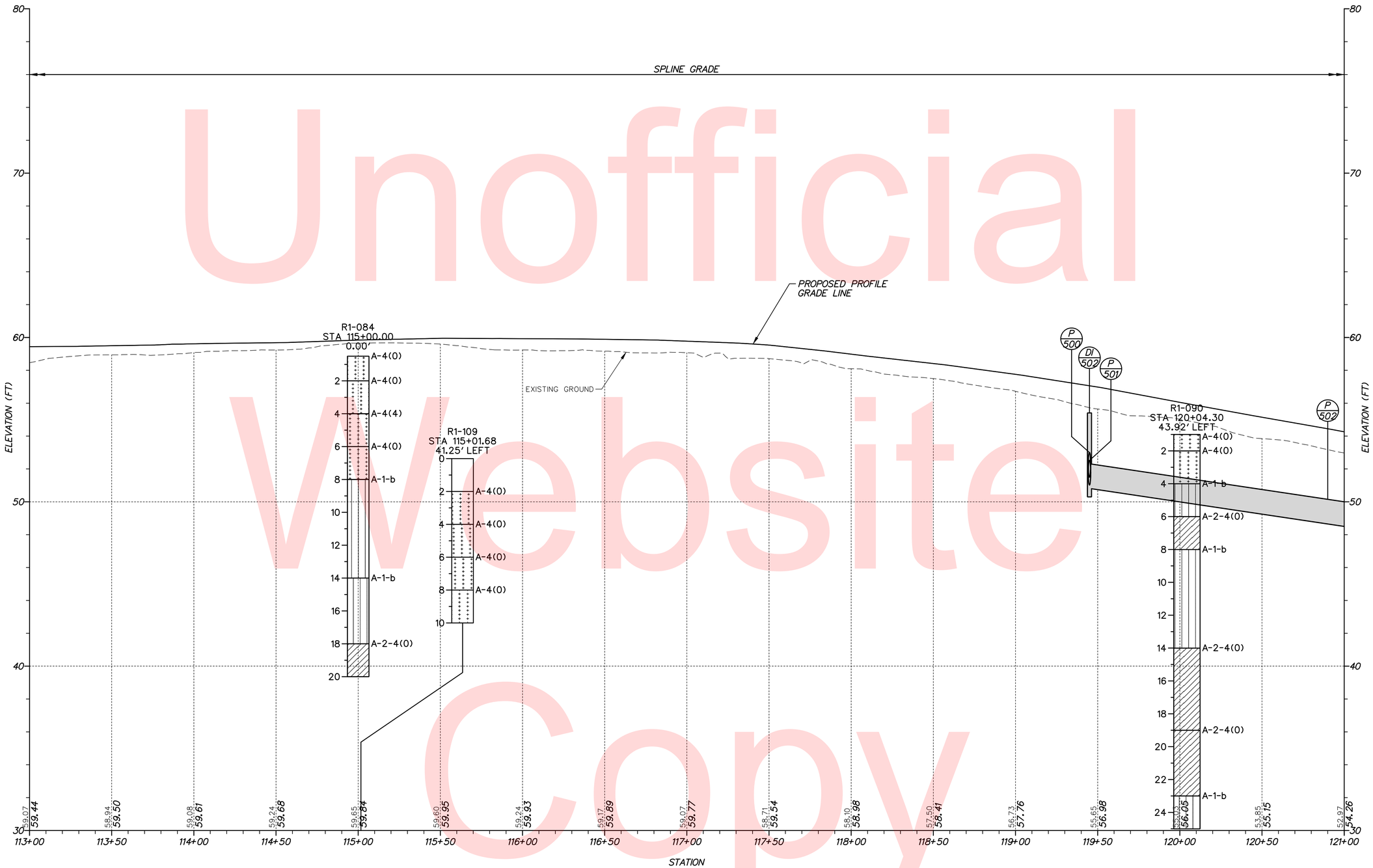

US 13 LEFT TURN LANE

VERTICAL SCALE FEET 0 3 6 9

PF-11

Unofficial Website Copy

n:\31653-000\contract t4\cadd\PF011U301_1D.dgn
6/17/2015 9:54:20 AM

DELAWARE DEPARTMENT OF TRANSPORTATION

ADDENDUMS / REVISIONS

SCALE 0 30 60 90 FEET

US 13 & PORT PENN RD INTERSECTION

CONTRACT	BRIDGE NO.
T201011302	DESIGNED BY: JAD
COUNTY	
NEW CASTLE	CHECKED BY: BRT

PROFILES

SHEET NO.
47
TOTAL SHTS.
179

NOTE: BORINGS ARE PROVIDED FOR INFORMATIONAL PURPOSES ONLY. MATERIALS ENCOUNTERED MAY NOT CORRESPOND TO BORING DATA PROVIDED HEREIN.

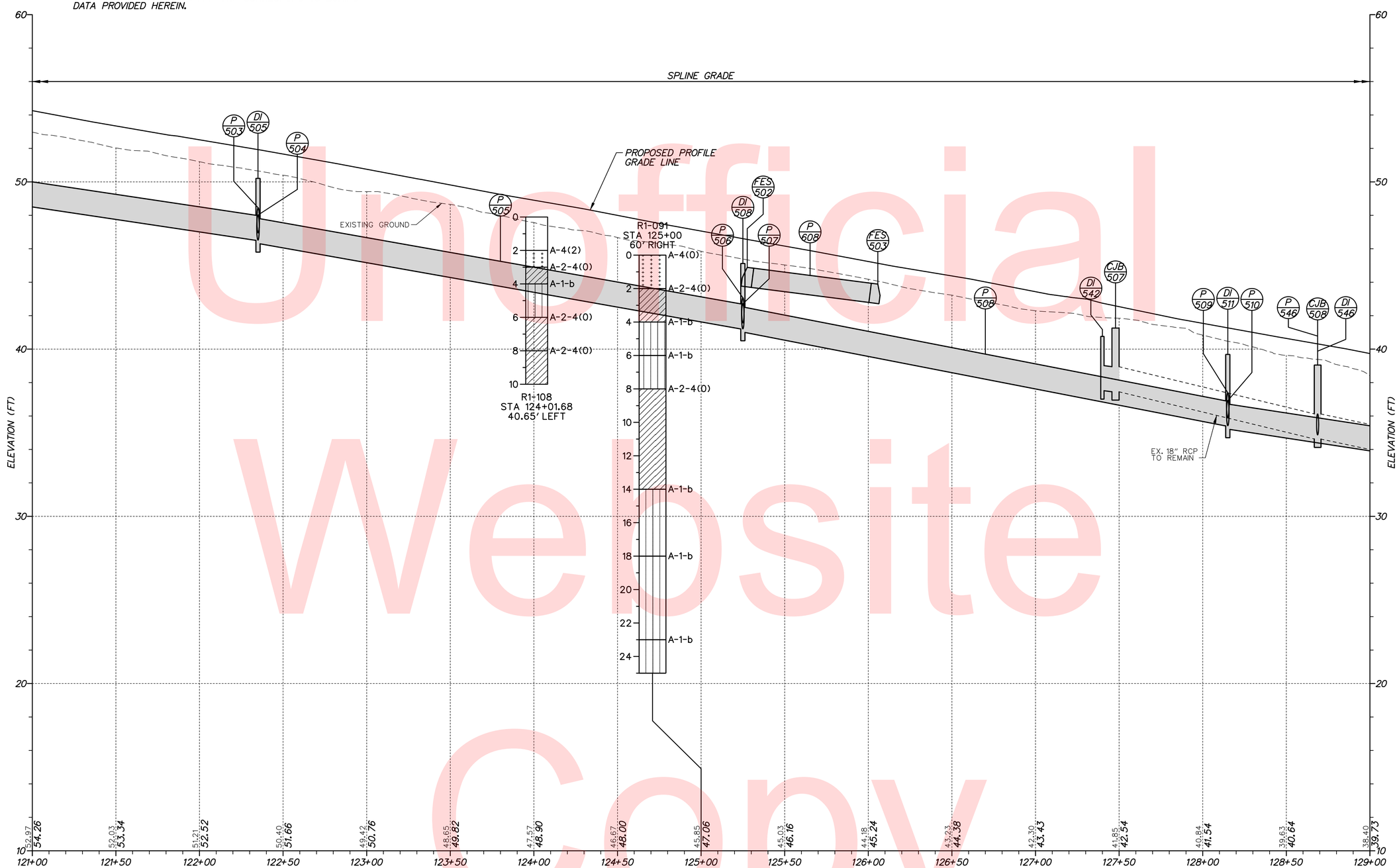

US 13 LEFT TURN LANE

VERTICAL SCALE FEET 0 3 6 9

PF-12

Unofficial Website Copy

pr\33653-000\contract 1a\cadd\PF012U301_1D.dgn
6/17/2015 9:54:21 AM

DELAWARE DEPARTMENT OF TRANSPORTATION	ADDENDUMS / REVISIONS	SCALE 0 30 60 90 FEET	US 13 & PORT PENN RD INTERSECTION	CONTRACT T201011302	BRIDGE NO.	PROFILES	SHEET NO. 48
				COUNTY NEW CASTLE	DESIGNED BY: JAD		TOTAL SHTS. 179
					CHECKED BY: BRT		

NOTE: BORINGS ARE PROVIDED FOR INFORMATIONAL PURPOSES ONLY. MATERIALS ENCOUNTERED MAY NOT CORRESPOND TO BORING DATA PROVIDED HEREIN.

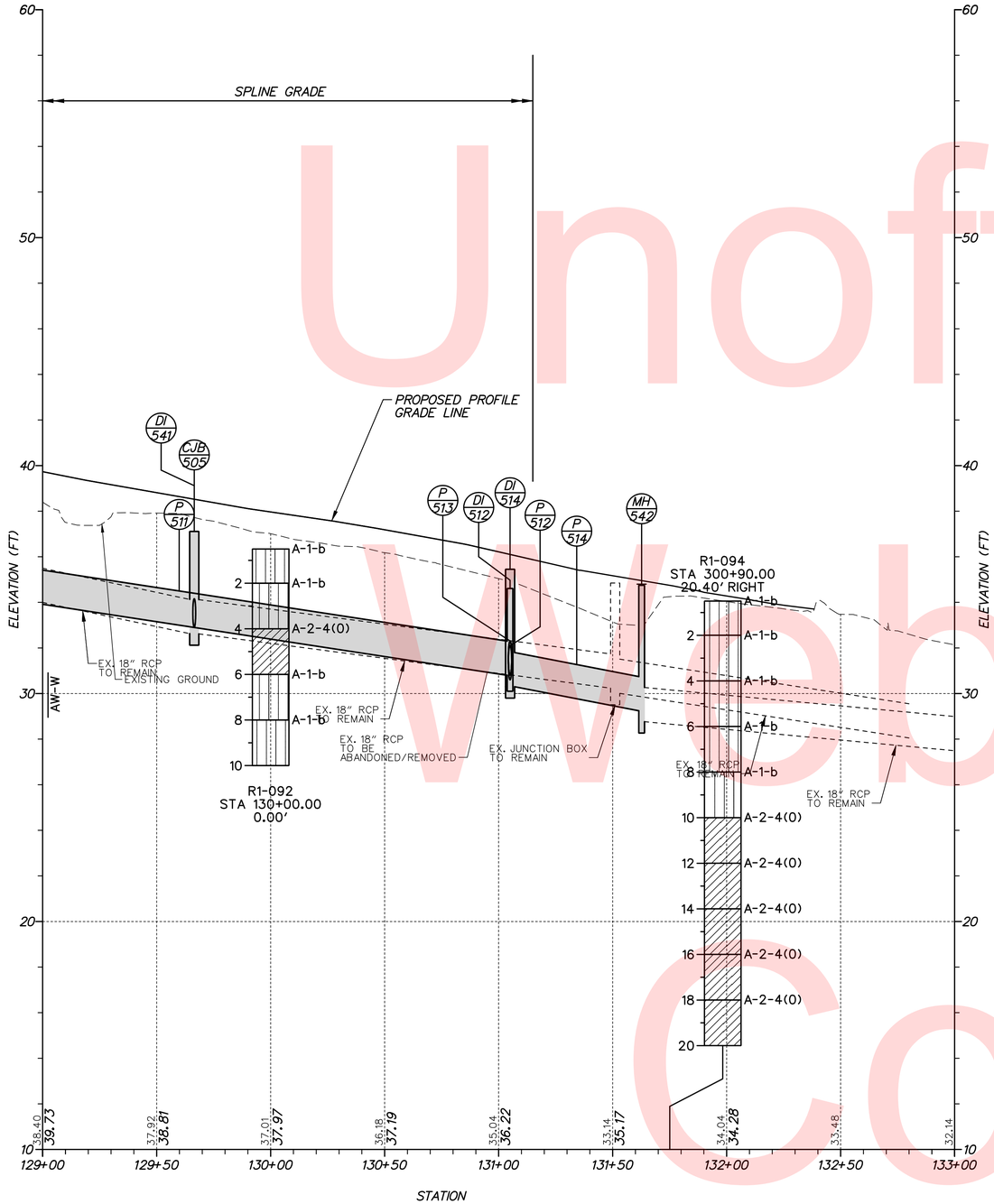

US 13 LEFT TURN LANE

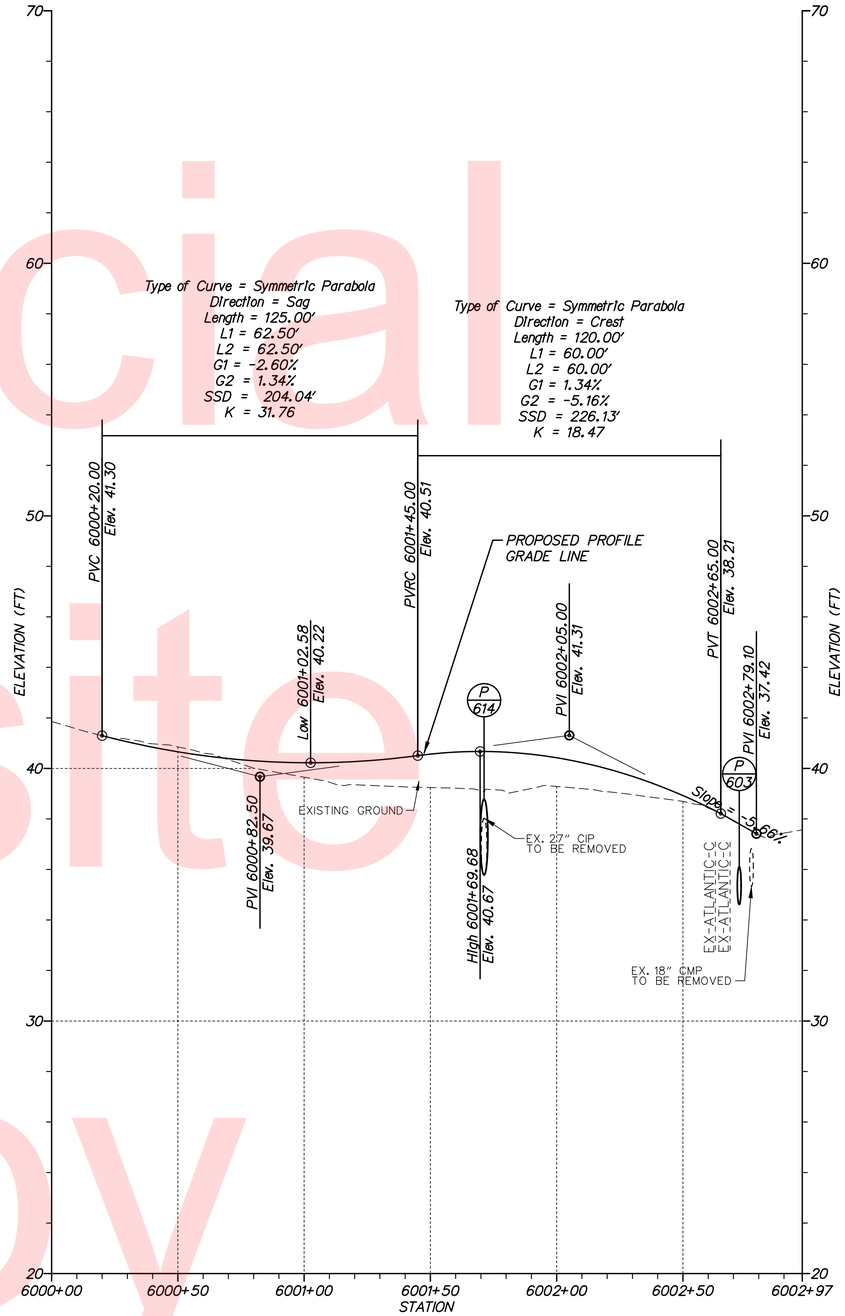

CHES-DEL DRIVEWAY

VERTICAL SCALE FEET 0 3 6 9

PF-13

Unofficial Website Copy

n:\31653-000\contract 14\cadd\PF013U301_10.dgn
6/17/2015 9:54:21 AM

DELAWARE DEPARTMENT OF TRANSPORTATION

ADDENDUMS / REVISIONS

SCALE 0 30 60 90 FEET

US 13 & PORT PENN RD INTERSECTION

CONTRACT	BRIDGE NO.
T201011302	DESIGNED BY: JAD
COUNTY	
NEW CASTLE	CHECKED BY: BRT

PROFILES

SHEET NO. 49

TOTAL SHTS. 179

COORDINATE LIST				
POINT NO.	STATION	OFFSET	NORTHING	EASTING
60000	89+99.86	19.00	551279.6225	590601.9701
60001	89+99.86	23.00	551279.5697	590605.9674
60002	93+46.36	23.00	551626.0399	590610.5430
60003	94+72.97	0.60	551752.9358	590589.8169
60004	94+72.97	2.60	551752.9094	590591.8179
60224	91+84.79	-3.40	551464.8332	590582.0118
60225	91+84.79	0.60	551464.7804	590586.0114
60226	95+30.63	-3.40	551810.6412	590586.5786

NOTES:

1. OFFSETS SHOWN IN THE GEOMETRY TABLES WITH A MINUS SIGN ARE TO THE LEFT OF THE CONSTRUCTION BASELINE.
2. UNLESS OTHERWISE NOTED, POINT GEOMETRY ADJACENT TO CURB AND GUTTER IS GIVEN TO THE EDGE OF PAVEMENT.
3. RADII ARE GIVEN TO THE EDGE OF PAVEMENT.
4. UNLESS OTHERWISE NOTED, EDGE OF PAVEMENT ELEVATIONS AT CURB RETURNS ARE GIVEN AT 10 FOOT INTERVALS
5. PROPOSED CURB OR PAVEMENT THAT TIES INTO EXISTING PAVEMENT OR EXISTING CURBS SHALL MATCH THE EXISTING PAVEMENT OR CURB ELEVATIONS AND CROSS SLOPES.

BEGIN CONTRACT T201011302 STATION 80+50

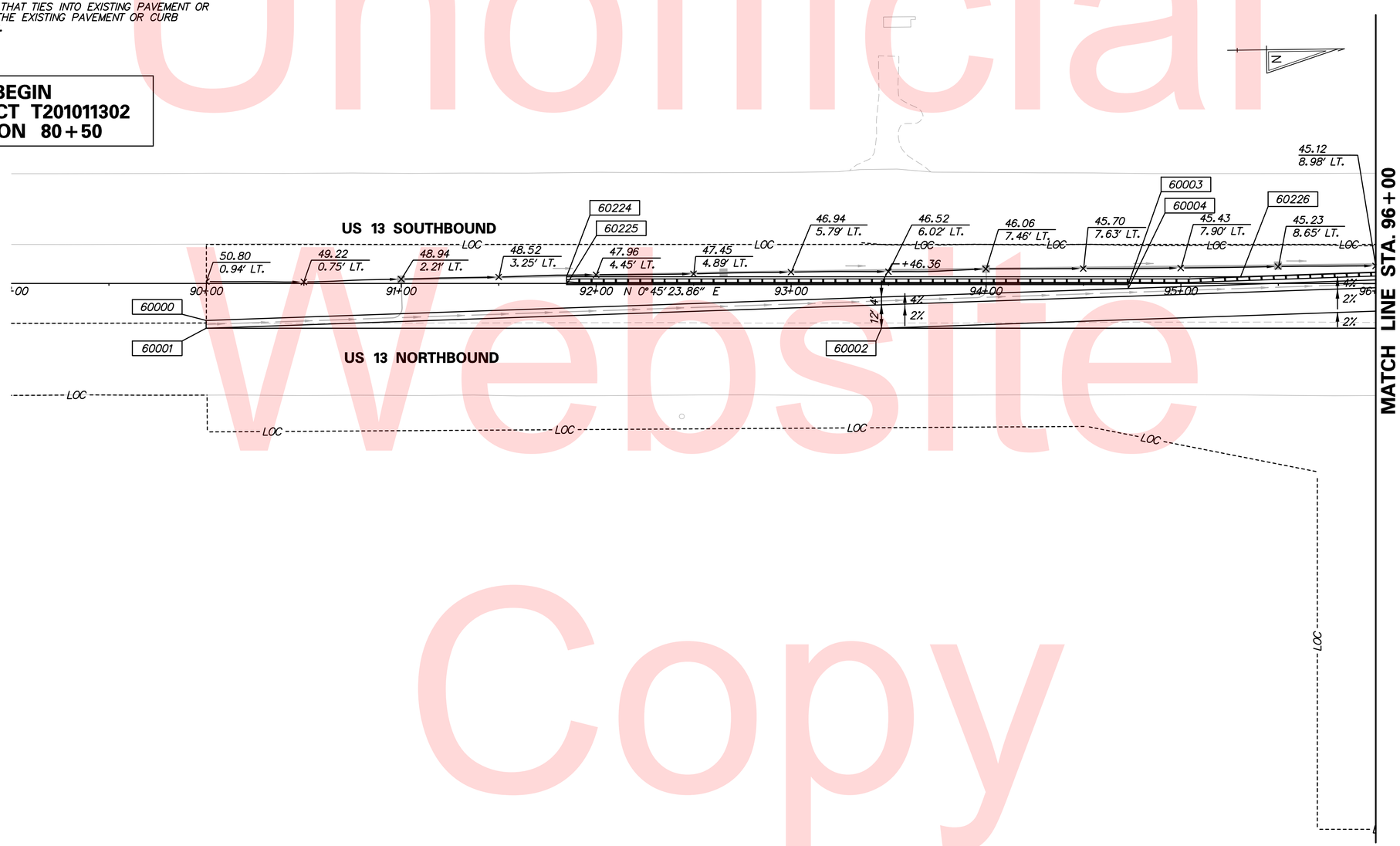

Unofficial Website Copy

N:\31653-000\Contract 1D\CADD\GG001U301_1D.dgn
7/10/2015 9:32:37 AM

DELAWARE DEPARTMENT OF TRANSPORTATION	ADDENDUMS / REVISIONS	SCALE 0 30 60 90 FEET	US 13 & PORT PENN RD INTERSECTION	CONTRACT T201011302 / COUNTY NEW CASTLE	BRIDGE NO. / DESIGNED BY: N.S.P. / CHECKED BY: B.R.T.	GRADES & GEOMETRICS

GG-01

SHEET NO. 50

TOTAL SHTS. 179

COORDINATE LIST				
POINT NO.	STATION	OFFSET	NORTHING	EASTING
60005	96+34.55	-3.00	551914.5424	590588.3508
60190	96+34.41	-7.00	551914.4566	590584.3518
60006	97+50.00	-3.00	552029.9862	590589.8754
60007	97+50.00	14.00	552029.7617	590606.8740
60008	97+50.00	18.00	552029.7089	590610.8736
60010	100+43.52	-19.00	552323.6958	590577.7529
60151	104+90.14	-19.00	552770.2719	590583.6506

NOTES:

1. OFFSETS SHOWN IN THE GEOMETRY TABLES WITH A MINUS SIGN ARE TO THE LEFT OF THE CONSTRUCTION BASELINE.
2. UNLESS OTHERWISE NOTED, POINT GEOMETRY ADJACENT TO CURB AND GUTTER IS GIVEN TO THE EDGE OF PAVEMENT.
3. RADII ARE GIVEN TO THE EDGE OF PAVEMENT.
4. UNLESS OTHERWISE NOTED, EDGE OF PAVEMENT ELEVATIONS AT CURB RETURNS ARE GIVEN AT 10 FOOT INTERVALS.
5. PROPOSED CURB OR PAVEMENT THAT TIES INTO EXISTING PAVEMENT OR EXISTING CURBS SHALL MATCH THE EXISTING PAVEMENT OR CURB ELEVATIONS AND CROSS SLOPES.

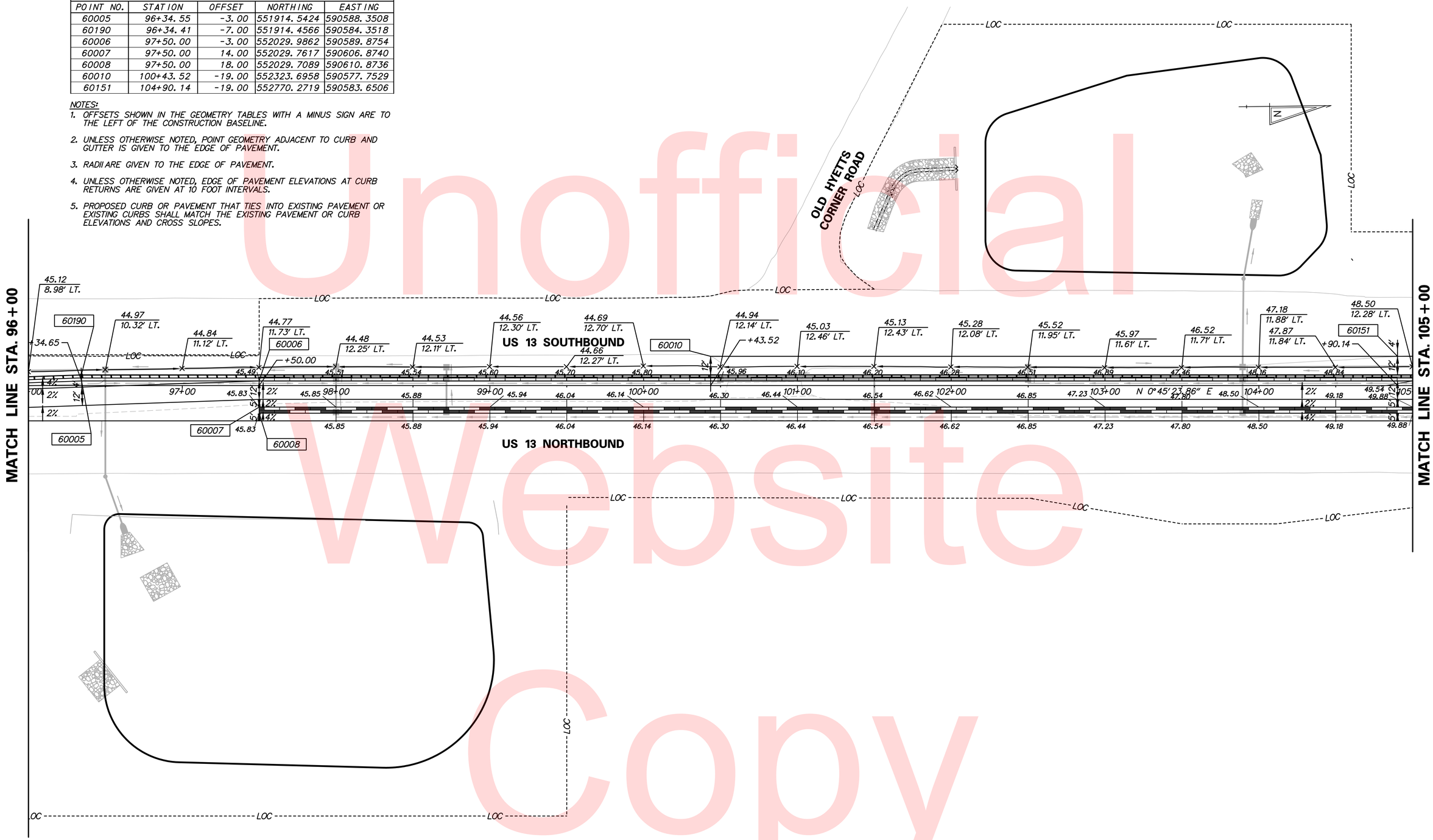

Unofficial Website Copy

N:\31653-000\Contract ID\CADD\GG002U301_1D.dgn
7/10/2015 9:38:16 AM

DELAWARE DEPARTMENT OF TRANSPORTATION

ADDENDUMS / REVISIONS

SCALE 0 30 60 90 FEET

US 13 & PORT PENN RD INTERSECTION

CONTRACT	BRIDGE NO.	
T201011302	DESIGNED BY: N.S.P.	
COUNTY		
NEW CASTLE	CHECKED BY: B.R.T.	

GRADES & GEOMETRICS

GG-02

SHEET NO. 51

TOTAL SHTS. 179

COORDINATE LIST				
POINT NO.	STATION	OFFSET	NORTHING	EASTING
60012	110+34.84	-57.00	553315.4252	590552.8481
60013	110+35.00	-47.00	553315.4552	590562.8480

NOTES:

1. OFFSETS SHOWN IN THE GEOMETRY TABLES WITH A MINUS SIGN ARE TO THE LEFT OF THE CONSTRUCTION BASELINE.
2. UNLESS OTHERWISE NOTED, POINT GEOMETRY ADJACENT TO CURB AND GUTTER IS GIVEN TO THE EDGE OF PAVEMENT.
3. RADII ARE GIVEN TO THE EDGE OF PAVEMENT.
4. UNLESS OTHERWISE NOTED, EDGE OF PAVEMENT ELEVATIONS AT CURB RETURNS ARE GIVEN AT 10 FOOT INTERVALS.
5. PROPOSED CURB OR PAVEMENT THAT TIES INTO EXISTING PAVEMENT OR EXISTING CURBS SHALL MATCH THE EXISTING PAVEMENT OR CURB ELEVATIONS AND CROSS SLOPES.

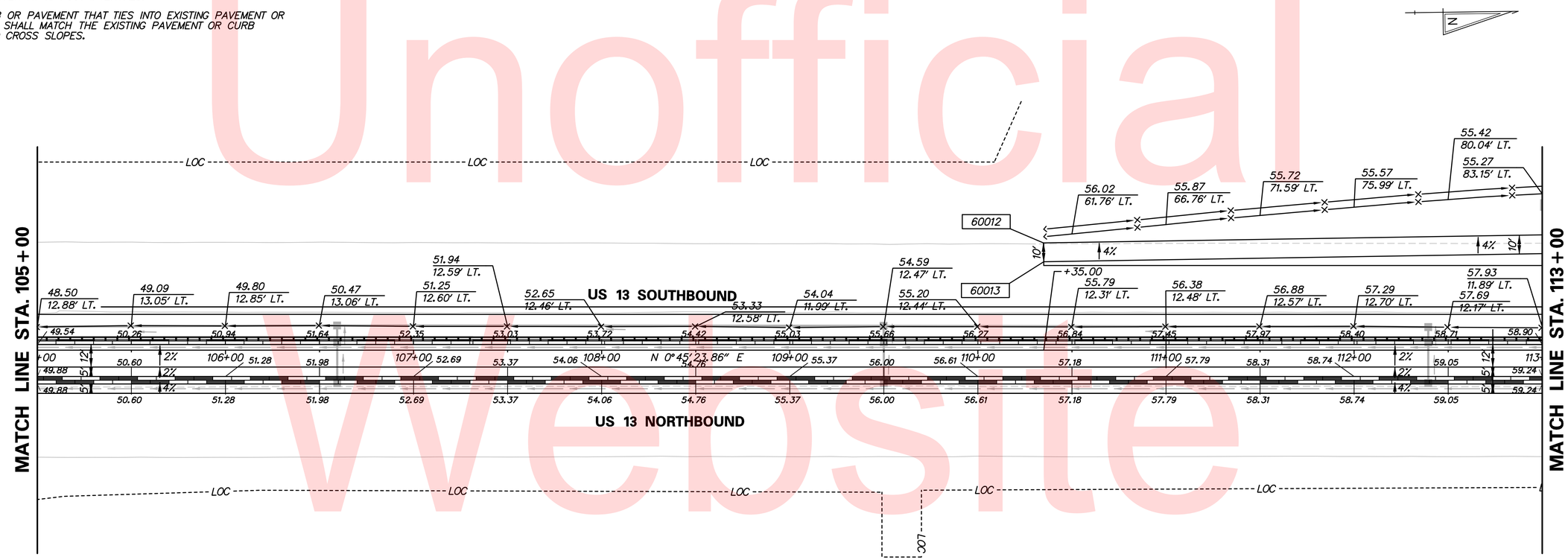

Unofficial Website Copy

N:\31653-000\Contract 1D\CADD\GG003U301_1D.dgn
7/10/2015 9:41:28 AM

DELAWARE DEPARTMENT OF TRANSPORTATION	ADDENDUMS / REVISIONS	SCALE 0 30 60 90 FEET	US 13 & PORT PENN RD INTERSECTION	CONTRACT T201011302 / COUNTY NEW CASTLE	BRIDGE NO. / DESIGNED BY: N.S.P. / CHECKED BY: B.R.T.	GRADES & GEOMETRICS

GG-03

SHEET NO. 52

TOTAL SHTS. 179

COORDINATE LIST				
POINT NO.	STATION	OFFSET	NORTHING	EASTING
60014	117+14.84	-19.00	553994.7480	590599.8119
60015	117+13.21	-7.00	553993.0823	590611.8006
60017	117+13.24	14.00	553992.8753	590632.7997
60018	117+13.24	18.00	553992.8381	590636.7995
60019	118+14.95	-69.00	554095.2031	590550.5095

NOTES:

1. OFFSETS SHOWN IN THE GEOMETRY TABLES WITH A MINUS SIGN ARE TO THE LEFT OF THE CONSTRUCTION BASELINE.
2. UNLESS OTHERWISE NOTED, POINT GEOMETRY ADJACENT TO CURB AND GUTTER IS GIVEN TO THE EDGE OF PAVEMENT.
3. RADII ARE GIVEN TO THE EDGE OF PAVEMENT.
4. UNLESS OTHERWISE NOTED, EDGE OF PAVEMENT ELEVATIONS AT CURB RETURNS ARE GIVEN AT 10 FOOT INTERVALS.
5. PROPOSED CURB OR PAVEMENT THAT TIES INTO EXISTING PAVEMENT OR EXISTING CURBS SHALL MATCH THE EXISTING PAVEMENT OR CURB ELEVATIONS AND CROSS SLOPES.

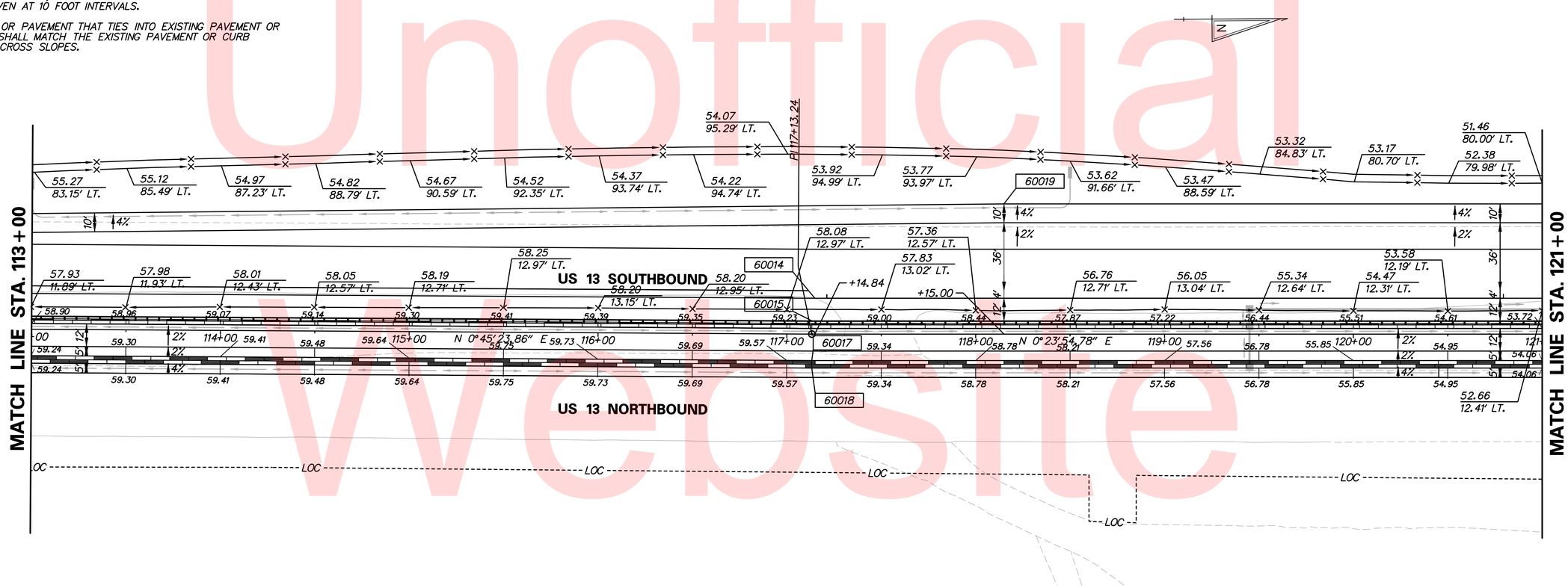

Unofficial Website Copy

N:\31653-000\Contract 1D\CADD\GG004U301_1D.dgn
7/10/2015 9:47:48 AM

DELAWARE DEPARTMENT OF TRANSPORTATION

ADDENDUMS / REVISIONS

SCALE 0 30 60 90 FEET

US 13 & PORT PENN RD INTERSECTION

CONTRACT	BRIDGE NO.
T201011302	DESIGNED BY: N.S.P.
COUNTY	
NEW CASTLE	CHECKED BY: B.R.T.

GRADES & GEOMETRICS

GG-04

SHEET NO. 53

TOTAL SHTS. 179

COORDINATE LIST				
POINT NO.	STATION	OFFSET	NORTHING	EASTING
60021	121+35.58	-19.00	554415.4747	590602.7385
60022	124+45.00	55.00	554724.3751	590678.8891
60023	124+45.00	59.00	554724.3473	590682.8890
60024	125+08.19	59.00	554787.5360	590683.3285
60025	125+08.19	109.00	554787.1885	590733.3273
60026	125+39.13	69.73	554818.4044	590694.2692
60027	126+03.35	88.53	554882.4881	590713.5179
60028	126+37.50	133.98	554916.3185	590759.2070
60030	126+08.12	79.39	554887.3169	590704.4083
60031	126+04.32	72.34	554883.5747	590697.3375
60032	126+35.86	64.00	554915.1691	590689.2165
60232	123+15.00	-69.00	554595.2408	590553.9878
60233	123+40.00	-94.00	554620.4141	590529.1623

NOTES:

1. OFFSETS SHOWN IN THE GEOMETRY TABLES WITH A MINUS SIGN ARE TO THE LEFT OF THE CONSTRUCTION BASELINE.
2. UNLESS OTHERWISE NOTED, POINT GEOMETRY ADJACENT TO CURB AND GUTTER IS GIVEN TO THE EDGE OF PAVEMENT.
3. RADII ARE GIVEN TO THE EDGE OF PAVEMENT.
4. UNLESS OTHERWISE NOTED, EDGE OF PAVEMENT ELEVATIONS AT CURB RETURNS ARE GIVEN AT 10 FOOT INTERVALS.
5. PROPOSED CURB OR PAVEMENT THAT TIES INTO EXISTING PAVEMENT OR EXISTING CURBS SHALL MATCH THE EXISTING PAVEMENT OR CURB ELEVATIONS AND CROSS SLOPES.

COORDINATE LIST				
POINT NO.	STATION	OFFSET	NORTHING	EASTING
60234	123+15.00	-94.00	554595.4147	590528.9884
60235	123+40.00	-102.98	554620.4766	590520.1794
60236	123+60.00	-102.98	554640.4761	590520.3185
60237	123+60.00	-94.00	554640.4136	590529.3014
60238	123+85.00	-94.00	554665.4130	590529.4753
60239	123+85.00	-69.00	554665.2391	590554.4747
60256	125+68.00	67.01	554847.2913	590691.7558
60257	125+69.73	64.00	554849.0376	590688.7565
60258	125+84.38	64.00	554863.6911	590688.8584
60259	125+85.23	65.52	554864.5320	590690.3885
60260	125+81.22	83.06	554860.3999	590707.8939
60261	125+75.04	84.15	554854.2056	590708.9468
60264	125+47.74	88.53	554826.8841	590713.1332
60265	125+11.06	100.39	554790.1220	590724.7356
60266	126+09.08	80.20	554888.2732	590705.2329
60267	125+69.73	66.00	554849.0237	590690.7564
60268	125+78.37	84.94	554857.5304	590709.7597
60269	125+84.38	65.00	554863.6841	590689.8584

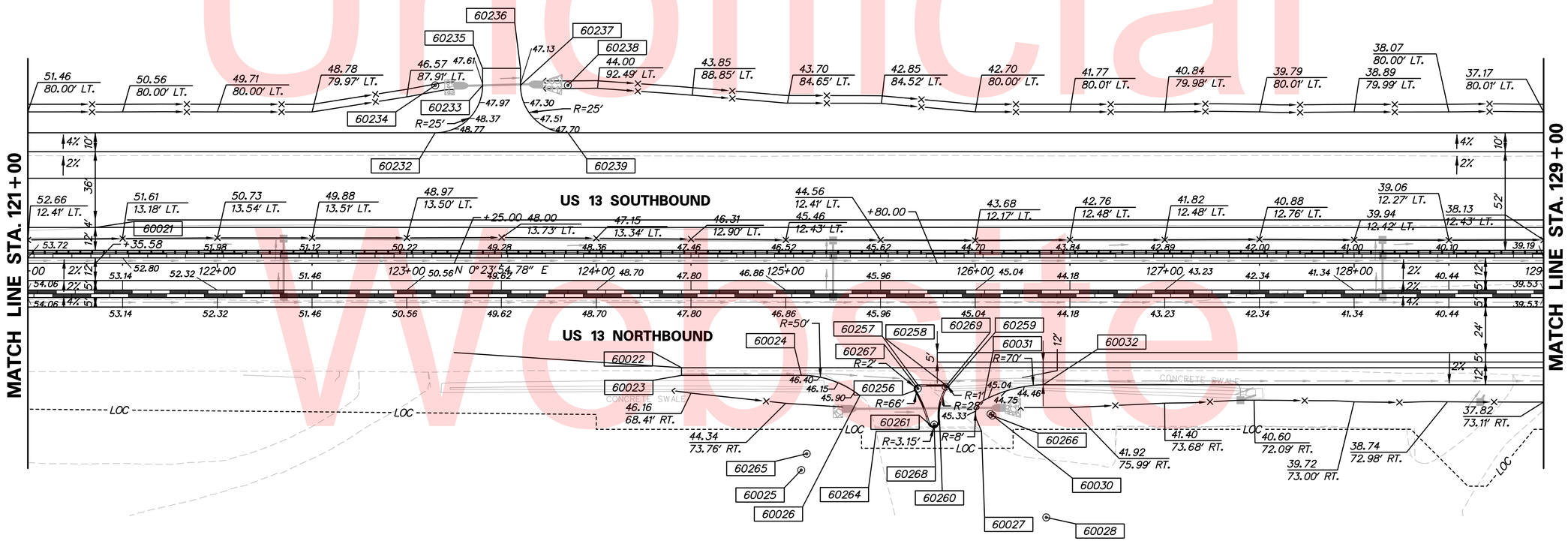

Unofficial Web Site Copy

N:\31653-000\Contract 1D\CADD\GG005U301_1D.dgn
7/10/2015 9:49:29 AM

DELAWARE DEPARTMENT OF TRANSPORTATION	ADDENDUMS / REVISIONS	SCALE 0 30 60 90 FEET	US 13 & PORT PENN RD INTERSECTION	CONTRACT T201011302	BRIDGE NO.	GRADES & GEOMETRICS	GG-05
				COUNTY NEW CASTLE	DESIGNED BY: N.S.P.		SHEET NO. 54
					CHECKED BY: B.R.T.		TOTAL SHTS. 179

COORDINATE LIST

POINT NO.	STATION	OFFSET	NORTHING	EASTING
60039	129+78.37	64.00	555257.6677	590691.5989
60040	129+93.32	77.79	555272.5227	590705.4943
60041	129+78.37	79.00	555257.5634	590706.5986
60043	130+19.00	64.00	555298.2940	590691.8815
60044	130+19.00	79.00	555298.1896	590706.8812
60045	130+04.04	77.79	555283.2471	590705.5689
60050	133+00.00	47.00	555579.4101	590676.8366
60052	133+00.00	57.00	555579.3405	590686.8364
60053	133+00.00	61.08	555579.3122	590690.9164
60057	131+15.00	14.00	555394.6441	590642.5506
60058	131+15.00	18.00	555394.6163	590646.5505
60072	132+38.45	-76.00	555518.7149	590553.4114
60074	133+82.50	-76.00	555662.7600	590554.4134
60076	3000+35.00	-75.05	555542.1442	590421.4855
60077	3000+35.00	-30.00	555535.8122	590466.0884
60078	3000+17.00	-30.00	555517.9909	590463.5585
60080	3000+17.00	15.00	555511.6659	590508.1117
60081	3000+88.43	33.00	555579.8598	590535.9733
60082	132+38.45	-80.00	555518.7427	590549.4115
60083	3000+56.86	15.00	555551.1322	590513.7145
60084	3000+75.10	33.00	555566.6570	590534.0990
60085	133+82.50	-80.00	555662.7878	590550.4135
60086	3001+78.17	33.57	555668.6272	590549.1548
60087	3001+56.82	12.50	555650.4512	590525.2892
60088	3001+80.23	36.34	555670.2794	590552.1795
60089	3000+64.00	-10.98	555561.8547	590488.9960
60090	3000+59.00	-15.98	555557.6034	590483.3423
60091	3000+64.00	-15.98	555562.5537	590484.0451
60092	3000+64.00	-25.20	555563.8499	590474.9146
60093	3000+59.00	-25.20	555558.8996	590474.2118
60094	3000+63.99	-30.20	555564.5418	590469.9627
60095	3001+75.24	-11.12	555672.0067	590504.4954
60096	3001+22.58	-81.81	555629.8095	590427.1039
60097	3001+23.14	-114.50	555634.9586	590394.8193
60098	5004+44.41	4.80	555600.8114	590366.9656
60099	5004+41.74	7.00	555602.5787	590363.9865
60100	304+26.24	24.00	555659.7239	590336.4376
60101	5003+64.10	-19.20	555680.1722	590378.6616
60102	303+33.84	52.92	555591.6320	590382.4393
60103	5003+48.57	-7.00	555695.7590	590367.9330
60104	301+64.25	-6.00	555446.7035	590449.5646
60105	301+64.25	-4.00	555448.5212	590450.3989
60106	305+13.66	-10.60	555746.9128	590309.7929
60107	3001+17.15	-114.60	555629.0335	590393.8743
60108	304+19.53	-19.56	555650.3515	590293.3850
60109	305+03.28	26.00	555731.6144	590344.6251
60110	304+84.50	-10.51	555718.0132	590305.8859
60111	304+84.50	-8.50	555717.7377	590307.8777
60152	304+70.95	68.03	555693.8374	590381.8280
60153	305+00.67	190.00	555706.5598	590506.7211
60195	302+42.54	-193.49	555355.0241	590254.6461
60196	302+70.69	-121.58	555438.1734	590274.9336
60197	303+26.11	-58.78	555536.0143	590285.2699
60198	304+19.86	-21.97	555650.5239	590290.9561
60199	304+14.29	-10.00	555645.6488	590303.3958
60200	302+63.15	-18.58	555498.1403	590359.2180
60201	304+77.98	29.16	555706.1187	590344.2938
60202	304+26.24	22.00	555659.6262	590334.4400
60222	3002+25.12	-52.25	555727.1712	590470.7815
60223	3001+99.21	-52.25	555701.5211	590467.1401

NOTES:

1. OFFSETS SHOWN IN THE GEOMETRY TABLES WITH A MINUS SIGN ARE TO THE LEFT OF THE CONSTRUCTION BASELINE.
2. UNLESS OTHERWISE NOTED, POINT GEOMETRY ADJACENT TO CURB AND GUTTER IS GIVEN TO THE EDGE OF PAVEMENT.
3. RADII ARE GIVEN TO THE EDGE OF PAVEMENT.
4. UNLESS OTHERWISE NOTED, EDGE OF PAVEMENT ELEVATIONS AT CURB RETURNS ARE GIVEN AT 10 FOOT INTERVALS.
5. PROPOSED CURB OR PAVEMENT THAT TIES INTO EXISTING PAVEMENT OR EXISTING CURBS SHALL MATCH THE EXISTING PAVEMENT OR CURB ELEVATIONS AND CROSS SLOPES.

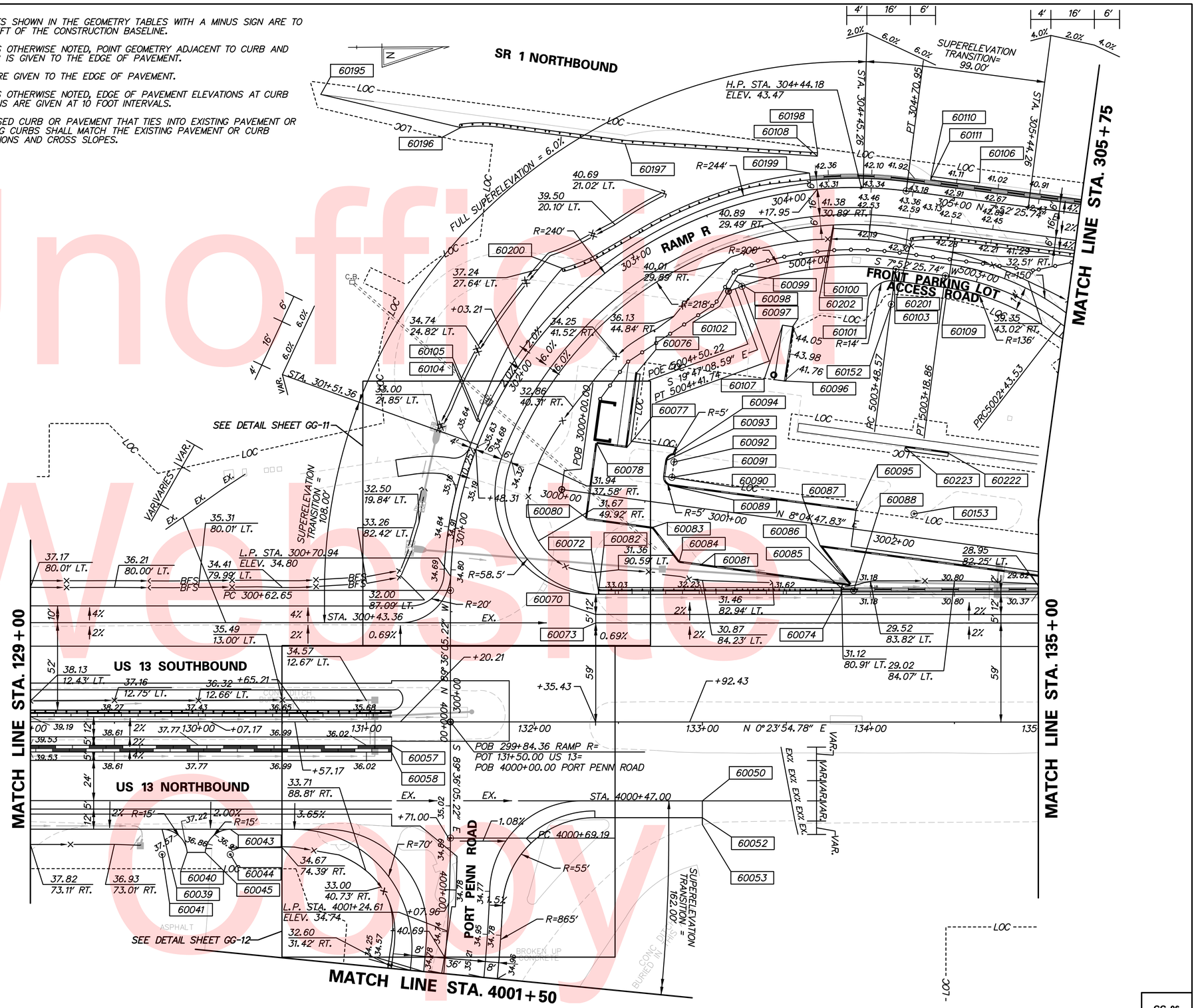

Unofficial Website Copy

N:\31653-000\Contract 1D:\CADD\CG006U301_1D.dgn
7/10/2015 9:43:19 AM

DELAWARE DEPARTMENT OF TRANSPORTATION	ADDENDUMS / REVISIONS	SCALE 0 30 60 90 FEET	US 13 & PORT PENN RD INTERSECTION	CONTRACT T201011302 / COUNTY NEW CASTLE	BRIDGE NO. / DESIGNED BY: N.S.P. / CHECKED BY: B.R.T.
GRADES & GEOMETRICS	GG-06	SHEET NO. 55	TOTAL SHTS. 179		

NOTES:

1. OFFSETS SHOWN IN THE GEOMETRY TABLES WITH A MINUS SIGN ARE TO THE LEFT OF THE CONSTRUCTION BASELINE.
2. UNLESS OTHERWISE NOTED, POINT GEOMETRY ADJACENT TO CURB AND GUTTER IS GIVEN TO THE EDGE OF PAVEMENT.
3. RADII ARE GIVEN TO THE EDGE OF PAVEMENT.
4. UNLESS OTHERWISE NOTED, EDGE OF PAVEMENT ELEVATIONS AT CURB RETURNS ARE GIVEN AT 10 FOOT INTERVALS.
5. PROPOSED CURB OR PAVEMENT THAT TIES INTO EXISTING PAVEMENT OR EXISTING CURBS SHALL MATCH THE EXISTING PAVEMENT OR CURB ELEVATIONS AND CROSS SLOPES.

COORDINATE LIST

POINT NO.	STATION	OFFSET	NORTHING	EASTING
60112	3003+03.25	-17.07	555799.5841	590516.5986
60113	3003+08.25	-17.12	555804.5418	590517.2469
60114	3003+08.11	-12.12	555803.6948	590522.1746
60115	3003+27.30	12.00	555819.7615	590548.6165
60116	3005+70.40	-12.00	556039.1703	590457.6353
60117	3005+70.40	12.00	556054.7276	590475.9102
60118	3005+70.40	81.00	556099.4548	590528.4504
60119	3007+57.32	42.00	556138.4400	590530.7217
60120	3007+55.32	12.00	556168.4532	590528.9304
60121	138+57.99	-76.00	556138.2394	590557.7209
60122	139+61.31	-69.00	556241.5140	590565.4395
60123	3007+47.38	-62.00	556241.8618	590515.4407
60124	3007+47.38	-12.00	556192.0692	590519.9895
60125	3003+16.52	-300.00	555852.4826	590238.3371
60154	3003+08.22	12.50	555800.3498	590546.5694
60155	3004+81.64	-12.00	555967.1249	590502.5362
60156	5000+22.52	-7.00	555972.0572	590488.8285

COORDINATE LIST

POINT NO.	STATION	OFFSET	NORTHING	EASTING
60157	5000+58.08	-7.00	555955.9337	590457.1338
60158	5001+30.20	-7.00	555904.7171	590420.6178
60159	5001+47.08	-34.06	555884.2685	590445.0928
60160	5001+47.08	-12.00	555887.3159	590423.2395
60161	5001+42.08	-7.00	555892.9586	590418.9780
60162	5001+30.20	7.00	555906.6507	590406.7519
60163	5000+78.44	7.00	555955.7658	590432.5498
60164	5000+37.85	15.75	555852.4826	590464.8519
60165	3005+52.18	-12.00	555985.3827	590468.5591
60203	311+25.00	-17.00	556353.3657	590387.2014
60204	311+25.00	-8.00	556352.1328	590396.1166
60205	309+42.53	26.00	556166.7213	590404.7986
60206	309+42.53	22.00	556167.2692	590400.8363
60207	3007+39.56	16.00	556163.3145	590516.3281
60208	3007+39.56	12.00	556167.2443	590515.5821
60209	137+00.00	-80.00	555980.2838	590552.6221
60210	137+00.00	-76.00	555980.2560	590556.6220

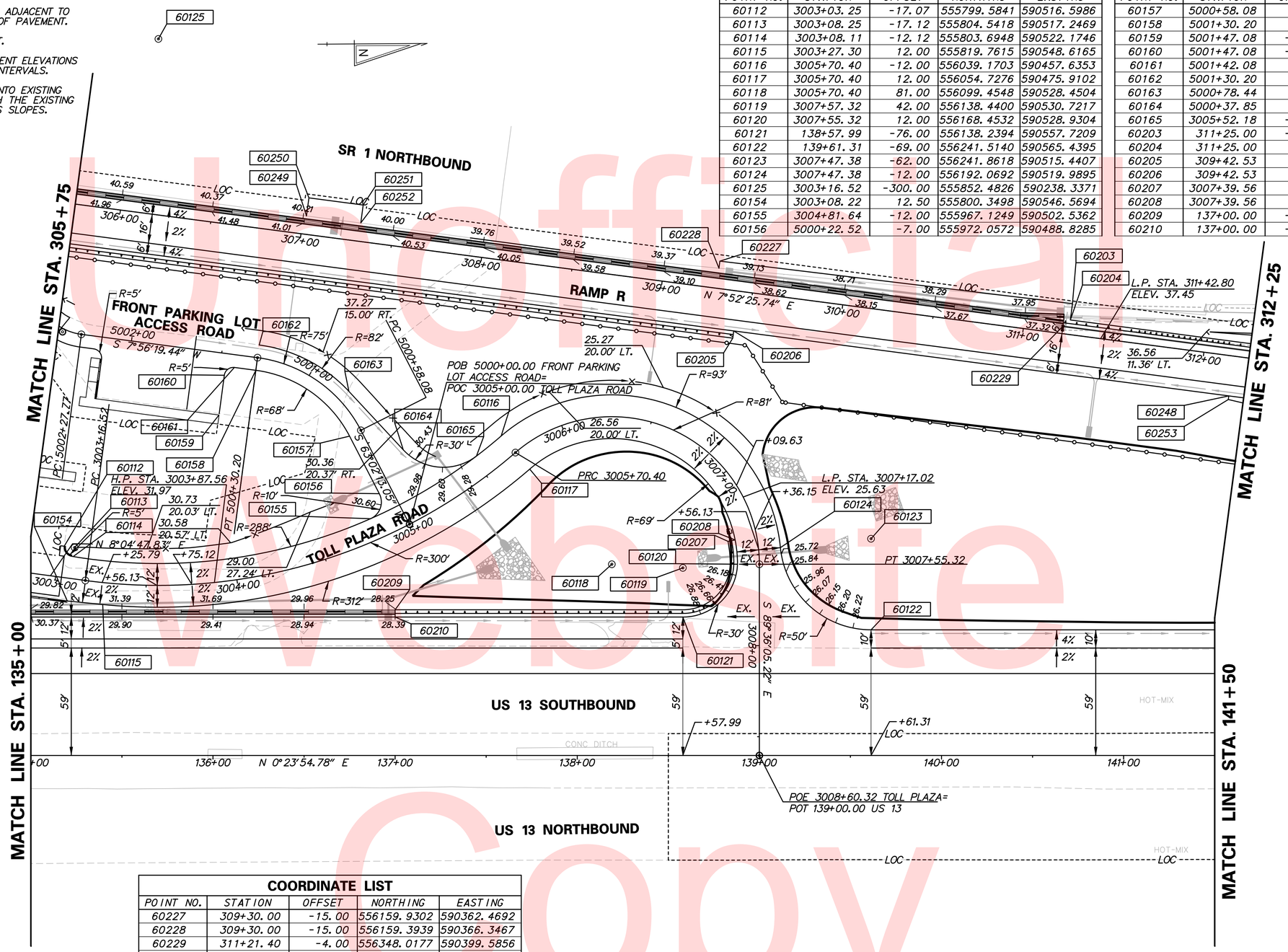

COORDINATE LIST

POINT NO.	STATION	OFFSET	NORTHING	EASTING
60227	309+30.00	-15.00	556159.9302	590362.4692
60228	309+30.00	-15.00	556159.3939	590366.3467
60229	311+21.40	-4.00	556348.0177	590399.5856
60248	312+16.69	22.00	556438.8473	590438.3944
60249	307+01.72	-10.08	555933.1313	590336.0742
60250	307+01.74	-20.08	555934.5200	590326.1711
60251	307+31.80	-20.08	555964.2901	590330.2882
60252	307+31.78	-10.18	555962.9155	590340.0910
60253	312+16.69	24.00	556438.5733	590440.3755

Unofficial Website Copy

N:\31653-000\Contract 1D:\CADD\GG007U301_1D.dgn
7/10/2015 9:48:13 AM

DELAWARE DEPARTMENT OF TRANSPORTATION

ADDENDUMS / REVISIONS

SCALE 0 30 60 90 FEET

US 13 & PORT PENN RD INTERSECTION

CONTRACT	BRIDGE NO.
T201011302	DESIGNED BY: N.S.P.
COUNTY	CHECKED BY: B.R.T.
NEW CASTLE	

GRADES & GEOMETRICS

GG-07

SHEET NO. 56

TOTAL SHTS. 179

COORDINATE LIST				
POINT NO.	STATION	OFFSET	NORTHING	EASTING
60126	142+85.29	-69.00	556565.4816	590567.6931
60127	316+00.00	-8.00	556822.6562	590461.1880
60128	316+00.00	-4.00	556822.1082	590465.1503
60129	316+00.00	26.00	556817.9985	590494.8674
60130	316+00.00	22.00	556818.5465	590490.9051
60131	144+66.60	-58.47	556746.7111	590579.4883
60170	144+66.60	-48.65	556746.6428	590589.3043

COORDINATE LIST				
POINT NO.	STATION	OFFSET	NORTHING	EASTING
60243	144+66.60	-23.00	556746.4644	590614.9531
60244	144+66.60	-19.00	556746.4366	590618.9530
60245	142+37.79	-19.00	556517.6386	590617.3615
60246	142+04.12	-16.00	556483.9472	590620.1272
60247	142+04.12	-23.00	556483.9959	590613.1273
60254	312+68.33	29.16	556489.0240	590452.5663
60255	312+93.63	26.00	556514.5198	590452.8976

NOTES:

1. OFFSETS SHOWN IN THE GEOMETRY TABLES WITH A MINUS SIGN ARE TO THE LEFT OF THE CONSTRUCTION BASELINE.
2. UNLESS OTHERWISE NOTED, POINT GEOMETRY ADJACENT TO CURB AND GUTTER IS GIVEN TO THE EDGE OF PAVEMENT.
3. RADII ARE GIVEN TO THE EDGE OF PAVEMENT.
4. UNLESS OTHERWISE NOTED, EDGE OF PAVEMENT ELEVATIONS AT CURB RETURNS ARE GIVEN AT 10 FOOT INTERVALS.
5. PROPOSED CURB OR PAVEMENT THAT TIES INTO EXISTING PAVEMENT OR EXISTING CURBS SHALL MATCH THE EXISTING PAVEMENT OR CURB ELEVATIONS AND CROSS SLOPES.

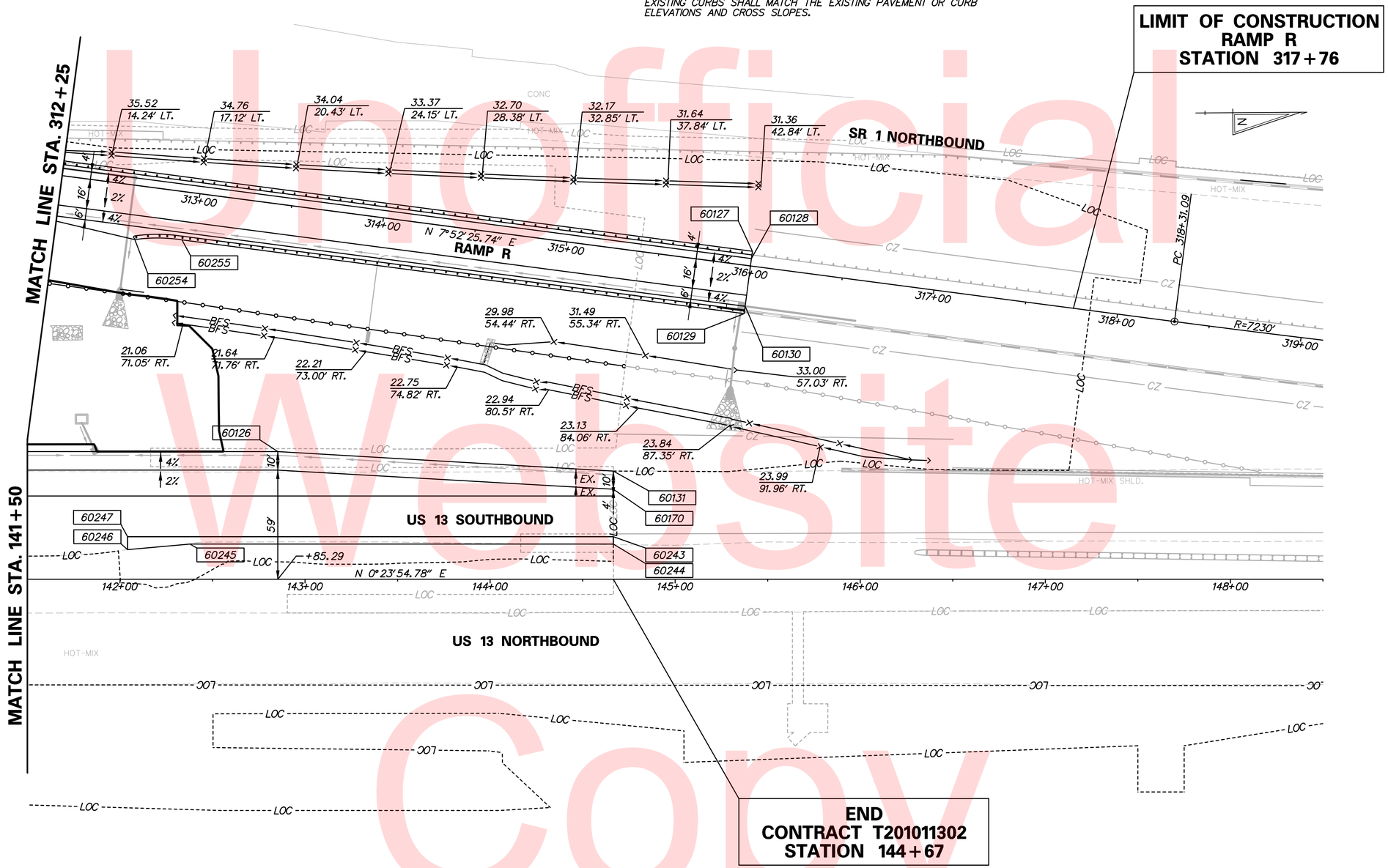

Unofficial Website Copy

N:\31653-000\Contract 1D\CADD\GG008U301_1D.dgn
7/10/2015 10:19:30 AM

DELAWARE DEPARTMENT OF TRANSPORTATION	ADDENDUMS / REVISIONS	SCALE 0 30 60 90 FEET	US 13 & PORT PENN RD INTERSECTION	CONTRACT T201011302	BRIDGE NO.	GRADES & GEOMETRICS	GG-08 SHEET NO. 57
				COUNTY NEW CASTLE	DESIGNED BY: N.S.P. CHECKED BY: B.R.T.		TOTAL SHTS. 179

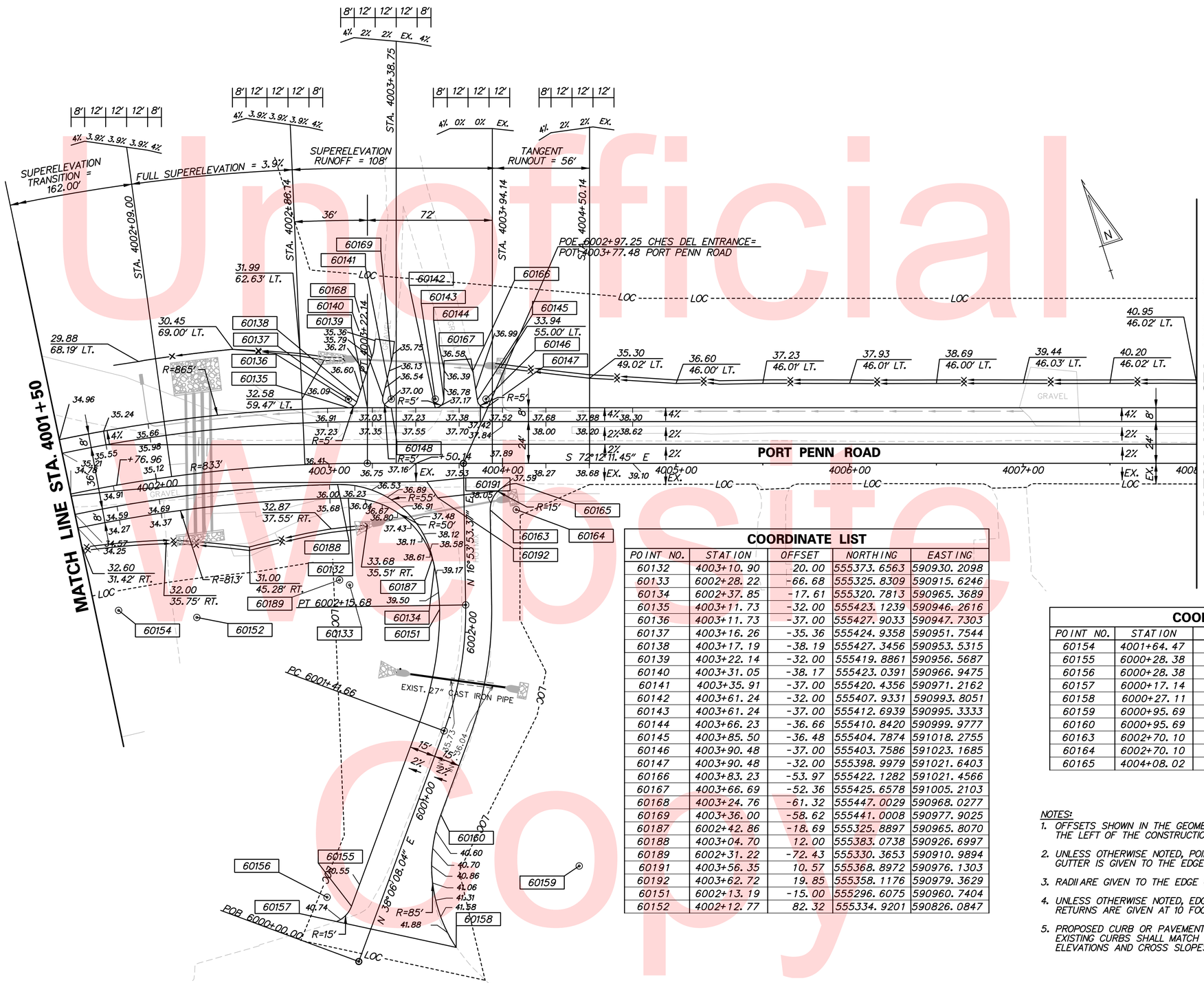

COORDINATE LIST

POINT NO.	STATION	OFFSET	NORTHING	EASTING
60132	4003+10.90	20.00	555373.6563	590930.2098
60133	6002+28.22	-66.68	555325.8309	590915.6246
60134	6002+37.85	-17.61	555320.7813	590965.3689
60135	4003+11.73	-32.00	555423.1239	590946.2616
60136	4003+11.73	-37.00	555427.9033	590947.7303
60137	4003+16.26	-35.36	555424.9358	590951.7544
60138	4003+17.19	-38.19	555427.3456	590953.5315
60139	4003+22.14	-32.00	555419.8861	590956.5687
60140	4003+31.05	-38.17	555423.0391	590966.9475
60141	4003+35.91	-37.00	555420.4356	590971.2162
60142	4003+61.24	-32.00	555407.9331	590993.8051
60143	4003+61.24	-37.00	555412.6939	590995.3333
60144	4003+66.23	-36.66	555410.8420	590999.9777
60145	4003+85.50	-36.48	555404.7874	591018.2755
60146	4003+90.48	-37.00	555403.7586	591023.1685
60147	4003+90.48	-32.00	555398.9979	591021.6403
60166	4003+83.23	-53.97	555422.1282	591021.4566
60167	4003+66.69	-52.36	555425.6578	591005.2103
60168	4003+24.76	-61.32	555447.0029	590968.0277
60169	4003+36.00	-58.62	555441.0008	590977.9025
60187	6002+42.86	-18.69	555325.8897	590965.8070
60188	4003+04.70	12.00	555383.0738	590926.6997
60189	6002+31.22	-72.43	555330.3653	590910.9894
60191	4003+56.35	10.57	555368.8972	590976.1303
60192	4003+62.72	19.85	555358.1176	590979.3629
60151	6002+13.19	-15.00	555296.6075	590960.7404
60152	4002+12.77	82.32	555334.9201	590826.0847

COORDINATE LIST

POINT NO.	STATION	OFFSET	NORTHING	EASTING
60154	4001+64.47	71.10	555352.5812	590784.4113
60155	6000+28.38	-15.00	555149.2791	590860.0858
60156	6000+28.38	-30.00	555158.5351	590848.2821
60157	6000+17.14	-20.07	555143.5610	590849.1633
60158	6000+27.11	49.79	555108.2999	590910.2863
60159	6000+95.69	100.00	555131.2879	590992.1187
60160	6000+95.69	15.00	555183.7385	590925.2313
60163	6002+70.10	15.00	555342.1581	591005.9468
60164	6002+70.10	30.00	555337.7980	591020.2992
60165	4004+08.02	11.68	555352.0461	590984.9888

NOTES:

1. OFFSETS SHOWN IN THE GEOMETRY TABLES WITH A MINUS SIGN ARE TO THE LEFT OF THE CONSTRUCTION BASELINE.
2. UNLESS OTHERWISE NOTED, POINT GEOMETRY ADJACENT TO CURB AND GUTTER IS GIVEN TO THE EDGE OF PAVEMENT.
3. RADII ARE GIVEN TO THE EDGE OF PAVEMENT.
4. UNLESS OTHERWISE NOTED, EDGE OF PAVEMENT ELEVATIONS AT CURB RETURNS ARE GIVEN AT 10 FOOT INTERVALS.
5. PROPOSED CURB OR PAVEMENT THAT TIES INTO EXISTING PAVEMENT OR EXISTING CURBS SHALL MATCH THE EXISTING PAVEMENT OR CURB ELEVATIONS AND CROSS SLOPES.

Unofficial Website Copy

COORDINATE LIST				
POINT NO.	STATION	OFFSET	NORTHING	EASTING
60148	4008+85.27	-32.00	555247.7696	591492.7513
60149	4010+65.00	-14.08	555175.7697	591658.4059
60150	4010+65.00	-12.08	555173.8696	591657.7959

NOTES:

1. OFFSETS SHOWN IN THE GEOMETRY TABLES WITH A MINUS SIGN ARE TO THE LEFT OF THE CONSTRUCTION BASELINE.
2. UNLESS OTHERWISE NOTED, POINT GEOMETRY ADJACENT TO CURB AND GUTTER IS GIVEN TO THE EDGE OF PAVEMENT.
3. RADII ARE GIVEN TO THE EDGE OF PAVEMENT.
4. UNLESS OTHERWISE NOTED, EDGE OF PAVEMENT ELEVATIONS AT CURB RETURNS ARE GIVEN AT 10 FOOT INTERVALS.
5. PROPOSED CURB OR PAVEMENT THAT TIES INTO EXISTING PAVEMENT OR EXISTING CURBS SHALL MATCH THE EXISTING PAVEMENT OR CURB ELEVATIONS AND CROSS SLOPES.

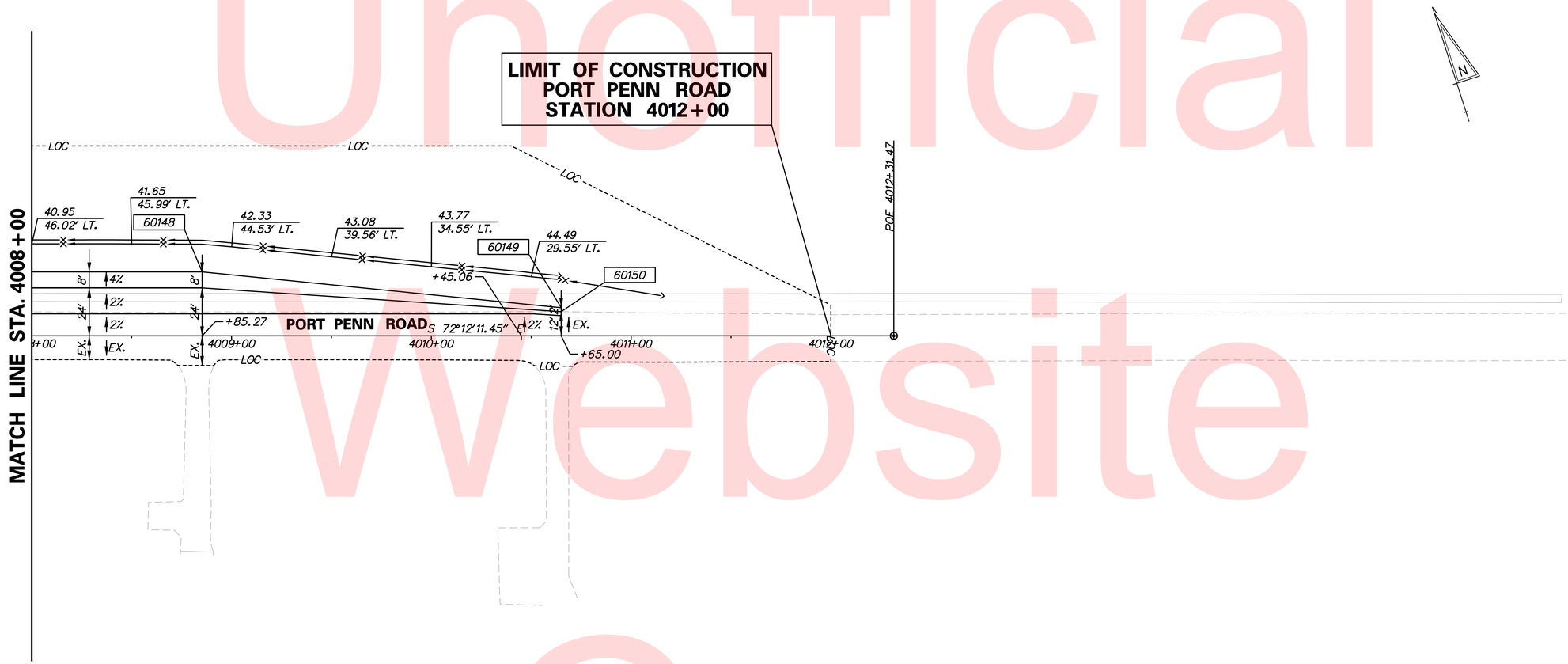

Unofficial Website Copy

N:\31653-000\Contract 1D\CADD\GG010U301_1D.dgn
7/10/2015 10:19:19 AM

DELAWARE DEPARTMENT OF TRANSPORTATION	ADDENDUMS / REVISIONS	SCALE 0 30 60 90 FEET	US 13 & PORT PENN RD INTERSECTION	CONTRACT T201011302	BRIDGE NO.	GRADES & GEOMETRICS	GG-10 SHEET NO. 59
				COUNTY NEW CASTLE	DESIGNED BY: N.S.P. CHECKED BY: B.R.T.		TOTAL SHTS. 179

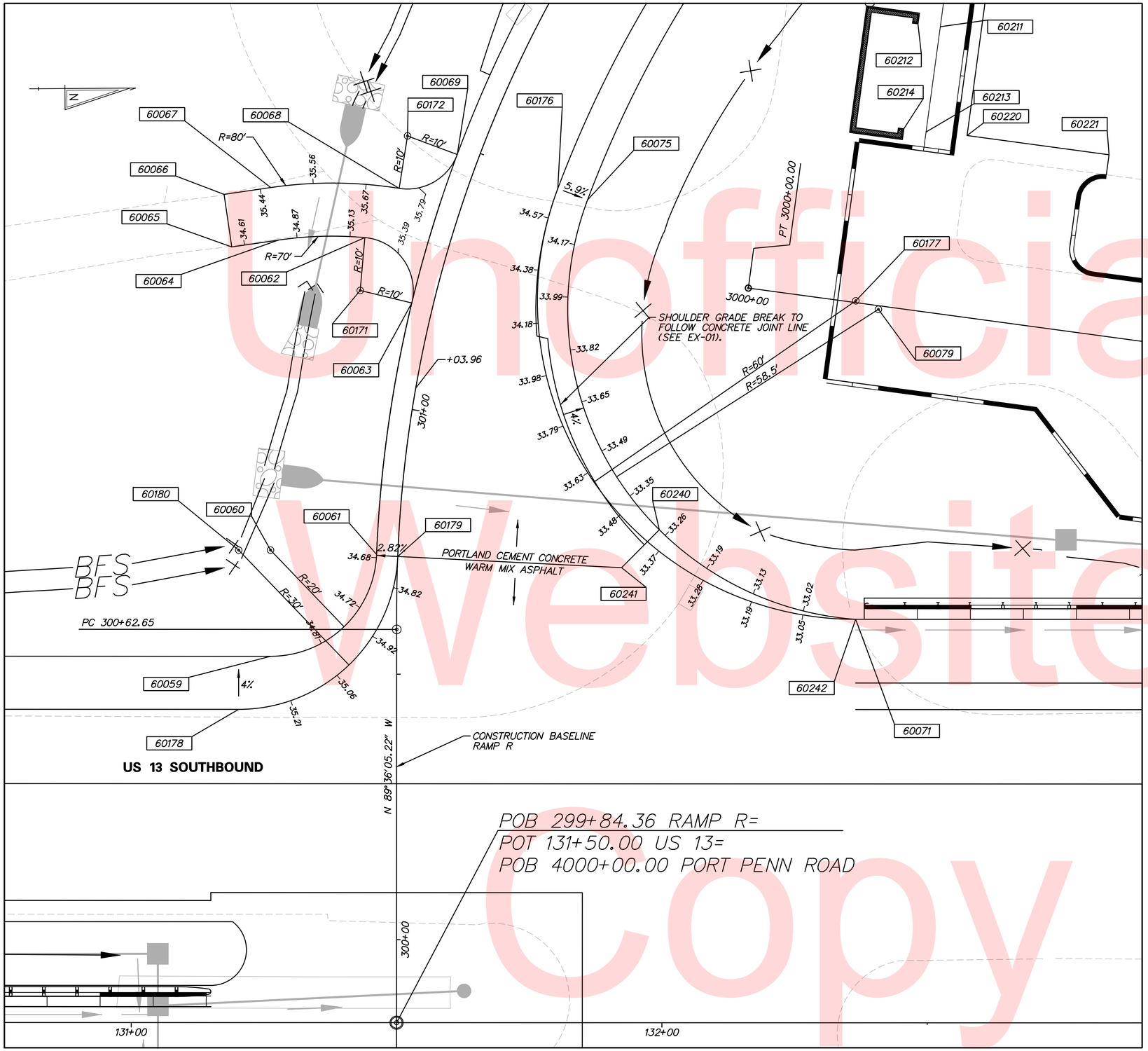

COORDINATE LIST

POINT NO.	STATION	OFFSET	NORTHING	EASTING
60059	131+26.22	-69.00	555406.4387	590559.6306
60060	300+72.39	-24.00	555406.5778	590539.6311
60061	300+72.39	-4.00	555426.5552	590540.5817
60062	301+28.81	-15.68	555424.7399	590480.8787
60063	301+19.52	-4.00	555433.5026	590493.2494
60064	301+24.48	-31.27	555408.4520	590481.2431
60065	301+21.48	-39.46	555399.6516	590482.4744
60066	301+29.31	-43.42	555398.2660	590472.5708
60067	301+32.50	-35.35	555407.0664	590471.3396
60068	301+38.98	-12.21	555431.2687	590471.6506
60069	301+48.31	-4.00	555442.2537	590465.3448
60071	132+36.49	-76.00	555516.7579	590553.3978
60075	301+48.96	22.00	555466.7629	590474.0448
60079	3000+24.82	00.68	555521.4258	590495.0312
60171	301+19.52	-14.00	555432.9084	590461.7860
60172	301+48.31	-14.00	555423.7987	590490.8343
60176	301+48.96	16.00	555461.1615	590471.8943
60177	301+48.96	76.00	555517.1753	590493.3993
60178	131+20.21	-59.00	555400.3644	590569.5886
60179	300+72.18	0.00	555430.5405	590540.9882
60180	300+72.18	-30.00	555400.5731	590539.5893
60211	302+23.80	64.25	555533.4406	590441.8848
60212	302+20.89	60.58	555529.2328	590441.2875
60213	301+98.97	73.59	555530.6295	590461.6863
60214	301+96.46	69.73	555526.4217	590461.0889
60220	302+04.38	80.43	555538.3545	590462.4093
60221	302+25.43	104.14	555565.0865	590466.2042
60240	300+71.67	48.92	555479.8670	590536.2783
60241	300+80.98	42.24	555472.7149	590543.3768
60242	132+36.49	-76.00	555516.7579	590553.3978

NOTES:

1. OFFSETS SHOWN IN THE GEOMETRY TABLES WITH A MINUS SIGN ARE TO THE LEFT OF THE CONSTRUCTION BASELINE.
2. UNLESS OTHERWISE NOTED, POINT GEOMETRY ADJACENT TO CURB AND GUTTER IS GIVEN TO THE EDGE OF PAVEMENT.
3. RADII ARE GIVEN TO THE EDGE OF PAVEMENT.
4. UNLESS OTHERWISE NOTED, EDGE OF PAVEMENT ELEVATIONS AT CURB RETURNS ARE GIVEN AT 10 FOOT INTERVALS.
5. PROPOSED CURB OR PAVEMENT THAT TIES INTO EXISTING PAVEMENT OR EXISTING CURBS SHALL MATCH THE EXISTING PAVEMENT OR CURB ELEVATIONS AND CROSS SLOPES.

Unofficial Website Copy

N:\31653-000\Contract 1D\CADD\GG011U301_1D.dgn
7/10/2015 10:25:27 AM

DELAWARE DEPARTMENT OF TRANSPORTATION

ADDENDUMS / REVISIONS

SCALE 0 10 20 30 FEET

US 13 & PORT PENN RD INTERSECTION

CONTRACT	BRIDGE NO.	
T201011302	DESIGNED BY: N.S.P.	
COUNTY		
NEW CASTLE	CHECKED BY: B.R.T.	

GRADES & GEOMETRICS

GG-11

SHEET NO. 60

TOTAL SHTS. 179

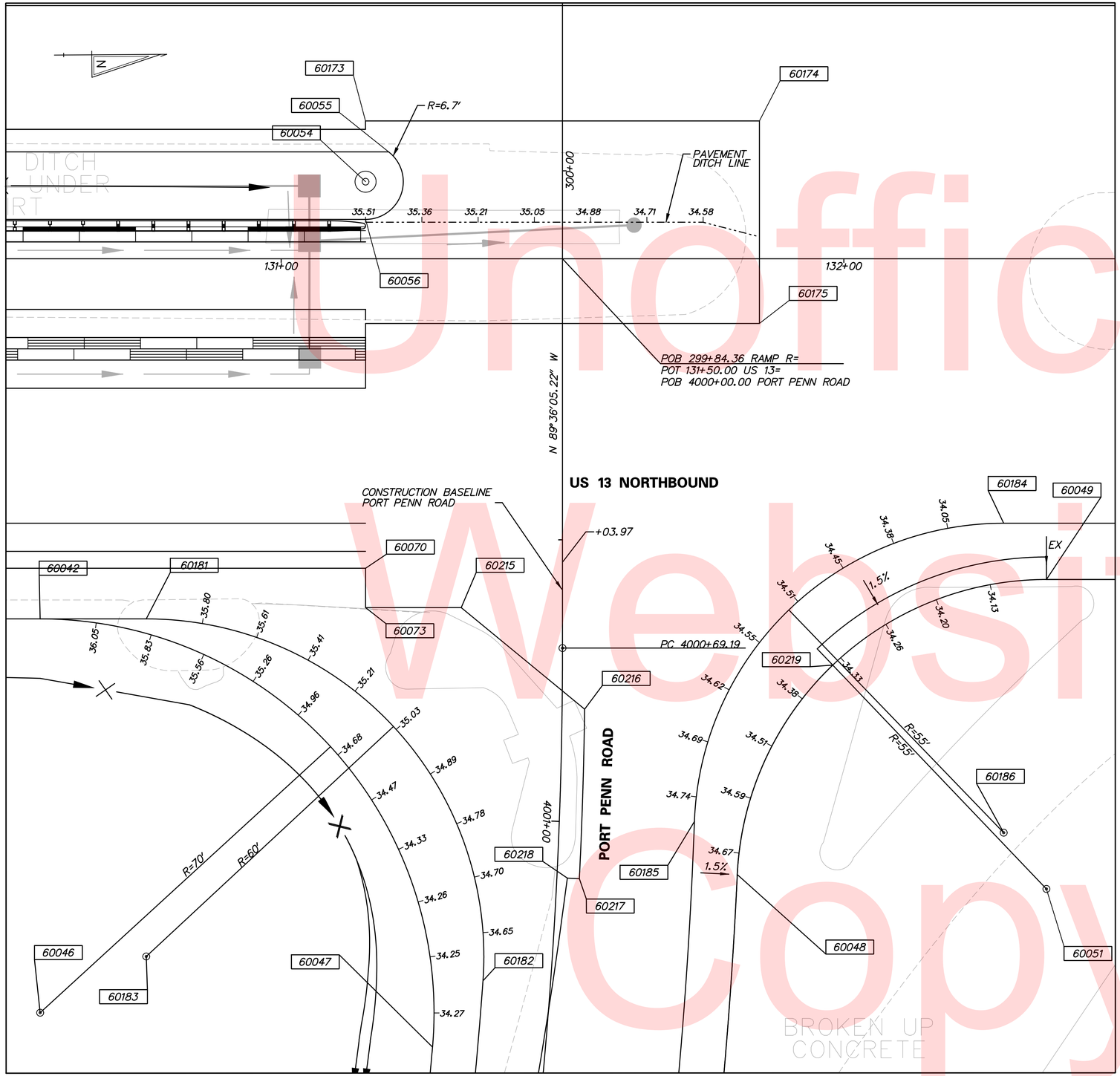

COORDINATE LIST

POINT NO.	STATION	OFFSET	NORTHING	EASTING
60042	130+57.17	64.00	555336.4657	590692.1471
60046	4001+41.94	90.00	555335.9788	590762.1454
60047	4001+41.94	20.00	555405.6678	590768.7362
60048	4001+07.97	-32.00	555460.0416	590738.4485
60049	132+36.00	57.00	555515.3454	590686.3912
60051	4001+07.97	-87.00	555514.9629	590741.3899
60054	131+15.00	-13.70	555394.8368	590614.8489
60055	131+19.11	-19.00	555398.9791	590609.5799
60056	131+15.00	-7.00	555394.7902	590621.5511
60070	131+15.00	55.00	555394.3589	590683.5496
60073	131+15.00	59.00	555394.3102	590690.5494
60173	131+14.99	-24.50	555394.8997	590604.0514
60174	131+85.00	-24.50	555464.9102	590604.5384
60175	131+85.00	11.50	555464.6598	590640.5375
60181	130+76.02	64.00	555355.3209	590692.2782
60182	4001+29.24	12.00	555414.7162	590757.0144
60183	4001+29.24	72.00	555354.9035	590752.2768
60184	132+28.41	47.00	555507.8215	590676.3386
60185	4000+99.16	-24.00	555452.4896	590728.9763
60186	4000+99.16	-79.00	555507.4389	590731.3373
60215	4000+62.00	18.00	555411.3098	590690.6676
60216	4000+80.00	-4.00	555433.1132	590708.8714
60217	4001+10.00	-4.00	555431.9699	590738.9921
60218	4001+10.00	-1.86	555507.4389	590731.3373
60219	4000+72.05	-48.03	555477.2653	590701.3413

NOTES:

1. OFFSETS SHOWN IN THE GEOMETRY TABLES WITH A MINUS SIGN ARE TO THE LEFT OF THE CONSTRUCTION BASELINE.
2. UNLESS OTHERWISE NOTED, POINT GEOMETRY ADJACENT TO CURB AND GUTTER IS GIVEN TO THE EDGE OF PAVEMENT.
3. RADII ARE GIVEN TO THE EDGE OF PAVEMENT.
4. UNLESS OTHERWISE NOTED, EDGE OF PAVEMENT ELEVATIONS AT CURB RETURNS ARE GIVEN AT 10 FOOT INTERVALS.
5. PROPOSED CURB OR PAVEMENT THAT TIES INTO EXISTING PAVEMENT OR EXISTING CURBS SHALL MATCH THE EXISTING PAVEMENT OR CURB ELEVATIONS AND CROSS SLOPES.

Unofficial Website Copy

N:\31653-000\Contract 1D\CADD\60012U301_1D.dgn
7/10/2015 10:27:04 AM

DELAWARE DEPARTMENT OF TRANSPORTATION

ADDENDUMS / REVISIONS

SCALE 0 10 20 30 FEET

US 13 & PORT PENN RD INTERSECTION

CONTRACT	BRIDGE NO.
T201011302	DESIGNED BY: N.S.P.
COUNTY	
NEW CASTLE	CHECKED BY: B.R.T.

GRADES & GEOMETRICS

GG-12

SHEET NO. 61

TOTAL SHTS. 179

AREA NOT SUBJECT TO SECTION 501.14 PAVEMENT SMOOTHNESS TESTING AND 501.16.3 PAVEMENT SMOOTHNESS ACCEPTANCE AND PAYMENT

NOTES:

1. JOINT LAYOUT AS SHOWN ON THE PLANS IS GRAPHICAL AND IT IS THE RESPONSIBILITY OF THE CONTRACTOR TO CONSTRUCT THE JOINTS ACCORDING TO THE STANDARD DETAILS AND THESE GENERAL NOTES.
2. TYPICAL TRANSVERSE JOINT SPACING IS 15'.
3. THE MAXIMUM SLAB WIDTH IS 14' UNLESS OTHERWISE NOTED ON THE PLANS OR APPROVED BY THE ENGINEER.
4. THE MINIMUM SLAB WIDTH IS 4'.
5. THE MINIMUM TRANSVERSE JOINT SPACING IS 12'. THE MAXIMUM TRANSVERSE SPACING IS 17'. MAXIMUM AND MINIMUM SPACING ON CURVES SHALL BE MEASURED ALONG THE LONGEST CHORD. THE MAXIMUM AND MINIMUM SPACING FOR CURVES ON THE US 301 MAINLINE SHOULD BE CALCULATED FOR FUTURE LANE EXPANSION INTO THE MEDIAN WHERE APPLICABLE.
6. PAVEMENT CROSS SLOPES AND TRANSITION LENGTHS SHALL BE ADJUSTED AS NEEDED PER LOCATION AND TO MEET DESIGN CRITERIA.
7. IN CURVED SECTIONS, SLAB DIMENSIONS ARE PROVIDED ALONG THE OUTER RADIUS OF THE THROUGH TRAVEL LANES.

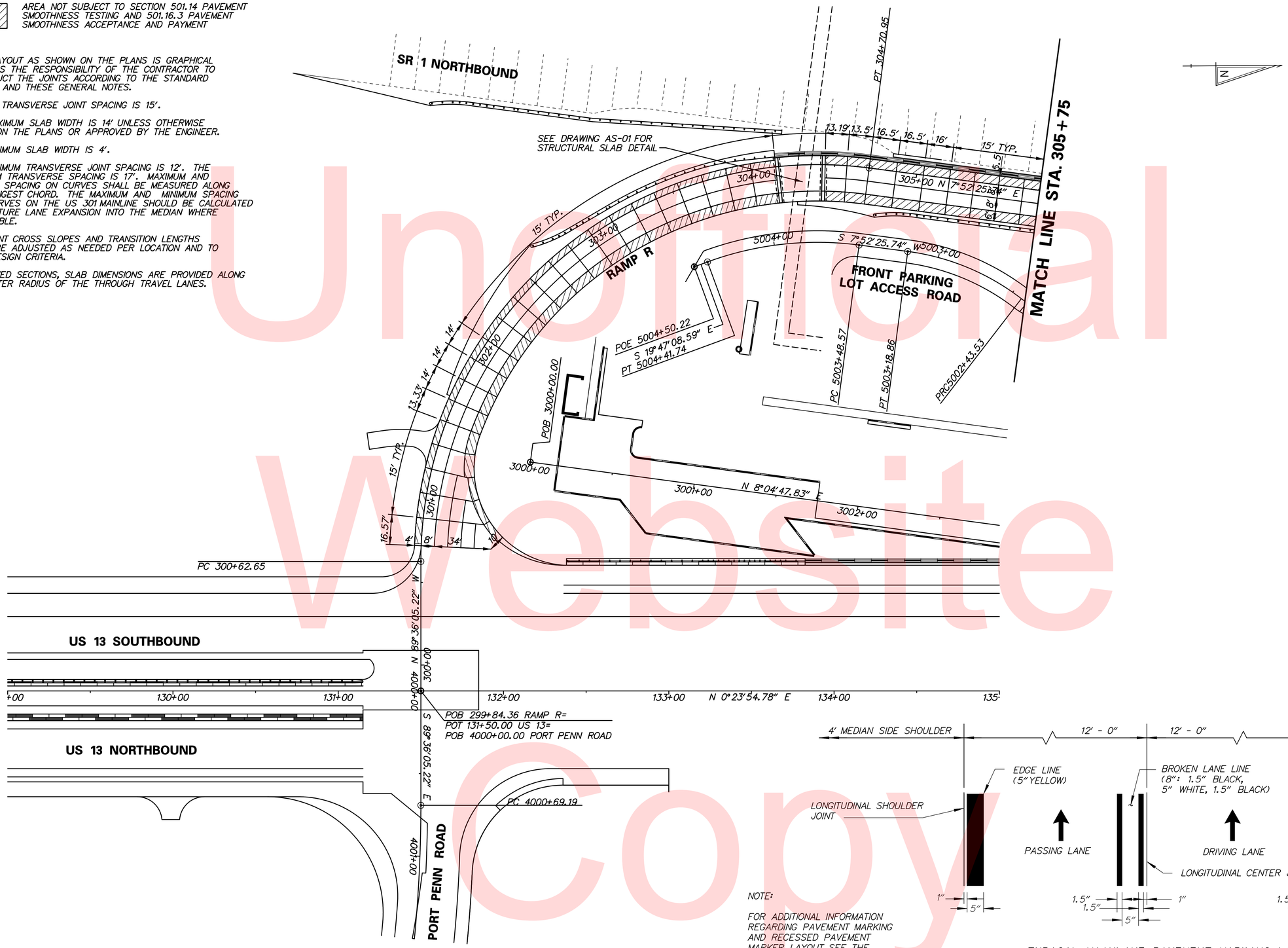

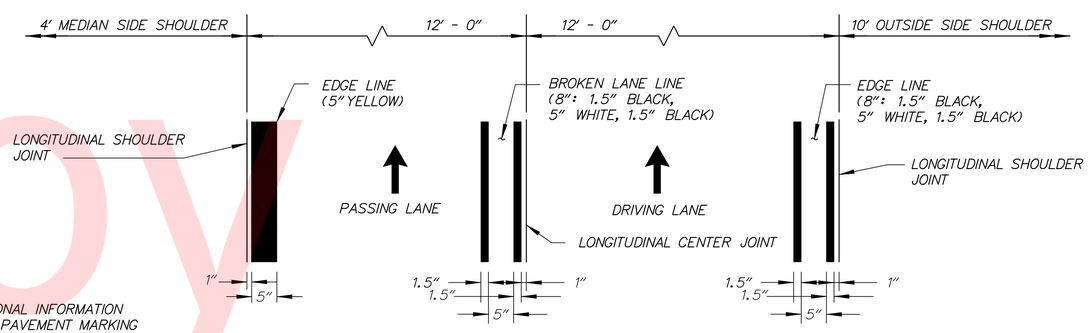

NOTE:

FOR ADDITIONAL INFORMATION REGARDING PAVEMENT MARKING AND RECESSED PAVEMENT MARKER LAYOUT SEE THE DELAWARE MUTCD.

TYPICAL MAINLINE PAVEMENT MARKING LAYOUT

NTS

Unofficial Website Copy

N:\33653-000\CONTRACT 1D\CADD\EX001U301_1D.dgn
11/12/2015 2:57:27 PM

DELAWARE DEPARTMENT OF TRANSPORTATION	ADDENDUMS / REVISIONS SCALE 0 30 60 90 FEET	US 13 & PORT PENN RD INTERSECTION	CONTRACT T201011302	BRIDGE NO.	PAVEMENT JOINT LAYOUT PLAN	EX-01
			COUNTY NEW CASTLE	DESIGNED BY: NSP CHECKED BY: BRT		SHEET NO. 62 TOTAL SHTS. 179

NOTES:

1. JOINT LAYOUT AS SHOWN ON THE PLANS IS GRAPHICAL AND IT IS THE RESPONSIBILITY OF THE CONTRACTOR TO CONSTRUCT THE JOINTS ACCORDING TO THE STANDARD DETAILS AND THESE GENERAL NOTES.
2. TYPICAL TRANSVERSE JOINT SPACING IS 15'.
3. THE MAXIMUM SLAB WIDTH IS 14' UNLESS OTHERWISE NOTED ON THE PLANS OR APPROVED BY THE ENGINEER.
4. THE MINIMUM SLAB WIDTH IS 4'.
5. THE MINIMUM TRANSVERSE JOINT SPACING IS 12'. THE MAXIMUM TRANSVERSE SPACING IS 17'. MAXIMUM AND MINIMUM SPACING ON CURVES SHALL BE MEASURED ALONG THE LONGEST CHORD. THE MAXIMUM AND MINIMUM SPACING FOR CURVES ON THE US 301 MAINLINE SHOULD BE CALCULATED FOR FUTURE LANE EXPANSION INTO THE MEDIAN WHERE APPLICABLE.
6. PAVEMENT CROSS SLOPES AND TRANSITION LENGTHS SHALL BE ADJUSTED AS NEEDED PER LOCATION AND TO MEET DESIGN CRITERIA.
7. IN CURVED SECTIONS, SLAB DIMENSIONS ARE PROVIDED ALONG THE OUTER RADIUS OF THE THROUGH TRAVEL LANES.

AREA NOT SUBJECT TO SECTION 501.14 PAVEMENT SMOOTHNESS TESTING AND 501.16.3 PAVEMENT SMOOTHNESS ACCEPTANCE AND PAYMENT

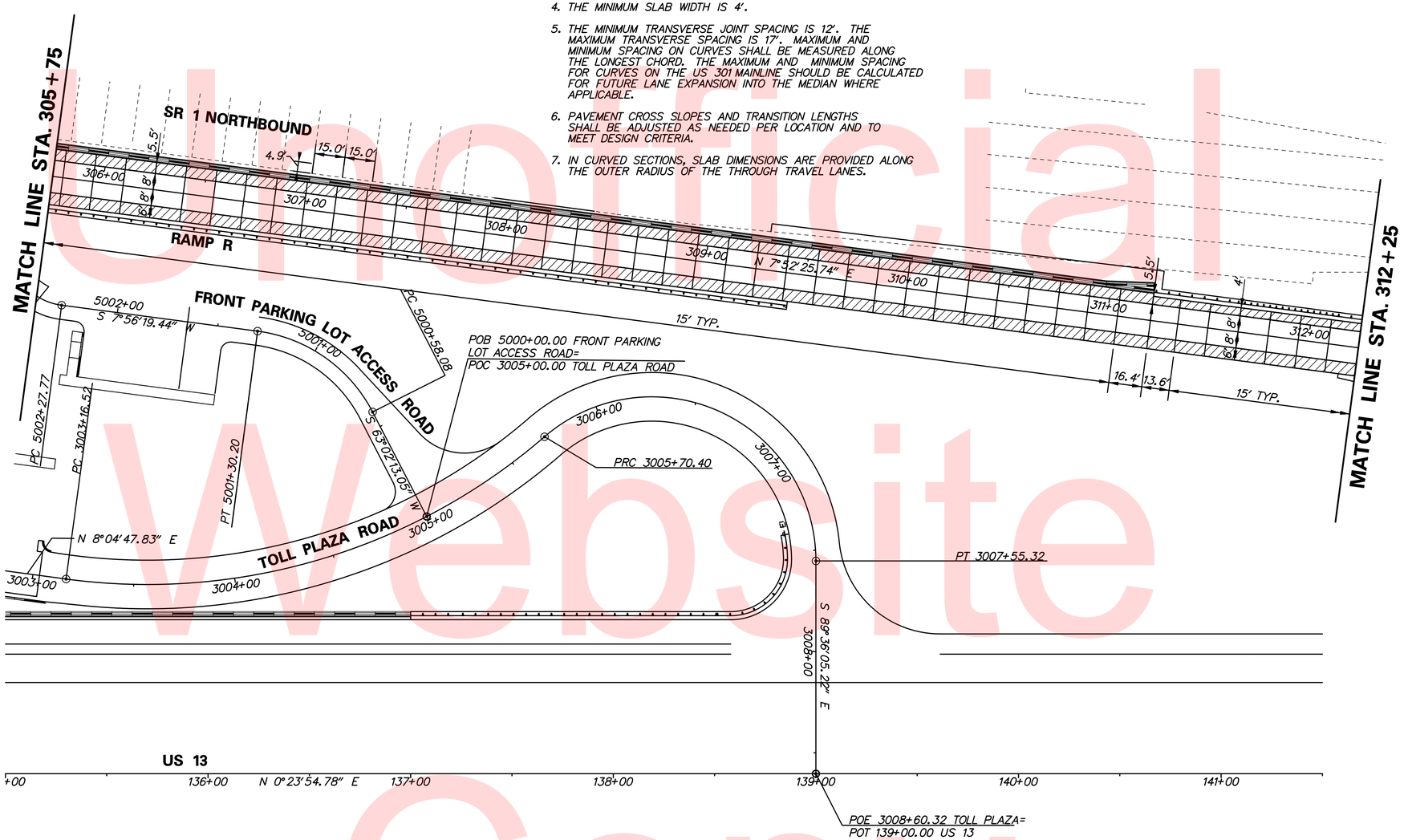

Unofficial Website Copy

N:\31653-000\CONTRACT 8/5/2015 12:02:44 PM ID:\CADD\EX002U301_1D.dgn

DELAWARE DEPARTMENT OF TRANSPORTATION	ADDENDUMS / REVISIONS	SCALE 0 30 60 90 FEET	US 13 & PORT PENN RD INTERSECTION	CONTRACT T201011302	BRIDGE NO.	PAVEMENT JOINT LAYOUT PLAN	EX-02
				COUNTY NEW CASTLE	DESIGNED BY: NSP		SHEET NO. 63
					CHECKED BY: BRT		TOTAL SHTS. 179

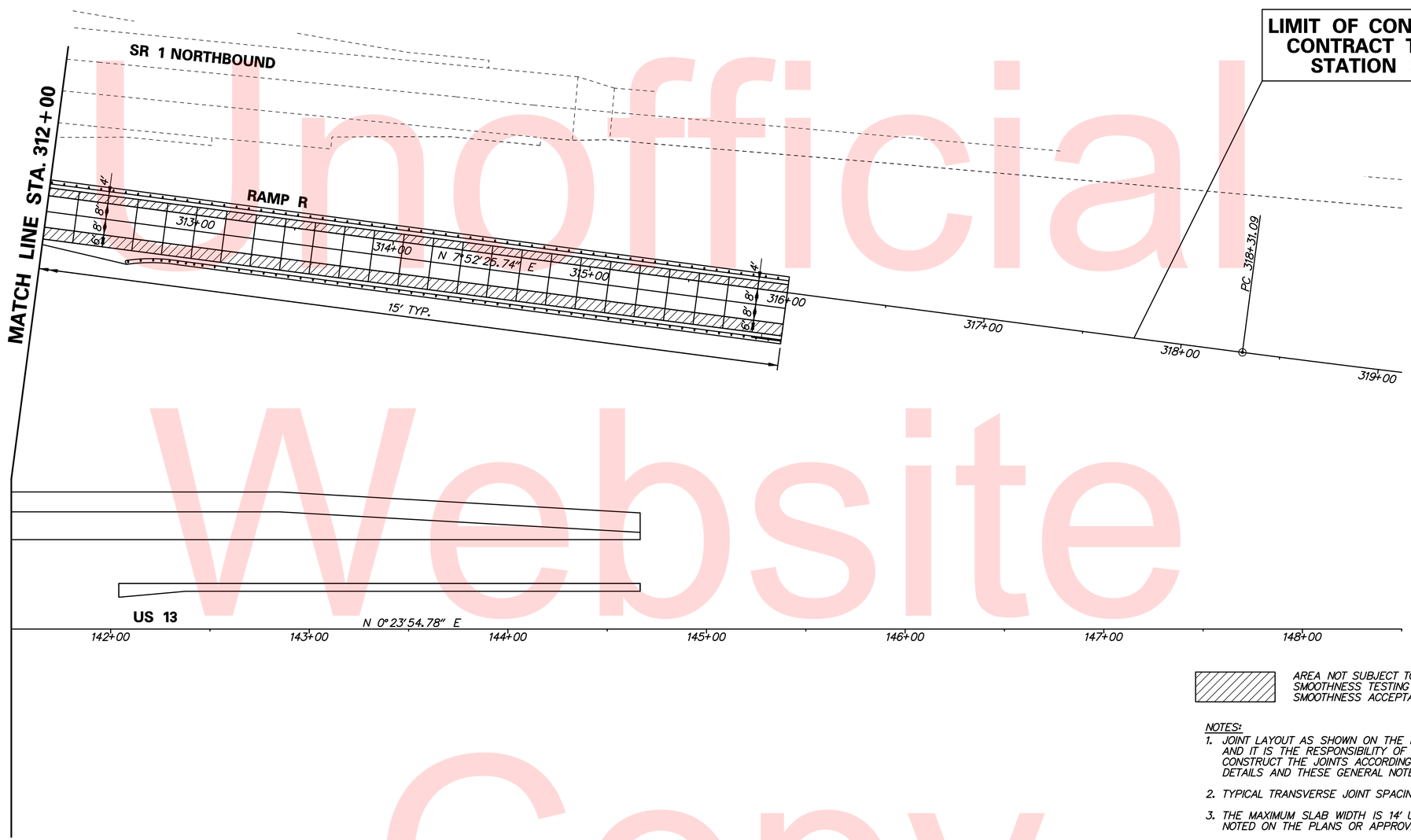

AREA NOT SUBJECT TO SECTION 501.14 PAVEMENT SMOOTHNESS TESTING AND 501.16.3 PAVEMENT SMOOTHNESS ACCEPTANCE AND PAYMENT

NOTES:

1. JOINT LAYOUT AS SHOWN ON THE PLANS IS GRAPHICAL AND IT IS THE RESPONSIBILITY OF THE CONTRACTOR TO CONSTRUCT THE JOINTS ACCORDING TO THE STANDARD DETAILS AND THESE GENERAL NOTES.
2. TYPICAL TRANSVERSE JOINT SPACING IS 15'.
3. THE MAXIMUM SLAB WIDTH IS 14' UNLESS OTHERWISE NOTED ON THE PLANS OR APPROVED BY THE ENGINEER.
4. THE MINIMUM SLAB WIDTH IS 4'.
5. THE MINIMUM TRANSVERSE JOINT SPACING IS 12'. THE MAXIMUM TRANSVERSE SPACING IS 17'. MAXIMUM AND MINIMUM SPACING ON CURVES SHALL BE MEASURED ALONG THE LONGEST CHORD. THE MAXIMUM AND MINIMUM SPACING FOR CURVES ON THE US 301 MAINLINE SHOULD BE CALCULATED FOR FUTURE LANE EXPANSION INTO THE MEDIAN WHERE APPLICABLE.
6. PAVEMENT CROSS SLOPES AND TRANSITION LENGTHS SHALL BE ADJUSTED AS NEEDED PER LOCATION AND TO MEET DESIGN CRITERIA.
7. IN CURVED SECTIONS, SLAB DIMENSIONS ARE PROVIDED ALONG THE OUTER RADIUS OF THE THROUGH TRAVEL LANES.

EX-03

DELAWARE DEPARTMENT OF TRANSPORTATION

ADDENDUMS / REVISIONS

SCALE 0 30 60 90 FEET

US 13 & PORT PENN RD INTERSECTION

CONTRACT	BRIDGE NO.	
T201011302	DESIGNED BY: NSP	
COUNTY		
NEW CASTLE	CHECKED BY: BRT	

PAVEMENT JOINT LAYOUT PLAN

SHEET NO. 64
TOTAL SHTS. 179

N:\31653-000\CONTRACT 1D\CADD\EX003U301_1D.dgn
8/5/2015 12:02:10 PM

Unofficial Website Copy

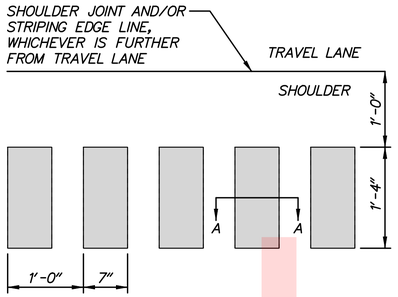

PLAN

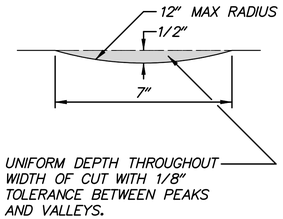

SECTION A-A

EDGELINE RUMBLE STRIPS DETAIL

NOT TO SCALE

NOTES:
- ALL WORK REQUIRED TO COMPLETE THE INSTALLATION OF EDGELINE RUMBLE STRIPS SHALL BE INCIDENTAL TO ITEM 760504 - RUMBLE STRIPS, HOT MIX AND/OR ITEM 760506 - RUMBLE STRIPS, CONCRETE.
- RUMBLE STRIPS END 50' PRIOR TO PHYSICAL GORE
- EDGELINE RUMBLE STRIPS SHALL BE INSTALLED ALONG SHOULDERS, AS PER THIS DETAIL, AT THE FOLLOWING STATIONS:

STATION 80+50 TO STATION 123+00, US 13 NB OUTSIDE SHOULDER
STATION 97+50 TO STATION 131+00, US 13 SB OUTSIDE SHOULDER
STATION 133+25 TO STATION 138+50, US 13 NB OUTSIDE SHOULDER
STATION 139+75 TO STATION 144+66, US 13 SB OUTSIDE SHOULDER
STATION 301+00 TO STATION 316+00, RAMP R INSIDE & OUTSIDE SHOULDERS
STATION 4001+50 TO STATION 4003+22, PORT PENN EB OUTSIDE SHOULDERS
STATION 4004+10 TO STATION 4008+85, PORT PENN WB OUTSIDE SHOULDERS
STATION 4001+20 TO STATION 4003+00, PORT PENN WB OUTSIDE SHOULDERS

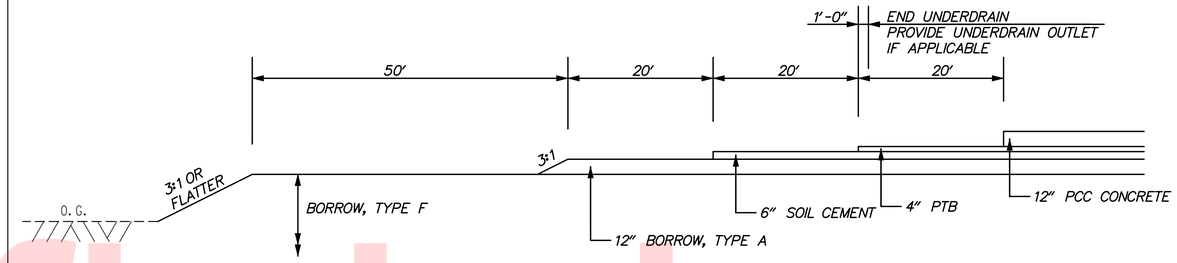

NOTES:
1. THIS DETAIL SHALL APPLY TO PAVEMENT CONSTRUCTED BY THE FIRST CONTRACTOR TO PERFORM WORK IN THIS AREA. SELECTION OF WHICH CONTRACT WILL CONSTRUCT THIS DETAIL WILL BE BASED UPON FIELD CONDITIONS AND WILL BE AT THE DIRECTION OF THE ENGINEER. PAYMENT SHALL BE MADE UNDER THE APPLICABLE CONTRACT PAY ITEMS.
2. THE FIRST CONTRACTOR SHALL COVER THE EXPOSED PERMEABLE TREATED BASE COURSE AND SOIL CEMENT BASE COURSE, INCLUDING SIDES AND ENDS, WITH POLYETHYLENE SHEETING, PROPERLY ANCHORED AND LAPPED AT LEAST 18". NO CONSTRUCTION TRAFFIC OF ANY KIND SHALL BE PERMITTED TO TRAVERSE OVER THE PTB OR SOIL CEMENT AT ANY TIME, EITHER COVERED OR UNCOVERED WITH POLYETHYLENE, EXCEPT FOR NECESSARY EQUIPMENT UTILIZED DURING PAVING OPERATIONS. ALL COSTS FOR FURNISHING, INSTALLING AND MAINTAINING THE POLYETHYLENE SHALL BE INCIDENTAL TO THE UNIT PRICE BID FOR THE PTB AND SOIL CEMENT BASE COURSE PAY ITEMS.
3. THE SECOND CONTRACTOR TO PERFORM OPERATIONS IN THIS AREA SHALL REMOVE AND PROPERLY DISPOSE OF THE POLYETHYLENE AND ANCHORING IMMEDIATELY PRIOR TO BEGINNING PAVEMENT OPERATIONS WITH ALL COSTS INCIDENTAL TO THE UNIT PRICE BID FOR THE PTB AND SOIL CEMENT BASE COURSE PAY ITEMS.
4. THE SECOND CONTRACTOR SHALL ALSO SAW CUT THE ENDS OF THE PTB AND SOIL CEMENT BASE COURSE A MINIMUM OF 6" FROM THE END FINISHED BY THE FIRST CONTRACTOR OR AS DIRECTED BY THE ENGINEER. COSTS FOR SAWCUTTING THE PTB SHALL BE MEASURED FOR PAYMENT UNDER ITEM 762001 SAWCUTTING, HOT MIX. COSTS FOR SAWCUTTING THE SOIL CEMENT BASE COURSE SHALL BE MEASURED FOR PAYMENT UNDER ITEM 762002 SAWCUTTING, CONCRETE, FULL DEPTH.
5. THE FIRST CONTRACTOR SHALL CONSTRUCT AND MAINTAIN EDGE BERMS AND TEMPORARY SLOPE DRAINS ALONG THE TOP OF ALL SIDE AND END SLOPES PER THE INCREMENTAL STABILIZATION DETAILS (STANDARD NO. E-1).
6. THE SECOND CONTRACTOR SHALL REMOVE THE EDGE BERMS AND TEMPORARY SLOPE DRAINS WITH ALL COSTS INCIDENTAL TO ITEM 202000.

PAVEMENT DETAIL AT LIMIT OF CONSTRUCTION

NOT TO SCALE

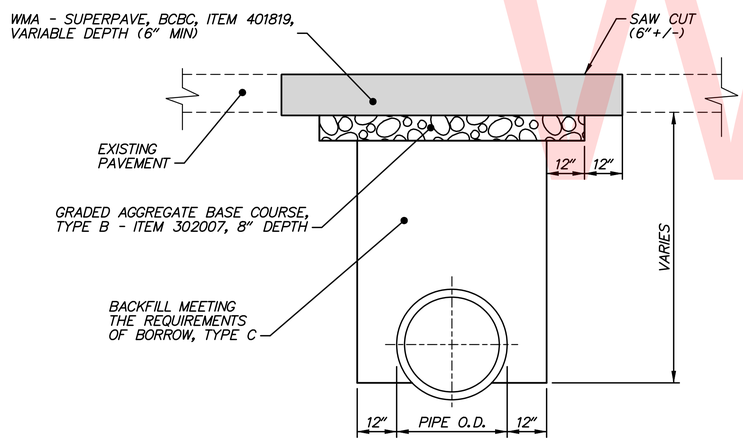

HOT-MIX PAVEMENT PATCH AND PIPE TRENCH

NOT TO SCALE

NOTES:
1. EXISTING HOT-MIX PAVEMENT MAY BE REMOVED BY A MILLING OPERATION. ALL HOT-MIX MATERIAL MUST BE REMOVED TO THE SAW CUT JOINTS PRIOR TO HOT-MIX PATCHING.
2. SEE STANDARD DETAILS FOR PIPE BEDDING.
3. THESE DETAILS SHOW MINIMUM PAVEMENT PATCH REQUIREMENTS. IF EXISTING ROADWAY HAS A HEAVIER CROSS SECTION, PROPOSED PAVEMENT PATCH WILL MATCH HEAVIER CROSS SECTION, OR AS DIRECTED BY THE ENGINEER.

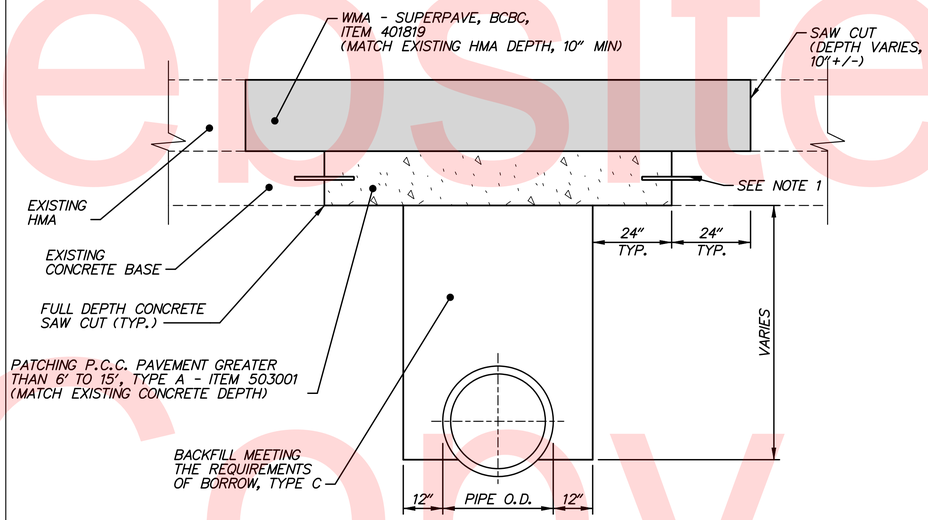

COMPOSITE PAVEMENT PATCH AND PIPE TRENCH

NOT TO SCALE

NOTES:
1. P.C.C. PAVEMENT PATCH SHALL BE DOWELED INTO ADJACENT CONCRETE PER STANDARD DETAILS. PAYMENT FOR DOWELS SHALL BE MADE INCIDENTAL TO ITEM 503002.
2. SEE STANDARD DETAILS FOR PIPE BEDDING.
3. THESE DETAILS SHOW MINIMUM PAVEMENT PATCH REQUIREMENTS. IF EXISTING ROADWAY HAS A HEAVIER CROSS SECTION, PROPOSED PAVEMENT PATCH WILL MATCH HEAVIER CROSS SECTION, OR AS DIRECTED BY THE ENGINEER.

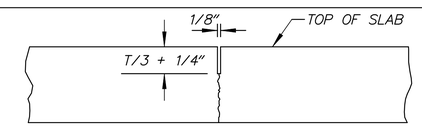

T = PAVEMENT THICKNESS IN INCHES

LONGITUDINAL AND TRANSVERSE SAW-CUT JOINT DETAIL

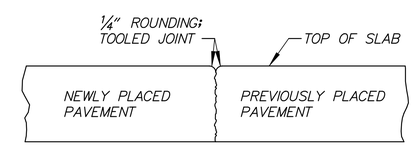

LONGITUDINAL AND TRANSVERSE CONSTRUCTION JOINT DETAIL

NOTES:
1. THESE JOINT DETAILS SHALL BE APPLIED IN LIEU OF THE SEALANT RESERVOIR AND SEALANT DETAILS IN THE STANDARD CONSTRUCTION DETAILS.
2. NO JOINT SEALANT IS REQUIRED TO BE PLACED IN THE PAVEMENT JOINTS, UNLESS SPECIFICALLY NOTED OTHERWISE ON THE PLANS.
3. DOWEL AND TIE BARS NOT SHOWN. SEE STANDARD CONSTRUCTION DETAILS FOR DOWEL AND TIE BAR REQUIREMENTS.

PCC PAVEMENT JOINT DETAILS

NOT TO SCALE

Unofficial Website Copy

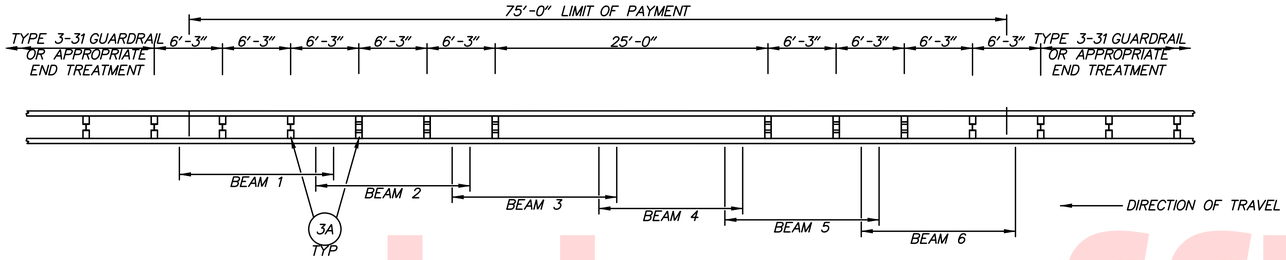

PLAN

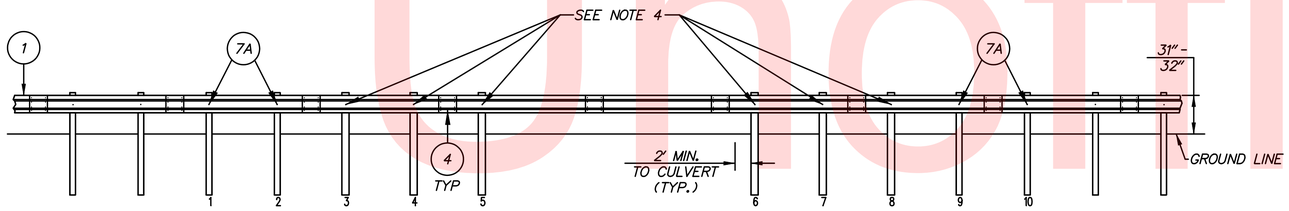

ELEVATION

MEDIAN GUARDRAIL OVER CULVERT, MODIFIED TYPE 3-31

NOT TO SCALE

NOTES:

1). ALL W-BEAMS ARE 13'-6½" (4130) IN LENGTH.
2). PLACE GUARDRAIL DELINEATORS AT THE INTERVALS SPECIFIED IN THE DELAWARE MANUAL ON UNIFORM TRAFFIC CONTROL DEVICES.
3). POSTS 1, 2, 9, & 10 ARE TO BE W6x9 (W15x13.5) STEEL POSTS. POSTS 3 THROUGH 8 ARE TO BE TYPE 31 LONG WOOD BREAKAWAY POSTS.
4). THE RAIL SHALL BE ATTACHED AT POSTS 3 THROUGH 8 WITH A ⅝" (16) x 22" (560) GUARDRAIL BOLT, STEEL WASHER, AND RECESS NUT.

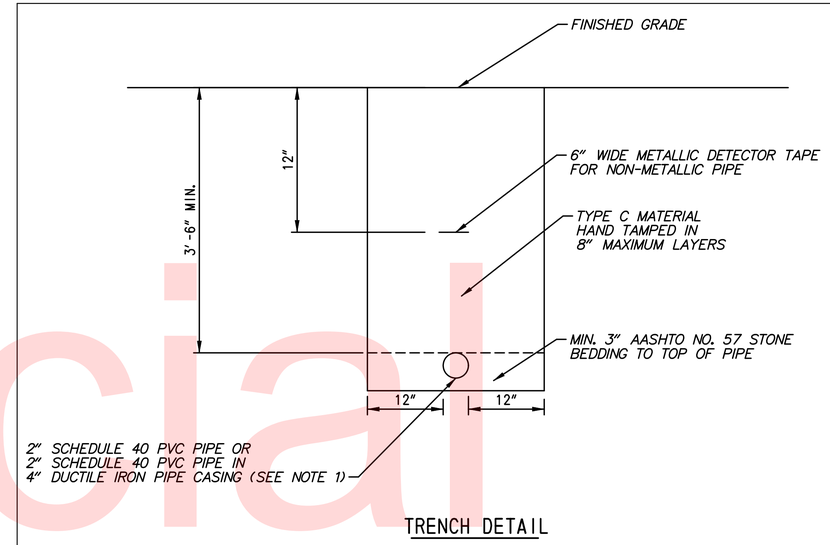

TRENCH DETAIL

NOTES:

1. INSTALL A 45° HORIZONTAL BEND FITTING AT POB. INSTALL 189 LF OF 2" PVC SCHEDULE 40 SANITARY FORCE MAIN WITH SOLVENT WELDED JOINTS FROM 45° HORIZONTAL BEND FITTING AT POB TO THE 90° HORIZONTAL BEND FITTING. INSTALL 63 LF OF 2" PVC SCHEDULE 40 SANITARY FORCE MAIN WITH SOLVENT WELDED JOINTS FROM 90° FITTING TO 45° FITTING AT POE. 42 LF OF FORCE MAIN IS TO BE ENCASED IN 4" DIP CASING PIPE WITH POLYMER CASING SPACERS FROM DIP CASING POB TO DIP CASING POE. SEE 2" SANITARY FORCE MAIN SCHEDULE ON UR-01 FOR FITTINGS AND TIE-IN LOCATIONS.

2" PVC - SCH 40 FORCE MAIN DETAILS

NOT TO SCALE

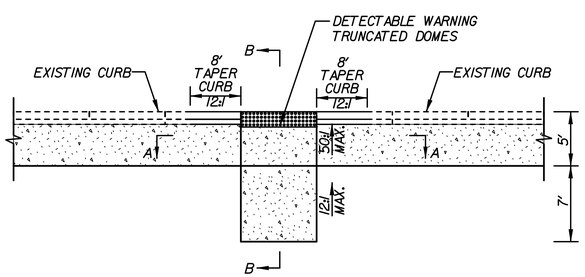

PLAN

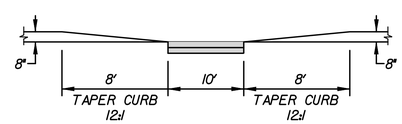

SECTION A-A

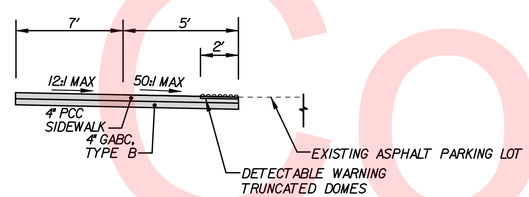

SECTION B-B

CURB RAMP DETAIL

NOT TO SCALE

Unofficial Website Copy

N:\31653-000\Contract 1D\CADD\DT002U301_1D.dgn
11/17/2015 11:32:59 AM

DELAWARE DEPARTMENT OF TRANSPORTATION	ADDENDUMS / REVISIONS	NOT TO SCALE	US 13 & PORT PENN RD INTERSECTION	CONTRACT T201011302 / COUNTY NEW CASTLE	BRIDGE NO. / DESIGNED BY: KAH / CHECKED BY: BRT	CONSTRUCTION DETAILS

DT-02

SHEET NO. 66

TOTAL SHTS. 179

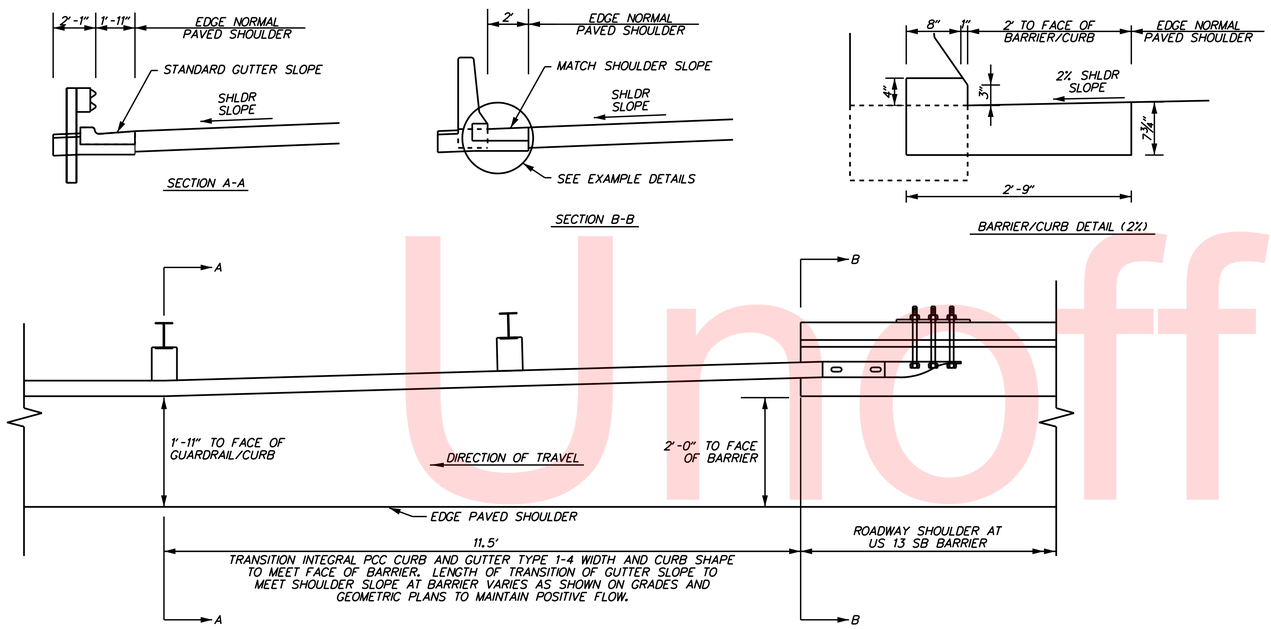

NOTES:
1. PLACE PREFORMED EXPANSION JOINT MATERIAL BETWEEN END OF CURB AND BARRIER PER SECTION 701.03.
2. TRANSITION LIMITS TO BE MEASURED FOR PAYMENT UNDER ITEM 701016 WITH ALL COSTS FOR TRANSITION INCLUDED IN ITEM 701016.

CURB TRANSITION DETAILS AT GUARDRAIL TO BARRIER CONNECTION (EXIT TYPE)

US 13 SOUTHBOUND OUTSIDE SHOULDER: STA. 133+32.5 TO STA. 133+21.0

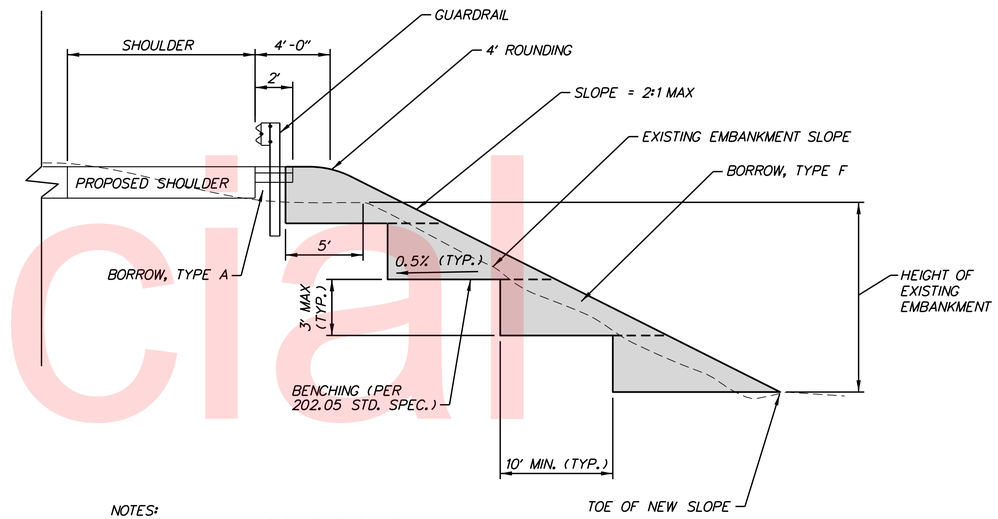

NOTES:
BENCHING SHALL CONFORM TO THIS DETAIL AT ALL LOCATIONS WHERE EXISTING EMBANKMENTS WITH A SLOPE 4:1 OR STEEPER, AND A HEIGHT OF 3' OR MORE, ARE WIDENED.

BENCHING DETAIL

NOT TO SCALE

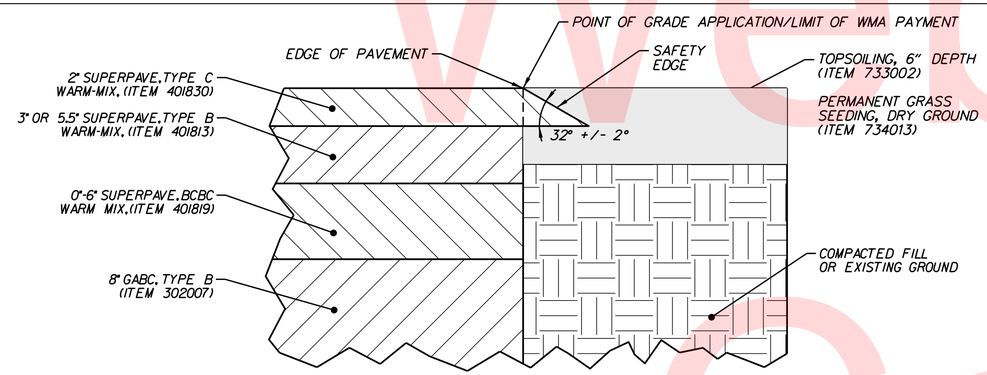

SAFETY EDGE - BITUMINOUS PAVEMENT AND OVERLAYS

NOT TO SCALE

NOTE:
1. FOR ADDITIONAL INFORMATION, SEE ITEM 401572 SAFETY EDGE FOR ROADWAY PAVEMENT.
2. THE SAFETY EDGE SHALL NOT BE CONSTRUCTED ADJACENT TO OTHER PAVEMENTS, CURB, CURB & GUTTER, CONCRETE SAFETY BARRIER OR MAINTENANCE PAVEMENT UNDER GUARDRAIL. THE CONTRACTOR SHALL STAKE OUT THE LIMITS OF THE AREAS NOT TO RECIEVE THE SAFETY EDGE FOR APPROVAL BY TH ENGINEER PRIOR TO BEGINNING PAVEMENT OPERATIONS.
3. IN BITUMINOUS CONCRETE PAVEMENT SECTIONS, PRIOR TO THE CONSTRUCTION OF THE SAFETY EDGE IN OVERLAY SECTIONS AND MILL/OVERLAY SECTIONS, THE EXISTING TOPSOIL OR IN-SITU MATERIAL AT THE EDGE OF PAVEMENT SHALL BE COMPACTED SO THAT IT IS LEVEL WITH THE BOTTOM OF THE FINAL SURFACE LAYER PRIOR TO PLACING THE FINAL SURFACE OVERLAY. AFTER THE FINAL SURFACE OVERLAY IS PACED, TOPSOIL SHALL BE PLACED TO THE TOP OF THE FINAL SURFACE OVERLAY.
4. IN BITUMINOUS CONCRETE PAVEMENT SECTIONS WHERE FULL DEPTH TOPSOIL IS PROPOSED TO BE PLACED ADJACENT TO THE EDGE OF PAVEMENT, THE TOPSOIL SHALL BE PLACED AND COMPACTED ALONG THE PAVEMENT EDGE TO THAT IS IT LEVEL WITH THE BOTTOM OF THE FINAL SURFACE LAYER PRIOR TO PACING THE FINAL SURFACE OVERAY. AFTER THE FINAL SURFACE OVERLAY IS PLACED, THE TOPSOIL SHALL BE PLACED TO THE TOP OF THE FINAL SURFACE OVERLAY. ALL COSTS FOR PLACING AND COMPACTING THE TOPSOIL SHALL BE INCLUDED IN THE PRICE OF THE TOPSOIL ITEM,

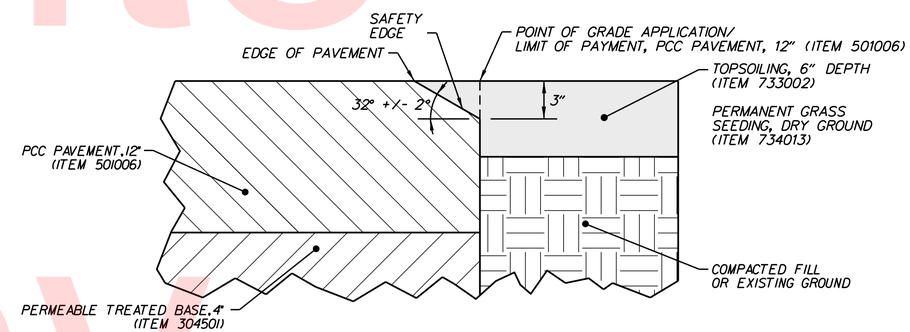

SAFETY EDGE - CONCRETE PAVEMENT

NOT TO SCALE

NOTE:
1. FOR ADDITIONAL INFORMATION, SEE ITEM 401572 SAFETY EDGE FOR ROADWAY PAVEMENT.
2. THE SAFETY EDGE SHALL NOT BE CONSTRUCTED ADJACENT TO OTHER PAVEMENTS, CURB, CURB & GUTTER, CONCRETE SAFETY BARRIER OR MAINTENANCE PAVEMENT UNDER GUARDRAIL. THE CONTRACTOR SHALL STAKE OUT THE LIMITS OF THE AREAS NOT TO RECIEVE THE SAFETY EDGE FOR APPROVAL BY THE ENGINEER PRIOR TO BEGINNING PAVEMENT OPERATIONS.

Unofficial Website Copy

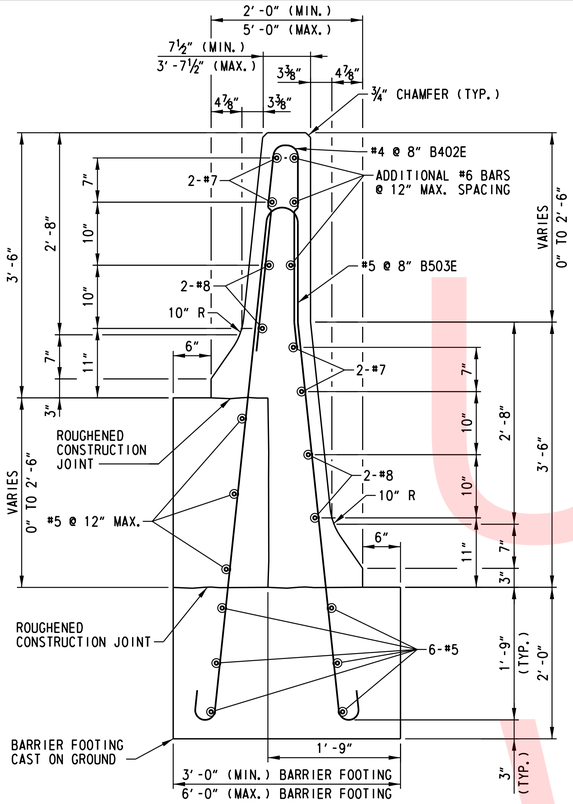

BIFURCATED CONCRETE MEDIAN BARRIER
SCALE: 1"=1'-0"

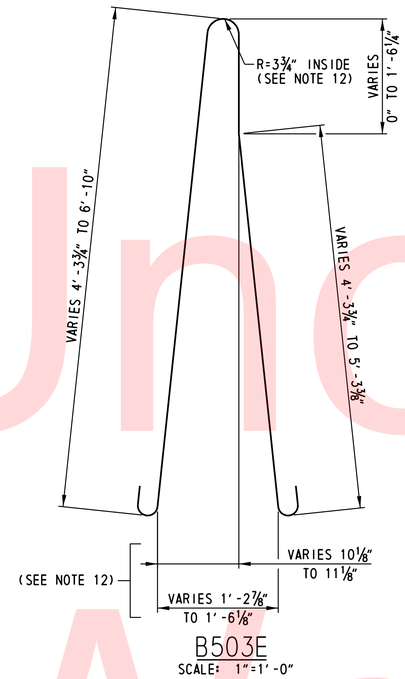

B503E
SCALE: 1"=1'-0"

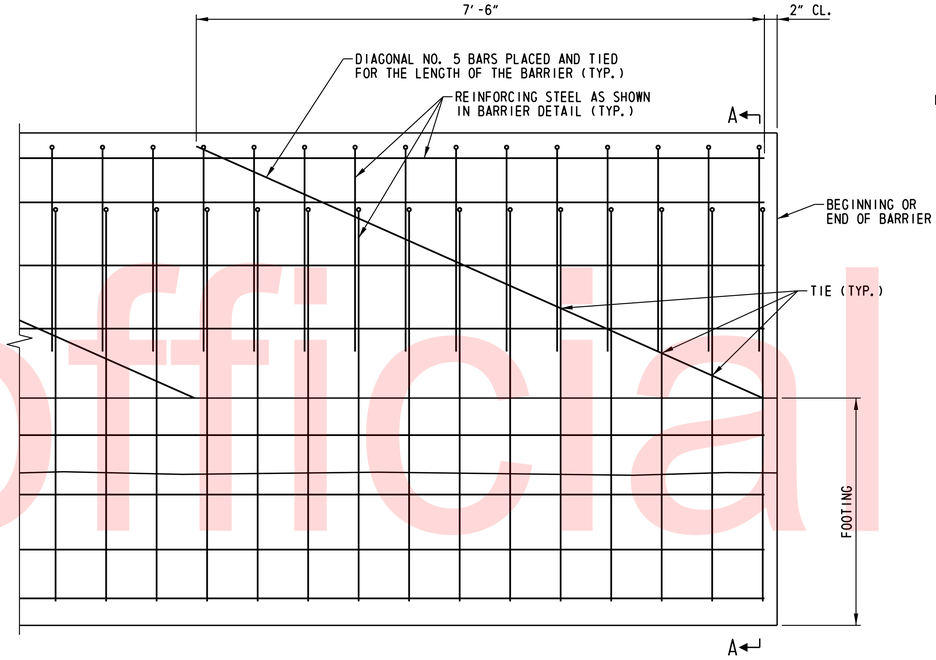

ELEVATION

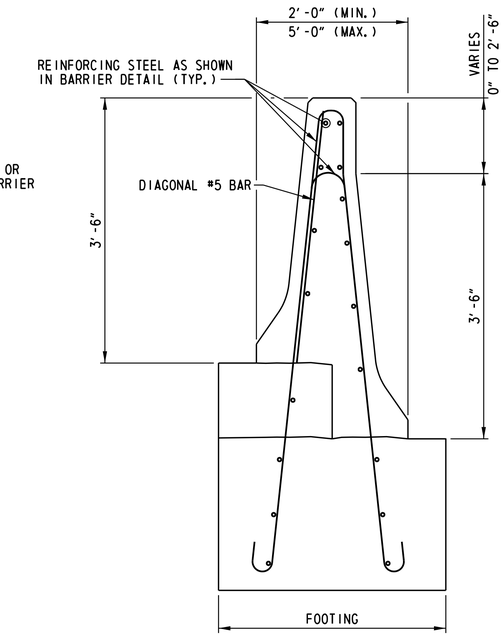

SECTION A-A BIFURCATED CONCRETE MEDIAN BARRIER

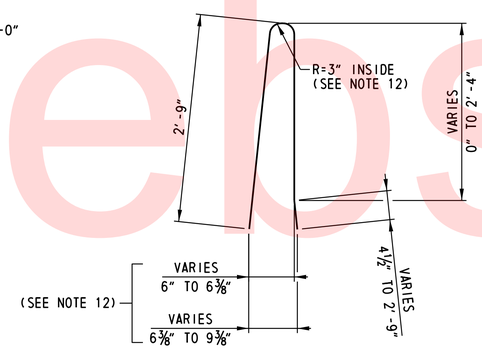

B402E
SCALE: 1"=1'-0"

DIAGONAL BAR DETAIL
SCALE: 1"=1'-0"

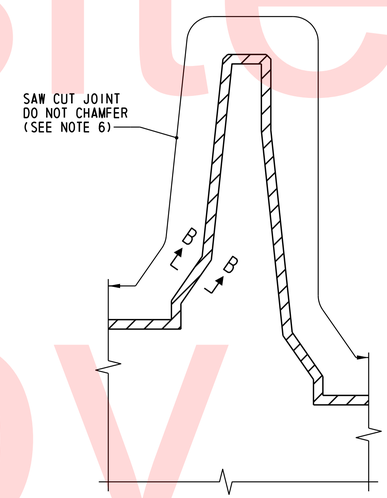

BARRIER CONTROL JOINT DETAIL
SCALE: 1"=1'-0"

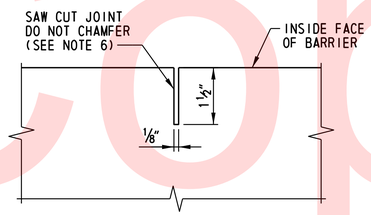

SECTION B-B
NOT TO SCALE

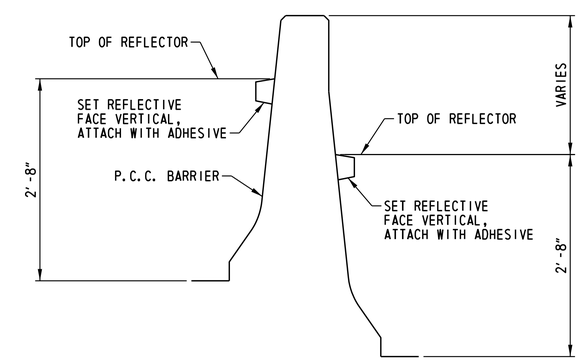

REFLECTOR DETAIL
SCALE: 1"=1'-0"

CONCRETE BARRIER NOTES:

1. BIFURCATED CONCRETE MEDIAN BARRIER MUST MEET TL-4 LOADING CRITERIA AS SPECIFIED IN NCHRP REPORT 350.
2. THE BARRIER AND FOOTING SHALL BE CAST SEPARATELY USING THE FIXED FORM OR THE SLIP FORM CONSTRUCTION METHOD. ALL CONCRETE SHALL BE CLASS A PORTLAND CEMENT CONCRETE (f'c = 4,500 PSI AT 28 DAYS) AND SHALL BE CONTINUOUSLY PLACED WHEN USING FIXED FORM CONSTRUCTION. ALL CONCRETE SHALL BE CLASS B PORTLAND CEMENT CONCRETE (f'c = 3,000 PSI AT 28 DAYS) WHEN USING THE SLIP FORMING CONSTRUCTION METHOD. WHEN USING THE SLIP FORMING CONSTRUCTION METHOD, THE SLIP FORMING MACHINE SHALL BE SUPPORTED OFF OF THE THE CONCRETE SOIL CEMENT BASE COURSE REQUIRED FOR THE ADJACENT ROADWAY.
3. ALL REINFORCING STEEL SHALL MEET THE REQUIREMENTS OF AASHTO M 31 (ASTM A 615), GRADE 60 AND SHALL BE BENT BEFORE APPLYING EPOXY COATING. ALL BAR LAPS SHALL BE IN CONFORMANCE WITH THE CURRENT EDITION OF THE AASHTO LRFD BRIDGE DESIGN SPECIFICATIONS AND ALL BARS SHALL BE TIED TOGETHER.
4. ALL REINFORCING STEEL SHALL BE PROTECTED WITH FUSION-BONDED EPOXY CONFORMING TO AASHTO M 284 (ASTM A 775).
5. WHEN THE BARRIER IS CONSTRUCTED USING THE SLIP FORM METHOD, DIAGONAL NO. 5 BARS ARE REQUIRED.
6. SPACING OF BARRIER CONTROL JOINTS SHALL BE A MAXIMUM OF 10 FEET REGARDLESS OF CONSTRUCTION METHOD, SEE DETAIL THIS SHEET. SPACING OF FOOTING CONTROL JOINTS SHALL BE A MAXIMUM OF 10 FEET AND ALIGN WITH THE CONTROL JOINTS IN THE BARRIER.
7. THE CONTRACTOR HAS THE OPTION TO CONSTRUCT THE FOOTING AND BARRIER AFTER CONSTRUCTION OF THE PAVEMENT. THE FOOTING FORMS, IF USED, SHALL BE REMOVED IF THE BARRIER AND FOOTING ARE CONSTRUCTED BEFORE THE PAVEMENT.
8. THE FOOTING REAR VERTICAL WALL SHALL BE FORMED OR THE CONCRETE PLACED AGAINST THE VERTICAL EARTH SIDE IF APPROVED BY THE ENGINEER. NO ADDITIONAL COMPENSATION FOR ADDITIONAL CONCRETE WILL BE PAID IF THE CONCRETE IS PLACED AGAINST THE EARTH.
9. THE CONTRACTOR SHALL ATTACH THE YELLOW AND/OR WHITE REFLECTORS TO THE BARRIERS AS SHOWN IN THE DETAIL ON THIS SHEET. PAYMENT FOR THE REFLECTORS SHALL BE IN ACCORDANCE WITH ITEM NOS. 720544 AND 720545 AS APPROPRIATE.
10. PRIOR TO PLACING BARRIER CONCRETE ADJACENT TO EXISTING CONCRETE PAVEMENT, OR PRIOR TO PLACING CONCRETE PAVEMENT ADJACENT TO EXISTING BARRIER CONCRETE, AN APPROVED BOND BREAKER SHALL BE APPLIED TO THE EXISTING CONCRETE VERTICAL FACE. THIS LONGITUDINAL JOINT AT THE INTERFACE BETWEEN THE CONCRETE PAVEMENT AND THE BARRIER CONCRETE SHALL BE CONSTRUCTED PER THE LONGITUDINAL DETAIL ON STANDARD P-2, SHEET 3 OF 5. VERTICAL CRACKS IN THE EXISTING CONCRETE FACE SHALL BE COVERED OR SEALED AS APPROVED BY THE ENGINEER TO PREVENT INTRUSION OF THE NEW CONCRETE INTO THE EXISTING CONCRETE. ALL WORK SHALL BE INCIDENTAL TO THE APPROPRIATE BARRIER ITEM.
11. COST OF THE BIFURCATED CONCRETE MEDIAN BARRIER CONCRETE FOOTING, REINFORCING STEEL AND EXCAVATION SHALL BE INCIDENTAL TO THE CONTRACT UNIT PRICE PER LINEAR FOOT FOR BIFURCATED CONCRETE MEDIAN BARRIER (ITEM 720629).
12. BARS B402E AND B503E ARE FOR A 2'-0" WIDE BARRIER. DIMENSIONS WILL VARY FOR BARRIERS GREATER THAN 2'-0" WIDE.

REFLECTOR DETAIL NOTES:

1. COLOR OF REFLECTOR ON TRAFFIC SIDE SHALL MATCH ADJACENT LANE LINE COLOR. BACK SIDE OF ALL REFLECTORS SHALL BE RED.
2. THE SPACING OF REFLECTORS ON PERMANENT P.C.C. BARRIER SHALL BE COORDINATED WITH THE DELINEATORS AT THE APPROACHES TO THE BARRIER SUCH THAT THE SPACING OF DELINEATORS/REFLECTORS DOES NOT EXCEED 100 FT.
3. ALL COST SHALL BE INCLUDED IN ITEM 720544 - REFLECTORS, WHITE, CONCRETE AND 720545 - REFLECTORS, YELLOW, CONCRETE.

Unofficial Website Copy

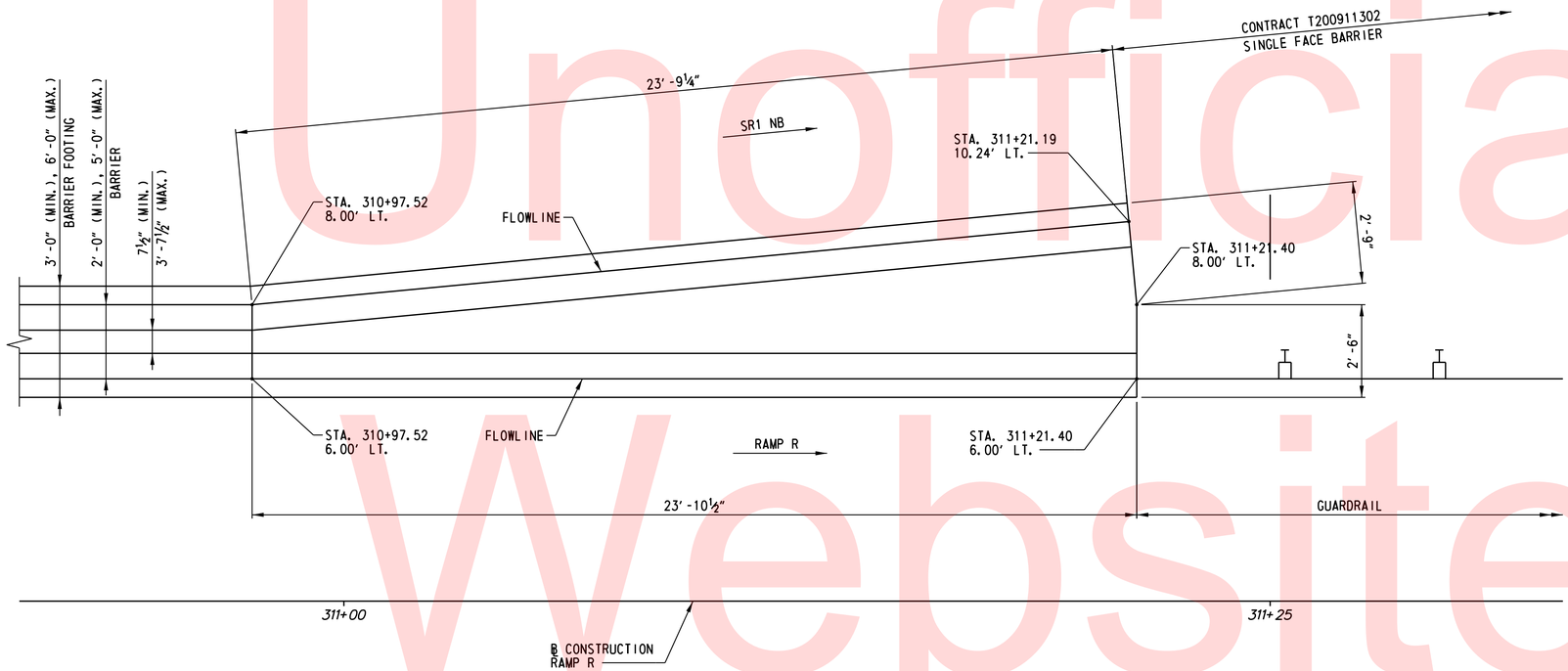

MEDIAN BARRIER AT RAMP R AND SR1 SPLIT - PLAN

SCALE: ½"=1'-0"

NOTE:
FOR CONCRETE BARRIER NOTES, SEE DWG. NO. DT-04.

Unofficial Website Copy

n:\3653-000\contract 1d\cadd\DT005U301_10.dgn
9/17/2012 9:45:40 AM

DELAWARE DEPARTMENT OF TRANSPORTATION	ADDENDUMS / REVISIONS		US 13 & PORT PENN RD INTERSECTION	CONTRACT T201011302	BRIDGE NO.	MEDIAN BARRIER AT RAMP R AND SR1 SPLIT – PLAN	DT-05
				COUNTY NEW CASTLE	DESIGNED BY: B.K.B.		SHEET NO. 69
					CHECKED BY: W.A.G.		TOTAL SHTS. 179

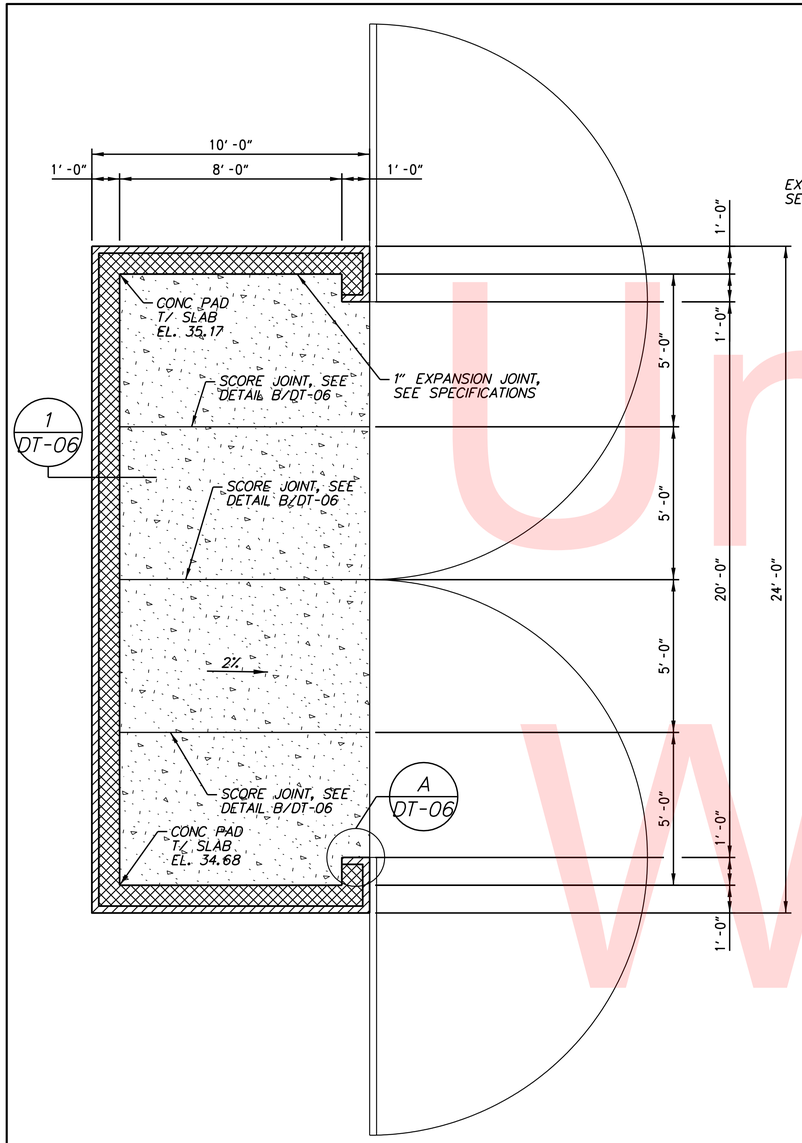

ENLARGED PLAN - DUMPSTER ENCLOSURE

NOT TO SCALE

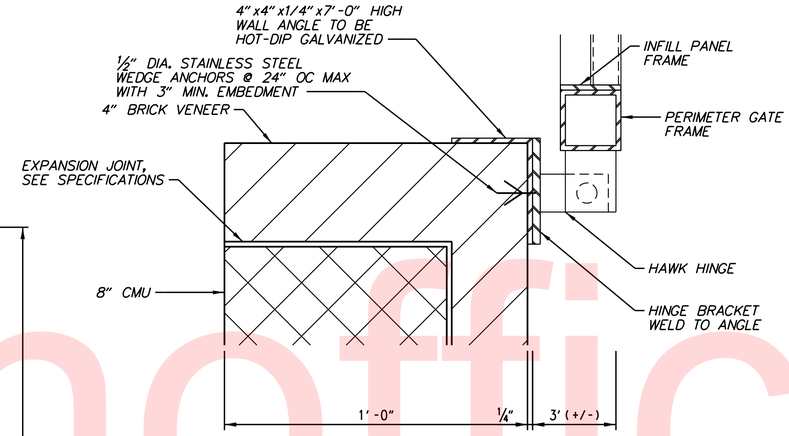

DETAIL

NOT TO SCALE

A
DT-06

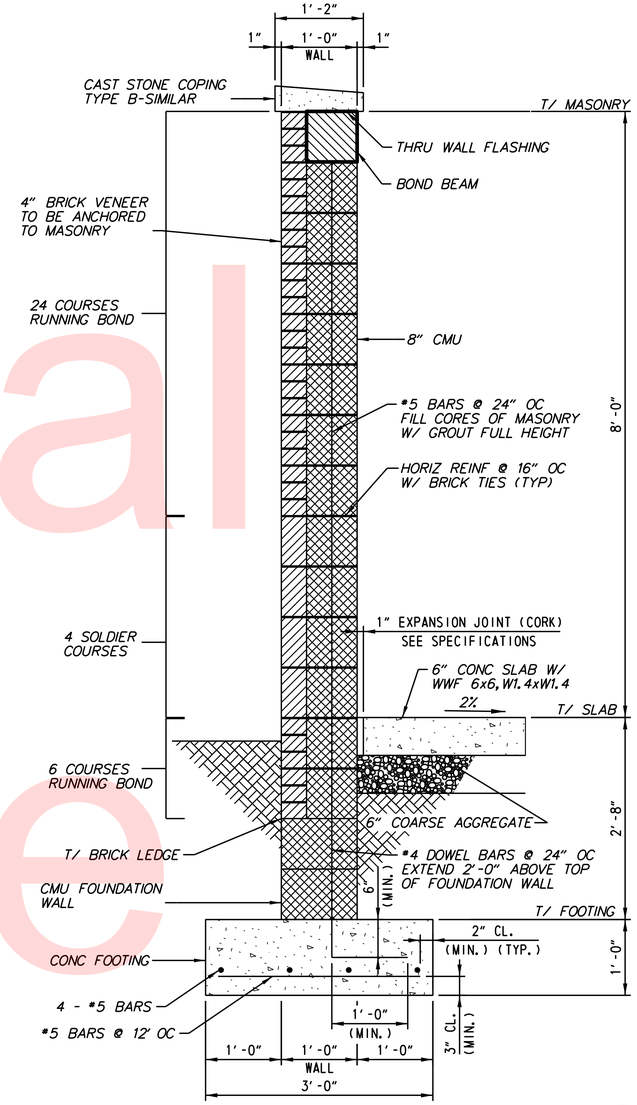

SECTION

NOT TO SCALE

1
DT-06

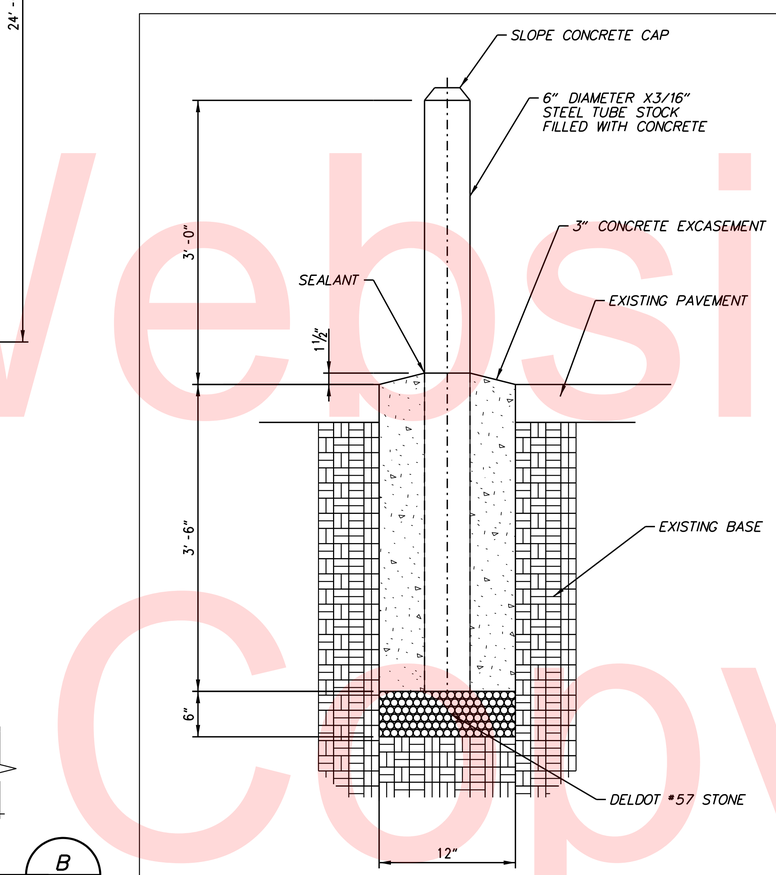

BOLLARD STEEL

NOT TO SCALE

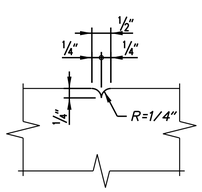

DETAIL

NOT TO SCALE

B
DT-06

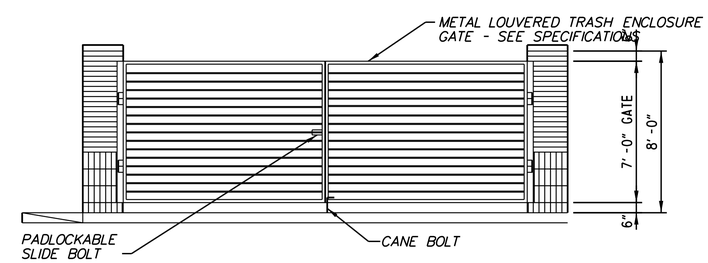

ELEVATION A

NOTES:

1. PAYMENT FOR DUMPSTER ENCLOSURE SHALL BE MADE UNDER ITEM 763659 - DUMPSTER ENCLOSURE.
2. ALL HARDWARE SHALL BE INSTALLED PER MANUFACTURER'S RECOMMENDATIONS.
3. THE CONCRETE PAD SHALL BE CLASS A, 4500 PSI CONCRETE.
4. TOLERANCE ON ALL SCORE JOINT DETAIL DIMENSIONS SHOWN SHALL BE PLUS 1/16", MINUS 0".
5. REFER TO SPECIAL PROVISIONS FOR ADDITIONAL MATERIALS AND CONSTRUCTION REQUIREMENTS.

Unofficial Website Copy

REINFORCED CONCRETE FLARED END SECTION
12" - 33" DIAMETER

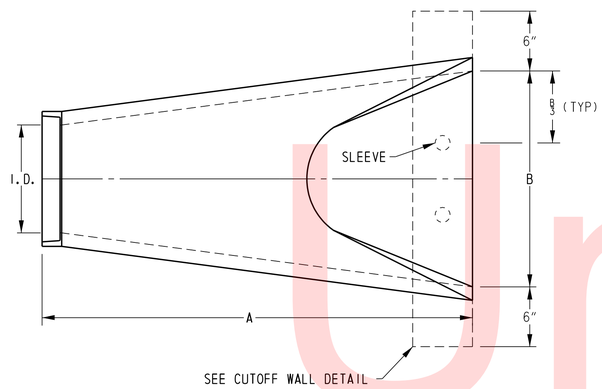

PLAN VIEW

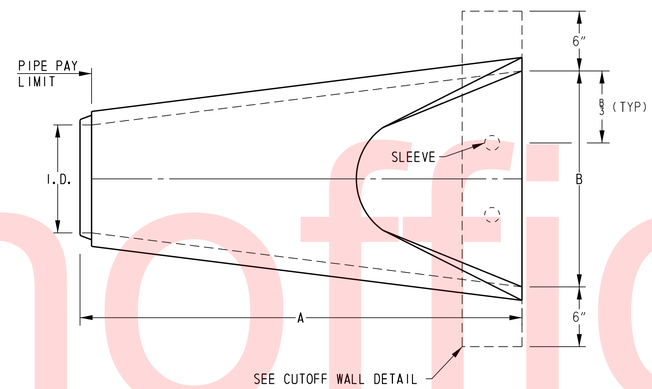

PLAN VIEW

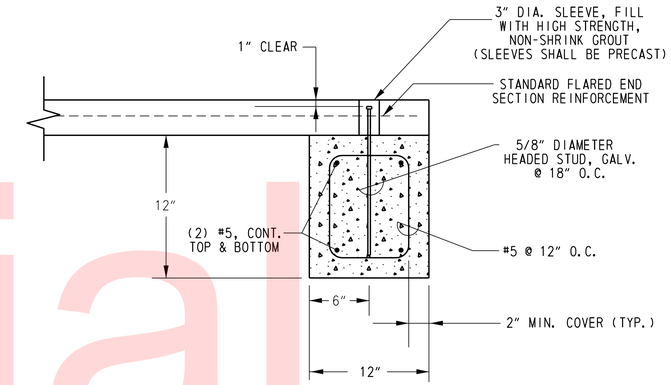

CUTOFF WALL DETAIL
N. T. S.

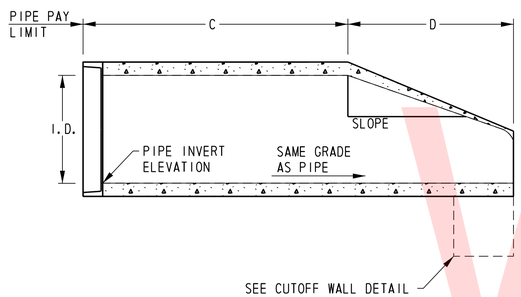

SIDE VIEW

FLARED END SECTION - OUTLET
N. T. S.

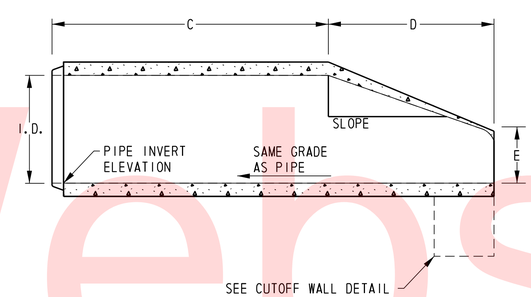

SIDE VIEW

FLARED END SECTION - INLET
N. T. S.

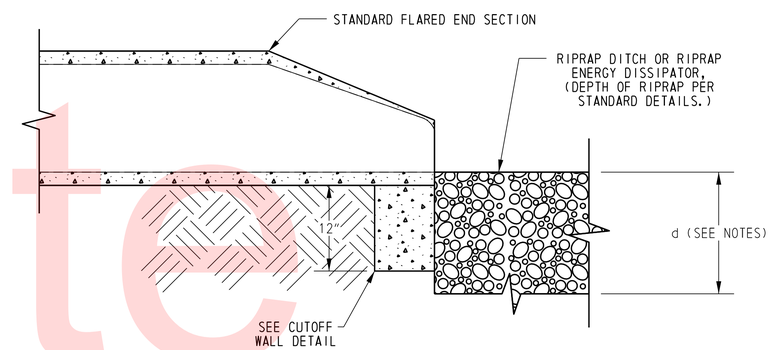

SIDE VIEW WITH OUTLET PROTECTION
N. T. S.

PIPE I.D.	SLOPE	WALL	A (INCHES)	B (INCHES)	C (INCHES)	D (INCHES)	E (INCHES)
12	3:1	2	69	24	48	21	5
15	3:1	2 1/4	73	30	46	27	6
18	3:1	2 1/2	73	36	46	27	9
21	3:1	2 3/4	74	42	38	36	9
24	3:1	3	72 1/2	48	29	43 1/2	9 1/2
27	3:1	3 1/4	75	54	25 1/2	49 1/2	10 1/2
30	3:1	3 1/2	73 3/4	60	19 3/4	54	12
33	3:1	3 3/4	81	66	26	55	14

NOTES:

1. FLARED END SECTIONS SHALL BE MANUFACTURED TO ASTM C-76 AND AASHTO M-170 WITH CLASS III REINFORCEMENT.
2. FLARED END SECTIONS SHALL BE BEDDED IN ACCORDANCE WITH DELDOT STANDARD SPECIFICATION 612, REINFORCED CONCRETE PIPE.
3. FLARED END SECTIONS 27 INCHES AND LARGER SHALL INCLUDE A 12 INCH WIDE CUTOFF WALL CONSTRUCTED AS SHOWN. CUTOFF WALL MAY BE CAST-IN-PLACE OR PRECAST CLASS B CONCRETE. ALL COSTS FOR THE CUTOFF WALL SHALL BE INCIDENTAL TO THE FLARED END SECTION.
4. DEPTH OF RIPRAP (d) PER STANDARD DETAILS.

Unofficial Website Copy

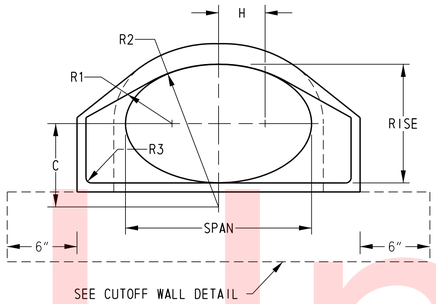

FRONT VIEW

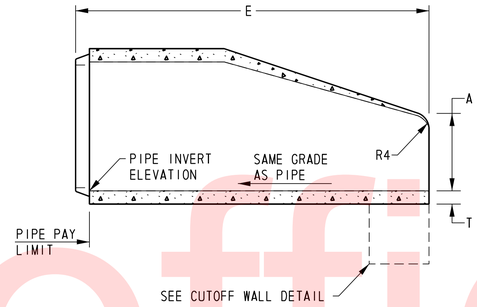

INLET SIDE VIEW

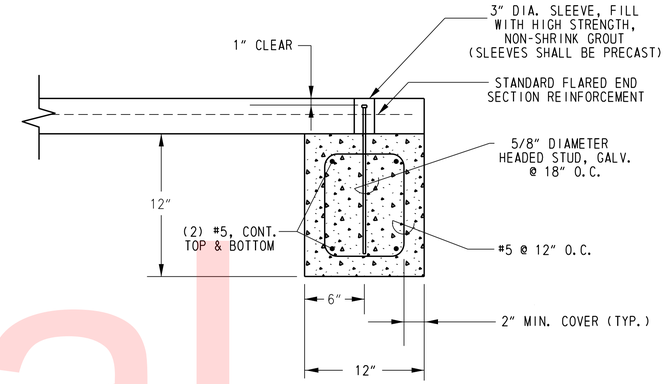

CUTOFF WALL DETAIL
N. T. S.

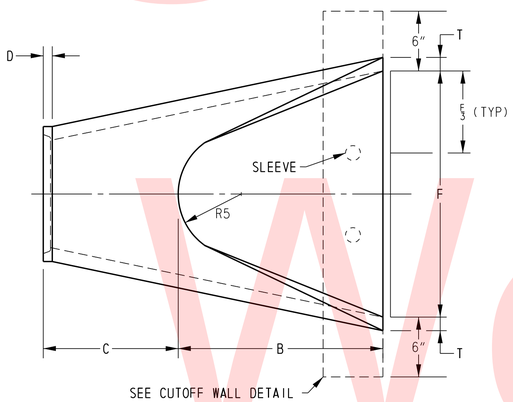

TOP VIEW

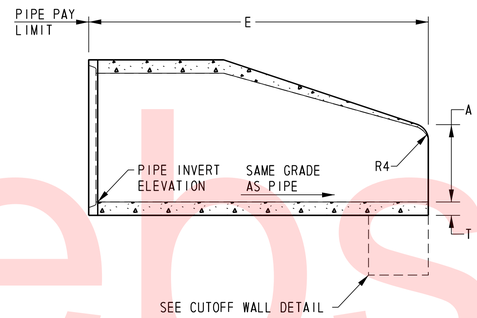

OUTLET SIDE VIEW

FLARED END SECTION - ELLIPTICAL
N. T. S.

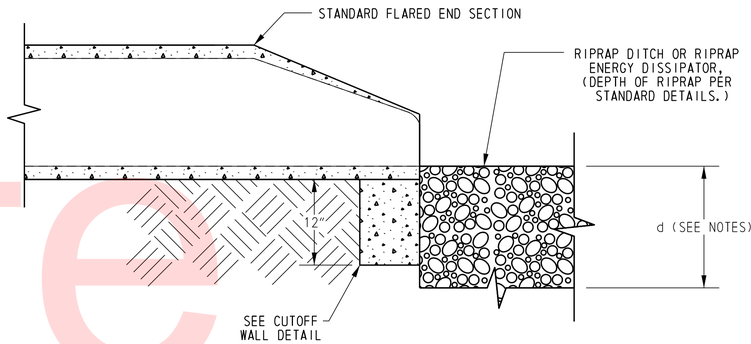

SIDE VIEW WITH OUTLET PROTECTION
N. T. S.

ELLIPTICAL FLARED END SECTIONS
TABLE OF DIMENSIONS

NOMINAL RISE	NOMINAL SPAN	EQUIVALENT DIA.	ACTUAL RISE	ACTUAL SPAN	T (INCHES)	A (INCHES)	B	C	D (INCHES)	E	F (INCHES)	G (INCHES)	H (INCHES)	R1 (INCHES)	R2 (INCHES)	R3 (INCHES)	R4 (INCHES)	R5 (INCHES)
14	23	18	14 5/8	22 7/8	2 3/4	6	2'-2"	3'-11"	2	6'-1"	36	12 25/32	5 11/32	8 27/32	20 11/16	1 1/2	3	12
19	30	24	19 1/8	30 1/8	3 1/4	9	2'-7"	3'-6"	2	6'-1"	48	16 11/16	6 27/32	11 15/32	29 1/2	1 1/2	3	14
22	34	27	21 9/16	34	3 1/2	10 1/2	2'-9"	3'-4"	2 1/4	6'-1"	54	18 3/4	7 3/4	12 3/4	33 1/32	1 1/2	3	14 1/2
24	38	30	24	37 7/8	3 3/4	12	4'-6"	1'-6"	2 1/2	6'-0"	60	20 13/16	8 11/16	14	36 9/16	1 1/2	3	15
27	42	33	26 23/32	41 15/16	4 1/2	11	5'-3"	2'-9"	3	8'-0"	72	24 31/32	10 5/16	16 13/16	43 7/8	1 1/2	4	18

NOTES:

1. FLARED END SECTIONS SHALL BE MANUFACTURED TO ASTM C-76 AND AASHTO M-170 WITH CLASS III REINFORCEMENT.
2. FLARED END SECTIONS SHALL BE BEDDED IN ACCORDANCE WITH DELDOT STANDARD SPECIFICATION 612, REINFORCED CONCRETE PIPE.
3. FLARED END SECTIONS WITH A RISE OF 27 INCHES AND LARGER SHALL INCLUDE A 12 INCH WIDE CUTOFF WALL CONSTRUCTED AS SHOWN. CUTOFF WALL MAY BE CAST-IN-PLACE OR PRECAST CLASS B CONCRETE. ALL COSTS FOR THE CUTOFF WALL SHALL BE INCIDENTAL TO THE FLARED END SECTION.
4. DEPTH OF RIPRAP (d) PER STANDARD DETAILS.

Unofficial Website Copy

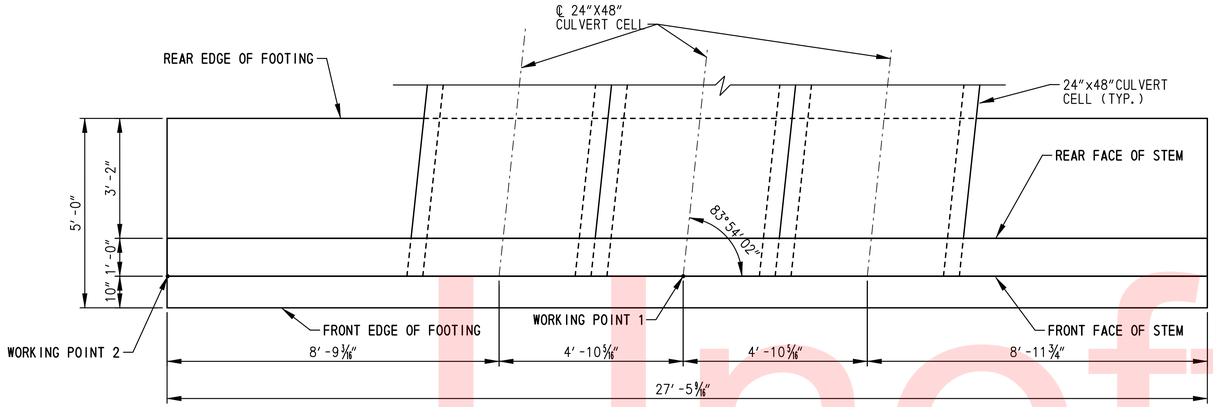

ENDWALL NO. 501 – NO. 502 – PLAN

SCALE: 1/2"=1'-0"

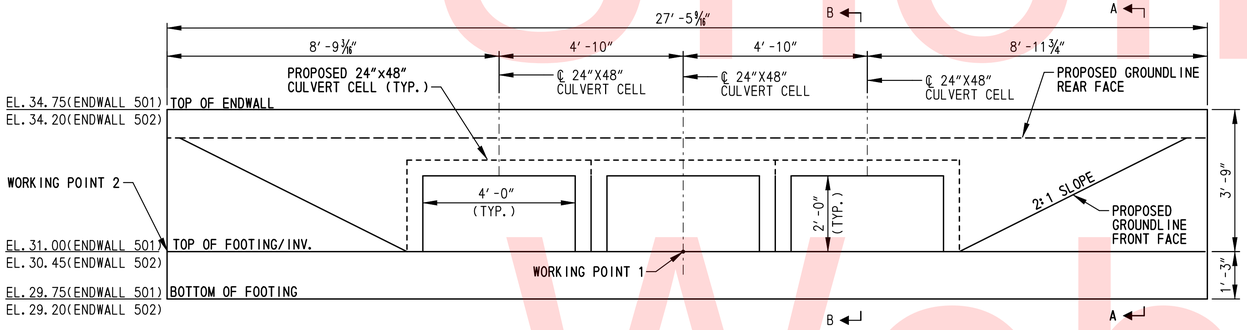

ENDWALL NO. 501 – NO. 502 – ELEVATION

SCALE: 1/2"=1'-0"

EW502 WORKING POINT COORDINATES		
WORKING POINT	NORTHING	EASTING
WORKINGG POINT-1	555458.8156	590866.5220
WORKINGG POINT-2	555456.2264	590879.8980

EW501 WORKING POINT COORDINATES		
WORKING POINT	NORTHING	EASTING
WORKINGG POINT-1	555380.0247	590842.3506
WORKINGG POINT-2	555382.6114	590828.9878

ENDWALL NO. 501 - NO. 502 NOTES:

1. MAXIMUM FACTORED BEARING RESISTANCE FOR THE ENDWALL IS 2 KSF.
2. KEYS ARE NOMINAL SIZE.
3. CONCRETE SHALL BE CLASS A, 4500 PSI.
4. RIPRAP IN FRONT OF WALL NOT SHOWN FOR CLARITY.
5. ENDWALL NO.203 SHALL BE CAST-IN-PLACE. NO PRECAST ALTERNATIVE WILL BE ALLOWED.
6. E.F. = EACH FACE
   F.F. = FRONT FACE
   R.F. = REAR FACE
   E.S. = EQUAL SPACING.
7. SEE REINFORCING BAR LIST ON DRAWING DT-10.

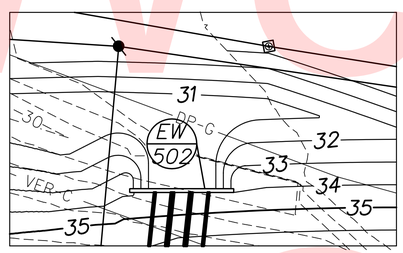

ENDWALL NO. 502 – GRADING

SCALE: 1"=20'

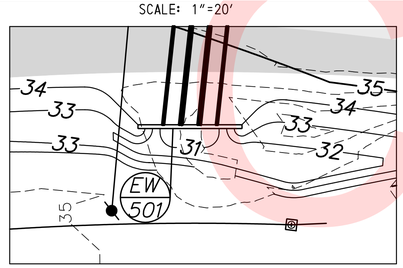

ENDWALL NO. 501 – GRADING

SCALE: 1"=20'

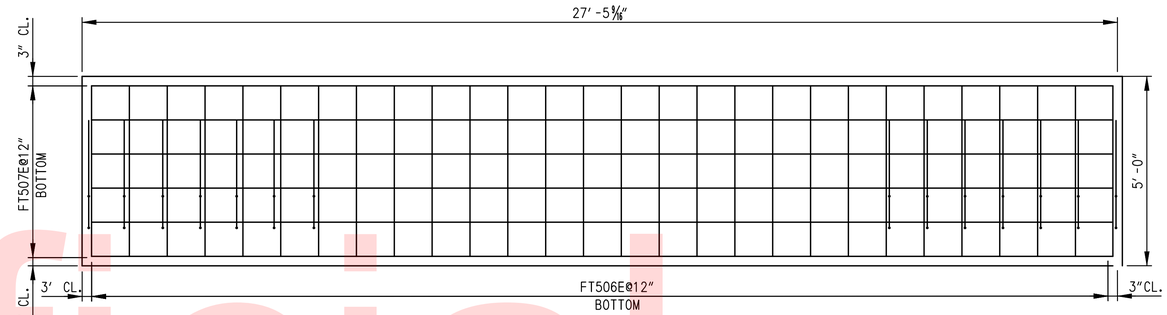

ENDWALL NO. 501 – NO.502 – FOOTING REINFORCEMENT PLAN

SCALE: 1/2"=1'-0"

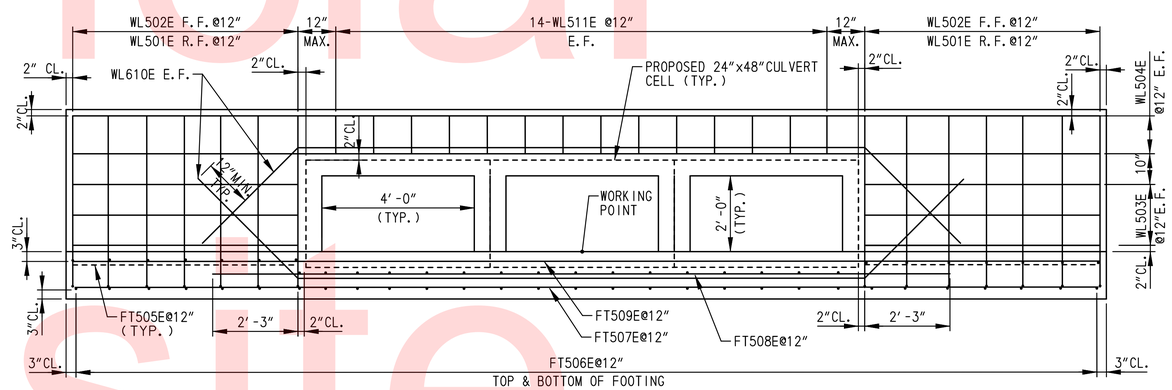

ENDWALL NO. 501 – NO. 502 – REINFORCEMENT ELEVATION

SCALE: 1/2"=1'-0"

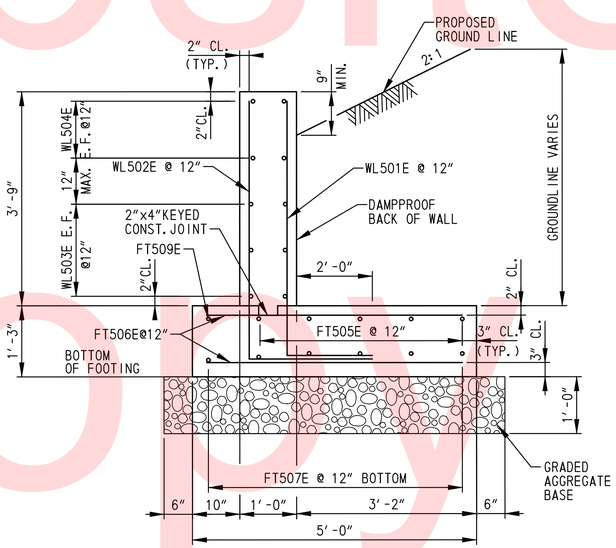

SECTION A–A

SCALE: 3/4"=1'-0"

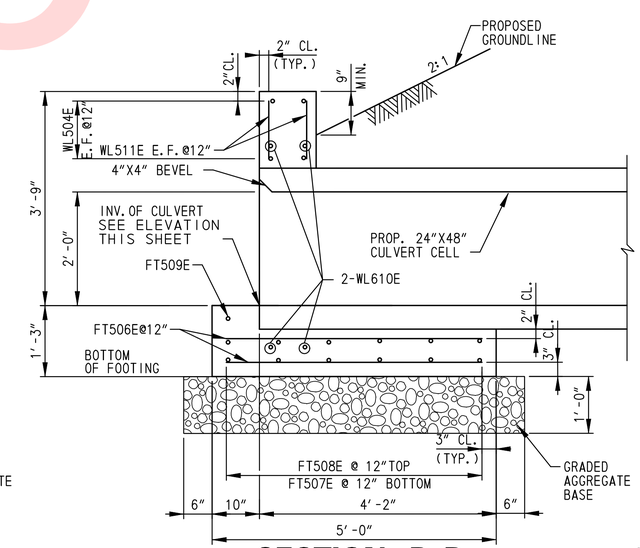

SECTION B–B

SCALE: 3/4"=1'-0"

Unofficial Website Copy

N:\31653-000\CONTRACT 1D\CADD\DT009U301_1D.dgn
11/30/2012 9:12:43 AM

DELAWARE DEPARTMENT OF TRANSPORTATION	ADDENDUMS / REVISIONS	US 13 & PORT PENN RD INTERSECTION	CONTRACT T201011302	BRIDGE NO.	ENDWALL NO. 501~NO. 502 DETAILS
			COUNTY NEW CASTLE	DESIGNED BY: HQ	
				CHECKED BY: JW	

DT-09

SHEET NO. 73

TOTAL SHTS. 179

(1) ANY MARK NUMBER WITH SUFFIX 'E' DENOTES EPOXY COATED REINFORCING STEEL.

(2) ALL MARK 'LOCATION PREFIXES' SHALL CONSIST OF TWO LETTERS AND ARE AS FOLLOWS: AB = ABUTMENT, AS = APPROACH SLAB, BC = BOX CULVERT, BW = BACKWALL, CL = COLUMN, DK = DECK, DL = DOWEL, FT = FOOTING, HW = HEADWALL, MS = MISC. BARS, PA = PARAPET, PR = PIER, SC = SHEETPILE CAP, SL = SLAB, TW = TOEWALL, WL = WALL (UNIQUE LOCATION), WW = WINGWALL

SPECIFICATIONS					BENDING DIMENSIONS (FEET-INCHES /QUARTER INCH)										
QTY.	SIZE	LENGTH	MARK	TYPE	A	B	C	D	E	F/R	G	H	J	K	O
ENDWALL NO. 501															
14	5	5-4	WL501E	17		3-10	1-6								
14	5	6-0	WL502E	17		3-10	2-2								
6X2	5	6-0	WL503E	STR		6-0									
		TO				TO									
		6-1				6-1									
2	5	27-1	WL504E	STR		27-1									
2X5	5	5-11	FT505E	STR		5-11									
		TO				TO									
		6-4				6-4									
56	5	4-6	FT506E	STR		4-6									
6	5	26-10	FT507E	STR		26-10									
6	5	19-2	FT508E	STR		19-2									
1	5	26-11	FT509E	STR		26-11									
4	5	21-11	WL610E	14		3-6	14-10	3-6				2-6		2-6	19-10
14	5	1-0	WL511E	STR		1-0									
ENDWALL NO. 502															
14	5	5-4	WL501E	17		3-10	1-6								
14	5	6-0	WL502E	17		3-10	2-2								
6X2	5	6-0	WL503E	STR		6-0									
		TO				TO									
		6-1				6-1									
2	5	27-1	WL504E	STR		27-1									
2X5	5	5-11	FT505E	STR		5-11									
		TO				TO									
		6-4				6-4									
56	5	4-6	FT506E	STR		4-6									
6	5	26-10	FT507E	STR		26-10									
6	5	19-2	FT508E	STR		19-2									
1	5	26-11	FT509E	STR		26-11									
4	5	21-11	WL610E	14		3-6	14-10	3-6				2-6		2-6	19-10
14	5	1-0	WL511E	STR		1-0									

SPECIFICATIONS					BENDING DIMENSIONS (FEET-INCHES /QUARTER INCH)										
QTY.	SIZE	LENGTH	MARK	TYPE	A	B	C	D	E	F/R	G	H	J	K	O

SPECIFICATIONS					BENDING DIMENSIONS (FEET-INCHES /QUARTER INCH)										
QTY.	SIZE	LENGTH	MARK	TYPE	A	B	C	D	E	F/R	G	H	J	K	O

Unofficial Website Copy

ASTM STANDARD ENGLISH REINFORCING BARS

BAR SIZE	NOMINAL DIMENSIONS: DIAMETER (INCHES)	AREA (INCHES²)	WEIGHT (LBS./FT.)	RECOMMENDED END HOOKS, APPLICABLE TO ALL GRADES: D	180° HOOKS: A OR G	180° HOOKS: J	90° HOOKS: A OR G	STIRRUP AND TIE HOOKS, APPLICABLE TO ALL GRADES: D	90° HOOK: A OR G	135° HOOK: A OR G	135° HOOK: A OR G
3	0.375	0.110	0.376	2¼"	5"	3"	6"	1½"	4"	4"	2½"
4	0.500	0.200	0.668	3"	6"	4"	8"	2"	4½"	4½"	3"
5	0.625	0.310	1.043	3¾"	7"	5"	10"	2½"	6"	5½"	3¾"
6	0.750	0.440	1.502	4½"	8"	6"	1-0"	4½"	1-0"	8"	4½"
7	0.875	0.600	2.044	5¼"	10"	7"	1-2"	5¼"	1-2"	9"	5¼"
8	1.000	0.790	2.670	6"	11"	8"	1-4"	6"	1-4"	10½"	6"
9	1.128	1.000	3.400	9½"	1-3"	11¾"	1-7"				
10	1.270	1.270	4.303	10¾"	1-5"	1-1¼"	1-10"				
11	1.410	1.560	5.313	1-0"	1-7"	1-2¾"	2-0"				
14	1.693	2.250	7.650	1-6¼"	2-3"	1-9¾"	2-7"				
18	2.257	4.000	13.600	2-0"	3-0"	2-4½"	3-5"				

NOTES:

1. FIGURES SHOWN IN CIRCLES REPRESENT BAR BEND TYPES.
2. STANDARD BAR BENDS INCLUDE ONLY THOSE TYPES BELOW, INDICATED AS SUCH.
3. ALL DIMENSIONS OUT-TO-OUT, EXCEPT "A" AND "G" ON STD. 180° AND 135° HOOKS.
4. "J" DIMENSIONS ON 180° HOOKS TO BE SHOWN ONLY WHERE NECESSARY TO RESTRICT HOOK SIZE, OTHERWISE STANDARD 'ACI' HOOKS ARE TO BE USED.
5. WHERE "J" IS NOT SHOWN, "J" WILL BE KEPT EQUAL TO OR LESS THAN "H" ON TYPES 3, 5 AND 22. WHERE "J" CAN EXCEED "H", IT SHALL BE SHOWN.
6. "H" DIMENSIONS OF STIRRUPS TO BE SHOWN AS NEEDED TO FIT WITHIN THE CONCRETE.
7. UNLESS OTHERWISE NOTED, DIAMETER "D" IS THE SAME FOR ALL BENDS AND HOOKS ON A BAR (EXCEPT FOR BEND TYPES 11 AND 13).
8. WHERE SLOPE DIFFERS FROM 45° OFFSET, "H" AND "K" MUST BE SHOWN.
9. WHERE BARS ARE TO BE BENT MORE ACCURATELY THAN STANDARD BENDING TOLERANCES, BENDING DIMENSIONS REQUIRING CLOSER FABRICATION SHOULD HAVE LIMITS INDICATED.
10. FOR RECOMMENDED DIAMETER "D", OF BENDS, HOOKS, ETC., REFER TO TABLE ABOVE, 'CRSI' OR 'ACI' TABLES WHERE APPLICABLE AND REQUIRED.
11. TYPE S1-S6, S11, T1-T3 AND T6-T9 APPLICABLE TO BAR SIZES #3 THROUGH #8.

STANDARD BAR BENDS

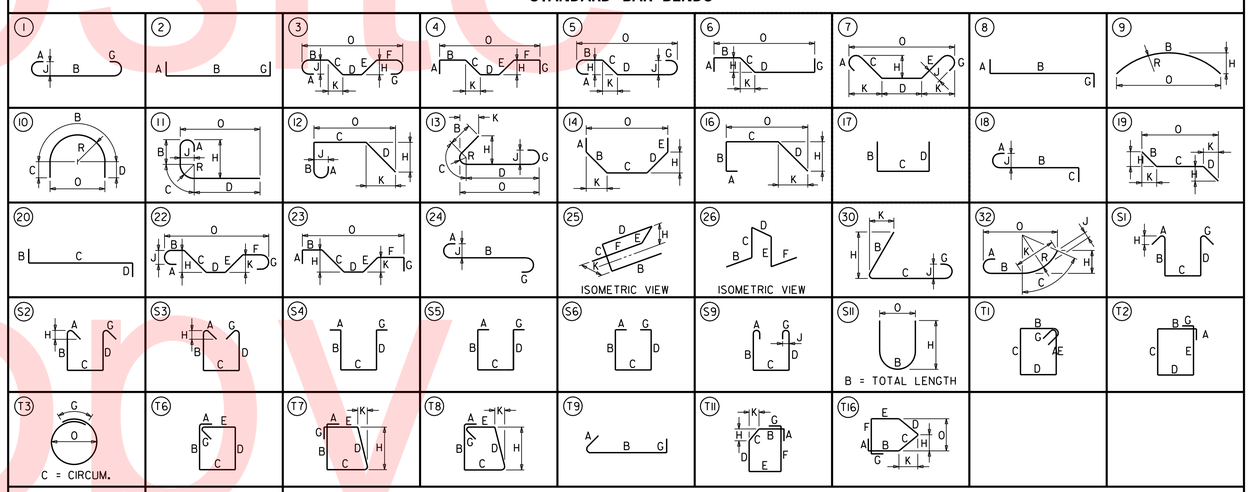

SPECIAL BAR BENDS

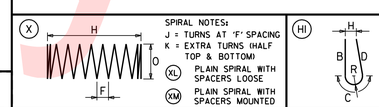

STIRRUP AND TIE HOOKS

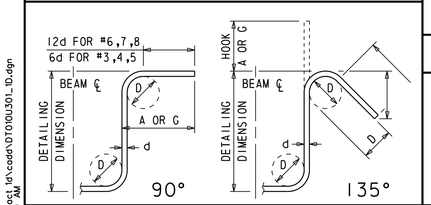

180° AND 90° END HOOKS

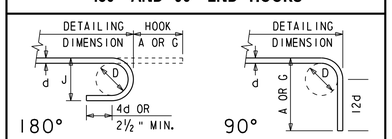

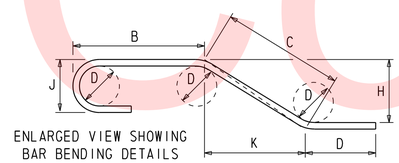

DELAWARE DEPARTMENT OF TRANSPORTATION

ADDENDUMS / REVISIONS

US 13 & PORT PENN RD INTERSECTION

CONTRACT	BRIDGE NO.	
T201011302	DESIGNED BY: H.Q.	
COUNTY		
NEW CASTLE	CHECKED BY: J.A.G.	

ENDWALL NO. 501~502 BAR CHART

DT-10

SHEET NO. 74

TOTAL SHTS. 179

n:\31653-000\contract_tdt\cadd\DT010U301_1D.dgn
9/17/2012 9:45:50 AM

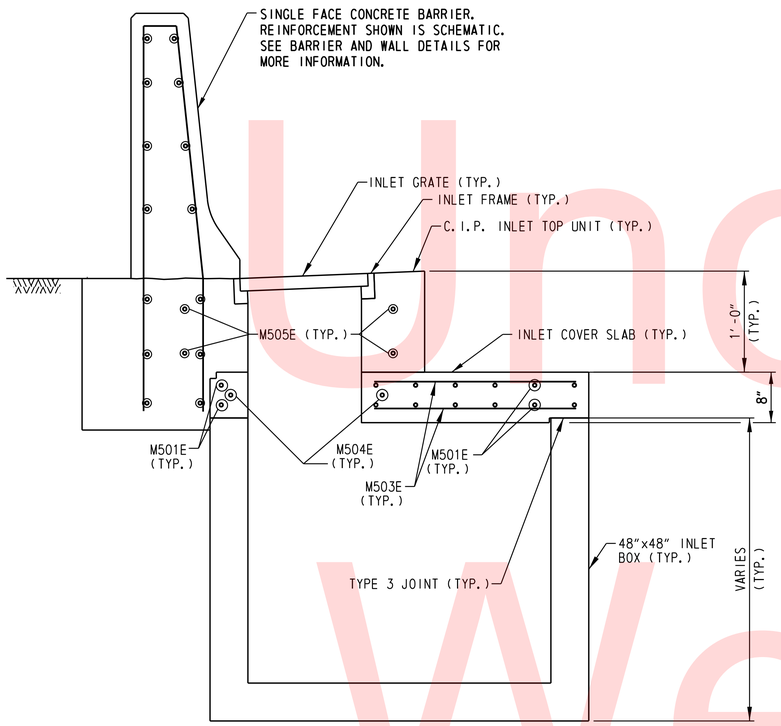

48"X48" DRAINAGE INLET ASSEMBLY

SCALE: 1"=1'-0"

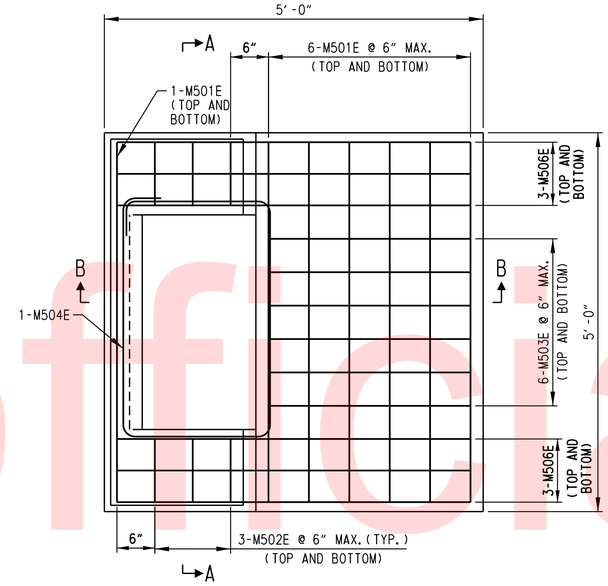

INLET COVER SLAB DETAIL

SCALE: 1"=1'-0"

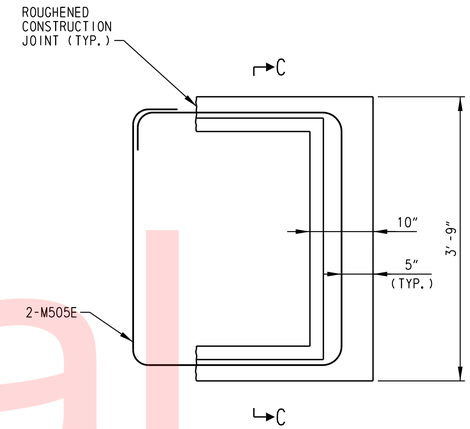

INLET TOP UNIT DETAIL

SCALE: 1"=1'-0"

NOTES:

1. PAYMENT FOR DRAINAGE INLETS INCLUDING BOXES, GRATES, TOP UNITS, COVER SLABS, MODIFICATIONS TO CONCRETE MEDIAN BARRIER, JOINT SEALANT AND ALL WORK ASSOCIATED WITH DRAINAGE INLET ASSEMBLIES WILL BE MADE UNDER ITEM NO. 708053 - DRAINAGE INLET, 48"X48".
2. FOR DRAINAGE INLET ASSEMBLY LOCATIONS SEE CONSTRUCTION PLANS.
3. SEE STANDARD NO. D-4 FOR INLET BOX DETAILS. SEE STANDARD NO. D-5 FOR GRATE, FRAME, AND JOINT DETAILS.
4. MINIMUM REINFORCEMENT COVER SHALL BE 1½".
5. HOT POURED JOINT SEALANT SHALL BE USED TO FILL THE GAP BETWEEN THE DRAINAGE INLET FRAMES.

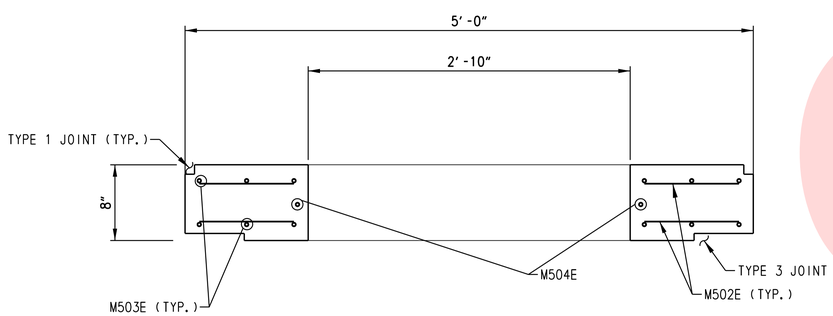

SECTION A-A

SCALE: 1½"=1'-0"

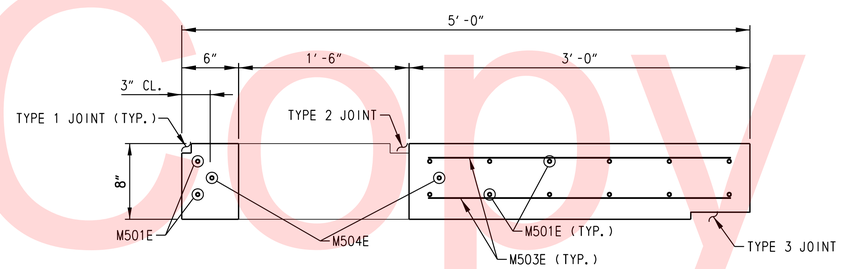

SECTION B-B

SCALE: 1½"=1'-0"

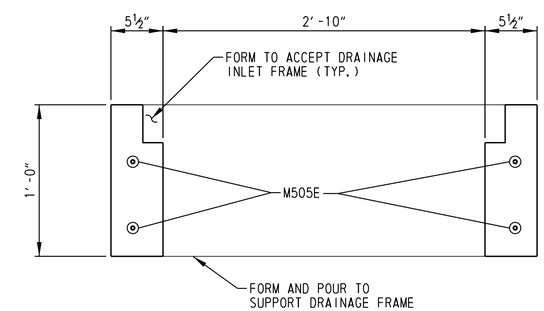

SECTION C-C

SCALE: 1½"=1'-0"

Unofficial Website Copy

DELAWARE DEPARTMENT OF TRANSPORTATION	ADDENDUMS / REVISIONS	SCALE: AS SHOWN	US 13 & PORT PENN RD INTERSECTION	CONTRACT T201011302	BRIDGE NO.	MODIFIED 48"X48" INLET TOP UNIT AND SLAB DETAILS	DT-11
				COUNTY NEW CASTLE	DESIGNED BY: K.M.K.		SHEET NO. 75
					CHECKED BY: B.K.B.		TOTAL SHTS. 179

n:\3653-000\contract 1d\cadd\DT011U301_1D.dgn 9/17/2012 9:45:51 AM

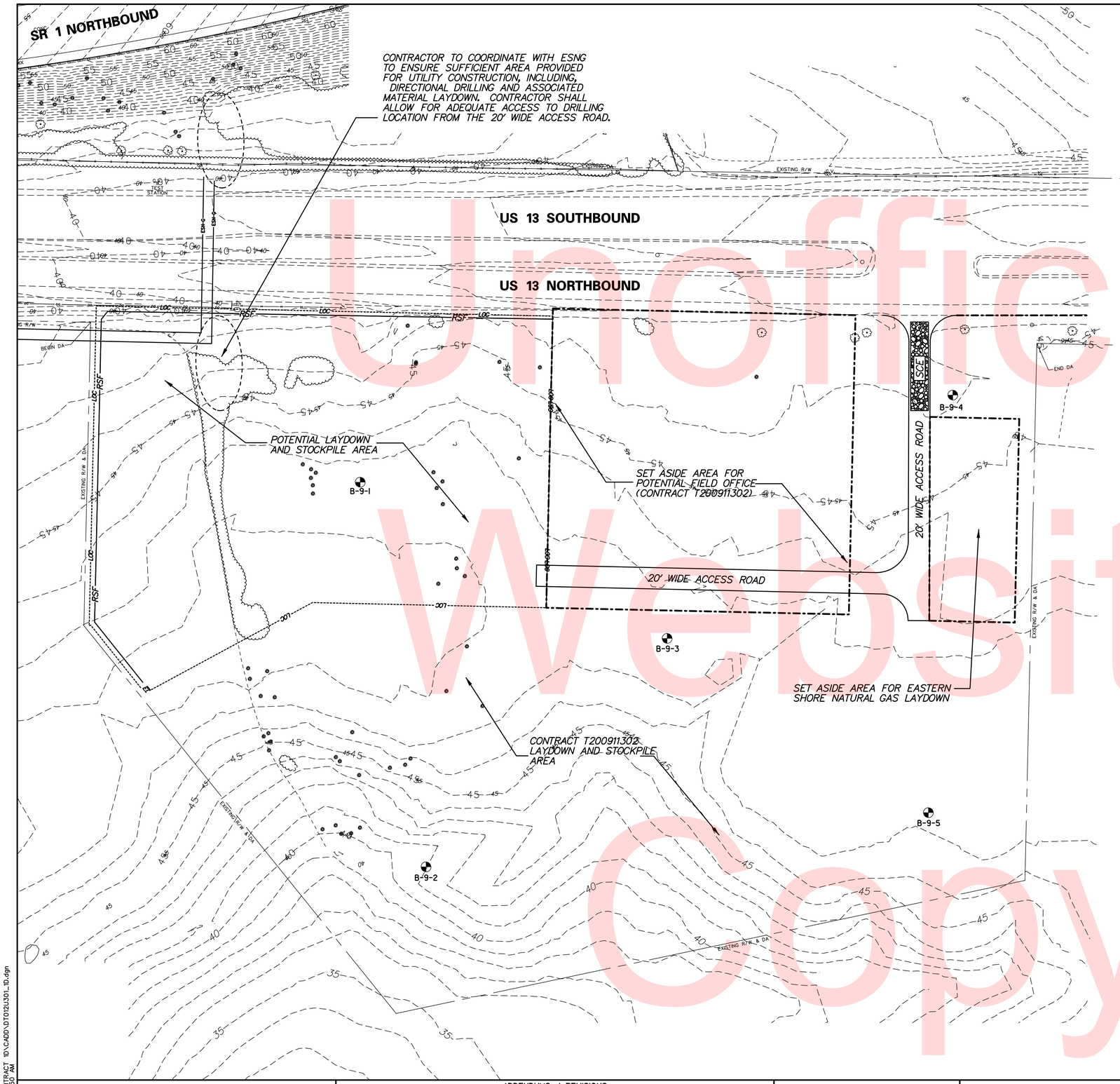

N

NOTES:

1. ALL AREAS ON THIS PLAN DISTURBED BY THE CONTRACTOR SHALL BE RESTORED TO ORIGINAL GRADES AND CONDITIONS UPON COMPLETION OF THE CONTRACT. TOPSOIL STRIPPING AND TOPSOILING AREAS ON THIS PLAN SHALL BE INCIDENTAL TO THE CONTRACT. SEEDING DISTURBED AREAS ON THIS PLAN SHALL BE MEASURED AND PAID UNDER ITEM 734013 - PERMANENT GRASS SEEDING, DRY GROUND.

2. CONTRACT T200911302 CONTRACTOR SHALL CONSTRUCT AND MAINTAIN STABILIZED CONSTRUCTION ENTRANCE AND ACCESS ROAD TO LAYDOWN AND STOCKPILE AREAS.

Unofficial Website Copy

N:\31653-000\CONTRACT ID\CADD\DT012U301_ID.dgn
12/3/2015 10:02:50 AM

DELAWARE DEPARTMENT OF TRANSPORTATION

ADDENDUMS / REVISIONS

SCALE 0 50 100 150 FEET

US 13 & PORT PENN RD INTERSECTION

CONTRACT	BRIDGE NO.
T201011302	DESIGNED BY: NSP
COUNTY	
NEW CASTLE	CHECKED BY: BRT

ST. GEORGES LAYDOWN AREA

DT-12
SHEET NO.
76
TOTAL SHTS.
179

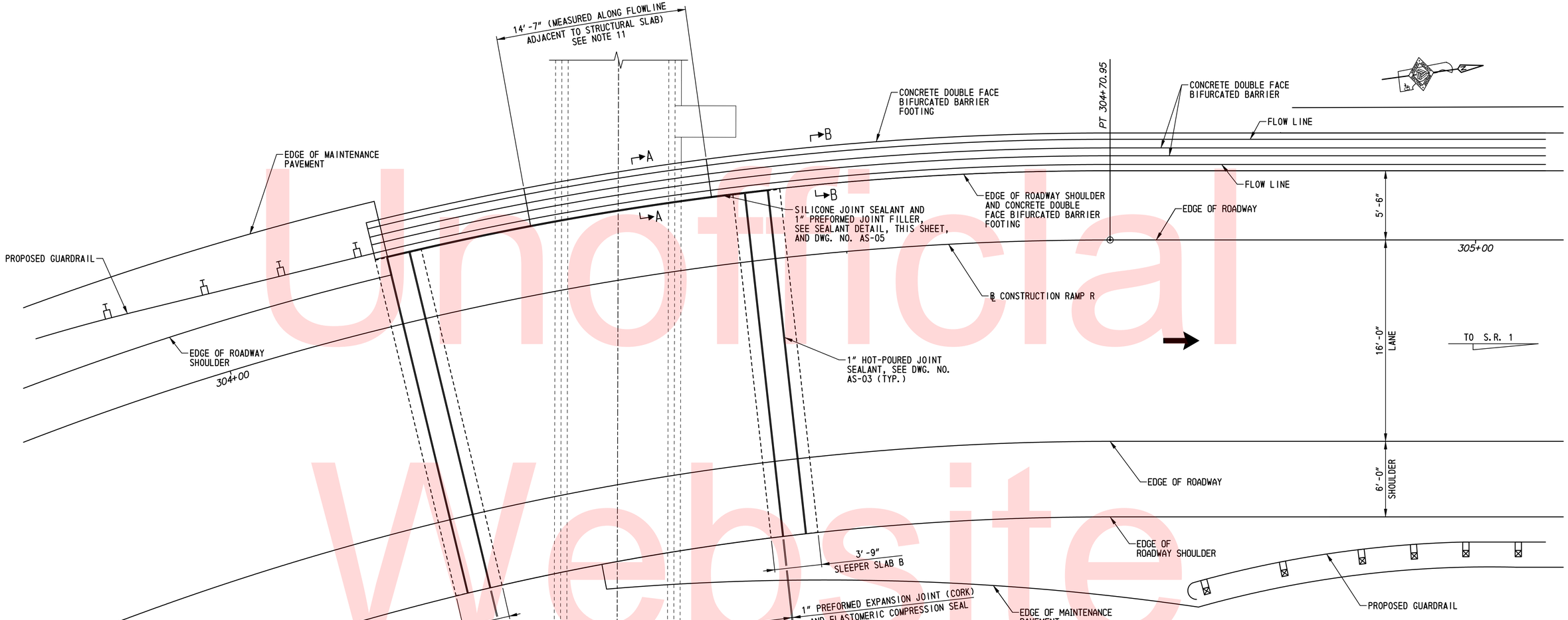

PLAN
SCALE: 1/4"=1'-0"

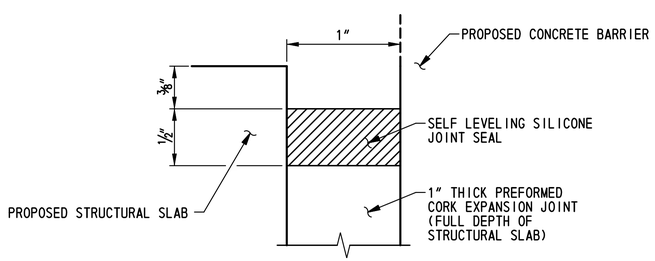

SEALANT DETAIL
LONGITUDINAL PREFORMED CORK JOINT
SCALE: NOT TO SCALE

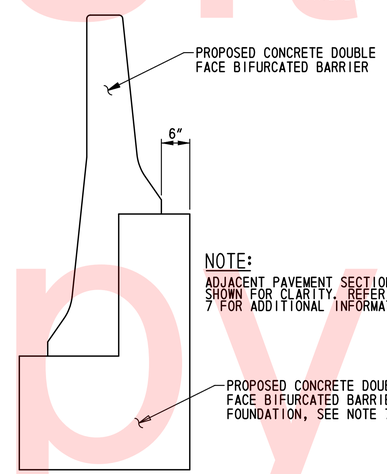

NOTE:
ADJACENT PAVEMENT SECTIONS NOT SHOWN FOR CLARITY. REFER TO NOTE 7 FOR ADDITIONAL INFORMATION.

SECTION B-B
LONGITUDINAL JOINT AT BIFURCATED BARRIER
SCALE: 3/4"=1'-0"

NOTES:

1. PAYMENT FOR EXCAVATION WILL BE MADE UNDER ITEM 207000 - EXCAVATION BACKFILL FOR STRUCTURES.
2. PAYMENT FOR CONSTRUCTION OF STRUCTURAL SLAB AND SLEEPER SLABS WILL BE MADE UNDER ITEM 602001 - PORTLAND CEMENT CONCRETE MASONRY, CLASS A. PAYMENT FOR BOND BREAKER WILL BE INCIDENTAL TO THIS ITEM. ANGLES AND STUDS AT APPROACH PAVEMENT EDGE OF SLEEPER SLABS SHALL BE INCIDENTAL TO THIS ITEM.
3. PAYMENT FOR EPOXY COATED REINFORCEMENT WILL BE MADE UNDER ITEM 604000 - BAR REINFORCEMENT, EPOXY COATED.
4. PAYMENT FOR PREFORMED EXPANSION JOINT (CORK) AND ELASTOMERIC COMPRESSION SEAL BETWEEN STRUCTURAL SLAB AND SLEEPER SLABS WILL BE MADE UNDER ITEM 605730 - PREFABRICATED EXPANSION JOINT SYSTEM, 1". PAYMENT FOR ANGLES AND STUDS ADJACENT TO THESE JOINTS BETWEEN THE STRUCTURAL SLAB AND SLEEPER SLABS WILL BE INCIDENTAL TO THIS ITEM.
5. PAYMENT FOR DELAWARE NO. 57 STONE WILL BE MADE UNDER ITEM 302012 - DELAWARE NO. 57 STONE.
6. TOLERANCE ON ALL JOINT SEALANT DETAIL DIMENSIONS SHOWN WITHOUT RANGES SHALL BE PLUS 1/16", MINUS 0".
7. FOR CONCRETE DOUBLE-FACE BIFURCATED BARRIER AND ADJACENT JOINT DETAILS AND PAYMENT INFORMATION, SEE DWG. NO. DT-04.
8. FOR PAVEMENT JOINT LAYOUT DETAILS, SEE DWG. NOS. EX-01, EX-02 AND EX-03.
9. FOR HORIZONTAL AND VERTICAL GEOMETRY, SEE DWG. NO. HV-02.
10. FOR SECTION A-A, SEE DWG. NO. AS-05.
11. FOR MODIFIED CONCRETE BARRIER AT EXISTING TUNNEL, SEE DWG. NO. AS-05.
12. SELF-LEVELING SILICONE JOINT SEALANT SHALL BE OF TYPE SL IN ACCORDANCE WITH ASTM D5893.
13. PAYMENT FOR 1" SILICONE JOINT SEALANT AND PREFORMED JOINT FILLER BETWEEN STRUCTURAL SLAB AND CONCRETE DOUBLE-FACE BIFURCATED BARRIER SHALL BE INCIDENTAL TO ITEM 602001 - PORTLAND CEMENT CONCRETE MASONRY, CLASS A.

Unofficial Website Copy

DELAWARE DEPARTMENT OF TRANSPORTATION	ADDENDUMS / REVISIONS	SCALE: AS NOTED	US 13 & PORT PENN RD INTERSECTION	CONTRACT T201011302 / COUNTY NEW CASTLE	BRIDGE NO. / DESIGNED BY: K.M.L. / CHECKED BY: J.A.G.	STRUCTURAL SLAB AND SLEEPER SLABS PLAN – 1

AS-01
SHEET NO. 77
TOTAL SHTS. 179

pr\31653-000\contract tg\cadd\Bridge\AS01U301_1D.dgn
9/17/2012 10:47:42 AM

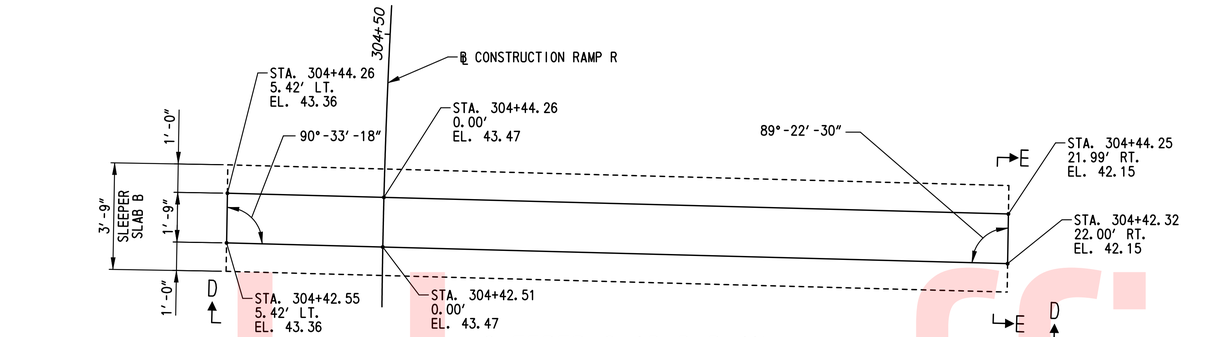

SLEEPER SLAB B PLAN

SCALE: ⅜″=1′-0″

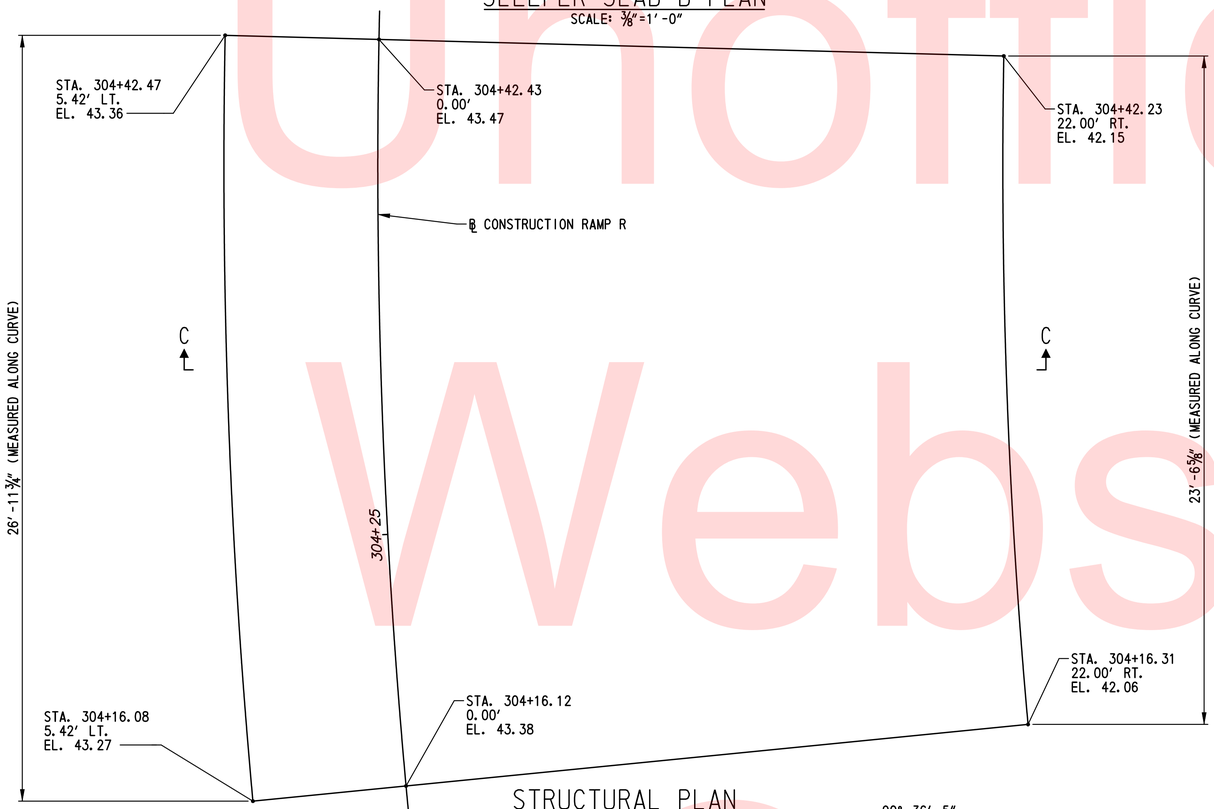

STRUCTURAL PLAN

SCALE: ⅜″=1′-0″

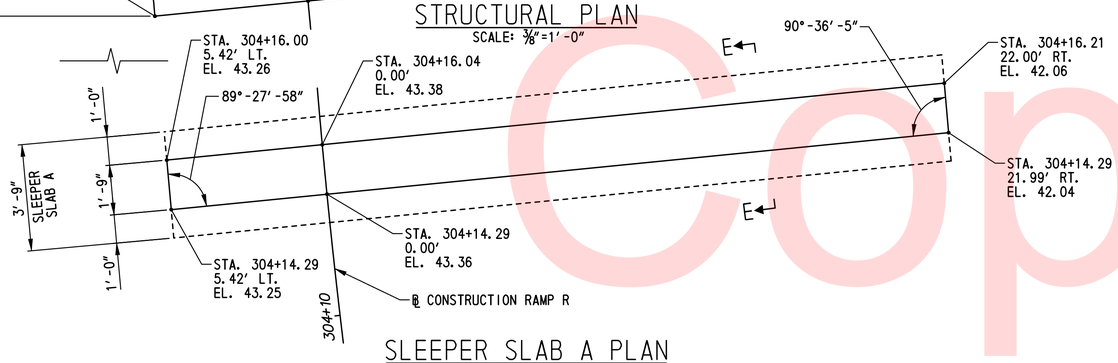

SLEEPER SLAB A PLAN

SCALE: ⅜″=1′-0″

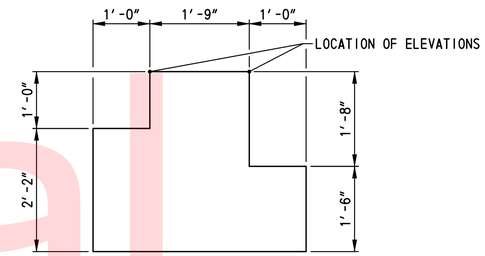

SECTION E-E

SCALE: ¾″=1′-0″

NOTES:

1. FOR STRUCTURAL SLAB AND SLEEPER SLAB NOTES SEE DWG. NO. AS-01.
2. FOR EXPANSION JOINT DETAILS SEE DETAIL B ON DWG. NO. AS-03.
3. FOR SECTION C-C AND VIEW D-D SEE DWG. NO. AS-03.
4. FOR HORIZONTAL AND VERTICAL GEOMETRY, SEE DWG. NO. HV-02.

Unofficial Website Copy

DELAWARE DEPARTMENT OF TRANSPORTATION	ADDENDUMS / REVISIONS	SCALE: AS NOTED	US 13 & PORT PENN RD INTERSECTION	CONTRACT T201011302	BRIDGE NO.	STRUCTURAL SLAB AND SLEEPER SLABS PLAN – 2
				COUNTY NEW CASTLE	DESIGNED BY: K.M.L.	
					CHECKED BY: J.A.G.	

AS-02

SHEET NO. 78

TOTAL SHTS. 179

n:\31653-000\contract_td\cadd\Bridge\AS02U301_1D.dgn
9/17/2012 10:47:43 AM

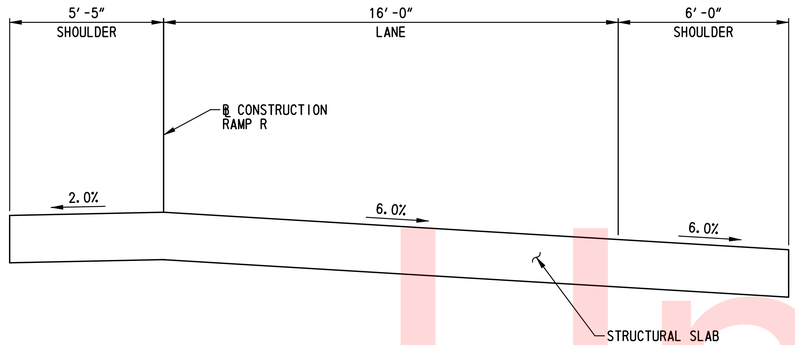

SECTION C-C
SCALE: 3/8"=1'-0"

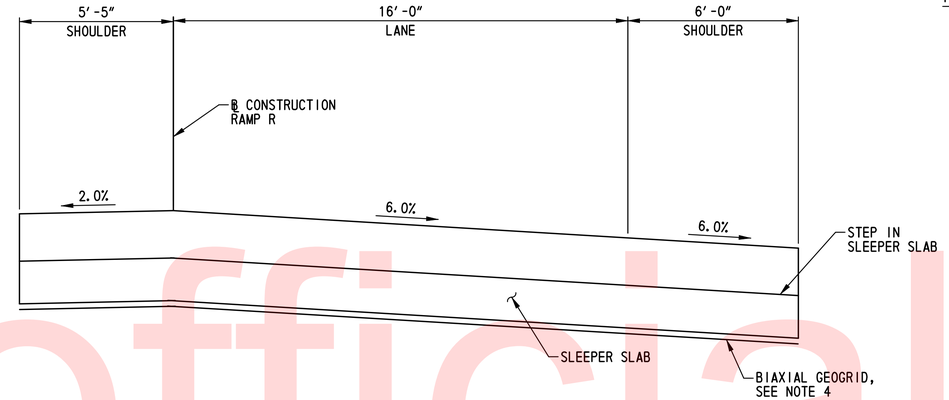

VIEW D-D
SCALE: 3/8"=1'-0"

NOTE:
SLEEPER SLAB B SHOWN SLEEPER SLAB A SIMILAR.

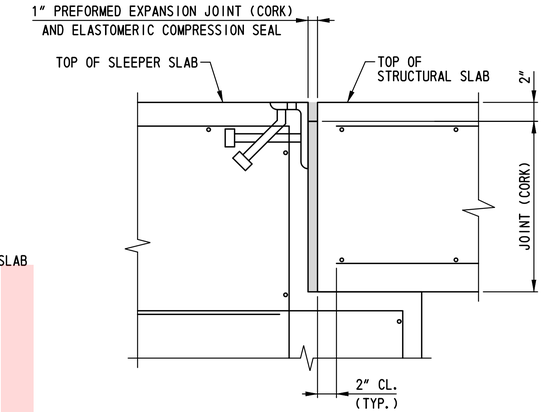

DETAIL B
SCALE: 1 1/2"=1'-0"

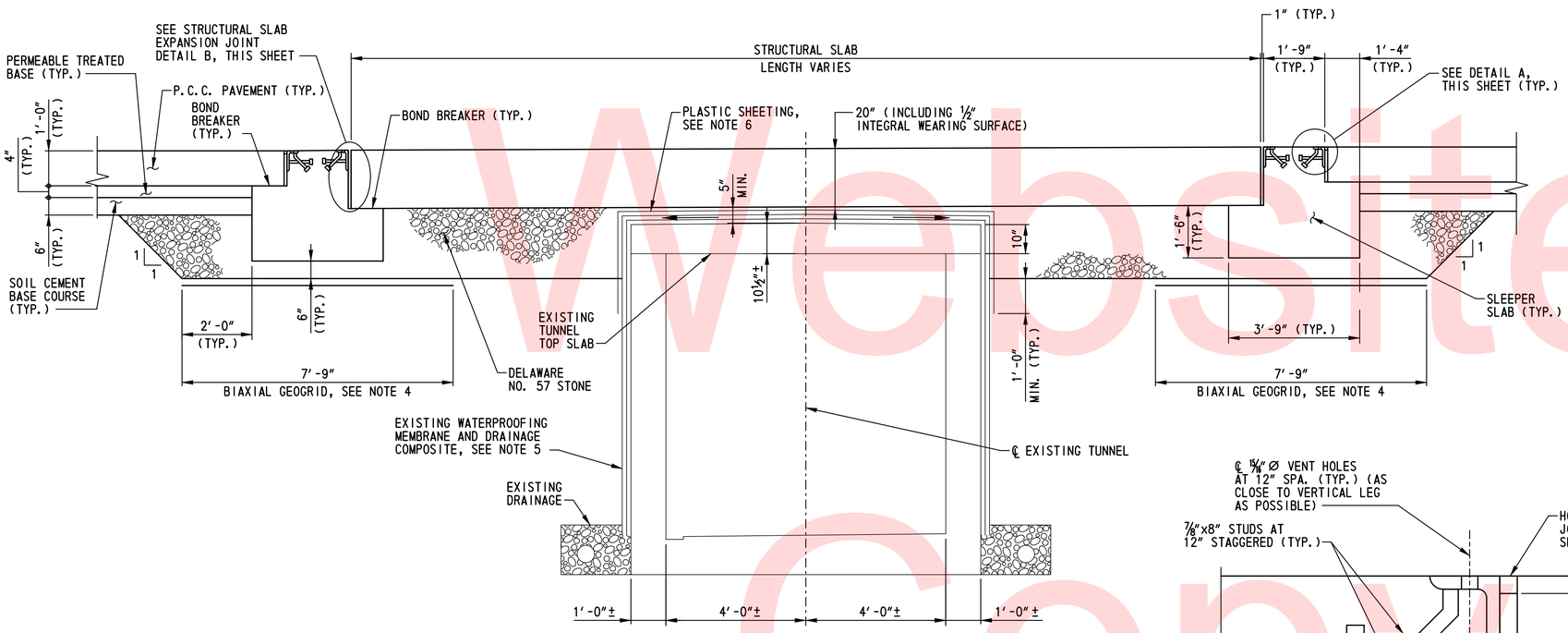

TYPICAL SECTION
SCALE: 1/2"=1'-0"

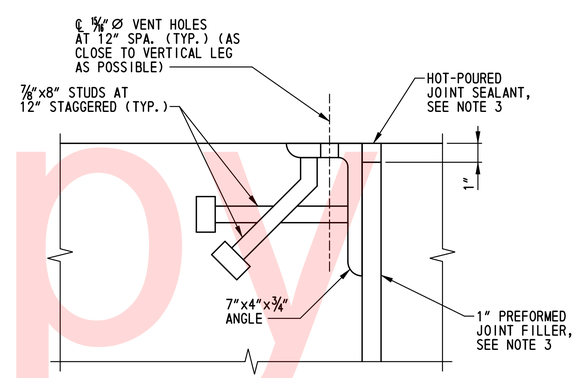

DETAIL A
SCALE: 3"=1'-0"

NOTES:

1. FOR CONCRETE BARRIER DETAILS. SEE DWG. NO. DT-04.
2. FOR LOCATIONS OF SECTION C-C AND VIEW D-D, SEE DWG. NO. AS-02
3. PAYMENT FOR JOINT ANGLES AT APPROACH PAVEMENT EDGE OF SLEEPER SLAB, PREFORMED JOINT FILLER, AND HOT-POURED JOINT SEALANT SHALL BE INCIDENTAL TO ITEM 602001 - PORTLAND CEMENT CONCRETE MASONRY, CLASS A.
4. BIAXIAL GOEGRID SHALL BE AN INTEGRALLY FORMED STRUCTURAL GEOGRID MANUFACTURED OF A STRESS RESISTANT POLYPROPYLENE MATERIAL WITH POSITIVE MECHANICAL INTERLOCK FOR LOAD TRANSFER. THE BIAXIAL GEOGRID SHALL MEET THE FOLLOWING MINIMUM REQUIREMENTS:

APERTURE DIMENSIONS	1.8 IN
MINIMUM RIB THICKNESS	0.05 IN
TRUE INITIAL MODULUS IN USE	24,000 LB/FT
TRUE TENSILE STRENGTH AT 2% STRAIN	380 LB/FT
TRUE TENSILE STRENGTH AT 5% STRAIN	720 LB/FT
JUNCTION EFFICIENCY	93 %
FLEXURAL STIFFNESS	450,000 MG-CM
APERTURE STABILITY	5.8 KG-CM/DEG
RESISTANCE TO INSTALLATION DAMAGE	
IN CLAYEY SAND	91%
IN WELL-GRADED SAND	83%
IN POORLY-GRADED GRAVEL	72%
RESISTANCE TO LONG-TERM DEGRADATION	100%

PAYMENT FOR BIAXIAL GEOGRID SHALL BE INCIDENTAL TO ITEM 602001 - PORTLAND CEMENT CONCRETE MASONRY, CLASS A.

5. EXTREME CAUTION SHALL BE USED TO AVOID DAMAGING THE COMPOSITE WATERPROOFING MEMBRANE OF THE EXISTING PEDESTRIAN TUNNEL. NON-MECHANIZED EXCAVATION WILL BE REQUIRED WITHIN 1' OF THE TOP OF TUNNEL. BARRIER FOOTING AND STRUCTURAL SLAB SHALL NOT BE PLACED DIRECTLY ON TOP OF TUNNEL. IF THE TUNNEL IS EXPOSED DURING EXCAVATION, A 3-PLY ROOFING PAPER BOND BREAKER SHALL BE PLACED BETWEEN THE TOP OF TUNNEL AND THE BOTTOM OF THE BARRIER FOOTING OR STRUCTURAL SLAB. PAYMENT FOR 3-PLY ROOFING PAPER SHALL BE INCIDENTAL TO ITEM 602001 - PORTLAND CEMENT CONCRETE MASONRY, CLASS A.
6. ONE (1) LAYER OF PLASTIC SHEETING SHALL BE PLACED ON TOP OF THE EXISTING WATERPROOFING MEMBRANE BEFORE PLACING THE DELAWARE NO. 57 STONE. PAYMENT FOR PLASTIC SHEETING SHALL BE INCIDENTAL TO ITEM 602001 - PORTLAND CEMENT CONCRETE MASONRY, CLASS A.

Unofficial Website Copy

n:\31653-000\contract 1d\cadd\Bridge\AS03U301_1D.dgn
9/17/2012 10:47:44 AM

DELAWARE
DEPARTMENT OF TRANSPORTATION

ADDENDUMS / REVISIONS

SCALE: AS NOTED

US 13 & PORT PENN RD
INTERSECTION

CONTRACT	BRIDGE NO.
T201011302	DESIGNED BY: K.M.L.
COUNTY	
NEW CASTLE	CHECKED BY: J.A.G.

STRUCTURAL SLAB AND
SLEEPER SLABS SECTIONS
AND VIEW

AS-03

SHEET NO.
79
TOTAL SHTS.
179

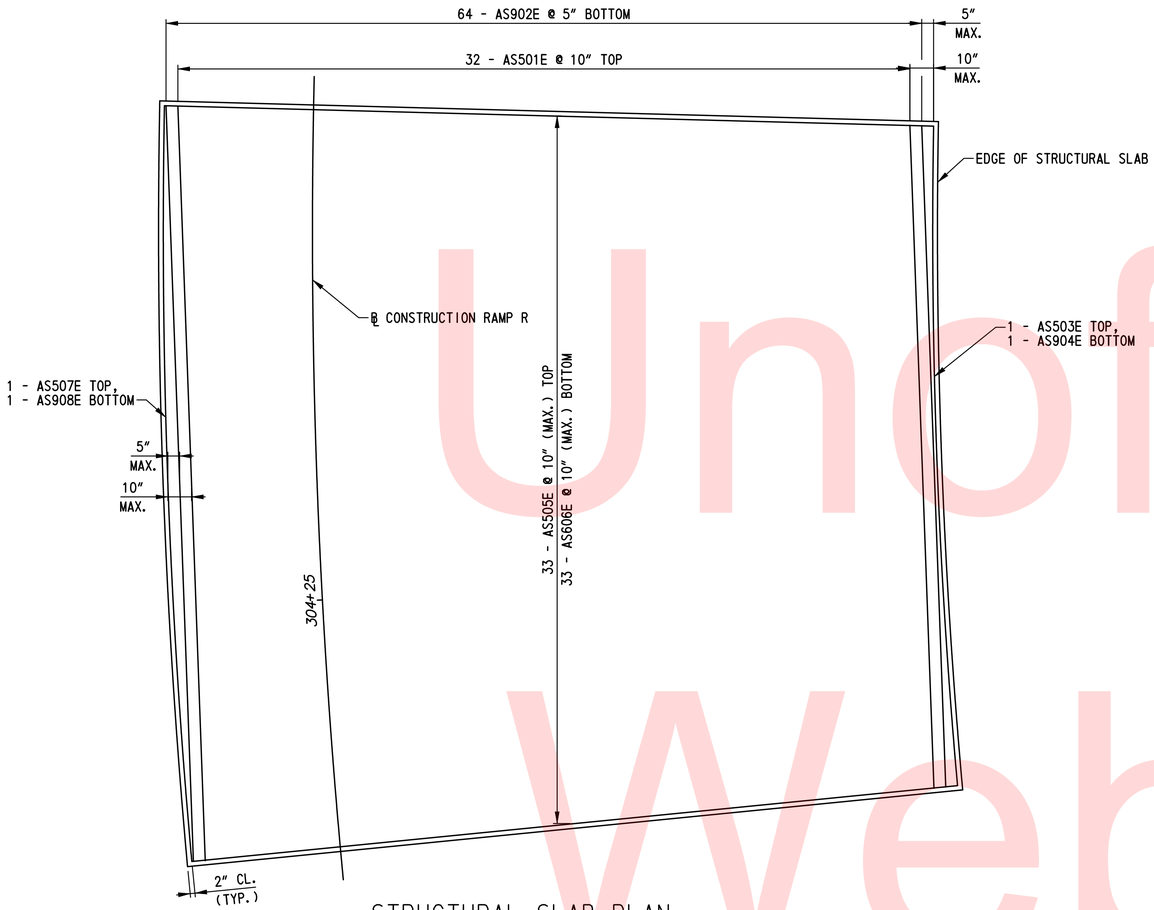

STRUCTURAL SLAB PLAN
REINFORCEMENT
SCALE: 3/8"=1'-0"

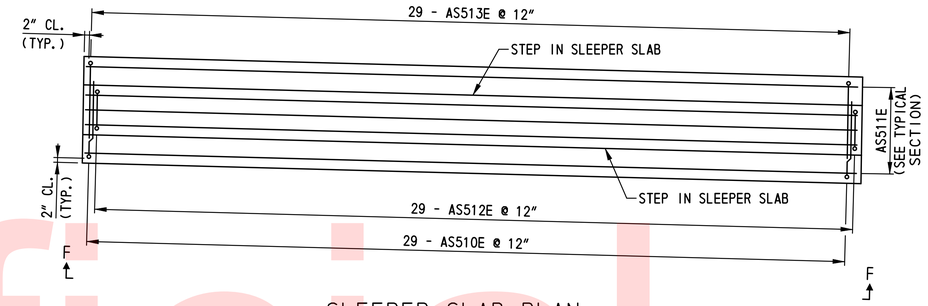

SLEEPER SLAB PLAN
REINFORCEMENT
SCALE: 3/8"=1'-0"

NOTE:
SLEEPER SLAB B REINFORCEMENT SHOWN. SLEEPER SLAB A REINFORCEMENT SIMILAR.

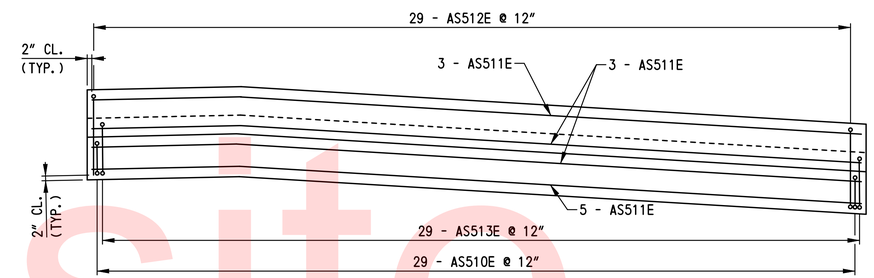

VIEW F-F
REINFORCEMENT
SCALE: 3/8"=1'-0"

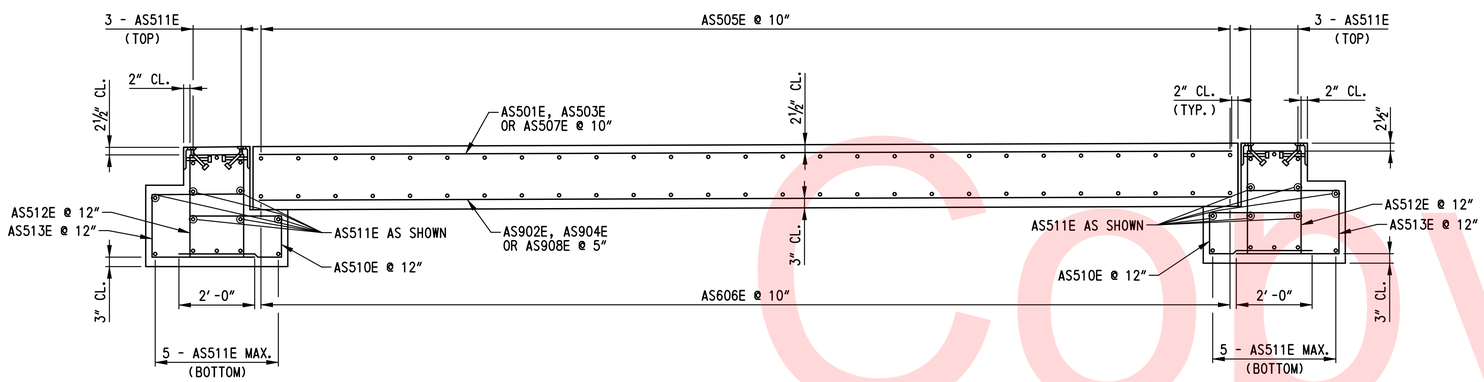

TYPICAL SECTION
REINFORCEMENT
SCALE: 1/2"=1'-0"

NOTES:
1. FOR STRUCTURAL SLAB AND SLEEPER SLAB NOTES, SEE DWG. NO. AS-01.

Unofficial Website Copy

AS-04

DELAWARE DEPARTMENT OF TRANSPORTATION	ADDENDUMS / REVISIONS	US 13 & PORT PENN RD INTERSECTION	CONTRACT T201011302	BRIDGE NO.	STRUCTURAL SLAB AND SLEEPER SLABS REINFORCEMENT PLANS
			COUNTY NEW CASTLE	DESIGNED BY: K.M.L.	SHEET NO. 80
				CHECKED BY: J.A.G.	TOTAL SHTS. 179

n:\31653-000\contract-14\cadd\Bridge\AS04U301_1D.dgn
9/17/2012 10:47:46 AM

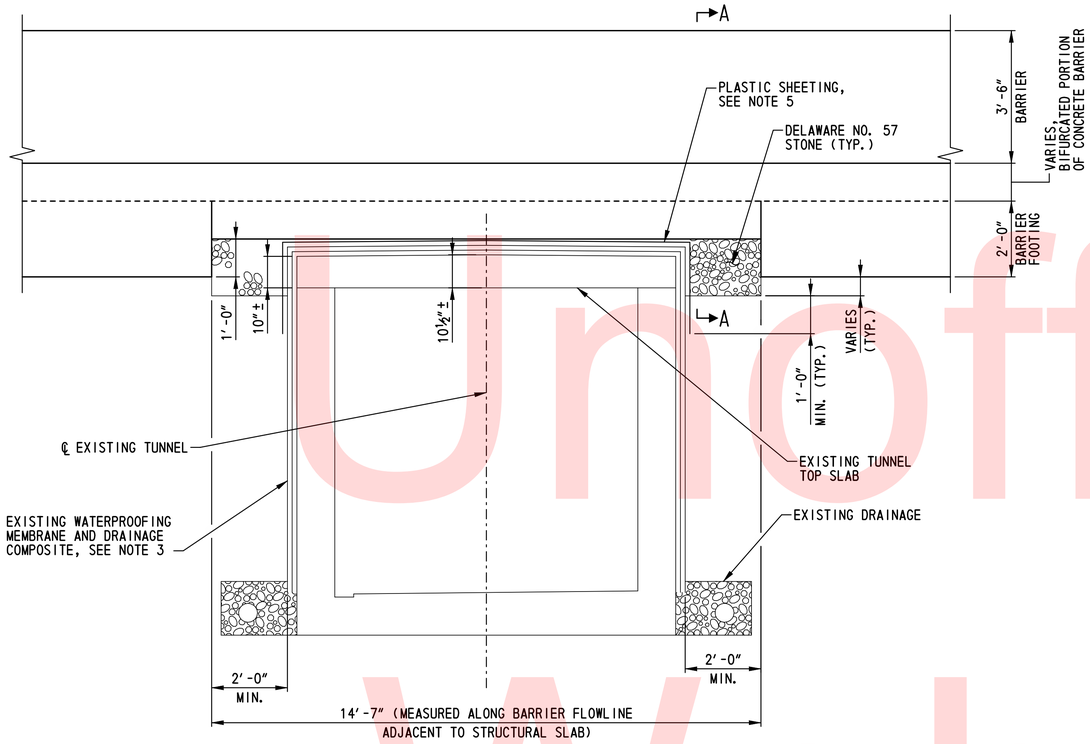

ELEVATION
SCALE: ½"=1'-0"

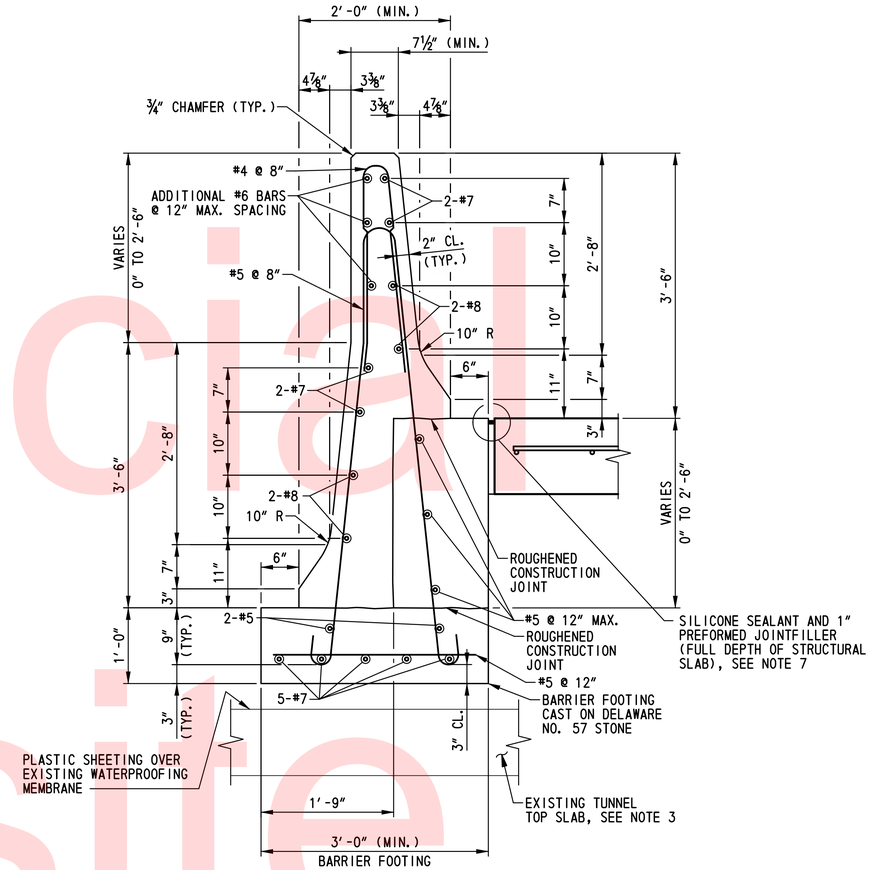

SECTION A-A
SCALE: 1"=1'-0"

NOTES:

1. FOR PLAN VIEW OF MODIFIED CONCRETE BARRIER, SEE DWG. NO. AS-01.
2. THE COST OF THE MODIFIED CONCRETE DOUBLE-FACE BIFURCATED BARRIER SHALL BE INCIDENTAL TO THE COST OF THE CONCRETE DOUBLE-FACE BIFURCATED BARRIER. FOR CONCRETE DOUBLE-FACE BIFURCATED PAYMENT DETAILS, SEE DWG. NO. DT-04.
3. EXTREME CAUTION SHALL BE USED TO AVOID DAMAGING THE COMPOSITE WATERPROOFING MEMBRANE OF THE EXISTING PEDESTRIAN TUNNEL. NON-MECHANIZED EXCAVATION WILL BE REQUIRED WITHIN 1' OF THE TOP OF TUNNEL. BARRIER FOOTING AND STRUCTURAL SLAB SHALL NOT BE PLACED DIRECTLY ON TOP OF TUNNEL. IF THE TUNNEL IS EXPOSED DURING EXCAVATION, A 3-PLY ROOFING PAPER BOND BREAKER SHALL BE PLACED BETWEEN THE TOP OF TUNNEL AND THE BOTTOM OF THE BARRIER FOOTING OR STRUCTURAL SLAB. PAYMENT FOR 3-PLY ROOFING PAPER SHALL BE INCIDENTAL TO ITEM 602001 - PORTLAND CEMENT CONCRETE MASONRY, CLASS A.
4. TOLERANCE ON ALL JOINT SEALANT DETAIL DIMENSIONS SHOWN WITHOUT RANGES SHALL BE PLUS 1/16", MINUS 0".
5. ONE (1) LAYER OF PLASTIC SHEETING SHALL BE PLACED ON TOP OF THE EXISTING WATERPROOFING MEMBRANE BEFORE PLACING THE DELAWARE NO. 57 STONE. PAYMENT FOR PLASTIC SHEETING SHALL BE INCIDENTAL TO ITEM 602001 - PORTLAND CEMENT CONCRETE MASONRY, CLASS A.
6. ALL REINFORCING STEEL SHALL BE PROTECTED WITH FUSION-BONDED EPOXY CONFORMING TO AASHTO M 284 (ASTM A 775).
7. SEE DWG. NO. AS-01 FOR PAYMENT INFORMATION FOR SILICONE JOINT SEALANT AND 1" PREFORMED JOINT FILLER BETWEEN STRUCTURAL SLAB AND CONCRETE DOUBLE-FACED BIFURCATED BARRIER.

Unofficial Website Copy

① ANY MARK NUMBER WITH SUFFIX 'E' DENOTES EPOXY COATED REINFORCING STEEL.

② ALL MARK 'LOCATION PREFIXES' SHALL CONSIST OF TWO LETTERS AND ARE AS FOLLOWS: AB = ABUTMENT, AS = APPROACH SLAB, BC = BOX CULVERT, BW = BACKWALL, CL = COLUMN, DK = DECK, DL = DOWEL, FT = FOOTING, HW = HEADWALL, MS = MISC. BARS, PA = PARAPET, PR = PIER, SC = SHEETPILE CAP, SL = SLAB, TW = TOEWALL, WL = WALL (UNIQUE LOCATION), WW = WINGWALL

SPECIFICATIONS					BENDING DIMENSIONS (FEET-INCHES /QUARTER INCH)										
QTY.	SIZE	LENGTH	MARK	TYPE	A	B	C	D	E	F/R	G	H	J	K	O
STRUCTURAL SLAB															
32*	5	23-04 2	AS501E	STR		23-04 2									
		TO				TO									
		26-07 2				26-07 2									
			*1 SET OF 27												
64*	9	23-03 2	AS902E	STR		23-03 2									
		TO				TO									
		26-07 2				26-07 2									
			*1 SET OF 54												
1	5	23-02 3	AS503E	9		23-02 3				218-02 0		0-03 3			23-02 2
1	9	23-02 3	AS904E	9		23-02 3				218-02 0		0-03 3			23-02 2
33	5	27-02 0	AS505E	STR		27-02 0									
33	6	27-02 0	AS606E	STR		27-02 0									
1	5	26-07 1	AS507E	STR		26-07 2				218-02 0		0-04 1			26-07 1
1	9	26-07 1	AS908E	STR		26-07 2				218-02 0		0-04 1			26-07 1
58	5	6-02 2	AS510E	17		2-08 2	1-01 0	2-05 0							
28	5	27-02 0	AS511E	STR		27-02 0									
58	5	6-11 0	AS512E	17		2-09 0	1-05 0	2-09 0							
58	5	6-10 2	AS513E	17		2-08 2	1-09 0	2-05 0							

SPECIFICATIONS					BENDING DIMENSIONS (FEET-INCHES /QUARTER INCH)										
QTY.	SIZE	LENGTH	MARK	TYPE	A	B	C	D	E	F/R	G	H	J	K	O

SPECIFICATIONS					BENDING DIMENSIONS (FEET-INCHES /QUARTER INCH)										
QTY.	SIZE	LENGTH	MARK	TYPE	A	B	C	D	E	F/R	G	H	J	K	O

Unofficial Website Copy

ASTM STANDARD ENGLISH REINFORCING BARS

BAR SIZE	NOMINAL DIMENSIONS: DIAMETER (INCHES)	AREA (INCHES²)	WEIGHT (LBS./FT.)	RECOMMENDED END HOOKS, APPLICABLE TO ALL GRADES: 180° HOOKS D	180° HOOKS A OR G	180° HOOKS J	90° HOOKS A OR G	STIRRUP AND TIE HOOKS, APPLICABLE TO ALL GRADES: 90° HOOK D	90° HOOK A OR G	135° HOOK A OR G	135° HOOK A OR G
3	0.375	0.110	0.376	2¼"	5"	3"	6"	1½"	4"	4"	2½"
4	0.500	0.200	0.668	3"	6"	4"	8"	2"	4½"	4½"	3"
5	0.625	0.310	1.043	3¾"	7"	5"	10"	2½"	6"	5½"	3¾"
6	0.750	0.440	1.502	4½"	8"	6"	1-0"	4½"	1-0"	8"	4½"
7	0.875	0.600	2.044	5¼"	10"	7"	1-2"	5¼"	1-2"	9"	5¼"
8	1.000	0.790	2.670	6"	11"	8"	1-4"	6"	1-4"	10½"	6"
9	1.128	1.000	3.400	9½"	1-3"	11¾"	1-7"				
10	1.270	1.270	4.303	10¾"	1-5"	1-1¼"	1-10"				
11	1.410	1.560	5.313	1-0"	1-7"	1-2¾"	2-0"				
14	1.693	2.250	7.650	1-6¼"	2-3"	1-9¾"	2-7"				
18	2.257	4.000	13.600	2-0"	3-0"	2-4½"	3-5"				

NOTES:

1. FIGURES SHOWN IN CIRCLES REPRESENT BAR BEND TYPES.
2. STANDARD BAR BENDS INCLUDE ONLY THOSE TYPES BELOW, INDICATED AS SUCH.
3. ALL DIMENSIONS OUT-TO-OUT, EXCEPT "A" AND "G" ON STD. 180° AND 135° HOOKS.
4. "J" DIMENSIONS ON 180° HOOKS TO BE SHOWN ONLY WHERE NECESSARY TO RESTRICT HOOK SIZE, OTHERWISE STANDARD 'ACI' HOOKS ARE TO BE USED.
5. WHERE "J" IS NOT SHOWN, "J" WILL BE KEPT EQUAL TO OR LESS THAN "H" ON TYPES 3, 5 AND 22. WHERE "J" CAN EXCEED "H", IT SHALL BE SHOWN.
6. "H" DIMENSIONS OF STIRRUPS TO BE SHOWN AS NEEDED TO FIT WITHIN THE CONCRETE.
7. UNLESS OTHERWISE NOTED, DIAMETER "D" IS THE SAME FOR ALL BENDS AND HOOKS ON A BAR (EXCEPT FOR BEND TYPES 11 AND 13).
8. WHERE SLOPE DIFFERS FROM 45° OFFSET, "H" AND "K" MUST BE SHOWN.
9. WHERE BARS ARE TO BE BENT MORE ACCURATELY THAN STANDARD BENDING TOLERANCES, BENDING DIMENSIONS REQUIRING CLOSER FABRICATION SHOULD HAVE LIMITS INDICATED.
10. FOR RECOMMENDED DIAMETER "D", OF BENDS, HOOKS, ETC., REFER TO TABLE ABOVE, 'CRSI' OR 'ACI' TABLES WHERE APPLICABLE AND REQUIRED.
11. TYPE S1-S6, S11, T1-T3 AND T6-T9 APPLICABLE TO BAR SIZES #3 THROUGH #8.

STANDARD BAR BENDS

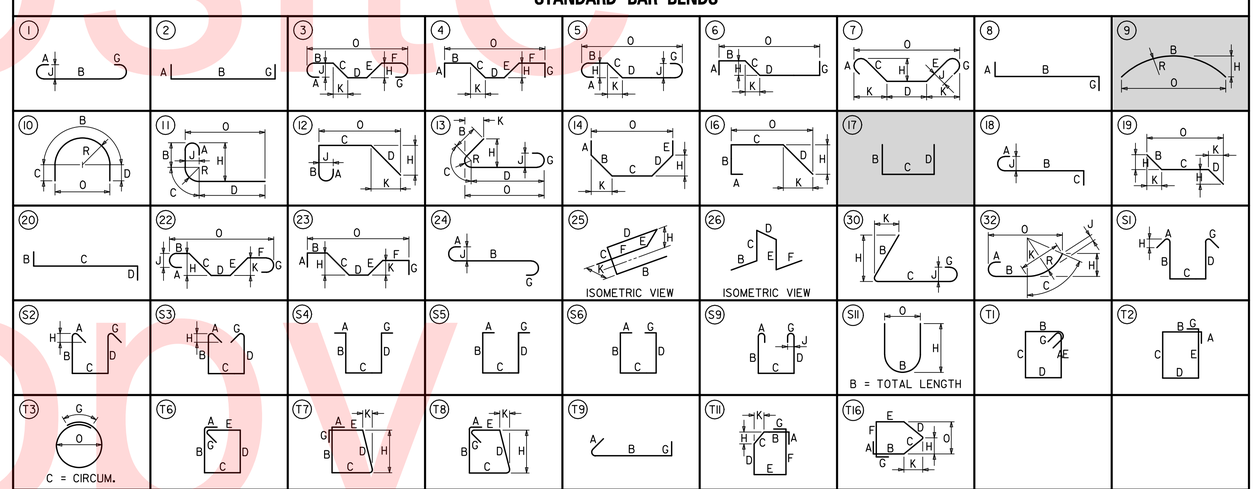

SPECIAL BAR BENDS

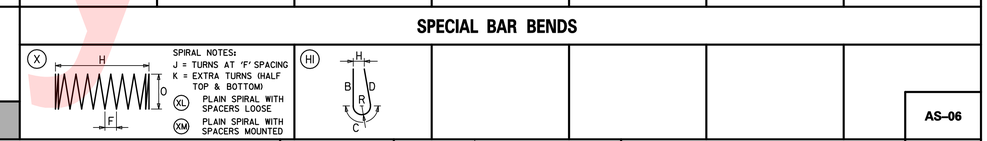

STIRRUP AND TIE HOOKS

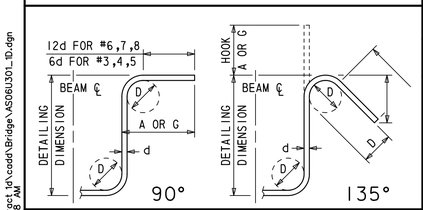

180° AND 90° END HOOKS

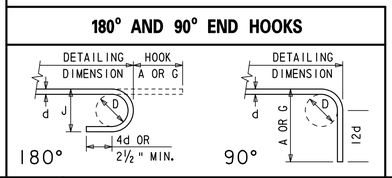

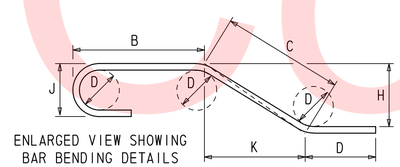

ENLARGED VIEW SHOWING BAR BENDING DETAILS

ADDENDUMS / REVISIONS

DELAWARE DEPARTMENT OF TRANSPORTATION

US 13 & PORT PENN RD INTERSECTION

CONTRACT	BRIDGE NO.
T201011302	DESIGNED BY: K.M.L.
COUNTY: NEW CASTLE	CHECKED BY: J.A.G.

STRUCTURAL SLAB AND SLEEPER SLABS REINFORCEMENT LIST

AS-06

SHEET NO. 82

TOTAL SHTS. 179

r:\3653-000\contract 14\cadd\Bridge\AS06U301_10.dgn
9/17/2012 10:47:48 AM

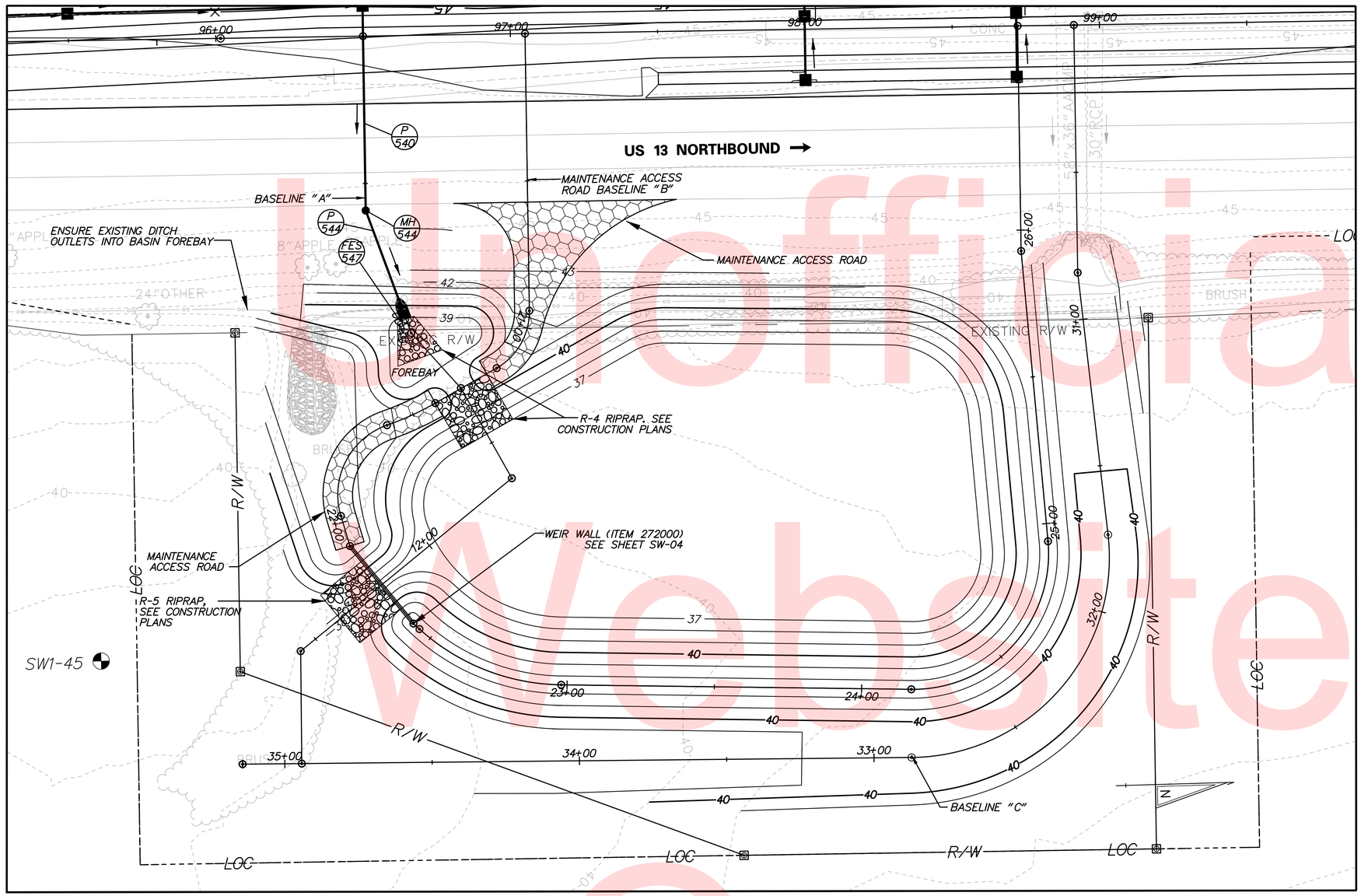

PLAN – SWM BMP NO. 756 STA. 96+50 TO STA. 99+00, INFILTRATION BASIN

SCALE: 1" = 20'

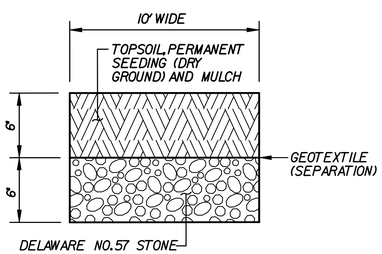

POND MAINTENANCE ACCESS ROAD

SCALE: NONE

GENERAL NOTES:

1. THE CONTRACTOR SHALL PROVIDE "AS-BUILT" DRAWINGS OF ALL STORMWATER MANAGEMENT FACILITIES, SUCH AS PONDS, BIOFILTRATION SWALES, BIO-RETENTION AREAS, ETC. THE "AS-BUILT" DRAWINGS SHALL SHOW THE ACTUAL FINISHED GROUND CONTOURS, OUTLET STRUCTURE DIMENSIONS AND ELEVATIONS, ETC., AS THEY EXIST AT THE COMPLETION OF THE PROJECT. THESE DRAWINGS SHALL BE SIGNED AND SEALED BY A PROFESSIONAL ENGINEER OR LAND SURVEYOR REGISTERED IN THE STATE OF DELAWARE. ALL "AS-BUILT" DRAWINGS SHALL BE SENT TO THE DELDOT STORMWATER ENGINEER. ALL COSTS FOR THIS WORK SHALL BE INCLUDED UNDER ITEM 763501 - CONSTRUCTION ENGINEERING.

2. STORMWATER MANAGEMENT FACILITIES SERVING AS TEMPORARY SEDIMENT BASINS DURING CONSTRUCTION SHALL HAVE SEDIMENT REMOVED AT TIMES DETERMINED BY THE ENGINEER OR AT THE CLEANOUT ELEVATION (39.38) AND AT THE CONCLUSION OF THE PROJECT AFTER ALL AREAS DRAINING TO THE FACILITY HAVE BEEN VEGETATIVELY STABILIZED. COST FOR SEDIMENT REMOVAL SHALL BE PAID FOR UNDER ITEM 250000 - SEDIMENT REMOVAL. ACCESS SHALL BE MAINTAINED TO ALL SEDIMENT REMOVAL CONTROL DEVICES REQUIRING MAINTENANCE UNTIL CONSTRUCTION PHASING AND VEGETATIVE STABILIZATION ALLOW THE REMOVAL OF THOSE CONTROLS, WHICH ARE NO LONGER REQUIRED.

STORMWATER MANAGEMENT FACILITY CONSTRUCTION SEQUENCE AND NOTES:

THE STORMWATER MANAGEMENT FACILITY SHALL FUNCTION AS A SEDIMENT BASIN DURING ROADWAY CONSTRUCTION AND SHALL BE CONSTRUCTED IN ACCORDANCE WITH THE FOLLOWING SECTIONS OF THE STANDARD SPECIFICATIONS:
SECTION 271 - STORMWATER MANAGEMENT POND
SECTION 272 - POND OUTLET STRUCTURE, CONCRETE

1. INSTALL STABILIZED CONSTRUCTION ENTRANCE PER CONSTRUCTION PHASING, MOT AND EROSION AND SEDIMENT CONTROL PLANS.
2. CLEAR AND GRUB FOR INSTALLATION OF PERIMETER EROSION AND SEDIMENT CONTROLS.
3. INSTALL PERIMETER SEDIMENT CONTROLS AS SHOWN ON THE CONSTRUCTION PHASING PLANS, MOT AND EROSION AND SEDIMENT CONTROL PLANS.
4. CLEAR AND GRUB REMAINING AREA FOR STORMWATER MANAGEMENT FACILITY CONSTRUCTION.
5. CONSTRUCT BASIN OUTLET WEIR WALL STRUCTURE AND RIPRAP PROTECTION AT OUTLET AS SHOWN. DE-WATER FOUNDATION AS NEEDED IN ACCORDANCE WITH SECTION 111 AND USE SUMP PIT FOR PUMPING. LOCATION OF SUMP PIT TO BE DETERMINED IN FIELD. INSTALL SKIMMER DEWATERING DEVICE AND OTHER TEMPORARY MODIFICATIONS AS NOTED ON CONSTRUCTION PHASING, M.O.T. AND EROSION CONTROL PLANS, SHEET CS-204.
6. EXCAVATE THE FACILITY AND COMPLETE THE BASIN TO LINES, GRADES, AND DETAILS SHOWN IN THE CONSTRUCTION PLANS; HOWEVER, GRADING SHALL ONLY BE COMPLETED TO 2-FEET ABOVE THE PERMANENT BOTTOM OF THE INFILTRATION BASIN TO PREVENT CLOGGING OF THE PERMANENT FACILITY. DURING EXCAVATION, THE CONTRACTOR SHALL SALVAGE AND STOCKPILE ANY SOILS CLASSIFIED AS CH, CL, CH, AND GM PER THE UNIFIED SOIL CLASSIFICATION SYSTEM TO BE USED TO CONSTRUCT EMBANKMENT. THE ABOVE CLASSIFIED SOILS MAY BE OBTAINED FROM ELSEWHERE WITHIN THE PROJECT LIMITS.
7. STABILIZE ALL BARE AREAS BELOW 38.00, INCLUDING THE BOTTOM OF THE BASIN, WITH WET SEED MIX AND ABOVE 38.00 WITH DRY SEED MIX IN ACCORANCE WITH TURF ESTABLISHMENT SPECIFICATIONS.

MAINTENANCE OF STORMWATER MANAGEMENT FACILITY AS A SEDIMENT BASIN

1. CONTRACTOR SHALL INSPECT THE BASIN IMMEDIATELY AFTER EVERY RAIN AND MAKE REPAIRS AS NEEDED.
2. CONTRACTOR SHALL CLEARLY MARK THE CLEANOUT ELEVATION, 39.38, ON A STAKE DRIVEN INTO THE GROUND AT A LOCATION CLEARLY VISIBLE FROM THE EMBANKMENT. SEDIMENT SHALL BE REMOVED WHEN CLEANOUT ELEVATION IS REACHED AND DISPOSED OF AT A LOCATION APPROVED BY THE ENGINEER.

CONVERSION TO PERMANENT STORMWATER MANAGEMENT FACILITY

1. CONVERT THE BASIN INTO THE PERMANENT STORMWATER MANAGEMENT FACILITY AFTER ALL AREAS DRAINING TO THE BASIN HAVE BEEN PERMANENTLY STABILIZED AND THE ENGINEER HAS APPROVED THE CONVERSION.
2. REMOVE EXCESS ACCUMULATED SEDIMENT ON THE POND BOTTOM AND BENCHES, IF ANY, AND COMPLETE EXCAVATION TO THE SPECIFIED FINISHED LINES AND GRADES SHOWN ON THE PLAN AND DISPOSE SEDIMENT AND EXCAVATED MATERIALS AT A LOCATION APPROVED BY THE ENGINEER. SEDIMENT REMOVAL AND EXCAVATION TO FINAL GRADES SHALL BE PAID UNDER ITEM 250000-SEDIMENT REMOVAL.
3. PUMP DOWN STANDING WATER IN THE BASIN AS NECESSARY.
4. COMPLETE STABILIZATION OF ALL BARE AREAS, REMOVE EROSION AND SEDIMENT CONTROL MEASURES AND REMOVE SKIMMER DEWATERING DEVICE AND PLYWOOD.

BMP NO. 756 – DESIGN SUMMARY

DESIGN STORM	FACILITY INFLOW (CFS)	FACILITY DISCHARGE (CFS)	WATER SURFACE ELEVATION	STORAGE VOLUME (AC-FT)
1-YEAR	3.3	0.0	38.00	0.00
10-YEAR	9.0	1.2	39.30	0.53
100-YEAR	18.6	4.2	40.28	1.05

HAZARD CLASSIFICATION "A" AS PER POND CODE 378

DRAINAGE AREA TO FACILITY: 4.47 ACRES

MANAGEMENT PROVIDED BY FACILITY: WATER QUALITY CONTROL VIA INFILTRATION FOR 1-YEAR RESOURCE PROTECTION STORM AND QUANTITY CONTROL FOR THE 10 AND 100-YEAR EVENTS.

Unofficial Website Copy

N:\31653-000\CONTRACT 1D:\CADD\SW01-96BU301_1D.dgn
1/15/2013 9:36:33 AM

DELAWARE DEPARTMENT OF TRANSPORTATION

ADDENDUMS / REVISIONS

SCALE 0 20 40 60 FEET

US 13 & PORT PENN RD INTERSECTION

CONTRACT	BRIDGE NO.
T201011302	DESIGNED BY: DLH
COUNTY	CHECKED BY: JDC
NEW CASTLE	

STORMWATER MANAGEMENT PLAN BMP 756

SW-01

SHEET NO. 83

TOTAL SHTS. 179

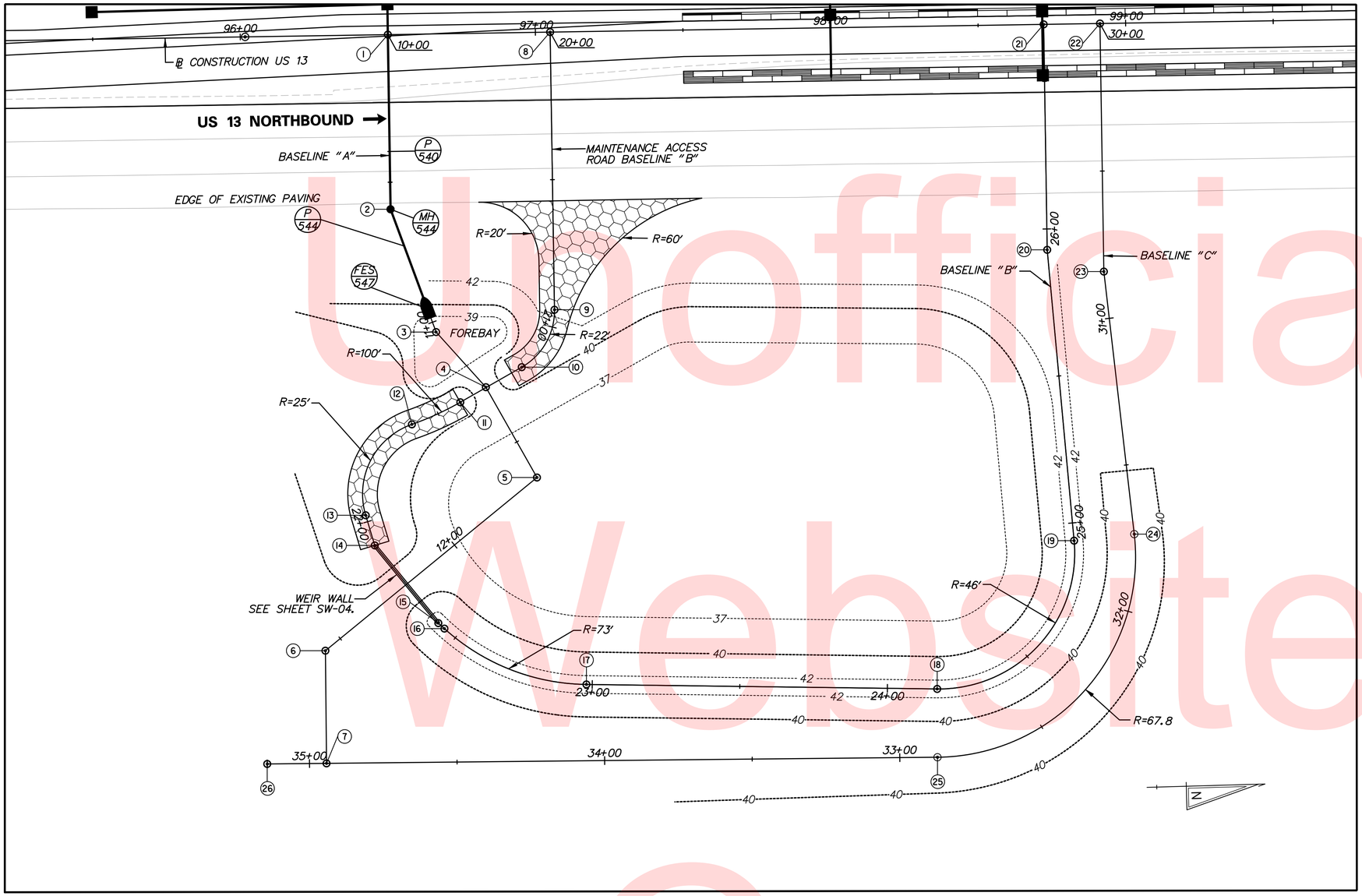

PLAN – SWM BMP NO. 756 STA. 96+50 TO STA. 99+00, INFILTRATION BASIN

SCALE: 1" = 20'

BASELINE "A" STAKEOUT INFORMATION

POINT NO.	STATION	NORTHING	EASTING
1	POB STA.10+00.00	551929.96	590591.55
2	PI STA.10+59.18	551929.17	590650.73
3	PI STA.11+03.54	551943.40	590692.75
4	PI STA.11+28.70	551959.72	590711.90
5	PI STA.11+63.86	551976.14	590742.99
6	PI STA.12+56.50	551902.80	590799.57
7	POE STA.12+94.68	551902.08	590837.74

ACCESS ROAD BASELINE "B" STAKEOUT INFORMATION

POINT NO.	STATION	NORTHING	EASTING
8	POB STA.20+00.00	551984.95	590592.28
9	PC STA.20+94.08	551983.71	590686.35
10	PT STA.21+17.56	551972.06	590705.47
11	PI STA.21+41.54	551950.91	590716.75
12	PRC STA.21+59.60	551934.29	590723.78
13	PT STA.21+97.73	551917.77	590754.11
14	PI STA. 22+08.40	551920.55	590764.40
15	PI STA. 22+42.40	551941.32	590791.32
16	PC STA.22+45.18	551943.32	590793.25
17	PT STA.22+92.02	551990.87	590813.55
18	PC STA.24+16.87	552109.61	590818.50
19	PT STA.24+93.97	552157.44	590769.63
20	PI STA.25+92.92	552151.16	590670.87
21	POE STA.26+69.31	552152.17	590594.49

CHANNEL BASELINE "C" STAKEOUT INFORMATION

POINT NO.	STATION	NORTHING	EASTING
22	POB STA.30+00.00	552171.2491	590594.74
23	PI STA.30+84.06	552170.1391	590678.79
24	PC STA.31+73.60	552177.8672	590768.00
25	PT STA.32+87.23	552109.0479	590841.63
26	POE STA.35+14.32	551881.9924	590837.36

Unofficial Website Copy

N:\31653-000\Contract 1D\CADD\SW02-96BU301_1D.dgn
11/29/2012 2:17:19 PM

DELAWARE DEPARTMENT OF TRANSPORTATION

ADDENDUMS / REVISIONS

SCALE 0 20 40 60 FEET

US 13 & PORT PENN RD INTERSECTION

CONTRACT	BRIDGE NO.
T201011302	DESIGNED BY: CRH
COUNTY	
NEW CASTLE	CHECKED BY: JDC

STORMWATER MANAGEMENT STAKEOUT PLAN BMP 756

SW-02

SHEET NO. 84

TOTAL SHTS. 179

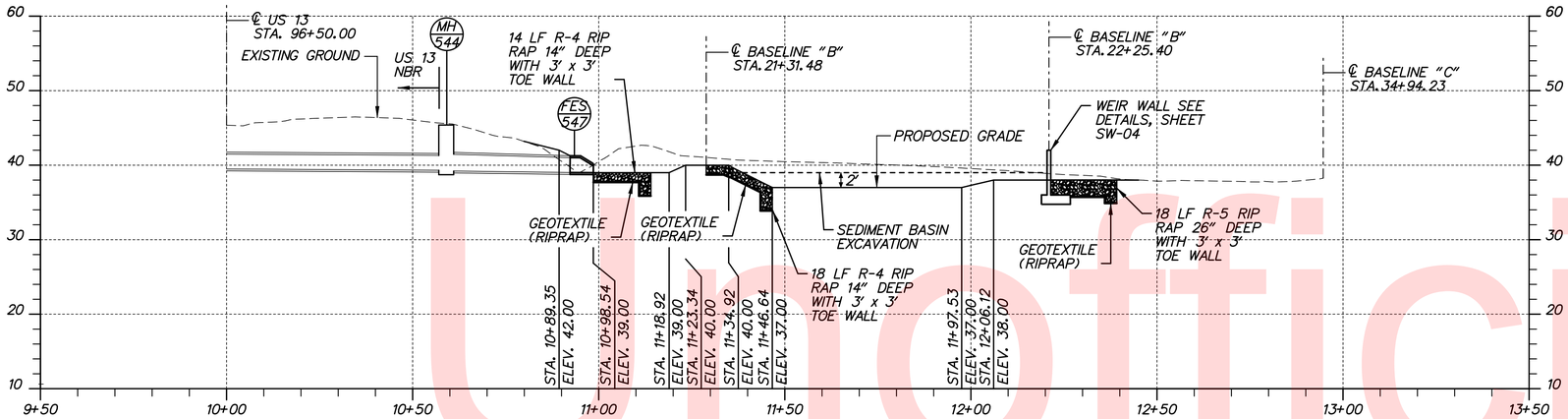

PROFILE – BMP 756 BASELINE "A"

SCALE: HORIZONTAL: 1" = 20'
VERTICAL: 1" = 10'

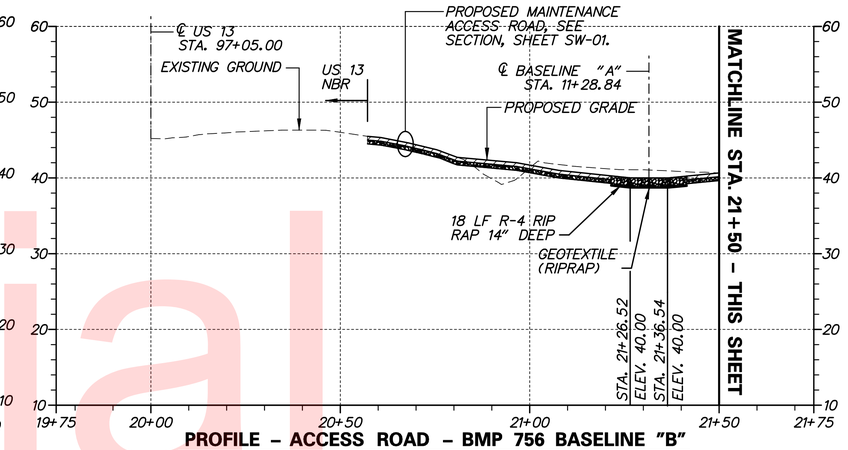

PROFILE – ACCESS ROAD – BMP 756 BASELINE "B"

SCALE: HORIZONTAL: 1" = 20'
VERTICAL: 1" = 10'

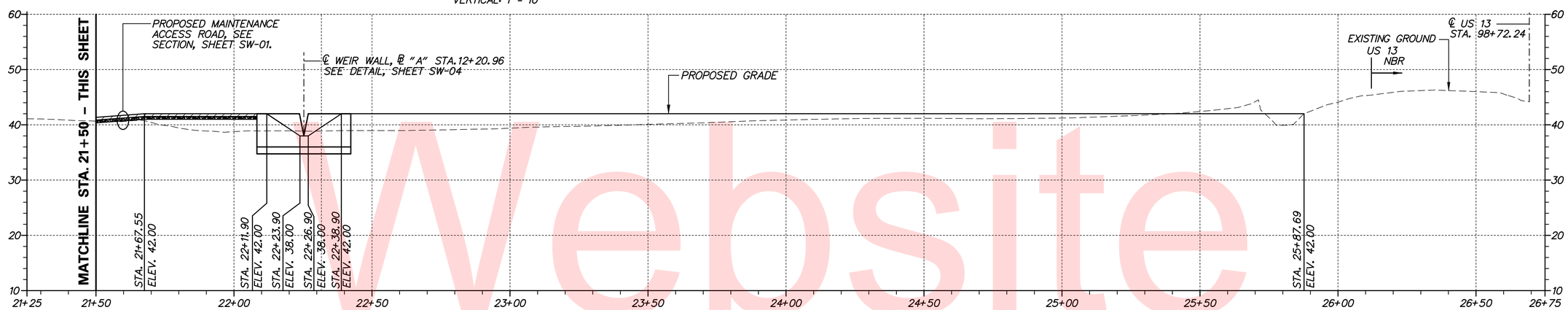

PROFILE – ACCESS ROAD – BMP 756 BASELINE "B"

SCALE: HORIZONTAL: 1" = 20'
VERTICAL: 1" = 10'

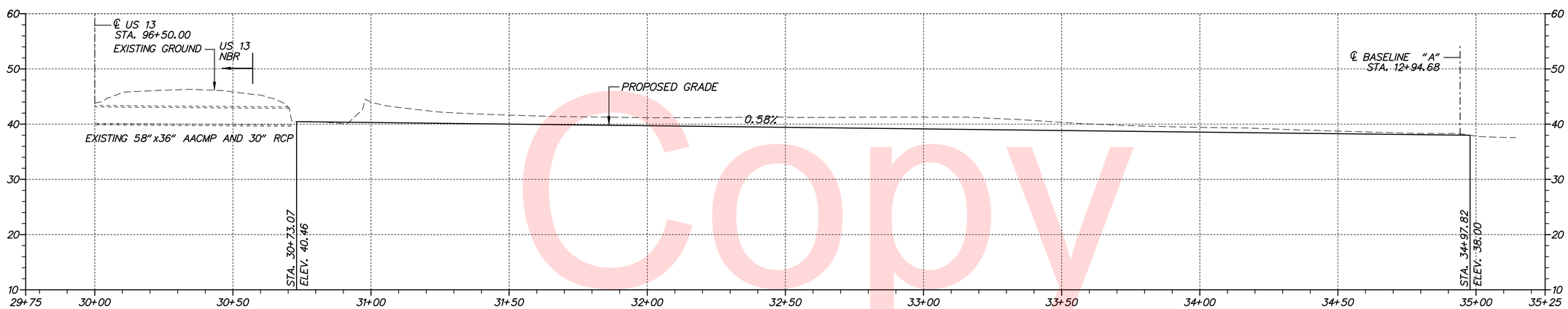

PROFILE – CHANNEL – BMP 756 BASELINE "C"

SCALE: HORIZONTAL: 1" = 20'
VERTICAL: 1" = 10'

Unofficial Website Copy

N:\31653-000\Centrost 11\CADD\SW03-968U301_1D.dgn
11/29/2012 2:14:18 PM

DELAWARE DEPARTMENT OF TRANSPORTATION	ADDENDUMS / REVISIONS	SCALE 0 20 40 60 FEET	US 13 & PORT PENN RD INTERSECTION	CONTRACT T201011302 / COUNTY NEW CASTLE	BRIDGE NO. / DESIGNED BY: CRH / CHECKED BY: JDC	STORMWATER MANAGEMENT PROFILES BMP 756

SW-03
SHEET NO. 85
TOTAL SHTS. 179

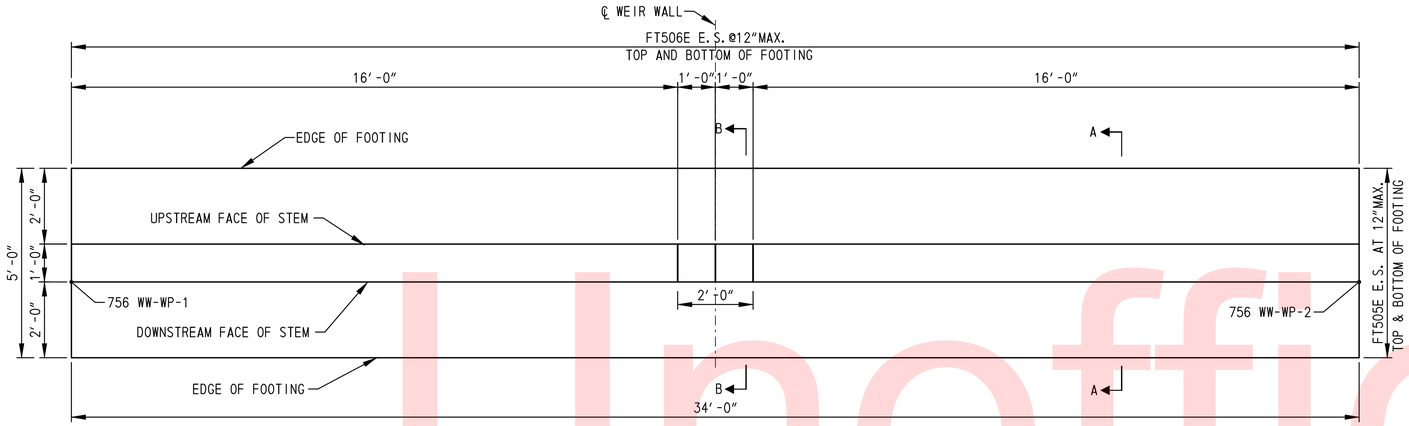

PLAN - SWM BMP NO. 756 WEIR WALL

SCALE: 1/2" = 1'

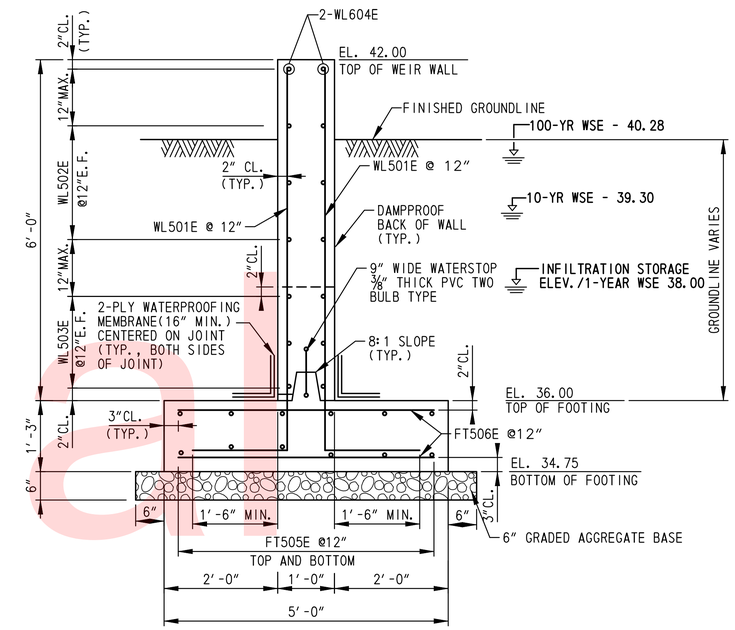

SECTION A-A

SCALE: 3/4"=1'-0"

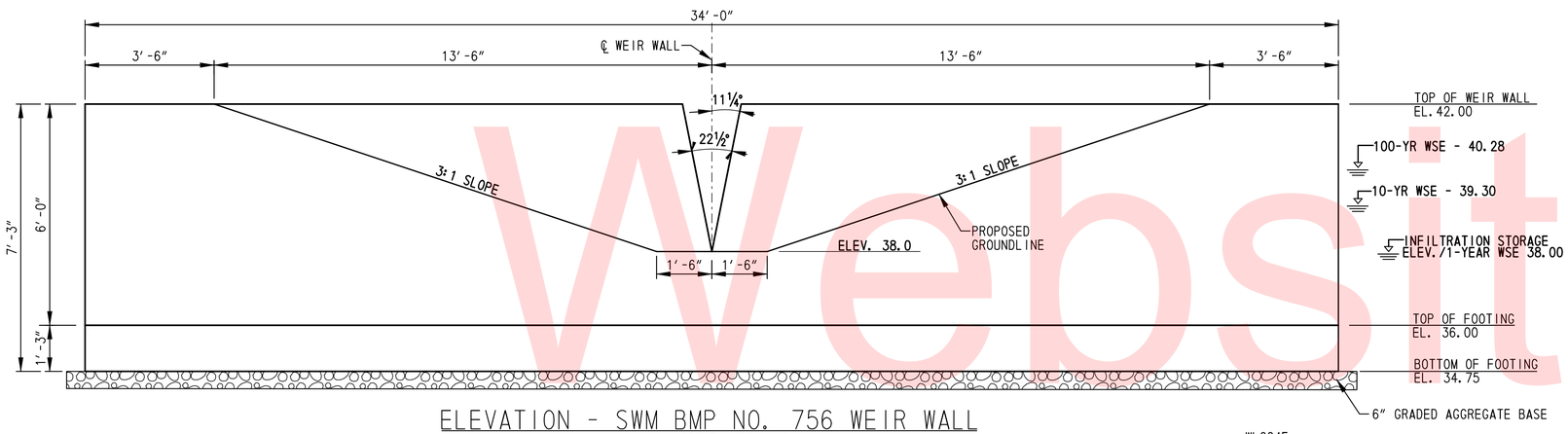

ELEVATION - SWM BMP NO. 756 WEIR WALL

SCALE: 1/2" = 1'

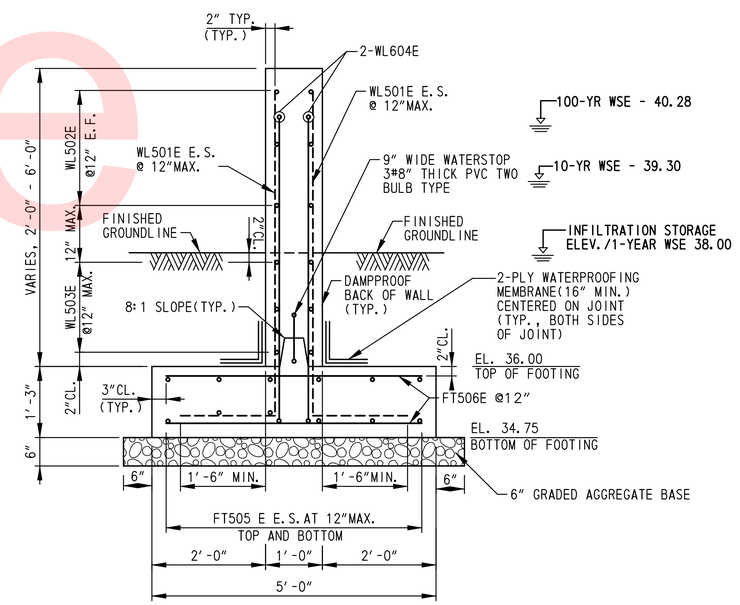

SECTION B-B

SCALE: 3/4"=1'-0"

WORKING POINT COORDINATES		
WORKING POINT	NORTHING	EASTING
756 WW-WP-1	551920.1541	590764.7081
756 WW-WP-2	551940.9175	590791.6249

NOTES:

1. MAXIMUM FACTORED BEARING RESISTANCE FOR WEIR WALL IS 2 KSF.
2. KEYS ARE NOMINAL SIZE.
3. CONCRETE SHALL BE CLASS A, 4500 PSI.
4. RIPRAP NOT SHOWN FOR CLARITY.
5. E.F. = EACH FACE, E.S.=EQUAL SPACING.
6. SEE REINFORCING BAR LIST ON DRAWING SW-13.
7. THE CLAY CORE SHALL BE COMPACTED TO AT LEAST 95% OF THE LABORATORY MAXIMUM DENSITY AS DETERMINED BY AASHTO T99 METHOD C FOR A DISTANCE OF 5'-0" MINIMUM ON EITHER SIDE OF THE WEIR WALL FOOTING ALONG THE CENTERLINE OF EMBANKMENT/CLAY CORE.

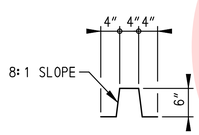

CONSTRUCTION JOINT DETAIL

SCALE: 3/4"=1'-0"

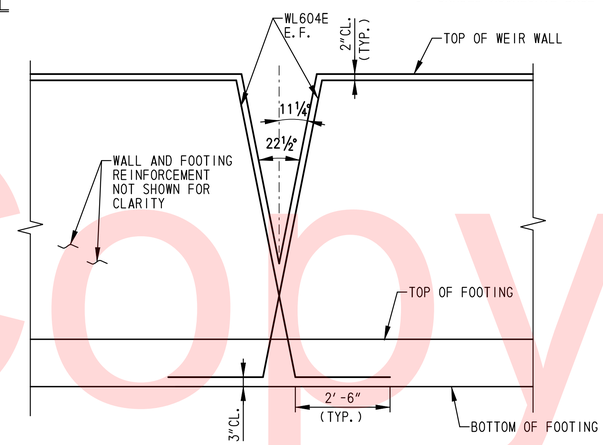

ADDITIONAL REINFORCEMENT AT WEIR WALL OPENING

SCALE: 1/2" = 1'

Unofficial Website Copy

N:\31653-000\Contract 1D\CADD\SW04-96BU301_1D.dgn
11/29/2012 1:38:14 PM

DELAWARE DEPARTMENT OF TRANSPORTATION	ADDENDUMS / REVISIONS	US 13 & PORT PENN RD INTERSECTION	CONTRACT T201011302	BRIDGE NO.	STORMWATER MANAGEMENT DETAILS BMP 756	SW-04
			COUNTY NEW CASTLE	DESIGNED BY: HQ		SHEET NO. 86
				CHECKED BY: JDC		TOTAL SHTS. 179

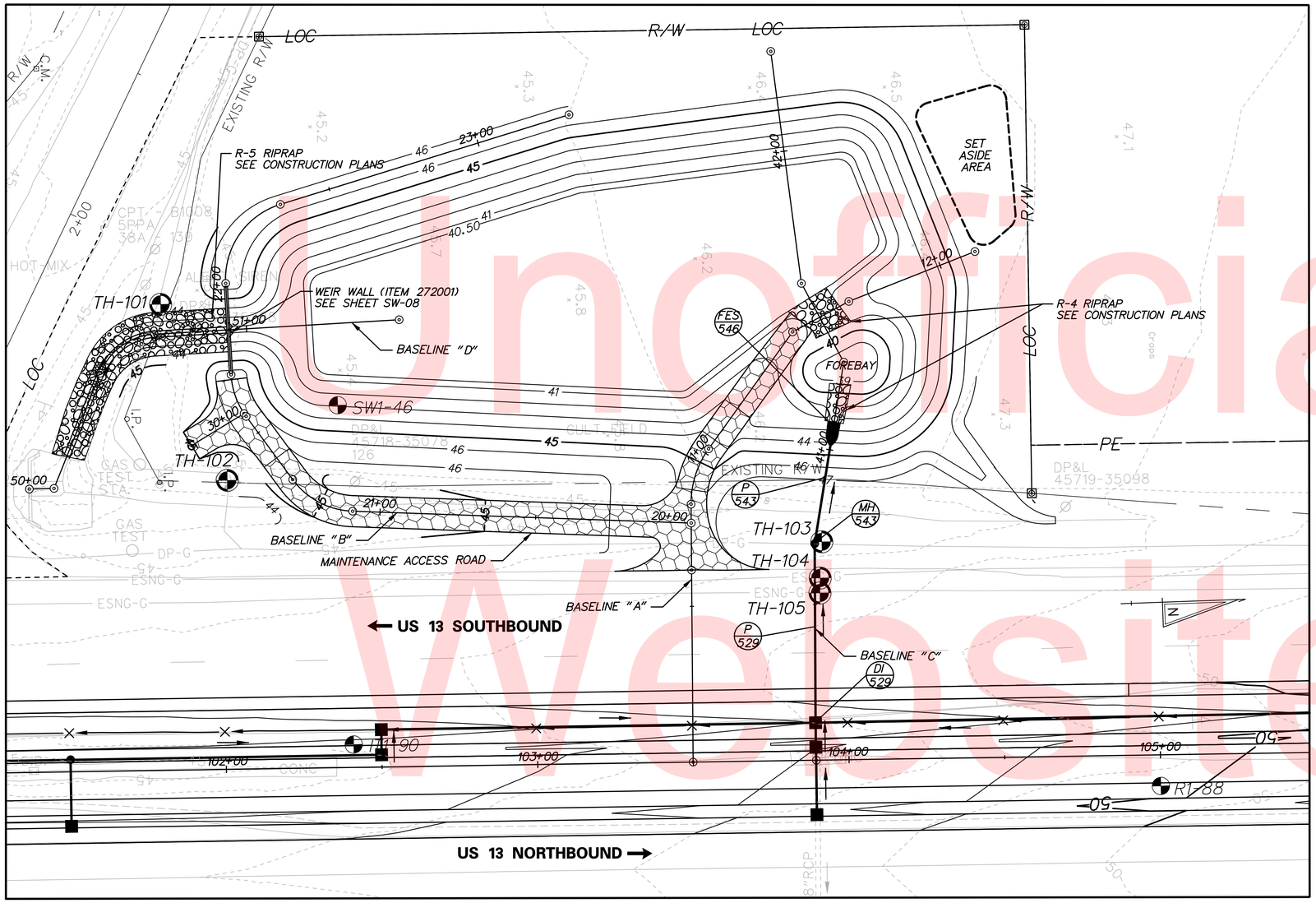

PLAN – SWM BMP NO. 757 STA. 102+00 TO STA 104+50, INFLITRATION BASIN

SCALE: 1" = 20'

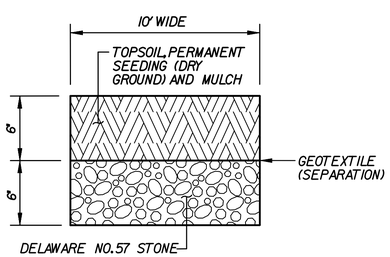

POND MAINTENANCE ACCESS ROAD

SCALE: NONE

GENERAL NOTES:

1. THE CONTRACTOR SHALL PROVIDE "AS-BUILT" DRAWINGS OF ALL STORMWATER MANAGEMENT FACILITIES, SUCH AS PONDS, BIOFILTRATION SWALES, BIO-RETENTION AREAS, ETC. THE "AS-BUILT" DRAWINGS SHALL SHOW THE ACTUAL FINISHED GROUND CONTOURS, OUTLET STRUCTURE DIMENSIONS AND ELEVATIONS, ETC., AS THEY EXIST AT THE COMPLETION OF THE PROJECT. THESE DRAWINGS SHALL BE SIGNED AND SEALED BY A PROFESSIONAL ENGINEER OR LAND SURVEYOR REGISTERED IN THE STATE OF DELAWARE. ALL "AS-BUILT" DRAWINGS SHALL BE SENT TO THE DELDOT STORMWATER ENGINEER. ALL COSTS FOR THIS WORK SHALL BE INCLUDED UNDER ITEM 763501 - CONSTRUCTION ENGINEERING.

2. STORMWATER MANAGEMENT FACILITIES SERVING AS TEMPORARY SEDIMENT BASINS DURING CONSTRUCTION SHALL HAVE SEDIMENT REMOVED AT TIMES DETERMINED BY THE ENGINEER OR AT THE CLEANOUT ELEVATION (42.60) AND AT THE CONCLUSION OF THE PROJECT AFTER ALL AREAS DRAINING TO THE FACILITY HAVE BEEN VEGETATIVELY STABILIZED. COST FOR SEDIMENT REMOVAL SHALL BE PAID FOR UNDER ITEM 250000 - SEDIMENT REMOVAL. ACCESS SHALL BE MAINTAINED TO ALL SEDIMENT REMOVAL CONTROL DEVICES REQUIRING MAINTENANCE UNTIL CONSTRUCTION PHASING AND VEGETATIVE STABILIZATION ALLOW THE REMOVAL OF THOSE CONTROLS, WHICH ARE NO LONGER REQUIRED.

STORMWATER MANAGEMENT FACILITY CONSTRUCTION SEQUENCE AND NOTES:

THE STORMWATER MANAGEMENT FACILITY SHALL FUNCTION AS A SEDIMENT BASIN DURING ROADWAY CONSTRUCTION AND SHALL BE CONSTRUCTED IN ACCORDANCE WITH THE FOLLOWING SECTIONS OF THE STANDARD SPECIFICATIONS:
SECTION 271 - STORMWATER MANAGEMENT POND
SECTION 272 - POND OUTLET STRUCTURE, CONCRETE

1. INSTALL STABILIZED CONSTRUCTION ENTRANCE PER CONSTRUCTION PHASING, MOT AND EROSION AND SEDIMENT CONTROL PLANS.

2. CLEAR AND GRUB FOR INSTALLATION OF PERIMETER EROSION AND SEDIMENT CONTROLS.

3. INSTALL PERIMETER SEDIMENT CONTROLS AS SHOWN ON THE CONSTRUCTION PHASING PLANS, MOT AND EROSION AND SEDIMENT CONTROL PLANS.

4. CLEAR AND GRUB REMAINING AREA FOR STORMWATER MANAGEMENT FACILITY CONSTRUCTION.

5. CONSTRUCT BASIN OUTLET WEIR WALL STRUCTURE AND RIPRAP PROTECTION AT OUTLET AS SHOWN. DE-WATER FOUNDATION AS NEEDED IN ACCORDANCE WITH SECTION 111 AND USE SUMP PIT FOR PUMPING. LOCATION OF SUMP PIT TO BE DETERMINED IN FIELD. INSTALL SKIMMER DEWATERING DEVICE AND OTHER TEMPORARY MODIFICATIONS AS NOTED ON CONSTRUCTION PHASING, M.O.T. AND EROSION CONTROL PLANS, SHEET CS-204.

6. EXCAVATE THE FACILITY AND COMPLETE THE BASIN TO LINES, GRADES, AND DETAILS SHOWN IN THE CONSTRUCTION PLANS; HOWEVER, GRADING SHALL ONLY BE COMPLETED TO 1-FOOT ABOVE THE PERMANENT BOTTOM OF THE INFILTRATION BASIN TO PREVENT CLOGGING OF THE PERMANENT FACILITY. DURING EXCAVATION, THE CONTRACTOR SHALL SALVAGE AND STOCKPILE ANY SOILS CLASSIFIED AS CH, CL, CH, AND GM PER THE UNIFIED SOIL CLASSIFICATION SYSTEM TO BE USED TO CONSTRUCT EMBANKMENT. THE ABOVE CLASSIFIED SOILS MAY BE OBTAINED FROM ELSEWHERE WITHIN THE PROJECT LIMITS.

7. STABILIZE ALL BARE AREAS BELOW 41.50, INCLUDING THE BOTTOM OF THE BASIN, WITH WET SEED MIX AND ABOVE 41.50 WITH DRY SEED MIX IN ACCORANCE WITH TURF ESTABLISHMENT SPECIFICATIONS.

MAINTENANCE OF STORMWATER MANAGEMENT FACILITY AS A SEDIMENT BASIN

1. CONTRACTOR SHALL INSPECT THE BASIN IMMEDIATELY AFTER EVERY RAIN AND MAKE REPAIRS AS NEEDED.

2. CONTRACTOR SHALL CLEARLY MARK THE CLEANOUT ELEVATION, 42.60, ON A STAKE DRIVEN INTO THE GROUND AT A LOCATION CLEARLY VISIBLE FROM THE EMBANKMENT. SEDIMENT SHALL BE REMOVED WHEN CLEANOUT ELEVATION IS REACHED AND DISPOSED OF AT A LOCATION APPROVED BY THE ENGINEER.

CONVERSION TO PERMANENT STORMWATER MANAGEMENT FACILITY

1. CONVERT THE BASIN INTO THE PERMANENT STORMWATER MANAGEMENT FACILITY AFTER ALL AREAS DRAINING TO THE BASIN HAVE BEEN PERMANENTLY STABILIZED AND THE ENGINEER HAS APPROVED THE CONVERSION.

2. REMOVE EXCESS ACCUMULATED SEDIMENT ON THE POND BOTTOM AND BENCHES, IF ANY, AND COMPLETE EXCAVATION TO THE SPECIFIED FINISHED LINES AND GRADES SHOWN ON THE PLAN AND DISPOSE SEDIMENT AND EXCAVATED MATERIALS AT A LOCATION APPROVED BY THE ENGINEER. SEDIMENT REMOVAL AND EXCAVATION TO FINAL GRADES SHALL BE PAID UNDER ITEM 250000-SEDIMENT REMOVAL.

3. PUMP DOWN STANDING WATER IN THE BASIN AS NECESSARY.

4. COMPLETE STABILIZATION OF ALL BARE AREAS, REMOVE EROSION AND SEDIMENT CONTROL MEASURES AND REMOVE SKIMMER DEWATERING DEVICE AND PLYWOOD.

BMP NO. 757 – DESIGN SUMMARY

DESIGN STORM	FACILITY INFLOW (CFS)	FACILITY DISCHARGE (CFS)	WATER SURFACE ELEVATION	STORAGE VOLUME (AC-FT)
1-YEAR	6.5	0.0	42.00	0.30
10-YEAR	15.3	2.4	43.84	0.67
100-YEAR	29.3	8.0	45.03	1.19

HAZARD CLASSIFICATION "A" AS PER POND CODE 378

DRAINAGE AREA TO FACILITY: 4.86 ACRES

MANAGEMENT PROVIDED BY FACILITY: WATER QUALITY CONTROL VIA INFILTRATION FOR 1-YEAR RESOURCE PROTECTION STORM AND QUANTITY CONTROL FOR THE 10 AND 100-YEAR EVENTS.

SW-05

Unofficial Website Copy

N:\31653-000\Contract 1D\CADD\SW01-96CU301_1D.dgn
4/12/2013 1:43:51 PM

DELAWARE DEPARTMENT OF TRANSPORTATION

ADDENDUMS / REVISIONS

SCALE 0 20 40 60 FEET

US 13 & PORT PENN RD INTERSECTION

CONTRACT	BRIDGE NO.
T201011302	DESIGNED BY: DLH
COUNTY	
NEW CASTLE	CHECKED BY: JDC

STORMWATER MANAGEMENT PLAN BMP 757

SHEET NO. 87
TOTAL SHTS. 179

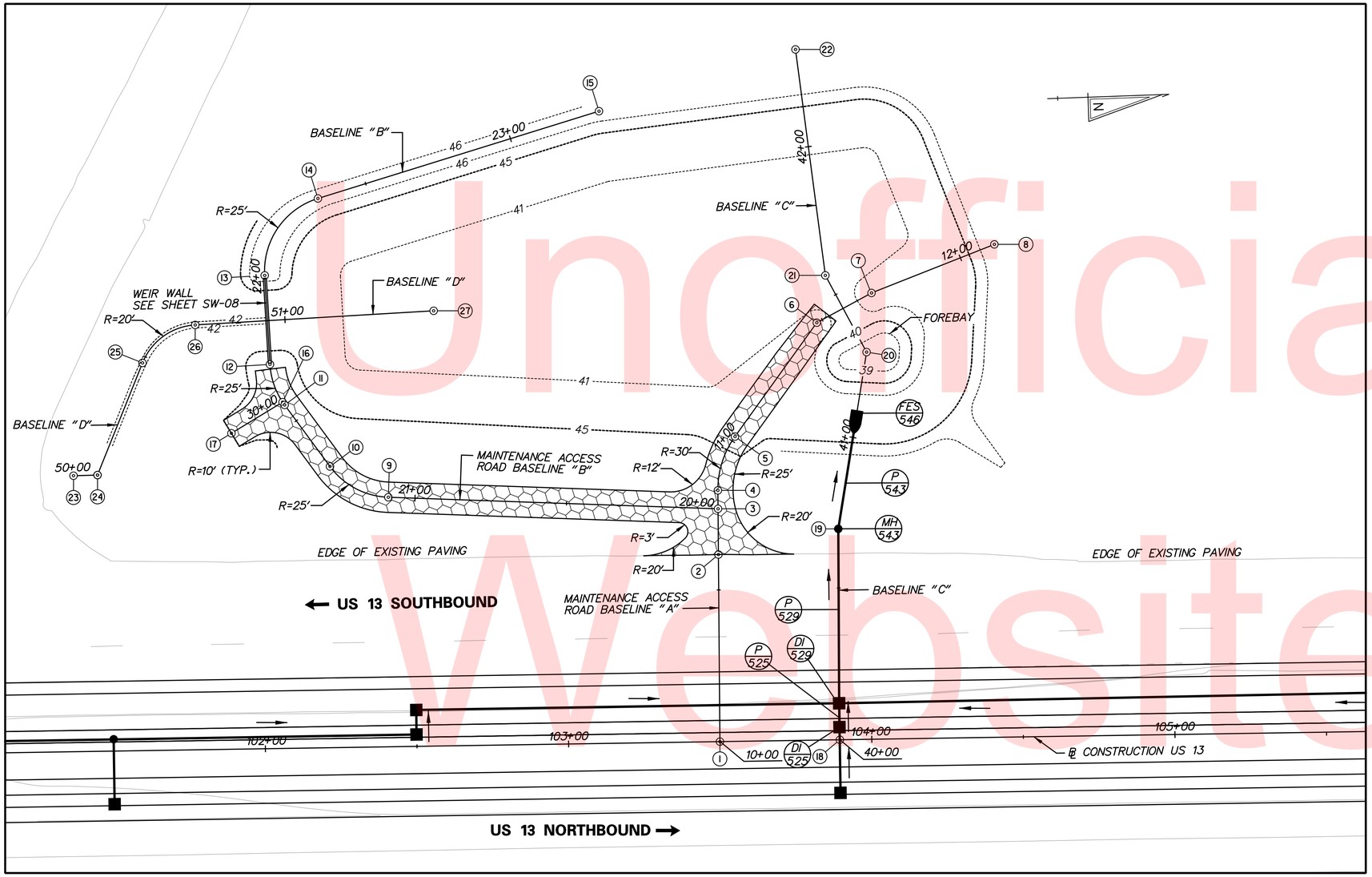

PLAN – SWM BMP NO. 757 STA. 102+00 TO STA 104+50. INFILTRATION BASIN

SCALE: 1" = 20'

ACCESS ROAD BASELINE "A" STAKEOUT INFORMATION

POINT NO.	STATION	NORTHING	EASTING
1	POB STA.10+00.00	552629.81	590600.80
2	PI STA.10+61.66	552631.09	590539.15
3	PI STA.10+76.74	552631.40	590524.08
4	PC STA.10+82.79	552631.52	590518.02
5	PT STA.11+01.73	552637.67	590500.44
6	PI STA.11+47.96	552665.72	590463.70
7	PI STA.11+68.49	552684.04	590454.43
8	POE STA.12+12.06	552725.00	590439.60

ACCESS ROAD BASELINE "B" STAKEOUT INFORMATION

POINT NO.	STATION	NORTHING	EASTING
3	POB STA.20+00.00	552631.40	590524.08
9	PC STA.21+08.80	552522.82	590517.14
10	PT STA.21+31.32	552503.87	590506.44
11	PC STA.21+56.51	552489.51	590485.74
12	PT STA.21+70.91	552485.06	590472.25
13	PC STA.22+00.29	552484.17	590442.88
14	PT STA.22+33.52	552502.44	590418.04
15	POE STA.23+30.58	552595.93	590391.96
16	POB STA.30+00.00	552488.86	590484.81
17	POE STA.30+19.75	552471.70	590494.57

BASELINE "C" STAKEOUT INFORMATION

POINT NO.	STATION	NORTHING	EASTING
18	POB STA.40+00.00	552669.37	590601.32
19	PI STA.40+69.51	552670.85	590531.83
20	PI STA.41+28.51	552681.86	590473.86
21	PI STA.41+57.21	552669.00	590448.20
22	POE STA.42+32.32	552661.29	590373.48

BASELINE "D" STAKEOUT INFORMATION

POINT NO.	STATION	NORTHING	EASTING
23	POB STA.50+00.00	552419.24	590507.05
24	PI STA.50+07.92	552427.16	590507.06
25	PC STA.50+47.75	552443.05	590470.55
26	PT STA.50+70.34	552460.78	590458.54
27	POE STA.51+49.12	552539.53	590456.15

Unofficial Website Copy

N:\31653-00\Contract 1D\CADD\SW02-96CU301_1D.dgn
9/14/2012 11:45:38 AM

DELAWARE DEPARTMENT OF TRANSPORTATION

ADDENDUMS / REVISIONS

SCALE 0 20 40 60 FEET

US 13 & PORT PENN RD INTERSECTION

CONTRACT	BRIDGE NO.
T201011302	DESIGNED BY: DLH
COUNTY	CHECKED BY: JDC
NEW CASTLE	

STORMWATER MANAGEMENT PLAN BMP 757

SW-06

SHEET NO. 88

TOTAL SHTS. 179

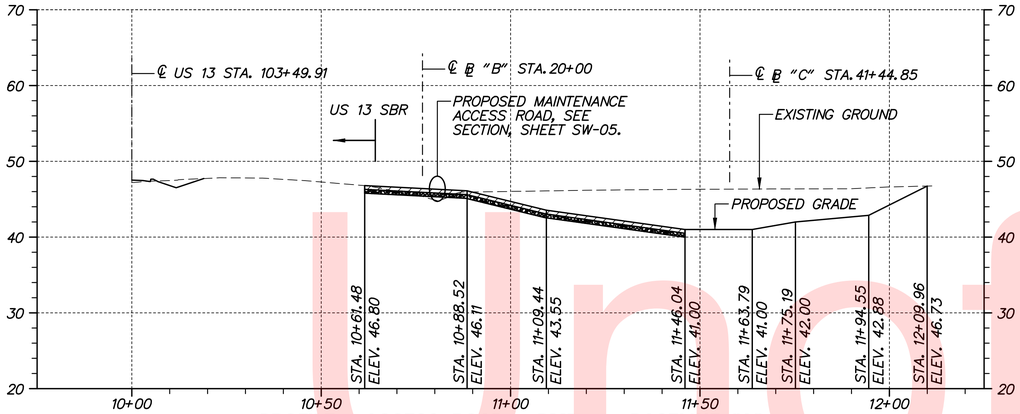

PROFILE – ACCESS ROAD – BMP 757 BASELINE "A"

SCALE: HORIZONTAL: 1" = 20'
VERTICAL: 1" = 10'

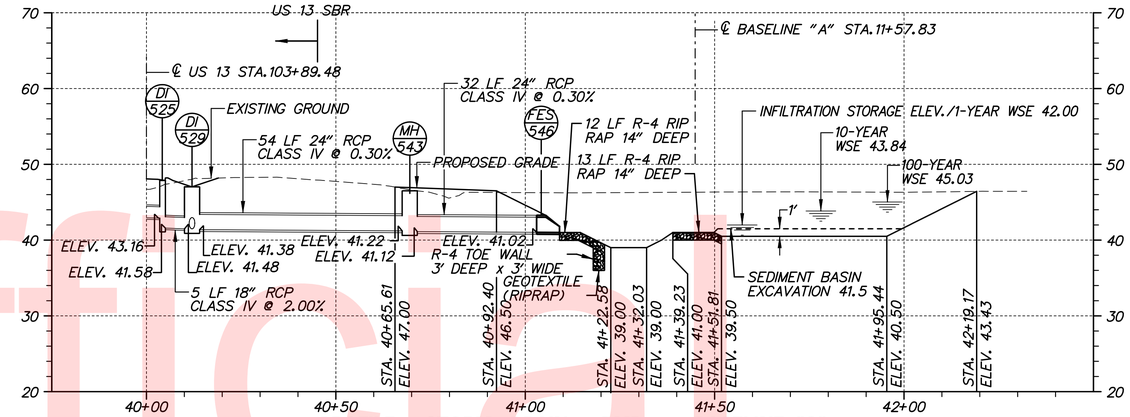

PROFILE – STORM DRAIN – BMP 757 BASELINE "C"

SCALE: HORIZONTAL: 1" = 20'
VERTICAL: 1" = 10'

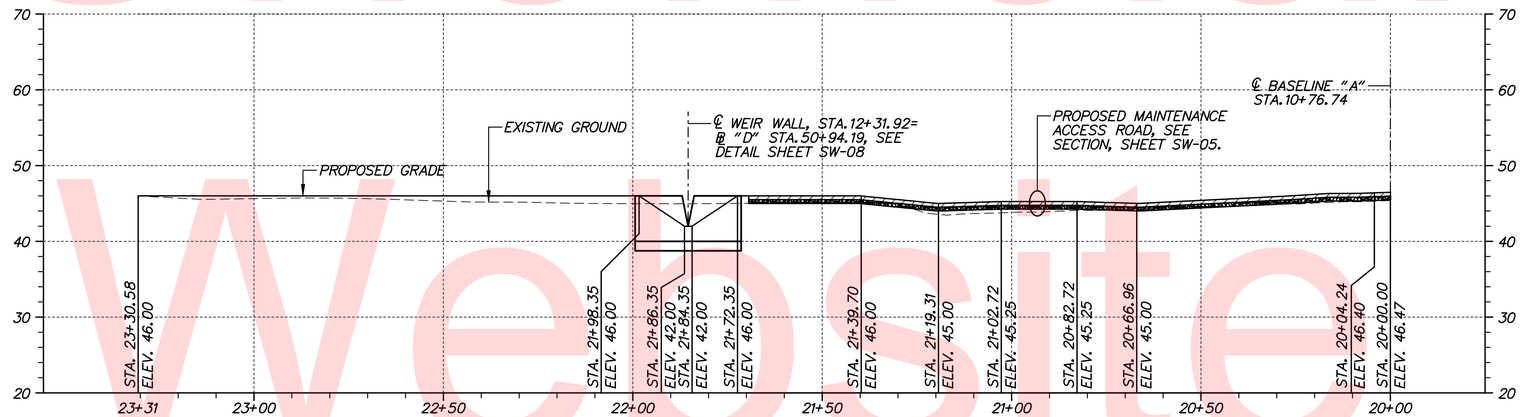

PROFILE – ACCESS ROAD – BMP 757 BASELINE "B"

SCALE: HORIZONTAL: 1" = 20'
VERTICAL: 1" = 10'

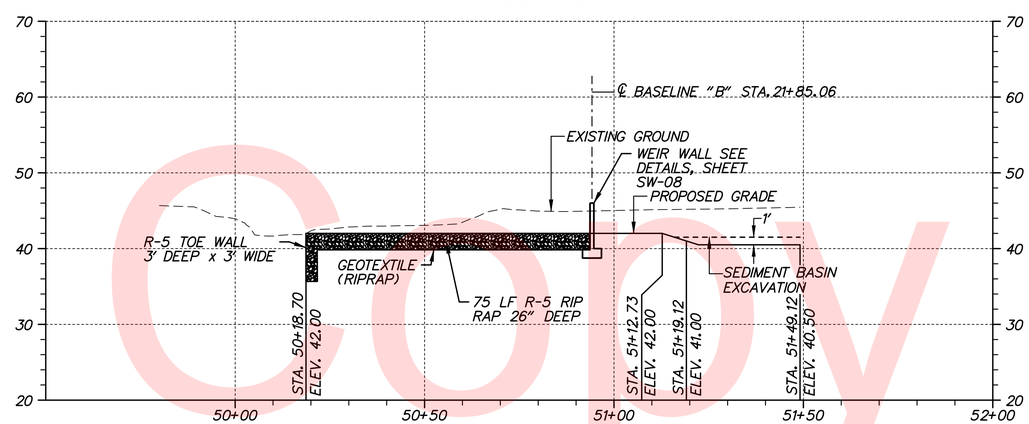

PROFILE – STORM DRAIN – BMP 757 BASELINE "D"

SCALE: HORIZONTAL: 1" = 20'
VERTICAL: 1" = 10'

Unofficial Website Copy

N:\31653-000\CONTRACT 1D:\CADD\SW03-96GU301_1D.dgn
7/10/2015 11:18:26 AM

DELAWARE DEPARTMENT OF TRANSPORTATION	ADDENDUMS / REVISIONS	SCALE 0 20 40 60 FEET	US 13 & PORT PENN RD INTERSECTION	CONTRACT T201011302 / COUNTY NEW CASTLE	BRIDGE NO. / DESIGNED BY: CRH / CHECKED BY: JDC	STORMWATER MANAGEMENT PROFILES BMP 757

SW-07

SHEET NO. 89

TOTAL SHTS. 179

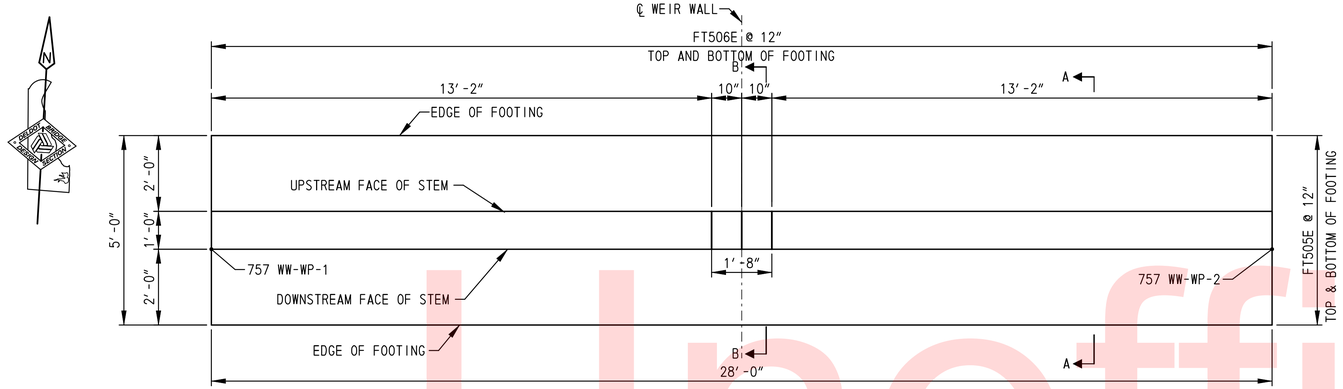

PLAN - SWM BMP NO. 757 WEIR WALL

SCALE: 1/2" = 1'

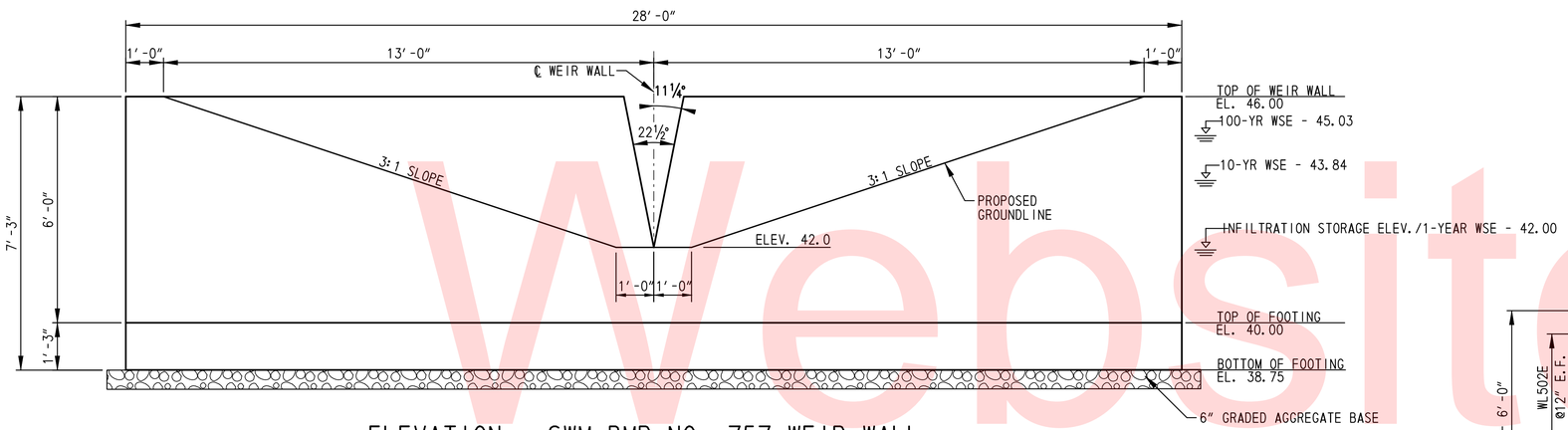

ELEVATION - SWM BMP NO. 757 WEIR WALL

SCALE: 1/2" = 1'

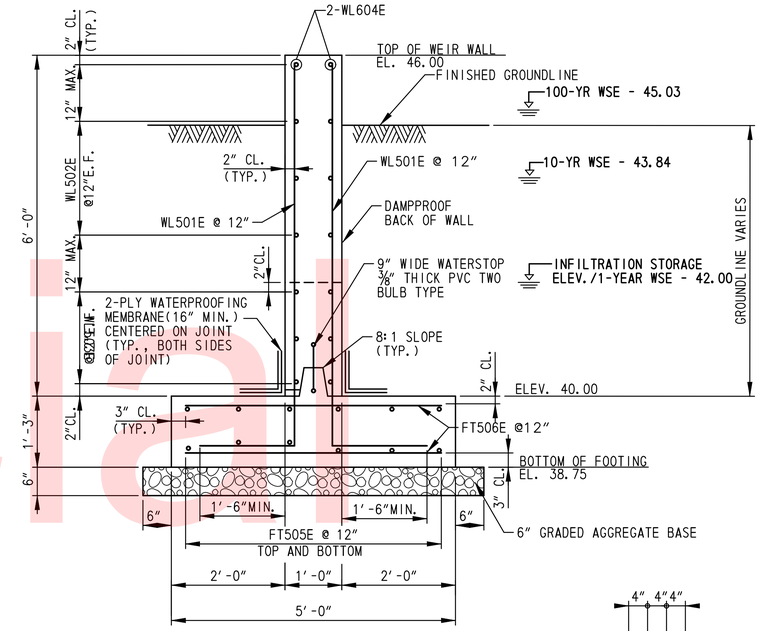

SECTION A-A

SCALE: ¾"=1'-0"

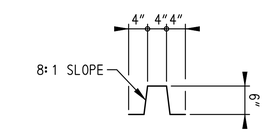

CONSTRUCTION JOINT DETAIL

SCALE: ¾"=1'-0"

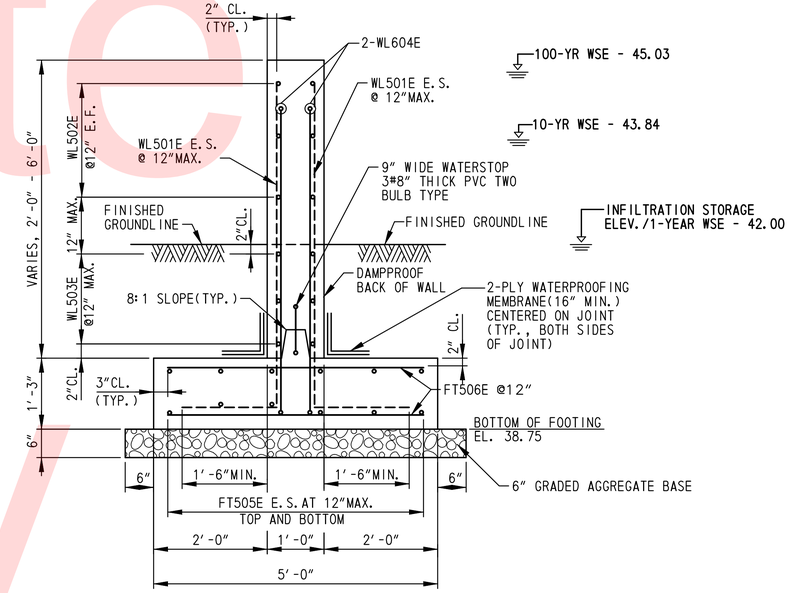

SECTION B-B

SCALE: ¾"=1'-0"

WORKING POINT COORDINATES		
WORKING POINT	NORTHING	EASTING
757 WW-WP-1	552485.6254	590443.7777
757 WW-WP-2	552486.4758	590471.7648

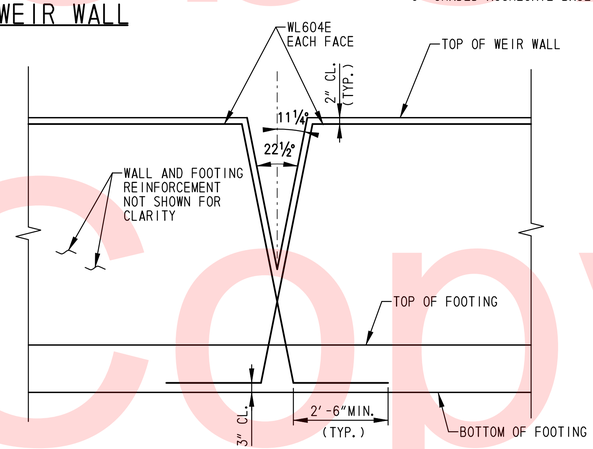

ADDITIONAL REINFORCEMENT AT WEIR WALL OPENING

SCALE: 1/2" = 1'

NOTES:

1. MAXIMUM FACTORED BEARING RESISTANCE FOR WEIR WALL IS 2 KSF.
2. KEYS ARE NOMINAL SIZE.
3. CONCRETE SHALL BE CLASS A, 4500 PSI.
4. RIPRAP NOT SHOWN FOR CLARITY.
5. E.F. = EACH FACE, E.S.=EQUAL SPACING.
6. SEE REINFORCING BAR LIST ON DRAWING SW-13.
7. THE CLAY CORE SHALL BE COMPACTED TO AT LEAST 95% OF THE LABORATORY MAXIMUM DENSITY AS DETERMINED BY AASHTO T99 METHOD C FOR A DISTANCE OF 5'-0" MINIMUM ON EITHER SIDE OF THE WEIR WALL FOOTING ALONG THE CENTERLINE OF EMBANKMENT/CLAY CORE.

Unofficial Website Copy

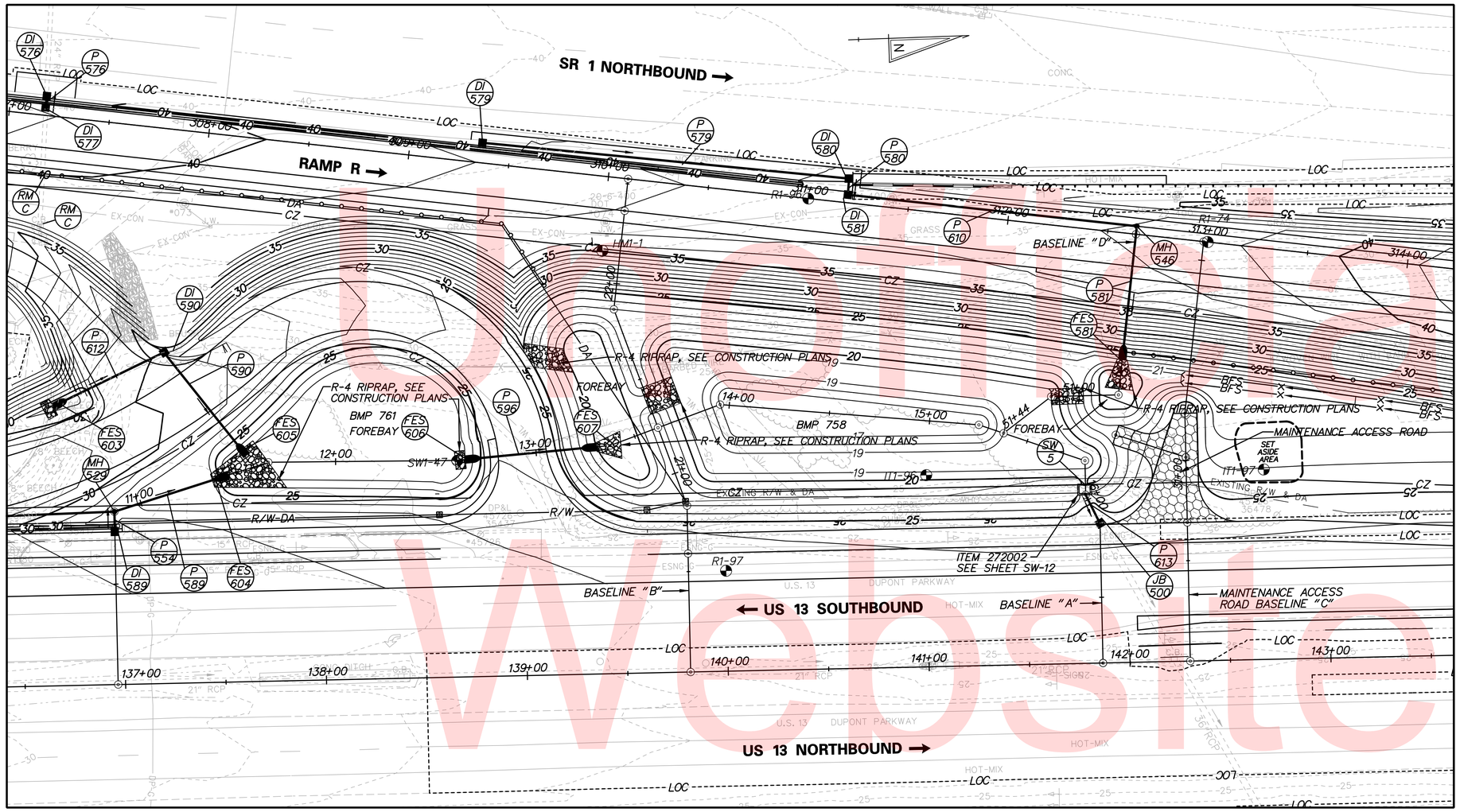

PLAN – SWM BMP NO. 758/761 STA. 137+00 TO STA. 142+00, WET POND

SCALE: 1" = 30'

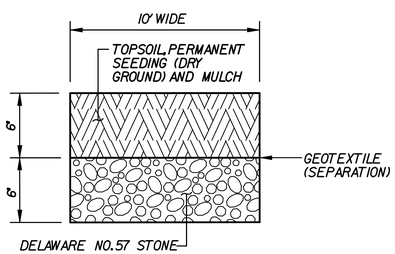

POND MAINTENANCE ACCESS ROAD

SCALE: NONE

GENERAL NOTES:

1. THE CONTRACTOR SHALL PROVIDE "AS-BUILT" DRAWINGS OF ALL STORMWATER MANAGEMENT FACILITIES, SUCH AS PONDS, BIOFILTRATION SWALES, BIO-RETENTION AREAS, ETC. THE "AS-BUILT" DRAWINGS SHALL SHOW THE ACTUAL FINISHED GROUND CONTOURS, OUTLET STRUCTURE DIMENSIONS AND ELEVATIONS, ETC., AS THEY EXIST AT THE COMPLETION OF THE PROJECT. THESE DRAWINGS SHALL BE SIGNED AND SEALED BY A PROFESSIONAL ENGINEER OR LAND SURVEYOR REGISTERED IN THE STATE OF DELAWARE. ALL "AS-BUILT" DRAWINGS SHALL BE SENT TO THE DELDOT STORMWATER ENGINEER. ALL COSTS FOR THIS WORK SHALL BE INCLUDED UNDER ITEM 763501 - CONSTRUCTION ENGINEERING.

2. STORMWATER MANAGEMENT PONDS SERVING AS TEMPORARY SEDIMENT BASINS DURING CONSTRUCTION SHALL HAVE SEDIMENT REMOVED AT TIMES DETERMINED BY THE ENGINEER OR AT THE CLEANOUT ELEVATION (21.88) AND AT THE CONCLUSION OF THE PROJECT AFTER ALL AREAS DRAINING TO THE POND HAVE BEEN VEGETATIVELY STABILIZED. COST FOR SEDIMENT REMOVAL SHALL BE PAID FOR UNDER ITEM 250000 - SEDIMENT REMOVAL. ACCESS SHALL BE MAINTAINED TO ALL SEDIMENT REMOVAL CONTROL DEVICES REQUIRING MAINTENANCE UNTIL CONSTRUCTION PHASING AND VEGETATIVE STABILIZATION ALLOW THE REMOVAL OF THOSE CONTROLS, WHICH ARE NO LONGER REQUIRED.

POND CONSTRUCTION SEQUENCE AND NOTES:

THE STORMWATER MANAGEMENT POND SHALL FUNCTION AS A SEDIMENT BASIN DURING ROADWAY CONSTRUCTION AND SHALL BE CONSTRUCTED IN ACCORDANCE WITH THE FOLLOWING SECTIONS OF THE STANDARD SPECIFICATIONS:
SECTION 271 - STORMWATER MANAGEMENT POND
SECTION 272 - POND OUTLET STRUCTURE, CONCRETE

1. INSTALL STABILIZED CONSTRUCTION ENTRANCE PER CONSTRUCTION PHASING, MOT AND EROSION AND SEDIMENT CONTROL PLANS.
2. CLEAR AND GRUB FOR INSTALLATION OF PERIMETER EROSION AND SEDIMENT CONTROLS.
3. INSTALL PERIMETER SEDIMENT CONTROLS AS SHOWN ON THE CONSTRUCTION PHASING PLANS, MOT AND EROSION AND SEDIMENT CONTROL PLANS.
4. CLEAR AND GRUB REMAINING AREA FOR POND CONSTRUCTION.
5. CONSTRUCT POND OUTLET STRUCTURE, PRINCIPAL SPILLWAY, AND JUNCTION BOX AT DOWNSTREAM END OF PRINCIPAL SPILLWAY. EXCAVATE AS NEEDED TO INSTALL POND OUTLET STRUCTURE. INSTALL SKIMMER DEWATERING DEVICE. DE-WATER FOUNDATION AS NEEDED IN ACCORDANCE WITH SECTION 111 AND USE SUMP PIT FOR PUMPING. LOCATION OF SUMP PIT TO BE DETERMINED IN FIELD.
6. EXCAVATE THE POND AND COMPLETE THE BASIN TO LINES, GRADES, AND DETAILS SHOWN IN THE CONSTRUCTION PLANS. OVEREXCAVATE THE BOTTOM OF THE POOL 2 FEET FOR SEDIMENT STORAGE. DURING EXCAVATION, THE CONTRACTOR SHALL SALVAGE AND STOCKPILE ANY SOILS CLASSIFIED AS CH, CL, CH, AND GM PER THE UNIFIED SOIL CLASSIFICATION SYSTEM TO BE USED TO CONSTRUCT EMBANKMENT. THE ABOVE CLASSIFIED SOILS MAY BE OBTAINED FROM ELSEWHERE WITHIN THE PROJECT LIMITS.
7. STABILIZE ALL BARE AREAS BELOW 21.00, EXCLUDING THE POND BOTTOM, WITH WET SEED MIX AND ABOVE ELEVATION 21.00 WITH DRY SEED MIX.

MAINTENANCE OF POND AS A SEDIMENT BASIN

1. CONTRACTOR SHALL INSPECT THE BASIN IMMEDIATELY AFTER EVERY RAIN AND MAKE REPAIRS AS NEEDED.
2. CONTRACTOR SHALL CLEARLY MARK THE CLEANOUT ELEVATION, 21.88, ON A STAKE DRIVEN INTO THE GROUND AT A LOCATION CLEARLY VISIBLE FROM THE EMBANKMENT. SEDIMENT SHALL BE REMOVED WHEN CLEANOUT ELEVATION IS REACHED AND DISPOSED OF AT A LOCATION APPROVED BY THE ENGINEER.

CONVERSION TO PERMANENT STORMWATER MANAGEMENT POND

1. CONVERT THE BASIN INTO THE PERMANENT STORMWATER MANAGEMENT POND AFTER ALL AREAS DRAINING TO THE POND HAVE BEEN PERMANENTLY STABILIZED AND THE ENGINEER HAS APPROVED THE CONVERSION.
2. REMOVE EXCESS ACCUMULATED SEDIMENT ON THE POND BOTTOM AND BENCHES, IF ANY, TO THE SPECIFIED FINISHED LINES AND GRADES SHOWN IN THE PLAN AND DISPOSE SEDIMENT AT A LOCATION APPROVED BY THE ENGINEER. IF ELEVATION OF ACCUMULATED SEDIMENT IN POND BOTTOMS IS BELOW THE PROPOSED FINISHED ELEVATION, ADDITIONAL FILL MATERIAL SHALL NOT BE PLACED IN POND.
3. PUMP DOWN STANDING WATER IN THE POND AS NECESSARY.
4. COMPLETE STABILIZATION OF ALL BARE AREAS, REMOVE EROSION AND SEDIMENT CONTROL MEASURES, REMOVE SKIMMER DEWATERING DEVICE AND PLYWOOD, AND INSTALL CATCH BASIN TRAP.

BMP NO. 758/761 – DESIGN SUMMARY

DESIGN STORM	FACILITY INFLOW (CFS)	FACILITY DISCHARGE (CFS)	WATER SURFACE ELEVATION	STORAGE VOLUME (AC-FT)
PERM. POOL	N. A.	N. A.	20.00	0.41
1-YEAR	16.9	2.9	21.46	0.55
10-YEAR	44.4	21.6	22.72	1.16
100-YEAR	90.0	48.5	24.02	2.05

HAZARD CLASSIFICATION "A" AS PER POND CODE 378

DRAINAGE AREA TO FACILITY: 16.75 ACRES

MANAGEMENT PROVIDED BY FACILITY: WATER QUALITY CONTROL VIA EXTENDED DETENTION FOR 1-YEAR RESOURCE PROTECTION STORM. QUANTITY CONTROL FOR THE 10-YEAR AND 100-YEAR STORM EVENTS WAIVED DUE TO TIDAL NATURE OF SCOTT RUN.

Website Copy

N:\31653-000\Contract 1D\CADD\SW01-143U301_1D.dgn
4/12/2013 10:55:49 AM

DELAWARE DEPARTMENT OF TRANSPORTATION	ADDENDUMS / REVISIONS	SCALE 0 30 60 90 FEET	US 13 & PORT PENN RD INTERSECTION	CONTRACT T201011302	BRIDGE NO.	STORMWATER MANAGEMENT PLAN BMP 758/761	SW-09 SHEET NO. 91
				COUNTY NEW CASTLE	DESIGNED BY: DLH		TOTAL SHTS. 179
					CHECKED BY: JDC		

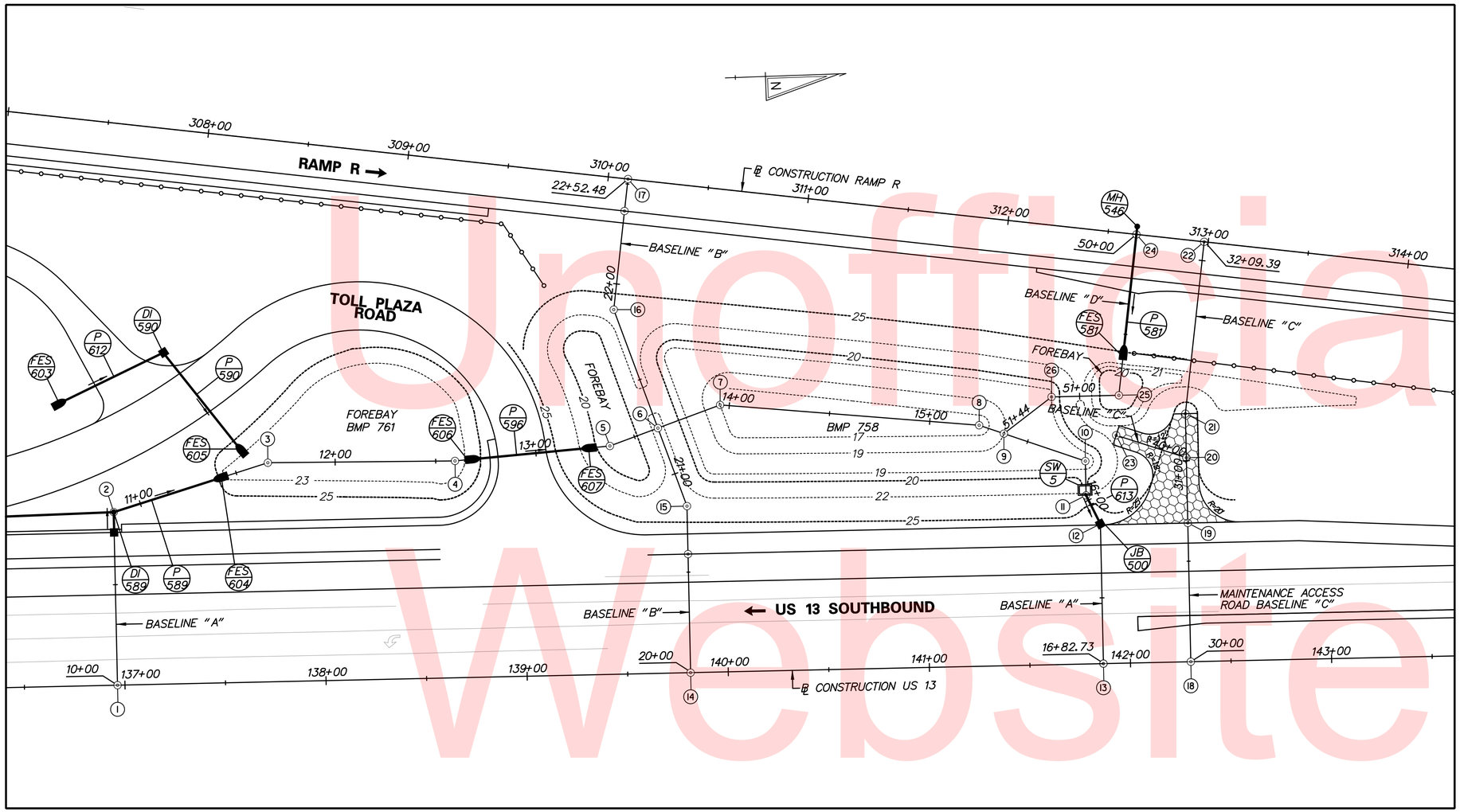

PLAN – SWM BMP NO. 758/761 STA. 137+00 TO STA. 142+00, WET POND

SCALE: 1" = 30'

BASELINE "A" STAKEOUT INFORMATION

POINT NO.	STATION	NORTHING	EASTING
1	POB STA.10+00.00	555976.02	590632.59
2	PI STA.10+86.09	555976.62	590546.51
3	PI STA.11+66.55	556053.91	590524.15
4	PI STA.12+59.58	556146.93	590525.93
5	PI STA.13+36.96	556224.13	590520.72
6	PI STA.13+62.42	556248.23	590512.52
7	PI STA.13+95.42	556279.48	590501.90
8	PI STA.15+24.60	556407.92	590515.72
9	PI STA.15+37.60	556420.11	590520.23
10	PI STA.15+80.30	556460.15	590535.06
11	PI STA.15+97.34	556460.05	590552.10
12	PI STA.16+13.23	556466.75	590566.51
13	POE STA.16+82.73	556466.27	590636.00

BASELINE "B" STAKEOUT INFORMATION

POINT NO.	STATION	NORTHING	EASTING
14	POB STA.20+00.00	556260.99	590634.58
15	PI STA.20+82.85	556261.56	590551.73
16	PI STA.21+87.14	556227.99	590452.99
17	POE STA.22+52.48	556236.94	590388.26

ACCESS ROAD BASELINE "C" STAKEOUT INFORMATION

POINT NO.	STATION	NORTHING	EASTING
18	POB STA.30+00.00	556509.71	590636.31
19	PI STA.30+69.03	556510.19	590567.28
20	PI STA.31+01.49	556510.42	590534.82
21	PI STA.31+23.40	556510.57	590512.91
22	POE STA.32+09.39	556522.35	590427.73
20	POB STA.40+00.00	556510.42	590534.82
23	POE STA.40+36.65	556475.85	590522.64

BASELINE "D" STAKEOUT INFORMATION

POINT NO.	STATION	NORTHING	EASTING
24	POB STA.50+00.00	556488.80	590423.09
25	PI STA.50+80.47	556477.78	590502.81
26	PI STA.51+13.96	556444.30	590502.67
9	POE STA.51+43.85	556420.11	590520.23

Unofficial Website Copy

N:\31653-000\Contract 1D\CADD\SW02-143U301_1D.dgn
4/12/2013 12:32 PM

DELAWARE DEPARTMENT OF TRANSPORTATION

ADDENDUMS / REVISIONS

SCALE 0 30 60 90 FEET

US 13 & PORT PENN RD INTERSECTION

CONTRACT	BRIDGE NO.
T201011302	DESIGNED BY: DLH
COUNTY	CHECKED BY: JDC
NEW CASTLE	

STORMWATER MANAGEMENT STAKEOUT PLAN BMP 758/761

SW-10

SHEET NO. 92

TOTAL SHTS. 179

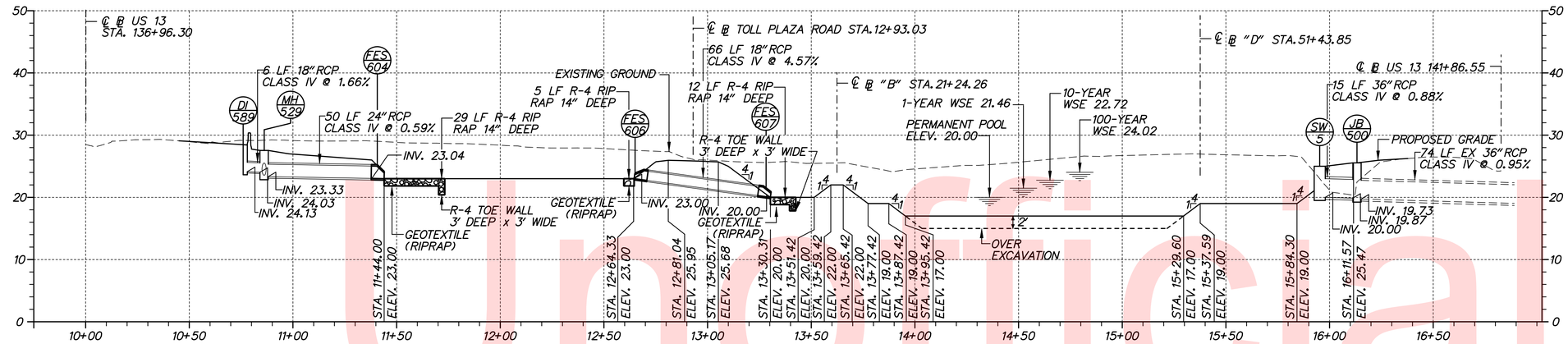

PROFILE – POND EMBANKMENT – BMP 758/761 BASELINE 'A'

SCALE: HORIZONTAL: 1" = 10'
VERTICAL: 1" = 30'

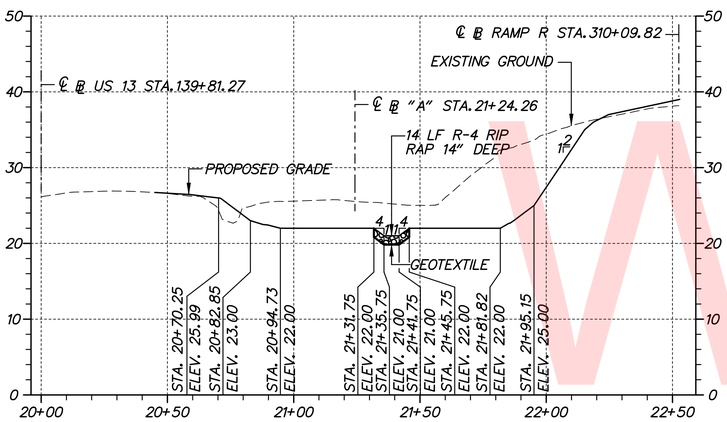

PROFILE – BMP 758/761 BASELINE 'B'

SCALE: HORIZONTAL: 1" = 10'
VERTICAL: 1" = 30'

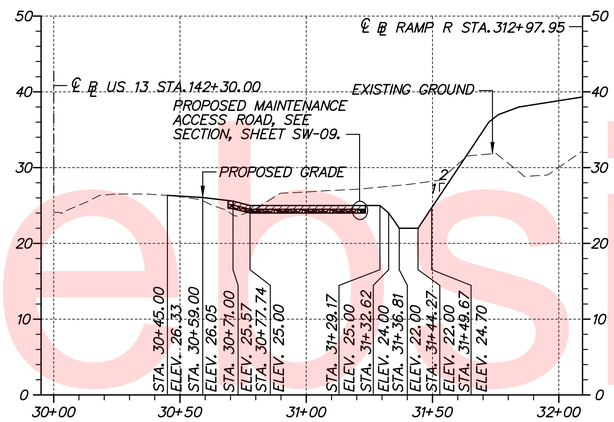

PROFILE – BMP 758/761 BASELINE 'C'

SCALE: HORIZONTAL: 1" = 10'
VERTICAL: 1" = 30'

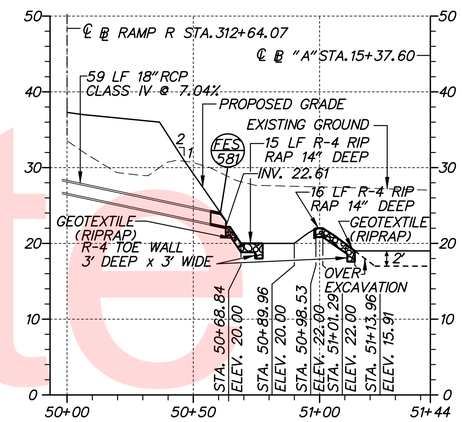

PROFILE – BMP 758/761 BASELINE 'D'

SCALE: HORIZONTAL: 1" = 10'
VERTICAL: 1" = 30'

Unofficial Website Copy

N:\31653-000\Contract ID\CADD\SW03-143U301_1D.dgn
4/12/2013 10:15:38 AM

DELAWARE DEPARTMENT OF TRANSPORTATION	ADDENDUMS / REVISIONS	US 13 & PORT PENN RD INTERSECTION	CONTRACT T201011302	BRIDGE NO.	STORMWATER MANAGEMENT PROFILES BMP 758/761	SW-11
			COUNTY NEW CASTLE	DESIGNED BY: CRH		SHEET NO. 93
				CHECKED BY: JDC		TOTAL SHTS. 179

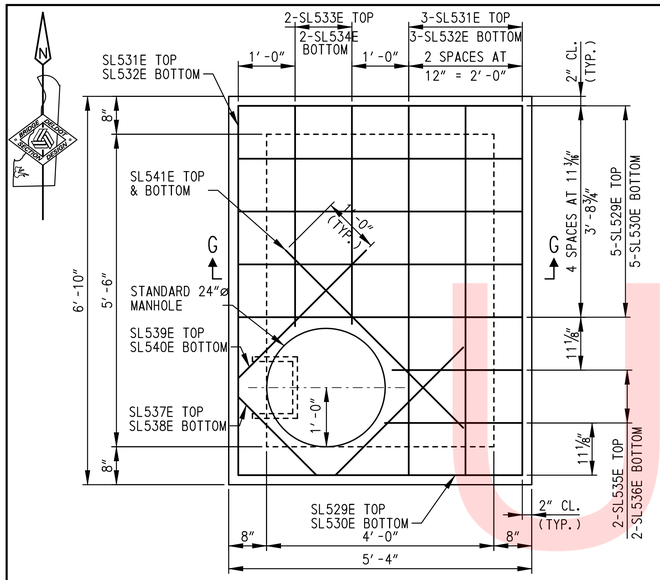

TOP SLAB - REINFORCEMENT PLAN

SCALE: ¾"=1'-0"

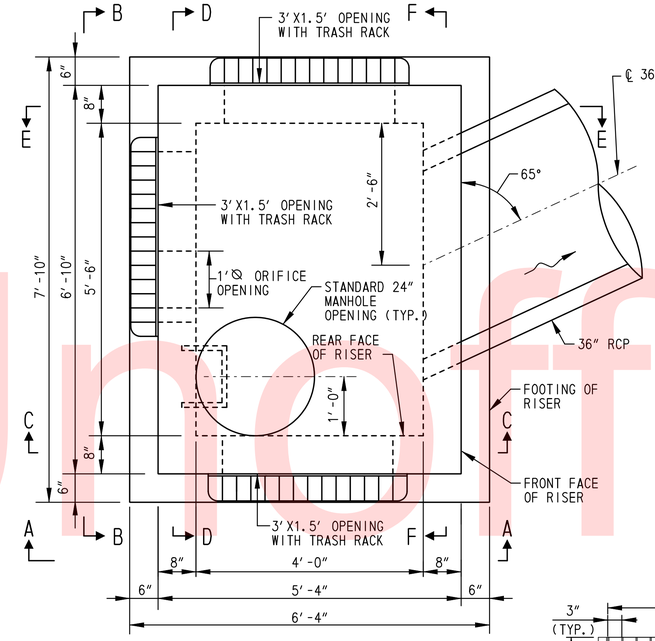

PLAN

SCALE: ¾"=1'-0"

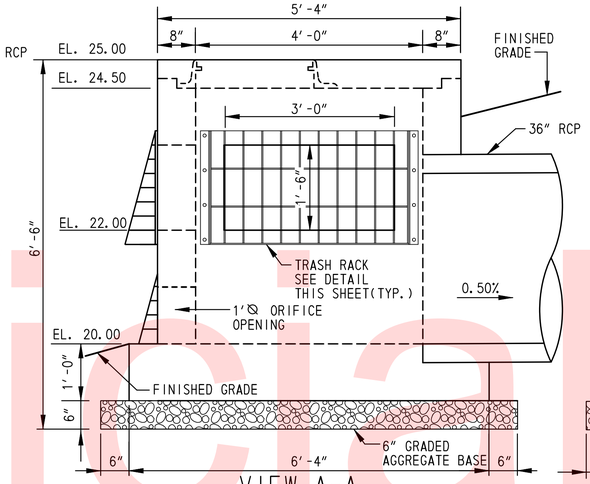

VIEW A-A

SCALE: ¾"=1'-0"

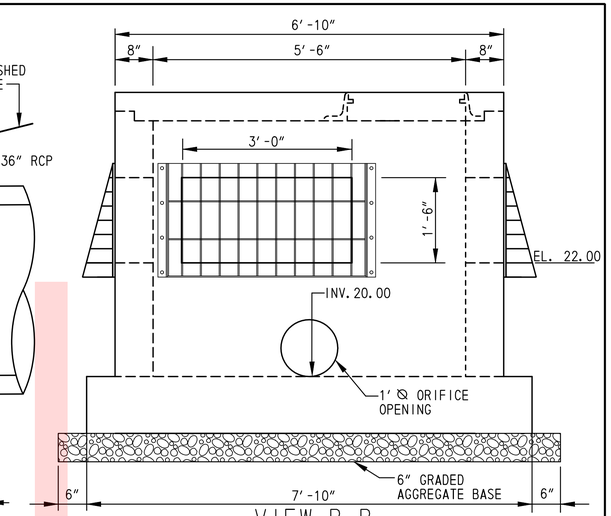

VIEW B-B

SCALE: ¾"=1'-0"

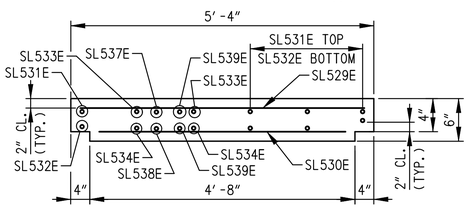

SECTION G-G

SCALE: ¾"=1'-0"

NOTES:

1. E.F. = EACH FACE
   F.F. = FRONT FACE
   R.F. = REAR FACE
2. MANHOLE STEPS NOT SHOWN IN SECTION VIEWS FOR CLARITY, SEE STANDARD CONSTRUCTION DETAILS FOR MANHOLE STEP DETAILS.
3. TOP SLAB NOT SHOWN IN SECTIONS C-C THROUGH F-F FOR CLARITY.
4. TOP SLAB SHALL BE PRECAST. A WATERSTOP SHALL BE PLACED BETWEEN THE PRECAST TOP SLAB AND THE CAST-IN-PLACE RISER STRUCTURE.
5. PAYMENT FOR EXCAVATION, CONCRETE, REINFORCING STEEL, HOOD, WATERSTOP, TRASH RACK, AND ALL WORK ASSOCIATED WITH CONSTRUCTION OF STORMWATER MANAGEMENT RISER STRUCTURE WILL BE MADE UNDER ITEM 272002 - POND OUTLET STRUCTURE, CONCRETE NO.1.

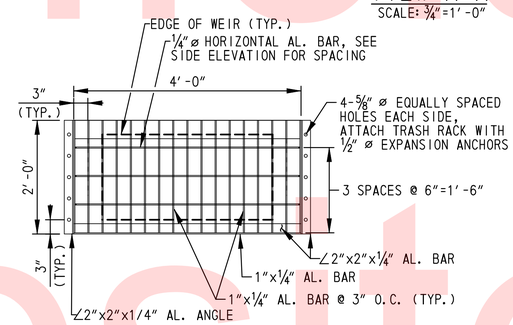

TRASH RACK 'D' - FRONT ELEVATION

N.T.S.

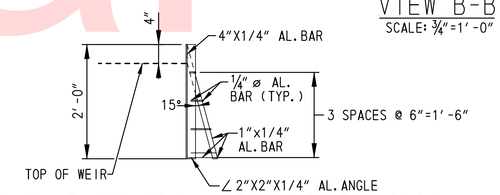

TRASH RACK 'D' - SIDE ELEVATION

N.T.S.

TRASH RACK NOTES:

1. EXPANSION ANCHORS SHALL CONFORM TO ASTM A510 AND SHALL HAVE A MINIMUM EMBEDMENT DEPTH OF 4" UNLESS NOTED OTHERWISE.
2. EXPANSION ANCHORS SHALL BE ZINC PLATED IN CONFORMANCE WITH ASTM B633, TYPE III FE/ZN 5.
3. ALUMINUM ANGLES SHALL CONFORM TO ASTM B308 ALLOY 6061-T6. REMAINING ALUMINUM SHALL CONFORM TO ASTM B211 ALLOY 6061-T6.

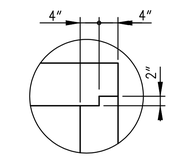

TOP SLAB KEY DETAIL

SCALE: 1"=1'-0"

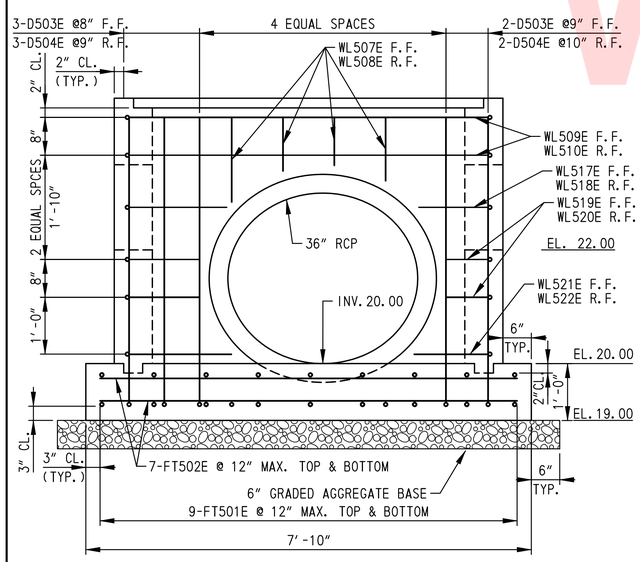

VIEW F-F

SCALE: ¾"=1'-0"

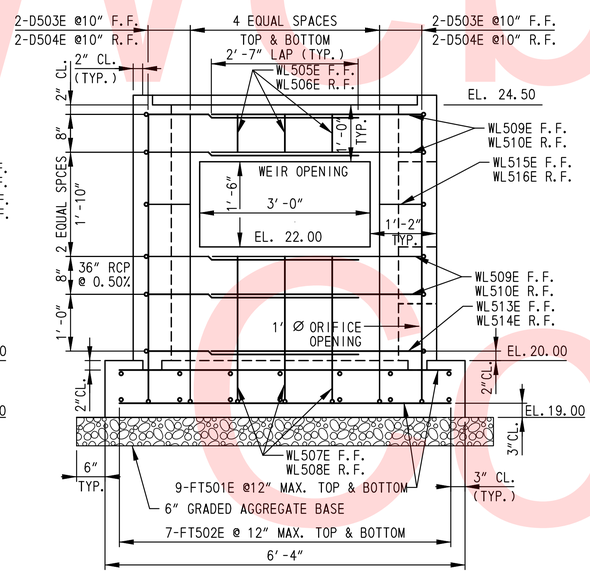

VIEW E-E

SCALE: ¾"=1'-0"

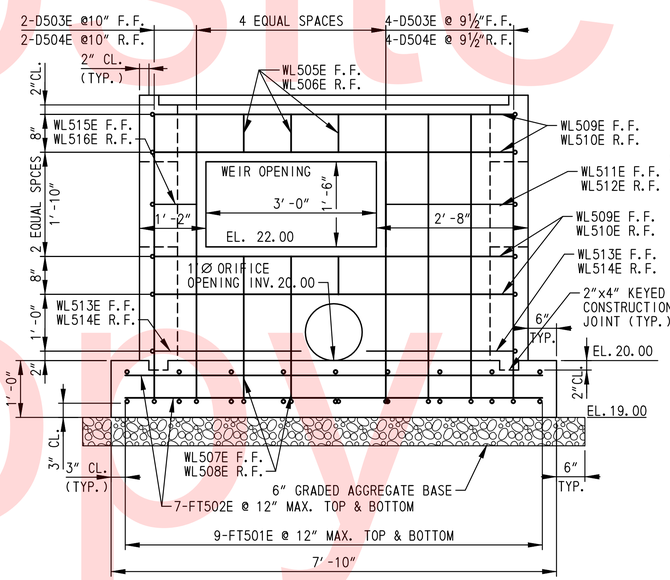

VIEW D-D

SCALE: ¾"=1'-0"

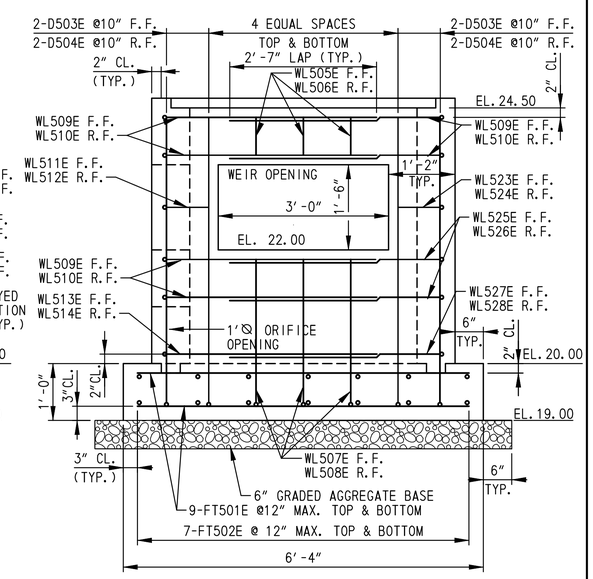

VIEW C-C

SCALE: ¾"=1'-0"

N:\31653-000\Contract 1D\CADD\SW04-143U301_1D.dgn
4/12/2013 1:12:13 AM

DELAWARE DEPARTMENT OF TRANSPORTATION

ADDENDUMS / REVISIONS

US 13 & PORT PENN RD INTERSECTION

CONTRACT	BRIDGE NO.
T201011302	DESIGNED BY: HQ
COUNTY	CHECKED BY: JW
NEW CASTLE	

STORMWATER MANAGEMENT DETAILS BMP 758/761

SW-12
SHEET NO. 94
TOTAL SHTS. 179

Unofficial Website Copy

① ANY MARK NUMBER WITH SUFFIX 'E' DENOTES EPOXY COATED REINFORCING STEEL.

② ALL MARK 'LOCATION PREFIXES' SHALL CONSIST OF TWO LETTERS AND ARE AS FOLLOWS: AB = ABUTMENT, AS = APPROACH SLAB, BC = BOX CULVERT, BW = BACKWALL, CL = COLUMN, DK = DECK, DL = DOWEL, FT = FOOTING, HW = HEADWALL, MS = MISC. BARS, PA = PARAPET, PR = PIER, SC = SHEETPILE CAP, SL = SLAB, TW = TOEWALL, WL = WALL (UNIQUE LOCATION), WW = WINGWALL

SPECIFICATIONS					BENDING DIMENSIONS (FEET-INCHES /QUARTER INCH)										
QTY.	SIZE	LENGTH	MARK	TYPE	A	B	C	D	E	F/R	G	H	J	K	O
SWM BMP NO. 900 WEIR WALL															
68	5	8-4	WL501E	17		6-10	1-6								
4X4	5	15-8	WL502E	STR		15-8									
		TO				TO									
		16-6				16-6									
6	5	33-8	WL503E	STR		33-8									
4	6	22-4	WL604E	6		12-10	6-11	2-6				6-10		1-4	16-9
12	5	33-6	WL505E	STR		33-6									
70	5	4-6	WL506E	STR		4-6									
SWM BMP NO. 901 WEIR WALL															
56	5	8-4	WL501E	17		6-10	1-6								
4X3	5	13-1	WL502E	STR		13-1									
		TO				TO									
		13-6				13-6									
6	5	27-8	WL503E	STR		27-8									
4	6	22-4	WL604E	6		12-10	6-11	2-6				6-10		1-4	16-9
12	5	27-6	WL505E	STR		27-6									
58	5	4-6	WL506E	STR		4-6									
SWM BMP NO.902 RISER STRUCTURE															
14	5	5-10	FT501E	STR		5-10									
18	5	7-4	FT502E	STR		7-4									
19	5	6-1	DL503E	2		5-3					0-10				
19	5	5-11	DL504E	2		5-1					0-10				
9	5	0-10	WL505E	STR		0-10									
9	5	0-8	WL506E	STR		0-8									
8	5	3-5	WL507E	2		2-7					0-10				
8	5	3-5	WL508E	2		2-7					0-10				
6	5	14-1	WL509E	17		3-9	6-6	3-9							
6	5	12-9	WL510E	17		3-5	5-10	3-5							
1	5	3-2	WL511E	17		2-4	0-10								
1	5	2-6	WL512E	17		2-0	0-6								
2	5	6-4	WL513E	17			2-7	3-9							
2	5	5-9	WL514E	17			2-4	3-5							
1	5	1-8	WL515E	17			0-10	0-10							
1	5	1-0	WL516E	17			0-6	0-6							
1	5	2-1	WL517E	17		1-3	0-10								
1	5	1-5	WL518E	17		0-11	0-6								
2	5	1-4	WL519E	17		0-10	0-6								

SPECIFICATIONS					BENDING DIMENSIONS (FEET-INCHES /QUARTER INCH)										
QTY.	SIZE	LENGTH	MARK	TYPE	A	B	C	D	E	F/R	G	H	J	K	O
2	5	0-10	WL520E	17		0-6	0-4								
1	5	5-1	WL521E	17		1-3	3-9								
1	5	4-5	WL522E	17		0-11	3-5								
1	5	2-7	WL523E	17			0-10	1-9							
1	5	1-11	WL524E	17			0-6	1-5							
2	5	5-4	WL525E	17			3-9	1-6							
2	5	4-8	WL526E	17			3-5	1-2							
1	5	5-7	WL527E	17			3-9	1-9							
1	5	4-11	WL528E	17			3-5	1-5							
6	5	5-0	SL529E	STR		5-0									
6	5	4-4	SL530E	STR		4-4									
4	5	6-6	SL531E	STR		6-6									
6	5	5-10	SL532E	STR		5-10									
2	5	3-10	SL533E	STR		3-10									
2	5	3-6	SL534E	STR		3-6									
2	5	2-3	SL535E	STR		2-3									
2	5	1-11	SL536E	STR		1-11									
1	5	1-11	SL537E	STR		1-11									
1	5	1-3	SL538E	STR		1-3									
2	5	3-2	SL539E	STR		3-2									
2	5	2-10	SL540E	STR		2-10									
2	5	4-5	SL541E	STR		4-5									

SPECIFICATIONS					BENDING DIMENSIONS (FEET-INCHES /QUARTER INCH)										
QTY.	SIZE	LENGTH	MARK	TYPE	A	B	C	D	E	F/R	G	H	J	K	O

ASTM STANDARD ENGLISH REINFORCING BARS				RECOMMENDED END HOOKS, APPLICABLE TO ALL GRADES				STIRRUP AND TIE HOOKS, APPLICABLE TO ALL GRADES			
	NOMINAL DIMENSIONS				180° HOOKS		90° HOOKS		90° HOOK	135° HOOK	
BAR SIZE	DIAMETER (INCHES)	AREA (INCHES²)	WEIGHT (LBS./FT.)	D	A OR G	J	A OR G	D	A OR G	A OR G	A OR G
3	0.375	0.110	0.376	2¼"	5"	3"	6"	1½"	4"	4"	2½"
4	0.500	0.200	0.668	3"	6"	4"	8"	2"	4½"	4½"	3"
5	0.625	0.310	1.043	3¾"	7"	5"	10"	2½"	6"	5½"	3¾"
6	0.750	0.440	1.502	4½"	8"	6"	1-0"	4½"	1-0"	8"	4½"
7	0.875	0.600	2.044	5¼"	10"	7"	1-2"	5¼"	1-2"	9"	5¼"
8	1.000	0.790	2.670	6"	11"	8"	1-4"	6"	1-4"	10½"	6"
9	1.128	1.000	3.400	9½"	1-3"	11¾"	1-7"				
10	1.270	1.270	4.303	10¾"	1-5"	1-1¼"	1-10"				
11	1.410	1.560	5.313	1-0"	1-7"	1-2¾"	2-0"				
14	1.693	2.250	7.650	1-6¼"	2-3"	1-9¾"	2-7"				
18	2.257	4.000	13.600	2-0"	3-0"	2-4½"	3-5"				

NOTES:

1. FIGURES SHOWN IN CIRCLES REPRESENT BAR BEND TYPES.
2. STANDARD BAR BENDS INCLUDE ONLY THOSE TYPES BELOW, INDICATED AS SUCH.
3. ALL DIMENSIONS OUT-TO-OUT, EXCEPT "A" AND "G" ON STD. 180° AND 135° HOOKS.
4. "J" DIMENSIONS ON 180° HOOKS TO BE SHOWN ONLY WHERE NECESSARY TO RESTRICT HOOK SIZE, OTHERWISE STANDARD 'ACI' HOOKS ARE TO BE USED.
5. WHERE "J" IS NOT SHOWN, "J" WILL BE KEPT EQUAL TO OR LESS THAN "H" ON TYPES 3, 5 AND 22. WHERE "J" CAN EXCEED "H", IT SHALL BE SHOWN.
6. "H" DIMENSIONS OF STIRRUPS TO BE SHOWN AS NEEDED TO FIT WITHIN THE CONCRETE.
7. UNLESS OTHERWISE NOTED, DIAMETER "D" IS THE SAME FOR ALL BENDS AND HOOKS ON A BAR (EXCEPT FOR BEND TYPES 11 AND 13).
8. WHERE SLOPE DIFFERS FROM 45° OFFSET, "H" AND "K" MUST BE SHOWN.
9. WHERE BARS ARE TO BE BENT MORE ACCURATELY THAN STANDARD BENDING TOLERANCES, BENDING DIMENSIONS REQUIRING CLOSER FABRICATION SHOULD HAVE LIMITS INDICATED.
10. FOR RECOMMENDED DIAMETER "D", OF BENDS, HOOKS, ETC., REFER TO TABLE ABOVE, 'CRSI' OR 'ACI' TABLES WHERE APPLICABLE AND REQUIRED.
11. TYPE S1-S6, S11, T1-T3 AND T6-T9 APPLICABLE TO BAR SIZES #3 THROUGH #8.

STANDARD BAR BENDS

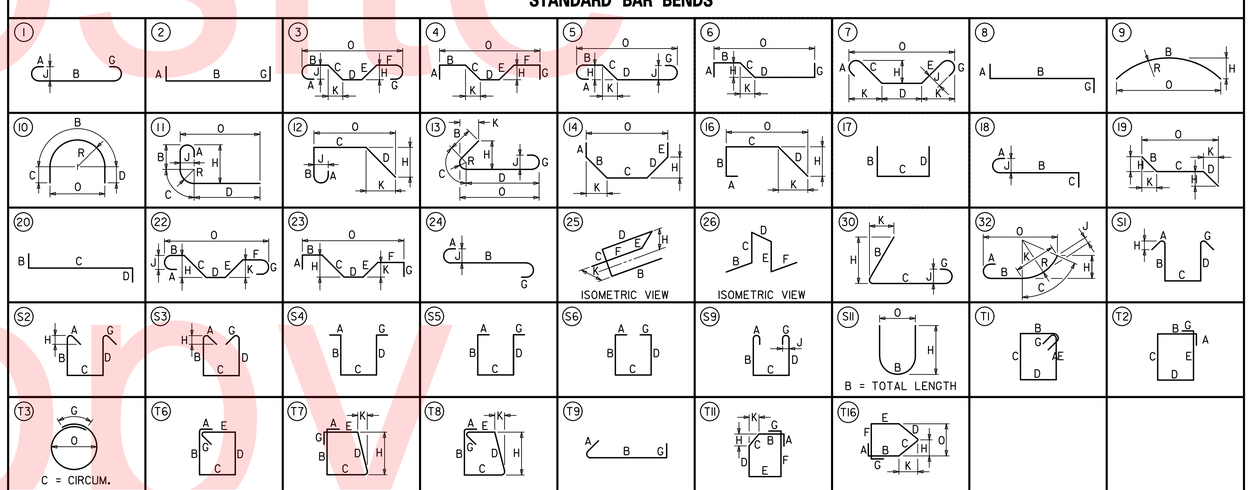

SPECIAL BAR BENDS

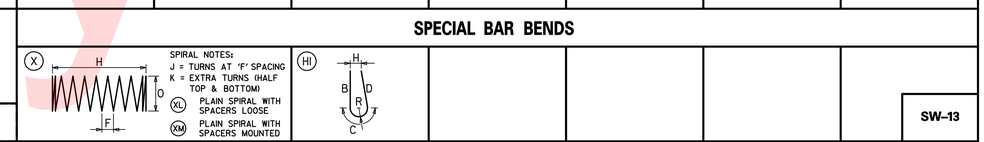

STIRRUP AND TIE HOOKS

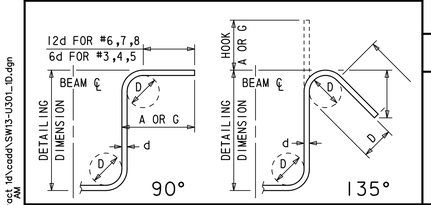

180° AND 90° END HOOKS

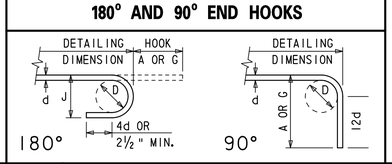

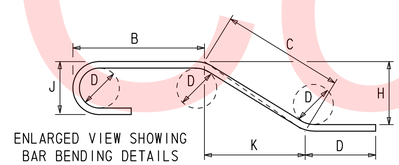

Unofficial Website Copy

DELAWARE DEPARTMENT OF TRANSPORTATION

ADDENDUMS / REVISIONS

US 13 & PORT PENN RD INTERSECTION

CONTRACT	BRIDGE NO.	
T201011302	DESIGNED BY: K.M.K.	
COUNTY		
NEW CASTLE	CHECKED BY: J.A.G.	

WIER WALL NO. 96B&96C, &RISER STRUCTURE NO.143 BAR CHART

SW-13

SHEET NO. 95

TOTAL SHTS. 179

r:\31653-000\contract td\cadd\SW13-U301_1D.dgn 9/14/2012 11:15:30 AM

PLAN SHEET INDEX CROSS REFERENCE		
ENVIRONMENTAL COMPLIANCE	96	97
CONSTRUCTION PLAN	10	11

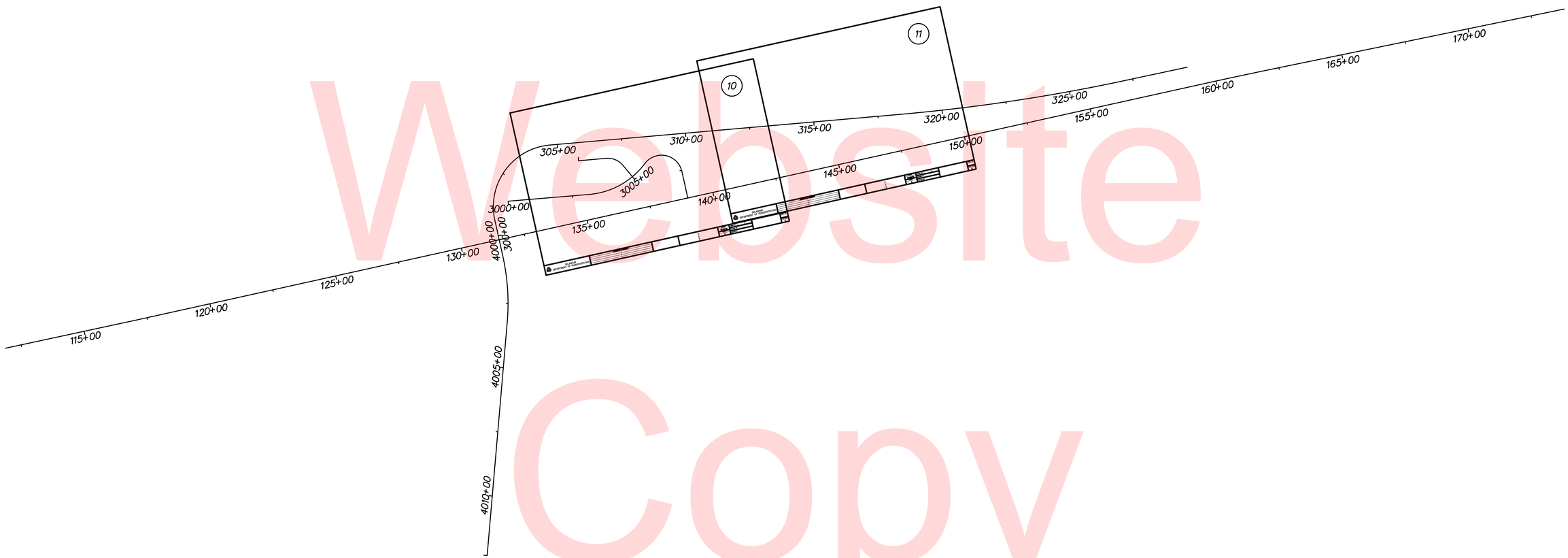

Unofficial Website Copy

$DGNNAME$ $TIME$
$$DATE$$

DELAWARE DEPARTMENT OF TRANSPORTATION

ADDENDUMS / REVISIONS

SCALE 0 200 400 600 FEET

US 13 & PORT PENN RD INTERSECTION

CONTRACT	BRIDGE NO.
T201011302	DESIGNED BY: REL
COUNTY	
NEW CASTLE	CHECKED BY: LMM

ENVIRONMENTAL COMPLIANCE INDEX

	EC-01
SHEET NO.	96
TOTAL SHTS.	179

ENVIRONMENTAL COMPLIANCE NOTES

1. GENERAL NOTES:

A. THE PURPOSE OF THESE ENVIRONMENTAL COMPLIANCE SHEETS IS TO IDENTIFY THOSE ITEMS ASSOCIATED WITH ENVIRONMENTAL COMPLIANCE. IMPACT CALCULATIONS ARE FOR AGENCY REPORTING PURPOSES ONLY AND ARE NOT TO BE USED FOR BIDDING PURPOSES.

B. AN ENVIRONMENTAL MONITOR WILL BE RESPONSIBLE FOR REVIEWING ENVIRONMENTAL COMPLIANCE. CONTACT INFORMATION FOR THE PROJECT'S ENVIRONMENTAL MONITOR WILL BE PROVIDED AT THE PRE-CONSTRUCTION MEETINGS AND MAY ALSO BE OBTAINED BY CALLING THE DELDOT ENVIRONMENTAL STUDIES SECTION AT (302) 760-2264. THE PRESENCE OF THE DEPARTMENT'S ENVIRONMENTAL MONITOR DOES NOT ALLEVIATE OR NULLIFY ANY OF THE CONTRACTOR'S OBLIGATIONS TO FULLY COMPLY WITH ALL ENVIRONMENTAL PERMITS AND/OR REGULATIONS.

C. IF A DEPARTURE FROM THE APPROVED PLANS IS NECESSARY, THE CONTRACTOR SHALL CONTACT THE ENGINEER AND ENVIRONMENTAL MONITOR IMMEDIATELY. THE ENVIRONMENTAL MONITOR SHALL COORDINATE WITH THE APPROPRIATE RESOURCE AGENCIES INCLUDING BUT NOT LIMITED TO THE ARMY CORPS OF ENGINEERS (USACE), DELAWARE DEPARTMENT OF NATURAL RESOURCES AND ENVIRONMENTAL CONTROL (DNREC), STATE HISTORIC PRESERVATION OFFICE (SHPO), AND MARYLAND DEPARTMENT OF THE ENVIRONMENT (MDE). WORK SHALL NOT PROCEED UNTIL ALL THE NECESSARY APPROVALS, PERMITS OR MODIFICATIONS ARE OBTAINED. THIS RESOURCE AGENCY APPROVAL IS IN ADDITION TO ANY APPROVAL THAT NEEDS TO BE DERIVED FROM THE ENGINEER. THE ENVIRONMENTAL MONITOR CANNOT APPROVE ANY CHANGE INDEPENDENT FROM THE ENGINEER. APPROVAL MAY TAKE A SIGNIFICANT AMOUNT OF TIME TO COMPLETE AND ALL CHANGES MAY NOT BE APPROVED. THE CONTRACTOR SHALL HAVE NO CLAIM AGAINST THE DEPARTMENT FOR COSTS OR DELAYS ASSOCIATED WITH RESOURCE AGENCY APPROVAL OR REJECTION OF CHANGES OR DEVIATIONS FROM THESE PLANS.

D. USE OF THESE SHEETS DOES NOT ALLEVIATE THE CONTRACTOR'S RESPONSIBILITY TO COMPLY WITH ALL CONDITIONS SET FORTH IN THE ENVIRONMENTAL STATEMENT AND PERMITS.

E. THE IDENTIFIED PERMANENT AND TEMPORARY IMPACTS TO JURISDICTIONAL RESOURCES SHOWN ON THE ENVIRONMENTAL COMPLIANCE SHEETS ARE THE ONLY AUTHORIZED IMPACTS.

2. NATURAL AND CULTURAL RESOURCE ISSUES:

A. **PERMIT REQUIREMENTS / APPROVALS*:
U.S. ARMY CORPS OF ENGINEERS (USACE) - INDIVIDUAL PERMIT - APPROVED 01-07-2013, CENAP-OP-R-2006-6071-1, EXPIRATION 12-31-2023
*DELAWARE DEPARTMENT OF NATURAL RESOURCES AND ENVIRONMENTAL CONTROL (DNREC) SUBAQUEOUS LANDS PERMIT - APPROVED 11-08-2012, SP 145/12, EXPIRATION 11-08-2017
*DNREC 401 WATER QUALITY CERTIFICATION - APPROVED 11-08-2012, WQ-147/12, EXPIRATION 11-08-2017
*DNREC - COASTAL ZONE CONSISTENCY - APPROVED 09-14-2007, MODIFICATION OF CONDITION 3 ON 04-04-2011, NO EXPIRATION

* THE PERMITS/APPROVALS LISTED ARE THOSE REQUIRED FOR THIS PROJECT. THE ENVIRONMENTAL STUDIES SECTION IS RESPONSIBLE FOR COORDINATING/OBTAINING THESE PERMITS/APPROVALS.

** THE CONTRACTOR MUST ENSURE THAT THESE PERMITS/APPROVALS ARE IN THEIR POSSESSION PRIOR TO THE BEGINNING OF CONSTRUCTION AND ENSURE THESE PERMITS/APPROVALS ARE DISPLAYED ON-SITE DURING THE ENTIRE CONSTRUCTION PERIOD.

B. CONSTRUCTION RESTRICTIONS:
ENDANGERED SPECIES: BOG TURTLES POTENTIALLY OCCUPY THE SCOTT RUN WATERSHED. PORTIONS OF WETLAND 29E ARE CONSIDERED POTENTIAL HABITAT FOR THE BOG TURTLE. THE CONTRACTOR SHALL NOT DISTURB OR ENCROACH ON WETLAND 29E EXCEPT AS SPECIFICALLY IDENTIFIED ON THESE EC SHEETS. WORK IN THE VICINITY OF WETLAND 29E IS SUBJECT TO THE FOLLOWING CONDITIONS IDENTIFIED IN THE PROJECT'S BIOLOGICAL ASSESSMENT.

1. EXCLUSIONARY FENCING SHALL BE INSTALLED TO PREVENT BOG TURTLES FROM ENTERING THE WORK AREA. FENCING SHALL CONSIST OF ITEM 251001 - REINFORCED SILT FENCE. FENCING SHALL BE INSTALLED BY HAND WITH MINIMAL DISTURBANCE TO THE WETLAND RESOURCE. FENCING SHALL BE INSTALLED AS SHOWN ON THE PLANS AND AS DIRECTED BY THE ENGINEER. FENCE INSTALLATION SHALL BE REVIEWED AND APPROVED BY THE ENGINEER IN CONSULTATION WITH DELDOT'S QUALIFIED BOG TURTLE SURVEYOR AND THE ENVIRONMENTAL MONITOR.

2. FOLLOWING FENCING INSTALLATION AND PRIOR TO ANY CONSTRUCTION ACTIVITIES, A PRE-CONSTRUCTION SURVEY OF THE EXCLUSION AREA WILL BE CONDUCTED BY DELDOT'S QUALIFIED BOG TURTLE SURVEYOR TO ENSURE NO BOG TURTLES ARE PRESENT IN THE WORK AREA.

3. SHOULD THE EXCLUSIONARY FENCE BE DAMAGED OR BREACHED, THE FENCE SHALL BE REPAIRED AND THE EXCLUSION AREA SHALL BE RE-SURVEYED PRIOR TO RESUMING CONSTRUCTION ACTIVITIES. ALL COSTS FOR THE FENCE DAMAGE OR BREACH SHALL BE AT THE CONTRACTOR'S EXPENSE.

4. FOR PROTECTION OF THE THREATENED NORTHERN LONG-EARED BAT (NLEB), THERE SHALL BE NO CLEARING OF TREES BETWEEN 12:01AM ON APRIL 15 AND 11:59PM ON AUGUST 31 WITHIN THE LIMITS OF THE "WOODS LINE" SYMBOL WITHING AREAS OF THE PROJECT THAT HAVE BEEN IDENTIFIED AS POTENTIAL NLEB HABITAT.

FISHERIES: NONE

MIGRATORY BIRDS: NONE

C. PROTECTION OF RESOURCES:
I. ITEM 727552 - RESOURCE PROTECTION FENCE (WITH ASSOCIATED SIGNAGE) SHALL BE USED ALONG THE LIMIT OF CONSTRUCTION (LOC) AND OTHER AREAS SHOWN ON THE PLANS WHERE WETLANDS, WATERS OR CULTURAL RESOURCES EXIST. RESOURCE PROTECTION FENCE SHALL BE INSTALLED IMMEDIATELY AFTER STAKEOUT OF LOC AND PRIOR TO INSTALLATION OF EROSION AND SEDIMENT CONTROLS. THE CONTRACTOR SHALL STAKEOUT THE LOCATION OF THE RESOURCE PROTECTION FENCE AND THE ENVIRONMENTAL MONITOR WILL BE RESPONSIBLE FOR CONFIRMING OR ADJUSTING THE FENCING LOCATIONS PRIOR TO CONSTRUCTION. IMPROPERLY PLACED FENCE SHALL BE RE-INSTALLED AT CONTRACTOR EXPENSE. ANY ADDITIONAL RESOURCE PROTECTION FENCE AS REQUESTED BY THE ENVIRONMENTAL MONITOR AND CONFIRMED BY THE ENGINEER SHALL BE PAID FOR AT THE CONTRACT UNIT PRICE. RESOURCE PROTECTION FENCE SIGNAGE SHALL BE PROVIDED BY DELDOT AND INSTALLED BY THE CONTRACTOR ALONG THE FENCE NO GREATER THAN 100 FEET APART AND WITH A MINIMUM OF 2 SIGNS PER CONTINUOUS FENCE RUN AS INDICATED IN THE SPECIAL PROVISIONS. RESOURCE PROTECTION FENCE SHALL BE PAID FOR UNDER ITEM 727552 - RESOURCE PROTECTION FENCE.
II. THE PURPOSE OF ITEM 727552 - RESOURCE PROTECTION FENCE IS TO PREVENT IMPACTS TO SENSITIVE RESOURCES DURING CONSTRUCTION. ACCESS INTO THESE AREAS IS STRICTLY PROHIBITED. THE CONTRACTOR IS RESPONSIBLE FOR ENSURING THAT ALL EMPLOYEES UNDERSTAND AND COMPLY WITH THE PURPOSE OF THE RESOURCE PROTECTION FENCE.
III. THE INSTALLATION OF THE RIGHT-OF-WAY FENCE AND RESOURCE PROTECTION FENCE ARE THE ONLY CONSTRUCTION ACTIVITIES THAT ARE AUTHORIZED TO OCCUR OUTSIDE OF THE LOC.
IV. RESOURCE PROTECTION FENCE SHALL BE INSTALLED BY HAND AS PER THE DETAILS AND SPECIFICATIONS OF ITEM 727552 - RESOURCE PROTECTION FENCE. THERE SHALL BE NO GRUBBING FOR THE INSTALLATION OF RESOURCE PROTECTION FENCE. RIGHT-OF-WAY FENCE SHALL BE INSTALLED BY HAND IN SENSITIVE AREAS, INCLUDING WETLANDS, FORESTS, AND CULTURAL RESOURCE AREAS PROTECTED BY RESOURCE PROTECTION FENCE. THERE SHALL BE NO GRUBBING FOR THE INSTALLATION OF RIGHT-OF-WAY FENCE IN SENSITIVE AREAS. WHERE CLEARING IS NECESSARY FOR FENCE INSTALLATION, VEGETATION SHALL BE CUT FLUSH WITH THE GROUND (I.E. NO DISTURBANCE OF THE ROOT MAT). ENVIRONMENTAL IMPACTS SHALL BE MINIMIZED DURING THE INSTALLATION OF THE RESOURCE PROTECTION FENCE AND RIGHT-OF-WAY FENCE AND THE REMOVAL OF THE RESOURCE PROTECTION FENCE. ACCESS AND INSTALLATION/REMOVAL OF RESOURCE PROTECTION FENCE AND INSTALLATION OF RIGHT-OF-WAY FENCE SHALL BE COORDINATED WITH THE ENVIRONMENTAL MONITOR.

D. STAGING, STOCKPILING AND DISPOSAL:
I. NO STOCKPILING OR STORAGE OF EQUIPMENT, MATERIALS, OR STRUCTURAL STEEL; NO STAGING AREA; AND NO INSTALLATION OF ANCILLARY FACILITIES SUCH AS CONCRETE OR ASPHALT PLANTS OR CONSTRUCTION TRAILERS SHALL BE PERMITTED ON ANY CULTURAL RESOURCE SITE OR WITHIN WETLANDS OR STREAMS OUTSIDE OF IDENTIFIED STORAGE AREAS APPROVED BY THE SHPO OR THE USACE. NO CONSTRUCTION MATERIALS, AGGREGATES, OR EARTH SHALL BE STOCKPILED OR STORED IN A MANNER THAT WOULD AFFECT WETLANDS OR STREAMS. STOCKPILES SHALL HAVE EROSION AND SEDIMENT CONTROLS APPROVED BY DELDOT.

II. ALL EXCESS EXCAVATED MATERIALS NOT USED IN HIGHWAY OR COMPENSATORY MITIGATION SITE CONSTRUCTION SHALL BE DISPOSED OF IN UPLAND, NON-WETLAND, NON-CULTURAL RESOURCE SITE(S). THE EXCAVATED MATERIAL SHALL BE PROPERLY CONTAINED AND STABILIZED TO PREVENT ITS ENTRY INTO ANY ADJACENT WETLANDS OR WATERWAYS. OUTSIDE OF ANY LOCATION DESIGNATED ON PLANS FOR DISPOSAL, NO DISPOSAL/WASTING OPERATION SHALL COMMENCE UNTIL WRITTEN APPROVAL OF THE DISPOSAL SITE(S) IS OBTAINED BY THE ENGINEER FROM THE USACE AND THE SHPO. THE CONTRACTOR SHALL SUBMIT THE PROPOSED DISPOSAL SITE LOCATION(S) TO THE ENGINEER. THE ENGINEER WILL SUBMIT THE PROPOSED DISPOSAL SITE INFORMATION TO THE SHPO AND USACE FOR APPROVAL. THE DEPARTMENT WILL NOT CONSIDER ANY DELAYS OR MONETARY CLAIMS OF ANY NATURE RESULTING FROM DELAYS IN APPROVAL OR REJECTION OF DISPOSAL SITES OR FROM THE CONTRACTOR'S FAILURE OR DIFFICULTY IN FINDING ACCEPTABLE DISPOSAL SITES TO MEET THE TIME FRAMES AND CAPACITIES REQUIRED. THE CONTRACTOR SHALL BE RESPONSIBLE FOR ALL PLANS, EROSION AND SEDIMENTATION CONTROL MEASURES, ETC. REQUIRED BY THE APPROPRIATE REGULATORY AGENCY FOR UTILIZING OFF-SITE SPOILS AREAS.

E. MINIMIZATION AND RESTORATION OF TEMPORARY IMPACTS:
ALL TEMPORARY IMPACTS SHOWN ON THESE SHEETS SHALL BE RESTORED AS SPECIFIED IN THE MISCELLANEOUS PROJECT NOTES TO PREDISTURBANCE GRADE AND CONDITION AND STABILIZED. THE AREA SHALL BE PLANTED AS SHOWN IN THE MOT SHEETS AND NOTED ON THESE EC SHEETS. STREAMS SHALL BE RESTORED TO PREDISTURBANCE PATTERN AND PROFILE.

F. CULTURAL RESOURCES:
IF ANY UNANTICIPATED DISCOVERIES OF ARCHAEOLOGICAL OR HUMAN REMAINS OCCUR DURING CONSTRUCTION, ALL WORK SHALL BE IMMEDIATELY SUSPENDED IN THE AREA OF THE DISCOVERY AND THE ENVIRONMENTAL MONITOR SHALL BE CONTACTED. THE ENVIRONMENTAL MONITOR WILL CONTACT DELDOT CULTURAL RESOURCES, SHPO AND USACE TO COMMENCE THE NECESSARY FEDERAL AND STATE COORDINATION. WORK SHALL NOT RESUME UNTIL APPROPRIATE RESOURCE AGENCY COORDINATION, INVESTIGATION AND/OR RECOVERY IS COMPLETE.

WETLANDS DELINEATED BY RUMMEL KLEPPER & KAHL, LLP. IN JUNE 2005 THROUGH MAY 2011 IN ACCORDANCE WITH THE 1987 USACE WETLAND DELINEATION MANUAL AND APPLICABLE REGIONAL SUPPLEMENTS.

PRELIMINARY JURISDICTIONAL DETERMINATION AUGUST 18, 2009.

WETLAND IDENTIFIERS (ALPHANUMERIC LABELS) CORRESPOND TO THE US 301 WETLAND DELINEATION REPORT AND ARE CONSISTENT WITH THE JURISDICTIONAL DETERMINATION.

SHEET PREPARED BY: MCCORMICK TAYLOR, INC.
DATE: APRIL 11, 2011

SHEETS LAST UPDATED: NOVEMBER 17, 2015

ALL IDENTIFIED WATER/WETLANDS ON THESE ENVIRONMENTAL COMPLIANCE SHEETS ARE USACE JURISDICTIONAL AND/OR DNREC JURISDICTIONAL.

PERMANENT WETLAND IMPACT AREA SCHEDULE

ID	IMPACT DESCRIPTION	AREA (SF)	AREA (AC)	VOLUME (CY)	JURISDICTION
3-W1	FILL	895.06	0.0205	N/A	USACE
3-W2	EXCAVATION	3,396.46	0.0780	N/A	USACE
TOTAL PERMANENT WETLAND IMPACTS		4,291.52	0.0985	N/A	

PERMANENT OPEN WATER IMPACT AREA SCHEDULE

ID	IMPACT DESCRIPTION	AREA (SF)	AREA (AC)	VOLUME (CY)	JURISDICTION
3-O1	FILL	1,435.32	0.0330	53.16	USACE/DNREC
TOTAL PERMANENT USACE IMPACTS		1,435.32	0.0330	53.16	USACE
TOTAL PERMANENT DNREC IMPACTS		1,435.32	0.0330	53.16	DNREC

TEMORARY WETLAND IMPACT AREA SCHEDULE

ID	IMPACT DESCRIPTION	AREA (SF)	AREA (AC)	VOLUME (CY)	JURISDICTION
4-WT1	E&S AREA	366.23	0.0084	N/A	USACE
4-WT2	E&S AREA	21.05	0.0005	N/A	USACE
TOTAL TEMPORARY WETLAND IMPACTS		387.28	0.0089	N/A	

TEMPORARY OPEN WATER IMPACT AREA SCHEDULE

ID	IMPACT DESCRIPTION	AREA (SF)	AREA (AC)	VOLUME (CY)	JURISDICTION
4-OT1	E&S AREA	255.64	0.0059	9.47	USACE/DNREC
TOTAL TEMPORARY USACE IMPACTS		255.64	0.0059	9.47	USACE
TOTAL TEMPORARY DNREC IMPACTS		255.64	0.0059	9.47	DNREC

Unofficial Website Copy

LEGEND

	PERMANENT IMPACT AREA
	TEMPORARY IMPACT AREA
OHW	ORDINARY HIGH WATER
OHW/WL	ORD. HIGH WATER / WETLAND
WL	WETLAND BOUNDARY
XX / ?X	IMPACT AREA TYPE ID. (SEE BELOW) / IMPACT AREA ID. AND/OR NUMBER

O = OPEN WATER IMPACT W = WETLAND IMPACT

T = TEMPORARY IMPACT

N

PERMANENT WETLAND IMPACT AREA SCHEDULE

ID	IMPACT DESCRIPTION	AREA (SF)	AREA (AC)	VOLUME (CY)	JURISDICTION
3-W1	FILL	895.06	0.0205	N/A	USACE
3-W2	EXCAVATION	3,396.46	0.0780	N/A	USACE
TOTAL PERMANENT WETLAND IMPACTS		4,291.52	0.0985	N/A	

PERMANENT OPEN WATER IMPACT AREA SCHEDULE

ID	IMPACT DESCRIPTION	AREA (SF)	AREA (AC)	VOLUME (CY)	JURISDICTION
3-01	FILL	1,435.32	0.0330	53.16	USACE/DNREC
TOTAL PERMANENT USACE IMPACTS		1,435.32	0.0330	53.16	
TOTAL PERMANENT DNREC IMPACTS		1,435.32	0.0330	53.16	

NOTES: 1. IMPACT 01 SHADING CONTINUES TO SHEET EC-04. ENTIRE IMPACT CALCULATION IS SHOWN ON THIS SHEET.

2. WETLAND 401A IS SUPPORTED SOLELY BY ROADWAY FACILITY STORMWATER RUNOFF AND WOULD BE LEFT AS A NONVIABLE REMNANTAS A RESULT OF STORMWATER REGULATIONS MANDATING THE EXISTING HYDROLOGY BE DIRECTED TO STORMWATER FACILITIES. THE STORMWATER BASIN PLACEMENT WAS SELECTED ONLY AFTER IT WAS DETERMINED THE WETLAND WOULD BE ELIMINATED BY THE LOSS OF ITS CONTRIBUTING HYDROLOGY.

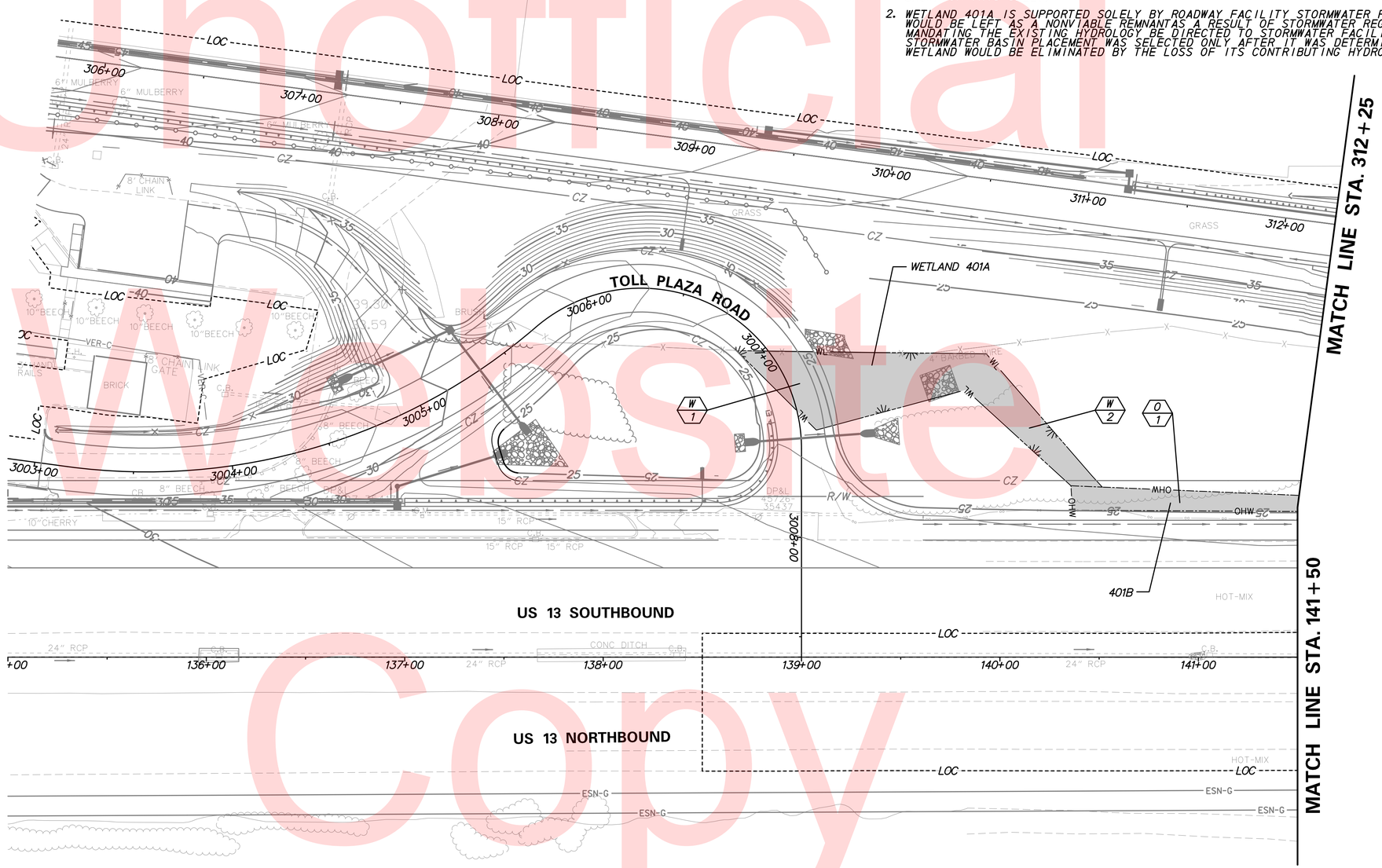

PARKWAY GRAVEL, INC.
T.M.#13-004.00-001
D.R.485-48

Unofficial Website Copy

EC-03

DELAWARE DEPARTMENT OF TRANSPORTATION

ADDENDUMS / REVISIONS

SCALE 0 30 60 90 FEET

US 13 & PORT PENN RD INTERSECTION

CONTRACT	BRIDGE NO.
T201011302	DESIGNED BY: REL
COUNTY	CHECKED BY: LMM
NEW CASTLE	

ENVIRONMENTAL COMPLIANCE PLAN

SHEET NO. 98

TOTAL SHTS. 179

$DGNNAME$ $DATE$ $TIME$

TEMORARY WETLAND IMPACT AREA SCHEDULE					
ID	IMPACT DESCRIPTION	AREA (SF)	AREA (AC)	VOLUME (CY)	JURISDICTION
4-WT1	E&S AREA	366.23	0.0084	N/A	USACE
4-WT2	E&S AREA	21.05	0.0005	N/A	USACE
TOTAL TEMPORARY WETLAND IMPACTS		387.28	0.0089	N/A	

TEMPORARY OPEN WATER IMPACT AREA SCHEDULE					
ID	IMPACT DESCRIPTION	AREA (SF)	AREA (AC)	VOLUME (CY)	JURISDICTION
4-OT1	E&S AREA	255.64	0.0059	9.47	USACE/DNREC
TOTAL TEMPORARY USACE IMPACTS		255.64	0.0059	9.47	USACE
TOTAL TEMPORARY DNREC IMPACTS		255.64	0.0059	9.47	DNREC

LEGEND

- PERMANENT IMPACT AREA
- TEMPORARY IMPACT AREA
- OHW — ORDINARY HIGH WATER
- OHW/WL — ORD. HIGH WATER / WETLAND
- WL — WETLAND BOUNDARY
- XX / ?X — IMPACT AREA TYPE ID. (SEE BELOW) / IMPACT AREA ID. AND/OR NUMBER

O = OPEN WATER IMPACT W = WETLAND IMPACT

T = TEMPORARY IMPACT

NOTES:
1. IMPACT 01 SHADING CONTINUES FROM SHEET EC-03. ENTIRE IMPACT CALCULATION IS SHOWN ON EC-03.
2. NO GRUBBING TO THE WETLANDS SHOWN ON THIS SHEET.

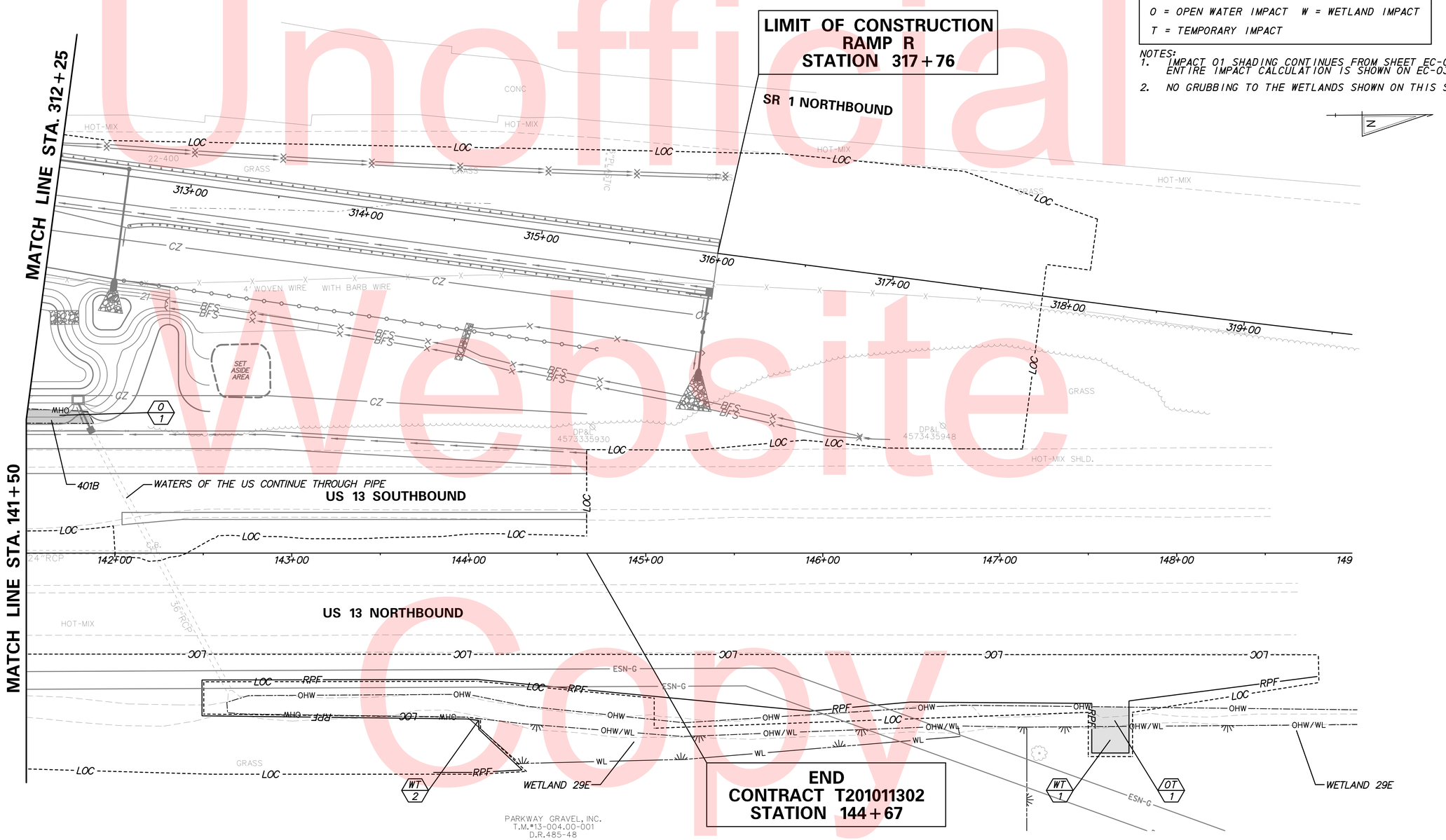

Unofficial Website Copy

DELAWARE DEPARTMENT OF TRANSPORTATION	ADDENDUMS / REVISIONS	SCALE 0 30 60 90 FEET	US 13 & PORT PENN RD INTERSECTION	CONTRACT T201011302 / COUNTY NEW CASTLE	BRIDGE NO. / DESIGNED BY: A.M.S. / CHECKED BY: B.R.T.	ENVIRONMENTAL COMPLIANCE PLAN

EC-04

SHEET NO. 99

TOTAL SHTS. 179

$DGNNAME$ $TIME$
$$DATE$$

A. GENERAL NOTES

1. THE CONTRACTOR SHALL COORDINATE ALL CONTRACT ACTIVITIES AND THE PLACEMENT OF ALL TEMPORARY TRAFFIC CONTROL DEVICES, INCLUDING PERMANENT AND TEMPORARY WARNING SIGNS, WITH CONTRACT NO. T200911302, AS DIRECTED BY THE ENGINEER.

2. THE CONTRACTOR SHALL SUPPLY PORTABLE CHANGEABLE MESSAGE SIGNS UNDER 743004 - FURNISH AND MAINTAIN PORTABLE CHANGEABLE MESSAGE SIGN. THE CONTRACTOR MUST DESIGNATE A PERSON RESPONSIBLE FOR THESE MESSAGE BOARDS. RELOCATING THE MESSAGE BOARDS TO DIFFERENT LOCATIONS WILL BE INCIDENTAL TO ITEM NO. 743004. ALL LOCATIONS AND MESSAGES FOR THE MESSAGE BOARDS SHALL BE APPROVED BY THE DISTRICT SAFETY OFFICER.

3. TRUCK-MOUNTED ATTENUATORS, TYPE 2 (ITEM 743010) SHALL BE REQUIRED WHEN TRAFFIC IS PRESENT DURING THE FOLLOWING OPERATIONS:
   - TEMPORARY AND PERMANENT PAVEMENT MARKING INSTALLATION AND REMOVAL
   - PLACEMENT AND REMOVAL OF TEMPORARY CONCRETE TRAFFIC BARRIER
   - AS DIRECTED BY THE ENGINEER

4. FLOODLIGHTING NECESSARY FOR NIGHT WORK WILL BE PAID UNDER ITEM 743005 - FURNISH AND MAINTAIN PORTABLE LIGHT ASSEMBLY. FLOODLIGHTING SHALL ALSO BE USED, AS DIRECTED BY THE ENGINEER, TO ILLUMINATE OTHER LOCATIONS.

5. THIS PROJECT IS CONSIDERED A SIGNIFICANT PROJECT AS DEFINED BY DELDOT'S WORK ZONE SAFETY AND MOBILITY - PROCEDURES AND GUIDELINES. A TYPE "B" TRANSPORTATION MANAGEMENT PLAN (TMP) HAS BEEN PREPARED AND IS AVAILABLE FOR VIEWING BY CONTACTING DELDOT'S SAFETY PROGRAMS MANAGER AT 302-659-4073. ALL MONITORING REQUIREMENTS OF THE TMP SHALL BE CONDUCTED BY DELDOT FORCES.

6. END PROTECTION FOR THE LEADING END OF ALL P.C.C. SAFETY BARRIER SHALL BE A PORTABLE IMPACT ATTENUATOR MEETING NCHRP REPORT 350 TEST LEVEL 3 (TL-3) CRITERIA OR HIGHER. ATTENUATORS ON SR 1 SHALL BE DESIGNED FOR A 70 MPH DESIGN SPEED AND ATTENUATORS ON US 13 SHALL BE DESIGNED FOR A 60 MPH DESIGN SPEED.

7. BARRIER PLACEMENT HAS BEEN SET TO ALLOW FOR POTENTIAL IMPACT DEFLECTION ON WORK ZONE SIDE UNLESS OTHERWISE NOTED. NO PERMANENT STORAGE OF EQUIPMENT AND MATERIALS SHALL BE ALLOWED WITHIN 3'-0" OF THE WORK ZONE SIDE OF THE TEMPORARY P.C.C. SAFETY BARRIER. TEMPORARY ENCROACHMENT WITHIN THIS 3'-0" BUFFER BY EQUIPMENT AND/OR WORKERS SHALL BE MINIMIZED TO THE MAXIMUM EXTENT POSSIBLE. IN SELECT AREAS LESS THAN 3'-0" BEHIND P.C.C. SAFETY BARRIER IS PROVIDED DUE TO SITE CONSTRAINTS AS SHOWN ON PLANS. IN ANY RUN OF P.C.C. SAFETY BARRIER WHERE LESS THAN 3'-0" BEHIND BARRIER IS PROVIDED THE CONTRACTOR SHALL PIN THE BARRIER TO MINIMIZE DEFLECTION. CONTRACTOR SHALL PROVIDE A PINNING METHOD THAT MEETS THE REQUIREMENTS OF NCHRP 350 FOR APPROVAL BY THE ENGINEER.

8. THE REFLECTIVE LENSES ONLY OF ANY EXISTING PLOWABLE RAISED PAVEMENT MARKERS IN CONFLICT WITH PROPOSED TEMPORARY STRIPING SHALL BE REMOVED. PAYMENT FOR REMOVAL OF THE REFLECTIVE LENSES WILL BE INCIDENTAL TO ITEM NO. 743000 - MAINTENANCE OF TRAFFIC. REFER TO SIGNING, STRIPING AND CONDUIT PLANS FOR PERMANENT PLOWABLE RAISED PAVEMENT MARKER CONFIGURATION INCLUDING REPLACEMENT OF REFLECTIVE LENSES IN EXISTING PAVEMENT MARKER HOUSING.

9. TEMPORARY RAISED PAVEMENT MARKERS SHALL BE INSTALLED THROUGHOUT THE LIMITS OF PROPOSED TEMPORARY STRIPING AS PER CHAPTER 3B OF THE DELDOT MUTCD.

10. THE CONTRACTOR SHALL MAINTAIN FIRE DEPARTMENT RESPONSE ACCESS TO AT LEAST 50% OF THE BIDDLES CORNER TOLL PLAZA ADMINISTRATION BUILDING THROUGHOUT CONSTRUCTION. THE CONTRACTOR SHALL PROVIDE 24 HOUR ACCESS TO THE TOLL PLAZA ADMINISTRATION BUILDING AND PARKING FOR ADMINISTRATION EMPLOYEES AND CUSTOMERS.

11. THE CONTRACTOR SHALL COORDINATE ALL WORK WHICH AFFECTS ADJACENT BUSINESS PROPERTIES WITH THE RESPECTIVE OWNER/MANAGER. ALL WORK AFFECTING THE BIDDLES CORNER TOLL PLAZA SHALL BE COORDINATED WITH THE TOLL PLAZA OPERATIONS PERSONNEL. THE CONTRACTOR SHALL PROVIDE AT LEAST TWO WEEKS WRITTEN NOTICE FOR ALL MOT ACTIVITIES WHICH WILL IMPACT OR MODIFY ACCESS TO ADJACENT PROPERTIES SO THAT THE PROPERTY OWNER/MANAGER CAN ACCOMODATE THE CHANGE.

12. AT THE COMPLETION OF CONSTRUCTION THE CONTRACTOR SHALL FURNISH AND INSTALL TEMPORARY TRAFFIC CONTROL DEVICES TO REMAIN AS SHOWN ON DRAWINGS CS-301 - CS-302 (PHASE 3). THE TEMPORARY TRAFFIC CONTROL DEVICES SHALL REMAIN IN PLACE AND SERVE TO TEMPORARILY CLOSE RAMP R UNTIL ITS OPENING BY THE OTHERS (CONTRACT NO. T200911302 CONTRACTOR). MAINTENANCE AND REMOVAL OF THE TEMPORARY TRAFFIC CONTROL DEVICES DURING THE INTERIM CLOSURE PERIOD AND UPON OPENING OF RAMP R SHALL BE THE RESPONSIBILITY OF OTHERS (CONTRACT NO. T200911302 CONTRACTOR). FURNISHING AND INSTALLATION OF THE TEMPORARY TRAFFIC CONTROL DEVICES TO REMAIN BY THE CONTRACT NO. T201011302 CONTRACTOR WILL NOT BE MEASURED AND PAID FOR BUT WILL BE INCIDENTAL TO ITEM 743000 - MAINTENANCE OF TRAFFIC.

13. ALL TEMPORARY SIGNS SHOWN ON THESE PLANS WILL BE PAID FOR UNDER ITEM 743024 - TEMPORARY WARNING SIGNS AND PLAQUES (EADY).

14. THE CONTRACTOR SHALL PHASE CONSTRUCTION TO MAINTAIN FULL ACCESS TO THE FRIGHTLAND ATTRACTION LOCATED IN THE NORTHEAST QUADRANT OF THE US 13 AND PORT PENN ROAD INTERSECTION DURING THE MONTH OF OCTOBER AND THE DELAWARE MUD RUN. THE CONTRACTOR SHALL COORDINATE ALL CONSTRUCTION WITH THE PROPERTY OWNER TO MINIMIZE IMPACTS TO ACCESS.

15. THE US 13 NORTHBOUND SHOULDER SOUTH OF PORT PENN ROAD IS NOT SUITABLE FOR BEARING TRAFFIC FOR CONTINUED USE DURING CONSTRUCTION. THE MAINTENANCE OF TRAFFIC PHASING PRESENTED ON THESE PLANS MINIMIZES THE USE OF THIS SHOULDER. IN MINIMIZING THE USE OF THE SHOULDER AND IN PROVIDING A 3'-0" BARRIER DEFLECTION ZONE (SEE NOTE 7), SELECT PAVING ALONG THE US 13 NORTHBOUND LEFT SIDE MUST BE COMPLETED IN STAGES DURING PHASE 2, AS NOTED ON THE PLANS.

16. A BICYCLE DETOUR FOR US 13 BICYCLE TRAFFIC IS PROPOSED BY OTHERS IN CONTRACT T200911302 WHICH SHALL LAST FOR THE DURATION OF CONSTRUCTION OF THIS CONTRACT. ALTHOUGH BICYCLE TRAFFIC ALONG US 13 WILL BE DETOURED, SPACE HAS BEEN PROVIDED FOR BICYCLES WHERE POSSIBLE AS SHOWN ON THE PLANS IN THE EVENT THAT THE DETOUR IS DISREGARDED. THE CONTRACTOR SHALL MAINTAIN THIS SPACE FOR BIKES AT ALL TIMES.

17. ANY STEEL PLATES USED DURING INSTALLATION OF PIPES OR FOR OTHER CONSTRUCTION SHALL BE RECESSED IN THE PAVEMENT SO THAT THE TOP SURFACE OF THE STEEL PLATE IS FLUSH WITH THE ADJACENT ROADWAY SURFACE AND SHALL BE PINNED TO THE PAVEMENT. THE CONTRACTOR SHALL SUBMIT DETAILS OF ALL STEEL PLATES TO THE ENGINEER FOR APPROVAL PRIOR TO USE.

18. TRAFFIC OFFICERS SHALL BE USED DURING LANE CLOSURES, DETOURS AND PHASE CHANGES, AS DIRECTED BY THE ENGINEER.

19. PROPOSED ADVANCE NOTIFICATION REQUIREMENTS: AT LEAST TEN (10) CALENDAR DAYS BEFORE A ROAD CLOSURE OR MAJOR CHANGE IN THE ROADWAY CONFIGURATION OR TRAVEL PATTERN, THE CONTRACTOR SHALL USE AN ADVANCE WARNING SIGN OR PORTABLE CHANGEABLE MESSAGE SIGN TO WARN MOTORISTS OF THE PENDING CHANGES. THIS SIGN SHALL REMAIN IN PLACE AT LEAST TEN (10) BUT NO MORE THAN FOURTEEN (14) CALENDAR DAYS BEFORE A MAJOR CHANGE IN THE ROADWAY CONFIGURATION OR TRAVEL PATTERN.

20. FOR TYPE 1 CLOSURES, THE CONTRACTOR SHALL MAKE PROVISIONS IN THE TEMPORARY TRAFFIC CONTROL PLAN FOR LOCAL TRAFFIC TO ACCESS PROPERTIES AND BUSINESSES AT ALL TIMES ON THE CLOSED ARTERIAL OR LOCAL STREET. TYPE 1 AND 2 CLOSURES WILL REQUIRE EXTENSIVE MEDIA AND STAKEHOLDER NOTIFICATION EFFORT AND COORDINATION AMONG VARIOUS LOCAL AND STATE AGENCIES.

21. FOR NIGHT-TIME CLOSURES OF ANY ROAD OR RAMP, PROVIDE ONE TRAFFIC OFFICER AT EACH CLOSURE POINT SHOWN IN THE APPLICABLE DETOUR PLANS. TRAFFIC OFFICER SHALL BE PLACED BEHIND THE CLOSURE BARRICADE WITH THE FRONT OF VEHICLE FACING APPROACHING TRAFFIC AND ALL EMERGENCY LIGHTS SHALL BE ACTIVATED. TRAFFIC OFFICER SHALL PROVIDE A REPORT TO THE CONTRACTOR AT THE END OF THE DAY'S ACTIVITY IDENTIFYING THE NUMBER OF VEHICLES THAT ATTEMPTED TO NOT FOLLOW THE DETOUR.

22. THE CONTRACTOR SHALL PROVIDE THREE TRAFFIC OFFICERS FOR A FOUR-HOUR PERIOD TWICE PER MONTH TO PERFORM SPEED ENFORCEMENT ALONG ROADWAYS WITHIN THE PROJECT LIMITS. AT THE END OF THE DAY'S ENFORCEMENT ACTIVITY, THE TRAFFIC OFFICERS SHALL PROVIDE A REPORT TO THE CONTRACTOR IDENTIFYING THE NUMBER OF VEHICLES STOPPED, NUMBER AND TYPE OF CITATIONS GIVEN AND THE RANGE OF SPEEDS OF THOSE VEHICLES STOPPED. ENFORCEMENT LOCATIONS WILL BE DETERMINED BY THE ENGINEER.

23. THE CONTRACTOR SHALL PROVIDE ONE TRAFFIC OFFICER FOR NIGHTTIME MOBILE PAVEMENT MARKING OPERATIONS ON SR 1 OR US 13.

24. THE CONTRACTOR SHALL PROVIDE ONE TRAFFIC OFFICER FOR MAJOR PHASE CHANGE TRAFFIC SWITCHES ON EXISTING US 13 OR SR 1.

25. THE CONTRACTOR SHALL PROVIDE TWO TRAFFIC OFFICERS FOR ANY ROLLING ROAD BLOCK OPERATION IN ACCORDANCE WITH TA-35H.

26. SEE PROJECT DETOUR PLANS FOR ADDITIONAL TRAFFIC OFFICER REQUIREMENTS.

27. THE CONTRACTOR SHALL PROVIDE ONE TRAFFIC OFFICER FOR ANY OPERATION WHERE AN EXISTING SIGNALIZED INTERSECTION IS PLACED IN FLASH-MODE. THE TRAFFIC OFFICER IS THE ONLY INDIVIDUAL THAT CAN PLACE A TRAFFIC SIGNAL IN FLASH-MODE AND THE TRAFFIC OFFICER MUST STAY ON LOCATION UNTIL THE SIGNAL IS PLACED BACK IN STOP-AND-GO OPERATION IN ACCORDANCE WITH DELDOT'S TEMPORARY TRAFFIC CONTROL WITHIN INTERSECTIONS MEMORANDUM (WWW.MUTCD.DELDOT.GOV).

28. ADDITIONAL USAGE OF TRAFFIC OFFICERS OUTSIDE OF THE ABOVE REQUIREMENTS SHALL BE APPROVED BY THE ENGINEER IN CONSULTATION WITH THE TRAFFIC SAFETY SECTION.

B. WORK HOUR/LANE CLOSURE RESTRICTIONS

1. THE FOLLOWING TYPICAL APPLICATIONS FROM PART 6 OF THE DELDOT MANUAL ON UNIFORM TRAFFIC CONTROL DEVICES (DELDOT MUTCD) SHALL BE UTILIZED FOR CONSTRUCTION ACTIVITIES WHICH OCCUR OUTSIDE OF THE WORK AREAS ESTABLISHED ON THE CONSTRUCTION PHASING, MOT AND EROSION AND SEDIMENT CONTROL PLANS:

   A. TYPICAL APPLICATION 1 & 3A - ALL LIGHTING, SIGNING AND TEMPORARY SIGNING WORK IN THE MEDIAN AND ON OR OFF THE SHOULDER

   B. TYPICAL APPLICATION 33 - INSTALLATION OF LIGHT POLES OVER TRAVEL LANES

   C. TYPICAL APPLICATION 17A & 35B - INSTALLATION OF ALL LANE LINE, CENTERLINE, AND EDGE LINE PAVEMENT MARKINGS

   D. TYPICAL APPLICATION 5A, 6, 18 & 33 - PAVING & PATCHING

2. ALL WORK ALONG US 13 NORTHBOUND REQUIRING A SINGLE LANE CLOSURE USING TYPICAL APPLICATION 33 SHALL BE PERMITTED DURING THE FOLLOWING HOURS:
   -MONDAY THROUGH THURSDAY FROM 9 AM - 3 PM
   -MONDAY THROUGH THURSDAY FROM 6 PM - 6 AM (THE FOLLOWING MORNING)

3. ALL WORK ALONG US 13 SOUTHBOUND REQUIRING A SINGLE LANE CLOSURE USING TYPICAL APPLICATION 33 SHALL BE PERMITTED DURING THE FOLLOWING HOURS:
   -MONDAY THROUGH THURSDAY FROM 9 AM - 3 PM
   -MONDAY THROUGH THURSDAY FROM 7 PM - 7 AM (THE FOLLOWING MORNING)

4. CLOSURES AND DETOURS OF US 13 FOR INSTALLATION OF CROSSROAD PIPES SHALL BE PERMITTED DURING THE FOLLOWING HOURS:
   -US 13 NORTHBOUND - MONDAY THROUGH THURSDAY FROM 9 PM - 5 AM (THE FOLLOWING MORNING)
   -US 13 SOUTHBOUND - MONDAY THROUGH THURSDAY FROM 10 PM - 5 AM (THE FOLLOWING MORNING)

5. FLAGGING OPERATIONS (ALTERNATING ONE-WAY OPERATIONS) ALONG PORT PENN ROAD SHALL BE PERMITTED DURING THE FOLLOWING HOURS:
   -MONDAY THROUGH FRIDAY FROM 9 AM - 3 PM
   -MONDAY THROUGH THURSDAY FROM 7 PM - 6 AM (THE FOLLOWING MORNING)

6. THE DETOUR OF THE PORT PENN ROAD LEFT-TURN TO US 13 SB IN PHASE 2A SHALL BE PERMITTED MONDAY THROUGH THURSDAY FROM 9 PM - 5 AM (THE FOLLOWING MORNING).

C. MAINTENANCE OF TRAFFIC FOR UTILITY RELOCATION NOTES:

1. THE CONTRACTOR SHALL BE RESPONSIBLE FOR PROVIDING MAINTENANCE OF TRAFFIC FOR ALL UTILITY RELOCATIONS BEING PERFORMED BY OTHERS DURING CONSTRUCTION, AS DIRECTED BY THE ENGINEER. THE CONTRACTOR SHALL BE RESPONSIBLE FOR COORDINATING WITH THE UTILITY COMPANIES TO ENSURE THAT MAINTENANCE OF TRAFFIC IS PROVIDED WHEN REQUIRED. THE CONTRACTOR SHALL OBTAIN THE REQUIRED PERMITS AND RECEIVE APPROVAL OF PROPOSED MAINTENANCE OF TRAFFIC ACTIVITIES FROM THE ENGINEER.

2. ROLLING ROAD BLOCKS SHALL BE USED FOR REMOVAL OR CONSTRUCTION OF OVERHEAD UTILITY LINES ACROSS US 13 AND PORT PENN ROAD, AS DIRECTED BY THE ENGINEER.

3. SINGLE LANE CLOSURES USING TYPICAL APPLICATION TA-33 AND/OR SHOULDER CLOSURES USING TYPICAL APPLICATION TA-5A SHALL BE USED FOR UTILITY RELOCATION WORK OCCURRING ALONG US 13, UNLESS OTHERWISE NOTED.

4. INSTALLATION OF UNDERGROUND UTILITIES ACROSS PORT PENN ROAD AND THE TOLL PLAZA ADMINISTRATION DRIVEWAY AND WITHIN THE TOLL PLAZA ADMINISTRATION BUILDING PARKING LOT THAT ARE CONSTRUCTED BY OPEN TRENCHING SHALL BE COMPLETED IN HALF SECTIONS USING FLAGGING OPERATIONS PER TYPICAL APPLICATION TA-10.

5. WHERE OPEN EXCAVATIONS ARE MADE WITHIN THE CLEARZONE THAT CANNOT BE PLATED OR BACKFILLED ON THE SAME WORKING DAY, POSITIVE BARRIER PROTECTION SHALL BE PROVIDED. THE CLEARZONE IS DEFINED AS 30 FEET FROM THE EDGE OF TRAVEL LANE ALONG US 13 AND 22 FEET FROM THE EDGE OF TRAVEL LANE ALONG PORT PENN ROAD. THE CONTRACTOR SHALL SUBMIT WORKING DRAWINGS SHOWING THE LOCATION OF THE BARRIER AND OTHER REQUIRED TEMPORARY TRAFFIC CONTROL DEVICES TO THE ENGINEER FOR APPROVAL PRIOR TO IMPLEMENTATION.

6. PAYMENT FOR MAINTENANCE OF TRAFFIC PROVIDED FOR UTILITY RELOCATION WILL BE PAID FOR UNDER THE PERTINENT MAINTENANCE OF TRAFFIC BID ITEMS.

29. THE CONTRACTOR IS REQUIRED TO SUBMIT REQUESTS FOR TRAFFIC RESTRICTIONS TO THE GEC AND DELDOT IN ACCORDANCE WITH THE TABLE BELOW:

Advance Notification

Type of Restriction	Minimum Advance Notice	Maximum Advance Notice
1*	30 Days	45 Days
2*, 3*, 4*	10 Days	14 Days

Type 1: Planned and acceptable closures of an arterial or local street, traffic switches, new ramp openings, or changed traffic patterns.
Type 2: A lane(s) closure that would have significant impact on traffic, such as temporarily stopping traffic completely (traffic drags), closing 2 or more lanes, closing an exit or entrance ramp at freeway interchanges, or flagging operations.
Type 3: A lane closure that would have minor or no impact on the flow of traffic, such as closing one lane on a three-lane freeway during off-peak hours.
Type 4: A lane closure that would close a shoulder (right or left)

Unofficial Website Copy

PERMANENT WARNING SIGN LEGEND

ROAD WORK 1 MILE	ROAD WORK 1/2 MILE	ROAD WORK 1500 FT	ROAD WORK 1000 FT	ROAD WORK 500 FT	ROAD WORK AHEAD	END ROAD WORK
W20-1 (48"x48") ①	W20-1 (48"x48") ②	W20-1 (48"x48") ③	W20-1 (48"x48") ④	W20-1 (48"x48") ⑤	ON US 13 — W20-1 (48"x48") W13-4 (36"x36") ⑥	G20-2 (48"x24") ⑦

N

NOTES:

1. SEE INDIVIDUAL PHASING PLANS FOR PLACEMENT OF TEMPORARY WARNING SIGNS. LOCATION OF ALL PERMANENT WARNING SIGNS SHALL BE COORDINATED WITH THE ENGINEER.
2. ANY EXISTING SIGNS THAT CONFLICT WITH CONSTRUCTION WARNING SIGNS SHALL BE COVERED, AS DIRECTED BY THE ENGINEER.
3. ALL WARNING SIGNS SHALL BE POST MOUNTED ON NCHRP REPORT 350 APPROVED BREAKAWAY SUPPORTS UNLESS OTHERWISE NOTED ON THESE PLANS, AS DIRECTED BY THE ENGINEER, OR ONE OF THE FOLLOWING CONDITIONS APPLY:
   1) A UTILITY CONFLICT EXISTS THAT PREVENTS THE BREAKAWAY SUPPORTS FROM BEING DRIVEN INTO THE GROUND (ALL UTILITY CONFLICTS MUST BE VERIFIED BY THE INSPECTOR), OR
   2) MATERIAL OTHER THAN COMMON EARTH, SUCH AS CONCRETE, HOT MIX ASPHALT, BRICK, ETC. PREVENTS DRIVING THE POSTS AND SUPPORTS INTO THE GROUND.
4. ALL SIGNS ON SR 1 AND US 13 SHALL BE DOUBLE POSTED.

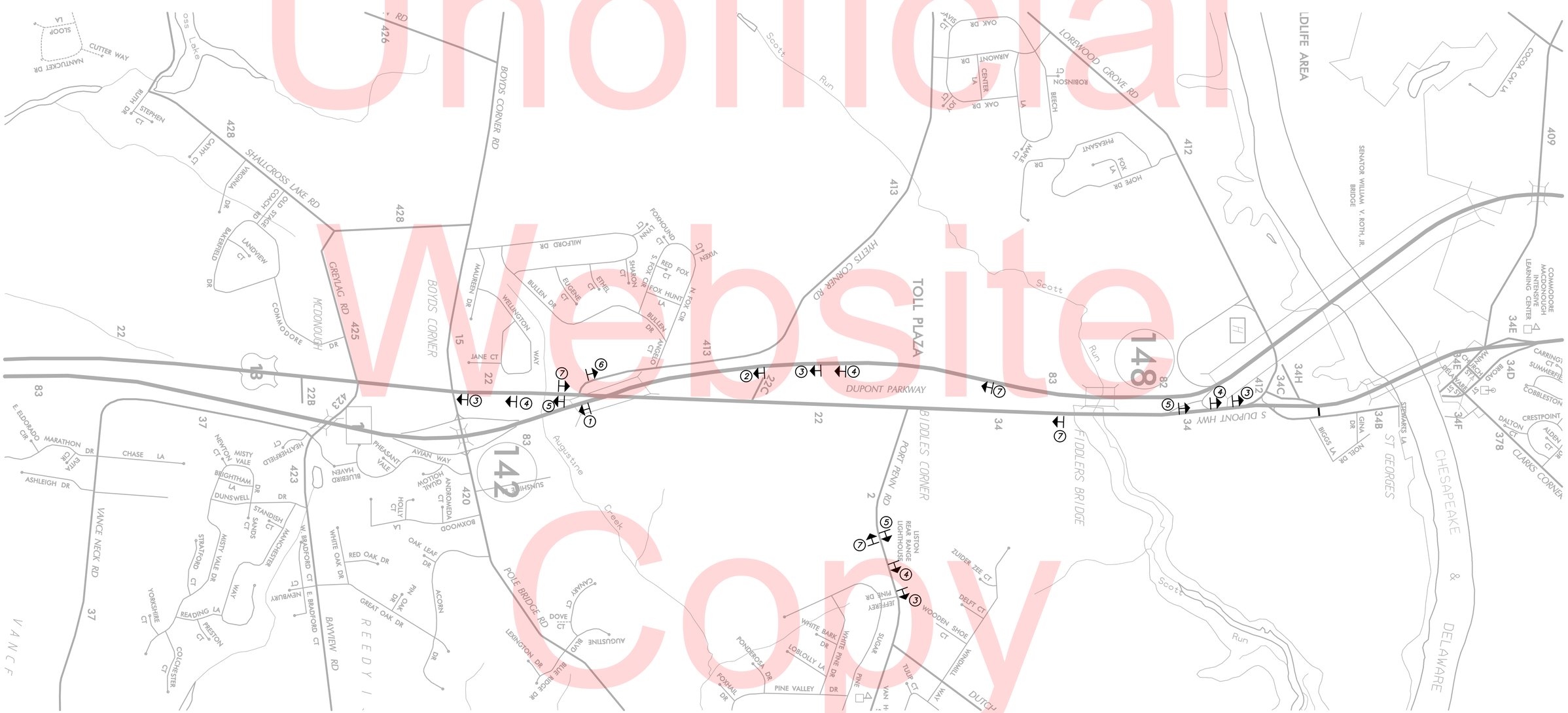

Unofficial Website Copy

n:\31653-000\contract t4\cadd\CS0101301_ID.dgn
12/5/2012 11:59:59 AM

DELAWARE DEPARTMENT OF TRANSPORTATION

ADDENDUMS / REVISIONS

SCALE 0 1000 2000 3000 FEET

US 13 & PORT PENN RD INTERSECTION

CONTRACT	BRIDGE NO.
T201011302	
COUNTY	DESIGNED BY: J.D.C.
NEW CASTLE	CHECKED BY: J.M.M.

PERMANENT WARNING SIGN LOCATION PLAN

CS-01
SHEET NO.
101
TOTAL SHTS.
179

CONSTRUCTION PHASING TYPICAL SECTIONS LEGEND

- PORTABLE P.C.C. SAFETY BARRIER (F SHAPE)
- EXISTING PAVEMENT MARKING
- TEMPORARY PAVEMENT MARKING
- PROPOSED CONSTRUCTION THIS PHASE
- TEMPORARY CONSTRUCTION
- TRAFFIC FLOW ARROW

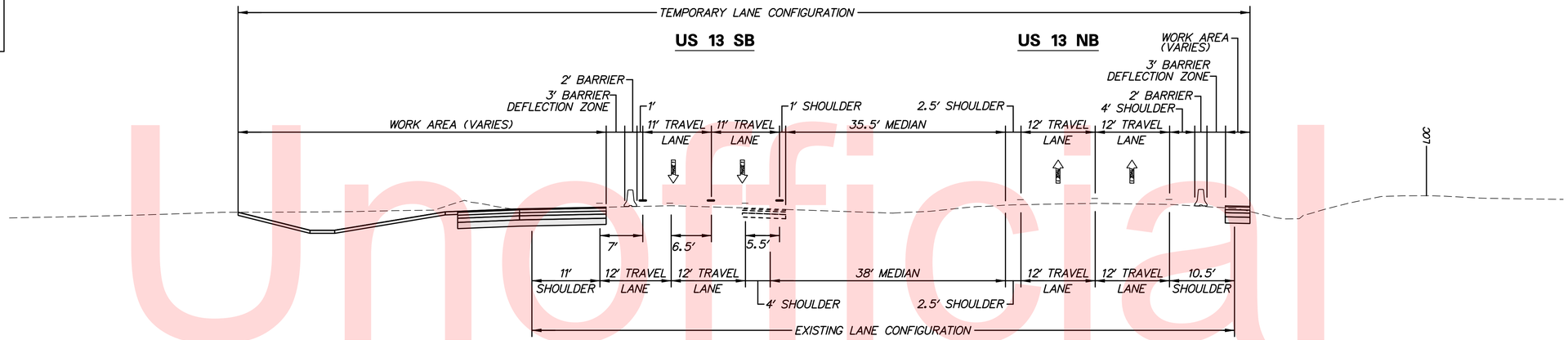

SECTION A'–A' – PHASE 1 US 13 STA. 124+50

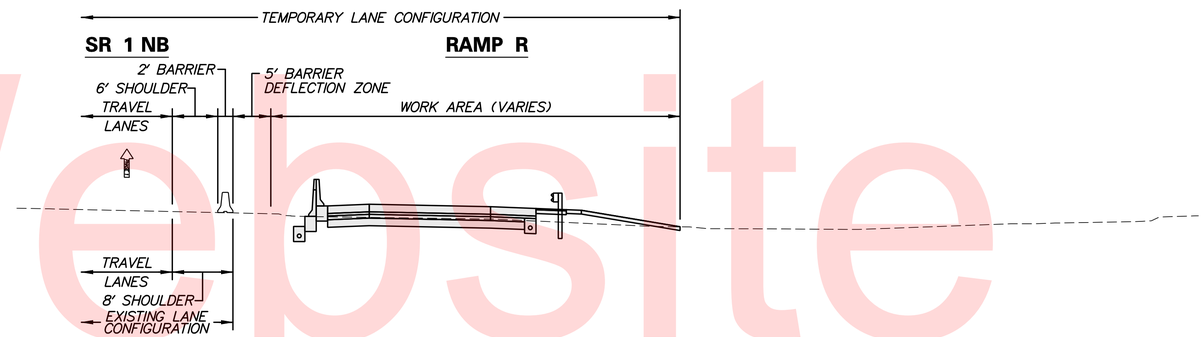

SECTION B'–B' – PHASE 1 RAMP R STA. 306+00

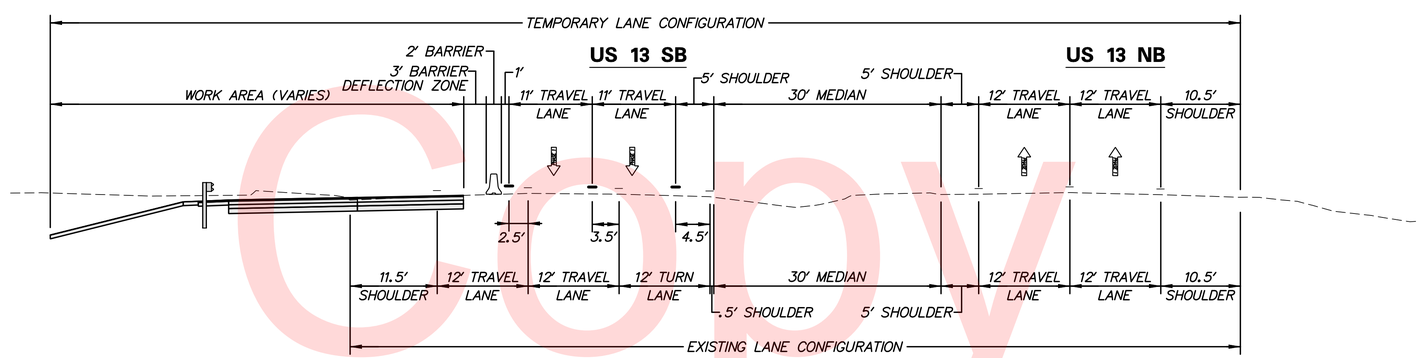

SECTION C'–C' – PHASE 1 US 13 STA. 138+00

Unofficial Website Copy

n:\31653-000\contract 1\cadd\traffic\rjm\CS002U301_1D.dgn
8/21/2015 10:25:20 AM

DELAWARE DEPARTMENT OF TRANSPORTATION	ADDENDUMS / REVISIONS	US 13 & PORT PENN RD INTERSECTION	CONTRACT T201011302	BRIDGE NO.	CONSTRUCTION PHASING TYPICAL SECTIONS	CS–02	
			COUNTY NEW CASTLE	DESIGNED BY: J.D.C.		SHEET NO. 102	
				CHECKED BY: J.M.M.		TOTAL SHTS. 179	

CONSTRUCTION PHASING TYPICAL SECTIONS LEGEND

- PORTABLE P.C.C. SAFETY BARRIER (F SHAPE)
- EXISTING PAVEMENT MARKING
- TEMPORARY PAVEMENT MARKING
- PROPOSED CONSTRUCTION THIS PHASE
- TEMPORARY CONSTRUCTION
- TRAFFIC FLOW ARROW

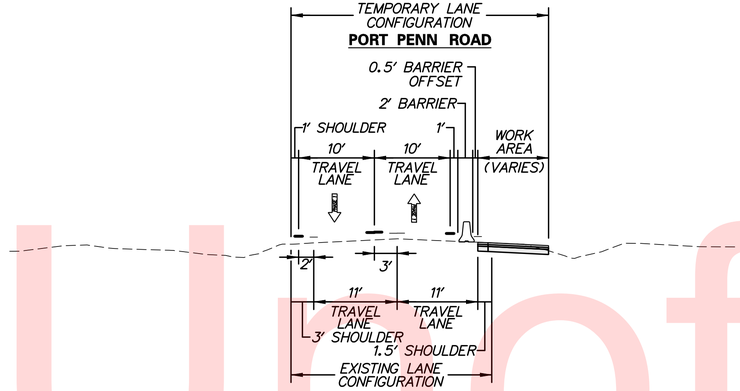

SECTION D'–D' – PHASE 1 PORT PENN RD STA. 4003+00

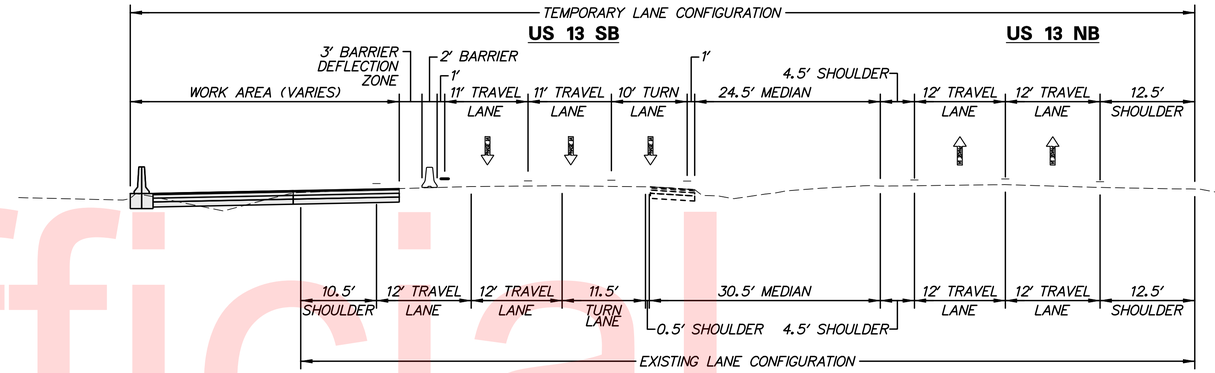

SECTION E'–E' – PHASE 1A US 13 STA. 134+00

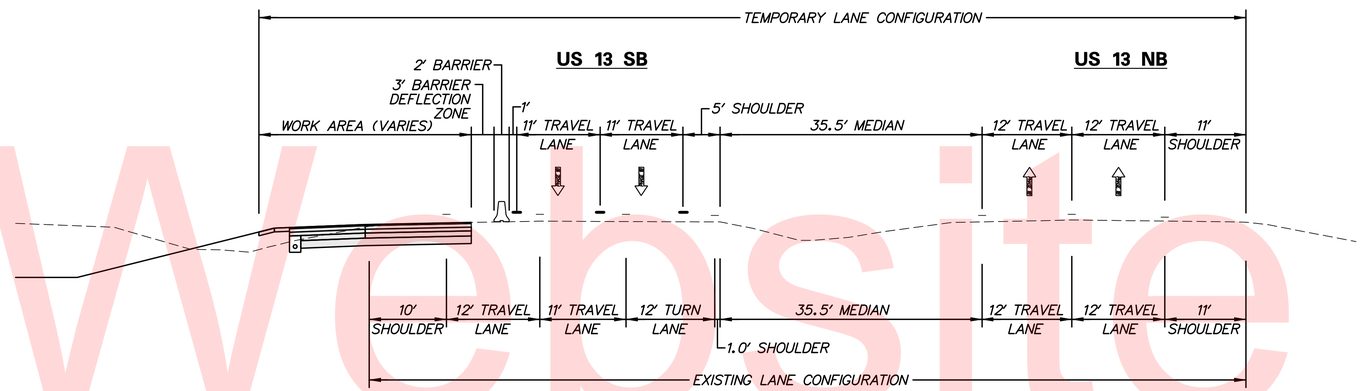

SECTION F'–F' – PHASE 1B US 13 STA. 141+00

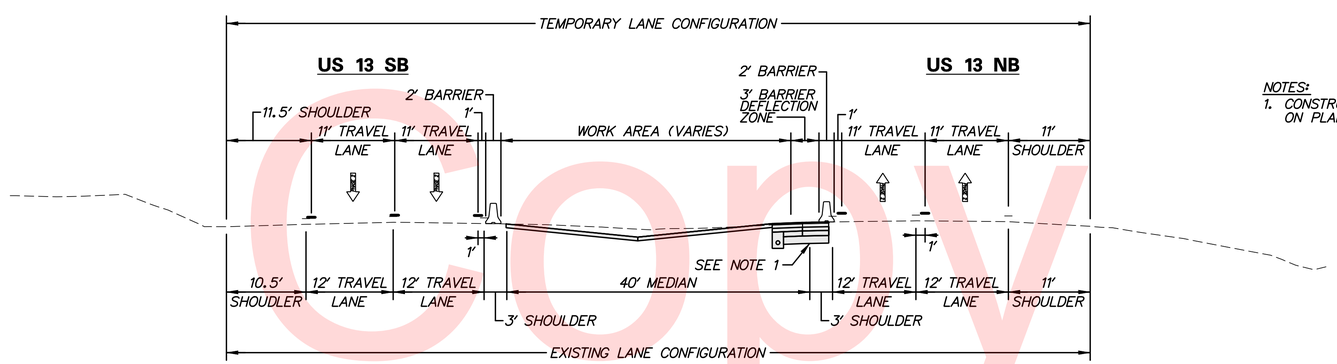

SECTION G'–G' – PHASE 2 US 13 STA. 91+00

NOTES:
1. CONSTRUCT RIGHT 4' OF PAVEMENT UNDER LANE CLOSURES AS NOTED ON PLANS.

Unofficial Website Copy

n:\33653-000\contract 1d\cadd\traffic\rjm\CS003U301_1D.dgn
8/21/2015 10:25:21 AM

DELAWARE DEPARTMENT OF TRANSPORTATION	ADDENDUMS / REVISIONS	NOT TO SCALE	US 13 & PORT PENN RD INTERSECTION	CONTRACT T201011302	BRIDGE NO.	CONSTRUCTION PHASING TYPICAL SECTIONS	CS–03
				COUNTY NEW CASTLE	DESIGNED BY: J.D.C.		SHEET NO. 103
					CHECKED BY: J.M.M.		TOTAL SHTS. 179

CONSTRUCTION PHASING TYPICAL SECTIONS LEGEND

- PORTABLE P.C.C. SAFETY BARRIER (F SHAPE)
- EXISTING PAVEMENT MARKING
- TEMPORARY PAVEMENT MARKING
- PROPOSED CONSTRUCTION THIS PHASE
- TEMPORARY CONSTRUCTION
- TRAFFIC FLOW ARROW

NOTES:
1. CONSTRUCT RIGHT 4' OF PAVEMENT UNDER LANE CLOSURES AS NOTED ON PLANS.

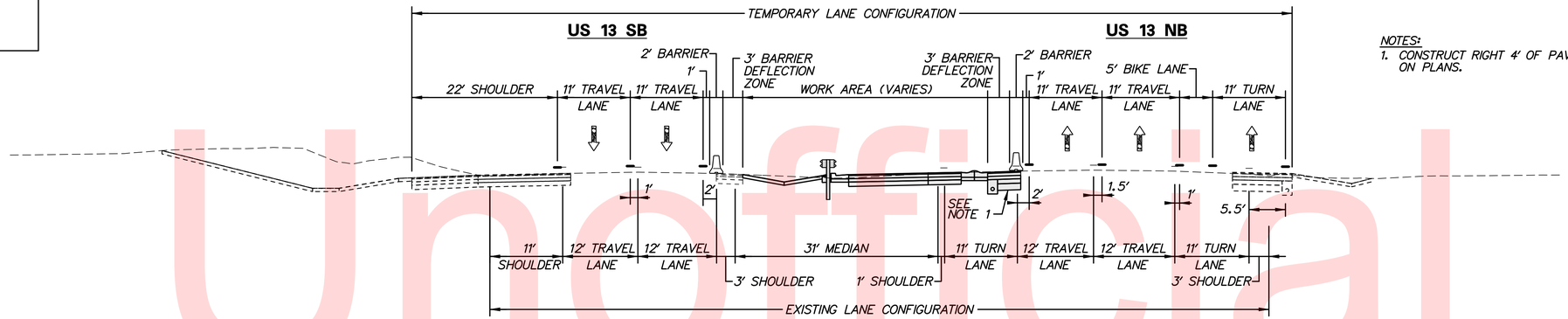

SECTION H'–H' – PHASE 2 US 13 STA. 129+50

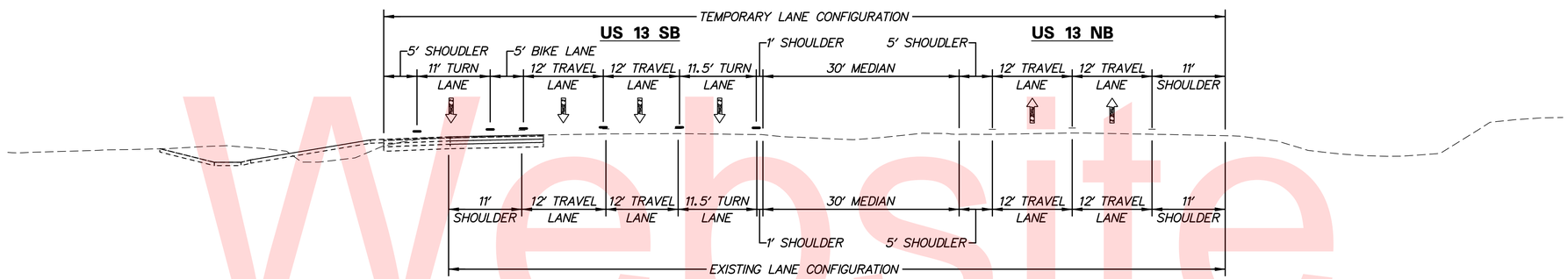

SECTION I'–I' – PHASE 2 US 13 STA. 140+00

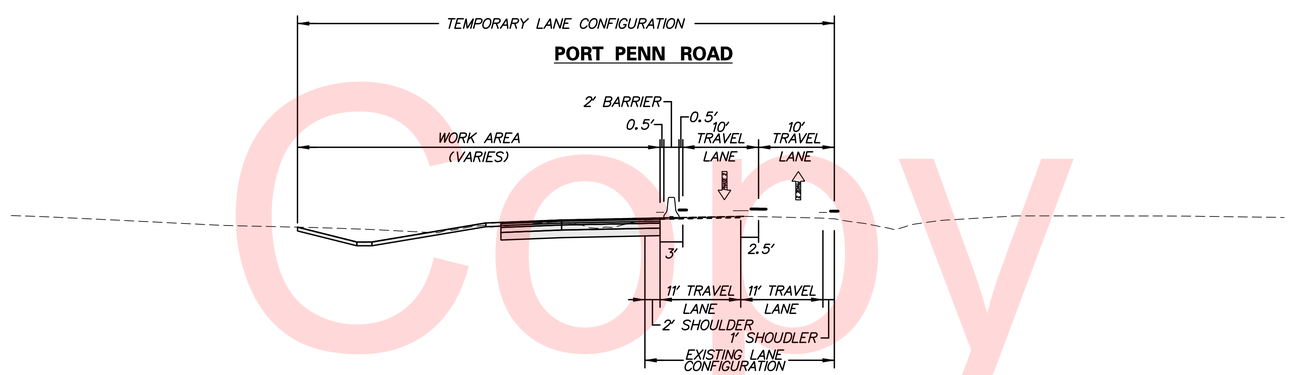

SECTION J'–J' – PHASE 2 PORT PENN ROAD STA. 4004+50

Unofficial Website Copy

r:\31653-000\contract 1d\cadd\traffic\rjm\CS004U301_1D.dgn
8/21/2015 10:25:22 AM

DELAWARE DEPARTMENT OF TRANSPORTATION	ADDENDUMS / REVISIONS	NOT TO SCALE	US 13 & PORT PENN RD INTERSECTION	CONTRACT T201011302	BRIDGE NO.	CONSTRUCTION PHASING TYPICAL SECTIONS	CS-04
				COUNTY NEW CASTLE	DESIGNED BY: J.D.C.		SHEET NO. 104
					CHECKED BY: J.M.M.		TOTAL SHTS. 179

CONSTRUCTION PHASING LEGEND

- PROPOSED CONSTRUCTION THIS PHASE
- TEMPORARY CONSTRUCTION
- EXISTING SIGN/PROPOSED TEMPORARY SIGN
- TYPE III BARRICADE
- PLASTIC DRUM
- PHASE 1 — TRAFFIC FLOW ARROW
- (A) 4" SOLID WHITE PAINT
- (B) 4" SOLID YELLOW PAINT
- (C) 4" BROKEN WHITE PAINT (10' LINE, 30' GAP)
- (D) 4" DOTTED WHITE PAINT (3' LINE, 9' GAP)
- (E) WHITE PAINT SYMBOL/LEGEND
- PORTABLE P.C.C. SAFETY BARRIER (F SHAPE)
- PORTABLE IMPACT ATTENUATOR
- ARROW PANEL
- (RM/C) REMOVE EXISTING STRIPING BY CONTRACTOR

SEQUENCE OF CONSTRUCTION - PRE-PHASE 1

1. PLACE ALL PERTINENT TEMPORARY TRAFFIC CONTROL DEVICES SHOWN ON THE PERMANENT WARNING SIGN LOCATION PLAN. INSTALL SEDIMENT CONTROLS AS SHOWN.
2. CLOSE THE LEFT LANE OF US 13 SOUTHBOUND FOLLOWING TYPICAL APPLICATION 33 OF THE DELDOT MUTCD AND INSTALL TEMPORARY TRAFFIC CONTROL DEVICES AS SHOWN ON PLAN. REFER TO DRAWING NO. TCN-01 FOR HOURS THE LANE CLOSURE IS PERMITTED.
3. RECONSTRUCT SHOULDER AND CONSTRUCT TEMPORARY PAVEMENT ALONG LEFT SIDE OF US 13 SOUTHBOUND. PAVING SECTION FOR TEMPORARY PAVEMENT TO MATCH PAVING SECTION OF RECONSTRUCTED SHOULDER (SEE DWG. NO. TS-08).
4. DURING DRY WEATHER FORECAST PERFORM TOPSOIL STRIPPING ALONG SOUTHBOUND US 13 BETWEEN EXISTING ROADWAy AND LIMIT OF CONSTRUCTION (LOC). THE AREA DISTURBED DURING TOPSOIL STRIPPING SHALL BE IMMEDIATELY STABILIZED.
5. INSTALL A SHOULDER CLOSURE WITH TEMPORARY TRAFFIC BARRIER FOLLOWING TYPICAL APPLICATION TA-5 BETWEEN STA. 109+00 AND STA. 119+50 AND COMPLETE ROUGH GRADING OFF THE US 13 SOUTHBOUND SHOULDER TO FACILITATE UTILITY RELOCATION WORK BY OTHERS.

EROSION & SEDIMENT CONTROL

DWB	DEWATERING BASIN	SCE	STABILIZED CONSTRUCTION ENTRANCE
	EROSION CONTROL BLANKET	SF	SILT FENCE
ED	EARTH DIKE	SP-1	SUMP PIT, TYPE 1
	INLET SEDIMENT CONTROL	SP-2	SUMP PIT, TYPE 2
	PERIMETER DIKE/SWALE	ST	SEDIMENT TRAP
PST	PORTABLE SEDIMENT TANK	ST	SEDIMENT TRAP WITH INLET AS OUTLET
RSF	REINFORCED SILT FENCE	ST	SEDIMENT TRAP PIPE OUTLET
SBD	SANDBAG DIKE	SW	STILLING WELL
SB	SANDBAG DIVERSION		TEMPORARY SWALE
	STONE CHECK DAM	TSD	TEMPORARY SLOPE DRAIN

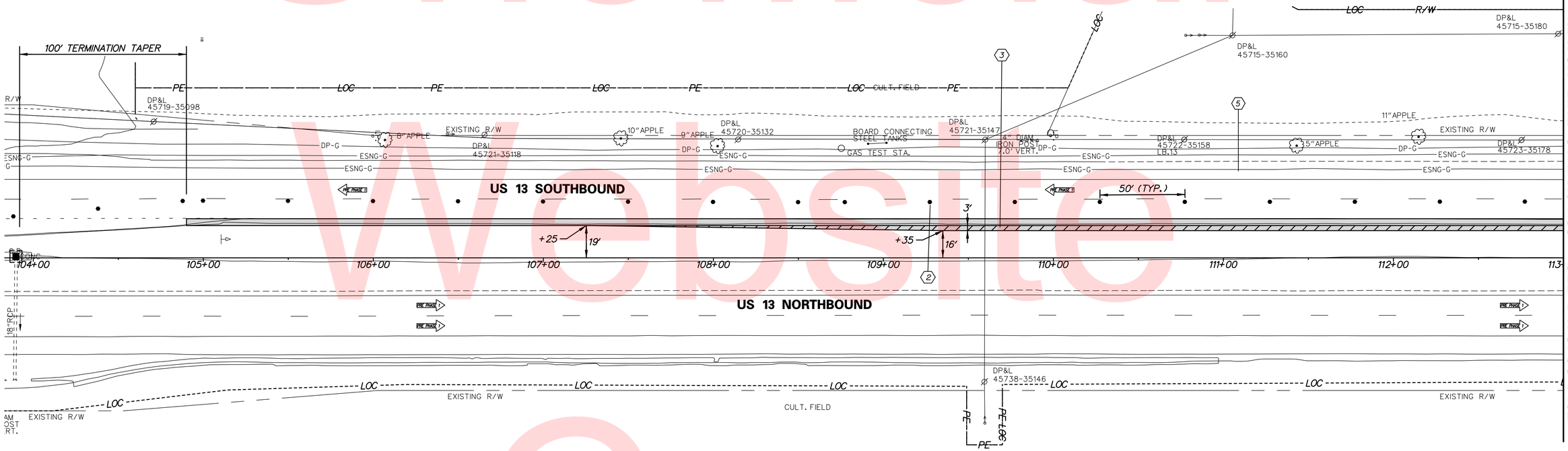

MATCH LINE STA. 113+00 – SEE DWG. CS-P102

Unofficial Website Copy

N:\31653-000\CONTRACT 1D:\CADD\Traffic\RJM\CSP101U301_1D.dgn
12/7/2015 2:37:46 PM

DELAWARE DEPARTMENT OF TRANSPORTATION

ADDENDUMS / REVISIONS

SCALE 0 30 60 90 FEET

US 13 & PORT PENN RD INTERSECTION

CONTRACT	BRIDGE NO.	
T201011302	DESIGNED BY:	J.Y.
COUNTY	CHECKED BY:	P.W.
NEW CASTLE		

CONSTRUCTION PHASING, M.O.T., AND EROSION CONTROL PLAN – PRE-PHASE 1

CS-P101

SHEET NO. 105

TOTAL SHTS. 179

CONSTRUCTION PHASING LEGEND

- PROPOSED CONSTRUCTION THIS PHASE
- TEMPORARY CONSTRUCTION
- EXISTING SIGN/PROPOSED TEMPORARY SIGN
- TYPE III BARRICADE
- PLASTIC DRUM
- TRAFFIC FLOW ARROW
- (A) 4" SOLID WHITE PAINT
- (B) 4" SOLID YELLOW PAINT
- (C) 4" BROKEN WHITE PAINT (10' LINE, 30' GAP)
- (D) 4" DOTTED WHITE PAINT (3' LINE, 9' GAP)
- (E) WHITE PAINT SYMBOL/LEGEND
- PORTABLE P.C.C. SAFETY BARRIER (F SHAPE)
- PORTABLE IMPACT ATTENUATOR
- ARROW PANEL
- (RM C) REMOVE EXISTING STRIPING BY CONTRACTOR

SEQUENCE OF CONSTRUCTION - PRE-PHASE I

1. PLACE ALL PERTINENT TEMPORARY TRAFFIC CONTROL DEVICES SHOWN ON THE PERMANENT WARNING SIGN LOCATION PLAN. INSTALL SEDIMENT CONTROL DEVICES AS SHOWN.
2. CLOSE THE LEFT LANE OF US 13 SOUTHBOUND FOLLOWING TYPICAL APPLICATION 33 OF THE DELDOT MUTCD AND INSTALL TEMPORARY TRAFFIC CONTROL DEVICES AS SHOWN ON PLAN. REFER TO DRAWING NO. TCN-01 FOR HOURS THE LANE CLOSURE IS PERMITTED.
3. RECONSTRUCT SHOULDER AND CONSTRUCT TEMPORARY PAVEMENT ALONG LEFT SIDE OF US 13 SOUTHBOUND. PAVING SECTION FOR TEMPORARY PAVEMENT TO MATCH PAVING SECTION OF RECONSTRUCTED SHOULDER (SEE DWG. NO. TS-08).
4. DURING DRY WEATHER FORECAST PERFORM TOPSOIL STRIPPING ALONG SOUTHBOUND US 13 BETWEEN EXISTING ROADWAy AND LIMIT OF CONSTRUCTION (LOC). THE AREA DISTURBED DURING TOPSOIL STRIPPING SHALL BE IMMEDIATELY STABILIZED.
5. INSTALL A SHOULDER CLOSURE WITH TEMPORARY TRAFFIC BARRIER FOLLOWING TYPICAL APPLICATION TA-5 BETWEEN STA. 109+00 AND STA. 119+50 AND COMPLETE ROUGH GRADING OFF THE US 13 SOUTHBOUND SHOULDER TO FACILITATE UTILITY RELOCATION WORK BY OTHERS.

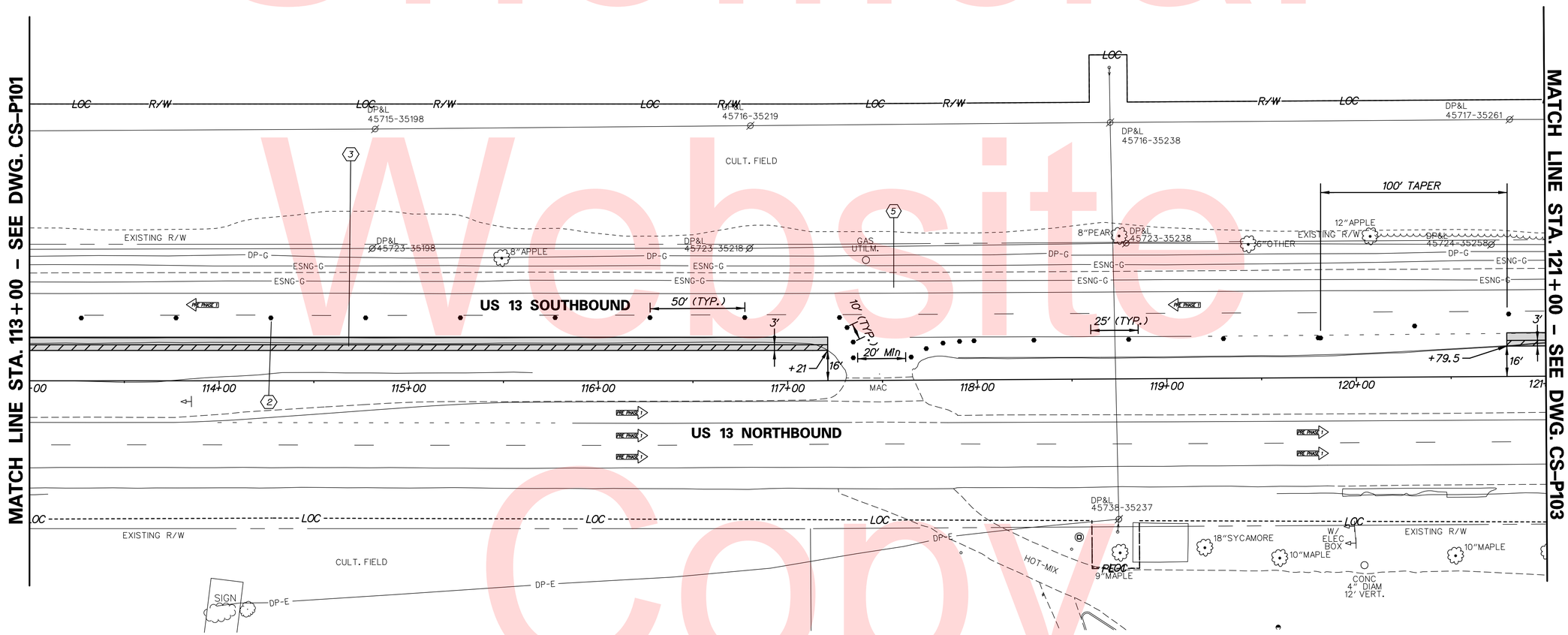

Unofficial Website Copy

DELAWARE DEPARTMENT OF TRANSPORTATION	ADDENDUMS / REVISIONS	SCALE 0 30 60 90 FEET	US 13 & PORT PENN RD INTERSECTION	CONTRACT T201011302 / COUNTY NEW CASTLE	BRIDGE NO. / DESIGNED BY: J.Y. / CHECKED BY: P.W.
CONSTRUCTION PHASING, M.O.T., AND EROSION CONTROL PLAN – PRE-PHASE 1	CS-P102	SHEET NO. 106	TOTAL SHTS. 179		

n:\33653-000\contract 1d\cadd\traffic\rjm\CSP102U301_1D.dgn
8/21/2015 10:47:58 AM

CONSTRUCTION PHASING LEGEND

- PROPOSED CONSTRUCTION THIS PHASE
- TEMPORARY CONSTRUCTION
- EXISTING SIGN/PROPOSED TEMPORARY SIGN
- TYPE III BARRICADE
- PLASTIC DRUM
- TRAFFIC FLOW ARROW
- (A) 4" SOLID WHITE PAINT
- (B) 4" SOLID YELLOW PAINT
- (C) 4" BROKEN WHITE PAINT (10' LINE, 30' GAP)
- (D) 4" DOTTED WHITE PAINT (3' LINE, 9' GAP)
- (E) WHITE PAINT SYMBOL/LEGEND
- PORTABLE P.C.C. SAFETY BARRIER (F SHAPE)
- PORTABLE IMPACT ATTENUATOR
- ARROW PANEL
- (RM C) REMOVE EXISTING STRIPING BY CONTRACTOR

SEQUENCE OF CONSTRUCTION - PRE-PHASE I

1. PLACE ALL PERTINENT TEMPORARY TRAFFIC CONTROL DEVICES SHOWN ON THE PERMANENT WARNING SIGN LOCATION PLAN. INSTALL SEDIMENT CONTROL DEVICES AS SHOWN.
2. CLOSE THE LEFT LANE OF US 13 SOUTHBOUND FOLLOWING TYPICAL APPLICATION 33 OF THE DELDOT MUTCD AND INSTALL TEMPORARY TRAFFIC CONTROL DEVICES AS SHOWN ON PLAN. REFER TO DRAWING NO. TCN-01 FOR HOURS THE LANE CLOSURE IS PERMITTED.
3. RECONSTRUCT SHOULDER AND CONSTRUCT TEMPORARY PAVEMENT ALONG LEFT SIDE OF US 13 SOUTHBOUND. PAVING SECTION FOR TEMPORARY PAVEMENT TO MATCH PAVING SECTION OF RECONSTRUCTED SHOULDER (SEE DWG. NO. TS-08).
4. DURING DRY WEATHER FORECAST PERFORM TOPSOIL STRIPPING ALONG SOUTHBOUND US 13 BETWEEN EXISTING ROADWAy AND LIMIT OF CONSTRUCTION (LOC) AND PERFORM TOPSOIL STRIPPING ALONG NB US 13 BETWEEN THE EXISTING ROADWAY AND THE LOC NORTH OF STA. 124+00. THE AREA DISTURBED DURING TOPSOIL STRIPPING SHALL BE IMMEDIATELY STABILIZED.

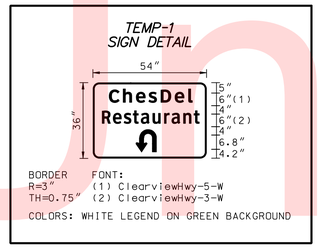

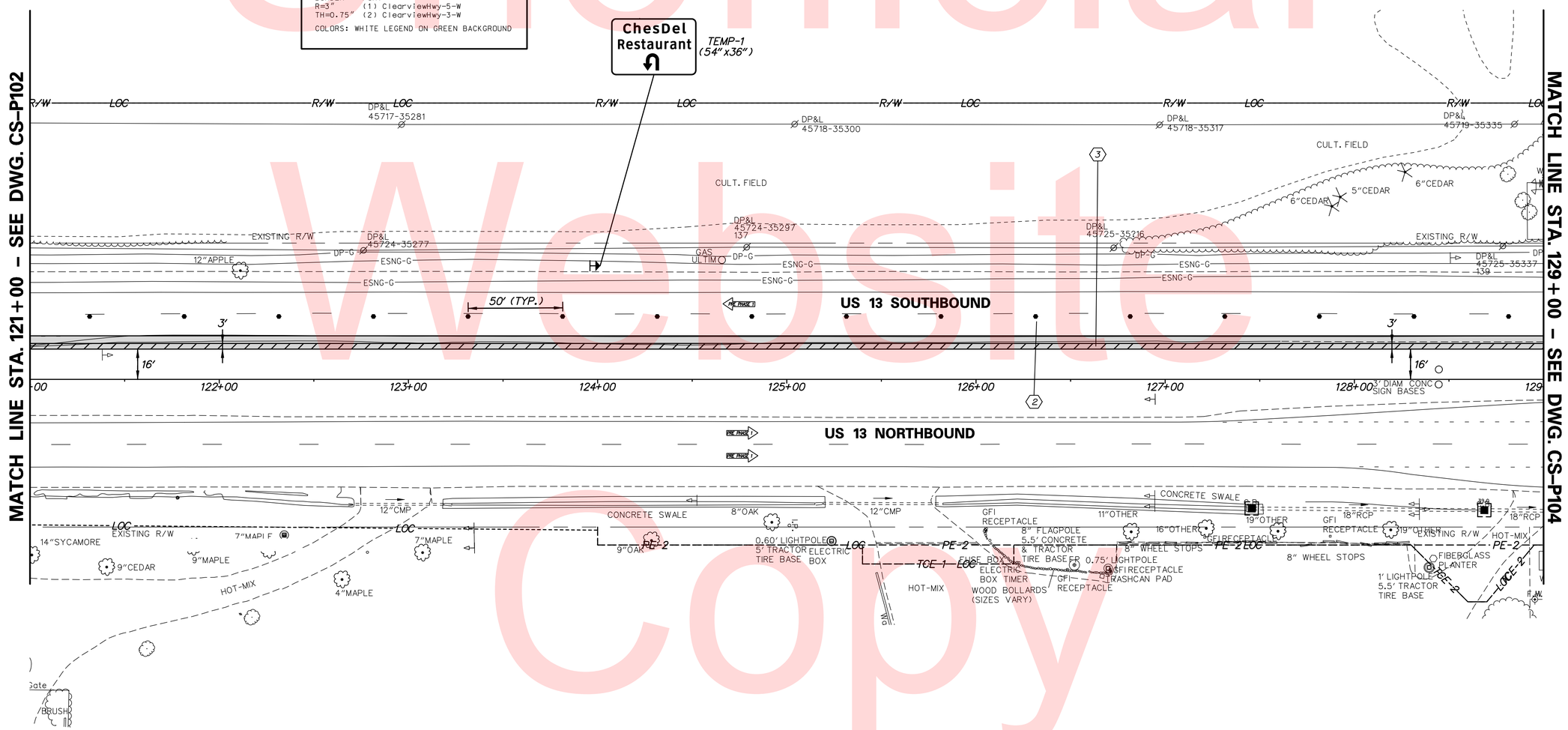

Unofficial Website Copy

DELAWARE DEPARTMENT OF TRANSPORTATION	ADDENDUMS / REVISIONS	SCALE 0 30 60 90 FEET	US 13 & PORT PENN RD INTERSECTION	CONTRACT T201011302	BRIDGE NO.	CONSTRUCTION PHASING, M.O.T., AND EROSION CONTROL PLAN – PRE-PHASE 1
				COUNTY NEW CASTLE	DESIGNED BY: J.Y.	
					CHECKED BY: P.W.	

CS-P103

SHEET NO. 107

TOTAL SHTS. 179

rt\31653-000\contract 1d\cadd\traffic\rjm\CSP103U301_10.dgn
8/21/2015 10:25:32 AM

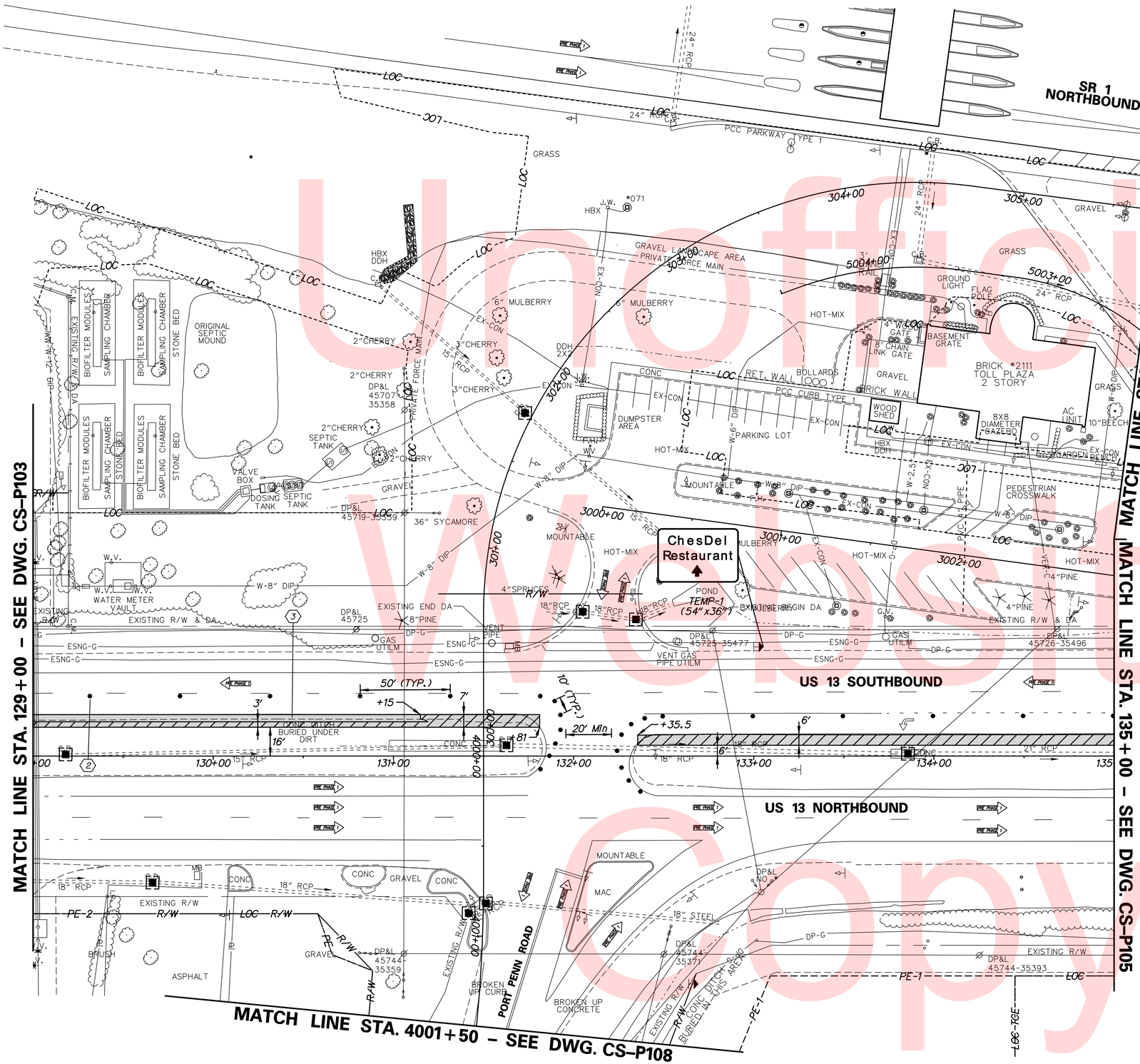

CONSTRUCTION PHASING LEGEND

- PROPOSED CONSTRUCTION THIS PHASE
- TEMPORARY CONSTRUCTION
- EXISTING SIGN/PROPOSED TEMPORARY SIGN
- TYPE III BARRICADE
- PLASTIC DRUM
- TRAFFIC FLOW ARROW
- (A) 4" SOLID WHITE PAINT
- (B) 4" SOLID YELLOW PAINT
- (C) 4" BROKEN WHITE PAINT (10' LINE, 30' GAP)
- (D) 4" DOTTED WHITE PAINT (3' LINE, 9' GAP)
- (E) WHITE PAINT SYMBOL/LEGEND
- PORTABLE P.C.C. SAFETY BARRIER (F SHAPE)
- PORTABLE IMPACT ATTENUATOR
- ARROW PANEL
- (RM C) REMOVE EXISTING STRIPING BY CONTRACTOR

TEMP-1 SIGN DETAIL

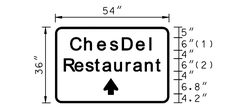

BORDER R=3" TH=0.75"

FONT: (1) ClearviewHwy-5-W (2) ClearviewHwy-3-W

COLORS: WHITE LEGEND ON GREEN BACKGROUND

SEQUENCE OF CONSTRUCTION - PRE-PHASE I

1. PLACE ALL PERTINENT TEMPORARY TRAFFIC CONTROL DEVICES SHOWN ON THE PERMANENT WARNING SIGN LOCATION PLAN. INSTALL SEDIMENT CONTROL DEVICES AS SHOWN.
2. CLOSE THE LEFT LANE OF US 13 SOUTHBOUND FOLLOWING TYPICAL APPLICATION 33 OF THE DELDOT MUTCD AND INSTALL TEMPORARY TRAFFIC CONTROL DEVICES AS SHOWN ON PLAN. REFER TO DRAWING NO. TCN-01 FOR HOURS THE LANE CLOSURE IS PERMITTED.
3. RECONSTRUCT SHOULDER AND CONSTRUCT TEMPORARY PAVEMENT ALONG LEFT SIDE OF US 13 SOUTHBOUND. PAVING SECTION FOR TEMPORARY PAVEMENT TO MATCH PAVING SECTION OF RECONSTRUCTED SHOULDER (SEE DWG. NO. TS-08).
4. DURING DRY WEATHER FORECAST PERFORM TOPSOIL STRIPPING ALONG NORTHBOUND AND SOUTHBOUND US 13 BETWEEN EXISTING ROADWAY AND LIMIT OF CONSTRUCTION (LOC). THE AREA DISTURBED DURING TOPSOIL STRIPPING SHALL BE IMMEDIATELY STABILIZED.

Unofficial Website Copy

N:\31653-000\Contract 1D\CADD\Traffic\RUM\CSP104U301_1D.dgn
12/23/2015 11:22:00 AM

DELAWARE DEPARTMENT OF TRANSPORTATION

ADDENDUMS / REVISIONS

SCALE 0 30 60 90 FEET

US 13 & PORT PENN RD INTERSECTION

CONTRACT	BRIDGE NO.	
T201011302	DESIGNED BY: J.Y.	
COUNTY		
NEW CASTLE	CHECKED BY: P.W.	

CONSTRUCTION PHASING, M.O.T., AND EROSION CONTROL PLAN – PRE-PHASE 1

CS-P104
SHEET NO.
108
TOTAL SHTS.
179

CONSTRUCTION PHASING LEGEND

- PROPOSED CONSTRUCTION THIS PHASE
- TEMPORARY CONSTRUCTION
- EXISTING SIGN/PROPOSED TEMPORARY SIGN
- TYPE III BARRICADE
- PLASTIC DRUM
- TRAFFIC FLOW ARROW
- (A) 4" SOLID WHITE PAINT
- (B) 4" SOLID YELLOW PAINT
- (C) 4" BROKEN WHITE PAINT (10' LINE, 30' GAP)
- (D) 4" DOTTED WHITE PAINT (3' LINE, 9' GAP)
- (E) WHITE PAINT SYMBOL/LEGEND
- PORTABLE P.C.C. SAFETY BARRIER (F SHAPE)
- PORTABLE IMPACT ATTENUATOR
- ARROW PANEL
- (RM C) REMOVE EXISTING STRIPING BY CONTRACTOR

N

NOTES:

1. THE CONTRACTOR SHALL COORDINATE THE INSTALLATION OF TEMPORARY TRAFFIC CONTROL DEVICES ALONG SR 1 NORTHBOUND AND US 13 WITH TEMPORARY TRAFFIC CONTROL DEVICES INSTALLED IN CONTRACT NO. T200911302. ADJUSTMENTS IN THE LOCATION OF DEVICES MAY BE NEEDED TO ENSURE CONTINUITY BETWEEN THE WORK ZONES. ANY NECESSARY ADJUSTMENTS SHALL BE MADE WITH APPROVAL OF THE ENGINEER.

SEQUENCE OF CONSTRUCTION - PRE-PHASE 1

1. PLACE ALL PERTINENT TEMPORARY TRAFFIC CONTROL DEVICES SHOWN ON THE PERMANENT WARNING SIGN LOCATION PLAN. INSTALL SEDIMENT CONTROL DEVICES AS SHOWN.
2. CLOSE THE LEFT LANE OF US 13 SOUTHBOUND FOLLOWING TYPICAL APPLICATION 33 OF THE DELDOT MUTCD AND INSTALL TEMPORARY TRAFFIC CONTROL DEVICES AS SHOWN ON PLAN. REFER TO DRAWING NO. TCN-01 FOR HOURS THE LANE CLOSURE IS PERMITTED.
3. RECONSTRUCT SHOULDER AND CONSTRUCT TEMPORARY PAVEMENT ALONG LEFT SIDE OF US 13 SOUTHBOUND. PAVING SECTION FOR TEMPORARY PAVEMENT TO MATCH PAVING SECTION OF RECONSTRUCTED SHOULDER (SEE DWG. NO. TS-08).
4. DURING DRY WEATHER FORECAST PERFORM TOPSOIL STRIPPING ALONG NORTHBOUND AND SOUTHBOUND US 13 BETWEEN EXISTING ROADWAy AND LIMIT OF CONSTRUCTION (LOC). THE AREA DISTURBED DURING TOPSOIL STRIPPING SHALL BE IMMEDIATELY STABILIZED.

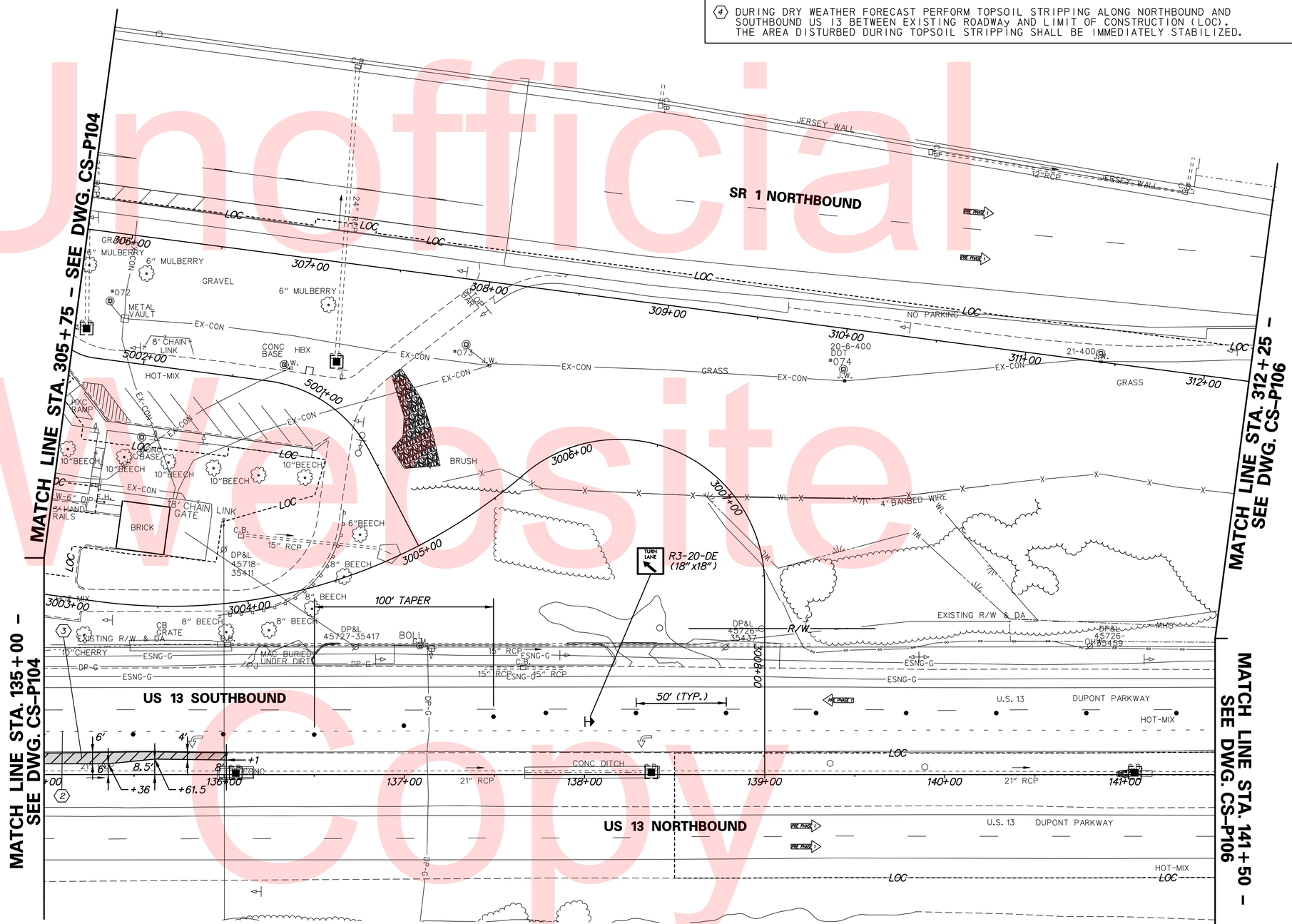

Unofficial Website Copy

DELAWARE DEPARTMENT OF TRANSPORTATION	ADDENDUMS / REVISIONS	SCALE 0 30 60 90 FEET	US 13 & PORT PENN RD INTERSECTION	CONTRACT T201011302 / COUNTY NEW CASTLE	BRIDGE NO. / DESIGNED BY: J.Y. / CHECKED BY: P.W.
CONSTRUCTION PHASING, M.O.T., AND EROSION CONTROL PLAN – PRE-PHASE 1	CS-P105	SHEET NO. 109	TOTAL SHTS. 179		

n:\31653-000\contract_td\cadd\traffic\rjm\CSP105U301_1D.dgn
8/21/2015 10:25:39 AM

CONSTRUCTION PHASING LEGEND

- PROPOSED CONSTRUCTION THIS PHASE
- TEMPORARY CONSTRUCTION
- EXISTING SIGN/PROPOSED TEMPORARY SIGN
- TYPE III BARRICADE
- PLASTIC DRUM
- TRAFFIC FLOW ARROW
- (A) 4" SOLID WHITE PAINT
- (B) 4" SOLID YELLOW PAINT
- (C) 4" BROKEN WHITE PAINT (10' LINE, 30' GAP)
- (D) 4" DOTTED WHITE PAINT (3' LINE, 9' GAP)
- (E) WHITE PAINT SYMBOL/LEGEND
- PORTABLE P.C.C. SAFETY BARRIER (F SHAPE)
- PORTABLE IMPACT ATTENUATOR
- ARROW PANEL
- (RM C) REMOVE EXISTING STRIPING BY CONTRACTOR

N

NOTES:

1. THE CONTRACTOR SHALL COORDINATE THE INSTALLATION OF TEMPORARY TRAFFIC CONTROL DEVICES ALONG US 13 SOUTHBOUND WITH TEMPORARY TRAFFIC CONTROL DEVICES INSTALLED IN CONTRACT NO. T200911302. ADJUSTMENTS IN THE LOCATION OF DEVICES MAY BE NEEDED TO ENSURE CONTINUITY BETWEEN THE WORK ZONES. ANY NECESSARY ADJUSTMENTS SHALL BE MADE WITH APPROVAL OF THE ENGINEER.

SEQUENCE OF CONSTRUCTION - PRE-PHASE 1

1. PLACE ALL PERTINENT TEMPORARY TRAFFIC CONTROL DEVICES SHOWN ON THE PERMANENT WARNING SIGN LOCATION PLAN. INSTALL SEDIMENT CONTROL DEVICES AS SHOWN.
2. CLOSE THE LEFT LANE OF US 13 SOUTHBOUND FOLLOWING TYPICAL APPLICATION 33 OF THE DELDOT MUTCD AND INSTALL TEMPORARY TRAFFIC CONTROL DEVICES AS SHOWN ON PLAN. REFER TO DRAWING NO. TCN-01 FOR HOURS THE LANE CLOSURE IS PERMITTED.
3. RECONSTRUCT SHOULDER AND CONSTRUCT TEMPORARY PAVEMENT ALONG LEFT SIDE OF US 13 SOUTHBOUND. PAVING SECTION FOR TEMPORARY PAVEMENT TO MATCH PAVING SECTION OF RECONSTRUCTED SHOULDER (SEE DWG. NO. TS-08).
4. DURING DRY WEATHER FORECAST PERFORM TOPSOIL STRIPPING ALONG SOUTHBOUND US 13 AND NORTHBOUND US 13 FROM STA. 141+50 TO STA. 143+50 BETWEEN EXISTING ROADWAY AND LIMIT OF CONSTRUCTION (LOC). THE AREA DISTURBED DURING TOPSOIL STRIPPING SHALL BE IMMEDIATELY STABILIZED..

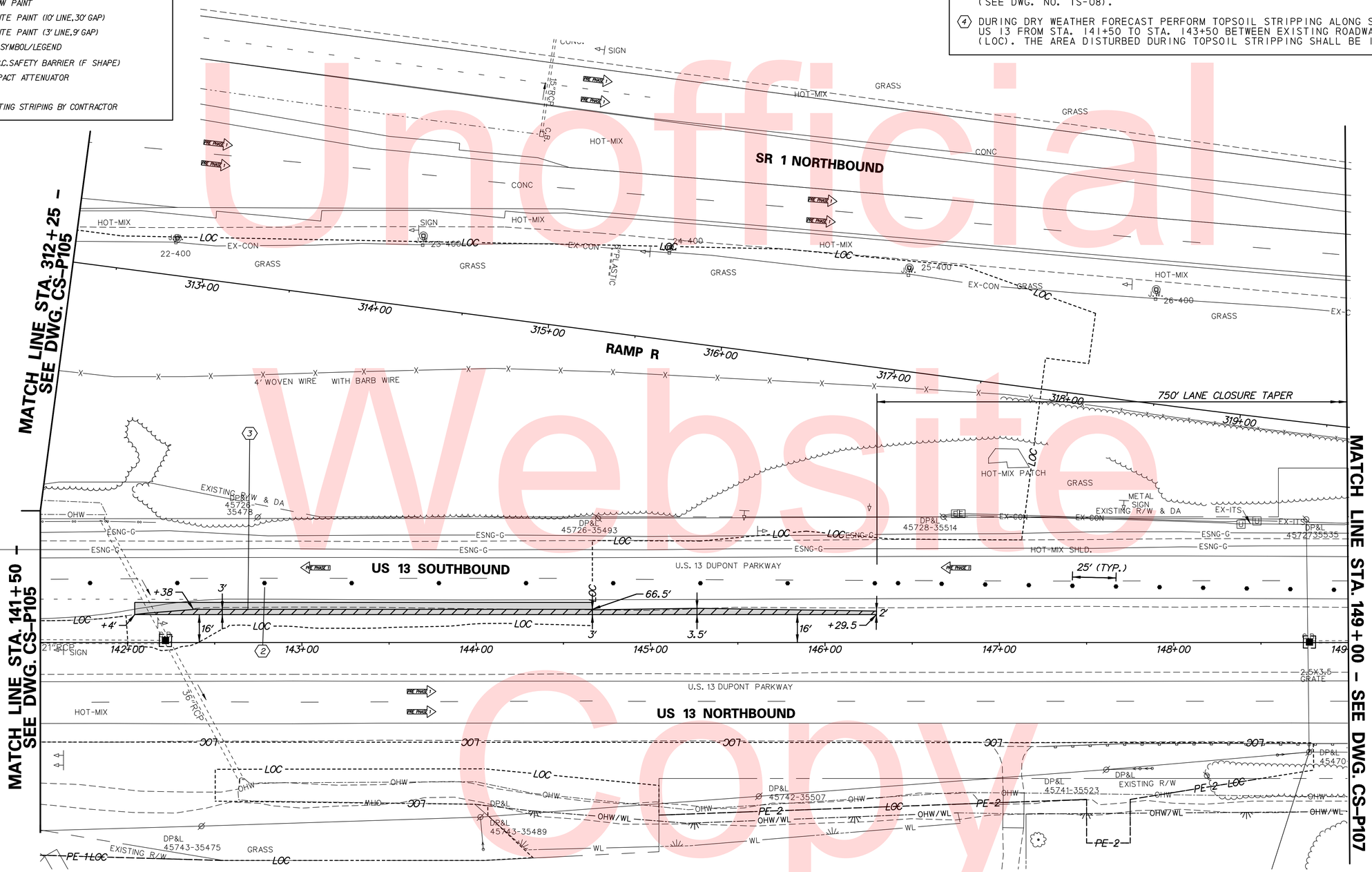

Unofficial Website Copy

DELAWARE DEPARTMENT OF TRANSPORTATION	ADDENDUMS / REVISIONS	SCALE 0 30 60 90 FEET	US 13 & PORT PENN RD INTERSECTION	CONTRACT T201011302 / COUNTY NEW CASTLE	BRIDGE NO. / DESIGNED BY: J.Y. / CHECKED BY: P.W.
CONSTRUCTION PHASING, M.O.T., AND EROSION CONTROL PLAN – PRE-PHASE 1	CS-P106	SHEET NO. 110	TOTAL SHTS. 179		

n:\31653-000\contract_td\cadd\traffic\rjm\CSP106U301_1D.dgn
8/21/2015 10:25:42 AM

CONSTRUCTION PHASING LEGEND

- PROPOSED CONSTRUCTION THIS PHASE
- TEMPORARY CONSTRUCTION
- EXISTING SIGN/PROPOSED TEMPORARY SIGN
- TYPE III BARRICADE
- PLASTIC DRUM
- TRAFFIC FLOW ARROW
- (A) 4" SOLID WHITE PAINT
- (B) 4" SOLID YELLOW PAINT
- (C) 4" BROKEN WHITE PAINT (10' LINE, 30' GAP)
- (D) 4" DOTTED WHITE PAINT (3' LINE, 9' GAP)
- (E) WHITE PAINT SYMBOL/LEGEND
- PORTABLE P.C.C. SAFETY BARRIER (F SHAPE)
- PORTABLE IMPACT ATTENUATOR
- ARROW PANEL
- (RM C) REMOVE EXISTING STRIPING BY CONTRACTOR

N

NOTES:

1. THE CONTRACTOR SHALL COORDINATE THE INSTALLATION OF TEMPORARY TRAFFIC CONTROL DEVICES ALONG US 13 SOUTHBOUND WITH TEMPORARY TRAFFIC CONTROL DEVICES INSTALLED IN CONTRACT NO. T200911302. ADJUSTMENTS IN THE LOCATION OF DEVICES MAY BE NEEDED TO ENSURE CONTINUITY BETWEEN THE WORK ZONES. ANY NECESSARY ADJUSTMENTS SHALL BE MADE WITH APPROVAL OF THE ENGINEER.

SEQUENCE OF CONSTRUCTION - PRE-PHASE 1

1. PLACE ALL PERTINENT TEMPORARY TRAFFIC CONTROL DEVICES SHOWN ON THE PERMANENT WARNING SIGN LOCATION PLAN. INSTALL SEDIMENT CONTROL DEVICES AS SHOWN.
2. CLOSE THE LEFT LANE OF US 13 SOUTHBOUND FOLLOWING TYPICAL APPLICATION 33 OF THE DELDOT MUTCD AND INSTALL TEMPORARY TRAFFIC CONTROL DEVICES AS SHOWN ON PLAN. REFER TO DRAWING NO. TCN-01 FOR HOURS THE LANE CLOSURE IS PERMITTED.

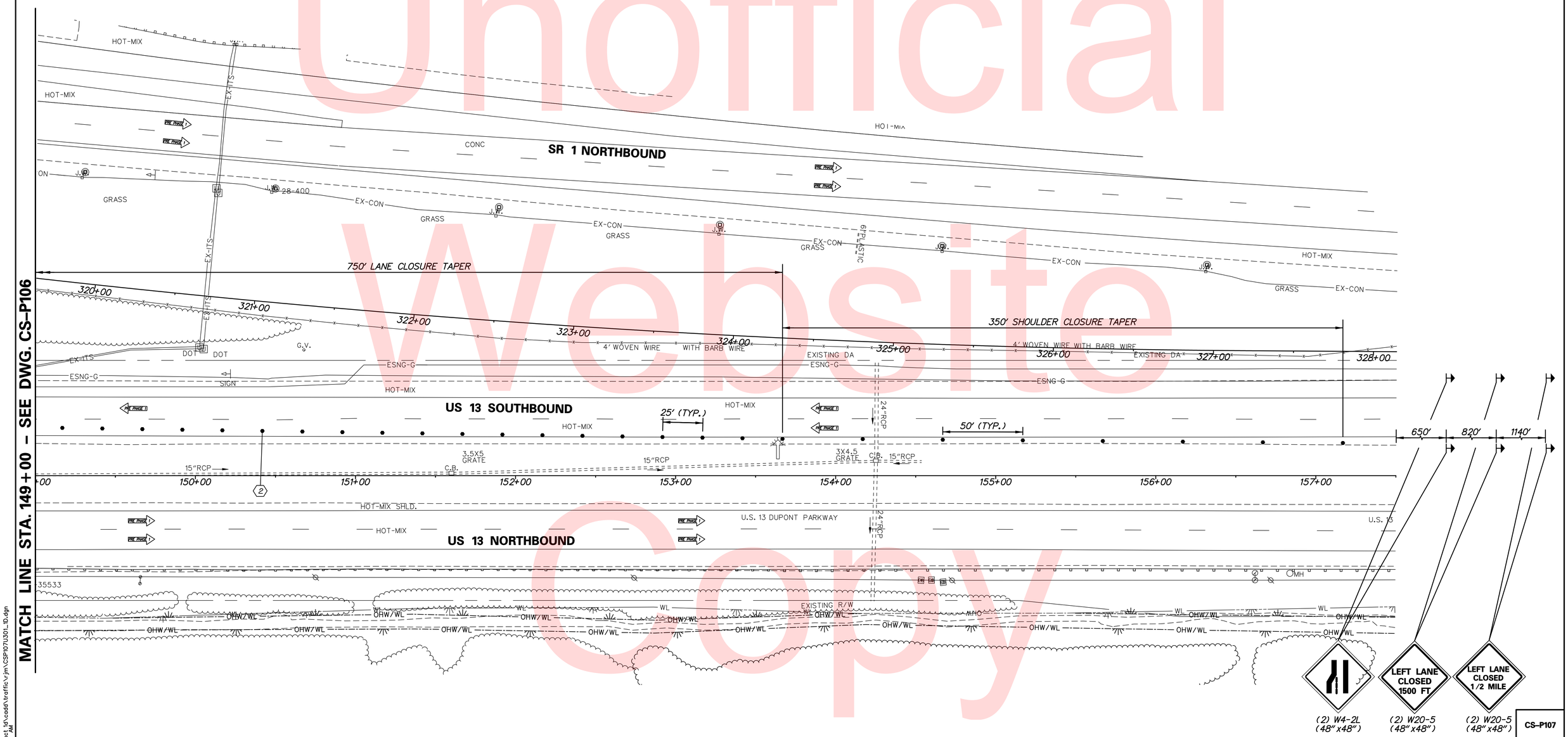

Unofficial Website Copy

n:\31653-000\contract 1d\cadd\traffic\rjm\CSP107U301_1D.dgn
8/21/2015 10:25:45 AM

DELAWARE DEPARTMENT OF TRANSPORTATION

ADDENDUMS / REVISIONS

SCALE 0 30 60 90 FEET

US 13 & PORT PENN RD INTERSECTION

CONTRACT	BRIDGE NO.	
T201011302	DESIGNED BY: J.Y.	
COUNTY	CHECKED BY: P.W.	
NEW CASTLE		

CONSTRUCTION PHASING, M.O.T., AND EROSION CONTROL PLAN – PRE-PHASE 1

CS-P107

SHEET NO.
111
TOTAL SHTS.
179

CONSTRUCTION PHASING LEGEND

- PROPOSED CONSTRUCTION THIS PHASE
- TEMPORARY CONSTRUCTION
- EXISTING SIGN/PROPOSED TEMPORARY SIGN
- TYPE III BARRICADE
- PLASTIC DRUM
- TRAFFIC FLOW ARROW
- (A) 4" SOLID WHITE PAINT
- (B) 4" SOLID YELLOW PAINT
- (C) 4" BROKEN WHITE PAINT (10' LINE, 30' GAP)
- (D) 4" DOTTED WHITE PAINT (3' LINE, 9' GAP)
- (E) WHITE PAINT SYMBOL/LEGEND
- PORTABLE P.C.C. SAFETY BARRIER (F SHAPE)
- PORTABLE IMPACT ATTENUATOR
- ARROW PANEL
- (RM C) REMOVE EXISTING STRIPING BY CONTRACTOR

NOTES:

1. CONTRACTOR SHALL NOTIFY PROPERTY OWNER IN WRITING OF CLOSURE OF ENTRANCE WITH AS MUCH NOTICE AS POSSIBLE, BUT A MINIMUM OF TWO WEEKS NOTICE. THE ENTRANCE TO PORT PENN ROAD MUST BE COMPLETED AND OPENED PRIOR TO CLOSING EITHER ENTRANCE TO US 13.

SEQUENCE OF CONSTRUCTION - PRE-PHASE I

1. PLACE ALL PERTINENT TEMPORARY TRAFFIC CONTROL DEVICES AND SEDIMENT CONTROL DEVICES INCLUDING CHECK DAMS AS SHOWN ON THIS PLAN AND THE PERMANENT WARNING SIGN LOCATION PLAN.
2. CLOSE DRIVEWAY FROM PORT PENN ROAD AND PROVIDE ACCESS TO PROPERTY FROM US 13.
3. REMOVE EXISTING DRIVEWAY, CONSTRUCT DRAINAGE PIPES AND NEW DRIVEWAY. STABILIZE AREAS OUTSIDE OF SILT FENCE AT FES-595 AND FES-596 IMMEDIATELY. FOR DRIVEWAY TIE-IN WITH PORT PENN ROAD, USE TYPICAL APPLICATION 10.
4. STABILIZE ALL DISTURBED AREAS.

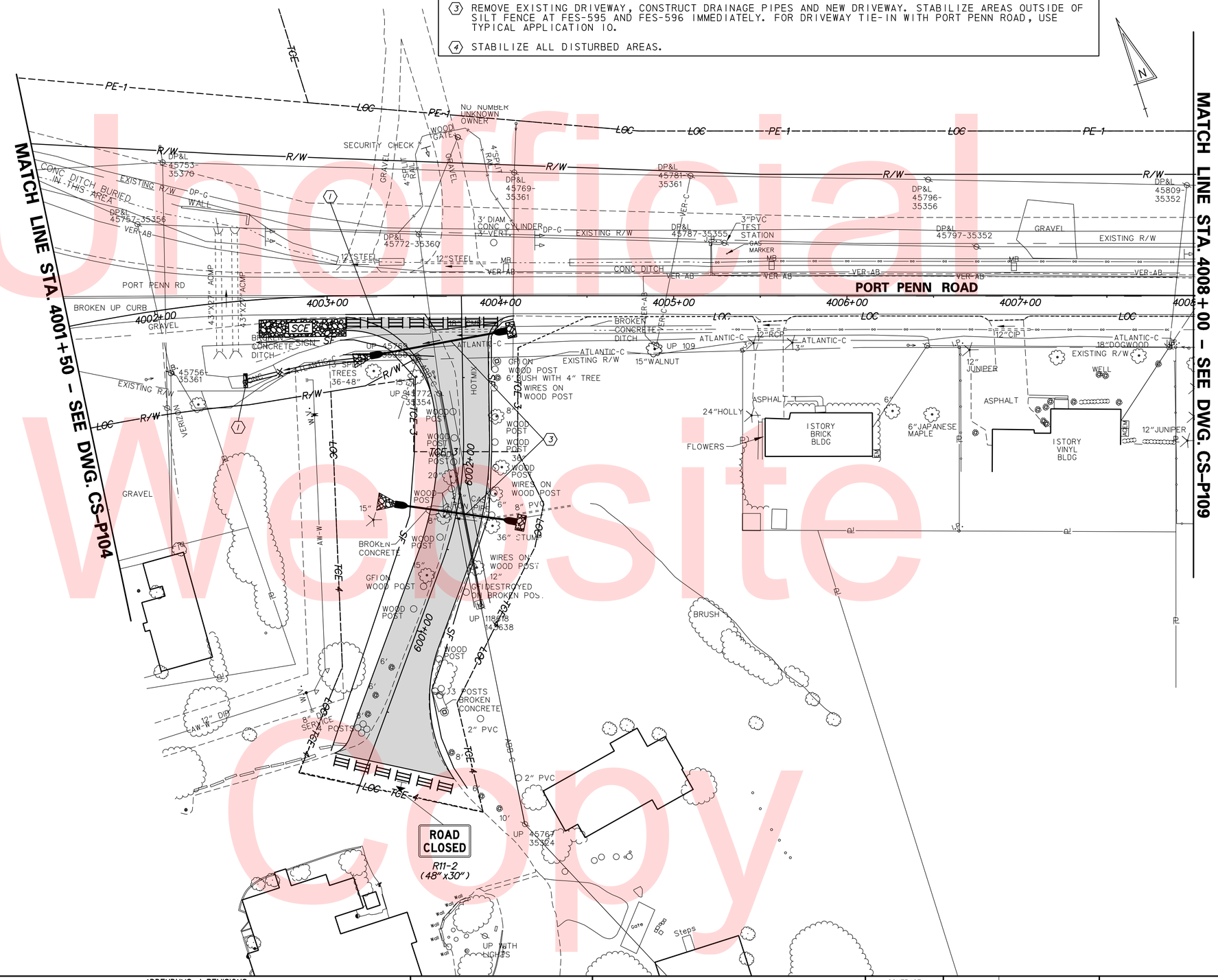

Unofficial Website Copy

N:\33653-000\Contract 1D\CADD\Traffic\RJM\CSP108U301_1D.dgn
12/23/2015 11:22:54 AM

DELAWARE DEPARTMENT OF TRANSPORTATION	ADDENDUMS / REVISIONS	SCALE 0 30 60 90 FEET	US 13 & PORT PENN RD INTERSECTION	CONTRACT T201011302	BRIDGE NO.	CONSTRUCTION PHASING, M.O.T., AND EROSION CONTROL PLAN – PRE-PHASE 1
				COUNTY NEW CASTLE	DESIGNED BY: J.D.C.	
					CHECKED BY: J.M.M.	

CS-P108
SHEET NO. 112
TOTAL SHTS. 179

CONSTRUCTION PHASING LEGEND

- PROPOSED CONSTRUCTION THIS PHASE
- TEMPORARY CONSTRUCTION
- EXISTING SIGN/PROPOSED TEMPORARY SIGN
- TYPE III BARRICADE
- PLASTIC DRUM
- TRAFFIC FLOW ARROW
- (A) 4" SOLID WHITE PAINT
- (B) 4" SOLID YELLOW PAINT
- (C) 4" BROKEN WHITE PAINT (10' LINE, 30' GAP)
- (D) 4" DOTTED WHITE PAINT (3' LINE, 9' GAP)
- (E) WHITE PAINT SYMBOL/LEGEND
- PORTABLE P.C.C. SAFETY BARRIER (F SHAPE)
- PORTABLE IMPACT ATTENUATOR
- ARROW PANEL
- (RM C) REMOVE EXISTING STRIPING BY CONTRACTOR

SEQUENCE OF CONSTRUCTION - PRE-PHASE I

(1) DURING DRY WEATHER FORECAST PERFORM TOPSOIL STRIPPING ALONG PORT PENN ROAD EXISTING ROADWAY AND LIMIT OF CONSTRUCTION (LOC). THE AREA DISTURBED DURING TOPSOIL STRIPPING SHALL BE IMMEDIATELY STABILIZED.

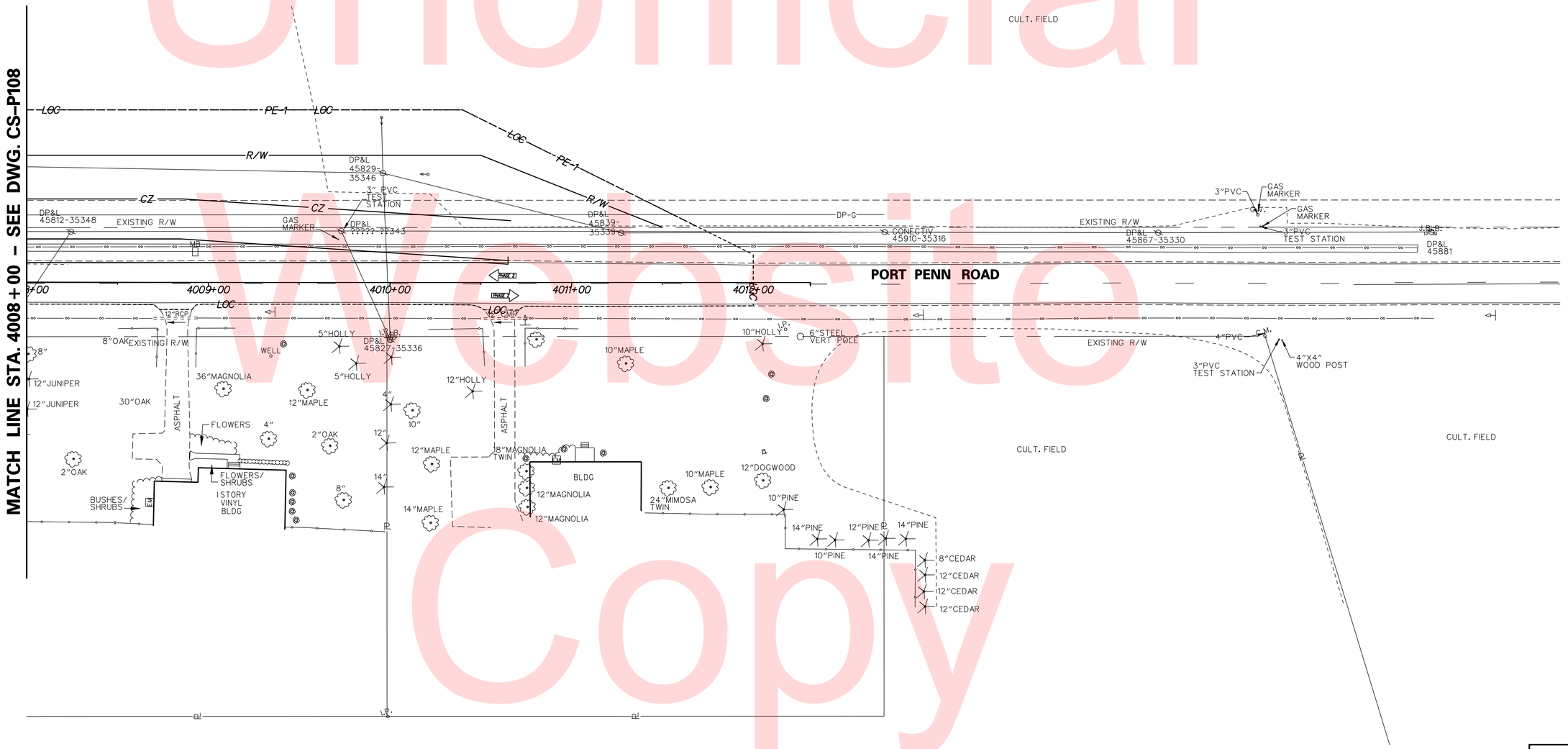

Unofficial Website Copy

N:\31653-000\Contract 1D\CADD\Traffic\RJM\CSP109U301_1D.dgn
12/23/2015 11:23:52 AM

DELAWARE DEPARTMENT OF TRANSPORTATION	ADDENDUMS / REVISIONS	SCALE 0 30 60 90 FEET	US 13 & PORT PENN RD INTERSECTION	CONTRACT T201011302	BRIDGE NO.	CONSTRUCTION PHASING, M.O.T., AND EROSION CONTROL PLAN – PRE-PHASE 1
				COUNTY NEW CASTLE	DESIGNED BY: J.D.C.	
					CHECKED BY: J.M.M.	

CS-P109

SHEET NO.
113
TOTAL SHTS.
179

CONSTRUCTION PHASING LEGEND

- PROPOSED CONSTRUCTION THIS PHASE
- TEMPORARY CONSTRUCTION
- EXISTING SIGN/PROPOSED TEMPORARY SIGN
- TYPE III BARRICADE
- PLASTIC DRUM
- TRAFFIC FLOW ARROW
- (A) 4" SOLID WHITE PAINT
- (B) 4" SOLID YELLOW PAINT
- (C) 4" BROKEN WHITE PAINT (10' LINE, 30' GAP)
- (D) 4" DOTTED WHITE PAINT (3' LINE, 9' GAP)
- (E) WHITE PAINT SYMBOL/LEGEND
- PORTABLE P.C.C. SAFETY BARRIER (F SHAPE)
- PORTABLE IMPACT ATTENUATOR
- ARROW PANEL
- (RM C) REMOVE EXISTING STRIPING BY CONTRACTOR

SEQUENCE OF CONSTRUCTION - PHASE 1

(1) PLACE ALL PERTINENT TEMPORARY TRAFFIC CONTROL DEVICES AS SHOWN ON THIS PLAN AND THE PERMANENT WARNING SIGN LOCATION PLAN.

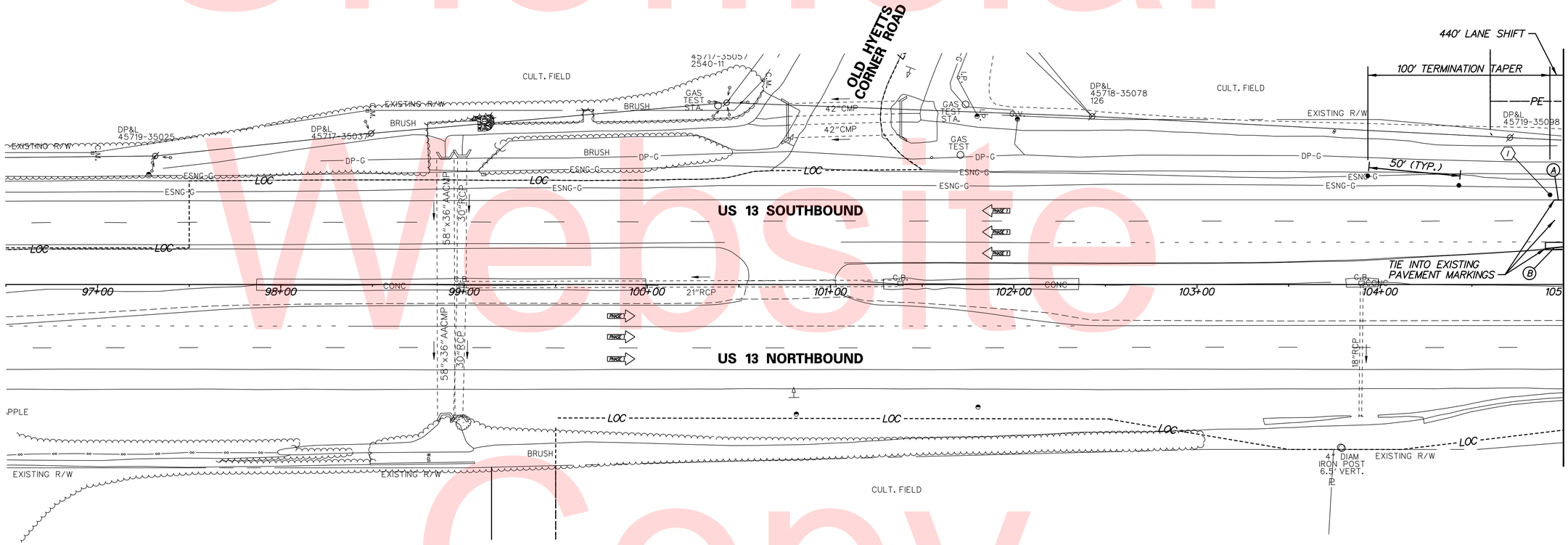

Unofficial Website Copy

DELAWARE DEPARTMENT OF TRANSPORTATION	ADDENDUMS / REVISIONS	SCALE 0 30 60 90 FEET	US 13 & PORT PENN RD INTERSECTION	CONTRACT T201011302	BRIDGE NO.	CONSTRUCTION PHASING, M.O.T., AND EROSION CONTROL PLAN - PHASE 1	CS-101
				COUNTY NEW CASTLE	DESIGNED BY: J.D.C.		SHEET NO. 114
					CHECKED BY: J.M.M.		TOTAL SHTS. 179

n:\31653-000\contrct_1d\cadd\traffic\rjm\CS101U301_1D.dgn
8/21/2015 10:25:55 AM

CONSTRUCTION PHASING LEGEND

- PROPOSED CONSTRUCTION THIS PHASE
- TEMPORARY CONSTRUCTION
- EXISTING SIGN/PROPOSED TEMPORARY SIGN
- TYPE III BARRICADE
- PLASTIC DRUM
- TRAFFIC FLOW ARROW
- (A) 4" SOLID WHITE PAINT
- (B) 4" SOLID YELLOW PAINT
- (C) 4" BROKEN WHITE PAINT (10' LINE, 30' GAP)
- (D) 4" DOTTED WHITE PAINT (3' LINE, 9' GAP)
- (E) WHITE PAINT SYMBOL/LEGEND
- PORTABLE P.C.C. SAFETY BARRIER (F SHAPE)
- PORTABLE IMPACT ATTENUATOR
- ARROW PANEL
- (RM C) REMOVE EXISTING STRIPING BY CONTRACTOR

SEQUENCE OF CONSTRUCTION - PHASE I

1. PLACE ALL PERTINENT TEMPORARY TRAFFIC CONTROL DEVICES AND SEDIMENT CONTROL DEVICES AS SHOWN ON THIS PLAN AND THE PERMANENT WARNING SIGN LOCATION PLAN. SHIFT US 13 SOUTHBOUND TRAFFIC TO DESIGNATED TRAVEL LANES.
2. CONSTRUCT FULL-DEPTH PAVEMENT AND PERMANENT DITCH ALONG RIGHT SIDE OF US 13 SOUTHBOUND.
3. STABILIZE ALL DISTURBED AREAS.

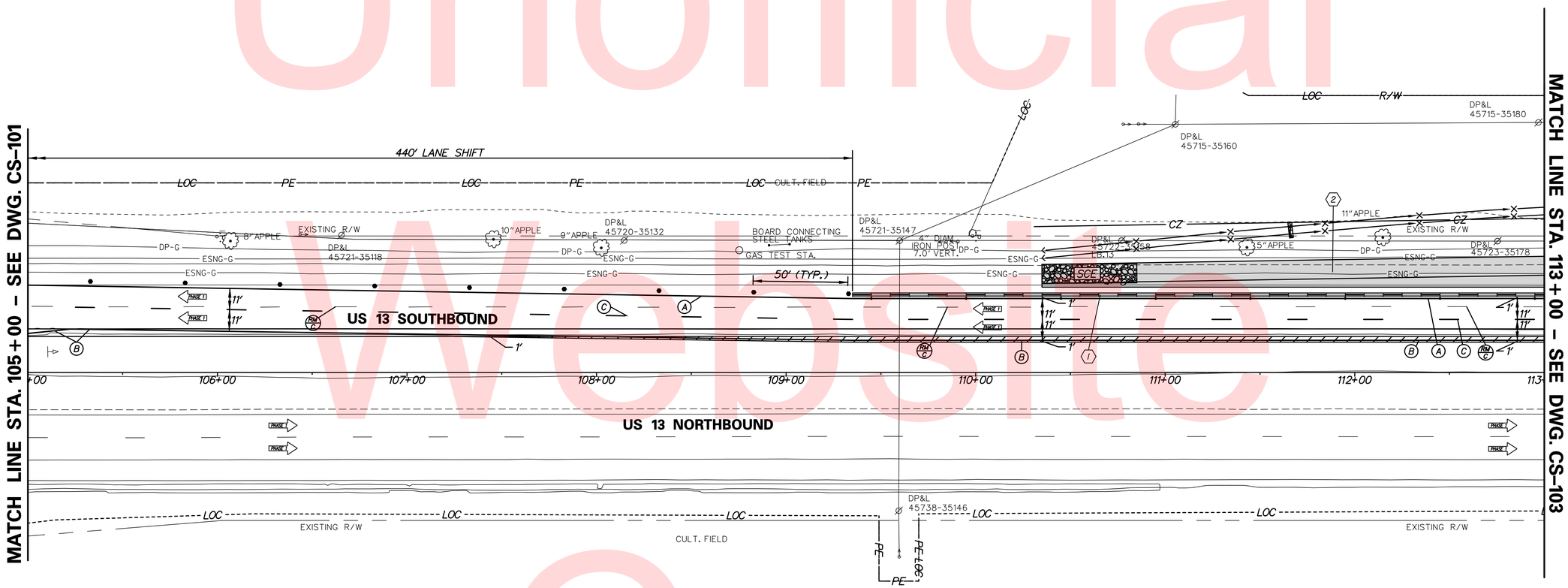

Unofficial Website Copy

DELAWARE DEPARTMENT OF TRANSPORTATION	ADDENDUMS / REVISIONS	SCALE 0 30 60 90 FEET	US 13 & PORT PENN RD INTERSECTION	CONTRACT T201011302	BRIDGE NO.	CONSTRUCTION PHASING, M.O.T., AND EROSION CONTROL PLAN – PHASE 1	CS-102
				COUNTY NEW CASTLE	DESIGNED BY: J.D.C.		SHEET NO. 115
					CHECKED BY: J.M.M.		TOTAL SHTS. 179

p:\31653-000\contract 1d\cadd\traffic\rjm\CS102U301_1D.dgn
8/21/2015 10:25:58 AM

CONSTRUCTION PHASING LEGEND

- PROPOSED CONSTRUCTION THIS PHASE
- TEMPORARY CONSTRUCTION
- EXISTING SIGN/PROPOSED TEMPORARY SIGN
- TYPE III BARRICADE
- PLASTIC DRUM
- TRAFFIC FLOW ARROW
- (A) 4" SOLID WHITE PAINT
- (B) 4" SOLID YELLOW PAINT
- (C) 4" BROKEN WHITE PAINT (10' LINE, 30' GAP)
- (D) 4" DOTTED WHITE PAINT (3' LINE, 9' GAP)
- (E) WHITE PAINT SYMBOL/LEGEND
- PORTABLE P.C.C. SAFETY BARRIER (F SHAPE)
- PORTABLE IMPACT ATTENUATOR
- ARROW PANEL
- (RM C) REMOVE EXISTING STRIPING BY CONTRACTOR

SEQUENCE OF CONSTRUCTION - PHASE I

1. PLACE ALL PERTINENT TEMPORARY TRAFFIC CONTROL DEVICES AND SEDIMENT CONTROL DEVICES AS SHOWN ON THIS PLAN AND THE PERMANENT WARNING SIGN LOCATION PLAN. SHIFT US 13 SOUTHBOUND TRAFFIC TO DESIGNATED TRAVEL LANES.
2. CONSTRUCT FULL-DEPTH PAVEMENT AND PERMANENT DITCH ALONG RIGHT SIDE OF US 13 SOUTHBOUND.
3. STABILIZE ALL DISTURBED AREAS.

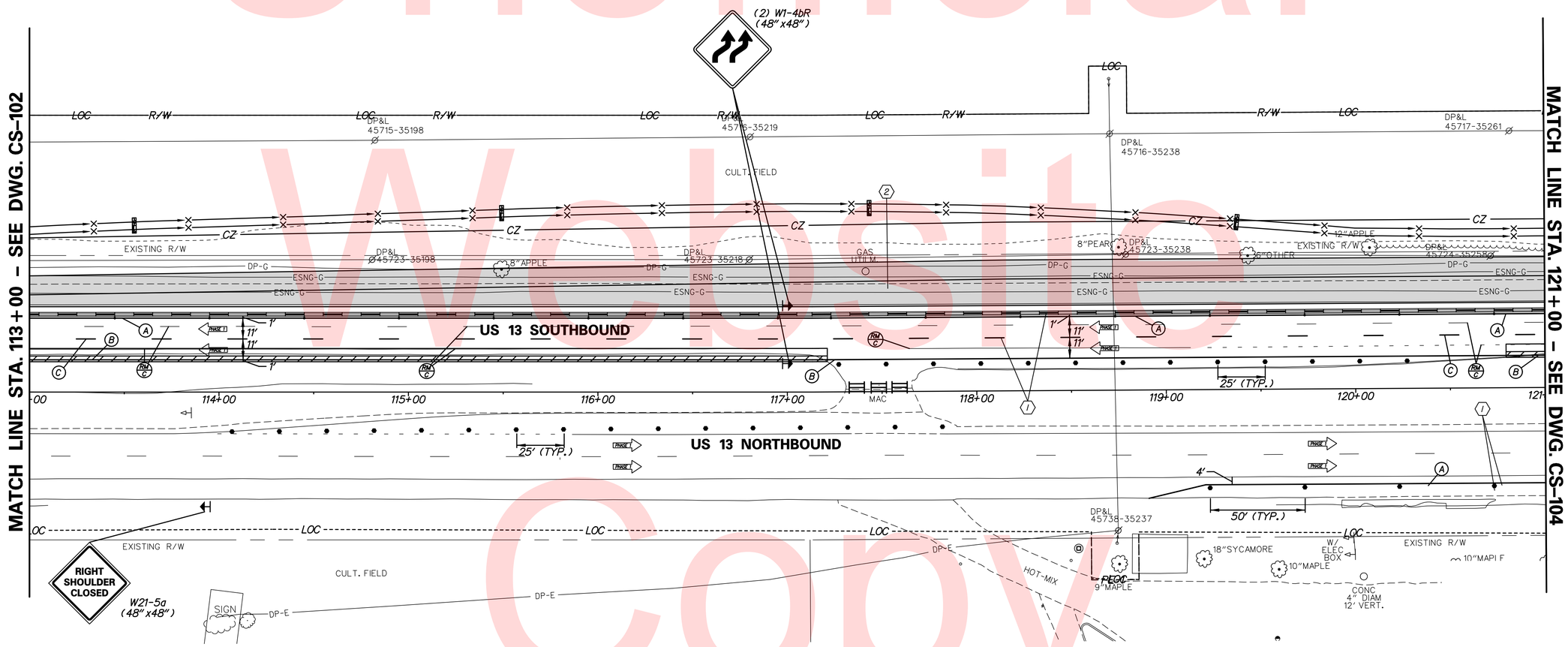

Unofficial Website Copy

DELAWARE DEPARTMENT OF TRANSPORTATION	ADDENDUMS / REVISIONS	SCALE 0 30 60 90 FEET	US 13 & PORT PENN RD INTERSECTION	CONTRACT T201011302 / COUNTY NEW CASTLE	BRIDGE NO. / DESIGNED BY: J.D.C. / CHECKED BY: J.M.M.	CONSTRUCTION PHASING, M.O.T., AND EROSION CONTROL PLAN – PHASE 1

CS-103

SHEET NO. 116

TOTAL SHTS. 179

p:\31653-000\contract_18\cadd\traffic\rjm\CS103U301_1D.dgn 8/21/2015 10:26:00 AM

CONSTRUCTION PHASING LEGEND

- PROPOSED CONSTRUCTION THIS PHASE
- TEMPORARY CONSTRUCTION
- EXISTING SIGN/PROPOSED TEMPORARY SIGN
- TYPE III BARRICADE
- PLASTIC DRUM
- TRAFFIC FLOW ARROW
- (A) 4" SOLID WHITE PAINT
- (B) 4" SOLID YELLOW PAINT
- (C) 4" BROKEN WHITE PAINT (10' LINE, 30' GAP)
- (D) 4" DOTTED WHITE PAINT (3' LINE, 9' GAP)
- (E) WHITE PAINT SYMBOL/LEGEND
- PORTABLE P.C.C. SAFETY BARRIER (F SHAPE)
- PORTABLE IMPACT ATTENUATOR
- ARROW PANEL
- (RM C) REMOVE EXISTING STRIPING BY CONTRACTOR

SEQUENCE OF CONSTRUCTION - PHASE I

1. PLACE ALL PERTINENT TEMPORARY TRAFFIC CONTROL DEVICES AND SEDIMENT CONTROL DEVICES AS SHOWN ON THIS PLAN AND THE PERMANENT WARNING SIGN LOCATION PLAN. SHIFT US 13 NORTHBOUND AND SOUTHBOUND TRAFFIC TO DESIGNATED TRAVEL LANES.
2. CLOSE DRIVEWAYS FROM US 13 AND PROVIDE ACCESS TO PROPERTY FROM PORT PENN ROAD.
3. CONSTRUCT FULL-DEPTH PAVEMENT AND PERMANENT DITCHES ALONG RIGHT SIDE OF US 13 NORTHBOUND AND SOUTHBOUND.
4. STABILIZE ALL DISTURBED AREAS.

NOTES:

1. CONTRACTOR SHALL NOTIFY PROPERTY OWNER OF CLOSURE OF ENTRANCES IN WRITING WITH AS MUCH NOTICE AS POSSIBLE, BUT A MINIMUM OF TWO WEEKS NOTICE. THE ENTRANCES TO US 13 SHALL REMAIN OPEN UNTIL THE ENTRANCE TO PORT PENN ROAD IS COMPLETED AND OPENED.

TEMP-1 SIGN DETAIL

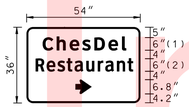

BORDER R=3" TH=0.75"
FONT: (1) ClearviewHwy-5-W (2) ClearviewHwy-3-W
COLORS: WHITE LEGEND ON GREEN BACKGROUND

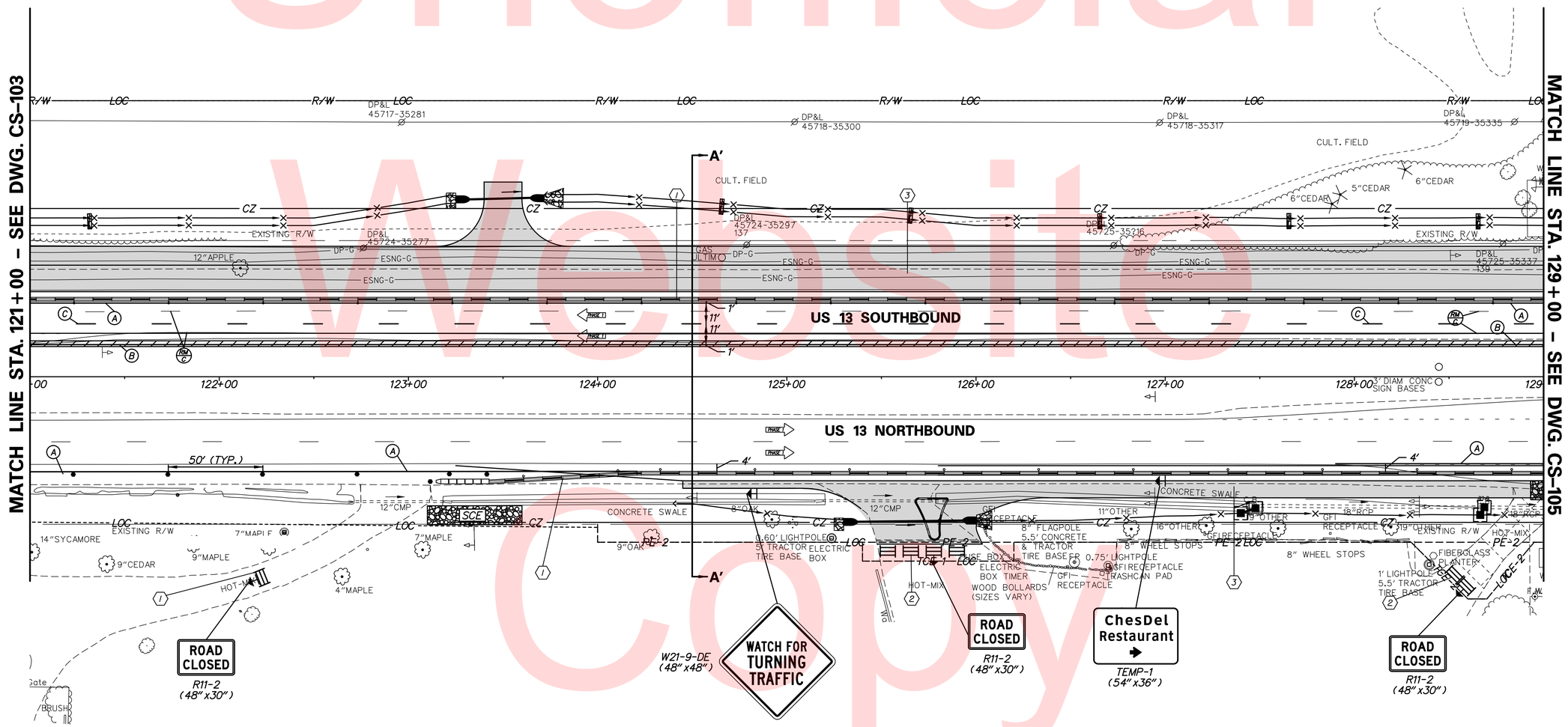

Unofficial Website Copy

N:\3653-000\Contract 1D\CADD\Traffic\RJM\CS104U301_1D.dgn
11/17/2015 5:12:49 PM

DELAWARE DEPARTMENT OF TRANSPORTATION	ADDENDUMS / REVISIONS	SCALE 0 30 60 90 FEET	US 13 & PORT PENN RD INTERSECTION	CONTRACT T201011302	BRIDGE NO.	CONSTRUCTION PHASING, M.O.T., AND EROSION CONTROL PLAN – PHASE 1	CS-104 SHEET NO. 117
				COUNTY NEW CASTLE	DESIGNED BY: J.D.C. CHECKED BY: J.M.M.		TOTAL SHTS. 179

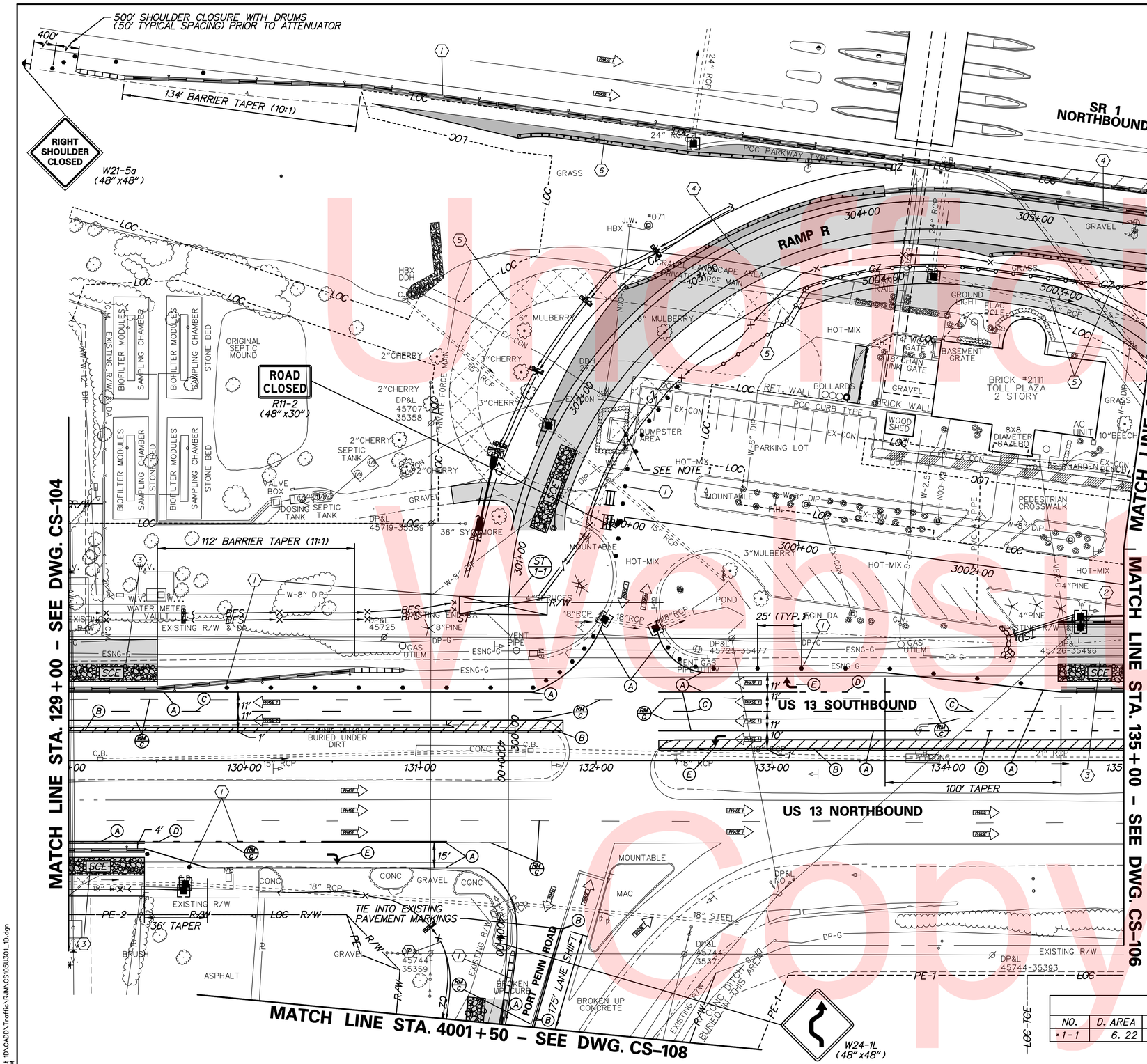

CONSTRUCTION PHASING LEGEND

- PROPOSED CONSTRUCTION THIS PHASE
- TEMPORARY CONSTRUCTION
- EXISTING SIGN/PROPOSED TEMPORARY SIGN
- TYPE III BARRICADE
- PLASTIC DRUM
- TRAFFIC FLOW ARROW
- (A) 4" SOLID WHITE PAINT
- (B) 4" SOLID YELLOW PAINT
- (C) 4" BROKEN WHITE PAINT (10' LINE, 30' GAP)
- (D) 4" DOTTED WHITE PAINT (3' LINE, 9' GAP)
- (E) WHITE PAINT SYMBOL/LEGEND
- PORTABLE P.C.C. SAFETY BARRIER (F SHAPE)
- PORTABLE IMPACT ATTENUATOR
- ARROW PANEL
- (RM C) REMOVE EXISTING STRIPING BY CONTRACTOR

NOTES:

1. THE CONTRACTOR SHALL COORDINATE IMPACTS TO THE TOLL PLAZA ADMINISTRATION BUILDING TRASH DUMPSTER WITH THE TOLL PLAZA OPERATIONS PERSONNEL. THE CONTRACTOR SHALL COORDINATE ANY TEMPORARY LOCATIONS FOR THE TRASH DUMPSTER AND FULL ACCESS SHALL BE MAINTAINED AT ALL TIMES UNTIL THE ULTIMATE TRASH DUMPSTER ENCLOSURE IS CONSTRUCTED IN PHASE 1A AND OPERATIONAL.

SEQUENCE OF CONSTRUCTION - PHASE I

1. PLACE ALL PERTINENT TEMPORARY TRAFFIC CONTROL DEVICES AND SEDIMENT CONTROL DEVICES AS SHOWN ON THIS PLAN AND THE PERMANENT WARNING SIGN LOCATION PLAN. SHIFT US 13 NORTHBOUND AND SOUTHBOUND TRAFFIC AND PORT PENN ROAD TRAFFIC TO DESIGNATED TRAVEL LANES. MAINTAIN SR 1 NORTHBOUND TRAFFIC IN EXISTING TRAVEL LANES. MAINTAIN EXISTING TOLL PLAZA ADMINISTRATION BUILDING DRIVEWAY.
2. CONSTRUCT CONCRETE BARRIER ALONG RIGHT SIDE OF US 13 SOUTHBOUND.
3. CONSTRUCT FULL-DEPTH PAVEMENT ALONG RIGHT SIDE OF US 13 NORTHBOUND AND SOUTHBOUND.
4. CONSTRUCT FULL-DEPTH PAVEMENT, CONCRETE BARRIER, DITCHES AND GUARDRAIL FOR RAMP R.
5. REMOVE EXISTING PARKING LOT AND DRIVEWAYS, AND CONSTRUCT NEW DRIVEWAY.
6. CONSTRUCT PAVEMENT AND GUARDRAIL ALONG SR 1.
7. INSTALL CHECK DAMS AND IMMEDIATELY STABILIZE AREA IN SOUTHEAST QUADRANT OF US 13/PORT PENN ROAD INTERSECTION WHERE INDICATED.

SEDIMENT TRAP SCHEDULE

NO.	D. AREA	LENGTH	WIDTH	DEPTH	OUT. TYPE	WEIR EL.	CLEAN EL.	WEIR LEN.	EMBANK. ELEV.
*1-1	6.22	190.0'	25.0'	4.0'	RIPRAP	33.0	31.14	14.0	36.00

CS-105

DELAWARE DEPARTMENT OF TRANSPORTATION

ADDENDUMS / REVISIONS

SCALE 0 30 60 90 FEET

US 13 & PORT PENN RD INTERSECTION

CONTRACT	BRIDGE NO.
T201011302	DESIGNED BY: J.D.C.
COUNTY	
NEW CASTLE	CHECKED BY: J.M.M.

CONSTRUCTION PHASING, M.O.T., AND EROSION CONTROL PLAN - PHASE 1

SHEET NO. 118

TOTAL SHTS. 179

N:\38553-000\Contract 1D:\CADD\Traffic\RAM\CS105\J301_1D.dgn 12/23/2015 11:25:16 AM

Unofficial Website Copy

CONSTRUCTION PHASING LEGEND

- PROPOSED CONSTRUCTION THIS PHASE
- TEMPORARY CONSTRUCTION
- EXISTING SIGN/PROPOSED TEMPORARY SIGN
- TYPE III BARRICADE
- PLASTIC DRUM
- TRAFFIC FLOW ARROW
- (A) 4" SOLID WHITE PAINT
- (B) 4" SOLID YELLOW PAINT
- (C) 4" BROKEN WHITE PAINT (10' LINE, 30' GAP)
- (D) 4" DOTTED WHITE PAINT (3' LINE, 9' GAP)
- (E) WHITE PAINT SYMBOL/LEGEND
- PORTABLE P.C.C. SAFETY BARRIER (F SHAPE)
- PORTABLE IMPACT ATTENUATOR
- ARROW PANEL
- (RM C) REMOVE EXISTING STRIPING BY CONTRACTOR

SEDIMENT BASIN SCHEDULE

NO.	SB758
DRAINAGE AREA, AC.	16.75
FACILITY AREA, AC.	0.76
REQUIRED STORAGE (Vs), CY	2395
CLEAN-OUT ELEV. (EL)	21.88
EMBANKMENT TOP WIDTH (TW), FT.	N.A
TOP OF EMBANKMENT ELEV. (TOB)	25.64
CREST OF EMERGENCY SPILLWAY ELEV.	N.A.
EMERGENCY SPILLWAY DEPTH (D), FT.	N.A.
EMERGENCY SPILLWAY WIDTH (B), FT.	N.A.
SKIMMER ORIFICE DIAMETER (IN)	4
SKIMMER ORIFICE INVERT	20.00

NOTES:

1. THE CONTRACTOR SHALL COORDINATE THE INSTALLATION OF TEMPORARY TRAFFIC CONTROL DEVICES ALONG SR 1 NORTHBOUND AND US 13 WITH TEMPORARY TRAFFIC CONTROL DEVICES INSTALLED IN CONTRACT NO. T200911302. ADJUSTMENTS IN THE LOCATION OF DEVICES MAY BE NEEDED TO ENSURE CONTINUITY BETWEEN THE WORK ZONES. ANY NECESSARY ADJUSTMENTS SHALL BE MADE WITH APPROVAL OF THE ENGINEER.
2. EXCAVATE SB758 BASIN TO LINES AND GRADES SHOWN ON SHEET SW-09. OVEREXCAVATE THE BOTTOM OF POOLS 2 FEET FOR SEDIMENT STORAGE. SEE CORRESPONDING STORMWATER MANAGEMENT PLANS FOR ADDITIONAL DETAILS AND INSTRUCTIONS.
3. PLACE EXTERIOR GRADE PLYWOOD ACROSS WEIR OPENINGS IN ORDER TO FORM CREST AT ELEVATION 23.17. PLYWOOD SHALL BE AFFIXED TO RISER STRUCTURE USING CONSTRUCTION ADHESIVE OR OTHER APPROVED MEANS. SKIMMER DEVICE SHALL BE ATTACHED USING A 4" ORIFICE TO THE PERMANENT 12" ORIFICE AND SEALED WITH GROUT, BRICK MASONRY, OR OTHER APPROVED MEANS. THE COST OF THE BAFFLES AND SKIMMER DEVICE AND MAINTENANCE AND/OR REPLACEMENT OF BOTH THROUGHOUT CONSTRUCTION SHALL BE INCIDENTAL TO ITEM 272500. SEE STORMWATER MANAGEMENT PLAN, SW-09, FOR INFORMATION REGARDING CONVERSION OF SEDIMENT BASIN TO STORMWATER MANAGEMENT POND.

SEQUENCE OF CONSTRUCTION - PHASE I

1. PLACE ALL PERTINENT TEMPORARY TRAFFIC CONTROL DEVICES AND SEDIMENT CONTROL DEVICES AS SHOWN ON THIS PLAN AND THE PERMANENT WARNING SIGN LOCATION PLAN. SHIFT US 13 SOUTHBOUND TRAFFIC TO DESIGNATED TRAVEL LANES. MAINTAIN US 13 NORTHBOUND AND SR 1 NORTHBOUND TRAFFIC IN EXISTING TRAVEL LANES. CONSTRUCT SEDIMENT BASIN AND ALL DITCHES/PIPES PROVIDING CONVEYANCE TO THE BASIN PRIOR TO COMMENCEMENT OF ROADWAY WORK.
2. CONSTRUCT CONCRETE BARRIER, FULL-DEPTH PAVEMENT, DITCHES, STORM DRAIN SYSTEMS AND GUARDRAIL ALONG RIGHT SIDE OF US 13 SOUTHBOUND AND TOLL PLAZA ENTRANCE.
3. CONSTRUCT FULL-DEPTH PAVEMENT, STORM DRAIN SYSTEM AND CONCRETE BARRIER FOR RAMP R.
4. REMOVE EXISTING PAVEMENT AND CONSTRUCT NEW DRIVEWAY AND CROSS CULVERT.
5. STABILIZE ALL DISTURBED AREAS.

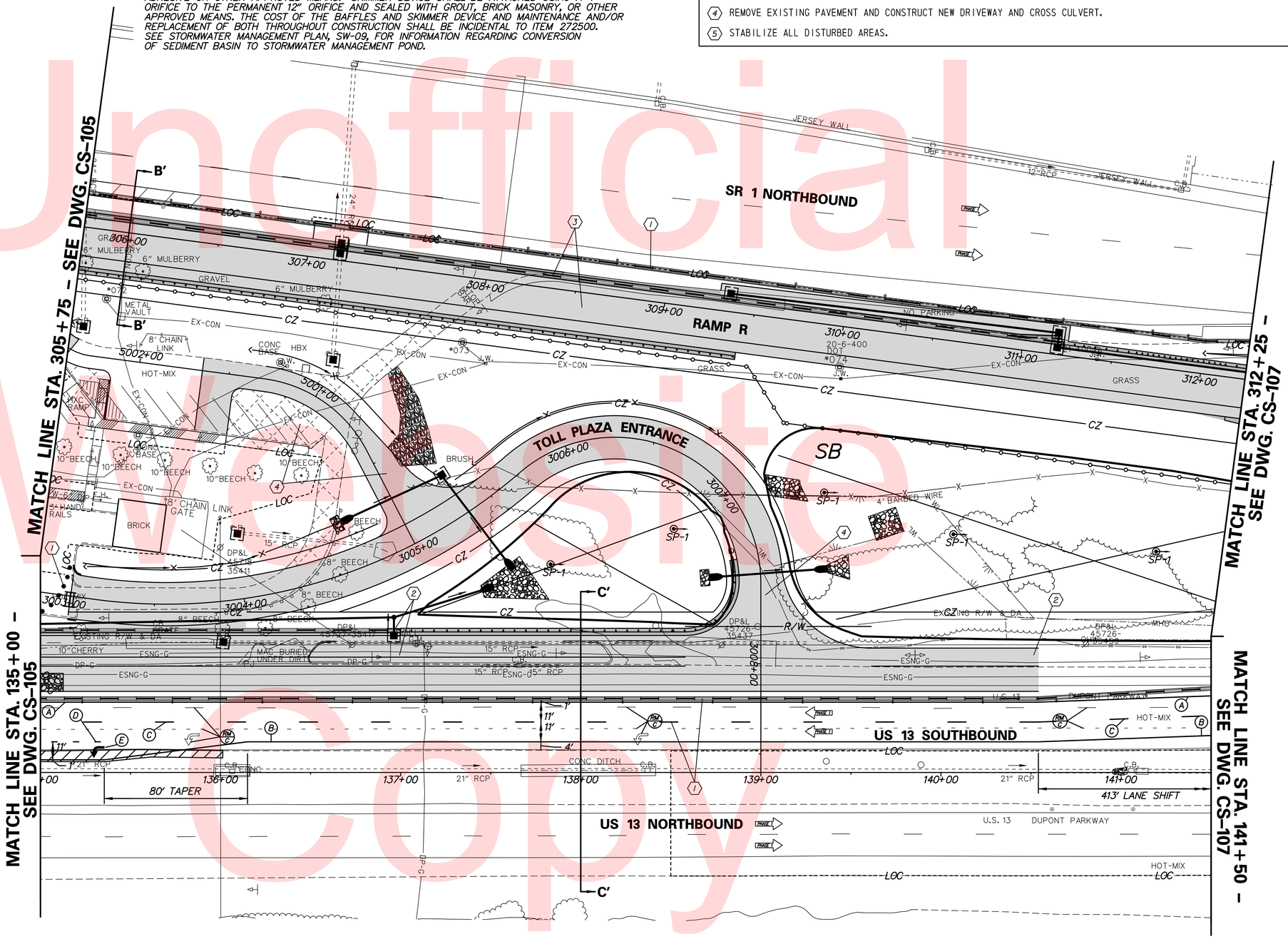

Unofficial Website Copy

n:\31653-000\contract_14\cadd\traffic\rjm\CS106U301_1D.dgn
8/21/2015 10:26:12 AM

DELAWARE DEPARTMENT OF TRANSPORTATION	ADDENDUMS / REVISIONS	SCALE 0 30 60 90 FEET	US 13 & PORT PENN RD INTERSECTION	CONTRACT T201011302	BRIDGE NO.	CONSTRUCTION PHASING, M.O.T., AND EROSION CONTROL PLAN – PHASE 1	CS-106
				COUNTY NEW CASTLE	DESIGNED BY: J.D.C.		SHEET NO. 119
					CHECKED BY: J.M.M.		TOTAL SHTS. 179

CONSTRUCTION PHASING LEGEND

- PROPOSED CONSTRUCTION THIS PHASE
- TEMPORARY CONSTRUCTION
- EXISTING SIGN/PROPOSED TEMPORARY SIGN
- TYPE III BARRICADE
- PLASTIC DRUM
- TRAFFIC FLOW ARROW
- (A) 4" SOLID WHITE PAINT
- (B) 4" SOLID YELLOW PAINT
- (C) 4" BROKEN WHITE PAINT (10' LINE, 30' GAP)
- (D) 4" DOTTED WHITE PAINT (3' LINE, 9' GAP)
- (E) WHITE PAINT SYMBOL/LEGEND
- PORTABLE P.C.C. SAFETY BARRIER (F SHAPE)
- PORTABLE IMPACT ATTENUATOR
- ARROW PANEL
- (RM C) REMOVE EXISTING STRIPING BY CONTRACTOR

N

NOTES:

1. THE CONTRACTOR SHALL COORDINATE THE INSTALLATION OF TEMPORARY TRAFFIC CONTROL DEVICES ALONG US 13 SOUTHBOUND AND SR 1 NORTHBOUND WITH TEMPORARY TRAFFIC CONTROL DEVICES INSTALLED IN CONTRACT NO. T200911302. ADJUSTMENTS IN THE LOCATION OF DEVICES MAY BE NEEDED TO ENSURE CONTINUITY BETWEEN THE WORK ZONES. ANY NECESSARY ADJUSTMENTS SHALL BE MADE WITH APPROVAL OF THE ENGINEER.
2. ALL TEMPORARY TRAFFIC CONTROL DEVICES AND PROPOSED CONSTRUCTION SHOWN SCREENED ON THIS PLAN ARE PROPOSED BY OTHERS UNDER CONTRACT NO. T200911302.

SEQUENCE OF CONSTRUCTION - PHASE I

1. PLACE ALL PERTINENT TEMPORARY TRAFFIC CONTROL DEVICES AND SEDIMENT CONTROL DEVICES AS SHOWN ON THIS PLAN AND THE PERMANENT WARNING SIGN LOCATION PLAN. SHIFT US 13 SOUTHBOUND TRAFFIC TO DESIGNATED TRAVEL LANES. MAINTAIN US 13 NORTHBOUND AND SR 1 NORTHBOUND TRAFFIC IN EXISTING TRAVEL LANES. CONSTRUCT SEDIMENT BASIN AND ALL DITCHES/PIPES PROVIDING CONVEYANCE TO THE BASIN PRIOR TO COMMENCEMENT OF ROADWAY WORK.
2. CONSTRUCT FULL-DEPTH PAVEMENT, DITCHES AND STORM DRAIN SYSTEM FOR RAMP R.
3. STABILIZE ALL DISTURBED AREAS.

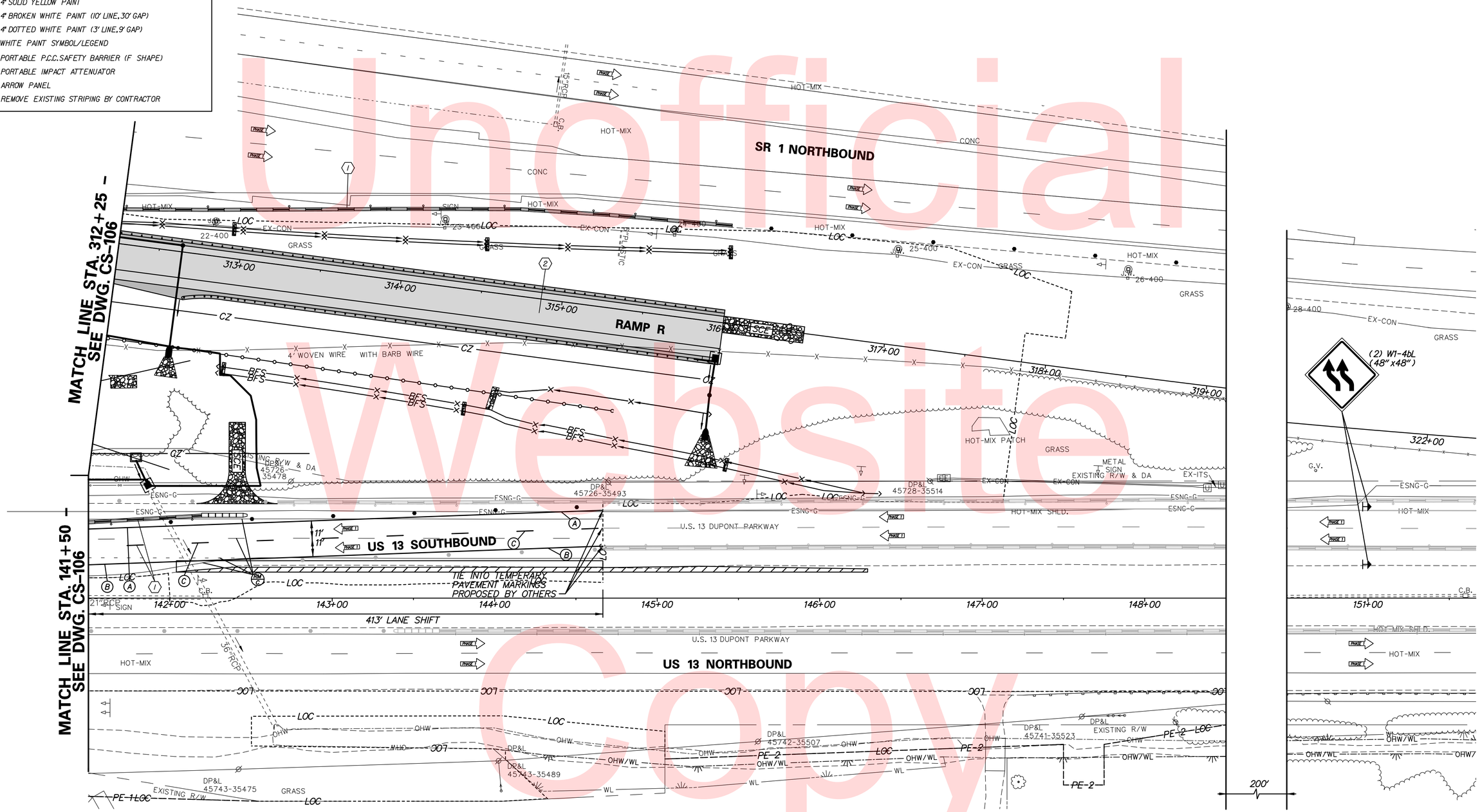

Unofficial Website Copy

N:\31653-000\CONTRACT 1D:\CADD\Traffic\RJM\CS107U301_1D.dgn
8/29/2019 6:32:03 PM

DELAWARE DEPARTMENT OF TRANSPORTATION	ADDENDUMS / REVISIONS	SCALE 0 30 60 90 FEET	US 13 & PORT PENN RD INTERSECTION	CONTRACT T201011302 / COUNTY NEW CASTLE	BRIDGE NO. / DESIGNED BY: J.D.C. / CHECKED BY: J.M.M.	CONSTRUCTION PHASING, M.O.T., AND EROSION CONTROL PLAN – PHASE 1

CS-107
SHEET NO. 120
TOTAL SHTS. 179

CONSTRUCTION PHASING LEGEND

- PROPOSED CONSTRUCTION THIS PHASE
- TEMPORARY CONSTRUCTION
- EXISTING SIGN/PROPOSED TEMPORARY SIGN
- TYPE III BARRICADE
- PLASTIC DRUM
- TRAFFIC FLOW ARROW
- (A) 4" SOLID WHITE PAINT
- (B) 4" SOLID YELLOW PAINT
- (C) 4" BROKEN WHITE PAINT (10' LINE, 30' GAP)
- (D) 4" DOTTED WHITE PAINT (3' LINE, 9' GAP)
- (E) WHITE PAINT SYMBOL/LEGEND
- PORTABLE P.C.C. SAFETY BARRIER (F SHAPE)
- PORTABLE IMPACT ATTENUATOR
- ARROW PANEL
- (RM C) REMOVE EXISTING STRIPING BY CONTRACTOR

SEQUENCE OF CONSTRUCTION - PHASE I

1. PLACE ALL PERTINENT TEMPORARY TRAFFIC CONTROL DEVICES AND SEDIMENT CONTROL DEVICES AS SHOWN ON THIS PLAN AND THE PERMANENT WARNING SIGN LOCATION PLAN. SHIFT PORT PENN ROAD TRAFFIC TO DESIGNATED TRAVEL LANES.
2. CONSTRUCT FULL-DEPTH PAVEMENT ALONG SOUTH SIDE OF PORT PENN ROAD.
3. USING TYPICAL APPLICATION 10 DURING OFF-PEAK HOURS, CONSTRUCT CULVERT IN HALF SECTIONS WORKING DOWNSTREAM TO UPSTREAM. USE SANDBAGS AND PORTABLE SEDIMENT TANKS TO DEWATER THE EXCAVATION AREA AS NECESSARY. DURING CULVERT AND HEADWALL INSTALLATION, FLOW SHALL BE DIVERTED INTO THE EASTERN CELL OF THE EXISTING CULVERT USING SAND BAGS AND TEMPORARY SLOPE DRAIN AND DIRECTED TO THE PROPOSED DITCH DOWNSTREAM OF THE CULVERT VIA TEMPORARY SLOPE DRAIN. UPON INSTALLATION OF THE CULVERT AND STABILIZATION OF ADJACENT AREAS, RUNOFF MAY BE DIRECTED INTO THE NEW CULVERT AND THE EXISTING CULVERT MAY BE REMOVED.
4. INSTALL CHECK DAMS AND IMMEDIATELY STABILIZE AREAS UPSTREAM AND DOWNSTREAM OF THE CULVERT WHERE NOTED.

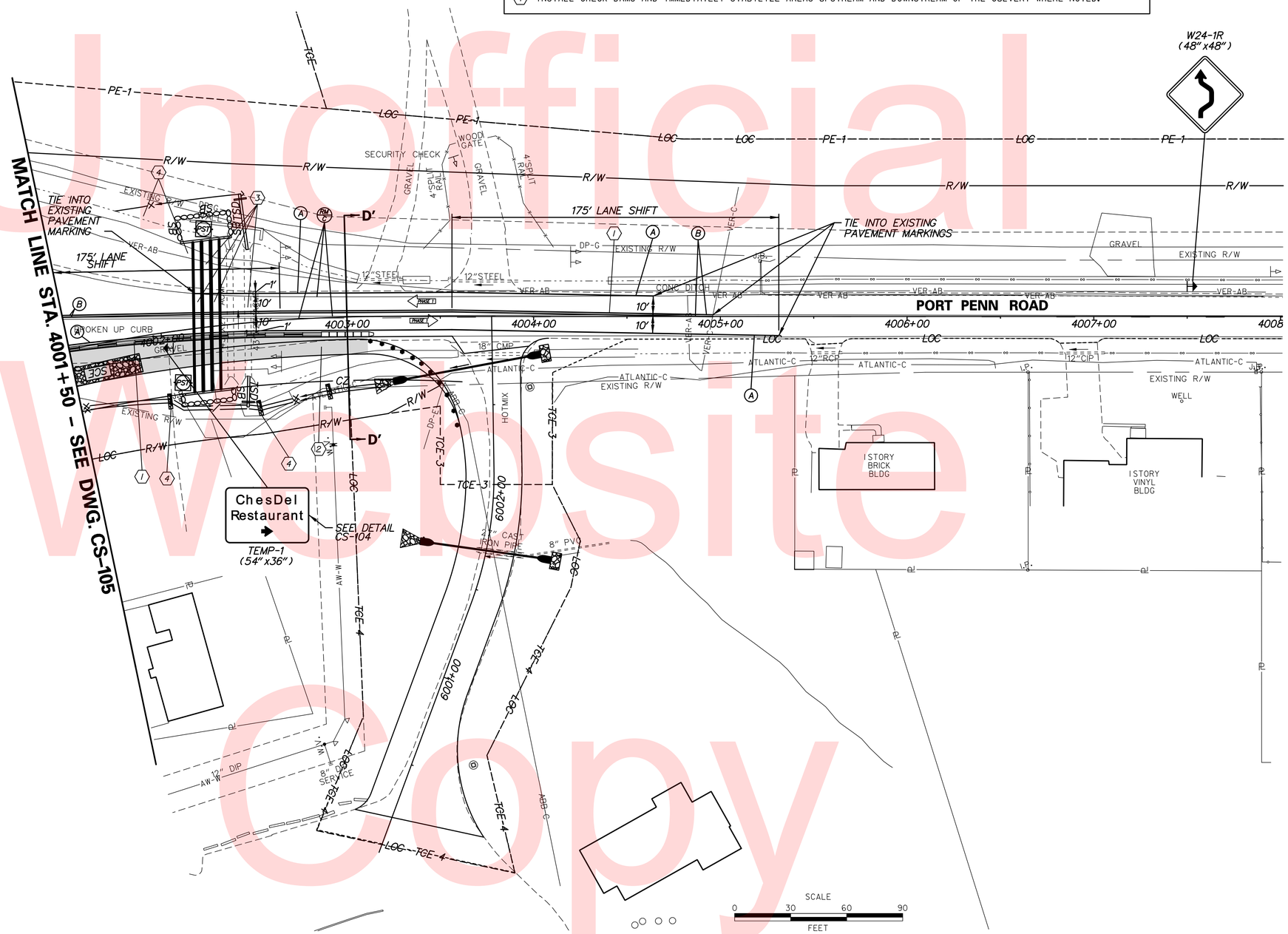

Unofficial Website Copy

N:\38553-000\Contract 1D:\CADD\Traffic\RJM\CS108U301_1D.dgn
12/23/2015 11:26:12 AM

DELAWARE DEPARTMENT OF TRANSPORTATION	ADDENDUMS / REVISIONS	US 13 & PORT PENN RD INTERSECTION	CONTRACT T201011302	BRIDGE NO.	CONSTRUCTION PHASING, M.O.T., AND EROSION CONTROL PLAN – PHASE 1	CS-108
			COUNTY NEW CASTLE	DESIGNED BY: J.D.C.		SHEET NO. 121
				CHECKED BY: J.M.M.		TOTAL SHTS. 179

SEQUENCE OF CONSTRUCTION - PHASE 1A

1. MAINTAIN TEMPORARY TRAFFIC CONTROL DEVICES ALONG SR 1 NORTHBOUND AND CONTINUE FULL-DEPTH PAVEMENT, DRAINAGE SYSTEM AND CONCRETE BARRIER CONSTRUCTION ALONG RAMP R, MAINTAINING SEDIMENT CONTROL DEVICES FROM PHASE 1.
2. MAINTAIN SELECT PHASE 1 TEMPORARY TRAFFIC CONTROL DEVICES AND SEDIMENT CONTROL DEVICES ALONG US 13. MAINTAIN US 13 NORTHBOUND TRAFFIC IN EXISTING TRAVEL LANES.
3. PLACE/RELOCATE TEMPORARY TRAFFIC CONTROL DEVICES AND SEDIMENT CONTROL DEVICES ALONG US 13 SOUTHBOUND. MAINTAIN US 13 SOUTHBOUND TRAFFIC IN PHASE 1 TRAVEL LANES AND CLOSE EXISTING TOLL PLAZA ADMINISTRATION BUILDING DRIVEWAY.
4. CONSTRUCT FULL-DEPTH PAVEMENT ALONG RIGHT SIDE OF US 13 SOUTHBOUND.
5. PLACE ADDITIONAL TEMPORARY TRAFFIC CONTROL DEVICES IN TOLL PLAZA ADMINISTRATION BUILDING PARKING LOT AND MAINTAIN TRAFFIC AS INDICATED ON PLAN. CONSTRUCT FULL-DEPTH PAVEMENT, CURB AND GUTTER AND COMPLETE PAVEMENT REMOVAL. STAGE CONSTRUCTION DURING WEEKEND HOURS TO MINIMIZE IMPACTS TO AVAILABLE PARKING AND PARKING LOT OPERATIONS.
6. CONSTRUCT FULL-DEPTH PAVEMENT ALONG RIGHT SIDE OF US 13 NORTHBOUND AND SOUTH SIDE OF PORT PENN ROAD.
7. USING TYPICAL APPLICATION 10, CONSTRUCT DRIVEWAY IN HALF SECTIONS SO THAT ACCESS IS MAINTAINED AT ALL TIMES.
8. USING TYPICAL APPLICATION 10, INSTALL ASPHALT PAVING WEDGE TO CORRECT DROP OFF BETWEEN NEW AND EXISTING ROADWAY, PRIOR TO SWITCHING TO PHASE 2.
9. STABILIZE ALL DISTURBED AREAS.

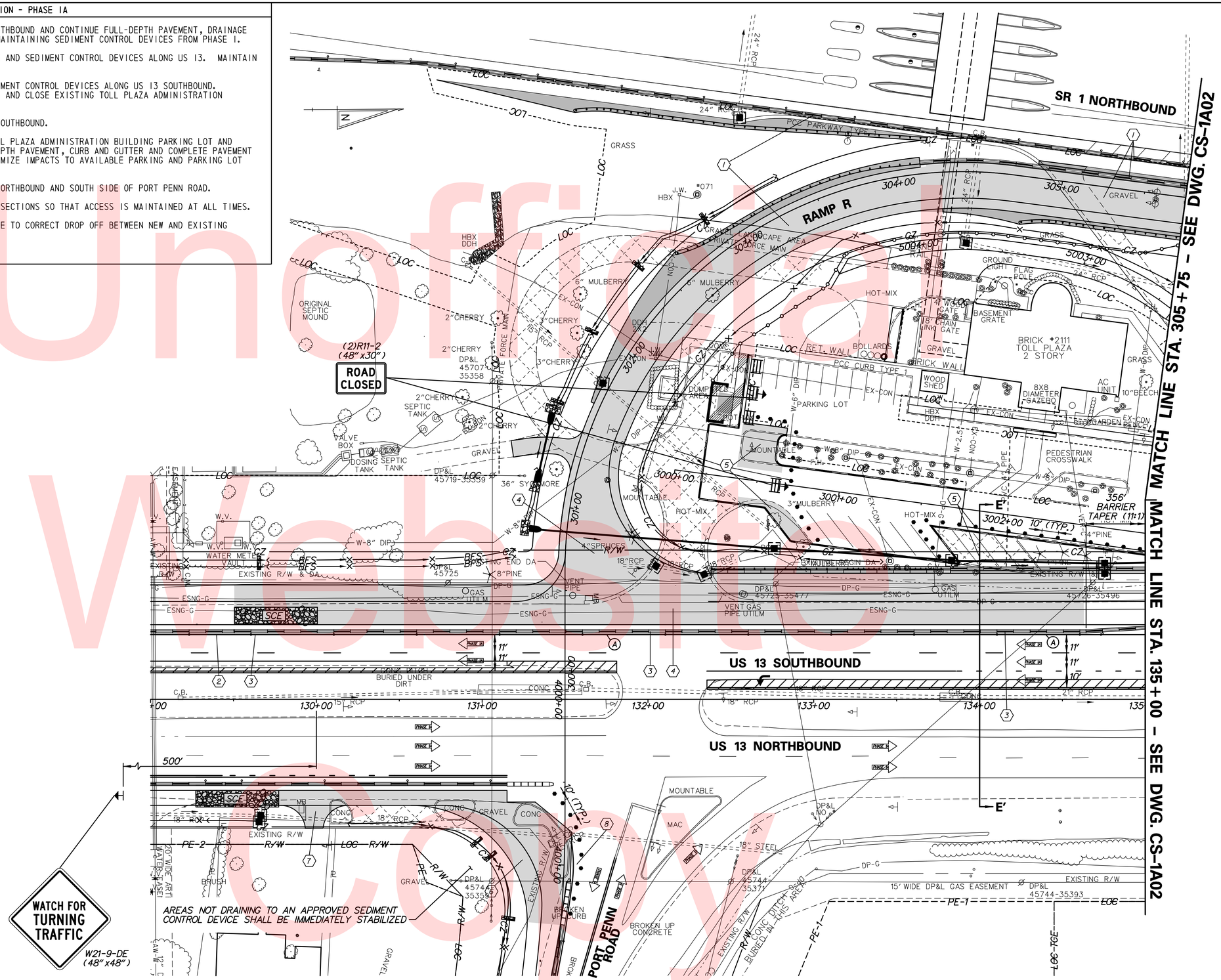

CONSTRUCTION PHASING LEGEND

- PROPOSED CONSTRUCTION THIS PHASE
- TEMPORARY CONSTRUCTION
- EXISTING SIGN/PROPOSED TEMPORARY SIGN
- TYPE III BARRICADE
- PLASTIC DRUM
- TRAFFIC FLOW ARROW
- (A) 4" SOLID WHITE PAINT
- (B) 4" SOLID YELLOW PAINT
- (C) 4" BROKEN WHITE PAINT (10' LINE, 30' GAP)
- (D) 4" DOTTED WHITE PAINT (3' LINE, 9' GAP)
- (E) WHITE PAINT SYMBOL/LEGEND
- PORTABLE P.C.C. SAFETY BARRIER (F SHAPE)
- PORTABLE IMPACT ATTENUATOR
- ARROW PANEL
- (RM 6) REMOVE EXISTING STRIPING BY CONTRACTOR

Unofficial Web Copy

N:\31653-000\Contract 1D\CADD\Traffic\RUM\CS1A01U301_1D.dgn
12/23/2015 11:27:00 AM

DELAWARE DEPARTMENT OF TRANSPORTATION

ADDENDUMS / REVISIONS

SCALE 0 30 60 90 FEET

US 13 & PORT PENN RD INTERSECTION

CONTRACT	BRIDGE NO.
T201011302	DESIGNED BY: J.D.C.
COUNTY	
NEW CASTLE	CHECKED BY: J.M.M.

CONSTRUCTION PHASING, M.O.T., AND EROSION CONTROL PLAN – PHASE 1A

CS-1A01
SHEET NO. 122
TOTAL SHTS. 179

CONSTRUCTION PHASING LEGEND

- PROPOSED CONSTRUCTION THIS PHASE
- TEMPORARY CONSTRUCTION
- EXISTING SIGN/PROPOSED TEMPORARY SIGN
- TYPE III BARRICADE
- PLASTIC DRUM
- TRAFFIC FLOW ARROW
- (A) 4" SOLID WHITE PAINT
- (B) 4" SOLID YELLOW PAINT
- (C) 4" BROKEN WHITE PAINT (10' LINE, 30' GAP)
- (D) 4" DOTTED WHITE PAINT (3' LINE, 9' GAP)
- (E) WHITE PAINT SYMBOL/LEGEND
- PORTABLE P.C.C. SAFETY BARRIER (F SHAPE)
- PORTABLE IMPACT ATTENUATOR
- ARROW PANEL
- (RM C) REMOVE EXISTING STRIPING BY CONTRACTOR

N

NOTES:

1. THE CONTRACTOR SHALL COORDINATE THE INSTALLATION OF TEMPORARY TRAFFIC CONTROL DEVICES ALONG US 13 SOUTHBOUND AND SR 1 NORTHBOUND WITH TEMPORARY TRAFFIC CONTROL DEVICES INSTALLED IN CONTRACT NO. T200911302. ADJUSTMENTS IN THE LOCATION OF DEVICES MAY BE NEEDED TO ENSURE CONTINUITY BETWEEN THE WORK ZONES. ANY NECESSARY ADJUSTMENTS SHALL BE MADE WITH APPROVAL OF THE ENGINEER.

SEQUENCE OF CONSTRUCTION - PHASE 1A

(1) MAINTAIN TEMPORARY TRAFFIC CONTROL DEVICES ALONG SR 1 NORTHBOUND AND CONTINUE FULL-DEPTH PAVEMENT, DRAINAGE SYSTEM AND CONCRETE BARRIER CONSTRUCTION ALONG RAMP R, MAINTAIN SEDIMENT CONTROL DEVICES FROM PHASE 1.

(2) MAINTAIN US 13 NORTHBOUND AND SOUTHBOUND TRAFFIC IN PHASE 1 TRAVEL LANES. PLACE/RELOCATE TEMPORARY TRAFFIC CONTROL DEVICES ALONG US 13 SOUTHBOUND AND OPEN TOLL PLAZA ENTRANCE TO TRAFFIC.

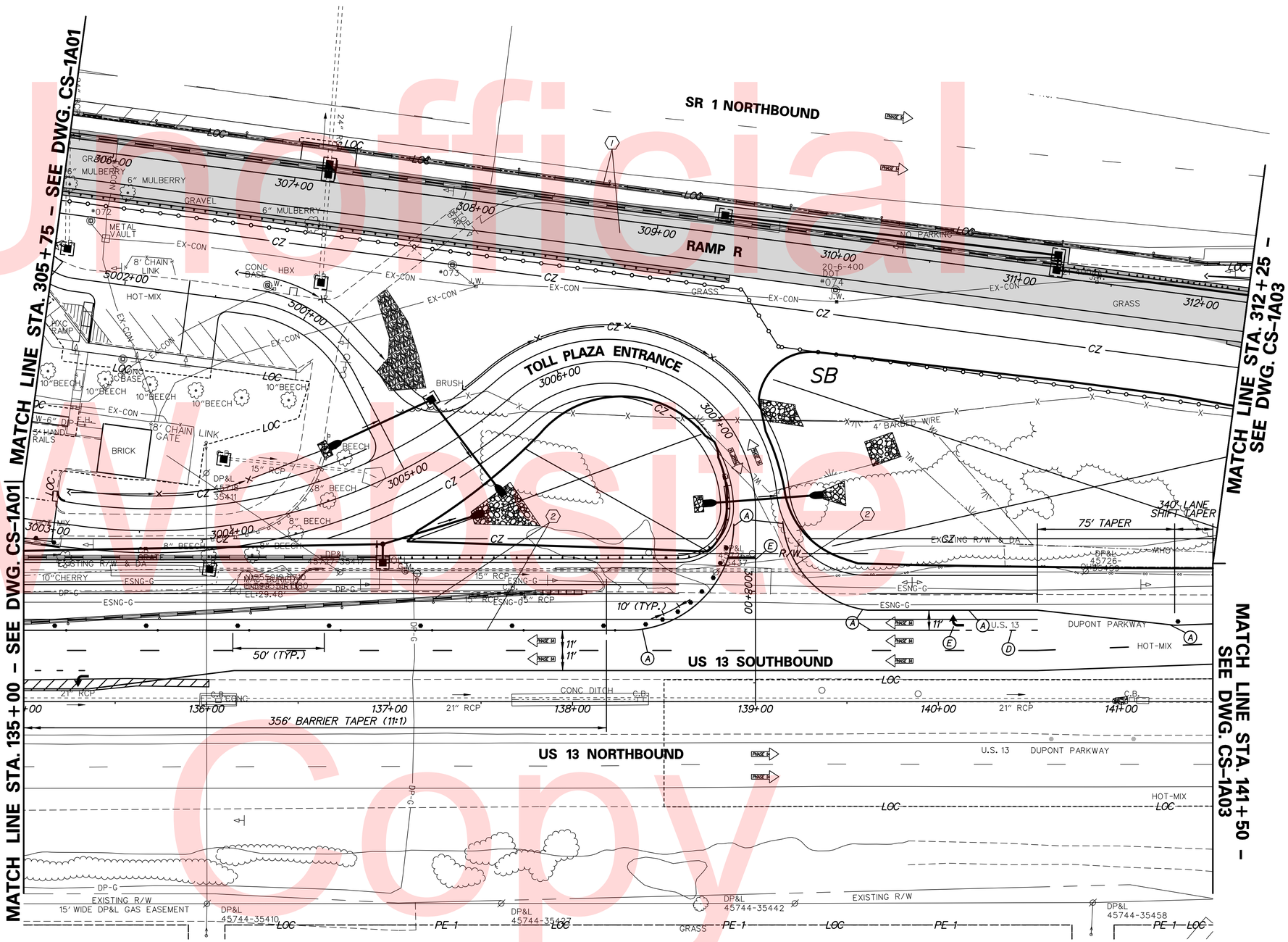

Unofficial Website Copy

DELAWARE DEPARTMENT OF TRANSPORTATION	ADDENDUMS / REVISIONS	SCALE 0 30 60 90 FEET	US 13 & PORT PENN RD INTERSECTION	CONTRACT T201011302	BRIDGE NO.	CONSTRUCTION PHASING, M.O.T., AND EROSION CONTROL PLAN – PHASE 1A	CS-1A02
				COUNTY NEW CASTLE	DESIGNED BY: J.D.C.		SHEET NO. 123
					CHECKED BY: J.M.M.		TOTAL SHTS. 179

n:\31653-000\contract_t4\cadd\traffic\rjm\CS1A02U301_1D.dgn
8/21/2015 10:26:27 AM

CONSTRUCTION PHASING LEGEND

- PROPOSED CONSTRUCTION THIS PHASE
- TEMPORARY CONSTRUCTION
- EXISTING SIGN/PROPOSED TEMPORARY SIGN
- TYPE III BARRICADE
- PLASTIC DRUM
- TRAFFIC FLOW ARROW
- (A) 4" SOLID WHITE PAINT
- (B) 4" SOLID YELLOW PAINT
- (C) 4" BROKEN WHITE PAINT (10' LINE, 30' GAP)
- (D) 4" DOTTED WHITE PAINT (3' LINE, 9' GAP)
- (E) WHITE PAINT SYMBOL/LEGEND
- PORTABLE P.C.C. SAFETY BARRIER (F SHAPE)
- PORTABLE IMPACT ATTENUATOR
- ARROW PANEL
- (RM C) REMOVE EXISTING STRIPING BY CONTRACTOR

SEQUENCE OF CONSTRUCTION - PHASE 1A

(1) MAINTAIN TEMPORARY TRAFFIC CONTROL DEVICES ALONG SR 1 NORTHBOUND AND CONTINUE FULL-DEPTH PAVEMENT, DRAINAGE SYSTEM AND CONCRETE BARRIER CONSTRUCTION ALONG RAMP R WHILE MAINTAINING SEDIMENT CONTROL DEVICES FROM PHASE 1.

(2) MAINTAIN US 13 NORTHBOUND AND SOUTHBOUND TRAFFIC IN PHASE 1 TRAVEL LANES. REMOVE PORTABLE P.C.C. SAFETY BARRIER ALONG US 13 SOUTHBOUND AND INSTALL DRUMS AS SHOWN.

NOTES:

1. THE CONTRACTOR SHALL COORDINATE THE INSTALLATION OF TEMPORARY TRAFFIC CONTROL DEVICES ALONG US 13 SOUTHBOUND AND SR 1 NORTHBOUND WITH TEMPORARY TRAFFIC CONTROL DEVICES INSTALLED IN CONTRACT NO. T200911302. ADJUSTMENTS IN THE LOCATION OF DEVICES MAY BE NEEDED TO ENSURE CONTINUITY BETWEEN THE WORK ZONES. ANY NECESSARY ADJUSTMENTS SHALL BE MADE WITH APPROVAL OF THE ENGINEER.

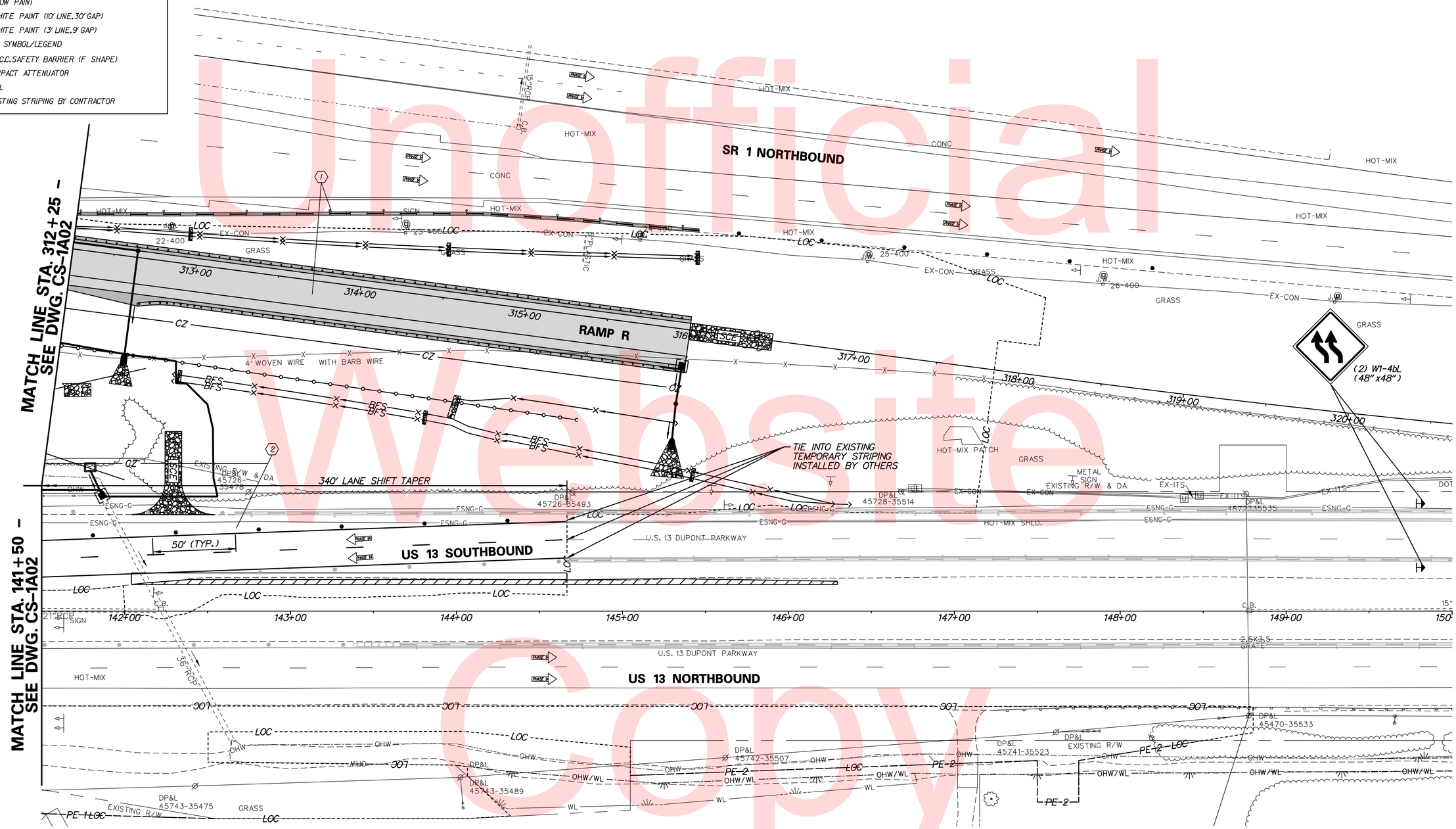

Unofficial Website Copy

DELAWARE DEPARTMENT OF TRANSPORTATION	ADDENDUMS / REVISIONS	SCALE 0 30 60 90 FEET	US 13 & PORT PENN RD INTERSECTION	CONTRACT T201011302	BRIDGE NO.	CONSTRUCTION PHASING, M.O.T., AND EROSION CONTROL PLAN – PHASE 1A	CS-1A03
				COUNTY NEW CASTLE	DESIGNED BY: J.D.C.		SHEET NO. 124
					CHECKED BY: J.M.M.		TOTAL SHTS. 179

p:\31653-000\contract_1d\cadd\traffic\rjm\CS1A03U301_1D.dgn
8/21/2015 10:26:30 AM

CONSTRUCTION PHASING LEGEND

- PROPOSED CONSTRUCTION THIS PHASE
- TEMPORARY CONSTRUCTION
- EXISTING SIGN/PROPOSED TEMPORARY SIGN
- TYPE III BARRICADE
- PLASTIC DRUM
- TRAFFIC FLOW ARROW
- (A) 4" SOLID WHITE PAINT
- (B) 4" SOLID YELLOW PAINT
- (C) 4" BROKEN WHITE PAINT (10' LINE, 30' GAP)
- (D) 4" DOTTED WHITE PAINT (3' LINE, 9' GAP)
- (E) WHITE PAINT SYMBOL/LEGEND
- PORTABLE P.C.C. SAFETY BARRIER (F SHAPE)
- PORTABLE IMPACT ATTENUATOR
- ARROW PANEL
- (RM C) REMOVE EXISTING STRIPING BY CONTRACTOR

N

NOTES:

1. THE CONTRACTOR SHALL COORDINATE THE INSTALLATION OF TEMPORARY TRAFFIC CONTROL DEVICES ALONG US 13 SOUTHBOUND AND SR 1 NORTHBOUND WITH TEMPORARY TRAFFIC CONTROL DEVICES INSTALLED IN CONTRACT NO. T200911302. ADJUSTMENTS IN THE LOCATION OF DEVICES MAY BE NEEDED TO ENSURE CONTINUITY BETWEEN THE WORK ZONES. ANY NECESSARY ADJUSTMENTS SHALL BE MADE WITH APPROVAL OF THE ENGINEER.

SEQUENCE OF CONSTRUCTION - PHASE 1B

1. MAINTAIN TEMPORARY TRAFFIC CONTROL DEVICES ALONG SR 1 NORTHBOUND AND CONTINUE FULL-DEPTH PAVEMENT, DRAINAGE SYSTEM AND CONCRETE BARRIER CONSTRUCTION ALONG RAMP R WHILE MAINTAINING SEDIMENT CONTROL DEVICES FROM PHASE 1.
2. MAINTAIN TEMPORARY TRAFFIC CONTROL DEVICES INSTALLED IN PHASE 1A ALONG US 13 SOUTHBOUND.
3. INSTALL ADDITIONAL TEMPORARY TRAFFIC CONTROL DEVICES AND SHIFT TRAFFIC TO DESIGNATED TRAVEL LANES.
4. CONSTRUCTION FULL-DEPTH PAVEMENT ALONG RIGHT SIDE OF US 13 SOUTHBOUND.

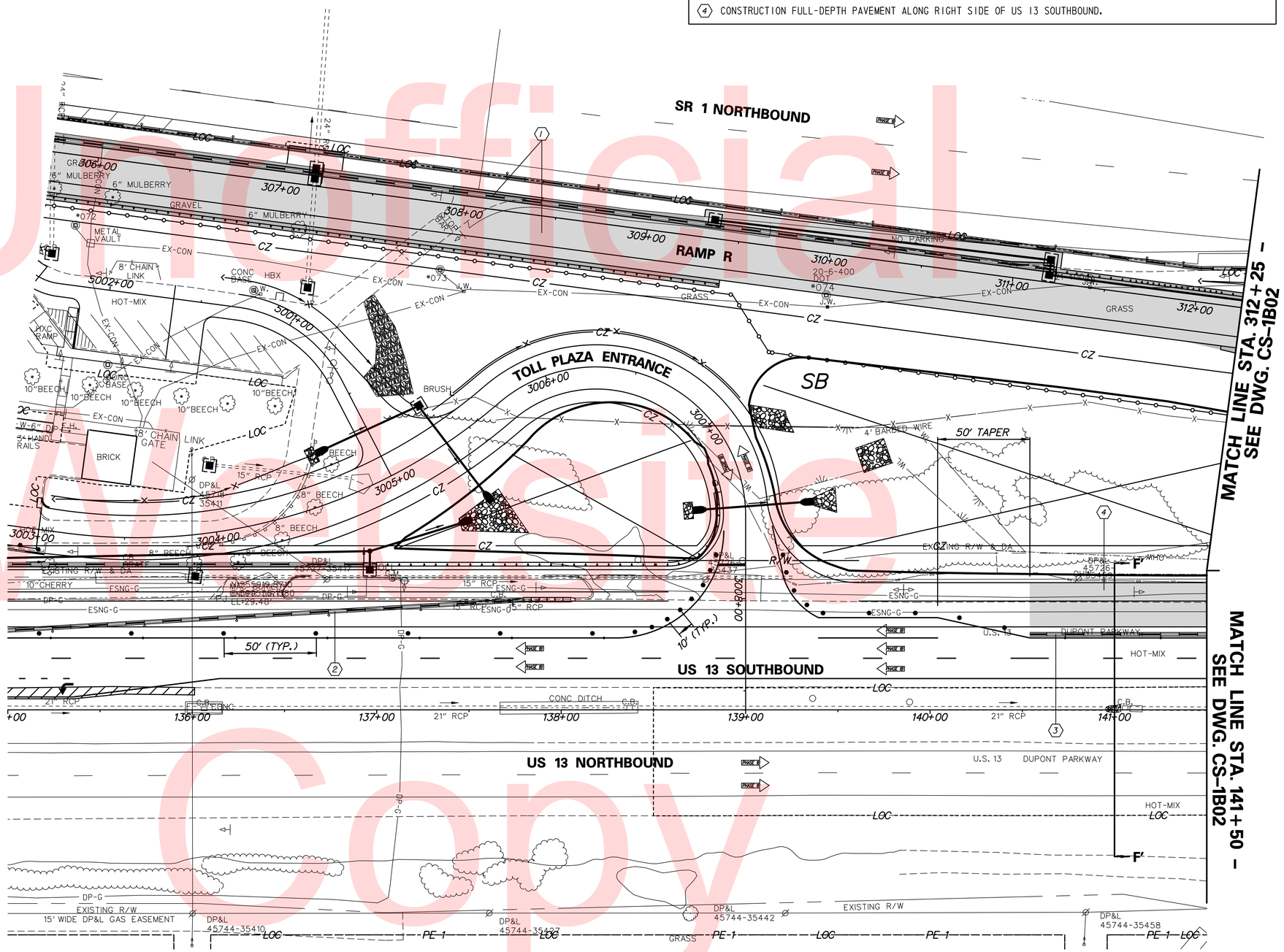

Unofficial Website Copy

DELAWARE DEPARTMENT OF TRANSPORTATION	ADDENDUMS / REVISIONS	SCALE 0 30 60 90 FEET	US 13 & PORT PENN RD INTERSECTION	CONTRACT T201011302	BRIDGE NO.	CONSTRUCTION PHASING, M.O.T., AND EROSION CONTROL PLAN – PHASE 1B	CS-1B01
				COUNTY NEW CASTLE	DESIGNED BY: J.D.C.		SHEET NO. 125
					CHECKED BY: J.M.M.		TOTAL SHTS. 179

n\31653-000\contract_1d\cadd\traffic\rjm\CS1B01U301_1D.dgn
8/21/2015 10:26:34 AM

CONSTRUCTION PHASING LEGEND

- PROPOSED CONSTRUCTION THIS PHASE
- TEMPORARY CONSTRUCTION
- EXISTING SIGN/PROPOSED TEMPORARY SIGN
- TYPE III BARRICADE
- PLASTIC DRUM
- TRAFFIC FLOW ARROW
- (A) 4" SOLID WHITE PAINT
- (B) 4" SOLID YELLOW PAINT
- (C) 4" BROKEN WHITE PAINT (10' LINE, 30' GAP)
- (D) 4" DOTTED WHITE PAINT (3' LINE, 9' GAP)
- (E) WHITE PAINT SYMBOL/LEGEND
- PORTABLE P.C.C. SAFETY BARRIER (F SHAPE)
- PORTABLE IMPACT ATTENUATOR
- ARROW PANEL
- (RM C) REMOVE EXISTING STRIPING BY CONTRACTOR

SEQUENCE OF CONSTRUCTION - PHASE 1B

1. MAINTAIN TEMPORARY TRAFFIC CONTROL DEVICES ALONG SR 1 NORTHBOUND AND CONTINUE FULL-DEPTH PAVEMENT, DRAINAGE SYSTEM AND CONCRETE BARRIER CONSTRUCTION ALONG RAMP R WHILE MAINTAINING SEDIMENT CONTROL DEVICES FROM PHASE 1.
2. INSTALL ADDITIONAL TEMPORARY TRAFFIC CONTROL DEVICES AND SHIFT TRAFFIC TO DESIGNATED TRAVEL LANES.
3. CONSTRUCTION FULL-DEPTH PAVEMENT ALONG RIGHT SIDE OF US 13 SOUTHBOUND.

NOTES:

1. THE CONTRACTOR SHALL COORDINATE THE INSTALLATION OF TEMPORARY TRAFFIC CONTROL DEVICES ALONG US 13 SOUTHBOUND AND SR 1 NORTHBOUND WITH TEMPORARY TRAFFIC CONTROL DEVICES INSTALLED IN CONTRACT NO. T200911302. ADJUSTMENTS IN THE LOCATION OF DEVICES MAY BE NEEDED TO ENSURE CONTINUITY BETWEEN THE WORK ZONES. ANY NECESSARY ADJUSTMENTS SHALL BE MADE WITH APPROVAL OF THE ENGINEER.

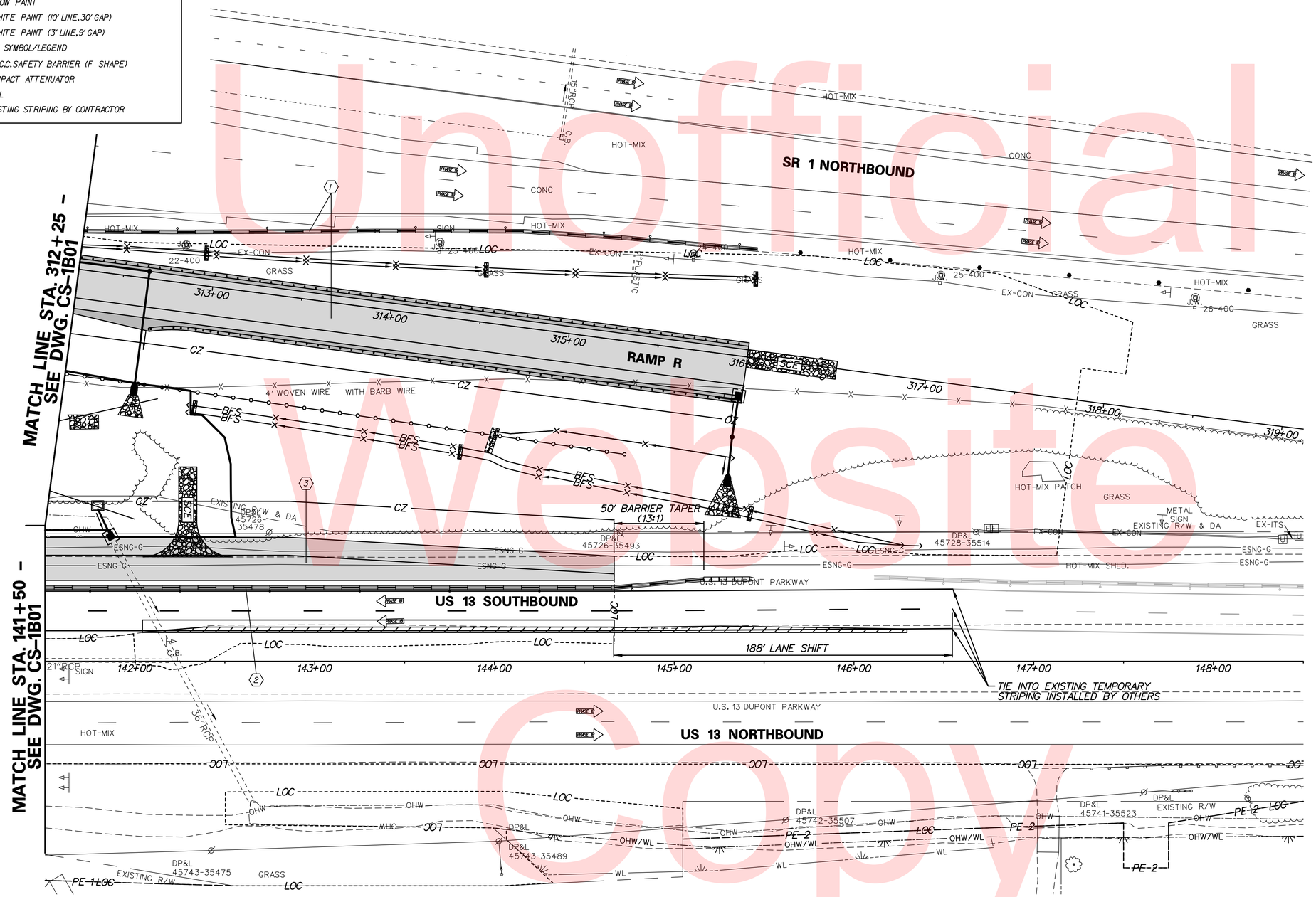

Unofficial Website Copy

DELAWARE DEPARTMENT OF TRANSPORTATION	ADDENDUMS / REVISIONS	SCALE 0 30 60 90 FEET	US 13 & PORT PENN RD INTERSECTION	CONTRACT T201011302	BRIDGE NO.	CONSTRUCTION PHASING, M.O.T., AND EROSION CONTROL PLAN – PHASE 1B	CS-1B02
				COUNTY NEW CASTLE	DESIGNED BY: J.D.C.		SHEET NO. 126
					CHECKED BY: J.M.M.		TOTAL SHTS. 179

n:\31653-000\contract_1d\cadd\traffic\rjm\CS1B02U301_1D.dgn 8/21/2015 10:26:38 AM

CONSTRUCTION PHASING LEGEND

- PROPOSED CONSTRUCTION THIS PHASE
- TEMPORARY CONSTRUCTION
- EXISTING SIGN/PROPOSED TEMPORARY SIGN
- TYPE III BARRICADE
- PLASTIC DRUM
- TRAFFIC FLOW ARROW
- (A) 4" SOLID WHITE PAINT
- (B) 4" SOLID YELLOW PAINT
- (C) 4" BROKEN WHITE PAINT (10' LINE, 30' GAP)
- (D) 4" DOTTED WHITE PAINT (3' LINE, 9' GAP)
- (E) WHITE PAINT SYMBOL/LEGEND
- PORTABLE P.C.C. SAFETY BARRIER (F SHAPE)
- PORTABLE IMPACT ATTENUATOR
- ARROW PANEL
- (RM C) REMOVE EXISTING STRIPING BY CONTRACTOR

SEQUENCE OF CONSTRUCTION - PHASE 2

1. PLACE ALL PERTINENT TEMPORARY TRAFFIC CONTROL DEVICES AS SHOWN ON THIS PLAN. MAINTAIN US 13 TRAFFIC IN EXISTING TRAVEL LANES.
2. FOLLOWING CONSTRUCTION, REMOVE ALL TEMPORARY TRAFFIC CONTROL DEVICES AND COMPLETE RESURFACING AND/OR INSTALL FINAL PAVEMENT SURFACE COURSE.

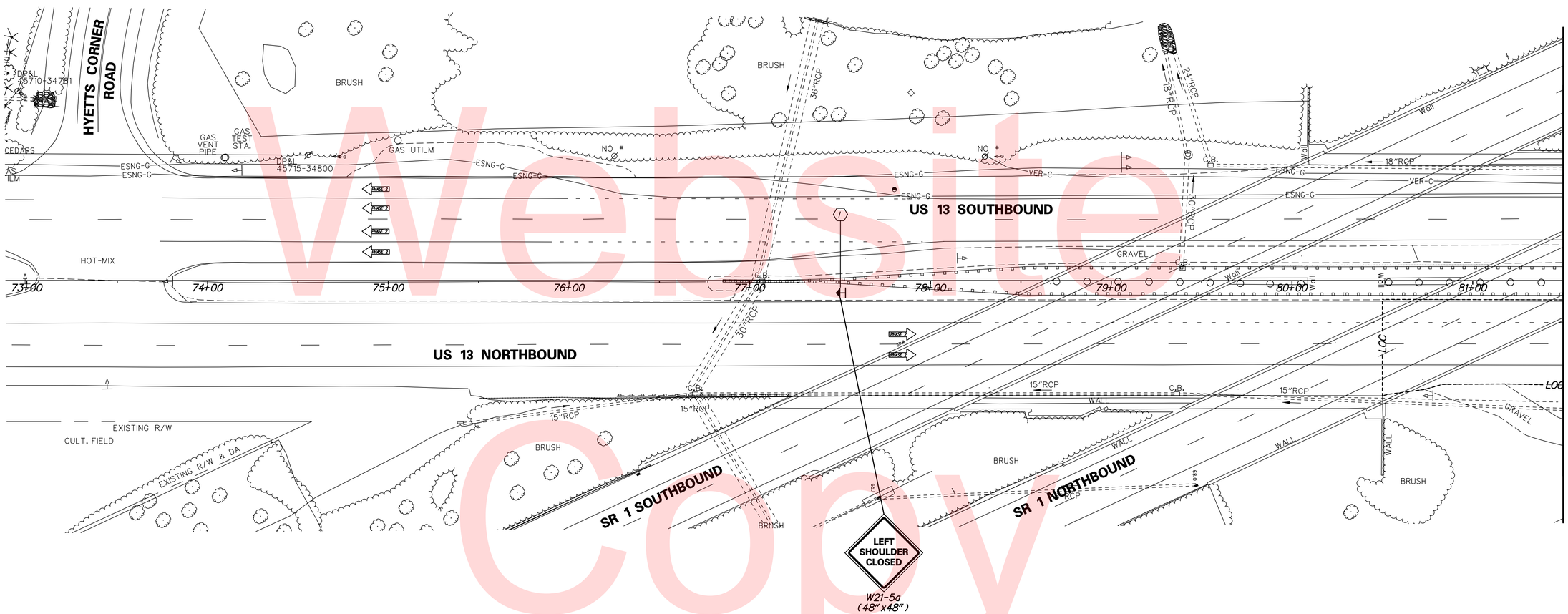

Unofficial Website Copy

DELAWARE DEPARTMENT OF TRANSPORTATION	ADDENDUMS / REVISIONS	SCALE 0 30 60 90 FEET	US 13 & PORT PENN RD INTERSECTION	CONTRACT T201011302	BRIDGE NO.	CONSTRUCTION PHASING, M.O.T., AND EROSION CONTROL PLAN – PHASE 2	CS-201
				COUNTY NEW CASTLE	DESIGNED BY: J.D.C.		SHEET NO. 127
					CHECKED BY: J.M.M.		TOTAL SHTS. 179

n:\31653-000\contract_td\cadd\traffic\rjm\CS201U301_1D.dgn
8/21/2015 10:26:47 AM

CONSTRUCTION PHASING LEGEND

- PROPOSED CONSTRUCTION THIS PHASE
- TEMPORARY CONSTRUCTION
- EXISTING SIGN/PROPOSED TEMPORARY SIGN
- TYPE III BARRICADE
- PLASTIC DRUM
- TRAFFIC FLOW ARROW
- (A) 4" SOLID WHITE PAINT
- (B) 4" SOLID YELLOW PAINT
- (C) 4" BROKEN WHITE PAINT (10' LINE, 30' GAP)
- (D) 4" DOTTED WHITE PAINT (3' LINE, 9' GAP)
- (E) WHITE PAINT SYMBOL/LEGEND
- PORTABLE P.C.C. SAFETY BARRIER (F SHAPE)
- PORTABLE IMPACT ATTENUATOR
- ARROW PANEL
- (RM C) REMOVE EXISTING STRIPING BY CONTRACTOR

SEQUENCE OF CONSTRUCTION - PHASE 2

1. PLACE ALL PERTINENT TEMPORARY TRAFFIC CONTROL DEVICES AS SHOWN ON THIS PLAN. SHIFT US 13 NORTHBOUND TRAFFIC TO DESIGNATED TRAVEL LANES.
2. FOLLOWING CONSTRUCTION, REMOVE ALL TEMPORARY TRAFFIC CONTROL DEVICES AND COMPLETE RESURFACING AND/OR INSTALL FINAL PAVEMENT SURFACE COURSE.

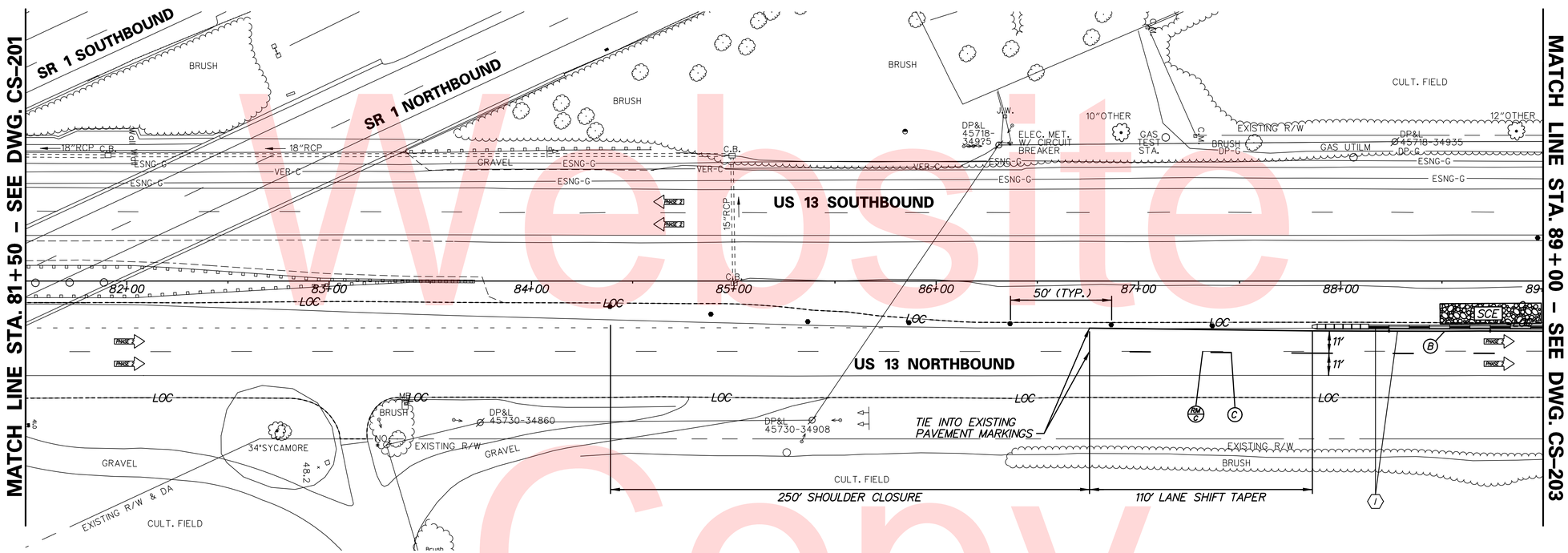

Unofficial Website Copy

n:\31653-000\contract t#\cadd\traffic\rjm\CS202U301_1D.dgn
8/21/2015 10:28:45 AM

DELAWARE DEPARTMENT OF TRANSPORTATION	ADDENDUMS / REVISIONS	SCALE 0 30 60 90 FEET	US 13 & PORT PENN RD INTERSECTION	CONTRACT T201011302	BRIDGE NO.	CONSTRUCTION PHASING, M.O.T., AND EROSION CONTROL PLAN – PHASE 2	CS-202 SHEET NO. 128
				COUNTY NEW CASTLE	DESIGNED BY: J.D.C. CHECKED BY: J.M.M.		TOTAL SHTS. 179

CONSTRUCTION PHASING LEGEND

- PROPOSED CONSTRUCTION THIS PHASE
- TEMPORARY CONSTRUCTION
- EXISTING SIGN/PROPOSED TEMPORARY SIGN
- TYPE III BARRICADE
- PLASTIC DRUM
- TRAFFIC FLOW ARROW
- (A) 4" SOLID WHITE PAINT
- (B) 4" SOLID YELLOW PAINT
- (C) 4" BROKEN WHITE PAINT (10' LINE, 30' GAP)
- (D) 4" DOTTED WHITE PAINT (3' LINE, 9' GAP)
- (E) WHITE PAINT SYMBOL/LEGEND
- PORTABLE P.C.C. SAFETY BARRIER (F SHAPE)
- PORTABLE IMPACT ATTENUATOR
- ARROW PANEL
- (RM C) REMOVE EXISTING STRIPING BY CONTRACTOR

SEQUENCE OF CONSTRUCTION - PHASE 2

1. PLACE ALL PERTINENT TEMPORARY TRAFFIC CONTROL DEVICES AND SEDIMENT CONTROL DEVICES AS SHOWN ON THIS PLAN. SHIFT US 13 NORTHBOUND AND SOUTHBOUND TRAFFIC TO DESIGNATED TRAVEL LANES.
2. CONSTRUCT FULL-DEPTH PAVEMENT, MEDIAN DRAINAGE SYSTEM AND DITCH, AND GUARDRAIL ALONG US 13 MEDIAN.
3. REMOVE ALL TEMPORARY TRAFFIC CONTROL DEVICES AND CONSTRUCT REMAINING 4 FEET OF FULL DEPTH PAVEMENT TO MEET EXISTING PAVEMENT USING TYPICAL APPLICATION 33.
4. STABILIZE ALL DISTURBED AREAS.
5. FOLLOWING CONSTRUCTION, COMPLETE RESURFACING AND/OR INSTALL FINAL PAVEMENT SURFACE COURSE.

Unofficial Website Copy

DELAWARE DEPARTMENT OF TRANSPORTATION	ADDENDUMS / REVISIONS	SCALE 0 30 60 90 FEET	US 13 & PORT PENN RD INTERSECTION	CONTRACT T201011302	BRIDGE NO.	CONSTRUCTION PHASING, M.O.T., AND EROSION CONTROL PLAN – PHASE 2	CS–203
				COUNTY NEW CASTLE	DESIGNED BY: J.D.C.		SHEET NO. 129
					CHECKED BY: J.M.M.		TOTAL SHTS. 179

n:\31653-000\contract_td\cadd\traffic\rjm\CS203U301_1D.dgn
8/21/2015 10:26:46 AM

CONSTRUCTION PHASING LEGEND

- PROPOSED CONSTRUCTION THIS PHASE
- TEMPORARY CONSTRUCTION
- EXISTING SIGN/PROPOSED TEMPORARY SIGN
- TYPE III BARRICADE
- PLASTIC DRUM
- TRAFFIC FLOW ARROW
- (A) 4" SOLID WHITE PAINT
- (B) 4" SOLID YELLOW PAINT
- (C) 4" BROKEN WHITE PAINT (10' LINE, 30' GAP)
- (D) 4" DOTTED WHITE PAINT (3' LINE, 9' GAP)
- (E) WHITE PAINT SYMBOL/LEGEND
- PORTABLE P.C.C. SAFETY BARRIER (F SHAPE)
- PORTABLE IMPACT ATTENUATOR
- ARROW PANEL
- (RM C) REMOVE EXISTING STRIPING BY CONTRACTOR

NOTES:

1. CONSTRUCT DIVERSION CHANNEL AND REMOVE EXISTING CONCRETE WALL ONCE CHANNEL HAS BEEN STABILIZED. EXCAVATE SB756 TO LINES AND GRADES SHOWN ON SHEET SW-01; HOWEVER, GRADING SHALL ONLY BE COMPLETED TO 2-FEET ABOVE THE PERMANENT BOTTOM OF THE INFILTRATION BASIN TO PREVENT CLOGGING OF THE PERMANENT FACILITY. SEE CORRESPONDING STORMWATER MANAGEMENT PLANS FOR ADDITIONAL DETAILS AND INSTRUCTIONS.
2. FOR SB756 PLACE EXTERIOR GRADE PLYWOOD ACROSS WEIR OPENING IN ORDER TO FORM CREST AT ELEVATION 40.40. PLYWOOD SHALL BE AFFIXED TO WEIR WALL USING CONSTRUCTION ADHESIVE OR OTHER APPROVED MEANS. SKIMMER DEVICE SHALL BE ATTACHED TO PLYWOOD BAFFLE USING A 3" ORIFICE AT ELEVATION 39.00. THE COST OF THE BAFFLE AND SKIMMER DEVICE AND MAINTENANCE AND/OR REPLACEMENT OF BOTH THROUGHOUT CONSTRUCTION SHALL BE INCIDENTAL TO ITEM 272500.
3. EXCAVATE SB757 TO LINES AND GRADES SHOWN ON SHEET SW-05; HOWEVER, GRADING SHALL ONLY BE COMPLETED TO 1-FOOT ABOVE THE PERMANENT BOTTOM OF THE INFILTRATION BASIN TO PREVENT CLOGGING OF THE PERMANENT FACILITY. SEE CORRESPONDING STORMWATER MANAGEMENT PLANS FOR ADDITIONAL DETAILS AND INSTRUCTIONS.
4. FOR SB 757 PLACE EXTERIOR GRADE PLYWOOD ACROSS WEIR OPENING IN ORDER TO FORM CREST AT ELEVATION 43.60. PLYWOOD SHALL BE AFFIXED TO WEIR WALL USING CONSTRUCTION ADHESIVE OR OTHER APPROVED MEANS. SKIMMER DEVICE SHALL BE ATTACHED TO PLYWOOD BAFFLE USING A 3" ORIFICE AT ELEVATION 42.00. THE COST OF THE BAFFLE AND SKIMMER DEVICE AND MAINTENANCE AND/OR REPLACEMENT OF BOTH THROUGHOUT CONSTRUCTION SHALL BE INCIDENTAL TO THE COST OF ITEM 272500.

SEDIMENT BASIN SCHEDULE

NO.	SB757
DRAINAGE AREA, AC.	4.86
FACILITY AREA, AC.	0.61
REQUIRED STORAGE (Vs), CY	651
CLEAN-OUT ELEV. (EL)	42.60
EMBANKMENT TOP WIDTH (TW), FT.	6.00
TOP OF EMBANKMENT ELEV. (TOB)	46.00
CREST OF EMERGENCY SPILLWAY ELEV.	N.A.
EMERGENCY SPILLWAY DEPTH (D), FT.	N.A.
EMERGENCY SPILLWAY WIDTH (B), FT.	N.A.
SKIMMER ORIFICE DIAMETER (IN)	3
SKIMMER ORIFICE INVERT	42.00

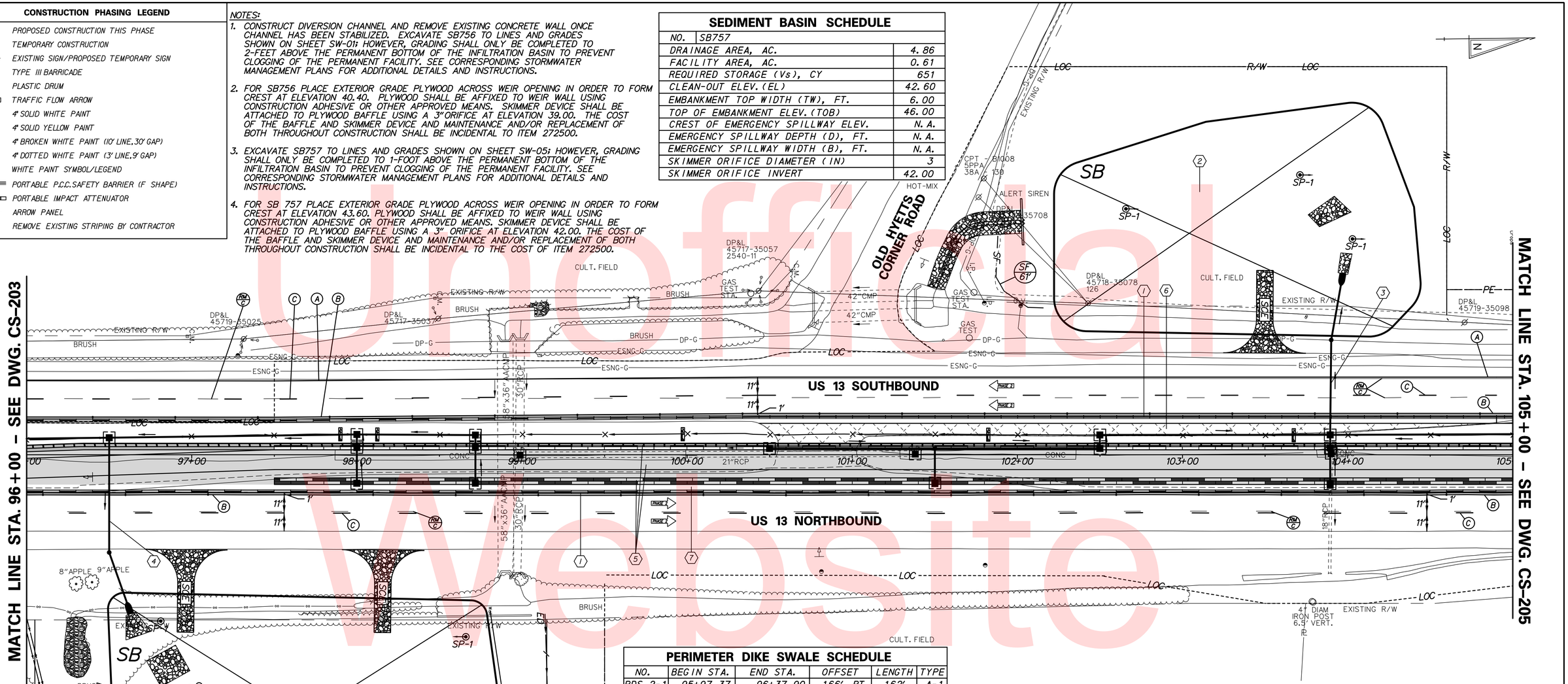

PERIMETER DIKE SWALE SCHEDULE

NO.	BEGIN STA.	END STA.	OFFSET	LENGTH	TYPE
PDS 2-1	95+97.37	96+37.90	166', RT.	162'	A-1

EARTH DIKE SCHEDULE

NO.	BEGIN STA.	END STA.	OFFSET	LENGTH
ED 2-1	96+39.54	99+13.91	175', RT.	414'
ED 2-2	96+47.20	96+42.27	193', RT.	110'
ED 2-9	96+41.53	97+01.41	245', RT.	63'

SEDIMENT BASIN SCHEDULE

NO.	SB756
DRAINAGE AREA, AC.	4.47
FACILITY AREA, AC.	0.99
REQUIRED STORAGE (Vs), CY	599
CLEAN-OUT ELEV. (EL)	39.38
EMBANKMENT TOP WIDTH (TW), FT.	6.00
TOP OF EMBANKMENT ELEV. (TOB)	42.00
CREST OF EMERGENCY SPILLWAY ELEV.	N.A.
EMERGENCY SPILLWAY DEPTH (D), FT.	N.A.
EMERGENCY SPILLWAY WIDTH (B), FT.	N.A.
SKIMMER ORIFICE DIAMETER (IN)	3
SKIMMER ORIFICE INVERT	39.00

SEQUENCE OF CONSTRUCTION - PHASE 2

1. PLACE ALL PERTINENT TEMPORARY TRAFFIC CONTROL DEVICES AND SEDIMENT CONTROL DEVICES AS SHOWN ON THIS PLAN. SHIFT US 13 NORTHBOUND AND SOUTHBOUND TRAFFIC TO DESIGNATED TRAVEL LANES.
2. CONSTRUCT DIVERSION CHANNEL. REMOVE EXISTING CONCRETE WALL ONCE CHANNEL HAS BEEN STABILIZED. CONSTRUCT STORMWATER MANAGEMENT FACILITIES. BOTTOM OF FACILITY SHALL BE EXCAVATED NO LOWER THAN 1-FOOT ABOVE FINAL ELEVATION. INSTALL ALL DITCHES/PIPES PROVIDING CONVEYANCE TO THE BASIN PRIOR TO COMMENCEMENT OF ROADWAY WORK.
3. USE THE US 13 SOUTHBOUND DETOUR AND CONSTRUCT THE PORTION OF THE CROSSROAD PIPE UNPROTECTED BY THE TEMPORARY CONCRETE TRAFFIC BARRIER.
4. USE THE US 13 NORTHBOUND DETOUR AND CONSTRUCT THE PORTION OF THE CROSSROAD PIPE UNPROTECTED BY THE TEMPORARY CONCRETE TRAFFIC BARRIER.
5. CONSTRUCT CURB AND GUTTER, FULL-DEPTH PAVEMENT, MEDIAN DRAINAGE SYSTEM, DITCH AND GUARDRAIL ALONG US 13 MEDIAN.
6. REMOVE EXISTING US 13 SOUTHBOUND LEFT-TURN LANE PAVEMENT.
7. REMOVE ALL TEMPORARY TRAFFIC CONTROL DEVICES AND CONSTRUCT REMAINING 4 FEET OF FULL DEPTH PAVEMENT TO MEET THE EXISTING PAVEMENT USING TYPICAL APPLICATION 33.
8. STABILIZE ALL DISTURBED AREAS.
9. FOLLOWING CONSTRUCTION, COMPLETE RESURFACING AND/OR INSTALL FINAL PAVEMENT SURFACE COURSE.

Unofficial Website Copy

CONSTRUCTION PHASING LEGEND

- PROPOSED CONSTRUCTION THIS PHASE
- TEMPORARY CONSTRUCTION
- EXISTING SIGN/PROPOSED TEMPORARY SIGN
- TYPE III BARRICADE
- PLASTIC DRUM
- TRAFFIC FLOW ARROW
- (A) 4" SOLID WHITE PAINT
- (B) 4" SOLID YELLOW PAINT
- (C) 4" BROKEN WHITE PAINT (10' LINE, 30' GAP)
- (D) 4" DOTTED WHITE PAINT (3' LINE, 9' GAP)
- (E) WHITE PAINT SYMBOL/LEGEND
- PORTABLE P.C.C. SAFETY BARRIER (F SHAPE)
- PORTABLE IMPACT ATTENUATOR
- ARROW PANEL
- (RM C) REMOVE EXISTING STRIPING BY CONTRACTOR

SEQUENCE OF CONSTRUCTION - PHASE 2

1. PLACE ALL PERTINENT TEMPORARY TRAFFIC CONTROL DEVICES AND SEDIMENT CONTROL DEVICES AS SHOWN ON THIS PLAN. SHIFT US 13 NORTHBOUND AND SOUTHBOUND TRAFFIC TO DESIGNATED TRAVEL LANES.
2. CONSTRUCT CURB AND GUTTER, FULL-DEPTH PAVEMENT, MEDIAN DRAINAGE SYSTEM, DITCH AND GUARDRAIL AND REMOVE TEMPORARY PAVING ALONG US 13 MEDIAN.
3. REMOVE ALL TEMPORARY TRAFFIC CONTROL DEVICES AND CONSTRUCT REMAINING 4 FEET OF FULL DEPTH PAVEMENT TO MEET THE EXISTING PAVEMENT USING TYPICAL APPLICATION 33.
4. STABILIZE ALL DISTURBED AREAS.
5. FOLLOWING CONSTRUCTION, COMPLETE RESURFACING AND/OR INSTALL FINAL PAVEMENT SURFACE COURSE.

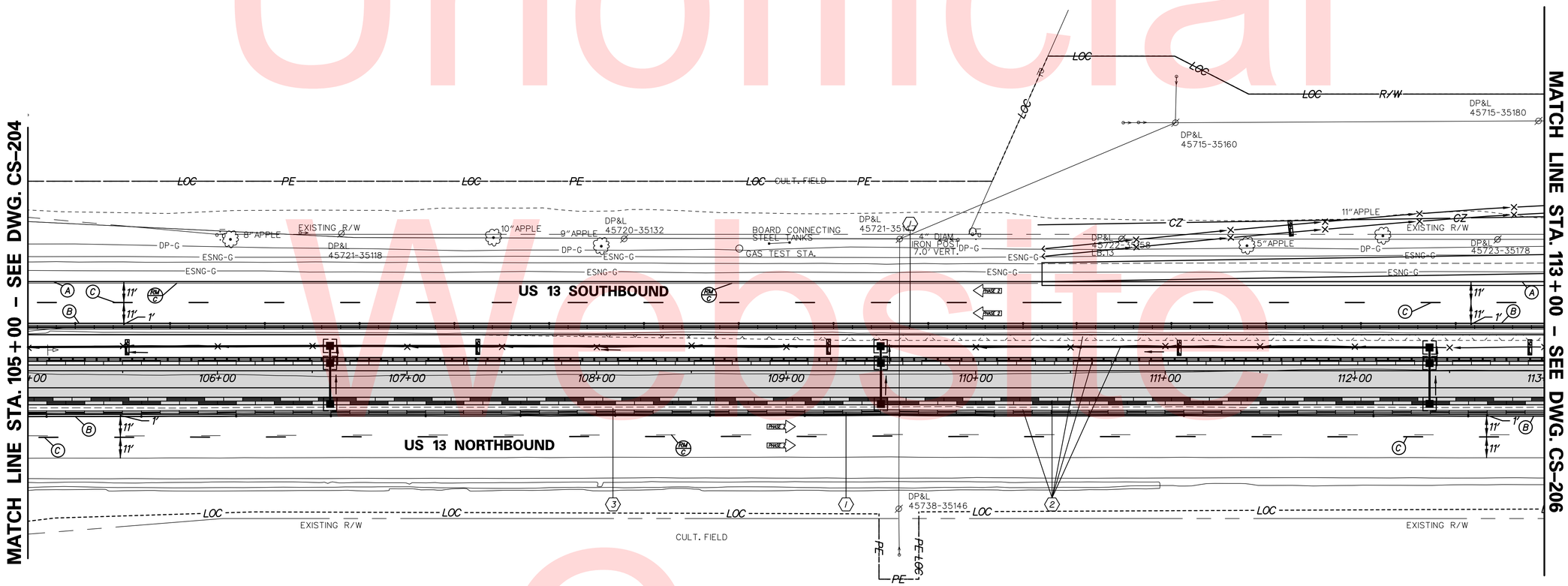

Unofficial Website Copy

DELAWARE DEPARTMENT OF TRANSPORTATION	ADDENDUMS / REVISIONS	SCALE 0 30 60 90 FEET	US 13 & PORT PENN RD INTERSECTION	CONTRACT T201011302 / COUNTY NEW CASTLE	BRIDGE NO. / DESIGNED BY: J.D.C. / CHECKED BY: J.M.M.	CONSTRUCTION PHASING, M.O.T., AND EROSION CONTROL PLAN – PHASE 2

CS-205
SHEET NO. 131
TOTAL SHTS. 179

n:\31653-000\contract_td\cadd\traffic\rjm\CS205U301_1D.dgn
8/21/2015 10:28:55 AM

CONSTRUCTION PHASING LEGEND

- PROPOSED CONSTRUCTION THIS PHASE
- TEMPORARY CONSTRUCTION
- EXISTING SIGN/PROPOSED TEMPORARY SIGN
- TYPE III BARRICADE
- PLASTIC DRUM
- TRAFFIC FLOW ARROW
- (A) 4" SOLID WHITE PAINT
- (B) 4" SOLID YELLOW PAINT
- (C) 4" BROKEN WHITE PAINT (10' LINE, 30' GAP)
- (D) 4" DOTTED WHITE PAINT (3' LINE, 9' GAP)
- (E) WHITE PAINT SYMBOL/LEGEND
- PORTABLE P.C.C. SAFETY BARRIER (F SHAPE)
- PORTABLE IMPACT ATTENUATOR
- ARROW PANEL
- (RM C) REMOVE EXISTING STRIPING BY CONTRACTOR

SEQUENCE OF CONSTRUCTION - PHASE 2

1. PLACE ALL PERTINENT TEMPORARY TRAFFIC CONTROL DEVICES AND SEDIMENT CONTROL DEVICES AS SHOWN ON THIS PLAN. SHIFT US 13 NORTHBOUND AND SOUTHBOUND TRAFFIC TO DESIGNATED TRAVEL LANES.
2. CONSTRUCT CURB AND GUTTER, FULL-DEPTH PAVEMENT, MEDIAN DRAINAGE SYSTEM, DITCH AND GUARDRAIL AND REMOVE TEMPORARY PAVING ALONG US 13 MEDIAN.
3. REMOVE EXISTING US 13 SOUTHBOUND LEFT-TURN LANE PAVEMENT.
4. REMOVE ALL TEMPORARY TRAFFIC CONTROL DEVICES AND CONSTRUCT REMAINING 4 FEET OF FULL DEPTH PAVEMENT TO MEET THE EXISTING PAVEMENT USING TYPICAL APPLICATION 33.
5. STABILIZE ALL DISTURBED AREAS.
6. FOLLOWING CONSTRUCTION, COMPLETE RESURFACING AND/OR INSTALL FINAL PAVEMENT SURFACE COURSE.

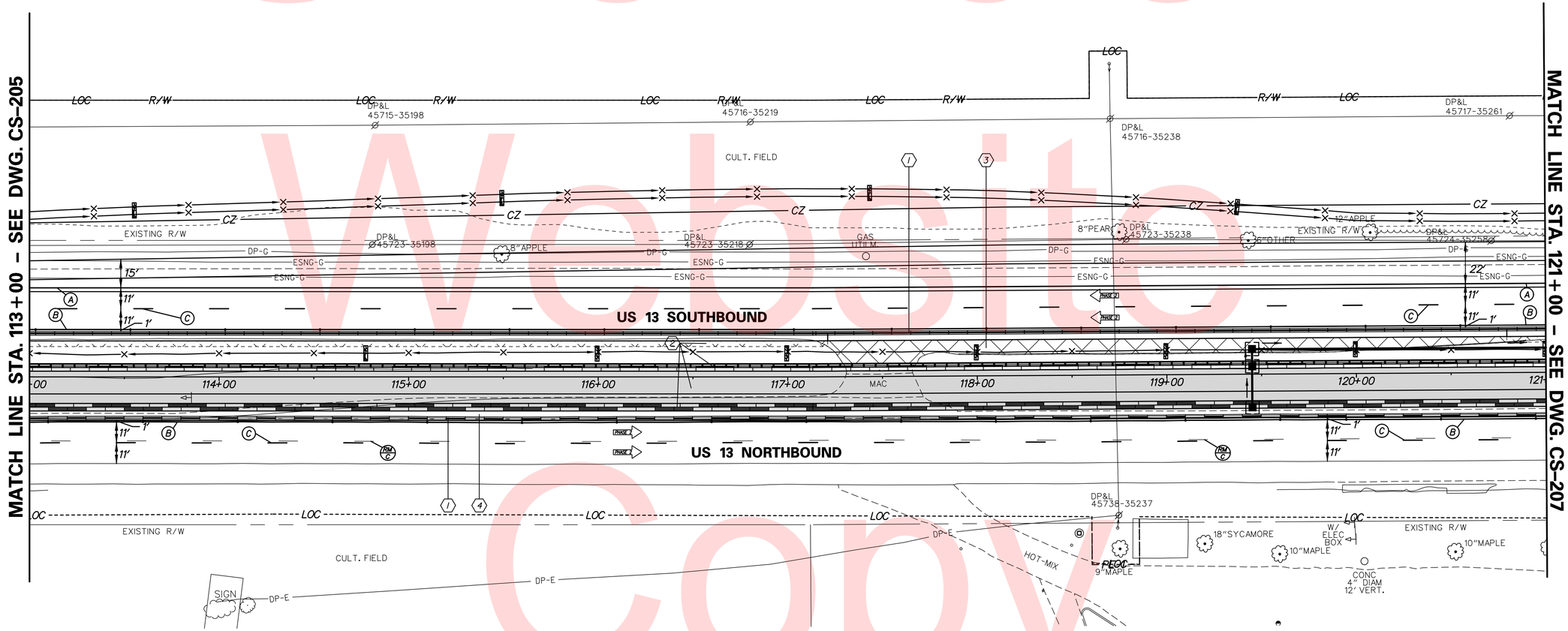

Unofficial Website Copy

DELAWARE DEPARTMENT OF TRANSPORTATION	ADDENDUMS / REVISIONS	SCALE 0 30 60 90 FEET	US 13 & PORT PENN RD INTERSECTION	CONTRACT T201011302	BRIDGE NO.	CONSTRUCTION PHASING, M.O.T., AND EROSION CONTROL PLAN – PHASE 2	CS-206
				COUNTY NEW CASTLE	DESIGNED BY: J.D.C.		SHEET NO. 132
					CHECKED BY: J.M.M.		TOTAL SHTS. 179

n\31653-000\contract_id\cadd\traffic\rjm\CS206U301_1D.dgn
8/21/2015 10:26:58 AM

CONSTRUCTION PHASING LEGEND

- PROPOSED CONSTRUCTION THIS PHASE
- TEMPORARY CONSTRUCTION
- EXISTING SIGN/PROPOSED TEMPORARY SIGN
- TYPE III BARRICADE
- PLASTIC DRUM
- TRAFFIC FLOW ARROW
- (A) 4" SOLID WHITE PAINT
- (B) 4" SOLID YELLOW PAINT
- (C) 4" BROKEN WHITE PAINT (10' LINE, 30' GAP)
- (D) 4" DOTTED WHITE PAINT (3' LINE, 9' GAP)
- (E) WHITE PAINT SYMBOL/LEGEND
- PORTABLE P.C.C. SAFETY BARRIER (F SHAPE)
- PORTABLE IMPACT ATTENUATOR
- ARROW PANEL
- (RM C) REMOVE EXISTING STRIPING BY CONTRACTOR

SEQUENCE OF CONSTRUCTION - PHASE 2

1. PLACE ALL PERTINENT TEMPORARY TRAFFIC CONTROL DEVICES AND SEDIMENT CONTROL DEVICES AS SHOWN ON THIS PLAN. SHIFT US 13 NORTHBOUND AND SOUTHBOUND TRAFFIC TO DESIGNATED TRAVEL LANES.
2. CONSTRUCT CURB AND GUTTER, FULL-DEPTH PAVEMENT, MEDIAN DRAINAGE SYSTEM, DITCH AND GUARDRAIL, AND REMOVED TEMPORARY PAVING ALONG US 13 MEDIAN.
3. REMOVE ALL TEMPORARY TRAFFIC CONTROAL DEVICES AND CONSTRUCT REMAINING 4 FEET OF FULL DEPTH PAVEMENT RIGHT OF THE CURB USING TYPICAL APPLICATION 33.
4. STABILIZE ALL DISTURBED AREAS.
5. FOLLOWING CONSTRUCTION, REMOVE ALL TEMPORARY TRAFFIC CONTROL DEVICES AND COMPLETE RESURFACING AND/OR INSTALL FINAL PAVEMENT SURFACE COURSE.

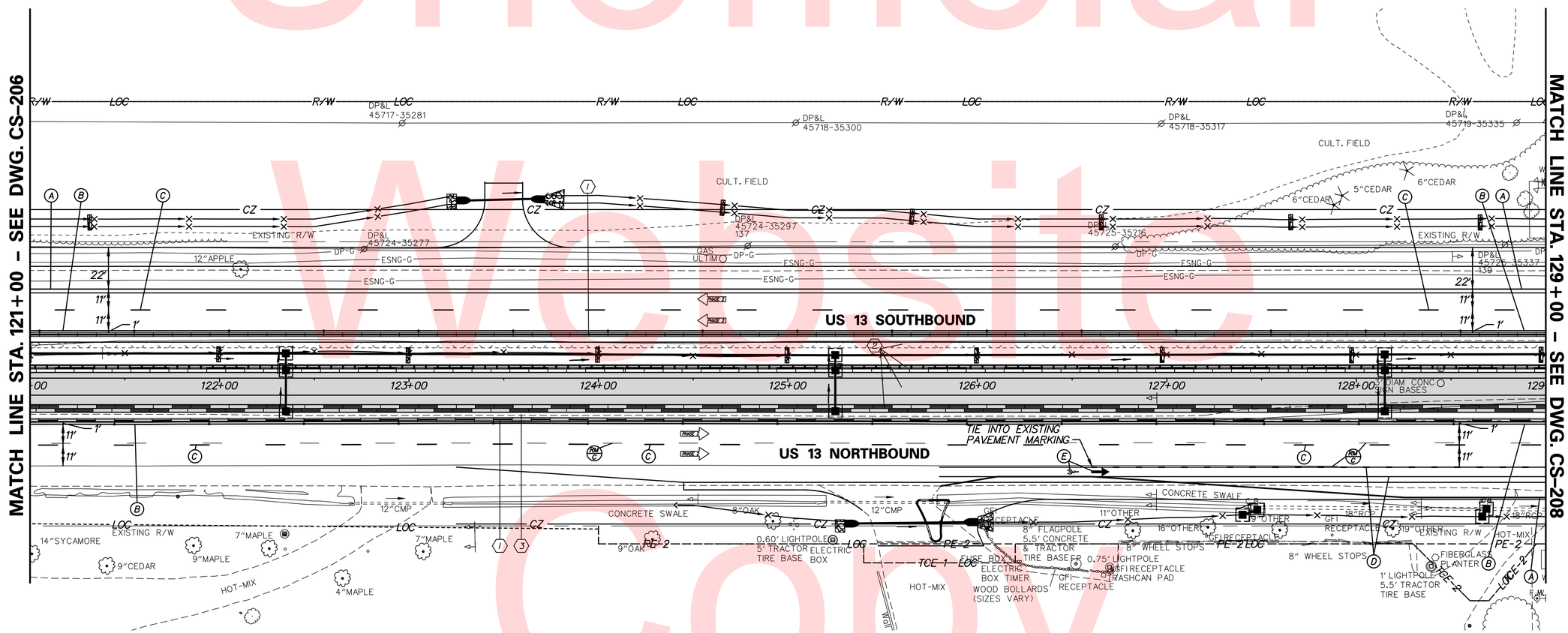

Unofficial Website Copy

DELAWARE DEPARTMENT OF TRANSPORTATION	ADDENDUMS / REVISIONS	SCALE 0 30 60 90 FEET	US 13 & PORT PENN RD INTERSECTION	CONTRACT T201011302	BRIDGE NO.	CONSTRUCTION PHASING, M.O.T., AND EROSION CONTROL PLAN – PHASE 2	CS-207
				COUNTY NEW CASTLE	DESIGNED BY: J.D.C.		SHEET NO. 133
					CHECKED BY: J.M.M.		TOTAL SHTS. 179

n:\31653-000\contract td\cadd\traffic-v jm\CS207U301_1D.dgn
8/21/2015 10:27:01 AM

SEQUENCE OF CONSTRUCTION - PHASE 2

1. PLACE ALL PERTINENT TEMPORARY TRAFFIC CONTROL DEVICES AND SEDIMENT CONTROL DEVICES AS SHOWN ON THIS PLAN. SHIFT US 13 NORTHBOUND AND SOUTHBOUND TRAFFIC TO DESIGNATED TRAVEL LANES.
2. CONSTRUCT CURB AND GUTTER, FULL-DEPTH PAVEMENT, MEDIAN DRAINAGE SYSTEM, DITCH AND GUARDRAIL AND REMOVE TEMPORARY PAVING ALONG US 13 MEDIAN.
3. REMOVE ALL TEMPORARY TRAFFIC CONTROL DEVICES AND CONSTRUCT REMAINING 4 FEET OF FULL DEPTH PAVEMENT TO MEET THE EXISTING PAVEMENT USING TYPICAL APPLICATION 33.
4. REMOVE TEMPORARY PAVING IN US 13 MEDIAN USING TYPICAL APPLICATION 33.
5. STABILIZE ALL DISTURBED AREAS.
6. FOLLOWING CONSTRUCTION, COMPLETE RESURFACING AND/OR INSTALL FINAL PAVEMENT SURFACE COURSE.

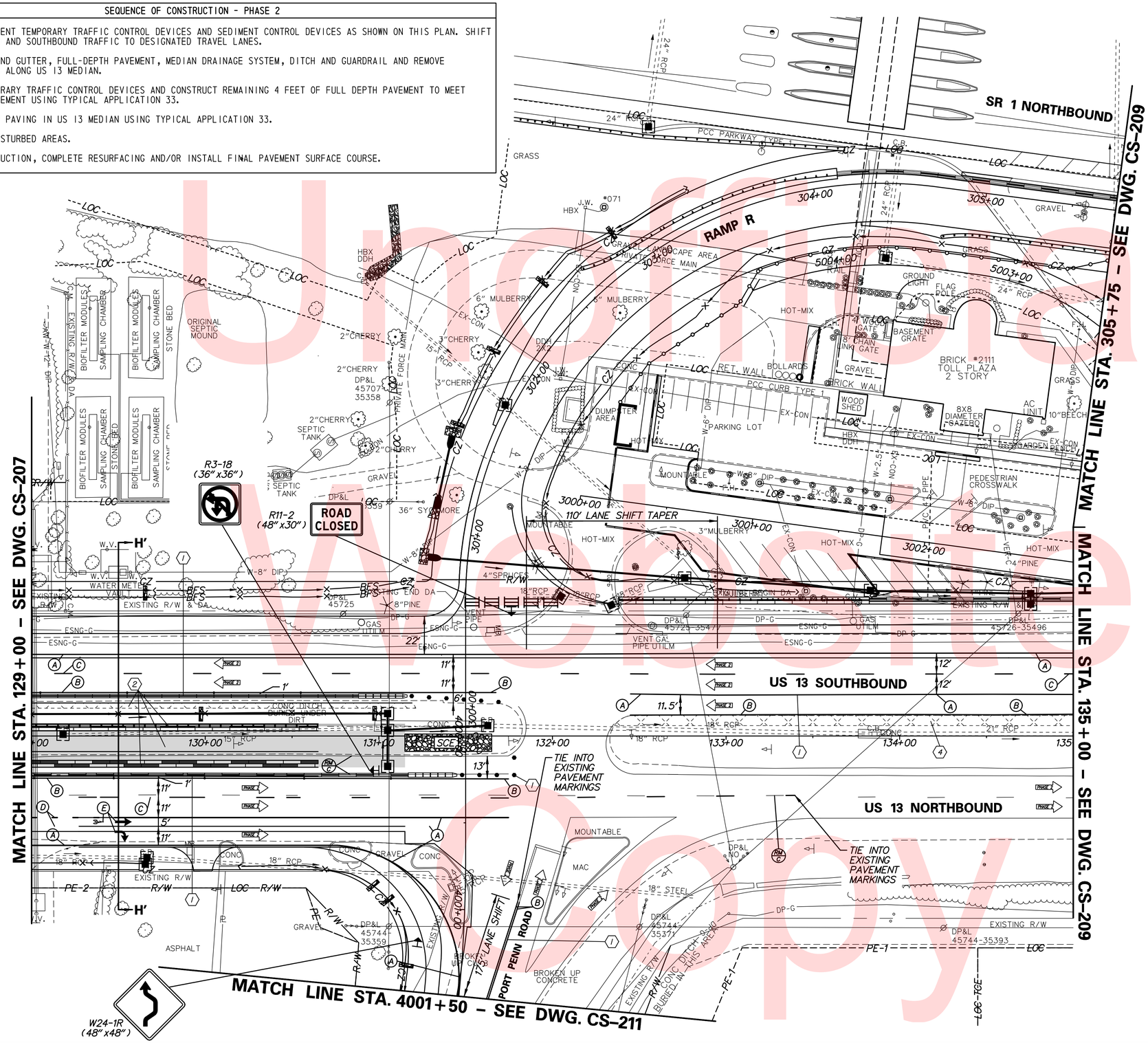

CONSTRUCTION PHASING LEGEND

- PROPOSED CONSTRUCTION THIS PHASE
- TEMPORARY CONSTRUCTION
- EXISTING SIGN/PROPOSED TEMPORARY SIGN
- TYPE III BARRICADE
- PLASTIC DRUM
- TRAFFIC FLOW ARROW
- (A) 4" SOLID WHITE PAINT
- (B) 4" SOLID YELLOW PAINT
- (C) 4" BROKEN WHITE PAINT (10' LINE, 30' GAP)
- (D) 4" DOTTED WHITE PAINT (3' LINE, 9' GAP)
- (E) WHITE PAINT SYMBOL/LEGEND
- PORTABLE P.C.C. SAFETY BARRIER (F SHAPE)
- PORTABLE IMPACT ATTENUATOR
- ARROW PANEL
- (RM C) REMOVE EXISTING STRIPING BY CONTRACTOR

Unofficial Website Copy

N:\31653-000\Contract 1D\CADD\Traffic\RUM\CS208U301_1D.dgn
12/23/2015 11:27:05 AM

DELAWARE DEPARTMENT OF TRANSPORTATION

ADDENDUMS / REVISIONS

SCALE 0 30 60 90 FEET

US 13 & PORT PENN RD INTERSECTION

CONTRACT	BRIDGE NO.
T201011302	DESIGNED BY: J.D.C.
COUNTY	CHECKED BY: J.M.M.
NEW CASTLE	

CONSTRUCTION PHASING, M.O.T., AND EROSION CONTROL PLAN – PHASE 2

CS-208
SHEET NO. 134
TOTAL SHTS. 179

CONSTRUCTION PHASING LEGEND

- PROPOSED CONSTRUCTION THIS PHASE
- TEMPORARY CONSTRUCTION
- EXISTING SIGN/PROPOSED TEMPORARY SIGN
- TYPE III BARRICADE
- PLASTIC DRUM
- TRAFFIC FLOW ARROW
- (A) 4" SOLID WHITE PAINT
- (B) 4" SOLID YELLOW PAINT
- (C) 4" BROKEN WHITE PAINT (10' LINE, 30' GAP)
- (D) 4" DOTTED WHITE PAINT (3' LINE, 9' GAP)
- (E) WHITE PAINT SYMBOL/LEGEND
- PORTABLE P.C.C. SAFETY BARRIER (F SHAPE)
- PORTABLE IMPACT ATTENUATOR
- ARROW PANEL
- (RM C) REMOVE EXISTING STRIPING BY CONTRACTOR

SEQUENCE OF CONSTRUCTION - PHASE 2

1. PLACE ALL PERTINENT TEMPORARY TRAFFIC CONTROL DEVICES AS SHOWN ON THIS PLAN. SHIFT US 13 SOUTHBOUND TRAFFIC TO DESIGNATED TRAVEL LANES. MAINTAIN US 13 NORTHBOUND TRAFFIC IN EXISTING TRAVEL LANES.
2. REMOVE TEMPORARY PAVING IN US 13 MEDIAN USING TYPICAL APPLICATION 33.
3. FOLLOWING CONSTRUCTION, REMOVE ALL TEMPORARY TRAFFIC CONTROL DEVICES AND SEDIMENT CONTROL DEVICES AND COMPLETE RESURFACING AND/OR INSTALL FINAL PAVEMENT SURFACE COURSE.

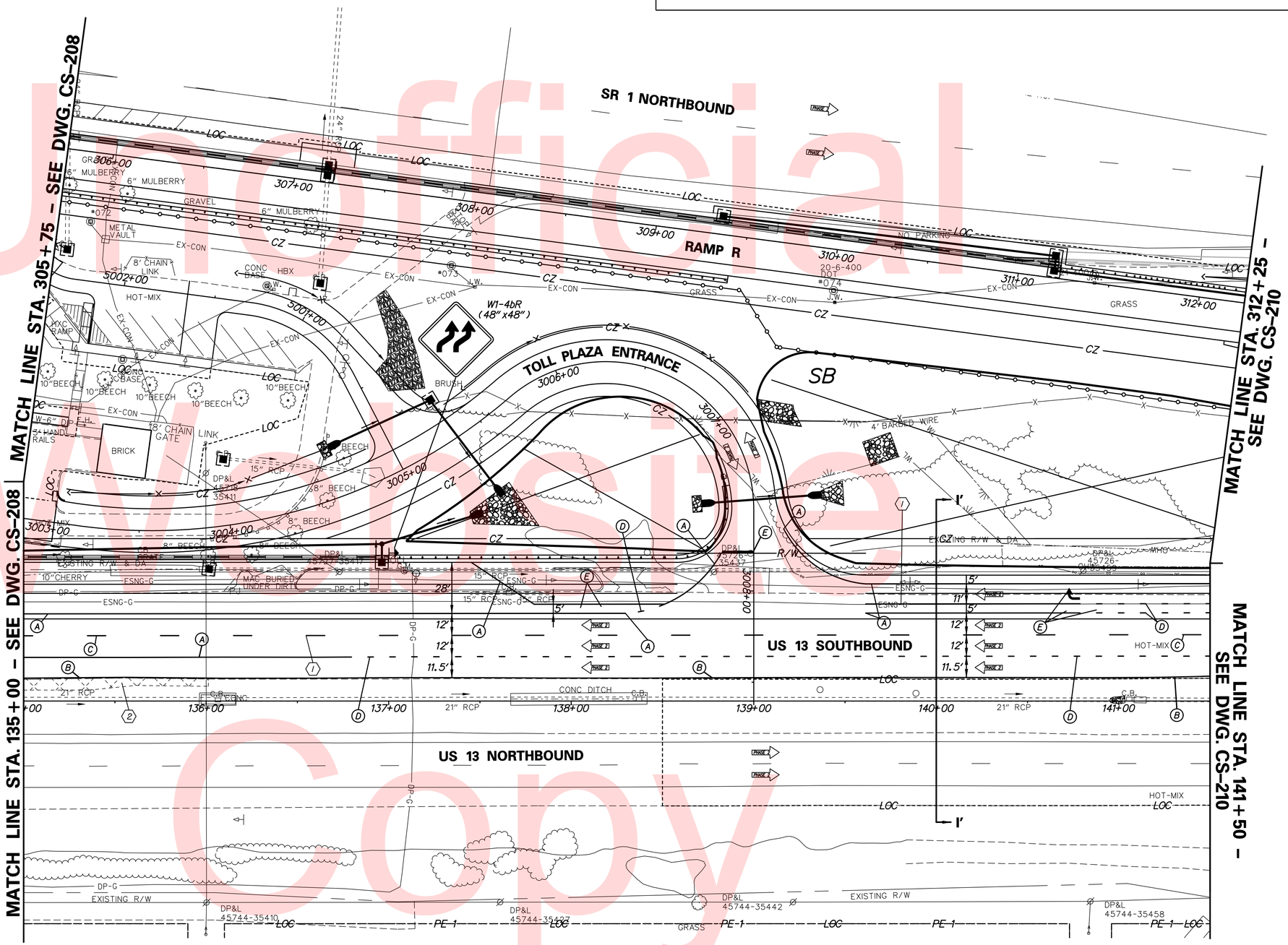

Unofficial Website Copy

DELAWARE DEPARTMENT OF TRANSPORTATION	ADDENDUMS / REVISIONS	SCALE 0 30 60 90 FEET	US 13 & PORT PENN RD INTERSECTION	CONTRACT T201011302 / COUNTY NEW CASTLE	BRIDGE NO. / DESIGNED BY: J.D.C. / CHECKED BY: J.M.M.	CONSTRUCTION PHASING, M.O.T., AND EROSION CONTROL PLAN - PHASE 2

CS-209

SHEET NO. 135

TOTAL SHTS. 179

n:\33653-000\contract 1d\cadd\traffic\rjm\CS209U301_1D.dgn
8/21/2015 10:27:09 AM

CONSTRUCTION PHASING LEGEND

- PROPOSED CONSTRUCTION THIS PHASE
- TEMPORARY CONSTRUCTION
- EXISTING SIGN/PROPOSED TEMPORARY SIGN
- TYPE III BARRICADE
- PLASTIC DRUM
- TRAFFIC FLOW ARROW
- (A) 4" SOLID WHITE PAINT
- (B) 4" SOLID YELLOW PAINT
- (C) 4" BROKEN WHITE PAINT (10' LINE, 30' GAP)
- (D) 4" DOTTED WHITE PAINT (3' LINE, 9' GAP)
- (E) WHITE PAINT SYMBOL/LEGEND
- PORTABLE P.C.C. SAFETY BARRIER (F SHAPE)
- PORTABLE IMPACT ATTENUATOR
- ARROW PANEL
- (RM/C) REMOVE EXISTING STRIPING BY CONTRACTOR

SEQUENCE OF CONSTRUCTION - PHASE 2

1. PLACE ALL PERTINENT TEMPORARY TRAFFIC CONTROL DEVICES AS SHOWN ON THIS PLAN. SHIFT US 13 NORTHBOUND AND SOUTHBOUND TRAFFIC TO DESIGNATED TRAVEL LANES. MAINTAIN US 13 NORTHBOUND TRAFFIC IN EXISTING TRAVEL LANES.
2. REMOVE TEMPORARY PAVING IN US 13 MEDIAN USING TYPICAL APPLICATION 33.
3. FOLLOWING CONSTRUCTION, REMOVE ALL TEMPORARY TRAFFIC CONTROL DEVICES, AND SEDIMENT CONTROL DEVICES AND COMPLETE RESURFACING AND/OR INSTALL FINAL PAVEMENT SURFACE COURSE.

NOTES:

1. THE CONTRACTOR SHALL COORDINATE THE INSTALLATION OF TEMPORARY TRAFFIC CONTROL DEVICES ALONG US 13 SOUTHBOUND WITH TEMPORARY TRAFFIC CONTROL DEVICES INSTALLED IN CONTRACT NO. T200911302. ADJUSTMENTS IN THE LOCATION OF DEVICES MAY BE NEEDED TO ENSURE CONTINUITY BETWEEN THE WORK ZONES. ANY NECESSARY ADJUSTMENTS SHALL BE MADE WITH APPROVAL OF THE ENGINEER.

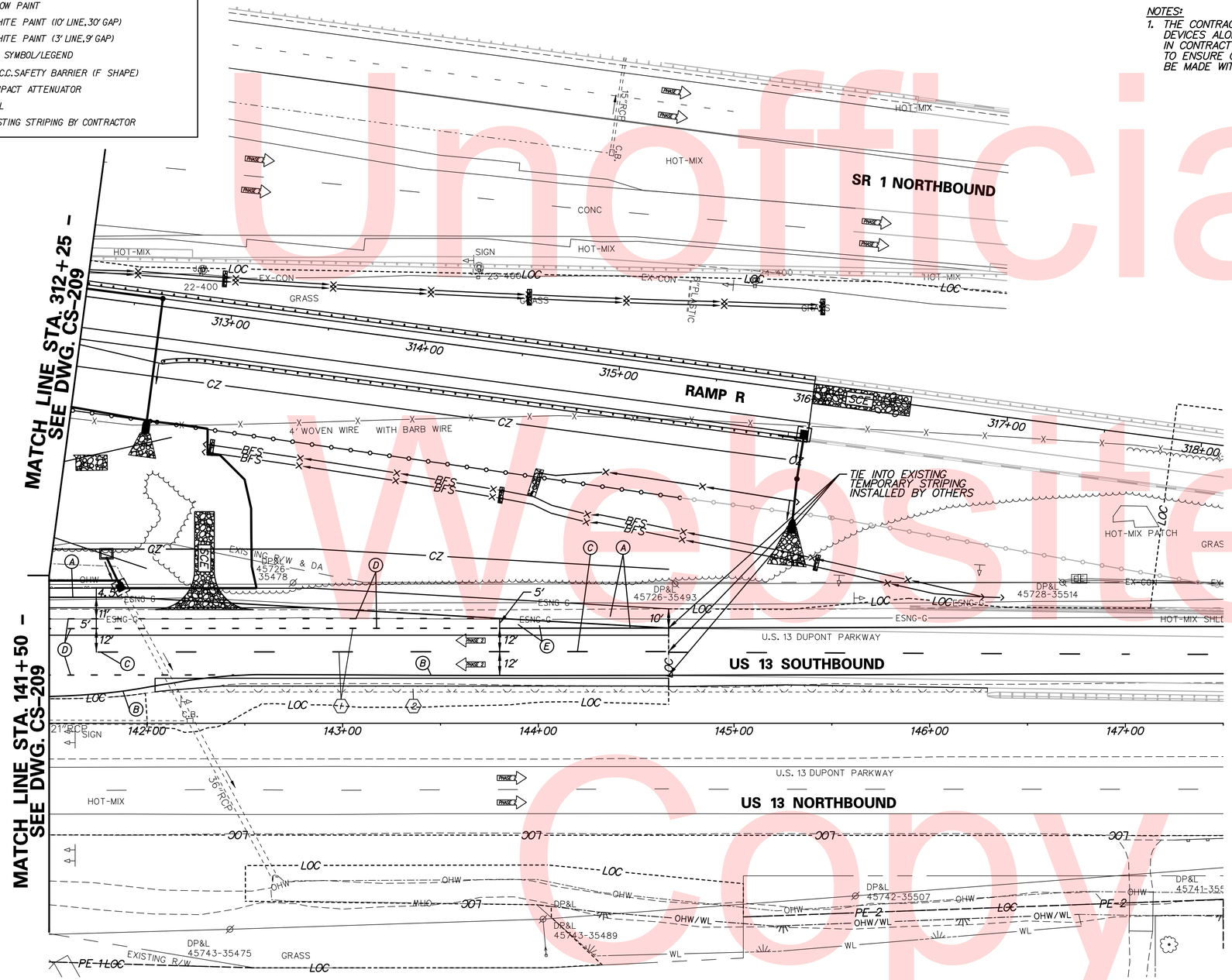

Unofficial Website Copy

DELAWARE DEPARTMENT OF TRANSPORTATION	ADDENDUMS / REVISIONS	SCALE 0 30 60 90 FEET	US 13 & PORT PENN RD INTERSECTION	CONTRACT T201011302	BRIDGE NO.	CONSTRUCTION PHASING, M.O.T., AND EROSION CONTROL PLAN – PHASE 2	CS-210 SHEET NO. 136 TOTAL SHTS. 179
				COUNTY NEW CASTLE	DESIGNED BY: J.D.C. CHECKED BY: J.M.M.		

n:\31653-000\contract_14\cadd\traffic\rjm\CS210U301_10.dgn 8/21/2015 10:27:15 AM

CONSTRUCTION PHASING LEGEND

- PROPOSED CONSTRUCTION THIS PHASE
- TEMPORARY CONSTRUCTION
- EXISTING SIGN/PROPOSED TEMPORARY SIGN
- TYPE III BARRICADE
- PLASTIC DRUM
- TRAFFIC FLOW ARROW
- (A) 4" SOLID WHITE PAINT
- (B) 4" SOLID YELLOW PAINT
- (C) 4" BROKEN WHITE PAINT (10' LINE, 30' GAP)
- (D) 4" DOTTED WHITE PAINT (3' LINE, 9' GAP)
- (E) WHITE PAINT SYMBOL/LEGEND
- PORTABLE P.C.C. SAFETY BARRIER (F SHAPE)
- PORTABLE IMPACT ATTENUATOR
- ARROW PANEL
- (RM C) REMOVE EXISTING STRIPING BY CONTRACTOR

SEQUENCE OF CONSTRUCTION - PHASE 2

1. PLACE ALL PERTINENT TEMPORARY TRAFFIC CONTROL DEVICES AND SEDIMENT CONTROL DEVICES AS SHOWN ON THIS PLAN. SHIFT PORT PENN ROAD TRAFFIC TO DESIGNATED TRAVEL LANES.
2. CONSTRUCT FULL-DEPTH PAVEMENT AND PERMANENT DITCH ALONG NORTH SIDE OF PORT PENN ROAD.
3. STABILIZE ALL DISTURBED AREAS.
4. FOLLOWING CONSTRUCTION, REMOVE ALL TEMPORARY TRAFFIC CONTROL DEVICES AND SEDIMENT CONTROL DEVICES AND COMPLETE RESURFACING AND/OR INSTALL FINAL PAVEMENT SURFACE COURSE.

NOTES:

1. CONTRACTOR SHALL MAINTAIN DRIVEWAY ACCESS TO PROPERTY AT ALL TIMES AND CONSTRUCTION OF THE DRIVEWAY SHALL BE COORDINATED WITH THE PROPERTY OWNER.

SEDIMENT TRAP SCHEDULE

NO.	D. AREA	LENGTH	WIDTH	DEPTH	OUT. TYPE	WEIR EL.	CLEAN EL.	WEIR LEN.	EMBANK. EL.
2-1	4.53	130.0'	38.0'	4.0'	STONE	37.0	35.56	18.0	38.00

EARTH DIKE SCHEDULE

NO.	BEGIN STA.	END STA.	OFFSET	LENGTH
ED 2-3	4004+05.64	4008+00.00	-85.00	410.44'

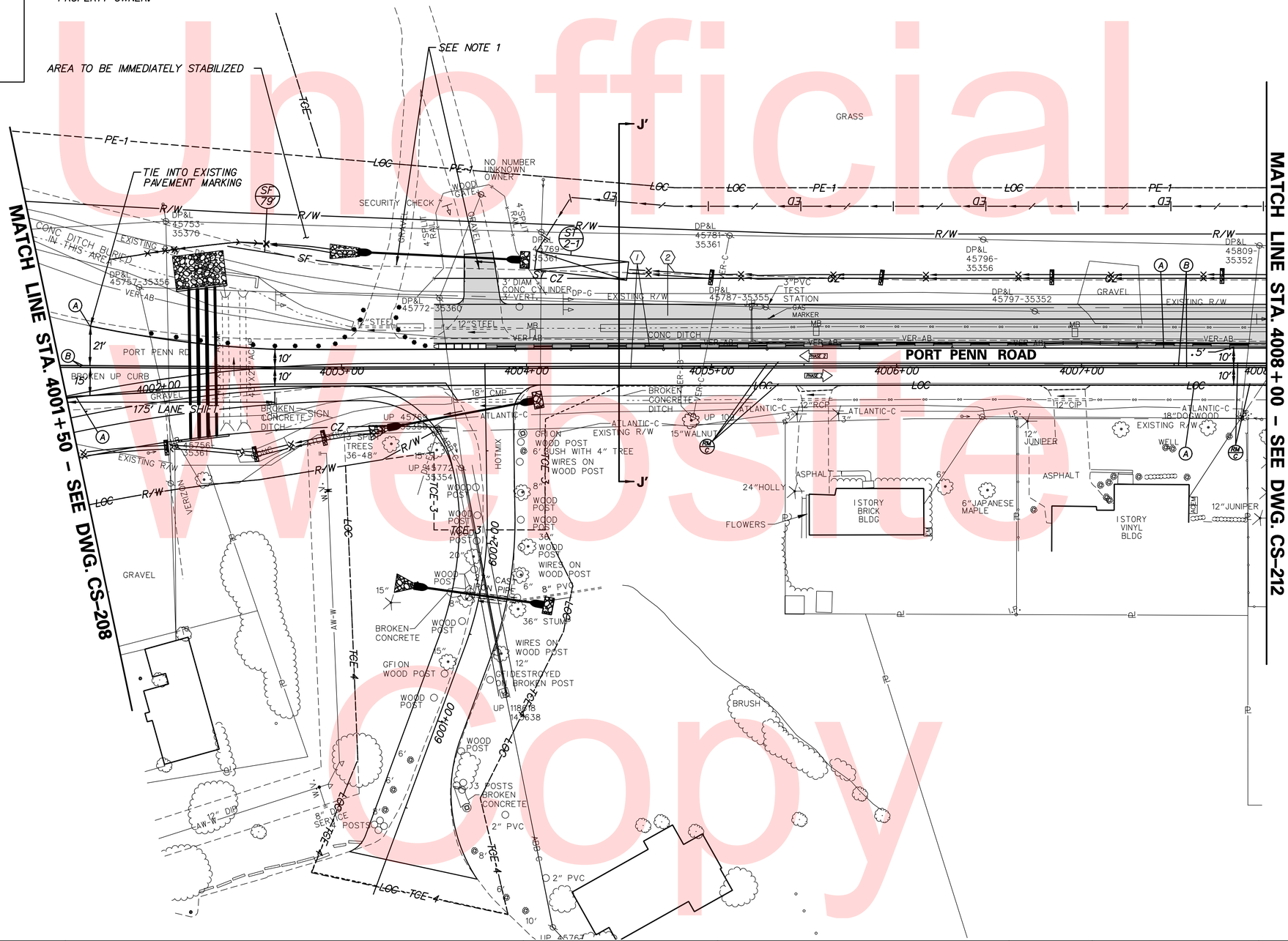

Unofficial Website Copy

DELAWARE DEPARTMENT OF TRANSPORTATION	ADDENDUMS / REVISIONS	SCALE 0 30 60 90 FEET	US 13 & PORT PENN RD INTERSECTION	CONTRACT T201011302	BRIDGE NO.	CONSTRUCTION PHASING, M.O.T., AND EROSION CONTROL PLAN – PHASE 2	CS-211
				COUNTY NEW CASTLE	DESIGNED BY: J.D.C.		SHEET NO. 137
					CHECKED BY: J.M.M.		TOTAL SHTS. 179

N:\31653-000\Contract 1D:\CADD\Traffic\RJM\CS211U301_1D.dgn
12/23/2015 11:28:41 AM

CONSTRUCTION PHASING LEGEND

- PROPOSED CONSTRUCTION THIS PHASE
- TEMPORARY CONSTRUCTION
- EXISTING SIGN/PROPOSED TEMPORARY SIGN
- TYPE III BARRICADE
- PLASTIC DRUM
- TRAFFIC FLOW ARROW
- (A) 4" SOLID WHITE PAINT
- (B) 4" SOLID YELLOW PAINT
- (C) 4" BROKEN WHITE PAINT (10' LINE, 30' GAP)
- (D) 4" DOTTED WHITE PAINT (3' LINE, 9' GAP)
- (E) WHITE PAINT SYMBOL/LEGEND
- PORTABLE P.C.C. SAFETY BARRIER (F SHAPE)
- PORTABLE IMPACT ATTENUATOR
- ARROW PANEL
- (RM C) REMOVE EXISTING STRIPING BY CONTRACTOR

SEQUENCE OF CONSTRUCTION - PHASE 2

1. PLACE ALL PERTINENT TEMPORARY TRAFFIC CONTROL DEVICES AS SHOWN ON THIS PLAN. SHIFT PORT PENN ROAD TRAFFIC TO DESIGNATED TRAVEL LANES.
2. CONSTRUCT FULL-DEPTH PAVEMENT ALONG NORTH SIDE OF PORT PENN ROAD.
3. STABILIZE ALL DISTURBED AREAS.
4. FOLLOWING CONSTRUCTION, REMOVE ALL TEMPORARY TRAFFIC CONTROL DEVICES AND COMPLETE RESURFACING AND/OR INSTALL FINAL PAVEMENT SURFACE COURSE.

EARTH DIKE SCHEDULE

NO.	BEGIN STA.	END STA.	OFFSET	LENGTH
ED 2-4	4008+00.00	4011+36.69	-85.00	348.02'

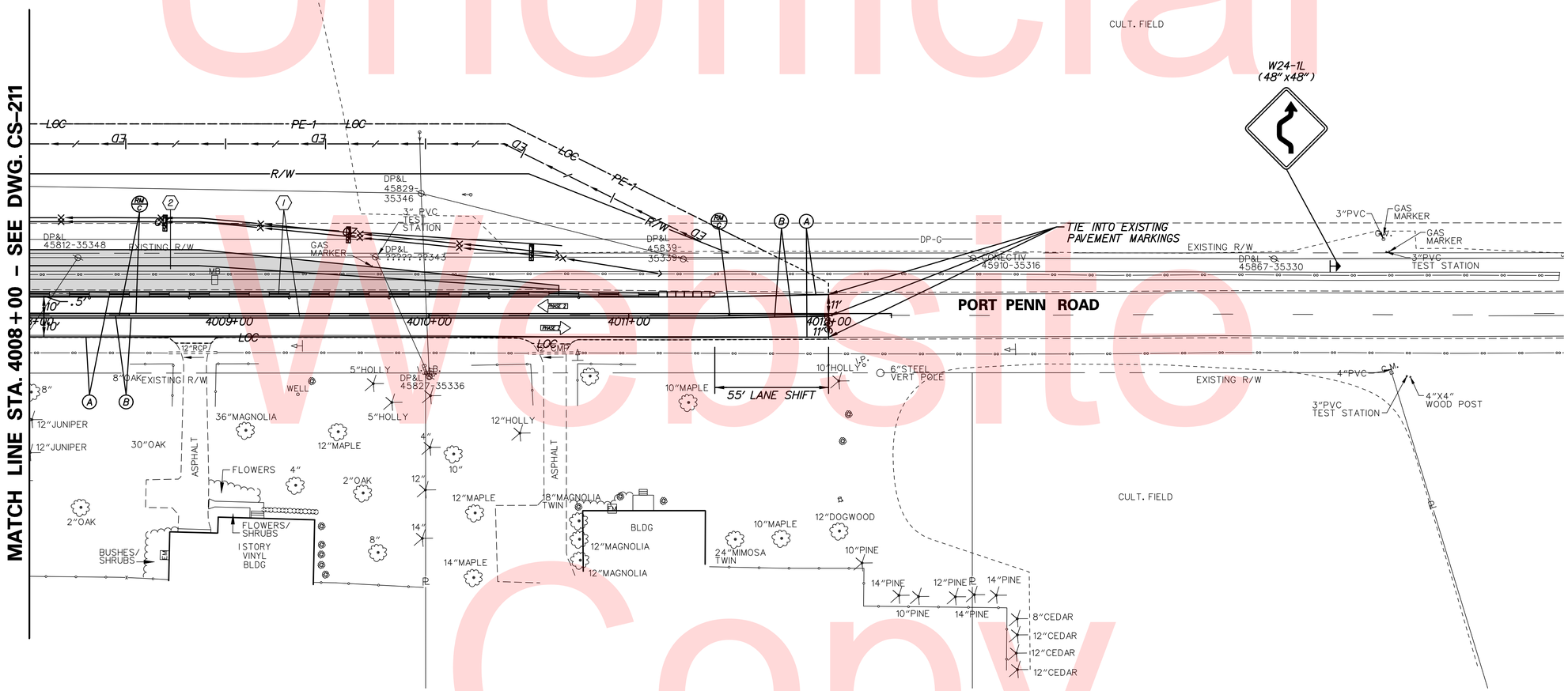

Unofficial Website Copy

N:\31653-000\Contract 1D\CADD\Traffic\RJM\CS212U301_1D.dgn
12/23/2015 11:49:22 AM

DELAWARE DEPARTMENT OF TRANSPORTATION	ADDENDUMS / REVISIONS	SCALE 0 30 60 90 FEET	US 13 & PORT PENN RD INTERSECTION	CONTRACT T201011302	BRIDGE NO.	CONSTRUCTION PHASING, M.O.T., AND EROSION CONTROL PLAN – PHASE 2	CS-212
				COUNTY NEW CASTLE	DESIGNED BY: J.D.C.		SHEET NO. 138
					CHECKED BY: J.M.M.		TOTAL SHTS. 179

SEQUENCE OF CONSTRUCTION - PHASE 2A

1. MAINTAIN PHASE 2 TEMPORARY TRAFFIC CONTROL DEVICES AND SEDIMENT CONTROL DEVICES.
2. DURING OFF-PEAK HOURS, CLOSE THE US 13 LEFT LANES USING TYPICAL APPLICATION 33, PLACE ADDITIONAL DRUMS AROUND WORK AREA AS SHOWN AND COMPLETE FULL-DEPTH PAVEMENT CONSTRUCTION IN US 13 AND PORT PENN ROAD INTERSECTION. MAINTAIN US 13 SOUTHBOUND LEFT TURNS DURING LEFT LANE CLOSURE. DETOUR PORT PENN ROAD LEFT-TURNS TO US 13 SOUTHBOUND.
3. STABILIZE ALL DISTURBED AREAS.
4. FOLLOWING CONSTRUCTION, REMOVE ALL TEMPORARY TRAFFIC CONTROL DEVICES AND SEDIMENT CONTROL DEVICES AND COMPLETE RESURFACING AND/OR INSTALL FINAL PAVEMENT SURFACE COURSE.

CONSTRUCTION PHASING LEGEND

- PROPOSED CONSTRUCTION THIS PHASE
- TEMPORARY CONSTRUCTION
- EXISTING SIGN/PROPOSED TEMPORARY SIGN
- TYPE III BARRICADE
- PLASTIC DRUM
- TRAFFIC FLOW ARROW
- (A) 4" SOLID WHITE PAINT
- (B) 4" SOLID YELLOW PAINT
- (C) 4" BROKEN WHITE PAINT (10' LINE, 30' GAP)
- (D) 4" DOTTED WHITE PAINT (3' LINE, 9' GAP)
- (E) WHITE PAINT SYMBOL/LEGEND
- PORTABLE P.C.C. SAFETY BARRIER (F SHAPE)
- PORTABLE IMPACT ATTENUATOR
- ARROW PANEL
- (RM C) REMOVE EXISTING STRIPING BY CONTRACTOR

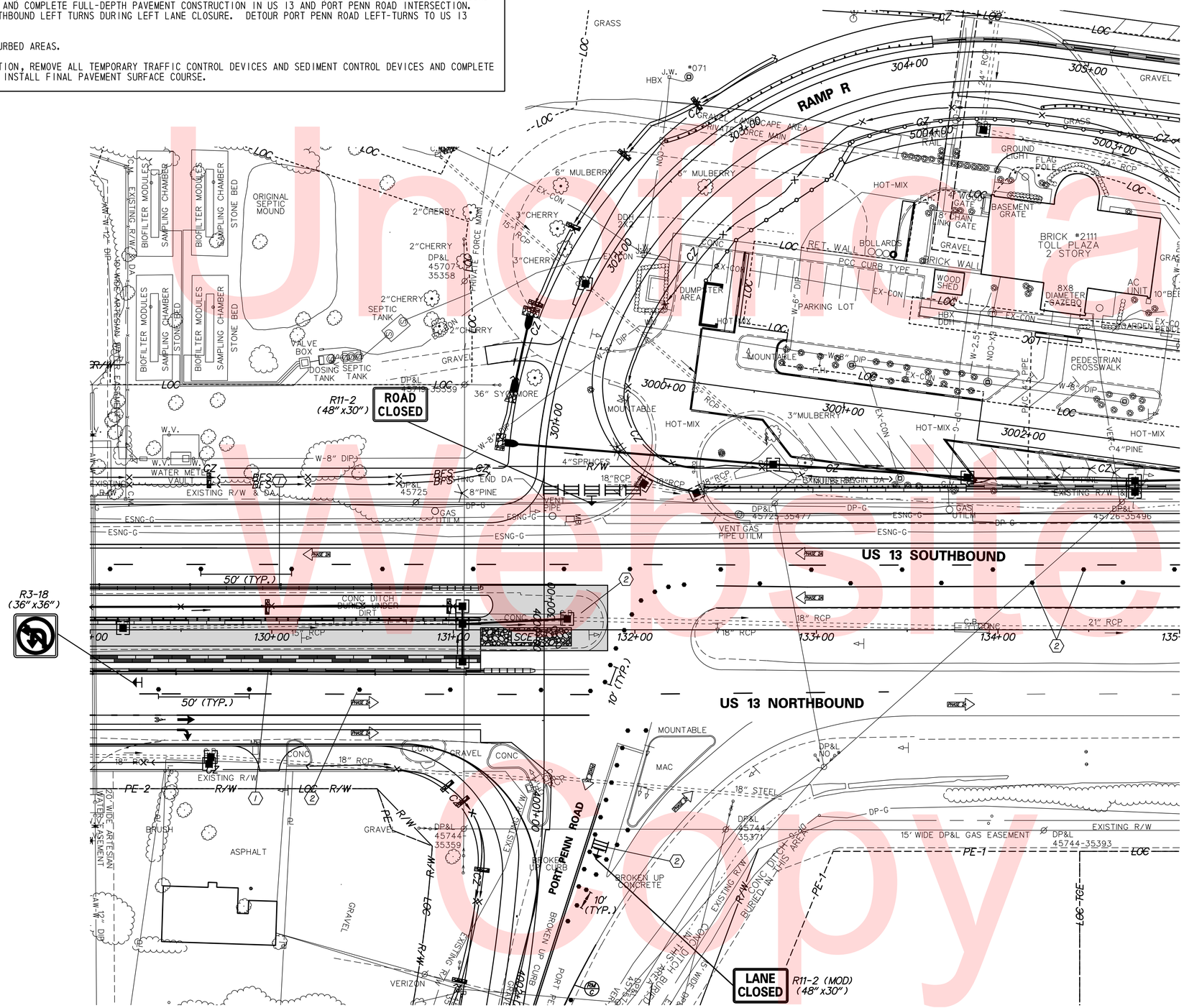

Unofficial Website Copy

N:\31653-000\Contract 1D:\CADD\Traffic\RAM\CS2A01U301_1D.dgn
12/23/2015 11:30:12 AM

DELAWARE DEPARTMENT OF TRANSPORTATION	ADDENDUMS / REVISIONS	SCALE 0 30 60 90 FEET	US 13 & PORT PENN RD INTERSECTION	CONTRACT T201011302	BRIDGE NO.	CONSTRUCTION PHASING, M.O.T., AND EROSION CONTROL PLAN – PHASE 2A	CS-2A01
				COUNTY NEW CASTLE	DESIGNED BY: J.D.C.		SHEET NO. 139
					CHECKED BY: J.M.M.		TOTAL SHTS. 179

SEQUENCE OF CONSTRUCTION - PHASE 2B

1. MAINTAIN PHASE 2 TEMPORARY TRAFFIC CONTROL DEVICES AND SEDIMENT CONTROL DEVICES.
2. PLACE/RELOCATE ADDITIONAL TEMPORARY P.C.C. SAFETY BARRIER, STRIPING AND SEDIMENT CONTROL DEVICES ALONG PORT PENN ROAD. SHIFT PORT PENN ROAD TRAFFIC TO DESIGNATED TRAVEL LANES.
3. DURING OFF-PEAK HOURS, PLACE ADDITIONAL DRUMS AROUND WORK AREA AS SHOWN AND COMPLETE PAVEMENT REMOVAL AND FULL-DEPTH PAVEMENT CONSTRUCTION IN NORTHEAST CORNER OF INTERSECTION.
4. STABILIZE ALL DISTURBED AREAS.
5. FOLLOWING CONSTRUCTION, REMOVE ALL TEMPORARY TRAFFIC CONTROL DEVICES AND SEDIMENT CONTROL DEVICES AND COMPLETE RESURFACING AND/OR INSTALL FINAL PAVEMENT SURFACE COURSE.

CONSTRUCTION PHASING LEGEND

- PROPOSED CONSTRUCTION THIS PHASE
- TEMPORARY CONSTRUCTION
- EXISTING SIGN/PROPOSED TEMPORARY SIGN
- TYPE III BARRICADE
- PLASTIC DRUM
- TRAFFIC FLOW ARROW
- (A) 4" SOLID WHITE PAINT
- (B) 4" SOLID YELLOW PAINT
- (C) 4" BROKEN WHITE PAINT (10' LINE, 30' GAP)
- (D) 4" DOTTED WHITE PAINT (3' LINE, 9' GAP)
- (E) WHITE PAINT SYMBOL/LEGEND
- PORTABLE P.C.C. SAFETY BARRIER (F SHAPE)
- PORTABLE IMPACT ATTENUATOR
- ARROW PANEL
- (RM C) REMOVE EXISTING STRIPING BY CONTRACTOR

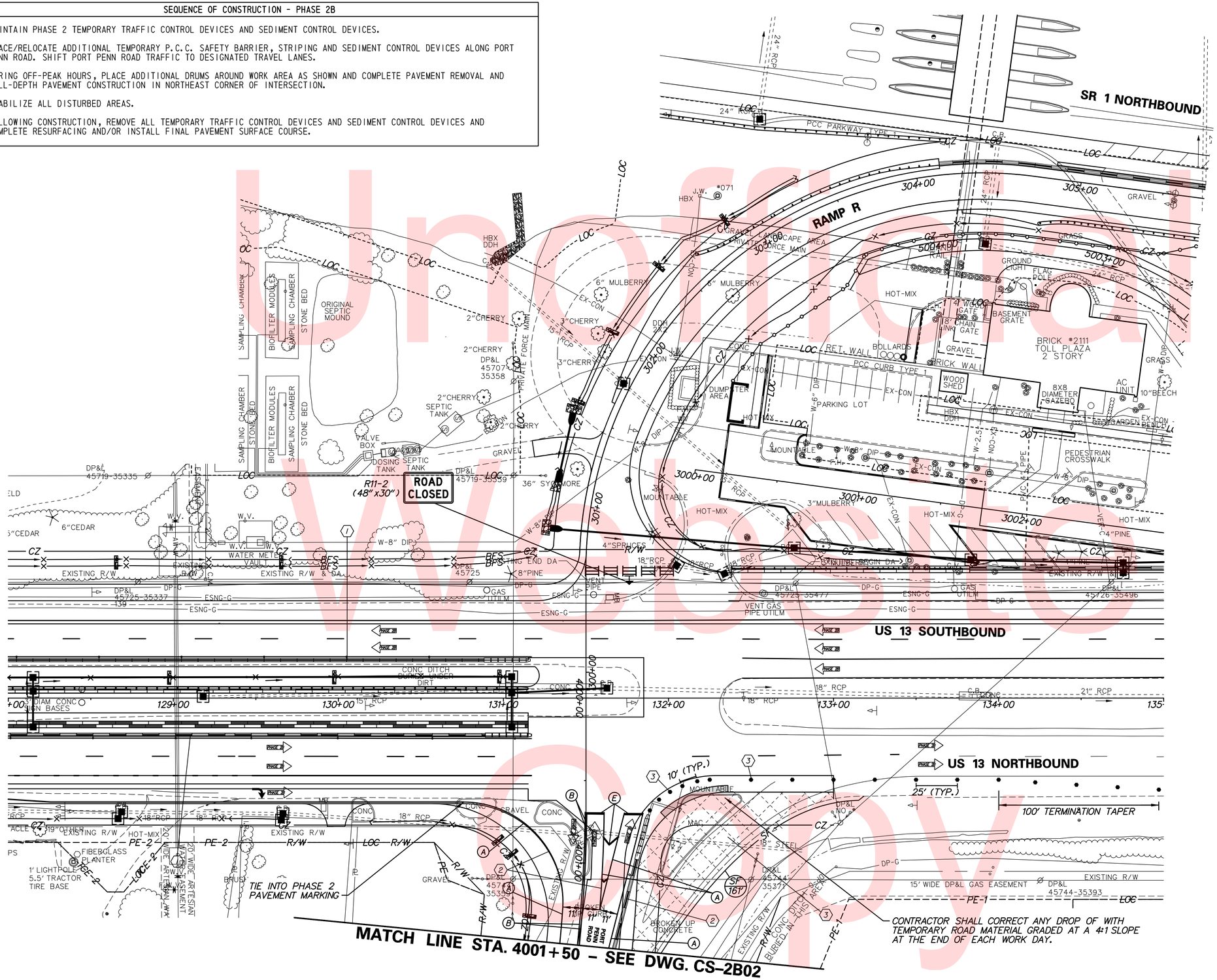

Unofficial Web Copy

DELAWARE DEPARTMENT OF TRANSPORTATION	ADDENDUMS / REVISIONS	SCALE 0 30 60 90 FEET	US 13 & PORT PENN RD INTERSECTION	CONTRACT T201011302	BRIDGE NO.	CONSTRUCTION PHASING, M.O.T., AND EROSION CONTROL PLAN - PHASE 2B	CS-2B01
				COUNTY NEW CASTLE	DESIGNED BY: J.D.C.		SHEET NO. 140
					CHECKED BY: J.M.M.		TOTAL SHTS. 179

N:\31653-000\Contract 1D:\CADD\Traffic\RAM\CS2B01U301_1D.dgn
12/23/2015 11:31:13 AM

CONSTRUCTION PHASING LEGEND

- PROPOSED CONSTRUCTION THIS PHASE
- TEMPORARY CONSTRUCTION
- EXISTING SIGN/PROPOSED TEMPORARY SIGN
- TYPE III BARRICADE
- PLASTIC DRUM
- TRAFFIC FLOW ARROW
- (A) 4" SOLID WHITE PAINT
- (B) 4" SOLID YELLOW PAINT
- (C) 4" BROKEN WHITE PAINT (10' LINE, 30' GAP)
- (D) 4" DOTTED WHITE PAINT (3' LINE, 9' GAP)
- (E) WHITE PAINT SYMBOL/LEGEND
- PORTABLE P.C.C. SAFETY BARRIER (F SHAPE)
- PORTABLE IMPACT ATTENUATOR
- ARROW PANEL
- (RM C) REMOVE EXISTING STRIPING BY CONTRACTOR

SEQUENCE OF CONSTRUCTION - PHASE 2B

1. MAINTAIN PHASE 2 TEMPORARY TRAFFIC CONTROL DEVICES AND SEDIMENT CONTROL DEVICES.
2. PLACE/RELOCATE ADDITIONAL TEMPORARY TRAFFIC CONTROL DEVICES AND SEDIMENT CONTROL DEVICES ALONG PORT PENN ROAD.
3. CONSTRUCT FULL-DEPTH PAVEMENT AND COMPLETE PAVEMENT REMOVAL ON NORTH SIDE OF PORT PENN ROAD.
4. STABILIZE ALL DISTURBED AREAS.
5. FOLLOWING CONSTRUCTION, REMOVE ALL TEMPORARY TRAFFIC CONTROL DEVICES AND SEDIMENT CONTROL DEVICES AND COMPLETE RESURFACING AND/OR INSTALL FINAL PAVEMENT SURFACE COURSE.

NOTES:

1. CONTRACTOR SHALL MAINTAIN DRIVEWAY ACCESS TO PROPERTY AT ALL TIMES AND CONSTRUCTION OF THE DRIVEWAY SHALL BE COORDINATED WITH THE PROPERTY OWNER.
2. CONTRACTOR SHALL AT ALL DELIVERY TIMES, ENSURE THAT DELIVERY VEHICLES HAVE INGRESS AND EGRESS ACCESS BETWEEN US 13 AND THE DRIVEWAY, AND SHALL COORDINATE WITH THE PROPERTY OWNER REGARDING THE SAME. TRAFFIC CONTROL DEVICES SHALL BE PLACED/STAGED, AND/OR FLAGGING SHALL BE PROVIDED, AS NEEDED TO PROVIDE THIS ACCESS.

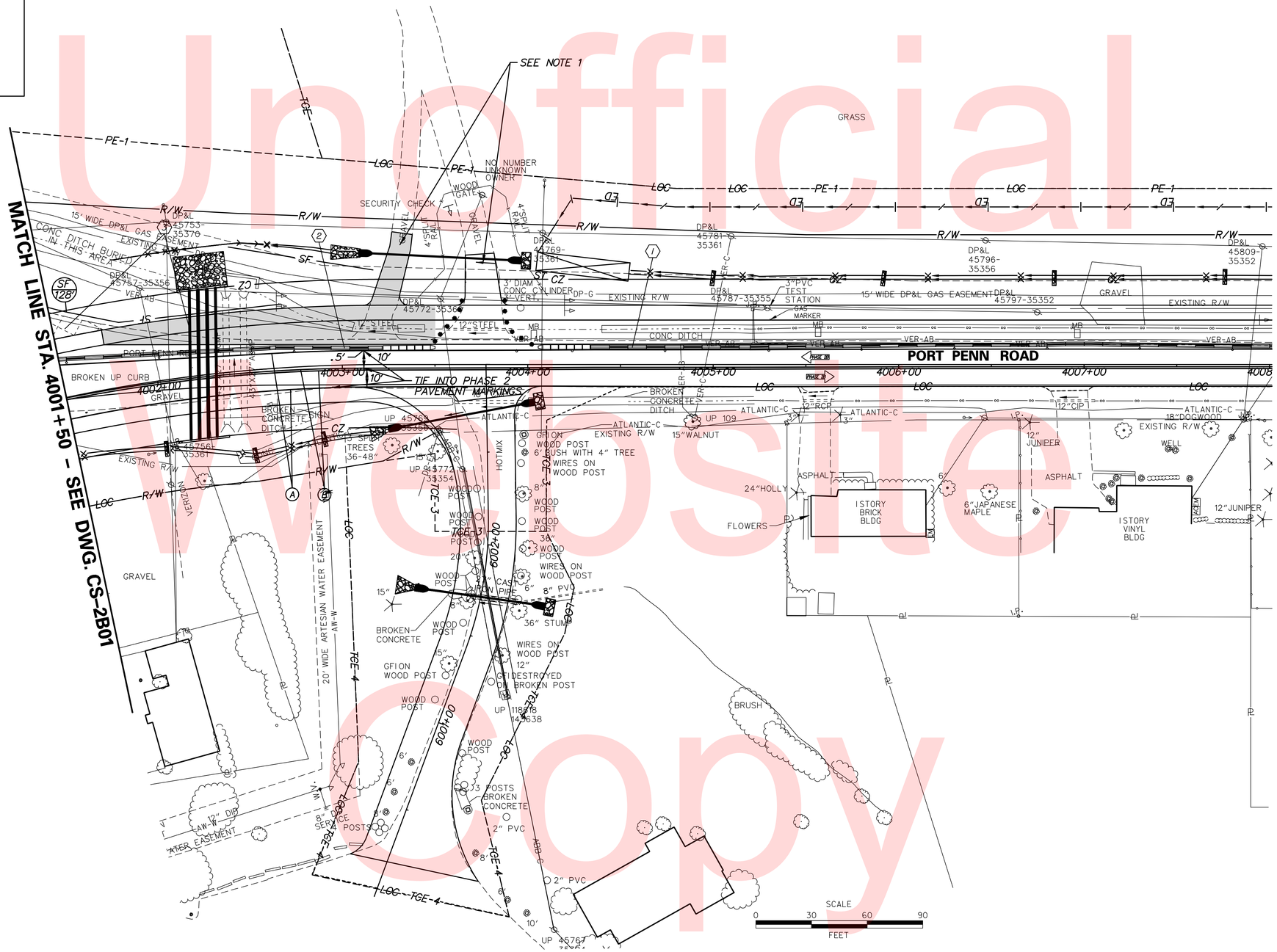

Unofficial Website Copy

DELAWARE DEPARTMENT OF TRANSPORTATION	ADDENDUMS / REVISIONS	US 13 & PORT PENN RD INTERSECTION	CONTRACT T201011302	BRIDGE NO.	CONSTRUCTION PHASING, M.O.T., AND EROSION CONTROL PLAN – PHASE 2B	CS-2B02
			COUNTY NEW CASTLE	DESIGNED BY: J.D.C.		SHEET NO. 141
				CHECKED BY: J.M.M.		TOTAL SHTS. 179

N:\3853-000\Contract 1D:\ADD\Traffic\RAM\CS2B02U301_1D.dgn
12/23/2015 11:31:57 AM

SEQUENCE OF CONSTRUCTION

(1) UPON COMPLETION OF ALL CONSTRUCTION ACTIVITIES, THE CONTRACT T201011302 CONTRACTOR SHALL REMOVE ALL TEMPORARY TRAFFIC CONTROL DEVICES FROM THE PREVIOUS PHASE AND INSTALL ALL TEMPORARY TRAFFIC CONTROL DEVICES NEEDED FOR THE CLOSURE OF RAMP R AS SHOWN ON THIS PLAN. THE TEMPORARY TRAFFIC CONTROL DEVICES SHALL REMAIN UNTIL THE OPENING OF RAMP R BY THE CONTRACT T200911302 CONTRACTOR (SEE NOTES 1, 2 & 3).

NOTES:

1. *CONTRACT T201011302 CONTRACTOR SHALL COVER SIGN WITH OPAQUE MATERIAL AFTER INSTALLATION OF SIGN AND LEAVE SIGN COVERED AT COMPLETION OF CONTRACT. CONTRACT T200911302 CONTRACTOR SHALL REMOVE SIGN COVERING UPON OPENING OF RAMP R IN THAT CONTRACT.*
2. *AT THE COMPLETION OF CONSTRUCTION THE CONTRACT T201011302 CONTRACTOR SHALL FURNISH AND INSTALL TEMPORARY TRAFFIC CONTROL DEVICES TO REMAIN AS SHOWN ON THIS PLAN. THE TEMPORARY TRAFFIC CONTROL DEVICES SHALL REMAIN IN PLACE AND SERVE TO TEMPORARILY CLOSE RAMP R UNTIL ITS OPENING BY THE CONTRACT T200911302 CONTRACTOR. MAINTENANCE AND REMOVAL OF THE TEMPORARY TRAFFIC CONTROL DEVICES DURING THE INTERIM CLOSURE PERIOD AND UPON OPENING OF RAMP R SHALL BE THE RESPONSIBILITY OF THE CONTRACT T200911302 CONTRACTOR.*
3. *PAYMENT FOR MAINTENANCE AND REMOVAL OF THE TEMPORARY TRAFFIC CONTROL DEVICES SHOWN ON THIS PLAN BY THE CONTRACT T200911302 CONTRACTOR WILL NOT BE MEASURED AND PAID FOR BUT WILL BE INCIDENTAL TO ITEM 763500 - MAINTENANCE OF TRAFFIC.*
4. *OTHER PERMANENT SIGNS NOT SHOWN ON THIS PLAN SHALL BE INSTALLED AS PER THE SIGNING, STRIPING & CONDUIT PLANS AND SHALL REMAIN UNCOVERED.*

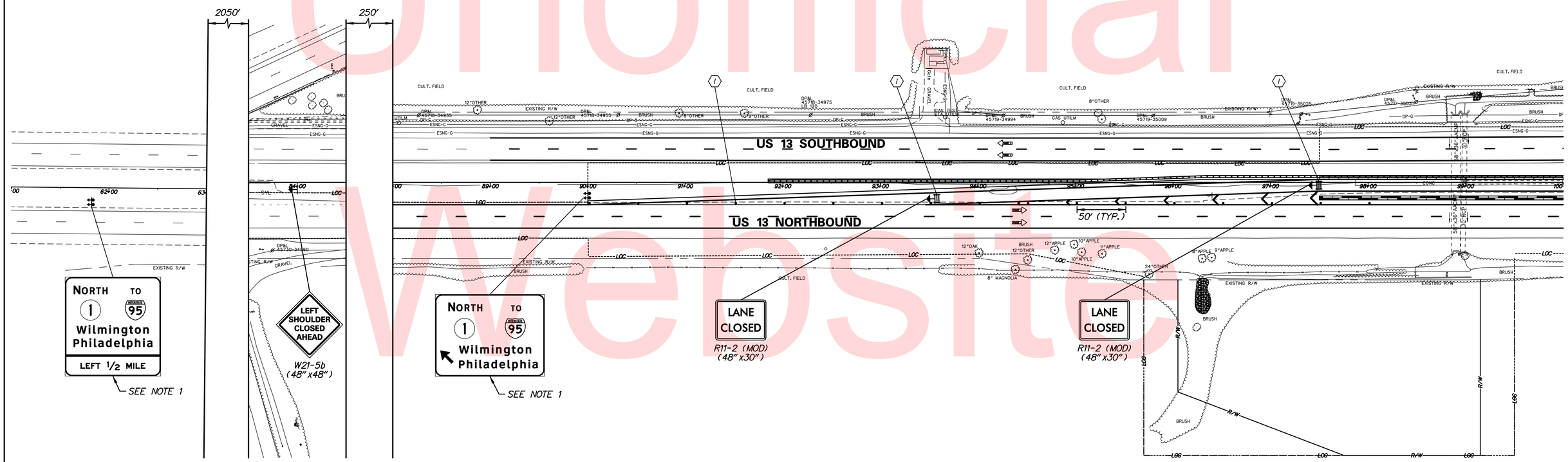

CONSTRUCTION PHASING LEGEND

- PROPOSED CONSTRUCTION THIS PHASE
- TEMPORARY CONSTRUCTION
- EXISTING SIGN/PROPOSED TEMPORARY SIGN
- TYPE III BARRICADE
- PLASTIC DRUM
- TRAFFIC FLOW ARROW
- (A) 4" SOLID WHITE PAINT
- (B) 4" SOLID YELLOW PAINT
- (C) 4" BROKEN WHITE PAINT (10' LINE, 30' GAP)
- (D) 4" DOTTED WHITE PAINT (3' LINE, 9' GAP)
- (E) WHITE PAINT SYMBOL/LEGEND
- PORTABLE P.C.C. SAFETY BARRIER (F SHAPE)
- PORTABLE IMPACT ATTENUATOR
- ARROW PANEL
- (PM/C) REMOVE EXISTING STRIPING BY CONTRACTOR

Unofficial Website Copy

n:\31653-000\contract 1d\cadd\traffic\rjm\CS301U301_10.dgn
8/21/2015 10:27:36 AM

DELAWARE DEPARTMENT OF TRANSPORTATION

ADDENDUMS / REVISIONS

SCALE 0 50 100 150 FEET

US 13 & PORT PENN RD INTERSECTION

CONTRACT	BRIDGE NO.
T201011302	DESIGNED BY: J.D.C.
COUNTY	
NEW CASTLE	CHECKED BY: J.M.M.

CONSTRUCTION PHASING, M.O.T., AND EROSION CONTROL PLAN - PHASE 3

CS-301
SHEET NO. 142
TOTAL SHTS. 179

SEQUENCE OF CONSTRUCTION

(1) UPON COMPLETION OF ALL CONSTRUCTION ACTIVITIES, THE CONTRACT T201011302 CONTRACTOR SHALL REMOVE ALL TEMPORARY TRAFFIC CONTROL DEVICES FROM THE PREVIOUS PHASE AND INSTALL ALL TEMPORARY TRAFFIC CONTROL DEVICES NEEDED FOR THE CLOSURE OF RAMP R AS SHOWN ON THIS PLAN. THE TEMPORARY TRAFFIC CONTROL DEVICES SHALL REMAIN UNTIL THE OPENING OF RAMP R BY THE CONTRACT T200911302 CONTRACTOR (SEE NOTES 1, 2 & 3).

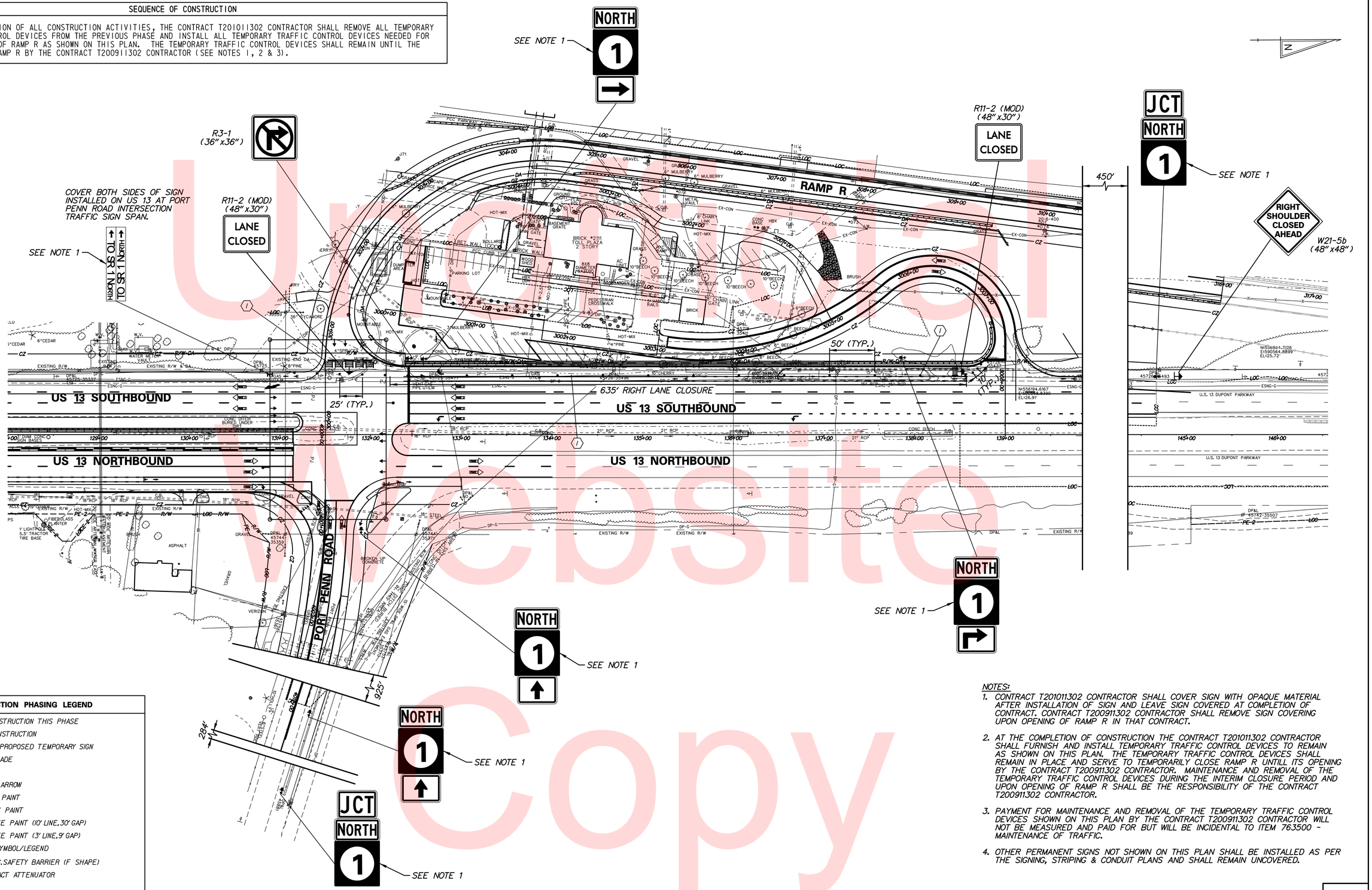

CONSTRUCTION PHASING LEGEND

- PROPOSED CONSTRUCTION THIS PHASE
- TEMPORARY CONSTRUCTION
- EXISTING SIGN/PROPOSED TEMPORARY SIGN
- TYPE III BARRICADE
- PLASTIC DRUM
- TRAFFIC FLOW ARROW
- (A) 4" SOLID WHITE PAINT
- (B) 4" SOLID YELLOW PAINT
- (C) 4" BROKEN WHITE PAINT (10' LINE, 30' GAP)
- (D) 4" DOTTED WHITE PAINT (3' LINE, 9' GAP)
- (E) WHITE PAINT SYMBOL/LEGEND
- PORTABLE P.C.C. SAFETY BARRIER (F SHAPE)
- PORTABLE IMPACT ATTENUATOR
- ARROW PANEL
- (RM C) REMOVE EXISTING STRIPING BY CONTRACTOR

NOTES:

1. CONTRACT T201011302 CONTRACTOR SHALL COVER SIGN WITH OPAQUE MATERIAL AFTER INSTALLATION OF SIGN AND LEAVE SIGN COVERED AT COMPLETION OF CONTRACT. CONTRACT T200911302 CONTRACTOR SHALL REMOVE SIGN COVERING UPON OPENING OF RAMP R IN THAT CONTRACT.
2. AT THE COMPLETION OF CONSTRUCTION THE CONTRACT T201011302 CONTRACTOR SHALL FURNISH AND INSTALL TEMPORARY TRAFFIC CONTROL DEVICES TO REMAIN AS SHOWN ON THIS PLAN. THE TEMPORARY TRAFFIC CONTROL DEVICES SHALL REMAIN IN PLACE AND SERVE TO TEMPORARILY CLOSE RAMP R UNTILL ITS OPENING BY THE CONTRACT T200911302 CONTRACTOR. MAINTENANCE AND REMOVAL OF THE TEMPORARY TRAFFIC CONTROL DEVICES DURING THE INTERIM CLOSURE PERIOD AND UPON OPENING OF RAMP R SHALL BE THE RESPONSIBILITY OF THE CONTRACT T200911302 CONTRACTOR.
3. PAYMENT FOR MAINTENANCE AND REMOVAL OF THE TEMPORARY TRAFFIC CONTROL DEVICES SHOWN ON THIS PLAN BY THE CONTRACT T200911302 CONTRACTOR WILL NOT BE MEASURED AND PAID FOR BUT WILL BE INCIDENTAL TO ITEM 763500 - MAINTENANCE OF TRAFFIC.
4. OTHER PERMANENT SIGNS NOT SHOWN ON THIS PLAN SHALL BE INSTALLED AS PER THE SIGNING, STRIPING & CONDUIT PLANS AND SHALL REMAIN UNCOVERED.

Unofficial Website Copy

N:\33653-090\Contract 1D\CADD\Traffic\RJM\CS302U301_1D.dgn
12/23/2015 11:33:06 AM

DELAWARE DEPARTMENT OF TRANSPORTATION

ADDENDUMS / REVISIONS

SCALE 0 50 100 150 FEET

US 13 & PORT PENN RD INTERSECTION

CONTRACT	BRIDGE NO.
T201011302	DESIGNED BY: J.D.C.
COUNTY	
NEW CASTLE	CHECKED BY: J.M.M.

CONSTRUCTION PHASING, M.O.T., AND EROSION CONTROL PLAN - PHASE 3

CS-302
SHEET NO.
143
TOTAL SHTS.
179

CHANGEABLE MESSAGE BOARDS

SPECIAL SIGNS

PRIOR TO DETOUR
(7 DAYS PRIOR TO BEGINNING OF DETOUR)

Ⓤ

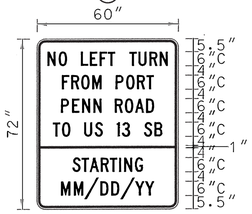

BORDER R=3" TH=1" IN=0.5"

LEGEND - BLACK
BACKGROUND - FLUORESCENT ORANGE

DURING DETOUR

Ⓥ

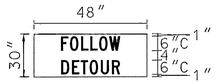

LEGEND - BLACK
BACKGROUND - FLUORESCENT ORANGE
(SEE NOTE 2)

NOTES:
1. INSTALL SIGNS AT RESTAURANT DRIVEWAY EXIT WITHIN DELDOT RIGHT OF WAY.
2. SPECIAL SIGN "U" TO BE DISPLAYED 7 DAYS PRIOR TO DETOUR. SPECIAL SIGN PANEL "V" SHALL BE INSTALLED ON SPECIAL SIGN "U" SO THAT IT COVERS THE "STARTING MM/DD/YY" MESSAGE DURING DETOUR.
3. REFER TO CONSTRUCTION PHASING PLANS PHASE 2A FOR ADDITIONAL TEMPORARY TRAFFIC CONTROL DEVICE PLACEMENT AT THE US 13 AND PORT PENN ROAD INTERSECTION.
4. SIGNS SHALL BE COVERED OR REMOVED WHEN DETOUR IS NOT BEING IMPLEMENTED.

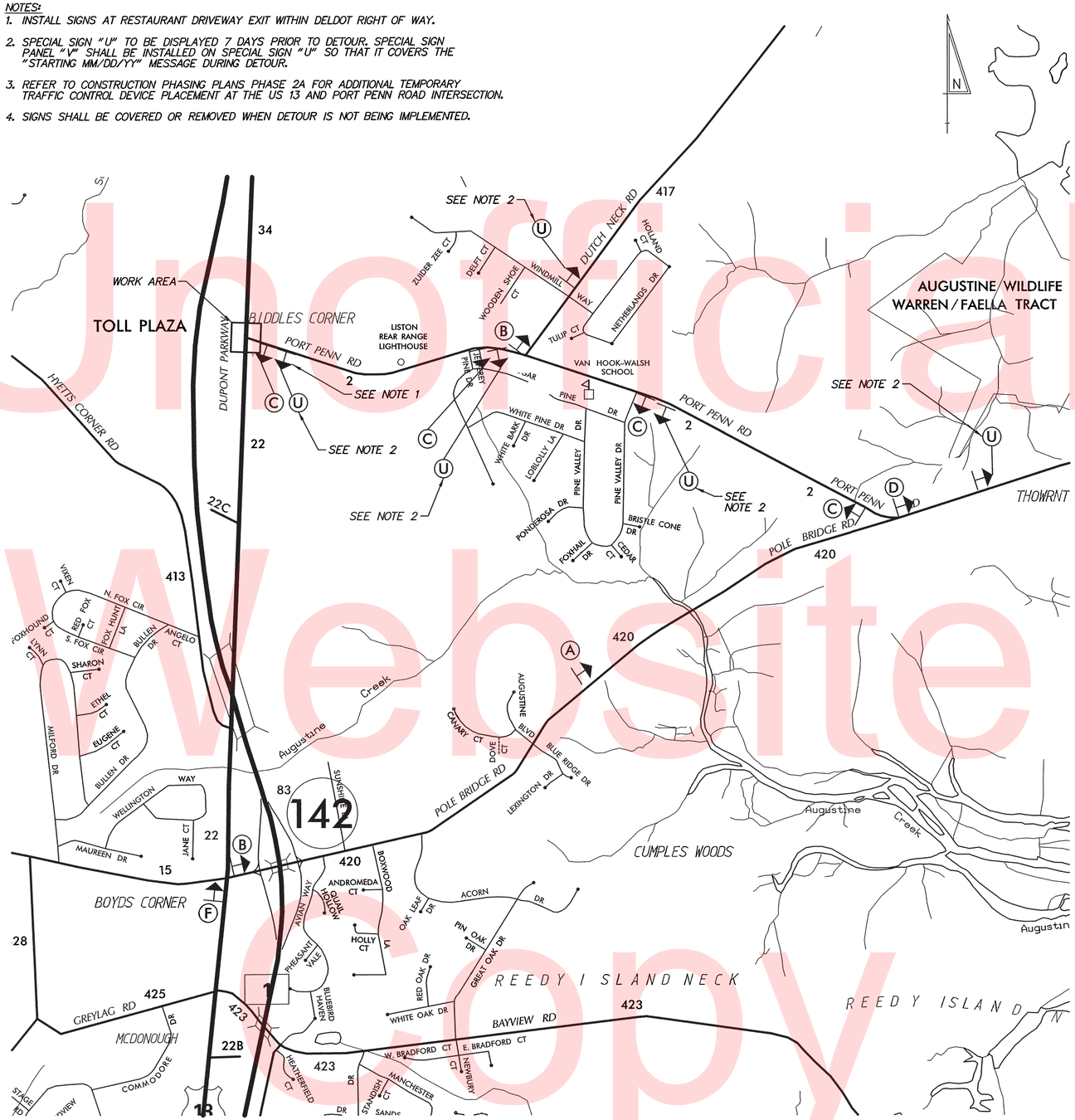

LEGEND

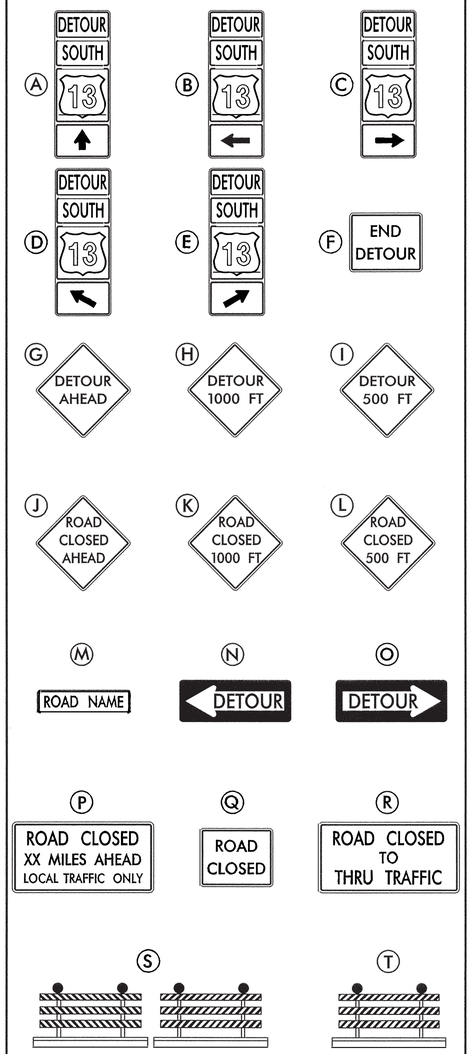

GENERAL NOTES

1. ALL DETOUR SIGNING, INCLUDING TRAILBLAZERS, ARE TO BE SUPPLIED AND MAINTAINED BY THE GENERAL CONTRACTOR IN COMPLIANCE WITH THE DELDOT MANUAL ON UNIFORM TRAFFIC CONTROL DEVICES.
2. THE CONTRACTOR SHALL COMPLY WITH GUIDELINES FOR LIGHTS, BARRICADES, AND SIGNS PER THE LATEST VERSION OF THE DELDOT MANUAL ON UNIFORM TRAFFIC CONTROL DEVICES, PART 6.
3. FIELD CONDITIONS MAY DICTATE CHANGES AT SOME TIME DURING THE LIFE OF THE CONTRACT. IN THE EVENT OF OMISSIONS OR CORRECTIONS, THE SIGNING PROVISIONS OF THE DELDOT MANUAL ON UNIFORM TRAFFIC CONTROL DEVICES WILL PREVAIL.
4. WARNING SIGNS SHOULD BE MOUNTED ON BREAKAWAY POSTS AND HAVE RETROREFLECTIVE FLUORESCENT SHEETING.
5. "S" BARRICADES SHALL COMPLETELY RUN THE FULL WIDTH OF ROADWAY.
6. BARRICADES SHALL BE A MINIMUM OF 6 FEET WIDE UNLESS DIRECTED BY THE ENGINEER.

RECOMMENDED _____ DATE: _____ | RECOMMENDED _____ DATE: _____ | RECOMMENDED _____ DATE: _____ | APPROVED CHIEF SAFETY OFFICER _____ DATE: 11-15-12 | APPROVED TRAFFIC ENGINEER _____ DATE: 11/19/12

DELAWARE DEPARTMENT OF TRANSPORTATION

ADDENDUM / REVISIONS

SCALE 0 1000 2000 3000 FEET

US 13 & PORT PENN RD INTERSECTION

CONTRACT	PERMIT NO.
T201011302	DESIGNED BY: J.D.C.
COUNTY	
NEW CASTLE	CHECKED BY: J.M.M.

DP-01: PORT PENN RD TO US 13 SOUTHBOUND

SHEET NO. 144
TOTAL SHTS. 179

Unofficial Website Copy

CHANGEABLE MESSAGE BOARDS

CMS-1 — PRIOR TO DETOUR
(10 DAYS PRIOR TO BEGINNING OF DETOUR)

US 13 NB TO BE CLOSED	MM/DD-MM/DD 9PM-5AM

CMS-1 — DURING DETOUR

US 13 NB CLOSED AHEAD	FOLLOW DETOUR

CMS-2 — PRIOR TO DETOUR
(10 DAYS PRIOR TO BEGINNING OF DETOUR)

US 13 NB TO BE CLOSED	MM/DD-MM/DD 9PM-5AM

CMS-2 — DURING DETOUR

US 13 NB CLOSED	FOLLOW DETOUR

CMS-3 — DURING DETOUR
(SEE NOTE 4)

NO TOLL	PROCEED WITH CAUTION

SPECIAL SIGNS

NOTES:

1. CLOSE THE LEFT TWO LANES OF US 13 NORTHBOUND PRIOR TO SR 896 (BOYDS CORNER ROAD) USING TYPICAL APPLICATION 37.
2. ALL DETOUR SIGNS SHOWN ON THIS PLAN SHALL BE COVERED OR REMOVED WHEN DETOUR IS NOT BEING IMPLEMENTED.
3. THE CONTRACTOR SHALL COORDINATE THIS DETOUR WITH THE ENGINEER AND OTHER US 301 CONTRACTORS. THIS DETOUR SHALL NOT BE PERMITTED AT THE SAME TIME AS DETOURS FOR SR 1, US 13, EXISTING US 301 OR SR 896 AS PROPOSED IN OTHER CONTRACTS FOR THE NEW US 301 ROADWAY.
4. THE CONTRACTOR SHALL COORDINATE THE HOURS OF THE SR 1 TOLL SUSPENSION WITH THE ENGINEER AND DELDOT. THE CMS SHALL ONLY BE DISPLAYED DURING HOURS THE TOLL IS SUSPENDED.

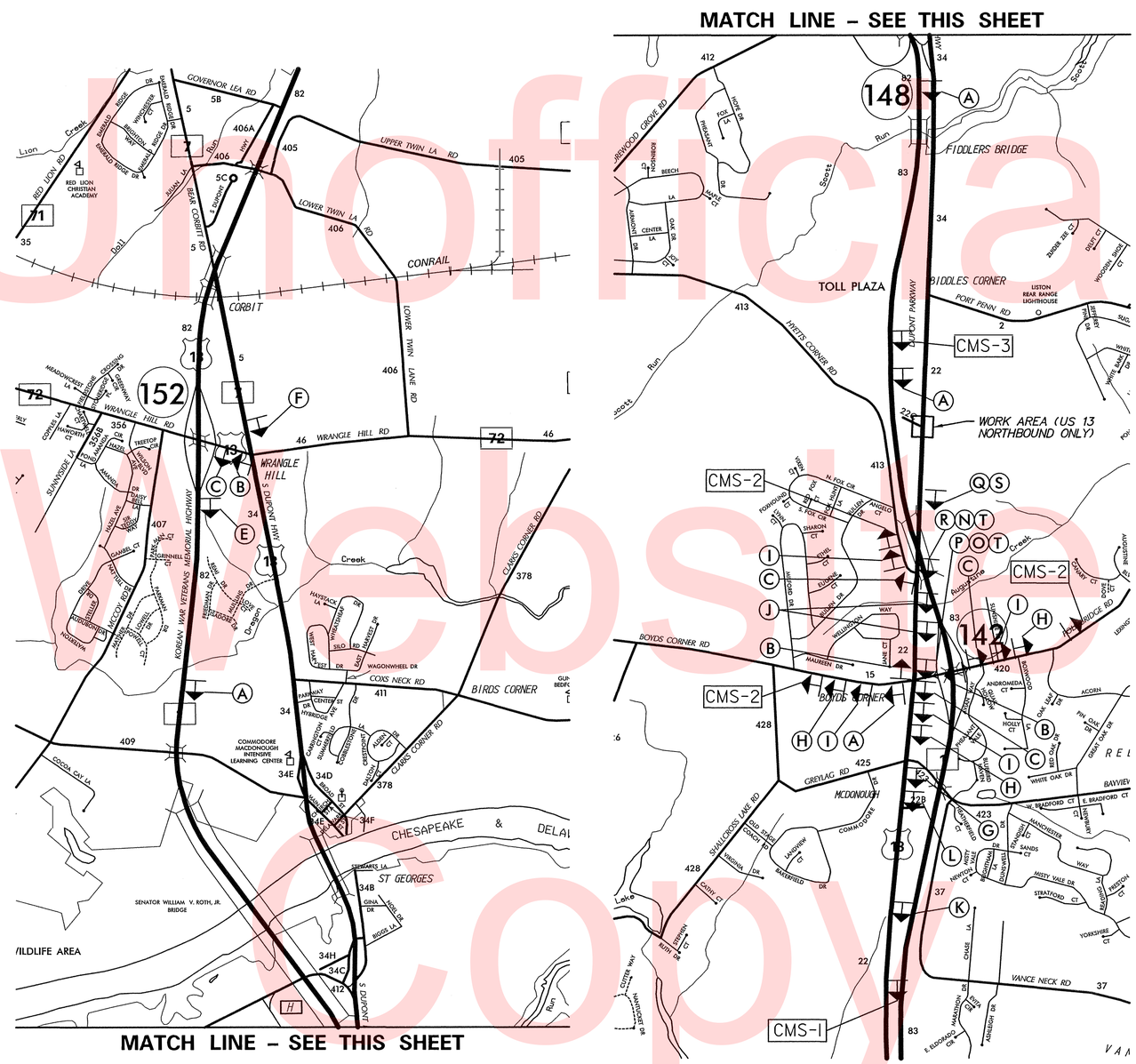

LEGEND

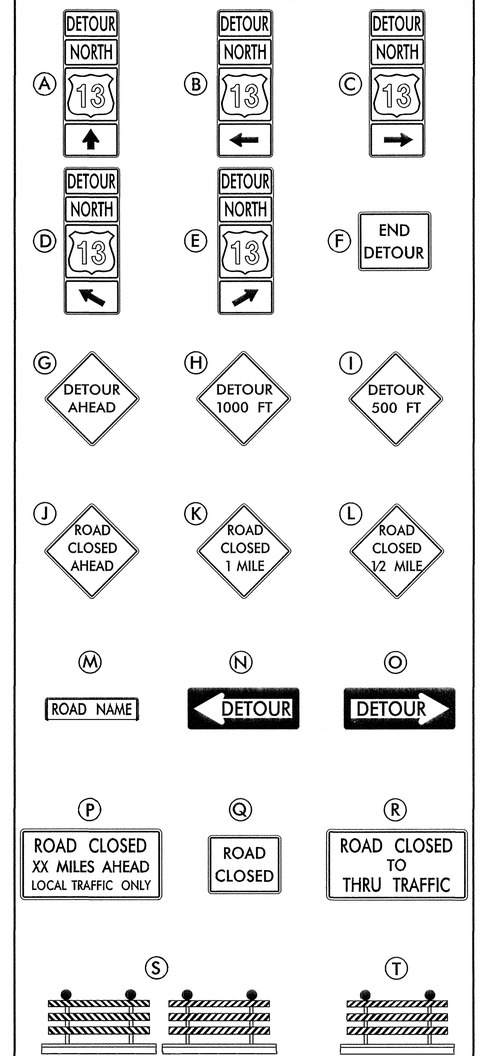

GENERAL NOTES

1. ALL DETOUR SIGNING, INCLUDING TRAILBLAZERS, ARE TO BE SUPPLIED AND MAINTAINED BY THE GENERAL CONTRACTOR IN COMPLIANCE WITH THE DELDOT MANUAL ON UNIFORM TRAFFIC CONTROL DEVICES.
2. THE CONTRACTOR SHALL COMPLY WITH GUIDELINES FOR LIGHTS, BARRICADES, AND SIGNS PER THE LATEST VERSION OF THE DELDOT MANUAL ON UNIFORM TRAFFIC CONTROL DEVICES, PART 6.
3. FIELD CONDITIONS MAY DICTATE CHANGES AT SOME TIME DURING THE LIFE OF THE CONTRACT. IN THE EVENT OF OMISSIONS OR CORRECTIONS, THE SIGNING PROVISIONS OF THE DELDOT MANUAL ON UNIFORM TRAFFIC CONTROL DEVICES WILL PREVAIL.
4. WARNING SIGNS SHOULD BE MOUNTED ON BREAKAWAY POSTS AND HAVE RETROREFLECTIVE FLUORESCENT SHEETING.
5. "S" BARRICADES SHALL COMPLETELY RUN THE FULL WIDTH OF ROADWAY.
6. BARRICADES SHALL BE A MINIMUM OF 6 FEET WIDE UNLESS DIRECTED BY THE ENGINEER.

RECOMMENDED _____ DATE: _____

RECOMMENDED _____ DATE: _____

RECOMMENDED _____ DATE: _____

APPROVED CHIEF SAFETY OFFICER _____ DATE: 10-20-12

APPROVED TRAFFIC ENGINEER _____ DATE: 10/20/12

DELAWARE DEPARTMENT OF TRANSPORTATION

ADDENDUM / REVISIONS

SCALE 0 1500 3000 4500 FEET

US 13 & PORT PENN RD INTERSECTION

CONTRACT	T201011302
COUNTY	NEW CASTLE
PERMIT NO.	
DESIGNED BY: J.D.C.	
CHECKED BY: J.M.M.	

DP-02: US 13 NORTHBOUND

SHEET NO.	145
TOTAL SHTS.	179

n:\31653-000\contract k\cadd\DP0201301_TD.dgn
9/13/2012 8:29:05 PM

Unofficial Website Copy

CHANGEABLE MESSAGE BOARDS

CMS-1

PRIOR TO DETOUR
(10 DAYS PRIOR TO BEGINNING OF DETOUR)

US 13 SB TO BE CLOSED	MM/DD-MM/DD 10PM-5AM

CMS-1

DURING DETOUR

US 13 SB CLOSED AHEAD	FOLLOW DETOUR

CMS-2

DURING DETOUR
(SEE NOTE 4)

NO TOLL	PROCEED WITH CAUTION

SPECIAL SIGNS

PRIOR TO DETOUR
(7 DAYS PRIOR TO BEGINNING OF DETOUR)

(U)

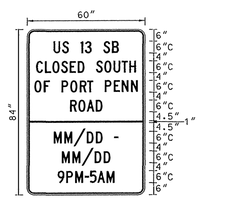

BORDER
R=3"
TH=0.75"
IN=0.5"

LEGEND – BLACK
BACKGROUND – FLUORESCENT ORANGE

DURING DETOUR

(V)

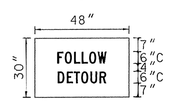

LEGEND – BLACK
BACKGROUND – FLUORESCENT ORANGE
(SEE NOTE 5)

NOTES:

1. REDUCE SOUTHBOUND SR 1 TO ONE TRAVEL LANE PRIOR TO SR 72 (WRANGLE HILL ROAD) USING TYPICAL APPLICATION 33.
2. ALL DETOUR SIGNS SHOWN ON THIS PLAN SHALL BE COVERED OR REMOVED WHEN DETOUR IS NOT BEING IMPLEMENTED.
3. THE CONTRACTOR SHALL COORDINATE THIS DETOUR WITH THE ENGINEER AND OTHER US 301 CONTRACTORS. THIS DETOUR SHALL NOT BE PERMITTED AT THE SAME TIME AS DETOURS FOR SR 1, US 13, EXISTING US 301 OR SR 896 AS PROPOSED IN OTHER CONTRACTS FOR THE NEW US 301 ROADWAY.
4. THE CONTRACTOR SHALL COORDINATE THE HOURS OF THE SR 1 TOLL SUSPENSION WITH THE ENGINEER AND DELDOT. THE CMS SHALL ONLY BE DISPLAYED DURING HOURS THE TOLL IS SUSPENDED.
5. SPECIAL SIGN "U" TO BE DISPLAYED 7 DAYS PRIOR TO DETOUR. SPECIAL SIGN PANEL "V" SHALL BE INSTALLED ON SPECIAL SIGN "U" SO THAT IT COVERS THE "MM/DD-MM/DD XXPM-XXAM" MESSAGE DURING DETOUR.

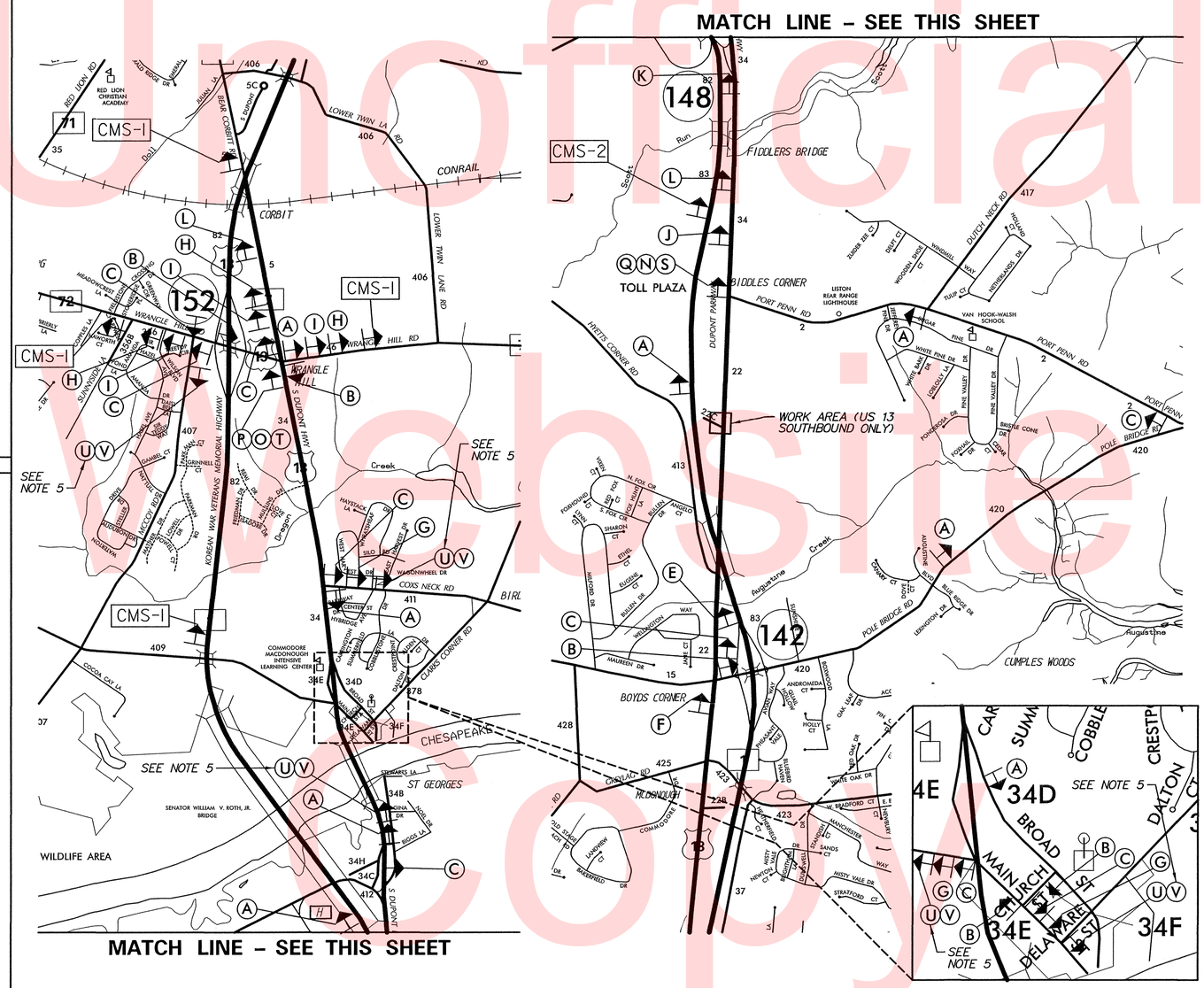

LEGEND

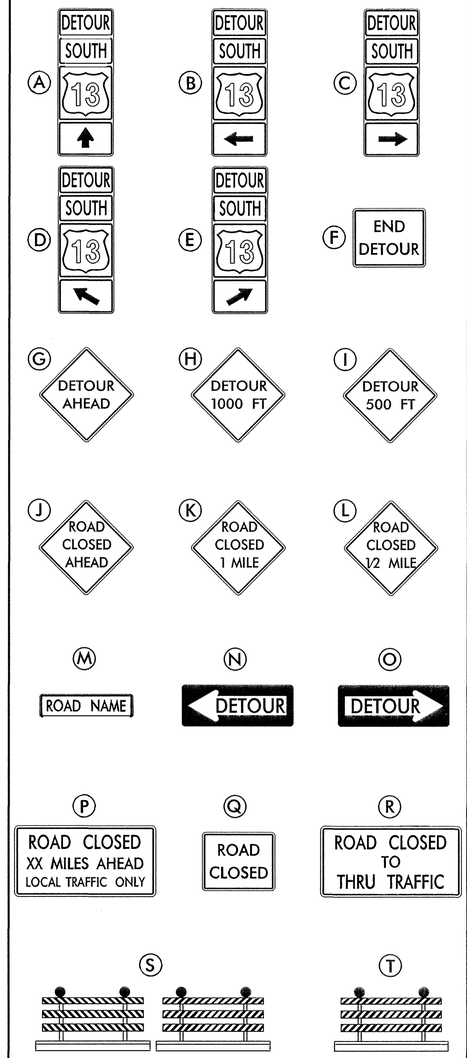

GENERAL NOTES

1. ALL DETOUR SIGNING, INCLUDING TRAILBLAZERS, ARE TO BE SUPPLIED AND MAINTAINED BY THE GENERAL CONTRACTOR IN COMPLIANCE WITH THE DELDOT MANUAL ON UNIFORM TRAFFIC CONTROL DEVICES.
2. THE CONTRACTOR SHALL COMPLY WITH GUIDELINES FOR LIGHTS, BARRICADES, AND SIGNS PER THE LATEST VERSION OF THE DELDOT MANUAL ON UNIFORM TRAFFIC CONTROL DEVICES, PART 6.
3. FIELD CONDITIONS MAY DICTATE CHANGES AT SOME TIME DURING THE LIFE OF THE CONTRACT. IN THE EVENT OF OMISSIONS OR CORRECTIONS, THE SIGNING PROVISIONS OF THE DELDOT MANUAL ON UNIFORM TRAFFIC CONTROL DEVICES WILL PREVAIL.
4. WARNING SIGNS SHOULD BE MOUNTED ON BREAKAWAY POSTS AND HAVE RETROREFLECTIVE FLUORESCENT SHEETING.
5. 'S' BARRICADES SHALL COMPLETELY RUN THE FULL WIDTH OF ROADWAY.
6. BARRICADES SHALL BE A MINIMUM OF 6 FEET WIDE UNLESS DIRECTED BY THE ENGINEER.

RECOMMENDED _____ DATE: _____

RECOMMENDED _____ DATE: _____

RECOMMENDED _____ DATE: _____

APPROVED CHIEF SAFETY OFFICER _____ DATE: 10-26-12

APPROVED TRAFFIC ENGINEER _____ DATE: 10/26/12

DELAWARE DEPARTMENT OF TRANSPORTATION

ADDENDUM / REVISIONS

SCALE
0 1500 3000 4500
FEET

US 13 & PORT PENN RD INTERSECTION

CONTRACT	PERMIT NO.
T201 011302	DESIGNED BY: J.D.C.
COUNTY	
NEW CASTLE	CHECKED BY: J.M.M.

DP-03: US 13 SOUTHBOUND

SHEET NO. 146
TOTAL SHTS. 179

p:\36533-000\contract 1\CADD\DP003U301_10.dgn
9/13/2012 6:28:18 PM

Unofficial Website Copy

PROJECT LIGHTING NOTES:

1. CONDUIT RUNS ARE SHOWN IN APPROXIMATE LOCATIONS. THE CONTRACTOR SHALL LOCATE THE SERVICE RUNS IN A MANNER THAT AVOIDS CONFLICTS WITH ALL EXISTING AND PROPOSED FEATURES AS FIELD CONDITIONS DICTATE AND AS APPROVED BY THE ENGINEER.
2. THE CONTRACTOR SHALL VERIFY ALL DIMENSIONS AND CONDITIONS PRIOR TO WORK.
3. THE LIGHTING CONTRACTOR SHALL COORDINATE HIS WORK WITH ALL THE CONTRACTORS INVOLVED ON THIS PROJECT. THE LIGHTING CONTRACTOR SHALL COORDINATE WITH THE ENGINEER AND THE GENERAL SUPERINTENDENT ON THE LOCATIONS OF ALL CONDUIT, JUNCTION WELLS AND POLE BASES TO ELIMINATE CONSTRUCTION CONFLICTS.
4. EXISTING UTILITY LOCATIONS SHOWN ON THE PLANS ARE APPROXIMATE. IT SHALL BE THE RESPONSIBILITY OF THE CONTRACTOR TO VERIFY THE EXACT LOCATIONS OF EXISTING AND PROPOSED UTILITIES PRIOR TO COMMENCING WORK.
5. THE CONTRACTOR SHALL CONTACT DELMARVA POWER TO COORDINATE SERVICE DROP LOCATIONS AND TO ENSURE ALL PROPOSED SERVICE FEEDS ARE APPROVED PRIOR TO INSTALLATION OF CABINETS AND ELECTRIC UTILITY SERVICE EQUIPMENT. THE CONTRACTOR SHALL ARRANGE A MEETING WITH DELMARVA POWER, THE ENGINEER AND THE DELDOT TRAFFIC SECTION TO ENSURE THAT POWER IS AVAILABLE WHEN REQUIRED.
6. COLOR CODING SHALL BE PROVIDED THROUGHOUT THE ENTIRE NETWORK FOR SERVICE, FEEDER, BRANCH AND CONTROL CONDUCTORS. EACH PHASE SHALL BE AN INDEPENDENT COLOR. CONDUCTORS SHALL HAVE FACTORY IMPREGNATED COLOR THROUGHOUT THEIR ENTIRE LENGTH.
7. ALL FUSED CONNECTIONS SHALL BE MADE IN THE POLE BASE. SPLICES IN JUNCTION BOXES OR PULL BOXES SHALL NOT BE FUSED.
8. ALL CONDUITS SHALL BE BONDED IN A CONTINUOUS RUN FROM THE SOURCE BY A COPPER GROUNDING CONDUCTOR WITH SIZE AS NOTED ON PLANS. 10 FEET OF ADDITIONAL SLACK FOR EACH GROUND WIRE IN EACH JUNCTION WELL SHALL BE PROVIDED AND NEATLY COILED.
9. ALL STATION, OFFSET AND DIMENSION INFORMATION SHOWN FOR PROPOSED LIGHTING STANDARDS IS TO THE CENTER OF THE PROPOSED POLE BASE.
10. THE CONTRACTOR SHALL COORDINATE THE INSTALLATION OF LIGHTING CONDUITS WITH ITMS CONDUITS. ITMS AND LIGHTING CONDUITS MAY SHARE A COMMON TRENCH BUT SHALL NOT SHARE COMMON JUNCTION WELLS.
11. ALL PROPOSED ROADWAY LIGHTING CONDUITS (SERVICE RUNS) SHALL BE RIGID POLYVINYL CHLORIDE SCHEDULE 80 WHEN INSTALLED BY TRENCHING AND SDR-13.5 HDPE WHEN INSTALLED BY BORING, UNLESS OTHERWISE NOTED ON PLANS.
12. SPLICES FOR ALL ROADWAY LIGHTING ELECTRICAL CABLES SHALL BE COMPLETED USING APPROVED SPLICE KITS OR METHODS APPROVED BY THE ENGINEER AND SHALL BE INCIDENTAL TO THE SUPPLY AND INSTALLATION OF THE VARIOUS ROADWAY LIGHTING ELECTRICAL CABLES.
13. ALL PROPOSED LIGHTING STANDARDS SHALL BE INSTALLED WITH BREAKAWAY TRANSFORMER BASES WHETHER PROTECTED BY TRAFFIC BARRIER OR UNPROTECTED.
14. ALL LIGHTING STANDARDS SHALL BE INSTALLED ON 2.5′ DIAMETER BY 11.5′ TALL POLE BASES. SEE DWG. NO. LI-08 FOR LIGHTING STANDARD POLE BASE DETAILS.
15. (1) ¾″ DIAMETER BY 10′ LONG GROUND ROD SHALL BE INSTALLED AT EACH LIGHTING STANDARD POLE BASE. (1) ¾″ DIAMETER BY 10′ LONG GROUND ROD SHALL BE INSTALLED IN THE JUNCTION WELL CLOSEST TO THE LIGHTING CONTROL AND DISTRIBUTION ENCLOSURE AND THE BARE COPPER GROUNDING CONDUCTORS FOR EACH RUN OF CIRCUITS SHALL BE CONNECTED TO THE GROUND ROD. (1) ¾″ DIAMETER BY 10′ LONG GROUND ROD SHALL BE INSTALLED AT THE LIGHTING CONTROL AND DISTRIBUTION ENCLOSURE WHICH SHALL BE BONDED TO THE GROUND ROD IN THE JUNCTION WELL CLOSEST TO THE LIGHTING CONTROL AND DISTRIBUTION ENCLOSURE. (1) ¾″ DIAMETER BY 10′ LONG GROUND ROD SHALL BE INSTALLED AT THE ELECTRIC SERVICE PEDESTAL. GROUND RODS SHALL BE SEPARATED BY A MINIMUM OF 6 FEET.
16. THE EXISTING ELECTRICAL CABLES IN ALL CONDUITS DESIGNATED TO BE ABANDONED SHALL BE REMOVED.
17. ALL EXISTING LIGHTING POLE BASES DESIGNATED TO BE REMOVED OR RELOCATED SHALL BE REMOVED A MINIMUM OF 12″ BELOW GRADE AND BACKFILLED.
18. THE CONTRACTOR SHALL VERIFY THE OPERATING CIRCUIT AND PHASE OF ALL EXISTING ROADWAY LIGHTING EQUIPMENT WHERE THE ELECTRICAL SERVICE IS BEING INTERRUPTED. THE EXISTING ROADWAY LIGHTING EQUIPMENT SHALL BE RECONNECTED TO THE SAME CIRCUIT AND PHASE AS IS EXISTING UNLESS OTHERWISE NOTED ON PLANS.
19. IF ANY UTILITY IS DAMAGED THE CONTRACTOR SHALL NOTIFY THE ENGINEER AND THE OWNER OF THE UTILITY IMMEDIATELY. ANY DAMAGE TO THE UTILITIES SHALL BE REPAIRED BY THE CONTRACTOR AT HIS OWN EXPENSE UNDER THE DIRECTION OF THE UTILITY OWNER. UNDER NO CIRCUMSTANCE SHALL THE CONTRACTOR BACKFILL AN EXCAVATION OF AN IMPACTED UTILITY WITHOUT PERMISSION FROM THE UTILITY OWNER.

LIGHTING SYMBOL LEGEND

SYMBOL	DESCRIPTION
	– PROPOSED LIGHTING STANDARD AND POLE BASE
	– EXISTING LIGHTING STANDARD AND POLE BASE
	– EXISTING OFFSET LIGHT POLE AND POLE BASE (SINGLE AND DUAL MOUNT)
	– EXISTING HIGH MAST TOWER AND POLE BASE
	– LIGHTING CONTROL AND DISTRIBUTION ENCLOSURE (EXISTING AND PROPOSED)
	– PROPOSED LIGHTING JUNCTION WELL
J.W.	– EXISTING LIGHTING JUNCTION WELL
P	– PROPOSED ELECTRICAL SERVICE ON PEDESTAL
—LI-CON—	– PROPOSED LIGHTING SERVICE RUN
—EX-CON—	– EXISTING LIGHTING SERVICE RUN
LS / LS	– LIGHTING STANDARD IDENTIFIER (EXISTING AND PROPOSED)
SR / SR	– SERVICE RUN IDENTIFIER (EXISTING AND PROPOSED)
JW / JW	– LIGHTING JUNCTION WELL IDENTIFIER (TYPE) (EXISTING AND PROPOSED)
CA / CA	– LIGHTING CONTROL AND DISTRIBUTION ENCLOSURE IDENTIFIER (EXISTING AND PROPOSED)
RM C / RM O	– REMOVE BY CONTRACTOR / REMOVE BY OTHERS
AB	– ABANDON BY CONTRACTOR

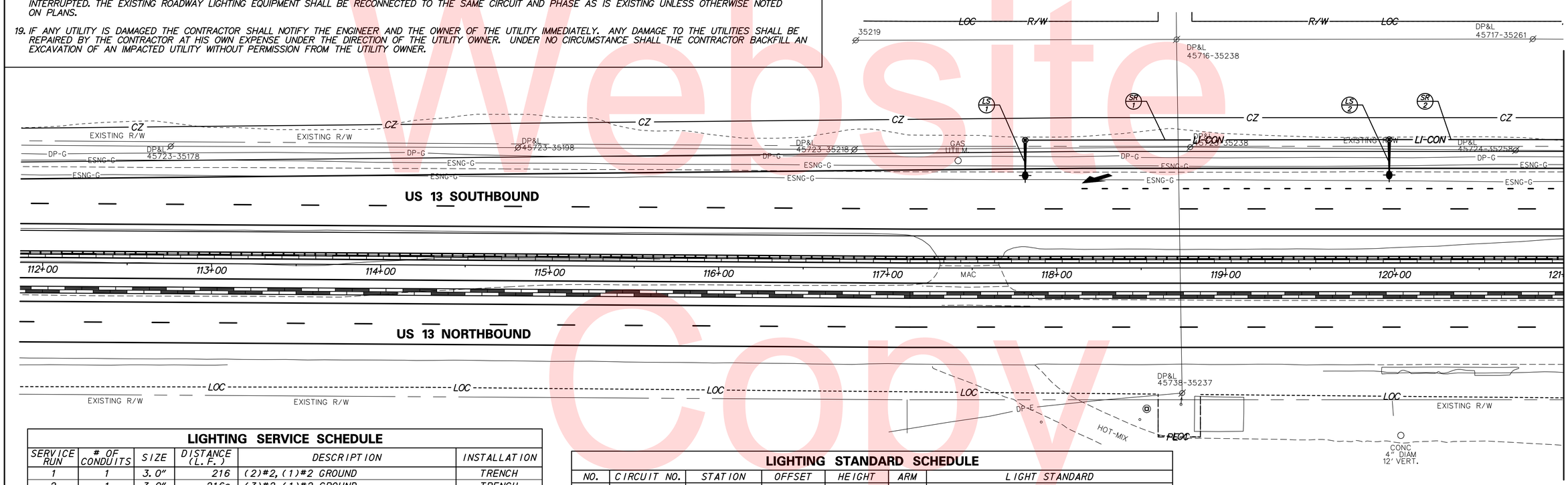

LIGHTING SERVICE SCHEDULE

SERVICE RUN	# OF CONDUITS	SIZE	DISTANCE (L.F.)	DESCRIPTION	INSTALLATION
1	1	3.0″	216	(2)#2, (1)#2 GROUND	TRENCH
2	1	3.0″	216*	(3)#2, (1)#2 GROUND	TRENCH

* DISTANCE CONTINUES ON ADJACENT PLAN SHEET.
NOTE: SERVICE RUN DISTANCE REFLECTS CONDUIT LENGTH ONLY.

LIGHTING STANDARD SCHEDULE

NO.	CIRCUIT NO.	STATION	OFFSET	HEIGHT	ARM	LIGHT STANDARD
LS-1	4	117+81.3	75.7′ LT.	35′	15′	250 W HPS DAVIT ARM LIGHTING STANDARD
LS-2	2	119+96.8	76.0′ LT.	35′	15′	250 W HPS DAVIT ARM LIGHTING STANDARD

Unofficial Website Copy

N:\36553-000\Contract 1D\CADD\Traffic\2015 - Updates\LI001U301_1D.dgn
8/10/2015 3:05:51 PM

DELAWARE DEPARTMENT OF TRANSPORTATION

ADDENDUMS / REVISIONS

SCALE 0 30 60 90 FEET

US 13 & PORT PENN RD INTERSECTION

CONTRACT	BRIDGE NO.
T201011302	DESIGNED BY: J.D.C.
COUNTY	
NEW CASTLE	CHECKED BY: J.M.M.

LIGHTING PLAN

LI-01

SHEET NO. 147
TOTAL SHTS. 179

LIGHTING SYMBOL LEGEND

SYMBOL	DESCRIPTION
	– PROPOSED LIGHTING STANDARD AND POLE BASE
	– EXISTING LIGHTING STANDARD AND POLE BASE
	– EXISTING OFFSET LIGHT POLE AND POLE BASE (SINGLE AND DUAL MOUNT)
	– EXISTING HIGH MAST TOWER AND POLE BASE
	– LIGHTING CONTROL AND DISTRIBUTION ENCLOSURE (EXISTING AND PROPOSED)
	– PROPOSED LIGHTING JUNCTION WELL
J.W.	– EXISTING LIGHTING JUNCTION WELL
P	– PROPOSED ELECTRICAL SERVICE ON PEDESTAL
—LI-CON—	– PROPOSED LIGHTING SERVICE RUN
—EX-CON—	– EXISTING LIGHTING SERVICE RUN
LS	– LIGHTING STANDARD IDENTIFIER (EXISTING AND PROPOSED)
SR	– SERVICE RUN IDENTIFIER (EXISTING AND PROPOSED)
JW X	– LIGHTING JUNCTION WELL IDENTIFIER (TYPE) (EXISTING AND PROPOSED)
CA X	– LIGHTING CONTROL AND DISTRIBUTION ENCLOSURE IDENTIFIER (EXISTING AND PROPOSED)
RM C / RM O	– REMOVE BY CONTRACTOR / REMOVE BY OTHERS
AB	– ABANDON BY CONTRACTOR

LIGHTING STANDARD SCHEDULE

NO.	CIRCUIT NO.	STATION	OFFSET	HEIGHT	ARM	LIGHT STANDARD
LS-3	4	122+12.6	76.0' LT.	35'	15'	250 W HPS DAVIT ARM LIGHTING STANDARD
LS-4	2	124+26.4	76.0' LT.	35'	15'	250 W HPS DAVIT ARM LIGHTING STANDARD
LS-5	4	126.42.4	76.0' LT.	35'	15'	250 W HPS DAVIT ARM LIGHTING STANDARD
LS-6	2	128+58.4	76.0' LT.	35'	15'	250 W HPS DAVIT ARM LIGHTING STANDARD
LS-13	3	126+43.5	72.0' RT.	35'	20'	250 W HPS DAVIT ARM LIGHTING STANDARD
LS-14	1	128+58.8	76.0' RT.	35'	20'	250 W HPS DAVIT ARM LIGHTING STANDARD

LIGHTING SERVICE SCHEDULE

SERVICE RUN	# OF CONDUITS	SIZE	DISTANCE (L.F.)	DESCRIPTION	INSTALLATION
2	1	3.0"	216*	(3)#2, (1)#2 GROUND	TRENCH
3	1	3.0"	214	(3)#2, (1)#2 GROUND	TRENCH
4	1	3.0"	217	(3)#2, (1)#2 GROUND	TRENCH
5	1	3.0"	217	(3)#2, (1)#2 GROUND	TRENCH
6	1	3.0"	216*	(3)#2, (1)#2 GROUND	TRENCH
7	1	3.0"	216	(2)#6, (1)#6 GROUND	TRENCH
8	1	3.0"	216*	(3)#6, (1)#6 GROUND	TRENCH/BORE

* DISTANCE CONTINUES ON ADJACENT PLAN SHEET.
NOTE: SERVICE RUN DISTANCE REFLECTS CONDUIT LENGTH ONLY.

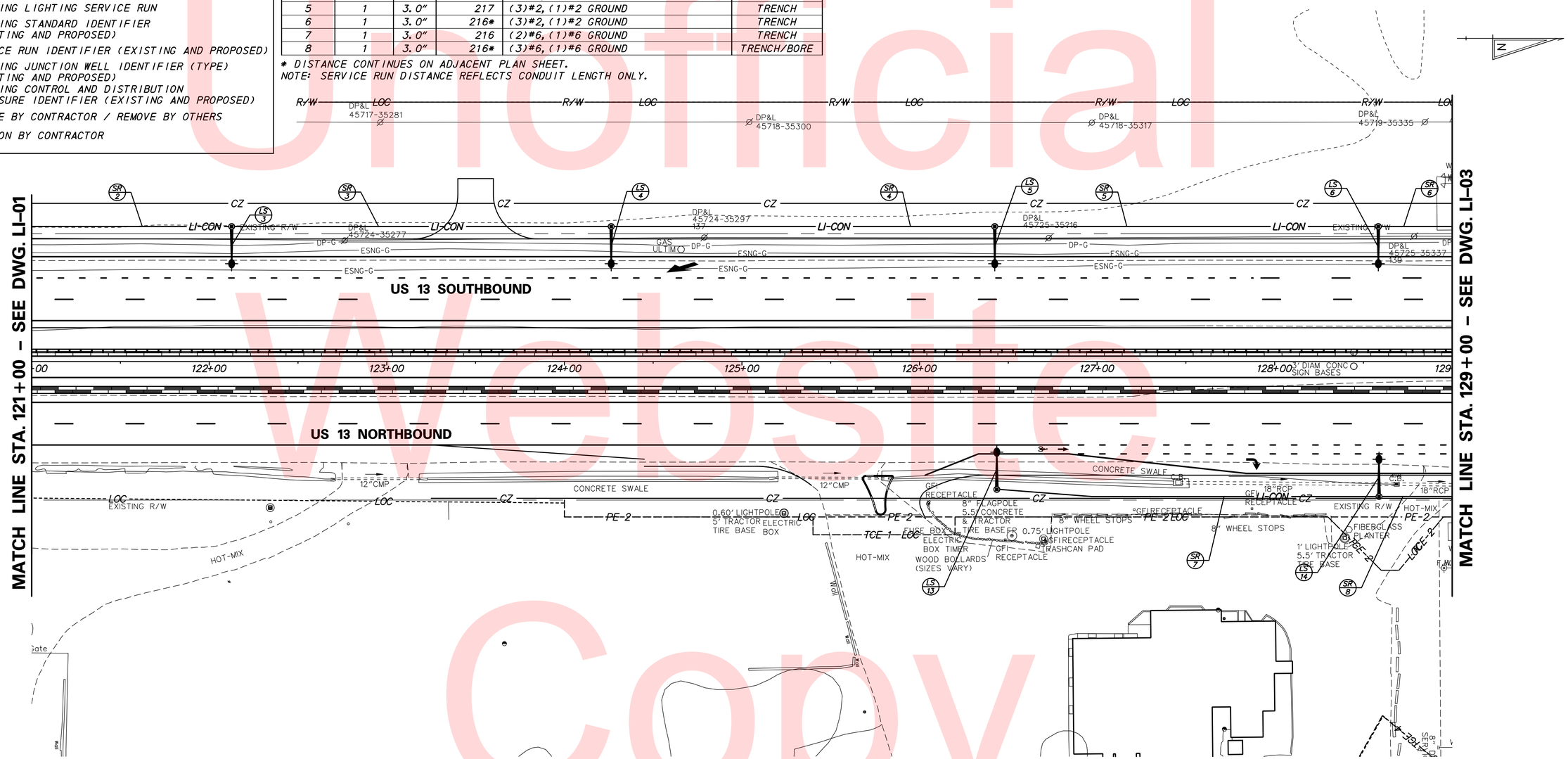

Unofficial Website Copy

N:\31653-000\Contract 1D\CADD\LI0020301_1D.dgn
8/10/2015 3:09:11 PM

DELAWARE DEPARTMENT OF TRANSPORTATION	ADDENDUMS / REVISIONS	SCALE 0 30 60 90 FEET	US 13 & PORT PENN RD INTERSECTION	CONTRACT T201011302	BRIDGE NO.	LIGHTING PLAN	LI-02
				COUNTY NEW CASTLE	DESIGNED BY: J.D.C.		SHEET NO. 148
					CHECKED BY: J.M.M.		TOTAL SHTS. 179

LIGHTING SYMBOL LEGEND

SYMBOL	DESCRIPTION
	– PROPOSED LIGHTING STANDARD AND POLE BASE
	– EXISTING LIGHTING STANDARD AND POLE BASE
	– EXISTING OFFSET LIGHT POLE AND POLE BASE (SINGLE AND DUAL MOUNT)
	– EXISTING HIGH MAST TOWER AND POLE BASE
	– LIGHTING CONTROL AND DISTRIBUTION ENCLOSURE (EXISTING AND PROPOSED)
	– PROPOSED LIGHTING JUNCTION WELL
J.W.	– EXISTING LIGHTING JUNCTION WELL
P	– PROPOSED ELECTRICAL SERVICE ON PEDESTAL
—LI-CON—	– PROPOSED LIGHTING SERVICE RUN
—EX-CON—	– EXISTING LIGHTING SERVICE RUN
LS LS	– LIGHTING STANDARD IDENTIFIER (EXISTING AND PROPOSED)
SR SR	– SERVICE RUN IDENTIFIER (EXISTING AND PROPOSED)
JW X JW X	– LIGHTING JUNCTION WELL IDENTIFIER (TYPE) (EXISTING AND PROPOSED)
CA X CA X	– LIGHTING CONTROL AND DISTRIBUTION ENCLOSURE IDENTIFIER (EXISTING AND PROPOSED)
RM C RM O	– REMOVE BY CONTRACTOR / REMOVE BY OTHERS
AB	– ABANDON BY CONTRACTOR

LIGHTING STANDARD SCHEDULE

NO.	CIRCUIT NO.	STATION	OFFSET	HEIGHT	ARM	LIGHT STANDARD
LS-7	4	130+73.9	76.0' LT.	35'	15'	250 W HPS DAVIT ARM LIGTHING STANDARD
LS-8	3	132+30.2	85.3' LT.	35'	20'	250 W HPS DAVIT ARM LIGHTING STANDARD
LS-9	1	134+41.0	87.0' LT.	35'	20'	250 W HPS DAVIT ARM LIGHTING STANDARD
LS-12	2	301+84.1	11.0' LT.	35'	8'	250 W HPS DAVIT ARM LIGHTING STANDARD
LS-15	3	130+77.3	73.0' RT.	35'	20'	250 W HPS DAVIT ARM LIGHTING STANDARD
LS-16	1	132+43.2	67.0' RT.	35'	20'	250 W HPS DAVIT ARM LIGHTING STANDARD
LS-17	3	4001+45.2	39.0' LT.	35'	15'	250 W HPS DAVIT ARM LIGHTING STANDARD

PANELBOARD SE

AIC RATING - 22 KAIC
SOLID NEUTRAL
ENCLOSURE: BASE MOUNTED CABINET

600 AMP BUS
120/240 VOLTS
SURFACE MOUNTED

100 AMP MAIN
SINGLE PHASE, 3 WIRE + GROUND
PANEL LOCATION: SEE PLANS

LOAD SERVED	CIRCUIT BREAKER FRAME	TRIP	POLE	CKT. NO.	CKT. NO.	CIRCUIT BREAKER FRAME	TRIP	POLE	LOAD SERVED
6-250W HPS	100	20	1	1	2	100	20	1	4-250W HPS
6-250W HPS	100	20	1	3	4	100	20	1	4-250W HPS
SPARE	100	20	1	5	6	100	20	1	SPARE
SPARE	100	20	1	7	8	100	20	1	SPARE

NOTES:

1. INSTALL CABINET BASE AS PER STD. NO. T-4 WITH (5) 3" CONDUIT SWEEPS. UNUSED CONDUIT SWEEPS SHALL BE CAPPED. INSTALL LIGHTING CONTROL AND DISTRIBUTION ENCLOSURE (SEE DETAILS ON DWG. NO. LI-07).
2. INSTALL ELECTRICAL SERVICE ON PEDESTAL (100 AMP, 120/240 V, SINGLE-PHASE, 3 WIRE). SEE DETAIL ON DWG. NO. LI-07.
3. SERVICE RUN NOS. 24 AND 28 SHALL BE RIGID GALVANIZED STEEL.
4. SEE DWG. NO. LI-08 FOR LIGHTING CONTROL AND DISTRIBUTION ENCLOSURE WIRING DIAGRAM.
5. SPLICE THE PROPOSED (4) #4 AND (4) #2 ELECTRICAL CABLES IN SERVICE RUN NO. 39 TO THE EXISTING (4) #4 AND (4) #2 ELECTRICAL CABLES IN THE EXISTING JUNCTION WELL. THE ELECTRICAL CABLES SHALL BE SPLICED SO THAT THE EXISTING ROADWAY LIGHTING TO THE SOUTH OPERATES OFF THE SAME CIRCUIT AND PHASE AS IS EXISTING. REPAIR EXISTING JUNCTION WELL.
6. LOCATE AND INTERCEPT THE EXISTING ROADWAY LIGHTING AND DOUSING PUMP CONDUITS WITH A PROPOSED TYPE 14 JUNCTION WELL. CUT AND/OR PULL BACK THE EXISTING CABLES IN THE EXISTING CONDUITS TO THE PROPOSED JUNCTION WELL, LEAVING SUFFICIENT LENGTH FOR SPLICING TO THE PROPOSED ELECTRICAL CABLES IN SERVICE RUN NOS. 38, 39 & 40 AND MAINTAINING ELECTRICAL SERVICE TO THE NORTH.
7. SPLICE THE EXISTING (4) #4 ELECTRICAL CABLES FROM THE INTERCEPTED CONDUIT TO THE PROPOSED (4)#4 ELECTRICAL CABLES IN SERVICE RUN NOS. 38 AND 39 AND SPLICE THE EXISTING (4) #2 ELECTRICAL CABLES FROM THE INTERCEPTED CONDUIT TO THE PROPOSED (4)#2 ELECTRICAL CABLES IN SERVICE RUN NO. 39 ENSURING THAT THE EXISTING ROADWAY LIGHTING TO THE SOUTH OPERATES OFF THE SAME CIRCUIT AND PHASE AS IS EXISTING. SPLICE THE EXISTING (3) #10 ELECTRICAL CABLES FROM THE EXISTING CONDUIT TO THE PROPOSED (3) #10 ELECTRICAL CABLES IN SERVICE RUN NO. 40.
8. SPLICE THE PROPOSED (4) #4 ELECTRICAL CABLES IN SERVICE RUN NO. 38 TO THE EXISTING (4) #4 ELECTRICAL CABLES IN THE EXISTING JUNCTION WELL. REPAIR EXISTING JUNCTION WELL.
9. CUT OR DISCONNECT BELOW GRADE THE EXISTING CONDUIT PROVIDING ELECTRICAL SERVICE TO THE DOUSING PUMPS CONTROL PANEL. ABANDON PORTION OF THE CONDUIT HEADING NORTH AND MAINTAIN PORTION OF CONDUIT LEADING TO THE CONTROL PANEL. COUPLE PROPOSED SERVICE RUN NO. 40 TO THE REMAINING CONDUIT AND FEED PROPOSED CABLES TO THE CONTROL PANEL. COORDINATE WITH THE ENGINEER TO MINIMIZE OUTAGES. CUTTING OF EXISTING CONDUIT WILL NOT BE MEASURED AND PAID FOR BUT WILL BE INCIDENTAL TO ITEM NO. 745544 - INSTALLATION OF CONDUIT IN UNPAVED TRENCH.

LIGHTING SERVICE SCHEDULE

SERVICE RUN	# OF CONDUITS	SIZE	DISTANCE (L.F.)	DESCRIPTION	INSTALLATION
6	1	3.0"	216*	(3)#2, (1)#2 GROUND	TRENCH
8	1	3.0"	216*	(3)#6, (1)#6 GROUND	TRENCH/BORE
9	1	3.0"	71	(3)#2, (1)#2 GROUND	TRENCH
10	1	3.0"	119	(2)#2, (1)#2 GROUND	TRENCH
11	1	3.0"	101	(3)#2, (1)#2 GROUND	BORE
12	1	3.0"	14	(2)#6, (1)#6 GROUND	TRENCH
13	1	3.0"	200	(3)#6, (1)#6 GROUND	BORE
14	1	3.0"	213*	(3)#6, (1)#6 GROUND	BORE
15	1	3.0"	89	(3)#2, (3)#6, (1)#2 GROUND	BORE
16	1	3.0"	63	(3)#2, (3)#6, (1)#2 GROUND	BORE
17	1	3.0"	8	(2)#6, (1)#6 GROUND	TRENCH
18	1	3.0"	66	(3)#2, (3)#6, (1)#2 GROUND	TRENCH
19	1	3.0"	58	(3)#6, (1)#6 GROUND	TRENCH
20	1	3.0"	70	(3)#6, (1)#6 GROUND	BORE
21	1	3.0"	39	(3)#6, (1)#6 GROUND	TRENCH
22	1	3.0"	212*	(3)#6, (1)#6 GROUND	TRENCH/BORE
23	1	3.0"	32	(3)#2, (3)#6, (1)#2 GROUND	TRENCH
24	1	3.0"	9	(3)#2, (1)#2 GROUND	TRENCH
28	1	3.0"	20	(3)#2, (1)#2 GROUND	TRENCH
38	1	3.0"	105	(4)#4, (1)#4 GROUND	TRENCH
39	2	3.0"	152	(4)#4, (1)#4 GROUND	TRENCH
		3.0"	152	(4)#2, (1)#2 GROUND	TRENCH
40	1	1.0"	215	(3)#10, (1)#10 GROUND	TRENCH

* DISTANCE CONTINUES ON ADJACENT PLAN SHEET.
NOTE: SERVICE RUN DISTANCE REFLECTS CONDUIT LENGTH ONLY.

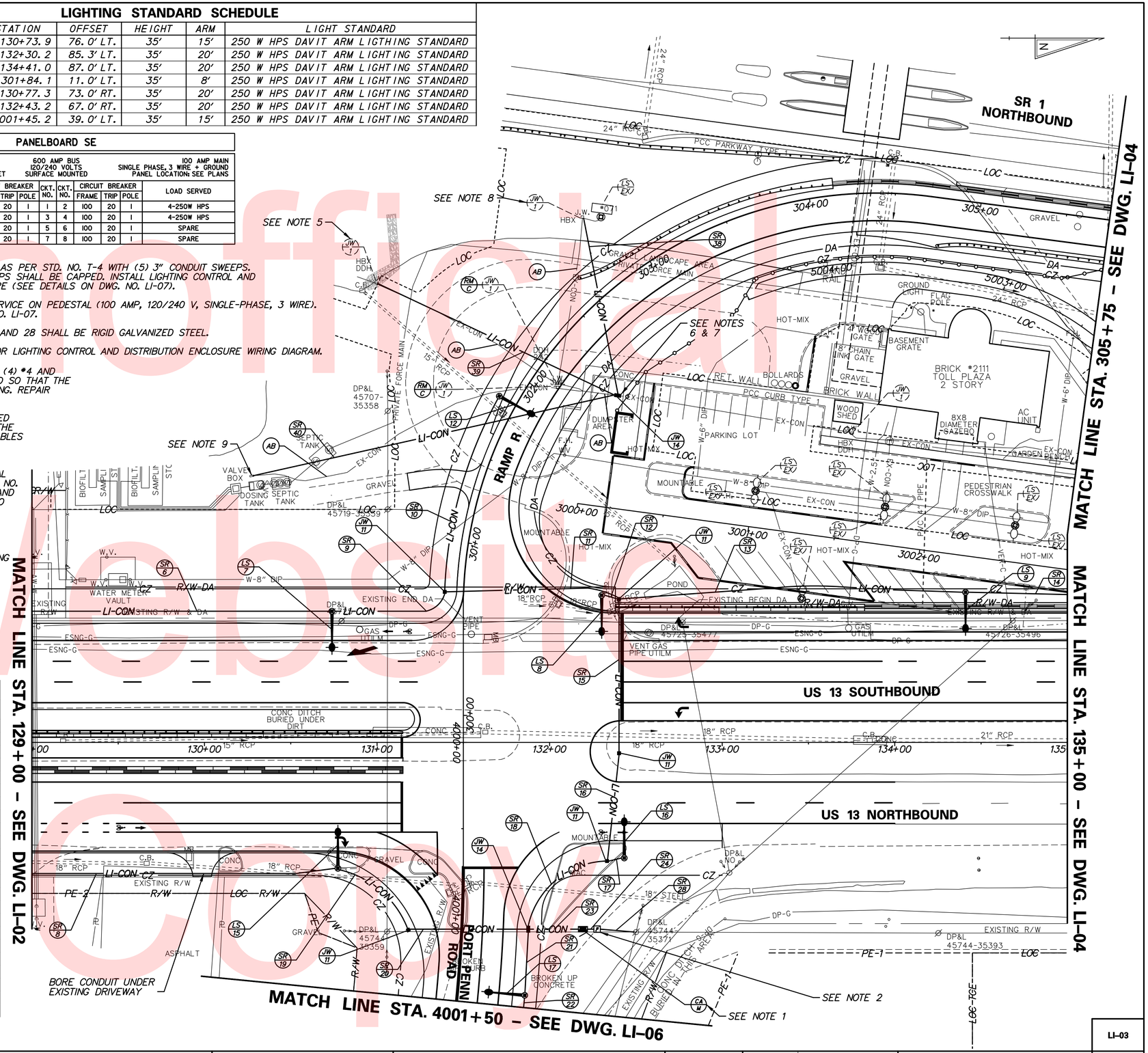

Unofficial Website Copy

DELAWARE DEPARTMENT OF TRANSPORTATION

ADDENDUMS / REVISIONS

SCALE 0 30 60 90 FEET

US 13 & PORT PENN RD INTERSECTION

CONTRACT	BRIDGE NO.
T201011302	
COUNTY	DESIGNED BY: J.D.C.
NEW CASTLE	CHECKED BY: J.M.M.

LIGHTING PLAN

LI-03

SHEET NO.
149
TOTAL SHTS.
179

N:\31653-000\Contract 1D\CADD\Traffic\2015 - Updates\U003U301_1D.dgn 12/23/2015 11:36:05 AM

NOTES:

1. EXISTING LIGHTING CONTROL AND DISTRIBUTION ENCLOSURE FOR SR 1 TOLL PLAZA LIGHTING.
2. SPLICE THE PROPOSED (4)#8 AND (4)#4 ELECTRICAL CABLES IN SERVICE RUN NO. 29 TO THE EXISTING (4)#8 (EX. CIRCUITS C1, C2, C3) AND (4)#4 (EX. CIRCUITS B1, B2, B3) ELECTRICAL CABLES IN THE EXISTING JUNCTION WELL. SPLICE THE ELECTRICAL CABLES SO THAT THE EXISTING ROADWAY LIGHTING ALONG SR 1 NORTHBOUND OPERATES OFF THE SAME CIRCUIT AND PHASE AS IS EXISTING. REPAIR EXISTING JUNCTION WELL.
3. INSTALLATION OF PROPOSED ROADWAY LIGHTING AND ABANDONING/REMOVAL OF EXISTING ROADWAY LIGHTING ALONG RAMP R FROM STA. 308+00 TO STA. 313+00 SHALL BE COORDINATED SO THAT THERE IS NO OUTAGE OF ROADWAY LIGHTING.
4. LIGHTING STANDARDS AND CONDUITS SHOWN SCREENED ARE PROPOSED BY OTHERS IN CONTRACT T200911302.
5. THE CONTRACTOR SHALL COORDINATE INSTALLATION OF SERVICE RUN NO. 34 WITH CONTRACT NO. T200911302. SERVICE RUN NO. 34 RESTORES ELECTRICAL SERVICE TO EXISTING ROADWAY LIGHTING ALONG SR 1 NORTHBOUND. EXISTING LIGHTING STANDARDS TO BE REMOVED BY OTHERS IN CONTRACT NO. T200911302

LIGHTING STANDARD SCHEDULE

NO.	CIRCUIT NO.	STATION	OFFSET	HEIGHT	ARM	LIGHT STANDARD
LS-10	3	136+56.7	83.0' LT.	35'	20'	250 W HPS DAVIT ARM LIGHTING STANDARD
LS-11	1	138+64.9	86.2' LT.	35'	20'	250 W HPS DAVIT ARM LIGHTING STANDARD
LS-A	EX. C1, C2, C3	310+1.2	37.0' RT.	80'	0'	(6) 400 W HPS

LIGHTING SERVICE SCHEDULE

SERVICE RUN	# OF CONDUITS	SIZE	DISTANCE (L.F.)	DESCRIPTION	INSTALLATION
14	1	3.0"	213*	(3)#6, (1)#6 GROUND	BORE
25	1	3.0"	205	(2)#6, (1)#6 GROUND	TRENCH
29	2	3.0"	194	(4)#8, (1)#8 GROUND	TRENCH
		3.0"	194	(4)#4, (1)#4 GROUND	TRENCH
30	1	3.0"	2	(4)#8, (1)#8 GROUND	TRENCH
31	1	3.0"	190	(4)#4, (1)#4 GROUND	TRENCH
32	1	3.0"	37	(4)#4, (1)#4 GROUND	TRENCH
34	1	3.0"	89*	(4)#4, (1)#4 GROUND	TRENCH

* DISTANCE CONTINUES ON ADJACENT PLAN SHEET.
NOTE: SERVICE RUN DISTANCE REFLECTS CONDUIT LENGTH ONLY.

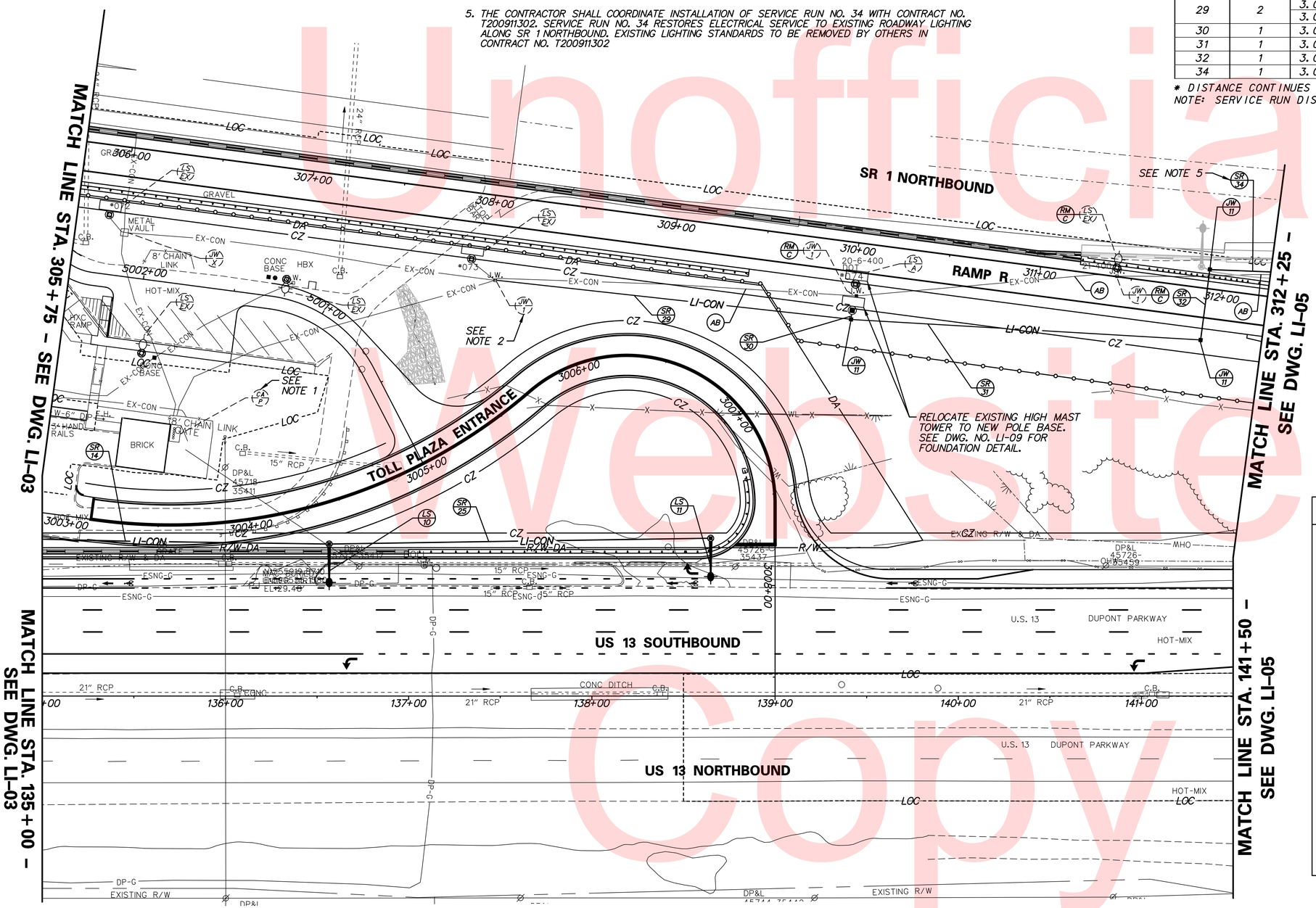

LIGHTING SYMBOL LEGEND

SYMBOL	DESCRIPTION
	– PROPOSED LIGHTING STANDARD AND POLE BASE
	– EXISTING LIGHTING STANDARD AND POLE BASE
	– EXISTING OFFSET LIGHT POLE AND POLE BASE (SINGLE AND DUAL MOUNT)
	– EXISTING HIGH MAST TOWER AND POLE BASE
	– LIGHTING CONTROL AND DISTRIBUTION ENCLOSURE (EXISTING AND PROPOSED)
	– PROPOSED LIGHTING JUNCTION WELL
J.W.	– EXISTING LIGHTING JUNCTION WELL
P	– PROPOSED ELECTRICAL SERVICE ON PEDESTAL
—LI-CON—	– PROPOSED LIGHTING SERVICE RUN
—EX-CON—	– EXISTING LIGHTING SERVICE RUN
LS / LS	– LIGHTING STANDARD IDENTIFIER (EXISTING AND PROPOSED)
SR / SR	– SERVICE RUN IDENTIFIER (EXISTING AND PROPOSED)
JW / JW	– LIGHTING JUNCTION WELL IDENTIFIER (TYPE) (EXISTING AND PROPOSED)
CA / CA	– LIGHTING CONTROL AND DISTRIBUTION ENCLOSURE IDENTIFIER (EXISTING AND PROPOSED)
RM / RM	– REMOVE BY CONTRACTOR / REMOVE BY OTHERS
AB	– ABANDON BY CONTRACTOR

Unofficial Website Copy

N:\31653-000\Contract_1D\CADD\Traffic\2015 - Updates\LI004U301_1D.dgn
8/10/2015 3:08:03 PM

DELAWARE DEPARTMENT OF TRANSPORTATION

ADDENDUMS / REVISIONS

SCALE 0 30 60 90 FEET

US 13 & PORT PENN RD INTERSECTION

CONTRACT	BRIDGE NO.	
T201011302	DESIGNED BY: J.D.C.	
COUNTY		
NEW CASTLE	CHECKED BY: J.M.M.	

LIGHTING PLAN

LI-04

SHEET NO. 150

TOTAL SHTS. 179

NOTES:

1. THE CONTRACTOR SHALL COORDINATE INSTALLATION OF SERVICE RUN NO. 34 WITH CONTRACT NO. T200911302. SERVICE RUN NO. 34 RESTORES ELECTRICAL SERVICE TO EXISTING ROADWAY LIGHTING ALONG SR 1 NORTHBOUND. EXISTING LIGHTING STANDARDS TO BE REMOVED BY OTHERS IN CONTRACT NO. T200911302.
2. INSTALLATION OF PROPOSED ROADWAY LIGHTING AND ABANDONING/REMOVAL OF EXISTING ROADWAY LIGHTING ALONG RAMP R FROM STA. 308+00 TO STA. 313+00 SHALL BE COORDINATED SO THAT THERE IS NO OUTAGE IN ROADWAY LIGHTING.
3. SPLICE THE PROPOSED (4)#4 ELECTRICAL CABLES IN SERVICE RUN NO. 34 TO THE EXISTING (4)#4 ELECTRICAL CABLES IN THE EXISTING JUNCTION WELL. SPLICE THE ELECTRICAL CABLES SO THAT THE ROADWAY LIGHTING ALONG SR 1 NORTHBOUND OPERATES OFF THE SAME CIRCUIT AND PHASE AS IS EXISTING. REPAIR EXISTING JUNCTION WELL.
4. LIGHTING STANDARDS AND CONDUITS SHOWN SCREENED ARE PROPOSED BY OTHERS IN CONTRACT NO. T200911302.

LIGHTING SERVICE SCHEDULE

SERVICE RUN	# OF CONDUITS	SIZE	DISTANCE (L.F.)	DESCRIPTION	INSTALLATION
34	1	3.0"	89*	(4)#4, (1)#4 GROUND	TRENCH

* DISTANCE CONTINUES ON ADJACENT PLAN SHEET.
NOTE: SERVICE RUN DISTANCE REFLECTS CONDUIT LENGTH ONLY.

LIGHTING SYMBOL LEGEND

SYMBOL	DESCRIPTION
	– PROPOSED LIGHTING STANDARD AND POLE BASE
	– EXISTING LIGHTING STANDARD AND POLE BASE
	– EXISTING OFFSET LIGHT POLE AND POLE BASE (SINGLE AND DUAL MOUNT)
	– EXISTING HIGH MAST TOWER AND POLE BASE
	– LIGHTING CONTROL AND DISTRIBUTION ENCLOSURE (EXISTING AND PROPOSED)
	– PROPOSED LIGHTING JUNCTION WELL
J.W.	– EXISTING LIGHTING JUNCTION WELL
P	– PROPOSED ELECTRICAL SERVICE ON PEDESTAL
—LI-CON—	– PROPOSED LIGHTING SERVICE RUN
—EX-CON—	– EXISTING LIGHTING SERVICE RUN
LS / LS	– LIGHTING STANDARD IDENTIFIER (EXISTING AND PROPOSED)
SR / SR	– SERVICE RUN IDENTIFIER (EXISTING AND PROPOSED)
JW X / JW	– LIGHTING JUNCTION WELL IDENTIFIER (TYPE) (EXISTING AND PROPOSED)
CA X / CA X	– LIGHTING CONTROL AND DISTRIBUTION ENCLOSURE IDENTIFIER (EXISTING AND PROPOSED)
RM C / RM O	– REMOVE BY CONTRACTOR / REMOVE BY OTHERS
AB	– ABANDON BY CONTRACTOR

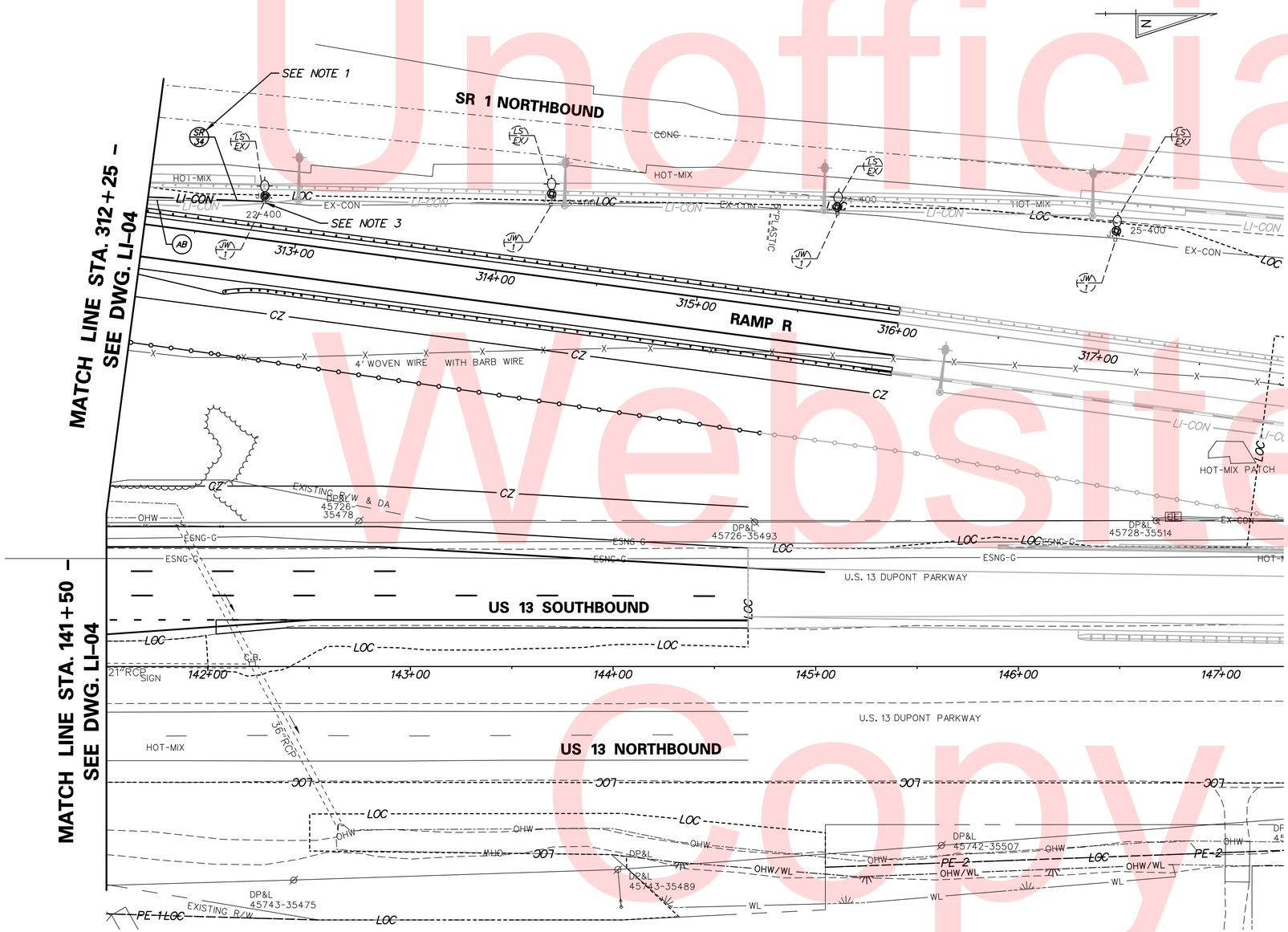

Unofficial Website Copy

N:\31653-000\Contract 1D:\CADD\LI005U301_1D.dgn
8/10/2015 3:10:29 PM

DELAWARE DEPARTMENT OF TRANSPORTATION	ADDENDUMS / REVISIONS	SCALE 0 30 60 90 FEET	US 13 & PORT PENN RD INTERSECTION	CONTRACT T201011302 / COUNTY NEW CASTLE	BRIDGE NO. / DESIGNED BY: J.D.C. / CHECKED BY: J.M.M.	LIGHTING PLAN

LI-05

SHEET NO. 151
TOTAL SHTS. 179

LIGHTING STANDARD SCHEDULE

NO.	CIRCUIT NO.	STATION	OFFSET	HEIGHT	ARM	LIGHT STANDARD
LS-18	1	4003+47.9	39.0' LT.	35'	15'	250 W HPS DAVIT ARM LIGHTING STANDARD
LS-19	3	4005+57.7	39.0' LT.	35'	15'	250 W HPS DAVIT ARM LIGHTING STANDARD
LS-20	1	4007+66.1	39.0' LT.	35'	15'	250 W HPS DAVIT ARM LIGHTING STANDARD

LIGHTING SERVICE SCHEDULE

SERVICE RUN	# OF CONDUITS	SIZE	DISTANCE (L.F.)	DESCRIPTION	INSTALLATION
22	1	3.0"	212*	(3)#6, (1)#6 GROUND	TRENCH/BORE
26	1	3.0"	211	(3)#6, (1)#6 GROUND	TRENCH/BORE
27	1	3.0"	209	(2)#6, (1)#6 GROUND	TRENCH

* DISTANCE CONTINUES ON ADJACENT PLAN SHEET.
NOTE: SERVICE RUN DISTANCE REFLECTS CONDUIT LENGTH ONLY.

LIGHTING SYMBOL LEGEND

SYMBOL	DESCRIPTION
	– PROPOSED LIGHTING STANDARD AND POLE BASE
	– EXISTING LIGHTING STANDARD AND POLE BASE
	– EXISTING OFFSET LIGHT POLE AND POLE BASE (SINGLE AND DUAL MOUNT)
	– EXISTING HIGH MAST TOWER AND POLE BASE
	– LIGHTING CONTROL AND DISTRIBUTION ENCLOSURE (EXISTING AND PROPOSED)
	– PROPOSED LIGHTING JUNCTION WELL
J.W.	– EXISTING LIGHTING JUNCTION WELL
P	– PROPOSED ELECTRICAL SERVICE ON PEDESTAL
—LI-CON—	– PROPOSED LIGHTING SERVICE RUN
—EX-CON—	– EXISTING LIGHTING SERVICE RUN
LS	– LIGHTING STANDARD IDENTIFIER (EXISTING AND PROPOSED)
SR	– SERVICE RUN IDENTIFIER (EXISTING AND PROPOSED)
JW X	– LIGHTING JUNCTION WELL IDENTIFIER (TYPE) (EXISTING AND PROPOSED)
CA X	– LIGHTING CONTROL AND DISTRIBUTION ENCLOSURE IDENTIFIER (EXISTING AND PROPOSED)
RM C / RM O	– REMOVE BY CONTRACTOR / REMOVE BY OTHERS
AB	– ABANDON BY CONTRACTOR

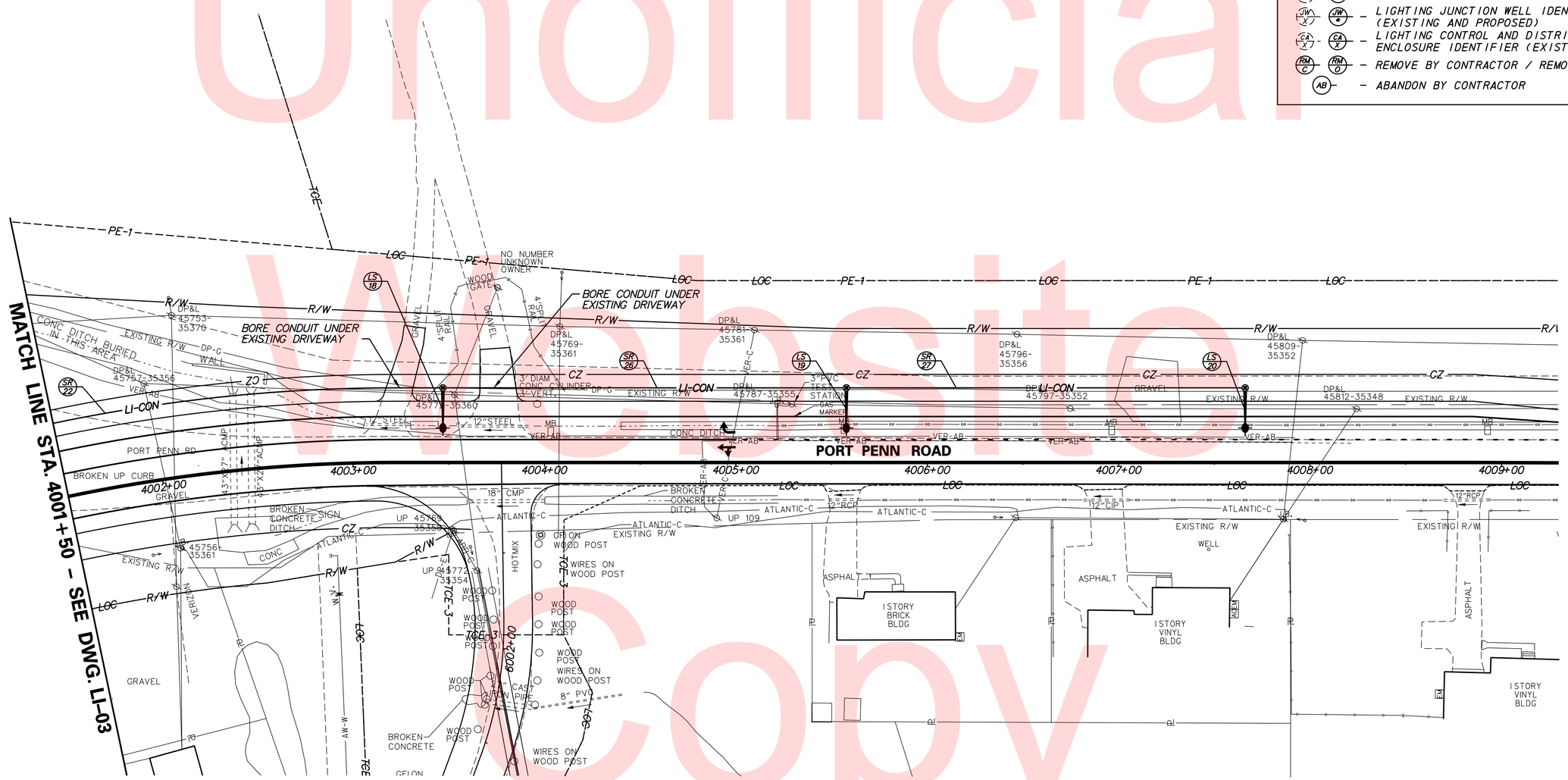

Unofficial Website Copy

N:\38153-000\Contract 1D\CADD\LI006U301_1D.dgn
12/23/2015 11:53:46 AM

DELAWARE DEPARTMENT OF TRANSPORTATION	ADDENDUMS / REVISIONS	SCALE 0 30 60 90 FEET	US 13 & PORT PENN RD INTERSECTION	CONTRACT T201011302	BRIDGE NO.	LIGHTING PLAN	LI-06
				COUNTY NEW CASTLE	DESIGNED BY: J.D.C.		SHEET NO. 152
					CHECKED BY: J.M.M.		TOTAL SHTS. 179

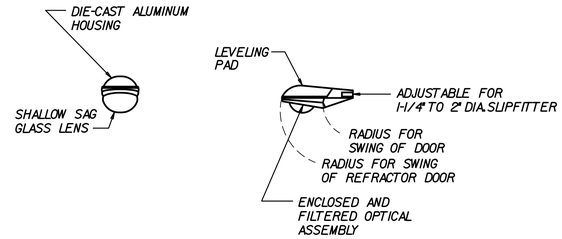

LUMINAIRE FIXTURE
SCALE: NONE

NOTES:
1. ALL PROPOSED LUMINAIRES SHALL BE 250 WATT HIGH PRESSURE SODIUM COBRAHEAD STYLE FIXTURES WITH A TYPE III HORIZONTAL LIGHT DISTRIBUTION, MEDIUM VERTICAL LIGHT DISTRIBUTION AND CUT-OFF OPTICS MOUNTED WITH A ZERO DEGREE TILT ANGLE. PHOTOCONTROL SHALL BE AT THE LIGHTING CONTROL AND DISTRIBUTION ENCLOSURE.

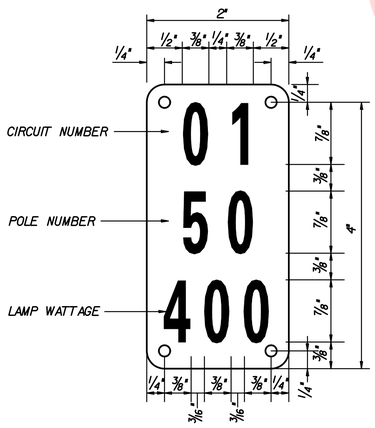

TYPICAL POLE IDENTIFICATION TAG
SCALE: NONE

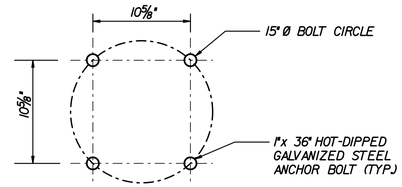

FOUNDATION ANCHOR BOLT CIRCLE DETAIL
SCALE: NONE

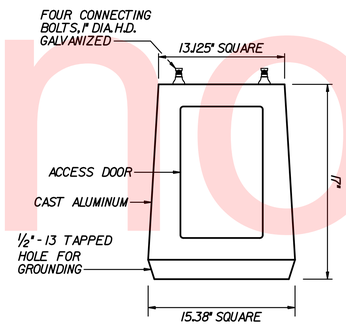

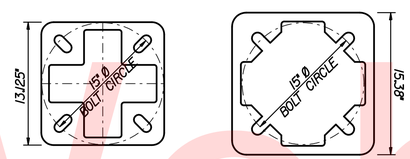

TOP **BOTTOM**

TRANSFORMER BASE DETAIL
SCALE: NONE

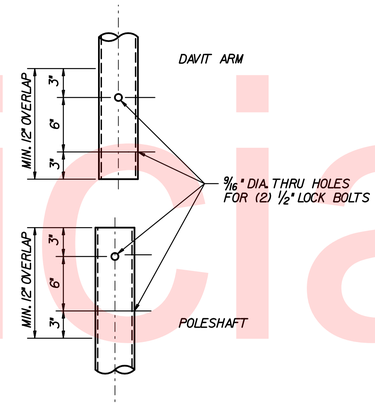

DETAIL 'A'
SCALE: NONE

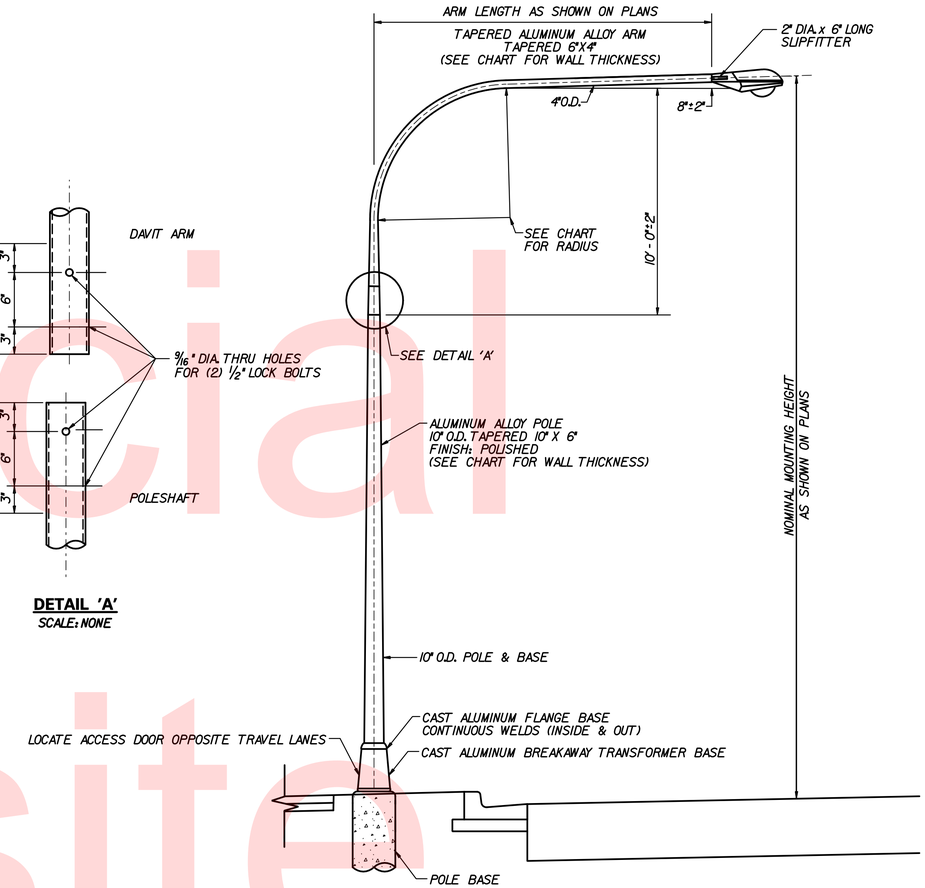

MOUNTING HEIGHT	ARM LENGTH	BEND RADIUS	WALL THICKNESS
35'	8'	5'-6"	0.156"
35'	12'	5'-6"	0.156"
35'	15'	5'-6"	0.156"
35'	20'	7'-0"	0.188"

ALUMINUM LIGHTING STANDARD WITH SINGLE DAVIT ARM
SCALE: NONE

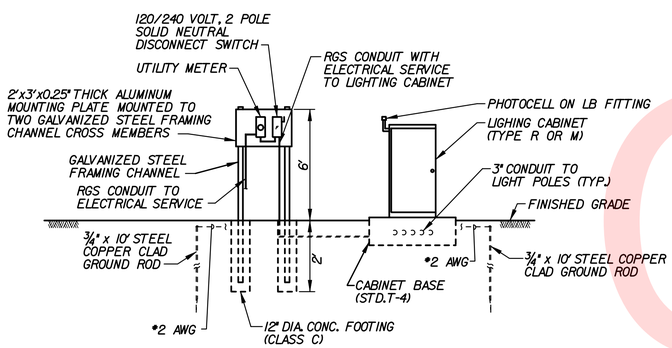

ELECTRICAL SERVICE ON PEDESTAL AND LIGHTING CONTROL AND DISTRIBUTION ENCLOSURE
SCALE: NONE

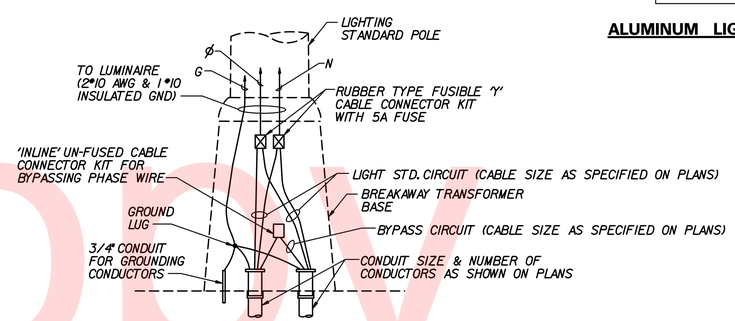

WIRING IN TRANSFORMER BASE
SCALE: NONE

Unofficial Website Copy

r:\31653-00\contract_td\cadd\LI007U301_1D.dgn
8/17/2015 11:53:23 AM

DELAWARE DEPARTMENT OF TRANSPORTATION	ADDENDUMS / REVISIONS	NOT TO SCALE	US 13 & PORT PENN RD INTERSECTION	CONTRACT T201011302	BRIDGE NO.	LIGHTING DETAILS	LI-07 SHEET NO. 153
				COUNTY NEW CASTLE	DESIGNED BY: J.D.C. CHECKED BY: J.M.M.		TOTAL SHTS. 179

LIGHTING STANDARD POLE BASE DETAIL

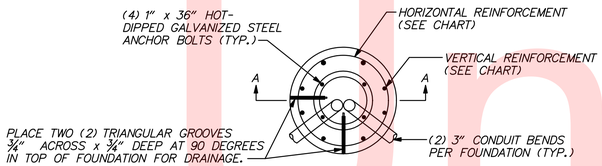

PLAN VIEW

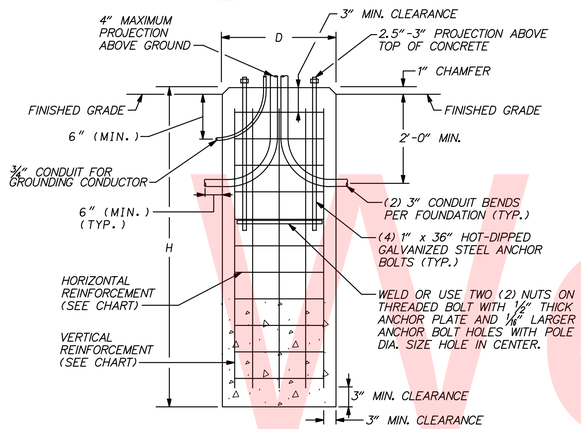

SECTION A-A

NOMINAL MOUNTING HEIGHT	DIAMETER (D)	HEIGHT (H)	VERTICAL REINFORCEMENT	HORIZONTAL REINFORCEMENT	CONCRETE REQUIRED (C.Y.)
30', 35' OR 40'	2.5'	11.5'	8 NO. 7	NO. 3 TIES AT 1'-0" CENTER TO CENTER	2.1

NOTES:

1. ANCHOR BOLTS SHALL BE PLUMB. A ¼" THICK STEEL TEMPLATE SHALL BE USED FOR INSTALLATION OF ANCHOR BOLTS.
2. FOUNDATION SHALL NOT BE INSTALLED IN DRAINAGE DITCH.

LIGHTING CONTROL AND DISTRIBUTION ENCLOSURE WIRING DIAGRAM

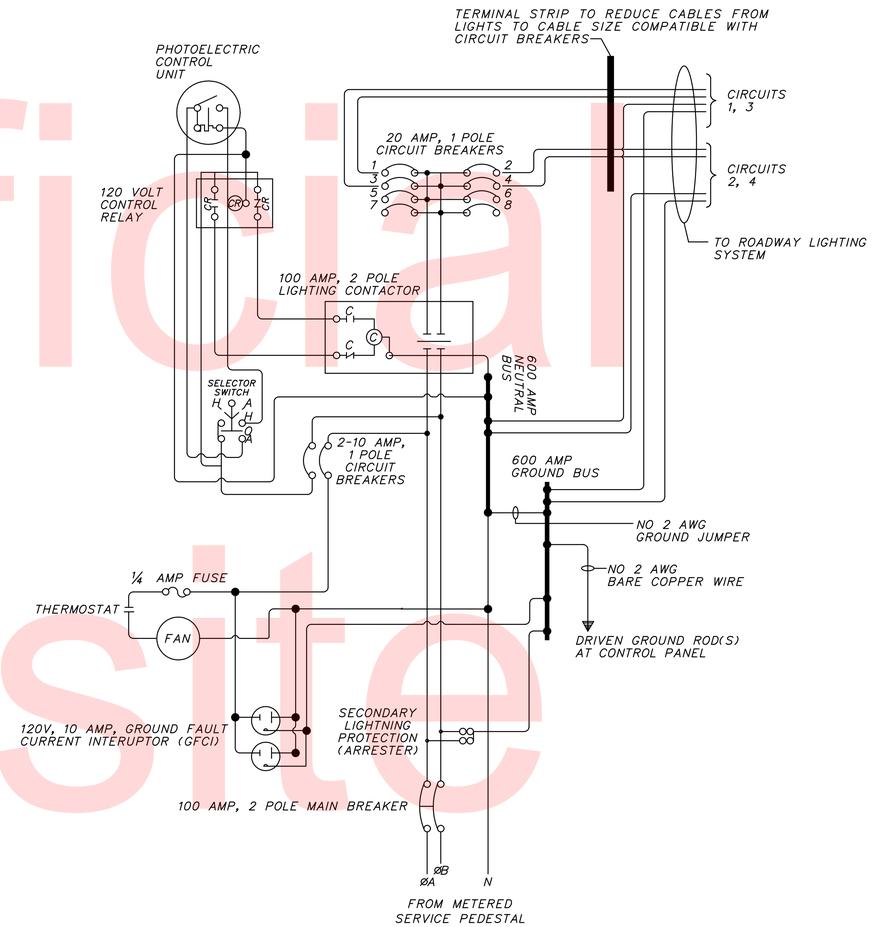

NOTES:

1. ALL WIRING FROM SERVICE FEEDS SHALL BE INSTALLED IN FLEXIBLE CONDUIT WITHIN THE LIGHTING CONTROL AND DISTRIBUTION ENCLOSURE.
2. NO CONDUCTORS MAY ENTER OR EXIT THROUGH THE REAR OF ANY PANEL.
3. THE LIGHTING CONTACTOR SHALL BE IN A PROPERLY SIZED ENCLOSURE.
4. A CONTINUOUS GROUNDING CONDUCTOR SHALL BE INSTALLED FROM THE METER SOCKET THROUGH ALL PANELS, THEN TO THE GROUNDING ELECTRODE.
5. ALL CONDUCTORS NOT IN CONDUIT SHALL BE BUNDLED OR WRAPPED AND SECURED IN CABINET AWAY FROM SHARP EDGES.
6. ALL CABLES SHALL MEET AMPACITY REQUIREMENTS OF THE NATIONAL ELECTRIC CODE. THE MINIMUM CABLE SIZE SHALL BE NO. 12 AWG

Unofficial Website Copy

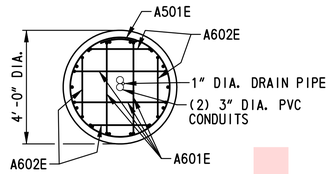

SECTION A-A
SCALE: 3/8"=1'-0"

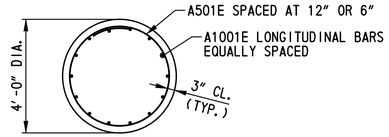

SECTION B-B
SCALE: 3/8"=1'-0"

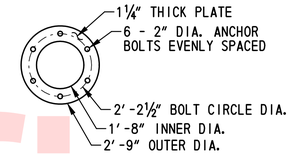

ANCHOR PLATE DETAIL
SCALE: 3/8"=1'-0"

NOTE:
HIGH MAST LIGHT POLE NOT SHOWN FOR CLARITY.

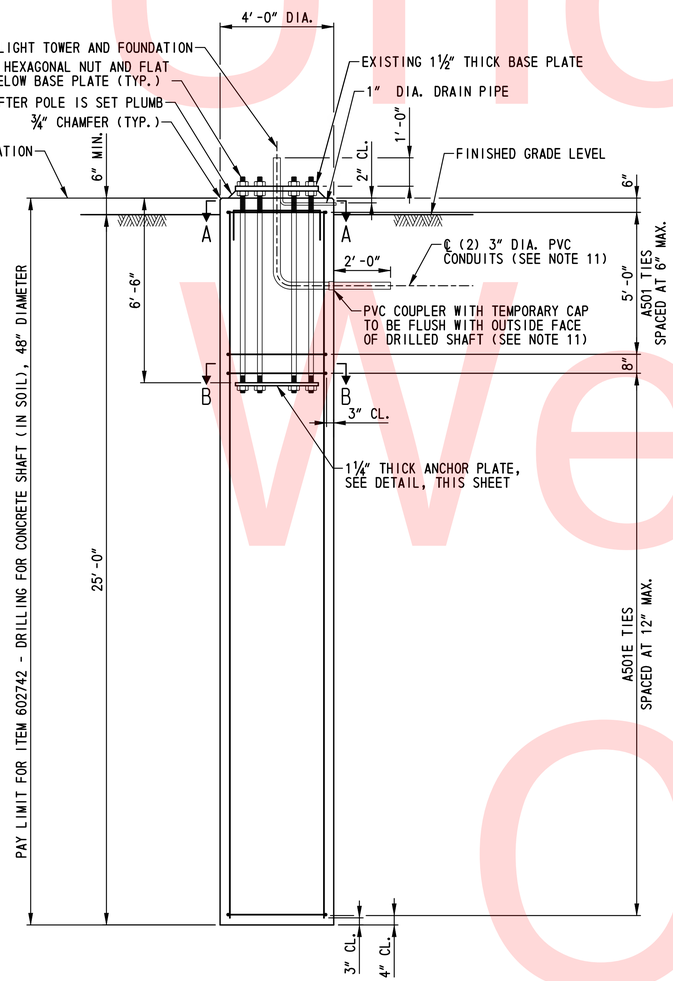

CAISSON FOUNDATION DETAIL
SCALE: 3/8"=1'-0"

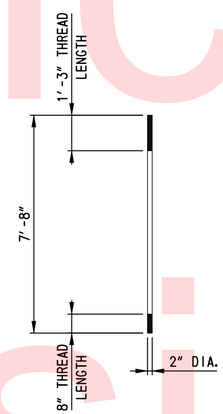

ANCHOR BOLT DETAIL
SCALE: 3/8"=1'-0"

GENERAL NOTES:

1. BEFORE CONSTRUCTING THE DRILLED SHAFT THE CONTRACTOR SHALL ACCURATELY LOCATE EXISTING UNDERGROUND UTILITIES IN THE VICINITY OF NEW CONSTRUCTION TO DETERMINE IF THERE IS A CONFLICT. IF A CONFLICT EXISTS, ADJUST THE LOCATION OF THE DRILLED SHAFT TO AVOID CONFLICT AND COMMENCE WITH CONSTRUCTION ONCE APPROVED BY ENGINEER.
2. ALL REINFORCEMENT SHALL BE GRADE 60 MINIMUM AND EPOXY COATED IN ACCORDANCE WITH AASHTO M 284 (ASTM A 775). ALL BAR DIMENSIONS ARE MEASURED OUT TO OUT AND MINIMUM COVER SHALL BE 3" UNLESS OTHERWISE NOTED.
3. CONCRETE IN DRILLED SHAFT FOUNDATION SHALL BE 4500 P.S.I.
4. ALL NEW STEEL PLATES SHALL CONFORM TO A709, GRADE 36.
5. ANCHOR BOLTS SHALL CONFORM TO F 1554 GRADE 105 UNC THREAD. HEX NUTS SHALL BE USED AND CONFORM TO A 194 GRADE 2H OR A 563 GR. DH. HEAVY WASHERS SHALL BE USED AND CONFORM TO F 436. ANCHOR BOLTS SHALL BE THREADED FOR 15" AT THE TOP END AND 8" AT THE BOTTOM END. NUTS, WASHERS, AND THE ANCHOR BOLTS SHALL BE GALVANIZED PER A 153. THE ANCHOR BOLTS SHALL STICK THROUGH THE TOP BASE PLATE NUTS FOR A LENGTH OF 1 1/2".
6. STEEL TEMPLATES SHALL BE USED TO SET ANCHOR BOLTS PLUMB WHEN POURING THE CONCRETE FOUNDATION. STEEL TEMPLATES SHALL CONTAIN HOLES FOR THE ANCHOR BOLTS 1/16" LARGER THAN THE ANCHOR BOLT DIAMETER.
7. ANCHOR BOLTS SHALL BE INSTALLED WITH MISALIGNMENTS OF LESS THAN 1:40 FROM VERTICAL. AFTER INSTALLATION, FIRM CONTACT SHALL EXIST BETWEEN THE ANCHOR BOLT NUTS, WASHER, AND BASE PLATE. IF ANY ANCHOR BOLT IS IN A MISALIGNED POSITION, A BEVELED WASHER IS REQUIRED IF MISALIGNMENT OF THE ANCHOR ROD IS GREATER THAN 1:40.
8. THE INSTALLATION AND TIGHTENING OF THE ANCHOR BOLTS SHALL BE PERFORMED IN STRICT CONFORMANCE WITH THE SEQUENCE OUTLINED IN APPENDIX A, PART 1 AND 2, SECTION 5.2 OF THE NATIONAL COOPERATIVE HIGHWAY RESEARCH PROGRAM (NCHRP) REPORT 469 - FATIGUE RESISTANCE DESIGN OF CANTILEVER SIGNAL, SIGN AND LIGHT SUPPORTS. SEE SPECIAL PROVISIONS.
9. GROUT FOR GROUT LEVELING PAD AND FOR ANCHOR BOLT HOLES SHALL BE A NON SHRINK GROUT IN CONFORMANCE WITH ASTM C 1107, WITH A MINIMUM COMPRESSIVE STRENGTH OF 5,000 P.S.I. IN SEVEN DAYS WHEN TESTED AS SPECIFIED IN AASHTO T 160 EXCEPT THAT THE CUBE MOLDS SHALL REMAIN INTACT WITH A TOP FIRMLY ATTACHED THROUGHOUT THE CURING PERIOD. THE NON SHRINK GROUT SHALL HAVE A MINIMUM EXPANSION OF 0.0 PERCENT AFTER SEVEN DAYS WHEN TESTED AS SPECIFIED IN AASHTO T 160. PRIOR TO PLACEMENT OF THE GROUT LEVELING PAD, AN EPOXY BONDING AGENT SUITABLE FOR USE ON STEEL AND CONCRETE SURFACES SHALL BE APPLIED. THE BONDING MATERIAL SHALL CONSIST OF A THERMOSETTING EPOXY RESIN AND HARDENER IN CONFORMANCE WITH ASTM C 881. GROUT SHALL BE PLACED WITHIN SEVEN (7) DAYS OF RELOCATING THE HIGH MAST LIGHT POLE ONTO THE NEW FOUNDATION
10. THE ORIENTATION OF THE PVC EXTENSION OUT OF THE DRILLED SHAFT FOUNDATION SHALL BE DETERMINED BY THE ENGINEER IN THE FIELD.
11. UPON COMPLETION OF INSTALLING THE DRILLED SHAFT FOUNDATION, THE CONTRACTOR SHALL LOCATE THE CONDUIT CAST INTO THE DRILLED SHAFT AND INSTALL THE PVC EXTENSION WITH CAP.
12. ANCHOR BOLTS NOT SHOWN IN SECTIONS A-A AND B-B FOR CLARITY.
13. PAYMENT FOR THE CAISSON FOUNDATION WILL BE MADE UNDER ITEM 602742 - DRILLING FOR CONCRETE SHAFT (IN SOIL), 48" DIAMETER.
14. PAYMENT FOR REMOVING, TRANSPORTING AND ERECTING THE LIGHT POLE WILL BE MADE UNDER ITEM 746898 - REMOVE AND RESET EXISTING HIGH MAST LIGHT POLE.
15. TEMPORARY STEEL CASING SHALL BE PROVIDED IN ACCORDANCE WITH THE SPECIAL PROVISIONS.

BENDING DIAGRAM

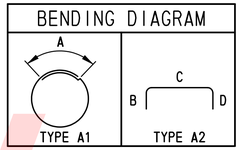

BAR MARK	SIZE	NO. REQ'D.	LENGTH	TYPE	DIMENSION			
					A	B	C	D
A501E	5	31	12'-3"	A1	1'-3"			
A601E	6	4	5'-2½"	A2		1'-0"	3'-2½"	1'-0"
A602E	6	4	4'-1"	A2		1'-0"	2'-1"	1'-0"
A1001E	10	14	24'-9"	STR.				

Unofficial Website Copy

LI-09

DELAWARE DEPARTMENT OF TRANSPORTATION

ADDENDUMS / REVISIONS

SCALE: AS NOTED

US 13 & PORT PENN RD INTERSECTION

CONTRACT	BRIDGE NO.
T201011302	DESIGNED BY: K.M.L.
COUNTY	
NEW CASTLE	CHECKED BY: J.A.G.

LIGHTING DETAILS

SHEET NO. 155
TOTAL SHTS. 179

n:\31653-000\contract_td\cadd\LI009U301_1D.dgn 8/1/2015 11:53:26 AM

NOTES:

1. ALL TRENCHES MUST MEET DELMARVA POWER CLEARANCE CODES FOR ALL SERVICES AS WELL AS PERTINENT LOCAL, STATE, OR NATIONAL ORDINANCES. CONTRACTOR TO DIG WITHIN TWO (2) FEET OF DELMARVA POWER'S NEW POLE. COORDINATE AND ARRANGE INSPECTION OF TRENCH FOR CONDUIT INSTALLATION WITH DELMARVA POWER. TRENCH SHALL BE BACKFILLED ONLY AFTER APPROVAL OF DELMARVA POWER REPRESENTATIVE.
2. ABANDON EXISTING DUCTBANK TO EXISTING POLE. REMOVE EXISTING FEEDERS AND DISPOSE AS DIRECTED BY OWNER. REMOVAL AND DISCONNECTION OF EXISTING FEEDERS, BETWEEN TRANSFORMER AND EXISTING POLE SHALL ONLY BE STARTED AFTER DELMARVA POWER INSTALLATION OF NEW POLE AND DUCTBANK INSTALLATION WITHIN TWO (2) FEET OF EXISTING DUCTBANK/DIRECT BURIED CONDUITS OUTSIDE OF THE WALL.
3. THE CONTRACTOR SHALL COORDINATE ALL WORK RELATED TO ELECTRICAL SERVICE INCLUDING LOCATION AND TERMINATION OF ALL ELECTRICAL EQUIPMENT WITH DELMARVA POWER BEFORE INSTALLATION.
4. INSTALLATION OF ALL ELECTRICAL WORK SHALL CONFORM TO THE LATEST EDITION OF THE NATIONAL ELECTRICAL CODE (NFPA 70) AND ALL APPLICABLE LOCAL CODES.
5. PROVIDE ALL NECESSARY COMPONENTS REQUIRED FOR MAKING FINAL CONNECTION OF ALL EQUIPMENT INSTALLED AS PART OF THIS CONTRACT.
6. ALL OUTDOOR UNDERGROUND CONCRETE ENCASED CONDUITS SHALL BE PVC SCHEDULE 80, UNLESS OTHERWISE NOTED.
7. ALL EXISTING TO REMAIN STRUCTURES, PAVEMENTS, PADS, EQUIPMENT AND UTILITIES SHALL BE PROTECTED AGAINST DAMAGE, AND IF DAMAGED SHALL BE RESTORED TO ORIGINAL CONDITION AT NO COST TO THE OWNER.
8. DUCTBANK RUNS ARE SHOWN DIAGRAMMATICALLY ONLY AND SHALL BE INSTALLED IN A MANNER TO PREVENT CONFLICTS WITH EXISTING UTILITIES AND EQUIPMENT. DUCTBANK SHALL BE BURIED WITH A MINIMUM OF 24 INCHES COVER. CONDUIT SHALL BE INSTALLED IN AS STRAIGHT A LINE AS POSSIBLE. TWO 90 DEGREE BENDS OF 36 INCHES RADIUS EACH ARE THE MAXIMUM NUMBER ALLOWED IN EACH CONDUIT RUN UNLESS DELMARVA POWER APPROVES ALTERNATIVE.
9. PROVIDE PULL STRINGS IN ALL EMPTY CONDUIT TO FACILITATE PULLING OF CABLES IN FUTURE.
10. CONTRACTOR SHALL TEST PIT TO DETERMINE LOCATION OF EXISTING DUCTBANK/DIRECT BURIED CONDUIT AND LOCATION OF EXISTING UTILITIES BEFORE CONSTRUCTION OF NEW DUCTBANK.
11. THE EXISTING FACILITY SHALL BE KEPT OPERATIONAL DURING CONSTRUCTION OF NEW DUCTBANK. THE NEW ELECTRICAL SYSTEM SHALL BE INSTALLED IN PHASES SUCH THAT THE EXISTING SYSTEM REMAINS IN PLACE UNTIL THE NEW DUCTBANK IS INSTALLED WITHIN THE TWO FEET OF EXISTING DUCTBANK. COORDINATE WITH OWNER DURING TIE-IN TO EXISTING DUCTBANK. EXISTING FACILITY SHALL BE SWITCHED TO STAND-BY POWER AND KEPT TO A MINIMUM. THE CONTRACTOR SHALL COORDINATE THE SWITCH OVER WITH THE ENGINEER AND SHALL OBTAIN WRITTEN PERMISSION FROM THE OWNER FOURTEEN (14) DAYS BEFORE SWITCHING THE FACILITY POWER TO BACK-UP POWER. EXISTING STAND-BY GENERATOR SHALL BE TESTED PRIOR TO SWITCHING THE FACILITY POWER.
12. THE CONTRACTOR SHALL MEASURE THE FUEL IN THE STAND-BY GENERATOR PRIOR TO TESTING AND SWITCHING OVER TO STAND-BY POWER. FOLLOWING THE SWITCH OVER TO THE NEW ELECTRICAL SERVICE THE CONTRACTOR SHALL AGAIN MEASURE THE FUEL IN THE STAND-BY GENERATOR AND REPLENISH FUEL USED DURING THE SWITCH OVER.
13. PROVIDE THREE (3) #1/0, 25KV, ALUMINUM SINGLE CONDUCTORS WITH CONCENTRIC NEUTRAL WIRES. CONDUCTORS SHALL BE PRYSMIAN PART #301223A OR SIMILAR. PROVIDE ONE (1) #2, 600V, COPPER CONDUCTOR FOR GROUND. RUN CONDUCTORS IN 1-6" CONDUIT. 1-6" CONDUIT SPARE FOR FUTURE.
14. APPROXIMATE LOCATION OF EXISTING TO REMAIN TRANSFORMER SHOWN. COORDINATE WITH DELMARVA POWER FOR CONNECTION OF NEW CONDUCTORS TO TRANSFORMER. PROVIDE ADDITIONAL LUGS MEETING DELMARVA POWER STANDARDS AS NECESSARY.
15. TERMINATE NEW CONDUCTORS WITH APPROXIMATELY 50' OF SLACK FOR EACH CONDUCTOR AT THE FOOT OF THE POLE. DELMARVA POWER TO MAKE FINAL CONNECTIONS TO POLE. COORDINATE WITH DELMARVA POWER FOR EXACT LENGTH OF SLACK CABLES. PROVIDE 50 LINEAR FEET OF 6" NON METALLIC POLE RISER SHIELD FOR INSTALLATION ON POLE BY DELMARVA POWER.
16. DELMARVA POWER WILL PROVIDE LB FUSED CUTOUTS AND ARRESTERS.
17. CONTRACTOR TO TIE INTO EXISTING DUCTBANK/DIRECT BURIED CONDUITS AT LEAST 5' FROM EXISTING WALL TO PREVENT DAMAGE.

LEGEND

- PROPOSED UTILITY POLE BY DELMARVA POWER
- T – EXISTING TRANSFORMER TO REMAIN
- AB – ABANDON BY CONTRACTOR

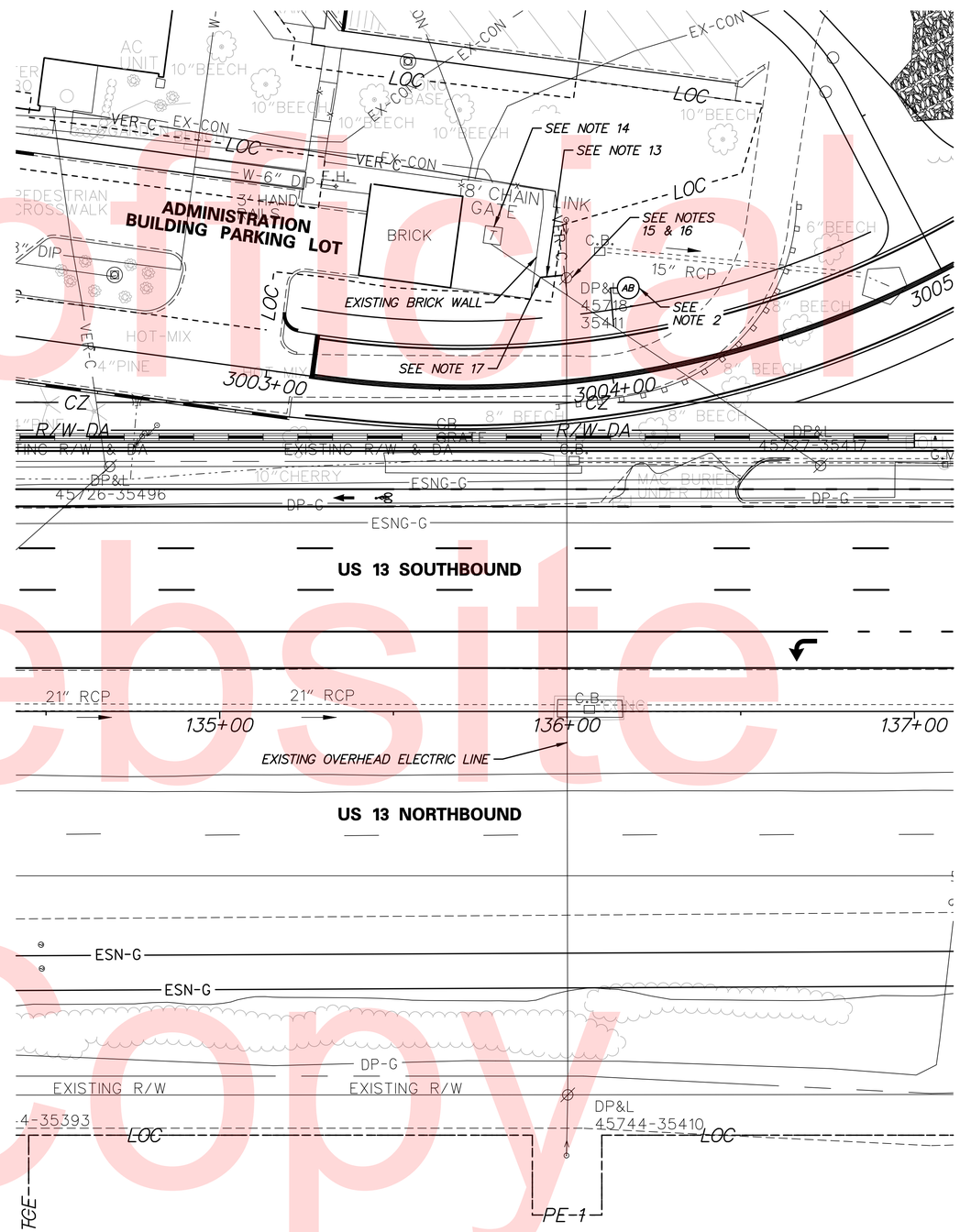

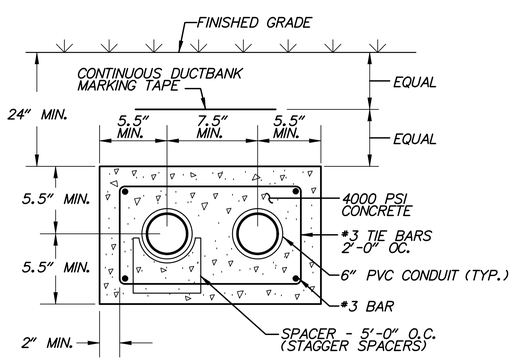

2-WAY CONCRETE ENCASED UNDERGROUND DUCTBANK (6" CONDUITS)

NOT TO SCALE

Unofficial Website Copy

N:\31653-000\Contract 1D\CADD\Traffic\2015 - Updates\EL001U301_1D.dgn
8/10/2015 3:13:10 PM

DELAWARE DEPARTMENT OF TRANSPORTATION	ADDENDUMS / REVISIONS	SCALE 0 20 40 60 FEET	US 13 & PORT PENN RD INTERSECTION	CONTRACT T201011302 / COUNTY NEW CASTLE	BRIDGE NO. / DESIGNED BY: J.V. / CHECKED BY: J.V.	ELECTRICAL SERVICE RELOCATION PLAN

EL-01

SHEET NO. 156

TOTAL SHTS. 179

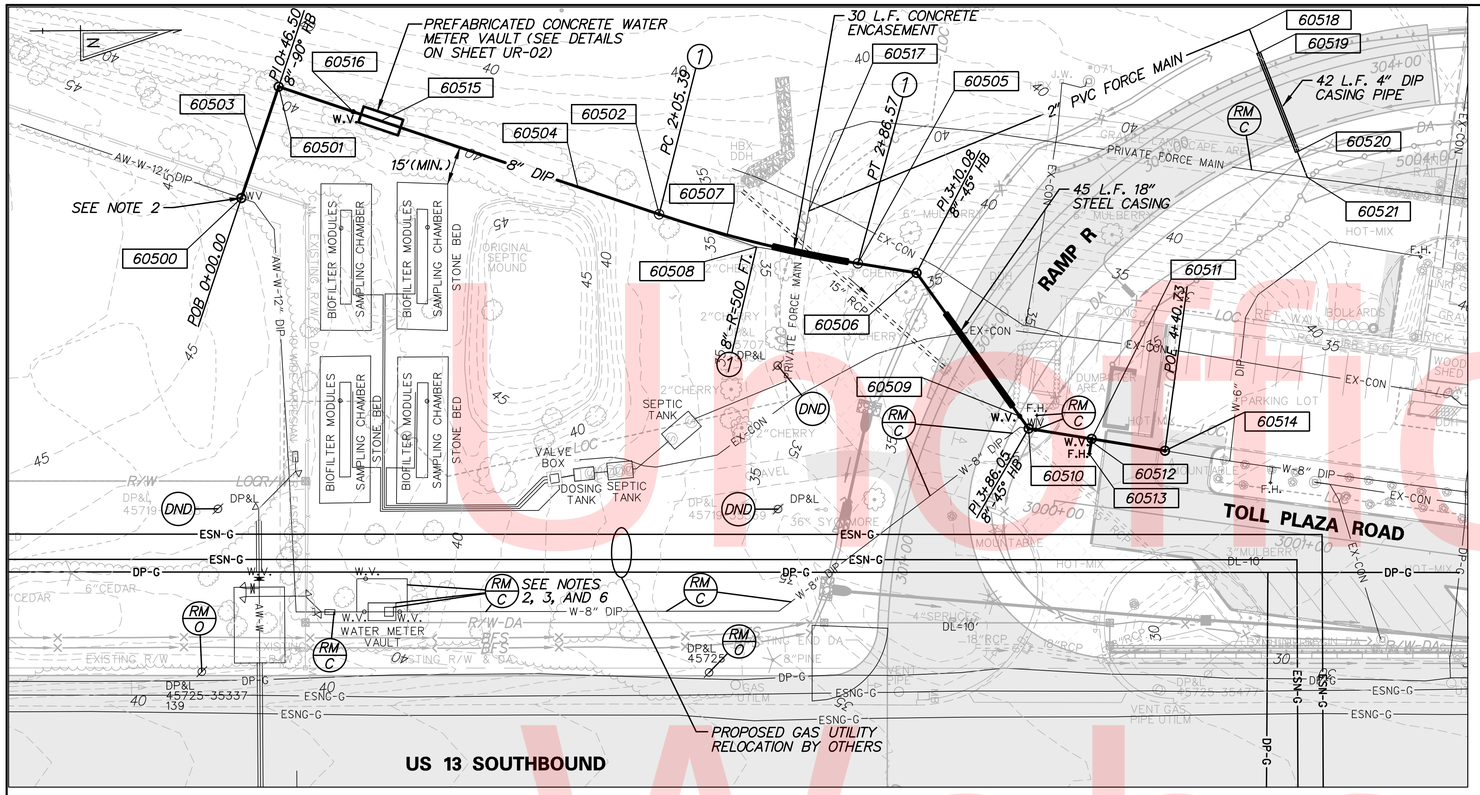

PLAN

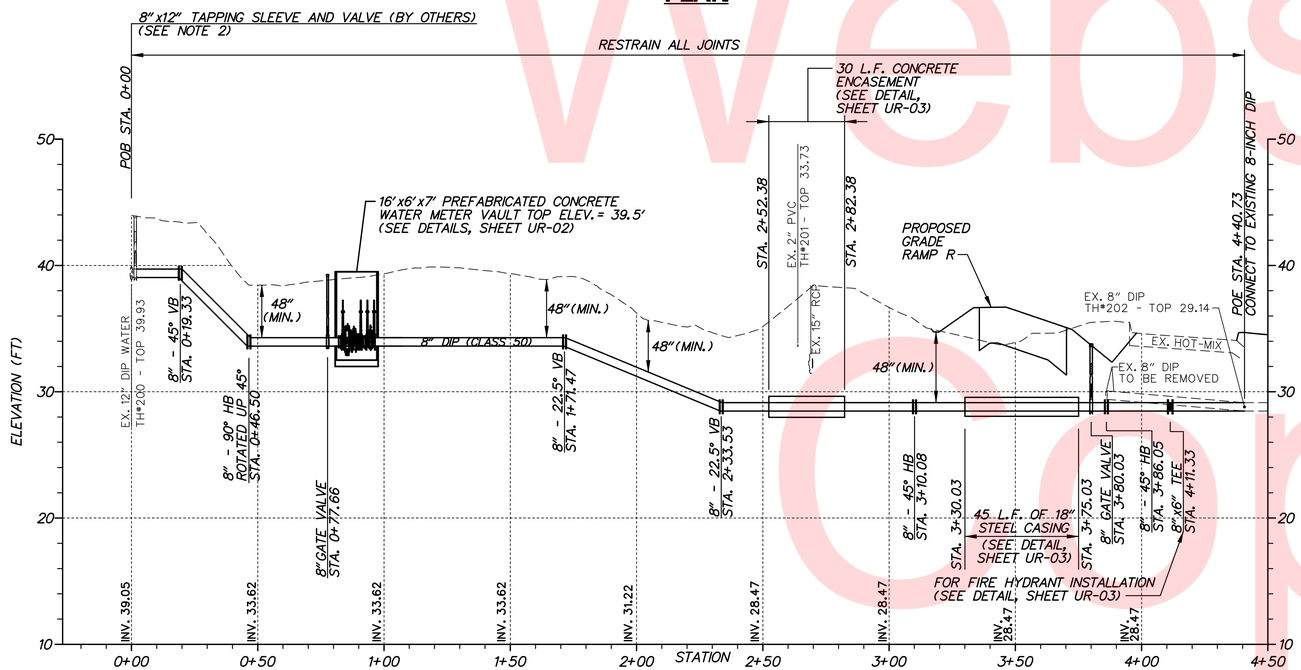

PROFILE

CIRCULAR CURVE #1

Δ = 9°18'11.2818" LEFT
D = 11°27'32.9612"
R = 500.0000'
T = 40.68'
L = 81.19'
LC = 81.10'
CH. BEARING = N14°15'45.8903"E

8" DIP WATER COORDINATE LIST

POINT NO.	DESCRIPTION	NORTHING	EASTING
60500	POB - EX. 12" DIP	555175.68	590368.95
60501	8" - 90° HB	555190.75	590324.95
60502	8" - PC - R=500 FT.	555341.06	590376.46
60503	8" - 45° VB	555181.95	590350.66
60504	8" - 22.5° VB	555308.98	590365.46
60505	8" - PT - R=500 FT.	555419.66	590396.44
60506	8" - 45° HB	555442.84	590400.36
60507	8" - 22.5° VB	555367.93	590384.83
60508	8" - PI - R=500 FT.	555379.55	590389.65
60509	8" GATE VALVE	555483.35	590457.38
60510	8" - 45° HB	555486.84	590462.29
60511	8"x6" TEE	555511.76	590466.52
60512	6" GATE VALVE	555511.59	590467.50
60513	FIRE HYDRANT	555510.76	590472.43
60514	POE - EX. 8" DIP	555540.75	590471.42
60515	CENTER OF VAULT	555231.12	590338.78
60516	8" GATE VALVE	555220.24	590335.06

2" SANITARY FORCE MAIN COORDINATE LIST

POINT NO.	DESCRIPTION	NORTHING	EASTING
60517	POB - 2" - 45° HB WITH THRUST BLOCK	555400.30	590375.59
60518	2" - 90° HB WITH THRUST BLOCK	555575.30	590304.78
60519	POB - 4" DIP CASING	555578.89	590314.12
60520	POE - 4" DIP CASING	555593.94	590353.33
60521	POE - 2" - 60° HB WITH THRUST BLOCK	555597.91	590363.58

NOTES:

1. THE SUPPLY AND INSTALLATION OF THE PROPOSED 8-INCH DUCTILE IRON WATER SERVICE PIPE, CONCRETE WATER METER VAULT, AND ACCESSORIES, AS DEPICTED ON THIS PLAN, SHALL BE THE RESPONSIBILITY OF THE CONTRACTOR AND PAID FOR UNDER ITEM 614508 - WATER MAIN AND ACCESSORIES. THIS INCLUDES ALL WORK AND MATERIALS FOR EXCAVATION, BACKFILLING, AND PIPE TRENCH BACKFILL. NO ADDITIONAL PAYMENT WILL BE MADE FOR EXCAVATION OR BORROW MATERIAL RELATED TO THE WATER SERVICE PIPE OR WATER METER VAULT INSTALLATION REGARDLESS OF DEPTH.
2. ARTESIAN WATER COMPANY WILL SUPPLY AND INSTALL THE PROPOSED 8"x12" TAPPING SLEEVE AND VALVE FOR THE SERVICE CONNECTION TO THE EXISTING 12-INCH WATER MAIN. ARTESIAN WATER COMPANY WILL SUPPLY THE NEW 8-INCH WATER METER TO BE INSTALLED BY THE CONTRACTOR. THE CONTRACTOR SHALL COORDINATE WITH ARTESIAN WATER COMPANY TO SCHEDULE THE SERVICE CONNECTION, DELIVERY OF THE NEW 8-INCH WATER METER, ROMAC FLANGED COUPLING ADAPTER, AND RETURN OF THE EXISTING WATER METER.
3. THE CONTRACTOR SHALL EXCAVATE AND REMOVE THE EXISTING 8-INCH DUCTILE IRON WATER SERVICE PIPE AS SHOWN ON THIS PLAN. THIS INCLUDES, BUT NOT LIMITED TO APPROXIMATELY 416 LF OF PIPE, FOUR GATE VALVES AND ASSOCIATED VALVE BOXES, ONE FIRE HYDRANT, AND ONE CONCRETE WATER METER VAULT. PRIOR TO REMOVAL OF THE EXISTING WATER METER VAULT, THE CONTRACTOR SHALL REMOVE THE EXISTING WATER METER AND RETURN IT TO ARTESIAN WATER COMPANY. THE CONTRACTOR SHALL COORDINATE WITH DELDOT TO DETERMINE IF ANY OF THE EXISTING WATER FACILITIES SHOULD BE SALVAGED. ANY COST ASSOCIATED WITH DAMAGE TO THE EXISTING WATER METER INCURRED DURING REMOVAL WILL BE THE RESPONSIBILITY OF THE CONTRACTOR. FOLLOWING REMOVAL OF THE EXISTING 8-INCH WATER SERVICE AND VAULT, THE CONTRACTOR SHALL BACKFILL THE EXCAVATED AREA TO MEET EXISTING GROUND. THE CONTRACTOR MAY USE EXISTING EXCAVATED MATERIAL MEETING THE REQUIREMENTS OF BORROW, TYPE F FOR BACKFILLING. ALL COSTS FOR REMOVAL OF EXISTING WATER FACILITIES SHALL BE INCIDENTAL TO ITEM 202000. CONTRACTOR TO INSTALL AND TEST PROPOSED 8-INCH WATER MAIN PRIOR TO REMOVAL OF EXISTING WATER SERVICES. SEE NOTE 6.
4. THE PROPOSED FIRE HYDRANT AND WATER MAINS SHALL BE INSTALLED IN ACCORDANCE WITH THE MOST CURRENT EDITION OF THE DELAWARE STATE FIRE CODE. FIRE HYDRANTS SHALL BE COLOR CODED IN ACCORDANCE WITH DSFPR 703, CHAPTER 3, SECTION 4. THIS INCLUDES BOTH COLOR CODING THE BONNET AND 2-INCH REFLECTIVE TAPE AROUND THE BARREL UNDER THE TOP FLANGE. THE DISTANCE BETWEEN THE FIRE HYDRANT AND THE FIRE LANE SHALL NOT BE GREATER THAN SEVEN (7') FEET AND THE STEAMER CONNECTION SHALL BE POSITIONED TO FACE THE FIRE LANE. SEE DETAIL, SHEET UR-03 FOR INSTALLATION DETAILS.
5. A 10-FOOT MINIMUM HORIZONTAL SEPARATION SHALL BE MAINTAINED BETWEEN EXISTING SANITARY SEWER AND PROPOSED WATER MAIN FACILITIES AT ALL TIMES UNLESS NOTED OTHERWISE. A 15-FOOT MINIMUM HORIZONTAL SEPARATION SHALL BE MAINTAINED BETWEEN THE EXISTING BIOFILTER MODULES SAMPLING CHAMBER AND THE PROPOSED WATER MAIN FACILITIES.
6. THE CONTRACTOR SHALL COORDINATE WITH THE DELDOT TOLL ADMINISTRATION A MINIMUM OF 48 HOURS PRIOR TO ANY WATER SERVICE DISRUPTION. THE MAXIMUM ALLOWABLE DURATION OF WATER SERVICE DISRUPTION SHALL NOT EXCEED FOUR (4) HOURS, WHICH INCLUDES DISINFECTING, TESTING, AND CONNECTING TO THE EXISTING 8-INCH WATER SERVICE. THE CONTRACTOR SHALL TAKE ALL NECESSARY PRECAUTIONS TO PROTECT EXISTING UTILITIES AND MAINTAIN UNINTERRUPTED SERVICE. ANY DAMAGE TO EXISTING UTILITIES DUE TO CONTRACTOR NEGLIGENCE SHALL BE IMMEDIATELY AND COMPLETELY REPAIRED AT THE CONTRACTOR'S EXPENSE.
7. SEE SHEETS UR-02 AND UR-03 FOR ADDITIONAL DETAILS.
8. ALL PROFILE ELEVATIONS SHOWN ARE PROPOSED INVERT ELEVATIONS UNLESS OTHERWISE NOTED.

VERTICAL SCALE FEET 0 6 12 18

UR-01

Unofficial Website Copy

N:\31653-000\Contract 1D\CADD\UR001U301_1D.dgn
11/16/2015 3:40:38 PM

DELAWARE DEPARTMENT OF TRANSPORTATION

ADDENDUMS / REVISIONS

SCALE 0 30 60 90 FEET

US 13 & PORT PENN RD INTERSECTION

CONTRACT	BRIDGE NO.	
T201011302	DESIGNED BY: B.S.S.	
COUNTY		
NEW CASTLE	CHECKED BY: J.M.M./T.A.O.	

UTILITY RELOCATION PLAN

SHEET NO. 157
TOTAL SHTS. 179

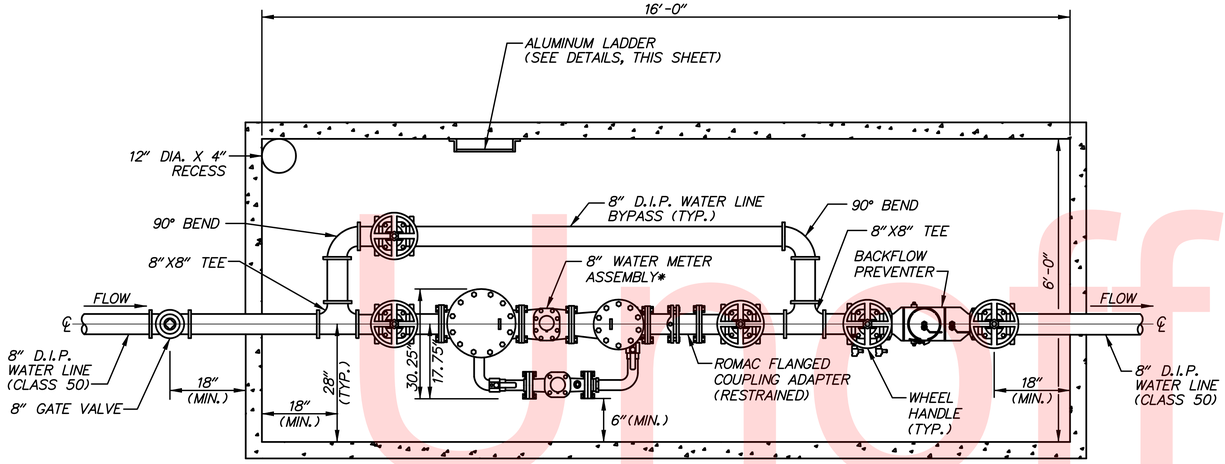

PLAN
NOT TO SCALE

*NOTE: SUPPLIED BY ARTESIAN WATER COMPANY AND INSTALLED BY THE CONTRACTOR (SEE NOTE 2)

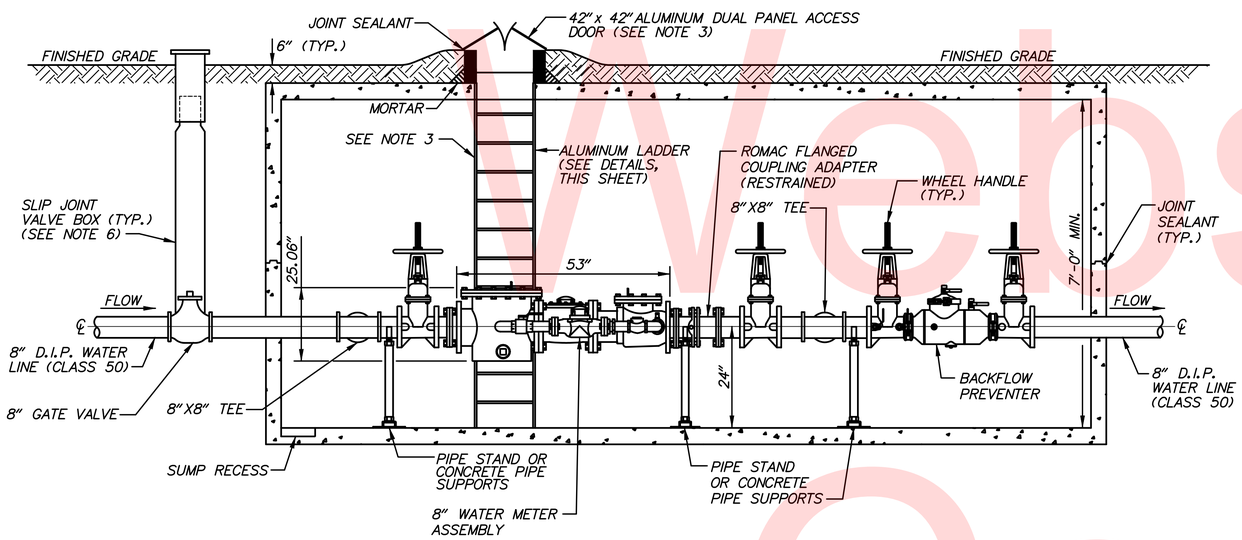

ELEVATION
NOT TO SCALE

8" WATER SERVICE METER ASSEMBLY

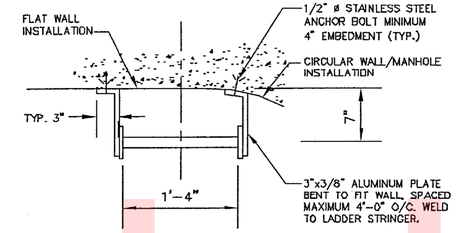

PLAN

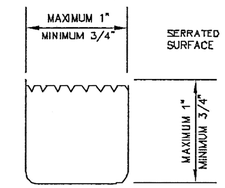

ALUMINUM RUNG DETAIL

RUNG SHALL BE FREE OF SHARP EDGES.

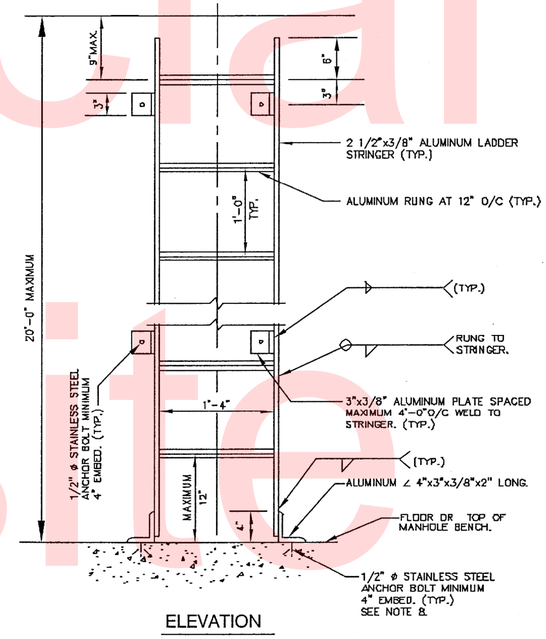

ELEVATION

NOTES

1. RUNG SHALL BE SOLID.
2. WHERE ALUMINUM CONTACTS CONCRETE, COAT ALUMINUM WITH AN EPOXY COATING SYSTEM
3. ACCESS OPENING SHALL BE MINIMUM 30" SQUARE OR 30" DIAMETER FRAME AND COVER
4. RUNG SHALL BEAR ON STRINGER 3/16" MINIMUM.
5. ALL WELDS SHALL BE MINIMUM 3/16" WIDE.
6. KEEP LADDER FREE OF OBSTACLES THAT WILL INTERFERE WITH THE PLACEMENT OF FEET OR HANDS.

WATER SERVICE VAULT ALUMINUM LADDER DETAIL
SCALE: NONE

NOTES:

1. THE PREFABRICATED PCC WATER METER VAULT SHALL BE SUPPLIED AND INSTALLED BY THE CONTRACTOR. THE COST OF THE PCC WATER METER VAULT WILL BE INCIDENTAL TO ITEM 614508 - WATER MAIN AND ACCESSORIES. THE PCC WATER METER VAULT SHALL BE MANUFACTURED BY A.C. MILLER CONCRETE, GILLESIPE PRECAST, OR AN APPROVED EQUAL IN ACCORDANCE WITH THE SPECIFICATIONS.
2. THE PROPOSED 8-INCH WATER METER AND ROMAC FLANGED COUPLING ADAPTER WILL BE SUPPLIED BY ARTESIAN WATER COMPANY AND SHALL BE INSTALLED BY THE CONTRACTOR. THE PROPOSED WATER METER SHALL BE INSTALLED BEFORE THE TOP HALF OF THE WATER METER VAULT IS INSTALLED.
3. 42"x42" ALUMINUM DUAL PANEL ACCESS DOOR AND ALUMINUM ACCESS LADDER SHALL BE SUPPLIED AND INSTALLED BY THE CONTRACTOR AND WILL BE INCIDENTAL TO ITEM 614508. THE DUAL PANEL ACCESS DOOR SHALL BE SET 6-INCHES ABOVE GRADE. THE FINISHED GRADE SHALL SLOPE AWAY FROM THE DOOR IN ALL DIRECTIONS TO PREVENT SURFACE RUNOFF FROM ENTERING VAULT.
4. CONTRACTOR SHALL NOT INSTALL PIPING DIRECTLY BENEATH THE DUAL PANEL ACCESS DOOR AND SHALL MAINTAIN ADEQUATE CLEARANCE FROM THE ACCESS LADDER.
5. AFTER INSTALLING THE PCC WATER METER VAULT AND PLACING BACKFILL MATERIAL, THE CONTRACTOR SHALL STABILIZE THE DISTURBED AREA WITH 6" TOPSOIL, PERMANENT SEEDING, AND BLANKET MULCH. THE COST OF SUPPLY AND INSTALLATION OF THE BLANKET MULCH WILL BE INCIDENTAL TO ITEM 734013 - PERMANENT GRASS SEEDING, DRY GROUND.
6. ALL VALVE BOX COVERS SHALL BE SET TO 6-INCHES ABOVE FINISHED GRADE.
7. ALL UNFLANGED JOINTS SHALL BE RESTRAINED IN ACCORDANCE WITH SPECIFICATIONS.

Unofficial Website Copy

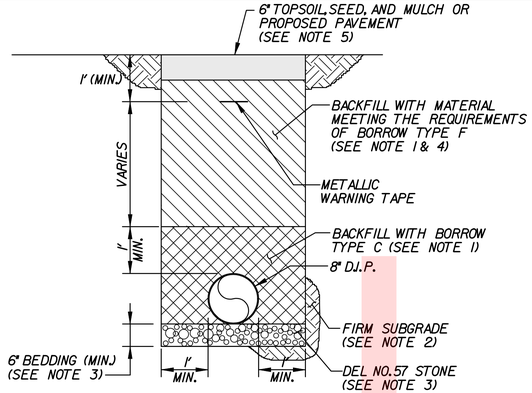

SECTION

NOTES:

1. ALL BACKFILL MATERIAL SHALL BE COMPACTED IN 8" LIFTS TO 95% STANDARD PROCTOR DENSITY AS PER ASTM D698.
2. ALL LOOSE MATERIAL SHALL BE REMOVED FROM THE TRENCH AND THE TRENCH BOTTOM SHALL BE FIRM PRIOR TO PLACING DEL NO.57 STONE.
3. THE 6" OF BEDDING MATERIAL SHALL BE COMPACTED TO GRADE ALONG THE ENTIRE LENGTH OF PIPE TO BE INSTALLED. IF THE TRENCH BOTTOM CONTAINS UNSUITABLE MATERIAL, MORE THAN 6" OF BEDDING MAY BE REQUIRED.
4. THE CONTRACTOR MAY UTILIZE EXISTING EXCAVATED MATERIAL MEETING THE REQUIREMENTS OF BORROW, TYPE F FOR BACKFILLING THE TRENCH. THE USE OF EXISTING EXCAVATED MATERIAL IS ONLY PERMITTED IN THE TRENCH BEGINNING AT A DEPTH OF ONE (1') FOOT ABOVE THE PROPOSED 8" D.I.P.
5. AFTER PLACING BACKFILL MATERIAL, THE CONTRACTOR SHALL STABILIZE THE DISTURBED AREA WITH 6" TOPSOIL, PERMANENT SEEDING, AND SOIL RETENTION BLANKET MULCH (SRBM). THE COST OF SUPPLY AND INSTALLATION OF THE SRBM WILL BE INCIDENTAL TO ITEM 734013 - PERMANENT GRASS SEEDING, DRY GROUND. IF THE PROPOSED WATER LINE IS INSTALLED BELOW THE EXISTING PAVED PARKING LOT, THE CONTRACTOR SHALL PLACE A TEMPORARY WARM-MIX ASPHALT PATCH AT A DEPTH EQUIVALENT TO THE EXISTING PAVEMENT.

TYPICAL TRENCH DETAIL

SCALE: NONE

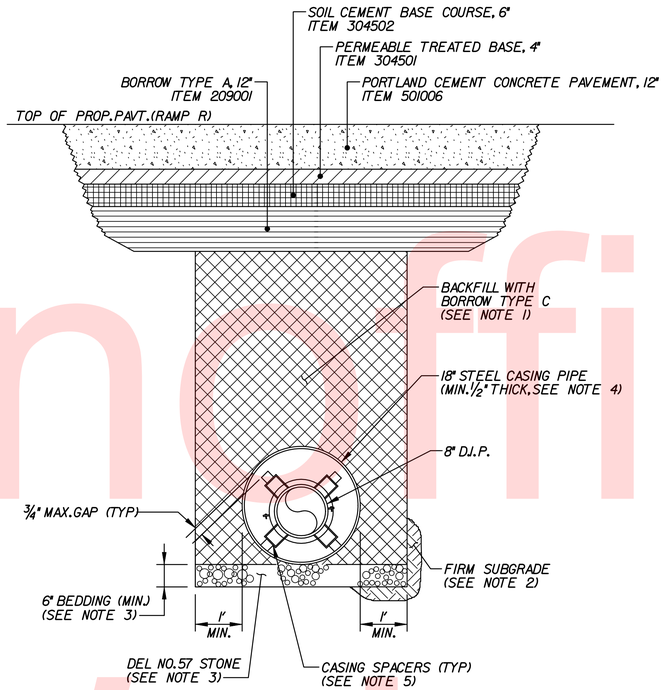

SECTION

NOTES:

1. ALL BACKFILL MATERIAL SHALL BE COMPACTED IN 8" LIFTS TO 95% STANDARD PROCTOR DENSITY AS PER ASTM D698.
2. ALL LOOSE MATERIAL SHALL BE REMOVED FROM THE TRENCH AND THE TRENCH BOTTOM SHALL BE FIRM PRIOR TO PLACING DEL NO.57 STONE.
3. THE 6" OF BEDDING MATERIAL SHALL BE COMPACTED TO GRADE ALONG THE ENTIRE LENGTH OF PIPE TO BE INSTALLED. IF THE TRENCH BOTTOM CONTAINS UNSUITABLE MATERIAL, MORE THAN 6" OF BEDDING MAY BE REQUIRED.
4. THE STEEL CASING PIPE SHALL HAVE A MINIMUM THICKNESS OF 1/2" AND BITUMINOUS COATED BOTH INSIDE AND OUTSIDE IN ACCORDANCE WITH THE SPECIAL PROVISION FOR ITEM 614508 - WATER MAIN AND ACCESSORIES.
5. THE CASING SPACERS SHALL BE SINGLE UNITS CONFIGURED TO CENTER THE 8" D.I.P. WITHIN THE CASING PIPE AS SHOWN WITH 3/4" CLEARANCE TO THE TOP OF THE CASING PIPE. CASING SPACERS SHALL BE INJECTED MOLDED POLYETHYLENE.
6. COVER END OPENINGS OF STEEL CASING WITH ELASTOMERIC BODY END SEALS WITH STAINLESS STEEL BANDS AND CLAMPS.

STEEL PIPE CASING DETAIL BELOW RAMP R

SCALE: NONE

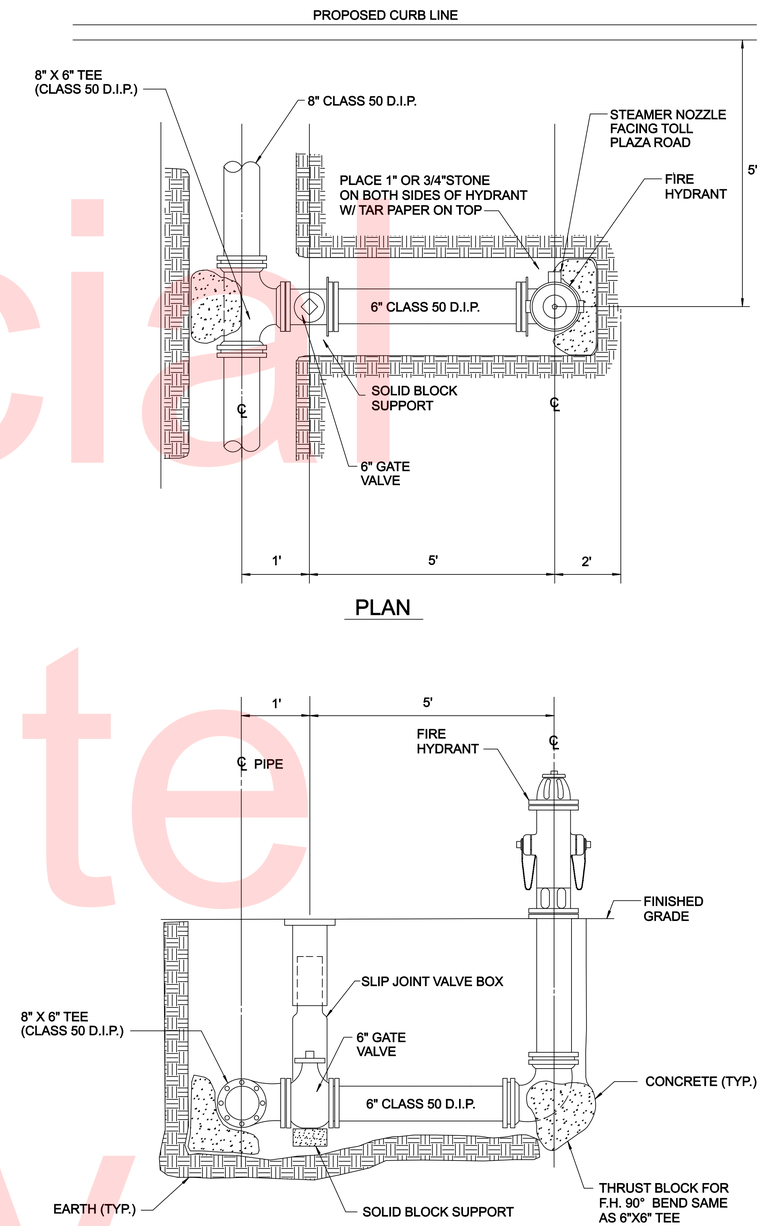

FIRE HYDRANT INSTALLATION

SCALE: NONE

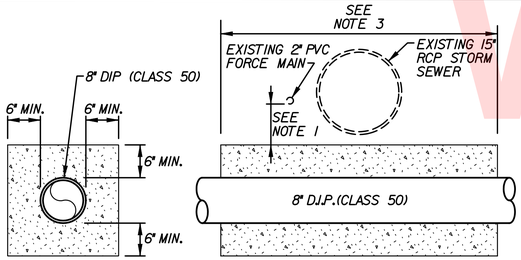

SECTION ELEVATION

NOTES:

1. WHERE THE PROPOSED 8" D.I.P. CROSSES THE EXISTING 15" RCP AND EXISTING 2" PVC FORCE MAIN, THE CONTRACTOR SHALL ENCASE THE PROPOSED 8" D.I.P. IN CONCRETE. THE EXISTING 15" RCP STORM SEWER AND EXISTING 2" PVC FORCE MAIN SHALL BE SUPPORTED BY DEL NO.57 STONE ABOVE THE CONCRETE ENCASEMENT IF THE OFFSET BETWEEN THE EXISTING UTILITIES AND PROPOSED 8" D.I.P. IS LESS THAN 12".
2. THE CONTRACTOR SHALL PROTECT AND SUPPORT THE EXISTING 15" RCP AND EXISTING 2" PVC FORCE MAIN DURING EXCAVATION AND INSTALLATION OF THE 8" D.I.P. PAYMENT FOR PROTECTION AND SUPPORT WILL BE INCIDENTAL TO ITEM 614508 - WATER MAIN AND ACCESSORIES.
3. THE CONCRETE ENCASEMENT SHALL EXTEND A MINIMUM OF TEN (10') FEET TO EITHER SIDE OF THE EXISTING 15" RCP AND EXISTING 2" PVC FORCE MAIN.
4. ALL CONCRETE SHALL BE CLASS B PCC (3,000 PSI) IN ACCORDANCE WITH SECTION 812 OF THE STANDARD SPECIFICATIONS.

CONCRETE ENCASEMENT DETAIL

SCALE: NONE

Unofficial Website Copy

SIGNING LEGEND	
①	REMOVE EXISTING SIGN
②	EXISTING SIGN TO REMAIN
③	PLACE NEW SIGN
④	RENEW EXISTING SIGN
⑤	REPOSITION EXISTING SIGN

N

SIGNING, STRIPING AND CONDUIT PLAN GENERAL NOTES:

1. THE CONTRACTOR SHALL INSTALL AND REMOVE ALL REGULATORY, WARNING AND SPECIAL SIGNS AND SIGN POSTS WITHIN THE CONTRACT LIMITS, AS SHOWN. DELDOT SHALL FURNISH AND SUPPLY THE STANDARD REGULATORY AND WARNING SIGNS, STANDARD SIGN POSTS AND SIGN BANDINGS TO THE CONTRACTOR FOR INSTALLATION. FOR COORDINATION AND PICK-UP OF SIGNS AND POSTS THE CONTRACTOR SHALL CONTACT DELDOT'S SIGN SHOP AT (302) 760-2581. ALLOW SIX WEEKS FOR SIGN FABRICATION.
2. INSTALLATION OF GROUND MOUNT SIGNS ON DELDOT SUPPLIED STANDARD SIGN POSTS SHALL BE PAID FOR UNDER ITEM NOS. 749687 - INSTALLATION OR REMOVAL OF TRAFFIC SIGN(S) ON SINGLE SIGN POST AND 749690 - INSTALLATION OR REMOVAL OF TRAFFIC SIGN(S) ON MULTIPLE SIGN POSTS. INSTALLATION OF GROUND MOUNT SIGNS ON STEEL BEAM SIGN SUPPORTS SHALL BE PAID FOR UNDER ITEM NO. 605501 - GROUND MOUNT BREAKAWAY TYPE SIGN SUPPORTS AND FOUNDATION.
3. THE CONTRACTOR SHALL FURNISH AND INSTALL ALL NON-STANDARD SIGNS SHOWN ON THE GUIDE SIGN DIMENSIONS AND DETAILS SHEETS AND ALL STEEL BEAM SIGN SUPPORTS AS SHOWN ON THE SIGNING CONSTRUCTION DETAILS.
4. UNLESS OTHERWISE NOTED, THE CONTRACTOR SHALL FURNISH AND INSTALL ALL CONDUIT, JUNCTION WELLS AND POLE BASES FOR ITMS DEVICES. DELDOT FORCES TO FURNISH AND INSTALL ALL ELECTRICAL AND COMMUNICATION CABLES FOR ITMS DEVICES.

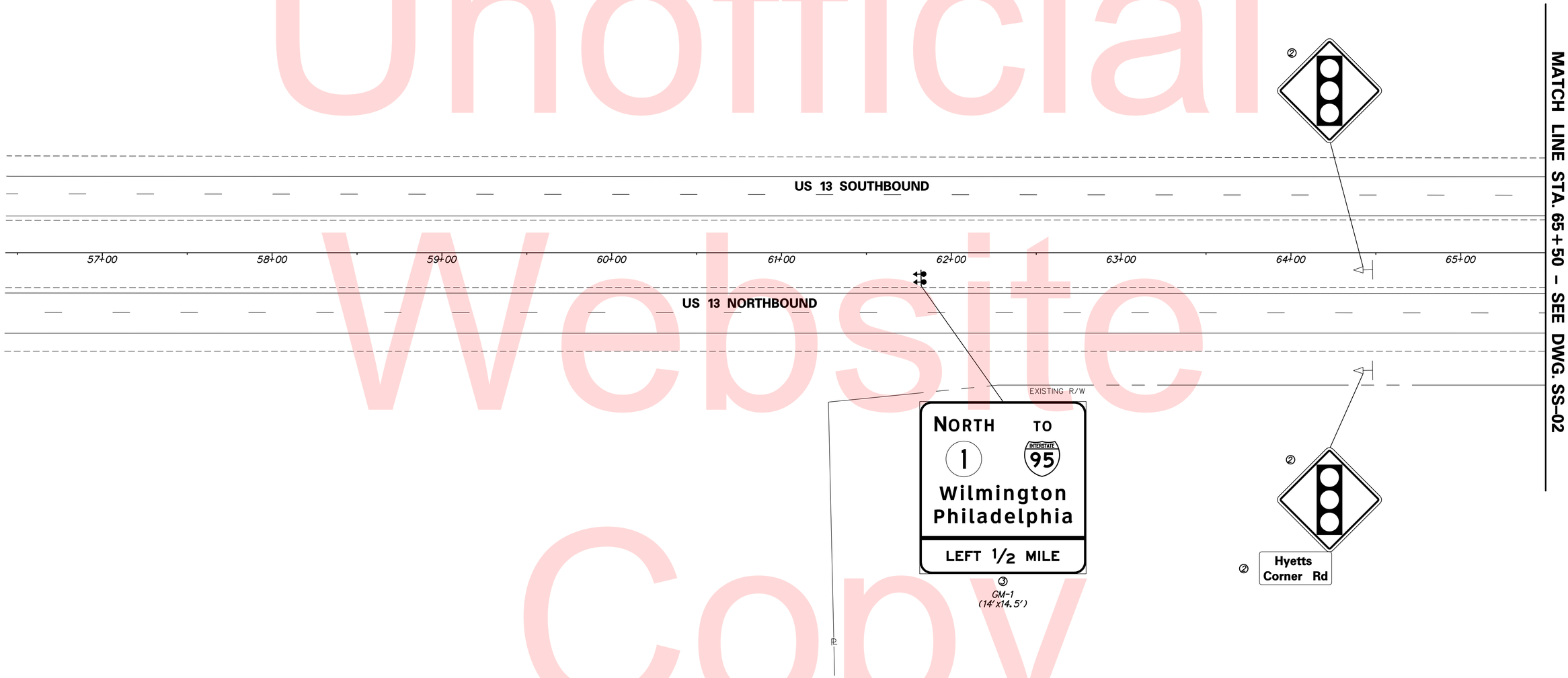

Unofficial Website Copy

N:\31653-000\Contract 1D:\CADD\Traffic\2015 - Updates\SS001U301_1D.dgn
1/14/2016 10:49:15 AM

DELAWARE DEPARTMENT OF TRANSPORTATION	ADDENDUMS / REVISIONS	SCALE 0 30 60 90 FEET	US 13 & PORT PENN RD INTERSECTION	CONTRACT T201011302	BRIDGE NO.	SIGNING, STRIPING & CONDUIT PLAN	SS-01
				COUNTY NEW CASTLE	DESIGNED BY: J.D.C.		SHEET NO. 160
					CHECKED BY: J.M.M.		TOTAL SHTS. 179

SIGNING LEGEND	
①	REMOVE EXISTING SIGN
②	EXISTING SIGN TO REMAIN
③	PLACE NEW SIGN
④	RENEW EXISTING SIGN
⑤	REPOSITION EXISTING SIGN

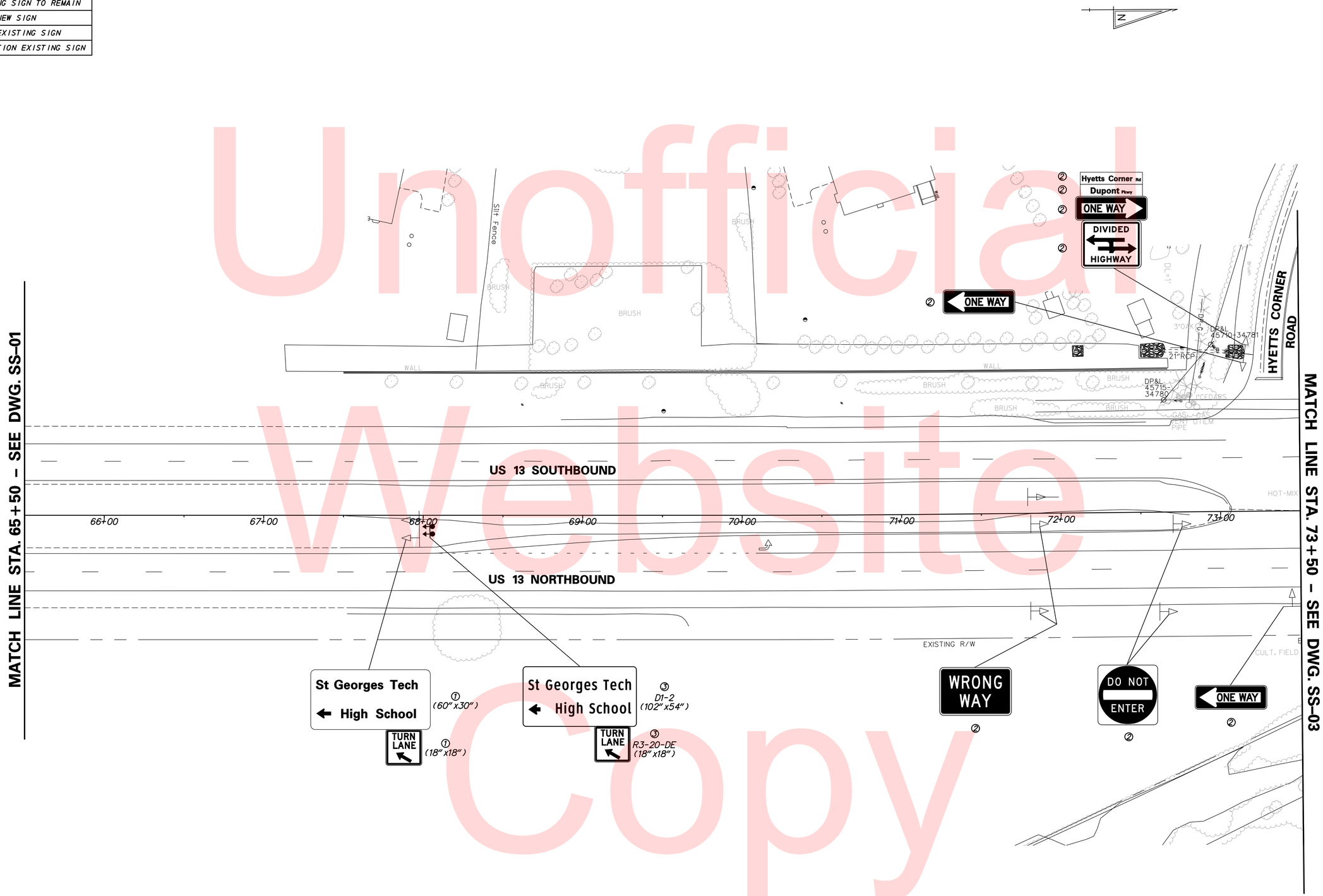

Unofficial Website Copy

N:\31653-000\Contract 1D\CADD\SS002U301_1D.dgn
1/14/2016 3:21:01 PM

DELAWARE DEPARTMENT OF TRANSPORTATION

ADDENDUMS / REVISIONS

SCALE 0 30 60 90 FEET

US 13 & PORT PENN RD INTERSECTION

CONTRACT	BRIDGE NO.
T201011302	DESIGNED BY: J.D.C.
COUNTY	CHECKED BY: J.M.M.
NEW CASTLE	

SIGNING, STRIPING & CONDUIT PLAN

SS–02
SHEET NO.
161
TOTAL SHTS.
179

SIGNING LEGEND	
①	REMOVE EXISTING SIGN
②	EXISTING SIGN TO REMAIN
③	PLACE NEW SIGN
④	RENEW EXISTING SIGN
⑤	REPOSITION EXISTING SIGN

NOTES:
1. INSTALL PLOWABLE RAISED PAVEMENT MARKERS ALONG THE LIMITS OF THE PROPOSED PAVEMENT STRIPING AS PER CHAPTER 3B OF THE DELDOT MUTCD, AS APPLICABLE.

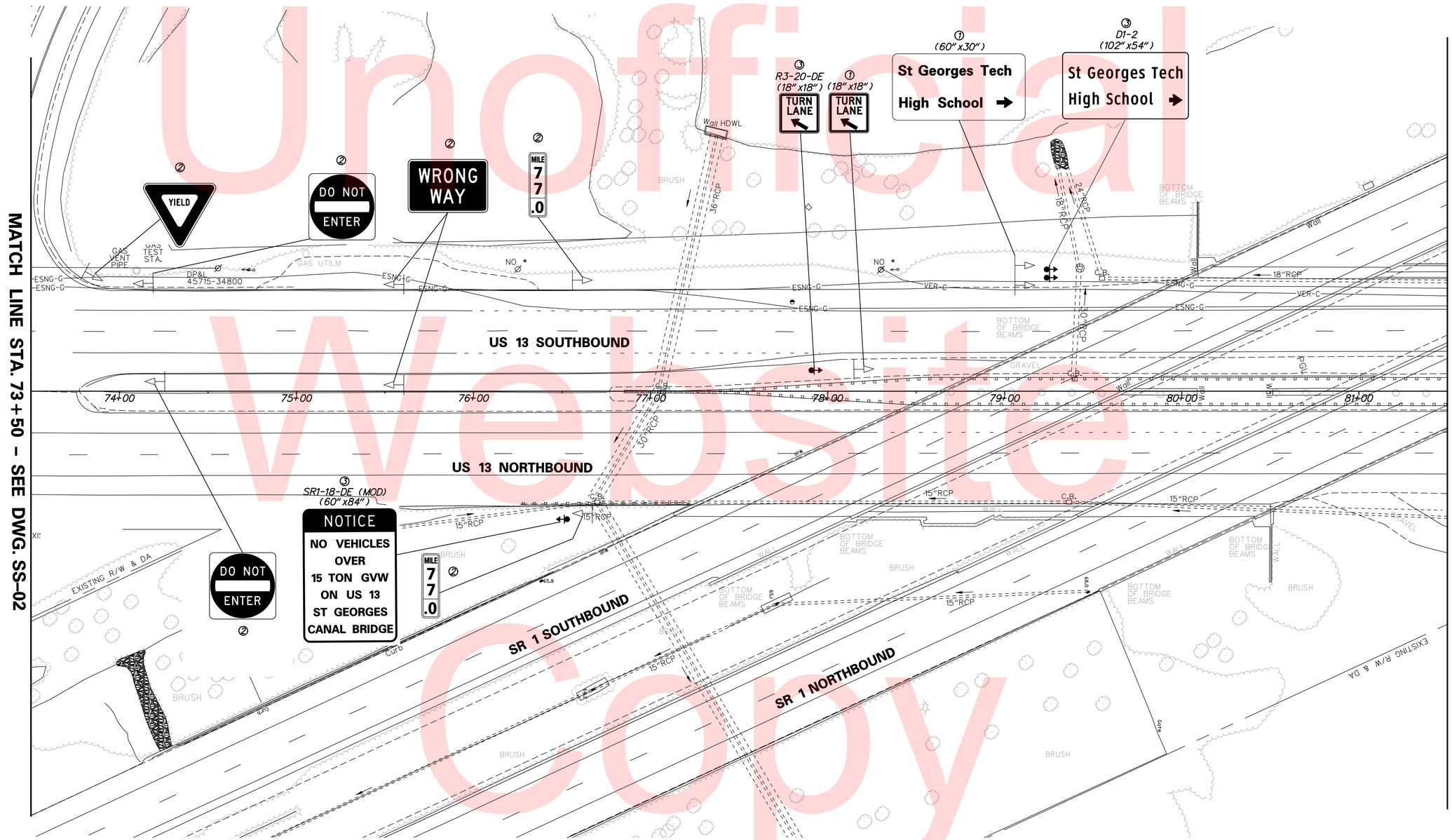

Unofficial Website Copy

N:\31653-00\Contract 1D\CADD\SS003U301_1D.dgn
11/4/2016 10:51:21 AM

DELAWARE DEPARTMENT OF TRANSPORTATION

ADDENDUMS / REVISIONS

SCALE 0 30 60 90 FEET

US 13 & PORT PENN RD INTERSECTION

CONTRACT	BRIDGE NO.
T201011302	DESIGNED BY: J.D.C.
COUNTY	
NEW CASTLE	CHECKED BY: J.M.M.

SIGNING, STRIPING & CONDUIT PLAN

SS-03
SHEET NO.
162
TOTAL SHTS.
179

PAVEMENT MARKINGS LEGEND

SYMBOL	ITEM		QUANTITY
(A)	10" SOLID WHITE EPOXY RESIN PAINT (ITEM 748549)		0 LF
(B)	5" SOLID WHITE EPOXY RESIN PAINT (ITEM 748548)		300 LF
(C)	5" SOLID YELLOW EPOXY RESIN PAINT (ITEM 748548)		300 LF
(D)	5" DOTTED WHITE EPOXY RESIN PAINT, 3' LINE, 9' GAP (ITEM 748548)		0 LF
(E)	5" BROKEN WHITE RETROREFLECTIVE PREFORMED PATTERNED MARKINGS, 10' LINE, 30' GAP (ITEM 748564)		80 LF
(F)	8" SOLID WHITE CONTRAST EPOXY RESIN PAINT, 3" BLACK, 5" WHITE	ITEM 748557	0 LF
		ITEM 748548	0 LF
(G)	WHITE ALKYD THERMOPLASTIC PAVEMENT SYMBOL/LEGEND (ITEM 748015)		0 SF
(H)	5" SOLID DOUBLE YELLOW EPOXY RESIN PAINT (ITEM 748548)		0 LF
(J)	5" DOTTED WHITE EPOXY RESIN PAINT, 2' LINE, 6' GAP (ITEM 748548)		0 LF
(K)	5" BROKEN YELLOW EPOXY RESIN PAINT, 10' LINE, 30' GAP (ITEM 748548)		0 LF
(L)	PREFORMED RETROREFLECTIVE THERMOPLASTIC PAVEMENT MARKINGS, BIKE SYMBOL (ITEM 748553)		0 EA
(M)	12" SOLID WHITE ALKYD-THERMOPLASTIC (ITEM 748027)		0 LF
(N)	5" DOTTED WHITE RETROREFLECTIVE PREFORMED PATTERNED MARKINGS, 3' LINE, 9' GAP (ITEM 748564)		0 LF

SIGNING LEGEND

(1)	REMOVE EXISTING SIGN
(2)	EXISTING SIGN TO REMAIN
(3)	PLACE NEW SIGN
(4)	RENEW EXISTING SIGN
(5)	REPOSITION EXISTING SIGN

NOTES:
1. INSTALL PLOWABLE RAISED PAVEMENT MARKERS ALONG THE LIMITS OF THE PROPOSED PAVEMENT STRIPING AS PER CHAPTER 3B OF THE DELDOT MUTCD, AS APPLICABLE.

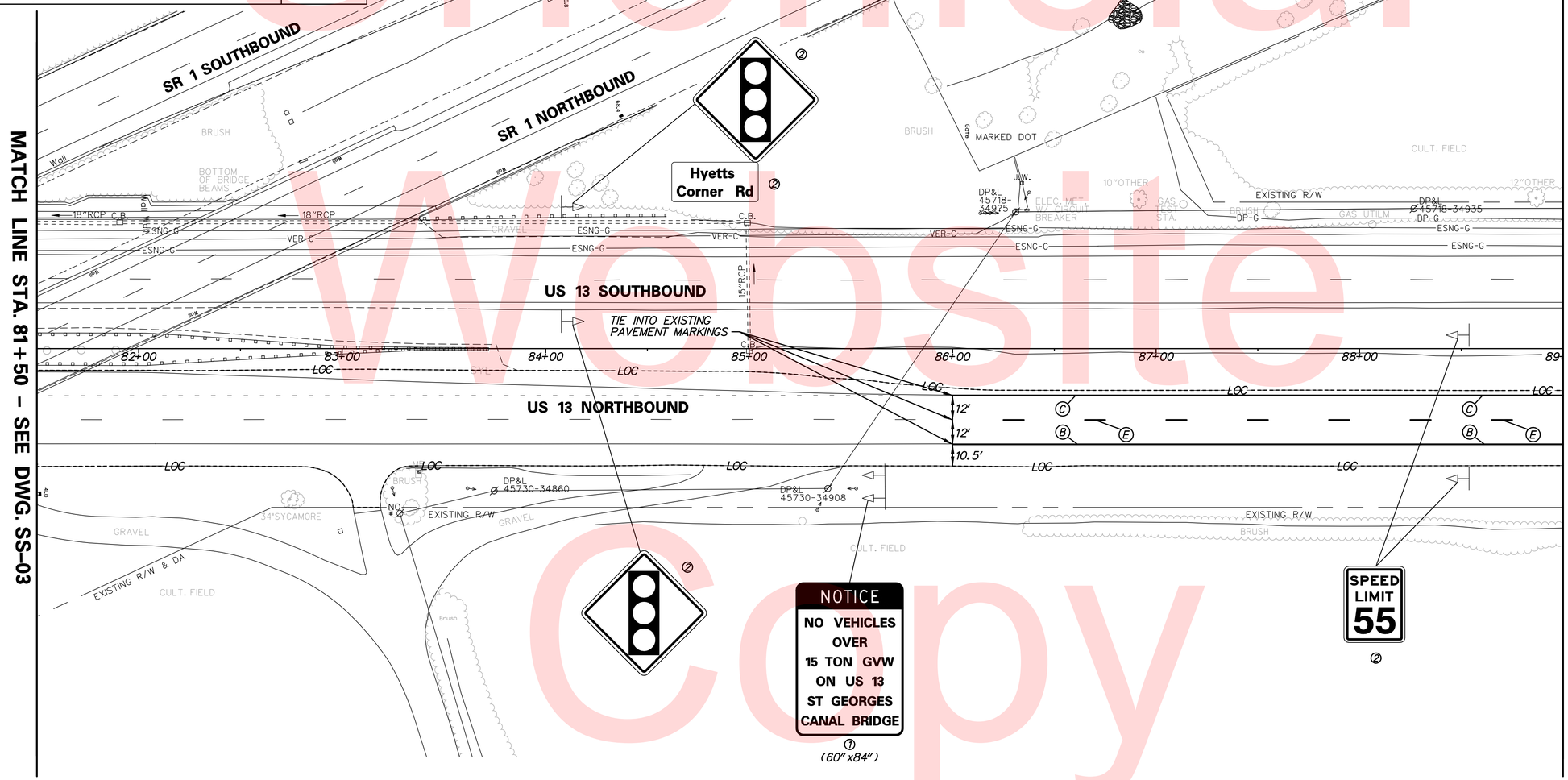

Unofficial Website Copy

DELAWARE DEPARTMENT OF TRANSPORTATION	ADDENDUMS / REVISIONS	SCALE 0 30 60 90 FEET	US 13 & PORT PENN RD INTERSECTION	CONTRACT T201011302 / COUNTY NEW CASTLE	BRIDGE NO. / DESIGNED BY: J.D.C. / CHECKED BY: J.M.M.	SIGNING, STRIPING & CONDUIT PLAN	SS-04 / SHEET NO. 163 / TOTAL SHTS. 179

H:\31653-000\Contract 1D\CADD\SS004U301_1D.dgn
1/14/2016 10:52:02 AM

PAVEMENT MARKINGS LEGEND

SYMBOL	ITEM		QUANTITY
A	10" SOLID WHITE EPOXY RESIN PAINT (ITEM 748549)		500 LF
B	5" SOLID WHITE EPOXY RESIN PAINT (ITEM 748548)		1400 LF
C	5" SOLID YELLOW EPOXY RESIN PAINT (ITEM 748548)		1400 LF
D	5" DOTTED WHITE EPOXY RESIN PAINT, 3' LINE, 9' GAP (ITEM 748548)		0 LF
E	5" BROKEN WHITE RETROREFLECTIVE PREFORMED PATTERNED MARKINGS, 10' LINE, 30' GAP (ITEM 748564)		350 LF
F	8" SOLID WHITE CONTRAST EPOXY RESIN PAINT, 3" BLACK, 5" WHITE	ITEM 748557	0 LF
		ITEM 748548	0 LF
G	WHITE ALKYD THERMOPLASTIC PAVEMENT SYMBOL/LEGEND (ITEM 748015)		0 SF
H	5" SOLID DOUBLE YELLOW EPOXY RESIN PAINT (ITEM 748548)		0 LF
J	5" DOTTED WHITE EPOXY RESIN PAINT, 2' LINE, 6' GAP (ITEM 748548)		0 LF
K	5" BROKEN YELLOW EPOXY RESIN PAINT, 10' LINE, 30' GAP (ITEM 748548)		0 LF
L	PREFORMED RETROREFLECTIVE THERMOPLASTIC PAVEMENT MARKINGS, BIKE SYMBOL (ITEM 748553)		0 EA
M	12" SOLID WHITE ALKYD-THERMOPLASTIC (ITEM 748027)		34 LF
N	5" DOTTED WHITE RETROREFLECTIVE PREFORMED PATTERNED MARKINGS, 3' LINE, 9' GAP (ITEM 748564)		0 LF

SIGNING LEGEND

1	REMOVE EXISTING SIGN
2	EXISTING SIGN TO REMAIN
3	PLACE NEW SIGN
4	RENEW EXISTING SIGN
5	REPOSITION EXISTING SIGN

NOTES:
1. INSTALL PLOWABLE RAISED PAVEMENT MARKERS ALONG THE LIMITS OF THE PROPOSED PAVEMENT STRIPING AS PER CHAPTER 3B OF THE DELDOT MUTCD, AS APPLICABLE.
2. INSTALL POST MOUNTED AND/OR GUARDRAIL MOUNTED DELINEATORS ALONG THE LIMITS OF THE PROPOSED GUARDRAIL AND ROADWAY AS PER CHAPTER 3F OF THE DELDOT MUTCD.

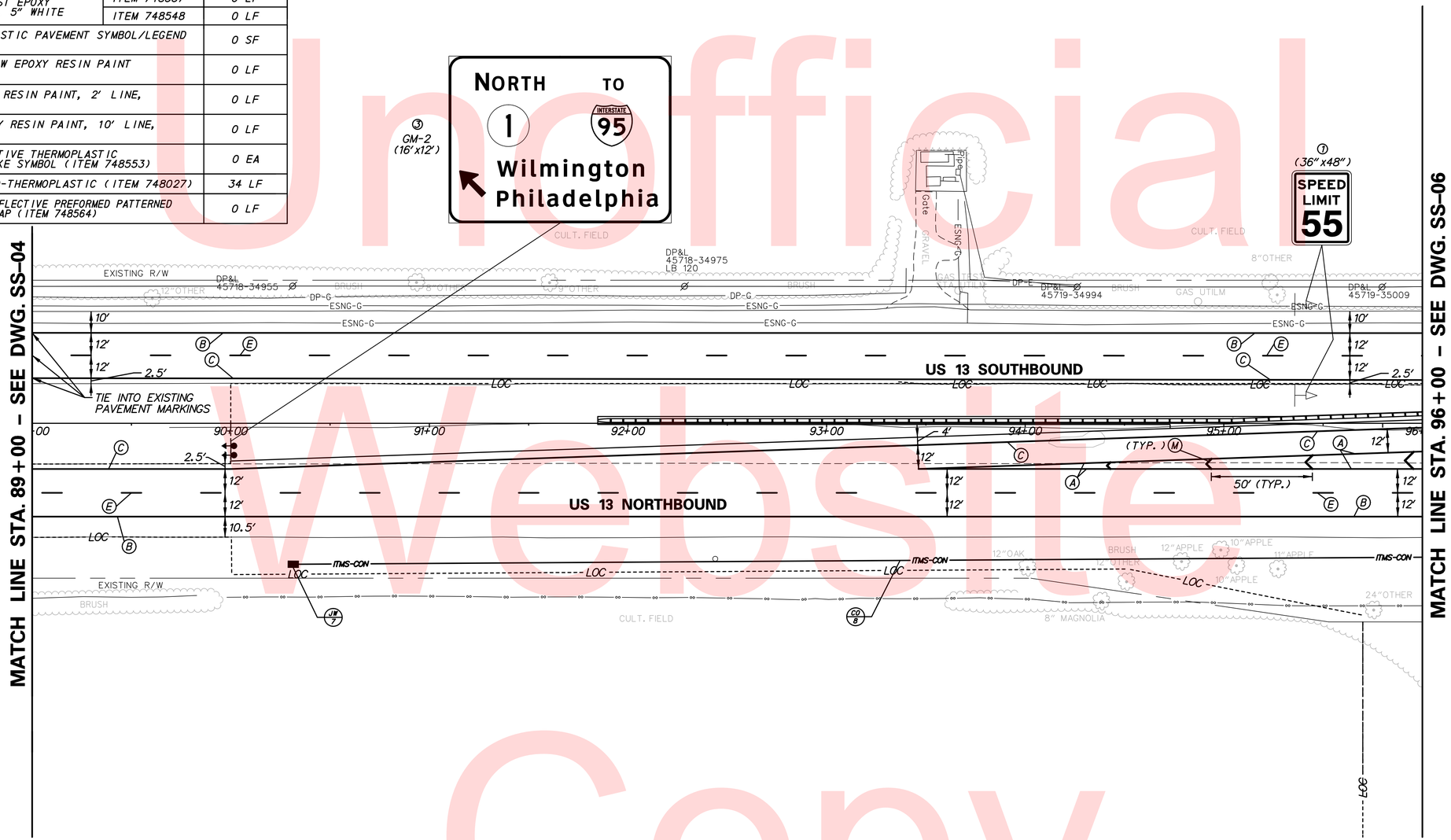

ITMS CONDUIT RUN SCHEDULE

CO*	# OF CONDUITS	SIZE	LENGTH	B/T/O	AMOUNT AND TYPE OF CABLE/WIRE (SUPPLY AND INSTALLATION BY DELDOT FORCES)
8	1	4.0 IN	600 FT**	T	EMPTY

*DENOTES EXISTING CONDUIT
**QUANTITY CONTINUES ON ADJACENT SHEET
B = BORE, T = TRENCH, O = OPEN CUT

Unofficial Website Copy

N:\31653-000\Contract 1D\CADD\SS005U301_1D.dgn
1/14/2016 10:54:06 AM

DELAWARE DEPARTMENT OF TRANSPORTATION

ADDENDUMS / REVISIONS

SCALE 0 30 60 90 FEET

US 13 & PORT PENN RD INTERSECTION

CONTRACT	BRIDGE NO.
T201011302	DESIGNED BY: J.D.C.
COUNTY	
NEW CASTLE	CHECKED BY: J.M.M.

SIGNING, STRIPING & CONDUIT PLAN

SS-05	
SHEET NO.	164
TOTAL SHTS.	179

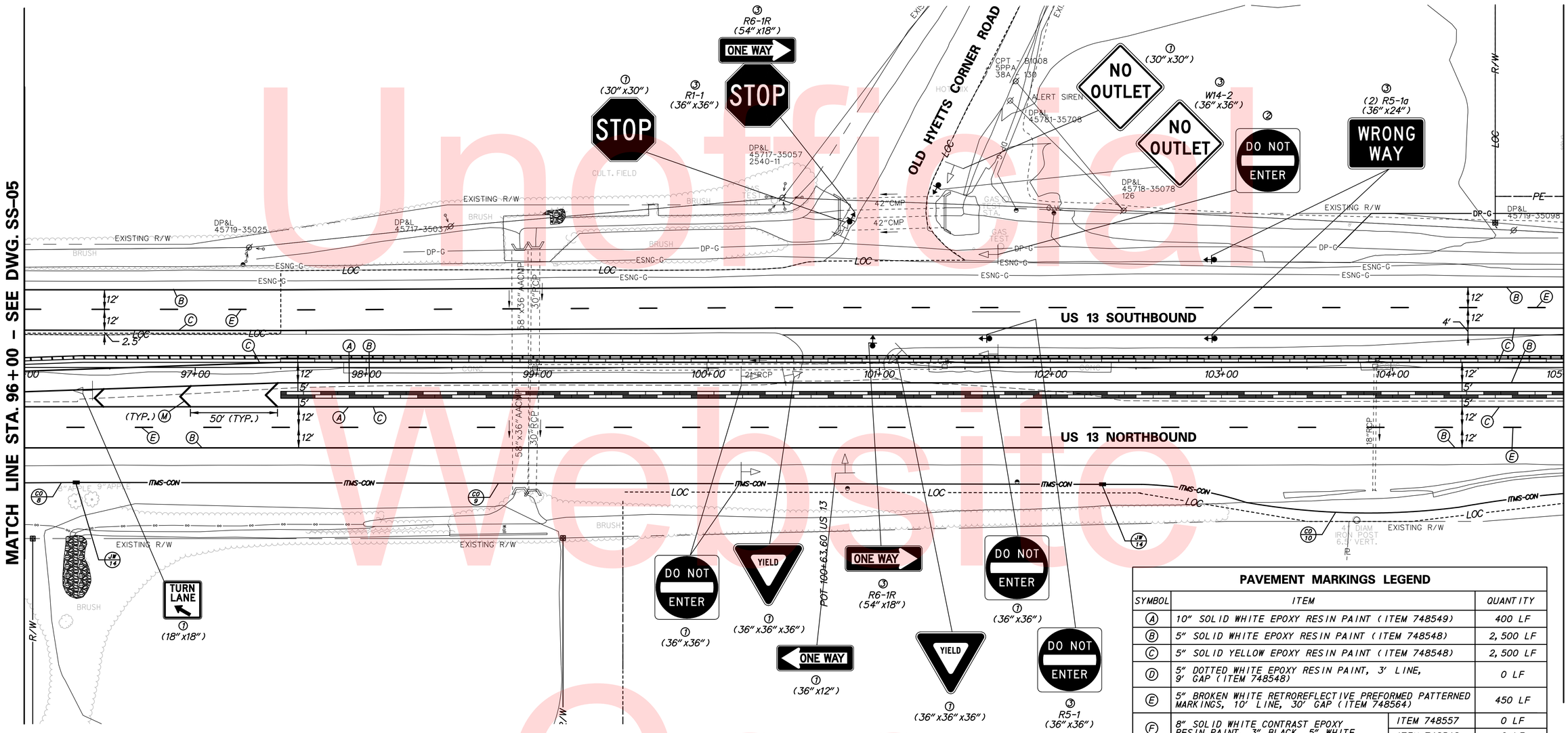

ITMS CONDUIT RUN SCHEDULE					
CO#	# OF CONDUITS	SIZE	LENGTH	B/T/O	AMOUNT AND TYPE OF CABLE/WIRE (SUPPLY AND INSTALLATION BY DELDOT FORCES)
8	1	4.0 IN	600 FT**	T	EMPTY
9	1	4.0 IN	600 FT	T	EMPTY
10	1	4.0 IN	600 FT**	T	EMPTY

*DENOTES EXISTING CONDUIT
**QUANTITY CONTINUES ON ADJACENT SHEET
B = BORE, T = TRENCH, O = OPEN CUT

SIGNING LEGEND	
1	REMOVE EXISTING SIGN
2	EXISTING SIGN TO REMAIN
3	PLACE NEW SIGN
4	RENEW EXISTING SIGN
5	REPOSITION EXISTING SIGN

NOTES:

1. INSTALL PLOWABLE RAISED PAVEMENT MARKERS ALONG THE LIMITS OF THE PROPOSED PAVEMENT STRIPING AS PER CHAPTER 3B OF THE DELDOT MUTCD, AS APPLICABLE.
2. INSTALL POST MOUNTED AND/OR GUARDRAIL MOUNTED DELINEATORS ALONG THE LIMITS OF THE PROPOSED GUARDRAIL AND ROADWAY AS PER CHAPTER 3F OF THE DELDOT MUTCD.

PAVEMENT MARKINGS LEGEND			
SYMBOL	ITEM		QUANTITY
A	10" SOLID WHITE EPOXY RESIN PAINT (ITEM 748549)		400 LF
B	5" SOLID WHITE EPOXY RESIN PAINT (ITEM 748548)		2,500 LF
C	5" SOLID YELLOW EPOXY RESIN PAINT (ITEM 748548)		2,500 LF
D	5" DOTTED WHITE EPOXY RESIN PAINT, 3' LINE, 9' GAP (ITEM 748548)		0 LF
E	5" BROKEN WHITE RETROREFLECTIVE PREFORMED PATTERNED MARKINGS, 10' LINE, 30' GAP (ITEM 748564)		450 LF
F	8" SOLID WHITE CONTRAST EPOXY RESIN PAINT, 3" BLACK, 5" WHITE	ITEM 748557	0 LF
		ITEM 748548	0 LF
G	WHITE ALKYD THERMOPLASTIC PAVEMENT SYMBOL/LEGEND (ITEM 748015)		0 SF
H	5" SOLID DOUBLE YELLOW EPOXY RESIN PAINT (ITEM 748548)		0 LF
J	5" DOTTED WHITE EPOXY RESIN PAINT, 2' LINE, 6' GAP (ITEM 748548)		0 LF
K	5" BROKEN YELLOW EPOXY RESIN PAINT, 10' LINE, 30' GAP (ITEM 748548)		0 LF
L	PREFORMED RETROREFLECTIVE THERMOPLASTIC PAVEMENT MARKINGS, BIKE SYMBOL (ITEM 748553)		0 EA
M	12" SOLID WHITE ALKYD-THERMOPLASTIC (ITEM 748027)		54 LF
N	5" DOTTED WHITE RETROREFLECTIVE PREFORMED PATTERNED MARKINGS, 3' LINE, 9' GAP (ITEM 748564)		0 LF

Unofficial Website Copy

N:\33653-000\Contract 1D\CADD\Traffic\2015 - Updates\SS006U301_1D.dgn
1/14/2016 3:29:17 PM

DELAWARE DEPARTMENT OF TRANSPORTATION

ADDENDUMS / REVISIONS

SCALE 0 30 60 90 FEET

US 13 & PORT PENN RD INTERSECTION

CONTRACT	BRIDGE NO.
T201011302	DESIGNED BY: J.D.C.
COUNTY	
NEW CASTLE	CHECKED BY: J.M.M.

SIGNING, STRIPING & CONDUIT PLAN

SS–06

SHEET NO. 165

TOTAL SHTS. 179

PAVEMENT MARKINGS LEGEND

SYMBOL	ITEM		QUANTITY
A	10" SOLID WHITE EPOXY RESIN PAINT (ITEM 748549)		0 LF
B	5" SOLID WHITE EPOXY RESIN PAINT (ITEM 748548)		2,400 LF
C	5" SOLID YELLOW EPOXY RESIN PAINT (ITEM 748548)		2,400 LF
D	5" DOTTED WHITE EPOXY RESIN PAINT, 3' LINE, 9' GAP (ITEM 748548)		0 LF
E	5" BROKEN WHITE RETROREFLECTIVE PREFORMED PATTERNED MARKINGS, 10' LINE, 30' GAP (ITEM 748564)		400 LF
F	8" SOLID WHITE CONTRAST EPOXY RESIN PAINT, 3" BLACK, 5" WHITE	ITEM 748557	0 LF
		ITEM 748548	0 LF
G	WHITE ALKYD THERMOPLASTIC PAVEMENT SYMBOL/LEGEND (ITEM 748015)		0 SF
H	5" SOLID DOUBLE YELLOW EPOXY RESIN PAINT (ITEM 748548)		0 LF
J	5" DOTTED WHITE EPOXY RESIN PAINT, 2' LINE, 6' GAP (ITEM 748548)		0 LF
K	5" BROKEN YELLOW EPOXY RESIN PAINT, 10' LINE, 30' GAP (ITEM 748548)		0 LF
L	PREFORMED RETROREFLECTIVE THERMOPLASTIC PAVEMENT MARKINGS, BIKE SYMBOL (ITEM 748553)		0 EA
M	12" SOLID WHITE ALKYD-THERMOPLASTIC (ITEM 748027)		0 LF
N	5" DOTTED WHITE RETROREFLECTIVE PREFORMED PATTERNED MARKINGS, 3' LINE, 9' GAP (ITEM 748564)		0 LF

SIGNING LEGEND

1	REMOVE EXISTING SIGN
2	EXISTING SIGN TO REMAIN
3	PLACE NEW SIGN
4	RENEW EXISTING SIGN
5	REPOSITION EXISTING SIGN

NOTES:
1. INSTALL PLOWABLE RAISED PAVEMENT MARKERS ALONG THE LIMITS OF THE PROPOSED PAVEMENT STRIPING AS PER CHAPTER 3B OF THE DELDOT MUTCD, AS APPLICABLE.
2. INSTALL POST MOUNTED AND/OR GUARDRAIL MOUNTED DELINEATORS ALONG THE LIMITS OF THE PROPOSED GUARDRAIL AND ROADWAY AS PER CHAPTER 3F OF THE DELDOT MUTCD.

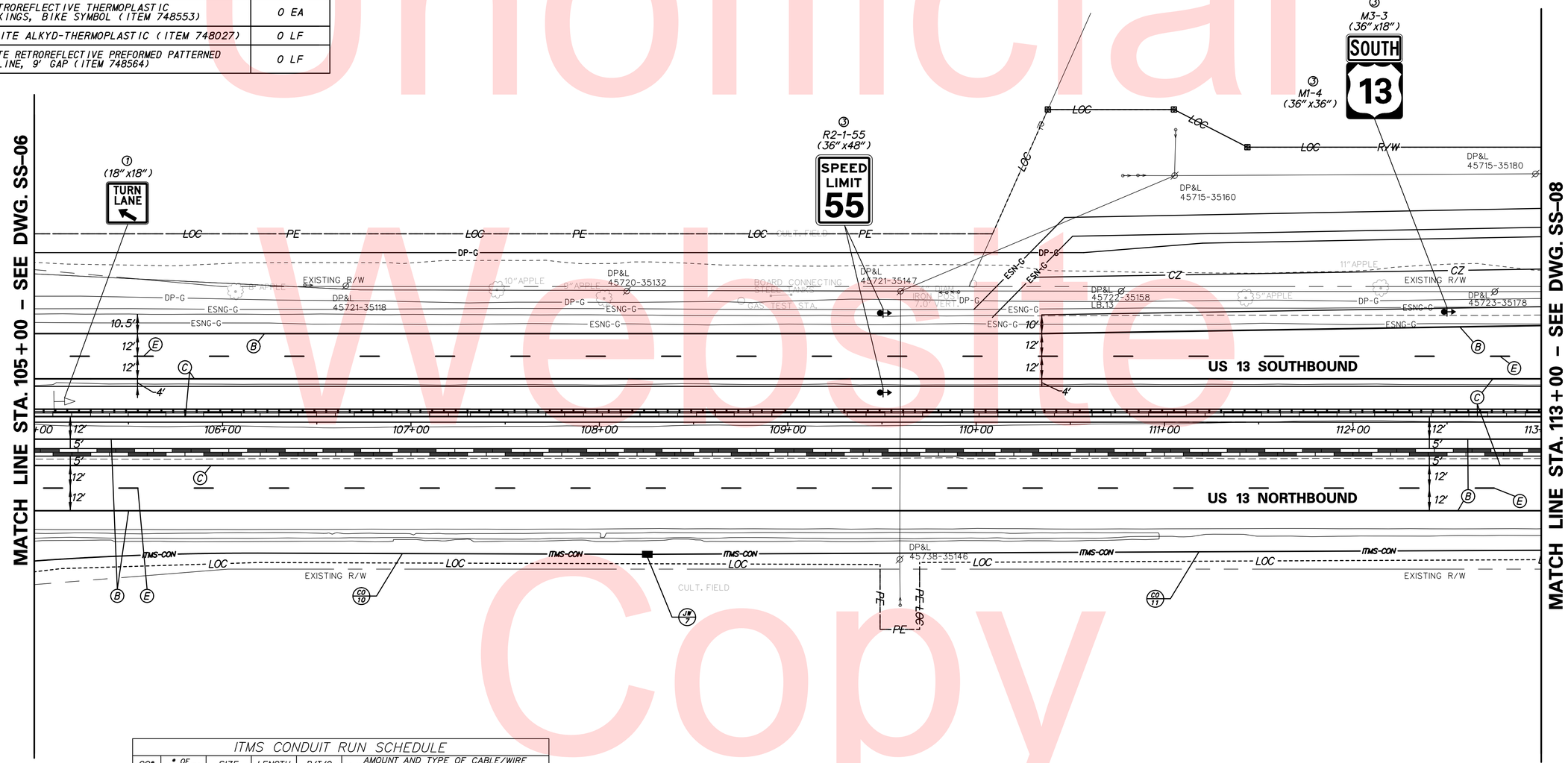

ITMS CONDUIT RUN SCHEDULE					
CO*	# OF CONDUITS	SIZE	LENGTH	B/T/O	AMOUNT AND TYPE OF CABLE/WIRE (SUPPLY AND INSTALLATION BY DELDOT FORCES)
10	1	4.0 IN	600 FT**	T	EMPTY
11	1	4.0 IN	600 FT**	T	EMPTY

*DENOTES EXISTING CONDUIT
**QUANTITY CONTINUES ON ADJACENT SHEET
B = BORE, T = TRENCH, O = OPEN CUT

Unofficial Website Copy

N:\3653-000\Contract 1\CADD\SS0071J01_1D.dgn
1/14/2016 10:56:03 AM

DELAWARE DEPARTMENT OF TRANSPORTATION

ADDENDUMS / REVISIONS

SCALE 0 30 60 90 FEET

US 13 & PORT PENN RD INTERSECTION

CONTRACT	BRIDGE NO.
T201011302	DESIGNED BY: J.D.C.
COUNTY	
NEW CASTLE	CHECKED BY: J.M.M.

SIGNING, STRIPING & CONDUIT PLAN

SS-07
SHEET NO.
166
TOTAL SHTS.
179

PAVEMENT MARKINGS LEGEND

SYMBOL	ITEM		QUANTITY
(A)	10" SOLID WHITE EPOXY RESIN PAINT (ITEM 748549)		0 LF
(B)	5" SOLID WHITE EPOXY RESIN PAINT (ITEM 748548)		2,400 LF
(C)	5" SOLID YELLOW EPOXY RESIN PAINT (ITEM 748548)		2,400 LF
(D)	5" DOTTED WHITE EPOXY RESIN PAINT, 3' LINE, 9' GAP (ITEM 748548)		72 LF
(E)	5" BROKEN WHITE RETROREFLECTIVE PREFORMED PATTERNED MARKINGS, 10' LINE, 30' GAP (ITEM 748564)		400 LF
(F)	8" SOLID WHITE CONTRAST EPOXY RESIN PAINT, 3" BLACK, 5" WHITE	ITEM 748557	0 LF
		ITEM 748548	0 LF
(G)	WHITE ALKYD THERMOPLASTIC PAVEMENT SYMBOL/LEGEND (ITEM 748015)		42 SF
(H)	5" SOLID DOUBLE YELLOW EPOXY RESIN PAINT (ITEM 748548)		0 LF
(J)	5" DOTTED WHITE EPOXY RESIN PAINT, 2' LINE, 6' GAP (ITEM 748548)		0 LF
(K)	5" BROKEN YELLOW EPOXY RESIN PAINT, 10' LINE, 30' GAP (ITEM 748548)		0 LF
(L)	PREFORMED RETROREFLECTIVE THERMOPLASTIC PAVEMENT MARKINGS, BIKE SYMBOL (ITEM 748553)		0 EA
(M)	12" SOLID WHITE ALKYD-THERMOPLASTIC (ITEM 748027)		0 LF
(N)	5" DOTTED WHITE RETROREFLECTIVE PREFORMED PATTERNED MARKINGS, 3' LINE, 9' GAP (ITEM 748564)		72 LF

SIGNING LEGEND

(1)	REMOVE EXISTING SIGN
(2)	EXISTING SIGN TO REMAIN
(3)	PLACE NEW SIGN
(4)	RENEW EXISTING SIGN
(5)	REPOSITION EXISTING SIGN

NOTES:

1. INSTALL PLOWABLE RAISED PAVEMENT MARKERS ALONG THE LIMITS OF THE PROPOSED PAVEMENT STRIPING AS PER CHAPTER 3B OF THE DELDOT MUTCD, AS APPLICABLE.
2. INSTALL POST MOUNTED AND/OR GUARDRAIL MOUNTED DELINEATORS ALONG THE LIMITS OF THE PROPOSED GUARDRAIL AND ROADWAY AS PER CHAPTER 3F OF THE DELDOT MUTCD.
3. THE PROPOSED W16-15p SIGN SHALL BE INSTALLED ABOVE THE PROPOSED W3-3 SIGN FOR A MINIMUM OF 30 DAYS AND A MAXIMUM OF 90 DAYS. DELDOT FORCES SHALL BE RESPONSIBLE FOR REMOVAL OF THE W16-15p SIGN.

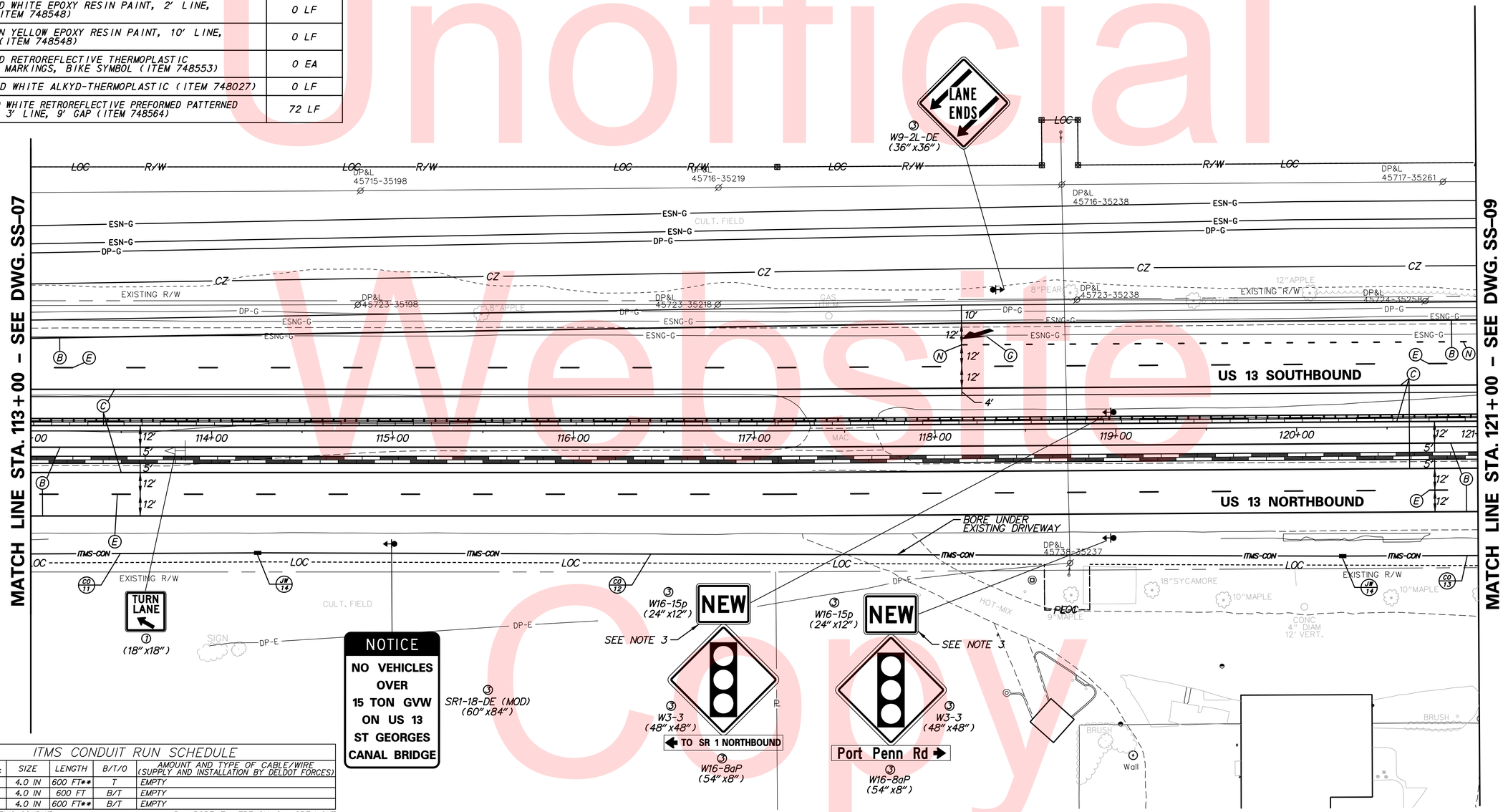

ITMS CONDUIT RUN SCHEDULE

CO#	# OF CONDUITS	SIZE	LENGTH	B/T/O	AMOUNT AND TYPE OF CABLE/WIRE (SUPPLY AND INSTALLATION BY DELDOT FORCES)
11	1	4.0 IN	600 FT**	T	EMPTY
12	1	4.0 IN	600 FT	B/T	EMPTY
13	1	4.0 IN	600 FT**	B/T	EMPTY

*DENOTES EXISTING CONDUIT

**QUANTITY CONTINUES ON ADJACENT SHEET

B = BORE, T = TRENCH, O = OPEN CUT

Unofficial Website Copy

N:\31653-000\Contract 1D\CADD\Traffic\2015 - Updates\SS008U301_1D.dgn
8/10/2015 3:23:39 PM

DELAWARE DEPARTMENT OF TRANSPORTATION

ADDENDUMS / REVISIONS

SCALE 0 30 60 90 FEET

US 13 & PORT PENN RD INTERSECTION

CONTRACT	BRIDGE NO.
T201011302	DESIGNED BY: J.D.C.
COUNTY	
NEW CASTLE	CHECKED BY: J.M.M.

SIGNING, STRIPING & CONDUIT PLAN

SS-08
SHEET NO.
167
TOTAL SHTS.
179

PAVEMENT MARKINGS LEGEND

SYMBOL	ITEM		QUANTITY
A	10" SOLID WHITE EPOXY RESIN PAINT (ITEM 748549)		0 LF
B	5" SOLID WHITE EPOXY RESIN PAINT (ITEM 748548)		2,484 LF
C	5" SOLID YELLOW EPOXY RESIN PAINT (ITEM 748548)		2,400 LF
D	5" DOTTED WHITE EPOXY RESIN PAINT, 3' LINE, 9' GAP (ITEM 748548)		109 LF
E	5" BROKEN WHITE RETROREFLECTIVE PREFORMED PATTERNED MARKINGS, 10' LINE, 30' GAP (ITEM 748564)		430 LF
F	8" SOLID WHITE CONTRAST EPOXY RESIN PAINT, 3" BLACK, 5" WHITE	ITEM 748557	0 LF
		ITEM 748548	0 LF
G	WHITE ALKYD THERMOPLASTIC PAVEMENT SYMBOL/LEGEND (ITEM 748015)		63 SF
H	5" SOLID DOUBLE YELLOW EPOXY RESIN PAINT (ITEM 748548)		0 LF
J	5" DOTTED WHITE EPOXY RESIN PAINT, 2' LINE, 6' GAP (ITEM 748548)		0 LF
K	5" BROKEN YELLOW EPOXY RESIN PAINT, 10' LINE, 30' GAP (ITEM 748548)		0 LF
L	PREFORMED RETROREFLECTIVE THERMOPLASTIC PAVEMENT MARKINGS, BIKE SYMBOL (ITEM 748553)		1 EA
M	12" SOLID WHITE ALKYD-THERMOPLASTIC (ITEM 748027)		0 LF
N	5" DOTTED WHITE RETROREFLECTIVE PREFORMED PATTERNED MARKINGS, 3' LINE, 9' GAP (ITEM 748564)		171 LF

SIGNING LEGEND

1	REMOVE EXISTING SIGN
2	EXISTING SIGN TO REMAIN
3	PLACE NEW SIGN
4	RENEW EXISTING SIGN
5	REPOSITION EXISTING SIGN

NOTES:
1. INSTALL PLOWABLE RAISED PAVEMENT MARKERS ALONG THE LIMITS OF THE PROPOSED PAVEMENT STRIPING AS PER CHAPTER 3B OF THE DELDOT MUTCD, AS APPLICABLE.
2. INSTALL POST MOUNTED AND/OR GUARDRAIL MOUNTED DELINEATORS ALONG THE LIMITS OF THE PROPOSED GUARDRAIL AND ROADWAY AS PER CHAPTER 3F OF THE DELDOT MUTCD.

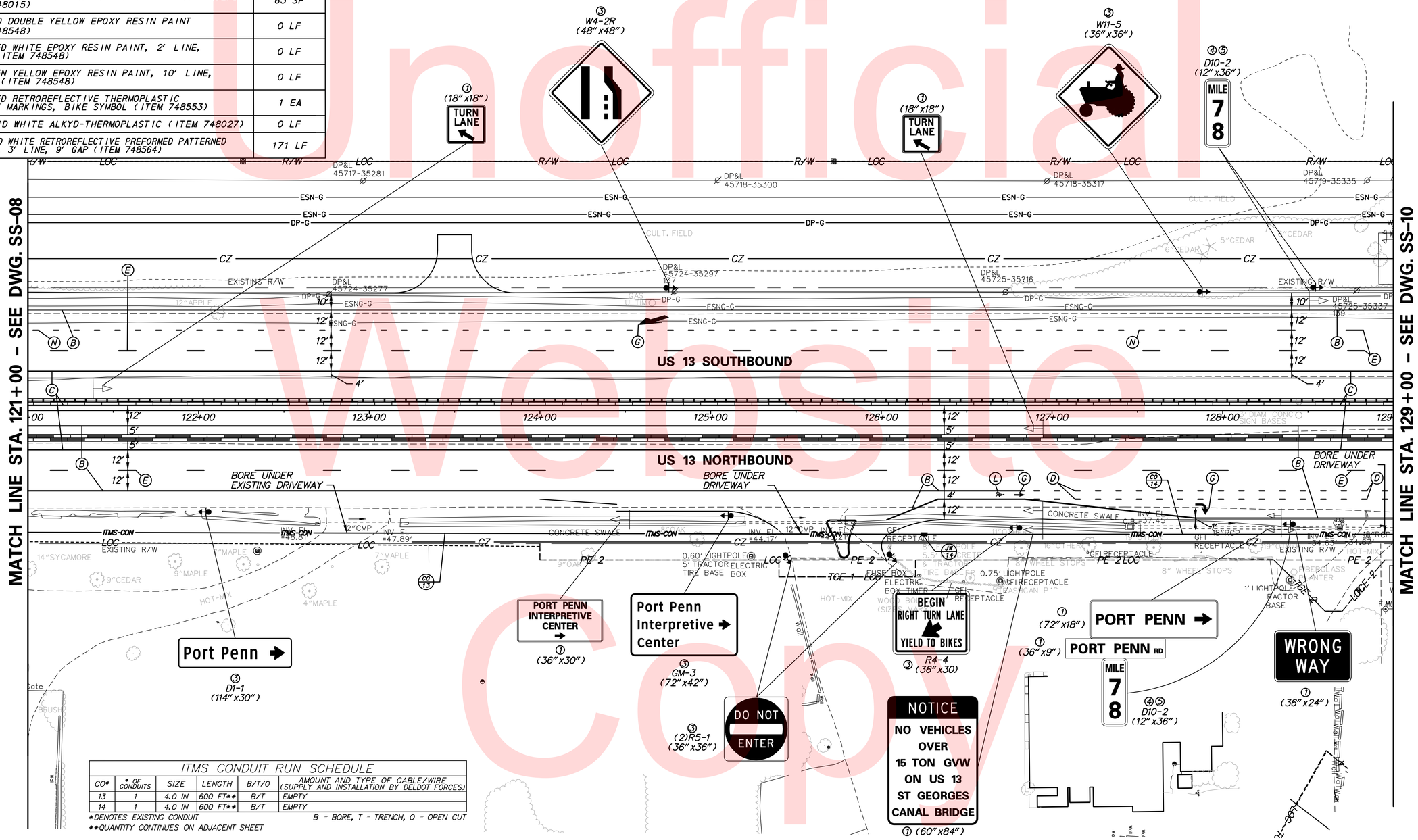

ITMS CONDUIT RUN SCHEDULE

CO#	# OF CONDUITS	SIZE	LENGTH	B/T/O	AMOUNT AND TYPE OF CABLE/WIRE (SUPPLY AND INSTALLATION BY DELDOT FORCES)
13	1	4.0 IN	600 FT**	B/T	EMPTY
14	1	4.0 IN	600 FT**	B/T	EMPTY

*DENOTES EXISTING CONDUIT
**QUANTITY CONTINUES ON ADJACENT SHEET
B = BORE, T = TRENCH, O = OPEN CUT

Unofficial Website Copy

N:\31653-000\Contract 1D\CADD\Traffic\2015 - Updates\SS009U301_1D.dgn
8/10/2015 3:25:05 PM

DELAWARE DEPARTMENT OF TRANSPORTATION

ADDENDUMS / REVISIONS

SCALE 0 30 60 90 FEET

US 13 & PORT PENN RD INTERSECTION

CONTRACT	BRIDGE NO.
T201011302	DESIGNED BY: J.D.C.
COUNTY	
NEW CASTLE	CHECKED BY: J.M.M.

SIGNING, STRIPING & CONDUIT PLAN

SS-09
SHEET NO. 168
TOTAL SHTS. 179

PAVEMENT MARKINGS LEGEND

SYMBOL	ITEM		QUANTITY
(A)	10" SOLID WHITE EPOXY RESIN PAINT (ITEM 748549)		0 LF
(B)	5" SOLID WHITE EPOXY RESIN PAINT (ITEM 748548)		3,072 LF
(C)	5" SOLID YELLOW EPOXY RESIN PAINT (ITEM 748548)		1,665 LF
(D)	5" DOTTED WHITE EPOXY RESIN PAINT, 3' LINE, 9' GAP (ITEM 748548)		24 LF
(E)	5" BROKEN WHITE RETROREFLECTIVE PREFORMED PATTERNED MARKINGS, 10' LINE, 30' GAP (ITEM 748564)		230 LF
(F)	8" SOLID WHITE CONTRAST EPOXY RESIN PAINT, 3" BLACK, 5" WHITE	ITEM 748557	475 LF
		ITEM 748548	475 LF
(G)	WHITE ALKYD THERMOPLASTIC PAVEMENT SYMBOL/LEGEND (ITEM 748015)		297 SF
(H)	5" SOLID DOUBLE YELLOW EPOXY RESIN PAINT (ITEM 748548)		150 LF
(J)	5" DOTTED WHITE EPOXY RESIN PAINT, 2' LINE, 6' GAP (ITEM 748548)		0 LF
(K)	5" BROKEN YELLOW EPOXY RESIN PAINT, 10' LINE, 30' GAP (ITEM 748548)		0 LF
(L)	PREFORMED RETROREFLECTIVE THERMOPLASTIC PAVEMENT MARKINGS, BIKE SYMBOL (ITEM 748553)		3 EA
(M)	12" SOLID WHITE ALKYD-THERMOPLASTIC (ITEM 748027)		0 LF
(N)	5" DOTTED WHITE RETROREFLECTIVE PREFORMED PATTERNED MARKINGS, 3' LINE, 9' GAP (ITEM 748564)		0 LF

NOTES:

1. INSTALL PLOWABLE RAISED PAVEMENT MARKERS ALONG THE LIMITS OF THE PROPOSED PAVEMENT STRIPING AS PER CHAPTER 3B OF THE DELDOT MUTCD, AS APPLICABLE.
2. INSTALL POST MOUNTED AND/OR GUARDRAIL MOUNTED DELINEATORS ALONG THE LIMITS OF THE PROPOSED GUARDRAIL AND ROADWAY AS PER CHAPTER 3F OF THE DELDOT MUTCD.
3. SEE DWG. NO. SS-16 FOR SIGNING AND PAVEMENT MARKINGS WITHIN TOLL PLAZA ADMINISTRATION BUILDING PARKING LOT.
4. ALL STOP LINES SHALL BE 16" WIDE.
5. BORE UNDER ROADWAY/DRIVEWAY.

ITMS LEGEND

- ITMS-CON — PROPOSED MULTIDUCT ITMS CONDUIT
- EX-ITS — EXISTING ITMS CONDUIT
- ITMS-CON — ITMS CONDUIT INSTALLED IN PREVIOUS PHASE
- CA X — ITMS CABINET AND IDENTIFIER
- ITMS CONDUIT JUNCTION WELL
- JW X / JW X — JUNCTION WELL IDENTIFIER (TYPE) (EXISTING AND PROPOSED)
- CO X / CO X — CONDUIT RUN IDENTIFIER (# OF RUN) (EXISTING AND PROPOSED)
- PB X / PB X — POLE BASE IDENTIFIER (TYPE) (EXISTING AND PROPOSED)
- JB X — PROPOSED CONCRETE BARRIER JUNCTION BOX IDENTIFIER (TYPE)
- RM C — TO BE REMOVED BY CONTRACTOR
- P — PROPOSED ELECTRICAL SERVICE ON PEDESTAL
- POLE BASE

SIGNING LEGEND

1	REMOVE EXISTING SIGN
2	EXISTING SIGN TO REMAIN
3	PLACE NEW SIGN
4	RENEW EXISTING SIGN
5	REPOSITION EXISTING SIGN

ITMS CONDUIT RUN SCHEDULE

CO*	# OF CONDUITS	SIZE	LENGTH	B/T/O	AMOUNT AND TYPE OF CABLE/WIRE (SUPPLY AND INSTALLATION BY DELDOT FORCES)
1	1	4.0 IN	392 FT**	B	COMMUNICATION CABLE
2	1	4.0 IN	261 FT	B	COMMUNICATION CABLE
3	1	4.0 IN	145 FT	B	COMMUNICATION CABLE
14	1	4.0 IN	600 FT**	T/B	EMPTY

*DENOTES EXISTING CONDUIT

**QUANTITY CONTINUES ON ADJACENT SHEET

B = BORE, T = TRENCH, O = OPEN CUT

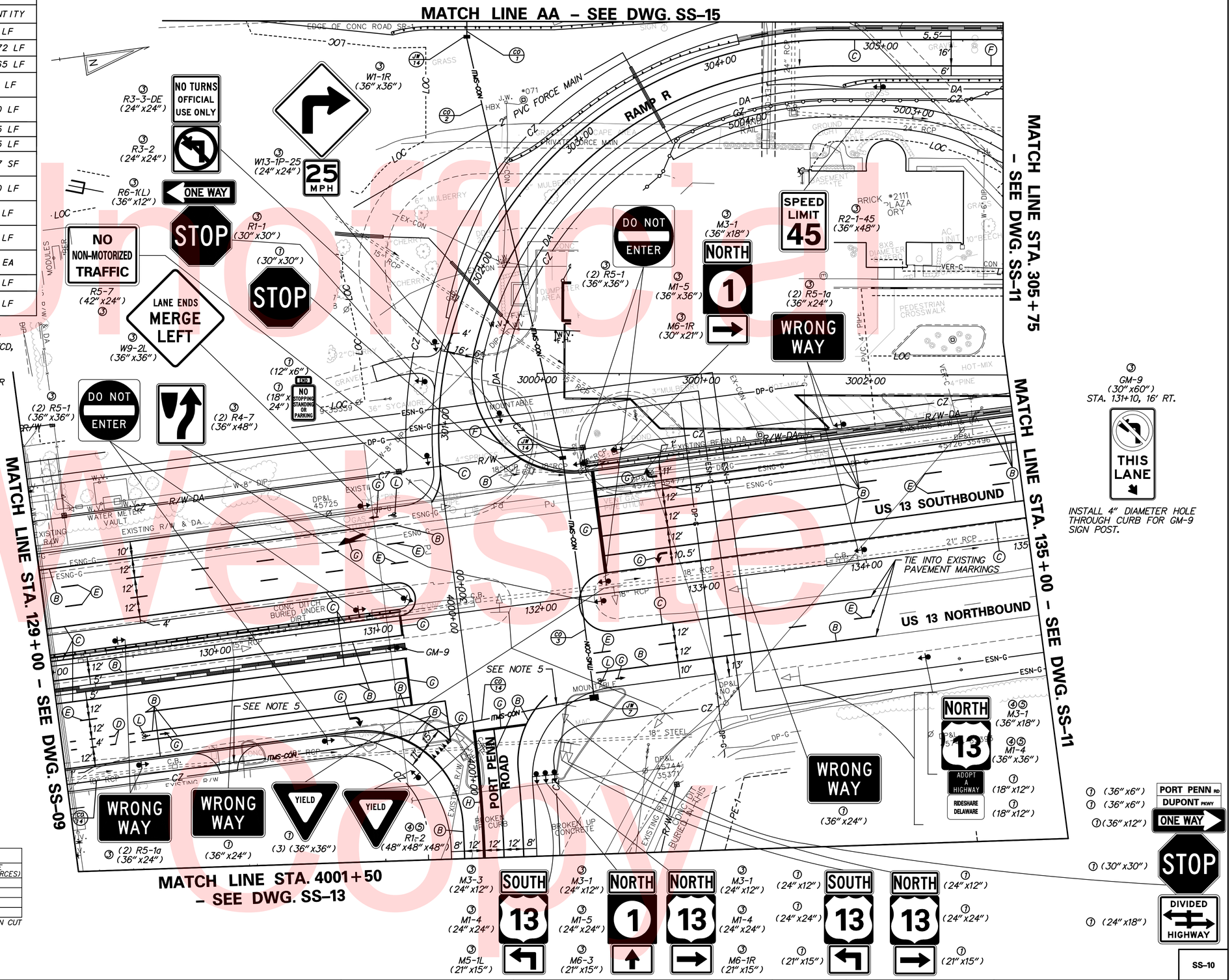

INSTALL 4" DIAMETER HOLE THROUGH CURB FOR GM-9 SIGN POST.

Unofficial Website

DELAWARE DEPARTMENT OF TRANSPORTATION	ADDENDUMS / REVISIONS	SCALE 0 30 60 90 FEET	US 13 & PORT PENN RD INTERSECTION	CONTRACT T201011302 / COUNTY NEW CASTLE	BRIDGE NO. / DESIGNED BY: J.D.C. / CHECKED BY: J.M.M.
SIGNING, STRIPING & CONDUIT PLAN	SS-10	SHEET NO. 169	TOTAL SHTS. 179		

N:\3853-000\Contract TD\CADD\Traffic\2015 - Updates\SS010U301_1D.dgn
12/23/2015 11:36:57 AM

PAVEMENT MARKINGS LEGEND

SYMBOL	ITEM		QUANTITY
(A)	10" SOLID WHITE EPOXY RESIN PAINT (ITEM 748549)		0 LF
(B)	5" SOLID WHITE EPOXY RESIN PAINT (ITEM 748548)		1,925 LF
(C)	5" SOLID YELLOW EPOXY RESIN PAINT (ITEM 748548)		1,300 LF
(D)	5" DOTTED WHITE EPOXY RESIN PAINT, 3' LINE, 9' GAP (ITEM 748548)		273 LF
(E)	5" BROKEN WHITE RETROREFLECTIVE PREFORMED PATTERNED MARKINGS, 10' LINE, 30' GAP (ITEM 748564)		320 LF
(F)	8" SOLID WHITE CONTRAST EPOXY RESIN PAINT, 3" BLACK, 5" WHITE	ITEM 748557	650 LF
		ITEM 748548	650 LF
(G)	WHITE ALKYD THERMOPLASTIC PAVEMENT SYMBOL/LEGEND (ITEM 748015)		137 SF
(H)	5" SOLID DOUBLE YELLOW EPOXY RESIN PAINT (ITEM 748548)		930 LF
(J)	5" DOTTED WHITE EPOXY RESIN PAINT, 2' LINE, 6' GAP (ITEM 748548)		0 LF
(K)	5" BROKEN YELLOW EPOXY RESIN PAINT, 10' LINE, 30' GAP (ITEM 748548)		0 LF
(L)	PREFORMED RETROREFLECTIVE THERMOPLASTIC PAVEMENT MARKINGS, BIKE SYMBOL (ITEM 748553)		3 EA
(M)	12" SOLID WHITE ALKYD-THERMOPLASTIC (ITEM 748027)		0 LF
(N)	5" DOTTED WHITE RETROREFLECTIVE PREFORMED PATTERNED MARKINGS, 3' LINE, 9' GAP (ITEM 748564)		0 LF

NOTES:

1. INSTALL PLOWABLE RAISED PAVEMENT MARKERS ALONG THE LIMITS OF THE PROPOSED PAVEMENT STRIPING AS PER CHAPTER 3B OF THE DELDOT MUTCD, AS APPLICABLE.
2. INSTALL POST MOUNTED AND/OR GUARDRAIL MOUNTED DELINEATORS ALONG THE LIMITS OF THE PROPOSED GUARDRAIL AND ROADWAY AS PER CHAPTER 3F OF THE DELDOT MUTCD.
3. ALL STOP LINES SHALL BE 16" WIDE BY LENGTH SHOWN ON PLAN.
4. SEE DWG. NO. SS-16 FOR SIGNING AND PAVEMENT MARKINGS WITHIN TOLL PLAZA ADMINISTRATION BUILDING PARKING LOT.
5. INSTALL SIGN ON BARRIER SIGN SUPPORT, SEE DETAIL ON DWG. NO. SS-19.
6. LOCATE AND INTERCEPT THE EXISTING POWER AND COMMUNICATION CONDUITS FOR THE LIGHT POLE AND CCTV CAMERAS WITH A TYPE 11 JUNCTION WELL. PULL BACK THE EXISTING CABLES IN THE CONDUITS TO THE SOUTH TO AVOID DAMAGE WHEN CUTTING CONDUITS. PULL CABLES FROM THE EXISTING ELECTRICAL VAULT LOCATED AT STA. 3001+75, LT. FEED THE EXISTING CABLES THROUGH THE PROPOSED CONDUIT RUNS AND TYPE 11 JUNCTION WELL AND RECONNECT TO THE RELOCATED CCTV CAMERAS AND LUMINAIRE. PULLING BACK AND RE-FEEDING CABLES AND CUTTING CONDUITS WILL NOT BE MEASURED AND PAID FOR BUT WILL BE INCIDENTAL TO ITEM NO. 745544 - INSTALLATION OF CONDUIT IN UNPAVED TRENCH.
7. RELOCATE THE EXISTING LIGHT POLE AND CCTV CAMERAS TO A NEW POLE BASE, TYPE 6. THE CONTRACTOR SHALL DISCONNECT AND PULL BACK ALL ELECTRICAL CABLES PRIOR TO RELOCATION (SEE NOTE 6). RELOCATION OF THE EXISTING CCTV CAMERAS WILL NOT BE MEASURED AND PAID FOR SEPARATELY BUT WILL BE INCIDENTAL TO ITEM 746537 - RELOCATING EXISTING LIGHT STANDARDS. ANY DAMAGE TO THE EXISTING CCTV CAMERAS SHALL BE REPAIRED BY THE CONTRACTOR AT HIS EXPENSE TO THE SATISFACTION OF THE ENGINEER.

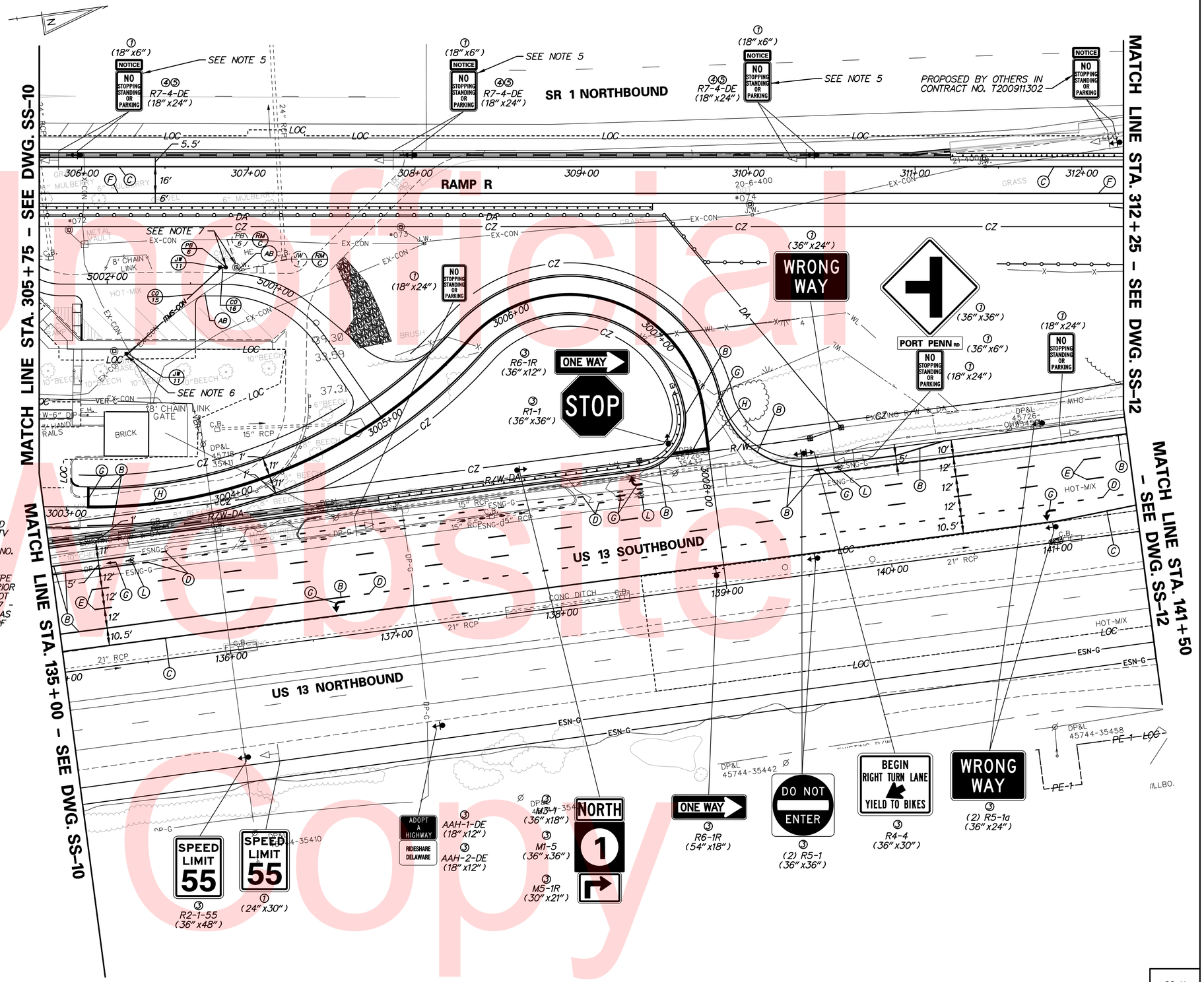

SIGNING LEGEND

(1)	REMOVE EXISTING SIGN
(2)	EXISTING SIGN TO REMAIN
(3)	PLACE NEW SIGN
(4)	RENEW EXISTING SIGN
(5)	REPOSITION EXISTING SIGN

ITMS CONDUIT RUN SCHEDULE

CO*	# OF CONDUITS	SIZE	LENGTH	B/T/O	AMOUNT AND TYPE OF CABLE/WIRE (SUPPLY AND INSTALLATION BY DELDOT FORCES)
15	3	2.0 IN	75 FT	T	EXISTING CABLES
16	3	2.0 IN	4 FT	T	EXISTING CABLES

*DENOTES EXISTING CONDUIT

B = BORE, T = TRENCH, O = OPEN CUT

**QUANTITY CONTINUES ON ADJACENT SHEET

Unofficial Website Copy

N:\31653-000\Contract 1D:\CADD\Traffic\2015 - Updates\SS0111\301_1D.dgn
8/10/2015 3:26:51 PM

DELAWARE DEPARTMENT OF TRANSPORTATION

ADDENDUMS / REVISIONS

SCALE 0 30 60 90 FEET

US 13 & PORT PENN RD INTERSECTION

CONTRACT	BRIDGE NO.	
T201011302	DESIGNED BY: J.D.C.	
COUNTY		
NEW CASTLE	CHECKED BY: J.M.M.	

SIGNING, STRIPING & CONDUIT PLAN

SS-11
SHEET NO. 170
TOTAL SHTS. 179

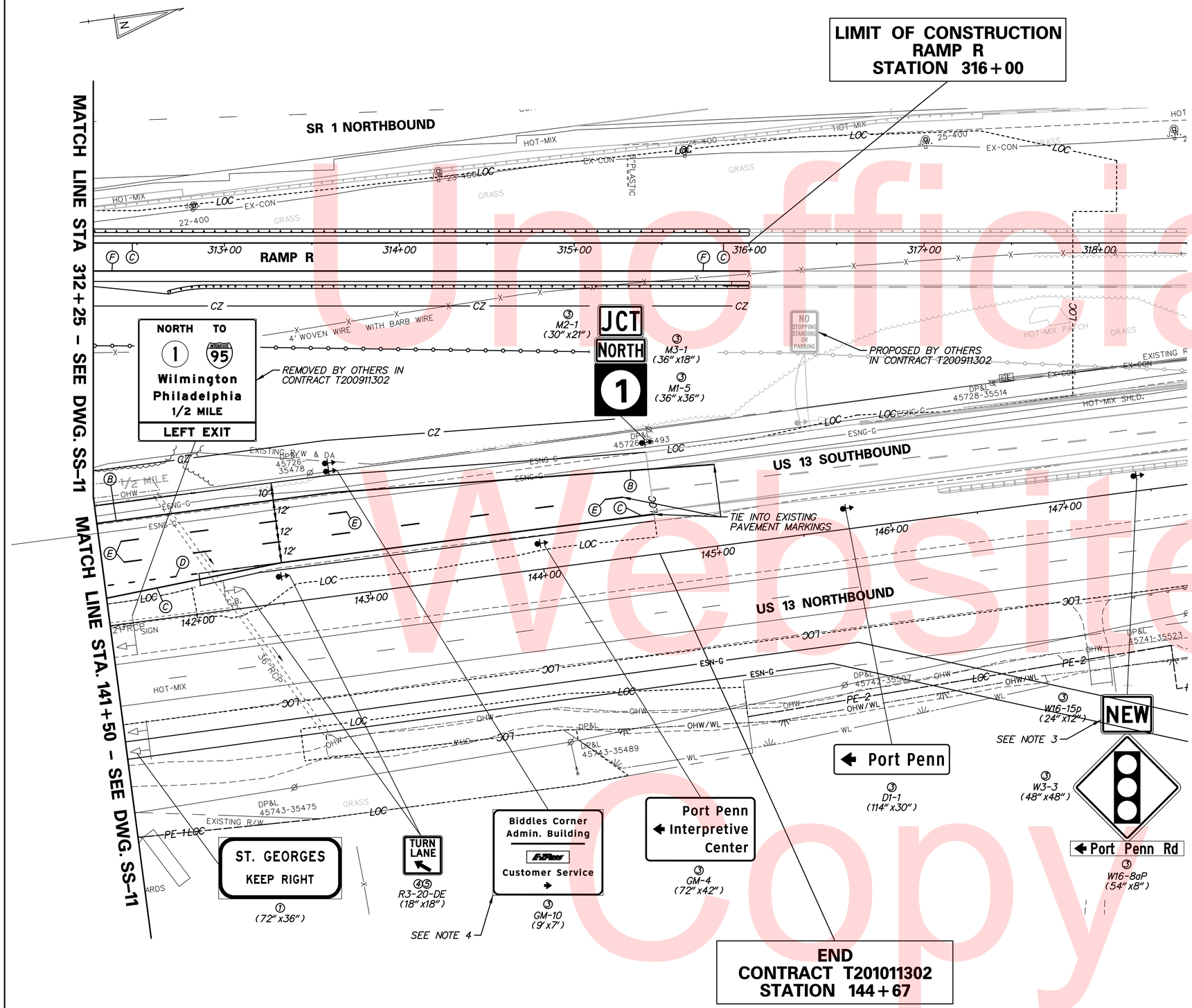

PAVEMENT MARKINGS LEGEND

SYMBOL	ITEM		QUANTITY
A	10" SOLID WHITE EPOXY RESIN PAINT (ITEM 748549)		0 LF
B	5" SOLID WHITE EPOXY RESIN PAINT (ITEM 748548)		353 LF
C	5" SOLID YELLOW EPOXY RESIN PAINT (ITEM 748548)		688 LF
D	5" DOTTED WHITE EPOXY RESIN PAINT, 3' LINE, 9' GAP (ITEM 748548)		24 LF
E	5" BROKEN WHITE RETROREFLECTIVE PREFORMED PATTERNED MARKINGS, 10' LINE, 30' GAP (ITEM 748564)		120 LF
F	8" SOLID WHITE CONTRAST EPOXY RESIN PAINT, 3" BLACK, 5" WHITE	ITEM 748557	375 LF
		ITEM 748548	375 LF
G	WHITE ALKYD THERMOPLASTIC PAVEMENT SYMBOL/LEGEND (ITEM 748015)		0 SF
H	5" SOLID DOUBLE YELLOW EPOXY RESIN PAINT (ITEM 748548)		0 LF
J	5" DOTTED WHITE EPOXY RESIN PAINT, 2' LINE, 6' GAP (ITEM 748548)		0 LF
K	5" BROKEN YELLOW EPOXY RESIN PAINT, 10' LINE, 30' GAP (ITEM 748548)		0 LF
L	PREFORMED RETROREFLECTIVE THERMOPLASTIC PAVEMENT MARKINGS, BIKE SYMBOL (ITEM 748553)		0 EA
M	12" SOLID WHITE ALKYD-THERMOPLASTIC (ITEM 748027)		0 LF
N	5" DOTTED WHITE RETROREFLECTIVE PREFORMED PATTERNED MARKINGS, 3' LINE, 9' GAP (ITEM 748564)		0 LF

SIGNING LEGEND

1	REMOVE EXISTING SIGN
2	EXISTING SIGN TO REMAIN
3	PLACE NEW SIGN
4	RENEW EXISTING SIGN
5	REPOSITION EXISTING SIGN

NOTES:

1. INSTALL PLOWABLE RAISED PAVEMENT MARKERS ALONG THE LIMITS OF THE PROPOSED PAVEMENT STRIPING AS PER CHAPTER 3B OF THE DELDOT MUTCD, AS APPLICABLE.
2. INSTALL POST MOUNTED AND/OR GUARDRAIL MOUNTED DELINEATORS ALONG THE LIMITS OF THE PROPOSED GUARDRAIL AND ROADWAY AS PER CHAPTER 3F OF THE DELDOT MUTCD.
3. THE PROPOSED W16-15p SIGN SHALL BE INSTALLED ABOVE THE PROPOSED W3-3 SIGN FOR A MINIMUM OF 30 DAYS AND A MAXIMUM OF 90 DAYS. DELDOT FORCES SHALL BE RESPONSIBLE FOR REMOVAL OF THE W16-15p SIGN.
4. THE CONTRACTOR SHALL INSTALL SIGN GM-10 PRIOR TO OPENING THE NEW TOLL PLAZA ENTRANCE DRIVEWAY IN PHASE 1A (SEE DWG. NOS. SS-17, CS-1A02 AND CS-1A03).

Unofficial Website Copy

N:\31653-000\Contract 1D:\CADD\SS0121J301_1D.dgn
8/10/2015 3:30:13 PM

DELAWARE DEPARTMENT OF TRANSPORTATION

ADDENDUMS / REVISIONS

SCALE 0 30 60 90 FEET

US 13 & PORT PENN RD INTERSECTION

CONTRACT	BRIDGE NO.	
T201011302	DESIGNED BY: J.D.C.	
COUNTY		
NEW CASTLE	CHECKED BY: J.M.M.	

SIGNING, STRIPING & CONDUIT PLAN

SS-12
SHEET NO.
171
TOTAL SHTS.
179

NOTES:

1. INSTALL PLOWABLE RAISED PAVEMENT MARKERS ALONG THE LIMITS OF THE PROPOSED PAVEMENT STRIPING AS PER CHAPTER 3B OF THE DELDOT MUTCD, AS APPLICABLE.
2. INSTALL POST MOUNTED AND/OR GUARDRAIL MOUNTED DELINEATORS ALONG THE LIMITS OF THE PROPOSED GUARDRAIL AND ROADWAY AS PER CHAPTER 3F OF THE DELDOT MUTCD.

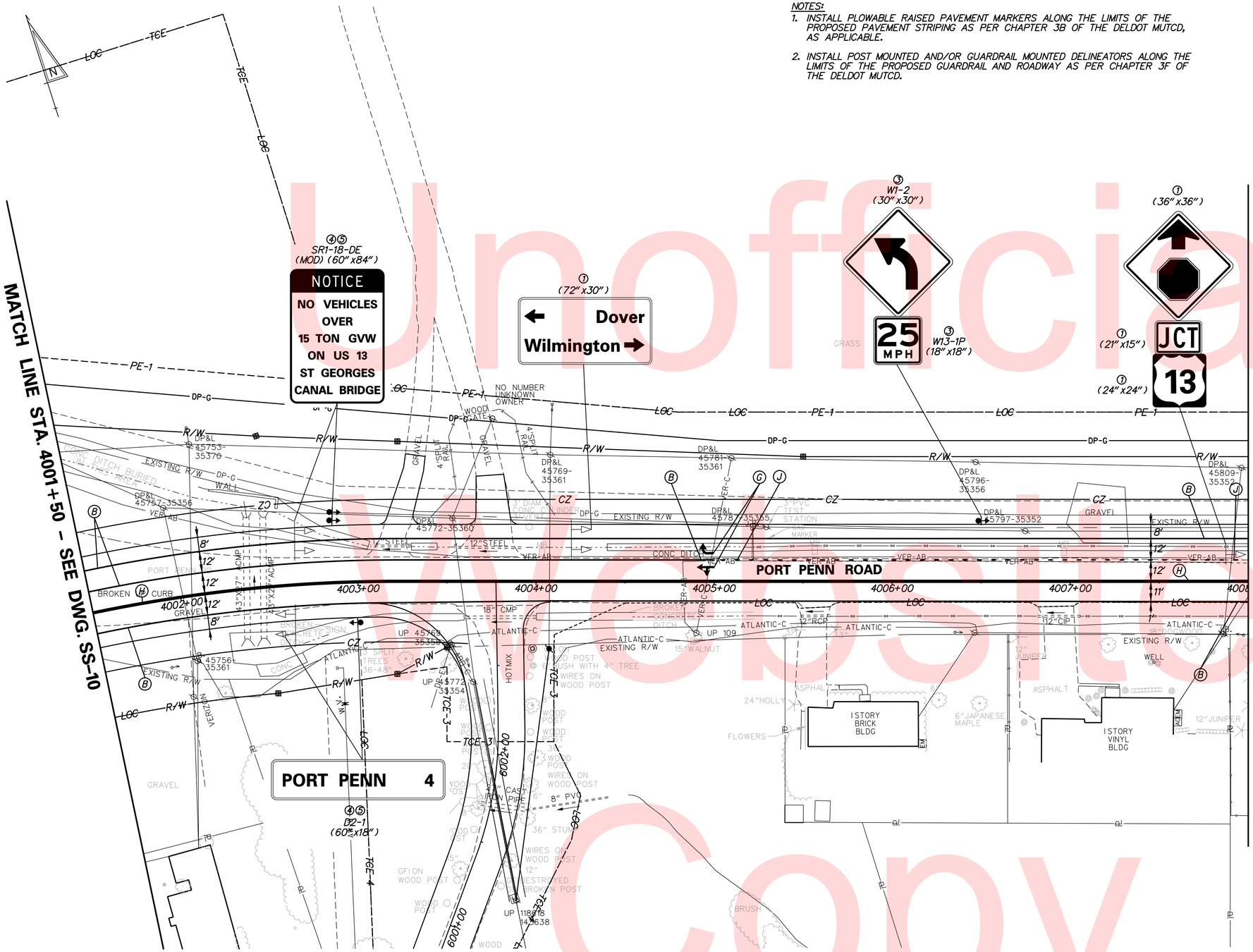

PAVEMENT MARKINGS LEGEND

SYMBOL	ITEM		QUANTITY
Ⓐ	10" SOLID WHITE EPOXY RESIN PAINT (ITEM 748549)		0 LF
Ⓑ	5" SOLID WHITE EPOXY RESIN PAINT (ITEM 748548)		1655 LF
Ⓒ	5" SOLID YELLOW EPOXY RESIN PAINT (ITEM 748548)		0 LF
Ⓓ	5" DOTTED WHITE EPOXY RESIN PAINT, 3' LINE, 9' GAP (ITEM 748548)		0 LF
Ⓔ	5" BROKEN WHITE RETROREFLECTIVE PREFORMED PATTERNED MARKINGS, 10' LINE, 30' GAP (ITEM 748564)		0 LF
Ⓕ	8" SOLID WHITE CONTRAST EPOXY RESIN PAINT, 3" BLACK, 5" WHITE	ITEM 748557	0 LF
		ITEM 748548	0 LF
Ⓖ	WHITE ALKYD THERMOPLASTIC PAVEMENT SYMBOL/LEGEND (ITEM 748015)		41 SF
Ⓗ	5" SOLID DOUBLE YELLOW EPOXY RESIN PAINT (ITEM 748548)		1300 LF
Ⓙ	5" DOTTED WHITE EPOXY RESIN PAINT, 2' LINE, 6' GAP (ITEM 748548)		74 LF
Ⓚ	5" BROKEN YELLOW EPOXY RESIN PAINT, 10' LINE, 30' GAP (ITEM 748548)		0 LF
Ⓛ	PREFORMED RETROREFLECTIVE THERMOPLASTIC PAVEMENT MARKINGS, BIKE SYMBOL (ITEM 748553)		0 EA
Ⓜ	12" SOLID WHITE ALKYD-THERMOPLASTIC (ITEM 748027)		0 LF
Ⓝ	5" DOTTED WHITE RETROREFLECTIVE PREFORMED PATTERNED MARKINGS, 3' LINE, 9' GAP (ITEM 748564)		0 LF

SIGNING LEGEND

①	REMOVE EXISTING SIGN
②	EXISTING SIGN TO REMAIN
③	PLACE NEW SIGN
④	RENEW EXISTING SIGN
⑤	REPOSITION EXISTING SIGN

Unofficial Website Copy

H:\31653-000\Contract 1D:\CADD\SS013U301_10.dgn
12/23/2015 11:44:51 AM

DELAWARE DEPARTMENT OF TRANSPORTATION

ADDENDUMS / REVISIONS

SCALE 0 30 60 90 FEET

US 13 & PORT PENN RD INTERSECTION

CONTRACT	BRIDGE NO.	
T201011302	DESIGNED BY: J.D.C.	
COUNTY		
NEW CASTLE	CHECKED BY: J.M.M.	

SIGNING, STRIPING & CONDUIT PLAN

SS-13	
SHEET NO.	172
TOTAL SHTS.	179

PAVEMENT MARKINGS LEGEND

SYMBOL	ITEM		QUANTITY
A	10" SOLID WHITE EPOXY RESIN PAINT (ITEM 748549)		0 LF
B	5" SOLID WHITE EPOXY RESIN PAINT (ITEM 748548)		800 LF
C	5" SOLID YELLOW EPOXY RESIN PAINT (ITEM 748548)		450 LF
D	5" DOTTED WHITE EPOXY RESIN PAINT, 3' LINE, 9' GAP (ITEM 748548)		0 LF
E	5" BROKEN WHITE RETROREFLECTIVE PREFORMED PATTERNED MARKINGS, 10' LINE, 30' GAP (ITEM 748564)		0 LF
F	8" SOLID WHITE CONTRAST EPOXY RESIN PAINT, 3" BLACK, 5" WHITE	ITEM 748557	0 LF
		ITEM 748548	0 LF
G	WHITE ALKYD THERMOPLASTIC PAVEMENT SYMBOL/LEGEND (ITEM 748015)		0 SF
H	5" SOLID DOUBLE YELLOW EPOXY RESIN PAINT (ITEM 748548)		560 LF
J	5" DOTTED WHITE EPOXY RESIN PAINT, 2' LINE, 6' GAP (ITEM 748548)		70 LF
K	5" BROKEN YELLOW EPOXY RESIN PAINT, 10' LINE, 30' GAP (ITEM 748548)		110 LF
L	PREFORMED RETROREFLECTIVE THERMOPLASTIC PAVEMENT MARKINGS, BIKE SYMBOL (ITEM 748553)		0 EA
M	12" SOLID WHITE ALKYD-THERMOPLASTIC (ITEM 748027)		0 LF
N	5" DOTTED WHITE RETROREFLECTIVE PREFORMED PATTERNED MARKINGS, 3' LINE, 9' GAP (ITEM 748564)		0 LF

SIGNING LEGEND

1	REMOVE EXISTING SIGN
2	EXISTING SIGN TO REMAIN
3	PLACE NEW SIGN
4	RENEW EXISTING SIGN
5	REPOSITION EXISTING SIGN

NOTES:

1. INSTALL PLOWABLE RAISED PAVEMENT MARKERS ALONG THE LIMITS OF THE PROPOSED PAVEMENT STRIPING AS PER CHAPTER 3B OF THE DELDOT MUTCD, AS APPLICABLE.
2. INSTALL POST MOUNTED AND/OR GUARDRAIL MOUNTED DELINEATORS ALONG THE LIMITS OF THE PROPOSED GUARDRAIL AND ROADWAY AS PER CHAPTER 3F OF THE DELDOT MUTCD.
3. THE PROPOSED W16-15p SIGN SHALL BE INSTALLED ABOVE THE PROPOSED W3-3 SIGN FOR A MINIMUM OF 30 DAYS AND MAXIMUM OF 90 DAYS. DELDOT FORCES SHALL BE RESPONSIBLE FOR REMOVAL OF THE W16-15p SIGN.

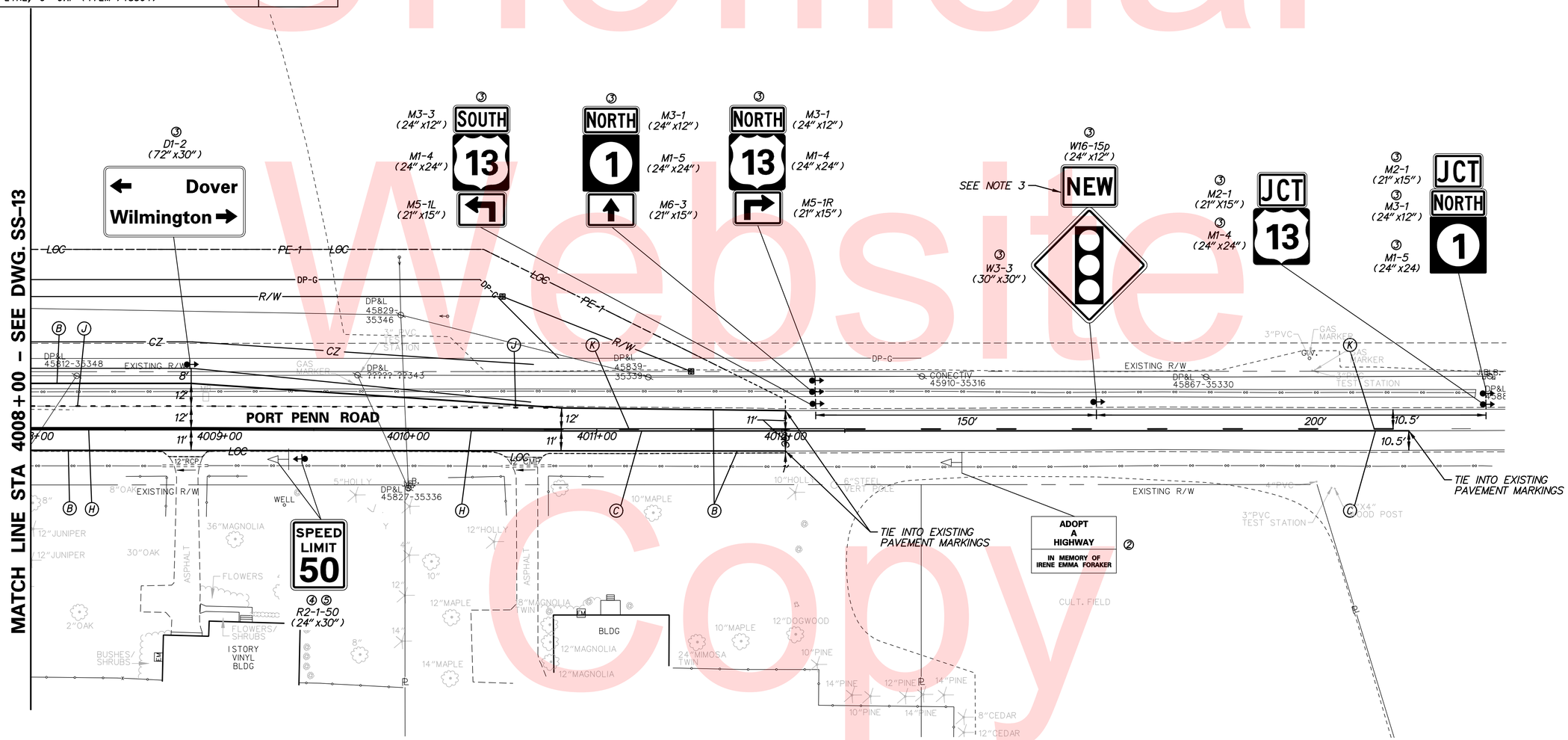

Unofficial Website Copy

N:\31653-000\Contract 1D\CADD\SS0141U301_1D.dgn
12/23/2015 11:42:31 AM

DELAWARE DEPARTMENT OF TRANSPORTATION	ADDENDUMS / REVISIONS	SCALE 0 30 60 90 FEET	US 13 & PORT PENN RD INTERSECTION	CONTRACT T201011302	BRIDGE NO.	SIGNING, STRIPING & CONDUIT PLAN	SHEET NO. 173
				COUNTY NEW CASTLE	DESIGNED BY: J.D.C.		TOTAL SHTS. 179
					CHECKED BY: J.M.M.		

PAVEMENT MARKINGS LEGEND

SYMBOL	ITEM		QUANTITY
A	10" SOLID WHITE EPOXY RESIN PAINT (ITEM 748549)		0 LF
B	5" SOLID WHITE EPOXY RESIN PAINT (ITEM 748548)		0 LF
C	5" SOLID YELLOW EPOXY RESIN PAINT (ITEM 748548)		0 LF
D	5" DOTTED WHITE EPOXY RESIN PAINT, 3' LINE, 9' GAP (ITEM 748548)		0 LF
E	5" BROKEN WHITE RETROREFLECTIVE PREFORMED PATTERNED MARKINGS, 10' LINE, 30' GAP (ITEM 748564)		0 LF
F	8" SOLID WHITE CONTRAST EPOXY RESIN PAINT, 3" BLACK, 5" WHITE	ITEM 748557	0 LF
		ITEM 748548	0 LF
G	WHITE ALKYD THERMOPLASTIC PAVEMENT SYMBOL/LEGEND (ITEM 748015)		0 SF
H	5" SOLID DOUBLE YELLOW EPOXY RESIN PAINT (ITEM 748548)		0 LF
J	5" DOTTED WHITE EPOXY RESIN PAINT, 2' LINE, 6' GAP (ITEM 748548)		0 LF
K	5" BROKEN YELLOW EPOXY RESIN PAINT, 10' LINE, 30' GAP (ITEM 748548)		0 LF
L	PREFORMED RETROREFLECTIVE THERMOPLASTIC PAVEMENT MARKINGS, BIKE SYMBOL (ITEM 748553)		0 EA
M	12" SOLID WHITE ALKYD-THERMOPLASTIC (ITEM 748027)		0 LF
N	5" DOTTED WHITE RETROREFLECTIVE PREFORMED PATTERNED MARKINGS, 3' LINE, 9' GAP (ITEM 748564)		0 LF

SIGNING LEGEND

1	REMOVE EXISTING SIGN
2	EXISTING SIGN TO REMAIN
3	PLACE NEW SIGN
4	RENEW EXISTING SIGN
5	REPOSITION EXISTING SIGN

ITMS CONDUIT RUN SCHEDULE

CO#	# OF CONDUITS	SIZE	LENGTH	B/T/O	AMOUNT AND TYPE OF CABLE/WIRE (SUPPLY AND INSTALLATION BY DELDOT FORCES)
1	1	4.0 IN	392 FT**	B	COMMUNICATION CABLE
4*	1	4.0 IN	N/A	-	EX. (1) 144 CT. SM FO, EX (1) 48 CT. SM FO, EX. (1) 24 CT. SM FO
5*	1	4.0 IN	890 FT**	-	EX. (1) 144 CT. SM FO, EX (1) 48 CT. SM FO, EX. (1) 24 CT. SM FO
6*	1	4.0 IN	240 FT	-	EX. (2) 24 CT. SM FO
7*	1	4.0 IN	5 FT	-	EX. COMMUNICATION CABLES

*DENOTES EXISTING CONDUIT
**QUANTITY CONTINUES ON ADJACENT SHEET

B = BORE, T = TRENCH, O = OPEN CUT

ITMS LEGEND

- ITMS-CON – PROPOSED MULTIDUCT ITMS CONDUIT
- EX-ITS – EXISTING ITMS CONDUIT
- ITMS-CON – ITMS CONDUIT INSTALLED IN PREVIOUS PHASE
- CA X – ITMS CABINET AND IDENTIFIER
- ITMS CONDUIT JUNCTION WELL
- JW X – JUNCTION WELL IDENTIFIER (TYPE) (EXISTING AND PROPOSED)
- CO X – CONDUIT RUN IDENTIFIER (# OF RUN) (EXISTING AND PROPOSED)
- PB X – POLE BASE IDENTIFIER (TYPE) (EXISTING AND PROPOSED)
- JB X – PROPOSED CONCRETE BARRIER JUNCTION BOX IDENTIFIER (TYPE)
- RM C – TO BE REMOVED BY CONTRACTOR
- P – PROPOSED ELECTRICAL SERVICE ON PEDESTAL
- POLE BASE

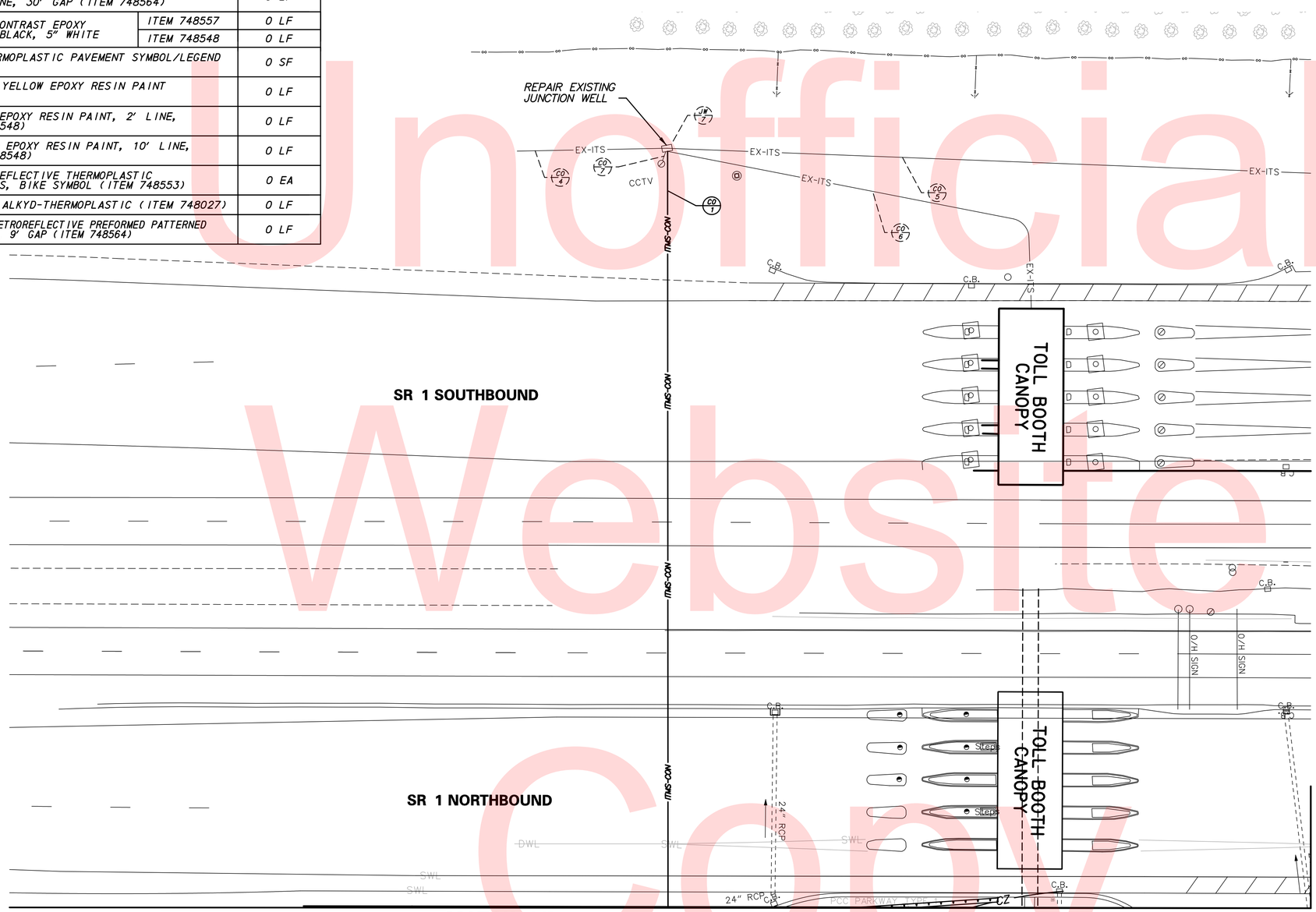

MATCH LINE AA – SEE DWG. SS-10

Unofficial Website Copy

N:\31653-000\Contract 1D\CADD\SS015U301_1D.dgn
8/10/2015 3:33:30 PM

DELAWARE DEPARTMENT OF TRANSPORTATION

ADDENDUMS / REVISIONS

SCALE 0 30 60 90 FEET

US 13 & PORT PENN RD INTERSECTION

CONTRACT	BRIDGE NO.
T201011302	DESIGNED BY: J.D.C.
COUNTY	
NEW CASTLE	CHECKED BY: J.M.M.

SIGNING, STRIPING & CONDUIT PLAN

SS-15	
SHEET NO.	174
TOTAL SHTS.	179

PAVEMENT MARKINGS LEGEND

SYMBOL	ITEM		QUANTITY
(A)	10" SOLID WHITE EPOXY RESIN PAINT (ITEM 748549)		0 LF
(B)	5" SOLID WHITE EPOXY RESIN PAINT (ITEM 748548)		371 LF
(C)	5" SOLID YELLOW EPOXY RESIN PAINT (ITEM 748548)		120 LF
(D)	5" DOTTED WHITE EPOXY RESIN PAINT, 3' LINE, 9' GAP (ITEM 748548)		0 LF
(E)	5" BROKEN WHITE RETROREFLECTIVE PREFORMED PATTERNED MARKINGS, 10' LINE, 30' GAP (ITEM 748564)		0 LF
(F)	8" SOLID WHITE CONTRAST EPOXY RESIN PAINT, 3" BLACK, 5" WHITE	ITEM 748557	0 LF
		ITEM 748548	0 LF
(G)	WHITE ALKYD THERMOPLASTIC PAVEMENT SYMBOL/LEGEND (ITEM 748015)		19 SF
(H)	5" SOLID DOUBLE YELLOW EPOXY RESIN PAINT (ITEM 748548)		0 LF
(J)	5" DOTTED WHITE EPOXY RESIN PAINT, 2' LINE, 6' GAP (ITEM 748548)		0 LF
(K)	5" BROKEN YELLOW EPOXY RESIN PAINT, 10' LINE, 30' GAP (ITEM 748548)		0 LF
(L)	PREFORMED RETROREFLECTIVE THERMOPLASTIC PAVEMENT MARKINGS, BIKE SYMBOL (ITEM 748553)		0 EA
(M)	12" SOLID WHITE ALKYD-THERMOPLASTIC (ITEM 748027)		0 LF
(N)	5" DOTTED WHITE RETROREFLECTIVE PREFORMED PATTERNED MARKINGS, 3' LINE, 9' GAP (ITEM 748564)		0 LF

NOTES:
1. SEE DWG. NO. SS-10 AND SS-11 FOR SIGNING AND PAVEMENT MARKINGS ALONG RAMP R AND US 13 SOUTHBOUND.

SIGNING LEGEND

(1)	REMOVE EXISTING SIGN
(2)	EXISTING SIGN TO REMAIN
(3)	PLACE NEW SIGN
(4)	RENEW EXISTING SIGN
(5)	REPOSITION EXISTING SIGN

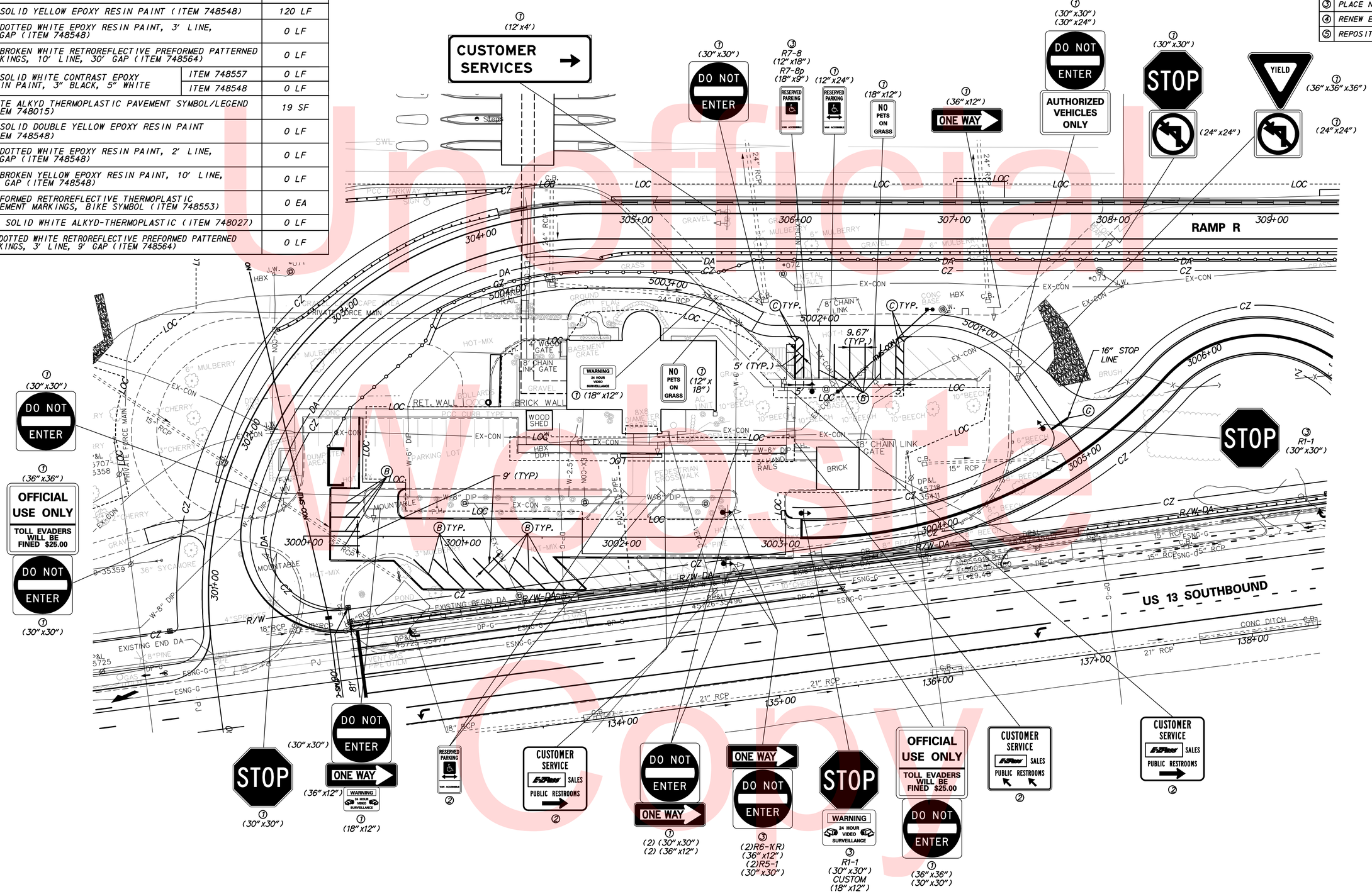

Unofficial Website Copy

N:\31653-000\Contract 1D\CADD\SS016U301_1D.dgn
8/10/2015 3:34:28 PM

DELAWARE DEPARTMENT OF TRANSPORTATION	ADDENDUMS / REVISIONS	SCALE 0 30 60 90 FEET	US 13 & PORT PENN RD INTERSECTION	CONTRACT T201011302 / COUNTY NEW CASTLE	BRIDGE NO. / DESIGNED BY: J.D.C. / CHECKED BY: J.M.M.
				SIGNING, STRIPING & CONDUIT PLAN	SS-16 / SHEET NO. 175 / TOTAL SHTS. 179

PANEL DESIGNATION	DWG. NO.	QUANTITY	LEGEND	SIZE AREA (SF)	SIZE WIDTH	SIZE HEIGHT	COLOR LEGEND	COLOR BCKGRND	BORDER THICKNESS	BORDER RADIUS	ARROW	SHEILD	REMARKS
GM-1	SS-01	1	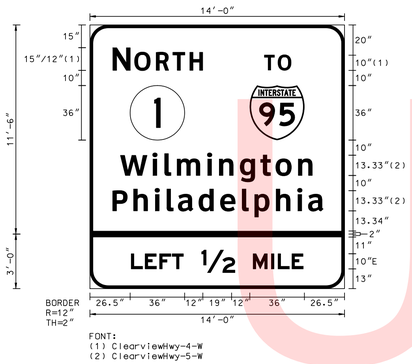	161	14'-0"	11'-6"	W	G	2"	12"	---	M1-5 (36"x36"), M1-1 (36"x36")	EXTRUDED ALUMINUM
				42	14'-0"	3'-0"	BLK	FY	2"	12"	---	---	EXTRUDED ALUMINUM
GM-2	SS-05	1	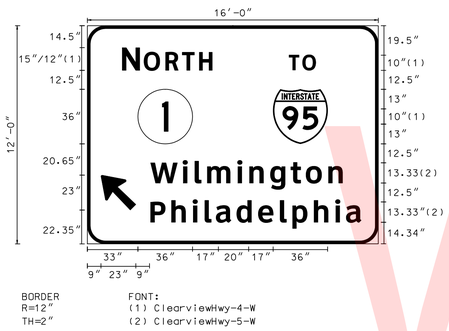	192	16'-0"	12'-0"	W	G	2"	12"	STD. UP ARROW @135°	M1-5 (36"x36"), M1-1 (36"x36")	EXTRUDED ALUMINUM
GM-3	SS-09	1	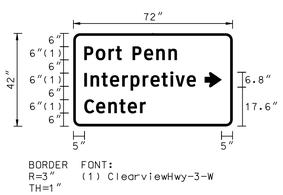	21	72"	42"	W	BRO	1"	3"	STD. ARROW @0° SHAFT WIDTH =2.5"	---	SHEET ALUMINUM
GM-4	SS-12	1	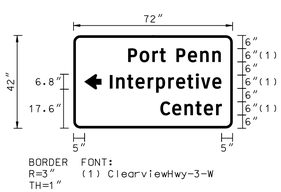	21	72"	42"	W	BRO	1"	3"	STD. ARROW @180° SHAFT WIDTH =2.5"	---	SHEET ALUMINUM

PANEL DESIGNATION	DWG. NO.	QUANTITY	LEGEND	SIZE AREA	SIZE WIDTH	SIZE HEIGHT	COLOR LEGEND	COLOR BCKGRND	BORDER THICKNESS	BORDER RADIUS	ARROW	SHEILD	REMARKS
GM-10	SS-12	1	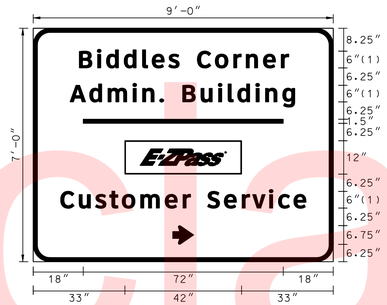	63	9'-0"	7'-0"	W	BLU	1.5"	6"	STD. ARROW @0° SHAFT WIDTH =2.5"	EZ-12	EXTRUDED ALUMINUM. SEE THIS DRAWING FOR E-Z PASS LOGO DETAILS.
GM-9	SS-10	1	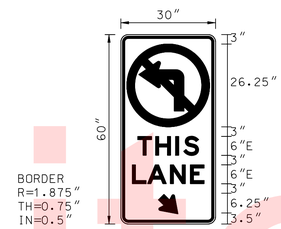	12.5	30"	60"	BLK	W	0.75"	1.875"	STD. ARROW @315° SHAFT WIDTH =2.5"	---	SHEET ALUMINUM SEE STANDARD R3-2 (30"x30") FOR LEFT TURN PROHIBITION SYMBOL DETAIL
EZ-12	---	---		3.5	42"	12"	W	PUR	1/4"	---	---	---	---

COLORS: BLK=BLACK, BLU=BLUE, BRO=BROWN, G=GREEN, R=RED, W=WHITE, Y=YELLOW, FY=FLUORESCENT YELLOW, FYG=FLUORESCENT YELLOW GREEN, PUR=PURPLE.

Unofficial Website Copy

r:\31653-000\contract 1d\cadd\SS017U301_1D.dgn
8/17/2015 11:54:38 AM

DELAWARE DEPARTMENT OF TRANSPORTATION

ADDENDUMS / REVISIONS

NOT TO SCALE

US 13 & PORT PENN RD INTERSECTION

CONTRACT	BRIDGE NO.	
T201011302	DESIGNED BY: J.D.C.	
COUNTY		
NEW CASTLE	CHECKED BY: J.M.M.	

SIGNING, STRIPING & CONDUIT PLAN – GUIDE SIGN DIMENSIONS AND DETAILS

SS-17

SHEET NO. 176

TOTAL SHTS. 179

GUIDE SIGN STEEL SUPPORT CHART

SIGN NO.	SIGN SIZE (WXH)	SHEET NO.	POST SIZE	SUPPORT L-1	SUPPORT L-2	SUPPORT L-3	LATERAL CLEARANCE		SUPPPORT SPACING FROM LEFT EDGE OF SIGN
							OFFSET	OBJECT**	
GM-1	14'x14.5'	SS-01	W10x26	24'-0"	24'-0"	-	(11.25'/12.25')	CM (ES/ES)	1.5'-11'-1.5'
GM-2	16'x12'	SS-05	W10x22	20'-6"	20'-6"	-	(11'/12')	CM (ES/ES)	3.2'-9.6'-3.2'
GM-10	9'x7'	SS-12	W6x12	15'-0"	15'-6"	-	6.0'	ES	.75'-7.5'-.75'

NOTES:

1. WHEN SPACING BETWEEN STEEL BEAM SUPPORTS IS GREATER THAN 8'-0" INSTALL DOUBLE ALUMINUM ANGLES (2½"x3½"x¼") FROM TOP TO BOTTOM OF SIGN WITH POST CLIPS INSTALLED AT EACH EXTRUDED ALUMINUM PANEL. COST TO FURNISH AND INSTALL ALUMINUM ANGLES SHALL BE INCIDENTAL TO THE INSTALLATION OF SIGNS ON GROUND MOUNT POSTS ITEM.
2. A MINIMUM 7'-0" FROM INSIDE OF FLANGE TO INSIDE OF FLANGE SHALL BE MAINTAINED BETWEEN ALL STEEL BEAM SIGN SUPPORTS LARGER THAN W6X9.
3. ALL STEEL BEAM SIGN SUPPORTS SHALL BE MOUNTED ON BREAKAWAY BASES REGARDLESS OF WHETHER PROTECTED BY TRAFFIC BARRIER OR UNPROTECTED. BREAKAWAY BASE SUPPORT SYSTEMS SHALL BE TRANSPO INDUSTRIES OR APPROVED EQUAL.
4. STEEL SUPPORTS DESIGNED FOR 90 MPH WIND SPEED AND 25 YEAR DESIGN LIFE USING ASTM A709 GRADE 36 STEEL BEAM SUPPORTS.

FOUNDATION SELECTION MATRIX

POST SIZE	FOUNDATION DIAMETER	ROADWAY CUT / FILL SLOPE										
		≥2:1	3:1	4:1	5:1	6:1	7:1	8:1	9:1	10:1	12:1	≤13:1
W6x9	30"	*	C	C	C	C	B	B	B	A	A	A
W6x12 or TS 5"X5"X¼"	30"	*	C	C	C	C	B	B	B	A	A	A
W6x15, W6x16 or TS 6"X6"X 1/4 "	30"	*	C	C	C	C	B	B	B	A	A	A
W8x18	30"	*	C	C	C	C	B	B	B	A	A	A
W8x21 or TS 7"X7"X¼"	30"	*	C	C	C	C	B	B	B	A	A	A
W10x22 or TS 8"X8"X⅜"	36"	*	*	C	C	C	C	B	B	B	A	A
W10x26	36"	*	*	C	C	C	C	B	B	B	A	A
W12x26	36"	*	*	C	C	C	C	B	B	B	A	A
W14x30	36"	*	*	C	C	C	C	B	B	B	A	A
W16x31	36"	*	*	C	C	C	C	B	B	B	A	A
W18x35 or W18x40	36"	*	*	C	C	C	C	B	B	B	A	A
W21x44	42"	*	*	C	C	C	C	C	B	B	B	A

*IF A FOUNDATION EXCEEDS THE 4" AASHTO CRITERIA, THE CONTRACTOR SHALL CONTACT THE ENGINEER FOR APPROPRIATE GUIDANCE.

SIGN STAKEOUT DIMENSIONS

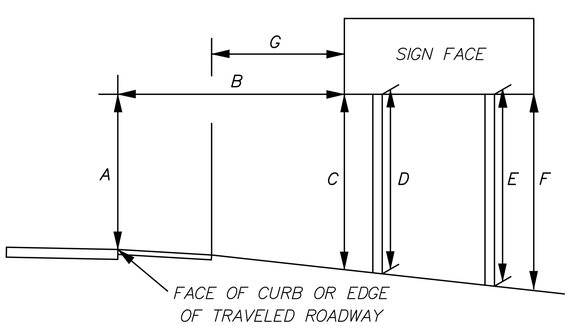

NOTE: CONTRACTOR SHALL COMPLETE SIGN STAKEOUT AND DETERMINE EXACT STEEL SIGN SUPPORT DIMENSIONS. STAKEOUT DIMENSIONS AND STEEL SIGN SUPPORT DIMENSIONS SHALL BE SUBMITTED TO ENGINEER FOR APPROVAL PRIOR TO FABRICATION OF STEEL SIGN SUPPORTS.

SIGN CLEARANCE

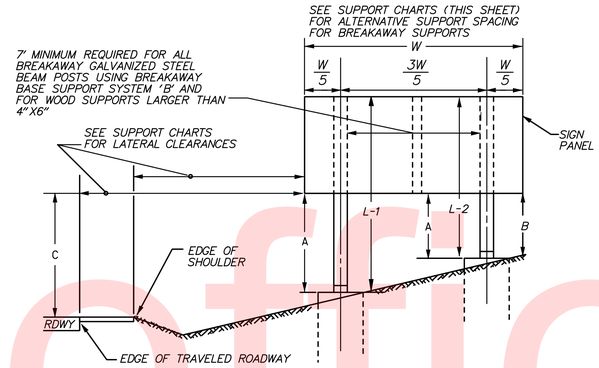

VERTICAL CLEARANCE OF SIGNS

A. 7'6" MINIMUM FOR BREAKAWAY SUPPORTS OR 7'-0" FOR NON-BREAKAWAY SUPPORTS.
B. 2.0' MINIMUM
C. 7'6" MINIMUM & PREFERABLE. THIS DIMENSION IS TO BE INCREASED ONLY WHEN REQUIRED TO MEET A = 7'-6" FOR BREAKAWAY OR A (MIN.) = 7'-0" FOR NON-BREAKAWAY AND B (MIN) 2'-0"

ALL DIMENSIONS ARE TO BOTTOM OF SIGN

*TOTAL WEIGHT BELOW THE HINGES SHOULD BE LESS THAN 600 POUNDS

LATERAL CLEARANCE

SEE SUPPORT CHARTS

** OBJECT CODES

W = FACE OF W-BEAM TRAFFIC BARRIER
FOC = FACE OF CURB
ES = EDGE OF SHOULDER
ETR = EDGE OF TRAVELED ROADWAY
CM = CENTERED IN MEDIAN (LEFT OBJECT/ RIGHT OBJECT)
CG = CENTERED IN GORE (LEFT OBJECT/ RIGHT OBJECT)
B = FACE OF CONCRETE TRAFFIC BARRIER

STANDARD SIGN VERTICAL AND LATERAL CLEARANCE DETAIL

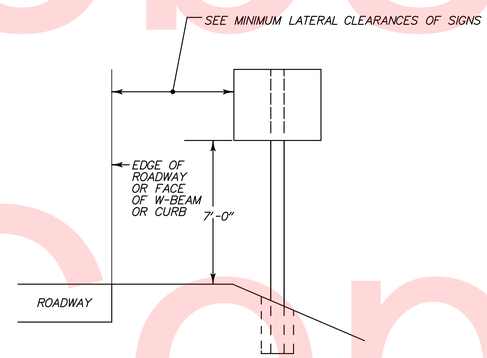

MINIMUM LATERAL CLEARANCE OF SIGNS:

1 = EDGE OF SIGN 6' FROM FACE OF W-BEAM TRAFFIC BARRIER
2 = EDGE OF SIGN 6' FROM EDGE OF SHOULDER
3 = EDGE OF SIGN 6' PREFERABLE MIN. (2' ABSOLUTE MIN.) FROM EACH EDGE OF SHOULDER IN MEDIAN OR CURB

GALVANIZED STEEL BEAM TYPE A SIGN POST FOUNDATION DETAIL

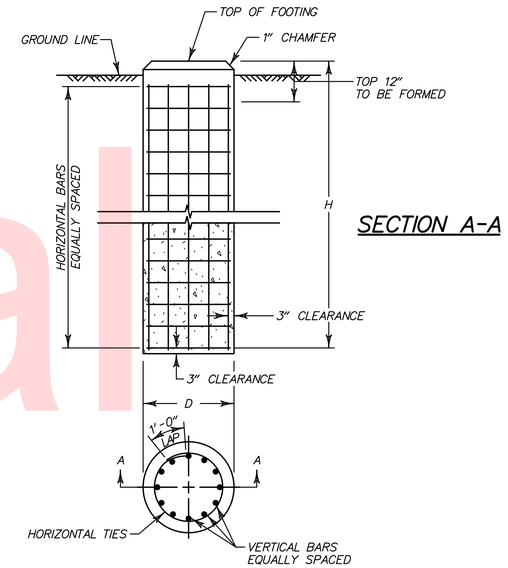

PLAN VIEW

FOUNDATION DATA TABLE

POST SIZE	D	H	VERTICAL REINFORCEMENT	HORIZONTAL REINFORCEMENT	CONCRETE REQUIRED (CY)
W6x9	30"	6'-0"	EIGHT (8)-NO. 7	SEVEN (7)-NO. 4	1.1
W6x12 OR TS-5x5x1/4	30"	6'-0"	EIGHT (8)-NO. 7	SEVEN (7)-NO. 4	1.1
W6x15, W6x16 OR TS-6x6x1/4	30"	6'-6"	EIGHT (8)-NO. 7	SEVEN (7)-NO. 4	1.2
W8x18	30"	7'-6"	EIGHT (8)-NO. 9	EIGHT (8)-NO. 4	1.4
W8x21 OR TS-7x7x1/4	30"	8'-0"	EIGHT (8)-NO. 9	NINE (9)-NO. 4	1.5
W10x22 OR TS-8x8x5/16	36"	8'-6"	EIGHT (8)-NO. 10	NINE (9)-NO. 4	2.3
W10x26	36"	9'-0"	EIGHT (8)-NO. 10	TEN (10)-NO. 4	2.4
W12x26	36"	10'-0"	EIGHT (8)-NO. 10	ELEVEN (11)-NO. 4	2.7
W14x30	36"	11'-0"	EIGHT (8)-NO. 10	TWELVE (12)-NO. 4	2.9
W16x31	36"	12'-0"	EIGHT (8)-NO. 10	THIRTEEN (13)-NO. 4	3.2
W18x35 OR W18x40	36"	13'-0"	EIGHT (8)-NO. 10	FOURTEEN (14)-NO. 4	3.5
W21x44	42"	12'-0"	TWELVE (12)-NO. 10	THIRTEEN (13)-NO. 4	4.3

STEEL POST BREAKAWAY SYSTEM SELECTION CHART

SYSTEM TYPE	ASSOCIATED POST SIZE
AI6	W6X9
B525	W6X12, W6X15, W6x16, W8X18, W8X21, 5"x5" & 6"x6" SQUARE
B650	7"x7" AND 8"X8" SQUARE AND ALL I-BEAMS LARGER THAN W8X21

Unofficial Website Copy

n:\31653-000\contract 1d\cadd\SS018U301_1D.dgn
8/1/2015 11:54:40 AM

DELAWARE DEPARTMENT OF TRANSPORTATION

ADDENDUMS / REVISIONS

NOT TO SCALE

US 13 & PORT PENN RD INTERSECTION

CONTRACT	BRIDGE NO.
T201011302	DESIGNED BY: J.D.C.
COUNTY	
NEW CASTLE	CHECKED BY: J.M.M.

SIGNING CONSTRUCTION DETAILS

SS-18

SHEET NO.
177
TOTAL SHTS.
179

GALVANIZED STEEL BEAM TYPE B SIGN POST FOUNDATION DETAIL

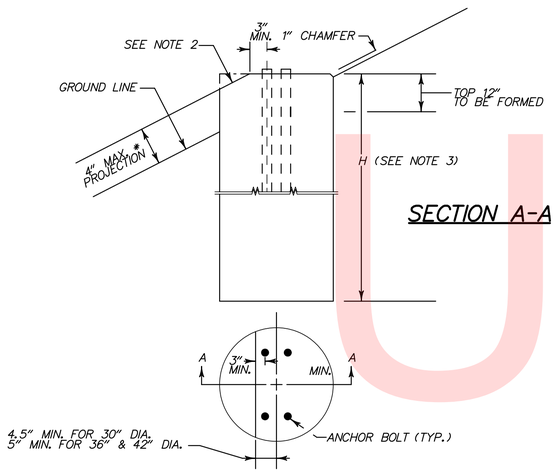

PLAN VIEW

NOTES:

1. THIS FOUNDATION SHALL BE USED ONLY IN LOCATIONS MEETING SLOPE CRITERIA IN ACCORDANCE WITH THE STEEL BREAKAWAY SUPPORT FOUNDATION SELECTION MATRIX ON SIGNING CONSTRUCTION DETAILS SHEET.
2. SLOPED PORTIONS OF THE FOUNDATION SHALL MATCH THE FINISHED GROUND SLOPE.
3. REFER TO GALVANIZED STEEL BEAM TYPE A SIGN POST FOUNDATION DETAIL FOR FOUNDATION DIMENSIONS AND REINFORCING STEEL DETAILS.

GALVANIZED STEEL BEAM TYPE C SIGN POST FOUNDATION DETAIL

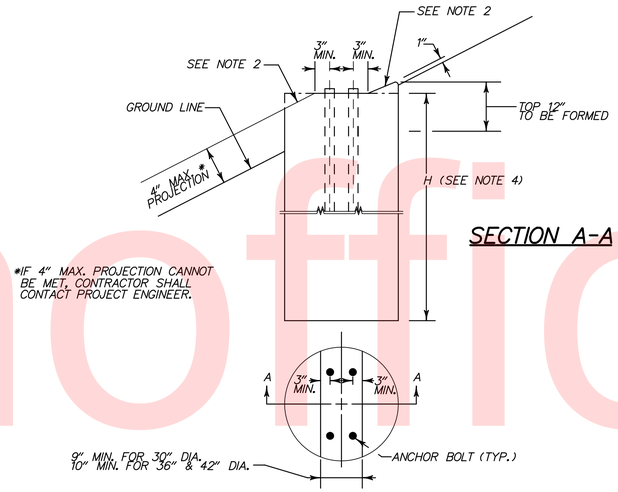

PLAN VIEW

NOTES:

1. THIS FOUNDATION SHALL BE USED ONLY IN LOCATIONS MEETING SLOPE CRITERIA IN ACCORDANCE WITH THE STEEL BREAKAWAY SUPPORT FOUNDATION SELECTION MATRIX ON THE SIGNING CONSTRUCTION DETAILS SHEET.
2. SLOPED PORTIONS OF THE FOUNDATION SHALL MATCH THE FINISHED GROUND SLOPE.
3. ON FILL SLOPES GREATER THAN 6:1 BUT NO STEEPER THAN 3:1, FOUNDATIONS DESIRABLY SHOULD BE INSTALLED A MINIMUM OF 14 FT BEYOND THE HINGE POINT. THE HINGE POINT IS THE POINT OF SLOPE TRANSITION FROM THE SHOULDER SLOPE, OR A RELATIVELY FLAT RECOVERY AREA ADJACENT TO THE ROADWAY, TO A STEEPER FORESLOPE, (ALSO KNOWN AS THE FORESLOPE BREAK).
4. REFER TO GALVANIZED STEEL BEAM TYPE A SIGN POST FOUNDATION DETAIL FOR FOUNDATION DIMENSIONS AND REINFORCING STEEL DETAILS.

BARRIER SIGN SUPPORT

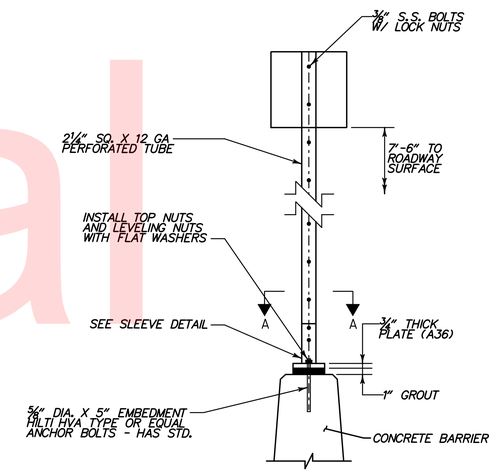

ELEVATION

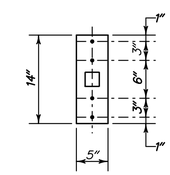

VIEW A-A
BASE PLATE

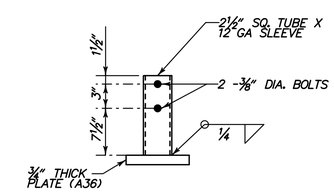

SLEEVE DETAIL

NOTES:

1. ALL STEEL SHALL BE HOT DIPPED GALVANIZED

BREAKAWAY POLES ADJUSTMENT FOR GROUND SLOPES DETAIL

TO AVOID UNDERCARRIAGE SNAGGING ON CONVEX GROUND PROFILES, THE TOP OF THE FOOTING SHALL NOT PROJECT MORE THAN 4" ABOVE ANY 60" CHORD ALIGNED PERPENDICULARLY TO THE EDGE OF THE ROADWAY BETWEEN A POINT ON THE GROUND SURFACE ON ONE SIDE OF THE SUPPORT TO A POINT ON THE GROUND SURFACE ON THE OTHER SIDE OF THE SUPPORT.

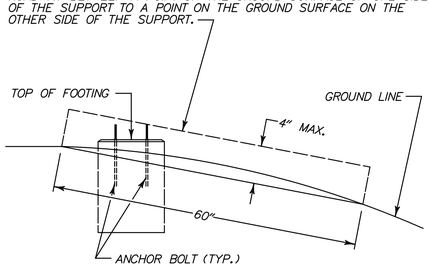

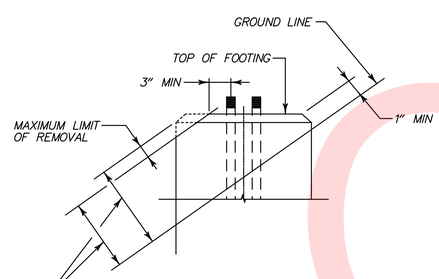

FOOTING PROJECTIONS ABOVE GROUND LINE SHALL BE MINIMIZED. THE MAXIMUM PERMISSIBLE FOOTING PROJECTION SHALL BE 4" ON THE LOWER SLOPE SIDE. WHERE NECESSARY, THE DASHED AREA OF THE FOOTING SHALL BE REMOVED AND REINFORCEMENT SHALL BE BENT TO FIT.

VERTICAL SUPPORT ATTACHMENT FOR GROUND MOUNTED SIGNS

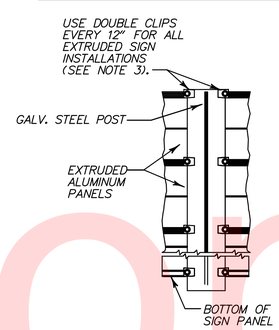

NOTES:

1. ALL STEEL SHALL BE HOT DIPPED GALVANIZED.
2. ALL STEEL SUPPORTS SHALL CONFORM TO A 709, GRADE 36.
3. POST CLIPS SHALL BE INSTALLED ON EACH SIDE OF SIGN SUPPORT SPACED EVERY 12" FOR ENTIRE HEIGHT OF SIGN, AS SHOWN. POST CLIPS SHALL MEET AASHTO STANDARD SPECIFICATIONS FOR STRUCTURAL SUPPORTS FOR HIGHWAY SIGNS, LUMINAIRES AND TRAFFIC SIGNALS.

Unofficial Website Copy

n:\31653-000\contract 1d\cadd\SS019U301_1D.dgn
8/1/2015 11:54:41 AM

DELAWARE DEPARTMENT OF TRANSPORTATION	ADDENDUMS / REVISIONS	NOT TO SCALE	US 13 & PORT PENN RD INTERSECTION	CONTRACT T201011302 / COUNTY NEW CASTLE	BRIDGE NO. / DESIGNED BY: J.D.C. / CHECKED BY: J.M.M.	SIGNING CONSTRUCTION DETAILS

SS-19
SHEET NO. 178
TOTAL SHTS. 179

CONDUIT RUN SCHEDULE

CO*	# OF CONDUITS	SIZE	LENGTH	B/T/O	AMOUNT AND TYPE OF CABLE/ WIRE
1*	1	2.0 IN	21 FT	T	(1) 2/#8 U.F. W/GROUND
2*	1	2.0 IN	5 FT	T	(1) 2/#8 U.F. W/GROUND
3	4	4.0 IN	11 FT	T	(16) 2/#14, FIBER OPTIC CABLE (BY OTHERS)
4	1	4.0 IN	4 FT	T	(2) 16/#14, (3) 4/#18
5	1	4.0 IN	28 FT	T	(10) 2/#14
6	1	4.0 IN	122 FT	B	(8) 2/#14
7	1	4.0 IN	63 FT	T	(1) 2/#14
8	1	4.0 IN	152 FT	T	(2) 2/#14
9	1	4.0 IN	202 FT	T	(2) 2/#14
10	1	4.0 IN	89 FT	B	(5) 2/#14
11	1	4.0 IN	65 FT	B	(1) 2/#14
12	1	4.0 IN	92 FT	T	(1) 2/#14
13	1	4.0 IN	75 FT	B	(6) 2/#14
14	1	4.0 IN	196 FT	T	(3) 2/#14
15	1	4.0 IN	192 FT	T	(3) 2/#14
16	1	4.0 IN	16 FT	T	FIBER OPTIC CABLE (BY OTHERS)
17	2	3.0 IN	4 FT	T	(2) 16/#14, (3) 4/#18
18	2	3.0 IN	18 FT	T	EMPTY
19	2	3.0 IN	30 FT	T	EMPTY
20	2	3.0 IN	18 FT	T	EMPTY

*RIGID GALVANIZED STEEL CONDUITS INSTALLED BY DELDOT FORCES

B = BORE, T = TRENCH, O = OPEN CUT

NOTES:

5. UNLESS OTHERWISE NOTED, THE CONTRACTOR SHALL BE RESPONSIBLE FOR THE INSTALLATION AND REMOVAL OF ALL UNDERGROUND SIGNAL EQUIPMENT - E.G., JUNCTION WELLS, CABINET AND POLE BASES, AND CONDUIT. DELDOT'S TRAFFIC CONTRACTOR SHALL BE RESPONSIBLE FOR THE INSTALLATION AND REMOVAL OF ALL ELECTRICAL CABLES AND ABOVE GROUND SIGNAL EQUIPMENT - E.G., HEADS, OPTICOM RECEIVERS, SPAN WIRES, SERVICE PEDESTAL, POLES, AND CABINET.
6. INSTALL SIGNAL HEAD BACK PLATES ON SIGNAL HEADS 1 THROUGH 9.
7. SEE SIGNING, STRIPING AND CONDUIT PLANS FOR CONTINUATION OF ITMS CONDUIT AND INSTALLATION OF TYPE 14 AND 7 JUNCTION WELLS.
8. INSTALL TUNNEL VISORS ON SIGNAL HEADS 11 AND 12.
9. ALL CONDUITS SHALL BE RIGID POLYVINYL CHLORIDE, SCHEDULE 80, UNLESS OTHERWISE NOTED.

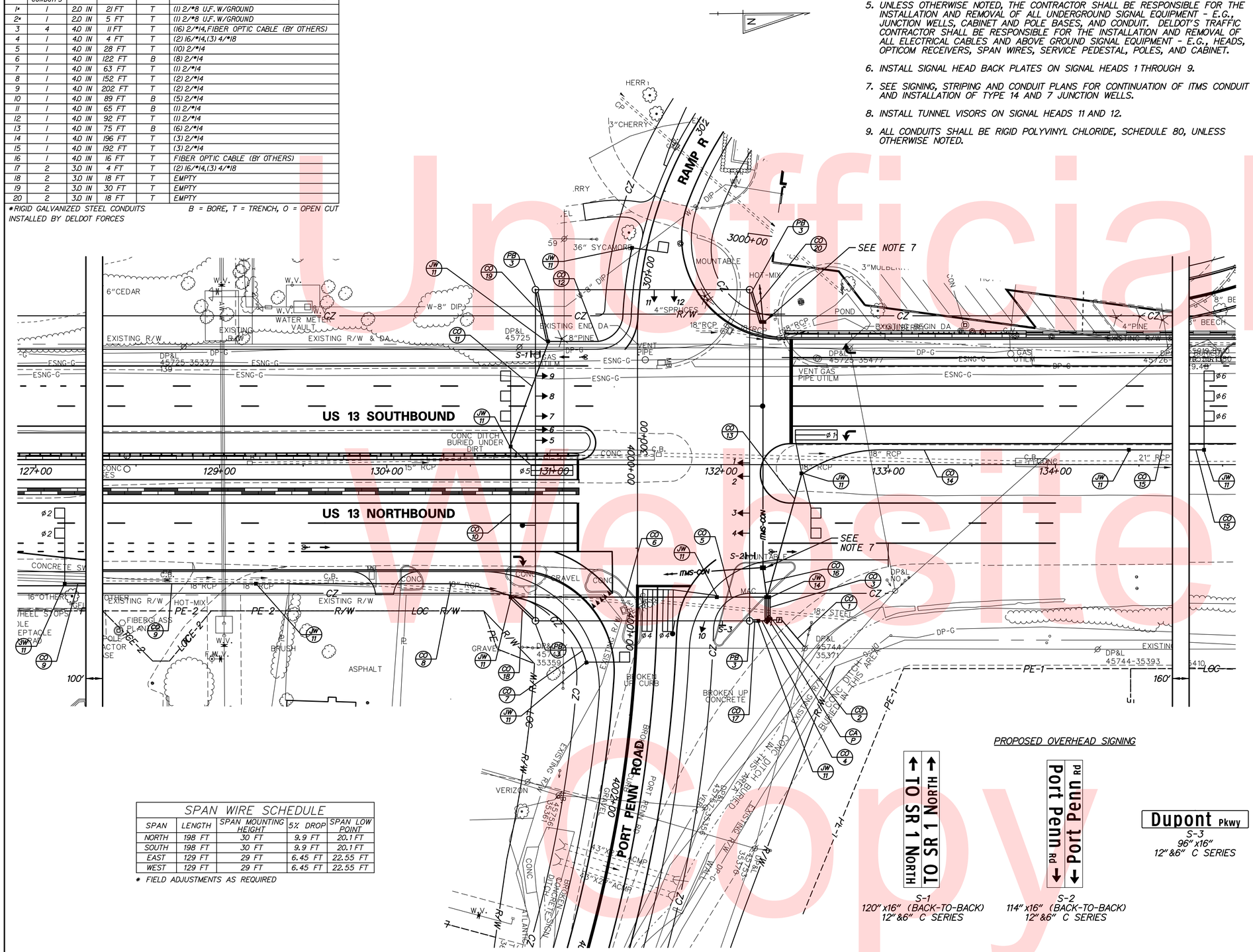

PROPOSED OVERHEAD SIGNING

SPAN WIRE SCHEDULE

SPAN	LENGTH	SPAN MOUNTING HEIGHT	5% DROP	SPAN LOW POINT
NORTH	198 FT	30 FT	9.9 FT	20.1 FT
SOUTH	198 FT	30 FT	9.9 FT	20.1 FT
EAST	129 FT	29 FT	6.45 FT	22.55 FT
WEST	129 FT	29 FT	6.45 FT	22.55 FT

* FIELD ADJUSTMENTS AS REQUIRED

SIGNAL PHASING

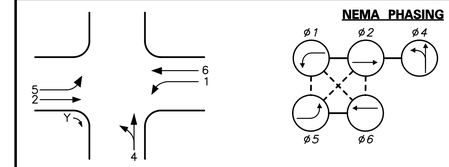

PHASING NOTES

1. PHASES ASSOCIATED BY A SOLID LINE WILL NOT OPERATE CONCURRENTLY.
2. PHASES ASSOCIATED BY A DASHED LINE WILL OPERATE CONCURRENTLY.

SIGNAL HEAD DIAGRAM

LEGEND

- PROPOSED SIGNAL CABINET
- EXISTING SIGNAL CABINET
- PROPOSED SIGNAL POLE BASE
- EXISTING SIGNAL POLE BASE
- PROPOSED PEDESTRIAN POLE BASE
- EXISTING PEDESTRIAN POLE BASE
- PROPOSED WOOD POLE
- EXISTING UTILITY POLE
- PROPOSED JUNCTION WELL
- J.W. EXISTING JUNCTION WELL
- PROPOSED SIGNAL HEAD
- EXISTING SIGNAL HEAD
- PROPOSED PEDESTRIAN SIGNAL HEAD
- EXISTING PEDESTRIAN SIGNAL HEAD
- PROPOSED PEDESTRIAN PUSHBUTTON
- EXISTING PEDESTRIAN PUSHBUTTON
- PROPOSED VIDEO DETECTION
- EXISTING VIDEO DETECTION
- PROPOSED MICROWAVE DETECTION
- EXISTING MICROWAVE DETECTION
- OVERHEAD SIGNING
- PROPOSED OPTICOM RECEIVER
- EXISTING OPTICOM RECEIVER
- PROPOSED MAST ARM
- EXISTING MAST ARM
- PROPOSED LUMINAIRE
- EXISTING LUMINAIRE
- PROPOSED LOOP DETECTOR (TYPE 1 OR 2)
- EXISTING LOOP DETECTOR (TYPE 1 OR 2)
- RM/C REMOVE BY CONTRACTOR
- RM/O REMOVE BY OTHERS
- AB ABANDON
- PB/X PROPOSED POLE BASE IDENTIFIER (TYPE OF POLE BASE)
- PB/X EXISTING POLE BASE IDENTIFIER (TYPE OF POLE BASE)
- JW/X PROPOSED JUNCTION WELL IDENTIFIER (TYPE OF JUNCTION WELL)
- JW/X EXISTING JUNCTION WELL IDENTIFIER (TYPE OF JUNCTION WELL)
- CO/# PROPOSED CONDUIT RUN IDENTIFIER (# OF CONDUIT RUN)
- CO/# EXISTING CONDUIT RUN IDENTIFIER (# OF CONDUIT RUN)
- OH/# PROPOSED OVERHEAD RUN IDENTIFIER (# OF OVERHEAD RUN)
- OH/# EXISTING OVERHEAD RUN IDENTIFIER (# OF OVERHEAD RUN)
- MA/XX PROPOSED MAST ARM IDENTIFIER (LENGTH OF ARM)
- MA/XX EXISTING MAST ARM IDENTIFIER (LENGTH OF ARM)
- CA/X PROPOSED CABINET IDENTIFIER (TYPE OF CABINET)
- CA/X EXISTING CABINET IDENTIFIER (TYPE OF CABINET)
- PROPOSED SPAN WIRE
- XX EXISTING SPAN WIRE
- RIGHT-OF-WAY OR PROPERTY LINE
- PROPOSED SPAN INSULATOR
- EXISTING SPAN INSULATOR
- P SERVICE PEDESTAL

GENERAL SIGNAL NOTES

1. LOOP DETECTORS:
   TYPE #1 - 6' x 6' - TO BE INSTALLED ON US 13 THROUGH MOVEMENTS.
   TYPE #2 - 6' x 25' - TO BE INSTALLED ON US 13 LEFT-TURN MOVEMENTS AND WESTBOUND PORT PENN ROAD MOVEMENTS.
   SYSTEM - 6' x 6' - TO BE INSTALLED ON US 13, RAMP R AND PORT PENN ROAD RECEIVING LANES, AS SHOWN.
2. ALL SIGNAL POLES WILL BE 32 FEET, EXCEPT WHERE SHOWN.
3. ALL GALVANIZED CONDUIT (GRC) SHALL BE REAMED AND THREADED. ALL GRC SHALL BE THREADED TOGETHER WITH APPROVED COUPLINGS. SET SCREW, BOLTED, AND COMPRESSION FITTINGS ARE NOT ACCEPTABLE.
4. ALL UNDERGROUND AND OVERHEAD UTILITIES SHOWN ON THESE PLANS ARE SCHEMATIC ONLY AND MAY NOT BE COMPLETE. THE CONTRACTOR SHALL BE RESPONSIBLE FOR NOTIFYING MISS UTILITY, AND/OR THE APPROPRIATE UTILITY PRIOR TO THE BEGINNING OF CONSTRUCTION FOR THE UTILITY MARKOUTS. IF THE CONTRACTOR PERCEIVES THAT A CONFLICT BETWEEN UTILITIES AND THE TRAFFIC SIGNAL WILL OCCUR, THE CONTRACTOR SHALL NOTIFY DELDOT TRAFFIC IMMEDIATELY BEFORE CONSTRUCTION.

Unofficial Website Copy

RECOMMENDED _____ DATE: _____ | RECOMMENDED _____ DATE: _____ | RECOMMENDED _____ DATE: _____ | APPROVED TRAFFIC ENGINEER _____ DATE: _____ | APPROVED FOR INSTALLATION CHIEF TRAFFIC ENGINEER _____ DATE: _____

DELAWARE DEPARTMENT OF TRANSPORTATION

ADDENDUM / REVISIONS

SCALE 0 30 60 90 FEET

US 13 & PORT PENN RD INTERSECTION

CONTRACT	PERMIT NO.	N784
T201011302	DESIGNED BY: J.D.C. (WR&A)	
COUNTY		
NEW CASTLE	CHECKED BY: J.M.M. (WR&A)	

SG-01: SIGNAL PLAN US 13 @ PORT PENN RD

SHEET NO.	179
TOTAL SHTS.	179

N:\31653-000\CONTRACT 8/25/2015 2:13:01 PM ID:\CADD\Traffic\2015 - Updates\SG001U301_1D.dgn