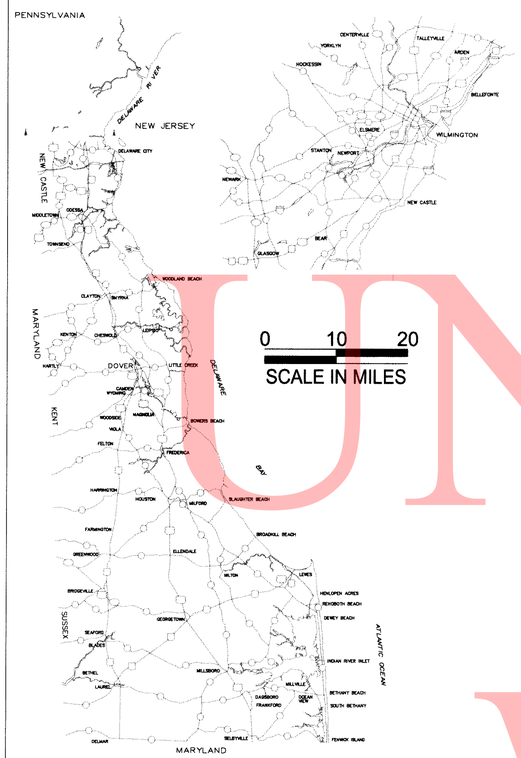

GENERAL LOCATION OF CONTRACT

THE STATE OF DELAWARE
DEPARTMENT OF TRANSPORTATION

U.S. CUSTOMARY UNITS

CONSTRUCTION PLANS FOR:

MAGNOLIA YARD
VEHICLE MAINTENANCE SHOP

COUNTY: KENT AGREEMENT NUMBER 1443

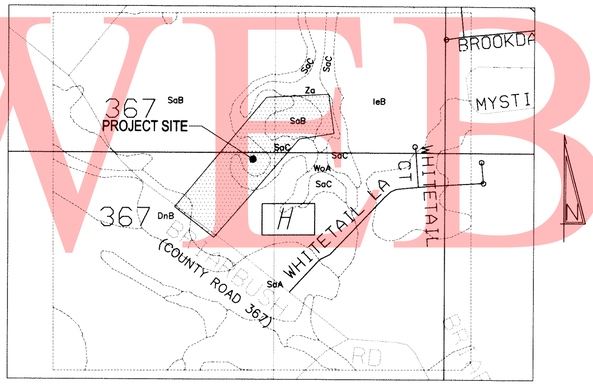

LOCATION MAP

SCALE: 1" = 1,000'

SITE DATA

PROPERTY ID: NM-00-104.00-02-32.00-000
ZONING: AC
TOTAL SITE AREA: 40.17 ACRES
TOTAL SITE AREA IMPACTED BY PLAN: 14.64 ACRES
ACREAGE IN STREET R/W: 0
ACREAGE WITHIN ACTIVE OPEN SPACE: 0
ACREAGE WITHIN PASSIVE OPEN SPACE: 0
ACREAGE OF EX. STORMWATER MANAGEMENT AREA: 2.51 ACRES ±
UTILITIES: PRIVATE SEPTIC SYSTEM; PUBLIC WATER
PERCENTAGE IMPERVIOUS COVER: EXISTING: 56.4% ±
PROPOSED: 56.4% ±
PRESENT USE: DELDOT HIGHWAY MAINTENANCE YARD
PROPOSED USE: DELDOT HIGHWAY MAINTENANCE YARD
RELATION TO GROWTH ZONE: INSIDE
WETLANDS: THE SWMP FOR KENT COUNTY SHOWS 0.29AC.± OF WETLANDS ON-SITE. NONE IS WITHIN THE PROJECT'S DISTURBED AREA
WOODLAND PRESERVATION: 100%
EXISTING BUILDING SQUARE FOOTAGE: 54,165 S.F.±
EXISTING BUILDING SQUARE FOOTAGE TO BE DEMOLISHED: 16,866 S.F.±
EXISTING BUILDING SQUARE FOOTAGE TO REMAIN: 37,299 S.F.±
NEW BUILDING SQUARE FOOTAGE: 44,184 S.F.±
PROPOSED TOTAL BUILDING SQUARE FOOTAGE: 81,483 S.F.±
MONUMENTS FOUND (SEE SHEET C-9): 6
MONUMENTS PROPOSED: 0
PROPOSED BUILDING HEIGHT: 35' MAXIMUM
FEMA MAP ID: 10001C0234H AND 10001C0253H
THERE ARE NO PROPOSED IMPACTS TO THE FLOODPLAINS
SLOPE OF SITE FROM STREET TO REAR: 1.0%
KENT COUNTY REFERENCE NUMBER: S-11-02
INTENDED BUILDING USES: SHOP BUILDING, TRUCK SHEDS, STORAGE SHEDS, MIX BARN
REFERENCE TRAVERSE STATION: GPS #10943
N 393,242.7392, E 631,828.2873 (NAD 83)
ELEVATION: 41.56 (NAVD 88)

OWNER / APPLICANT:

STATE OF DELAWARE
C/O DEPARTMENT OF TRANSPORTATION
800 BAY ROAD
DOVER, DELAWARE 19901
ATTN: EDWIN TENNEFOSS, P.E.
PHONE: 302-760-2368

ENGINEER :

WHITNEY, BAILEY, COX, & MAGNANI, LLC
849 FAIRMOUNT AVENUE, SUITE 100
BALTIMORE, MD. 21286
ATTN: PHILLIP CARROLL
PHONE: 410-512-4500

FIRE MARSHALL NOTES:

1. THERE ARE NO BUILDINGS 10,000 SQUARE FEET OR LARGER AT THIS SITE.
2. ANY GAS FIRED HVAC EQUIPMENT MUST BE EQUIPPED WITH EMERGENCY CUT-OFF SWITCHES, REMOTELY LOCATED.
3. ADDRESS NUMBERS OF AT LEAST (6) SIX INCHES IN HEIGHT MUST BE PLACED ON THE STREET SIDE OF THE BUILDING, VISIBLE FROM THE STREET.
4. ANY NATURAL OR LP GAS BOTTLES, METERS, VALVES, REGULATORS, ETC., MUST HAVE IMPACT PROTECTION.
5. THE PROPOSED BUILDING MUST BE EQUIPPED WITH A KNOX BOX SYSTEM FOR FIRE DEPARTMENT ACCESSIBILITY AS REQUIRED BY THE DELAWARE STATE FIRE PREVENTION REGULATIONS.
6. ALL FIRE LANES, FIRE HYDRANTS, AND FIRE DEPARTMENT CONNECTIONS SHALL BE MARKED IN ACCORDANCE WITH THE STATE FIRE PREVENTION REGULATIONS.
7. THE PROPOSED BUILDINGS WILL NOT HAVE AUTOMATIC FIRE SPRINKLERS.
8. THE PROPOSED TRUCK SHEDS, STORAGE BUILDINGS, AND MIX SHED ARE NFPA CONSTRUCTION TYPE V, (000) (WOOD FRAME CONSTRUCTION) AND THE PROPOSED SHOP BUILDING IS NFPA CONSTRUCTION TYPE II (000) (NON-COMBUSTIBLE CONSTRUCTION).
9. PUBLIC WATER FOR FIRE PROTECTION IS AVAILABLE AT THIS SITE.

RECOMMENDED

Maria Santini — 7/25/12
MAINTENANCE ENGINEER — DATE

7/25/12
DISTRICT ENGINEER — DATE

7/24/12
MAINTENANCE IMPROVEMENT ENGINEER — DATE

7/25/12
ASSISTANT DIRECTOR STATEWIDE SUPPORT SERVICES — DATE

7/27/12
DIRECTOR MAINTENANCE AND OPERATIONS — DATE

RECOMMENDED AS TO PROCESS

Natalie Barnhart
CHIEF ENGINEER

DATE July 30, 2012

RECOMMENDED

STORMWATER ENGINEER

DATE

SEAL

PREPARED BY
ENGINEERING CONSULTANT

WHITNEY BAILEY COX & MAGNANI, LLC
849 Fairmount Ave Suite 100 Baltimore, MD 21286
MAIN 410.512.4500 FAX 410.324.4100
www.wbcm.com

WBCM
ARCHITECTURE ENGINEERING CONSTRUCTION

PHILIP DER — NUMBER 0003894 — REGISTERED PROFESSIONAL ENGINEER — DELAWARE

Philip Der
RECOMMENDED

SEAL
7/18/12
DATE

DESIGN DESIGNATION

FUNCTIONAL CLASS:		D.H.V. PROJECTED:	YEAR:
TYPE OF CONSTRUCTION:		DESIGN SPEED: M.P.H.	
A.A.D.T. CURRENT:	YEAR:	TRUCKS: %	
A.A.D.T. PROJECTED:	YEAR:	DIRECTION OF DISTRIBUTION: %	

INDEX OF SHEETS

DWG. No.	SHT. No.	TABLE OF CONTENTS	DWG. No.	SHT. No.	TABLE OF CONTENTS
		SITE DRAWINGS			SHOP BUILDING (CONT.)
T1.0	1	TITLE	S1.0	30	GENERAL NOTES
C1.0	2	LEGEND	S1.1	31	FOUNDATION AND GROUND FLOOR PLAN
C2.0	3	GENERAL AND PROJECT NOTES	S2.1	32	SECTIONS & DETAILS
C3.0	4	EXISTING CONDITIONS AND DEMOLITION PLAN	S3.1	33	TYPICAL SECTIONS AND DETAILS
C4.0	5	LAYOUT, SIGNAGE, AND STRIPING PLAN	S3.2	34	TYPICAL SECTIONS AND DETAILS
C5.0	6	GRADING AND UTILITY PLAN			
C5.1	7	UTILITY PROFILES AND DETAILS	M1.0	35	MECHANICAL LEGEND AND GENERAL NOTES
C5.2	8	PUMP STATION PART PLAN, PROFILE, & DETAILS	M1.1	36	MECHANICAL GROUND FLOOR PLAN - HVAC
C6.0	9	SITE DETAILS	M1.2	37	MECHANICAL MEZZANINE FLOOR PLAN - HVAC
C7.0	10	EROSION AND SEDIMENT CONTROL PLAN	M3.1	38	MECHANICAL SECTIONS
C8.0	11	LANDSCAPE PLAN, DETAILS, AND NOTES	M7.1	39	MECHANICAL DETAILS
			M7.2	40	MECHANICAL DETAILS
			M9.1	41	MECHANICAL SCHEDULES
		SHOP BUILDING			
A1.0	12	CODE ANALYSIS, ABBREVIATIONS & SYMBOLS	E0.1	42	ELECTRICAL LEGEND AND SCHEDULE
A1.1	13	GROUND FLOOR PLAN	E0.2	43	SITE PLAN - ELECTRICAL
A1.2	14	MEZZANINE FLOOR PLAN	E1.1	44	GROUND FLOOR PLAN - LIGHTING
A1.3	15	EQUIPMENT FLOOR PLAN	E1.2	45	MEZZANINE PLAN - LIGHTING
A1.4	16	ROOF PLAN	E2.1	46	GROUND FLR. PLAN - POWER & SPECIAL SYSTEMS
A2.1	17	BUILDING ELEVATIONS	E2.2	47	MEZZANINE PLAN - POWER & SPECIAL SYSTEMS
A3.1	18	BUILDING SECTIONS	E5.1	48	RISER DIAGRAMS
A3.2	19	BUILDING SECTIONS	E6.1	49	ELECTRICAL DETAILS
A3.3	20	WALL SECTIONS	E6.2	50	ELECTRICAL DETAILS
A3.4	21	WALL SECTIONS	E7.1	51	ELECTRICAL SCHEDULES
A3.5	22	SECTIONS & DETAILS			
A4.1	23	LARGE SCALE PLAN & INTERIOR ELEVATIONS	P1.0	52	PLUMBING LEGEND AND GENERAL NOTES
A4.2	24	STAIR PLANS, SECTIONS & DETAILS	P1.1	53	FOUNDATION PLAN - PLUMBING WORK
A5.1	25	PLAN DETAILS	P1.2	54	GROUND FLOOR PLAN - PLUMBING
A5.2	26	MISCELLANEOUS DETAILS	P1.3	55	MEZZANINE FLOOR PLAN - PLUMBING
A6.1	27	DOOR SCHEDULE	P1.4	56	ROOF PLAN - PLUMBING
A6.2	28	DOOR DETAILS	P3.1	57	PLUMBING RISER DIAGRAMS
A6.3	29	FINISH SCHEDULE	P7.1	58	PLUMBING DETAILS
			P9.1	59	PLUMBING SCHEDULES

TOTAL SHEETS: 59

APPROVED DESIGN EXCEPTIONS

DESIGN PARAMETER	REQUIRED	PROVIDED	DATE

ADDENDA & REVISIONS

DESCRIPTION	NAME & DATE
COUNTY SUBMISSION	WBCM 04/11/11
FINAL PLANS	WBCM 10/28/11
REVISED PER KENT CO. COMMENTS	WBCM 04/12/12
REVISED PER KENT CO. COMMENTS	WBCM 05/16/12

ASSOCIATED CONTRACTS

CONTRACT NO.	CONTRACT NAME

PLAN PREPARED JUNE 25, 2010

UNOFFICIAL WEBSITE COPY

EXISTING SYMBOLS

DRAINAGE

	DITCH OR STREAM CENTERLINE
	DIRECTIONAL STREAM FLOW ARROW
C.B.	DRAINAGE CATCH BASIN
J.B.	DRAINAGE JUNCTION BOX
D	DRAINAGE MANHOLE
SIZE/TYPE LABEL	DRAINAGE PIPE AND FLOW ARROW
	DRAINAGE PIPE HEADWALL
	RIPRAP - AREA FEATURE
	RIPRAP - LINEAR FEATURE

MANMADE ROADSIDE FEATURES

(TYPE LABEL)	CURB
(TYPE LABEL)	CURB AND GUTTER
	FENCE - CHAINLINK OR STRANDED
	FENCE - STOCKADE OR SPLIT RAIL
F.P.	FLAG POLE
	GUARDRAIL - STEEL BEAM
	GUARDRAIL - WIRE ROPE
LAMP	LAMP AND POST - RESIDENTIAL
MB	MAILBOX
P.M.	PARKING METER AND POST
	PAVEMENT - FLEXIBLE
	PAVEMENT - RIGID
	PILE - BRIDGE
	PILLAR OR MISCELLANEOUS POST
	TRAFFIC SIGN AND POST
	WALL - BRICK OR BLOCK
	WALL - STONE

NATURAL ROADSIDE FEATURES

	GRASS LAWN
	HEDGEROW OR THICKET
	MARSH BOUNDARY LINE
	TREE - CONIFEROUS
	TREE - DECIDUOUS
	TREE STUMP
	SHRUBBERY
WL	DELINEATED WETLAND BOUNDARY LINE
	WOODS LINE BOUNDARY

SURVEY CONTROL & MONUMENTATION

B.M.	SURVEY BENCHMARK LOCATION
T.P.	SURVEY TIE POINT LOCATION
△	SURVEY TRAVERSE POINT
⊙	POINT OF CURVATURE OR TANGENCY
◎	POINT OF INTERSECTING TANGENTS
C.M.	PROPERTY MARKER - CONCRETE MON.
I.P.	PROPERTY MARKER - IRON PIPE

UTILITY

	SOIL BORING LOCATION
	UTILITY TEST HOLE LOCATION
TV	CABLE TV DISTRIBUTION BOX
E	ELECTRIC MANHOLE
EM	ELECTRIC METER
E	ELECTRIC TRANSFORMER
	POLE MOUNTED LUMINAIRE
G	GAS MANHOLE
G.M.	GAS METER
G.V.	GAS VALVE
G.P.	GAS PUMP - SERVICE STATION
	RAILROAD TRACKS
S	SANITARY SEWER MANHOLE
S.V.	SANITARY SEWER VALVE
VENT	SANITARY SEWER VENT OR CLEANOUT
S.D.F.	SEPTIC DRAIN FIELD
B	TELEPHONE BOOTH
T	TELEPHONE MANHOLE
T	TELEPHONE TEST POINT
J.W.	TRAFFIC - CONDUIT JUNCTION WELL
	TRAFFIC - LIGHT POLE AND BASE
	TRAFFIC - PEDESTRIAN POLE & BASE
	TRAFFIC - SIGNAL CABINET & BASE
⊗	TRAFFIC - SIGNAL POLE AND BASE
U	UTILITY BOX
	UTILITY POLE GUY WIRE ANCHOR
	UTILITY POLE
F.H.	WATER - FIRE HYDRANT
W.M.	WATER METER
W.V.	WATER VALVE
WELL	WELL HEAD

UTILITY COMPANY FACILITIES

E	EXISTING ELECTRIC LINE
G	EXISTING GAS LINE
SS	EXISTING SANITARY SEWER LINE
	EXISTING STORM DRAIN LINE
T	EXISTING TELEPHONE LINE
UKN	EXISTING UNKNOWN UTILITY LINE
W	EXISTING WATER LINE

PROPOSED SYMBOLS

CONSTRUCTION

	CONCRETE SAFETY BARRIER – PERMANENT
BFS	BIOFILTRATION SWALE
	BUTT JOINT
100+00	CONSTRUCTION BASELINE
	CURB, TYPE 1 & TYPE 3
	CURB, TYPE 2
	CURB & GUTTER, TYPE 1
	CURB & GUTTER, TYPE 2
	CURB & GUTTER, TYPE 3
	CURB & GUTTER, TYPE 4
CZ	CLEAR ZONE
	DRAINAGE INLET
	DITCH
	FENCE – METAL
	FENCE – WOOD
	FLARED END SECTION
	GUARDRAIL, TYPES 1 & 3
	GUARDRAIL, TYPE 2
	GUARDRAIL END TREATMENT – PARALLEL
	GUARDRAIL END TREATMENT – PARABOLIC
HC	HORIZONTAL CLEARANCE
	JUNCTION BOX – DRAINAGE
LOC	LIMIT OF CONSTRUCTION
	MANHOLE
	PAVEMENT PATCH
	PIPE & DIRECTIONAL FLOW ARROW
	RIPRAP
	P.C.C. SIDEWALK @ 4"
	P.C.C. SIDEWALK @ 5"
	UNDERDRAIN
	UNDERDRAIN OUTLET

CONSTRUCTION PHASING SYMBOLS

	BARRICADE, TYPE 3
	CONCRETE SAFETY BARRIER – PORTABLE
	CONSTRUCTION WARNING SIGN LOCATION
ROAD WORK AHEAD	CONSTRUCTION WARNING SIGN
	CRASH CUSHION ARRAY
	DRUM – TRAFFIC CONTROL
	PHASING TRAFFIC FLOW ARROW

LANDSCAPING

	SHRUBBERY
	CONIFEROUS TREE
	DECIDUOUS TREE

EROSION & SEDIMENT CONTROL

DWB	DEWATERING BASIN
	EROSION CONTROL BLANKET
ED	EARTH DIKE
	INLET SEDIMENT CONTROL
	PERIMETER DIKE/SWALE
PST	PORTABLE SEDIMENT TANK
RSF	REINFORCED SILT FENCE
SBD	SANDBAG DIKE
SB	SANDBAG DIVERSION
	STONE CHECK DAM
SCE	STABILIZED CONSTRUCTION ENTRANCE
SF	SILT FENCE
SP-1	SUMP PIT, TYPE 1
SP-2	SUMP PIT, TYPE 2
ST	SEDIMENT TRAP
ST	SEDIMENT TRAP WITH INLET AS OUTLET
ST	SEDIMENT TRAP PIPE OUTLET
SW	STILLING WELL
	TEMPORARY SWALE
TSD	TEMPORARY SLOPE DRAIN

IDENTIFIERS

A C	ADJUST BY CONTRACTOR
A O	ADJUST BY OTHERS
B	CONCRETE SAFETY BARRIER
C	CURB OR CURB & GUTTER
C.J.B.	CONVERT TO JUNCTION BOX
C.M.H.	CONVERT TO DRAINAGE MANHOLE
C O	CURB OPENING
CR	CURB RAMP / TYPE
CR-W	CURB RAMP / TYPE– WITHOUT SIDEWALK SURFACE DETECTABLE WARNING SYSTEM
DI	DRAINAGE INLET
DND	DO NOT DISTURB
FES	FLARED END SECTION
FS	FILTRATION STRUCTURE
GR	GUARDRAIL
JB	JUNCTION BOX
LS	LANDSCAPE PLANTINGS
MH	MANHOLE
M	MONUMENT – RIGHT-OF-WAY
P	PIPE
RL C	RELOCATE BY CONTRACTOR
RL O	RELOCATE BY OTHERS
RM C	REMOVE BY CONTRACTOR
RM O	REMOVE BY OTHERS
ST	SEDIMENT TRAP
SF	SILT FENCE
UD	UNDERDRAIN

LEGEND

PAVEMENT SECTION(S)

	RECONSTRUCTED PAVEMENT – SEE TYPICAL SECTIONS FOR MATERIALS AND DEPTHS

RIGHT-OF-WAY SYMBOLS

	PROPOSED RIGHT-OF-WAY MONUMENT
PL	EXISTING PROPERTY LINE
EASEMENT TYPE	EXISTING EASEMENT
	EXISTING RIGHT-OF-WAY
DA	PROPOSED DENIAL OF ACCESS
PE	PROPOSED PERMANENT EASEMENT
R/W	PROPOSED RIGHT-OF-WAY
R/W-DA	PROPOSED R/W & DENIAL OF ACCESS
TCE	TEMPORARY CONSTRUCTION EASEMENT
100+00	PROPOSED RIGHT-OF-WAY BASELINE
100+00	HISTORIC RIGHT-OF-WAY BASELINE

TRAFFIC

ITMS-CON	ITMS CONDUIT
SIG-CON	SIGNAL CONDUIT
	CONDUIT JUNCTION WELL
	LUMINAIRE
	PAVEMENT MARKINGS
	PAVEMENT STRIPING
	TRAFFIC SIGN

MISCELLANEOUS

	SWMP MAPPED WETLAND
SaB	SOIL BOUNDARY AND DESIGNATION
	BUILDING SETBACK LINE
	PROPOSED EASEMENT LINE

CONTRACT	COUNTY	F.A.P. NO.	SHEET NO.	TOTAL SHTS
30-801-01	KENT	SEE TITLE SHEET	C1.0 / 2	59

DELAWARE DEPARTMENT OF TRANSPORTATION

MAGNOLIA YARD VEHICLE MAINTENANCE SHOP

REVISIONS

04/11/11 - COUNTY SUBMISSION	05/16/12 - REVISED PER KENT CO. COMMENTS
10/28/11 - 100% SUBMISSION	08/07/13 - REV. FINAL PLANS PER COMMENTS
01/30/12 - REVISED HOPPER RACKS	
04/12/12 - REVISED PER KENT CO. COMMENTS	

PHILIP DER REGISTERED PROFESSIONAL ENGINEER No. 8884 DELAWARE 8/8/13

WHITNEY BAILEY COX & MAGNANI, LLC
849 Fairmount Ave Suite 100 Baltimore, MD 21286
MAIN 410.512.4500 FAX 410.324.4100
www.wbcm.com
WBCM
ARCHITECTURE ENGINEERING CONSTRUCTION

UNOFFICIAL WEBSITE COPY

Aug 08, 2013 - 9:54am User: pcarroll P:\2008\08012101\Drawings\07-SITE\Legend.dwg
PREL. TRACING ____ DESIGN ____ CHKD. ____

© WBCM 2012

CONTRACT	COUNTY	F.A.P. NO.	SHEET NO.	TOTAL SHTS
30-801-01	KENT	SEE TITLE SHEET	C2.0 / 3	59

DELAWARE DEPARTMENT OF TRANSPORTATION

MAGNOLIA YARD VEHICLE MAINTENANCE SHOP

REVISIONS

04/11/11 - COUNTY SUBMISSION	05/16/12 - REVISED PER KENT CO. COMMENTS
10/28/11 - 100% SUBMISSION	08/07/13 - REV. FINAL PLANS PER COMMENTS
01/30/12 - REVISED HOPPER RACKS	
04/12/12 - REVISED PER KENT CO. COMMENTS	

PHILIP DER
REGISTERED PROFESSIONAL ENGINEER
No. 8954
DELAWARE
8/8/13

WHITNEY BAILEY COX & MAGNANI, LLC
849 Fairmount Ave Suite 100 Baltimore, MD 21286
MAIN 410.512.4500 FAX 410.324.4100
www.wbcm.com
WBCM
ARCHITECTURE ENGINEERING CONSTRUCTION

GENERAL NOTES

1. THIS PROJECT IS TO BE CONSTRUCTED IN ACCORDANCE WITH THE DELAWARE DEPARTMENT OF TRANSPORTATION "STANDARD SPECIFICATIONS" DATED AUGUST 2001 AND THE DELAWARE DEPARTMENT OF TRANSPORTATION "STANDARD CONSTRUCTION DETAILS", DATED 2001, INCLUDING ALL REVISIONS UP TO THE DATE OF ADVERTISEMENT.

2. THE CONTRACTOR SHALL GIVE TWO (2) WEEKS NOTICE TO THE PROPERTY OWNER WHEN ANY FIXTURE, SHRUB OR OTHER OBJECT MUST BE REMOVED FROM THE RIGHT OF WAY OR EASEMENT AREA. IF THE OWNER HAS NOT ATTEMPTED TO SALVAGE THIS PROPERTY, THE CONTRACTOR SHALL REMOVE IT WITHOUT OBLIGATION. COMPENSATION SHALL BE INCIDENTAL TO THE CONTRACT.

3. THE ENDS OF ALL CURBS SHALL BE DEPRESSED FLUSH WITH THE PAVEMENT AT A RATIO OF TWELVE TO ONE (12:1) UNLESS OTHERWISE DIRECTED BY THE ENGINEER.

4. THE CONTRACTOR SHALL PROVIDE AND INSTALL PVC SLEEVES (4" INSIDE MINIMUM DIAMETER, 6" INSIDE MAXIMUM DIAMETER) IN PROPOSED CONCRETE SIDEWALKS, ISLANDS, AND MEDIANS FOR FUTURE TRAFFIC SIGN POSTS AS DIRECTED BY THE ENGINEER. THE LOWER END OF THE SLEEVE SHALL SIT ON THE TOP OF THE SUBBASE MATERIAL. THE COST SHALL BE INCIDENTAL TO THE CONTRACT.

5. STAGING AREAS – PROPER EROSION AND SEDIMENT CONTROL MEASURES AS DETERMINED BY THE ENGINEER SHALL BE INSTALLED IN ALL STAGING AREAS. ALL AREAS USED BY THE CONTRACTOR FOR STAGING OPERATIONS SHALL BE FULLY RESTORED BY THE CONTRACTOR UPON COMPLETION OF THE CONTRACT. IF THE STAGING AREA IS PAVED, IT SHALL BE TO ITS ORIGINAL CONDITION. IF THE AREA IS UNPAVED, IT SHALL BE RE-GRADED, TOPSOILED, SEEDED AND MULCHED IN ACCORDANCE WITH DELAWARE STANDARD SPECIFICATIONS 732, 734, AND 735 FOR TOPSOIL, SEED, AND MULCH, RESPECTIVELY, TO THE SATISFACTION OF THE ENGINEER. THE SEED SHALL ADHERE TO THE SPECIFICATIONS OF SECTION 734 FOR PERMANENT GRASS SEEDING – DRY GROUND. ALL COSTS ASSOCIATED WITH RESTORATION OF THE STAGING AREA SHALL BE AT THE CONTRACTOR'S EXPENSE. IF THE ENGINEER DETERMINES THAT A SATISFACTORY STAND OF GRASS DOES NOT EXIST AT THE TIME OF FINAL INSPECTION, ALL COSTS ASSOCIATED WITH REESTABLISHING A SATISFACTORY STAND OF GRASS SHALL BE AT THE CONTRACTOR'S EXPENSE.

6. SITE REVIEWER – AN EROSION CONTROL SITE REVIEWER SHALL BE A PERSON FROM THE CONTRACTOR'S STAFF ASSIGNED TO EROSION AND SEDIMENT CONTROL IMPLEMENTATION AND MAINTENANCE AND SHALL BE REQUIRED ON SPECIFIC PROJECTS. THE NAME AND DNREC CERTIFICATION NUMBER OF SITE REVIEWER SO REQUIRED SHALL BE SUBMITTED TO THE DEPARTMENT AT THE TIME OF THE BID. THE NAME OF THE DELAWARE REGISTERED PROFESSIONAL ENGINEER PROVIDING DIRECTION AND SUPERVISION OF THE SITE REVIEWER, AS DESCRIBED IN SECTION 12.3 OF THE DELAWARE SEDIMENT AND STORMWATER REGULATIONS, SHALL ALSO BE SUBMITTED TO THE DEPARTMENT AT THE TIME OF BID. THE SITE REVIEWER REQUIREMENTS IN EFFECT ON THIS PROJECT SHALL BE MARKED WITH AN "X" BELOW:

EROSION POTENTIAL FOR THIS PROJECT	SITE REVIEWER REQUIREMENT
( ) INSIGNIFICANT	NONE
(X) MINOR	CONTRACTOR CERTIFICATION COURSE TRAINING ONLY AS DEFINED IN SECTION 13 OF THE DELAWARE SEDIMENT AND STORMWATER REGULATIONS.
( ) MEDIUM	AT THE TIME OF BID OF THE CONTRACT, EITHER THE SUPERINTENDENT OR A SEPARATE INDIVIDUAL FROM THE CONTRACTOR'S STAFF SHALL BE A CERTIFIED CONSTRUCTION REVIEWER (CCR), AS DEFINED IN SECTION 12 OF THE DELAWARE SEDIMENT AND STORMWATER REGULATIONS.
( ) MAJOR	SUPERINTENDENT AND AN INDIVIDUAL FROM CONTRACTOR'S STAFF SHALL BE CCR. ONE INDIVIDUAL FROM THE CONTRACTOR'S STAFF MUST BE A CRR AT THE TIME OF BID OF THE CONTRACT. THE SUPERINTENDENT MUST BECOME A CCR WITHIN ONE YEAR AFTER THE AWARD OF THE CONTRACT.

7. ELECTRONIC PROJECT FILES THAT WILL BE MADE AVAILABLE TO THE CONTRACTOR INCLUDE:

(X)	NONE
( )	ASCII DATA FILES WITH COORDINATES AND ELEVATIONS FOR PROPOSED POINTS AS SELECTED BY THE ENGINEER.
( )	RASTER FILES, IN .CAL FORMAT, FOR ALL PLAN SHEETS.
( )	EXISTING DIGITAL TERRAIN MODEL, IN .DTM FILE FORMAT, COMPATIBLE WITH SOFTWARE CURRENTLY USED BY DELDOT.
( )	PROPOSED DIGITAL TERRAIN MODEL, IN .DTM FILE FORMAT, COMPATIBLE WITH SOFTWARE CURRENTLY USED BY DELDOT.
( )	DESIGN FILE, IN .DGN FORMAT, CONTAINING ONLY THE PROPOSED 3D TRIANGLES OF THE PROPOSED DIGITAL TERRAIN MODEL (DTM).

8. AMERICAN TRAFFIC SAFETY SERVICES ASSOCIATION (ATSSA) CERTIFIED TRAFFIC CONTROL SUPERVISOR REQUIREMENT FOR THIS PROJECT.

(X)	THE CONTRACTOR SHALL NOT BE REQUIRED TO HAVE AN ATSSA SUPERVISOR ASSIGNED TO THIS PROJECT.
( )	THE CONTRACTOR SHALL HAVE AN ATSSA SUPERVISOR ASSIGNED TO THIS PROJECT. THE CONTRACTOR'S GENERAL SUPERINTENDENT FOR THIS PROJECT OR ANOTHER ATSSA CERTIFIED MEMBER OF THE CONTRACTOR'S PROJECT STAFF MAY BE THE ATSSA SUPERVISOR.
( )	THE CONTRACTOR SHALL HAVE AN ATSSA SUPERVISOR ASSIGNED TO THIS PROJECT. THE ATSSA SUPERVISOR'S SOLE JOB SHALL BE SUPERVISION OF THE INSTALLATION. OPERATION AND MAINTENANCE OF TRAFFIC CONTROL DEVICES FOR THIS PROJECT. THE CONTRACTOR'S GENERAL SUPERINTENDENT FOR THIS PROJECT SHALL NOT BE THE ATSSA SUPERVISOR.

9. THE DISTURBED AREA FOR THIS PROJECT IS 4.92± ACRES.

PROJECT NOTES

SECTION 100

1. ANY DAMAGE TO ITEMS NOTED TO BE RELOCATED OR RESET BY THE CONTRACTOR, AT THE DISCRETION OF THE ENGINEER, SHALL BE REPAIRED AND/OR REPLACED IN KIND AT THE CONTRACTOR'S EXPENSE.

2. UNLESS OTHERWISE NOTED ON THE PLANS, THE CONTRACTOR SHALL, AS PART OF HIS PROJECT SCHEDULE, SUBMIT TO THE ENGINEER AN ESTIMATE OF THE MONTHLY PAYMENTS EXPECTED TO BE RECEIVED ON THE CONTRACT. THIS SHALL BE REFERENCED AS THE "MONTHLY PAYMENT CHART".

   A CHART IN MICROSOFT EXCEL, MICROSOFT WORD, OR HANDWRITTEN FORMAT WILL BE ACCEPTABLE FOR THIS PURPOSE. THE CHART SHOULD INCLUDE, AS A MINIMUM, COLUMNS FOR THE MONTH, YEAR, AND ESTIMATED MONTHLY PAYMENTS. THE TOTAL OF ALL ESTIMATED MONTHLY PAYMENTS SHOULD EQUAL THE AWARDED CONTRACT TOTAL BID PRICE.

   THE ENGINEER MAY REQUEST AN UPDATED "MONTHLY PAYMENT CHART" AT HIS DISCRETION, DEPENDING ON THE ACCURACY OF THE INITIAL ESTIMATES AND ACCORDING TO THE OVERALL NEEDS OF THE DEPARTMENT.

   THE "MONTHLY PAYMENT CHART" WILL NOT BE CONSIDERED A BINDING DOCUMENT BY EITHER THE CONTRACTOR OR THE DEPARTMENT AND IS CONSIDERED SOLELY INFORMATIONAL.

   ON PROJECTS REQUIRING CPM SCHEDULES, THE CONTRACTOR MAY, BUT IS NOT REQUIRED TO, "COST LOAD" THE CPM SCHEDULE IN ORDER TO GENERATE THE MONTHLY PAYMENT ESTIMATES.

   COSTS TO PREPARE AND/OR UPDATE THE "MONTHLY PAYMENT CHART" ARE ADDRESSED AS FOLLOWS:
   A. ON CONTRACTS REQUIRING CPM SCHEDULES AND UPDATES, PREPARATION OF THE INITIAL CHART SHALL BE INCIDENTAL TO ITEM 763508, UPDATES SHALL BE INCIDENTAL TO ITEM 763509.
   B. ON CONTRACTS NOT REQUIRING CPM SCHEDULES, THE COST TO PREPARE AND UPDATE THE "MONTHLY PAYMENT CHART" SHALL BE INCLUDED IN ITEM 763000, INITIAL EXPENSE.

SECTION 200

3. THIS PROJECT IS COVERED UNDER THE NPDES GENERAL PERMIT FOR CONSTRUCTION, UNDER THE GENERAL PERMIT. COMPLIANCE WITH DELDOT'S APPROVED SEDIMENT AND STORMWATER MANAGEMENT PLANS WILL CONSTITUTE COMPLIANCE WITH THE NPDES INDUSTRIAL PERMITTING REQUIREMENTS FOR THIS CONSTRUCTION PROJECT. A COPY OF THE NPDES GENERAL PERMIT AND NOI IS KEPT ON FILE IN EACH OF THE CONSTRUCTION OFFICES AND THE DEPARTMENT'S TEAM SUPPORT SECTION. A COPY OF THE GENERAL PERMIT OR THE NOI CAN BE OBTAINED UPON REQUEST FROM EITHER THE DEPARTMENT'S STORMWATER ENGINEER OR THE APPROPRIATE CONSTRUCTION ENGINEER.

4. POOR SUBGRADE SOILS THAT ARE ENCOUNTERED AND DETERMINED BY THE ENGINEER TO REQUIRE UNDERCUT EXCAVATION SHALL BE EXCAVATED TO THE DEPTH DETERMINED BY THE ENGINEER AND SHALL BE PAID UNDER ITEM 212000, UNDERCUT EXCAVATION.

5. ALL SUITABLE EXCESS EXCAVATION FROM ANY WORK IN THIS CONTRACT SHALL BE UTILIZED BY THE CONTRACTOR IN BACKFILL FOR THE PROJECT. IT SHALL BE THE RESPONSIBILITY OF THE CONTRACTOR TO DRY OR WET THE MATERIAL OBTAINED UNDER THE EXCAVATION, IF NEEDED, SO THAT THE MATERIALS WILL MEET THE REQUIREMENTS OF THE DELAWARE DEPARTMENT OF TRANSPORTATION STANDARD SPECIFICATIONS. ALL EXCESS MATERIAL WHICH IS UNSUITABLE FOR BACKFILL SHALL BE SUBSEQUENTLY REMOVED AND DISPOSED OF BY THE CONTRACTOR. MOISTURE CONTENT ALONE SHALL NOT BE A REASON TO DECLARE MATERIAL AS BEING UNSUITABLE FOR BACKFILL.

SECTION 700

6. ALL PAVED AREAS TO BE RECONSTRUCTED OR WIDENED SHALL BE SAWCUT AT THE POINT WHERE THE NEW PAVEMENT IS TO TIE INTO THE EXISTING PAVEMENT.

7. ALL HOT-MIX SAW CUTTING SHALL BE FULL DEPTH, UNLESS OTHERWISE NOTED ON THE PLANS, OR AS DIRECTED BY THE ENGINEER.

MISCELLANEOUS

8. ALL EXISTING DRAINAGE SYSTEMS SHOWN WITHIN WORK AREA ARE TO REMAIN OPERATIONAL UNLESS DENOTED FOR ABANDONMENT.

9. THE EXISTING PAVEMENT OF THE MAGNOLIA FACILITY SHALL NOT BE DAMAGED DURING CONSTRUCTION OF THIS PROJECT, EXCEPT AS REQUIRED TO CONSTRUCT THE PROPOSED IMPROVEMENTS. THIS PAVEMENT, IF DAMAGED, MUST BE RESTORED TO THE PRE-CONSTRUCTION CONDITIONS AS DETERMINED BY THE ENGINEER. COST ASSOCIATED WITH THE REPAIR OF SAID ITEMS SHALL BE AT THE CONTRACTOR'S EXPENSE.

10. THESE PLANS ARE BASED ON A FIELD-RUN SURVEY TOPOGRAPHIC SURVEY PERFORMED BY WBCM, LLC IN SEPTEMBER 2009 AND REFLECTS SITE CONDITIONS AS OF THAT DATE. THE SURVEY IS BASED ON DATUM SUPPLIED BY THE DELAWARE DEPARTMENT OF TRANSPORTATION BY WAY OF THE FOLLOWING TRAVERSE STATIONS:
    GPS #10943 N393,242.7392 E631,828.2873 ELEV. 41.56'

EROSION AND SEDIMENT CONTROL NOTES

1. DUST CONTROL: DUST IS TO BE CONTROLLED EXCLUSIVELY THROUGH THE USE OF WATER. COSTS ASSOCIATED WITH THE FURNISHINGS AND APPLICATION OF WATER FOR DUST CONTROL SHALL BE INCIDENTAL TO ALL THE CONTRACT BID ITEMS.

2. CONSTRUCTION ENTRANCES: IT IS INTENDED THAT MUD TRACKING BE ELIMINATED ON ALL STATE MAINTAINED ROADWAYS ADJOINING THE PROJECT. ALL PAVED SURFACES ADJOINING THE PROJECT LIMITS SHALL BE LEFT IN A BROOM-CLEAN CONDITION AT THE END OF EACH WORKDAY.

3. SOIL STOCKPILES: STOCKPILES OF SOIL SHALL BE STABILIZED WITH ITEM 734017, TEMPORARY GRASS SEEDING.

4. SEDIMENT REMOVAL: SEDIMENT TRAPS, TEMPORARY SWALES, DEWATERING BASINS, AND DIVERSIONS SHALL BE CLEANED OF ACCUMULATED SEDIMENT WHEN THEY ARE 50 PERCENT FILLED. SILT FENCE, REINFORCED SILT FENCE, AND SEDIMENT CONTROL DIKES SHALL BE PAID FOR UNDER ITEM 250000, SEDIMENT REMOVAL, REMOVAL AND BACKFILLING OF TEMPORARY SEDIMENT CONTROLS WHEN THEY ARE NO LONGER NEEDED SHALL BE INCIDENTAL TO THEIR INITIAL CONSTRUCTION.

5. REVIEW AND OR APPROVAL OF THE SEDIMENT AND STORMWATER MANAGEMENT PLAN SHALL NOT RELIEVE THE CONTRACTOR FROM HIS OR HER RESPONSIBILITIES FOR COMPLIANCE WITH THE REQUIREMENTS OF THE SEDIMENT AND STORMWATER REGULATIONS, NOR SHALL IT RELIEVE THE CONTRACTOR FROM ERRORS OR OMISSIONS IN THE APPROVED PLAN.

6. IF THE APPROVED PLAN NEEDS TO BE MODIFIED, ADDITIONAL SEDIMENT AND STORMWATER CONTROL MEASURES MAY BE REQUIRED AS DEEMED NECESSARY BY DELDOT.

7. FOLLOWING SOIL DISTURBANCE OR REDISTURBANCE, PERMANENT OR TEMPORARY STABILIZATION SHALL BE COMPLETED WITHIN 14 CALENDAR DAYS AS TO THE SURFACE OF ALL PERIMETER SEDIMENT CONTROLS, SOIL STOCKPILES, AND ALL OTHER DISTURBED OR GRADED AREAS ON THE PROJECT SITE.

8. THE CONTRACTOR SHALL BE RESPONSIBLE FOR ADHERING TO THE CONSTRUCTION SITE POLLUTION PREVENTION SPECIFICATIONS AS DETAILED IN SECTION 3.6 OF THE "DELAWARE EROSION AND SEDIMENT CONTROL HANDBOOK". ALL COSTS ASSOCIATED WITH ADHERING TO THE STANDARDS SHALL BE INCIDENTAL TO THE OVERALL CONTRACT COSTS.

9. THE EROSION AND SEDIMENT CONTROL PLAN HAS BEEN APPROVED BY DELDOT'S STORMWATER ENGINEER UNDER DELDOT'S DELEGATED AUTHORITY. THE EROSION AND SEDIMENT CONTROL PLANS ARE VALID FOR A THREE YEAR PERIOD, BEGINNING ON THE DATE THE STORMWATER ENGINEER SIGNED THE CONSTRUCTION TITLE SHEET. IF THE FINAL ACCEPTANCE OF THE PROJECT IS ANTICIPATED TO EXTEND BEYOND THE THREE YEARS, THE CONTRACTOR SHALL INFORM THE ENGINEER THREE MONTHS PRIOR TO THE EXPIRATION OF THE EROSION AND SEDIMENT CONTROL PLAN APPROVAL. DELDOT WILL REVIEW THE CURRENT EROSION AND SEDIMENT CONTROL PLAN AND ISSUE AN EXTENSION WITH ANY APPROPRIATE MODIFICATIONS.

EARTHWORK SUMMARY

EXCAVATION	
EXCAVATION FROM CROSS SECTIONS	4,800 C.Y.
ROCK EXCAVATION FOR ROADWAY AND TRENCHES	0 C.Y.
TOPSOIL STRIPPING	0 C.Y.
TOTAL EXCAVATION	0 C.Y.
EXCAVATION AVAILABLE FOR EMBANKMENT	
EXCAVATION MEETING BORROW TYPE 'A'	0 C.Y.
EXCAVATION MEETING BORROW TYPE 'F'	0 C.Y.
EXCAVATION MEETING TOPSOIL	0 C.Y.
EMBANKMENT REQUIREMENTS	
BORROW TYPE 'A' REQUIRED (INCLUDING UNDERCUT)	0 C.Y.
BORROW TYPE 'F' REQUIRED	0 C.Y.
TOPSOIL REQUIRED	0 C.Y.
MATERIAL BALANCE ("+"=EXCESS, "–"= NEED)	
BORROW TYPE 'A'	0 C.Y.
BORROW TYPE 'F'	0 C.Y.
TOPSOIL	0 C.Y.
UNSUITABLE MATERIAL	4,800 C.Y.

NOTES:
1. THE VALUES LISTED IN THE EARTHWORK SUMMARY ARE APPROXIMATE AND ARE NOT TO BE USED AS A BASIS OF PAYMENT. THE EARTHWORK SUMMARY IS CONSIDERED FOR INFORMATIONAL PURPOSES ONLY.
2. OTHER SOURCES OF EXCAVATION MAY INCLUDE PIPE TRENCH EXCAVATION, STRUCTURE EXCAVATION, UNDERCUT EXCAVATION, STORMWATER MANAGEMENT POND EXCAVATION, ENVIRONMENTAL SITE EXCAVATION, MAINTENANCE OF TRAFFIC EXCAVATION, ETC.
3. UNSUITABLE MATERIALS INCLUDE UNDERCUT SOILS, BITUMINOUS PAVEMENT, ETC.

UTILITY STATEMENT

1. THE CONTRACTOR'S ATTENTION IS DIRECTED TO SECTION 105.09 UTILITIES, DELAWARE STANDARD SPECIFICATIONS, AUG. 2001. THE CONTRACTOR SHALL CONTACT MISS UTILITY (1-800-282-8555) TWO WORKING DAYS PRIOR TO ANY EXCAVATION. THE CONTRACTOR IS RESPONSIBLE FOR SUPPORT AND PROTECTION OF ALL UTILITIES WHEN EXCAVATING. THE CONTRACTOR IS RESPONSIBLE FOR ENSURING PROPER CLEARANCES, INCLUDING SAFETY CLEARANCES, FROM OVERHEAD UTILITIES FOR CONSTRUCTION EQUIPMENT. THE CONTRACTOR IS ADVISED TO CHECK THE SITE FOR ACCESS PURPOSES FOR HIS EQUIPMENT AND, IF NECESSARY, MAKE ARRANGEMENTS DIRECTLY WITH THE UTILITY COMPANIES FOR FIELD ADJUSTMENTS FOR ADEQUATE CLEARANCES.

2. IT IS UNDERSTOOD AND AGREED THAT THE CONTRACTOR HAS CONSIDERED IN HIS BID ALL PERMANENT AND TEMPORARY UTILITY APPURTENANCES IN THEIR PRESENT AND RELOCATED POSITIONS AS SHOWN ON THE PLANS OR DESCRIBED IN THIS UTILITY STATEMENT OR ARE READILY DISCERNABLE AND THAT NO ADDITIONAL COMPENSATION WILL BE ALLOWED FOR ANY DELAYS, INCONVENIENCE, OR DAMAGE DUE TO ANY INTERFERENCE FROM THE UTILITY FACILITIES OR APPURTENANCES OR THE OPERATION OF MOVING THEM, EXCEPT THAT THE CONTRACTOR MAY BE GRANTED AN EQUITABLE EXTENSION OF TIME.

3. COORDINATION AND COOPERATION AMONG THE UTILITY COMPANIES AND THE STATE'S CONTRACTOR ARE OF PRIME IMPORTANCE. THEREFORE, THE CONTRACTOR IS DIRECTED TO CONTACT THE UTILITY COMPANY REPRESENTATIVES WITH ANY QUESTIONS REGARDING THIS WORK PRIOR TO SUBMITTING BIDS AND WORK SCHEDULES. PROPOSED WORK SCHEDULES SHOULD REFLECT THE UTILITY COMPANIES' PROPOSED RELOCATIONS. THE UTILITY COMPANIES DO NOT WORK ON WEEKENDS OR LEGAL HOLIDAYS.

ENVIRONMENTAL REQUIREMENTS

1. ALL CONSTRUCTION DEBRIS, EXCAVATED MATERIAL, BRUSH, ROCKS, AND REFUSE INCIDENTAL TO THIS WORK SHALL BE PLACED EITHER ON-SHORE ABOVE THE INFLUENCE OF FLOOD WATERS OR ON SOME SUITABLE DUMPING GROUND.

2. EFFORT SHALL BE MADE TO KEEP CONSTRUCTION DEBRIS FROM ENTERING ADJACENT WATERWAYS OR WETLANDS. ANY DEBRIS THAT ENTERS THOSE AREAS SHALL BE REMOVED IMMEDIATELY.

3. THE DISPOSAL OF TREES, BRUSH, AND OTHER DEBRIS IN ANY STREAM CORRIDOR, WETLAND, SURFACE WATER, OR DRAINAGE AREA IS PROHIBITED.

UNOFFICIAL WEBSITE COPY

LAST REVISED: 06/18/2010
Aug 08, 2013 – 9:53am User: pcarroll P:\2008\08012101\Drawings\07-SITE\Notes.dwg
PREL. TRACING ____ DESIGN ____ CHKD. ____

© WBCM 2012

EXISTING CONDITIONS AND DEMOLITION PLAN

CONTRACT	COUNTY	F.A.P. NO.	SHEET NO.	TOTAL SHTS
30-801-01	KENT	SEE TITLE SHEET	C3.0 4	59

DELAWARE DEPARTMENT OF TRANSPORTATION

MAGNOLIA YARD VEHICLE MAINTENANCE SHOP

REVISIONS

04/11/11 - COUNTY SUBMISSION	05/16/12 - REVISED PER KENT CO. COMMENTS
10/28/11 - 100% SUBMISSION	08/07/13 - REVISED PER KENT CO. COMMENTS
01/30/12 - REVISED HOPPER RACKS	
04/12/12 - REVISED PER KENT CO. COMMENTS	

GRAPHIC SCALE

40 0 20 40 80

(IN FEET)
1 inch = 40 ft.

PHILIP DER — REGISTERED — No. 8554 — DELAWARE — PROFESSIONAL ENGINEER
8/8/13

WHITNEY BAILEY COX & MAGNANI, LLC
849 Fairmount Ave Suite 100 Baltimore, MD 21286
MAIN 410.512.4500 FAX 410.324.4100
www.wbcm.com
WBCM
ARCHITECTURE ENGINEERING CONSTRUCTION

DEMOLITION NOTES

D-1	LIMIT OF SAW CUT.
D-2	REMOVE EXISTING MACADAM PAVING.
D-3	REMOVE EXISTING BUILDING / STRUCTURE.
D-4	REMOVE EXISTING CONCRETE PAD.
D-5	RELOCATE EXISTING STORAGE TANKS (BY OTHERS).
D-6	REMOVE AND DISPOSE OF EXISTING FIRE HYDRANT.
D-7	REMOVE EXISTING ELECTRIC.
D-8	RELOCATE EXISTING GAS TANK.
D-9	REMOVE AND DISPOSE OF EXISTING MACADAM RAMP.
D-10	REMOVE AND RELOCATE EXISTING WATER TANK.
D-11	REMOVE AND RELOCATE EXISTING FIRE HYDRANT.
D-12	RAISE EX. WELL HEAD TO PROPOSED GRADE.
D-13	REMOVE EXISTING SALT HOPPER STORAGE RACK (BY OTHERS).
D-14	RELOCATE EXISTING WALL. (BY OTHERS)
D-15	REMOVE AND DISPOSE OF EXISTING LIGHT.
D-16	REMOVE EXISTING WOOD SHED.
D-17	REMOVE AND DISPOSE OF EXISTING BOLLARD.
D-18	REMOVE EX. 2" WATER AND CAP AT TEE.
D-19	REMOVE EX. WOOD SHED (BY OTHERS).
D-20	REMOVE EXISTING GROUND MACADAM STOCKPILE.

DEMOLITION LEGEND

- BUILDING TO BE DEMOLISHED
- MACADAM PAVING TO BE DEMOLISHED
- WATER LINE TO BE REMOVED

NOTE:

BRINE TANK MUST BE AVAILABLE FOR USE FROM 11/15 TO 03/15 DURING THE YEAR.

UTILITY SCHEDULE

MH#	TOP	DIR.	INVERT	SIZE & TYPE	MH#	TOP	DIR.	INVERT	SIZE & TYPE
I-1185	33.63	N/W	31.53	12"	I-2276	32.86	S/W	31.06	6" PVC
		–	31.35	FLOOR			S/W	29.90	12"
I-1407	34.24	N/E	32.06	6" PVC			N/W	29.91	15"
		S/E	31.47	12" SILTED			S/E	29.91	15"
I-1412	33.89	N/W	30.89	12"	I-2774	31.92	–	30.74	FLOOR
		N/E	30.79	12" CONC			S/W	30.62	12"
		S/E	30.79	12"	I-2818	32.62	S	30.29	12"
I-1416	30.83	N/W	30.83	12"			N	29.49	12"
		S/E	30.81	12"	I-2822	32.25	N/E	30.2	12" SILTED
		N/E	30.69	12"			N	30.2	12" SILTED
I-1420	33.69	S/W	30.74	12"	I-3246	34.50	–	32.5	SILTED FLOOR
		N/E	30.61	12"			N/E	32.64	12"
I-1424	33.14	S/W	30.99	12"	I-5742	18.10	–	17.02	FLOOR
		S/E	30.79	12" SILTED			N/W	16.58	15"
I-1428	33.50	S/E	30.92	12"					F/W/CONC
		N/W	30.83	12"	I-5880	28.97	N/E	25.84	18"
		N/E	30.83	12"			S/W	26.07	18"
I-1432	34.09	S/E	32.49	4" PVC	I-7217	33.59	S/E	31.31	12"
		S/E	32.39	4" PVC			N/E	31.29	18"
		N/W	31.32	12"					
I-1436	33.62	N/W	31.02	12" CONC					
		S/E	30.92	12"	F/W/CONC = FILLED W/CONC				
I-1461	33.33	N/W	30.80	12"	PNV = PIPES NOT VISIBLE				
		–	30.88	FLOOR	NOTE: THE ABOVE INFORMATION REFLECT FIELD				
I-2272	33.10	W	30.36	8" PVC	MEASUREMENTS & OBSERVATIONS AND THEY MAY				
		N/W	30.15	15"	DIFFER FROM PLANS BY OTHERS(SEE GENERAL NOTES).				

W.B.C.M. SURVEY TRAVERSE CONTROL LISTING

PT#	NORTH	EAST	ELEV.	DESCRIPTION
600	392724.065	632505.861	38.08	MON CONC
601	394099.380	633694.899	27.72	MON CONC (PROJECTING 12" A/G)
892	394643.423	633595.576	15.96	TRV WBCM RC
893	393630.839	632760.142	33.84	TRV MAGNAIL
894	393906.627	633038.552	23.44	TRV WBCM RC
895	393250.027	632224.574	37.16	TRV MAGNAIL
896	393047.752	632644.540	39.79	TRV MAGNAIL
897	393006.000	632505.127	37.98	TRV MAGNAIL
898	393237.765	632488.432	37.88	TRV MAGNAIL
899	393351.204	632432.527	37.17	TRV WBCM RC
900	392803.307	632551.429	38.13	TRV MAGNAIL
901	393093.503	632817.976	40.14	TRV WBCM RC
902	393330.987	633025.920	39.90	TRV WBCM RC
903	393626.722	633273.838	39.59	TRV WBCM RC
904	394134.500	633542.508	22.82	TRV WBCM RC
905	394487.077	633688.723	19.63	TRV WBCM RC
906	394626.908	633421.536	17.66	TRV WBCM RC
907	394207.041	633078.805	20.99	TRV WBCM RC
908	393908.207	632679.364	28.23	TRV WBCM RC
909	393642.287	632457.260	33.04	TRV WBCM RC
910	393453.330	632257.697	34.27	TRV WBCM RC
911	393227.181	632024.984	38.43	TRV WBCM RC
912	393087.262	632152.765	38.30	TRV WBCM RC
913	392992.902	632268.802	37.98	TRV WBCM RC
914	392826.220	632405.255	38.25	TRV WBCM RC

UNOFFICIAL WEBSITE COPY

© WBCM, 2012

PLOTTED BY: pcarroll
Aug 08, 2013 – 9:52am User: pcarroll P:\2008\08012101\Drawings\07-SITE\ExCond.dwg
PREL. TRACING DESIGN CHKD.

LAYOUT, SIGNAGE, AND STRIPING PLAN

CONTRACT	COUNTY	F.A.P. NO.	SHEET NO.	TOTAL SHTS
30-801-01	KENT	SEE TITLE SHEET	C4.0 / 5	59

DELAWARE DEPARTMENT OF TRANSPORTATION

MAGNOLIA YARD VEHICLE MAINTENANCE SHOP

REVISIONS

04/11/11 - COUNTY SUBMISSION	05/16/12 - REVISED PER KENT CO. COMMENTS
10/28/11 - 100% SUBMISSION	08/07/13 - REV. FINAL PLANS PER COMMENTS
01/30/12 - REVISED HOPPER RACKS	
04/12/12 - REVISED PER KENT CO. COMMENTS	

GRAPHIC SCALE

40 0 20 40 80

(IN FEET)
1 inch = 40 ft.

PHILIP DEREK BAILEY — No. 6654 — REGISTERED PROFESSIONAL ENGINEER — DELAWARE
8/8/13

WHITNEY BAILEY COX & MAGNANI, LLC
849 Fairmount Ave Suite 100 Baltimore, MD 21286
MAIN 410.512.4500 FAX 410.324.4100
www.wbcm.com
WBCM
ARCHITECTURE ENGINEERING CONSTRUCTION

CONSTRUCTION NOTES

- N-1 NEW BITUMINOUS CONCRETE PAVING. SEE DETAIL 1, SHEET C6.0.
- N-2 NEW 5-FOOT WIDE CONCRETE WALK. SEE DETAIL 4, SHEET C6.0.
- N-3 NEW CONCRETE CURB & GUTTER. SEE DELDOT STD. NO. C-1 (2012) - 2, TYPE 3-8.
- N-4 NEW CONCRETE EQUIPMENT PAD FOR RELOCATED BRINE/WATER TANKS. CHAMFER EXPOSED CORNERS 8" x 8". SEE DETAIL 1, SHEET S3.2.
- N-5 NEW PAINT PARKING SPACE STRIPING. SEE DETAIL 6, SHEET C6.0.
- N-6 NEW CONCRETE PEDESTRIAN RAMP WITH DETECTABLE WARNING STRIP. SEE DELDOT STD. NO. C-2 (2012) - 2, TYPE 2.
- N-7 NEW HANDICAPPED PAVEMENT MARKING. SEE DETAIL 3, SHEET C6.0.
- N-8 NEW HANDICAPPED PARKING SIGN. SEE DETAIL 7, THIS SHEET.
- N-9 NEW CONCRETE PARKING BUMPER. SEE DELDOT STD. NO. M-8 (2007).
- N-10 NEW CONCRETE APRON. CHAMFER EXPOSED CORNERS 8" x 8". SEE DETAIL 5, SHEET S2.1.
- N-11 NEW CONCRETE EQUIPMENT PAD FOR TRUCK WASH. CHAMFER EXPOSED CORNERS 8" x 8". SEE DETAIL 1, SHEET S3.2.
- N-12 NEW BITUMINOUS PAVING REPAIR. SEE DETAIL 2, SHEET C6.0.
- N-13 NEW CONCRETE EQUIPMENT PAD FOR GENERATOR. CHAMFER EXPOSED CORNERS 8" x 8". SEE DETAIL 1, SHEET S3.2.
- N-14 NEW CONCRETE-FILLED 8-INCH STEEL BOLLARD. SEE DETAIL 3, SHEET C5.1.
- N-15 NEW 5' X 8' CONCRETE DOOR PAD. SEE DETAIL 6, SHEET S2.1.

NOTES:

1. SEE SHEET NO. C1.0 FOR LEGEND AND C2.0 FOR PROJECT NOTES.
2. LIGHTING SHALL BE WALL PACKS ON PROPOSED BUILDING.

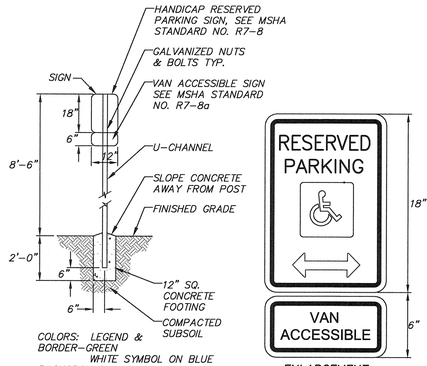

PLAN

7 HANDICAPPED PARKING SIGN
NOT TO SCALE

GEOMETRY POINT TABLE

PT #	DESCRIPTION	NORTHING	EASTING
1	BUILDING CORNER	392923.83	632546.22
2	BUILDING CORNER	393001.17	632612.66
3	BUILDING CORNER	393070.57	632672.28
4	BUILDING CORNER	393188.15	632773.28
5	BUILDING CORNER	393232.75	632813.44
6	BUILDING CORNER	393323.30	632891.73
7	BUILDING CORNER	393162.04	632565.81
8	BUILDING CORNER	393279.61	632666.81
9	BUILDING CORNER	393536.33	632523.38
10	BUILDING CORNER	393580.58	632563.91
11	SAWCUT	393070.10	632474.40
12	SAWCUT	393188.07	632462.93
14	SAWCUT	393448.99	632687.07
15	SAWCUT	393475.82	632717.37
16	SAWCUT	393446.41	632777.71
17	SAWCUT	393266.26	632893.20
18	SAWCUT	393037.60	632692.86
19	SAWCUT	392981.55	632663.25
20	SAWCUT	392852.27	632542.23
21	SAWCUT	392887.33	632495.80
22	SAWCUT	392862.22	632478.83
23	SAWCUT	392868.93	632470.38
24	SAWCUT	392893.80	632487.22
25	SAWCUT	392918.25	632454.84
26	SAWCUT	392898.47	632438.20
27	SAWCUT	392904.60	632430.88
28	SAWCUT	392924.36	632447.44
29	SAWCUT	392961.28	632402.48
30	SAWCUT	393027.77	632458.88
33	SAWCUT	393374.10	632454.67
34	SAWCUT	393415.41	632490.33
35	SAWCUT	393425.68	632477.28
36	SAWCUT	393451.22	632499.30
37	SAWCUT	393386.11	632574.19
38	SAWCUT	393327.73	632524.21
39	SAWCUT	393500.24	632535.72
40	SAWCUT	393527.92	632468.07
41	SAWCUT	393543.88	632482.54
42	SAWCUT	393603.62	632507.03
43	SAWCUT	393634.05	632560.48
44	SAWCUT	393611.05	632588.12
45	SAWCUT	393568.17	632595.78
46	BUILDING CORNER	393271.06	632554.00
47	BUILDING CORNER	393274.85	632557.25
48	BUILDING CORNER	393183.39	632663.73
49	BUILDING CORNER	393179.59	632660.47
51	SAWCUT	393139.22	632210.39
52	SAWCUT	393174.14	632238.77
53	SAWCUT	393266.05	632200.92
54	SAWCUT	393293.00	632169.85
55	SAWCUT	393280.17	632158.57
58	SAWCUT	393286.41	632151.75
59	BUILDING CORNER	393458.56	632714.78
60	BUILDING CORNER	393396.77	632740.68
61	SAWCUT	393460.00	632838.00
62	SAWCUT	393439.50	632923.00
63	SAWCUT	393357.45	633007.20
64	SAWCUT	393314.18	632969.79

UNOFFICIAL WEBSITE COPY

PREL. TRACING DESIGN CHKD. User: pcarroll P:\2008\08012101\Drawings\07-SITE\Layout.dwg Aug 08, 2013 - 9:52am
LAST REVISED 08/19/2010

© WBCM 2012

GRADING AND UTILITY PLAN

CONTRACT	COUNTY	F.A.P. NO.	SHEET NO.	TOTAL SHTS
30-801-01	KENT	SEE TITLE SHEET	C5.0 6	59

DELAWARE DEPARTMENT OF TRANSPORTATION

MAGNOLIA YARD VEHICLE MAINTENANCE SHOP

REVISIONS

04/11/11 - COUNTY SUBMISSION	05/16/12 - REVISED PER KENT CO. COMMENTS
10/28/11 - 100% SUBMISSION	08/07/13 - REV. FINAL PLANS PER COMMENTS
01/30/12 - REVISED HOPPER RACKS	
04/12/12 - REVISED PER KENT CO. COMMENTS	

GRAPHIC SCALE
40 0 20 40 80
(IN FEET)
1 inch = 40 ft.

PHILIP DER REGISTERED PROFESSIONAL ENGINEER DELAWARE No. 9354 8/8/13

WHITNEY BAILEY COX & MAGNANI, LLC
849 Fairmount Ave Suite 100 Baltimore, MD 21286
MAIN 410.512.4500 FAX 410.324.4100
www.wbcm.com
WBCM ARCHITECTURE ENGINEERING CONSTRUCTION

UNOFFICIAL WEB SITE COPY

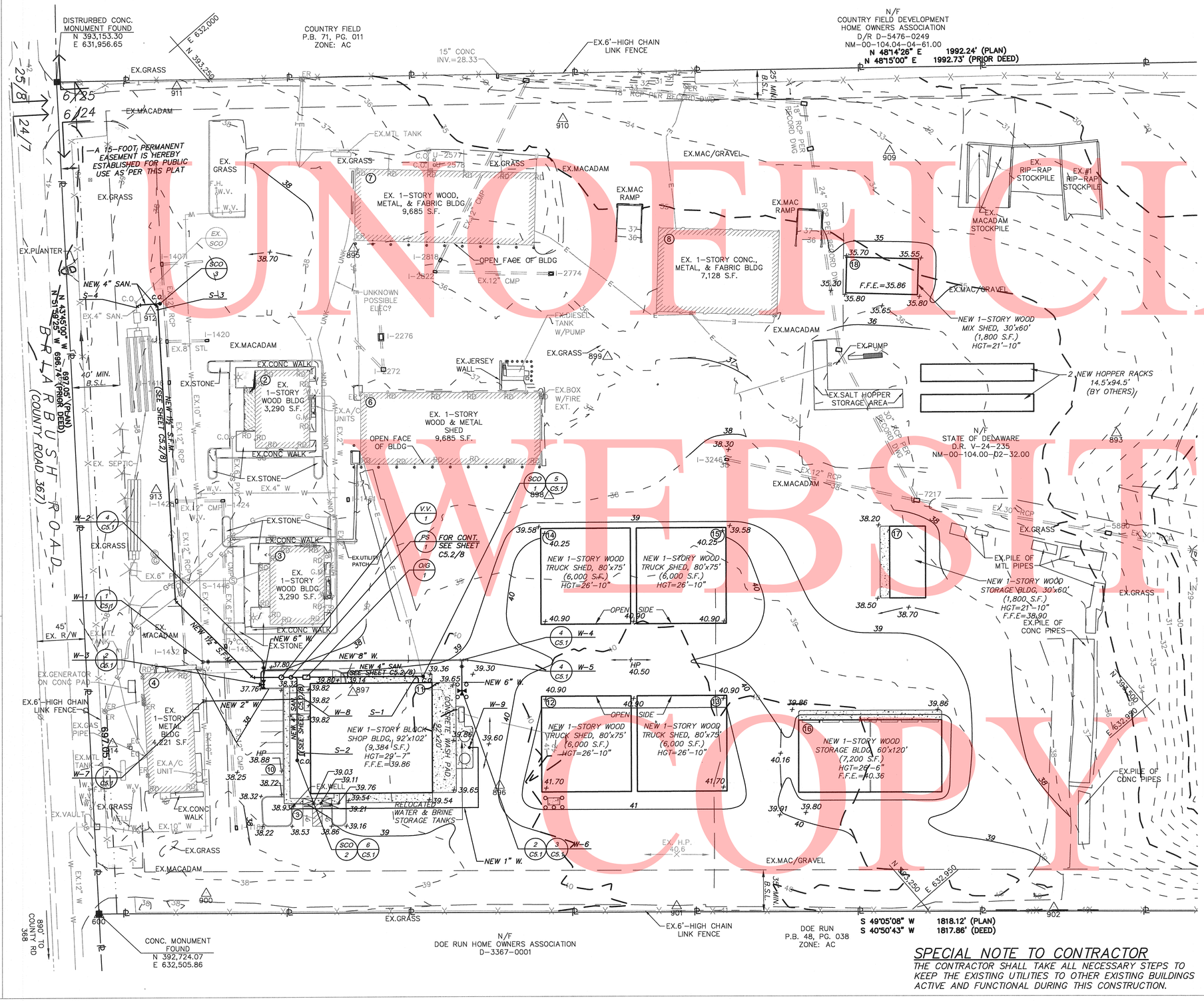

WATER NOTES AND FITTINGS SCHEDULE

NO.	DESCRIPTION	COORDINARES NORTHING	COORDINARES EASTING
W-1	10" X 8" TAPPING SLEEVE & VALVE WITH ROADWAY BOX	392927.56	632403.44
W-2	8" X 6" TEE & 6" VALVE WITH ROADWAY BOX	392966.33	632436.75
W-3	6" FIRE HYDRANT (5' BURY)	392953.73	632451.46
W-4	8" X 6" TEE & 6" VALVE WITH ROADWAY BOX	393092.29	632544.95
W-5	8" CAP & BUTTRESS	393096.07	632548.20
W-6	6" FIRE HYDRANT (5' BURY) WITH 4 BOLLARDS	393075.52	632564.47
W-7	2" CORPORATION STOP	392906.59	632428.78
W-8	2" TEMPORARY CAP	392971.49	632483.00
W-9	WOODFORD MODEL Y2 FREEZELESS YARD HYDRANT (4' BURY)	393049.08	632604.45

SEE WATER PROFILES FOR TOP AND INVERT ELEVATIONS.
ALL FITTINGS ARE TO BE BUTTRESSED.

SANITARY SEWER SCHEDULE

NO.	DESCRIPTION	COORDINARES NORTHING	COORDINARES EASTING
S-1	4" X 4" WYE	392927.56	632403.44
S-2	4" X 4" WYE	392966.33	632436.75
S-3	4" CAP WITH FORCE MAIN CONNECTION	393090.27	632159.13
S-4	CUT 4" X 4" WYE INTO EX. 4" SANITARY	393079.95	632143.20
SCO-1	4" CLEANOUT LAMPHOLE	393058.95	632533.96
SCO-2	4" CLEANOUT	392933.40	632518.02
SCO-3	4" CLEANOUT	393092.34	632156.32
O/G-1	PRE-CAST CONCRETE OIL/GRIT SEPARATOR	392984.80	632470.25
PS-1	SIMPLEX GRINDER PUMP STATION	392975.00	632461.84
V.V.-1	PRE-CAST CONCRETE VALVE VAULT	392968.93	632456.62

SEE SANITARY PROFILES FOR TOP AND INVERT ELEVATIONS.
SEE SHEET C5.2/8 FOR GRINDER PUMP STATION AND FORCE MAIN PLAN, DETAILS, AND PROFILE.

SPECIAL NOTE TO CONTRACTOR

THE CONTRACTOR SHALL TAKE ALL NECESSARY STEPS TO KEEP THE EXISTING UTILITIES TO OTHER EXISTING BUILDINGS ACTIVE AND FUNCTIONAL DURING THIS CONSTRUCTION.

NOTES

1. PROPOSED WATER MAIN/SERVICE SHALL HAVE MINIMUM OF 4-FOOT COVER FROM PROPOSED GRADE.
2. CONTRACTOR IS TO VERIFY LOCATION AND DEPTH OF EXISTING UTILITY CROSSINGS BY TEST PIT PRIOR TO STARTING WORK AND ADVISE ENGINEER OF ANY POTENTIAL CONFLICT.

Last Modified On: 04/13/12 © WBCM 2012

LAST REVISED ON 4/12/2012
Aug 08, 2013 - 9:51am User: pcarroll P:\2008\08012101\Drawings\07-SITE\Grading.dwg
PREL TRACING DESIGN CHKD.

UTILITY PROFILES AND DETAILS

CONTRACT	COUNTY	F.A.P. NO.	SHEET NO.	TOTAL SHTS
30-801-01	KENT	SEE TITLE SHEET	C5.1 / 7	59

DELAWARE DEPARTMENT OF TRANSPORTATION

MAGNOLIA YARD VEHICLE MAINTENANCE SHOP

REVISIONS

04/11/11 - COUNTY SUBMISSION	05/16/12 - REVISED PER KENT CO. COMMENTS
10/28/11 - 100% SUBMISSION	08/07/13 - REV. FINAL PLANS PER COMMENTS
01/30/12 - REVISED HOPPER RACKS	
04/12/12 - REVISED PER KENT CO. COMMENTS	

PHILIP DER BRUTTO — No. 8954 — DELAWARE — PROFESSIONAL ENGINEER — 8/2/13

WHITNEY BAILEY COX & MAGNANI, LLC
849 Fairmount Ave Suite 100 Baltimore, MD 21286
MAIN 410.512.4500 FAX 410.324.4100
www.wbcm.com
WBCM ARCHITECTURE ENGINEERING CONSTRUCTION

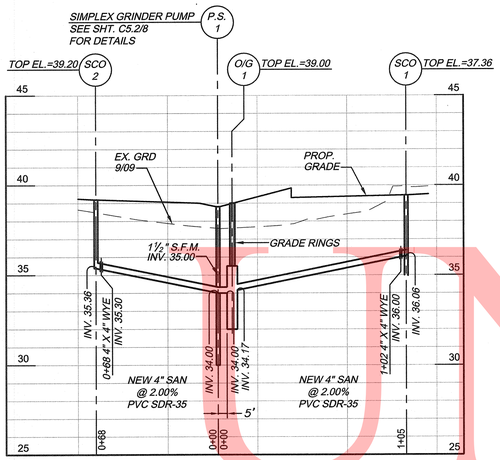

SANITARY SEWER PROFILE

SCALE: HORIZ. 1"=40'
VERT. 1"=4'

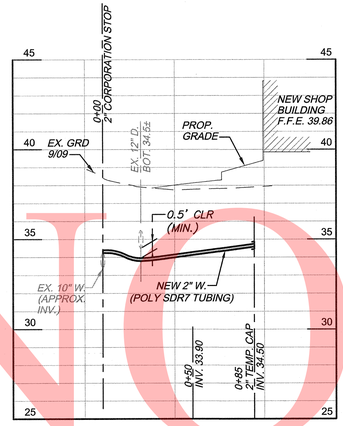

2" DOMESTIC WATER PROFILE

SCALE: HORIZ. 1"=40'
VERT. 1"=4'

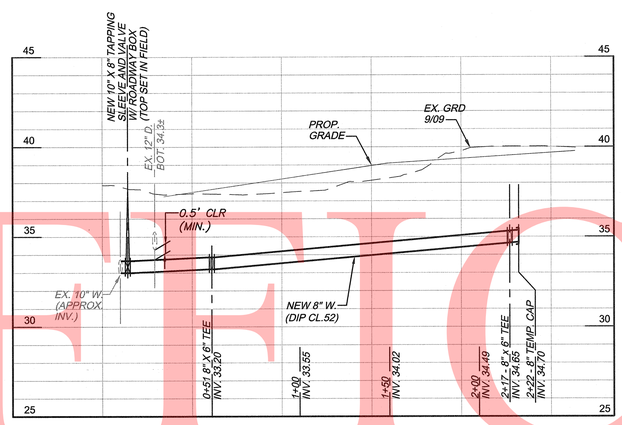

8" FIRE WATER PROFILE

SCALE: HORIZ. 1"=40'
VERT. 1"=4'

GRAPHIC SCALE

40 0 20 40 80

(IN FEET)
1 inch = 40 ft.

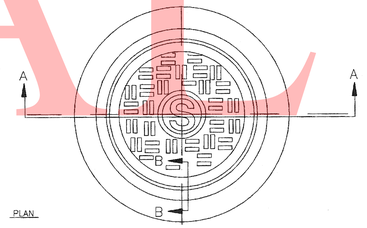

PLAN

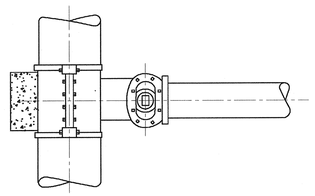

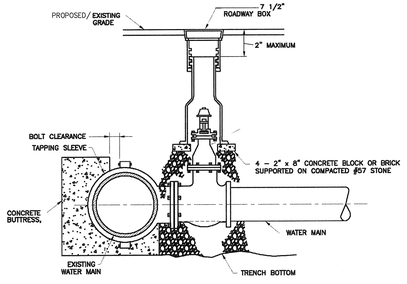

1 / C5.1 INSTALLATION OF TAPPING SLEEVE&VALVE WITH ROADWAY BOX

NOT TO SCALE

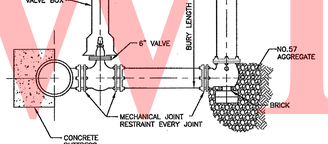

ELEVATION

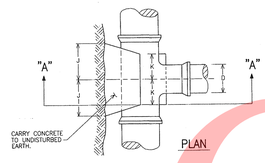

PLAN

NOTES:

1. APPLY BITUMINOUS MATERIAL PROTECTIVE COATING TO ALL EXPOSED STEEL PER AWWA C203.
2. BURY LENGTH = BURY LINE ELEV (–) FIRE HYDRANT INVERT.

2 / C5.1 FIRE HYDRANT SETTING

NOT TO SCALE

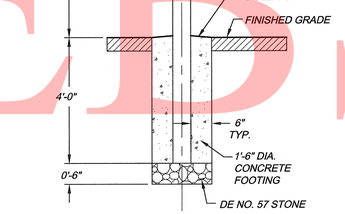

SECTION

NOTE: CONCRETE SHALL BE CLASS B

SPACING

3 / C5.1 8" DIAMETER BOLLARD

NOT TO SCALE

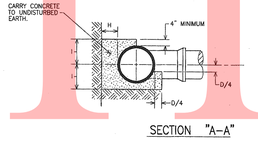

PLAN

SECTION "A–A"

BUTTRESS FOR TEES								
SIZE OF BRANCH								
D	6"	8"	10"	12"	16"	20"	24"	30"	36"
H	8"	9"	10"	1'-0"	1'-3"	1'-10"	1'-8"	2'-6"	4'-6"
I	9"	11"	1'-2"	1'-4"	1'-9"	2'-2"	2'-7"	3'-3"	3'-11"
J	8"	11"	1'-1"	1'-4"	1'-9"	2'-2"	2'-7"	3'-2"	3'-9"
K	6"	8"	8"	8"	10"	1'-2"	1'-4"	1'-6"	1'-10"

NOTES

1. ALL CONCRETE TO BE MIX #1. (2,500 p.s.i.)
2. BUTTRESS DIMENSIONS SHOWN ARE MINIMUM. DIMENSIONS ARE BASED UPON SOIL BEARING PRESSURE OF 3,000 p.s.f. STATIC WATER PRESSURE OF 150 p.s.i. AND DUCTILE IRON PIPE SIZES. WHERE PRESSURE EXCEEDS 150 p.s.i. OR WHERE SOIL BEARING PRESSURE IS LESS THAN 3,000 p.s.f. SPECIAL BUTTRESS DESIGN IS REQUIRED.

BUTTRESS FOR CAPS

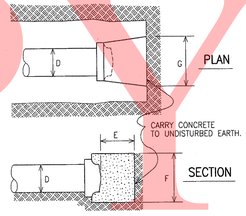

PLAN

SECTION

NOTES :

1. ALL CONCRETE TO BE MIX #1.
2. BUTTRESS DIMENSIONS SHOWN ARE MINIMUM. DIMENSIONS ARE BASED UPON SOIL BEARING PRESSURE OF 3,000 p.s.f. STATIC WATER PRESSURE OF 150 p.s.i. AND DUCTILE IRON PIPE SIZES. WHERE PRESSURE EXCEEDS 150 p.s.i. OR WHERE SOIL BEARING PRESSURE IS LESS THAN 3,000 p.s.f. SPECIAL BUTTRESS DESIGN IS REQUIRED, OR ALTERNATIVE RESTRAINT METHODS SHALL BE USED.

BUTTRESS FOR CAPS									
D	6"	8"	10"	12"	16"	20"	24"	30"	36"
E	6"	8"	8"	10"	1'-1"	1'-4"	1'-8"	2'-4"	2'-11"
F	1'-3"	1'-8"	2'-0"	2'-4"	3'-0"	3'-10"	4'-6"	5'-1"	6'-0"
G	1'-6"	2'-0"	2'-6"	3'-0"	4'-0"	4'-10"	5'-10"	7'-11"	9'-8"

4 / C5.1 TEE AND CAP BUTTRESSING

NOT TO SCALE

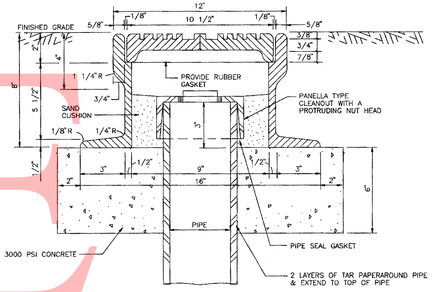

SECTION A–A

5 / C5.1 SEWER CLEANOUT LAMPHOLE

NOT TO SCALE

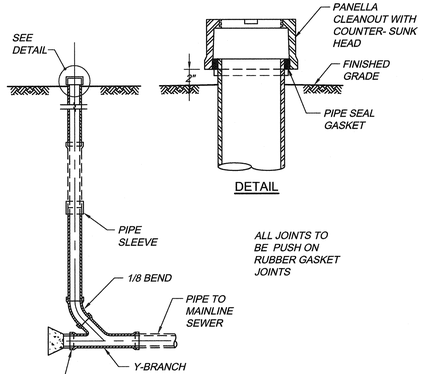

DETAIL

ALL JOINTS TO BE PUSH ON RUBBER GASKET JOINTS

6 / C5.1 SANITARY SEWER CLEANOUT

NOT TO SCALE

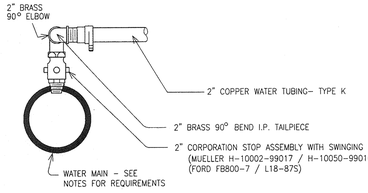

NOTES:

1. ON 4" – 10" DUCTILE IRON PIPE, USE SERVICE SADDLE (FORD FC202 OR SMITH-BLAIR 317).
2. FOR 12" AND LARGER DIP, CONTRACTOR MAY INSTALL CORPORATION USING SERVICE SADDLE LISTED IN NOTE 1.

7 / C5.1 INSTALLATION OF 2" WATER SUPPLY SERVICE

NOT TO SCALE

UNOFFICIAL WEBSITE COPY

© WBCM 2012

LAST REVISED ON 8/7/2013 Aug 08, 2013 – 9:47am User: pcarroll P:\2008\08012101\Drawings\07-SITE\Utility Profiles.dwg
PREL. TRACING DESIGN CHKD.

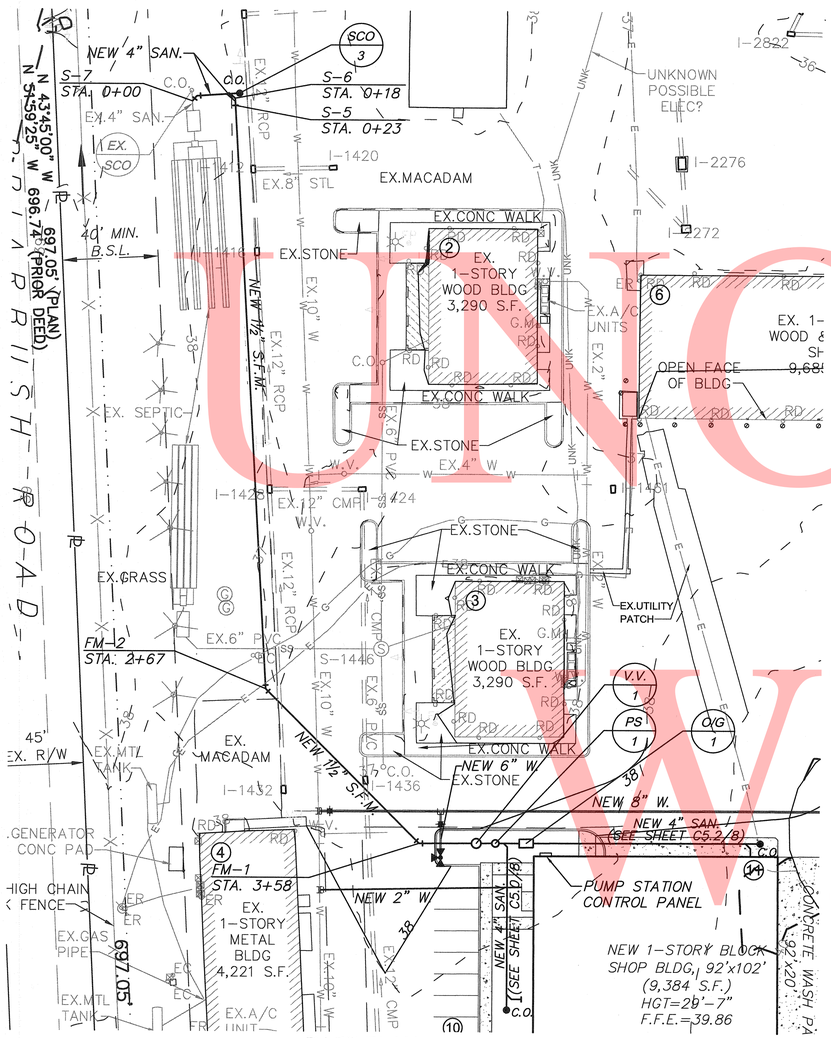

PART PLAN

SCALE: 1" = 30'

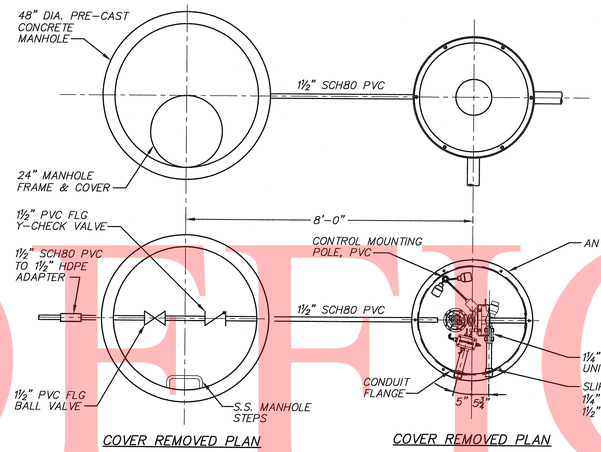

COVER REMOVED PLAN

COVER REMOVED PLAN

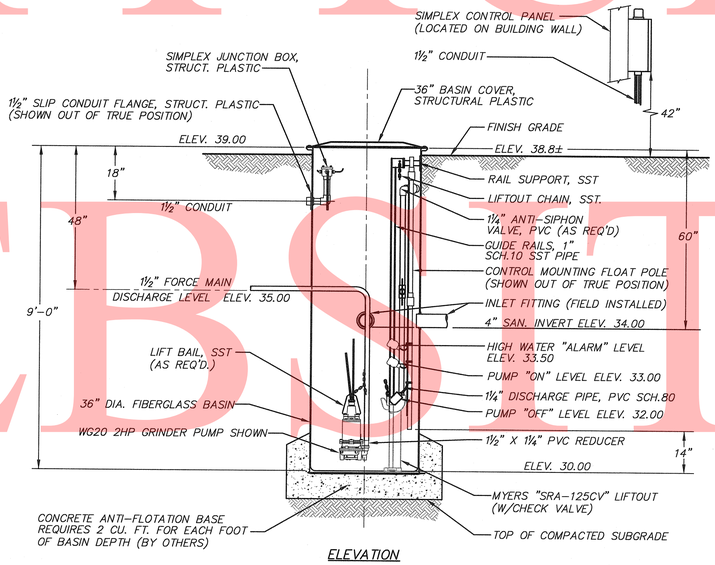

ELEVATION

GRINDER PUMP STATION DETAIL

SCALE: ½" = 1'-0"

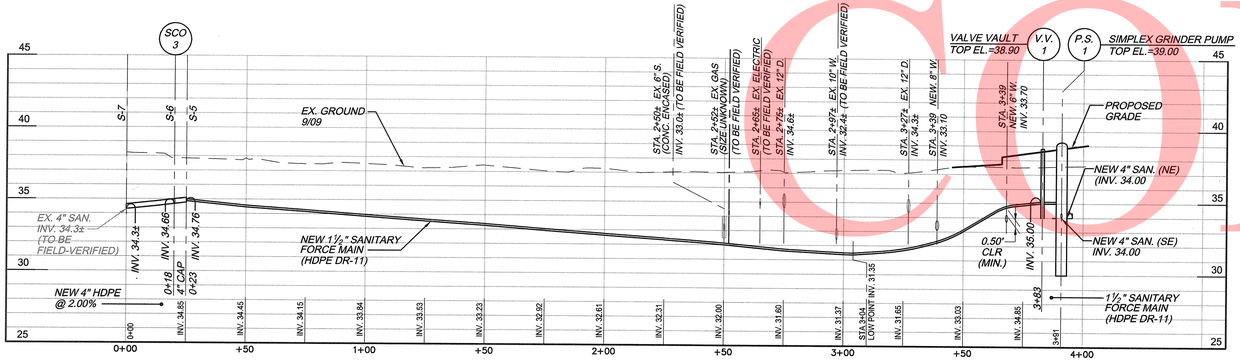

SANITARY FORCE MAIN PROFILE

SCALE: HORZ. 1" = 30'
VERT. 1" = 5'

SANITARY SEWER SCHEDULE

NO.	DESCRIPTION	COORDINATES	
		NORTHING	EASTING
S-5	4" END CAP	393092.40	632156.36
S-6	4" X 4" WYE	393094.22	632153.98
S-7	4" X 4" WYE WITH CLEANOUT	393079.95	632143.20
FM-1	1/8 HORIZONTAL BEND	392943.90	632350.15
FM-2	1/8 HORIZONTAL BEND	392950.75	632441.00
PS-1	SIMPLEX GRINDER PUMP STATION	392978.79	632465.09
V.V.-1	PRE-CAST CONCRETE VALVE VAULT	392975.00	632461.84
O/G-1	PRE-CAST CONCRETE OIL/GRIT SEPARATOR	392968.93	632456.62

PUMP STATION PART PLAN, PROFILE, & DETAILS

GRAPHIC SCALE
30 0 15 30 60
(IN FEET)
1 inch = 30 ft.

GRAPHIC SCALE
5 0 2.5 5 10
(IN FEET)
1 inch = 5 ft.

GRAPHIC SCALE
0 1 2 4 6
(IN FEET)
1/2"=1'-0"

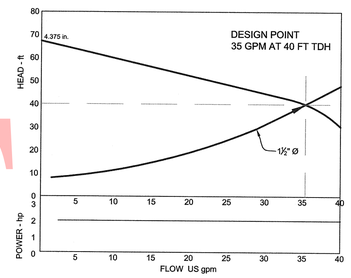

PUMP / SYSTEM CURVES

CONTRACT	COUNTY	F.A.P. NO.	SHEET NO.	TOTAL SHTS
30-801-01	KENT	SEE TITLE SHEET	C5.2 / 8	59

DELAWARE DEPARTMENT OF TRANSPORTATION

MAGNOLIA YARD VEHICLE MAINTENANCE SHOP

REVISIONS

04/11/11 - COUNTY SUBMISSION	05/16/12 - REVISED PER KENT CO. COMMENTS
10/28/11 - 100% SUBMISSION	08/07/13 - REV. FINAL PLANS PER COMMENTS
01/30/12 - REVISED HOPPER RACKS	
04/12/12 - REVISED PER KENT CO. COMMENTS	

PHILIP DER REGISTERED No. 8954 PROFESSIONAL ENGINEER STATE OF DELAWARE
8/8/13

WHITNEY BAILEY COX & MAGNANI, LLC
849 Fairmount Ave Suite 100 Baltimore, MD 21286
MAIN 410.512.4500 FAX 410.324.4100
www.wbcm.com
WBCM
ARCHITECTURE ENGINEERING CONSTRUCTION

DESIGN DATA

1. WASH BAY DESIGN FLOW (3 VEHICLES / DRY @ 10 GPM X 10 MIN.) = 300 GPD
2. DOMESTIC DEMAND (7 PERSONS @ 20 GPD) = 140 GDD
3. TOTAL DAILY FLOW (ADF) = 440 GPD
4. EXISTING SEPTIC SYSTEM CAPACITY: 500 GPD
5. PUMP STATION DESIGN FLOW REQUIRED (440 GPD / 8 HOURS X 60 MIN.) = 1 GPM
6. PUMP STATION DESIGN FLOW PROVIDED = 35 GPM
7. WET WELL VOLUME REQUIRED (7 MIN. X 35 GPM / 4) = 61 GAL
8. WET WELL VOLUME PROVIDED: 1.16 FT = 14 INCHES (61 GAL / 52.8 GAL /* FT) OPERATING RANGE

Aug 08, 2013 - 9:45am User: pcarroll P:\2008\08012101\Drawings\07-SITE\Pump Station.dwg
PREL. TRACING DESIGN CHKD.

Last Modified On: 04/13/12

© WBCM 2012

UNOFFICIAL WEBSITE COPY

CONTRACT	COUNTY	F.A.P. NO.	SHEET NO.	TOTAL SHTS
30-801-01	KENT	SEE TITLE SHEET	C6.0 / 9	59

DELAWARE DEPARTMENT OF TRANSPORTATION

MAGNOLIA YARD VEHICLE MAINTENANCE SHOP

REVISIONS

04/11/11 - COUNTY SUBMISSION	05/16/12 - REVISED PER KENT CO. COMMENTS
10/28/11 - 100% SUBMISSION	08/07/13 - REV. FINAL PLANS PER COMMENTS
01/30/12 - REVISED HOPPER RACKS	
04/12/12 - REVISED PER KENT CO. COMMENTS	

PHILIP DEE BRITTINGHAM — No. 9854 — STATE OF DELAWARE — PROFESSIONAL ENGINEER — 8/8/13

WHITNEY BAILEY COX & MAGNANI, LLC
849 Fairmount Ave Suite 100 Baltimore, MD 21286
MAIN 410.512.4500 FAX 410.324.4100
www.wbcm.com
WBCM
ARCHITECTURE ENGINEERING CONSTRUCTION

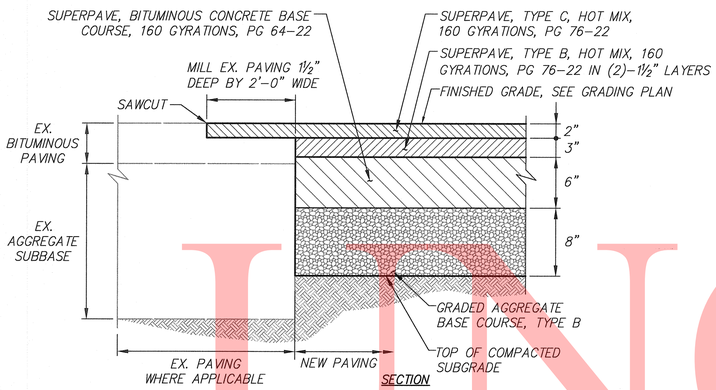

1 HOT MIX ASPHALT PAVING DETAIL
NOT TO SCALE

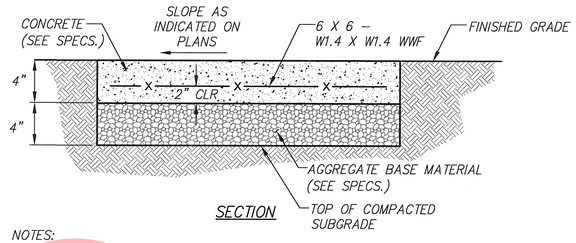

NOTES:
1. ½" PREMOLDED EXPANSION JOINT MATERIAL TO BE PLACED WHERE WALKS ABUT CURBS, STEPS, BUILDINGS, OTHER WALKS, ETC. AND AT A MAXIMUM OF 20' INTERVALS ALONG THE WALK.
2. SCORING SHALL BE PROVIDED AT 4' ON-CENTER FOR 4' & 8' WALKS, 5' ON-CENTER FOR 5' & 10' WALKS, AND 6' ON-CENTER FOR 6' AND LARGER NOT PREVIOUSLY MENTIONED.

4 CONCRETE WALK
NOT TO SCALE

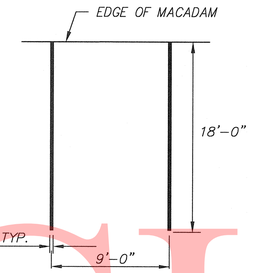

NOTE: PAINT TO BE WHITE TRAFFIC PAINT APPLIED IN ACCORDANCE WITH THE MANUFACTURER'S RECOMMENDATIONS. TWO (2) COATS REQUIRED.

PLAN

6 PARKING STRIPING
NOT TO SCALE

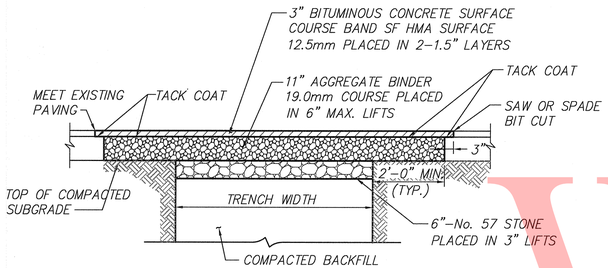

2 BITUMINOUS PAVING REPAIR
NOT TO SCALE

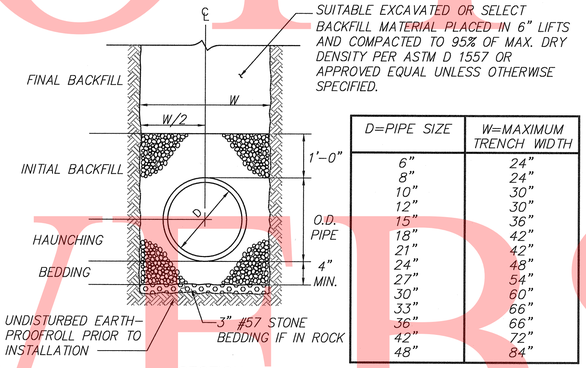

D=PIPE SIZE	W=MAXIMUM TRENCH WIDTH
6"	24"
8"	24"
10"	30"
12"	30"
15"	36"
18"	42"
21"	42"
24"	48"
27"	54"
30"	60"
33"	66"
36"	66"
42"	72"
48"	84"

SECTION

PIPE MATERIAL	BEDDING, HAUNCHING, & INITIAL BACKFILL MATERIAL	COMPACTION, % OF MAX. DRY DENSITY PER ASTM D 1557
CONCRETE	**ASTM D 2321 CLASS II OR III MATERIALS	95%
DUCTILE IRON	**ASTM D 2321 CLASS II OR III MATERIALS	95%
HDPE	*ASTM D 2321 CLASS I MATERIALS	95%
PVC	*ASTM D 2321 CLASS I MATERIALS	95%

* ASTM D 2321 CLASS I MATERIAL: AASHTO M43 #5 or #56 STONE
** ASTM D 2321 CLASS II OR III MATERIALS: GW, GP, SW, SP, GM, GC, SM, OR SC MATERIALS AS DEFINED BY ASTM D 2487, FREE OF STONES MORE THAN 3"ø, TRASH, STICKS, FROZEN MATERIAL AND ALL OTHER OBJECTIONABLE MATERIALS.

5 PIPE TRENCH DETAIL
NOT TO SCALE

SEE SHEET C4.0/5 FOR DETAIL 7

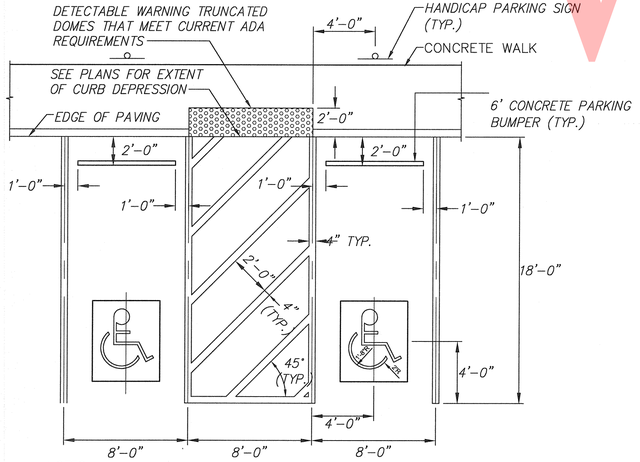

NOTES:
1. PAINT TO BE WHITE TRAFFIC PAINT APPLIED IN ACCORDANCE WITH THE MANUFACTURER'S RECOMMENDATIONS. TWO (2) COATS REQUIRED.
2. SEE PLAN TO DETERMINE IF MULTIPLE HANDICAP SPACES ARE REQUIRED.
3. HANDICAPPED SYMBOL TO BE WHITE TRAFFIC PAINT ON BLUE TRAFFIC PAINT BACKGROUND APPLIED IN ACCORDANCE WITH THE MANUFACTURER'S RECOMMENDATIONS. TWO (2) COATS REQUIRED.

PLAN

3 HANDICAP PAVEMENT MARKING
NOT TO SCALE

UNOFFICIAL WEBSITE COPY

LAST REVISED: 08/18/2010
Aug 08, 2013 - 9:44am User: pcarroll P:\2008\08012101\Drawings\07-SITE\Site Details.dwg
PREL. TRACING DESIGN CHKD.

 © WBCM 2012

EROSION AND SEDIMENT CONTROL PLAN

CONTRACT	COUNTY	F.A.P. NO.	SHEET NO.	TOTAL SHTS
30-801-01	KENT	SEE TITLE SHEET	C7.0 / 10	59

DELAWARE DEPARTMENT OF TRANSPORTATION

MAGNOLIA YARD VEHICLE MAINTENANCE SHOP

REVISIONS

04/11/11 - COUNTY SUBMISSION	05/16/12 - REVISED PER KENT CO. COMMENTS
10/28/11 - 100% SUBMISSION	08/07/13 - REV. FINAL PLANS PER COMMENTS
01/30/12 - REVISED HOPPER RACKS	
04/12/12 - REVISED PER KENT CO. COMMENTS	

PHILIP DER REGISTERED PROFESSIONAL ENGINEER No. 9854 — 8/8/13

WHITNEY BAILEY COX & MAGNANI, LLC
849 Fairmount Ave Suite 100 Baltimore, MD 21286
MAIN 410.512.4500 FAX 410.324.4100
www.wbcm.com
WBCM ARCHITECTURE ENGINEERING CONSTRUCTION

GRAPHIC SCALE

40 0 20 40 80

(IN FEET)
1 inch = 40 ft.

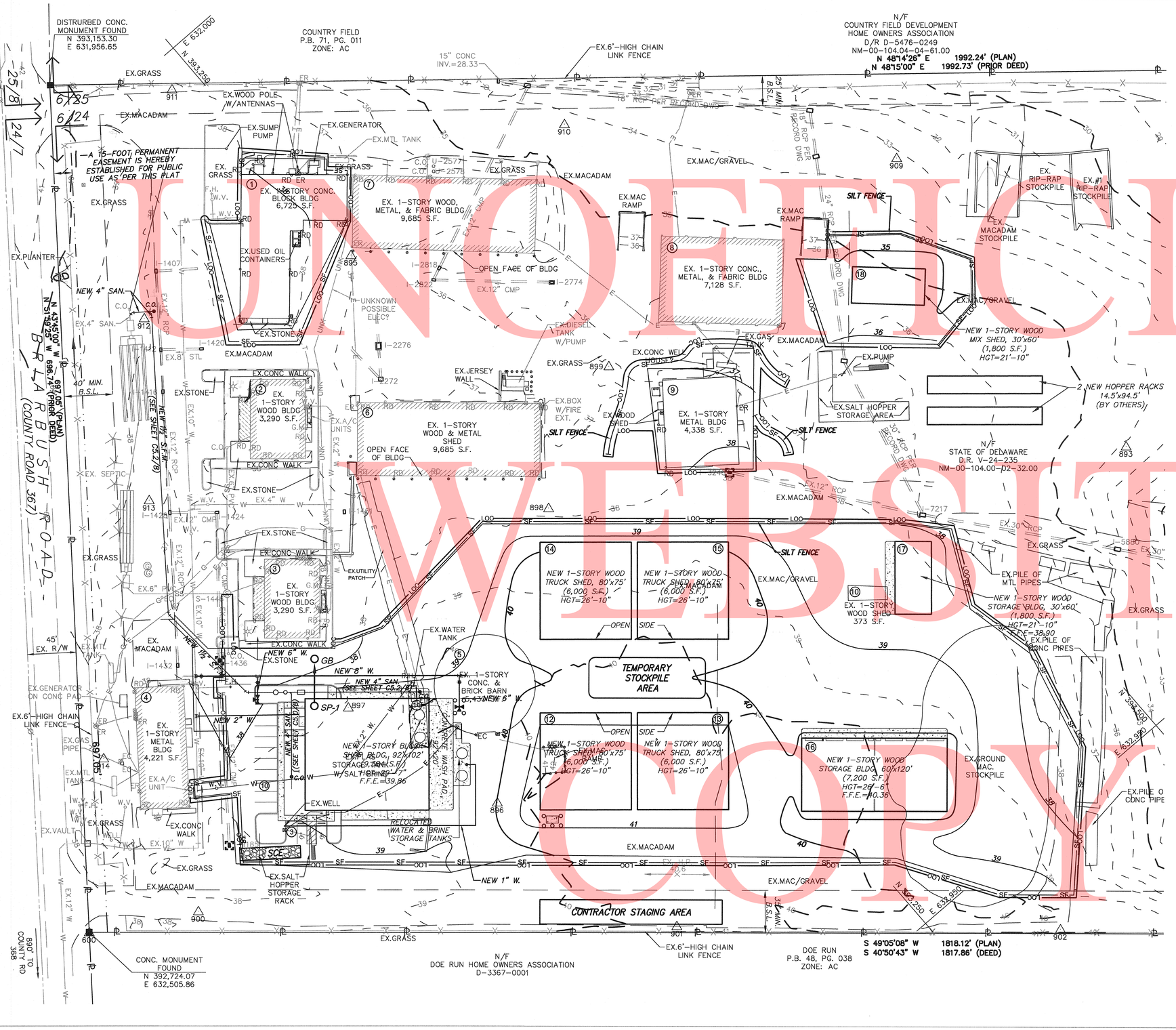

SEQUENCE OF CONSTRUCTION:

1. CONTRACTOR SHALL NOTIFY, IN WRITING, FIVE (5) DAYS PRIOR TO BEGINNING CONSTRUCTION THE DELDOT PROJECT MANAGER.
2. INSTALL PERIMETER CONTROLS: STABILIZED CONSTRUCTION ENTRANCE, SILT FENCE AND INLET PROTECTION.
3. SAW CUT AND REMOVE EXISTING PAVEMENT AND DEMOLISH BUILDINGS AS INDICATED ON SHEET NO. C-3.
4. ROUGH GRADE SITE AND STABILIZE WITH STONE BASE.
5. BEGIN CONSTRUCTION OF BUILDINGS. INSTALL SUMP PIT AND DEWATERING BAG WHEN EXCAVATING FOR SHOP FOUNDATION.
6. CONSTRUCT NEW SANITARY SEWER AND WATER SERVICES TO SHOP BUILDING.
7. CONSTRUCT NEW CURB AND SIDEWALKS.
8. COMPLETE FINAL GRADING AND CONSTRUCT NEW PAVEMENT.
9. WITH THE APPROVAL OF THE SEDIMENT CONTROL INSPECTOR REMOVE ALL REMAINING SEDIMENT CONTROLS AND PERMANENTLY STABILIZE AND DISTRUBANCE CAUSED BY THE REMOVAL.

LEGEND

STABILIZED CONSTRUCTION ENTRANCE	SCE
LIMIT OF CONSTRUCTION	LOC
SILT FENCE	SF
INLET SEDIMENT CONTROL	
SUMP PIT, TYPE 1	SP-1
GEOTEXTILE DEWATERING BAG	GB

TOTAL DISTURBED AREA: 4.92 AC.±

UNOFFICIAL WEB SITE COPY

LAST REVISED: 06/19/2010
Aug 08, 2013 - 9:43am User: pcarroll P:\2008\08012101\Drawings\07-SITE\SedCon.dwg
PREL. TRACING DESIGN CHKD.

 © WBCM 2012

UNOFFICIAL
NOT IN CONTRACT
WEBSITE
COPY

LANDSCAPE PLAN, DETAILS, AND NOTES

CONTRACT	COUNTY	F.A.P. NO.	SHEET NO.	TOTAL SHTS
30-801-01	KENT	SEE TITLE SHEET	C8.0 / 11	59

DELAWARE DEPARTMENT OF TRANSPORTATION

MAGNOLIA YARD VEHICLE MAINTENANCE SHOP

REVISIONS

04/11/11 - COUNTY SUBMISSION	05/16/12 - REVISED PER KENT CO. COMMENTS
10/28/11 - 100% SUBMISSION	08/07/13 - REV. FINAL PLANS PER COMMENTS
01/30/12 - REVISED HOPPER RACKS	
04/12/12 - REVISED PER KENT CO. COMMENTS	

WHITNEY BAILEY COX & MAGNANI, LLC
849 Fairmount Ave Suite 100 Baltimore, MD 21286
MAIN 410.512.4500 FAX 410.324.4100
www.wbcm.com
WBCM ARCHITECTURE ENGINEERING CONSTRUCTION

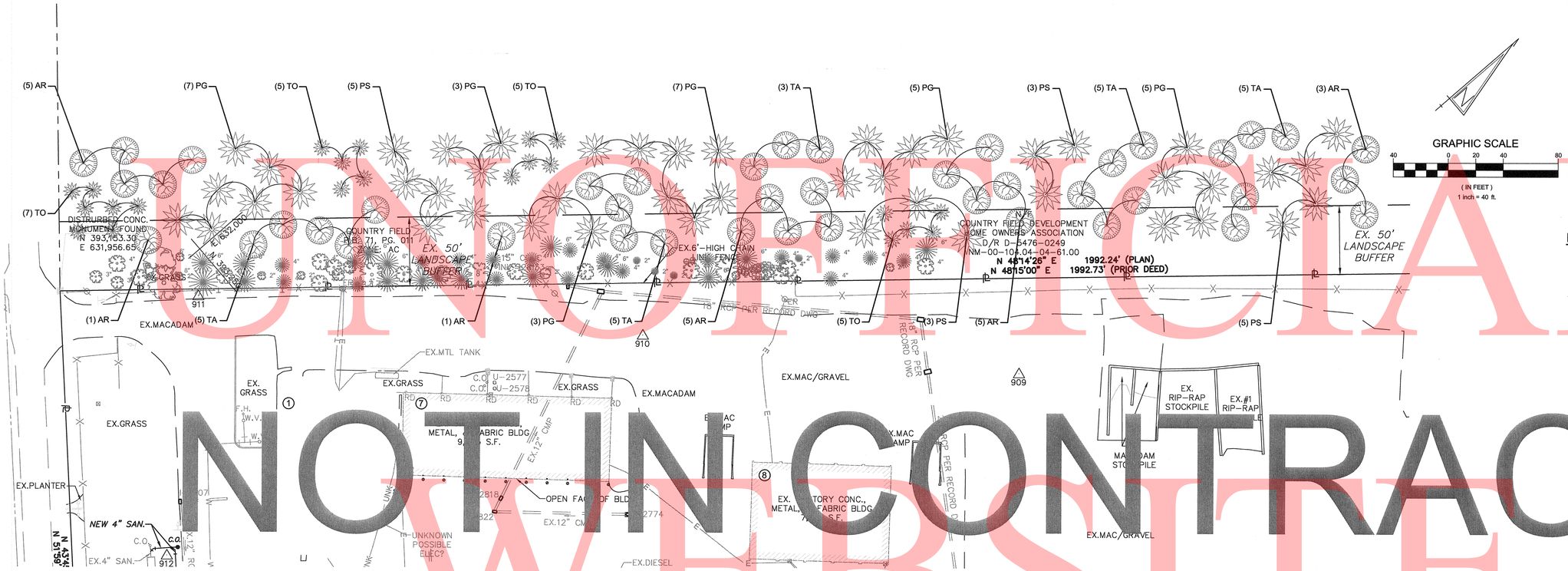

LEGEND

NEW DECIDUOUS TREE

NEW EVERGREEN TREE

PLANT SCHEDULE

Key	Qty.	Botanical Name	Common Name	Size (Min.)	Root	Remarks
Deciduous Trees						
AR	20	Acer rubrum	Red Maple	2.5" Cal.	B&B	As Shown
PS	16	Pinus strobus	White Pine	6-7' Hgt.	B&B	As Shown
TA	23	Tilia americana 'Redmond'	Redmond American Linden	2.5" Cal.	B&B	As Shown
PG	30	Picca glauca	White Spruce	6-7' Hgt.	B&B	As Shown
TO	22	Thuja occidentalis 'Emerald'	Emerald Arborvitea	4-5' Hgt.	B&B	As Shown
	111	**Total**				

LANDSCAPE CALCULATION

1) GROSS IMPACTED OPEN AREA= 637,715 S.F.
TOTAL PROPOSED BUILDING AREA = 84,223 S.F.
NET IMPACTED OPEN AREA = 553,492 S.F.

2) PLANTING REQUIRED = 553,492 S.F. @ 1 TREE / 5,000 S.F.
= 111 TREES

3) PLANTING PROPOSED = 111 TREES

LANDSCAPE NOTES

1) DELDOT WILL PLANT THE TREES SHOWN ON THIS PLAN AS PREPARED BY WBCM, LLC IN THE "COUNTRY FIELD" OPEN SPACE AT THEIR SOLE EXPENSE.
2) DELDOT WILL MAINTAIN THE PLANTINGS SHOWN HEREON FOR A PERIOD OF ONE (1) YEAR FROM DATE OF KENT COUNTY FINAL INSPECTION AND APPROVAL.
3) "COUNTRY FIELD" WILL ASSUME ALL MAINTENANCE AND REPLACEMENT EXPENSE FOR THE PLANTINGS AT THE END OF DELDOT'S 1 YEAR FULL PRICE REPLACEMENT GUARANTEE, SUCH DATE TO BE THE DATE THAT KENT COUNTY INDICATES WRITTEN SATISFACTION OF THAT REQUIREMENT.
4) THE CONTRACTOR SHALL PROVIDE A FULL-PRICE REPLACEMENT GUARANTEE FOR ONE YEAR FOR ALL TREE PLANTINGS SHOWN ON THE "COUNTRY FIELD" PROPERTY.
5) NO REQUIRED LANDSCAPE PLANTING SHALL BE CONDUCTED BETWEEN MAY 15 AND SEPTEMBER 1.

LANDSCAPE CERTIFICATION

I CERTIFY THAT I HAVE REVIEWED THIS LANDSCAPE PLAN; THAT I AM AWARE OF THE LANDSCAPE REGULATIONS PRESENTED IN THE KENT COUNTY CODE; AND THIS PLAN COMPLIES WITH THOSE REGULATIONS AND ALL APPLICABLE POLICY, GUIDELINES, AND ORDINANCES.

APPLICANT SIGNATURE DATE PRINT NAME

STREET ADDRESS (PRINT) CITY STATE, ZIP

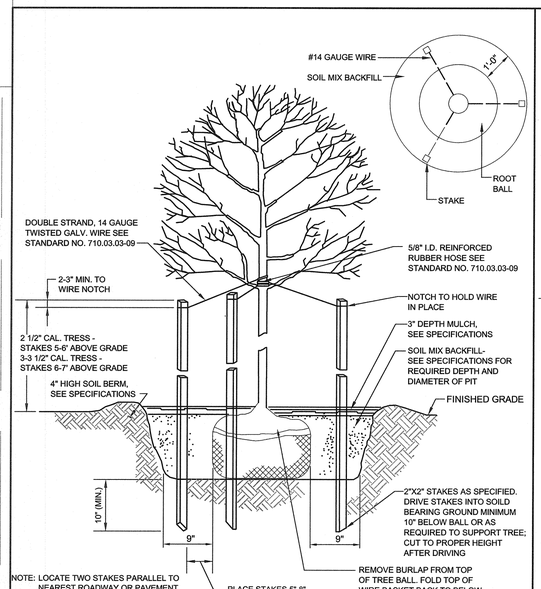

1 DECIDUOUS TREE NOT TO SCALE

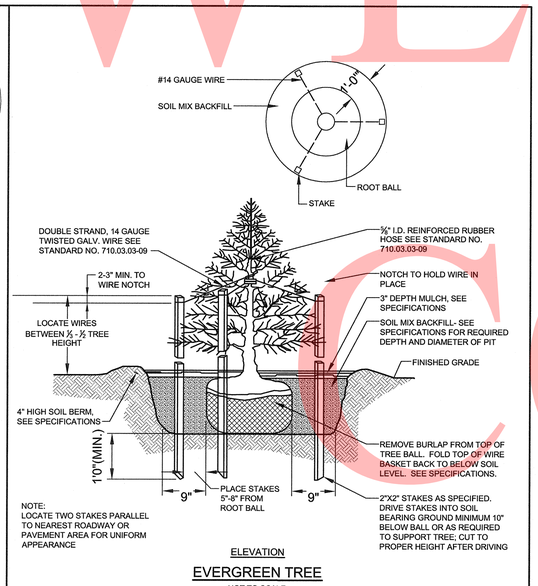

ELEVATION

EVERGREEN TREE

NOT TO SCALE

2 EVERGREEN TREE NOT TO SCALE

PREL. TRACING | DESIGN | CHKD.
User: pcarroll P:\2008\08012101\Drawings\07-SITE\Planting.dwg
Aug 08, 2013 - 9:42am
LAST REVISED 06/19/2012

Last Modified On: 04/13/12

© WBCM 2012

CODE ANALYSIS, ABBREVIATIONS & SYMBOLS

CONTRACT	COUNTY	F.A.P. NO.	SHEET NO.	TOTAL SHTS
30-801-01	KENT	SEE TITLE SHEET	A1.0 / 12	59

DELAWARE DEPARTMENT OF TRANSPORTATION

MAGNOLIA YARD VEHICLE MAINTENANCE SHOP

REVISIONS

04/12/12 - REVISED PER KENT CO. COMMENTS	

STEPHEN C. BURSHTEIN NO. 85-7295 STATE OF DELAWARE REGISTERED ARCHITECT 6/5/12

WHITNEY BAILEY COX & MAGNANI, LLC
849 Fairmount Ave. Suite 100 Baltimore, MD 21286
MAIN 410.512.4500 FAX 410.324.4100
www.wbcm.com
WBCM ARCHITECTURE ENGINEERING CONSTRUCTION

DETAIL SYMBOLS

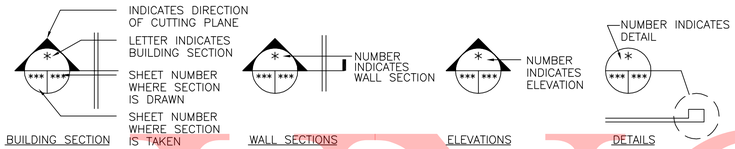

ABBREVIATIONS

AFF	above finish floor	MBL	marble	GWB	gypsum wall board
AT	acoustical tile	MDO	medium density overlay	GYP	gypsum
AC	air conditioning	MO	masonry opening	HDW	hardware
ALT	alternate	MTL	metal	HGT	height
ALUM	aluminum	MAX	maximum	HTG	heating
AB	anchor bolt	MECH	mechanical	HVAC	heating ventilating air conditioning
APPROX	approximate	MED	medium		
ARCH	architect (ural)	MIN	minimum	HC	hollow core
ASPH	asphalt	MISC	miscellaneous	HM	hollow metal
AUTO	automatic	NOM	nominal	HOR	horizontal
BSMT	basement	N	north	HB	hose bib
BPL	bearing plate	NIC	not in contract	HWH	hot water heater
BFF	below finish floor	NTS	not to scale	INCL	include (d) (ing)
BM	bench mark	NUM	number	ID	inside diameter
BIT	bituminous	OC	on center	INSUL	insulation
BLK	block	OPG	opening	IG	insulated glass
BD	board	OD	outside diameter	INT	interior
BS	both sides	OA	overall	PL	property line
BOT	bottom	OH	overhead	QT	quarry tile
BLDG	building	PFG	polished float glass	R	radius
BUR	built up roof	PNL	panel	REF	reference
C	cove	PER	perimeter	RA	return air
CI	cast iron	PLAS	plaster	REV	revision, revised
CB	catch basin	PL	plate	ROW	right of way
CLG	ceiling	PLK	concrete plank-painted	R	riser
CEM	cement	PWD	plywood	RM	room
CT	ceramic tile	PT	point	RO	rough opening
COL	column	PVC	pounds per square foot	SCH	schedule
CONC	concrete	PSF	polyvinyl chloride	SEC	section
CMU	concrete masonry unit	PSI	pounds per square inch	SIM	similar
CONST	construction	E	east, enamel paint	S	south, switch (es)
CONT	continuous, continue	ELEC	electric (al)	SF	seamless floor
CJT	control joint	EWC	electric water cooler	SPEC	specification (s)
CU	cubic	ELEV	elevation	SQ	square
DL	dead load	EMER	emergency	ST	straight
DEM	demolish, demolition	EST	estimate	STL	steel
DTL	detail	EW	each way	STO	storage
DIA	diameter	EXH	exhaust	STR	structural
DIM	dimension	EXIST	existing	SYS	system
DR	door	EXP	expansion, exposed	TFG	tempered float glass
DS	downspout	EXT	exterior	TH	threshold
D	drain	FIN	finish (ed)	TIG	tempered insulated glass
DWG	drawing	FE	fire extinguisher	THK	thick (ness)
DF	drinking fountain	FEC	fire extinguisher cabinet	T&G	tongue & groove
HW	hand wash station	FFL	finished floor line	T	tread
INV	invert	FLG	flashing	TYP	typical
JT	joint	FLR	floor (ing)	VERT	vertical
KO	knock out	FD	floor drain	VCT	vinyl composition tile
LBL	label	FTG	footing	VB	vinyl base
LAV	lavatory	FND	foundation	VCD	vinyl covered drywall
LH	left hand	GA	gauge	WC	water closet
L	length, latex	GC	general contractor	WP	waterproof (ing)
LT	light	GD	grade, grading	WWF	welded wire fabric
LL	live load	GHM	galvanized hollow metal	W	west, width, wide
MH	manhole	GMU	glazed masonry unit	W/	with
MFR	manufacture (er)			WD	wood
MAS	masonry			WB	wood base

PROJECT INFORMATION

PROJECT NAME/ADDRESS:
DELAWARE DEPARTMENT OF TRANSPORTATION
MAGNOLIA MAINTENANCE YARD SHOP #21
1225 BRIARBUSH ROAD
MAGNOLIA, DELAWARE 19962

APPLICABLE CODES:
INTERNATIONAL BUILDING CODE 2006 EDITION
NFPA 101 LIFE SAFETY CODE 2006 YEAR
NATIONAL ELECTRICAL CODE
INTERNATIONAL PLUMBING CODE

1. USE AND OCCUPANCY: MOTOR VEHICLE REPAIR – S-1
2. TYPE OF CONSTRUCTION: TYPE III B
3. ALLOWABLE BUILDING HEIGHTS AND AREA (TABLE 503)
   AREA = 17,500
   HEIGHT = 3 STORY

   ACTUAL HEIGHT: 1 STORY WITH EQUIPMENT MEZZANINE

   ACTUAL FLOOR AREA:
   TOTAL FOOTPRINT = 11,600 SQ. FT. MEZZ (EQUIP/STORAGE) NOT INCLUDED PER 503.1
4. FIRE RESISTANCE RATING FOR BUILDING ELEMENTS:

STRUCTURAL FRAME:	0 HOUR
BEARING WALLS:	0 HOUR
NON-BEARING WALL (INT):	0 HOUR
FLOOR CONSTRUCTION:	0 HOUR
ROOF CONSTRUCTION:	0 HOUR

   FIRE SEPARATION DISTANCE: GREATER THAN 30', (TABLE 602) MIN. 60' OPEN YARD
5. FIRE PROTECTION SYSTEM: NOT REQUIRED
6. ALLOWABLE OCCUPANCY: 100 SQ. FT. PER PERSON
7. DESIGN OCCUPANT LOAD:
   11,600 X SQ. FT. AREA
   (100 S.F. PER PERSON) = 116 PEOPLE
8. ACTUAL OCCUPANT LOAD: 4± PEOPLE EXPECTED
9. MINIMUM NUMBER OF EXITS REQUIRED: 2 EXITS
10. EXITS PROVIDED: 5 EXITS
11. MAXIMUM ACCESS TRAVEL DISTANCE: (PER TABLE 1015.1)
    ALLOWABLE: 300'-0"
    ACTUAL: APPROX. 75'-0" MAX.

GENERAL NOTES

1. ALL PLAN DIMENSIONS ARE TO FACE OF SUBSTRATE, VERIFY IN FIELD.
2. PROVIDE SURFACE MOUNTED FIRE EXTINGUISHERS MOUNTED ON MASONRY WALL AS REQUIRED BY NFPA 10. FINAL LOCATION AND SIZE TO BE DETERMINED BY FIRE MARSHAL.
3. CONTRACTOR TO VERIFY ALL ± DIMENSIONS PRIOR TO COMMENCEMENT TO CONSTRUCTION, AND NOTIFY ARCHITECT OF ANY DISCREPANCIES.
4. TOILET SIZE IS BASED UPON ADA REQUIREMENTS REFER TO TOILET ROOM PLAN FOR TOILET, GRAB BARS, ACCESSORY HEIGHTS & WALL HUNG SINK.
5. ALL PARTITIONS NOT DESIGNATED, SHALL BE CONSIDERED WALL TYPE "A"
6. DO NOT SCALE DRAWINGS. USE WRITTEN DIMENSIONS ONLY.
7. ALL DIMENSIONS, NOTES, FINISHES AND FIXTURES SHOWN ON TYPICAL FLOOR PLANS, SECTIONS, OR DETAILS SHALL APPLY TO ALL SIMILAR, SYMMETRICAL OR OPPOSITE HAND PLANS, SECTIONS OR DETAILS.
8. ALL DOOR JAMBS SHALL BE LOCATED 4" FROM INTERSECTING WALL, U.N.O.
9. CONTRACTOR TO PROVIDE AND INSTALL EXIT SIGNS AND EMERGENCY LIGHTING AS REQUIRED BY APPLICABLE CODES. COORDINATE WITH ELECTRICAL DRAWINGS.
10. GENERAL CONTRACTOR TO VERIFY ALL EXISTING UTILITIES
    A. DOMESTIC WATER SERVICE
    B. SANITARY SEWER SERVICE
    C. ELECTRIC POWER SOURCE
11. COORDINATE ALL PROPOSED FLOOR, WALL AND ROOF PENETRATIONS

DETAIL SYMBOLS

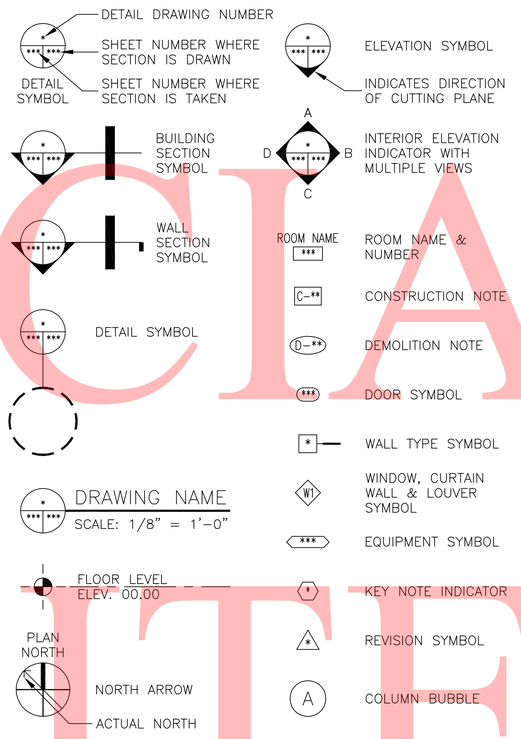

MATERIALS

(ARCHITECTURAL AND STRUCTURAL DRAWINGS)

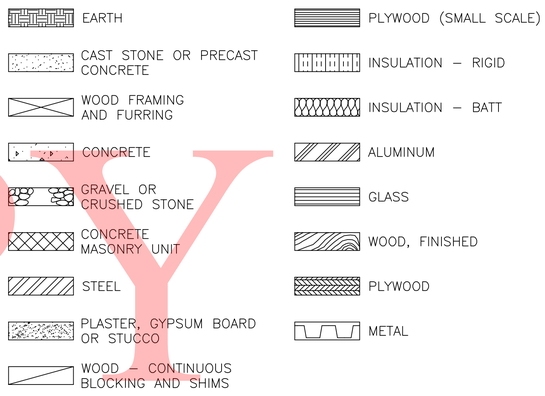

UNOFFICIAL WEBSITE COPY

LAST REVISED: 06/18/2010
May 03, 2012 - 2:29pm User: jmoyer P:\2008\08012101\Drawings\01-Arch\Magnolia Maintenance Yard\Magnolia Shop Building\A1.0.dwg

DESIGN CHKD. PREL. TRACING

© WBCM 2012

UNOFFICIAL WEBSITE COPY

GROUND LEVEL PLAN

CONTRACT	COUNTY	F.A.P. NO.	SHEET NO.	TOTAL SHTS
30-801-01	KENT	SEE TITLE SHEET	A1.1 / 13	59

DELAWARE DEPARTMENT OF TRANSPORTATION

MAGNOLIA YARD VEHICLE MAINTENANCE SHOP

REVISIONS

04/12/12 - REVISED PER KENT CO. COMMENTS

STEPHEN C. BURSHTYN NO. 85-7295 STATE OF DELAWARE REGISTERED ARCHITECT 6/8/12

WHITNEY BAILEY COX & MAGNANI, LLC
849 Fairmount Ave Suite 100 Baltimore, MD 21286
MAIN 410.512.4500 FAX 410.324.4100
www.wbcm.com
WBCM ARCHITECTURE ENGINEERING CONSTRUCTION

GRAPHIC SCALE

8 0 4 8 16
(IN FEET)
1/8 inch = 1 ft.

8 0 4 8 16
(IN INCHES)
1 1/2 inch = 1 ft.

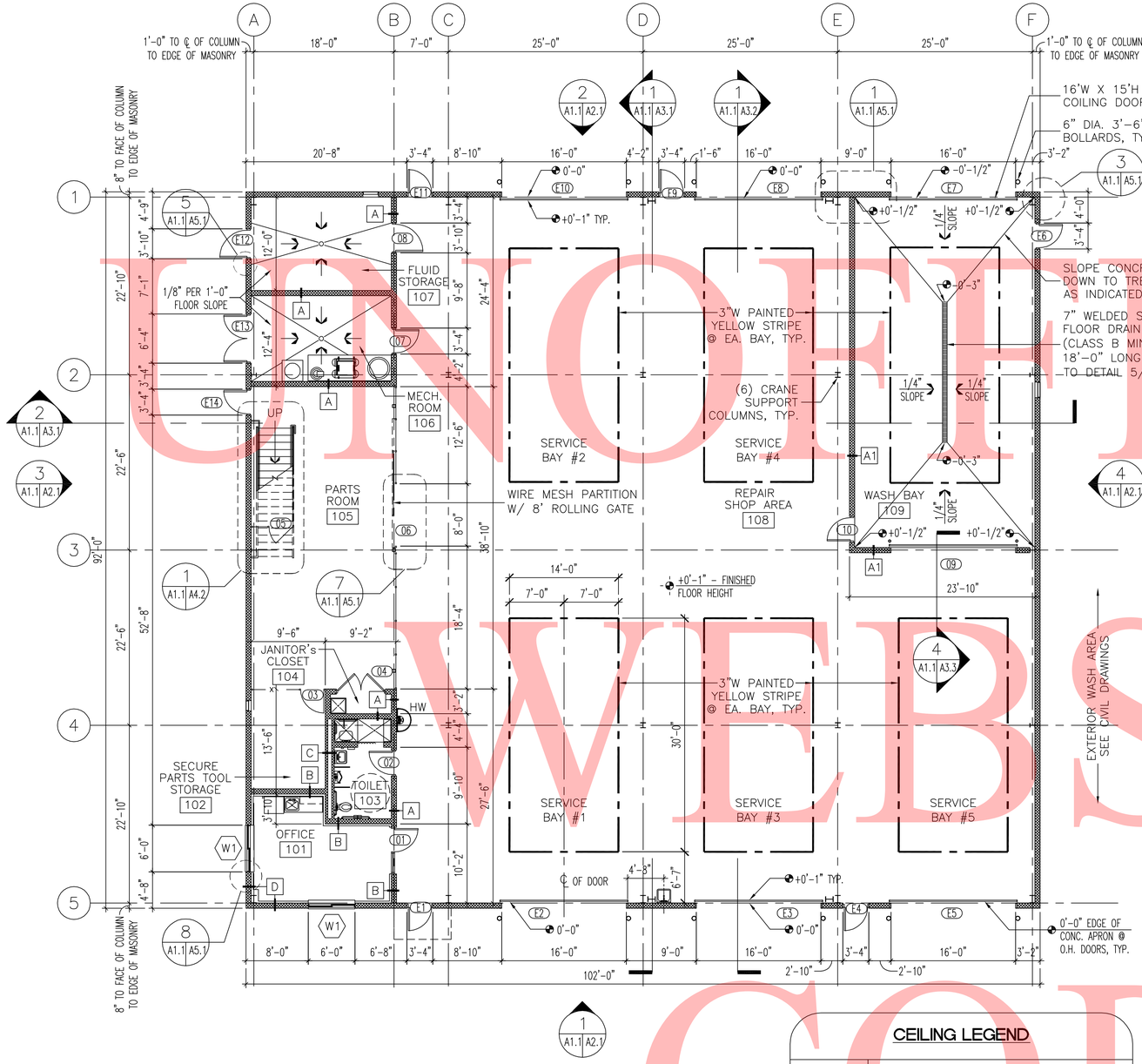

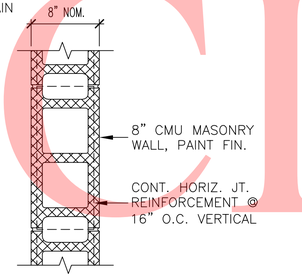

A 8" CMU MASONRY WALL TO UNDERSIDE OF MEZZANINE

A1 8" CMU MASONRY WALL @ 10'-8" HEIGHT

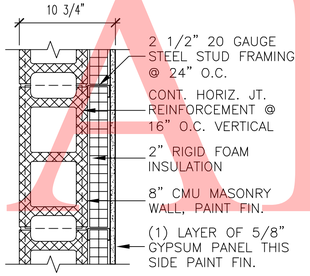

B 8" CMU MASONRY WALL W/ FURRING

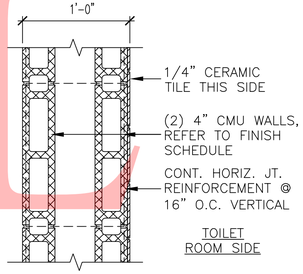

C MASONRY PLUMBING WALL W/ WAINSCOAT

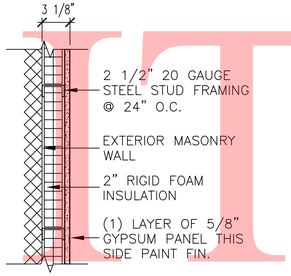

D STEEL STUD & GYPSUM BOARD WALL FURRING

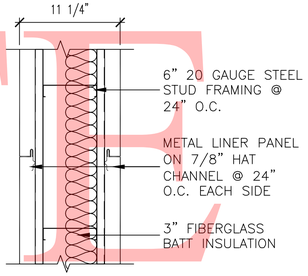

E WASH BAY STEEL STUD HIGH PARTITION

2 A1.1 A1.1 WALL TYPES
SCALE: 1 1/2" = 1'-0"

TRUE NORTH

PLAN NORTH

1 A1.1 A1.1 GROUND FLOOR PLAN
SCALE: 1/8" = 1'-0"

GENERAL NOTE:
ALL METAL BUILDING ENGINEERING & CONSTRUCTION BY METAL BUILDING MANUFACTURER.

CEILING LEGEND

1/2" MOISTURE RESISTANT GYPSUM BOARD CEILING METAL STUD FRAMING.

2 X 4 SUSPENDED ACOUSTICAL TILE CEILING SYSTEM.

2 X 4 FLUORESCENT LIGHT FIXTURES REFER TO ELECTRICAL DRAWINGS FOR EXACT LOCATIONS & VERIFICATION OF FIXTURE QUANTITIES.

GENERAL CEILING NOTE:

1. FOR EXIT & EMERGENCY LIGHTING REFER TO ELECTRICAL DRAWINGS & SPECIFICATIONS.
2. FOR SWITCHING & WIRING REFER TO ELECTRICAL DRAWINGS & SPECIFICATIONS.
3. FIRE ALARM SYSTEM SHALL BE COORDINATED ON THE ELECTRICAL DRAWINGS & SPECIFICATIONS.

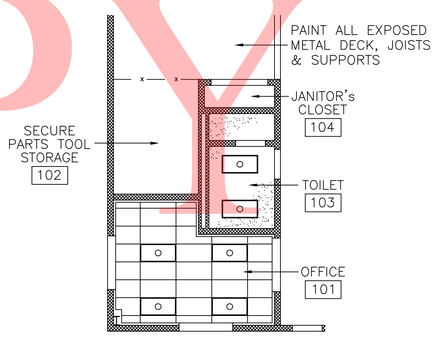

3 A1.1 A1.1 PARTIAL CEILING PLAN
SCALE: 1 1/2" = 1'-0"

LAST REVISED: 06/18/2010
May 03, 2012 - 3:50pm User: jmoyer P:\2008\08012101\Drawings\01-Arch\Magnolia Maintenance Yard\Magnolia Shop Building\A1.1.dwg

PREL. TRACING ____ DESIGN ____ CHKD. ____

Last Modified On: 04/13/12 © WBCM 2012

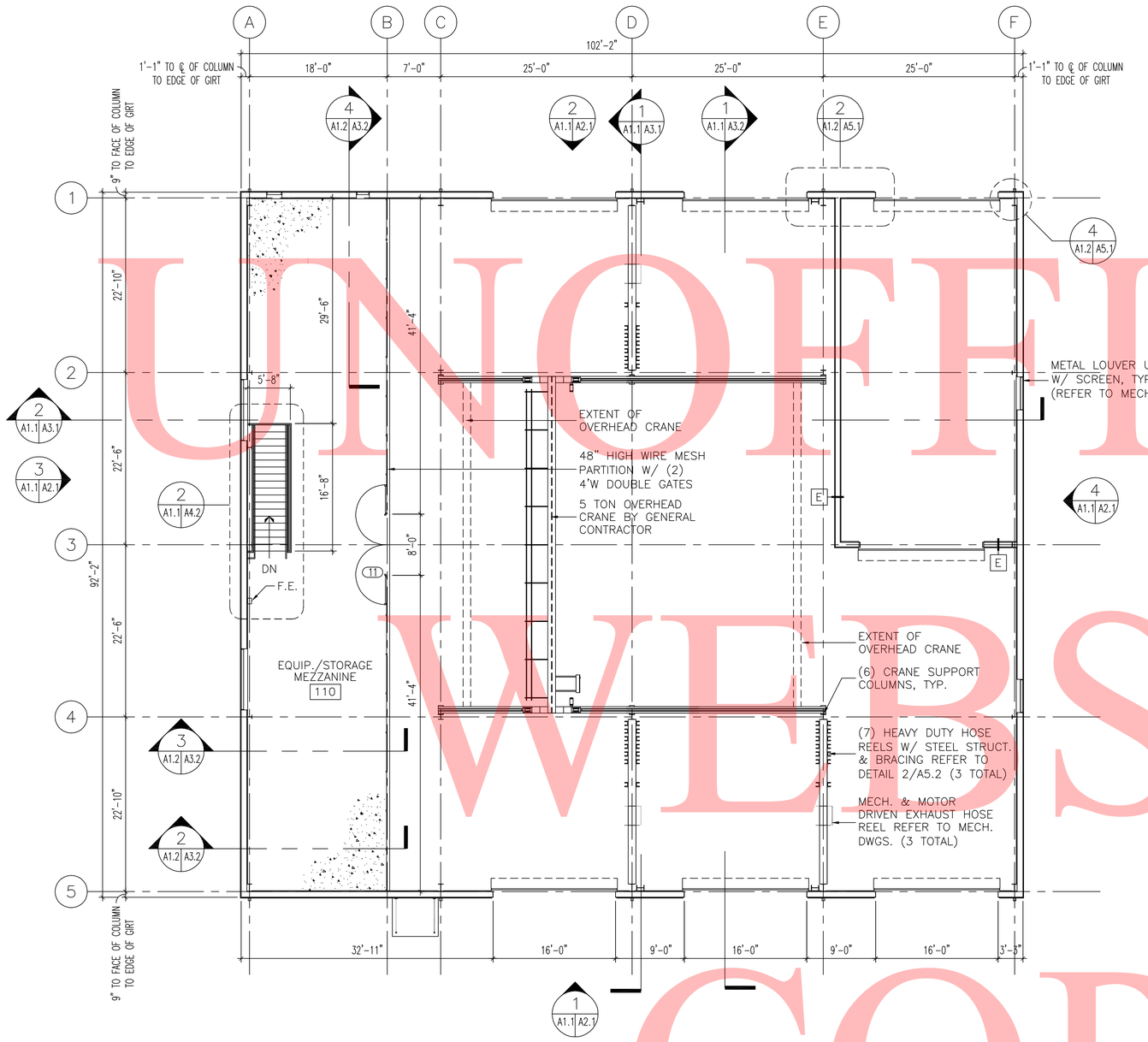

TRUE NORTH

PLAN NORTH

1 A1.2 A1.2 MEZZANINE FLOOR PLAN
SCALE: 1/8" = 1'-0"

GENERAL NOTE:
ALL METAL BUILDING ENGINEERING & CONSTRUCTION BY METAL BUILDING MANUFACTURER.

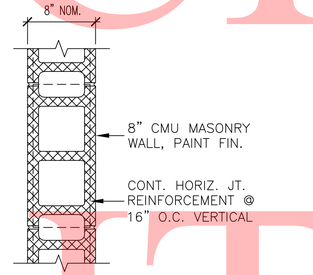

A 8" CMU MASONRY WALL TO UNDERSIDE OF MEZZANINE

A1 8" CMU MASONRY WALL @ 10'-8" HEIGHT

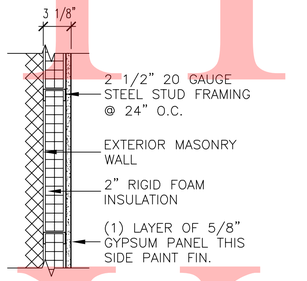

D STEEL STUD & GYPSUM BOARD WALL FURRING

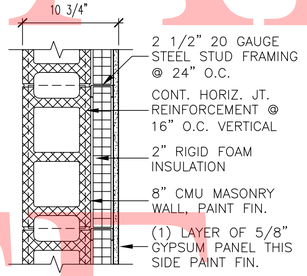

B 8" CMU MASONRY WALL W/ FURRING

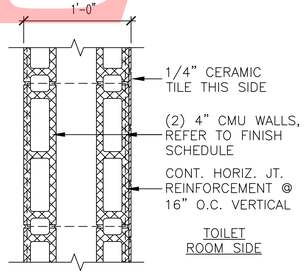

C MASONRY PLUMBING WALL W/ WAINSCOAT

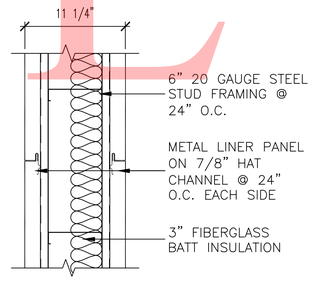

E WASH BAY STEEL STUD HIGH PARTITION

2 A1.2 A1.2 WALL TYPES
SCALE: 1 1/2" = 1'-0"

MEZZANINE FLOOR PLAN

GRAPHIC SCALE

8 0 4 8 16
(IN FEET)
1/8 inch = 1 ft.

8 0 4 8 16
(IN INCHES)
1 1/2 inch = 1 ft.

CONTRACT	COUNTY	F.A.P. NO.	SHEET NO.	TOTAL SHTS
30-801-01	KENT	SEE TITLE SHEET	A1.2 / 14	59

DELAWARE DEPARTMENT OF TRANSPORTATION

MAGNOLIA YARD VEHICLE MAINTENANCE SHOP

REVISIONS

04/12/12 - REVISED PER KENT CO. COMMENTS	

STEPHEN C. BURSKEY NO. 85-7295 STATE OF DELAWARE REGISTERED ARCHITECT 6/8/12

WHITNEY BAILEY COX & MAGNANI, LLC
849 Fairmount Ave Suite 100 Baltimore, MD 21286
MAIN 410.512.4500 FAX 410.324.4100
www.wbcm.com
WBCM ARCHITECTURE ENGINEERING CONSTRUCTION

UNOFFICIAL WEBSITE COPY

LAST REVISED: 06/18/2010
May 03, 2012 - 3:32pm
User: jmoyer P:\2008\0801201\Drawings\01-Arch\Magnolia Maintenance Yard\Magnolia Shop Building\A1.2.dwg
PREL. TRACING ____ DESIGN ____ CHKD. ____

© WBCM 2012

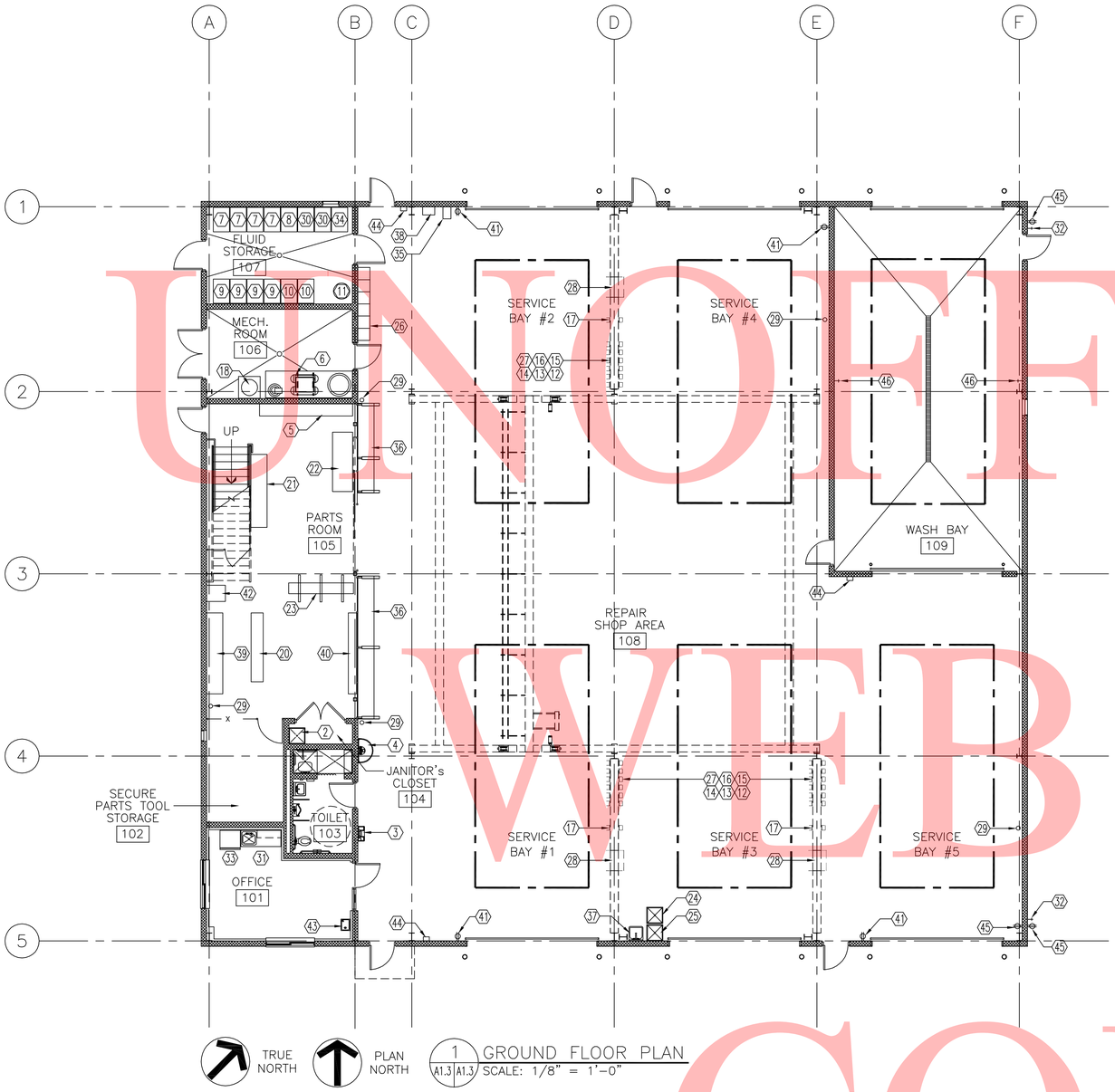

TRUE NORTH

PLAN NORTH

1 / A1.3 | A1.3 GROUND FLOOR PLAN
SCALE: 1/8" = 1'-0"

EQUIPMENT FLOOR PLAN

GRAPHIC SCALE

8 0 4 8 16

(IN FEET)
1/8 inch = 1 ft.

CONTRACT	COUNTY	F.A.P. NO.	SHEET NO.	TOTAL SHTS
30-801-01	KENT	SEE TITLE SHEET	A1.3 / 15	59

DELAWARE DEPARTMENT OF TRANSPORTATION

MAGNOLIA YARD VEHICLE MAINTENANCE SHOP

REVISIONS

04/12/12 - REVISED PER KENT CO. COMMENTS	

STEPHEN C. BURSTEIN NO. 85-7295 STATE OF DELAWARE REGISTERED ARCHITECT 6/5/12

WHITNEY BAILEY COX & MAGNANI, LLC
849 Fairmount Ave Suite 100 Baltimore, MD 21286
MAIN 410.512.4500 FAX 410.324.4100
www.wbcm.com
WBCM ARCHITECTURE ENGINEERING CONSTRUCTION

XX EQUIPMENT SCHEDULE

EQUIP. NO.	EQUIPMENT DESCRIPTION	EQUIP. QUANT.	FURNISHED BY	SIZE (DxHxL)
01	FOUR HOSE HEAVY DUTY MOBILE VEHICLE LIFT SYSTEM – 64,000 LBS. CAPACITY – 208V 3–PHASE 30A TWIST LOCK PLUG IN DEVICE	2	NIC – BY OWNER	–
02	MOP SINK	1	BY GENERAL CONTRACTOR	18" x 18"
03	PORTABLE EYE WASH	1	BY GENERAL CONTRACTOR	–
04	HALF ROUND HAND SINK	1	BY GENERAL CONTRACTOR	–
05	PARTS CABINET	1	NIC – BY OWNER	1'–6" x 11'–6"
06	AIR COMPRESSOR – 110 GALLON TANK REFER TO MECHANICAL DRAWINGS	1	BY GENERAL CONTRACTOR	–
07	15–40 MOTOR OIL PUMP ASSEMBLY AND 60 GAL. BULK STORAGE CUBE	4	BY GENERAL CONTRACTOR	–
08	10–30 MOTOR OIL PUMP ASSEMBLY AND 60 GAL. BULK STORAGE CUBE	1	BY GENERAL CONTRACTOR	–
09	HYDRAULIC OIL PUMP ASSEMBLY AND STATIONARY 60 GAL. CUBE	4	BY GENERAL CONTRACTOR	–
10	TRANSMISSION FLUID PUMP ASSEMBLY AND STATIONARY 60 GAL. CUBE	2	BY GENERAL CONTRACTOR	–
11	GREASE PUMP ASSEMBLY AND 55 GAL. DRUM WITH MOUNTING BRACKETS, PUMP, AND FLANGE FOR CONNECTION	1	BY GENERAL CONTRACTOR	–
12	CLG. MOUNTED HEAVY DUTY SERIES HOSE REEL – MOTOR OIL 15–40	3	BY GENERAL CONTRACTOR	–
13	CLG. MOUNTED HEAVY DUTY SERIES HOSE REEL – ANTI–FREEZE (PIPED IN COPPER)	3	BY GENERAL CONTRACTOR	–
14	CLG. MOUNTED HEAVY DUTY SERIES HOSE REEL – GREASE	3	BY GENERAL CONTRACTOR	–
15	CLG. MOUNTED HEAVY DUTY SERIES HOSE REEL – HYDRAULIC FLUID	3	BY GENERAL CONTRACTOR	–
16	CLG. MOUNTED HEAVY DUTY SERIES HOSE REEL – TRANSMISSION FLUID	3	BY GENERAL CONTRACTOR	–
17	CLG. MOUNTED HEAVY DUTY SERIES HOSE REEL – COMPRESSED AIR LINES	3	BY GENERAL CONTRACTOR	–
18	NATURAL GAS FIRED 50 GAL. HOT WATER HEATER REFER TO MECH. DRAWINGS	1	BY GENERAL CONTRACTOR	–
19	PORTABLE WELDER – 220V 1–PHASE 50A TWIST LOCK PLUG IN DEVICE, 3 OUTLETS TO BE PROVIDED AROUND SHOP	1	NIC – BY OWNER	–
20	RACK	1	NIC – BY OWNER	1'–6" X 8'–6"
21	PART CABINET	1	NIC – BY OWNER	2'–0" X 9'–0"
22	PARTS CASE	1	NIC – BY OWNER	2'–6" X 7'–4"
23	PARTS RACK	1	NIC – BY OWNER	1'–4" X 8'–4"
24	250 GAL. DOUBLE WALLED WASTE OIL RECOVERY TANK WITH INTERIOR BASIN	1	BY GENERAL CONTRACTOR	–
25	500 GAL. DOUBLE WALLED WASTE HYDRAULIC RECOVERY OIL TANK WITH INTERIOR BASIN	1	BY GENERAL CONTRACTOR	–
26	SINGLE TIER FULL HEIGHT FLOOR MOUNTED METAL LOCKER	6	NIC – BY OWNER	18" X 18" X 7'–0"
27	CEILING MOUNTED HEAVY DUTY SERIES REEL – ELECTRIC LINE	3	BY GENERAL CONTRACTOR	–
28	OVERHEAD EXHAUST REMOVAL SYSTEM HOSE REEL W/ Y ADAPTER & ADD'L HOSE	3	BY GENERAL CONTRACTOR	–
29	WALL MOUNTED COMPRESSED AIR DROPS STATIONS AT 48" AFF.	4	BY GENERAL CONTRACTOR	–
30	ANTI–FREEZE PUMP ASSEMBLY AND 60 GAL. BULK STORAGE CUBE	2	BY GENERAL CONTRACTOR	–
31	BASE CABINETS, COUNTER AND SINK W/ (2) 110 V. ELEC. OUTLETS AT 48" AFF.	1	BY GENERAL CONTRACTOR	2'–0" X 5'–0"
32	FROST–PROOF HOSE BIB W/ WALL MTD. HOSE RACK FOR 75' LG. X 3/4" WATER HOSE	2	NIC – BY OWNER	75' LG. X 3/4" WATER HOSE N.I.C.
33	REFRIGERATOR – DO NOT PROVIDE WATER LINE	1	NIC – BY OWNER	–
34	LUBE OIL 60 GAL. BULK STORAGE CUBE	1	BY GENERAL CONTRACTOR	–
35	DRILL PRESS – 208V 3–PHASE 20A PLUG IN DEVICE ON A DEDICATED CIRCUIT	1	NIC – BY OWNER	–
36	WORK BENCH W/ (2) 110 V. ELEC. OUTLETS AT 48" AFF.	2	NIC – BY OWNER	–
37	ENAMELED CAST IRON WALL MOUNTED UTILITY SINK	1	BY GENERAL CONTRACTOR	22" X 18"
38	PEDESTAL GRINDER – 120V 1–PHASE 20A PLUG IN DEVICE ON A DEDICATED CIRCUIT	1	NIC – BY OWNER	–
39	TOOL CABINET W/ (2) 110 V. ELEC. OUTLETS AT 48" AFF.	1	NIC – BY OWNER	2'–0" X 10'–0"
40	FREESTANDING BOOKCASE	1	NIC – BY OWNER	1'–0" X 10'–0"
41	OUTLET FOR PORTABLE WELDER	3	NIC – BY OWNER	–
42	MANUAL 20 TON HYDRAULIC PRESS	1	NIC – BY OWNER	–
43	WALL MOUNTED ELECTRIC WATER COOLER	1	BY GENERAL CONTRACTOR	–
44	FIRE EXTINGUISHERS – WALL MOUNTED	4	BY GENERAL CONTRACTOR	–
45	ELECTRICAL OUTLET 48" AFF.	3	BY GENERAL CONTRACTOR	–
46	STANDARD HOSE BIB & W.P. ELECTRICAL OUTLET FOR WASH EQUIPMENT	2	BY GENERAL CONTRACTOR	–

GENERAL NOTES:
ALL HOSE REEL LENGTHS TO EXTEND A MINIMUM OF 15'–0" BEYOND THE EXTERIOR FACE OF THE BUILDING FOR OUTSIDE SERVICE OF TRUCKS. HEAVY DUTY HOSE REELS TO ACCOMMODATE 75 FOOT HOSE.

THE (5) HEAVY DUTY SERIES HOSE REELS SHALL BE PROVIDED AND GROUPED TOGETHER FOR THE FLUIDS LISTED IN THE EQUIPMENT SCHEDULE. (4) OF THE (5) HOSE REEL FLUIDS TO BE PROVIDED WITH STEEL PIPE, THE REEL CONTAINING ANTI–FREEZE SHALL USE COPPER PIPING. PROVIDE HOSE REELS FOR COMPRESSED AIR AND ELECTRIC AT SAME LOCATION.

ALL EQUIPMENT SHOWN DIAGRAMMATICALLY, COORDINATE EXACT LOCATION WITH OWNER BEFORE INSTALLATION.

ALL METAL BUILDING ENGINEERING & CONSTRUCTION BY METAL BUILDING MANUFACTURER.

UNOFFICIAL WEBSITE COPY

LAST REVISED: 06/18/2010
May 03, 2012 - 3:33pm User: jmoyer P:\2008\08012101\Drawings\01-Arch\Magnolia Maintenance Yard\Magnolia Shop Building\A1.3.dwg

PREL. TRACING ____ DESIGN ____ CHKD. ____

© WBCM 2012

ROOF PLAN

GRAPHIC SCALE

8 0 4 8 16

(IN FEET)
1/8 inch = 1 ft.

CONTRACT	COUNTY	F.A.P. NO.	SHEET NO.	TOTAL SHTS
30-801-01	KENT	SEE TITLE SHEET	A1.4 / 16	59

DELAWARE DEPARTMENT OF TRANSPORTATION

MAGNOLIA YARD VEHICLE MAINTENANCE SHOP

REVISIONS

04/12/12 - REVISED PER KENT CO. COMMENTS	

STEPHEN C. BURGETTE NO. 85-7295 STATE OF DELAWARE REGISTERED ARCHITECT 6/5/12

WHITNEY BAILEY COX & MAGNANI, LLC
849 Fairmount Ave Suite 100 Baltimore, MD 21286
MAIN 410.512.4500 FAX 410.324.4100
www.wbcm.com
WBCM
ARCHITECTURE ENGINEERING CONSTRUCTION

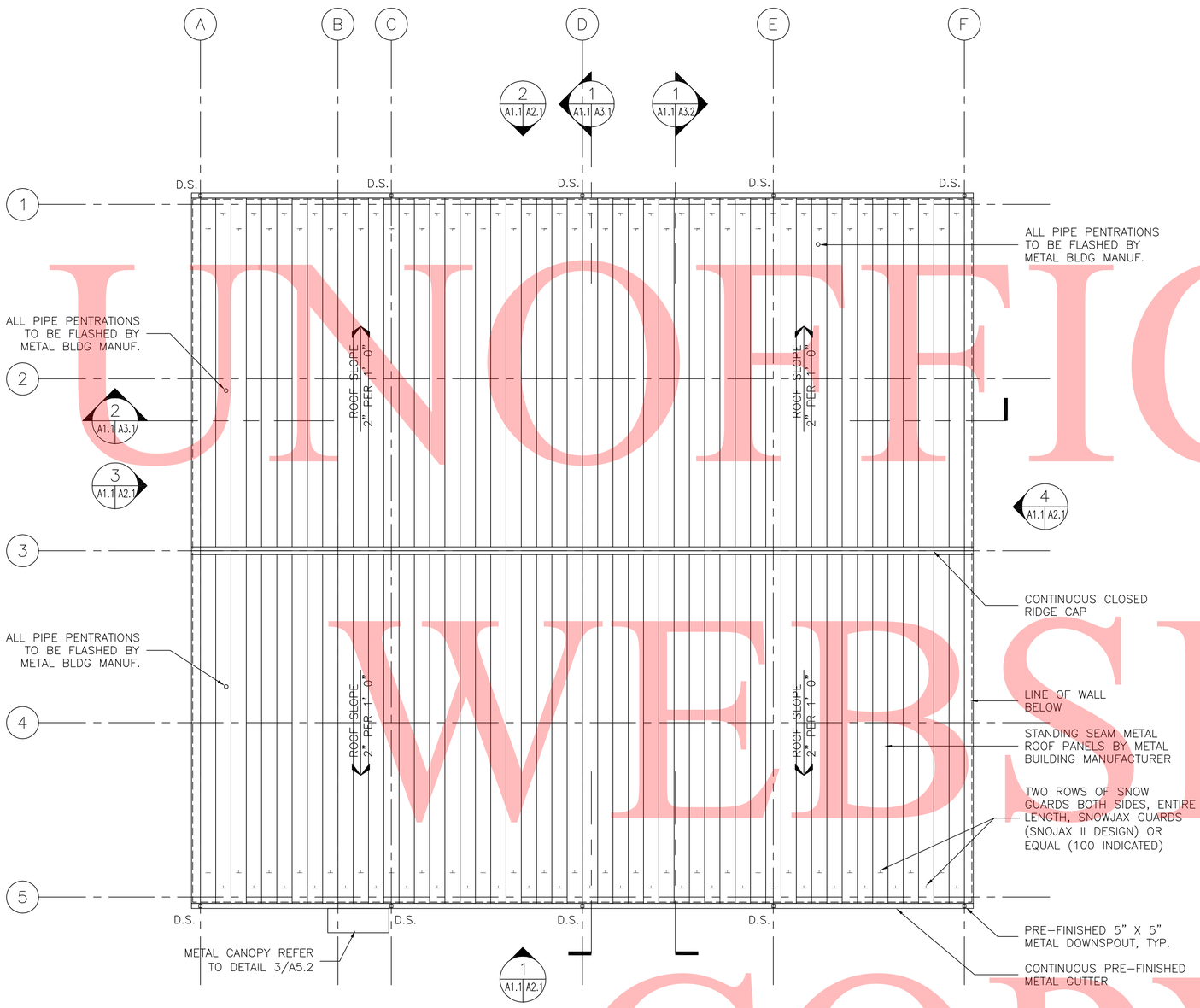

TRUE NORTH

PLAN NORTH

1 A1.4 A1.4 ROOF PLAN – SHOP BUILDING
SCALE: 1/8" = 1'-0"

GENERAL NOTE:
ALL METAL BUILDING ENGINEERING & CONSTRUCTION BY METAL BUILDING MANUFACTURER.

UNOFFICIAL WEBSITE COPY

LAST REVISED: 06/18/2010
May 03, 2012 - 3:34pm User: jmoyer P:\2008\08012101\Drawings\01-Arch\Magnolia Maintenance Yard\Magnolia Shop Building\A1.4.dwg
PREL. TRACING ____ DESIGN ____ CHKD. ____

© WBCM 2012

BUILDING ELEVATIONS

GRAPHIC SCALE
8 0 4 8 16
(IN FEET)
1/8 inch = 1 ft.

CONTRACT	COUNTY	F.A.P. NO.	SHEET NO.	TOTAL SHTS
30-801-01	KENT	SEE TITLE SHEET	A2.1 / 17	59

DELAWARE DEPARTMENT OF TRANSPORTATION
MAGNOLIA YARD VEHICLE MAINTENANCE SHOP

REVISIONS

04/12/12 - REVISED PER KENT CO. COMMENTS

STEPHEN C. BURSHTEIN NO. 85-7295 STATE OF DELAWARE REGISTERED ARCHITECT 6/5/12

WHITNEY BAILEY COX & MAGNANI, LLC
849 Fairmount Ave Suite 100 Baltimore, MD 21286
MAIN 410.512.4500 FAX 410.324.4100
www.wbcm.com
WBCM ARCHITECTURE ENGINEERING CONSTRUCTION

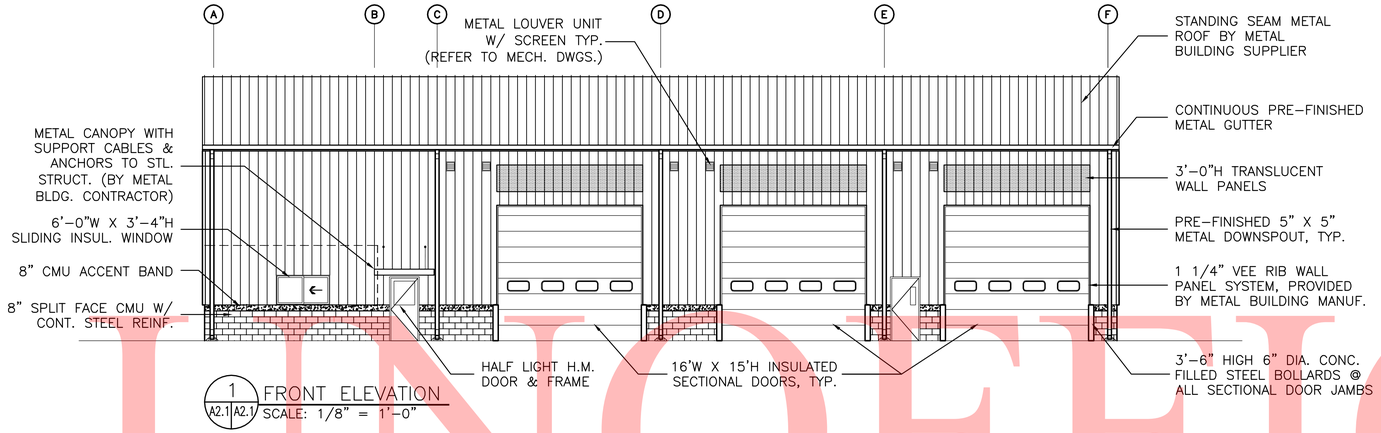

1 A2.1 A2.1 FRONT ELEVATION
SCALE: 1/8" = 1'-0"

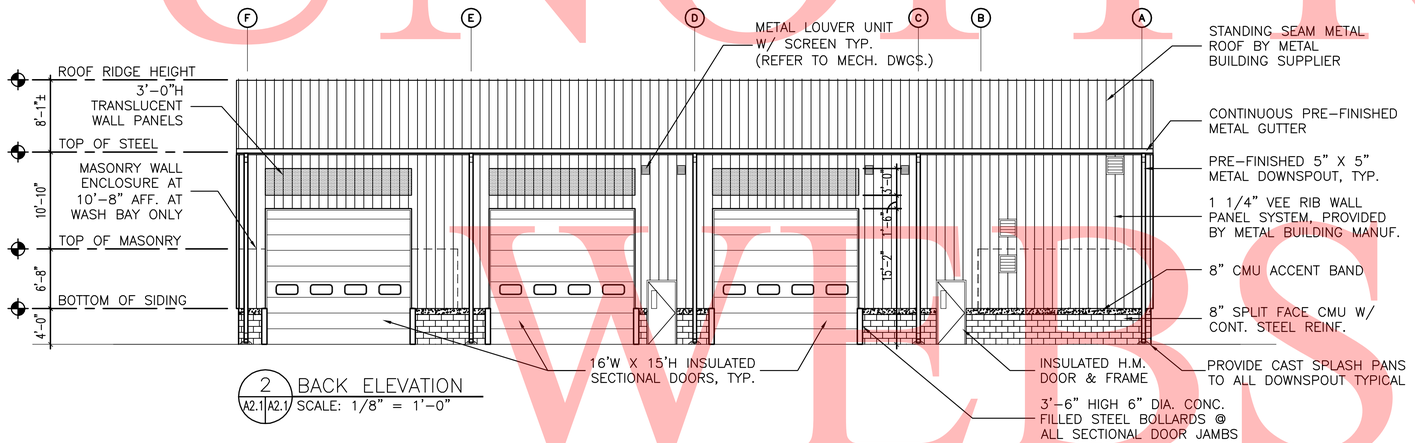

2 A2.1 A2.1 BACK ELEVATION
SCALE: 1/8" = 1'-0"

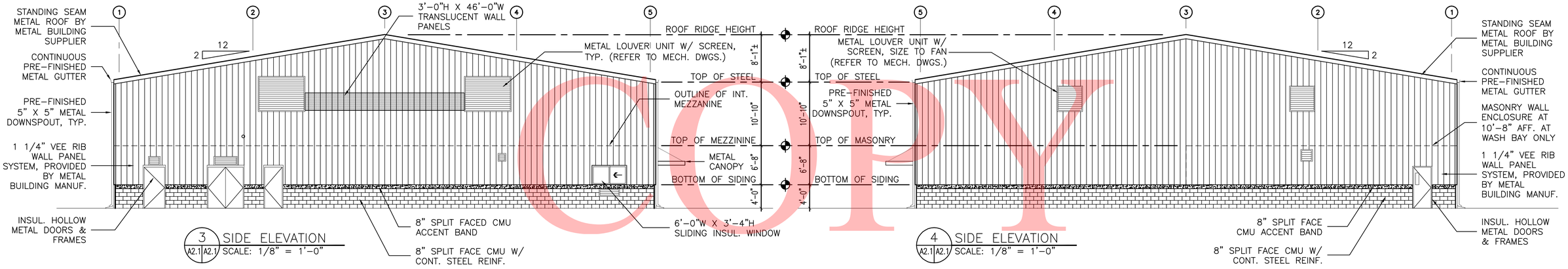

3 A2.1 A2.1 SIDE ELEVATION
SCALE: 1/8" = 1'-0"

4 A2.1 A2.1 SIDE ELEVATION
SCALE: 1/8" = 1'-0"

GENERAL NOTES:
ALL METAL BUILDING ENGINEERING & CONSTRUCTION BY METAL BUILDING MANUFACTURER.

FOR SIZES OF METAL LOUVER UNIT W/ INSECT SCREEN REFER TO MECHANICAL DRAWINGS.

FOR LIGHT FIXTURE MOUNTING HEIGHTS REFER TO ELECTRICAL DRAWING E0.1.

UNOFFICIAL WEBSITE COPY

LAST REVISED: 06/13/2010
May 03, 2012 - 3:28pm User: jmoyer P:\2008\0801201\DRAWINGS\01-Arch\Magnolia Maintenance Yard\Magnolia Shop Building\A2.1.dwg
DESIGN CHKD.
PREL. TRACING

© WBCM 2012

BUILDING SECTIONS

GRAPHIC SCALE
4 0 2 4 8
(IN FEET)
1/4 inch = 1 ft.

CONTRACT	COUNTY	F.A.P. NO.	SHEET NO.	TOTAL SHTS
30-801-01	KENT	SEE TITLE SHEET	A3.1 / 18	59

DELAWARE DEPARTMENT OF TRANSPORTATION
MAGNOLIA YARD VEHICLE MAINTENANCE SHOP

REVISIONS

04/12/12 - REVISED PER KENT CO. COMMENTS	

STEPHEN C. BURDETTE NO. 85-7295 STATE OF DELAWARE REGISTERED ARCHITECT 6/5/12

WHITNEY BAILEY COX & MAGNANI, LLC
849 Fairmount Ave Suite 100 Baltimore, MD 21286
MAIN 410.512.4500 FAX 410.324.4100
www.wbcm.com
WBCM
ARCHITECTURE ENGINEERING CONSTRUCTION

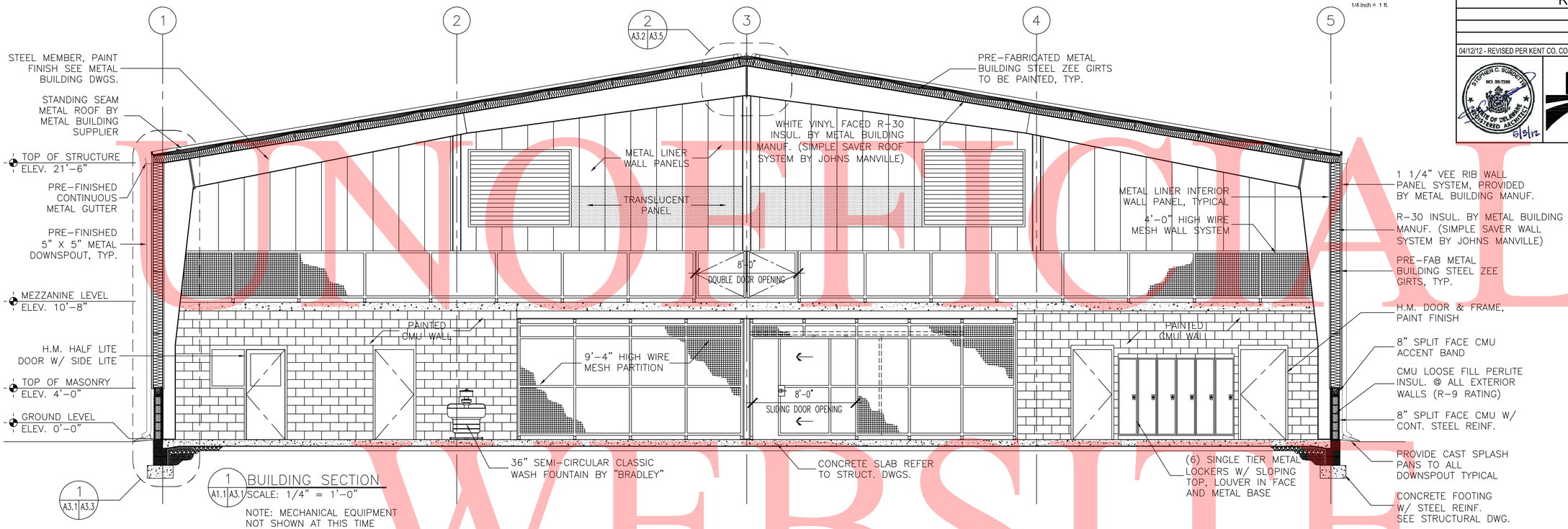

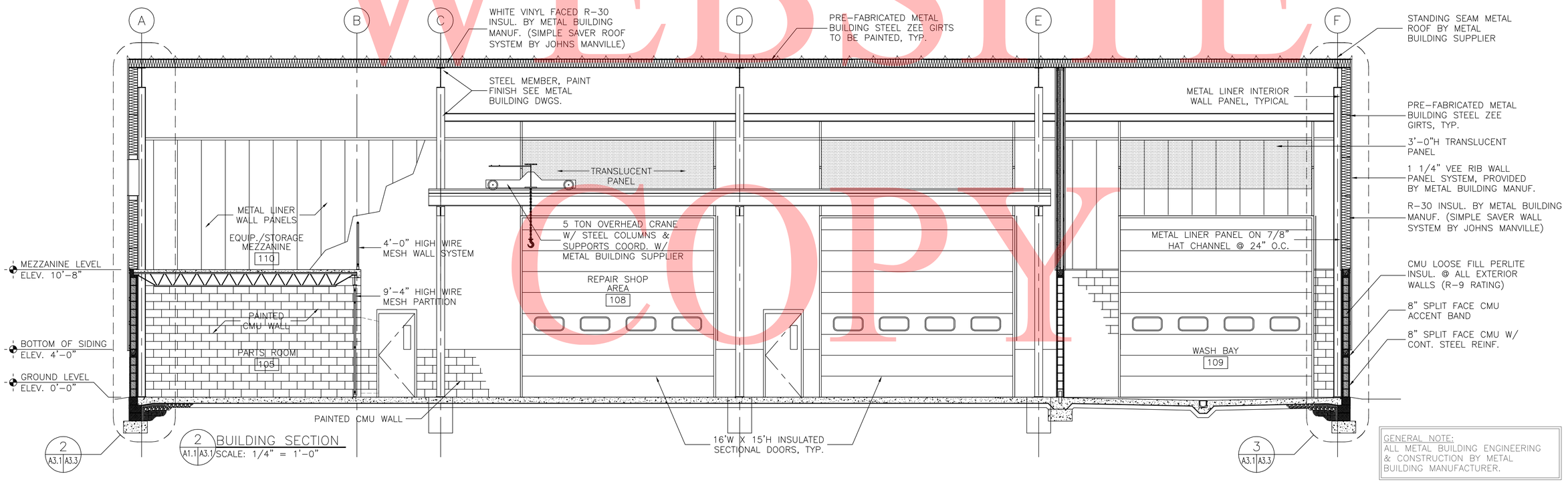

GENERAL NOTE:
ALL METAL BUILDING ENGINEERING & CONSTRUCTION BY METAL BUILDING MANUFACTURER.

UNOFFICIAL WEBSITE COPY

LAST REVISED: 06/18/2010
May 03, 2012 - 3:35pm
User: jmoyer P:\2008\0801201\Drawings\01-Arch\Magnolia Maintenance Yard\Magnolia Shop Building\A3.1.dwg
DESIGN
CHKD.
PREL. TRACING

© WBCM 2012

BUILDING SECTIONS

GRAPHIC SCALE
4 0 2 4 8
(IN FEET)
1/4 inch = 1 ft.

CONTRACT	COUNTY	F.A.P. NO.	SHEET NO.	TOTAL SHTS
30-801-01	KENT	SEE TITLE SHEET	A3.2 / 19	59

DELAWARE DEPARTMENT OF TRANSPORTATION

MAGNOLIA YARD VEHICLE MAINTENANCE SHOP

REVISIONS

04/12/12 - REVISED PER KENT CO. COMMENTS

STEPHEN C. BURSKEY NO. 85-7295 STATE OF DELAWARE REGISTERED ARCHITECT 6/5/12

WHITNEY BAILEY COX & MAGNANI, LLC
849 Fairmount Ave Suite 100 Baltimore, MD 21286
MAIN 410.512.4500 FAX 410.324.4100
www.wbcm.com
WBCM ARCHITECTURE ENGINEERING CONSTRUCTION

UNOFFICIAL WEBSITE COPY

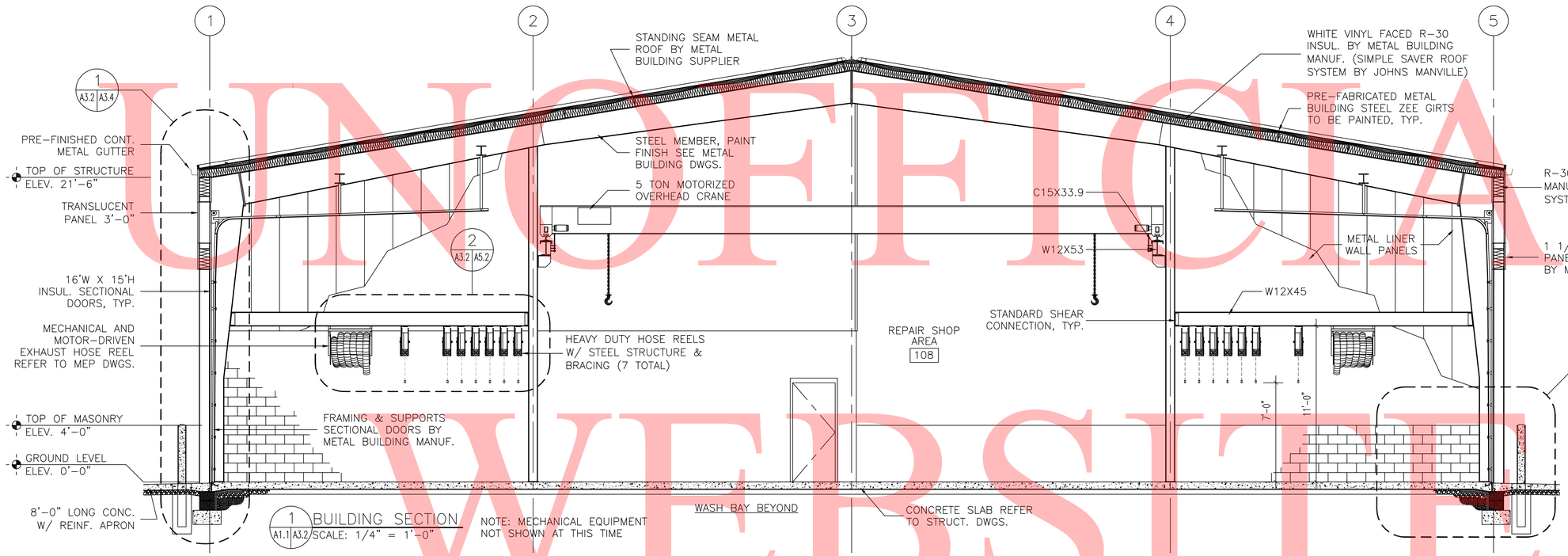

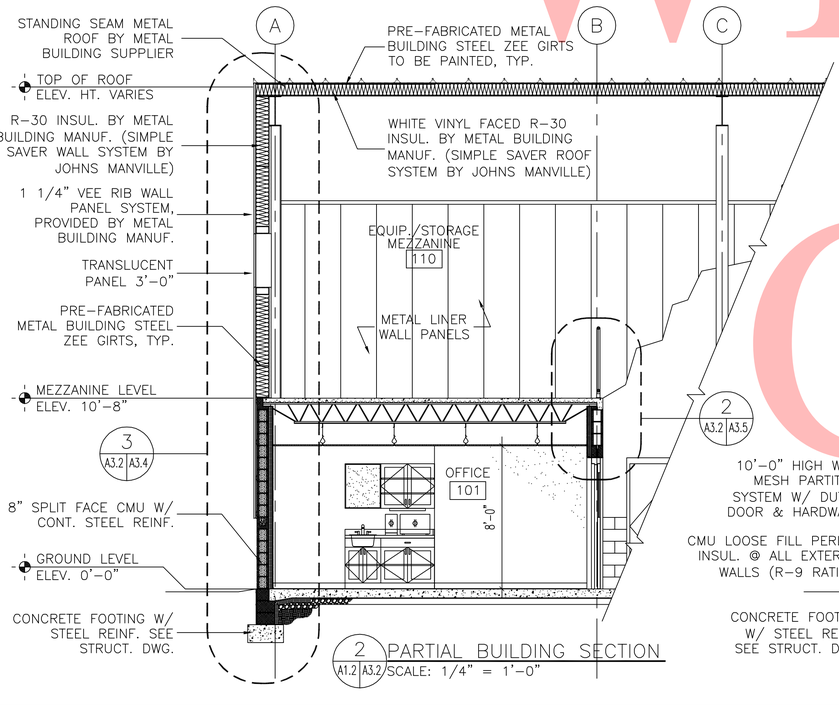

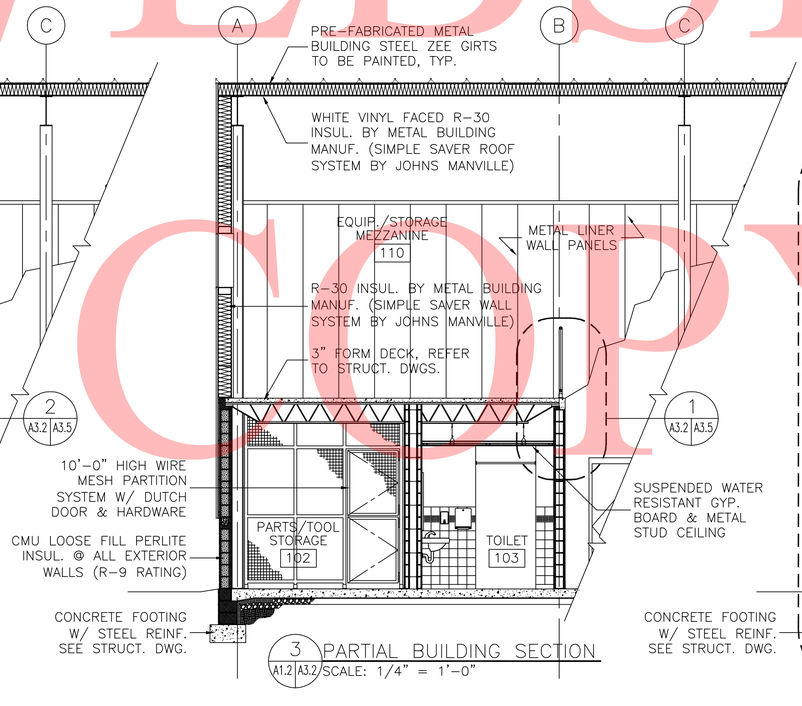

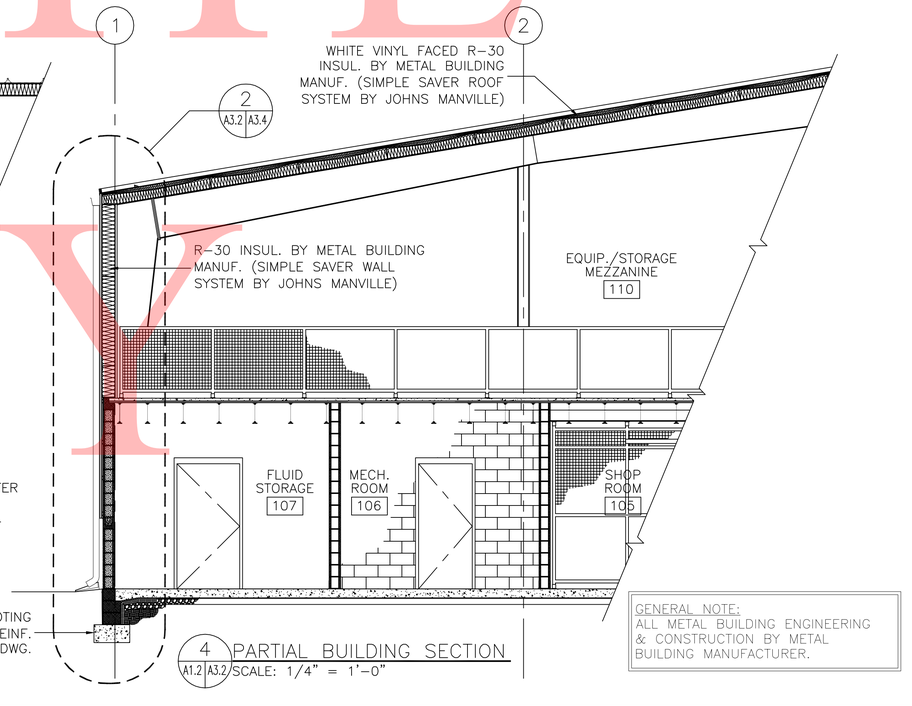

GENERAL NOTE:
ALL METAL BUILDING ENGINEERING & CONSTRUCTION BY METAL BUILDING MANUFACTURER.

LAST REVISED: 06/18/2010
May 05, 2012 - 3:57pm User: jmoyer P:\2008\08012101\Drawings\01-Arch\Magnolia Maintenance Yard\Magnolia Shop Building\A3.2.dwg
DESIGN CHKD.
PREL. TRACING

Last Modified On: 04/13/12

© WBCM 2012

WALL SECTIONS

GRAPHIC SCALE
16 0 8 16 32
(IN INCHES)
3/4 inch = 1 ft.

CONTRACT	COUNTY	F.A.P. NO.	SHEET NO.	TOTAL SHTS
30-801-01	KENT	SEE TITLE SHEET	A3.3 / 20	59

DELAWARE DEPARTMENT OF TRANSPORTATION
MAGNOLIA YARD VEHICLE MAINTENANCE SHOP

REVISIONS

04/12/12 - REVISED PER KENT CO. COMMENTS	

STEPHEN C. BURSTEIN NO. 85-7295 REGISTERED ARCHITECT STATE OF DELAWARE 6/5/12

WHITNEY BAILEY COX & MAGNANI, LLC
849 Fairmount Ave Suite 100 Baltimore, MD 21286
MAIN 410.512.4500 FAX 410.324.4100
www.wbcm.com
WBCM ARCHITECTURE ENGINEERING CONSTRUCTION

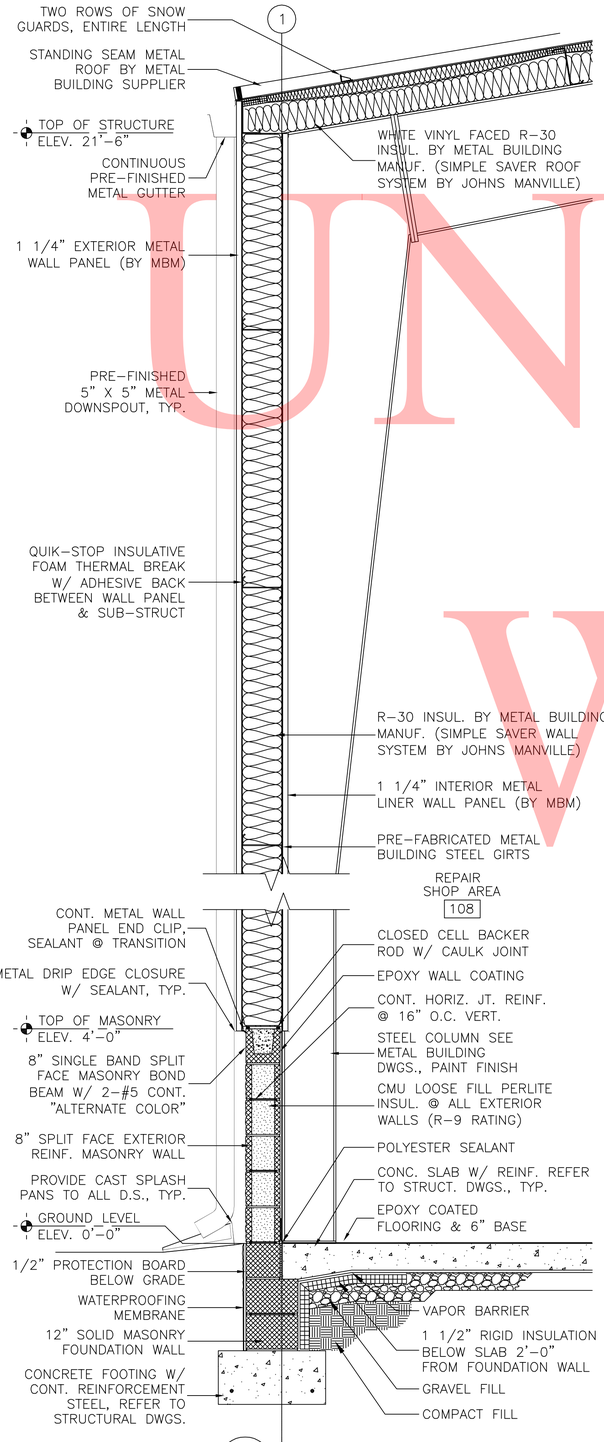

1 BUILDING WALL SECTION
A3.1 A3.3 SCALE: 3/4" = 1'-0"

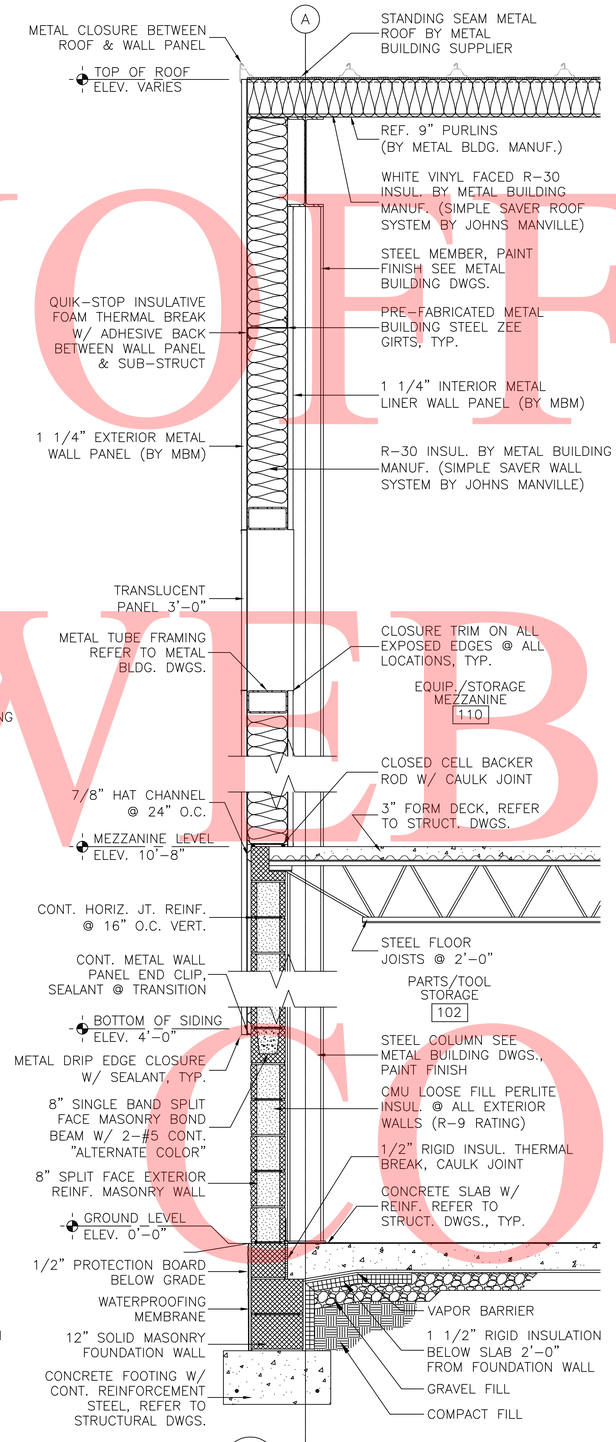

2 BUILDING WALL SECTION
A3.1 A3.3 SCALE: 3/4" = 1'-0"

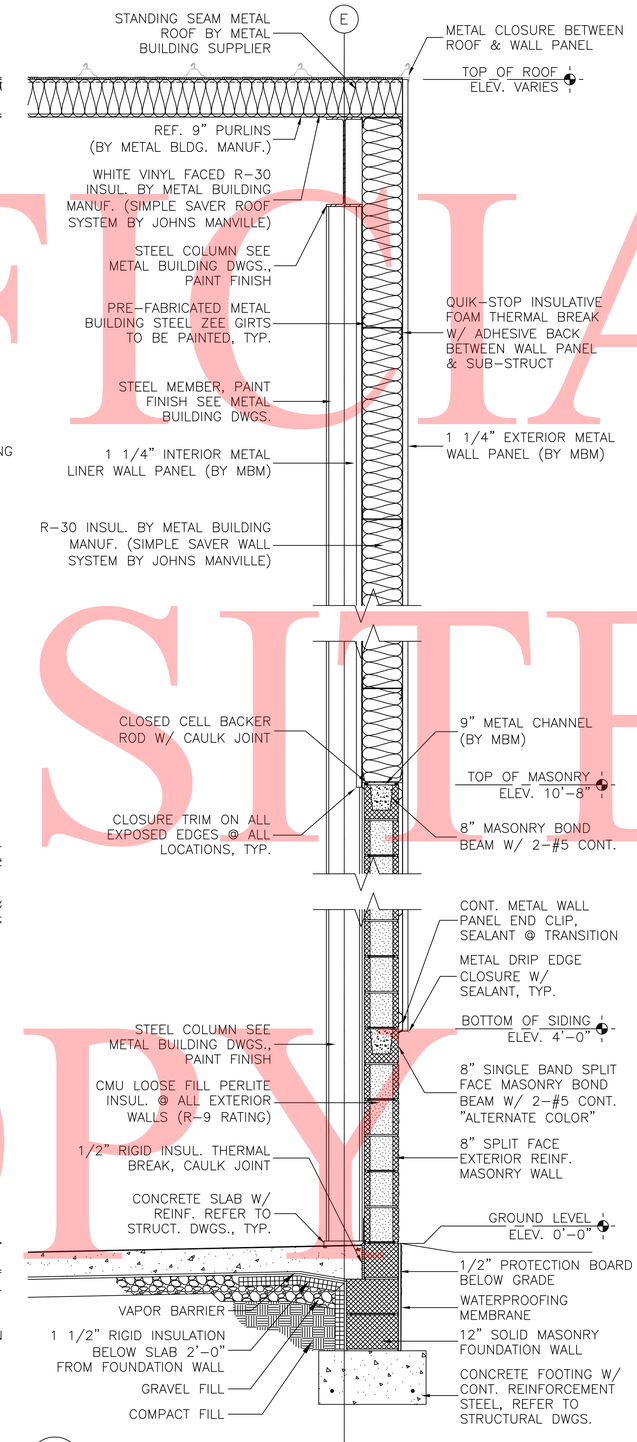

3 BUILDING WALL SECTION
A3.1 A3.3 SCALE: 3/4" = 1'-0"

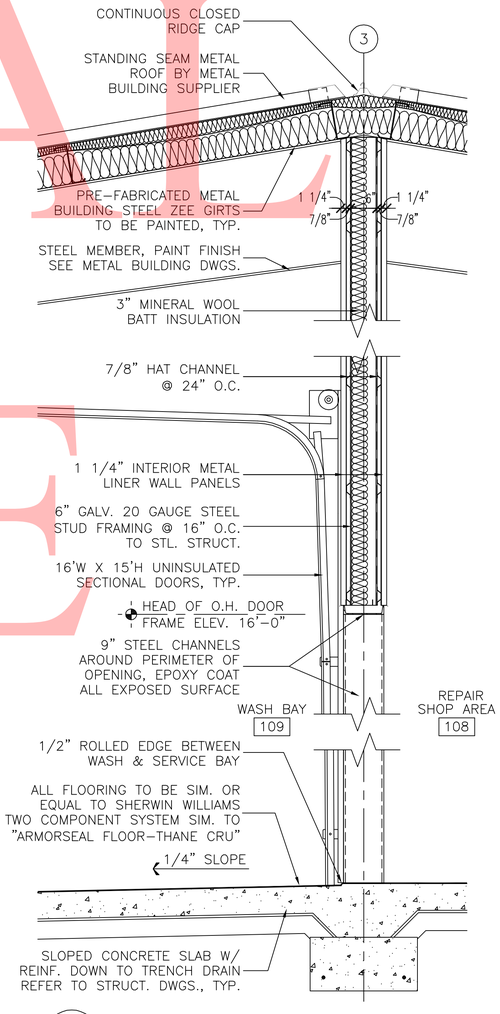

4 BUILDING WALL SECTION
A1.1 A3.3 SCALE: 3/4" = 1'-0"

GENERAL NOTE:
ALL METAL BUILDING ENGINEERING & CONSTRUCTION BY METAL BUILDING MANUFACTURER.

UNOFFICIAL WEBSITE COPY

LAST REVISED: 06/18/2010
May 05, 2012 - 3:39pm User: jmoyer P:\2008\08012101\Drawings\01-Arch\Magnolia Maintenance Yard\Magnolia Shop Building\A3.3.dwg
PREL. TRACING DESIGN CHKD.

© WBCM 2012

WALL SECTIONS

GRAPHIC SCALE
16 0 8 16 32
(IN INCHES)
3/4 inch = 1 ft.

CONTRACT	COUNTY	F.A.P. NO.	SHEET NO.	TOTAL SHTS
30-801-01	KENT	SEE TITLE SHEET	A3.4 / 21	59

DELAWARE DEPARTMENT OF TRANSPORTATION
MAGNOLIA YARD VEHICLE MAINTENANCE SHOP

REVISIONS

04/12/12 - REVISED PER KENT CO. COMMENTS	

STEPHEN C. BURSETTE NO. SS-7295 STATE OF DELAWARE REGISTERED ARCHITECT 6/5/12

WHITNEY BAILEY COX & MAGNANI, LLC
849 Fairmount Ave Suite 100 Baltimore, MD 21286
MAIN 410.512.4500 FAX 410.324.4100
www.wbcm.com
WBCM ARCHITECTURE ENGINEERING CONSTRUCTION

GENERAL NOTE:
ALL METAL BUILDING ENGINEERING & CONSTRUCTION BY METAL BUILDING MANUFACTURER.

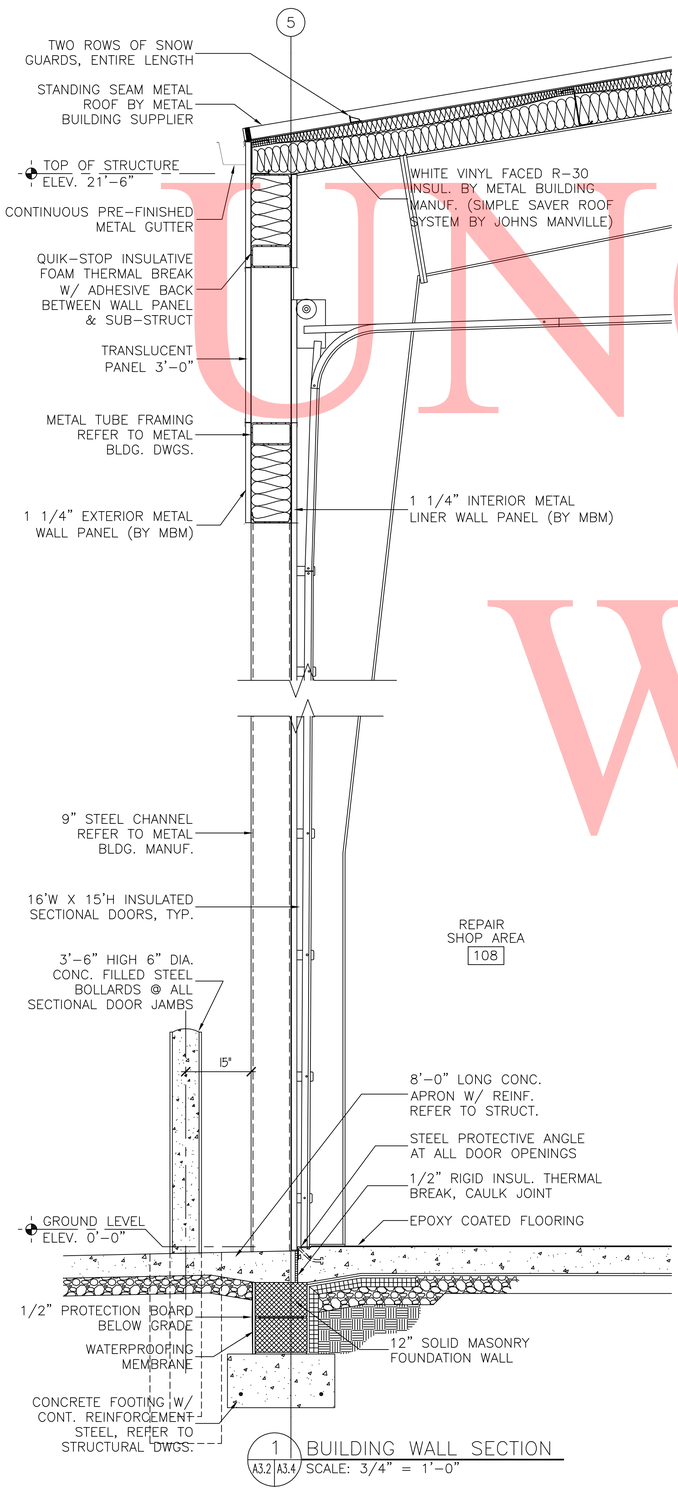

1 BUILDING WALL SECTION
A3.2 A3.4 SCALE: 3/4" = 1'-0"

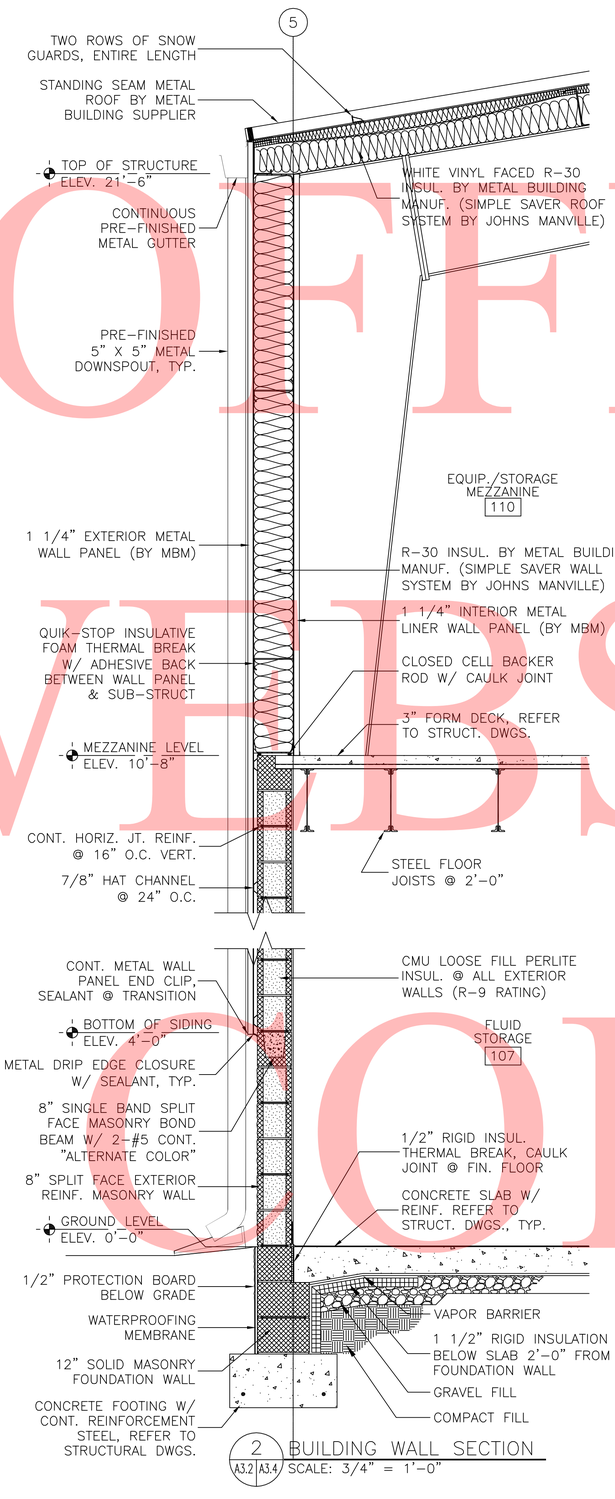

2 BUILDING WALL SECTION
A3.2 A3.4 SCALE: 3/4" = 1'-0"

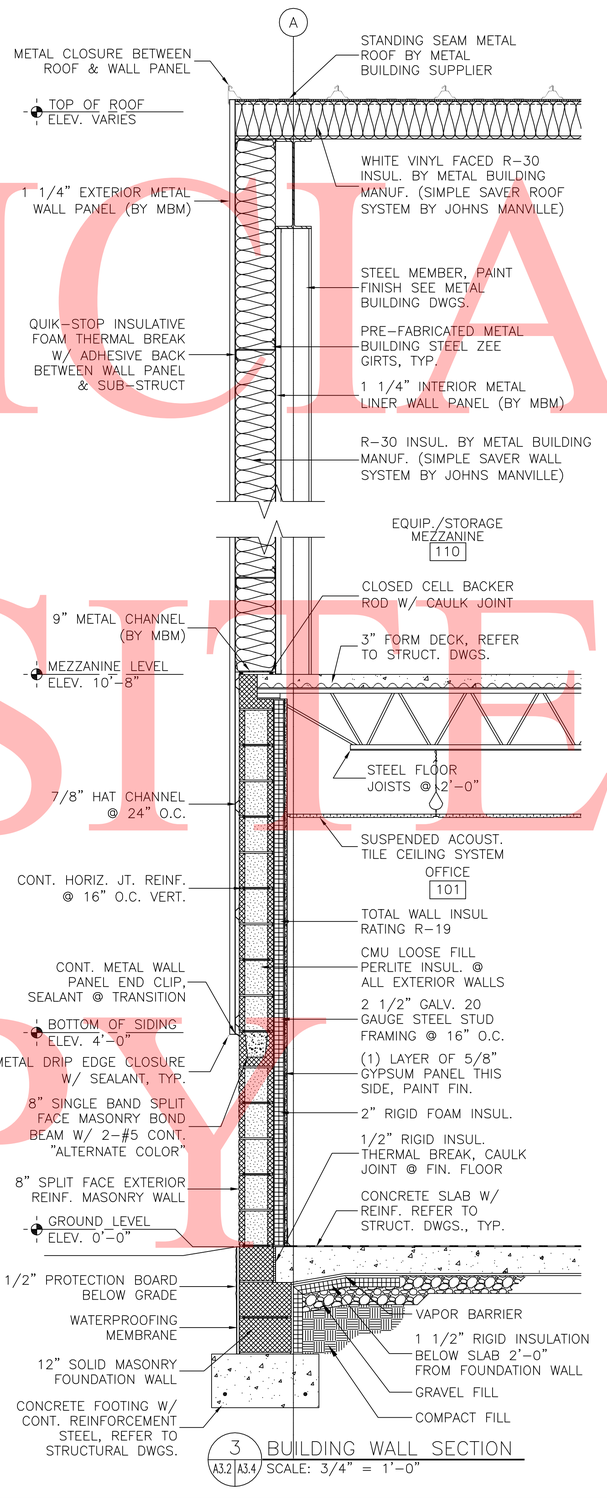

3 BUILDING WALL SECTION
A3.2 A3.4 SCALE: 3/4" = 1'-0"

UNOFFICIAL WEBSITE COPY

LAST REVISED: 06/18/2010
May 05, 2012 - 2:39pm User: jmoyer P:\2008\V0801201\Drawings\01-Arch\Magnolia Maintenance Yard\Magnolia Shop Building\A3.4.dwg
DESIGN CHKD.
PREL. TRACING

© WBCM 2012

SECTIONS & DETAILS

GRAPHIC SCALE
16 0 8 16 32
(IN INCHES)
3/4 inch = 1 ft.

CONTRACT	COUNTY	F.A.P. NO.	SHEET NO.	TOTAL SHTS
30-801-01	KENT	SEE TITLE SHEET	A3.5 / 22	59

DELAWARE DEPARTMENT OF TRANSPORTATION
MAGNOLIA YARD VEHICLE MAINTENANCE SHOP

REVISIONS

04/12/12 - REVISED PER KENT CO. COMMENTS	

STEPHEN C. BURGETTE NO. 85-7286 STATE OF DELAWARE REGISTERED ARCHITECT 6/5/12

WHITNEY BAILEY COX & MAGNANI, LLC
849 Fairmount Ave. Suite 100 Baltimore, MD 21286
MAIN 410.512.4500 FAX 410.324.4100
www.wbcm.com
WBCM ARCHITECTURE ENGINEERING CONSTRUCTION

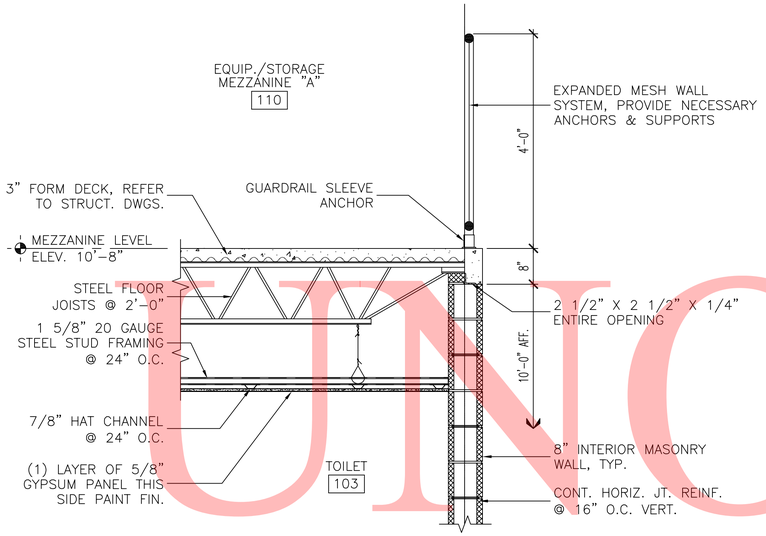

1 A3.2 A3.5 MEZZANINE RAIL DETAIL
SCALE: 3/4" = 1'-0"

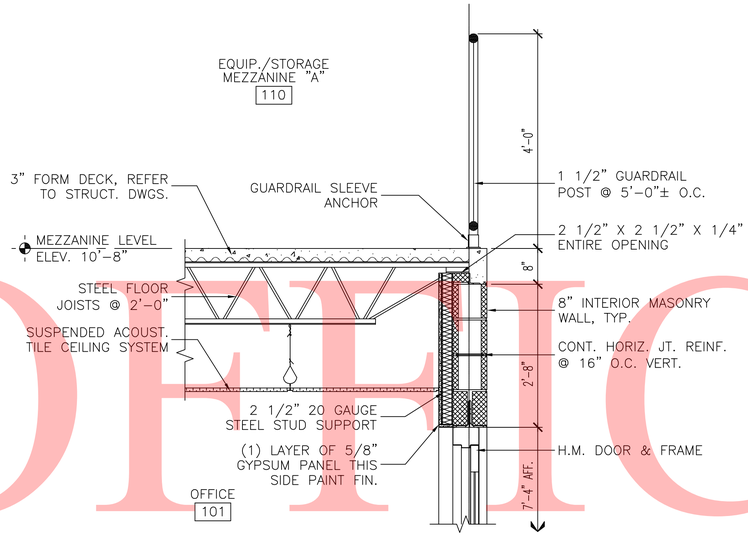

2 A3.2 A3.5 SOFFIT DETAIL @ OFFICE
SCALE: 3/4" = 1'-0"

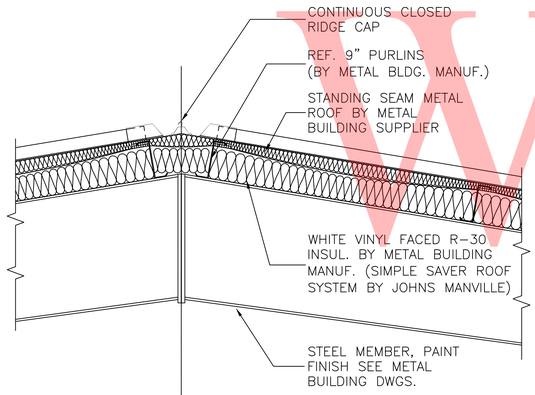

3 A3.2 A3.5 ROOF RIDGE DETAIL
SCALE: 3/4" = 1'-0"

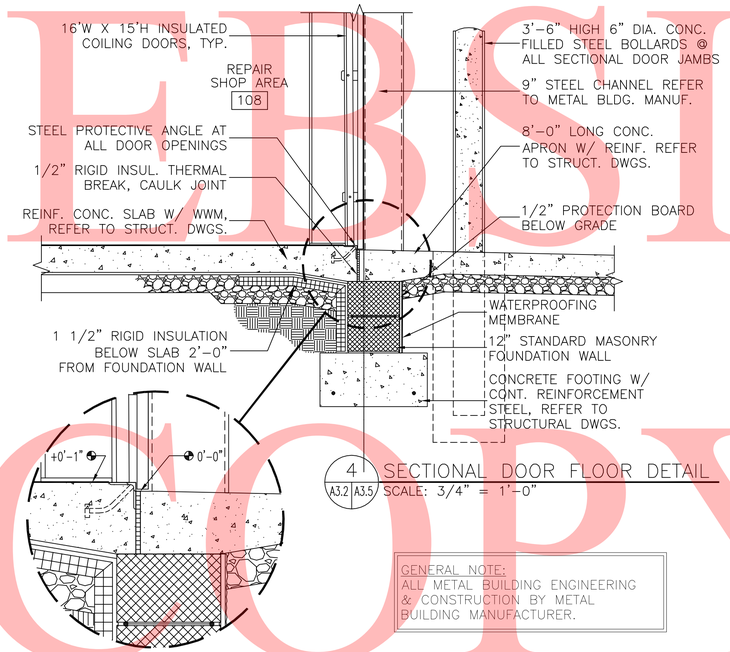

4 A3.2 A3.5 SECTIONAL DOOR FLOOR DETAIL
SCALE: 3/4" = 1'-0"

GENERAL NOTE:
ALL METAL BUILDING ENGINEERING & CONSTRUCTION BY METAL BUILDING MANUFACTURER.

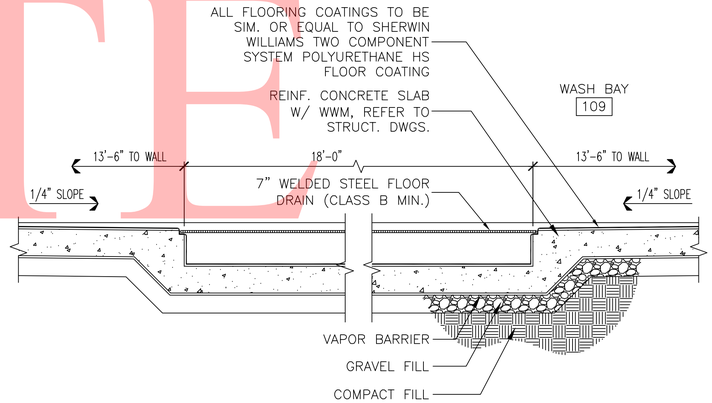

5 A1.1 A3.5 WASH BAY TRENCH DETAIL
SCALE: 3/4" = 1'-0"

UNOFFICIAL
WEBSITE
COPY

LAST REVISED: 06/18/2010
May 03, 2012 - 3:40pm User: jmoyer P:\2008\0801201\Drawings\01-Arch\Magnolia Maintenance Yard\Magnolia Shop Building\A3.5.dwg
DESIGN CHKD.
PREL. TRACING

© WBCM 2012

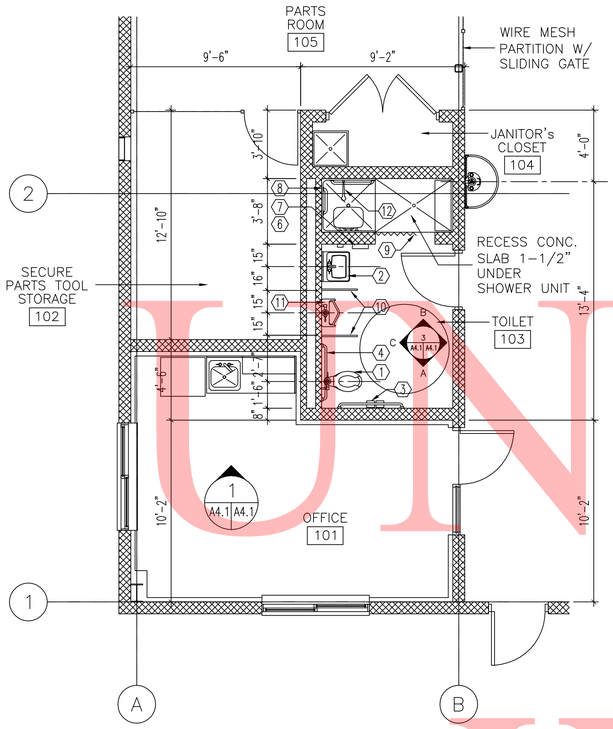

1 LARGE SCALE FLOOR PLAN
A1.1 A4.1 SCALE: 1/4" = 1'-0"

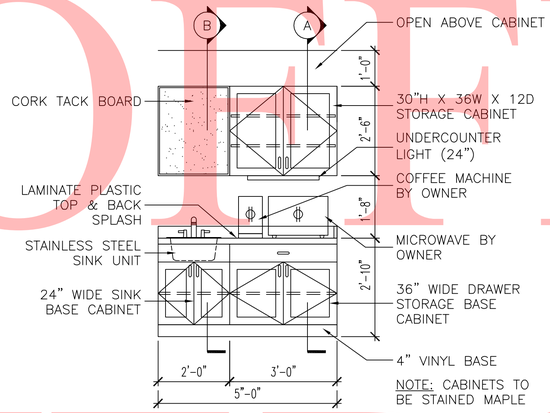

2 LARGE SCALE FLOOR PLAN
A4.1 A4.1 SCALE: 1/4" = 1'-0"

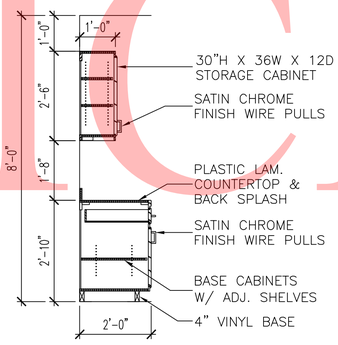

A TYPICAL CASEWORK SECTION

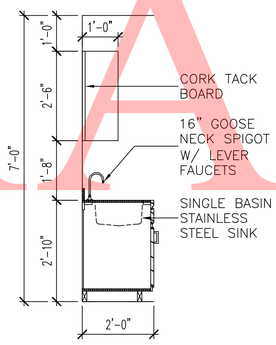

B TYPICAL SINK CASEWORK SECTION

ACCESSORY SCHEDULE:

1. FLOOR MOUNTED WATER CLOSET WITH FLUSH VALVE, MOUNTED AT HANDICAP HEIGHT.
2. WALL MOUNTED HANDICAP SINK, MOUNTED AT HANDICAP HEIGHT WITH SURFACE MOUNTED STAINLESS STEEL FRAME MIRROR, ABOVE 20" WIDE BY 40" HIGH WALL MOUNTED SINK.
3. SURFACE MOUNTED DOUBLE ROLL TOILET PAPER DISPENSER WITH BRUSHED METAL FINISH, MOUNTED AT STANDARD HEIGHT.
4. BRUSHED STAINLESS STEEL HANDICAP GRAB BARS.
   - 3'-6" (SIDE WALL)
   - 3'-0" (REAR WALL)
5. WRAP EXPOSED SINK DRAIN PIPES PER ADA REQUIREMENTS.
6. STAINLESS STEEL SURFACE WALL MOUNTED SOAP DISPENSER, MOUNTED AT STANDARD HANDICAP HEIGHT.
7. STAINLESS STEEL SURFACE MOUNTED PAPER TOWEL DISPENSER, MOUNTED AT STANDARD HANDICAP HEIGHT.
8. PREFABRICATED FIBERGLASS SHOWER UNIT WITH FOLD DOWN SEATING AND HANDICAP GRAB BARS. SIMILAR TO MODEL 36-34H BY FLORESTONE
9. CURTAIN ROD TO BE MOUNTED AT 7'-0" AFF.
10. WALL MOUNTED URINAL SCREEN WITH STAINLESS STEEL FINISH, PROVIDE BRACING AS SPECIFIED.
11. WALL MOUNTED URINAL WITH FLUSH VALVE, REFER TO ELEVATION FOR MOUNTING HEIGHT.
12. WALL MOUNTED SHOWER FIXTURE.
13. PROVIDE NEW SHOWER CONTROL VALVE TO BE INSTALLED AT STANDARD HEIGHT.
14. FIXED SHOWER BENCH.

GENERAL NOTE: THE ABOVE NOTED ITEMS ARE TO BE SIMILAR OR EQUAL TO ITEM FABRICATED BY BOBRICK WASHROOM EQUIPMENT

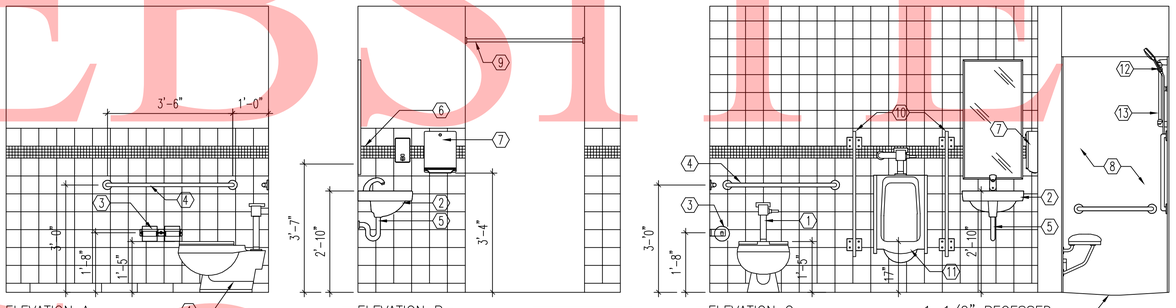

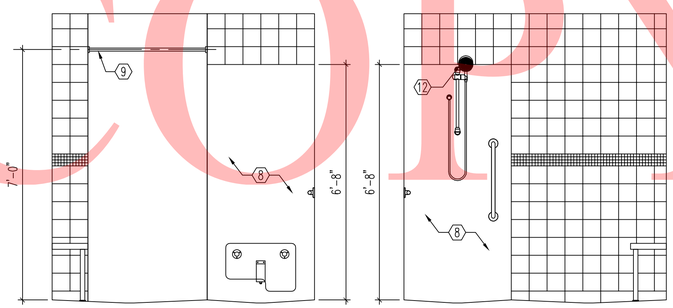

3 TOILET RM. 103 ELEVATIONS
A4.1 A4.1 SCALE: 1/2" = 1'-0"

GENERAL NOTE: WALL, ACCENT, BASE & FLOOR TILE TO BE PORCELAIN BY DALTILE MANUFACTURE "FIDENZA SERIES".

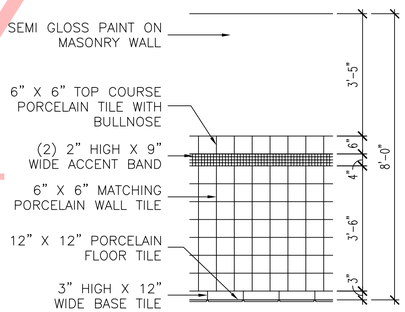

4 WAINSCOAT TILE PATTERN
A4.1 A4.1 SCALE: 1/2" = 1'-0"

LARGE SCALE PLAN & INTERIOR ELEVATIONS

GRAPHIC SCALE

4 0 2 4 8
(IN FEET)
1/4 inch = 1 ft.

8 0 4 8 16
(IN FEET)
1/2 inch = 1 ft.

CONTRACT	COUNTY	F.A.P. NO.	SHEET NO.	TOTAL SHTS
30-801-01	KENT	SEE TITLE SHEET	A4.1 / 23	59

DELAWARE DEPARTMENT OF TRANSPORTATION

MAGNOLIA YARD VEHICLE MAINTENANCE SHOP

REVISIONS

04/12/12 - REVISED PER KENT CO. COMMENTS	

STEPHEN C. BURGESS NO. 85-7295 STATE OF DELAWARE REGISTERED ARCHITECT 6/5/12

WHITNEY BAILEY COX & MAGNANI, LLC
849 Fairmount Ave Suite 100 Baltimore, MD 21286
MAIN 410.512.4500 FAX 410.324.4100
www.wbcm.com
WBCM ARCHITECTURE ENGINEERING CONSTRUCTION

UNOFFICIAL WEBSITE COPY

LAST REVISED: 06/18/2010
May 03, 2012 - 3:42pm User: jmoyer P:\2008\0801201\Drawings\01-Arch\Magnolia Maintenance Yard\Magnolia Shop Building\A4.1.dwg
PREL. TRACING ____ DESIGN ____ CHKD. ____

© WBCM 2012

CONTRACT	COUNTY	F.A.P. NO.	SHEET NO.	TOTAL SHTS
30-801-01	KENT	SEE TITLE SHEET	A4.2 / 24	59

DELAWARE DEPARTMENT OF TRANSPORTATION

MAGNOLIA YARD VEHICLE MAINTENANCE SHOP

REVISIONS

04/12/12 - REVISED PER KENT CO. COMMENTS

STEPHEN C. BURDETTE NO. 35-7296 STATE OF DELAWARE REGISTERED ARCHITECT 5/3/12

WHITNEY BAILEY COX & MAGNANI, LLC
849 Fairmount Ave Suite 100 Baltimore, MD 21286
MAIN 410.512.4500 FAX 410.324.4100
www.wbcm.com
WBCM
ARCHITECTURE ENGINEERING CONSTRUCTION

STAIR PLANS, SECTIONS & DETAILS

GRAPHIC SCALE

(IN FEET)
1/4 inch = 1 ft.

(IN FEET)
1/2 inch = 1 ft.

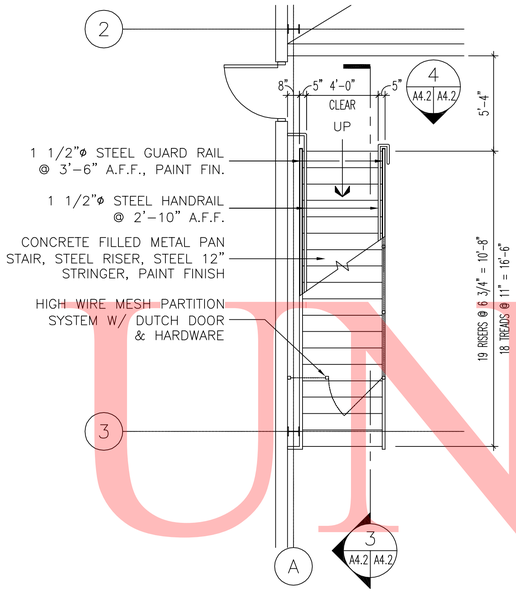

1 GROUND FLOOR STAIR PLAN
A1.1 A4.2 SCALE: 1/4" = 1'-0"

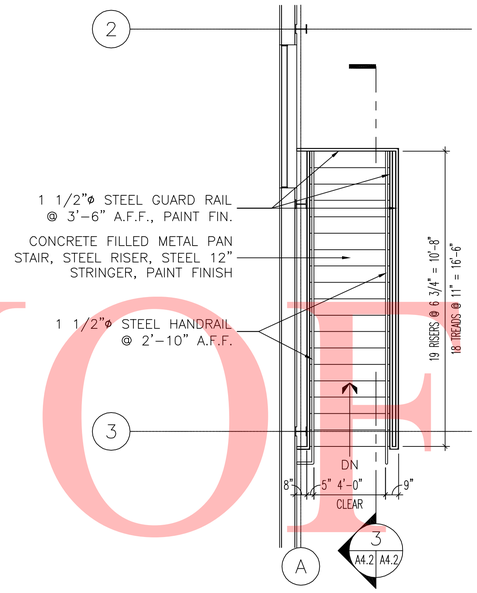

2 MEZZANINE LEVEL STAIR PLAN
A1.2 A4.2 SCALE: 1/4" = 1'-0"

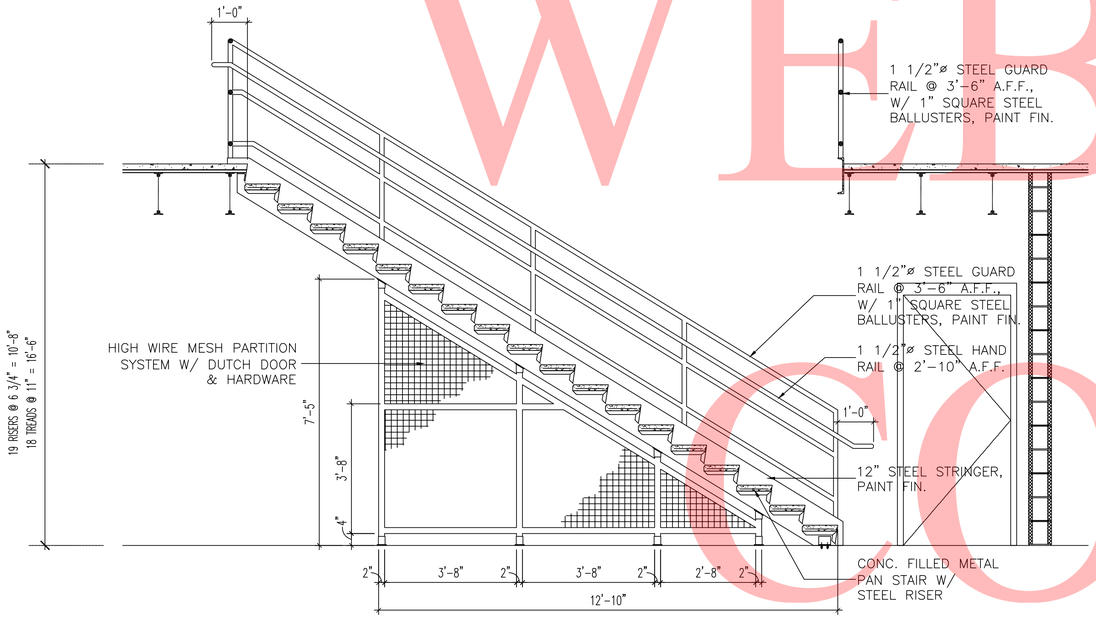

3 MEZZANINE STAIR SECTION
A4.2 A4.2 SCALE: 1/2" = 1'-0"

GENERAL NOTE: PLANS, DETAILS & SECTIONS SHOWN ARE FOR REFERENCE ONLY. THE DESIGN AND ENGINEERING OF THE STAIRS SHALL BE THE RESPONSIBLITY OF THE STAIR MANUFACTURER. STAIRS TO MEET ALL APPLICABLE CODES MODIFYING REFERENCE DATA IF NECESSARY.

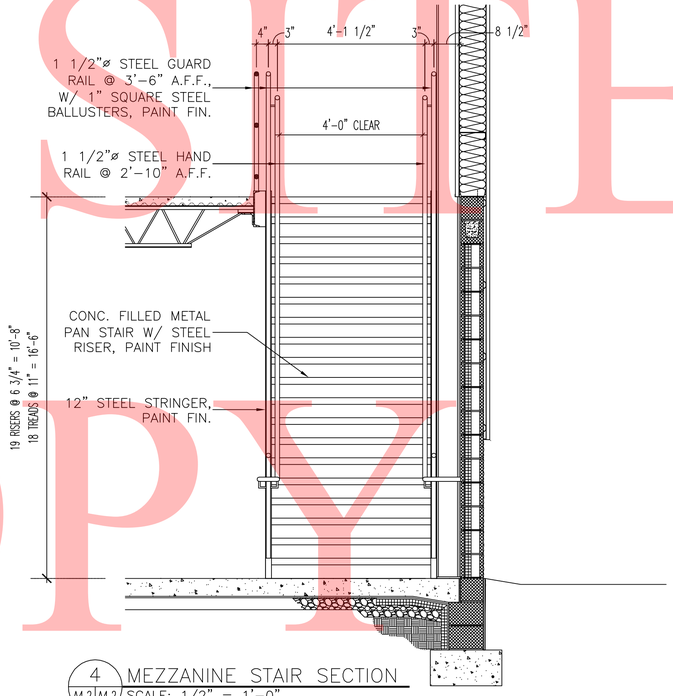

4 MEZZANINE STAIR SECTION
A4.2 A4.2 SCALE: 1/2" = 1'-0"

UNOFFICIAL WEBSITE COPY

LAST REVISED: 06/18/2010
May 03, 2012 - 3:43pm User: jmoyer P:\2008\08012101\Drawings\01-Arch\Magnolia Maintenance Yard\Magnolia Shop Building\A4.2.dwg

PREL. TRACING _____ DESIGN _____ CHKD. _____

© WBCM 2012

PLAN DETAILS

CONTRACT	COUNTY	F.A.P. NO.	SHEET NO.	TOTAL SHTS
30-801-01	KENT	SEE TITLE SHEET	A5.1 / 25	59

DELAWARE DEPARTMENT OF TRANSPORTATION

MAGNOLIA YARD VEHICLE MAINTENANCE SHOP

REVISIONS

04/12/12 - REVISED PER KENT CO. COMMENTS	

GRAPHIC SCALE

8 0 4 8 16

(IN INCHES)

1 1/2 inch = 1 ft.

STEPHEN C. BURSHTEIN NO. 85-7295 STATE OF DELAWARE REGISTERED ARCHITECT 6/5/12

WHITNEY BAILEY COX & MAGNANI, LLC
849 Fairmount Ave Suite 100 Baltimore, MD 21286
MAIN 410.512.4500 FAX 410.324.4100
www.wbcm.com

WBCM ARCHITECTURE ENGINEERING CONSTRUCTION

GENERAL NOTE:
ALL METAL BUILDING ENGINEERING & CONSTRUCTION BY METAL BUILDING MANUFACTURER.

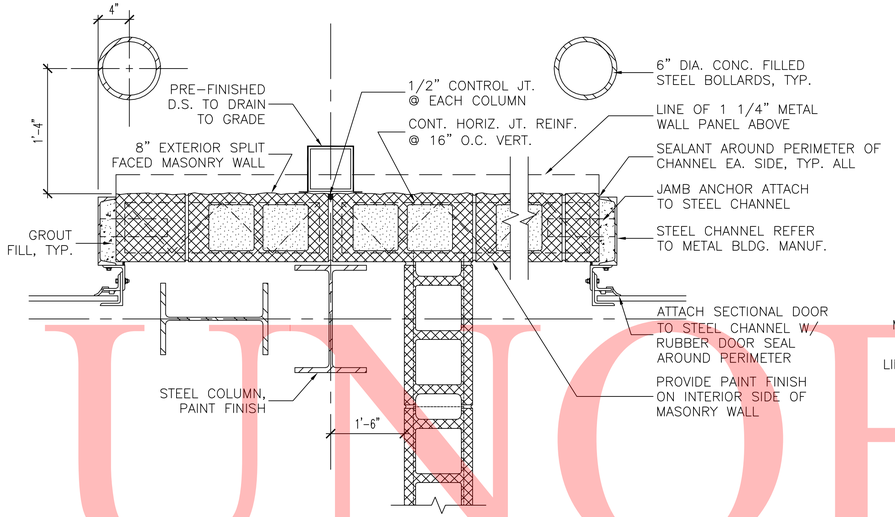

1 O.H. SECTIONAL DOOR DETAIL
A1.1 A5.1 SCALE: 1 1/2" = 1'-0"

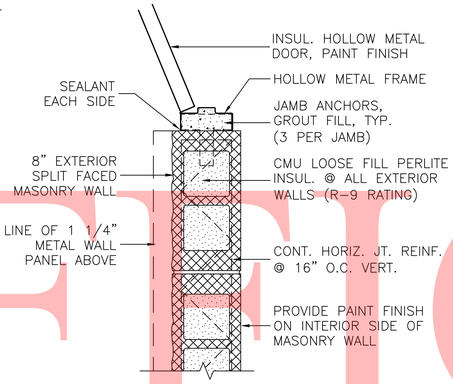

5 DOOR JAMB DETAIL
A1.1 A5.1 SCALE: 1 1/2" = 1'-0"

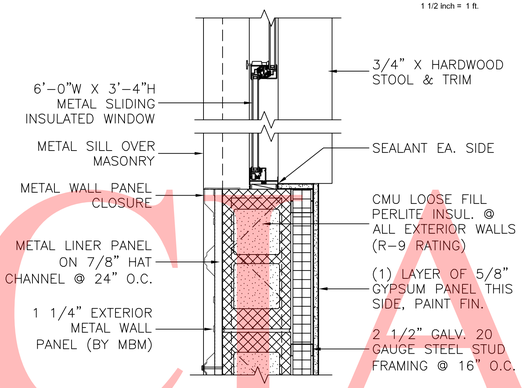

8 WINDOW PLAN DETAIL
A1.1 A5.1 SCALE: 1 1/2" = 1'-0"

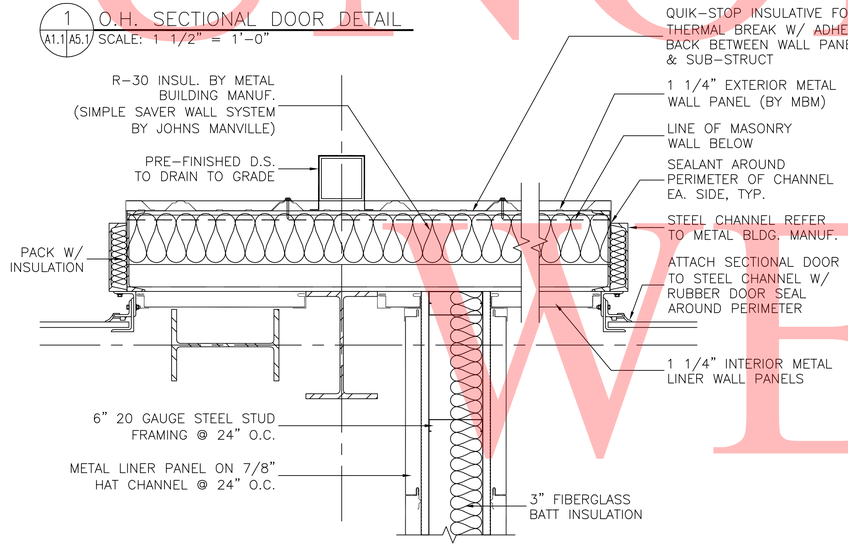

2 O.H. SECTIONAL DOOR DETAIL
A1.2 A5.1 SCALE: 1 1/2" = 1'-0"

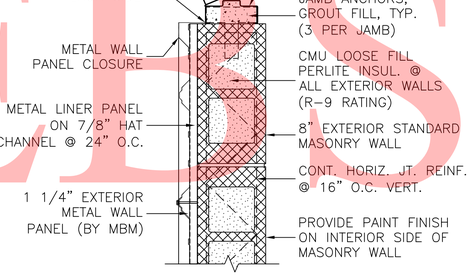

6 DOOR JAMB DETAIL
A1.1 A5.1 SCALE: 1 1/2" = 1'-0"

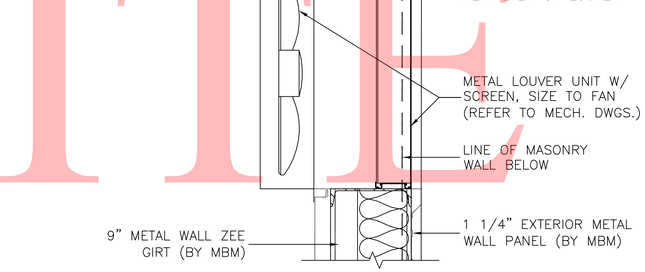

9 LOUVER JAMB DETAIL
A1.2 A5.1 SCALE: 1 1/2" = 1'-0"

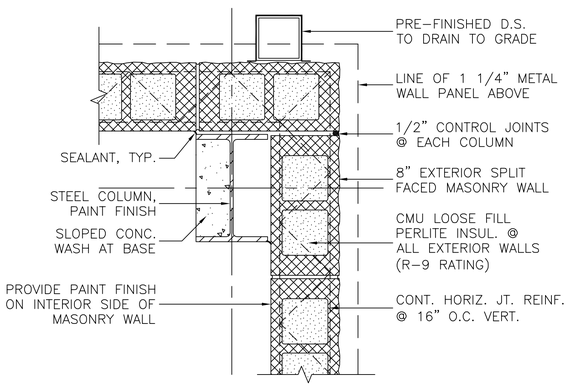

3 CORNER PLAN DETAIL
A1.1 A5.1 SCALE: 1 1/2" = 1'-0"

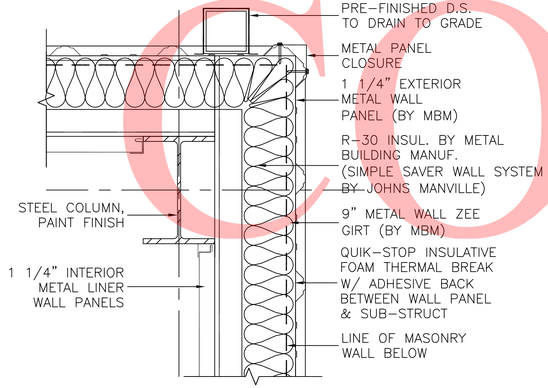

4 CORNER PLAN DETAIL
A1.2 A5.1 SCALE: 1 1/2" = 1'-0"

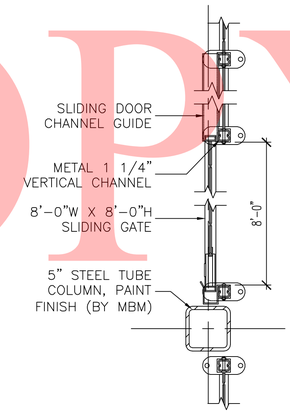

7 PLAN DETAIL - WIRE MESH SLIDING GATE
A1.1 A5.1 SCALE: 1 1/2" = 1'-0"

UNOFFICIAL WEBSITE COPY

LAST REVISED: 06/16/2010
May 05, 2012 - 3:44pm User: jmoyer P:\2008\08012101\Drawings\01-Arch\Magnolia Maintenance Yard\Magnolia Shop Building\A5.1.dwg
DESIGN CHKD.
PREL. TRACING

© WBCM 2012

MISCELLANEOUS DETAILS

GRAPHIC SCALE

16 0 8 16 32
(IN INCHES)
3/4 inch = 1 ft.

10 0 5 10 20
(IN INCHES)
1 inch = 1 ft.

CONTRACT	COUNTY	F.A.P. NO.	SHEET NO.	TOTAL SHTS
30-801-01	KENT	SEE TITLE SHEET	A5.2 / 26	59

DELAWARE DEPARTMENT OF TRANSPORTATION

MAGNOLIA YARD VEHICLE MAINTENANCE SHOP

REVISIONS

04/12/12 - REVISED PER KENT CO. COMMENTS	

STEPHEN C. BURSKEY NO. 85-7295 STATE OF DELAWARE REGISTERED ARCHITECT 6/5/12

WHITNEY BAILEY COX & MAGNANI, LLC
849 Fairmount Ave Suite 100 Baltimore, MD 21286
MAIN 410.512.4500 FAX 410.324.4100
www.wbcm.com
WBCM ARCHITECTURE ENGINEERING CONSTRUCTION

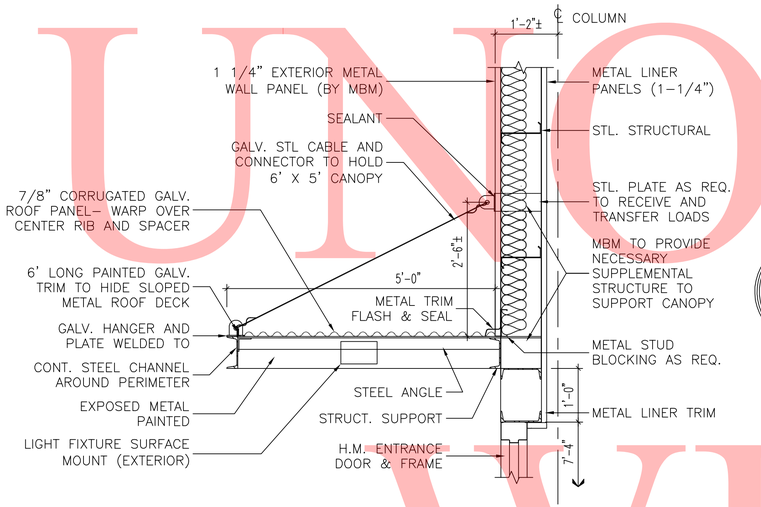

1 A5.2 A5.2 CANOPY SECTION
SCALE: 3/4" = 1'–0"

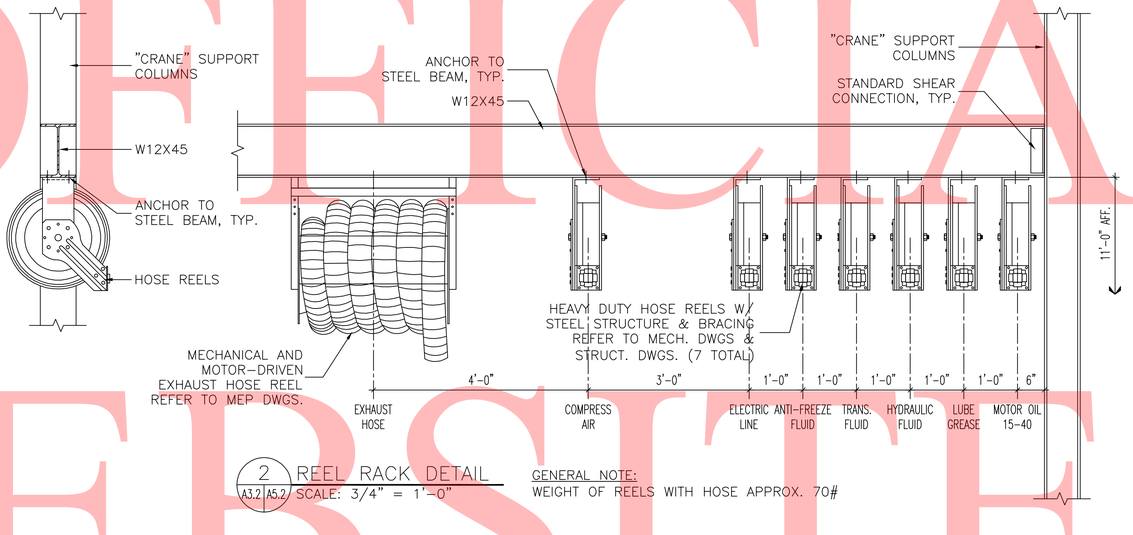

2 A3.2 A5.2 REEL RACK DETAIL
SCALE: 3/4" = 1'–0"

GENERAL NOTE:
WEIGHT OF REELS WITH HOSE APPROX. 70#

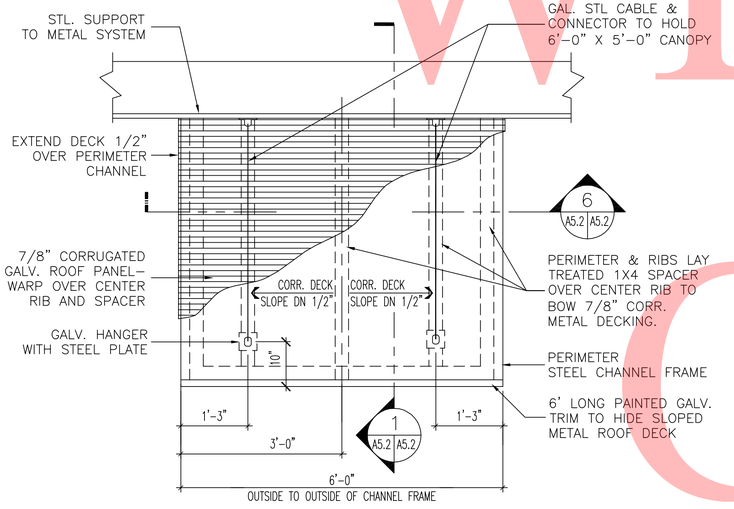

3 A1.3 A5.2 CANOPY ROOF PLAN
SCALE: 3/4" = 1'–0"

GENERAL NOTE:
ALL METAL BUILDING ENGINEERING & CONSTRUCTION BY METAL BUILDING MANUFACTURER.

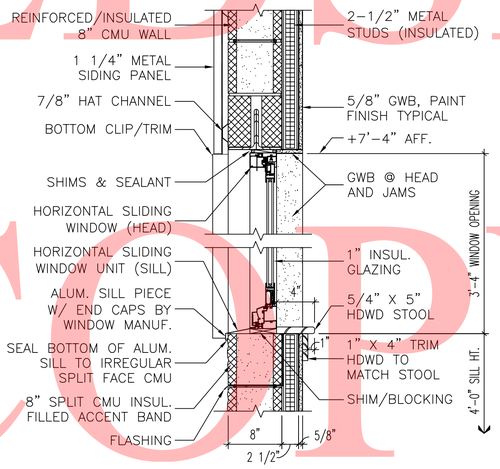

4 A3.2 A5.2 WINDOW SECTION
SCALE: 1" = 1'–0"

ALL METAL ROOF DECKING, STRUCTURAL FRAMING, STEEL CABLES, MISCELLANEOUS BRACING FOR THE ENTRANCE CANOPY REFER TO METAL BUILDING MANUFACTURER FOR FABRICATION AND DETAILS.

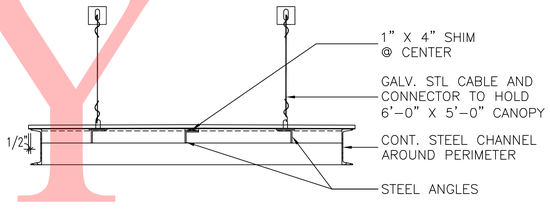

5 A5.2 A5.2 CANOPY SECTION
SCALE: 3/4" = 1'–0"

UNOFFICIAL WEBSITE COPY

LAST REVISED: 06/18/2010
May 03, 2012 - 3:45pm User: jmoyer P:\2008\08012101\Drawings\01-Arch\Magnolia Maintenance Yard\Magnolia Shop Building\A5.2.dwg
PREL. TRACING DESIGN CHKD.

© WBCM 2012

DOOR SCHEDULE

DOOR (##)	DOOR TYPE	DOOR MATERIAL	SIZE	FRAME TYPE	FRAME MATERIAL	FIRE RATING	HEAD	JAMB	SILL	HDW. SET	REMARKS
E1	B	H.M./GL.	3'-0" x 7'-0" x 1 3/4"	2	H.M.	N/A	1/A5.2	5/A5.1 13/A6.2	17/A6.2	ENT.	OH., EL., CARD READER
E2	A	STL.	16'-0" x 15'-0"	---	STL.	N/A	15/A6.2	1/A5.1 2/A5.1	4/A3.5	COD.	COD.
E3	A	STL.	16'-0" x 15'-0"	---	STL.	N/A	15/A6.2	1/A5.1 2/A5.1	4/A3.5	COD.	COD.
E4	C	H.M./GL.	3'-0" x 7'-0" x 1 3/4"	2	H.M.	N/A	1/A5.2	5/A5.1 13/A6.2	17/A6.2	ENT.	OH., EL., CARD READER
E5	A	STL.	16'-0" x 15'-0"	---	STL.	N/A	15/A6.2	1/A5.1 2/A5.1	4/A3.5	COD.	COD.
E6	C	H.M./GL.	3'-0" x 7'-0" x 1 3/4"	2	H.M.	N/A	6/A6.2	5/A5.1 6/A5.1	17/A6.2	ENT.	OH., CL.
E7	A	STL.	16'-0" x 15'-0"	---	STL.	N/A	15/A6.2	1/A5.1 2/A5.1	4/A3.5	COD.	COD.
E8	A	STL.	16'-0" x 15'-0"	---	STL.	N/A	15/A6.2	1/A5.1 2/A5.1	4/A3.5	COD.	COD.
E9	C	H.M./GL.	3'-0" x 7'-0" x 1 3/4"	2	H.M.	N/A	1/A5.2	5/A5.1 13/A6.2	17/A6.2	ENT.	OH., CL.
E10	A	STL.	16'-0" x 15'-0"	---	STL.	N/A	15/A6.2	1/A5.1 2/A5.1	4/A3.5	COD.	COD.
E11	C	H.M./GL.	3'-0" x 7'-0" x 1 3/4"	2	H.M.	N/A	1/A5.2	5/A5.1 13/A6.2	17/A6.2	ENT.	OH., EL., CARD READER
E12	D	H.M.	3'-6" x 7'-0" x 1 3/4"	2	H.M.	N/A	6/A6.2	5/A5.1 6/A5.1	17/A6.2	ENT.	OH., CL.
E13	E	H.M.	(2) 3'-0" x 7'-0" x 1 3/4"	2	H.M.	N/A	6/A6.2	5/A5.1 6/A5.1	17/A6.2	ENT.	OH., CL.
E14	C	H.M./GL.	3'-0" x 7'-0" x 1 3/4"	2	H.M.	N/A	6/A6.2	5/A5.1 6/A5.1	17/A6.2	ENT.	OH., CL.
01	B	H.M./GL.	3'-0" x 7'-0" x 1 3/4"	1	H.M.	N/A	2/A6.2	7/A5.1	3/A6.2	OFF.	OH. SINGLE GLAZE (T)
02	F	H.M.	3'-0" x 7'-0" x 1 3/4"	3	H.M.	N/A	11/A6.2	14/A6.2	4/A6.2	PR.	
03	G	STL.	(2) 3'-0" x 4'-0"	---	STL.	N/A	---	---	---	CLO.	WIRE MESH PARTITION REFER TO 5/A6.1
04	F	H.M.	(2) 3'-0" x 7'-0" x 1 3/4"	3	H.M.	1 HR.	11/A6.2	14/A6.2	8/A6.2	CLO.	OH., W/ DOOR ASTRAGAL
05	G	STL.	(2) 3'-0" x 4'-0"	---	STL.	N/A	---	---	---	CLO.	WIRE MESH PARTITION REFER TO 5/A6.1
06	J	STL.	8'-0" x 8'-0"	---	STL.	N/A	---	7/A5.1	---	CLO.	WIRE MESH PARTITION REFER TO 4/6.1
07	F	H.M.	3'-0" x 7'-0" x 1 3/4"	3	H.M.	1 HR.	11/A6.2	14/A6.2	8/A6.2	CLO.	OH.
08	F	H.M.	3'-6" x 7'-0" x 1 3/4"	3	H.M.	N/A	11/A6.2	14/A6.2	8/A6.2	PA.	
09	A	STL.	16'-0" x 15'-0"	---	STL.	N/A	4/A3.3	---	4/A3.3	PA.	INTERIOR SECTIONAL DOOR UNINSULATED
10	F	H.M.	3'-0" x 7'-0" x 1 3/4"	3	H.M.	N/A	11/A6.2	14/A6.2	12/A6.2	PA.	
11	K	STL.	(2) 4'-0" x 4'-0"	---	STL.	N/A	---	---	---	PA.	MEZZARAIL RAIL SYSTEM REFER TO 6/6.1

LEGEND:

ABBREVIATIONS:

1. H.M.	HOLLOW METAL
2. STL.	STEEL
3. GL.	GLASS
4. T.	TEMPERED GLASS

HARDWARE TYPES BY FUNCTION:

1. OFF.	OFFICE FUNCTION
2. CLO.	CLOSET FUNCTION
3. PR.	PRIVACY FUNCTION
4. ENT.	ENTRANCE FUNCTION
5. PA.	PASSAGE FUNCTION
6. COD.	COILING OVERHEAD DOOR

REMARKS:

1. OH.	OVER HEAD DOOR CLOSURE.
2. PD.	PANIC DEVICE.
3. EL.	ELECTRIC LOCK.
4. DP.	DOOR PULLS.
5. CL.	CYLINDER LOCK.

DOOR SCHEDULE

GRAPHIC SCALE

4 0 2 4 8

(IN FEET)
1/4 inch = 1 ft.

CONTRACT	COUNTY	F.A.P. NO.	SHEET NO.	TOTAL SHTS
30-801-01	KENT	SEE TITLE SHEET	A6.1 / 27	59

DELAWARE DEPARTMENT OF TRANSPORTATION

MAGNOLIA YARD VEHICLE MAINTENANCE SHOP

REVISIONS

04/12/12 - REVISED PER KENT CO. COMMENTS

STEPHEN C. BURGESS NO. 85-7295 STATE OF DELAWARE REGISTERED ARCHITECT 6/8/12

WHITNEY BAILEY COX & MAGNANI, LLC
849 Fairmount Ave Suite 100 Baltimore, MD 21286
MAIN 410.512.4500 FAX 410.324.4100
www.wbcm.com
WBCM ARCHITECTURE ENGINEERING CONSTRUCTION

UNOFFICIAL WEBSITE COPY

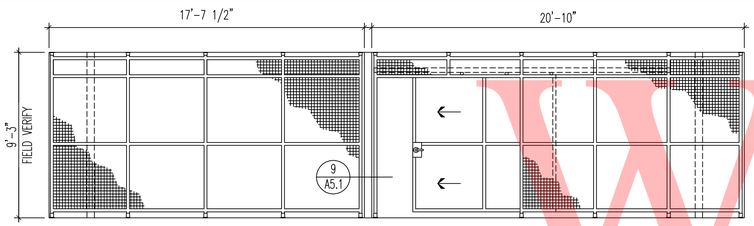

1 MESH PARTITION ELEVATION AT PARTS ROOM

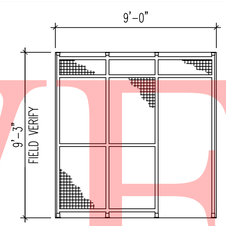

2 MESH PARTITION ELEVATION AT PARTS ROOM

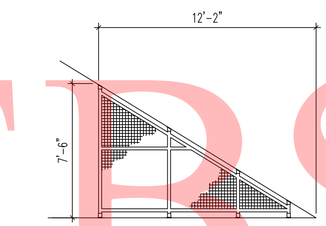

3 MESH PARTITION ELEVATION AT SECURE PARTS TOOL STORAGE

4 MESH PARTITION ELEVATION AT UNDER MEZZANINE STAIRS

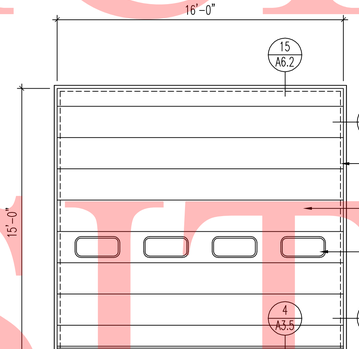

A AUTOMATIC INSULATED O.H. SECTIONAL DOOR W/ VISION PANELS

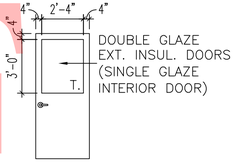

B SINGLE FLUSH INSULATED H.M. DOOR & HALF LITE GLASS, PAINT FINISH

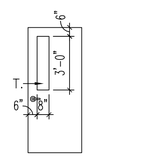

C SINGLE FLUSH INSULATED H.M. DOOR W/ VISION PANEL, PAINT FINISH

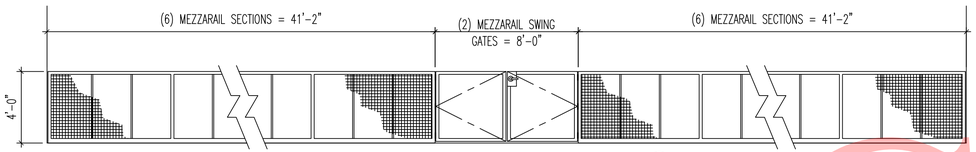

4 MEZZANINE MESH PARTITION ELEVATIONS
A6.1 A6.1 SCALE: 1/4" = 1'-0"

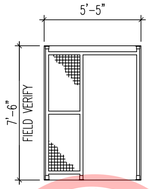

5 MESH PARTITION ELEVATION AT EQUIP./ STORAGE MEZZANINE

6 MESH PARTITION ELEVATION AT UNDER MEZZANINE STAIRS

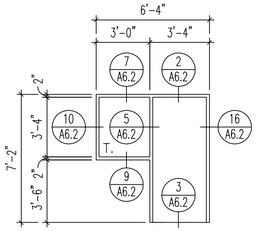

1 H.M. FRAME W/ GLASS SIDE LITE

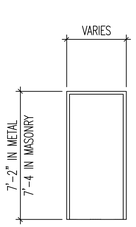

2 EXTERIOR H.M. FRAME

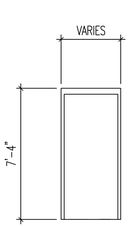

3 STANDARD H.M. FRAME

2 FRAME ELEVATIONS
A6.1 A6.1 SCALE: 1/4" = 1'-0"

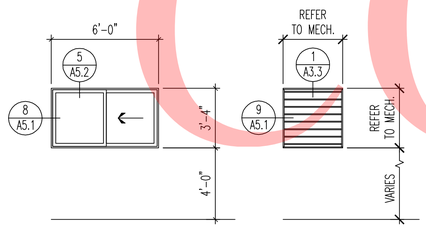

W1 INSULATED ALUM. SLIDING WINDOW WITH SCREEN

FIXED ALUM. LOUVER WITH SCREEN

2 WINDOW / LOUVER ELEVATIONS
A6.1 A6.1 SCALE: 1/4" = 1'-0"

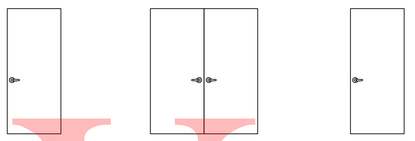

D SINGLE FLUSH INSULATED H.M. DOOR, PAINT FINISH

E DOUBLE FLUSH INSULATED H.M. DOOR, PAINT FINISH

F SINGLE FLUSH UNINSULATED H.M. DOOR, PAINT FINISH

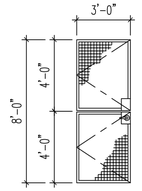

G DUTCH DOOR METAL GATES W/ CYLINDER LOCK & LEAF LOCKS

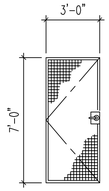

H METAL GATES W/ CYLINDER LOCK & LEAF LOCKS

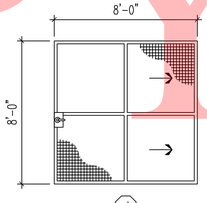

J SLIDING METAL GATE W/ OVERHEAD RECEIVER & CYLINDER LOCK

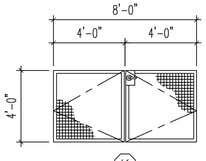

K DOUBLE HINGED METAL GATES (MEZZARAIL BARRIER)

3 DOOR ELEVATIONS
A6.1 A6.1 SCALE: 1/4" = 1'-0"

GENERAL NOTE:
1/4" TEMPERED GLASS GLAZING NOTED ON THE ELEVATION WITH "T." ON THE GLASS PANEL REQUIRED.

LAST REVISED 06/18/2010
May 03, 2012 - 3:48pm
User: jmoyer P:\2008\08012101\Drawings\01-Arch\Magnolia Maintenance Yard\Magnolia Shop Building\A6.1.dwg
DESIGN
CHKD.
PREL. TRACING

© WBCM 2012

DOOR DETAILS

CONTRACT	COUNTY	F.A.P. NO.	SHEET NO.	TOTAL SHTS
30-801-01	KENT	SEE TITLE SHEET	A6.2 / 28	59

DELAWARE DEPARTMENT OF TRANSPORTATION

MAGNOLIA YARD VEHICLE MAINTENANCE SHOP

REVISIONS

04/12/12 - REVISED PER KENT CO. COMMENTS	

STEPHEN C. BURSETTE NO. 85-7295 STATE OF DELAWARE REGISTERED ARCHITECT 6/5/12

WHITNEY BAILEY COX & MAGNANI, LLC
849 Fairmount Ave Suite 100 Baltimore, MD 21286
MAIN 410.512.4500 FAX 410.324.4100
www.wbcm.com
WBCM ARCHITECTURE ENGINEERING CONSTRUCTION

GRAPHIC SCALE

4 0 2 4 8

(IN FEET)
1 1/2 inch = 1 ft.

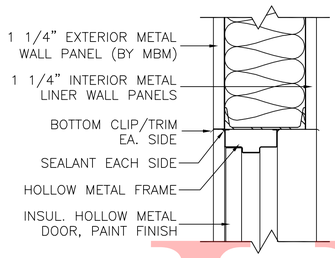

1 DOOR HEAD DETAIL
A6.2 A6.2 SCALE: 1 1/2" = 1'-0"

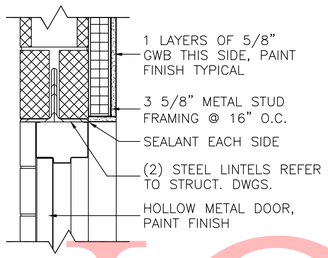

2 DOOR HEAD DETAIL
A6.2 A6.2 SCALE: 1 1/2" = 1'-0"

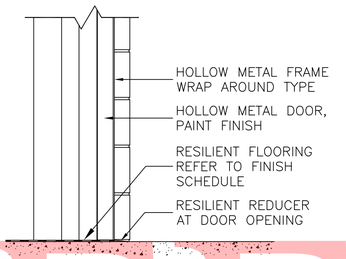

3 DOOR TRANSITION DETAIL
A6.2 A6.2 SCALE: 1 1/2" = 1'-0"

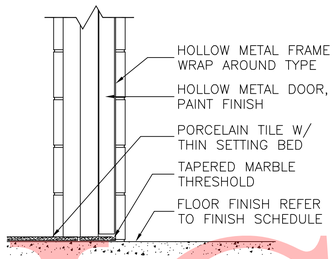

4 DOOR TRANSITION DETAIL
A6.2 A6.2 SCALE: 1 1/2" = 1'-0"

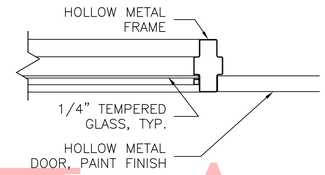

5 WINDOW JAMB DETAIL
A6.2 A6.2 SCALE: 1 1/2" = 1'-0"

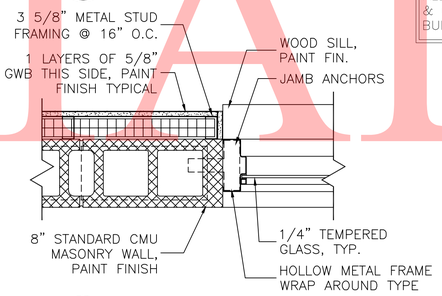

GENERAL NOTE:
ALL METAL BUILDING ENGINEERING & CONSTRUCTION BY METAL BUILDING MANUFACTURER.

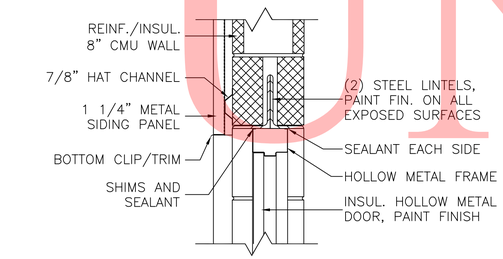

6 DOOR HEAD DETAIL
A6.2 A6.2 SCALE: 1 1/2" = 1'-0"

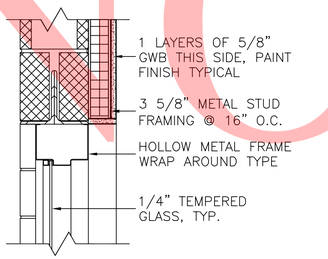

7 WINDOW HEAD DETAIL
A6.2 A6.2 SCALE: 1 1/2" = 1'-0"

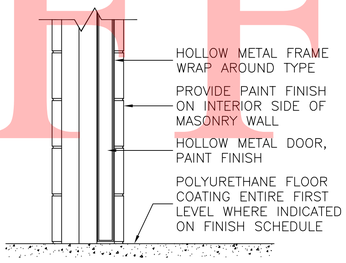

8 DOOR TRANSITION DETAIL
A6.2 A6.2 SCALE: 1 1/2" = 1'-0"

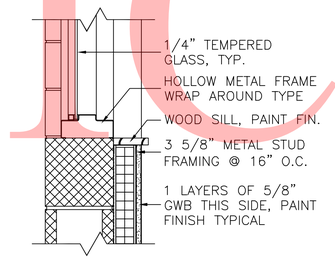

9 WINDOW SILL DETAIL
A6.2 A6.2 SCALE: 1 1/2" = 1'-0"

10 WINDOW JAMB DETAIL
A6.2 A6.2 SCALE: 1 1/2" = 1'-0"

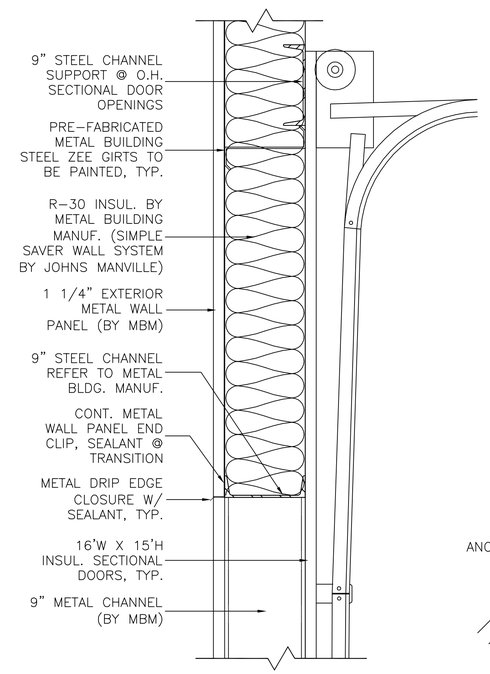

DOOR HEAD DETAIL @ SECTIONAL OVERHEAD DOOR
A6.2 A6.2 SCALE: 1 1/2" = 1'-0"

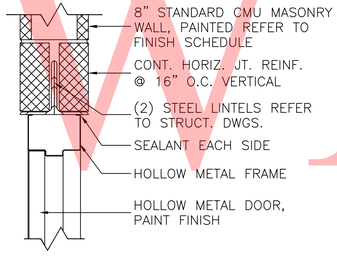

11 DOOR HEAD DETAIL
A6.2 A6.2 SCALE: 1 1/2" = 1'-0"

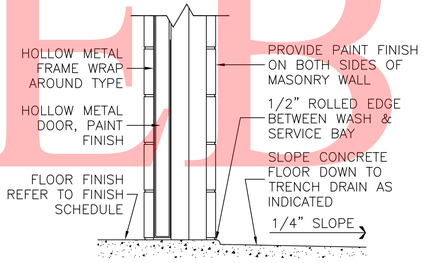

12 DOOR TRANSITION DETAIL
A6.2 A6.2 SCALE: 1 1/2" = 1'-0"

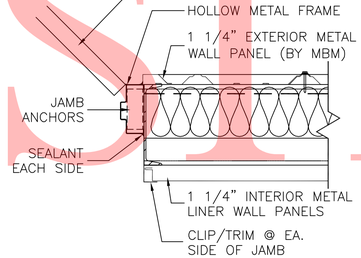

13 DOOR JAMB DETAIL
A6.2 A6.2 SCALE: 1 1/2" = 1'-0"

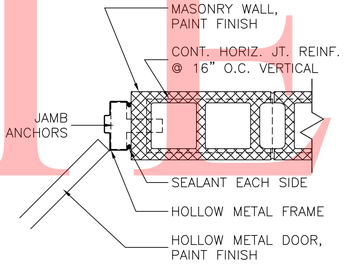

14 DOOR JAMB DETAIL
A6.2 A6.2 SCALE: 1 1/2" = 1'-0"

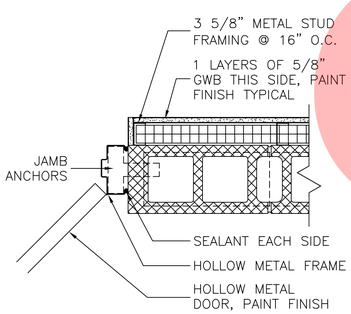

16 DOOR JAMB DETAIL
A6.2 A6.2 SCALE: 1 1/2" = 1'-0"

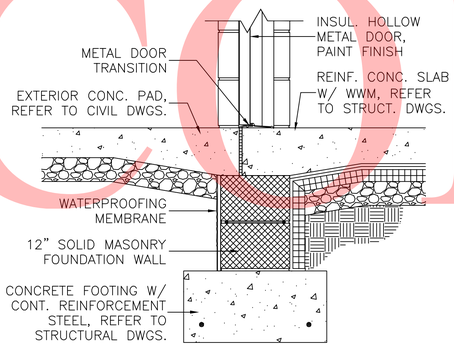

17 DOOR TRANSITION DETAIL
A6.2 A6.2 SCALE: 1 1/2" = 1'-0"

UNOFFICIAL WEB SITE COPY

LAST REVISED: 06/18/2010
May 03, 2012 - 3:47pm User: jmoyer P:\2008\0801201\Drawings\01-Arch\Magnolia Maintenance Yard\Magnolia Shop Building\A6.2.dwg
DESIGN CHKD.
PREL. TRACING

© WBCM 2012

FINISH SCHEDULE

ROOM FINISH SCHEDULE

ROOM OR SPACE NO.	TITLE	FLOORING: RESILIENT TILE	FLOORING: 12" X 12" PORCELAIN TILE	FLOORING: EPOXY COATING	FLOORING: CONCRETE SEALER	BASE: VINYL BASE	BASE: PORCELAIN TILE BASE	BASE: 6" EPOXY COATING BASE	BASE: NONE	WALLS: PAINTED GWB	WALLS: 3/32" FRP PANELS	WALLS: PORCELAIN TILE	WALLS: PAINTED MASONRY	WALLS: PRE-FINISH INTERIOR PANEL	CEILING: ACT STANDARD 2' X 2'	CEILING: PAINTED WATER RESISTANT GWB	CEILING: PAINTED STRUCTURE	CEILING: NONE	CEILING HEIGHT	REMARKS
101	OFFICE	●				●				●					●				8'-0"	---
102	SECURE PARTS / TOOL STORAGE			●				●					●				●		---	
103	TOILET ROOM		●				●					●	●			●			8'-0"	
104	JANITOR CLOSET			●				●					●				●		---	
105	PARTS ROOM			●				●					●				●		---	
106	MECHANICAL ROOM			●				●					●				●		---	
107	FLUID STORAGE			●				●					●				●		---	
108	REPAIR SHOP AREA			●				●					●	●			●		---	
109	WASH BAY			●				●			●		●	●			●		---	
110	EQUIPMENT / STORAGE MEZZANINE				●				●					●			●		---	

INTERIOR FINISHES:

FLOORING:

1. POLYURETHANE FLOOR COATING
   GENERALLY ENTIRE FIRST LEVEL WHERE INDICATED ON FINISH SCHEDULE. SIMILAR TO SHERWIN-WILLIAMS, 3 COAT SYSTEM. ARMORSEAL HS POLYURETHANE FLOOR COATING (2 COATS) OVER ARMORSEAL 1000HS (1 COAT).

2. SEALED CONCRETE
   EQUIPMENT/STORAGE MEZZANINE AS SPECIFIED.

3. 12" X 12" PORCELAIN TILE
   TOILET ROOMS AS SPECIFIED, BY TILE MANUFACTURE DALTILE "FIDENZA SERIES".

4. RESILIENT TILE
   OFFICE AS SPECIFIED, SIMILAR TO TILE MANUFACTURED BY "ARMSTRONG".

BASE:

1. PAINTED
   6" HIGH EPOXY BASE. GENERALLY ENTIRE FIRST LEVEL WHERE INDICATED ON FINISH SCHEDULE. SIMILAR TO SHERWIN-WILLIAMS, 3 COAT SYSTEM. ARMORSEAL HS POLYURETHANE FLOOR COATING (2 COATS) OVER ARMORSEAL 1000HS (1 COAT).

2. PORCELAIN TILE
   TOILET ROOMS AS SPECIFIED, 3" HIGH BY 12" WIDE COVED BASE TILES BY TILE MANUFACTURE DALTILE "FIDENZA SERIES".

3. 4" COVE VINYL BASE
   OFFICE AS SPECIFIED, 1/8" THICK PRODUCTS SIMILAR TO TILE MANUFACTURED BY "ARMSTRONG".

WALL:

1. PAINTED GWB
   OFFICE AS SPECIFIED, SIMILAR TO BENJAMIN MOORE "ARURA SERIES" SEMI GLOSS FINISH, COLOR AS SELECTED.

2. PAINTED MASONRY
   GENERALLY ALL EXPOSED MASONRY AS SPECIFIED, SIMILAR TO SHERWIN WILLIAMS TILE-CLAD EPOXY, 3 COAT SYSTEM, COLOR AS SELECTED.

3. FIBERGLASS REINFORCED POLYESTER PANELS (FRP)
   WASH BAY AS SPECIFIED FROM 4'-0" TO 14'-0", 10'-0" LONG PANELS. SIMILAR TO "MARLITE" FRP 48" X 120" X 3/32" ATTACHED TO WATER RESISTANT GWB BASE.

4. PORCELAIN TILE
   TOILET ROOMS AS SPECIFIED, 6" X 6" FIELD WALL TILES & (2) ROWS OF 2" X 9" ACCENT COLOR BAND BY TILE MANUFACTURE DALTILE "FIDENZA SERIES".

CEILING:

1. 2' X 2' ACOUSTICAL TILE
   OFFICE AS SPECIFIED, SIMILAR TO "ARMSTRONG FINE FISSURED #1833". 2'-0" X 2'-0" ON 15/16" GRID (WHITE) "ANGLED TEGLAR".

2. PAINTED WATER RESISTANT GWB
   TOILET ROOMS AS SPECIFIED, SIMILAR TO BENJAMIN MOORE "ARURA SERIES" SEMI GLOSS FINISH, COLOR AS SELECTED.

3. PAINTED STRUCTURE
   GENERALLY ALL EXPOSED STEEL STRUCTURE, SIMILAR TO SHERWIN WILLIAMS TILE CLAD EPOXY WALL SYSTEM FOR METAL SURFACES.

GENERAL NOTES:

1. THE FOLLOWING PRODUCTS LISTED BELOW ARE FOR REFERENCE ONLY. ACTUAL PRODUCTS PROVIDED SHOULD BE SIMILAR OR EQUAL TO THE ITEM SPECIFIED.
2. ALL EXPOSED STRUCTURE TO BE CLEANED & PREPPED BEFORE PAINTED FINISH IS APPLIED.
3. FOR ALL SEALANT TYPE REFER TO SPECIFICATIONS.
4. ALL EXPOSED INTERIOR & EXTERIOR METAL IS TO BE PRIMED & 2 COAT FINISH PAINTED, COLOR TO BE AS INDICATED.

CONTRACT	COUNTY	F.A.P. NO.	SHEET NO.	TOTAL SHTS
30-801-01	KENT	SEE TITLE SHEET	A6.3 / 29	59

DELAWARE DEPARTMENT OF TRANSPORTATION

MAGNOLIA YARD VEHICLE MAINTENANCE SHOP

REVISIONS

04/12/12 - REVISED PER KENT CO. COMMENTS	

STEPHEN C. BURGETTE NO. 85-7295 STATE OF DELAWARE REGISTERED ARCHITECT 6/5/12

WHITNEY BAILEY COX & MAGNANI, LLC
849 Fairmount Ave Suite 100 Baltimore, MD 21286
MAIN 410.512.4500 FAX 410.324.4100
www.wbcm.com
WBCM ARCHITECTURE ENGINEERING CONSTRUCTION

UNOFFICIAL WEBSITE COPY

LAST REVISED: 06/18/2010
May 05, 2012 - 3:49pm User: jmoyer P:\2008\0801201\Drawings\01-Arch\Magnolia Maintenance Yard\Magnolia Shop Building\A6.3.dwg
PREL. TRACING ____ DESIGN ____ CHKD. ____

© WBCM 2012

CONTRACT	COUNTY	F.A.P. NO.	SHEET NO.	TOTAL SHTS
30-801-01	KENT	SEE TITLE SHEET	S1.0 / 30	59

DELAWARE DEPARTMENT OF TRANSPORTATION

MAGNOLIA YARD VEHICLE MAINTENANCE SHOP

REVISIONS

04/12/12 - REVISED PER KENT CO. COMMENTS

MARCO T. LEGALUPO REGISTERED No. 11341 PROFESSIONAL ENGINEER DELAWARE
5/3/12

WHITNEY BAILEY COX & MAGNANI, LLC
849 Fairmount Ave. Suite 100, Baltimore, MD 21286
MAIN 410.512.4500 FAX 410.324.4100
www.wbcm.com
WBCM
ARCHITECTURE ENGINEERING CONSTRUCTION

GENERAL NOTES

1. CODE
   A. ALL CONSTRUCTION SHALL CONFORM WITH THE PROVISIONS OF THE IBC 2006, AND THE ASCE 7-05 WITH DELAWARE KENT COUNTY SUPPLEMENT.

2. DESIGN LOADING
   A. THE MINIMUM DESIGN LIVE LOADINGS FOR ALL NEW FRAMING IS AS FOLLOWS:

SLAB ON GRADE:
8" SLAB = HS-20
5" SLAB = 100 PSF

LIVE LOAD REDUCTION NOT USE

ROOF LIVE LOAD	= 30 PSF
ROOF SNOW LOAD	= 25 PSF
SNOW EXPOSURE FACTOR (Ce)	= 1.0
SNOW LOAD IMPORTANCE FACTOR (I)	= 1.0
BASIC WIND SPEED (V)	= 100 MPH
WIND LOAD IMPORTANCE FACTOR (I)	= 1.0
WIND EXPOSURE	= C
SEISMIC USE	GROUP II
SEISMIC DESIGN	CATEGORY B
BASIC SEISMIC RESISTING SYSTEM	= STRUCTURAL STEEL SYSTEMS
RESPONSE MODIFICATION FACTOR (R)	= 3

   B. MEZZANINE LIVE LOAD = 125 PSF.

   C. STAIR LIVE LOAD = 100 PSF.

3. GENERAL
   A. CONSULT THE ARCHITECTURAL, MECHANICAL AND ELECTRICAL DRAWINGS FOR LOCATION AND DIMENSIONS OF CHASES, INSERTS, OPENINGS, SLEEVES, WASHERS, DRIPS, REVEALS, DEPRESSIONS AND OTHER PROJECT REQUIREMENTS.

   B. CONTRACTOR SHALL VERIFY ALL BUILDING DIMENSIONS, ANCHOR BOLT AND BASE PLATE SIZES & LOCATIONS WITH ACTUAL BUILDING SUPPLIED PRIOR TO CONSTRUCTION.

   C. IT IS THE CONTRACTOR'S RESPONSIBILITY TO SATISFY HIMSELF AS TO THE LOCATION OF ANY & ALL UTILITIES IN THE IMMEDIATE VICINITY OF CONSTRUCTION SO AS TO PREVENT DAMAGE TO THEM. SHOULD ANY DAMAGE TO SUCH UTILITIES OCCUR THE CONTRACTOR SHALL BE REQUIRED TO REPAIR SUCH DAMAGE AT HIS OWN EXPENSE AND TO THE SATISFACTION OF THE STATE.

   D. ANY REVIEW OF STRUCTURAL ITEM SHOP DRAWINGS BY THE STRUCTURAL ENGINEER IS FOR GENERAL CONFORMANCE WITH THE DESIGN CONCEPT AS PRESENTED BY THE CONTRACT DOCUMENTS. NO DETAILED CHECK OF QUANTITIES OR DIMENSIONS WILL BE MADE.

   E. THE STRUCTURAL CONTRACT DOCUMENTS ARE NOT TO BE REPRODUCED FOR USE AS SHOP DRAWINGS.

   F. SHOP DRAWINGS FOR ALL STRUCTURAL ELEMENTS SHOWN ON THE CONTRACT DOCUMENTS MUST BE SUBMITTED BY THE GENERAL CONTRACTOR. IF THE CONTRACTOR OR STATE FAILS TO SUBMIT THE SHOP DRAWINGS, THE ENGINEER WILL NOT BE RESPONSIBLE FOR THE STRUCTURAL CERTIFICATION OR FOR THE DESIGN OF THE PROJECT.

4. FOUNDATIONS
   A. THE BOTTOM OF ALL EXTERIOR FOOTINGS SHALL BE A MINIMUM OF 3'-0" BELOW FINISH GRADE.

   B. ALL FOOTINGS HAVE BEEN DESIGNED FOR AN ASSUMED ALLOWABLE NET SOIL BEARING PRESSURE OF 2500 PSF. SOIL BEARING PRESSURE SHALL BE FIELD VERIFIED BY THE DELDOT LAB.

   C. ALL EXCAVATION, BACKFILLING, AND FILLING OPERATIONS BENEATH THE BUILDING SLAB AND FOUNDATIONS, AND ALL COMPACTION TESTS AND INSPECTION, SHALL BE DONE UNDER THE DIRECTION AND SUPERVISION OF THE DELDOT LAB.

   D. ALL FILL UNDER FOOTINGS SHALL BE COMPACTED TO AT LEAST 95% OF THE MODIFIED PROCTOR MAXIMUM DRY DENSITY AS DETERMINED BY ASTM D-1577.

5. CAST-IN-PLACE CONCRETE
   A. ALL CONCRETE WORK SHALL CONFORM TO ALL PROVISIONS OF THE "SPECIFICATIONS FOR STRUCTURAL CONCRETE FOR BUILDINGS" (ACI 301), AND TO THE "BUILDING CODE REQUIREMENTS FOR REINFORCED CONCRETE" (ACI 318).

   B. ADDITIONALLY THE CONCRETE SHALL CONFORM TO ALL PROVISIONS OF THE FOLLOWING PUBLICATIONS:

      1) ACI 305R RECOMMENDED PRACTICE FOR HOT WEATHER CONCRETING.

      2) ACI 306R RECOMMENDED PRACTICE FOR COLD WEATHER CONCRETING.

      3) ACI 347 RECOMMENDED PRACTICE FOR CONCRETE FORMWORK.

   C. ALL CONCRETE, UNLESS NOTED OTHERWISE, SHALL BE STONE AGGREGATE CONCRETE HAVING THE FOLLOWING, MINIMUM COMPRESSIVE STRENGTHS AT 28 DAYS:

      FOOTINGS ---------- 4,000 PSI

      ALL OTHER CONCRETE ---------- 4,000 PSI

      ALL CONCRETE EXPOSED TO WEATHER SHALL HAVE AN AIR ENTRAINMENT OF 6% ± 1%. NO ADMIXTURES CONTAINING CALCIUM CHLORIDE SHALL BE PERMITTED. MAXIMUM AGGREGATE SIZE FOR CONCRETE SHALL BE 1", AND MAXIMUM SLUMP SHALL BE 4". ALL CONCRETE, EXCEPT FOOTINGS, SHALL CONTAIN A WATER REDUCING ADMIXTURE.

   D. ALL CONCRETE MIX DESIGNS AND ADMIXTURES SHALL BE APPROVED BY THE ARCHITECT 30 DAYS PRIOR TO INITIATION OF FIRST POUR.

   E. ALL REINFORCING BARS SHALL CONFORM TO ASTM A-615 GRADE 60. WELDED WIRE FABRIC SHALL CONFORM TO ASTM A-185.

   F. ALL CONCRETE SHALL BE SAMPLED AND TESTED BY AN APPROVED TESTING AGENCY, RETAINED BY THE STATE. THE CONTRACTOR SHALL NOTIFY THE TESTING AGENCY 48 HOURS PRIOR TO PLACING ANY CONCRETE.

1. MASONRY
   A. ALL MATERIALS AND CONSTRUCTION SHALL CONFORM TO THE REQUIREMENTS OF THE BUILDING CODE REQUIREMENTS FOR MASONRY STRUCTURES (ACI 530/ASCE 5).

   B. ALL EXTERIOR WALLS AND ALL WALLS SUPPORTING LOADS OTHER THAN THEIR OWN WEIGHT SHALL BE CONSTRUCTED OF LOAD BEARING UNITS.

   C. HOLLOW LOAD-BEARING BLOCK SHALL CONFORM TO ASTM C-90 AND SOLID LOAD-BEARING BLOCK SHALL CONFORM TO ASTM C-145. PROVIDE TYPE N-1.

   D. ALL BEARING WALLS SHALL BE LAID UP WITH TYPE S MORTAR.

   E. ALL MASONRY WALLS SHALL BE REINFORCED WITH TRUSS-TYPE GALVANIZED JOINT REINFORCEMENT SPACED VERTICALLY AT 16" O.C., U.N.O. PROVIDE CORNER AND TEE PIECES AT ALL INTERSECTIONS. LAP ALL JOINT REINF. 6" MINIMUM.

   F. PROVIDE 16" MINIMUM DEPTH OF 100% SOLID MASONRY OR HOLLOW BLOCK FILLED SOLID WITH GROUT BELOW ALL LINTELS.

   G. BRACE AND SHORE ALL MASONRY WALLS AS REQUIRED UNTIL FLOORS HAVE BEEN COMPLETELY INSTALLED.

   H. PROVIDE SOLID BLOCK OR SOLID GROUT FILL DIRECTLY BELOW ALL CHANGES IN WALL THICKNESS OR CONSTRUCTION AS REQUIRED TO PROVIDE CONTINUOUS BEARING FOR ALL FACE SHELLS OF BLOCK.

   J. ALL FILL FOR MASONRY WALLS SHALL BE GROUT CONFORMING TO ASTM C476. FILL SHALL BE PLACED IN 5'-0" MAXIMUM LIFTS.

   K. LAP ALL VERTICAL REINFORCING 48 BAR DIAMETERS MINIMUM.

   L. ALL MASONRY CONSTRUCTION SHALL BE INSPECTED AS PER ACI 530/ASCE 5.

   M. ALL GROUT SHALL HAVE A MINIMUM 28 DAY COMPRESSIVE STRENGTH OF 2000 PSI.

   N. THE COMPRESSIVE STRENGTH OF MASONRY SHALL BE F'M = 2000 PSI MINIMUM.

7. PRE ENGINEERED METAL BUILDING
   A. A REGISTERED PROFESSIONAL ENGINEER IN DELAWARE SHALL CERTIFY THE DESIGN, FABRICATION, AND ERECTION OF THE PRE-ENGINEERED METAL BUILDING. CERTIFICATION SHALL BE BY P.E. SEAL AND SIGNATURE ON THE FINAL SHOP DRAWINGS AND FIELD INSPECTION REPORTS.

   B. THE TOTAL RESPONSIBILITY OF THE DESIGN AND CONSTRUCTION OF THE PRE-ENGINEERED METAL BUILDING SHALL BE BORNE BY THE CONTRACTOR, THE PRE-ENGINEERED METAL BUILDING MANUFACTURER AND THEIR REGISTERED PROFESSIONAL ENGINEER. WHITNEY, BAILEY, COX AND MAGNANI WILL NOT BE RESPONSIBLE UNDER ANY CONDITIONS FOR THE STRUCTURAL DESIGN, FABRICATION AND ERECTION OF THE PRE-ENGINEERED BUILDING AND ITS COMPONENTS.

   C. THE FOUNDATIONS OF THE PRE-ENGINEERED METAL BUILDING HAVE BEEN DESIGNED FOR AN ASSUMED ESTIMATED BUILDING STRUCTURE REACTIONS NOTED ON DRAWINGS. FOOTING AND PEDESTAL SIZES AND REINFORCING HAVE BEEN DESIGNED ASSUMING A PINNED CONNECTION AT THE COLUMN BASE. IF THE ACTUAL BUILDING REACTIONS ARE MORE THAN FOUNDATION REACTIONS NOTED ON DRAWINGS, THEN IT IS THE PRE-ENGINEERED METAL BUILDING MANUFACTURER'S RESPONSIBILITY TO REDESIGN THE PEDESTALS AND FOUNDATIONS.

   D. CONTRACTOR SHALL VERIFY QUANTITY, SIZE AND LENGTH OF ANCHOR BOLTS PRIOR TO CONSTRUCTION.

   E. SUBMIT SETTING PLANS FOR ANCHOR BOLTS, FURNISH TEMPLATES AS REQUIRED FOR PROPER INSTALLATION OF ANCHOR BOLTS.

   F. THE DESIGN DEAD LOADS ARE AS FOLLOWS (PREMANUFACTURED BUILDINGS)
      1) SELF WEIGHT OF PRE-MANUFACTURED BUILDING COMPONENTS, FRAMES, BEAMS, GIRTS, PURLINS, METAL PANELS.
      2) PROVIDE AN ADDITIONAL 8 PSF UNIFORM COLLATERAL LOAD CAPACITY THROUGHOUT THE ENTIRE ROOF FRAMING SYSTEM FOR HANGING PIPE LOADS, CEILING, MECHANICAL AND ELECTRICAL.
      3) THE METAL BUILDING FRAMING SHALL BE DESIGNED TO SUPPORT MECHANICAL UNITS AS NOTED ON THE MECHANICAL DRAWINGS. CONTRACTOR TO COORDINATE AND PROVIDE DIMENSIONS AND WEIGHTS OF ALL EQUIPMENT TO THE METAL BUILDING DESIGNER.
      4) DESIGN LOAD SHALL INCLUDE CRANE AT FULL CAPACITY.

   G. THE PRE-ENGINEERED METAL BUILDING MUST BE ADEQUATELY BRACED AGAINST LATERAL FORCES AND UPLIFT UNTIL CONCRETE FOUNDATIONS THAT THE METAL BUILDING DEPENDS ON FOR STABILITY ARE IN PLACE AND CONCRETE HAS REACHED ITS 28-DAY COMPRESSIVE STRENGTH.

   H. PORTAL FRAMES SHALL BE USED TO BRACE BOTH SIDE WALLS OF THE BUILDING.

   J. LATERAL LOADS AT TOP OF MASONRY WALLS SHALL BE RESISTED BY METAL BUILDING FRAMING. LIMIT LATERAL DEFLECTION OF PRE-ENGINEERED METAL BUILDING TO A MAXIMUM OF L/200 (L=HEIGHT OF BUILDING).

   K. PRE-ENGINEERED BUILDING MANUFACTURER SHALL SUBMIT ALL FOUNDATION LOADS, BASE PLATE SIZES, AND ANCHOR BOLT SIZES AND LOCATIONS FOR THE ACTUAL BUILDING SUPPLIED TO THE ENGINEER AS FIRST ORDER OF WORK AFTER THE NOTICE TO PROCEED.

8. STEEL STAIRS
   A. ALL STAIR FRAMING SHALL BE DESIGNED BY THE STAIR MANUFACTURER TO SUPPORT ALL DEAD LOADS PLUS A MINIMUM LIVE LOADING OF 100 PSF.

   B. WHERE STEEL FRAMING BEARS ON MASONRY WALLS, PROVIDE STEEL BEARING PLATES AS REQUIRED TO LIMIT THE BEARING STRESS TO 170 PSI MAXIMUM.

   C. PROVIDE STEEL HANGERS, CLIP ANGLES, ETC., AS REQUIRED TO SUPPORT STAIR FRAMING FROM THE STRUCTURE.

   D. SHOP DRAWINGS FOR ALL STAIRS SHALL BE SEALED BY A PROFESSIONAL ENGINEER REGISTERED IN THE STATE OF DELAWARE AND STATING THAT ALL STAIR COMPONENTS HAVE BEEN DESIGNED TO THE SPECIFIED LOADING AND COMPLIES WITH THE BUILDING CODE.

9. STRUCTURAL AND MISCELLANEOUS STEEL

9A. GENERAL AND NEW CONSTRUCTION
   A. ALL STRUCTURAL AND MISCELLANEOUS STEEL SHALL CONFORM TO THE 13th EDITION OF THE AISC "SPECIFICATION FOR THE DESIGN, FABRICATION AND ERECTION OF STRUCTURAL STEEL FOR BUILDINGS" AND ALL ITS SUPPLEMENTS, AND TO THE AISC "CODE OF STANDARD PRACTICE FOR STEEL BUILDINGS AND BRIDGES."

   B. ALL MISCELLANEOUS STEEL SHALL CONFORM TO ASTM A-36 HAVING A MINIMUM YIELD STRENGTH OF 36,000 PSI.

   C. ALL STRUCTURAL STEEL SHALL BE AS FOLLOWS:
      COLUMNS: ASTM A-992, FY = 50,000 PSI
      BEAMS AND GIRDERS: ASTM A-992, FY = 50,000 PSI

   D. STEEL TUBES SHALL CONFORM TO ASTM A500 GRADE B, FY = 46,000 PSI.

   E. ALL WELDED CONNECTIONS SHALL BE DONE WITH E70XX ELECTRODES. SHOP AND FIELD WELDS SHALL BE MADE BY APPROVED CERTIFIED WELDERS AND SHALL CONFORM TO THE AMERICAN WELDING SOCIETY CODE FOR BUILDINGS AWS D1.1. WELDS SHALL DEVELOP THE FULL STRENGTH OF MATERIALS BEING WELDED UNLESS OTHERWISE NOTED.

   F. ALL BUTT WELDS SHALL BE FULL PENETRATION BUTT WELDS IN ACCORDANCE WITH THE STRUCTURAL WELDING CODE (ANSI/AWS D1.1). THESE WELDS SHALL BE MADE ONLY BY OPERATORS QUALIFIED BY PRESCRIBED TESTS IN THE STRUCTURAL WELDING CODE IN BUILDING CONSTRUCTION OF THE AMERICAN WELDING SOCIETY. ACCEPTANCE TO BE SUBJECT TO THE INSPECTION AND REVIEW OF AN INDEPENDENT INSPECTION AGENCY.

   G. WELDING SEQUENCE AND TECHNIQUE SHALL BE SUCH THAT DISTORTION OF STEEL MEMBERS IS MINIMIZED AND UNDUE DISTORTION IS AVOIDED.

   H. CONNECTIONS DETAILED BY THE FABRICATOR SHALL MEET THE FOLLOWING REQUIREMENTS:

      1) PARAGRAPH 4.2.1 OF THE "CODE OF STANDARD PRACTICE FOR STEEL BUILDINGS AND BRIDGES" IS HEREBY MODIFIED BY DELETION OF THE FOLLOWING SENTENCE: "THIS APPROVAL CONSTITUTES THE OWNER'S ACCEPTANCE OF ALL RESPONSIBILITY FOR THE DESIGN ADEQUACY OF ANY CONNECTIONS DESIGNED BY THE FABRICATOR AS A PART OF HIS PREPARATION OF THESE SHOP DRAWINGS."

      2) UNLESS OTHERWISE NOTED ALL CONNECTIONS DESIGNED BY THE FABRICATOR SHALL BE DESIGNED IN ACCORDANCE WITH THE "AISC MANUAL OF STEEL CONSTRUCTION, ALLOWABLE STRESS DESIGN", 13th EDITION AND THE "AISC MANUAL OF STEEL CONSTRUCTION, VOLUME II, CONNECTIONS" USING THE ASD 13th EDITION PROVISIONS CONTAINED THEREIN. THE USE OF "SNUG TIGHT" BOLTED CONNECTIONS IS NOT PERMITTED. BOLTS SHALL BE SLIP CRITICAL OR BEARING. SHEAR CONNECTIONS SHALL DEVELOP THE END REACTION WCxL/2 WHERE "WC" IS THE UNIFORM LOAD CONSTANT IN KIPS PER FOOT AND WHERE "L" IS THE SPAN IN FEET, AS SHOWN IN THE TABLES "UNIFORM LOAD CONSTANTS FOR BEAMS LATERALLY SUPPORTED" FOR GIVEN SHAPE, SPAN AND STEEL SPECIFIED, EXCEPT CONSIDERATION SHALL BE GIVEN TO CONCENTRATED LOADS NEAR THE ENDS OF BEAMS. BOLTED CONNECTIONS SHALL HAVE NO LESS THAN TWO BOLTS.

      3) WHERE BEARING TYPE CONNECTIONS ARE SPECIFIED, SHEAR VALUES FOR THREADS INCLUDED IN THE SHEAR PLANE SHALL BE USED, EXCEPT AS FOLLOWS: SPECIAL CONNECTIONS FOR REACTIONS EXCEEDING 45 KIPS MAY BE DESIGNED AND DETAILED USING LARGE DIAMETER BOLTS AND/OR HIGH STRENGTH BOLTS AND/OR BOLT STRENGTHS FOR THREADS EXCLUDED FROM THE SHEAR PLANE.

      4) CONNECTIONS OTHER THAN THOSE SPECIFIED IN PARAGRAPHS (2) AND (3) ABOVE MAY BE USED PROVIDED THAT COMPLETE STRUCTURAL COMPUTATIONS SIGNED AND SEALED BY A STRUCTURAL ENGINEER LICENSED IN DELAWARE ARE SUBMITTED TO THE ARCHITECT.

10. STEEL JOISTS
   A. ALL STEEL JOISTS SHALL CONFORM TO THE SJI STANDARD SPECIFICATIONS IN ALL RESPECTS AND SHALL HAVE BRIDGING IN ACCORDANCE WITH THE SJI SPECIFICATIONS. JOISTS SHALL BE WELDED TO STEEL SUPPORTS WITH A MINIMUM OF TWO 1" WELDS. MINIMUM BEARING SHALL BE 2-1/2" ON STEEL, 4" ON MASONRY.

   B. UNLESS OTHERWISE SHOWN, NO MECHANICAL EQUIPMENT SHALL BE PLACED ON JOISTS WITHOUT APPROVAL OF THE ENGINEER.

   C. ALL OPEN WEB K-SERIES JOISTS SHALL BE DESIGNED, FABRICATED AND ERECTED IN ACCORDANCE WITH THE LATEST EDITION OF "STANDARD SPECIFICATIONS AND LOAD TABLES" AS ADOPTED BY THE STEEL JOIST INSTITUTE.

   D. STEEL JOISTS SHALL BE SHOP PAINTED WITH AN APPROVED CORROSION RESISTANT PRIMER, SUCH AS "TNEMEC PRIMER 10-99." ALL STEEL SHALL BE PAINTED IN STRICT ACCORDANCE WITH THE AISC SPECIFICATIONS AND MANUFACTURER'S RECOMMENDATIONS. PRIOR TO PAINTING, ALL STEEL SURFACES SHALL BE PREPARED IN ACCORDANCE WITH SSPC-SP3. ALL PAINTS SHALL BE APPROVED BY THE ARCHITECT PRIOR TO THEIR USE.

   E. ALL STEEL JOISTS, SHALL BE INSPECTED BY AN AGENCY RETAINED BY THE GENERAL CONTRACTOR. IT SHALL BE THE CONTRACTOR'S RESPONSIBILITY TO INFORM THE INSPECTION AGENCY OF THE PROGRESS OF THE STEEL ERECTION AND TO NOTIFY THE AGENCY 24 HRS. PRIOR TO A REQUESTED INSPECTION. THE CONTRACTOR SHALL PROVIDE ANY ASSISTANCE REQUIRED BY THE INSPECTOR FOR THE COMPLETION OF HIS DUTIES.

   F. ALL REQUIREMENTS FOR INSPECTION, WELDER'S CERTIFICATION, AND SHOP DRAWINGS AS DESCRIBED IN THE GENERAL NOTES FOR SHOP DRAWINGS AND STRUCTURAL AND MISCELLANEOUS STEEL SHALL APPLY TO STEEL JOISTS.

   G. PROVIDE BOLTED ERECTION CONNECTION FOR JOIST CLOSEST TO THE CENTERLINE OF THE COLUMN.

11. METAL DECKING
   A. ALL METAL DECKING SHALL BE DESIGNED, FABRICATED AND ERECTED IN ACCORDANCE WITH THE LATEST EDITION OF THE "SPECIFICATION OF THE STEEL DECK INSTITUTE." ALL METAL DECKING SHALL BE THREE SPAN CONTINUOUS.

   B. ALL METAL FORM DECKING SHALL BE 9/16" X 26 GAGE DECKING AS MANUFACTURED BY VULCRAFT OR AN APPROVED EQUIVALENT.

   C. ALL WELDS AND BURN AREAS SHALL BE CLEANED AND PAINTED WITH AN APPROVED PRIMER.

   D. FLOOR DECKING SHALL BE FASTENED TO SUPPORTS WITH 5/8" DIA. PUDDLE WELDS AT 12" O.C. AT SUPPORTS AND PERIMETER AND WITH SPACING AS SPECIFIED BY MANUFACTURER AT SIDE SEAMS.

UNOFFICIAL WEBSITE COPY

May 03, 2012 - 2:22pm User: jmoyer P:\2008\0801201\Drawings\03-Struc\01 - 6 Bay with Wash Magnolia Shop Bldg\0801201_S1-0_6_Bay_w_Wash-Magnolia Bldg.dwg
PREL TRACING DESIGN CHKD.

© WBCM 2012