THE STATE OF DELAWARE
DEPARTMENT OF TRANSPORTATION

U.S. CUSTOMARY UNITS

CONSTRUCTION & RIGHT-OF-WAY PLANS FOR:

BR. 2-195A
ON WEST RAILROAD AVE
OVER ISAAC BRANCH, WYOMING

CONTRACT NUMBER: T201107201

FEDERAL AID PROJECT NUMBER: BRN-K195(04)

COUNTY: KENT **M.R. #: 195**

UNOFFICIAL WEBSITE COPY

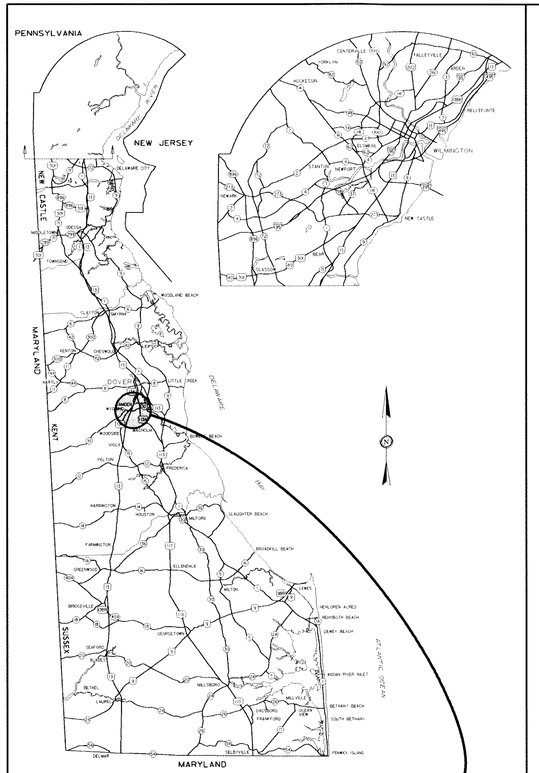

GENERAL LOCATION OF CONTRACT

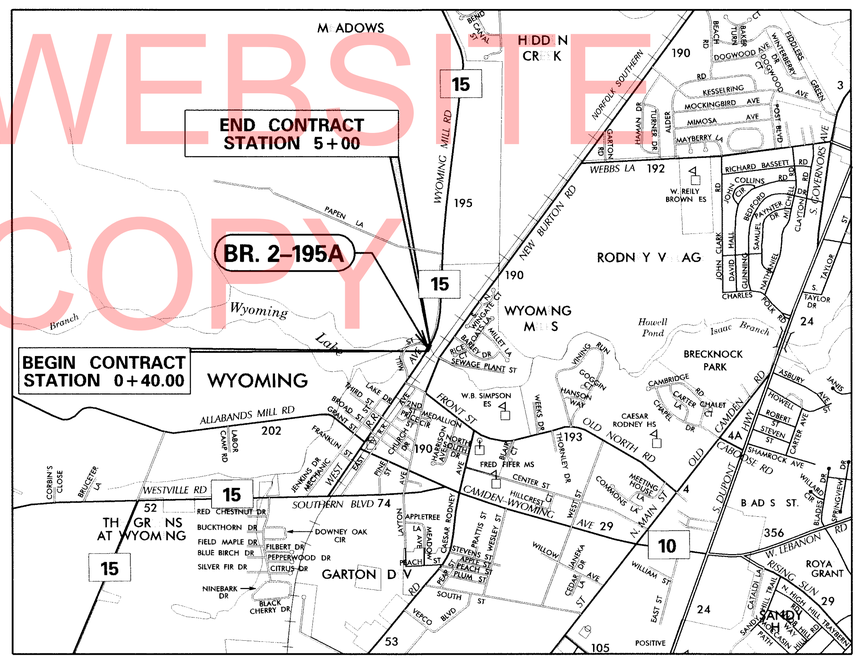

DESIGN DESIGNATION

FUNCTIONAL CLASS: MAJOR COLLECTOR	D.H.V. PROJECTED: 765	YEAR: 2040
TYPE OF CONSTRUCTION: REPLACEMENT	DESIGN SPEED: 40 M.P.H.	
A.A.D.T. CURRENT: 8762 YEAR: 2010	TRUCKS: 12 %	
A.A.D.T. PROJECTED: 12750 YEAR: 2040	DIRECTION OF DISTRIBUTION: 60 %	

INDEX OF SHEETS

SHEET Nº	TABLE OF CONTENTS
1	TITLE SHEET
2	LEGEND SHEET
3	PROJECT NOTES
4	TYPICAL SECTIONS
5	HORIZONTAL AND VERTICAL CONTROL
6	CONSTRUCTION PLANS
7	PROFILE SHEET
8	PLAN AND ELEVATION
9	BRIDGE SECTION
10	LAYOUT PLAN
11	SOUTH ABUTMENT DETAILS
12	NORTH ABUTMENT DETAILS
13	SOUTH AND NORTH ABUTMENTS REINFORCEMENT DETAILS
14	BEARING BETAILS
15	BEAM DETAILS
16	BEAM REINFORCEMENTS
17	DIAPHRAGM DETAILS
18	PARAPET DETAILS
19	BORING SHEET
20	CONSTRUCTION SEQUENCE, EROSION AND SEDIMENT CONTROL
21	ENVIRONMENTAL COMPLIANCE SHEET
22	UTILITY PLAN
23	DETOUR PLAN
24-26	RIGHT-OF-WAY SHEETS

TOTAL SHEETS: 26

APPROVED DESIGN EXCEPTIONS

DESIGN PARAMETER	REQUIRED	PROVIDED	DATE

ADDENDA & REVISIONS

DESCRIPTION	NAME & DATE

ASSOCIATED CONTRACTS

CONTRACT NO.	CONTRACT NAME
74-12-008	REPLACEMENT OF BRIDGE NO. 195A ON ROAD NO. 195

RECOMMENDED

Gregory D. Pawlowski — 10/16/12
SQUAD MANAGER, CONSTRUCTION — DATE

10/22/12
GROUP ENGINEER, CONSTRUCTION — DATE

N/A
ASSISTANT DIRECTOR, TRANSPORTATION SOLUTIONS (CONSTRUCTION) — DATE

FINAL PLANS

RECOMMENDED
Vincent W. Davis
STORMWATER ENGINEER
DATE 16 OCT 2012
VINCENT W. DAVIS REGISTERED No. 12898 DELAWARE PROFESSIONAL ENGINEER — SEAL

RECOMMENDED
Acting - Douglas A. Rife
SQUAD MANAGER, TRANSPORTATION SOLUTIONS (PROJECT DEVELOPMENT OR BRIDGE DESIGN)
DATE October 15, 2012
DOUGLAS A. RIFE REGISTERED No. 11436 DELAWARE PROFESSIONAL ENGINEER — SEAL

RECOMMENDED
Douglas A. Rife
BRIDGE DESIGN ENGINEER
DATE October 15, 2012
DOUGLAS A. RIFE REGISTERED No. 11436 DELAWARE PROFESSIONAL ENGINEER — SEAL

RECOMMENDED
ASSISTANT DIRECTOR, TRANSPORTATION SOLUTIONS
DATE NOVEMBER 8, 2012
BARRY A. BENTON REGISTERED No. 10774 DELAWARE PROFESSIONAL ENGINEER — SEAL

APPROVED
Natalie Barnhart
CHIEF ENGINEER
DATE November 8, 2012
NATALIE M. BARNHART REGISTERED No. 9629 DELAWARE PROFESSIONAL ENGINEER — SEAL

LAST REVISED: 03/03/2011
V:\EVENT\195\BRIDGE\T201107201\PLANS\TCO1.DGN

EXISTING SYMBOLS

DRAINAGE

	DITCH OR STREAM CENTERLINE
	DIRECTIONAL STREAM FLOW ARROW
C.B. / D.I.	DRAINAGE INLET
J.B.	DRAINAGE JUNCTION BOX
D	DRAINAGE MANHOLE
SIZE/TYPE LABEL	DRAINAGE PIPE AND FLOW ARROW
	DRAINAGE PIPE HEADWALL
	RIPRAP - AREA FEATURE
	RIPRAP - LINEAR FEATURE

MANMADE ROADSIDE FEATURES

	BOLLARD - STEEL POLE
	BOLLARD - WOOD POST
(TYPE LABEL)	CURB
(TYPE LABEL)	CURB AND GUTTER
	FENCE - CHAINLINK OR STRANDED
	FENCE - STOCKADE OR SPLIT RAIL
FP	FLAG POLE
	GUARDRAIL - STEEL BEAM
	GUARDRAIL - WIRE ROPE
LAMP	LAMP AND POST - RESIDENTIAL
MB	MAILBOX
PM	PARKING METER AND POST
	PAVEMENT - FLEXIBLE
	PAVEMENT - RIGID
	PILE - BRIDGE
	PILLAR OR MISCELLANEOUS POST
	TRAFFIC SIGN AND POST
	WALL - BRICK OR BLOCK
	WALL - STONE

NATURAL ROADSIDE FEATURES

	GRASS LAWN
	HEDGEROW OR THICKET
	MARSH BOUNDARY LINE
	TREE - CONIFEROUS
	TREE - DECIDUOUS
	TREE STUMP
	SHRUBBERY
WL	DELINEATED WETLAND BOUNDARY LINE
	WOODS LINE BOUNDARY

RIGHT-OF-WAY SYMBOLS

C.M.	PROPERTY MARKER - CONCRETE MON.
I.P.	PROPERTY MARKER - IRON PIPE
100+00	HISTORIC RIGHT-OF-WAY BASELINE
	EXISTING RIGHT-OF-WAY
PL	EXISTING PROPERTY LINE
EASEMENT TYPE	EXISTING EASEMENT
DA	EXISTING DENIAL OF ACCESS
R/W-DA	EXISTING R/W & DENIAL OF ACCESS

SURVEY CONTROL & MONUMENTATION

B.M.	SURVEY BENCHMARK LOCATION
T.P.	SURVEY TIE POINT LOCATION
	SURVEY TRAVERSE POINT
	POINT OF CURVATURE OR TANGENCY
	POINT OF INTERSECTING TANGENTS

UTILITY

	SOIL BORING LOCATION
	UTILITY TEST HOLE LOCATION
TV	CABLE TV DISTRIBUTION BOX
E	ELECTRIC MANHOLE
EM	ELECTRIC METER
E	ELECTRIC TRANSFORMER
	POLE MOUNTED LUMINAIRE
G	GAS MANHOLE
G.M.	GAS METER
G.V.	GAS VALVE
G.P.	GAS PUMP - SERVICE STATION
	RAILROAD TRACKS
S	SANITARY SEWER MANHOLE
S.V.	SANITARY SEWER VALVE
VENT	SANITARY SEWER VENT OR CLEANOUT
S.D.F.	SEPTIC DRAIN FIELD
B	TELEPHONE BOOTH
T	TELEPHONE MANHOLE
T	TELEPHONE TEST POINT
J.W.	TRAFFIC - CONDUIT JUNCTION WELL
	TRAFFIC - LIGHT POLE AND BASE
	TRAFFIC - PEDESTRIAN POLE & BASE
	TRAFFIC - SIGNAL CABINET & BASE
	TRAFFIC - SIGNAL POLE AND BASE
U	UTILITY BOX
	UTILITY POLE GUY WIRE ANCHOR
	UTILITY POLE
F.H.	WATER - FIRE HYDRANT
W.M.	WATER METER
W.V.	WATER VALVE
WELL	WELL HEAD
?	MANHOLE - UNDETERMINED OWNER

UTILITY COMPANY FACILITIES

TU-W	TIDEWATER
CU-G	CHESAPEAKE UTILITIES GAS
DP-E	DELMARMA POWER-ELECTRIC
VER-C	VERIZON

PROPOSED SYMBOLS

CONSTRUCTION

	CONCRETE SAFETY BARRIER - PERMANENT
BFS	BIOFILTRATION SWALE
	BOLLARD - STEEL POLE
	BOLLARD - WOOD POST
	BRICK PATTERNED SURFACE
	BUTT JOINT
100+00	CONSTRUCTION BASELINE
CSF	CONSTRUCTION SAFETY FENCE
	CURB, TYPE 1 & TYPE 3
	CURB, TYPE 2
	CURB & GUTTER, TYPE 1
	CURB & GUTTER, TYPE 2
	CURB & GUTTER, TYPE 3
	CURB & GUTTER, TYPE 4
CZ	CLEAR ZONE
	DRAINAGE INLET
	DITCH
	FENCE - METAL
	FENCE - WOOD
	FLARED END SECTION
	GUARDRAIL, TYPE 1
	GUARDRAIL, TYPE 2
	GUARDRAIL, TYPE 3
	GUARDRAIL END ANCHORAGE
	GUARDRAIL END TREATMENT, TYPE 1
	GUARDRAIL END TREATMENT, TYPE 2
	GUARDRAIL END TREATMENT, TYPE 3
HC	HORIZONTAL CLEARANCE
	IMPACT ATTENUATOR
	JUNCTION BOX - DRAINAGE
LOC	LIMIT OF CONSTRUCTION
	MANHOLE
	PAVEMENT PATCH
	PAVEMENT REMOVAL - TOPSOIL, SEED AND MULCH
	PIPE & DIRECTIONAL FLOW ARROW
	RIPRAP
	P.C.C. SIDEWALK @ 4"
	P.C.C. SIDEWALK @ 6"
	UNDERDRAIN
	UNDERDRAIN OUTLET

RIGHT-OF-WAY SYMBOLS

	PROPOSED RIGHT-OF-WAY MONUMENT
DA	PROPOSED DENIAL OF ACCESS
PE	PROPOSED PERMANENT EASEMENT
R/W	PROPOSED RIGHT-OF-WAY
R/W-DA	PROPOSED R/W & DENIAL OF ACCESS
TCE	TEMPORARY CONSTRUCTION EASEMENT
100+00	PROPOSED RIGHT-OF-WAY BASELINE

IDENTIFIERS

A/C	ADJUST BY CONTRACTOR
A/O	ADJUST BY OTHERS
B	CONCRETE SAFETY BARRIER
C	CURB OR CURB & GUTTER
C.J.B.	CONVERT TO JUNCTION BOX
C.M.H.	CONVERT TO DRAINAGE MANHOLE
C/O	CURB OPENING
CR	CURB RAMP / TYPE
CR-W	CURB RAMP / TYPE - WITHOUT SIDEWALK SURFACE DETECTABLE WARNING SYSTEM
CSF	CONSTRUCTION SAFETY FENCE
DI	DRAINAGE INLET
DND	DO NOT DISTURB
ED	ENERGY DISSIPATOR
F	FENCE
F.E.S.	FLARED END SECTION
F.F/C	FILL WITH FLOWABLE FILL
F.S.	FILTRATION STRUCTURE
GR	GUARDRAIL
J.B.	JUNCTION BOX
M.H.	MANHOLE
M	MONUMENT - RIGHT-OF-WAY
P	PIPE
R.L/C	RELOCATE BY CONTRACTOR
R.L/O	RELOCATE BY OTHERS
R.M/C	REMOVE BY CONTRACTOR
R.M/O	REMOVE BY OTHERS
U.D.	UNDERDRAIN / LENGTH
U.O.P.	UNDERDRAIN OUTLET PIPE

LANDSCAPING

L.S.	LANDSCAPE PLANTINGS
	SHRUBBERY
	CONIFEROUS TREE
	DECIDUOUS TREE

TRAFFIC

ITMS-CON	ITMS CONDUIT
SIG-CON	SIGNAL CONDUIT
	CONDUIT JUNCTION WELL
	LUMINAIRE
	PAVEMENT MARKINGS
	PAVEMENT STRIPING
	TRAFFIC SIGN

PAVEMENT SECTION(S)

	2" SUPERPAVE TYPE C, PG 64-22, 160 GYRATIONS (WMA) 6" GABC
	2" SUPERPAVE TYPE C, PG 64-22, 160 GYRATIONS (WMA) 3" SUPERPAVE TYPE B, PG 64-22, 160 GYRATIONS (WMA); 3.5" BCBC, PG 64-22, 160 GYRATIONS (WMA); 8" GABC

EROSION & SEDIMENT CONTROL

DWB	DEWATERING BASIN
	EROSION CONTROL BLANKET
ED	EARTH DIKE
	INLET SEDIMENT CONTROL
	PERIMETER DIKE/SWALE
PST	PORTABLE SEDIMENT TANK
RSF	REINFORCED SILT FENCE
SBD	SANDBAG DIKE
SB	SANDBAG DIVERSION
	STONE CHECK DAM
SCE	STABILIZED CONSTRUCTION ENTRANCE
SF	SILT FENCE
SP-1	SUMP PIT, TYPE 1
SP-2	SUMP PIT, TYPE 2
ST	SEDIMENT TRAP
ST	SEDIMENT TRAP WITH INLET AS OUTLET
ST	SEDIMENT TRAP PIPE OUTLET
SW	STILLING WELL
	TEMPORARY SWALE
TSD	TEMPORARY SLOPE DRAIN

UNOFFICIAL WEBSITE COPY

LAST REVISED: 12/02/2010
Y:\KENT\195\BRIDGE\T201107201\PLANS\LG01.DGN

DELAWARE DEPARTMENT OF TRANSPORTATION

ADDENDUMS / REVISIONS

NOT TO SCALE

BR. 2-195A
ON WEST RAILROAD AVE
OVER ISAAC BRANCH, WYOMING

CONTRACT T201107102	BRIDGE NO.	2-195A
COUNTY KENT	DESIGNED BY: PAM	
	CHECKED BY: JKM	

LEGEND

SHEET NO. 2
TOTAL SHTS. 26

GENERAL NOTES

1. THIS PROJECT IS TO BE CONSTRUCTED IN ACCORDANCE WITH THE DELAWARE DEPARTMENT OF TRANSPORTATION "STANDARD SPECIFICATIONS", DATED AUGUST 2001 AND THE DELAWARE DEPARTMENT OF TRANSPORTATION "STANDARD CONSTRUCTION DETAILS", DATED 2001, INCLUDING ALL REVISIONS UP TO THE DATE OF ADVERTISEMENT.

2. THE CONTRACTOR SHALL GIVE TWO (2) WEEKS NOTICE TO THE PROPERTY OWNER WHEN ANY FIXTURE, SHRUB OR OTHER OBJECT MUST BE REMOVED FROM THE RIGHT OF WAY OR EASEMENT AREA. IF THE OWNER HAS NOT ATTEMPTED TO SALVAGE THIS PROPERTY, THE CONTRACTOR SHALL REMOVE IT WITHOUT OBLIGATION. COMPENSATION SHALL BE INCIDENTAL TO THE CONTRACT.

3. THE ENDS OF ALL CURBS SHALL BE DEPRESSED FLUSH WITH THE PAVEMENT AT A RATIO OF TWELVE TO ONE (12:1) UNLESS OTHERWISE DIRECTED BY THE ENGINEER.

4. THE CONTRACTOR SHALL PROVIDE AND INSTALL PVC SLEEVES (4" INSIDE MINIMUM DIAMETER, 6" INSIDE MAXIMUM DIAMETER) IN PROPOSED CONCRETE SIDEWALKS, ISLANDS, AND MEDIANS FOR FUTURE TRAFFIC SIGN POSTS AS DIRECTED BY THE ENGINEER. THE LOWER END OF THE SLEEVE SHALL SIT ON THE TOP OF THE SUBBASE MATERIAL. THE COST SHALL BE INCIDENTAL TO THE CONTRACT.

5. STAGING AREAS - PROPER EROSION AND SEDIMENT CONTROL MEASURES AS DETERMINED BY THE ENGINEER SHALL BE INSTALLED IN ALL STAGING AREAS. ALL AREAS USED BY THE CONTRACTOR FOR STAGING OPERATIONS SHALL BE FULLY RESTORED BY THE CONTRACTOR UPON COMPLETION OF THE CONTRACT. IF THE STAGING AREA IS PAVED, IT SHALL BE RESTORED TO ITS ORIGINAL CONDITION. IF THE AREA IS UNPAVED, IT SHALL BE RE-GRADED, TOPSOILED, SEEDED AND MULCHED IN ACCORDANCE WITH DELAWARE STANDARD SPECIFICATIONS 732, 734 AND 735, FOR TOPSOIL, SEED AND MULCH RESPECTIVELY, TO THE SATISFACTION OF THE ENGINEER. THE SEED SHALL ADHERE TO THE SPECIFICATIONS OF SECTION 734 FOR PERMANENT GRASS SEEDING - DRY GROUND. ALL COSTS ASSOCIATED WITH RESTORATION OF THE STAGING AREA SHALL BE AT THE CONTRACTOR'S EXPENSE. IF THE ENGINEER DETERMINES THAT A SATISFACTORY STAND OF GRASS DOES NOT EXIST AT THE TIME OF FINAL INSPECTION, ALL COSTS ASSOCIATED WITH REESTABLISHING A SATISFACTORY STAND OF GRASS SHALL BE AT THE CONTRACTOR'S EXPENSE.

6. SITE REVIEWER - AN EROSION CONTROL SITE REVIEWER SHALL BE A PERSON FROM THE CONTRACTOR'S STAFF ASSIGNED TO EROSION AND SEDIMENT CONTROL IMPLEMENTATION AND MAINTENANCE AND SHALL BE REQUIRED ON SPECIFIC PROJECTS. THE NAME AND DNREC CERTIFICATION NUMBER OF EACH SITE REVIEWER SO REQUIRED SHALL BE SUBMITTED TO THE DEPARTMENT. THE NAME OF THE DELAWARE REGISTERED PROFESSIONAL ENGINEER PROVIDING DIRECTION AND SUPERVISION OF THE SITE REVIEWER, AS REQUIRED IN SECTION 12.3 OF THE DELAWARE SEDIMENT AND STORMWATER REGULATIONS, SHALL ALSO BE SUBMITTED TO THE DEPARTMENT. THE SITE REVIEWER REQUIREMENTS IN EFFECT ON THIS PROJECT SHALL BE MARKED WITH AN "X" BELOW:

EROSION POTENTIAL FOR THIS PROJECT	SITE REVIEWER REQUIREMENT
( ) INSIGNIFICANT	NONE
( ) MINOR	CONTRACTOR CERTIFICATION COURSE TRAINING ONLY, AS DEFINED IN SECTION 1.3 OF THE DELAWARE SEDIMENT AND STORMWATER REGULATIONS.
(x) MEDIUM	AT THE TIME OF BID OF THE CONTRACT, EITHER THE SUPERINTENDENT OR A SEPARATE INDIVIDUAL FROM THE CONTRACTOR'S STAFF SHALL BE A CERTIFIED CONSTRUCTION REVIEWER (CCR), AS DEFINED IN SECTION 12 OF THE DELAWARE SEDIMENT AND STORMWATER REGULATIONS.
( ) MAJOR	SUPERINTENDENT AND AN INDIVIDUAL FROM CONTRACTOR'S STAFF SHALL BE CCR. ONE INDIVIDUAL FROM THE CONTRACTOR'S STAFF MUST BE A CCR AT THE TIME OF BID OF THE CONTRACT. THE SUPERINTENDENT MUST BECOME A CCR WITHIN ONE YEAR AFTER THE AWARD OF CONTRACT.

7. ELECTRONIC PROJECT FILES THAT WILL BE MADE AVAILABLE TO THE CONTRACTOR INCLUDE:

(x)	NONE
( )	ASCII DATA FILES WITH COORDINATES AND ELEVATIONS FOR PROPOSED POINTS AS SELECTED BY THE ENGINEER.
( )	RASTER FILES, IN .CAL FILE FORMAT, FOR ALL PLAN SHEETS.
( )	EXISTING DIGITAL TERRAIN MODEL, IN .DTM FILE FORMAT, COMPATIBLE WITH SOFTWARE CURRENTLY USED BY DELDOT.
( )	PROPOSED DIGITAL TERRAIN MODEL, IN .DTM FILE FORMAT, COMPATIBLE WITH SOFTWARE CURRENTLY USED BY DELDOT.
( )	DESIGN FILE, IN .DGN FILE FORMAT, CONTAINING ONLY THE PROPOSED 3D TRIANGLES OF THE PROPOSED DIGITAL TERRAIN MODEL (DTM).

NOTE: THE DOCUMENT ENTITLED "RELEASE FOR DELIVERY OF DOCUMENTS IN ELECTRONIC FORM TO A CONTRACTOR" MUST BE SIGNED BY ALL PARTIES PRIOR TO THE DELIVERY OF ANY ELECTRONIC PROJECT FILES.

8. AMERICAN TRAFFIC SAFETY SERVICES ASSOCIATION (ATSSA) CERTIFIED TRAFFIC CONTROL SUPERVISOR REQUIREMENT FOR THIS PROJECT.

(x)	THE CONTRACTOR SHALL NOT BE REQUIRED TO HAVE AN ATSSA SUPERVISOR ASSIGNED TO THIS PROJECT.
( )	THE CONTRACTOR SHALL HAVE AN ATSSA SUPERVISOR ASSIGNED TO THIS PROJECT. THE CONTRACTOR'S GENERAL SUPERINTENDENT FOR THIS PROJECT OR ANOTHER ATSSA CERTIFIED MEMBER OF THE CONTRACTOR'S PROJECT STAFF MAY BE THE ATSSA SUPERVISOR. PAYMENT FOR THE ATSSA SUPERVISOR IS INCIDENTAL TO ITEM 743000.
( )	THE CONTRACTOR SHALL HAVE AN ATSSA SUPERVISOR ASSIGNED TO THIS PROJECT. THE ATSSA SUPERVISOR'S SOLE JOB SHALL BE SUPERVISION OF THE INSTALLATION, OPERATION AND MAINTENANCE OF TRAFFIC CONTROL DEVICES FOR THIS PROJECT. THE CONTRACTOR'S GENERAL SUPERINTENDENT FOR THIS PROJECT SHALL NOT BE THE ATSSA SUPERVISOR. PAYMENT FOR ATSSA SUPERVISOR SHALL BE PAID FOR UNDER ITEM 743031

9. THE DISTURBED AREA FOR THIS PROJECT IS 0.58 ACRES.

10. THE CONTRACTOR SHALL BE RESPONSIBLE FOR ADHERING TO THE CONSTRUCTION SITE POLLUTION PREVENTION SPECIFICATIONS AS DETAILED IN SECTION 3.6 OF THE "DELAWARE EROSION AND SEDIMENT CONTROL HANDBOOK". ALL COSTS ASSOCIATED WITH ADHERING TO THE STANDARDS SHALL BE INCIDENTAL TO THE OVERALL CONTRACT COSTS.

11. THE EROSION AND SEDIMENT CONTROL PLANS HAVE BEEN APPROVED BY DELDOT'S STORMWATER ENGINEER UNDER DELDOT'S DELEGATED AUTHORITY. THE EROSION AND SEDIMENT CONTROL PLANS ARE VALID FOR A THREE YEAR PERIOD, BEGINNING ON THE DATE THE STORMWATER ENGINEER SIGNED THE CONSTRUCTION TITLE SHEET. IF THE FINAL ACCEPTANCE OF THE PROJECT IS ANTICIPATED TO EXTEND BEYOND THE THREE YEARS, THE CONTRACTOR SHALL INFORM THE ENGINEER THREE MONTHS PRIOR TO THE EXPIRATION OF THE EROSION AND SEDIMENT CONTROL PLAN APPROVAL. DELDOT WILL REVIEW THE CURRENT EROSION AND SEDIMENT CONTROL PLAN AND ISSUE AN EXTENSION WITH ANY APPROPRIATE MODIFICATIONS.

PROJECT NOTES

SECTION 200

1. ITEMS TO BE REMOVED UNDER ITEM 211000 - REMOVAL OF STRUCTURES AND OBSTRUCTIONS, SHALL INCLUDE, BUT NOT BE LIMITED TO THE FOLLOWING:
   - REMOVAL OF STRUCTURE IN ITS ENTIRETY -EXISTING CORRUGATED METAL PIPES ARCHES AND OBSTRUCTIONS.
   - REMOVAL OF EXISTING GUARDRAILS, REINFORCED CONCRETE PIPES, AND FENCING IN RIGHT-OF-WAY AS SHOWN ON PLAN.
   - SACK CONCRETE RIPRAP APRONS.

SECTION 300

2. A. THE CONTRACTOR MAY ELECT TO USE ANY OF THE FOLLOWING MATERIALS TO MEET THE REQUIREMENTS OF ITEM 302007 - GRADED AGGREGATE BASE COURSE, TYPE 'B':
   a. CRUSHED STONE (PER STANDARD SPECIFICATION 821)
   b. CRUSHED CONCRETE (PER STANDARD SPECIFICATION 821)
   c. HOT-MIX MILLINGS (PER SPECIAL PROVISION 302514 MILLED HOT-MIX BASE COURSE)

   THE CONTRACTOR WILL NOT BE ALLOWED TO MIX DIFFERENT MATERIALS (OR SIMILAR MATERIALS FROM DIFFERENT SOURCES) TO MEET THE REQUIREMENTS OF ITEM 302007 - GRADED AGGREGATE BASE COURSE, TYPE 'B'.

   ALL OF THE ABOVE LISTED MATERIALS ARE PERMITTED FOR USE ON THE JOB, PROVIDED THEY ARE SEPARATED INTO APPROVED AREAS. EACH AREA OF BASE COURSE MUST BE CONSTRUCTED USING MATERIALS FROM A SINGULAR SOURCE, FULL DEPTH, IN ORDER THAT PROPER TESTING MAY BE ACCOMPLISHED. THE CONTRACTOR AND ENGINEER SHALL AGREE ON THE LIMITS OF EACH SOURCE OF MATERIAL PRIOR TO PLACEMENT.

   B. THE QUANTITY USED FOR BASE OF EACH OF THE ABOVE LISTED MATERIALS WILL BE THE CONTRACTOR'S CHOICE, WITH THE TOTAL BEING EQUAL TO THE ACTUAL QUANTITY USED UNDER ITEM 302007 - GRADED AGGREGATE BASE COURSE, TYPE 'B'.

   C. THE CONTRACTOR MAY ALSO ELECT TO RECYCLE MILLINGS FOR USE IN HOT-MIX AS PERMITTED BY THE STANDARD SPECIFICATIONS. THE CHOICE OF THE QUANTITY OF MILLINGS USED FOR THIS PURPOSE, OR FOR BASE COURSE, LIES WITH THE CONTRACTOR. ALL EXCESS MILLING MATERIAL SHALL BECOME PROPERTY OF THE CONTRACTOR.

   D. HOT-MIX MILLINGS MAY BE GENERATED FROM THE FOLLOWING SOURCES:
   a. MATERIAL MADE AVAILABLE WHEN MILLED.
   b. MATERIAL MILLED ON THIS CONTRACT AT THE CONTRACTOR'S CHOICE UNDER ITEM 202000.
   c. MILLED MATERIAL FURNISHED ON THE JOB FROM THE CONTRACTOR'S YARD OR OTHER OUTSIDE SOURCE.
   ALL MILLED MATERIALS SHALL MEET THE MATERIAL REQUIREMENTS OF ITEM 302514 - MILLED HOT-MIX BASE COURSE.

   E. PAYMENT CLARIFICATION:
   a. SHOULD THE CONTRACTOR ELECT TO MILL PORTIONS OF HOT-MIX SHOWN ON THE PLANS TO BE REMOVED UNDER ITEM 202000 - EXCAVATION AND EMBANKMENT THE COST OF MILLING THIS HOT-MIX WILL BE PAID AS ITEM 202000 - EXCAVATION AND EMBANKMENT. THE MILLINGS GENERATED MAY BE RECYCLED INTO HOT-MIX, UTILIZED FOR BASE COURSE, OR DISPOSED OF TO AN APPROVED SITE. HAULING COSTS FOR DISPOSAL AND/OR RECYCLING ARE INCIDENTAL TO ITEM 202000 - EXCAVATION AND EMBANKMENT.

   b. MILLINGS GENERATED UNDER ITEM 760502 - PAVEMENT MILLINGS, TAPERCUT MAY BE RECYCLED INTO HOT-MIX, UTILIZED FOR BASE COURSE OR DISPOSED OF BY THE CONTRACTOR TO AN APPROVED SITE. NO SEPARATE PAYMENT WILL BE MADE FOR TRANSPORTING MILLINGS ON SITE OR TO AN APPROVED DISPOSAL SITE.

   c. SHOULD THE CONTRACTOR ELECT TO TEMPORARILY STOCKPILE MILLINGS ON THE JOB SITE FOR LATER USE, ALL COSTS FOR STOCKPILING AND SUBSEQUENT REHANDLING SHALL BE INCIDENTAL TO ITEM 202000 - EXCAVATION AND EMBANKMENT.

   d. MILLINGS USED FOR BASE COURSE SHALL BE PLACED IN ACCORDANCE WITH THE REQUIREMENTS OF SPECIAL PROVISION 302514 - MILLED HOT-MIX BASE COURSE. NO SEPARATE PAYMENT WILL BE MADE TO FURNISH MILLINGS FROM AN OUTSIDE SOURCE OR TRANSPORT MILLINGS WITHIN THE PROJECT LIMITS. MILLINGS USED FOR BASE COURSE WILL BE PAID FOR AT THE UNIT BID PRICE FOR ITEM 302007 - GRADED AGGREGATE BASE COURSE, TYPE 'B'.

   e. ALL COSTS TO UTILIZE MILLINGS IN RECYCLED HOT-MIX WILL BE INCIDENTAL TO THE UNIT PRICE BID FOR THE HOT-MIX ITEM USING THE RECYCLED MATERIAL.

   f. SPECIAL PROVISION 302514 - MILLED HOT-MIX BASE COURSE IS PROVIDED TO SPECIFY THE MEANS OF LAY DOWN AND COMPACTION AS WELL AS THE MATERIAL REQUIREMENTS FOR MILLINGS USED AS BASE COURSE. ALL COSTS TO BRING THE MILLINGS INTO COMPLIANCE WITH THE REQUIREMENTS OF ITEM - 302514 MILLED HOT-MIX BASE COURSE ARE INCIDENTAL TO ITEM 302007 - GRADED AGGREGATE BASE COURSE, TYPE 'B'. NO PAYMENT WILL BE MADE FOR ITEM 302514 - MILLED HOT-MIX BASE COURSE. THE QUANTITY OF MILLINGS USED FOR BASE COURSE WILL BE PAID FOR UNDER ITEM 302007 - GRADED AGGREGATE BASE COURSE.

SECTION 600

3. STRUCTURAL ELEMENTS OF PORTLAND CEMENT CONCRETE SHALL BE AS NOTED:
   (F'c = 28 DAY COMPRESSIVE STRENGTH)
   ITEM * 623000)-PRECAST PRESTRESSED CONCRETE MEMBERS (F'c = 10.0 KSI)
   ITEM * 602001-P.C.C. MASONRY, CLASS A (F'c= 4.5 ksi)
   ITEM * 602011-P.C.C. MASONRY, SUPERSTRUCTURE CLASS A (F'c= 4.5 ksi)
   ITEM * 602758-PRECAST CONCRETE ABUTMENT (F'c= 4.5 ksi)
   MIX REQUIREMENTS SHALL CONFORM TO SECTION 812 OF THE SPECIFICATIONS. ALL EXPOSED EDGES SHALL BE CHAMFERED 3/4" UNLESS OTHERWISE NOTED.

4. REINFORCING STEEL SHALL CONFORM TO AASHTO M31 (ASTM A615), GRADE 60. ALL REINFORCING STEEL SHALL HAVE A CLEAR COVER OF 2" UNLESS OTHERWISE SPECIFIED ON THE PLANS. EPOXY COATED REINFORCING STEEL SHALL CONFORM TO AASHTO M284 (ASTM D3963), AND IS DENOTED WITH THE SUFFIX "E" IN BAR MARKS.

5. LIMITS OF COURSE AGGREGATE FOR FOUNDATION STABILIZATION AND SUBFOUNDATION BACKFILL (ITEM *608000) SHALL EXTEND 18" OUTSIDE OF THE NEAT LINE PERIMETER OF THE VERTICAL FACES OF THE FOOTING OR STRUCTURAL UNIT.

SECTION 700

6. ALL PAVED AREAS TO BE RECONSTRUCTED OR WIDENED SHALL BE SAWCUT AT THE POINT WHERE THE NEW PAVEMENT IS TO TIE INTO THE EXISTING PAVEMENT.

MISCELLANEOUS

7. THE CONTRACTOR SHALL CONTACT MICHAEL ELLER, THE CHIEF OF SCHEDULING FOR DART FIRST STATE, 14 DAYS PRIOR TO THE START OF CONSTRUCTION AT 302-576-6061.

8. DESIGN CRITERIA: 2010 AASHTO LRFD BRIDGE DESIGN SPECIFICATIONS, 5TH EDITION, USING AASHTO HL93 FOR LIVE LOAD, 15 PSF FOR SIP FORM AND 25 PSF FOR FUTURE WEARING SURFACE.

9. HYDRAULIC DATA
   DRAINAGE AREA = 28.1 SQ. MILES
   DESIGN FREQUENCY = 50 YEARS — 50 YR FLOOD ELEVATION = 29.20 FT
   DESIGN DISCHARGE = 2095 CFS — PROPOSED OPENING = 367 SF

10. THE PROPOSED STRUCTURE HAS BEEN ANALYZED FOR THE EFFECTS OF SCOUR IN ACCORDANCE WITH HEC-18-'EVALUATING SCOUR AT BRIDGES' AND HEC-23-'BRIDGE SCOUR AND STREAM INSTABILITY COUNTERMEASURES.' SCOUR COUNTERMEASURES HAVE BEEN DESIGNED FOR THE WORST CASE OF THE OVERTOPPING FLOOD OR THE 500-YR FLOOD EVENT.
    DESIGN EVENT 50 = OVERTOPPING — DESIGN VELOCITY = 4.96 FT/SEC
    DESIGN DISCHARGE = 2095 CFS — DESIGN DEPTH OF FLOW = 12.20 FT

11. THIS PROJECT TAKES PLACE WITHIN THE TOWN OF WYOMING HISTORIC DISTRICT. NO ADDITIONAL WORK BEYOND THE THE SCOPE INDICATED IN THESE PLANS SHALL BE PREFORMED. ANY PLAN MODIFICATIONS SIGNIFICANT IN NATURE OR NEW INFORMAITON NOT INITIALLY KNOWN THAT ALTERS PLANS AND DESIGNS IS TO BE COORDINATED WITH THE DISTRICT ENGINEER AND THE ENVIRONMENTAL STUDIES OFFICE (CONTACT MICHAEL HAHN 302-760-2131 OR MICHAEL.C.HAHN@STATE.DE.US) . IF IT IS DEEMED NECESSARY, COORDINATION WITH THE DELAWARE STATE HISTORIC PRESERVATION OFFICE (SHPO) AND FEDERAL HIGHWAY ADMINISTRATION (FHWA) WILL BE INITIATED BEFORE ANY ACTION IS IMPLEMENTED. PROPOSED OR NECESSARY MODIFICATONS AND CHANGES WILL BE REVIEWED TO ENSURE PROPER TREATMENT AND CONSIDERATIONS TO HISTORIC PROPERTIES, PER DIALOGUE BETEEEN SHPO, FHWA, AFFECTED PROPERTY OWNERS, AND THE CONTRACTOR.

    BEFORE CONSTRUCTION ACTIVITIES BEGIN, THE CONTRACTOR WILL RECORD AND MONITOR SITE CONDITIONS BY USE OF VIDEO OR OTHER DATE RECORDATION IN ACCORDANCE TO ITEM 211508 - VIDEOTAPING BUILDING. AS PART OF THAT EFFORT, THE CONTRACTOR MAY ALSO UNDERTAKE FIELD MEASUREMENTS AND RECORD EXISTING CONDITIONS FOR DESIGN DETAILS AND ANY CONTRACTING SPECIFICATIONS. COPIES WILL BE PROVIDED TO THE APPROPRIATE PERSONNEL DURING THE PRECONSTRUCTION MEETING AND PRIOR TO CONSTRUCTION. THESE RECORDS WILL BE USED FOR DISPUTE RESOLUTION, SHOULD QUERY ARISE.

    DURING THE LENGTH OF THIS CONTRACT, SHOULD DAMAGE OCCUR TO ANY PROPERTIES WITHIN THE HISTORIC DISTRICT AS A RESULT OF VIBRATION DAMAGE (NOTE: ADJACENT PROPERTIES ARE CONTRIBUTING TO THE HISTORIC DISTRICT), DELDOT'S ENVIRONMENTAL STUDIES WILL BE CONTACTED PRIOR TO IMPLEMENTATION OF REPAIRS TO ENSURE REPARIS WILL MEET OR FOLLOW THE SECRETARY OF THE INTERIOR STANDARDS FOR REHABILITATION AND/OR TREATMENT OF HISTORIC PROPERTIES. ANY REPAIRS MEASURES WILL AVOID AND MINNIMIZE POTENTIAL ADVERSE EFFECTS AS DETERMINED BY DELDOT, SHPO, AND FHWA.

    THE SHPO WILL DETERMINE IF A CULTURAL RESOURCE SURVEY IS REQUIRED BEFORE THE SITE CAN BE APPROVED. IF ADDITIONAL SURVEY WORK IS REQUIRED, IT WILL BE THE CONTRACTOR'S RESPONSIBILITY TO HIRE A QUALIFIED PROFESSIONAL TO ASSESS THE SITE(S) FOR THE PRESENCE OR ABSENCE OF CULTURAL RESOURCES (I.E. HISTORIC OR PREHISTORIC ARCHEOLOGICAL SITES). THE CONTRACTOR'S CONSULTANT WILL BE RESPONSIBLE FOR PRODUCING DOCUMENTATION OF THE SURVEY RESULTS FOR SUBMISSION TO THE SHPO.

    IF THE CONTRACTOR PROPOSES THE USE OF DISPOSAL SITES OUTSIDE THE STATE OF DELAWARE, THE CONTRACTOR MUST PROVIDE WRITTEN APPROVAL FROM THE STATE HISTORIC PRESERVATION OFFICE OF EACH RESPECTIVE STATE.

    A PROJECT'S DISPOSAL OPERATION WILL NOT COMMENCE UNTIL THE SHPO HAS NOTIFIED THE DELDOT DISTRICT OFFICE THAT THE SITE LOCATION(S) IS APPROVED FOR USE.

    THE USE OF THE DISPOSAL SITE WILL NOT RESULT IN DISCHARGE OF MATERIALS INTO THE U.S. ARMY CORPS OF ENGINEERS OR DNREC JURISDICTIONAL WETLANDS OR WATERS. IT IS THE RESPONSIBILITY OF THE CONTRACTOR TO PROVIDE ANY SITE SURVEYS OR WETLAND DELINEATIONS NEEDED TO PRECLUDE WETLAND ENCROACHMENT.

    THE CONTRACTOR WILL BE RESPONSIBLE FOR ALL SEDIMENT AND EROSION CONTROL MEASURES AND SUBSEQUENT APPROVALS REQUIRED FOR THE DISPOSAL SITE(S) OPERATIONS.

    IT IS THE CONTRACTOR'S RESPONSIBILITY TO OBTAIN ALL OTHER APPROPRIATE FEDERAL, STATE, OR LOCAL APPROVALS REQUIRED BY LAW FOR USE OF THE DISPOSAL SITE(S).

12. ENVIRONMENTAL COMPLIANCE:
    SEE ENVIRONMENTAL COMPLIANCE PLAN FOR FURTHER RESTRICTIONS/GUIDANCE ASSOCIATED WITH THIS PROJECT.

13. SIGNING AND STRIPING
    A 5" DOUBLE YELLOW STRIPE SHALL BE PLACED AT BASELINE AND 5" SINGLE WHITE STRIPE AT THE EDGES. PAYMENT UNDER ITEM *748548-PERMANENT PAVEMENT STRIPING, EPOXY RESIN PAINT 5".

14. PRESTRESSED REINFORCED CONCRETE MEMBERS
    THE PRECASTER IS RESPONSIBLE FOR FABRICATION, DELIVERY, AND POST-TENSIONING OF THE PRECAST ELEMENTS PROVIDED UNDER CONTRACT *T201307201. PRECAST ELEMENT DETAILS FROM THAT CONTRACT ARE INCLUDED HERE FOR INFORMATIONAL PURPOSES. UNDER THIS CONTRACT, THE CONTRACTOR IS REPONSIBLE FOR INSTALLATION ONLY (I.E. SETTING THE PRECAST ELEMENTS, GROUTING, REINFORCEMENT, ETC.). THE CONTRACTOR SHALL PROVIDE ALL NECESSARY HARDWARE FOR INSTALLATION INCLUDING BEARING PADS. PAYMENT FOR ITEM *623000 - PRESTRESSED REINFORCED CONCRETE MEMBERS, SHALL BE FOR INSTALLATION COSTS AND ALL INCIDENTALS NECESSARY TO INSTALL THE BEAMS. ALL PORTIONS OF SPECIAL PROVISION FOR ITEM *623000 PERTAINING TO INSTALLATION SHALL APPLY. CONTACT INFORMATION OF FABRICATOR SHALL BE PROVIDED BY THE DEPARTMENT PRIOR TO THE TIME OF BID.

15. SEE ADDITIONAL NOTES ON THE CONSTRUCTION PLAN.

LRFR LOAD RATINGS

RATING VEHICLE	RATING TYPE	CONTROLLING UNIT/SPAN/MEMBER	CONTROLLING POINT	LOAD EFFECT	LIMIT STATE	LOAD RATING FACTOR	LOAD RATING (tons)
HL-93 TRUCK	INVENTORY	-	105.00	MOMENT	STRENGTH 1	1.53	54.95
HL-93 TANDEM	INVENTORY	-	-	MOMENT	STRENGTH 1	1.67	41.64
HL-93 TRUCK	OPERATING	-	105.00	MOMENT	STRENGTH 1	1.97	70.97
HL-93 TANDEM	OPERATING	-	-	MOMENT	STRENGTH 1-0	2.15	53.73
S220	LEGAL	-	106.00	FLEXURE	STRENGTH 1	2.99	20.00
S335	LEGAL	-	105.00	FLEXURE	SERVICE III	1.67	35.00
S437	LEGAL	-	105.00	FLEXURE	SERVICE III	1.63	37.00
T330	LEGAL	-	105.00	FLEXURE	SERVICE III	2.61	30.00
T435	LEGAL	-	106.00	FLEXURE	SERVICE III	2.32	35.00
T540	LEGAL	-	105.00	FLEXURE	SERVICE III	2.08	40.00

UNOFFICIAL WEBSITE COPY

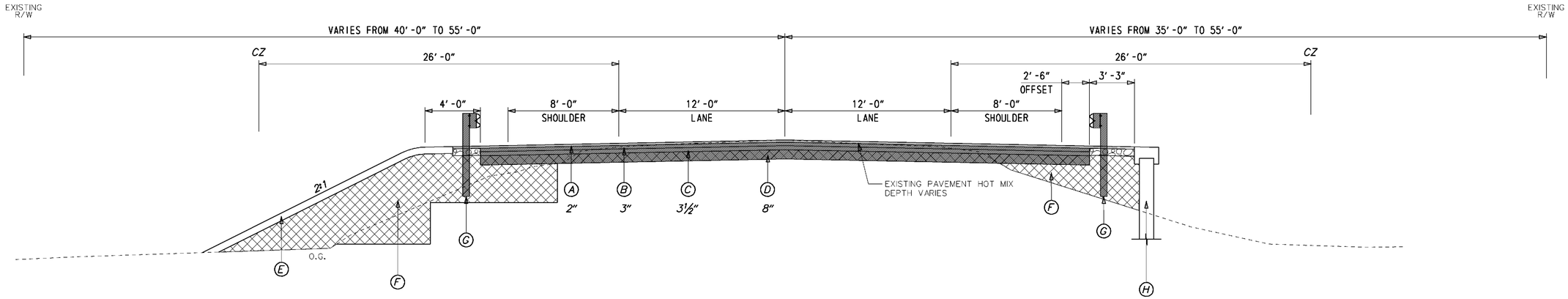

WEST RAILROAD AVE
TYPICAL SECTION WITH SHEETPILE AND SLOPE

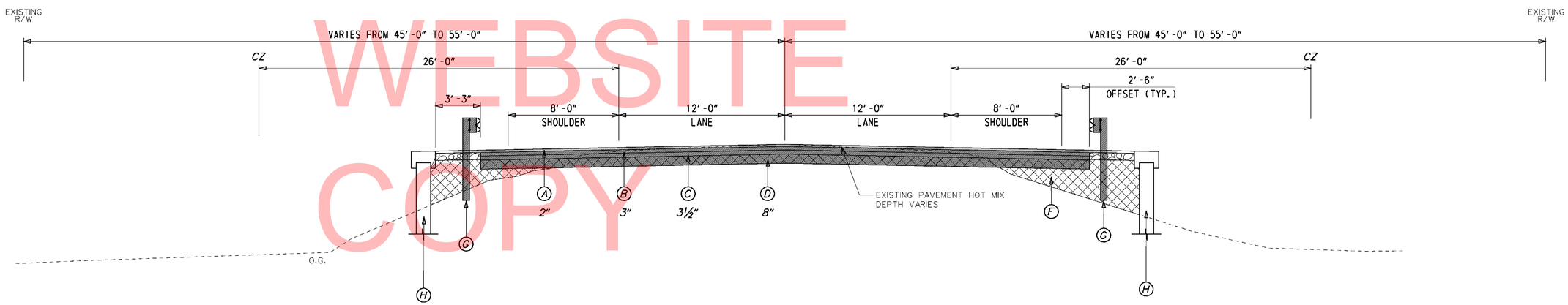

WEST RAILROAD AVE
TYPICAL SECTION BETWEEN SHEETPILES

UNOFFICIAL WEBSITE COPY

LEGEND

- (A) ITEM 401801-SUPERPAVE TYPE C, PG 64-22 160 GYRATION (WMA)
- (B) ITEM 401810-SUPERPAVE TYPE B, PG 64-22, 160 GYRATIONS (WMA)
- (C) ITEM 401819-BCBC, PG 64-22 160 GYRATIONS (WMA)
- (D) ITEM 302007 - GABC, TYPE B
- (E) ITEM 732004-TOPSOIL (TON)
  ITEM 734013-PERMANENT GRASS SEEDING, DRY GROUND
- (F) ITEM 209001-BORROW TYPE A
- (G) ITEM 720050-GALVANIZED STEEL BEAM GUARDRAIL, TYPE 1-31
- (H) ITEM 622015-STEEL SHEET PILES, PZC13

DELAWARE DEPARTMENT OF TRANSPORTATION	ADDENDUMS / REVISIONS	SCALE 0 4 8 12 FEET	BR. 2-195A ON WEST RAILROAD AVE OVER ISAAC BRANCH, WYOMING	CONTRACT T201107201 / COUNTY KENT	BRIDGE NO. 2-195A / DESIGNED BY: PAM / CHECKED BY: JM	TYPICAL SECTIONS	SHEET NO. 4 / TOTAL SHTS. 26

Y:\KENT\195\BRIDGE\T201107201\PLANS\TS01.DGN

DATUM REFERENCE:
HORIZONTAL - THIS PROJECT IS REFERENCED TO THE DELAWARE STATE PLANE COORDINATE SYSTEM (NAD 83/91).

VERTICAL - THIS PROJECT IS REFERENCED TO NAVD 88 AND BASED ON THE FOLLOWING STATE OF DELAWARE BENCHMARKS ESTABLISHED BY THE DELAWARE DEPARTMENT OF TRANSPORTATION:
GPS *WYMI, ELEVATION 29.5570
GPS *WYMA, ELEVATION 35.7578

HORIZONTAL / VERTICAL CONTROL DATA

POINT	STATION	OFFSET	NORTHING	EASTING	ELEVATION
TP1	-	-	409836.7239	617049.6698	35.76
TP2	-	-	409447.4718	617012.4274	29.56
TP3	5+29.36	168.03	409143.7088	617022.4756	33.78
TP4	3+48.30	139.24	409002.0472	619894.8257	33.99
TP5	3+05.03	200.40	408932.1095	619921.7119	27.94
TP6	-	-	408886.0970	617008.8903	25.98
TP7	0+72.08	151.97	408773.4712	616757.7469	34.37
TP8	0+70.21	-182.95	408949.3760	616472.4908	24.12
TP9	3.71+11	-335.45	409284.3266	616512.5054	28.18
TP12	3+31.53	18.47	409055.0795	616785.0346	28.47
TP16	4+29.45	-231.55	409275.2373	616445.3185	29.73
TP18	-	-	408536.2184	616445.4148	0.00

UNOFFICIAL WEBSITE COPY

HORIZONTAL CURVE DATA
P.I. STA. = 5+58.13
Δ = 8°38'27.17" LEFT
R = 954.93'
T = 72.15'
L = 144.02'
E = 2.71'

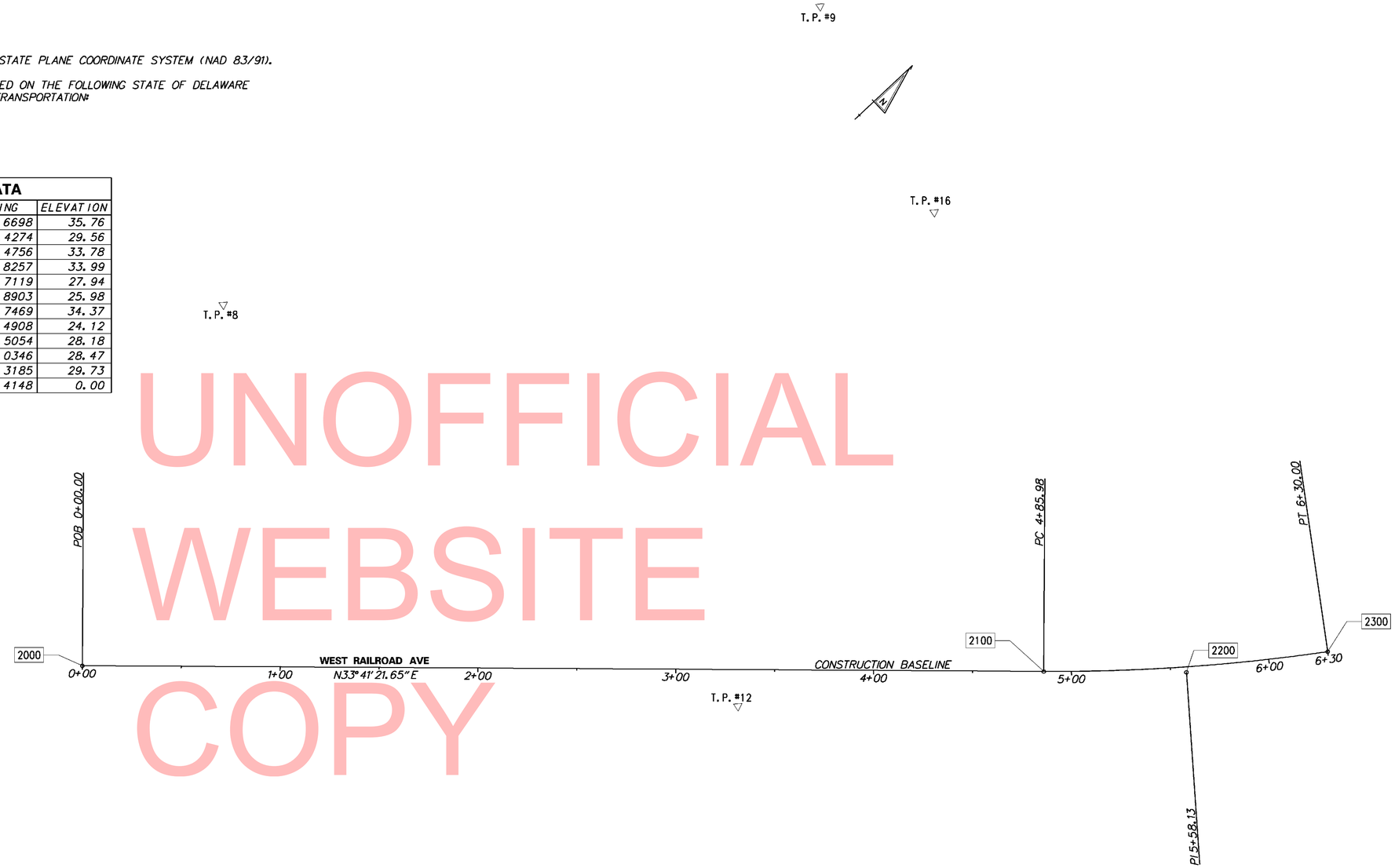

CONSTRUCTION ALIGNMENT CONTROL

POINT	STATION	OFFSET	NORTHING	EASTING
2000	0.00	0.00	408789.4721	616585.7706
2100	4+85.98	0.00	409193.8358	616855.3390
2200	5+58.13	2.72	409253.8661	616895.3581
2300	6+30.00	0.00	409319.2309	616925.8966

W:\MSV8\CELLS\PROJDEV\SB.CEL

DELAWARE DEPARTMENT OF TRANSPORTATION

ADDENDUMS / REVISIONS

SCALE 0 30 60 90 FEET

BR. 2-195A ON WEST RAILROAD AVE OVER ISAAC BRANCH, WYOMING

CONTRACT	BRIDGE NO.	2-195A
T201107201	DESIGNED BY: PAM	
COUNTY		
KENT	CHECKED BY: JM	

HORIZONTAL AND VERTICAL CONTROL

SHEET NO. 5
TOTAL SHTS. 26

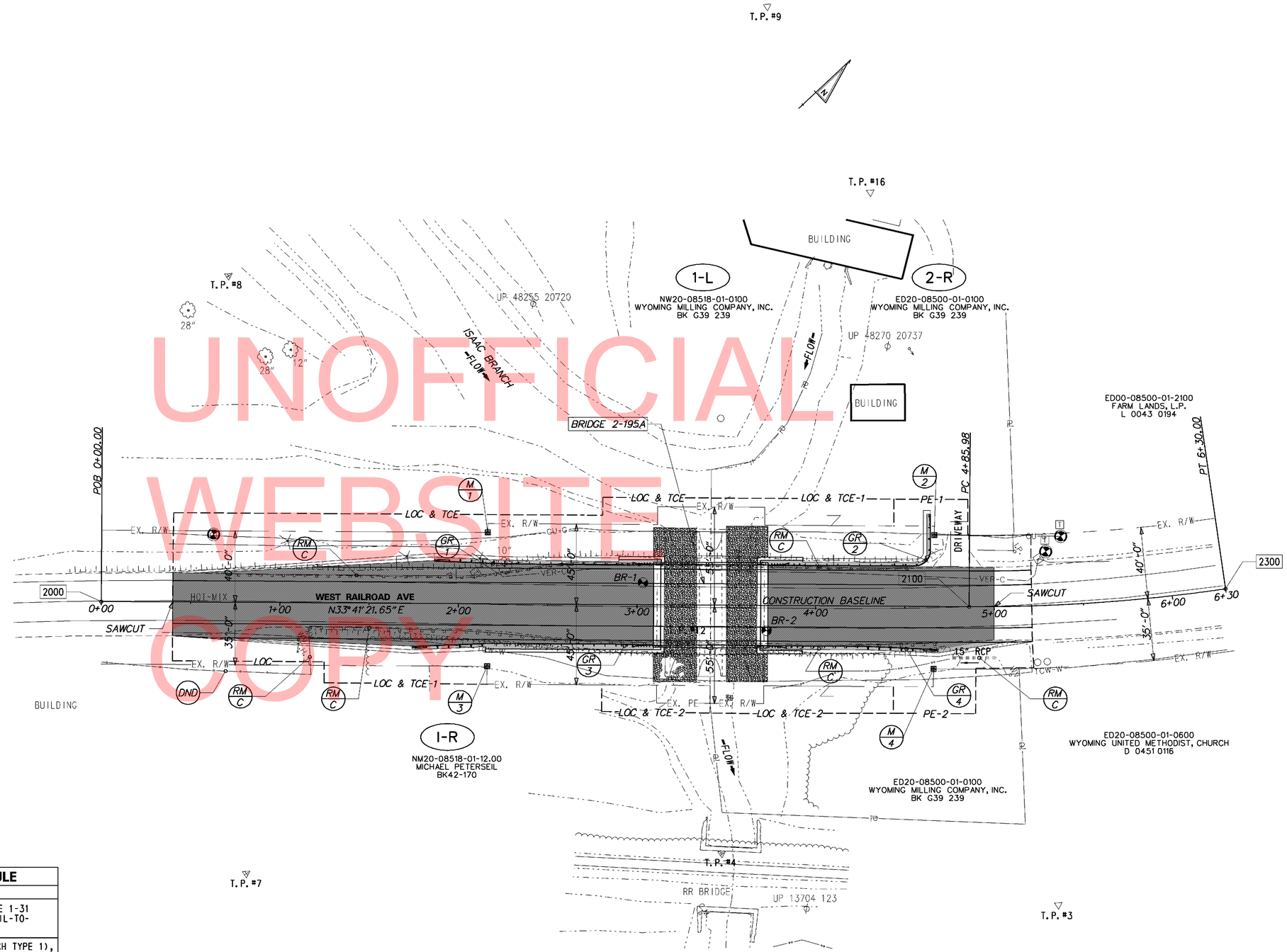

UNOFFICIAL WEBSITE COPY

GUARDRAIL PLACEMENT SCHEDULE

NO.	DESCRIPTION
1	1- GUARDRAIL END TREATMENT ATTENUATOR, TYPE 1-31 62.50 FEET GUARDRAIL TYPE 1 AND 1- GUARDRAIL-TO-BARRIER CONNECTION (APPROACH TYPE 1),
2	1- GUARDRAIL-TO-BARRIER CONNECTION (APPROACH TYPE 1), 50.00 FEET GUARDRAIL TYPE 1, CURVED GUARDRAIL SECTION AND 1- GUARDRAIL END ANCHORAGE, TYPE I-31
3	1- GUARDRAIL END TREATMENT ATTENUATOR, TYPE 1-31 62.50 FEET GUARDRAIL TYPE 1 AND 1- GUARDRAIL-TO-BARRIER CONNECTION (APPROACH TYPE 1),
4	1- GUARDRAIL-TO-BARRIER CONNECTION (APPROACH TYPE 1), 37.50 FEET GUARDRAIL TYPE 1, AND 1- GUARDRAIL END TREATMENT ATTENUATOR, TYPE 1-31

RIGHT-OF-WAY MONUMENT SCHEDULE

NO.	TYPE	STATION	OFFSET	NORTHING	EASTING
1	CAPPED REBAR	2+16.25	-40.00	408991.59	616672.44
2	CAPPED REBAR	4+65.25	-40.00	409198.77	616810.56
3	CAPPED REBAR	2+16.25	35.00	408949.99	616734.84
4	CAPPED REBAR	4+65.25	35.00	409157.17	616872.96

W:\MSV8\CELLS\PROJDEV\SB.CEL

DELAWARE DEPARTMENT OF TRANSPORTATION

ADDENDUMS / REVISIONS

SCALE 0 30 60 90 FEET

BR. 2-195A ON WEST RAILROAD AVE OVER ISAAC BRANCH, WYOMING

CONTRACT	BRIDGE NO.	2-195A
T201107201	DESIGNED BY: PAM	
COUNTY		
KENT	CHECKED BY: JM	

CONSTRUCTION PLAN

SHEET NO. 6
TOTAL SHTS. 26

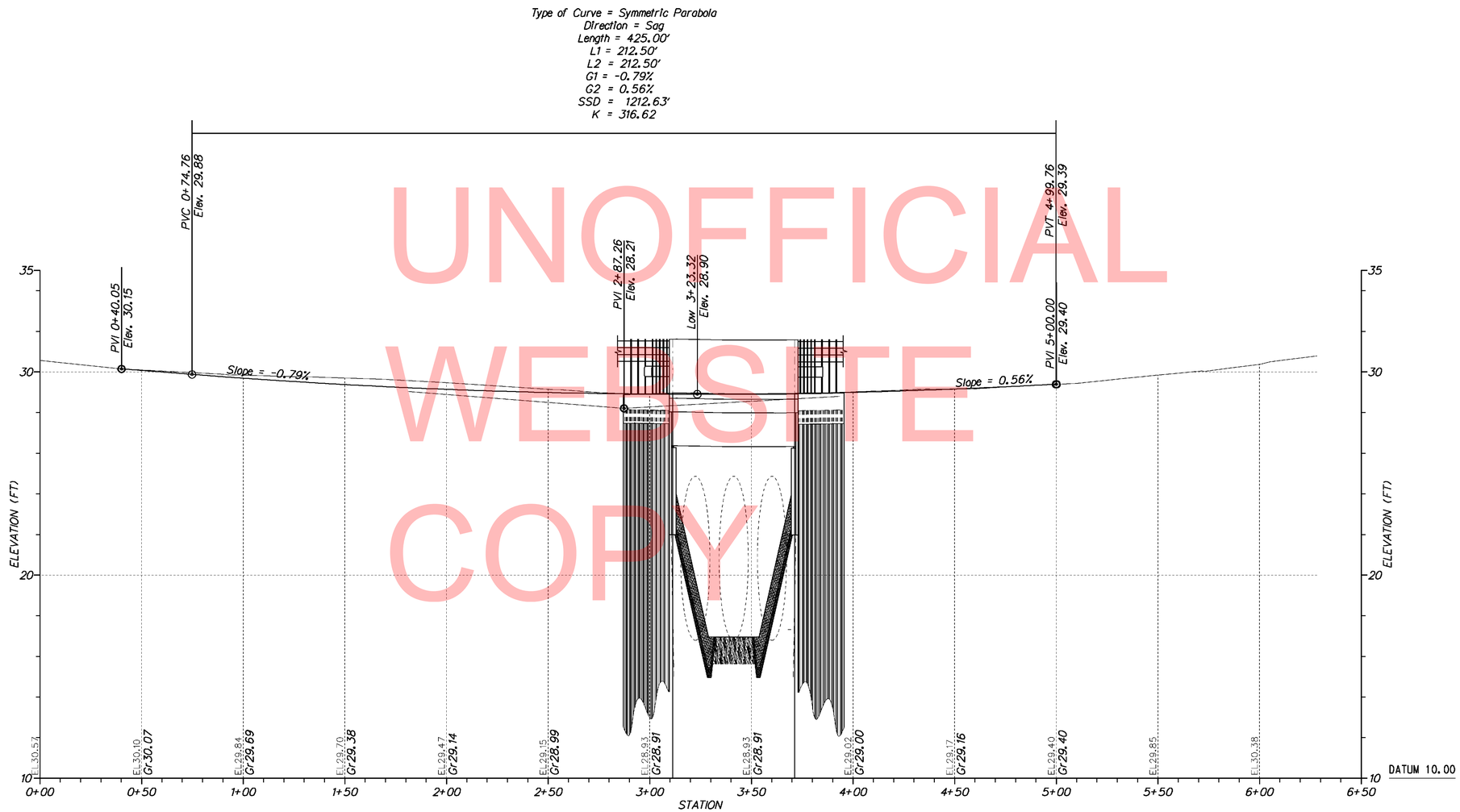

UNOFFICIAL WEBSITE COPY

WEST RAILROAD AVE

VERTICAL SCALE FEET 18 12 6 0

Y:\KENT\195\BRIDGE\T201107201\PLANS\PF.DGN

DELAWARE DEPARTMENT OF TRANSPORTATION	ADDENDUMS / REVISIONS	SCALE 0 30 60 90 FEET	**BR. 2-195A ON WEST RAILROAD AVE OVER ISAACH BRANCH, WYOMING**	CONTRACT T201107201	BRIDGE NO. 2-195A	**PROFILE**	SHEET NO. 7
				COUNTY KENT	DESIGNED BY: PAM		TOTAL SHTS. 26
					CHECKED BY: JM		

* INCLUDES 8'-0" SHOULDER AND 2'-6" OFFSET

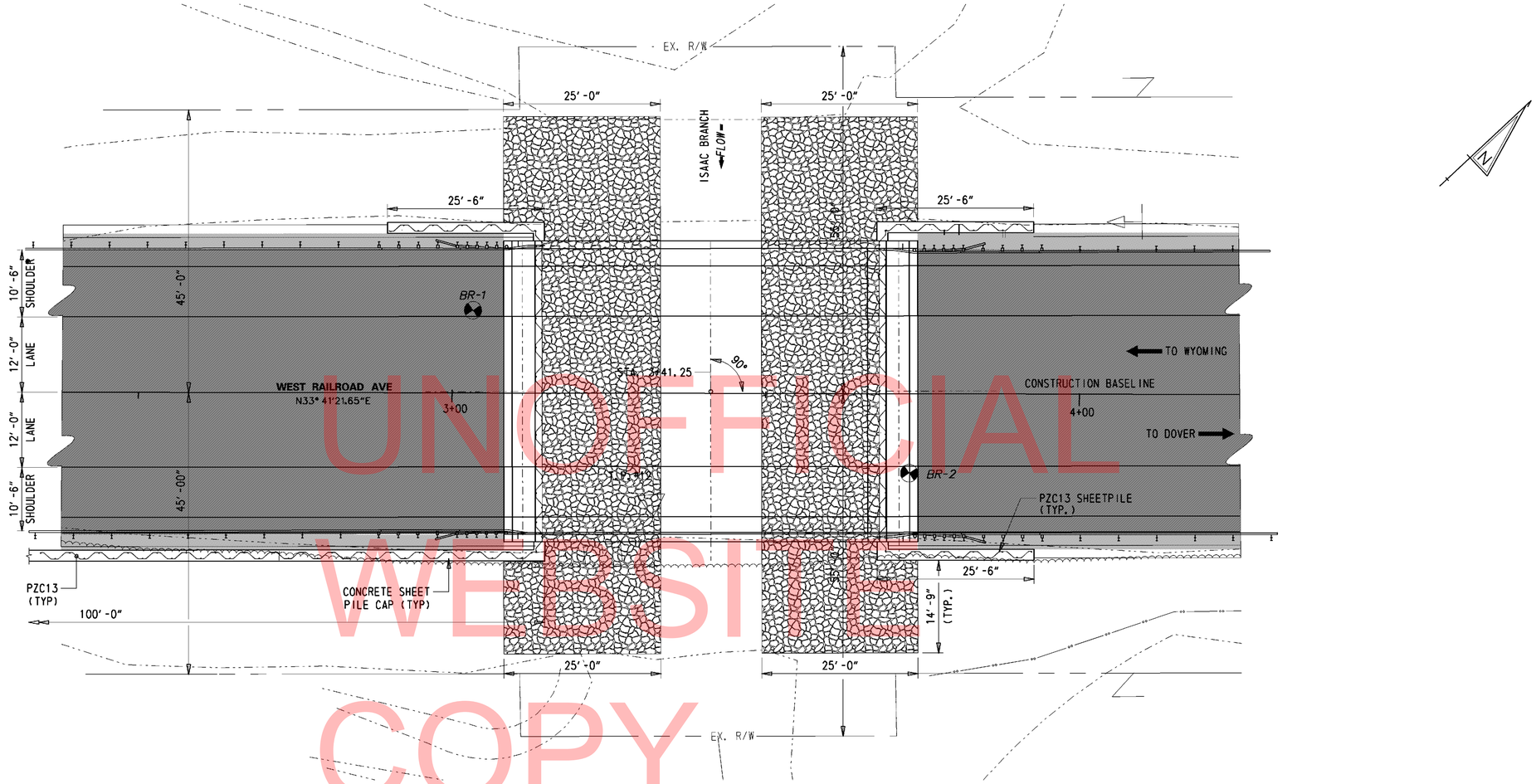

PLAN

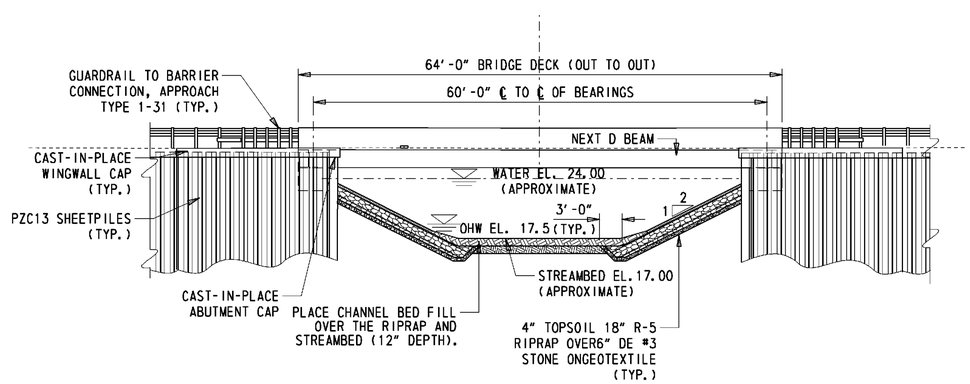

ELEVATION

RIPRAP SLOPE SHALL EXTEND 17' IN FRONT OF EACH ABUTMENT TO APPROXIMATE STREAM BOTTOM ELEVATION OF 17.00. THE STREAM BOTTOM ELEVATION SHALL BE FIELD ADJUSTED TO MATCH EXISTING UPSTREAM AND DOWNSTREAM GRADES. THE SLOPE CAN BE ADJUSTED TO A 1.5:1 MAXIMUM. A 3'-0" WIDE RIPRAP TOE SHALL EXTEND INTO THE CHANNEL BOTTOM ACROSS THE FULL WIDTH OF THE STREAM BANK SLOPE.

SEE ENVIRONMENTAL COMPLIANCE NOTE 4D FOR DETAILS ABOUT RIPRAP SLOPE TREATMENT.

UNOFFICIAL WEBSITE COPY

Y:\KENT*\BRIDGE\T201107201\PLANS\PE01.DGN

DELAWARE DEPARTMENT OF TRANSPORTATION	ADDENDUMS / REVISIONS	SCALE 0 10 20 30 FEET	BR 2-195A ON WEST RAILROAD ROAD OVER ISAAC BRANCH, WYOMING	CONTRACT 201107201	BRIDGE NO. 2-195A	PLAN & ELEVATION	SHEET NO. 8
				COUNTY KENT	DESIGNED BY: PAM		TOTAL SHTS. 26
					CHECKED BY: JM		

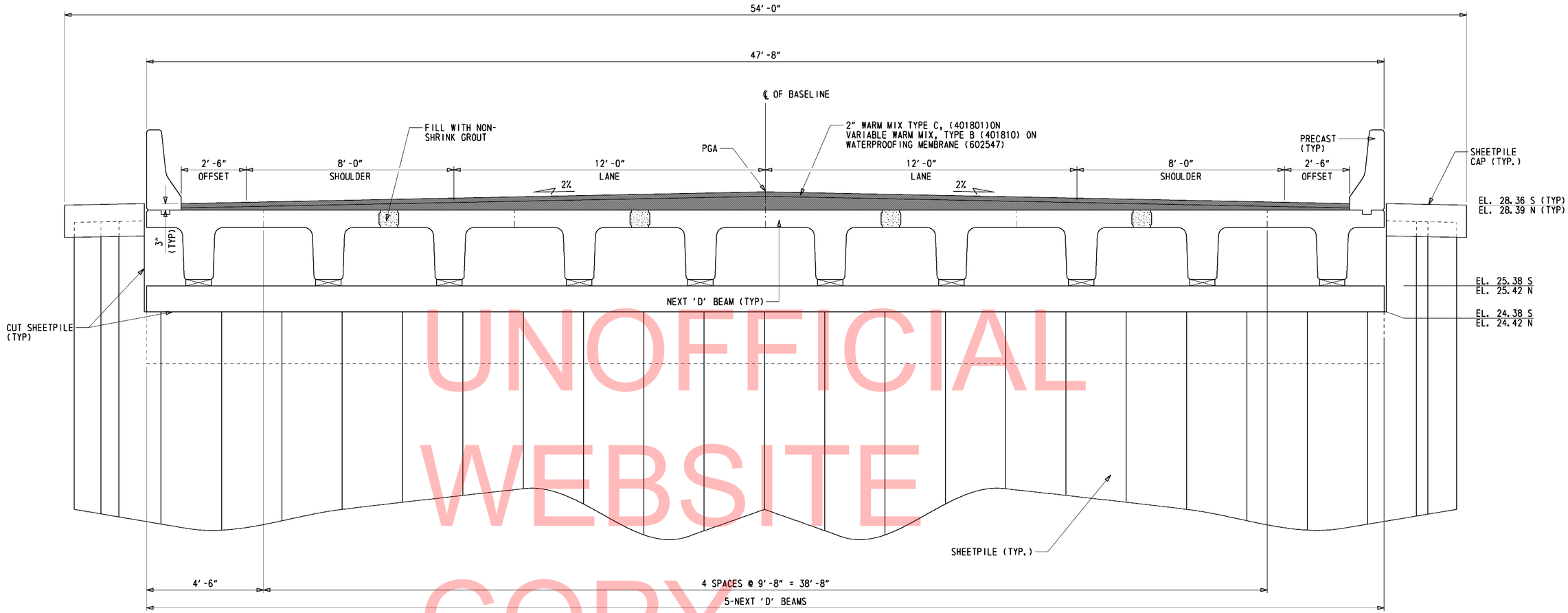

UNOFFICIAL WEBSITE COPY

BRIDGE SECTION

Y:\KENT\95\BRIDGE\T201107201\PLANS\PE02.DGN

DELAWARE DEPARTMENT OF TRANSPORTATION	ADDENDUMS / REVISIONS	SCALE 0 2 4 6 FEET	BR. 2-195A ON WEST RAILROAD AVE OVER ISAAC RUN, WYOMING	CONTRACT T201107201	BRIDGE NO. 2-195A	BRIDGE SECTION	SHEET NO. 9
				COUNTY KENT	DESIGNED BY: PAM		TOTAL SHTS. 26
					CHECKED BY: JM		

SHEET PILE NOTES:

1. PZC13 SHAPES ARE DEPICTED IN THESE DETAILS. PZ SHAPES ARE ALSO ACCEPTABLE FOR USE. IF PZ SHAPES ARE USED, THE CONTRACTOR SHALL SUBMIT SHOP DRAWINGS SHOWING THE ALTERNATE LAYOUT, CORNER PIECES, ETC.
2. SHEET PILES SHALL BE 25 FEET IN LENGTH AND DRIVEN TO ELEVATION AS SHOWN ON PLANS.
3. PAYMENT FOR ALL MATERIALS AND LABOR USED IN THE CONCRETE CAP EXCEPT FOR PCC MASONRY & REINFORCING BARS (JOINTS, STRUCTURAL L'S, HARDWARE, ETC) SHALL BE INCLUDED IN THE ITEM #622015-STEEL SHEET PILES, PZC 13.
4. ALL STEEL SHEET PILES AND FABRICATED PIECES SHALL CONFORM TO ASTM A572 GRADE 345 (50 KSI) PAYMENT UNDER ITEM #622015-STEEL SHEET PILES, PZC 13.
5. ALL CONNECTION UNITS SHALL BE COMPATIBLE WITH THE UNITS THEY CONNECT, PERTAINING TO THE ASTM DESIGNATIONS.

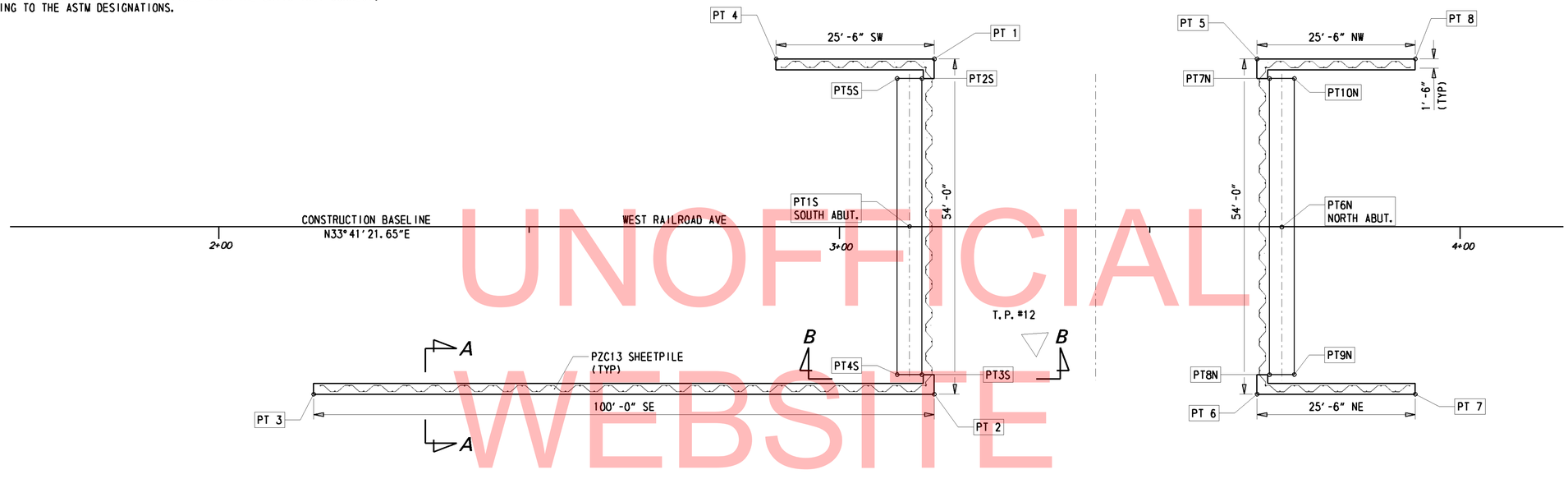

ABUTMENT AND SHEETPILE LAYOUT

1" = 10'

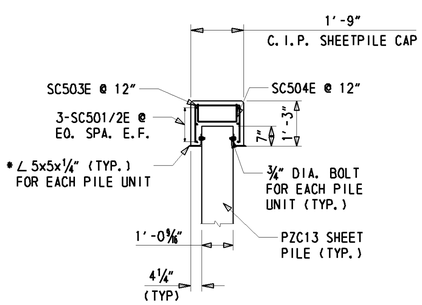

SECTION A-A

1" = 40'

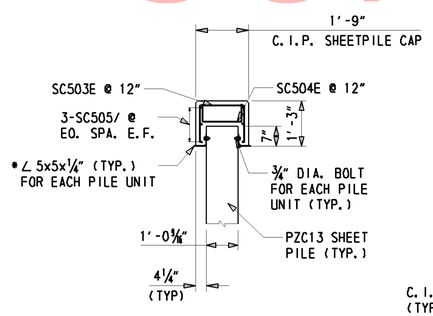

SECTION B-B

1" = 40'

NOTE:
CONCRETE FOR SHEET PILE CONCRETE CAP SHALL BE PAID UNDER ITEM #602011-P.C.C. MASONRY, SUPERSTRUCTURE CLASS A

FIELD CUT BARS AS NECESARRY. PAYMENT FOR CUTTING BARS SHALL BE INCIDENTAL TO ITEM #604000-BAR REINFORCEMENT EPOXY COATED.

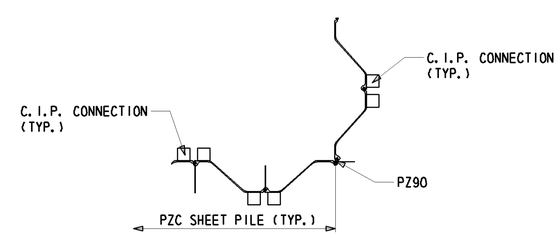

TYPICAL CORNER

1" = 40'

SOUTH ABUTMENT WORKING POINTS				
PT.	STATION	OFFSET	NORTHING	EASTING
1S	3+11.25	0.0	409048.450	616758.418
2S	3+13.25	- 23.84	409063.338	616739.691
3S	3+13.25	23.84	409036.890	616779.363
4S	3+09.25	23.84	409033.562	616777.145
5S	3+09.25	- 23.84	409060.100	616737.472

NORTH ABUTMENT WORKING POINTS				
PT.	STATION	OFFSET	NORTHING	EASTING
6N	3+71.25	0.0	409098.373	616791.699
7N	3+69.25	-23.83	409109.933	616770.753
8N	3+69.25	23.83	409083.489	616810.420
9N	3+73.25	23.83	409086.814	616812.645
10N	3+73.25	-23.83	409113.261	616772.972

SHEETPILE WORKING POINTS				
PT.	STATION	OFFSET	NORTHING	EASTING
1	3+15.25	-27.00	409066.755	616737.171
2	3+15.25	27.00	409036.802	616783.102
3	2+15.25	27.00	408953.597	616727.635
4	2+89.75	-27.00	409045.537	616724.026
5	3+67.25	-27.00	409110.022	616767.015
6	3+67.25	27.00	409080.069	616812.946
7	3+92.75	27.00	409101.286	616826.091
8	3+92.95	-27.00	409131.239	616781.159

REINFORCING BAR LIST							
MARK	LENGTH	NO. BARS	TYPE	A	B	C	D
SC501E	52'-0"	12	STR		52'-0"		
SC502E	25'-2"	18	STR		25'-2"		
SC503E	3'-3"	220	17		0'-11"	1'-05"	0'-11"
SC504E	2"-3"	220	17		0'-05"	1'-05"	0'-05"
SC505E	2'-8"	24	STR		2'-8"		

ALL DIMENSIONS ARE OUT TO OUT.

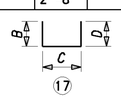

* ∠S 5"x5"x1#4' ARE OPTIONAL. THEY ARE FOR SUPPORTING THE TEMPORARY FORMWORK ONLY. PAYMENT INCIDENTAL TO ITEM 622015

UNOFFICIAL WEBSITE COPY

DELAWARE DEPARTMENT OF TRANSPORTATION	ADDENDUMS / REVISIONS	SCALE AS NOTED	BR. 2-195A ON WEST RAILROAD AVE OVER ISAAC BRANCH, WYOMING	CONTRACT T201107201	BRIDGE NO. 2-195A	SHEETPILE LAYOUT AND DETAILS	SHEET NO. 10
				COUNTY KENT	DESIGNED BY: PAM		TOTAL SHTS. 26
					CHECKED BY: JM		

W:\MSV8\CELLS\PROJDEV\SB.CEL

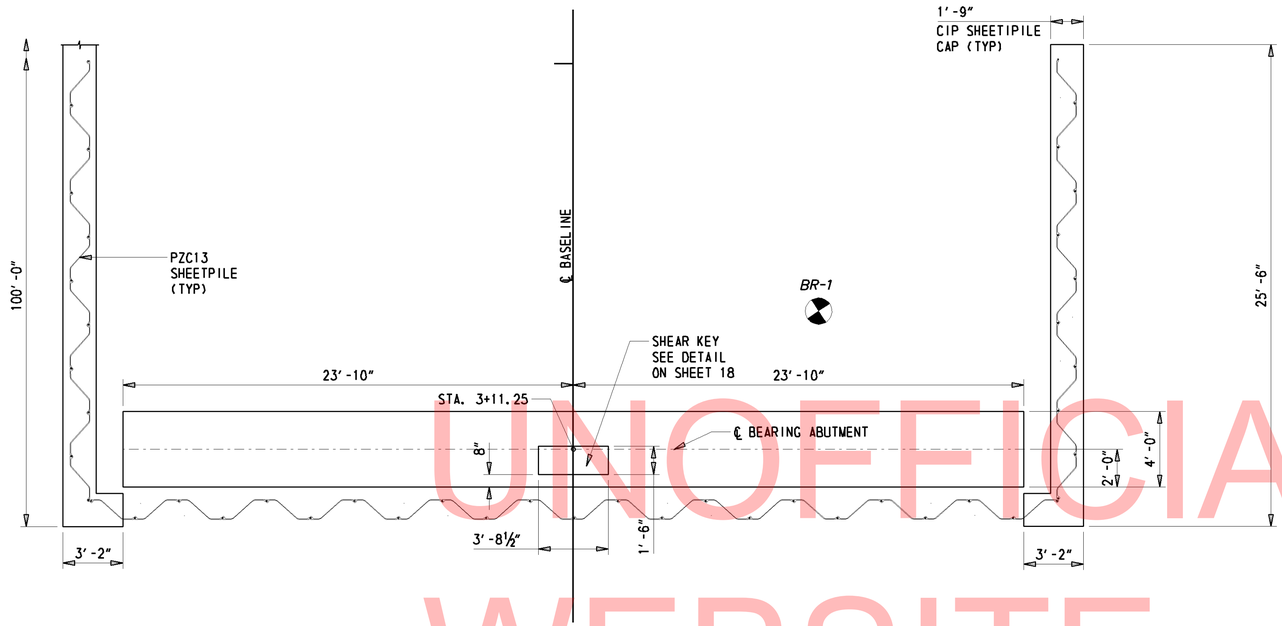

PLAN

¼" = 1'

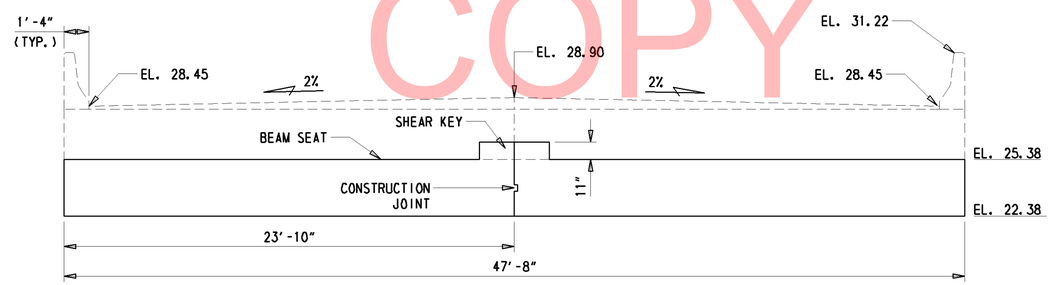

ELEVATION

¼" = 1'

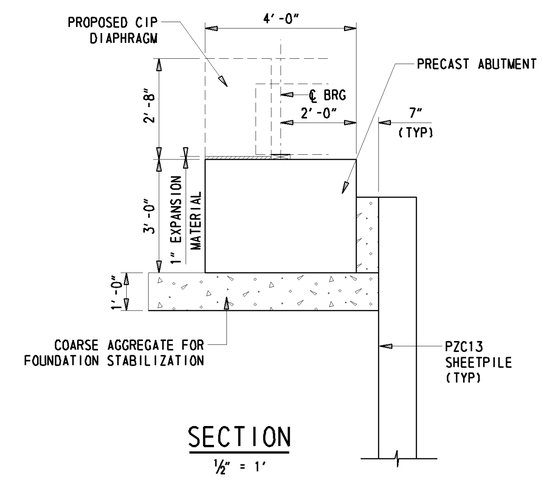

SECTION

½" = 1'

NOTE: FOR SHEAR KEY REINFORCEMENT SEE SHEET 15.

UNOFFICIAL WEBSITE COPY

W:\MSV8\CELLS\PROJDEV\SB.CEL

DELAWARE DEPARTMENT OF TRANSPORTATION	ADDENDUMS / REVISIONS	SCALE AS NOTED	BR 2-195A ON WEST RAILROAD AVE OVER ISAAC BRANCH, WYOMING	CONTRACT T201107201	BRIDGE NO. 2-195A	SOUTH ABUTMENT DETAILS	SHEET NO. 11
				COUNTY KENT	DESIGNED BY: PAM		TOTAL SHTS. 26
					CHECKED BY: JM		

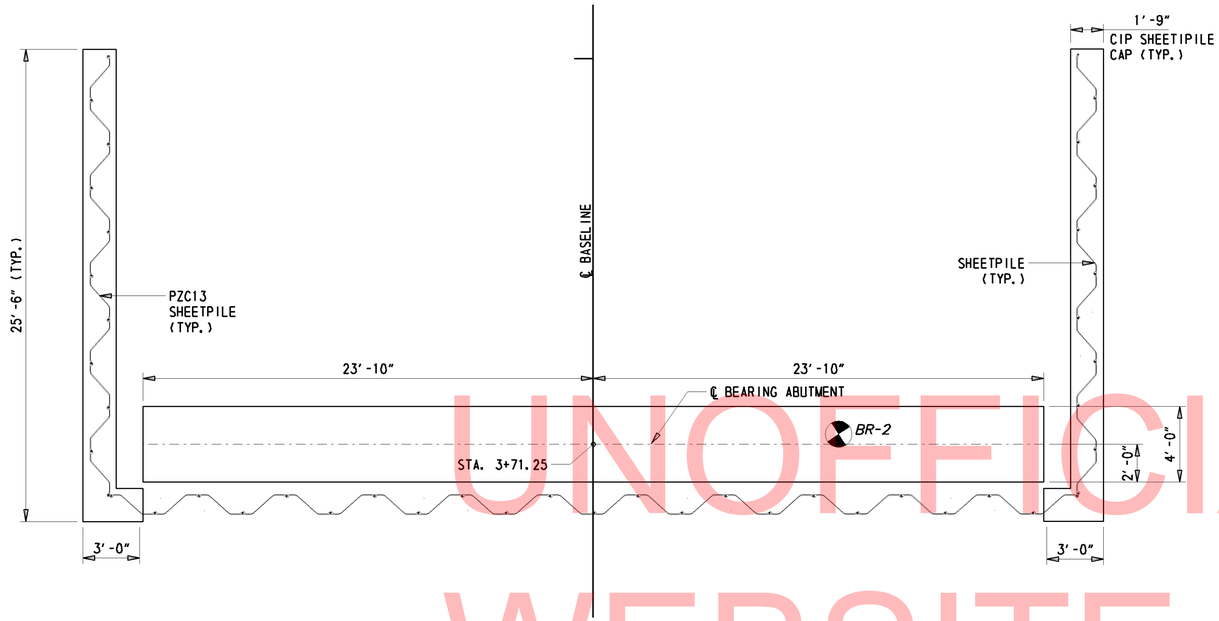

PLAN
1/4" = 1'

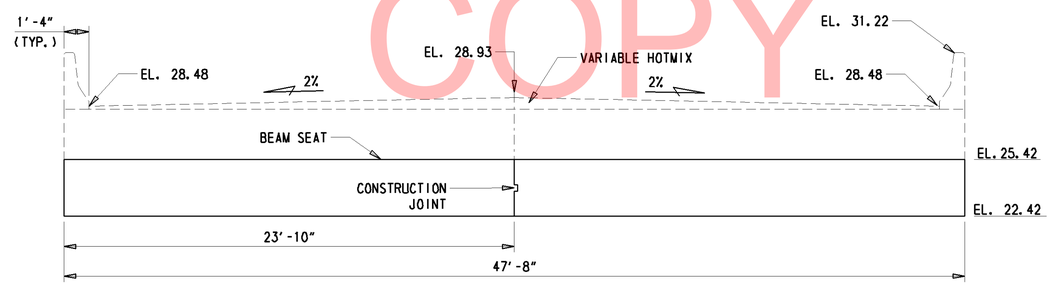

ELEVATION
1/4" = 1'

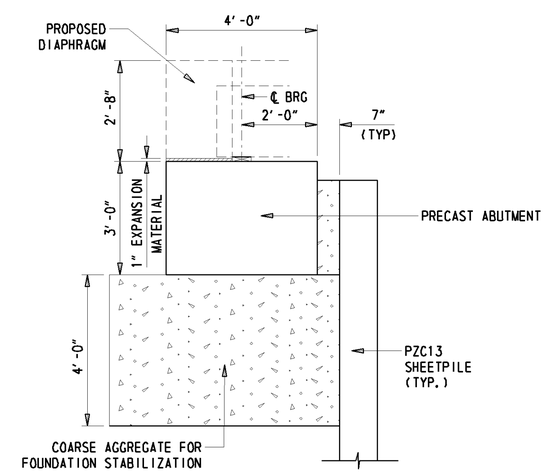

SECTION
1/2" = 1'

UNOFFICIAL WEBSITE COPY

W:\MSV8\CELLS\PROJDEV\SB.CEL

DELAWARE DEPARTMENT OF TRANSPORTATION	ADDENDUMS / REVISIONS	SCALE AS NOTED	BR 2-195A ON WEST RAILROAD AVE OVER ISAAC BRANCH, WYOMING	CONTRACT T201107201	BRIDGE NO. 2-195A	NORTH ABUTMENT DETAILS	SHEET NO. 12
				COUNTY KENT	DESIGNED BY: PAM		TOTAL SHTS. 26
					CHECKED BY: JM		

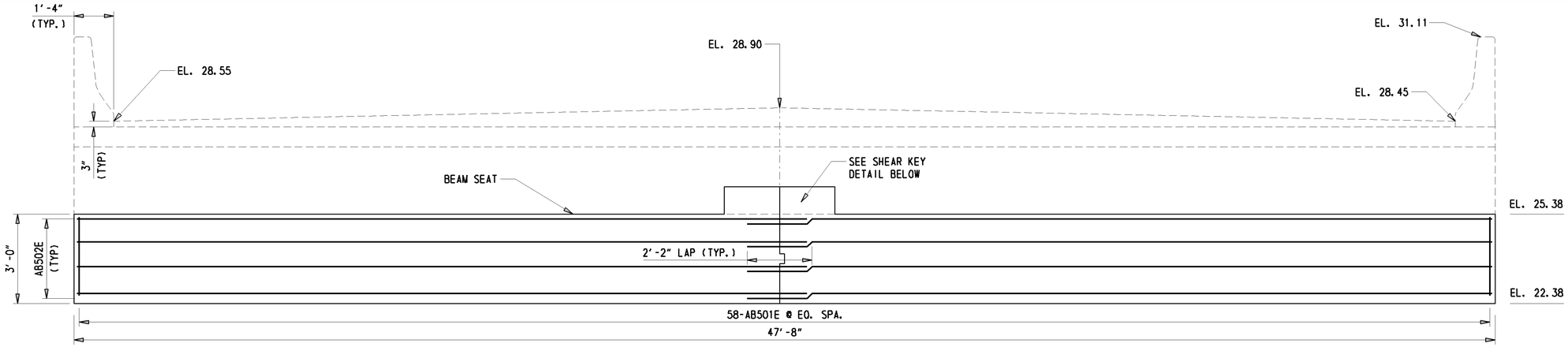

SOUTH ABUTMENT

½" = 1'

REINFORCING BAR LIST (EACH ABUTMENT CAP)											
MARK	LENGTH	NO. BARS	TYPE	A	B	C	D	E	F/R	G	H
AB501E	8'-10"	59	17		2'-7"	3'-8"	2'-7"				
AB502E	24'-9"	28	ST			24'-9"					
AB503E	4'-8"	5	17		1'-9"	1'-2"	1'-9"				
AB504E	3'-4"	2	STR			3'-4"					

ALL DIMENSIONS ARE OUT TO OUT.

NOTE: BARS AB503E AND AB504E ONLY IN SOUTH ABUTMENT

NOTE:
PAYMENT FOR REBARS SHALL BE INCLUDED IN THE BID PRICE FOR ITEM #602547-PRECAST CONCRETE ABUTMENT
REBARS AB503/4E IN SOUTH ABUTMENT ONLY.

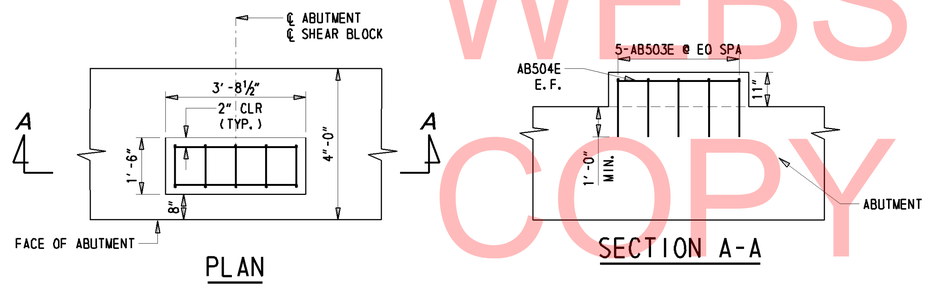

SHEAR BLOCK DETAILS

SOUTH ABUTMENT ONLY.

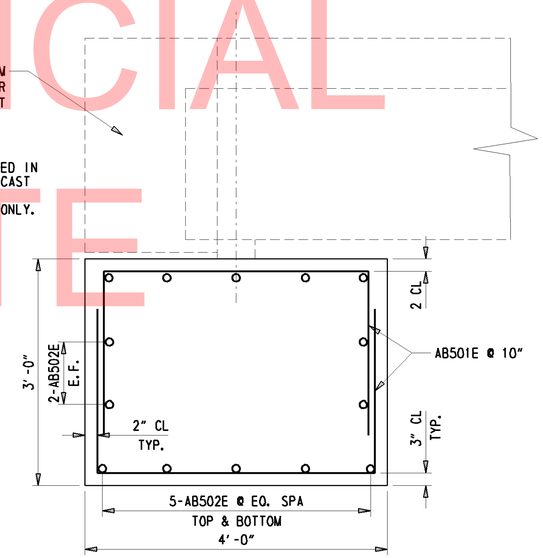

SECTION

1" = 1'

PRECAST CONCRETE ABUTMENT NOTES (48" x 36")

DESIGN PLANS - WORKING DRAWINGS

INFORMATION PERTAINING TO THE PRECAST REINFORCED CONCRETE ABUTMENT IS INTENDED TO SERVE AS AN INDICATION OF THE TYPE OF CONSTRUCTION ACCEPTABLE FOR USE. THE CONTRACTOR WILL BE REQUIRED TO PREPARE AND SUBMIT, FOR APPROVAL, A COMPLETE SET OF DETAILED SHOP PLANS FOR THE PRECAST CONCRETE UNITS.

HANDLING

PRECAST ABUTMENT SHALL BE HANDLED ONLY BY LIFTING STRANDS PROVIDED ESPECIALLY FOR THIS PURPOSE. THE APPROXIMATE DEAD WEIGHT IS 42.90 TONS.

CONCRETE STRESSES

THE MINIMUM COMPRESSIVE STRENGTH AT 28 DAYS EQUALS 4500 psi.

BAR REINFORCEMENT

MATERIALS REQUIREMENT: ASTM M31 - GRADE 60
ALL BAR REINFORCEMENT TO HAVE 2" MINIMUM COVER EXCEPT AS NOTED OR DETAILED.
ALL BAR REINFORCEMENT AND CHAIR SUPPORTS SHALL BE PROTECTED WITH FUSION BONDED EPOXY.
PAYMENT FOR REINFORCING BARS IS INCIDENTAL TO ITEM 602758 - PRECAST CONCRETE ABUTMENT.

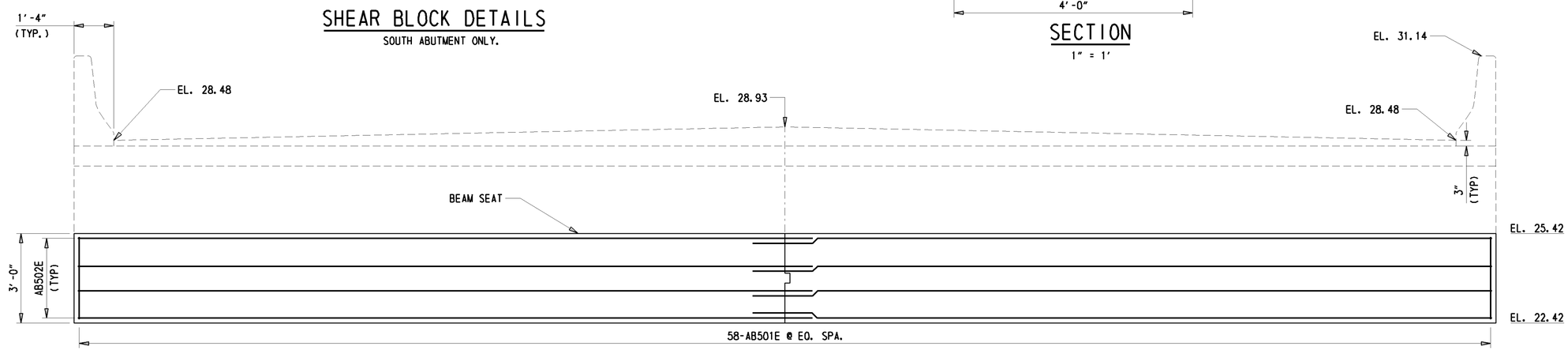

NORTH ABUTMENT

½" = 1'

UNOFFICIAL WEBSITE COPY

DELAWARE DEPARTMENT OF TRANSPORTATION	ADDENDUMS / REVISIONS	SCALE AS NOTED	BR 2-195A ON WEST RAILROAD AVE OVER ISAAC BRANCH, WYOMING	CONTRACT T201107201 / COUNTY KENT	BRIDGE NO. 2-195A / DESIGNED BY: PAM / CHECKED BY: JM	NORTH & SOUTH ABUTMENTS REINFORCEMNET DETAILS	SHEET NO. 13 / TOTAL SHTS. 26

W:\MSV8\CELLS\PROJDEV\SB.CEL

BEARING TABLE

LOCATION	BEARING DESIGNATION						LAMINATED ELASTOMERIC PAD						
	MARK	TYPE	NEOPRENE HARDNESS (SHORE A)	TOTAL NO REQD	CAPACITY/PAD		DIM					INTEROIR LAYERS	TOTAL PAD THICKNESS "T"
					REACTION ⊗	MOVEMENT ⊠	'L'	'W'	'D'	SHAPE FACTOR ▲	AREA IN²		
SOUTH ABUTMENT	EX 1	EXP	60± 5 DURO	10	84.06 K	.25	7"	11.0"	1.25"	6.844	66.43	4	1.8125"
NORTH ABUTMENT	FX 1	FIX	60± 5 DURO	10	84.06 K	-	7"	11.0"	1.25"	6.844	66.43	4	1.8125"

LEGEND:

⊗ MAX. UN-FACTURED SERVICE 1 REACTION (W/O DYNAMIC LOAD ALLOWANCE).

⊠ TEMPERATURE MOVEMENT FOR 60°F FALL

▲ INTERIOR LAYERS.

BEARING NOTES:

1. PAYMENT FOR ELASTOMERIC PADS, AND INSTALLATION SHALL BE INCIDENTAL TO ITEM "623000 - PRECAST PRESTRESSED CONCRETE MEMBERS.
2. DESIGN OF STEEL LAMINATE IS BASED ON ASTM A 709 GRADE 36. SOLE PLATE SHALL BE ASTM A 709 GRADE 50.
3. NEOPRENE IN BEARING PAD SHALL HAVE A SHORE 'A' DUROMETER HARDNESS OF 60.
4. BEARING SHALL BE PLACED NORMAL TO CENTERLINE OF BEAM.

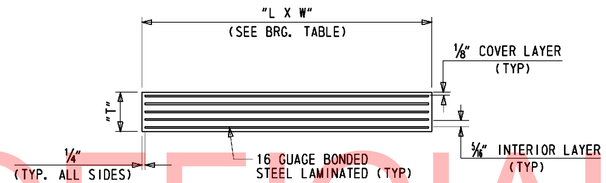

LAMINATED ELASTOMERIC BRG PAD DETAIL

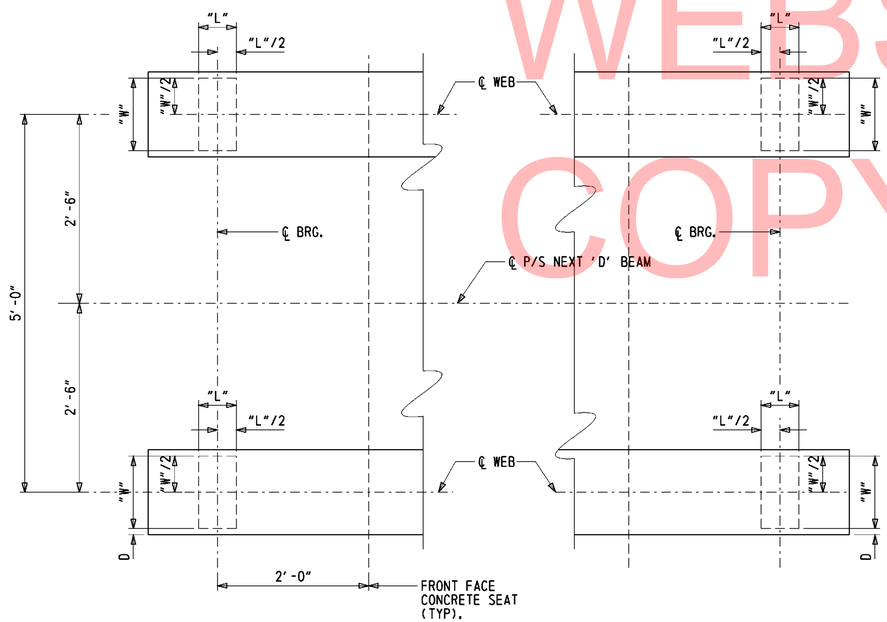

BEARING PAD LAYOUT

UNOFFICIAL WEBSITE COPY

Y:\KENT*\BRIDGE\T201107201\PLANS\BM04.DGN

DELAWARE DEPARTMENT OF TRANSPORTATION	ADDENDUMS / REVISIONS	SCALE 0 1 2 3 FEET	BR. 2-195A ON WEST RAILROAD AVE OVER ISAAC RUN, WYOMING	CONTRACT T201107201	BRIDGE NO. 2-195A	BEARING DETAILS	SHEET NO. 14
				COUNTY KENT	DESIGNED BY: PAM		TOTAL SHTS. 26
					CHECKED BY: JM		

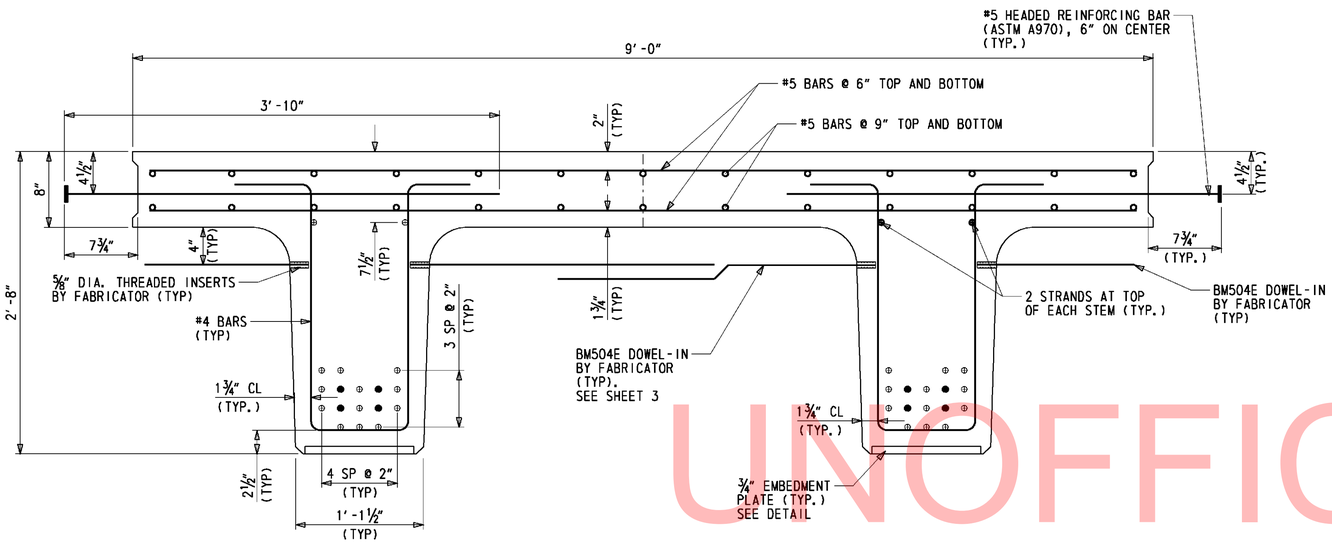

TYPICAL INTERIOR BEAM REINFORCING

LEGEND

- ⊕ FULLY BONDED STRANDS
- ● DEBONDED STRANDS
- ○ REINFORCEMENTS

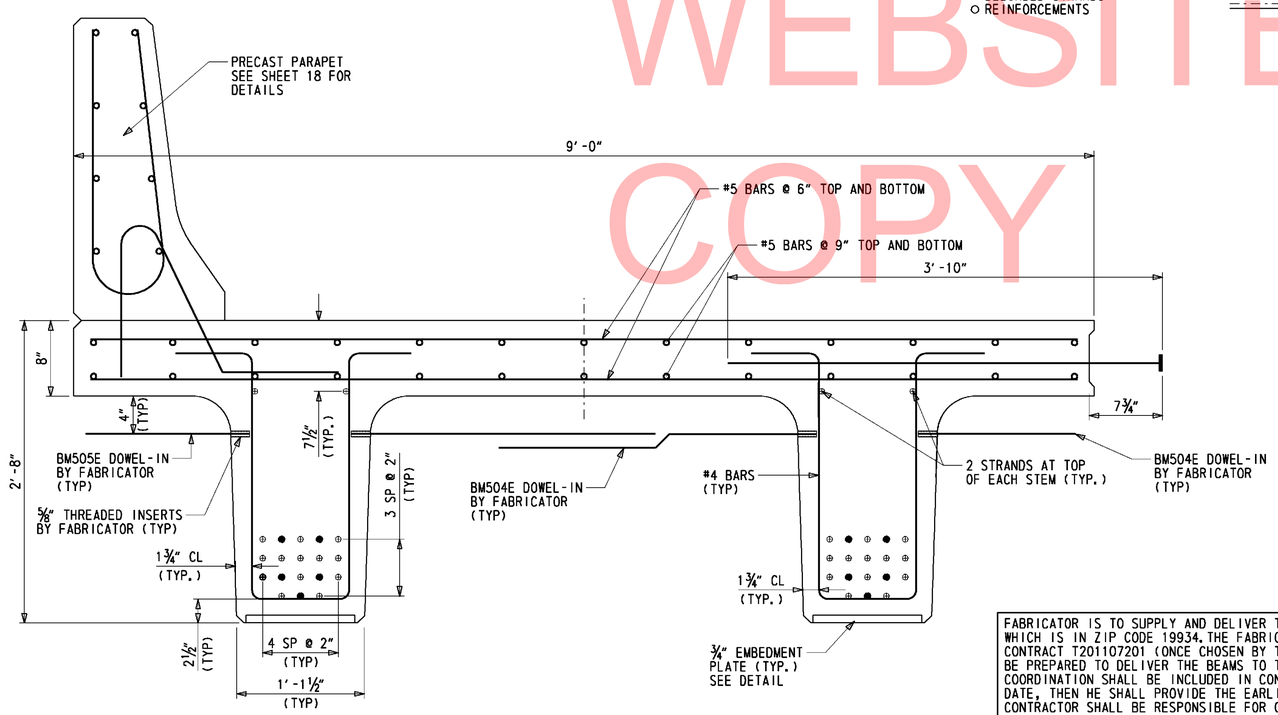

TYPICAL EXTERIOR BEAM REINFORCING

PRECAST PRESTRESSED CONCRETE MEMBER NOTES (108" x 32")

DESIGN PLANS - WORKING DRAWINGS

INFORMATION PERTAINING TO THE PRESTRESSED PRECAST REINFORCED CONCRETE NEXT BEAMS IS INTENDED TO SERVE AS AN INDICATION OF THE TYPE OF CONSTRUCTION ACCEPTABLE FOR USE. THE FABRICATOR WILL BE REQUIRED TO PREPARE AND SUBMIT, FOR APPROVAL, A COMPLETE SET OF DETAILED SHOP PLANS FOR THE PRESTRESSED PRECAST CONCRETE UNITS.

HANDLING

PRESTRESSED BEAMS SHALL BE HANDLED ONLY BY LIFTING STRANDS PROVIDED ESPECIALLY FOR THIS PURPOSE. THE APPROXIMATE DEAD WEIGHT OF EXTERIOR UNIT IS 61.14 TONS AND INTERIOR UNIT IS 49.64 TONS.

CONCRETE STRESSES

THE MINIMUM COMPRESSIVE STRENGTH AT TIME OF INITIAL PRESTRESS EQUALS 7500 psi.
THE MINIMUM COMPRESSIVE STRENGTH AT 28 DAYS EQUALS 10000 psi.

BAR REINFORCEMENT

MATERIALS REQUIREMENT: ASTM M31 - GRADE 60
ALL BAR REINFORCEMENT TO HAVE 2" MINIMUM COVER EXCEPT AS NOTED OR DETAILED.
ALL BAR REINFORCEMENT AND CHAIR SUPPORTS SHALL BE PROTECTED WITH FUSION BONDED EPOXY.
PAYMENT FOR REINFORCING BARS IS INCIDENTAL TO ITEM 623000 - PRECAST PRESTRESSED CONCRETE MEMBERS.

STRAND

INITIAL PRESTRESSES ON EACH .6" DIA. 270 ksi LOW RELAXATION STRAND EQUALS 43940 lbs MINIMUM ULTIMATE STRENGTH EQUALS 58590 lbs PER STRAND.

NOTE: ABOVE NOTES APPLY TO FABRICATOR ONLY.

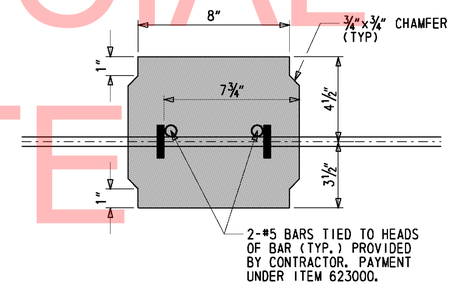

SECTION

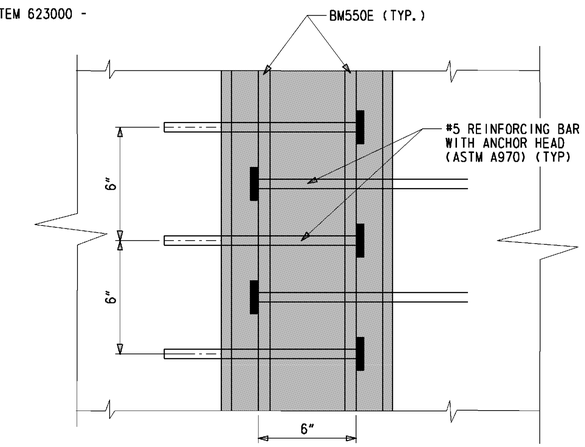

PLAN

FLANGE CONNECTOR DETAILS

¼" = 1'

DEBONDING SCHEDULE		
BEAM	STRAND #	LENGTH
INTERIOR	15 & 16	12'-0"
	17 & 18	12'-0"
	35 & 36	15'-0"
	37 & 38	15'-0"
EXTERIOR	9 & 10	9'-0"
	15 & 16	12'-0"
	17 & 18	12'-0"
	35 & 36	15'-0"
	37 & 38	15'-0"

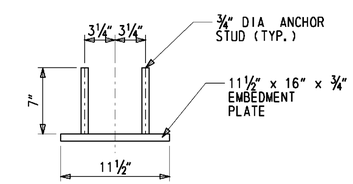

EMBEDMENT PLATE DETAIL

NOT TO SCALE

FABRICATOR IS TO SUPPLY AND DELIVER THE BEAMS TO THE JOB SITE (SEE MAP ON TITLE SHEET) WHICH IS IN ZIP CODE 19934. THE FABRICATOR SHALL COORDINATE WITH THE CONTRACTOR OF CONTRACT T201107201 (ONCE CHOSEN BY THE DEPARTMENT) FOR DELIVERY. THE FABRICATOR MUST BE PREPARED TO DELIVER THE BEAMS TO THE SITE ON JULY 18, 2013. PAYMENT FOR DELIVERY AND COORDINATION SHALL BE INCLUDED IN CONTRACT T201307201. IF THE FABRICATOR CAN NOT MEET THIS DATE, THEN HE SHALL PROVIDE THE EARLIEST DATE IN WHICH HE CAN PROVIDE THE BEAMS. THE CONTRACTOR SHALL BE RESPONSIBLE FOR OFFLOADING THE BEAMS FROM THE TRUCKS AT THE SITE. PAYMENT UNDER ITEM 623000-PRECASTED PRESTRESSED CONCRETE MEMBERS.

NOTES:
1. CONNECTOR REINFORCING TO BE PLACED ALONG THE ENTIRE SPAN WITH 6" SPACING.
2. METHOD OF FORMING CLOSURE POUR TO BE DETERMINED BY THE CONTRACTOR. THE FORMS NEED TO BE REMOVABLE AND ABLE TO ACCOMODATE DIFFERENTIAL CAMBER. FORM SUPPORTS SHOULD NOT PENETRATE THROUGH TOP OF POUR UNLESS APPROVED BY THE ENGINEER. PAYMENT INCIDENTAL TO ITEM #623000-PRESTRESSED PRECAST CONCRETE MEMBER
3. CLOSURE POUR MATERIAL TO BE A NON-SHRINK MIX THAT HAS A MINIMUM COMPRESSIVE STRENGTH OF 7000 PSI. THE GROUT SHOULD BE EXTENDED WITH AGGREGATE. PAYMENT INCIDENTAL TO ITEM #623000-PRESTRESSED PRECAST CONCRETE MEMBER
4. SAND BLASTING OF THE FACES OF THE KEYS JUST PRIOR TO INSTALLATION SHALL BE DONE TO IMPROVE GROUT BOND. PAYMENT INCIDENTAL TO ITEM #623000-PRESTRESSED PRECAST CONCRETE MEMBER

UNOFFICIAL WEBSITE COPY

Y:\KENT*\BRIDGE\T201107201\PLANS\BM01.DGN

DELAWARE DEPARTMENT OF TRANSPORTATION	ADDENDUMS / REVISIONS	SCALE AS NOTED	BR. 2-195A ON WEST RAILROAD AVE OVER ISAAC RUN, WYOMING	CONTRACT T201107201	BRIDGE NO. 2-195A	BEAM DETAILS	SHEET NO. 15
				COUNTY KENT	DESIGNED BY: PAM		TOTAL SHTS. 26
					CHECKED BY: MJG		

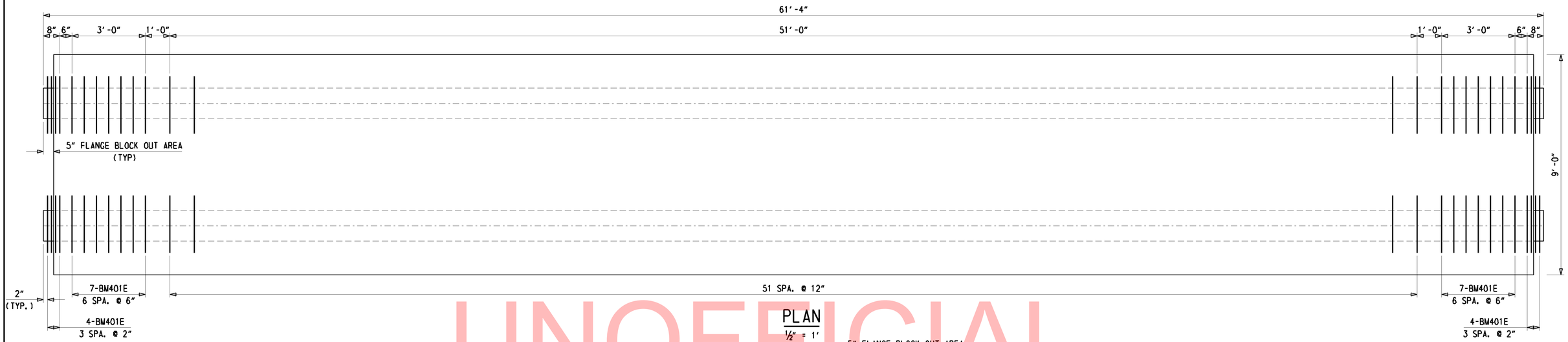

PLAN

½" = 1'

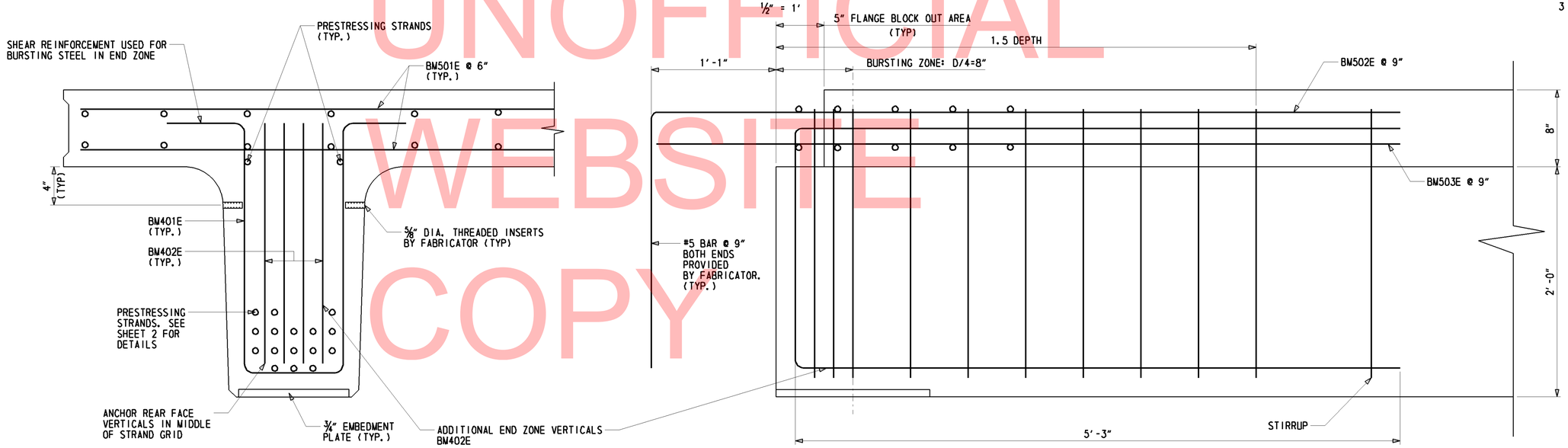

END ELEVATION-STEM END

⅛" = 1'

ELEVATION-STEM END

⅛" = 1'

UNOFFICIAL WEBSITE COPY

CAMBER TABLE BEAMS 1 & 5	IN.
CAMBER DUE TO PRESTRESSED FORCE AT TRANSFER	2⅛"
DEFLECTION DUE TO BEAM DEAD LOAD AT TRANSFER	¾"
DEFLECTION DUE TO SUPERIMPOSED DEAD LOAD	⅝"
NET TOTAL CAMBER AT BEAM MIDSPAN	1 1/16"

CAMBER TABLE BEAMS 2, 3 & 4	IN.
CAMBER DUE TO PRESTRESSED FORCE AT TRANSFER	1 15/16"
DEFLECTION DUE TO BEAM DEAD LOAD AT TRANSFER	¾"
DEFLECTION DUE TO SUPERIMPOSED DEAD LOAD	⅛"
NET TOTAL CAMBER AT BEAM MIDSPAN	1

REINFORCING BAR LIST (EACH BEAM)

MARK	LENGTH	NO. BARS	TYPE	A	B	C	D	E	F/R	G	H
BM401E	7'-0"	148	S4	1'-0"	2'-1"	0'-10"	2'-1"			1'-0"	
BM402E	12'-5"	16	17		5'-3"	1'-11"	5'-3"				
BM501E	8'-7"	124	STR		8'-7"						
BM502E	68'-0"	13	17		2'-3"	63'-6"	2'-3"				
BM503E	63'-6"	13	STR			63'-6"					
BM504E	3'-0"	6/8	STR			3'-0"					
BM505E	1'-4"	2	STR			1'-4"					
BM550E	63'-6"	8	STR			63'-6"					

ALL DIMENSIONS ARE OUT TO OUT.

NOTE: BM550E PROVIDED BY CONTRACTOR.

S4

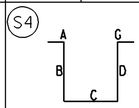

17

DELAWARE DEPARTMENT OF TRANSPORTATION

ADDENDUMS / REVISIONS

SCALE AS NOTED

PROVIDE BEAMS FOR BR. 2-195A ON WEST RAILROAD AVE OVER ISAAC RUN, WYOMING

CONTRACT	BRIDGE NO.	2-195A
T201107201	DESIGNED BY: PAM	
COUNTY		
KENT	CHECKED BY: MJG	

BEAM REINFORCEMENTS

SHEET NO. 16

TOTAL SHTS. 26

Y:\KENT*\BRIDGE\T201107201\PLANS\BM02.DGN

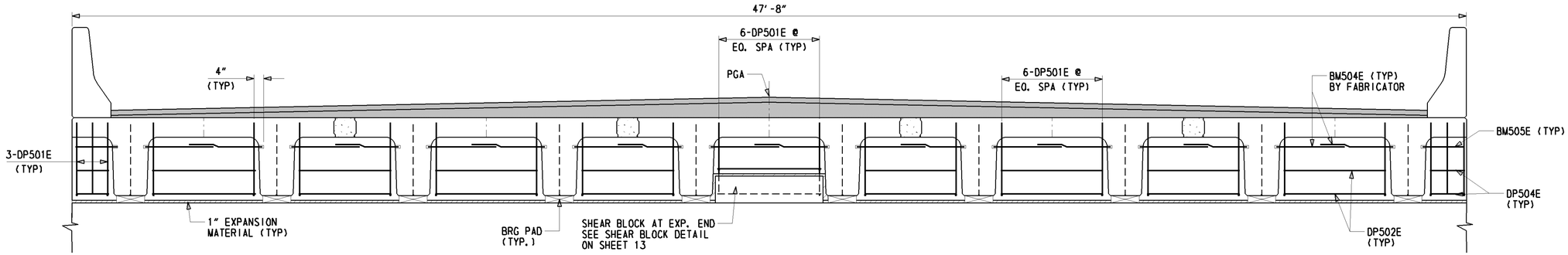

SOUTH ABUTMENT

EXPANSION

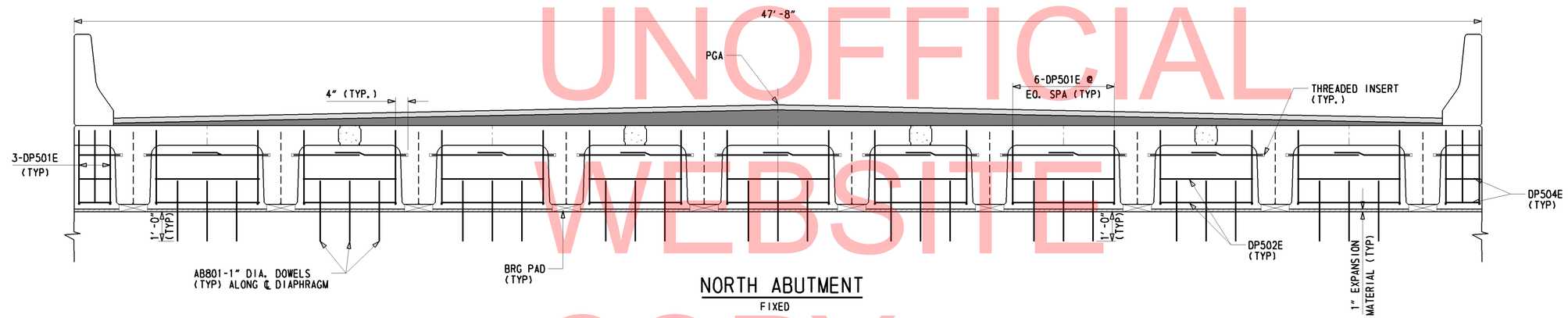

NORTH ABUTMENT

FIXED

UNOFFICIAL WEBSITE COPY

REINFORCING BAR LIST									
MARK	LENGTH	NO. BARS	TYPE	A	B	C	D	F/R	H
DP501E	5'-10"	120	17		2'-3"	1'-4"	2'-3"		
DP502E	3'-6"	36	STR		3'-6"				
DP503E	3'-0"	36	STR		3'-0"				
DP504E	1'-4"	8	STR		1'-2"				
DP505E	47'-4"	6	STR		47'-4"				
DP506E	5'-5"	20	17		2'-3"	0'-11"	2'-3"		
DP601E	47'-4"	8	STR		47'-4"				
BM801E	3'-0"	54	STR		3'-0"				

NOTE:
CAST-IN-PLACE DIAPHRAGM SHALL BE PAID UNDER ITEM #602001-P.C.C. MASONRY, CLASS A. REINFORCEMNT PAID SEPARATELY UNDER ITEM 604000-BAR REINFORCEMENT, EPOXY COATED. EXPANSION MATERIAL SHALL BE INCIDENTAL TO ITEM #602001-P.C.C. MASONRY, CLASS A.

DRILLING AND INSTALLATION OF DOWELS SHALL BE IN ACCORDANCE WITH ITEM #602579-DRILLING HOLES AND INSTALLING DOWELS. THE CONTRACTOR HAS THE OPTION OF PRECASTING THE HOLES. PAYMENT FOR DRILLING HOLES, PROVIDING THE DOWELS (AB801E), AND INSTALLATION SHALL BE INCIDENTAL TO ITEM 602001-P.C.C. MASONRY, CLASS A.

FIELD BEND AND CUT REBARS AS NECESSAY. PAYMENT INCIDENTAL TO ITEM #602001-P.C.C. MASONRY, CLASS A.

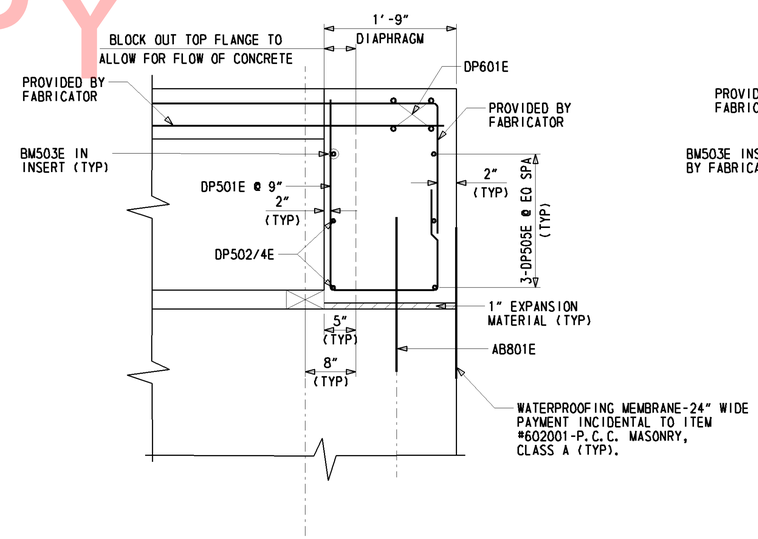

TYP. DIAPHRAGM SECTION

FIXED

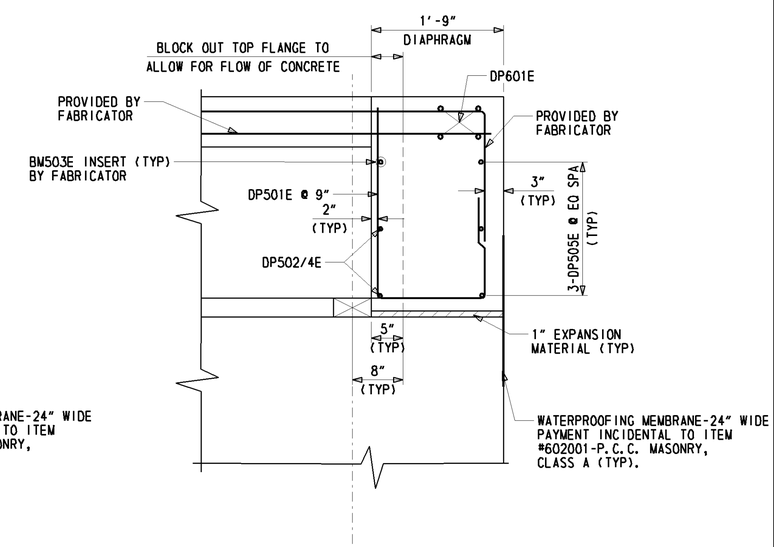

TYP. DIAPHRAGM SECTION

EXPANSION

Y:\KENT*\BRIDGE\T201107201\PLANS\BM03.DGN

DELAWARE DEPARTMENT OF TRANSPORTATION	ADDENDUMS / REVISIONS	SCALE AS NOTED	BR. 2-195A ON WEST RAILROAD AVE OVER ISAAC RUN, WYOMING	CONTRACT T201107201	BRIDGE NO. 2-195A	DIAPHRAGM DETAILS	SHEET NO. 17
				COUNTY KENT	DESIGNED BY: PAM		TOTAL SHTS. 26
					CHECKED BY: JM		

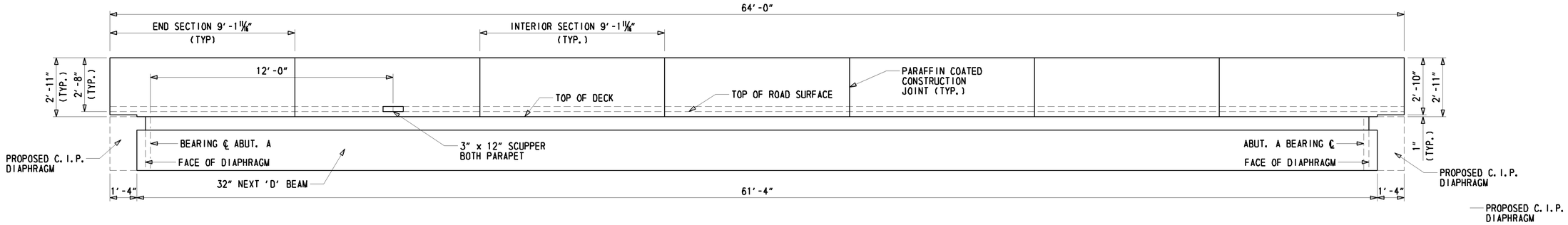

ELEVATION

3/8" = 1'

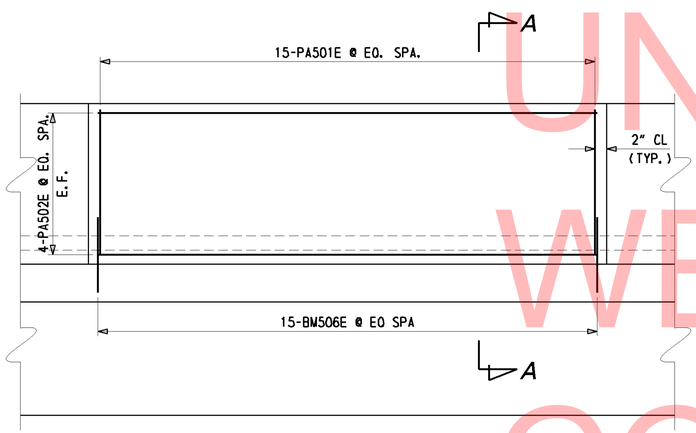

TYPICAL INTERIOR SECTION

3/4" = 1'

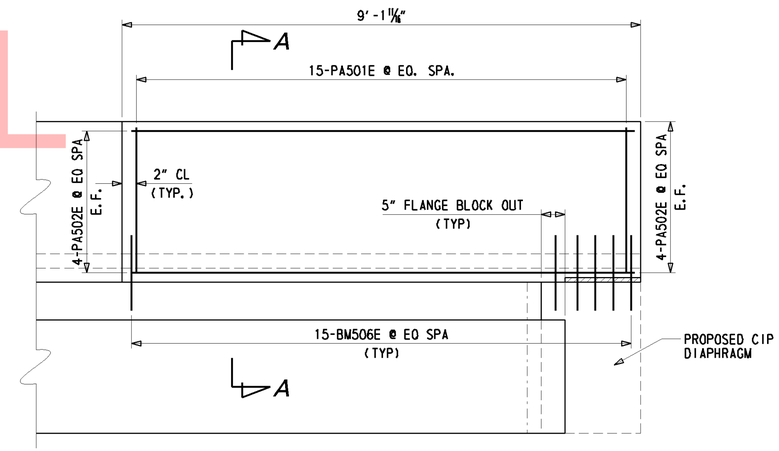

TYPICAL END SECTION

3/4" = 1'

UNOFFICIAL WEBSITE COPY

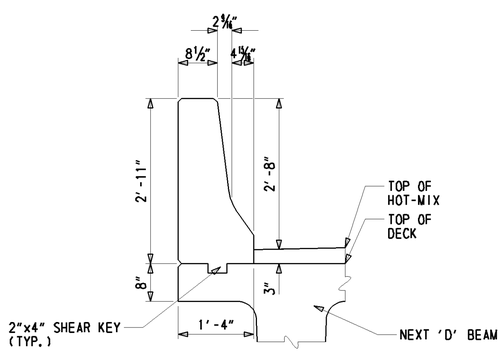

TYPICAL SECTION

3/4" = 1'

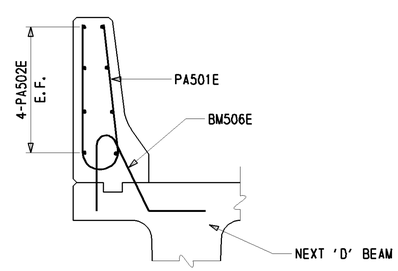

SECTION A-A

3/4" = 1'

REINFORCING BAR LIST

MARK	LENGTH	NO. BARS	TYPE	A	B	C	D	F/R	H
BM506E	4'-4 1/2"	210	T15		1'-0"	1'-9 1/2"	1'-7"		
PA501E	23'-11"	210	H1		2'-3 5/16"	0'-11 5/8"	2'-3 1/2"	0'-3 3/4"	0'-4 3/8"
PA502E	8'-10 1/2"	112	STR.		8'-10 1/2"				

ALL DIMENSIONS ARE OUT TO OUT.

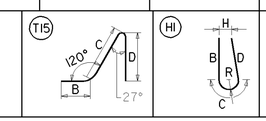

NOTE:
PARAPETS ARE PRECASTED WITH EXTERIOR BEAMS.

DELAWARE DEPARTMENT OF TRANSPORTATION	ADDENDUMS / REVISIONS	SCALE AS NOTED	BR. 2-195A ON WEST RAILROAD AVE OVER ISAAC RUN, WYOMING	CONTRACT T201107201 / COUNTY KENT	BRIDGE NO. 2-195A / DESIGNED BY: PAM / CHECKED BY: MJG	PARAPET DETAILS	SHEET NO. 18 / TOTAL SHTS. 25

Y:\KENT*\BRIDGE\T201107201\PLANS\PA01.DGN

BORING: RA # 1 | **DATE DRILLED:** 2/3/2011
STATION: 3+3.22 | **OFFSET:** 12.38 LEFT | **ELEVATION:** 28.67 | **NORTHING:** 409260.10 | **EASTING:** 616747.05
COMMENTS: N/A

SAMPLE INFORMATION

NO.	DEPTH	BLOWS /6"	DESCRIPTION	CLASS /G.I.	REMARKS
	0.0 0.0		NO SAMPLING		
1	0.0 2.0	7 8 9 12	MOIST MEDIUM DENSE BROWN COARSE SAND W/SOME FINE GRAVEL, TRACE OF FINE SAND AND SILT.	A-1-B	
2	2.0 4.0	6 7 11 15	MOIST MEDIUM DENSE BROWN FINE GRAVELLY COARSE SAND W/TRACE OF FINE SAND AND SILT.	A-1-B	
3	4.0 6.0	16 18 24 15	MOIST DENSE BROWN FINE GRAVELLY COARSE SAND W/TRACE OF FINE SAND AND SILT.	A-1-B	
4	6.0 8.0	8 10 14 19	MOIST MEDIUM DENSE BROWN FINE GRAVELLY COARSE SAND W/TRACE OF FINE SAND AND SILT.	A-1-B	BOTTOM OF FOUNDATION STABILIZATION STONES
5	8.0 10.0	8 7 5 2	MOIST MEDIUM DENSE BROWNISH GRAY FINE GRAVELLY COARSE SAND W/SOME FINE SAND, TRACE OF SILT.	A-1-B	
6	10.0 12.0	3 8 12 21	WET MEDIUM DENSE TANNISH GRAY FINE TO COARSE SAND W/SOME FINE GRAVEL, TRACE OF SILT.	A-1-B	
7	12.0 14.0	8 11 22 27	WET DENSE BROWN FINE TO COARSE SAND W/TRACE OF FINE GRAVEL AND SILT.	A-3	
8	14.0 16.0	10 15 18 22	WET DENSE TANNISH GRAY COARSE TO FINE SAND W/SOME FINE GRAVEL, TRACE OF SILT.	A-1-B	
9	16.0 18.0	21 23 21 27	WET DENSE ORANGE FINE TO COARSE SAND W/SOME FINE GRAVEL, TRACE OF SILT.	A-3	
10	18.0 23.0	17 28 28 39	WET VERY DENSE ORANGE FINE SAND W/SOME COARSE SAND, TRACE OF FINE GRAVEL AND SILT.	A-3	
11	23.0 28.0	17 25 15 18	WET DENSE ORANGE COARSE TO FINE SAND W/TRACE OF FINE GRAVEL AND SILT.	A-1-B	
12	28.0 33.0	8 9 14 16	WET MEDIUM DENSE ORANGISH TAN COARSE TO FINE SAND W/SOME FINE GRAVEL, TRACE OF SILT.	A-1-B	TIP OF SHEET PILE
13	33.0 38.0	22 26 32 32	WET VERY DENSE ORANGE FINE TO COARSE SAND W/TRACE OF SILT AND FINE GRAVEL.	A-3	
14	38.0 43.0	12 8	WET MEDIUM DENSE GRAY FINE SAND W/SOME COARSE SAND, TRACE OF FINE GRAVEL AND SILT.	A-3	
14A	43.0 44.0	5 7	SATURATED STIFF GRAY ORGANIC FINE SANDY SILT W/SOME COARSE SAND.	A-4(0)	
15	44.0 48.0	8 13 14 16	SATURATED MEDIUM DENSE GRAY FINE SAND W/SOME COARSE SAND AND SILT, TRACE OF ORGANIC MATTER AND FINE GRAVEL.	A-2-4(0)	
	48.0 50.0		END OF BORING		

BORING: RA # 2 | **DATE DRILLED:** 2/3/2011
STATION: 3+72.58 | **OFFSET:** 14.06 RIGHT | **ELEVATION:** 28.65 | **NORTHING:** 409092.35 | **EASTING:** 616799.63
COMMENTS: N/A

SAMPLE INFORMATION

NO.	DEPTH	BLOWS /6"	DESCRIPTION	CLASS /G.I.	REMARKS
	0.0 0.0		NO SAMPLING		
1	0.0 2.0	4 5 6 5	MOIST MEDIUM DENSE BROWN COARSE TO FINE SAND W/SOME SILT, TRACE OF FINE GRAVEL.	A-2-4(0)	
2	2.0 4.0	10 11 12 13	MOIST MEDIUM DENSE BROWN COARSE TO FINE SAND W/SOME FINE GRAVEL AND SILT.	A-1-B	
3	4.0 6.0	10 12 18 16	MOIST MEDIUM DENSE BROWN FINE GRAVELLY COARSE SAND W/TRACE OF FINE SAND AND SILT.	A-1-B	
4	6.0 8.0	7 7 4 3	WET MEDIUM DENSE GRAY FINE TO COARSE SAND W/SOME FINE GRAVEL AND SILT.	A-2-4(0)	
5	8.0 10.0	2 2 2 4	WET VERY LOOSE GRAY SILTY FINE TO COARSE SAND W/SOME ORGANIC MATTER, TRACE OF FINE GRAVEL.	A-2-4(0)	BOTTOM OF FOUNDATION STABILIZATION STONES
6	10.0 12.0	7 12 14 16	WET MEDIUM DENSE BROWN FINE TO COARSE SAND W/SOME SILT, TRACE OF FINE GRAVEL.	A-2-4(0)	
7	12.0 14.0	14 16 18 20	WET DENSE ORANGE FINE TO COARSE SAND W/SOME FINE GRAVEL, TRACE OF SILT.	A-1-B	

BORING: RA # 2 CONT.

SAMPLE INFORMATION

NO.	DEPTH	BLOWS /6"	DESCRIPTION	CLASS /G.I.	REMARKS
		8			
	16.0	10			
9	16.0 18.0	21 23 18 19	WET DENSE ORANGE FINE TO COARSE SAND W/TRACE OF FINE GRAVEL AND SILT.	A-1-B	
10	18.0 23.0	30 50/3"	WET VERY DENSE ORANGE FINE TO COARSE SAND W/TRACE OF SILT AND FINE GRAVEL.	A-3	
11	23.0 28.0	10 17 27 20	SATURATED HARD BROWN FINE SANDY SILT W/SOME COARSE SAND.	A-4(0)	
12	28.0 33.0	17 33 30 30	SATURATED VERY DENSE BROWN FINE TO COARSE SAND W/SOME FINE GRAVEL, TRACE OF SILT.	A-3	TIP OF SHEET PILE
13	33.0 38.0	20 34 50	SATURATED VERY DENSE BROWN FINE GRAVELLY COARSE TO FINE SAND W/TRACE OF SILT.	A-1-B	
14	38.0 43.0	31 50/4"	SATURATED VERY DENSE GRAY FINE SAND W/SOME COARSE SAND, TRACE OF SILT AND ORGANIC MATTER.	A-3	
15	43.0 48.0	5 6 8 9	SATURATED MEDIUM DENSE GRAY FINE SAND W/SOME COARSE SAND AND SILT, TRACE OF ORGANIC MATTER.	A-2-4(0)	
	48.0 50.0		END OF BORING		

UNOFFICIAL WEBSITE COPY

Y:\KENT*\BRIDGE\T201107201\PLANS\B001.DGN

DELAWARE DEPARTMENT OF TRANSPORTATION

ADDENDUMS / REVISIONS

NOT TO SCALE

BR 2-195A ON WEST RAILROAD AVE OVER ISAAC BRANCH, WYOMING

CONTRACT	BRIDGE NO.	2-195A
T201107201	DESIGNED BY: PAM	
COUNTY		
KENT	CHECKED BY: JM	

BORING SHEET

SHEET NO. 19
TOTAL SHTS. 26

SEQUENCE OF CONSTRUCTION:

1. CLOSE WEST RAILROAD AVE IN ACCORDANCE WITH THE DETOUR PLAN.
2. PLACE SILT FENCE, EXCEPT CONNECTION TO SANDBAG DIKE, AS SHOWN ON PLAN.
3. CONSTRUCT SANDBAG DIKES AT THE TWO EXTERIOR PIPES TO CHANNEL FLOW THROUGH INTERIOR PIPE ONLY. ONE DIKE WITH A SEGMENT OF 2 FT DIA. FLEXIBLE TEMPORARY PIPE AT ENTRANCE AND EXIT (WITH WATERTIGHT JOINT AND CAP). CONNECT SILT FENCE TO SANDBAG DIKES. EXCAVATE AS NECESSARY, INSTALL SHEETPILES, EXCAVATE AND INSTALL PRECAST CONCRETE FOUNDATION, AND CONSTRUCT SHEET PILE CAPS AS SHOWN ON PLAN.
4. REMOVE EXTERIOR PIPES, BUILD SLOPES AND PLACE RIPRAP AND CHANNEL BED MATERIAL BEFORE EACH ABUTMENT ACCORDING TO PLANS. CONNECT TEMPORARY PIPE TO EXISTING SEGMENTS, OPEN CAPS AND PLACE ADDITIONAL SANDBAG DIKES AT THE ENTRANCE AND EXIT OF INTERIOR PIPE TO CHANNEL WATER THROUGH TEMPORARY PIPE. REMOVE INTERIOR PIPE, EXCAVATE TO REQUIRED ELEVATION AND PLACE RIPRAP AND CHANNEL BED FILL MATERIAL AS SHOWN ON PLANS AND AS DIRECTED BY THE ENGINEER. REMOVE SANDBAG DIKES.
5. INSTALL PRESTRESSED CONCRETE BEAMS, PROPOSED PAVEMENT, GUARDRAIL AND ANY OTHER REMAINING WORK.
6. REMOVE ALL EROSION AND SEDIMENT CONTROL DEVICES AND RESTORE STREAM TO EXISTING CONDITION AS OUTLINED IN THE ENVIRONMENTAL COMPLIANCE NOTES AND AS DIRECTED BY THE ENGINEER. REMOVE ALL MAINTENANCE OF TRAFFIC DEVICES AND STABILIZE AS NECESSARY.

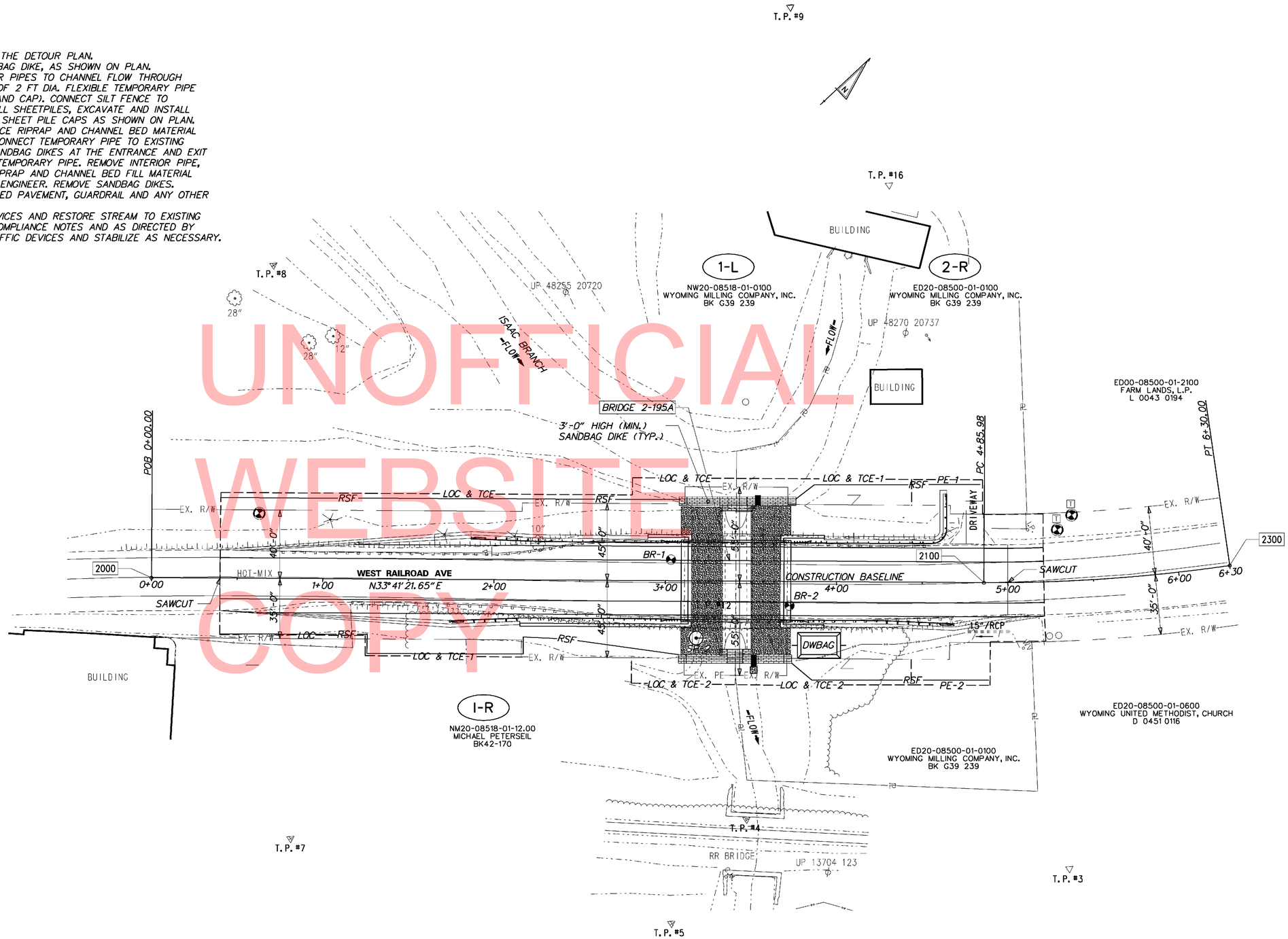

UNOFFICIAL WEBSITE COPY

W:\MSV8\CELLS\PROJDEV\SB.CEL

DELAWARE DEPARTMENT OF TRANSPORTATION	ADDENDUMS / REVISIONS	SCALE 0 30 60 90 FEET	BR. 2-195A ON WEST RAILROAD AVE OVER ISAAC BRANCH, WYOMING	CONTRACT T201107201	BRIDGE NO. 2-195A	CONSTRUCTION SEQUENCE, EROSION AND SEDIMENT CONTROL PLAN	SHEET NO. 20
				COUNTY KENT	DESIGNED BY: PAM		TOTAL SHTS. 26
					CHECKED BY: JM		

ENVIRONMENTAL COMPLIANCE NOTES

1. GENERAL NOTES:

A. THE PURPOSE OF THIS SHEET IS TO IDENTIFY THOSE ITEMS ASSOCIATED WITH ENVIRONMENTAL COMPLIANCE. IMPACT CALCULATIONS ARE FOR THE AGENCY PERMIT REPORTING PURPOSES ONLY AND ARE NOT TO BE USED FOR BIDDING PURPOSES.

B. IF A DEPARTURE FROM THE APPROVED PLANS (WHICH WOULD AFFECT ANY NATURAL AND/OR CULTURAL RESOURCES) IS NECESSARY, THE ENVIRONMENTAL STUDIES SECTION SHALL BE CONTACTED AT (302)760-2264 TO ALLOW FOR COORDINATION WITH THE APPROPRIATE RESOURCE AGENCIES AND APPROVAL.

C. USE OF THIS SHEET DOES NOT ALLEVIATE THE CONTRACTOR'S RESPONSIBILITY TO COMPLY WITH ALL CONDITIONS SET FORTH IN THE ENVIRONMENTAL STATEMENT AND PERMITS.

2. NATURAL RESOURCE ISSUES:

A. PERMIT REQUIREMENTS/APPROVALS*:
U.S. ARMY CORPS OF ENGINEERS (COE): NATIONWIDE PERMIT #3 (A) AND (C) (NO PCN).
DNREC - WETLANDS & SUBAQUEOUS LANDS (WLSL): PROJECT CONSISTENT WITH DEL. CODE CH. 72, SECTION 17, (b) AS AMENDED BY SB 186.
DNREC - WATER QUALITY (WQC) & COASTAL ZONE CONSISTENCY (CZM): ISSUED (PROJECT NOT LOCATED IN CRW).

* THE PERMITS/APPROVALS LISTED ARE THOSE REQUIRED FOR THIS PROJECT. THE ENVIRONMENTAL STUDIES SECTION IS RESPONSIBLE FOR COORDINATING AND/OR OBTAINING THIS APPROVAL.

NOTE: THE ABSENCE OF ASTERISKS AFTER A PERMIT (COE, WLSL, WQC, CZM) INDICATES THAT COORDINATION HAS BEEN DONE WITH THE AGENCY BUT NO WRITTEN AUTHORIZATION WAS REQUIRED. AS SUCH, NO PAPERWORK FROM THAT SHOULD BE ANTICIPATED.

B. CONSTRUCTION RESTRICTIONS:
FISHERIES - NONE
ENDANGERED SPECIES - NONE
MIGRATORY BIRDS - NONE

3. CULTURAL RESOURCE ISSUES:

SEE NOTE 11 ON PROJECT NOTES, SHEET #3.

4. STREAM RESTORATION AND RIPRAP TREATMENTS

A. THE CONTRACTOR SHALL FOLLOW THE SPECIAL PROVISIONS OF ITEM #712531 - CHANNEL BED FILL IN REGARDS TO THE SALVAGING OF ON-SITE NATURAL STREAM BOTTOM MATERIAL OR THE FURNISHING OF OFF-SITE MATERIAL. IF SUFFICIENT SOURCES FOR CHANNEL BED FILL DO NOT EXIST ON-SITE, ANY NEW MATERIAL SHALL CONFORM TO THE REQUIREMENTS OF ITEM #712531 - CHANNEL BED FILL. ALL RIPRAP IN THE CHANNEL BOTTOM (I.E. BELOW THE WATER LINE) SHALL BE RECESSED ONE FOOT BELOW STREAM BED ELEVATION AND CHOKED WITH BORROW TYPE 'B' SO THAT ALL OF THE VOIDS IN THE RIPRAP ARE FILLED WITH MATERIAL. PAYMENT UNDER ITEM #209002 - BORROW TYPE 'B'. THE RIPRAP SHALL THEN BE COVERED WITH A MINIMUM OF 12" CHANNEL BED FILL. FINAL CHANNEL ELEVATIONS SHALL MATCH EXISTING ELEVATIONS AT THE UPSTREAM AND DOWNSTREAM PROJECT LIMITS. THROUGH THE STRUCTURE, ELEVATIONS SHALL BE AS NOTED ON THE PLANS. PAYMENT UNDER ITEM #712531 - CHANNEL BED FILL.

B. OTHER AREAS OF THE CHANNEL BOTTOM AFFECTED BY CONSTRUCTION (INCLUDING, BUT NOT LIMITED TO, THE LOCATION OF SUMP PITS, STABILIZED OUTFALLS, TEMPORARY PIPES AND/OR SANDBAG DIKES AND DIVERSIONS) SHALL BE RESTORED TO EXISTING CONDITIONS. ANY CAVITIES OR SCOUR HOLES RESULTING FROM CONSTRUCTION ACTIVITIES SHALL BE FILLED WITH CHANNEL BED FILL. PAYMENT UNDER ITEM #712531- CHANNEL BED FILL.

C. WHEN ALL EROSION AND SEDIMENT CONTROL MEASURES ARE REMOVED AND THE STREAM RETURNS TO ITS NATURAL FLOW CONDITIONS, THE FLOW MUST REMAIN ABOVE GROUND AND ABOVE THE RIPRAP (I.E. THE FLOW CANNOT BE "LOST" IN THE RIPRAP OR BENEATH THE STRUCTURE). IF THIS IS NOT ACHIEVED, THE CONTRACTOR WILL BE REQUIRED TO TAKE CORRECTIVE ACTION AT THE CONTRACTOR'S EXPENSE.

D. ALL RIPRAP ON THE STREAM BANK, OUTSIDE THE CHANNEL BED, SHALL BE CHOKED WITH DELAWARE #57 STONE, FILLED WITH TOPSOIL, AND SEEDED. PLACE JUST ENOUGH CHOKE MATERIAL TO PREVENT THE LOSS OF TOPSOIL THROUGH THE RIPRAP, AND THEN FINISH FILLING THE VOIDS WITH TOPSOIL SO THAT THE RIPRAP PEAKS ARE BARELY VISIBLE. AN ADDITIONAL 4-INCH TOPSOIL LAYER SHALL BE PLACED ON TOP OF THE RIPRAP. SLOPE SEEDING SHALL BE WITH ITEM #734531 - STREAMBANK SEED MIX. FOLLOWING THE SEEDING OPERATION, ITEM #735535-SOIL RETENTION BLANKET MULCH, TYPE 5, OR OTHER BLANKET SHOWN ON PLANS SHALL BE INSTALLED. ALL WORK, STARTING WITH THE INITIAL CHOKING WITH TOPSOIL THROUGH THE SEEDING SHALL BE COMPLETED PRIOR TO ANY RAIN EVENT. PAYMENT FOR DELAWARE #57 STONE SHALL BE INCIDENTAL TO THE RIPRAP ITEM. ALL OTHER ITEMS SHALL BE PAID FOR UNDER THEIR RESPECTIVE ITEMS.

PROJECT AREA DELINATED BY ENVIRONMENTAL RESOURCES, INC. (ERI) IN OCTOBER 2011 IN ACCORDANCE WITH THE 1987 CORPS OF ENGINEERS WETLAND DELINEATION MANUAL AND REGINAL SUPPLEMENT.

ORIGINAL SHEET PREPARED BY P. McNEIL ON 06/08/2012. SHEET LAST UPDATED ON 10/17/2012.

LEGEND

	PERMANENT IMPACT AREA
	TEMPORARY IMPACT AREA
	CREATION AREA
OHW	ORDINARY HIGH WATER
WL	WETLAND BOUNDARY
OHW/WL	ORD. HIGH WATER / WETLAND

XX / 2X — IMPACT AREA TYPE ID. (SEE BELOW) / IMPACT AREA ID. AND/OR NUMBER

O = OPEN WATER IMPACT
W = WETLAND IMPACT
T = TEMPORARY IMPACT
C = CREATION AREA

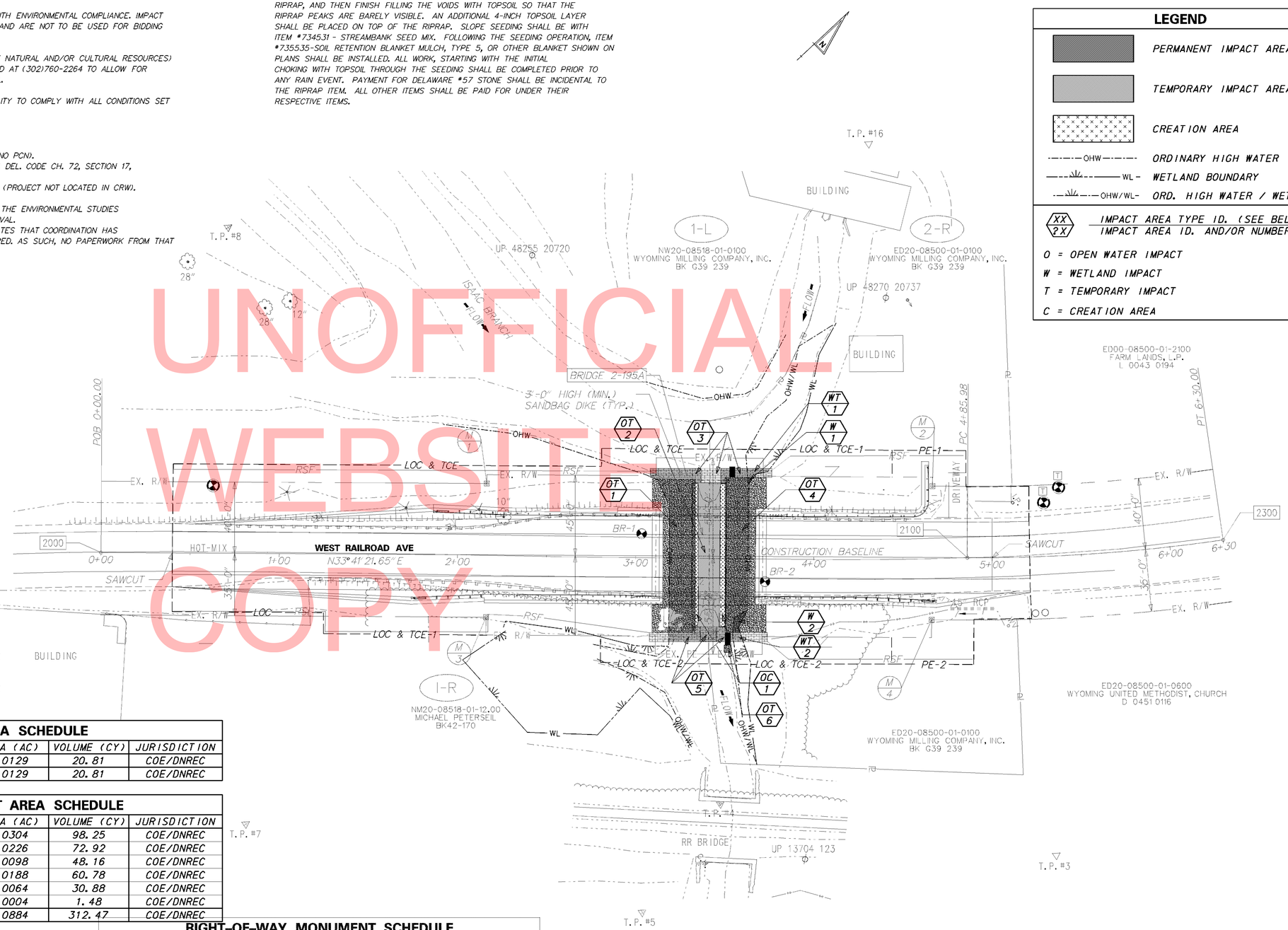

UNOFFICIAL WEBSITE COPY

OPEN WATER CREATION AREA SCHEDULE

ID	IMPACT DESCRIPTION	AREA (SF)	AREA (AC)	VOLUME (CY)	JURISDICTION
OC-1	AREAS BETWEEN PIPES	562.89	0.0129	20.81	COE/DNREC
TOTAL OPEN WATER CREATION AREAS		562.89	0.0129	20.81	COE/DNREC

TEMPORARY OPEN WATER IMPACT AREA SCHEDULE

ID	IMPACT DESCRIPTION	AREA (SF)	AREA (AC)	VOLUME (CY)	JURISDICTION
OT-1	PIPE LINER TO RIPRAP	1326.33	0.0304	98.25	COE/DNREC
OT-2	PIPE LINER TO CHANNEL BED	984.38	0.0226	72.92	COE/DNREC
OT-3	SANDBAG DIKE	433.52	0.0098	48.16	COE/DNREC
OT-4	PIPE LINER TO RIPRAP	819.14	0.0188	60.78	COE/DNREC
OT-5	SANDBAG DIKE	277.92	0.0064	30.88	COE/DNREC
OT-6	RIPRAP	20.00	0.0004	1.48	COE/DNREC
TOTAL FOR THIS SHEET		3861.29	0.0884	312.47	COE/DNREC

TEMPORARY WETLAND IMPACT AREA SCHEDULE

ID	IMPACT DESCRIPTION	AREA (SF)	AREA (AC)	VOLUME (CY)	JURISDICTION
WT-1	SANDBAG DIKE	47.15	0.0011	N/A	COE
WT-2	SANDBAG DIKE	23.76	0.0005	N/A	COE
TOTAL FOR THIS SHEET		70.91	0.0016	N/A	COE

RIGHT-OF-WAY MONUMENT SCHEDULE

NO.	TYPE	STATION	OFFSET
2	CAPPED REBAR	[illegible]	[illegible]
3	CAPPED REBAR	[illegible]	[illegible]
4	CAPPED REBAR	[illegible]	[illegible]

PERMANENT WETLAND IMPACT AREA SCHEDULE

ID	IMPACT DESCRIPTION	AREA (SF)	AREA (AC)	VOLUME (CY)	JURISDICTION
W-1	PIPE LINER TO RIPRAP	6.49	0.0001	N/A	COE
W-2	PIPE LINER TO RIPRAP	46.61	0.0011	N/A	COE
TOTAL PERMANENT WETLAND IMPACT AREAS		53.10	0.0011	N/A	COE

W:\MSV8\CELLS\PROJDEV\SB.CEL

DELAWARE DEPARTMENT OF TRANSPORTATION

ADDENDUMS / REVISIONS

SCALE 0 30 60 90 FEET

BR. 2-195A ON WEST RAILROAD AVE OVER ISAAC BRANCH, WYOMING

CONTRACT	BRIDGE NO.	2-195A
T201107201	DESIGNED BY: PAM	
COUNTY		
KENT	CHECKED BY: JM	

ENVIRONMENTAL COMPLIANCE SHEET

SHEET NO. 21
TOTAL SHTS. 26

NOTE: ALL RELOCATIONS SHALL BE WITHIN THE EXISTING RIGHT-OF-WAY

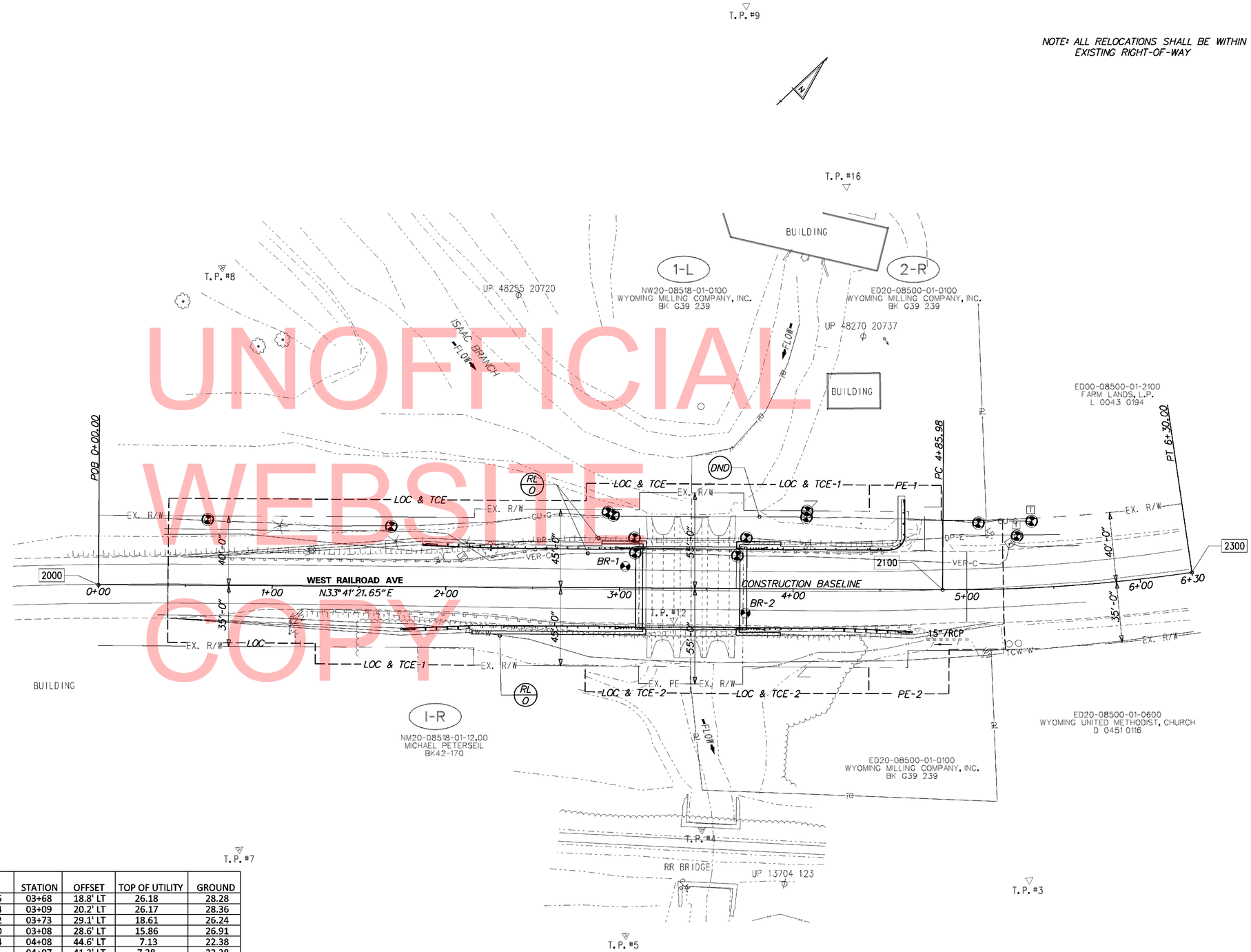

UNOFFICIAL WEBSITE COPY

TEST HOLE #	UTILITY	SIZE	MATERIAL	NORTHING	EASTING	STATION	OFFSET	TOP OF UTILITY	GROUND
1	TELEPHONE	1/2"	DBC	409105.927	616774.055	03+68	18.8' LT	26.18	28.28
2	TELEPHONE	1/2"	DBC	409057.727	616740.324	03+09	20.2' LT	26.17	28.36
3			CONC. SLAB	409115.844	616768.362	03+73	29.1' LT	18.61	26.24
4	ELECTRIC	-	DBC	409061.972	616733.000	03+08	28.6' LT	15.86	26.91
5	NONE FOUND			409153.487	616774.744	04+08	44.6' LT	7.13	22.38
5A	NONE FOUND			409151.358	616777.341	04+07	41.3' LT	7.38	22.38
6	NONE FOUND			409057.436	616712.144	02+93	43.4' LT	6.10	21.10
6A	NONE FOUND			409059.192	616715.356	02+94	41.7' LT	6.25	21.25
7	GAS	4"	PLASTIC	409232.147	616834.610	05+07	38.2' LT	18.77	25.86
8	GAS	4"	PLASTIC	408948.758	616650.372	01+68	34.6' LT	16.54	21.90

DELAWARE DEPARTMENT OF TRANSPORTATION

ADDENDUMS / REVISIONS

SCALE 0 30 60 90 FEET

BR. 2-195A ON WEST RAILROAD AVE OVER ISAAC BRANCH, WYOMING

CONTRACT T201107201
COUNTY KENT
BRIDGE NO. 2-195A
DESIGNED BY: PAM
CHECKED BY: JM

UTILITY PLAN

SHEET NO. 22
TOTAL SHTS. 26

W:\MSV8\CELLS\PROJDEV\SB.CEL

CHANGEABLE MESSAGE BOARDS

CMS-1

PRIOR TO DETOUR
(10 DAYS PRIOR TO BEGINNING OF DETOUR)

WYOMING MILL ROAD	TO CLOSE STARTING XX/XX/XX

CMS-1

DURING DETOUR
(DISPLAY FOR 5 DAYS AFTER IMPLEMENTATION OF DETOUR)

WYOMING MILL ROAD	CLOSED FOLLOW DETOUR

SPECIAL SIGNS

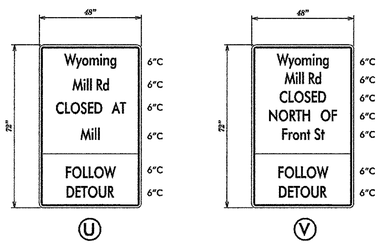

D/G RETROREFLECTIVE FLUORESCENT ORANGE BACKGROUND; BLACK LEGEND

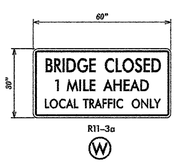

SPECIAL NOTES

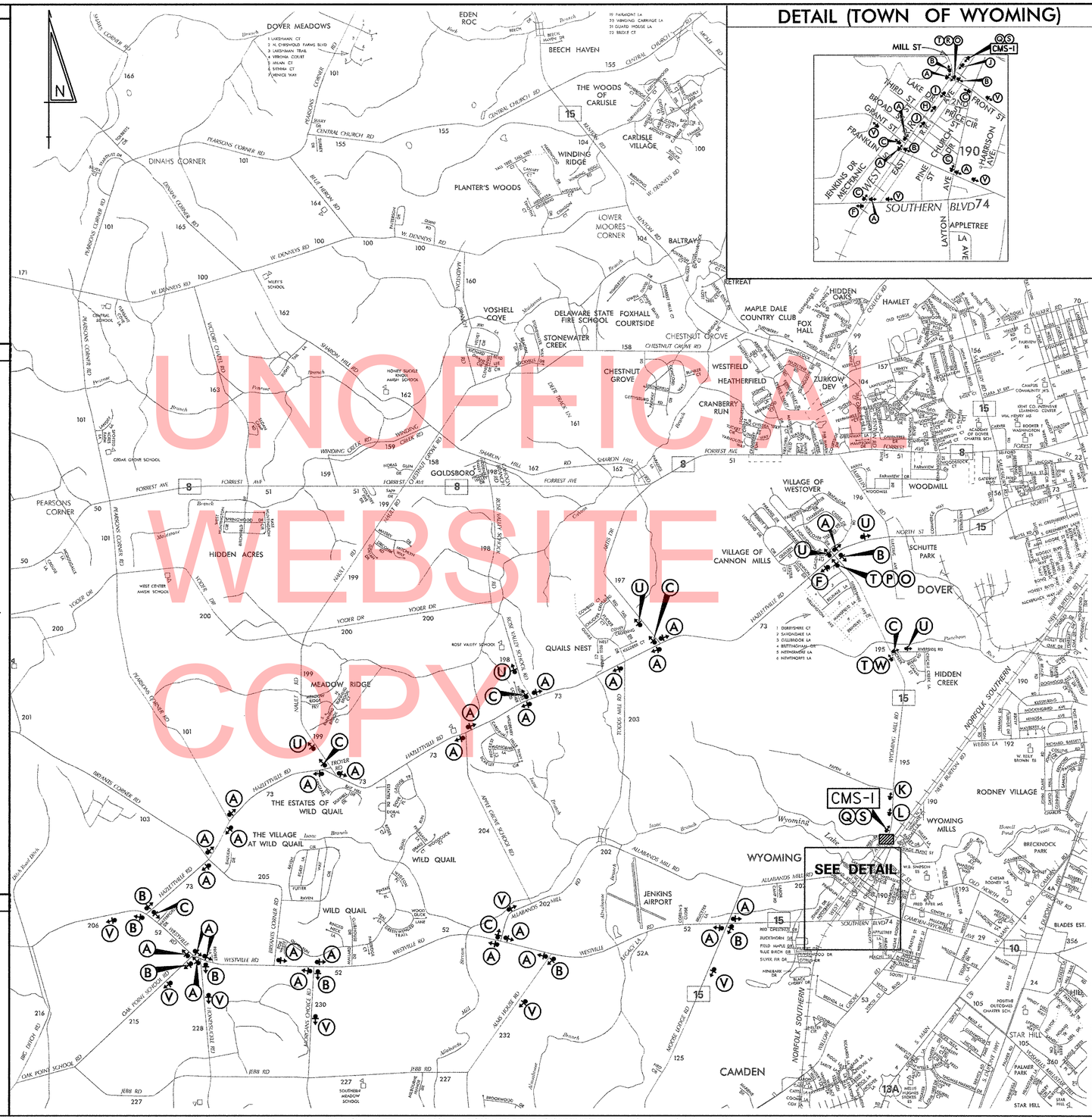

UNOFFICIAL WEBSITE COPY

DETAIL (TOWN OF WYOMING)

LEGEND

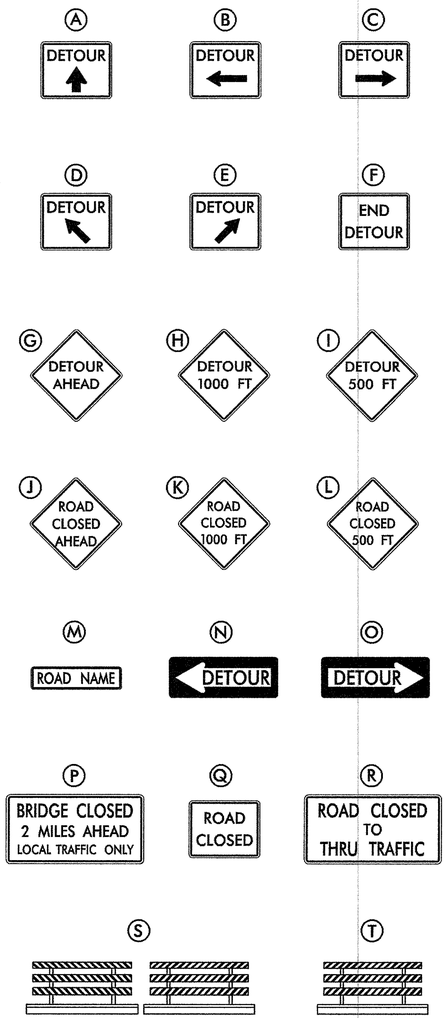

GENERAL NOTES

1. ALL DETOUR SIGNING INCLUDING, TRAILBLAZERS, ARE TO BE SUPPLIED AND MAINTAINED BY THE GENERAL CONTRACTOR IN COMPLIANCE TO THE DE MANUAL OF UNIFORM TRAFFIC CONTROL DEVICES.
2. THE CONTRACTOR SHALL COMPLY WITH GUIDELINES IN "THE DELAWARE MANUAL ON UNIFORM TRAFFIC CONTROL DEVICES (DE- MUTCD PART 6) FOR LIGHTS, BARRICADES AND SIGNS.(AS PER LATEST REVISION)
3. FIELD CONDITIONS MAY DICTATE CHANGES AT SOME TIME DURING THE LIFE OF THE CONTRACT. IN THE EVENT OF OMISSIONS OR CORRECTIONS, THE SIGNING PROVISIONS OF THE DELAWARE MANUAL ON UNIFORM TRAFFIC CONTROL DEVICES WILL PREVAIL.
4. SIGNS J THROUGH L AND P THROUGH R ,THE WORD (ROAD) SHOULD BE CHANGED TO RAMP, R/R OR BRIDGE WHERE APPLICABLE.
5. WARNING SIGNS SHOULD BE MOUNTED ON BREAKAWAY POSTS AND HAVE RETROREFLECTIVE FLUORESCENT SHEETING.
6. "S" BARRICADES SHALL COMPLETELY RUN THE FULL WIDTH OF ROADWAY.
7. BARRICADES SHALL BE A MINIMUM OF 6 FEET WIDE UNLESS DIRECTED BY THE ENGINEER.

RECOMMENDED Mulvey DATE: 2-29-12

RECOMMENDED John Subda Sr DATE: 2-29-12

RECOMMENDED _____ DATE: _____

APPROVED CHIEF SAFETY OFFICER [signature] DATE: 3-15-12

APPROVED TRAFFIC ENGINEER [signature] DATE: 3/15/12

DELAWARE DEPARTMENT OF TRANSPORTATION

ADDENDUM / REVISIONS

NOT TO SCALE

KENT COUNTY BRIDGE PROJECT
WEST RAILROAD AVE OVER
ISAAC BRANCH BR 2-195A

CONTRACT	ROAD NO.	K195
T201107201	DESIGNED BY: MFR	
COUNTY		
KENT	CHECKED BY: ASW	

DETOUR PLAN
WYOMING MILL RD
AT BR 2-195A

SHEET NO. 23
TOTAL SHTS. 26

C:\DOCUMENTS AND SETTINGS\MICHAEL.RIVERA\MY DOCUMENTS\MICRO STATION DGN\WYOMING MILL RD VIA WESTVILLE RD AND HAZLETVILLE RD.DGN

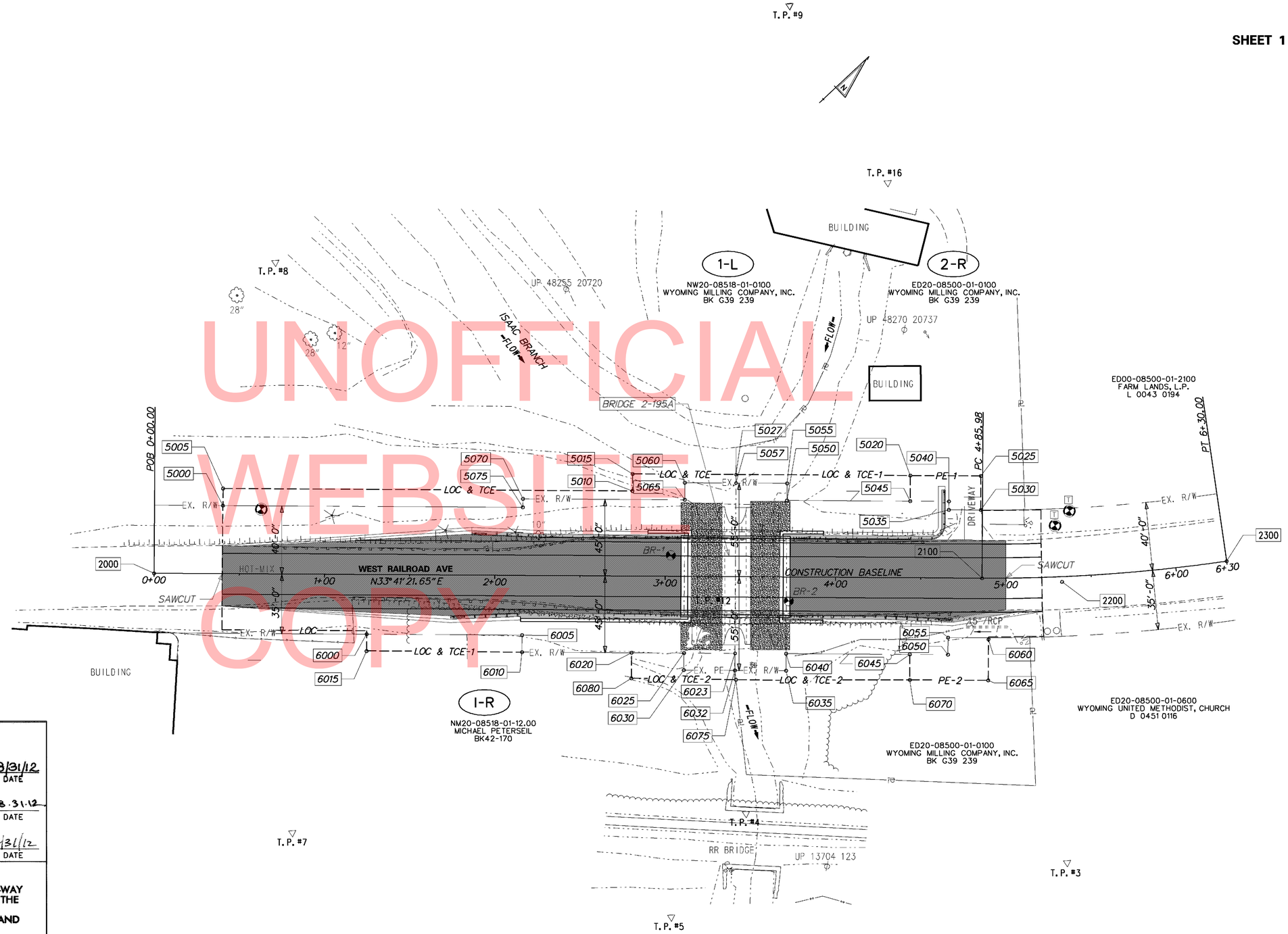

UNOFFICIAL WEBSITE COPY

RECOMMENDED

TEAM SUPPORT SQUAD MANAGER	DATE 8/31/12
TEAM SUPPORT ENGINEER	DATE 8.31.12
ASSISTANT DIRECTOR, ENGINEERING SUPPORT	DATE 8/31/12

"AS-ACQUIRED" PLANS

I CERTIFY THAT ALL PROPOSED RIGHT-OF-WAY HAS BEEN ACQUIRED IN THE NAME OF THE STATE OF DELAWARE AND THAT THESE PLANS ACCURATELY DEPICT THE NATURE AND EXTENT OF THE REAL ESTATE SECTION ACQUISITION UNDER THIS PROJECT.

CHIEF, REAL ESTATE — DATE

W:\MSV8\CELLS\PROJDEV\SB.CEL

DELAWARE DEPARTMENT OF TRANSPORTATION

ADDENDUMS / REVISIONS

SCALE 0 30 60 90 FEET

BR. 2-195A ON WEST RAILROAD AVE OVER ISAAC BRANCH, WYOMING

CONTRACT T201107201	BRIDGE NO. 2-195A	RIGHT-OF-WAY PLAN	SHEET NO. 24
COUNTY KENT	DESIGNED BY: PAM		TOTAL SHTS. 26
	CHECKED BY: JM		

ASSESSMENT NUMBER	OWNERSHIP OF RECORD	TYPE OF ACQUISITION	TITLE SOURCE	PARCEL AREA (ACRES)
NW20-08518-01-12.00	(1-R) MICHAEL PETERSEIL	TCE-2	BK 42 170	0.980

ALIGNMENT NUMBER & DESCRIPTION: 5000 - R/W ALIGNMENT

PT. NO.	ALIGN. NO.	STATION	OFFSET *	NORTH	EAST	BEARING	DISTANCE	CHORD BEARING	CHORD LENGTH	ARC LENGTH	RADIUS **
6020	5000	2+80.50	45.00	408997.9032	616778.8036	N 33°41'21.64" E	30.7500				
6025	5000	3+11.25	45.00	409023.4889	616795.8603	S 56°18'38.36" E	10.0000				
6030	5000	3+11.25	55.00	409017.9420	616804.1809	N 33°41'21.64" E	30.0000				
6032	5000	3+41.25	55.00	409042.9037	616820.8216	S 63°29'31.48" E	5.0395				
6075	5000	3+41.88	60.00	409040.6545	616825.3313	S 33°41'21.64" W	61.3800				
6080	5000	2+80.50	60.00	408989.5828	616791.2845	N 56°18'38.36" W	15.0000				
6020	5000	2+80.50	45.00	408997.9032	616778.8036						

FIGURE 7050 AREA = 612.8250 SQ. FT. (0.0141 ACRES)

ASSESSMENT NUMBER	OWNERSHIP OF RECORD	TYPE OF ACQUISITION	TITLE SOURCE	PARCEL AREA (ACRES)
NW20-08518-01-12.00	(1-R) MICHAEL PETERSEIL	TCE-1	BK 42 170	0.980

ALIGNMENT NUMBER & DESCRIPTION: 5000 - R/W ALIGNMENT

PT. NO.	ALIGN. NO.	STATION	OFFSET *	NORTH	EAST	BEARING	DISTANCE	CHORD BEARING	CHORD LENGTH	ARC LENGTH	RADIUS **
6000	5000	1+25.00	35.00	408874.0651	616684.2288	N 33°41'21.64" E	91.2500				
6005	5000	2+16.25	35.00	408949.9904	616734.8442	S 56°18'38.36" E	10.0000				
6010	5000	2+16.25	45.00	408944.4435	616743.1648	S 33°41'21.64" W	91.2500				
6015	5000	1+25.00	45.00	408868.5183	616692.5494	N 56°18'38.36" W	10.0000				
6000	5000	1+25.00	35.00	408874.0651	616684.2288						

FIGURE 7040 AREA = 912.5000 SQ. FT. (0.0209 ACRES)

ASSESSMENT NUMBER	OWNERSHIP OF RECORD	TYPE OF ACQUISITION	TITLE SOURCE	PARCEL AREA (ACRES)
ED20-08500-01-0100	(2-R) WYOMING MILLING COMPANY, INC	TCE-2	BK G39 239	4.962

ALIGNMENT NUMBER & DESCRIPTION: 5000 - R/W ALIGNMENT

PT. NO.	ALIGN. NO.	STATION	OFFSET *	NORTH	EAST	BEARING	DISTANCE	CHORD BEARING	CHORD LENGTH	ARC LENGTH	RADIUS **
6032	5000	3+41.25	55.00	409042.9037	616820.8216	N 33°41'21.64" E	30.0000				
6035	5000	3+71.25	55.00	409067.8655	616837.4623	N 56°18'38.36" W	10.0000				
6040	5000	3+71.25	45.00	409073.4124	616829.1417	N 33°41'21.64" E	72.0000				
6045	5000	4+43.25	45.00	409133.3205	616869.0794	S 57°15'55.78" E	15.0021				
6070	5000	4+43.50	60.00	409125.2082	616881.6989	S 33°41'21.64" W	101.6200				
6075	5000	3+41.88	60.00	409040.6545	616825.3313	N 63°29'31.48" W	5.0395				
6032	5000	3+41.25	55.00	409042.9037	616820.8216						

FIGURE 7030 AREA = 1230.3000 SQ. FT. (0.0282 ACRES)

ASSESSMENT NUMBER	OWNERSHIP OF RECORD	TYPE OF ACQUISITION	TITLE SOURCE	PARCEL AREA (ACRES)
NW20-08518-01-0100	(1-L) WYOMING MILL COMPANY INC	TCE	BK G39 239	4.962

ALIGNMENT NUMBER & DESCRIPTION: 5000 - R/W ALIGNMENT

PT. NO.	ALIGN. NO.	STATION	OFFSET *	NORTH	EAST	BEARING	DISTANCE	CHORD BEARING	CHORD LENGTH	ARC LENGTH	RADIUS **
5000	5000	0+40.00	-40.00	408844.9420	616574.6759	N 56°18'38.36" W	10.0000				
5005	5000	0+40.00	-50.00	408850.4889	616566.3553	N 33°41'21.64" E	240.5000				
5010	5000	2+80.50	-50.00	409050.5987	616699.7582	N 56°18'38.36" W	10.0000				
5015	5000	2+80.50	-60.00	409056.1456	616691.4376	N 33°41'21.64" E	60.7500				
5027	5000	3+41.25	-60.00	409106.6931	616725.1350	S 56°18'38.36" E	5.0000				
5057	5000	3+41.25	-55.00	409103.9196	616729.2953	S 33°41'21.64" W	30.0000				
5060	5000	3+11.25	-55.00	409078.9579	616712.6546	S 56°18'38.36" E	10.0000				
5065	5000	3+11.25	-45.00	409073.4110	616720.9752	S 33°41'21.64" W	95.0000				
5070	5000	2+16.25	-45.00	408994.3656	616668.2796	S 56°18'38.36" E	5.0000				
5075	5000	2+16.25	-40.00	408991.5921	616672.4399	S 33°41'21.64" W	176.2500				
5000	5000	0+40.00	-40.00	408844.9420	616574.6759						

FIGURE 7020 AREA = 2695.0000 SQ. FT. (0.0619 ACRES)

ASSESSMENT NUMBER	OWNERSHIP OF RECORD	TYPE OF ACQUISITION	TITLE SOURCE	PARCEL AREA (ACRES)
ED20-08500-01-0100	(2-R) WYOMING MILLING COMPANY, INC	P/E-2	BK G39 239	4.962

ALIGNMENT NUMBER & DESCRIPTION: 5000 - R/W ALIGNMENT

PT. NO.	ALIGN. NO.	STATION	OFFSET *	NORTH	EAST	BEARING	DISTANCE	CHORD BEARING	CHORD LENGTH	ARC LENGTH	RADIUS **
6045	5000	4+43.25	45.00	409133.3205	616869.0794	N 33°41'21.64" E	22.0000				
6050	5000	4+65.25	45.00	409151.6257	616881.2825	N 56°18'38.36" W	10.0000				
6055	5000	4+65.25	35.00	409157.1726	616872.9620	N 33°41'21.64" E	19.7500				
6060	5000	4+85.00	35.00	409173.6058	616883.9171	S 56°18'38.36" E	25.0000				
6065	5000	4+85.00	60.00	409159.7385	616904.7185	S 33°41'21.64" W	41.5000				
6070	5000	4+43.50	60.00	409125.2082	616881.6989	N 57°15'55.78" W	15.0021				
6045	5000	4+43.25	45.00	409133.3205	616869.0794						

FIGURE 7010 AREA = 821.8750 SQ. FT. (0.0189 ACRES)

ASSESSMENT NUMBER	OWNERSHIP OF RECORD	TYPE OF ACQUISITION	TITLE SOURCE	PARCEL AREA (ACRES)
ED20-08500-01-0100	(2-R) WYOMING MILLING COMPANY, INC	P/E-1	BK G39 239	4.962

ALIGNMENT NUMBER & DESCRIPTION: 5000 - R/W ALIGNMENT

PT. NO.	ALIGN. NO.	STATION	OFFSET *	NORTH	EAST	BEARING	DISTANCE	CHORD BEARING	CHORD LENGTH	ARC LENGTH	RADIUS **
5020	5000	4+43.50	-60.00	409191.7709	616781.8520	N 33°41'21.64" E	41.5000				
5025	5000	4+85.00	-60.00	409226.3013	616804.8716	S 56°18'38.36" E	20.0000				
5030	5000	4+85.00	-40.00	409215.2075	616821.5128	S 33°41'21.64" W	19.7500				
5035	5000	4+65.25	-40.00	409198.7744	616810.5577	N 56°18'38.36" W	5.0000				
5040	5000	4+65.25	-45.00	409201.5478	616806.3974	S 33°41'21.64" W	21.7500				
5045	5000	4+43.50	-45.00	409183.4506	616794.3329	N 56°18'38.36" W	15.0000				
5020	5000	4+43.50	-60.00	409191.7709	616781.8520						

FIGURE 7000 AREA = 721.2500 SQ. FT. (0.0166 ACRES)

ASSESSMENT NUMBER	OWNERSHIP OF RECORD	TYPE OF ACQUISITION	TITLE SOURCE	PARCEL AREA (ACRES)
ED20-08500-01-0100	(2-R) WYOMING MILLING COMPANY, INC	TCE-1	BK G39 239	4.962

ALIGNMENT NUMBER & DESCRIPTION: 5000 - R/W ALIGNMENT

PT. NO.	ALIGN. NO.	STATION	OFFSET *	NORTH	EAST	BEARING	DISTANCE	CHORD BEARING	CHORD LENGTH	ARC LENGTH	RADIUS **
5027	5000	3+41.25	-60.00	409106.6931	616725.1350	N 33°41'21.64" E	102.2500				
5020	5000	4+43.50	-60.00	409191.7709	616781.8520	S 56°18'38.36" E	15.0000				
5045	5000	4+43.50	-45.00	409183.4506	616794.3329	S 33°41'21.64" W	72.2500				
5050	5000	3+71.25	-45.00	409123.3344	616754.2565	N 56°18'38.36" W	10.0000				
5055	5000	3+71.25	-55.00	409128.8813	616745.9360	S 33°41'21.64" W	30.0000				
5057	5000	3+41.25	-55.00	409103.9196	616729.2953	N 56°18'38.36" W	5.0000				
5027	5000	3+41.25	-60.00	409106.6931	616725.1350						

FIGURE 7025 AREA = 1233.7500 SQ. FT. (0.0283 ACRES)

UNOFFICIAL WEBSITE COPY

LEGEND

FEE AREA OF ACQUISITION
R/W AREA OCCUPIED BY EXISTING R/W
P/E PERMANENT EASEMENT
TCE TEMPORARY CONSTRUCTION EASEMENT

* "-" OFFSET IS LEFT OF BASELINE
** "-" CURVE TURNS TO THE LEFT

Y:\KENT\195\BRIDGE\T201107201\PLANS\RB01.DGN

DELAWARE DEPARTMENT OF TRANSPORTATION

ADDENDUMS / REVISIONS

NOT TO SCALE

BR. 2-195A ON WEST RAILROAD AVE OVER ISAAC BRANCH, WYOMING

CONTRACT T201107201
COUNTY KENT
BRIDGE NO. 2-195A
DESIGNED BY: PAM
CHECKED BY: JM

RIGHT-OF-WAY DATA SHEET

SHEET NO. 25
TOTAL SHTS. 26

COUNTY ASSESSMENT PARCEL NUMBER	PLAN SHEET NUMBER	OWNERSHIP OF RECORD	TITLE SOURCE	PROPERTY AREA BEFORE ACQUISITION (ACRE) D=DEED C=CALCULATED A=ASSESMENT	ACQUISITION CODE FEE, R/W, P/E, TCE	AREA TO BE ACQUIRED				PROPERTY AREA REMAINING (SQ. FEET /ACRES)	DEED RECORD OF ACQUISTITION	REMARKS
						ACQUISITION (SQ. FEET /ACRES)	AREA OCCUPIED BY EXISTING RIGHT OF WAY (SQ. FEET /ACRES)	EASEMENT PERMANENT (SQ. FEET /ACRES)	EASEMENT TEMPORARY (SQ. FEET /ACRES)			
NW20-08518-01-12.00	23	(1-R) MICHAEL PETERSEIL	BK 42 170	D - 0.98	TCE-2				612.825 / 0.01			
					TCE-1				912.50 / 0.02	42688.80 / 0.98		
ED20-08500-01-0100	23	(2-R) WYOMING MILLING COMPANY, INC	BK G39 239	D - 4.96	TCE-2				1230.30 / 0.03	216144.70 / 4.96		
NW20-08518-01-0100	23	(1-L) WYOMING MILL COMPANY INC	BK G39 239	D - 4.96	TCE				2695.00 / 0.06	216144.70 / 4.96		
ED20-08500-01-0100	23	(2-R) WYOMING MILLING COMPANY, INC	BK G39 239	D - 4.96	P/E-2			821.875 / 0.02				
					P/E-1			721.25 / 0.02				
					TCE-1				1233.75 / 0.03	216144.70 / 4.96		

UNOFFICIAL WEBSITE COPY

ACQUISITION CODES

FEE - ACQUISITION
R/W - AREA OCCUPIED BY EXISTING R/W
P/E - PERMANENT EASEMENT
TCE - TEMPORARY EASEMENT

DELAWARE DEPARTMENT OF TRANSPORTATION

ADDENDUMS / REVISIONS

NOT TO SCALE

BR. 2-195A on WEST RAILROAD AVE over ISAAC BRANCH, WYOMING

CONTRACT	BRIDGE NO.	2-195A
T201107201	DESIGNED BY: PAM	
COUNTY		
KENT	CHECKED BY: JM	

RIGHT-OF-WAY TABULATION SHEET

SHEET NO. 26
TOTAL SHTS. 26

Y:\KENT\195\BRIDGE\T201107201\PLANS\RT01.DGN