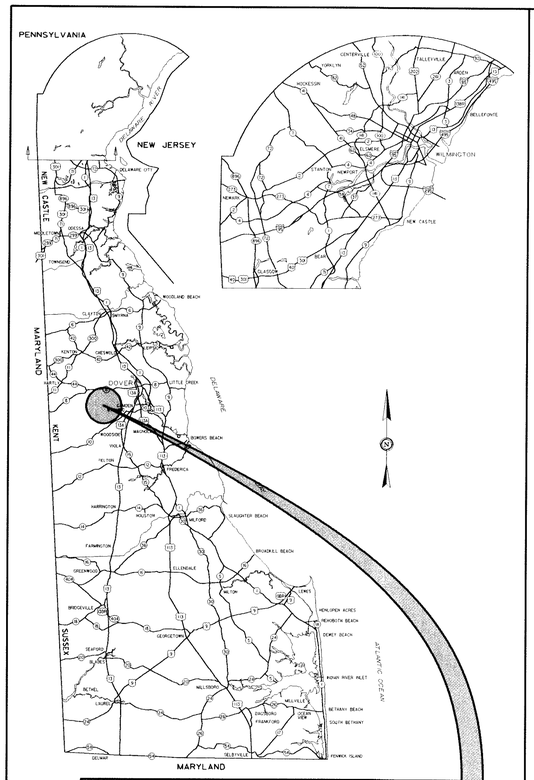

GENERAL LOCATION OF CONTRACT

THE STATE OF DELAWARE
DEPARTMENT OF TRANSPORTATION

U.S. CUSTOMARY UNITS

CONSTRUCTION & RIGHT-OF-WAY PLANS FOR:

BR 2-204A ON APPLE GROVE SCHOOL ROAD OVER ISAAC BRANCH

CONTRACT NUMBER: T201107205

FEDERAL AID PROJECT NUMBER: N/A

COUNTY: KENT M.R. #: K204

UNOFFICIAL WEBSITE COPY

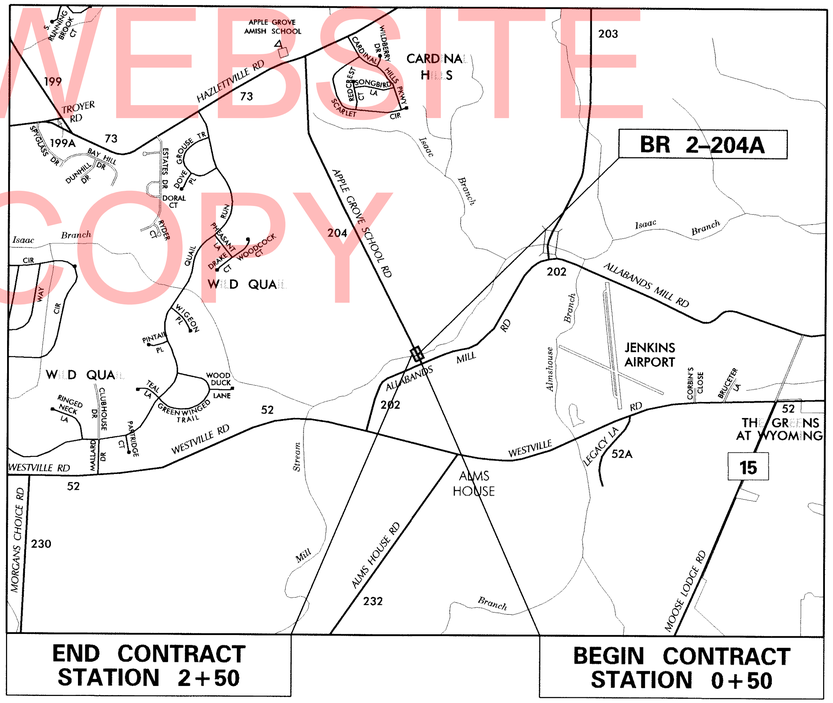

END CONTRACT STATION 2+50

BEGIN CONTRACT STATION 0+50

DESIGN DESIGNATION

FUNCTIONAL CLASS: RURAL LOCAL ROAD		D.H.V. PROJECTED: 60	YEAR: 2040
TYPE OF CONSTRUCTION: PIPE REPLACEMENT		DESIGN SPEED: 45 M.P.H.	
A.A.D.T. CURRENT: 652	YEAR: 2012	TRUCKS: 8 %	
A.A.D.T. PROJECTED: 875	YEAR: 2040	DIRECTION OF DISTRIBUTION: 60 %	

INDEX OF SHEETS

SHEET Nº	TABLE OF CONTENTS
1	TITLE SHEET
2	LEGEND
3	NOTES
4	HORIZONTAL & VERTICAL CONTROL
5	CONSTRUCTION PLAN
6	PROFILE
7	BRIDGE SECTION AND ELEVATION
8	LIMITS OF PAYMENT
9	ENVIRONMENTAL COMPLIANCE NOTES
10	ENVIRONMENTAL COMPLIANCE PLAN
11	CONSTRUCTION SEQUENCE & EROSION CONTROL PLAN
12	DETOUR PLAN
13	RIGHT-OF-WAY PLAN
14	RIGHT-OF-WAY DATA SHEET
15	RIGHT-OF-WAY TABULATION SHEET

TOTAL SHEETS: 15

APPROVED DESIGN EXCEPTIONS

DESIGN PARAMETER	REQUIRED	PROVIDED	DATE

ADDENDA & REVISIONS

DESCRIPTION	NAME & DATE

ASSOCIATED CONTRACTS

CONTRACT NO.	CONTRACT NAME
75-09-014	DEL. DIRT ROAD PROGRAM

RECOMMENDED

Gregory B. Pawlowski 10/4/12
SQUAD MANAGER, CONSTRUCTION DATE

[signature] 10/4/12
GROUP ENGINEER, CONSTRUCTION DATE

N/A
ASSISTANT DIRECTOR, TRANSPORTATION SOLUTIONS (CONSTRUCTION) DATE

RECOMMENDED

Vincent W. Davis
STORMWATER ENGINEER
DATE 16 Oct 2012

VINCENT W. DAVIS REGISTERED No. 12898 DELAWARE PROFESSIONAL ENGINEER
SEAL

RECOMMENDED

[signature]
SQUAD MANAGER, TRANSPORTATION SOLUTIONS (PROJECT DEVELOPMENT OR BRIDGE DESIGN)
DATE 16 OCTOBER 2012

JASON N. HASTINGS REGISTERED No. 13545 DELAWARE PROFESSIONAL ENGINEER
SEAL

RECOMMENDED

[signature]
For BRIDGE DESIGN ENGINEER
DATE 16 OCTOBER 2012

JASON N. HASTINGS REGISTERED No. 13545 DELAWARE PROFESSIONAL ENGINEER
SEAL

RECOMMENDED

[signature]
ASSISTANT DIRECTOR, TRANSPORTATION SOLUTIONS
DATE OCTOBER 17, 2012

BARRY A. BENTON REGISTERED No. 10774 DELAWARE PROFESSIONAL ENGINEER
SEAL

APPROVED

Natalie Barnhart
CHIEF ENGINEER
DATE 10/17/12

NATALIE M. BARNHART REGISTERED No. 9629 DELAWARE PROFESSIONAL ENGINEER
SEAL

LAST REVISED: 03/03/2011
Y:\KENT\204\BRIDGE\T201107205\PLANS\TC01.DGN

EXISTING SYMBOLS

DRAINAGE

	DITCH OR STREAM CENTERLINE
	DIRECTIONAL STREAM FLOW ARROW
C.B. / D.I.	DRAINAGE INLET
J.B.	DRAINAGE JUNCTION BOX
Ⓓ	DRAINAGE MANHOLE
SIZE/TYPE LABEL	DRAINAGE PIPE AND FLOW ARROW
	DRAINAGE PIPE HEADWALL
	RIPRAP - AREA FEATURE
	RIPRAP - LINEAR FEATURE

MANMADE ROADSIDE FEATURES

	BOLLARD - STEEL POLE
	BOLLARD - WOOD POST
(TYPE LABEL)	CURB
(TYPE LABEL)	CURB AND GUTTER
	FENCE - CHAINLINK OR STRANDED
	FENCE - STOCKADE OR SPLIT RAIL
FP	FLAG POLE
	GUARDRAIL - STEEL BEAM
	GUARDRAIL - WIRE ROPE
LAMP	LAMP AND POST - RESIDENTIAL
MB	MAILBOX
PM	PARKING METER AND POST
	PAVEMENT - FLEXIBLE
	PAVEMENT - RIGID
	PILE - BRIDGE
	PILLAR OR MISCELLANEOUS POST
	TRAFFIC SIGN AND POST
	WALL - BRICK OR BLOCK
	WALL - STONE

NATURAL ROADSIDE FEATURES

	GRASS LAWN
	HEDGEROW OR THICKET
	MARSH BOUNDARY LINE
	TREE - CONIFEROUS
	TREE - DECIDUOUS
	TREE STUMP
	SHRUBBERY
WL	DELINEATED WETLAND BOUNDARY LINE
	WOODS LINE BOUNDARY

RIGHT-OF-WAY SYMBOLS

C.M.	PROPERTY MARKER - CONCRETE MON.
I.P.	PROPERTY MARKER - IRON PIPE
100+00	HISTORIC RIGHT-OF-WAY BASELINE
	EXISTING RIGHT-OF-WAY
PP	EXISTING PROPERTY LINE
EASEMENT TYPE	EXISTING EASEMENT
DA	EXISTING DENIAL OF ACCESS
R/W-DA	EXISTING R/W & DENIAL OF ACCESS

SURVEY CONTROL & MONUMENTATION

B.M.	SURVEY BENCHMARK LOCATION
T.P.	SURVEY TIE POINT LOCATION
△	SURVEY TRAVERSE POINT
	POINT OF CURVATURE OR TANGENCY
	POINT OF INTERSECTING TANGENTS

UTILITY

	SOIL BORING LOCATION
	UTILITY TEST HOLE LOCATION
TV	CABLE TV DISTRIBUTION BOX
Ⓔ	ELECTRIC MANHOLE
EM	ELECTRIC METER
E	ELECTRIC TRANSFORMER
	POLE MOUNTED LUMINAIRE
Ⓖ	GAS MANHOLE
G.M.	GAS METER
G.V.	GAS VALVE
G.P.	GAS PUMP - SERVICE STATION
	RAILROAD TRACKS
Ⓢ	SANITARY SEWER MANHOLE
S.V.	SANITARY SEWER VALVE
VENT	SANITARY SEWER VENT OR CLEANOUT
S.D.F.	SEPTIC DRAIN FIELD
B	TELEPHONE BOOTH
Ⓣ	TELEPHONE MANHOLE
T	TELEPHONE TEST POINT
J.W.	TRAFFIC - CONDUIT JUNCTION WELL
	TRAFFIC - LIGHT POLE AND BASE
	TRAFFIC - PEDESTRIAN POLE & BASE
	TRAFFIC - SIGNAL CABINET & BASE
	TRAFFIC - SIGNAL POLE AND BASE
U	UTILITY BOX
	UTILITY POLE GUY WIRE ANCHOR
	UTILITY POLE
F.H.	WATER - FIRE HYDRANT
W.M.	WATER METER
W.V.	WATER VALVE
WELL	WELL HEAD
?	MANHOLE - UNDETERMINED OWNER

UTILITY COMPANY FACILITIES

DEC	DELAWARE ELECTRIC COOPERATIVE
VER	VERIZON
XXX	EXISTING UTILITY NAME
XXX	EXISTING UTILITY NAME

PROPOSED SYMBOLS

CONSTRUCTION

	CONCRETE SAFETY BARRIER - PERMANENT
BFS	BIOFILTRATION SWALE
	BOLLARD - STEEL POLE
	BOLLARD - WOOD POST
	BRICK PATTERNED SURFACE
	BUTT JOINT
100+00	CONSTRUCTION BASELINE
CSF	CONSTRUCTION SAFETY FENCE
	CURB, TYPE 1 & TYPE 3
	CURB, TYPE 2
	CURB & GUTTER, TYPE 1
	CURB & GUTTER, TYPE 2
	CURB & GUTTER, TYPE 3
	CURB & GUTTER, TYPE 4
CZ	CLEAR ZONE
	DRAINAGE INLET
	DITCH
	FENCE - METAL
	FENCE - WOOD
	FLARED END SECTION
	GUARDRAIL, TYPE 1
	GUARDRAIL, TYPE 2
	GUARDRAIL, TYPE 3
	GUARDRAIL END ANCHORAGE
	GUARDRAIL END TREATMENT, TYPE 1
	GUARDRAIL END TREATMENT, TYPE 2
	GUARDRAIL END TREATMENT, TYPE 3
HC	HORIZONTAL CLEARANCE
	IMPACT ATTENUATOR
	JUNCTION BOX - DRAINAGE
LOC	LIMIT OF CONSTRUCTION
MB	MAILBOX
	MANHOLE
	PAVEMENT PATCH
	PAVEMENT REMOVAL - TOPSOIL, SEED AND MULCH
	PIPE & DIRECTIONAL FLOW ARROW
	RIPRAP
	P.C.C. SIDEWALK - 4"
	P.C.C. SIDEWALK - 6" (USE 8" DEPTH FOR CHANNELIZATION ISLANDS.)
	UNDERDRAIN
	UNDERDRAIN OUTLET

RIGHT-OF-WAY SYMBOLS

	PROPOSED RIGHT-OF-WAY MONUMENT
DA	PROPOSED DENIAL OF ACCESS
PE	PROPOSED PERMANENT EASEMENT
R/W	PROPOSED RIGHT-OF-WAY
R/W-DA	PROPOSED R/W & DENIAL OF ACCESS
TCE	TEMPORARY CONSTRUCTION EASEMENT
100+00	PROPOSED RIGHT-OF-WAY BASELINE

IDENTIFIERS

A/C	ADJUST BY CONTRACTOR
A/O	ADJUST BY OTHERS
B	CONCRETE SAFETY BARRIER
C	CURB OR CURB & GUTTER
C.I.B.	CONVERT TO JUNCTION BOX
C.M.H.	CONVERT TO DRAINAGE MANHOLE
C/O	CURB OPENING
CR	CURB RAMP / TYPE
CR-N	CURB RAMP / TYPE - WITHOUT SIDEWALK SURFACE DETECTABLE WARNING SYSTEM
CSF	CONSTRUCTION SAFETY FENCE
DI	DRAINAGE INLET
DND	DO NOT DISTURB
ED	ENERGY DISSIPATOR
F	FENCE
FES	FLARED END SECTION
FF/C	FILL WITH FLOWABLE FILL
FS	FILTRATION STRUCTURE
GR	GUARDRAIL
JB	JUNCTION BOX
MH	MANHOLE
M	MONUMENT - RIGHT-OF-WAY
P	PIPE
RL/C	RELOCATE BY CONTRACTOR
RL/O	RELOCATE BY OTHERS
RM/C	REMOVE BY CONTRACTOR
RM/O	REMOVE BY OTHERS
UD	UNDERDRAIN / LENGTH
UDO	UNDERDRAIN OUTLET PIPE

LANDSCAPING

LS	LANDSCAPE PLANTINGS
	SHRUBBERY
	CONIFEROUS TREE
	DECIDUOUS TREE

TRAFFIC

ITMS-CON	ITMS CONDUIT
SIG-CON	SIGNAL CONDUIT
	CONDUIT JUNCTION WELL
	LUMINAIRE
	PAVEMENT MARKINGS
	PAVEMENT STRIPING
	TRAFFIC SIGN

PAVEMENT SECTION(S)

	2" MILL AND OVERLAY
	1¾" WMA, SUPERPAVE, TYPE C 2¼" WMA, SUPERPAVE, TYPE B 8" GABC
	N/A

UTILITY COMPANY FACILITIES

XXX	PROPOSED UTILITY NAME
XXX	PROPOSED UTILITY NAME
XXX	PROPOSED UTILITY NAME
XXX	PROPOSED UTILITY NAME

EROSION & SEDIMENT CONTROL

DWBAG	DEWATERING BAG
DWB	DEWATERING BASIN
ED	EARTH DIKE
	INLET SEDIMENT CONTROL
	PERIMETER DIKE/SWALE
PST	PORTABLE SEDIMENT TANK
SBD	SANDBAG DIKE
SB	SANDBAG DIVERSION
	STONE CHECK DAM
SCE	STABILIZED CONSTRUCTION ENTRANCE
SF	SILT FENCE / LENGTH
SF	SILT FENCE
RSF	SILT FENCE - REINFORCED
SP-1	SUMP PIT, TYPE 1
SP-2	SUMP PIT, TYPE 2
ST	SEDIMENT TRAP
ST	SEDIMENT TRAP
ST	SEDIMENT TRAP WITH INLET AS OUTLET
ST	SEDIMENT TRAP PIPE OUTLET
SW	STILLING WELL
	TEMPORARY SWALE
TSD	TEMPORARY SLOPE DRAIN
T/XXX	TURBIDITY CURTAIN / LENGTH
T	TURBIDITY CURTAIN

UNOFFICIAL WEBSITE COPY

LAST REVISED: 01/30/2012
Y:\KENT\204\BRIDGE\T201107205\PLANS\LG01.DGN

DELAWARE DEPARTMENT OF TRANSPORTATION

ADDENDUMS / REVISIONS

NOT TO SCALE

BR 2-204A ON APPLE GROVE SCHOOL ROAD OVER ISAAC BRANCH

CONTRACT	T201107205	BRIDGE NO. BR 2-204A
COUNTY	KENT	DESIGNED BY: JAT
		CHECKED BY: EM

LEGEND

SHEET NO. 2
TOTAL SHTS. 15

GENERAL NOTES

1. THIS PROJECT IS TO BE CONSTRUCTED IN ACCORDANCE WITH THE DELAWARE DEPARTMENT OF TRANSPORTATION "STANDARD SPECIFICATIONS", DATED AUGUST 2001 AND THE DELAWARE DEPARTMENT OF TRANSPORTATION "STANDARD CONSTRUCTION DETAILS", DATED 2001, INCLUDING ALL REVISIONS UP TO THE DATE OF ADVERTISEMENT.

2. THE CONTRACTOR SHALL GIVE TWO (2) WEEKS NOTICE TO THE PROPERTY OWNER WHEN ANY FIXTURE, SHRUB OR OTHER OBJECT MUST BE REMOVED FROM THE RIGHT OF WAY OR EASEMENT AREA. IF THE OWNER HAS NOT ATTEMPTED TO SALVAGE THIS PROPERTY, THE CONTRACTOR SHALL REMOVE IT WITHOUT OBLIGATION. COMPENSATION SHALL BE INCIDENTAL TO THE CONTRACT.

3. THE ENDS OF ALL CURBS SHALL BE DEPRESSED FLUSH WITH THE PAVEMENT AT A RATIO OF TWELVE TO ONE (12:1) UNLESS OTHERWISE DIRECTED BY THE ENGINEER.

4. THE CONTRACTOR SHALL PROVIDE AND INSTALL PVC SLEEVES (4" INSIDE MINIMUM DIAMETER, 6" INSIDE MAXIMUM DIAMETER) IN PROPOSED CONCRETE SIDEWALKS, ISLANDS, AND MEDIANS FOR FUTURE TRAFFIC SIGN POSTS AS DIRECTED BY THE ENGINEER. THE LOWER END OF THE SLEEVE SHALL SIT ON THE TOP OF THE SUBBASE MATERIAL. THE COST SHALL BE INCIDENTAL TO THE CONTRACT.

5. STAGING AREAS - PROPER EROSION AND SEDIMENT CONTROL MEASURES AS DETERMINED BY THE ENGINEER SHALL BE INSTALLED IN ALL STAGING AREAS. ALL AREAS USED BY THE CONTRACTOR FOR STAGING OPERATIONS SHALL BE FULLY RESTORED BY THE CONTRACTOR UPON COMPLETION OF THE CONTRACT. IF THE STAGING AREA IS PAVED, IT SHALL BE RESTORED TO ITS ORIGINAL CONDITION. IF THE AREA IS UNPAVED, IT SHALL BE RE-GRADED, TOPSOILED, SEEDED AND MULCHED IN ACCORDANCE WITH DELAWARE STANDARD SPECIFICATIONS 732, 734 AND 735, FOR TOPSOIL, SEED AND MULCH RESPECTIVELY, TO THE SATISFACTION OF THE ENGINEER. THE SEED SHALL ADHERE TO THE SPECIFICATIONS OF SECTION 734 FOR PERMANENT GRASS SEEDING - DRY GROUND. ALL COSTS ASSOCIATED WITH RESTORATION OF THE STAGING AREA SHALL BE AT THE CONTRACTOR'S EXPENSE. IF THE ENGINEER DETERMINES THAT A SATISFACTORY STAND OF GRASS DOES NOT EXIST AT THE TIME OF FINAL INSPECTION, ALL COSTS ASSOCIATED WITH REESTABLISHING A SATISFACTORY STAND OF GRASS SHALL BE AT THE CONTRACTOR'S EXPENSE.

6. SITE REVIEWER - AN EROSION CONTROL SITE REVIEWER SHALL BE A PERSON FROM THE CONTRACTOR'S STAFF ASSIGNED TO EROSION AND SEDIMENT CONTROL IMPLEMENTATION AND MAINTENANCE AND SHALL BE REQUIRED ON SPECIFIC PROJECTS. THE NAME AND DNREC CERTIFICATION NUMBER OF EACH SITE REVIEWER SO REQUIRED SHALL BE SUBMITTED TO THE DEPARTMENT AT THE TIME OF BID. THE NAME OF THE DELAWARE REGISTERED PROFESSIONAL ENGINEER PROVIDING DIRECTION AND SUPERVISION OF THE SITE REVIEWER, AS REQUIRED IN SECTION 12.3 OF THE DELAWARE SEDIMENT AND STORMWATER REGULATIONS, SHALL ALSO BE SUBMITTED TO THE DEPARTMENT AT THE TIME OF BID. THE SITE REVIEWER REQUIREMENTS IN EFFECT ON THIS PROJECT SHALL BE MARKED WITH AN "X" BELOW:

EROSION POTENTIAL FOR THIS PROJECT	SITE REVIEWER REQUIREMENT
( ) INSIGNIFICANT	NONE
( ) MINOR	CONTRACTOR CERTIFICATION COURSE TRAINING ONLY, AS DEFINED IN SECTION 1.3 OF THE DELAWARE SEDIMENT AND STORMWATER REGULATIONS.
(X) MEDIUM	AT THE TIME OF BID OF THE CONTRACT, EITHER THE SUPERINTENDENT OR A SEPARATE INDIVIDUAL FROM THE CONTRACTOR'S STAFF SHALL BE A CERTIFIED CONSTRUCTION REVIEWER (CCR), AS DEFINED IN SECTION 12 OF THE DELAWARE SEDIMENT AND STORMWATER REGULATIONS.
( ) MAJOR	SUPERINTENDENT AND AN INDIVIDUAL FROM CONTRACTOR'S STAFF SHALL BE CCR. ONE INDIVIDUAL FROM THE CONTRACTOR'S STAFF MUST BE A CCR AT THE TIME OF BID OF THE CONTRACT. THE SUPERINTENDENT MUST BECOME A CCR WITHIN ONE YEAR AFTER THE AWARD OF CONTRACT.

7. ELECTRONIC PROJECT FILES THAT WILL BE MADE AVAILABLE TO THE CONTRACTOR INCLUDE:

( )	NONE
( )	ASCII DATA FILES WITH COORDINATES AND ELEVATIONS FOR PROPOSED POINTS AS SELECTED BY THE ENGINEER.
(X)	RASTER FILES, IN .CAL FILE FORMAT, FOR ALL PLAN SHEETS.
(X)	EXISTING DIGITAL TERRAIN MODEL, IN .DTM FILE FORMAT, COMPATIBLE WITH SOFTWARE CURRENTLY USED BY DELDOT.
( )	PROPOSED DIGITAL TERRAIN MODEL, IN .DTM FILE FORMAT, COMPATIBLE WITH SOFTWARE CURRENTLY USED BY DELDOT.
( )	DESIGN FILE, IN .DGN FILE FORMAT, CONTAINING ONLY THE PROPOSED 3D TRIANGLES OF THE PROPOSED DIGITAL TERRAIN MODEL (DTM).

NOTE: THE DOCUMENT ENTITLED "RELEASE FOR DELIVERY OF DOCUMENTS IN ELECTRONIC FORM TO A CONTRACTOR" MUST BE SIGNED BY ALL PARTIES PRIOR TO THE DELIVERY OF ANY ELECTRONIC PROJECT FILES.

8. AMERICAN TRAFFIC SAFETY SERVICES ASSOCIATION (ATSSA) CERTIFIED TRAFFIC CONTROL SUPERVISOR REQUIREMENT FOR THIS PROJECT.

(X)	THE CONTRACTOR SHALL NOT BE REQUIRED TO HAVE AN ATSSA SUPERVISOR ASSIGNED TO THIS PROJECT.
( )	THE CONTRACTOR SHALL HAVE AN ATSSA SUPERVISOR ASSIGNED TO THIS PROJECT. THE CONTRACTOR'S GENERAL SUPERINTENDENT FOR THIS PROJECT OR ANOTHER ATSSA CERTIFIED MEMBER OF THE CONTRACTOR'S PROJECT STAFF MAY BE THE ATSSA SUPERVISOR.
( )	THE CONTRACTOR SHALL HAVE AN ATSSA SUPERVISOR ASSIGNED TO THIS PROJECT. THE ATSSA SUPERVISOR'S SOLE JOB SHALL BE SUPERVISION OF THE INSTALLATION, OPERATION AND MAINTENANCE OF TRAFFIC CONTROL DEVICES FOR THIS PROJECT. THE CONTRACTOR'S GENERAL SUPERINTENDENT FOR THIS PROJECT SHALL NOT BE THE ATSSA SUPERVISOR.

9. THE DISTURBED AREA FOR THIS PROJECT IS 0.31 ACRES.

10. THE CONTRACTOR SHALL BE RESPONSIBLE FOR ADHERING TO THE CONSTRUCTION SITE POLLUTION PREVENTION SPECIFICATIONS AS DETAILED IN SECTION 3.6 OF THE "DELAWARE EROSION AND SEDIMENT CONTROL HANDBOOK". ALL COSTS ASSOCIATED WITH ADHERING TO THE STANDARDS SHALL BE INCIDENTAL TO THE OVERALL CONTRACT COSTS.

11. THE EROSION AND SEDIMENT CONTROL PLANS HAVE BEEN APPROVED BY DELDOT'S STORMWATER ENGINEER UNDER DELDOT'S DELEGATED AUTHORITY. THE EROSION AND SEDIMENT CONTROL PLANS ARE VALID FOR A THREE YEAR PERIOD, BEGINNING ON THE DATE THE STORMWATER ENGINEER SIGNED THE CONSTRUCTION TITLE SHEET. IF THE FINAL ACCEPTANCE OF THE PROJECT IS ANTICIPATED TO EXTEND BEYOND THE THREE YEARS, THE CONTRACTOR SHALL INFORM THE ENGINEER THREE MONTHS PRIOR TO THE EXPIRATION OF THE EROSION AND SEDIMENT CONTROL PLAN APPROVAL. DELDOT WILL REVIEW THE CURRENT EROSION AND SEDIMENT CONTROL PLAN AND ISSUE AN EXTENSION WITH ANY APPROPRIATE MODIFICATIONS.

PROJECT NOTES

SECTION 100

1. ANY DAMAGE TO ITEMS NOTED TO BE RELOCATED OR RESET BY THE CONTRACTOR, AT THE DISCRETION OF THE ENGINEER, SHALL BE REPAIRED AND/OR REPLACED IN KIND AT THE CONTRACTOR'S EXPENSE.

SECTION 200

2. THE CONTRACTOR SHALL REMOVE AND RESET ALL MAILBOXES TO MAINTAIN MAIL SERVICE AS DIRECTED BY THE ENGINEER. THE CONTRACTOR SHALL RELOCATE MAILBOXES AS REQUIRED BY THE PROPOSED GEOMETRICS AND AS DIRECTED BY THE ENGINEER. WHEN RELOCATING MAILBOXES IN CURBED SECTIONS, THE FACE OF THE MAILBOX SHALL BE FLUSH WITH THE BACK EDGE OF CURB. WHEN RELOCATING MAILBOXES IN OPEN SECTIONS, THE FACE OF THE MAILBOX SHALL SET BACK 8 INCHES FROM THE EDGE OF THE PAVED SHOULDER. THE BOTTOM OF THE MAILBOX SHALL BE SET 46 INCHES ABOVE THE ROADWAY SURFACE. MAILBOXES LOCATED AT DRIVEWAY ENTRANCES SHALL BE PLACED ON THE FAR SIDE OF THE DRIVEWAY IN THE DIRECTION OF TRAVEL. POSTS BEING RESET IN CONCRETE SIDEWALK SHALL BE PLACED IN AN APPROPRIATE SIZE PVC SLEEVE. COST FOR ALL WORK AND MATERIALS SHALL BE PAID UNDER ITEM 201000 - CLEARING AND GRUBBING.

3. THE ENGINEER MAY REQUIRE THE CONTRACTOR TO EXCAVATE TEST PITS ALONG PROPOSED DRAINAGE RUNS, AT POINTS OF POSSIBLE UTILITY CONFLICTS, TO DETERMINE IF A CONFLICT EXISTS. ANY CONFLICTS SHALL BE COORDINATED BY THE CONTRACTOR, WITH THE ENGINEER AND THE UTILITY COMPANY INVOLVED. THE ENGINEER SHALL ULTIMATELY DETERMINE THE SOLUTION TO THE UTILITY CONFLICT. TEST HOLES SHALL BE MEASURED AND PAID FOR IN ACCORDANCE WITH ITEM 208000 - EXCAVATION AND BACKFILL FOR PIPE TRENCHES, BUT ONLY TO THE ACTUAL DEPTH EXCAVATED.

4. ITEMS TO BE REMOVED UNDER ITEM 211000 - REMOVAL OF STRUCTURES AND OBSTRUCTIONS SHALL INCLUDE, BUT NOT BE LIMITED TO THE FOLLOWING:
   - (2) EXISTING CORRUGATED METAL 95"X67" PIPE ARCHES.
   - (5) 'POSTED' SIGNS (3 ARE OUTSIDE PROJECT LIMITS).

SECTION 700

5. ALL PAVED AREAS TO BE RECONSTRUCTED OR WIDENED SHALL BE SAWCUT AT THE POINT WHERE THE NEW PAVEMENT IS TO TIE INTO THE EXISTING PAVEMENT. ALL HOT-MIX SAW CUTTING SHALL BE FULL DEPTH, UNLESS OTHERWISE NOTED ON THE PLANS, OR AS DIRECTED BY THE ENGINEER.

6. CENTERLINE OF ROAD SHALL BE STRIPED TO MATCH EXISTING STRIPING ON THE ROAD. STRIPING SHALL EXTEND THE LENGTH OF THE PROJECT LIMITS. PAYMENT UNDER ITEM *748548.

7. TEMPORARY TRAFFIC CONTROL SHALL BE MAINTAINED IN ACCORDANCE WITH THE PLANS, THE DE MUTCD, AND THE REQUIREMENTS OF ITEM 763643 - MAINTENANCE OF TRAFFIC, ALL INCLUSIVE.

MISCELLANEOUS

8. UTILITIES
   SEE THE UTILITIES STATEMENT FOR UTILITIES INFORMATION.

9. HYDRAULIC DATA
   DRAINAGE AREA: 4.18 sq miles
   DESIGN FREQUENCY: 25-year
   DESIGN DISCHARGE: 440 cfs
   DESIGN FLOOD EL.: 38.91 ft

   SCOUR ANALYSIS
   THE PROPOSED STRUCTURE HAS BEEN ALALYZED FOR THE EFFECTS OF SCOUR IN ACCORDANCE WITH HEC-18 'EVALUATING SCOUR AT BRIDGES'. THE EVENT FOR SCOUR IS THE WORST CASE OF THE OVERTOPPING FLOOD OR THE 500-YEAR FLOOD EVENT.

   DESIGN EVENT: OVERTOPPING — DESIGN VELOCITY: 3.37 ft/s
   DESIGN DISCHARGE: 641 cfs — TAILWATER DEPTH: 40.58 ft

UNOFFICIAL WEBSITE COPY

HORIZONTAL / VERTICAL CONTROL DATA

POINT	STATION	OFFSET	NORTHING	EASTING	ELEVATION
TP 1			408163.0087	604503.1340	49.88
TP 2			407765.2390	604719.9923	43.75
TP 3	1+39.79	12.06	407310.9958	604964.9513	39.47
TP 4			407129.9643	605034.3579	43.53
TP 5			407464.8736	604852.8750	39.98
TP103	1+06.15	46.30	407298.2025	605011.2178	40.49

CONSTRUCTION ALIGNMENT CONTROL

POINT	STATION	OFFSET	NORTHING	EASTING
5000	0+00.00	0.00	407182.9239	605022.2601
5001	3+00.00	0.00	407445.2104	604876.3680

SEE RIGHT-OF-WAY SHEET FOR RIGHT-OF-WAY BASELINE INFORMATION.
CONSTRUCTION STA. 0+00.00 = R/W STA. 0+37.40

DATUM REFERENCE:
HORIZONTAL - THIS PROJECT IS REFERENCED TO THE DELAWARE STATE PLANE COORDINATE SYSTEM (NAD 83/91).

VERTICAL - THIS PROJECT IS REFERENCED TO NAVD 88

UNOFFICIAL WEBSITE COPY

TRAVERSE POINT #3

TRAVERSE POINT #103

FULL DEPTH
RECONSTRUCTION

Y:\KENT\204\BRIDGE\T201107205\PLANS\CP01.DGN

DELAWARE
DEPARTMENT OF TRANSPORTATION

ADDENDUMS / REVISIONS

SCALE
0 10 20 30
FEET

BR 2-204A ON APPLE GROVE SCHOOL ROAD OVER ISAAC BRANCH

CONTRACT	BRIDGE NO.	2-204A
T201107205	DESIGNED BY: JAT	
COUNTY		
KENT	CHECKED BY: EM	

HORIZONTAL AND VERTICAL CONTROL

SHEET NO.
4
TOTAL SHTS.
15

UNOFFICIAL WEBSITE COPY

1-L

7-00-093.00-01-11.00-000
JOHN H. BALDWIN AND MARY R. BALDWIN
D0528-0344

2-L

9-00-93.00-01-20.00-000
TRACY P. BOYER & NANCY P. PAPEN
IS 23/289

1-R

7-00-093.00-01-12.00-000
BLANCHE C. WASHINGTON AND MARILYN V. PURNELL
D4409 0042

2-R

9-00-084.00-01-23.01-000
HENRY E. MAST AND ROSA J. MAST
D4736-0070

POB 0+00.00

POE 3+00.00

APPLE GROVE SCHOOL ROAD (K204)
N 29° 02' 20.89" W

0+00 1+00 2+00 3+00

℄ PROPOSED PIPES
(2) 5' DIA. RCP, (1) 6' DIA. RCP
STA. 1+50.00

EXISTING PIPES - (2) 95"X67" CORRUGATED METAL PIPE ARCHES

40'-0"

12'-0"

15'-0"

20'

25'-0"

TCE LOC WL EXISTING PE OHW-WL VER-UG SAWCUT RM C RL C M 1 M 2 M 3 M 4 MBMB LAMP CHAIN LINK FENCE SPLIT RAIL WOOD FENCE MILL & OVERLAY FULL DEPTH RECONSTRUCTION HOT-MIX INCIDENTAL TO ITEM 201000 - CLEARING AND GRUBBING. FLOW FD

RIGHT-OF-WAY MONUMENT SCHEDULE

NO.	TYPE	STATION	OFFSET	NORTHING	EASTING
1	REBAR	0+95.84	25.00	407254.5779	604953.8829
2	REBAR	2+01.44	25.00	407346.9028	604902.6239
3	REBAR	0+97.91	-25.00	407280.6573	604996.5929
4	REBAR	2+03.51	-25.00	407372.9822	604945.3340

DELAWARE
DEPARTMENT OF TRANSPORTATION

ADDENDUMS / REVISIONS

SCALE
0 10 20 30
FEET

BR 2-204A ON APPLE GROVE SCHOOL ROAD OVER ISAAC BRANCH

CONTRACT	T201107205
COUNTY	KENT
BRIDGE NO.	2-204A
DESIGNED BY:	JAT
CHECKED BY:	EM

CONSTRUCTION PLAN

SHEET NO.	5
TOTAL SHTS.	15

Y:\KENT\204\BRIDGE\T201107205\PLANS\CP01.DGN

UNOFFICIAL WEBSITE COPY

Type of Curve = Symmetric Parabola
Direction = Sag
Length = 136.80'
L1 = 68.40'
L2 = 68.40'
G1 = -2.77%
G2 = -0.06%
SSD = 400.63'
K = 50.44

Type of Curve = Symmetric Parabola
Direction = Sag
Length = 55.30'
L1 = 27.65'
L2 = 27.65'
G1 = -0.06%
G2 = 0.74%
SSD = 328.61'
K = 69.66

PVC 0+17.60
Elev. 42.10

PVT 1+54.40
Elev. 40.16

PVC 2+28.35
Elev. 40.12

Low 2+32.45
Elev. 40.12

PVT 2+83.65
Elev. 40.30

Slope = -0.06%

5' DIA. RCP (OUTSIDE PIPES)
6' DIA. RCP (MIDDLE PIPE)

2 - 95" X 67" CMP ARCHES

PVI 0+86.00
Elev. 40.20

PVI 2+65.00
Elev. 40.10

ELEVATION (FT)

45
40
30

42.58
41.30 41.30
40.47 40.49
40.11 40.16
40.12 40.13
40.14 40.14
40.42

0+00 0+50 1+00 1+50 2+00 2+50 3+00

STATION

K204 – APPLE GROVE SCHOOL ROAD

VERTICAL SCALE FEET 0 1 2 3

Y:\KENT\204\BRIDGE\T201107205\PLANS\PF01.DGN

DELAWARE DEPARTMENT OF TRANSPORTATION

ADDENDUMS / REVISIONS

SCALE 0 10 20 30 FEET

BR 2-204A ON APPLE GROVE SCHOOL ROAD OVER ISAAC BRANCH

CONTRACT	BRIDGE NO.	2-204A
T201107205	DESIGNED BY: JAT	
COUNTY	CHECKED BY: EM	
KENT		

PROFILE

SHEET NO.
6
TOTAL SHTS.
15

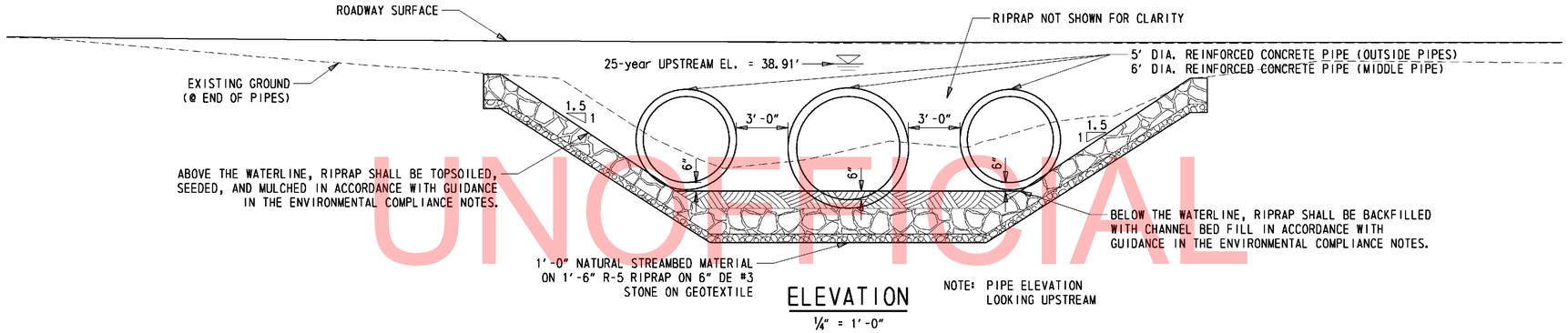

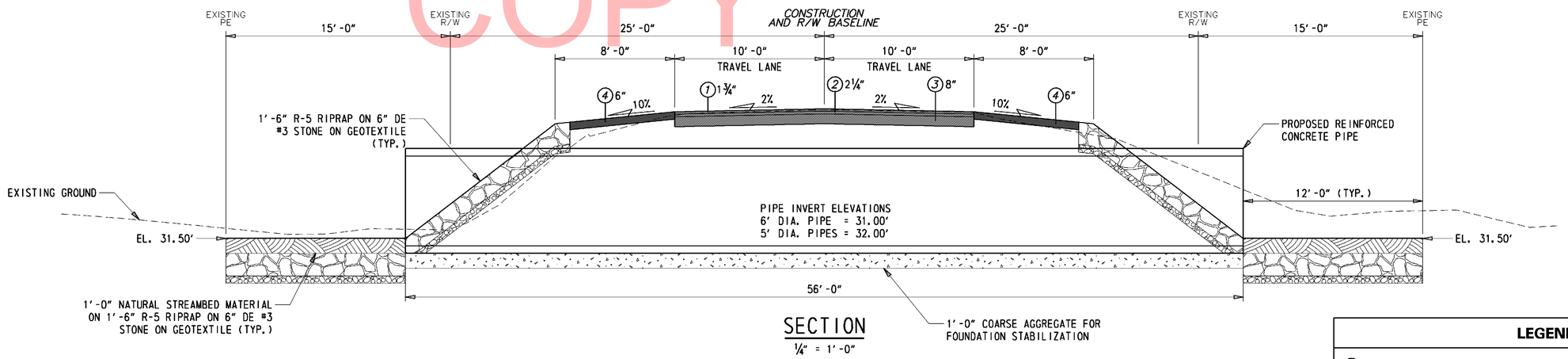

LEGEND

1. ITEM 401800 - WMA, SUPERPAVE, TYPE C, 115 GYRATIONS
2. ITEM 401809 - WMA, SUPERPAVE, TYPE B, 115 GYRATIONS
3. ITEM 302007 - GRADED AGGREGATE BASE COURSE, TYPE B
4. ITEM 732004 - TOPSOIL
   ITEM 734013 - PERMANENT GRASS SEEDING, DRY GROUND

UNOFFICIAL WEBSITE COPY

DELAWARE DEPARTMENT OF TRANSPORTATION	ADDENDUMS / REVISIONS	SCALE 0 4 8 12 FEET	BR 2-204A ON APPLE GROVE SCHOOL ROAD OVER ISAAC BRANCH	CONTRACT T201107205	BRIDGE NO. 2-204A	BRIDGE SECTION AND ELEVATION	SHEET NO. 7
				COUNTY KENT	DESIGNED BY: JAT		TOTAL SHTS. 15
					CHECKED BY: EM		

Y:\KENT\204\BRIDGE\T201107205\PLANS\PE01.DGN

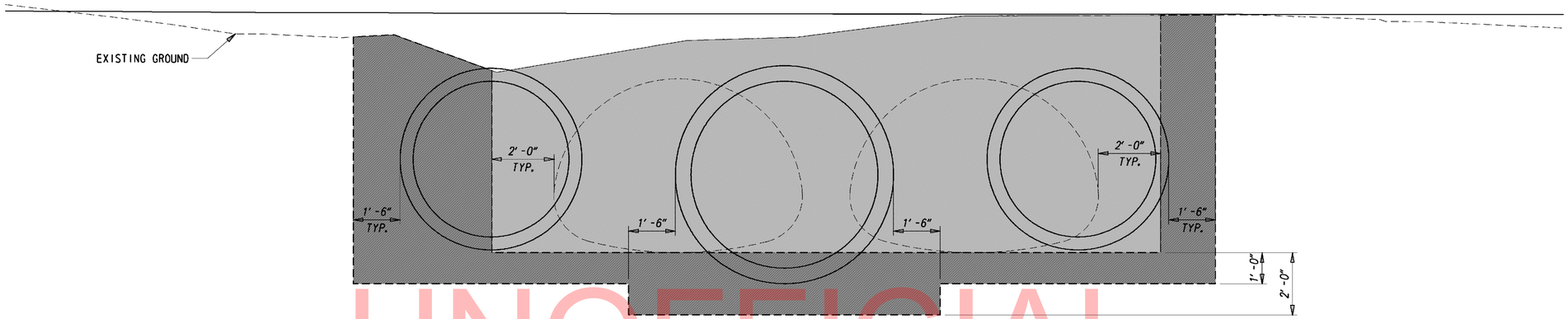

EXCAVATION PAY LIMITS

207000 - EXCAVATION AND BACKFILL FOR STRUCTURES

211000 - REMOVAL OF STRUCTURES AND OBSTRUCTIONS

UNOFFICIAL WEBSITE COPY

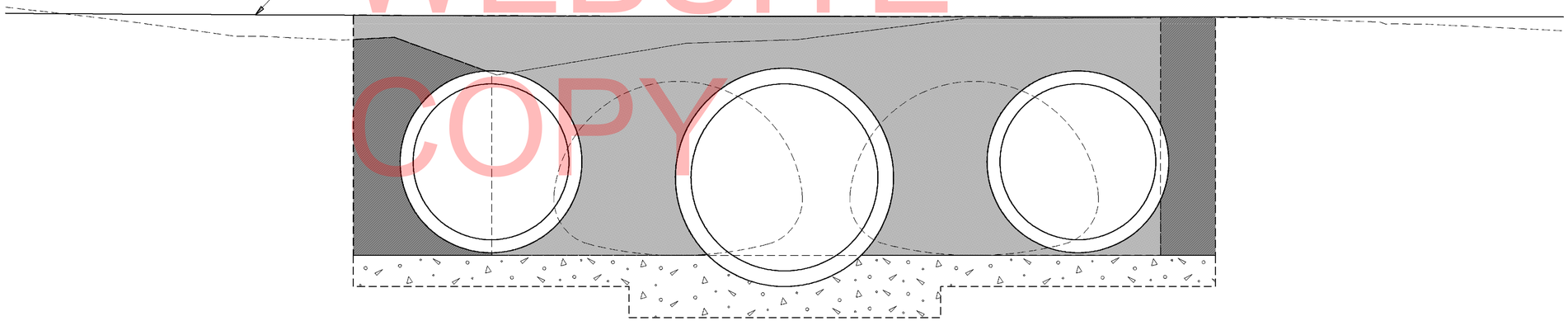

BACKFILL PAY LIMITS

210000 - FURNISHING BORROW TYPE 'C' FOR STRUCTURAL BACKFILL

209003 - BORROW TYPE 'C' FOR STRUCTURAL BACKFILL

608000 - COARSE AGGREGATE FOR FOUNDATION STABILIZATION

Y:\KENT\204\BRIDGE\T201107205\PLANS\PE01.DGN

DELAWARE DEPARTMENT OF TRANSPORTATION

ADDENDUMS / REVISIONS

SCALE 0 2 4 6 FEET

BR 2-204A ON APPLE GROVE SCHOOL ROAD OVER ISAAC BRANCH

CONTRACT	BRIDGE NO.	2-204A
T201107205	DESIGNED BY: JAT	
COUNTY	CHECKED BY: JNH	
KENT		

LIMITS OF PAYMENT

SHEET NO.
8
TOTAL SHTS.
15

ENVIRONMENTAL COMPLIANCE NOTES

1. GENERAL NOTES:

A. THE PURPOSE OF THESE SHEETS ARE TO IDENTIFY THOSE ITEMS ASSOCIATED WITH ENVIRONMENTAL COMPLIANCE. IMPACT CALCULATIONS ARE FOR THE AGENCY PERMIT REPORTING PURPOSES ONLY AND ARE NOT TO BE USED FOR BIDDING PURPOSES.

B. IF A DEPARTURE FROM THE APPROVED PLANS (WHICH WOULD AFFECT ANY NATURAL AND/OR CULTURAL RESOURCES) IS NECESSARY, THE ENVIRONMENTAL STUDIES SECTION SHALL BE CONTACTED AT (302)760-2264 TO ALLOW FOR COORDINATION WITH THE APPROPRIATE RESOURCE AGENCIES AND APPROVAL.

C. USE OF THESE SHEETS DOES NOT ALLEVIATE THE CONTRACTOR'S RESPONSIBILITY TO COMPLY WITH ALL CONDITIONS SET FORTH IN THE ENVIRONMENTAL STATEMENT AND PERMITS.

2. NATURAL RESOURCE ISSUES:

A. PERMIT REQUIREMENTS/APPROVALS*:
U.S. ARMY CORPS OF ENGINEERS (COE): NATIONWIDE PERMIT (NWP) #3 (a) & (c) (NO PCN)
DNREC - WETLANDS & SUBAQUEOUS LANDS (WLSL): PROJECT IS CONSISTENT WITH DEL. CODE CH. 92, SECTION 7217, SPECIAL EXEMPTION (b) AS AMENDED BY SB186
DNREC - WATER QUALITY CERTIFICATION (WQC) & COASTAL ZONE MANAGEMENT (CZM): ISSUED (PROJECT IS NOT LOCATED IN CRW).

* THE PERMITS/APPROVALS LISTED ARE THOSE REQUIRED FOR THIS PROJECT. THE ENVIRONMENTAL STUDIES SECTION IS RESPONSIBLE FOR COORDINATING AND/OR OBTAINING THIS APPROVAL.
NOTE: THE ABSENCE OF ASTERISKS AFTER A PERMIT (COE, WLSL, WQC, CZM) INDICATES THAT COORDINATION HAS BEEN DONE WITH THAT AGENCY BUT NO WRITTEN AUTHORIZATION WAS REQUIRED. AS SUCH, NO PAPERWORK FROM THAT AGENCY SHOULD BE ANTICIPATED.

B. CONSTRUCTION RESTRICTIONS:
FISHERIES - NONE
ENDANGERED SPECIES - NONE
MIGRATORY BIRDS - NONE

3. CULTURAL RESOURCE ISSUES:

A. PROJECT CONSISTENT WITH STIPULATION II. B. (4 & 12) OF DELDOT'S PROGRAMMATIC AGREEMENT WITH FHWA, DE SHPO, AND ACHP.

4. STREAM RESTORATION AND SLOPE RIPRAP TREATMENT

A. THE CONTRACTOR SHALL FOLLOW THE SPECIAL PROVISIONS OF ITEM #712531 - CHANNEL BED FILL IN REGARDS TO THE SALVAGING OF ON-SITE NATURAL STREAM BOTTOM MATERIAL OR THE FURNISHING OF OFF-SITE MATERIAL. IF SUFFICIENT SOURCES FOR CHANNEL BED FILL DO NOT EXIST ON-SITE, ANY NEW MATERIAL SHALL CONFORM TO THE REQUIREMENTS OF ITEM # 712531 - CHANNEL BED FILL. ALL RIPRAP IN THE CHANNEL BOTTOM (I.E. BELOW THE WATER LINE) SHALL BE RECESSED ONE FOOT BELOW STREAM BED ELEVATION AND CHOKED WITH BORROW TYPE 'B' SO THAT ALL OF THE VOIDS IN THE RIPRAP ARE FILLED WITH MATERIAL. PAYMENT UNDER ITEM #209002 - BORROW TYPE 'B'. THE RIPRAP SHALL THEN BE COVERED WITH A MINIMUM OF 12" CHANNEL BED FILL. FINAL CHANNEL ELEVATIONS SHALL MATCH EXISTING ELEVATIONS AT THE UPSTREAM AND DOWNSTREAM PROJECT LIMITS. THROUGH THE STRUCTURE, ELEVATIONS SHALL BE AS NOTED ON THE PLANS. PAYMENT UNDER ITEM #712531 - CHANNEL BED FILL.

B. OTHER AREAS OF THE CHANNEL BOTTOM AFFECTED BY CONSTRUCTION (INCLUDING, BUT NOT LIMITED TO, THE LOCATION OF SUMP PITS, STABILIZED OUTFALLS, TEMPORARY PIPES AND/OR SANDBAG DIKES AND DIVERSIONS) SHALL BE RESTORED TO EXISTING CONDITIONS. ANY CAVITIES OR SCOUR HOLES RESULTING FROM CONSTRUCTION ACTIVITIES SHALL BE FILLED WITH CHANNEL BED FILL. PAYMENT UNDER ITEM #712531 - CHANNEL BED FILL.

C. WHEN ALL EROSION AND SEDIMENT CONTROL MEASURES ARE REMOVED AND THE STREAM RETURNS TO ITS NATURAL FLOW CONDITIONS, THE FLOW MUST REMAIN ABOVE GROUND AND ABOVE THE RIPRAP (I.E. THE FLOW CANNOT BE "LOST" IN THE RIPRAP OR BENEATH THE STRUCTURE). IF THIS IS NOT ACHIEVED, THE CONTRACTOR WILL BE REQUIRED TO TAKE CORRECTIVE ACTION AT THE CONTRACTOR'S EXPENSE.

D. ALL RIPRAP ON THE STREAM BANK, OUTSIDE THE CHANNEL BED, SHALL BE CHOKED WITH DELAWARE #57 STONE, FILLED WITH TOPSOIL, AND SEEDED. PLACE JUST ENOUGH CHOKE MATERIAL TO PREVENT THE LOSS OF TOPSOIL THROUGH THE RIPRAP, AND THEN FINISH FILLING THE VOIDS WITH TOPSOIL SO THAT THE RIPRAP PEAKS ARE BARELY VISIBLE. AN ADDITIONAL 4" TOPSOIL LAYER SHALL BE PLACED ON TOP OF THE RIPRAP AND MULCH WITH SOIL RETENTION BLANKET MULCH, TYPE 5. SLOPE SEEDING SHALL BE WITH ITEM # 734531, STREAMBANK SEED MIX. ALL WORK, STARTING WITH THE INITIAL CHOKING WITH TOPSOIL THROUGH THE SEEDING, SHALL BE COMPLETED PRIOR TO ANY RAIN EVENT. PAYMENT FOR DELAWARE #57 STONE SHALL BE INCIDENTAL TO THE RIPRAP ITEM. ALL OTHER ITEMS SHALL BE PAID FOR UNDER THEIR RESPECTIVE ITEMS.

5. ACCESS:

A. THE CONTRACTOR SHALL ACCESS THE STREAM FROM THE SOUTHEAST AND SOUTHWEST CORNERS ONLY.

6. WETLAND CLEARING AND RESTORATION

A. CLEARING IN WETLAND AND UPLAND AREAS SHALL BE KEPT TO THE MIMIMUM ABSOLUTELY NECESSARY FOR CONSTRUCTION ACCESS. IN WETLAND AREAS THAT ARE CLEARED, THERE SHALL BE NO GRUBBING EXCEPT WHERE NECESSARY TO CONSTRUCT PROJECT COMPONENTS SUCH AS FOUNDATIONS AND RIPRAP PROTECTION. VEGETATION SHALL BE CUT FLUSH WITH THE GROUND (I.E. NO DISTURBANCE OF THE ROOT MAT).

B. ALL MATERIALS ASSOCIATED WITH A TEMPORARY ACCESS ROAD WILL BE REMOVED IN THEIR ENTIRETY UPON COMPLETION OF THE PROJECT. THE DISTURBED WETLAND AREAS WILL BE RESTORED i.e., ORIGINAL ELEVATIONS & GRADES WILL BE RE-ESTABLISHED. TOPSOIL WILL BE ADDED AS NEEDED.

C. NATURALIZE PLANTING OF RED MAPLES (1-1/2 TO 1-3/4" CAL., BB OR CONT.) ON 10' CENTER-SPACING (8' MIN. AND 12' MAX.) WITHIN DISTURBED WETLAND AREAS (ALL AREAS WITHIN LOC, EXCLUDING AREA WITHIN THE TOS AND RIPRAP PROTECTION). 20 RED MAPLE TREES (TOTAL) SHALL BE PLANTED IN DISTURBED AREAS (PAYMENT UNDER ITEM #737523 - PLANTING). WET GROUND EROSION CONTROL GRASS SEEDING - FLATS SHALL BE PLACED IN DISTURBED WETLAND AREAS (PAYMENT UNDER ITEM #734552 - WET GROUND EROSION CONTROL GRASS SEEDING - FLATS) AND MULCHED WITH SOIL RETENTION BLANKET MULCH, TYPE 5 (ITEM #735535).

D. THE CONTRACTOR SHALL BE REQUIRED TO WATER ALL MAJOR AND MINOR TREES, SHRUBS AND ALL HERBACEOUS BEDS BI-WEEKLY DURING THE PERIOD FROM JUNE 15 THROUGH OCTOBER 1. OVER THE COURSE OF THIS PERIOD, THERE ARE NINE DISTINCT WATERINGS. WATERING, ONCE INITIATED, SHALL CONTINUE WITHOUT INTERRUPTION UNTIL ALL PLANTS ON THE PROJECT HAVE BEEN WATERED. PAYMENT SHALL BE PER 1,000 GALS OF WATER APPLIED AND SHALL BE BASED ON APPLYING FIFTEEN (15) GALLONS OF WATER TO EACH PLANT EACH OF THE NINE WATERINGS. PAYMENT SHALL BE MADE UNDER ITEM 737523 - PLANTING. NO BREAKOUT SHEET FOR ITEM 737723 - PLANTING IS INCLUDED.

UNOFFICIAL WEBSITE COPY

LAST REVISED: 03/22/2011
Y:\KENT\204\BRIDGE\T201107205\PLANS\EC01.DGN

DELAWARE
DEPARTMENT OF TRANSPORTATION

ADDENDUMS / REVISIONS	

BR 2-204A ON APPLE GROVE SCHOOL ROAD OVER ISAAC BRANCH

CONTRACT	BRIDGE NO.	2-204A
T201107205	DESIGNED BY: JAT	
COUNTY		
KENT	CHECKED BY: EM	

ENVIRONMENTAL COMPLIANCE NOTES

	EC-01
SHEET NO.	9
TOTAL SHTS.	15

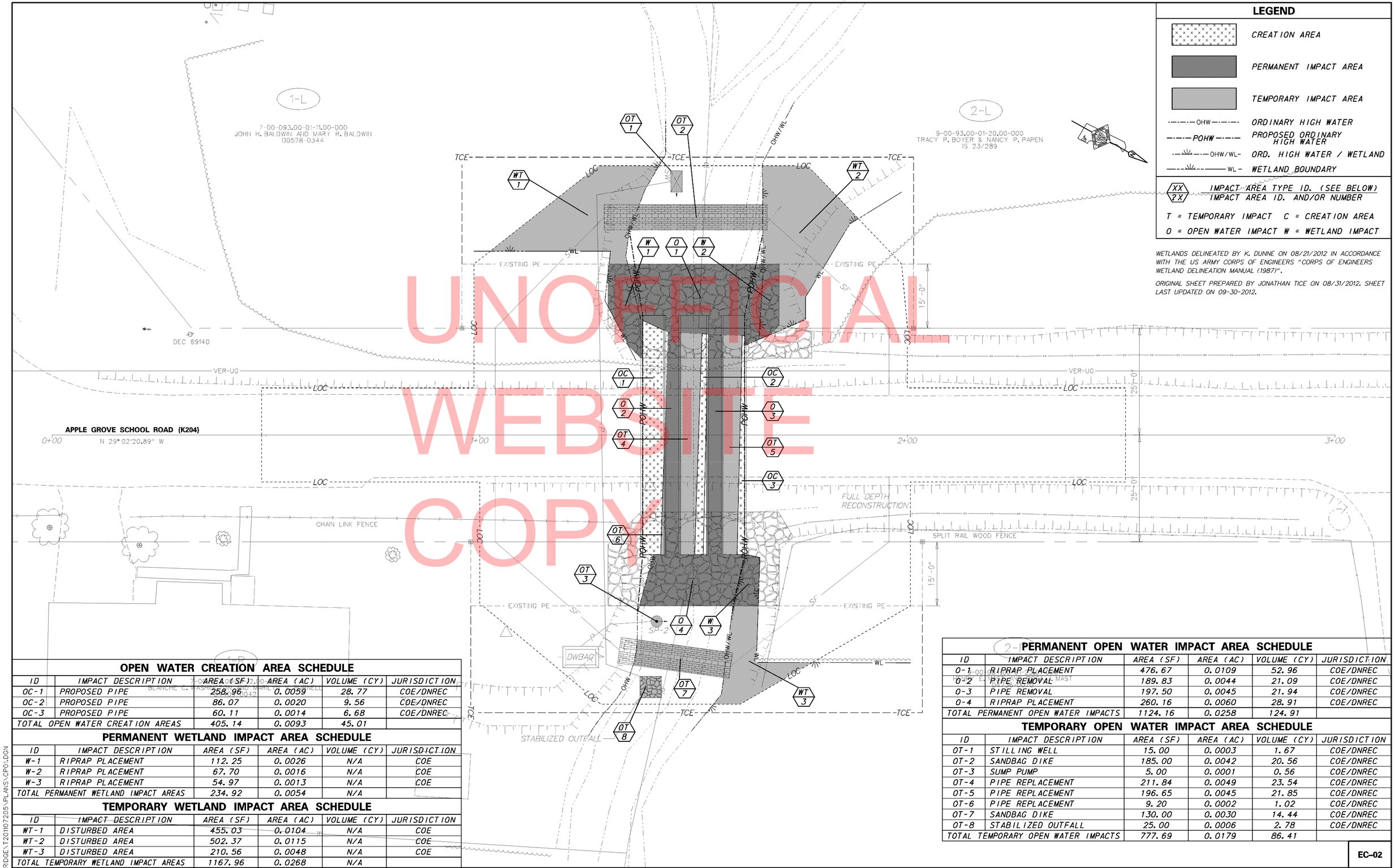

UNOFFICIAL WEBSITE
COPY

LEGEND

- CREATION AREA
- PERMANENT IMPACT AREA
- TEMPORARY IMPACT AREA
- OHW — ORDINARY HIGH WATER
- POHW — PROPOSED ORDINARY HIGH WATER
- OHW/WL — ORD. HIGH WATER / WETLAND
- WL — WETLAND BOUNDARY
- XX / 2X — IMPACT AREA TYPE ID. (SEE BELOW) / IMPACT AREA ID. AND/OR NUMBER

T = TEMPORARY IMPACT C = CREATION AREA

O = OPEN WATER IMPACT W = WETLAND IMPACT

WETLANDS DELINEATED BY K. DUNNE ON 08/21/2012 IN ACCORDANCE WITH THE US ARMY CORPS OF ENGINEERS "CORPS OF ENGINEERS WETLAND DELINEATION MANUAL (1987)".

ORIGINAL SHEET PREPARED BY JONATHAN TICE ON 08/31/2012. SHEET LAST UPDATED ON 09-30-2012.

OPEN WATER CREATION AREA SCHEDULE

ID	IMPACT DESCRIPTION	AREA (SF)	AREA (AC)	VOLUME (CY)	JURISDICTION
OC-1	PROPOSED PIPE	258.96	0.0059	28.77	COE/DNREC
OC-2	PROPOSED PIPE	86.07	0.0020	9.56	COE/DNREC
OC-3	PROPOSED PIPE	60.11	0.0014	6.68	COE/DNREC
TOTAL OPEN WATER CREATION AREAS		405.14	0.0093	45.01	

PERMANENT WETLAND IMPACT AREA SCHEDULE

ID	IMPACT DESCRIPTION	AREA (SF)	AREA (AC)	VOLUME (CY)	JURISDICTION
W-1	RIPRAP PLACEMENT	112.25	0.0026	N/A	COE
W-2	RIPRAP PLACEMENT	67.70	0.0016	N/A	COE
W-3	RIPRAP PLACEMENT	54.97	0.0013	N/A	COE
TOTAL PERMANENT WETLAND IMPACT AREAS		234.92	0.0054	N/A	

TEMPORARY WETLAND IMPACT AREA SCHEDULE

ID	IMPACT DESCRIPTION	AREA (SF)	AREA (AC)	VOLUME (CY)	JURISDICTION
WT-1	DISTURBED AREA	455.03	0.0104	N/A	COE
WT-2	DISTURBED AREA	502.37	0.0115	N/A	COE
WT-3	DISTURBED AREA	210.56	0.0048	N/A	COE
TOTAL TEMPORARY WETLAND IMPACT AREAS		1167.96	0.0268	N/A	

PERMANENT OPEN WATER IMPACT AREA SCHEDULE

ID	IMPACT DESCRIPTION	AREA (SF)	AREA (AC)	VOLUME (CY)	JURISDICTION
O-1	RIPRAP PLACEMENT	476.67	0.0109	52.96	COE/DNREC
O-2	PIPE REMOVAL	189.83	0.0044	21.09	COE/DNREC
O-3	PIPE REMOVAL	197.50	0.0045	21.94	COE/DNREC
O-4	RIPRAP PLACEMENT	260.16	0.0060	28.91	COE/DNREC
TOTAL PERMANENT OPEN WATER IMPACTS		1124.16	0.0258	124.91	

TEMPORARY OPEN WATER IMPACT AREA SCHEDULE

ID	IMPACT DESCRIPTION	AREA (SF)	AREA (AC)	VOLUME (CY)	JURISDICTION
OT-1	STILLING WELL	15.00	0.0003	1.67	COE/DNREC
OT-2	SANDBAG DIKE	185.00	0.0042	20.56	COE/DNREC
OT-3	SUMP PUMP	5.00	0.0001	0.56	COE/DNREC
OT-4	PIPE REPLACEMENT	211.84	0.0049	23.54	COE/DNREC
OT-5	PIPE REPLACEMENT	196.65	0.0045	21.85	COE/DNREC
OT-6	PIPE REPLACEMENT	9.20	0.0002	1.02	COE/DNREC
OT-7	SANDBAG DIKE	130.00	0.0030	14.44	COE/DNREC
OT-8	STABILIZED OUTFALL	25.00	0.0006	2.78	COE/DNREC
TOTAL TEMPORARY OPEN WATER IMPACTS		777.69	0.0179	86.41	

EC-02

DELAWARE
DEPARTMENT OF TRANSPORTATION

ADDENDUMS / REVISIONS

SCALE
0 10 20 30
FEET

BR 2-204A ON APPLE GROVE SCHOOL ROAD OVER ISAAC BRANCH

CONTRACT	BRIDGE NO.	2-204A
T201107205	DESIGNED BY: JAT	
COUNTY	CHECKED BY: EM	
KENT		

ENVIRONMENTAL COMPLIANCE PLAN

SHEET NO.
10
TOTAL SHTS.
15

Y:\KENT\204\BRIDGE\T201107205\PLANS\CP01.DGN

UNOFFICIAL WEBSITE COPY

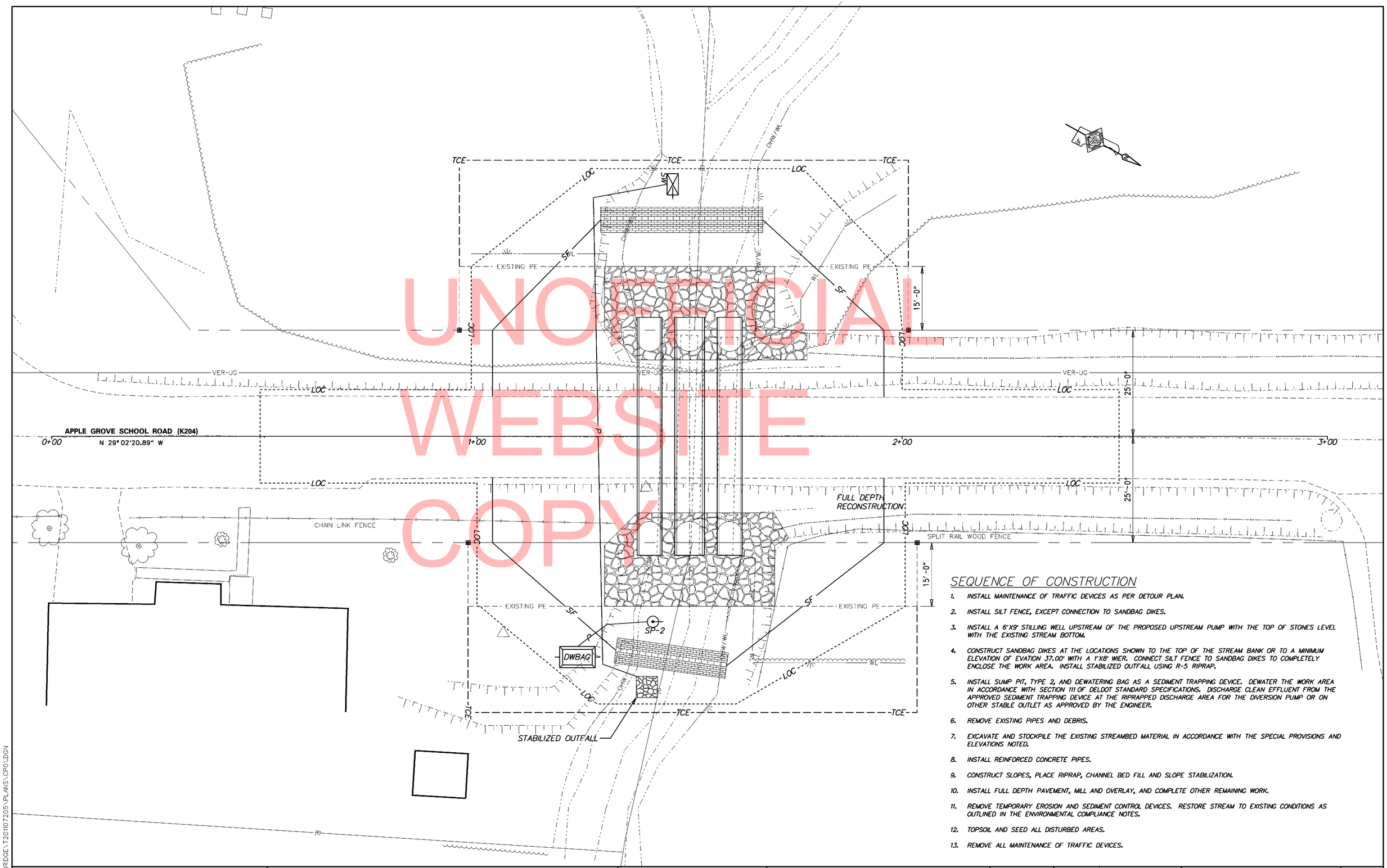

SEQUENCE OF CONSTRUCTION

1. INSTALL MAINTENANCE OF TRAFFIC DEVICES AS PER DETOUR PLAN.
2. INSTALL SILT FENCE, EXCEPT CONNECTION TO SANDBAG DIKES.
3. INSTALL A 6'X9' STILLING WELL UPSTREAM OF THE PROPOSED UPSTREAM PUMP WITH THE TOP OF STONES LEVEL WITH THE EXISTING STREAM BOTTOM.
4. CONSTRUCT SANDBAG DIKES AT THE LOCATIONS SHOWN TO THE TOP OF THE STREAM BANK OR TO A MINIMUM ELEVATION OF EVATION 37.00' WITH A 1'X8' WIER. CONNECT SILT FENCE TO SANDBAG DIKES TO COMPLETELY ENCLOSE THE WORK AREA. INSTALL STABILIZED OUTFALL USING R-5 RIPRAP.
5. INSTALL SUMP PIT, TYPE 2, AND DEWATERING BAG AS A SEDIMENT TRAPPING DEVICE. DEWATER THE WORK AREA IN ACCORDANCE WITH SECTION 111 OF DELDOT STANDARD SPECIFICATIONS. DISCHARGE CLEAN EFFLUENT FROM THE APPROVED SEDIMENT TRAPPING DEVICE AT THE RIPRAPPED DISCHARGE AREA FOR THE DIVERSION PUMP OR ON OTHER STABLE OUTLET AS APPROVED BY THE ENGINEER.
6. REMOVE EXISTING PIPES AND DEBRIS.
7. EXCAVATE AND STOCKPILE THE EXISTING STREAMBED MATERIAL IN ACCORDANCE WITH THE SPECIAL PROVISIONS AND ELEVATIONS NOTED.
8. INSTALL REINFORCED CONCRETE PIPES.
9. CONSTRUCT SLOPES, PLACE RIPRAP, CHANNEL BED FILL AND SLOPE STABILIZATION.
10. INSTALL FULL DEPTH PAVEMENT, MILL AND OVERLAY, AND COMPLETE OTHER REMAINING WORK.
11. REMOVE TEMPORARY EROSION AND SEDIMENT CONTROL DEVICES. RESTORE STREAM TO EXISTING CONDITIONS AS OUTLINED IN THE ENVIRONMENTAL COMPLIANCE NOTES.
12. TOPSOIL AND SEED ALL DISTURBED AREAS.
13. REMOVE ALL MAINTENANCE OF TRAFFIC DEVICES.

Y:\KENT\204\BRIDGE\T201107205\PLANS\CP01.DGN

DELAWARE
DEPARTMENT OF TRANSPORTATION

ADDENDUMS / REVISIONS

SCALE
0 10 20 30
FEET

BR 2-204A ON APPLE GROVE SCHOOL ROAD OVER ISAAC BRANCH

CONTRACT	BRIDGE NO.	2-204A
T201107205	DESIGNED BY: JAT	
COUNTY	CHECKED BY: EM	
KENT		

CONSTRUCTION SEQUENCE AND EROSION CONTROL PLAN

SHEET NO.
11
TOTAL SHTS.
15

PORTABLE CHANGEABLE MESSAGE SIGNS

PRIOR TO DETOUR
(10 DAYS PRIOR TO BEGINNING OF DETOUR)

PCMS-1

APPLE GROVE SCHOOL	RD TO CLOSE XX/XX/XX

DURING DETOUR
(DISPLAY FOR 5 DAYS AFTER IMPLEMENTATION OF DETOUR)

PCMS-1

APPLE GROVE SCHOOL	CLOSED FOLLOW DETOUR

PRIOR TO DETOUR
(10 DAYS PRIOR TO BEGINNING OF DETOUR)

PCMS-1

XXXXXXXX XXXXXXXX XXXXXXXX	XXXXXXXX XXXXXXXX XXXXXXXX

DURING DETOUR
(DISPLAY FOR 5 DAYS AFTER IMPLEMENTATION OF DETOUR)

PCMS-1

XXXXXXXX XXXXXXXX XXXXXXXX	XXXXXXXX XXXXXXXX XXXXXXXX

SPECIAL SIGNS

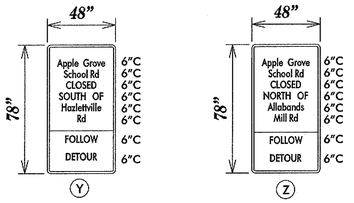

***D/G RETROREFLECTIVE FLUORESCENT ORANGE BACKGROUND; BLACK LEGEND**

SPECIAL NOTES

1. CONTRACTOR SHALL COORDINATE THE TIMELINE WITH THE BRIDGE SECTION TO MITIGATE OVERLAPPING PROJECT ON WYOMING MILL RD (BR2-195A;T201107201)

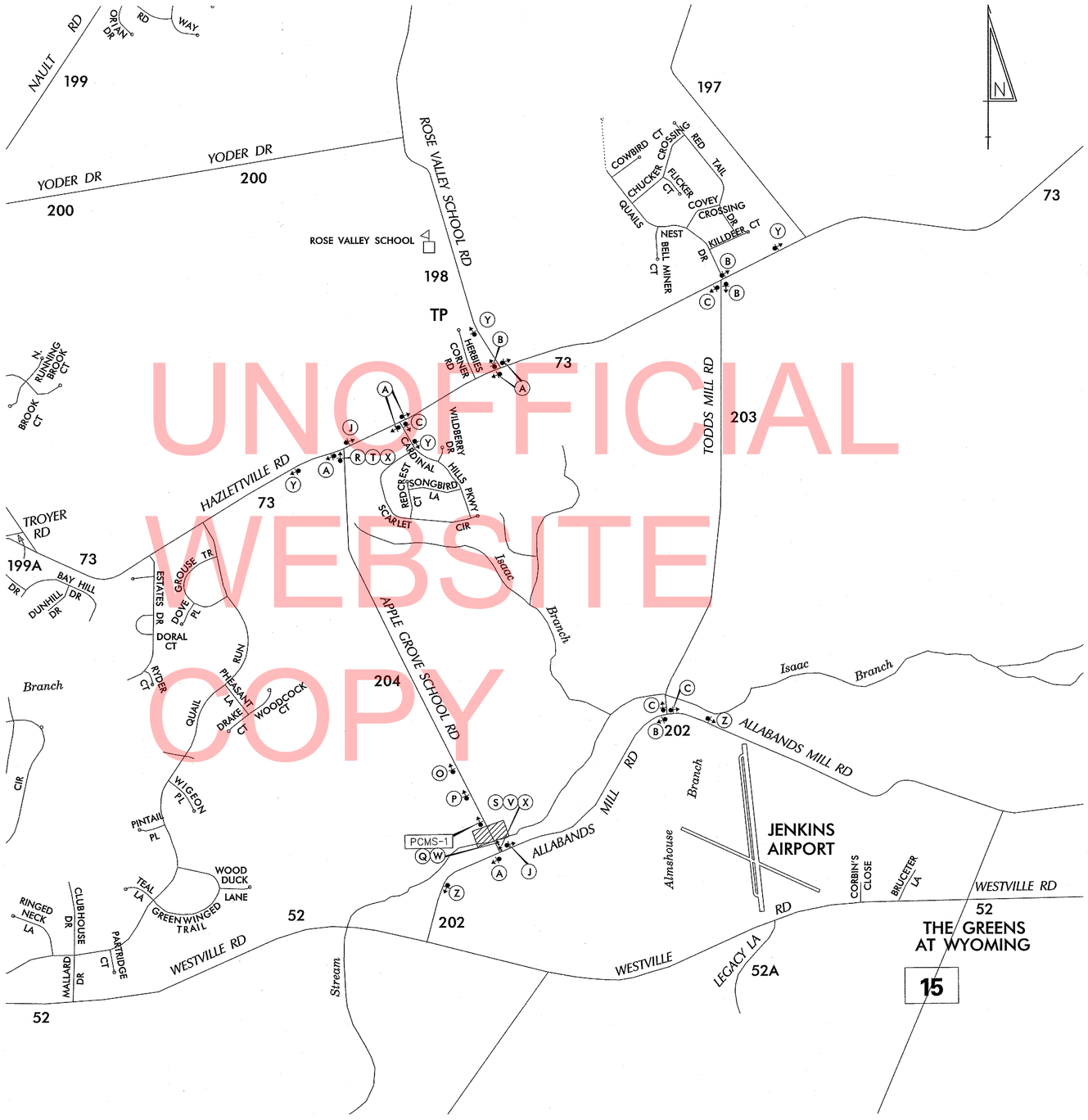

UNOFFICIAL WEBSITE COPY

LEGEND

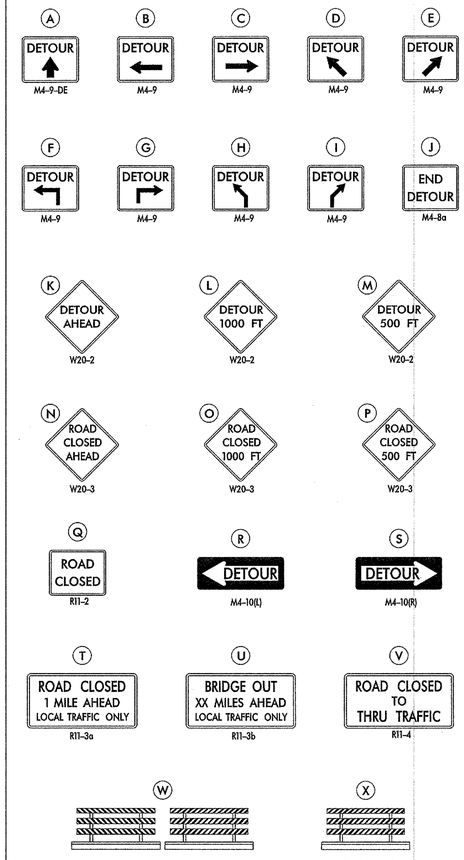

GENERAL NOTES

1. ALL DETOUR SIGNING, INCLUDING TRAILBLAZERS, ARE TO BE SUPPLIED AND MAINTAINED BY THE GENERAL CONTRACTOR IN COMPLIANCE WITH "THE DELAWARE MANUAL ON UNIFORM TRAFFIC CONTROL DEVICES" (DE MUTCD.)
2. THE CONTRACTOR SHALL COMPLY WITH GUIDELINES IN "THE DELAWARE MANUAL ON UNIFORM TRAFFIC CONTROL DEVICES" (DE MUTCD PART 6) FOR BARRICADES AND SIGNS (AS PER LATEST REVISION.)
3. DESIGN OF ALL SIGNS SHALL BE IN ACCORDANCE WITH THE FHWA STANDARD HIGHWAY SIGNS BOOK.
4. SIZES OF ALL SIGNS SHALL BE IN ACCORDANCE WITH "THE DELAWARE MANUAL ON UNIFORM TRAFFIC CONTROL DEVICES" (DE MUTCD.) SIZE OF SIGN SHALL BE BASED ON TYPE OF ROADWAY ON WHICH THE SIGN IS INSTALLED.
5. SIGNS NO LONGER IN USE SHALL BE COMPLETELY COVERED WITH NO RETROREFLECTIVE MATERIAL SHOWING, OR SHALL BE REMOVED, AS DIRECTED BY THE ENGINEER.
6. FIELD CONDITIONS MAY DICTATE CHANGES AT SOME TIME DURING THE LIFE OF THE CONTRACT. IN THE EVENT OF OMISSIONS OR CORRECTIONS, THE SIGNING PROVISIONS OF "THE DELAWARE MANUAL ON UNIFORM TRAFFIC CONTROL DEVICES" (DE MUTCD) WILL PREVAIL.
7. SIGNS "N" THROUGH "Q" AND "T" AND "V", THE WORD "ROAD" SHOULD BE CHANGED TO "RAMP", "RR XING", OR "BRIDGE" WHERE APPLICABLE.
8. WARNING SIGNS AND DETOUR TRAILBLAZERS SHALL BE MOUNTED ON BREAKAWAY POSTS AND HAVE RETROREFLECTIVE FLUORESCENT ORANGE SHEETING.
9. "W" BARRICADES SHALL COMPLETELY RUN THE FULL WIDTH OF THE ROADWAY.
10. BARRICADES SHALL BE A MINIMUM OF 6 FEET WIDE UNLESS DIRECTED BY THE ENGINEER.

C:\DOCUMENTS AND SETTINGS\MICHAEL.RIVERA\MY DOCUMENTS\MICRO STATION DGN\APPLE GROVE SCHOOL RD (BR2-204A) T201107205.DGN

RECOMMENDED Michael F. Rivera DATE: 8/16/12	RECOMMENDED John C. Sabula Jr. DATE: 8/17/12	RECOMMENDED _____ DATE:	APPROVED CHIEF SAFETY OFFICER _____ DATE: 9/13/12

APPROVED TRAFFIC ENGINEER _____ DATE: 9/13/12

DELAWARE DEPARTMENT OF TRANSPORTATION

ADDENDUM / REVISIONS

NOT TO SCALE

BR2-204A
APPLE GROVE SCHOOL RD
OVER ISAAC BRANCH

CONTRACT	ROAD NO.	K204
T201107205	DESIGNED BY: MFR	
COUNTY	CHECKED BY: ASW	
KENT		

VEHICULAR DETOUR PLAN
APPLE GROVE SCHOOL RD
AT ALLABANDS MILL RD

SHEET NO.
12
TOTAL SHTS.
15

RIGHT-OF-WAY ALIGNMENT CONTROL				
POINT	STATION	OFFSET	NORTHING	EASTING
POB	0+00.00	0.00	407150.23	605040.41
POE	3+93.97	0.00	407494.67	604849.18

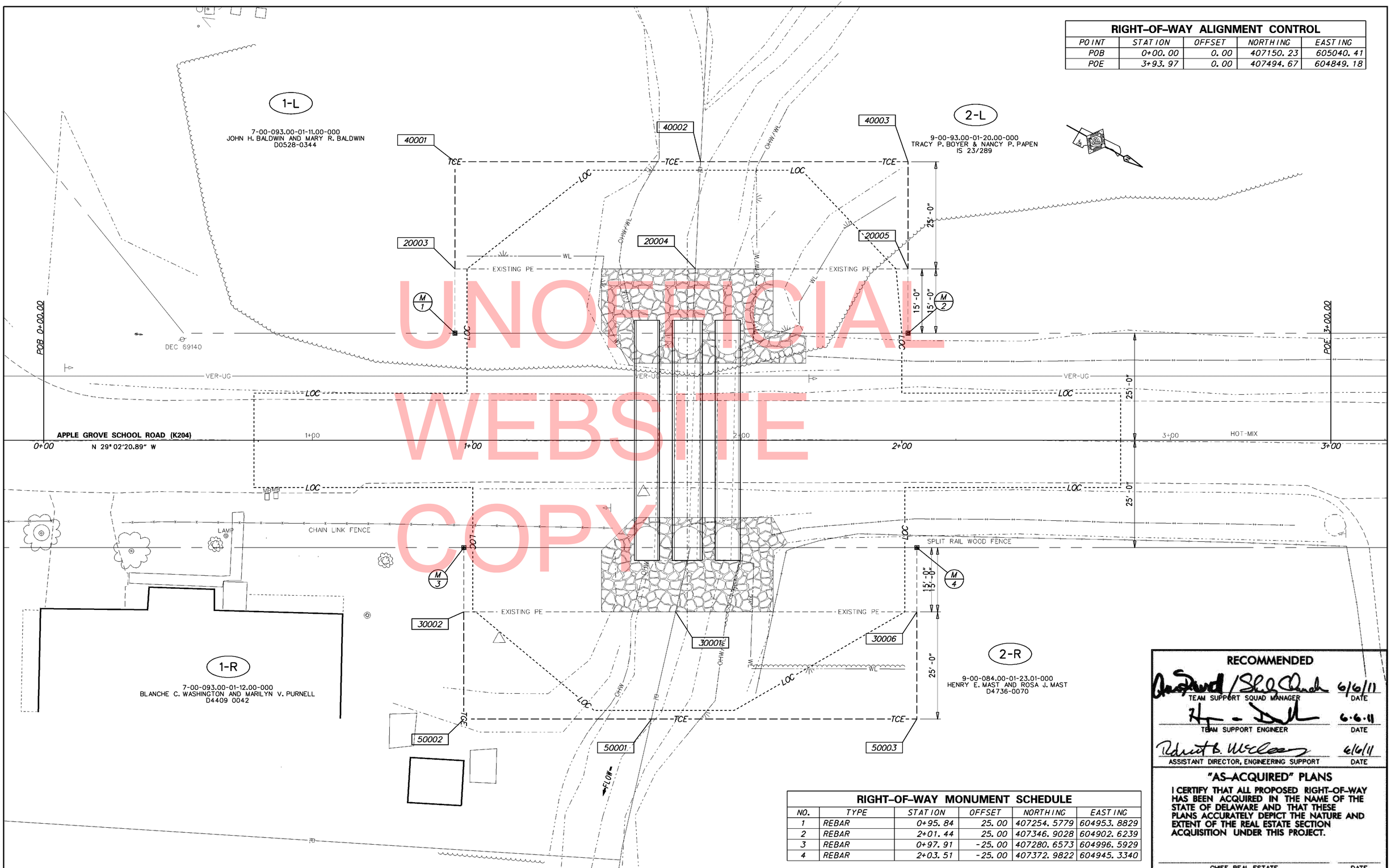

RIGHT-OF-WAY MONUMENT SCHEDULE					
NO.	TYPE	STATION	OFFSET	NORTHING	EASTING
1	REBAR	0+95.84	25.00	407254.5779	604953.8829
2	REBAR	2+01.44	25.00	407346.9028	604902.6239
3	REBAR	0+97.91	-25.00	407280.6573	604996.5929
4	REBAR	2+03.51	-25.00	407372.9822	604945.3340

RECOMMENDED

TEAM SUPPORT SQUAD MANAGER — DATE 6/6/11

TEAM SUPPORT ENGINEER — DATE 6.6.11

ASSISTANT DIRECTOR, ENGINEERING SUPPORT — DATE 6/6/11

"AS-ACQUIRED" PLANS

I CERTIFY THAT ALL PROPOSED RIGHT-OF-WAY HAS BEEN ACQUIRED IN THE NAME OF THE STATE OF DELAWARE AND THAT THESE PLANS ACCURATELY DEPICT THE NATURE AND EXTENT OF THE REAL ESTATE SECTION ACQUISITION UNDER THIS PROJECT.

CHIEF, REAL ESTATE — DATE

UNOFFICIAL WEBSITE COPY

Y:\KENT\204\BRIDGE\T201107205\PLANS\CP01.DGN

DELAWARE DEPARTMENT OF TRANSPORTATION

ADDENDUMS / REVISIONS

SCALE 0 10 20 30 FEET

BR 2-204A ON APPLE GROVE SCHOOL ROAD OVER ISAAC BRANCH

CONTRACT	BRIDGE NO.	2-204A
T201107205	DESIGNED BY: JAT	
COUNTY	CHECKED BY: EM	
KENT		

RIGHT-OF-WAY PLAN

SHEET NO. 13

TOTAL SHTS. 15

ASSESSMENT NUMBER	OWNERSHIP OF RECORD	TYPE OF ACQUISITION	TITLE SOURCE	PARCEL AREA (ACRES)
7-00-093.00-01-11.00-000	(1-L) JOHN H. BALDWIN	TCE	D0528-0344	0.726

ALIGNMENT NUMBER & DESCRIPTION: 1002 - APPLE GROVE SCHOOL ROAD

PT. NO.	ALIGN. NO.	STATION	OFFSET *	NORTH	EAST
20004	1002	1+89.28	-40.00	407296.2954	604913.5645
20003	1002	1+33.24	-40.00	407247.2970	604940.7685
40001	1002	1+33.24	-65.00	407235.1618	604918.9113
40002	1002	1+90.49	-65.00	407285.2211	604891.1183
20004	1002	1+89.28	-40.00	407296.2954	604913.5645

BEARING	DISTANCE	CHORD BEARING	CHORD LENGTH	ARC LENGTH	RADIUS **
S 29°02'20.89" E	56.0438				
S 60°57'39.11" W	25.0000				
N 29°02'20.89" W	57.2571				
N 63°44'22.26" E	25.0294				

FIGURE 40001 AREA = 1416.2616 SQ. FT. (0.0325 ACRES)

ASSESSMENT NUMBER	OWNERSHIP OF RECORD	TYPE OF ACQUISITION	TITLE SOURCE	PARCEL AREA (ACRES)
7-00-093.00-01-12.00-000	(1-R) BLANCHE C. WASHINGTON	TCE	D4409-0042	0.273

ALIGNMENT NUMBER & DESCRIPTION: 1002 - APPLE GROVE SCHOOL ROAD

PT. NO.	ALIGN. NO.	STATION	OFFSET *	NORTH	EAST
50001	1002	1+79.01	65.00	407338.2817	605010.3513
50002	1002	1+35.30	65.00	407300.0738	605031.5644
30002	1002	1+35.30	40.00	407287.9386	605009.7072
30001	1002	1+84.69	40.00	407331.1181	604985.7338
50001	1002	1+79.01	65.00	407338.2817	605010.3513

BEARING	DISTANCE	CHORD BEARING	CHORD LENGTH	ARC LENGTH	RADIUS **
S 29°02'20.89" E	43.7017				
S 60°57'39.11" W	25.0000				
N 29°02'20.89" W	49.3882				
N 73°46'30.49" E	25.6386				

FIGURE 50001 AREA = 1163.6237 SQ. FT. (0.0267 ACRES)

ASSESSMENT NUMBER	OWNERSHIP OF RECORD	TYPE OF ACQUISITION	TITLE SOURCE	PARCEL AREA (ACRES)
9-00-93.00-01-20.00-000	(2-L) TRACY P. BOYER & NANCY P. PAPEN	TCE	760445	1.9

ALIGNMENT NUMBER & DESCRIPTION: 1002 - APPLE GROVE SCHOOL ROAD

PT. NO.	ALIGN. NO.	STATION	OFFSET *	NORTH	EAST
20004	1002	1+89.28	-40.00	407296.2954	604913.5645
40002	1002	1+90.49	-65.00	407285.2211	604891.1183
40003	1002	2+38.84	-65.00	407327.4867	604867.6523
20005	1002	2+38.84	-40.00	407339.6218	604889.5095
20004	1002	1+89.28	-40.00	407296.2954	604913.5645

BEARING	DISTANCE	CHORD BEARING	CHORD LENGTH	ARC LENGTH	RADIUS **
S 63°44'22.26" W	25.0294				
N 29°02'20.89" W	48.3429				
N 60°57'39.11" E	25.0000				
S 29°02'20.89" E	49.5562				

FIGURE 40002 AREA = 1223.7384 SQ. FT. (0.0281 ACRES)

ASSESSMENT NUMBER	OWNERSHIP OF RECORD	TYPE OF ACQUISITION	TITLE SOURCE	PARCEL AREA (ACRES)
9-00-084.00-01-23.01-000	(2-R) HENRY E. MAST	TCE	D4736-0070	10.08

ALIGNMENT NUMBER & DESCRIPTION: 1002 - APPLE GROVE SCHOOL ROAD

PT. NO.	ALIGN. NO.	STATION	OFFSET *	NORTH	EAST
50001	1002	1+79.01	65.00	407338.2817	605010.3513
30001	1002	1+84.69	40.00	407331.1181	604985.7338
30006	1002	2+40.90	40.00	407380.2634	604958.4482
50003	1002	2+40.90	65.00	407392.3986	604980.3054
50001	1002	1+79.01	65.00	407338.2817	605010.3513

BEARING	DISTANCE	CHORD BEARING	CHORD LENGTH	ARC LENGTH	RADIUS **
S 73°46'30.49" W	25.6386				
N 29°02'20.89" W	56.2118				
N 60°57'39.11" E	25.0000				
S 29°02'20.89" E	61.8983				

FIGURE 50002 AREA = 1476.3763 SQ. FT. (0.0339 ACRES)

UNOFFICIAL WEBSITE COPY

LEGEND

FEE	AREA OF ACQUISITION
R/W	AREA OCCUPIED BY EXISTING R/W
P/E	PERMANENT EASEMENT
TCE	TEMPORARY CONSTRUCTION EASEMENT
*	"-" OFFSET IS LEFT OF BASELINE
**	"-" CURVE TURNS TO THE LEFT

Y:\KENT\204\BRIDGE\T201107205\PLANS\RB01.DGN

DELAWARE DEPARTMENT OF TRANSPORTATION

ADDENDUMS / REVISIONS

NOT TO SCALE

BR 2-204A ON APPLE SCHOOL GROVE ROAD OVER ISAAC BRANCH

CONTRACT	BRIDGE NO.	2-204A
T201107205	DESIGNED BY: JAT	
COUNTY	CHECKED BY: JNH	
KENT		

RIGHT-OF-WAY DATA SHEET

SHEET NO.
14
TOTAL SHTS.
15

COUNTY ASSESSMENT PARCEL NUMBER	PLAN SHEET NUMBER	OWNERSHIP OF RECORD	TITLE SOURCE	PROPERTY AREA BEFORE ACQUISITION (ACRE) D=DEED C=CALCULATED A=ASSESMENT	ACQUISTITION CODE FEE, R/W, P/E, TCE	AREA TO BE ACQUIRED				PROPERTY AREA REMAINING (SQ. FEET /ACRES)	DEED RECORD OF ACQUISTITION	REMARKS
						ACQUISITION (SQ. FEET /ACRES)	AREA OCCUPIED BY EXISTING RIGHT OF WAY (SQ. FEET /ACRES)	EASEMENT				
								PERMANENT (SQ. FEET /ACRES)	TEMPORARY (SQ. FEET /ACRES)			
7-00-093.00-01-11.00-000	1	(1-L) JOHN H. BALDWIN	D0528-0344	D - 0.73	TCE				1416.2616 / 0.03	31624.56 / 0.73		EXISTING PE ACQUIRED UNDER CONTRACT NO. 75-090-14
7-00-093.00-01-12.00-000	1	(1-R) BLANCHE C. WASHINGTON	D4409-0042	D - 0.27	TCE				1163.6237 / 0.03	11900.00 / 0.27		EXISTING PE ACQUIRED UNDER CONTRACT NO. 75-090-14
9-00-93.00-01-20.00-000	1	(2-L) TRACY P. BOYER & NANCY P. PAPEN	760445	D - 1.90	TCE				1223.7384 / 0.03	82764.00 / 1.90		EXISTING PE ACQUIRED UNDER CONTRACT NO. 75-090-14
9-00-084.00-01-23.01-000	1	(2-R) HENRY E. MAST	D4736-0070	D - 10.08	TCE				1476.3763 / 0.03	439084.80 / 10.08		EXISTING PE ACQUIRED UNDER CONTRACT NO. 75-090-14

UNOFFICIAL WEBSITE COPY

ACQUISTITION CODES

FEE – ACQUISITION P/E – PERMANENT EASEMENT
R/W – AREA OCCUPIED BY EXISTING R/W TCE – TEMPORARY EASEMENT

DELAWARE
DEPARTMENT OF TRANSPORTATION

ADDENDUMS / REVISIONS

NOT TO SCALE

BR 2–204A ON APPLE SCHOOL GROVE ROAD OVER ISAAC BRANCH

CONTRACT T201107205
COUNTY KENT
BRIDGE NO. 2–204A
DESIGNED BY: JAT
CHECKED BY: JNH

RIGHT–OF–WAY TABULATION SHEET

SHEET NO. 15
TOTAL SHTS. 15

Y:\KENT\204\BRIDGE\T201107205\PLANS\RT01.DGN