THE STATE OF DELAWARE
DEPARTMENT OF TRANSPORTATION

U.S. CUSTOMARY UNITS

CONSTRUCTION PLANS FOR:

BR 3-930 ON S225 MARSHALL STREET, OVER HERRING BRANCH, MILFORD

CONTRACT NUMBER: T201107303
FEDERAL AID PROJECT NUMBER: N/A

COUNTY: SUSSEX **M.R. #:** 225

UNOFFICIAL WEBSITE COPY

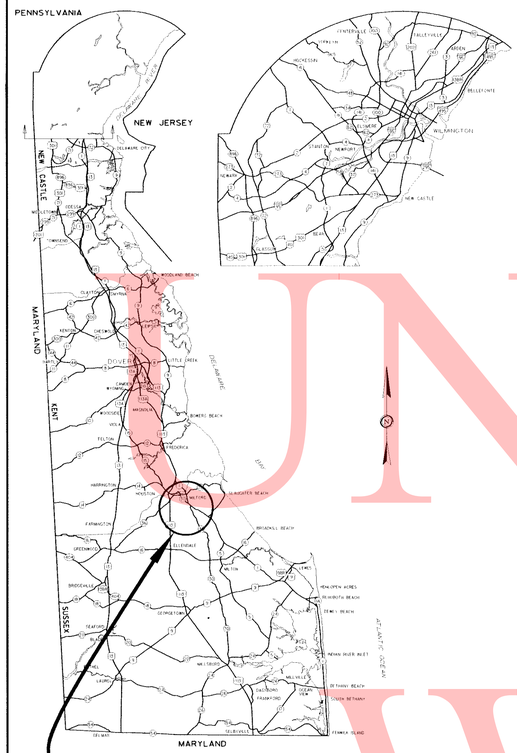

GENERAL LOCATION OF CONTRACT

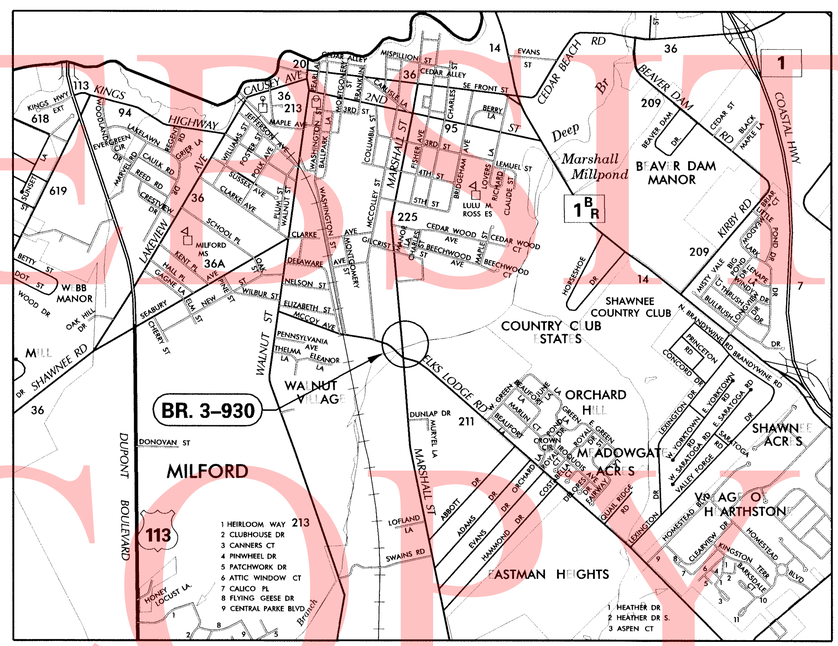

DESIGN DESIGNATION

FUNCTIONAL CLASS: MAJOR COLLECTOR		D.H.V. PROJECTED: YEAR:
TYPE OF CONSTRUCTION: BRIDGE REPLACEMENT		DESIGN SPEED: 35 M.P.H.
A.A.D.T. CURRENT: 2640	YEAR: 2009	TRUCKS: 11 %
A.A.D.T. PROJECTED:	YEAR: 2040	DIRECTION OF DISTRIBUTION: 53 %

INDEX OF SHEETS

SHEET Nº	TABLE OF CONTENTS
1	TITLE SHEET
2	LEGEND
3	GENERAL NOTES, PROJECT NOTES AND TYPICAL SECTION
4	CONSTRUCTION PLAN
5	PROFILE
6	BRIDGE PLAN, SECTION AND ELEVATION
7	BRIDGE DETAILS
8	SOIL BORING LOGS
9	SEQUENCE OF CONSTRUCTION
10	ENVIRONMENTAL COMPLIANCE PLAN
11	UTILITY PLAN
12	DETOUR PLAN
13	RIGHT-OF-WAY PLAN
14	RIGHT-OF-WAY METES AND BOUNDS
15	RIGHT-OF-WAY TABULATION

TOTAL SHEETS: 15

APPROVED DESIGN EXCEPTIONS

DESIGN PARAMETER	REQUIRED	PROVIDED	DATE

ADDENDA & REVISIONS

DESCRIPTION	NAME & DATE

ASSOCIATED CONTRACTS

CONTRACT NO.	CONTRACT NAME

PREPARED BY
THE CONSULTING FIRM OF

SEAL

RECOMMENDED DATE

RECOMMENDED

SQUAD MANAGER, CONSTRUCTION — DATE 1/23/12

GROUP ENGINEER, CONSTRUCTION — DATE 1/23/2012

ASSISTANT DIRECTOR, TRANSPORTATION SOLUTIONS (CONSTRUCTION) — DATE N/A

RECOMMENDED

STORMWATER ENGINEER

DATE 31 JAN 2012

VINCENT W. DAVIS REGISTERED No. 12398 DELAWARE PROFESSIONAL ENGINEER

SEAL

RECOMMENDED

SQUAD MANAGER, TRANSPORTATION SOLUTIONS (PROJECT DEVELOPMENT OR BRIDGE DESIGN)

DATE 01.27.12

JASON K. MCCLUSKEY LICENSED No. 16272 DELAWARE PROFESSIONAL ENGINEER

SEAL

RECOMMENDED

BRIDGE DESIGN ENGINEER

DATE 01.27.12

JASON N. HASTINGS REGISTERED No. 13545 DELAWARE PROFESSIONAL ENGINEER

SEAL

RECOMMENDED

GROUP ENGINEER, PROJECT DEVELOPMENT

DATE

SEAL

RECOMMENDED

ASSISTANT DIRECTOR, TRANSPORTATION SOLUTIONS

DATE FEBRUARY 2, 2012

BARRY A. BENTON REGISTERED No. 10774 DELAWARE PROFESSIONAL ENGINEER

SEAL

APPROVED

CHIEF ENGINEER

DATE February 2, 2012

NATALIE M. BARNHART REGISTERED No. 9629 DELAWARE PROFESSIONAL ENGINEER

SEAL

LAST REVISED: 8/7/2008
Y:\SUSSEX\225\BRIDGE\T201107303\PLANS\TITLE.DGN

EXISTING SYMBOLS

DRAINAGE	
	DITCH OR STREAM CENTERLINE
	DIRECTIONAL STREAM FLOW ARROW
C.B.	DRAINAGE CATCH BASIN
J.B.	DRAINAGE JUNCTION BOX
D	DRAINAGE MANHOLE
SIZE/TYPE LABEL	DRAINAGE PIPE AND FLOW ARROW
	DRAINAGE PIPE HEADWALL
	RIPRAP - AREA FEATURE
	RIPRAP - LINEAR FEATURE

MANMADE ROADSIDE FEATURES	
(TYPE LABEL)	CURB
(TYPE LABEL)	CURB AND GUTTER
	FENCE - CHAINLINK OR STRANDED
	FENCE - STOCKADE OR SPLIT RAIL
FP	FLAG POLE
	GUARDRAIL - STEEL BEAM
	GUARDRAIL - WIRE ROPE
LAMP	LAMP AND POST - RESIDENTIAL
MB	MAILBOX
PM	PARKING METER AND POST
	PAVEMENT - FLEXIBLE
	PAVEMENT - RIGID
	PILE - BRIDGE
	PILLAR OR MISCELLANEOUS POST
	TRAFFIC SIGN AND POST
	WALL - BRICK OR BLOCK
	WALL - STONE

NATURAL ROADSIDE FEATURES	
	GRASS LAWN
	HEDGEROW OR THICKET
	MARSH BOUNDARY LINE
	TREE - CONIFEROUS
	TREE - DECIDUOUS
	TREE STUMP
	SHRUBBERY
WL	DELINEATED WETLAND BOUNDARY LINE
	WOODS LINE BOUNDARY

SURVEY CONTROL & MONUMENTATION	
B.M.	SURVEY BENCHMARK LOCATION
T.P.	SURVEY TIE POINT LOCATION
	SURVEY TRAVERSE POINT
	POINT OF CURVATURE OR TANGENCY
	POINT OF INTERSECTING TANGENTS
C.M.	PROPERTY MARKER - CONCRETE MON.
I.P.	PROPERTY MARKER - IRON PIPE

UTILITY	
	SOIL BORING LOCATION
	UTILITY TEST HOLE LOCATION
TV	CABLE TV DISTRIBUTION BOX
E	ELECTRIC MANHOLE
E	ELECTRIC TRANSFORMER
	POLE MOUNTED LUMINAIRE
G	GAS MANHOLE
G.M.	GAS METER
G.V.	GAS VALVE
G.P.	GAS PUMP - SERVICE STATION
	RAILROAD TRACKS
S	SANITARY SEWER MANHOLE
S.V.	SANITARY SEWER VALVE
VENT	SANITARY SEWER VENT OR CLEANOUT
S.D.F.	SEPTIC DRAIN FIELD
B	TELEPHONE BOOTH
T	TELEPHONE MANHOLE
T	TELEPHONE TEST POINT
J.W.	TRAFFIC - CONDUIT JUNCTION WELL
	TRAFFIC - LIGHT POLE AND BASE
	TRAFFIC - PEDESTRIAN POLE & BASE
	TRAFFIC - SIGNAL CABINET & BASE
	TRAFFIC - SIGNAL POLE AND BASE
U	UTILITY BOX
	UTILITY POLE GUY WIRE ANCHOR
	UTILITY POLE
F.H.	WATER - FIRE HYDRANT
W.M.	WATER METER
W.V.	WATER VALVE
WELL	WELL HEAD

UTILITY COMPANY FACILITIES	
CM-E	CITY OF MILFORD - ELECTRIC
CM-W	CITY OF MILFORD - WATER
CHES-UG	CHEAPEAKE UTILITY - GAS
COM-C	COMCAST CABLE
VER-T	VERIZON

PROPOSED SYMBOLS

CONSTRUCTION	
	CONCRETE SAFETY BARRIER - PERMANENT
BFS	BIOFILTRATION SWALE
	BUTT JOINT
100+00	CONSTRUCTION BASELINE
	CURB, TYPE 1 & TYPE 3
	CURB, TYPE 2
	CURB & GUTTER, TYPE 1
	CURB & GUTTER, TYPE 2
	CURB & GUTTER, TYPE 3
	CURB & GUTTER, TYPE 4
CZ	CLEAR ZONE
	DRAINAGE INLET
	DITCH
	FENCE - METAL
	FENCE - WOOD
	FLARED END SECTION
	GUARDRAIL, TYPES 1 & 3
	GUARDRAIL, TYPE 2
	GUARDRAIL END TREATMENT - PARALLEL
	GUARDRAIL END TREATMENT - PARABOLIC
HC	HORIZONTAL CLEARANCE
	JUNCTION BOX - DRAINAGE
LOC	LIMIT OF CONSTRUCTION
	MANHOLE
	PAVEMENT PATCH
	PIPE & DIRECTIONAL FLOW ARROW
	RIPRAP
	P.C.C. SIDEWALK @ 4"
	P.C.C. SIDEWALK @ 6"
	UNDERDRAIN
	UNDERDRAIN OUTLET

CONSTRUCTION PHASING SYMBOLS	
	BARRICADE, TYPE 3
	CONCRETE SAFETY BARRIER - PORTABLE
	CONSTRUCTION WARNING SIGN LOCATION
END ROAD WORK	CONSTRUCTION WARNING SIGN
	CRASH CUSHION ARRAY
	DRUM - TRAFFIC CONTROL
	PHASING TRAFFIC FLOW ARROW

LANDSCAPING	
	SHRUBBERY
	CONIFEROUS TREE
	DECIDUOUS TREE

EROSION & SEDIMENT CONTROL	
DWB	DEWATERING BASIN
	EROSION CONTROL BLANKET
ED	EARTH DIKE
	INLET SEDIMENT CONTROL
	PERIMETER DIKE/SWALE
PST	PORTABLE SEDIMENT TANK
RSF	REINFORCED SILT FENCE
SBD	SANDBAG DIKE
SB	SANDBAG DIVERSION
	STONE CHECK DAM
SCE	STABILIZED CONSTRUCTION ENTRANCE
SF	SILT FENCE
SP-1	SUMP PIT, TYPE 1
SP-2	SUMP PIT, TYPE 2
ST	SEDIMENT TRAP
ST	SEDIMENT TRAP WITH INLET AS OUTLET
ST	SEDIMENT TRAP PIPE OUTLET
SW	STILLING WELL
	TEMPORARY SWALE
TSD	TEMPORARY SLOPE DRAIN

IDENTIFIERS	
A/C	ADJUST BY CONTRACTOR
A/O	ADJUST BY OTHERS
B	CONCRETE SAFETY BARRIER
C	CURB OR CURB & GUTTER
C/JB	CONVERT TO JUNCTION BOX
C/MH	CONVERT TO DRAINAGE MANHOLE
C/O	CURB OPENING
CR	CURB RAMP / TYPE
CR-W	CURB RAMP / TYPE - WITHOUT SIDEWALK SURFACE DETECTABLE WARNING SYSTEM
DI	DRAINAGE INLET
DND	DO NOT DISTURB
FES	FLARED END SECTION
FS	FILTRATION STRUCTURE
GR	GUARDRAIL
JB	JUNCTION BOX
LS	LANDSCAPE PLANTINGS
MH	MANHOLE
M	MONUMENT - RIGHT-OF-WAY
P	PIPE
RL/C	RELOCATE BY CONTRACTOR
RL/O	RELOCATE BY OTHERS
RM/C	REMOVE BY CONTRACTOR
RM/O	REMOVE BY OTHERS
ST	SEDIMENT TRAP
SF	SILT FENCE
UD	UNDERDRAIN

PAVEMENT SECTION(S)	
	MAINTENANCE STRIP CONSISTING OF 2" SUPERPAVE TYPE C 6" GABC
	2" SUPERPAVE TYPE C 2 1/4" SUPERPAVE TYPE B 3" BCBC 8" GRADED AGGREGATE BASE COURSE, TYPE B
	2" MILLING 2" SUPERPAVE TYPE C

RIGHT-OF-WAY SYMBOLS	
	PROPOSED RIGHT-OF-WAY MONUMENT
	EXISTING PROPERTY LINE
EASEMENT TYPE	EXISTING EASEMENT
	EXISTING RIGHT-OF-WAY
DA	PROPOSED DENIAL OF ACCESS
PE	PROPOSED PERMANENT EASEMENT
R/W	PROPOSED RIGHT-OF-WAY
R/W-DA	PROPOSED R/W & DENIAL OF ACCESS
TCE	TEMPORARY CONSTRUCTION EASEMENT
100+00	PROPOSED RIGHT-OF-WAY BASELINE
100+00	HISTORIC RIGHT-OF-WAY BASELINE

TRAFFIC	
ITMS-CON	ITMS CONDUIT
SIG-CON	SIGNAL CONDUIT
	CONDUIT JUNCTION WELL
	LUMINAIRE
	PAVEMENT MARKINGS
	PAVEMENT STRIPING
	TRAFFIC SIGN

UTILITY COMPANY FACILITIES

UNOFFICIAL WEBSITE COPY

LAST REVISED: 3/12/2008
Y:\SUSSEX\225\BRIDGE\T201107303\PLANS\LG.DGN

DELAWARE DEPARTMENT OF TRANSPORTATION

ADDENDUMS / REVISIONS

NOT TO SCALE

BR 3-930 ON S225 MARSHALL STREET, OVER HERRING BRANCH, MILFORD

CONTRACT	BRIDGE NO.	3-930
T201107303	DESIGNED BY:	
COUNTY		
SUSSEX	CHECKED BY:	

LEGEND

SHEET NO.
2
TOTAL SHTS.
15

GENERAL NOTES

1. THIS PROJECT IS TO BE CONSTRUCTED IN ACCORDANCE WITH THE DELAWARE DEPARTMENT OF TRANSPORTATION "STANDARD SPECIFICATIONS", DATED AUGUST 2001 AND THE DELAWARE DEPARTMENT OF TRANSPORTATION "STANDARD CONSTRUCTION DETAILS", DATED 2001, INCLUDING ALL REVISIONS UP TO THE DATE OF ADVERTISEMENT.

2. THE CONTRACTOR SHALL GIVE TWO (2) WEEKS NOTICE TO THE PROPERTY OWNER WHEN ANY FIXTURE, SHRUB OR OTHER OBJECT MUST BE REMOVED FROM THE RIGHT OF WAY OR EASEMENT AREA. IF THE OWNER HAS NOT ATTEMPTED TO SALVAGE THIS PROPERTY, THE CONTRACTOR SHALL REMOVE IT WITHOUT OBLIGATION. COMPENSATION SHALL BE INCIDENTAL TO THE CONTRACT.

3. THE ENDS OF ALL CURBS SHALL BE DEPRESSED FLUSH WITH THE PAVEMENT AT A RATIO OF TWELVE TO ONE (12:1) UNLESS OTHERWISE DIRECTED BY THE ENGINEER.

4. THE CONTRACTOR SHALL PROVIDE AND INSTALL PVC SLEEVES (4" INSIDE MINIMUM DIAMETER, 6" INSIDE MAXIMUM DIAMETER) IN PROPOSED CONCRETE SIDEWALKS, ISLANDS, AND MEDIANS FOR FUTURE TRAFFIC SIGN POSTS AS DIRECTED BY THE ENGINEER. THE LOWER END OF THE SLEEVE SHALL SIT ON THE TOP OF THE SUBBASE MATERIAL. THE COST SHALL BE INCIDENTAL TO THE CONTRACT.

5. STAGING AREAS - PROPER EROSION AND SEDIMENT CONTROL MEASURES AS DETERMINED BY THE ENGINEER SHALL BE INSTALLED IN ALL STAGING AREAS. ALL AREAS USED BY THE CONTRACTOR FOR STAGING OPERATIONS SHALL BE FULLY RESTORED BY THE CONTRACTOR UPON COMPLETION OF THE CONTRACT. IF THE STAGING AREA IS PAVED, IT SHALL BE RESTORED TO ITS ORIGINAL CONDITION. IF THE AREA IS UNPAVED, IT SHALL BE RE-GRADED, TOPSOILED, SEEDED AND MULCHED IN ACCORDANCE WITH DELAWARE STANDARD SPECIFICATIONS 732, 734 AND 735, FOR TOPSOIL, SEED AND MULCH RESPECTIVELY, TO THE SATISFACTION OF THE ENGINEER. THE SEED SHALL ADHERE TO THE SPECIFICATIONS OF SECTION 734 FOR PERMANENT GRASS SEEDING - DRY GROUND. ALL COSTS ASSOCIATED WITH RESTORATION OF THE STAGING AREA SHALL BE AT THE CONTRACTOR'S EXPENSE. IF THE ENGINEER DETERMINES THAT A SATISFACTORY STAND OF GRASS DOES NOT EXIST AT THE TIME OF FINAL INSPECTION, ALL COSTS ASSOCIATED WITH REESTABLISHING A SATISFACTORY STAND OF GRASS SHALL BE AT THE CONTRACTOR'S EXPENSE.

6. SITE REVIEWER - AN EROSION CONTROL SITE REVIEWER SHALL BE A PERSON FROM THE CONTRACTOR'S STAFF ASSIGNED TO EROSION AND SEDIMENT CONTROL IMPLEMENTATION AND MAINTENANCE AND SHALL BE REQUIRED ON SPECIFIC PROJECTS. THE NAME AND DNREC CERTIFICATION NUMBER OF EACH SITE REVIEWER SO REQUIRED SHALL BE SUBMITTED TO THE DEPARTMENT THE NAME OF THE DELAWARE REGISTERED PROFESSIONAL ENGINEER PROVIDING DIRECTION AND SUPERVISION OF THE SITE REVIEWER, AS REQUIRED IN SECTION 12.3 OF THE DELAWARE SEDIMENT AND STORMWATER REGULATIONS, SHALL ALSO BE SUBMITTED TO THE DEPARTMENT THE SITE REVIEWER REQUIREMENTS IN EFFECT ON THIS PROJECT SHALL BE MARKED WITH AN "X" BELOW:

EROSION POTENTIAL FOR THIS PROJECT	SITE REVIEWER REQUIREMENT
( ) INSIGNIFICANT	NONE
( ) MINOR	CONTRACTOR CERTIFICATION COURSE TRAINING ONLY, AS DEFINED IN SECTION 13 OF THE DELAWARE SEDIMENT AND STORMWATER REGULATIONS.
(X) MEDIUM	AT THE TIME OF BID OF THE CONTRACT, EITHER THE SUPERINTENDENT OR A SEPARATE INDIVIDUAL FROM THE CONTRACTOR'S STAFF SHALL BE A CERTIFIED CONSTRUCTION REVIEWER (CCR), AS DEFINED IN SECTION 12 OF THE DELAWARE SEDIMENT AND STORMWATER REGULATIONS.
( ) MAJOR	SUPERINTENDENT AND AN INDIVIDUAL FROM CONTRACTOR'S STAFF SHALL BE CCR. ONE INDIVIDUAL FROM THE CONTRACTOR'S STAFF MUST BE A CCR AT THE TIME OF BID OF THE CONTRACT. THE SUPERINTENDENT MUST BECOME A CCR WITHIN ONE YEAR AFTER THE AWARD OF CONTRACT.

7. ELECTRONIC PROJECT FILES THAT WILL BE MADE AVAILABLE TO THE CONTRACTOR INCLUDE:

(X)	NONE
( )	ASCII DATA FILES WITH COORDINATES AND ELEVATIONS FOR PROPOSED POINTS AS SELECTED BY THE ENGINEER.
( )	RASTER FILES, IN .CAL FILE FORMAT, FOR ALL PLAN SHEETS.
( )	EXISTING DIGITAL TERRAIN MODEL, IN .DTM FILE FORMAT, COMPATIBLE WITH SOFTWARE CURRENTLY USED BY DELDOT.
( )	PROPOSED DIGITAL TERRAIN MODEL, IN .DTM FILE FORMAT, COMPATIBLE WITH SOFTWARE CURRENTLY USED BY DELDOT.
( )	DESIGN FILE, IN .DGN FILE FORMAT, CONTAINING ONLY THE PROPOSED 3D TRIANGLES OF THE PROPOSED DIGITAL TERRAIN MODEL (DTM).

8. AMERICAN TRAFFIC SAFETY SERVICES ASSOCIATION (ATSSA) CERTIFIED TRAFFIC CONTROL SUPERVISOR REQUIREMENT FOR THIS PROJECT.

(X)	THE CONTRACTOR SHALL NOT BE REQUIRED TO HAVE AN ATSSA SUPERVISOR ASSIGNED TO THIS PROJECT.
( )	THE CONTRACTOR SHALL HAVE AN ATSSA SUPERVISOR ASSIGNED TO THIS PROJECT. THE CONTRACTOR'S GENERAL SUPERINTENDENT FOR THIS PROJECT OR ANOTHER ATSSA CERTIFIED MEMBER OF THE CONTRACTOR'S PROJECT STAFF MAY BE THE ATSSA SUPERVISOR.
( )	THE CONTRACTOR SHALL HAVE AN ATSSA SUPERVISOR ASSIGNED TO THIS PROJECT. THE ATSSA SUPERVISOR'S SOLE JOB SHALL BE SUPERVISION OF THE INSTALLATION, OPERATION AND MAINTENANCE OF TRAFFIC CONTROL DEVICES FOR THIS PROJECT. THE CONTRACTOR'S GENERAL SUPERINTENDENT FOR THIS PROJECT SHALL NOT BE THE ATSSA SUPERVISOR.

9. THE DISTURBED AREA FOR THIS PROJECT IS 0.454 ACRES.

PROJECT NOTES

SECTION 100

1. ANY DAMAGE TO ITEMS NOTED TO BE RELOCATED OR RESET BY THE CONTRACTOR, AT THE DISCRETION OF THE ENGINEER, SHALL BE REPAIRED AND/OR REPLACED IN KIND AT THE CONTRACTOR'S EXPENSE.

SECTION 200

2. SHORING SHALL BE REQUIRED FOR ANY EXCAVATION EXCEEDING 5 FEET IN HEIGHT. THE COST OF SHORING SHALL BE INCIDENTAL TO ITEM 207000 - EXCAVATION AND BACKFILL FOR STRUCTURES. IN LIEU OF SHORING, THE CONTRACTOR MAY USE A 2:1 CUT SLOPE. NO PAYMENT SHALL BE MADE FOR ADDITIONAL EXCAVATION OR FILL OUTSIDE THE LIMITS AS DEFINED IN EITHER SECTION 207 OF THE STANDARD SPECIFICATIONS.

3. ITEMS TO BE REMOVED UNDER ITEM 211000 - REMOVAL OF STRUCTURES AND OBSTRUCTIONS SHALL INCLUDE, BUT NOT BE LIMITED TO THE FOLLOWING:
   - REMOVAL OF THE EXISTING STRUCTURE IN ITS ENTIRETY INCLUDING ALL PIPES AND CONCRETE SLOPE PAVING
   - REMOVAL OF THE EXISTING CONCRETE SACK RIPRAP WITHIN THE CHANNEL THAT CONFLICTS WITH RIPRAP PLACEMENT

4. ALL EXISTING PAVEMENT FROM STA. 2+50 TO STA. 3+50 AS SHOWN ON THE PLAN SHALL BE EXCAVATED IN ITS ENTIRETY. PAYMENT FOR HOTMIX REMOVAL UNDER ITEM 202000 - EXCAVATION AND EMBANKMENT.

SECTION 600

5. PORTLAND CEMENT CONCRETE
   STRUCTURAL ELEMENTS OF PORTLAND CEMENT CONCRETE SHALL BE AS NOTED: (F'c = 28 DAY COMPRESSIVE STRENGTH)
   - CLASS A CONCRETE - PARAPET (F'c = 4500 psi)
   - MIX REQUIREMENTS SHALL CONFORM TO SECTION 812 OF THE SPECIFICATIONS.
   - ALL EXPOSED EDGES SHALL BE CHAMFERED ¾" UNLESS OTHERWISE NOTED.
   - ALL KEYED CONSTRUCTION JOINTS SHALL BE 2" x 4" UNLESS OTHERWISE NOTED.
   - ALL EXPOSED CONSTRUCTION JOINTS EDGES SHALL HAVE A ¾" V-NOTCH.

6. BAR REINFORCEMENT
   REINFORCING STEEL SHALL CONFORM TO AASHTO M31 (ASTM A615), GRADE 60. ALL REINFORCING STEEL SHALL HAVE A CLEAR COVER OF 2", UNLESS OTHERWISE SPECIFIED ON THE PLANS. ALL REINFORCING STEEL SHALL BE PROTECTED WITH FUSION BONDED EPOXY. EPOXY COATED REINFORCING STEEL SHALL CONFORM TO AASHTO M284 (ASTM D3963) AND IS DENOTED WITH A SUFFIX 'E' IN THE BAR MARKS.

7. LIMITS OF COARSE AGGREGATE FOR FOUNDATION STABILIZATION SHALL EXTEND 18" OUTSIDE OF THE NEAT LINE PERIMETER OF THE VERTCAL FACES OF ANY FOOTER, ENCASEMENT OR STRUCTURAL UNIT.

8. UNDERCUT EXCAVATION
   THE SOIL BORINGS IDENTIFY LOOSE SAND AT THE ELEVATION OF THE BOTTOM OF FOOTINGS. THIS LAYER MAY BE UNACCEPTABLE FOR BEARING OF THE RIGID FRAME / WINGWALLS AND SHALL BE EXCAVATED UNTIL SUITABLE MATERIAL IS REACHED AS DETERMINED BY THE FIELD ENGINEER. UNDERCUT EXCAVATION IS ESTIMATED AT 2' ANY AREAS OF UNDERCUT EXCAVATION SHALL BE BACKFILLED WITH BORROW TYPE 'B'.

SECTION 700

9. ALL PAVED AREAS TO BE REPLACED OR OVERLAYED SHALL BE SAWCUT AT THE POINT WHERE THE NEW PAVEMENT IS TO TIE INTO THE EXISTING PAVEMENT. ALL HOT-MIX SAWCUTTING SHALL BE FULL DEPTH, UNLESS OTHERWISE NOTED ON THE PLANS, OR AS DIRECTED BY THE ENGINEER.

10. ALL PAVEMENT BETWEEN STATIONS 2+00 TO 2+50 AND 3+50 TO 4+00 SHALL BE MILLED TO DEPTH OF 2" UNLESS NOTED OTHERWISE (E.G., UNDERGROUND UTILITY RELOCATIONS) IN THESE PLANS. REMOVAL SHALL BE AS PER ITEM 760006 - PAVEMENT-MILLING, HOT-MIX, 2" DEPTH.

11. STRIPING
    PROPOSED STRIPING SHALL MATCH THE EXISTING STRIPING PATTERN OF A DOUBLE YELLOW CENTERLINE AND WHITE EDGE LINES. THE STOP ON SOUTHBOUND MARSHALL STREET AT STA. 2+00 SHALL BE REPLACED.

MISCELLANEOUS

12. DESIGN CRITERIA
    2010 AASHTO LRFD BRIDGE DESIGN SPECIFICATIONS, 5th EDITION,
    USING AASHTO HL93 FOR LIVE LOAD, 25 psf FOR FUTURE WEARING SURFACE.

13. HYDRAULIC DATA
    DRAINAGE AREA = 4.65 sq.miles
    DESIGN FREQUENCY = 50 years — 50 yr FLOOD ELEVATION = 14.38 ft
    DESIGN DISCHARGE = 439 cfs — PROPOSED OPENING = 130 SF

14. SCOUR ANALYSIS
    THE PROPOSED STRUCTURE HAS BEEN ANALYZED FOR THE EFFECTS OF SCOUR IN ACCORDANCE WITH HEC-18 - 'EVALUATING SCOUR AT BRIDGES' AND HEC-14 - 'HYDRAULIC DESIGN OF ENERGY DISSIPATORS.' SCOUR COUNTERMEASURES HAVE BEEN DESIGNED FOR THE WORST CASE OF THE OVERTOPPING FLOOD OR THE 500-yr FLOOD EVENT.

    DESIGN EVENT = 500 YR — DESIGN VELOCITY = 5.38 ft/s
    DESIGN DISCHARGE = 750 cfs — DESIGN DEPTH OF FLOW = 7.68 ft

15. ENVIRONMENTAL COMPLIANCE:
    REFER TO THE ENVIRONMENTAL COMPLIANCE PLAN FOR ANY RESTRICTIONS AND ADDITIONAL GUIDANCE THAT MAY BE ASSOCIATED TO THIS PROJECT.

16. THERE SHALL BE NO ACCESS AND NO DISTURBANCE TO THE MILL POND PROPERTIES PARCEL.

LRFR LOAD RATINGS

TYPE OF TRUCK	INVENTORY RATING		OPERATING RATING	
	RATING FACTOR	LOAD RATING (TONS)	RATING FACTOR	LOAD RATING (TONS)
AASHTO HL-93 + HL-93 LANE	x.xx	N/A	x.xx	N/A
AASHTO HL-93 TANDEM + HL-93-LANE	x.xx	N/A	x.xx	N/A
AASHTO HS20T	x.xx	xx.xx	x.xx	xx.xx

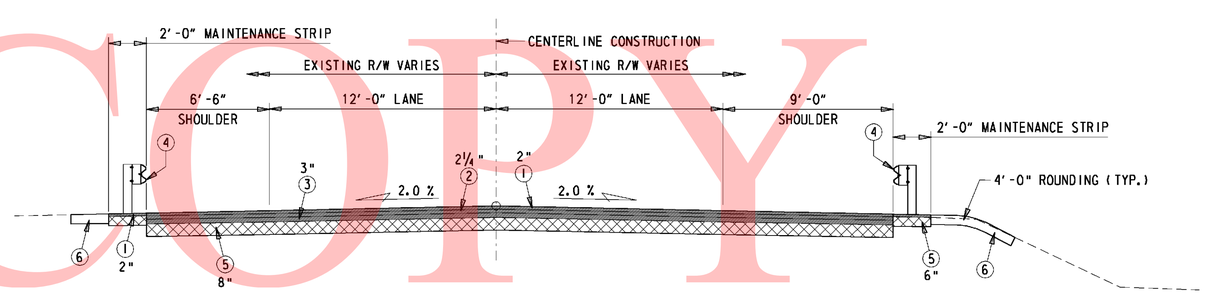

TYPICAL ROADWAY SECTION

¼" = 1'-0"

TYP. SECTION LEGEND

1. SUPERPAVE, TYPE C HOT MIX, 160 GYRATIONS, PG 70-22
2. SUPERPAVE, TYPE B HOT MIX, 160 GYRATIONS, PG 70-22
3. SUPERPAVE, BCBC, 160 GYRATIONS, PG 64-22
4. GALVANIZED STEEL BEAM GUARDRAIL, 27"
5. GRADED AGGREGATE BASE COURSE, TYPE 'B'
6. TOPSOIL, 6" DEPTH, PER. SEEDING, DRY GROUND

UNOFFICIAL WEBSITE COPY

LAST REVISED: 5/5/2009
Y:\SUSSEX\225\BRIDGE\T201107303\PLANS\PN01.DGN

DELAWARE DEPARTMENT OF TRANSPORTATION	ADDENDUMS / REVISIONS	NOT TO SCALE	BR 3-930 ON S225 MARSHALL STREET, OVER HERRING BRANCH, MILFORD	CONTRACT T201107303	BRIDGE NO. 3-930	GENERAL NOTES AND PROJECT NOTES	SHEET NO. 3
				COUNTY SUSSEX	DESIGNED BY: GCL III		TOTAL SHTS. 15
					CHECKED BY: GCL III		

HORIZONTAL / VERTICAL CONTROL DATA					
POINT	STATION	OFFSET	NORTHING	EASTING	ELEVATION
2			326857.86	654575.01	27.45
3	1+10.99	-35.20	327650.35	654542.62	24.62
4	2+71.28	-113.88	327203.27	654450.43	18.62
5	4+09.20	-232.50	327330.47	654320.38	15.50
6			327659.82	654562.02	18.85
7	2+99.18	-20.30	327239.12	654541.27	18.24
8			326872.27	654617.43	28.70
103	2+72.30	126.06	327224.94	654689.40	15.91

UNOFFICAL WEBSITE COPY

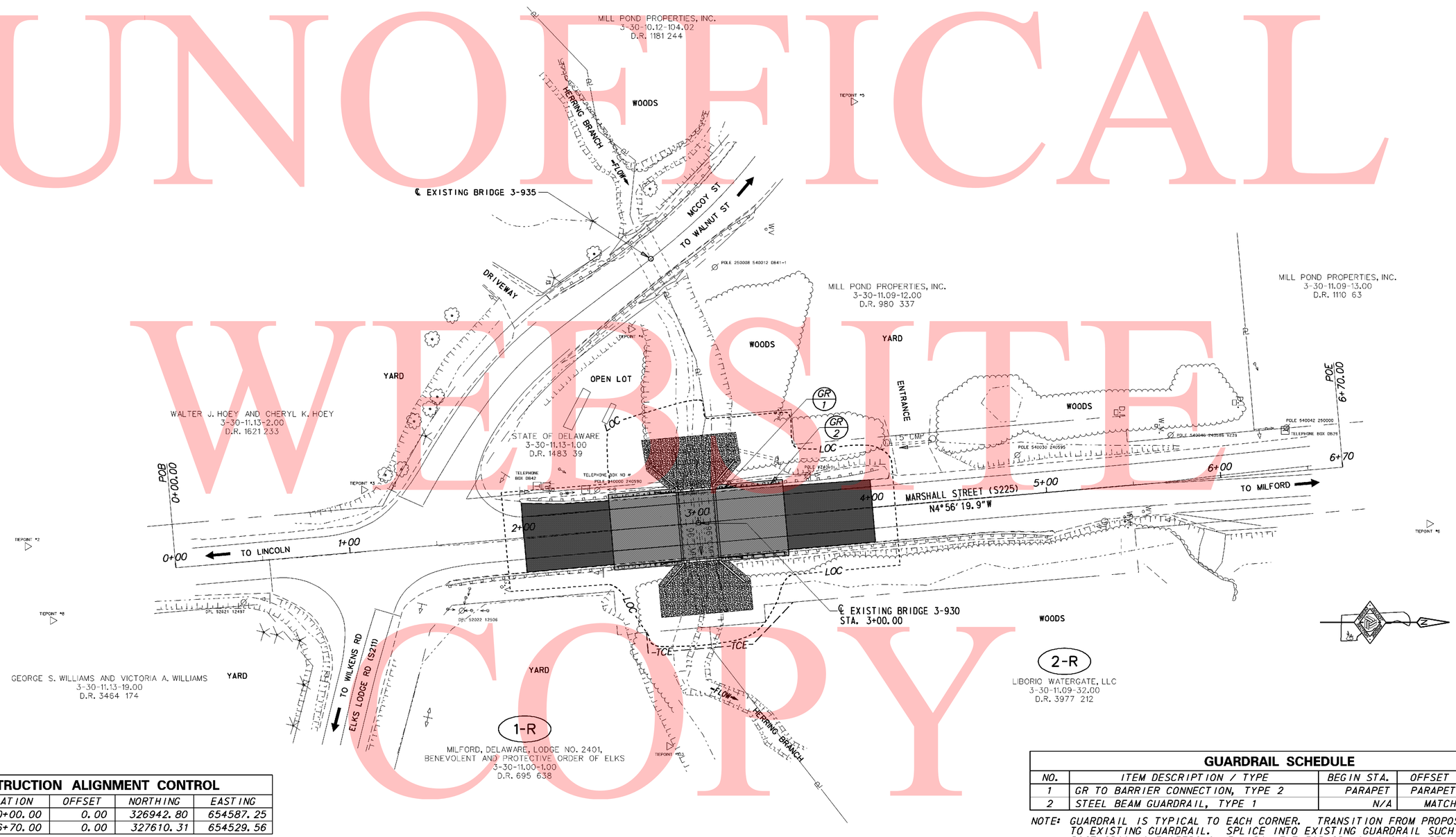

CONSTRUCTION ALIGNMENT CONTROL				
POINT	STATION	OFFSET	NORTHING	EASTING
POB	0+00.00	0.00	326942.80	654587.25
POE	6+70.00	0.00	327610.31	654529.56

GUARDRAIL SCHEDULE				
NO.	ITEM DESCRIPTION / TYPE	BEGIN STA.	OFFSET	LENGTH
1	GR TO BARRIER CONNECTION, TYPE 2	PARAPET	PARAPET	25.00
2	STEEL BEAM GUARDRAIL, TYPE 1	N/A	MATCH	12.50

NOTE: GUARDRAIL IS TYPICAL TO EACH CORNER. TRANSITION FROM PROPOSED PARAPET TO EXISTING GUARDRAIL. SPLICE INTO EXISTING GUARDRAIL SUCH THAT NO POST SPACING EXCEEDS 6'-3". PAYMENT FOR SPLICING SHALL BE INCIDENTAL TO ITEM 720043 - GALVANIZED STEEL BEAM GUARDRAIL, TYPE 1 - 27".

Y:/SUSSEX/225/BRIDGE/T201107303/PLANS/CP01.DGN

DELAWARE DEPARTMENT OF TRANSPORTATION

ADDENDUMS / REVISIONS

SCALE 0 30 60 90 FEET

BR 3-930 ON S225 MARSHALL STREET, OVER HERRING BRANCH, MILFORD

CONTRACT	BRIDGE NO. 3-930	CONSTRUCTION PLAN	SHEET NO.
T201107303	DESIGNED BY: GCL III		4
COUNTY			TOTAL SHTS.
SUSSEX	CHECKED BY: JKM		15

UNOFFICAL WEBSITE COPY

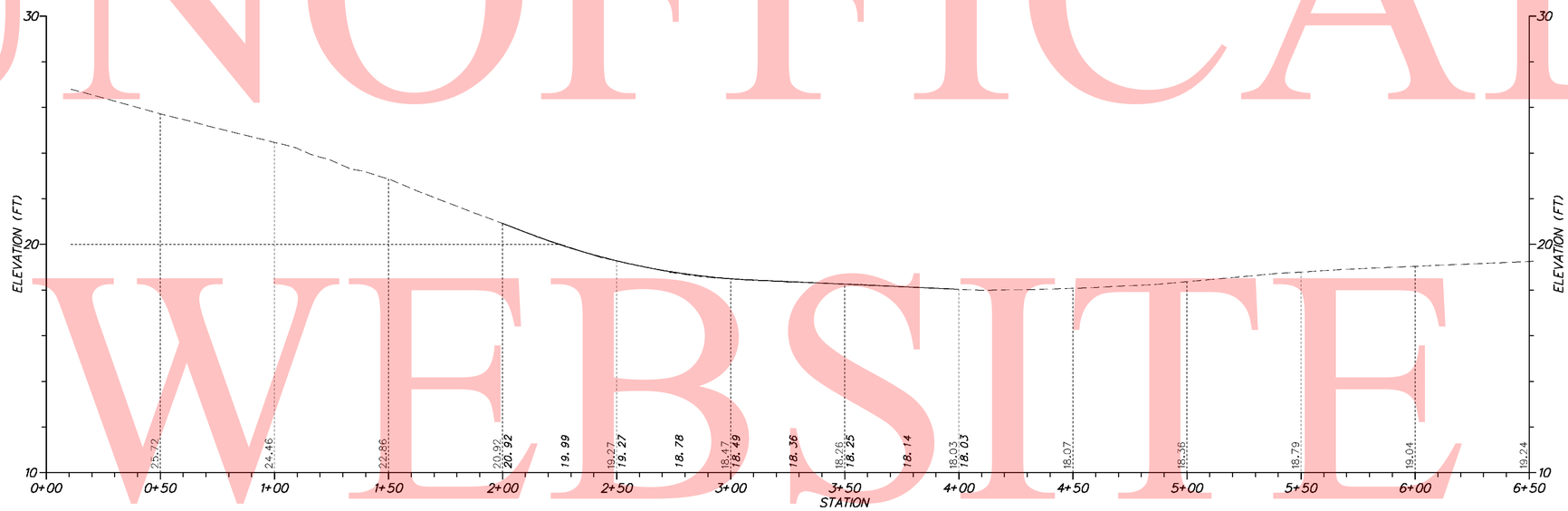

VERTICAL SCALE FEET 0 3 6 9

W:\MSV8\CELLS\PROJDEV\SB.CEL

DELAWARE DEPARTMENT OF TRANSPORTATION

ADDENDUMS / REVISIONS	

SCALE 0 30 60 90 FEET

BR 3-930 ON S225 MARSHALL STREET, OVER HERRING BRANCH, MILFORD

CONTRACT	BRIDGE NO.	3-930
T201107303	DESIGNED BY: GCL III	
COUNTY		
SUSSEX	CHECKED BY: BAB	

PROFILES

SHEET NO.
5
TOTAL SHTS.
15

CAST-IN-PLACE CONCRETE REINFORCING BAR LIST								
QTY.	SIZE	LENGTH	MARK	TYPE	A	B	C	D
96	5	3-2'0	PA501E	STR		3-2'0		
32	5	10-1'10	PA502E	STR		10-1'10		
52	5	3-7'0	PA503E	17		1-4'0	0-1'10	1-4'0
4	5	5-7'0	PA504E	17		2-4'0	0-1'10	2-4'0

NOTES:
1. REINFORCING BARS LISTED HERE PERTAIN TO THE CAST-IN-PLACE PARAPETS ONLY.
2. THE LENGTH OF BAR PA501E ASSUMES 6" TO BE THREADED AND INSERTED INTO THE THREADED INSERT PROVIDED IN PRECAST SECTIONS, SUCH THAT A 2" COVER REMAINS AT THE TOP OF THE BAR. THIS LENGTH MAY BE ADJUSTED TO MATCH WITH THE CONTRACTOR'S AND/OR PRECASTER'S CHOICE OF THREADED INSERT.

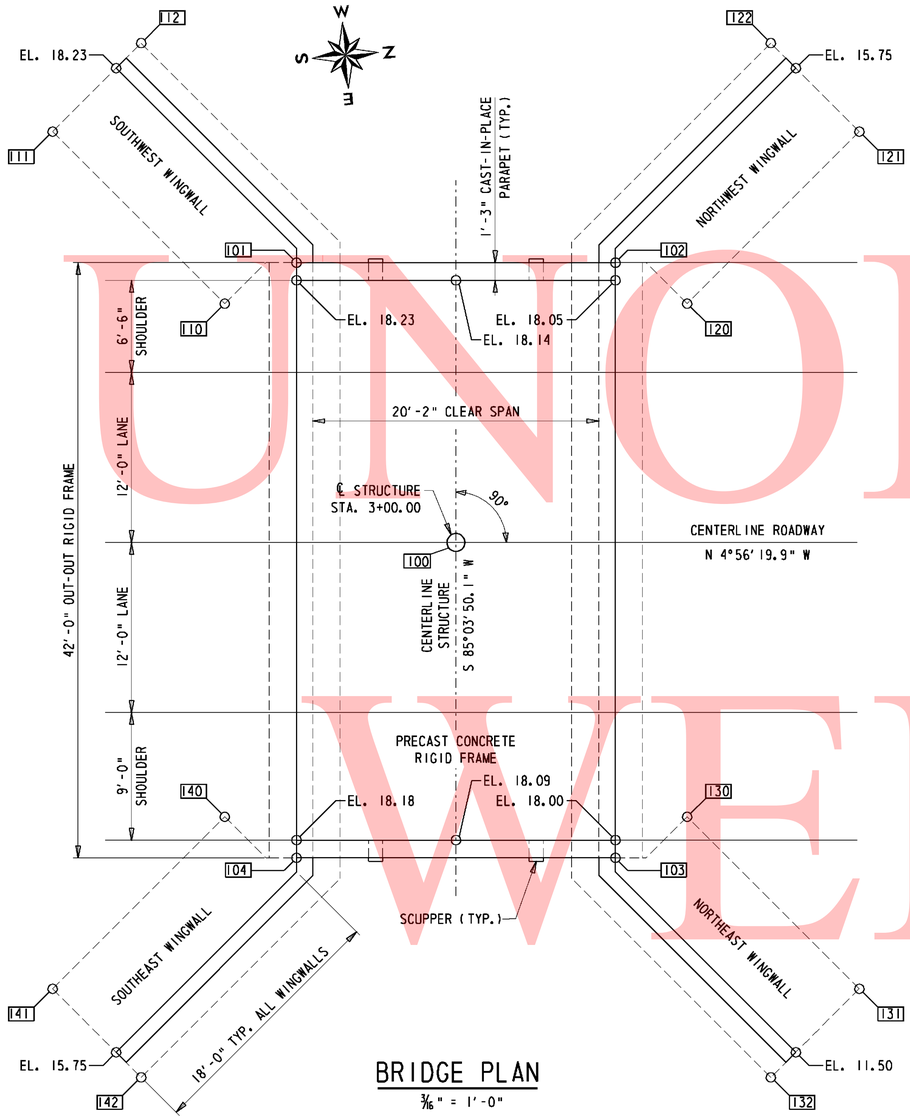

BRIDGE PLAN

3/16" = 1'-0"

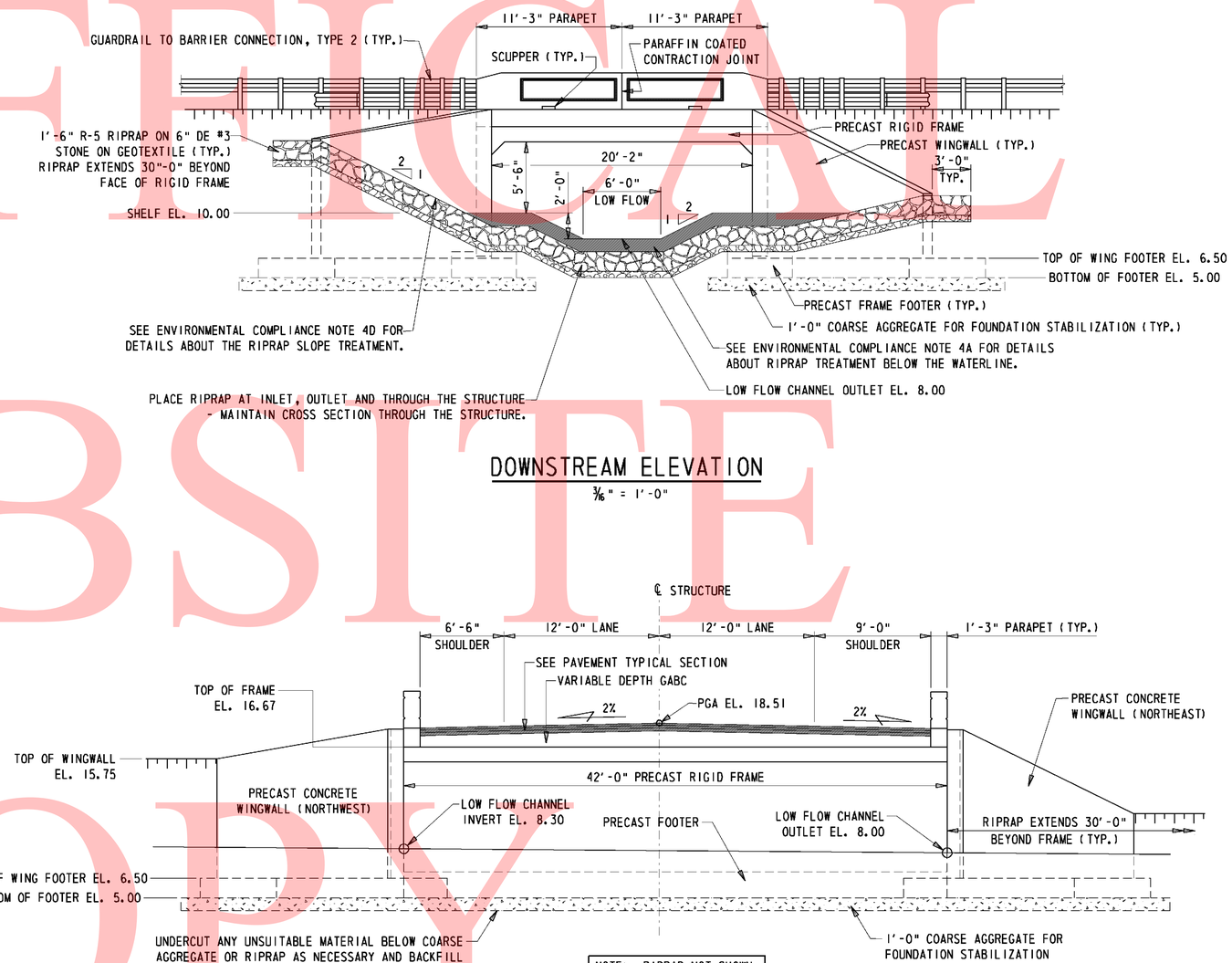

DOWNSTREAM ELEVATION

3/16" = 1'-0"

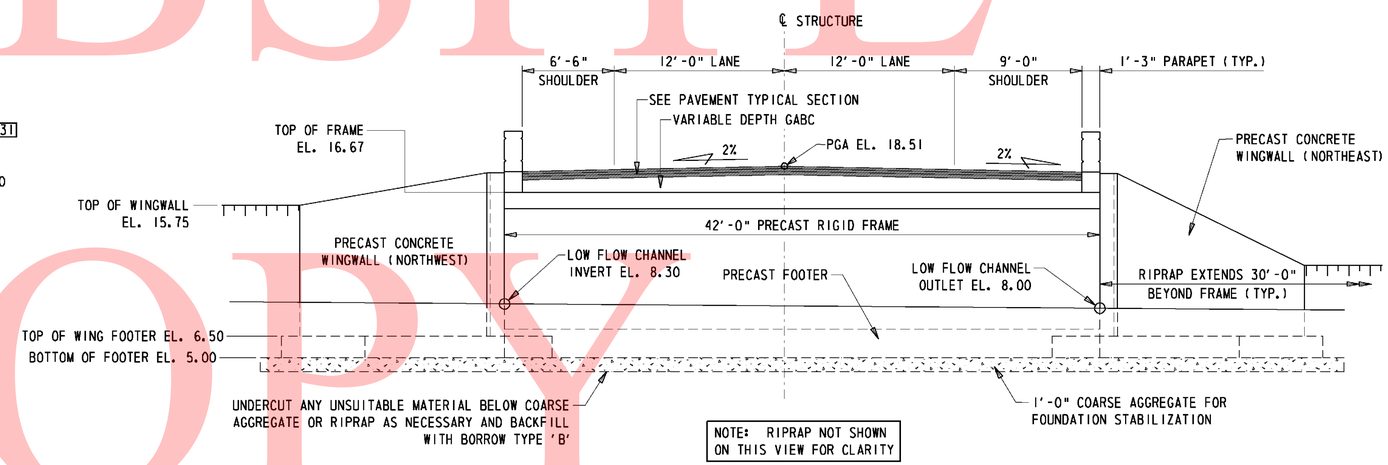

BRIDGE SECTION

3/16" = 1'-0"

WORKING POINTS					WORKING POINTS				
POINT	STATION	OFFSET	NORTHING	EASTING	POINT	STATION	OFFSET	NORTHING	EASTING
100	3+00.00	0.00	327241.69	654561.42	122	3+22.21	-35.25	327260.78	654524.39
101	2+88.75	-19.75	327228.78	654542.71	130	3+16.31	19.35	327259.61	654579.30
102	3+11.25	-19.75	327251.20	654540.77	131	3+28.46	31.50	327272.75	654590.35
103	3+11.25	22.25	327254.81	654582.62	132	3+22.21	37.75	327267.07	654597.11
104	2+88.75	22.25	327232.40	654584.55	140	2+83.69	19.35	327227.10	654582.11
110	2+83.69	-16.85	327223.99	654546.03	141	2+71.54	31.50	327216.05	654595.25
111	2+71.54	-29.00	327210.84	654534.98	142	2+77.79	37.75	327222.81	654600.81
112	2+77.79	-35.25	327216.53	654528.21					
120	3+16.31	-16.85	327256.49	654543.22					
121	3+28.46	-29.00	327267.54	654530.08					

UNOFFICIAL WEBSITE COPY

W:\MSV8\CELLS\PROJDEV\SB.CEL

DELAWARE DEPARTMENT OF TRANSPORTATION

ADDENDUMS / REVISIONS

BR 3-930 ON S225 MARSHALL STREET, OVER HERRING BRANCH, MILFORD

CONTRACT	BRIDGE NO.	3-930
T201107303	DESIGNED BY: GCL III	
COUNTY	CHECKED BY: JKM	
SUSSEX		

BRIDGE PLAN, SECTION AND ELEVATION

SHEET NO. 6
TOTAL SHTS. 15

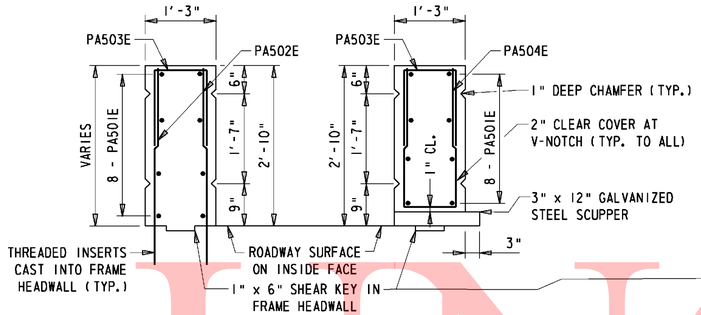

TYPICAL SECTION SECTION AT SCUPPER

TYPICAL PARAPET SECTIONS

3/4" = 1'-0"

NOTE: ALL PARAPETS SHALL BE CAST-IN-PLACE.

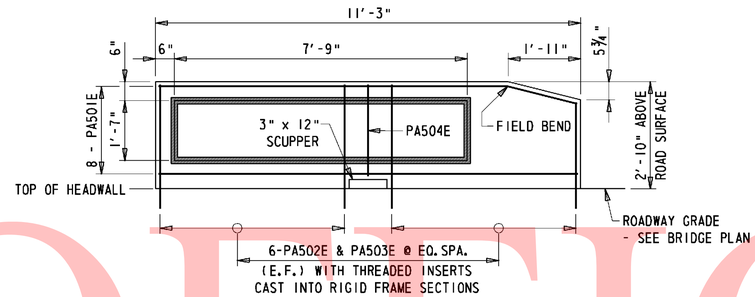

FRAME PARAPET ELEVATION

1/2" = 1'-0"

PRECAST ELEMENT NOTES

1. DESIGN PLANS / WORKING DRAWINGS
   INFORMATION PERTAINING TO THE PRECAST REINFORCED CONCRETE RIGID FRAME AND WINGWALL SECTIONS IS INTENDED TO SERVE AS AN INDICATION OF THE TYPE OF CONSTRUCTION ACCEPTABLE FOR USE. THE CONTRACTOR WILL BE REQUIRED TO PREPARE AND SUBMIT FOR APPROVAL A COMPLETE SET OF DETAILED SHOP DRAWINGS FOR THE PRECAST CONCRETE UNITS THEY PROPOSE TO FURNISH. THE SHOP DRAWINGS SHALL INCLUDE:
   A. AN OVERALL PLAN SHOWING ALL UNITS TOGETHER AND DETAILS OF EACH TYPE OF UNIT.
   B. A PLAN VIEW OF REINFORCEMENT FOR ANY IRREGULAR SHAPED (SKEWED, CURVED, ETC.) SECTIONS.
   C. REINFORCING BAR LIST
   D. BILL OF MATERIALS INCLUDING ALL ACCESSORIES
   E. METHOD AND SEQUENCE OF POST-TENSIONING
2. PRECAST ELEMENTS, ACCESSORIES AND INSTALLATION
   PAYMENT FOR ITEM 602739 - PRECAST CONCRETE RIGID FRAME AND ITEM 602738 - PRECAST CONCRETE RETAINING WALL SHALL INCLUDE:
   A. ALL PRECAST ELEMENTS FOR RIGID FRAME, HEADWALLS AND FOOTERS UNDER ITEM 602739 AND WINGWALLS UNDER ITEM 602738.
   B. ALL ASSOCIATED REINFORCEMENT.
   C. ALL ACCESSORIES (INCLUDING, BUT NOT LIMITED TO, WEEP HOLES, CONCRETE FINISH, POST-TENSIONING TENDONS, CONNECTION PLATES, GROUT, JOINT WRAP, THREADED INSERTS) MENTIONED IN THE FOLLOWING NOTES UNLESS NOTED OTHERWISE.
   D. DELIVERY AND INSTALLATION OF ALL PRECAST ELEMENTS AND ALL ACCESSORIES.
3. MISCELLANEOUS CONCRETE NOTES
   A. ALL EXPOSED SURFACES SHALL BE PROTECTED WITH A WATER MISCIBLE, PENETRATING SILANE SEALER SUCH AS ENVIROSEAL 20 BY BASF SUPERIOR OR APPROVED EQUAL.
   B. ALL EXPOSED EDGES SHALL BE CHAMFERED 3/4" UNLESS OTHERWISE NOTED.
4. RIGID FRAME POST-TENSIONING
   THE PRECAST RIGID FRAME SECTIONS SHALL BE POST-TENSIONED TOGETHER WITH A MINIMUM OF FOUR POST-TENSIONING TENDONS. THE FRAME SHALL BE POST-TENSIONED SUCH THAT THE NEOPRENE GASKETS ARE COMPRESSED ALL AROUND AND THERE IS A 1/2" MAXIMUM GAP BETWEEN SECTIONS. MAXIMUM POST-TENSIONING FORCE SHALL BE 28,900 lbs. POST-TENSIONING DETAILS (PLACEMENT, SEQUENCE OF TENSIONING, etc.) SHALL BE SHOWN IN THE SUBMITTED SHOP DRAWINGS. ALL POCKETS FOR POST-TENSIONING DUCTS SHALL BE FILLED WITH NON-SHRINK GROUT.
5. WINGWALL POST TENSIONING
   A. THE PRECAST WINGWALL SECTIONS SHALL BE POST TENSIONED TOGETHER AND POSITIVELY CONNECTED TO THE RIGID FRAME WITH A MINIMUM OF TWO POST-TENSIONING TENDONS. POST-TENSIONING SHALL BE AS PER NOTE 4.
   B. AT LOCATIONS WHERE POST TENSIONING OF THE WINGWALLS IS NOT FEASIBLE, A BOLTED CONNECTION MAY BE USED. BOLTED CONNECTION DETAILS SHALL BE SHOWN IN THE SUBMITTED SHOP DRAWINGS.
6. BOLTED CONNECTIONS
   THE BOLTED CONNECTION MUST CONSIST OF A MINIMUM OF TWO 3'-0" WIDE x 2'-0" TALL x 1#4" THICK PLATES PER JOINT WITH AT LEAST FOUR 3/4" BOLTS PER PLATE. ANGLED PLATES SHALL HAVE 8 BOLTS. SLOTTED HOLES IN THE PLATE SHALL NOT BE PERMITTED. HOLES FOR ANCHOR BOLTS MAY BE FIELD DRILLED.
7. JOINTS BETWEEN PRECAST SECTIONS
   A. NEOPRENE GASKETS SHALL BE PROVIDED AT THE JOINTS BETWEEN ALL PRECAST UNITS IN ORDER TO MAKE THE JOINTS WATERTIGHT. AFTER INSTALLATION, THE GASKETS SHALL BE COMPRESSED SUCH THAT GAPS ARE NOT VISIBLE.
   B. ALL JOINTS BETWEEN PRECAST RIGID FRAME SECTIONS SHALL HAVE A SHEAR KEY IN THE TOP SLAB.
   C. ALL WINGWALL TO WINGWALL AND WINGWALL TO RIGID FRAME JOINTS SHALL HAVE A SHEAR KEY.
   D. THE LOCATIONS OF THE JOINTS IN THE RIGID FRAME OR WINGWALLS SHALL BE DETERMINED BY THE PRECASTER AND SUBMITTED IN THE SHOP DRAWINGS FOR APPROVAL.
   E. THE REINFORCEMENT SHALL HAVE 2" COVER AT THE END OF EACH SECTION AND MEET OR EXCEED THE MINIMUM AREA OF STEEL PER FOOT DENOTED IN THE PLANS.
   F. ALL JOINT EXTERIORS SHALL BE COVERED WITH A MINIMUM 9" WIDE WRAP CENTERED ON THE JOINT AS PER THE SPECIAL PROVISION FOR ITS RESPECTIVE ITEM.

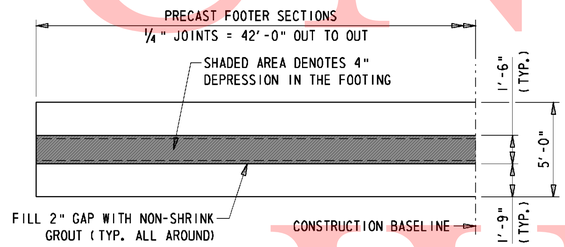

PRECAST FOOTER HALF PLAN

1/4" = 1'-0"

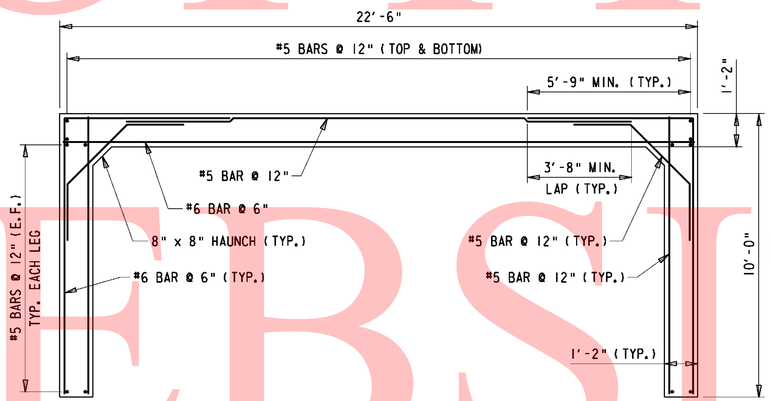

PRECAST RIGID FRAME SECTION

3/8" = 1'-0"

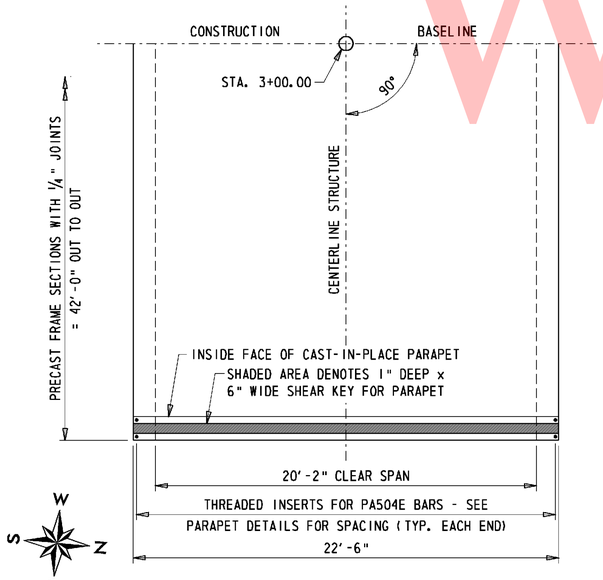

PRECAST RIGID FRAME HALF PLAN

1/4" = 1'-0"

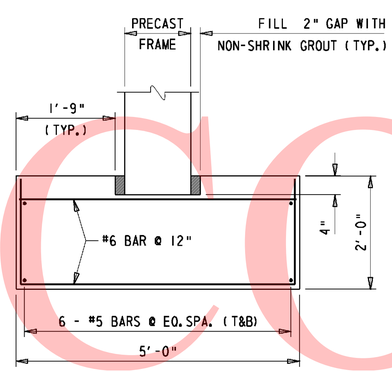

PRECAST FOOTER SECTION

3/4" = 1'-0"

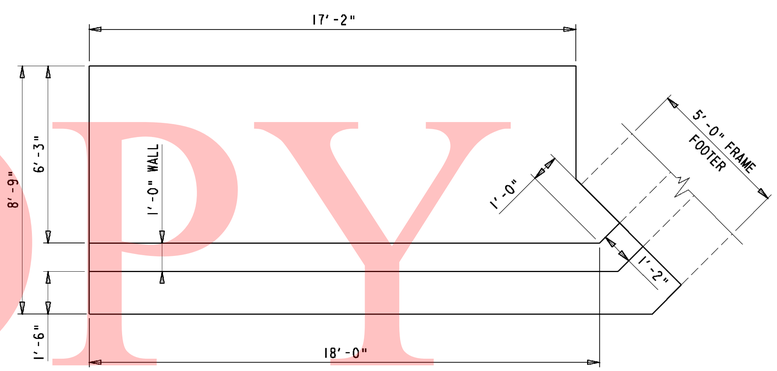

NOTE: SEE BRIDGE PLAN FOR TOP OF WINGWALL ELEVATIONS.

WINGWALL PLAN

3/8" = 1'-0"

NOTE: OTHER WINGWALLS ARE OPPOSITE HAND ABOUT C/L STRUCTURE OR C/L ROADWAY.

F.F. - DENOTES FILL FACE
S.F. - DENOTES STREAM FACE
E.F. - DENOTES EACH FACE

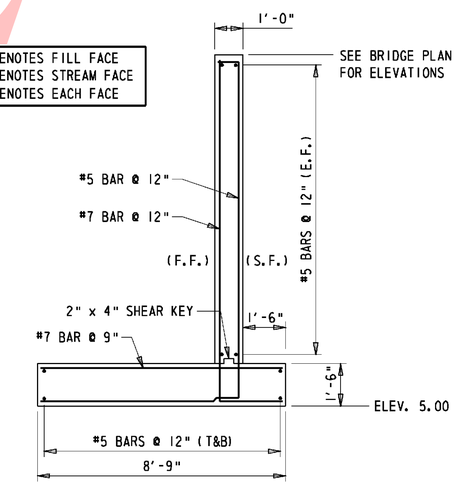

PRECAST WINGWALL SECTION

3/8" = 1'-0"

UNOFFICIAL WEBSITE COPY

DELAWARE DEPARTMENT OF TRANSPORTATION	ADDENDUMS / REVISIONS	BR 3-930 ON S225 MARSHALL STREET, OVER HERRING BRANCH, MILFORD	CONTRACT T201107303 / COUNTY SUSSEX	BRIDGE NO. 3-930 / DESIGNED BY: GCL III / CHECKED BY: JKM	BRIDGE DETAILS	SHEET NO. 7 / TOTAL SHTS. 15

BORING: MS # 1 | DATE DRILLED:
STATION: | OFFSET: | ELEVATION: | NORTHING: 327267.78 | EASTING: 654563.50
COMMENTS:

DEPTH (FT.)	NO.	SAMPLE DEPTH	Blows/6"	SAMPLE DESCRIPTION	CLASS./G.I.	REMARKS
	1	0.0'		No Sampling		Asphalt - 6". Crusher
	2	2.0'	10 11	0" RECOVERY	A-2-4(0)	\Run
	3	2.0' 4.0'	9 9	Moist medium dense brown fine to coarse sand w/some silt, trace of fine gravel. 24" RECOVERY	A-2-4(0)	
	4	4.0'	5		A-2-4(0)	
10	5	6.0'	6	Moist medium dense brown fine to coarse w/some silt, trace of fine gravel. 22" RECOVERY	A-2-4(0)	
	5A	6.0'	8		A-3	
	6	8.0'	8		A-1-b	
	7	8.0' 9.0'	10 5	Moist loose brown fine to coarse sand w/ some silt, trace of fine gravel. 22" RECOVERY	A-1-b	
	8	9.0'	5		A-1-b	
	9	10.0'	4		A-1-b	
20	10	10.0' 12.0'	4 3	Moist loose gray fine to coarse sand w/ some silt, trace of fine gravel. 12" RECOVERY	A-1-b	
	11	12.0' 14.0'	2 3	No Sieve Analysis - Indication of saturated soft brown organic silt. 10" RECOVERY	A-1-b	
		14.0' 16.0'	5 4			
30	12	16.0' 18.0'	5 5	Saturated loose gray fine to coarse sand w/trace of silt and fine gravel. 14" RECOVERY	A-1-b	
	13	18.0' 20.0'	3 3	Saturated loose gray fine gravelly coarse to fine sand w/trace of silt. 18" RECOVERY	A-3	
		23.0' 25.0'	16 7			
40	14	28.0' 30.0'	5 4	Saturated medium dense light brown coarse to fine sand w/some fine gravel, trace of silt. 14" RECOVERY	A-2-4(0)	
	15	33.0' 35.0'	5 4		A-2-4(0)	
		38.0' 40.0'	4 5	Saturated loose light brown coarse to fine sand w/trace of silt and fine gravel. 20" RECOVERY		
50	16	43.0' 45.0'	5 6		A-2-4(0)	
		48.0' 50.0'	5 7	Saturated medium dense light brown coarse to fine sand w/trace of silt and fine gravel. 22" RECOVERY		
			9 11			
60			11 14	Saturated medium dense light brown fine gravelly coarse to fine sand w/trace of silt. 18" RECOVERY		
			20 16			
			12 12			
			20 26	Saturated dense brown fine gravelly coarse sand w/some fine sand, trace of silt. 16" RECOVERY		
70			3 9			
			12 11			
			5 7	Saturated dense light brown fine sand w/ trace of coarse sand, silt and fine gravel. 20" RECOVERY		
			10 12			
80			20 20	Saturated medium dense light brown fine sand w/some silt, trace of coarse sand and organic matter. 24" RECOVERY		
			22 20			
90				Saturated medium dense gray fine sand w/ some silt, trace of coarse sand and organic matter. 24" RECOVERY		
				Saturated dense gray fine sand w/some silt, trace of coarse sand and organic matter. 24" RECOVERY		
100				End of Boring		
110						
120						
130						
140						
150						

BORING: MS # 2 | DATE DRILLED: 1/20/2011
STATION: | OFFSET: | ELEVATION: | NORTHING: 327220.29 | EASTING: 654553.37
COMMENTS:

DEPTH (FT.)	NO.	SAMPLE DEPTH	Blows/6"	SAMPLE DESCRIPTION	CLASS./G.I.	REMARKS
		0.0'		No Sampling		Asphalt - 6". Crushed
	1	2.0'	11 18	0" RECOVERY	A-2-4(0)	Stone - 12".
	2	2.0' 4.0'	21 19	Moist dense tan fine to coarse sand w/ some silt, trace of fine gravel. 18" RECOVERY	A-2-4(0)	Fill
	3	4.0'	7		A-2-4(0)	Fill
10	3A	6.0'	6	Moist medium dense tan fine to coarse sand w/some silt, trace of fine gravel. 20" RECOVERY	A-2-4(0)	Fill
	4	6.0'	6		A-2-4(0)	
	5	7.0'	6		A-4(0)	
	6	7.0' 8.0'	4 4	Moist loose tan fine to coarse sand w/ some silt, trace of fine gravel. 10" RECOVERY	A-1-b	
	7	8.0'	2		A-1-b	
	8	10.0'	2		A-1-b	
20	9	10.0' 12.0'	1 1	Wet very loose gray fine to coarse sand w/some silt, trace of fine gravel. 11" RECOVERY	A-1-b	
	10	12.0' 14.0'	1 1	No Sieve Analysis - Indication of wet soft brown organic sandy silt. 4" RECOVERY		
		14.0' 16.0'	2 9			
30	11	16.0' 18.0'	11 3	Wet medium dense brown organic silty fine to coarse sand w/some fine gravel. 15" RECOVERY	A-2-4(0)	
		18.0'	4			
	12	20.0'	2	Wet firm grayish orange silt w/some fine gravel and fine to coarse sand. 12" RECOVERY	A-2-4(0)	
		24.0' 26.0'	4 4			
40	13	29.0' 31.0'	3 3	Wet loose orange coarse to fine sand w/ some silt, trace of fine gravel. 13" RECOVERY	A-2-4(0)	
	13A		3		A-2-4(0)	
	14	34.0' 36.0'	3 5	Wet loose orange coarse to fine sand w/ trace of silt and fine gravel. 16" RECOVERY	A-2-4(0)	
		39.0' 40.0'	3 2			
50	15	40.0' 41.0'	3 2	Wet loose orange coarse to fine sand w/ some silt, trace of fine gravel. 14" RECOVERY	A-3	
		44.0' 46.0'	6 7	No Recovery 0" RECOVERY		
		48.0' 50.0'	10 13	Wet dense orangish tan fine sand w/some silt, trace of coarse sand. 17" RECOVERY		
60			11 15			
			15 13	Wet dense orange fine sand w/some silt, trace of coarse sand and fine gravel. 22" RECOVERY		
			14 22	Wet dense brown fine sand w/some silt, trace of coarse sand. 12" RECOVERY		
70			17 20			
			19 25	Wet dense gray fine sand w/some silt, trace of coarse sand. 6" RECOVERY		
			5 7			
			11 14	Wet medium dense gray fine sand w/some silt, trace of coarse sand and organic matter. 24" RECOVERY		
80			16 24			
			23 20	Wet dense gray fine sand w/trace of silt, coarse sand and organic matter. 19" RECOVERY		
90				End of Boring		
100						
110						
120						
130						
140						
150						

UNOFFICIAL WEBSITE COPY

DELAWARE DEPARTMENT OF TRANSPORTATION

ADDENDUMS / REVISIONS

BR 3-930 ON S225 MARSHALL STREET, OVER HERRING BRANCH, MILFORD

CONTRACT	BRIDGE NO.	3-930
T201107303	DESIGNED BY: GCL III	
COUNTY		
SUSSEX	CHECKED BY: GCL III	

BORING LOGS

SHEET NO.
8
TOTAL SHTS.
15

SEQUENCE OF CONSTRUCTION:

1. CLOSE MARSHALL STREET IN ACCORDANCE WITH THE DETOUR PLAN.
2. PLACE SILT FENCE, EXCEPT CONNECTION TO SANDBAG DIKES, AS SHOWN ON THE PLAN. CONSTRUCT SANDBAG DIKES IN THE EXISTING CHANNEL AND CONNECT THE SILT FENCE TO THE SANDBAG DIKE TO ENCLOSE THE WORK AREA. INSTALL STABILIZED OUTFALL USING R-5 RIPRAP. TO MAINTAIN STREAM FLOW, INSTALL PUMPS TO MAINTAIN FLOW AROUND THE WORK AREA. THE STREAM DIVERSION SHALL BE INSTALLED AS PER ITEM 265500 - STREAM DIVERSIONS. INSTALL SUMP PIT AND DEWATERING BAG FOR USE IN DEWATERING THE WORK AREA. SEE SECTION 111 OF THE STANDARD SPECIFICATIONS FOR MORE INFORMATION ON DEWATERING OPERATIONS.
2. REMOVE THE EXISTING PIPES. INSTALL THE PROPOSED PRECAST FRAME AND WINGWALLS.
3. INSTALL RIPRAP, CHANNEL BED FILL AND SLOPE STABILIZATION AS NOTED, INCLUDING THE LOW FLOW CHANNEL AND TRANSITIONS TO THE EXISTING CHANNEL.
4. INSTALL PROPOSED PAVEMENT AND GUARDRAIL AND COMPLETE ANY OTHER REMAINING WORK.
5. REMOVE ALL EROSION AND SEDIMENT CONTROL DEVICES (INCLUDING RIPRAP USED AS STILLING WELL AND STABILIZED OUTFALL) AND RESTORE THE STREAM TO EXISTING CONDITIONS AS OUTLINED IN THE ENVIRONMENTAL COMPLIANCE NOTES. REMOVE ALL MAINTENANCE OF TRAFFIC DEVICES.

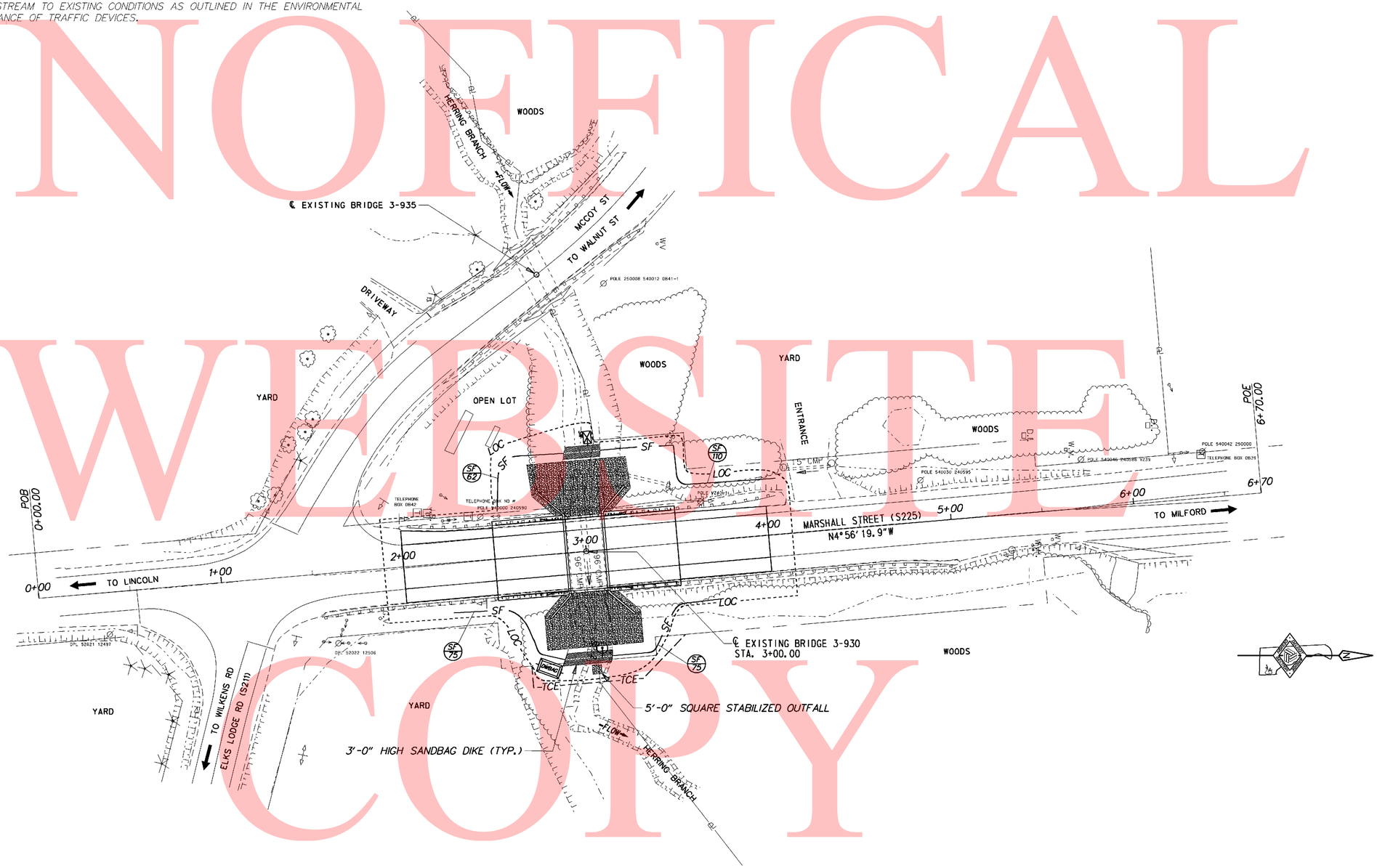

UNOFFICAL WEBSITE COPY

Y:/SUSSEX/225/BRIDGE/T201107303/PLANS/CP01.DGN

DELAWARE DEPARTMENT OF TRANSPORTATION	ADDENDUMS / REVISIONS	SCALE 0 30 60 90 FEET	BR 3-930 ON S225 MARSHALL STREET, OVER HERRING BRANCH, MILFORD	CONTRACT T201107303	BRIDGE NO. 3-930	CONSTRUCTION SEQUENCE, AND EROSION AND SEDIMENT CONTROL PLAN	SHEET NO. 9
				COUNTY SUSSEX	DESIGNED BY: GCL III		TOTAL SHTS. 15
					CHECKED BY: JKM		

ENVIRONMENTAL COMPLIANCE NOTES

1. GENERAL NOTES
   A. THE PURPOSE OF THIS SHEET IS TO IDENTIFY THOSE ITEMS ASSOCIATED WITH ENVIRONMENTAL COMPLIANCE. IMPACT CALCULATIONS ARE FOR THE AGENCY PERMIT REPORTING PURPOSES ONLY AND ARE NOT TO BE USED FOR BIDDING PURPOSES.
   B. IF A DEPARTURE FROM THE APPROVED PLANS (WHICH WOULD AFFECT ANY NATURAL AND/OR CULTURAL RESOURCES) IS NECESSARY, THE ENVIRONMENTAL STUDIES SECTION SHALL BE CONTACTED AT (302)760-2264 TO ALLOW FOR COORDINATION WITH THE APPROPRIATE RESOURCE AGENCIES AND APPROVAL.
   C. USE OF THIS SHEET DOES NOT ALLEVIATE THE CONTRACTOR'S RESPONSIBILITY TO COMPLY WITH ALL CONDITIONS SET FORTH IN THE ENVIRONMENTAL STATEMENT AND PERMITS.
2. NATURAL RESOURCE ISSUES:
   A. PERMIT / APPROVAL REQUIREMENTS*:
      CORPS OF ENGINEERS NWP #3 (a) &(c) (NO PCN)
      DNREC WETLANDS & SUBAQUEOUS LANDS (WLSL) PROJECT CONSISTENT WITH DEL. CODE CH. 72, SECTION 7217, AS AMENDED BY SB 186
      DNREC - WATER QUALITY CERTIFICATION (WQC) AND COASTAL ZONE CONSISTENCY (CZM) -- WAIVED (PROJECT NOT LOCATED IN CRITICAL RESOURCE WATER)

   * THE PERMITS/APPROVALS LISTED ARE THOSE REQUIRED FOR THIS PROJECT. THE ENVIRONMENTAL STUDIES SECTION IS RESPONSIBLE FOR COORDINATING AND/OR OBTAINING THIS APPROVAL.

   NOTE: THE ABSENCE OF ASTERISKS AFTER A PERMIT (COE, WLSL, WQC, CZM) INDICATES THAT COORDINATION HAS BEEN DONE WITH THAT AGENCY BUT NO WRITTEN AUTHORIZATION WAS REQUIRED. AS SUCH, NO PAPERWORK FROM THAT AGENCY SHOULD BE ANTICIPATED.
   B. CONSTRUCTION RESTRICTIONS:
      FISHERIES - NONE
      ENDANGERED SPECIES - NONE
      MIGRATORY BIRDS - NONE
3. CULTURAL RESOURCE ISSUES:
   A. PROJECT CONSISTENT WITH STIPULATION IIB. (4+12) OF DELDOT'S PROGRAMATIC AGREEMENT WITH FHWA, DE SHPO, AND ACHP.
4. STREAM RESTORATION AND RIPRAP TREATMENTS
   A. THE CONTRACTOR SHALL FOLLOW THE SPECIAL PROVISIONS OF ITEM #712531 - CHANNEL BED FILL IN REGARDS TO THE SALVAGING OF ON-SITE NATURAL STREAM BOTTOM MATERIAL OR THE FURNISHING OF OFF-SITE MATERIAL. IF SUFFICIENT SOURCES FOR CHANNEL BED FILL DO NOT EXIST ON-SITE, ANY NEW MATERIAL SHALL CONFORM TO THE REQUIREMENTS OF ITEM #712531 - CHANNEL BED FILL. ALL RIPRAP IN THE CHANNEL BOTTOM (I.E. BELOW THE WATER LINE) SHALL BE RECESSED ONE FOOT BELOW STREAM BED ELEVATION AND CHOKED WITH BORROW TYPE 'B' SO THAT ALL OF THE VOIDS IN THE RIPRAP ARE FILLED WITH MATERIAL. PAYMENT UNDER ITEM #209002 - BORROW TYPE 'B'. THE RIPRAP SHALL THEN BE COVERED WITH A MINIMUM OF 12" CHANNEL BED FILL. FINAL CHANNEL ELEVATIONS SHALL MATCH EXISTING ELEVATIONS AT THE UPSTREAM AND DOWNSTREAM PROJECT LIMITS. THROUGH THE STRUCTURE, ELEVATIONS SHALL BE AS NOTED ON THE PLANS. PAYMENT UNDER ITEM #712531 - CHANNEL BED FILL.
   B. OTHER AREAS OF THE CHANNEL BOTTOM AFFECTED BY CONSTRUCTION (INCLUDING, BUT NOT LIMITED TO, THE LOCATION OF SUMP PITS, STABILIZED OUTFALLS, TEMPORARY PIPES AND/OR SANDBAG DIKES AND DIVERSIONS) SHALL BE RESTORED TO EXISTING CONDITIONS. ANY CAVITIES OR SCOUR HOLES RESULTING FROM CONSTRUCTION ACTIVITIES SHALL BE FILLED WITH CHANNEL BED FILL. PAYMENT UNDER ITEM #712531 - CHANNEL BED FILL.
   C. WHEN ALL EROSION AND SEDIMENT CONTROL MEASURES ARE REMOVED AND THE STREAM RETURNS TO ITS NATURAL FLOW CONDITIONS, THE FLOW MUST REMAIN ABOVE GROUND AND ABOVE THE RIPRAP (I.E. THE FLOW CANNOT BE "LOST" IN THE RIPRAP OR BENEATH THE STRUCTURE). IF THIS IS NOT ACHIEVED, THE CONTRACTOR WILL BE REQUIRED TO TAKE CORRECTIVE ACTION AT THE CONTRACTOR'S EXPENSE.
   D. ALL RIPRAP ON THE STREAM BANK, OUTSIDE THE CHANNEL BED, SHALL BE CHOKED WITH DELAWARE #57 STONE, FILLED WITH TOPSOIL, AND SEEDED. PLACE JUST ENOUGH CHOKE MATERIAL TO PREVENT THE LOSS OF TOPSOIL THROUGH THE RIPRAP, AND THEN FINISH FILLING THE VOIDS WITH TOPSOIL SO THAT THE RIPRAP PEAKS ARE BARELY VISIBLE. AN ADDITIONAL 4" TOPSOIL LAYER SHALL BE PLACED ON TOP OF THE RIPRAP. SEEDING SHALL BE PERMANENT GRASS SEEDING WET GROUND (ITEM NO. 734015) FROM STREAM BASE FLOW ELEVATION TO 2' UP THE SLOPE AND PERMANENT GRASS SEEDING DRY GROUND (ITEM NO. 734013) ON THE REMAINING SLOPE. ALL WORK, STARTING WITH THE INITIAL CHOKING WITH TOPSOIL THROUGH THE SEEDING SHALL BE COMPLETED PRIOR TO ANY RAIN EVENT. PAYMENT FOR RIPRAP AND DELAWARE #57 STONE SHALL BE PAID FOR UNDER THE RIPRAP ITEM. ALL OTHER ITEMS SHALL BE PAID FOR UNDER THEIR RESPECTIVE ITEMS.

LEGEND

OHW	ORDINARY HIGH WATER
WL	WETLAND BOUNDARY
OHW/WL	ORD. HIGH WATER / WETLAND
	PERMANENT IMPACT AREA
	TEMPORARY IMPACT AREA
	CREATION AREA

XX — IMPACT AREA TYPE ID. (SEE BELOW)
?X — IMPACT AREA ID. AND/OR NUMBER

O = OPEN WATER IMPACT W = WETLAND IMPACT
T = TEMPORARY IMPACT C = CREATION AREA

PERMANENT OPEN WATER IMPACT AREA SCHEDULE

ID	IMPACT DESCRIPTION	AREA (SF)	AREA (AC)	VOLUME (CY)	JURISDICTION
O-1	UPSTREAM RIPRAP	185.67	0.0043	13.75	COE/DNREC
O-2	DOWNSTREAM RIPRAP	235.26	0.0054	17.42	COE/DNREC
TOTAL PERMANENT OPEN WATER IMPACTS		420.93	0.0097	31.17	COE/DNREC

PERMANENT WETLAND IMPACT AREA SCHEDULE

ID	IMPACT DESCRIPTION	AREA (SF)	AREA (AC)	VOLUME (CY)	JURISDICTION
W-1	DOWNSTREAM RIPRAP (SE)	49.70	0.0011	N/A	COE
W-2	DOWNSTREAM RIPRAP (NE)	239.50	0.0055	N/A	COE
TOTAL PERMANENT WETLAND IMPACT AREAS		289.20	0.0066	N/A	COE

TEMPORARY OPEN WATER IMPACT AREA SCHEDULE

ID	IMPACT DESCRIPTION	AREA (SF)	AREA (AC)	VOLUME (CY)	JURISDICTION
OT-1	STILLING WELL	54.00	0.0012	2.00	COE/DNREC
OT-2	UPSTREAM SANDBAGS	128.38	0.0029	8.13	COE/DNREC
OT-3	EX. PIPE TO PRO. RIPRAP	1293.48	0.0297	95.81	COE/DNREC
OT-4	DOWNSTREAM SANDBAGS	166.73	0.0038	10.56	COE/DNREC
OT-5	STABILIZED OUTFALL	25.00	0.0006	0.93	COE/DNREC
TOTAL TEMPORARY OPEN WATER IMPACTS		1667.59	0.0382	117.43	COE/DNREC

TEMPORARY WETLAND IMPACT AREA SCHEDULE

ID	IMPACT DESCRIPTION	AREA (SF)	AREA (AC)	VOLUME (CY)	JURISDICTION
WT-1	DEWATERING BAG	54.02	0.0012	N/A	COE
TOTAL TEMPORARY WETLAND IMPACT AREAS		54.02	0.0012	N/A	COE

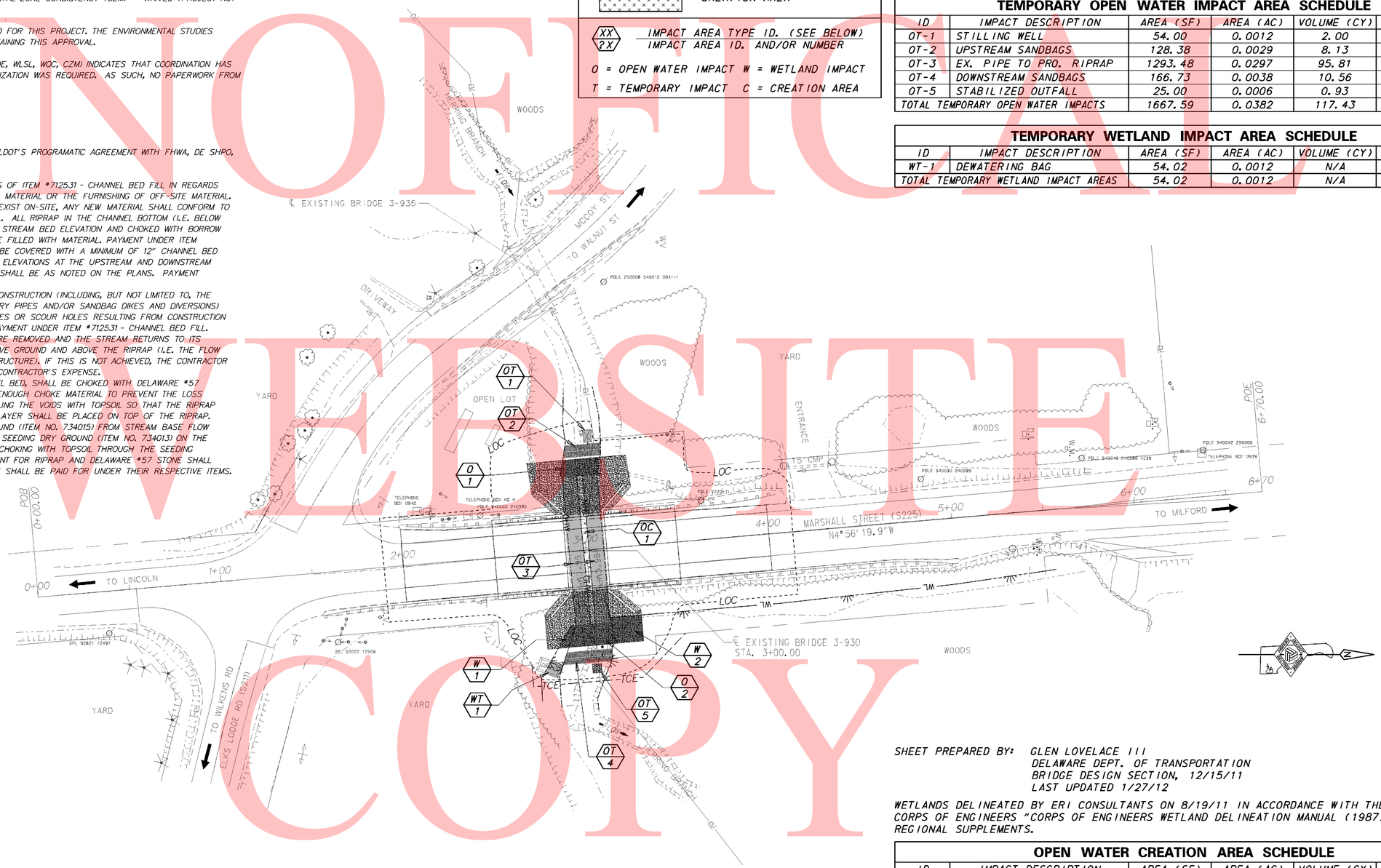

UNOFFICIAL WEBSITE COPY

SHEET PREPARED BY: GLEN LOVELACE III
DELAWARE DEPT. OF TRANSPORTATION
BRIDGE DESIGN SECTION, 12/15/11
LAST UPDATED 1/27/12

WETLANDS DELINEATED BY ERI CONSULTANTS ON 8/19/11 IN ACCORDANCE WITH THE US ARMY CORPS OF ENGINEERS "CORPS OF ENGINEERS WETLAND DELINEATION MANUAL (1987) AND REGIONAL SUPPLEMENTS.

OPEN WATER CREATION AREA SCHEDULE

ID	IMPACT DESCRIPTION	AREA (SF)	AREA (AC)	VOLUME (CY)	JURISDICTION
OC-1	PROPOSED FLOW AREA	240.41	0.0055	26.71	COE/DNREC
TOTAL OPEN WATER CREATION AREAS		240.41	0.0055	26.71	COE/DNREC

Y:/SUSSEX/225/BRIDGE/T201107303/PLANS/CP01.DGN

DELAWARE DEPARTMENT OF TRANSPORTATION

ADDENDUMS / REVISIONS

SCALE 0 30 60 90 FEET

BR 3-930 ON S225 MARSHALL STREET, OVER HERRING BRANCH, MILFORD

CONTRACT	BRIDGE NO. 3-930
T201107303	DESIGNED BY: GCL III
COUNTY	
SUSSEX	CHECKED BY: JKM

ENVIRONMENTAL COMPLIANCE PLAN

SHEET NO. 10
TOTAL SHTS. 15

THE UNDERGRUND VERIZON LINE AND UNDERGROUND CHESAPEAKE UTILITIES GAS LINE SHALL BE RELOCATED (BELOW THE ELEVATION OF THE PROPOSED BRIDGE) BY OTHERS PRIOR TO CONSTRUCTION. SEE UTILITY STATEMENT FOR DETAILS.

SO-DEEP Inc.
The Subsurface Utility Engineering Company
8397 Euclid Avenue
Manassas Park, VA 20111
703.361.6005
Performing out-of-sight work...with vision!™

SBLD119.DGN	Located By: J.D.
Scale: 1"=30'	Drafted By: C.P.
Sheet: 1 Of 1	Checked By: M.E.S.
Date: 09-16-11	SBLD119

UNOFFICAL WEBSITE COPY

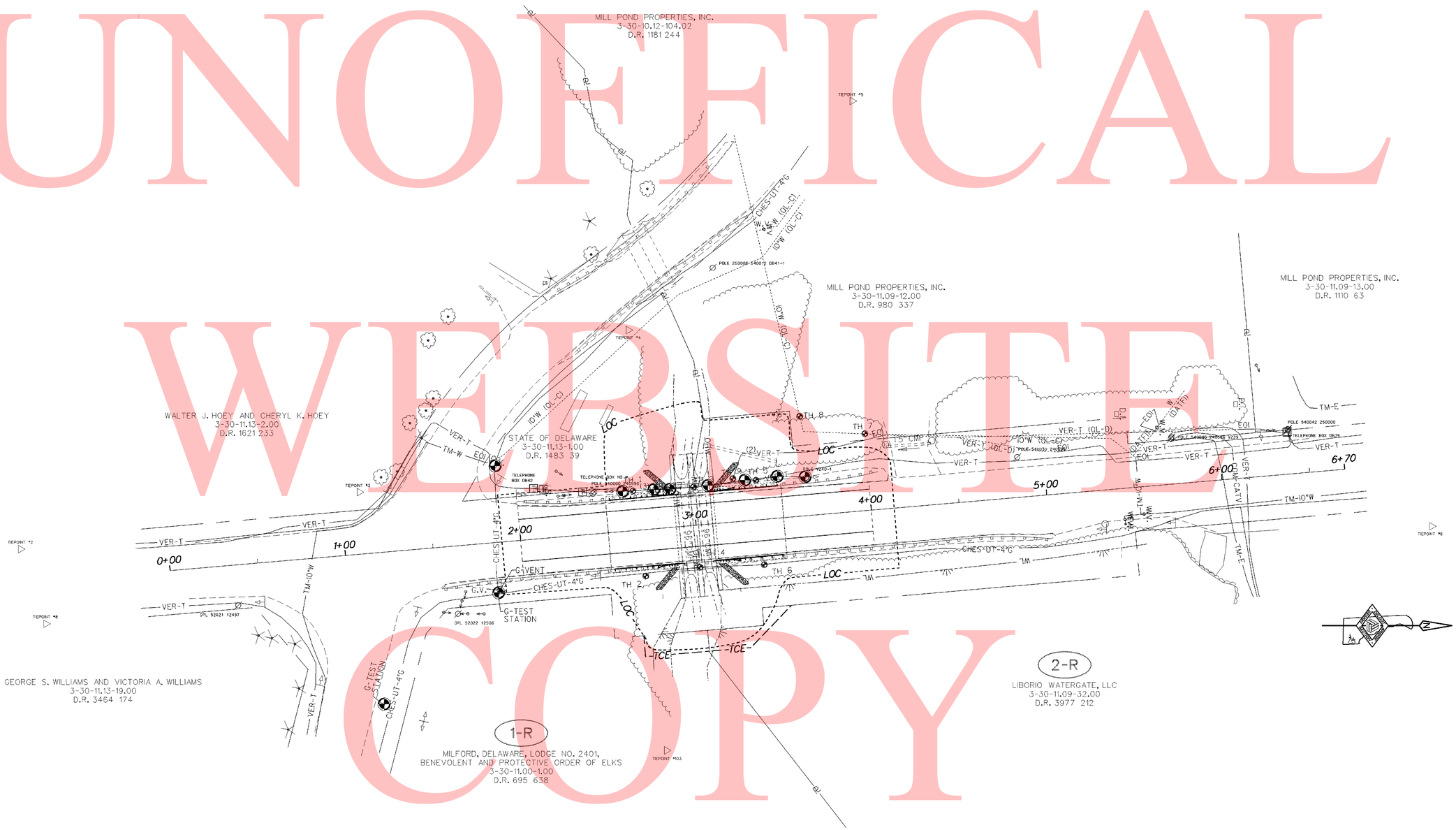

DELAWARE DEPARTMENT OF TRANSPORTATION	ADDENDUMS / REVISIONS	SCALE 0 30 60 90 FEET	BR 3-930 ON S225 MARSHALL STREET, OVER HERRING BRANCH, MILFORD	CONTRACT T201107303	BRIDGE NO. 3-930	UTILITY RELOCATION PLAN	SHEET NO. 11
				COUNTY SUSSEX	DESIGNED BY: GCL III		TOTAL SHTS. 15
					CHECKED BY: JKM		

Y:/SUSSEX/225/BRIDGE/T201107303/PLANS/CP01.DGN

CHANGEABLE MESSAGE BOARDS

CMS-1

PRIOR TO DETOUR
(10 DAYS PRIOR TO BEGINNING OF DETOUR)

MARSHALL STREET TO CLOSE	STARTING XX/XX/XX

CMS-2

DURING DETOUR
(DISPLAY FOR THE DURATION OF THE DETOUR)

MARSHALL STREET CLOSED	FOLLOW DETOUR

NOTE – CMS-1 SHALL BE RELOCATED TO CMS-2 LOCATIONS ONCE THE DETOUR IS IMPLEMENTED.

SPECIAL SIGNS

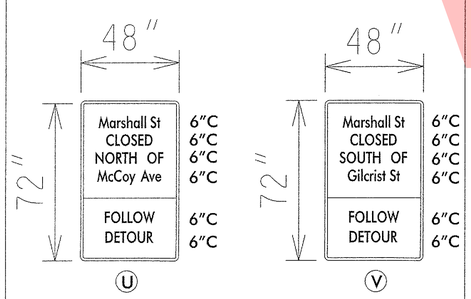

D/G FLOURESCENT ORANGE; BLACK LEGEND

LEGEND

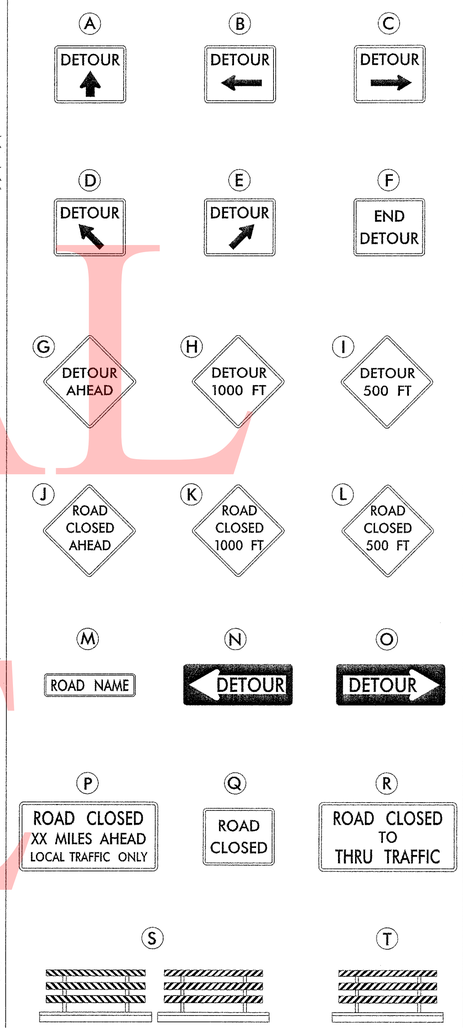

GENERAL NOTES

1. ALL DETOUR SIGNING INCLUDING, TRAILBLAZERS, ARE TO BE SUPPLIED AND MAINTAINED BY THE GENERAL CONTRACTOR IN COMPLIANCE TO THE DE MANUAL OF UNIFORM TRAFFIC CONTROL DEVICES.
2. THE CONTRACTOR SHALL COMPLY WITH GUIDELINES IN "THE DELAWARE MANUAL ON UNIFORM TRAFFIC CONTROL DEVICES (DE- MUTCD PART 6) FOR LIGHTS, BARRICADES AND SIGNS.(AS PER LATEST REVISION)
3. FIELD CONDITIONS MAY DICTATE CHANGES AT SOME TIME DURING THE LIFE OF THE CONTRACT. IN THE EVENT OF OMISSIONS OR CORRECTIONS, THE SIGNING PROVISIONS OF THE DELAWARE MANUAL ON UNIFORM TRAFFIC CONTROL DEVICES WILL PREVAIL.
4. SIGNS J THROUGH L AND P THROUGH R ,THE WORD (ROAD) SHOULD BE CHANGED TO RAMP, R/R OR BRIDGE WHERE APPLICABLE.
5. WARNING SIGNS SHOULD BE MOUNTED ON BREAKAWAY POSTS AND HAVE RETROREFLECTIVE FLUORESCENT SHEETING.
6. "S" BARRICADES SHALL COMPLETELY RUN THE FULL WIDTH OF ROADWAY.
7. BARRICADES SHALL BE A MINIMUM OF 6 FEET WIDE UNLESS DIRECTED BY THE ENGINEER.

RECOMMENDED [signature] DATE: 12-6-11

RECOMMENDED _____ DATE: _____

RECOMMENDED _____ DATE: _____

APPROVED CHIEF SAFETY OFFICER [signature] DATE: 12-7-11

APPROVED TRAFFIC ENGINEER [signature] DATE: 12/7/11

DELAWARE DEPARTMENT OF TRANSPORTATION

ADDENDUM / REVISIONS

NOT TO SCALE

BR 3-390
MARSHALL ST
PIPE REPLACEMENT

CONTRACT	ROAD NO.	S225
T201107303	DESIGNED BY: MFR	
COUNTY		
SUSSEX	CHECKED BY: ASW	

DETOUR PLAN
MARSHALL ST

SHEET NO. 12
TOTAL SHTS. 15

C:\DOCUMENTS AND SETTINGS\MICHAEL.RIVERA\MY DOCUMENTS\MICRO STATION DGN\MARSHALL ST BR 3-930.DGN

UNOFFICIAL WEBSITE COPY

RECOMMENDED (AS PER REVISION #1)

Robert A. Pick / Shelly Chandler	3/28/12
TEAM SUPPORT SQUAD MANAGER	DATE
[signature]	3.28.12
TEAM SUPPORT ENGINEER	DATE
Richard B. McCreary	3/28/12
ASSISTANT DIRECTOR, ENGINEERING SUPPORT	DATE

ORIGINAL SIGNATURE DATE 01/17/12

UNOFFICAL WEBSITE COPY

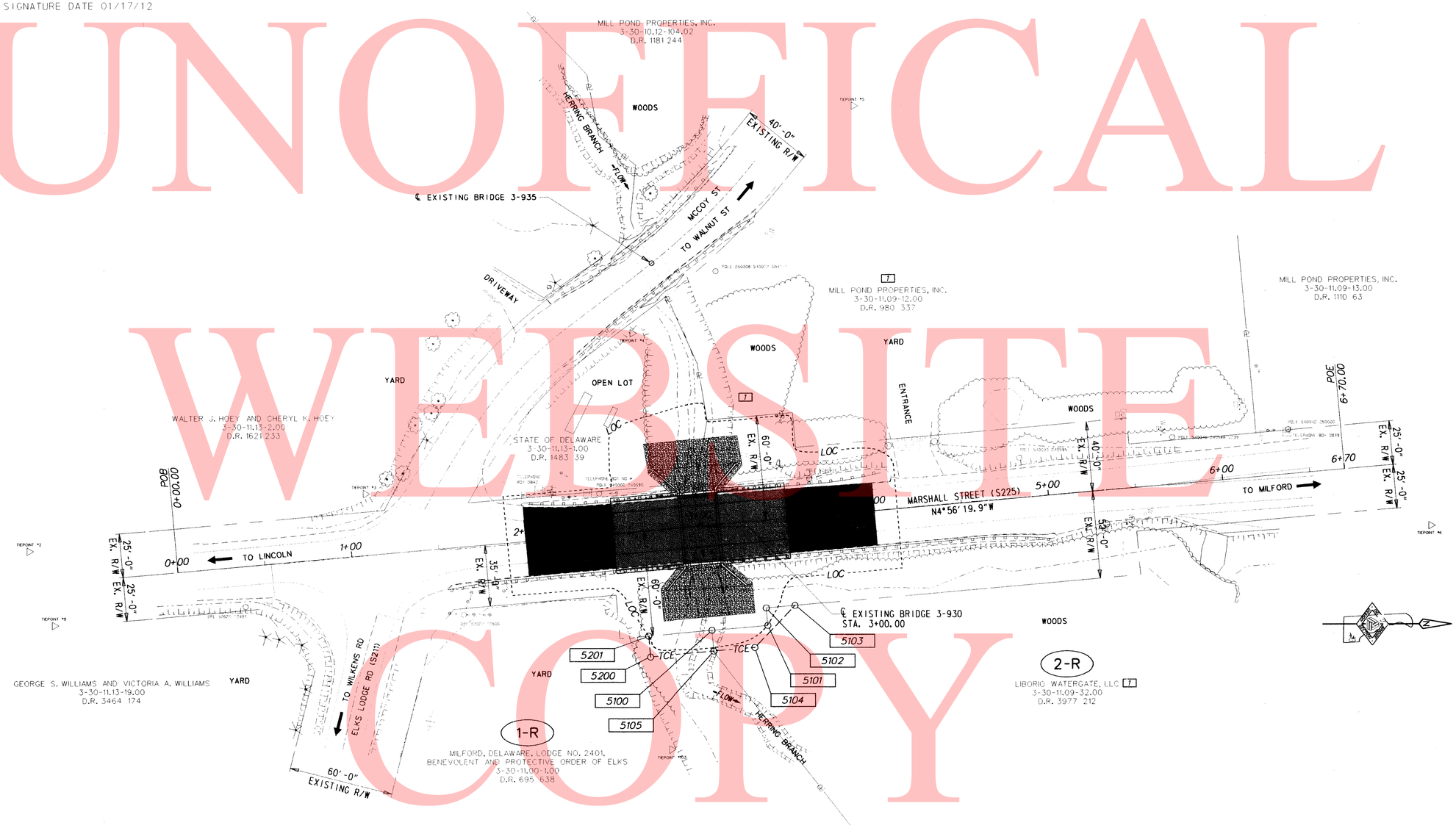

NOTE: THIS SHEET SHALL BE USED FOR RIGHT-OF-WAY ACQUISTITION PURPOSES ONLY.

DELAWARE DEPARTMENT OF TRANSPORTATION

ADDENDUMS / REVISIONS

7 DELETED TCE FROM MILL POND PROPERTIES. REVISED OWNER FOR PARCEL 2-R.

SCALE 0 30 60 90 FEET

BR 3-930 ON S225 MARSHALL STREET, OVER HERRING BRANCH, MILFORD

CONTRACT	BRIDGE NO.	3-930	
T201107303	DESIGNED BY: GCL III		
COUNTY			
SUSSEX	CHECKED BY: JKM		

RIGHT-OF-WAY PLAN SHEET 1 OF 3

SHEET NO.
13
TOTAL SHTS.
15

Y:/SUSSEX/225/BRIDGE/T201107303/PLANS/CP01.DGN

ASSESSMENT NUMBER	OWNERSHIP OF RECORD	TYPE OF ACQUISITION	TITLE SOURCE	PARCEL AREA (ACRES)
3-30-11.09-32.00	(2-R) LIBORIO WATERGATE, LLC 7	TCE	3977 212	21.117

ALIGNMENT NUMBER & DESCRIPTION: 3000 - CONSTRUCTION BASELINE

PT. NO.	ALIGN. NO.	STATION	OFFSET *	NORTH	EAST	BEARING	DISTANCE	CHORD BEARING	CHORD LENGTH	ARC LENGTH	RADIUS **
5100	3000	3+01.42	60.00	327248.2686	654621.0732	N 4°56'19.93" W	32.0800				
5101	3000	3+33.50	60.00	327280.2295	654618.3114	S 85°03'40.07" W	10.0000				
5102	3000	3+33.50	50.00	327279.3685	654608.3485	N 4°56'19.93" W	16.5000				
5103	3000	3+50.00	50.00	327295.8073	654606.9280	S 46°17'11.93" E	33.3017				
5104	3000	3+25.00	72.00	327272.7941	654630.9986	S 4°56'19.93" E	23.5800				
5105	3000	3+01.42	72.00	327249.3017	654633.0287	S 85°03'40.07" W	12.0000				
5100	3000	3+01.42	60.00	327248.2686	654621.0732						

FIGURE 5100 AREA = 472.9600 SQ. FT. (0.0109 ACRES)

ASSESSMENT NUMBER	OWNERSHIP OF RECORD	TYPE OF ACQUISITION	TITLE SOURCE	PARCEL AREA (ACRES)
3-30-11.00-1.00	(1-R) MILFORD, DELAWARE, LODGE NO. 2401, BENEVOLENT AND PROTECTIVE ORDER OF ELKS	TCE	695 638	7.652

ALIGNMENT NUMBER & DESCRIPTION: 3000 - CONSTRUCTION BASELINE

PT. NO.	ALIGN. NO.	STATION	OFFSET *	NORTH	EAST	BEARING	DISTANCE	CHORD BEARING	CHORD LENGTH	ARC LENGTH	RADIUS **
5100	3000	3+01.42	60.00	327248.2686	654621.0732	N 85°03'40.07" E	12.0000				
5105	3000	3+01.42	72.00	327249.3017	654633.0287	S 4°56'19.93" E	36.4200				
5200	3000	2+65.00	72.00	327213.0169	654636.1642	S 85°03'40.07" W	12.0000				
5201	3000	2+65.00	60.00	327211.9838	654624.2087	N 4°56'19.93" W	36.4200				
5100	3000	3+01.42	60.00	327248.2686	654621.0732						

FIGURE 5200 AREA = 437.0400 SQ. FT. (0.0100 ACRES)

UNOFFICAL WEBSITE COPY

LEGEND

FEE	AREA OF ACQUISITION
R/W	AREA OCCUPIED BY EXISTING R/W
P/E	PERMANENT EASEMENT
TCE	TEMPORARY CONSTRUCTION EASEMENT
*	"-" OFFSET IS LEFT OF BASELINE
**	"-" CURVE TURNS TO THE LEFT

Y:\SUSSEX\225\BRIDGE\T201107303\PLANS\RB01.DGN

DELAWARE DEPARTMENT OF TRANSPORTATION

ADDENDUMS / REVISIONS

7 DELETED TCE FROM MILL POND PROPERTIES.
REVISED OWNER FOR PARCEL 2-R.

BRIDGE 3-930 ON MARSHALL ST., MILFORD

CONTRACT	BRIDGE NO.	3-930
T201107303	DESIGNED BY: GCL III	
COUNTY	CHECKED BY: GCL III	
SUSSEX		

RIGHT-OF-WAY DATA SHEET

SHEET NO. 14
TOTAL SHTS. 15

COUNTY ASSESSMENT PARCEL NUMBER	PLAN SHEET NUMBER	OWNERSHIP OF RECORD	TITLE SOURCE	PROPERTY AREA BEFORE ACQUISITION (ACRE) D=DEED C=CALCULATED A=ASSESMENT	ACQUISITION CODE FEE, R/W, P/E, TCE	AREA TO BE ACQUIRED				PROPERTY AREA REMAINING (SQ. FEET /ACRES)	DEED RECORD OF ACQUISTITION	REMARKS
						ACQUISITION (SQ. FEET /ACRES)	AREA OCCUPIED BY EXISTING RIGHT OF WAY (SQ. FEET /ACRES)	EASEMENT				
								PERMANENT (SQ. FEET /ACRES)	TEMPORARY (SQ. FEET /ACRES)			
3-30-11.09-32.00	-	(2-R) LIBORIO WATERGATE, LLC 1	3977 212 1	C - 21.12	TCE				472.96 / 0.01	919856.52 / 21.12		
3-30-11.00-1.00	-	(1-R) MILFORD, DELAWARE, LODGE NO. 2401, BENEVOLENT AND PROTECTIVE ORDER OF ELKS	695 638	D - 7.65	TCE				437.04 / 0.01	333321.12 / 7.65		
1												

UNOFFICAL WEBSITE COPY

ACQUISTITION CODES

FEE - ACQUISITION
R/W - AREA OCCUPIED BY EXISTING R/W
P/E - PERMANENT EASEMENT
TCE - TEMPORARY EASEMENT

DELAWARE DEPARTMENT OF TRANSPORTATION

ADDENDUMS / REVISIONS

1 DELETED TCE FROM MILL POND PROPERTIES.
REVISED OWNER FOR PARCEL 2-R.

BRIDGE 3-930 ON MARSHALL ST., MILFORD

CONTRACT	BRIDGE NO.	3-930
T201107303	DESIGNED BY: GCL III	
COUNTY	CHECKED BY: GCL III	
SUSSEX		

RIGHT-OF-WAY TABULATION SHEET

SHEET NO.
15
TOTAL SHTS.
15

Y:\SUSSEX\225\BRIDGE\T201107303\PLANS\RT01.DGN