THE STATE OF DELAWARE
DEPARTMENT OF TRANSPORTATION

U.S. CUSTOMARY UNITS

CONSTRUCTION PLANS FOR:

BR 1-826 N&S ON I-495 OVER STONEY CREEK

UNOFFICIAL VERSION COPY

CONTRACT NUMBER: T201107402
FEDERAL AID PROJECT NUMBER: ESTP-N060(15)

COUNTY: NEW CASTLE M.R. #: N060

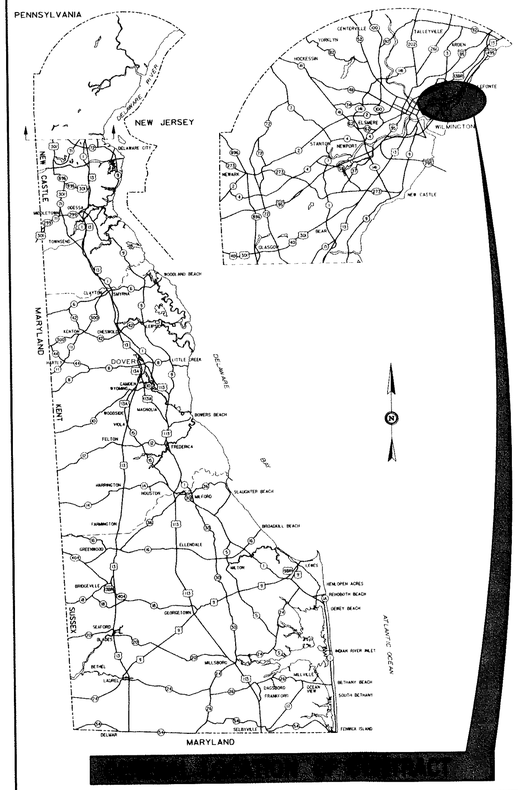

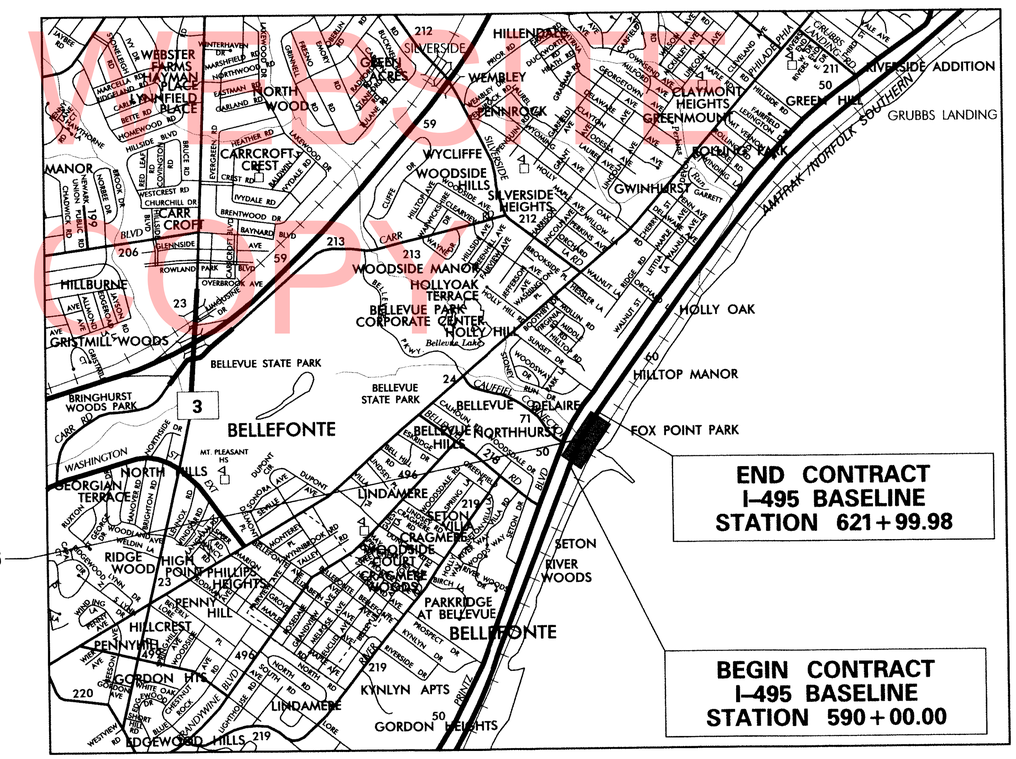

DESIGN DESIGNATION

FUNCTIONAL CLASS: INTERSTATE	D.H.V. PROJECTED: 8590	YEAR: 2020
TYPE OF CONSTRUCTION: BRIDGE REHAB.	DESIGN SPEED: N/A	
A.A.D.T. CURRENT: 70000	YEAR: 2010	TRUCKS: 10.98%
A.A.D.T. PROJECTED: 85300	YEAR: 2011	DIRECTION OF DISTRIBUTION: 65.90%

INDEX OF SHEETS

SHEET Nº	TABLE OF CONTENTS
1	TITLE SHEET
2	LEGEND
3	NOTES
4	HORZONTAL AND VERTICAL CONTROL
5	CONSTRUCTION PLAN
6	PROFILE
7-9	CONSTRUCTION DETAILS
10	GENERAL BRIDGE PLAN AND ELEVATION
11-16	SUBSTRUCTURE REPAIR DETIALS
17	PARAPET REPLACEMENT DETAILS
18	EXPANSION JOINT REPLACEMENT DETAILS
19-21	APPROACH SLAB DETAILS
22-23	REINFORCING BAR SUMMARY
24-49	CONSTRUCTION, PHASING, M.O.T. AND EROSION CONTROL PLANS
50-51	ENVIRONMENTAL COMPLIANCE PLANS
52-54	SIGNING AND STRIPING PLAN

TOTAL SHEETS: 54

APPROVED DESIGN EXCEPTIONS

DESIGN PARAMETER	REQUIRED	PROVIDED	DATE

ADDENDA & REVISIONS

DESCRIPTION	NAME & DATE

ASSOCIATED CONTRACTS

CONTRACT NO.	CONTRACT NAME
68-07-005	INTERSTATE ROUTE I-495
7518	REHABILITATION OF BRIDGE NUMBERS 762, 764, 771, 826A, 826 AND BOX CULVERT NUMBER 828

PREPARED BY
THE CONSULTING FIRM OF
McCormick Taylor
Engineers & Planners Since 1946

MICHAEL A. ANGELO REGISTERED NO. 6725 DELAWARE PROFESSIONAL ENGINEER
SEAL

RECOMMENDED — 12/3/12
DATE

RECOMMENDED

SQUAD MANAGER, CONSTRUCTION — 12/12/12 DATE

GROUP ENGINEER, CONSTRUCTION — 12/12/12 DATE

ASSISTANT DIRECTOR, TRANSPORTATION SOLUTIONS (CONSTRUCTION) — DATE

RECOMMENDED
STORMWATER ENGINEER, Acting
DATE Dec. 11, 2012
WENDY L. POLASKO REGISTERED No. 12899 DELAWARE PROFESSIONAL ENGINEER
SEAL

RECOMMENDED
PROJECT MANAGER, BRIDGE DESIGN
DATE 12/10/12
STEPHEN DIRK RICHTER REGISTERED NO. 9235 DELAWARE PROFESSIONAL ENGINEER
SEAL

RECOMMENDED
BRIDGE DESIGN ENGINEER
DATE 12/11/2012
DOUGLAS A. ROBB REGISTERED No. 11438 DELAWARE PROFESSIONAL ENGINEER
SEAL

RECOMMENDED
GROUP ENGINEER, PROJECT DEVELOPMENT
DATE
SEAL

RECOMMENDED
ASSISTANT DIRECTOR, BRIDGE
DATE DECEMBER 14, 2012
BARRY A. BENTON REGISTERED No. 10774 DELAWARE PROFESSIONAL ENGINEER
SEAL

APPROVED
CHIEF ENGINEER
DATE 12/18/12
NATALIE M. BARNHART REGISTERED No. 9629 DELAWARE PROFESSIONAL ENGINEER
SEAL

LAST REVISED: 8/7/2008
N:\559 BRIDGE DESIGN\NO 3 - BR 1-826 N&S\FINAL PLANS\TC_BR 1-826.DGN

EXISTING SYMBOLS

DRAINAGE

	DITCH OR STREAM CENTERLINE
	DIRECTIONAL STREAM FLOW ARROW
D.I.	DRAINAGE INLET
J.B.	DRAINAGE JUNCTION BOX
D	DRAINAGE MANHOLE
SIZE/TYPE LABEL	DRAINAGE PIPE AND FLOW ARROW
	DRAINAGE PIPE HEADWALL
	RIPRAP - AREA FEATURE
	RIPRAP - LINEAR FEATURE

MANMADE ROADSIDE FEATURES

	BOLLARD - STEEL POLE
	BOLLARD - WOOD POST
(TYPE LABEL)	CURB
(TYPE LABEL)	CURB AND GUTTER
	FENCE - CHAINLINK OR STRANDED
	FENCE - STOCKADE OR SPLIT RAIL
FP	FLAG POLE
	GUARDRAIL - STEEL BEAM
	GUARDRAIL - WIRE ROPE
LAMP	LAMP AND POST - RESIDENTIAL
MB	MAILBOX
PM	PARKING METER AND POST
	PAVEMENT - FLEXIBLE
	PAVEMENT - RIGID
	PILE - BRIDGE
	PILLAR OR MISCELLANEOUS POST
	TRAFFIC SIGN AND POST
	WALL - BRICK OR BLOCK
	WALL - STONE

NATURAL ROADSIDE FEATURES

	GRASS LAWN
	HEDGEROW OR THICKET
	MARSH BOUNDARY LINE
	TREE - CONIFEROUS
	TREE - DECIDUOUS
	TREE STUMP
	SHRUBBERY
WL	DELINEATED WETLAND BOUNDARY LINE
	WOODS LINE BOUNDARY

RIGHT-OF-WAY SYMBOLS

C.M.	PROPERTY MARKER - CONCRETE MON.
I.P.	PROPERTY MARKER - IRON PIPE
100+00	HISTORIC RIGHT-OF-WAY BASELINE
	EXISTING RIGHT-OF-WAY
	EXISTING PROPERTY LINE
EASEMENT TYPE	EXISTING EASEMENT
DA	EXISTING DENIAL OF ACCESS
R/W-DA	EXISTING R/W & DENIAL OF ACCESS

SURVEY CONTROL & MONUMENTATION

B.M.	SURVEY BENCHMARK LOCATION
T.P.	SURVEY TIE POINT LOCATION
	SURVEY TRAVERSE POINT
	POINT OF CURVATURE OR TANGENCY
	POINT OF INTERSECTING TANGENTS

UTILITY

	SOIL BORING LOCATION
	UTILITY TEST HOLE LOCATION
TV	CABLE TV DISTRIBUTION BOX
E	ELECTRIC MANHOLE
EM	ELECTRIC METER
E	ELECTRIC TRANSFORMER
	POLE MOUNTED LUMINAIRE
G	GAS MANHOLE
G.M.	GAS METER
G.V.	GAS VALVE
G.P.	GAS PUMP - SERVICE STATION
	RAILROAD TRACKS
S	SANITARY SEWER MANHOLE
S.V.	SANITARY SEWER VALVE
VENT	SANITARY SEWER VENT OR CLEANOUT
S.D.F.	SEPTIC DRAIN FIELD
B	TELEPHONE BOOTH
T	TELEPHONE MANHOLE
T	TELEPHONE TEST POINT
J.W.	TRAFFIC - CONDUIT JUNCTION WELL
	TRAFFIC - LIGHT POLE AND BASE
	TRAFFIC - PEDESTRIAN POLE & BASE
	TRAFFIC - SIGNAL CABINET & BASE
	TRAFFIC - SIGNAL POLE AND BASE
U	UTILITY BOX
	UTILITY POLE GUY WIRE ANCHOR
	UTILITY POLE
F.H.	WATER - FIRE HYDRANT
W.M.	WATER METER
W.V.	WATER VALVE
WELL	WELL HEAD
?	MANHOLE - UNDETERMINED OWNER

PROPOSED SYMBOLS

CONSTRUCTION

	CONCRETE SAFETY BARRIER - PERMANENT
BFS	BIOFILTRATION SWALE
	BOLLARD - STEEL POLE
	BOLLARD - WOOD POST
	BRICK PATTERNED SURFACE
	BUTT JOINT
100+00	CONSTRUCTION BASELINE
CSF	CONSTRUCTION SAFETY FENCE
	CURB, TYPE 1 & TYPE 3
	CURB, TYPE 2
	CURB & GUTTER, TYPE 1
	CURB & GUTTER, TYPE 2
	CURB & GUTTER, TYPE 3
	CURB & GUTTER, TYPE 4
CZ	CLEAR ZONE
	DRAINAGE INLET
	DITCH
	FENCE - METAL
	FENCE - WOOD
	FLARED END SECTION
	GUARDRAIL, TYPE 1
	GUARDRAIL, TYPE 2
	GUARDRAIL, TYPE 3
	GUARDRAIL END ANCHORAGE
	GUARDRAIL END TREATMENT, TYPE 1
	GUARDRAIL END TREATMENT, TYPE 2
	GUARDRAIL END TREATMENT, TYPE 3
HC	HORIZONTAL CLEARANCE
	IMPACT ATTENUATOR
	JUNCTION BOX - DRAINAGE
LOC	LIMIT OF CONSTRUCTION
	MANHOLE
	PAVEMENT PATCH
	PAVEMENT REMOVAL - TOPSOIL, SEED AND MULCH
	PIPE & DIRECTIONAL FLOW ARROW
	RIPRAP
	P.C.C. SIDEWALK @ 4"
	P.C.C. SIDEWALK @ 6"
	UNDERDRAIN
	UNDERDRAIN OUTLET

RIGHT-OF-WAY SYMBOLS

	PROPOSED RIGHT-OF-WAY MONUMENT
DA	PROPOSED DENIAL OF ACCESS
PE	PROPOSED PERMANENT EASEMENT
R/W	PROPOSED RIGHT-OF-WAY
R/W-DA	PROPOSED R/W & DENIAL OF ACCESS
TCE	TEMPORARY CONSTRUCTION EASEMENT
100+00	PROPOSED RIGHT-OF-WAY BASELINE

IDENTIFIERS

A/C	ADJUST BY CONTRACTOR
A/O	ADJUST BY OTHERS
B	CONCRETE SAFETY BARRIER
C	CURB OR CURB & GUTTER
C.JB	CONVERT TO JUNCTION BOX
C.MH	CONVERT TO DRAINAGE MANHOLE
C/O	CURB OPENING
CR	CURB RAMP / TYPE
CR-N	CURB RAMP / TYPE - WITHOUT SIDEWALK SURFACE DETECTABLE WARNING SYSTEM
CSF	CONSTRUCTION SAFETY FENCE
DI	DRAINAGE INLET
DND	DO NOT DISTURB
ED	ENERGY DISSIPATOR
F	FENCE
F.E.S.	FLARED END SECTION
FF/C	FILL WITH FLOWABLE FILL
F.S.	FILTRATION STRUCTURE
GR	GUARDRAIL
JB	JUNCTION BOX
MH	MANHOLE
M	MONUMENT - RIGHT-OF-WAY
P	PIPE
RL/C	RELOCATE BY CONTRACTOR
RL/O	RELOCATE BY OTHERS
RM/C	REMOVE BY CONTRACTOR
RM/O	REMOVE BY OTHERS
UD	UNDERDRAIN / LENGTH
UOL	UNDERDRAIN OUTLET PIPE

LANDSCAPING

LS	LANDSCAPE PLANTINGS
	SHRUBBERY
	CONIFEROUS TREE
	DECIDUOUS TREE

TRAFFIC

ITMS-CON	ITMS CONDUIT
SIG-CON	SIGNAL CONDUIT
	CONDUIT JUNCTION WELL
	LUMINAIRE
	PAVEMENT MARKINGS
	PAVEMENT STRIPING
	TRAFFIC SIGN

PAVEMENT SECTION(S)

	PORTLAND CEMENT CONCRETE PAVEMENT, 14" GRADED AGGREGATE BASE COURSE, TYPE B, 8"
	APPROACH SLAB - STRUCTURES PLANS FOR DETAILS

UNOFFICIAL WEBSITE COPY

LG-01

DELAWARE DEPARTMENT OF TRANSPORTATION

ADDENDUMS / REVISIONS

NOT TO SCALE

BR 1-826 N&S ON I-495 OVER STONEY CREEK

CONTRACT T201107402 | COUNTY NEW CASTLE | BRIDGE NO. 1-826 N&S | DESIGNED BY: TM | CHECKED BY: MAA

LEGEND

SHEET NO. 2 | TOTAL SHTS. 54

GENERAL NOTES

1. THIS PROJECT IS TO BE CONSTRUCTED IN ACCORDANCE WITH THE DELAWARE DEPARTMENT OF TRANSPORTATION "STANDARD SPECIFICATIONS", DATED AUGUST 2001 AND THE DELAWARE DEPARTMENT OF TRANSPORTATION "STANDARD CONSTRUCTION DETAILS", DATED 2001, INCLUDING ALL REVISIONS UP TO THE DATE OF ADVERTISEMENT.

2. THE CONTRACTOR SHALL GIVE TWO (2) WEEKS NOTICE TO THE PROPERTY OWNER WHEN ANY FIXTURE, SHRUB OR OTHER OBJECT MUST BE REMOVED FROM THE RIGHT OF WAY OR EASEMENT AREA. IF THE OWNER HAS NOT ATTEMPTED TO SALVAGE THIS PROPERTY, THE CONTRACTOR SHALL REMOVE IT WITHOUT OBLIGATION. COMPENSATION SHALL BE INCIDENTAL TO THE CONTRACT.

3. THE ENDS OF ALL CURBS SHALL BE DEPRESSED FLUSH WITH THE PAVEMENT AT A RATIO OF TWELVE TO ONE (12:1) UNLESS OTHERWISE DIRECTED BY THE ENGINEER.

4. THE CONTRACTOR SHALL PROVIDE AND INSTALL PVC SLEEVES (4" INSIDE MINIMUM DIAMETER, 6" INSIDE MAXIMUM DIAMETER) IN PROPOSED CONCRETE SIDEWALKS, ISLANDS, AND MEDIANS FOR FUTURE TRAFFIC SIGN POSTS AS DIRECTED BY THE ENGINEER. THE LOWER END OF THE SLEEVE SHALL SIT ON THE TOP OF THE SUBBASE MATERIAL. THE COST SHALL BE INCIDENTAL TO THE CONTRACT.

5. STAGING AREAS - PROPER EROSION AND SEDIMENT CONTROL MEASURES AS DETERMINED BY THE ENGINEER SHALL BE INSTALLED IN ALL STAGING AREAS. ALL AREAS USED BY THE CONTRACTOR FOR STAGING OPERATIONS SHALL BE FULLY RESTORED BY THE CONTRACTOR UPON COMPLETION OF THE CONTRACT. IF THE STAGING AREA IS PAVED, IT SHALL BE RESTORED TO ITS ORIGINAL CONDITION. IF THE AREA IS UNPAVED, IT SHALL BE RE-GRADED, TOPSOILED, SEEDED AND MULCHED IN ACCORDANCE WITH DELAWARE STANDARD SPECIFICATIONS 732, 734 AND 735, FOR TOPSOIL, SEED AND MULCH RESPECTIVELY, TO THE SATISFACTION OF THE ENGINEER. THE SEED SHALL ADHERE TO THE SPECIFICATIONS OF SECTION 734 FOR PERMANENT GRASS SEEDING - DRY GROUND. ALL COSTS ASSOCIATED WITH RESTORATION OF THE STAGING AREA SHALL BE AT THE CONTRACTOR'S EXPENSE. IF THE ENGINEER DETERMINES THAT A SATISFACTORY STAND OF GRASS DOES NOT EXIST AT THE TIME OF FINAL INSPECTION, ALL COSTS ASSOCIATED WITH REESTABLISHING A SATISFACTORY STAND OF GRASS SHALL BE AT THE CONTRACTOR'S EXPENSE.

6. SITE REVIEWER - AN EROSION CONTROL SITE REVIEWER SHALL BE A PERSON FROM THE CONTRACTOR'S STAFF ASSIGNED TO EROSION AND SEDIMENT CONTROL IMPLEMENTATION AND MAINTENANCE AND SHALL BE REQUIRED ON SPECIFIC PROJECTS. THE NAME AND DNREC CERTIFICATION NUMBER OF EACH SITE REVIEWER SO REQUIRED SHALL BE SUBMITTED TO THE DEPARTMENT. THE NAME OF THE DELAWARE REGISTERED PROFESSIONAL ENGINEER PROVIDING DIRECTION AND SUPERVISION OF THE SITE REVIEWER, AS REQUIRED IN SECTION 12.3 OF THE DELAWARE SEDIMENT AND STORMWATER REGULATIONS, SHALL ALSO BE SUBMITTED TO THE DEPARTMENT. THE SITE REVIEWER REQUIREMENTS IN EFFECT ON THIS PROJECT SHALL BE MARKED WITH AN "X" BELOW:

EROSION POTENTIAL FOR THIS PROJECT	SITE REVIEWER REQUIREMENT
( ) INSIGNIFICANT	NONE
( ) MINOR	CONTRACTOR CERTIFICATION COURSE TRAINING ONLY, AS DEFINED IN SECTION 13 OF THE DELAWARE SEDIMENT AND STORMWATER REGULATIONS.
(X) MEDIUM	AT THE TIME OF BID OF THE CONTRACT, EITHER THE SUPERINTENDENT OR A SEPARATE INDIVIDUAL FROM THE CONTRACTOR'S STAFF SHALL BE A CERTIFIED CONSTRUCTION REVIEWER (CCR), AS DEFINED IN SECTION 12 OF THE DELAWARE SEDIMENT AND STORMWATER REGULATIONS.
( ) MAJOR	SUPERINTENDENT AND AN INDIVIDUAL FROM CONTRACTOR'S STAFF SHALL BE CCR. ONE INDIVIDUAL FROM THE CONTRACTOR'S STAFF MUST BE A CCR AT THE TIME OF BID OF THE CONTRACT. THE SUPERINTENDENT MUST BECOME A CCR WITHIN ONE YEAR AFTER THE AWARD OF CONTRACT.

7. ELECTRONIC PROJECT FILES THAT WILL BE MADE AVAILABLE TO THE CONTRACTOR INCLUDE:

(X)	NONE
( )	ASCII DATA FILES WITH COORDINATES AND ELEVATIONS FOR PROPOSED POINTS AS SELECTED BY THE ENGINEER.
( )	RASTER FILES, IN .CAL FILE FORMAT, FOR ALL PLAN SHEETS.
( )	EXISTING DIGITAL TERRAIN MODEL, IN .DTM FILE FORMAT, COMPATIBLE WITH SOFTWARE CURRENTLY USED BY DELDOT.
( )	PROPOSED DIGITAL TERRAIN MODEL, IN .DTM FILE FORMAT, COMPATIBLE WITH SOFTWARE CURRENTLY USED BY DELDOT.
( )	DESIGN FILE, IN .DGN FILE FORMAT, CONTAINING ONLY THE PROPOSED 3D TRIANGLES OF THE PROPOSED DIGITAL TERRAIN MODEL (DTM).

NOTE: THE DOCUMENT ENTITLED "RELEASE FOR DELIVERY OF DOCUMENTS IN ELECTRONIC FORM TO A CONTRACTOR" MUST BE SIGNED BY ALL PARTIES PRIOR TO THE DELIVERY OF ANY ELECTRONIC PROJECT FILES.

8. AMERICAN TRAFFIC SAFETY SERVICES ASSOCIATION (ATSSA) CERTIFIED TRAFFIC CONTROL SUPERVISOR REQUIREMENT FOR THIS PROJECT.

( )	THE CONTRACTOR SHALL NOT BE REQUIRED TO HAVE AN ATSSA SUPERVISOR ASSIGNED TO THIS PROJECT.
( )	THE CONTRACTOR SHALL HAVE AN ATSSA SUPERVISOR ASSIGNED TO THIS PROJECT. THE CONTRACTOR'S GENERAL SUPERINTENDENT FOR THIS PROJECT OR ANOTHER ATSSA CERTIFIED MEMBER OF THE CONTRACTOR'S PROJECT STAFF MAY BE THE ATSSA SUPERVISOR.
(X)	THE CONTRACTOR SHALL HAVE AN ATSSA SUPERVISOR ASSIGNED TO THIS PROJECT. THE ATSSA SUPERVISOR'S SOLE JOB SHALL BE SUPERVISION OF THE INSTALLATION, OPERATION AND MAINTENANCE OF TRAFFIC CONTROL DEVICES FOR THIS PROJECT. THE CONTRACTOR'S GENERAL SUPERINTENDENT FOR THIS PROJECT SHALL NOT BE THE ATSSA SUPERVISOR.

9. THE DISTURBED AREA FOR THIS PROJECT IS 1.97 ACRES.

10. THE CONTRACTOR SHALL BE RESPONSIBLE FOR ADHERING TO THE CONSTRUCTION SITE POLLUTION PREVENTION SPECIFICATIONS AS DETAILED IN SECTION 3.6 OF THE "DELAWARE EROSION AND SEDIMENT CONTROL HANDBOOK". ALL COSTS ASSOCIATED WITH ADHERING TO THE STANDARDS SHALL BE INCIDENTAL TO THE OVERALL CONTRACT COSTS.

11. THE EROSION AND SEDIMENT CONTROL PLANS HAVE BEEN APPROVED BY DELDOT'S STORMWATER ENGINEER UNDER DELDOT'S DELEGATED AUTHORITY. THE EROSION AND SEDIMENT CONTROL PLANS ARE VALID FOR A THREE YEAR PERIOD, BEGINNING ON THE DATE THE STORMWATER ENGINEER SIGNED THE CONSTRUCTION TITLE SHEET. IF THE FINAL ACCEPTANCE OF THE PROJECT IS ANTICIPATED TO EXTEND BEYOND THE THREE YEARS, THE CONTRACTOR SHALL INFORM THE ENGINEER THREE MONTHS PRIOR TO THE EXPIRATION OF THE EROSION AND SEDIMENT CONTROL PLAN APPROVAL. DELDOT WILL REVIEW THE CURRENT EROSION AND SEDIMENT CONTROL PLAN AND ISSUE AN EXTENSION WITH ANY APPROPRIATE MODIFICATIONS.

PROJECT NOTES

SECTION 100

1. THE DEPARTMENT RESERVES THE RIGHT TO INCREASE OR DECREASE THE QUANTITIES OF PAY ITEMS SPECIFIED FOR THE STRUCTURES LISTED IN THIS CONTRACT. SUCH ADDITIONS OR DELETIONS SHALL NOT BE CAUSE FOR AN INCREASE OR DECREASE IN ANY CONTRACT UNIT BID PRICES. THE "CHANGE" THRESHOLD OF PLUS OR MINUS 25%, AS DESCRIBED IN SECTION 104.05 OF THE DELDOT STANDARD SPECIFICATIONS, SHALL NOT APPLY TO THIS CONTRACT.

SECTION 200

2. ALL ADJUSTMENTS OF EXISTING FENCING SHALL BE PAID FOR UNDER ITEM 201000 - CLEARING AND GRUBBING.

3. ITEMS TO BE REMOVED UNDER ITEM 211000 - REMOVAL OF STRUCTURES AND OBSTRUCTIONS SHALL INCLUDE, BUT NOT BE LIMITED TO THE FOLLOWING:

   - DRAINAGE INLET
   - DOWNSPOUT PIPES

SECTION 600

4. EXISTING STRUCTURES:
ANY DAMAGE INCURRED TO EXISTING PORTIONS OF THE STRUCTURE TO REMAIN RESULTING FROM THE CONTRACTOR'S OPERATIONS SHALL BE REPAIRED AT THE CONTRACTOR'S EXPENSE, TO THE SATISFACTION OF THE ENGINEER.

5. USE AN APPROVED EPOXY BONDING COMPOUND BETWEEN THE OLD AND THE NEW CONCRETE SURFACES. THE BONDING COMPOUND SHALL CONFORM TO THE REQUIREMENTS OF SECTION 602 OF THE STANDARD SPECIFICATIONS. PAYMENT IS INCIDENTAL TO THE PCC MASONRY ITEM BEING PLACED.

6. ESTIMATED REPAIR QUANTITIES FOR ITEM NO. 602586-REHABILITATION OF CONCRETE STRUCTURE AND 602611-REPAIR OF CONCRETE STRUCTURES BY EPOXY INJECTION HAVE BEEN INCREASED BY 50% OVER THE QUANTITIES MEASURED DURING THE NOVEMBER 2011 BRIDGE INSPECTION. PAYMENT WILL BE BASED UPON THE ACTUAL QUANTITIES REQUIRED TO COMPLETE THE REPAIRS.

7. POWER-WASHING OF HORIZONTAL SURFACES (PIER CAPS AND ABUTMENTS): PRIOR TO APPLICATION OF SEALANT, THE SURFACES MUST BE PREPARED IN ACCORDANCE WITH ITEM NO. 602646.

8. WHEN PERFORMING SPALL REPAIRS ON VERTICAL CONCRETE SURFACES UNDER PAY ITEM NO. 602586, THE PRODUCT DATA SHEET FOR PROPOSED MATERIAL MUST STATE THAT THE MATERIAL IS SUITABLE FOR REPAIRS ON VERTICAL SURFACES.

9. WHEN REPAIRING CONCRETE VERTICAL SURFACES, SUCH AS ABUTMENTS AND PIERS, PERFORM REPAIRS IN ACCORDANCE WITH THE FOLLOWING REQUIREMENTS:

   a. REPAIR ALL SPALLS AS PER THE "SPALL REPAIR" DETAIL SHOWN ON THE PLANS.

   b. CRACKS 1/16" WIDE TO 1/2" WIDE SHALL BE REPAIRED BY EPOXY INJECTION. CRACK WIDTHS LARGER THAN ONE HALF INCH SHALL BE REPAIRED BY GROUTING. PAYMENT WILL BE UNDER ITEM NO. 602709, REPAIRING EXISTING P.C.C. STRUCTURES.

10. ALL CONCRETE SPALL REPAIR PERFORMED UNDER PAY ITEM NO. 602586 SHALL BE PERFORMED IN ACCORDANCE WITH THE REQUIREMENTS AS STATED IN THE RESPECTIVE SPECIAL PROVISION, AND IN ACCORDANCE WITH THE FOLLOWING ADDITIONAL REQUIREMENTS:

   a. PERFORM ABRASIVE BLASTING OF REINFORCING STEEL AS NECESSARY TO REMOVE CORROSION AND OTHER CONTAMINANTS PRIOR TO PLACEMENT OF PATCHING MORTAR OR CONCRETE.

   b. PREPARED CONCRETE SURFACE SHALL BE ROUGHENED BY ABRASIVE BLASTING PRIOR TO PLACEMENT OF PATCH MORTAR OR CONCRETE. THIS ROUGHENING IMPROVES THE MECHANICAL BOND WHEN PATCH MATERIAL IS APPLIED.

   c. ALL ABRASIVE BLAST MATERIAL AND MATERIAL REMOVED FROM BLASTING AND CHIPPING SHALL BE CONTAINED AND PROPERLY DISPOSED OF FROM THE SITE. CONTAINMENT WILL BE DESIGNED TO NOT ALLOW MATERIAL INTO STONEY CREEK. PAYMENT IS INCIDENTAL TO ITEM 602586.

11. REPAIR SPALLS AND DELAMINATIONS IN CONCRETE ABUTMENTS, BACKWALLS, WINGWALLS AND PIERS. PERFORM SOUNDING FOR DELAMINATION AROUND VISIBLE CRACKS, SPALLS AND DETERIORATION. SOUNDING IS INCIDENTAL TO THE APPROPRIATE SPALL REPAIR ITEM. REMOVE AND REPLACE DELAMINATED AND DETERIORATED CONCRETE. PAYMENT FOR CONCRETE SPALL AND DELAMINATION REPAIR SHALL BE AS DESCRIBED IN THE PROJECT NOTES FOR SPALL REPAIR.

12. REPAIR CRACKS IN CONCRETE ABUTMENTS, BACKWALLS, WINGWALLS AND PIERS. CRACK REPAIR SHALL BE PERFORMED UNDER PAY ITEM NO. 602611, AS APPROVED BY DELDOT INSPECTOR.

13. APPLY SILICONE BASED ACRYLIC CONCRETE SEALANT TO THE SUBSTRUCTURE AS INDICATED. PAYMENT SHALL BE UNDER ITEM NO. 602646.

14. THE DIMENSIONS SHOWN ON THE PLANS ARE BASED ON THE EXISTING BRIDGE PLANS. THE EXISTING BRIDGE PLANS ARE AVAILABLE UPON REQUEST FROM THE DELAWARE DEPARTMENT OF TRANSPORTATION. THE APPLICABLE CONSTRUCTION CONTRACT NUMBERS ARE 6807005 AND 7518. THE CONTRACTOR SHALL VERIFY THE DIMENSIONING SHOWN PRIOR TO CALCULATING QUANTITIES AND ORDERING MATERIALS.

15. PRIOR TO APPLYING NEW PAINT SYSTEM, ALL EXISTING COATINGS ON THE STRUCTURAL STEEL TO BE PAINTED SHALL BE COMPLETELY REMOVED, IN ACCORDANCE WITH ITEM NO. 605620. THERE SHALL BE NO OVER COATING OF EXISTING PAINT OR SEALANT SYSTEMS.

16. IF ANY CLEANING TO BE PERFORMED REQUIRES PRE-CLEANING BY PRESSURE WASHING, THEN THIS PRESSURE WASHING SHALL BE INCIDENTAL TO ITEM NO. 605620.

17. SELECT FINISH COAT PAINT COLOR TO MATCH COLOR OF EXISTING BRIDGE. SUBMIT PAINT COLOR FOR APPROVAL.

18. LOCATIONS TO BE PAINTED WILL BE INDICATED BY THE ENGINEER PRIOR TO COMMENCEMENT OF CLEANING AND PAINTING OPERATIONS.

19. SEE ENVIRONMENTAL COMPLIANCE PLAN FOR FURTHER RESTRICTIONS/GUIDANCE ASSOCIATED WITH THIS PROJECT.

20. NO TREES TO BE REMOVED UNLESS DIRECTED BY ENGINEER.

BRIDGE NOTES

1. DESIGN CRITERIA
2007 AASHTO LRFD BRIDGE DESIGN SPECIFICATIONS, INCLUDING 2008 AND 2009 INTERIMS, AND SUPPLEMENTED BY THE DELAWARE DEPARTMENT OF TRANSPORTATION 2005 BRIDGE DESIGN MANUAL, INCLUDING REVISIONS THROUGH 2009.

2. CONCRETE
ALL CONCRETE PROPERTIES SHALL BE IN ACCORDANCE WITH SECTION 812 OF THE DELAWARE DEPARTMENT OF TRANSPORTATION STANDARD SPECIFICATIONS.

   CLASS A: BACKWALLS, DECK SLAB, APPROACH SLAB, SLEEPER SLAB AND PARAPETS (f'c = 4,500 PSI).

   DURING PHASES 2 AND 5 OF CONSTRUCTION CLASS A CONCRETE MIX USED FOR APPROACH SLAB AND PAVEMENT SECTION SHALL REACH 2,000 PSI IN 24 HOURS. THE CONTRACTOR SHALL SUBMIT MIX PROPORTIONS TO THE ENGINEER AT LEAST 10 DAYS PRIOR TO PLACEMENT OF CONCRETE. THE MIX DESIGN SHALL BE BASED UPON SEASONAL AND AMBIENT CONDITIONS.

3. REINFORCING STEEL
ALL REINFORCING STEEL SHALL BE AASHTO M31 (ASTM A615), GRADE 60 AND UNLESS NOTED OTHERWISE SHALL BE PROTECTED WITH FUSION BONDED EPOXY, CONFORMING TO AASHTO M284 (ASTM D3963). PROVIDE 2 INCH CONCRETE COVER ON REINFORCEMENT BARS, EXCEPT AS NOTED.

4. INTENTIONALLY ROUGHEN, POWER WASH, AND APPLY EPOXY BONDING COMPOUND TO ALL EXISTING CONCRETE SURFACES TO WHICH NEW CONCRETE WILL BE ADDED, UNLESS OTHERWISE DIRECTED.

5. DO NOT CONSIDER ANY OF THE DATA ON THE EXISTING STRUCTURE SUPPLIED IN THE ORIGINAL DESIGN DRAWINGS OR MADE AVAILABLE BY THE DEPARTMENT OR ITS AUTHORIZED AGENT AS POSITIVE REPRESENTATIONS OF ANY OF THE CONDITIONS THAT MAY BE ENCOUNTERED IN THE FIELD.

6. THE STRUCTURE REHABILITATION PLANS WERE DEVELOPED BASED ON EXISTING PLANS. FIELD VERIFY ALL DIMENSIONS FOR PROPER FIT OF THE NEW CONSTRUCTION.

7. PRIOR TO SHOP DRAWING SUBMITTAL, THE CONTRACTOR SHALL PERFORM A FIELD SURVEY TO VERIFY ALL DIMENSIONS ON THE SHOP DRAWINGS. ASSUME FULL RESPONSIBILITY FOR ACCURACY OF DIMENSIONS. PAYMENT FOR COMPLETION OF FIELD SURVEY IS INCIDENTAL TO THE ITEM TO BE FABRICATED.

8. ANY DAMAGE TO THE STRUCTURE BEYOND THE REMOVAL AREA CAUSED BY THE CONTRACTOR'S OPERATION IS TO BE REPAIRED OR REPLACED TO THE SATISFACTION OF THE ENGINEER AT NO COST TO THE DEPARTMENT.

9. THIS PROJECT DOES NOT CHANGE THE LOAD RATING OF THE BRIDGE. A CURRENT LOAD RATING OF THE BRIDGE IS ON FILE AND MAY BE OBTAINED FROM THE BRIDGE MANAGEMENT SECTION.

UNOFFICIAL WEBSITE COPY

CIRCULAR CURVE 1

	STATION	NORTHING	EASTING
PC (6001)	591+20.1500	645251.3915	637507.2135
PI (6002)	599+58.8617	646026.5330	637827.5150
CC ( )		642333.9122	644567.6213
PT (6003)	607+90.8823	646713.7188	638308.3611

Radius: 7639.4400
Delta: 12° 31' 49.7560" Right
Degree of Curvature(Arc): 0° 44' 59.9990"
Length: 1670.7323
Tangent: 838.7117
Chord: 1667.4047
Middle Ordinate: 45.6278
External: 45.9019
Tangent Direction: N 22° 27' 04.4555" E
Radial Direction: S 67° 32' 55.5445" E
Chord Direction: N 28° 42' 59.3335" E
Radial Direction: S 55° 01' 05.7885" E
Tangent Direction: N 34° 58' 54.2115" E

HORIZONTAL / VERTICAL CONTROL DATA

POINT	STATION	OFFSET	NORTHING	EASTING	ELEVATION
1	603+69.5949	70.8494	646324.7025	638136.6683	2.88
2	603+29.4962	-72.9586	646366.0773	637993.2211	3.86
3	604+15.1307	-19.4170	646411.0161	638084.1566	6.45
4	602+92.9454	-11.4022	646302.6449	638026.6315	5.93
20	604+99.1113	-66.8147	646507.7124	638089.5233	16.58
21	602+00.4183	-67.2772	646251.5363	637930.9269	15.97
30	602+03.5067	67.2715	646185.7758	638048.3512	14.11
31	604+64.6547	66.6217	646406.6874	638183.2592	15.18

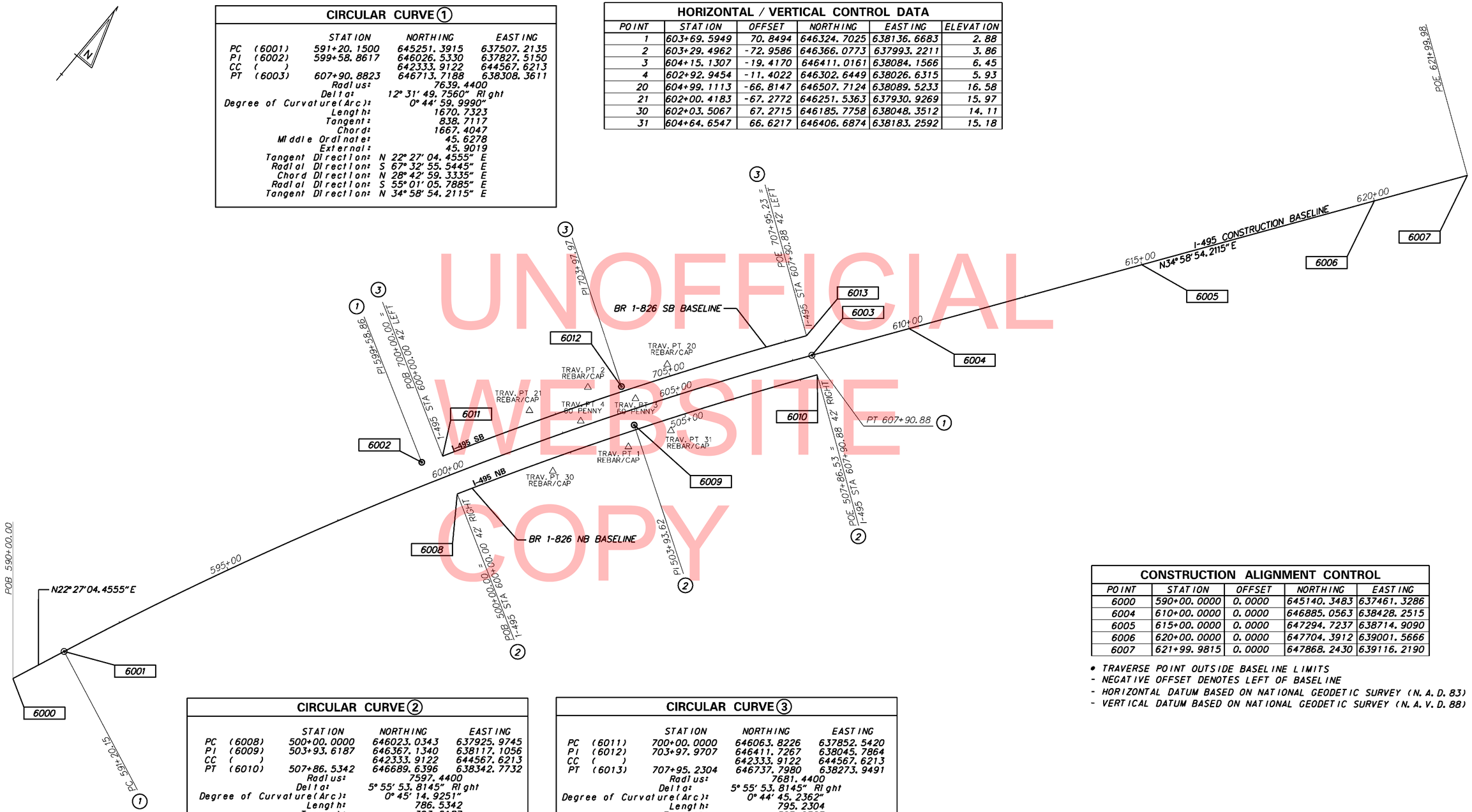

UNOFFICIAL WEBSITE COPY

CONSTRUCTION ALIGNMENT CONTROL

POINT	STATION	OFFSET	NORTHING	EASTING
6000	590+00.0000	0.0000	645140.3483	637461.3286
6004	610+00.0000	0.0000	646885.0563	638428.2515
6005	615+00.0000	0.0000	647294.7237	638714.9090
6006	620+00.0000	0.0000	647704.3912	639001.5666
6007	621+99.9815	0.0000	647868.2430	639116.2190

* TRAVERSE POINT OUTSIDE BASELINE LIMITS
- NEGATIVE OFFSET DENOTES LEFT OF BASELINE
- HORIZONTAL DATUM BASED ON NATIONAL GEODETIC SURVEY (N.A.D.83)
- VERTICAL DATUM BASED ON NATIONAL GEODETIC SURVEY (N.A.V.D.88)

CIRCULAR CURVE 2

	STATION	NORTHING	EASTING
PC (6008)	500+00.0000	646023.0343	637925.9745
PI (6009)	503+93.6187	646367.1340	638117.1056
CC ( )		642333.9122	644567.6213
PT (6010)	507+86.5342	646689.6396	638342.7732

Radius: 7597.4400
Delta: 5° 55' 53.8145" Right
Degree of Curvature(Arc): 0° 45' 14.9251"
Length: 786.5342
Tangent: 393.6187
Chord: 786.1830
Middle Ordinate: 10.1761
External: 10.1897
Tangent Direction: N 29° 03' 00.3970" E
Radial Direction: S 60° 56' 59.6030" E
Chord Direction: N 32° 00' 57.3043" E
Radial Direction: S 55° 01' 05.7885" E
Tangent Direction: N 34° 58' 54.2115" E

CIRCULAR CURVE 3

	STATION	NORTHING	EASTING
PC (6011)	700+00.0000	646063.8226	637852.5420
PI (6012)	703+97.9707	646411.7267	638045.7864
CC ( )		642333.9122	644567.6213
PT (6013)	707+95.2304	646737.7980	638273.9491

Radius: 7681.4400
Delta: 5° 55' 53.8145" Right
Degree of Curvature(Arc): 0° 44' 45.2362"
Length: 795.2304
Tangent: 397.9707
Chord: 794.8753
Middle Ordinate: 10.2886
External: 10.3024
Tangent Direction: N 29° 03' 00.3970" E
Radial Direction: S 60° 56' 59.6030" E
Chord Direction: N 32° 00' 57.3043" E
Radial Direction: S 55° 01' 05.7885" E
Tangent Direction: N 34° 58' 54.2115" E

HV-01

DELAWARE DEPARTMENT OF TRANSPORTATION

ADDENDUMS / REVISIONS

SCALE 0 100 200 300 FEET

BR 1-826 N&S ON I-495 OVER STONEY CREEK

CONTRACT	BRIDGE NO.	1-826 N&S
T201107402	DESIGNED BY: TM	
COUNTY		
NEW CASTLE	CHECKED BY: MAA	

HORIZONTAL AND VERTICAL CONTROL

SHEET NO. 4
TOTAL SHTS. 54

GUARDRAIL SCHEDULE

NO.	ITEM DESCRIPTION / TYPE	BEGIN STA.	OFFSET	LENGTH
1	GALVANIZED STEEL BEAM GUARDRAIL, TYPE 1-27	500+66.95	24.85	125.00
2	GUARDRAIL TO BARRIER CONNECTION, APPROACH TYPE 1-27	501+92.33	22.98	**
3	GUARDRAIL TO BARRIER CONNECTION (EXIT TYPE 27)	504+46.16	21.45	**
4	GALVANIZED STEEL BEAM GUARDRAIL, TYPE 1-27	504+57.60	22.72	87.50
5	GALVANIZED STEEL BEAM GUARDRAIL, TYPE 1-27	701+77.34	29.76	50.00
6	GUARDRAIL TO BARRIER CONNECTION (EXIT TYPE 27)	702+27.53	30.93	**
7	GUARDRAIL TO BARRIER CONNECTION, APPROACH TYPE 1-27	704+75.56	29.58	**
8	GALVANIZED STEEL BEAM GUARDRAIL, TYPE 1-27	704+95.39	29.68	100.00
9	GALVANIZED STEEL BEAM GUARDRAIL, TYPE 1-27	602+71.88	-105.23	50.00
10	GUARDRAIL TO BARRIER CONNECTION, APPROACH TYPE 1-27	603+21.12	-107.93	**

** SEE DELDOT STANDARD CONSTRUCTION DETAILS FOR LENGTH

PAVEMENT CORE

NO.	DESCRIPTION
PC-1	3" HOT MIX 6+" GABC

CURB SCHEDULE

NO.	ITEM DESCRIPTION / TYPE	LENGTH
1	PORTLAND CEMENT CONCRETE CURB, TYPE 1-4	102.00
2	PORTLAND CEMENT CONCRETE CURB, TYPE 1-4	29.00
3	PORTLAND CEMENT CONCRETE CURB, TYPE 1-4	53.00

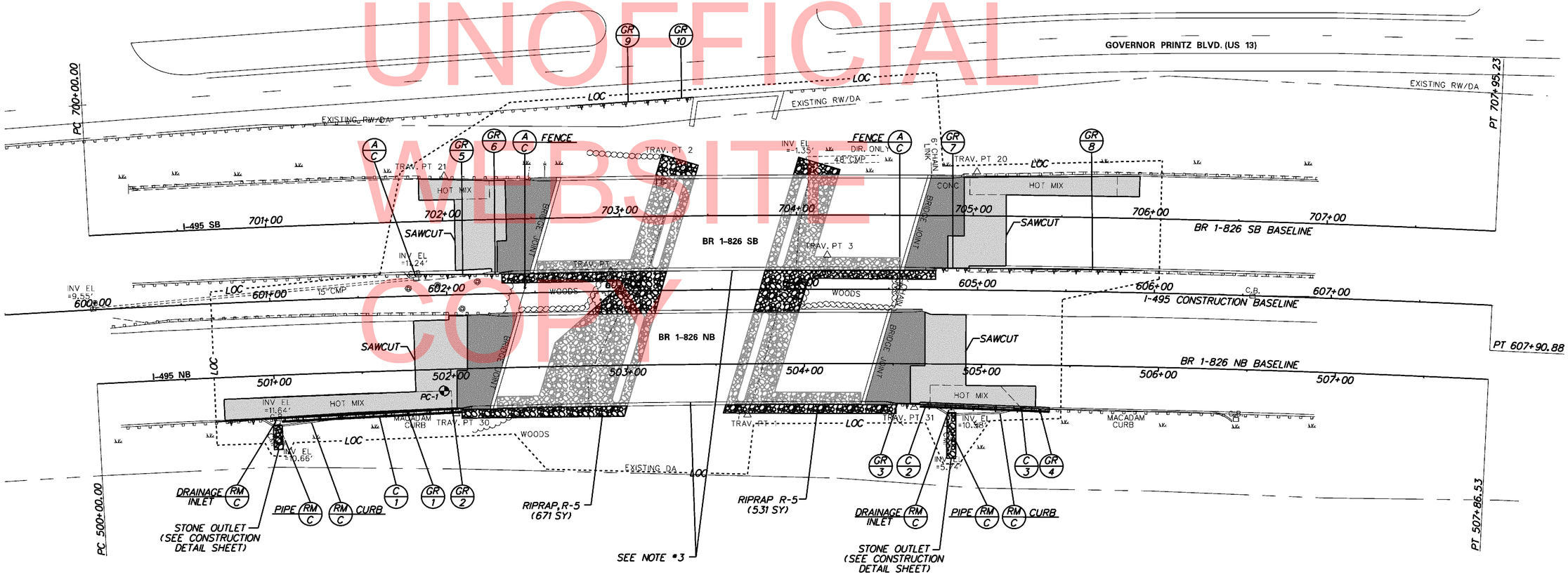

UNOFFICIAL WEBSITE COPY

NOTES

1. SEE BRIDGE PLANS AND DETAILS FOR ALL STRUCTURES AND APPROACH WORK.
2. SEE CONTRACT 6807005 FOR EXISTING RIGHT OF WAY DETAILS.
3. EXISTING PARAPET WALLS TO BE REPLACED - SEE STRUCTURE PLANS FOR DETAILS

CP-01

DELAWARE DEPARTMENT OF TRANSPORTATION

ADDENDUMS / REVISIONS

SCALE 0 30 60 90 FEET

BR 1-826 N&S ON I-495 OVER STONEY CREEK

CONTRACT	BRIDGE NO.	1-826 N&S
T201107402	DESIGNED BY: TM	
COUNTY		
NEW CASTLE	CHECKED BY: MAA	

CONSTRUCTION PLAN

SHEET NO. 5
TOTAL SHTS. 54

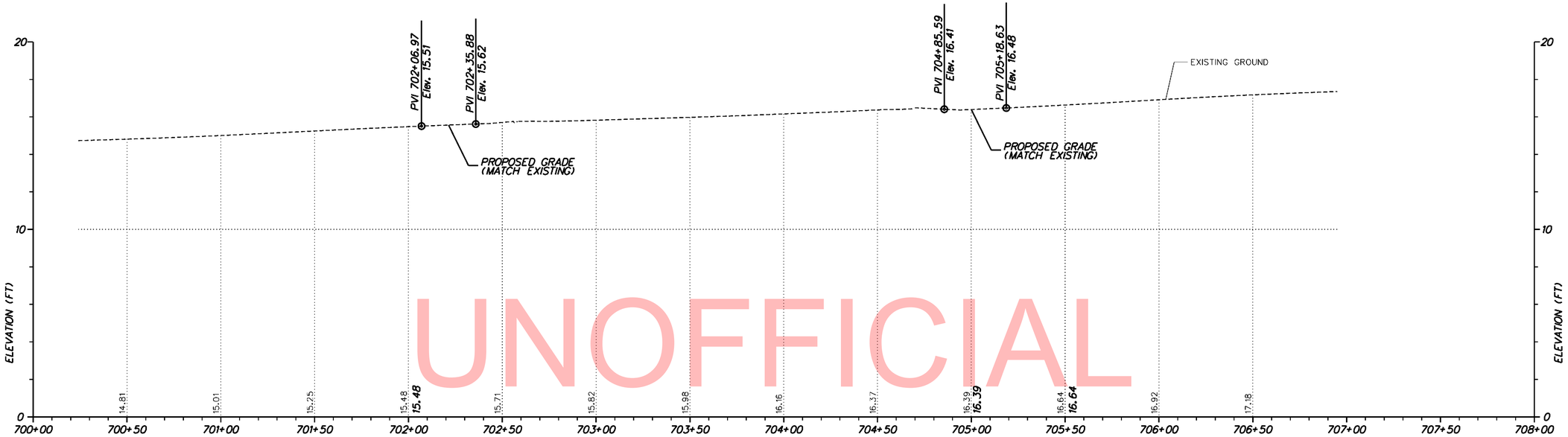

BR 1–826 SB

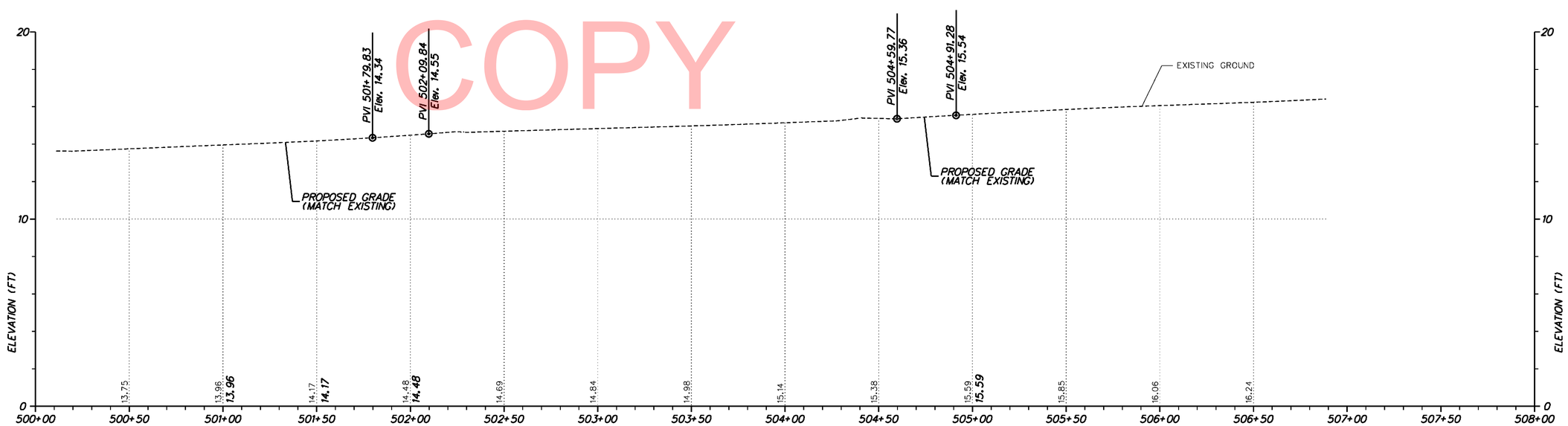

BR 1–826 NB

SCALE FEET
9
6
3
0

UNOFFICIAL WEBSITE COPY

DELAWARE DEPARTMENT OF TRANSPORTATION	ADDENDUMS / REVISIONS	SCALE 0 30 60 90 FEET	BR 1-826 N&S ON I-495 OVER STONEY CREEK	CONTRACT T201107402	BRIDGE NO. 1-826 N&S	PROFILES	PF-01
				COUNTY NEW CASTLE	DESIGNED BY: TM		SHEET NO. 6
					CHECKED BY: MAA		TOTAL SHTS. 54

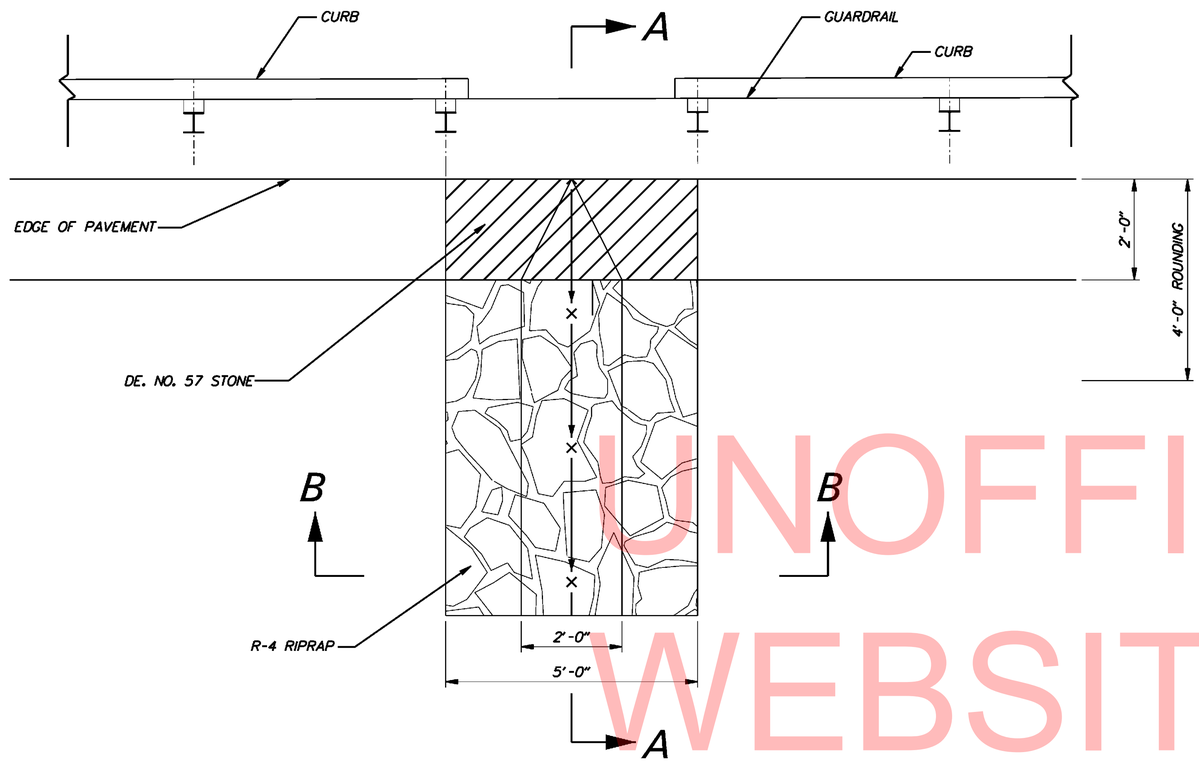

PLAN

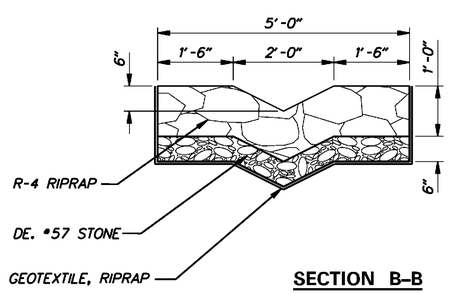

SECTION B–B

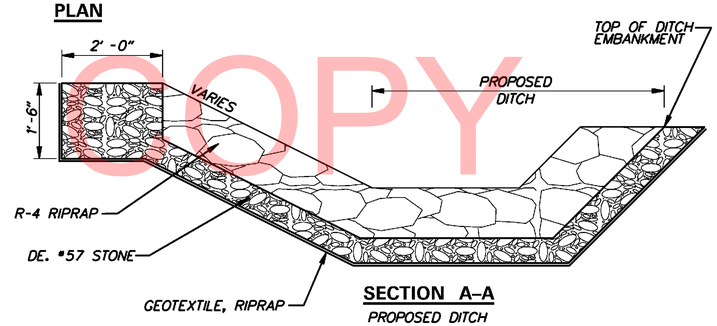

SECTION A–A
PROPOSED DITCH

STONE OUTLET DETAILS

LEGEND

- (A) ITEM 720043 - GALVANIZED STEEL BEAM GUARDRAIL, TYPE 1-27
- (B) ITEM 401801 - WMA, SUPERPAVE TYPE C HOT-MIX, 160 GYRATIONS, PG 64-22
- (C) ITEM 302007 - GRADED AGGREGATE BASE COURSE, TYPE B
- (D) ITEM 701012 - PORTLAND CEMENT CONCRETE CURB, TYPE 1-4
- (E) ITEM 501012 - PORTLAND CEMENT CONCRETE PAVEMENT, 14"

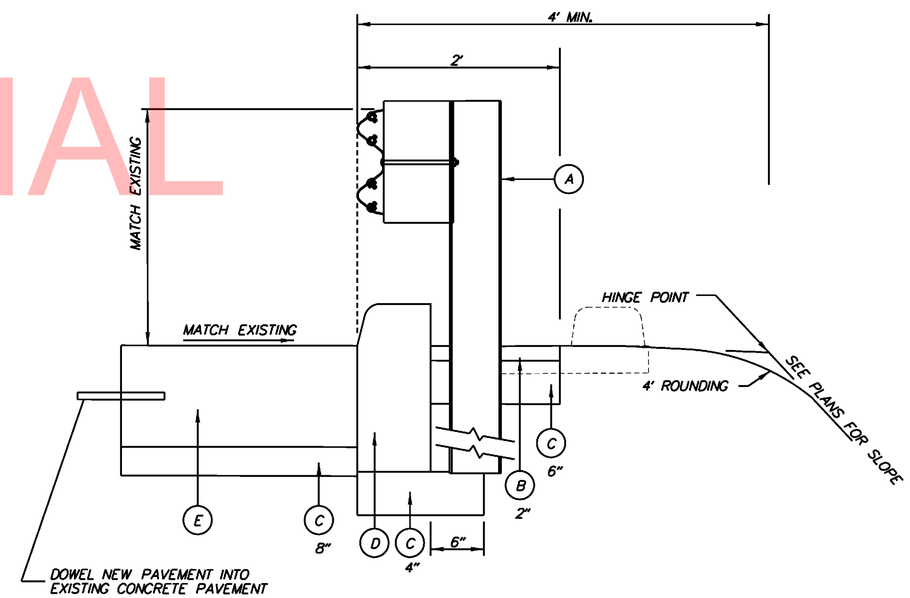

GUARDRAIL SECTION

UNOFFICIAL WEBSITE COPY

DT–01

DELAWARE DEPARTMENT OF TRANSPORTATION	ADDENDUMS / REVISIONS	NTS	BR 1-826 N&S ON I-495 OVER STONEY CREEK	CONTRACT T201107402	BRIDGE NO. 1-826 N&S	CONSTRUCTION DETAILS	SHEET NO. 7
				COUNTY NEW CASTLE	DESIGNED BY: TM		TOTAL SHTS. 54
					CHECKED BY: MAA		

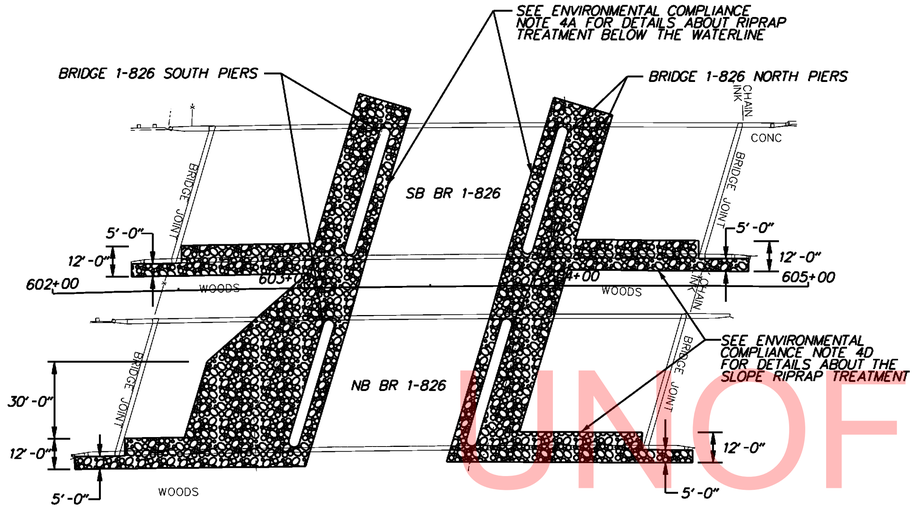

RIPRAP DETAIL PLAN

NOTE: SEE ENVIRONMENTAL COMLIANCE NOTE 4 FOR DETAILS REGARDING STREAM RESTORATION AND RIPRAP TREATMENTS.

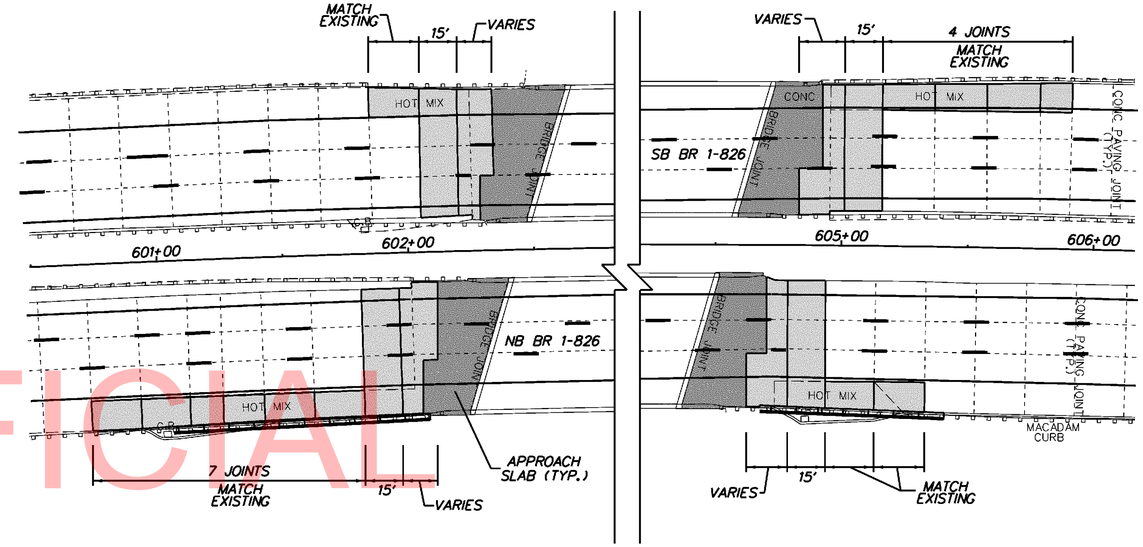

CONCRETE PAVEMENT JOINT LAYOUT

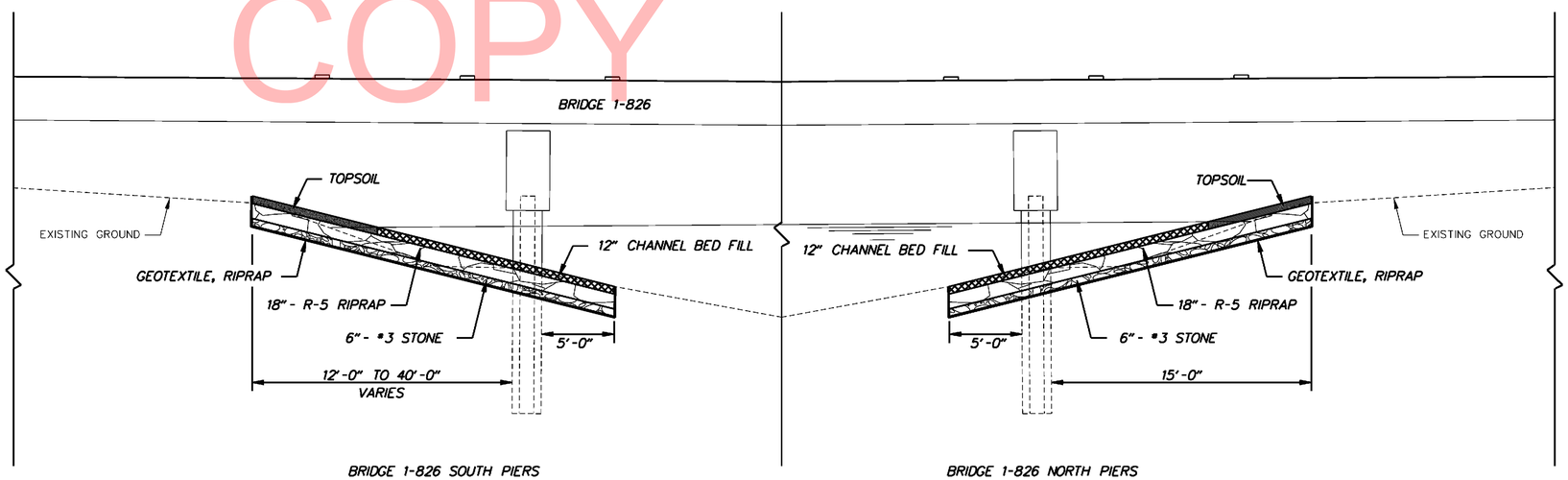

RIPRAP ELEVATION DETAIL

UNOFFICIAL WEBSITE COPY

DT-02

DELAWARE DEPARTMENT OF TRANSPORTATION	ADDENDUMS / REVISIONS	NTS	BR 1-826 N&S ON I-495 OVER STONEY CREEK	CONTRACT T201107402	BRIDGE NO. 1-826 N&S	CONSTRUCTION DETAILS	SHEET NO. 8
				COUNTY NEW CASTLE	DESIGNED BY: TM		TOTAL SHTS. 54
					CHECKED BY: MAA		

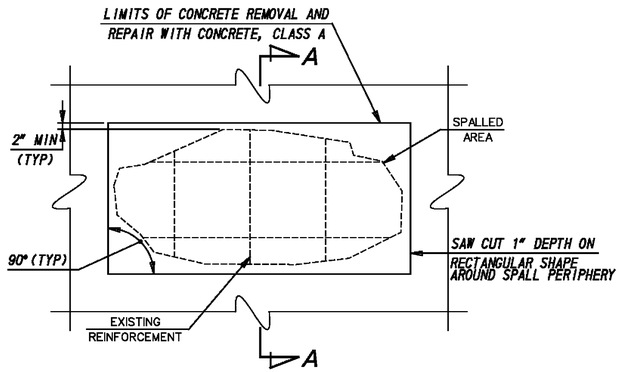

SPALL REPAIR

N.T.S.

SPALL REPAIRS:

1. THE CONTRACTOR SHALL SAWCUT 1" DEEP RECTANGULAR SHAPE AROUND THE SPALL PERIPHERY, SHAPE TO BE 2" WIDER THAN SPALL PERIPHERY.
2. THE CONTRACTOR SHALL REMOVE UNSOUND CONCRETE FROM THE REPAIR AREA.
3. THE CONTRACTOR SHALL CHIP AWAY CONCRETE SURROUNDING REINFORCEMENT BAR.
4. THE CONTRACTOR SHALL ABRASIVE BLAST CLEAN THE EXISTING REINFORCEMENT.
5. THE CONTRACTOR SHALL APPLY AN EPOXY BONDING COAT TO ROUGHENED AND CLEANED CONCRETE SURFACES.
6. THE CONTRACTOR SHALL TROWEL APPLY CONCRETE BEHIND REINFORCEMENT IN LIFTS UP TO 3" THICK.
7. THE CONTRACTOR SHALL TROWEL APPLY CONCRETEREPAIR AND BUILD UP CLEAR COVER BEYOND EXISTING CONCRETE FACE.
8. THE CONTRACTOR SHALL TRANISTION BUILT UP CONCRETE AREA IN A GRADUAL MANNER TO THE LIMITS OF THE SAWCUT.
9. DAMAGED REINFORCEMENT SHALL BE REPLACED IN KIND TO INCLUDE SIZE AND TYPE (I.E. REPLACE BLACK REINFORCEMENT WITH BLACK REINFORCEMENT AND EPOXY COATED REINFORCEMENT WITH EPOXY COATED REINFORCEMENT).

UNOFFICIAL WEBSITE COPY

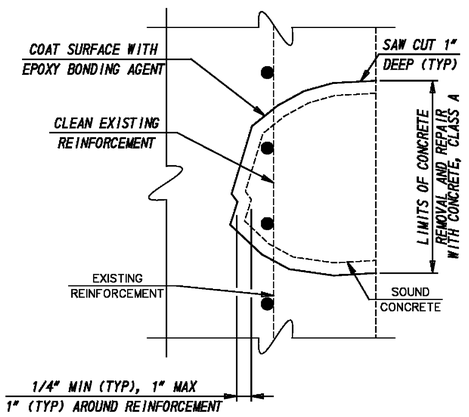

NOTE: SOUND REPAIRS AFTER CURING TO ENSURE BOND.

SECTION A-A

N.T.S.

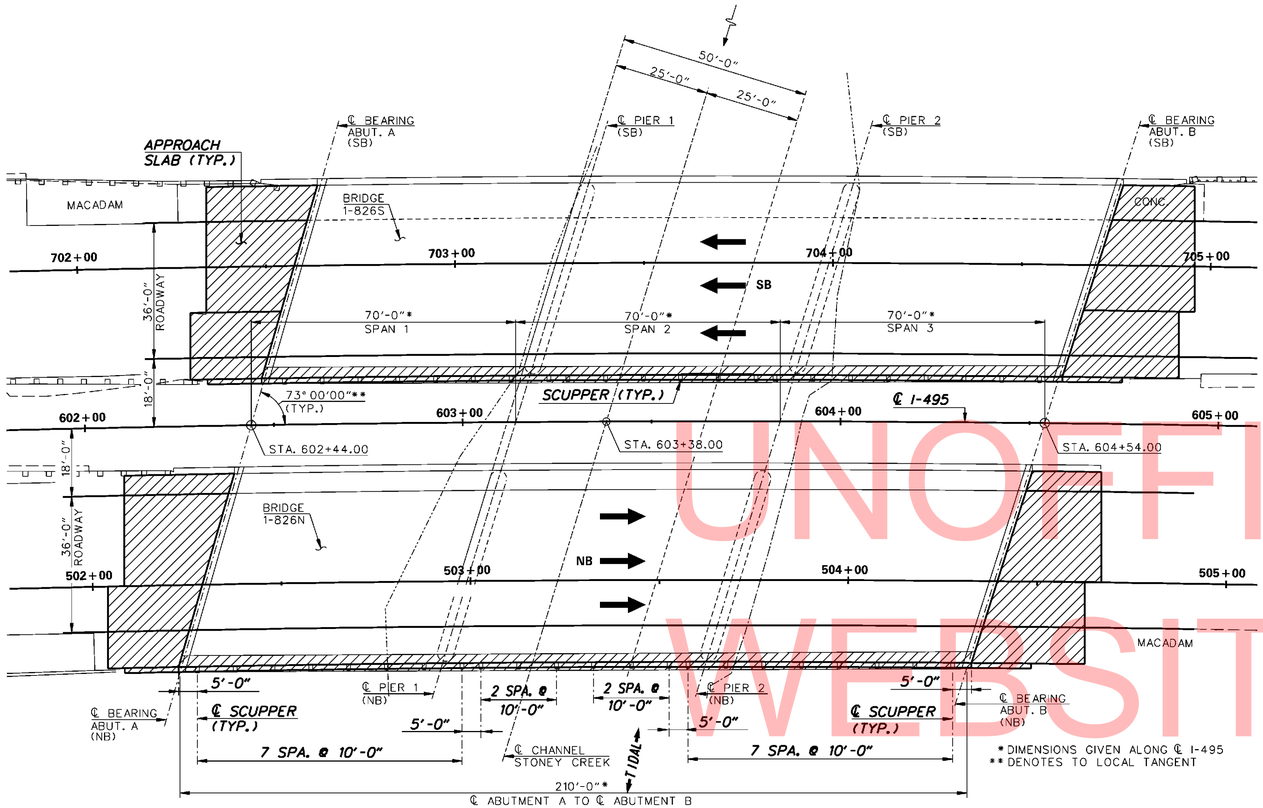

PLAN

SCALE
0 1 2 3
FEET

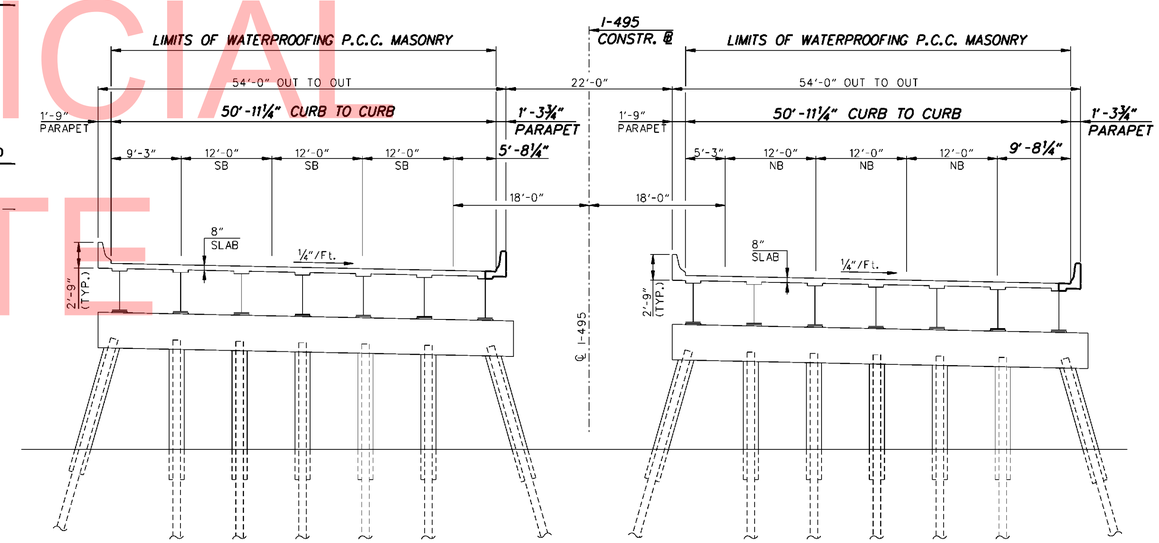

SECTION

SCALE
0 10 20 30
FEET

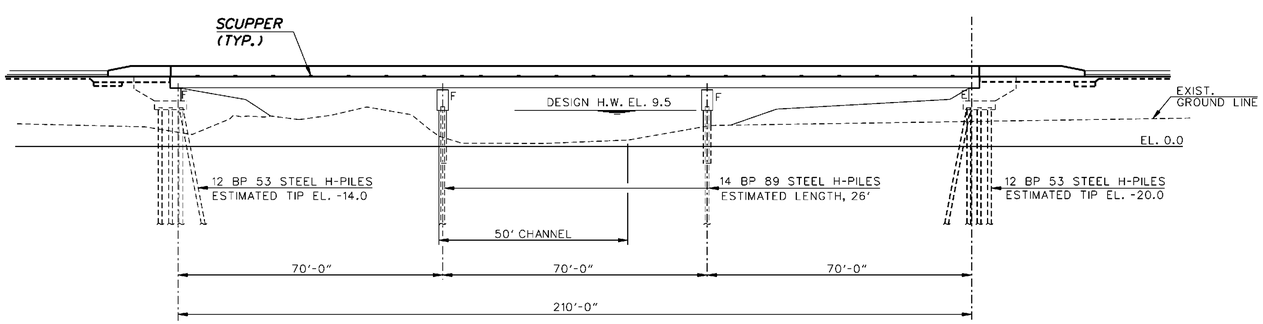

ELEVATION

SCALE
0 1 2 3
FEET

PROPOSED CONSTRUCTION

- REPLACE PARAPETS AND DECK OVERHANGS AT LOW SIDE OF NB AND SB BRIDGE. SPACING OF SCUPPERS AS SHOWN IS TYPICAL FOR NB BRIDGE AND SB BRIDGE.
- REPLACE APPROACH SLABS.
- RESEAL DECK JOINTS AT SOUTH ABUTMENTS.
- REPLACE EXPANSION DAMS AT NORTH ABUTMENTS WITH NEOPRENE STRIP SEALS.

NOTE: ROADWAY APPROACH, STREAM BANK, AND SUBSTRUCTURE REPAIR LIMITS NOT SHOWN FOR CLARITY.

LEGEND:

ABUT.	=	ABUTMENT
E	=	EXPANSION
EL.	=	ELEVATION
F	=	FIXED
MAX.	=	MAXIMUM
NB	=	NORTHBOUND
SB	=	SOUTHBOUND
SPA.	=	SPACES
STA.	=	STATION
TYP.	=	TYPICAL

AREA OF RECONSTRUCTION

UNOFFICIAL WEBSITE COPY

DELAWARE DEPARTMENT OF TRANSPORTATION	ADDENDUMS / REVISIONS	NTS	BR 1-826 N&S ON I-495 OVER STONEY CREEK	CONTRACT T201107402	BRIDGE NO. 1-826 N&S	BRIDGE PLAN AND ELEVATION	PE-01
				COUNTY NEW CASTLE	DESIGNED BY: ZME		SHEET NO. 10
					CHECKED BY: BJH		TOTAL SHTS. 54

LEGEND:

- (LENGTH x WIDTH) SPALL REPAIR
- (LENGTH) CRACK REPAIR
- EXCAVATION AREA

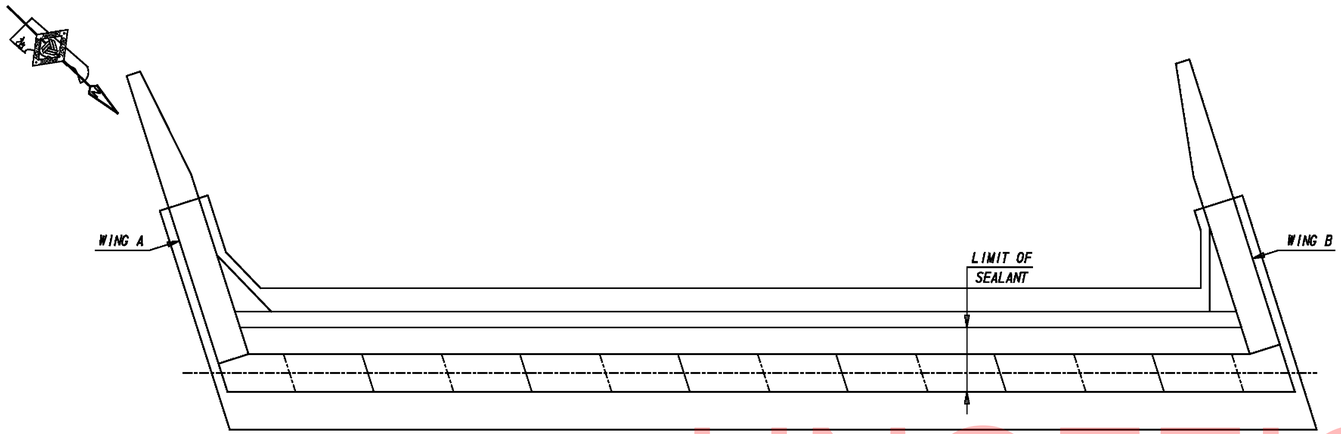

PLAN - ABUTMENT A

CONCRETE REPAIR QUANTITIES		
ABUTMENT A		PAID FOR UNDER ITEM NO.
SPALL REPAIR	0 CF	602586
CRACK REPAIR	55 LF	602611
SEALANT	770 SF	602646

UNOFFICIAL WEBSITE COPY

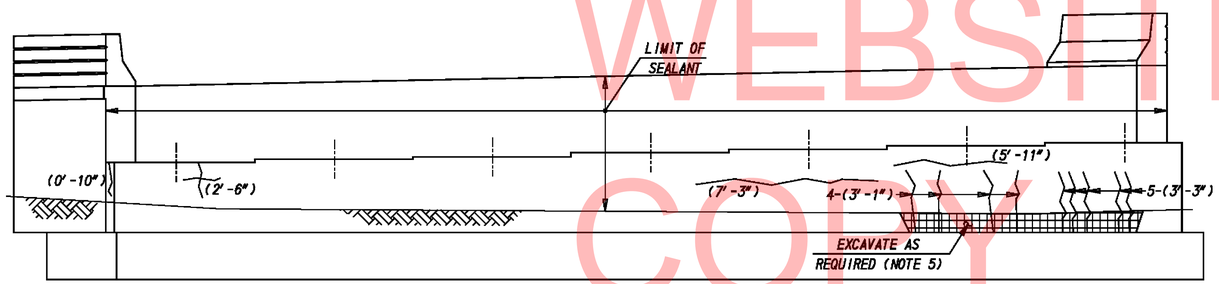

ELEVATION - ABUTMENT A

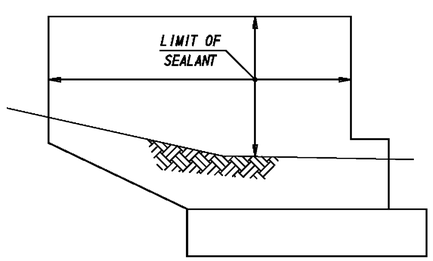

ELEVATION - WING A

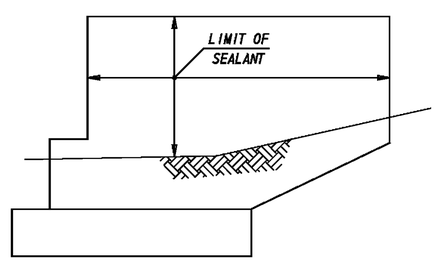

ELEVATION - WING B

NOTES:

1. CONCRETE REPAIR DIMENSIONS IN FEET AND INCHES.
2. CONTRACTOR TO FIELD VERIFY ALL REPAIR DIMENSIONS.
3. ENGINEER SHALL CONFIRM CONTRACTOR DELINEATION OF CRACK AND SPALL AREAS PRIOR TO COMMENCEMENT OF REPAIRS.
4. WHERE CRACKS AND SPALLS ARE SHOWN CONCURRENTLY, COMPLETE THE SPALL REPAIR AND THEN COMPLETE THE CRACK REPAIR.
5. EXCAVATE AS REQUIRED TO LOCATE THE EXTENT OF THE CRACK OR SPALL. EXCAVATION, REPLACEMENT AND COMPACTION OF SOIL IS INCIDENTAL TO THE ASSOCIATED REPAIR ITEMS: 602586 AND 602611.
6. PROTECT BEARINGS AND BEARING GREASE DURING CLEANING AND APPLICATION OF SEALANT. BEARING PROTECTION COST IS INCIDENTAL TO ITEM NO. 602646 "SILICONE ACRYLIC CONCRETE SEALER".

PENNONI ASSOCIATES INC.
FILE NAME=...\DESIGN\CT\AB01.dgn
PEN TABLE=pennoni-dwg01.tbl
PLOT DRIVER=PENNON-WIDE.PDF
DATE PLOTTED=10/27/2022 @ 2:51:58 PM
USER NAME=leanderson

DELAWARE DEPARTMENT OF TRANSPORTATION	ADDENDUMS / REVISIONS	SCALE 0 2' 4' 8'	REHABILITATION OF BR 1-826N AND BR 1-826S CARRYING I-495 OVER STONEY CREEK	CONTRACT T201107402 / COUNTY NEW CASTLE	BRIDGE NO. 1-826N AND 1-826S / DESIGNED BY: BJM / CHECKED BY: LAA	NORTHBOUND (BR 1-826N) ABUTMENT A REPAIRS	AB-01 / SHEET NO. 11 / TOTAL SHTS. 54

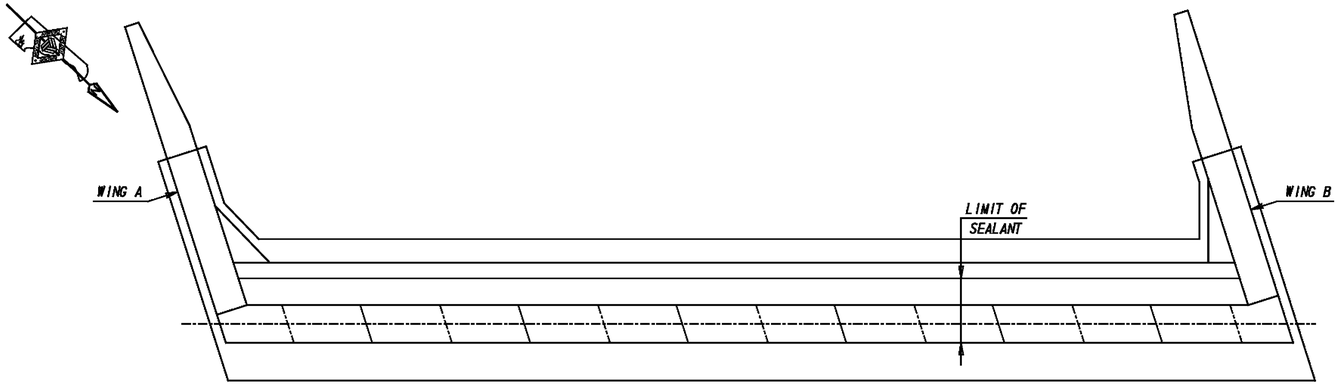

PLAN - ABUTMENT A

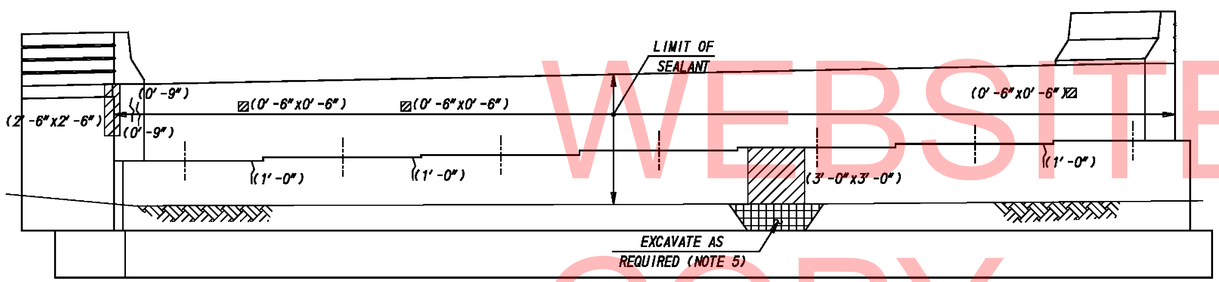

ELEVATION - ABUTMENT A

UNOFFICIAL WEBSITE COPY

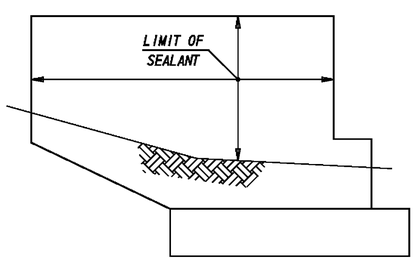

ELEVATION - WING A

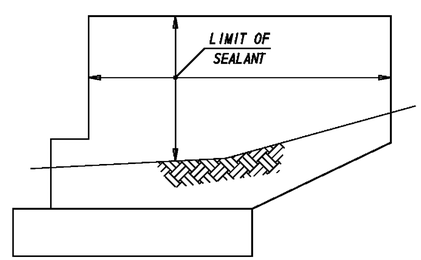

ELEVATION - WING B

LEGEND:

- (LENGTH x WIDTH) SPALL REPAIR
- (LENGTH) CRACK REPAIR
- EXCAVATION AREA

CONCRETE REPAIR QUANTITIES		
ABUTMENT A		PAID FOR UNDER ITEM NO.
SPALL REPAIR	8 CF	602586
CRACK REPAIR	7 LF	602611
SEALANT	770 SF	602646

NOTES:

1. CONCRETE REPAIR DIMENSIONS IN FEET AND INCHES.
2. CONTRACTOR TO FIELD VERIFY ALL REPAIR DIMENSIONS.
3. ENGINEER SHALL CONFIRM CONTRACTOR DELINEATION OF CRACK AND SPALL AREAS PRIOR TO COMMENCEMENT OF REPAIRS.
4. WHERE CRACKS AND SPALLS ARE SHOWN CONCURRENTLY, COMPLETE THE SPALL REPAIR AND THEN COMPLETE THE CRACK REPAIR.
5. EXCAVATE AS REQUIRED TO LOCATE THE EXTENT OF THE CRACK OR SPALL. EXCAVATION, REPLACEMENT AND COMPACTION OF SOIL IS INCIDENTAL TO THE ASSOCIATED REPAIR ITEMS: 602586 AND 602611.
6. PROTECT BEARINGS AND BEARING GREASE DURING CLEANING AND APPLICATION OF SEALANT. BEARING PROTECTION COST IS INCIDENTAL TO ITEM NO. 602646 "SILICONE ACRYLIC CONCRETE SEALER".

PENNONI ASSOCIATES INC.
FILE NAME=...\DESIGN\CT\AB02.dgn
PEN TABLE=pennoni-dedot.tbl
PLOT DRIVER=PENNONI-MUM-DELDOT-FULL-PDF.PL.TCFG
DATE=10/25/2022 @ 2:59:47 PM
USER NAME=lacordeiron

DELAWARE DEPARTMENT OF TRANSPORTATION

ADDENDUMS / REVISIONS

SCALE 0 2' 4' 8'

REHABILITATION OF BR 1-826N AND BR 1-826S CARRYING I-495 OVER STONEY CREEK

CONTRACT	BRIDGE NO.	1-826N AND 1-826S
T201107402	DESIGNED BY: BJM	
COUNTY		
NEW CASTLE	CHECKED BY: LAA	

SOUTHBOUND (BR 1-826S) ABUTMENT A REPAIRS

AB-02

SHEET NO. 12

TOTAL SHTS. 54

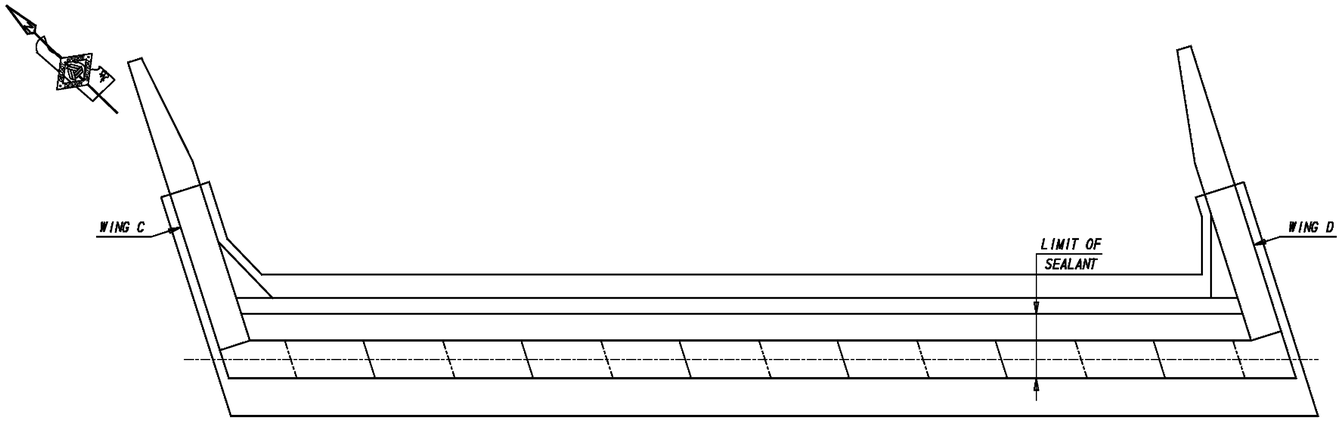

PLAN - ABUTMENT B

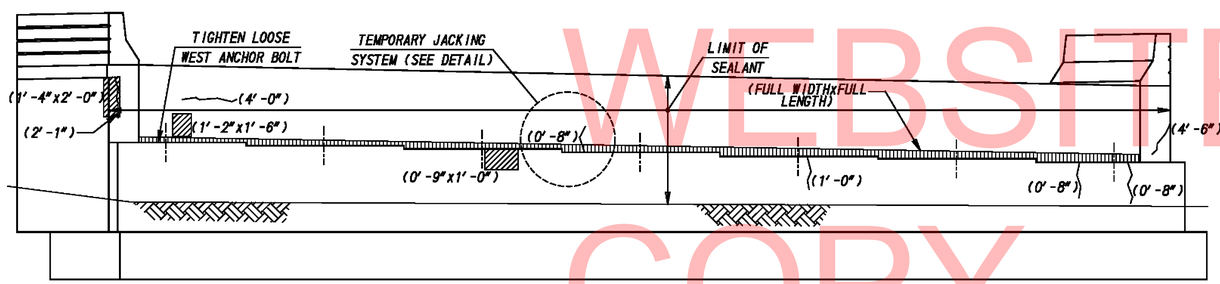

ELEVATION - ABUTMENT B

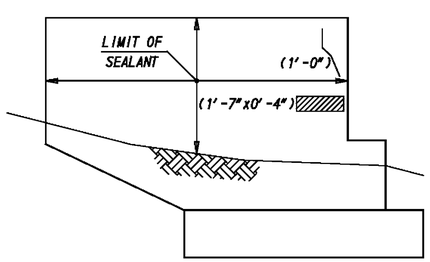

ELEVATION - WING C

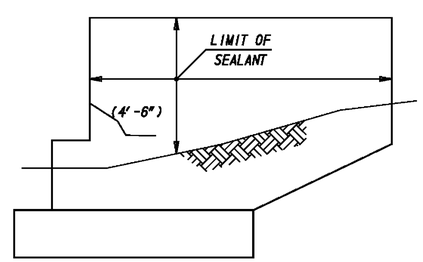

ELEVATION - WING D

CONCRETE REPAIR QUANTITIES

ABUTMENT B		PAID FOR UNDER ITEM NO.
SPALL REPAIR	3 CF	602586
CRACK REPAIR	22 LF	602611
SEALANT	770 SF	602646

LEGEND:

- (LENGTH x WIDTH) SPALL REPAIR
- (WIDTH x LENGTH) REMOVAL OF DEBRIS
- (LENGTH) CRACK REPAIR

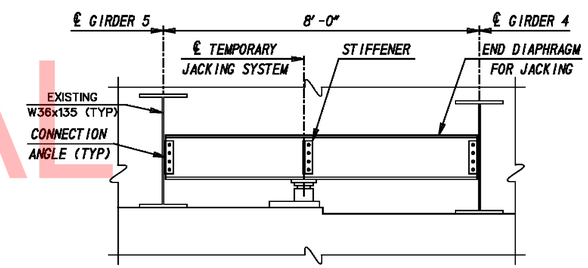

TEMPORARY JACKING DETAIL

SCALE 0 1' 2' 4'

NOTES:

1. CONCRETE REPAIR DIMENSIONS IN FEET AND INCHES.
2. CONTRACTOR TO FIELD VERIFY ALL REPAIR DIMENSIONS.
3. ENGINEER SHALL CONFIRM CONTRACTOR DELINEATION OF CRACK AND SPALL AREAS PRIOR TO COMMENCEMENT OF REPAIRS.
4. WHERE CRACKS AND SPALLS ARE SHOWN CONCURRENTLY, COMPLETE THE SPALL REPAIR AND THEN COMPLETE THE CRACK REPAIR.
5. PAYMENT FOR TIGHTEN LOOSE WEST ANCHOR BOLT SHALL BE INCIDENTAL TO ITEM NO. 602709 "REPAIRING EXISTING P.C.C. STRUCTURES".
6. PROTECT BEARINGS AND BEARING GREASE DURING CLEANING AND APPLICATION OF SEALANT. BEARING PROTECTION COST IS INCIDENTAL TO ITEM NO. 602646 "SILICONE ACRYLIC CONCRETE SEALER".
7. JACKING REQUIREMENT WILL BE INDICATED BY THE ENGINEER PRIOR TO COMMENCEMENT OF SHALLOW SPALL REPAIR ADJACENT TO GIRDER 5 BEARING. THE JACKING DESIGN SHALL BE SIGNED AND SEALED BY A PROFESSIONAL ENGINEER REGISTERED IN THE STATE OF DELAWARE. COSTS ASSOCIATED WITH THE JACKING OPERATION TO BE PAID FOR UNDER ITEM NO. 605607 "JACKING BRIDGE".
8. PAYMENT FOR REMOVAL OF DEBRIS FROM THE ABUTMENT SEAT SHALL BE PAID FOR UNER ITEM NO. 602646 "SILICONE ACRYLIC CONCRETE SEALER".

UNOFFICIAL WEBSITE COPY

PENNONI ASSOCIATES INC.
FILE NAME=...\DESIGN\CT\AB01.dgn
PEN TABLE=pennoni-deldot.tbl
PLOT DRIVER=PENNONI-MAP-DELDOT-FULL-PDF.PLTCFG
PLOT SCALE=1.0000 PLOT DATE=9/27/2019 @ 2:52:12 PM
USER NAME=leandersen

DELAWARE DEPARTMENT OF TRANSPORTATION

ADDENDUMS / REVISIONS

SCALE 0 2' 4' 8'

REHABILITATION OF BR 1-826N AND BR 1-826S CARRYING I-495 OVER STONEY CREEK

CONTRACT	BRIDGE NO.	1-826N AND 1-826S
T201107402	DESIGNED BY: BJM	
COUNTY		
NEW CASTLE	CHECKED BY: LAA	

NORTHBOUND (BR 1-826N) ABUTMENT B REPAIRS

AB-03

SHEET NO. 13

TOTAL SHTS. 54

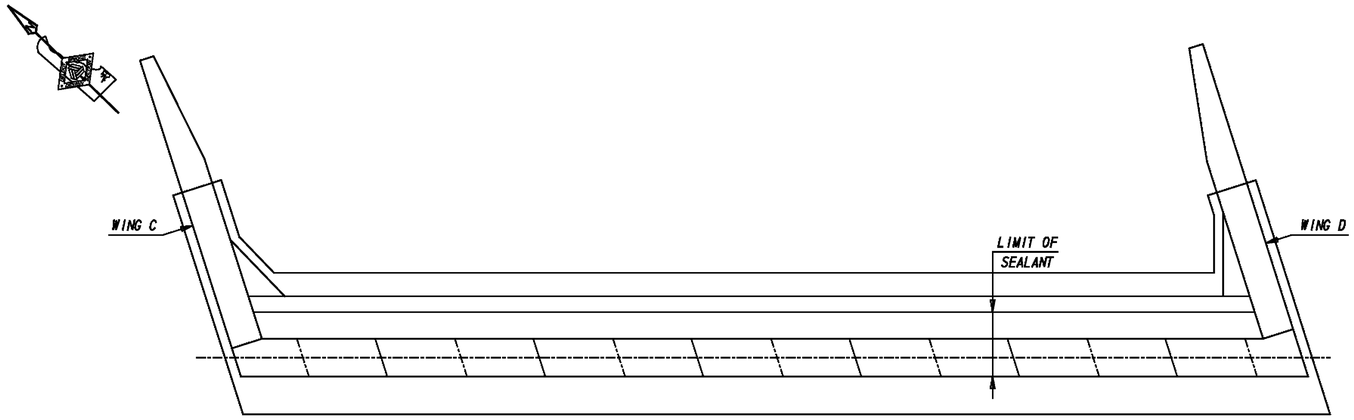

PLAN - ABUTMENT B

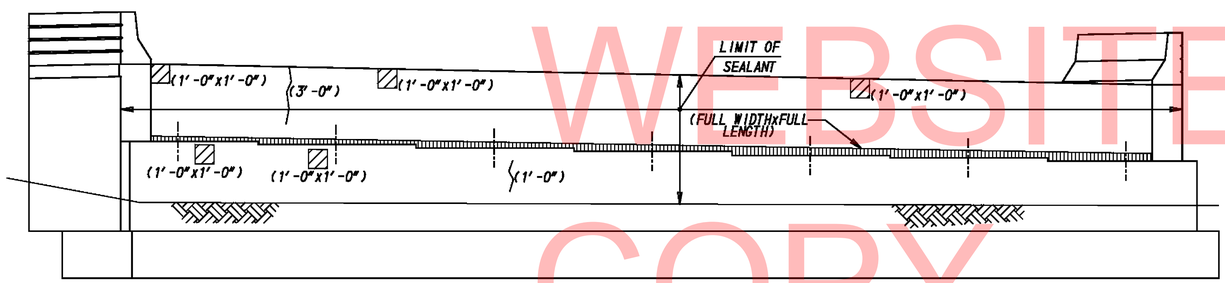

ELEVATION - ABUTMENT B

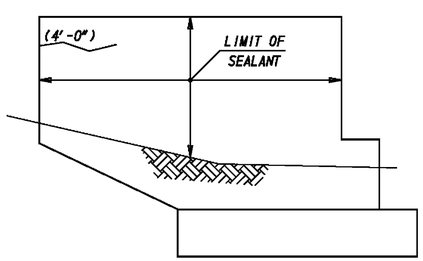

ELEVATION - WING C

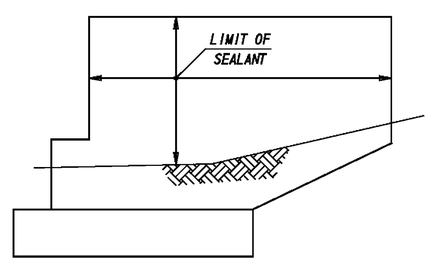

ELEVATION - WING D

LEGEND:

- (LENGTH x WIDTH) SPALL REPAIR
- (WIDTH x LENGTH) REMOVAL OF DEBRIS
- (LENGTH) CRACK REPAIR

CONCRETE REPAIR QUANTITIES		
ABUTMENT B		PAID FOR UNDER ITEM NO.
SPALL REPAIR	3 CF	602586
CRACK REPAIR	12 LF	602611
SEALANT	770 SF	602646

NOTES:

1. CONCRETE REPAIR DIMENSIONS IN FEET AND INCHES.
2. CONTRACTOR TO FIELD VERIFY ALL REPAIR DIMENSIONS.
3. ENGINEER SHALL CONFIRM CONTRACTOR DELINEATION OF CRACK AND SPALL AREAS PRIOR TO COMMENCEMENT OF REPAIRS.
4. WHERE CRACKS AND SPALLS ARE SHOWN CONCURRENTLY, COMPLETE THE SPALL REPAIR AND THEN COMPLETE THE CRACK REPAIR.
5. PROTECT BEARINGS AND BEARING GREASE DURING CLEANING AND APPLICATION OF SEALANT. BEARING PROTECTION COST IS INCIDENTAL TO ITEM NO. 602646 "SILICONE ACRYLIC CONCRETE SEALER".

UNOFFICIAL WEBSITE COPY

PENNONI ASSOCIATES INC.
FILE NAME= ...\DESIGN\CT\AB02.dgn
PEN TABLE= pennoni-delgd1.tbl
PLOT DRIVER=PENNONI-WIM-DELDOT-FULL-PDF.PLTCFG
DATE PLOTTED= 10/10/2024 @ 2:59:53 PM
USER NAME= leanderson

DELAWARE DEPARTMENT OF TRANSPORTATION

ADDENDUMS / REVISIONS

SCALE 0 2' 4' 8'

REHABILITATION OF BR 1-826N AND BR 1-826S CARRYING I-495 OVER STONEY CREEK

CONTRACT	BRIDGE NO.	1-826N AND 1-826S
T201107402	DESIGNED BY: BJM	
COUNTY		
NEW CASTLE	CHECKED BY: LAA	

SOUTHBOUND (BR 1-826S) ABUTMENT B REPAIRS

AB-04

SHEET NO. 14

TOTAL SHTS. 54

CONCRETE REPAIR QUANTITIES		
PIERS 1 AND 2		PAID FOR UNDER ITEM NO.
SPALL REPAIR	8 CF	602586
CRACK REPAIR	120 LF	602611
SEALANT	2200 SF	602646

LEGEND:

- (LENGTH x WIDTH) SPALL REPAIR
- (LENGTH) CRACK REPAIR
- EXCAVATION AREA

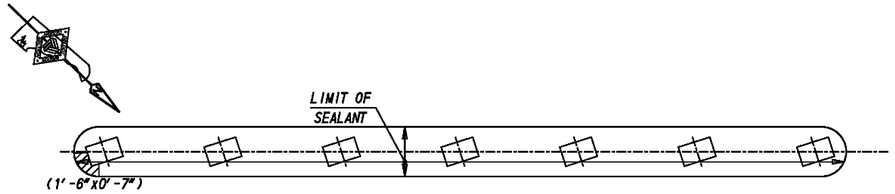

PLAN - PIER 1

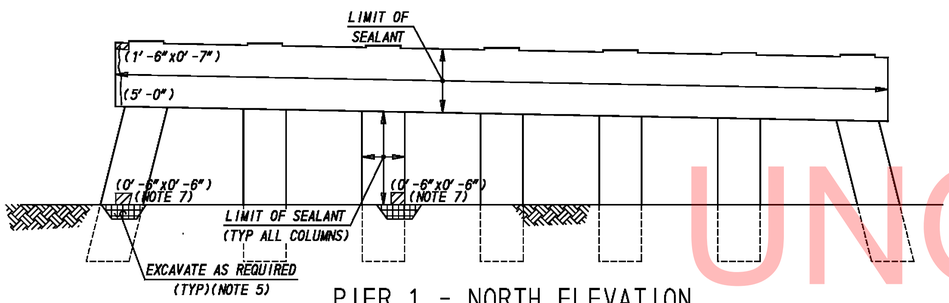

PIER 1 - NORTH ELEVATION

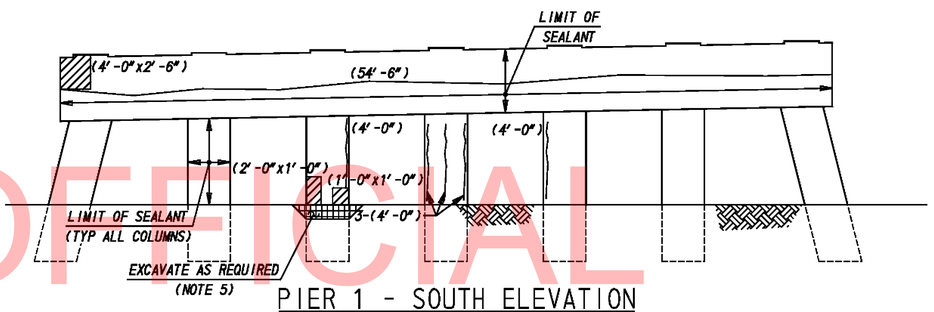

PIER 1 - SOUTH ELEVATION

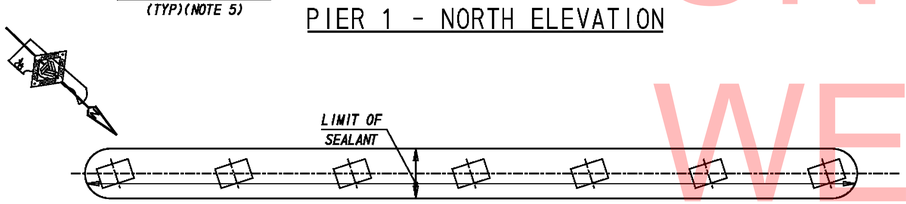

PLAN - PIER 2

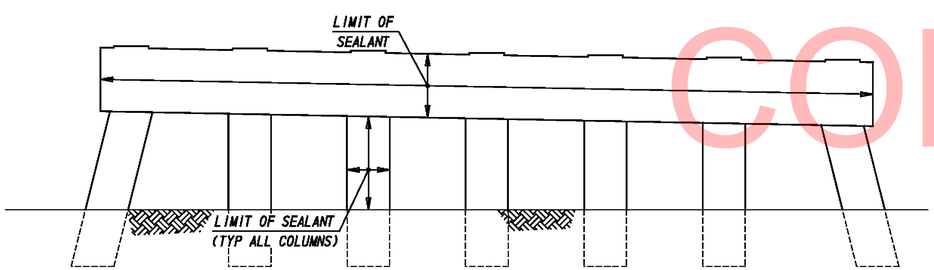

PIER 2 - NORTH ELEVATION

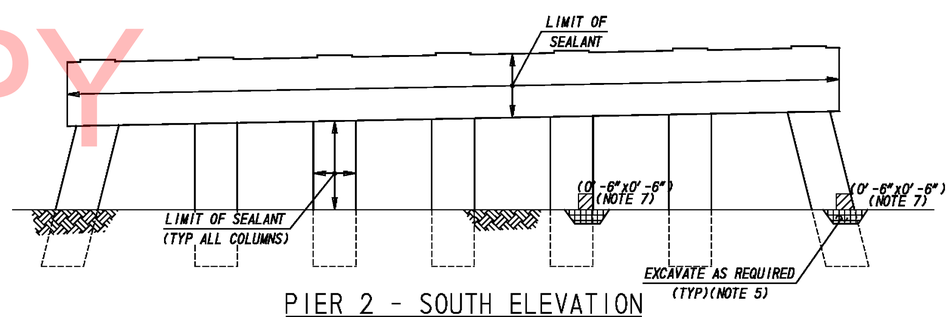

PIER 2 - SOUTH ELEVATION

NOTES:

1. CONCRETE REPAIR DIMENSIONS IN FEET AND INCHES.
2. CONTRACTOR TO FIELD VERIFY ALL REPAIR DIMENSIONS.
3. ENGINEER SHALL CONFIRM CONTRACTOR DELINEATION OF CRACK AND SPALL AREAS PRIOR TO COMMENCEMENT OF REPAIRS.
4. WHERE CRACKS AND SPALLS ARE SHOWN CONCURRENTLY, COMPLETE THE SPALL REPAIR AND THEN COMPLETE THE CRACK REPAIR.
5. EXCAVATE AS REQUIRED TO LOCATE THE EXTENT OF THE CRACK OR SPALL. EXCAVATION, REPLACEMENT AND COMPACTION OF SOIL IS INCIDENTAL TO THE ASSOCIATED REPAIR ITEMS: 602586 AND 602611.
6. PREVIOUSLY NOTED SPALLS COULD NOT BE VERIFIED DUE TO WATER LEVEL AT TIME OF INSPECTION.
7. PROTECT BEARINGS AND BEARING GREASE DURING CLEANING AND APPLICATION OF SEALANT. BEARING PROTECTION COST IS INCIDENTAL TO ITEM NO. 602646 "SILICONE ACRYLIC CONCRETE SEALER".

UNOFFICIAL WEBSITE COPY

PENNONI ASSOCIATES INC.
FILE NAME: ...\DESIGN\CT\PR01.dgn
PEN TABLE: pennoni-dot61.tbl
PLOT DRIVER: PENNONI-HP-DELDOT-FULL-PDF.PLT.CFG
LAST REVISED: 10/24/2022 @ 2:54:51 PM
USER NAME: leanderson

DELAWARE DEPARTMENT OF TRANSPORTATION

ADDENDUMS / REVISIONS

SCALE 0 4' 8' 12'

REHABILITATION OF BR 1-826N AND BR 1-826S CARRYING I-495 OVER STONEY CREEK

CONTRACT	BRIDGE NO.	1-826N AND 1-826S
T201107402	DESIGNED BY: BJM	
COUNTY		
NEW CASTLE	CHECKED BY: LAA	

NORTHBOUND (BR 1-826N) PIER 1 & 2 REPAIRS

PR-01
SHEET NO.
15
TOTAL SHTS.
54

CONCRETE REPAIR QUANTITIES		
PIERS 1 AND 2		PAID FOR UNDER ITEM NO.
SPALL REPAIR	17 CF	602586
CRACK REPAIR	18 LF	602611
SEALANT	2200 SF	602646

LEGEND:

- (LENGTH x WIDTH) SPALL REPAIR
- (LENGTH) CRACK REPAIR
- EXCAVATION AREA

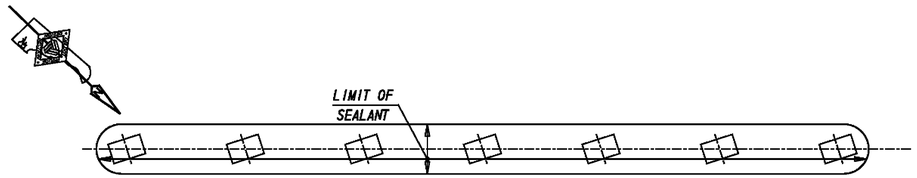

PLAN - PIER 1

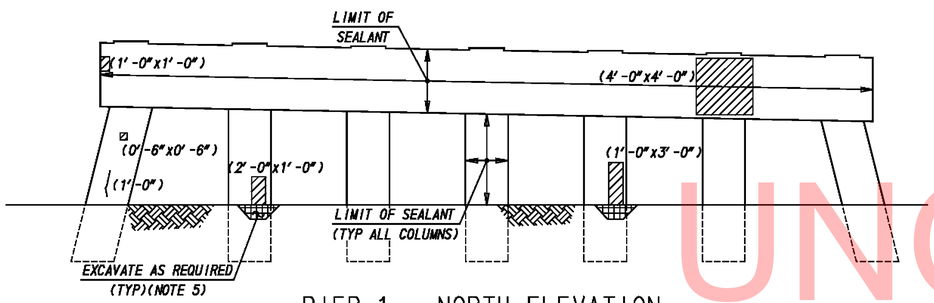

PIER 1 - NORTH ELEVATION

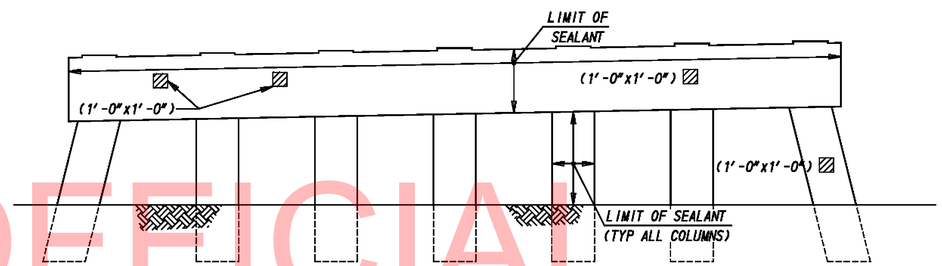

PIER 1 - SOUTH ELEVATION

UNOFFICIAL WEBSITE COPY

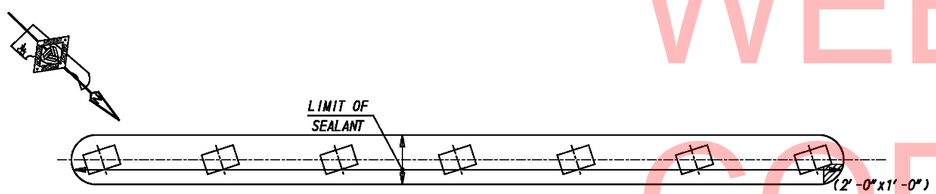

PLAN - PIER 2

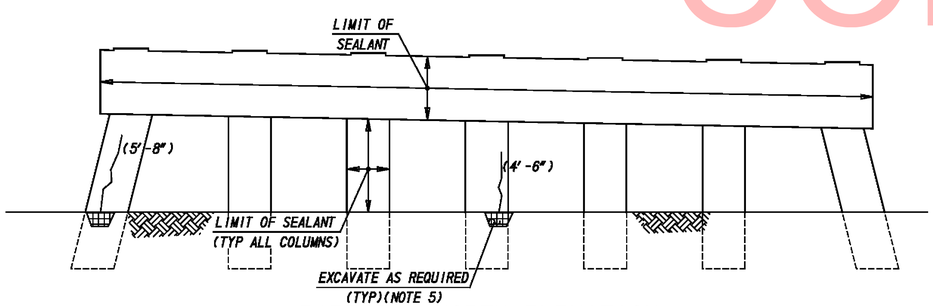

PIER 2 - NORTH ELEVATION

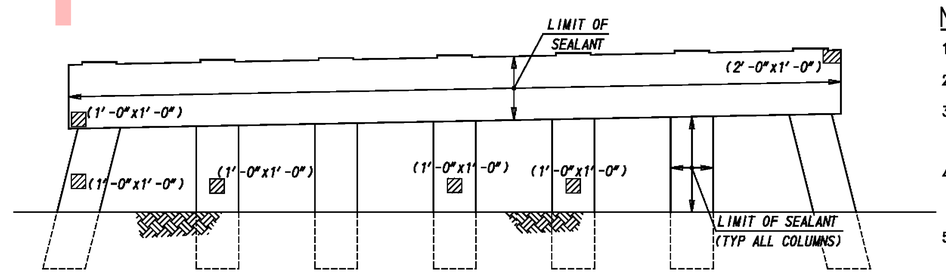

PIER 2 - SOUTH ELEVATION

NOTES:

1. CONCRETE REPAIR DIMENSIONS IN FEET AND INCHES.
2. CONTRACTOR TO FIELD VERIFY ALL REPAIR DIMENSIONS.
3. ENGINEER SHALL CONFIRM CONTRACTOR DELINEATION OF CRACK AND SPALL AREAS PRIOR TO COMMENCEMENT OF REPAIRS.
4. WHERE CRACKS AND SPALLS ARE SHOWN CONCURRENTLY, COMPLETE THE SPALL REPAIR AND THEN COMPLETE THE CRACK REPAIR.
5. EXCAVATE AS REQUIRED TO LOCATE THE EXTENT OF THE CRACK OR SPALL. EXCAVATION, REPLACEMENT AND COMPACTION OF SOIL IS INCIDENTAL TO THE ASSOCIATED REPAIR ITEMS: 602586 AND 602611.
6. PROTECT BEARINGS AND BEARING GREASE DURING CLEANING AND APPLICATION OF SEALANT. BEARING PROTECTION COST IS INCIDENTAL TO ITEM NO. 602646 "SILICONE ACRYLIC CONCRETE SEALER".

PENNONI ASSOCIATES INC.
FILE NAME: ...\DESIGN\CT\PR02.dgn
PEN TABLE: pennoni-default.tbl
PLOT DRIVER: PENNONI-MLM-DELDOT-FULL-PDF.PL.TGFG
DATE: FRI, OCT 19, 2012 @ 4:55:19 PM
USER NAME: isanderson

DELAWARE DEPARTMENT OF TRANSPORTATION	ADDENDUMS / REVISIONS	SCALE 0 4' 8' 12'	REHABILITATION OF BR 1-826N AND BR 1-826S CARRYING I-495 OVER STONEY CREEK	CONTRACT T201107402	BRIDGE NO. 1-826N AND 1-826S	SOUTHBOUND (BR 1-826S) PIER 1 & 2 REPAIRS	PR-02
				COUNTY NEW CASTLE	DESIGNED BY: BJM		SHEET NO. 16
					CHECKED BY: LAA		TOTAL SHTS. 54

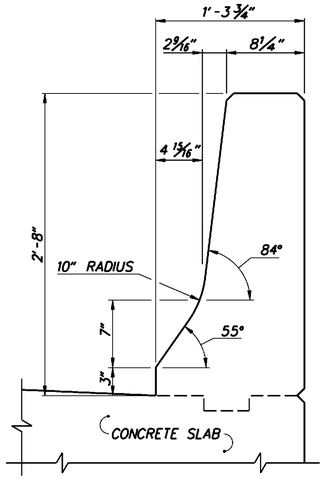

TYPICAL SECTION

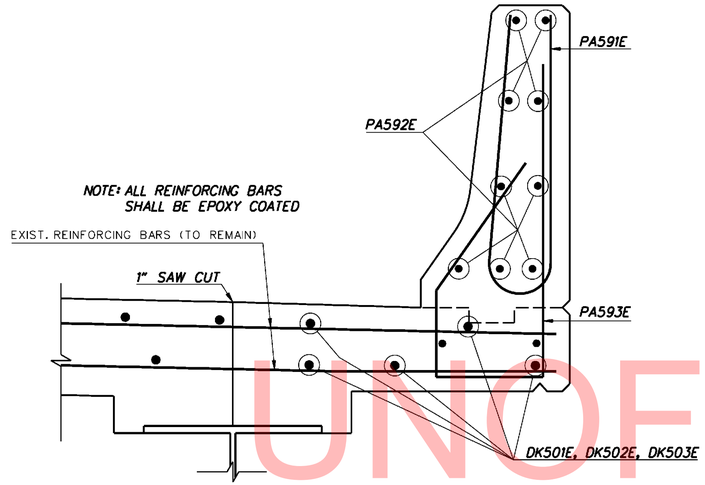

REINFORCEMENT - BRIDGE PARAPET

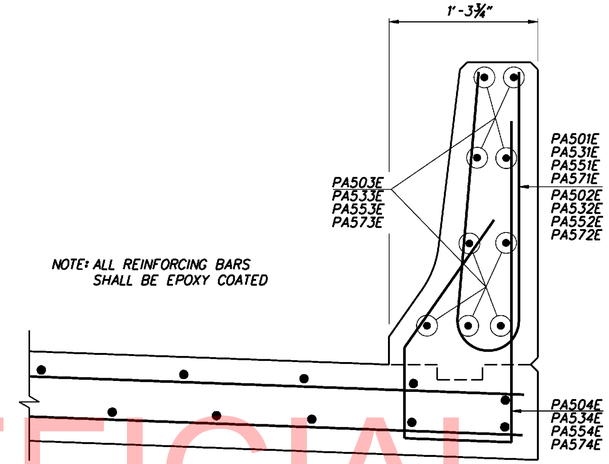

SECTION G-G
REINFORCEMENT - APPROACH SLAB PARAPET

PARAPET SECTIONS

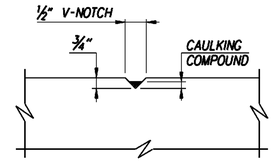

SECTION A-A

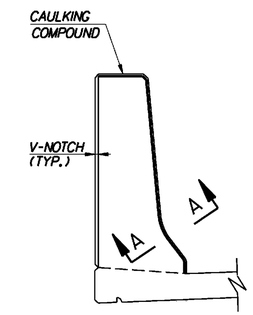

NOTES
- LONGITUDINAL REINFORCEMENT IS CONTINUOUS THROUGH THE JOINT.
- PROVIDE CAULKING COMPOUND IN ACCORDANCE WITH ASTM C834 OR C920.

MODIFIED DEFLECTION JOINT DETAIL

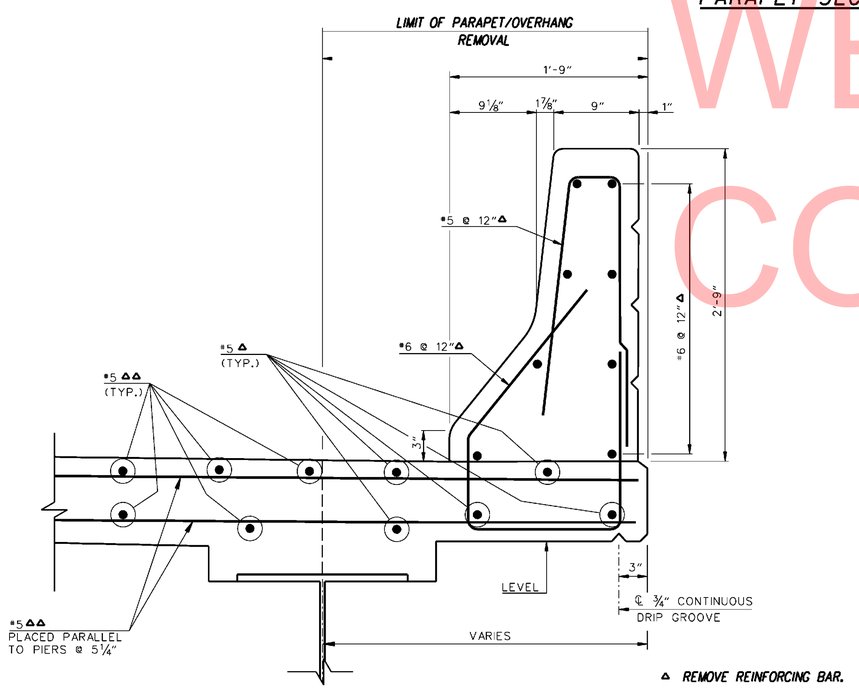

△ REMOVE REINFORCING BAR.
△△ SALVAGE REINFORCING BAR.

EXISTING PARAPET

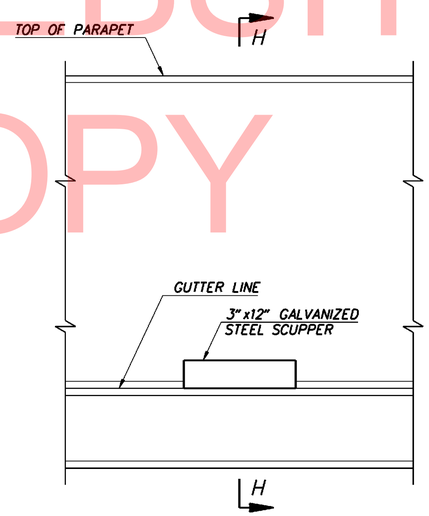

TYPICAL PARAPET ELEVATION

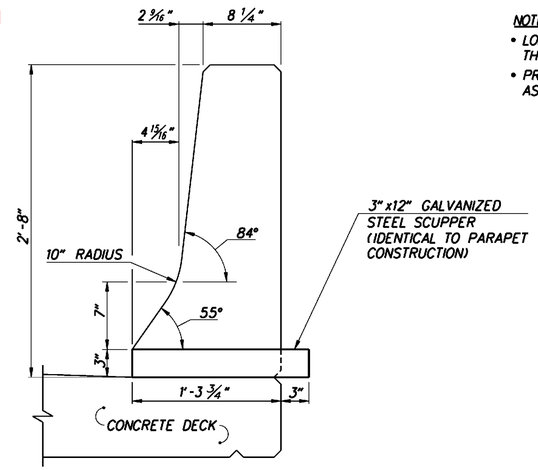

SECTION H-H

NOTE:
- FOR LOCATION OF SECTION G-G, SEE SHEETS 19 AND 20.
- WATER BASED ACRYLIC CONCRETE SEALER TO COVER ALL FACES OF BOTH EXISTING AND PROPOSED PARAPET.
- FOR SCUPPER LOCATIONS AND SPACING, SEE SHEET 10.

LEGEND:

ABUT.	=	ABUTMENT
E	=	EXPANSION
EL.	=	ELEVATION
EXIST.	=	EXISTING
EXP.	=	EXPANSION
F	=	FIXED
JT.	=	JOINT
NB	=	NORTHBOUND
N. T. S.	=	NOT TO SCALE
O. C.	=	ON CENTER
SB	=	SOUTHBOUND
STA.	=	STATION
S. W.	=	STUD WELDING
TYP.	=	TYPICAL

UNOFFICIAL WEBSITE COPY

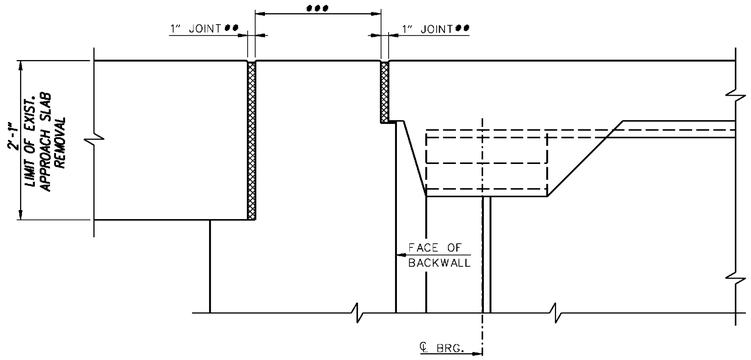

SECTION A-A (AT ABUTMENT A)
EXISTING CONDITIONS
N.T.S.

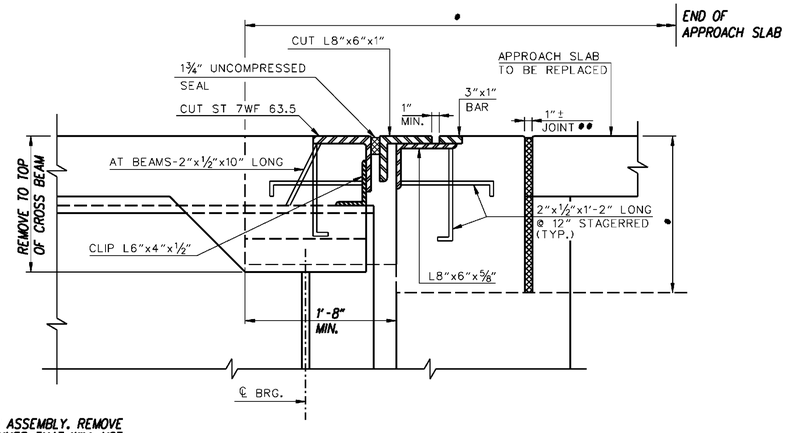

SECTION E-E (AT ABUTMENT B)
EXISTING CONDITIONS
N.T.S.

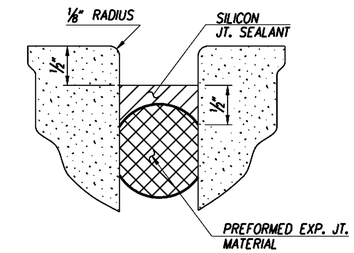

DETAIL A
N.T.S.

• REMOVE EXISTING EXPANSION DAM ASSEMBLY. REMOVE SURROUNDING CONCRETE IN A MANNER THAT WILL NOT DAMAGE THE EXISTING REINFORCEMENT (TO REMAIN).

•• REPLACE EXISTING JOINT WITH 1" EXP. JT. SEALER OVER PREFORMED EXP. MATERIAL. SEE DETAIL A.

••• REPAIR SPALLS AT TOP OF BACKWALL.

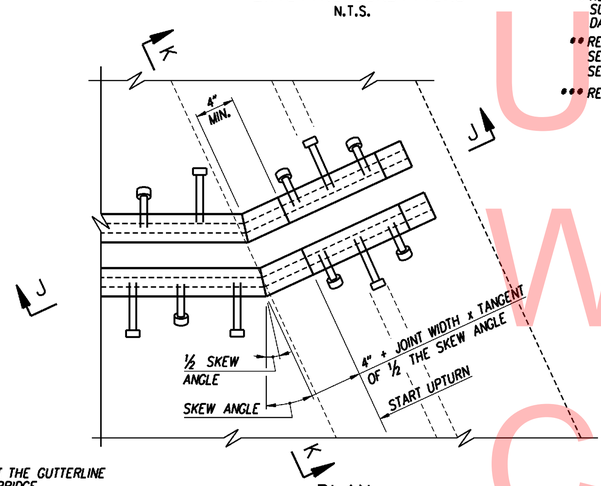

NOTE:
TERMINATE JOINT ARMORING AT THE GUTTERLINE AT THE HIGH SIDE OF EACH BRIDGE.

PLAN
SHOWN WITHOUT BENT SLIDING PLATE FOR CLARITY
N.T.S.

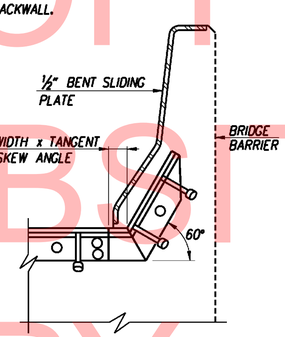

SECTION J-J
N.T.S.

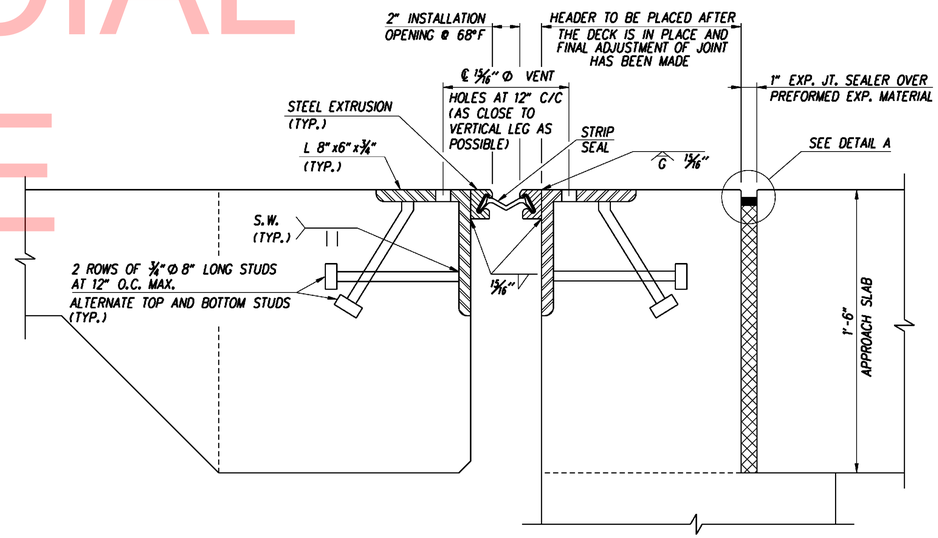

SECTION E-E (AT ABUTMENT B)
PROPOSED CONDITIONS
N.T.S.

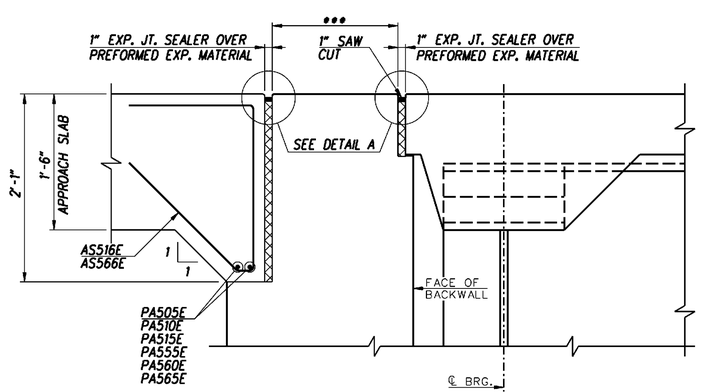

SECTION A-A (AT ABUTMENT A)
PROPOSED CONDITIONS
N.T.S.

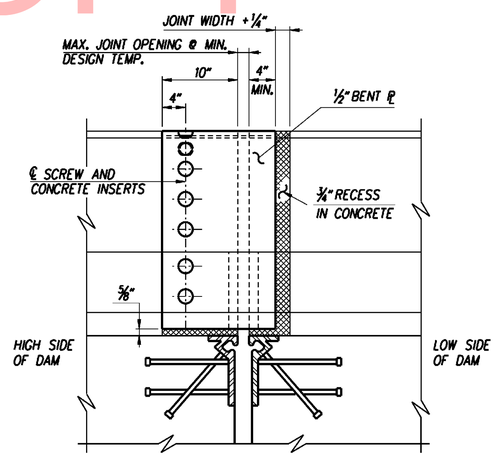

SECTION H-H
N.T.S.

NOTE:
FORM CONCRETE RECESS AREA IN BARRIER AND GRIND TO PROVIDE SMOOTH SURFACE. APPLY ONE COAT OF ASPHALT CEMENT PAINT WA-1 OR PERFORMANCE GRADED ASPHAT CEMENT PG 64-22 TO ALLOW BENT SLIDING PLATE TO MOVE FREELY WITHOUT FRICTION.

NOTE
FOR LOCATION OF SECTIONS A-A, AND E-E, SEE SHEETS 19 AND 20.

LEGEND

BRG.	=	BEARING
C/C	=	CENTER TO CENTER
EXIST.	=	EXISTING
EXP.	=	EXPANSION
JT.	=	JOINT
MAX.	=	MAXIMUM
MIN.	=	MINIMUM
O.C.	=	ON CENTER
TYP.	=	TYPICAL

UNOFFICIAL WEBSITE COPY

EX-01

DELAWARE DEPARTMENT OF TRANSPORTATION	ADDENDUMS / REVISIONS	NTS	BR 1-826 N&S ON I-495 OVER STONEY CREEK	CONTRACT T201107402	BRIDGE NO. 1-826 N&S	MISCELLANEOUS JOINT DETAILS
				COUNTY NEW CASTLE	DESIGNED BY: ZME	SHEET NO. 18
					CHECKED BY: BJH	TOTAL SHTS. 54

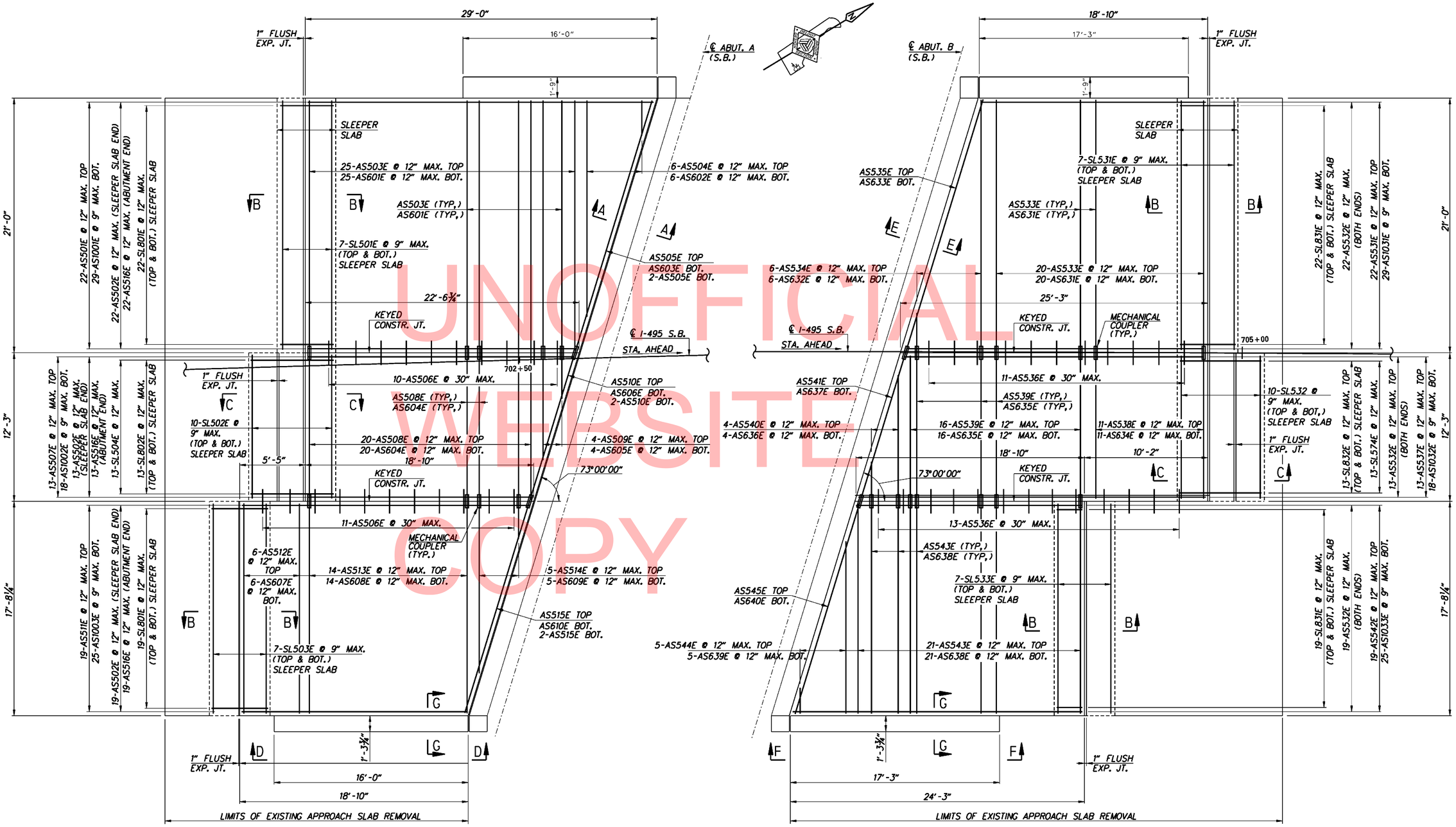

APPROACH SLAB A (S.B.)

APPROACH SLAB B (S.B.)

UNOFFICIAL WEBSITE COPY

LEGEND

BOT.	=	BOTTOM
CONSTR.	=	CONSTRUCTION
EXP.	=	EXPANSION
JT.	=	JOINT
MAX.	=	MAXIMUM
S.B.	=	SOUTHBOUND

NOTE

FOR SECTIONS A-A, B-B, C-C, D-D, E-E AND F-F, SEE SHEETS 18 AND 21.

AS-01

DELAWARE DEPARTMENT OF TRANSPORTATION	ADDENDUMS / REVISIONS	NTS	BR 1-826 N&S ON I-495 OVER STONEY CREEK	CONTRACT T201107402	BRIDGE NO. 1-826 N&S	APPROACH SLAB - 1	SHEET NO. 19
				COUNTY NEW CASTLE	DESIGNED BY: ZME		TOTAL SHTS. 54
					CHECKED BY: BJH		

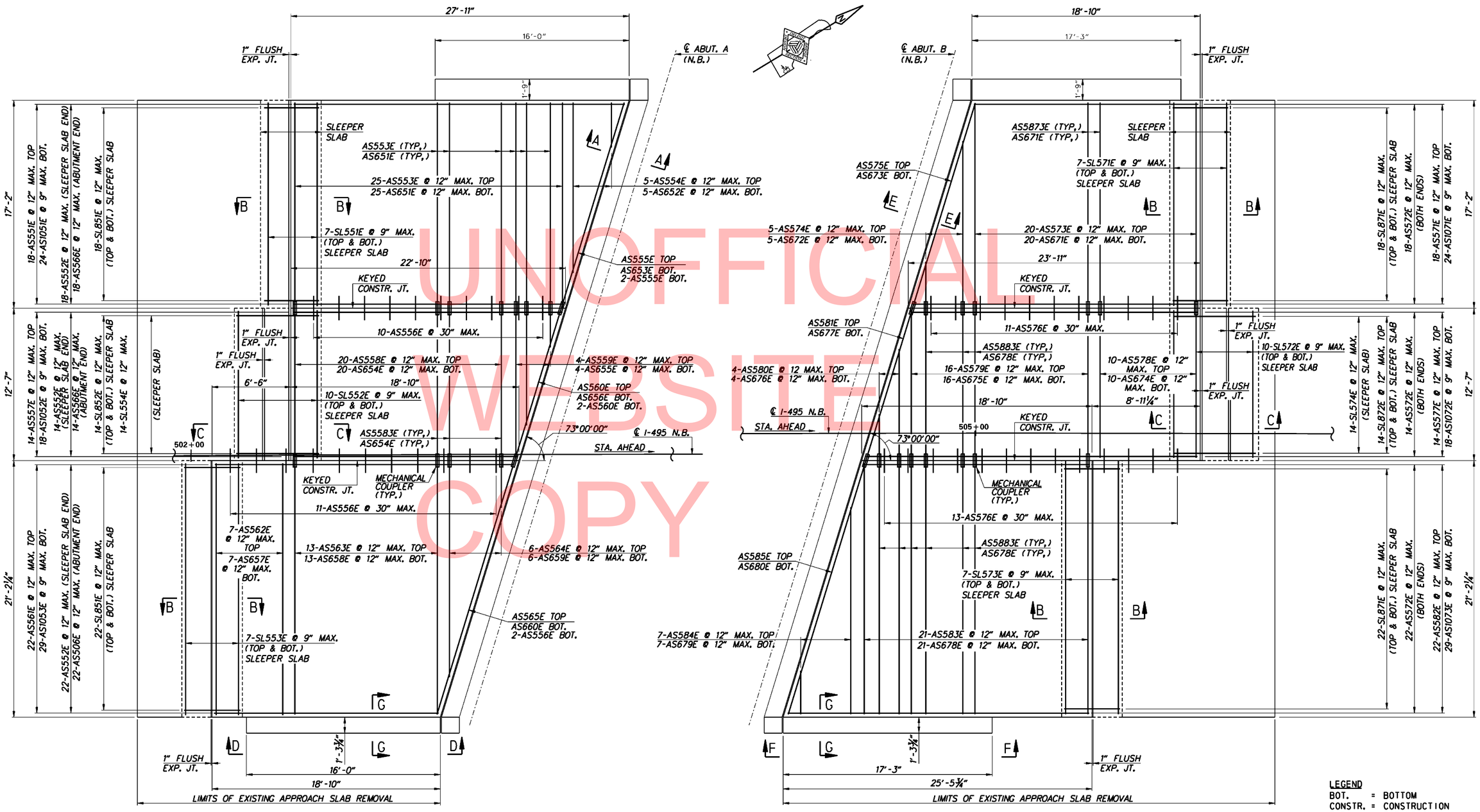

UNOFFICIAL WEBSITE COPY

LEGEND

BOT.	=	BOTTOM
CONSTR.	=	CONSTRUCTION
EXP.	=	EXPANSION
JT.	=	JOINT
MAX.	=	MAXIMUM
S.B.	=	SOUTHBOUND

NOTE

FOR SECTIONS A-A, B-B, C-C, D-D, E-E AND F-F, SEE SHEETS 18 AND 20.

AS-02

DELAWARE DEPARTMENT OF TRANSPORTATION	ADDENDUMS / REVISIONS	NTS	BR 1-826 N&S ON I-495 OVER STONEY CREEK	CONTRACT T201107402	BRIDGE NO. 1-826 N&S	APPROACH SLAB - 2
				COUNTY NEW CASTLE	DESIGNED BY:ZME	SHEET NO. 20
					CHECKED BY:BJH	TOTAL SHTS. 54

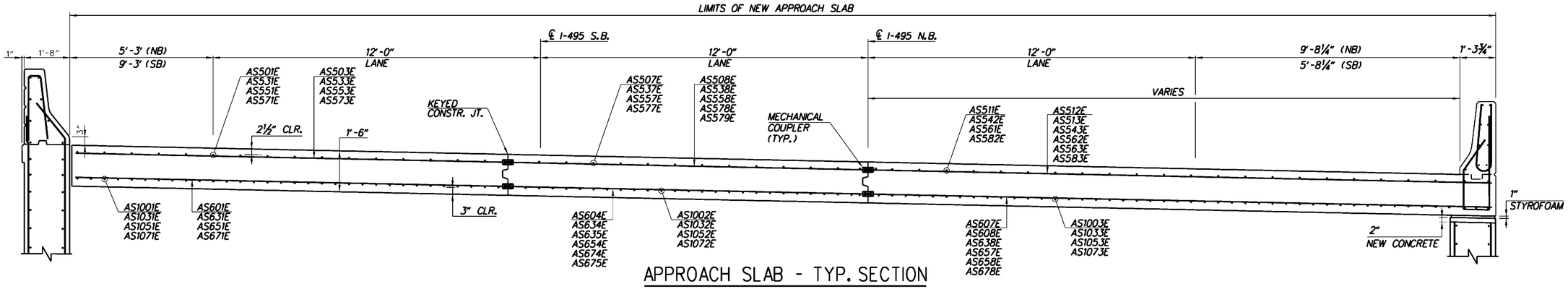

APPROACH SLAB - TYP. SECTION

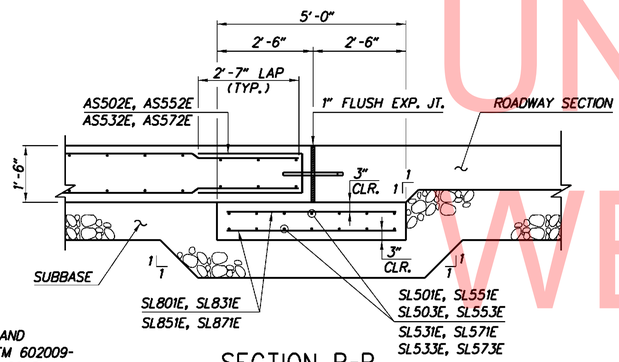

SECTION B-B
SLEEPER SLAB

NOTE:
CAST-IN-PLACE SLEEPER SLAB AND REINFORCEMENT PAID UNDER ITEM 602009-PORTLAND CEMENT CONCRETE MASONRY, APPROACH SLAB, CLASS A.

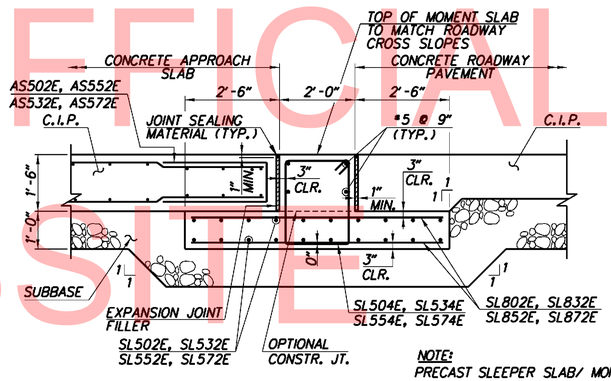

SECTION C-C
PRECAST SLEEPER AND MOMENT SLAB

NOTE:
PRECAST SLEEPER SLAB/ MOMENT SLAB AND REINFORCEMENT PAID UNDER ITEM 602796 PRECAST SLEEPER SLAB.

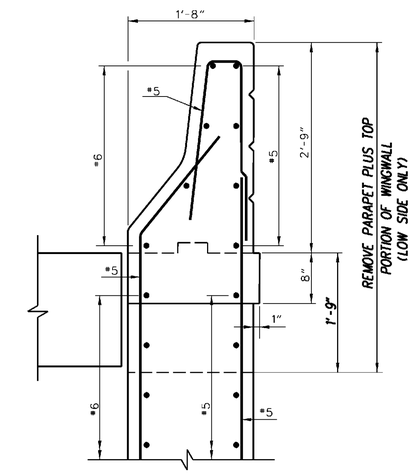

SECTION G-G
TYPICAL SECTION

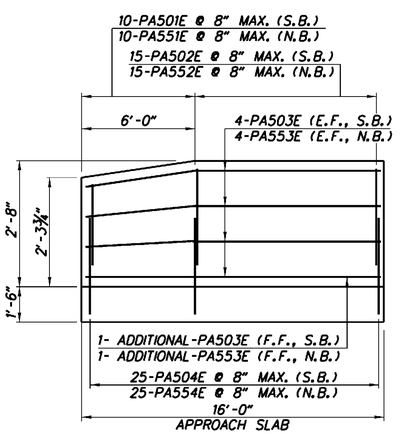

SECTION D-D
N. T. S.

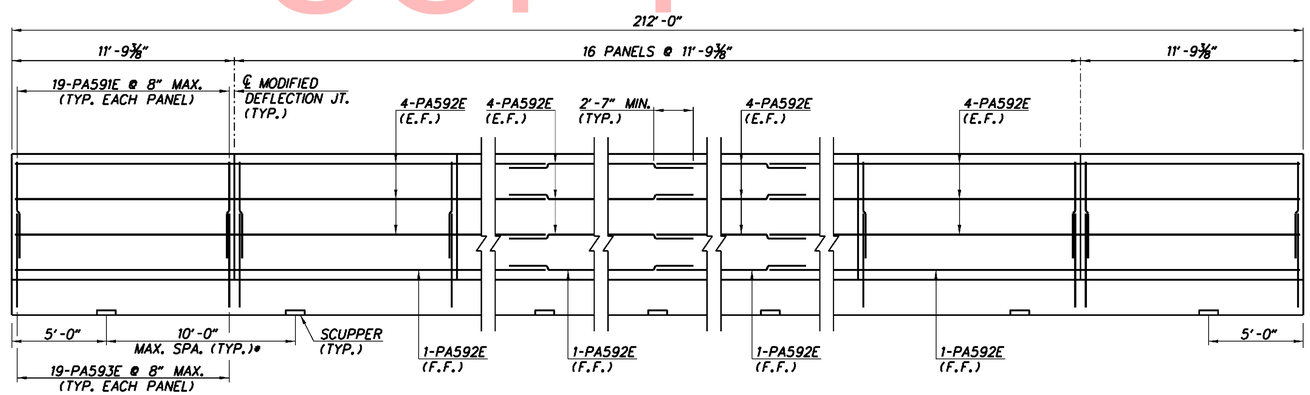

* DO NOT PLACE SCUPPERS AT A MODIFIED DEFLECTION JOINT LOCATION

PARAPET ELEVATION

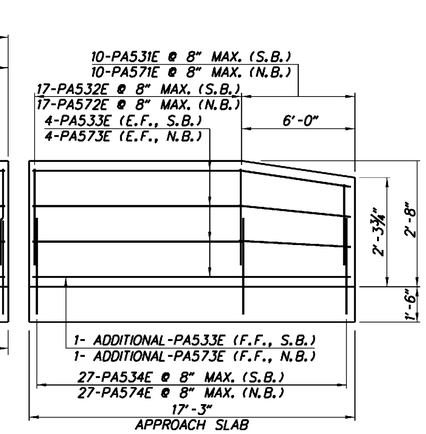

SECTION F-F

LEGEND

BOT.	=	BOTTOM
C. I. P.	=	CAST-IN-PLACE
CLR.	=	CLEARANCE
CONSTR.	=	CONSTRUCTION
EXP.	=	EXPANSION
JT.	=	JOINT
MAX.	=	MAXIMUM
NB	=	NORTHBOUND
N. T. S.	=	NOT TO SCALE
SB	=	SOUTHBOUND
SPA.	=	SPACE
TYP.	=	TYPICAL

NOTE
FOR MODIFIED DEFLECTION JOINT DETAILS, SEE SHEET 17.

UNOFFICIAL WEBSITE COPY

AS-03

DELAWARE DEPARTMENT OF TRANSPORTATION	ADDENDUMS / REVISIONS	NTS	BR 1-826 N&S ON I-495 OVER STONEY CREEK	CONTRACT T201107402 / COUNTY NEW CASTLE	BRIDGE NO. 1-826 N&S / DESIGNED BY: ZME / CHECKED BY: BJH	APPROACH SLAB – 3	SHEET NO. 21 / TOTAL SHTS. 54

① ANY MARK NUMBER WITH SUFFIX 'E' DENOTES EPOXY COATED REINFORCING STEEL.

② ALL MARK 'LOCATION PREFIXES' SHALL CONSIST OF TWO LETTERS AND ARE AS FOLLOWS: AB = ABUTMENT, AS = APPROACH SLAB, BC = BOX CULVERT, BW = BACKWALL, CL = COLUMN, DK = DECK, DL = DOWEL, FT = FOOTING, HW = HEADWALL, MS = MISC. BARS, PA = PARAPET, PR = PIER, SC = SHEETPILE CAP, SL = SLAB, TW = TOEWALL, WL = WALL (UNIQUE LOCATION), WW = WINGWALL

SPECIFICATIONS					BENDING DIMENSIONS (FEET-INCHES /QUARTER INCH)											
QTY.	SIZE	LENGTH	MARK	TYPE	A	B	C	D	E	F/R	G	H	J	K	O
APPROACH SLAB NORTHBOUND - 1															
1X18	5	22-3¼	AS551E	STR		22-3¼									
		TO 27-7½				TO 27-7½									
54	5	6-2½	AS552E	17		2-7½	1-0½	2-7½							
25	5	18-0½	AS553E	17		1-0½	17-0⅛								
1X5	5	2-6½	AS554E	17		1-0½	1-6⅛								
		TO 15-1½				TO 1-0½	TO 14-1⅛	TO							
3	5	18-9⅜	AS555E	17		1-0½	17-9⅛								
21	5	3-0⅛	AS556E	STR		3-0⅛									
1X14	5	18-5¼	AS557E	STR		18-5¼									
		TO 22-6⅛				TO 22-6⅛									
20	5	12-7⅛	AS558E	STR		12-7⅛									
1X4	5	1-6⅛	AS559E	STR		1-6⅛									
		TO 10-11¼				TO 10-11¼									
3	5	13-1⅜	AS560E	STR		13-1⅜									
1X22	5	18-5¼	AS561E	STR		18-5¼									
		TO 25-0⅛				TO 25-0⅛									
7	5	21-10⅜	AS562E	17		1-0½	20-10¼								
13	5	22-0⅜	AS563E	17		1-0½	21-0¼								
1X6	5	1-6⅛	AS564E	STR		1-6⅛									
		TO 17-2⅜				TO 17-2⅜									
3	5	23-0¼	AS565E	17		1-0½	21-11⅜								
54	5	6-10½	AS566E	16	2-9⅛	1-7½	0-6⅛	2-0⅛				1-4⅛		1-4⅛	1-10⅛
25	6	18-0½	AS651E	17		1-0½	17-0⅛								
1X5	6	2-10½	AS652E	17		1-0½	1-10⅛								
		TO 15-3½				TO 1-0½	TO 14-3⅛	TO							
1	6	18-9⅜	AS653E	17		1-0½	17-9⅛								
20	6	12-7⅛	AS654E	STR		12-7⅛									
1X4	6	1-10⅛	AS655E	STR		1-10⅛									
		TO 11-1⅜				TO 11-1⅜									
1	6	13-1⅜	AS656E	STR		13-1⅜									
7	6	21-10⅜	AS657E	17		1-0½	20-10¼								
13	6	22-0⅜	AS658E	17		1-0½	21-0¼								
1X6	6	1-10⅛	AS659E	STR		1-10⅛									
		TO 17-4¼				TO 17-4¼									
1	6	23-0¼	AS660E	17		1-0½	21-11⅜								
1X24	1	22-3⅜	AS1051	STR		22-3⅜									
		TO 27-7½				TO 27-7½									

SPECIFICATIONS					BENDING DIMENSIONS (FEET-INCHES /QUARTER INCH)											
QTY.	SIZE	LENGTH	MARK	TYPE	A	B	C	D	E	F/R	G	H	J	K	O
1X18	1	18-2⅛	AS1052	STR		18-2⅛									
		TO 22-4⅛				TO 22-4⅛									
1X29	1	18-6⅛	AS1053	STR		18-6⅛									
		TO 24-11⅛				TO 24-11⅛									
1X10	5	4-3¼	PA551E	H1		1-8⅛	0-11⅜	1-7⅜		0-3⅜		0-4⅜			
		TO 4-11⅜				TO 2-0¼	TO 0-11¼	TO 2-0⅛		TO 0-3⅜		TO 0-9⅜			
15	5	4-11⅜	PA552E	H1		2-0¼	0-11¼	2-0⅛		0-3⅜		0-4⅜			
9	5	15-8¼	PA553E	16			9-10⅛	5-10¼				0-4¼			15-8⅛
25	5	6-7⅛	PA554E	16	2-9⅛	0-11⅜	1-5¼	1-4⅜				0-9⅜		1-1⅜	2-7⅛
14	5	16-8⅛	SL551E	STR		16-8⅛									
20	5	12-1⅛	SL552E	STR		12-1⅛									
14	5	20-8¼	SL553E	STR		20-8¼									
14	5	8-0⅛	SL554E	T1	0-5⅜	1-6⅛	2-0⅜	1-6⅛	2-0⅜		0-5⅜				
80	8	4-6⅛	SL851E	STR		4-6⅛									
28	8	6-6⅛	SL852E	STR		6-6⅛									
APPROACH SLAB NORTHBOUND - 2															
1X18	5	18-6⅛	AS571E	STR		18-6⅛									
		TO 23-5⅜				TO 23-5⅜									
108	5	6-2⅜	AS572E	17		2-7⅛	1-0½	2-7⅛							
20	5	18-0⅜	AS573E	17		1-0½	17-0⅛								
1X5	5	1-6⅛	AS574E	STR		1-6⅛	1-6⅛								
		TO 14-4⅛				TO 14-4⅛	TO 14-4⅛	TO							
1	5	18-9⅜	AS575E	17		1-0½	17-9⅛								
24	5	3-0⅛	AS576E	STR		3-0⅛									
1X14	5	23-4⅜	AS577E	STR		23-4⅜									
		TO 27-5¼				TO 27-5¼									
10	5	12-5⅛	AS578E	STR		12-5⅛									
16	5	12-7⅛	AS579E	STR		12-7⅛									
1X4	5	1-6⅛	AS580E	STR		1-6⅛									
		TO 10-11¼				TO 10-11¼									
1	5	13-1⅜	AS581E	STR		13-1⅜									
1X22	5	18-1⅜	AS582E	STR		18-1⅜									
		TO 25-1⅜				20-1⅜									
21	5	22-0⅜	AS583E	17		1-0½	21-0¼								
1X7	5	2-6⅜	AS584E	17		1-0½	1-6⅛								
		TO 21-5⅛				TO 1-0½	TO 20-4⅜								
1	5	23-0¼	AS585E	17		1-0½	21-11⅜								
20	6	18-0⅜	AS671E	17		1-0½	17-0⅛								

SPECIFICATIONS					BENDING DIMENSIONS (FEET-INCHES /QUARTER INCH)											
QTY.	SIZE	LENGTH	MARK	TYPE	A	B	C	D	E	F/R	G	H	J	K	O
1X5	6	1-10⅛	AS672E	STR		1-10⅛	1-10⅛								
		TO 14-3⅛				TO 14-3⅛	TO 14-3⅛								
1	6	18-9⅜	AS673E	17		1-0½	17-9⅛								
10	6	12-5⅛	AS674E	STR		12-5⅛									
16	6	12-7⅛	AS675E	STR		12-7⅛									
1X4	6	1-10⅛	AS676E	STR		1-10⅛									
		TO 11-1⅜				TO 11-1⅜									
1	6	13-1⅜	AS677E	STR		13-1⅜	20-10¼								
21	6	22-0⅜	AS678E	17		1-0½	21-0¼								
1X7	6	2-10⅜	AS679E	17		1-0½	1-10⅛								
		TO 21-6⅛				TO 1-0½	TO 20-5⅜	TO							
1	6	23-0¼	AS680E	17		1-0½	21-11⅜								
1X24	1	18-6⅛	AS1071	STR		18-6⅛									
		TO 23-3⅜				TO 23-3⅜									
1X18	1	23-6⅜	AS1072	STR		23-6⅜									
		TO 27-5¼				TO 27-5¼									
1X29	1	18-1⅜	AS1073	STR		18-1⅜									
		TO				TO									
		25-1⅜				25-1⅜									
1X10	5	4-3¼	PA571E	H1		1-8⅛	0-11⅜	1-7⅜		0-3⅜		0-4⅜			
		TO 4-11⅜				TO 2-0¼	TO 0-11¼	TO 2-0⅛		TO 0-3⅜		TO 0-9⅜			
17	5	4-11⅜	PA572E	H1		2-0¼	0-11¼	2-0⅛		0-3⅜		0-4⅜			
9	5	16-11¼	PA573E	16			11-1⅛	5-10¼				0-4¼		5-10⅛	16-11⅛
25	5	6-7⅛	PA574E	16	2-9⅛	0-11⅜	1-5¼	1-4⅜				0-9⅜		1-1⅜	2-7⅛
14	5	16-8⅛	SL571E	STR		16-8⅛									
20	5	12-1⅛	SL572E	STR		12-1⅛									
14	5	20-8¼	SL573E	STR		20-8¼									
14	5	8-0⅛	SL574E	T1	0-5⅜	1-6⅛	2-0⅜	1-6⅛	2-0⅜						
80	8	4-6⅛	SL871E	STR		4-6⅛									
28	8	6-6⅛	SL872E	STR		6-6⅛									
SUPERSTRUCTURE NORTHBOUND															
342	5	4-11⅜	PA591E	H1		2-0¼	0-11¼	2-0⅛		0-3⅜		0-4⅜			
36	5	54-4¼	PA592E	STR		54-4¼									
342	5	5-5⅛	PA593E	16	2-2⅛	0-11¼	0-10¼	1-4⅜				0-9⅜		1-1⅜	2-0⅛
20	5	27-9⅛	DK501E	STR		27-9⅛									
10	5	36-0⅛	DK502E	STR		36-0⅛									
5	5	36-6⅛	DK503E	STR		36-6⅛									

UNOFFICIAL WEBSITE COPY

ASTM STANDARD ENGLISH REINFORCING BARS

BAR SIZE	NOMINAL DIMENSIONS: DIAMETER (INCHES)	AREA (INCHES²)	WEIGHT (LBS./FT.)	RECOMMENDED END HOOKS, APPLICABLE TO ALL GRADES: 180° HOOKS D	180° HOOKS A OR G	180° HOOKS J	90° HOOKS A OR G	STIRRUP AND TIE HOOKS, APPLICABLE TO ALL GRADES: 90° HOOK D	90° HOOK A OR G	135° HOOK A OR G	135° HOOK A OR G
3	0.375	0.110	0.376	2¼"	5"	3"	6"	1½"	4"	4"	2½"
4	0.500	0.200	0.668	3"	6"	4"	8"	2"	4½"	4½"	3"
5	0.625	0.310	1.043	3¾"	7"	5"	10"	2½"	6"	5½"	3¾"
6	0.750	0.440	1.502	4½"	8"	6"	1-0"	4½"	1-0"	8"	4½"
7	0.875	0.600	2.044	5¼"	10"	7"	1-2"	5¼"	1-2"	9"	5¼"
8	1.000	0.790	2.670	6"	11"	8"	1-4"	6"	1-4"	10½"	6"
9	1.128	1.000	3.400	9½"	1-3"	11¾"	1-7"				
10	1.270	1.270	4.303	10¾"	1-5"	1-1¼"	1-10"				
11	1.410	1.560	5.313	1-0"	1-7"	1-2¾"	2-0"				
14	1.693	2.250	7.650	1-6¼"	2-3"	1-9¾"	2-7"				
18	2.257	4.000	13.600	2-0"	3-0"	2-4½"	3-5"				

NOTES:

1. FIGURES SHOWN IN CIRCLES REPRESENT BAR BEND TYPES.
2. STANDARD BAR BENDS INCLUDE ONLY THOSE TYPES BELOW, INDICATED AS SUCH.
3. ALL DIMENSIONS OUT-TO-OUT, EXCEPT "A" AND "G" ON STD. 180° AND 135° HOOKS.
4. "J" DIMENSIONS ON 180° HOOKS TO BE SHOWN ONLY WHERE NECESSARY TO RESTRICT HOOK SIZE, OTHERWISE STANDARD 'ACI' HOOKS ARE TO BE USED.
5. WHERE "J" IS NOT SHOWN, "J" WILL BE KEPT EQUAL TO OR LESS THAN "H" ON TYPES 3, 5 AND 22. WHERE "J" CAN EXCEED "H", IT SHALL BE SHOWN.
6. "H" DIMENSIONS OF STIRRUPS TO BE SHOWN AS NEEDED TO FIT WITHIN THE CONCRETE.
7. UNLESS OTHERWISE NOTED, DIAMETER "D" IS THE SAME FOR ALL BENDS AND HOOKS ON A BAR (EXCEPT FOR BEND TYPES 11 AND 13).
8. WHERE SLOPE DIFFERS FROM 45° OFFSET, "H" AND "K" MUST BE SHOWN.
9. WHERE BARS ARE TO BE BENT MORE ACCURATELY THAN STANDARD BENDING TOLERANCES, BENDING DIMENSIONS REQUIRING CLOSER FABRICATION SHOULD HAVE LIMITS INDICATED.
10. FOR RECOMMENDED DIAMETER "D", OF BENDS, HOOKS, ETC., REFER TO TABLE ABOVE, 'CRSI' OR 'ACI' TABLES WHERE APPLICABLE AND REQUIRED.
11. TYPE S1-S6, S11, T1-T3 AND T6-T9 APPLICABLE TO BAR SIZES #3 THROUGH #8.

STANDARD BAR BENDS

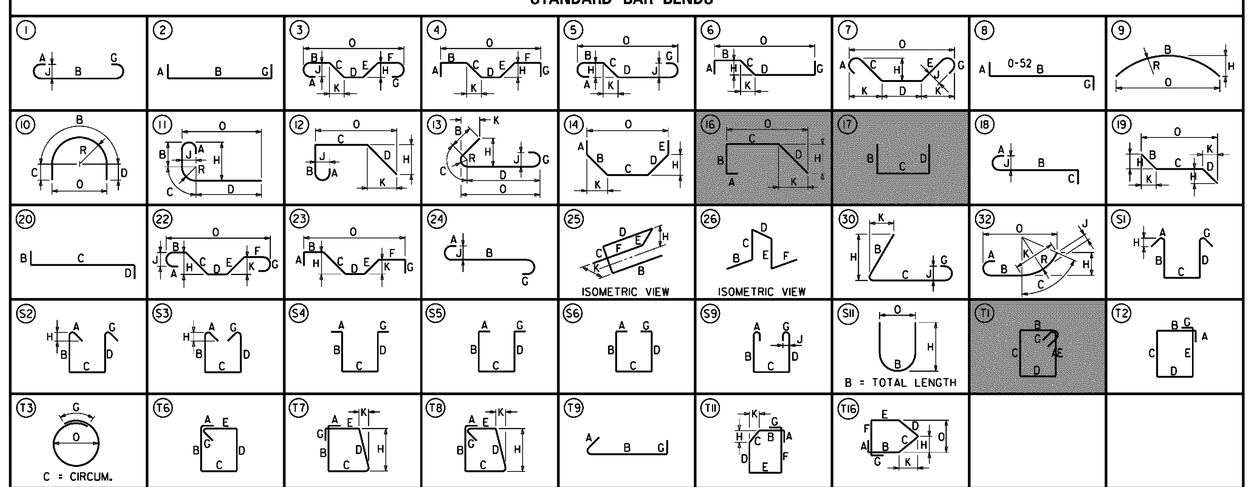

SPECIAL BAR BENDS

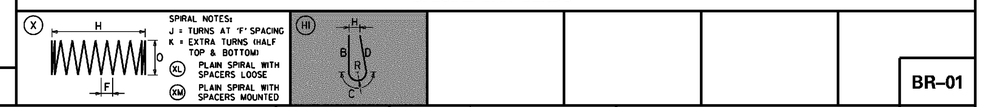

STIRRUP AND TIE HOOKS

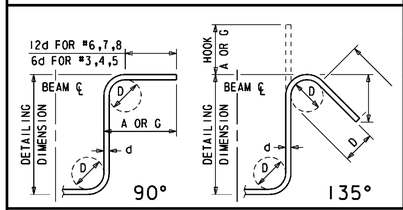

180° AND 90° END HOOKS

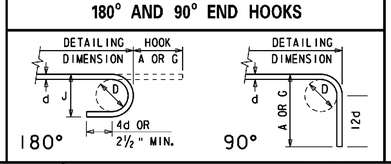

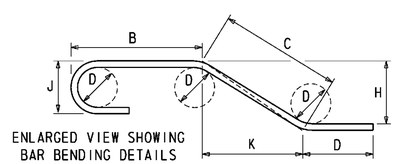

ENLARGED VIEW SHOWING BAR BENDING DETAILS

DELAWARE DEPARTMENT OF TRANSPORTATION

ADDENDUMS / REVISIONS

NTS

BR 1-826 N&S ON I-495 OVER STONEY CREEK

CONTRACT	BRIDGE NO.	1-826 N&S
T201107402	DESIGNED BY: SBM	
COUNTY		
NEW CASTLE	CHECKED BY: ZME	

REINFORCEMENT BAR LIST NORTHBOUND

BR-01

SHEET NO.	TOTAL SHTS.
22	54

① ANY MARK NUMBER WITH SUFFIX 'E' DENOTES EPOXY COATED REINFORCING STEEL.

② ALL MARK 'LOCATION PREFIXES' SHALL CONSIST OF TWO LETTERS AND ARE AS FOLLOWS: AB = ABUTMENT, AS = APPROACH SLAB, BC = BOX CULVERT, BW = BACKWALL, CL = COLUMN, DK = DECK, DL = DOWEL, FT = FOOTING, HW = HEADWALL, MS = MISC. BARS, PA = PARAPET, PR = PIER, SC = SHEETPILE CAP, SL = SLAB, TW = TOEWALL, WL = WALL (UNIQUE LOCATION), WW = WINGWALL

SPECIFICATIONS					BENDING DIMENSIONS (FEET-INCHES /QUARTER INCH)										
QTY.	SIZE	LENGTH	MARK	TYPE	A	B	C	D	E	F/R	G	H	J	K	O
APPROACH SLAB SOUTHBOUND - 1															
1X22	5	22-11	AS501E	STR		22-11									
		TO 28-80				TO 28-80									
54	5	6-22	AS502E	17		2-70	1-02	2-70							
25	5	21-102	AS503E	17		1-02	20-100								
1X6	5	2-62	AS504E	17		1-02	1-60								
		TO 18-31				TO 1-02	TO 17-23	TO							
3	5	22-100	AS505E	17		1-02	21-92								
21	5	3-00	AS506E	STR		3-00									
1X13	5	18-40	AS507E	STR		18-40									
		TO 22-10				TO 22-10									
20	5	12-30	AS508E	STR		12-30									
1X4	5	1-60	AS509E	STR		1-60									
		TO10-111				TO10-111									
3	5	12-93	AS510E	STR		12-93									
1X19	5	18-60	AS511E	STR		18-60									
		TO 23-90				TO 23-90									
6	5	18-43	AS512E	17		1-02	17-41								
14	5	18-63	AS513E	17		1-02	17-61								
1X5	5	1-60	AS514E	STR		1-60									
		TO 14-10				TO 14-10									
3	5	19-42	AS515E	17		1-02	18-40								
54	5	6-102	AS516E	16	2-90	1-72	0-60	2-00				1-40		1-40	1-100
25	6	21-102	AS601E	17		1-02	20-100								
1X6	6	2-102	AS602E	17		1-02	1-100								
		TO 18-43				TO 1-02	TO 17-41	TO							
1	6	22-100	AS603E	17		1-02	21-92								
20	6	12-30	AS604E	STR		12-30									
1X4	6	1-100	AS605E	STR		1-100									
		TO 11-13				TO 11-13									
1	6	12-93	AS606E	STR		12-93									
6	6	18-43	AS607E	17		1-02	17-41								
14	6	18-63	AS608E	17		1-02	17-61								
1X5	6	1-100	AS609E	STR		1-100									
		TO 14-30				TO 14-30									
1	6	19-42	AS610E	17		1-02	18-40								
1X29	1	21-80	AS1001	STR		21-80									
		TO 28-80				TO 28-80									
1X18	1	18-21	AS1002	STR		18-21									
		TO 22-10				TO 22-10									

SPECIFICATIONS					BENDING DIMENSIONS (FEET-INCHES /QUARTER INCH)										
QTY.	SIZE	LENGTH	MARK	TYPE	A	B	C	D	E	F/R	G	H	J	K	O
1X25	1	18-60	AS1003	STR		18-60									
		TO 23-60				TO 23-60									
1X10	5	4-112	PA501E	H1		2-01	0-111	2-00		0-32		0-42			
		TO				TO	TO	TO		TO		TO			
		4-30				1-80	0-112	1-73		0-32		0-42			
15	5	4-112	PA502E	H1		2-01	0-111	2-00		0-32		0-42			
9	5	15-81	PA503E	16			9-100	5-101				0-41		5-100	15-80
25	5	6-70	PA504E	16	2-90	0-113	1-51	1-43				0-93		1-13	2-70
14	5	20-60	SL501E	STR		20-60									
20	5	11-90	SL502E	STR		11-90									
14	5	17-21	SL503E	STR		17-21									
13	5	8-00	SL504E	T1	0-52	1-60	2-02	1-60	2-02		0-52				
82	8	4-60	SL801E	STR		4-60									
26	8	6-60	SL802E	STR		6-60									
APPROACH SLAB SOUTHBOUND - 2															
1X22	5	18-60	AS531E	STR		18-60									
		TO 24-72				TO 24-72									
108	5	6-22	AS532E	17		2-70	1-02	2-70							
20	5	21-102	AS533E	17		1-02	20-100								
1X6	5	1-60	AS534E	STR		1-60	1-60								
		TO 17-23				TO 17-23	TO 17-23								
1	5	22-100	AS535E	17		1-02	21-92								
24	5	3-00	AS536E	STR		3-00									
1X13	5	24-110	AS537E	STR		24-110									
		TO 28-80				TO 28-80									
11	5	12-10	AS538E	STR		12-10									
16	5	12-30	AS539E	STR		12-30									
1X4	5	1-60	AS540E	STR		1-60									
		TO 10-41				TO 10-41									
1	5	12-93	AS541E	STR		12-93									
1X19	5	18-32	AS542E	STR		18-32	17-41								
		TO23-110				TO23-110									
20	5	18-63	AS543E	17		1-02	17-61								
1X5	5	2-62	AS544E	17		1-02	1-60								
		TO 15-12				TO 1-02	TO 14-10								

SPECIFICATIONS					BENDING DIMENSIONS (FEET-INCHES /QUARTER INCH)										
QTY.	SIZE	LENGTH	MARK	TYPE	A	B	C	D	E	F/R	G	H	J	K	O
1	5	19-42	AS545E	17		1-02	18-40								
20	6	21-102	AS631E	17		1-02	20-100								
1X6	6	1-100	AS632E	STR		1-100	1-100								
		TO 17-41				TO 17-41	TO 17-41								
1	6	22-100	AS633E	17		1-02	21-92								
11	6	12-10	AS634E	STR		12-10									
16	6	12-30	AS635E	STR		12-30									
1X4	6	1-100	AS636E	STR		1-100									
		TO 11-13				TO 11-13									
1	6	12-93	AS637E	STR		12-93	17-41								
20	6	18-63	AS638E	17		1-02	17-61								
1X5	6	2-102	AS639E	17		1-02	1-100								
		TO 15-32				TO 1-02	TO 14-30	TO							
1	6	19-42	AS640E	17		1-02	18-40								
1X29	1	18-60	AS1031	STR		18-60									
		TO24-110				TO24-110									
1X18	1	24-91	AS1032	STR		24-91									
		TO 28-80				TO 28-80									
1X25	1	18-50	AS1033	STR		18-50									
		TO23-110				TO23-110									
1X10	5	4-31	PA531E	H1		1-80	0-112	1-73		0-32		0-42			
		TO 4-113				TO 2-01	TO 0-111	TO 2-00		TO 0-32		TO 0-93			
17	5	4-112	PA532E	H1		2-01	0-111	2-00		0-32		0-42			
9	5	16-111	PA533E	16			11-10	5-101				0-41		5-100	16-110
25	5	6-70	PA534E	16	2-90	0-113	1-51	1-43				0-93		1-13	2-70
14	5	20-60	SL531E	STR		20-60									
20	5	11-90	SL532E	STR		11-90									
14	5	17-21	SL533E	STR		17-21									
13	5	8-00	SL534E	T1	0-52	1-60	2-02	1-60	2-02		0-52				
82	8	4-60	SL831E	STR		4-60									
26	8	6-60	SL832E	STR		6-60									
SUPERSTRUCTURE SOUTHBOUND															
342	5	4-112	PA591E	H1		2-01	0-111	2-00		0-32		0-42			
36	5	54-41	PA592E	STR		54-41									
342	5	5-50	PA593E	16	2-20	0-113	0-101	1-43				0-93		1-13	2-00
20	5	27-90	DK501E	STR		27-90									
10	5	36-00	DK502E	STR		36-00									
5	5	36-60	DK503E	STR		36-60									

ASTM STANDARD ENGLISH REINFORCING BARS

BAR SIZE	NOMINAL DIMENSIONS: DIAMETER (INCHES)	AREA (INCHES²)	WEIGHT (LBS./FT.)	RECOMMENDED END HOOKS, APPLICABLE TO ALL GRADES: 180° HOOKS D	180° HOOKS A OR G	180° HOOKS J	90° HOOKS A OR G	STIRRUP AND TIE HOOKS, APPLICABLE TO ALL GRADES: 90° HOOK D	90° HOOK A OR G	135° HOOK A OR G	135° HOOK A OR G
3	0.375	0.110	0.376	2¼"	5"	3"	6"	1½"	4"	4"	2½"
4	0.500	0.200	0.668	3"	6"	4"	8"	2"	4½"	4½"	3"
5	0.625	0.310	1.043	3¾"	7"	5"	10"	2½"	6"	5½"	3¾"
6	0.750	0.440	1.502	4½"	8"	6"	1-0"	4½"	1-0"	8"	4½"
7	0.875	0.600	2.044	5¼"	10"	7"	1-2"	5¼"	1-2"	9"	5¼"
8	1.000	0.790	2.670	6"	11"	8"	1-4"	6"	1-4"	10½"	6"
9	1.128	1.000	3.400	9½"	1-3"	11¾"	1-7"				
10	1.270	1.270	4.303	10¾"	1-5"	1-1¼"	1-10"				
11	1.410	1.560	5.313	1-0"	1-7"	1-2¾"	2-0"				
14	1.693	2.250	7.650	1-6¼"	2-3"	1-9¾"	2-7"				
18	2.257	4.000	13.600	2-0"	3-0"	2-4½"	3-5"				

NOTES:

1. FIGURES SHOWN IN CIRCLES REPRESENT BAR BEND TYPES.
2. STANDARD BAR BENDS INCLUDE ONLY THOSE TYPES BELOW, INDICATED AS SUCH.
3. ALL DIMENSIONS OUT-TO-OUT, EXCEPT "A" AND "G" ON STD. 180° AND 135° HOOKS.
4. "J" DIMENSIONS ON 180° HOOKS TO BE SHOWN ONLY WHERE NECESSARY TO RESTRICT HOOK SIZE, OTHERWISE STANDARD 'ACI' HOOKS ARE TO BE USED.
5. WHERE "J" IS NOT SHOWN, "J" WILL BE KEPT EQUAL TO OR LESS THAN "H" ON TYPES 3, 5 AND 22. WHERE "J" CAN EXCEED "H", IT SHALL BE SHOWN.
6. "H" DIMENSIONS OF STIRRUPS TO BE SHOWN AS NEEDED TO FIT WITHIN THE CONCRETE.
7. UNLESS OTHERWISE NOTED, DIAMETER "D" IS THE SAME FOR ALL BENDS AND HOOKS ON A BAR (EXCEPT FOR BEND TYPES 11 AND 13).
8. WHERE SLOPE DIFFERS FROM 45° OFFSET, "H" AND "K" MUST BE SHOWN.
9. WHERE BARS ARE TO BE BENT MORE ACCURATELY THAN STANDARD BENDING TOLERANCES, BENDING DIMENSIONS REQUIRING CLOSER FABRICATION SHOULD HAVE LIMITS INDICATED.
10. FOR RECOMMENDED DIAMETER "D", OF BENDS, HOOKS, ETC., REFER TO TABLE ABOVE, 'CRSI' OR 'ACI' TABLES WHERE APPLICABLE AND REQUIRED.
11. TYPE S1-S6, S11, T1-T3 AND T6-T9 APPLICABLE TO BAR SIZES #3 THROUGH #8.

STANDARD BAR BENDS

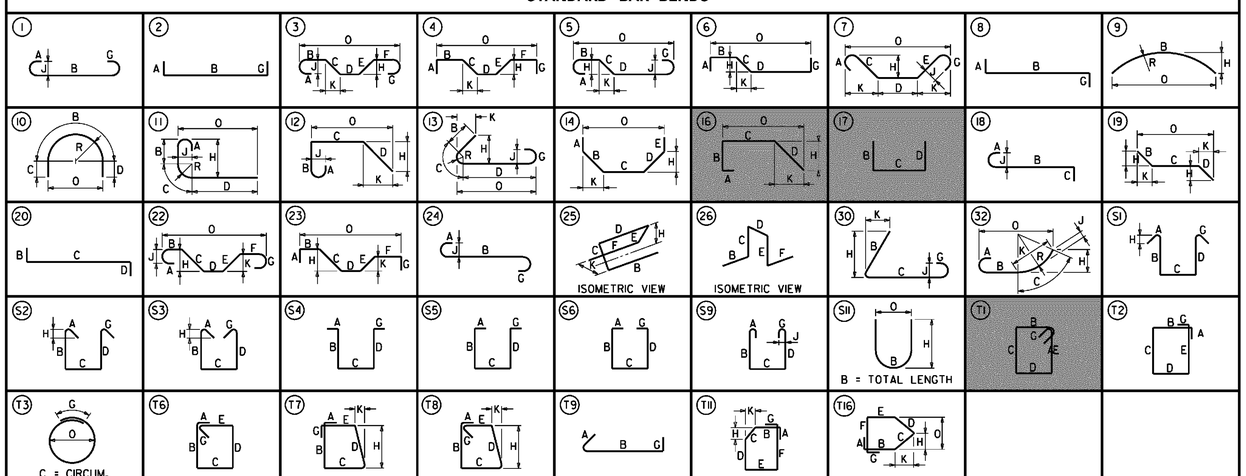

SPECIAL BAR BENDS

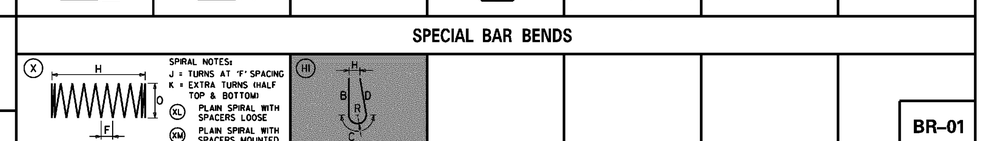

STIRRUP AND TIE HOOKS

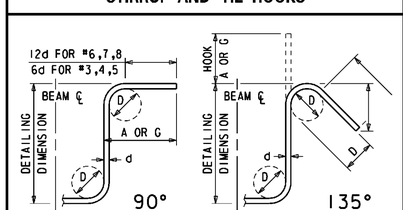

180° AND 90° END HOOKS

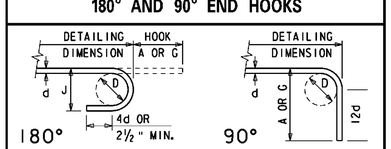

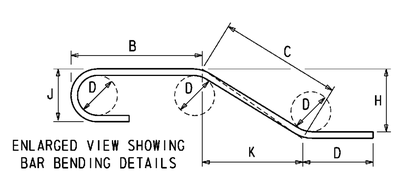

ENLARGED VIEW SHOWING BAR BENDING DETAILS

UNOFFICIAL WEBSITE COPY

DELAWARE DEPARTMENT OF TRANSPORTATION

ADDENDUMS / REVISIONS

NTS

BR 1-826 N&S ON I-495 OVER STONEY CREEK

CONTRACT	BRIDGE NO.	1-826 N&S
T201107402	DESIGNED BY: SBM	
COUNTY		
NEW CASTLE	CHECKED BY: ZME	

REINFORCEMENT BAR LIST SOUTHBOUND

BR-01

SHEET NO.	TOTAL SHTS.
23	54

GENERAL MOT NOTES:

1. MAINTENANCE OF TRAFFIC DURING LANE CLOSURES AND LANE SHIFTS SHALL CONFORM TO TYPICAL APPLICATION TA-5, TA-5A, TA-33, TA-36, AND TA-37 OF THE DELAWARE MUTCD.

2. THIS PROJECT IS CONSIDERED A SIGNIFICANT PROJECT AS DEFINED BY DELDOT'S WORK ZONE MOBILITY PROCEDURES AND GUIDELINES. A TYPE B TRANSPORTATION MANAGEMENT PLAN (TMP) HAS BEEN PREPARED AND IS AVAILABLE FOR VIEWING BY CONTACTING THE DEPARTMENT'S SAFETY PROGRAMS MANAGER AT (302)659-4060. ALL MONITORING REQUIREMENTS OF THE TMP SHALL BE CONDUCTED BY DELDOT FORCES UNLESS OTHERWISE DIRECTED BY THE ENGINEER. MODIFICATIONS TO THE TMP SHALL BE COMPLETED BY THE CONTRACTOR IF CHANGES TO THE TIME RESTRICTIONS OR THE TRAFFIC CONTROL PLAN ARE DESIRED. THE MODIFIED TMP SHALL BE PREPARED BY A PROFESSIONAL ENGINEER, REGISTERED IN THE STATE OF DELAWARE.

3. A TYPE II TRUCK MOUNTED ATTENUATOR (TMA) SHALL BE REQUIRED ON THIS PROJECT DURING THE FOLLOWING OPERATIONS: TEMPORARY/PERMANENT PAVEMENT MARKINGS, ROADSIDE SPRAYING, PATCHING, MILLING, SWEEPING, TEMPORARY TRAFFIC BARRIER PLACEMENT OR AS DIRECTED BY THE ENGINEER. THE ROLL AHEAD DISTANCE SHALL BE AS PER THE MANUFACTURER'S RECOMMENDATIONS. THE TMA SHALL CONFORM TO THE REQUIREMENTS OF SECTION 6F OF THE DELAWARE MUTCD.

4. WITHIN THE MAINLINE WORK AREA, PERMANENT ADVANCE WARNING SIGNS WITH THE LEGENDS "ROAD WORK 1 MILE", "ROAD WORK 1/2 MILE" AND "ROAD WORK 1000 FT" SHALL BE INSTALLED IN ADVANCE OF THE WORK AREA IN BOTH DIRECTIONS. AN "END ROAD WORK" SIGN SHALL BE LOCATED 500 FEET DOWNSTREAM FROM THE WORK AREA. ON INTERSECTING ROADWAYS AND/OR RAMPS WITHIN THE PROJECT LIMITS, A "ROAD WORK AHEAD" SIGN SHALL BE PLACED AT A DISTANCE NOT LESS THAN 500 FEET IN ADVANCE OF THE WORK AREA AND AN "END ROAD WORK" SIGN SHALL BE LOCATED 500 FEET DOWNSTREAM OF THE WORK AREA. THE USE OF SKID MOUNTED SIGN SUPPORTS IS NOT ALLOWED UNLESS THE CONTRACTOR CAN DEMONSTRATE THAT A UTILITY CONFLICT EXISTS, WHICH SHALL BE VERIFIED BY THE ENGINEER: OR CONCRETE MEDIANS PREVENT THE INSTALLATION OF THE PERMANENT SIGNS IN THE APPROPRIATE LOCATION.

5. WORK SHALL BE PERFORMED IN A MANNER THAT WILL REASONABLY PROVIDE THE LEAST PRACTICABLE OBSTRUCTION TO TRAFFIC, CONSISTENT WITH SAFETY STANDARDS AND SHALL COMPLY WITH THE LATEST EDITION OF THE MANUAL TITLED *DELAWARE DEPARTMENT OF TRANSPORTATION MANUAL ON UNIFORM TRAFFIC CONTROL DEVICES (MUTCD) FOR STREETS AND HIGHWAYS* HERE AFTER REFERED TO AS THE TRAFFIC CONTROL MANUAL.

6. THE CONTRACTOR SHALL SUBMIT TO THE ENGINEER A TRAFFIC CONTROL PLAN FOR THE DEPARTMENTS APPROVAL SEVEN DAYS IN ADVANCE OF THE PROPOSED START OF WORK DATE. LONGITUDINAL DIMENSIONS FOR MAINTENANCE OF TRAFFIC CONFIGURATIONS MAY BE ADJUSTED SLIGHTLY TO FIT FIELD CONDITION AS DIRECTED BY THE ENGINEER.

7. THE CONTRACTOR SHALL HAVE AN AMERICAN TRAFFIC SAFETY SERVICES ASSOCIATION (ATSSA) CERTIFIED SUPERVISOR ASSIGNED TO THIS PROJECT. THE CERTIFIED ATSSA SUPERVISOR'S SOLE JOB SHALL BE SUPERVISION OF THE INSTALLATION, OPERATION AND MAINTENANCE OF TRAFFIC CONTROL DEVICES FOR THIS PROJECT. THIS PERSON SHALL BE THE LIAISON BETWEEN DELDOT AND THE CONTRACTOR IN MAINTENANCE OF TRAFFIC MATTERS. THE CONTRACTOR'S GENERAL SUPERINTENDENT FOR THIS PROJECT SHALL NOT BE THE ATSSA SUPERVISOR. PAYMENT FOR THE ATSSA SUPERVISOR SHALL BE INCLUDED IN ITEM 743000 - MAINTENANCE OF TRAFFIC.

8. TEMPORARY PAVEMENT MARKINGS SHALL MATCH THE DIMENSIONS AND LAYOUT OF "PERMANENT MARKINGS" AND SHALL BE INSTALLED IN ACCORDANCE WITH THE TRAFFIC CONTROL MANUAL. ALL CONFLICTING STRIPING IS TO BE REMOVED AS DIRECTED BY THE ENGINEER, BY A METHOD APPROVED BY THE ENGINEER. PAINTING OVER THE CONFLICTING STRIPING WILL NOT BE ACCEPTED.

9. ON ALL INTERSECTING STREETS APPROACHING THE WORK AREA, "ROAD WORK 1,500 FT." "ROAD WORK 1,000 FT."
AND "ROAD WORK 500 FT." PERMANENT SIGNS SHALL BE PLACED AS SHOWN ON THESE PLANS OR AS DIRECTED
BY THE ENGINEER. AN "END ROAD WORK" SIGN SHALL BE PLACED ACROSS THE STREET FROM THE *ROAD WORK
500 FT.* SIGN, VISIBLE TO TRAFFIC OPERATING THE WORK ZONE.

10. NO WIDE LOAD PERMIT VEHICLES SHALL BE PERMITTED ON I-495 DURING CONSTRUCTION PHASE 2 AND CONSTRUCTION PHASE 5. THE CONTRACTOR SHALL CONTACT DENNIS BLADES FROM DELDOT PERMIT OFFICE (302)-744-2717 AT LEAST 14 DAYS PRIOR TO SWITCHING TO EITHER PHASE 2 OR 5.

11. THE CONTRACTOR SHALL ABIDE BY TABLE G6.2 OF THE DEMUTCD IN REGARDS TO STORAGE EQUIPMENT.

12. THE TRAFFIC SAFETY SECTION WILL PREPARE A TEMPORARY TRAFFIC CONTROL DEVICE AUTHORIZATION, TO BE APPROVED BY THE CHIEF TRAFFIC ENGINEER, TO AUTHORIZE THE REDUCED SPEED LIMIT.

13. UPON THE START OF WORK FOR WHICH A REDUCED SPEED LIMIT IS REQUIRED, THE PROJECT ENGINEER WILL CONTACT THE TRANSPORTATION MANAGEMENT CENTER (TMC) TO REQUEST THE DISPLAY OF THE REDUCED SPEED LIMIT ON THE APPLICABLE VARIABLE SPEED LIMIT (VSL) SIGNS. IT WILL BE THE RESPONSIBILITY OF THE PROJECT ENGINEER TO CONTACT THE TMC WHEN THE REDUCED SPEED LIMIT IS NO LONGER REQUIRED AND THE ORIGINAL SPEED LIMIT CAN BE DISPLAYED ON THE APPLICABLE VSL SIGNS.

<u>SUBSTRUCTURE PHASE 1</u>

1. SET UP BARRIER AND TRAFFIC CONTROLS ALONG GOVERNOR PRINTZ BLVD. AS PER TA-5.
2. ALL WORK IN THIS PHASE MAY BE DONE CONCURRENT WITH PHASES 1-6 OF SUPERSTRUCTURE AND ROADWAY REPAIR.
3. REMOVE GUARDRAIL ATTACHED TO BRIDGE FOR ACCESS.
4. ATTACH ATTENUATOR TO END OF BRIDGE WALL.
5. INSTALL STABILIZED CONSTRUCTION ENTRANCE AND PIPE AT EXISTING DITCH.
6. INSTALL COFFERDAM AND DEWATER AREA.
7. REPAIR SUBSTRUCTURE AND INSTALL RIPRAP UNDER AND AROUND SOUTH PIERS OF BRIDGE 1-826 AS SHOWN IN PLANS USING FLAGGER AND TYPE III BARRICADES TO CONTROL VEHICLES ENTERING AND EXITING CONSTRUCTION AREA.
8. REMOVE END ATTENUATOR AND REPLACE GUARDRAIL.
9. REMOVE TRAFFIC CONTROLS PERTAINING TO THIS PHASE.

<u>SUBSTRUCTURE PHASE 2</u>

1. SET UP TRAFFIC CONTROLS ALONG GOVERNOR PRINTZ BLVD. AS PER TA-5A.
2. ALL WORK IN THIS PHASE MAY BE DONE CONCURRENT WITH PHASES 1-6 OF SUPERSTRUCTURE AND ROADWAY REPAIR.
3. INSTALL STABILIZED CONSTRUCTION ENTRANCE.
4. INSTALL COFFERDAM AND DEWATER AREA.
5. REPAIR SUBSRTUCTURE AND INSTALL RIPRAP UNDER AND AROUND NORTH PIERS OF BRIDGE 1-826 AS SHOWN IN PLANS USING FLAGGERS AND TYPE III BARRICADES TO CONTROL VEHICLES ENTERING AND EXITING CONSTRUCTION AREA.
6. REMOVE TRAFFIC CONTROLS PERTAINING TO THIS PHASE.

<u>PHASE 1</u>

1. SET UP TRAFFIC CONTROLS ALONG SOUTHBOUND I-495 FOR RIGHT LANE CLOSURE AS PER TA-33.
2. SET UP TRAFFIC CONTROLS ALONG SOUTHBOUND I-495 FOR LANE SHIFT AS PER TA-36.
3. PLACE AND PIN PORTABLE CONCRETE BARRIER AS SHOWN IN PLANS.
4. REMOVE APPROACH SLAB, STRIP SEAL, AND DETERIORATED CONCRETE ALONG BACKWALL OF BRIDGE ABUTMENT WITHIN WORKZONE.
5. REPLACE DETERIORATED CONCRETE, APPROACH SLAB AND STRIP SEAL AS SHOWN ON STRUCTURE REPAIR PLANS.
6. REMOVE TRAFFIC CONTROLS PERTAINING TO THIS PHASE.

<u>PHASE 2</u>

1. SET UP TRAFFIC CONTROLS ALONG SOUTHBOUND I-495 FOR 2 LEFT LANE CLOSURES AS PER TA-37.
2. SET UP TRAFFIC CONTROLS ALONG SOUTHBOUND I-495 FOR LANE SHIFT AS PER TA-36.
3. PLACE PORTABLE CONCRETE BARRIER AS SHOWN IN PLANS.
4. REMOVE APPROACH SLAB, STRIP SEAL, AND DETERIORATED CONCRETE ALONG BACKWALL OF BRIDGE ABUTMENT WITHIN WORKZONE.
5. REPLACE DETERIORATED CONCRETE, APPROACH SLAB AND STRIP SEAL AS SHOWN ON STRUCTURE REPAIR PLANS.

CONCRETE USED IN THIS PHASE MUST MEET REQUIREMENTS SHOWN IN PROJECT NOTES SHEET. THIS TRAFFIC PHASING MUST BE COMPLETED OVER A WEEKENDS TIME. SET UP MUST NOT OCCUR PRIOR TO 8PM FRIDAY EVENING AND MUST BE REMOVED BEFORE 5AM MONDAY MORNING.

<u>PHASE 3</u>

1. SET UP TRAFFIC CONTROLS ALONG SOUTHBOUND I-495 FOR LEFT LANE CLOSURE AS PER TA-33.
2. SET UP TRAFFIC CONTROLS ALONG SOUTHBOUND 1-495 FOR LANE SHIFT AS PER TA-36.
3. PLACE PORTABLE CONCRETE BARRIER AS SHOWN IN PLANS.
4. REMOVE APPROACH SLAB, PARAPET WALL, STRIP SEAL, AND DETERIORATED CONCRETE ALONG BACKWALL OF BRIDGE ABUTMENT WITHIN WORKZONE.
5. REPLACE DETERIORATED CONCRETE, APPROACH SLAB, PARAPET WALL, AND STRIP SEAL AS SHOWN ON STRUCTURE REPAIR PLANS.
6. REMOVE TRAFFIC CONTROLS PERTAINING TO THIS PHASE.

<u>PHASE 4</u>

1. SET UP TRAFFIC CONTROLS ALONG NORTHBOUND I-495 FOR RIGHT LANE CLOSURE AS PER TA-33.
2. SET UP TRAFFIC CONTROLS ALONG NORTHBOUND I-495 FOR LANE SHIFT AS PER TA-36.
3. PLACE AND PIN PORTABLE CONCRETE BARRIER AS SHOWN IN PLANS.
4. REMOVE APPROACH SLAB, STRIP SEAL, AND DETERIORATED CONCRETE ALONG BACKWALL OF BRIDGE ABUTMENT WITHIN WORKZONE.
5. REPLACE DETERIORATED CONCRETE, APPROACH SLAB, AND STRIP SEAL AS SHOWN ON STRUCTURE REPAIR PLANS.
6. REMOVE TRAFFIC CONTROLS PERTAINING TO THIS PHASE.

<u>PHASE 5</u>

1. SET UP TRAFFIC CONTROLS ALONG NORTHBOUND I-495 FOR 2 LEFT LANE CLOSURES AS PER TA-37.
2. SET UP TRAFFIC CONTROLS ALONG NORTHBOUND I-495 FOR LANE SHIFT AS PER TA-36.
3. PLACE PORTABLE CONCRETE BARRIER AS SHOWN IN PLANS.
4. REMOVE APPROACH SLAB, STRIP SEAL, AND DETERIORATED CONCRETE ALONG BACKWALL OF BRIDGE ABUTMENT WITHIN WORKZONE.
5. REPLACE DETERIORATED CONCRETE, APPROACH SLAB AND STRIP SEAL AS SHOWN ON STRUCTURE REPAIR PLANS.

CONCRETE USED IN THIS PHASE MUST MEET REQUIREMENTS SHOWN IN PROJECT NOTES SHEET. THIS TRAFFIC PHASING MUST BE COMPLETED OVER A WEEKENDS TIME. SET UP MUST NOT OCCUR PRIOR TO 8PM FRIDAY EVENING AND MUST BE REMOVED BEFORE 5AM MONDAY MORNING.

<u>PHASE 6</u>

1. SET UP TRAFFIC CONTROLS ALONG NORTHBOUND I-495 FOR LEFT LANE CLOSURE AS PER TA-33.
2. SET UP TRAFFIC CONTROLS ALONG NORTHBOUND 1-495 FOR LANE SHIFT AS PER TA-36.
3. PLACE PORTABLE CONCRETE BARRIER AS SHOWN IN PLANS.
4. REMOVE APPROACH SLAB, PARAPET WALL, STRIP SEAL, AND DETERIORATED CONCRETE ALONG BACKWALL OF BRIDGE ABUTMENT WITHIN WORKZONE.
5. REPLACE DETERIORATED CONCRETE, APPROACH SLAB, PARAPET WALL, AND STRIP SEAL AS SHOWN ON STRUCTURE REPAIR PLANS.
6. REMOVE TRAFFIC CONTROLS PERTAINING TO THIS PHASE.

GENERAL EROSION AND SEDIMENT CONTROL NOTES:

1. EROSION AND SEDIMENT CONTROL DEVICES WILL BE MAINTAINED IN PLACE AND WILL ONLY BE REMOVED WHEN IT IS NO LONGER NECESSARY TO PROVIDE FOR THEIR DESIGNATED FUNCTIONS AS APPROVED BY THE ENGINEER.

2. COST OF WATER PUMPING FROM SUMP PIT, TYPE 2 (ITEM 263001) SHALL BE INCIDNETAL TO THIS ITEM.

UNOFFICIAL WEBSITE COPY

CS-01

DELAWARE DEPARTMENT OF TRANSPORTATION	ADDENDUMS / REVISIONS	NOT TO SCALE	BR 1-826 N&S ON I-495 OVER STONEY CREEK	CONTRACT T201107402	BRIDGE NO. 1-826 N&S	CONSTRUCTION PHASING, M.O.T., AND EROSION CONTROL PLAN - NOTES	SHEET NO. 24
				COUNTY NEW CASTLE	DESIGNED BY: TM		TOTAL SHTS. 54
					CHECKED BY: MAA		

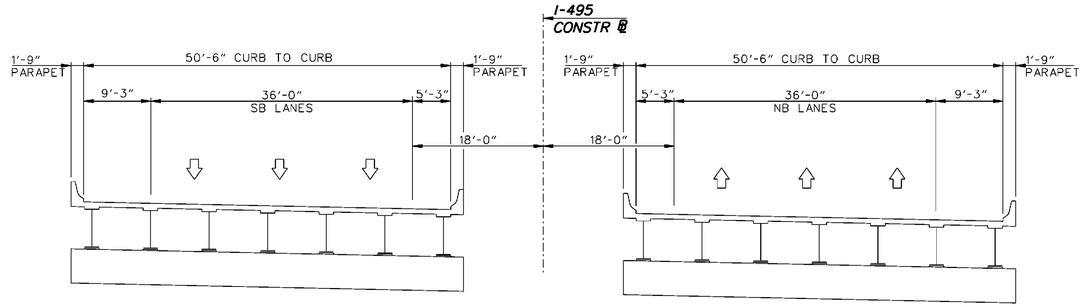

EXISTING TYPICAL SECTION

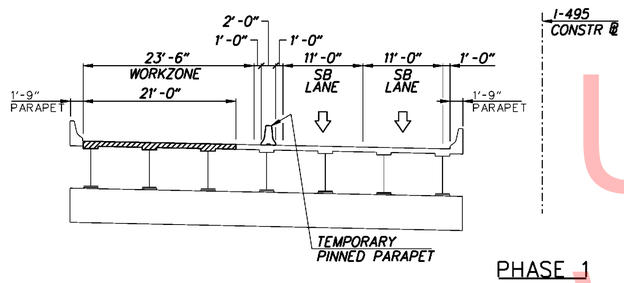

PHASE 1

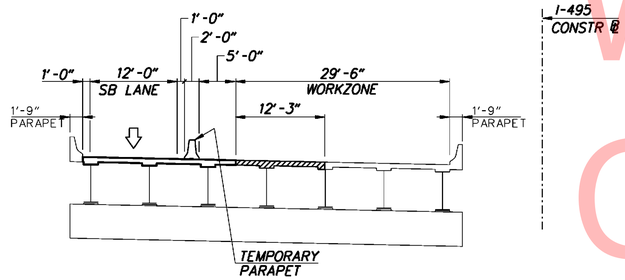

PHASE 2

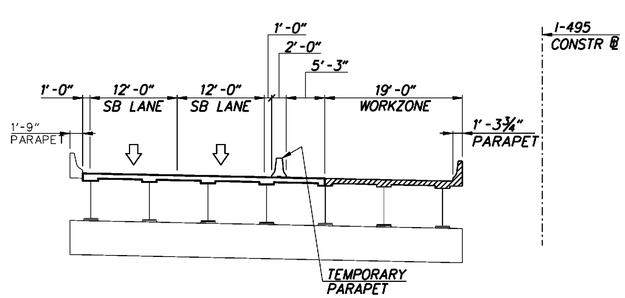

PHASE 3

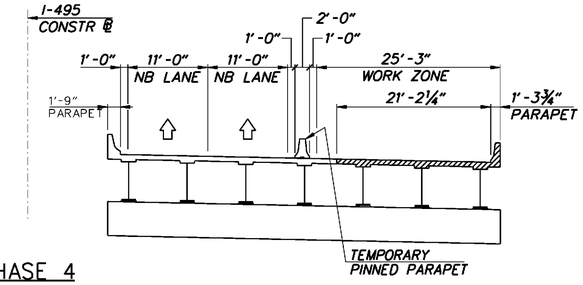

PHASE 4

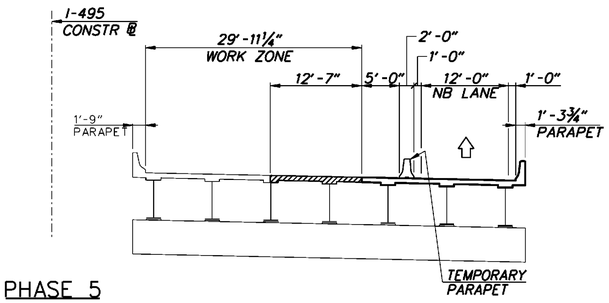

PHASE 5

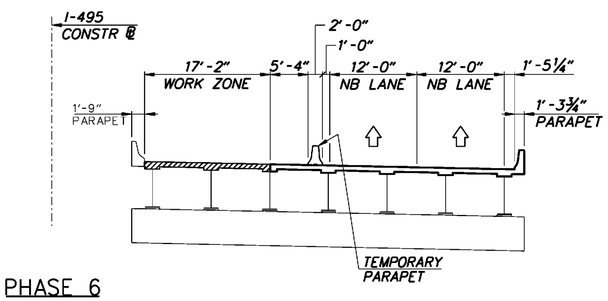

PHASE 6

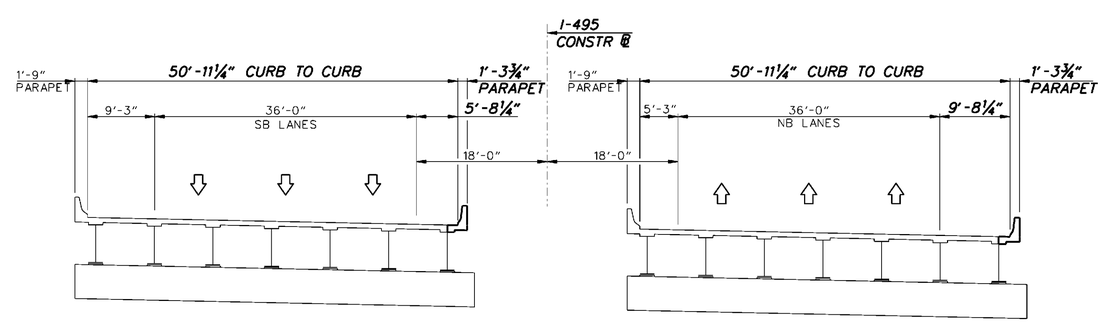

FINISHED CONDITION

LEGEND:
CONSTR = CONSTRUCTION
NB = NORTHBOUND
SB = SOUTHBOUND

UNOFFICIAL WEBSITE COPY

DELAWARE DEPARTMENT OF TRANSPORTATION	ADDENDUMS / REVISIONS	NTS	BR 1-826 N&S ON I-495 OVER STONEY CREEK	CONTRACT T201107402 / COUNTY NEW CASTLE	BRIDGE NO. 1-826 N&S / DESIGNED BY: BJH / CHECKED BY: ZME	CONSTRUCTION PHASING

CS-02
SHEET NO. 25
TOTAL SHTS. 54

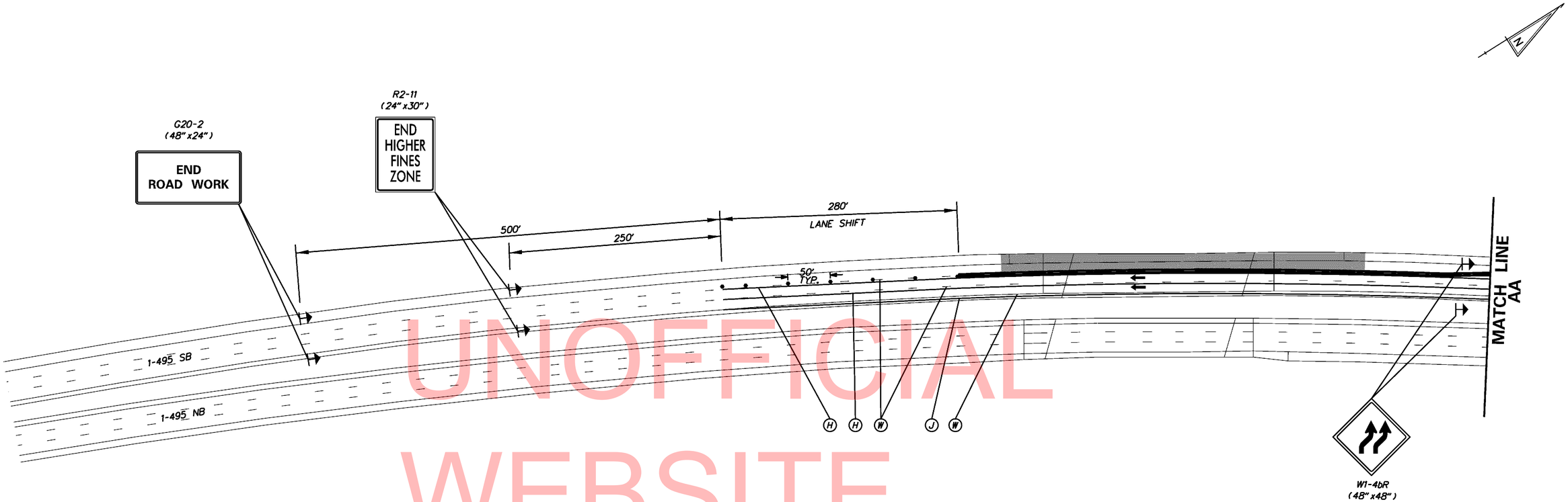

UNOFFICIAL WEBSITE COPY

CONSTRUCTION PHASING & M.O.T	
	WORK AREA THIS PHASE
	PHASING TRAFFIC FLOW ARROW
	CONSTRUCTION WARNING SIGN LOCATION
•	DRUM - TRAFFIC CONTROL
	ARROW PANEL
	TRUCK WITH MOUNTED ATTENUATOR
	PORTABLE CONCRETE BARRIER
	PORTABLE SEDIMENT TANK
	TEMPORARY BARRICADE, TYPE III
— SF —	SILT FENCE
SP-2	SUMP PIT, TYPE 2
	STABILIZED CONSTRUCTION ENTRANCE

TEMPORARY PAVEMENT MARKINGS LEGEND		
SYMBOL	ITEM	QUANTITY
H	5" SOLID WHITE TEMPORARY TAPE PAVEMENT STRIPING (ITEM 748570)	1,813 LF
J	5" SOLID YELLOW TEMPORARY TAPE PAVEMENT STRIPING (ITEM 748570)	905 LF
W	REMOVAL OF PAVEMENT STRIPING (ITEM 748530)	1,359 LF

LANE SHIFT
(W)(S)=L
(4.25')(65 MPH)=276.25'

12/12/2012

...\CS002_BR 1-826 _Phase1.dgn

DELAWARE
DEPARTMENT OF TRANSPORTATION

ADDENDUMS / REVISIONS

SCALE
0 60 120 240
FEET

BR 1-826 N&S ON I-495
OVER STONEY CREEK

CONTRACT: T201107402
COUNTY: NEW CASTLE COUNTY
BRIDGE NO. 1-826 N&S
DESIGNED BY: TM
CHECKED BY: MAA

CONSTRUCTION PHASING, M.O.T., AND EROSION CONTROL PLAN – PHASE 1

CS-03
SHEET NO. 26
TOTAL SHTS. 54

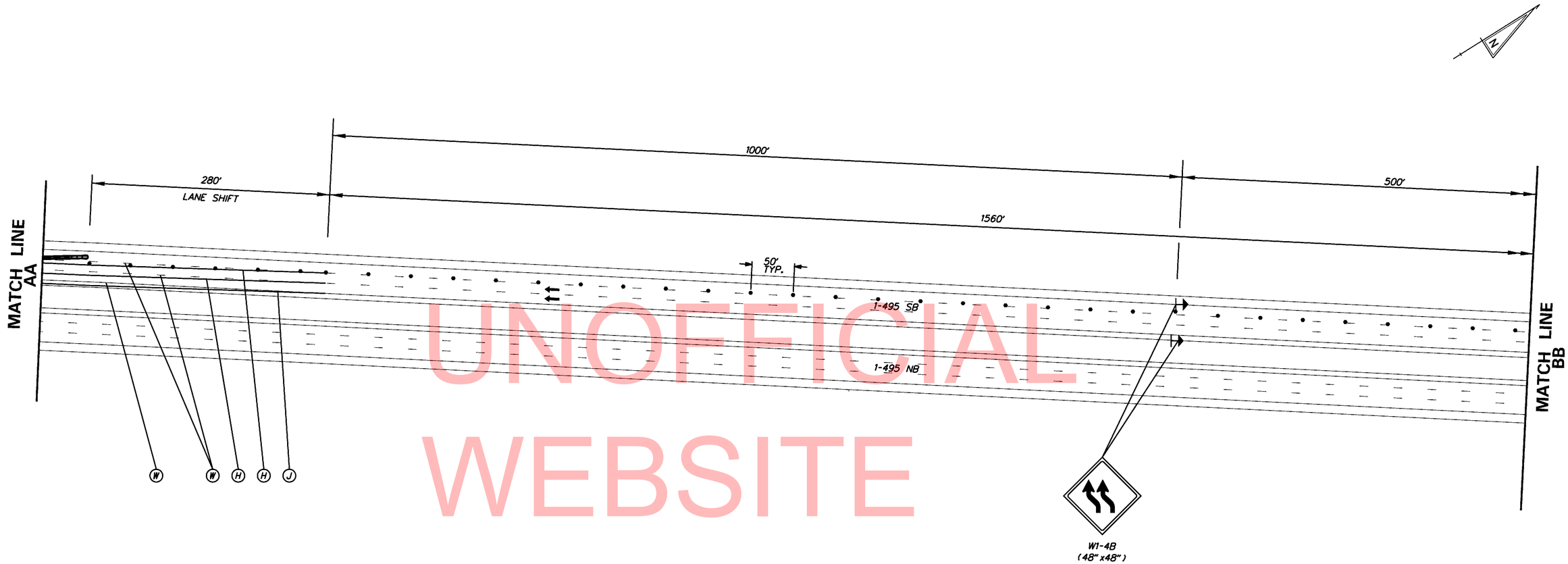

UNOFFICIAL WEBSITE COPY

TEMPORARY PAVEMENT MARKINGS LEGEND		
SYMBOL	ITEM	QUANTITY
H	5" SOLID WHITE TEMPORARY TAPE PAVEMENT STRIPING (ITEM 748570)	668 LF
J	5" SOLID YELLOW TEMPORARY TAPE PAVEMENT STRIPING (ITEM 748570)	334 LF
W	REMOVAL OF PAVEMENT STRIPING (ITEM 748530)	501 LF

CONSTRUCTION PHASING & M.O.T	
	WORK AREA THIS PHASE
	PHASING TRAFFIC FLOW ARROW
	CONSTRUCTION WARNING SIGN LOCATION
•	DRUM - TRAFFIC CONTROL
	ARROW PANEL
	TRUCK WITH MOUNTED ATTENUATOR
	PORTABLE CONCRETE BARRIER
PST	PORTABLE SEDIMENT TANK
	TEMPORARY BARRICADE, TYPE III
— SF —	SILT FENCE
SP-2	SUMP PIT, TYPE 2
SCE	STABILIZED CONSTRUCTION ENTRANCE

LANE SHIFT
(W)(S)=L
(4.25')(65 MPH)= 276.25'

DELAWARE
DEPARTMENT OF TRANSPORTATION

ADDENDUMS / REVISIONS

SCALE
0 60 120 240
FEET

BR 1-826 N&S ON I-495
OVER STONEY CREEK

CONTRACT T201107402
COUNTY NEW CASTLE COUNTY
BRIDGE NO. 1-826 N&S
DESIGNED BY: TM
CHECKED BY: MAA

CONSTRUCTION PHASING, M.O.T., AND EROSION CONTROL PLAN – PHASE 1

CS-04
SHEET NO. 27
TOTAL SHTS. 54

12/12/2012
...\CS003_BR 1-826_Phase1.dgn

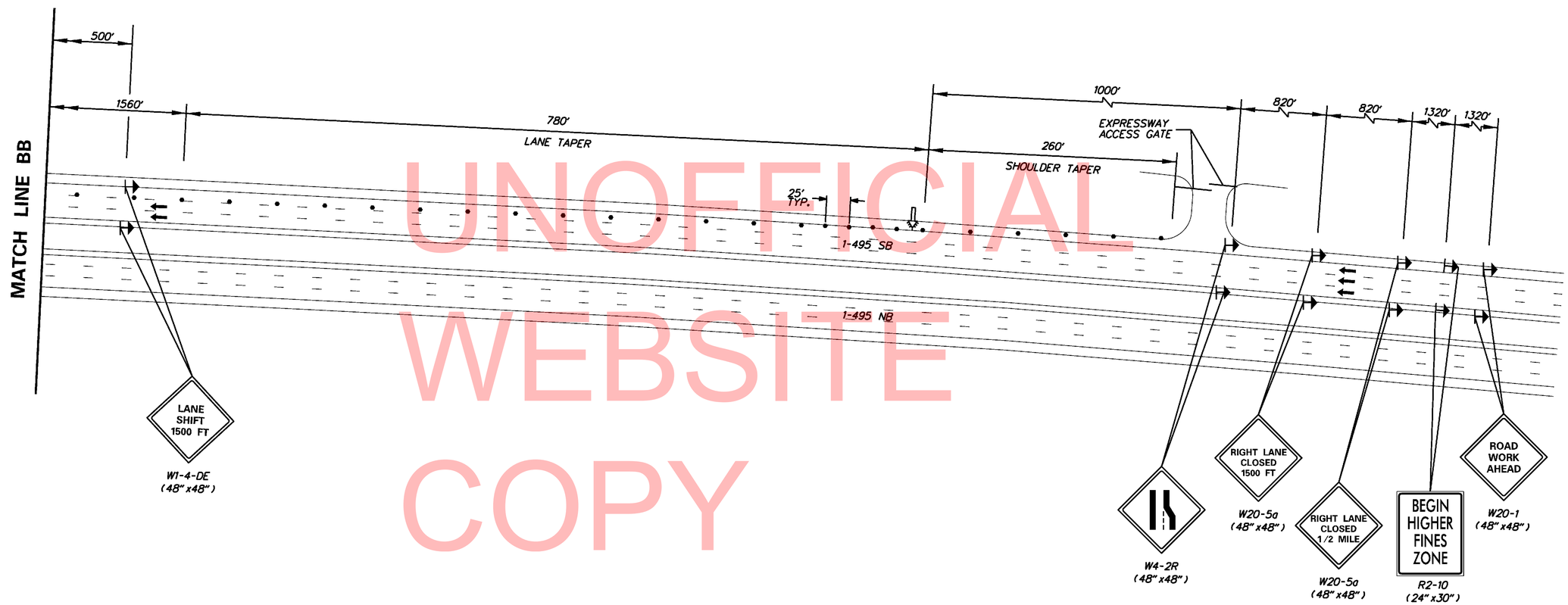

UNOFFICIAL WEBSITE COPY

CONSTRUCTION PHASING & M.O.T	
	WORK AREA THIS PHASE
	PHASING TRAFFIC FLOW ARROW
	CONSTRUCTION WARNING SIGN LOCATION
	DRUM - TRAFFIC CONTROL
	ARROW PANEL
	TRUCK WITH MOUNTED ATTENUATOR
	PORTABLE CONCRETE BARRIER
PST	PORTABLE SEDIMENT TANK
	TEMPORARY BARRICADE, TYPE III
— SF —	SILT FENCE
SP-2	SUMP PIT, TYPE 2
SCE	STABILIZED CONSTRUCTION ENTRANCE

LANE TAPER
(W)(S)=L
(12')(65 MPH)= 780'

SHOULDER TAPER
1/3(L) = 1/3(780') = 260'

11/2/2012

...\CS004_BR 1-826_Phase1.dgn

DELAWARE DEPARTMENT OF TRANSPORTATION

ADDENDUMS / REVISIONS

SCALE 0 60 120 240 FEET

BR 1-826 N&S ON I-495 OVER STONEY CREEK

CONTRACT	BRIDGE NO.	1-826 N&S
T201107402	DESIGNED BY: TM	
COUNTY		
NEW CASTLE COUNTY	CHECKED BY: MAA	

CONSTRUCTION PHASING, M.O.T., AND EROSION CONTROL PLAN – PHASE 1

CS-05

SHEET NO.	TOTAL SHTS.
28	54

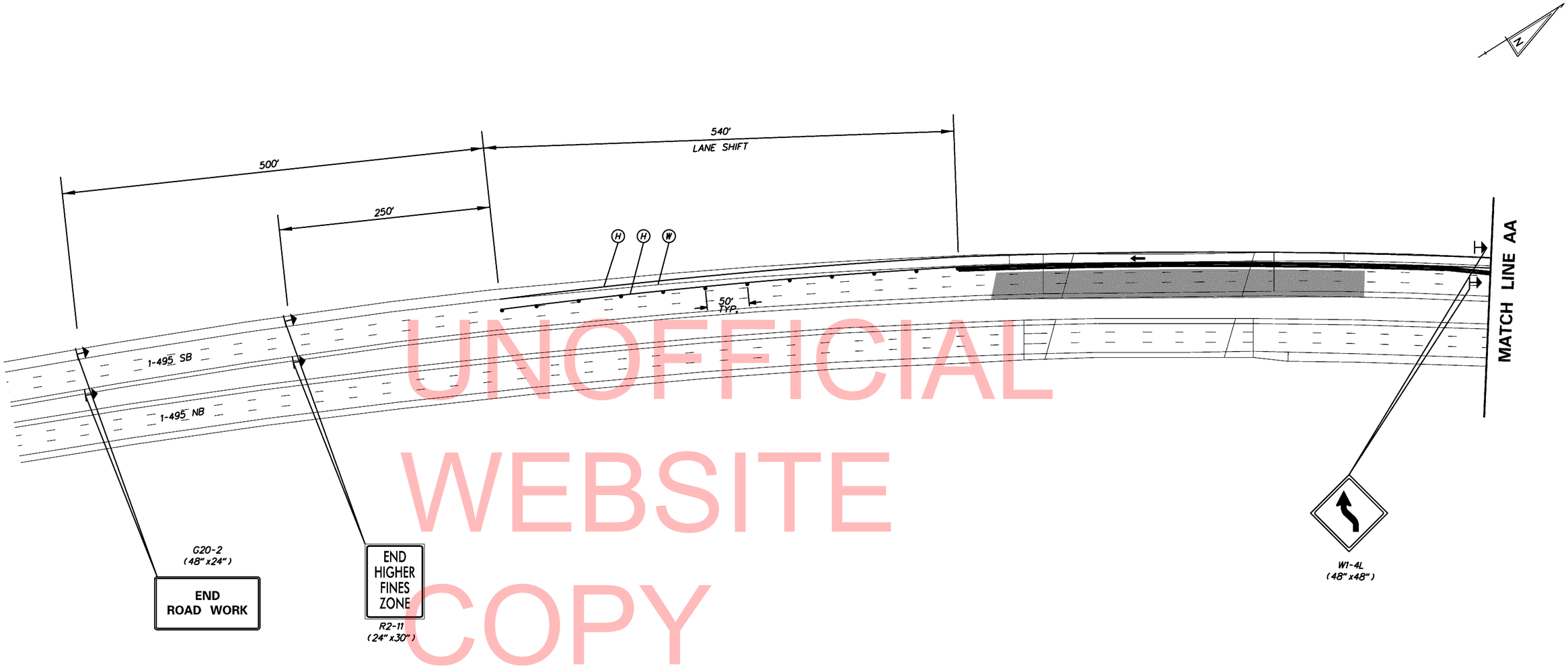

UNOFFICIAL WEBSITE COPY

CONSTRUCTION PHASING & M.O.T	
	WORK AREA THIS PHASE
	PHASING TRAFFIC FLOW ARROW
	CONSTRUCTION WARNING SIGN LOCATION
	DRUM - TRAFFIC CONTROL
	ARROW PANEL
	TRUCK WITH MOUNTED ATTENUATOR
	PORTABLE CONCRETE BARRIER
PST	PORTABLE SEDIMENT TANK
	TEMPORARY BARRICADE, TYPE III
— SF —	SILT FENCE
SP-2	SUMP PIT, TYPE 2
SCE	STABILIZED CONSTRUCTION ENTRANCE

TEMPORARY PAVEMENT MARKINGS LEGEND		
SYMBOL	ITEM	QUANTITY
H	5" SOLID WHITE TEMPORARY TAPE PAVEMENT STRIPING (ITEM 748570)	2,345 LF
J	5" SOLID YELLOW TEMPORARY TAPE PAVEMENT STRIPING (ITEM 748570)	0 LF
W	REMOVAL OF PAVEMENT STRIPING (ITEM 748530)	1,172 LF

LANE SHIFT
(W)(S)=L
(8.25')(65 MPH)= 536.25'

12/12/2012

...\CS005_BR 1-826_Phase2.dgn

DELAWARE
DEPARTMENT OF TRANSPORTATION

ADDENDUMS / REVISIONS

SCALE
0 60 120 240
FEET

BR 1-826 N&S ON I-495
OVER STONEY CREEK

CONTRACT	BRIDGE NO.	1-826 N&S
T201107402	DESIGNED BY: TM	
COUNTY		
NEW CASTLE COUNTY	CHECKED BY: MAA	

CONSTRUCTION PHASING, M.O.T., AND EROSION CONTROL PLAN - PHASE 2

CS-06

SHEET NO.
29
TOTAL SHTS.
54

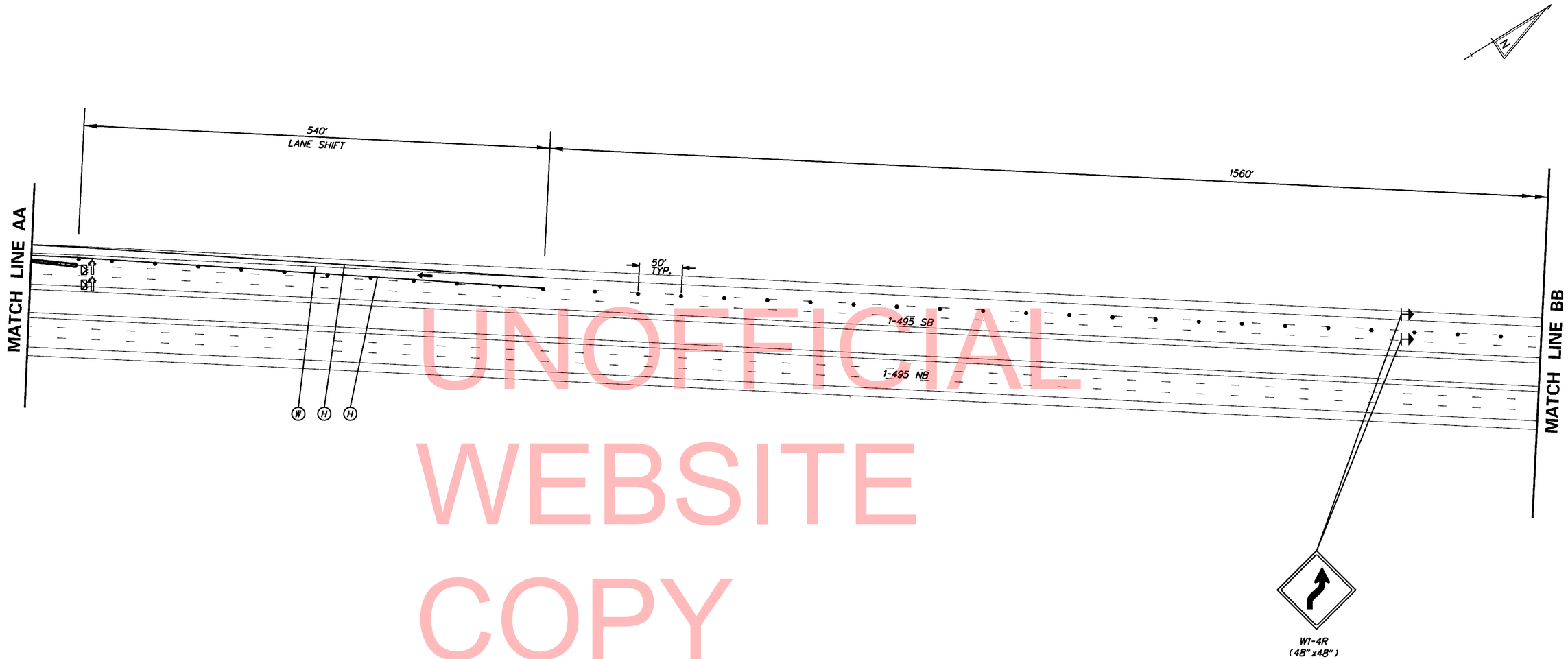

UNOFFICIAL WEBSITE COPY

TEMPORARY PAVEMENT MARKINGS LEGEND		
SYMBOL	ITEM	QUANTITY
H	5" SOLID WHITE TEMPORARY TAPE PAVEMENT STRIPING (ITEM 748570)	1,188 LF
J	5" SOLID YELLOW TEMPORARY TAPE PAVEMENT STRIPING (ITEM 748570)	0 LF
W	REMOVAL OF PAVEMENT STRIPING (ITEM 748530)	594 LF

NOTE: TMA'S AT THE BEGINNING OF BARRIER ARE TO FLASH FOUR CORNERS ON ARROW PANELS.

CONSTRUCTION PHASING & M.O.T	
	WORK AREA THIS PHASE
	PHASING TRAFFIC FLOW ARROW
	CONSTRUCTION WARNING SIGN LOCATION
•	DRUM - TRAFFIC CONTROL
	ARROW PANEL
	TRUCK WITH MOUNTED ATTENUATOR
	PORTABLE CONCRETE BARRIER
PST	PORTABLE SEDIMENT TANK
	TEMPORARY BARRICADE, TYPE III
— SF —	SILT FENCE
SP-2	SUMP PIT, TYPE 2
SCE	STABILIZED CONSTRUCTION ENTRANCE

LANE SHIFT
(W)(S)=L
(8.25')(65 MPH)= 536.25'

DELAWARE DEPARTMENT OF TRANSPORTATION

ADDENDUMS / REVISIONS

SCALE 0 60 120 240 FEET

BR 1-826 N&S ON I-495 OVER STONEY CREEK

CONTRACT T201107402
COUNTY NEW CASTLE COUNTY
BRIDGE NO. 1-826 N&S
DESIGNED BY: TM
CHECKED BY: MAA

CONSTRUCTION PHASING, M.O.T., AND EROSION CONTROL PLAN - PHASE 2

CS-07
SHEET NO. 30
TOTAL SHTS. 54

12/12/2012

...\CS006_BR 1-826_Phase2.dgn

UNOFFICIAL WEBSITE COPY

CONSTRUCTION PHASING & M.O.T	
	WORK AREA THIS PHASE
	PHASING TRAFFIC FLOW ARROW
	CONSTRUCTION WARNING SIGN LOCATION
•	DRUM - TRAFFIC CONTROL
	ARROW PANEL
	TRUCK WITH MOUNTED ATTENUATOR
	PORTABLE CONCRETE BARRIER
PST	PORTABLE SEDIMENT TANK
	TEMPORARY BARRICADE, TYPE III
— SF —	SILT FENCE
SP-2	SUMP PIT, TYPE 2
SCE	STABILIZED CONSTRUCTION ENTRANCE

LANE SHIFT
(W)(S)=L
(12')(65 MPH)= 780'

CS-08

DELAWARE DEPARTMENT OF TRANSPORTATION

ADDENDUMS / REVISIONS

SCALE 0 60 120 240 FEET

BR 1-826 N&S ON I-495 OVER STONEY CREEK

CONTRACT	BRIDGE NO.	1-826 N&S
T201107402	DESIGNED BY: TM	
COUNTY		
NEW CASTLE COUNTY	CHECKED BY: MAA	

CONSTRUCTION PHASING, M.O.T., AND EROSION CONTROL PLAN - PHASE 2

SHEET NO. 31
TOTAL SHTS. 54

11/2/2012

...\CS007_BR 1-826_Phase2.dgn

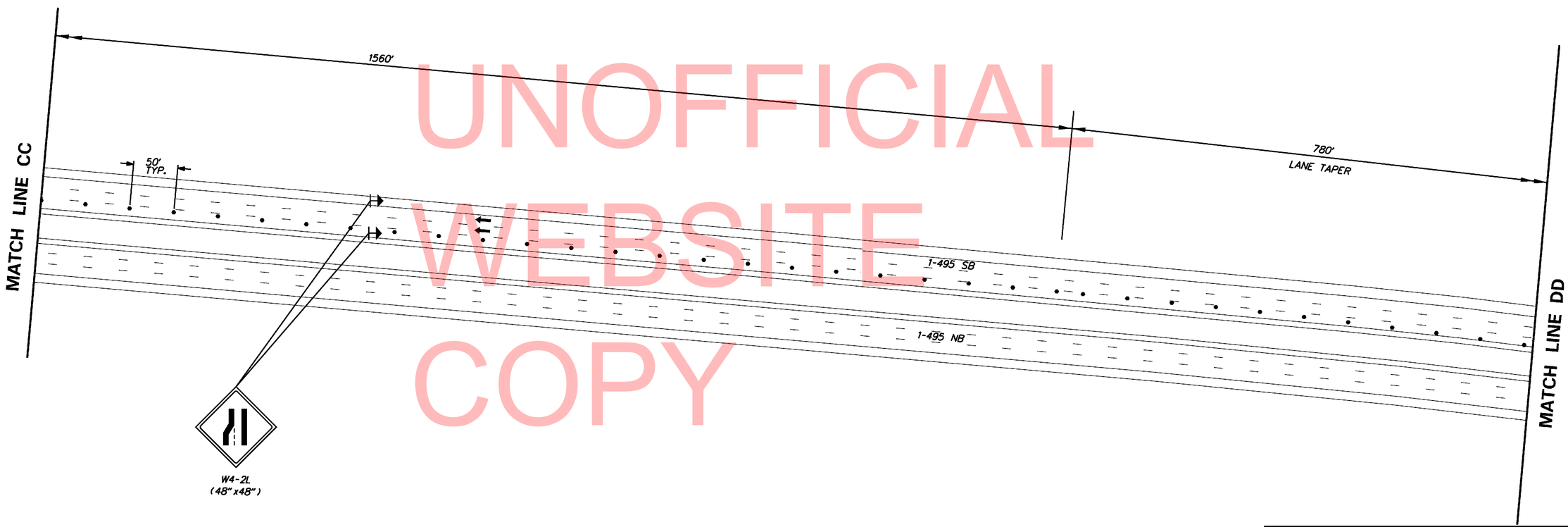

UNOFFICIAL WEBSITE COPY

CONSTRUCTION PHASING & M.O.T	
	WORK AREA THIS PHASE
	PHASING TRAFFIC FLOW ARROW
	CONSTRUCTION WARNING SIGN LOCATION
	DRUM - TRAFFIC CONTROL
	ARROW PANEL
	TRUCK WITH MOUNTED ATTENUATOR
	PORTABLE CONCRETE BARRIER
PST	PORTABLE SEDIMENT TANK
	TEMPORARY BARRICADE, TYPE III
— SF —	SILT FENCE
SP-2	SUMP PIT, TYPE 2
SCE	STABILIZED CONSTRUCTION ENTRANCE

LANE TAPER
(W)(S)=L
(12')(65 MPH)= 780'

CS-09

DELAWARE DEPARTMENT OF TRANSPORTATION

ADDENDUMS / REVISIONS

SCALE 0 60 120 240 FEET

BR 1-826 N&S ON I-495 OVER STONEY CREEK

CONTRACT	BRIDGE NO.	1-826 N&S
T201107402	DESIGNED BY: TM	
COUNTY	CHECKED BY: MAA	
NEW CASTLE COUNTY		

CONSTRUCTION PHASING, M.O.T., AND EROSION CONTROL PLAN - PHASE 2

SHEET NO. 32
TOTAL SHTS. 54

11/2/2012

...\CS008_BR 1-826_Phase2.dgn

UNOFFICIAL WEBSITE COPY

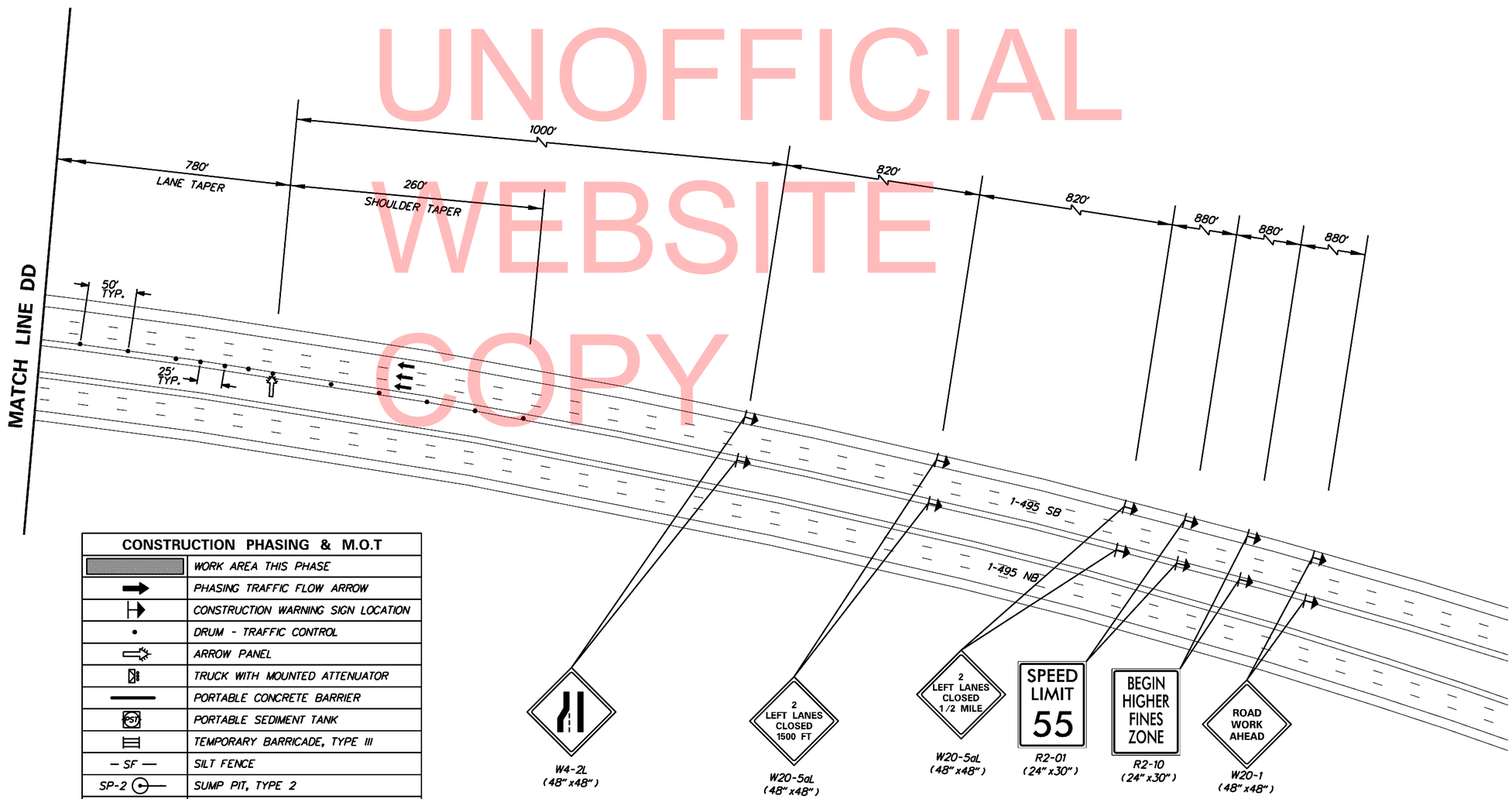

CONSTRUCTION PHASING & M.O.T	
	WORK AREA THIS PHASE
	PHASING TRAFFIC FLOW ARROW
	CONSTRUCTION WARNING SIGN LOCATION
	DRUM - TRAFFIC CONTROL
	ARROW PANEL
	TRUCK WITH MOUNTED ATTENUATOR
	PORTABLE CONCRETE BARRIER
PST	PORTABLE SEDIMENT TANK
	TEMPORARY BARRICADE, TYPE III
— SF —	SILT FENCE
SP-2	SUMP PIT, TYPE 2
SCE	STABILIZED CONSTRUCTION ENTRANCE

LANE SHIFT
(W)(S)= L
(12')(65 MPH)= 780'

SHOULDER TAPER
1/3L= 1/3(780')= 260'

CS-10

DELAWARE
DEPARTMENT OF TRANSPORTATION

ADDENDUMS / REVISIONS

SCALE
0 60 120 240
FEET

BR 1-826 N&S ON I-495
OVER STONEY CREEK

CONTRACT	BRIDGE NO.	1-826 N&S
T201107402	DESIGNED BY: TM	
COUNTY		
NEW CASTLE COUNTY	CHECKED BY: MAA	

CONSTRUCTION PHASING, M.O.T., AND EROSION CONTROL PLAN - PHASE 2

SHEET NO. 33
TOTAL SHTS. 54

11/2/2012

...\CS009_BR 1-826_Phase2.dgn

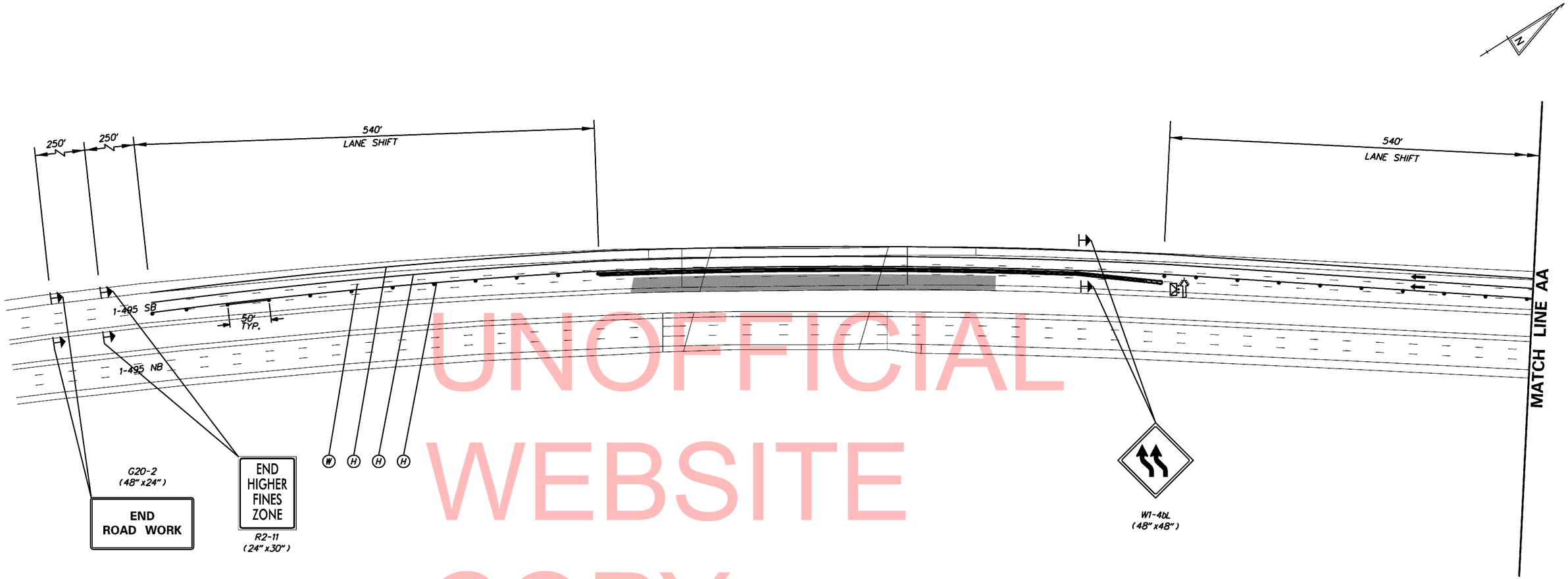

UNOFFICIAL WEBSITE COPY

CONSTRUCTION PHASING & M.O.T	
	WORK AREA THIS PHASE
	PHASING TRAFFIC FLOW ARROW
	CONSTRUCTION WARNING SIGN LOCATION
•	DRUM - TRAFFIC CONTROL
	ARROW PANEL
	TRUCK WITH MOUNTED ATTENUATOR
	PORTABLE CONCRETE BARRIER
PST	PORTABLE SEDIMENT TANK
	TEMPORARY BARRICADE, TYPE III
— SF —	SILT FENCE
SP-2	SUMP PIT, TYPE 2
SCE	STABILIZED CONSTRUCTION ENTRANCE

NOTE: TMA AT THE BEGINNING OF BARRIER IS TO FLASH FOUR CORNERS ON THE ARROW PANEL

TEMPORARY PAVEMENT MARKINGS LEGEND		
SYMBOL	ITEM	QUANTITY
H	5" SOLID WHITE TEMPORARY TAPE PAVEMENT STRIPING (ITEM 748570)	5,004 LF
J	5" SOLID YELLOW TEMPORARY TAPE PAVEMENT STRIPING (ITEM 748570)	0 LF
W	REMOVAL OF PAVEMENT STRIPING (ITEM 748530)	70 LF

LANE SHIFT
(W)(S)= L
(8.25')(65 MPH)= 536.25'

LANE SHIFT
(W)(S)= L
(8.25')(65 MPH)= 536.25'

12/12/2012

...\CS010_BR 1-826_Phase3.dgn

DELAWARE DEPARTMENT OF TRANSPORTATION

ADDENDUMS / REVISIONS

SCALE 0 60 120 240 FEET

BR 1-826 N&S ON I-495 OVER STONEY CREEK

CONTRACT T201107402

COUNTY NEW CASTLE COUNTY

BRIDGE NO. 1-826 N&S

DESIGNED BY: TM

CHECKED BY: MAA

CONSTRUCTION PHASING, M.O.T., AND EROSION CONTROL PLAN – PHASE 3

CS-11

SHEET NO. 34

TOTAL SHTS. 54

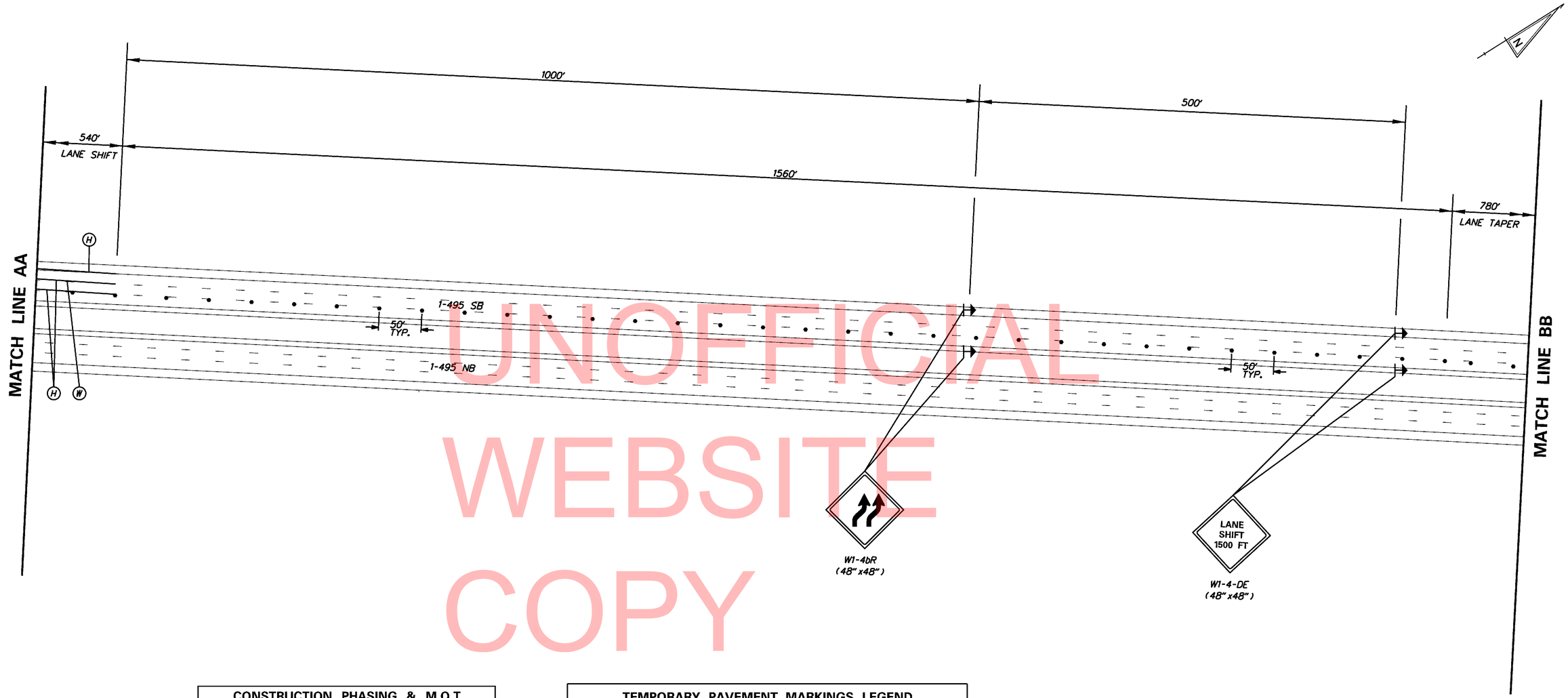

UNOFFICIAL WEBSITE COPY

CONSTRUCTION PHASING & M.O.T	
	WORK AREA THIS PHASE
	PHASING TRAFFIC FLOW ARROW
	CONSTRUCTION WARNING SIGN LOCATION
	DRUM - TRAFFIC CONTROL
	ARROW PANEL
	TRUCK WITH MOUNTED ATTENUATOR
	PORTABLE CONCRETE BARRIER
PST	PORTABLE SEDIMENT TANK
	TEMPORARY BARRICADE, TYPE III
— SF —	SILT FENCE
SP-2	SUMP PIT, TYPE 2
SCE	STABILIZED CONSTRUCTION ENTRANCE

TEMPORARY PAVEMENT MARKINGS LEGEND		
SYMBOL	ITEM	QUANTITY
H	5" SOLID WHITE TEMPORARY TAPE PAVEMENT STRIPING (ITEM 748570)	279 LF
J	5" SOLID YELLOW TEMPORARY TAPE PAVEMENT STRIPING (ITEM 748570)	0 LF
W	REMOVAL OF PAVEMENT STRIPING (ITEM 748530)	24 LF

LANE SHIFT
(W)(S)= L
(8.25')(65 MPH)= 536.25'

LANE TAPER
(W)(S)= L
(12')(65 MPH)= 780'

12/12/2012

...\CS011_BR 1-826_Phase3.dgn

CS-12

DELAWARE
DEPARTMENT OF TRANSPORTATION

ADDENDUMS / REVISIONS

SCALE
0 60 120 240
FEET

BR 1-826 N&S ON I-495
OVER STONEY CREEK

CONTRACT	BRIDGE NO.	1-826 N&S
T201107402	DESIGNED BY: TM	
COUNTY	CHECKED BY: MAA	
NEW CASTLE COUNTY		

CONSTRUCTION PHASING, M.O.T., AND EROSION CONTROL PLAN – PHASE 3

SHEET NO. 35
TOTAL SHTS. 54

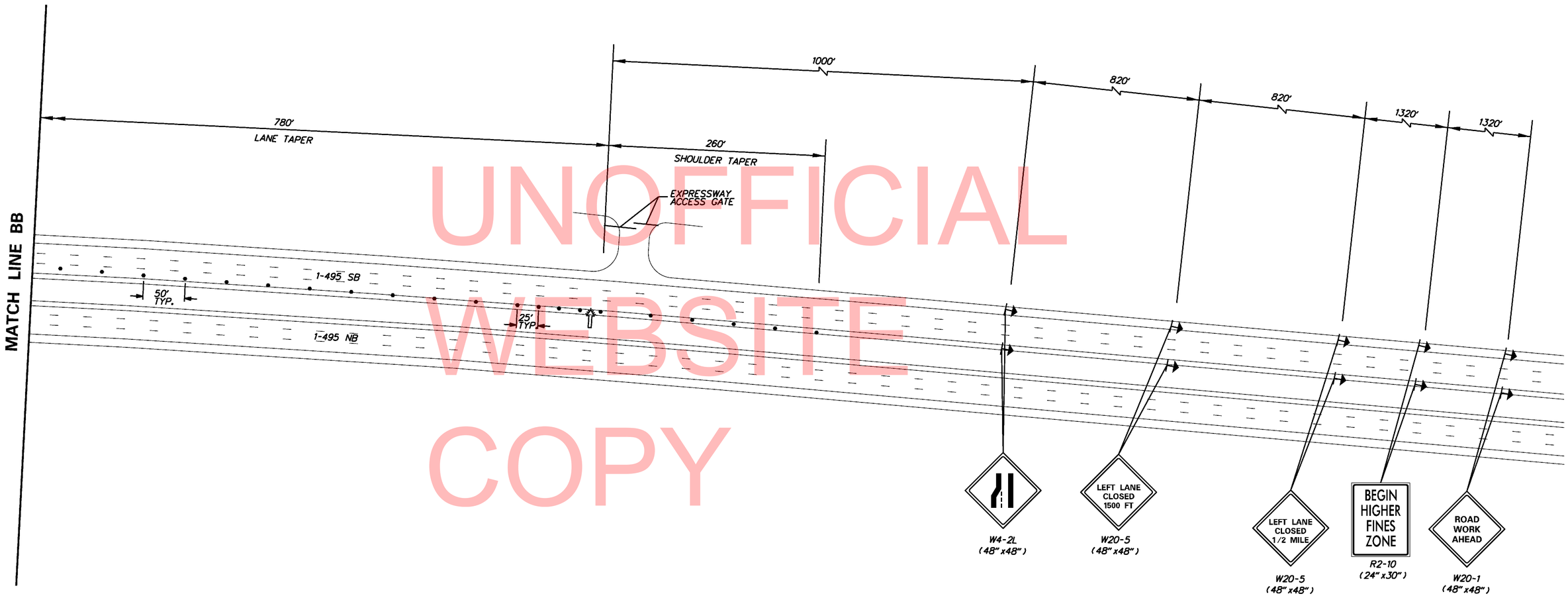

UNOFFICIAL WEBSITE COPY

CONSTRUCTION PHASING & M.O.T	
	WORK AREA THIS PHASE
	PHASING TRAFFIC FLOW ARROW
	CONSTRUCTION WARNING SIGN LOCATION
	DRUM - TRAFFIC CONTROL
	ARROW PANEL
	TRUCK WITH MOUNTED ATTENUATOR
	PORTABLE CONCRETE BARRIER
PST	PORTABLE SEDIMENT TANK
	TEMPORARY BARRICADE, TYPE III
— SF —	SILT FENCE
SP-2	SUMP PIT, TYPE 2
SCE	STABILIZED CONSTRUCTION ENTRANCE

LANE TAPER
(W)(S)= L
(12')(65 MPH)= 780'

SHOULDER TAPER
1/3L= 1/3(780')= 260'

CS-13

DELAWARE
DEPARTMENT OF TRANSPORTATION

ADDENDUMS / REVISIONS

SCALE
0 60 120 240
FEET

BR 1-826 N&S ON I-495
OVER STONEY CREEK

CONTRACT	BRIDGE NO.	1-826 N&S
T201107402	DESIGNED BY: TM	
COUNTY	CHECKED BY: MAA	
NEW CASTLE COUNTY		

CONSTRUCTION PHASING, M.O.T., AND EROSION CONTROL PLAN – PHASE 3

SHEET NO. 36
TOTAL SHTS. 54

12/12/2012

...\CS012_BR 1-826_Phase3.dgn

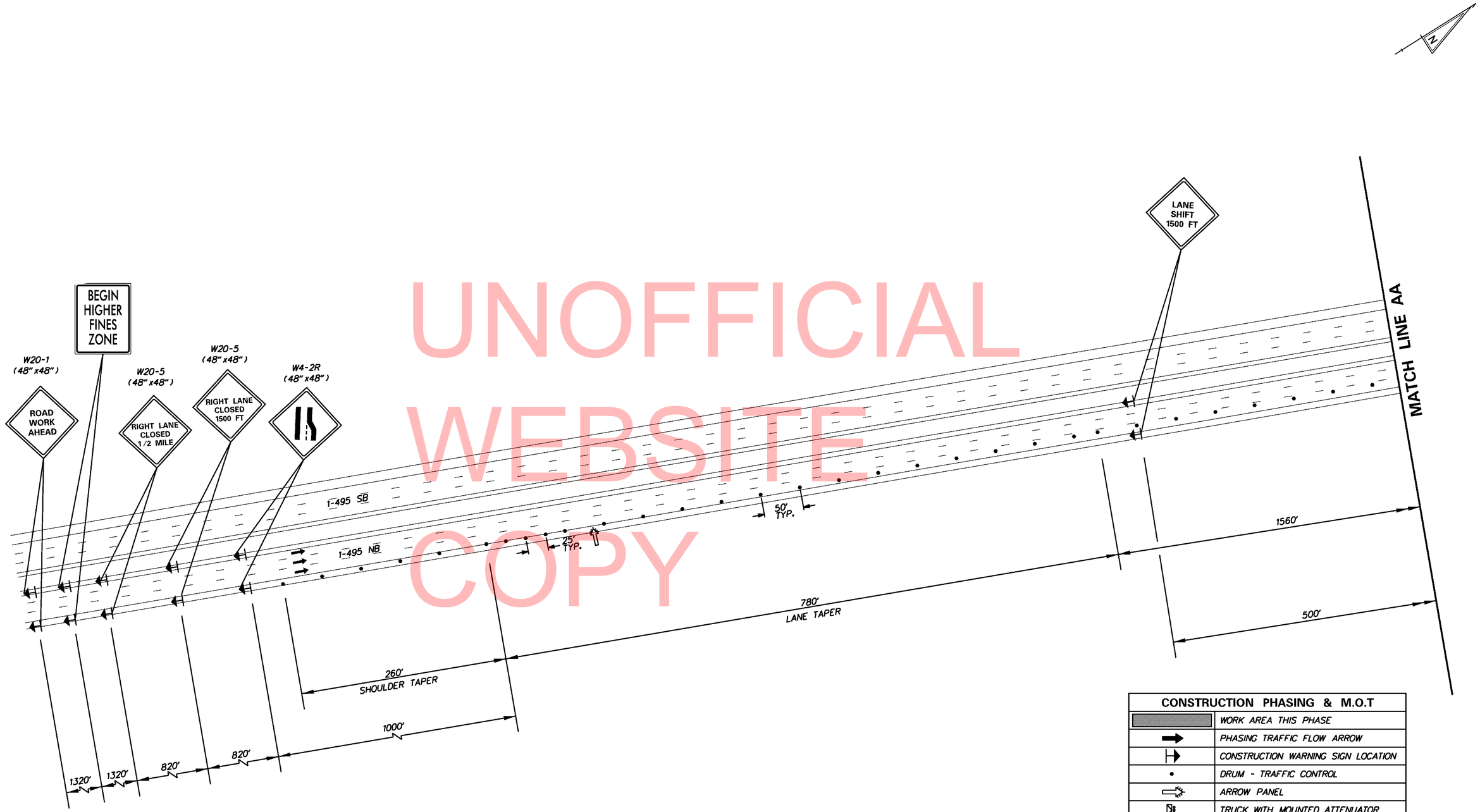

UNOFFICIAL WEBSITE COPY

CONSTRUCTION PHASING & M.O.T	
	WORK AREA THIS PHASE
	PHASING TRAFFIC FLOW ARROW
	CONSTRUCTION WARNING SIGN LOCATION
	DRUM - TRAFFIC CONTROL
	ARROW PANEL
	TRUCK WITH MOUNTED ATTENUATOR
	PORTABLE CONCRETE BARRIER
PST	PORTABLE SEDIMENT TANK
	TEMPORARY BARRICADE, TYPE III
— SF —	SILT FENCE
SP-2	SUMP PIT, TYPE 2
SCE	STABILIZED CONSTRUCTION ENTRANCE

LANE TAPER
(W)(S)= L
(12')(65 MPH)= 780'

SHOULDER TAPER
1/3L= 1/3(780')= 260'

CS-14

DELAWARE DEPARTMENT OF TRANSPORTATION

ADDENDUMS / REVISIONS

SCALE 0 60 120 240 FEET

BR 1-826 N&S ON I-495 OVER STONEY CREEK

CONTRACT T201107402
COUNTY NEW CASTLE COUNTY

BRIDGE NO. 1-826 N&S
DESIGNED BY: TM
CHECKED BY: MAA

CONSTRUCTION PHASING, M.O.T., AND EROSION CONTROL PLAN – PHASE 4

SHEET NO. 37
TOTAL SHTS. 54

11/2/2012

...\CS014_BR 1-826_Phase4.dgn

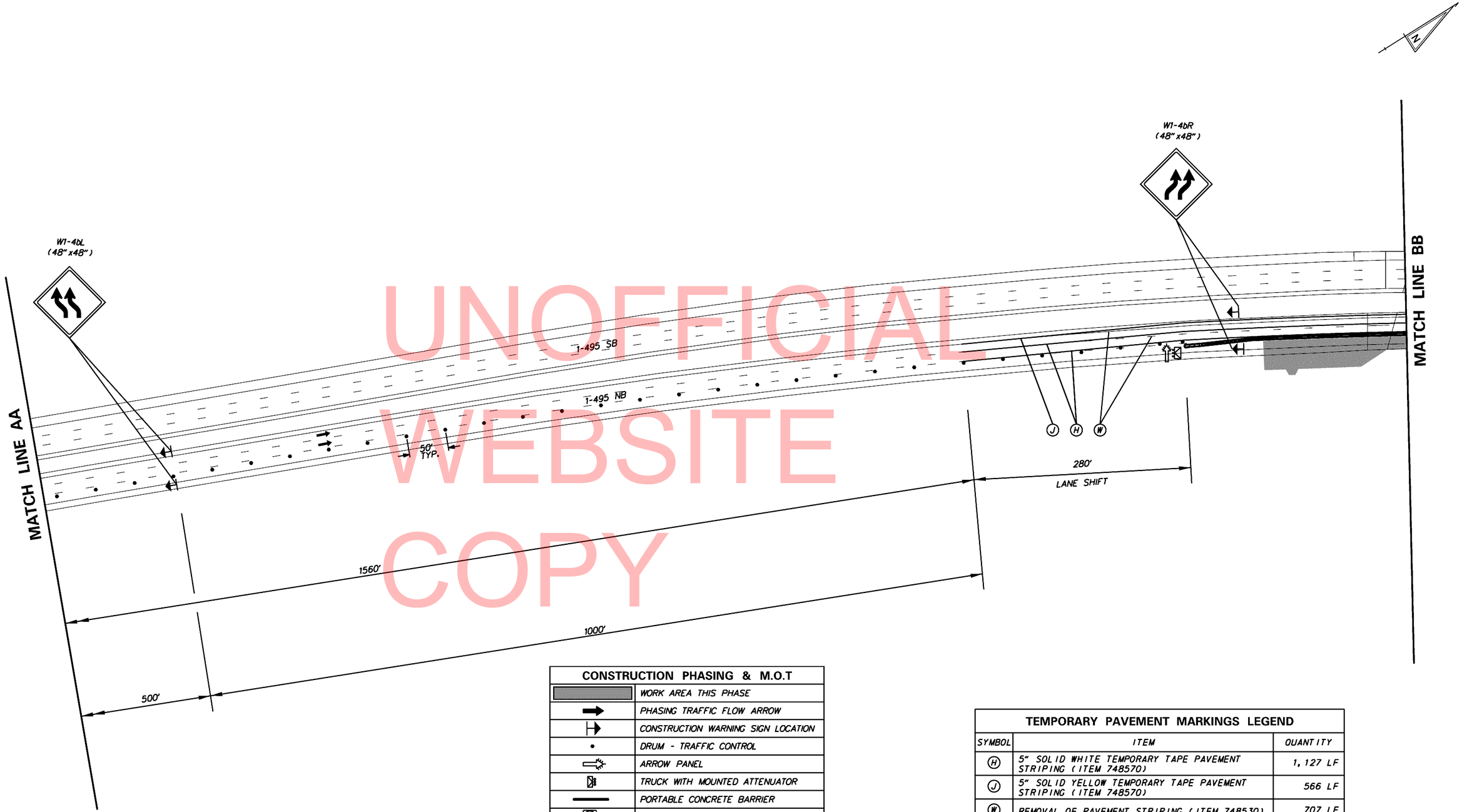

UNOFFICIAL WEBSITE COPY

CONSTRUCTION PHASING & M.O.T	
	WORK AREA THIS PHASE
	PHASING TRAFFIC FLOW ARROW
	CONSTRUCTION WARNING SIGN LOCATION
	DRUM - TRAFFIC CONTROL
	ARROW PANEL
	TRUCK WITH MOUNTED ATTENUATOR
	PORTABLE CONCRETE BARRIER
PST	PORTABLE SEDIMENT TANK
	TEMPORARY BARRICADE, TYPE III
— SF —	SILT FENCE
SP-2	SUMP PIT, TYPE 2
SCE	STABILIZED CONSTRUCTION ENTRANCE

NOTE: TMA AT THE BEGINNING OF THE BARRIER IS TO FLASH FOUR CORNERS ON THE ARROW PANEL

TEMPORARY PAVEMENT MARKINGS LEGEND		
SYMBOL	ITEM	QUANTITY
H	5" SOLID WHITE TEMPORARY TAPE PAVEMENT STRIPING (ITEM 748570)	1,127 LF
J	5" SOLID YELLOW TEMPORARY TAPE PAVEMENT STRIPING (ITEM 748570)	566 LF
W	REMOVAL OF PAVEMENT STRIPING (ITEM 748530)	707 LF

LANE SHIFT
(W)(S)= L
(4.25')(65 MPH)= 276.25'

CS-15

DELAWARE DEPARTMENT OF TRANSPORTATION

ADDENDUMS / REVISIONS

SCALE 0 60 120 240 FEET

BR 1-826 N&S ON I-495 OVER STONEY CREEK

CONTRACT	BRIDGE NO.	1-826 N&S
T201107402	DESIGNED BY: TM	
COUNTY		
NEW CASTLE COUNTY	CHECKED BY: MAA	

CONSTRUCTION PHASING, M.O.T., AND EROSION CONTROL PLAN – PHASE 4

SHEET NO. 38
TOTAL SHTS. 54

12/12/2012

...\CS015_BR 1-826_Phase4.dgn

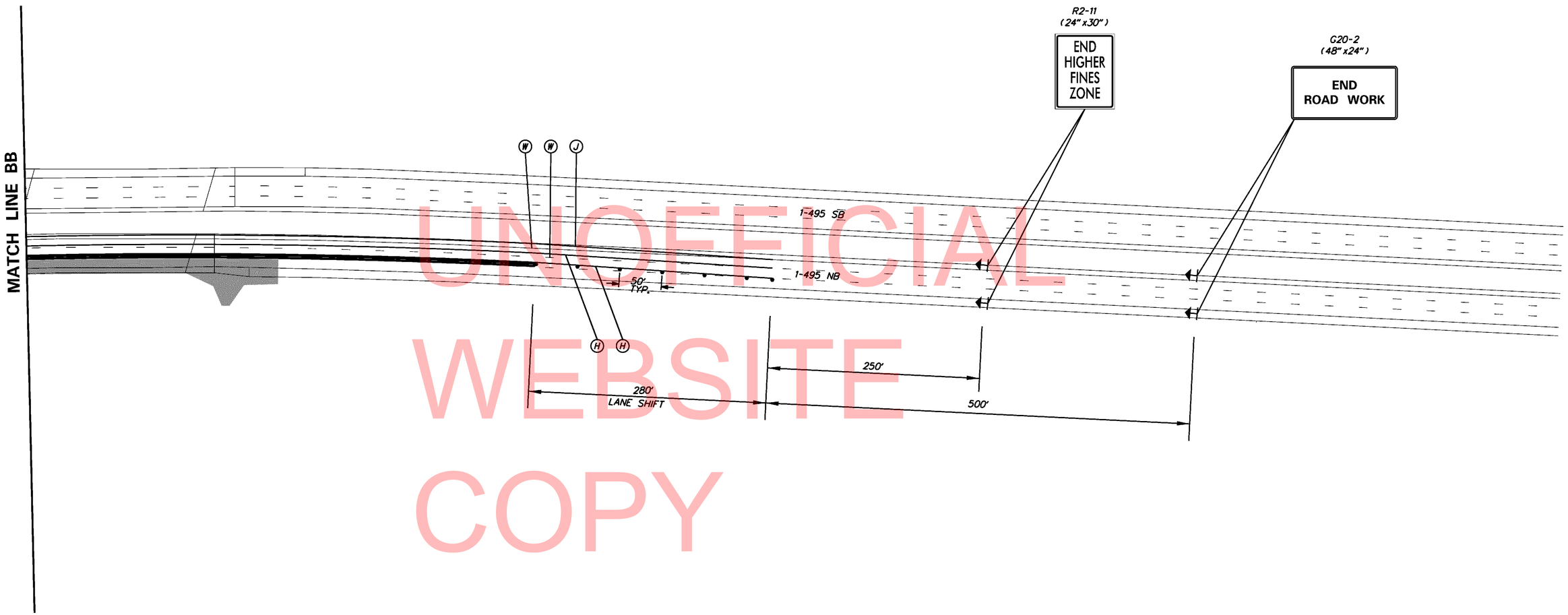

UNOFFICIAL WEBSITE COPY

CONSTRUCTION PHASING & M.O.T	
	WORK AREA THIS PHASE
	PHASING TRAFFIC FLOW ARROW
	CONSTRUCTION WARNING SIGN LOCATION
	DRUM - TRAFFIC CONTROL
	ARROW PANEL
	TRUCK WITH MOUNTED ATTENUATOR
	PORTABLE CONCRETE BARRIER
	PORTABLE SEDIMENT TANK
	TEMPORARY BARRICADE, TYPE III
— SF —	SILT FENCE
SP-2	SUMP PIT, TYPE 2
SCE	STABILIZED CONSTRUCTION ENTRANCE

TEMPORARY PAVEMENT MARKINGS LEGEND		
SYMBOL	ITEM	QUANTITY
H	5" SOLID WHITE TEMPORARY TAPE PAVEMENT STRIPING (ITEM 748570)	1,760 LF
J	5" SOLID YELLOW TEMPORARY TAPE PAVEMENT STRIPING (ITEM 748570)	880 LF
W	REMOVAL OF PAVEMENT STRIPING (ITEM 748530)	1,098 LF

LANE SHIFT
(W)(S)= L
(4.25')(65 MPH)= 276.25'

12/12/2012

...\CS016_BR 1-826_Phase4.dgn

DELAWARE
DEPARTMENT OF TRANSPORTATION

ADDENDUMS / REVISIONS

SCALE
0 60 120 240
FEET

BR 1-826 N&S ON I-495
OVER STONEY CREEK

CONTRACT T201107402
COUNTY NEW CASTLE COUNTY
BRIDGE NO. 1-826 N&S
DESIGNED BY: TM
CHECKED BY: MAA

CONSTRUCTION PHASING, M.O.T., AND EROSION CONTROL PLAN – PHASE 4

CS-16
SHEET NO. 39
TOTAL SHTS. 54

CONSTRUCTION PHASING & M.O.T	
	WORK AREA THIS PHASE
	PHASING TRAFFIC FLOW ARROW
	CONSTRUCTION WARNING SIGN LOCATION
•	DRUM - TRAFFIC CONTROL
	ARROW PANEL
	TRUCK WITH MOUNTED ATTENUATOR
	PORTABLE CONCRETE BARRIER
PST	PORTABLE SEDIMENT TANK
	TEMPORARY BARRICADE, TYPE III
— SF —	SILT FENCE
SP-2	SUMP PIT, TYPE 2
SCE	STABILIZED CONSTRUCTION ENTRANCE

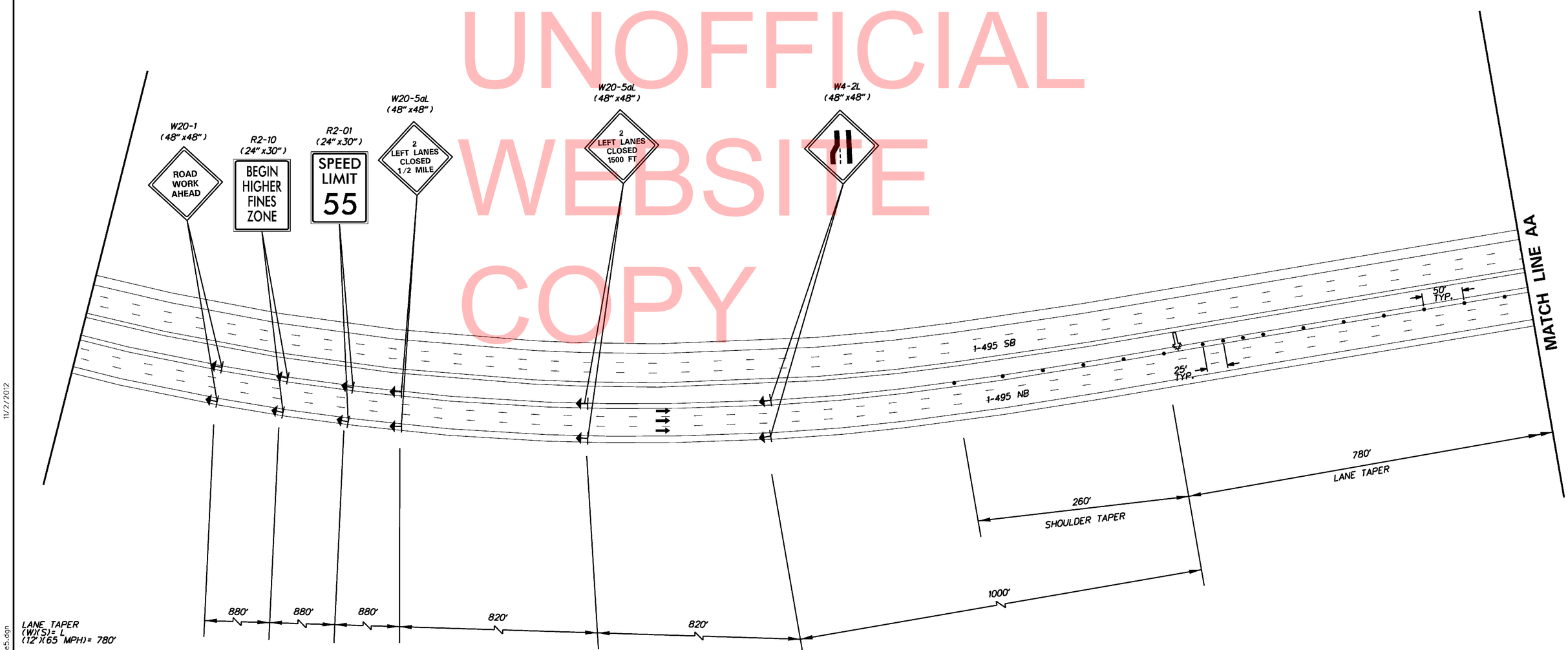

LANE TAPER
(W)(S)= L
(12')(65 MPH)= 780'

SHOULDER TAPER
1/3L= 1/3(780')= 260'

UNOFFICIAL WEBSITE COPY

11/2/2012

...\CS018_BR 1-826_Phase5.dgn

DELAWARE DEPARTMENT OF TRANSPORTATION	ADDENDUMS / REVISIONS	SCALE 0 60 120 240 FEET	BR 1-826 N&S ON I-495 OVER STONEY CREEK	CONTRACT T201107402	BRIDGE NO. 1-826 N&S	CONSTRUCTION PHASING, M.O.T., AND EROSION CONTROL PLAN – PHASE 5	CS-17
				COUNTY NEW CASTLE COUNTY	DESIGNED BY: TM		SHEET NO. 40
					CHECKED BY: MAA		TOTAL SHTS. 54

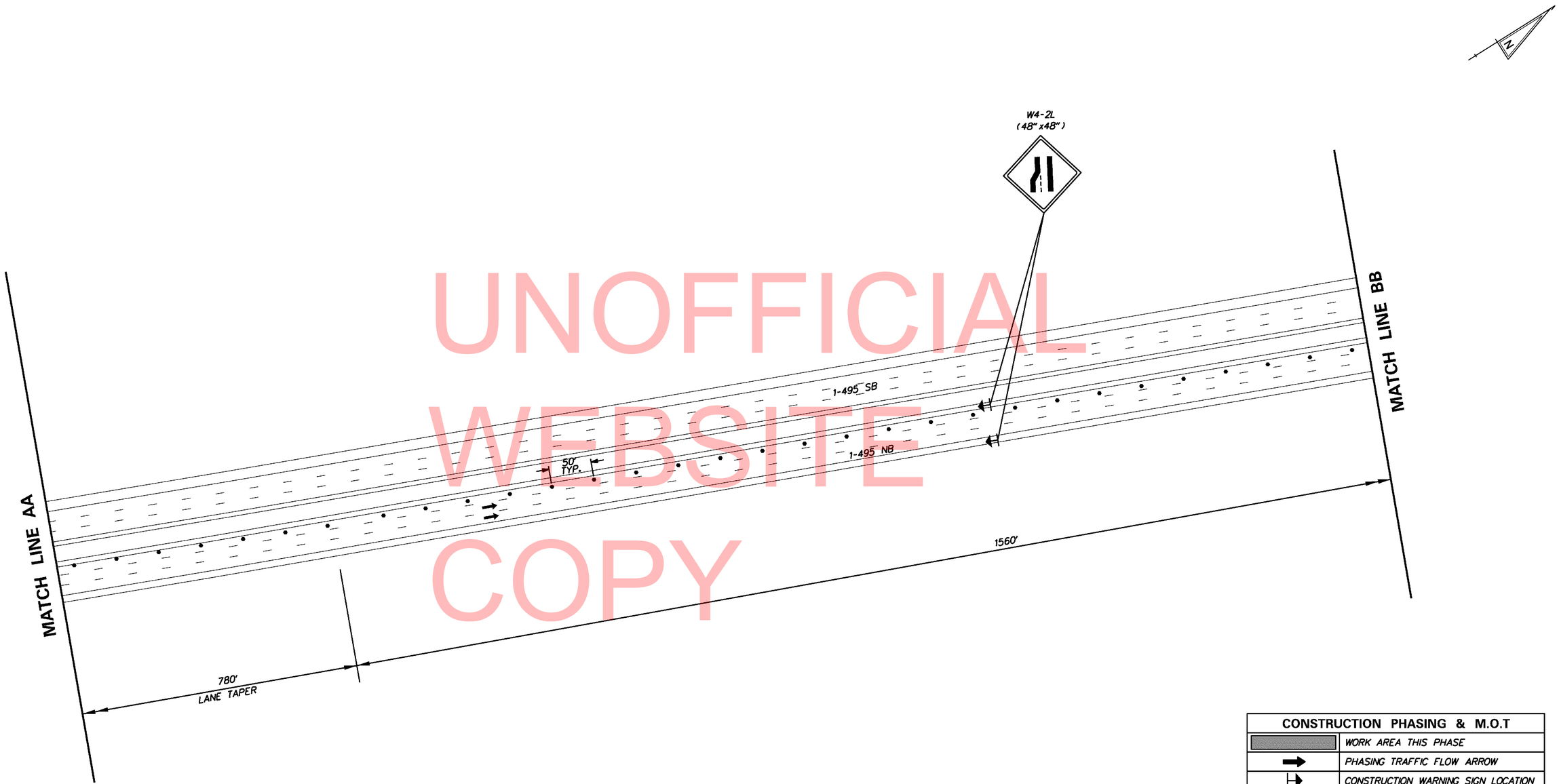

UNOFFICIAL WEBSITE COPY

CONSTRUCTION PHASING & M.O.T	
	WORK AREA THIS PHASE
	PHASING TRAFFIC FLOW ARROW
	CONSTRUCTION WARNING SIGN LOCATION
•	DRUM - TRAFFIC CONTROL
	ARROW PANEL
	TRUCK WITH MOUNTED ATTENUATOR
	PORTABLE CONCRETE BARRIER
PST	PORTABLE SEDIMENT TANK
	TEMPORARY BARRICADE, TYPE III
— SF —	SILT FENCE
SP-2	SUMP PIT, TYPE 2
SCE	STABILIZED CONSTRUCTION ENTRANCE

LANE TAPER
(W)(S)= L
(12')(65 MPH)= 780'

CS-18

DELAWARE
DEPARTMENT OF TRANSPORTATION

ADDENDUMS / REVISIONS

SCALE
0 60 120 240
FEET

BR 1-826 N&S ON I-495
OVER STONEY CREEK

CONTRACT T201107402
COUNTY NEW CASTLE COUNTY
BRIDGE NO. 1-826 N&S
DESIGNED BY: TM
CHECKED BY: MAA

CONSTRUCTION PHASING, M.O.T., AND EROSION CONTROL PLAN – PHASE 5

SHEET NO. 41
TOTAL SHTS. 54

11/2/2012
...\CS019_BR 1-826_Phase5.dgn

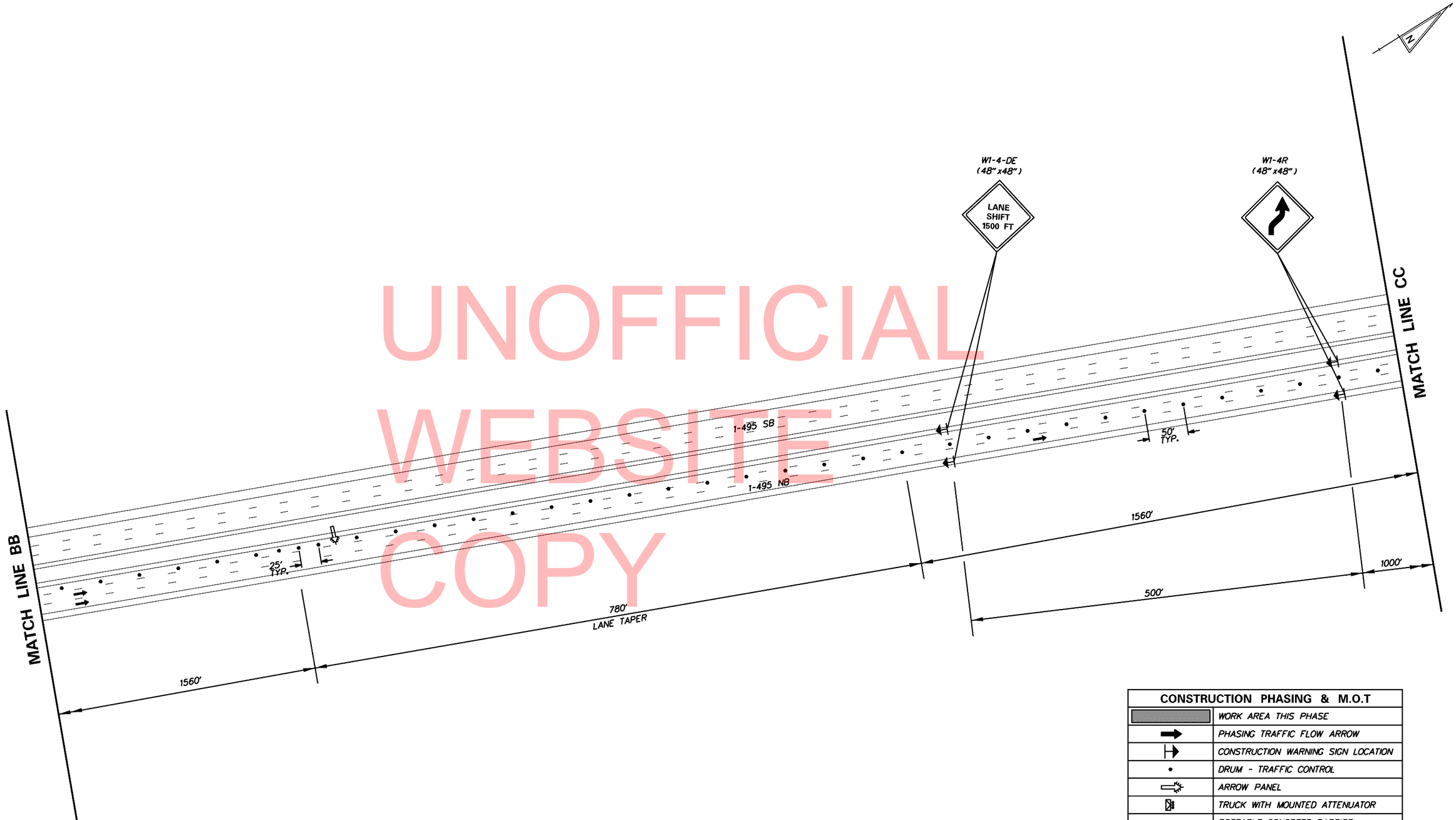

UNOFFICIAL WEBSITE COPY

LANE TAPER
(W)(S)= L
(12')(65 MPH)= 780'

CONSTRUCTION PHASING & M.O.T	
	WORK AREA THIS PHASE
	PHASING TRAFFIC FLOW ARROW
	CONSTRUCTION WARNING SIGN LOCATION
•	DRUM - TRAFFIC CONTROL
	ARROW PANEL
	TRUCK WITH MOUNTED ATTENUATOR
	PORTABLE CONCRETE BARRIER
PST	PORTABLE SEDIMENT TANK
	TEMPORARY BARRICADE, TYPE III
— SF —	SILT FENCE
SP-2	SUMP PIT, TYPE 2
SCE	STABILIZED CONSTRUCTION ENTRANCE

CS-19

DELAWARE
DEPARTMENT OF TRANSPORTATION

ADDENDUMS / REVISIONS

SCALE
0 60 120 240
FEET

BR 1-826 N&S ON I-495
OVER STONEY CREEK

CONTRACT: T201107402
COUNTY: NEW CASTLE COUNTY

BRIDGE NO. 1-826 N&S
DESIGNED BY: TM
CHECKED BY: MAA

CONSTRUCTION PHASING, M.O.T., AND EROSION CONTROL PLAN - PHASE 5

SHEET NO. 42
TOTAL SHTS. 54

11/2/2012

...\CS020_BR 1-826_Phase5.dgn

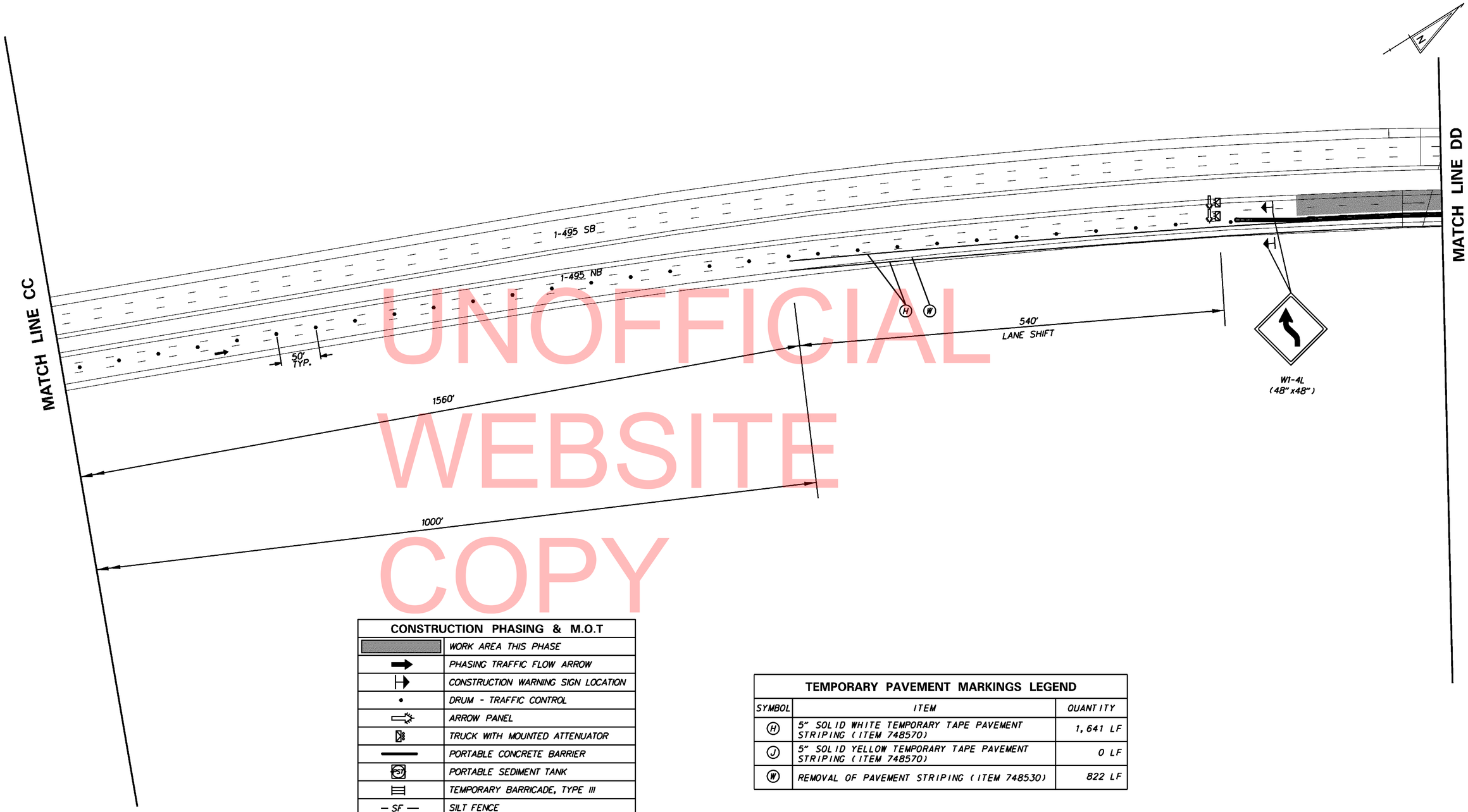

UNOFFICIAL WEBSITE COPY

CONSTRUCTION PHASING & M.O.T	
	WORK AREA THIS PHASE
	PHASING TRAFFIC FLOW ARROW
	CONSTRUCTION WARNING SIGN LOCATION
•	DRUM - TRAFFIC CONTROL
	ARROW PANEL
	TRUCK WITH MOUNTED ATTENUATOR
	PORTABLE CONCRETE BARRIER
PST	PORTABLE SEDIMENT TANK
	TEMPORARY BARRICADE, TYPE III
— SF —	SILT FENCE
SP-2	SUMP PIT, TYPE 2
SCE	STABILIZED CONSTRUCTION ENTRANCE

NOTE: TMA'S AT THE BEGINNING OF THE BARRIER ARE TO FLASH FOUR CORNERS ON THE ARROW PANELS

TEMPORARY PAVEMENT MARKINGS LEGEND		
SYMBOL	ITEM	QUANTITY
H	5" SOLID WHITE TEMPORARY TAPE PAVEMENT STRIPING (ITEM 748570)	1,641 LF
J	5" SOLID YELLOW TEMPORARY TAPE PAVEMENT STRIPING (ITEM 748570)	0 LF
W	REMOVAL OF PAVEMENT STRIPING (ITEM 748530)	822 LF

LANE SHIFT
(W)(S)= L
(3.25')(65 MPH)= 536.25'

12/12/2012

...\CS021_BR 1-826_Phase5.dgn

DELAWARE DEPARTMENT OF TRANSPORTATION

ADDENDUMS / REVISIONS

SCALE 0 60 120 240 FEET

BR 1-826 N&S ON I-495 OVER STONEY CREEK

CONTRACT T201107402
COUNTY NEW CASTLE COUNTY
BRIDGE NO. 1-826 N&S
DESIGNED BY: TM
CHECKED BY: MAA

CONSTRUCTION PHASING, M.O.T., AND EROSION CONTROL PLAN – PHASE 5

CS-20
SHEET NO. 43
TOTAL SHTS. 54

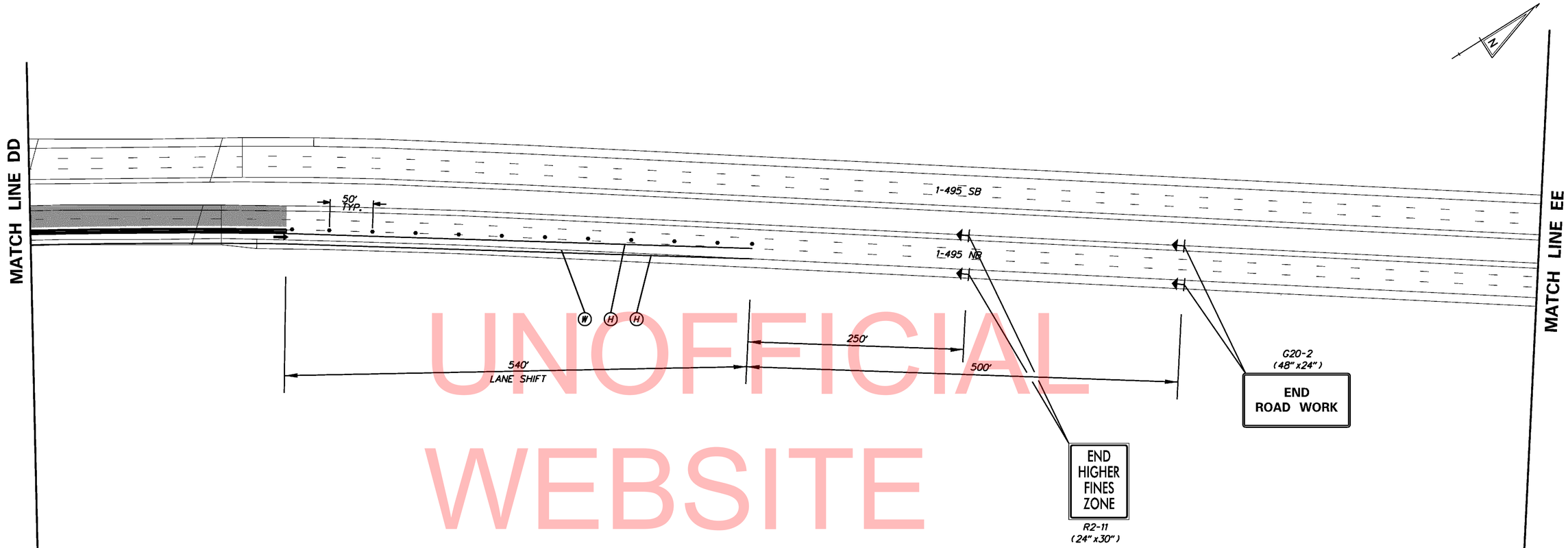

UNOFFICIAL WEBSITE COPY

CONSTRUCTION PHASING & M.O.T	
	WORK AREA THIS PHASE
	PHASING TRAFFIC FLOW ARROW
	CONSTRUCTION WARNING SIGN LOCATION
•	DRUM - TRAFFIC CONTROL
	ARROW PANEL
	TRUCK WITH MOUNTED ATTENUATOR
	PORTABLE CONCRETE BARRIER
PST	PORTABLE SEDIMENT TANK
	TEMPORARY BARRICADE, TYPE III
— SF —	SILT FENCE
SP-2	SUMP PIT, TYPE 2
SCE	STABILIZED CONSTRUCTION ENTRANCE

TEMPORARY PAVEMENT MARKINGS LEGEND		
SYMBOL	ITEM	QUANTITY
H	5" SOLID WHITE TEMPORARY TAPE PAVEMENT STRIPING (ITEM 748570)	1,672 LF
J	5" SOLID YELLOW TEMPORARY TAPE PAVEMENT STRIPING (ITEM 748570)	0 LF
W	REMOVAL OF PAVEMENT STRIPING (ITEM 748530)	837 LF

LANE SHIFT
(W)(S)= L
(3.25')(65 MPH)= 536.25'

12/12/2012

...\CS022_BR 1-826_Phase5.dgn

CS-21

DELAWARE
DEPARTMENT OF TRANSPORTATION

ADDENDUMS / REVISIONS

SCALE
0 60 120 240
FEET

BR 1-826 N&S ON I-495
OVER STONEY CREEK

CONTRACT: T201107402
COUNTY: NEW CASTLE COUNTY
BRIDGE NO.: 1-826 N&S
DESIGNED BY: TM
CHECKED BY: MAA

CONSTRUCTION PHASING, M.O.T., AND EROSION CONTROL PLAN - PHASE 5

SHEET NO. 44
TOTAL SHTS. 54

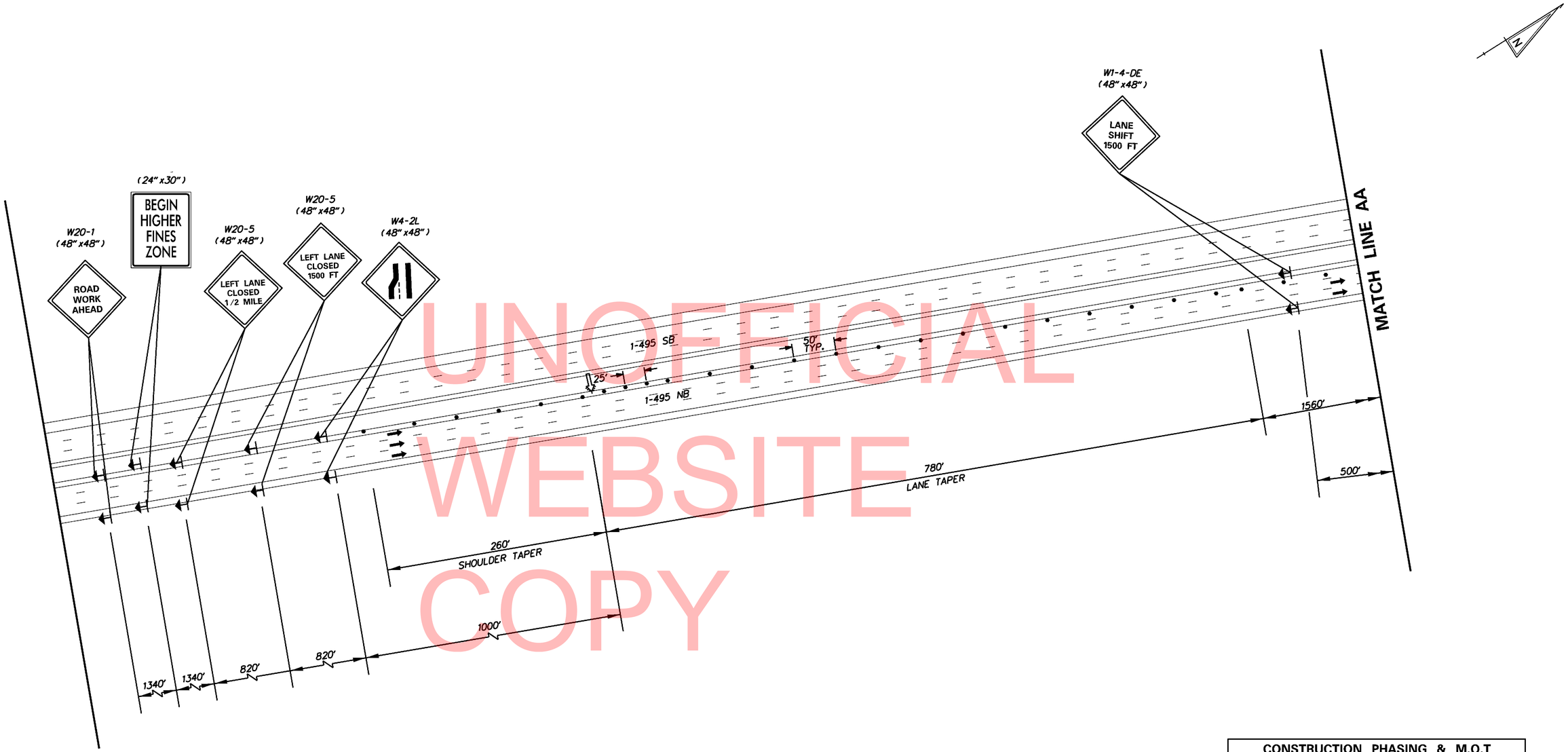

UNOFFICIAL WEBSITE COPY

LANE TAPER
(W)(S)= L
(12')(65 MPH)= 780'

SHOULDER TAPER
1/3L=1/3(780')= 260'

CONSTRUCTION PHASING & M.O.T	
	WORK AREA THIS PHASE
	PHASING TRAFFIC FLOW ARROW
	CONSTRUCTION WARNING SIGN LOCATION
•	DRUM - TRAFFIC CONTROL
	ARROW PANEL
	TRUCK WITH MOUNTED ATTENUATOR
	PORTABLE CONCRETE BARRIER
	PORTABLE SEDIMENT TANK
	TEMPORARY BARRICADE, TYPE III
— SF —	SILT FENCE
SP-2	SUMP PIT, TYPE 2
	STABILIZED CONSTRUCTION ENTRANCE

CS-22

DELAWARE DEPARTMENT OF TRANSPORTATION

ADDENDUMS / REVISIONS

SCALE 0 60 120 240 FEET

BR 1-826 N&S ON I-495 OVER STONEY CREEK

CONTRACT	BRIDGE NO.	1-826 N&S
T201107402	DESIGNED BY: TM	
COUNTY		
NEW CASTLE COUNTY	CHECKED BY: MAA	

CONSTRUCTION PHASING, M.O.T., AND EROSION CONTROL PLAN – PHASE 6

SHEET NO. 45

TOTAL SHTS. 54

11/2/2012

...\CS023_BR 1-826_Phase6.dgn

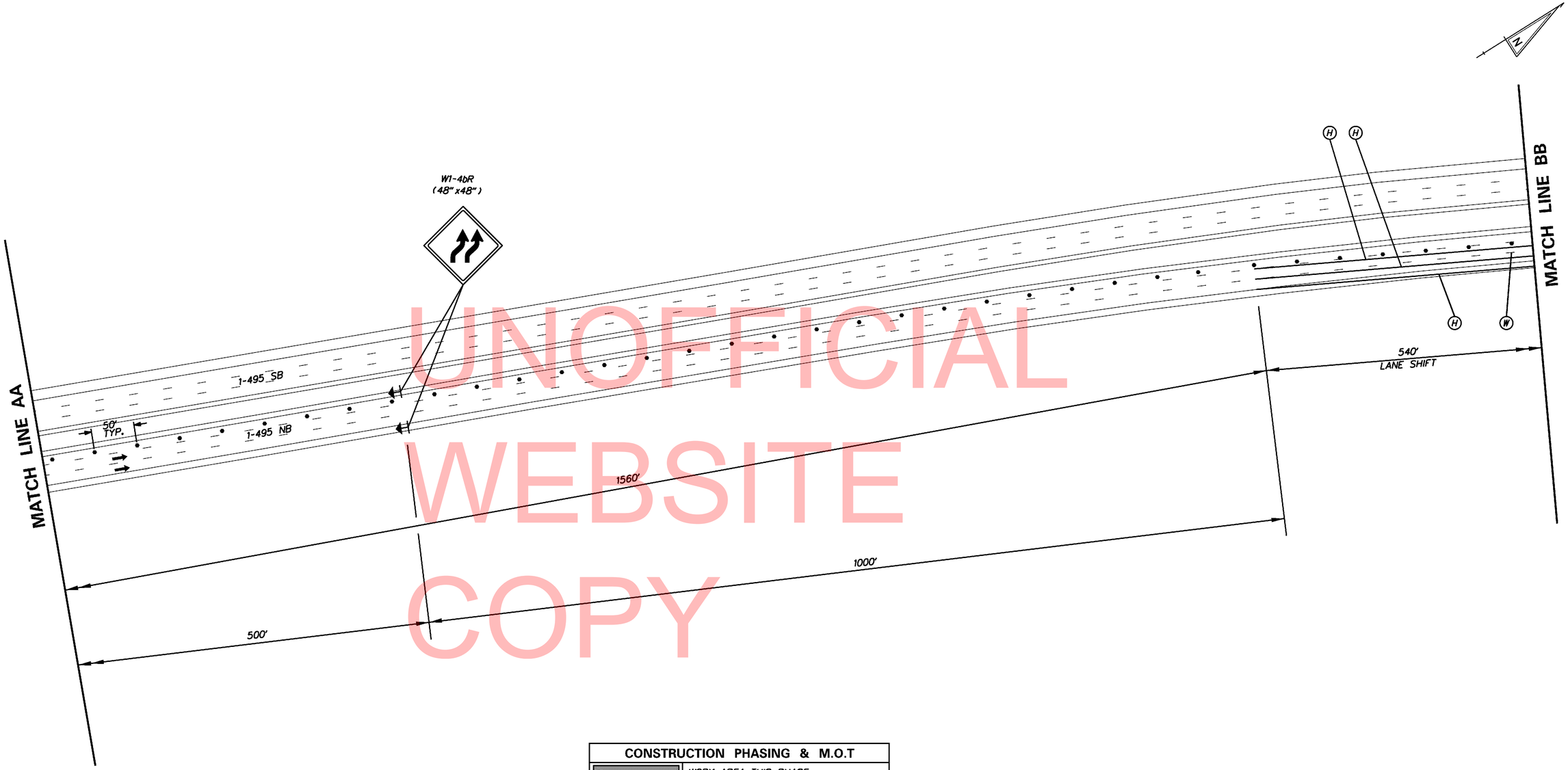

UNOFFICIAL WEBSITE COPY

LANE SHIFT
(W)(S)= L
(8.25')(65 MPH)= 536.25'

TEMPORARY PAVEMENT MARKINGS LEGEND		
SYMBOL	ITEM	QUANTITY
H	5" SOLID WHITE TEMPORARY TAPE PAVEMENT STRIPING (ITEM 748570)	975 LF
J	5" SOLID YELLOW TEMPORARY TAPE PAVEMENT STRIPING (ITEM 748570)	0 LF
W	REMOVAL OF PAVEMENT STRIPING (ITEM 748530)	81 LF

CONSTRUCTION PHASING & M.O.T	
	WORK AREA THIS PHASE
	PHASING TRAFFIC FLOW ARROW
	CONSTRUCTION WARNING SIGN LOCATION
•	DRUM - TRAFFIC CONTROL
	ARROW PANEL
	TRUCK WITH MOUNTED ATTENUATOR
	PORTABLE CONCRETE BARRIER
PST	PORTABLE SEDIMENT TANK
	TEMPORARY BARRICADE, TYPE III
— SF —	SILT FENCE
SP-2	SUMP PIT, TYPE 2
SCE	STABILIZED CONSTRUCTION ENTRANCE

CS-23

DELAWARE
DEPARTMENT OF TRANSPORTATION

ADDENDUMS / REVISIONS

SCALE
0 60 120 240
FEET

BR 1-826 N&S ON I-495
OVER STONEY CREEK

CONTRACT	BRIDGE NO.	1-826 N&S
T201107402	DESIGNED BY: TM	
COUNTY		
NEW CASTLE COUNTY	CHECKED BY: MAA	

CONSTRUCTION PHASING, M.O.T., AND EROSION CONTROL PLAN – PHASE 6

SHEET NO. 46
TOTAL SHTS. 54

12/12/2012

...\CS024_BR 1-826_Phase6.dgn

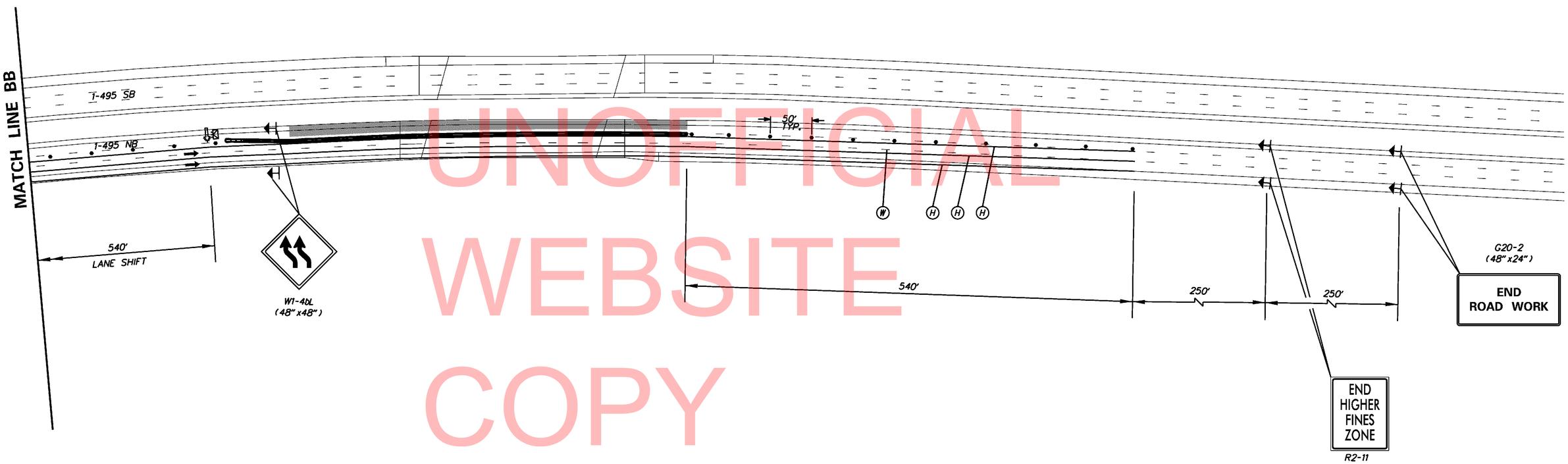

UNOFFICIAL WEBSITE COPY

CONSTRUCTION PHASING & M.O.T	
	WORK AREA THIS PHASE
	PHASING TRAFFIC FLOW ARROW
	CONSTRUCTION WARNING SIGN LOCATION
	DRUM - TRAFFIC CONTROL
	ARROW PANEL
	TRUCK WITH MOUNTED ATTENUATOR
	PORTABLE CONCRETE BARRIER
PST	PORTABLE SEDIMENT TANK
	TEMPORARY BARRICADE, TYPE III
— SF —	SILT FENCE
SP-2	SUMP PIT, TYPE 2
SCE	STABILIZED CONSTRUCTION ENTRANCE

NOTE: TMA AT THE BEGINNING OF THE BARRIER IS TO FLASH FOUR CORNERS ON THE ARROW PANEL

TEMPORARY PAVEMENT MARKINGS LEGEND		
SYMBOL	ITEM	QUANTITY
H	5" SOLID WHITE TEMPORARY TAPE PAVEMENT STRIPING (ITEM 748570)	4,002 LF
J	5" SOLID YELLOW TEMPORARY TAPE PAVEMENT STRIPING (ITEM 748570)	0 LF
W	REMOVAL OF PAVEMENT STRIPING (ITEM 748530)	333 LF

LANE SHIFT
(W)(S)= L
(8.25')(65 MPH)= 536.25'

12/12/2012

...\CS025_BR 1-826_Phase6.dgn

CS-24

DELAWARE
DEPARTMENT OF TRANSPORTATION

ADDENDUMS / REVISIONS

SCALE
0 60 120 240
FEET

BR 1-826 N&S ON I-495
OVER STONEY CREEK

CONTRACT	BRIDGE NO.	1-826 N&S	CONSTRUCTION PHASING, M.O.T., AND EROSION CONTROL PLAN – PHASE 6
T201107402	DESIGNED BY: TM		
COUNTY			
NEW CASTLE COUNTY	CHECKED BY: MAA		

SHEET NO. 47
TOTAL SHTS. 54

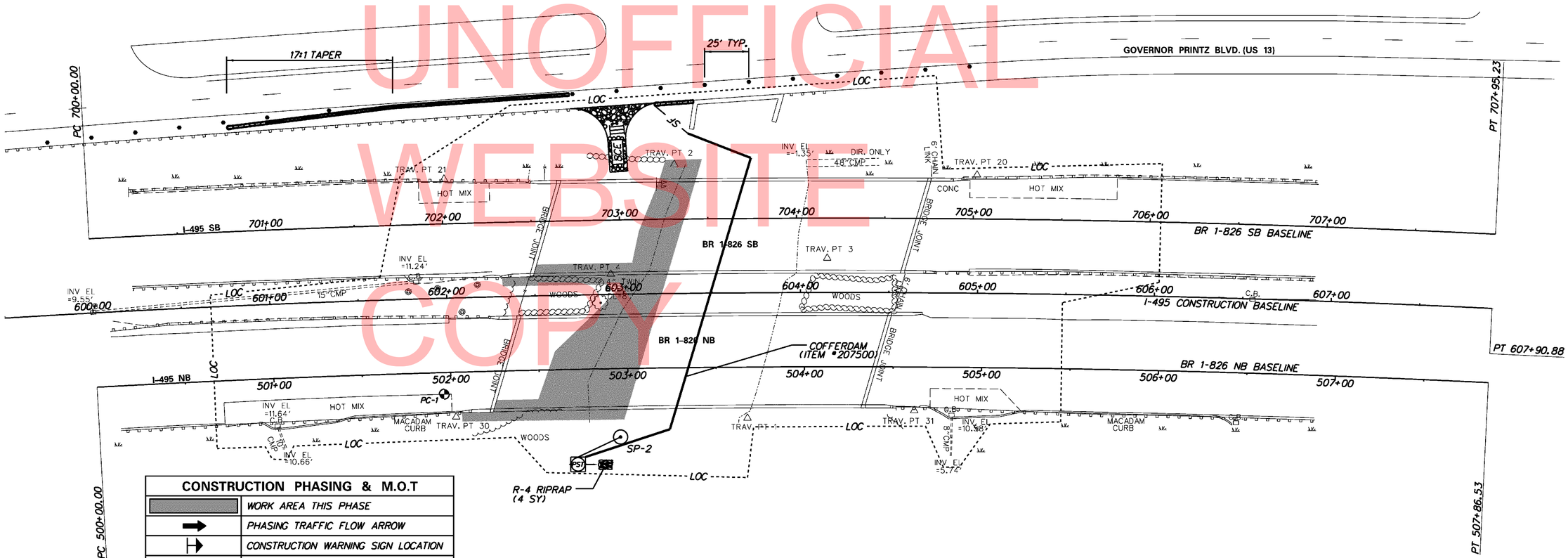

UNOFFICIAL WEBSITE
COPY

CONSTRUCTION PHASING & M.O.T	
	WORK AREA THIS PHASE
	PHASING TRAFFIC FLOW ARROW
	CONSTRUCTION WARNING SIGN LOCATION
•	DRUM - TRAFFIC CONTROL
	ARROW PANEL
	TRUCK WITH MOUNTED ATTENUATOR
	PORTABLE CONCRETE BARRIER
PST	PORTABLE SEDIMENT TANK
	TEMPORARY BARRICADE, TYPE III
— SF —	SILT FENCE
SP-2	SUMP PIT, TYPE 2
SCE	STABILIZED CONSTRUCTION ENTRANCE

CS-25

DELAWARE
DEPARTMENT OF TRANSPORTATION

ADDENDUMS / REVISIONS

SCALE
0 30 60 90
FEET

BR 1-826 N&S ON I-495
OVER STONEY CREEK

CONTRACT	BRIDGE NO.	1-826 N&S
T201107402	DESIGNED BY: TM	
COUNTY	CHECKED BY: MAA	
NEW CASTLE COUNTY		

CONSTRUCTION PHASING, M.O.T., AND EROSION CONTROL PLAN - SUBSTRUCTURE PHASE 1

SHEET NO. 48
TOTAL SHTS. 54

11/2/2012

...\CS001_Substructure_BR 1-826.dgn

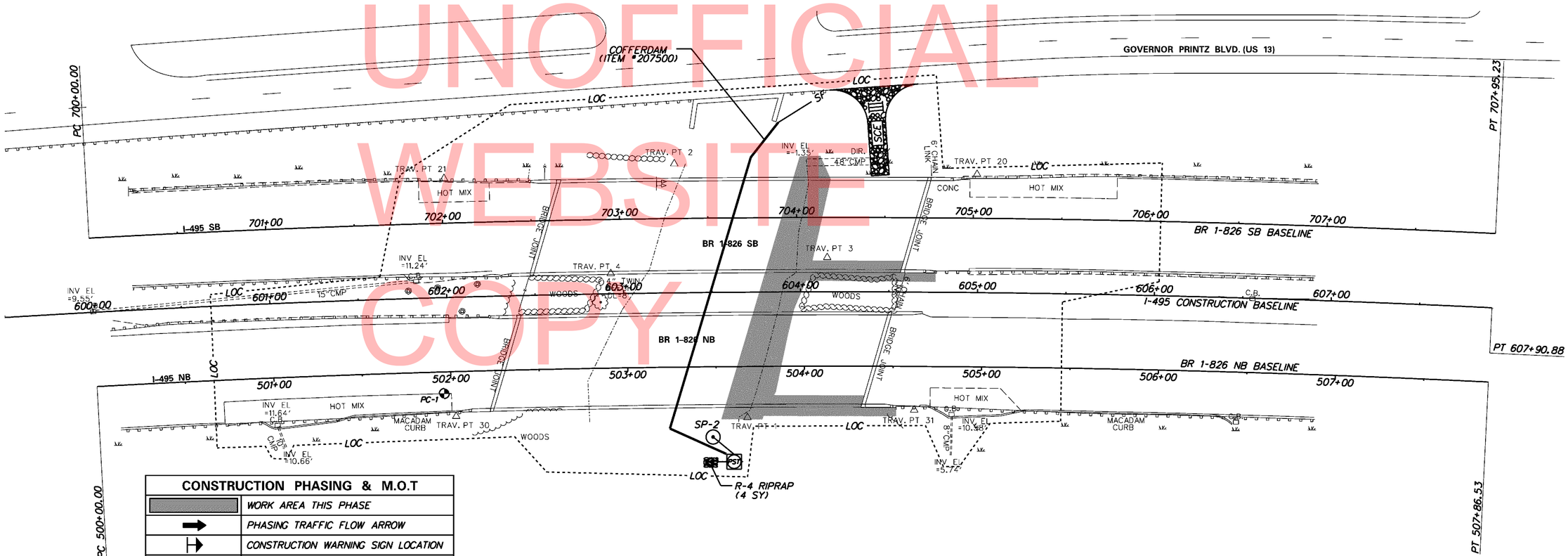

CONSTRUCTION PHASING & M.O.T

	WORK AREA THIS PHASE
	PHASING TRAFFIC FLOW ARROW
	CONSTRUCTION WARNING SIGN LOCATION
	DRUM - TRAFFIC CONTROL
	ARROW PANEL
	TRUCK WITH MOUNTED ATTENUATOR
	PORTABLE CONCRETE BARRIER
PST	PORTABLE SEDIMENT TANK
	TEMPORARY BARRICADE, TYPE III
— SF —	SILT FENCE
SP-2	SUMP PIT, TYPE 2
SCE	STABILIZED CONSTRUCTION ENTRANCE

UNOFFICIAL WEBSITE COPY

DELAWARE
DEPARTMENT OF TRANSPORTATION

ADDENDUMS / REVISIONS

SCALE
0 30 60 90
FEET

BR 1-826 N&S ON I-495
OVER STONEY CREEK

CONTRACT	T201107402
COUNTY	NEW CASTLE COUNTY
BRIDGE NO.	1-826 N&S
DESIGNED BY: TM	
CHECKED BY: MAA	

CONSTRUCTION PHASING, M.O.T., AND EROSION CONTROL PLAN - SUBSTRUCTURE PHASE 2

	CS-26
SHEET NO.	49
TOTAL SHTS.	54

11/2/2012

...\CS002_Substructure_BR 1-826.dgn

ENVIRONMENTAL COMPLIANCE NOTES

1. GENERAL NOTES

A. THE PURPOSE OF THIS SHEETS IS TO IDENTIFY THOSE ITEMS ASSOCIATED WITH ENVIRONMENTAL COMPLIANCE. IMPACT CALCULATIONS ARE FOR THE AGENCY PERMIT REPORTING PURPOSES ONLY AND ARE NOT TO BE USED FOR BIDDING PURPOSES.

B. IF A DEPARTURE FROM THE APPROVED PLANS (WHICH WOULD AFFECT ANY NATURAL AND/OR CULTURAL IS NECESSARY, THE ENVIRONMENTAL STUDIES SECTION SHALL BE CONTACTED AT (302)760-2264 TO ALLOW FOR COORDINATION WITH THE APPROPRIATE RESOURCE AGENCIES AND APPROVAL.

C. USE OF THIS SHEET DOES NOT ALLEVIATE THE CONTRACTOR'S RESPONSIBILITY TO COMPLY WITH ALL CONDITIONS SET FORTH IN THE ENVIRONMENTAL STATEMENT AND PERMITS.

2. NATURAL RESOURCE ISSUES:

A. PERMIT REQUIREMENTS/APPROVALS*:
U.S. ARMY CORPS OF ENGINEERS (COE): - NWP 3 (a) & (c) (NO PCN)
DNREC - WETLANDS & SUBAQUEOUS LANDS (WLSL): - SUBAQUEOUS LANDS PERMIT**
DNREC - WATER QUALITY (WQC) & COASTAL ZONE CONSISTENCY (CZM): - ISSUED (PROJECT NOT LOCATED IN CRW)
NEW CASTLE COUNTY DEPT. OF LAND USE - NONE (MAINTENANCE ACTIVITY)

* THE PERMITS/APPROVALS LISTED ARE THOSE REQUIRED FOR THIS PROJECT. THE ENVIRONMENTAL STUDIES SECTION IS RESPONSIBLE FOR COORDINATING AND/OR OBTAINING THIS APPROVAL.

** THE CONTRACTOR MUST ENSURE THAT THESE PERMITS/APPROVALS ARE IN THEIR POSSESSION PRIOR TO BEGINNING CONSTRUCTION IN THE PERMITTED AREA(S) AND ENSURE IT IS DISPLAYED ON-SITE DURING THE ENTIRE CONSTRUCTION PERIOD.

NOTE: THE ABSENCE OF ASTERISKS AFTER A PERMIT (COE, WQC, CZM) INDICATES COORDINATION HAS BEEN DONE WITH THAT AGENCY, BUT NO WRITTEN AUTHORIZATION WAS REQUIRED. AS SUCH, NO PAPERWORK FROM THAT AGENCY SHOULD BE ANTICIPATED.

B. CONSTRUCTION RESTRICTIONS:
FISHERIES - NONE
ENDANGERED SPECIES - NONE
MIGRATORY BIRDS - APRIL 15-AUGUST 1 (INCLUSIVE) EITHER BEGIN WORK ON THE UNDERSIDE OF TH STRUCTURE PRIOR TO 4/15 (TO PREVENT BIRDS FROM NESTING) OR WAIT UNTIL AFTER 8/1 (AFTER HATCHLINGS HAVE LEFT) TO BEGIN WORK TO UNDERSIDE. IF NEITHER OF THESE OPTIONS IS PRACTICABLE, THE DETERRENT NETTING OR SIMILAR DEVICE SHALL BE INSTALLED PRIOR TO 4/15.

3. CULTURAL RESOURCE ISSUES:

A. COORDINATION ONGOING.

4. STREAM RESTORATION AND RIPRAP TREATMENTS

A. THE CONTRACTOR SHALL FOLLOW THE SPECIAL PROVISIONS OF ITEM #712531 - CHANNEL BED FILL IN REGARDS TO THE SALVAGING OF ON-SITE NATURAL STREAM BOTTOM MATERIAL OR THE FURNISHING OF OFF-SITE MATERIAL. IF SUFFICIENT SOURCES FOR CHANNEL BED FILL DO NOT EXIST ON-SITE, ANY NEW MATERIAL SHALL CONFORM TO THE REQUIREMENTS OF ITEM #712531 - CHANNEL BED FILL. ALL RIPRAP IN THE CHANNEL BOTTOM (I.E. BELOW THE WATER LINE) SHALL BE RECESSED ONE FOOT BELOW STREAM BED ELEVATION AND CHOKED WITH BORROW TYPE 'B' SO THAT ALL OF THE VOIDS IN THE RIPRAP ARE FILLED WITH MATERIAL. PAYMENT UNDER ITEM #209002 - BORROW TYPE 'B'.THE RIPRAP SHALL THEN BE COVERED WITH A MINIMUM OF 12" CHANNEL BED FILL. FINAL CHANNEL ELEVATIONS SHALL MATCH EXISTING ELEVATIONS AT THE UPSTREAM AND DOWNSTREAM PROJECT LIMITS. THROUGH THE STRUCTURE, ELEVATIONS SHALL BE AS NOTED ON THE PLANS. PAYMENT UNDER ITEM #712531 - CHANNEL BED FILL.

B. OTHER AREAS OF THE CHANNEL BOTTOM AFFECTED BY CONSTRUCTION (INCLUDING, BUT NOT LIMITED TO, THE LOCATION OF SUMP PITS, STABILIZED OUTFALLS, TEMPORARY PIPES AND/OR SANDBAG DIKES AND DIVERSIONS) SHALL BE RESTORED TO EXISTING CONDITIONS. ANY CAVITIES OR SCOUR HOLES RESULTING FROM CONSTRUCTION ACTIVITIES SHALL BE FILLED WITH CHANNEL BED FILL. PAYMENT UNDER ITEM #712531 - CHANNEL BED FILL.

C. WHEN ALL EROSION AND SEDIMENT CONTROL MEASURES ARE REMOVED AND THE STREAM RETURNS TO ITS NATURAL FLOW CONDITIONS, THE FLOW MUST REMAIN ABOVE GROUND AND ABOVE THE RIPRAP (I.E. THE FLOW CANNOT BE "LOST" IN THE RIPRAP OR BENEATH THE STRUCTURE). IF THIS IS NOT ACHIEVED, THE CONTRACTOR WILL BE REQUIRED TO TAKE CORRECTIVE ACTION AT THE CONTRACTOR'S EXPENSE.

D. ALL RIPRAP ON THE STREAM BANK, OUTSIDE THE CHANNEL BED, SHALL BE CHOKED WITH DELAWARE #57 STONE, FILLED WITH TOPSOIL, AND SEEDED. PLACE JUST ENOUGH CHOKE MATERIAL TO PREVENT THE LOSS OF TOPSOIL THROUGH THE RIPRAP, AND THEN FINISH FILLING THE VOIDS WITH TOPSOIL SO THAT THE RIPRAP PEAKS ARE BARELY VISIBLE. AN ADDITIONAL 4-INCH TOPSOIL LAYER SHALL BE PLACED ON TOP OF THE RIPRAP. SLOPE SEEDING SHALL BE WITH ITEM #734531 - STREAMBANK SEED MIX. FOLLOWING THE SEEDING OPERATION, ITEM #735535 - SOIL RETENTION BLANKET MULCH, TYPE 5, OR OTHER BLANKET AS SHOWN ON THE PLANS SHALL BE INSTALLED. ALL WORK, STARTING WITH THE INITIAL CHOKING WITH TOPSOIL THROUGH THE SEEDING SHALL BE COMPLETED PRIOR TO ANY RAIN EVENT. PAYMENT FOR RIPRAP AND DELAWARE #57 STONE SHALL BE PAID FOR UNDER THE RIPRAP ITEM. ALL OTHER ITEMS SHALL BE PAID FOR UNDER THEIR RESPECTIVE ITEMS.

5. CLEARING IN WETLAND AREAS SHALL BE KEPT TO A MINIMUM ABSOLUTELY NECESSARY FOR CONSTRUCTION ACCESS. ALL EQUIPMENT TRAVERSING WETLANDS AND SUBAQUEOUS LANDS SHALL BE SUPPORTED ON MATS. IN WETLAND AREAS THAT ARE CLEARED, THERE SHALL BE NO GRUBBING EXCEPT WHERE NECESSARY TO CONSTRUCT PROJECT COMPONENTS SUCH AS FOUNDATIONS AND RIPRAP PROTECTION. VEGETATION SHALL BE CUT FLUSH WITH GROUND (I.E. NO DISTURBANCE OF THE ROOT MAT).

6. ALL TEMPORARY FILLS TO WETLANDS/WATERWAYS WILL BE REMOVED IN THEIR ENTIRETY AND ORIGINAL GRADES AND CONTOURS WILL BE RESTORED. TEMPORARY GRASS SEEDING - WET GROUND, SHALL BE PLACED IN DISTURBED WETLAND AREAS (PAVEMENT UNDER ITEM 734020 - TEMPORARY GRASS SEEDING, WET GROUND).

PLAN SHEET INDEX CROSS REFERENCE	
ENVIRONMENTAL COMPLIANCE	51
CONSTRUCTION PLAN	5

SHEET PREPARED BY:
MCCORMICK TAYLOR, INC.
JUNE 25, 2012

SHEETS UPDATED: 12/5/2012

UNOFFICIAL WEBSITE COPY

EC-01

PERMANENT WETLAND IMPACT AREA SCHEDULE

ID	IMPACT DESCRIPTION	AREA (SF)	AREA (AC)	VOLUME (CY)	JURISDICTION
W-1	RIPRAP	165.71	0.0038	N/A	USACE
W-2	RIPRAP	42.54	0.0010	N/A	USACE
TOTAL PERMANENT WETLAND IMPACT AREAS		208.25	0.0048	N/A	USACE

PERMANENT OPEN WATER IMPACT AREA SCHEDULE

ID	IMPACT DESCRIPTION	AREA (SF)	AREA (AC)	VOLUME (CY)	JURISDICTION
O-1	RIPRAP	2353.40	0.0540	174.33	USACE/DNREC
TOTAL PERMANENT OPEN WATER IMPACTS		2353.40	0.0540	174.33	USACE/DNREC

TEMPORARY WETLAND IMPACT AREA SCHEDULE

ID	IMPACT DESCRIPTION	AREA (SF)	AREA (AC)	VOLUME (CY)	JURISDICTION
WT-1	COFFERDAM / ACCESS	835.60	0.0192	N/A	USACE
WT-2	COFFERDAM / ACCESS	136.81	0.0007	N/A	USACE
WT-3	CONSTRUCTION ACCESS	118.81	0.0031	N/A	USACE
TOTAL TEMPORARY WETLAND IMPACT AREAS		1091.22	0.0250	N/A	USACE

TEMPORARY OPEN WATER IMPACT AREA SCHEDULE

ID	IMPACT DESCRIPTION	AREA (SF)	AREA (AC)	VOLUME (CY)	JURISDICTION
OT-1	COFFERDAM / ACCESS	9458.43	0.2171	350.31	USACE/DNREC
OT-2	CONSTRUCTION ACCESS	1133.31	0.0260	41.97	USACE/DNREC
OT-3	CONSTRUCTION ACCESS	1394.17	0.0320	51.64	USACE/DNREC
OT-4	PST OUTFALL	72.00	0.0017	2.67	USACE/DNREC
TOTAL TEMPORARY OPEN WATER IMPACTS		12,054.91	0.2768	446.59	USACE/DNREC

LEGEND

- PERMANENT IMPACT AREA
- TEMPORARY IMPACT AREA
- HTL — HIGH TIDE LINE
- MHW/TW — MEAN HIGH WATER / TIDAL WETLAND
- WL — WETLAND BOUNDARY
- XX / ?X — IMPACT AREA TYPE ID. (SEE BELOW) / IMPACT AREA ID. AND/OR NUMBER

O = OPEN WATER IMPACT T = TEMPORARY IMPACT
W = WETLAND IMPACT

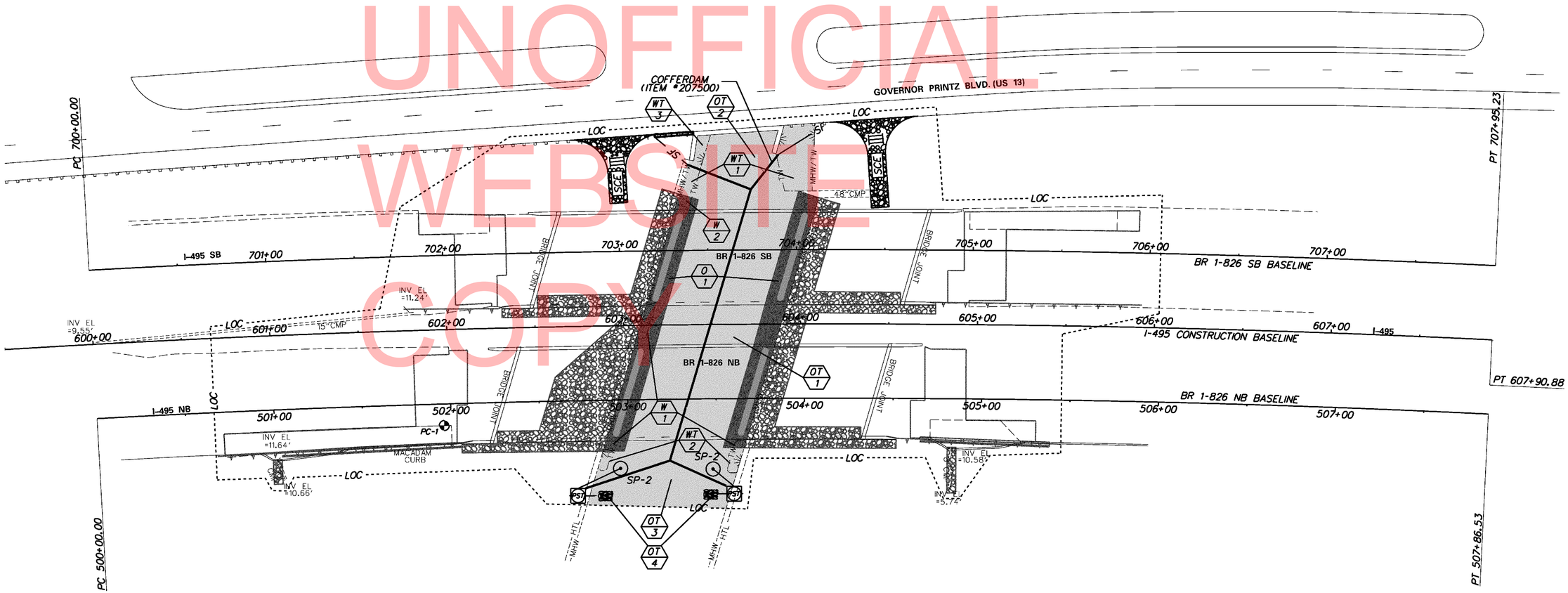

UNOFFICIAL WEBSITE COPY

WETLANDS DELINEATED BY: DELDOT IN JUNE 2010 IN ACCORDANCE WITH THE 1987 USACE WETLAND DELINEATION MANUAL AND APPLICABLE REGIONAL SUPPLEMENTS.

NOTE: NO STATE-MAPPED WETLANDS EXIST

EC-02

DELAWARE DEPARTMENT OF TRANSPORTATION

ADDENDUMS / REVISIONS

SCALE 0 30 60 90 FEET

BR 1-826 N&S ON I-495 OVER STONEY CREEK

CONTRACT	BRIDGE NO.	1-826 N&S
T201107402	DESIGNED BY: TM	
COUNTY		
NEW CASTLE	CHECKED BY: MAA	

ENVIRONMENTAL COMPLIANCE

SHEET NO. 51
TOTAL SHTS. 54

PAVEMENT MARKINGS LEGEND		
SYMBOL	ITEM	QUANTITY
A	EPOXY RESIN PAINT PAVEMENT STRIPING, WHITE 5" SOLID (ITEM 748548)	1,188 LF
	EPOXY RESIN PAINT PAVEMENT STRIPING, BLACK 3" SOLID (ITEM 748557)	1,188 LF
B	5" SOLID YELLOW EPOXY RESIN PAVEMENT STRIPING (ITEM 748548)	669 LF
C	PREFORMED PATTERNED TAPE MARKINGS, WHITE/BLACK 8" DOTTED - 10' LINE & 30' GAP (ITEM 748566)	464 LF

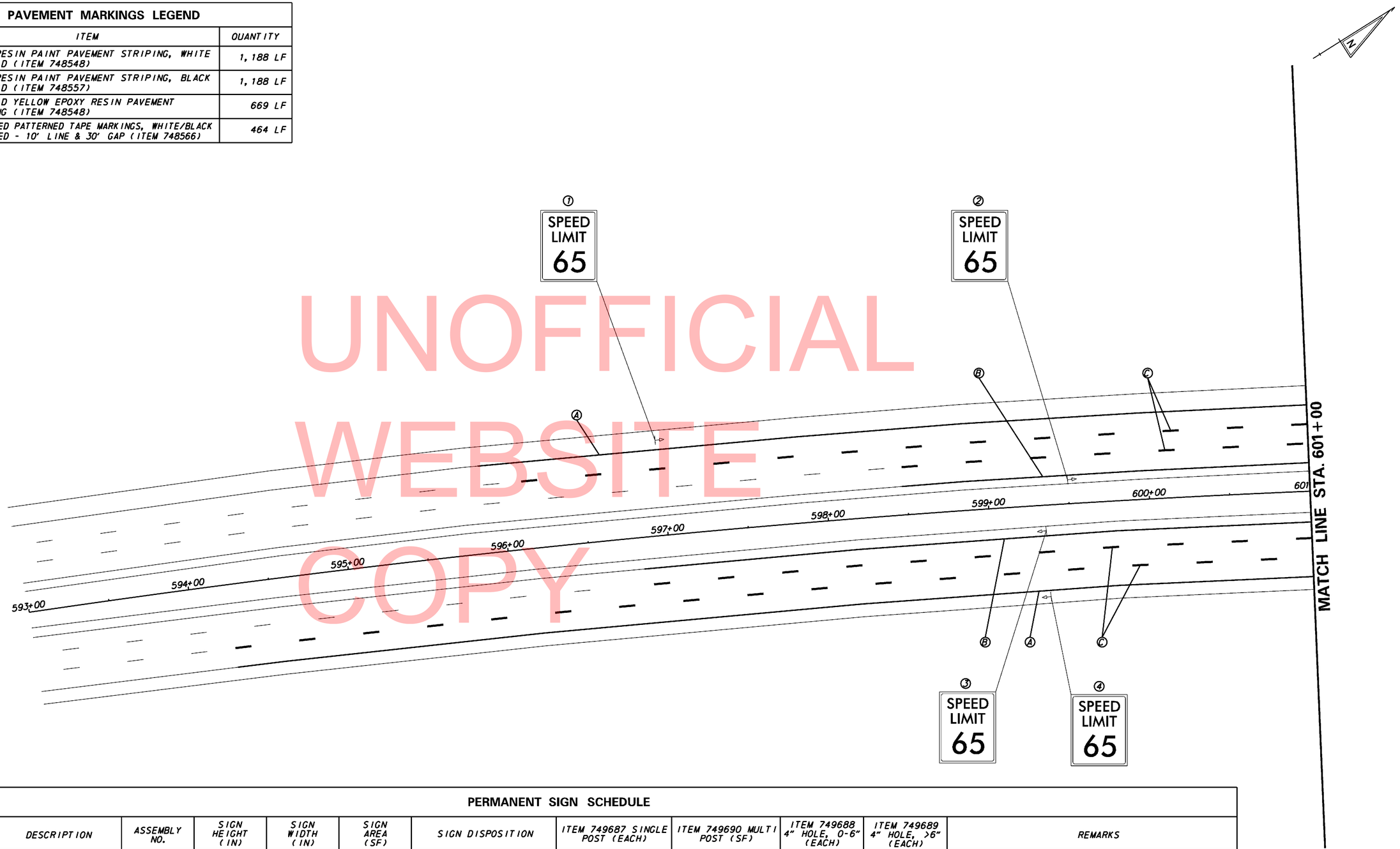

UNOFFICIAL WEBSITE COPY

PERMANENT SIGN SCHEDULE													
SHEET NO.	NO.	CODE	DESCRIPTION	ASSEMBLY NO.	SIGN HEIGHT (IN)	SIGN WIDTH (IN)	SIGN AREA (SF)	SIGN DISPOSITION	ITEM 749687 SINGLE POST (EACH)	ITEM 749690 MULTI POST (SF)	ITEM 749688 4" HOLE, 0-6" (EACH)	ITEM 749689 4" HOLE, >6" (EACH)	REMARKS
SS-01	1	N/A	SPEED LIMIT 65					EXISTING SIGN TO REMAIN					CHANGEABLE SPEED LIMIT SIGN WITH SOLAR PANELS
SS-01	2	N/A	SPEED LIMIT 65					EXISTING SIGN TO REMAIN					CHANGEABLE SPEED LIMIT SIGN WITH SOLAR PANELS
SS-01	3	N/A	SPEED LIMIT 65					EXISTING SIGN TO REMAIN					CHANGEABLE SPEED LIMIT SIGN WITH SOLAR PANELS
SS-01	4	N/A	SPEED LIMIT 65					EXISTING SIGN TO REMAIN					CHANGEABLE SPEED LIMIT SIGN WITH SOLAR PANELS

SS-01

DELAWARE DEPARTMENT OF TRANSPORTATION

ADDENDUMS / REVISIONS

SCALE 0 30 60 90 FEET

BR 1-826 N&S ON I-495 OVER STONEY CREEK

CONTRACT T201107402
COUNTY NEW CASTLE
BRIDGE NO. 1-826 N&S
DESIGNED BY: TM
CHECKED BY: MAA

SIGNING, STRIPING, AND CONDUIT PLANS

SHEET NO. 52
TOTAL SHTS. 54

PAVEMENT MARKINGS LEGEND		
SYMBOL	ITEM	QUANTITY
A	EPOXY RESIN PAINT PAVEMENT STRIPING, WHITE 5" SOLID (ITEM 748548)	1,400 LF
	EPOXY RESIN PAINT PAVEMENT STRIPING, BLACK 3" SOLID (ITEM 748557)	1,400 LF
B	5" SOLID YELLOW EPOXY RESIN PAVEMENT STRIPING (ITEM 748548)	1,400 LF
C	PREFORMED PATTERNED TAPE MARKINGS, WHITE/BLACK 8" DOTTED - 10' LINE & 30' GAP (ITEM 748566)	700 LF

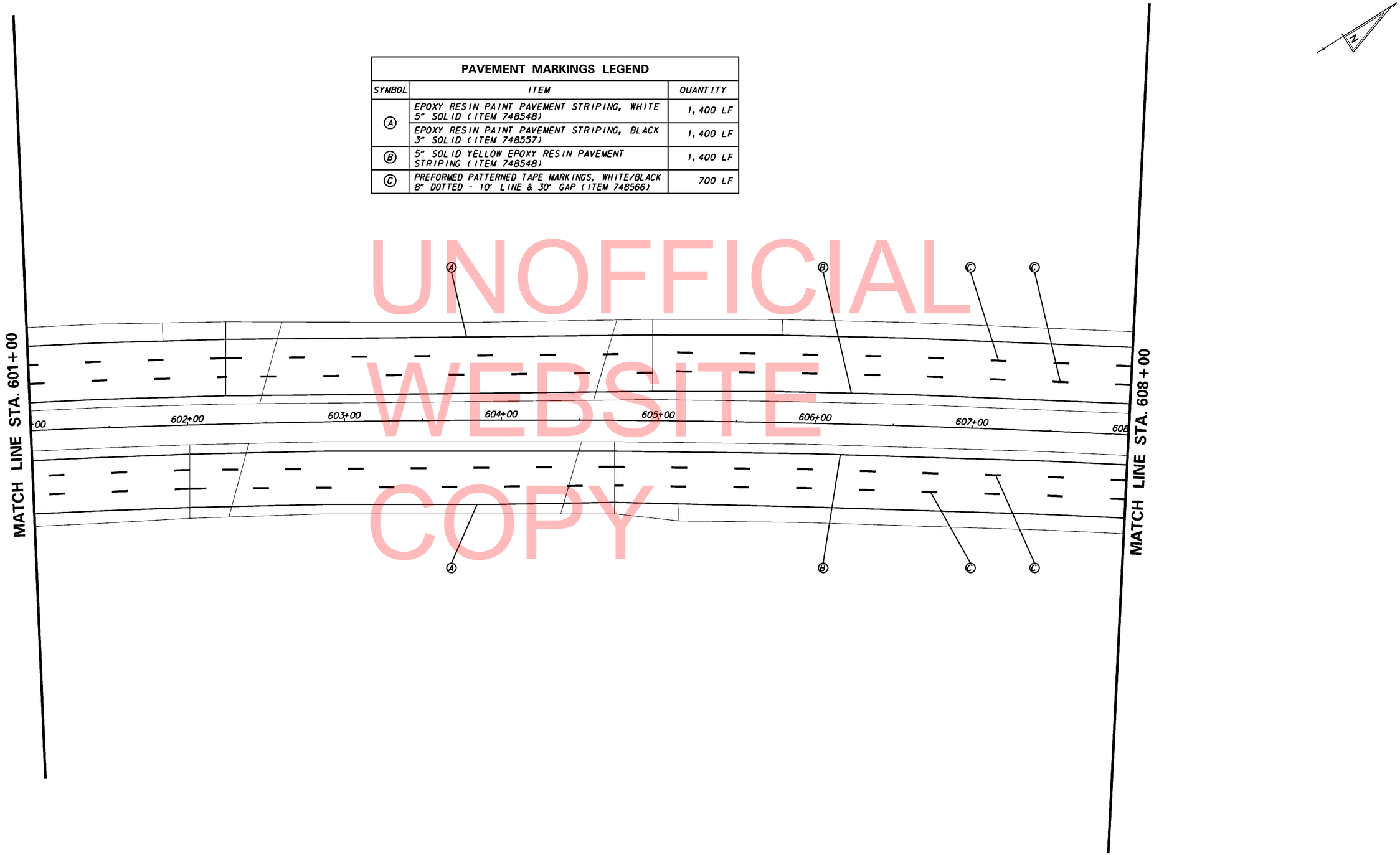

UNOFFICIAL WEBSITE COPY

SS-02

DELAWARE DEPARTMENT OF TRANSPORTATION

ADDENDUMS / REVISIONS

SCALE 0 30 60 90 FEET

BR 1-826 N&S ON I-495 OVER STONEY CREEK

CONTRACT T201107402

COUNTY NEW CASTLE

BRIDGE NO. 1-826 N&S

DESIGNED BY: TM

CHECKED BY: MAA

SIGNING, STRIPING, AND CONDUIT PLANS

SHEET NO. 53

TOTAL SHTS. 54

PAVEMENT MARKINGS LEGEND		
SYMBOL	ITEM	QUANTITY
A	EPOXY RESIN PAINT PAVEMENT STRIPING, WHITE 5" SOLID (ITEM 748548)	833 LF
	EPOXY RESIN PAINT PAVEMENT STRIPING, BLACK 3" SOLID (ITEM 748557)	833 LF
B	5" SOLID YELLOW EPOXY RESIN PAVEMENT STRIPING (ITEM 748548)	615 LF
C	PREFORMED PATTERNED TAPE MARKINGS, WHITE/BLACK 8" DOTTED - 10' LINE & 30' GAP (ITEM 748566)	362 LF

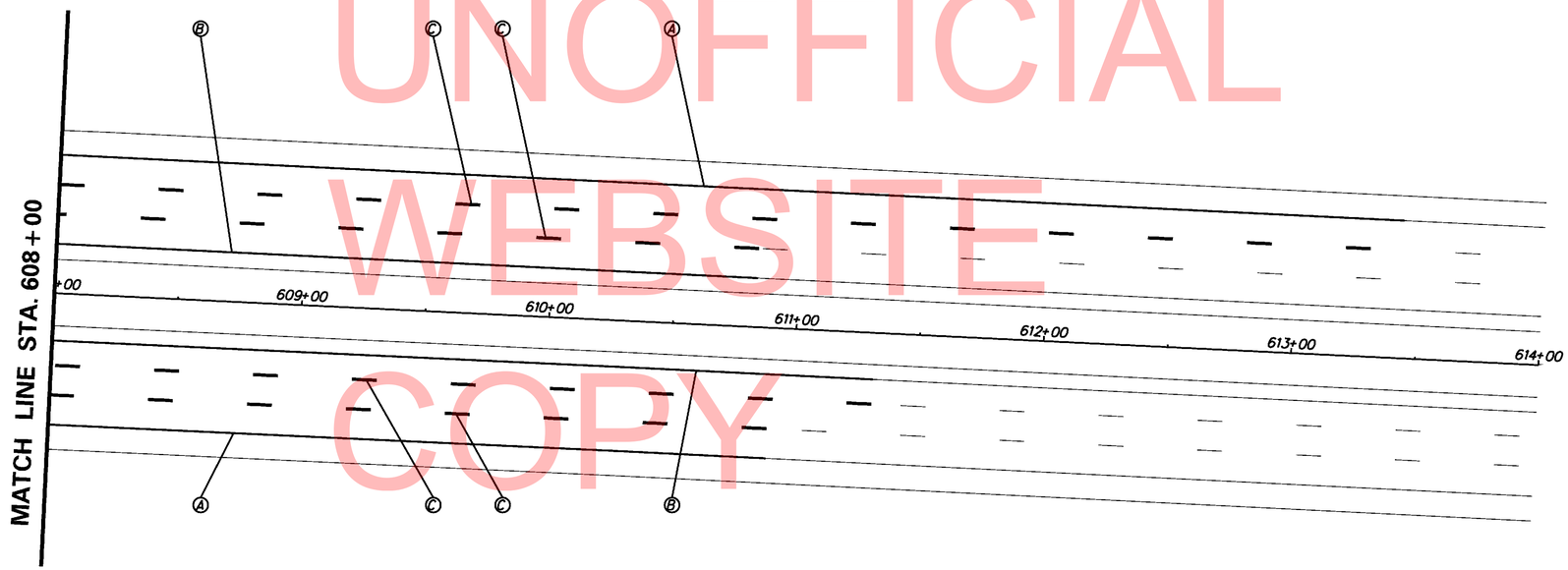

UNOFFICIAL WEBSITE COPY

DELAWARE DEPARTMENT OF TRANSPORTATION

ADDENDUMS / REVISIONS

SCALE 0 30 60 90 FEET

BR 1-826 N&S ON I-495 OVER STONEY CREEK

CONTRACT T201107402

COUNTY NEW CASTLE

BRIDGE NO. 1-826 N&S

DESIGNED BY: TM

CHECKED BY: MAA

SIGNING, STRIPING, AND CONDUIT PLANS

SS-03

SHEET NO. 54

TOTAL SHTS. 54