THE STATE OF DELAWARE
DEPARTMENT OF TRANSPORTATION

U.S. CUSTOMARY UNITS

CONSTRUCTION PLANS FOR:

HEP KC,
SR10 & SR15
INTERSECTION IMPROVEMENTS

CONTRACT NUMBER: T201200802

FEDERAL AID PROJECT NUMBER: ESTP-K356(12)

COUNTY: KENT **M.R. #:** 053, 125

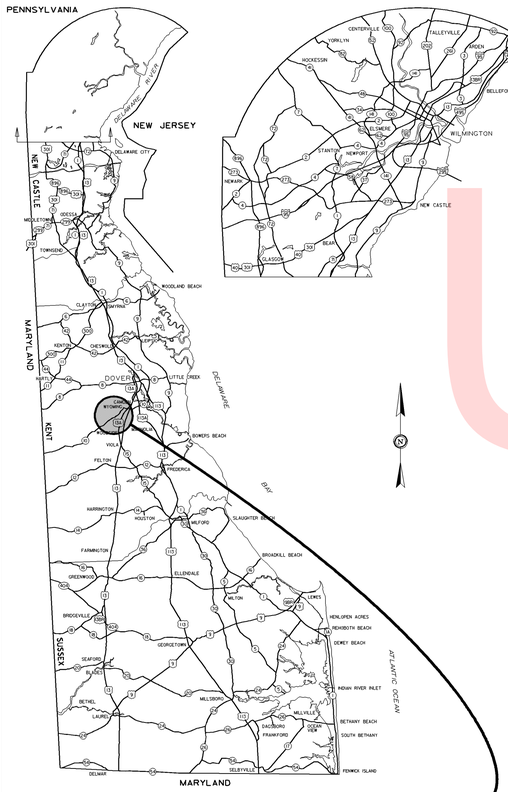

GENERAL LOCATION OF CONTRACT

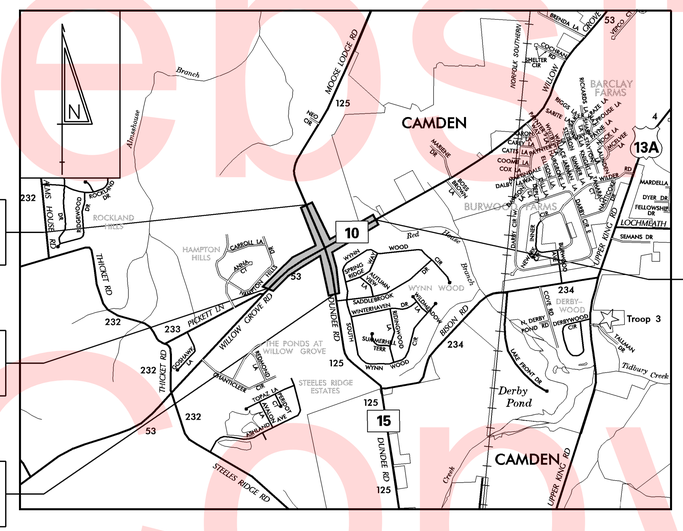

LOCATION MAP
NOT TO SCALE

LIMIT OF CONTRACT STATION 314+50

BEGIN CONTRACT STATION 210+90

LIMIT OF CONTRACT STATION 307+50

END CONTRACT STATION 229+60

DESIGN DESIGNATION

SR10	FUNCTIONAL CLASS: MAJOR COLLECTOR		D.H.V. PROJECTED: 480	YEAR: 2040
	TYPE OF CONSTRUCTION: RECONSTRUCTION		DESIGN SPEED: 25 M.P.H.	
	A.A.D.T. CURRENT: 6682	YEAR: 2012	TRUCKS: 9 %	
	A.A.D.T. PROJECTED: 8000	YEAR: 2040	DIRECTION OF DISTRIBUTION: 60 %	
SR15	FUNCTIONAL CLASS: LOCAL ROAD		D.H.V. PROJECTED: 188	YEAR: 2040
	TYPE OF CONSTRUCTION: RECONSTRUCTION		DESIGN SPEED: 25 M.P.H.	
	A.A.D.T. CURRENT: 2531	YEAR: 2012	TRUCKS: 8 %	
	A.A.D.T. PROJECTED: 3800	YEAR: 2040	DIRECTION OF DISTRIBUTION: 60 %	

INDEX OF SHEETS

SHEET Nº	TABLE OF CONTENTS
1	TITLE
2	PLAN SHEET INDEX
3	LEGEND
4	NOTES
5-7	TYPICAL SECTIONS
8	HORIZONTAL AND VERTICAL CONTROLS
9-13	CONSTRUCTION PLANS
14-15	PROFILES
16-21	GRADES & GEOMETRICS
22	CONSTRUCTION DETAILS
23	STORMWATER MANAGEMENT PLAN
24-28	CONSTRUCTION PHASING, M.O.T., AND EROSION CONTROL PLANS
29-33	DETOUR PLANS
34	LANDSCAPING PLAN
35-37	LIGHTING PLANS
38-44	SIGNING AND STRIPING PLANS

TOTAL SHEETS: 44

APPROVED DESIGN EXCEPTIONS

DESIGN PARAMETER	REQUIRED	PROVIDED	DATE

ADDENDA & REVISIONS

DESCRIPTION	NAME & DATE

ASSOCIATED CONTRACTS

CONTRACT NO.	CONTRACT NAME
1447	WILLOW GROVE TO WYOMING - RTE. 10
1479	RD. 125 (RD. 54 TO RD. 52)
397	WOODSIDE TO GUYTOWN

PREPARED BY
THE CONSULTING FIRM OF

SEAL

RECOMMENDED DATE

RECOMMENDED

SQUAD MANAGER, CONSTRUCTION — DATE 08/25/2016

GROUP ENGINEER, CONSTRUCTION — DATE 08/25/2016

ASSISTANT DIRECTOR, TRANSPORTATION SOLUTIONS (CONSTRUCTION) — DATE 08/30/2016

RECOMMENDED
STORMWATER ENGINEER
DATE 07/27/2016
VINCENT W. DAVIS REGISTERED No. 12898 DELAWARE PROFESSIONAL ENGINEER — SEAL

RECOMMENDED
SQUAD MANAGER, TRANSPORTATION SOLUTIONS (PROJECT DEVELOPMENT OR BRIDGE DESIGN)
DATE 07/21/2016
JOHN R. GAINES LICENSED No. 13553 DELAWARE PROFESSIONAL ENGINEER — SEAL

RECOMMENDED
BRIDGE DESIGN ENGINEER
DATE
SEAL

RECOMMENDED
GROUP ENGINEER, PROJECT DEVELOPMENT
DATE 08/30/2016
JAMES M. SATTERFIELD LICENSED No. 10391 DELAWARE PROFESSIONAL ENGINEER — SEAL

RECOMMENDED
ASSISTANT DIRECTOR, TRANSPORTATION SOLUTIONS
DATE 08/30/2016
MICHAEL H. SIMMONS REGISTERED No. 8211 DELAWARE PROFESSIONAL ENGINEER — SEAL

APPROVED
CHIEF ENGINEER
DATE 09/12/2016
ROBERT BRIAN McCLEARY REGISTERED No. 8567 DELAWARE PROFESSIONAL ENGINEER — SEAL

LAST REVISED: 8/7/2008
Y:\KENT\053\ROAD\T201200802\PLANS\FINAL\TC01.DGN

Unofficial Website Copy

PLAN SHEET INDEX CROSS REFERENCE					
CONSTRUCTION PLAN	9	10	11	12	13
PROFILES	14	14-15	14	15	15
GRADES AND GEOMETRICS	16	17	18	19	20
STORMWATER MANAGEMENT	23	-	-	-	-
CONSTRUCTION PHASING, M.O.T. AND E&S	24-28	24-28	24-28	24-28	24-28
DETOUR PLAN	29-33	29-33	29-33	29-33	29-33
LANDSCAPING PLAN	-	34	-	-	-
LIGHTING PLAN	-	35	-	-	-
SIGNING, STRIPING AND CONDUIT PLAN	38	39	40	41	42

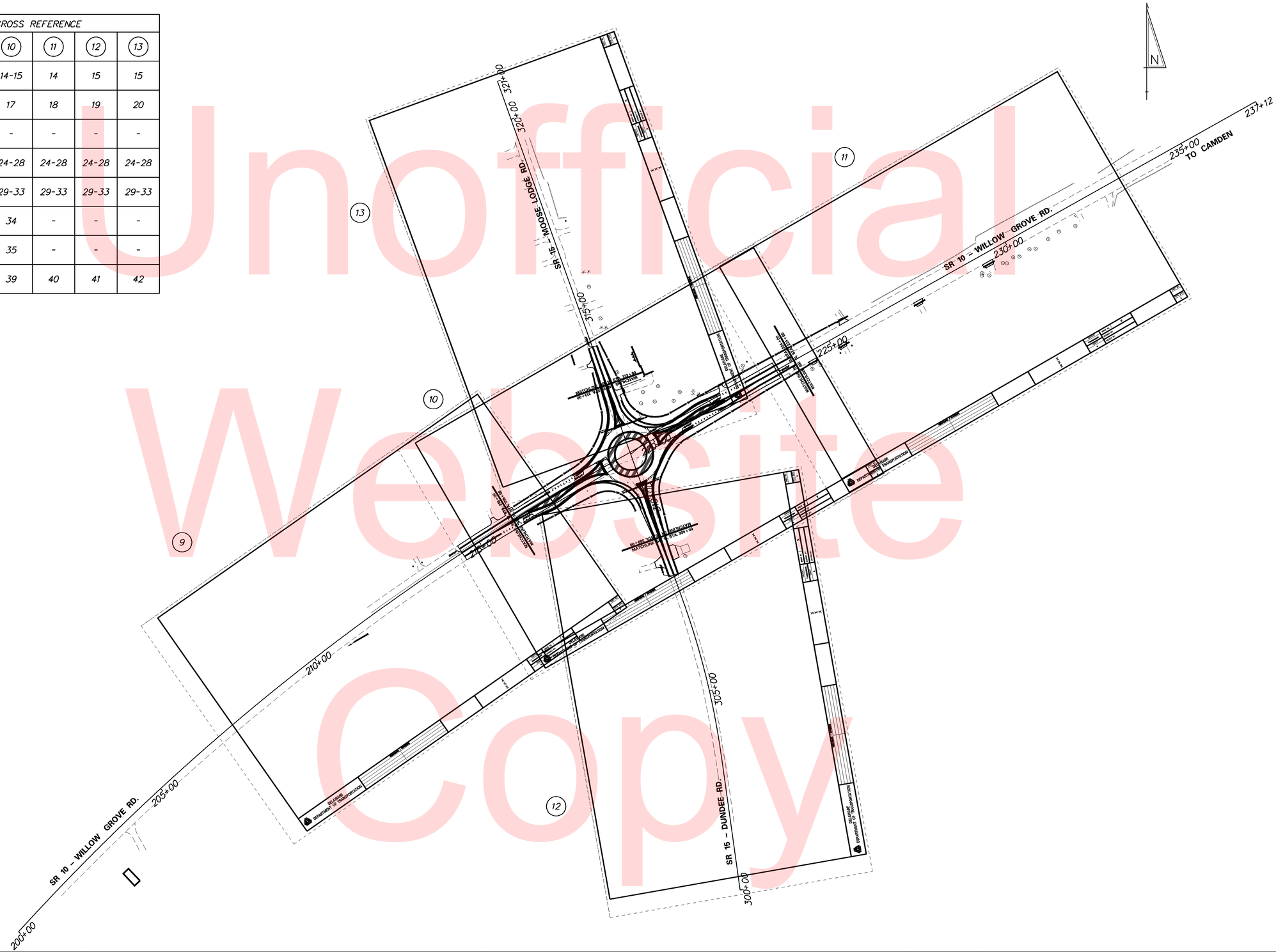

Unofficial Website Copy

Y:\KENT\053\ROAD\T201200802\PLANS\FINAL\IS01.DGN

DELAWARE DEPARTMENT OF TRANSPORTATION	ADDENDUMS / REVISIONS	SCALE 0 120 240 360 FEET	HEP KC, SR10 & SR15 INTERSECTION IMPROVEMENTS	CONTRACT T201200802	BRIDGE NO. X	PLAN SHEET INDEX	SHEET NO. 2
				COUNTY KENT	DESIGNED BY: CCE		TOTAL SHTS. 44
					CHECKED BY: JRG		

EXISTING SYMBOLS

DRAINAGE

	DITCH OR STREAM CENTERLINE
	DIRECTIONAL STREAM FLOW ARROW
C.B. / D.I.	DRAINAGE INLET
J.B.	DRAINAGE JUNCTION BOX
D	DRAINAGE MANHOLE
SIZE/TYPE LABEL	DRAINAGE PIPE AND FLOW ARROW
	DRAINAGE PIPE HEADWALL
	RIPRAP - AREA FEATURE
	RIPRAP - LINEAR FEATURE

MANMADE ROADSIDE FEATURES

	BOLLARD - STEEL POLE
	BOLLARD - WOOD POST
(TYPE LABEL)	CURB
(TYPE LABEL)	CURB AND GUTTER
	FENCE - CHAINLINK OR STRANDED
	FENCE - STOCKADE OR SPLIT RAIL
FP	FLAG POLE
	GUARDRAIL - STEEL BEAM
	GUARDRAIL - WIRE ROPE
LAMP	LAMP AND POST - RESIDENTIAL
MB	MAILBOX
PM	PARKING METER AND POST
	PAVEMENT - FLEXIBLE
	PAVEMENT - RIGID
	PILE - BRIDGE
	PILLAR OR MISCELLANEOUS POST
	TRAFFIC SIGN AND POST
	WALL - BRICK OR BLOCK
	WALL - STONE

NATURAL ROADSIDE FEATURES

	GRASS LAWN
	HEDGEROW OR THICKET
	MARSH BOUNDARY LINE
	TREE - CONIFEROUS
	TREE - DECIDUOUS
	TREE STUMP
	SHRUBBERY
WL	DELINEATED WETLAND BOUNDARY LINE
	WOODS LINE BOUNDARY

RIGHT-OF-WAY SYMBOLS

C.M.	PROPERTY MARKER - CONCRETE MON.
I.P.	PROPERTY MARKER - IRON PIPE
100+00	HISTORIC RIGHT-OF-WAY BASELINE
	EXISTING RIGHT-OF-WAY
PB	EXISTING PROPERTY LINE
UE	EXISTING UTILITY EASEMENT
DA	EXISTING DENIAL OF ACCESS
R/W-DA	EXISTING R/W & DENIAL OF ACCESS

SURVEY CONTROL & MONUMENTATION

B.M.	SURVEY BENCHMARK LOCATION
T.P.	SURVEY TIE POINT LOCATION
	SURVEY TRAVERSE POINT
	POINT OF CURVATURE OR TANGENCY
	POINT OF INTERSECTING TANGENTS

UTILITY

	SOIL BORING LOCATION
	UTILITY TEST HOLE LOCATION
TV	CABLE TV DISTRIBUTION BOX
E	ELECTRIC MANHOLE
EM	ELECTRIC METER
E	ELECTRIC TRANSFORMER
	POLE MOUNTED LUMINAIRE
G	GAS MANHOLE
G.M.	GAS METER
G.V.	GAS VALVE
G.P.	GAS PUMP - SERVICE STATION
	RAILROAD TRACKS
S	SANITARY SEWER MANHOLE
S.V.	SANITARY SEWER VALVE
VENT	SANITARY SEWER VENT OR CLEANOUT
S.D.F.	SEPTIC DRAIN FIELD
B	TELEPHONE BOOTH
T	TELEPHONE MANHOLE
T	TELEPHONE TEST POINT
J.W.	TRAFFIC - CONDUIT JUNCTION WELL
	TRAFFIC - LIGHT POLE AND BASE
	TRAFFIC - PEDESTRIAN POLE & BASE
	TRAFFIC - SIGNAL CABINET & BASE
	TRAFFIC - SIGNAL POLE AND BASE
U	UTILITY BOX
	UTILITY POLE GUY WIRE ANCHOR
	UTILITY POLE
F.H.	WATER - FIRE HYDRANT
W.M.	WATER METER
W.V.	WATER VALVE
WELL	WELL HEAD
?	MANHOLE - UNDETERMINED OWNER

UTILITY COMPANY FACILITIES

VER-C	VERIZON - UNDERGROUND
DPL-E	DELMARVA POWER - UNDERGROUND
CHPK	CHESAPEAKE UTILITIES - GAS
COM-C	COMCAST CABLE - UNDERGROUND

PROPOSED SYMBOLS

CONSTRUCTION

	CONCRETE SAFETY BARRIER - PERMANENT
BFS	BIOFILTRATION SWALE
	BOLLARD - STEEL POLE
	BOLLARD - WOOD POST
	BRICK PATTERNED SURFACE
	BUTT JOINT
100+00	CONSTRUCTION BASELINE
CSF	CONSTRUCTION SAFETY FENCE
	CURB, TYPE 1 & TYPE 3
	CURB, TYPE 2
	CURB & GUTTER, TYPE 1
	CURB & GUTTER, TYPE 2
	CURB & GUTTER, TYPE 3
	CURB & GUTTER, TYPE 4
	CURB OPENING
CZ	CLEAR ZONE
	DRAINAGE INLET
	DITCH
	FENCE - METAL
	FENCE - WOOD
	FLARED END SECTION
	GUARDRAIL, TYPE 1
	GUARDRAIL, TYPE 2
	GUARDRAIL, TYPE 3
	GUARDRAIL END ANCHORAGE
	GUARDRAIL END TREATMENT, TYPE 1
	GUARDRAIL END TREATMENT, TYPE 2
	GUARDRAIL END TREATMENT, TYPE 3
HC	HORIZONTAL CLEARANCE
	IMPACT ATTENUATOR
	JUNCTION BOX - DRAINAGE
LOC	LIMIT OF CONSTRUCTION
MB	MAILBOX
	MANHOLE
	PAVEMENT PATCH
	PAVEMENT REMOVAL - TOPSOIL, SEED AND MULCH
	PIPE & DIRECTIONAL FLOW ARROW
	PROPOSED STORMWATER MANAGEMENT INFILTRATION TRENCH STONE
	RIPRAP
	PATTERNED CONCRETE TRUCK APRON AND SPLITTER ISLANDS (SEE TYPICALS & DETAILS)
	UNDERDRAIN
	UNDERDRAIN OUTLET

IDENTIFIERS

A/C	ADJUST BY CONTRACTOR
A/O	ADJUST BY OTHERS
B	CONCRETE SAFETY BARRIER
C	CURB OR CURB & GUTTER
CA	LIGHTING CONTROL CABINET
CJB	CONVERT TO JUNCTION BOX
CMH	CONVERT TO DRAINAGE MANHOLE
C/O	CURB OPENING
CR	CURB RAMP / TYPE
CR-N	CURB RAMP / TYPE - WITHOUT SIDEWALK SURFACE DETECTABLE WARNING SYSTEM
CSF	CONSTRUCTION SAFETY FENCE
DI	DRAINAGE INLET
DND	DO NOT DISTURB
ED	ENERGY DISSIPATOR
F	FENCE
FES	FLARED END SECTION
FF/C	FILL WITH FLOWABLE FILL
FS	FILTRATION STRUCTURE
GR	GUARDRAIL
JB	JUNCTION BOX
JW	JUNCTION WELL
LSR	LIGHTING SERVICE RUN
LST	LIGHTING STRUCTURE
MH	MANHOLE
M	MONUMENT - RIGHT-OF-WAY
P	PIPE
RL/C	RELOCATE BY CONTRACTOR
RL/O	RELOCATE BY OTHERS
RM/C	REMOVE BY CONTRACTOR
RM/O	REMOVE BY OTHERS
S	SIGN - EXISTING
S	SIGN - PROPOSED
UD	UNDERDRAIN / LENGTH
UDO	UNDERDRAIN OUTLET PIPE

LANDSCAPING

LS	LANDSCAPE PLANTINGS
	SHRUBBERY
	CONIFEROUS TREE
	DECIDUOUS TREE

TRAFFIC

ITMS-CON	ITMS CONDUIT
SIG-CON	SIGNAL CONDUIT
	CONDUIT JUNCTION WELL
	LUMINAIRE
	PAVEMENT MARKINGS
	PAVEMENT STRIPING
	TRAFFIC SIGN

PAVEMENT SECTION(S)

	MILL & OVERLAY PAVEMENT - SEE TYPICAL SECTIONS FOR MATERIALS AND DEPTHS
	RECONSTRUCTED PAVEMENT - SEE TYPICAL SECTIONS FOR MATERIALS AND DEPTHS
	DRIVEWAY AND ENTRANCE PAVEMENT - SEE NOTE FOR MATERIALS AND DEPTHS OR 2" TYPE C OVER 8" GABC

UTILITY COMPANY FACILITIES

COM-C	COMCAST
DPL-UG	DELMARVA POWER
CHPK-UG	CHESAPEAKE
VER-C	VERIZON

RIGHT-OF-WAY SYMBOLS

	PROPOSED RIGHT-OF-WAY MONUMENT
DA	PROPOSED DENIAL OF ACCESS
PE	PROPOSED PERMANENT EASEMENT
R/W	PROPOSED RIGHT-OF-WAY
R/W-DA	PROPOSED R/W & DENIAL OF ACCESS
TCE	TEMPORARY CONSTRUCTION EASEMENT
100+00	PROPOSED RIGHT-OF-WAY BASELINE

Unofficial Website Copy

GENERAL NOTES

1. THIS PROJECT IS TO BE CONSTRUCTED IN ACCORDANCE WITH THE DELAWARE DEPARTMENT OF TRANSPORTATION "STANDARD SPECIFICATIONS", DATED AUGUST 2001 AND THE DELAWARE DEPARTMENT OF TRANSPORTATION "STANDARD CONSTRUCTION DETAILS", DATED 2001, INCLUDING ALL REVISIONS UP TO THE DATE OF ADVERTISEMENT.

2. SITE REVIEWER - AN EROSION CONTROL SITE REVIEWER SHALL BE A PERSON FROM THE CONTRACTOR'S STAFF ASSIGNED TO EROSION AND SEDIMENT CONTROL IMPLEMENTATION AND MAINTENANCE AND SHALL BE REQUIRED ON SPECIFIC PROJECTS. THE NAME AND DNREC CERTIFICATION NUMBER OF EACH SITE REVIEWER SO REQUIRED SHALL BE SUBMITTED TO THE DEPARTMENT PRIOR TO THE EXECUTION OF THE CONTRACT. THE NAME OF THE DELAWARE REGISTERED PROFESSIONAL ENGINEER PROVIDING DIRECTION AND SUPERVISION OF THE SITE REVIEWER, AS REQUIRED IN SECTION 12.3 OF THE DELAWARE SEDIMENT AND STORMWATER REGULATIONS, SHALL ALSO BE SUBMITTED TO THE DEPARTMENT PRIOR TO THE EXECUTION OF THE CONTRACT. THE SITE REVIEWER REQUIREMENTS IN EFFECT ON THIS PROJECT SHALL BE MARKED WITH AN "X" BELOW:

EROSION POTENTIAL FOR THIS PROJECT	SITE REVIEWER REQUIREMENT
( ) INSIGNIFICANT	NONE
( ) MINOR	CONTRACTOR CERTIFICATION COURSE TRAINING ONLY, AS DEFINED IN SECTION 13 OF THE DELAWARE SEDIMENT AND STORMWATER REGULATIONS.
(X) MEDIUM	THE SUPERINTENDENT OR A SEPARATE INDIVIDUAL FROM THE CONTRACTOR'S STAFF SHALL BE A CERTIFIED CONSTRUCTION REVIEWER (CCR), AS DEFINED IN SECTION 12 OF THE DELAWARE SEDIMENT AND STORMWATER REGULATIONS.
( ) MAJOR	SUPERINTENDENT AND AN INDIVIDUAL FROM CONTRACTOR'S STAFF SHALL BE CCR. ONE INDIVIDUAL FROM THE CONTRACTOR'S STAFF MUST BE A CCR PRIOR TO THE EXECUTION OF THE CONTRACT. THE SUPERINTENDENT MUST BECOME A CCR WITHIN ONE YEAR AFTER THE AWARD OF CONTRACT.

3. ELECTRONIC PROJECT FILES THAT WILL BE MADE AVAILABLE TO THE AWARDED CONTRACTOR, INCLUDE:

( )	NONE
(X)	ASCII DATA FILES WITH COORDINATES AND ELEVATIONS FOR PROPOSED POINTS AS SELECTED BY THE ENGINEER.
(X)	RASTER FILES, IN .PDF FILE FORMAT, FOR ALL PLAN SHEETS.
( )	EXISTING DIGITAL TERRAIN MODEL, IN .DTM FILE FORMAT, COMPATIBLE WITH SOFTWARE CURRENTLY USED BY DELDOT.
( )	PROPOSED DIGITAL TERRAIN MODEL, IN .DTM FILE FORMAT, COMPATIBLE WITH SOFTWARE CURRENTLY USED BY DELDOT.
( )	DESIGN FILE, IN .DGN FILE FORMAT, CONTAINING ONLY THE PROPOSED 3D TRIANGLES OF THE PROPOSED DIGITAL TERRAIN MODEL (DTM).

NOTE: THE DOCUMENT ENTITLED "RELEASE FOR DELIVERY OF DOCUMENTS IN ELECTRONIC FORM TO A CONTRACTOR" MUST BE SIGNED BY ALL PARTIES PRIOR TO THE DELIVERY OF ANY ELECTRONIC PROJECT FILES.

4. PROJECT FILES THAT WILL BE MADE AVAILABLE TO THE CONTRACTOR, INCLUDE:

(X)	CROSS SECTIONS (WILL BE MADE AVAILABLE TO THE AWARDED CONTRACTOR)
(X)	RIGHT-OF-WAY PLANS (WILL BE MADE AVAILABLE TO THE AWARDED CONTRACTOR)

5. AMERICAN TRAFFIC SAFETY SERVICES ASSOCIATION (ATSSA) CERTIFIED TRAFFIC CONTROL SUPERVISOR REQUIREMENT FOR THIS PROJECT.

( )	THE CONTRACTOR SHALL NOT BE REQUIRED TO HAVE AN ATSSA SUPERVISOR ASSIGNED TO THIS PROJECT.
(X)	THE CONTRACTOR SHALL HAVE AN ATSSA SUPERVISOR ASSIGNED TO THIS PROJECT. THE CONTRACTOR'S GENERAL SUPERINTENDENT FOR THIS PROJECT OR ANOTHER ATSSA CERTIFIED MEMBER OF THE CONTRACTOR'S PROJECT STAFF MAY BE THE ATSSA SUPERVISOR. PAYMENT FOR ATSSA SUPERVISOR IS INCIDENTAL TO ITEM 743000.
( )	THE CONTRACTOR SHALL HAVE AN ATSSA SUPERVISOR ASSIGNED TO THIS PROJECT. THE ATSSA SUPERVISOR'S SOLE JOB SHALL BE SUPERVISION OF THE INSTALLATION, OPERATION AND MAINTENANCE OF TRAFFIC CONTROL DEVICES FOR THIS PROJECT. THE CONTRACTOR'S GENERAL SUPERINTENDENT FOR THIS PROJECT SHALL NOT BE THE ATSSA SUPERVISOR. PAYMENT FOR ATSSA SUPERVISOR SHALL BE PAID FOR UNDER ITEM 743031.

6. THE DISTURBED AREA FOR THIS PROJECT IS 3.74 ACRES.

7. THE SEDIMENT AND STORMWATER MANAGEMENT PLANS HAVE BEEN APPROVED BY DELDOT'S STORMWATER ENGINEER UNDER DELDOT'S DELEGATED AUTHORITY. THE SEDIMENT AND STORMWATER MANAGEMENT PLANS ARE VALID FOR A THREE YEAR PERIOD, BEGINNING ON THE DATE THE STORMWATER ENGINEER SIGNED THE CONSTRUCTION TITLE SHEET. IF THE FINAL ACCEPTANCE OF THE PROJECT IS ANTICIPATED TO EXTEND BEYOND THE THREE YEARS, THE CONTRACTOR WILL INFORM THE ENGINEER THREE MONTHS PRIOR TO THE EXPIRATION OF THE APPROVED SEDIMENT AND STORMWATER MANAGEMENT PLANS. THE STORMWATER ENGINEER WILL REVIEW THE CURRENT SEDIMENT AND STORMWATER MANAGEMENT PLAN AND ISSUE AN EXTENSION WITH ANY APPROPRIATE MODIFICATIONS.

PROJECT NOTES

SECTION 100

1. ANY DAMAGE TO ITEMS NOTED TO BE RELOCATED OR RESET BY THE CONTRACTOR, AT THE DISCRETION OF THE ENGINEER, SHALL BE REPAIRED AND/OR REPLACED IN KIND AT THE CONTRACTOR'S EXPENSE.

SECTION 200

2. THE CONTRACTOR SHALL REMOVE AND RESET ALL MAILBOXES TO MAINTAIN MAIL SERVICE AS DIRECTED BY THE ENGINEER. THE CONTRACTOR SHALL RELOCATE MAILBOXES AS REQUIRED BY THE PROPOSED GEOMETRICS AND AS DIRECTED BY THE ENGINEER. WHEN RELOCATING MAILBOXES IN CURBED SECTIONS, THE FACE OF THE MAILBOX SHALL BE FLUSH WITH THE BACK EDGE OF CURB. WHEN RELOCATING MAILBOXES IN OPEN SECTIONS, THE FACE OF THE MAILBOX SHALL SET BACK 8 INCHES FROM THE EDGE OF THE PAVED SHOULDER. THE BOTTOM OF THE MAILBOX SHALL BE SET 46 INCHES ABOVE THE ROADWAY SURFACE. MAILBOXES LOCATED AT DRIVEWAY ENTRANCES SHALL BE PLACED ON THE FAR SIDE OF THE DRIVEWAY IN THE DIRECTION OF TRAVEL. POSTS BEING RESET IN CONCRETE SIDEWALK SHALL BE PLACED IN AN APPROPRIATE SIZE PVC SLEEVE. COST FOR ALL WORK AND MATERIALS SHALL BE PAID UNDER ITEM 201000 - CLEARING AND GRUBBING.

3. THE ENGINEER MAY REQUIRE THE CONTRACTOR TO EXCAVATE TEST PITS ALONG PROPOSED DRAINAGE RUNS, AT POINTS OF POSSIBLE UTILITY CONFLICTS, TO DETERMINE IF A CONFLICT EXISTS. ANY CONFLICTS SHALL BE COORDINATED BY THE CONTRACTOR, WITH THE ENGINEER AND THE UTILITY COMPANY INVOLVED. THE ENGINEER SHALL ULTIMATELY DETERMINE THE SOLUTION TO THE UTILITY CONFLICT. TEST HOLES SHALL BE MEASURED AND PAID FOR IN ACCORDANCE WITH ITEM 208000 - EXCAVATION AND BACKFILL FOR PIPE TRENCHES, BUT ONLY TO THE ACTUAL DEPTH EXCAVATED.

4. ITEMS TO BE REMOVED UNDER ITEM 211000 - REMOVAL OF STRUCTURES AND OBSTRUCTIONS SHALL INCLUDE, BUT NOT BE LIMITED TO THE FOLLOWING:
   - DRAINAGE PIPES
   - DRAINAGE STRUCTURES
   - ROADWAY LIGHTING ITEMS

SECTION 300

5. A. THE CONTRACTOR MAY ELECT TO USE ANY OF THE FOLLOWING MATERIALS TO MEET THE REQUIREMENTS OF ITEM 302007 - GRADED AGGREGATE BASE COURSE, TYPE 'B':
   a. CRUSHED STONE (PER STANDARD SPECIFICATION 821)
   b. CRUSHED CONCRETE (PER STANDARD SPECIFICATION 821)
   c. HOT-MIX MILLINGS (PER SPECIAL PROVISION 302514 MILLED HOT-MIX BASE COURSE)

   THE CONTRACTOR WILL NOT BE ALLOWED TO MIX DIFFERENT MATERIALS (OR SIMILAR MATERIALS FROM DIFFERENT SOURCES) TO MEET THE REQUIREMENTS OF ITEM 302007 - GRADED AGGREGATE BASE COURSE, TYPE 'B'.

   ALL OF THE ABOVE LISTED MATERIALS ARE PERMITTED FOR USE ON THE JOB, PROVIDED THEY ARE SEPARATED INTO APPROVED AREAS. EACH AREA OF BASE COURSE MUST BE CONSTRUCTED USING MATERIALS FROM A SINGULAR SOURCE, FULL DEPTH, IN ORDER THAT PROPER TESTING MAY BE ACCOMPLISHED. THE CONTRACTOR AND ENGINEER SHALL AGREE ON THE LIMITS OF EACH SOURCE OF MATERIAL PRIOR TO PLACEMENT.

   B. THE QUANTITY USED FOR BASE OF EACH OF THE ABOVE LISTED MATERIALS WILL BE THE CONTRACTOR'S CHOICE, WITH THE TOTAL BEING EQUAL TO THE ACTUAL QUANTITY USED UNDER ITEM 302007 - GRADED AGGREGATE BASE COURSE, TYPE 'B'.

   C. THE CONTRACTOR MAY ALSO ELECT TO RECYCLE MILLINGS FOR USE IN HOT-MIX AS PERMITTED BY THE STANDARD SPECIFICATIONS. THE CHOICE OF THE QUANTITY OF MILLINGS USED FOR THIS PURPOSE, OR FOR BASE COURSE, LIES WITH THE CONTRACTOR. ALL EXCESS MILLING MATERIAL SHALL BECOME PROPERTY OF THE CONTRACTOR.

   D. HOT-MIX MILLINGS MAY BE GENERATED FROM THE FOLLOWING SOURCES:
   a. MATERIAL MADE AVAILABLE WHEN MILLED ON THIS CONTRACT UNDER ITEM 760507.
   b. MATERIAL MILLED ON THIS CONTRACT AT THE CONTRACTOR'S CHOICE UNDER ITEM 202000.
   c. MILLED MATERIAL FURNISHED ON THE JOB FROM THE CONTRACTOR'S YARD OR OTHER OUTSIDE SOURCE.
   ALL MILLED MATERIALS SHALL MEET THE MATERIAL REQUIREMENTS OF ITEM 302514 - MILLED HOT-MIX BASE COURSE.

   E. PAYMENT CLARIFICATION:
   a. SHOULD THE CONTRACTOR ELECT TO MILL PORTIONS OF HOT-MIX SHOWN ON THE PLANS TO BE REMOVED UNDER ITEM 202000 - EXCAVATION AND EMBANKMENT THE COST OF MILLING THIS HOT-MIX WILL BE PAID AS ITEM 202000 - EXCAVATION AND EMBANKMENT. THE MILLINGS GENERATED MAY BE RECYCLED INTO HOT-MIX, UTILIZED FOR BASE COURSE, OR DISPOSED OF TO AN APPROVED SITE. HAULING COSTS FOR DISPOSAL AND/OR RECYCLING ARE INCIDENTAL TO ITEM 202000 - EXCAVATION AND EMBANKMENT.

   b. MILLINGS GENERATED UNDER ITEM 760502 - PAVEMENT MILLINGS, TAPERCUT MAY BE RECYCLED INTO HOT-MIX, UTILIZED FOR BASE COURSE OR DISPOSED OF BY THE CONTRACTOR TO AN APPROVED SITE. NO SEPARATE PAYMENT WILL BE MADE FOR TRANSPORTING MILLINGS ON SITE OR TO AN APPROVED DISPOSAL SITE.

   c. SHOULD THE CONTRACTOR ELECT TO TEMPORARILY STOCKPILE MILLINGS ON THE JOB SITE FOR LATER USE, ALL COSTS FOR STOCKPILING AND SUBSEQUENT REHANDLING SHALL BE INCIDENTAL TO ITEM 202000 - EXCAVATION AND EMBANKMENT.

   d. MILLINGS USED FOR BASE COURSE SHALL BE PLACED IN ACCORDANCE WITH THE REQUIREMENTS OF SPECIAL PROVISION 302514 - MILLED HOT-MIX BASE COURSE. NO SEPARATE PAYMENT WILL BE MADE TO FURNISH MILLINGS FROM AN OUTSIDE SOURCE OR TRANSPORT MILLINGS WITHIN THE PROJECT LIMITS. MILLINGS USED FOR BASE COURSE WILL BE PAID FOR AT THE UNIT BID PRICE FOR ITEM 302007 - GRADED AGGREGATE BASE COURSE, TYPE 'B'.

   e. ALL COSTS TO UTILIZE MILLINGS IN RECYCLED HOT-MIX WILL BE INCIDENTAL TO THE UNIT PRICE BID FOR THE HOT-MIX ITEM USING THE RECYCLED MATERIAL.

   f. SPECIAL PROVISION 302514 - MILLED HOT-MIX BASE COURSE IS PROVIDED TO SPECIFY THE MEANS OF LAY DOWN AND COMPACTION AS WELL AS THE MATERIAL REQUIREMENTS FOR MILLINGS USED AS BASE COURSE. ALL COSTS TO BRING THE MILLINGS INTO COMPLIANCE WITH THE REQUIREMENTS OF ITEM - 302514 MILLED HOT-MIX BASE COURSE ARE INCIDENTAL TO ITEM 302007 - GRADED AGGREGATE BASE COURSE, TYPE 'B'. NO PAYMENT WILL BE MADE FOR ITEM 302514 - MILLED HOT-MIX BASE COURSE. THE QUANTITY OF MILLINGS USED FOR BASE COURSE WILL BE PAID FOR UNDER ITEM 302007 - GRADED AGGREGATE BASE COURSE.

SECTION 400

6. THE PAVEMENT SECTION FOR WARM-MIX RESIDENTIAL DRIVEWAYS SHALL BE 2" WARM-MIX, TYPE 'C' OVER 8" GRADED AGGREGATE BASE COURSE, TYPE 'B', UNLESS OTHERWISE NOTED ON THE PLANS.

SECTION 600

7. THE DEPARTMENT AND THE CONTRACTOR SHALL INSPECT ALL EXISTING PIPES AND DRAINAGE STRUCTURES TO BE USED IN THE FINAL DRAINAGE SYSTEM AND AGREE ON THE CONDITION PRIOR TO THE START OF CONSTRUCTION. EXISTING PIPES AND DRAINAGE STRUCTURES DAMAGED DUE TO CONTRACTOR OPERATIONS SHALL BE REPAIRED OR REPLACED IN-KIND AT THE CONTRACTOR'S EXPENSE. THE DEPARTMENT WILL VIDEO INSPECT NEW PIPE RUNS TO CONFIRM CONDITION PRIOR TO ACCEPTANCE. PIPE CLEANING PRIOR TO VIDEO INSPECTION AND MAINTENANCE OF TRAFFIC DURING THE VIDEO INSPECTION ARE THE RESPONSIBILITY OF THE CONTRACTOR AND INCIDENTAL TO THE PIPE ITEM THAT IS BEING VIDEO INSPECTED.

SECTION 700

8. STATION AND ELEVATION DATA GIVEN FOR DRAINAGE STRUCTURES ARE TO BE APPLIED TO THE CENTER OF THE GRATE FOR INLETS, AND TO THE CENTER OF THE STRUCTURE FOR JUNCTION BOXES AND MANHOLES.

9. ALL PAVED AREAS TO BE RECONSTRUCTED OR WIDENED SHALL BE SAWCUT AT THE POINT WHERE THE NEW PAVEMENT IS TO TIE INTO THE EXISTING PAVEMENT.

SECTION 900

10. THIS PROJECT IS COVERED UNDER AN NPDES GENERAL PERMIT FOR CONSTRUCTION. UNDER THE GENERAL PERMIT, COMPLIANCE WITH DELDOT'S APPROVED SEDIMENT AND STORMWATER MANAGEMENT PLANS WILL CONSTITUTE COMPLIANCE WITH THE NPDES INDUSTRIAL PERMITTING REQUIREMENTS FOR THIS CONSTRUCTION PROJECT. A COPY OF THE NPDES GENERAL PERMIT AND NOI IS KEPT ON FILE IN EACH OF THE CONSTUCTION OFFICES AND THE DEPARTMENT'S STORMWATER SECTION. A COPY OF THE GENERAL PERMIT OR THE NOI CAN BE OBTAINED UPON REQUEST FROM EITHER THE DEPARTMENT'S STORMWATER ENGINEER OR THE APPROPRIATE CONSTRUCTION ENGINEER.

11. THE CONTRACTOR SHALL INSTALL A 1-ROLL WIDTH OF ITEM 908020, EROSION CONTROL BLANKET, AT THE END OF ALL CURB RUNS AND CURB OPENINGS. THE ECB SHALL BE TRENCHED IN ALONG ALL FOUR EDGES AND RUN A MINIMUM OF TWO FEET UP THE BACKSLOPE OF THE SWALE INTO WHICH THE RUNOFF IS DRAINING.

MISCELLANEOUS

12. THE CONTRACTOR SHALL CONTACT WILLIAM LOTHARP, THE CHIEF OF SCHEDULING FOR DART FIRST STATE, 14 DAYS PRIOR TO THE START OF CONSTRUCTION AT 302-576-6006.

13. REFER TO THE CONSTRUCTION PLAN SHEETS FOR THE LOCATION OF THE CLEAR ZONE AREA LIMITS.

14. THERE ARE NO ENVIRONMENTAL PERMITS ASSOCIATED WITH THIS PROJECT. AS SUCH, AN ENVIRONMENTAL COMPLIANCE SHEET WAS NOT PREPARED.

15. ALL WORK REQUIRED FOR CALCULATING AND STAKING OF GRADES SHALL BE PAID FOR UNDER ITEM 763501-CONSTRUCTION ENGINEERING.

EARTHWORK SUMMARY

EXCAVATION		
EXCAVATION FROM CROSS SECTIONS	4221	C.Y.
ROCK EXCAVATION FOR ROADWAY AND TRENCHES	0	C.Y.
TOPSOIL STRIPPING	0	C.Y.
TOTAL EXCAVATION	4221	C.Y.
EXCAVATION AVAILABLE FOR EMBANKMENT		
EXCAVATION MEETING BORROW TYPE 'A'	0	C.Y.
EXCAVATION MEETING BORROW TYPE 'F'	0	C.Y.
EXCAVATION MEETING TOPSOIL	0	C.Y.
EMBANKMENT REQUIREMENTS		
BORROW TYPE 'A' REQUIRED (INCLUDING UNDERCUT)	573	C.Y.
BORROW TYPE 'F' REQUIRED	181	C.Y.
TOPSOIL REQUIRED	2787	C.Y.
MATERIAL BALANCE ("+"= EXCESS, "-"= NEED)		
BORROW TYPE 'A'	573	C.Y.
BORROW TYPE 'F'	181	C.Y.
TOPSOIL	1487	C.Y.
UNSUITABLE MATERIAL	4221	C.Y.

NOTES:
1) THE VALUES LISTED IN THE EARTHWORK SUMMARY ARE APPROXIMATE AND ARE NOT TO BE USED AS A BASIS OF PAYMENT. THE EARTHWORK SUMMARY IS CONSIDERED FOR INFORMATIONAL PURPOSES ONLY.

2) OTHER SOURCES OF EXCAVATION MAY INCLUDE PIPE TRENCH EXCAVATION, STRUCTURE EXCAVATION, UNDERCUT EXCAVATION, STORMWATER MANAGEMENT POND EXCAVATION, ENVIRONMENTAL SITE EXCAVATION, MAINTENANCE OF TRAFFIC EXCAVATION, ETC.

3) UNSUITABLE MATERIALS INCLUDE UNDERCUT SOILS, BITUMINOUS PAVEMENT, ETC.

Unofficial Website Copy

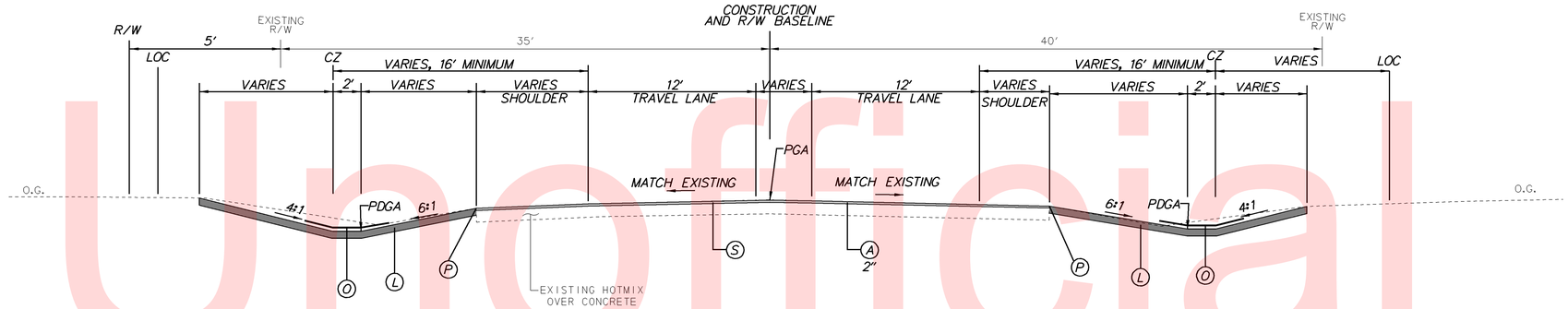

WILLOW GROVE RD. (SR10)
STATION 222+25 TO STATION 223+50

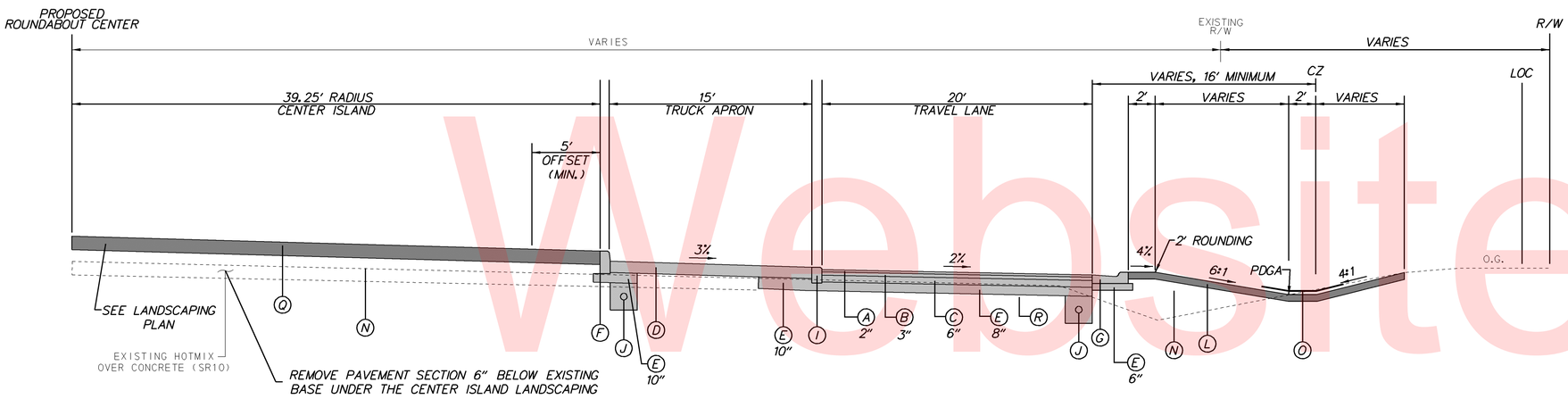

MATERIAL	LIFT THICKNESS	
	MINIMUM	MAXIMUM
WMA, TYPE 'C'	1.25"	2"
WMA, TYPE 'B'	2.25"	3"
BITUMINOUS CONCRETE BASE COURSE	3"	6"
GRADED AGGREGATE BASE COURSE	3"	8"

NOTES:

* IN AREAS WHERE THE PGA IS LOCATED WITHIN THE SPLITTER ISLAND, ITS VERTICAL LOCATION SHALL BE THE TOP OF THE ADJACENT PAVEMENT ELEVATION PROJECTED AT THE PROPOSED CROSS SLOPE TO THE CONSTRUCTION BASELINE. (SEE SPLITTER ISLAND DETAIL)

** EASEMENTS IN SOUTHWEST INTERSECTION QUADRANT ONLY.

ROUNDABOUT CENTER SECTION
SR10 – STATION 218+56 TO STATION 220+11
SR15 – STATION 310+41 TO STATION 311+96

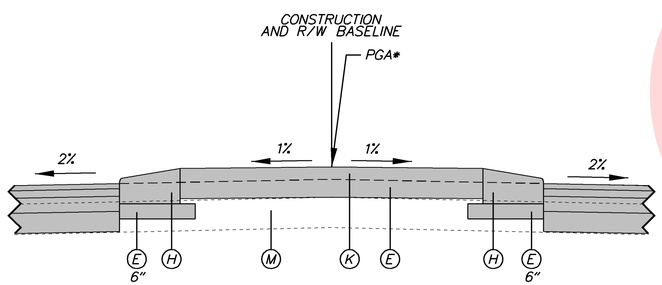

SR 15 SPLITTER ISLAND PGA DETAIL
NOT TO SCALE

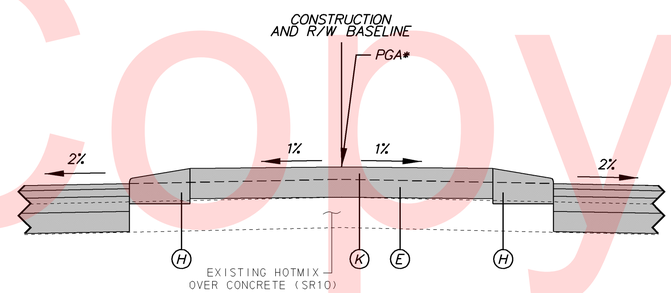

SR 10 SPLITTER ISLAND PGA DETAIL
NOT TO SCALE

LEGEND

- (A) ITEM 401807 - WMA, SUPERPAVE, TYPE C, 160 GYRATIONS, PG 76-22 (CARBONATE STONE)
- (B) ITEM 401816 - WMA, SUPERPAVE, TYPE B, 160 GYRATIONS, PG 76-22
- (C) ITEM 401819 - WMA, SUPERPAVE, BITUMINOUS BASE COURSE, 160 GYRATIONS, PG 64-22
- (D) ITEM 501527 - PATTERNED PORTLAND CEMENT CONCRETE PAVEMENT, 9"
- (E) ITEM 302007 - GRADED AGGREGATE BASE COURSE, TYPE B
- (F) ITEM 701010 - PORTLAND CEMENT CONCRETE CURB, TYPE 1-8
- (G) ITEM 701016 - INTEGRAL PORTLAND CEMENT CONCRETE CURB AND GUTTER, TYPE 1-4
- (H) ITEM 701025 - PORTLAND CEMENT CONCRETE CURB, TYPE 2 MODIFIED
- (I) ITEM 701013 - PORTLAND CEMENT CONCRETE CURB, TYPE 1-2
- (J) ITEM 715001 - PERFORATED PIPE UNDERDRAIN, 6"
- (K) ITEM 705521 - PATTERNED PORTLAND CEMENT CONCRETE SIDEWALK, 8"
- (L) ITEM 908004 - TOPSOIL, 6" DEPTH / ITEM 908014 - PERMANENT GRASS SEEDING, DRY GROUND
- (M) ITEM 209001 - BORROW, TYPE A
- (N) ITEM 209006 - BORROW, TYPE F
- (O) ITEM 908020 - EROSION CONTROL BLANKET
- (P) ITEM 401752 - SAFETY EDGE FOR ROADWAY PAVEMENT
- (Q) ITEM 908005 - TOPSOIL, 12" DEPTH
- (R) ITEM 209003 - BORROW, TYPE C
- (S) ITEM 760507 - PROFILE MILLING, BITUMINOUS CONCRETE
- (T) ITEM 302008 - GRADED AGGREGATE BASE COURSE, TYPE B, PATCHING
- (U) ITEM 401823 - WMA, SUPERPAVE, BIT. BASE COURSE, 160 GYRATIONS, PG 64-22, PATCHING
- (V) ITEM 401822 - WMA, SUPERPAVE, TYPE B, 160 GYRATIONS, PG 64-22, PATCHING

Unofficial Website Copy

Y:\KENT\053\ROAD\T201200802\PLANS\FINAL\TS00.DGN

DELAWARE DEPARTMENT OF TRANSPORTATION	ADDENDUMS / REVISIONS	NOT TO SCALE	HEP KC, SR10 & SR15 INTERSECTION IMPROVEMENTS	CONTRACT T201200802	BRIDGE NO. X	TYPICAL SECTIONS	SHEET NO. 5
				COUNTY KENT	DESIGNED BY: CCE		TOTAL SHTS. 44
					CHECKED BY: JRG		

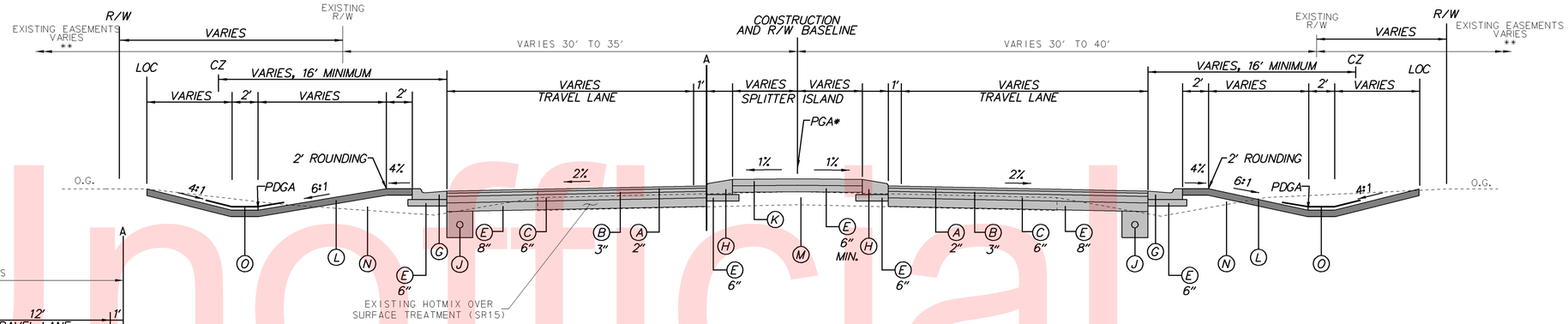

MOOSE LODGE/DUNDEE RD. (SR15)
STATION 309+82 TO STATION 310+41
STATION 311+95 TO STATION 312+46

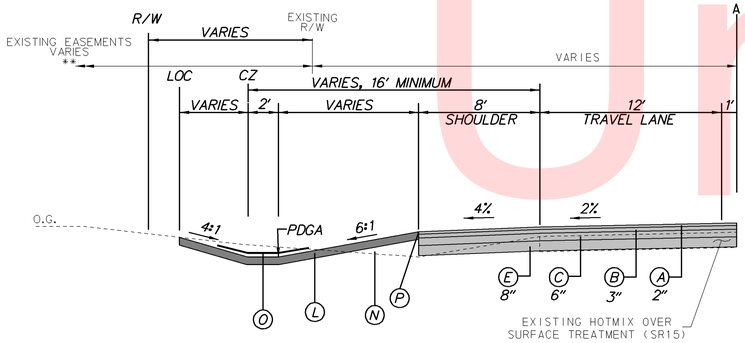

MOOSE LODGE/DUNDEE RD. (SR15)
STATION 309+61 TO STATION 309+82

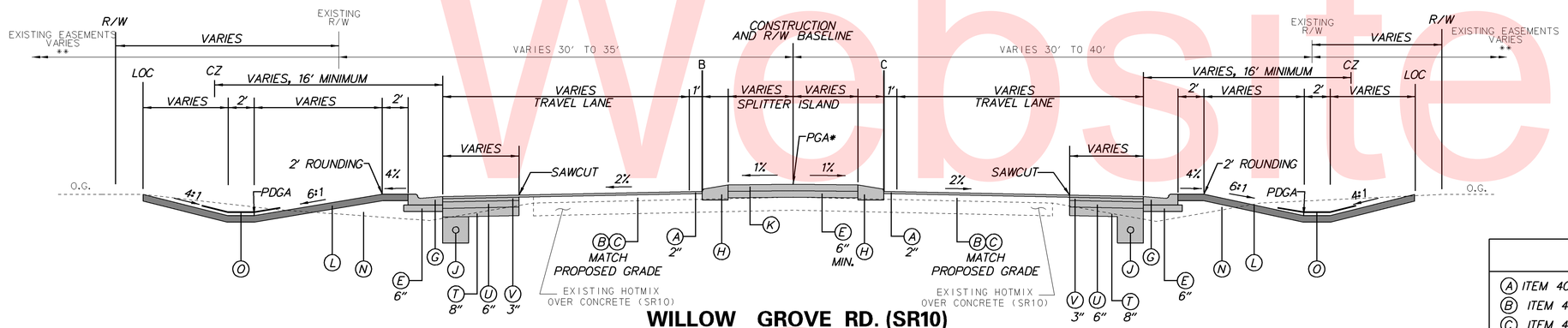

WILLOW GROVE RD. (SR10)
STATION 217+83 TO STATION 218+58
STATION 220+09 TO STATION 220+99

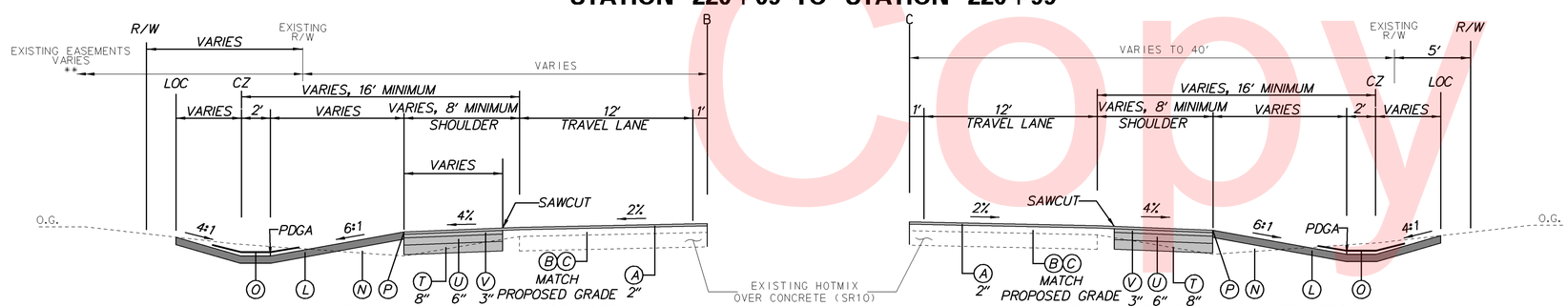

WILLOW GROVE RD. (SR10)
STATION 216+41 TO STATION 217+83

WILLOW GROVE RD. (SR10)
STATION 220+99 TO STATION 221+99

MATERIAL	LIFT THICKNESS	
	MINIMUM	MAXIMUM
WMA, TYPE 'C'	1.25"	2"
WMA, TYPE 'B'	2.25"	3"
BITUMINOUS CONCRETE BASE COURSE	3"	6"
GRADED AGGREGATE BASE COURSE	3"	8"

NOTES:

* IN AREAS WHERE THE PGA IS LOCATED WITHIN THE SPLITTER ISLAND, ITS VERTICAL LOCATION SHALL BE THE TOP OF THE ADJACENT PAVEMENT ELEVATION PROJECTED AT THE PROPOSED CROSS SLOPE TO THE CONSTRUCTION BASELINE. (SEE SPLITTER ISLAND DETAIL)

** EASEMENTS IN SOUTHWEST INTERSECTION QUADRANT ONLY.

LEGEND

- (A) ITEM 401807 - WMA, SUPERPAVE, TYPE C, 160 GYRATIONS, PG 76-22 (CARBONATE STONE)
- (B) ITEM 401816 - WMA, SUPERPAVE, TYPE B, 160 GYRATIONS, PG 76-22
- (C) ITEM 401819 - WMA, SUPERPAVE, BITUMINOUS BASE COURSE, 160 GYRATIONS, PG 64-22
- (D) ITEM 501527 - PATTERNED PORTLAND CEMENT CONCRETE PAVEMENT, 9"
- (E) ITEM 302007 - GRADED AGGREGATE BASE COURSE, TYPE B
- (F) ITEM 701010 - PORTLAND CEMENT CONCRETE CURB, TYPE 1-8
- (G) ITEM 701016 - INTEGRAL PORTLAND CEMENT CONCRETE CURB AND GUTTER, TYPE 1-4
- (H) ITEM 701025 - PORTLAND CEMENT CONCRETE CURB, TYPE 2 MODIFIED
- (I) ITEM 701013 - PORTLAND CEMENT CONCRETE CURB, TYPE 1-2
- (J) ITEM 715001 - PERFORATED PIPE UNDERDRAIN, 6"
- (K) ITEM 705521 - PATTERNED PORTLAND CEMENT CONCRETE SIDEWALK, 8"
- (L) ITEM 908004 - TOPSOIL, 6" DEPTH
- (L) ITEM 908014 - PERMANENT GRASS SEEDING, DRY GROUND
- (M) ITEM 209001 - BORROW, TYPE A
- (N) ITEM 209006 - BORROW, TYPE F
- (O) ITEM 908020 - EROSION CONTROL BLANKET
- (P) ITEM 401752 - SAFETY EDGE FOR ROADWAY PAVEMENT
- (Q) ITEM 908005 - TOPSOIL, 12" DEPTH
- (R) ITEM 209003 - BORROW, TYPE C
- (S) ITEM 760507 - PROFILE MILLING, BITUMINOUS CONCRETE
- (T) ITEM 302008 - GRADED AGGREGATE BASE COURSE, TYPE B, PATCHING
- (U) ITEM 401823 - WMA, SUPERPAVE, BIT. BASE COURSE, 160 GYRATIONS, PG 64-22, PATCHING
- (V) ITEM 401822 - WMA, SUPERPAVE, TYPE B, 160 GYRATIONS, PG 64-22, PATCHING

DELAWARE DEPARTMENT OF TRANSPORTATION	ADDENDUMS / REVISIONS	NOT TO SCALE	HEP KC, SR10 & SR15 INTERSECTION IMPROVEMENTS	CONTRACT T201200802	BRIDGE NO. X	TYPICAL SECTIONS	SHEET NO. 6
				COUNTY KENT	DESIGNED BY: CCE		TOTAL SHTS. 44
					CHECKED BY: JRG		

Y:\KENT\053\ROAD\T201200802\PLANS\FINAL\TS00.DGN

Unofficial Website Copy

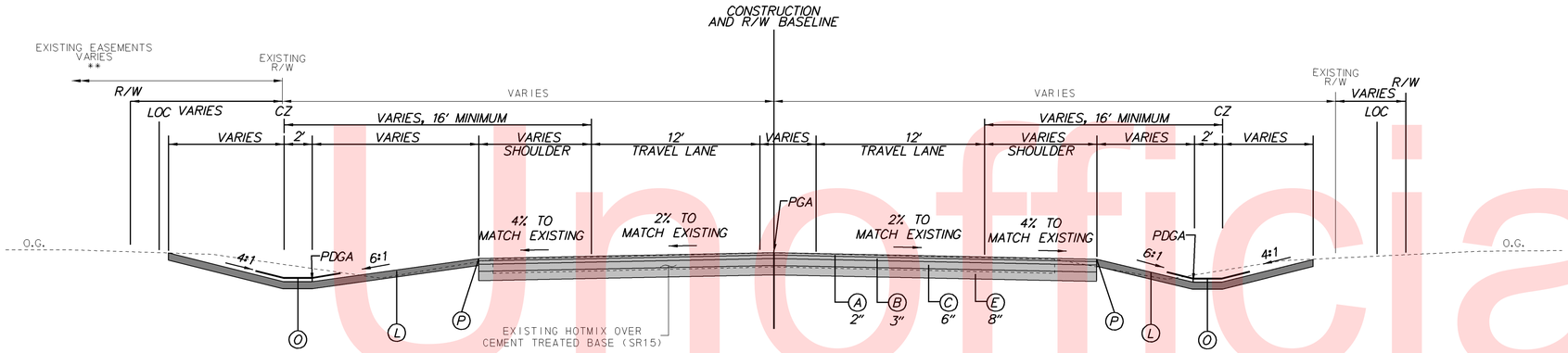

MOOSE LODGE/DUNDEE RD. (SR15)
STATION 308+75 TO STATION 309+45
STATION 313+04 TO STATION 313+41

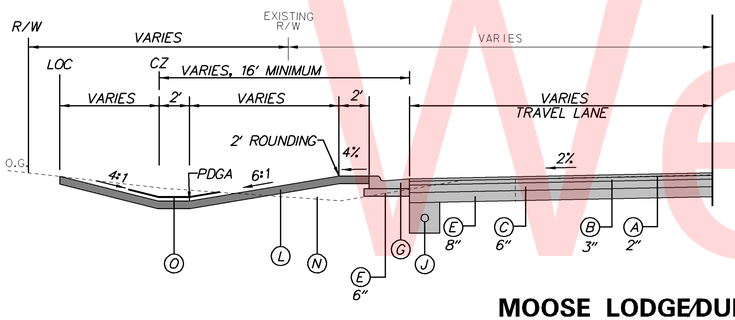

MOOSE LODGE/DUNDEE RD. (SR15)
STATION 312+53 TO STATION 313+04

MATERIAL	LIFT THICKNESS	
	MINIMUM	MAXIMUM
WMA, TYPE 'C'	1.25"	2"
WMA, TYPE 'B'	2.25"	3"
BITUMINOUS CONCRETE BASE COURSE	3"	6"
GRADED AGGREGATE BASE COURSE	3"	8"

NOTES:

* IN AREAS WHERE THE PGA IS LOCATED WITHIN THE SPLITTER ISLAND, ITS VERTICAL LOCATION SHALL BE THE TOP OF THE ADJACENT PAVEMENT ELEVATION PROJECTED AT THE PROPOSED CROSS SLOPE TO THE CONSTRUCTION BASELINE. (SEE SPLITTER ISLAND DETAIL)

** EASEMENTS IN SOUTHWEST INTERSECTION QUADRANT ONLY.

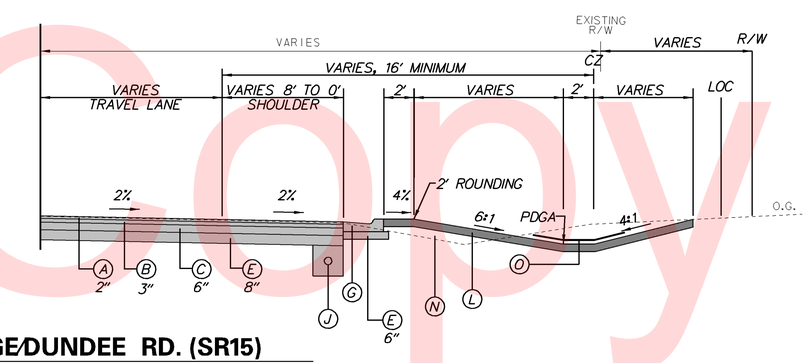

MOOSE LODGE/DUNDEE RD. (SR15)
STATION 309+46 TO STATION 309+61

LEGEND

- (A) ITEM 401807 - WMA, SUPERPAVE, TYPE C, 160 GYRATIONS, PG 76-22 (CARBONATE STONE)
- (B) ITEM 401816 - WMA, SUPERPAVE, TYPE B, 160 GYRATIONS, PG 76-22
- (C) ITEM 401819 - WMA, SUPERPAVE, BITUMINOUS BASE COURSE, 160 GYRATIONS, PG 64-22
- (D) ITEM 501527 - PATTERNED PORTLAND CEMENT CONCRETE PAVEMENT, 9"
- (E) ITEM 302007 - GRADED AGGREGATE BASE COURSE, TYPE B
- (F) ITEM 701010 - PORTLAND CEMENT CONCRETE CURB, TYPE 1-8
- (G) ITEM 701016 - INTEGRAL PORTLAND CEMENT CONCRETE CURB AND GUTTER, TYPE 1-4
- (H) ITEM 701025 - PORTLAND CEMENT CONCRETE CURB, TYPE 2 MODIFIED
- (I) ITEM 701013 - PORTLAND CEMENT CONCRETE CURB, TYPE 1-2
- (J) ITEM 715001 - PERFORATED PIPE UNDERDRAIN, 6"
- (K) ITEM 705521 - PATTERNED PORTLAND CEMENT CONCRETE SIDEWALK, 8"
- (L) ITEM 908004 - TOPSOIL, 6" DEPTH
  ITEM 908014 - PERMANENT GRASS SEEDING, DRY GROUND
- (M) ITEM 209001 - BORROW, TYPE A
- (N) ITEM 209006 - BORROW, TYPE F
- (O) ITEM 908020 - EROSION CONTROL BLANKET
- (P) ITEM 401752 - SAFETY EDGE FOR ROADWAY PAVEMENT
- (Q) ITEM 908005 - TOPSOIL, 12" DEPTH
- (R) ITEM 209003 - BORROW, TYPE C
- (S) ITEM 760507 - PROFILE MILLING, BITUMINOUS CONCRETE
- (T) ITEM 302008 - GRADED AGGREGATE BASE COURSE, TYPE B, PATCHING
- (U) ITEM 401823 - WMA, SUPERPAVE, BIT. BASE COURSE, 160 GYRATIONS, PG 64-22, PATCHING
- (V) ITEM 401822 - WMA, SUPERPAVE, TYPE B, 160 GYRATIONS, PG 64-22, PATCHING

DELAWARE DEPARTMENT OF TRANSPORTATION	ADDENDUMS / REVISIONS	NOT TO SCALE	HEP KC, SR10 & SR15 INTERSECTION IMPROVEMENTS	CONTRACT T201200802 / COUNTY KENT	BRIDGE NO. X / DESIGNED BY: CCE / CHECKED BY: JRG	TYPICAL SECTIONS	SHEET NO. 7 / TOTAL SHTS. 44

Y:\KENT\053\ROAD\T201200802\PLANS\FINAL\TS00.DGN

Unofficial Website Copy

HORIZONTAL / VERTICAL CONTROL DATA

POINT	STATION	OFFSET	NORTHING	EASTING	ELEVATION
1			396874.0061	607543.6996	57.69
2	200+70.97	-38.46	397477.4990	608017.7472	56.05
3	205+85.55	-42.08	397842.9775	608384.8784	56.11
4	211+96.74	-23.40	398213.7765	608875.1161	54.66
5	218+78.44	-25.28	398581.7487	609451.7773	51.83
6	224+97.70	-18.95	398879.2393	609994.9364	50.43
7	231+68.50	-31.42	399218.3400	610573.8400	46.35
8	236+12.87	24.93	399386.6371	610988.9549	48.32
9	231+33.06	20.11	399156.0681	610568.1458	48.32
10	223+90.26	19.04	398793.5332	609919.8254	50.66
11	216+68.36	22.92	398434.8914	609294.1257	52.35
12	209+61.01	32.99	398027.1041	608720.8389	55.48
13	201+57.28	37.76	397487.8684	608132.4353	56.84
16	308+75.31	59.78	398373.7728	609652.5451	54.42
17	306+19.91	239.12	398179.8454	609908.6229	53.48

CONSTRUCTION ALIGNMENT CONTROL

POINT	STATION	OFFSET	NORTHING	EASTING
30013	200+00.00	0.00	397399.3210	607997.5664
30018	237+11.50	0.00	399456.6411	611062.7711
30019	300+00.00	0.00	397502.1845	609785.8336
30024	321+00.00	0.00	399507.0663	609184.4927

NOTE: NEGATIVE OFFSET IS LEFT OF CONSTRUCTION BASELINE.

DATUM REFERENCE:
HORIZONTAL - THIS PROJECT IS REFERENCED TO THE DELAWARE STATE PLANE COORDINATE SYSTEM (NAD 83/91).

VERTICAL - THIS PROJECT IS REFERENCED TO NAVD 88.

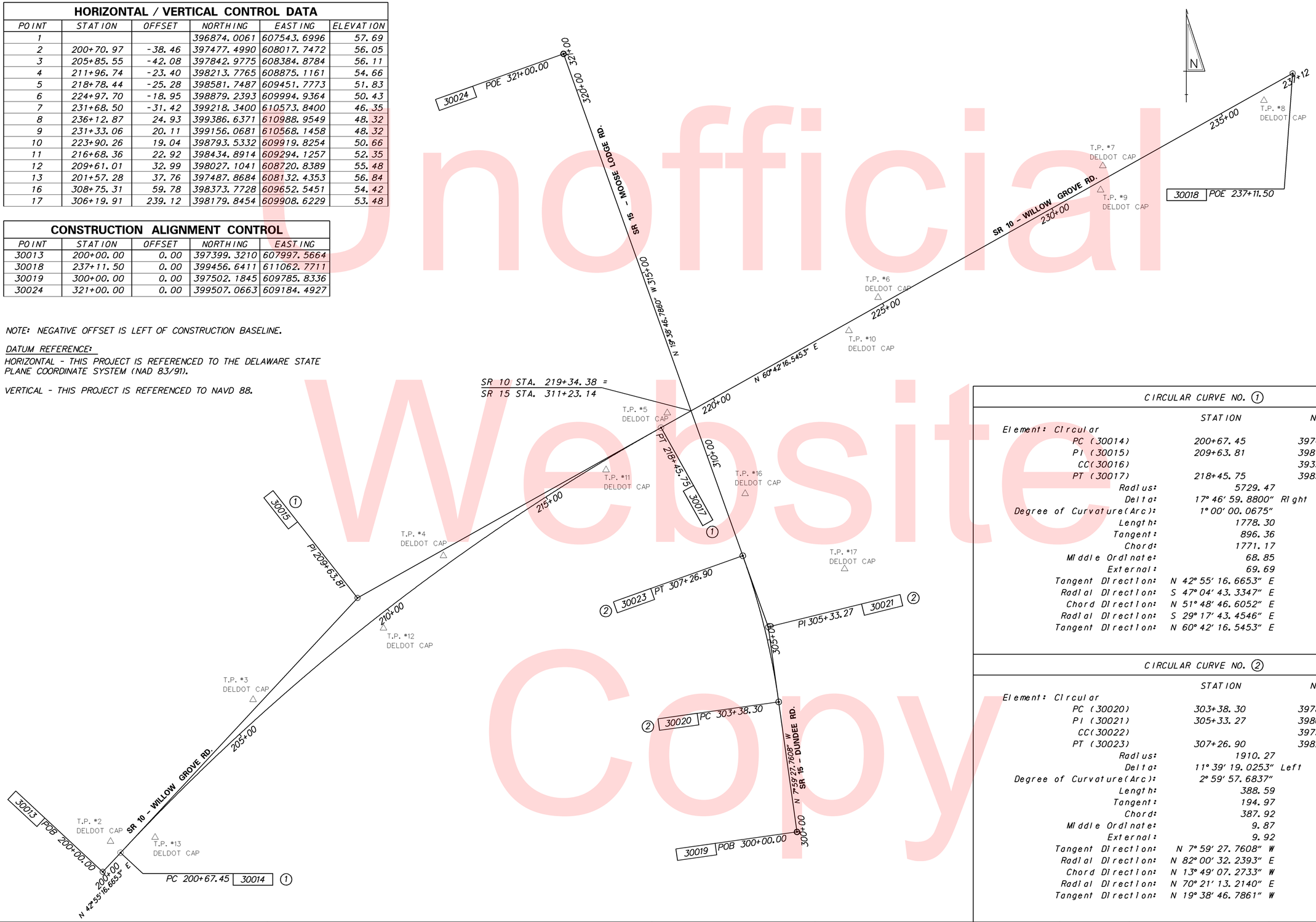

CIRCULAR CURVE NO. 1

	STATION	NORTHING	EASTING
Element: Circular			
PC (30014)	200+67.45	397448.7140	608043.4993
PI (30015)	209+63.81	398105.1061	608653.9114
CC(30016)		393546.9840	612239.1324
PT (30017)	218+45.75	398543.7042	609435.6308
Radius:	5729.47		
Delta:	17° 46' 59.8800" Right		
Degree of Curvature(Arc):	1° 00' 00.0675"		
Length:	1778.30		
Tangent:	896.36		
Chord:	1771.17		
Middle Ordinate:	68.85		
External:	69.69		
Tangent Direction:	N 42° 55' 16.6653" E		
Radial Direction:	S 47° 04' 43.3347" E		
Chord Direction:	N 51° 48' 46.6052" E		
Radial Direction:	S 29° 17' 43.4546" E		
Tangent Direction:	N 60° 42' 16.5453" E		

CIRCULAR CURVE NO. 2

	STATION	NORTHING	EASTING
Element: Circular			
PC (30020)	303+38.30	397837.2030	609738.8032
PI (30021)	305+33.27	398030.2790	609711.6990
CC(30022)		397571.6406	607847.0833
PT (30023)	307+26.90	398213.8983	609646.1477
Radius:	1910.27		
Delta:	11° 39' 19.0253" Left		
Degree of Curvature(Arc):	2° 59' 57.6837"		
Length:	388.59		
Tangent:	194.97		
Chord:	387.92		
Middle Ordinate:	9.87		
External:	9.92		
Tangent Direction:	N 7° 59' 27.7608" W		
Radial Direction:	N 82° 00' 32.2393" E		
Chord Direction:	N 13° 49' 07.2733" W		
Radial Direction:	N 70° 21' 13.2140" E		
Tangent Direction:	N 19° 38' 46.7861" W		

Unofficial Website Copy

DELAWARE DEPARTMENT OF TRANSPORTATION

ADDENDUMS / REVISIONS

SCALE 0 120 240 360 FEET

HEP KC, SR10 & SR15 INTERSECTION IMPROVEMENTS

CONTRACT	BRIDGE NO.	X
T201200802	DESIGNED BY: CCE	
COUNTY		
KENT	CHECKED BY: JRG	

HORIZONTAL AND VERTICAL CONTROL

SHEET NO. 8
TOTAL SHTS. 44

Y:\KENT\053\ROAD\T201200802\PLANS\FINAL\HV01.DGN

Unofficial Website Copy

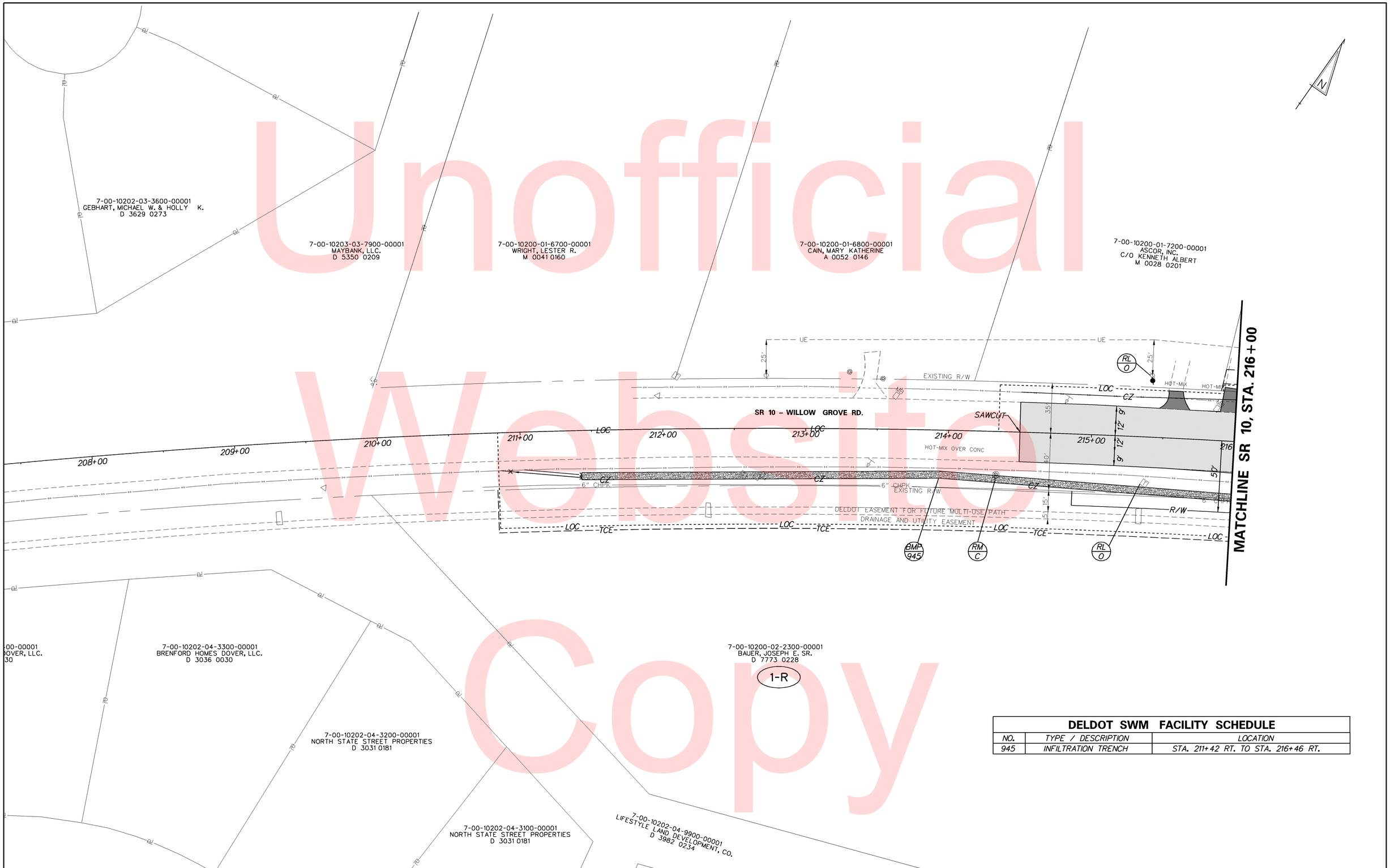

DELDOT SWM FACILITY SCHEDULE		
NO.	TYPE / DESCRIPTION	LOCATION
945	INFILTRATION TRENCH	STA. 211+42 RT. TO STA. 216+46 RT.

Y:\KENT\053\ROAD\T201200802\PLANS\FINAL\CP01.DGN

DELAWARE DEPARTMENT OF TRANSPORTATION

ADDENDUMS / REVISIONS

SCALE 0 30 60 90 FEET

HEP KC, SR10 & SR15 INTERSECTION IMPROVEMENTS

CONTRACT	BRIDGE NO.	X
T201200802	DESIGNED BY: CCE	
COUNTY		
KENT	CHECKED BY: JRG	

CONSTRUCTION PLAN

SHEET NO. 9

TOTAL SHTS. 44

FLARED END SECTION SCHEDULE			
NO.	SIZE / TYPE	SLOPE	SAFETY GRATE
1	14"X23" RCP	0.0031	NO
2	14"X23" RCP	0.0031	NO
3	14"X23" RCP	0.0038	NO
4	14"X23" RCP	0.0038	NO

RIPRAP SCHEDULE						
NO.	STATION	OFFSET	TYPE	LENGTH	WIDTH	QUANTITY
1	311+91	74.72	R-4	5.0'	5.0'	3.0 SY
2	310+37	50.41	R-4	5.0'	5.0'	3.0 SY

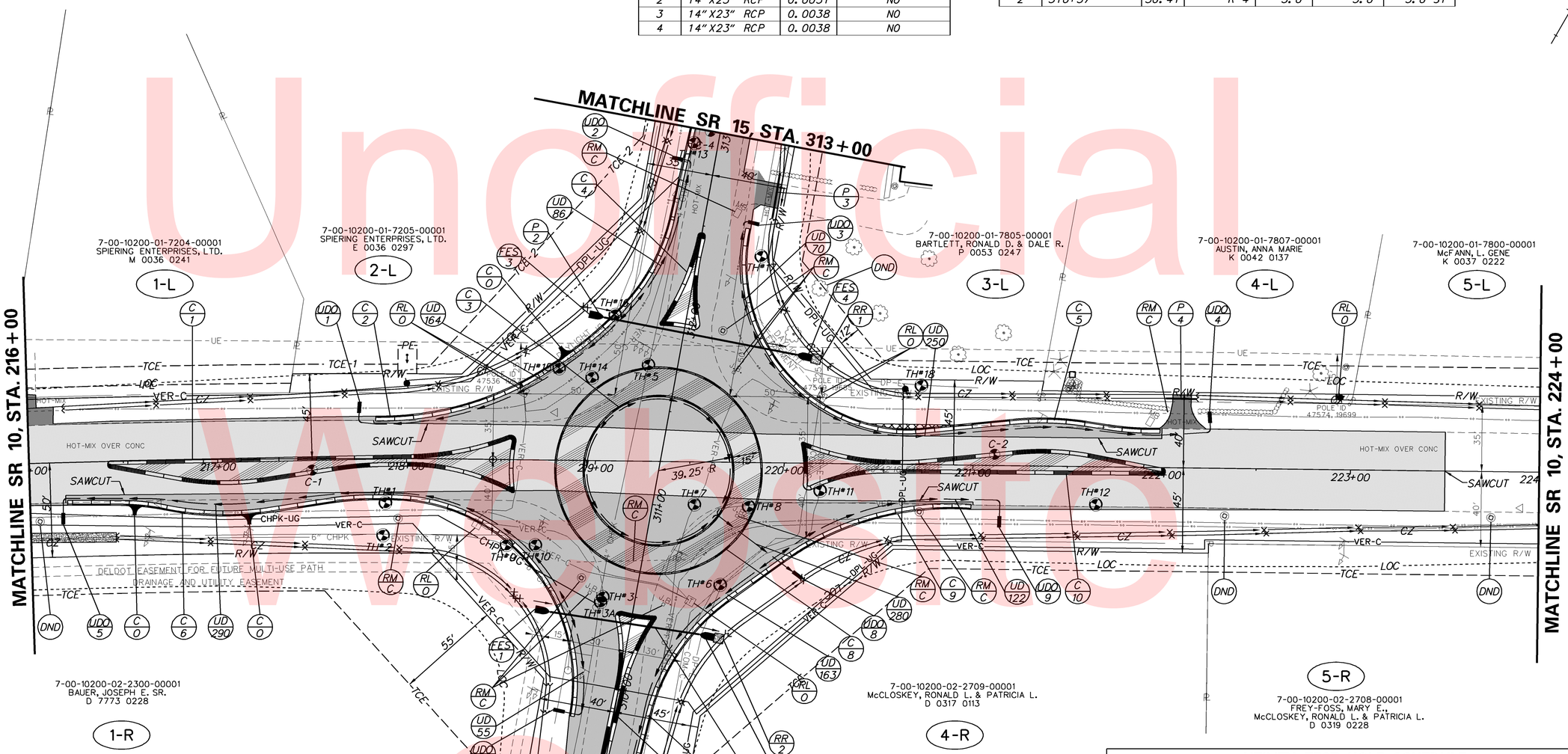

CURB SCHEDULE		
NO.	ITEM DESCRIPTION / TYPE	LENGTH
1	PCC, TYPE 2 MODIFIED	467.93'
2	INTEGRAL PCC CAG, TYPE 1-4	257.24'
3	PCC, TYPE 1-8	251.33'
4	PCC, TYPE 2 MODIFIED	127.14'
5	INTEGRAL PCC CAG, TYPE 1-4	292.72'
6	INTEGRAL PCC CAG, TYPE 1-4	346.00'
7	PCC, TYPE 2 MODIFIED	185.90'
8	PCC, TYPE 1-2	345.58'
9	INTEGRAL PCC CAG, TYPE 1-4	264.37'
10	PCC, TYPE 2 MODIFIED	414.29'

DRAINAGE PIPE SCHEDULE						
NO.	SIZE / TYPE	CLASS	LENGTH	SLOPE	INT. EL.	DIS. EL.
1	14"X23" RCP	IV	80.0'	0.0031	50.25'	50.00'
2	14"X23" RCP	IV	104.0'	0.0038	49.40'	49.00'
3	15" RCP	III	24.0'	0.0042	50.05'	49.95'
4	18" RCP	III	16.0'	0.0031	48.40'	48.35'

UNDERDRAIN OUTLETS		
NO.	LENGTH	DIS. EL.
1	12.0'	49.80'
2	12.0'	50.65'
3	12.0'	49.70'
4	12.0'	48.40'
5	15.0'	50.85'
6	12.0'	50.60'
7	12.0'	51.20'
8	10.0'	49.90'
9	13.0'	49.45'

ROADWAY CORE SCHEDULE			
NO.	STATION	OFFSET	DESCRIPTION
1	217+50.00	6.00'	7.5" HMA, 8" P.C.C.
2	221+11.50	-6.00'	7.5" HMA, 8" P.C.C.
3	309+50.00	5.07'	1.5" HMA, 1.5" SURFACE TREATMENT
4	313+00.00	-5.25'	3" HOT MIX, 5.5" CEMENT TREATMENT BASE

UTILITY TEST HOLE SCHEDULE						
NO.	UTILITY	STATION	OFFSET	GRND EL.	COVER	O.D. & MATERIAL
1	TELEPHONE	217+89	23.4'	51.95'	2.48'	DBC
2	GAS	217+88	40.6'	50.30'	2.83'	6" PLASTIC
3	GAS	310+47	-17.0'	51.63'	5.0'	4" STEEL
3A	UNKNOWN	310+44	-17.7'	51.71'	2.34'	0.5" PLASTIC
4	GAS	309+40	-16.8'	52.80'	3.50'	4" PLASTIC
5	GAS	311+72	-15.3'	51.82'	3.29'	4" STEEL
6	ELECTRIC	310+65	43.0'	52.01'	2.65'	1.5" PLASTIC
7	FIBER OPT.	311+04	21.9'	51.82'	6.40'	UNKNOWN
8	TELEPHONE	219+81	23.3'	51.65'	2.22'	2.5" DBC
9	GAS	218+54	45.2'	50.53'	3.21'	4" PLASTIC
10	TELEPHONE	218+69	45.1'	50.36'	1.87'	1.5" DBC
11	ELECTRIC	220+19	14.4'	51.76'	6.18'	UNKNOWN
12	TELEPHONE	221+65	20.0'	51.46'	2.60'	2.5" DBC
13	GAS	312+92	-12.7'	53.17'	3.87'	4" UNKNOWN
14	TELEPHONE	311+60	-43.5'	51.11'	2.32'	1" DBC
15	CABLE TV	311+62	-61.5'	51.42'	1.49'	1" DBC
16	ELECTRIC	311+95	-37.4'	51.16'	3.80'	UNKNOWN
17	ELECTRIC	312+40	33.2'	50.64'	2.61'	UNKNOWN
18	TELEPHONE	220+72	-42.0'	50.29'	2.79'	UNKNOWN

Unofficial Web Site Copy

Y:\KENT\053\ROAD\T201200802\PLANS\FINAL\CP02.DGN

DELAWARE DEPARTMENT OF TRANSPORTATION

ADDENDUMS / REVISIONS

SCALE 0 30 60 90 FEET

HEP KC, SR10 & SR15 INTERSECTION IMPROVEMENTS

CONTRACT	BRIDGE NO.	X	CONSTRUCTION PLAN	SHEET NO.
T201200802	DESIGNED BY: CCE			10
COUNTY				TOTAL SHTS.
KENT	CHECKED BY: JRG			44

Unofficial Website Copy

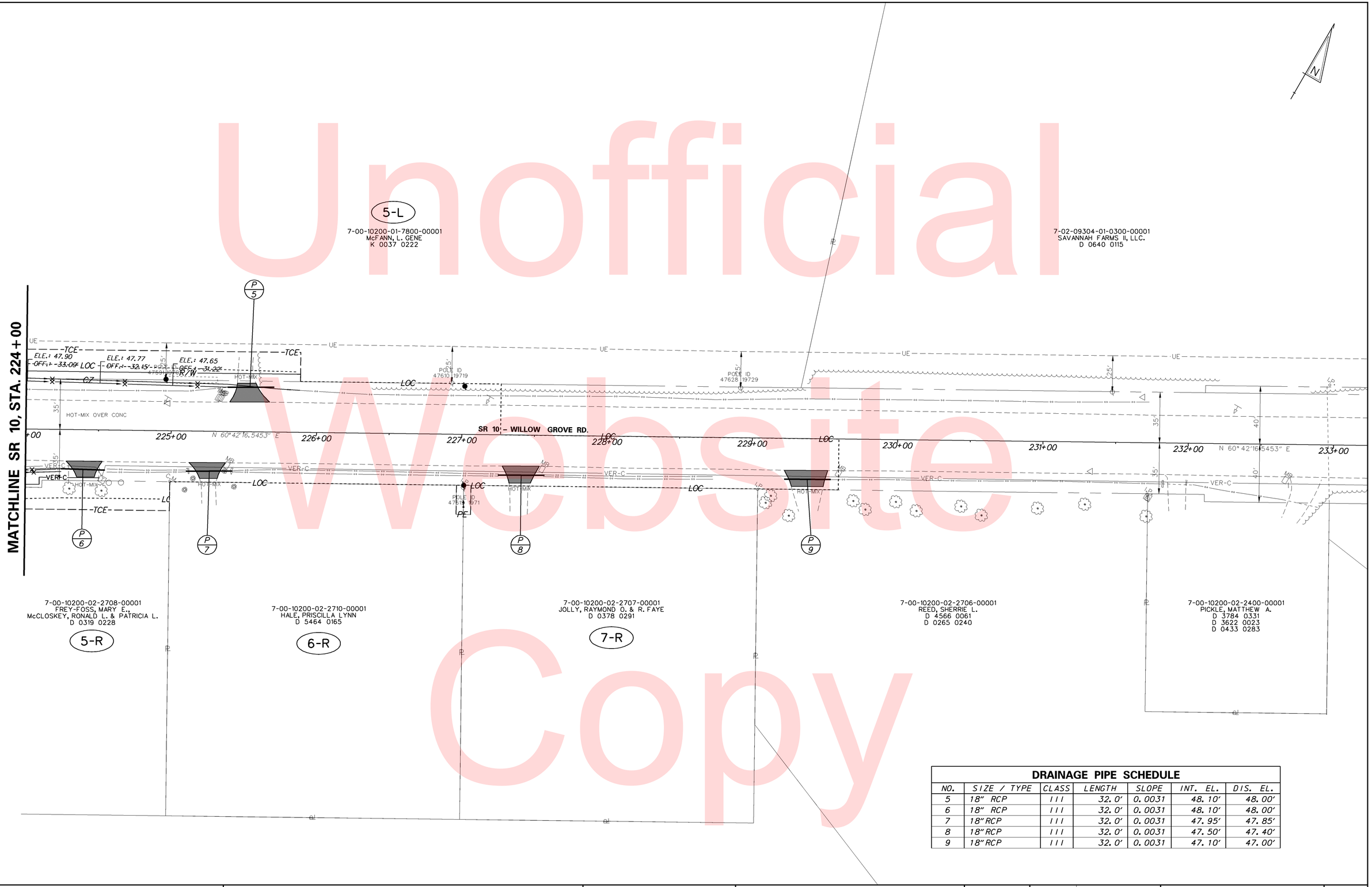

DRAINAGE PIPE SCHEDULE

NO.	SIZE / TYPE	CLASS	LENGTH	SLOPE	INT. EL.	DIS. EL.
5	18" RCP	III	32.0'	0.0031	48.10'	48.00'
6	18" RCP	III	32.0'	0.0031	48.10'	48.00'
7	18" RCP	III	32.0'	0.0031	47.95'	47.85'
8	18" RCP	III	32.0'	0.0031	47.50'	47.40'
9	18" RCP	III	32.0'	0.0031	47.10'	47.00'

DELAWARE DEPARTMENT OF TRANSPORTATION

ADDENDUMS / REVISIONS

SCALE 0 30 60 90 FEET

HEP KC, SR10 & SR15 INTERSECTION IMPROVEMENTS

CONTRACT	BRIDGE NO.	X
T201200802	DESIGNED BY: CCE	
COUNTY		
KENT	CHECKED BY: JRG	

CONSTRUCTION PLAN

SHEET NO. 11

TOTAL SHTS. 44

Y:\KENT\053\ROAD\T201200802\PLANS\FINAL\CP03.DGN

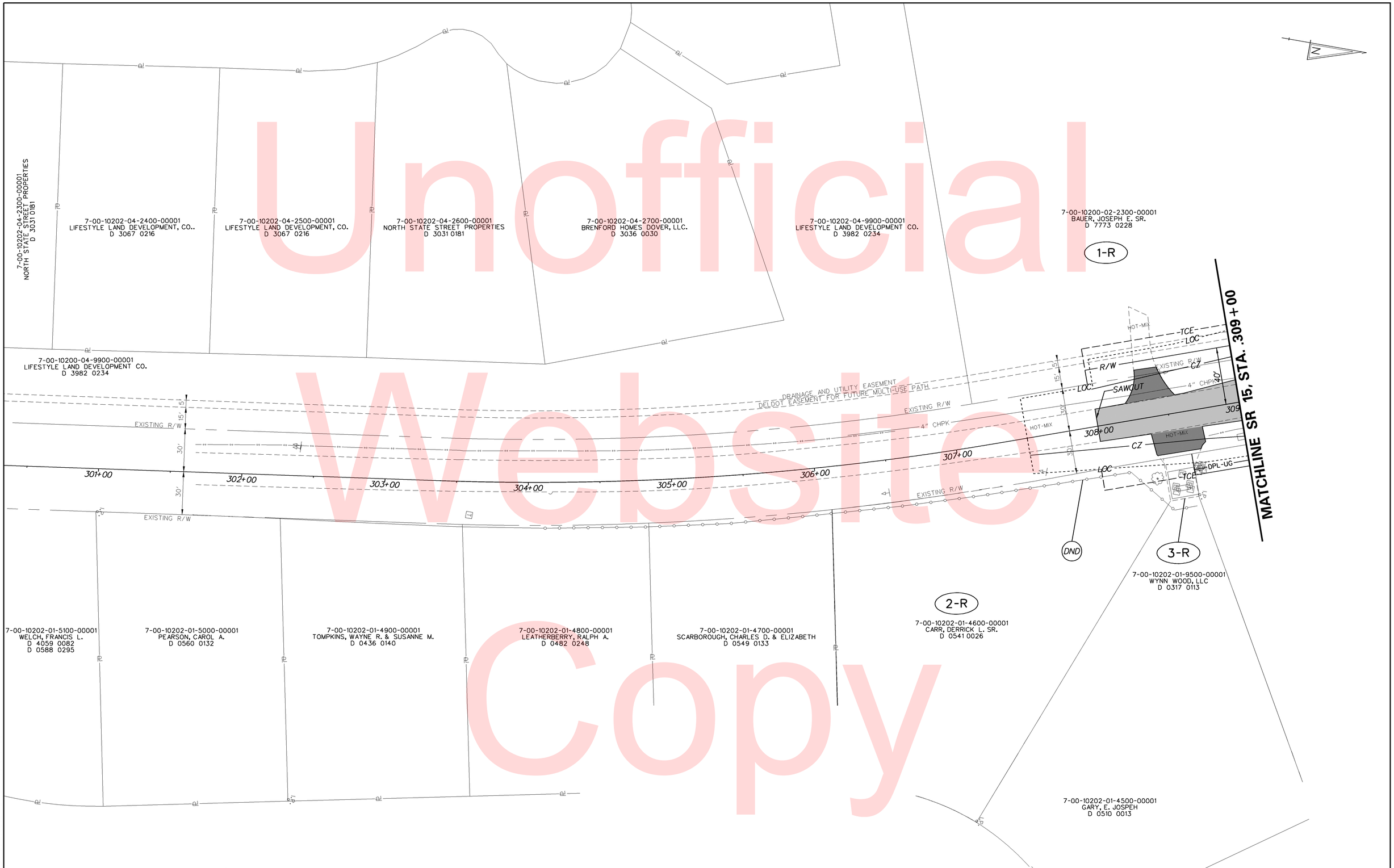

Unofficial Website Copy

Y:\KENT\053\ROAD\T201200802\PLANS\FINAL\CP04.DGN

DELAWARE DEPARTMENT OF TRANSPORTATION

ADDENDUMS / REVISIONS

SCALE 0 30 60 90 FEET

HEP KC, SR10 & SR15 INTERSECTION IMPROVEMENTS

CONTRACT	BRIDGE NO.	X
T201200802	DESIGNED BY: CCE	
COUNTY		
KENT	CHECKED BY: JRG	

CONSTRUCTION PLAN

SHEET NO.
12
TOTAL SHTS.
44

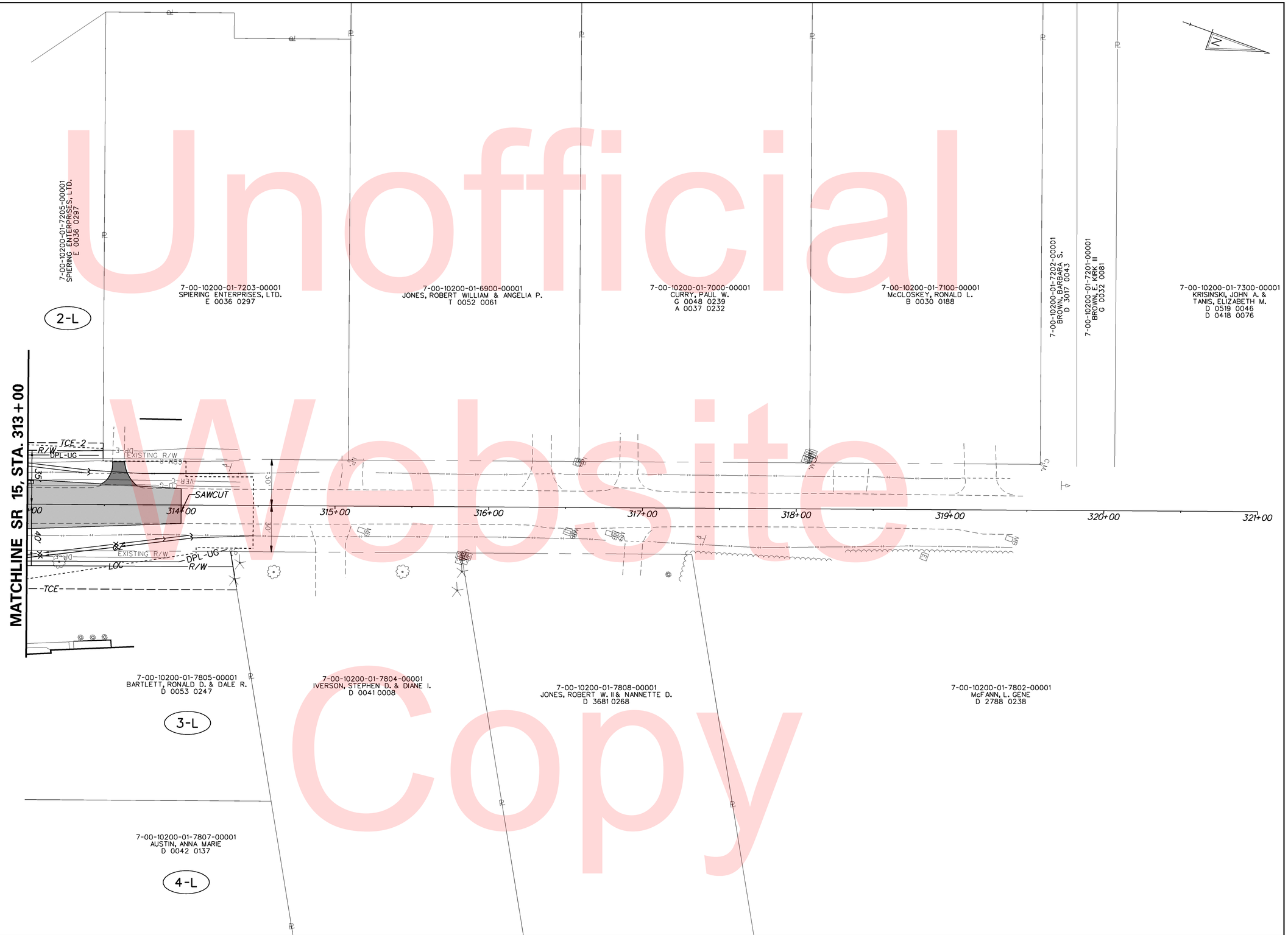

Unofficial Website Copy

Y:\KENT\053\ROAD\T201200802\PLANS\FINAL\CP05.DGN

DELAWARE DEPARTMENT OF TRANSPORTATION

ADDENDUMS / REVISIONS

SCALE 0 30 60 90 FEET

HEP KC, SR10 & SR15 INTERSECTION IMPROVEMENTS

CONTRACT	BRIDGE NO.	X
T201200802	DESIGNED BY: CCE	
COUNTY		
KENT	CHECKED BY: JRG	

CONSTRUCTION PLAN

SHEET NO. 13

TOTAL SHTS. 44

Unofficial Website Copy

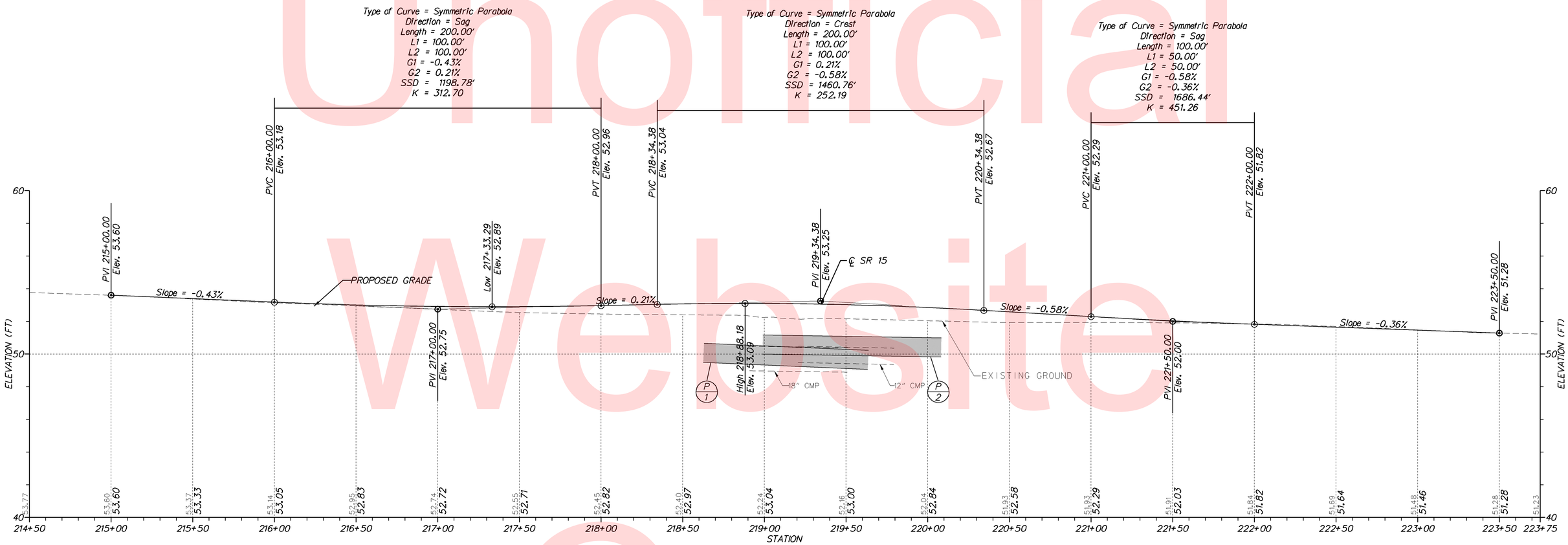

SR10

SCALE
0 30 60 90
FEET

VERTICAL SCALE FEET
9 6 3 0

Y:\KENT\053\ROAD\T201200802\PLANS\FINAL\PF01.DGN

DELAWARE DEPARTMENT OF TRANSPORTATION	ADDENDUMS / REVISIONS	HEP KC, SR10 & SR15 INTERSECTION IMPROVEMENTS	CONTRACT T201200802	BRIDGE NO. X	PROFILES	SHEET NO. 14
			COUNTY KENT	DESIGNED BY: JLC		TOTAL SHTS. 44
				CHECKED BY: JRG		

Unofficial Website Copy

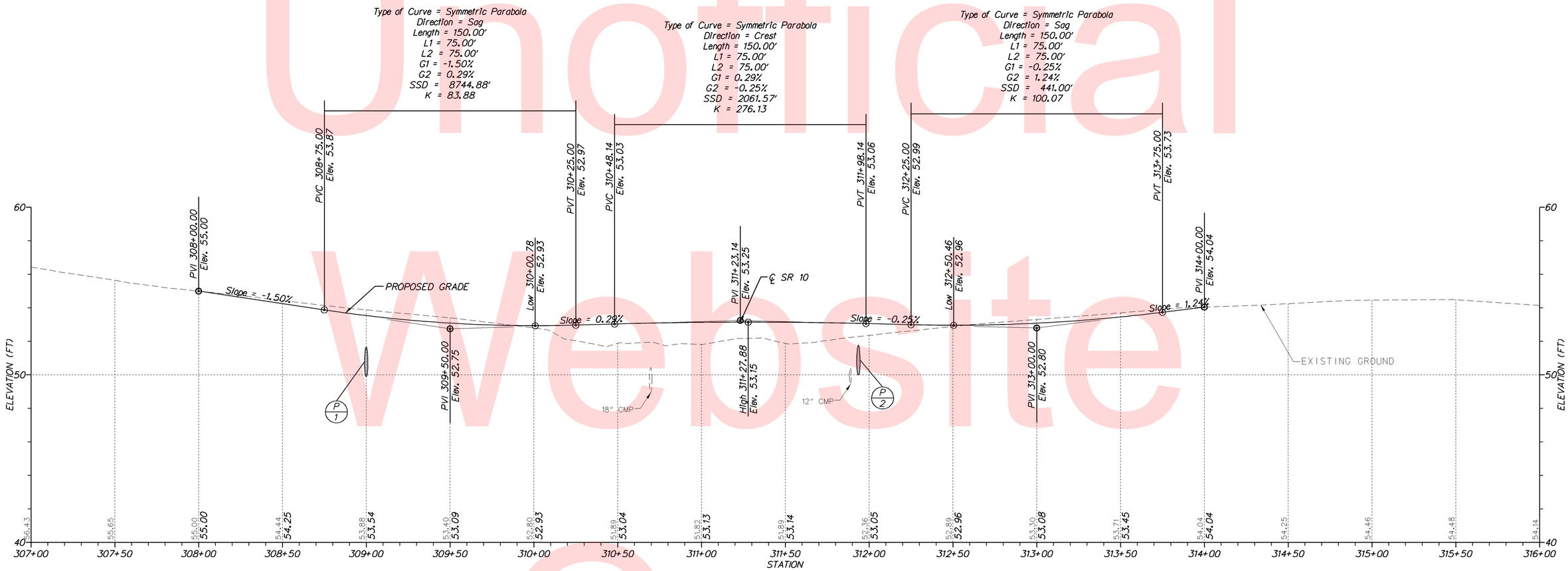

SR15

SCALE
0 30 60 90
FEET

VERTICAL SCALE FEET
9 6 3 0

DELAWARE DEPARTMENT OF TRANSPORTATION	ADDENDUMS / REVISIONS	HEP KC, SR10 & SR15 INTERSECTION IMPROVEMENTS	CONTRACT T201200802	BRIDGE NO. X	PROFILES	SHEET NO. 15
			COUNTY KENT	DESIGNED BY: JLC		TOTAL SHTS. 44
				CHECKED BY: JRG		

Y:\KENT\053\ROAD\T201200802\PLANS\FINAL\PF01.DGN

COORDINATE LIST				
POINT NO.	STATION	OFFSET	NORTHING	EASTING
80000	214+50.00	20.66	398321.02	609108.79
80001	215+52.76	21.21	398375.93	609195.20
80007	214+50.00	-21.02	398355.88	609085.93
80400	211+42.58	29.47	398139.17	608862.48
80401	215+52.72	-33.00	398421.77	609166.26
80402	215+62.78	-33.00	398427.16	609147.83
80403	215+91.71	-37.52	398446.41	609197.12

Unofficial Website Copy

Y:\KENT\053\ROAD\T201200802\PLANS\FINAL\CP01.DGN

DELAWARE DEPARTMENT OF TRANSPORTATION

ADDENDUMS / REVISIONS

SCALE 0 30 60 90 FEET

HEP KC, SR10 & SR15 INTERSECTION IMPROVEMENTS

CONTRACT T201200802 | COUNTY KENT | BRIDGE NO. X | DESIGNED BY: CCE | CHECKED BY: JRG

GRADES AND GEOMETRICS

SHEET NO. 16 | TOTAL SHTS. 44

COORDINATE LIST				
POINT NO.	STATION	OFFSET	NORTHING	EASTING
80003	216+48.32	20.77	398426.40	609275.93
80004	217+82.86	19.20	398495.99	609390.53
80005	217+93.61	19.25	398501.29	609399.85
80008	216+13.39	-20.71	398443.57	609224.49
80009	217+55.65	-22.15	398518.15	609346.27
80010	217+83.63	-19.83	398530.20	609371.74
80011	218+72.38	-45.34	398596.28	609436.68
80030	216+72.23	23.70	398436.22	609297.83
80031	217+26.75	25.75	398462.22	609345.53
80033	217+59.77	20.87	398483.03	609371.45
80069	219+17.15	-82.95	398650.98	609457.32
80070	312+51.70	-15.56	398702.92	609455.05
80104	218+78.74	0.00	398559.85	609464.41
80266	216+20.05	20.03	398412.35	609251.50
80314	217+91.92	118.22	398414.59	609447.62
80315	217+85.11	-186.82	398675.71	609289.78
80316	217+74.04	-211.44	398691.32	609267.56
80317	218+44.31	-146.96	398671.15	609362.44
80404	216+04.71	-36.22	398452.19	609208.93

COORDINATE LIST				
POINT NO.	STATION	OFFSET	NORTHING	EASTING
80014	220+73.86	-16.74	398669.92	609626.38
80016	221+21.12	-21.12	398697.58	609665.05
80017	221+60.05	-21.28	398716.06	609699.33
80018	221+71.03	-19.69	398720.04	609709.68
80019	221+92.32	-18.14	398729.11	609729.00
80020	221+98.85	-18.13	398732.29	609734.70
80021	222+23.33	-20.78	398746.58	609754.75
80022	223+05.37	-20.68	398786.64	609826.35
80023	223+50.00	-20.62	398808.43	609865.30
80075	312+81.83	16.00	398741.91	609474.64
80076	312.63.30	24.56	398727.33	609488.93
80077	312+52.88	22.42	398716.80	609490.42
80100	219+40.24	-34.50	398620.03	609501.16
80101	311+73.14	0.00	398634.16	609496.11
80107	219+73.21	0.00	398606.08	609546.80
80108	219+88.30	0.00	398613.46	609559.95
80318	220+65.21	-105.32	398742.94	609575.50
80405	312+79.05	37.04	398746.37	609495.39
80406	312+66.15	37.20	398734.27	609499.88
80407	222+05.48	-38.73	398753.50	609730.40
80408	222+15.23	-38.66	398758.22	609738.94

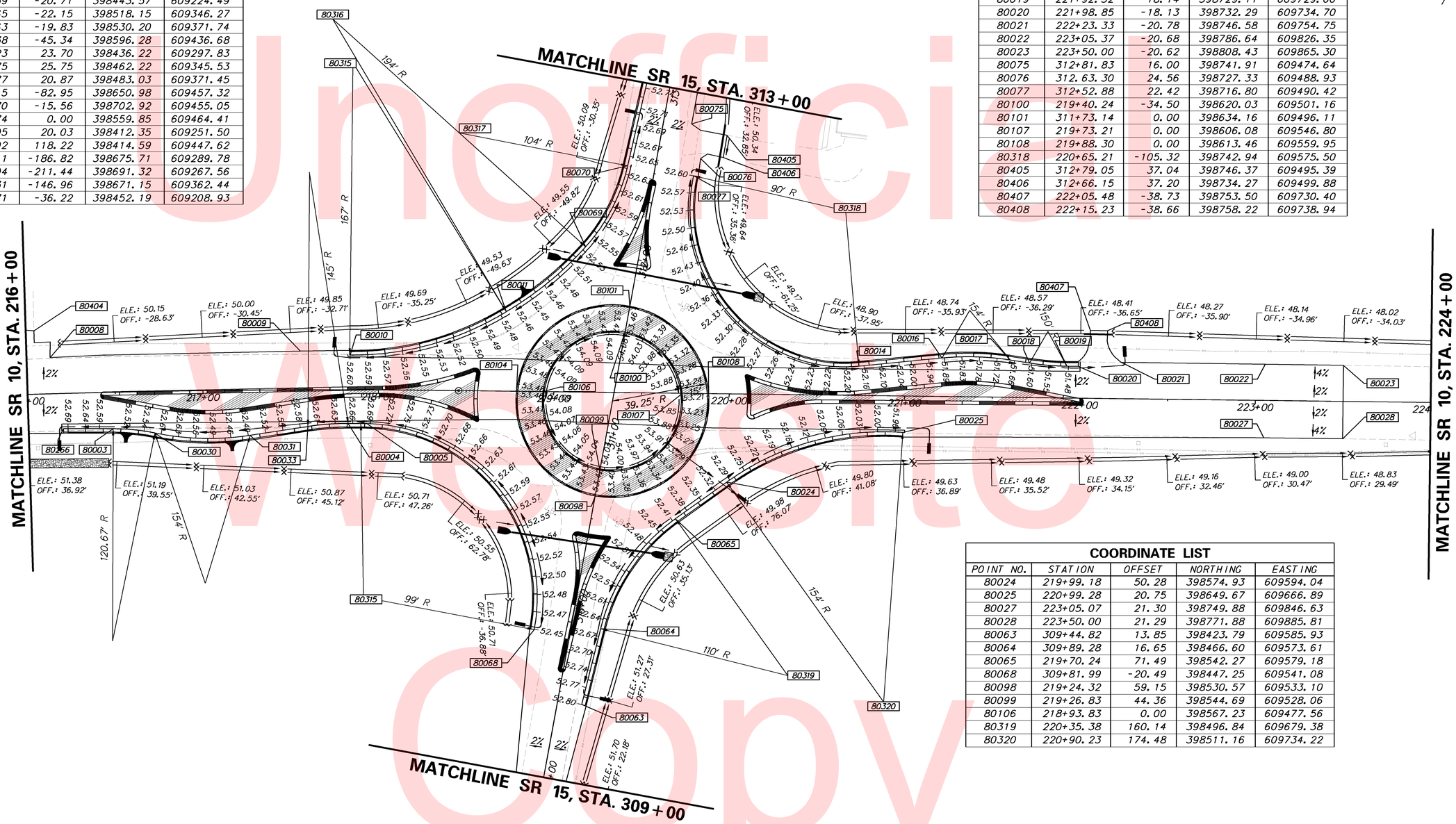

COORDINATE LIST				
POINT NO.	STATION	OFFSET	NORTHING	EASTING
80024	219+99.18	50.28	398574.93	609594.04
80025	220+99.28	20.75	398649.67	609666.89
80027	223+05.07	21.30	398749.88	609846.63
80028	223+50.00	21.29	398771.88	609885.81
80063	309+44.82	13.85	398423.79	609585.93
80064	309+89.28	16.65	398466.60	609573.61
80065	219+70.24	71.49	398542.27	609579.18
80068	309+81.99	-20.49	398447.25	609541.08
80098	219+24.32	59.15	398530.57	609533.10
80099	219+26.83	44.36	398544.69	609528.06
80106	218+93.83	0.00	398567.23	609477.56
80319	220+35.38	160.14	398496.84	609679.38
80320	220+90.23	174.48	398511.16	609734.22

Unofficial Website Copy

Y:\KENT\053\ROAD\T201200802\PLANS\FINAL\GP02.DGN

DELAWARE
DEPARTMENT OF TRANSPORTATION

ADDENDUMS / REVISIONS

SCALE
0 30 60 90
FEET

HEP KC,
SR10 & SR15
INTERSECTION IMPROVEMENTS

CONTRACT	BRIDGE NO.	X
T201200802	DESIGNED BY: CCE	
COUNTY		
KENT	CHECKED BY: JRG	

GRADES AND
GEOMETRICS

SHEET NO.
17
TOTAL SHTS.
44

COORDINATE LIST				
POINT NO.	STATION	OFFSET	NORTHING	EASTING
80409	225+45.26	-33.33	398915.05	610029.37
80410	225+58.02	-33.42	398921.38	610040.46
80411	224+35.33	32.50	398803.85	609965.71
80412	224+47.40	32.46	398809.79	609976.22
80413	225+19.92	32.48	398845.26	610039.48
80414	225+31.99	32.44	398851.20	610049.99
80415	227+32.88	33.08	398948.94	610225.49
80416	227+47.62	32.98	398956.24	610238.30
80417	229+27.22	33.03	399044.08	610394.95
80418	229+49.08	32.95	399054.85	610413.98

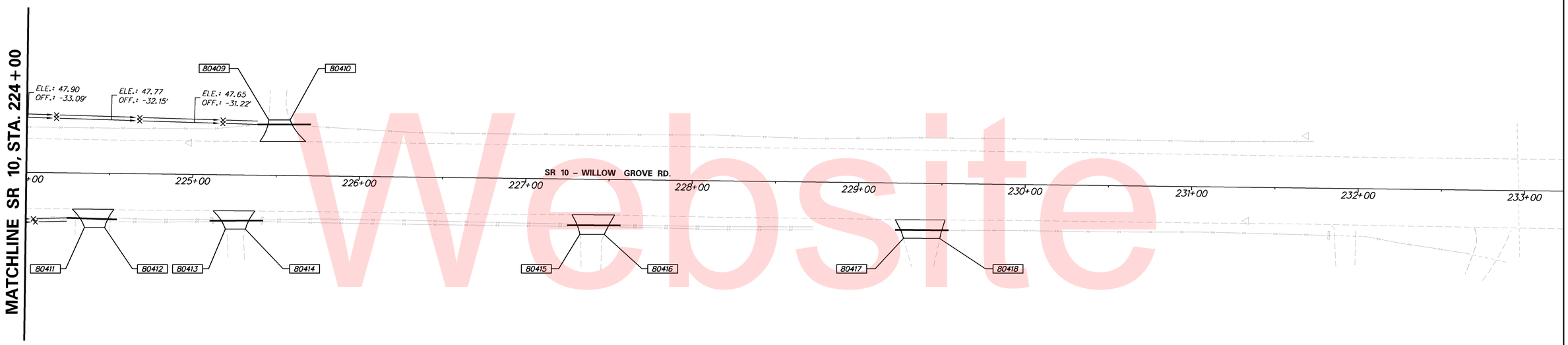

Unofficial Website Copy

Y:\KENT\053\ROAD\T201200802\PLANS\FINAL\CP03.DGN

DELAWARE DEPARTMENT OF TRANSPORTATION	ADDENDUMS / REVISIONS	SCALE 0 30 60 90 FEET	HEP KC, SR10 & SR15 INTERSECTION IMPROVEMENTS	CONTRACT T201200802	BRIDGE NO. X	GRADES AND GEOMETRICS	SHEET NO. 18
				COUNTY KENT	DESIGNED BY: CCE		TOTAL SHTS. 44
					CHECKED BY: JRG		

COORDINATE LIST				
POINT NO.	STATION	OFFSET	NORTHING	EASTING
80061	308+00.00	10.87	398286.39	609631.78
80062	309+00.00	13.01	398381.30	609600.20
80066	308+00.00	-12.13	398278.67	609610.16
80067	309+62.89	-12.68	398337.71	609588.48
80419	308+37.80	27.28	398327.52	609634.55
80420	308+68.29	27.63	398356.35	609624.64
80421	308+72.37	23.14	398358.68	609619.03
80424	308+31.27	-34.37	398300.64	609578.69
80425	308+47.00	-33.92	398315.61	609573.82

Unofficial Website Copy

Y:\KENT\053\ROAD\T201200802\PLANS\FINAL\CP04.DGN

DELAWARE DEPARTMENT OF TRANSPORTATION	ADDENDUMS / REVISIONS	SCALE 0 30 60 90 FEET	HEP KC, SR10 & SR15 INTERSECTION IMPROVEMENTS	CONTRACT T201200802	BRIDGE NO. X	GRADES AND GEOMETRICS	SHEET NO. 19
				COUNTY KENT	DESIGNED BY: CCE		TOTAL SHTS. 44
					CHECKED BY: JRG		

COORDINATE LIST				
POINT NO.	STATION	OFFSET	NORTHING	EASTING
80071	313+03.63	-13.20	398752.76	609439.77
80072	314+00.00	-10.67	398844.23	609409.80
80073	314+00.00	11.98	398851.85	609431.12
80074	313+00.00	16.00	398759.02	609468.53
80422	313+55.15	-27.84	398796.22	609408.70
80423	313+63.07	-27.87	398803.67	609406.01

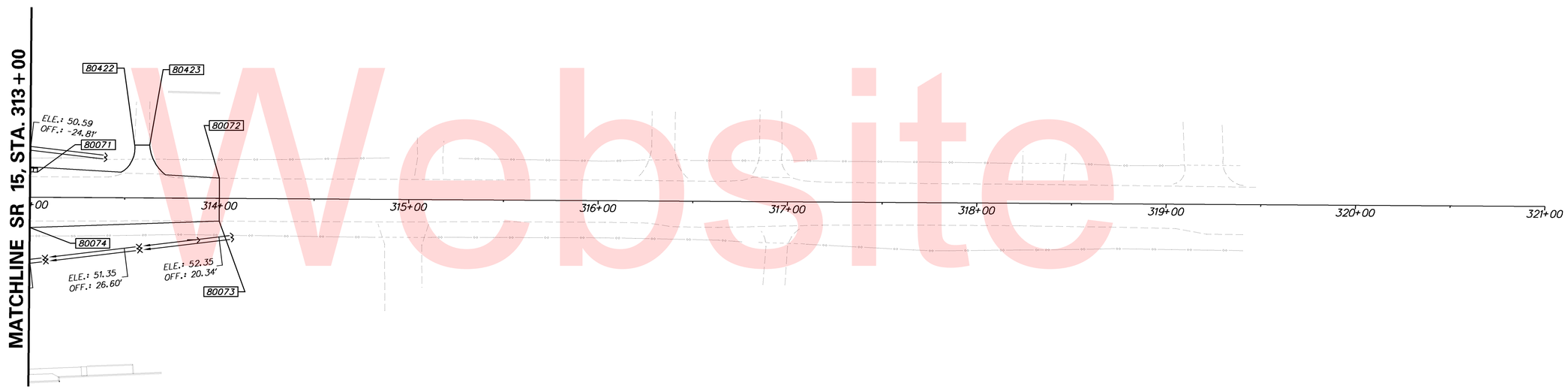

Unofficial Website Copy

Y:\KENT\053\ROAD\T201200802\PLANS\FINAL\CP05.DGN

DELAWARE DEPARTMENT OF TRANSPORTATION	ADDENDUMS / REVISIONS	SCALE 0 30 60 90 FEET	HEP KC, SR10 & SR15 INTERSECTION IMPROVEMENTS	CONTRACT T201200802	BRIDGE NO. X	GRADES AND GEOMETRICS	SHEET NO. 20
				COUNTY KENT	DESIGNED BY: CCE		TOTAL SHTS. 44
					CHECKED BY: JRG		

COORDINATE LIST

POINT NO.	STATION	OFFSET	NORTHING	EASTING
80034	216+43.35	3.69	398438.42	609262.83
80036	216+78.65	10.74	398450.62	609296.64
80038	217+24.74	11.89	398473.14	609336.77
80039	217+44.31	9.03	398485.49	609352.16
80040	217+84.89	4.27	398509.94	609384.84
80041	217+97.05	3.98	398516.24	609395.24
80042	218+55.93	17.40	398533.51	609453.02
80043	218+57.37	16.36	398535.12	609453.78
80044	218+57.86	-9.38	398557.81	609441.61
80045	216+43.64	-0.29	398441.97	609261.01
80046	218+02.37	-2.15	398524.20	609396.81
80047	218+53.82	-12.73	398558.75	609436.44

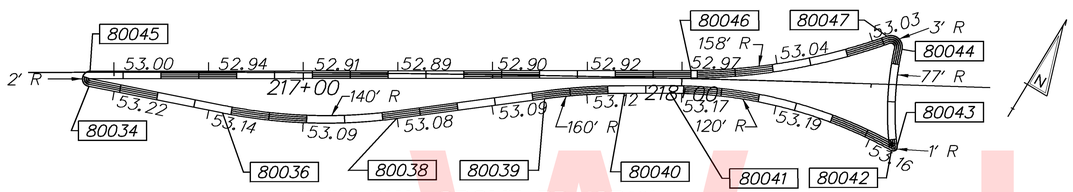

WILLOW GROVE RD. (SR10)

STATION 216+41 TO STATION 218+56

COORDINATE LIST

POINT NO.	STATION	OFFSET	NORTHING	EASTING
80048	220+10.41	-11.07	398633.93	609573.82
80049	220+53.36	-2.23	398647.23	609615.60
80050	220+75.39	-2.82	398658.53	609634.53
80051	221+22.65	-8.03	398686.20	609673.20
80052	221+63.07	-6.60	398704.73	609709.14
80054	222+00.35	0.19	398717.05	609744.98
80055	222+00.00	4.16	398713.42	609746.62
80056	220+52.20	4.71	398640.61	609617.98
80058	220+14.60	13.85	398614.25	609589.66
80059	220+10.29	10.92	398614.69	609584.47
80060	220+09.07	-9.95	398632.29	609573.20

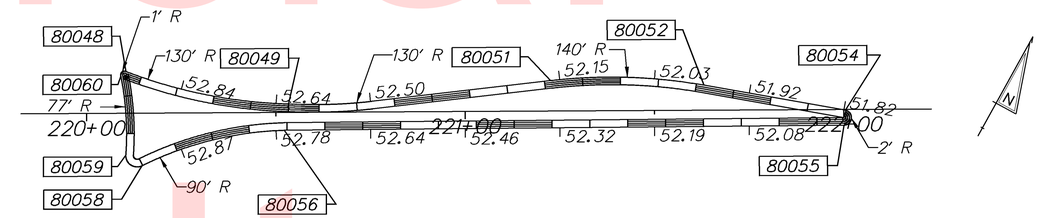

WILLOW GROVE RD. (SR10)

STATION 220+10 TO STATION 222+02

COORDINATE LIST

POINT NO.	STATION	OFFSET	NORTHING	EASTING
80086	309+62.83	0.96	398436.42	609567.73
80087	309+97.30	3.04	398469.59	609558.10
80089	310+40.64	12.78	398513.68	609552.70
80090	309+62.95	-3.04	398435.19	609563.92
80091	310+03.34	-1.96	398473.59	609551.36
80092	310+37.15	-8.34	398503.29	609533.98
80093	310+41.32	-5.37	398508.22	609535.37
80094	310.42.04	11.72	398514.63	609551.23

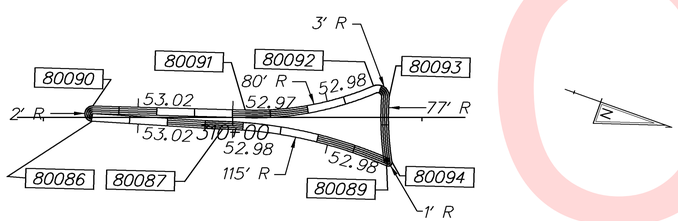

DUNDEE RD. (SR15)

STATION 309+61 TO STATION 310+42

COORDINATE LIST

POINT NO.	STATION	OFFSET	NORTHING	EASTING
80078	312+44.17	2.11	398701.77	609474.22
80079	312+12.49	4.57	398672.23	609486.43
80080	311+99.06	7.43	398661.07	609494.40
80081	312+44.31	-1.89	398700.55	609470.41
80083	311+95.58	-13.17	398651.00	609476.17
80084	311+94.18	-12.10	398649.91	609477.64
80085	311+95.01	4.44	398656.25	609492.95

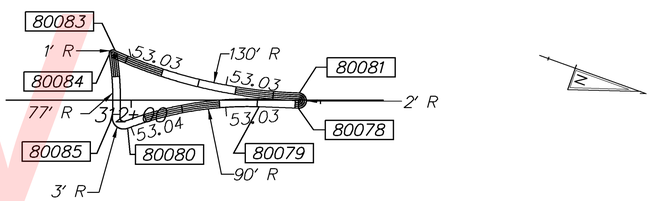

MOOSE LODGE RD. (SR15)

STATION 311+94 TO STATION 312+46

Unofficial Website Copy

DELAWARE DEPARTMENT OF TRANSPORTATION	ADDENDUMS / REVISIONS	SCALE 0 20 40 60 FEET	HEP KC, SR10 & SR15 INTERSECTION IMPROVEMENTS	CONTRACT T201200802 / COUNTY KENT	BRIDGE NO. X / DESIGNED BY: CCE / CHECKED BY: JRG	SPLITTER ISLAND GRADES AND GEOMETRICS	SHEET NO. 21 / TOTAL SHTS. 44

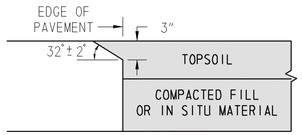

CONCRETE PAVEMENTS
NOT TO SCALE

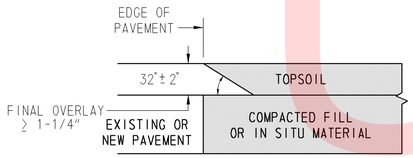

HOT-MIX PAVEMENTS AND OVERLAYS
NOT TO SCALE

SAFETY EDGE DETAIL
NOT TO SCALE

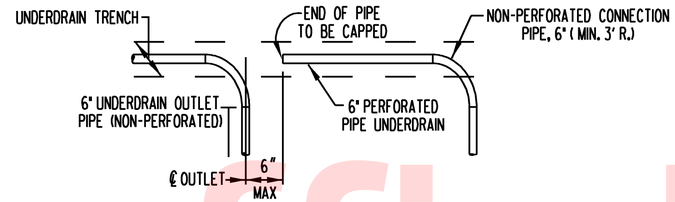

NOTES:

1. CONNECTION PIPE SHALL BE LAID WITH A MINIMUM RADIUS OF 3'.
2. WHEN TWO LINES OF PIPE UNDERDRAIN DRAIN TO A LOW POINT, ONLY ONE UNDERDRAIN OUTLET PIPE IS TO BE USED. CONNECTION SHALL BE MADE WITH A "Y" AT THE END OF THE 3' RADIUS OF THE CONNECTION PIPE. FURNISHING AND INSTALLING THE "Y" SHALL BE INCLUDED IN THE UNIT PRICE BID ITEM 715001-PERFORATED PIPE UNDERDRAINS, 6".
3. CUT GEOTEXTILE IN WALL OF UNDERDRAIN TRENCH FOR CONNECTION PIPE SO AS TO MINIMIZE EXPOSURE OF THE TRENCH. WRAP SECTION OF CONNECTION PIPE OUTSIDE TRENCH IN GEOTEXTILE AND PROVIDE 6" LAP AROUND CONNECTION PIPE AT UNDERDRAIN TRENCH WALL. GEOTEXTILE TO BE INCLUDED IN THE UNIT PRICE BID FOR ITEM 715001-PERFORATED PIPE UNDERDRAINS, 6".
4. NON-PERFORATED UNDERDRAIN OUTLET PIPE SHALL HAVE A SMOOTH INSIDE WALL AND BE THE SAME MATERIAL AS FOR PERFORATED PIPE UNDERDRAINS OR AS APPROVED BY THE ENGINEER. ALL REQUIRED CONNECTIONS SHALL BE INCIDENTAL TO ITEM 715500-UNDERDRAIN OUTLET PIPE, 6".
5. SEE UNDERDRAIN OUTLET SCHEDULE ON PLAN SHEETS FOR LOCATIONS AND LIMITS OF UNDERDRAIN OUTLETS.

UNDERDRAIN OUTLET DETAIL
NOT TO SCALE

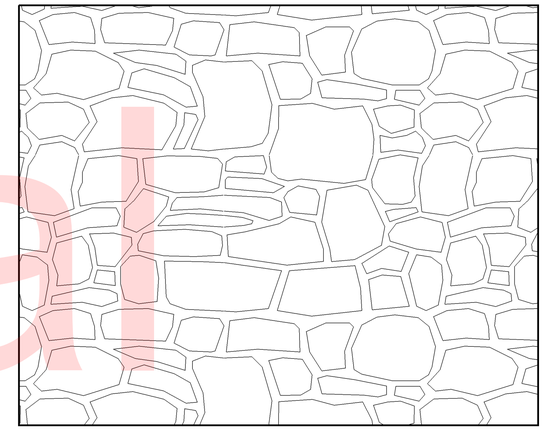

PATTERNED PORTLAND CEMENT CONCRETE DETAIL
NOT TO SCALE

SPLITTER ISLANDS USE ITEM 705521 - PATTERNED PORTLAND CEMENT CONCRETE SIDEWALK, 8"
TRUCK APRON USE ITEM 501527 - PATTERNED PORTLAND CEMENT CONCRETE PAVEMENT, 9"

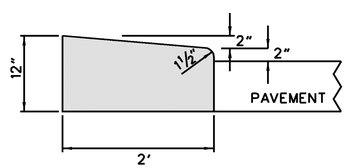

P.C.C CURB TYPE 2, MODIFIED DETAIL
NOT TO SCALE

Unofficial Website Copy

Unofficial Website Copy

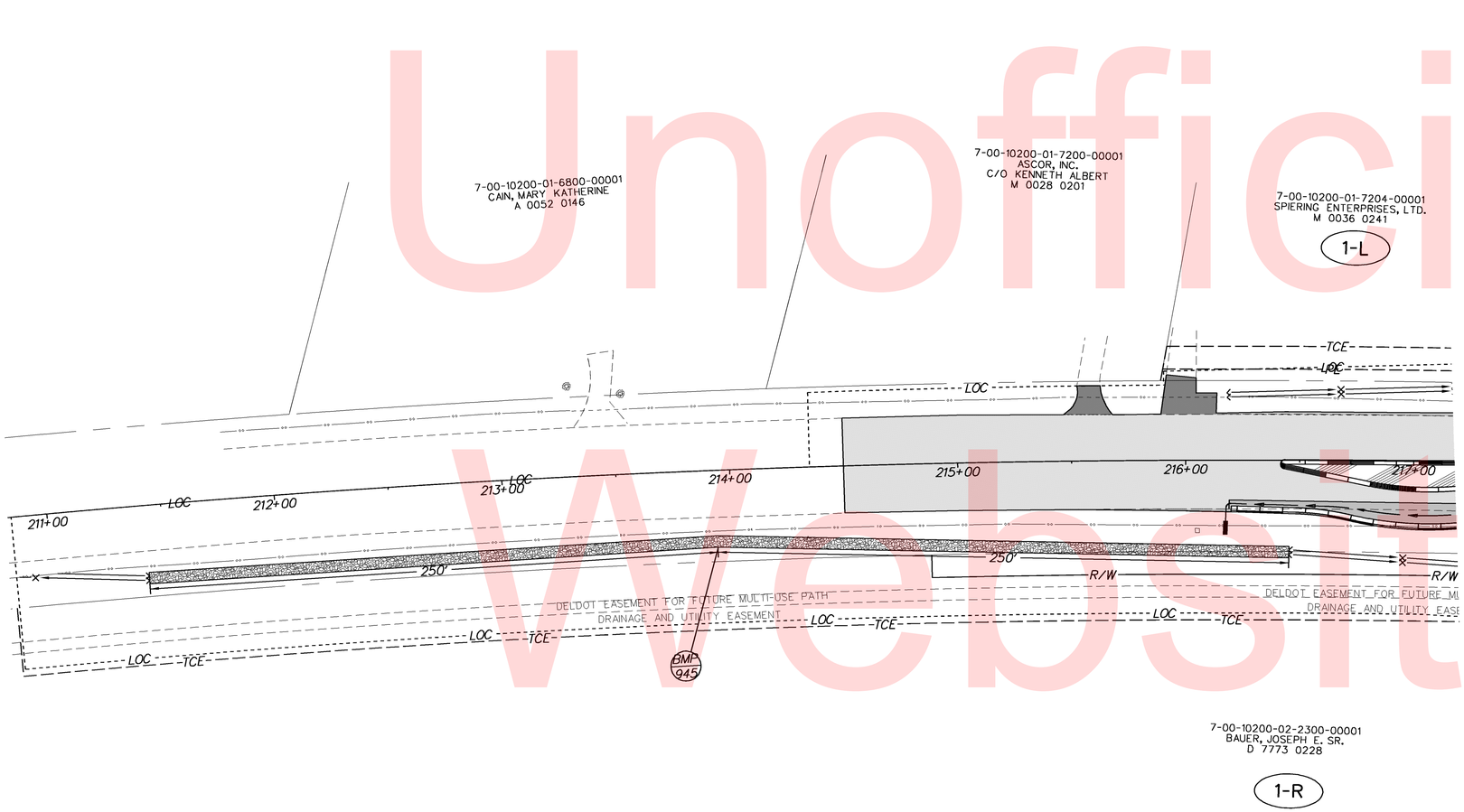

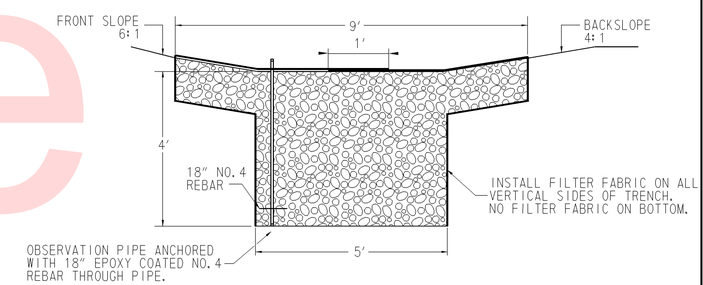

INFILTRATION TRENCH - ITEM 910009

NOT TO SCALE

NOTES:

INFILTRATION TRENCH CONSTRUCTION SEQUENCE
BEFORE CONSTRUCTION OF THE INFILTRATION TRENCH, ALL AREAS DRAINING TO THE TRENCH MUST BE AT FINAL GRADE AND STABILIZED. ABSOLUTELY NO EQUIPMENT SHALL BE IN THE ACTUAL TRENCH AREA ONCE CONSTRUCTION ON THE TRENCH HAS STARTED. ALL EXCAVATION WITH HEAVY EQUIPMENT SHALL BE DONE FROM THE SIDE. ALL STONE USED IN THE TRENCH SHALL CONFORM TO THE INFILTRATION STONE SPECIFICATION.

1. IF AREA(S) DRAINING TO THE INFILTRATION TRENCH ARE NOT VEGETATIVELY STABILIZED, INFLOW SWALES WILL HAVE A STONE CHECK DAM OR 18" COMPOST FILTER LOG PLACED 25 FEET BEFORE THE EDGE OF THE PROPOSED TRENCH OR CLOSER IF DIRECTED BY THE ENGINEER. OTHER INFLOW AREAS, INCLUDING SIDE SLOPES, WILL HAVE SILT FENCE OR 18" COMPOST FILTER LOG INSTALLED SO THAT RUNOFF IS INTERCEPTED BEFORE ENTERING THE TRENCH AREA. THESE ITEMS WILL REMAIN UNTIL SURROUNDING VEGETATION IS ESTABLISHED.

2. EXCAVATE THE TRENCH TO THE DIMENSIONS SHOWN ON THE PLANS AND SCARIFY THE BOTTOM.

3. INSTALL GEOTEXTILE ON ALL TRENCH SIDES MAKING SURE TO HAVE ENOUGH EXTRA TO COVER THE TOP OF THE TRENCH COMPLETELY AFTER STONE IS PLACED AND HAVING AT LEAST 1 FOOT OF OVERLAP OF THE GEOTEXTILE.
THE ONLY AREA THAT IS NOT COVERED WITH GEOTEXTILE IS THE BOTTOM.

4. PLACE THE OBSERVATION WELL AS SHOWN IN THE PLANS.

5. ADD #3 INFILTRATION STONE.

6. AFTER STONE PLACEMENT, COVER THE ENTIRE TOP OF THE TRENCH WITH THE EXCESS GEOTEXTILE AND SPARINGLY SECURE WITH #3 STONE, SO GEOTEXTILE DOES NOT MOVE.
BRUSH CLEAN GEOTEXTILE COVER AS NEEDED TO PREVENT SEDIMENT ACCUMULATION.

7. THE SAME DAY THAT THE TRENCH IS COMPLETED, PERMANENTLY STABILIZE THE DISTURBED AREA AROUND THE TRENCH WITH PERMANENT SEED DRY GROUND AND EROSION CONTROL BLANKET.

8. AFTER ALL SURROUNDING AREAS DRAINING TO THE TRENCH HAVE SUFFICIENT VEGETATION, AS DETERMINED BY THE STORMWATER ENGINEER, ALL E&S DEVICES SHALL BE REMOVED AND THE EXCESS GEOTEXTILE REMOVED FROM THE TOP.

GENERAL NOTES:

1. AT NO TIME DURING CONSTRUCTION SHOULD EXCAVATION OCCUR WITHIN 1-FOOT OF THE PROPOSED TRENCH AREA BOTTOM UNTIL ACTUAL TRENCH CONSTRUCTION COMMENCES.

2. FILTER FABRIC SHALL BE IN ACCORDANCE WITH SECTION 827.04 OF THE STANDARD SPECIFICATIONS SHALL BE INCIDENTAL TO 910009.

3. AN OBSERVATION PERFORATED PIPE SHALL BE INSTALLED AT THE DOWNSTREAM END OF INFILTRATION TRENCH. THE PIPE SHALL BE 5-FEET LONG, 6-INCH PVC SCH. 40 WITH A REMOVABLE CAP AT THE TOP. TOP OF REMOVABLE CAP SHALL BE 1-FOOT ABOVE STONE BACKFILL. PERFORATIONS SHALL BE 4 ROWS OF 3/8-INCH HOLES AT 6-INCH ON CENTER.

DELDOT SWM FACILITY SCHEDULE

NO.	TYPE / DESCRIPTION	LOCATION
945	INFILTRATION TRENCH	STA. 211+42 RT. TO STA. 216+46 RT.

WARNING SIGN LEGEND

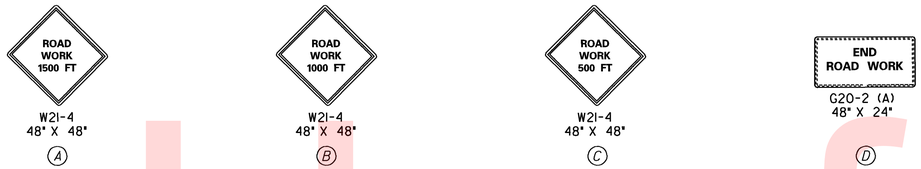

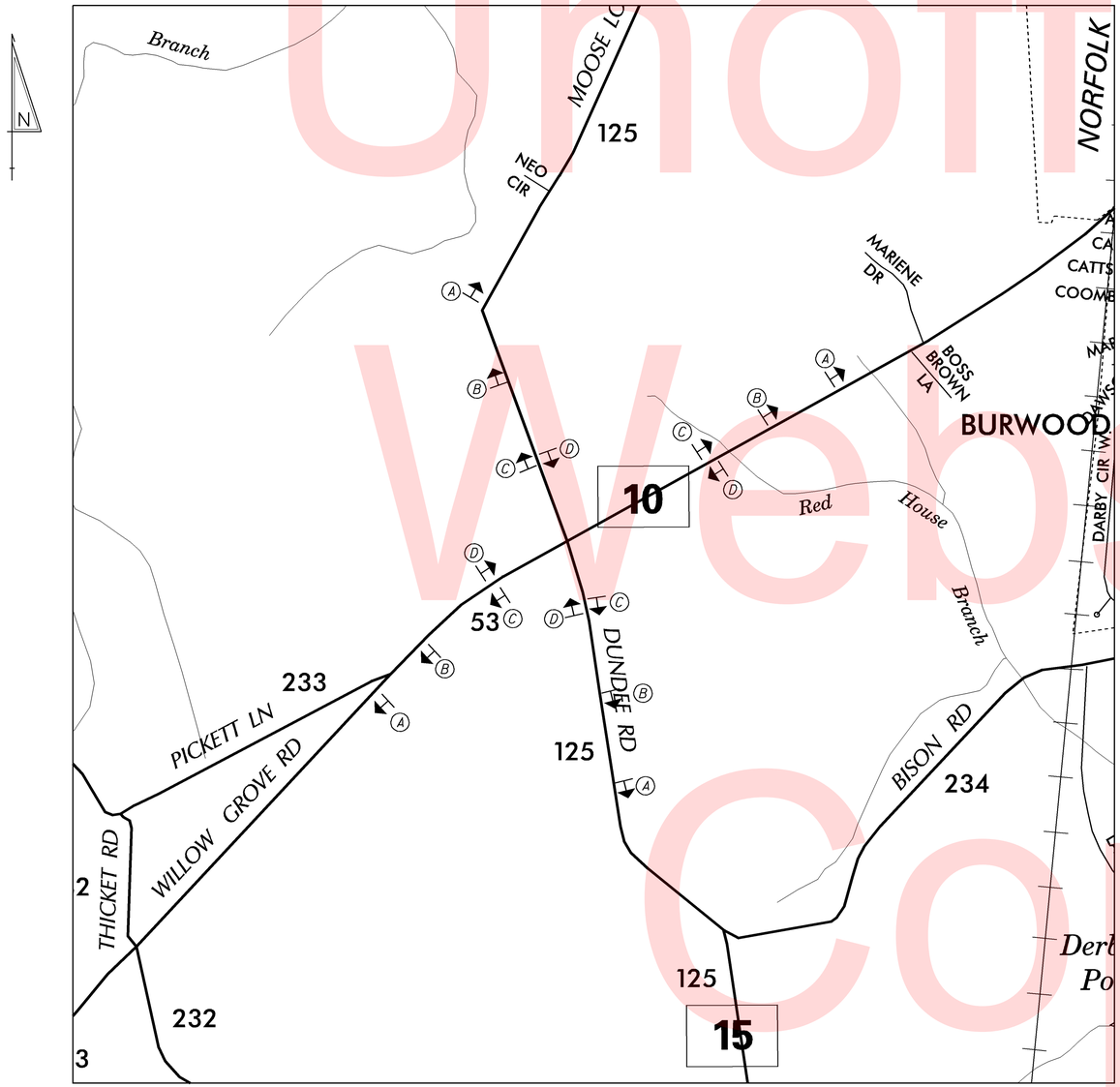

M.O.T. NOTES

1. MAINTENANCE OF TRAFFIC DURING LANE CLOSURES SHALL CONFORM TO TYPICAL APPLICATION 10 (TA-10) OF THE DELAWARE MUTCD. MAINTENANCE OF TRAFFIC DURING LANE SHIFTS SHALL CONFORM TO TYPICAL APPLICATION 11B (TA-11B) OF THE DELAWARE MUTCD. MAINTENANCE OF TRAFFIC DURING SHOULDER CLOSURES SHALL CONFORM TO TYPICAL APPLICATION 3 (TA-3) OF THE DELAWARE MUTCD.

2. LONGITUDINAL EDGE DROP-OFFS SHALL BE CORRECTED IN ACCORDANCE WITH TABLE 6G-1 OF THE DELAWARE MUTCD.

   a) WHERE PLACEMENT OF A WEDGE/FILLET BETWEEN TRAVEL LANES AND A PAVEMENT BOX IS REQUIRED, APPROVED BASE COURSE MATERIAL SHALL BE USED FOR THE FILLET MATERIAL. THE BASE COURSE MATERIAL SHALL BE PLACED AT NO GREATER THAN THE SLOPE SPECIFIED IN TABLE 6G-1 AND SHALL BE COMPACTED. EXCESS BASE COURSE MATERIAL SHALL BE PUSHED AHEAD AND USED IN THE NEXT SEGMENT AND SHALL BE INCIDENTAL TO THE PARTICULAR BASE COURSE ITEM.

   b) WHERE PLACEMENT OF A WEDGE/FILLET AT THE EDGE OF THE ROADWAY IS REQUIRED, PAVEMENT MILLINGS SHALL BE USED FOR THE FILLET MATERIAL. PAYMENT FOR PAVEMENT MILLINGS SHALL BE INCIDENTAL TO ITEM 743000. NO SEPARATE PAYMENT SHALL BE MADE FOR PAVEMENT MILLINGS TO CORRECT PAVEMENT EDGE DROP-OFFS, UNLESS THE MATERIAL IS EVENTUALLY USED AS PART OF A PERMANENT ROADWAY, AT WHICH TIME THE MATERIAL WOULD BE PAID FOR UNDER THE RESPECTIVE CONTRACT BID ITEM.

3. LANE CLOSURES ON SR-10 MAY NOT TAKE PLACE BETWEEN 6 AM AND 9 AM, OR BETWEEN 3 PM AND 6 PM, MONDAY THROUGH FRIDAY.

4. THE USE OF MILLINGS AND GABC IN THE TRAVEL WAY, TEMPORARY TRAVEL WAY, HIGH VOLUME ENTRANCES AND ACCESS RAMP FOR THE PURPOSE OF PROVIDING A TEMPORARY ROADWAY SURFACE, POTHOLE REPAIR, TAPERED EDGE FOR UTILITIES, BUTT JOINTS, AND LONGITUDINAL DROP-OFFS (MILLING AND PAVING OPERATIONS) IS PROHIBITED UNLESS IT IS OTHERWISE DESIGNATED TO BE USED IN THE CONTRACT PLANS. USE COLD PATCH, BITUMINOUS CONCRETE, BITUMINOUS CONCRETE WEDGE, OR TAPERED MILL, AS NOTED IN THE CONTRACT DOCUMENTS OR APPROVED BY THE ENGINEER. PAYMENT FOR COLD PATCH, BITUMINOUS CONCRETE, BITUMINOUS CONCRETE WEDGE SHALL BE PAID AS NOTED IN THE CONTRACT DOCUMENTS. TAPER MILL BITUMINOUS CONCRETE SHALL BE PAID UNDER THE BITUMINOUS CONCRETE MILLING ITEM.

5. MILLINGS OR GABC SHALL BE USED AT THE FOLLOWING LOCATIONS WHERE ACCESS TO A BUSINESS, RESIDENCE, OR EDGE DROP-OFF NEEDS TO BE MAINTAINED UNLESS OTHERWISE NOTED IN THE PLANS OR DIRECTED BY THE ENGINEER TO USE BITUMINOUS CONCRETE OR COLD PATCH. ALL MILLINGS AND GABC WILL BE ROLLED AND COMPACTED TO HELP PREVENT THE MATERIAL FROM UNRAVELLING:
   - A. DRIVEWAYS
   - B. ENTRANCES
   - C. LOW VOLUME ACCESS RAMPS (IDENTIFIED IN THE CONTRACT DOCUMENTS)
   - D. EDGE DROP-OFFS ADJACENT TO LIVE ROADWAY (LANE, SHOULDER, OR TURN LANE) AND THE PROPOSED ROAD CONSTRUCTION
   - E. EDGE OF ROADWAY DROP-OFF

   GRADING AND MAINTAINING BASE COURSE THAT IS BEING USED FOR ROADWAY WEDGE/FILLET BETWEEN TRAVEL LANES AND PAVEMENT BOX, EDGE OF TRAVELWAY, DRIVEWAY OR ENTRANCE ACCESS SHALL BE INCIDENTAL TO ITEM NO. 743000 - MAINTENANCE OF TRAFFIC. THE BASE COURSE MATERIAL SHALL BE PLACED AT NO GREATER THAN THE SLOPE SPECIFIED IN TABLE 6G-1 AND SHALL BE COMPACTED. EXCESS BASE COURSE MATERIAL SHALL BE PUSHED AHEAD AND USED IN THE NEXT SEGMENT AND SHALL BE INCIDENTAL TO THE PARTICULAR BASE COURSE PAY ITEM. NO SEPERATE PAYMENT SHALL BE MADE FOR MILLINGS OR GABC TEMPORARY ROADWAY MATERIAL (TRM) USED TO PROTECT EDGE DROP-OFFS, UNLESS THE MATERIAL IS EVENTUALLY UTILIZED AS PART OF A PERMANENT ROADWAY AT WHICH TIME THE MATERIAL WOULD BE PAID FOR UNDER THE RESPECTIVE CONTRACT MATERIAL ITEM. VERTICAL DIFFERENCES SHALL BE CORRECTED IN ACCORDANCE WITH TABLE 6G-1 OF THE DELAWARE MUTCD.

Unofficial Website Copy

DELAWARE DEPARTMENT OF TRANSPORTATION	ADDENDUMS / REVISIONS	NOT TO SCALE	HEP KC, SR10 & SR15 INTERSECTION IMPROVEMENTS	CONTRACT T201200802	BRIDGE NO. X	CONSTRUCTION PHASING, M.O.T., AND EROSION CONTROL PLAN	SHEET NO. 24
				COUNTY KENT	DESIGNED BY: JLC		TOTAL SHTS. 44
					CHECKED BY: JRG		

Y:\KENT\053\ROAD\T201200802\PLANS\FINAL\CSPH01_AWS.DGN

EROSION & SEDIMENT CONTROL	
DWBAG	DEWATERING BAG
DWB	DEWATERING BASIN
ED	EARTH DIKE
	INLET SEDIMENT CONTROL
	PERIMETER DIKE/SWALE
PST	PORTABLE SEDIMENT TANK
SBD	SANDBAG DIKE
SB	SANDBAG DIVERSION
CFL	COMPOST FILTER LOG
SCE	STABILIZED CONSTRUCTION ENTRANCE
SF	SILT FENCE / LENGTH
SF	SILT FENCE
RSF	SILT FENCE - REINFORCED
SP	SUMP PIT
ST	SEDIMENT TRAP / NUMBER
ST	SEDIMENT TRAP
ST	SEDIMENT TRAP WITH INLET AS OUTLET
ST	SEDIMENT TRAP PIPE OUTLET
SW	STILLING WELL
	TEMPORARY SWALE
TSD	TEMPORARY SLOPE DRAIN
T XXX	TURBIDITY CURTAIN / LENGTH
T	TURBIDITY CURTAIN

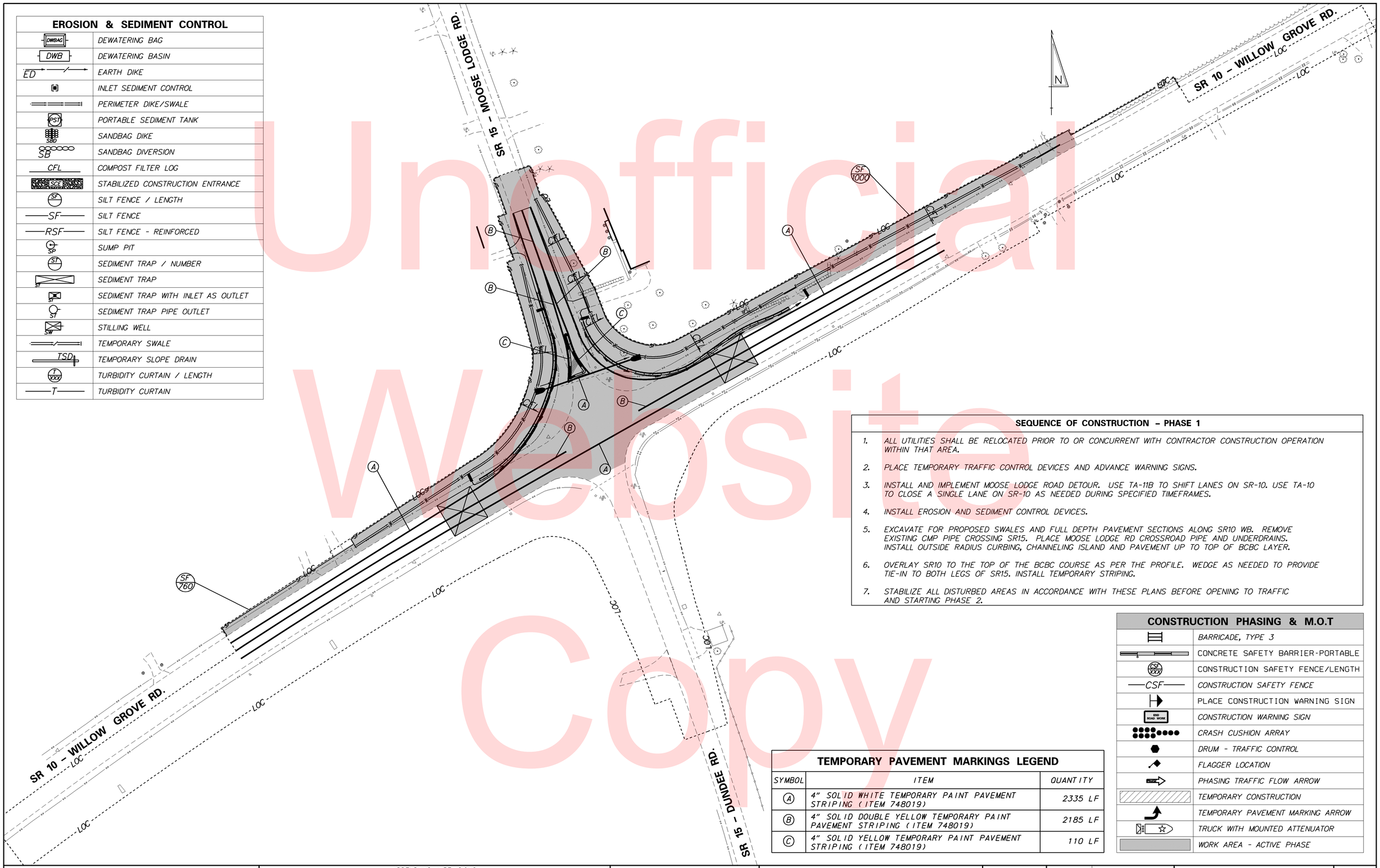

SEQUENCE OF CONSTRUCTION - PHASE 1

1. ALL UTILITIES SHALL BE RELOCATED PRIOR TO OR CONCURRENT WITH CONTRACTOR CONSTRUCTION OPERATION WITHIN THAT AREA.
2. PLACE TEMPORARY TRAFFIC CONTROL DEVICES AND ADVANCE WARNING SIGNS.
3. INSTALL AND IMPLEMENT MOOSE LODGE ROAD DETOUR. USE TA-11B TO SHIFT LANES ON SR-10. USE TA-10 TO CLOSE A SINGLE LANE ON SR-10 AS NEEDED DURING SPECIFIED TIMEFRAMES.
4. INSTALL EROSION AND SEDIMENT CONTROL DEVICES.
5. EXCAVATE FOR PROPOSED SWALES AND FULL DEPTH PAVEMENT SECTIONS ALONG SR10 WB. REMOVE EXISTING CMP PIPE CROSSING SR15. PLACE MOOSE LODGE RD CROSSROAD PIPE AND UNDERDRAINS. INSTALL OUTSIDE RADIUS CURBING, CHANNELING ISLAND AND PAVEMENT UP TO TOP OF BCBC LAYER.
6. OVERLAY SR10 TO THE TOP OF THE BCBC COURSE AS PER THE PROFILE. WEDGE AS NEEDED TO PROVIDE TIE-IN TO BOTH LEGS OF SR15. INSTALL TEMPORARY STRIPING.
7. STABILIZE ALL DISTURBED AREAS IN ACCORDANCE WITH THESE PLANS BEFORE OPENING TO TRAFFIC AND STARTING PHASE 2.

TEMPORARY PAVEMENT MARKINGS LEGEND

SYMBOL	ITEM	QUANTITY
A	4" SOLID WHITE TEMPORARY PAINT PAVEMENT STRIPING (ITEM 748019)	2335 LF
B	4" SOLID DOUBLE YELLOW TEMPORARY PAINT PAVEMENT STRIPING (ITEM 748019)	2185 LF
C	4" SOLID YELLOW TEMPORARY PAINT PAVEMENT STRIPING (ITEM 748019)	110 LF

CONSTRUCTION PHASING & M.O.T

	BARRICADE, TYPE 3
	CONCRETE SAFETY BARRIER-PORTABLE
CSF XXX	CONSTRUCTION SAFETY FENCE/LENGTH
CSF	CONSTRUCTION SAFETY FENCE
	PLACE CONSTRUCTION WARNING SIGN
END ROAD WORK	CONSTRUCTION WARNING SIGN
	CRASH CUSHION ARRAY
	DRUM - TRAFFIC CONTROL
	FLAGGER LOCATION
STOP	PHASING TRAFFIC FLOW ARROW
	TEMPORARY CONSTRUCTION
	TEMPORARY PAVEMENT MARKING ARROW
	TRUCK WITH MOUNTED ATTENUATOR
	WORK AREA - ACTIVE PHASE

Unofficial Website Copy

Y:\KENT\053\ROAD\T201200802\PLANS\FINAL\CSPH01.DGN

DELAWARE DEPARTMENT OF TRANSPORTATION

ADDENDUMS / REVISIONS

SCALE 0 50 100 150 FEET

HEP KC, SR10 & SR15 INTERSECTION IMPROVEMENTS

CONTRACT	BRIDGE NO.	X
T201200802	DESIGNED BY: CCE	
COUNTY		
KENT	CHECKED BY: JRG	

CONSTRUCTION PHASING, M.O.T., AND EROSION CONTROL PLAN - PHASE 1

SHEET NO. 25

TOTAL SHTS. 44

EROSION & SEDIMENT CONTROL	
DWBAG	DEWATERING BAG
DWB	DEWATERING BASIN
ED	EARTH DIKE
	INLET SEDIMENT CONTROL
	PERIMETER DIKE/SWALE
PST	PORTABLE SEDIMENT TANK
SBD	SANDBAG DIKE
SB	SANDBAG DIVERSION
CFL	COMPOST FILTER LOG
SCE	STABILIZED CONSTRUCTION ENTRANCE
SF	SILT FENCE / LENGTH
SF	SILT FENCE
RSF	SILT FENCE - REINFORCED
SP	SUMP PIT
ST	SEDIMENT TRAP / NUMBER
ST	SEDIMENT TRAP
ST	SEDIMENT TRAP WITH INLET AS OUTLET
ST	SEDIMENT TRAP PIPE OUTLET
SW	STILLING WELL
	TEMPORARY SWALE
TSD	TEMPORARY SLOPE DRAIN
T XXX	TURBIDITY CURTAIN / LENGTH
T	TURBIDITY CURTAIN

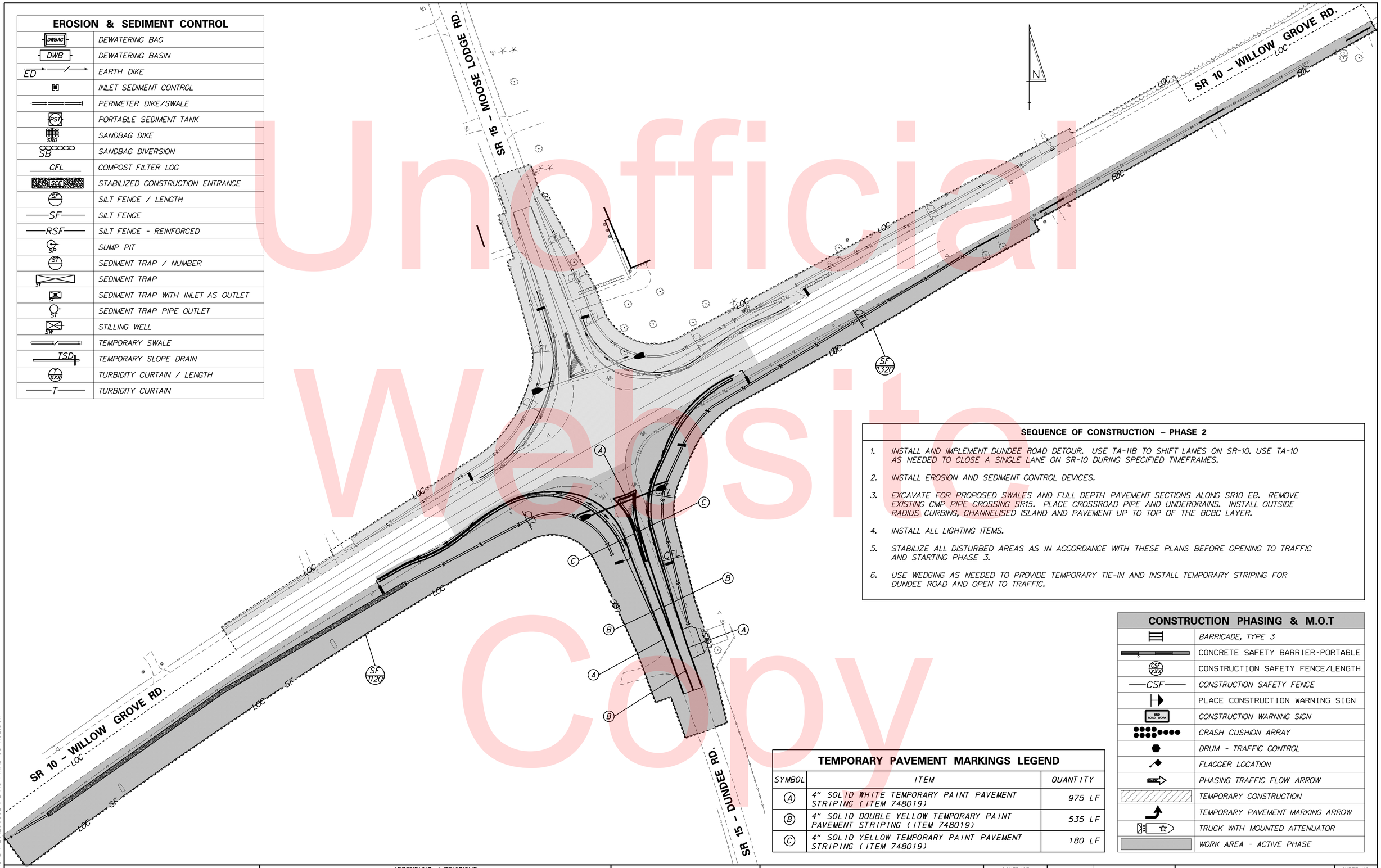

SEQUENCE OF CONSTRUCTION – PHASE 2

1. INSTALL AND IMPLEMENT DUNDEE ROAD DETOUR. USE TA-11B TO SHIFT LANES ON SR-10. USE TA-10 AS NEEDED TO CLOSE A SINGLE LANE ON SR-10 DURING SPECIFIED TIMEFRAMES.
2. INSTALL EROSION AND SEDIMENT CONTROL DEVICES.
3. EXCAVATE FOR PROPOSED SWALES AND FULL DEPTH PAVEMENT SECTIONS ALONG SR10 EB. REMOVE EXISTING CMP PIPE CROSSING SR15. PLACE CROSSROAD PIPE AND UNDERDRAINS. INSTALL OUTSIDE RADIUS CURBING, CHANNELISED ISLAND AND PAVEMENT UP TO TOP OF THE BCBC LAYER.
4. INSTALL ALL LIGHTING ITEMS.
5. STABILIZE ALL DISTURBED AREAS AS IN ACCORDANCE WITH THESE PLANS BEFORE OPENING TO TRAFFIC AND STARTING PHASE 3.
6. USE WEDGING AS NEEDED TO PROVIDE TEMPORARY TIE-IN AND INSTALL TEMPORARY STRIPING FOR DUNDEE ROAD AND OPEN TO TRAFFIC.

TEMPORARY PAVEMENT MARKINGS LEGEND

SYMBOL	ITEM	QUANTITY
A	4" SOLID WHITE TEMPORARY PAINT PAVEMENT STRIPING (ITEM 748019)	975 LF
B	4" SOLID DOUBLE YELLOW TEMPORARY PAINT PAVEMENT STRIPING (ITEM 748019)	535 LF
C	4" SOLID YELLOW TEMPORARY PAINT PAVEMENT STRIPING (ITEM 748019)	180 LF

CONSTRUCTION PHASING & M.O.T	
	BARRICADE, TYPE 3
	CONCRETE SAFETY BARRIER-PORTABLE
CSF XXX	CONSTRUCTION SAFETY FENCE/LENGTH
CSF	CONSTRUCTION SAFETY FENCE
	PLACE CONSTRUCTION WARNING SIGN
END ROAD WORK	CONSTRUCTION WARNING SIGN
	CRASH CUSHION ARRAY
	DRUM - TRAFFIC CONTROL
	FLAGGER LOCATION
	PHASING TRAFFIC FLOW ARROW
	TEMPORARY CONSTRUCTION
	TEMPORARY PAVEMENT MARKING ARROW
	TRUCK WITH MOUNTED ATTENUATOR
	WORK AREA - ACTIVE PHASE

Unofficial Website Copy

Y:\KENT\053\ROAD\T201200802\PLANS\FINAL\CSPH02.DGN

DELAWARE DEPARTMENT OF TRANSPORTATION

ADDENDUMS / REVISIONS

SCALE 0 50 100 150 FEET

HEP KC, SR10 & SR15 INTERSECTION IMPROVEMENTS

CONTRACT	BRIDGE NO.	X
T201200802	DESIGNED BY: CCE	
COUNTY		
KENT	CHECKED BY: JRG	

CONSTRUCTION PHASING, M.O.T., AND EROSION CONTROL PLAN – PHASE 2

SHEET NO. 26 / TOTAL SHTS. 44

EROSION & SEDIMENT CONTROL	
DWBAG	DEWATERING BAG
DWB	DEWATERING BASIN
ED	EARTH DIKE
	INLET SEDIMENT CONTROL
	PERIMETER DIKE/SWALE
PST	PORTABLE SEDIMENT TANK
SBD	SANDBAG DIKE
SB	SANDBAG DIVERSION
CFL	COMPOST FILTER LOG
SCE	STABILIZED CONSTRUCTION ENTRANCE
SF	SILT FENCE / LENGTH
SF	SILT FENCE
RSF	SILT FENCE - REINFORCED
SP	SUMP PIT
ST	SEDIMENT TRAP / NUMBER
ST	SEDIMENT TRAP
ST	SEDIMENT TRAP WITH INLET AS OUTLET
ST	SEDIMENT TRAP PIPE OUTLET
SW	STILLING WELL
	TEMPORARY SWALE
TSD	TEMPORARY SLOPE DRAIN
T XXX	TURBIDITY CURTAIN / LENGTH
T	TURBIDITY CURTAIN

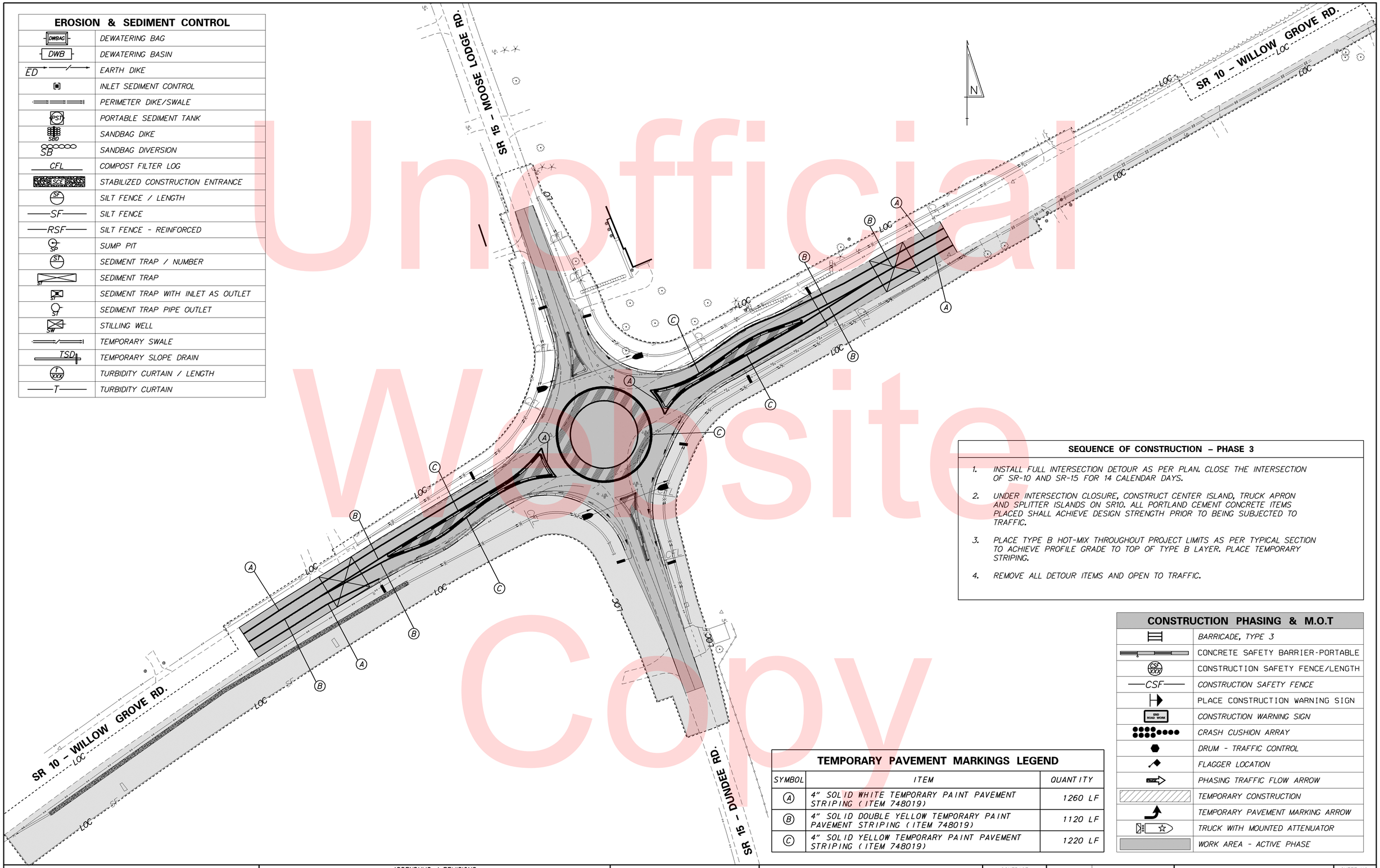

SEQUENCE OF CONSTRUCTION – PHASE 3

1. INSTALL FULL INTERSECTION DETOUR AS PER PLAN. CLOSE THE INTERSECTION OF SR-10 AND SR-15 FOR 14 CALENDAR DAYS.
2. UNDER INTERSECTION CLOSURE, CONSTRUCT CENTER ISLAND, TRUCK APRON AND SPLITTER ISLANDS ON SR10. ALL PORTLAND CEMENT CONCRETE ITEMS PLACED SHALL ACHIEVE DESIGN STRENGTH PRIOR TO BEING SUBJECTED TO TRAFFIC.
3. PLACE TYPE B HOT-MIX THROUGHOUT PROJECT LIMITS AS PER TYPICAL SECTION TO ACHIEVE PROFILE GRADE TO TOP OF TYPE B LAYER. PLACE TEMPORARY STRIPING.
4. REMOVE ALL DETOUR ITEMS AND OPEN TO TRAFFIC.

TEMPORARY PAVEMENT MARKINGS LEGEND

SYMBOL	ITEM	QUANTITY
A	4" SOLID WHITE TEMPORARY PAINT PAVEMENT STRIPING (ITEM 748019)	1260 LF
B	4" SOLID DOUBLE YELLOW TEMPORARY PAINT PAVEMENT STRIPING (ITEM 748019)	1120 LF
C	4" SOLID YELLOW TEMPORARY PAINT PAVEMENT STRIPING (ITEM 748019)	1220 LF

CONSTRUCTION PHASING & M.O.T	
	BARRICADE, TYPE 3
	CONCRETE SAFETY BARRIER-PORTABLE
CSF XXX	CONSTRUCTION SAFETY FENCE/LENGTH
CSF	CONSTRUCTION SAFETY FENCE
	PLACE CONSTRUCTION WARNING SIGN
END ROAD WORK	CONSTRUCTION WARNING SIGN
	CRASH CUSHION ARRAY
	DRUM - TRAFFIC CONTROL
	FLAGGER LOCATION
	PHASING TRAFFIC FLOW ARROW
	TEMPORARY CONSTRUCTION
	TEMPORARY PAVEMENT MARKING ARROW
	TRUCK WITH MOUNTED ATTENUATOR
	WORK AREA - ACTIVE PHASE

Unofficial Website Copy

Y:\KENT\053\ROAD\T201200802\PLANS\FINAL\CSPH03.DGN

DELAWARE DEPARTMENT OF TRANSPORTATION

ADDENDUMS / REVISIONS

SCALE 0 50 100 150 FEET

HEP KC, SR10 & SR15 INTERSECTION IMPROVEMENTS

CONTRACT	BRIDGE NO.	X
T201200802	DESIGNED BY: CCE	
COUNTY		
KENT	CHECKED BY: JRG	

CONSTRUCTION PHASING, M.O.T., AND EROSION CONTROL PLAN – PHASE 3

SHEET NO. 27

TOTAL SHTS. 44

EROSION & SEDIMENT CONTROL	
DWBAG	DEWATERING BAG
DWB	DEWATERING BASIN
ED	EARTH DIKE
	INLET SEDIMENT CONTROL
	PERIMETER DIKE/SWALE
PST	PORTABLE SEDIMENT TANK
SBD	SANDBAG DIKE
SB	SANDBAG DIVERSION
CFL	COMPOST FILTER LOG
SCE	STABILIZED CONSTRUCTION ENTRANCE
SF	SILT FENCE / LENGTH
SF	SILT FENCE
RSF	SILT FENCE - REINFORCED
SP	SUMP PIT
ST	SEDIMENT TRAP / NUMBER
ST	SEDIMENT TRAP
ST	SEDIMENT TRAP WITH INLET AS OUTLET
ST	SEDIMENT TRAP PIPE OUTLET
SW	STILLING WELL
	TEMPORARY SWALE
TSD	TEMPORARY SLOPE DRAIN
T XXX	TURBIDITY CURTAIN / LENGTH
T	TURBIDITY CURTAIN

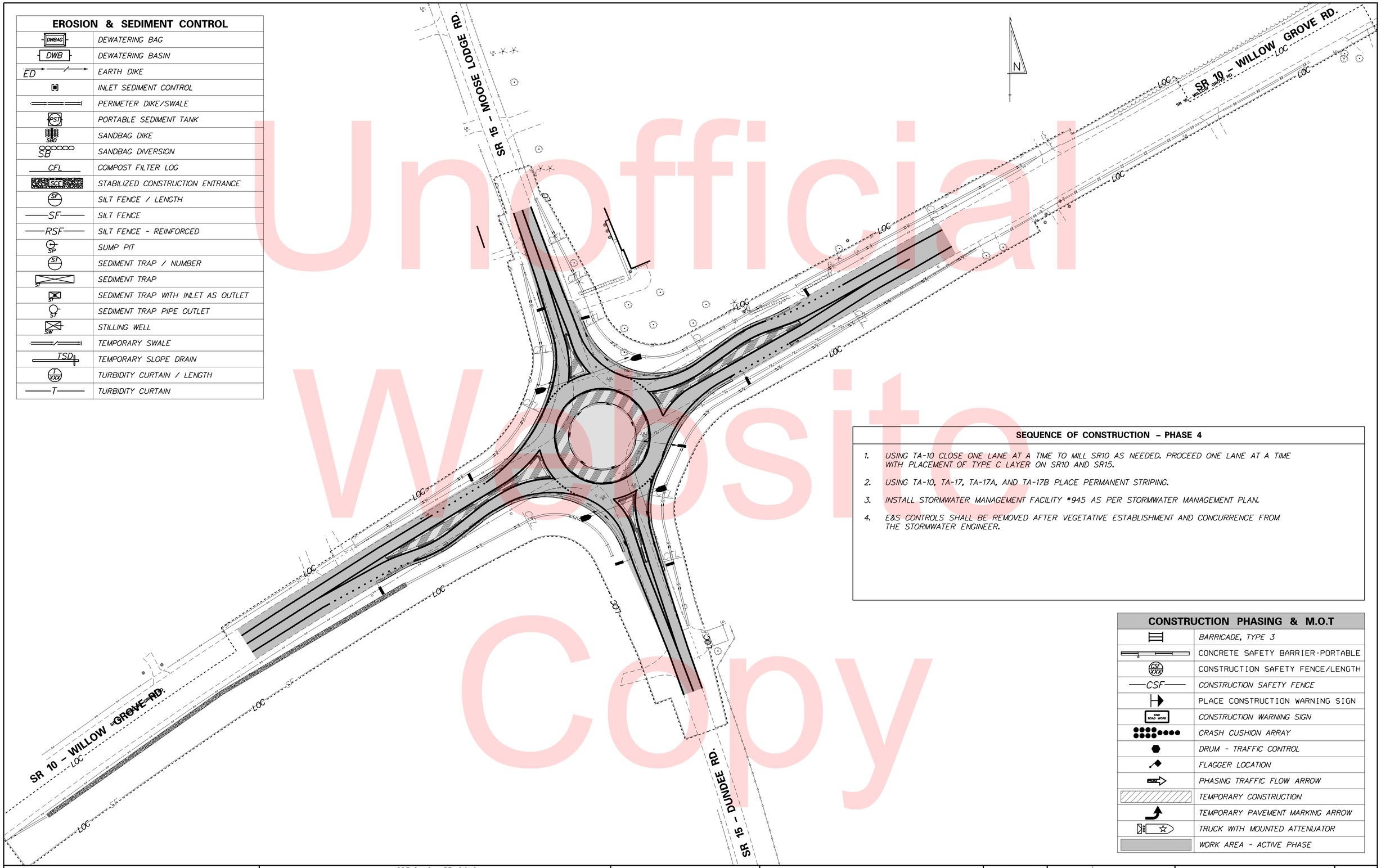

SEQUENCE OF CONSTRUCTION – PHASE 4

1. USING TA-10 CLOSE ONE LANE AT A TIME TO MILL SR10 AS NEEDED. PROCEED ONE LANE AT A TIME WITH PLACEMENT OF TYPE C LAYER ON SR10 AND SR15.
2. USING TA-10, TA-17, TA-17A, AND TA-17B PLACE PERMANENT STRIPING.
3. INSTALL STORMWATER MANAGEMENT FACILITY #945 AS PER STORMWATER MANAGEMENT PLAN.
4. E&S CONTROLS SHALL BE REMOVED AFTER VEGETATIVE ESTABLISHMENT AND CONCURRENCE FROM THE STORMWATER ENGINEER.

CONSTRUCTION PHASING & M.O.T	
	BARRICADE, TYPE 3
	CONCRETE SAFETY BARRIER-PORTABLE
CSF XXX	CONSTRUCTION SAFETY FENCE/LENGTH
CSF	CONSTRUCTION SAFETY FENCE
	PLACE CONSTRUCTION WARNING SIGN
END ROAD WORK	CONSTRUCTION WARNING SIGN
	CRASH CUSHION ARRAY
	DRUM - TRAFFIC CONTROL
	FLAGGER LOCATION
FLOW	PHASING TRAFFIC FLOW ARROW
	TEMPORARY CONSTRUCTION
	TEMPORARY PAVEMENT MARKING ARROW
	TRUCK WITH MOUNTED ATTENUATOR
	WORK AREA - ACTIVE PHASE

Unofficial Website Copy

Y:\KENT\053\ROAD\T201200802\PLANS\FINAL\CSPH04.DGN

DELAWARE DEPARTMENT OF TRANSPORTATION

ADDENDUMS / REVISIONS

SCALE 0 50 100 150 FEET

HEP KC, SR10 & SR15 INTERSECTION IMPROVEMENTS

CONTRACT	BRIDGE NO.	X
T201200802	DESIGNED BY: CCE	
COUNTY		
KENT	CHECKED BY: JRG	

CONSTRUCTION PHASING, M.O.T., AND EROSION CONTROL PLAN – PHASE 4

SHEET NO. 28

TOTAL SHTS. 44

PORTABLE CHANGEABLE MESSAGE SIGNS

PRIOR TO DETOUR
(10 DAYS PRIOR TO BEGINNING OF DETOUR)

PCMS-1

MOOSE LODGE RD CLOSING	NORTH OF DE 10 XX/XX/XX

SPECIAL SIGNS

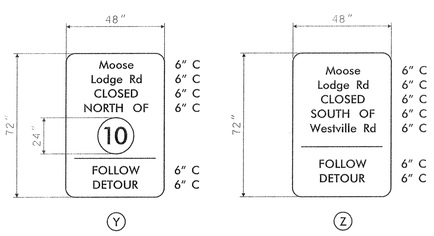

ROUTE SHIELD: BLACK NUMBER ON WHITE BACKGROUND

SIGN: BLACK LEGEND ON RETROREFLECTIVE FLUORESCENT ORANGE BACKGROUND

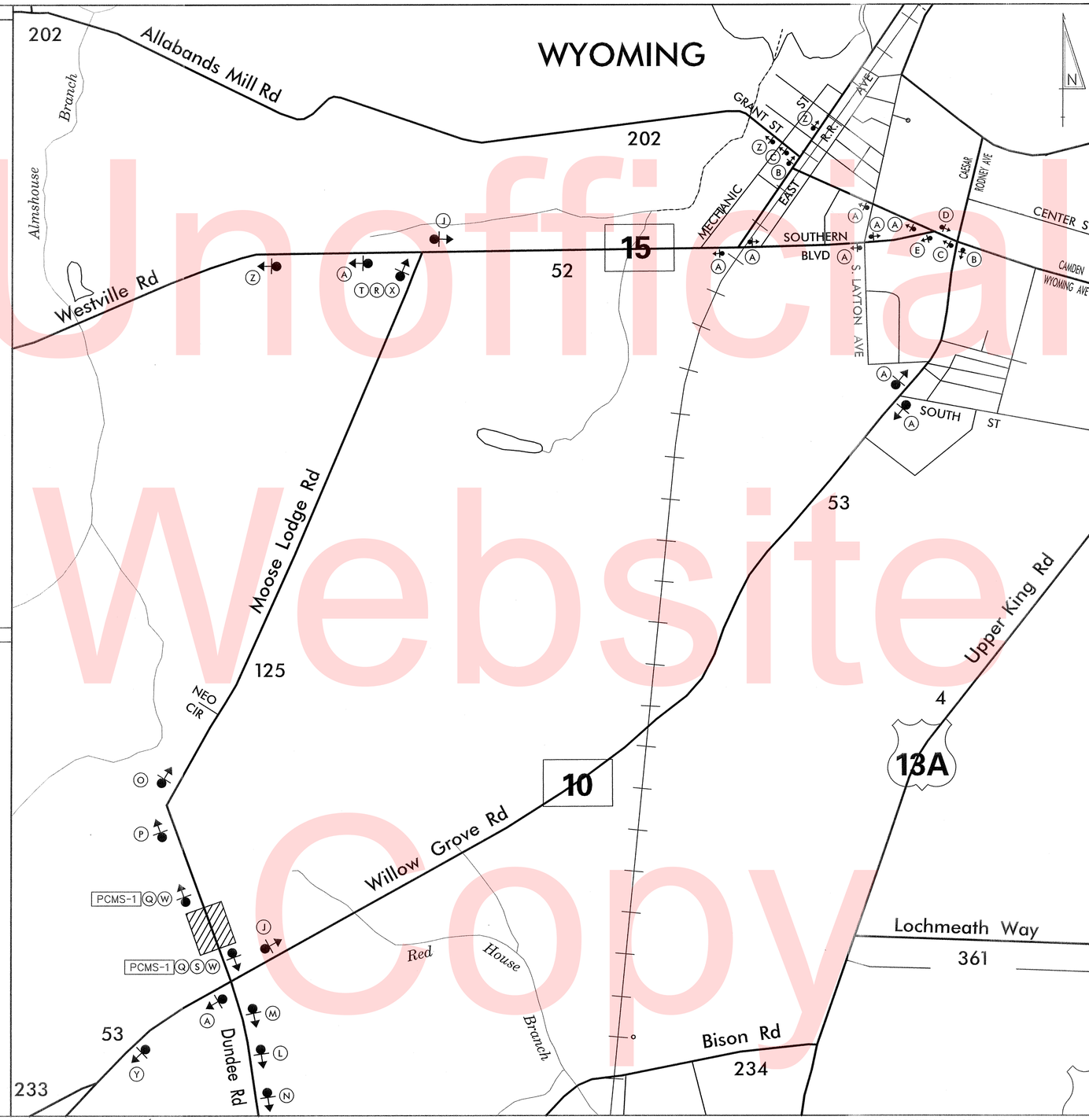

LEGEND

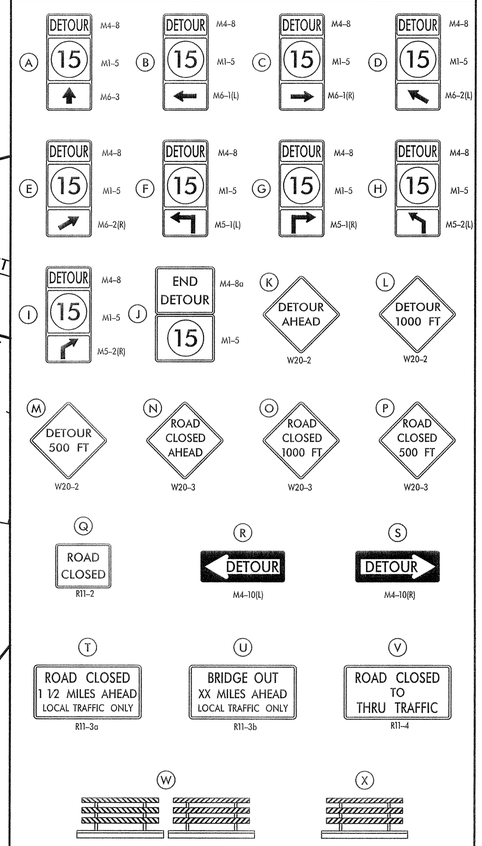

GENERAL NOTES

1. ALL DETOUR SIGNING, INCLUDING TRAILBLAZERS, ARE TO BE SUPPLIED AND MAINTAINED BY THE GENERAL CONTRACTOR IN COMPLIANCE WITH "THE DELAWARE MANUAL OF UNIFORM TRAFFIC CONTROL DEVICES" (DE MUTCD.)
2. THE CONTRACTOR SHALL COMPLY WITH GUIDELINES IN "THE DELAWARE MANUAL ON UNIFORM TRAFFIC CONTROL DEVICES" (DE MUTCD PART 6) FOR BARRICADES AND SIGNS (AS PER LATEST REVISION.)
3. DESIGN OF ALL SIGNS SHALL BE IN ACCORDANCE WITH THE FHWA STANDARD HIGHWAY SIGNS BOOK.
4. SIZES OF ALL SIGNS SHALL BE IN ACCORDANCE WITH THE DELAWARE MANUAL ON UNIFORM TRAFFIC CONTROL DEVICES" (DE MUTCD.) SIZE OF SIGN SHALL BE BASED ON TYPE OF ROADWAY ON WHICH THE SIGN IS INSTALLED.
5. THE COLORS, DIMENSIONS, AND CHARACTERISTICS OF ALL INTERSTATE, U.S ROUTE, AND STATE ROUTE SHIELD SIGNS SHALL BE IN ACCORDANCE WITH SECTION 2D.11 OF "THE DELAWARE MANUAL ON UNIFORM TRAFFIC CONTROL DEVICES" (DE MUTCD.)
6. SIGNS NO LONGER IN USE SHALL BE COMPLETELY COVERED WITH NO RETROREFLECTIVE MATERIAL SHOWING, OR SHALL BE REMOVED, AS DIRECTED BY THE ENGINEER.
7. FIELD CONDITIONS MAY DICTATE CHANGES AT SOME TIME DURING THE LIFE OF THE CONTRACT. IN THE EVENT OF OMISSIONS OR CORRECTIONS, THE SIGNING PROVISIONS OF "THE DELAWARE MANUAL ON UNIFORM TRAFFIC CONTROL DEVICES" (DE MUTCD) WILL PREVAIL.
8. SIGNS "N" THROUGH "Q" AND "T" AND "V", THE WORD "ROAD" SHOULD BE CHANGED TO "RAMP", "RR XING", OR "BRIDGE" WHERE APPLICABLE.
9. WARNING SIGNS AND DETOUR TRAILBLAZERS SHALL BE MOUNTED ON BREAKAWAY POSTS AND HAVE RETROREFLECTIVE FLUORESCENT ORANGE SHEETING.
10. "W" BARRICADES SHALL COMPLETELY RUN THE FULL WIDTH OF THE ROADWAY.
11. BARRICADES SHALL BE A MINIMUM OF 6 FEET WIDE UNLESS DIRECTED BY THE ENGINEER.

RECOMMENDED ____ DATE: ____	RECOMMENDED ____ DATE: 10-24-14	RECOMMENDED ____ DATE: 10/24/14	APPROVED CHIEF SAFETY OFFICER ____ DATE: 10-29-14	APPROVED TRAFFIC ENGINEER ____ DATE: 10/29/14

DELAWARE DEPARTMENT OF TRANSPORTATION	ADDENDUM / REVISIONS	NOT TO SCALE	HEP KC, SR10 & SR15 INTERSECTION IMPROVEMENTS	CONTRACT T201200802	ROAD NO. K125	DETOUR PLAN PHASE 1	SHEET NO. 29
				COUNTY X	DESIGNED BY: SWN		TOTAL SHTS. 44
					CHECKED BY: ASW		

W:\MSV8\CELLS\PROJDEV\SB.CEL

Unofficial Website Copy

PORTABLE CHANGEABLE MESSAGE SIGNS

PRIOR TO DETOUR
(10 DAYS PRIOR TO BEGINNING OF DETOUR)

PCMS-1

DUNDEE ROAD CLOSING	SOUTH OF DE 10 XX/XX/XX

PRIOR TO DETOUR
(10 DAYS PRIOR TO BEGINNING OF DETOUR)

PCMS-2

DUNDEE ROAD CLOSING	NORTH OF BISON RD XX/XX/XX

SPECIAL SIGNS

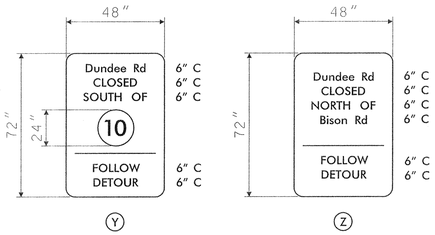

ROUTE SHIELD: BLACK LEGEND ON WHITE BACKGROUND

SIGN: BLACK LEGEND ON RETROREFLECTIVE FLUORESCENT ORANGE BACKGROUND

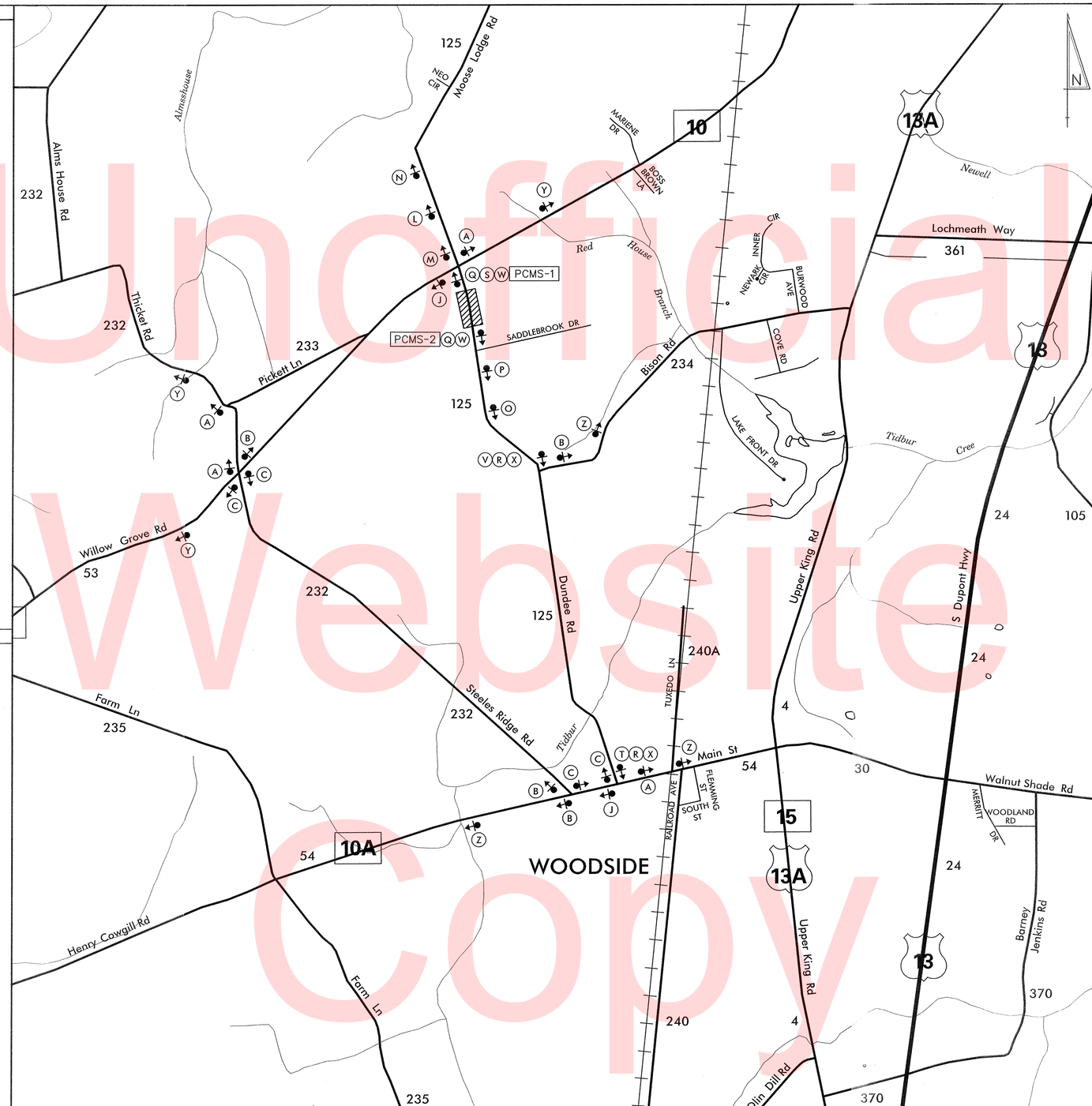

LEGEND

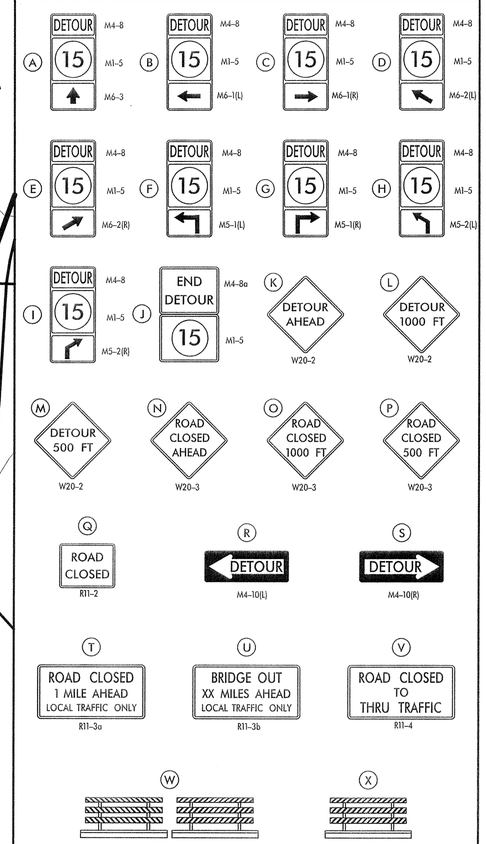

GENERAL NOTES

1. ALL DETOUR SIGNING, INCLUDING TRAILBLAZERS, ARE TO BE SUPPLIED AND MAINTAINED BY THE GENERAL CONTRACTOR IN COMPLIANCE WITH "THE DELAWARE MANUAL OF UNIFORM TRAFFIC CONTROL DEVICES" (DE MUTCD.)
2. THE CONTRACTOR SHALL COMPLY WITH GUIDELINES IN "THE DELAWARE MANUAL ON UNIFORM TRAFFIC CONTROL DEVICES" (DE MUTCD PART 6) FOR BARRICADES AND SIGNS (AS PER LATEST REVISION.)
3. DESIGN OF ALL SIGNS SHALL BE IN ACCORDANCE WITH THE FHWA STANDARD HIGHWAY SIGNS BOOK.
4. SIZES OF ALL SIGNS SHALL BE IN ACCORDANCE WITH THE DELAWARE MANUAL ON UNIFORM TRAFFIC CONTROL DEVICES" (DE MUTCD.) SIZE OF SIGN SHALL BE BASED ON TYPE OF ROADWAY ON WHICH THE SIGN IS INSTALLED.
5. THE COLORS, DIMENSIONS, AND CHARACTERISTICS OF ALL INTERSTATE, U.S ROUTE, AND STATE ROUTE SHIELD SIGNS SHALL BE IN ACCORDANCE WITH SECTION 2D.11 OF "THE DELAWARE MANUAL ON UNIFORM TRAFFIC CONTROL DEVICES" (DE MUTCD.)
6. SIGNS NO LONGER IN USE SHALL BE COMPLETELY COVERED WITH NO RETROREFLECTIVE MATERIAL SHOWING, OR SHALL BE REMOVED, AS DIRECTED BY THE ENGINEER.
7. FIELD CONDITIONS MAY DICTATE CHANGES AT SOME TIME DURING THE LIFE OF THE CONTRACT. IN THE EVENT OF OMISSIONS OR CORRECTIONS, THE SIGNING PROVISIONS OF "THE DELAWARE MANUAL ON UNIFORM TRAFFIC CONTROL DEVICES" (DE MUTCD) WILL PREVAIL.
8. SIGNS "N" THROUGH "Q" AND "T" AND "V", THE WORD "ROAD" SHOULD BE CHANGED TO "RAMP", "RR XING", OR "BRIDGE" WHERE APPLICABLE.
9. WARNING SIGNS AND DETOUR TRAILBLAZERS SHALL BE MOUNTED ON BREAKAWAY POSTS AND HAVE RETROREFLECTIVE FLUORESCENT ORANGE SHEETING.
10. "W" BARRICADES SHALL COMPLETELY RUN THE FULL WIDTH OF THE ROADWAY.
11. BARRICADES SHALL BE A MINIMUM OF 6 FEET WIDE UNLESS DIRECTED BY THE ENGINEER.

RECOMMENDED _____ DATE:	RECOMMENDED DATE: 10-24-14	RECOMMENDED DATE: 10/24/14	APPROVED CHIEF SAFETY OFFICER DATE: 10-29-14	APPROVED TRAFFIC ENGINEER DATE: 10/29/14

DELAWARE DEPARTMENT OF TRANSPORTATION	ADDENDUM / REVISIONS	NOT TO SCALE	HEP KC, SR10 & SR15 INTERSECTION IMPROVEMENTS	CONTRACT T201200802	ROAD NO. K125	DETOUR PLAN PHASE 2	SHEET NO. 30
				COUNTY KENT	DESIGNED BY: SWN		TOTAL SHTS. 44
					CHECKED BY: ASW		

W:\MSV8\CELLS\PROJDEV\SB.CEL

Unofficial Website Copy

PORTABLE CHANGEABLE MESSAGE SIGNS

PRIOR TO DETOUR
(10 DAYS PRIOR TO BEGINNING OF DETOUR)

PCMS-1

SR 10 TO CLOSE AT SR 15	STARTING XX/XX/XX

DURING DETOUR
(DISPLAY FOR 5 DAYS AFTER IMPLEMENTATION OF DETOUR)

PCMS-2

SR 10 CLOSED AT SR 15	FOLLOW DETOUR SR 10ALT

DURING DETOUR
(DISPLAY FOR 5 DAYS AFTER IMPLEMENTATION OF DETOUR)

PCMS-3

SR 10 CLOSED AT SR 15	FOLLOW DETOUR US 13 SB

PRIOR TO DETOUR
(10 DAYS PRIOR TO BEGINNING OF DETOUR)

PCMS-4

SR 15 TO CLOSE AT SR 10	STARTING XX/XX/XX

DURING DETOUR
(DISPLAY FOR 5 DAYS AFTER IMPLEMENTATION OF DETOUR)

PCMS-5

SR 15 CLOSED AT SR 10	FOLLOW DETOUR

DURING DETOUR
(DISPLAY FOR 5 DAYS AFTER IMPLEMENTATION OF DETOUR)

PCMS-6

SR 15 CLOSED AT SR 10	FOLLOW DETOUR US 13 NB

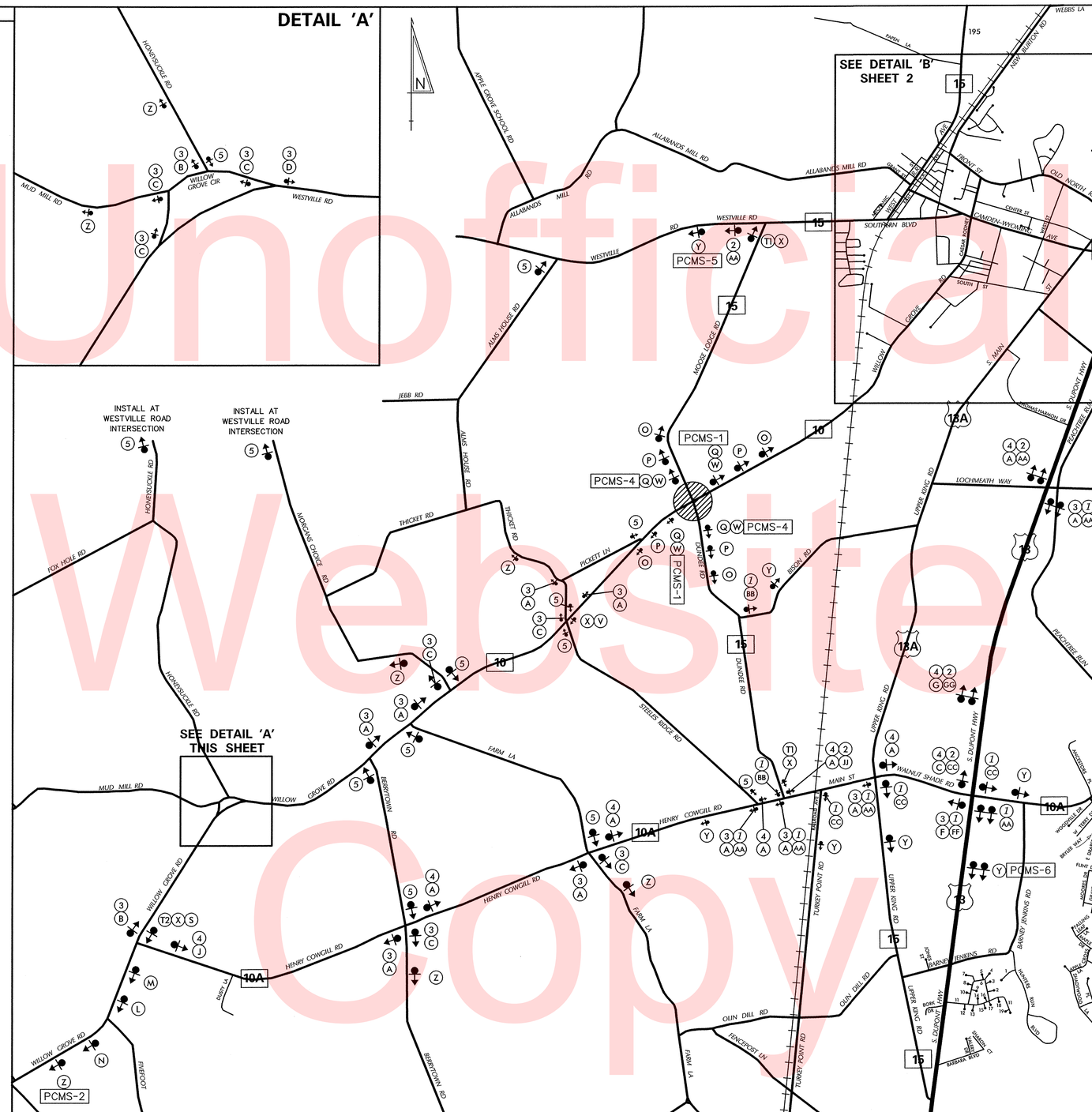

LEGEND

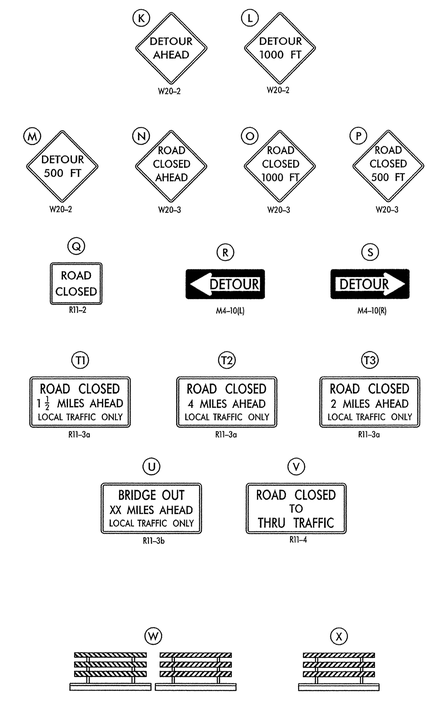

GENERAL NOTES

1. ALL DETOUR SIGNING, INCLUDING TRAILBLAZERS, ARE TO BE SUPPLIED AND MAINTAINED BY THE GENERAL CONTRACTOR IN COMPLIANCE WITH "THE DELAWARE MANUAL OF UNIFORM TRAFFIC CONTROL DEVICES" (DE MUTCD.)
2. THE CONTRACTOR SHALL COMPLY WITH GUIDELINES IN "THE DELAWARE MANUAL ON UNIFORM TRAFFIC CONTROL DEVICES" (DE MUTCD PART 6) FOR BARRICADES AND SIGNS (AS PER LATEST REVISION.)
3. DESIGN OF ALL SIGNS SHALL BE IN ACCORDANCE WITH THE FHWA STANDARD HIGHWAY SIGNS BOOK.
4. SIZES OF ALL SIGNS SHALL BE IN ACCORDANCE WITH THE DELAWARE MANUAL ON UNIFORM TRAFFIC CONTROL DEVICES" (DE MUTCD.) SIZE OF SIGN SHALL BE BASED ON TYPE OF ROADWAY ON WHICH THE SIGN IS INSTALLED.
5. THE COLORS, DIMENSIONS, AND CHARACTERISTICS OF ALL INTERSTATE, U.S ROUTE, AND STATE ROUTE SHIELD SIGNS SHALL BE IN ACCORDANCE WITH SECTION 2D.11 OF "THE DELAWARE MANUAL ON UNIFORM TRAFFIC CONTROL DEVICES" (DE MUTCD.)
6. SIGNS NO LONGER IN USE SHALL BE COMPLETELY COVERED WITH NO RETROREFLECTIVE MATERIAL SHOWING, OR SHALL BE REMOVED, AS DIRECTED BY THE ENGINEER.
7. FIELD CONDITIONS MAY DICTATE CHANGES AT SOME TIME DURING THE LIFE OF THE CONTRACT. IN THE EVENT OF OMISSIONS OR CORRECTIONS, THE SIGNING PROVISIONS OF "THE DELAWARE MANUAL ON UNIFORM TRAFFIC CONTROL DEVICES" (DE MUTCD) WILL PREVAIL.
8. SIGNS "N" THROUGH "Q" AND "T" AND "V", THE WORD "ROAD" SHOULD BE CHANGED TO "RAMP", "RR XING", OR "BRIDGE" WHERE APPLICABLE.
9. WARNING SIGNS AND DETOUR TRAILBLAZERS SHALL BE MOUNTED ON THEIR OWN BREAKAWAY POSTS AND HAVE RETROREFLECTIVE FLUORESCENT ORANGE SHEETING.
10. "W" BARRICADES SHALL COMPLETELY RUN THE FULL WIDTH OF THE ROADWAY.
11. BARRICADES SHALL BE A MINIMUM OF 6 FEET WIDE UNLESS DIRECTED BY THE ENGINEER.

RECOMMENDED _____ DATE: _____

RECOMMENDED _____ DATE: _____

RECOMMENDED _____ DATE: 6/16/15

APPROVED CHIEF SAFETY OFFICER _____ DATE: 6-17-15

APPROVED TRAFFIC ENGINEER _____ DATE: 6/10/15

DELAWARE DEPARTMENT OF TRANSPORTATION

ADDENDUM / REVISIONS

NOT TO SCALE

HEP KC, SR10 & SR15 INTERSECTION IMPROVEMENTS

CONTRACT	PERMIT NO.	X
T201200802	DESIGNED BY: SWN	
COUNTY	CHECKED BY: ASW	
KENT		

DETOUR PLAN

PHASE 3

SHEET NO. 31

TOTAL SHTS. 44

\\DOTFS08\CADD\ACTIVE_DESIGNS\TRAFFIC\SAFETY\CAPITALPROJECTS\KENT\SCOTT\T201200802 - SR 10 & SR 15 INTERSECTION IMPROVEMENTS\DETOUR, JUNE 2015\SR 10 & SR 15.DGN

Unofficial Website Copy

PORTABLE CHANGEABLE MESSAGE SIGNS

PRIOR TO DETOUR
(10 DAYS PRIOR TO BEGINNING OF DETOUR)

PCMS-1

SR 10 TO CLOSE AT SR 15	STARTING XX/XX/XX

DURING DETOUR
(DISPLAY FOR 5 DAYS AFTER IMPLEMENTATION OF DETOUR)

PCMS-2

SR 10 CLOSED AT SR 15	FOLLOW DETOUR SR 10ALT

DURING DETOUR
(DISPLAY FOR 5 DAYS AFTER IMPLEMENTATION OF DETOUR)

PCMS-3

SR 10 CLOSED AT SR 15	FOLLOW DETOUR US 13 SB

PRIOR TO DETOUR
(10 DAYS PRIOR TO BEGINNING OF DETOUR)

PCMS-4

SR 15 TO CLOSE AT SR 10	STARTING XX/XX/XX

DURING DETOUR
(DISPLAY FOR 5 DAYS AFTER IMPLEMENTATION OF DETOUR)

PCMS-5

SR 15 CLOSED AT SR 10	FOLLOW DETOUR

DURING DETOUR
(DISPLAY FOR 5 DAYS AFTER IMPLEMENTATION OF DETOUR)

PCMS-6

SR 15 CLOSED AT SR 10	FOLLOW DETOUR US 13 NB

DETAIL 'B'

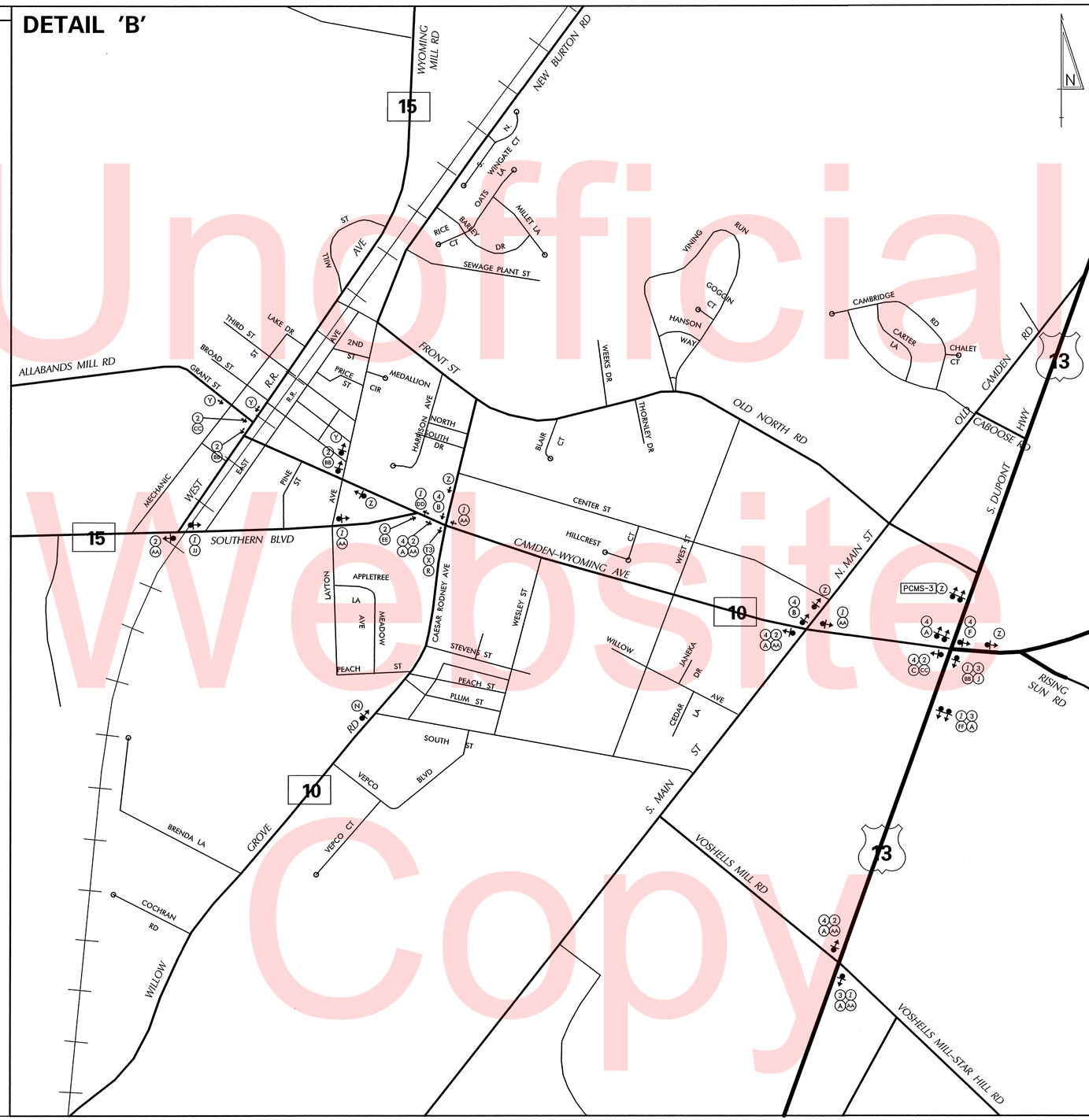

LEGEND

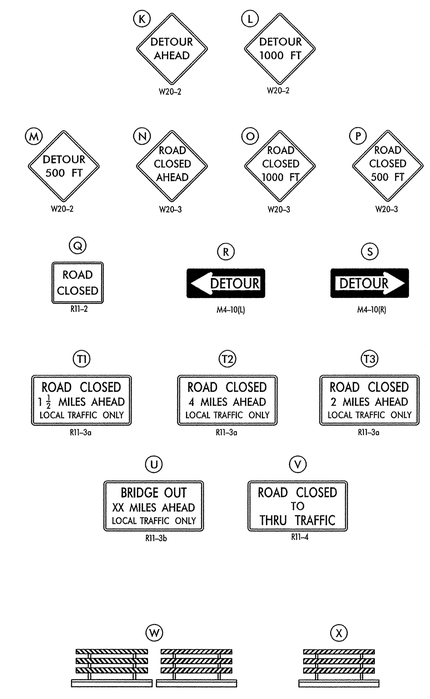

GENERAL NOTES

1. ALL DETOUR SIGNING, INCLUDING TRAILBLAZERS, ARE TO BE SUPPLIED AND MAINTAINED BY THE GENERAL CONTRACTOR IN COMPLIANCE WITH "THE DELAWARE MANUAL OF UNIFORM TRAFFIC CONTROL DEVICES" (DE MUTCD.)
2. THE CONTRACTOR SHALL COMPLY WITH GUIDELINES IN "THE DELAWARE MANUAL ON UNIFORM TRAFFIC CONTROL DEVICES" (DE MUTCD PART 6) FOR BARRICADES AND SIGNS (AS PER LATEST REVISION.)
3. DESIGN OF ALL SIGNS SHALL BE IN ACCORDANCE WITH THE FHWA STANDARD HIGHWAY SIGNS BOOK.
4. SIZES OF ALL SIGNS SHALL BE IN ACCORDANCE WITH THE DELAWARE MANUAL ON UNIFORM TRAFFIC CONTROL DEVICES" (DE MUTCD.) SIZE OF SIGN SHALL BE BASED ON TYPE OF ROADWAY ON WHICH THE SIGN IS INSTALLED.
5. THE COLORS, DIMENSIONS, AND CHARACTERISTICS OF ALL INTERSTATE, U.S ROUTE, AND STATE ROUTE SHIELD SIGNS SHALL BE IN ACCORDANCE WITH SECTION 2D.11 OF "THE DELAWARE MANUAL ON UNIFORM TRAFFIC CONTROL DEVICES" (DE MUTCD.)
6. SIGNS NO LONGER IN USE SHALL BE COMPLETELY COVERED WITH NO RETROREFLECTIVE MATERIAL SHOWING, OR SHALL BE REMOVED, AS DIRECTED BY THE ENGINEER.
7. FIELD CONDITIONS MAY DICTATE CHANGES AT SOME TIME DURING THE LIFE OF THE CONTRACT. IN THE EVENT OF OMISSIONS OR CORRECTIONS, THE SIGNING PROVISIONS OF "THE DELAWARE MANUAL ON UNIFORM TRAFFIC CONTROL DEVICES" (DE MUTCD) WILL PREVAIL.
8. SIGNS "N" THROUGH "Q" AND "T" AND "V", THE WORD "ROAD" SHOULD BE CHANGED TO "RAMP", "RR XING", OR "BRIDGE" WHERE APPLICABLE.
9. WARNING SIGNS AND DETOUR TRAILBLAZERS SHALL BE MOUNTED ON THEIR OWN BREAKAWAY POSTS AND HAVE RETROREFLECTIVE FLUORESCENT ORANGE SHEETING.
10. "W" BARRICADES SHALL COMPLETELY RUN THE FULL WIDTH OF THE ROADWAY.
11. BARRICADES SHALL BE A MINIMUM OF 6 FEET WIDE UNLESS DIRECTED BY THE ENGINEER.

RECOMMENDED _____ DATE:	RECOMMENDED _____ DATE:	RECOMMENDED _____ DATE: 6/10/15	APPROVED CHIEF SAFETY OFFICER _____ DATE: 6-17-15	APPROVED TRAFFIC ENGINEER _____ DATE: 6/18/15

DELAWARE DEPARTMENT OF TRANSPORTATION	ADDENDUM / REVISIONS	NOT TO SCALE	HEP KC, SR10 & SR15 INTERSECTION IMPROVEMENTS	CONTRACT T201200802 / COUNTY KENT	PERMIT NO. X / DESIGNED BY: SWN / CHECKED BY: ASW	DETOUR PLAN PHASE 3	SHEET NO. 32 / TOTAL SHTS. 44

\\DOTFS08\CADD\ACTIVE_DESIGNS\TRAFFIC\SAFETY\CAPITALPROJECTS\KENT\SCOTT\T201200802 - SR 10 & SR 15 INTERSECTION IMPROVEMENTS\DETOUR, JUNE 2015\SR 10 & SR 15.DGN

Unofficial Website Copy

DETOUR TRAILBLAZERS

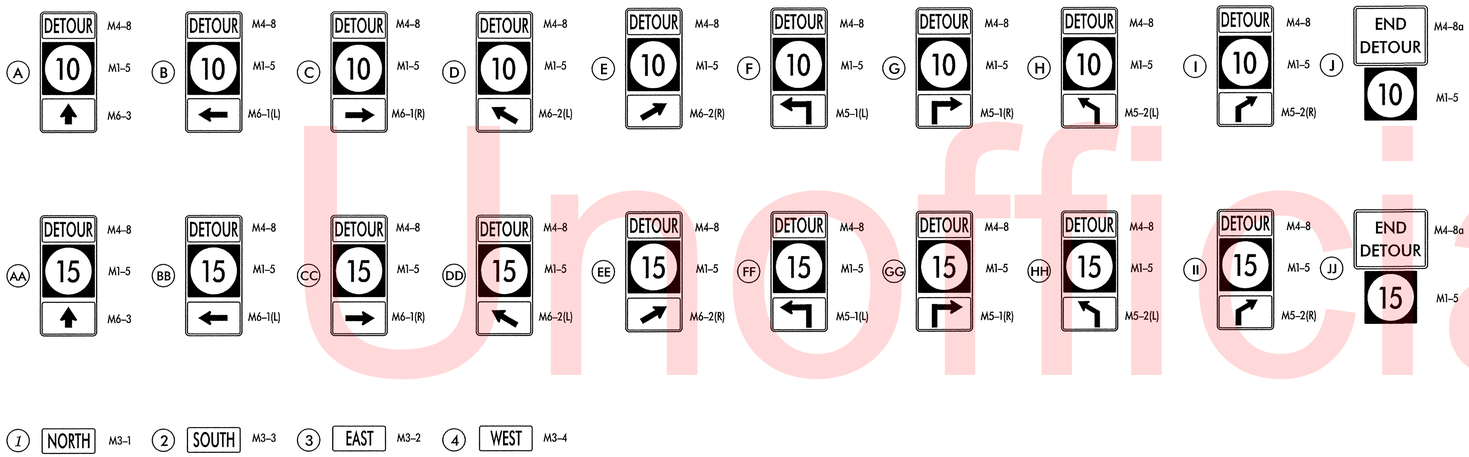

TRAILBLAZER MOUNTING

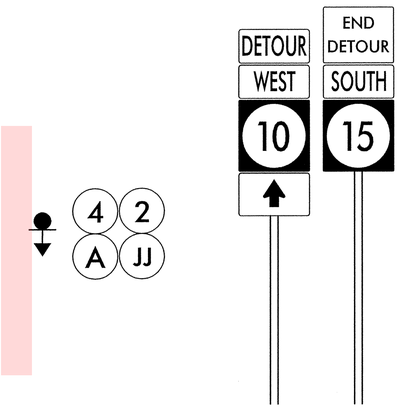

NOTES:

DIRECTIONAL PLAQUES 1 THROUGH 4 SHALL BE MOUNTED DIRECTLY UNDERNEATH "DETOUR" (M4-8) PLAQUES

DIRECTIONAL PLAQUES AND ROUTE SHIELDS SHALL BE BLACK ON WHITE AS PER THE DE-MUTCD.

"DETOUR" AND ARROW PLAQUES SHALL BE BLACK ON RETROREFLECTIVE FLUORESCENT PRISMATIC ORANGE.

PAIRS OF SIGN ICONS DENOTE SIGN ASSEMBLIES TO BE INSTALLED ON BOTH THE LEFT AND RIGHT SHOULDERS OF THE ROADWAY.

SPECIAL SIGNS

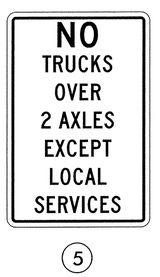

5

R12-3-DE
24"x36"
BLACK ON WHITE

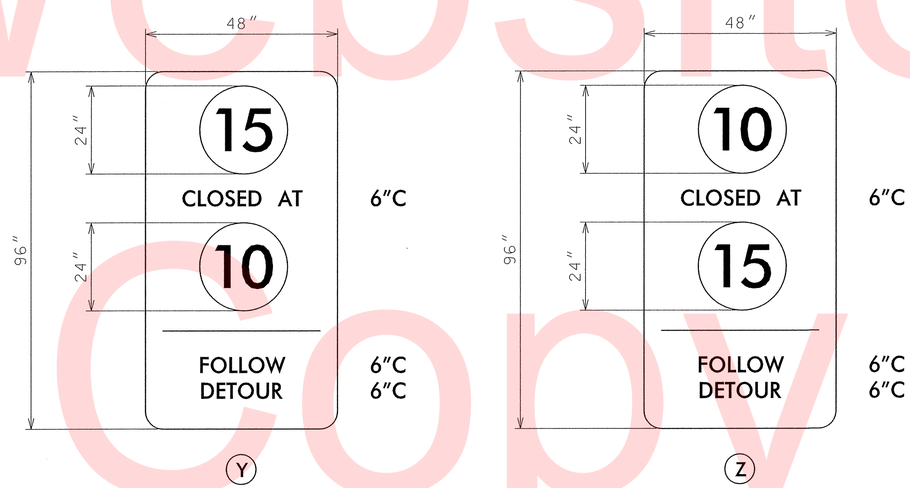

NOTES:

SIGNS Y AND Z SHALL BE BLACK ON RETROREFLECTIVE FLUORESCENT PRISMATIC ORANGE.

ALL ROUTE SHIELDS SHALL BE BLACK LEGEND ON WHITE BACKGROUND PER THE DE-MUTCD

GENERAL NOTES

1. ALL DETOUR SIGNING, INCLUDING TRAILBLAZERS, ARE TO BE SUPPLIED AND MAINTAINED BY THE GENERAL CONTRACTOR IN COMPLIANCE WITH "THE DELAWARE MANUAL OF UNIFORM TRAFFIC CONTROL DEVICES" (DE MUTCD.)
2. THE CONTRACTOR SHALL COMPLY WITH GUIDELINES IN "THE DELAWARE MANUAL ON UNIFORM TRAFFIC CONTROL DEVICES" (DE MUTCD PART 6) FOR BARRICADES AND SIGNS (AS PER LATEST REVISION.)
3. DESIGN OF ALL SIGNS SHALL BE IN ACCORDANCE WITH THE FHWA STANDARD HIGHWAY SIGNS BOOK.
4. SIZES OF ALL SIGNS SHALL BE IN ACCORDANCE WITH THE DELAWARE MANUAL ON UNIFORM TRAFFIC CONTROL DEVICES" (DE MUTCD.) SIZE OF SIGN SHALL BE BASED ON TYPE OF ROADWAY ON WHICH THE SIGN IS INSTALLED.
5. THE COLORS, DIMENSIONS, AND CHARACTERISTICS OF ALL INTERSTATE, U.S ROUTE, AND STATE ROUTE SHIELD SIGNS SHALL BE IN ACCORDANCE WITH SECTION 2D.11 OF "THE DELAWARE MANUAL ON UNIFORM TRAFFIC CONTROL DEVICES" (DE MUTCD.)
6. SIGNS NO LONGER IN USE SHALL BE COMPLETELY COVERED WITH NO RETROREFLECTIVE MATERIAL SHOWING, OR SHALL BE REMOVED, AS DIRECTED BY THE ENGINEER.
7. FIELD CONDITIONS MAY DICTATE CHANGES AT SOME TIME DURING THE LIFE OF THE CONTRACT. IN THE EVENT OF OMISSIONS OR CORRECTIONS, THE SIGNING PROVISIONS OF "THE DELAWARE MANUAL ON UNIFORM TRAFFIC CONTROL DEVICES" (DE MUTCD) WILL PREVAIL.
8. SIGNS "N" THROUGH "Q" AND "T" AND "V", THE WORD "ROAD" SHOULD BE CHANGED TO "RAMP", "RR XING", OR "BRIDGE" WHERE APPLICABLE.
9. WARNING SIGNS AND DETOUR TRAILBLAZERS SHALL BE MOUNTED ON THEIR OWN BREAKAWAY POSTS AND HAVE RETROREFLECTIVE FLUORESCENT ORANGE SHEETING.
10. "W" BARRICADES SHALL COMPLETELY RUN THE FULL WIDTH OF THE ROADWAY.
11. BARRICADES SHALL BE A MINIMUM OF 6 FEET WIDE UNLESS DIRECTED BY THE ENGINEER.

RECOMMENDED _____ DATE: _____ | RECOMMENDED _____ DATE: _____ | RECOMMENDED _____ DATE: 6/10/15 | APPROVED CHIEF SAFETY OFFICER _____ DATE: 6-17-15 | APPROVED TRAFFIC ENGINEER _____ DATE: 6/10/15

DELAWARE DEPARTMENT OF TRANSPORTATION	ADDENDUM / REVISIONS	NOT TO SCALE	HEP KC, SR10 & SR15 INTERSECTION IMPROVEMENTS	CONTRACT T201200802	PERMIT NO. X	DETOUR SIGNAGE PHASE 3	SHEET NO. 33
				COUNTY KENT	DESIGNED BY: SWN		TOTAL SHTS. 44
					CHECKED BY: ASW		

Unofficial Website Copy

\\DOTFS08\CADD\ACTIVE_DESIGNS\TRAFFIC\SAFETY\CAPITALPROJECTS\KENT\SCOTT\T201200802 - SR 10 & SR 15 INTERSECTION IMPROVEMENTS\DETOUR, JUNE 2015\SR 10 & SR 15.DGN

LANDSCAPE PLANTING SCHEDULE		
NO.	PLANTING DESCRIPTION	QUANTITY
1	NATIVE GRASS SEEDING	560 SY

LANDSCAPING NOTES

1. CONTRACTOR SHALL REMOVE ALL ROADWAY MATERIALS FROM THE AREA WITHIN THE CENTER ISLAND, TO INCLUDE ANY SUBBASE STONE. ALL COSTS COVERED UNDER THE CORRESPONDING REMOVAL ITEMS.
2. CONTRACTOR SHALL BACKFILL THE CENTER ISLAND WITH BORROW AND TOPSOIL AS DIRECTED BY THE ENGINEER. UPON COMPLETION OF BACKFILL THE CONTRACTOR SHALL INSTALL ITEM 908501 - NATIVE GRASS SEEDING, NO MOW MIX AND MULCH AS PER SPECIFICATION FOR THE ITEM.
3. ALL ADDITIONAL LANDSCAPING ITEMS ARE TO BE INSTALLED BY THE DEPARTMENT'S ROADSIDE ENVIRONMENTAL SECTION, ITEMS SHOWN FOR INFORMATIONAL PURPOSES ONLY

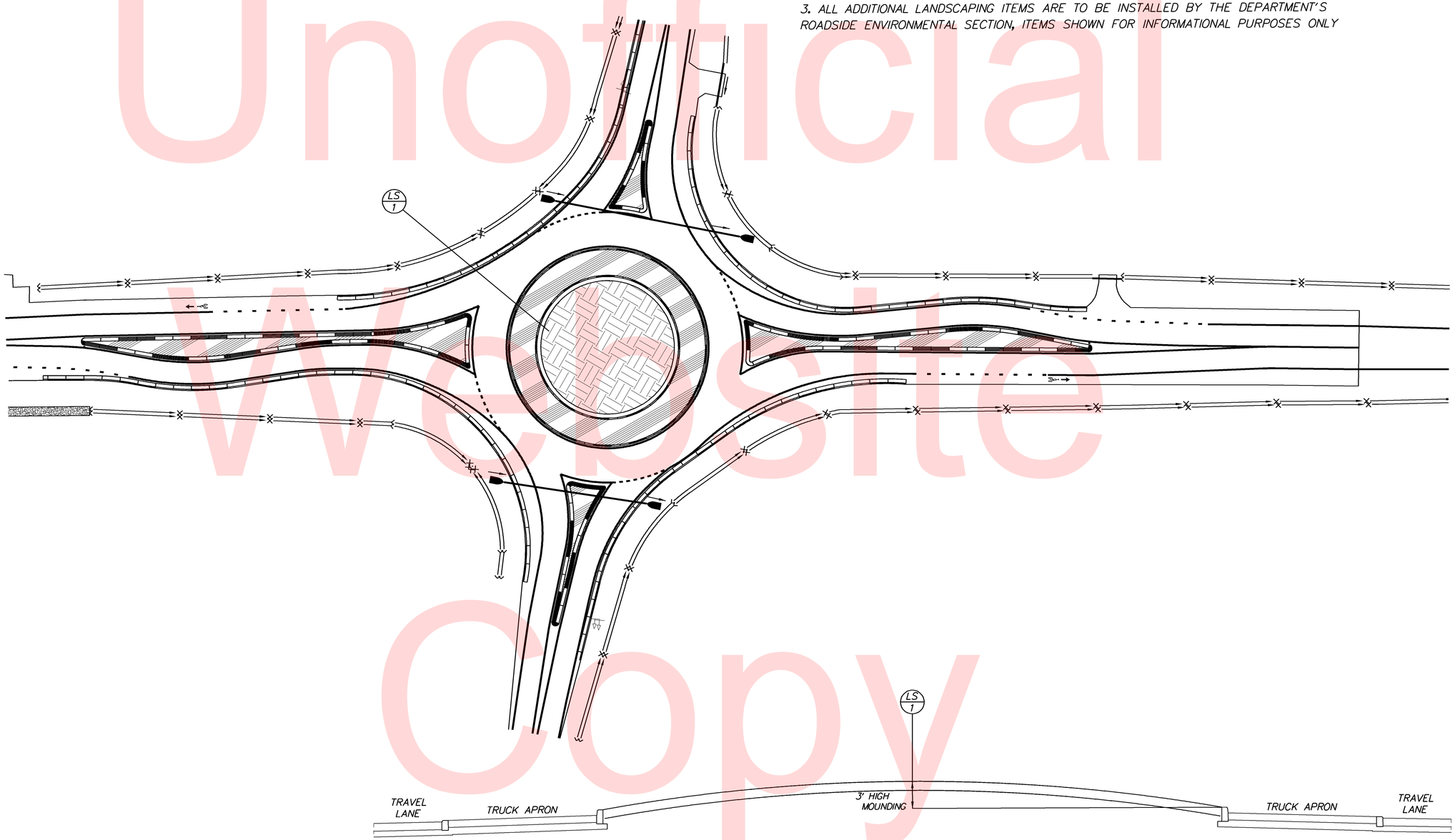

ROUNDABOUT CENTER ISLAND TYPICAL SECTION
NOT TO SCALE

Unofficial Website Copy

Y:\KENT\053\ROAD\T201200802\PLANS\FINAL\LS00.DGN

DELAWARE DEPARTMENT OF TRANSPORTATION

ADDENDUMS / REVISIONS

SCALE 0 30 60 90 FEET

HEP KC, SR10 & SR15 INTERSECTION IMPROVEMENTS

CONTRACT	BRIDGE NO.	X
T201200802	DESIGNED BY: JLC	
COUNTY		
KENT	CHECKED BY: JRG	

LANDSCAPING PLAN

SHEET NO.
34
TOTAL SHTS.
44

LIGHTING STANDARD SCHEDULE

NO.	CIRCUIT NO.	STATION	OFFSET	ARM	LIGHT STANDARD
1	A	218+65	76.1.4' L	12'	138 WATTS LED LUMINAIRE
2	B	220+15	71.2' L	12'	138 WATTS LED LUMINAIRE
3	B	221+10	29.4' R	12'	138 WATTS LED LUMINAIRE
4	A	220+00	101.0' R	12'	138 WATTS LED LUMINAIRE
5	B	218+50	86.1' L	12'	138 WATTS LED LUMINAIRE
6	A	217+44	38.1' R	12'	138 WATTS LED LUMINAIRE
#7	B	216+05	30.9' R	5'	138 WATTS LED LUMINAIRE
8	A	214+42	27' R	5'	138 WATTS LED LUMINAIRE
#9	A	222+33	25.5' R	5'	138 WATTS LED LUMINAIRE
#10	B	223+74	24.3' R	5'	138 WATTS LED LUMINAIRE

# DENOTES EXISTING LIGHTING POLE AND DAVIT ARM TO REMAIN & EXISTING HPS LUMINAIRE ASSEMBLY TO BE REPLACED WITH LED LUMINAIRE ASSEMBLY.

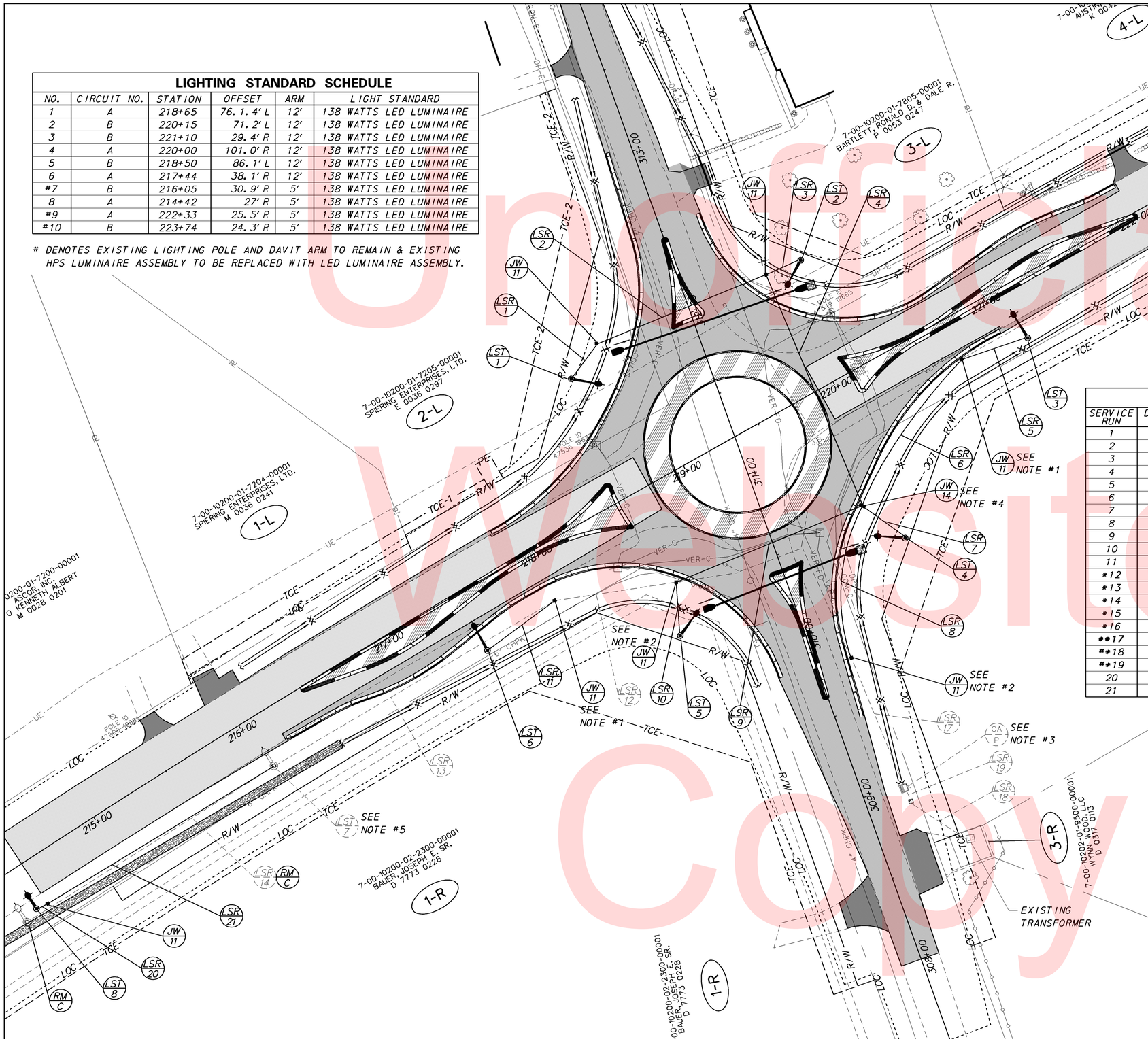

LIGHTING SERVICE SCHEDULE

SERVICE RUN	DISTANCE (L.F.)	DESCRIPTION	INSTALLATION
1	25.0'	(2)#6 + (1)#6 GND IN 3" SCH 80 PVC CONDUIT	DIRECT BURIAL
2	105.0'	(2)#6 + (1)#6 GND IN 4" SCH 80 PVC CONDUIT	DIRECT BURIAL
3	20.0'	(2)#6 + (1)#6 GND IN 3" SCH 80 PVC CONDUIT	DIRECT BURIAL
4	145.0'	(3)#6 + (1)#6 GND IN 4" SCH 80 PVC CONDUIT	DIRECT BURIAL
5	40.0'	(2)#6 + (1)#6 GND IN 3" SCH 80 PVC CONDUIT	DIRECT BURIAL
6	105.0'	(3)#6 + (1)#6 GND IN 4" SCH 80 PVC CONDUIT	DIRECT BURIAL/INTERCEPT
7	30.0'	(2)#6 + (1)#6 GND IN 3" SCH 80 PVC CONDUIT	DIRECT BURIAL
8	95.0'	(3)#6 + (1)#6 GND IN 4" SCH 80 PVC CONDUIT	DIRECT BURIAL/INTERCEPT
9	115.0'	(3)#6 + (1)#6 GND IN 4" SCH 80 PVC CONDUIT	DIRECT BURIAL/INTERCEPT
10	30.0'	(2)#6 + (1)#6 GND IN 3" SCH 80 PVC CONDUIT	DIRECT BURIAL
11	50.0'	(2)#6 + (1)#6 GND IN 3" SCH 80 PVC CONDUIT	DIRECT BURIAL
#12	72.0'	(3)#6 + (1)#6 GND IN 2.5" GALVANIZED CONDUIT	EXISTING CONDUIT RUN
#13	190.0'	(3)#6 + (1)#6 GND IN 2.5" GALVANIZED CONDUIT	EXISTING CONDUIT RUN
#14	165.0'	(2)#6 + (1)#6 GND IN 2.5" GALVANIZED CONDUIT	EXISTING TO BE REMOVED
#15	162.0'	(3)#6 + (1)#6 GND IN 2.5" GALVANIZED CONDUIT	EXISTING CONDUIT RUN
#16	162.0'	(2)#6 + (1)#6 GND IN 2.5" GALVANIZED CONDUIT	EXISTING CONDUIT RUN
**17	80.0'	(3)#6 + (1)#6 GND IN 2.5" GALVANIZED CONDUIT	EXISTING CONDUIT RUN
#*18	40.0'	(3)#2 + (1)#2 GND IN 2.5" GALVANIZED CONDUIT	EXISTING CONDUIT RUN
#*19	10.0'	(3)#2 + (1)#2 GND IN 2.5" GALVANIZED CONDUIT	EXISTING CONDUIT RUN
20	7.0'	(2)#6 + (1)#6 GND IN 3" SCH 80 PVC CONDUIT	DIRECT BURIAL
21	155.0'	(2)#6 + (1)#6 GND IN 3" SCH 80 PVC CONDUIT	DIRECT BURIAL

* DENOTES EXISTING

** PROJECT SHOULD PLAN TO REPLACE EXISTING CONDUIT RUN WITH 4" SCH 80 PVC AS NEEDED IN ANTICIPATION OF FILL CAPACITY ISSUES.

UPGRADE POWER CONDUIT RUNS TO 4" GALVANIZED AS NEEDED.

LIGHTING NOTES

1. REMOVE EXISTING POLE BASE TYPE 6 & INSTALL JUNCTION WELL TYPE 11 TO INTERCEPT EXISTING CONDUIT RUNS.
2. INTERCEPT EXISTING CONDUIT RUN WITH JUNCTION WELL TYPE 11.
3. REUSE EXISTING LIGHTING CONTROL CABINET AND POWER SERVICE IF FEASIBLE. ENSURE THAT LIGHTING CABINET COMPLIES WITH LATEST SPECS REQUIREMENTS. UPGRADE SERVICE METER AS NECESSARY.
4. JUNCTION WELL TYPE 14 WILL BE USED TO SPLICE ALL OF THE CABLES.
5. REPLACE EXISTING 150W HPS LUMINAIRE ASSEMBLY WITH 150W EQUIVALENT LED LUMINAIRE ASSEMBLY (138W). EXISTING LIGHT POLE AND DAVIT ARM TO REMAIN
6. EXISTING LIGHTING POLES BASES AND CONDUITS TO BE REMOVED OR MODIFIED AS SHOWN ON PROPOSED LIGHTING DESIGN. LST 7, 9, 10 POLES AND ARMS TO REMAIN, BUT HPS FIXTURES TO BE REPLACED WITH 138W LED FIXTURES

Unofficial Website Copy

DELAWARE DEPARTMENT OF TRANSPORTATION

ADDENDUMS / REVISIONS

SCALE 0 30 60 90 FEET

HEP KC, SR 10, SR 15 INTERSECTION IMPROVEMENTS

CONTRACT	BRIDGE NO.	N/A
T201200802	DESIGNED BY: MS	
COUNTY		
KENT	CHECKED BY: JMT	

LIGHTING PLAN

SHEET NO. 35 TOTAL SHTS. 44

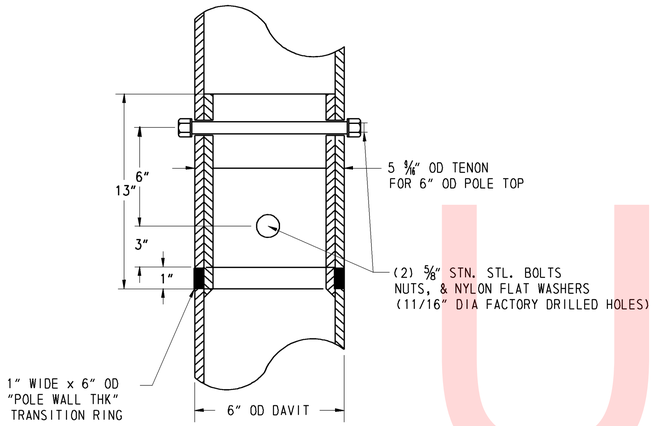

FLUSH JOINT DETAIL

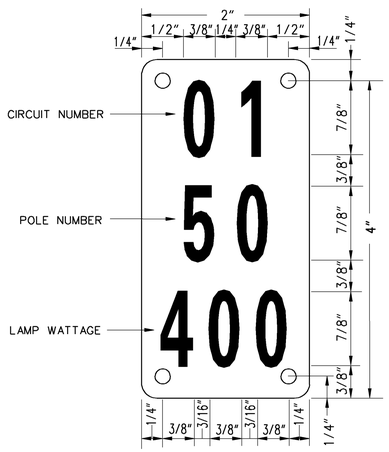

TYPICAL POLE I.D. TAG

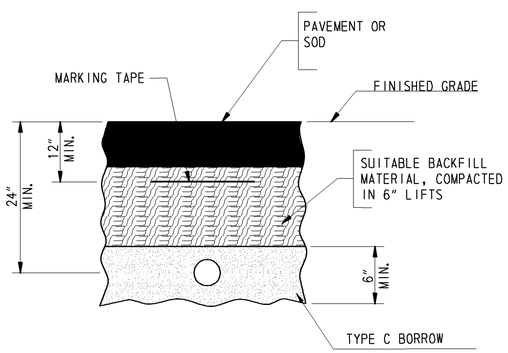

BURIED CONDUIT DETAIL

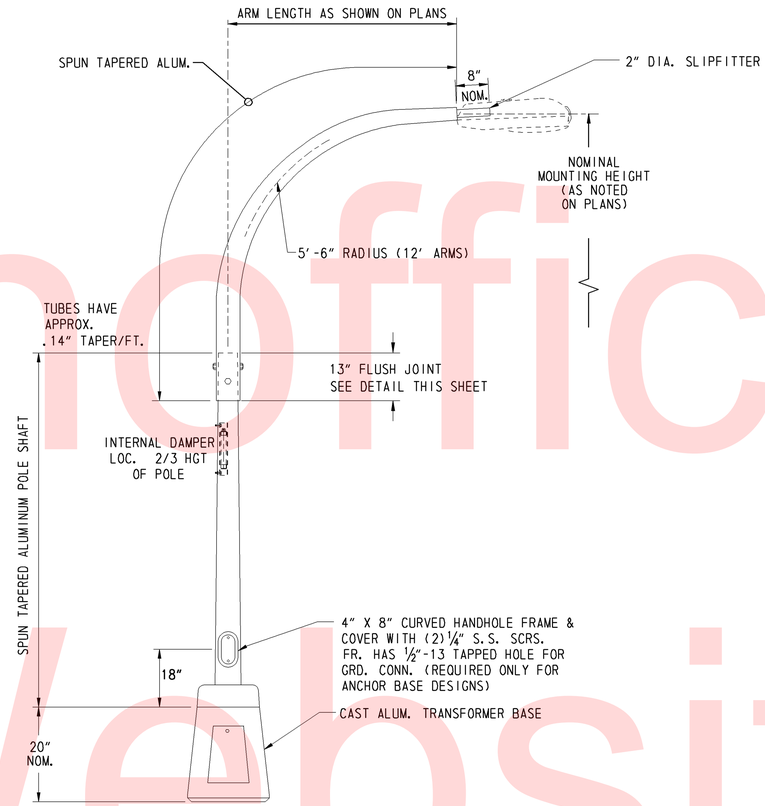

DAVIT ARM LIGHT POLE DETAIL

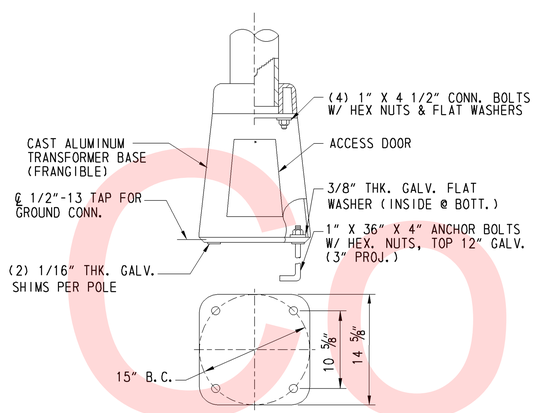

TRANSFORMER BASE DETAIL

NOTES:
1. TRANSFORMER BASE SHALL BE PROVIDED WITH ALL LIGHT POLES, WHETHER PROTECTED OR UNPROTECTED, UNLESS OTHERWISE NOTED.
2. REFER TO NOTES FOR THE ANCHOR BASE DETAIL FOR CONDITIONS WHERE AN ANCHOR BASE IS REQUIRED.

GENERAL NOTES: (LIGHTING)

1. ALL ELECTRICAL WORK SHALL BE PERFORMED AND ALL MATERIAL PROVIDED SHALL BE IN ACCORDANCE WITH THE NATIONAL ELECTRIC CODE OF THE NATIONAL FIRE PROTECTION ASSOCIATION, TO ALL LOCAL AND SPECIAL LAWS, AND/OR TO ORDINANCES GOVERNING SUCH MATERIAL. CODE SHALL BE CONSIDERED THE MINIMUM REQUIREMENTS FOR THE ELECTRICAL WORK AND IF THERE IS A CONFLICT BETWEEN THE REQUIREMENTS SPECIFIED IN THE CONTRACT DOCUMENTS AND THE CODE, THE MORE STRINGENT REQUIREMENT WILL APPLY AS DETERMINED AND APPROVED BY THE ENGINEER. WHEN THESE REQUIREMENTS DO NOT GOVERN, AND WHERE NOT OTHERWISE SPECIFIED, ELECTRICAL MATERIALS SHALL CONFORM TO THE STANDARDIZATION RULES OF THE INSTITUTE OF ELECTRICAL ENGINEERS.
2. THE CONTRACTOR SHALL PROVIDE AND SECURE ALL ELECTRICAL INSPECTIONS AS REQUIRED AND PAY FOR THE SAME. THE ELECTRICAL CONTRACTOR SHALL OBTAIN AT HIS EXPENSE ALL NECESSARY PERMITS AND CERTIFICATES AS REQUIRED.
3. BURIED ELECTRICAL CABLE AND CONDUIT, AND OTHER UTILITIES MAY EXIST THROUGHOUT THIS PROJECT. ALL UNDERGROUND AND OVERHEAD UTILITIES SHOWN ON THESE PLANS ARE SCHEMATIC ONLY AND MAY NOT BE COMPLETE. THE CONTRACTOR SHALL BE RESPONSIBLE FOR NOTIFYING MISS UTILITY PRIOR TO THE BEGINNING OF CONSTRUCTION FOR UTILITY MARKOUTS. THE CONTRACTOR IS RESPONSIBLE FOR PREVENTING DAMAGE TO THEM, AND MAINTAINING THEM IN SERVICE WHEN AND WHERE REQUIRED. THE CONTRACTOR SHALL VERIFY THE EXACT LOCATIONS PRIOR TO COMMENCING WORK. IF THE CONTRACTOR PERCEIVES THAT A CONFLICT MAY OCCUR, THE CONTRACTOR SHALL NOTIFY DELDOT TRAFFIC IMMEDIATELY PRIOR TO COMMENCING CONSTRUCTION IN THAT AREA.
4. THE ELECTRICAL CONTRACTOR SHALL GUARANTEE ALL WORK MATERIAL AND LABOR TO BE FREE FROM DEFECTS FOR A ONE YEAR PERIOD FROM THE TIME OF OWNER ACCEPTANCE. ANY DEFECTS OCCURRING DURING THIS PERIOD SHALL BE CORRECTED BY THE ELECTRICAL CONTRACTOR AT NO ADDITIONAL COST TO THE OWNER.
5. CONDUIT RUNS ARE SHOWN IN APPROXIMATE LOCATIONS. THE CONTRACTOR SHALL LOCATE THE CONDUIT RUNS IN A MANNER THAT AVOIDS CONFLICTS WITH ALL EXISTING AND PROPOSED FEATURES AS FIELD CONDITIONS DICTATE AND AS APPROVED BY THE ENGINEER.
6. ALL GALVANIZED CONDUITS(GRC) SHALL BE REAMED AND THREADED. ALL GRC SHALL BE THREADED TOGETHER WITH APPROVED COUPLINGS. SET, SCREW, BOLTED AND COMPESSION FITTINGS ARE NOT ACCEPTABLE.
7. TERMINATE ALL GALVANIZED CONDUITS WHEN ENTERING ENCLOSURES WITH LOCKNUT AND BONDING BUSHINGS. ALL OTHER GALVANIZED CONDUITS SHALL BE PROVIDED WITH BONDING BUSHINGS. ALL GALVANIZED CONDUITS SHALL BE BONDED WITH GROUND WIRE.
8. COLOR CODING SHALL BE PROVIDED THROUGHOUT THE ENTIRE NETWORK FOR SERVICE,FEEDER, BRANCH AND CONTROL CONDUCTORS. EACH PHASE SHALL BE AN INDEPENDENT COLOR. CONDUCTORS SHALL HAVE FACTORY IMPREGNATED COLOR THROUGHOUT THEIR ENTIRE LENGTH. PHASE TAPING IS NOT PERMITTED.
9. THE CONTRACTOR SHALL NOTIFY DELMARVA POWER TWO WEEKS IN ADVANCE TO ARRANGE FINAL POWER CONNECTIONS.
10. ALL FUSED CONNECTIONS SHALL BE MADE IN THE POLE BASE. SPLICES IN JUNCTION WELLS SHALL NOT BE FUSED.
11. THE CONTRACTOR SHALL VERIFY ALL DIMENSIONS AND CONDITIONS AT SITE PRIOR TO WORK. WORK INCLUDES FURNISHING LABOR, MATERIAL, EQUIPMENT AND SERVICE NECESSARY AND INCIDENTAL TO PROPER COMPLETION OF THE ELECTRICAL WORK AS SHOWN. MINOR ITEMS,ACCESSORIES OR DEVICES NECESSARY FOR COMPLETION AND PROPER OPERATION OF ANY SYSTEM SHALL BE PROVIDED WHETHER OR NOT THEY ARE SPECIFICALLY CALLED FOR BY SPECIFICATIONS OR DRAWINGS.
12. ALL CONDUITS, JUNCTION WELLS, LIGHTING STANDARDS, ETC. SHALL BE STAKED OUT AND EVERY LOCATION APPROVED BY THE ENGINEER BEFORE ANY WORK IS DONE.
13. ALL STATION AND OFFSET INFORMATION SHOWN ON THE PLANS FOR PROPOSED LIGHTING STANDARDS IS TO THE CENTER OF THE POLE BASE.
14. SPLICES FOR ALL ROADWAY LIGHTING ELECTRICAL CABLES SHALL BE COMPLETED USING APPROVED SPLICE KITS OR METHODS APPROVED BY THE ENGINEER AND SHALL BE INCIDENTAL TO THE SUPPLY AND INSTALLATION OF VARIOUS ROADWAY LIGHTING ELECTRICAL CABLES.
15. ALL PROPOSED DAVIT ARM LIGHTING STANDARDS SHALL BE PROVIDED AND INSTALLED WITH BREAKAWAY TRANSFORMER BASES.
16. ALL LIGHT POLE FOUNDATIONS SHALL BE DELDOT STANDARD POLE BASE TYPE 6 (STD. NO. T-5).
17. UNDERGROUND CONDUIT SHALL BE SLOPED TO DRAIN TO NEAREST JUNCTION WELL. IF THIS CANNOT BE ACCOMPLISHED, PROVIDE A DRAINAGE TEE AT LOW POINT OF CONDUIT RUN. DRAINAGE TEES SHALL BE INCIDENTAL TO SUPPLY OF CONDUIT.
18. RIGID GALVANIZED STEEL CONDUIT SHALL BE USED FOR ELECTRICAL SERVICE. SCHEDULE 80 PVC CONDUIT SHALL BE USED IN TRENCHES. SDR-13.5 HDPE CONDUIT SHALL BE USED FOR BORES.
19. CONTRACTOR SHALL VERIFY THE LUMINAIRE DETAIL WITH THE LED SUPPLIER.

Unofficial Website Copy

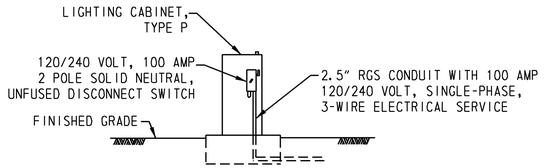

EXISTING LIGHTING CONTROL AND DISTRIBUTION ENCLOSURE (REAR VIEW)

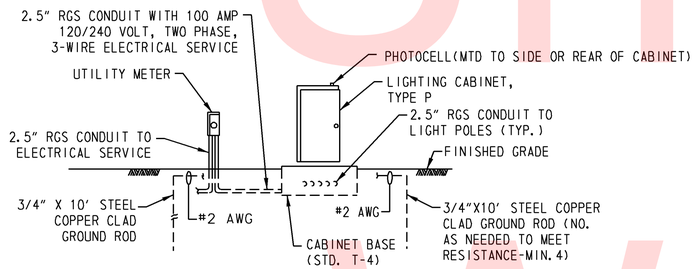

EXISTING ELECTRICAL SERVICE ON PEDESTAL AND LIGHTING CONTROL AND DISTRIBUTION ENCLOSURE (FRONT VIEW)

NOTES:

1. THE EXISTING LIGHTING CABINET, ELECTRICAL SERVICE PEDESTAL, AND DISTRIBUTION ENCLOSURE WILL BE MAINTAINED AS IT IS AND SHALL NOT BE DISTURBED.
2. THE CONTRACTOR SHALL REPLACE THE EXISTING LIGHTING CIRCUITRY AND CABLE SIZES AS SHOWN ON THE LIGHTING PLAN.

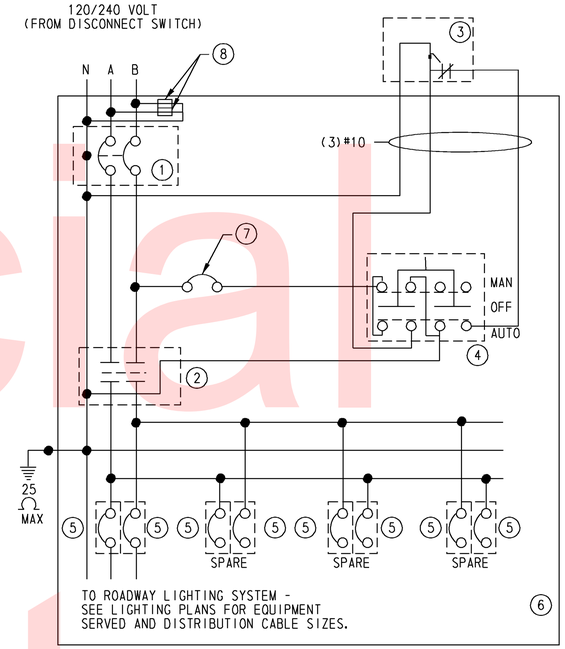

N NEUTRAL
A LINE 1
B LINE 2
1 100 AMP MAIN CIRCUIT BREAKER
2 100 AMP CONTACTOR
3 PHOTOELECTRIC CELL (MOUNTED ON NORTH SIDE OF CABINET)
4 SELECTOR SWITCH
5 20 AMP SIGNLE POLE BREAKER
6 CONTROL CABINET
7 15 AMP SINGLE POLE BREAKER
8 LIGHTING ARRESTOR

EXISTING LOAD CENTER CABINET SCHEMATIC WIRING DIAGRAM

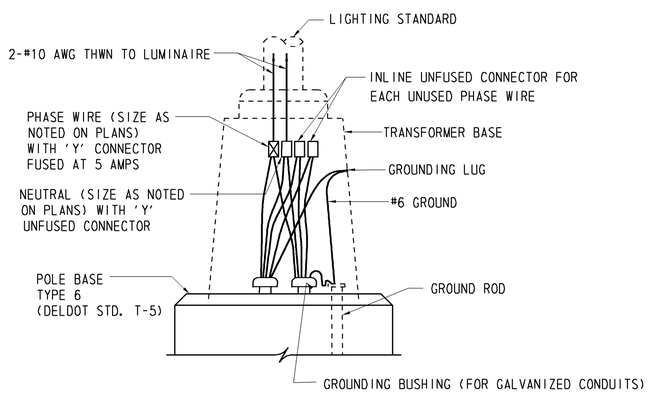

TYPICAL LUMINAIRE CONNECTION 120/240V

LIGHTING PANEL SCHEDULE

TYPE: 1P, 3W
NUMBER OF POLES: 10(MIN)
GROUND BUS RATING: 100%
MAIN BUS RATING: 100 AMP
MAIN RATING: 100 AMP, 1P MCB

VOLTAGE 120/240
ENCLOSURE: TYPE P, NEMA 3R
PANEL MIN. A.I.C. RATING: 10KA
LOCATION: DUNDEE RD, SOUTH OF ROUNDABOUT

CIRCUIT NO.	CIRCUIT BKR	DESCRIPTION	LOAD/PHASE				DESCRIPTION	CIRCUIT BKR	CIRCUIT NO.
			LOAD	L1	L2	LOAD			
1	20A	LST 1, 4, 6, 8, 9	1380	1380	1380	1380	LST 2, 3, 5, 7, 10	20A	2
3		N/A	-	-	-	-	N/A		4
5		N/A	-	-	-	-	N/A		6
7		N/A	-	-	-	-	N/A		8
TOTALS			1380	1380					
TOTAL CONNECTED VA LOAD			2760						

Unofficial Website Copy

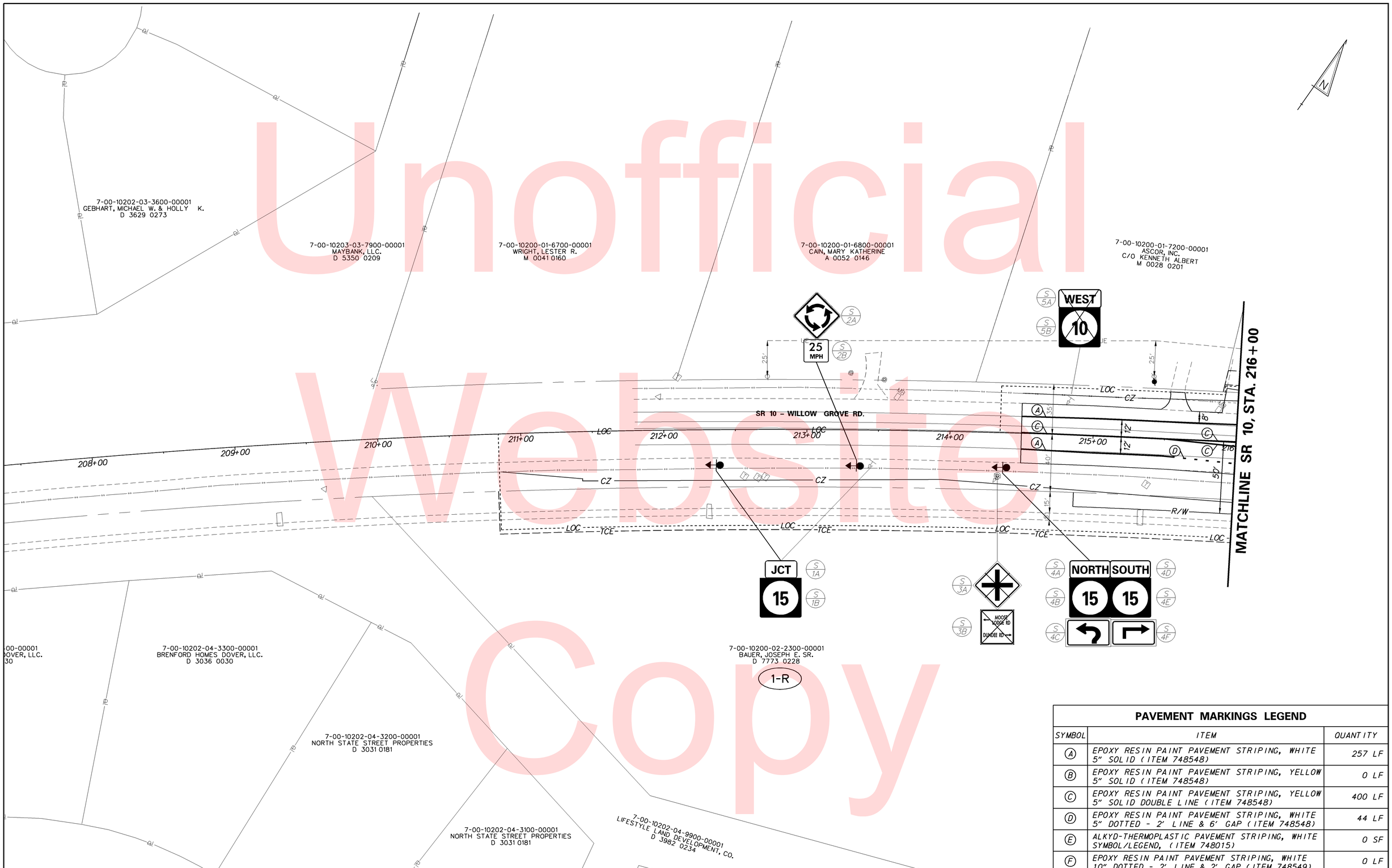

PAVEMENT MARKINGS LEGEND

SYMBOL	ITEM	QUANTITY
A	EPOXY RESIN PAINT PAVEMENT STRIPING, WHITE 5" SOLID (ITEM 748548)	257 LF
B	EPOXY RESIN PAINT PAVEMENT STRIPING, YELLOW 5" SOLID (ITEM 748548)	0 LF
C	EPOXY RESIN PAINT PAVEMENT STRIPING, YELLOW 5" SOLID DOUBLE LINE (ITEM 748548)	400 LF
D	EPOXY RESIN PAINT PAVEMENT STRIPING, WHITE 5" DOTTED - 2' LINE & 6' GAP (ITEM 748548)	44 LF
E	ALKYD-THERMOPLASTIC PAVEMENT STRIPING, WHITE SYMBOL/LEGEND, (ITEM 748015)	0 SF
F	EPOXY RESIN PAINT PAVEMENT STRIPING, WHITE 10" DOTTED - 2' LINE & 2' GAP (ITEM 748549)	0 LF

Y:\KENT\053\ROAD\T201200802\PLANS\FINAL\CP01.DGN

DELAWARE DEPARTMENT OF TRANSPORTATION

ADDENDUMS / REVISIONS

SCALE 0 30 60 90 FEET

HEP KC, SR10 & SR15 INTERSECTION IMPROVEMENTS

CONTRACT	BRIDGE NO.	X
T201200802	DESIGNED BY: CCE	
COUNTY		
KENT	CHECKED BY: JRG	

SIGNING, STRIPING AND CONDUIT PLAN

SHEET NO. 38

TOTAL SHTS. 44

Unofficial Website Copy

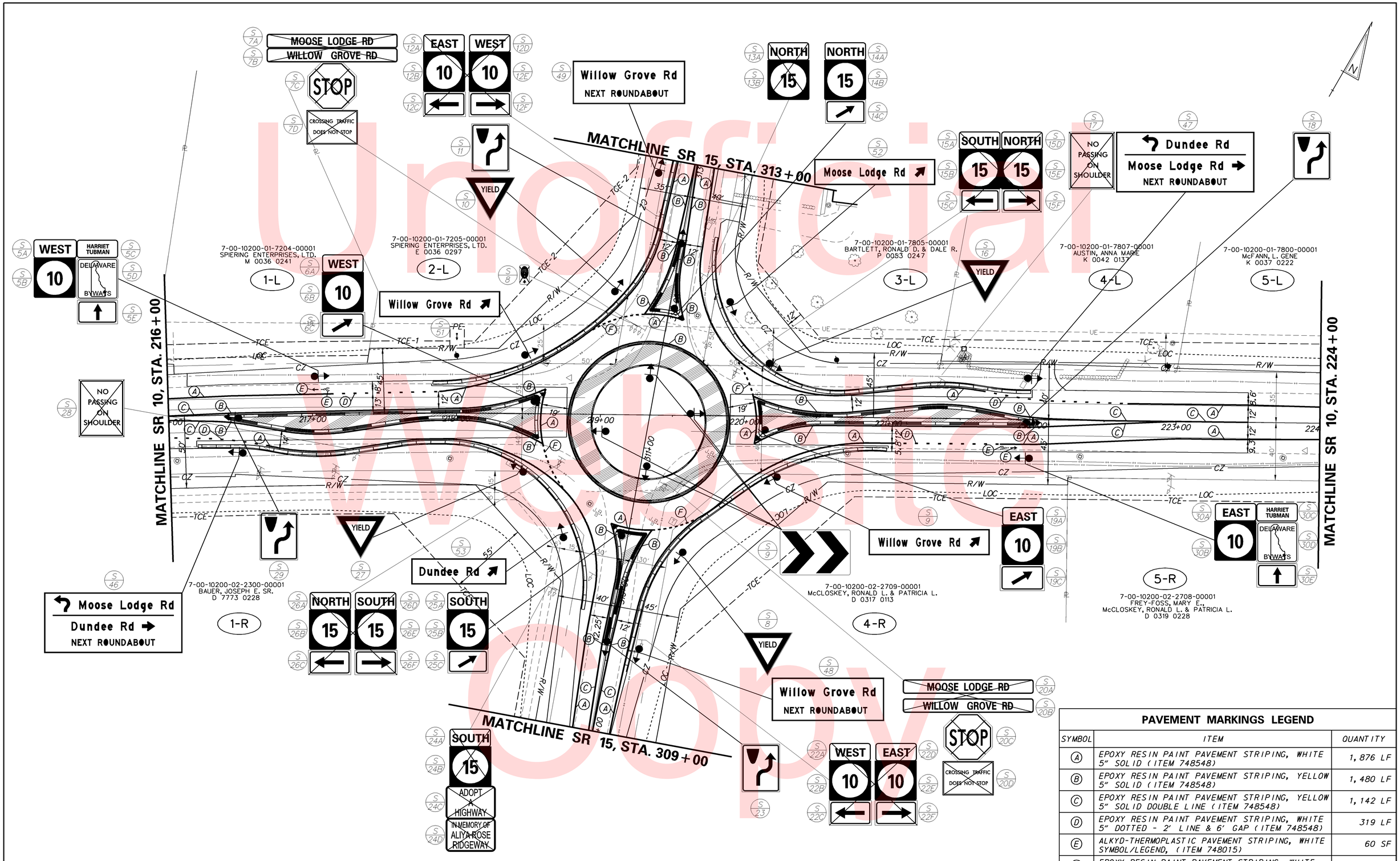

PAVEMENT MARKINGS LEGEND

SYMBOL	ITEM	QUANTITY
A	EPOXY RESIN PAINT PAVEMENT STRIPING, WHITE 5" SOLID (ITEM 748548)	1,876 LF
B	EPOXY RESIN PAINT PAVEMENT STRIPING, YELLOW 5" SOLID (ITEM 748548)	1,480 LF
C	EPOXY RESIN PAINT PAVEMENT STRIPING, YELLOW 5" SOLID DOUBLE LINE (ITEM 748548)	1,142 LF
D	EPOXY RESIN PAINT PAVEMENT STRIPING, WHITE 5" DOTTED - 2' LINE & 6' GAP (ITEM 748548)	319 LF
E	ALKYD-THERMOPLASTIC PAVEMENT STRIPING, WHITE SYMBOL/LEGEND, (ITEM 748015)	60 SF
F	EPOXY RESIN PAINT PAVEMENT STRIPING, WHITE 10" DOTTED - 2' LINE & 2' GAP (ITEM 748549)	142 LF

Unofficial Website Copy

Y:\KENT\053\ROAD\T201200802\PLANS\FINAL\CP02.DGN

DELAWARE DEPARTMENT OF TRANSPORTATION

ADDENDUMS / REVISIONS

SCALE 0 30 60 90 FEET

HEP KC, SR10 & SR15 INTERSECTION IMPROVEMENTS

CONTRACT	T201200802
COUNTY	KENT
BRIDGE NO.	X
DESIGNED BY: CCE	
CHECKED BY: JRG	

SIGNING, STRIPING AND CONDUIT PLAN

SHEET NO.	39
TOTAL SHTS.	44

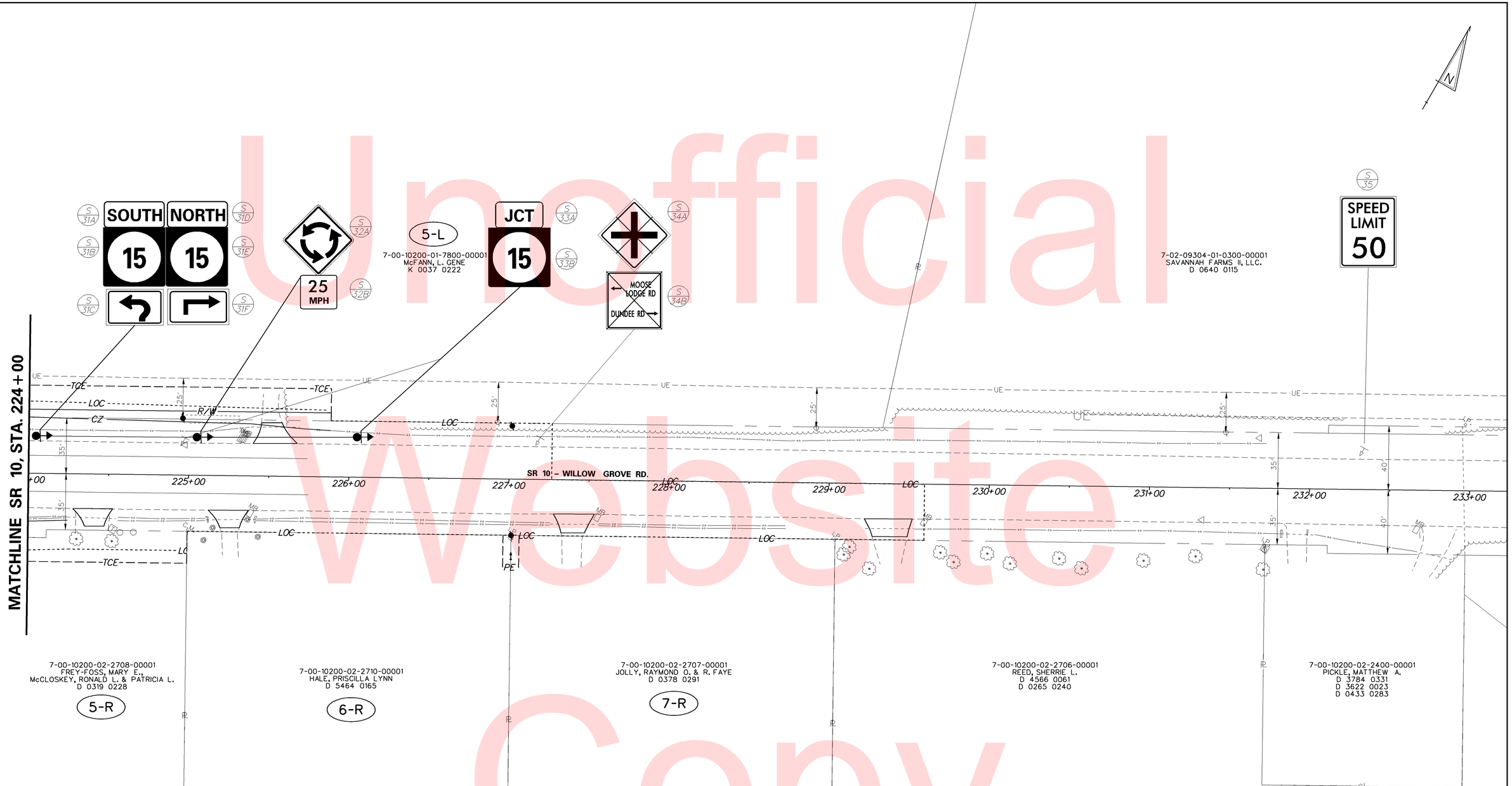

PAVEMENT MARKINGS LEGEND

SYMBOL	ITEM	QUANTITY
A	EPOXY RESIN PAINT PAVEMENT STRIPING, WHITE 5" SOLID (ITEM 748548)	0 LF
B	EPOXY RESIN PAINT PAVEMENT STRIPING, YELLOW 5" SOLID (ITEM 748548)	0 LF
C	EPOXY RESIN PAINT PAVEMENT STRIPING, YELLOW 5" SOLID DOUBLE LINE (ITEM 748548)	0 LF
D	EPOXY RESIN PAINT PAVEMENT STRIPING, WHITE 5" DOTTED - 2' LINE & 6' GAP (ITEM 748548)	0 LF
E	ALKYD-THERMOPLASTIC PAVEMENT STRIPING, WHITE SYMBOL/LEGEND, (ITEM 748015)	0 SF
F	EPOXY RESIN PAINT PAVEMENT STRIPING, WHITE 10" DOTTED - 2' LINE & 2' GAP (748549)	0 SF

Unofficial Website Copy

Y:\KENT\053\ROAD\T201200802\PLANS\FINAL\CP03.DGN

DELAWARE DEPARTMENT OF TRANSPORTATION

ADDENDUMS / REVISIONS

SCALE 0 30 60 90 FEET

HEP KC, SR10 & SR15 INTERSECTION IMPROVEMENTS

CONTRACT	BRIDGE NO.	X
T201200802	DESIGNED BY: CCE	
COUNTY		
KENT	CHECKED BY: JRG	

SIGNING, STRIPING AND CONDUIT PLAN

SHEET NO. 40

TOTAL SHTS. 44

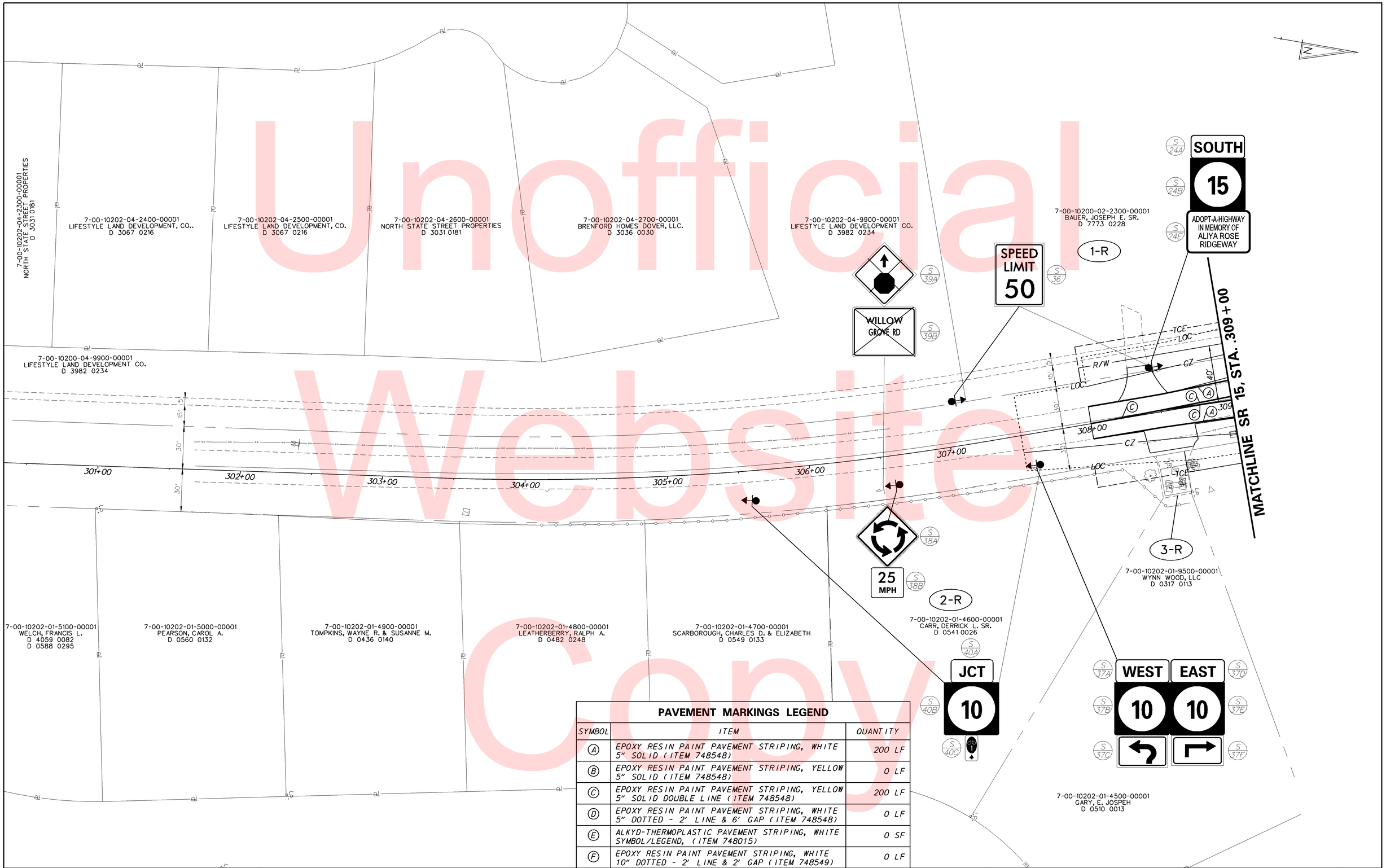

Unofficial Website Copy

PAVEMENT MARKINGS LEGEND

SYMBOL	ITEM	QUANTITY
A	EPOXY RESIN PAINT PAVEMENT STRIPING, WHITE 5" SOLID (ITEM 748548)	200 LF
B	EPOXY RESIN PAINT PAVEMENT STRIPING, YELLOW 5" SOLID (ITEM 748548)	0 LF
C	EPOXY RESIN PAINT PAVEMENT STRIPING, YELLOW 5" SOLID DOUBLE LINE (ITEM 748548)	200 LF
D	EPOXY RESIN PAINT PAVEMENT STRIPING, WHITE 5" DOTTED - 2' LINE & 6' GAP (ITEM 748548)	0 LF
E	ALKYD-THERMOPLASTIC PAVEMENT STRIPING, WHITE SYMBOL/LEGEND, (ITEM 748015)	0 SF
F	EPOXY RESIN PAINT PAVEMENT STRIPING, WHITE 10" DOTTED - 2' LINE & 2' GAP (ITEM 748549)	0 LF

Y:\KENT\053\ROAD\T201200802\PLANS\FINAL\CP04.DGN

DELAWARE DEPARTMENT OF TRANSPORTATION

ADDENDUMS / REVISIONS

SCALE 0 30 60 90 FEET

HEP KC, SR10 & SR15 INTERSECTION IMPROVEMENTS

CONTRACT	BRIDGE NO.	X
T201200802	DESIGNED BY: CCE	
COUNTY		
KENT	CHECKED BY: JRG	

SIGNING, STRIPING AND CONDUIT PLAN

SHEET NO. 41

TOTAL SHTS. 44

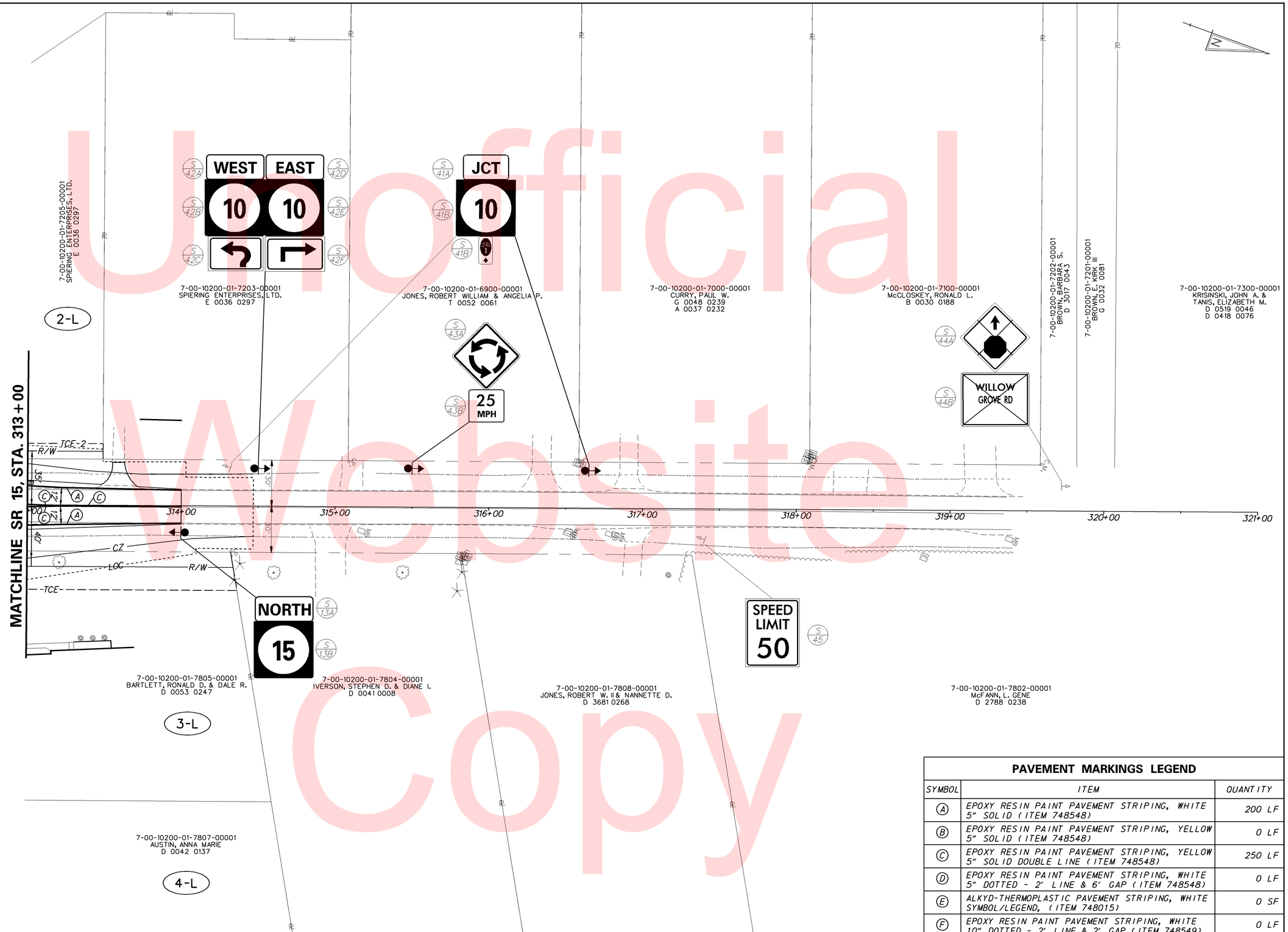

PAVEMENT MARKINGS LEGEND

SYMBOL	ITEM	QUANTITY
A	EPOXY RESIN PAINT PAVEMENT STRIPING, WHITE 5" SOLID (ITEM 748548)	200 LF
B	EPOXY RESIN PAINT PAVEMENT STRIPING, YELLOW 5" SOLID (ITEM 748548)	0 LF
C	EPOXY RESIN PAINT PAVEMENT STRIPING, YELLOW 5" SOLID DOUBLE LINE (ITEM 748548)	250 LF
D	EPOXY RESIN PAINT PAVEMENT STRIPING, WHITE 5" DOTTED - 2' LINE & 6' GAP (ITEM 748548)	0 LF
E	ALKYD-THERMOPLASTIC PAVEMENT STRIPING, WHITE SYMBOL/LEGEND, (ITEM 748015)	0 SF
F	EPOXY RESIN PAINT PAVEMENT STRIPING, WHITE 10" DOTTED - 2' LINE & 2' GAP (ITEM 748549)	0 LF

Unofficial Website Copy

Y:\KENT\053\ROAD\T201200802\PLANS\FINAL\CP05.DGN

DELAWARE DEPARTMENT OF TRANSPORTATION

ADDENDUMS / REVISIONS

SCALE 0 30 60 90 FEET

HEP KC, SR10 & SR15 INTERSECTION IMPROVEMENTS

CONTRACT	BRIDGE NO.	X
T201200802	DESIGNED BY: CCE	
COUNTY		
KENT	CHECKED BY: JRG	

SIGNING, STRIPING AND CONDUIT PLAN

SHEET NO. 42

TOTAL SHTS. 44

SIGN SCHEDULE

SHEET NO.	CODE	QTY.	DESCRIPTION	ASSEMBLY NO.	SIGN WIDTH (IN)	SIGN HEIGHT (IN)	SIGN AREA (SF)	ITEM 749687 SINGLE POST (EACH)			ITEM 749690 MULTI POST (SF)			POST INSTALLATION TYPE	Code X11 12' Post (W/ Basepost)	ITEM 749688 4" HOLE, 0-6" (EACH)	ITEM 749689 4" HOLE, >6" (EACH)	REMARKS
								SIGN DISPOSTION	REMOVE	INSTALL	SIGN DISPOSTION	REMOVE	INSTALL					
38	M2-1(21)	1	JUNCTION - 21x15	S1	21	15	2.19	REPOSITION	1	1					0	0	0	
38	M1-5(24)	1	STATE ROUTE (2 - Digit Sign) - 24x24	S1	24	24	4.00	REPOSITION	1	1					0	0	0	STATE ROUTE 15
38	W2-6(30)	1	CIRCULAR INTERSECTION - 30x30	S2	30	30	6.25	NEW		1				SOIL	1	0	0	
38	W13-1P-25(18)	1	ADVISORY SPEED (25 MPH) 18x18	S2	18	18	2.25	ADD TO EXIST.		1					0	0	0	
38	W2-1(30)	1	CROSS ROAD - 30x30	S3	30	30	6.25	REMOVE	1						0	0	0	
38	D1-2	1	DESTINATION (2 Line)	S3	24	30	5.00	REMOVE	1						0	0	0	MOOSE LODGE RD; DUNDEE RD
38	M3-1(24)	1	CARDINAL DIRECTION - NORTH - 24x12	S4	24	12	2.00	ADD TO EXIST.		1					0	0	0	
38	M3-3(24)	1	CARDINAL DIRECTION - SOUTH - 24x12	S4	24	12	2.00	ADD TO EXIST.		1					0	0	0	
38	M1-5(24)	3	STATE ROUTE (2 - Digit Sign) - 24x24	S4	24	24	12.00	NEW		2				SOIL	2	0	0	STATE ROUTE 15
38	M5-3_L	1	ADVANCE TURN ARROW (Left - curved-stem)	S4	21	15	2.19	ADD TO EXIST.		1					0	0	0	
38	M5-1_R	1	ADVANCE TURN ARROW (Right - 90)	S4	21	15	2.19	ADD TO EXIST.		1					0	0	0	
38	M3-4(24)	1	CARDINAL DIRECTION - WEST - 24x12	S5	24	12	2.00	REMOVE	1						0	0	0	
38	M1-5(24)	1	STATE ROUTE (2 - Digit Sign) - 24x24	S5	24	24	4.00	REMOVE	1						0	0	0	STATE ROUTE 10
39	N/A	1	EXISTING SIGN	S6	24	24		REMAIN							0	0	0	PONDS AT WILLOW GROVE (RLC)
39	N/A	1	EXISTING SIGN	S6	24	24		REMAIN							0	0	0	FOR SALE SIGN (RLC)
39	N/A	1	EXISTING SIGN	S6	24	24		REMAIN							0	0	0	SOUTHERN MEADOW COMMUNITY (RLC)
39	R4-7(18)	4	KEEP RIGHT (Symbol) - 24x30	S11, S18, S23, S24	24	30	20.00	NEW		4				CONCRETE	4	4	0	
39	R1-2(36)	4	YIELD	S8, S10, S16, S27	36	36	36.00	NEW		4				SOIL	4	0	0	
39	M3-4(24)	2	CARDINAL DIRECTION - WEST - 24x12	S5, S6	24	12	4.00	ADD TO EXIST.		1					0	0	0	
39	M3-3(24)	1	CARDINAL DIRECTION - SOUTH - 24x12	S25	24	12	2.00	ADD TO EXIST.		1					0	0	0	
39	M3-2(24)	2	CARDINAL DIRECTION - EAST - 24x12	S19, S30	24	12	4.00	ADD TO EXIST.		1					0	0	0	
39	M3-1(24)	1	CARDINAL DIRECTION - NORTH - 24x12	S14	24	12	2.00	ADD TO EXIST.		1					0	0	0	
39	M6-2_R(21)	4	DIRECTIONAL ARROW (Right - upward 45) - 21x15	S6, S14, S19, S25	21	15	8.75	ADD TO EXIST.		4					0	0	0	
39	M1-5(24)	2	STATE ROUTE (2 - Digit Sign) - 24x24	S13, S14, S26	24	24	8.00	NEW		2				CONCRETE	2	2	0	STATE ROUTE 15
39	M1-5(24)	4	STATE ROUTE (2 - Digit Sign) - 24x24	S5, S6, S19, S30	24	24	32.00	NEW		2				CONCRETE	2	2	0	STATE ROUTE 10
39	M3-1(24)	3	CARDINAL DIRECTION - NORTH - 24x12	S13, S15, S26	24	12	6.00	REMOVE	2						0	0	0	
39	M3-3(24)	3	CARDINAL DIRECTION - SOUTH - 24x12	S15, S24, S26	24	12	6.00	REMOVE	2						0	0	0	
39	M3-4(24)	2	CARDINAL DIRECTION - WEST - 24x12	S12, S22	24	12	4.00	REMOVE	2						0	0	0	
39	M3-2(24)	2	CARDINAL DIRECTION - EAST - 24x12	S12, S22	24	12	4.00	REMOVE	2						0	0	0	
39	M6-1_R(21)	4	DIRECTIONAL ARROW (Right) - 21x15	S12, S15, S22, S26	21	15	8.75	REMOVE	4						0	0	0	
39	M6-1_L(21)	4	DIRECTIONAL ARROW (Left) - 21x15	S12, S15, S22, S26	21	15	8.75	REMOVE	4						0	0	0	
39	M1-5(24)	5	STATE ROUTE (2 - Digit Sign) - 24x24	S13, S15, S24, S26	24	24	20.00	REMOVE	1						0	0	0	STATE ROUTE 15
39	D14-3-DE	1	ADOPT A HIGHWAY	S24	24	24	4.00	REMOVE	1						0	0	0	(RLC)
39	D14-2(36)	1	ACKNOWLEDGEMENT - 36x30	S24	36	30	7.50	REMOVE	1						0	0	0	IN MEMORY OF ALIYA ROSE RIDGEWAY (RLC)
39	R4-18(24)	2	DO NOT PASS ON SHOULDER - 24x30	S28	24	30	10.00	REMOVE	2						0	0	0	
39	D3-1(9)	2	STREET NAME (1 Line)	S7, S20	24	9	3.00	REMOVE	2						0	0	0	MOOSE LODGE RD
39	D3-1(9)	2	STREET NAME (1 Line)	S7, S20	24	9	3.00	REMOVE	2						0	0	0	WILLOW GROVE RD
39	R1-1(30)	2	STOP	S7, S20	30	30	12.50	REMOVE	2						0	0	0	
39	W4-4P(24)	2	CROSS TRAFFIC DOES NOT STOP (plaque) - 24x12	S20	24	12	4.00	REMOVE	2						0	0	0	
39	R3-17	2	BIKE LANE (Symbol)	S41	24	18	6.00	NEW		2				SOIL	2	0	0	
39	R3-17aP	2	AHEAD (plaque)	S14	24	8	2.67	ADD TO EXIST.		2					0	0	0	
39	R6-4a	4	ROUNDABOUT DIRECTIONAL (3 chevrons)	S9	48	24	32.00				NEW		8	SOIL	8	0	0	
39	M1-8a(12)	1	BIKE ROUTE (pictograph) - 12x18	S41	12	18	1.50	REMOVE	1						0	0	0	
39	D14-4-DE	1	DELAWARE BYWAYS	S5D	24"	24"	4	NEW		1								
39	D14-4-DE	1	DELAWARE BYWAYS	S30D	24"	24"	4	NEW		1								
39	SPECIAL	2	DELAWARE BYWAYS UP ARROW	S5; S30	24	9"	3	ADD TO EXIST.										
39	SPECIAL	2	DELAWARE BYWAYS HARRIET TUBMAN PLAQUE	S5; S3C	24"	9"	3	ADD TO EXIST.										
39	D3-2(42)	2	ADVANCE STREET NAME (3 Line)	S46, S47	96"	42"	56				NEW		2					
39	D3-2(30)	2	ADVANCE STREET NAME (2 Line)	S48, S49	78"	30"	32.5				NEW		2					
39	D1-1d		CIRCULAR INTERSECTION DESTINATION (1 Line)	S9, S52	84"	18"	31.5				NEW		2					MOOSE LODGE RD ; WILLOW GROVE RD
39	D1-1d		CIRCULAR INTERSECTION DESTINATION (1 Line)	S51, S53	66"	18"	8.25				NEW		2					DUNDEE RD
40	M2-1(21)	1	JUNCTION - 21x15	S33	21	15	2.19	REPOSITION	1	1					0	0	0	
40	M1-5(24)	1	STATE ROUTE (2 - Digit Sign) - 24x24	S33	24	24	4.00	REPOSITION	1	1					0	0	0	STATE ROUTE 15
40	W2-6(30)	1	CIRCULAR INTERSECTION - 30x30	S32	30	30	6.25	NEW		1				SOIL	1	0	0	
40	W13-1P-25(18)	1	ADVISORY SPEED (25 MPH) 18x18	S32	18	18	2.25	ADD TO EXIST.		1					0	0	0	
40	W2-1(30)	1	CROSS ROAD - 30x30	S34	30	30	6.25	REMOVE	1						0	0	0	
40	D1-2	1	DESTINATION (2 Line)	S34	24	30	5.00	REMOVE	1						0	0	0	MOOSE LODGE RD; DUNDEE RD
40	M3-3(24)	1	CARDINAL DIRECTION - SOUTH - 24x12	S31	24	12	2.00	ADD TO EXIST.		1					0	0	0	
40	M3-1(24)	1	CARDINAL DIRECTION - NORTH - 24x12	S31	24	12	2.00	ADD TO EXIST.		1					0	0	0	
			PAGE TOTALS				**485**		40	42		0	16		26	8	0	

Unofficial Website Copy

SIGN SCHEDULE

SHEET NO.	CODE	QTY.	DISCRIPTION	ASSEMBLY NO.	SIGN WIDTH (IN)	SIGN HEIGHT (IN)	SIGN AREA (SF)	ITEM 749687 SINGLE POST (EACH)			ITEM 749690 MULTI POST (SF)			POST INSTALLATION TYPE	Code X11 12' Post (W/ Basepost)	ITEM 749688 4" HOLE, 0-6" (EACH)	ITEM 749689 4" HOLE, >6" (EACH)	REMARKS
								SIGN DISPOSTION	REMOVE	INSTALL	SIGN DISPOSTION	REMOVE	INSTALL					
40	M1-5(24)	2	STATE ROUTE (2 - Digit Sign) - 24x24	S31	24	24	8.00	NEW		2				SOIL	2	0	0	STATE ROUTE 15
40	M5-3_L	1	ADVANCE TURN ARROW (Left - curved-stem)	S31	21	15	2.19	ADD TO EXIST.		1					0	0	0	
40	M5-1_R	1	ADVANCE TURN ARROW (Right - 90)	S31	21	15	2.19	ADD TO EXIST.		1					0	0	0	
40	R2-1-50(24)	1	SPEED LIMIT (50 MPH - 24x30)	S35	24	30		REMAIN							0	0	0	
41	W2-6(30)	1	CIRCULAR INTERSECTION - 30x30	S38	30	30	6.25	NEW		1				SOIL	1	0	0	
41	W13-1P-25(18)	1	ADVISORY SPEED (25 MPH) 18x18	S38	18	18	2.25	ADD TO EXIST.		1					0	0	0	
41	R2-1-50(24)	1	SPEED LIMIT (50 MPH - 24x30)	S36	24	30	5.00	NEW	1	1					1	0	0	
41	W3-1(30)	1	STOP AHEAD (Symbol) - 30x30	S39	30	30	6.25	REMOVE	1						0	0	0	
41	D1-1	1	DESTINATION (1 Line)	S39	24	18	3.00	REMOVE	1						0	0	0	WILLOW GROVE RD
41	M2-1(21)	1	JUNCTION - 21x15	S40	21	15	2.19	REPOSITION	1	1					0	0	0	
41	M1-5(24)	1	STATE ROUTE (2 - Digit Sign) - 24x24	S40	24	24	4.00	REPOSITION	1	1					0	0	0	STATE ROUTE 10
41	M1-8a(12)	1	BIKE ROUTE (pictograph) - 12x18	S40	12	18	1.50	REMOVE	1						0	0	0	
41	M3-4(24)	1	CARDINAL DIRECTION - WEST - 24x12	S37	24	12	2.00	ADD TO EXIST.		1					0	0	0	
41	M3-2(24)	1	CARDINAL DIRECTION - EAST - 24x12	S37	24	12	2.00	ADD TO EXIST.		1					0	0	0	
41	M1-5(24)	2	STATE ROUTE (2 - Digit Sign) - 24x24	S37	24	24	8.00	NEW		2				SOIL	2	0	0	
41	M5-3_L	1	ADVANCE TURN ARROW (Left - curved-stem)	S37	21	15	2.19	ADD TO EXIST.		1					0	0	0	
41	M5-1_R	1	ADVANCE TURN ARROW (Right - 90)	S37	21	15	2.19	ADD TO EXIST.		1					0	0	0	
42	M2-1(21)	1	JUNCTION - 21x15	S41	21	15	2.19	REPOSITION	1	1					0	0	0	
42	M1-5(24)	1	STATE ROUTE (2 - Digit Sign) - 24x24	S41	24	24	4.00	REPOSITION	1	1					0	0	0	STATE ROUTE 10
42	W2-6(30)	1	CIRCULAR INTERSECTION - 30x30	S43	30	30	6.25	NEW		1				SOIL	1	0	0	
42	W13-1P-25(18)	1	ADVISORY SPEED (25 MPH) 18x18	S43	18	18	2.25	ADD TO EXIST.		1					0	0	0	
42	R2-1-50(24)	1	SPEED LIMIT (50 MPH - 24x30)	S45	24	30		REMAIN							0	0	0	
42	W3-1(30)	1	STOP AHEAD (Symbol) - 30x30	S44	30	30	6.25	REMOVE	1						0	0	0	
42	D1-1	1	DESTINATION (1 Line)	S44	24	18	3.00	REMOVE	1						0	0	0	WILLOW GROVE RD
42	M3-4(24)	1	CARDINAL DIRECTION - WEST - 24x12	S42	24	12	2.00	ADD TO EXIST.		1					0	0	0	
42	M3-2(24)	1	CARDINAL DIRECTION - EAST - 24x12	S42	24	12	2.00	ADD TO EXIST.		1					0	0	0	
42	M1-5(24)	2	STATE ROUTE (2 - Digit Sign) - 24x24	S42	24	24	8.00	NEW		2				SOIL	2	0	0	STATE ROUTE 10
42	M5-3_L	1	ADVANCE TURN ARROW (Left - curved-stem)	S42	21	15	2.19	ADD TO EXIST.		1					0	0	0	
42	M5-1_R	1	ADVANCE TURN ARROW (Right - 90)	S42	21	15	2.19	ADD TO EXIST.		1					0	0	0	
															0	0	0	DELAWARE BYWAYS
															0	0	0	STATE ROUTE 10
															0	0	0	
															0	0	0	STATE ROUTE 15
															0	0	0	
PAGE TOTALS							100		10	25		0	0		9	0	0	
JOB TOTALS							584		50	67		0	16		35	8	0	

Unofficial Website Copy

Y:\KENT\053\ROAD\T201200802\PLANS\FINAL\SS06.DGN

DELAWARE DEPARTMENT OF TRANSPORTATION

ADDENDUMS / REVISIONS

HEP KC, SR10 & SR15 INTERSECTION IMPROVEMENTS

CONTRACT T201200802 | COUNTY KENT | BRIDGE NO. X | DESIGNED BY: CCE | CHECKED BY: JRG

SIGNING, STRIPING AND CONDUIT PLAN

SHEET NO. 44 | TOTAL SHTS. 44