THE STATE OF DELAWARE
DEPARTMENT OF TRANSPORTATION

U.S. CUSTOMARY UNITS

CONSTRUCTION & RIGHT-OF-WAY PLANS FOR:

BR 1-159 ON JAMES STREET OVER CHRISTINA RIVER

CONTRACT NUMBER: T201207101

FEDERAL AID PROJECT NUMBER: EBRN-N159(2)

COUNTY: NEW CASTLE **M.R. #: N327**

UNOFFICIAL WEBSITE COPY

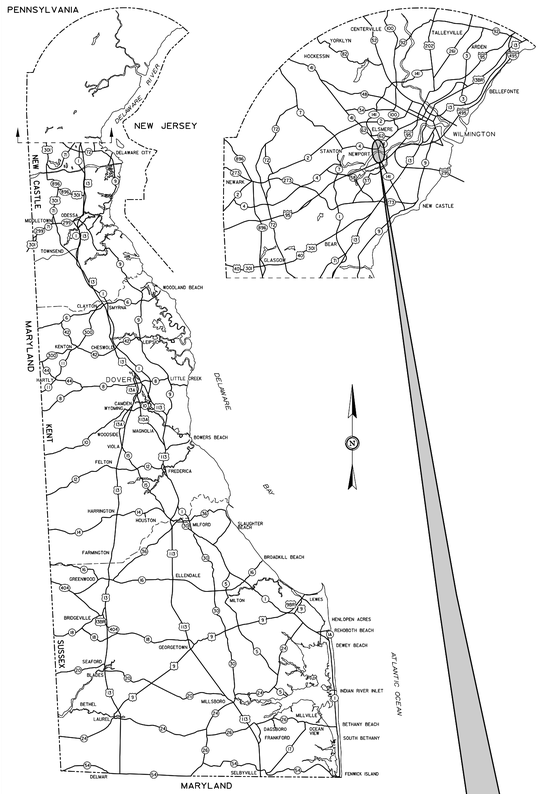

GENERAL LOCATION OF CONTRACT

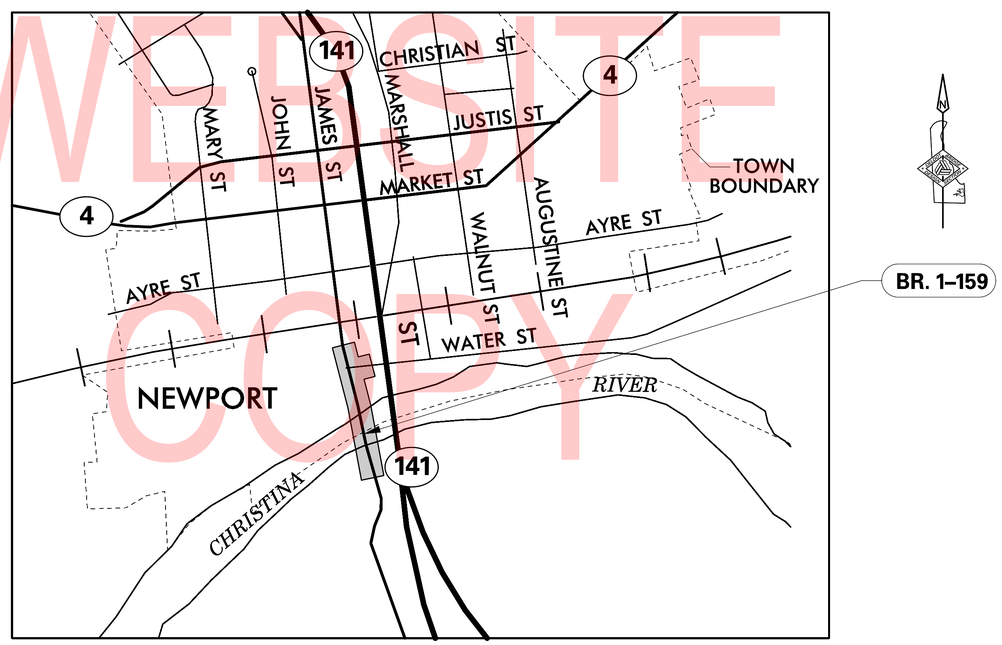

DESIGN DESIGNATION

MRD #: N327	ROAD NAME: JAMES STREET	
FUNCTIONAL CLASS: URBAN LOCAL ROAD	D.H.V. PROJECTED: 383	YEAR: 2040
TYPE OF CONSTRUCTION: BRIDGE REPLACEMENT	DESIGN SPEED: 25 M.P.H.	
A.A.D.T. CURRENT: 4439 YEAR: 2017	TRUCKS: 9 %	
A.A.D.T. PROJECTED: 5800 YEAR: 2040	DIRECTION OF DISTRIBUTION: 60 %	

APPROVED DESIGN EXCEPTIONS

DESIGN PARAMETER	REQUIRED	PROVIDED	DATE

ADDENDA & REVISIONS

DESCRIPTION	NAME & DATE

ASSOCIATED CONTRACTS

CONTRACT NO.	CONTRACT NAME
67-10-006	RELOCATED DELAWARE ROUTE 141 THRU NEWPORT
103/103A	NEWPORT BRIDGE ACROSS CHRISTINA RIVER
85-074-01	REHABILITATION OF BRIDGE NO. 159, NEWPORT

APPROVED FOR ADVERTISEMENT

DIRECTOR OF TRANSPORTATION SOLUTIONS — DATE: 02/06/19

PREPARED BY
McCORMICK TAYLOR

01/25/2019
DATE

THIS SEAL APPLIES TO ALL SHEETS BEARING THE "McT" SECTION DESIGNATION.

BRYAN JOHN HEALY — LICENSE No. 21696 — DELAWARE PROFESSIONAL ENGINEER

SEAL

INDEX OF SHEETS

SECTION	SHEET DESCRIPTION	SHEET NO(S)
McT	TITLE	1
McT	INDEX OF SHEETS	2
	ADDENDA AND REVISIONS	3
McT	LEGEND	4
McT	NOTES	5-6
McT	TYPICAL SECTIONS	7
McT	HORIZONTAL AND VERTICAL CONTROL	8-9
McT	CONSTRUCTION PLANS	10-11
McT	PROFILES	12
McT	GRADES AND GEOMETRICS	13-14
McT	GRADING PLAN	15-16
McT	CONSTRUCTION DETAILS	17-19
McT	BRIDGE PLAN AND ELEVATION	20
McT	TYPICAL BRIDGE SECTION	21
McT	GEOMETRIC LAYOUT PLAN	22
McT	DRILLED SHAFT DETAILS	23-24
McT	ABUTMENT DETAILS	25-28
McT	PIER DETAILS	29-32

INDEX OF SHEETS

SECTION	SHEET DESCRIPTION	SHEET NO(S)
McT	UTILITY SUPPORT DETAILS	33-34
McT	BEARING DETAILS	35-36
McT	BEAM DETAILS	37-42
McT	FRAMING PLAN	43-44
McT	DIAPHRAGM DETAILS	45-46
McT	DECK DETAILS	47-51
McT	FINISHED DECK ELEVATIONS	52
McT	APPROACH SLAB DETAILS	53-56
McT	EXPANSION JOINT DETAILS	57
McT	BRIDGE RAILING DETAILS	58-60
McT	DEMOLITION PLAN	61
McT	REINFORCING BAR LIST	62-65
McT	BORING LOG	66-69
McT	ENVIRONMENTAL COMPLIANCE PLANS	70-71
McT	CONSTRUCTION PHASING, M.O.T. AND EROSION CONTROL PLANS	72-76
McT	DETOUR PLANS	77
McT	LIGHTING PLANS	78-82
McT	UTILITY RELOCATION PLANS	83-84
McT	SIGNING, STRIPING AND CONDUIT PLANS	85-87
McT	SIGNAL PLAN	88
McT	RIGHT-OF-WAY PLAN	89

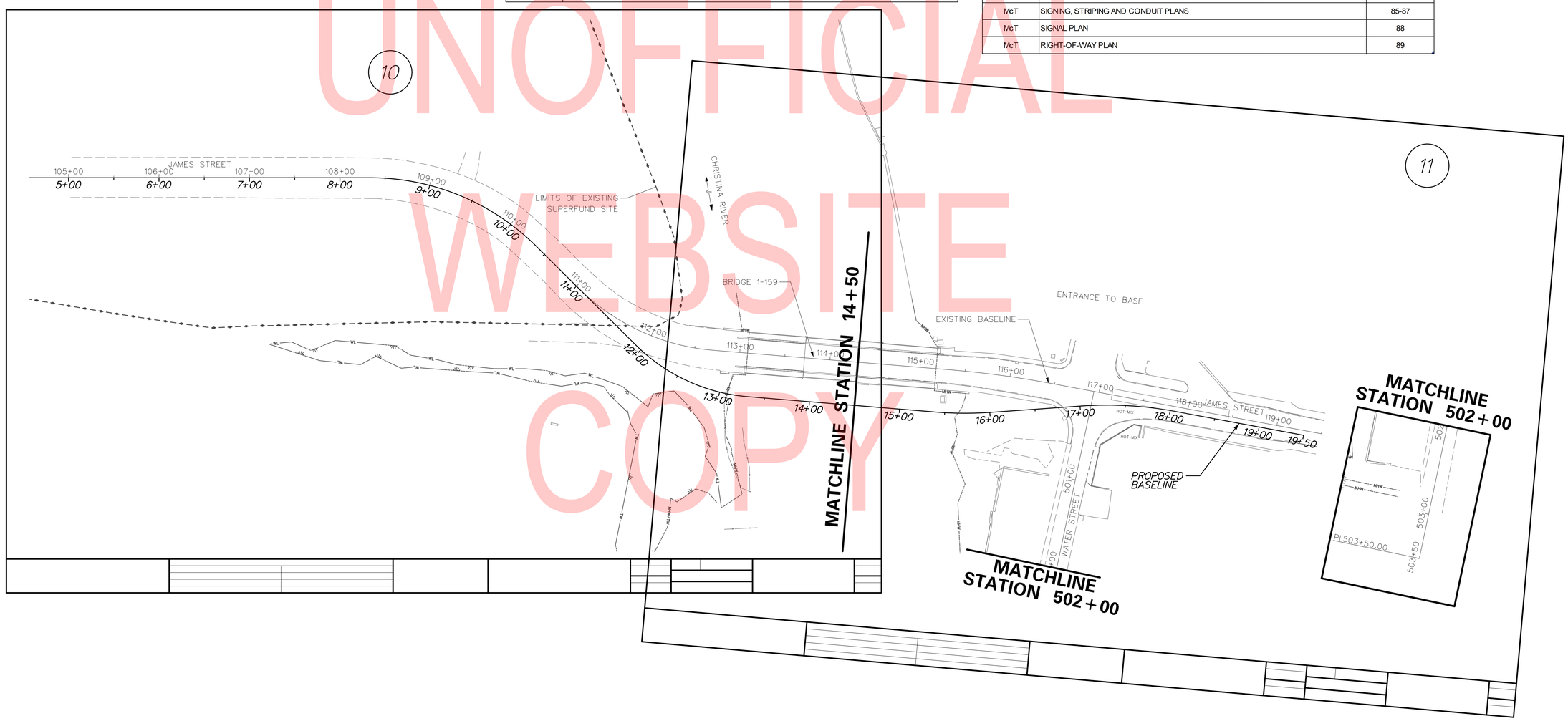

UNOFFICIAL WEBSITE COPY

ADDENDA / REVISIONS

SCALE 0 60 120 180 FEET

BR 1-159 ON JAMES STREET OVER CHRISTINA RIVER

CONTRACT	BRIDGE NO.	1-159
T201207101	DESIGNED BY: SFR	
COUNTY		
NEW CASTLE	CHECKED BY: DLH	

INDEX OF SHEETS

IS-01
SECTION
McT
SHEET NO.
2

3/15/2019
6:08:55 PM
...\Plan_Set\Roadway\IS_BR159.dgn

ADDENDUM PREPARED BY
DELDOT – TRANSPORTATION SOLUTIONS
XXXXXXXXXXXXXXXXXXXXX

THIS SEAL APPLIES TO THE FOLLOWING SHEETS CHANGED UNDER ADDENDUM #X:
XX, XX-XX, XX

DATE

SEAL

REVISION PREPARED BY
McCORMICK TAYLOR

THIS SEAL APPLIES TO THE FOLLOWING SHEETS CHANGED UNDER REVISION #X:
XX, XX-XX, XX

DATE

SEAL

UNOFFICIAL WEBSITE COPY

ADDENDA / REVISIONS		NOT TO SCALE	BR 1-159 ON JAMES STREET OVER CHRISTINA RIVER	CONTRACT T201207101	BRIDGE NO. 1-159	ADDENDA AND REVISIONS	SECTION
				COUNTY NEW CASTLE	DESIGNED BY: SFR		SHEET NO. 3
					CHECKED BY: DLH		

3/15/2019
8:09:04 PM
...\Roadway\ADDENDA_BR159.dgn

EXISTING SYMBOLS

DRAINAGE

—∞—	DITCH OR STREAM CENTERLINE
	DIRECTIONAL STREAM FLOW ARROW
C.B. / D.I.	DRAINAGE INLET
J.B.	DRAINAGE JUNCTION BOX
D	DRAINAGE MANHOLE
SIZE/TYPE LABEL	DRAINAGE PIPE AND FLOW ARROW
	DRAINAGE PIPE HEADWALL
	RIPRAP - AREA FEATURE
	RIPRAP - LINEAR FEATURE

MANMADE ROADSIDE FEATURES

	BOLLARD - STEEL POLE
	BOLLARD - WOOD POST
(TYPE LABEL)	CURB
(TYPE LABEL)	CURB AND GUTTER
—x—	FENCE - CHAINLINK OR STRANDED
	FENCE - STOCKADE OR SPLIT RAIL
FP	FLAG POLE
	GUARDRAIL - STEEL BEAM
	GUARDRAIL - WIRE ROPE
LAMP	LAMP AND POST - RESIDENTIAL
MB	MAILBOX
PM	PARKING METER AND POST
	PAVEMENT - FLEXIBLE
	PAVEMENT - RIGID
	PILE - BRIDGE
	PILLAR OR MISCELLANEOUS POST
	TRAFFIC SIGN AND POST
	WALL - BRICK OR BLOCK
	WALL - STONE

NATURAL ROADSIDE FEATURES

	GRASS LAWN
	HEDGEROW OR THICKET
	MARSH BOUNDARY LINE
	TREE - CONIFEROUS
	TREE - DECIDUOUS
	TREE STUMP
	SHRUBBERY
—WL—	DELINEATED WETLAND BOUNDARY LINE
	WOODS LINE BOUNDARY

RIGHT-OF-WAY SYMBOLS

C.M.	PROPERTY MARKER - CONCRETE MON.
I.P.	PROPERTY MARKER - IRON PIPE
100+00	HISTORIC RIGHT-OF-WAY BASELINE
— —	EXISTING RIGHT-OF-WAY
—PL—	EXISTING PROPERTY LINE
—EASEMENT TYPE—	EXISTING EASEMENT
—DA—	EXISTING DENIAL OF ACCESS
—R/W-DA—	EXISTING R/W & DENIAL OF ACCESS

SURVEY CONTROL & MONUMENTATION

B.M.	SURVEY BENCHMARK LOCATION
T.P.	SURVEY TIE POINT LOCATION
△	SURVEY TRAVERSE POINT
	POINT OF CURVATURE OR TANGENCY
	POINT OF INTERSECTING TANGENTS

UTILITY

	SOIL BORING LOCATION
	UTILITY TEST HOLE LOCATION
TV	CABLE TV DISTRIBUTION BOX
E	ELECTRIC MANHOLE
EM	ELECTRIC METER
E	ELECTRIC TRANSFORMER
	POLE MOUNTED LUMINAIRE
G	GAS MANHOLE
G.M.	GAS METER
G.V.	GAS VALVE
G.P.	GAS PUMP - SERVICE STATION
	RAILROAD TRACKS
S	SANITARY SEWER MANHOLE
S.V.	SANITARY SEWER VALVE
VENT	SANITARY SEWER VENT OR CLEANOUT
S.D.F.	SEPTIC DRAIN FIELD
B	TELEPHONE BOOTH
T	TELEPHONE MANHOLE
T	TELEPHONE TEST POINT
J.W.	TRAFFIC - CONDUIT JUNCTION WELL
	TRAFFIC - LIGHT POLE AND BASE
	TRAFFIC - PEDESTRIAN POLE & BASE
	TRAFFIC - SIGNAL CABINET & BASE
	TRAFFIC - SIGNAL POLE AND BASE
U	UTILITY BOX
	UTILITY POLE GUY WIRE ANCHOR
	UTILITY POLE
F.H.	WATER - FIRE HYDRANT
W.M.	WATER METER
W.V.	WATER VALVE
WELL	WELL HEAD
?	MANHOLE - UNDETERMINED OWNER

UTILITY COMPANY FACILITIES

—AW-W—	ARTESIAN WATER (WATER)
—ATT-C—	AT&T TRANSMISSION
—COM-C—	COMCAST CABLE
—DP-G—	DELMARVA POWER (GAS)
—DP-E—	DELMARVA POWER (ELECTRIC)
—MCI-C—	MCI TELECOMMUNICATIONS
—NCC-S—	SANITARY SEWER
—SZ-W—	SUEZ WATER
—UW-W—	UNITED WATER
—VER-C—	VERIZON

PROPOSED SYMBOLS

CONSTRUCTION

	CONCRETE SAFETY BARRIER - PERMANENT
—BFS—	BIOFILTRATION SWALE
	BOLLARD - STEEL POLE
	BOLLARD - WOOD POST
	BRICK PATTERNED SURFACE
	BUTT JOINT
100+00	CONSTRUCTION BASELINE
—CSF—	CONSTRUCTION SAFETY FENCE
	CURB, TYPE 1 & TYPE 3
	CURB, TYPE 2
	CURB & GUTTER, TYPE 1
	CURB & GUTTER, TYPE 2
	CURB & GUTTER, TYPE 3
	CURB & GUTTER, TYPE 4
—CZ—	CLEAR ZONE
	DRAINAGE INLET
	DITCH
	FENCE - METAL
	FENCE - WOOD
	FLARED END SECTION
	GUARDRAIL, TYPE 1
	GUARDRAIL, TYPE 2
	GUARDRAIL, TYPE 3
	GUARDRAIL END ANCHORAGE
	GUARDRAIL END TREATMENT, TYPE 1
	GUARDRAIL END TREATMENT, TYPE 2
	GUARDRAIL END TREATMENT, TYPE 3
—HC—	HORIZONTAL CLEARANCE
	IMPACT ATTENUATOR
	JUNCTION BOX - DRAINAGE
-----LOC-----	LIMIT OF CONSTRUCTION
MB	MAILBOX
	MANHOLE
	PAVEMENT PATCH
	PAVEMENT, CURB AND SIDEWALK REMOVAL - TOPSOIL, SEED AND MULCH
	PIPE & DIRECTIONAL FLOW ARROW
	RIPRAP
	P.C.C. SIDEWALK - 4"
	P.C.C. SIDEWALK - 6" (USE 8" DEPTH FOR CHANNELIZATION ISLANDS.)
	UNDERDRAIN
	UNDERDRAIN OUTLET

RIGHT-OF-WAY SYMBOLS

	PROPOSED RIGHT-OF-WAY MONUMENT
—DA—	PROPOSED DENIAL OF ACCESS
—PE—	PROPOSED PERMANENT EASEMENT
—R/W—	PROPOSED RIGHT-OF-WAY
—R/W-DA—	PROPOSED R/W & DENIAL OF ACCESS
—TCE—	TEMPORARY CONSTRUCTION EASEMENT
100+00	PROPOSED RIGHT-OF-WAY BASELINE

IDENTIFIERS

A/C	ADJUST BY CONTRACTOR
A/O	ADJUST BY OTHERS
B	CONCRETE SAFETY BARRIER
C	CURB OR CURB & GUTTER
C.J.B.	CONVERT TO JUNCTION BOX
C.M.H.	CONVERT TO DRAINAGE MANHOLE
C/O	CURB OPENING
CR	CURB RAMP / TYPE
CR-N	CURB RAMP / TYPE - WITHOUT SIDEWALK SURFACE DETECTABLE WARNING SYSTEM
CSF	CONSTRUCTION SAFETY FENCE
DI	DRAINAGE INLET
DND	DO NOT DISTURB
ED	ENERGY DISSIPATOR
F	FENCE
FES	FLARED END SECTION
FF/C	FILL WITH FLOWABLE FILL
FS	FILTRATION STRUCTURE
GR	GUARDRAIL
JB	JUNCTION BOX
MH	MANHOLE
M	MONUMENT - RIGHT-OF-WAY
P	PIPE
RL/C	RELOCATE BY CONTRACTOR
RL/O	RELOCATE BY OTHERS
RM/C	REMOVE BY CONTRACTOR
RM/O	REMOVE BY OTHERS
UD	UNDERDRAIN / LENGTH
UDO	UNDERDRAIN OUTLET PIPE

LANDSCAPING

LS	LANDSCAPE PLANTINGS
	SHRUBBERY
	CONIFEROUS TREE
	DECIDUOUS TREE

TRAFFIC

—ITMS-CON—	ITMS CONDUIT
—SIG-CON—	SIGNAL CONDUIT
	CONDUIT JUNCTION WELL
	LUMINAIRE
	PAVEMENT MARKINGS
	PAVEMENT STRIPING
	TRAFFIC SIGN

PAVEMENT SECTION(S)

	2" PAVEMENT MILLING AND 2" WMA, SUPERPAVE, TYPE C
	2" WMA, SUPERPAVE, TYPE C 3" WMA, SUPERPAVE, TYPE B 3" SUPERPAVE, BCBC 8" GABC, TYPE B
	2" WMA, SUPERPAVE, TYPE C 8" GABC, TYPE B
	PCC PAVEMENT PATCH, FULL DEPTH

MISCELLANEOUS

	EXISTING SUPERFUND SITE BOUNDARY
TW	TIDAL WETLAND
	PROPOSED BRIDGE (PEDESTRIAN) RAIL)
AB/O	ABANDON BY OTHERS
S	SANITARY SEWER MARKER
	SANITARY SEWER PIPE OUTLINE
	DETECTABLE WARNING, TRUNCATED DOMES
	SIDEWALK, VARIABLE DEPTH

UTILITY COMPANY FACILITIES

—DP-E-UG—	PROPOSED DELMARVA POWER - ELECTRIC
—DP-G-8" STEEL—	PROPOSED DELMARVA POWER - GAS
—DP-G-TEMP—	TEMPORARY DELMARVA POWER - GAS
—VER-C—	PROPOSED VERIZON
—VER-C-OH—	PROPOSED VERIZON (OVERHEAD)
—DP-E-OH—	PROPOSED DELMARVA POWER - ELECTRIC (OVERHEAD)
—FT-FO-OH—	PROPOSED FIBERTECH - FIBER OPTIC (OVERHEAD)
—COM-FO-OH—	PROPOSED COMCAST CABLE - FIBER OPTIC (OVERHEAD)

UNOFFICIAL WEBSITE COPY

ADDENDA / REVISIONS

NOT TO SCALE

BR 1-159 ON JAMES STREET OVER CHRISTINA RIVER

CONTRACT	BRIDGE NO. 1-159
T201207101	DESIGNED BY: SFR
COUNTY	
NEW CASTLE	CHECKED BY: DLH

LEGEND

LG-01

SECTION McT

SHEET NO. 4

3/15/2019
6:40:05 PM
...\Plan_Set\Roadway\LG_BR159.dgn

GENERAL NOTES

1. THIS PROJECT IS TO BE CONSTRUCTED IN ACCORDANCE WITH THE DELAWARE DEPARTMENT OF TRANSPORTATION "STANDARD SPECIFICATIONS", DATED AUGUST 2001 AND THE DELAWARE DEPARTMENT OF TRANSPORTATION "STANDARD CONSTRUCTION DETAILS", DATED 2001, INCLUDING ALL REVISIONS UP TO THE DATE OF ADVERTISEMENT.

2. ELECTRONIC PROJECT FILES THAT WILL BE MADE AVAILABLE TO THE AWARDED CONTRACTOR, INCLUDE:

( )	NONE
( )	ASCII DATA FILES WITH COORDINATES AND ELEVATIONS FOR PROPOSED POINTS AS SELECTED BY THE ENGINEER.
(X)	ALL PLAN SHEETS, IN PDF FORMAT.
( )	EXISTING DIGITAL TERRAIN MODEL, IN .DTM FILE FORMAT, COMPATIBLE WITH SOFTWARE CURRENTLY USED BY DELDOT.
( )	PROPOSED DIGITAL TERRAIN MODEL, IN .DTM FILE FORMAT, COMPATIBLE WITH SOFTWARE CURRENTLY USED BY DELDOT.
( )	DESIGN FILE, IN .DGN FILE FORMAT, CONTAINING ONLY THE PROPOSED 3D TRIANGLES OF THE PROPOSED DIGITAL TERRAIN MODEL (DTM).

NOTE: THE DOCUMENT ENTITLED "RELEASE FOR DELIVERY OF DOCUMENTS IN ELECTRONIC FORM TO A CONTRACTOR" MUST BE SIGNED BY ALL PARTIES PRIOR TO THE DELIVERY OF ANY ELECTRONIC PROJECT FILES.

3. PROJECT FILES THAT WILL BE MADE AVAILABLE TO THE CONTRACTOR, INCLUDE:

(X)	CROSS SECTIONS (WILL BE AVAILABLE TO AWARDED CONTRACTOR)
(X)	RIGHT-OF-WAY PLANS (INCLUDED IN PLAN SET)

PROJECT NOTES

SECTION 200

1. THE ENGINEER MAY REQUIRE THE CONTRACTOR TO EXCAVATE TEST PITS ALONG PROPOSED DRAINAGE RUNS, AT POINTS OF POSSIBLE UTILITY CONFLICTS, TO DETERMINE IF A CONFLICT EXISTS. ANY CONFLICTS SHALL BE COORDINATED BY THE CONTRACTOR, WITH THE ENGINEER AND THE UTILITY COMPANY INVOLVED. THE ENGINEER SHALL ULTIMATELY DETERMINE THE SOLUTION TO THE UTILITY CONFLICT. TEST HOLES SHALL BE MEASURED AND PAID FOR IN ACCORDANCE WITH ITEM 208000 - EXCAVATION AND BACKFILL FOR PIPE TRENCHES, BUT ONLY TO THE ACTUAL DEPTH EXCAVATED.

2. ITEMS TO BE REMOVED UNDER ITEM 211000 - REMOVAL OF STRUCTURES AND OBSTRUCTIONS SHALL INCLUDE, BUT NOT BE LIMITED TO THE FOLLOWING:

- 24" RCP STA. 15+75
- MANHOLE AND 18" RCP STA. 16+25 LT
- DRAINAGE INLET AND 12" RCP STA. 16+80
- DRAINAGE INLET AND 10" PVC PIPE STA. 16+75 LT
- EXISTING GUARDRAIL
- SUBMERGED PILES, TIMBERS, DEBRIS OF ANY KIND, FLOATING DEBRIS/TREES, LOGS TRAPPED OR STUCK IN FENDER SYSTEM
- EXISTING CONCRETE BARRIER STA. 501+00 TO STA. 501+50 RT

SECTION 300

3. A. THE CONTRACTOR MAY ELECT TO USE ANY OF THE FOLLOWING MATERIALS TO MEET THE REQUIREMENTS OF ITEM 302007 - GRADED AGGREGATE BASE COURSE, TYPE 'B':
   a. CRUSHED STONE (PER STANDARD SPECIFICATION 821)
   b. CRUSHED CONCRETE (PER STANDARD SPECIFICATION 821)
   c. HOT-MIX MILLINGS (PER SPECIAL PROVISION 302514 MILLED HOT-MIX BASE COURSE)

THE CONTRACTOR WILL NOT BE ALLOWED TO MIX DIFFERENT MATERIALS (OR SIMILAR MATERIALS FROM DIFFERENT SOURCES) TO MEET THE REQUIREMENTS OF ITEM 302007 - GRADED AGGREGATE BASE COURSE, TYPE 'B'.

ALL OF THE ABOVE LISTED MATERIALS ARE PERMITTED FOR USE ON THE JOB, PROVIDED THEY ARE SEPARATED INTO APPROVED AREAS. EACH AREA OF BASE COURSE MUST BE CONSTRUCTED USING MATERIALS FROM A SINGULAR SOURCE, FULL DEPTH, IN ORDER THAT PROPER TESTING MAY BE ACCOMPLISHED. THE CONTRACTOR AND ENGINEER SHALL AGREE ON THE LIMITS OF EACH SOURCE OF MATERIAL PRIOR TO PLACEMENT.

B. THE QUANTITY USED FOR BASE OF EACH OF THE ABOVE LISTED MATERIALS WILL BE THE CONTRACTOR'S CHOICE, WITH THE TOTAL BEING EQUAL TO THE ACTUAL QUANTITY USED UNDER ITEM 302007 - GRADED AGGREGATE BASE COURSE, TYPE 'B'.

C. THE CONTRACTOR MAY ALSO ELECT TO RECYCLE MILLINGS FOR USE IN HOT-MIX AS PERMITTED BY THE STANDARD SPECIFICATIONS. THE CHOICE OF THE QUANTITY OF MILLINGS USED FOR THIS PURPOSE, OR FOR BASE COURSE, LIES WITH THE CONTRACTOR. ALL EXCESS MILLING MATERIAL SHALL BECOME PROPERTY OF THE CONTRACTOR.

D. HOT-MIX MILLINGS MAY BE GENERATED FROM THE FOLLOWING SOURCES:
   a. MATERIAL MADE AVAILABLE WHEN MILLED ON THIS CONTRACT UNDER ITEM 760000.
   b. MATERIAL MILLED ON THIS CONTRACT AT THE CONTRACTOR'S CHOICE UNDER ITEM 202000.
   c. MILLED MATERIAL FURNISHED ON THE JOB FROM THE CONTRACTOR'S YARD OR OTHER OUTSIDE SOURCE.

ALL MILLED MATERIALS SHALL MEET THE MATERIAL REQUIREMENTS OF ITEM 302514 - MILLED HOT-MIX BASE COURSE.

E. PAYMENT CLARIFICATION:
   a. SHOULD THE CONTRACTOR ELECT TO MILL PORTIONS OF HOT-MIX SHOWN ON THE PLANS TO BE REMOVED UNDER ITEM 202000 - EXCAVATION AND EMBANKMENT THE COST OF MILLING THIS HOT-MIX WILL BE PAID AS ITEM 202000 - EXCAVATION AND EMBANKMENT. THE MILLINGS GENERATED MAY BE RECYCLED INTO HOT-MIX, UTILIZED FOR BASE COURSE, OR DISPOSED OF TO AN APPROVED SITE. HAULING COSTS FOR DISPOSAL AND/OR RECYCLING ARE INCIDENTAL TO ITEM 202000 - EXCAVATION AND EMBANKMENT.

   b. SHOULD THE CONTRACTOR ELECT TO TEMPORARILY STOCKPILE MILLINGS ON THE JOB SITE FOR LATER USE, ALL COSTS FOR STOCKPILING AND SUBSEQUENT REHANDLING SHALL BE INCIDENTAL TO ITEM 202000 - EXCAVATION AND EMBANKMENT.

   c. MILLINGS USED FOR BASE COURSE SHALL BE PLACED IN ACCORDANCE WITH THE REQUIREMENTS OF SPECIAL PROVISION 302514 - MILLED HOT-MIX BASE COURSE. NO SEPARATE PAYMENT WILL BE MADE TO FURNISH MILLINGS FROM AN OUTSIDE SOURCE OR TRANSPORT MILLINGS WITHIN THE PROJECT LIMITS. MILLINGS USED FOR BASE COURSE WILL BE PAID FOR AT THE UNIT BID PRICE FOR ITEM 302007 - GRADED AGGREGATE BASE COURSE, TYPE 'B'.

   d. ALL COSTS TO UTILIZE MILLINGS IN RECYCLED HOT-MIX WILL BE INCIDENTAL TO THE UNIT PRICE BID FOR THE HOT-MIX ITEM USING THE RECYCLED MATERIAL.

   e. SPECIAL PROVISION 302514 - MILLED HOT-MIX BASE COURSE IS PROVIDED TO SPECIFY THE MEANS OF LAY DOWN AND COMPACTION AS WELL AS THE MATERIAL REQUIREMENTS FOR MILLINGS USED AS BASE COURSE. ALL COSTS TO BRING THE MILLINGS INTO COMPLIANCE WITH THE REQUIREMENTS OF ITEM - 302514 MILLED HOT-MIX BASE COURSE ARE INCIDENTAL TO ITEM 302007 - GRADED AGGREGATE BASE COURSE, TYPE 'B'. NO PAYMENT WILL BE MADE FOR ITEM 302514 - MILLED HOT-MIX BASE COURSE. THE QUANTITY OF MILLINGS USED FOR BASE COURSE WILL BE PAID FOR UNDER ITEM 302007 - GRADED AGGREGATE BASE COURSE.

SECTION 600

4. THE DEPARTMENT AND THE CONTRACTOR SHALL INSPECT ALL EXISTING PIPES AND DRAINAGE STRUCTURES TO BE USED IN THE FINAL DRAINAGE SYSTEM AND AGREE ON THE CONDITION PRIOR TO THE START OF CONSTRUCTION. EXISTING PIPES AND DRAINAGE STRUCTURES DAMAGED DUE TO CONTRACTOR OPERATIONS SHALL BE REPAIRED OR REPLACED IN-KIND AT THE CONTRACTOR'S EXPENSE. THE DEPARTMENT WILL VIDEO INSPECT NEW PIPE RUNS TO CONFIRM CONDITION PRIOR TO ACCEPTANCE. PIPE CLEANING PRIOR TO VIDEO INSPECTION AND MAINTENANCE OF TRAFFIC DURING THE VIDEO INSPECTION ARE THE RESPONSIBILITY OF THE CONTRACTOR AND INCIDENTAL TO THE PIPE ITEM THAT IS BEING VIDEO INSPECTED.

5. ALL CONCRETE PROPERTIES SHALL BE IN ACCORDANCE WITH SECTION 812 OF THE DELAWARE DEPARTMENT OF TRANSPORTATION STANDARD SPECIFICATIONS.

CLASS A - ABUTMENTS, STEMS, BACKWALLS, WINGWALL STEMS, CHEEKWALLS, SHEAR BLOCKS, PIER CAPS AND PARAPETS (f'c = 4,500 PSI).
CLASS B - WINGWALL FOOTINGS AND PIPE COLLARS (f'c = 3,000 PSI).
CLASS D - CONCRETE DECK SLAB, APPROACH SLAB, SLEEPER SLAB, AND DIAPHRAGMS (f'c = 4,500 PSI).

ALL EXPOSED EDGES SHALL BE CHAMFERED 3/4" UNLESS NOTED OTHERWISE.

PROJECT NOTES (CONT.)

SECTION 600 (CONT.)

6. ALL REINFORCING STEEL SHALL BE AASHTO M31 (ASTM A615), GRADE 60, AND UNLESS NOTED OTHERWISE, SHALL BE PROTECTED WITH FUSION BONDED EPOXY CONFORMING TO ASTM A775 AND ASTM D3963. MINIMUM CONCRETE COVER FOR REINFORCING STEEL SHALL BE 2" UNLESS NOTED OTHERWISE AND AS NOTED BELOW:

FOUNDATION ELEMENTS: 3" UNLESS NOTED OTHERWISE
DECK SLABS: 2-1/2" TOP OF SLAB (INCLUDES 1/2" INTEGRAL WEARING SURFACE)
1" BOTTOM OF SLAB WHEN STAY-IN-PLACE FORMS ARE USED.

7. ELASTOMERIC BEARINGS SHALL SHALL CONFORM TO AASHTO M251. NEOPRENE SHALL BE 50 ±5 DUROMETER. INTERNAL SHIMS SHALL BE 11 GAGE MILD STEEL CONFORMING TO AASHTO M270, GRADE 36.

8. KEYED CONSTRUCTION JOINTS SHALL BE 2" X 4" OR AS NOTED. ALL EXPOSED CONSTRUCTION JOINT EDGES SHALL HAVE A 3/4" V-NOTCH UNLESS NOTED OTHERWISE.

SECTION 700

9. IN AREAS WHERE PROPOSED CURB MEETS EXISTING CURB AND THE TWO CURB TYPES ARE NOT SIMILAR, THE PROPOSED CURB SHALL BE TRANSITIONED IN 10 LINEAR FEET, UNLESS OTHERWISE DIRECTED BY THE ENGINEER. PAYMENT FOR THIS WORK, INCLUDING SAW CUTTING EXISTING CURB SHALL BE INCIDENTAL TO THE PROPOSED CURB ITEM.

10. WHERE PROPOSED CONCRETE SIDEWALK IS CONSTRUCTED TO MEET EXISTING SIDEWALK, THE EXISTING SIDEWALK SHALL BE SAWCUT AT THE TIE-IN POINT OR MEET THE NEAREST EXISTING SIDEWALK JOINT. ALL SAW CUTTING SHALL BE FULL DEPTH, UNLESS OTHERWISE NOTED ON THE PLANS OR DIRECTED BY THE ENGINEER AND SHALL BE PAID FOR UNDER ITEM 762002 - SAWCUTTING, CONCRETE, FULL DEPTH.

11. ALL HOT-MIX SAW CUTTING SHALL BE FULL DEPTH, UNLESS OTHERWISE NOTED ON THE PLANS, OR AS DIRECTED BY THE ENGINEER.

12. STATION AND ELEVATION DATA GIVEN FOR DRAINAGE INLETS ARE TO BE APPLIED AT THE FLOW LINE. STATION AND ELEVATION DATA GIVEN FOR OTHER DRAINAGE STRUCTURES ARE TO BE APPLIED TO THE CENTER OF THE STRUCTURE FOR JUNCTION BOXES AND MANHOLES.

13. ALL PAVED AREAS TO BE RECONSTRUCTED OR WIDENED SHALL BE SAWCUT AT THE POINT WHERE THE NEW PAVEMENT IS TO TIE INTO THE EXISTING PAVEMENT.

SECTION 900

14. THIS PROJECT IS COVERED UNDER AN NPDES GENERAL PERMIT FOR CONSTRUCTION. UNDER THE GENERAL PERMIT, COMPLIANCE WITH DELDOT'S APPROVED SEDIMENT AND STORMWATER MANAGEMENT PLANS WILL CONSTITUTE COMPLIANCE WITH THE NPDES INDUSTRIAL PERMITTING REQUIREMENTS FOR THIS CONSTRUCTION PROJECT. A COPY OF THE NPDES GENERAL PERMIT AND NOI IS KEPT ON FILE IN EACH OF THE CONSTRUCTION OFFICES AND THE DEPARTMENT'S STORMWATER SECTION. A COPY OF THE GENERAL PERMIT OR THE NOI CAN BE OBTAINED UPON REQUEST FROM EITHER THE DEPARTMENT'S STORMWATER ENGINEER OR THE APPROPRIATE CONSTRUCTION ENGINEER.

MISCELLANEOUS

15. THE CONTRACTOR SHALL CONTACT THE CHIEF OF SCHEDULING FOR DART FIRST STATE 14 DAYS PRIOR TO THE START OF CONSTRUCTION AT 302-576-6191, OR BY EMAIL NOTIFICATION TO DOT_DETOUR@DELAWARE.GOV.

16. SEE ENVIRONMENTAL COMPLIANCE SHEET FOR FURTHER RESTRICTIONS/GUIDANCE ASSOCIATED WITH THIS PROJECT.

17. STOCKPILING AND STAGING AREAS SHALL OCCUR IN UPLAND, NON-ARCHEOLOGICALLY SENSITIVE AREAS.

18. THE PROJECT TAKES PLACE NEXT TO THE KREBS PIGMENT & COLOR CORPORATION BUILDING A-47. THIS INDIVIDUAL BUILDING HAS BEEN DEEMED ELIGIBLE FOR THE NATIONAL REGISTER OF HISTORIC PLACES. AS SUCH, NO ADDITIONAL WORK BEYOND THE SCOPE INDICATED IN THESE PLANS SHALL BE PERFORMED. ANY MODIFICATIONS SIGNIFICANT IN NATURE OR NEW INFORMATION NOT INITIALLY KNOWN THAT ALTERS THESE PLANS AND DESIGNS IS TO BE COORDINATED WITH THE DISTRICT ENGINEER AND THE ENVIRONMENTAL STUDIES OFFICE (CONTACT ALEX TARANTINO, 302-760-4887 OR ALEXANDRA.TARANTINO@DELAWARE.GOV). IF IT IS DEEMED NECESSARY, COORDINATION WITH THE DELAWARE STATE HISTORIC PRESERVATION OFFICE (SHPO) AND FEDERAL HIGHWAY ADMINISTRATION (FHWA) WILL BE INITIATED BEFORE ANY ACTION IS IMPLEMENTED. PROPOSED OR NECESSARY MODIFICATIONS AND CHANGES WILL BE REVIEWED TO ENSURE PROPER TREATMENT AND CONSIDERATIONS TO HISTORIC PROPERTIES, PER DIALOGUE BETWEEN SHPO, FHWA, AFFECTED PROPERTY OWNERS, AND THE CONTRACTOR.

BEFORE CONSTRUCTION ACTIVITIES BEGIN, THE CONTRACTOR WILL RECORD AND MONITOR SITE CONDITIONS BY USE OF VIDEO OR OTHER DATE RECORDATION IN ACCORDANCE TO SPECIAL PROVISION 211508 - VIDEOTAPING BUILDINGS. AS PART OF THAT EFFORT, THE CONTRACTOR MAY ALSO UNDERTAKE FIELD MEASUREMENTS AND RECORD EXISTING CONDITIONS FOR DESIGN DETAILS AND ANY CONTRACTING SPECIFICATIONS. COPIES WILL BE PROVIDED TO THE APPROPRIATE PERSONNEL DURING THE PRECONSTRUCTION MEETING AND PRIOR TO CONSTRUCTION. THESE RECORDS WILL BE USED FOR DISPUTE RESOLUTION, SHOULD QUERY ARISE.

DURING THE LENGTH OF THIS CONTRACT, SHOULD DAMAGE OCCUR TO THIS BUILDING AS A RESULT OF VIBRATIONS DAMAGE, SHEETPILE OR DRILLED SHAFT INSTALLATION, REMOVAL OF THE EXISTING BRIDGE, OR OTHER HEAVY CONSTRUCTION ACTIVITIES, DELDOT'S ENVIRONMENTAL STUDIES WILL BE CONTACTED PRIOR TO IMPLEMENTATION OF REPAIRS TO ENSURE REPAIRS WILL MEET OR FOLLOW THE SECRETARY OF THE INTERIOR STANDARDS FOR REHABILITATION AND/OR TREATMENT OF HISTORIC PROPERTIES. ANY REPAIRS WILL AVOID AND MINIMIZE POTENTIAL ADVERSE EFFECTS AS DETERMINED BY DELDOT, SHPO AND FHWA.

19. CONTRACTOR SHALL SUBMIT A LIST OF ALL COMPACTION EQUIPMENT FOR REVIEW ALONG WITH DESIGN CALCULATIONS SHOWING THAT COMPACTION EQUIPMENT WILL NOT PRODUCE PEAK PARTICLE VELOCITIES (PPV) GREATER THAN 0.2 INCHES PER SECOND AT ANY POINT ADJACENT TO THE EXISTING 72" NCC SANITARY SEWER USING THE BRITISH STANDARD METHOD. DESIGN CALCULATIONS SHALL BE SEALED BY A DELAWARE PROFESSIONAL ENGINEER.

UNOFFICIAL WEBSITE COPY

PROJECT NOTES (CONT.)

MISCELLANEOUS (CONT.)

20. NEW CASTLE COUNTY (NCC) MAINTAINS A CRITICAL 72" DIAMETER SANITARY SEWER FORCE MAIN THAT TRAVERSES THE BRIDGE CONSTRUCTION AND DEMOLITION AREAS OF THIS SITE. THE CONTRACTOR SHALL FAMILIARIZE HIMSELF WITH THE PROTECTION PLANS AND MEASURES DESCRIBED IN THE DRAWINGS AND SPECIFICATIONS. A PIPELINE FAILURE DURING CONSTRUCTION WOULD CREATE CATASTROPHIC ENVIRONMENTAL AND PUBLIC HEALTH IMPACTS AND POTENTIALLY DELAY FURTHER CONSTRUCTION ACTIVITIES FOR A SIGNIFICANT TIME.

FOR ADDITIONAL INFORMATION ON NCC SEWER LINE SEE SHEET CS-01, CONSTRUCTION PHASING, M.O.T., AND EROSION CONTROL PLAN.

IN THE EVENT OF FAILURE THE CONTRACTOR SHALL TAKE ALL NECESSARY PRECAUTIONS TO PREVENT ANY WORSENING OF THE DAMAGE TO THE PIPELINE AND SHALL NOT PERFORM ANY WORK WHICH COULD RISK ADDITIONAL PIPE BREAKS AND/OR LEAKS. THE CONTRACTOR SHALL IMMEDIATELY CEASE WORK AND ASSURE SITE ACCESS IS NOT IMPEDED. THE CONTRACTOR SHALL IMMEDIATELY INFORM DELDOT'S ON-SITE INSPECTOR AND BEGIN MOVING EQUIPMENT FROM THE FAILURE LOCATION. DELDOT WILL IMMEDIATELY NOTIFY THE COUNTY UPON RECEIVING THIS INFORMATION OR OBSERVING THE FAILURE. THE COUNTY WILL ENGAGE THEIR RESPONSE CONTRACTOR TO MOBILIZE TO THE SITE AND PROVIDE TEMPORARY REPAIR OF THE PIPELINE UNTIL A PERMANENT SOLUTION CAN BE ESTABLISHED.

A COUNTY REPRESENTATIVE SHALL BE INVITED TO THE PRE-CONSTRUCTION MEETING AS WELL AS SUBSEQUENT PROGRESS MEETINGS INVOLVING CRITICAL CONSTRUCTION ITEMS (I.E. DRILLED SHAFTS, DEMOLITION, ETC.) IN THE VICINITY OF THE PIPELINE.

21. THE CONTRACTOR SHALL PROVIDE NCC A MINIMUM 48 HOURS OF ADVANCE NOTICE FOR CONSTRUCTION MEETINGS AND CONSTRUCTION ACTIVITIES INVOLVING THE FOLLOWING WORK ITEMS:
    1. PROTECTIVE SHEETING PLACEMENT AT ABUTMENT A
    2. PLACEMENT OF PROTECTION FENCING FOR 72" NCC SS
    3. DP&L ELECTRIC POLE PLACEMENT NEAR ABUTMENT A/PIER 1
    4. PLACEMENT OF TEMPORARY DP&L GAS LINE
    5. PLACEMENT OF PERMANENT DP&L GAS LINE
    6. COFFERDAM PLACEMENT/REMOVAL AT PIER 1
    7. DRILLED SHAFT PLACEMENT AT ABUTMENT A AND AT PIER 1
    8. PRESTRESSED BOX BEAM PLACEMENT AT SPAN 1
    9. EXISTING BRIDGE AND FENDER SYTEM DEMOLITION
    10. COFFERDAM PLACEMENT/REMOVAL FOR EXISTING BRIDGE DEMOLITION

22. STOCKPILING OF MATERIALS SHALL NOT BE PERMITTED WITHIN THE LIMITS OF CONSTRUCTION SOUTH OF EXISTING BRIDGE 1-159.

23. PRIOR TO THE START OF CONSTRUCTION AND UTILITY RELOCATION WORK, THE CONTRACTOR SHALL ACCURATELY DETERMINE THE LIMITS OF THE 72" DIAMETER SANITARY SEWER FORCE MAIN. METHODS INCLUDE HAND DIGGING AND SOFT DIGGING, SUBJECT TO APPROVAL BY NCC. THIS WORK IS INCIDENTAL TO ITEM 763501 CONSTRUCTION ENGINEERING. DELDOT AND NCC REPRESENTATIVES SHALL BE PRESENT FOR THIS WORK. NOTIFY THE DEPARTMENT AND NCC AT LEAST 48 HOURS BEFORE THIS WORK BEGINS.

24. THE CONTRACTOR IS HEREBY NOTIFIED THAT THE DEPARTMENT SHALL PROVIDE TWO (2) WEEKS FOR NCC TO REVIEW AND COMMENT ON CERTAIN WORKING DRAWINGS. DELDOT WILL PROVIDE THE FOLLOWING WORKING DRAWINGS TO NCC FOR THEIR REVIEW AND COMMENT:
    1. PROTECTIVE SHEETING DETAILS AT ABUTMENT A
    2. PIER 1 COFFERDAM DETAILS
    3. DRILLED SHAFT DETAILS
    4. EXISTING BRIDGE DEMOLITION PLAN
    5. COFFERDAM DETAILS FOR EXISTING BRIDGE PIER DEMOLITION
    6. TEMPORARY ACCESS FOR UTILITY POLE INSTALLATION

25. DREDGING SHALL NOT BE PERMITTED.

26. BRIDGE DESIGN CRITERIA:

2012 AASHTO LRFD BRIDGE DESIGN SPECIFICATIONS AND SUPPLEMENTED BY THE DELAWARE DEPARTMENT OF TRANSPORTATION 2005 BRIDGE DESIGN MANUAL, INCLUDING REVISIONS THROUGH 2009. PROVIDE MATERIAL AND PERFORM WORK IN ACCORDANCE TO THE 2001 DELAWARE DEPARTMENT OF TRANSPORTATION STANDARD SPECIFICATIONS, STANDARD CONSTRUCTION DETAILS, AND CONTRACT SPECIAL PROVISIONS.

27. LOADING CRITERIA:

LIVE LOAD: AASHTO HL-93 AND DELAWARE LEGAL LOADS
FUTURE OVERLAY = 25 PSF
S.I.P. DECK FORMS = 15 PSF
FILL SOIL = 120 PCF
LIGHTWEIGHT AGGREGATE FILL = 45 PCF
SEISMIC DESIGN AND REQUIREMENTS SHALL BE IN ACCORDANCE WITH 2012 AASHTO LRFD BRIDGE DESIGN SPECIFICATIONS

28. LOAD RATINGS
LOAD AND RESISTANCE FACTOR RATING METHOD

LOAD RATING SUMMARY

VEHICLE TYPE	RATING FACTOR	RATING WEIGHT (TONS)	CONTROLLING MEMBER	CONTROLLING POINT	LOAD EFFECT
HL-93 TRUCK + HL-93 LANE (INVENTORY)	1.33	47.91	SPAN2_EXTERNAL GIRDER G1	105	STRESS
HL-93 TANDEM + HL-93 LANE (INVENTORY)	1.55	38.72	SPAN2_EXTERNAL GIRDER G1	105	STRESS
HS20 (INVENTORY)	1.77	63.57	SPAN2_EXTERNAL GIRDER G1	104	STRESS
HL-93 TRUCK + HL-93 LANE (OPERATING)	1.74	62.73	SPAN2_EXTERNAL GIRDER G1	106	L. REINFORCEMENT
HL-93 TANDEM + HL-93 LANE (OPERATING)	2.01	50.15	SPAN2_EXTERNAL GIRDER G1	105	L. REINFORCEMENT
HS20 (OPERATING)	2.29	82.31	SPAN2_EXTERNAL GIRDER G1	104	L. REINFORCEMENT
DE S220	2.46	49.30	SPAN2_EXTERNAL GIRDER G1	105	STRESS
DE S335	1.37	48.07	SPAN2_EXTERNAL GIRDER G1	105	STRESS
DE S437	1.31	47.89	SPAN2_EXTERNAL GIRDER G1	105	STRESS
DE T330	1.91	57.22	SPAN2_EXTERNAL GIRDER G1	105	STRESS
DE T435	1.67	58.44	SPAN2_EXTERNAL GIRDER G1	105	STRESS
DE T540	1.48	59.12	SPAN2_EXTERNAL GIRDER G1	105	STRESS

29. HYDRAULIC DESIGN
    DRAINAGE AREA = 216.22 SQ. MILES
    DESIGN FREQUENCY = 25 YEARS
    DESIGN FLOOD ELEVATION = 7.90
    DESIGN DISCHARGE = 18,000 CFS
    PROPOSED OPENING = 5598 SF

30. THE PROPOSED STRUCTURE HAS BEEN ANALYZED FOR THE EFFECTS OF SCOUR IN ACCORDANCE WITH HEC 18 - "EVALUATING SCOUR AT BRIDGES" AND HEC 23 - "BRIDGE SCOUR AND STREAM INSTABILITY COUNTERMEASURES". SCOUR COUNTERMEASURES HAVE BEEN DESIGNED FOR THE WORST CASE OF THE OVERTOPPING FLOOD OR THE 500-YEAR FLOOD EVENT:
    DESIGN EVENT = Q500
    DESIGN DISCHARGE = 40,400 CFS
    DESIGN VELOCITY = 8.8 FPS
    DESIGN DEPTH OF FLOW = 26.0 FT

31. ANY DAMAGE TO ITEMS NOTED TO BE RELOCATED OR RESET BY THE CONTRACTOR, AT THE DISCRETION OF THE ENGINEER, SHALL BE REPAIRED AND/OR REPLACED IN KIND AT THE CONTRACTOR'S EXPENSE.

32. THE CONTRACTOR WILL CONTACT THE DELAWARE TMC AT 302-659-4600 PRIOR TO ANY UNMANNED AIRCRAFT VEHICLE (UAV) FLIGHTS. THE CONTRACTOR WILL BE REQUIRED TO PROVIDE THE FOLLOWING INFORMATION: THE REGISTRATION NUMBER OF THE UAV, THE FLIGHT TIME, LOCATION OF THE FLIGHT, THE PILOT'S NAME AND THE PILOT'S CONTACT NUMBER DURING THE FLIGHT.

33. CONTACT ANTHONY TALLMAN (US GEOLOGICAL SURVEY) AT 302-734-2506 WITH 14 DAYS NOTICE TO REMOVE THE EXISTING USGS STREAM GAGE.

34. THE CONTRACTOR SHALL FIELD VERIFY ALL EXISTING DIMENSIONS, GEOMETRY AND ELEVATIONS AS NECESSARY PRIOR TO ORDERING ANY MATERIALS AND COMMENCING CONSTRUCTION TO ENSURE A PROPER FIT OF THE PROPOSED CONSTRUCTION. PAYMENT SHALL BE INCIDENTAL TO ITEM #763501 - CONSTRUCTION ENGINEERING. THE CONTRACTOR SHALL NOT CONSIDER ANY OF THE DATA ON THE EXISTING STRUCTURE SUPPLIED IN THE ORIGINAL DESIGN DRAWINGS OR MADE AVAILABLE BY THE DEPARTMENT OR ITS AUTHORIZED AGENTS AS POSITIVE REPRESENTATIONS OF THE CONDITIONS THAT WILL BE ENCOUNTERED IN THE FIELD.

EARTHWORK SUMMARY

	CP-01 STA. 9+00 TO STA. 14+50	CP-02 STA. 14+50 TO STA. 19+50	PROJECT TOTALS
EXCAVATION - ITEM 202000 (CY) [NEED = '-' / EXCESS = '+']			
EX01 : FROM CROSS SECTIONS / MODELS (+)	335.59	246.02	581.61
EX02 : BITUMINOUS PAVEMENT REMOVED IN FILL SECTIONS (+) (ASSUMED 18")	709.52	303.84	1013.36
EX03 : TOPSOIL REMOVED UNDER FILL SECTIONS (+) (ASSUMED 6")	60.88	41.49	102.37
EX04 : TOPSOIL PLACED IN CUT SECTIONS (+)	0	0	0
EX05 : ROOT MAT REMOVED IN CUT SECTIONS (-)	0	0	0
EX06 : CURB AND/OR CURB AND GUTTER EXCAVATION (-)	0	0	0
EX07 : UNDERDRAIN EXCAVATION (-)	0	0	0
EX08 : ROCK EXCAVATION (-)	0	0	0
EX09 : REMOVAL OF PCC PAVEMENT, CURBS, SIDEWALK, ETC. (-)	0	0	0
EXTOTAL : TOTAL EXCAVATION	1105.99	591.35	1697.34
STORMWATER MANAGEMENT POND EXCAVATION - ITEM 271000 (CY) [NEED = '-' / EXCESS = '+']			
SWEX01 : FROM CROSS SECTIONS / MODELS (+)	0	0	0
SWEX02 : TOPSOIL REMOVED UNDER FILL SECTIONS (+)	0	0	0
SWEX03 : TOPSOIL PLACED IN CUT SECTIONS (+)	0	0	0
SWEX04 : ROOT MAT REMOVED (-)	0	0	0
SWEX05 : ROCK EXCAVATION (-)	0	0	0
SWEXTOTAL : TOTAL STORMWATER MANAGEMENT POND EXCAVATION	0	0	0
EXCAVATION AVAILABLE FOR EMBANKMENT (CY) [NEED = '-' / EXCESS = '+']			
EXTOTAL : TOTAL EXCAVATION (+) [ITEM 202000]	1105.99	591.35	1697.34
SWEXTOTAL : TOTAL STORMWATER MANAGEMENT POND EXCAVATION (+) [ITEM 271000]	0	0	0
AVEX01 : EXCAVATION AND BACKFILLING FOR STRUCTURES (+) [ITEM 207000]	0	0	0
AVEX02 : EXCAVATION AND BACKFILLING FOR PIPE TRENCHES (+) [ITEM 208000 + PIPES < 24" IN DIAMETER]	0	0	0
AVEX03 : CHANNEL EXCAVATION (+) [ITEM 203000]	0	0	0
AVEX04 : EXCAVATION FROM LATERAL OR LONGITUDINAL DITCHING (+) [ITEM 714000]	0	0	0
AVEX05 : EXCAVATION FROM CURBS AND/OR CURB AND GUTTER (+)	0	0	0
AVEX06 : EXCAVATION FROM UNDERDRAINS (+) [ITEM 71500X]	0	0	0
AVEX07 : MISCELLANEOUS EXCAVATIONS (+)	0	0	0
AVEX08 : TOPSOIL REMOVED IN CUT AND/OR FILL SECTIONS (-)	0	0	0
AVEX09 : TOPSOIL REMOVED IN CUT AND/OR FILL SECTIONS FOR STORMWATER MANAGEMENT PONDS (-)	0	0	0
AVEX10: UNSUITABLE MATERIALS (-)	1105.99	591.35	1697.34
AVEXTOTAL : TOTAL EXCAVATION AVAILABLE FOR EMBANKMENT	0	0	0
EMBANKMENT AND BORROW, TYPE 'F' REQUIRED (CY) [NEED = '-' / EXCESS = '+']			
EMRF01 : FROM CROSS SECTIONS / MODEL (+) [EMBANKMENT REQUIRED BELOW SUBGRADE OR CAPPING]	197.83	327.59	525.42
EMRF02 : TOPSOIL REMOVED UNDER FILL (+)	0	0	0
EMRF03 : ROOT MAT REMOVED UNDER FILL (+)	0	0	0
EMRF04 : UNSUITABLE MATERIAL REMOVED UNDER FILL (+)	0	0	0
EMRF05 : PCC REMOVED UNDER FILL (+)	0	0	0
EMRF06 : BITUMINOUS PAVEMENT REMOVED UNDER FILL (+)	0	0	0
EMRF07 : TOPSOIL TO BE PLACED IN FILL (+)	0	0	0
EMRF08 : SUBTOTAL OF EMBANKMENT AND BORROW, TYPE 'F' REQUIRED	197.83	327.59	525.42
EMRF09 : COMPACTION FACTOR APPLIED TO THE SUBTOTAL (%)	1.2	1.2	
EMRFTOTAL : TOTAL EMBANKMENT AND BORROW, TYPE 'F' REQUIRED	237.40	393.11	630.51
TOPSOIL SUMMARY (CY) [NEED = '-' / EXCESS = '+']			
TOP01 : TOPSOIL SALVAGED FROM CUT SECTIONS (+)	0	0	0
TOP02 : TOPSOIL SALVAGED FROM FILL SECTIONS (+)	0	0	0
TOP03 : TOPSOIL SALVAGED FROM STORMWATER MANAGEMENT PONDS (+)	0	0	0
TOP04 : TOPSOIL REQUIRED (-)	356.08	304.51	660.59
TOPTOTAL : TOTAL TOPSOIL	-356.08	-304.51	-660.59
MATERIAL BALANCE (CY) [NEED = '-' / EXCESS = '+']			
LIGHTWEIGHT AGGREGATE FILL	900.25	0	900.25
BORROW, TYPE 'B'	0	0	0
BORROW, TYPE 'C'	0	0	0
BORROW, TYPE 'F'	237.40	393.11	630.51
TOPSOIL	356.08	304.51	660.59
UNSUITABLE MATERIAL	1105.99	591.35	1697.34

UNOFFICIAL WEB SITE COPY

ADDENDA / REVISIONS

NOT TO SCALE

BR 1-159 ON JAMES STREET OVER CHRISTINA RIVER

CONTRACT T201207101 | COUNTY NEW CASTLE | BRIDGE NO. 1-159 | DESIGNED BY: SFR | CHECKED BY: DLH

NOTES

PN-02 | SECTION McT | SHEET NO. 6

6/4/2019 10:25:14 AM ...\Roadway\PN02_BR159.dgn

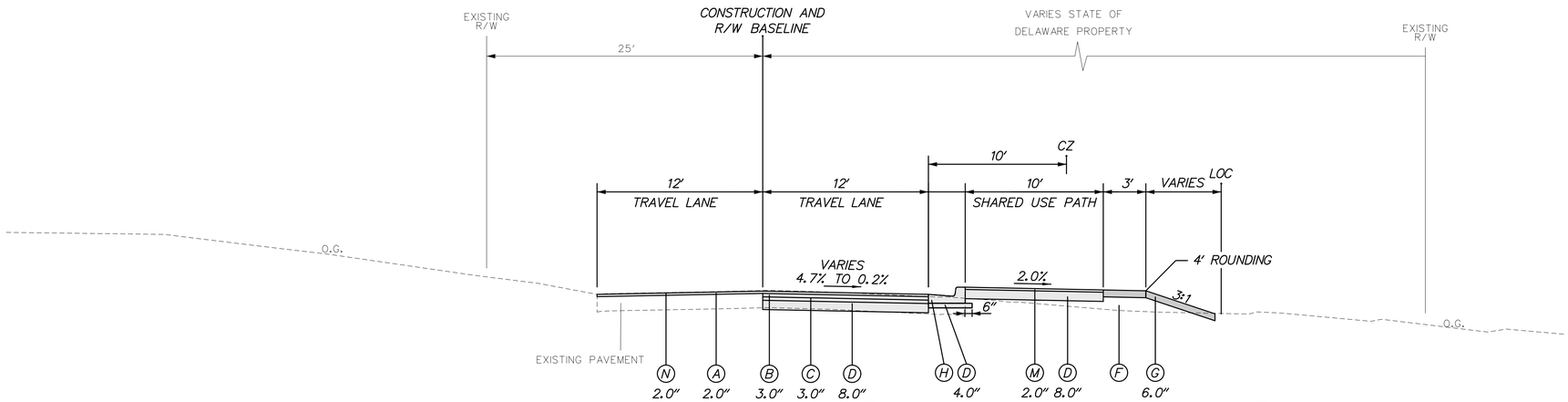

WATER STREET
STA. 500+75.00 TO STA. 501+55.10

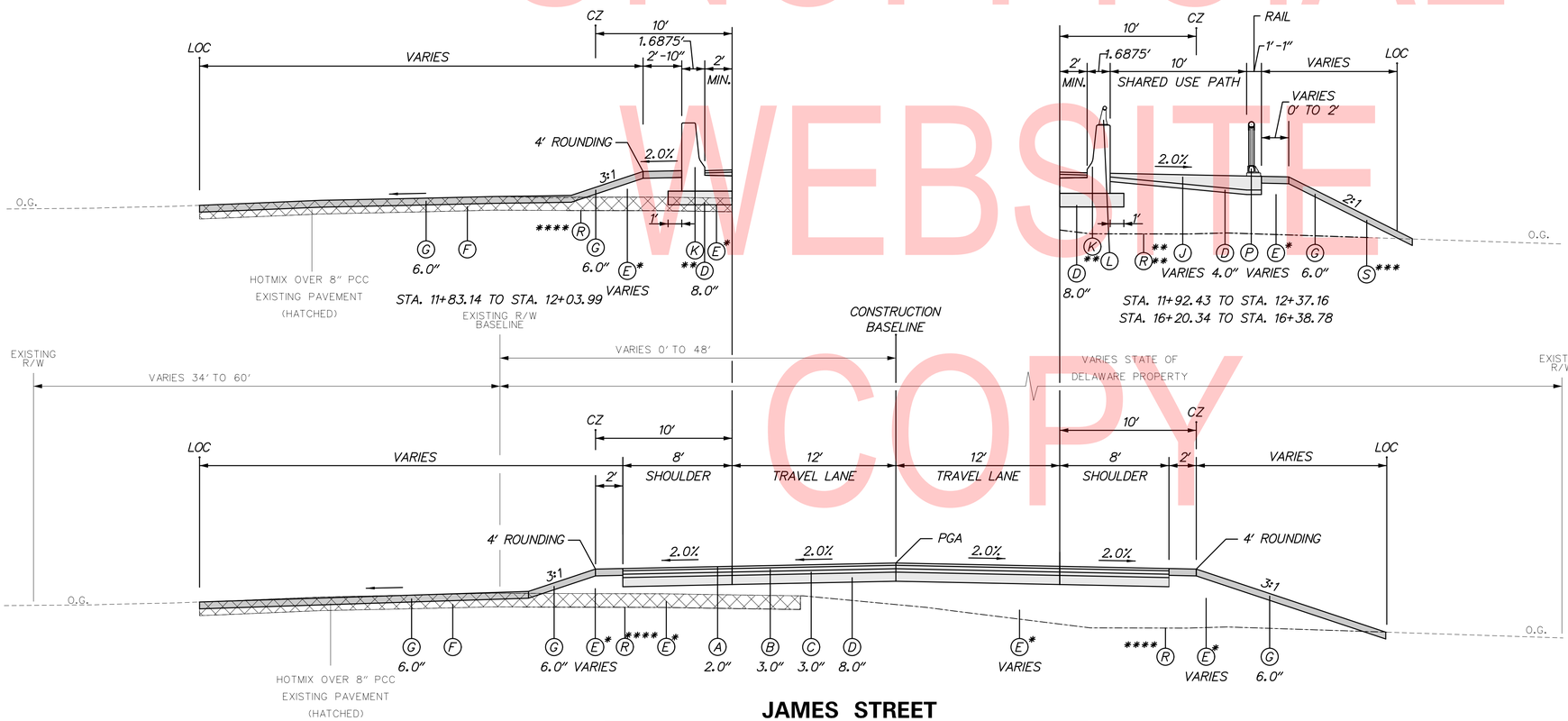

JAMES STREET
TYPICAL NORMAL SECTION
STATION 10+50 TO STATION 12+03.99

LEGEND

- (A) ITEM 401833 - WMA, SUPERPAVE, TYPE C, 160 GYRATIONS, PG 76-22 (NON-CARBONATE STONE)
- (B) ITEM 401816 - WMA, SUPERPAVE TYPE B, 160 GYRATIONS, PG 76-22
- (C) ITEM 401819 - WMA, SUPERPAVE, BITUMINOUS CONCRETE BASE COURSE, 160 GYRATIONS, PG 64-22
- (D) ITEM 302007 - GRADED AGGREGATE BASE COURSE, TYPE B
- (E) ITEM 209511 - LIGHTWEIGHT AGGREGATE FILL
- (F) ITEM 209006 - BORROW, TYPE F
- (G) ITEM 908004 - TOPSOIL, 6" DEPTH
  ITEM 908014 - PERMANENT GRASS SEEDING, DRY GROUND
- (H) ITEM 701020 - INTEGRAL PCC CURB & GUTTER, TYPE 1-8
- (J) ITEM 705006 - P.C.C. SIDEWALK, VARIABLE DEPTH
- (K) ITEM 720529 - P.C.C. SAFETY BARRIER PERMANENT, SINGLE FACE
- (L) ITEM 606002 - METAL BRIDGE RAILING, ALUMINUM
- (M) ITEM 401801 - WMA, SUPERPAVE, TYPE C, 160 GYRATIONS, PG 64-22 (CARBONATE STONE)
- (N) ITEM 760000 - PAVEMENT MILLING, HOT-MIX
- (P) ITEM 606003 - METAL BRIDGE RAILING (PEDESTRIAN)
- (R) ITEM 713002 - GEOTEXTILES, SEPARATION
- (S) ITEM 908020 - EROSION CONTROL BLANKET MULCH

THE LIFTS FOR THE INDIVIDUAL PAVING MATERIALS ARE:

	MIN.	MAX.
SUPERPAVE TYPE C	1.25"	2"
SUPERPAVE TYPE B	2.25"	4"
SUPERPAVE BCBC	3"	6"
GABC	N/A	8"

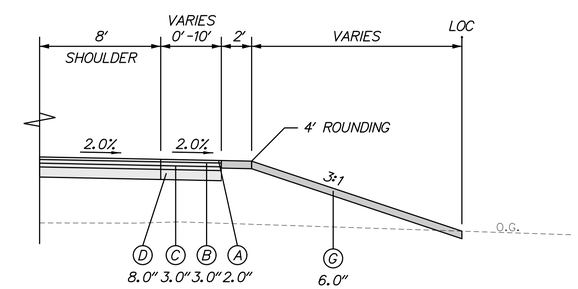

STA. 11+00.00 TO STA. 11+51.14

NOTES:

*: LIGHTWEIGHT AGGREGATE SHALL BE USED FOR EMBANKMENT MATERIAL FROM STA. 10+50 TO ABUTMENT A (UNLESS NOTED). EMBANKMENT AREAS TO BE CONSTRUCTED FROM STA. 11+90 TO ABUTMENT A THAT REQUIRE THE PLACEMENT OF OVER 2' OF NEW FILL MATERIAL SHALL BE OVER-EXCAVATED TO A DEPTH EQUAL TO THE FILL HEIGHT AND BACKFILLED WITH THE LIGHTWEIGHT AGGREGATE MATERIAL. PAYMENT FOR OVER-EXCAVATION SHALL BE UNDER ITEM 202000 -EXCAVATION AND EMBANKMENT.

**: P.C.C. SAFETY BARRIER SHALL BE WATER CURED PER SECTION 602.18 OF THE STANDARD SPECIFICATION. PAYMENT INCIDENTAL TO ITEM 720529. (SEE DETAIL ON SHEET AS-04 FOR ADDITIONAL INFORMATION)

***: PLACE ITEM 908020 - EROSION CONTROL BLANKET, 6' WIDE AT THE BOTTOM OF THE SLOPE IN AREAS ALONG THE WETLANDS.

****: PLACE ITEM 713002, GEOTEXTILES, SEPARATION UNDER LIGHTWEIGHT AGGREGATE IN ALL LOCATIONS.

UNOFFICIAL WEBSITE COPY

ADDENDA / REVISIONS	

SCALE 0 5 10 15 FEET

BR 1-159 ON JAMES STREET OVER CHRISTINA RIVER

CONTRACT	BRIDGE NO. 1-159
T201207101	DESIGNED BY: SFR
COUNTY	
NEW CASTLE	CHECKED BY: DLH

TYPICAL SECTIONS

TS-01
SECTION
McT
SHEET NO.
7

3/15/2019
8:00:01 AM
...\Roadway\TS01_BR159.dgn

EXISTING ALIGNMENT CONTROL				
POINT	STATION	OFFSET	NORTHING	EASTING
10000	105+00.00	0.00'	622175.9234	602205.0402
10010	120+84.99	0.00'	623710.5068	601995.9043
15001	500+00.00	0.00'	623324.3014	602054.8745
15002	503+50.00	0.00'	623368.9615	602402.0135

CONSTRUCTION ALIGNMENT CONTROL				
POINT	STATION	OFFSET	NORTHING	EASTING
20000	5+00.00	0.00'	622175.9234	602205.0402
20013	19+50.00	0.00'	623559.0597	602024.3381

HORIZONTAL / VERTICAL CONTROL DATA					
POINT	STATION	OFFSET	NORTHING	EASTING	ELEVATION
100	104+84.49	-27.25'	622152.3084	602184.4182	8.65
101	111+18.00	29.29'	622751.1731	602167.8585	8.93
103	116+40.11	26.30'	623274.7696	602089.0479	10.46
104	120+36.58	-16.25'	623660.1973	601987.1485	6.29

- NEGATIVE OFFSET DENOTES LEFT OF BASELINE

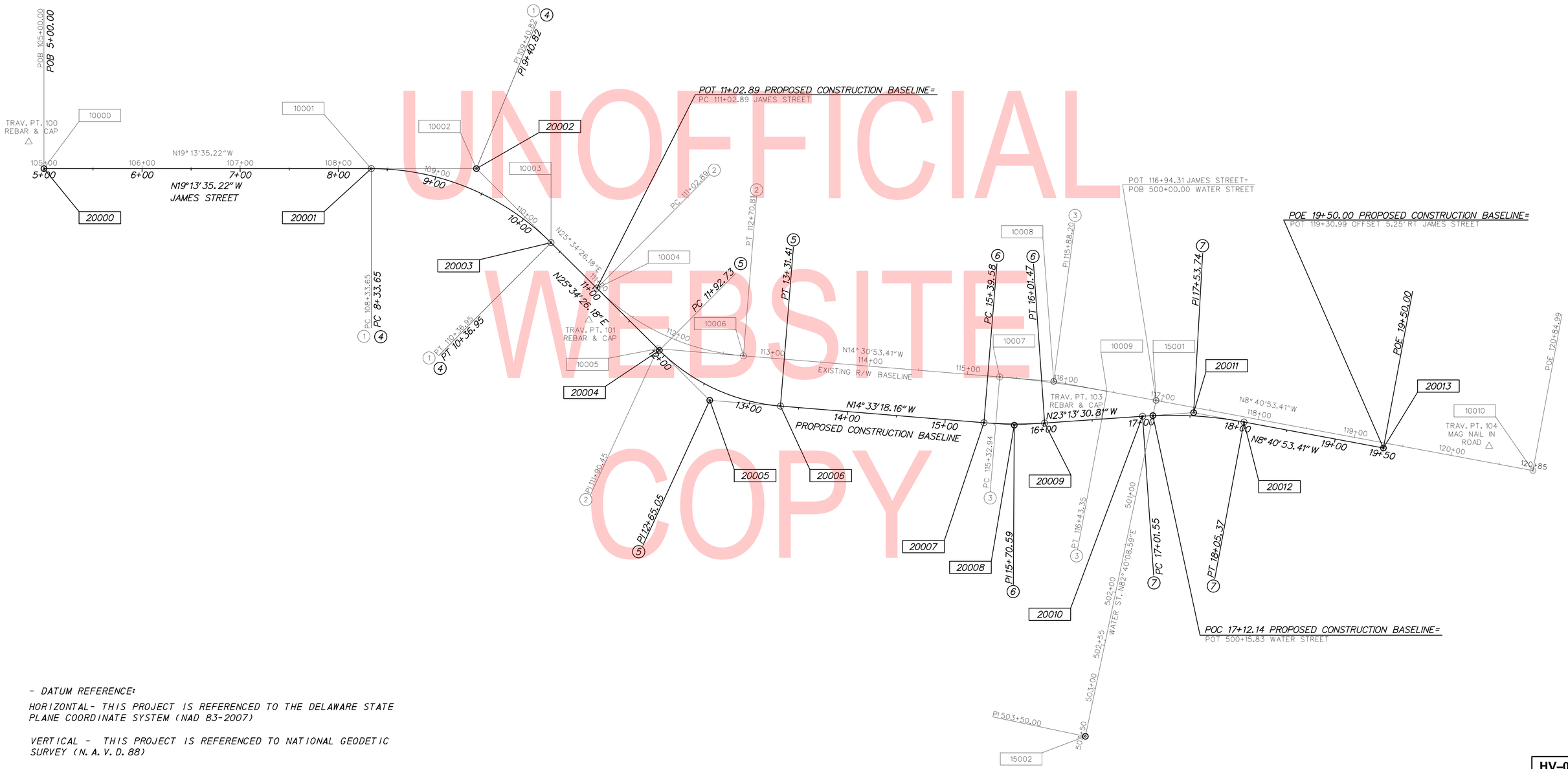

UNOFFICIAL WEBSITE COPY

- DATUM REFERENCE:

HORIZONTAL- THIS PROJECT IS REFERENCED TO THE DELAWARE STATE PLANE COORDINATE SYSTEM (NAD 83-2007)

VERTICAL - THIS PROJECT IS REFERENCED TO NATIONAL GEODETIC SURVEY (N.A.V.D.88)

ADDENDA / REVISIONS

SCALE 0 50 100 150 FEET

BR 1-159 ON JAMES STREET OVER CHRISTINA RIVER

CONTRACT	BRIDGE NO.	1-159
T201207101	DESIGNED BY: SFR	
COUNTY		
NEW CASTLE	CHECKED BY: DLH	

HORIZONTAL AND VERTICAL CONTROL

HV-01

SECTION McT

SHEET NO. 8

3/15/2019
6:00:07 PM
...\Roadway\HV_01_BR159.dgn

CIRCULAR CURVE NO. 1

	STATION	NORTHING	EASTING
PC (10001)	108+33.65	622490.9676	602095.1671
PI (10002)	109+40.82	622592.1557	602059.8773
CC ( )		622576.5863	602340.6654
PT (10003)	110+36.95	622688.8219	602106.1379

Radius: 260.00
Delta: 44° 48′ 01.3952″ Right
Degree of Curvature(Arc): 22° 02′ 12.6178″
Length: 203.30
Tangent: 107.17
Chord: 198.16
Middle Ordinate: 19.62
External: 21.22
Tangent Direction: N 19° 13′35.2186″ W
Radial Direction: N 70° 46′ 24.7814″ E
Chord Direction: N 3° 10′ 25.4790″ E
Radial Direction: S 64° 25′ 33.8234″ E
Tangent Direction: N 25° 34′ 26.1766″ E

CIRCULAR CURVE NO. 2

	STATION	NORTHING	EASTING
PC (10004)	111+02.89	622748.2965	602134.6001
PI (10005)	111+90.45	622827.2813	602172.3991
CC ( )		622851.8986	601918.1132
PT (10006)	112+70.81	622912.0500	602150.4530

Radius: 240.00
Delta: 40° 05′ 19.5867″ Left
Degree of Curvature(Arc): 23° 52′ 23.6693″
Length: 167.92
Tangent: 87.56
Chord: 164.52
Middle Ordinate: 14.54
External: 15.47
Tangent Direction: N 25° 34′ 26.1766″ E
Radial Direction: S 64° 25′ 33.8234″ E
Chord Direction: N 5° 31′ 46.3832″ E
Radial Direction: N 75° 29′ 06.5899″ E
Tangent Direction: N 14° 30′ 53.4101″ W

CIRCULAR CURVE NO. 3

	STATION	NORTHING	EASTING
PC (10007)	115+32.94	623165.8169	602084.7543
PI (10008)	115+88.20	623219.3060	602070.9063
CC ( )		623437.6158	603134.6014
PT (10009)	116+43.35	623273.9256	602062.5664

Radius: 1084.46
Delta: 5° 50′ 00.0000″ Right
Degree of Curvature(Arc): 5° 17′ 00.0474″
Length: 110.41
Tangent: 55.25
Chord: 110.36
Middle Ordinate: 1.40
External: 1.41
Tangent Direction: N 14° 30′ 53.4101″ W
Radial Direction: N 75° 29′ 06.5899″ E
Chord Direction: N 11° 35′ 53.4101″ W
Radial Direction: N 81° 19′ 06.5899″ E
Tangent Direction: N 8° 40′ 53.4101″ W

CIRCULAR CURVE NO. 4

	STATION	NORTHING	EASTING
PC (20001)	8+33.65	622490.9676	602095.1671
PI (20002)	9+40.82	622592.1557	602059.8773
CC ( )		622576.5863	602340.6654
PT (20003)	10+36.95	622688.8219	602106.1379

Radius: 260.0000
Design Speed(mph): 25.0000
Delta: 44° 48′ 01.3952″ Right
Degree of Curvature(Arc): 22° 02′ 12.6178″
Length: 203.2977
Tangent: 107.1653
Chord: 198.1582
Middle Ordinate: 19.6184
External: 21.2195
Tangent Direction: N 19° 13′ 35.2186″ W
Radial Direction: N 70° 46′ 24.7814″ E
Chord Direction: N 3° 10′ 25.4790″ E
Radial Direction: S 64° 25′ 33.8234″ E
Tangent Direction: N 25° 34′ 26.1766″ E

CIRCULAR CURVE NO. 5

	STATION	NORTHING	EASTING
PC (20004)	11+92.73	622829.3401	602173.3844
PI (20005)	12+65.05	622894.5735	602204.6025
CC ( )		622914.8118	601994.7826
PT (20006)	13+31.41	622964.5712	602186.4282

Radius: 198.0000
Design Speed(mph): 25.0000
Delta: 40° 07′ 44.3396″ Left
Degree of Curvature(Arc): 28° 56′ 14.1446″
Length: 138.6758
Tangent: 72.3186
Chord: 135.8587
Middle Ordinate: 12.0172
External: 12.7937
Tangent Direction: N 25° 34′ 26.1766″ E
Radial Direction: S 64° 25′ 33.8234″ E
Chord Direction: N 5° 30′ 34.0068″ E
Radial Direction: N 75° 26′ 41.8370″ E
Tangent Direction: N 14° 33′ 18.1630″ W

CIRCULAR CURVE NO. 6

	STATION	NORTHING	EASTING
PC (20007)	15+39.58	623166.0648	602134.1118
PI (20008)	15+70.59	623196.0745	602126.3200
CC ( )		623063.2790	601738.2380
PT (20009)	16+01.47	623224.5667	602114.0933

Radius: 409.0000
Design Speed(mph): 25.0000
Delta: 8° 40′ 12.6464″ Left
Degree of Curvature(Arc): 14° 00′ 31.4930″
Length: 61.8912
Tangent: 31.0048
Chord: 61.8321
Middle Ordinate: 1.1701
External: 1.1735
Tangent Direction: N 14° 33′ 18.1630″ W
Radial Direction: N 75° 26′ 41.8370″ E
Chord Direction: N 18° 53′ 24.4862″ W
Radial Direction: N 66° 46′ 29.1906″ E
Tangent Direction: N 23° 13′ 30.8094″ W

CIRCULAR CURVE NO. 7

	STATION	NORTHING	EASTING
PC (20010)	17+01.55	623316.5369	602074.6269
PI (20011)	17+53.74	623364.4975	602054.0460
CC ( )		623477.8247	602450.4823
PT (20012)	18+05.37	623416.0895	602046.1684

Radius: 409.0000
Design Speed(mph): 25.0000
Delta: 14° 32′ 37.3993″ Right
Degree of Curvature(Arc): 14° 00′ 31.4930″
Length: 103.8189
Tangent: 52.1900
Chord: 103.5404
Middle Ordinate: 3.2897
External: 3.3164
Tangent Direction: N 23° 13′ 30.8094″ W
Radial Direction: N 66° 46′ 29.1906″ E
Chord Direction: N 15° 57′ 12.1098″ W
Radial Direction: N 81° 19′ 06.5899″ E
Tangent Direction: N 8° 40′ 53.4101″ W

UNOFFICIAL WEBSITE COPY

- DATUM REFERENCE:

HORIZONTAL- THIS PROJECT IS REFERENCED TO THE DELAWARE STATE PLANE COORDINATE SYSTEM (NAD 83-2007)

VERTICAL - THIS PROJECT IS REFERENCED TO NATIONAL GEODETIC SURVEY (N. A. V. D. 88)

FENCE SCHEDULE			
NO.	QTY.	DESCRIPTION	NOTES
F-1	25 LF	CHAIN-LINK FENCE, 6 FT. HIGH (ITEM 727004)	STA. 12+09, 15.69' LT.
F-2	1 EACH	VEHICULAR GATE (ITEM 727012)	DOUBLE, 6' HIGH X 6' WIDE

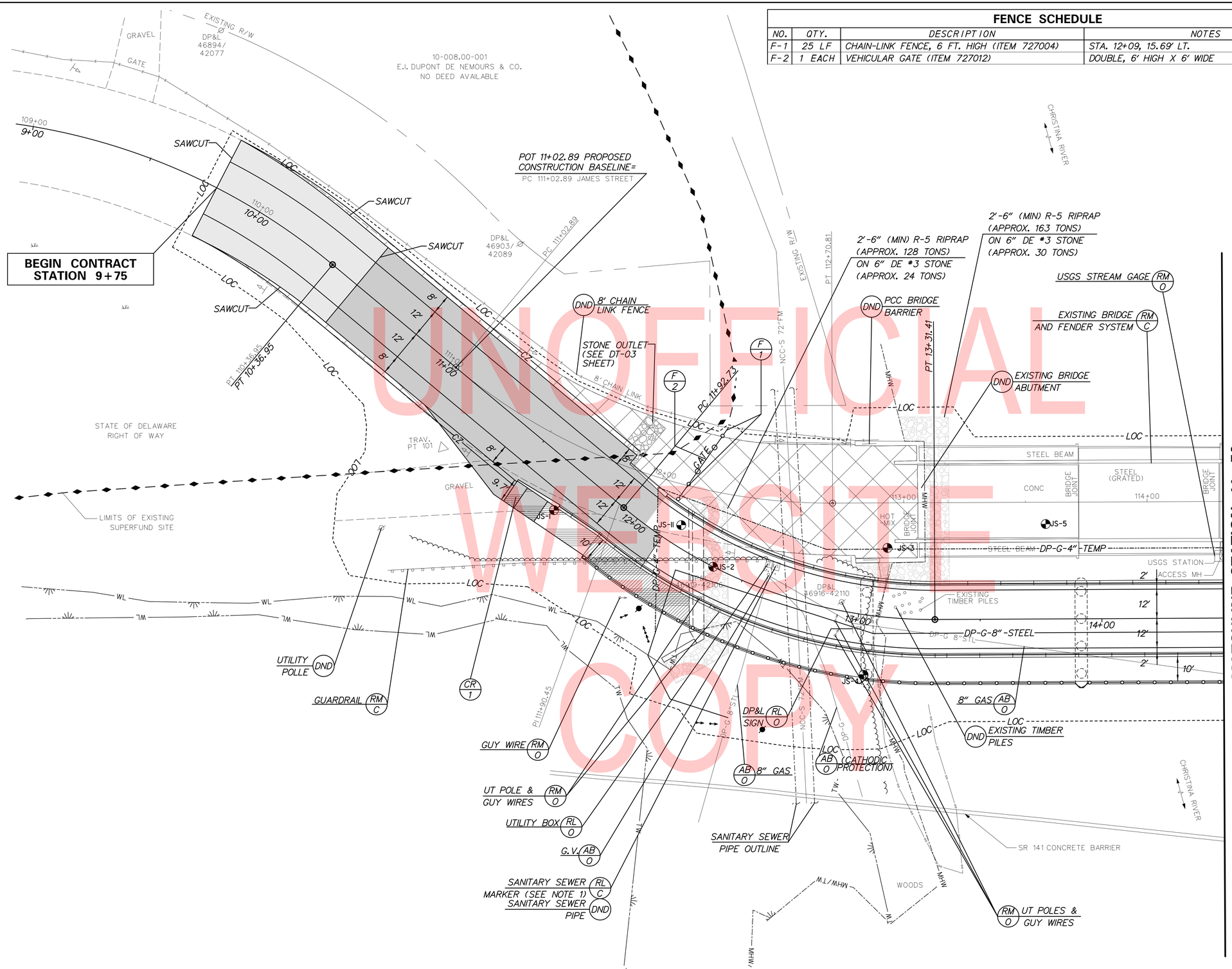

NOTES:
1. FOR SANITARY SEWER PROTECTION MEASURES SEE SHEETS PN-01, PN-02 AND CS-01 THRU CS-05.
2. SEE DT-01 AND DT-02 SHEETS FOR CURB RAMP DETAILS.

UNOFFICIAL WEBSITE COPY

ADDENDA / REVISIONS		SCALE 0 20 40 60 FEET	BR 1-159 ON JAMES STREET OVER CHRISTINA RIVER	CONTRACT T201207101	BRIDGE NO. 1-159	CONSTRUCTION PLAN	CP-01
				COUNTY NEW CASTLE	DESIGNED BY: SFR		SECTION McT
					CHECKED BY: DLH		SHEET NO. 10

3/15/2019
8:09:10 PM
...\Roadway\CP001_BR159.dgn

FLARED END SECTION SCHEDULE

NO.	SIZE / TYPE	SLOPE	SAFETY GRATE
1	24" RCP	0.0015	NO

MANHOLE SCHEDULE

NO.	STATION	OFFSET	TYPE/SIZE	T.G. EL.	INV. EL.
1	16+36.90	49.46	48" x 48"	7.81	2.50

FENCE SCHEDULE

NO.	QTY.	DESCRIPTION	NOTES
F-3	127 LF	CHAIN-LINK FENCE, 6 FT. HIGH (ITEM 727004)	STA. 16+27, 15.69' LT.
F-4	1 EACH	VEHICULAR GATE (ITEM 727012)	DOUBLE, 6' HIGH X 6' WIDE

ROADWAY CORE SCHEDULE

NO.	STATION	OFFSET	DESCRIPTION
C-1	116+04.32	-15.88	2.75" HMA, 9" PCC (BROKEN)
C-2	116+10.63	-12.00	2.75" HMA, PCC (UNKNOWN DEPTH)
C-3	118+07.01	14.23	3.25" HMA, 7.5" PCC (BROKEN)
C-4	118+12.15	8.14	2.00" HMA, PCC (BROKEN, UNK. DEPTH)
C-5	118+34.42	16.73	1.5" HMA, PCC (BROKEN, UNK. DEPTH)
C-6	118+75.84	-5.05	4.50" HMA, 7" PCC (BROKEN)
C-7	118+66.98	-9.88	2.00" HMA, PCC (BROKEN, UNK. DEPTH)
C-8	115+94.56	-19.17	4.00" HMA, PCC (BROKEN, UNK. DEPTH)
C-9	115+47.26	-19.78	5.00" HMA, PCC (BROKEN, UNK. DEPTH)

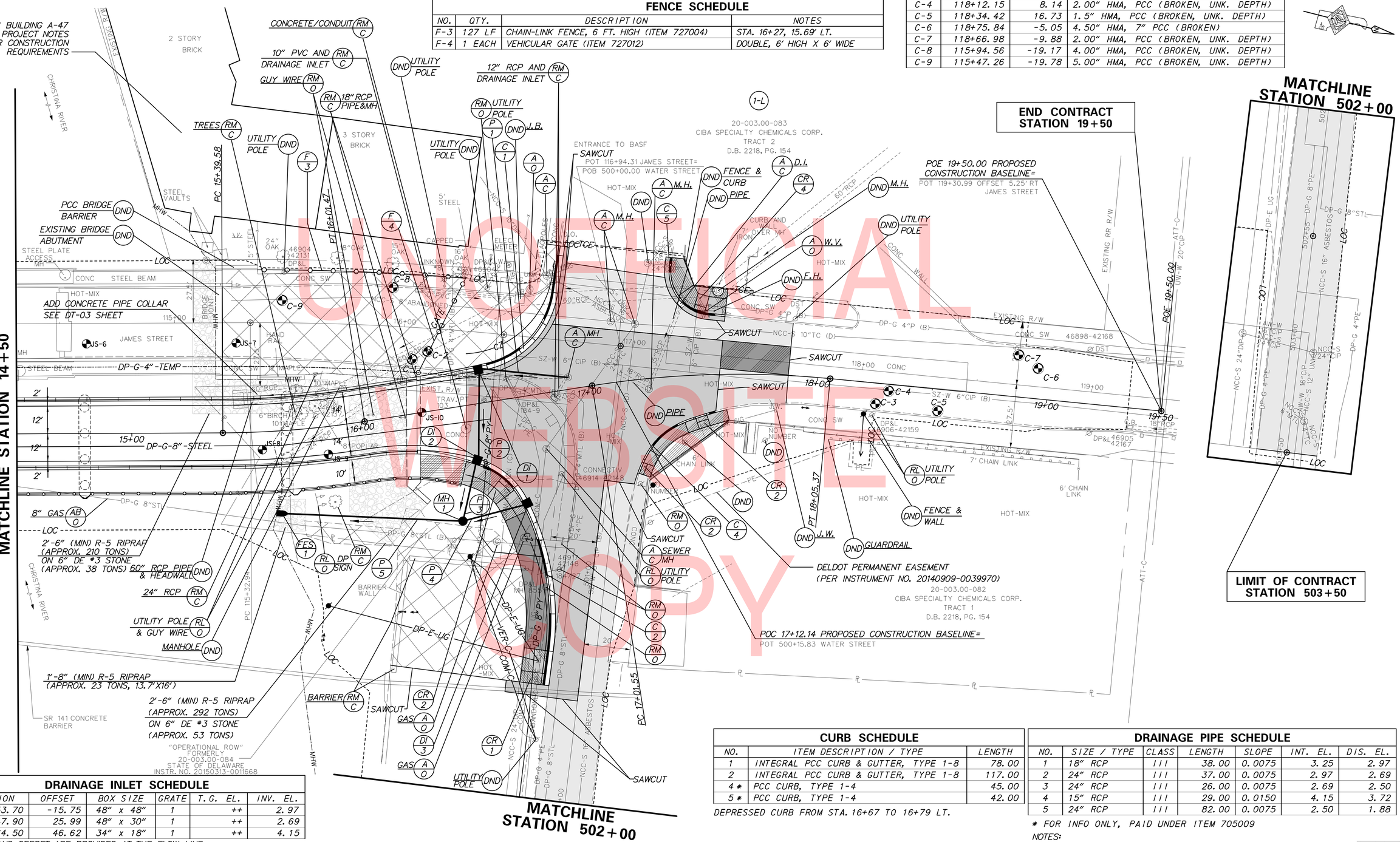

DRAINAGE INLET SCHEDULE

NO.	STATION	OFFSET	BOX SIZE	GRATE	T.G. EL.	INV. EL.
1	16+53.70	-15.75	48" x 48"	1	++	2.97
2	16+47.90	25.99	48" x 30"	1	++	2.69
3	16+64.50	46.62	34" x 18"	1	++	4.15

NOTE: STATION AND OFFSET ARE PROVIDED AT THE FLOW LINE
++ MATCH FLOWLINE OF PROPOSED CURB

CURB SCHEDULE

NO.	ITEM DESCRIPTION / TYPE	LENGTH
1	INTEGRAL PCC CURB & GUTTER, TYPE 1-8	78.00
2	INTEGRAL PCC CURB & GUTTER, TYPE 1-8	117.00
4 *	PCC CURB, TYPE 1-4	45.00
5 *	PCC CURB, TYPE 1-4	42.00

DEPRESSED CURB FROM STA. 16+67 TO 16+79 LT.

DRAINAGE PIPE SCHEDULE

NO.	SIZE / TYPE	CLASS	LENGTH	SLOPE	INT. EL.	DIS. EL.
1	18" RCP	III	38.00	0.0075	3.25	2.97
2	24" RCP	III	37.00	0.0075	2.97	2.69
3	24" RCP	III	26.00	0.0075	2.69	2.50
4	15" RCP	III	29.00	0.0150	4.15	3.72
5	24" RCP	III	82.00	0.0075	2.50	1.88

* FOR INFO ONLY, PAID UNDER ITEM 705009

NOTES:
1. SEE DT-01 AND DT-02 SHEETS FOR CURB RAMP DETAILS

ADDENDA / REVISIONS

SCALE 0 20 40 60 FEET

BR 1-159 ON JAMES STREET OVER CHRISTINA RIVER

CONTRACT	BRIDGE NO. 1-159
T201207101	DESIGNED BY: SFR
COUNTY NEW CASTLE	CHECKED BY: DLH

CONSTRUCTION PLAN

CP-02 | SECTION McT | SHEET NO. 11

3/18/2019 12:49:55 PM ...\Roadway\CP002_BR159.dgn

NOTE: BORING INFORMATION IS FOR INFORMATIONAL PURPOSES ONLY (SEE BORING LOG SHEETS BO-01 TO BO-04)

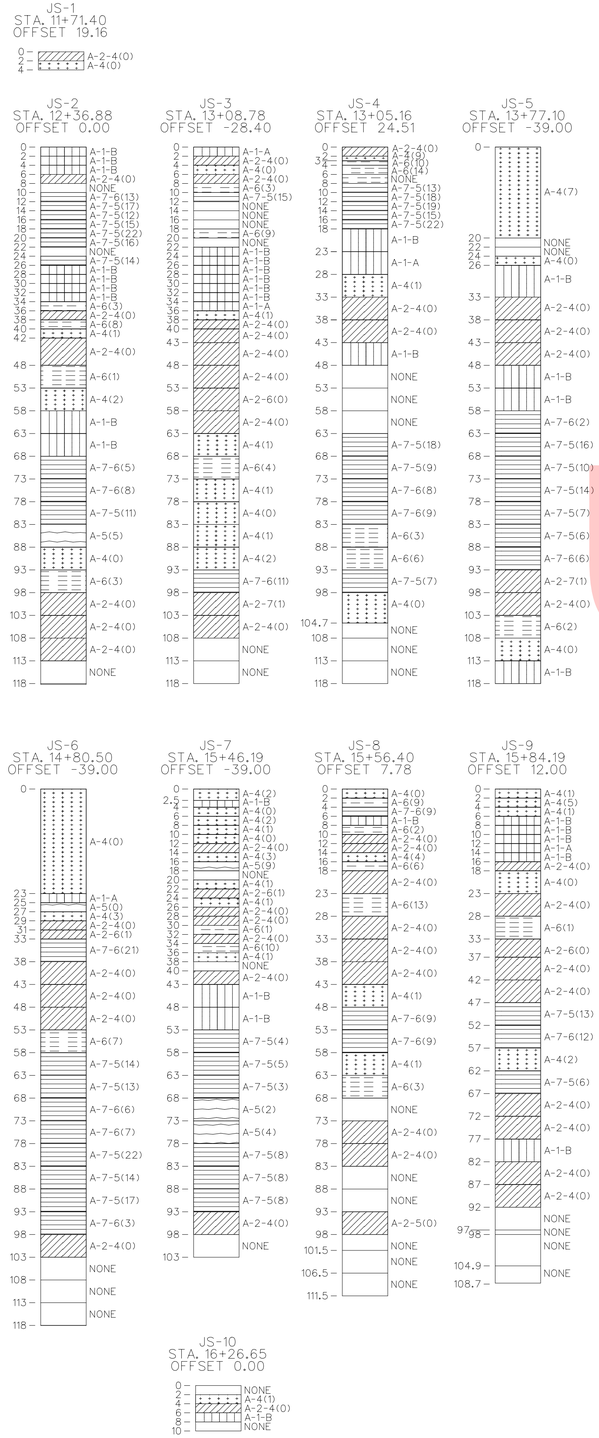

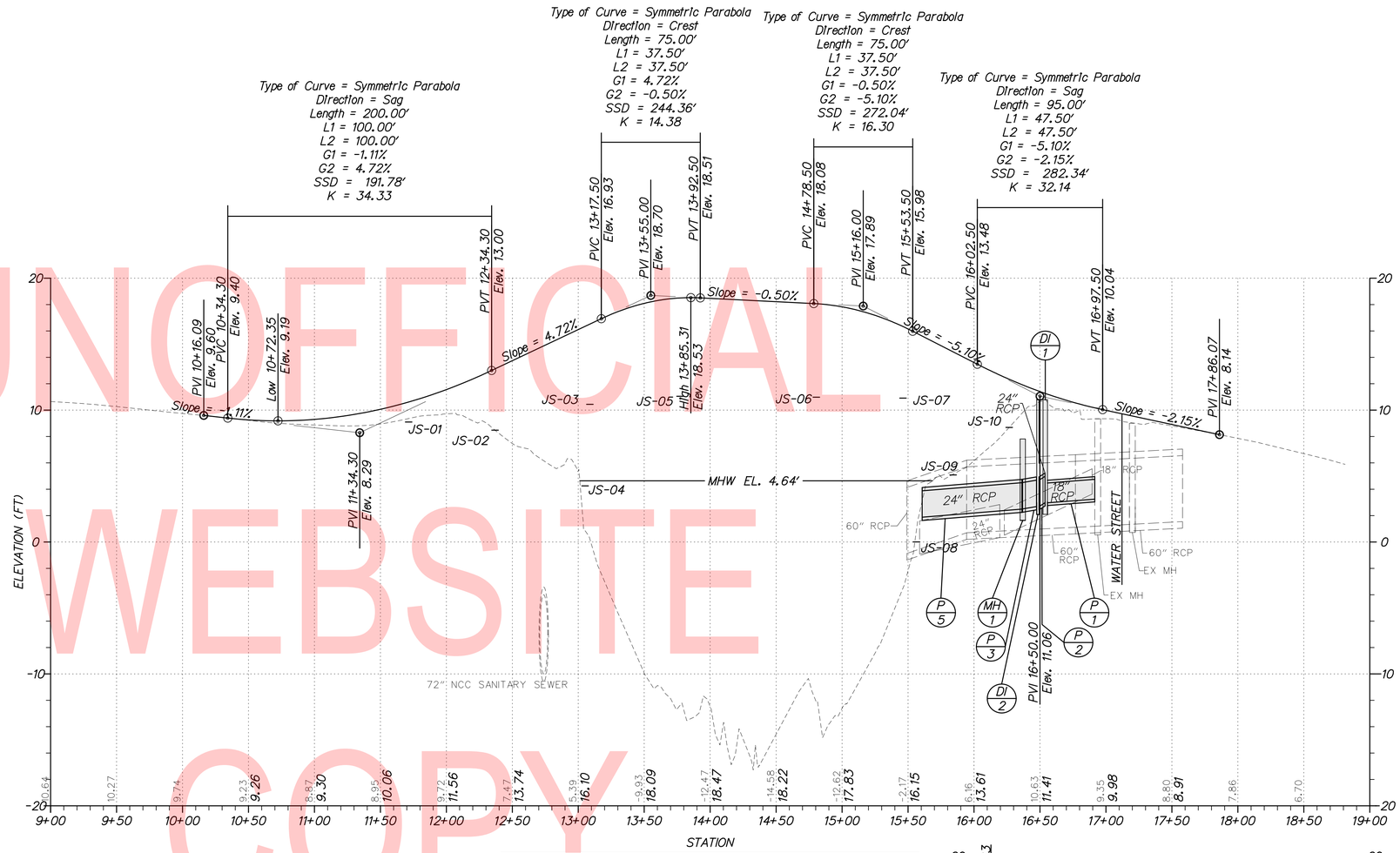

PROPOSED ALIGNMENT JAMES ST. BRIDGE 1–159

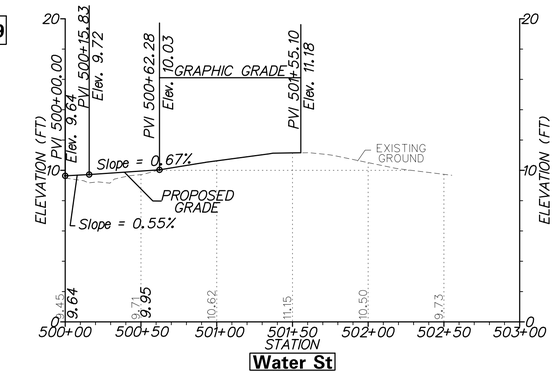

Water St

VERTICAL SCALE FEET

NOTE: THE BORING DATA PROVIDED ON THE PROFILE SHEETS INDICATES THE SOIL CONDITION ONLY AT THE SPECIFIC LOCATION EACH BORING WAS PERFORMED AND ONLY TO THE DEPTH PENETRATED.

ADDENDA / REVISIONS

SCALE 0 50 100 150 FEET

BR 1–159 ON JAMES STREET OVER CHRISTINA RIVER

CONTRACT	BRIDGE NO. 1–159
T201207101	DESIGNED BY: SFR
COUNTY	
NEW CASTLE	CHECKED BY: DLH

PROFILES

PF–01

SECTION McT

SHEET NO. 12

UNOFFICIAL WEBSITE COPY

3/15/2019
6:02:44 PM
...\Plan_Set\Roadway\PF_BR159.dgn

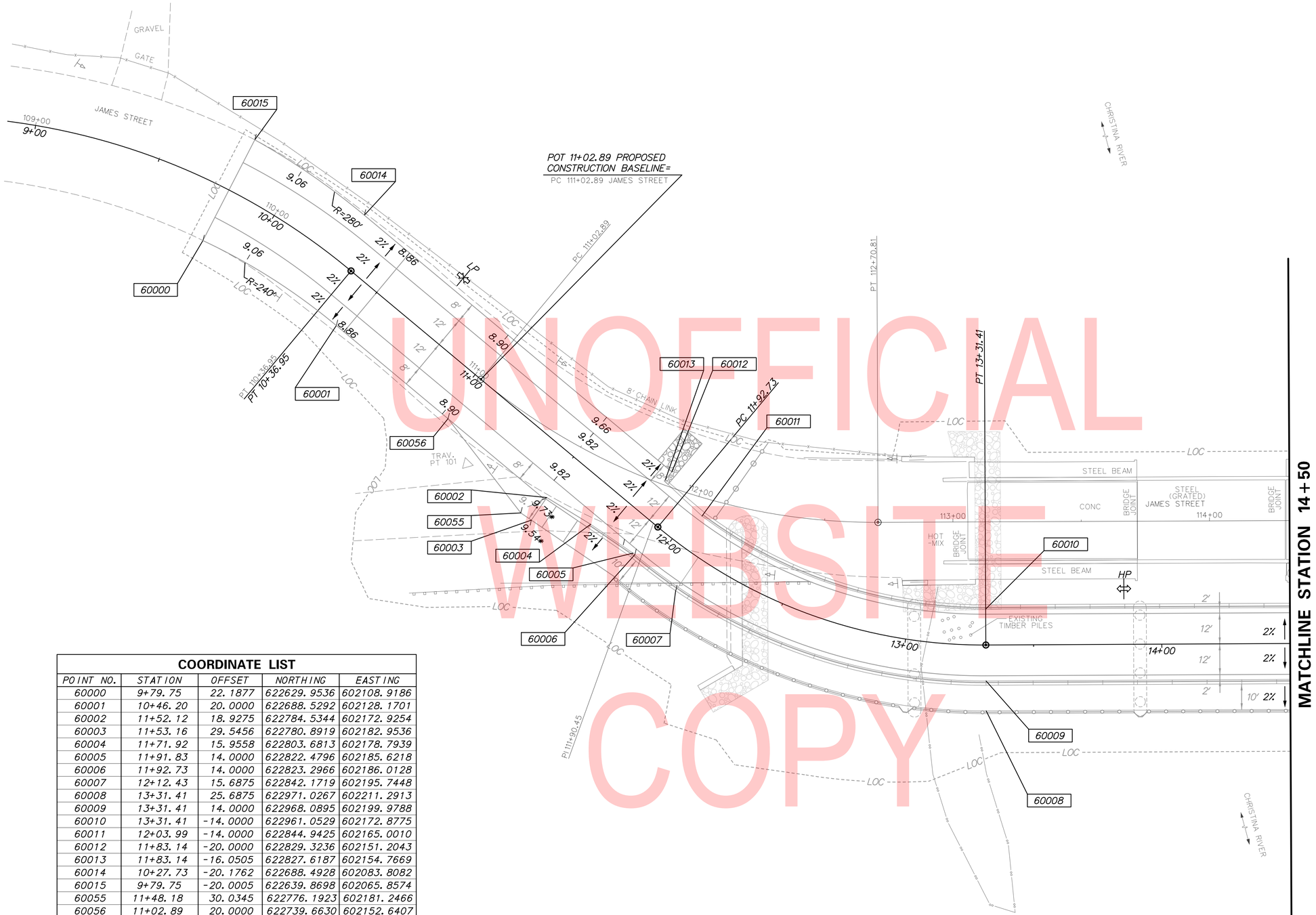

COORDINATE LIST				
POINT NO.	STATION	OFFSET	NORTHING	EASTING
60000	9+79.75	22.1877	622629.9536	602108.9186
60001	10+46.20	20.0000	622688.5292	602128.1701
60002	11+52.12	18.9275	622784.5344	602172.9254
60003	11+53.16	29.5456	622780.8919	602182.9536
60004	11+71.92	15.9558	622803.6813	602178.7939
60005	11+91.83	14.0000	622822.4796	602185.6218
60006	11+92.73	14.0000	622823.2966	602186.0128
60007	12+12.43	15.6875	622842.1719	602195.7448
60008	13+31.41	25.6875	622971.0267	602211.2913
60009	13+31.41	14.0000	622968.0895	602199.9788
60010	13+31.41	-14.0000	622961.0529	602172.8775
60011	12+03.99	-14.0000	622844.9425	602165.0010
60012	11+83.14	-20.0000	622829.3236	602151.2043
60013	11+83.14	-16.0505	622827.6187	602154.7669
60014	10+27.73	-20.1762	622688.4928	602083.8082
60015	9+79.75	-20.0005	622639.8698	602065.8574
60055	11+48.18	30.0345	622776.1923	602181.2466
60056	11+02.89	20.0000	622739.6630	602152.6407

NOTES:
1. FOR SANITARY SEWER PROTECTION MEASURES SEE SHEETS PN-01, PN-02 AND CS-01 THRU CS-05.

* - CURB RAMP GRADES

UNOFFICIAL WEBSITE COPY

ADDENDA / REVISIONS

SCALE 0 20 40 60 FEET

BR 1-159 ON JAMES STREET OVER CHRISTINA RIVER

CONTRACT	BRIDGE NO.	1-159
T201207101	DESIGNED BY: SFR	
COUNTY		
NEW CASTLE	CHECKED BY: DLH	

GRADES AND GEOMETRICS

GG-01

SECTION McT

SHEET NO. 13

3/15/2018 6:05:15 PM ...\Roadway\GG001_BR159.dgn

COORDINATE LIST

POINT NO.	STATION	OFFSET	NORTHING	EASTING
60016	15+39.58	14.0000	623169.5832	602147.6625
60017	15+39.58	25.6875	623172.5203	602158.9749
60018	16+01.47	14.0000	623230.0876	602126.9588
60019	16+01.47	15.6875	623230.7531	602128.5096
60020	16+01.47	25.6875	623234.6965	602137.6992
60021	15+64.76	81.5248	623215.5305	602204.5362
60022	16+23.55	17.8777	623251.9003	602121.8182
60023	16+49.26	27.6037	623279.3691	602120.6143
60024	16+47.18	23.5651	623275.8648	602117.7234
60025	16+38.78	33.3821	623272.0136	602130.0588

B.O.B. - BACK OF BARRIER
* - CURB RAMP GRADES

COORDINATE LIST

POINT NO.	STATION	OFFSET	NORTHING	EASTING
60026	16+33.55	54.7124	623275.6198	602151.7226
60027	16+55.10	52.2786	623294.4618	602140.9887
60028	16+65.87	44.1563	623301.1577	602129.2767
60029	16+01.47	128.0000	623275.0431	602231.7205
60030	16+54.75	108.0358	623316.1302	602192.3644
60031	16+66.91	111.5965	623328.7051	602190.8429
60032	16+62.69	125.9916	623330.5069	602205.7343
60033	16+50.53	122.4309	623317.9319	602207.2558
60034	15+39.58	-14.0000	623162.5465	602120.5611
60035	16+01.47	-14.0000	623219.0459	602101.2279
60036	16+26.60	-15.6890	623241.4656	602089.7692
60037	16+54.86	-54.0000	623252.3296	602043.4178
60038	16+54.86	-14.0000	623268.1034	602080.1762
60039	16+57.81	-14.1095	623270.7781	602078.9093

COORDINATE LIST

POINT NO.	STATION	OFFSET	NORTHING	EASTING
60040	16+57.62	-16.7689	623269.5482	602076.5432
60041	16+93.02	-42.0024	623292.1268	602039.3955
60042	16+99.17	-61.5692	623290.0643	602018.9883
60043	17+44.21	-50.7924	623341.4838	602011.3694
60044	17+61.20	-36.8364	623363.4137	602019.5760
60050	17+61.22	19+8782	623377.9878	602074.3861
60051	17+22.42	42.7112	623350.7333	602106.9489

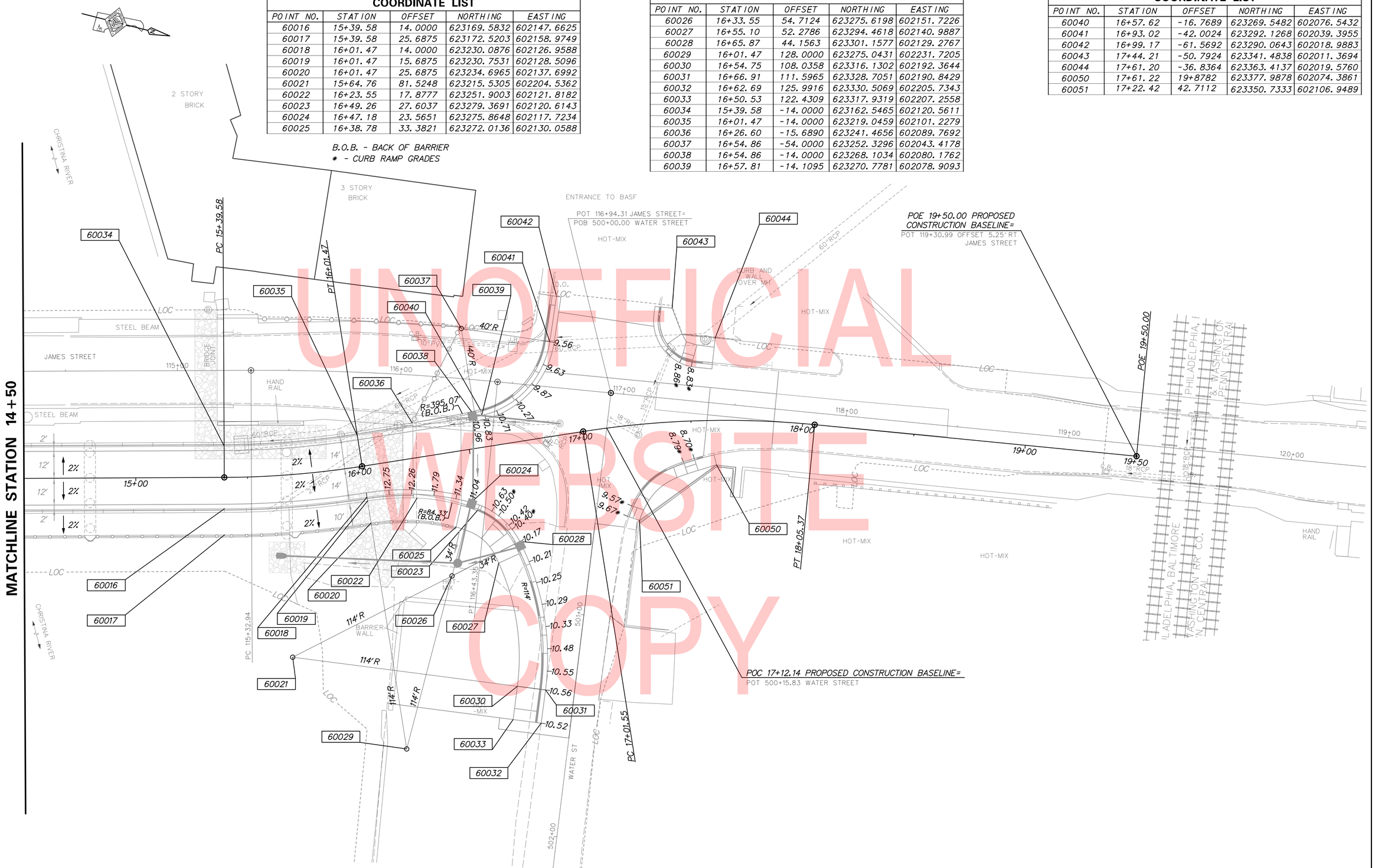

UNOFFICIAL WEBSITE COPY

ADDENDA / REVISIONS

SCALE 0 20 40 60 FEET

BR 1-159 ON JAMES STREET OVER CHRISTINA RIVER

CONTRACT	BRIDGE NO. 1-159
T201207101	DESIGNED BY: SFR
COUNTY	
NEW CASTLE	CHECKED BY: DLH

GRADES AND GEOMETRICS

GG-02

SECTION McT

SHEET NO. 14

3/15/2019
6:06:46 PM
...\Roadway\GG002_BR159.dgn

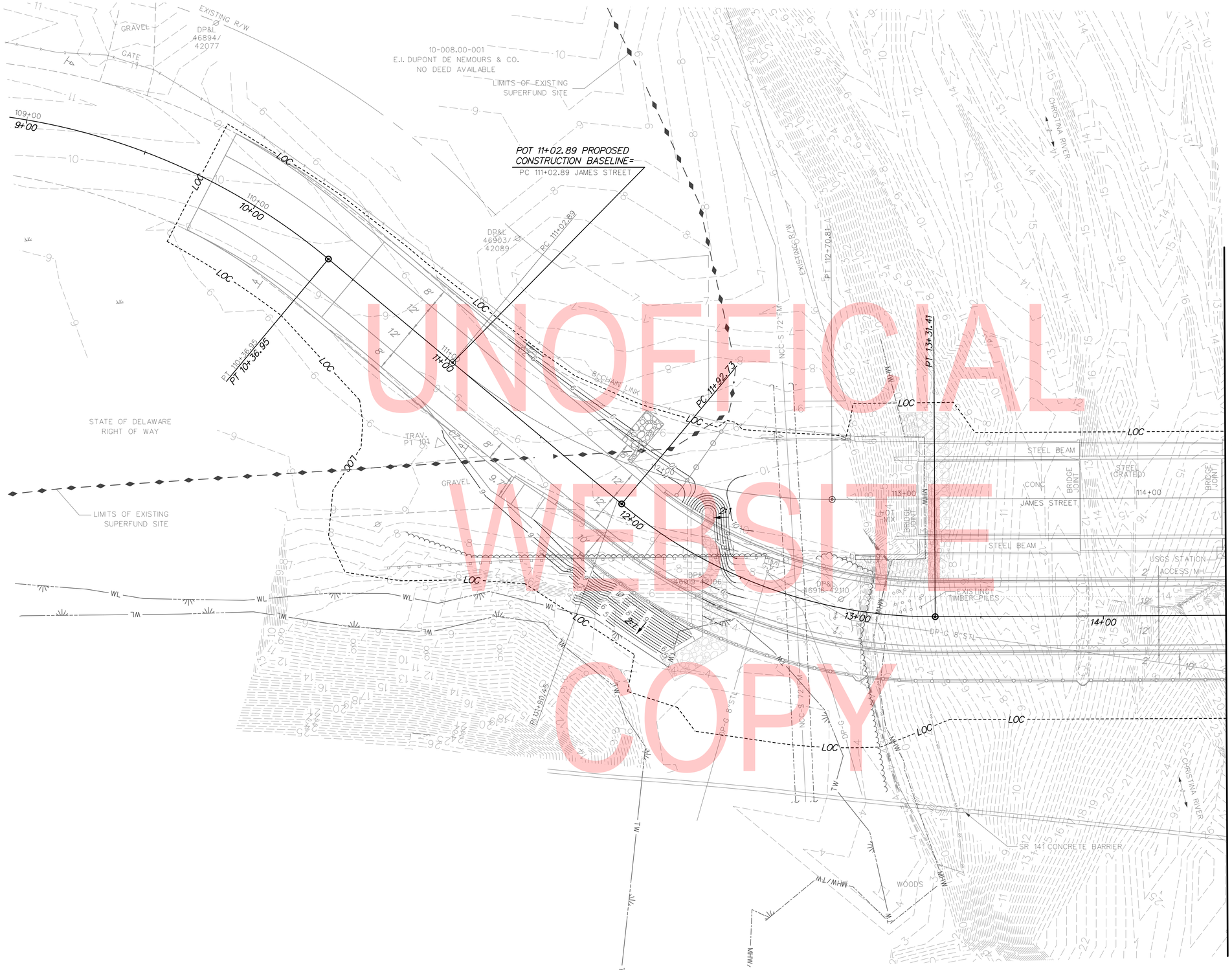

UNOFFICIAL WEBSITE COPY

NOTES:
1. FOR SANITARY SEWER PROTECTION MEASURES SEE SHEETS PN-01, PN-02 AND CS-01 THRU CS-05.

ADDENDA / REVISIONS	

SCALE 0 20 40 60 FEET

BR 1-159 ON JAMES STREET OVER CHRISTINA RIVER

CONTRACT	BRIDGE NO.	1-159
T201207101	DESIGNED BY: SFR	
COUNTY		
NEW CASTLE	CHECKED BY: DLH	

GRADING PLAN

GP-01
SECTION
McT
SHEET NO.
15

3/15/2019
6:09:19 PM
...\Roadway\GP001_BR159.dgn

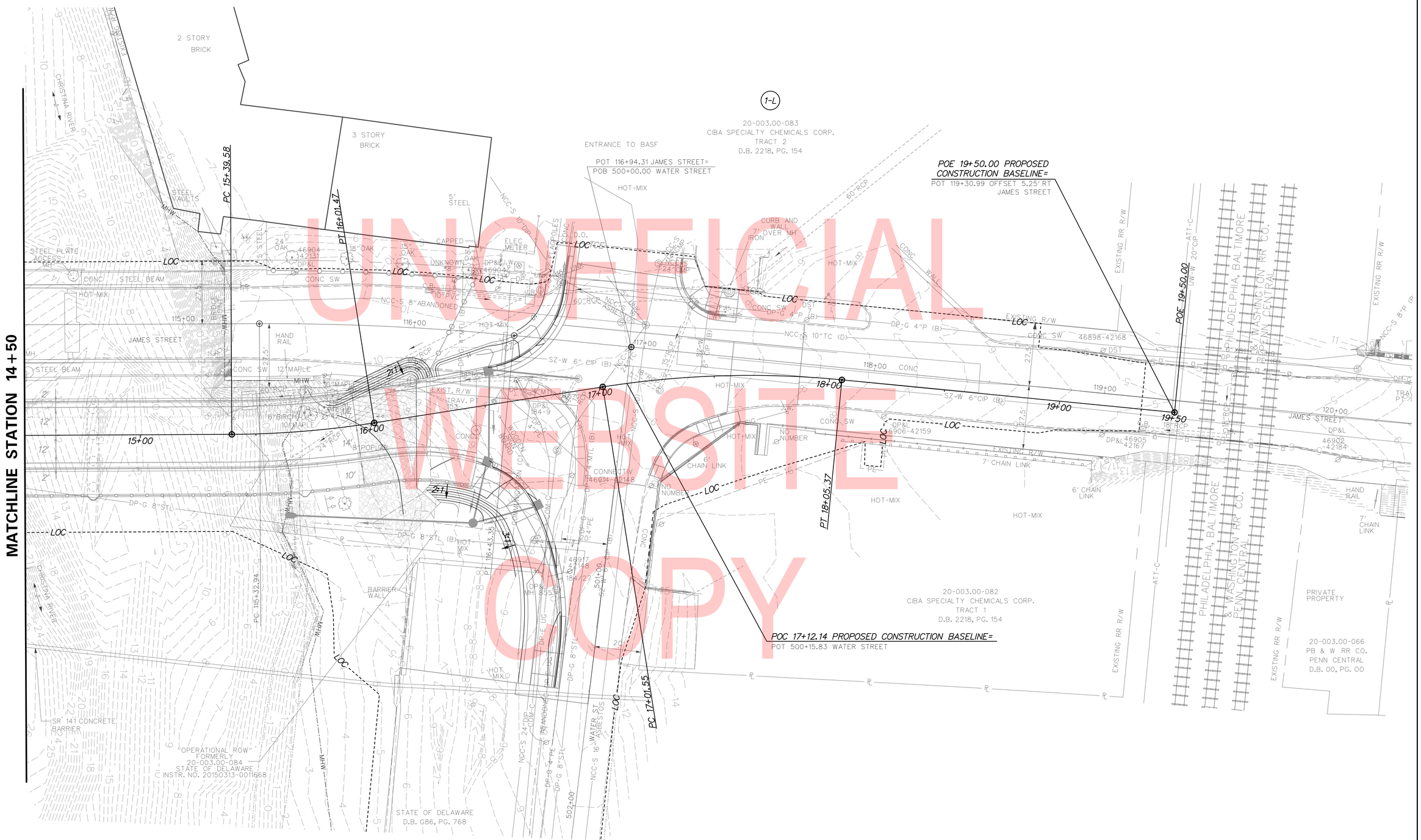
MATCHLINE STATION 14+50
2 STORY BRICK
3 STORY BRICK
CHRISTINA RIVER
STEEL VAULTS
PC 15+39.58
PT 16+01.47
1-L
20-003.00-083
CIBA SPECIALTY CHEMICALS CORP.
TRACT 2
D.B. 2218, PG. 154
ENTRANCE TO BASF
POT 116+94.31 JAMES STREET=
POB 500+00.00 WATER STREET
POE 19+50.00 PROPOSED CONSTRUCTION BASELINE=
POT 119+30.99 OFFSET 5.25' RT
JAMES STREET
POE 19+50.00
JAMES STREET
PHILADELPHIA, BALTIMORE & WASHINGTON RR CO. PENN CENTRAL
PT 18+05.37
POC 17+12.14 PROPOSED CONSTRUCTION BASELINE=
POT 500+15.83 WATER STREET
20-003.00-082
CIBA SPECIALTY CHEMICALS CORP.
TRACT 1
D.B. 2218, PG. 154
PRIVATE PROPERTY
20-003.00-066
PB & W RR CO.
PENN CENTRAL
D.B. 00, PG. 00
PC 17+01.55
SR 141 CONCRETE BARRIER
"OPERATIONAL ROW" FORMERLY 20-003.00-084 STATE OF DELAWARE INSTR. NO. 20150313-0011668
STATE OF DELAWARE
D.B. G86, PG. 768
BARRIER WALL
WATER ST
ASBESTOS
EXISTING RR R/W
LOC
HOT-MIX
CONC SW
STEEL BEAM
HAND RAIL
7' CHAIN LINK
6' CHAIN LINK
NO NUMBER
CURB AND WALL
7' OVER MH
IRON
ELEC METER
CAPPED
UNKNOWN
NCC-S 8" ABANDONED
NCC-S 10" TC (D)
SZ-W 6" CIP (B)
DP-G 4" P (B)
DP-G 8" STL
DP-G 8" STL (B)
DP-E UG
NCC-S 24" CIP
NCC-S 16" ASBESTOS
DP-G 4" PE
EXIST. R/W
TRAV. PT
CONNECTIV
46914-42148
46917
42148
184/27
DP&L 184-9
DP&L 46906-42159
DP&L 46905 42167
DP&L 46902 42184
46898-42168
46904 42131
DP&L 46904 42131
DP&L 46904 42132
DP&L 46904 42133
DP&L 46904 42134
DP&L 46904 42135
DP&L 46904 42136
DP&L 46904 42137
DP&L 46904 42138
DP&L 46904 42139
DP&L 46904 42140
DP&L 46904 42141
DP&L 46904 42142
DP&L 46904 42143
DP&L 46904

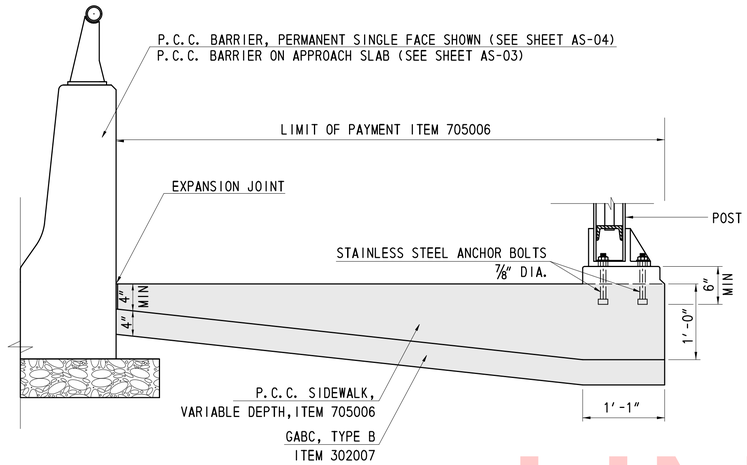

POST ON P.C.C. SIDEWALK

NOTE: SEE ADDITIONAL DETAILS FOR ALUMINUM PEDESTRIAN RAILING DETAILS ON SHEET RA-02.

* INCIDENTAL TO ITEM 705006 - P.C.C. SIDEWALK, VARIABLE DEPTH

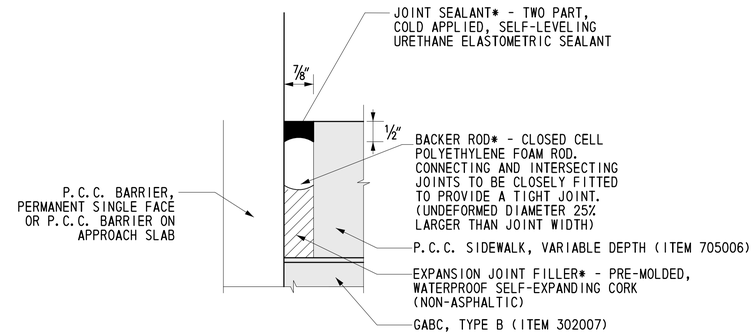

EXPANSION JOINT DETAIL

CONCRETE SIDEWALK DETAILS

NOT TO SCALE

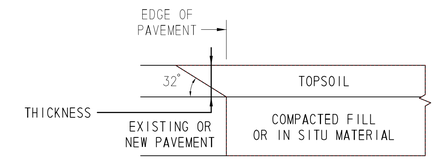

THICKNESS OF SAFETY EDGE	
CONCRETE PAVEMENT	3"
BITUMINOUS CONCRETE PAVEMENT	HEIGHT OF FINAL LIFT OF THE TOP WEARING COURSE

SAFETY EDGE DETAIL

NOT TO SCALE

NOTES:

1. FOR ROADWAYS WHERE THE COMBINED TRAVEL LANE WIDTH AND SHOULDER WIDTH IS 11' OR LESS, THE SAFETY EDGE SHALL OVERLAP THE COMPACTED FILL OR IN-SITU MATERIAL. COMPACTED FILL OR IN-SITU MATERIAL SHALL BE LEVEL WITH THE ROADWAY PRIOR TO FINAL BITUMINOUS CONCRETE PAVING LIFT.

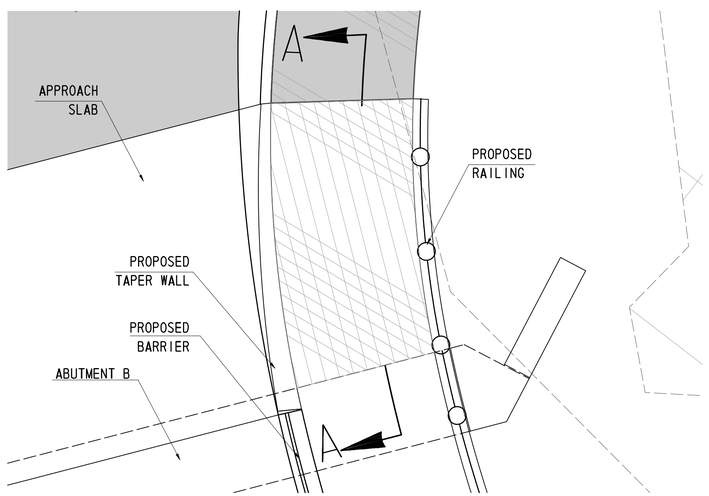

SIDEWALK STA. 16+24 RT TO STA. 16+49

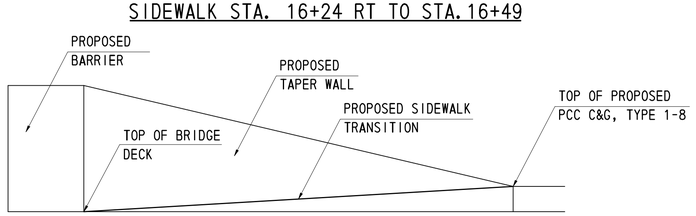

SECTION A-A

SIDEWALK TRANSITION AT ABUTMENT B

NOT TO SCALE

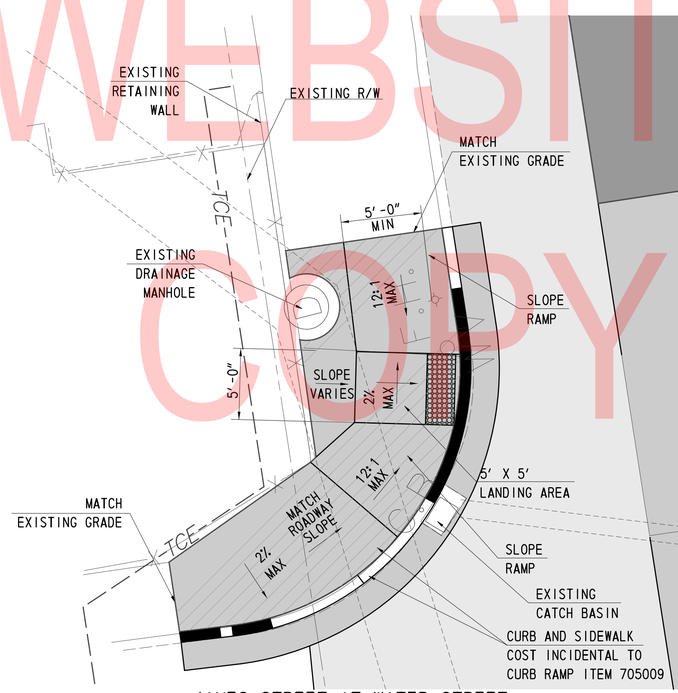

JAMES STREET AT WATER STREET NORTHWEST CORNER

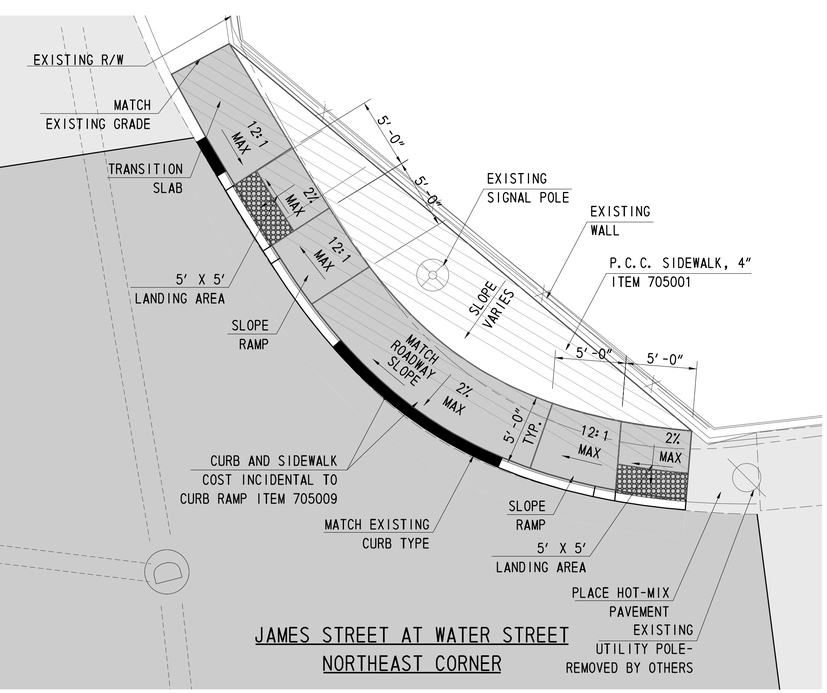

JAMES STREET AT WATER STREET NORTHEAST CORNER

CURB RAMP DETAILS

NOT TO SCALE

NOTE: ALL SIDEWALK SHALL BE SAWCUT TO THE NEAREST JOINT

UNOFFICIAL WEBSITE COPY

3/15/2019
6:09:23 PM
...\Roadway\DT001_BR159.dgn

ADDENDA / REVISIONS	

NOT TO SCALE

BR 1-159 ON JAMES STREET OVER CHRISTINA RIVER

CONTRACT	BRIDGE NO. 1-159
T201207101	DESIGNED BY: SFR
COUNTY	CHECKED BY: DLH
NEW CASTLE	

CONSTRUCTION DETAILS

DT-01

SECTION: McT

SHEET NO. 17

UNOFFICIAL WEBSITE COPY

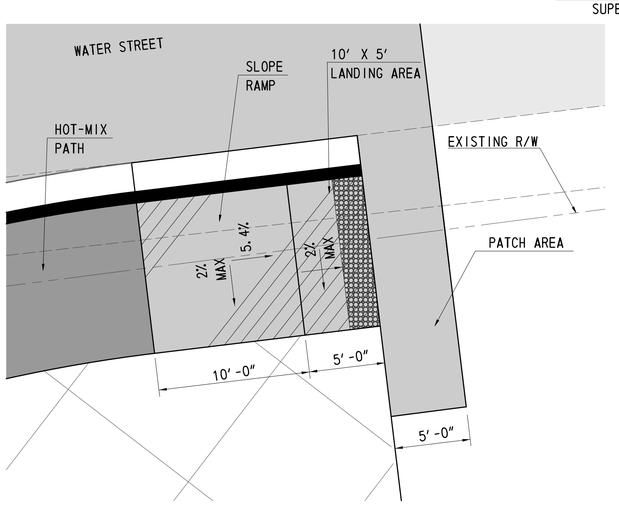

WATER STREET
501+45 RT

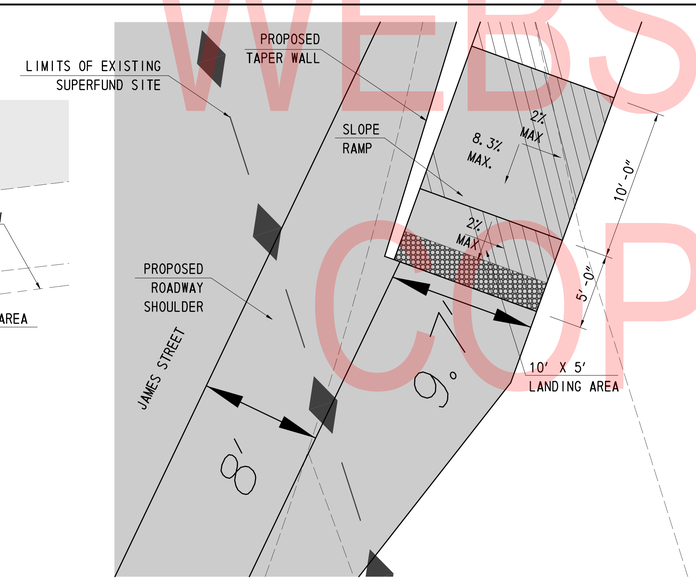

JAMES STREET
11+50 RT

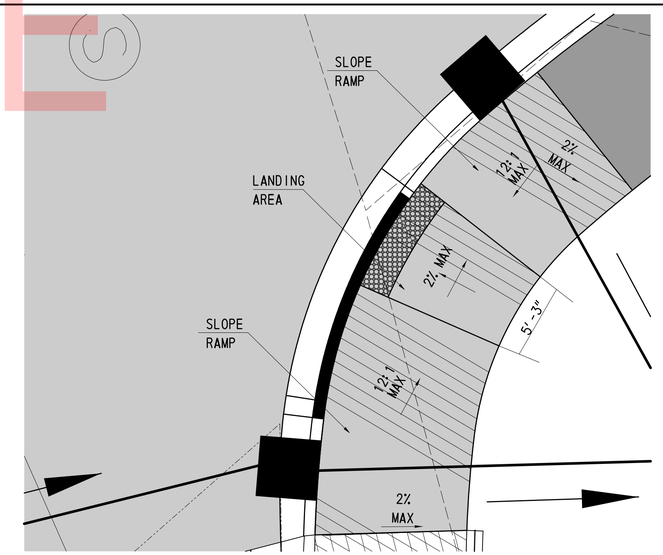

WATER STREET
500+50 RT

CURB RAMP DETAILS

NOT TO SCALE

ADDENDA / REVISIONS		NOT TO SCALE	BR 1-159 ON JAMES STREET OVER CHRISTINA RIVER	CONTRACT T201207101	BRIDGE NO. 1-159	CONSTRUCTION DETAILS	DT-02
				COUNTY NEW CASTLE	DESIGNED BY: SFR		SECTION McT
					CHECKED BY: DLH		SHEET NO. 18

3/15/2019
6:02:21 PM
...\Roadway\DT001_BR159.dgn

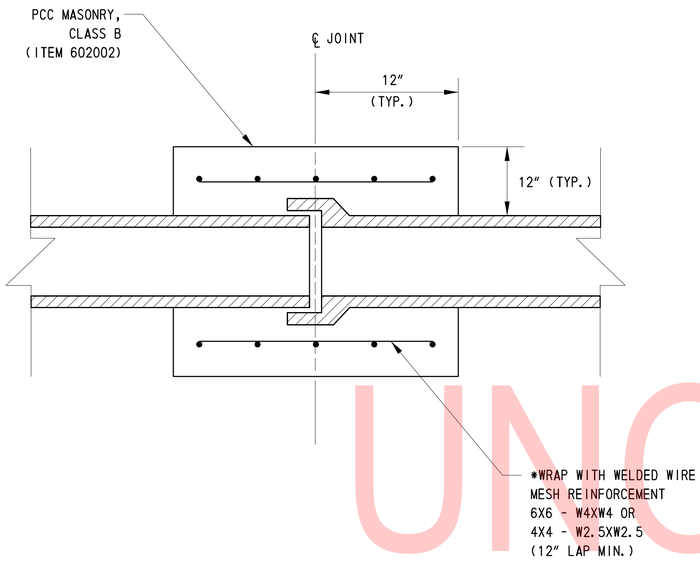

PIPE COLLAR DETAIL*

NOT TO SCALE

* INCIDENTAL TO ITEM 602002 - P.C.C. MASONRY, CLASS B

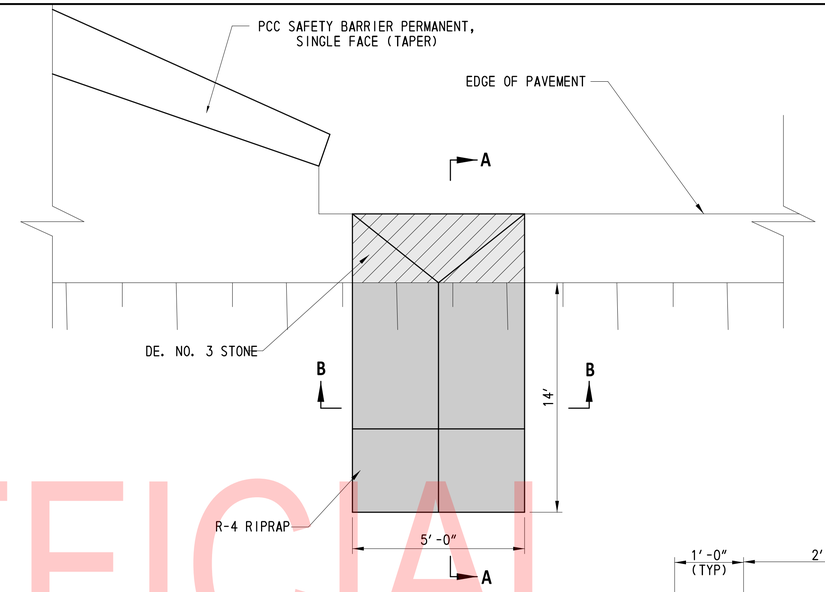

PLAN

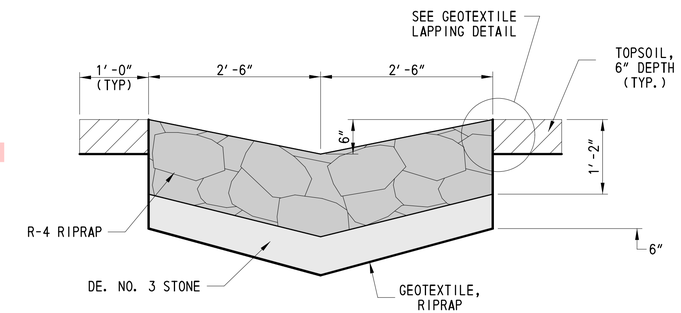

SECTION B-B

NOTE:
PAYMENT SHALL BE
MADE UNDER THE
RESPECTIVE PAY ITEMS.

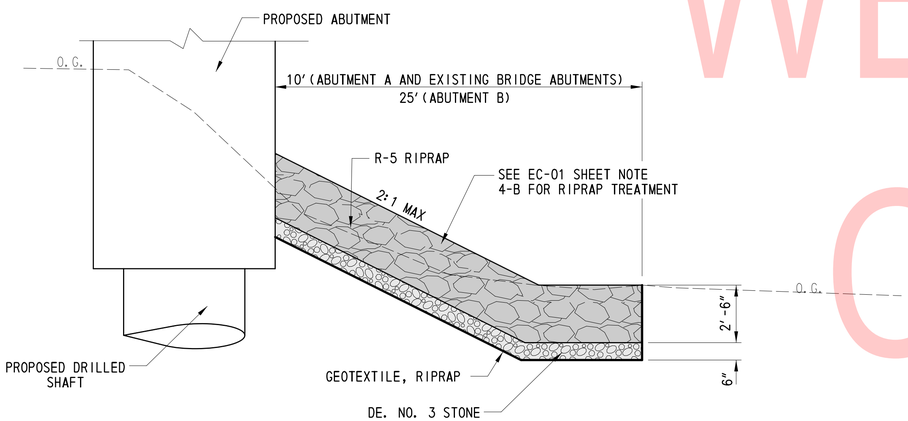

NOTE: SEE GP-01 AND GP-02 SHEETS FOR GRADING

RIPRAP DETAIL AT ABUTMENTS

NOT TO SCALE

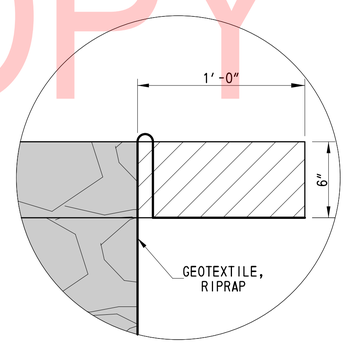

GEOTEXTILE LAPPING DETAIL

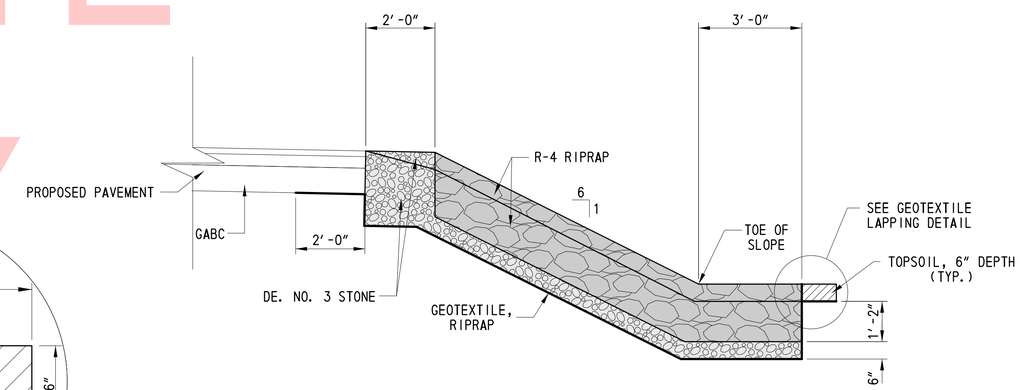

SECTION A-A

STONE OUTLET DETAILS

STA. 11+80 LT

NOT TO SCALE

UNOFFICIAL WEBSITE COPY

ADDENDA / REVISIONS	ADDENDUMS / REVISIONS

NOT TO SCALE

BR 1-159 ON JAMES STREET OVER CHRISTINA RIVER

CONTRACT	BRIDGE NO.	1-159
T201207101	DESIGNED BY: SFR	
COUNTY		
NEW CASTLE	CHECKED BY: DLH	

CONSTRUCTION DETAILS

DT-03
SECTION
MCT
SHEET NO.
19

3/15/2019
8:09:23 PM
...\Roadway\DT001_BR159.dgn

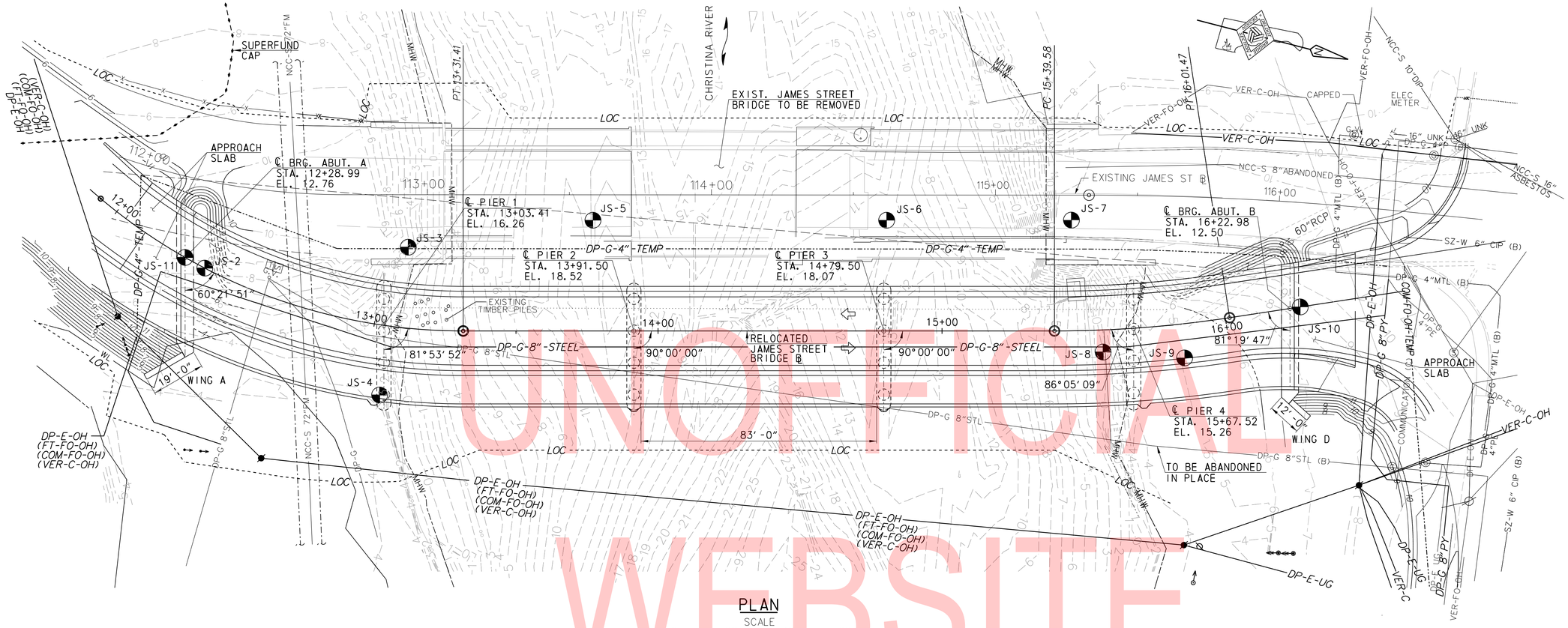

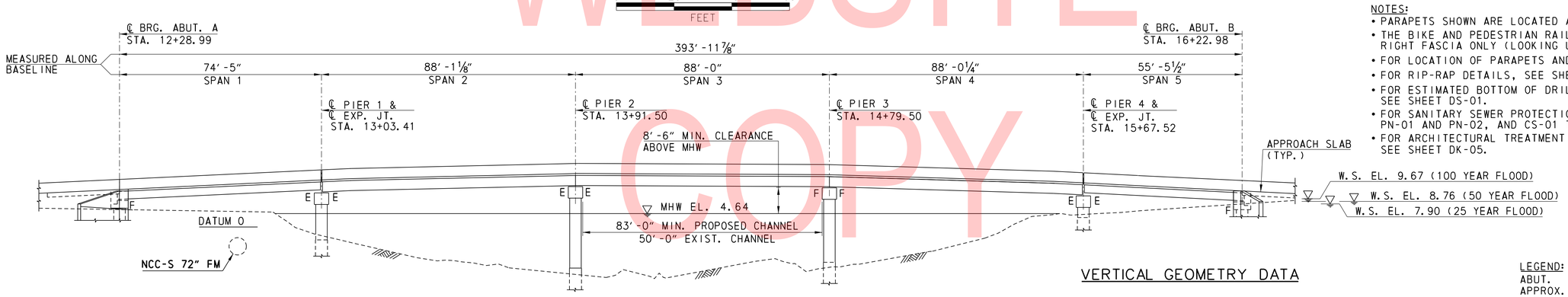

* 4'-0" HIGH RAILING AND ARCHITECTURAL TREATMENT DETAILS NOT SHOWN FOR CLARITY.

NOTES:
- PARAPETS SHOWN ARE LOCATED ADJACENT TO THE ROADWAY.
- THE BIKE AND PEDESTRIAN RAILING IS LOCATED AT THE RIGHT FASCIA ONLY (LOOKING UPSTATION).
- FOR LOCATION OF PARAPETS AND RAILING, SEE SHEET PE-02.
- FOR RIP-RAP DETAILS, SEE SHEET DT-03.
- FOR ESTIMATED BOTTOM OF DRILLED SHAFT ELEVATIONS, SEE SHEET DS-01.
- FOR SANITARY SEWER PROTECTION MEASURES, SEE SHEETS PN-01 AND PN-02, AND CS-01 THRU CS-05.
- FOR ARCHITECTURAL TREATMENT DETAIL ON PARAPETS, SEE SHEET DK-05.

HORIZONTAL GEOMETRY DATA

P.I. STA. 12+65.05	P.I. STA. 15+70.59
Δ = 40° 07' 44.3396" LT.	Δ = 8° 40' 12.6464" LT.
D = 28° 56' 14.1446"	D = 14° 00' 31.4930"
T = 72.3186'	T = 31.0048'
L = 138.6758'	L = 61.8912'
R = 198.0000'	R = 409.0000'
E = 12.7937'	E = 1.1735'

VERTICAL GEOMETRY DATA

4.72%: PVT STA. 12+34.30 EL. 13.00 — PVC STA. 13+17.50 EL 16.93

-0.50%: PVT STA. 13+92.50 EL. 18.51 — PVC STA. 14+78.50 EL. 18.08

-5.10%: PVT STA. 15+53.50 EL. 15.98 — PVC STA. 16+02.50 EL. 13.48

PVI STA 13+55.00 EL 18.70 (4.72% / -0.50%): PVC STA. 13+17.50 EL. 16.93 — PVT STA. 13+92.50 EL. 18.51

PVI STA. 15+16.00 EL. 17.89 (-0.50% / -5.10%): PVC STA. 14+78.50 EL. 18.08 — PVT STA. 15+53.50 EL. 15.98

LEGEND:

ABUT.	=	ABUTMENT
APPROX.	=	APPROXIMATE
BOT.	=	BOTTOM
BRG.	=	BEARING
DIA.	=	DIAMETER
E	=	EXPANSION
EL.	=	ELEVATION
EXIST.	=	EXISTING
EXP.	=	EXPANSION
F	=	FIXED
JT.	=	JOINT
MHW	=	MEAN HIGH WATER
MIN.	=	MINIMUM
STA.	=	STATION
TYP.	=	TYPICAL
W.S.	=	WATER SURFACE
◐	=	SOIL BORING, JS-X

UNOFFICIAL WEBSITE COPY

ADDENDA / REVISIONS	SCALE: AS NOTED	BR 1-159 ON JAMES STREET OVER CHRISTINA RIVER	CONTRACT T201207101	BRIDGE NO. 1-159	BRIDGE PLAN AND ELEVATION	PE-01
			COUNTY NEW CASTLE	DESIGNED BY: ZME		SECTION McT
				CHECKED BY: BJH		SHEET NO. 20

$DATE$ $TIME$ AM $FILE$

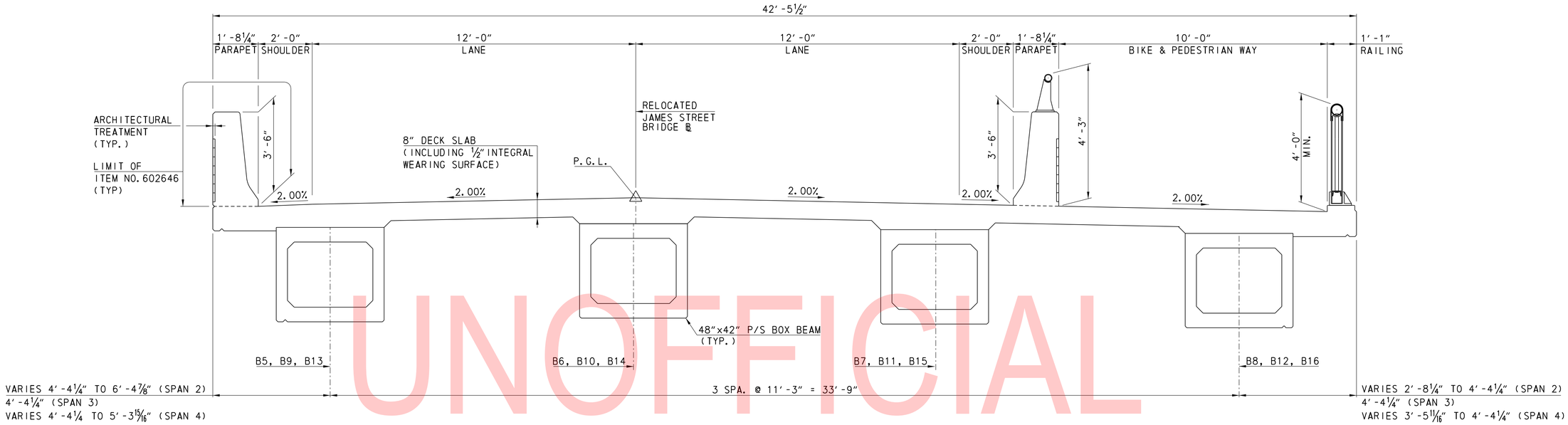

TYPICAL SECTION - SPANS 2, 3 AND 4

SCALE 0 2 4 6 FEET

NOTES:
- FOR ARCHITECTURAL TREATMENT DETAIL ON PARAPETS, SEE SHEET DK-05.

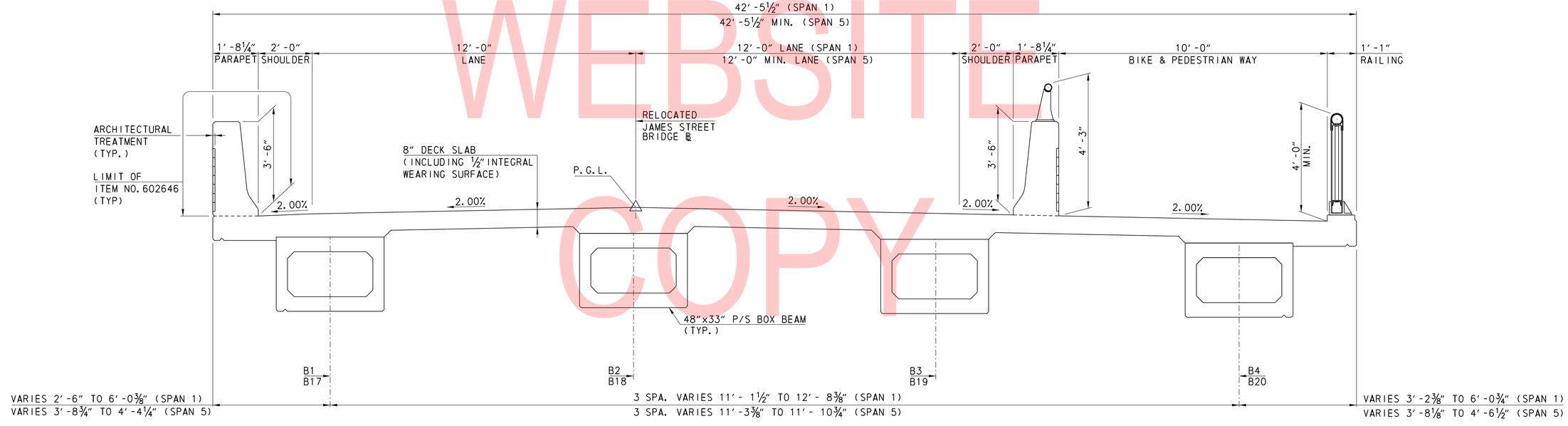

TYPICAL SECTION - SPANS 1 AND 5

SCALE 0 2 4 6 FEET

LEGEND:

MIN.	=	MINIMUM
P.G.L.	=	PROFILE GRADE LINE
P/S	=	PRESTRESSED
SPA.	=	SPACE
TYP.	=	TYPICAL

UNOFFICIAL WEBSITE COPY

ADDENDA / REVISIONS	SCALE: AS NOTED	BR 1-159 ON JAMES STREET OVER CHRISTINA RIVER	CONTRACT T201207101	BRIDGE NO. 1-159	TYPICAL BRIDGE SECTION	PE-02
			COUNTY NEW CASTLE	DESIGNED BY: ZME		SECTION McT
				CHECKED BY: BJH		SHEET NO. 21

$DATE$ 8-9-16 PM
$FILE$

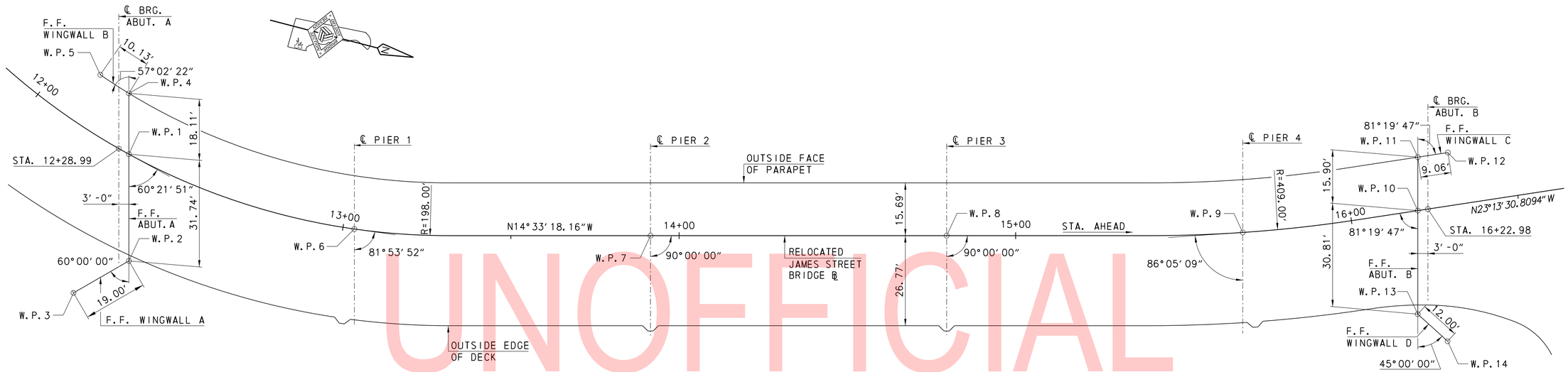

STAKE-OUT PLAN

SCALE 0 10 20 30 FEET

UNOFFICIAL WEBSITE COPY

WORK POINT COORDINATES				
W.P.	NORTHING	EASTING	STATION	OFFSET (FT)
1	622866.6226	602186.8290	12+32.42	0.00
2	622874.6005	602217.5551	12+45.74	28.37 RT
3	622861.0615	602230.8854	12+36.78	44.14 RT
4	622862.0713	602169.3000	12+22.99	15.69 LT
5	622852.4701	602166.1050	12+12.00	15.69 LT
6	622937.0643	602191.5283	13+03.41	0.00
7	623022.7368	602171.3259	13+91.50	0.00
8	623107.9126	602149.2106	14+79.50	0.00
9	623192.8486	602126.1719	15+67.52	0.00
10	623241.5450	602106.8076	16+19.94	0.00
11	623237.5570	602091.4480	16+22.33	15.69 LT
12	623245.8927	602087.8710	16+31.41	15.69 LT
13	623249.2874	602136.6271	16+15.30	30.46 RT
14	623260.8540	602139.8229	16+24.67	37.95 RT

LEGEND:

ABUT. = ABUTMENT
BRG. = BEARING
F.F. = FRONT FACE
LT. = LEFT
RT. = RIGHT
STA. = STATION
W.P. = WORK POINT

NOTES

- OFFSET IS MEASURED PERPENDICULAR TO ℄ ROADWAY LOOKING STATION AHEAD.
- FOUR DECIMAL PLACE COORDINATES ARE FOR COMPUTATIONAL PURPOSES ONLY AND DO NOT IMPLY A PRECISION BEYOND TWO DECIMAL POINTS.
- BEARING ANGLES MEASURED FROM LOCAL TANGENT ON CURVED BASELINE.

PE-03

ADDENDA / REVISIONS	SCALE: AS NOTED	BR 1-159 ON JAMES STREET OVER CHRISTINA RIVER	CONTRACT T201207101	BRIDGE NO. 1-159	GEOMETRIC LAYOUT PLAN	SECTION McT
			COUNTY NEW CASTLE	DESIGNED BY: SBM		SHEET NO. 22
				CHECKED BY: BJH		

$DATE$ $TIME$ PM
$FILE$

DRILLED SHAFT SIZES & REQUIREMENTS		
DRILLED SHAFT SIZE 'A'	MINIMUM CONCRETE COVER 'B'	MAXIMUM LONGITUDINAL BAR LOCATIONS 'C' @ EQ. SPA.
48"	4"	25

NOTES
- MINIMUM CONCRETE COVER 'B' ARE FOR LONGITUDINAL BARS. MINIMUM CONCRETE COVER FOR TRANSVERSE BARS MAY BE LESS THAN REQUIRED FOR LONGITUDINAL BARS BY NO MORE THAN 0.5".
- LONGITUDINAL BARS SHALL BE BUNDLED IN THE RADIAL DIRECTION. PROVIDE 25 SETS OF 2-BAR BUNDLE.

DRILLED SHAFT CONSTRUCTION NOTES AT PIER 1 AND ABUTMENT A.
- SEE CONSTRUCTION SEQUENCE NOTES ON SHEET CS-03. CONSTRUCTION OPERATIONS SHALL BE CONDUCTED IN A MANNER TO MINIMIZE VIBRATION AND SETTLEMENT AT THE NCC-S 72" FORCE MAIN. DO NOT PERFORM ANY DEWATERING OR OPERATIONS WHICH WILL DRAW DOWN THE GROUNDWATER TABLE FOR ANY REASON, SO AS TO AVOID SETTLEMENT OF THE GROUND IN THE VICINITY OF THE 72" FORCE MAIN.
- SEE ALSO SHEETS PN-01, PN-02 AND CS-01 FOR RELATED NOTES.
- BEFORE STARTING WORK THE SHEET PILE SPECIALTY CONTRACTOR SHALL DEMONSTRATE SUFFICIENT EXPERIENCE WITH PRESS-IN METHOD OF INSTALLING SHEET PILES, TO THE SATISFACTION OF THE DEPARTMENT; INCLUDING QUALIFICATIONS OF PERSONNEL, ADEQUACY OF EQUIPMENT, AND A SOUND WORK PLAN.
- PIER 1: INSTALL SHEET PILE COFFERDAM AS INDICATED ON SHEET CS-03, PRIOR TO INSTALLING DRILLED SHAFTS. UPON COMPLETION OF SUBSTRUCTURE UNIT, REMOVE SHEET PILE COFFERDAM WALLS EXCEPT AS INDICATED OTHERWISE.
- ABUTMENT A: INSTALL SHEET PILE WALL AS INDICATED ON SHEET CS-03, PRIOR TO INSTALLING DRILLED SHAFTS. UPON COMPLETION OF SUBSTRUCTURE UNIT, CUT OFF SHEET PILE WALL AS INDICATED AND LEAVE IN PLACE.
- A MAXIMUM STRESS OF 423 PSF APPLIED OVER A PAD SIZE OF 25 FT BY 25 FT WAS ASSUMED FOR DRILLED SHAFT INSTALLATION, IN ORDER TO MINIMIZE SETTLEMENT AT THE NCC-S 72" FORCE MAIN. IN ADDITION, RIPRAP ROCK BACKFILL WITH A UNIT WEIGHT OF 140 PCF AND AN AVERAGE THICKNESS OF 6 FT WERE ASSUMED FOR THE COFFERDAM TEMPORARY BACKFILL AT PIER 1.
- SHEET PILE COFFERDAM AT PIER 1 SHALL BE PAID UNDER ITEM 207501. PLACING AND REMOVING RIPRAP ROCK BACKFILL AND GEOTEXTILE WITHIN THE COFFERDAM IS INCIDENTAL TO ITEM 207501. TIMBER MATTING IN THE COFFERDAM IS INCIDENTAL TO ITEM 207501.
- AFTER THE COFFERDAM IS NO LONGER NEEDED, THE RIPRAP ROCK BACKFILL AND GEOTEXTILE WITHIN THE COFFERDAM SHALL BE REMOVED AND PLACED IN THEIR PERMANENT LOCATIONS. THE PERMANENT CONSTRUCTION SHALL BE PAID UNDER ITEMS 712021 AND 713003, RESPECTIVELY.
- SHEET PILE WALL AT ABUTMENT A SHALL BE PAID UNDER ITEM 622001.

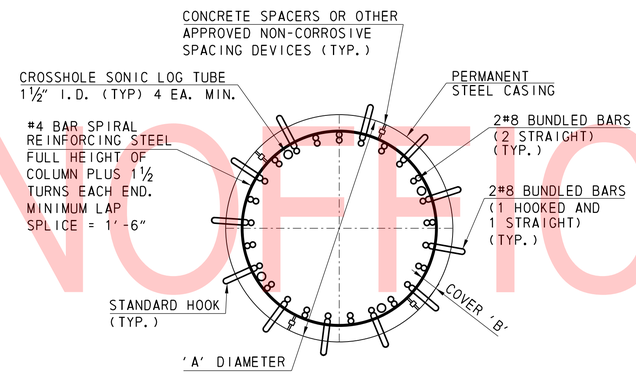

PLAN

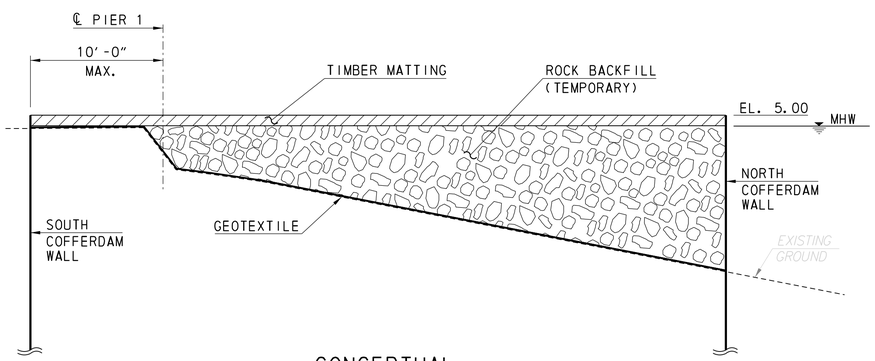

CONCEPTUAL
SHEET PILE COFFERDAM SECTION

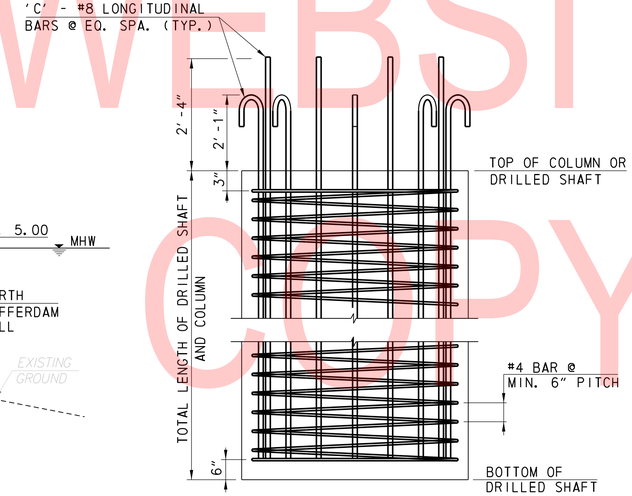

NOTE: BUNDLED BARS NOT SHOWN FOR CLARITY.

ELEVATION

DRILLED SHAFT FOR BRIDGE STRUCTURE

DRILLED SHAFT NOTES
- THIS PROJECT SHALL UTILIZE 48" DIAMETER DRILLED SHAFTS. THE LONGITUDINAL BARS SHALL BE #8 BARS AND SHALL BE BUNDLED. THE TRANSVERSE BARS SHALL BE #4 BARS SPIRALED SPACED AT MINIMUM 6" PITCH AND SHALL NOT BE BUNDLED. THE MINIMUM CONCRETE COVER SHALL BE 4" FOR LONGITUDINAL BARS.
- FOR ESTIMATED DRILLED SHAFT LENGTH, BEARING RESISTANCE AND ESTIMATED TIP ELEVATION, SEE DRILLED SHAFT FOUNDATION TABLE.
- DRILLED SHAFTS SHALL UTILIZE CLASS A CONCRETE.
- DRILLED SHAFTS SHALL REQUIRE PERMANENT CASING. SEE DRILLED SHAFT FOUNDATION TABLE FOR CASING THICKNESS. SEE SPECIAL PROVISION FOR ITEM #618531.
- COST OF REINFORCING BARS INSIDE THE DRILLED SHAFT IS INCLUDED IN THE BID PRICE FOR ITEM #618529 DRILLED SHAFT, 48". REINFORCEMENT SHALL BE EPOXY COATED.
- VIBRATION MONITORING IS REQUIRED DURING CONSTRUCTION OF DRILLED SHAFTS. MONITORING SHALL BE INSTALLED AND PERFORMED BY THE CONTRACTOR IN ACCORDANCE WITH THE SPECIAL PROVISION FOR ITEM #763620 PROTECTION OF EXISTING UTILITIES BY CONTRACTOR. THE PEAK PARTICLE VELOCITY AT LOCATIONS DEFINED IN THE MONITORING PLAN OR AS DETERMINED BY NCC SHALL NOT EXCEED 0.2 INCHES PER SECOND.
- INSTALL PERMANENT CASING USING ROTATING OR OSCILLATING METHOD TO A DEPTH OF 40 FEET AT ABUTMENT A AND PIER 1. VIBRATION METHOD MAY BE USED BELOW 40 FEET IN DEPTH, IF APPROVED BY THE ENGINEER AND CONFORMS TO THE VIBRATION THRESHOLD CRITERIA.
- PERMANENT CASING MAY BE INSTALLED USING VIBRATING METHOD, PROVIDED THE MEASURED VIBRATIONS DO NOT EXCEED THE THRESHOLD LIMIT OF 0.2 INCHES PER SECOND, FOR THE FOLLOWING SUBSTRUCTURES: ABUTMENT B, PIER 4, PIER 3, PIER 2, PIER 1 (BELOW 40 FEET), ABUTMENT A (BELOW 40 FEET).
- THE ENGINEER WILL VERIFY TOP OF ROCK LOCATION BY OBSERVATION OF THE DRILL CUTTINGS.
- EXPLORATORY DRILLING IS ANTICIPATED AT PIER 3. PAYMENT UNDER ITEM #619511.
- TECHNIQUE SHAFT
  - SEE SPECIAL PROVISION FOR ITEM #618530.
  - A TOTAL OF 1 TECHNIQUE SHAFT SHALL BE CONSTRUCTED AT PIER 4. SEE SHEET PR-04 FOR LOCATION. THE TECHNIQUE SHAFT SHALL BE LOAD TESTED BY THE CONTRACTOR IN ACCORDANCE WITH ITEM #618532 LOAD TESTING OF DRILLED SHAFTS.
  - TERMINATE THE TOP OF THE TECHNIQUE SHAFT AT EXISTING GROUND BELOW RIP RAP. LEAVE TECHNIQUE SHAFT IN PLACE AFTER TESTING.
  - BI-DIRECTIONAL LOAD CELL TESTING SHALL BE DONE AT THE TECHNIQUE SHAFT ONLY.
  - ESTIMATED LENGTH = 100.5', TIP ELEVATION = -102.5'

DRILLED SHAFT FOUNDATION TABLE						
	ABUTMENT A	ABUTMENT B	PIER 1	PIER 2	PIER 3	PIER 4
TOP OF PERMANENT CASING ELEVATION*	1.5/4.5	4.0	0.0	-12.0	-1.0	3.0
MINIMUM CASING THICKNESS (INCHES)	0.50	0.50	0.50	0.50	0.75	0.50
APPROXIMATE TOP OF ROCK ELEVATION	-109.5	-92.5	-107.0	-107.0	-107.0	-100.5
ESTIMATED BOTTOM OF DRILLED SHAFT ELEVATION	-111.5	-94.5	-109.0	-109.0	-109.0	-102.5
ESTIMATED DRILLED SHAFT LENGTH (FEET)**	113.0/116.0	98.5	109.0	97.0	108.0	105.5
FACTORED AXIAL LOAD (KIPS)	504.4	402.1	777.5	689.2	688.2	709.1
FACTORED AXIAL RESISTANCE (KIPS)	516	415	778	703	695	1044
FACTORED LATERAL LOAD (KIPS)	67.9	55.3	13.6	8.8	21.3	9.4
FACTORED LATERAL RESISTANCE (KIPS)	105.6	229.3	67.79	30.73	22.81	81.31
SERVICE LIMIT STATE LATERAL DEFLECTION (INCHES)	0.69	0.19	0.08	0.42	0.70	0.23
SERVICE LIMIT STATE ALLOWABLE DEFLECTION (INCHES)	1	1	1	1	1	1
BEARING RESISTANCE FACTOR, SIDE/TIP	0.55/0.5 (SAND) AND 0.45/0.4 (CLAY)	0.55/0.5 (SAND) AND 0.45/0.4 (CLAY)	0.55/0.5 (SAND) AND 0.45/0.4 (CLAY)	0.55/0.5 (SAND) AND 0.45/0.4 (CLAY)	0.55/0.5 (SAND) AND 0.45/0.4 (CLAY)	0.55/0.5 (SAND) AND 0.45/0.4 (CLAY)

* TOP OF PERMANENT CASING ELEVATION IS GIVEN AT 1'-0" BELOW GROUND LINE AT PIERS 1 AND 4, FIELD VERIFY TOP OF GROUND LINE.

** DRILLED SHAFT LENGTH MEASURED FROM TOP OF PERMANENT CASING ELEVATION TO ESTIMATED BOTTOM OF DRILLED SHAFT.
NOTE: LOADS AND DEFLECTIONS MEASURED AT THE TOP OF COLUMN.

LEGEND:
EA. = EACH
EL. = ELEVATION
EQ. = EQUAL
I.D. = INSIDE DIAMETER
MIN. = MINIMUM
SPA. = SPACE
TYP. = TYPICAL

UNOFFICIAL WEBSITE COPY

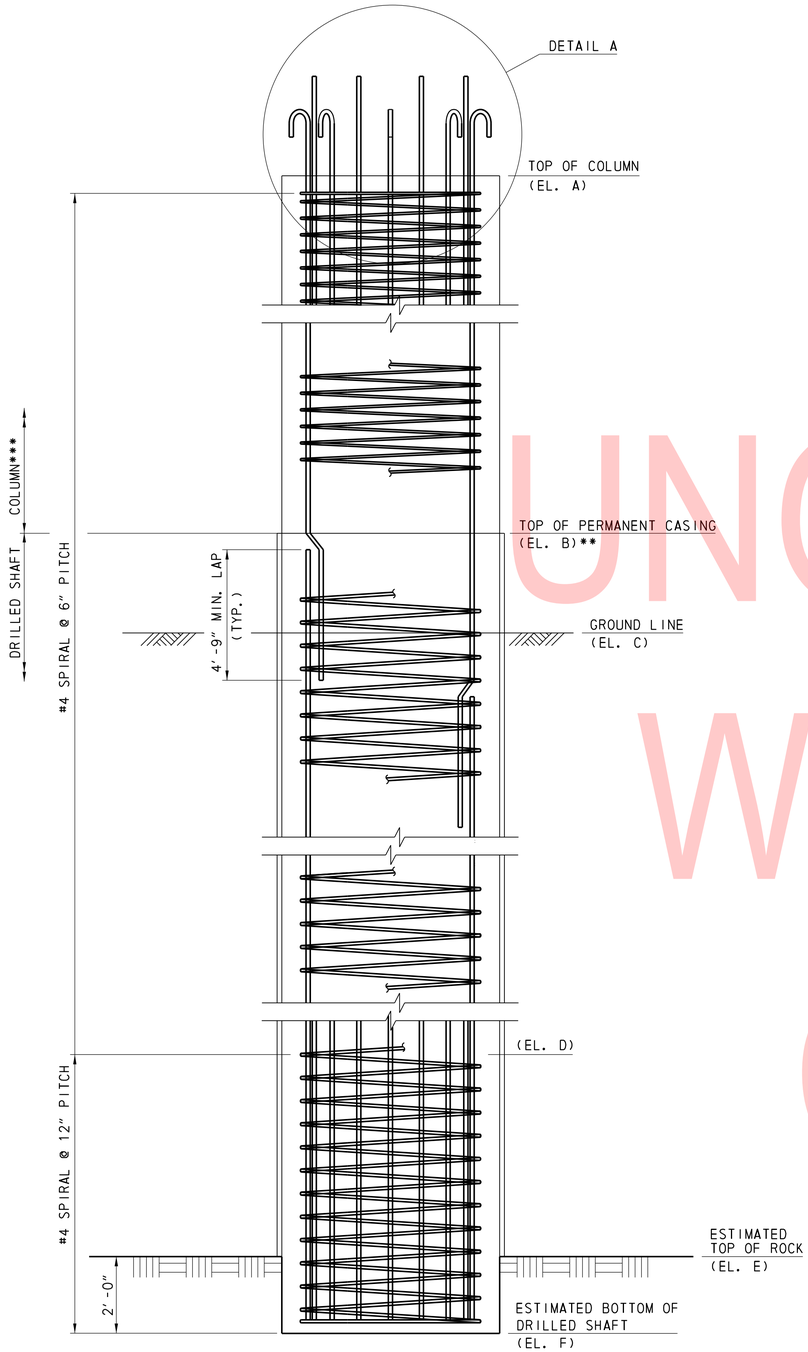

NOTE: ADDITIONAL LONGITUDINAL BARS NOT SHOWN FOR CLARITY.

DRILLED SHAFT/COLUMN
REINFORCEMENT DETAIL

ELEVATION TABLE						
ELEVATION	ABUTMENT A	ABUTMENT B	PIER 1	PIER 2	PIER 3	PIER 4
A	1.5/4.5	4.0	7.25	9.22	8.83	6.29
B	1.5/4.5	4.0	0.0	-12.0	-1.0	3.0
C	1.5/4.5	4.0	1.0	-14.0	-13.0	4.0
D	-79.85/-76.85	-57.00	-77.06	-74.60	-79.73	-71.24
E	-109.5	-92.5	-107.0	-107.0	-107.0	-100.5
F	-111.5	-94.5	-109.0	-109.0	-109.0	-102.5

** TERMINATE PERMANENT CASING 1'-0" BELOW GROUND LINE AT PIERS 1 AND 4. FIELD VERIFY TOP OF GROUND LINE.

*** USE REMOVABLE CASING.

DRILLED SHAFT INSTALLATION DATA					
SHAFT NO. OR SUBSTRUCTURE UNIT	DESIGN DATA			ACTUAL FIELD DATA	
	EL. B	ESTIMATED EL. E	ESTIMATED EL. F	EL. E	EL. F
ABUTMENT A	1.5/4.5	-109.5	-111.5		
PIER 1	0.0	-107.0	-109.0		
PIER 2	-12.0	-107.0	-109.0		
PIER 3	-1.0	-107.0	-109.0		
PIER 4	3.0	-100.5	-102.5		
ABUTMENT B	4.0	-92.5	-94.5		

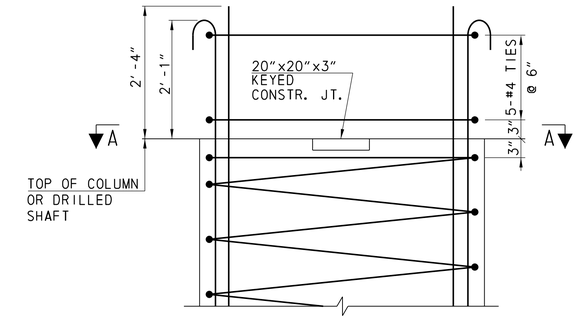

DETAIL A

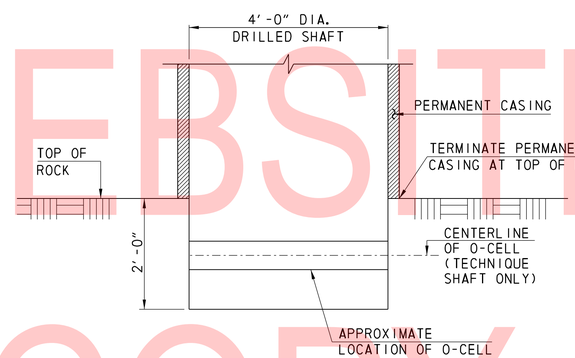

DRILLED SHAFT
TIP SECTION

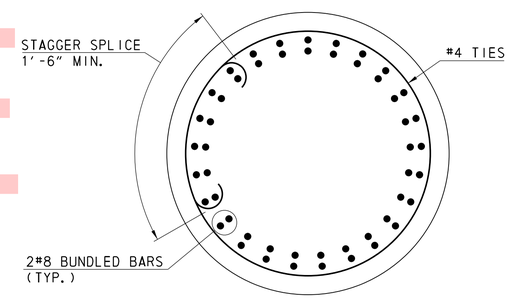

SECTION A-A

NOTES:

- EACH SPIRAL PIECE SHALL BE PROVIDED WITH 1½" EXTRA TURNS AND A 135° HOOK AT EACH END. EACH HOOK SHALL ENGAGE A VERTICAL REINFORCING BAR. THE MAXIMUM DISTANCE BETWEEN THE SPIRAL PIECES IS LIMITED TO THE PITCH OF THE SPIRAL.
- CONSTRUCT COLUMN INTEGRAL WITH DRILLED SHAFT. DRILLED SHAFTS ARE PAID UNDER ITEM #618529.
- COLUMNS SHALL BE MEASURED AND PAID UNDER ITEM #618529, DRILLED SHAFT, 48". REINFORCING BARS IN THE COLUMN SHALL BE EPOXY COATED. COLUMNS SHALL UTILIZE CLASS A CONCRETE. REMOVABLE CASING IS INCIDENTAL TO ITEM #618529.
- COFFERDAMS ARE NOT PERMITTED IN THE STREAM, EXCEPT WHERE INDICATED ON SHEET CS-03.

LEGEND:

EL. = ELEVATION
DIA. = DIAMETER
MIN. = MINIMUM
TYP. = TYPICAL

UNOFFICIAL WEBSITE COPY

ADDENDA / REVISIONS	NOT TO SCALE	BR 1-159 ON JAMES STREET OVER CHRISTINA RIVER	CONTRACT T201207101	BRIDGE NO. 1-159	DRILLED SHAFT DETAILS – 2	DS-02
			COUNTY NEW CASTLE	DESIGNED BY: ZME/SBM		SECTION McT
				CHECKED BY: BJH/SJM		SHEET NO. 24

$DATE$
$TIME$
$FILE$

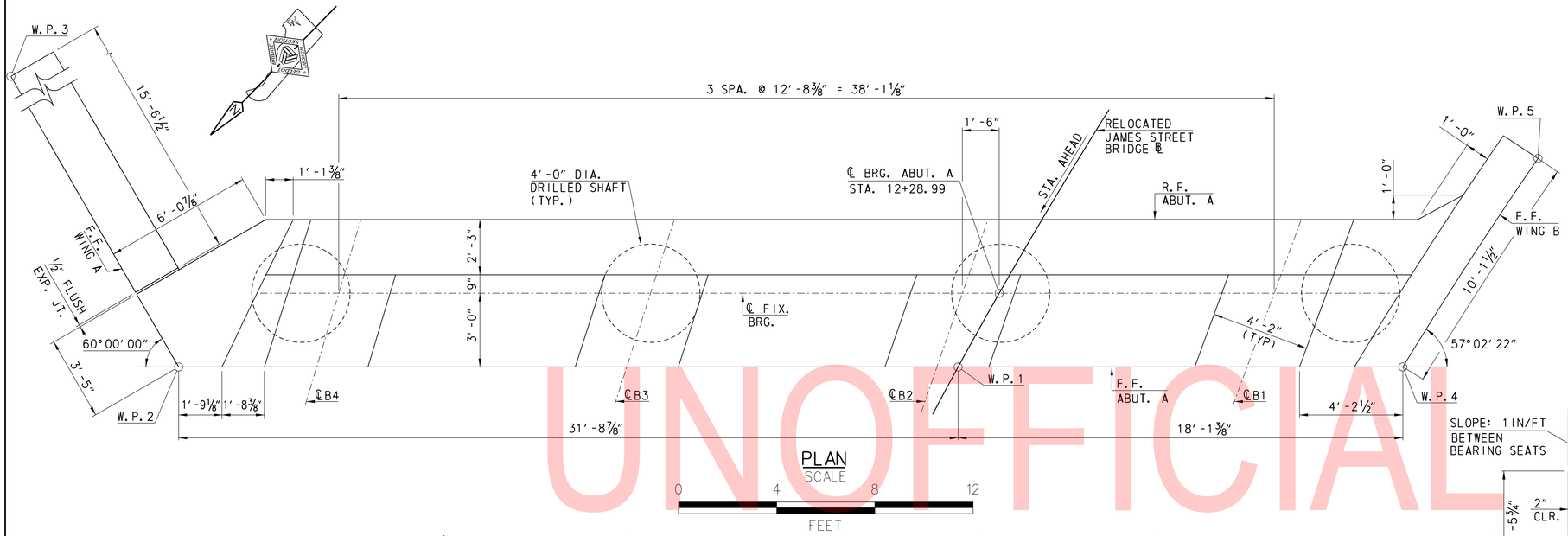

PLAN
SCALE
0 4 8 12
FEET

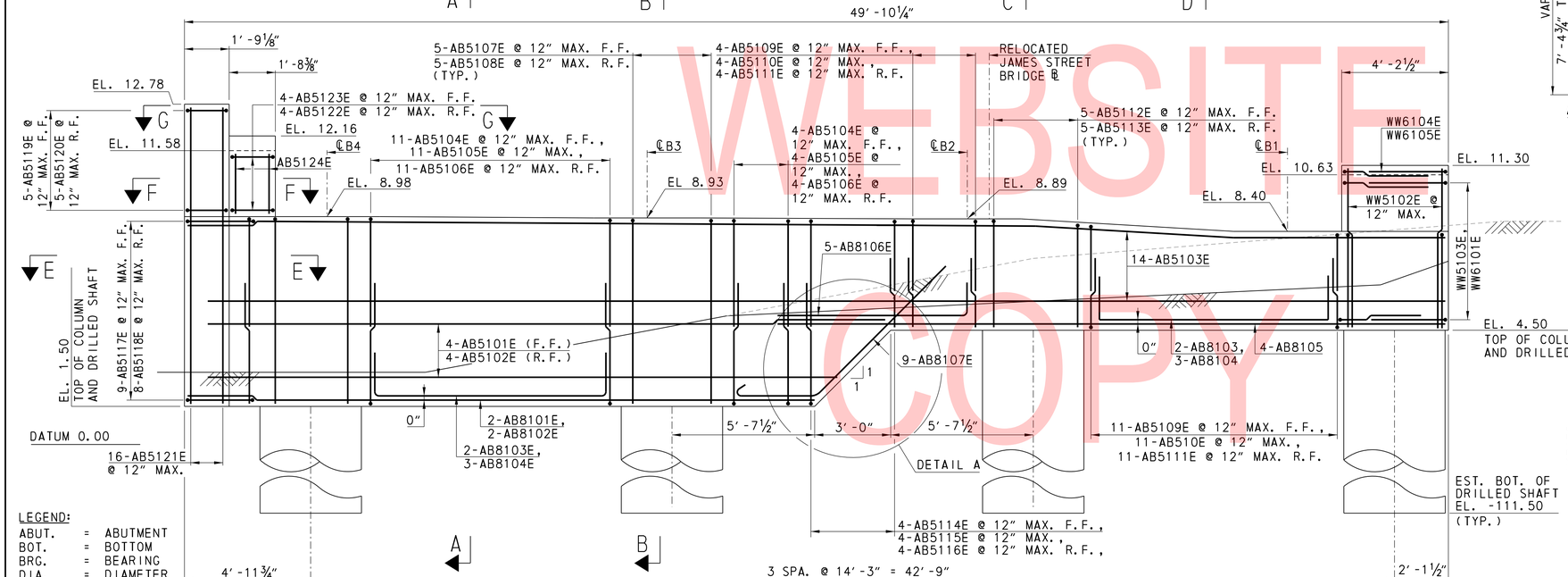

ELEVATION
SCALE
0 4 8 12
FEET

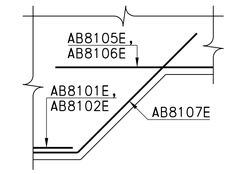

DETAIL A
NOT TO SCALE

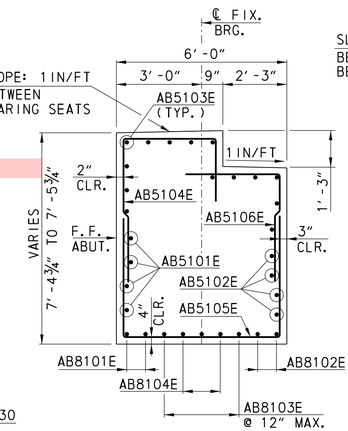

SECTION A-A
SCALE
0 2 4 8
FEET

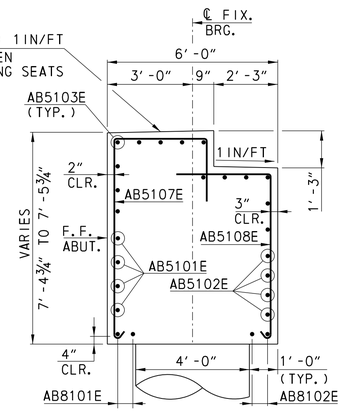

SECTION B-B
SCALE
0 2 4 8
FEET

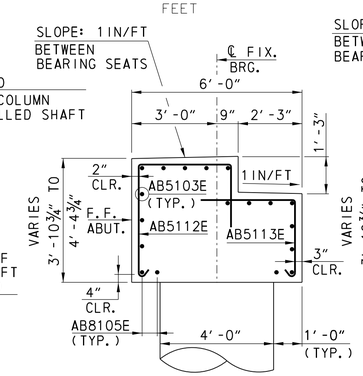

SECTION C-C
SCALE
0 2 4 8
FEET

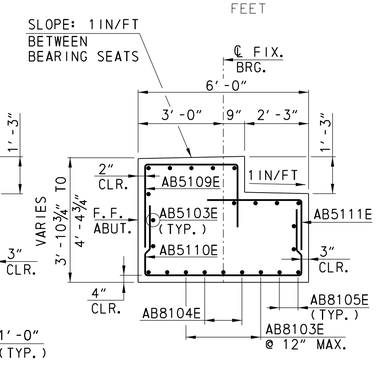

SECTION D-D
SCALE
0 2 4 8
FEET

LEGEND:

ABUT.	=	ABUTMENT
BOT.	=	BOTTOM
BRG.	=	BEARING
DIA.	=	DIAMETER
EL.	=	ELEVATION
EST.	=	ESTIMATED
FF.	=	FRONT FACE
FIX.	=	FIXED
MAX.	=	MAXIMUM
R.F.	=	REAR FACE
SPA.	=	SPACE
STA.	=	STATION
TYP.	=	TYPICAL
W.P.	=	WORK POINT

NOTES:
- ELEVATION OF BRIDGE SEATS GIVEN ALONG ℄ BEARING.
- FOR SECTIONS E-E, F-F AND G-G SEE SHEET AB-02.
- FOR REINFORCEMENT BAR LIST, SEE SHEET BR-01.
- FOR STAKE-OUT PLAN, SEE SHEET PE-03.
- FOR DRILLED SHAFT DETAILS, SEE SHEETS DS-01 AND DS-02.
- FOR LIMITS OF CONCRETE SEALERS, SEE SHEET AB-04.
- FOR UTILITY BAY PEDESTAL DETAILS, SEE SHEET UD-02.
- FOR BEAM ANGLES, SEE SHEET FR-02.

UNOFFICIAL WEBSITE COPY

ADDENDA / REVISIONS	SCALE: AS NOTED	BR 1-159 ON JAMES STREET OVER CHRISTINA RIVER	CONTRACT T201207101	BRIDGE NO. 1-159	ABUTMENT A – PLAN AND ELEVATION	AB-01
			COUNTY NEW CASTLE	DESIGNED BY: ZME		SECTION McT
				CHECKED BY: BJH		SHEET NO. 25

$DATE$
DGN
$FILE$
AM

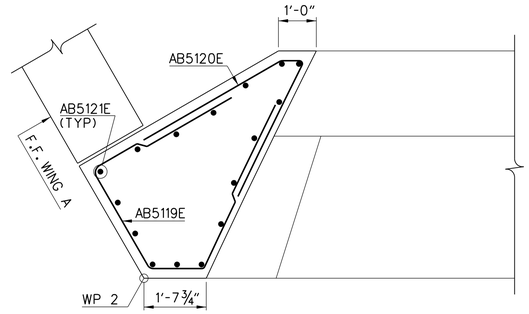

SECTION G-G

SCALE 0 2 4 6 FEET

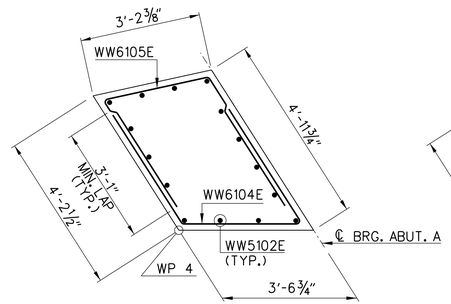

SECTION J-J

SCALE 0 2 4 6 FEET

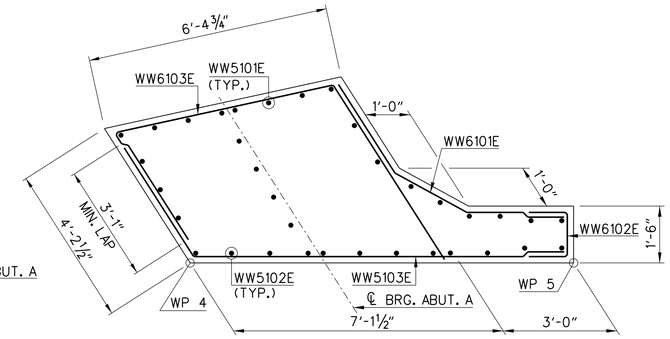

SECTION H-H

SCALE 0 2 4 6 FEET

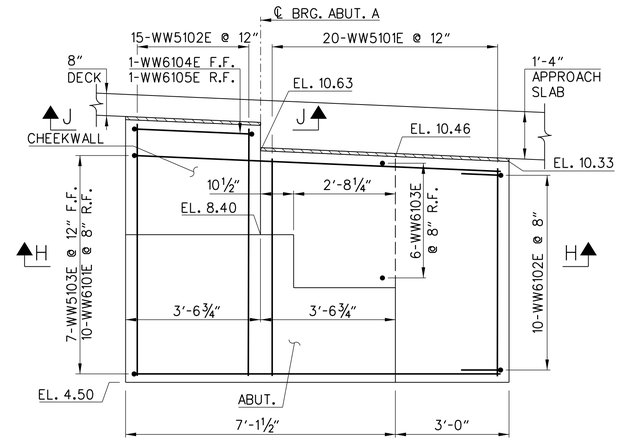

ELEVATION
WINGWALL B

SCALE 0 2 4 6 FEET

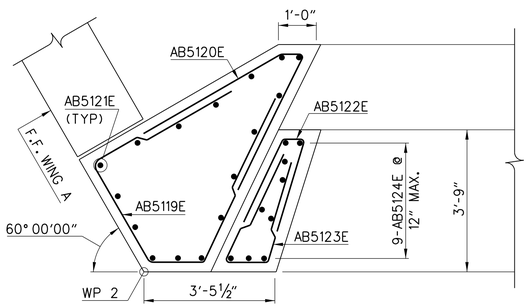

SECTION F-F

SCALE 0 2 4 6 FEET

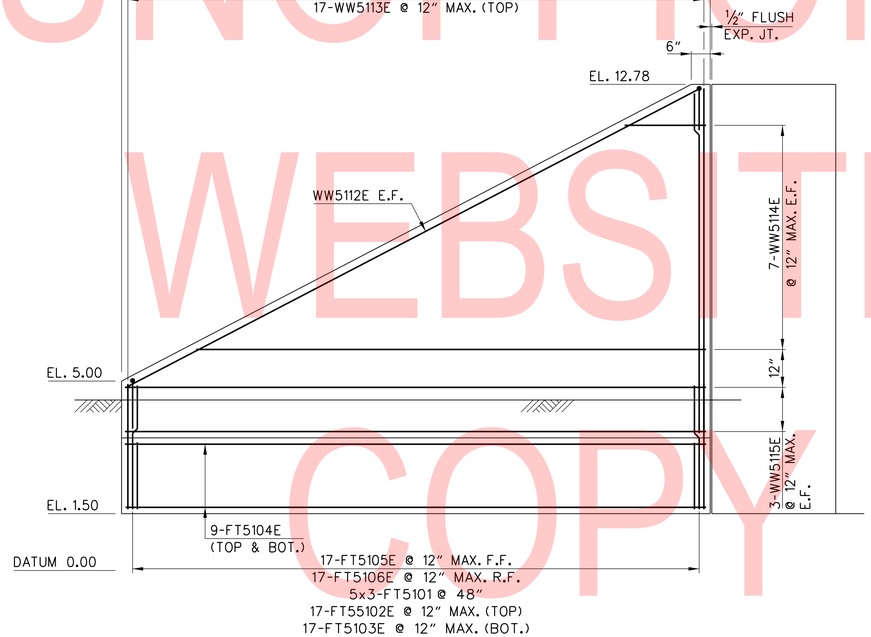

ELEVATION

WINGWALL A

SCALE 0 2 4 6 FEET

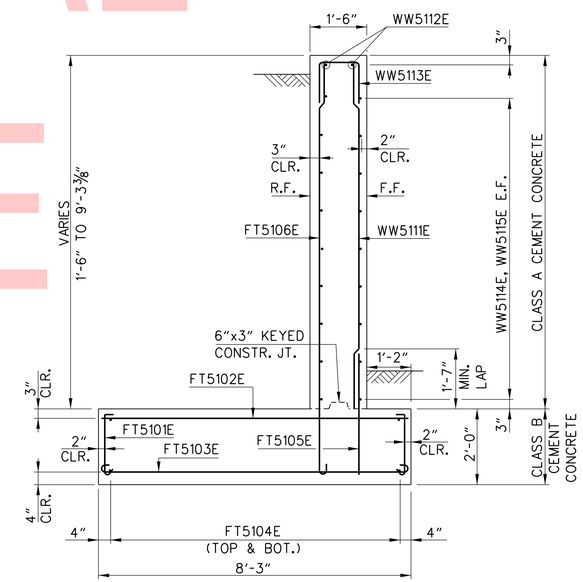

TYPICAL SECTION

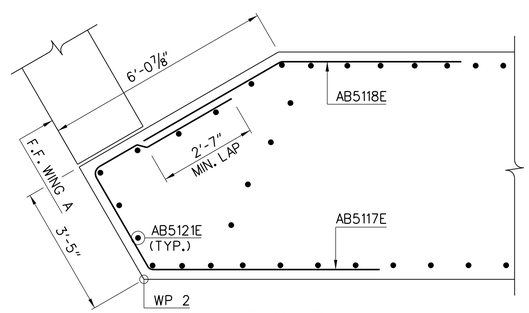

SECTION E-E

SCALE 0 2 4 6 FEET

NOTES:

- TIE TOP AND BOTTOM MATS OF REINFORCING STEEL WITH FT5101E BARS AT 4'-0" MAXIMUM IN EACH DIRECTION. ALTERNATE 90° AND 135° HOOKS AT TOP IN ALTERNATE TIES.
- FOR LOCATION OF SECTIONS E-E, F-F AND G-G, SEE SHEET AB-01.
- FOR REINFORCEMENT BAR LIST, SEE SHEET BR-01.
- FOR LIMITS OF CONCRETE SEALERS, SEE SHEET AB-04.

LEGEND:

ABUT.	=	ABUTMENT
BRG.	=	BEARING
CONSTR.	=	CONSTRUCTION
E.F.	=	EACH FACE
EL.	=	ELEVATION
EST.	=	ESTIMATE
F.F.	=	FRONT FACE
MAX.	=	MAXIMUM
MIN.	=	MINIMUM
R.F.	=	REAR FACE
TYP.	=	TYPICAL

UNOFFICIAL WEBSITE COPY

AB-02

ADDENDA / REVISIONS	SCALE: AS NOTED	BR 1-159 ON JAMES STREET OVER CHRISTINA RIVER	CONTRACT T201207101	BRIDGE NO. 1-159	ABUTMENT A SECTIONS	SECTION McT
			COUNTY NEW CASTLE	DESIGNED BY: ZME		SHEET NO. 26
				CHECKED BY: BJH		

$DATE$ 4:29:19 PM
$FILE$

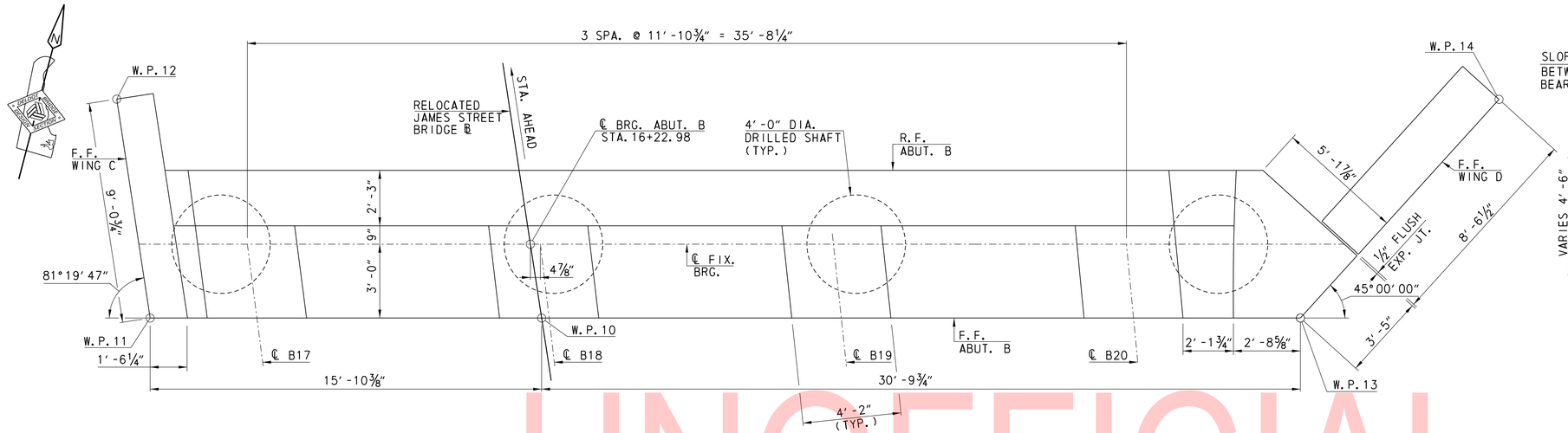

PLAN
SCALE
0 4 8 12
FEET

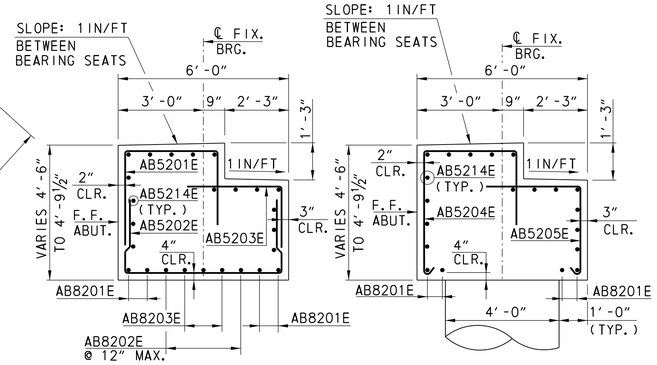

SECTION D-D
SCALE
0 2 4 6
FEET

SECTION E-E
SCALE
0 2 4 6
FEET

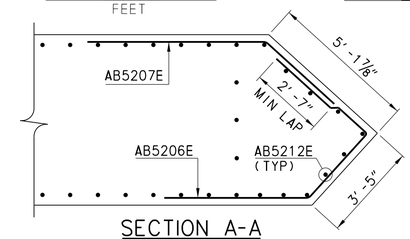

SECTION A-A
SCALE
0 2 4 6
FEET

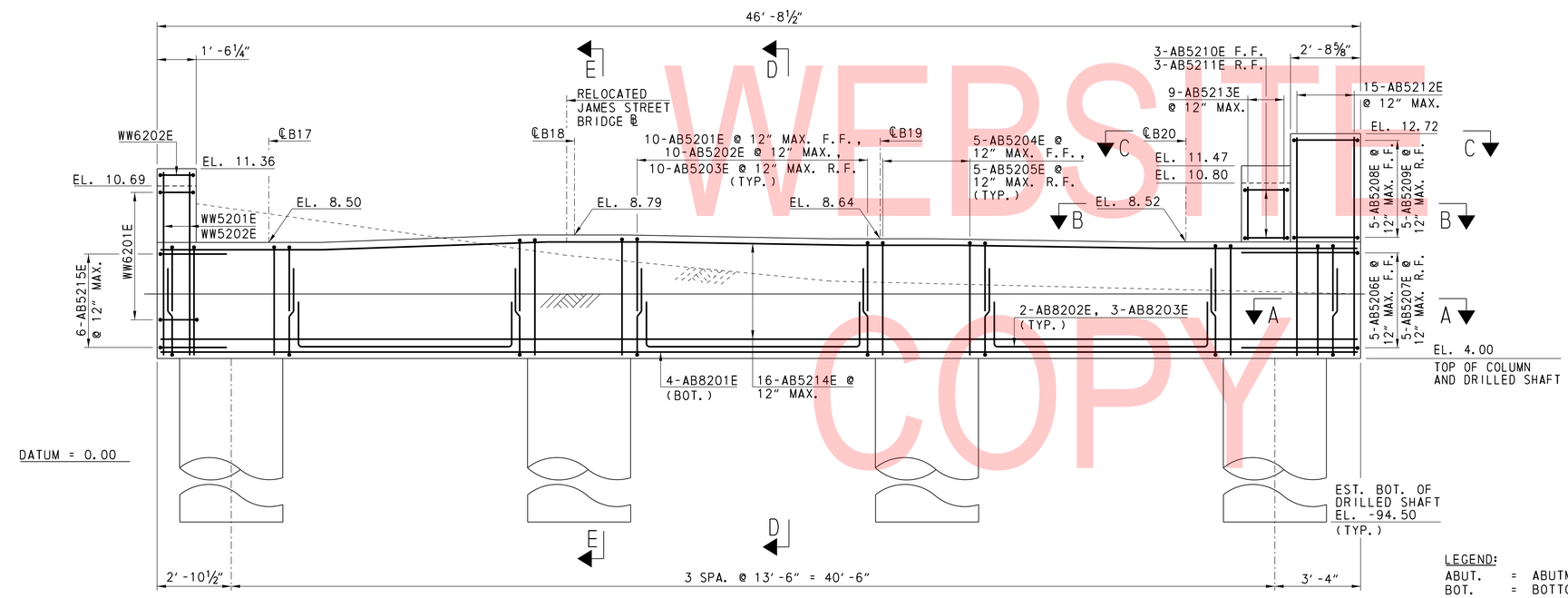

ELEVATION
SCALE
0 4 8 12
FEET

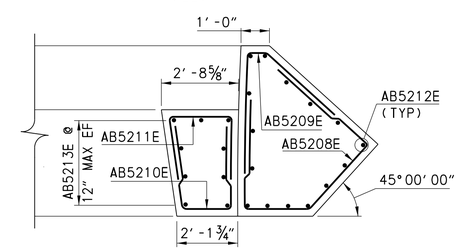

SECTION B-B
SCALE
0 2 4 6
FEET

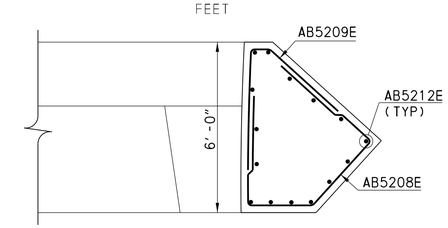

SECTION C-C
SCALE
0 2 4 6
FEET

NOTES:
- ELEVATION OF BRIDGE SEATS GIVEN ALONG ℄ BEARING.
- FOR REINFORCEMENT BAR LIST, SEE SHEET BR-01.
- FOR STAKE-OUT PLAN, SEE SHEET PE-03.
- FOR DRILLED SHAFT DETAILS, SEE SHEETS DS-01 AND DS-02.
- FOR LIMITS OF CONCRETE SEALERS, SEE SHEET AB-04.
- FOR UTILITY BAY PEDESTAL DETAILS, SEE SHEET UD-02.
- FOR BEAM ANGLES, SEE SHEET FR-02.

LEGEND:

ABUT.	=	ABUTMENT
BOT.	=	BOTTOM
BRG.	=	BEARING
EL.	=	ELEVATION
EST.	=	ESTIMATED
FIX.	=	FIXED
F.F.	=	FRONT FACE
MAX.	=	MAXIMUM
R.F.	=	REAR FACE
SPA.	=	SPACE
STA.	=	STATION
TYP.	=	TYPICAL
W.P.	=	WORK POINT

UNOFFICIAL WEBSITE COPY

ADDENDA / REVISIONS

SCALE: AS NOTED

BR 1-159 ON JAMES STREET OVER CHRISTINA RIVER

CONTRACT	BRIDGE NO. 1-159
T201207101	DESIGNED BY: ZME
COUNTY	CHECKED BY: BJH
NEW CASTLE	

ABUTMENT B PLAN AND ELEVATION

AB-03

SECTION McT

SHEET NO. 27

$DATE$ 9/20/19 AM
$FILE$

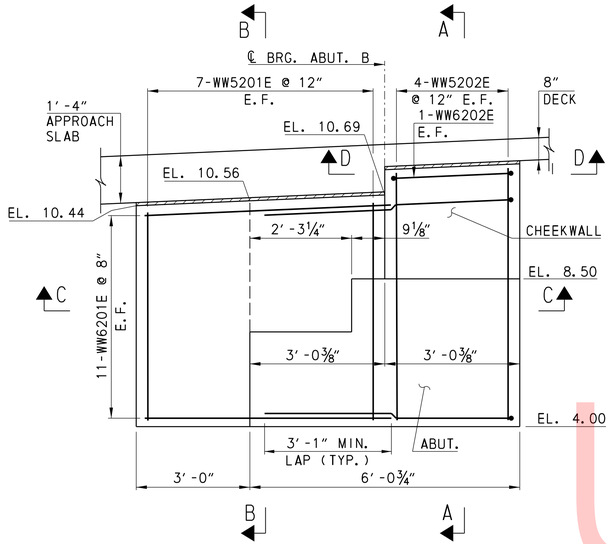

ELEVATION
WINGWALL C

SCALE
0 2 4 6
FEET

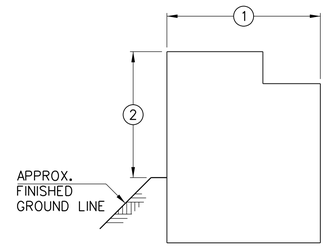

ABUTMENTS

① LIMITS OF ITEM NO. 602520-EPOXY CONCRETE SEALER

② LIMITS OF ITEM NO. 602646-SILICONE ACRYLIC CONCRETE SEALER

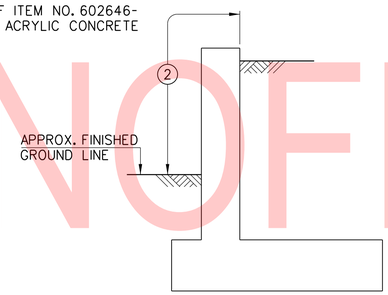

WINGWALLS

LIMITS OF CONCRETE SEALERS
NOT TO SCALE

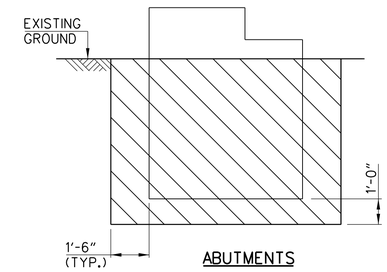

ABUTMENTS

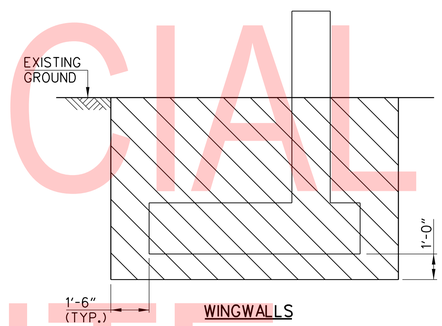

WINGWALLS

LIMITS OF EXCAVATION
NOT TO SCALE

AT ABUTMENT A: ITEM 209511 LIGHT WEIGHT AGGREGATE FILL
AT ABUTMENT B: ITEM 210000 FURNISHING BORROW TYPE C

ITEM 207000 EXCAVATION AND BACKFILL FOR STRUCTURES

ITEM 608000 COARSE AGGREGATE FOR FOUNDATION STABILIZATION

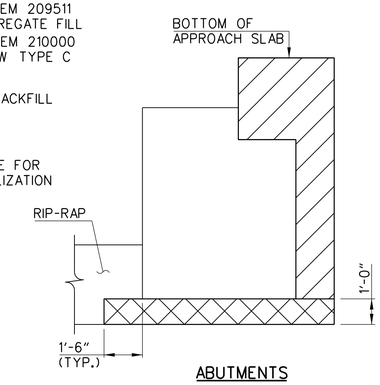

ABUTMENTS

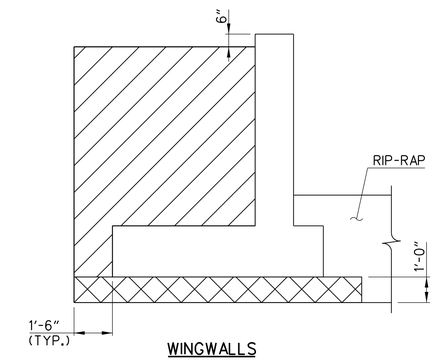

WINGWALLS

LIMITS OF BACKFILL
NOT TO SCALE

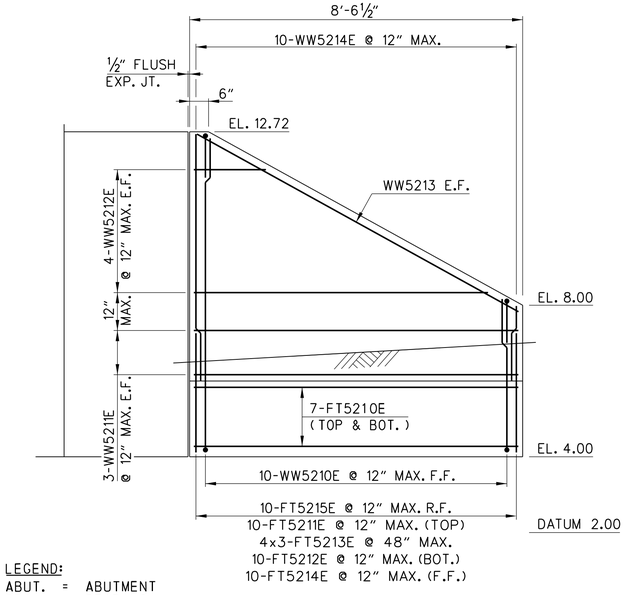

ELEVATION

LEGEND:

ABUT.	=	ABUTMENT
BRG.	=	BEARING
E.F.	=	EACH FACE
EL.	=	ELEVATION
F.F.	=	FRONT FACE
MIN.	=	MINIMUM
R.F.	=	REAR FACE
TYP.	=	TYPICAL

WINGWALL D

SCALE
0 2 4 6
FEET

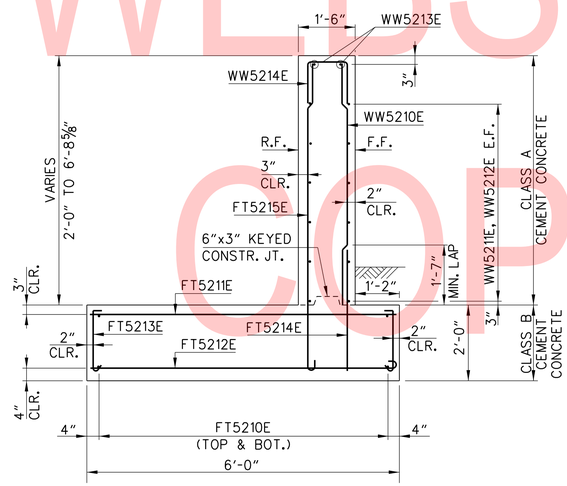

TYPICAL SECTION

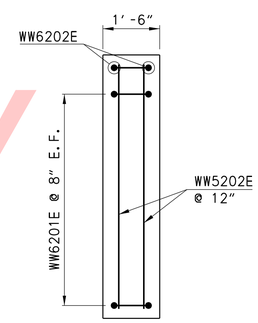

SECTION A-A
NOT TO SCALE

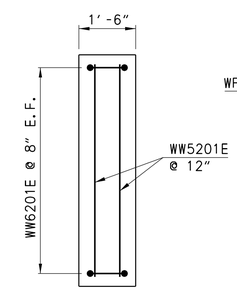

SECTION B-B
NOT TO SCALE

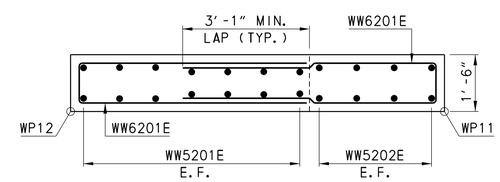

SECTION C-C

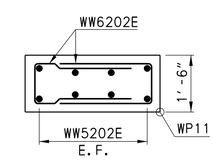

SECTION D-D
NOT TO SCALE

NOTES:
- TIE TOP AND BOTTOM MATS OF REINFORCING STEEL WITH FT5213E BARS AT 4'-0" MAXIMUM IN EACH DIRECTION. ALTERNATE 90° AND 135° HOOKS AT TOP IN ALTERNATE TIES.
- FOR REINFORCEMENT BAR LIST, SEE SHEET BR-01.

UNOFFICIAL WEBSITE COPY

ADDENDA / REVISIONS	SCALE: AS NOTED	BR 1-159 ON JAMES STREET OVER CHRISTINA RIVER	CONTRACT T201207101	BRIDGE NO. 1-159	ABUTMENT B SECTIONS	AB-04
			COUNTY NEW CASTLE	DESIGNED BY: ZME		SECTION McT
				CHECKED BY: BJH		SHEET NO. 28

$DATE$ $TIME$ PM
$FILE$

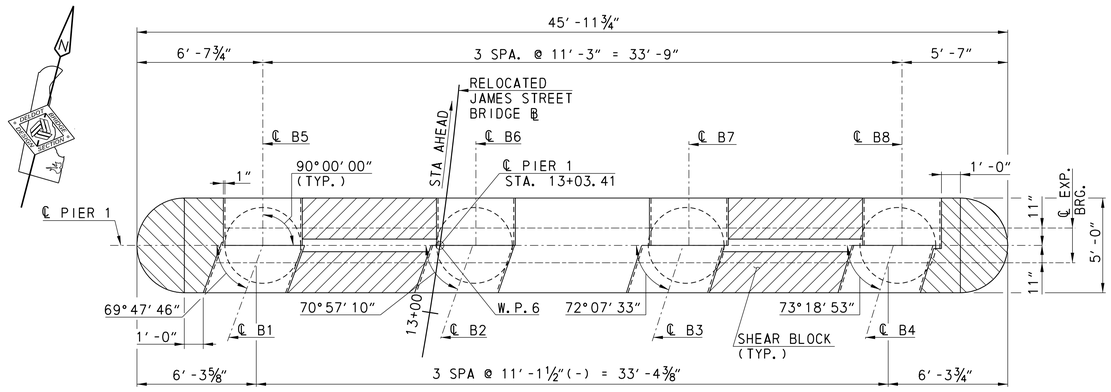

PLAN

SCALE

0 4 8 12

FEET

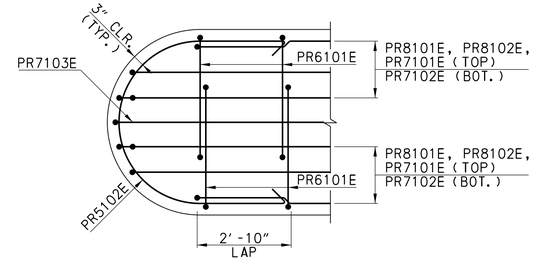

SECTION B-B

NOT TO SCALE

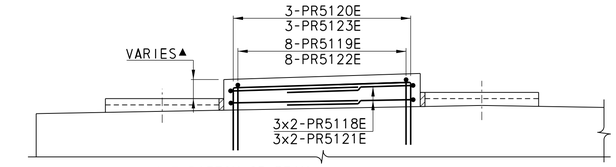

ELEVATION

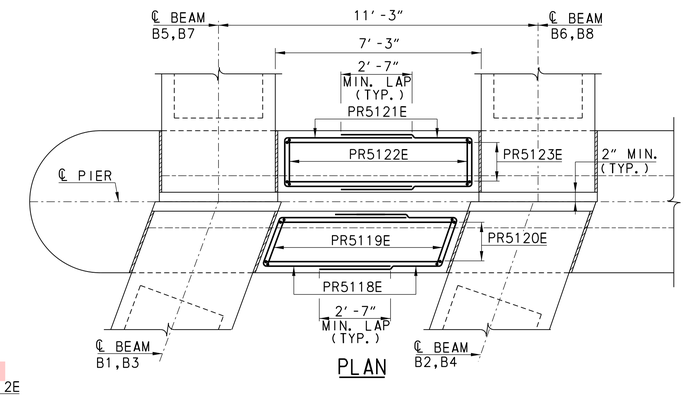

PLAN

SHEAR BLOCK

NOT TO SCALE

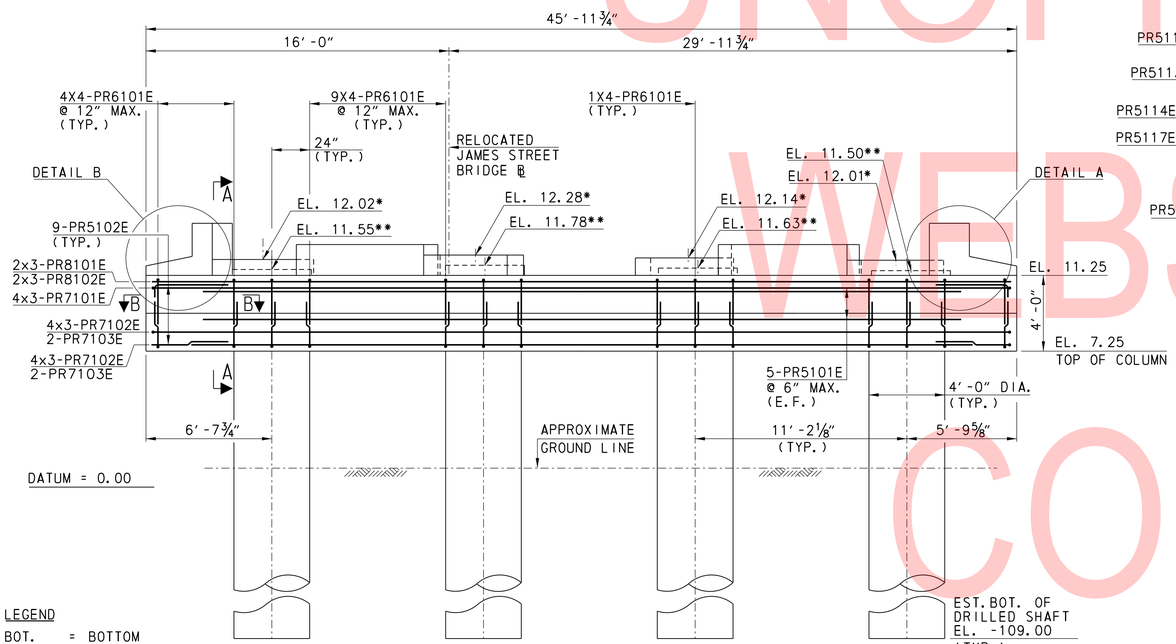

* BACK STATION BEAM SEAT EL.

** AHEAD STATION BEAM SEAT EL.

ELEVATION

SCALE

0 4 8 12

FEET

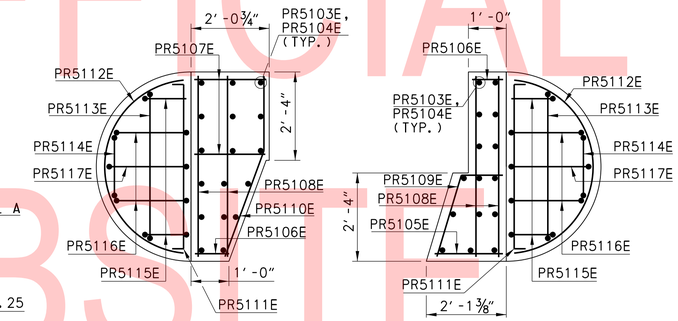

SECTION C-C

NOT TO SCALE

SECTION D-D

NOT TO SCALE

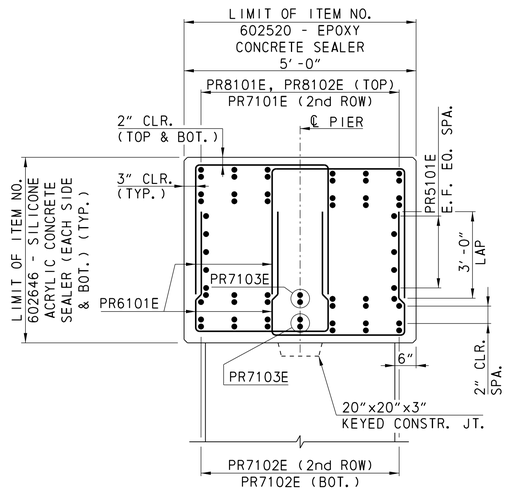

SECTION A-A

NOT TO SCALE

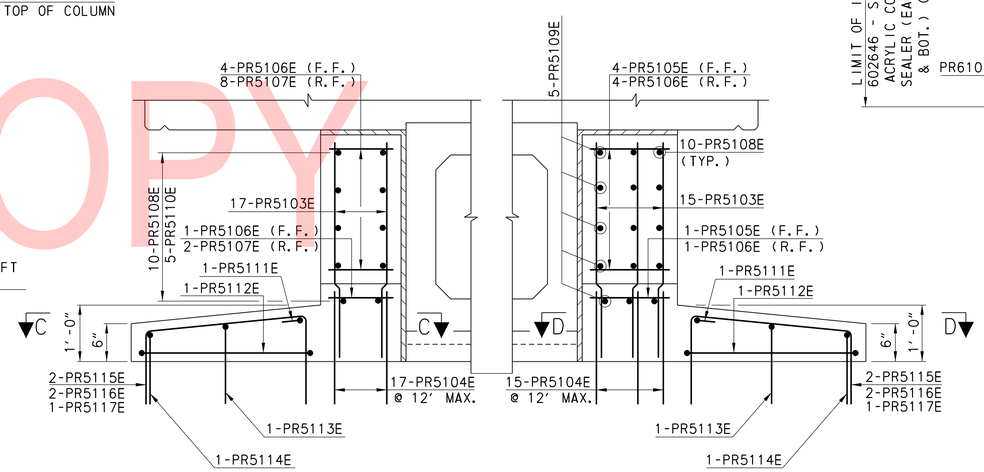

DETAIL B

NOT TO SCALE

DETAIL A

NOT TO SCALE

LEGEND

BOT.	=	BOTTOM
BRG.	=	BEARING
CLR.	=	CLEAR
CONSTR.	=	CONSTRUCTION
DIA.	=	DIAMETER
E.F.	=	EACH FACE
EL.	=	ELEVATION
EQ.	=	EQUAL
EST.	=	ESTIMATED
EXP.	=	EXPANSION
F.F.	=	FRONT FACE
R.F.	=	REAR FACE
JT.	=	JOINT
MAX.	=	MAXIMUM
MIN.	=	MINIMUM
SPA.	=	SPACE
STA.	=	STATION
TYP.	=	TYPICAL
W.P.	=	WORK POINT

NOTES:

- FOR REINFORCEMENT BAR LIST, SEE SHEET BR-02.
- FOR STAKE-OUT PLAN, SEE SHEET PE-03.
- SHEAR BLOCKS SHALL BE CLASS A CONCRETE.
- FOR DRILLED SHAFT DETAILS, SEE SHEETS DS-01 AND DS-02.
- FOR UTILITY BAY PEDESTAL DETAILS, SEE SHEET UD-02.

UNOFFICIAL WEBSITE COPY

ADDENDA / REVISIONS	SCALE: AS NOTED	BR 1-159 ON JAMES STREET OVER CHRISTINA RIVER	CONTRACT T201207101	BRIDGE NO. 1-159	PIER 1 PLAN, ELEVATION AND SECTIONS	PR-01
			COUNTY NEW CASTLE	DESIGNED BY: SBM		SECTION McT
				CHECKED BY: BJH		SHEET NO. 29

$DATE$ 12:41 PM $FILE$

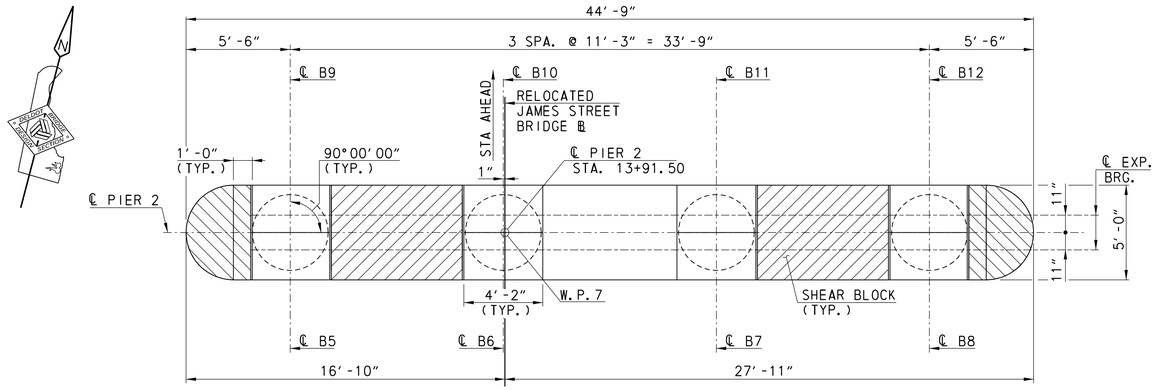

PLAN

SCALE 0 4 8 12 FEET

CHEEK WALL

SHEAR BLOCK

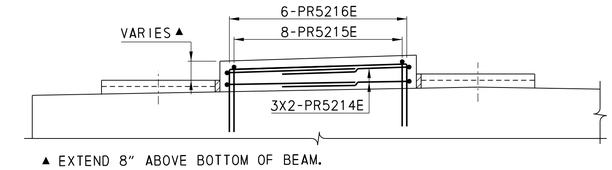

ELEVATION
NOT TO SCALE

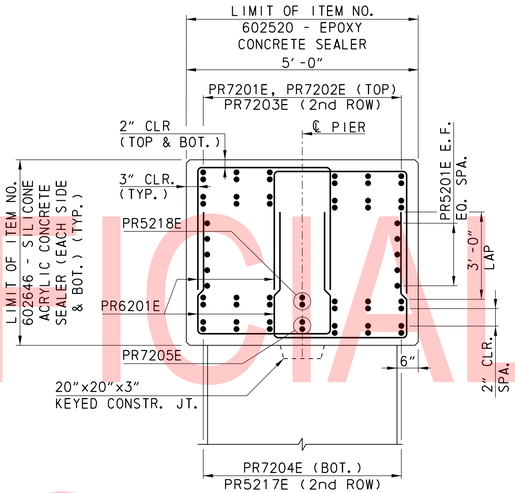

SECTION A-A
NOT TO SCALE

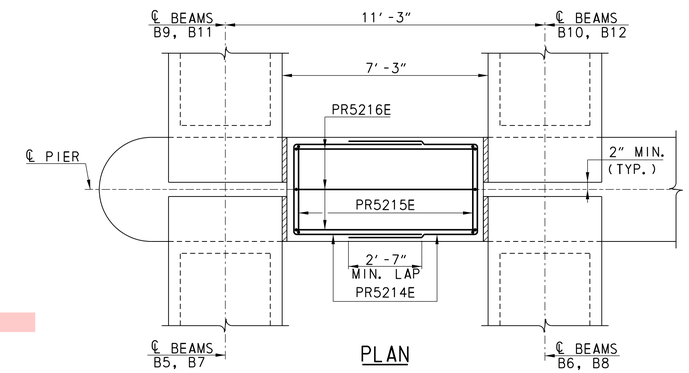

PLAN

SHEAR BLOCK
NOT TO SCALE

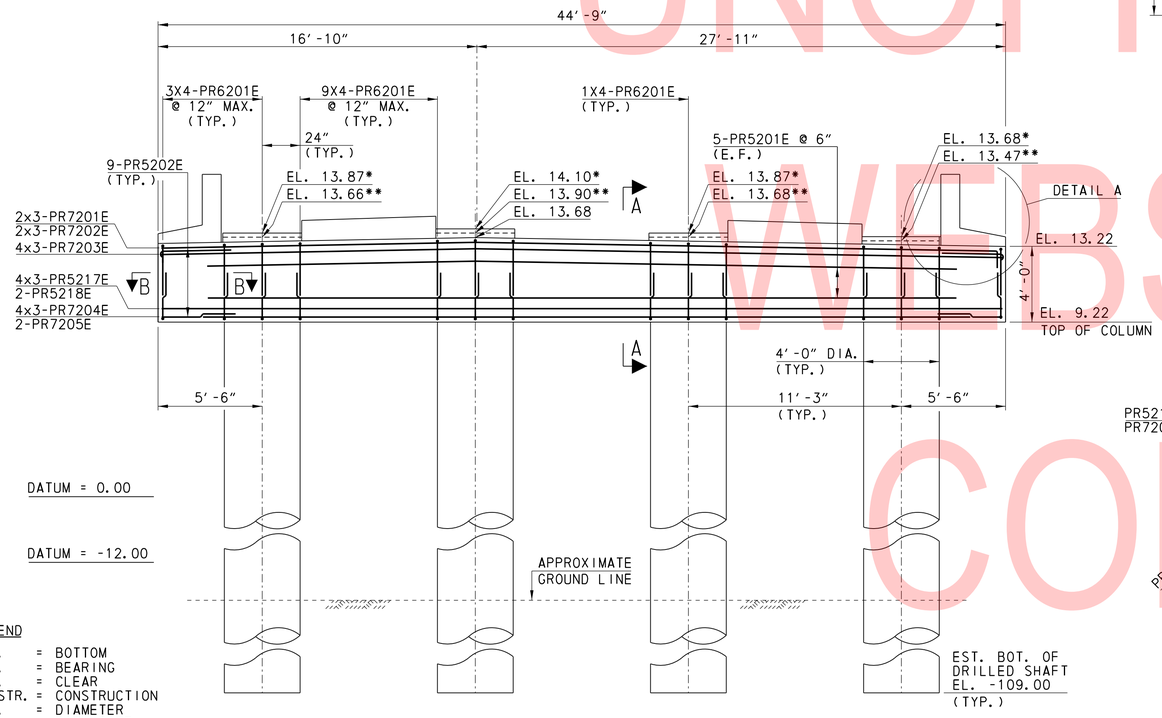

ELEVATION

SCALE 0 4 8 12 FEET

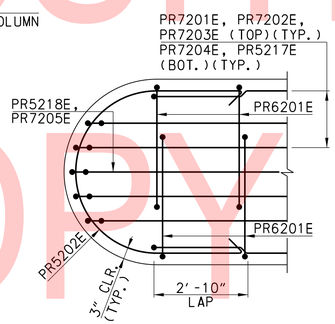

SECTION B-B
NOT TO SCALE

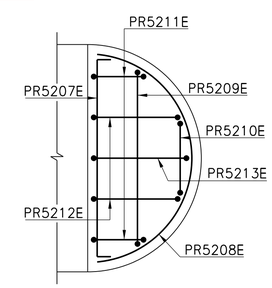

SECTION C-C
NOT TO SCALE

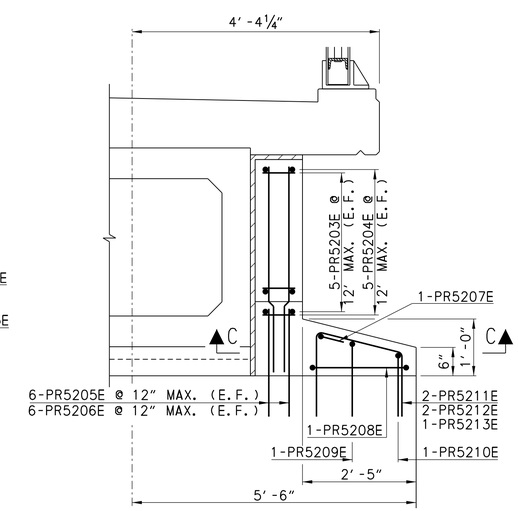

NOTE: EAST END SHOWN.
WEST END OPPOSITE HAND.

DETAIL A
NOT TO SCALE

LEGEND

BOT.	=	BOTTOM
BRG.	=	BEARING
CLR.	=	CLEAR
CONSTR.	=	CONSTRUCTION
DIA.	=	DIAMETER
E.F.	=	EACH FACE
EL.	=	ELEVATION
EQ.	=	EQUAL
EST.	=	ESTIMATED
EXP.	=	EXPANSION
F.F.	=	FRONT FACE
R.F.	=	REAR FACE
JT.	=	JOINT
MAX.	=	MAXIMUM
MIN.	=	MINIMUM
SPA.	=	SPACE
STA.	=	STATION
TYP.	=	TYPICAL
W.P.	=	WORK POINT

* BACK STATION BEAM SEAT EL.
** AHEAD STATION BEAM SEAT EL.

NOTES:
- FOR REINFORCEMENT BAR LIST, SEE SHEET BR-02.
- FOR STAKE-OUT PLAN, SEE SHEET PE-03.
- SHEAR BLOCKS SHALL BE CLASS A CONCRETE.
- FOR DRILLED SHAFT DETAILS, SEE SHEETS DS-01 AND DS-02.
- FOR UTILITY BAY PEDESTAL DETAILS, SEE SHEET UD-02.

UNOFFICIAL WEBSITE COPY

ADDENDA / REVISIONS	SCALE: AS NOTED	BR 1-159 ON JAMES STREET OVER CHRISTINA RIVER	CONTRACT T201207101	BRIDGE NO. 1-159	PIER 2 PLAN, ELEVATION AND SECTIONS	PR-02
			COUNTY NEW CASTLE	DESIGNED BY: ZME		SECTION McT
				CHECKED BY: BJH		SHEET NO. 30

$DATE$ $TIME$ PM $FILE$

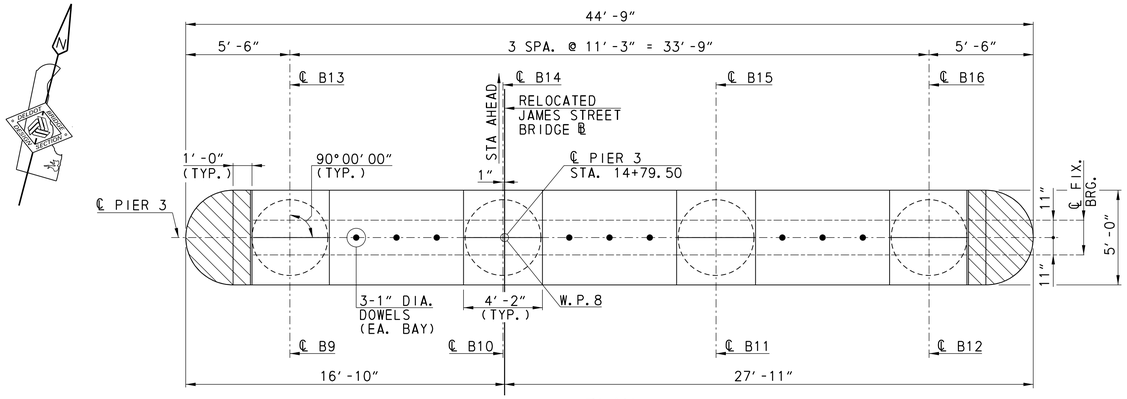

PLAN
SCALE
0 4 8 12
FEET

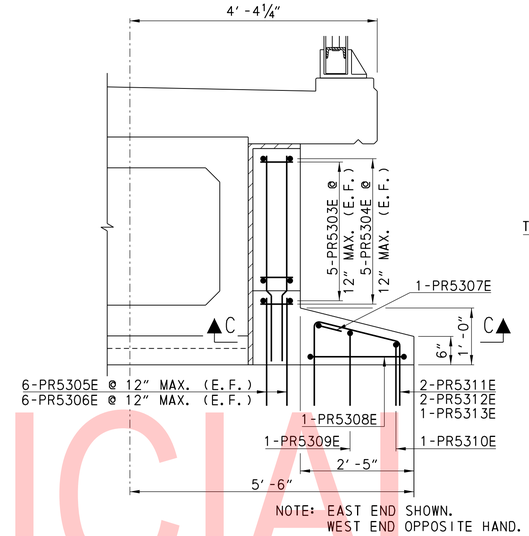

NOTE: EAST END SHOWN.
WEST END OPPOSITE HAND.

DETAIL A
NOT TO SCALE

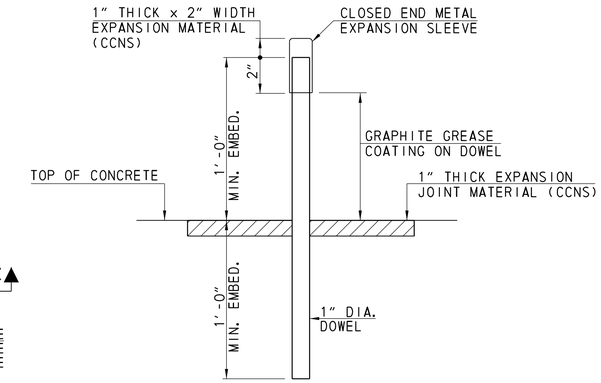

DOWEL DETAIL
NOT TO SCALE

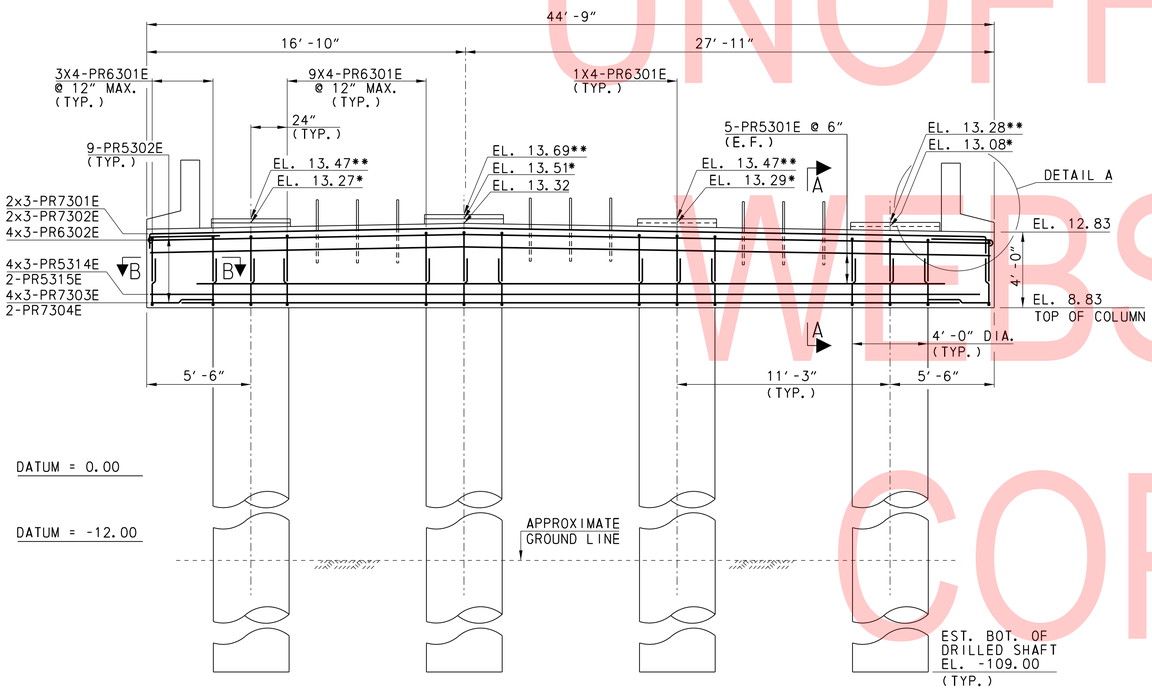

ELEVATION
SCALE
0 4 8 12
FEET

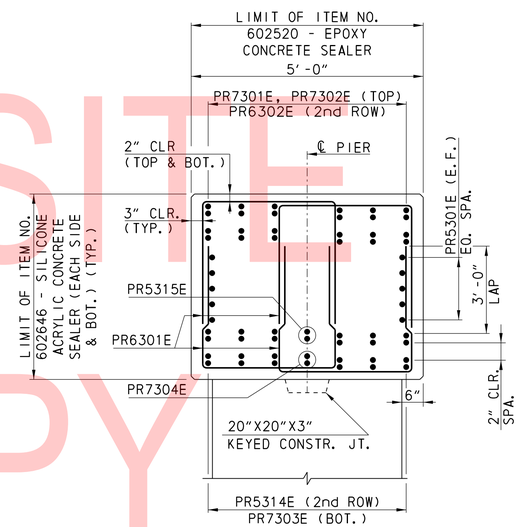

SECTION A-A
NOT TO SCALE

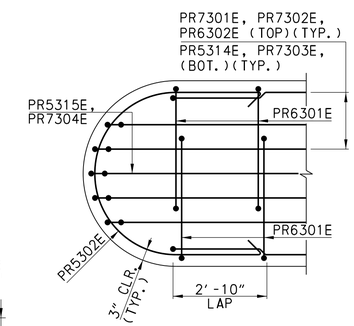

SECTION B-B
NOT TO SCALE

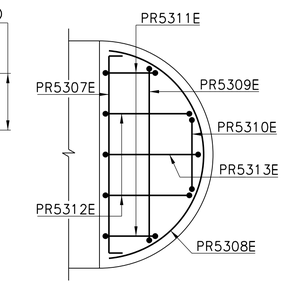

SECTION C-C
NOT TO SCALE

LEGEND

BOT.	=	BOTTOM
BRG.	=	BEARING
CCNS	=	CLOSED CELL NEOPRENE SPONGE
CLR.	=	CLEAR
CONSTR.	=	CONSTRUCTION
DIA.	=	DIAMETER
E.F.	=	EACH FACE
EL.	=	ELEVATION
EMBED.	=	EMBEDMENT
EQ.	=	EQUAL
EST.	=	ESTIMATED
EXP.	=	EXPANSION
F.F.	=	FRONT FACE
R.F.	=	REAR FACE
JT.	=	JOINT
MAX.	=	MAXIMUM
MIN.	=	MINIMUM
SPA.	=	SPACE
STA.	=	STATION
TYP.	=	TYPICAL
W.P.	=	WORK POINT

* BACK STATION BEAM SEAT EL.
** AHEAD STATION BEAM SEAT EL.

NOTES:
- FOR REINFORCEMENT BAR LIST, SEE SHEET BR-03.
- FOR STAKE-OUT PLAN, SEE SHEET PE-03.
- FOR DRILLED SHAFT DETAILS, SEE SHEETS DS-01 AND DS-02.
- FOR UTILITY BAY PEDESTAL DETAILS, SEE SHEET UD-02.

UNOFFICIAL WEBSITE COPY

ADDENDA / REVISIONS	SCALE: AS NOTED	BR 1-159 ON JAMES STREET OVER CHRISTINA RIVER	CONTRACT T201207101	BRIDGE NO. 1-159	PIER 3 PLAN, ELEVATION AND SECTIONS	PR-03
			COUNTY NEW CASTLE	DESIGNED BY: ZME		SECTION McT
				CHECKED BY: BJH		SHEET NO. 31

$DATE$ $TIME$ PM
$FILES

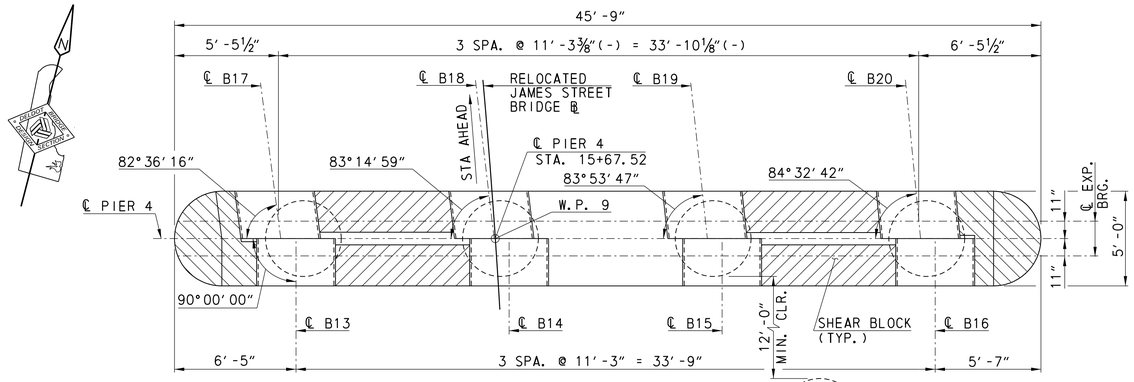

PLAN

SCALE 0 4 8 12 FEET

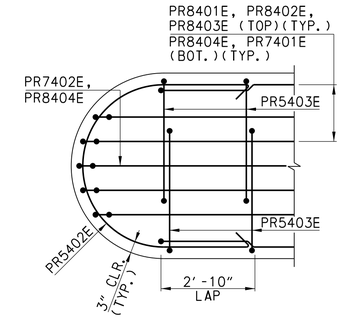

SECTION B-B

NOT TO SCALE

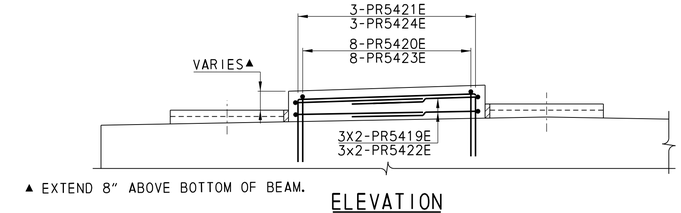

ELEVATION

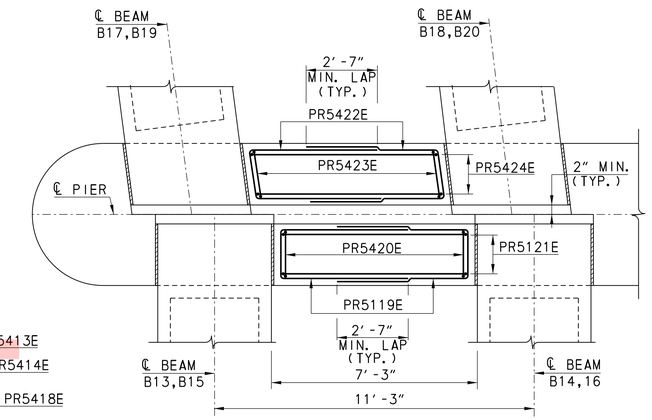

PLAN
SHEAR BLOCK

NOT TO SCALE

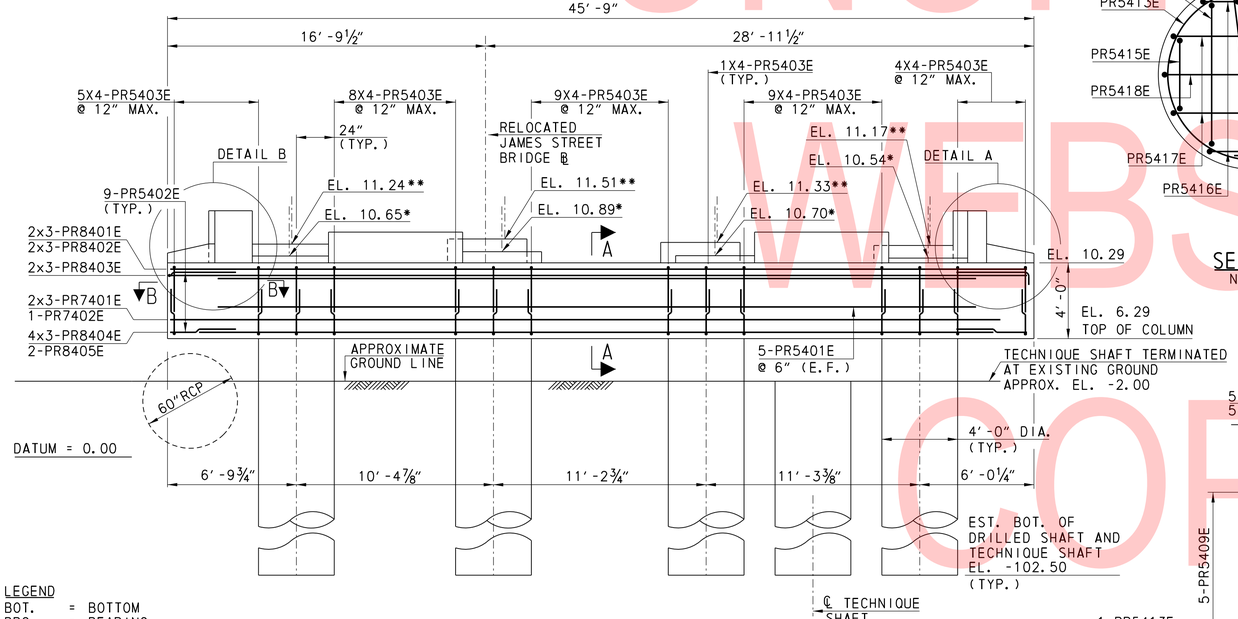

ELEVATION

SCALE 0 4 8 12 FEET

* BACK STATION BEAM SEAT EL.
** AHEAD STATION BEAM SEAT EL.

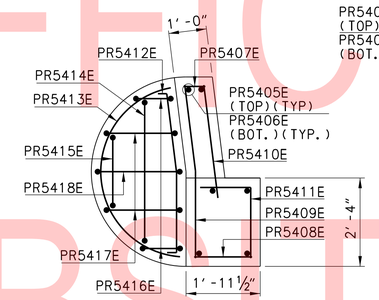

SECTION C-C

NOT TO SCALE

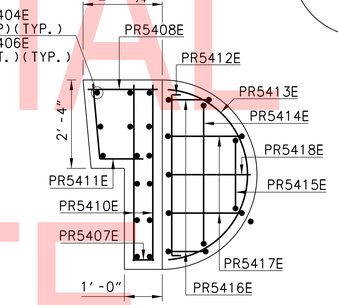

SECTION D-D

NOT TO SCALE

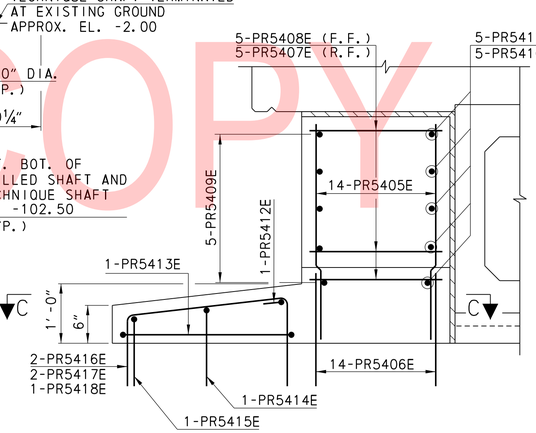

DETAIL B

NOT TO SCALE

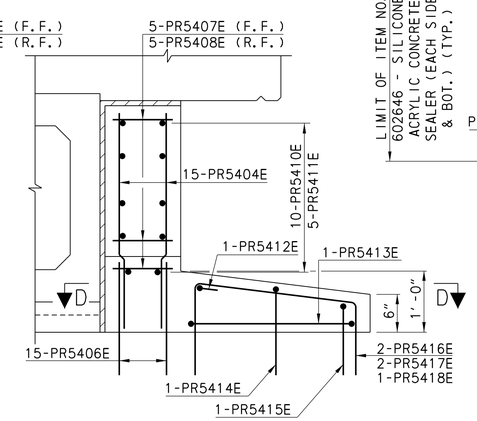

DETAIL A

NOT TO SCALE

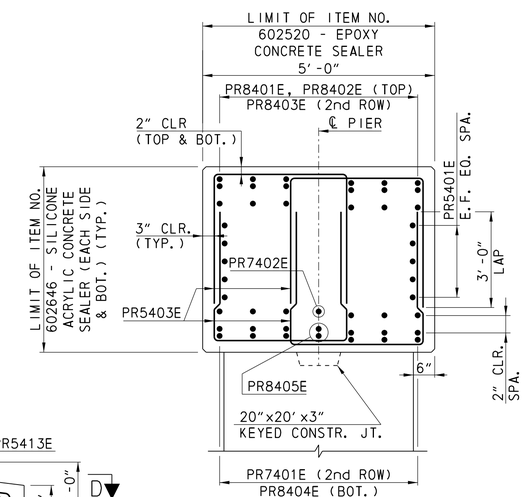

SECTION A-A

NOT TO SCALE

LEGEND

BOT.	=	BOTTOM
BRG.	=	BEARING
CLR.	=	CLEAR
CONSTR.	=	CONSTRUCTION
DIA.	=	DIAMETER
E.F.	=	EACH FACE
EL.	=	ELEVATION
EQ.	=	EQUAL
EST.	=	ESTIMATED
EXP.	=	EXPANSION
F.F.	=	FRONT FACE
R.F.	=	REAR FACE
JT.	=	JOINT
MAX.	=	MAXIMUM
MIN.	=	MINIMUM
SPA.	=	SPACE
STA.	=	STATION
TYP.	=	TYPICAL
W.P.	=	WORK POINT

NOTES:

- FOR REINFORCEMENT BAR LIST, SEE SHEET BR-03.
- FOR STAKE-OUT PLAN, SEE SHEET PE-03.
- SHEAR BLOCKS SHALL BE CLASS A CONCRETE.
- FOR DRILLED SHAFT DETAILS, SEE SHEETS DS-01 AND DS-02.
- FOR UTILITY BAY PEDESTAL DETAILS, SEE SHEET UD-02.

UNOFFICIAL WEBSITE COPY

ADDENDA / REVISIONS	SCALE: AS NOTED	BR 1-159 ON JAMES STREET OVER CHRISTINA RIVER	CONTRACT T201207101	BRIDGE NO. 1-159	PIER 4 PLAN, ELEVATION AND SECTIONS	PR-04
			COUNTY NEW CASTLE	DESIGNED BY: ZME		SECTION McT
				CHECKED BY: BJH		SHEET NO. 32

$DATE$
$PLOT$
$FILE$

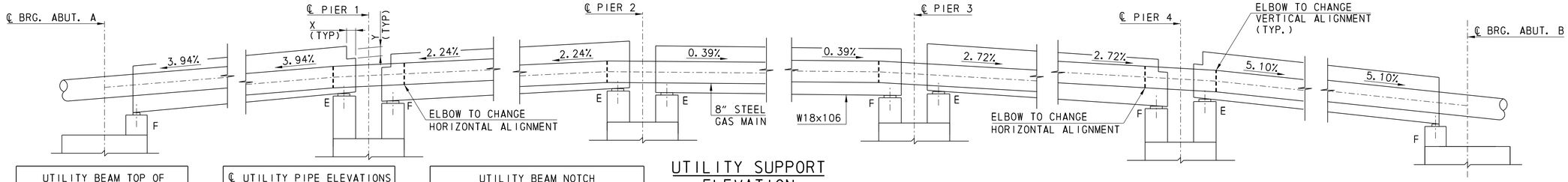

UTILITY SUPPORT ELEVATION

NTS

UTILITY BEAM TOP OF PEDESTAL ELEVATIONS	
ABUT. A	9.47
PIER 1 (STA. BACK)	12.56
PIER 1 (STA. AHEAD)	12.32
PIER 2 (STA. BACK)	14.50
PIER 2 (STA. AHEAD)	14.36
PIER 3 (STA. BACK)	13.94
PIER 3 (STA. AHEAD)	14.07
PIER 4 (STA. BACK)	11.37
PIER 4 (STA. AHEAD)	11.60
ABUT. B	8.95

℄ UTILITY PIPE ELEVATIONS AT DIAPHRAGM LOCATIONS	
ABUT. A	10.50
PIER 1 (STA. BACK)	13.34
PIER 1 (STA. AHEAD)	13.38
PIER 2	15.26
PIER 3	14.86
PIER 4 (STA. BACK)	12.50
PIER 4 (STA. AHEAD)	12.44
ABUT. B	9.75

UTILITY BEAM NOTCH DIMENSIONS		
	X	Y
PIER 1 (STA. BACK)	5"	14½"
PIER 1 (STA. AHEAD)	2"	17"
PIER 4 (STA. BACK)	2"	17½"
PIER 4 (STA. AHEAD)	4"	14"

GAS FACILITIES

MATERIALS	FURNISHED BY	INSTALLED BY	UNIT	QUANTITY
605002 - STEEL STRUCTURES (1)	CONTRACTOR	CONTRACTOR	LS	1
DOUBLE PIPE ROLL HANGER ASSEMBLY (2)	GAS	GAS	EA	41
8" DIA STEEL PIPE GAS MAIN	GAS	GAS	FT	437
12" DIA STEEL CASING	GAS	GAS	FT	70
ABUTMENT OPENING (3)	CONTRACTOR	CONTRACTOR	EA	2
LINK SEALS	GAS	GAS	EA	32
FRP 240° 8" ROLL-ON SHIELD	GAS	GAS	EA	41
8" STEEL PIPE CAP	GAS	GAS	EA	2
8" SHRINK SLEEVES	GAS	GAS	EA	4
8" CASING SPACER	GAS	GAS	EA	10

(1) APPROXIMATE WEIGHT 160,000 LBS.
(2) WITH NON-CONDUCTIVE ROLLERS. INCLUDES ADJUSTABLE SOCKETS, ROLL AXLES, THREADED RODS, HEX NUTS AND WASHERS.
(3) PAYMENT SHALL BE INCIDENTAL TO CONCRETE WORK

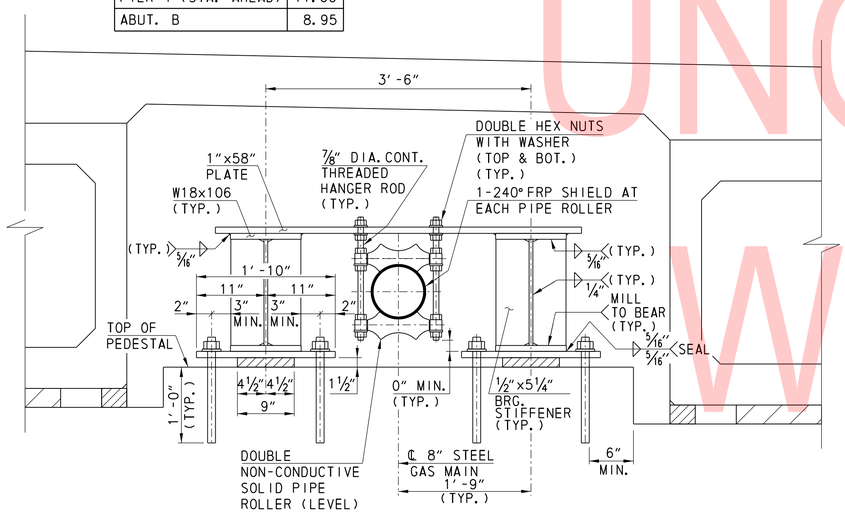

SECTION

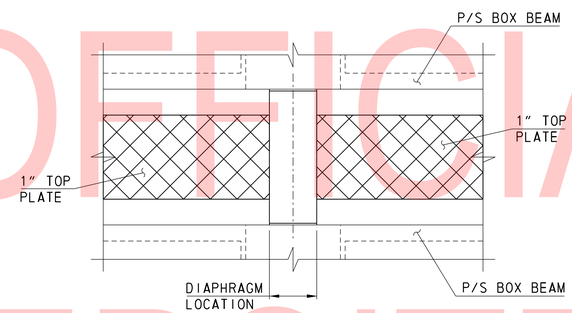

DETAIL 1
PLAN - TOP PLATE LIMITS

NTS

LIMITS OF 1" PLATE ABOVE W18x106 BEAMS.

NOTES
- OMIT PLATE AT ALL DIAPHRAGM LOCATIONS.
- FOR LOCATION OF DETAIL 1, SEE SHEET FR-01.

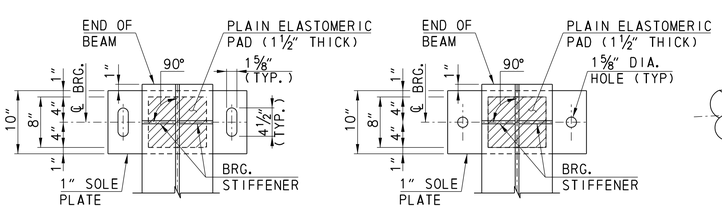

EXPANSION BEARING

FIXED BEARING

UTILITY DETAIL

SCALE
0 1 2 3
FEET

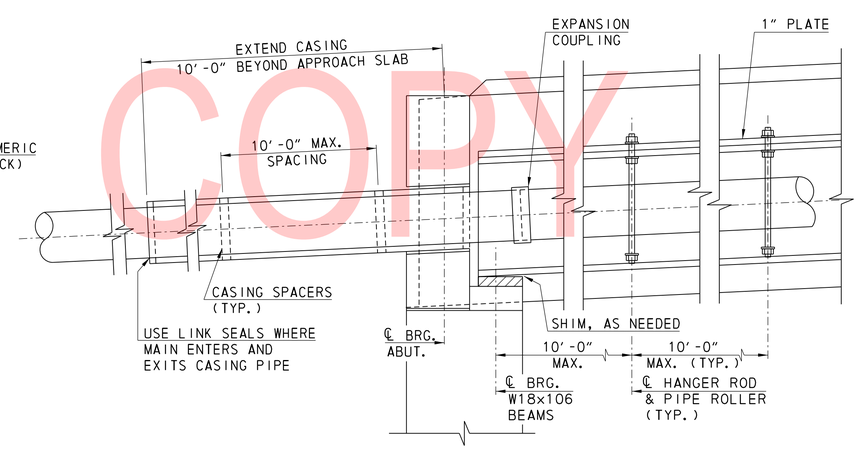

GAS MAIN THROUGH ABUTMENT DIAPHRAGM

NTS

BEARING PAD NOTES FOR UTILITY BEAM
- ALL BEARING PADS ARE TO BE MOLDED TO DESIGN DIMENSIONS. CUTTING TO SIZE AFTER FABRICATION IS PROHIBITED.
- MEET THE MATERIAL SPECIFICATIONS FOR ELASTOMERIC BEARING REQUIREMENTS OF AASHTO M251. BEARING PADS SHALL BE SAMPLED FOR TESTING ACCORDING TO AASHTO M251, AS DIRECTED. BEARING PAD AND TESTING WILL BE INCIDENTAL TO ITEM NO. 605002 - STEEL STRUCTURES.
- PROVIDE NEOPRENE 50 ±5 DUROMETER.
- SANDBLAST CLEAN THE CONCRETE BEARING SURFACES TO ACHIEVE A ROUGH TEXTURE. DO NOT EPOXY COAT BEARING SURFACES.
- BEARING PAD TOLERANCES IN RADIANS ABOUT TRANSVERSE AXIS TOP AND BOTTOM: 0.005 (SPANS 1-5)
  ABOUT LONGITUDINAL AXIS OF PAD: 0.005 RADIANS (SPANS 1, 2, 3, 4 AND 5.)
- ANCHOR BOLTS SHALL MEET THE REQUIREMENTS OF ASTM A36, AND SHALL HAVE HEX NUTS AND WASHERS. WHEN AN ANCHOR BOLT GOES THROUGH THE SOLE PLATE, THE NUT IS TO BE 0.25" CLEAR. BURR THREADS AT FACE OF NUT. ANCHOR BOLT HARDWARE SHALL BE GALVANIZED. ANCHOR BOLTS ARE INCIDENTAL TO ITEM 605002 - STEEL STRUCTURES.
- SET ANCHOR BOLTS TO TEMPLATE OR IN PRE-FORMED HOLES. DO NOT DRILL UNLESS SPECIFICALLY INDICATED ON PLANS. FILL THE PRE-FORMED HOLES WITH NON-SHRINK GROUT. IN MASONRY PLATES, FILL THE CLEARANCE BETWEEN ANCHOR BOLTS AND HOLES WITH APPROVED NON-HARDENING CAULKING COMPOUND.
- STEEL PLATES SHALL MEET A FLATNESS REQUIREMENT OF 0.5 PERCENT IN THE DIRECTION BEING MEASURED (WIDTH, LENGTH, DIAGONALS) MAXIMUM, BUT NOT TO EXCEED ⅛".

STRUCTURAL STEEL NOTES
- PROVIDE STRUCTURAL STEEL CONFORMING TO AASHTO M270, GRADE 50 (ASTM A709, GRADE 50) UNLESS OTHERWISE NOTED.
- PROVIDE MATERIALS AND WORKMANSHIP CONFORMING TO AASHTO/AWS D1.5 WELDING CODE. MAKE TACK WELDS WITH THE SAME TYPE OF ELECTRODE AND INCORPORATE IN THE FINAL WELD. NO OTHER TACK WELDING WILL BE PERMITTED.
- PAINT WITH MOISTURE CURED URETHANE SYSTEM. PAYMENT INCIDENTAL TO ITEM 605002 - STEEL STRUCTURES.
- FOR ALL GROOVE WELDS USE PREQUALIFIED COMPLETE PENETRATION WELDS.
- PROVIDE CONTROLLED PEENING IF INDICATED OR SPECIFIED.

NOTES
- FOR UTILITY PIPE HORIZONTAL ALIGNMENT, SEE SHEETS FR-01 AND FR-02.

LEGEND
ABUT. = ABUTMENT
BOT. = BOTTOM
BRG. = BEARING
CONT. = CONTINUOUS
DIA. = DIAMETER
MAX. = MAXIMUM
N.T.S. = NOT TO SCALE
TYP. = TYPICAL

UNOFFICIAL WEBSITE COPY

UD-01

ADDENDA / REVISIONS	SCALE: AS NOTED	BR 1-159 ON JAMES STREET OVER CHRISTINA RIVER	CONTRACT T201207101	BRIDGE NO. 1-159	GAS LINE SUPPORT DETAILS – 1	SECTION McT
			COUNTY NEW CASTLE	DESIGNED BY: BSW		SHEET NO. 33
				CHECKED BY: MDM		

$DATE$ 9:40:40 AM
$FILE$

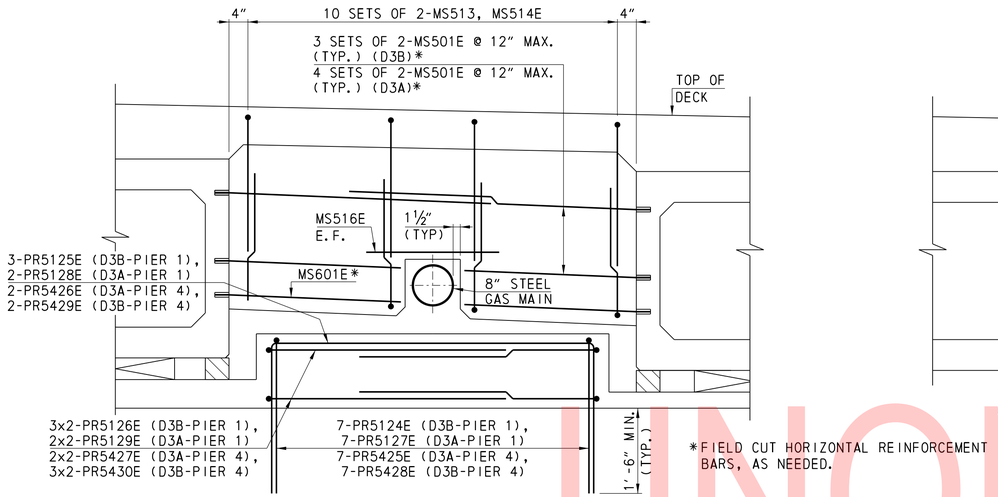

*FIELD CUT HORIZONTAL REINFORCEMENT BARS, AS NEEDED.

UTILITY BAY
PIER DIAPHRAGMS D3A AND D3B

SCALE
0 1 2 3
FEET

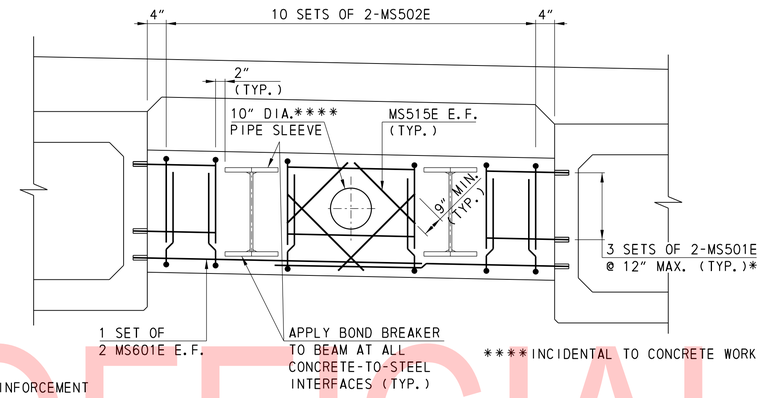

****INCIDENTAL TO CONCRETE WORK

UTILITY BAY
INTERMEDIATE DIAPHRAGM D4
SPANS 2, 3, AND 4

SCALE
0 1 2 3
FEET

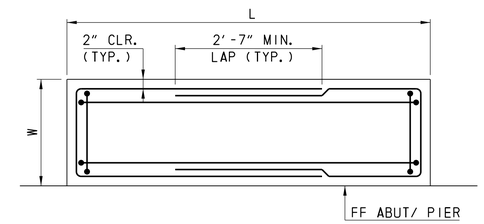

UTILITY BAY PEDESTAL PLAN
NOT TO SCALE

UTILITY BAY PEDESTAL DIMENSIONS		
	L	W
ABUTMENT A	6'-4¾"	1'-10½"
PIER 1 (STA. BACK)	6'-3¾"	1'-6½"
PIER 1 (STA. AHEAD)	5'-11¼"	1'-1"
PIER 2 (STA. BACK)	5'-11¼"	1'-1"
PIER 2 (STA. AHEAD)	5'-11¼"	1'-1"
PIER 3 (STA. BACK)	5'-11¼"	1'-1"
PIER 3 (STA. AHEAD)	5'-11¼"	1'-1"
PIER 4 (STA. BACK)	5'-11¼"	1'-1"
PIER 4 (STA. AHEAD)	6'-0¾"	1'-3½"
ABUTMENT B	6'-1½"	1'-7¾"

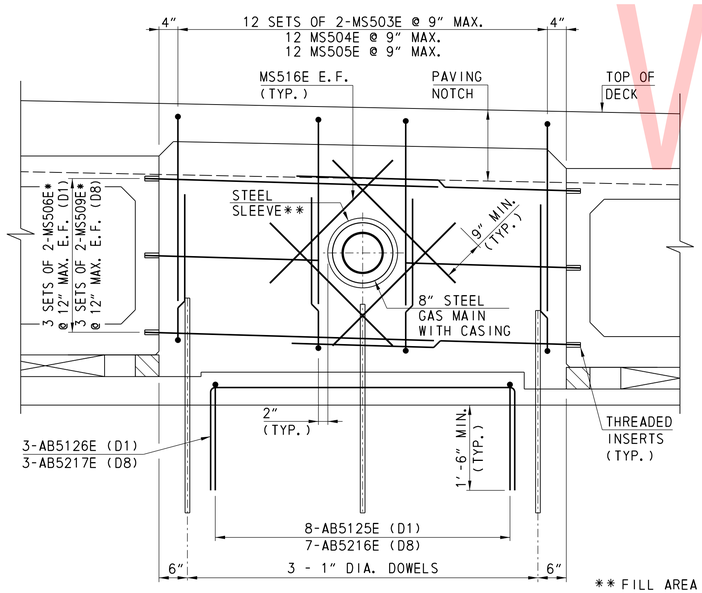

** FILL AREA BETWEEN CASING PIPE AND STEEL SLEEVE WITH NON SHRINK GROUT (INCIDENTAL TO CONCRETE WORK)

UTILITY BAY
ABUTMENTS DIAPHRAGMS D1 AND D8

SCALE
0 1 2 3
FEET

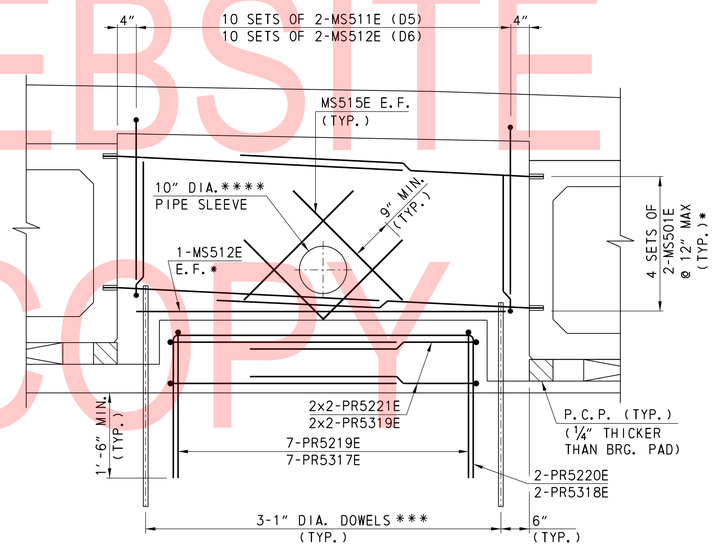

*** OMIT DOWELS AT PIER 2

**** INCIDENTAL CONCRETE WORK

UTILITY BAY
PIER DIAPHRAGM D6

SCALE
0 1 2 3
FEET

NOTES
- FOR DIAPHRAGM REINFORCEMENT BAR LAYOUT, SEE SHEETS FR-03 AND FR-04.

LEGEND
BRG = BEARING
DIA. = DIAMETER
EA. = EACH
E.F. = EACH FACE
MAX. = MAXIMUM
MIN. = MINIMUM
SPA. = SPACE
STA. = STATION
TYP. = TYPICAL

UNOFFICIAL WEBSITE COPY

ADDENDA / REVISIONS	SCALE: AS NOTED	BR 1-159 ON JAMES STREET OVER CHRISTINA RIVER	CONTRACT T201207101	BRIDGE NO. 1-159	GAS LINE SUPPORT DETAILS – 2	UD-02
			COUNTY NEW CASTLE	DESIGNED BY: BSW		SECTION McT
				CHECKED BY: MDM		SHEET NO. 34

$DATE$
10:20:29 AM
$FILE$

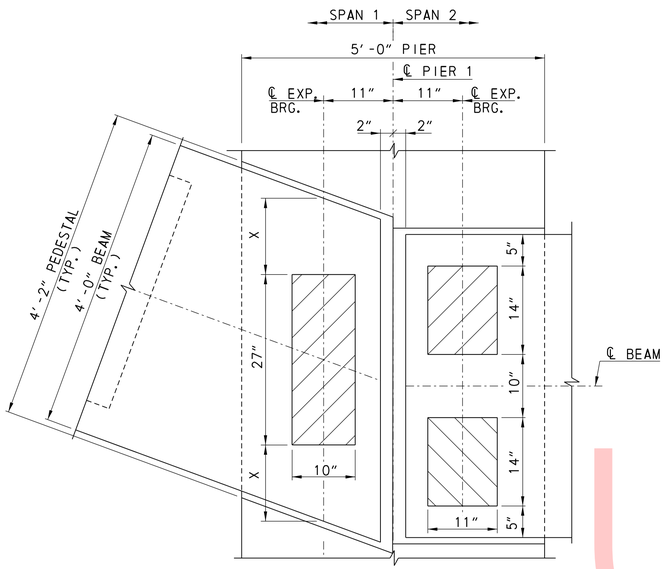

PIER 1
BEARING PAD
LAYOUT PLAN

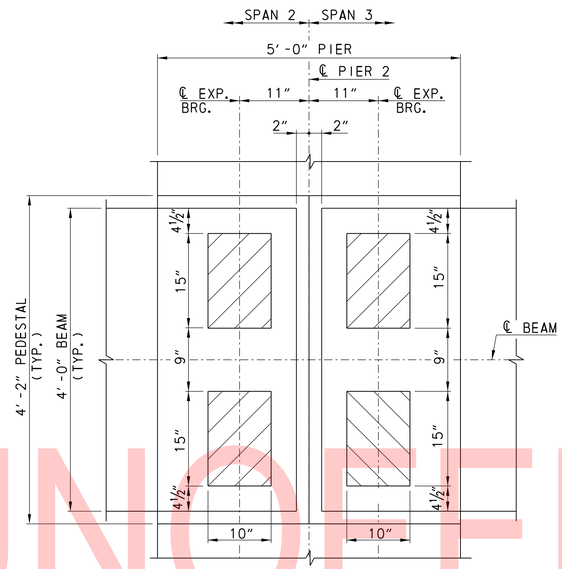

PIER 2
BEARING PAD
LAYOUT PLAN

BEARING PAD LOCATION	
LOCATION	X
BEAM 1	12 1/16"
BEAM 2	11 7/8"
BEAM 3	11 11/16"
BEAM 4	11 9/16"

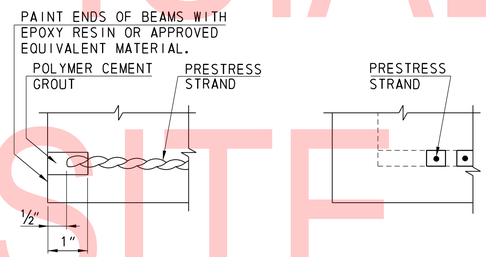

NOTES:
- RECESS CAN BE MADE FOR A SINGLE STRAND OR A GROUP OF STRANDS.
- CLEAN STRANDS FROM ALL FOREIGN MATERIALS SUCH AS RUST, SLAG, ETC. PRIOR TO APPLICATION OF POLYMER CEMENT GROUT OR EPOXY RESIN.
- PAINT BEAM ENDS PRIOR TO SHIPMENT OR STORAGE.

GROUTED RECESS FOR STRANDS AT BEAM ENDS

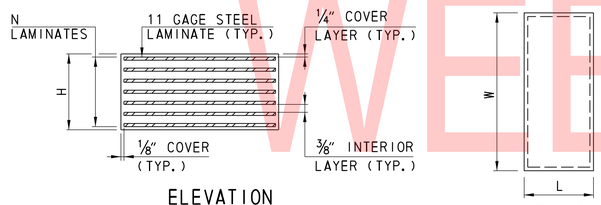

ELEVATION

PLAN

BEARING PAD DETAILS
(EXP AND FIX BEARINGS)

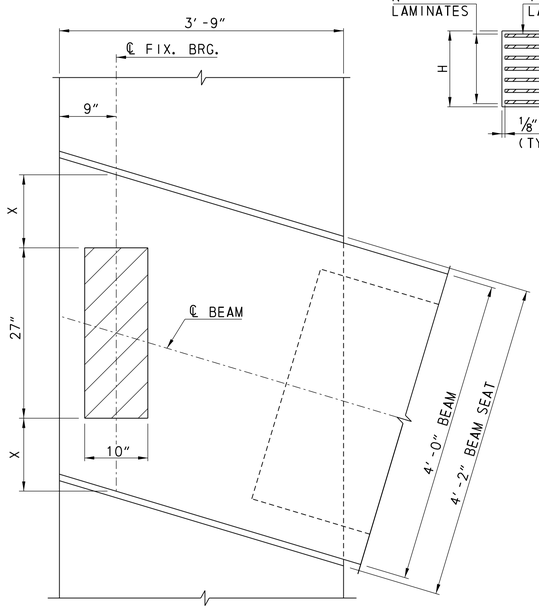

ABUTMENT A BEARING PAD

LAMINATED BEARING PAD INFORMATION						
LOCATION	L	W	N	H	NUMBER REQ'D.	MAX. DESIGN LOAD
ABUTMENT A	10"	27"	7	3.0926"	1x4=4	203K
PIER 1, SPAN 1	10"	27"	7	3.0926"	1x4=4	203K
PIER 1, SPAN 2	11"	14"	8	3.5872"	2x4=8	231K
PIER 2, SPAN 2	10"	15"	6	2.5980"	2x4=8	227K
PIER 2, SPAN 3	10"	15"	6	2.5980"	2x4=8	222K
PIER 3, SPAN 3	8"	18"	5	2.1034"	2x4=8	222K
PIER 3, SPAN 4	13"	11"	5	2.1034"	2x4=8	229K
PIER 4, SPAN 4	11"	14"	6	2.5980"	2x4=8	229K
PIER 4, SPAN 5	9"	14"	5	2.1034"	2x4=8	167K
ABUTMENT B	10"	15"	5	2.1034"	2x4=8	221K

NOTES:
- AT THE ABUTMENTS, AREAS UNDER THE BEAMS NOT IN CONTACT WITH THE BEARING PADS SHALL BE BLOCKED USING 1" THICK BACKER RODS.
- FOR BEAM FABRICATION DETAILS, SEE SHEETS BM-01 THROUGH BM-06.
- FOR SKEW ANGLE AT BEAM ENDS, SEE SHEETS FR-01 AND FR-02.

BEAM NOTES

- GIRDERS ARE SPREAD BOX, AASHTO TYPE BIV-48(48x42) SPANS 2, 3 AND 4. AASHTO TYPE BII-48(48x33) SPANS 1 AND 5.
- CONCRETE STRENGTH AT STRAND RELEASE (f'ci) = 6.8 Ksi
- CONCRETE STRENGTH AT 28 DAYS (f'c) = 8.0 Ksi
- JACKING PRESTRESS STRESS (f pj) PER STRAND = 202.50 ksi
- USE LOW RELAXATION 270 ksi, 0.6" DIAMETER STRANDS (A = 0.217 in^2)
- MINIMUM COVER ON REINFORCEMENT BARS:
  STIRRUPS - 1" MIN.
  ALL OTHERS - 1½" MIN. UNLESS OTHERWISE NOTED
- PROVIDE MILD STEEL REINFORCEMENT CONFORMING TO AASHTO M31, GRADE 60.
- END ZONE REINFORCEMENT MAY BE INCREASED BY FABRICATOR TO REFLECT FABRICATOR'S EXPERIENCE AND/OR TO CONTROL CRACKING. WIRE MESH OF EQUIVALENT AREA IS PERMISSIBLE FOR CRACK CONTROL REINFORCEMENT.
- CAST ENDS OF BEAMS TO BE TRULY VERTICAL WHEN ERECTED.
- CLEAN TOP OF BEAMS BEFORE DECK SLAB IS PLACED.
- SHOW PLAN, ELEVATION, SECTIONS AND ALL REINFORCEMENT DETAILS ON SHOP DRAWINGS.
- SHOW DESIGN LENGTH AND CASTING LENGTH ON SHOP DRAWINGS.
- SHOW DETAILS OF GIRDER LIFTING DEVICES WITH ITS TYPE, SIZE AND LOCATION ON THE SHOP DRAWINGS.
- AT THE SHOP DRAWING STAGE PROVIDE CRACK CONTROL DEBONDING.
- SHOW ON THE SHOP DRAWINGS THE TYPE AND LOCATION OF TEMPORARY STORAGE SUPPORT AND THE TYPE AND LOCATION OF TEMPORARY TRANSPORTATION BRACING AND SUPPORTS.
- SHOW ANY MODIFICATIONS TO REINFORCEMENT SPLICE AND BENDING DETAILS ON SHOP DRAWINGS.
- ALL MILD STEEL REINFORCEMENT IN GIRDERS SHALL BE EPOXY COATED.
- GIRDER LENGTHS IN CASTING BED SHALL BE DETERMINED AND DEPICTED IN SHOP DRAWINGS TO COMPENSATE FOR GRADE SHORTENING DUE TO PRESTRESS EFFECT.
- TOP SURFACE OF ALL GIRDERS SHALL BE ROUGH FINISHED TO A FULL AMPLITUDE OF 1/4" AND SCRUBBED TRANSVERSELY WITH A COARSE WIRE BRUSH TO REMOVE ALL LAITANCE AND TO PRODUCE A ROUGHENED SURFACE FOR BONDING.
- NO CLEAR COVER LESS THAN AS SHOWN ON THESE PLANS WILL BE ACCEPTED.
- FOR PERMANENT STEEL BRIDGE DECK FORM DETAILS, SEE SHEET DK-03.
- SHOW FORM ANCHOR DETAIL ON THE SHOP DRAWINGS. SUPPORT SYSTEM AND THE GALVANIZED ANCHOR INSERT ARE TO BE FROM AN APPROVED MANUFACTURER. THE ANCHOR INSERT IS TO BE PROVIDED AT EACH WELD REQUIRED ALONG THE DECK FORM AND SHALL NOT BE CONTINUOUS.
- PERMANENT STEEL DECK FORMS AND SUPPORTS SHALL CONFORM TO SECTION 602 OF THE STANDARD SPECIFICATIONS. THESE FORMS SHALL BE THE PROPER GAGE TO SUPPORT, WITHIN SPECIFIED DEFLECTIONS, THE SPECIFIED WEIGHTS FOR THE PARTICULAR SPAN INVOLVED. THE DESIGN SPAN SHALL BE THE CLEAR DISTANCE BETWEEN GIRDER FLANGES LESS 2".
- ANY PERMANENTLY EXPOSED FORM METAL WHERE THE GALVANIZED COATING HAS BEEN DAMAGED SHALL BE THOROUGHLY CLEANED, WIRE BRUSHED AND PAINTED WITH TWO COATS OF ZINC DUST-ZINC OXIDE PAINT, NO COLOR ADDED, TO THE SATISFACTION OF THE ENGINEER. MINOR HEAT DISCOLORATION IN AREAS OF WELDS NEED NOT BE TOUCHED UP.

BEARING PAD NOTES

- SMOOTH CUT AND DEBURR METAL SHIMS.
- GRIT BLAST AND DEGREASE METAL SHIMS.
- ALL BEARING PADS ARE TO BE MOLDED TO DESIGN DIMENSIONS. CUTTING TO SIZE AFTER FABRICATION IS PROHIBITED.
- MEET THE MATERIAL SPECIFICATIONS FOR ELASTOMERIC BEARING REQUIREMENTS OF AASHTO M251. BEARING PADS SHALL BE SAMPLED FOR TESTING ACCORDING TO AASHTO M251, AS DIRECTED.
- PROVIDE NEOPRENE 50 ±5 DUROMETER.
- PROVIDE INTERNAL SHIMS PER AASHTO M270, GRADE 36.
- VULCANIZE PATCH PIN GROOVES.
- SANDBLAST CLEAN THE CONCRETE BEARING SURFACES TO ACHIEVE A ROUGH TEXTURE. DO NOT EPOXY COAT BEARING SURFACES.
- BEARING PAD TOLERANCES IN RADIANS ABOUT TRANSVERSE AXIS TOP AND BOTTOM:
  0.005 (SPANS 1-5)
  ABOUT LONGITUDINAL AXIS OF PAD:
  0.003 RADIANS (SPAN 1)
  0.000 RADIANS (SPANS 2, 3, 4, AND 5)
- BEARING PADS ARE PAID FOR AS A PART OF ITEM 623002 - PRESTRESSED REINFORCED CONCRETE MEMBERS, BOX BEAMS.
- BEARINGS ARE DESIGNED USING METHOD A.

LEGEND:
BRG. = BEARING
EXP. = EXPANSION
FIX. = FIXED
TYP. = TYPICAL

UNOFFICIAL WEBSITE COPY

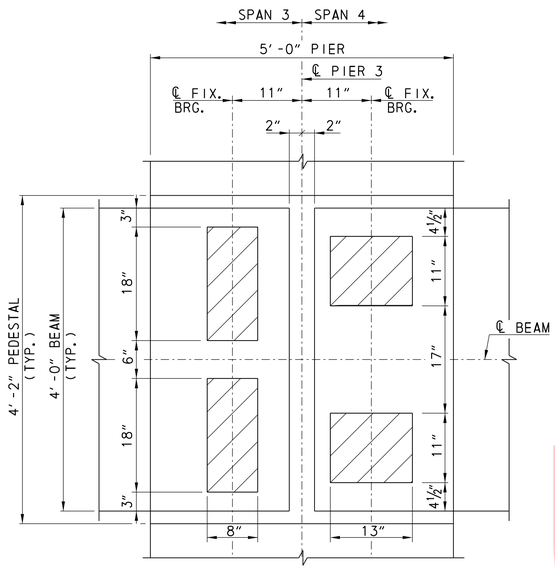

PIER 3
BEARING PAD
LAYOUT PLAN

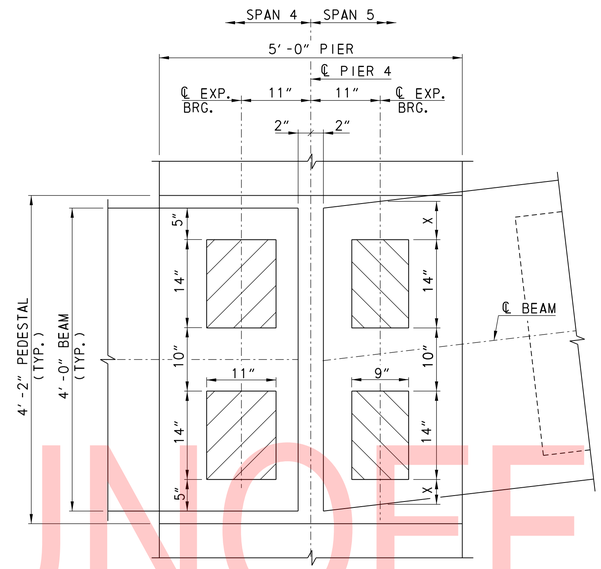

PIER 4
BEARING PAD
LAYOUT PLAN

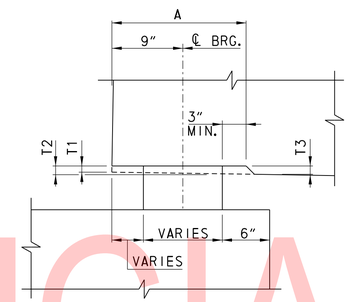

TYPICAL BEAM DAP DETAIL

BEARING PAD LOCATION		
LOCATION	X	Y
BEAM 17	5 3/16"	4 11/16"
BEAM 18	5 3/16"	4 11/16"
BEAM 19	5 1/8"	4 5/8"
BEAM 20	5 1/8"	4 5/8"

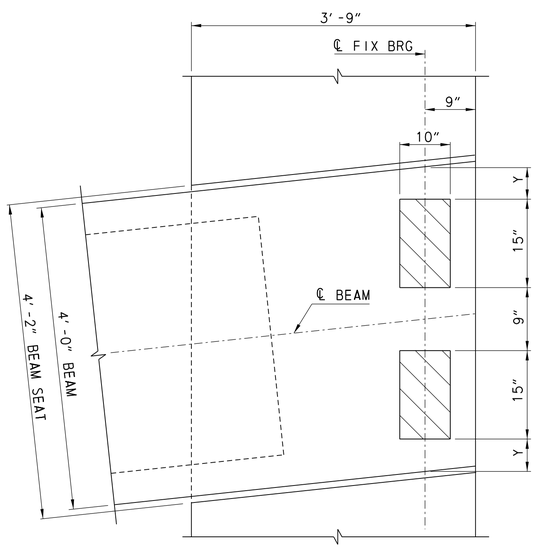

ABUTMENT B BEARING PAD

BEAM DAP SCHEDULE

SPAN	BEAM	NEAR END				FAR END			
		A	T1	T2	T3	A	T1	T2	T3
1	1-4	17	1/4	13/16	1 3/8	17	1/4	11/16	1
2	5-8	17½	1/4	9/16	7/8	17	1/4	½	¾
3	9-12	NO DAP REQUIRED				NO DAP REQUIRED			
4	13-16	18½	1/4	5/8	7/8	17½	1/4	5/8	1
5	17-20	16½	1/4	11/16	1 1/16	16½	1/4	11/16	1 3/16

NOTES:
- AT THE ABUTMENTS, AREAS UNDER THE BEAMS NOT IN CONTACT WITH THE BEARING PADS SHALL BE BLOCKED USING 1" THICK BACKER RODS.
- FOR BEAM FABRICATION DETAILS, SEE SHEETS BM-01 THROUGH BM-06.
- FOR BEARING PAD NOTES, SEE SHEET BB-01.
- FOR SKEW ANGLE AT BEAM ENDS, SEE SHEETS FR-01 AND FR-02.

LEGEND:
BRG. = BEARING
EXP. = EXPANSION
FIX. = FIXED
TYP. = TYPICAL

UNOFFICIAL WEBSITE COPY

BB-02

ADDENDA / REVISIONS	NOT TO SCALE	BR 1-159 ON JAMES STREET OVER CHRISTINA RIVER	CONTRACT T201207101	BRIDGE NO. 1-159	BEAM NOTES AND BEARING DETAILS – 2	SECTION McT
			COUNTY NEW CASTLE	DESIGNED BY: SBM		SHEET NO. 36
				CHECKED BY: BJH		

$DATE$
$TIME$
$FILE$

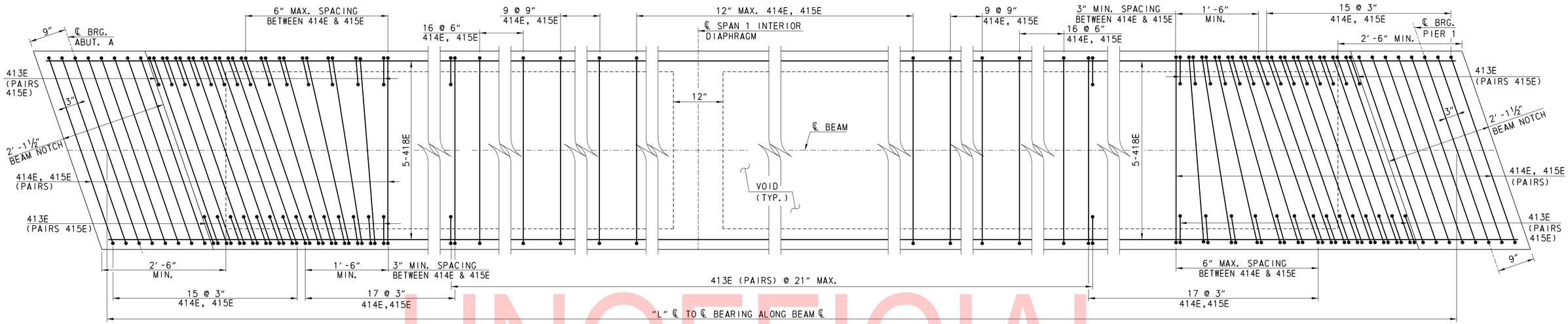

PLAN - SPAN 1

SCALE 0 1 2 3 FEET

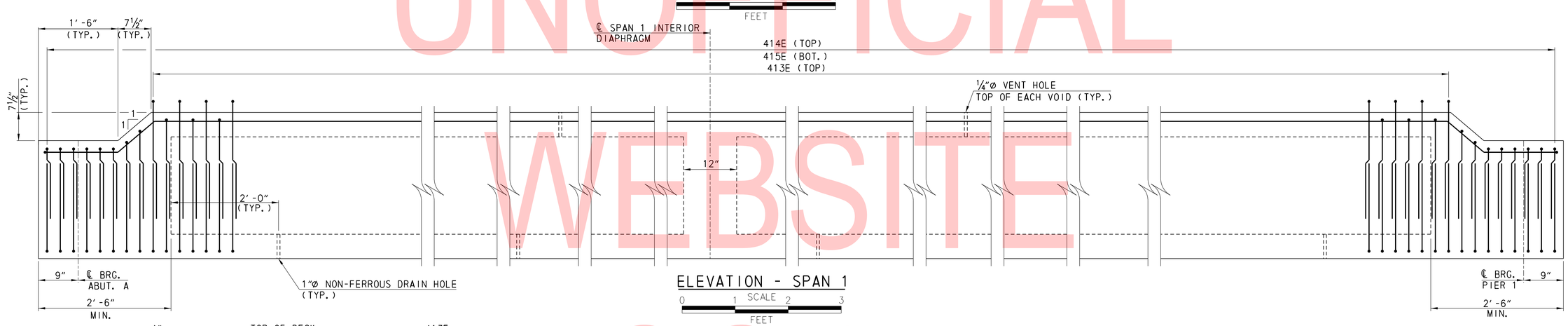

ELEVATION - SPAN 1

SCALE 0 1 2 3 FEET

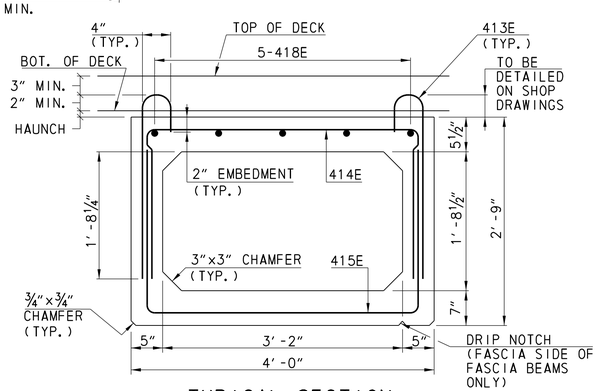

TYPICAL SECTION SPAN 1

SCALE 0 1 2 3 FEET

INTERIOR DIAPHRAGM	LOCATION *
BEAM 1	36.81'
BEAM 2	32.66'
BEAM 3	39.95'
BEAM 4	36.06'

SPAN LENGTH	
BEAM	"L"
1	73'-7⅜"
2	73'-1⅛"
3	72'-7⅛"
4	72'-1½"

*DISTANCE MEASURED ALONG ℄ OF BEAM FROM ℄ BEARING ABUTMENT A.

NOTES:
- FOR BEAM NOTES, SEE SHEET BB-01.
- FOR DIAPHRAGM DETAILS, SEE SHEETS FR-03 AND FR-04.
- FOR LOCATION OF THREADED INSERTS, SEE DIAPHRAGM DETAILS SHEETS FR-03 AND FR-04.
- FOR ADDITIONAL BEAM DETAILS, SEE SHEET BM-06.
- FOR CAMBER INFORMATION, SEE SHEET FR-01.
- FOR DAPPING DETAILS, SEE SHEET BB-02.
- PROVIDE THREADED INSERTS IN P/S BEAMS FOR DIAPHRAGM REINFORCEMENT.
- FOR SKEW ANGLE AT BEAM ENDS, SEE SHEET FR-02.

LEGEND:

ABUT.	=	ABUTMENT
BOT.	=	BOTTOM
BRG.	=	BEARING
MAX.	=	MAXIMUM
MIN.	=	MINIMUM
SPA.	=	SPACING
TYP.	=	TYPICAL

UNOFFICIAL WEBSITE COPY

ADDENDA / REVISIONS

SCALE: AS NOTED

BR 1-159 ON JAMES STREET OVER CHRISTINA RIVER

CONTRACT	BRIDGE NO. 1-159
T201207101	DESIGNED BY: SBM
COUNTY	
NEW CASTLE	CHECKED BY: BJH

BEAM PLAN, ELEVATION AND SECTIONS - 1

BM-01

SECTION McT

SHEET NO. 37

$DATE$
$TIME$
$FILE$

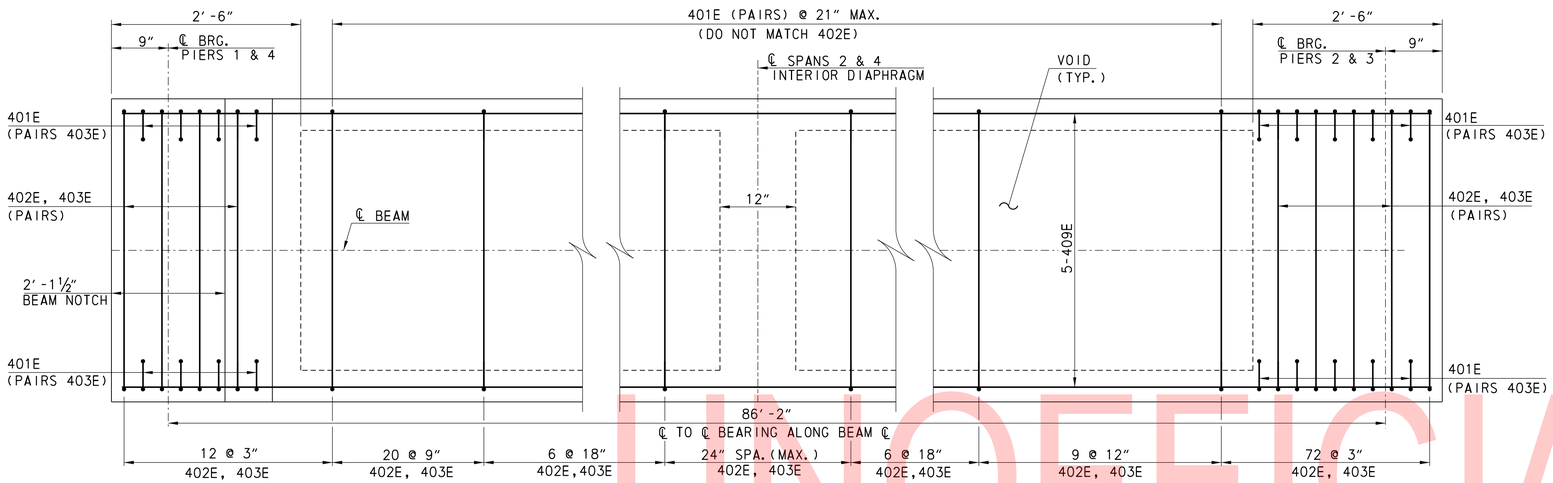

PLAN
SPANS 2 AND 4

SCALE
0 1 2 3
FEET

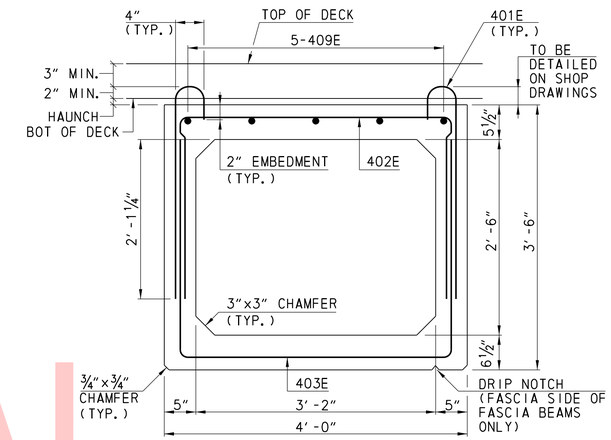

TYPICAL SECTION
SPANS 2 & 4

SCALE
0 1 2 3
FEET

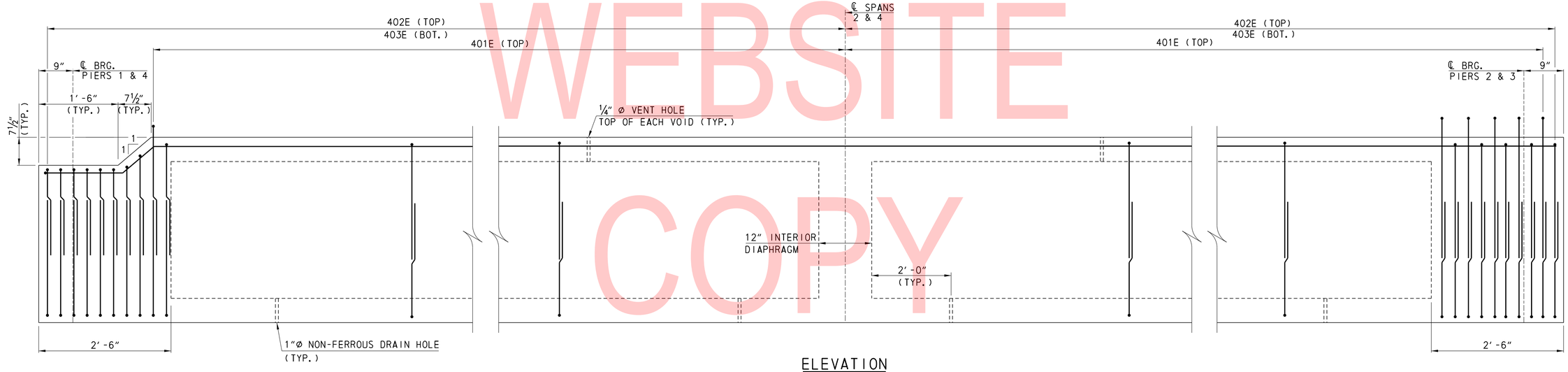

ELEVATION
SPANS 2 AND 4

SCALE
0 1 2 3
FEET

NOTES:
- FOR BEAM NOTES, SEE SHEET BB-01.
- FOR DIAPHRAGM DETAILS, SEE SHEETS FR-03 AND FR-04.
- FOR LOCATION OF THREADED INSERTS, SEE DIAPHRAGM DETAILS SHEETS FR-03 AND FR-04.
- FOR ADDITIONAL BEAM DETAILS, SEE SHEETS BM-05 AND BM-06.
- FOR CAMBER INFORMATION, SEE SHEET FR-01.
- FOR DAPPING DETAILS, SEE SHEET BB-02.
- PROVIDE THREADED INSERTS IN P/S BEAMS FOR DIAPHRAGM REINFORCEMENT.

LEGEND:

BOT.	=	BOTTOM
BRG.	=	BEARING
MAX.	=	MAXIMUM
MIN.	=	MINIMUM
TYP.	=	TYPICAL

UNOFFICIAL WEBSITE COPY

ADDENDA / REVISIONS	SCALE: AS NOTED	BR 1-159 ON JAMES STREET OVER CHRISTINA RIVER	CONTRACT T201207101	BRIDGE NO. 1-159	BEAM PLAN, ELEVATION AND SECTIONS – 2	BM-02
			COUNTY NEW CASTLE	DESIGNED BY: ZME		SECTION McT
				CHECKED BY: BJH		SHEET NO. 38

$DATE$
2024/12 PM
$FILE$

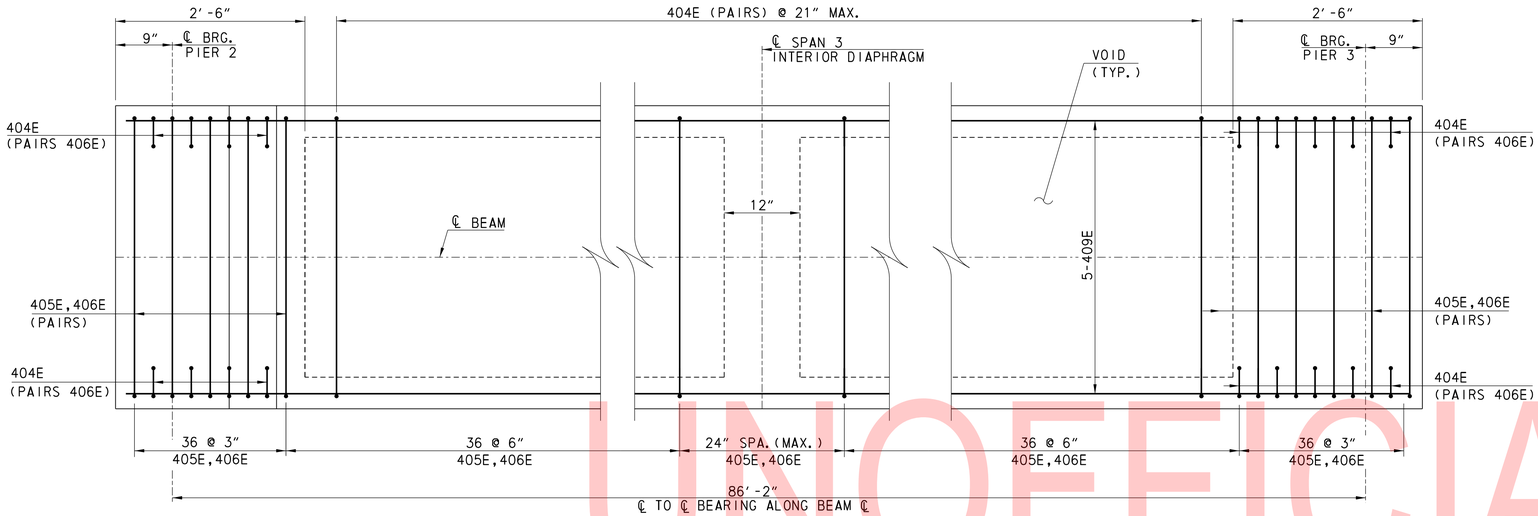

PLAN
SPAN 3

SCALE

0 1 2 3

FEET

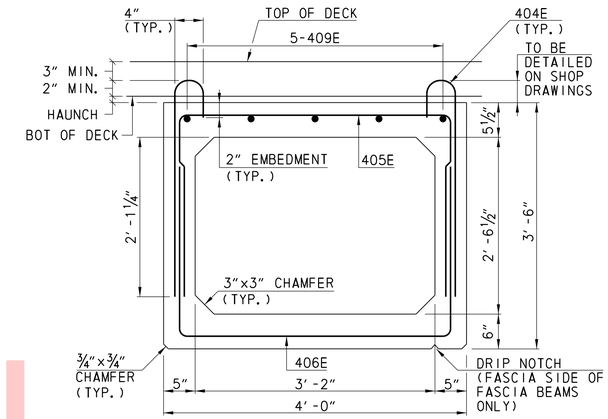

TYPICAL SECTION
SPAN 3

SCALE

0 1 2 3

FEET

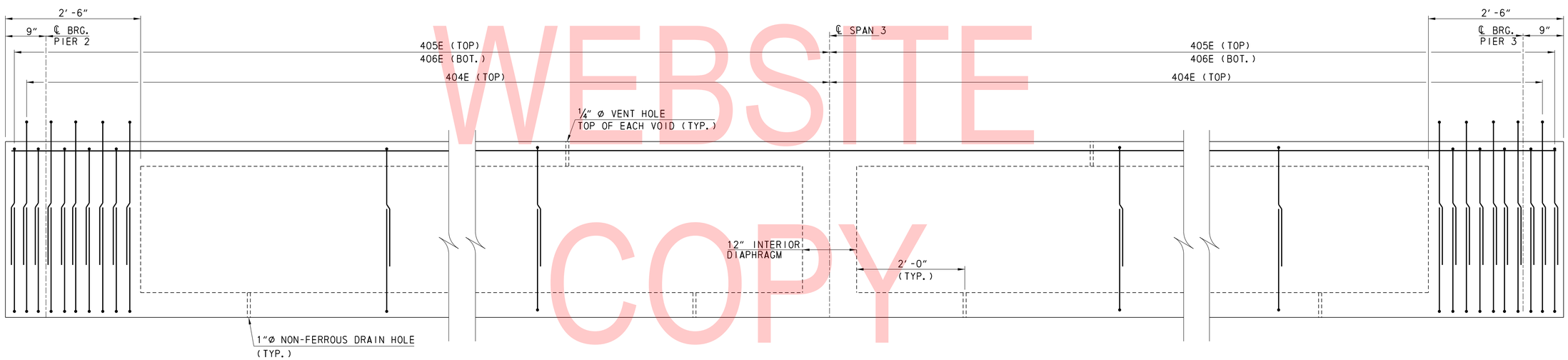

ELEVATION
SPAN 3

SCALE

0 1 2 3

FEET

NOTES:

- FOR BEAM NOTES, SEE SHEET BB-01.
- FOR DIAPHRAGM DETAILS, SEE SHEETS FR-03 AND FR-04.
- FOR LOCATION OF THREADED INSERTS, SEE DIAPHRAGM DETAILS SHEETS FR-03 AND FR-04.
- FOR ADDITIONAL BEAM DETAILS, SEE SHEET BM-05.
- FOR CAMBER INFORMATION, SEE SHEET FR-01.
- FOR DAPPING DETAILS, SEE SHEET BB-02.
- PROVIDE THREADED INSERTS IN P/S BEAMS FOR DIAPHRAGM REINFORCEMENT.

LEGEND:

BOT. = BOTTOM
BRG. = BEARING
MAX. = MAXIMUM
MIN. = MINIMUM
SPA. = SPACING
TYP. = TYPICAL

UNOFFICIAL WEBSITE COPY

ADDENDA / REVISIONS	SCALE: AS NOTED	BR 1-159 ON JAMES STREET OVER CHRISTINA RIVER	CONTRACT T201207101	BRIDGE NO. 1-159	BEAM PLAN, ELEVATION AND SECTIONS – 3	BM-03
			COUNTY NEW CASTLE	DESIGNED BY: ZME		SECTION McT
				CHECKED BY: BJH		SHEET NO. 39

$DATE$
$TIME$ PM
$FILE$

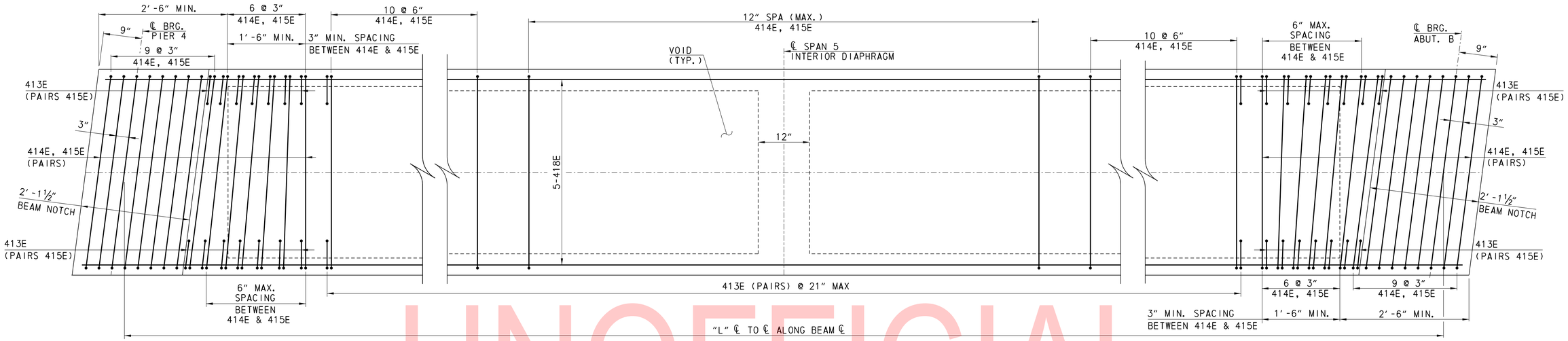

PLAN - SPAN 5

SCALE 0 1 2 3 FEET

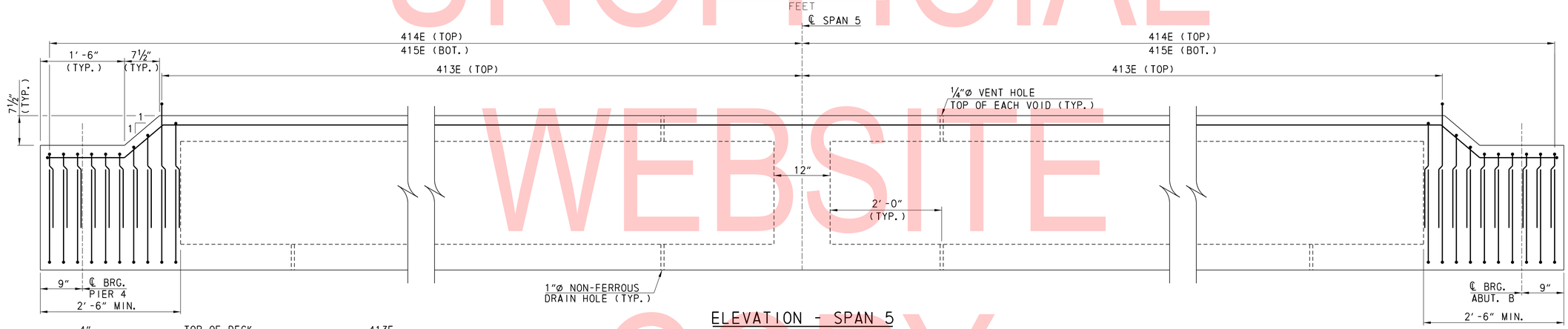

ELEVATION - SPAN 5

SCALE 0 1 2 3 FEET

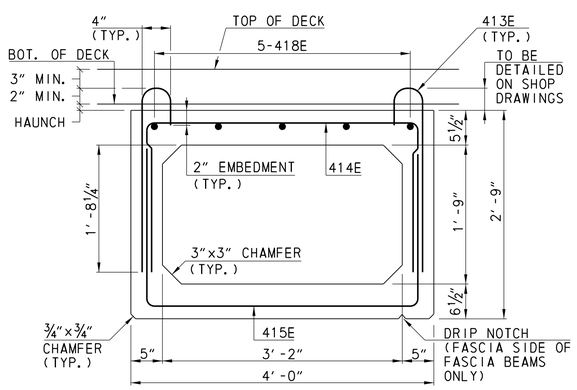

TYPICAL SECTION - SPAN 5

SCALE 0 1 2 3 FEET

SPAN LENGTH	
BEAM	"L"
17	54'-6½"
18	54'-5½"
19	54'-4¾"
20	54'-4"

NOTES:

- FOR BEAM NOTES, SEE SHEET BB-01.
- FOR DIAPHRAGM DETAILS, SEE SHEETS FR-03 AND FR-04.
- FOR LOCATION OF THREADED INSERTS, SEE DIAPHRAGM DETAILS SHEET FR-03 AND FR-04.
- FOR ADDITIONAL BEAM DETAILS, SEE SHEET BM-06.
- FOR CAMBER INFORMATION, SEE SHEET FR-01.
- FOR SKEW ANGLE AT BEAM ENDS, SEE SHEET FR-02.
- FOR DAPPING DETAILS, SEE SHEET BB-02.

LEGEND:

BOT. = BOTTOM
BRG. = BEARING
MAX. = MAXIMUM
MIN. = MINIMUM
SPA. = SPACING
TYP. = TYPICAL

UNOFFICIAL WEBSITE COPY

ADDENDA / REVISIONS

SCALE: AS NOTED

BR 1-159 ON JAMES STREET OVER CHRISTINA RIVER

CONTRACT	BRIDGE NO.	1-159
T201207101	DESIGNED BY: SBM	
COUNTY		
NEW CASTLE	CHECKED BY: BJH	

BEAM PLAN, ELEVATION AND SECTIONS - 4

BM-04

SECTION McT

SHEET NO. 40

$DATE$
$TIME$
$FILE$

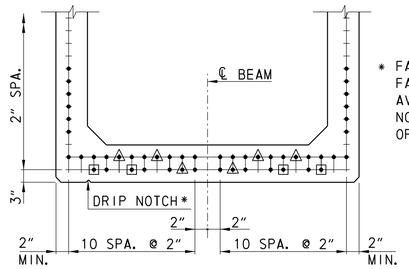

* FASCIA SIDE OF FASCIA BEAMS ONLY. AVOID PLACING DRIP NOTCH UNDER LOCATION OF STRAND.

• STRAND LOCATION
◬ STRANDS DEBONDED 3'-0"
⊡ STRANDS DEBONDED 9'-6"

SPANS 2 & 4 (48"x42") PRESTRESSING STRAND PATTERN

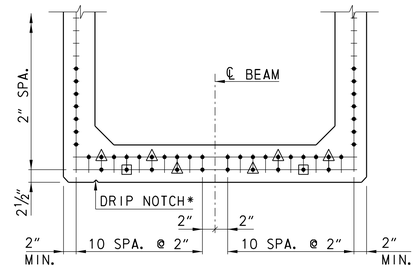

• STRAND LOCATION
◬ STRANDS DEBONDED 4'-0"
⊡ STRANDS DEBONDED 7'-0"

SPAN 3 (48"x42") PRESTRESSING STRAND PATTERN

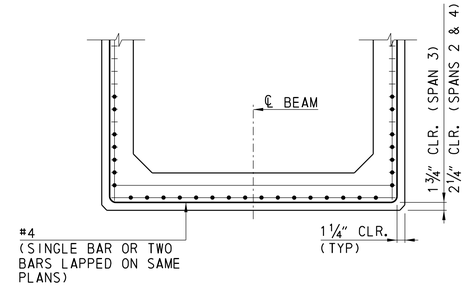

TYPICAL STRAND CONFINEMENT

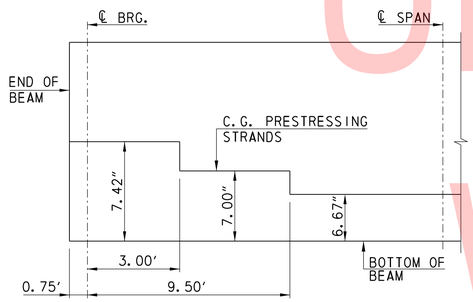

SPANS 2 & 4 DEBONDING DIAGRAM (48"x42")

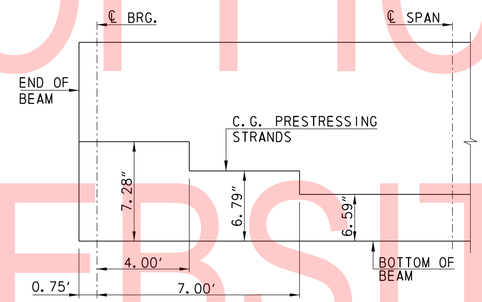

SPAN 3 DEBONDING DIAGRAM (48"x42")

PRESTRESSING DATA		
BEAM SIZE	48"x42"	48"x42"
SPAN NUMBER	2 & 4	3
NUMBER OF STRANDS	48	44
C.G. @ MIDSPAN	6.67"	6.59"
C.G. @ ℄ BEARING	7.42"	7.28"
f'ci (ksi.)	6.8	6.8
f'c (ksi.)	8.0	8.0
Pj (K)	2109.2	1933.5
Fpj (ksi.)	202.5	202.5
STRAND TYPE	LOW RELAXATION 270 ksi, 0.60" DIA. STRAND, AREA = 0.217 in.^{2}	

NOTE:
FOR ADDITIONAL BEAM INFORMATION, SEE SHEETS BB-01, BB-02, BM-02, AND BM-03.

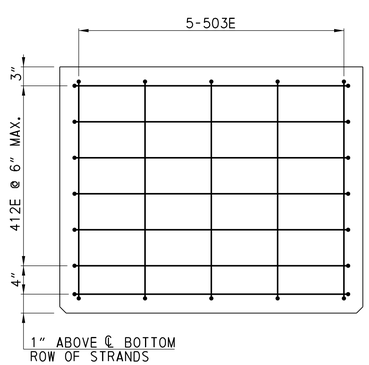

SECTION A-A WITHOUT BEAM NOTCH

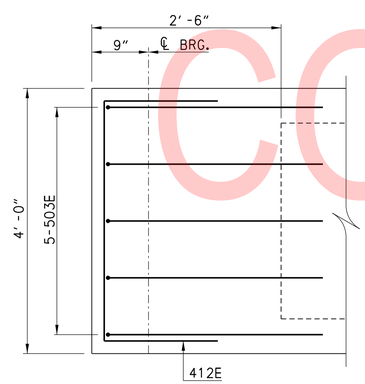

PLAN - END BLOCK WITHOUT BEAM NOTCH

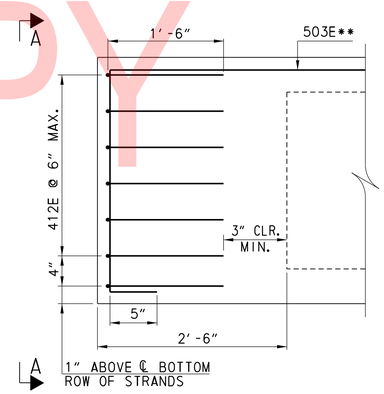

** 2'-0" MIN. AND EXTEND 1'-6" MIN. BEYOND LIFTING INSERTS.

ELEVATION - END BLOCK WITHOUT BEAM NOTCH

NOTES:
- WORK THIS SHEET WITH SHEETS BM-02 AND BM-03.
- FOR END BLOCK DETAILS WITH BEAM NOTCH, SEE SHEET BM-06.

LEGEND
BRG. = BEARING
CLR. = CLEAR
MAX. = MAXIMUM
MIN. = MINIMUM
SPA. = SPACING
TYP. = TYPICAL

UNOFFICIAL WEBSITE COPY

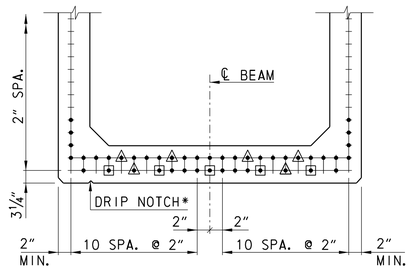

• STRAND LOCATION
◬ STRANDS DEBONDED 2'-6"
⊡ STRANDS DEBONDED 9'-0"

SPAN 1 (48"x33")
PRESTRESSING STRAND PATTERN

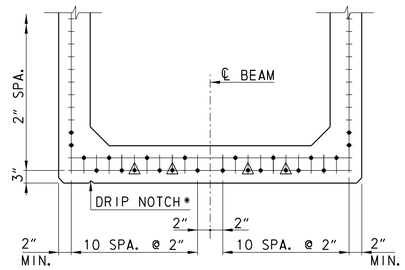

• STRAND LOCATION
◬ STRANDS DEBONDED 2'-6"

SPAN 5 (48"x33")
PRESTRESSING STRAND PATTERN

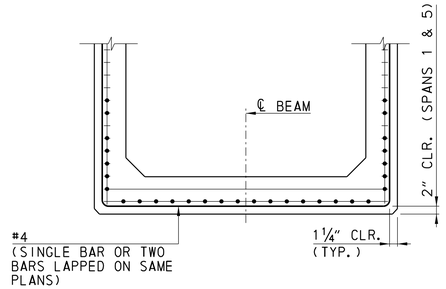

TYPICAL STRAND CONFINEMENT

PRESTRESSING DATA		
BEAM SIZE	48"x33"	48"x33"
SPAN NUMBER	1	5
NUMBER OF STRANDS	44	24
C.G. @ MIDSPAN	5.11"	4.50"
C.G. @ ℄ BEARING	5.49"	4.80"
f'ci (ksi.)	6.8	6.8
f'c (ksi.)	8.0	8.0
Pj (K)	1933.5	1054.6
Fpj (ksi.)	202.5	202.5
STRAND TYPE	LOW RELAXATION 270 ksi, 0.60" DIA. STRAND, AREA = 0.217 In.²	

NOTE:
FOR ADDITIONAL BEAM INFORMATION, SEE SHEETS BB-01 AND BB-02, BM-01 AND BM-04.

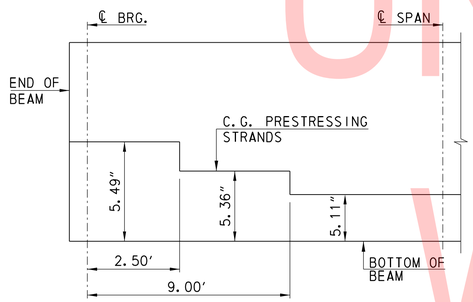

SPAN 1
DEBONDING DIAGRAM
(48"x33")

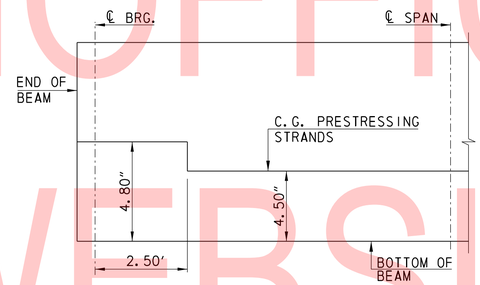

SPAN 5
DEBONDING DIAGRAM
(48"x33")

* FASCIA SIDE OF FASCIA BEAMS ONLY. AVOID PLACING DRIP NOTCH UNDER LOCATION OF STRAND.

** 2'-0' MINIMUM AND EXTEND 1'-6" MINIMUM BEYOND LIFTING INSERTS.

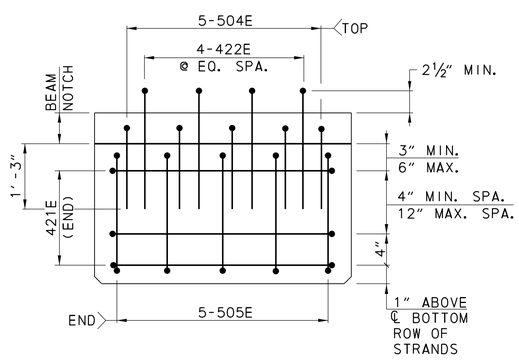

SECTION B-B
WITH BEAM NOTCH

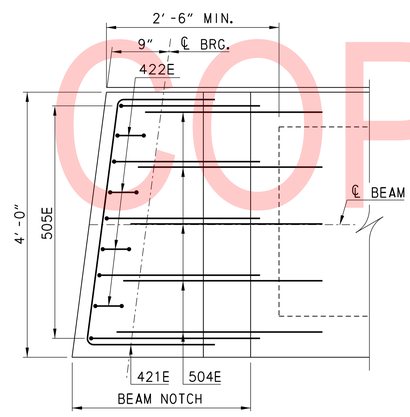

PLAN - END BLOCK
WITH BEAM NOTCH

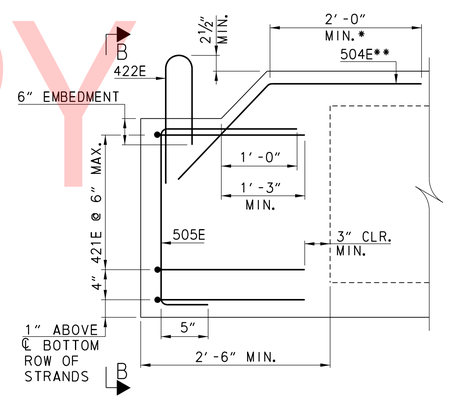

ELEVATION - END BLOCK
WITH BEAM NOTCH

NOTES:
• WORK THIS SHEET WITH SHEETS BM-01, BM-02 AND BM-04.
• FOR END BLOCK DETAILS WITHOUT BEAM NOTCH, SEE SHEET BM-05.

LEGEND
BRG. = BEARING
CLR. = CLEAR
MAX. = MAXIMUM
MIN. = MINIMUM
SPA. = SPACING
TYP. = TYPICAL

UNOFFICIAL WEBSITE COPY

ADDENDA / REVISIONS	NOT TO SCALE	BR 1-159 ON JAMES STREET OVER CHRISTINA RIVER	CONTRACT T201207101	BRIDGE NO. 1-159	BEAM DETAILS – 2	BM-06
			COUNTY NEW CASTLE	DESIGNED BY: SBM		SECTION McT
				CHECKED BY: BJH		SHEET NO. 42

$DATE$
$TIME$ PM
$FILE$

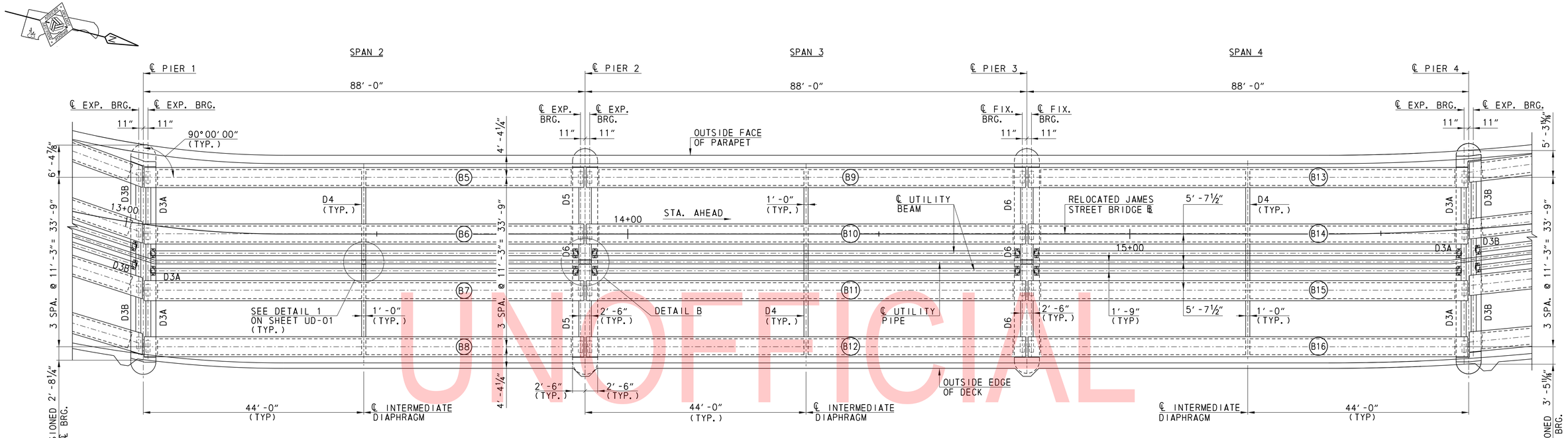

PLAN

SCALE

0 10 20 30 0001

FEET

CAMBER TABLE			
BEAM	A(In)	B(In)	C(In)
B1	3.67	1.50	2.17
B2	3.62	1.74	1.88
B3	3.59	1.75	1.84
B4	3.59	1.65	1.94
B5	3.71	1.73	1.98
B6	3.71	1.85	1.86
B7	3.71	1.86	1.85
B8	3.71	1.70	2.01
B9	3.50	1.55	1.95
B10	3.50	1.73	1.77
B11	3.50	1.75	1.75
B12	3.50	1.57	1.93
B13	3.71	1.68	2.03
B14	3.71	1.82	1.89
B15	3.71	1.83	1.88
B16	3.71	1.67	2.04
B17	1.28	0.44	0.84
B18	1.28	0.52	0.76
B19	1.28	0.52	0.76
B20	1.28	0.46	0.82

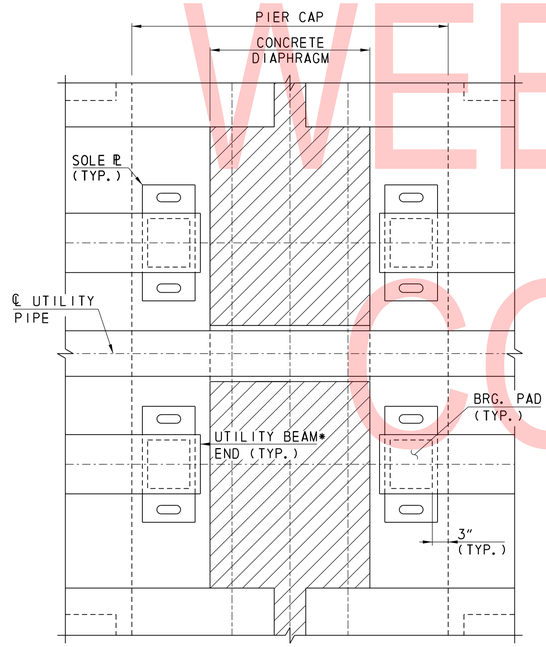

DETAIL B
PIER 2 SHOWN, PIER 3 SIMILAR

NOT TO SCALE

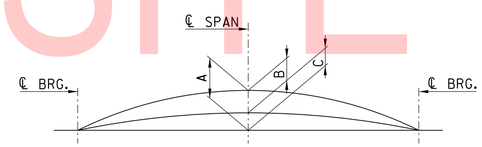

BEAM CAMBER DESIGN
NOT TO SCALE

CAMBER NOTES

A = ESTIMATED PRESTRESS CAMBER LESS DEFLECTION DUE TO DEAD LOAD OF BEAM TIMES CREEP FACTOR OF 1.6 AND INITIAL P/S LOSS OF 10%.

B = DEFLECTION DUE TO DEAD LOAD OF SLAB, PERMANENT METAL FORMS AND SUPERIMPOSED DEAD LOAD.

C = NET FINAL CAMBER (A-B).

- CAMBER VALUES ARE THEORETICAL AND MAY VARY WITH ACTUAL CONCRETE STRENGTH (AGE), VARIOUS PRESTRESSING CONDITIONS, CREEP FACTOR AND PRESTRESS LOSSES.
- BEARING SEAT ELEVATIONS AND HAUNCH THICKNESS HAVE BEEN CALCULATED USING THE NET FINAL CAMBER "C".

DIAPHRAGM

NOTES:
- FOR TYPICAL SECTION, SEE SHEET PE-02.
- FOR BEAM DETAILS, SEE SHEETS BM-01 THROUGH BM-06.
- FOR DIAPHRAGM DETAILS, SEE SHEET FR-03 AND FR-04.
- FOR SPANS 1 AND 5, SEE SHEET FR-02.
- FOR UTILITY BEAM DETAILS, SEE SHEET UD-01 AND UD-02.

LEGEND
BRG. = BEARING
EXP. = EXPANSION
FIX. = FIXED
MIN. = MINIMUM
SPA. = SPACE
STA. = STATION
TYP. = TYPICAL

UNOFFICIAL WEBSITE COPY

ADDENDA / REVISIONS	SCALE: AS NOTED	BR 1-159 ON JAMES STREET OVER CHRISTINA RIVER	CONTRACT T201207101	BRIDGE NO. 1-159	FRAMING PLAN SPANS 2 – 4	FR-01
			COUNTY NEW CASTLE	DESIGNED BY: ZME		SECTION McT
				CHECKED BY: BJH		SHEET NO. 43

$DATE$ 3/20/2019 PM $FILE$

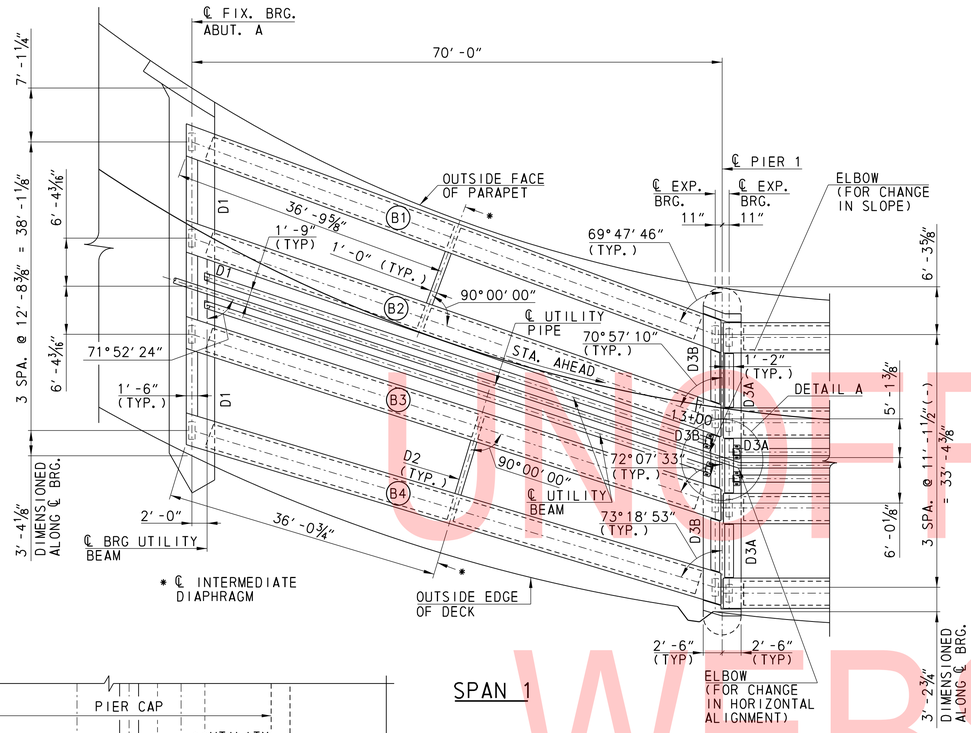

SPAN 1

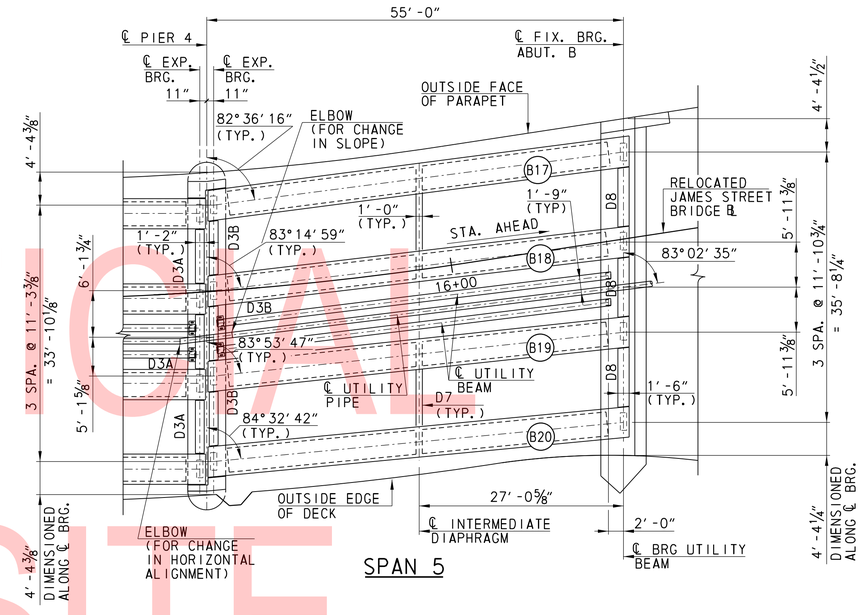

SPAN 5

PLAN

SCALE

0 10 20 30

FEET

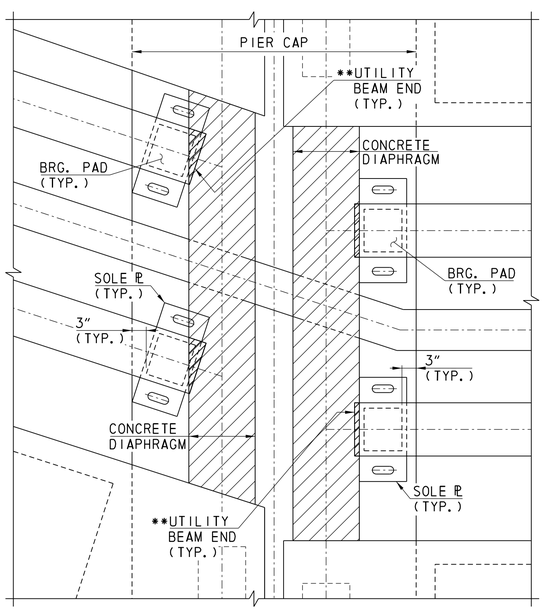

DETAIL A
PIER 1 SHOWN, PIER 4 SIMILAR
NOT TO SCALE

DIAPHRAGM

** CLIP TOP FLANGE AND WEB TO AVOID INTERFERENCE WITH CONCRETE DIAPHRAGM

NOTES:
- FOR TYPICAL SECTION, SEE SHEET PE-02.
- FOR BEAM DETAILS, SEE SHEETS BM-01 THROUGH BM-06.
- FOR DIAPHRAGM DETAILS, SEE SHEETS FR-03 AND FR-04.
- OMIT INTERMEDIATE DIAPHRAGM AT UTILITY BAY.
- FOR SPANS 2, 3 AND 4, SEE SHEET FR-01.
- FOR UTILITY BEAM DETAILS, SEE SHEET UD-01 AND UD-02.

LEGEND
ABUT. = ABUTMENT
BRG. = BEARING
EXP. = EXPANSION
FIX. = FIXED
SPA. = SPACE
STA. = STATION
TYP. = TYPICAL

UNOFFICIAL WEBSITE COPY

ADDENDA / REVISIONS	SCALE: AS NOTED	BR 1-159 ON JAMES STREET OVER CHRISTINA RIVER	CONTRACT T201207101	BRIDGE NO. 1-159	FRAMING PLAN SPANS 1 AND 5	FR-02
			COUNTY NEW CASTLE	DESIGNED BY: SBM		SECTION McT
				CHECKED BY: BJH		SHEET NO. 44

$DATE$
$TIME$
$FILE$

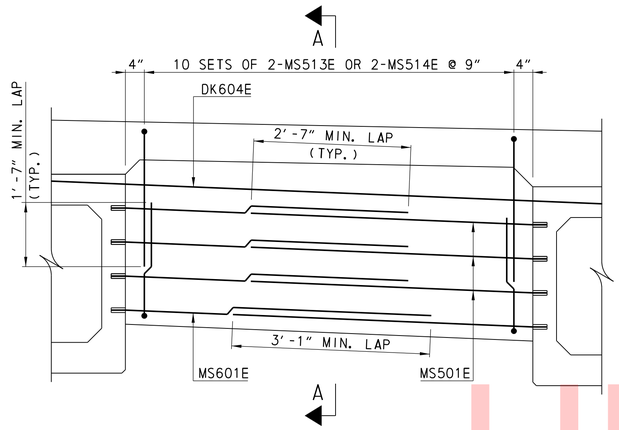

ELEVATION @ PIERS 1 AND 4 - D3A AND D3B

NOT TO SCALE

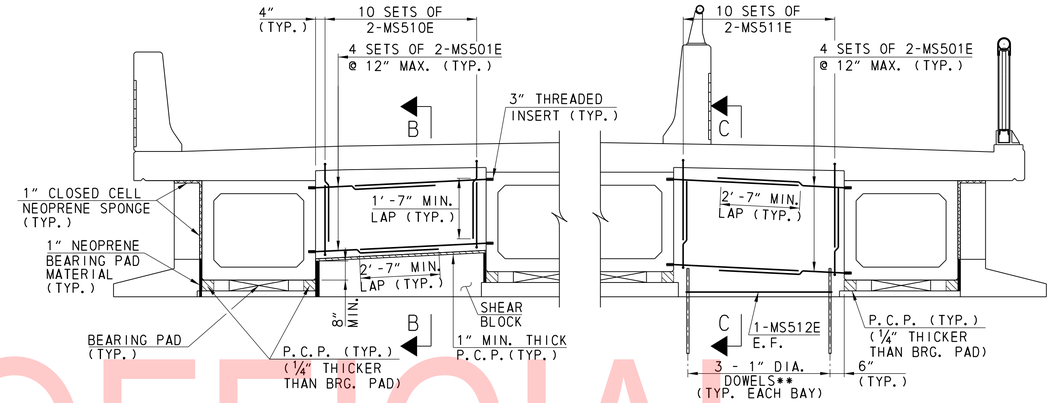

AT PIER 2 - D5 AT PIER 2 AND PIER 3 - D6**

DIAPHRAGM ELEVATION AT PIERS

SCALE 0 2 4 6 FEET

** OMIT DOWELS AT PIER 2

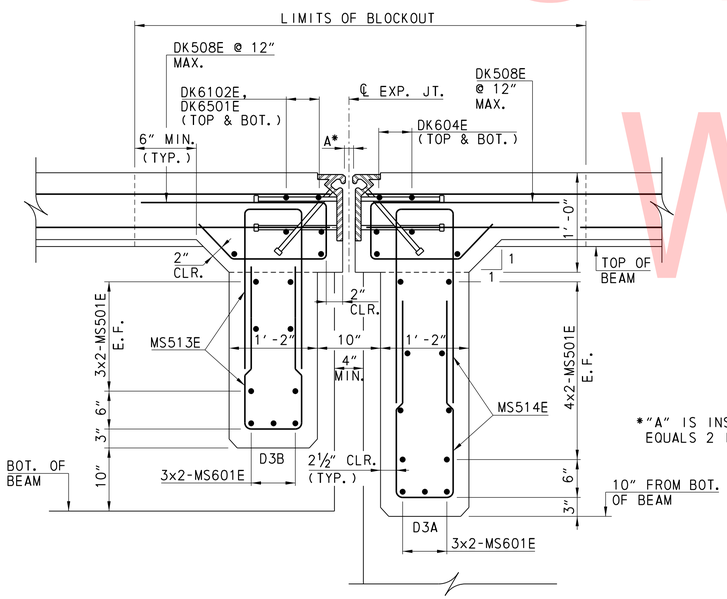

*"A" IS INSTALLATION WIDTH EQUALS 2 INCHES AT 68°F.

SECTION A-A

NOT TO SCALE

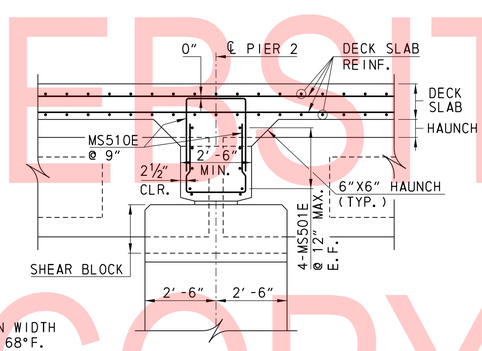

SECTION B-B

SCALE 0 2 4 6 FEET

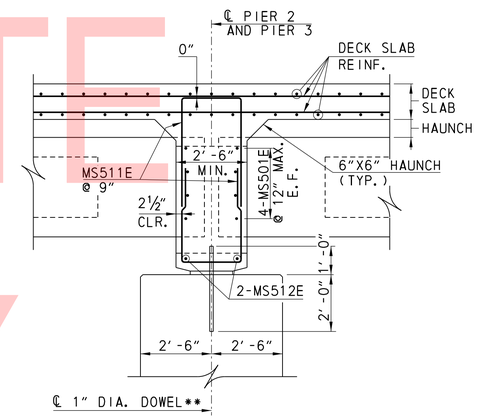

SECTION C-C

SCALE 0 2 4 6 FEET

NOTES

- FOR SHEAR BLOCK DETAILS, SEE SHEET PR-01, PR02 AND PR-04.
- FOR FRAMING PLAN, SEE SHEETS FR-01 AND FR-02.
- FOR BEARING PAD DETAILS, SEE SHEETS BB-01 AND BB-02.
- FOR BEAM DETAILS, SEE SHEETS BM-01 THROUGH BM-06.
- FOR REINFORCEMENT BAR LIST, SEE SHEET BR-04.
- FOR DOWEL DETAIL, SEE SHEET PR-03.
- FOR EXPANSION JOINT DETAILS, SEE SHEET EX-01.
- FOR ARCHITECTURAL TREATMENT DETAIL ON PARAPETS, SEE SHEET DK-05.

LEGEND

ABUT.	=	ABUTMENT
BRG.	=	BEARING
BOT.	=	BOTTOM
CLR.	=	CLEARANCE
DIA.	=	DIAMETER
E.F.	=	EACH FACE
EXP.	=	EXPANSION
JT.	=	JOINT
P.C.P.	=	PREFORMED CELLULAR POLYSTYRENE
MAX.	=	MAXIMUM
MIN.	=	MINIMUM
REINF.	=	REINFORCEMENT
TYP.	=	TYPICAL

DIMENSION "A" TABLE

(INSTALLATION DIMENSION "A" @ VARIOUS TEMPERATURE)

LOCATION	TEMPERATURE (°F)	-10	-5	5	15	25	32	40	50	60	68	80	85	95	105	110
PIER 1		3⅜"	3¼"	3⅛"	3"	2¾"	2⅝"	2½"	2⅜"	2⅛"	2"	1¾"	1¾"	1½"	1⅜"	1¼"
PIER 4		2¾"	2¾"	2⅝"	2½"	2½"	2⅜"	2¼"	2⅛"	2⅛"	2"	1⅞"	1⅞"	1¾"	1⅝"	1⅝"

NOTE: TABLE TO BE SHOWN ON FABRICATORS SHOP DRAWINGS.

UNOFFICIAL WEBSITE COPY

ADDENDA / REVISIONS	SCALE: AS NOTED	BR 1-159 ON JAMES STREET OVER CHRISTINA RIVER	CONTRACT T201207101	BRIDGE NO. 1-159	DIAPHRAGM DETAILS – 1	FR-03
			COUNTY NEW CASTLE	DESIGNED BY: ZME		SECTION McT
				CHECKED BY: BJH		SHEET NO. 45

$DATE$ $TIME$ PM $FILE$

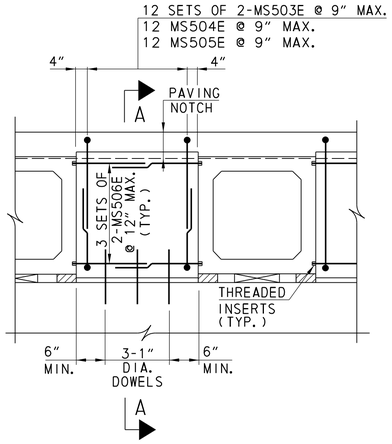

ABUTMENT A - DIAPHRAGM D1

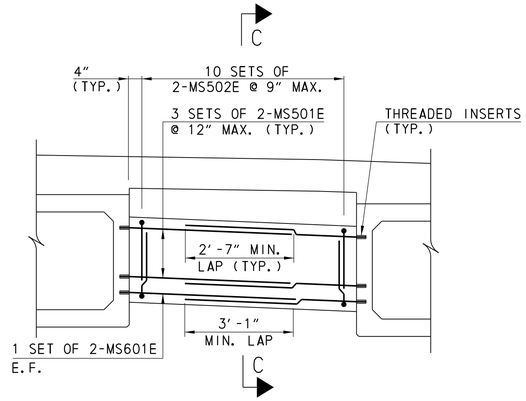

INTERMEDIATE DIAPHRAGM
SPANS 2, 3, & 4 - D4

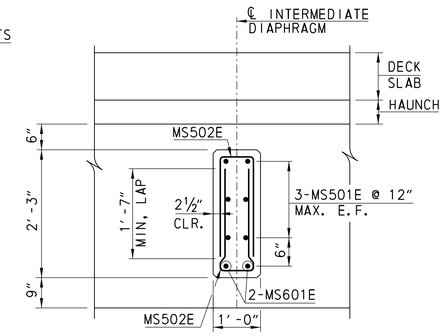

SECTION C-C

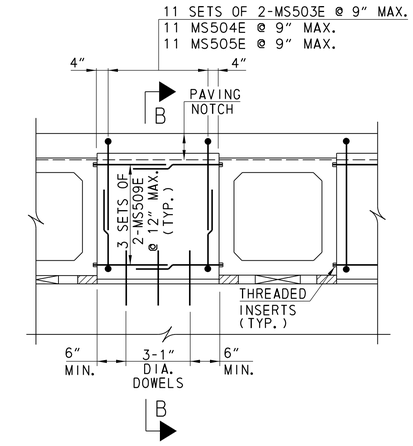

ABUTMENT B - DIAPHRAGM D8

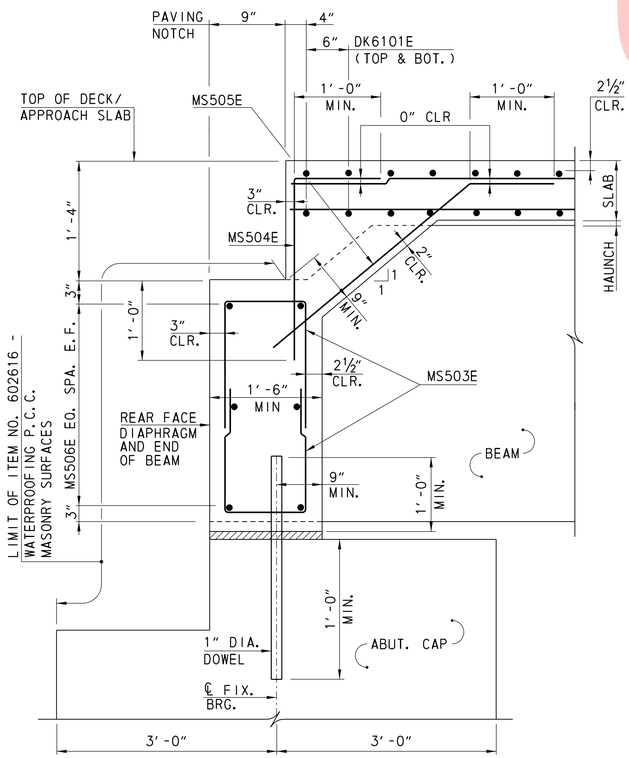

SECTION A-A

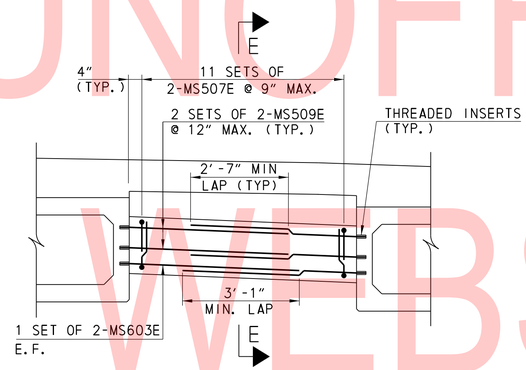

INTERMEDIATE DIAPHRAGM
SPAN 5 - D7

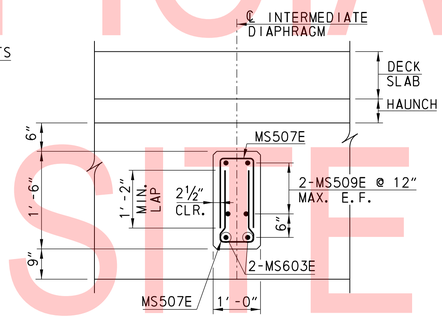

SECTION E-E

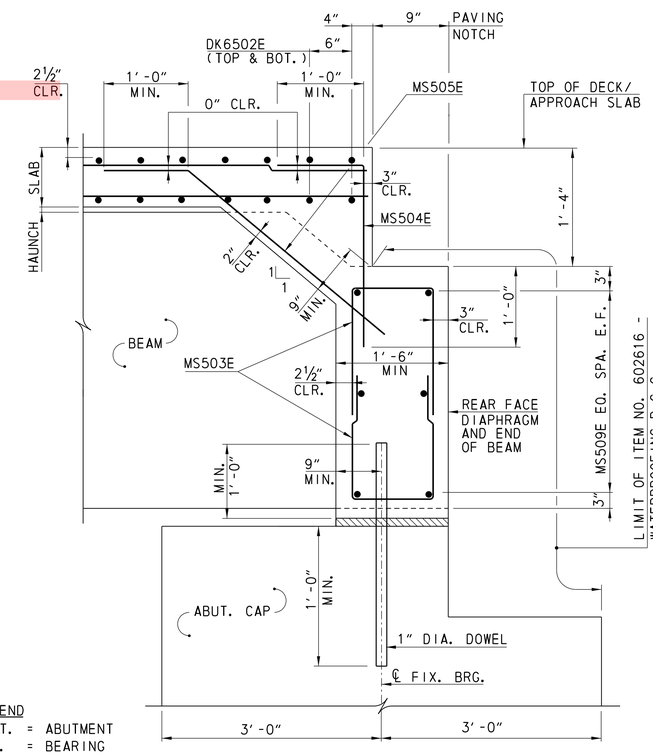

SECTION B-B

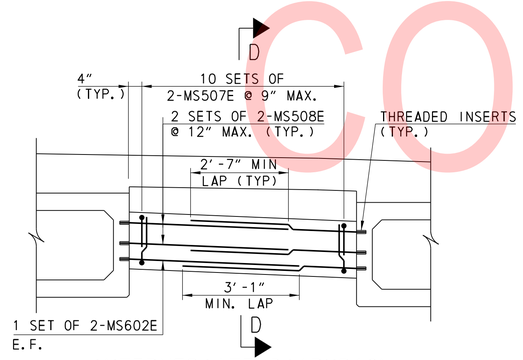

INTERMEDIATE DIAPHRAGM
SPAN 1 - D2

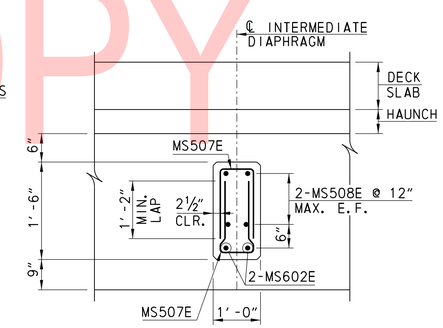

SECTION D-D

LEGEND

ABUT.	=	ABUTMENT
BRG.	=	BEARING
BOT.	=	BOTTOM
CLR.	=	CLEARANCE
DIA.	=	DIAMETER
E.F.	=	EACH FACE
EQ.	=	EQUAL
FIX.	=	FIXED
MAX.	=	MAXIMUM
MIN.	=	MINIMUM
SPA.	=	SPACE
TYP.	=	TYPICAL

NOTES

- FOR FRAMING PLAN, SEE SHEETS FR-01 AND FR-02.
- FOR BEARING PAD DETAILS, SEE SHEETS BB-01 AND BB-02.
- FOR BEAM DETAILS, SEE SHEETS BM-01 THROUGH BM-06.
- FOR REINFORCEMENT BAR LIST, SEE SHEET BR-03.
- FOR DOWEL DETAILS, SEE SHEET PR-03.

UNOFFICIAL WEBSITE COPY

ADDENDA / REVISIONS

NOT TO SCALE

BR 1-159 ON JAMES STREET OVER CHRISTINA RIVER

CONTRACT	BRIDGE NO.	1-159
T201207101	DESIGNED BY: SBM	
COUNTY		
NEW CASTLE	CHECKED BY: BJH	

DIAPHRAGM DETAILS - 2

FR-04
SECTION
McT
SHEET NO.
46

$DATE$
$TIME$
$FILE$

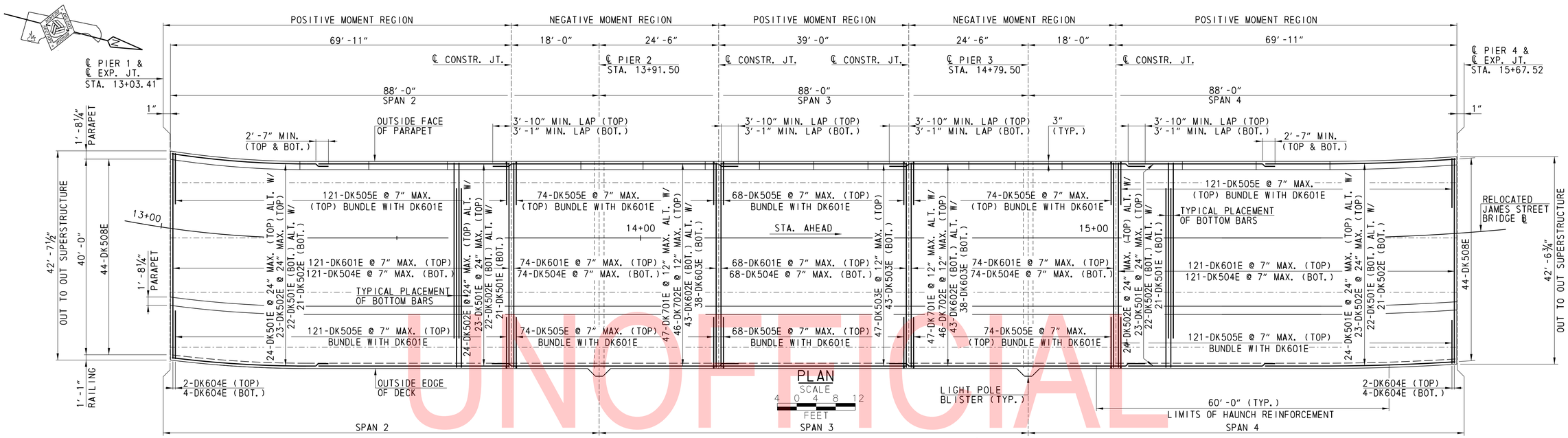

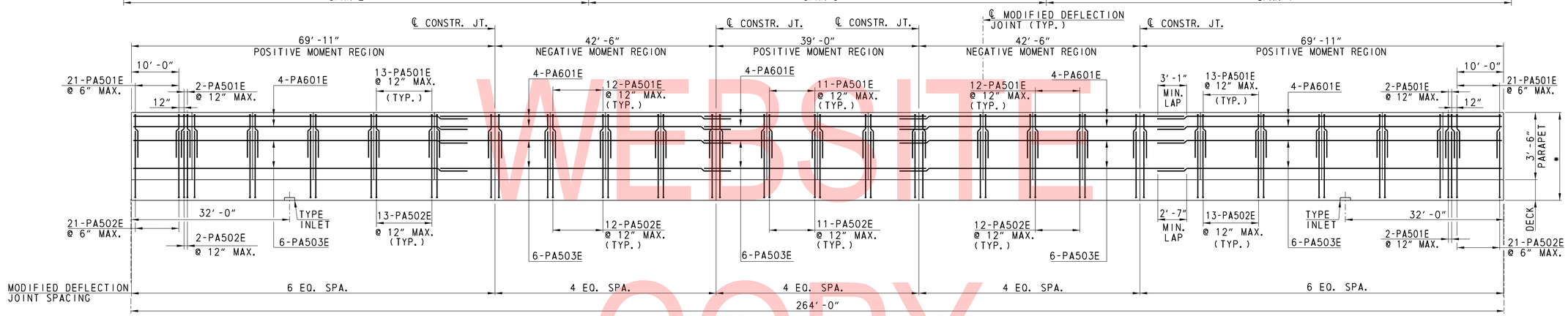

PARAPET ELEVATION (SB & NB)

SCALE
4 0 4 8 12
FEET

* VERTICAL SCALE EXAGGERATED FOR CLARITY. ARCHITECTURAL TREATMENT NOT SHOWN FOR CLARITY.

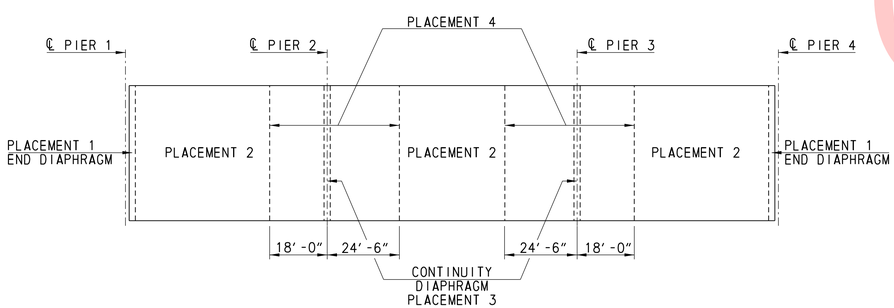

DECK PLACEMENT SEQUENCE SPANS 2 - 4

NOT TO SCALE

NOTES:

- FOR REINFORCEMENT BAR LIST, SEE SHEET BR-04.
- WORK THIS SHEET WITH SHEET DK-02
- FOR SPAN 1 DECK SECTION, SEE SHEET DK-04.
- FOR SPANS 2, 3 AND 4 DECK SECTIONS, SEE SHEET DK-03.
- FOR SPAN 5 DECK SECTION, SEE SHEET DK-05.
- FOR LIGHT POLE BLISTER DETAIL, SEE SHEET DK-04.
- FOR ALUMINUM PARAPET RAILING DETAILS, SEE SHEET RA-01.
- FOR ALUMINUM PEDESTRIAN RAILING DETAILS, SEE SHEETS RA-02 AND RA-03.
- SLIP FORMING FOR PARAPETS IS NOT ALLOWED.
- FOR ARCHITECTURAL TREATMENT DETAIL ON PARAPETS, SEE SHEET DK-05.
- PLACE DECK REINFORCEMENT TO AVOID INTERFERENCE OF THE RAILING AND LIGHT POST ANCHOR BOLTS.

PLACEMENT SEQUENCE

STEP NO.	ITEM
1.	CAST PLACEMENT 1 (SHEAR BLOCKS, INTERMEDIATE AND END DIAPHRAGMS).
2.	CAST PLACEMENT 2 (POSITIVE MOMENT REGION).
3.	CAST PLACEMENT 3 (CONTINUITY DIAPHRAGMS AT PIERS).
4.	CAST PLACEMENT 4 (NEGATIVE MOMENT REGION) MINIMUM TWO HOURS AFTER PLACEMENT OF CONTINUITY DIAPHRAGMS.
5.	CAST PARAPETS IN POSITIVE MOMENT REGION THEN NEGATIVE MOMENT REGION, UNLESS CONTINUOUS CASTING CAN BE MAINTAINED.

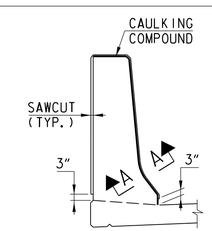

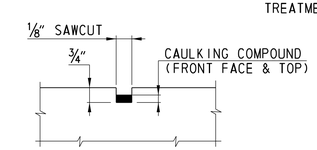

SECTION A-A

NOTES:

1. LONGITUDINAL REINFORCEMENT IS CONTINUOUS THROUGH THE JOINT.
2. PROVIDE CAULKING COMPOUND IN ACCORDANCE WITH ASTM C834 OR C920.
3. COMPLETE SAWCUTS 3″ ABOVE THE TOP OF THE DECK SLAB OR PAVEMENT SURFACE.

MODIFIED DEFLECTION JOINT DETAIL

NOT TO SCALE

LEGEND

ALT.	=	ALTERNATE
BOT.	=	BOTTOM
BRG.	=	BEARING
CONSTR.	=	CONSTRUCTION
EQ.	=	EQUAL
EXP.	=	EXPANSION
JT.	=	JOINT
MAX.	=	MAXIMUM
MIN.	=	MINIMUM
SPA.	=	SPACE
STA.	=	STATION
TYP.	=	TYPICAL
W/	=	WITH

UNOFFICIAL WEBSITE COPY

ADDENDA / REVISIONS	SCALE: AS NOTED	BR 1-159 ON JAMES STREET OVER CHRISTINA RIVER	CONTRACT T201207101	BRIDGE NO. 1-159	DECK PLAN SPANS 2, 3 AND 4	DK-01
			COUNTY NEW CASTLE	DESIGNED BY: ZME		SECTION McT
				CHECKED BY: BJH		SHEET NO. 47

$DATE$ 2/5/26 2:15 PM $FILE$

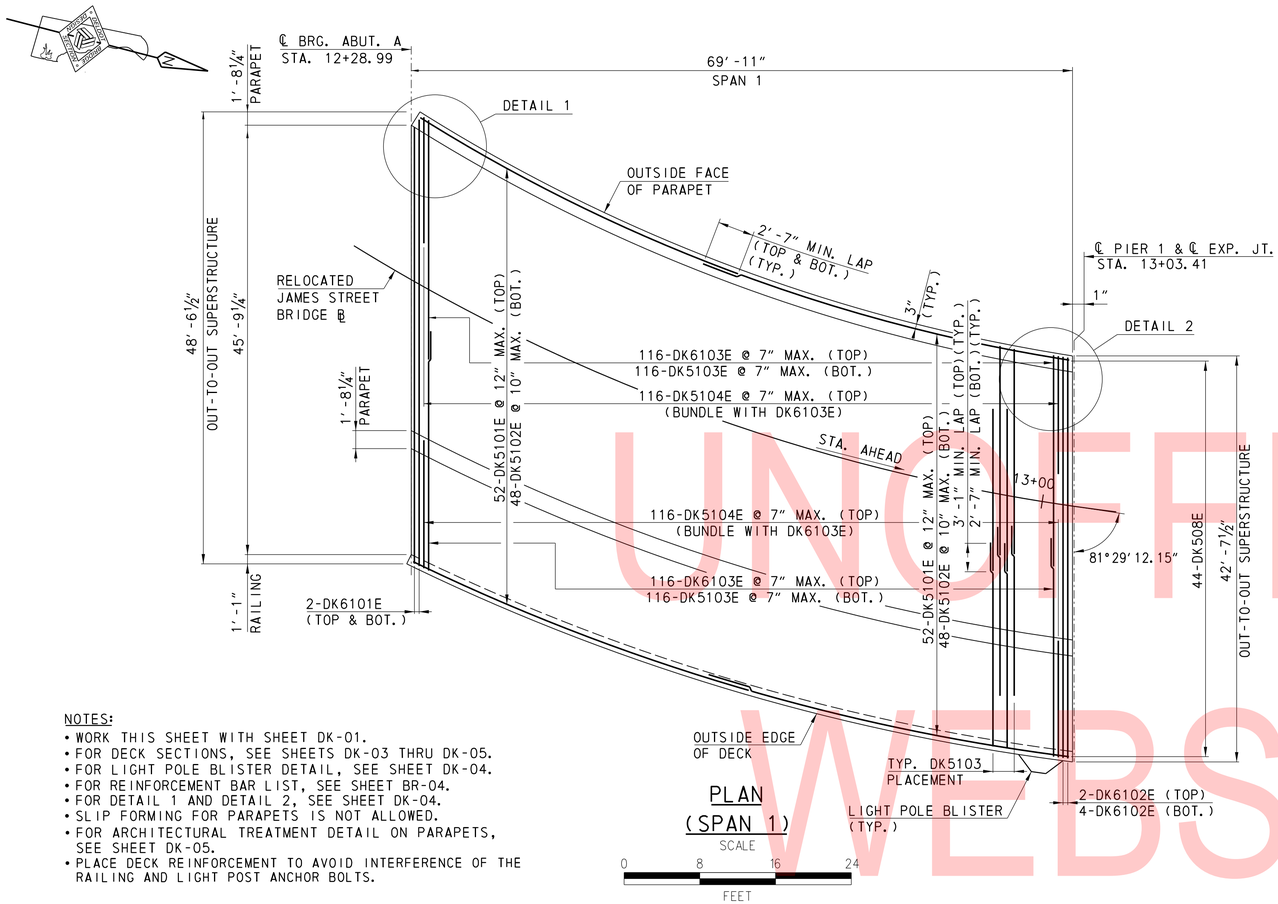

PLAN
(SPAN 1)
SCALE
0 8 16 24
FEET

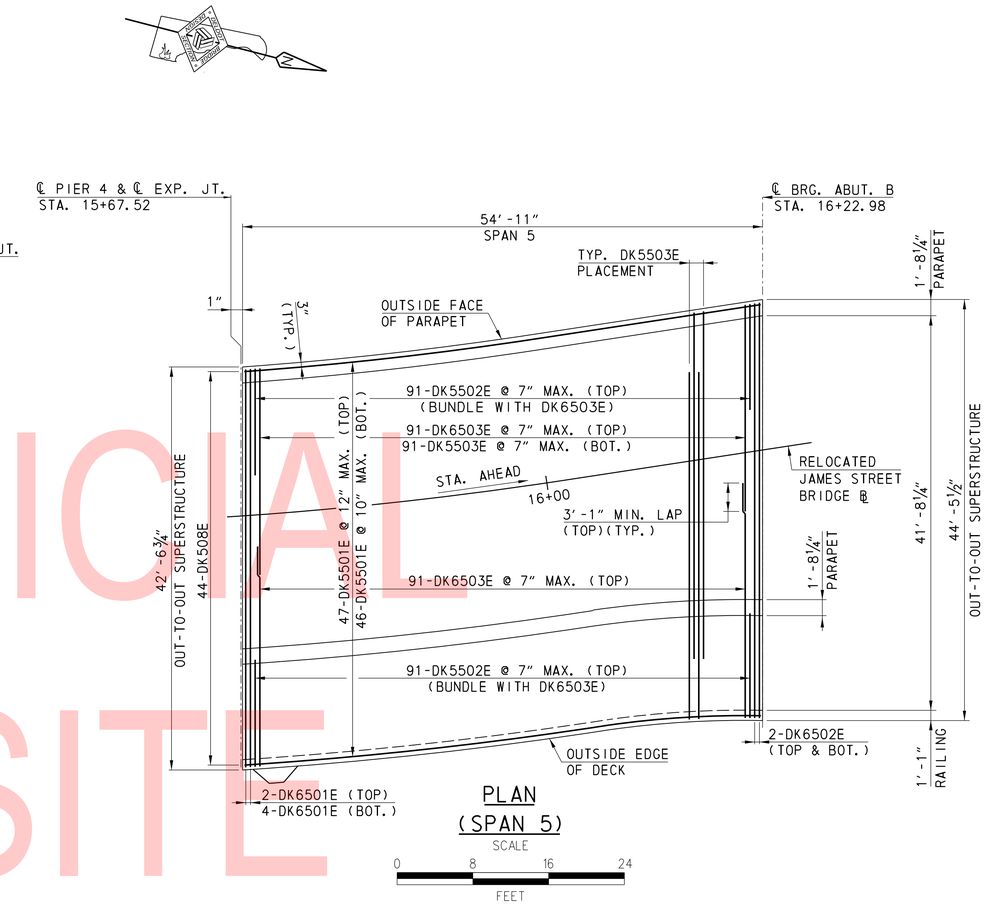

PLAN
(SPAN 5)
SCALE
0 8 16 24
FEET

NOTES:
- WORK THIS SHEET WITH SHEET DK-01.
- FOR DECK SECTIONS, SEE SHEETS DK-03 THRU DK-05.
- FOR LIGHT POLE BLISTER DETAIL, SEE SHEET DK-04.
- FOR REINFORCEMENT BAR LIST, SEE SHEET BR-04.
- FOR DETAIL 1 AND DETAIL 2, SEE SHEET DK-04.
- SLIP FORMING FOR PARAPETS IS NOT ALLOWED.
- FOR ARCHITECTURAL TREATMENT DETAIL ON PARAPETS, SEE SHEET DK-05.
- PLACE DECK REINFORCEMENT TO AVOID INTERFERENCE OF THE RAILING AND LIGHT POST ANCHOR BOLTS.

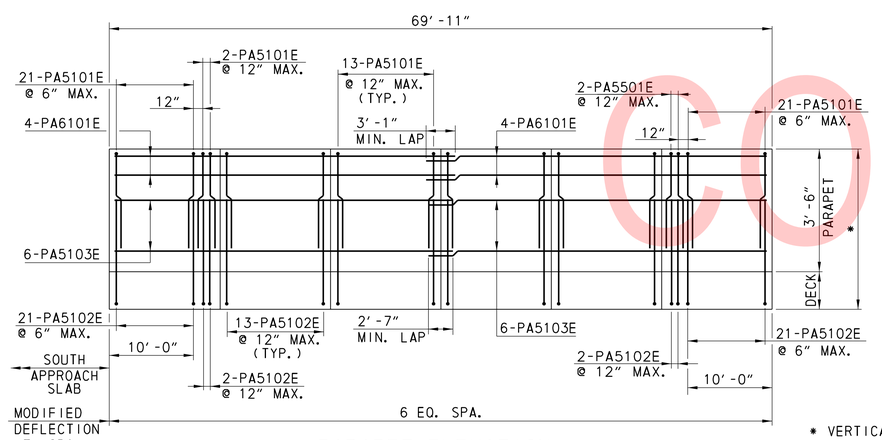

PARAPET ELEVATION
(SPAN 1)(SB & NB)
SCALE
0 8 16 24
FEET

* VERTICAL SCALE EXAGGERATED FOR CLARITY. ARCHITECTURAL TREATMENT NOT SHOWN FOR CLARITY.

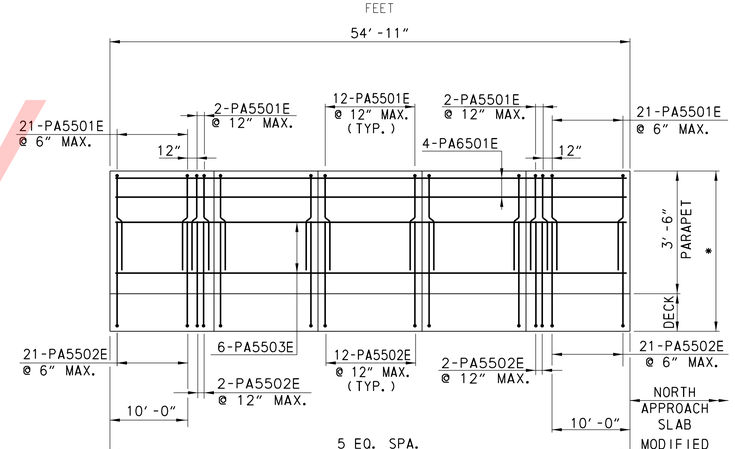

PARAPET ELEVATION
(SPAN 5)(SB & NB)
SCALE
0 8 16 24
FEET

LEGEND
ABUT. = ABUTMENT
BOT. = BOTTOM
BRG. = BEARING
EXP. = EXPANSION
JT. = JOINT
MAX. = MAXIMUM
MIN. = MINIMUM
SPA. = SPACE
STA. = STATION
TYP. = TYPICAL

UNOFFICIAL WEBSITE COPY

DK–02

ADDENDA / REVISIONS	SCALE: AS NOTED	BR 1–159 ON JAMES STREET OVER CHRISTINA RIVER	CONTRACT T201207101	BRIDGE NO. 1–159	DECK PLAN SPANS 1 AND 5	SECTION McT
			COUNTY NEW CASTLE	DESIGNED BY: SNL		SHEET NO. 48
				CHECKED BY: BJH		

$DATE$
$TIME$
$FILE$

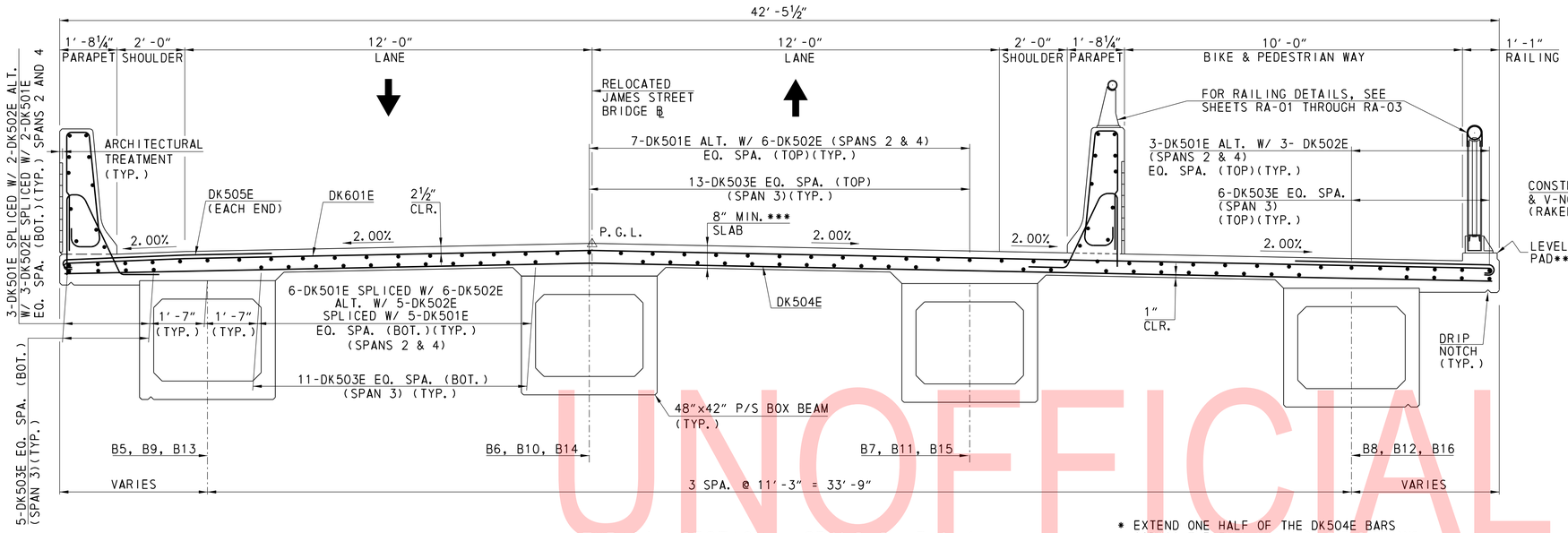

TYPICAL SECTION - SPANS 2, 3 & 4 (POSITIVE MOMENT REGION)

SCALE 0 2 4 6 FEET

* EXTEND ONE HALF OF THE DK504E BARS ACROSS THE FULL WIDTH OF THE OVERHANG. THE ALTERNATE BARS WHICH DO NOT EXTEND INTO THE OVERHANG SHALL EXTEND 6" MIN. BEYOND THE INTERIOR EDGE OF THE FLANGE OF THE FASCIA BEAM.

** PLACE LEVELING PADS INTEGRALLY WITH DECK. TOOL EDGES OF PADS.

*** INCLUDES ½" INTEGRAL WEARING SURFACE.

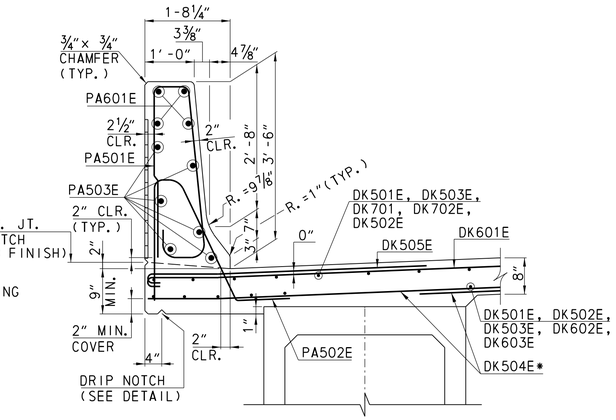

OVERHANG DETAIL

NOT TO SCALE

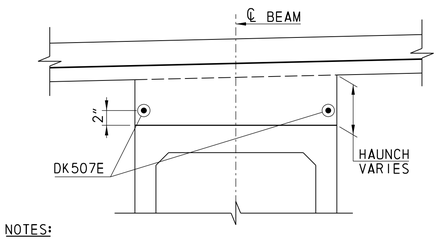

NOTES:

1. DECK SLAB REINFORCEMENT NOT SHOWN FOR CLARITY.
2. FIELD VERIFY ACTUAL HAUNCH DIMENSIONS.
3. THE HAUNCH REINFORCEMENT QUANTITY SHOWN ON THE REINFORCEMENT BAR SCHEDULE PROVIDES THE AMOUNT NECESSARY TO COVER THE LIMITS SHOWN ON SHEET DK-01. PROVIDE ADDITIONAL HAUNCH REINFORCEMENT IN OTHER REGIONS ALONG THE LENGTH OF THE BEAM WHERE ACTUAL HAUNCH THICKNESSES EXCEED 5".

HAUNCH REINFORCEMENT

NOT TO SCALE

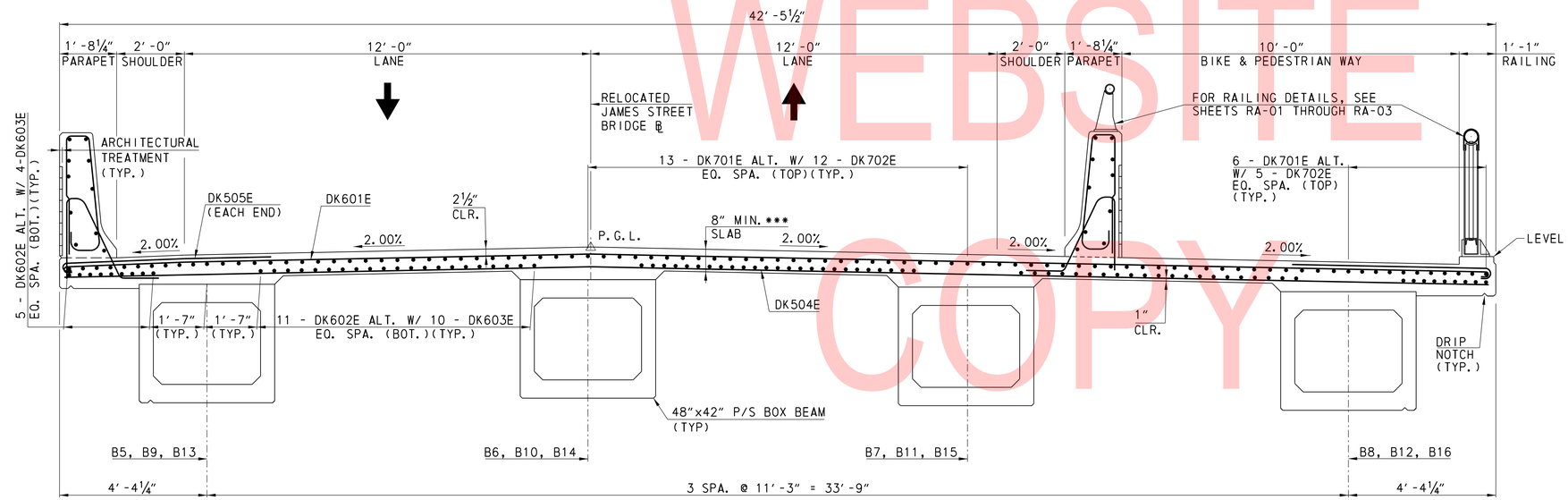

TYPICAL SECTION - SPANS 2, 3 & 4 (NEGATIVE MOMENT REGION)

SCALE 0 2 4 6 FEET

NOTES:

- FOR REINFORCEMENT BAR LIST, SEE SHEET BR-04.
- FOR FINISHED DECK ELEVATIONS, SEE SHEET FD-01.
- FOR DECK PLAN, SEE SHEETS DK-01 THRU DK-02.
- FOR ALUMINUM PARAPET RAILING DETAILS, SEE SHEET RA-01.
- FOR ALUMINUM PEDESTRIAN RAILING DETAILS, SEE SHEETS RA-02 AND RA-03.
- FOR ARCHITECTURAL TREATMENT DETAIL ON PARAPETS, SEE SHEET DK-05.
- PLACE DECK REINFORCEMENT TO AVOID INTERFERENCE OF THE RAILING AND LIGHT POST ANCHOR BOLTS.

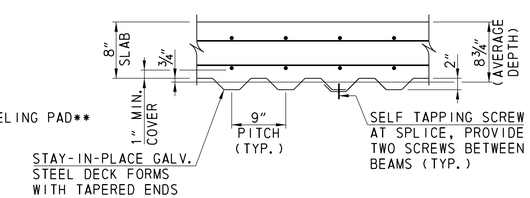

NOTES:

- SHOP DRAWINGS SHALL BE SUBMITTED FOR REVIEW AND APPROVAL BY THE ENGINEER. METAL FORMS MUST BE GALVANIZED, MORTAR TIGHT AND STEEL METAL SCREWS MUST BE NON-CORROSIVE. SELF TAPPING SCREWS SHALL BE INSTALLED AT THE SIDE LAP OF THE SHEETS AT MID-SPAN BETWEEN SUPPORTS.
- FOR ADDITIONAL NOTES, SEE SHEET BB-01.

STAY-IN-PLACE FORM CONNECTION

NOT TO SCALE

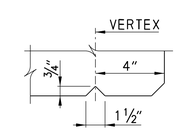

DRIP NOTCH DETAIL

NOT TO SCALE

LEGEND

ALT.	=	ALTERNATE
BOT.	=	BOTTOM
CLR.	=	CLEAR
CONSTR.	=	CONSTRUCTION
EQ.	=	EQUAL
GALV.	=	GALVANIZED
JT.	=	JOINT
MIN.	=	MINIMUM
P/S	=	PRESTRESSED
R.	=	RADIUS
SPA.	=	SPACE
TYP.	=	TYPICAL

UNOFFICIAL WEBSITE COPY

ADDENDA / REVISIONS	SCALE: AS NOTED	BR 1-159 ON JAMES STREET OVER CHRISTINA RIVER	CONTRACT T201207101	BRIDGE NO. 1-159	DECK SECTION AND DETAILS - 1	DK-03
			COUNTY NEW CASTLE	DESIGNED BY: AKW		SECTION McT
				CHECKED BY: BJH		SHEET NO. 49

$DATE$ 4:23:35 PM
$FILE$

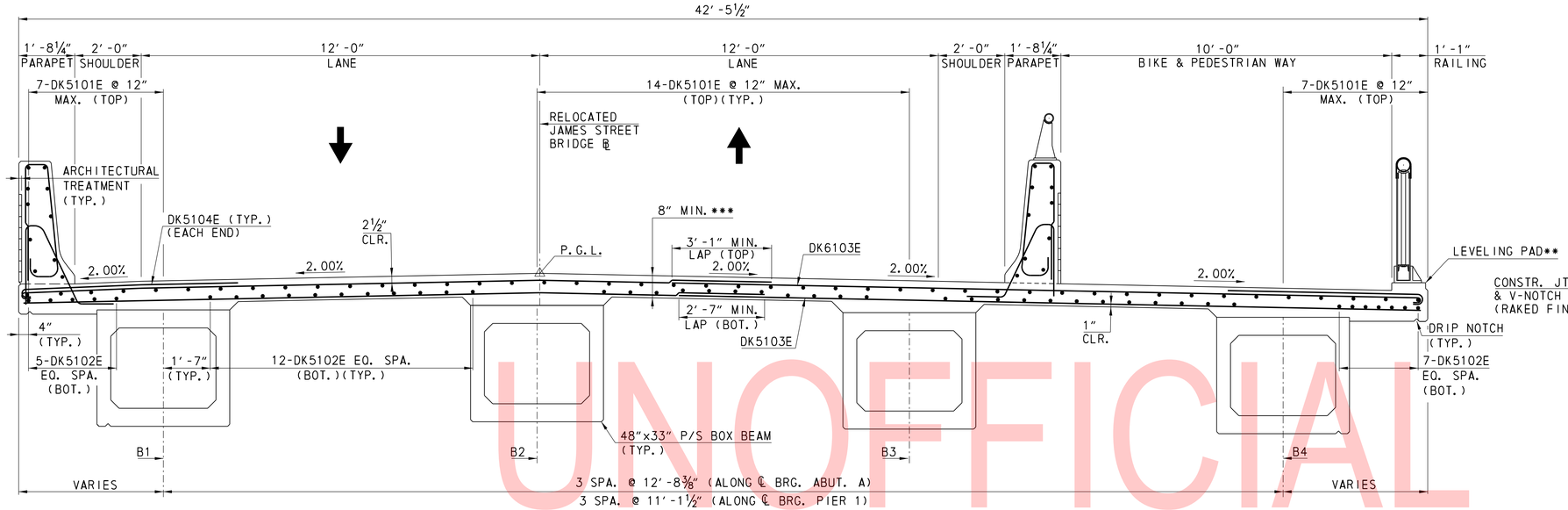

TYPICAL SECTION
SPAN 1

SCALE
0 2 4 6
FEET

* EXTEND ONE HALF OF THE DK5103E BARS ACROSS THE FULL WIDTH OF THE OVERHANG. THE ALTERNATE BARS WHICH DO NOT EXTEND INTO THE OVERHANG SHALL EXTEND 6″ MINIMUM BEYOND THE INTERIOR EDGE OF THE FLANGE OF THE FASCIA BEAM.

** PLACE LEVELING PADS INTEGRALLY WITH DECK. TOOL EDGES OF PADS.

*** INCLUDES ½″ INTEGRAL WEARING SURFACE.

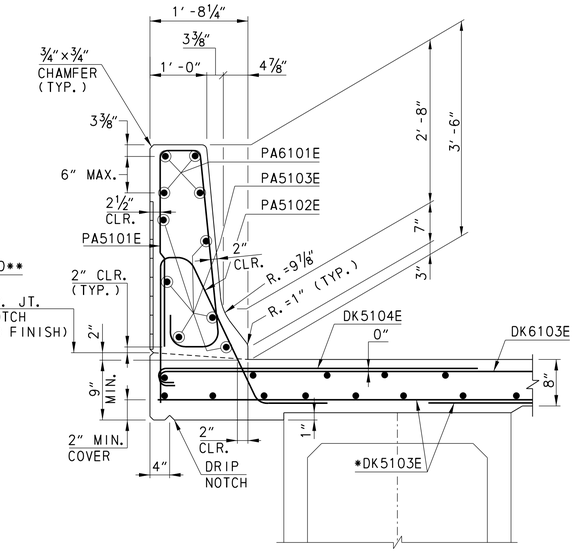

OVERHANG DETAIL
NOT TO SCALE

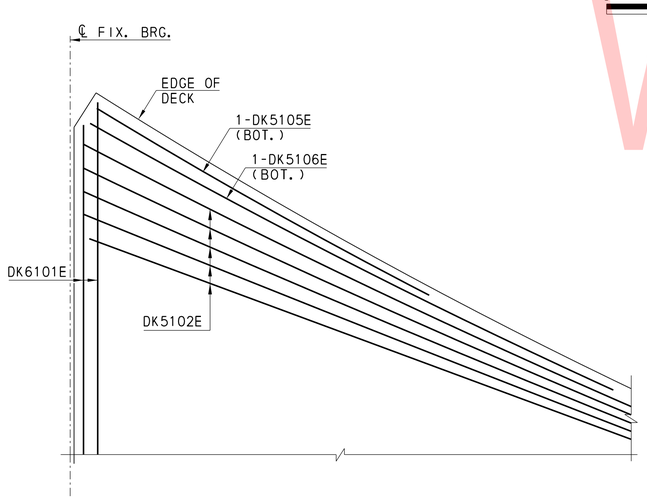

DETAIL 1 (ABUT. A)
NOT TO SCALE

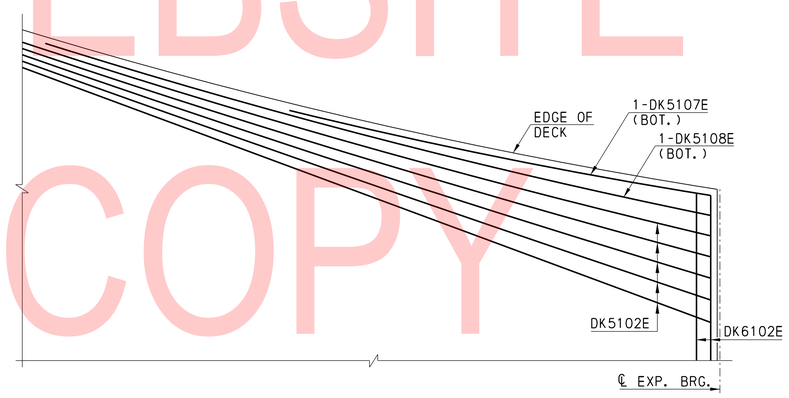

DETAIL 2 (PIER 1)
NOT TO SCALE

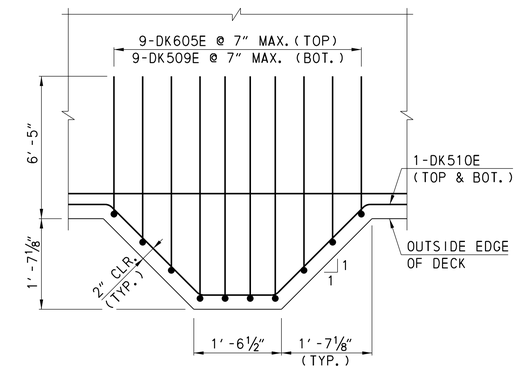

LIGHT POLE BLISTER
NOT TO SCALE

NOTE: DK5103E BARS NOT SHOWN FOR CLARITY.

NOTES:

- FOR RAILING DETAILS, SEE SHEETS RA-01, RA-02 AND RA-03.
- FOR LOCATION OF LIGHT POLE BLISTERS, SEE SHEETS DK-01, AND DK-02.
- FOR DECK PLAN, SEE SHEETS DK-01 AND DK-02.
- FOR HAUNCH REINFORCEMENT, SEE SHEET DK-03.
- FOR DRIP NOTCH DETAIL, SEE SHEET DK-03.
- FOR REINFORCEMENT BAR LIST, SEE SHEET BR-04.
- FOR FINISHED DECK ELEVATIONS, SEE SHEET FD-01.
- FOR ARCHITECTURAL TREATMENT DETAIL ON PARAPETS, SEE SHEET DK-05.
- FOR S.I.P. FORMS, SEE SHEET DK-03.
- PLACE DECK REINFORCEMENT TO AVOID INTERFERENCE OF THE RAILING AND LIGHT POST ANCHOR BOLTS.

LEGEND

ABUT.	=	ABUTMENT
BOT.	=	BOTTOM
BRG.	=	BEARING
CLR.	=	CLEAR
CONSTR.	=	CONSTRUCTION
EXP.	=	EXPANSION
FIX.	=	FIXED
JT.	=	JOINT
MAX.	=	MAXIMUM
MIN.	=	MINIMUM
P/S	=	PRESTRESSED
R.	=	RADIUS
TYP.	=	TYPICAL

UNOFFICIAL WEBSITE COPY

ADDENDA / REVISIONS	SCALE: AS NOTED	BR 1-159 ON JAMES STREET OVER CHRISTINA RIVER	CONTRACT T201207101	BRIDGE NO. 1-159	DECK SECTION AND DETAILS – 2	DK-04
			COUNTY NEW CASTLE	DESIGNED BY: SNL		SECTION McT
				CHECKED BY: BJH		SHEET NO. 50

DATE$ 4/29/22 PM
FILE$

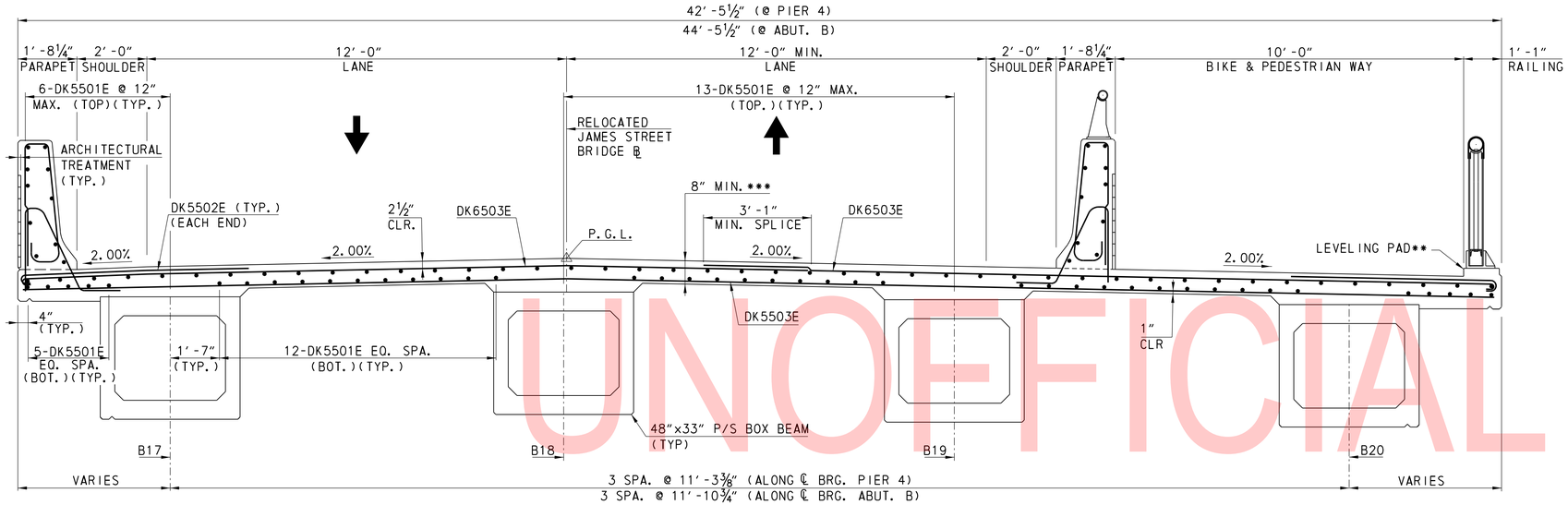

TYPICAL SECTION
SPAN 5

SCALE
0 2 4 6
FEET

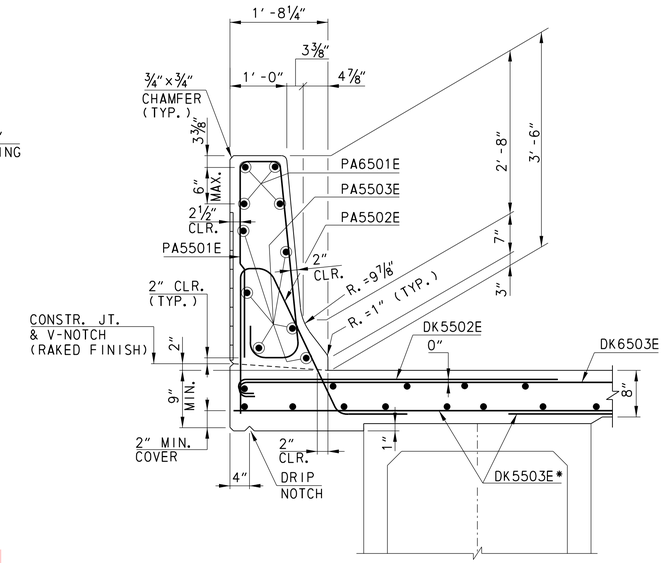

OVERHANG DETAIL
NOT TO SCALE

* EXTEND ONE HALF OF THE DK5503E BARS ACROSS THE FULL WIDTH OF THE OVERHANG. THE ALTERNATE BARS WHICH DO NOT EXTEND INTO THE OVERHANG SHALL EXTEND 6" MINIMUM BEYOND THE INTERIOR EDGE OF THE FLANGE OF THE FASCIA BEAM.

** PLACE LEVELING PADS INTEGRALLY WITH DECK. TOOL EDGES OF PADS.

*** INCLUDES ½" INTEGRAL WEARING SURFACE.

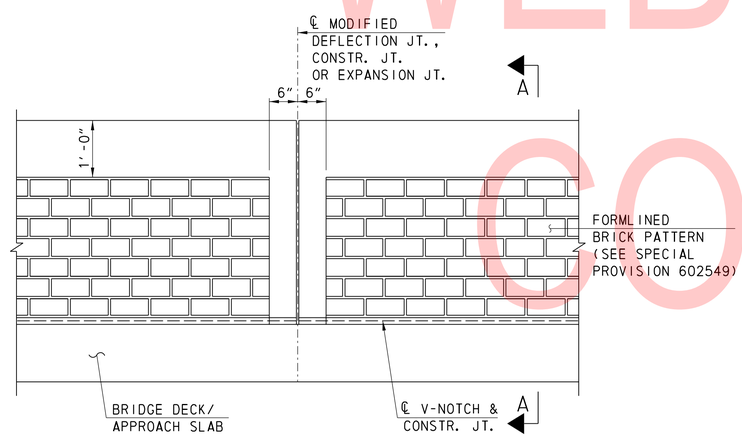

PARTIAL ELEVATION - PARAPET

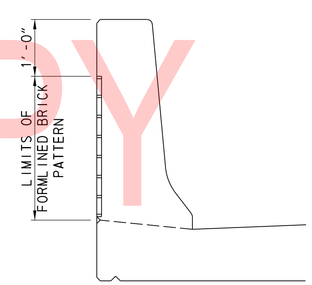

SECTION A-A

ARCHITECTURAL TREATMENT DETAIL
NOT TO SCALE

NOTES:

- FOR RAILING DETAILS, SEE SHEETS RA-01, RA-02 AND RA-03.
- FOR DECK PLAN, SEE SHEETS DK-01 AND DK-02.
- FOR HAUNCH REINFORCEMENT, SEE SHEET DK-03.
- FOR DRIP NOTCH DETAIL, SEE SHEET DK-03.
- FOR REINFORCEMENT BAR LIST, SEE SHEET BR-04.
- FOR FINISHED DECK ELEVATIONS, SEE SHEET FD-01.
- FOR LOCATION OF LIGHT POLE BLISTERS, SEE SHEETS DK-01 AND DK-02.
- FOR S.I.P. FORMS, SEE SHEET DK-03.
- PLACE DECK REINFORCEMENT TO AVOID INTERFERENCE OF THE RAILING AND LIGHT POST ANCHOR BOLTS.
- THE CONTRACTOR SHALL SUBMIT PAINT COLOR SAMPLES FOR THE FORMLINED BRICK PATTERN TO THE ENGINEER FOR APPROVAL.

LEGEND

ABUT.	=	ABUTMENT
BOT.	=	BOTTOM
CLR.	=	CLEAR
CONSTR.	=	CONSTRUCTION
JT.	=	JOINT
MAX.	=	MAXIMUM
MIN.	=	MINIMUM
P/S	=	PRESTRESSED
R.	=	RADIUS
TYP.	=	TYPICAL

UNOFFICIAL WEBSITE COPY

DK-05

ADDENDA / REVISIONS	SCALE: AS NOTED	BR 1-159 ON JAMES STREET OVER CHRISTINA RIVER	CONTRACT T201207101	BRIDGE NO. 1-159	DECK SECTION AND DETAILS – 3	SECTION McT
			COUNTY NEW CASTLE	DESIGNED BY: SNL		SHEET NO. 51
				CHECKED BY: BJH		

$DATE$
$TIME$
$FILE$

UNOFFICIAL WEBSITE COPY

TOP OF DECK ELEVATIONS AT ℄ BEAM AT TENTH POINTS

BRIDGE 1-159

BEAM B1			BEAM B2			BEAM B3			BEAM B4		
STATION	OFFSET	ELEVATION	STATION	OFFSET	ELEVATION	STATION	OFFSET	ELEVATION	STATION	OFFSET	ELEVATION
12+23.17	**9.65**	**12.31**	**12+29.73**	**1.30**	**12.77**	**12+35.60**	**12.45**	**12.81**	**12+40.87**	**23.77**	**12.87**
12+30.82	10.93	12.63	12+36.92	0.12	13.12	12+42.36	11.33	13.15	12+47.25	22.69	13.19
12+38.56	11.93	12.96	12+44.18	0.81	13.45	12+49.19	10.46	13.49	12+53.69	21.84	13.51
12+46.37	12.64	13.32	12+51.50	1.46	13.78	12+56.07	9.84	13.83	12+60.17	21.23	13.83
12+54.23	13.06	13.68	12+58.86	1.85	14.12	12+62.99	9.47	14.16	12+66.68	20.86	14.14
12+62.11	13.19	14.05	12+66.24	1.96	14.47	12+69.91	9.35	14.49	12+73.21	20.72	14.46
12+70.00	13.02	14.42	12+73.62	1.80	14.82	12+76.84	9.48	14.82	12+79.74	20.82	14.76
12+77.85	12.56	14.80	12+80.97	1.37	15.18	12+83.75	9.88	15.14	12+86.25	21.15	15.06
12+85.65	11.81	15.19	12+88.28	0.66	15.53	12+90.63	10.52	15.45	12+92.74	21.73	15.36
12+93.38	10.78	15.57	12+95.53	0.30	15.88	12+97.46	11.41	15.75	12+99.18	22.53	15.65
13+01.02	**9.46**	**15.96**	**13+02.70**	**1.54**	**16.20**	**13+04.22**	**12.55**	**16.05**	**13+05.58**	**23.57**	**15.93**

BEAM B5			BEAM B6			BEAM B7			BEAM B8		
STATION	OFFSET	ELEVATION	STATION	OFFSET	ELEVATION	STATION	OFFSET	ELEVATION	STATION	OFFSET	ELEVATION
13+02.97	**9.39**	**16.05**	**13+04.57**	**1.75**	**16.28**	**13+06.00**	**12.90**	**16.13**	**13+07.28**	**24.06**	**16.00**
13+11.98	10.43	16.46	13+13.08	0.77	16.70	13+14.06	11.97	16.53	13+14.94	23.18	16.38
13+21.07	11.08	16.87	13+21.65	0.16	17.12	13+22.18	11.39	16.92	13+22.65	22.63	16.75
13+30.20	11.33	17.25	13+30.27	0.08	17.47	13+30.33	11.17	17.25	13+30.38	22.42	17.07
13+38.88	11.33	17.55	13+38.88	0.08	17.78	13+38.88	11.17	17.56	13+38.88	22.42	17.37
13+47.50	11.33	17.81	13+47.50	0.08	18.03	13+47.50	11.17	17.81	13+47.50	22.42	17.62
13+56.12	11.33	18.01	13+56.12	0.08	18.23	13+56.12	11.17	18.01	13+56.12	22.42	17.82
13+64.73	11.33	18.16	13+64.73	0.08	18.38	13+64.73	11.17	18.16	13+64.73	22.42	17.97
13+73.35	11.33	18.25	13+73.35	0.08	18.48	13+73.35	11.17	18.26	13+73.35	22.42	18.07
13+81.97	11.33	18.30	13+81.97	0.08	18.52	13+81.97	11.17	18.30	13+81.97	22.42	18.11
13+90.58	**11.33**	**18.29**	**13+90.58**	**0.08**	**18.52**	**13+90.58**	**11.17**	**18.30**	**13+90.58**	**22.42**	**18.11**

BEAM B9			BEAM B10			BEAM B11			BEAM B12		
STATION	OFFSET	ELEVATION	STATION	OFFSET	ELEVATION	STATION	OFFSET	ELEVATION	STATION	OFFSET	ELEVATION
13+92.42	**11.33**	**18.29**	**13+92.42**	**0.08**	**18.51**	**13+92.42**	**11.17**	**18.29**	**13+92.42**	**22.42**	**18.10**
14+01.03	11.33	18.24	14+01.03	0.08	18.47	14+01.03	11.17	18.24	14+01.03	22.42	18.05
14+09.65	11.33	18.20	14+09.65	0.08	18.42	14+09.65	11.17	18.20	14+09.65	22.42	18.01
14+18.27	11.33	18.15	14+18.27	0.08	18.38	14+18.27	11.17	18.16	14+18.27	22.42	17.97
14+26.88	11.33	18.11	14+26.88	0.08	18.34	14+26.88	11.17	18.11	14+26.88	22.42	17.92
14+35.50	11.33	18.07	14+35.50	0.08	18.29	14+35.50	11.17	18.07	14+35.50	22.42	17.88
14+44.12	11.33	18.03	14+44.12	0.08	18.25	14+44.12	11.17	18.03	14+44.12	22.42	17.84
14+52.73	11.33	17.98	14+52.73	0.08	18.21	14+52.73	11.17	17.99	14+52.73	22.42	17.79
14+61.35	11.33	17.94	14+61.35	0.08	18.16	14+61.35	11.17	17.94	14+61.35	22.42	17.75
14+69.97	11.33	17.90	14+69.97	0.08	18.12	14+69.97	11.17	17.90	14+69.97	22.42	17.71
14+78.58	**11.33**	**17.85**	**14+78.58**	**0.08**	**18.08**	**14+78.58**	**11.17**	**17.86**	**14+78.58**	**22.42**	**17.66**

BEAM B13			BEAM B14			BEAM B15			BEAM B16		
STATION	OFFSET	ELEVATION	STATION	OFFSET	ELEVATION	STATION	OFFSET	ELEVATION	STATION	OFFSET	ELEVATION
14+80.42	**11.33**	**17.84**	**14+80.42**	**0.08**	**18.07**	**14+80.42**	**11.17**	**17.85**	**14+80.42**	**22.42**	**17.65**
14+89.03	11.33	17.77	14+89.03	0.08	17.99	14+89.03	11.17	17.77	14+89.03	22.42	17.58
14+97.65	11.33	17.65	14+97.65	0.08	17.87	14+97.65	11.17	17.65	14+97.65	22.42	17.46
15+06.27	11.33	17.48	15+06.27	0.08	17.70	15+06.27	11.17	17.48	15+06.27	22.42	17.29
15+14.88	11.33	17.27	15+14.88	0.08	17.49	15+14.88	11.17	17.27	15+14.88	22.42	17.08
15+23.50	11.33	17.01	15+23.50	0.08	17.23	15+23.50	11.17	17.01	15+23.50	22.42	16.82
15+32.12	11.33	16.70	15+32.12	0.08	16.93	15+32.12	11.17	16.71	15+32.12	22.42	16.52
15+40.77	11.33	16.35	15+40.73	0.08	16.58	15+40.70	11.17	16.36	15+40.67	22.42	16.17
15+49.63	11.21	15.95	15+49.35	0.03	16.19	15+49.09	11.28	15.97	15+48.84	22.53	15.79
15+58.48	10.91	15.51	15+57.96	0.33	15.75	15+57.47	11.57	15.55	15+57.00	22.81	15.38
15+67.31	**10.42**	**15.07**	**15+66.55**	**0.81**	**15.30**	**15+65.83**	**12.03**	**15.11**	**15+65.15**	**23.26**	**14.95**

BEAM B17			BEAM B18			BEAM B19			BEAM B20		
STATION	OFFSET	ELEVATION	STATION	OFFSET	ELEVATION	STATION	OFFSET	ELEVATION	STATION	OFFSET	ELEVATION
15+69.27	**11.34**	**14.95**	**15+68.45**	**0.09**	**15.22**	**15+67.67**	**11.16**	**15.03**	**15+66.94**	**22.42**	**14.88**
15+74.87	11.61	14.66	15+73.89	0.31	14.93	15+72.97	10.99	14.77	15+72.09	22.30	14.62
15+80.48	11.81	14.37	15+79.34	0.46	14.65	15+78.26	10.89	14.50	15+77.24	22.25	14.36
15+86.10	11.93	14.08	15+84.79	0.53	14.37	15+83.56	10.86	14.23	15+82.39	22.26	14.10
15+91.71	11.97	13.79	15+90.25	0.54	14.09	15+88.86	10.90	13.96	15+87.55	22.35	13.83
15+97.33	11.95	13.51	15+95.70	0.47	13.82	15+94.15	11.01	13.69	15+92.69	22.50	13.57
16+02.90	11.84	13.22	16+01.15	0.33	13.54	15+99.45	11.20	13.41	15+97.84	22.72	13.30
16+08.36	11.72	12.95	16+06.59	0.14	13.27	16+04.83	11.43	13.13	16+03.06	23.01	13.03
16+13.81	11.60	12.69	16+12.03	0.04	13.01	16+10.26	11.68	12.86	16+08.48	23.32	12.75
16+19.26	11.48	12.44	16+17.48	0.22	12.75	16+15.69	11.92	12.60	16+13.91	23.62	12.48
16+24.71	**11.36**	**12.20**	**16+22.92**	**0.40**	**12.50**	**16+21.13**	**12.16**	**12.34**	**16+19.33**	**23.93**	**12.22**

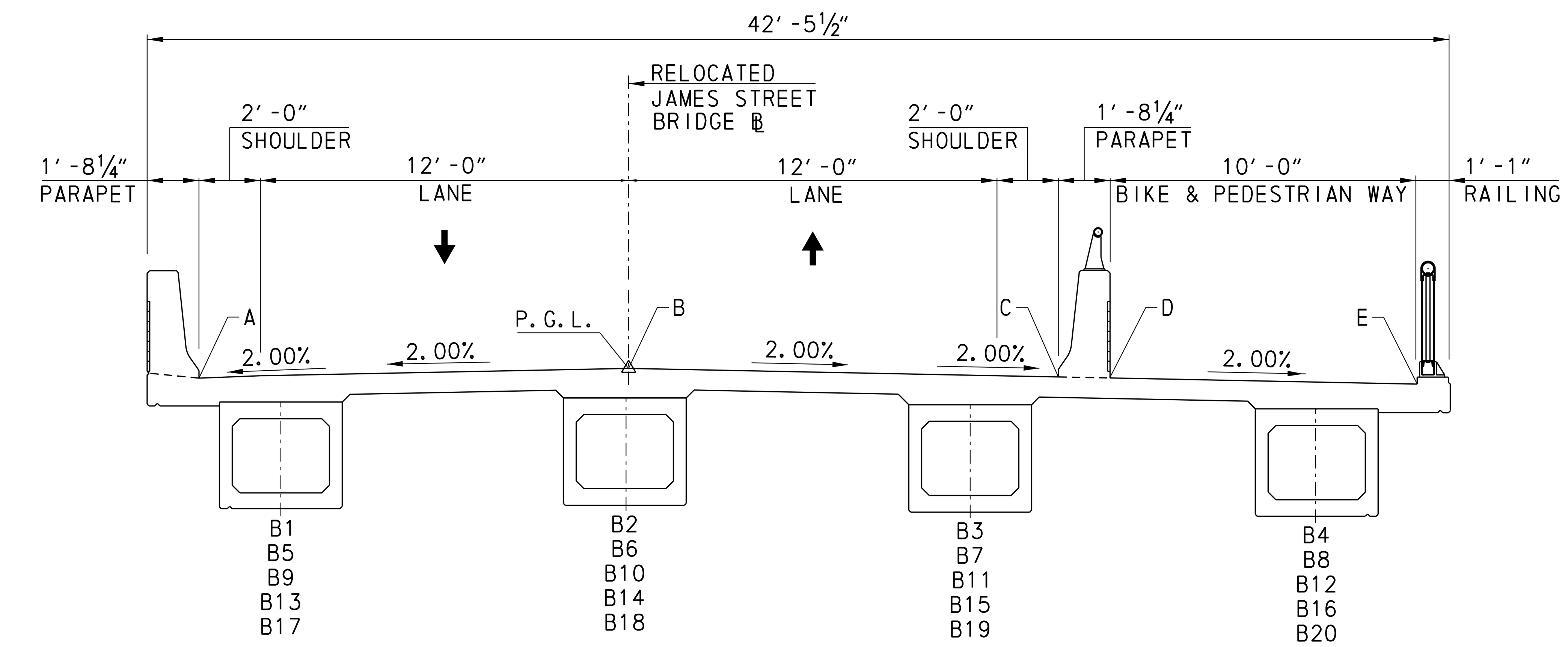

SECTION

TOP OF DECK ELEVATIONS AT 10 FT INTERVALS

STATION	DECK ELEVATION @ A (LEFT GUTTER)	P.G.L. ELEVATION @ CONSTR. BASELINE	DECK ELEVATION @ C	DECK ELEVATION @ D	DECK ELEVATION @ E (RIGHT GUTTER)
12+00.00	11.28	11.56	11.28	11.28	11.08
12+10.00	11.67	11.95	11.67	11.67	11.47
12+20.00	12.08	12.36	12.08	12.08	11.88
12+28.99	12.48	12.76	12.48	12.48	12.28
12+30.00	12.53	12.81	12.53	12.53	12.33
12+40.00	12.99	13.27	12.99	12.99	12.79
12+50.00	13.46	13.74	13.46	13.46	13.26
12+60.00	13.93	14.21	13.93	13.93	13.73
12+70.00	14.41	14.69	14.41	14.41	14.21
12+80.00	14.88	15.16	14.88	14.88	14.68
12+90.00	15.35	15.63	15.35	15.35	15.15
13+00.00	15.82	16.10	15.82	15.82	15.62
13+03.41	15.98	16.26	15.98	15.98	15.78
13+10.00	16.29	16.57	16.29	16.29	16.09
13+20.00	16.77	17.05	16.77	16.77	16.57
13+30.00	17.19	17.47	17.19	17.19	16.99
13+40.00	17.54	17.82	17.54	17.54	17.34
13+50.00	17.82	18.10	17.82	17.82	17.62
13+60.00	18.03	18.31	18.03	18.03	17.83
13+70.00	18.17	18.45	18.17	18.17	17.97
13+80.00	18.24	18.52	18.24	18.24	18.04
13+90.00	18.24	18.52	18.24	18.24	18.04
13+91.50	18.24	18.52	18.24	18.24	18.04
14+00.00	18.19	18.47	18.19	18.19	17.99
14+10.00	18.14	18.42	18.14	18.14	17.94
14+20.00	18.09	18.37	18.09	18.09	17.89
14+30.00	18.04	18.32	18.04	18.04	17.84
14+40.00	17.99	18.27	17.99	17.99	17.79
14+50.00	17.94	18.22	17.94	17.94	17.74
14+60.00	17.89	18.17	17.89	17.89	17.69
14+70.00	17.84	18.12	17.84	17.84	17.64
14+79.50	17.79	18.07	17.79	17.79	17.59
14+80.00	17.79	18.07	17.79	17.79	17.59
14+90.00	17.70	17.98	17.70	17.70	17.50
15+00.00	17.55	17.83	17.55	17.55	17.35
15+10.00	17.34	17.62	17.34	17.34	17.14
15+20.00	17.06	17.34	17.06	17.06	16.86
15+30.00	16.73	17.01	16.73	16.73	16.53
15+40.00	16.33	16.61	16.33	16.33	16.13
15+50.00	15.87	16.15	15.87	15.87	15.67
15+60.00	15.37	15.65	15.37	15.37	15.17
15+67.52	14.98	15.26	14.98	14.98	14.78
15+70.00	14.86	15.14	14.86	14.86	14.66
15+80.00	14.35	14.63	14.35	14.35	14.15
15+90.00	13.84	14.12	13.84	13.84	13.64
16+00.00	13.33	13.61	13.33	13.33	13.13
16+10.00	12.83	13.11	12.82	12.82	12.62
16+20.00	12.36	12.64	12.32	12.32	12.12
16+22.98	12.22	12.50	12.18	12.18	11.98
16+30.00	11.91	12.19	11.84	11.84	11.63
16+40.00	11.51	11.79	11.37	11.37	11.15

NOTE
OFFSET IS MEASURED IN FEET.

ADDENDA / REVISIONS

NOT TO SCALE

BR 1–159 ON JAMES STREET OVER CHRISTINA RIVER

CONTRACT	T201207101
COUNTY	NEW CASTLE

BRIDGE NO. **1–159**
DESIGNED BY: ZME
CHECKED BY: BJH

FINISHED DECK ELEVATIONS

FD–01
SECTION McT
SHEET NO. 52

$DATE$ 4:48:26 PM $FILE$

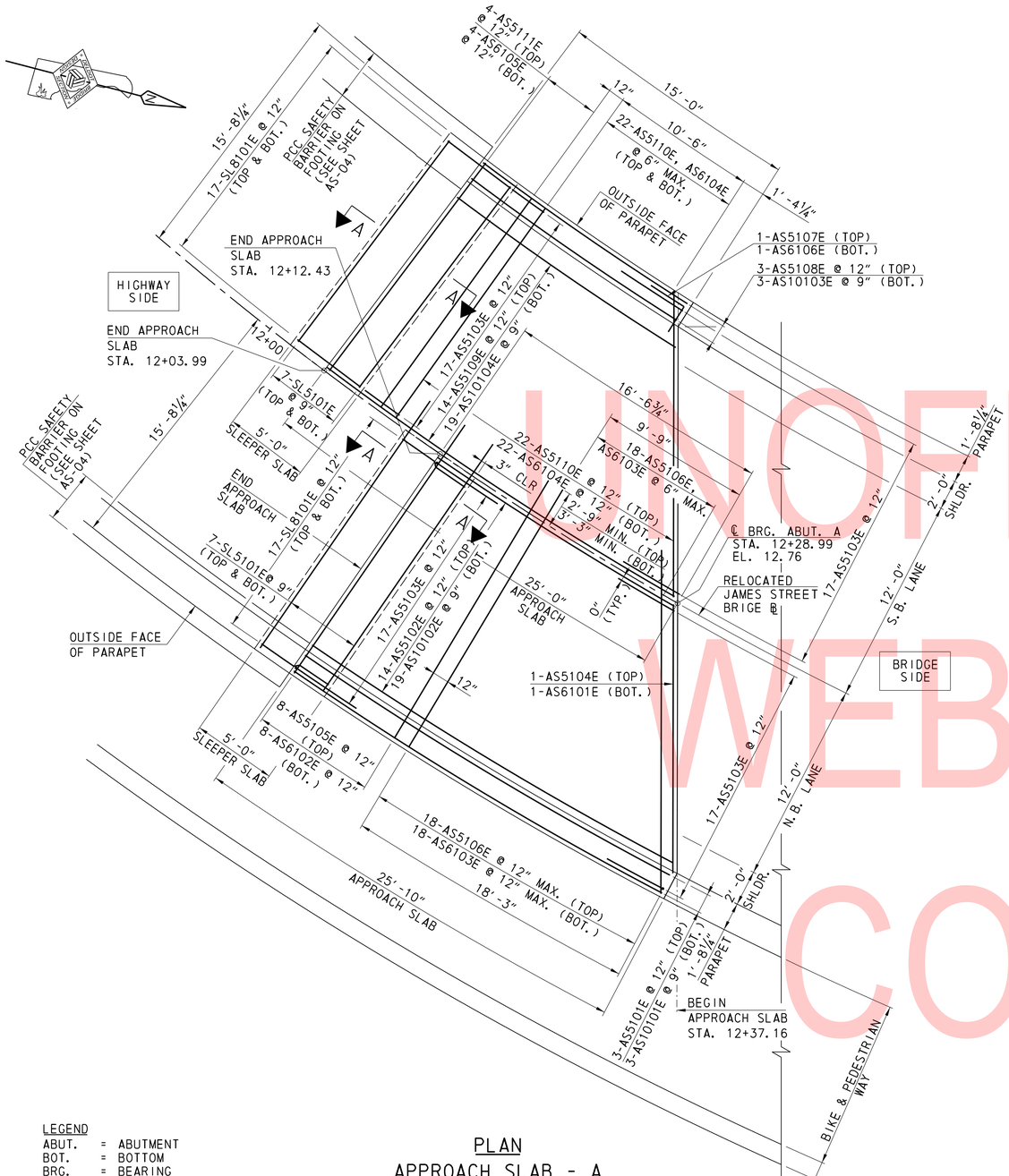

PLAN
APPROACH SLAB - A

SCALE
0 4 8 12
FEET

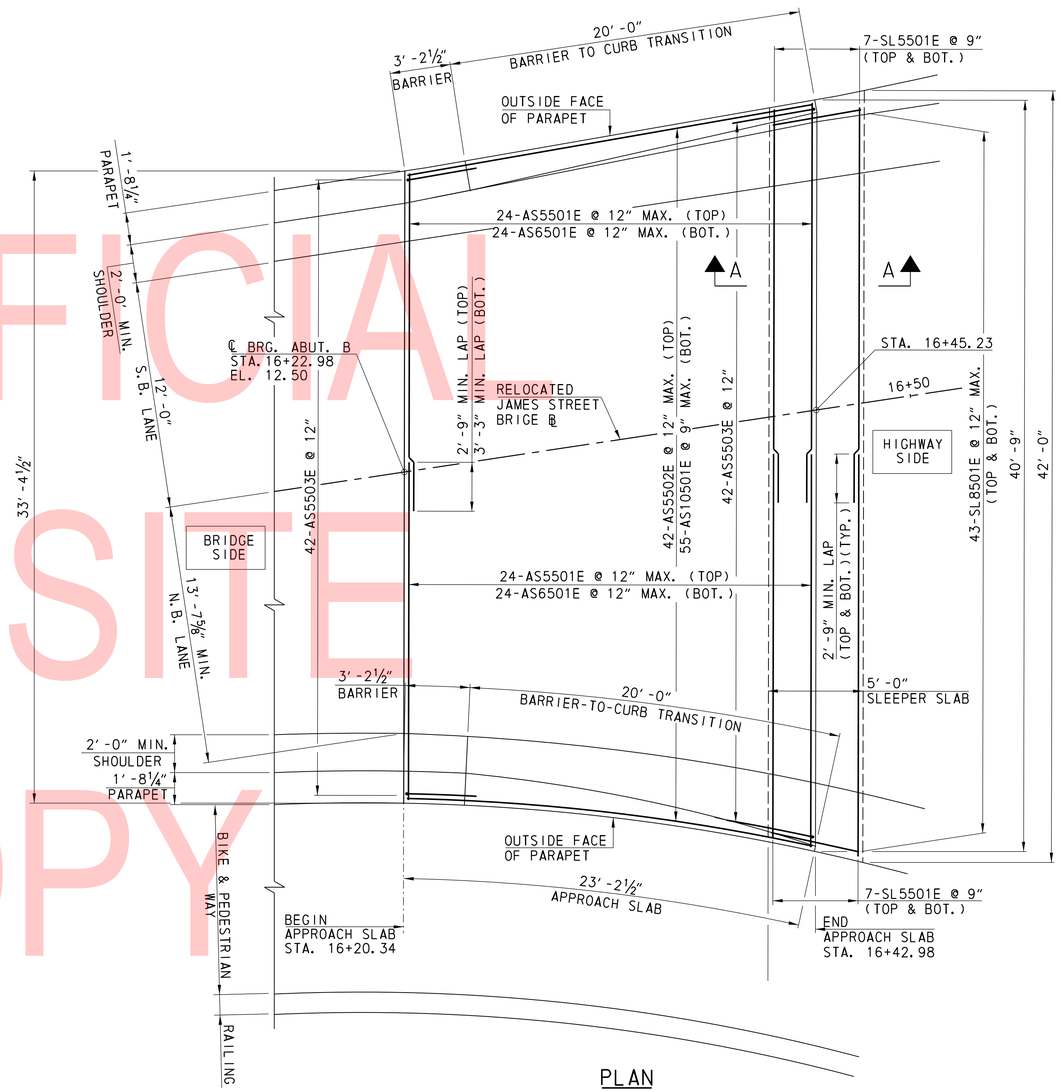

PLAN
APPROACH SLAB - B

SCALE
0 4 8 12
FEET

LEGEND

ABUT.	=	ABUTMENT
BOT.	=	BOTTOM
BRG.	=	BEARING
CLR.	=	CLEAR
EL.	=	ELEVATION
MAX.	=	MAXIMUM
MIN.	=	MINIMUM
N.B.	=	NORTHBOUND
S.B.	=	SOUTHBOUND
STA.	=	STATION
TYP.	=	TYPICAL

NOTES
- FOR SECTION A-A, SEE SHEET AS-02.
- FOR TYPICAL SECTIONS, SEE SHEET AS-02.
- FOR PARAPET DETAILS, SEE SHEET AS-03.
- FOR REINFORCEMENT BAR LIST, SEE SHEET BR-04.
- FOR PCC SAFETY BARRIER DETAILS, SEE SHEET AS-04.

UNOFFICIAL WEBSITE COPY

AS-01

ADDENDA / REVISIONS	SCALE: AS NOTED	BR 1-159 ON JAMES STREET OVER CHRISTINA RIVER	CONTRACT T201207101	BRIDGE NO. 1-159	APPROACH SLAB PLAN	SECTION McT
			COUNTY NEW CASTLE	DESIGNED BY: SNL		SHEET NO. 53
				CHECKED BY: SBM		

$DATE$
$TIME$ PM
$FILE$

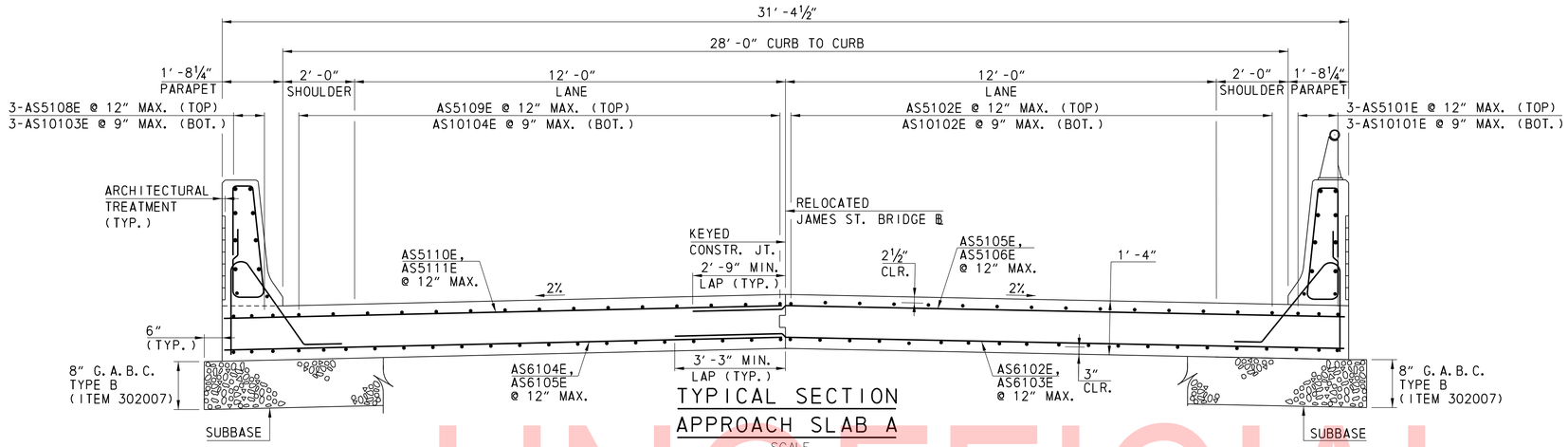

TYPICAL SECTION
APPROACH SLAB A

SCALE
0 2 4 6
FEET

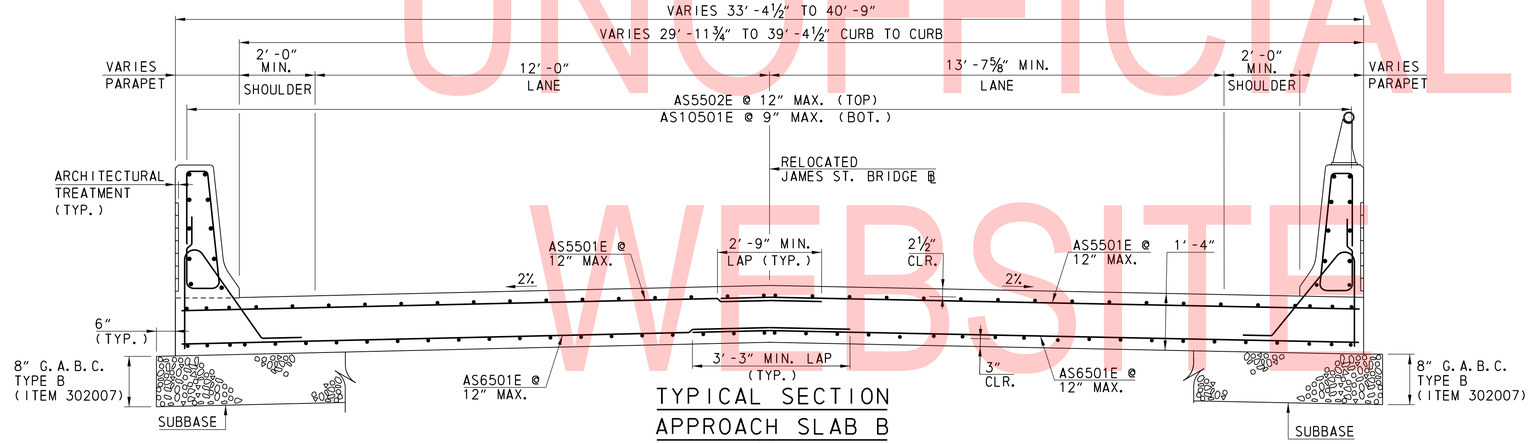

TYPICAL SECTION
APPROACH SLAB B

SCALE
0 2 4 6
FEET

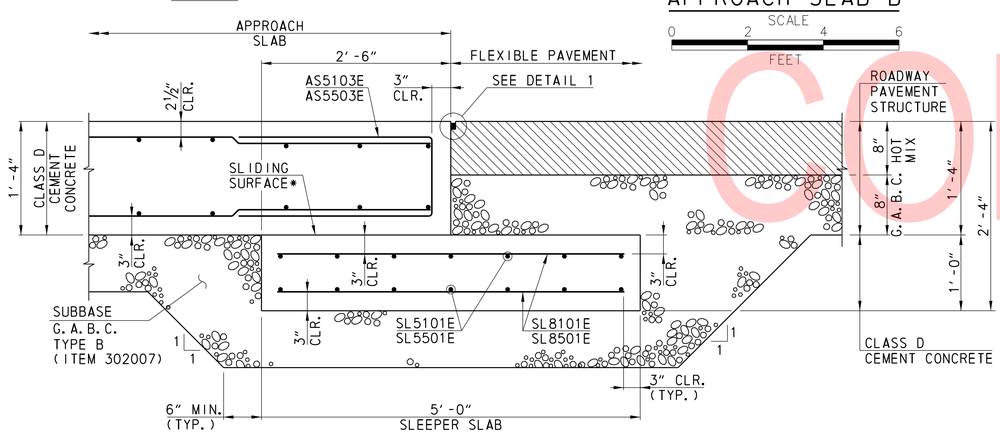

SECTION A-A

SCALE
0 1 2 3
FEET

* TROWEL SMOOTH AND PLACE 2 LAYERS OF 4 MIL. POLYETHYLENE SHEETING AS BOND BREAKER.

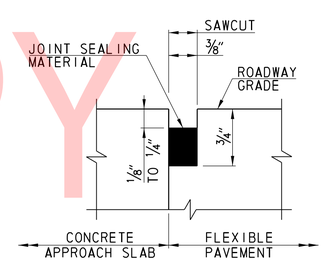

DETAIL 1
NOT TO SCALE

NOTES:

- FOR LOCATION OF SECTION A-A, SEE SHEET AS-01.
- FOR PARAPET DETAILS, SEE SHEET AS-03.
- FOR REINFORCEMENT BAR LIST, SEE SHEET BR-04.
- FOR ALUMINUM BRIDGE PARAPET RAILING DETAILS, SEE SHEET RA-01.
- FOR ALUMINUM PEDESTRIAN RAILING DETAILS, SEE SHEETS RA-02 AND RA-03.
- FOR ARCHITECTURAL TREATMENT DETAIL ON PARAPETS, SEE SHEET DK-05.

LEGEND

BOT.	=	BOTTOM
CLR.	=	CLEAR
CONSTR.	=	CONSTRUCTION
JT.	=	JOINT
MAX.	=	MAXIMUM
MIN.	=	MINIMUM
TYP.	=	TYPICAL

UNOFFICIAL WEBSITE COPY

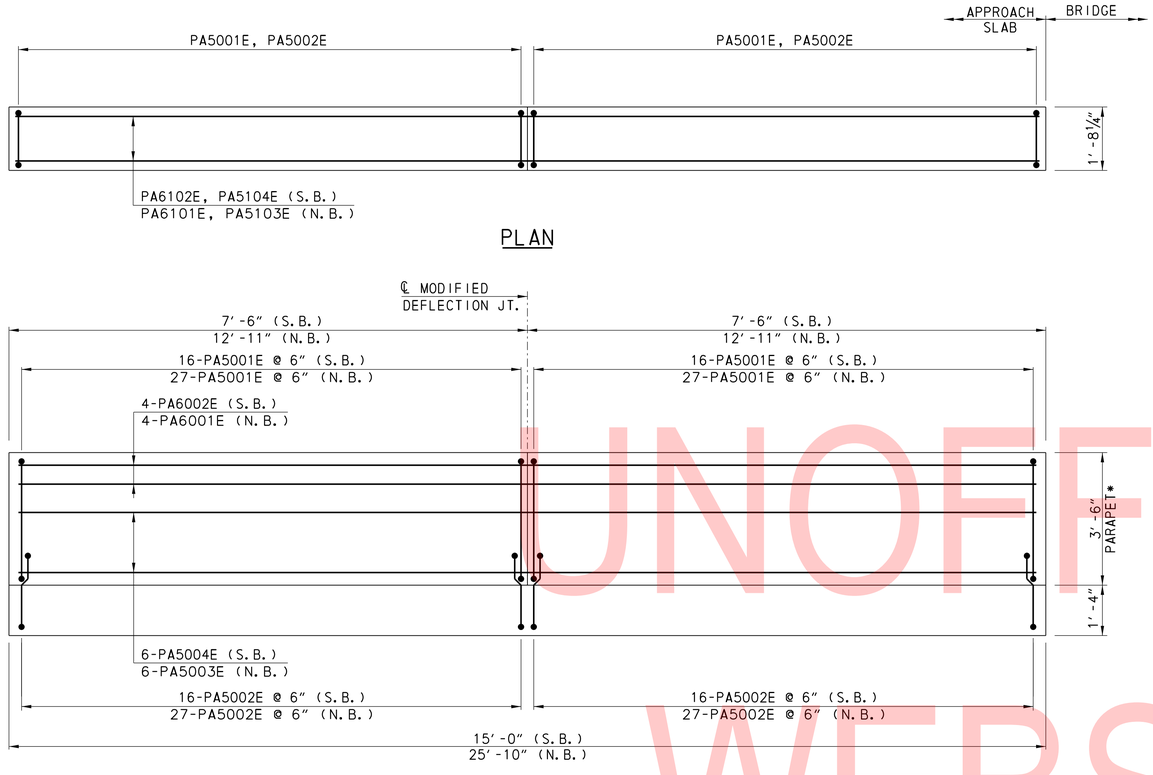

ELEVATION
APPROACH PARAPETS
ON APPROACH SLAB - A
NOT TO SCALE

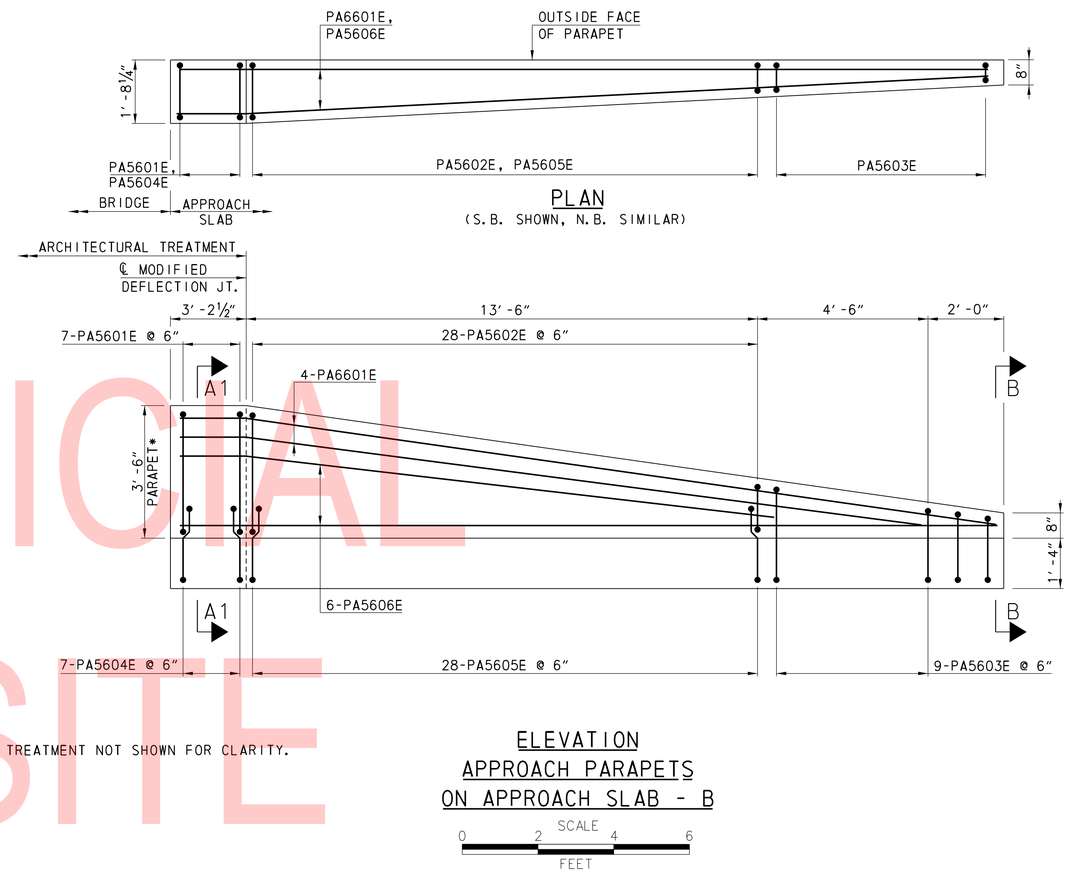

* ARCHITECTURAL TREATMENT NOT SHOWN FOR CLARITY.

ELEVATION
APPROACH PARAPETS
ON APPROACH SLAB - B

SCALE
0 2 4 6
FEET

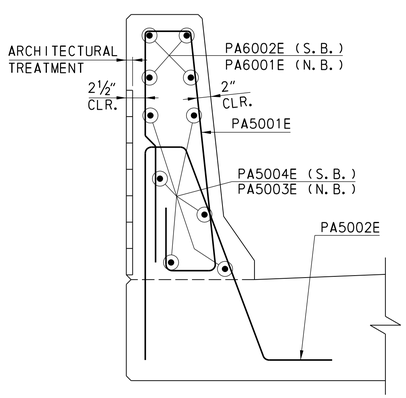

TYPICAL SECTION
NOT TO SCALE

LEGEND
CLR. = CLEAR
JT. = JOINT
N.B. = NORTHBOUND
S.B. = SOUTHBOUND

NOTES:
- WORK THIS SHEET WITH SHEET AS-01.
- FOR REINFORCEMENT BAR LIST, SEE SHEET BR-04.
- SLIP FORMING OF PARAPETS IS NOT PERMITTED.
- FOR MODIFIED DEFLECTION JOINT DETAILS, SEE SHEET DK-01.
- FOR ARCHITECTURAL TREATMENT DETAIL ON PARAPETS, SEE SHEET DK-05.

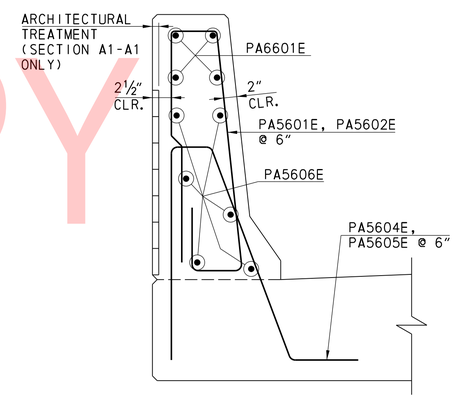

SECTIONS A1-A1
NOT TO SCALE

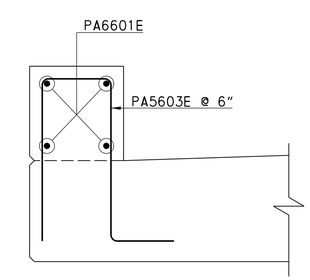

SECTION B-B
NOT TO SCALE

UNOFFICIAL WEBSITE COPY

ADDENDA / REVISIONS	SCALE: AS NOTED	BR 1-159 ON JAMES STREET OVER CHRISTINA RIVER	CONTRACT T201207101	BRIDGE NO. 1-159	APPROACH SLAB DETAILS – 2	AS-03
			COUNTY NEW CASTLE	DESIGNED BY: SNL		SECTION McT
				CHECKED BY: ZME		SHEET NO. 55

$DATE$
DGN
$FILE$

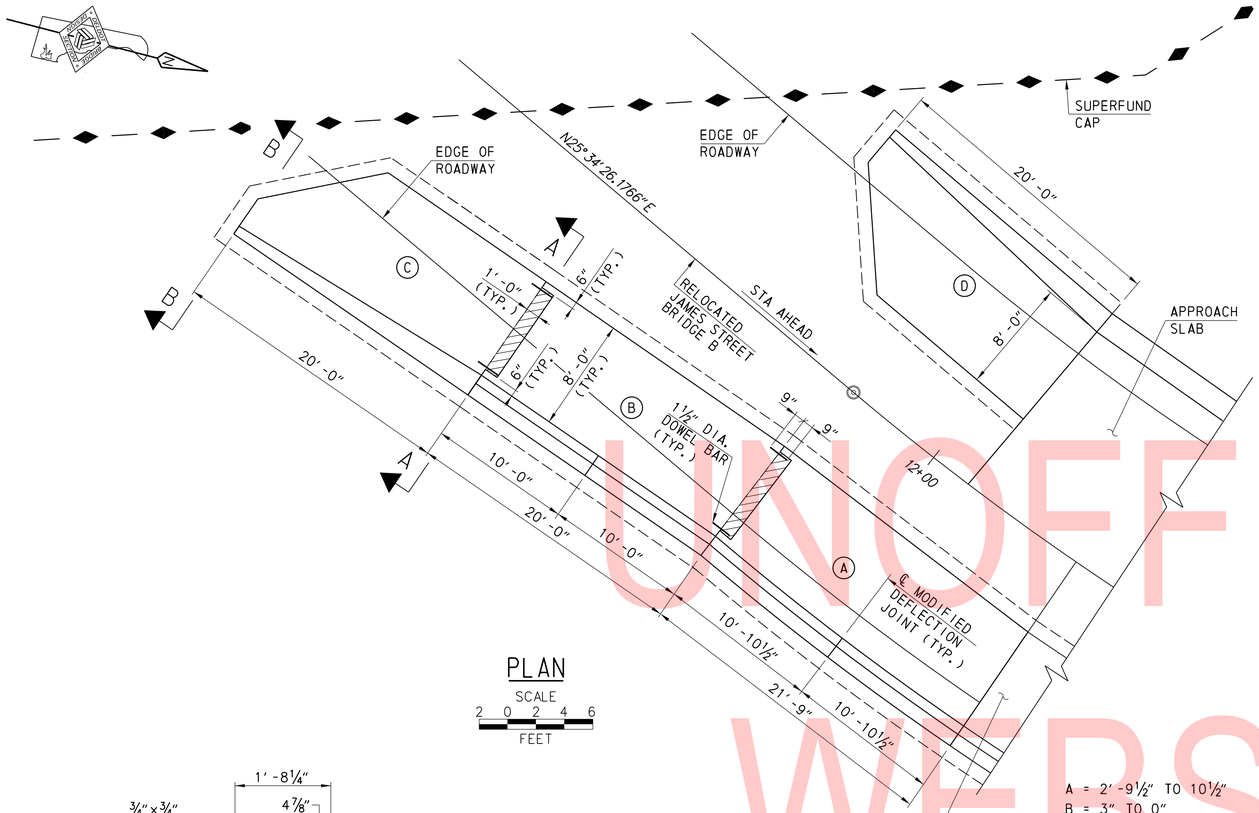

PLAN

SCALE 2 0 2 4 6 FEET

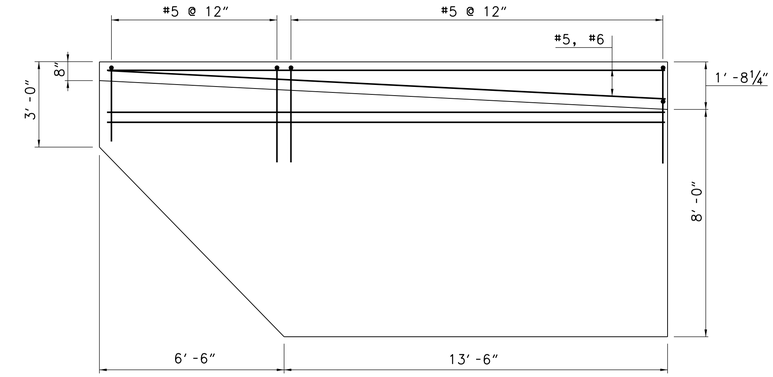

PLAN
(S.B. SHOWN, N.B. SIMILAR)

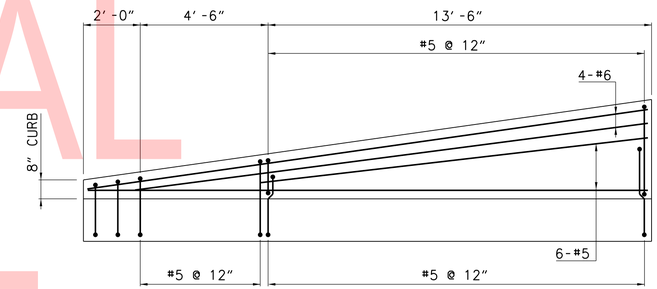

NOTE: REINFORCEMENT IN SLAB NOT SHOWN FOR CLARITY.

ELEVATION

BARRIER TO CURB TRANSITION
PCC SAFETY BARRIER, PERMANENT SINGLE FACE

SCALE 0 2 4 6 FEET

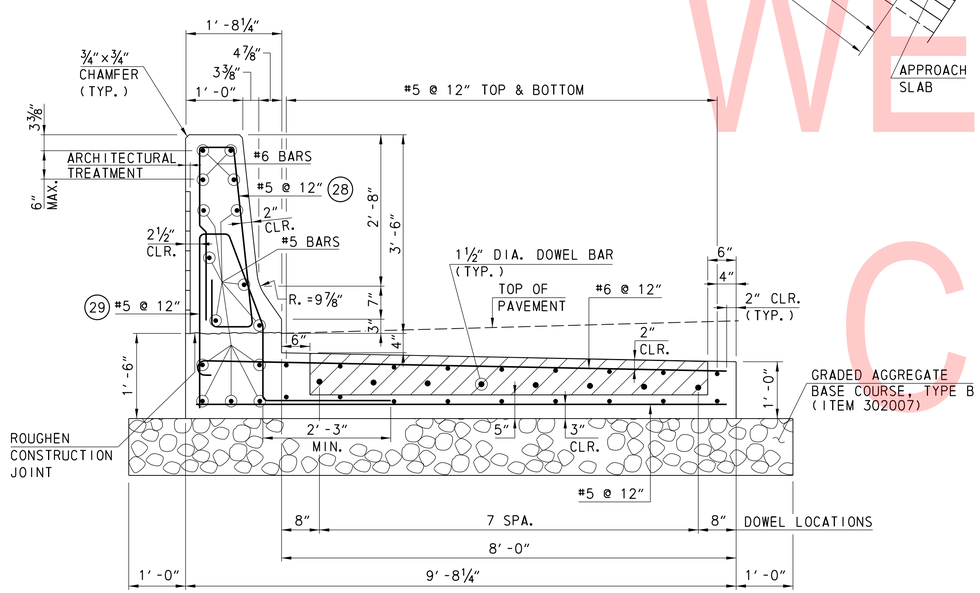

SECTION A-A
PCC SAFETY BARRIER, PERMANENT SINGLE FACE

SCALE 0 1 2 3 FEET

A = 2'-9½" TO 10½"
B = 3" TO 0"
C = 2'-7¾" TO 10"
D = 6¼" TO 3"
E = 3½" TO 0"
R = 2"

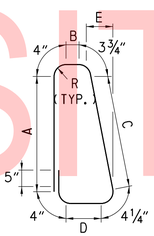

(28)

B = 2'-7" TO 1'-10"
C = 2'-9½" TO 1'-10"
D = 3½" TO 0"
R = 2"

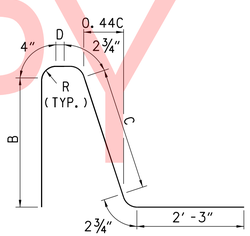

(29)

A = 1'-0"
B = 2'-2¾" TO 1'-8½"
C = 5" TO 4"
D = 2'-2¾" TO 1'-8½"

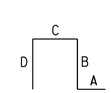

(S4)

NOTES:

- COST OF THE CONCRETE FOOTING, ALL REINFORCEMENT AND EXCAVATION SHALL BE INCIDENTAL TO ITEM 720529. REFER TO SPECIAL PROVISIONS FOR ADDITIONAL INFORMATION.
- TOLERANCE IN DIMENSIONS SHOWN SHALL BE WITHIN ¼"
- ALL PARAPETS SHALL BE CURED ONLY BY WATER METHOD PER 602.18(a) OF THE STANDARD SPECIFICATIONS.
- SLIP FORMING OF PARAPETS IS NOT PERMITTED.
- WORK THIS SHEET WITH AS-01.
- FOR ARCHITECTURAL TREATMENT DETAIL ON PARAPETS, SEE SHEET DK-05.

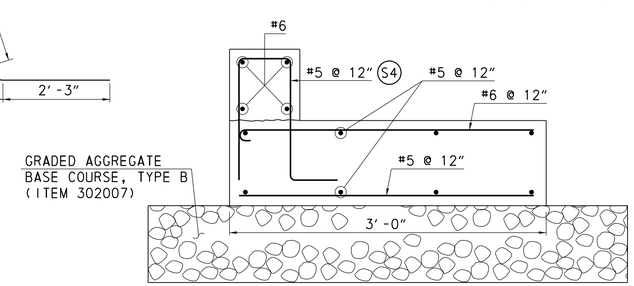

SECTION B-B
NOT TO SCALE

LEGEND

CLR.	=	CLEAR
MAX.	=	MAXIMUM
MIN.	=	MINIMUM
R.	=	RADIUS
STA.	=	STATION
TYP.	=	TYPICAL

CAST IN PLACE MOMENT SLAB CONNECTION

UNOFFICIAL WEBSITE COPY

AS-04

ADDENDA / REVISIONS	SCALE: AS NOTED	BR 1-159 ON JAMES STREET OVER CHRISTINA RIVER	CONTRACT T201207101	BRIDGE NO. 1-159	APPROACH SLAB DETAILS – 3	SECTION McT
			COUNTY NEW CASTLE	DESIGNED BY: BJH		SHEET NO. 56
				CHECKED BY: XXX		

$DATE$
$TIME$ PM
$FILE$

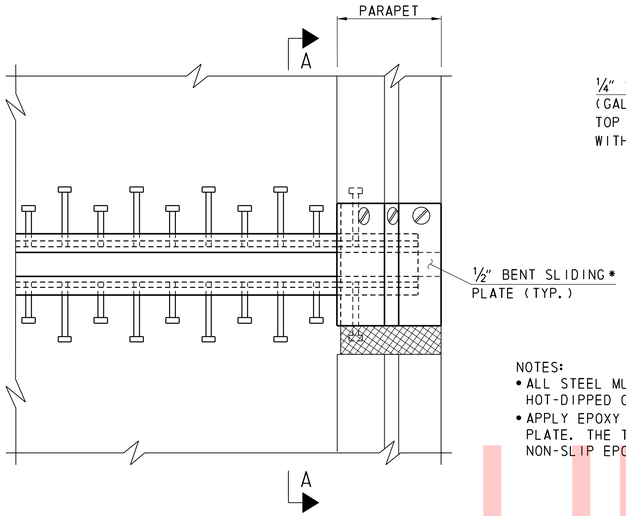

* INCIDENTAL TO STRIP SEAL ASSEMBLY.

PLAN AT PARAPET

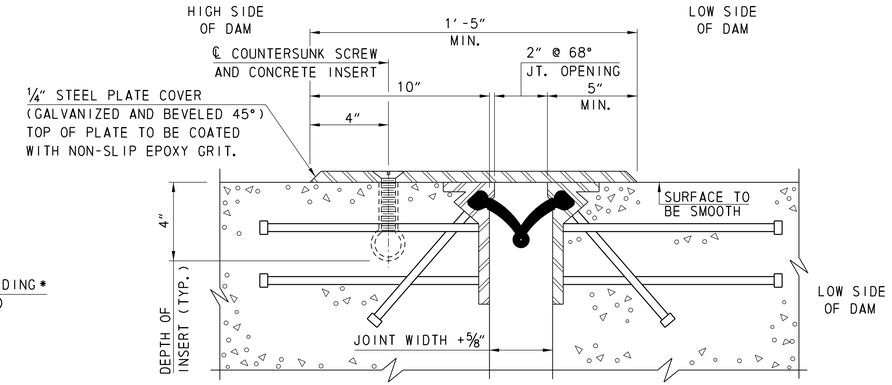

NOTES:
- ALL STEEL MUST BE ASTM A709, GRADE 36 OR 50 AND HOT-DIPPED GALVANIZED IN ACCORDANCE WITH ASTM A123.
- APPLY EPOXY COATING ON BOTH SIDES OF THE STEEL COVER PLATE. THE TOP OF PLATE (WALKING SURFACE) MUST RECEIVE NON-SLIP EPOXY GRIT COATING IN ACCORDANCE WITH ADA A4.5.

SECTION B-B

STRIP SEAL INSTALLATION NOTES

- THE FRAME RAILS SHALL BE CLEANED THOROUGHLY AND SEAL CHANNELS SHALL BE INSPECTED TO ASCERTAIN THE ABSENCE OF CONCRETE AND DEBRIS. THE SEAL CHANNEL SHALL ALSO BE INSPECTED AT ALL FIELD SPLICES, AND ALL WELD SPLATTER AND/OR SHARP EDGES SHALL BE REMOVED.
- LIBERALLY COAT THE STRIP SEAL LUGS WITH LUBRICANT ADHESIVE. COAT ONLY 3'-0" TO 4'-0" PRECEDING THE INSTALLATION.
- COLLAPSE THE STRIP SEAL INTO THE THE JOINT OPENING UNTIL THE LUG IS ALIGNED WITH THE FRAME RAIL CHANNEL. (SEE FIGURE 1)
- PUSH THE LUG INTO THE CHANNEL AND THEN USE A BENT BAR TO FORCE THE LUG INTO THE CHANNEL (MAKE SURE THAT THE BAR IS DULL TO PREVENT PUNCTURING OF THE SEAL) (SEE FIGURE 2)
- AFTER THE SEAL LOCKS INTO PLACE, PUSH THE TOP OF THE LUG AGAINST THE FRAME RAIL TO INSURE PROPER SEATING. (SEE FIGURE 3)
- AS THE WORK PROGRESSES DOWN THE LENGTH OF THE JOINT, WORK BOTH SIDES OF THE STRIP SEAL INTO THE RAIL CHANNEL.
- 3" JOINT SYSTEM TO BE USED. STRIP SEAL, EXTRUSION, STUDS, SLIDING PLATES AND ASSOCIATED MATERIALS ARE INCIDENTAL TO ITEM 605511.
- ENTIRE EXPANSION DAM SYSTEM SHALL BE PAINTED AFTER FABRICATION USING URETHANE SYSTEM, EXCEPT AS DETAILED IN EXTRUSION SCHEMATIC.
- GALVANIZING THE ENTIRE EXPANSION DAM SYSTEM MAY BE USED AS AN ALTERNATE TO PAINTING.
- PAYMENT FOR ALL WORK AND MATERIAL FOR STEEL PLATE COVER ARE INCIDENTAL TO ITEM 605511 - PREFABRICATED EXPANSION JOINT SYSTEM, 3".
- USE FLATHEAD STAINLESS STEEL ASTM F 738M OR F 593 (TYPE 304) FOR COUNTERSUNK SCREWS WITH INSERTS. ALL CONCRETE INSERTS AND M20 COUNTERSUNK MACHINE SCREWS ARE ¾" DIAMETER UNLESS OTHERWISE NOTED.

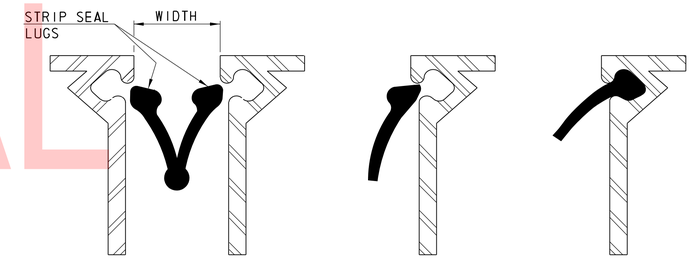

FIGURE 1 FIGURE 2 FIGURE 3

STRIP SEAL INSTALLATION PROCEDURE

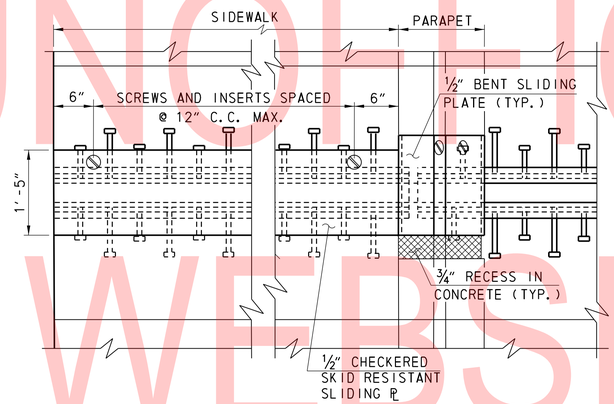

PLAN AT SIDEWALK

LEGEND:

C.C.	=	CENTER TO CENTER
DIA.	=	DIAMETER
MAX.	=	MAXIMUM
MIN.	=	MINIMUM
REINF.	=	REINFORCEMENT
TEMP.	=	TEMPERATURE
TYP.	=	TYPICAL

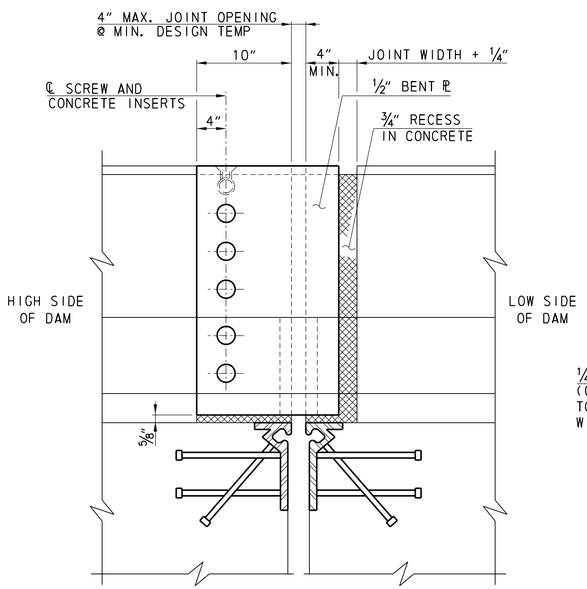

NOTE
FORM CONCRETE RECESS AREA IN BARRIER AND GRIND TO PROVIDE SMOOTH SURFACE. APPLY ONE COAT OF ASPHALT CEMENT PAINT OR PERFORMANCE GRADED ASPHALT CEMENT PG 64-22 TO ALLOW BENT SLIDING PLATE TO MOVE FREELY WITHOUT FRICTION.

SECTION A-A

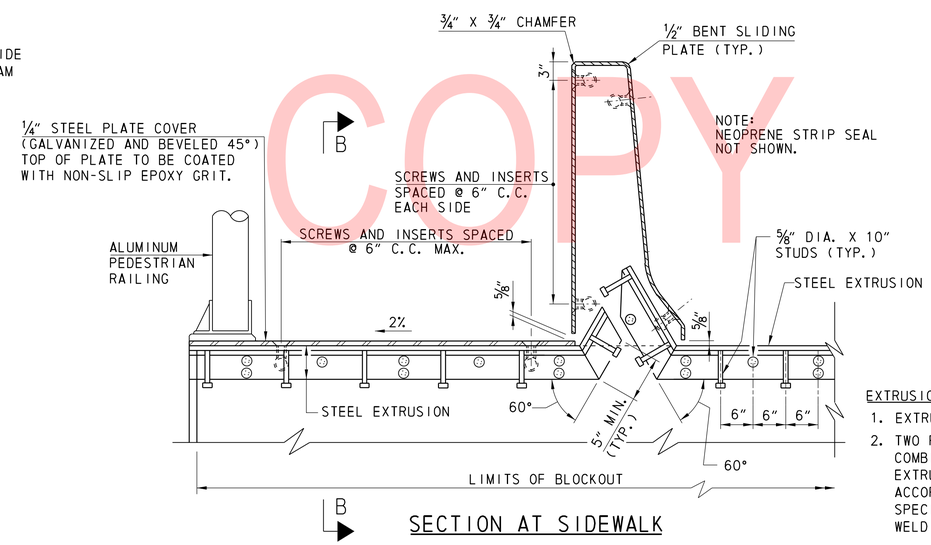

SECTION AT SIDEWALK

EXTRUSION NOTES:
1. EXTRUSION THICKNESS IS ½".
2. TWO PIECE MEMBER (EXTRUSION AND PLATE COMBINATION) IN LIEU OF ONE PIECE EXTRUSION IS PERMITTED. WELD IN ACCORDANCE WITH AASHTO/AWS SPECIFICATIONS. (FULL PENETRATION WELD AND MIN REQUIRED)

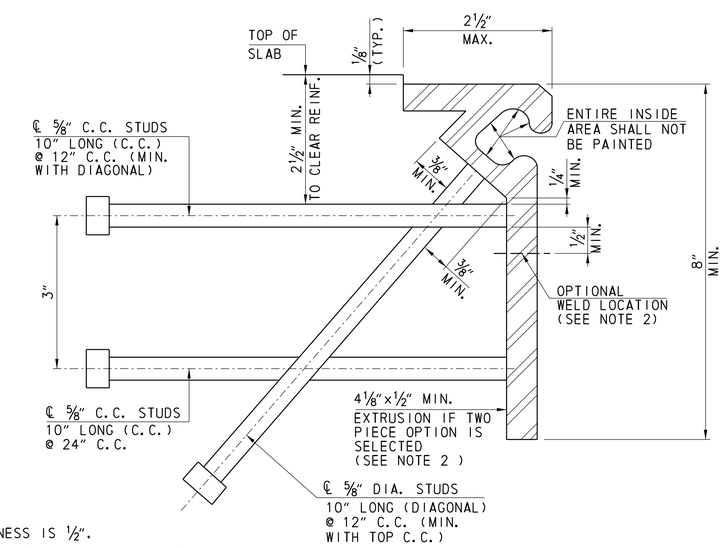

EXTRUSION SCHEMATIC

UNOFFICIAL WEBSITE COPY

ADDENDA / REVISIONS	NOT TO SCALE	BR 1-159 ON JAMES STREET OVER CHRISTINA RIVER	CONTRACT T201207101	BRIDGE NO. 1-159	EXPANSION JOINT DETAILS	EX-01
			COUNTY NEW CASTLE	DESIGNED BY: AKW		SECTION McT
				CHECKED BY: BJH		SHEET NO. 57

DATE$
STATE$ PM
FILE$

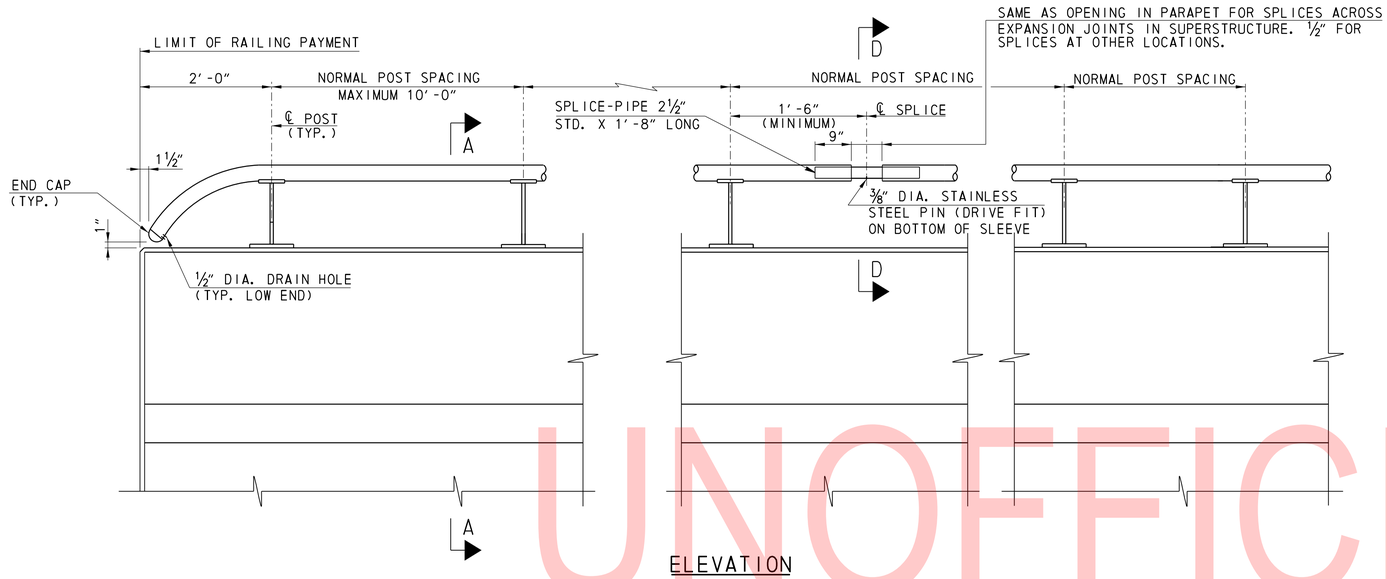

ELEVATION

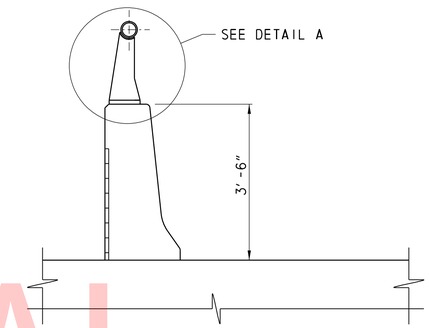

SECTION A-A

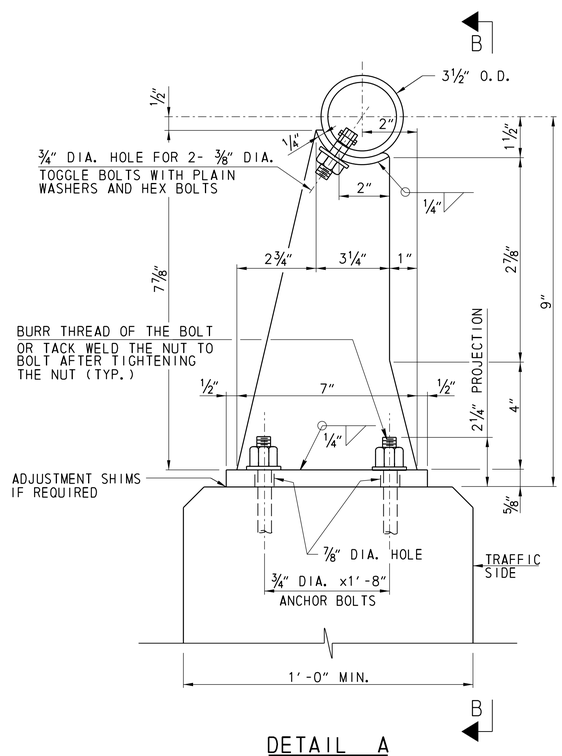

DETAIL A

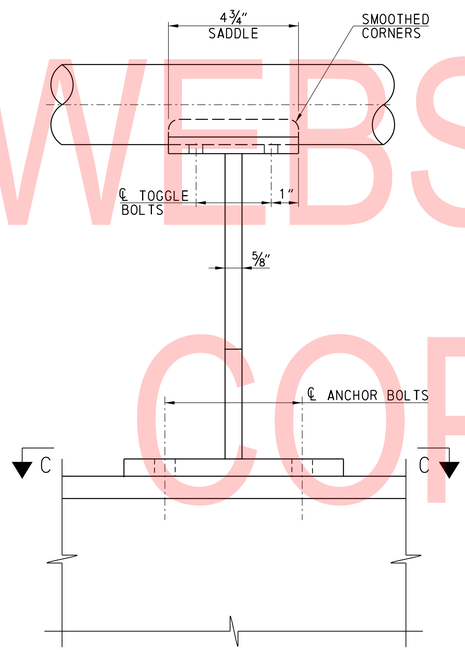

VIEW B-B

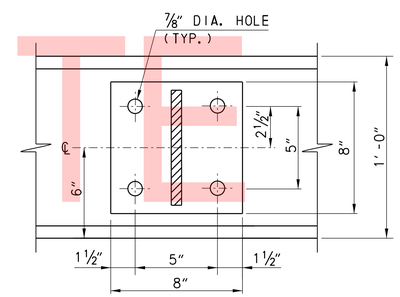

SECTION C-C

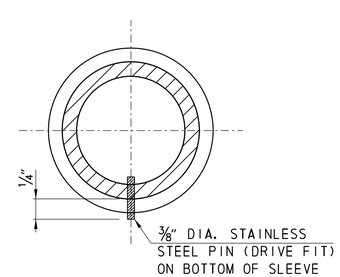

SECTION D-D

LEGEND

DIA.	=	DIAMETER
MIN.	=	MINIMUM
O.D.	=	OUTER DIAMETER
STD.	=	STANDARD
TYP.	=	TYPICAL

NOTES:

- IN LIEU OF FABRICATED POST, USE CAST OR OTHER TYPE POST IF APPROVED BY THE ENGINEER.
- DO NOT PAINT ANY MATERIALS.
- PLACE POST AND POST ANCHOR BOLTS NORMAL TO GRADE AND RAILS PARALLEL TO GRADE.
- LOCATE RAIL SPLICES BETWEEN EXPANSION JOINTS AND AT OTHER LOCATIONS WHERE NECESSARY. PROVIDE RAILS AS LONG AS PRACTICAL, WITH A MINIMUM OF THREE POSTS BETWEEN SPLICES, UNLESS OTHERWISE REQUIRED FOR EXPANSION. LOCATE ℄ RAIL SPLICE 1'-6" FROM ℄ OF POSTS.
- DRILL HOLES IN RAILS AS REQUIRED IN THE FIELD.
- COAT ALL SURFACES OF THE BASE PLATE IN CONTACT WITH CONCRETE WITH CAULKING COMPOUND PRIOR TO ERECTION. AFTER ERECTION AND ALIGNMENT, SEAL OPENINGS BETWEEN THE METAL SURFACES AND THE CONCRETE WITH AN APPROVED CAULKING COMPOUND MEETING THE REQUIREMENTS OF ASTM C834 OR C920.
- FOR ARCHITECTURAL TREATMENT DETAIL ON PARAPETS, SEE SHEET DK-05.
- PAYMENT FOR ALUMINUM BRIDGE PARAPET RAILING WILL BE UNDER ITEM 606002.

UNOFFICIAL WEBSITE COPY

ADDENDA / REVISIONS	NOT TO SCALE	BR 1-159 ON JAMES STREET OVER CHRISTINA RIVER	CONTRACT T201207101	BRIDGE NO. 1-159	ALUMINUM BRIDGE PARAPET RAILING	RA-01
			COUNTY NEW CASTLE	DESIGNED BY: AKW		SECTION McT
				CHECKED BY: BJH		SHEET NO. 58

$DATE$
$TIME$
$FILE$

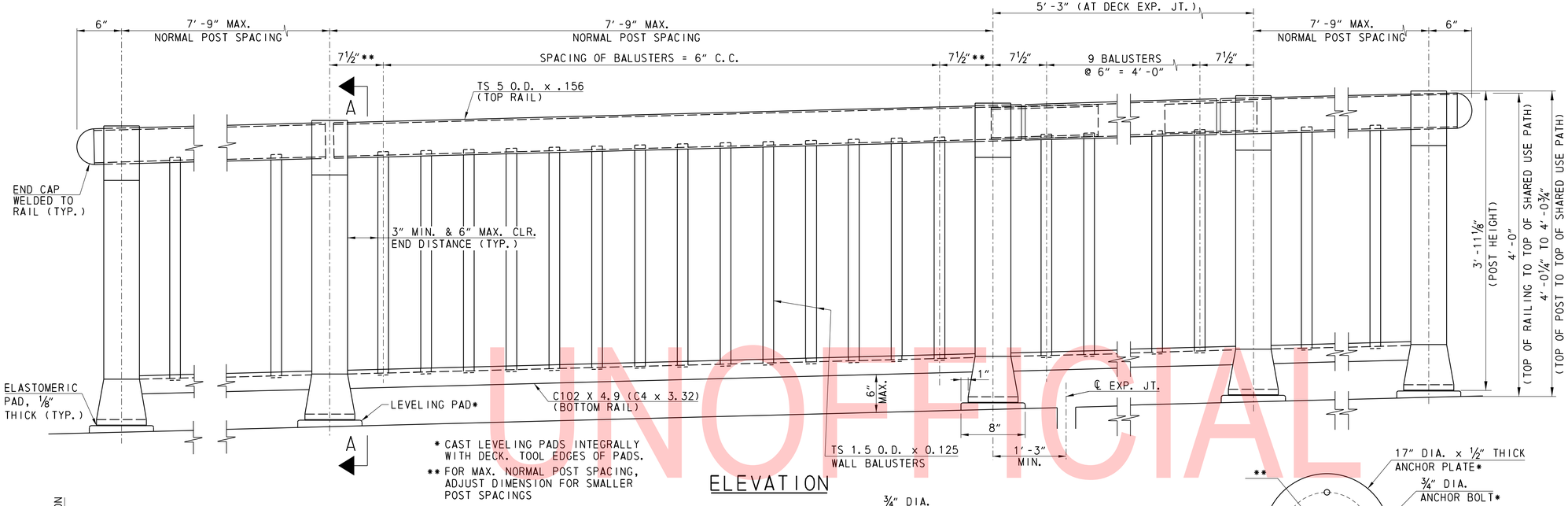

ELEVATION

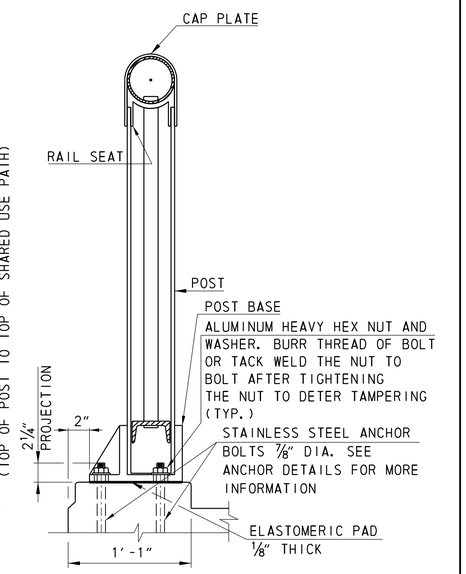

SECTION A-A

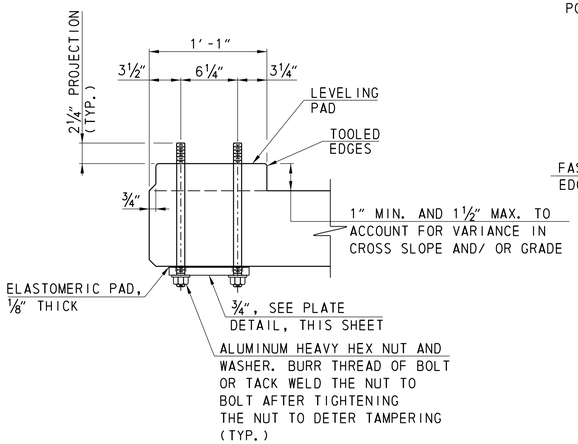

ANCHOR DETAIL

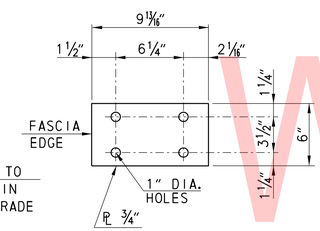

PLATE DETAIL

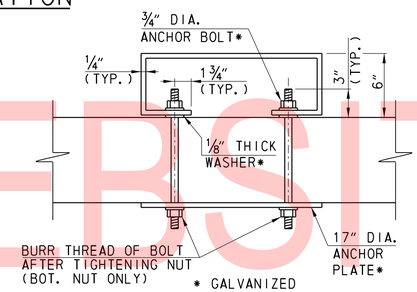

SECTION X-X

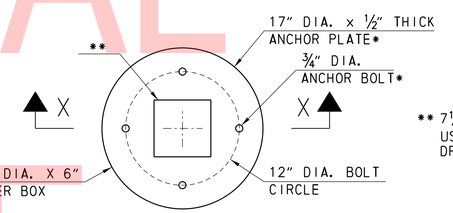

** 7½"x7½"x¼" COVER FOR 6"x6" HAND HOLE.
USE COUNTERSUNK SCREWS TO ATTACH.
DRILL AND TAP THROUGH COVER PLATE.

NOTE: PAINT COVER BOX AND HAND HOLE COVER SAFETY YELLOW.

TEMPORARY COVER FOR ANCHOR BOLTS
AT FUTURE LIGHT POLE BASE

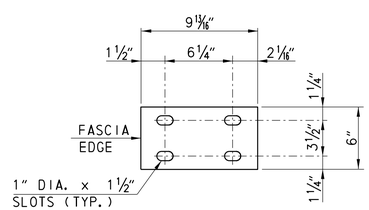

ELASTOMERIC PAD DETAIL
⅛" THICK

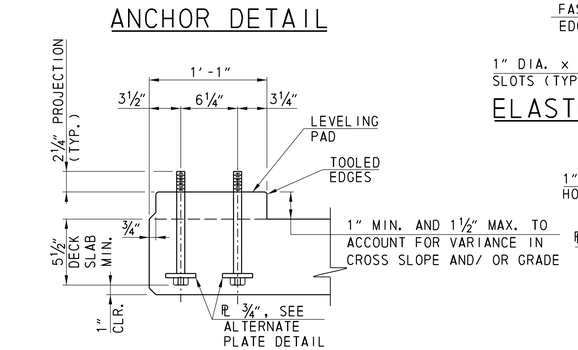

ALTERNATE ANCHOR DETAIL A

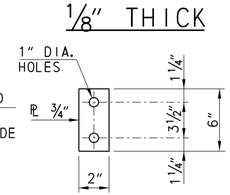

ALTERNATE PLATE DETAIL

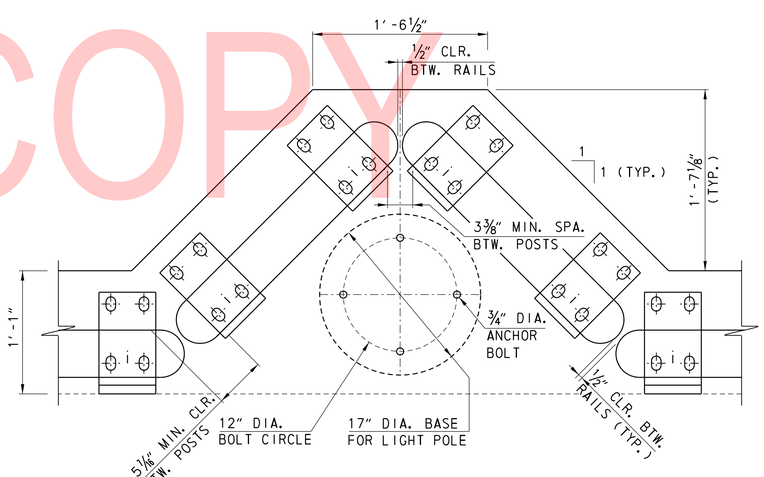

FUTURE LIGHT POLE BASE PLAN

NOTES:

- PAYMENT FOR TEMPORARY COVER FOR ANCHOR BOLTS WILL BE UNDER 605002. PAYMENT FOR ALUMINUM PEDESTRIAN RAILING WILL BE UNDER 606003.
- PLACE POST, BALUSTERS AND ANCHOR BOLTS TRULY VERTICAL. PLACE RAILS PARALLEL TO GRADE.
- PLACE END CAPS FLUSH WITH RAILS.
- PROVIDE UNIFORM SPACING OF BALUSTERS IN EACH PANEL. IF POST SPACING SHOWN ON DESIGN DRAWINGS DOES NOT RESULT IN 6" SPACING FOR THE BALUSTERS, ADJUST THE DIFFERENCE BY INCREASING OR DECREASING BALUSTERS SPACING AND END DISTANCE BY NOT MORE THAN ¼".
- IN LIEU OF CAST "POST BASE AND RAIL SEAT", USE FABRICATED "POST BASE AND RAIL SEAT" IF APPROVED BY THE ENGINEER.
- WORK THIS SHEET WITH RA-03.
- MATERIALS FOR ALUMINUM RAILING SYSTEM AND NUTS MUST MEET REQUIREMENTS OF ASTM B-221 ALLOY 6061-T6.
- ELASTOMERIC PADS MUST MEET REQUIREMENTS OF 60 +/- SHORE A DUROMETER.
- STAINLESS STEEL HEX NUTS MUST MEET REQUIREMENTS OF ASTM A-307, GRADE A.
- BOLTS MUST MEET REQUIREMENTS OF ASTM B-211, ALUMINUM ALLOY 2024-T4.
- ANCHOR BOLTS MUST MEET REQUIREMENTS OF ASTM A-276, TYPE 304 OR TYPE 430 (THREADS TO BE ROLLED NOT CUT).
- ALUMINUM WASHERS MUST MEET REQUIREMENTS OF ASTM B-209 ALLOY ALCLAD 2024-T4.
- ANCHOR BOLT PATTERN FOR FUTURE LIGHT POLE BASED ON ASSUMED USE OF GRANVILLE LUMINAIRE WITH WADSWORTH BASE.
- DO NOT PAINT ANY MATERIAL WITH EXCEPTION OF COVER BOX AND HAND HOLE COVER.

UNOFFICIAL WEBSITE COPY

ADDENDA / REVISIONS	NOT TO SCALE	BR 1-159 ON JAMES STREET OVER CHRISTINA RIVER	CONTRACT T201207101	BRIDGE NO. 1-159	ALUMINUM PEDESTRIAN RAILING DETAILS – 1	RA-02
			COUNTY NEW CASTLE	DESIGNED BY: AKW		SECTION McT
				CHECKED BY: BJH		SHEET NO. 59

$DATE$
3/20/12 2:42 PM
$FILE$

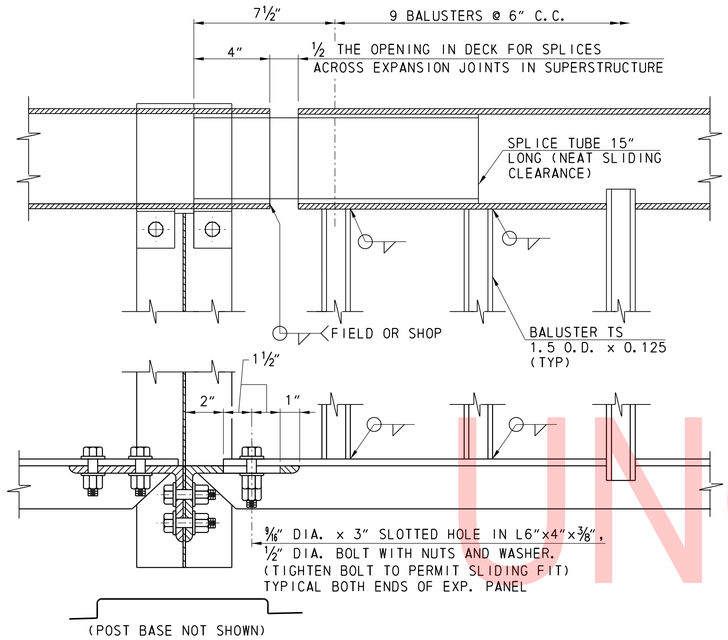

TYPICAL EXPANSION PANEL DETAIL

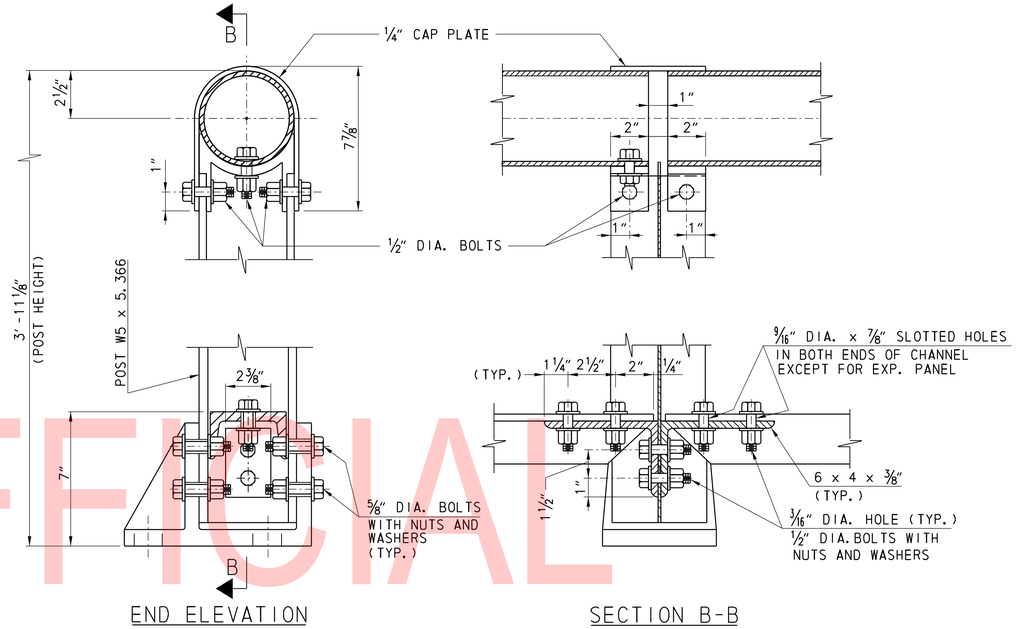

END ELEVATION

SECTION B-B

TYPICAL DETAIL AT POST

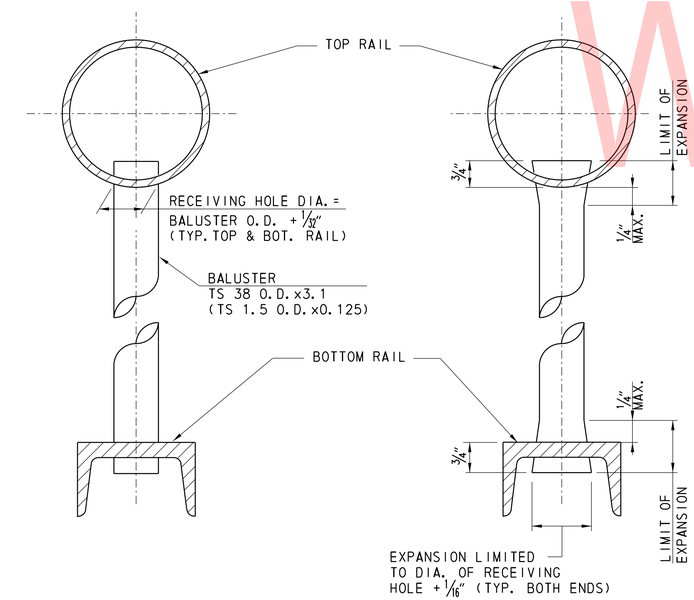

PRIOR TO EXPANDING

EXPANDED

BALUSTER DETAILS

EXPAND FULL CIRCUMFERENCE OF BALUSTER WITHIN THE LIMIT OF EXPANSION

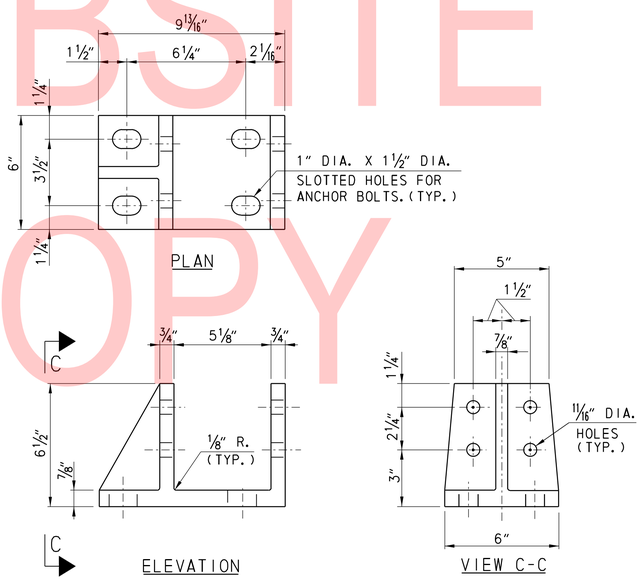

POST BASE DETAIL

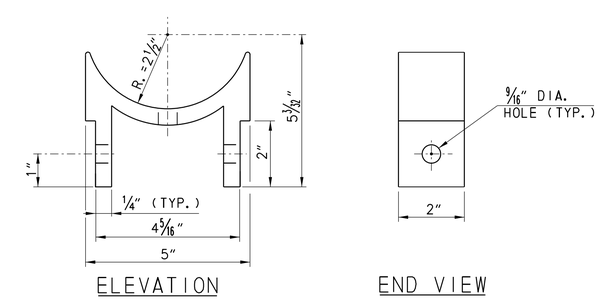

RAIL SEAT DETAIL

LEGEND

BOT.	=	BOTTOM
C.C.	=	CENTER TO CENTER
DIA.	=	DIAMETER
EXP.	=	EXPANSION
MAX.	=	MAXIMUM
O.D.	=	OUTER DIAMETER
R.	=	RADIUS
TYP.	=	TYPICAL

UNOFFICIAL WEBSITE COPY

ADDENDA / REVISIONS	NOT TO SCALE	BR 1-159 ON JAMES STREET OVER CHRISTINA RIVER	CONTRACT T201207101	BRIDGE NO. 1-159	ALUMINUM PEDESTRIAN RAILING DETAILS – 2	RA-03
			COUNTY NEW CASTLE	DESIGNED BY: AKW		SECTION McT
				CHECKED BY: BJH		SHEET NO. 60

$DATE$
$LOAD$ PM
$FILE$

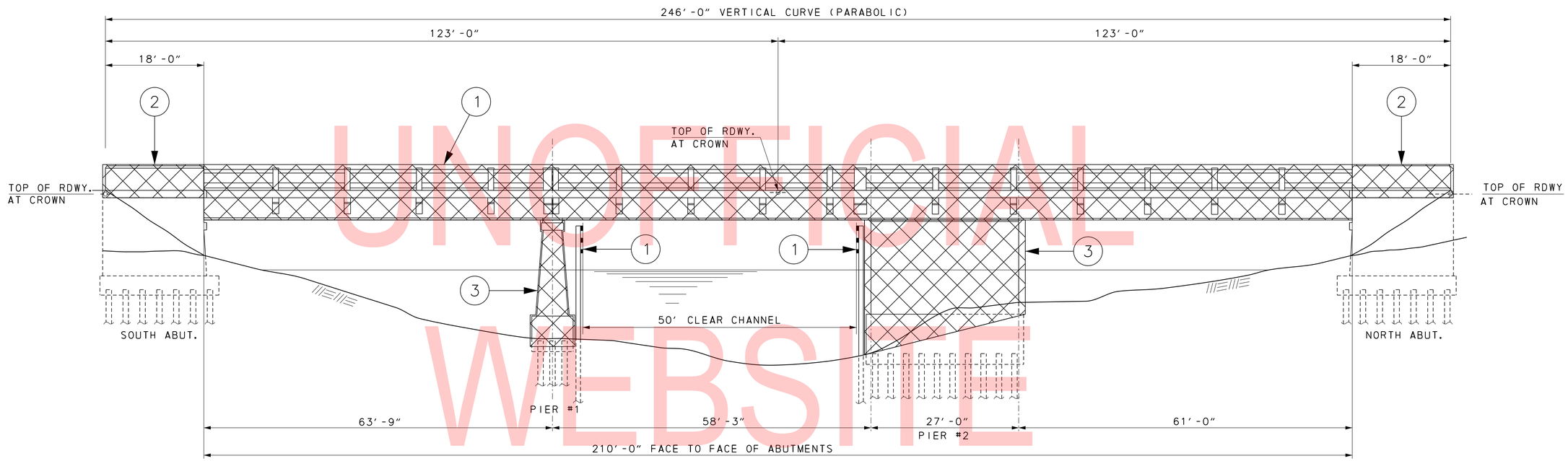

ELEVATION

SCALE
0 10 20 30
FEET

SEQUENCE OF REMOVAL:

1. REMOVE EXISTING SUPERSTRUCTURE AND FENDER SYSTEM.
2. REMOVE ABUTMENTS DOWN TO TOP OF BACKWALL.
3. REMOVE PIERS AND ALL PILES TO 1'-0" BELOW RIVERBED.

NOTE:

- SAW CUT TOP OF ABUTMENTS TO LEAVE A SMOOTH SURFACE.
- LEAVE WEST BARRIERS IN PLACE ON ABUTMENTS. REMOVE EAST BARRIERS TO SAME ELEVATION AS REST OF ABUTMENT.
- PAYMENT FOR DEMOLITION OF EXISTING BR 1-159 INCLUDED UNDER ITEM NO. 211550. REFER TO SPECIAL PROVISION OF ITEM NO. 211550 - DEMOLITION OF EXISTING BRIDGE, FOR MORE INFORMATION.
- REFER TO SHEET CS-05 FOR APPROXIMATE LIMITS OF COFFERDAM INSTALLATION AT EXISTING PIERS 1 AND 2. PAYMENT FOR COFFERDAMS IS INCLUDED UNDER ITEM NO. 211550.
- REFER TO SHEET CS-01 CONSTRUCTION NOTES ON CONSTRUCTION INDUCED VIBRATIONS WITH RESPECT TO THE 72" NCC SANITARY SEWER.
- REFER TO NOTE 4(A) ON EC-01 FOR INFORMATION ON RIPRAP TREATMENT OF CAVITIES RESULTING FROM REMOVAL OF EXISTING BASCULE AND REST PIERS.
- FINISHED GROUND ADJACENT TO THE EXISTING ABUTMENTS TO BE SET 6" BELOW THE TOP OF THE CUT WALL AND SLOPED TO PROVIDE SURFACE DRAINAGE AWAY FROM THE WALLS.
- LEAD PAINT ON THE EXISTING STEEL OF THE SUPERSTRUCTURE AND BASCULE SPAN MACHINERY, ASBESTOS CONDUIT IN THE DECK AND SUBSTRUCTURES, AND TIMBER TREATED WITH CREOSOTE MAY BE PRESENT WITHIN THE EXISTING BR 1-159 DEMOLITION LIMITS. REMOVAL OF THESE ELEMENTS, INCLUDING HANDLING OF ANY HAZARDOUS MATERIALS SUCH AS LEAD PAINT, ASBESTOS, AND TIMBER TREATED WITH CREOSOTE WITHIN THE EXISTING BR 1-159 DEMOLITION LIMITS WILL BE INCIDENTAL TO ITEM 211550-DEMOLITION OF EXISTING BRIDGE. IF HAZARDOUS MATERIALS ARE ENCOUNTERED REFER TO SPECIAL PROVISION 202560-CONTAMINATED MATERIALS FOR MORE INFORMATION. HANDLING OF ANY HAZARDOUS MATERIALS, INCLUDING CONTAMINATED SOIL, OUTSIDE THE EXISTING BR 1-159 DEMOLITION LIMITS WILL BE INCIDENTAL TO THEIR RESPECTIVE EXCAVATION ITEMS.
- A USGS STREAM GAGE IS LOCATED AT THE EXISTING BASCULE PIER (PIER #2) AND WILL BE REMOVED. REFER TO NOTE 33 ON SHEET PN-02 FOR ADDITIONAL INFORMATION.

LEGEND:

ABUT. = ABUTMENT
RDWY. = ROADWAY
TO BE REMOVED

UNOFFICIAL WEBSITE COPY

ADDENDA / REVISIONS		SCALE: AS NOTED	BR 1-159 ON JAMES STREET OVER CHRISTINA RIVER	CONTRACT T201207101	BRIDGE NO. 1-159	DEMOLITION PLAN	SR-01
				COUNTY NEW CASTLE	DESIGNED BY: BJH		SECTION McT
					CHECKED BY: AKW		SHEET NO. 61

$DATE$
10:09:54 AM
$FILE$

① ANY MARK NUMBER WITH SUFFIX 'E' DENOTES EPOXY COATED REINFORCING STEEL.

② ALL MARK 'LOCATION PREFIXES' SHALL CONSIST OF TWO LETTERS AND ARE AS FOLLOWS: AB = ABUTMENT, AS = APPROACH SLAB, BC = BOX CULVERT, BW = BACKWALL, CL = COLUMN, DK = DECK, DL = DOWEL, FT = FOOTING, HW = HEADWALL, MS = MISC. BARS, PA = PARAPET, PR = PIER, SC = SHEETPILE CAP, SL = SLAB, TW = TOEWALL, WL = WALL (UNIQUE LOCATION), WW = WINGWALL

SPECIFICATIONS					BENDING DIMENSIONS (FEET-INCHES /QUARTER INCH)										
QTY.	SIZE	LENGTH	MARK	TYPE	A	B	C	D	E	F/R	G	H	J	K	O
1X4	5	24-30	AB5101E	STR		24-30									
		TO				TO									
		27-30				27-30									
1X4	5	20-80 TO 23-80	AB5102E	STR		20-80 TO 23-80									
14	5	49-40	AB5103E	STR		49-40									
15	5	10-60	AB5104E	17		4-90	3-30	2-60							
15	5	14-41	AB5105E	17		4-90	5-60	4-11							
15	5	7-71	AB5106E	17			3-60	4-11							
10	5	13-02	AB5107E	S3	0-52	6-100	3-30	2-60				0-33			
10	5	9-62	AB5108E	S3			3-60	5-70			0-52	0-33			
15	5	8-11	AB5109E	17		3-21	3-30	2-60							
15	5	11-30	AB5110E	17		3-21	5-60	2-63							
15	5	6-03	AB5111E	17			3-60	2-63							
10	5	9-61	AB5112E	S3	0-52	3-33	3-30	2-60				0-33			
10	5	6-01	AB5113E	S3			3-60	2-03			0-52	0-33			
1X4	5	10-60 TO 8-11	AB5114E	17		4-90 TO 3-21	3-30 TO 3-30	2-60 TO 2-60							
1X4	5	14-41 TO 11-30	AB5115E	17		4-90 TO 3-21	5-60 TO 5-60	4-11 TO 2-63							
1X4	5	7-71 TO 6-03	AB5116E	17			3-60 TO 3-60	4-11 TO 2-63							
9	5	9-82	AB5117E	16		4-10	2-110	2-82				2-42		1-32	4-22
8	5	6-91	AB5118E	16			4-10	2-81				2-23		1-60	5-70
5	5	12-41	AB5119E	55	4-10	2-110	1-41	4-42	0-81	1-21	2-51	3-70			
5	5	8-112	AB5120E	56		4-10	0-60	4-42	2-02	3-62	1-103	3-103			
16	5	10-111	AB5121E	STR		10-111									
4	5	6-80	AB5122E	56		3-12	0-60	3-02	2-93	1-41	1-02	2-101			
4	5	7-11	AB5123E	56		3-12	0-101	3-12	2-101	1-41	1-02	2-93			
9	5	2-00	AB5124E	STR		2-00									
8	5	5-22	AB5125E	17		1-100	1-62	1-100							
3	5	9-83	AB5126E	17		1-100	6-03	1-100							
2	8	24-40	AB8101E	STR		24-40									
2	8	20-90	AB8102E	STR		20-90									
4	8	14-103	AB8103E	17		2-00	10-103	2-00							
6	8	13-90	AB8104E	17		2-00	9-90	2-00							
4	8	29-70	AB8105E	STR		29-70									

SPECIFICATIONS					BENDING DIMENSIONS (FEET-INCHES /QUARTER INCH)										
QTY.	SIZE	LENGTH	MARK	TYPE	A	B	C	D	E	F/R	G	H	J	K	O
5	8	10-50	AB8106E	17		2-00	8-50								
9	8	9-112	AB8107E	30		6-00	3-02				0-110	4-30	0-80	4-30	
20	5	5-60	WW5101E	STR		5-60									
15	5	6-42	WW5102E	STR		6-42									
7	5	13-70	WW5103E	16			3-53	10-11				5-60		8-53	11-112
10	6	7-81	WW6101E	14		2-110	1-101	2-110				1-42		2-63	6-113
10	6	3-20	WW6102E	17		1-00	1-20	1-00							
6	6	15-01	WW6103E	57		3-53	6-03	5-53				2-10		5-80	
1	6	10-21	WW6104E	57		3-53	2-101	3-101				0-113		2-80	
1	6	10-63	WW6105E	57		3-53	3-23	3-101				1-80		2-80	
1X17	5	8-11	WW5111E	STR		8-11									
		TO				TO									
		1-20				1-20									
2	5	16-110	WW5112E	STR		16-110									
17	5	3-10	WW5113E	17		1-00	1-10	1-00							
2X7	5	1-103	WW5114E	STR		1-103									
		TO				TO									
		13-03				13-03									
6	5	15-22	WW5115E	STR		15-22									
15	5	2-42	FT5101E	T9	0-52	1-50					0-60				
17	5	7-110	FT5102E	STR		7-110									
17	5	9-10	FT5103E	1	0-70	7-110					0-70		0-50		
18	5	15-22	FT5104E	STR		15-22									
17	5	3-50	FT5105E	STR		3-50									
1X17	5	11-40	FT5106E	1		10-91					0-70		0-50		
		TO				TO					TO		TO		
		3-70				3-00					0-70		0-50		
30	5	9-13	AB5201E	17		3-43	3-30	2-60							
30	5	11-80	AB5202E	17		3-43	5-60	2-91							
30	5	6-31	AB5203E	17			3-60	2-91							
20	5	10-12	AB5204E	S3	0-52	3-110	3-30	2-60				0-33			
20	5	6-72	AB5205E	S3			3-60	2-80			0-52	0-33			
5	5	10-62	AB5206E	16		3-72	2-110	4-00				2-112		2-81	5-71
5	5	6-12	AB5207E	16			3-72	2-60				1-80		1-101	5-53

SPECIFICATIONS					BENDING DIMENSIONS (FEET-INCHES /QUARTER INCH)										
QTY.	SIZE	LENGTH	MARK	TYPE	A	B	C	D	E	F/R	G	H	J	K	O
5	5	12-101	AB5208E	55	4-02	2-31	2-110	3-72	2-03	2-03	2-63	2-63			
5	5	8-20	AB5209E	16		4-02	0-60	3-72				2-51		2-81	3-21
3	5	8-21	AB5210E	16		3-32	1-72	3-31				3-31		0-22	1-100
3	5	8-90	AB5211E	16		3-32	2-21	3-31				3-31		0-22	2-43
15	5	8-12	AB5212E	STR		8-12									
9	5	1-91	AB5213E	STR		1-91									
16	5	46-00	AB5214E	STR		46-00									
6	5	10-80	AB5215E	17		2-70	5-60	2-70							
7	5	4-53	AB5216E	17		1-70	1-33	1-70							
3	5	8-112	AB5217E	17		1-70	5-92	1-70							
4	8	46-00	AB8201E	STR		46-00									
6	8	14-13	AB8202E	17		2-00	10-13	2-00							
9	8	13-00	AB8203E	17		2-00	9-00	2-00							
2X7	5	5-101 TO 6-11	WW5201E	STR		5-101 TO 6-11									
8	5	6-70	WW5202E	STR		6-70									
22	6	12-72	WW6201E	17		5-93	1-00	5-93							
2	6	6-00	WW6202E	17		2-60	1-00	2-60							
1X10	5	8-00 TO 3-60	WW5210E	STR		8-00 TO 3-60									
6	5	8-22	WW5211E	STR		8-22									
2X4	5	1-11	WW5212E	STR		1-11									
		TO				TO									
		6-102				6-102									
2	5	8-102	WW5213E	STR		8-102									
10	5	4-70	WW5214E	17		1-90	1-10	1-90							
14	5	8-22	FT5210E	STR		8-22									
10	5	5-80	FT5211E	STR		5-80									
10	5	6-100	FT5212E	1	0-70	5-80					0-70		0-50		
12	5	2-42	FT5213E	T9	0-52	1-50					0-60				
10	5	3-50	FT5214E	STR		3-50									
1X10	5	8-70	FT5215E	1	0-70	8-00							0-50		
		TO			TO	TO							TO		
		4-10			0-70	3-60							0-50		

ASTM STANDARD ENGLISH REINFORCING BARS

	NOMINAL DIMENSIONS			RECOMMENDED END HOOKS, APPLICABLE TO ALL GRADES				STIRRUP AND TIE HOOKS, APPLICABLE TO ALL GRADES			
					180° HOOKS		90° HOOKS		90° HOOK	135° HOOK	
BAR SIZE	DIAMETER (INCHES)	AREA (INCHES²)	WEIGHT (LBS./FT.)	D	A OR G	J	A OR G	D	A OR G	A OR G	A OR G
3	0.375	0.110	0.376	2¼"	5"	3"	6"	1½"	4"	4"	2½"
4	0.500	0.200	0.668	3"	6"	4"	8"	2"	4½"	4½"	3"
5	0.625	0.310	1.043	3¾"	7"	5"	10"	2½"	6"	5½"	3¾"
6	0.750	0.440	1.502	4½"	8"	6"	1-0"	4½"	1-0"	8"	4½"
7	0.875	0.600	2.044	5¼"	10"	7"	1-2"	5¼"	1-2"	9"	5¼"
8	1.000	0.790	2.670	6"	11"	8"	1-4"	6"	1-4"	10½"	6"
9	1.128	1.000	3.400	9½"	1-3"	11¾"	1-7"				
10	1.270	1.270	4.303	10¾"	1-5"	1-1¼"	1-10"				
11	1.410	1.560	5.313	1-0"	1-7"	1-2¾"	2-0"				
14	1.693	2.250	7.650	1-6¼"	2-3"	1-9¾"	2-7"				
18	2.257	4.000	13.600	2-0"	3-0"	2-4½"	3-5"				

NOTES:

1. FIGURES SHOWN IN CIRCLES REPRESENT BAR BEND TYPES.
2. STANDARD BAR BENDS INCLUDE ONLY THOSE TYPES BELOW, INDICATED AS SUCH.
3. ALL DIMENSIONS OUT-TO-OUT, EXCEPT "A" AND "G" ON STD. 180° AND 135° HOOKS.
4. "J" DIMENSIONS ON 180° HOOKS TO BE SHOWN ONLY WHERE NECESSARY TO RESTRICT HOOK SIZE, OTHERWISE STANDARD 'ACI' HOOKS ARE TO BE USED.
5. WHERE "J" IS NOT SHOWN, "J" WILL BE KEPT EQUAL TO OR LESS THAN "H" ON TYPES 3, 5 AND 22. WHERE "J" CAN EXCEED "H", IT SHALL BE SHOWN.
6. "H" DIMENSIONS OF STIRRUPS TO BE SHOWN AS NEEDED TO FIT WITHIN THE CONCRETE.
7. UNLESS OTHERWISE NOTED, DIAMETER "D" IS THE SAME FOR ALL BENDS AND HOOKS ON A BAR (EXCEPT FOR BEND TYPES 11 AND 13).
8. WHERE SLOPE DIFFERS FROM 45° OFFSET, "H" AND "K" MUST BE SHOWN.
9. WHERE BARS ARE TO BE BENT MORE ACCURATELY THAN STANDARD BENDING TOLERANCES, BENDING DIMENSIONS REQUIRING CLOSER FABRICATION SHOULD HAVE LIMITS INDICATED.
10. FOR RECOMMENDED DIAMETER "D", OF BENDS, HOOKS, ETC., REFER TO TABLE ABOVE, 'CRSI' OR 'ACI' TABLES WHERE APPLICABLE AND REQUIRED.
11. TYPE S1-S6, S11, T1-T3 AND T6-T9 APPLICABLE TO BAR SIZES #3 THROUGH #8.

STANDARD BAR BENDS

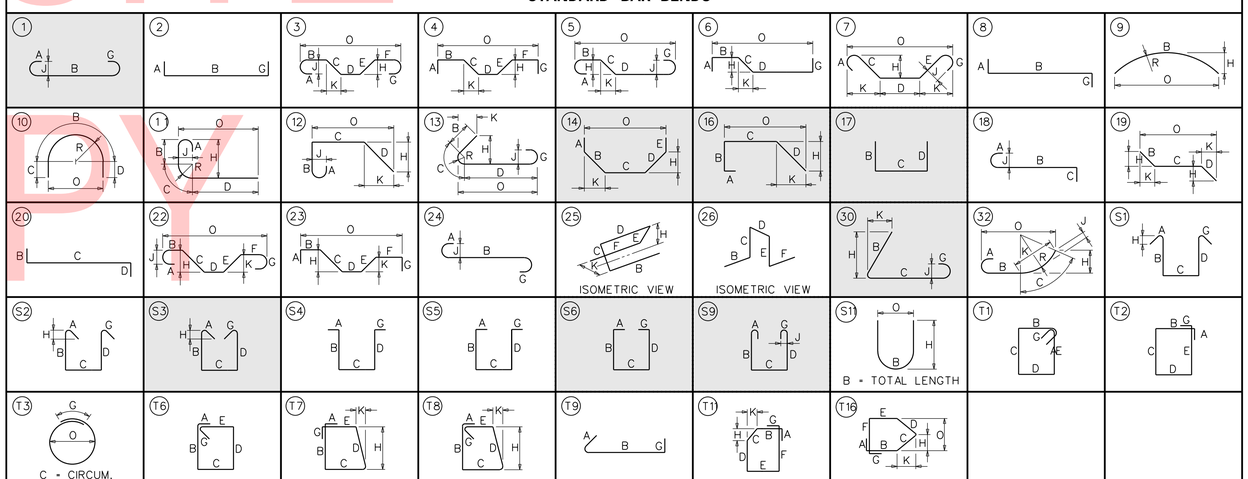

SPECIAL BAR BENDS

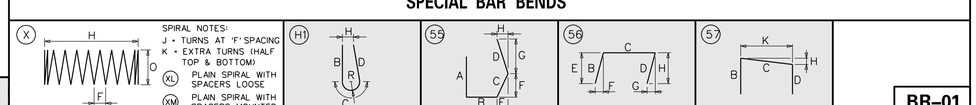

STIRRUP AND TIE HOOKS

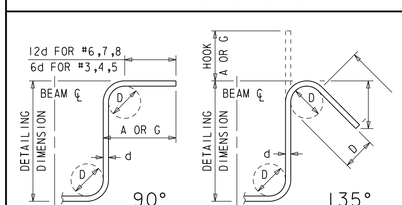

180° AND 90° END HOOKS

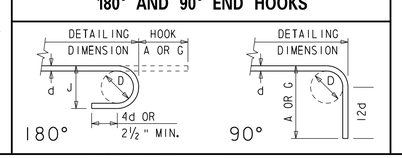

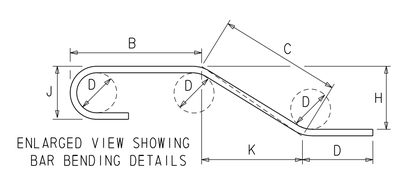

ADDENDA / REVISIONS

NOT TO SCALE

BR 1-159 ON JAMES STREET OVER CHRISTINA RIVER

CONTRACT	BRIDGE NO.	1-159
T201207101	DESIGNED BY: ZME	
COUNTY		
NEW CASTLE	CHECKED BY: SNL	

ABUTMENT REINFORCEMENT BAR LIST

BR-01
SECTION
McT
SHEET NO.
62

$DATE$
$TIME$ AM
$FILE$

UNOFFICIAL WEBSITE COPY

① ANY MARK NUMBER WITH SUFFIX 'E' DENOTES EPOXY COATED REINFORCING STEEL.

② ALL MARK 'LOCATION PREFIXES' SHALL CONSIST OF TWO LETTERS AND ARE AS FOLLOWS: AB = ABUTMENT, AS = APPROACH SLAB, BC = BOX CULVERT, BW = BACKWALL, CL = COLUMN, DK = DECK, DL = DOWEL, FT = FOOTING, HW = HEADWALL, MS = MISC. BARS, PA = PARAPET, PR = PIER, SC = SHEETPILE CAP, SL = SLAB, TW = TOEWALL, WL = WALL (UNIQUE LOCATION), WW = WINGWALL

SPECIFICATIONS					BENDING DIMENSIONS (FEET-INCHES /QUARTER INCH)										
QTY.	SIZE	LENGTH	MARK	TYPE	A	B	C	D	E	F/R	G	H	J	K	O
PIER 1															
10	5	39-9	PR5101E	STR		39-9									
18	5	12-8	PR5102E	10		7-0	2-10	2-10		2-3					4-6
32	5	3-2	PR5103E	STR		3-2									
32	5	2-7	PR5104E	STR		2-7									
5	5	1-9	PR5105E	STR		1-9									
10	5	0-8	PR5106E	STR		0-8									
10	5	1-8	PR5107E	STR		1-8									
20	5	4-8	PR5108E	STR		4-8									
5	5	3-1	PR5109E	16			1-0	2-1				2-0		0-7	1-7
5	5	3-10	PR5110E	16			0-11	2-11				1-0		2-8	4-8
2	5	6-2	PR5111E	2	0-10	4-6					0-10				
2	5	7-0	PR5112E	10		7-0				2-3					4-6
2	5	8-1	PR5113E	17		2-1	3-11	2-1							
2	5	5-9	PR5114E	17		1-10	2-1	1-10							
4	5	5-7	PR5115E	17		2-4	0-11	2-4							
4	5	6-6	PR5116E	17		2-4	1-10	2-4							
2	5	6-9	PR5117E	17		2-4	2-1	2-4							
12	5	11-1	PR5118E	17		4-6	2-1	4-6							
16	5	8-5	PR5119E	17		3-2	2-1	3-2							
6	5	12-8	PR5120E	17		3-2	6-4	3-2							
12	5	11-4	PR5121E	17		4-8	2-0	4-8							
16	5	7-5	PR5122E	17		2-8	2-0	2-8							
6	5	12-2	PR5123E	17		2-8	6-9	2-8							
7	5	6-4	PR5124E	17		2-7	1-2	2-7							
3	5	11-1	PR5125E	17		2-7	5-11	2-7							
6	5	9-10	PR5126E	17		4-4	1-2	4-4							
7	5	5-5	PR5127E	17		2-4	0-9	2-4							
2	5	10-3	PR5128E	17		2-4	5-7	2-4							
4	5	9-1	PR5129E	17		4-2	0-9	4-2							
156	6	9-9	PR6101E	17		3-4	3-11	3-4							
4X3	7	39-5 TO 43-10	PR7101E	1	0-10 TO 0-10	37-9 TO 42-2					0-10 TO 0-10		0-7 TO 0-7		
8X3	7	40-9 TO 45-2	PR7102E	STR		40-9 TO 45-2									
4	7	45-3	PR7103E	STR		45-3									

SPECIFICATIONS					BENDING DIMENSIONS (FEET-INCHES /QUARTER INCH)										
QTY.	SIZE	LENGTH	MARK	TYPE	A	B	C	D	E	F/R	G	H	J	K	O
2X3	8	43-5 TO 47-10	PR8101E	2	1-4 TO 1-4	40-9 TO 45-2					1-4 TO 1-4				
2X3	8	42-1 TO 46-6	PR8102E	1	0-11 TO 0-11	40-3 TO 44-8					0-11 TO 0-11		0-8 TO 0-8		
PIER 2															
10	5	39-9	PR5201E	STR		39-9									
18	5	12-8	PR5202E	10		7-0	2-10	2-10		2-3					4-6
20	5	0-8	PR5203E	STR		0-8									
20	5	4-8	PR5204E	STR		4-8									
24	5	3-5	PR5205E	STR		3-5									
24	5	2-7	PR5206E	STR		2-7									
2	5	6-2	PR5207E	2	0-10	4-6					0-10				
2	5	7-0	PR5208E	10		7-0				2-3					4-6
2	5	8-1	PR5209E	17		2-1	3-11	2-1							
2	5	5-9	PR5210E	17		1-10	2-1	1-10							
4	5	5-7	PR5211E	17		2-4	0-11	2-4							
4	5	6-6	PR5212E	17		2-4	1-10	2-4							
2	5	6-9	PR5213E	17		2-4	2-1	2-4							
12	5	14-0	PR5214E	17		4-8	4-8	4-8							
16	5	10-8	PR5215E	17		3-0	4-8	3-0							
12	5	12-9	PR5216E	17		3-0	6-9	3-0							
4X3	5	39-9 TO 43-11	PR5217E	STR		39-9 TO 43-11									
2	5	44-3	PR5218E	STR		44-3									
14	5	5-11	PR5219E	17		2-7	0-9	2-7							
4	5	10-9	PR5220E	17		2-7	5-7	2-7							
8	5	9-1	PR5221E	17		4-2	0-9	4-2							
148	6	9-9	PR6201E	17		3-4	3-11	3-4							
2X3	7	42-1 TO 46-3	PR7201E	2	1-2 TO 1-2	39-9 TO 43-11					1-2 TO 1-2				
2X3	7	40-11 TO 45-1	PR7202E	1	0-10 TO 0-10	39-3 TO 43-5					0-10 TO 0-10		0-7 TO 0-7		

SPECIFICATIONS					BENDING DIMENSIONS (FEET-INCHES /QUARTER INCH)										
QTY.	SIZE	LENGTH	MARK	TYPE	A	B	C	D	E	F/R	G	H	J	K	O
4X3	7	39-9 TO 43-11	PR7203E	2	1-2 TO 1-2	37-5 TO 41-7					1-2 TO 1-2				
4X3	7	39-9 TO 43-11	PR7204E	STR		39-9 TO 43-11									
2	7	44-3	PR7205E	STR		44-3									

ASTM STANDARD ENGLISH REINFORCING BARS				RECOMMENDED END HOOKS, APPLICABLE TO ALL GRADES				STIRRUP AND TIE HOOKS, APPLICABLE TO ALL GRADES			
	NOMINAL DIMENSIONS				180° HOOKS		90° HOOKS		90° HOOK	135° HOOK	
BAR SIZE	DIAMETER (INCHES)	AREA (INCHES²)	WEIGHT (LBS./FT.)	D	A OR G	J	A OR G	D	A OR G	A OR G	A OR G
3	0.375	0.110	0.376	2¼"	5"	3"	6"	1½"	4"	4"	2½"
4	0.500	0.200	0.668	3"	6"	4"	8"	2"	4½"	4½"	3"
5	0.625	0.310	1.043	3¾"	7"	5"	10"	2½"	6"	5½"	3¾"
6	0.750	0.440	1.502	4½"	8"	6"	1-0"	4½"	1-0"	8"	4½"
7	0.875	0.600	2.044	5¼"	10"	7"	1-2"	5¼"	1-2"	9"	5¼"
8	1.000	0.790	2.670	6"	11"	8"	1-4"	6"	1-4"	10½"	6"
9	1.128	1.000	3.400	9½"	1-3"	11¾"	1-7"				
10	1.270	1.270	4.303	10¾"	1-5"	1-1¼"	1-10"				
11	1.410	1.560	5.313	1-0"	1-7"	1-2¾"	2-0"				
14	1.693	2.250	7.650	1-6¼"	2-3"	1-9¾"	2-7"				
18	2.257	4.000	13.600	2-0"	3-0"	2-4½"	3-5"				

NOTES:

1. FIGURES SHOWN IN CIRCLES REPRESENT BAR BEND TYPES.
2. STANDARD BAR BENDS INCLUDE ONLY THOSE TYPES BELOW, INDICATED AS SUCH.
3. ALL DIMENSIONS OUT-TO-OUT, EXCEPT "A" AND "G" ON STD. 180° AND 135° HOOKS.
4. "J" DIMENSIONS ON 180° HOOKS TO BE SHOWN ONLY WHERE NECESSARY TO RESTRICT HOOK SIZE, OTHERWISE STANDARD 'ACI' HOOKS ARE TO BE USED.
5. WHERE "J" IS NOT SHOWN, "J" WILL BE KEPT EQUAL TO OR LESS THAN "H" ON TYPES 3, 5 AND 22. WHERE "J" CAN EXCEED "H", IT SHALL BE SHOWN.
6. "H" DIMENSIONS OF STIRRUPS TO BE SHOWN AS NEEDED TO FIT WITHIN THE CONCRETE.
7. UNLESS OTHERWISE NOTED, DIAMETER "D" IS THE SAME FOR ALL BENDS AND HOOKS ON A BAR (EXCEPT FOR BEND TYPES 11 AND 13).
8. WHERE SLOPE DIFFERS FROM 45° OFFSET, "H" AND "K" MUST BE SHOWN.
9. WHERE BARS ARE TO BE BENT MORE ACCURATELY THAN STANDARD BENDING TOLERANCES, BENDING DIMENSIONS REQUIRING CLOSER FABRICATION SHOULD HAVE LIMITS INDICATED.
10. FOR RECOMMENDED DIAMETER "D", OF BENDS, HOOKS, ETC., REFER TO TABLE ABOVE, 'CRSI' OR 'ACI' TABLES WHERE APPLICABLE AND REQUIRED.
11. TYPE S1-S6, S11, T1-T3 AND T6-T9 APPLICABLE TO BAR SIZES #3 THROUGH #8.

STANDARD BAR BENDS

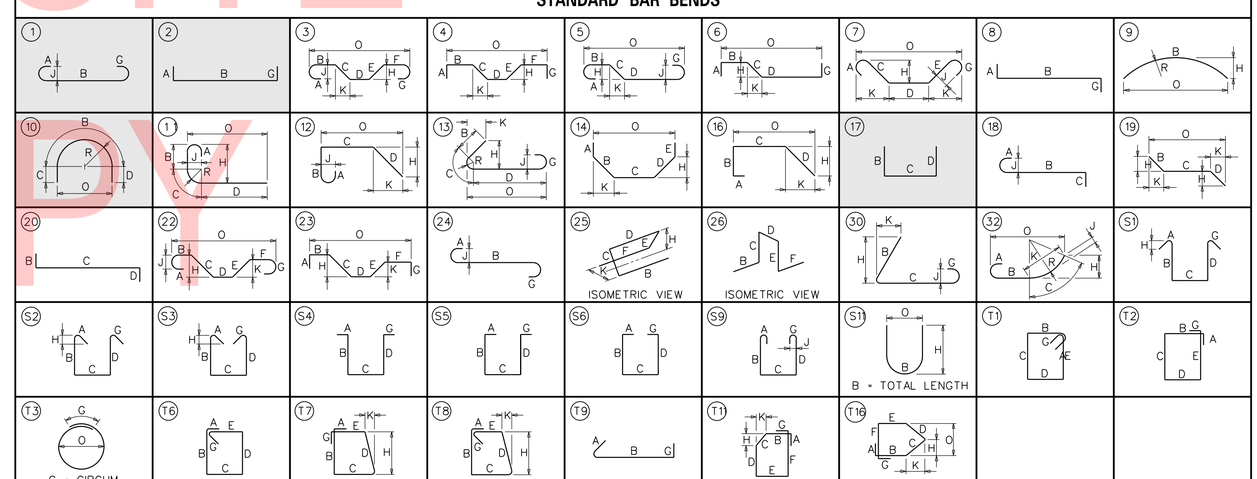

SPECIAL BAR BENDS

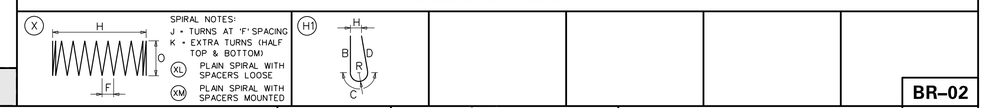

STIRRUP AND TIE HOOKS

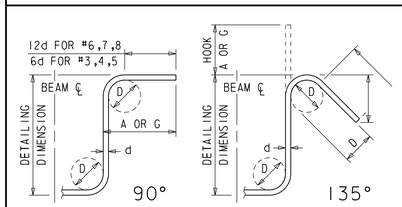

180° AND 90° END HOOKS

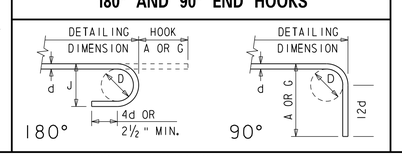

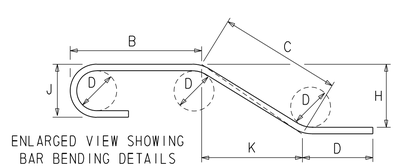

ENLARGED VIEW SHOWING BAR BENDING DETAILS

ADDENDA / REVISIONS

NOT TO SCALE

BR 1-159 ON JAMES STREET OVER CHRISTINA RIVER

CONTRACT	BRIDGE NO. 1-159	PIERS 1 AND 2 REINFORCEMENT BAR LIST	SECTION McT
T201207101	DESIGNED BY: ZME		SHEET NO. 63
COUNTY NEW CASTLE	CHECKED BY: BJH		BR-02

$DATE$ $TIME$ $USER$ $FILE$

UNOFFICIAL WEBSITE COPY

① ANY MARK NUMBER WITH SUFFIX 'E' DENOTES EPOXY COATED REINFORCING STEEL.

② ALL MARK 'LOCATION PREFIXES' SHALL CONSIST OF TWO LETTERS AND ARE AS FOLLOWS: AB = ABUTMENT, AS = APPROACH SLAB, BC = BOX CULVERT, BW = BACKWALL, CL = COLUMN, DK = DECK, DL = DOWEL, FT = FOOTING, HW = HEADWALL, MS = MISC. BARS, PA = PARAPET, PR = PIER, SC = SHEETPILE CAP, SL = SLAB, TW = TOEWALL, WL = WALL (UNIQUE LOCATION), WW = WINGWALL

SPECIFICATIONS					BENDING DIMENSIONS (FEET-INCHES /QUARTER INCH)										
QTY.	SIZE	LENGTH	MARK	TYPE	A	B	C	D	E	F/R	G	H	J	K	O
PIER 3															
10	5	39-9	PR5301E	STR		39-9									
18	5	12-8	PR5302E	10		7-0	2-10	2-10		2-3					4-6
20	5	0-8	PR5303E	STR		0-8									
20	5	4-8	PR5304E	STR		4-8									
24	5	3-7	PR5305E	STR		3-7									
24	5	2-7	PR5306E	STR		2-7									
2	5	6-2	PR5307E	2	0-10	4-6					0-10				
2	5	7-0	PR5308E	10		7-0				2-3					4-6
2	5	8-1	PR5309E	17		2-1	3-11	2-1							
2	5	5-9	PR5310E	17		1-10	2-1	1-10							
4	5	5-7	PR5311E	17		2-4	0-11	2-4							
4	5	6-6	PR5312E	17		2-4	1-10	2-4							
2	5	6-9	PR5313E	17		2-4	2-1	2-4							
4X3	5	39-9 TO 43-11	PR5314E	STR		39-9 TO 43-11									
2	5	44-3	PR5315E	STR		44-3									
14	5	5-11	PR5317E	17		2-7	0-9	2-7							
4	5	10-9	PR5318E	17		2-7	5-7	2-7							
8	5	9-1	PR5319E	17		4-2	0-9	4-2							
148	6	9-9	PR6301E	17		3-4	3-1	3-4							
4X3	6	39-5 TO 43-7	PR6302E	2	1-0 TO 1-0	37-5 TO 41-7					1-0 TO 1-0				
2X3	7	42-1 TO 46-3	PR7301E	2	1-2 TO 1-2	39-9 TO 43-11					1-2 TO 1-2				
2X3	7	40-11 TO 45-1	PR7302E	1	0-10 TO 0-10	39-3 TO 43-5					0-10 TO 0-10		0-7 TO 0-7		
4X3	7	39-9 TO 43-11	PR7303E	STR		39-9 TO 43-11									
2	7	44-3	PR7304E	STR		44-3									

SPECIFICATIONS					BENDING DIMENSIONS (FEET-INCHES /QUARTER INCH)										
QTY.	SIZE	LENGTH	MARK	TYPE	A	B	C	D	E	F/R	G	H	J	K	O
PIER 4															
10	5	40-10	PR5401E	STR		40-10									
18	5	12-8	PR5402E	10		7-0	2-10	2-10		2-3					4-6
156	5	9-9	PR5403E	17		3-4	3-1	3-4							
15	5	3-2	PR5404E	STR		3-2									
14	5	3-3	PR5405E	STR		3-3									
29	5	2-7	PR5406E	STR		2-7									
10	5	0-8	PR5407E	STR		0-8									
10	5	1-7	PR5408E	STR		1-7									
5	5	4-8	PR5409E	16			2-4	2-4				0-3		2-4	4-8
15	5	4-8	PR5410E	STR		4-8									
10	5	3-5	PR5411E	17		2-0	1-5								
2	5	6-2	PR5412E	2	0-10	4-6					0-10				
2	5	7-0	PR5413E	10		7-0				2-3					4-6
2	5	8-1	PR5414E	17		2-1	3-11	2-1							
2	5	5-9	PR5415E	17		1-10	2-1	1-10							
4	5	5-7	PR5416E	17		2-4	0-11	2-4							
4	5	6-6	PR5417E	17		2-4	1-10	2-4							
2	5	6-9	PR5418E	17		2-4	2-1	2-4							
12	5	11-4	PR5419E	17		4-8	2-0	4-8							
16	5	7-4	PR5420E	17		2-8	2-0	2-8							
6	5	12-1	PR5421E	17		2-8	6-9	2-8							
12	5	11-4	PR5422E	17		4-8	2-0	4-8							
16	5	8-6	PR5423E	17		3-3	2-0	3-3							
6	5	13-3	PR5424E	17		3-3	6-9	3-3							
7	5	5-5	PR5425E	17		2-4	0-9	2-4							
2	5	10-3	PR5426E	17		2-4	5-7	2-4							
4	5	9-1	PR5427E	17		4-2	0-9	4-2							
7	5	6-1	PR5428E	17		2-7	0-11	2-7							
2	5	10-10	PR5429E	17		2-7	5-8	2-7							
6	5	9-3	PR5430E	17		4-2	0-11	4-2							
2X3	7	40-10 TO 45-1	PR7401E	STR		40-10 TO 45-1									
1	7	45-4	PR7402E	STR		45-4									
2X3	8	43-6 TO 47-9	PR8401E	2	1-4 TO 1-4	40-10 TO 45-1					1-4 TO 1-4				

SPECIFICATIONS					BENDING DIMENSIONS (FEET-INCHES /QUARTER INCH)										
QTY.	SIZE	LENGTH	MARK	TYPE	A	B	C	D	E	F/R	G	H	J	K	O
2X3	8	42-2 TO 46-5	PR8402E	1	0-11 TO 0-11	40-4 TO 44-7					0-11 TO 0-11		0-8 TO 0-8		
2X3	8	41-2 TO 45-5	PR8403E	2	1-4 TO 1-4	38-6 TO 42-9					1-4 TO 1-4				
4X3	8	40-10 TO 45-1	PR8404E	STR		40-10 TO 45-1									
2	8	45-4	PR8405E	STR		45-4									

ASTM STANDARD ENGLISH REINFORCING BARS				RECOMMENDED END HOOKS, APPLICABLE TO ALL GRADES				STIRRUP AND TIE HOOKS, APPLICABLE TO ALL GRADES			
	NOMINAL DIMENSIONS				180° HOOKS		90° HOOKS		90° HOOK	135° HOOK	
BAR SIZE	DIAMETER (INCHES)	AREA (INCHES²)	WEIGHT (LBS./FT.)	D	A OR G	J	A OR G	D	A OR G	A OR G	A OR G
3	0.375	0.110	0.376	2¼"	5"	3"	6"	1½"	4"	4"	2½"
4	0.500	0.200	0.668	3"	6"	4"	8"	2"	4½"	4½"	3"
5	0.625	0.310	1.043	3¾"	7"	5"	10"	2½"	6"	5½"	3¾"
6	0.750	0.440	1.502	4½"	8"	6"	1-0"	4½"	1-0"	8"	4½"
7	0.875	0.600	2.044	5¼"	10"	7"	1-2"	5¼"	1-2"	9"	5¼"
8	1.000	0.790	2.670	6"	11"	8"	1-4"	6"	1-4"	10½"	6"
9	1.128	1.000	3.400	9½"	1-3"	11¾"	1-7"				
10	1.270	1.270	4.303	10¾"	1-5"	1-1¼"	1-10"				
11	1.410	1.560	5.313	1-0"	1-7"	1-2¾"	2-0"				
14	1.693	2.250	7.650	1-6¼"	2-3"	1-9¾"	2-7"				
18	2.257	4.000	13.600	2-0"	3-0"	2-4½"	3-5"				

NOTES:

1. FIGURES SHOWN IN CIRCLES REPRESENT BAR BEND TYPES.
2. STANDARD BAR BENDS INCLUDE ONLY THOSE TYPES BELOW, INDICATED AS SUCH.
3. ALL DIMENSIONS OUT-TO-OUT, EXCEPT "A" AND "G" ON STD. 180° AND 135° HOOKS.
4. "J" DIMENSIONS ON 180° HOOKS TO BE SHOWN ONLY WHERE NECESSARY TO RESTRICT HOOK SIZE, OTHERWISE STANDARD 'ACI' HOOKS ARE TO BE USED.
5. WHERE "J" IS NOT SHOWN, "J" WILL BE KEPT EQUAL TO OR LESS THAN "H" ON TYPES 3, 5 AND 22. WHERE "J" CAN EXCEED "H", IT SHALL BE SHOWN.
6. "H" DIMENSIONS OF STIRRUPS TO BE SHOWN AS NEEDED TO FIT WITHIN THE CONCRETE.
7. UNLESS OTHERWISE NOTED, DIAMETER "D" IS THE SAME FOR ALL BENDS AND HOOKS ON A BAR (EXCEPT FOR BEND TYPES 11 AND 13).
8. WHERE SLOPE DIFFERS FROM 45° OFFSET, "H" AND "K" MUST BE SHOWN.
9. WHERE BARS ARE TO BE BENT MORE ACCURATELY THAN STANDARD BENDING TOLERANCES, BENDING DIMENSIONS REQUIRING CLOSER FABRICATION SHOULD HAVE LIMITS INDICATED.
10. FOR RECOMMENDED DIAMETER "D", OF BENDS, HOOKS, ETC., REFER TO TABLE ABOVE, 'CRSI' OR 'ACI' TABLES WHERE APPLICABLE AND REQUIRED.
11. TYPE S1-S6, S11, T1-T3 AND T6-T9 APPLICABLE TO BAR SIZES #3 THROUGH #8.

STANDARD BAR BENDS

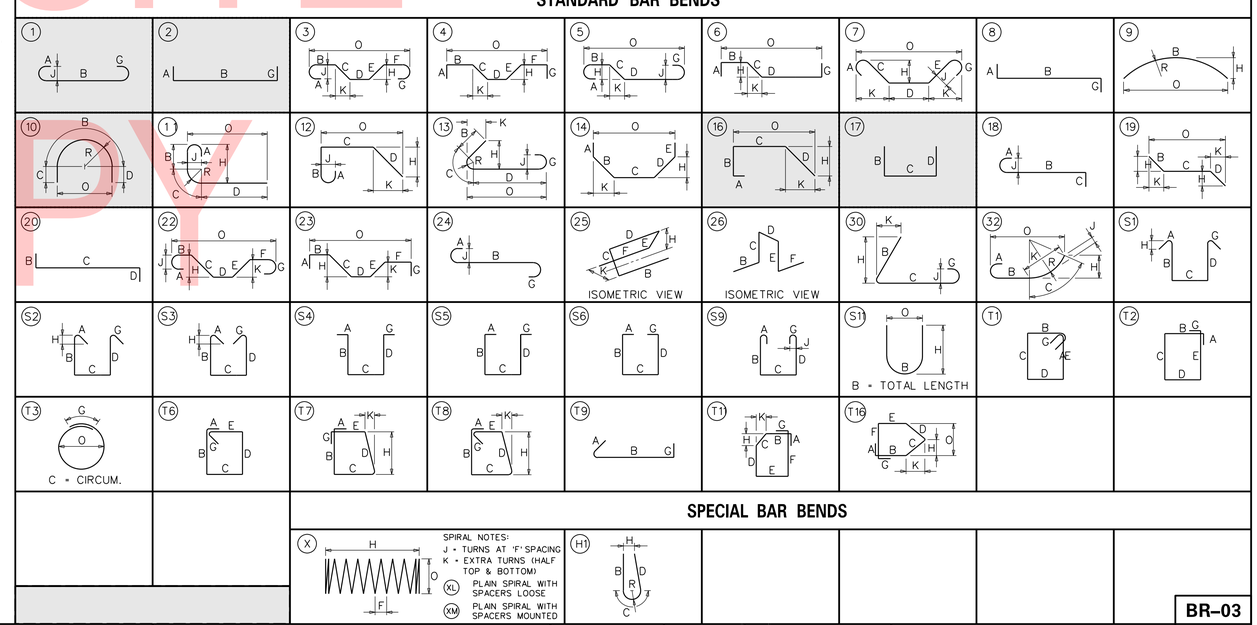

STIRRUP AND TIE HOOKS

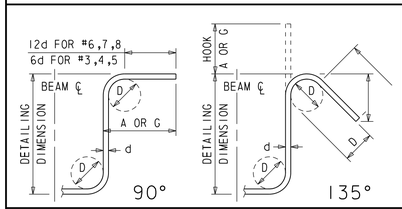

180° AND 90° END HOOKS

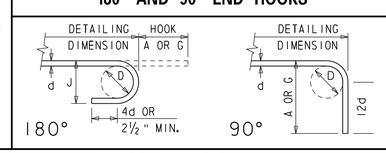

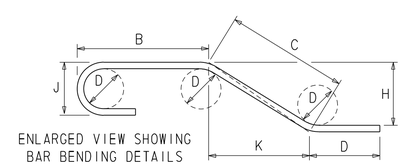

ADDENDA / REVISIONS	

NOT TO SCALE

BR 1-159 ON JAMES STREET OVER CHRISTINA RIVER

CONTRACT	BRIDGE NO. 1-159	PIERS 3 AND 4 REINFORCEMENT BAR LIST	SECTION
T201207101	DESIGNED BY: ZME		McT
COUNTY	CHECKED BY: BJH		SHEET NO.
NEW CASTLE			64

BR-03

$DATE$
11:46:19 AM
$FILE$

UNOFFICIAL WEBSITE COPY

(1) ANY MARK NUMBER WITH SUFFIX 'E' DENOTES EPOXY COATED REINFORCING STEEL.

(2) ALL MARK 'LOCATION PREFIXES' SHALL CONSIST OF TWO LETTERS AND ARE AS FOLLOWS: AB = ABUTMENT, AS = APPROACH SLAB, BC = BOX CULVERT, BW = BACKWALL, CL = COLUMN, DK = DECK, DL = DOWEL, FT = FOOTING, HW = HEADWALL, MS = MISC. BARS, PA = PARAPET, PR = PIER, SC = SHEETPILE CAP, SL = SLAB, TW = TOEWALL, WL = WALL (UNIQUE LOCATION), WW = WINGWALL

SPECIFICATIONS					BENDING DIMENSIONS (FEET-INCHES /QUARTER INCH)										
QTY.	SIZE	LENGTH	MARK	TYPE	A	B	C	D	E	F/R	G	H	J	K	O
104	5	38-8	DK5101E	STR		38-8									
96	5	38-8	DK5102E	STR		38-8									
232	5	23-11	DK5103E	STR		23-11									
232	5	9-9	DK5104E	1	0-7	9-2							0-5		
1	5	13-2	DK5105E	STR		13-2									
1	5	20-9	DK5106E	STR		20-9									
1	5	15-1	DK5107E	STR		15-1									
1	5	24-2	DK5108E	STR		24-2									
4	6	47-10	DK6101E	STR		47-10									
6	6	42-4	DK6102E	STR		42-4									
232	6	26-10	DK6103E	1	0-8	26-2							0-6		
196	5	7-11	PA5101E	28	2-9	0-3	2-7	0-6	0-3						
196	5	5-9	PA5102E	29		1-9	1-11	0-3							
24	5	38-8	PA5103E	STR		38-8									
16	6	38-11	PA6101E	STR		38-11									
180	5	34-11	DK501E	STR		34-11									
180	5	37-6	DK502E	STR		37-6									
90	5	39-0	DK503E	STR		39-0									
458	5	36-7	DK504E	STR		36-7									
916	5	7-0	DK505E	1	0-7	6-5							0-5		
16	5	60-0	DK507E	STR		60-0									
176	5	4-6	DK508E	16	2-2	0-8	1-3	0-5	0-3			0-3		0-3	1-6
36	5	7-10	DK509E	STR		7-10									
8	5	10-11	DK510E	23		2-7	2-3	1-2	2-3	2-7		1-7		1-7	9-7
458	6	43-3	DK601E	1	0-8	41-11					0-8		0-6		
86	6	50-2	DK602E	STR		50-2									
76	6	54-8	DK603E	STR		54-8									
12	6	42-3	DK604E	STR		42-3									
36	6	8-6	DK605E	1	0-8	7-10							0-6		
94	7	50-2	DK701E	STR		50-2									
92	7	54-8	DK702E	STR		54-8									
632	5	7-11	PA501E	28	2-9	0-3	2-7	0-6	0-3						
632	5	5-9	PA502E	29		1-9	1-11	0-3							
60	5	55-6	PA503E	STR		55-6									
40	6	56-0	PA601E	STR		56-0									
372	5	5-2	MS501E	STR		5-2									
180	5	4-1	MS502E	17		1-9	0-7	1-9							
138	5	4-4	MS503E	17		1-8	1-0	1-8							
69	5	3-4	MS504E	17		2-4	1-0								
69	5	3-11	MS505E	16			1-0	2-11				2-1		2-1	3-1

SPECIFICATIONS					BENDING DIMENSIONS (FEET-INCHES /QUARTER INCH)										
QTY.	SIZE	LENGTH	MARK	TYPE	A	B	C	D	E	F/R	G	H	J	K	O
36	5	5-11	MS506E	STR		5-11									
84	5	3-0	MS507E	17		1-2	0-7	1-2							
16	5	5-2	MS508E	STR		5-2									
52	5	5-4	MS509E	STR		5-4									
40	5	7-3	MS510E	17		2-7	2-1	2-7							
80	5	8-0	MS511E	17		2-11	2-1	2-11							
8	5	6-7	MS512E	STR		6-7									
120	5	4-9	MS513E	17		2-0	0-9	2-0							
120	5	5-6	MS514E	17		2-4	0-9	2-4							
40	5	2-8	MS515E	STR		2-8									
24	5	3-1	MS516E	STR		3-1									
108	6	5-5	MS601E	STR		5-5									
8	6	5-5	MS602E	STR		5-5									
8	6	5-7	MS603E	STR		5-7									
93	5	54-9	DK5501E	STR		54-9									
182	5	7-0	DK5502E	1	0-7	6-5							0-5		
91	5	41-1	DK5503E	STR		41-1									
6	6	42-2	DK6501E	STR		42-2									
4	6	43-11	DK6502E	STR		43-11									
182	6	24-10	DK6503E	1	0-8	24-2							0-6		
164	5	7-11	PA5501E	28	2-9	0-3	2-7	0-6	0-3						
164	5	5-9	PA5502E	29		1-9	1-11	0-3							
12	5	54-9	PA5503E	STR		54-9									
8	6	54-9	PA6501E	STR		54-9									
3	5	25-6	AS5101E	STR		25-6									
1X14	5	24-7 TO 16-4	AS5102E	STR		24-7 TO 16-4									
68	5	6-4	AS5103E	17		2-9	0-10	2-9							
1	5	15-7	AS5104E	STR		15-7									
8	5	18-6	AS5105E	STR		18-6									
1X18	5	18-6 TO 20-7	AS5106E	STR		18-6 TO 20-7									
1	5	3-0	AS5107E	17		1-6	1-6								
3	5	14-8	AS5108E	STR		14-8									
1X14	5	15-6 TO 24-5	AS5109E	STR		15-6 TO 24-5									
1X22	5	17-11 TO 15-4	AS5110E	STR		17-11 TO 15-4									
4	5	15-4	AS5111E	STR		15-4									

SPECIFICATIONS					BENDING DIMENSIONS (FEET-INCHES /QUARTER INCH)										
QTY.	SIZE	LENGTH	MARK	TYPE	A	B	C	D	E	F/R	G	H	J	K	O
1	6	15-7	AS6101E	STR		15-7									
8	6	19-0	AS6102E	STR		19-0									
1X18	6	19-0 TO 21-1	AS6103E	STR		19-0 TO 21-1									
1X22	6	17-11 TO 15-4	AS6104E	STR		17-11 TO 15-4									
4	6	15-4	AS6105E	STR		15-4									
1	6	3-8	AS6106E	17		1-10	1-10								
3	10	25-6	AS10101E	STR		25-6									
1X19	10	24-7 TO 16-4	AS10102E	STR		24-7 TO 16-4									
3	10	14-8	AS10103E	STR		14-8									
1X19	10	15-6 TO 24-5	AS10104E	STR		15-6 TO 24-5									
28	5	15-2	SL5101E	STR		15-2									
68	8	4-6	SL8101E	STR		4-6									
86	5	7-11	PA5001E	28	2-9	0-3	2-7	0-6	0-3						
86	5	7-1	PA5002E	29		2-5	2-7	0-3							
6	5	25-6	PA5003E	STR		25-6									
6	5	14-8	PA5004E	STR		14-8									
4	6	25-6	PA6001E	STR		25-6									
4	6	14-8	PA6002E	STR		14-8									
48	5	21-7	AS5501E	STR		21-7									
42	5	22-10	AS5502E	STR		22-10									
84	5	6-4	AS5503E	17		2-9	0-10	2-9							
48	6	21-10	AS6501E	STR		21-10									
55	10	22-10	AS10501E	STR		22-10									
28	5	22-10	SL5501E	STR		22-10									
86	8	4-6	SL8501E	STR		4-6									
14	5	7-11	PA5601E	28	2-9	0-3	2-7	0-6	0-3						
2x28	5	7-11 TO 3-11	PA5602E	28	2-9 TO 0-10	0-3 TO 0-0	2-7 TO 0-10	0-6 TO 0-3	0-3 TO 0-0						
2X9	5	5-5 TO 4-4	PA5603E	S4	0-6 TO 0-6	2-2 TO 1-8	0-3 TO 0-3	2-5 TO 1-11							
14	5	7-1	PA5604E	29		2-5	2-7	0-3							
2X28	5	7-1 TO 5-2	PA5605E	29		2-5 TO 1-8	2-7 TO 1-8	0-3 TO 0-0							
12	5	15-6	PA5606E	STR		15-6									
8	6	20-0	PA6601E	16			1-10	18-2				18-0		2-6	4-4

ASTM STANDARD ENGLISH REINFORCING BARS				RECOMMENDED END HOOKS, APPLICABLE TO ALL GRADES				STIRRUP AND TIE HOOKS, APPLICABLE TO ALL GRADES			
	NOMINAL DIMENSIONS				180° HOOKS		90° HOOKS		90° HOOK	135° HOOK	
BAR SIZE	DIAMETER (INCHES)	AREA (INCHES²)	WEIGHT (LBS./FT.)	D	A OR G	J	A OR G	D	A OR G	A OR G	A OR G
3	0.375	0.110	0.376	2¼"	5"	3"	6"	1½"	4"	4"	2½"
4	0.500	0.200	0.668	3"	6"	4"	8"	2"	4½"	4½"	3"
5	0.625	0.310	1.043	3¾"	7"	5"	10"	2½"	6"	5½"	3¾"
6	0.750	0.440	1.502	4½"	8"	6"	1-0"	4½"	1-0"	8"	4½"
7	0.875	0.600	2.044	5¼"	10"	7"	1-2"	5¼"	1-2"	9"	5¼"
8	1.000	0.790	2.670	6"	11"	8"	1-4"	6"	1-4"	10½"	6"
9	1.128	1.000	3.400	9½"	1-3"	11¾"	1-7"				
10	1.270	1.270	4.303	10¾"	1-5"	1-1¼"	1-10"				
11	1.410	1.560	5.313	1-0"	1-7"	1-2¾"	2-0"				
14	1.693	2.250	7.650	1-6¼"	2-3"	1-9¾"	2-7"				
18	2.257	4.000	13.600	2-0"	3-0"	2-4½"	3-5"				

NOTES:

1. FIGURES SHOWN IN CIRCLES REPRESENT BAR BEND TYPES.
2. STANDARD BAR BENDS INCLUDE ONLY THOSE TYPES BELOW, INDICATED AS SUCH.
3. ALL DIMENSIONS OUT-TO-OUT, EXCEPT "A" AND "G" ON STD. 180° AND 135° HOOKS.
4. "J" DIMENSIONS ON 180° HOOKS TO BE SHOWN ONLY WHERE NECESSARY TO RESTRICT HOOK SIZE, OTHERWISE STANDARD 'ACI' HOOKS ARE TO BE USED.
5. WHERE "J" IS NOT SHOWN, "J" WILL BE KEPT EQUAL TO OR LESS THAN "H" ON TYPES 3, 5 AND 22. WHERE "J" CAN EXCEED "H", IT SHALL BE SHOWN.
6. "H" DIMENSIONS OF STIRRUPS TO BE SHOWN AS NEEDED TO FIT WITHIN THE CONCRETE.
7. UNLESS OTHERWISE NOTED, DIAMETER "D" IS THE SAME FOR ALL BENDS AND HOOKS ON A BAR (EXCEPT FOR BEND TYPES 11 AND 13).
8. WHERE SLOPE DIFFERS FROM 45° OFFSET, "H" AND "K" MUST BE SHOWN.
9. WHERE BARS ARE TO BE BENT MORE ACCURATELY THAN STANDARD BENDING TOLERANCES, BENDING DIMENSIONS REQUIRING CLOSER FABRICATION SHOULD HAVE LIMITS INDICATED.
10. FOR RECOMMENDED DIAMETER "D", OF BENDS, HOOKS, ETC., REFER TO TABLE ABOVE, 'CRSI' OR 'ACI' TABLES WHERE APPLICABLE AND REQUIRED.
11. TYPE S1-S6, S11, T1-T3 AND T6-T9 APPLICABLE TO BAR SIZES #3 THROUGH #8.

STANDARD BAR BENDS

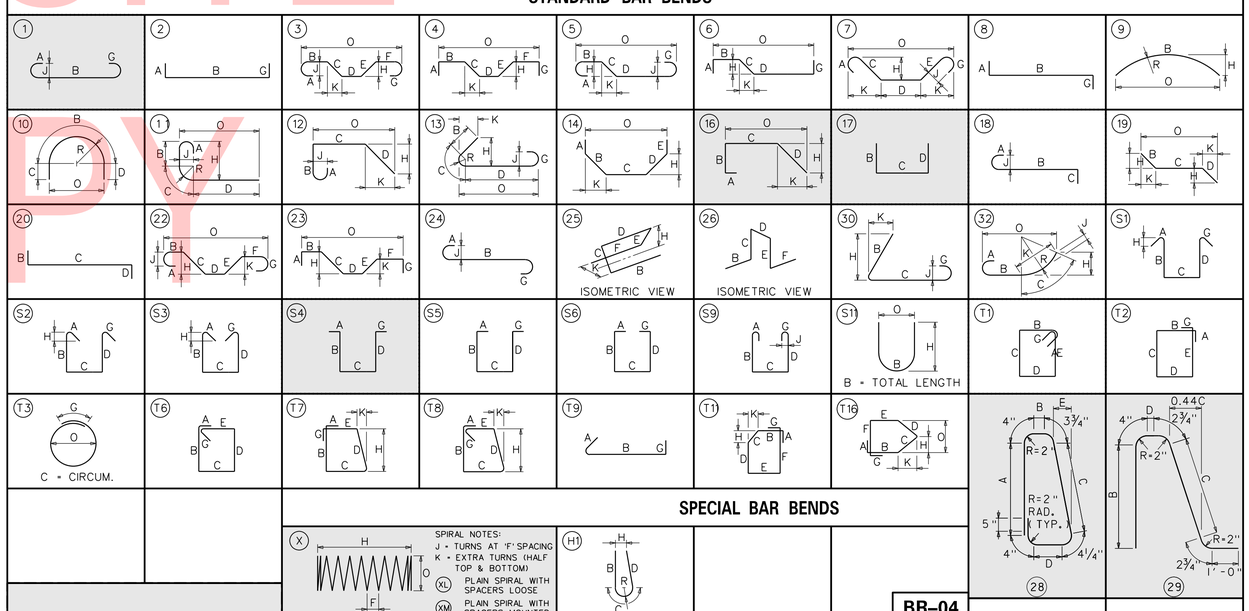

SPECIAL BAR BENDS

STIRRUP AND TIE HOOKS

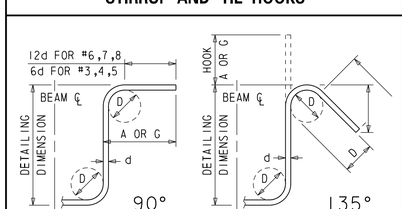

180° AND 90° END HOOKS

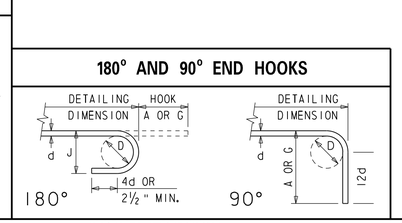

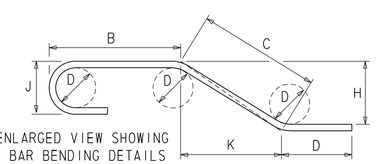

ADDENDA / REVISIONS	

NOT TO SCALE

BR 1-159 ON JAMES STREET OVER CHRISTINA RIVER

CONTRACT	BRIDGE NO.	1-159
T201207101	DESIGNED BY: ZME	
COUNTY	CHECKED BY: BJH	
NEW CASTLE		

SUPERSTRUCTURE REINFORCEMENT BAR LIST

SECTION
McT
SHEET NO.
65

BR-04

$DATE$
11:42:20 AM
$FILE$

UNOFFICIAL WEBSITE COPY

BORING: JS-1 | **DATE DRILLED:** 5/31/12
STATION: 11+71.40 | **OFFSET:** 19.16 | **ELEVATION:** xxxx | **NORTHING:** 622801.8238 | **EASTING:** 602181.4553
COMMENTS: N/A

SAMPLE INFORMATION

NO.	DEPTH	BLOWS /6"	DESCRIPTION	CLASS /G.I.	REMARKS
1	0.0	10	MOIST MEDIUM DENSE BROWN CLAYEY FINE GRAVEL AND COARSE SAND W/SOME FINE SAND AND SILT.	A-2-4(0)	
		14			
		16			
	2.0	11			
2	2.0	7	MOIST VERY STIFF BROWN FINE GRAVELLY SILT W/SOME CLAY, TRACE OF COARSE TO FINE SAND.	A-4(0)	
		8			
		13			
	4.0	50			
	4.0		END BORING		
	5.5				

BORING: JS-2 | **DATE DRILLED:** 5/31/12
STATION: 12+36.88 | **OFFSET:** 0.0 | **ELEVATION:** xxxx | **NORTHING:** 622870.9487 | **EASTING:** 602187.8630
COMMENTS: CONCRETE SLAB @ 4' +/-

SAMPLE INFORMATION

NO.	DEPTH	BLOWS /6"	DESCRIPTION	CLASS /G.I.	REMARKS
1	0.0	6	MOIST LOOSE BROWN COARSE SANDY FINE GRAVEL W/SOME FINE SAND, TRACE OF SILT.	A-1-B	
		10			
		10			
	2.0	9			
2	2.0	7	MOIST VERY DENSE GRAY COARSE TO FINE SAND W/SOME FINE GRAVEL AND SILT.	A-1-B	
	4.0	50			
3	4.0	2	MOIST MEDIUM DENSE GRAYISH TAN SILTY FINE TO COARSE SAND AND FINE GRAVEL.	A-1-B	
		4			
		8			
	6.0	7			
4	6.0	6	MOIST MEDIUM DENSE BLACK SILTY FINE GRAVEL AND COARSE SAND W/SOME FINE SAND, TRACE OF CLAY.	A-2-4(0)	
		11			
		9			
	8.0	6			
5	8.0	4	NO SIEVE ANALYSIS - INDICATION OF MOIST LOOSE GRAY CLAYEY SAND, TRACE OF FINE GRAVEL.		
		4			
		4			
	10.0	8			
6	10.0	3	SATURATED SOFT GRAY CLAY W/TRACE OF COARSE TO FINE SAND, FINE GRAVEL AND SILT.	A-7-6(13)	
		2			
		2			
	12.0	3			
7	12.0	2	SATURATED SOFT TAN ORGANIC CLAY W/SOME COARSE SAND, TRACE OF FINE SAND AND SILT.	A-7-5(17)	
		2			
		2			
	14.0	2			
U-1	14.0		SATURATED DARK GRAY ORGANIC CLAY W/SOME FINE GRAVEL, TRACE OF FINE TO COARSE SAND AND SILT.	A-7-5(12)	
	16.0				
9	16.0	1	SATURATED FIRM DARK GRAY ORGANIC CLAY W/SOME COARSE TO FINE SAND, TRACE OF SILT.	A-7-5(15)	
		2			
		3			
	18.0	3			
10	18.0	4	SATURATED FIRM GRAY ORGANIC CLAY W/TRACE OF COARSE TO FINE SAND AND SILT.	A-7-5(22)	
		3			
		4			
	20.0	3			
11	20.0	1	SATURATED SOFT GRAY ORGANIC COARSE SANDY CLAY W/TRACE OF FINE SAND AND SILT.	A-7-5(16)	
		1			
		1			
	22.0	2			
U-2	22.0				
	24.0				
12	24.0	1	SATURATED SOFT GRAY ORGANIC COARSE SANDY CLAY W/TRACE OF FINE SAND AND SILT.	A-7-5(14)	
		1			
		1			
	26.0	2			
13	26.0	1	SATURATED SOFT TANNISH GRAY COARSE SAND W/SOME FINE SAND AND SILT, TRACE OF FINE GRAVEL.	A-1-B	
		2			
		3			
	28.0	7			
14	28.0	7	SATURATED MEDIUM DENSE TANNISH GRAY FINE GRAVELLY COARSE TO FINE SAND W/TRACE OF SILT.	A-1-B	
		9			
		6			
	30.0	8			
15	30.0	9	SATURATED MEDIUM DENSE GRAY COARSE TO FINE SAND W/SOME FINE GRAVEL, TRACE OF SILT.	A-1-B	
		8			
		12			
	32.0	10			
16	32.0	9	SATURATED DENSE GRAY COARSE SANDY FINE GRAVEL W/SOME FINE SAND, TRACE OF SILT.	A-1-B	
		15			
		30			
	34.0	40			
17	34.0	1	SATURATED VERY STIFF TAN FINE SANDY CLAY W/SOME SILT, TRACE OF COARSE SAND AND FINE GRAVEL.	A-6(3)	
		3			
		15			
	36.0	19			
18	36.0	16	SATURATED MEDIUM DENSE TAN FINE TO COARSE SAND W/SOME SILT, TRACE OF FINE GRAVEL.	A-2-4(0)	
		13			
		16			
	38.0	15			
19	38.0	3	SATURATED STIFF RED SILTY FINE SANDY CLAY W/TRACE OF COARSE SAND.	A-6(8)	
		5			
		7			
	40.0	10			
20	40.0	16	SATURATED VERY STIFF RED CLAYEY FINE SANDY SILT W/SOME COARSE SAND AND FINE GRAVEL.	A-4(1)	
		14			
		14			
	42.0	15			
21	42.0	4	SATURATED DENSE BROWN CLAYEY FINE SAND W/SOME FINE GRAVEL AND SILT, TRACE OF COARSE SAND.	A-2-4(0)	
		16			
		30			
	48.0	21			
22	48.0	7	SATURATED STIFF BROWN FINE TO COARSE SANDY CLAY W/TRACE OF FINE GRAVEL AND SILT.	A-6(1)	
		7			
		5			
	53.0	4			

BORING: JS-2 CONT.

SAMPLE INFORMATION

NO.	DEPTH	BLOWS /6"	DESCRIPTION	CLASS /G.I.	REMARKS
23	53.0	5	SATURATED STIFF BROWN CLAYEY FINE SANDY SILT W/SOME FINE GRAVEL, TRACE OF COARSE SAND.	A-4(2)	
		6			
		8			
	58.0	8			
24	58.0	4	SATURATED MEDIUM DENSE BROWN SILTY COARSE TO FINE SAND AND FINE GRAVEL.	A-1-B	
		5			
		12			
	63.0	15			
25	63.0	2	SATURATED MEDIUM DENSE BROWN COARSE TO FINE SAND W/SOME SILT, TRACE OF FINE GRAVEL.	A-1-B	
		3			
		10			
	68.0	5			
26	68.0	5	SATURATED VERY STIFF BROWN FINE SANDY CLAY W/TRACE OF COARSE SAND, FINE GRAVEL AND SILT.	A-7-6(5)	
		8			
		10			
	73.0	11			
27	73.0	12	SATURATED HARD BROWN FINE SANDY CLAY W/TRACE OF COARSE SAN, FINE GRAVEL AND SILT.	A-7-6(8)	
		11			
		20			
	78.0	28			
28	78.0	9	SATURATED HARD BROWN CLAY W/SOME FINE SAND, TRACE OF COARSE SAND, FINE GRAVEL AND SILT.	A-7-5(11)	
		15			
		23			
	83.0	28			
29	83.0	11	SATURATED HARD GRAYISH RED CLAYEY FINE SANDY SILT W/TRACE OF COARSE SAND AND FINE GRAVEL. WEATHERED ROCK.	A-5(5)	
		23			
		38			
	88.0	45			
30	88.0	10	SATURATED HARD GRAYISH RED FINE SANDY SILT W/TRACE OF COARSE SAND. WEATHERED ROCK.	A-4(0)	
		17			
		27			
	93.0	50			
31	93.0	18	SATURATED HARD GRAYISH BROWN FINE SANDY CLAY W/SOME SILT, TRACE OF COARSE SAND AND FINE GRAVEL. WEATHERED ROCK.	A-6(3)	
		20			
		24			
	98.0	29			
32	98.0	26	SATURATED VERY DENSE GRAYISH BROWN SILTY FINE SAND W/SOME COARSE SAND AND FINE GRAVEL. WEATHERED ROCK.	A-2-4(0)	
		33			
	103.0	50			
33	103.0	37	SATURATED VERY DENSE GRAY SILTY FINE SAND W/SOME COARSE SAND AND FINE GRAVEL. WEATHERED ROCK.	A-2-4(0)	
	108.0	50			
34	108.0	18	SATURATED VERY DENSE GRAY SILTY FINE GRAVELLY FINE SAND W/TRACE OF COARSE SAND. WEATHERED ROCK.	A-2-4(0)	
		34			
		45			
	113.0	50			
35	113.0	50	NO SIEVE ANALYSIS - INDICATION OF SATURATED HARD GRAY WEATHERED ROCK.		
	118.0				
	118.0		END BORING		EBDSE -111.50
	118.2				

BORING: JS-3 | **DATE DRILLED:** 5/31/12
STATION: 13+08.78 | **OFFSET:** -16.03 | **ELEVATION:** xxx | **NORTHING:** 622940.1561 | **EASTING:** 602174.9788
COMMENTS: N/A

SAMPLE INFORMATION

NO.	DEPTH	BLOWS /6"	DESCRIPTION	CLASS /G.I.	REMARKS
1	0.0	4	MOIST VERY STIFF BROWN COARSE SANDY SILT W/SOME FINE SAND, TRACE OF FINE GRAVEL AND CLAY.	A-4(0)	
		7			
		7			
	0.0	23			
2	0.0	20	MOIST MEDIUM DENSE GRAY FINE GRAVEL W/TRACE OF FINE TO COARSE SAND AND SILT.	A-1-A	
		11			
		7			
	2.0	9			
3	2.0	3	MOIST LOOSE BROWN CLAYEY FINE GRAVEL W/SOME COARSE TO FINE SAND AND SILT.	A-2-4(0)	
		3			
		3			
	4.0	4			
4	4.0	3	WET FIRM GRAYISH BROWN COARSE TO FINE SANDY SILT W/SOME CLAY, TRACE OF FINE GRAVEL.	A-4(0)	
		4			
		3			
	6.0	3			
5	6.0	3	WET DENSE GRAY SILTY FINE GRAVEL W/SOME COARSE TO FINE SAND AND CLAY.	A-2-4(0)	
		9			
		41			
	8.0	3			
6	8.0	2	SATURATED SOFT GRAYISH BROWN FINE GRAVELLY CLAY W/SOME SILT AND FINE SAND, TRACE OF COARSE SAND.	A-6(3)	
		2			
		2			
	10.0	2			
7	10.0	WH	SATURATED SOFT GRAY CLAY W/SOME COARSE SAND AND SILT, TRACE OF FINE SAND.	A-7-5(15)	
		1			
		1			
	12.0	2			
8	12.0	32	NO SIEVE ANALYSIS - INDICATION OF SATURATED HARD GRAY WET VERY STIFF SILT.		
		32			
	14.0	12			
9	14.0	8	NO SIEVE ANALYSIS - INDICATION OF SATURATED HARD GRAY ORGANIC WET VERY STIFF SILT.		
		11			
		7			
	16.0	5			
10	16.0	5	NO SIEVE ANALYSIS - INDICATION OF SATURATED HARD GRAY ORGANIC WET VERY STIFF SILT.		
		2			
		1			
	18.0	1			
11	18.0	2	SATURATED SOFT GRAY ORGANIC SILTY CLAY W/SOME FINE TO COARSE SAND.	A-6(9)	
		2			
		2			
	20.0	1			
U-1	20.0				
	22.0				
13	22.0	WR	SATURATED LOOSE GRAY COARSE TO FINE SAND W/TRACE OF SILT AND FINE GRAVEL.	A-1-B	
		3			
		2			
	24.0	8			

BORING: JS-3 CONT.

SAMPLE INFORMATION

NO.	DEPTH	BLOWS /6"	DESCRIPTION	CLASS /G.I.	REMARKS
14	24.0	4	SATURATED MEDIUM DENSE GRAY COARSE TO FINE SAND W/TRACE OF FINE GRAVEL AND SILT.	A-1-B	
		5			
		8			
	26.0	16			
15	26.0	23	SATURATED DENSE GRAY COARSE SAND W/SOME FINE GRAVEL, TRACE OF FINE SAND AND SILT.	A-1-B	
		28			
		21			
	28.0	25			
16	28.0	4	SATURATED LOOSE GRAY COARSE TO FINE SAND W/TRACE OF FINE GRAVEL AND SILT.	A-1-B	
		3			
		5			
	30.0	12			
17	30.0	10	SATURATED MEDIUM DENSE GRAY FINE GRAVELLY COARSE TO FINE SAND W/TRACE OF SILT.	A-1-B	
		15			
		15			
	32.0	17			
18	32.0	14	SATURATED DENSE GRAYISH BROWN COARSE SANDY FINE GRAVEL W/SOME FINE SAND, TRACE OF SILT.	A-1-B	
		17			
		16			
	34.0	15			
19	34.0	16	SATURATED MEDIUM DENSE GRAYISH BROWN COARSE SANDY FINE GRAVEL W/SOME FINE SAND, TRACE OF SILT.	A-1-A	
		22			
	36.0	50			
20	36.0	7	SATURATED HARD REDDISH BROWN CLAYEY FINE TO COARSE SANDY SILT W/TRACE OF FINE GRAVEL.	A-4(1)	
		12			
		20			
	38.0	16			
21	38.0	9	SATURATED MEDIUM DENSE REDDISH BROWN CLAYEY FINE SAND W/SOME COARSE SAND, FINE GRAVEL AND SILT.	A-2-4(0)	
		12			
		18			
	40.0	22			
22	40.0	5	SATURATED MEDIUM DENSE BROWN CLAYEY FINE TO COARSE SAND W/SOME SILT, TRACE OF FINE GRAVEL.	A-2-4(0)	
		6			
		8			
	43.0	10			
23	43.0	6	SATURATED MEDIUM DENSE BROWN SILTY FINE TO COARSE SAND.	A-2-4(0)	
		7			
		4			
	48.0	6			
24	48.0	19	SATURATED MEDIUM DENSE BROWN SILTY FINE SAND W/SOME COARSE SAND, TRACE OF FINE GRAVEL.	A-2-4(0)	
		14			
		11			
	53.0	17			
25	53.0	11	SATURATED MEDIUM DENSE BROWN CLAYEY FINE TO COARSE SAND AND FINE GRAVEL W/SOME SILT.	A-2-6(0)	
		12			
		17			
	58.0	9			
26	58.0	10	SATURATED MEDIUM DENSE BROWN SILTY FINE TO COARSE SAND W/TRACE OF FINE GRAVEL.	A-2-4(0)	
		10			
		13			
	63.0	11			
27	63.0	4	SATURATED STIFF GRAYISH BROWN CLAYEY FINE SANDY SILT W/SOME COARSE SAND, TRACE OF FINE GRAVEL.	A-4(1)	
		5			
		5			
	68.0	5			
28	68.0	5	SATURATED VERY STIFF GRAYISH BROWN FINE TO COARSE SANDY CLAY W/SOME SILT.	A-6(4)	
		6			
		10			
	73.0	9			
29	73.0	11	SATURATED VERY STIFF GRAY CLAYEY FINE TO COARSE SANDY SILT.	A-4(1)	
		7			
		11			
	78.0	20			
30	78.0	15	SATURATED HARD GRAY FINE SANDY SILT W/SOME COARSE SAND, TRACE OF FINE GRAVEL.	A-4(0)	
		20			
		17			
	83.0	27			
31	83.0	13	SATURATED HARD GRAY CLAYEY COARSE TO FINE SANDY SILT W/TRACE OF FINE GRAVEL. (WEATHERED ROCK)	A-4(1)	
		23			
		38			
	88.0	50			
32	88.0	15	SATURATED HARD GRAY CLAYEY FINE SANDY SILT W/SOME COARSE SAND. (WEATHERED ROCK)	A-4(2)	
		23			
		34			
	93.0	50			
33	93.0	14	SATURATED HARD GRAYISH BROWN FINE SANDY CLAY W/SOME COARSE SAND AND SILT, TRACE OF FINE GRAVEL. (WEATHERED ROCK)	A-7-6(11)	
		22			
		23			
	98.0	34			
34	98.0	23	SATURATED VERY DENSE BLUISH GRAY CLAYEY FINE TO COARSE SAND W/SOME SILT, TRACE OF FINE GRAVEL. (WEATHERED ROCK)	A-2-7(1)	
		24			
		40			
	103.0	50			
35	103.0	33	SATURATED VERY DENSE BLUISH GRAY CLAYEY FINE SAND W/SOME COARSE SAND AND SILT, TRACE OF FINE GRAVEL.	A-2-4(0)	
	108.0	50			
36	108.0	50	NO SIEVE ANALYSIS - INDICATION OF BLUE GREY WEATHERED ROCK.		
	113.0				
37	113.0	50	END BORING.		EBDSE -109.00
	118.0				

EBDSE - ESTIMATED BOTTOM OF DRILLED SHAFT ELEVATION
NOTE: BORING INFORMATION IS FOR INFORMATIONAL PURPOSES ONLY

UNOFFICIAL WEBSITE COPY

ADDENDA / REVISIONS

NOT TO SCALE

BR 1-159 ON JAMES STREET OVER CHRISTINA RIVER

CONTRACT	BRIDGE NO. 1-159
T201207101	DESIGNED BY: SFR
COUNTY	
NEW CASTLE	CHECKED BY: DLH

BORING LOG

BO-01
SECTION: McT
SHEET NO. 66

3/15/2019
6:02:24 PM
...\Roadway\BO01_BR159.dgn

BORING: JS-4 | **DATE DRILLED:** 8/21/12
STATION: 13+05.16 | **OFFSET:** 24.51 | **ELEVATION:** xxxx | **NORTHING:** 622941.7700 | **EASTING:** 602215.6500
COMMENTS: 5' OF 8" CASING SET, 48' OF 4" CASING SET.

SAMPLE INFORMATION

NO.	DEPTH	BLOWS /6"	DESCRIPTION	CLASS /G.I.	REMARKS
1	0.0 0.0	4 4 5	WET STIFF BROWN FINE TO COARSE SANDY SILT W/TRACE OF FINE GRAVEL.	A-4(0)	
2A	0.0 2.0	4 4	WET LOOSE BROWN SILTY FINE TO COARSE SAND W/SOME FINE GRAVEL.	A-2-4(0)	
2B	2.0 3.0	5 3	SATURATED FIRM GRAY CLAYEY SILT W/TRACE OF FINE TO COARSE SAND AND FINE GRAVEL.	A-4(9)	
3	3.0 4.0	1 2 2 2	SATURATED SOFT GRAY SILTY CLAY W/TRACE OF FINE TO COARSE SAND AND FINE GRAVEL.	A-6(10)	
4	4.0 6.0	2 1 2 2	SATURATED SOFT GRAY SILTY CLAY W/TRACE OF FINE TO COARSE SAND.	A-6(14)	
U-1	6.0 8.0				
5	8.0 10.0	WH 1 1 1	SATURATED SOFT GRAY ORGANIC CLAY W/SOME SILT, TRACE OF FINE TO COARSE SAND.	A-7-5(13)	
6	10.0 12.0	WH 1 1 1	SATURATED SOFT GRAY ORGANIC CLAY W/SOME SILT, TRACE OF FINE TO COARSE SAND.	A-7-5(18)	
7	12.0 14.0	1 1 1 2	SATURATED SOFT GRAY ORGANIC CLAY W/SOME SILT, TRACE OF FINE TO COARSE SAND.	A-7-5(19)	
8	14.0 16.0	1 2 2 2	SATURATED SOFT GRAY ORGANIC CLAY W/SOME SILT, TRACE OF FINE TO COARSE SAND.	A-7-5(15)	
9	16.0 18.0	1 1 1 1	SATURATED SOFT GRAY CLAY W/SOME SILT, TRACE OF COARSE TO FINE SAND.	A-7-5(22)	
10	18.0 23.0	1 3 5 8	SATURATED LOOSE GRAY COARSE SAND W/SOME FINE SAND AND FINE GRAVEL, TRACE OF SILT.	A-1-B	
11	23.0 28.0	22 28 8 8	SATURATED DENSE ORANGE FINE GRAVEL W/SOME COARSE TO FINE SAND AND SILT.	A-1-A	
12	28.0 33.0	7 8 11 23	SATURATED VERY STIFF YELLOW CLAYEY FINE SANDY SILT W/TRACE OF COARSE SAND AND FINE GRAVEL.	A-4(1)	
13	33.0 38.0	8 9 9 9	SATURATED MEDIUM DENSE TAN SILTY FINE TO COARSE SAND W/TRACE OF FINE GRAVEL.	A-2-4(0)	
14	38.0 43.0	11 14 18 19	SATURATED DENSE TAN SILTY FINE TO COARSE SAND W/TRACE OF FINE GRAVEL.	A-2-4(0)	
15	43.0 48.0	28 20 20 20	SATURATED DENSE TAN COARSE TO FINE SAND W/SOME FINE GRAVEL AND SILT.	A-1-B	
16	48.0 53.0	18 19 15 12	NO RECOVERY		
17	53.0 58.0	8 10 12 14	NO RECOVERY		
18	58.0 63.0	5 7 9 9	NO RECOVERY		
19	63.0 68.0	6 6 8 12	SATURATED STIFF YELLOW CLAY W/SOME SILT AND FINE SAND, TRACE OF COARSE SAND.	A-7-5(18)	
20	68.0 73.0	6 10 15 40	SATURATED VERY STIFF GRAY CLAY W/SOME FINE TO COARSE SAND AND FINE GRAVEL, TRACE OF SILT.	A-7-5(9)	
21	73.0 78.0	10 15 25 29	SATURATED HARD GRAY FINE SANDY CLAY W/TRACE OF COARSE SAND AND SILT.	A-7-6(8)	
22	78.0 83.0	13 20 20 26	SATURATED HARD GRAY FINE SANDY CLAY W/TRACE OF COARSE SAND AND SILT.	A-7-6(9)	
23	83.0 88.0	15 18 28 36	SATURATED HARD GRAY FINE SANDY CLAY W/SOME SILT, TRACE OF COARSE SAND.	A-6(3)	
24	88.0 93.0	15 17 28 29	SATURATED HARD GRAY SILTY FINE SANDY CLAY W/TRACE OF COARSE SAND.	A-6(6)	
25	93.0 98.0	12 13 25 48	SATURATED HARD GREEN FINE SANDY CLAY W/SOME COARSE SAND, TRACE OF SILT.	A-7-5(7)	

BORING: JS-4 CONT.

SAMPLE INFORMATION

NO.	DEPTH	BLOWS /6"	DESCRIPTION	CLASS /G.I.	REMARKS
26	98.0 104.7	19 40 48 50	SATURATED HARD GREENISH BROWN FINE SANDY SILT W/SOME COARSE SAND AND CLAY.	A-4(0)	
27	104.7 108.0	50	NO SIEVE ANALYSIS - INDICATION OF SATURATED DENSE GRAY SILTY SAND.		
28	108.0 113.2	50	NO SIEVE ANALYSIS - INDICATION OF SATURATED DENSE GRAY SILTY SAND. (WEATHERED ROCK)		
29	113.2 118.0	50	NO RECOVERY		EBDSE -109.00

BORING: JS-5 | **DATE DRILLED:** 8/7/12
STATION: 13+77.10 | **OFFSET:** -39.00 | **ELEVATION:** xxxx | **NORTHING:** 622998.9921 | **EASTING:** 602137.1979
COMMENTS: MUDLINE @ 20'

SAMPLE INFORMATION

NO.	DEPTH	BLOWS /6"	DESCRIPTION	CLASS /G.I.	REMARKS
1	0.0 20.0	1 2 2 2	SATURATED SOFT GRAY CLAYEY SILT W/SOME FINE SAND, TRACE OF COARSE SAND AND FINE GRAVEL.	A-4(7)	
2	20.0 22.0	6 WH	NO SAMPLE		
3	22.0 24.0	WH	NO SAMPLE		
4	24.0 26.0	1 2	SATURATED SOFT GRAY CLAYEY FINE SANDY SILT W/SOME COARSE SAND AND FINE GRAVEL.	A-4(0)	
5	26.0 33.0	8 6 4 6	SATURATED LOOSE TAN FINE GRAVELLY COARSE TO FINE SAND W/TRACE OF SILT.	A-1-B	
6	33.0 38.0	7 6 7 7	SATURATED MEDIUM DENSE RED SILTY COARSE TO FINE SAND W/TRACE OF FINE GRAVEL.	A-2-4(0)	
7	38.0 43.0	7 14 15 15	SATURATED MEDIUM DENSE TAN FINE TO COARSE SAND W/SOME SILT.	A-2-4(0)	
8	43.0 48.0	9 8 8 8	SATURATED MEDIUM DENSE TAN SILTY FINE TO COARSE SAND W/TRACE OF FINE GRAVEL.	A-2-4(0)	
9	48.0 53.0	9 8 9 15	SATURATED MEDIUM DENSE YELLOW COARSE TO FINE SAND W/SOME SILT, TRACE OF FINE GRAVEL.	A-1-B	
10	53.0 58.0	12 11 8 11	SATURATED MEDIUM DENSE YELLOWS COARSE TO FINE SAND AND FINE GRAVEL W/SOME SILT.	A-1-B	
11	58.0 63.0	13 6 9 14	SATURATED STIFF YELLOW COARSE SANDY CLAY W/SOME FINE SAND AND FINE GRAVEL, TRACE OF SILT.	A-7-6(2)	
12	63.0 68.0	6 9 13 17	SATURATED VERY STIFF GRAYISH TAN FINE SANDY CLAY W/SOME SILT, TRACE OF COARSE SAND.	A-7-5(16)	
13	68.0 73.0	5 12 11 15	SATURATED VERY STIFF GRAYISH BROWN FINE SANDY CLAY W/SOME COARSE SAND AND SILT.	A-7-5(10)	
14	73.0 78.0	9 19 26 37	SATURATED HARD REDDISH BROWN FINE SANDY CLAY W/SOME COARSE SAND AND SILT.	A-7-5(14)	
15	78.0 83.0	21 32 50	SATURATED HARD GRAYISH FINE SANDY CLAY W/SOME COARSE SAND AND SILT.	A-7-5(7)	
16	83.0 88.0	15 34 50	SATURATED HARD GRAYISH BROWN FINE SANDY CLAY W/SOME COARSE SAND AND SILT.	A-7-5(6)	
17	88.0 93.0	16 19 22 30	SATURATED HARD REDDISH BROWN FINE SANDY CLAY W/SOME SILT, TRACE OF COARSE SAND.	A-7-6(6)	
18	93.0 98.0	18 28 24 52	SATURATED VERY DENSE GRAYISH BROWN CLAYEY FINE TO COARSE SAND W/TRACE OF SILT AND FINE GRAVEL. (WEATHERED ROCK)	A-2-7(1)	
19	98.0 103.0	26 28 50	SATURATED VERY DENSE GRAYISH BROWN SILTY FINE SAND W/SOME COARSE SAND, TRACE OF FINE GRAVEL. (WEATHERED ROCK)	A-2-4(0)	
20	103.0 108.0	50	SATURATED HARD GREEN FINE TO COARSE SANDY CLAY W/SOME SILT, TRACE OF FINE GRAVEL. (HIGHLY WEATHERED ROCK)	A-6(2)	
21	108.0 113.0	50	SATURATED HARD GREEN CLAYEY FINE SANDY SILT W/TRACE OF COARSE SAND. (HIGHLY WEATHERED ROCK)	A-4(0)	
22	113.0 118.0	50	SATURATED DENSE GREEN SILTY COARSE TO FINE SAND W/SOME FINE GRAVEL. (HIGHLY WEATHERED ROCK)	A-1-B	
	118.0		END BORING		EBDSE -109.00

BORING: JS-6 | **DATE DRILLED:** 8/16/12
STATION: 14+80.50 | **OFFSET:** -39.00 | **ELEVATION:** xxxx | **NORTHING:** 623099.0794 | **EASTING:** 602111.2109
COMMENTS: BORING PERFORMED THROUGH BRIDGE DECK. 8" CASING SET TO 20', 4" CASING SET TO 40'.

SAMPLE INFORMATION

NO.	DEPTH	BLOWS /6"	DESCRIPTION	CLASS /G.I.	REMARKS
1	0.0 23.0	WH	RIVER MUD.	A-4(0)	
2	23.0 25.0	17 13 6 WH	SATURATED MEDIUM DENSE GRAY COARSE SANDY FINE GRAVEL W/SOME SILT, TRACE OF FINE SAND.	A-1-A	
3	25.0 27.0	WH	SATURATED SOFT DARK GRAY ORGANIC FINE SANDY SILT W/SOME COARSE SAND.	A-5(0)	

BORING: JS-6 CONT.

SAMPLE INFORMATION

NO.	DEPTH	BLOWS /6"	DESCRIPTION	CLASS /G.I.	REMARKS
4	27.0 29.0	WH	SATURATED SOFT DARK GRAY CLATEY FINE SANDY SILT W/TRACE OF COARSE SAND.	A-4(3)	
5	29.0 31.0	7 5 7 6	SATURATED MEDIUM DENSE ORANGE FINE TO COARSE SAND W/SOME SILT, TRACE OF FINE GRAVEL.	A-2-4(0)	
6	31.0 33.0	3 3 6 7	SATURATED LOOSE ORANGE CLAYEY COARSE TO FINE SAND W/SOME SILT, TRACE OF FINE GRAVEL.	A-2-6(1)	
7	33.0 38.0	WH 1 3 8	SATURATED SOFT PINKISH WHITE CLAY W/SOME SILT AND FINE SAND, TRACE OF COARSE SAND.	A-7-6(21)	
8	38.0 43.0	12 11 8 7	SATURATED MEDIUM DENSE ORANGISH TAN COARSE TO FINE SAND W/SOME SILT, TRACE OF FINE GRAVEL.	A-2-4(0)	
9	43.0 48.0	7 8 7 7	SATURATED MEDIUM DENSE ORANGE ORGANIC SILTY FINE SAND W/SOME COARSE SAND, FINE GRAVEL AND CLAY.	A-2-4(0)	
10	48.0 53.0	6 6 7 10	SATURATED MEDIUM DENSE TANNISH ORANGE SILTY COARSE TO FINE SAND W/SOME FINE GRAVEL.	A-2-4(0)	
11	53.0 58.0	4 4 5 7	SATURATED STIFF GRAY SILTY FINE SANDY CLAY W/TRACE OF COARSE SAND AND FINE GRAVEL.	A-6(7)	
12	58.0 63.0	7 10 13 13	SATURATED VERY STIFF GREEN FINE SANDY CLAY W/SOME SILT, TRACE OF COARSE SAND.	A-7-5(14)	
13	63.0 68.0	10 13 18 19	SATURATED HARD GREEN FINE SANDY CLAY W/SOME SILT, TRACE OF COARSE SAND.	A-7-5(13)	
14	68.0 73.0	11 22 24 28	SATURATED HARD GREEN FINE SANDY CLAY W/SOME SILT, TRACE OF COARSE SAND.	A-7-6(6)	
15	73.0 78.0	11 17 16 19	SATURATED HARD GRAYISH BROWN FINE SANDY CLAY W/SOME SILT, TRACE OF COARSE SAND.	A-7-6(7)	
16	78.0 83.0	8 9 15 15	SATURATED VERY STIFF GREEN CLAY W/SOME FINE SAND AND SILT, TRACE OF COARSE SAND.	A-7-5(22)	
17	83.0 88.0	13 22 32 40	SATURATED HARD GREEN FINE SANDY CLAY W/SOME SILT, TRACE OF COARSE SAND.	A-7-5(14)	
18	88.0 93.0	22 26 24 32	SATURATED HARD REDDISH BROWN CLAY W/SOME COARSE TO FINE SAND AND SILT.	A-7-5(17)	
19	93.0 98.0	22 28 28 22	SATURATED HARD BLUISH GRAY FINE SANDY CLAY W/TRACE OF COARSE SAND AND SILT.	A-7-6(3)	
20	98.0 103.0	50	SATURATED DENSE BLUISH GRAY SILTY FINE TO COARSE SAND.	A-2-4(0)	
21	103.0 108.0		NO SAMPLE		
22	108.0 113.0		NO SAMPLE		
23	113.0 118.0		END BORING.		EBDSE -109.00

EBDSE - ESTIMATED BOTTOM OF DRILLED SHAFT ELEVATION

NOTE: BORING INFORMATION IS FOR INFORMATIONAL PURPOSES ONLY

UNOFFICIAL WEBSITE COPY

ADDENDA / REVISIONS

NOT TO SCALE

BR 1-159 ON JAMES STREET OVER CHRISTINA RIVER

CONTRACT	BRIDGE NO. 1-159	BORING LOG	BO-02
T201207101	DESIGNED BY: SFR		SECTION McT
COUNTY NEW CASTLE	CHECKED BY: DLH		SHEET NO. 67

3/15/2019
6:42:24 PM
...\Roadway\BO02_BR159.dgn

BORING: JS-7 | **DATE DRILLED:** 6/7/12
STATION: 15+46.19 | **OFFSET:** -39.00 | **ELEVATION:** xxxx | **NORTHING:** 623162.0350 | **EASTING:** 602094.8116
COMMENTS: N/A

SAMPLE INFORMATION

NO.	DEPTH	BLOWS /6"	DESCRIPTION	CLASS /G.I.	REMARKS
1	0.0 2.5	2 4 3	WET FIRM BROWN CLAYEY SILT W/SOME COARSE TO FINE SAND, TRACE OF FINE GRAVEL.	A-4(2)	
2	2.5 4.0	2 5 50	WET VERY DENSE BROWN FINE GRAVEL W/SOME FINE TO COARSE SAND AND SILT.	A-1-B	
3	4.0 6.0	3 2 2 3	WET SOFT BROWN CLAYEY COARSE SANDY FINE GRAVELLY SILT W/SOME FINE SAND.	A-4(0)	
4	6.0 8.0	2 2 3 4	WET FIRM BROWN CLAYEY SILT W/SOME FINE TO COARSE SAND, TRACE OF FINE GRAVEL.	A-4(2)	
5	8.0 10.0	3 2 1 1	SATURATED SOFT GRAY CLAYEY SILT W/SOME COARSE TO FINE SAND AND FINE GRAVEL.	A-4(1)	
6	10.0 12.0	17 9 7 6	SATURATED VERY STIFF GRAY CLAYEY FINE GRAVELLY SILT W/SOME FINE TO COARSE SAND.	A-4(0)	
7	12.0 14.0	3 2 2 1	SATURATED LOOSE GRAY CLAYEY FINE GRAVEL W/SOME FINE TO COARSE SAND AND SILT.	A-2-4(0)	
8	14.0 16.0	3 5 3 2	SATURATED FIRM GRAY CLAYEY FINE GRAVELLY SILT W/SOME FINE SAND, TRACE OF COARSE SAND.	A-4(3)	
9	16.0 18.0	3 2 3 2	SATURATED FIRM GRAY CLAYEY SILT W/TRACE OF FINE TO COARSE SAND AND FINE GRAVEL.	A-5(9)	
U-1	18.0 20.0				
11	20.0 22.0	2 3 6 10	SATURATED FIRM BROWN CLAYEY FINE SANDY SILT W/SOME COARSE SAND, TRACE OF FINE GRAVEL.	A-4(1)	
12	22.0 24.0	2 3 6 10	SATURATED LOOSE TAN CLAYEY FINE SAND W/SOME COARSE SAND, FINE GRAVEL AND SILT.	A-2-6(1)	
13	24.0 26.0	6 7 6 7	SATURATED STIFF REDDISH BROWN CLAYEY FINE SANDY SILT W/TRACE OF COARSE SAND AND FINE GRAVEL.	A-4(1)	
14	26.0 28.0	5 10 14 13	SATURATED MEDIUM DENSE REDDISH BROWN SILTY FINE SAND W/SOME COARSE SAND AND FINE GRAVEL.	A-2-4(0)	
15	28.0 30.0	9 14 20 22	SATURATED DENSE BROWN CLAYEY FINE SAND W/SOME COARSE SAND AND SILT, TRACE OF FINE GRAVEL.	A-2-4(0)	
16	30.0 32.0	3 8 12 17	SATURATED VERY STIFF BROWN FINE SAND CLAY W/SOME COARSE SAND AND SILT, TRACE OF FINE GRAVEL.	A-6(1)	
17	32.0 34.0	8 10 13 15	SATURATED MEDIUM DENSE BROWN CLAYEY COARSE TO FINE SAND W/SOME SILT, TRACE OF FINE GRAVEL.	A-2-4(0)	
18	34.0 36.0	11 13 9 8	SATURATED VERY STIFF BROWN SILTY CLAY W/SOME FINE SAND, TRACE OF COARSE SAND AND FINE GRAVEL.	A-6(10)	
19	36.0 38.0	8 10 10 13	SATURATED VERY STIFF REDDISH BROWN CLAYEY FINE SANDY SILT W/TRACE OF COARSE SAND AND FINE GRAVEL.	A-4(1)	
20	38.0 40.0	8 15 25 20	NO SIEVE ANALYSIS - INDICATION OF SATURATED DENSE BROWN SAND.		
21	40.0 43.0	15 20 22 16	SATURATED DENSE BROWN SILTY FINE TO COARSE SAND W/SOME FINE GRAVEL.	A-2-4(0)	
22	43.0 48.0	7 8 13 20	SATURATED MEDIUM DENSE GRAY COARSE TO FINE SAND W/SOME FINE GRAVEL AND SILT.	A-1-B	
23	48.0 53.0	10 6 5 11	SATURATED MEDIUM DENSE TAN FINE GRAVEL AND COARSE TO FINE SAND W/SOME SILT.	A-1-B	
24	53.0 58.0	5 7 7 13	SATURATED STIFF TAN FINE SANDY CLAY W/SOME COARSE SAND, TRACE OF SILT AND FINE GRAVEL.	A-7-5(4)	
25	58.0 63.0	15 24 24 28	SATURATED HARD GRAYISH BROWN FINE SANDY CLAY W/SOME SILT, TRACE OF COARSE SAND. (WEATHERED ROCK)	A-7-5(5)	
26	63.0 68.0	14 23 39 37	SATURATED HARD GRAYISH BROWN FINE SANDY CLAY W/SOME COARSE SAND, TRACE OF SILT. (WEATHERED ROCK)	A-7-5(3)	
27	68.0 73.0	27 45 50	SATURATED HARD BLUISH GRAY CLAYEY FINE TO COARSE SANDY SILT. (WEATHERED ROCK)	A-5(2)	

BORING: JS-7 CONT.

SAMPLE INFORMATION

NO.	DEPTH	BLOWS /6"	DESCRIPTION	CLASS /G.I.	REMARKS
28	73.0 78.0	24 25 50	SATURATED HARD BLUISH GRAY CLAYEY FINE SANDY SILT W/TRACE OF COARSE SAND. (WEA T HERED ROCK)	A-5(4)	
29	78.0 83.0	19 25 24 50	SATURATED HARD BLUISH GRAY CLAY W/SOME FINE TO COARSE SAND AND SILT. (WEATHERED ROCK)	A-7-5(8)	
30	83.0 88.0	21 27 28 41	SATURATED HARD BLUISH GRAY FINE SANDY CLAY W/SOME SILT, TRACE OF COARSE SAND. (WEATHERED ROCK)	A-7-5(8)	
31	88.0 93.0	15 20 20 25	SATURATED HARD BLUISH GRAY FINE SANDY CLAY W/SOME SILT, TRACE OF COARSE SAND AND FINE GRAVEL. (WEATHERED ROCK)	A-7-5(8)	
32	93.0 98.0	23 44 50	SATURATED VERY DENSE BLUISH GRAY SILTY FINE SAND W/SOME COARSE SAND.(WEATHERED ROCK)	A-2-4(0)	
33	98.0 103.0		END BORING.		EBDSE -102.50

BORING: JS-8 | **DATE DRILLED:** 5/21/12
STATION: 15+56.40 | **OFFSET:** 7.78 | **ELEVATION:** xxxx | **NORTHING:** 623184.5185 | **EASTING:** 602136.9958
COMMENTS: 8" CASING SET @ 18', 4" CASING SET AT 23'.

SAMPLE INFORMATION

NO.	DEPTH	BLOWS /6"	DESCRIPTION	CLASS /G.I.	REMARKS
1	0.0 0.0	10 10 12 12	MOIST MEDIUM DENSE BROWN SILTY COARSE SANDY FINE GRAVEL W/SOME FINE SAND.	A-2-4(0)	
2	0.0 2.0	5 4 4 3	SATURATED FIRM BLACK COARSE SANDY FINE GRAVELLY SILT W/SOME FINE SAND.	A-4(0)	
3	2.0 4.0	2 1 1 3	SATURATED SOFT GRAY SILTY CLAY W/SOME FINE GRAVEL, TRACE OF FINE TO COARSE SAND.	A-6(9)	
4	4.0 6.0	2 2 1 2	SATURATED SOFT GRAY CLAY W/SOME COARSE TO FINE SAND AND SILT, TRACE OF FINE GRAVEL.	A-7-6(9)	
5	6.0 8.0	5 10 11 12	SATURATED MEDIUM DENSE BROWN FINE GRAVELLY COARSE SAND W/SOME FINE SAND AND SILT.	A-1-B	
6	8.0 10.0	7 8 7 10	SATURATED STIFF BROWNISH RED FINE TO COARSE SANDY CLAY W/SOME SILT, TRACE OF FINE GRAVEL.	A-6(2)	
7	10.0 12.0	5 8 9 9	SATURATED MEDIUM DENSE ORANGE SILTY FINE SAND W/SOME COARSE SAND.	A-2-4(0)	
8	12.0 14.0	5 8 8 8	SATURATED MEDIUM DENSE ORANGISH BROWN SILTY FINE TO COARSE SAND W/TRACE OF FINE GRAVEL.	A-2-4(0)	
9	14.0 16.0	5 7 8 9	SATURATED STIFF REDDISH ORANGE CLAYEY FINE SANDY SILT W/TRACE OF COARSE SAND AND FINE GRAVEL.	A-4(4)	
10	16.0 18.0	3 4 7 8	SATURATED STIFF RED SILTY FINE SANDY CLAY W/TRACE OF COARSE SAND.	A-6(6)	
11	18.0 23.0	7 6 10 8	SATURATED MEDIUM DENSE BROWNISH ORANGE SILTY FINE TO COARSE SAND W/TRACE OF FINE GRAVEL.	A-2-4(0)	
12	23.0 28.0	3 4 6 6	SATURATED FIRM RED SILTY CLAY W/SOME FINE SAND, TRACE OF COARSE SAND.	A-6(13)	
13	28.0 33.0	6 10 12 16	SATURATED MEDIUM DENSE ORANGE SILTY FINE TO COARSE SAND W/SOME FINE GRAVEL.	A-2-4(0)	
14	33.0 38.0	14 15 13 16	SATURATED MEDIUM DENSE BROWN SILTY FINE SAND W/SOME COARSE SAND AND FINE GRAVEL.	A-2-4(0)	
15	38.0 43.0	7 14 14 15	SATURATED MEDIUM DENSE GRAY CLAYEY FINE TO COARSE SAND W/SOME SILT AND FINE GRAVEL.	A-2-4(0)	
16	43.0 48.0	10 12 15 17	SATURATED VERY STIFF BROWNISH TAN FINE SANDY SILT W/SOME CLAY, TRACE OF COARSE SAND.	A-4(1)	
17	48.0 53.0	6 8 19 24	SATURATED VERY STIFF BROWNISH GRAY FINE SANDY CLAY W/TRACE OF COARSE SAND, FINE GRAVEL AND SILT.	A-7-6(9)	
18	53.0 58.0	8 10 18 19	SATURATED VERY STIFF BROWN FINE SANDY CLAY W/SOME SILT, TRACE OF COARSE SAND.	A-7-6(9)	
19	58.0 63.0	12 19 28 27	SATURATED HARD BROWNISH GRAY CLAYEY FINE SANDY SILT W/SOME COARSE SAND.	A-4(1)	

BORING: JS-8 CONT.

SAMPLE INFORMATION

NO.	DEPTH	BLOWS /6"	DESCRIPTION	CLASS /G.I.	REMARKS
20	63.0 68.0	12 18 24 18	SATURATED HARD GRAYISH GREEN FINE SANDY CLAY W/SOME SILT, TRACE OF COARSE SAND.	A-6(3)	
21	68.0 73.0	50	NO SAMPLE		
22	73.0 78.0	17 36 43 50	SATURATED VERY DENSE GREENISH GRAY SILTY FINE TO COARSE SAND.	A-2-4(0)	
23	78.0 83.0	23 35 50	SATURATED VERY DENSE GREENISH GRAY SILTY FINE TO COARSE SAND W/TRACE OF FINE GRAVEL.	A-2-4(0)	
24	83.0 88.0	50	NO SIEVE ANALYSIS - INDICATION OF SATURATED DENSE GREENISH GRAY HIGHLY WEATHERED ROCK.		
25	88.0 93.0	50	NO SIEVE ANALYSIS - INDICATION OF SATURATED DENSE GREENISH GRAY HIGHLY WEATHERED ROCK.		
26	93.0 98.0	25 50	SATURATED VERY DENSE GREENISH GRAY CLAYEY FINE TO COARSE SAND W/SOME SILT, TRACE OF FINE GRAVEL.	A-2-5(0)	
CR-1	98.0 101.5		SCHIST, GRAY FINE GRAINED, THIN BEDDED, SLIGHTLY WEATHERED, HARD.		
CR-2	101.5 106.5		SCHIST, GRAY FINE GRAINED, THIN BEDDED, SLIGHTLY WEATHERED, HARD.		
	106.5 111.5		END BORING.		EBDSE -102.50

EBDSE - ESTIMATED BOTTOM OF DRILLED SHAFT ELEVATION

NOTE: BORING INFORMATION IS FOR INFORMATIONAL PURPOSES ONLY

UNOFFICIAL WEBSITE COPY

ADDENDA / REVISIONS

NOT TO SCALE

BR 1-159 ON JAMES STREET OVER CHRISTINA RIVER

CONTRACT	BRIDGE NO. 1-159
T201207101	DESIGNED BY: SFR
COUNTY	
NEW CASTLE	CHECKED BY: DLH

BORING LOG

BO-03
SECTION McT
SHEET NO. 68

BORING: JS-9 | **DATE DRILLED:** 5/21/12
STATION: 15+84.19 | **OFFSET:** 12.00 | **ELEVATION:** xxx | **NORTHING:** 623212.8093 | **EASTING:** 602131.7881
COMMENTS: N/A

NO.	DEPTH	BLOWS /6"	DESCRIPTION	CLASS /G.I.	REMARKS
		SAMPLE INFORMATION			
1	0.0 0.0	15 8 8 12	MOIST MEDIUM DENSE BROWN COARSE TO FINE SAND AND FINE GRAVEL W/SOME SILT.	A-1-B	
2	0.0 2.0	3 3 3 2	WET FIRM BROWNISH GRAY SILT W/SOME FINE TO COARSE SAND, TRACE OF FINE GRAVEL AND CLAY.	A-4(1)	
3	2.0 4.0	6 6 6 5	WET STIFF TAN CLAYEY SILT W/TRACE OF FINE TO COARSE SAND AND FINE GRAVEL.	A-4(5)	
4	4.0 6.0	6 7 11 9	WET VERY STIFF TAN SILT W/SOME FINE SAND AND CLAY, TRACE OF COARSE SAND AND FINE GRAVEL.	A-4(1)	
5	6.0 8.0	6 8 12 12	WET MEDIUM DENSE BROWN COARSE TO FINE SAND W/SOME FINE GRAVEL AND SILT.	A-1-B	
6	8.0 10.0	8 11 9 6	WET MEDIUM DENSE BROWN FINE GRAVELLY COARSE TO FINE SAND W/SOME SILT.	A-1-B	
7	10.0 12.0	9 19 20 20	WET DENSE BROWN COARSE SANDY FINE GRAVEL W/SOME FINE SAND, TRACE OF SILT.	A-1-B	
8	12.0 14.0	25 29 19 27	WET DENSE ORANGE COARSE SANDY FINE GRAVEL W/SOME FINE SAND AND SILT.	A-1-A	
9	14.0 16.0	25 8 11 10	WET MEDIUM DENSE ORANGE SILTY FINE SAND AND FINE GRAVEL W/SOME COARSE SAND.	A-1-B	
10	16.0 18.0	12 3 8 9	WET MEDIUM DENSE ORANGE SILTY FINE SAND W/SOME COARSE SAND, TRACE OF FINE GRAVEL.	A-2-4(0)	
11	18.0 23.0	5 5 7 12	WET STIFF BROWN CLAYEY FINE SANDY SILT W/SOME COARSE SAND, TRACE OF FINE GRAVEL.	A-4(0)	
12	23.0 28.0	10 11 8 10	WET MEDIUM DENSE BROWNISH ORANGE SILTY COARSE TO FINE SAND W/TRACE OF FINE GRAVEL.	A-2-4(0)	
13	28.0 33.0	2 6 13 12	WET VERY STIFF REDDISH BROWN FINE SANDY CLAY W/SOME COARSE SAND AND SILT, TRACE OF FINE GRAVEL.	A-6(1)	
14	33.0 37.0	6 16 14 16	WET MEDIUM DENSE BROWNISH GRAY CLAYEY FINE TO COARSE SAND W/SOME FINE GRAVEL, TRACE OF SILT	A-2-6(0)	
15	37.0 42.0	4 7 12 19	WET MEDIUM DENSE REDDISH BROWN SILTY FINE SAND W/SOME FINE GRAVEL AND CLAY, TRACE OF COARSE SAND.	A-2-4(0)	
16	42.0 47.0	8 11 10 14	WET MEDIUM DENSE GRAY SILTY FINE SAND W/SOME COARSE SAND AND FINE GRAVEL.	A-2-4(0)	
17	47.0 52.0	2 3 6 5	SATURATED FIRM GRAYISH BROWN FINE SANDY CLAY W/SOME SILT, TRACE OF COARSE SAND AND FINE GRAVEL.	A-7-5(13)	
18	52.0 57.0	7 7 9 13	SATURATED VERY STIFF GRAYISH BROWN FINE SANDY CLAY W/SOME SILT, TRACE OF COARSE SAND AND FINE GRAVEL.	A-7-6(12)	
19	57.0 62.0	9 10 11 23	SATURATED VERY STIFF GRAYISH BROWN CLAYEY FINE SANDY SILT W/TRACE OF COARSE SAND AND FINE GRAVEL.	A-4(2)	
20	62.0 67.0	10 17 20 22	SATURATED HARD BLUISH GRAY FINE SANDY CLAY W/SOME COARSE SAND, TRACE OF SILT AND FINE GRAVEL.	A-7-5(6)	
21	67.0 72.0	18 16 18 50	SATURATED MEDIUM DENSE BLUISH GRAY SILTY FINE TO COARSE SAND W/TRACE OF FINE GRAVEL.	A-2-4(0)	
22	72.0 77.0	50	SATURATED VERY DENSE BLUISH GRAY SILTY FINE SAND W/SOME COARSE SAND, TRACE OF FINE GRAVEL.	A-2-4(0)	
23	77.0 82.0	28 38 44 50	SATURATED VERY DENSE BLUISH GRAY COARSE TO FINE SAND AND FINE GRAVEL W/SOME SILT.	A-1-B	
24	82.0 87.0	50	SATURATED DENSE GRAY SILTY FINE SAND W/SOME COARSE SAND, TRACE OF FINE GRAVEL. (WEATHERED ROCK)	A-2-4(0)	
25	87.0 92.0	50	SATURATED DENSE GRAY SILTY FINE SAND W/SOME COARSE SAND, TRACE OF FINE GRAVEL. (WEATHERED ROCK)	A-2-4(0)	
26	92.0 97.0	50	SCHIST, WET, VERY DENSE WEATHERED ROCK.		
CR-1	97.0 98.0		SCHIST GRAY FINE GRAINED THIN BEDDED, MOD-SLIGHTLY WEATHERED ROCK.		
CR-2	98.0 104.9		SCHIST GRAY FINE GRAINED THIN BEDDED, SLIGHTLY WEATHERED ROCK.		
	104.9 108.7		END BORING.		EBDSE -98.5

BORING: JS-10 | **DATE DRILLED:** 5/21/12
STATION: 16+26.65 | **OFFSET:** 0.00 | **ELEVATION:** xxx | **NORTHING:** 623247.6999 | **EASTING:** 602104.1664
COMMENTS: N/A

NO.	DEPTH	BLOWS /6"	DESCRIPTION	CLASS /G.I.	REMARKS
		SAMPLE INFORMATION			
1	0.0 0.0	9 12 14 10	MOIST VERY STIFF RED COARSE SANDY SILT W/SOME FINE SAND AND FINE GRAVEL, TRACE OF CLAY.	A-4(0)	
2	0.0 2.0	4 4 3 2	INDICATION OF - MOIST LOOSE RED BRICK RUBBLE.		
3	2.0 4.0	12 8 9 10	WET VERY STIFF BROWN SILT W/TRACE OF FINE TO COARSE SAND AND CLAY.	A-4(1)	
4	4.0 6.0	11 6 6 9	WET MEDIUM DENSE BROWN SILTY FINE TO COARSE SAND AND FINE GRAVEL.	A-2-4(0)	
5	6.0 8.0	10 12 14 14	WET MEDIUM DENSE BROWN COARSE SAND AND FINE GRAVEL W/TRACE OF FINE SAND AND SILT.	A-1-B	
	8.0 10.0		END BORING.		

NOTES: 1. BORING INFORMATION IS FOR INFORMATIONAL PURPOSES ONLY.
2. JS-11 WAS DRILLED AT STA. 12+29, OFFSET 0'. TOP OF ROCK WAS ENCOUNTERED AT A DEPTH OF 120 FEET.

EBDSE - ESTIMATED BOTTOM OF DRILLED SHAFT ELEVATION

UNOFFICIAL WEBSITE COPY

ADDENDA / REVISIONS

NOT TO SCALE

BR 1-159 ON JAMES STREET OVER CHRISTINA RIVER

CONTRACT	BRIDGE NO. 1-159
T201207101	DESIGNED BY: SFR
COUNTY	
NEW CASTLE	CHECKED BY: DLH

BORING LOG

BO-04

SECTION: McT

SHEET NO. 69

3/15/2019
6:02:25 PM
...\Roadway\BO04_BR159.dgn

ENVIRONMENTAL COMPLIANCE NOTES

1. GENERAL NOTES:

A. THE PURPOSE OF THESE SHEETS IS TO IDENTIFY THOSE ITEMS ASSOCIATED WITH ENVIRONMENTAL COMPLIANCE. IMPACT CALCULATIONS ARE FOR THE AGENCY PERMIT REPORTING PURPOSES ONLY AND ARE NOT TO BE USED FOR BIDDING PURPOSES.

B. IF A DEPARTURE FROM THE APPROVED PLANS (WHICH WOULD AFFECT ANY NATURAL AND/OR CULTURAL RESOURCES) IS NECESSARY, THE ENVIRONMENTAL STUDIES SECTION SHALL BE CONTACTED AT (302)760-2264 TO ALLOW FOR COORDINATION WITH THE APPROPRIATE RESOURCE AGENCIES AND APPROVAL.

C. USE OF THESE SHEETS DOES NOT ALLEVIATE THE CONTRACTOR'S RESPONSIBILITY TO COMPLY WITH ALL CONDITIONS SET FORTH IN THE ENVIRONMENTAL STATEMENT AND PERMITS.

2. NATURAL RESOURCE ISSUES:

A. PERMIT REQUIREMENTS/APPROVALS*:
U.S. ARMY CORPS OF ENGINEERS (COE): - NWP *23**
DNREC - WETLAND AND SUBAQUEOUS LANDS (WLSL): - SUBAQUEOUS LANDS PERMIT**
DNREC - WATER QUALITY (WQC) & COASTAL ZONE CONSISTENCY (CZM): - ISSUED (PROJECT NOT LOCATED IN CRITICAL RESOURCE WATERS (CRW))
NEW CASTLE COUNTY DEPARTMENT OF LAND USE (NCC) - FLOODPLAIN PERMIT**
USCG - ADVANCED APPROVAL**

* THE PERMITS/APPROVALS LISTED ARE THOSE REQUIRED FOR THIS PROJECT. THE ENVIRONMENTAL STUDIES SECTION IS RESPONSIBLE FOR COORDINATING AND/OR OBTAINING THIS APPROVAL.
** THE CONTRACTOR MUST ENSURE THAT THESE PERMITS/APPROVALS (COE, WLSL, NCC) ARE IN THEIR POSSESSION PRIOR TO BEGINNING CONSTRUCTION IN THE PERMITTED AREA(S) AND ENSURE THEY ARE DISPLAYED ON-SITE DURING THE ENTIRE CONSTRUCTION PERIOD.
NOTE: THE ABSENCE OF ASTERISKS AFTER A PERMIT (WQZ, CZM) INDICATES COORDINATION HAS BEEN DONE WITH THOSE AGENCIES, BUT NO WRITTEN AUTHORIZATION WAS REQUIRED. AS SUCH, NO PAPERWORK FROM THOSE AGENCIES SHOULD BE ANTICIPATED.

B. CONSTRUCTION RESTRICTIONS:
FISHERIES - MARCH 1 TO JUNE 30 (INCLUSIVE). DUE TO THE PRESENCE OF ANADROMOUS SPECIES (HICKORY SHAD, ALEWIFE RIVER HERRING AND BLUEBACK RIVER HERRING) NO IN-WATER WORK SHALL OCCUR.
ENDANGERED SPECIES - NONE
MIGRATORY BIRDS - APRIL 15 TO AUGUST 1 (INCLUSIVE). IMPACTS TO NESTING BARN SWALLOWS AND/OR EASTERN PHOEBES MUST BE AVOIDED. IF THIS IS NOT PRACTICAL, THEN DETERRENT NETTING (OR SIMILAR DEVICE) SHALL BE USED TO BLOCK ACCESS TO NESTING SITES ON THE UNDERSIDE OF THE EXISTING BRIDGE. THE NETTING MUST BE IN PLACE PRIOR TO APRIL 15 AND THE UNDERSIDE OF THE EXISTING BRIDGE MUST BE FULLY ENCAPSULATED AND REMAIN IN PLACE UNTIL DEMOLITION. NETTING SHALL BE PAID FOR UNDER ITEM 763623 - NETTING, MIGRATORY BIRD EXCLUSION.

3. CULTURAL RESOURCE ISSUES:

A. SEE NOTE 18 ON PROJECT NOTES, SHEET PN-01.

4. STREAM RESTORATION AND SLOPE RIPRAP TREATMENT:

A. REMOVE THE EXISTING BASCULE PIER AND REST PIER TO 1' BELOW CHANNEL GRADE. BACKFILL WITH R-4 RIPRAP AND CHOKE WITH CHANNEL BED FILL (PAYMENT UNDER ITEM 712531 CHANNEL BED FILL AND ITEM 712020 RIPRAP, R-4). SET TOP OF R-4 RIPRAP LEVEL WITH TOP OF EXISTING CHANNEL GRADE.

B. ALL RIPRAP ON THE STREAM BANK, OUTSIDE THE CHANNEL BED, SHALL BE CHOKED WITH DELAWARE *57 STONE. PLACE JUST ENOUGH CHOKE MATERIAL TO PREVENT THE LOSS OF CHANNEL BED FILL OR TOPSOIL (DEPENDING ON LOCATION AS INDICATED BELOW) THROUGH THE RIPRAP.

- BENEATH THE PROPOSED BRIDGE: AFTER PLACING THE DELAWARE *57 STONE, PERFORM A FINAL CHOKE OF CHANNEL BED FILL SO THAT THE RIPRAP PEAKS ARE BARELY VISIBLE. PAYMENT UNDER ITEM 712531 CHANNEL BED FILL. DELAWARE *57 STONE SHALL BE INCIDENTAL TO THE RIPRAP ITEM.
- ALL OTHER LOCATIONS: FINISH FILLING THE VOIDS WITH TOPSOIL SO THAT THE RIPRAP PEAKS ARE BARELY VISIBLE. PLACE AN ADDITIONAL 6-INCH TOPSOIL LAYER (ITEM 908002) ON TOP OF THE RIPRAP. SLOPE SEEDING WILL BE DONE WITH ITEM 908019 STREAMBANK SEED MIX, SEEDING. FOLLOWING THE SEEDING OPERATION, INSTALL ITEM 908020 EROSION CONTROL BLANKET (ECB) MULCH, OR OTHER BLANKET AS SHOWN ON THE PLANS. ECB AT TOE OF SLOPE CAN BE EITHER TRENCHED IN OR STAPLED AT 6" ON CENTER. COMPLETE ALL WORK, STARTING WITH THE INITIAL CHOKING WITH TOPSOIL THROUGH THE SEEDING AND MULCHING PRIOR TO ANY RAIN EVENT. DELAWARE *57 STONE IS INCIDENTAL TO THE RIPRAP ITEM. ALL OTHER ITEMS WILL BE PAID FOR UNDER THEIR RESPECTIVE ITEMS.

5. PROTECTION OF RESOURCES:

A. KEEP CLEARING IN WETLAND AREAS TO THE MINIMUM ABSOLUTELY NECESSARY FOR CONSTRUCTION ACCESS. SUPPORT ALL EQUIPMENT TRAVERSING WETLANDS AND SUBAQUEOUS LAND ON MATS. PAYMENT FOR MATS WILL BE MADE UNDER ITEM 202510 - TEMPORARY COMPOSITE MATTING. IN WETLAND AREAS THAT ARE CLEARED, NO GRUBBING EXCEPT WHERE NECESSARY TO CONSTRUCT PROJECT COMPONENTS SUCH AS FOUNDATIONS AND RIPRAP PROTECTION IS PERMITTED. CUT VEGETATION FLUSH WITH THE GROUND (I.E. NO DISTURBANCE OF THE ROOT MAT). RESTORE TEMPORARILY DISTURBED WETLAND AREAS TO GRADE AND SEED WITH TEMPORARY GRASS SEEDING - DRY GROUND (PAYMENT UNDER ITEM 908017).

B. USE SILT FENCE OR CONSTRUCTION SAFETY FENCE ALONG THE LIMITS OF CONSTRUCTION IN ALL AREAS WHERE WATER/WETLANDS ARE BEING IMPACTED (AS SHOWN ON ENVIRONMENTAL COMPLIANCE SHEETS), AND ALSO IN ANY AREA WHERE WATER/WETLANDS EXIST WITHIN 20 FEET OF THE LIMIT OF CONSTRUCTION (AS SHOWN ON CONSTRUCTION PLAN SHEETS). ANY CONTRACTOR ACCESS BEYOND THE LIMIT OF CONSTRUCTION IS STRICTLY PROHIBITED.

C. USE SANDBAGS OF COMPOST FILTER LOG (CFL) TO SECURE SILT FENCE IN AREAS ADJACENT TO WOODED UPLANDS/ALL WETLANDS IN LIEU OF TRENCHING UNLESS PROPER EROSION AND SEDIMENT CONTROL CANNOT BE MAINTAINED. SANDBAGS AND CFL'S (AND CONTENTS) MUST BE REMOVED IN THEIR ENTIRETY WHEN NO LONGER NEEDED. SANDBAGS/CFL USED TO SECURE SILT FENCE IS INCIDENTAL TO ITEM NUMBER 905001 - SILT FENCE. THE ENVIRONMENTAL STUDIES SECTION (CAROL SULLIVAN, 302-760-2129) CAN PROVIDE FURTHER GUIDANCE REGARDING THIS METHOD OF INSTALLATION.

D. CLEARLY MARK ALL TREES TO BE REMOVED WITH PAINT PRIOR TO THE EROSION AND SEDIMENT CONTROL MEETING.

6. U.S COAST GUARD 30-DAY ADVANCED COORDINATION/APPROVAL:

A. THE WATERWAYS ARE USED FOR RECREATIONAL PURPOSES. THE CONTRACTOR SHALL PROVIDE SAFE PASSAGE THROUGH THE WORK AREAS FOR THE WATERWAY USERS AND SHALL HAVE THE PASSAGEWAY CLEARLY MARKED. PAYMENT IS INCLUDED UNDER ITEM 763522 - COAST GUARD SPECIFIC CONDITIONS. ANY CONTRACTOR ACTIVITY, WHICH WILL RESULT IN THE SHORT-TERM RESTRICTION OF THE WATERWAYS TO THOSE INDIVIDUALS, IS TO BE COORDINATED WITH THE ENGINEER AND THE U.S. COAST GUARD ONE MONTH IN ADVANCE. THE WORK WITHIN THE WATER SHALL BE LIMITED TO WHAT APPEARS ON THE PLANS AND BARGE PLACEMENT. IF ANY ADDITIONAL IN-WATER/WETLANDS WORK IS NEEDED, IT MUST BE COORDINATED WITH THE U.S. COAST GUARD PRIOR TO BEGINNING WORK AND BE IN CONFORMANCE WITH ITEM 763522 - COAST GUARD SPECIFIC CONDITIONS. CONTACT HAL R. PITTS AT (757) 398-6629, AS WELL AS SUBMIT A WRITTEN NOTICE (WHICH INCLUDES A SKETCH DEPICTING THE LOCATIONS AND DURATIONS OF ALL RESTRICTIONS) TO THE COMMANDING OFFICER (AOWB), 5TH COAST GUARD DISTRICT, FEDERAL BUILDING 431 CRAWFORD ST., PORTSMOUTH, VA 23704 FOR APPROVAL.

B. A CLEAR CHANNEL OF 45' SHALL BE MAINTAINED AT ALL TIMES.

C. NO "IN WATER" ACTIVITY WHICH WOULD PREVENT PASSAGE THROUGH THE WORK AREA WILL BE ALLOWED ON THE FIRST SUNDAY IN OCTOBER NOR ANY WEEKEND THAT A "CHRISTINA RIVER CLEAN-UP" IS SCHEDULED (SEE WWW.CHRISTINARIVERCLEANUP.ORG).

PERMANENT OPEN WATER IMPACT AREA SCHEDULE

ID	IMPACT DESCRIPTION	AREA (SF)	AREA (AC)	VOLUME (CY)	JURISDICTION
2-01	RIPRAP	2089.69	0.0480	77.40	USACE/DNREC
2-02	RIPRAP/PIPE	45.35	0.0010	1.68	USACE/DNREC
2-03	CAISSONS	113.10	0.0026	4.19	USACE/DNREC
TOTAL PERMANENT OPEN WATER IMPACTS		2248.14	0.0516	83.27	USACE/DNREC

TEMPORARY OPEN WATER IMPACT AREA SCHEDULE

ID	IMPACT DESCRIPTION	AREA (SF)	AREA (AC)	VOLUME (CY)	JURISDICTION
2-OT1	PIER REMOVAL (COFFERDAMS)	805.44	0.0185	29.83	USACE/DNREC
2-OT2	PIER REMOVAL	1706.26	0.0392	63.19	USACE/DNREC
2-OT3	TEMPORARY RIPRAP	1155.72	0.0265	42.80	USACE/DNREC
2-OT4	TEMPORARY RIPRAP PLATFORM	1146.72	0.0263	42.47	USACE/DNREC
TOTAL TEMPORARY OPEN WATER IMPACTS		4814.14	0.1105	178.29	USACE/DNREC

OPEN WATER CREATION AREA SCHEDULE

ID	IMPACT DESCRIPTION	AREA (SF)	AREA (AC)	VOLUME (CY)	JURISDICTION
2-OC1	PIER REMOVAL	144.00	0.0033	5.33	USACE/DNREC
2-OC2	PIER REMOVAL	1382.26	0.0317	51.19	USACE/DNREC
TOTAL OPEN WATER CREATION AREAS		1526.26	0.0350	56.52	USACE/DNREC

PERMANENT TIDAL WETLAND IMPACT AREA SCHEDULE

ID	IMPACT DESCRIPTION	AREA (SF)	AREA (AC)	VOLUME (CY)	JURISDICTION
2-W1	ABUTMENT/FILL	66.88	0.0015	N/A	USACE
2-W2	RIPRAP	290.61	0.0067	N/A	USACE
TOTAL PERM. TIDAL WETLAND IMPACT AREAS		357.49	0.0082	N/A	USACE

TEMPORARY TIDAL WETLAND IMPACT AREA SCHEDULE

ID	IMPACT DESCRIPTION	AREA (SF)	AREA (AC)	VOLUME (CY)	JURISDICTION
2-WT1	ACCESS AREA	2140.08	0.0491	N/A	USACE
TOTAL TEMP. TIDAL WETLAND IMPACT AREAS		2140.08	0.0491	N/A	USACE

TEMPORARY NON-TIDAL WETLAND IMPACT AREA SCHEDULE

ID	IMPACT DESCRIPTION	AREA (SF)	AREA (AC)	VOLUME (CY)	JURISDICTION
2-WT2	ACCESS AREA	200.83	0.0046	N/A	USACE
TOTAL TEMP. NON-TIDAL WETLAND IMPACT		200.83	0.0046	N/A	USACE

PLAN SHEET INDEX CROSS REFERENCE	
ENVIRONMENTAL COMPLIANCE	71
CONSTRUCTION PLAN	10-11

SHEET PREPARED BY:
MCCORMICK TAYLOR, INC.
JUNE 25, 2012

SHEETS UPDATED: 12/27/18

PROJECT AREA DELINEATED BY MCCORMICK TAYLOR, INC. IN APRIL 2010 IN ACCORDANCE WITH THE 1987 CORPS OF ENGINEERS WETLAND DELINEATION MANUAL AND REGIONAL SUPPLEMENTS.

DNREC JURISDICTIONAL WETLANDS WERE DETERMINED USING DELAWARE REGULATED TIDAL WETLANDS MAPS *401

UNOFFICIAL WEBSITE COPY

ADDENDA / REVISIONS

NOT TO SCALE

BR 1-159 ON JAMES STREET OVER CHRISTINA RIVER

CONTRACT	BRIDGE NO. 1-159
T201207101	DESIGNED BY: SFR
COUNTY	
NEW CASTLE	CHECKED BY: DLH

ENVIRONMENTAL COMPLIANCE PLAN

EC-01
SECTION McT
SHEET NO. 70

3/15/2019
6:06:26 PM
...\Roadway\EC001_BR159.dgn

LEGEND

	PERMANENT IMPACT AREA
	TEMPORARY IMPACT AREA
	CREATION AREA
—·—·—MHW—·—·—	MEAN HIGH WATER
—·—MHW/TW—	MEAN HIGH WATER / TIDAL WETLAND
——TW——	TIDAL WETLAND
——WL——	WETLAND BOUNDARY
XX / ?X	IMPACT AREA TYPE ID. (SEE BELOW) / IMPACT AREA ID. AND/OR NUMBER

O = OPEN WATER IMPACT W = WETLAND IMPACT
T = TEMPORARY IMPACT C = CREATION AREA

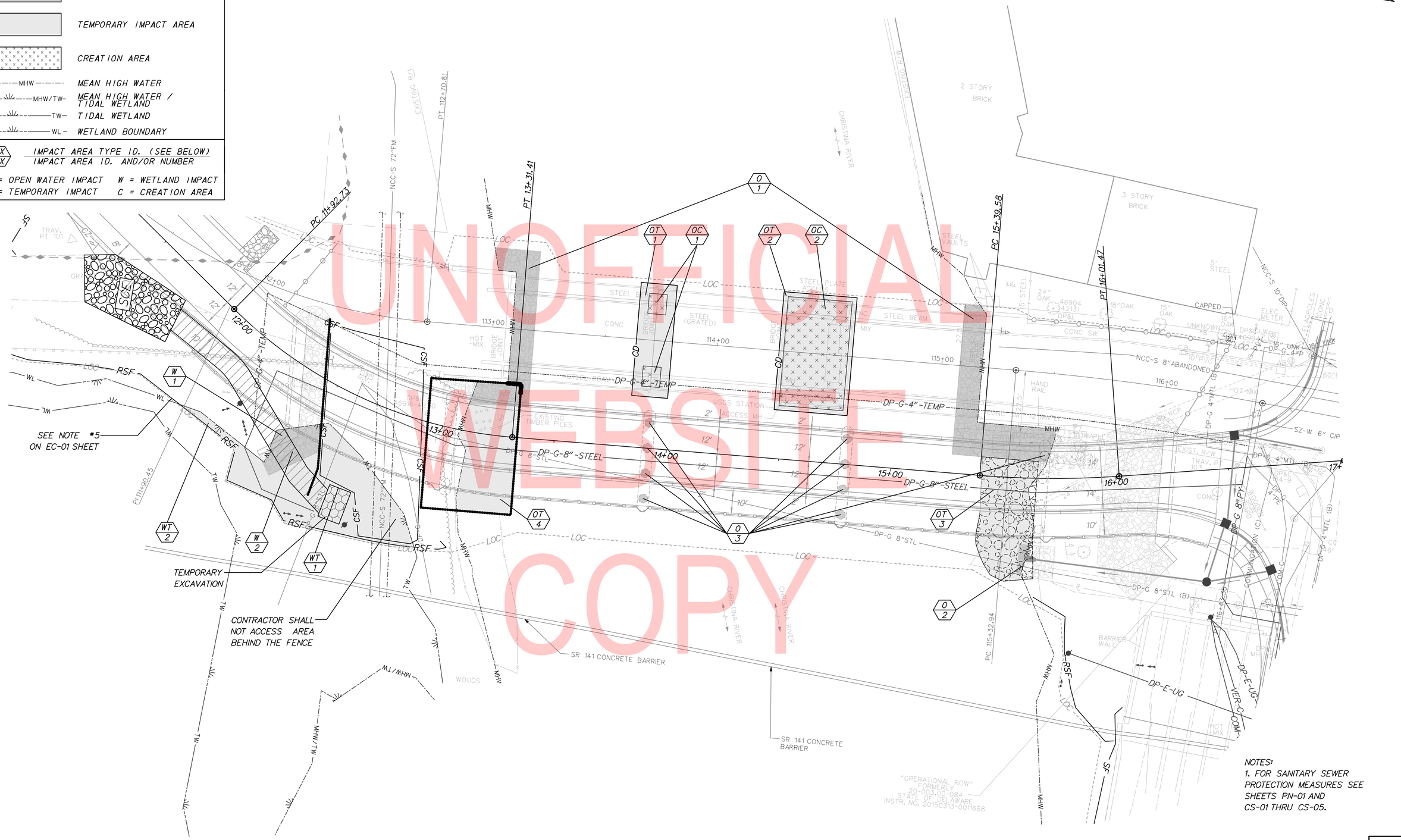

NOTES:
1. FOR SANITARY SEWER PROTECTION MEASURES SEE SHEETS PN-01 AND CS-01 THRU CS-05.

ADDENDA / REVISIONS

SCALE 0 20 40 60 FEET

BR 1-159 ON JAMES STREET OVER CHRISTINA RIVER

CONTRACT	BRIDGE NO. 1-159
T201207101	DESIGNED BY: SFR
COUNTY	CHECKED BY: DLH
NEW CASTLE	

ENVIRONMENTAL COMPLIANCE PLAN

EC-02
SECTION McT
SHEET NO. 71

3/18/2019
12:48:46 PM
...\Roadway\EC002_BR159.dgn

Vincent W. Davis 06/11/2019

DELDOT STORMWATER ENGINEER — DATE

"I CERTIFY TO THE BEST OF MY KNOWLEDGE AND BELIEF THAT THESE PLANS MEET THE REQUIREMENTS OF THE DELAWARE SEDIMENT AND STORMWATER REGULATIONS AND THAT ALL CLEARING, GRADING, AND CONSTRUCTION WILL BE ACCOMPLISHED PURSUANT TO THE PLAN."

CONSTRUCTION NOTES

72" NEW CASTLE COUNTY SANITARY SEWER (NCC SS)

1. NEW CASTLE COUNTY MAINTAINS A 72" FORCE MAIN SANITARY SEWER FACILITY IN THE VICINITY OF STA. 12+65, AS SHOWN ON THE PLANS. THE EXISTING PIPE IS A 72" PRESTRESSED CONCRETE CYLINDER PIPE WHICH WAS MANUFACTURED IN THE EARLY 1970'S. PIPES MANUFACTURED DURING THIS PERIOD HAVE BEEN FOUND TO BE SUSCEPTIBLE TO FAILURES DUE TO CORROSION OF THE PRESTRESSING STEEL WIRES WHICH SURROUND THE PIPE. THE CONDITION OF THE PIPE IS UNKNOWN. AS SUCH CONSTRUCTION METHODS SHALL NOT CREATE ADDITIONAL LOADS AND VIBRATIONS IN THE VICINITY OF THE EXISTING 72" NCC SS. THE PIPE IS ENCASED IN A 96" TUNNEL LINER BELOW JAMES STREET.

2. AS NOTED ON THE PLANS, CONSTRUCTION FENCING WILL BE PLACED AROUND THE NCC SS FACILITY TO DELINEATE AN AREA WHERE CONSTRUCTION EQUIPMENT AND OTHER LOADINGS WILL NOT BE PERMITTED. THE CONTRACTOR SHALL ACCURATELY LOCATE THE 72" NCC SS PRIOR TO THE START OF CONSTRUCTION. REFER TO NOTE 23 ON SHEET PN-02.

3. PRIOR TO CONSTRUCTION, THE CONTRACTOR SHALL FLAG THE PERIMETER OF THE 72" NCC SS FACILITY WHERE THE CONSTRUCTION FENCING WILL BE PLACED. CLEARING WITHIN THIS AREA SHALL BE LIMITED TO HAND CUTTING OF BUSHES AND TREES. GRUBBING WILL NOT BE PERMITTED. A SIGN "SANITARY SEWER PROTECTION AREA" SHALL BE ADDED ON EACH SIDE OF THE FENCE (SEE DETAIL). THIS SPECIAL "SANITARY SEWER PROTECTION AREA" SIGN WILL NEED TO BE ATTACHED TO THE FENCE SUPPORT.

4. THE CONTRACTOR SHALL ERECT CONSTRUCTION FENCING AND SIGNAGE (EVERY 25'-40') TO DELINEATE THE 72" NCC SS PROTECTION AREA IMMEDIATELY UPON COMPLETION OF CLEARING OPERATIONS.

5. THE NEW CASTLE COUNTY DEPARTMENT OF PUBLIC WORKS (NCCDPW) HAS DEVELOPED AN EMERGENCY ACTION PLAN IN THE EVENT OF DAMAGE TO THEIR SANITARY SEWER FACILITY. PRIOR TO CONSTRUCTION THE CONTRACTOR SHALL CONTACT REPRESENTATIVES OF NCCDPW TO DISCUSS EMERGENCY ACTION PLAN DETAILS:

   ANTHONY SCHIAVI, P.E.
   ASSISTANT COUNTY ENGINEER
   NEW CASTLE COUNTY
   DEPARTMENT OF PUBLIC WORKS
   187-A OLD CHURCHMANS RD
   NEW CASTLE, DE 19720
   PHONE: (302)-395-5700
   EMAIL: ANTHONY.SCHIAVI@NEWCASTLEDE.GOV

6. THE CONTRACTOR SHALL MONITOR CONSTRUCTION INDUCED VIBRATIONS AND GROUND MOVEMENTS IN THE VICINITY OF THE 72" NCC SS. THE CONTRACTOR SHALL IMMEDIATELY STOP ANY CONSTRUCTION ACTIVITY THAT INDUCE THRESHOLD VIBRATION PEAK PARTICLE VELOCITY OF 0.2 IN/SEC AND/OR ANY GROUND MOVEMENT OF 0.03125". THE CONTRACTOR SHALL SUBMIT REVISED CONSTRUCTION MEANS AND METHODS ALONG WITH ANY NECESSARY ENGINEERING CALCULATIONS VERIFYING THAT THE ABOVE THRESHOLD CRITERIA WILL NOT BE EXCEEDED TO THE ENGINEER FOR APPROVAL PRIOR TO RESUMING THAT ACTIVITY. THE ENGINEERING CALCULATIONS SHALL BE SIGNED AND SEALED BY A PROFESSIONAL ENGINEER LICENSED IN THE STATE OF DELAWARE. REFER TO SPECIAL PROVISION FOR ITEM 763620 PROTECTION OF EXISTING UTILITIES BY CONTRACTOR.

7. THE DELDOT FIELD REPRESENTATIVES WHO WILL HAVE OVERSIGHT RESPONSIBIILITY FOR THE SOIL MONITORING PROGRAM AND ENSURE ADHERENCE TO THE PLANS AND SPECIAL PROVISION, WILL BE ASSIGNED AT THE PRE-CONSTRUCTION MEETING.

EPA SUPERFUND SITE

1. A SUPERFUND SITE EXISTS WITHIN THE LIMITS OF CONSTRUCTION AT THE SOUTH END OF THE PROJECT, AS SHOWN ON THE PLANS. THE SUPERFUND SITE IS CAPPED WITH A SYNTHETIC GEOMEMBRANE LINER APPROXIMATELY 18" BELOW THE GROUND SURFACE. THE SITE IS MAINTAINED BY THE DUPONT COMPANY UNDER THE SUPERVISION OF THE FEDERAL ENVIRONMENTAL PROTECTION AGENCY (EPA).

2. PRIOR TO THE START OF CONSTRUCTION, THE CONTRACTOR WILL FLAG THE SUPERFUND SITE PERIMETER WITHIN THE PROJECT LIMITS OF CONSTRUCTION. COST SHALL BE INCIDENTAL TO ITEM - 763501 - CONSTRUCTION ENGINEERING.

3. THE CONTRACTOR WILL MAKE EVERY EFFORT TO MINIMIZE CONSTRUCTION ACTIVITIES WITHIN THIS AREA.

4. EXCAVATION WITHIN THIS AREA WILL BE LIMITED TO REMOVAL OF HOT-MIX PAVEMENT AND 6" OF TOPSOIL STRIPPING.

5. STOCKPILING OF MATERIALS, STORAGE OF CONSTRUCTION EQUIPMENT AND ACTIVITY NOT INDICATED ON THE PLANS WILL NOT BE PERMITTED IN THIS AREA.

6. THE CONTRACTOR SHALL CONTACT THE DELDOT HAZMAT PROGRAM MANAGER AND REPRESENTATIVE OF THE DUPONT COMPANY PRIOR TO BEGINNING CONSTRUCTION TO REVIEW HIS CONSTRUCTION PLAN AND SCHEDULE:

   DELDOT: JEFF LEONARD
   HAZMAT PROGRAM MANAGER
   DELAWARE DEPARTMENT OF TRANSPORTATION
   NORTH DISTRICT
   39 E. REGAL BLVD.
   NEWARK, DE 19713
   PHONE: (302)-326-4585
   EMAIL: JEFF.LEONARD@DELAWARE.GOV

   CHEMOURS: SEBASTIAN PJ HARRISON
   CONSTRUCTION ENGINEER,
   CORPORATE REMEDIATION GROUP
   (302) 773-1290
   THE CHEMOURS COMPANY
   1007 MARKET STREET, OFFICE *12098B
   WILMINGTON, DE 19899

PARSONS: DANA VITEK
PARSONS
1013 CENTRE ROAD - SUITE 228
WILMINGTON, DE 19805
PHONE: (302)-233-4447
EMAIL: DANA.VITEK@PARSONS.COM

ANN LOGUE
SENIOR PROJECT MANAGER
PARSONS
1601 MARKET STREET
9TH FLOOR, SUITE 900
PHILADELPHIA, PENNSYLVANIA 19103
PHONE: (215)-983-5991
EMAIL: ANN.LOGUE@PARSONS.COM

MAINTENANCE OF TRAFFIC NOTES

1. MAINTENANCE OF TRAFFIC DURING LANE CLOSURES SHALL CONFORM TO TYPICAL APPLICATION TA-10 OF THE DELAWARE MUTCD DURING LANE CLOSURE.

2. A. THE USE OF MILLINGS AND GRADED AGGREGATE BASE COURSE (GABC) IN THE TRAVEL WAY, TEMPORARY TRAVEL WAY, HIGH VOLUME ENTRANCES AND ACCESS RAMP FOR THE PURPOSE OF PROVIDING A TEMPORARY ROADWAY SURFACE, POTHOLE REPAIR, TAPERED EDGE FOR UTILITIES, BUTT JOINTS, AND LONGITUDINAL DROP-OFFS (MILLING AND PAVING OPERATIONS) IS PROHIBITED UNLESS IT IS OTHERWISE DESIGNATED TO BE USED IN THE CONTRACT PLANS. USE COLD PATCH, BITUMINOUS CONCRETE, BITUMINOUS CONCRETE WEDGE, OR TAPER MILL, AS NOTED IN THE CONTRACT DOCUMENTS OR APPROVED BY THE ENGINEER. PAYMENT FOR COLD PATCH, BITUMINOUS CONCRETE OR BITUMINOUS CONCRETE WEDGE SHALL BE PAID AS NOTED IN THE CONTRACT DOCUMENTS. TAPER MILL BITUMINOUS CONCRETE SHALL BE PAID UNDER THE BITUMINOUS CONCRETE MILLING ITEM.

   B. MILLINGS OR GABC SHALL BE USED AT THE FOLLOWING LOCATIONS WHERE ACCESS TO A BUSINESS, RESIDENCE, OR EDGE DROP OFF NEEDS TO BE MAINTAINED UNLESS OTHERWISE NOTED IN THE PLANS OR DIRECTED BY THE ENGINEER TO USE BITUMINOUS CONCRETE OR COLD PATCH. ALL MILLINGS AND GABC WILL BE ROLLED AND COMPACTED TO HELP PREVENT THE MATERIAL FROM UNRAVELLING:
      a. DRIVEWAYS
      b. ENTRANCES
      c. LOW VOLUME ACCESS RAMPS (IDENTIFIED IN THE CONTRACT DOCUMENTS)
      d. EDGE DROP-OFFS ADJACENT TO LIVE ROADWAY (LANES AND SHOULDER) AND THE PROPOSED ROAD CONSTRUCTION
      e. EDGE OF ROADWAY DROP-OFF

   GRADING AND MAINTAINING BASE COURSE THAT IS BEING USED FOR ROADWAY WEDGE/FILLET BETWEEN TRAVEL LANES AND PAVEMENT BOX, EDGE OF TRAVELWAY, DRIVEWAY OR ENTRANCE ACCESS SHALL BE INCIDENTAL TO ITEM NO. 743000 - MAINTENANCE OF TRAFFIC. THE BASE COURSE MATERIAL SHALL BE PLACED AT NO GREATER THAN THE SLOPE SPECIFIED IN TABLE 6G-1 AND SHALL BE COMPACTED. EXCESS BASE COURSE MATERIAL SHALL BE PUSHED AHEAD AND USED IN THE NEXT SEGMENT AND SHALL BE INCIDENTAL TO THE PARTICULAR BASE COURSE PAY ITEM. NO SEPARATE PAYMENT SHALL BE MADE FOR MILLINGS OR GABC TEMPORARY ROADWAY MATERIAL (TRM) USED TO PROTECT EDGE DROP-OFFS, UNLESS THE MATERIAL IS EVENTUALLY UTILIZED AS PART OF A PERMANENT ROADWAY AT WHICH TIME THE MATERIAL WOULD BE PAID FOR UNDER THE RESPECTIVE CONTRACT MATERIAL ITEM.

   VERTICAL DIFFERENCES SHALL BE CORRECTED IN ACCORDANCE WITH TABLE 6G-1 OF THE DELAWARE MUTCD.

3. MAINTENANCE OF TRAFFIC ITEMS SHALL BE PLACED AS PER PLAN OR THE DELAWARE MUTCD.

4. PEDESTRIAN ACCESS TO BASF PLANT SHALL BE MAINTAINED AT ALL TIMES. DURING THE CURB RAMP CONSTRUCTION ON NW AND NE SIDE OF JAMES STREET/WATER STREET AND PAVING OPERATIONS CONTRACTOR SHALL USE FLAGGERS TO DETOUR PEDESTRIAN TRAFFIC AROUND THE WORK ZONE. AT THE END OF EACH WORK DAY THE CONTRACTOR SHALL USE AN ADA APPROVED HOT MIX TEMPORARY ROADWAY MATERIAL TO ACCOMMODATE PEDESTRIAN TRAFFIC DURING THE NON-WORKING HOURS.

5. ACCEPTABLE MATERIALS FOR TEMPORARY PEDESTRIAN PATHS SHALL INCLUDE CONCRETE, HOT-MIX, COMPACTED MILLINGS OR PLYWOOD WALKWAY STRUCTURE. PLYWOOD WALKWAY STRUCTURES SHALL ALSO INCLUDE DETECTABLE EDGING AND RAILINGS IN ACCORDANCE WITH ADA GUIDELINES AND THE DELAWARE MUTCD. TEMPORARY PEDESTRIAN PATHS SHALL BE INCEDENTAL TO ITEM 743000 - MAINTENANCE OF TRAFFIC, ALL INCLUSIVE UNLESS OTHERWISE SPECIFIED IN THE PLANS. STONE OR GRADED AGGREGATE BASE COURSE SHALL NOT BE USED FOR TEMPORARY PEDESTRIAN PATHS.

TRAFFIC RESTRICTIONS

1. WATER STREET AND THE ENTRANCE TO BASF SHALL REMAIN OPEN AT ALL TIMES.

2. TEMPORARY DETOURS OF JAMES STREET SHALL BE AS NOTED BELOW:

   - WEEKEND WORK BETWEEN THE HOURS OF SATURDAY AT 5:00 PM UNTIL SUNDAY 11:59 PM FOR SETTING BRIDGE GIRDERS AND PLACING BRIDGE DECK CONCRETE. ALL DETOUR DATES WILL BE COORDINATED THROUGH THE DEPARTMENT WITH REPRESENTATIVES FROM THE TOWN OF NEWPORT.

   TOWN MANAGER: WENDY KING
   302-994-6403

   - WEEKEND WORK BETWEEN THE HOURS OF 7:00 PM FRIDAY AND TO 5:00 AM MONDAY FOR PHASE 2 ONLY WORK. ALL DETOUR DATES WILL BE COORDINATED THROUGH THE DEPARTMENT WITH REPRESENTATIVES FROM BASF AND THE INDUSTRIAL PARK.

3. ALLOWABLE LANE CLOSURES DURING PHASE 1 AND PHASE 3 ARE AS FOLLOWS:

ALLOWABLE LANE CLOSURE HOURS: JAMES STREET AND WATER STREET

	12:00 AM	1:00 AM	2:00 AM	3:00 AM	4:00 AM	5:00 AM	6:00 AM	7:00 AM	8:00 AM	9:00 AM	10:00 AM	11:00 AM	12:00 PM	1:00 PM	2:00 PM	3:00 PM	4:00 PM	5:00 PM	6:00 PM	7:00 PM	8:00 PM	9:00 PM	10:00 PM	11:00 PM
SUNDAY																								
MONDAY																								
TUESDAY																								
WEDNESDAY																								
THURSDAY																								
FRIDAY																								
SATURDAY																								

LANE CLOSED ▢ LANE OPEN ▢

4. CONSTRUCTION VEHICLE LOADINGS ON JAMES STREET SOUTH OF EXISTING BR 1-159 SHALL BE LIMITED TO DELAWARE LEGAL LOADS:

   20,000 LB PER SINGLE AXLE
   34,000 LB PER TANDEM AXLE
   2 AXLE VEHICLE - 40,000 LBS MAXIMUM
   3 AXLE VEHICLE - 65,000 LBS MAXIMUM
   4 AXLE VEHICLE - 73,280 LBS MAXIMUM
   5 AXLE VEHICLE - 80,000 LBS MAXIMUM

5. AMERICAN TRAFFIC SAFETY SERVICES ASSOCIATION (ATSSA) CERTIFIED TRAFFIC CONTROL SUPERVISOR REQUIREMENT FOR THIS PROJECT.

( )	THE CONTRACTOR SHALL NOT BE REQUIRED TO HAVE AN ATSSA SUPERVISOR ASSIGNED TO THIS PROJECT.
(X)	THE CONTRACTOR SHALL HAVE AN ATSSA SUPERVISOR ASSIGNED TO THIS PROJECT. THE CONTRACTOR'S GENERAL SUPERINTENDENT FOR THIS PROJECT OR ANOTHER ATSSA CERTIFIED MEMBER OF THE CONTRACTOR'S PROJECT STAFF MAY BE THE ATSSA SUPERVISOR. PAYMENT FOR ATSSA SUPERVISOR IS INCIDENTAL TO ITEM 743000.
( )	THE CONTRACTOR SHALL HAVE AN ATSSA SUPERVISOR ASSIGNED TO THIS PROJECT. THE ATSSA SUPERVISOR'S SOLE JOB SHALL BE SUPERVISION OF THE INSTALLATION, OPERATION AND MAINTENANCE OF TRAFFIC CONTROL DEVICES FOR THIS PROJECT. THE CONTRACTOR'S GENERAL SUPERINTENDENT FOR THIS PROJECT SHALL NOT BE THE ATSSA SUPERVISOR. PAYMENT FOR ATSSA SUPERVISOR SHALL BE PAID FOR UNDER ITEM 743031.

GENERAL EROSION AND SEDIMENT CONTROL NOTES

1. THE EROSION AND SEDIMENT CONTROL DEVICES SHALL BE INSTALLED PER PLAN AND REMAIN IN PLACE UNTIL FINAL VEGETATIVE STABILIZATION OF ALL DISTURBED AREAS AS DIRECTED BY THE ENGINEER.

2. THE SEDIMENT AND STORMWATER MANAGEMENT PLANS HAVE BEEN APPROVED BY DELDOT'S STORMWATER ENGINEER UNDER DELDOT'S DELEGATED AUTHORITY. THE SEDIMENT AND STORMWATER MANAGEMENT PLANS ARE VALID FOR A FIVE YEAR PERIOD, BEGINNING ON THE DATE THE STORMWATER ENGINEER SIGNED THE CONSTRUCTION TITLE SHEET. IF THE FINAL ACCEPTANCE OF THE PROJECT IS ANTICIPATED TO EXTEND BEYOND THE FIVE YEARS, THE CONTRACTOR WILL INFORM THE ENGINEER THREE MONTHS PRIOR TO THE EXPIRATION OF THE APPROVED SEDIMENT AND STORMWATER MANAGEMENT PLANS. THE STORMWATER ENGINEER WILL REVIEW THE CURRENT SEDIMENT AND STORMWATER MANAGEMENT PLAN AND ISSUE AN EXTENSION WITH ANY APPROPRIATE MODIFICATIONS.

3. THE DISTURBED AREA FOR THIS PROJECT IS 0.98 ACRES.

4. THERE IS NO ADDITIONAL IMPERVIOUS AREA FOR THIS PROJECT.

EROSION POTENTIAL FOR THIS PROJECT	CONTRACTOR ESC SUPERVISOR REQUIREMENT
( ) INSIGNIFICANT	NONE
( ) MINOR	CONTRACTOR TRAINING PROGRAM, AS DEFINED IN SECTION 6.2 OF THE DELAWARE SEDIMENT AND STORMWATER REGULATIONS.
(X) MAJOR	CERTIFIED CONSTRUCTION REVIEWER (CCR), AS DEFINED IN SECTION 6.3 OF THE DELAWARE SEDIMENT AND STORMWATER REGULATIONS.

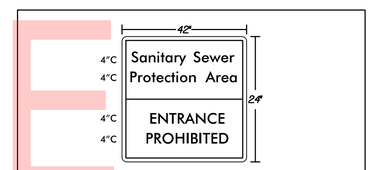

NOTE:
SIGNS SHALL BE BLACK ON RETROREFLECTIVE FLUORESCENT ORANGE SHEETING. SIGNS SHALL BE ATTACHED TO THE PROTECTIVE FENCE SECURELY TO THE FENCE SUPPORT AND IN A VISIBLE LOCATION. COST FOR SIGNS AND INSTALLATION TO BE INCIDENTAL TO ITEM 727014 - CONSTRUCTION SAFETY FENCE.

PROTECTION FENCE SIGN

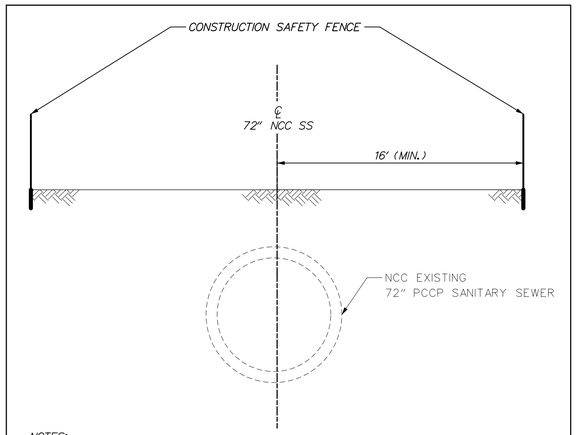

NOTES:
1. ADJUST CONSTRUCTION SAFETY FENCE TO CLEAR PROPOSED DP&L ELECTRICAL POLE.
2. AFTER THE UTILITY POLE IS INSTALLED AND/OR THE TEMPORARY ACCESS IS REMOVED, EXTEND THE CONSTRUCTION SAFETY FENCE ENCLOSURE BEHIND THE UTILITY POLE AS FAR AS POSSIBLE WITHOUT INTERFERING WITH SUBSEQUENT CONSTRUCTION ACTIVITIES.
3. PRIOR TO PHASE 3, PROVIDE CONSTRUCTION STAKES AT THE EDGES OF EXISTING JAMES STREET TO DELINEATE SEWER PROTECTION AREA.

72" NCC SANITARY SEWER PROTECTION PLAN

UNOFFICIAL WEBSITE COPY

ADDENDA / REVISIONS

NOT TO SCALE

BR 1-159 ON JAMES STREET OVER CHRISTINA RIVER

CONTRACT T201207101 | COUNTY NEW CASTLE | BRIDGE NO. 1-159 | DESIGNED BY: SFR | CHECKED BY: DLH

CONSTRUCTION PHASING, M.O.T., AND EROSION CONTROL PLAN

CS-01 | SECTION McT | SHEET NO. 72

6/4/2019 10:22:24 AM ...\Roadway\CS000_BR159.dgn

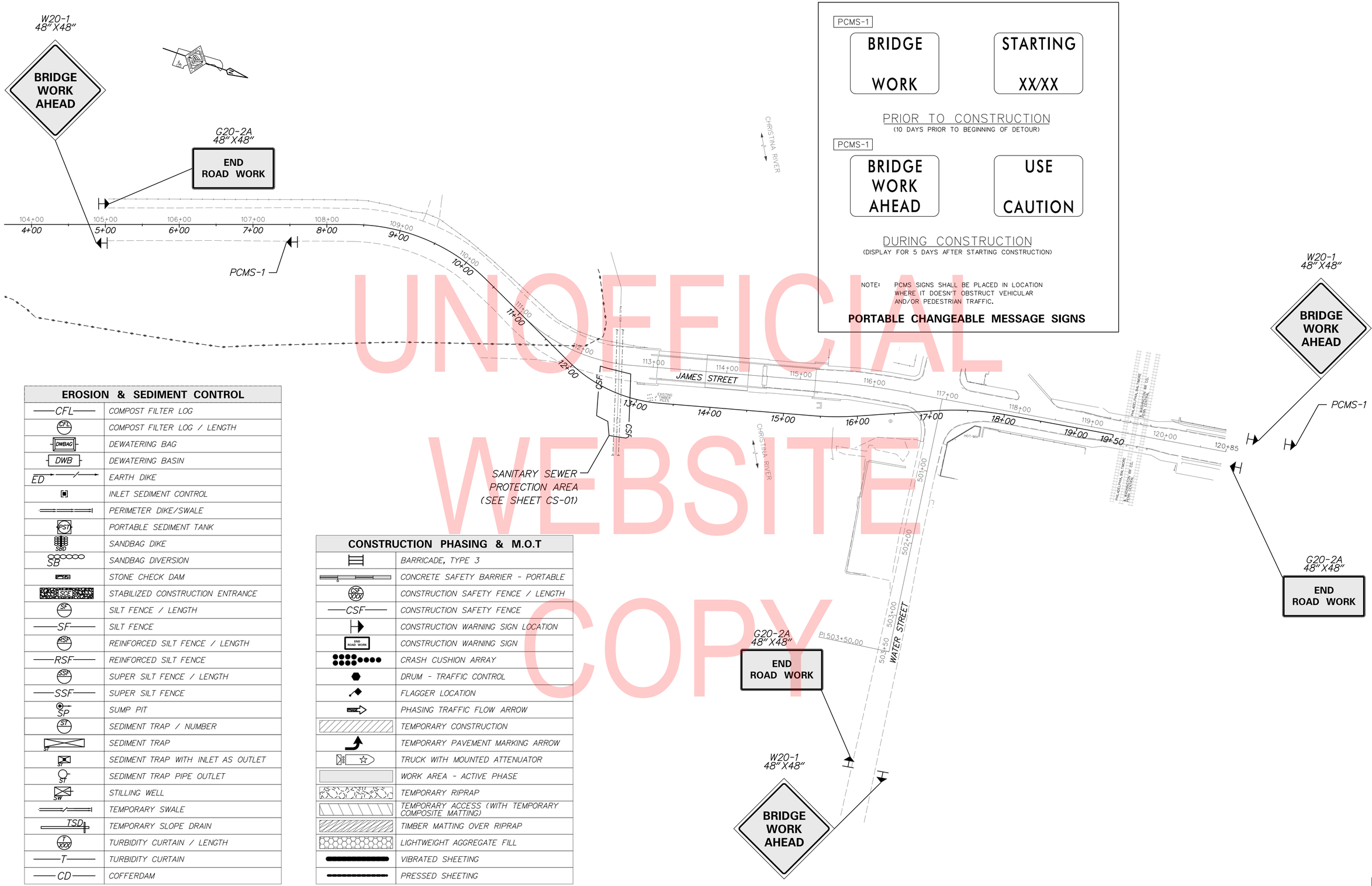

PCMS-1

BRIDGE WORK	STARTING XX/XX

PRIOR TO CONSTRUCTION
(10 DAYS PRIOR TO BEGINNING OF DETOUR)

PCMS-1

BRIDGE WORK AHEAD	USE CAUTION

DURING CONSTRUCTION
(DISPLAY FOR 5 DAYS AFTER STARTING CONSTRUCTION)

NOTE: PCMS SIGNS SHALL BE PLACED IN LOCATION WHERE IT DOESN'T OBSTRUCT VEHICULAR AND/OR PEDESTRIAN TRAFFIC.

PORTABLE CHANGEABLE MESSAGE SIGNS

UNOFFICIAL WEBSITE COPY

EROSION & SEDIMENT CONTROL

CFL	COMPOST FILTER LOG
CFL	COMPOST FILTER LOG / LENGTH
DWBAG	DEWATERING BAG
DWB	DEWATERING BASIN
ED	EARTH DIKE
	INLET SEDIMENT CONTROL
	PERIMETER DIKE/SWALE
PST	PORTABLE SEDIMENT TANK
SBD	SANDBAG DIKE
SB	SANDBAG DIVERSION
	STONE CHECK DAM
SCE	STABILIZED CONSTRUCTION ENTRANCE
SF	SILT FENCE / LENGTH
SF	SILT FENCE
RSF	REINFORCED SILT FENCE / LENGTH
RSF	REINFORCED SILT FENCE
SSF	SUPER SILT FENCE / LENGTH
SSF	SUPER SILT FENCE
SP	SUMP PIT
ST	SEDIMENT TRAP / NUMBER
ST	SEDIMENT TRAP
ST	SEDIMENT TRAP WITH INLET AS OUTLET
ST	SEDIMENT TRAP PIPE OUTLET
SW	STILLING WELL
	TEMPORARY SWALE
TSD	TEMPORARY SLOPE DRAIN
T XXX	TURBIDITY CURTAIN / LENGTH
T	TURBIDITY CURTAIN
CD	COFFERDAM

CONSTRUCTION PHASING & M.O.T

	BARRICADE, TYPE 3
	CONCRETE SAFETY BARRIER - PORTABLE
CSF XXX	CONSTRUCTION SAFETY FENCE / LENGTH
CSF	CONSTRUCTION SAFETY FENCE
	CONSTRUCTION WARNING SIGN LOCATION
END ROAD WORK	CONSTRUCTION WARNING SIGN
	CRASH CUSHION ARRAY
	DRUM - TRAFFIC CONTROL
	FLAGGER LOCATION
PHASE 1	PHASING TRAFFIC FLOW ARROW
	TEMPORARY CONSTRUCTION
	TEMPORARY PAVEMENT MARKING ARROW
	TRUCK WITH MOUNTED ATTENUATOR
	WORK AREA - ACTIVE PHASE
	TEMPORARY RIPRAP
	TEMPORARY ACCESS (WITH TEMPORARY COMPOSITE MATTING)
	TIMBER MATTING OVER RIPRAP
	LIGHTWEIGHT AGGREGATE FILL
	VIBRATED SHEETING
	PRESSED SHEETING

ADDENDA / REVISIONS

SCALE 0 60 120 180 FEET

BR 1-159 ON JAMES STREET OVER CHRISTINA RIVER

CONTRACT	BRIDGE NO. 1-159
T201207101	DESIGNED BY: SFR
COUNTY	
NEW CASTLE	CHECKED BY: DLH

CONSTRUCTION PHASING, M.O.T., AND EROSION CONTROL PLAN

CS-02

SECTION McT

SHEET NO. 73

3/15/2019
3:09:29 PM
...\Roadway\CS001_BR159.dgn

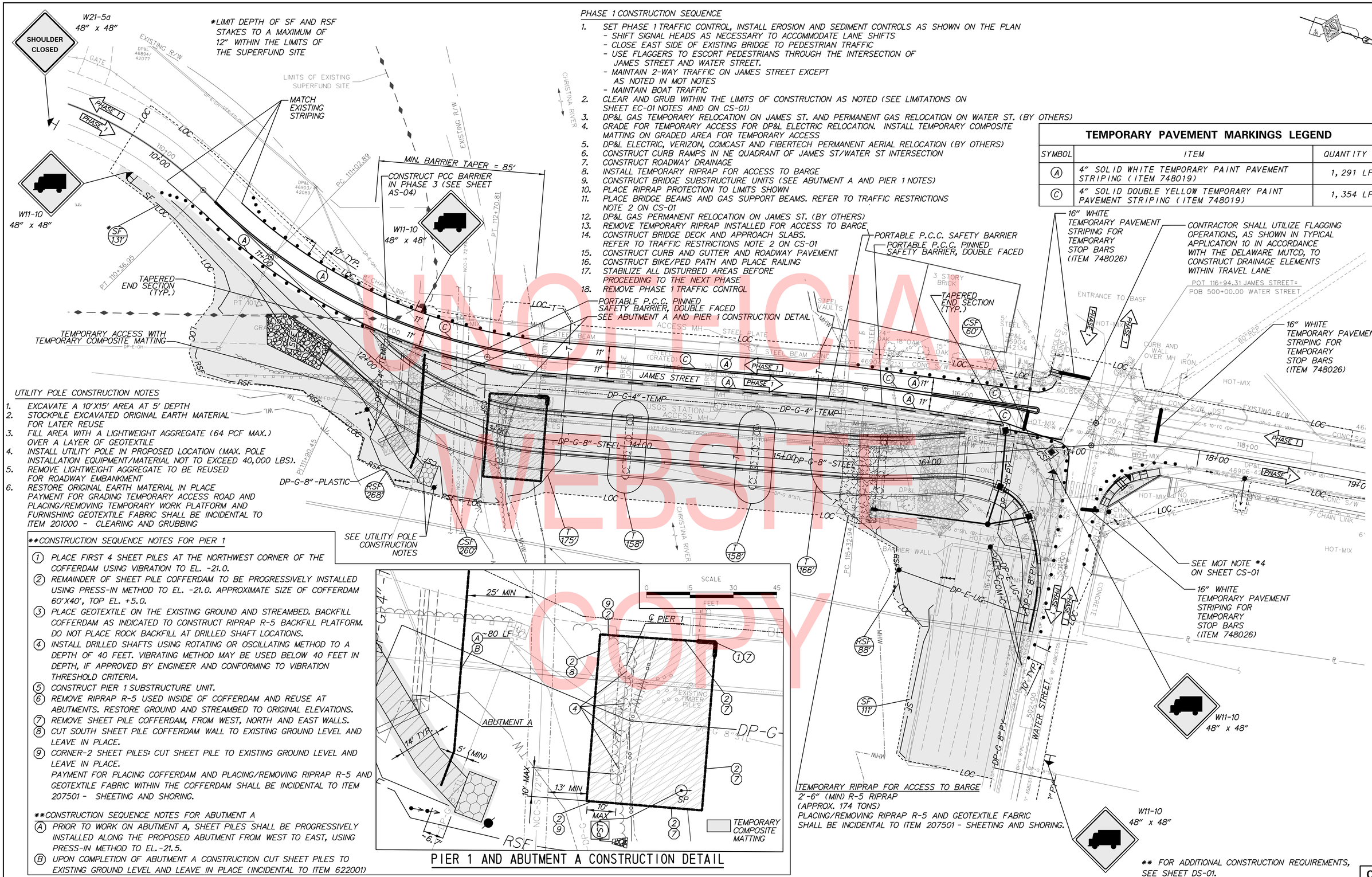

PHASE 1 CONSTRUCTION SEQUENCE

1. SET PHASE 1 TRAFFIC CONTROL, INSTALL EROSION AND SEDIMENT CONTROLS AS SHOWN ON THE PLAN
   - SHIFT SIGNAL HEADS AS NECESSARY TO ACCOMMODATE LANE SHIFTS
   - CLOSE EAST SIDE OF EXISTING BRIDGE TO PEDESTRIAN TRAFFIC
   - USE FLAGGERS TO ESCORT PEDESTRIANS THROUGH THE INTERSECTION OF JAMES STREET AND WATER STREET.
   - MAINTAIN 2-WAY TRAFFIC ON JAMES STREET EXCEPT AS NOTED IN MOT NOTES
   - MAINTAIN BOAT TRAFFIC
2. CLEAR AND GRUB WITHIN THE LIMITS OF CONSTRUCTION AS NOTED (SEE LIMITATIONS ON SHEET EC-01 NOTES AND ON CS-01)
3. DP&L GAS TEMPORARY RELOCATION ON JAMES ST. AND PERMANENT GAS RELOCATION ON WATER ST. (BY OTHERS)
4. GRADE FOR TEMPORARY ACCESS FOR DP&L ELECTRIC RELOCATION. INSTALL TEMPORARY COMPOSITE MATTING ON GRADED AREA FOR TEMPORARY ACCESS
5. DP&L ELECTRIC, VERIZON, COMCAST AND FIBERTECH PERMANENT AERIAL RELOCATION (BY OTHERS)
6. CONSTRUCT CURB RAMPS IN NE QUADRANT OF JAMES ST/WATER ST INTERSECTION
7. CONSTRUCT ROADWAY DRAINAGE
8. INSTALL TEMPORARY RIPRAP FOR ACCESS TO BARGE
9. CONSTRUCT BRIDGE SUBSTRUCTURE UNITS (SEE ABUTMENT A AND PIER 1 NOTES)
10. PLACE RIPRAP PROTECTION TO LIMITS SHOWN
11. PLACE BRIDGE BEAMS AND GAS SUPPORT BEAMS. REFER TO TRAFFIC RESTRICTIONS NOTE 2 ON CS-01
12. DP&L GAS PERMANENT RELOCATION ON JAMES ST. (BY OTHERS)
13. REMOVE TEMPORARY RIPRAP INSTALLED FOR ACCESS TO BARGE
14. CONSTRUCT BRIDGE DECK AND APPROACH SLABS. REFER TO TRAFFIC RESTRICTIONS NOTE 2 ON CS-01
15. CONSTRUCT CURB AND GUTTER AND ROADWAY PAVEMENT
16. CONSTRUCT BIKE/PED PATH AND PLACE RAILING
17. STABILIZE ALL DISTURBED AREAS BEFORE PROCEEDING TO THE NEXT PHASE
18. REMOVE PHASE 1 TRAFFIC CONTROL

TEMPORARY PAVEMENT MARKINGS LEGEND

SYMBOL	ITEM	QUANTITY
(A)	4" SOLID WHITE TEMPORARY PAINT PAVEMENT STRIPING (ITEM 748019)	1,291 LF
(C)	4" SOLID DOUBLE YELLOW TEMPORARY PAINT PAVEMENT STRIPING (ITEM 748019)	1,354 LF

UTILITY POLE CONSTRUCTION NOTES

1. EXCAVATE A 10'X15' AREA AT 5' DEPTH
2. STOCKPILE EXCAVATED ORIGINAL EARTH MATERIAL FOR LATER REUSE
3. FILL AREA WITH A LIGHTWEIGHT AGGREGATE (64 PCF MAX.) OVER A LAYER OF GEOTEXTILE
4. INSTALL UTILITY POLE IN PROPOSED LOCATION (MAX. POLE INSTALLATION EQUIPMENT/MATERIAL NOT TO EXCEED 40,000 LBS).
5. REMOVE LIGHTWEIGHT AGGREGATE TO BE REUSED FOR ROADWAY EMBANKMENT
6. RESTORE ORIGINAL EARTH MATERIAL IN PLACE
   PAYMENT FOR GRADING TEMPORARY ACCESS ROAD AND PLACING/REMOVING TEMPORARY WORK PLATFORM AND FURNISHING GEOTEXTILE FABRIC SHALL BE INCIDENTAL TO ITEM 201000 - CLEARING AND GRUBBING

**CONSTRUCTION SEQUENCE NOTES FOR PIER 1

(1) PLACE FIRST 4 SHEET PILES AT THE NORTHWEST CORNER OF THE COFFERDAM USING VIBRATION TO EL. -21.0.
(2) REMAINDER OF SHEET PILE COFFERDAM TO BE PROGRESSIVELY INSTALLED USING PRESS-IN METHOD TO EL. -21.0. APPROXIMATE SIZE OF COFFERDAM 60'X40', TOP EL. +5.0.
(3) PLACE GEOTEXTILE ON THE EXISTING GROUND AND STREAMBED. BACKFILL COFFERDAM AS INDICATED TO CONSTRUCT RIPRAP R-5 BACKFILL PLATFORM. DO NOT PLACE ROCK BACKFILL AT DRILLED SHAFT LOCATIONS.
(4) INSTALL DRILLED SHAFTS USING ROTATING OR OSCILLATING METHOD TO A DEPTH OF 40 FEET. VIBRATING METHOD MAY BE USED BELOW 40 FEET IN DEPTH, IF APPROVED BY ENGINEER AND CONFORMING TO VIBRATION THRESHOLD CRITERIA.
(5) CONSTRUCT PIER 1 SUBSTRUCTURE UNIT.
(6) REMOVE RIPRAP R-5 USED INSIDE OF COFFERDAM AND REUSE AT ABUTMENTS. RESTORE GROUND AND STREAMBED TO ORIGINAL ELEVATIONS.
(7) REMOVE SHEET PILE COFFERDAM, FROM WEST, NORTH AND EAST WALLS.
(8) CUT SOUTH SHEET PILE COFFERDAM WALL TO EXISTING GROUND LEVEL AND LEAVE IN PLACE.
(9) CORNER-2 SHEET PILES: CUT SHEET PILE TO EXISTING GROUND LEVEL AND LEAVE IN PLACE.
PAYMENT FOR PLACING COFFERDAM AND PLACING/REMOVING RIPRAP R-5 AND GEOTEXTILE FABRIC WITHIN THE COFFERDAM SHALL BE INCIDENTAL TO ITEM 207501 - SHEETING AND SHORING.

**CONSTRUCTION SEQUENCE NOTES FOR ABUTMENT A

(A) PRIOR TO WORK ON ABUTMENT A, SHEET PILES SHALL BE PROGRESSIVELY INSTALLED ALONG THE PROPOSED ABUTMENT FROM WEST TO EAST, USING PRESS-IN METHOD TO EL.-21.5.
(B) UPON COMPLETION OF ABUTMENT A CONSTRUCTION CUT SHEET PILES TO EXISTING GROUND LEVEL AND LEAVE IN PLACE (INCIDENTAL TO ITEM 622001)

UNOFFICIAL WEBSITE COPY

ADDENDA / REVISIONS

SCALE 0 30 60 90 FEET

BR 1-159 ON JAMES STREET OVER CHRISTINA RIVER

CONTRACT	BRIDGE NO.	1-159
T201207101	DESIGNED BY: SFR	
COUNTY		
NEW CASTLE	CHECKED BY: DLH	

CONSTRUCTION PHASING, M.O.T., AND EROSION CONTROL PLAN – PHASE 1

CS-03

SECTION McT

SHEET NO. 74

3/18/2019
12:49:58 PM
...\Roadway\CS002_BR159.dgn

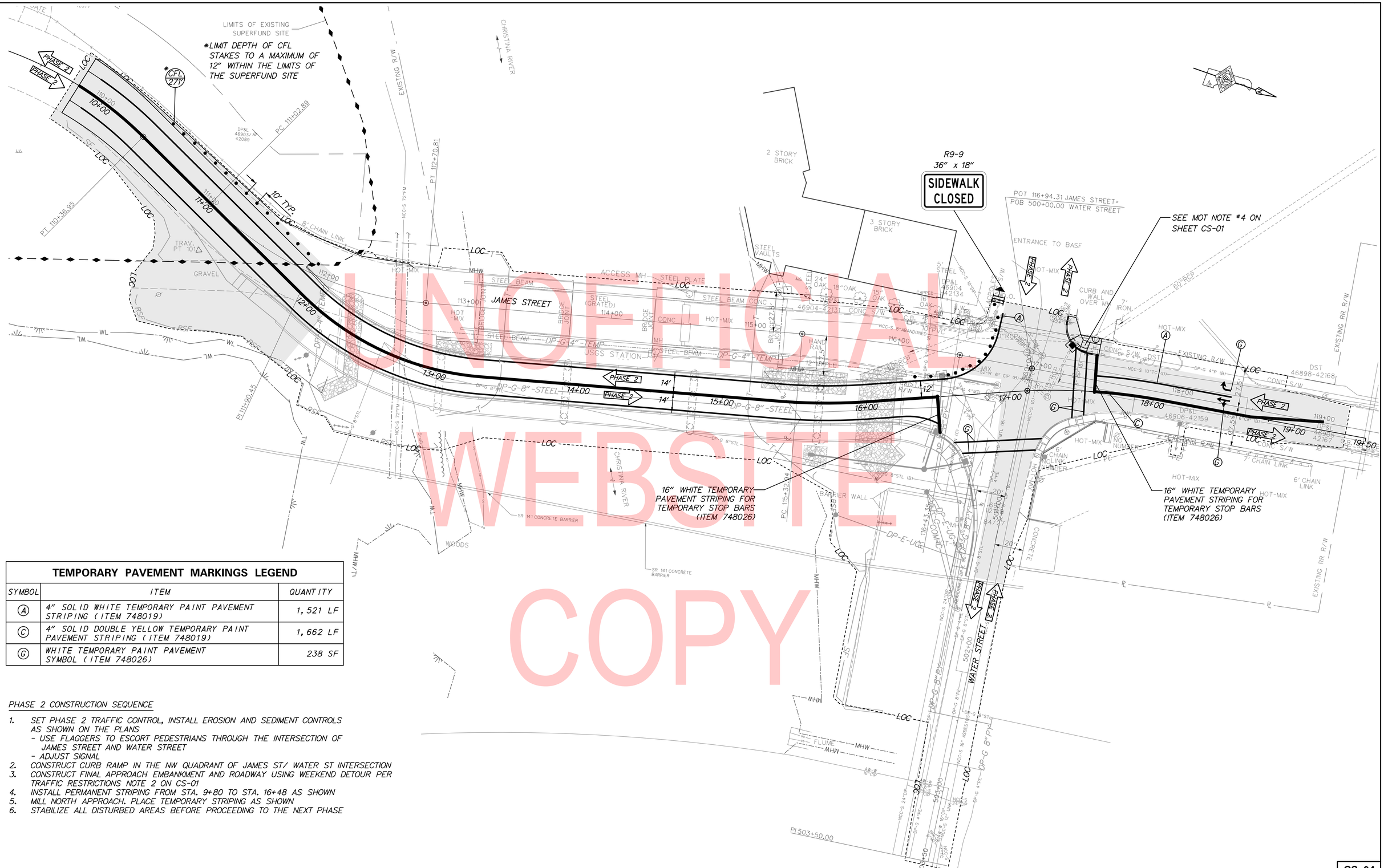

UNOFFICIAL WEBSITE COPY

TEMPORARY PAVEMENT MARKINGS LEGEND

SYMBOL	ITEM	QUANTITY
Ⓐ	4" SOLID WHITE TEMPORARY PAINT PAVEMENT STRIPING (ITEM 748019)	1,521 LF
Ⓒ	4" SOLID DOUBLE YELLOW TEMPORARY PAINT PAVEMENT STRIPING (ITEM 748019)	1,662 LF
Ⓖ	WHITE TEMPORARY PAINT PAVEMENT SYMBOL (ITEM 748026)	238 SF

PHASE 2 CONSTRUCTION SEQUENCE

1. SET PHASE 2 TRAFFIC CONTROL, INSTALL EROSION AND SEDIMENT CONTROLS AS SHOWN ON THE PLANS
   - USE FLAGGERS TO ESCORT PEDESTRIANS THROUGH THE INTERSECTION OF JAMES STREET AND WATER STREET
   - ADJUST SIGNAL
2. CONSTRUCT CURB RAMP IN THE NW QUADRANT OF JAMES ST/ WATER ST INTERSECTION
3. CONSTRUCT FINAL APPROACH EMBANKMENT AND ROADWAY USING WEEKEND DETOUR PER TRAFFIC RESTRICTIONS NOTE 2 ON CS-01
4. INSTALL PERMANENT STRIPING FROM STA. 9+80 TO STA. 16+48 AS SHOWN
5. MILL NORTH APPROACH. PLACE TEMPORARY STRIPING AS SHOWN
6. STABILIZE ALL DISTURBED AREAS BEFORE PROCEEDING TO THE NEXT PHASE

3/18/2019
12:48:59 PM
...\Roadway\CS003_BR159.dgn

ADDENDA / REVISIONS	SCALE 0 30 60 90 FEET	BR 1-159 ON JAMES STREET OVER CHRISTINA RIVER	CONTRACT T201207101	BRIDGE NO. 1-159	CONSTRUCTION PHASING, M.O.T., AND EROSION CONTROL PLAN – PHASE 2	CS-04
			COUNTY NEW CASTLE	DESIGNED BY: SFR		SECTION McT
				CHECKED BY: DLH		SHEET NO. 75

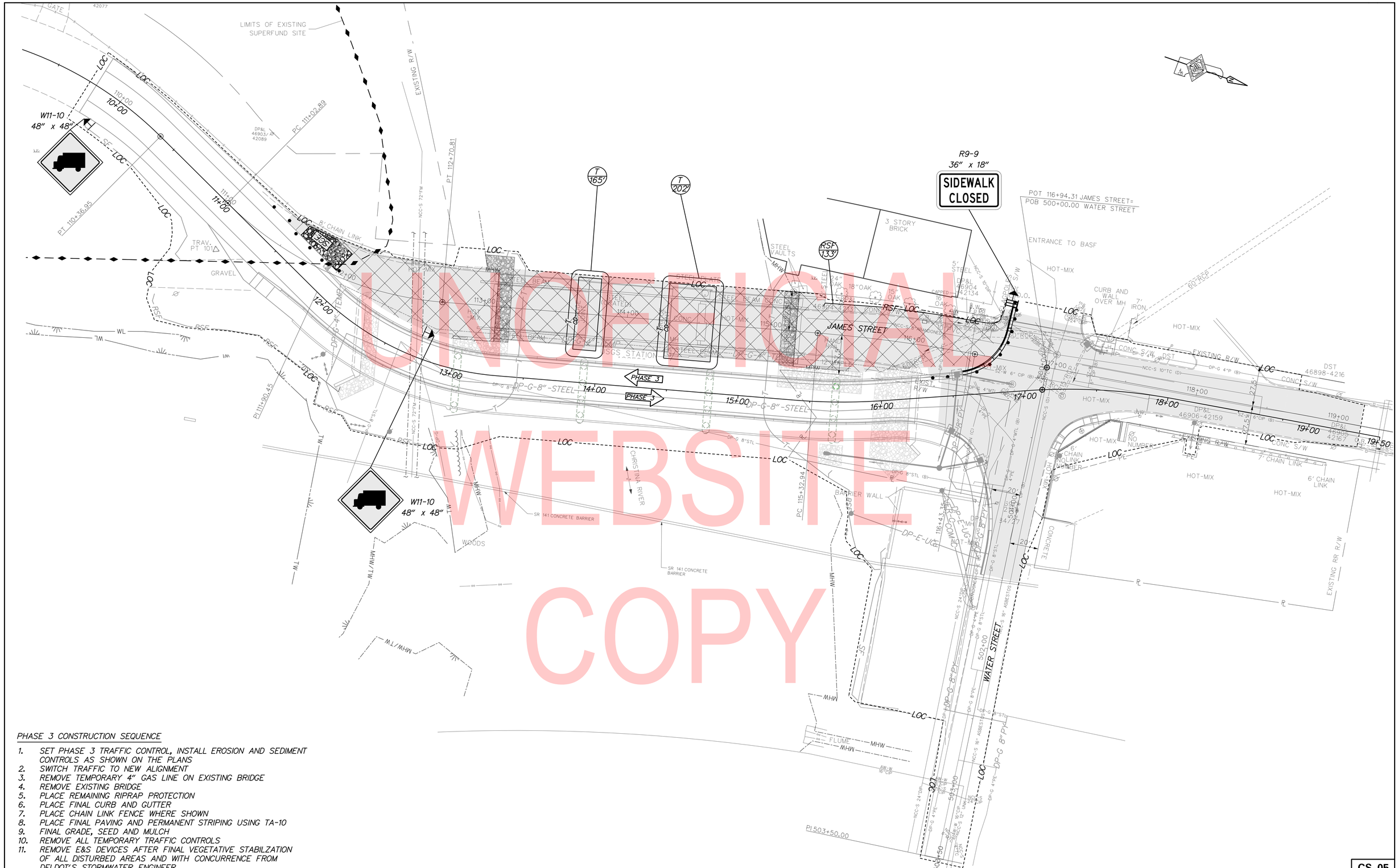

UNOFFICIAL WEBSITE COPY

PHASE 3 CONSTRUCTION SEQUENCE

1. SET PHASE 3 TRAFFIC CONTROL, INSTALL EROSION AND SEDIMENT CONTROLS AS SHOWN ON THE PLANS
2. SWITCH TRAFFIC TO NEW ALIGNMENT
3. REMOVE TEMPORARY 4" GAS LINE ON EXISTING BRIDGE
4. REMOVE EXISTING BRIDGE
5. PLACE REMAINING RIPRAP PROTECTION
6. PLACE FINAL CURB AND GUTTER
7. PLACE CHAIN LINK FENCE WHERE SHOWN
8. PLACE FINAL PAVING AND PERMANENT STRIPING USING TA-10
9. FINAL GRADE, SEED AND MULCH
10. REMOVE ALL TEMPORARY TRAFFIC CONTROLS
11. REMOVE E&S DEVICES AFTER FINAL VEGETATIVE STABILZATION OF ALL DISTURBED AREAS AND WITH CONCURRENCE FROM DELDOT'S STORMWATER ENGINEER

ADDENDA / REVISIONS	

SCALE 0 30 60 90 FEET

BR 1-159 ON JAMES STREET OVER CHRISTINA RIVER

CONTRACT	BRIDGE NO.	1-159
T201207101	DESIGNED BY: SFR	
COUNTY		
NEW CASTLE	CHECKED BY: DLH	

CONSTRUCTION PHASING, M.O.T., AND EROSION CONTROL PLAN – PHASE 3

CS-05
SECTION
McT
SHEET NO.
76

3/18/2019
12:49:00 PM
...\Roadway\CS004_BR159.dgn

PORTABLE CHANGEABLE MESSAGE SIGNS

PRIOR TO DETOUR

PCMS-1

JAMES ST BRIDGE TO CLOSE

5 DAYS IN ADVANCE:

STARTING XX/XX/XX

PCMS-2

DURING DETOUR

JAMES ST BRIDGE CLOSED

FOLLOW DETOUR

SPECIAL SIGNS

1

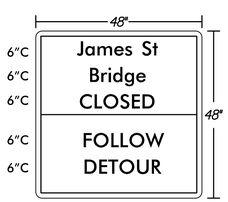

2

NOTE: ALL SPECIAL SIGNS SHALL BE BLACK ON RETROREFLECTIVE FLUORESCENT PRISMATIC ORANGE SHEETING

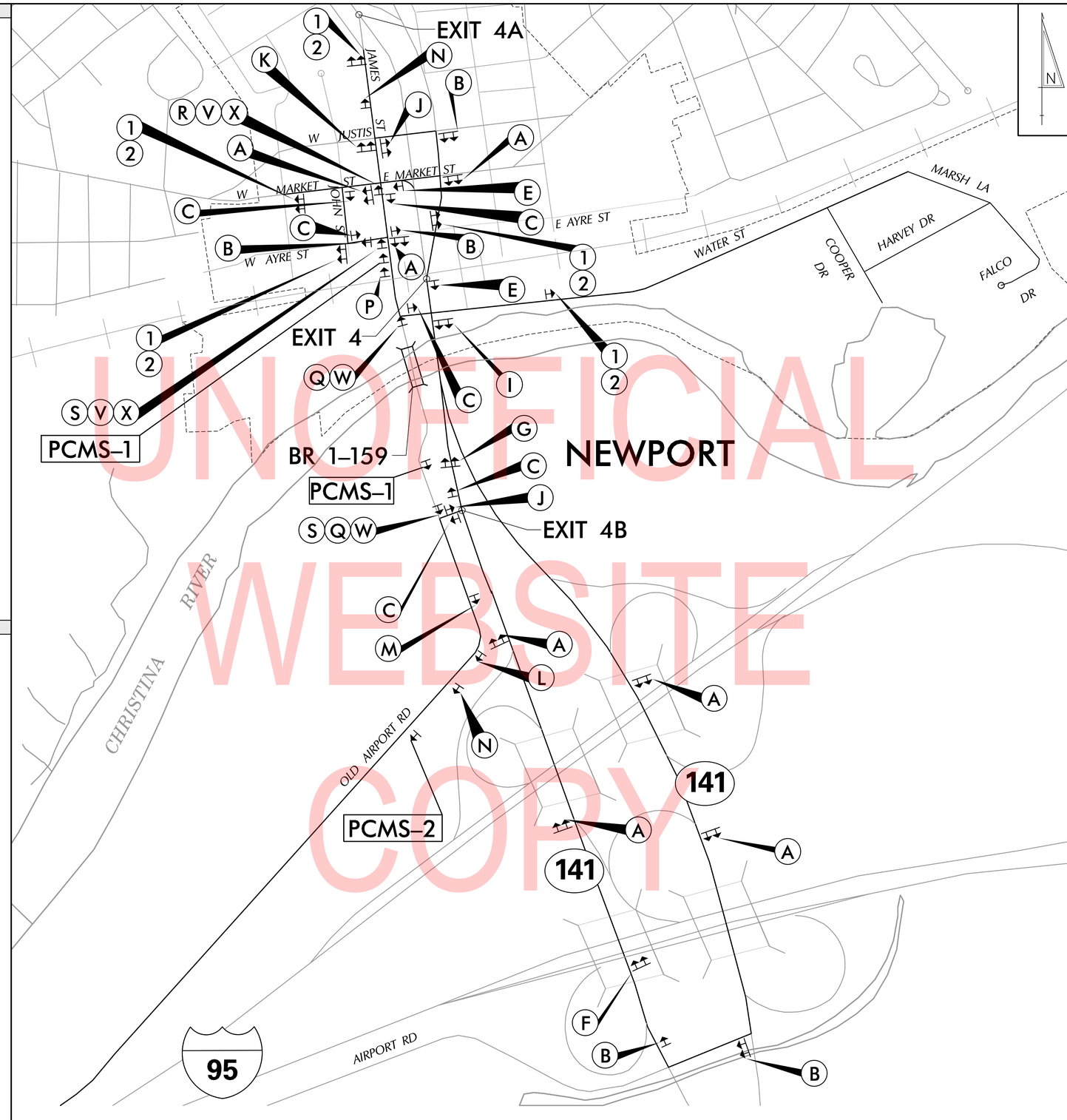

UNOFFICIAL WEBSITE COPY

LEGEND

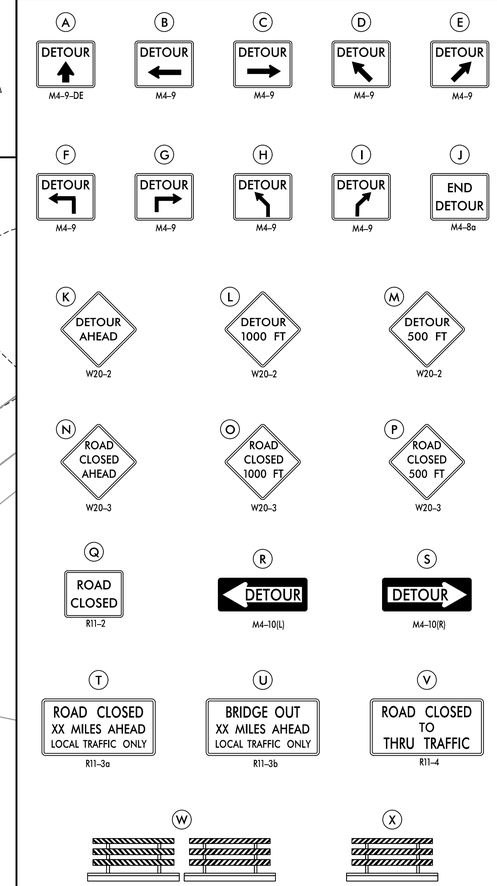

GENERAL NOTES

1. ALL DETOUR SIGNING, INCLUDING TRAILBLAZERS, ARE TO BE SUPPLIED AND MAINTAINED BY THE GENERAL CONTRACTOR IN COMPLIANCE WITH "THE DELAWARE MANUAL OF UNIFORM TRAFFIC CONTROL DEVICES" (DE MUTCD.)
2. THE CONTRACTOR SHALL COMPLY WITH GUIDELINES IN "THE DELAWARE MANUAL ON UNIFORM TRAFFIC CONTROL DEVICES" (DE MUTCD PART 6) FOR BARRICADES AND SIGNS (AS PER LATEST REVISION.)
3. DESIGN OF ALL SIGNS SHALL BE IN ACCORDANCE WITH THE FHWA STANDARD HIGHWAY SIGNS BOOK.
4. SIZES OF ALL SIGNS SHALL BE IN ACCORDANCE WITH "THE DELAWARE MANUAL OF UNIFORM TRAFFIC CONTROL DEVICES" (DE MUTCD.) SIZE OF SIGN SHALL BE BASED ON TYPE OF ROADWAY ON WHICH THE SIGN IS INSTALLED.
5. SIGNS NO LONGER IN USE SHALL BE COMPLETELY COVERED WITH NO RETROREFLECTIVE MATERIAL SHOWING, OR SHALL BE REMOVED, AS DIRECTED BY THE ENGINEER.
6. FIELD CONDITIONS MAY DICTATE CHANGES AT SOME TIME DURING THE LIFE OF THE CONTRACT. IN THE EVENT OF OMISSIONS OR CORRECTIONS, THE SIGNING PROVISIONS OF "THE DELAWARE MANUAL ON UNIFORM TRAFFIC CONTROL DEVICES" (DE MUTCD) WILL PREVAIL.
7. SIGNS "N" THROUGH "Q" AND "T" AND "V", THE WORD "ROAD" SHOULD BE CHANGED TO "RAMP", "RR XING", OR "BRIDGE" WHERE APPLICABLE.
8. WARNING SIGNS AND DETOUR TRAILBLAZERS SHALL BE MOUNTED ON BREAKAWAY POSTS AND HAVE RETROREFLECTIVE FLUORESCENT ORANGE SHEETING.
9. "W" BARRICADES SHALL COMPLETELY RUN THE FULL WIDTH OF THE ROADWAY.
10. BARRICADES SHALL BE A MINIMUM OF 6 FEET WIDE UNLESS DIRECTED BY THE ENGINEER.

ADDENDA / REVISIONS	NOT TO SCALE	BR 1-159 ON JAMES STREET OVER CHRISTINA RIVER	CONTRACT T201207101	BRIDGE NO. 1-159	DETOUR PLANS	DP-01
			COUNTY NEW CASTLE	DESIGNED BY: SFR		SECTION McT
				CHECKED BY: DLH		SHEET NO. 77

3/15/2019
8:09:24 PM
...\Roadway\DP001_BR159.dgn

LIGHTING SERVICE SCHEDULE			
SERVICE RUN	DISTANCE (L.F.)	DESCRIPTION	INSTALLATION
LSR-8	170	2.5" GALVANIZED	BY OTHERS
LSR-9	27	1.0" GALVANIZED	BY OTHERS
LSR-10	40	2.5" GALVANIZED	BY OTHERS
LSR-11	5	1.0" GALVANIZED	BY OTHERS
LSR-12	44	1.0" GALVANIZED	BY OTHERS
LSR-13	41	2.5" GALVANIZED	BY OTHERS
LSR-14	27	1.0" GALVANIZED	BY OTHERS
LSR-15	85	2.5" GALVANIZED	BY OTHERS
LSR-16	17	1.0" GALVANIZED	BY OTHERS
LSR-17	85	2.5" GALVANIZED	BY OTHERS
LSR-18	17	1.0" GALVANIZED	BY OTHERS
LSR-19	94	2.5" GALVANIZED	BY OTHERS
LSR-20	17	1.0" GALVANIZED	BY OTHERS
LSR-21	85	2.5" GALVANIZED	BY OTHERS
LSR-22	17	1.0" GALVANIZED	BY OTHERS
LSR-23	86	2.5" GALVANIZED	BY OTHERS

NOTE: ALL CONDUIT RUNS THIS SHEET IN THE BRIDGE WALL OR DECK

LIGHTING LEGEND	
SYMBOL	ITEM
■ ▬	CONDUIT JUNCTION WELL (TYPE 1, 4)
⊠	JUNCTION BOX (SPECIAL / IN STRUCTURE)
⊙	DECORATIVE LIGHT BLISTER
▬●	ROADWAY LIGHT STANDARD W/ LUMINAIRE*
	LIGHTING CONTROL CENTER*
JW # / JB #	PROPOSED CONDUIT JUNCTION WELL/BOX IDENTIFIER (TYPE OF JUNCTION WELL)
LSR #	PROPOSED LIGHTING CONDUIT RUN IDENTIFIER (LIGHTING SERVICE RUN #)
P	ELECTRIC SERVICE PEDESTAL AND METER*

* NONE THIS SHEET

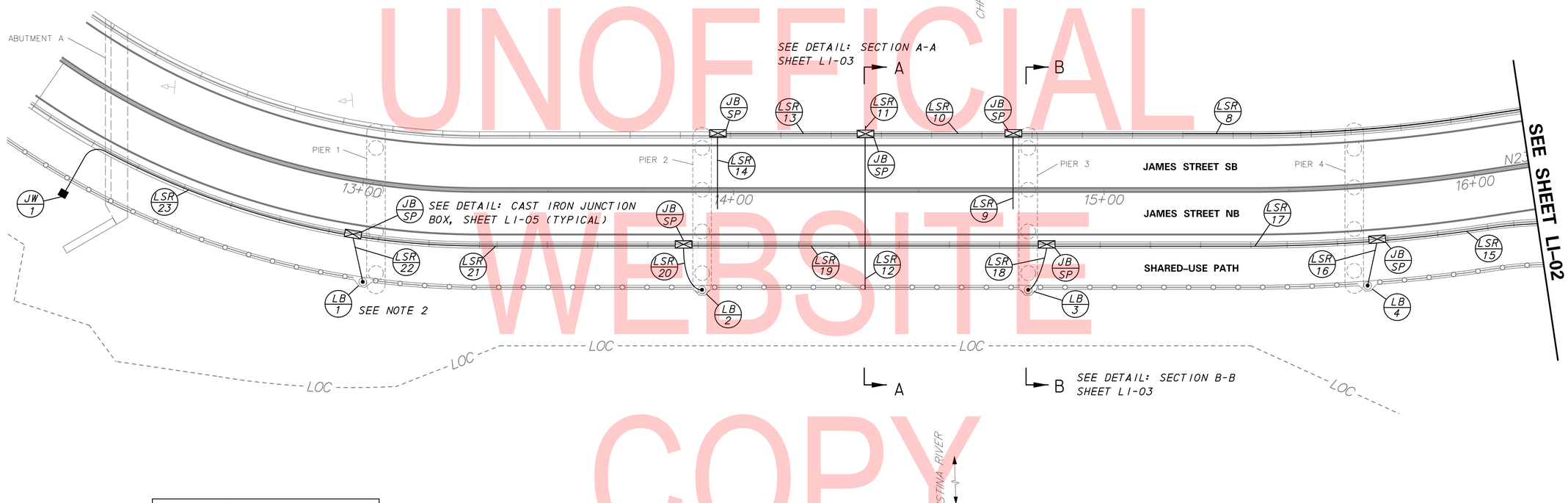

UNOFFICIAL WEBSITE COPY

LIGHTING BLISTER SCHEDULE		
NO.	STATION	OFFSET
LB-4	15+70	27.5'
LB-3	14+79	27.5'
LB-2	13+91	27.5'
LB-1	13+04	27.5'

LIGHTING BLISTERS FOR FUTURE USE BY OTHERS

NOTES:

1. SEE SHEET LI-04 FOR ELECTRICAL SCHEMATIC
2. SEE BRIDGE CONSTRUCTION PLAN SHEET RA-02 FOR ADDITIONAL DETAILS PERTAINING TO LIGHT BLISTERS AND TEMPORARY COVERS FOR ANCHOR BOLTS.
3. USE CONDUIT EXPANSION FITTINGS AT ALL EXPANSION JOINTS AND CAST IRON JUNCTION BOX (JB-SP) AS SHOWN ON SHEET LI-05.

ADDENDA / REVISIONS

SCALE 0 15 30 45 FEET

BR 1-159 ON JAMES STREET OVER CHRISTINA RIVER

CONTRACT	BRIDGE NO. 1-159
T201207101	DESIGNED BY: CAG
COUNTY	
NEW CASTLE	CHECKED BY: CJG/DLH

LIGHTING PLAN

LI-01
SECTION
McT
SHEET NO.
78

3/15/2019
3:09:36 PM
...\Roadway\LI01_BR 1-159.dgn

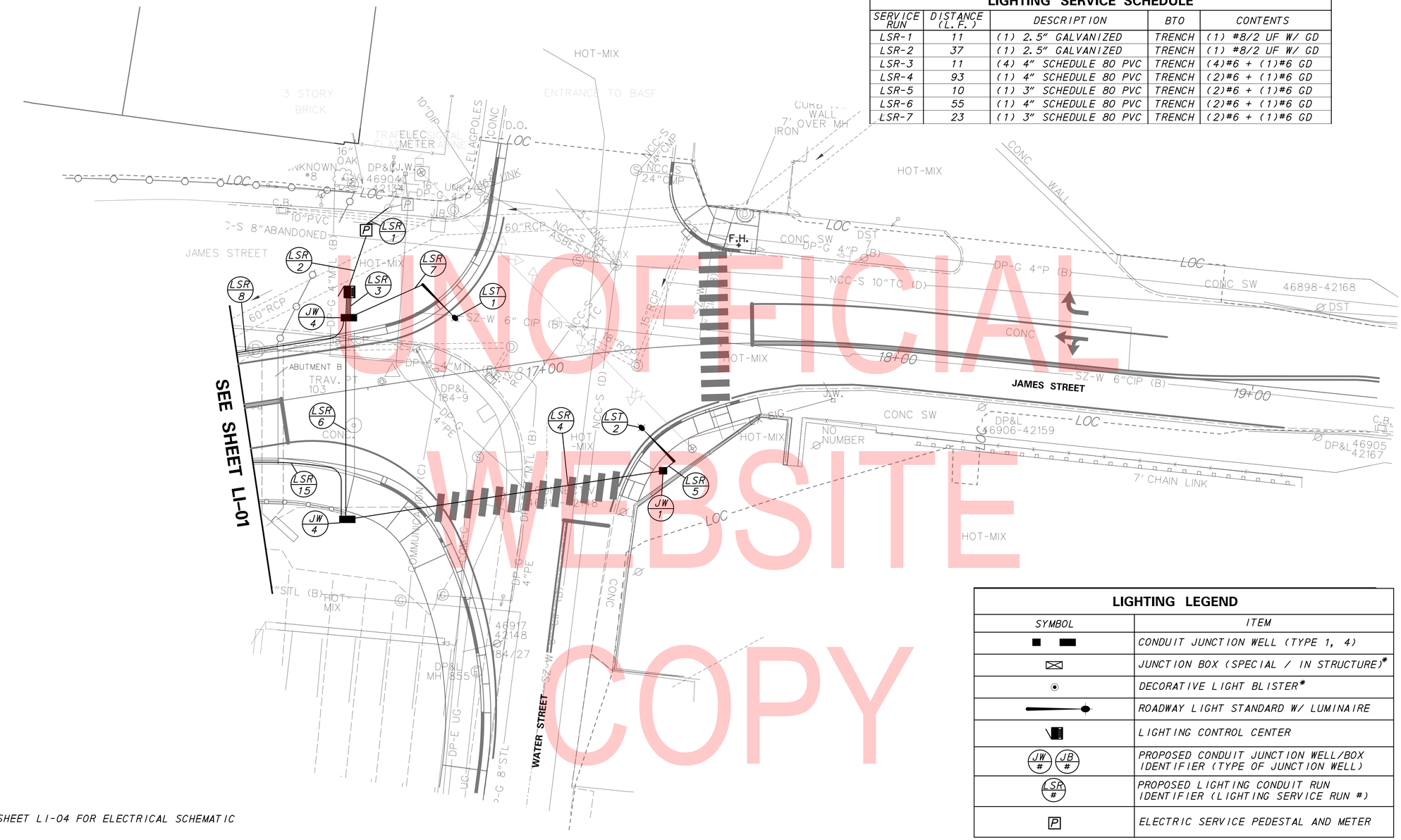

LIGHTING SERVICE SCHEDULE

SERVICE RUN	DISTANCE (L.F.)	DESCRIPTION	BTO	CONTENTS
LSR-1	11	(1) 2.5" GALVANIZED	TRENCH	(1) #8/2 UF W/ GD
LSR-2	37	(1) 2.5" GALVANIZED	TRENCH	(1) #8/2 UF W/ GD
LSR-3	11	(4) 4" SCHEDULE 80 PVC	TRENCH	(4)#6 + (1)#6 GD
LSR-4	93	(1) 4" SCHEDULE 80 PVC	TRENCH	(2)#6 + (1)#6 GD
LSR-5	10	(1) 3" SCHEDULE 80 PVC	TRENCH	(2)#6 + (1)#6 GD
LSR-6	55	(1) 4" SCHEDULE 80 PVC	TRENCH	(2)#6 + (1)#6 GD
LSR-7	23	(1) 3" SCHEDULE 80 PVC	TRENCH	(2)#6 + (1)#6 GD

LIGHTING LEGEND

SYMBOL	ITEM
■ ▬	CONDUIT JUNCTION WELL (TYPE 1, 4)
⊠	JUNCTION BOX (SPECIAL / IN STRUCTURE)*
⊙	DECORATIVE LIGHT BLISTER*
—●—	ROADWAY LIGHT STANDARD W/ LUMINAIRE
	LIGHTING CONTROL CENTER
JW # / JB #	PROPOSED CONDUIT JUNCTION WELL/BOX IDENTIFIER (TYPE OF JUNCTION WELL)
LSR #	PROPOSED LIGHTING CONDUIT RUN IDENTIFIER (LIGHTING SERVICE RUN #)
P	ELECTRIC SERVICE PEDESTAL AND METER

* NONE THIS SHEET

NOTES:

1. SEE SHEET LI-04 FOR ELECTRICAL SCHEMATIC
2. USE CONDUIT EXPANSION FITTINGS AT ALL EXPANSION JOINTS AND CAST IRON JUNCTION BOX (JB-SP) AS SHOWN ON SHEET LI-05.

LIGHTING STANDARD SCHEDULE

NO.	CIRCUIT NO.	STATION	OFFSET	HEIGHT	ARM	LIGHT STANDARD
LST-1	C	16+70	-26'	30'	12'	150 WATT HPS LUMINAIRE
LST-2	D	17+34	32'	30'	12'	150 WATT HPS LUMINAIRE

USE STANDARD DELDOT POLE BASE, TYPE 6

UNOFFICIAL WEBSITE COPY

ADDENDA / REVISIONS

SCALE 0 15 30 45 FEET

BR 1-159 ON JAMES STREET OVER CHRISTINA RIVER

CONTRACT T201207101 | COUNTY NEW CASTLE | BRIDGE NO. 1-159 | DESIGNED BY: CAG | CHECKED BY: CJG/DLH

LIGHTING PLAN

LI-02 | SECTION McT | SHEET NO. 79

3/22/2019
12:06:34 PM
...\Roadway\LI02_BR 1-159.dgn

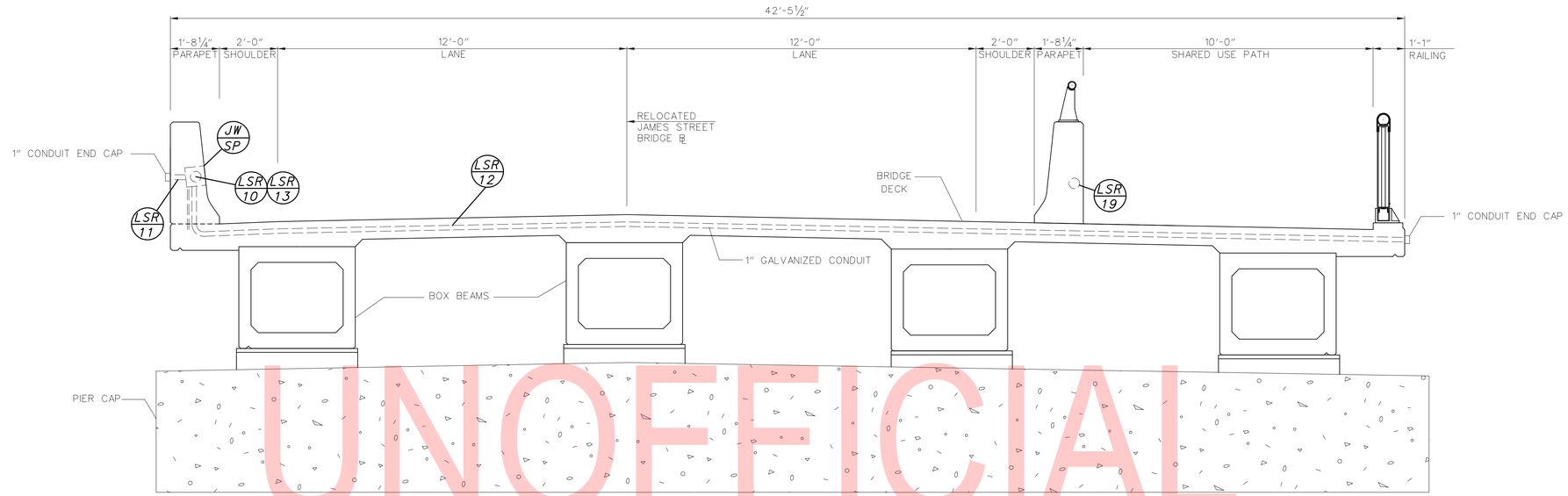

SECTION A-A, BETWEEN PIERS 2 & 3

NTS

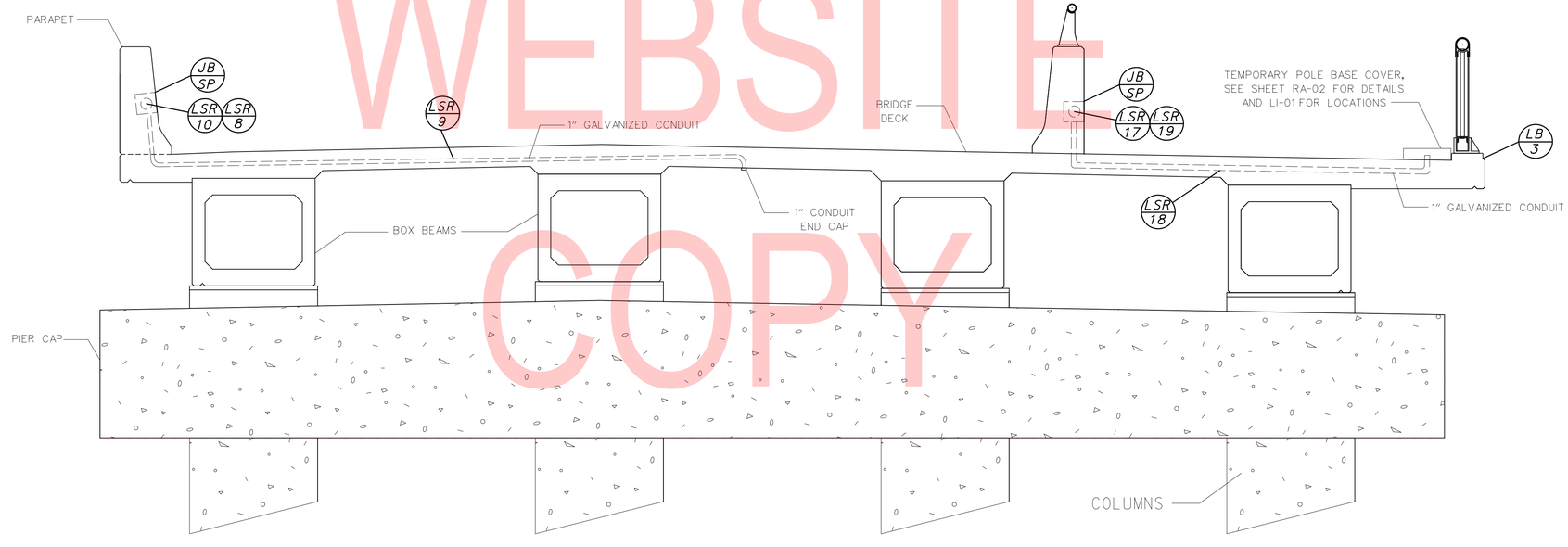

SECTION B-B, AT PIER 3 (PIER 2 SIMILAR)

NTS

NOTE: SEE SHEET LI-01 FOR LIGHTING SERVICE SCHEDULE

UNOFFICIAL WEBSITE COPY

ADDENDA / REVISIONS	SCALE: AS NOTED	BR 1-159 ON JAMES STREET OVER CHRISTINA RIVER	CONTRACT T201207101	BRIDGE NO. 1-159	LIGHTING PLAN	LI-03
			COUNTY NEW CASTLE	DESIGNED BY: CAG		SECTION McT
				CHECKED BY: CJG/DLH		SHEET NO. 80

3/15/2019
6:09:37 PM
...\Roadway\LI03_BR 1-159.dgn

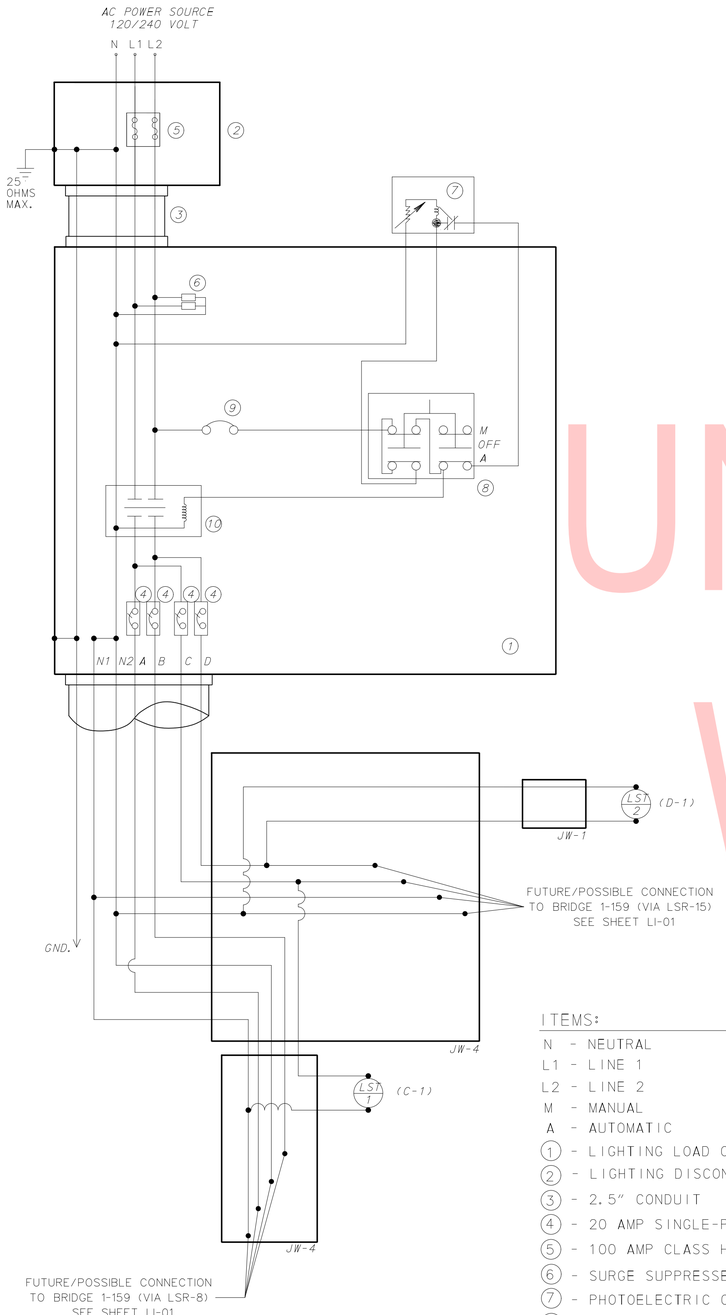

ELECTRICAL SCHEMATIC
LIGHTING CONTROL CENTER

ITEMS:

- N - NEUTRAL
- L1 - LINE 1
- L2 - LINE 2
- M - MANUAL
- A - AUTOMATIC
- (1) - LIGHTING LOAD CENTER
- (2) - LIGHTING DISCONNECT
- (3) - 2.5" CONDUIT
- (4) - 20 AMP SINGLE-POLE CIRCUIT BREAKER
- (5) - 100 AMP CLASS H FUSES
- (6) - SURGE SUPPRESSER
- (7) - PHOTOELECTRIC CONTROL (PLUG-IN TYPE)
- (8) - SELECTOR SWITCH
- (9) - 15 AMP SINGLE-POLE CIRCUIT BREAKER
- (10) - CONTROL CONTACTOR

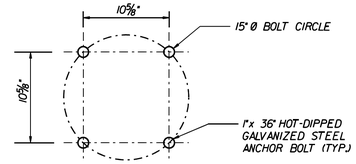

FOUNDATION ANCHOR BOLT CIRCLE DETAIL
SCALE: NONE

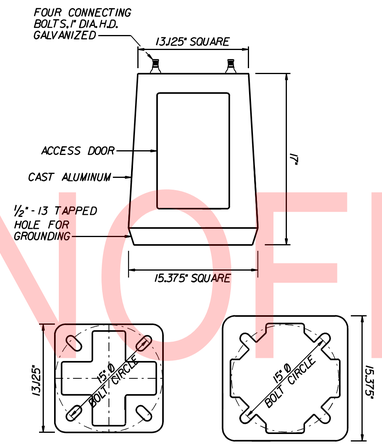

TOP **BOTTOM**

TRANSFORMER BASE DETAIL
SCALE: NONE

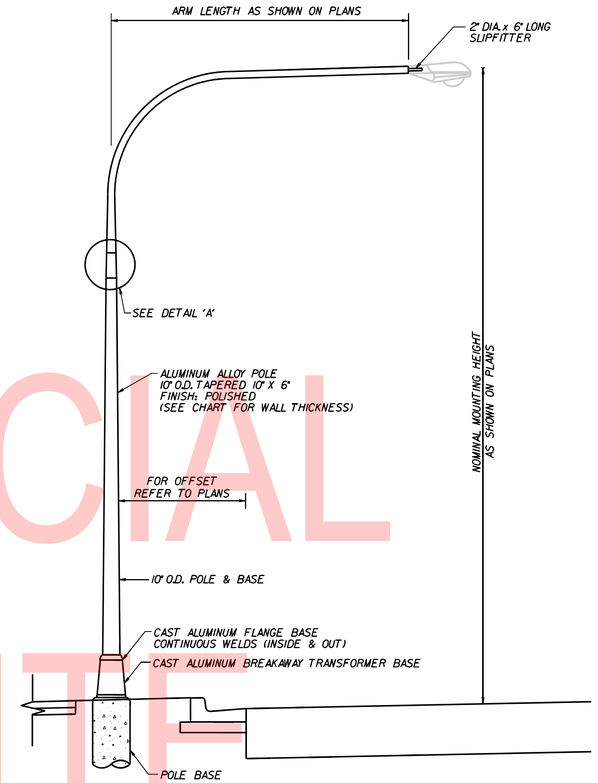

ALUMINUM LIGHTING STANDARD WITH SINGLE DAVIT ARM
SCALE: NONE

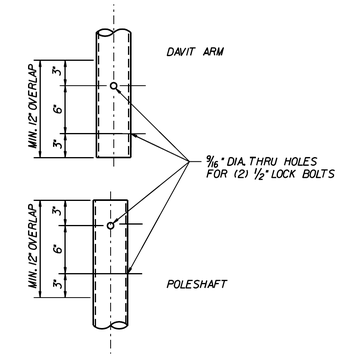

DETAIL 'A'
SCALE: NONE

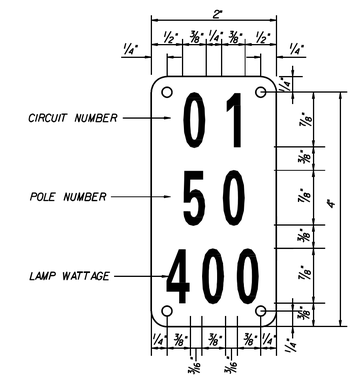

TYPICAL POLE IDENTIFICATION TAG
SCALE: NONE

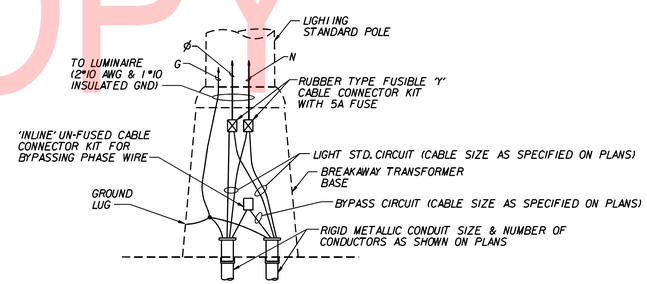

WIRING IN TRANSFORMER BASE
SCALE: NONE

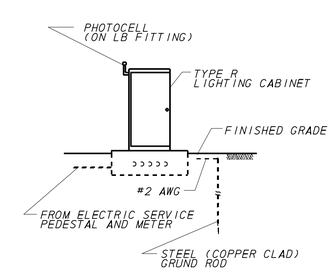

ELECTRICAL SERVICE ON PEDESTAL AND LIGHTING CONTROL AND DISTRIBUTION ENCLOSURE
SCALE: NONE

UNOFFICIAL WEBSITE COPY

ADDENDA / REVISIONS	NOT TO SCALE	BR 1-159 ON JAMES STREET OVER CHRISTINA RIVER	CONTRACT T201207101	BRIDGE NO. 1-159	LIGHTING PLAN	LI-04
			COUNTY NEW CASTLE	DESIGNED BY: CAG		SECTION McT
				CHECKED BY: CJG/DLH		SHEET NO. 81

3/15/2019
8:09:39 PM
...\Roadway\LI04_BR 1-159.dgn

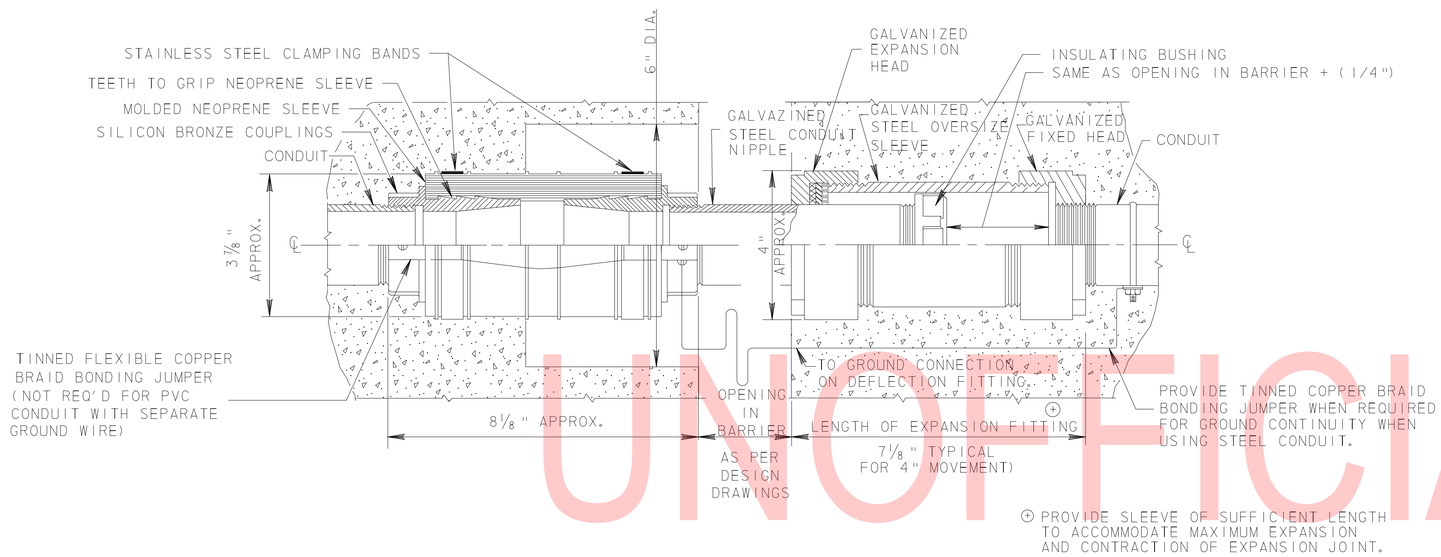

CONDUIT EXPANSION AND DEFLECTION JOINT FITTINGS

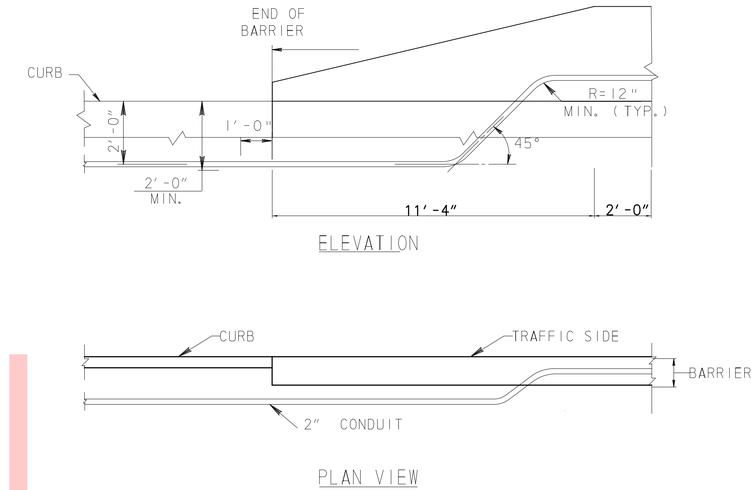

CONDUIT DETAILS AT ENDS OF BRIDGE

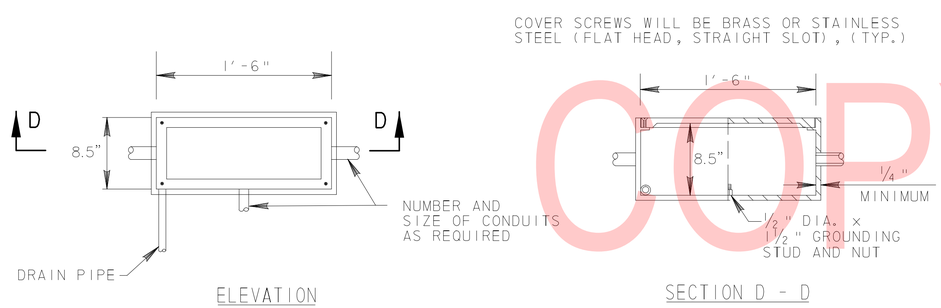

8"x8"x18" CAST IRON JUNCTION BOX DETAILS

NOTES:

1. *PROVIDE MATERIALS AND WORKMANSHIP IN ACCORDANCE WITH DELDOT STANDARDS.*
2. *MINIMUM CENTER TO CENTER SPACING OF JUNCTION BOXES IN BRIDGE PARAPETS TO BE 10'-0". BOXES TO BE A MINIMUM OF 10'-0" FROM OPEN JOINT.*
3. *MAXIMUM NUMBER OF CONDUITS PERMITTED TO BE PLACED IN BRIDGE BARRIER IS FOUR. CONDUITS MUST BE STAGGERED AND AS WIDELY SPACED AS PRACTICAL.*

UNOFFICIAL WEBSITE COPY

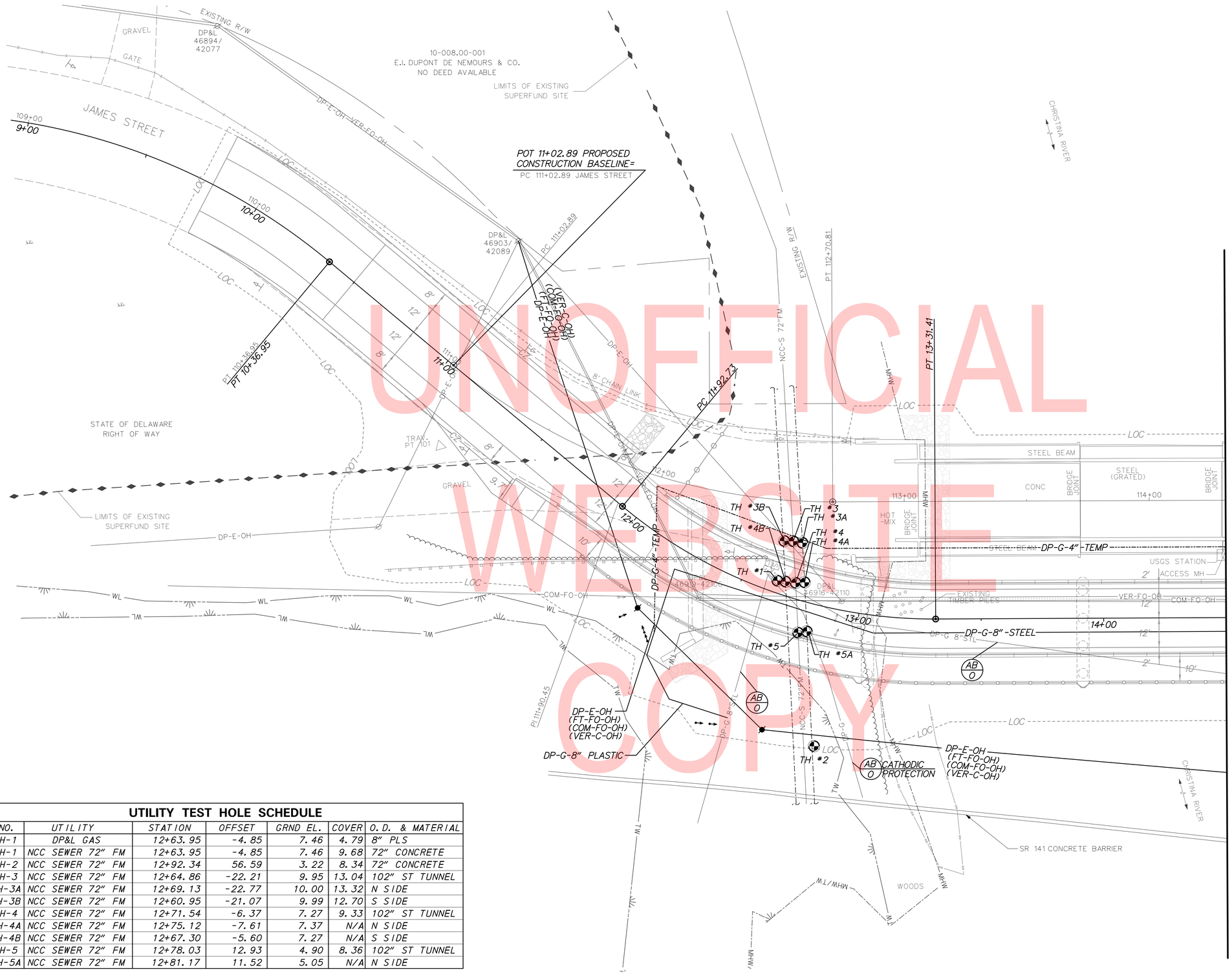

UNOFFICIAL WEBSITE COPY

UTILITY TEST HOLE SCHEDULE

NO.	UTILITY	STATION	OFFSET	GRND EL.	COVER	O.D. & MATERIAL
TH-1	DP&L GAS	12+63.95	-4.85	7.46	4.79	8" PLS
TH-1	NCC SEWER 72" FM	12+63.95	-4.85	7.46	9.68	72" CONCRETE
TH-2	NCC SEWER 72" FM	12+92.34	56.59	3.22	8.34	72" CONCRETE
TH-3	NCC SEWER 72" FM	12+64.86	-22.21	9.95	13.04	102" ST TUNNEL
TH-3A	NCC SEWER 72" FM	12+69.13	-22.77	10.00	13.32	N SIDE
TH-3B	NCC SEWER 72" FM	12+60.95	-21.07	9.99	12.70	S SIDE
TH-4	NCC SEWER 72" FM	12+71.54	-6.37	7.27	9.33	102" ST TUNNEL
TH-4A	NCC SEWER 72" FM	12+75.12	-7.61	7.37	N/A	N SIDE
TH-4B	NCC SEWER 72" FM	12+67.30	-5.60	7.27	N/A	S SIDE
TH-5	NCC SEWER 72" FM	12+78.03	12.93	4.90	8.36	102" ST TUNNEL
TH-5A	NCC SEWER 72" FM	12+81.17	11.52	5.05	N/A	N SIDE

NOTES:
1. FOR SANITARY SEWER PROTECTION MEASURES SEE SHEETS PN-01 AND CS-01 THRU CS-05.

UTILITY RELOCATION PLAN IS FOR INFORMATION PURPOSE ONLY. REFER TO UTILITY STATEMENT FOR MORE INFORMATION.

ADDENDA / REVISIONS

SCALE 0 20 40 60 FEET

BR 1-159 ON JAMES STREET OVER CHRISTINA RIVER

CONTRACT T201207101 | COUNTY NEW CASTLE | BRIDGE NO. 1-159 | DESIGNED BY: SFR | CHECKED BY: DLH

UTILITY RELOCATION PLAN

UT-01 | SECTION McT | SHEET NO. 83

3/15/2019
6:09:41 PM
...\Roadway\UT001_BR159.dgn

UTILITY TEST HOLE SCHEDULE

NO.	UTILITY	STATION	OFFSET	GRND EL.	COVER	O.D. & MATERIAL
TH-3	DP&L GAS	16+59.18	-4.59	10.36	2.41	4" PE
TH-4	DP&L ELECTRIC	16+68.84	63.02	9.54	3.06	1" CONDUITS (3)
TH-4	DP&L GAS	16+68.84	63.02	9.54	3.78	4" STEEL
TH-4	DP&L GAS	16+68.84	63.02	9.54	4.30	4" STEEL
TH-4	NCC SANITARY	16+68.84	63.02	9.54	9.81	24" IRON
TH-11	DP&L GAS	19+25.17	-26.90	6.44	1.67	4" PLASTIC
TH-12	SZ WATER	19+28.42	3.12	5.07	4.19	6" METAL
TH-19	DP&L GAS	16+95.65	10.70	9.51	3.49	4" METAL

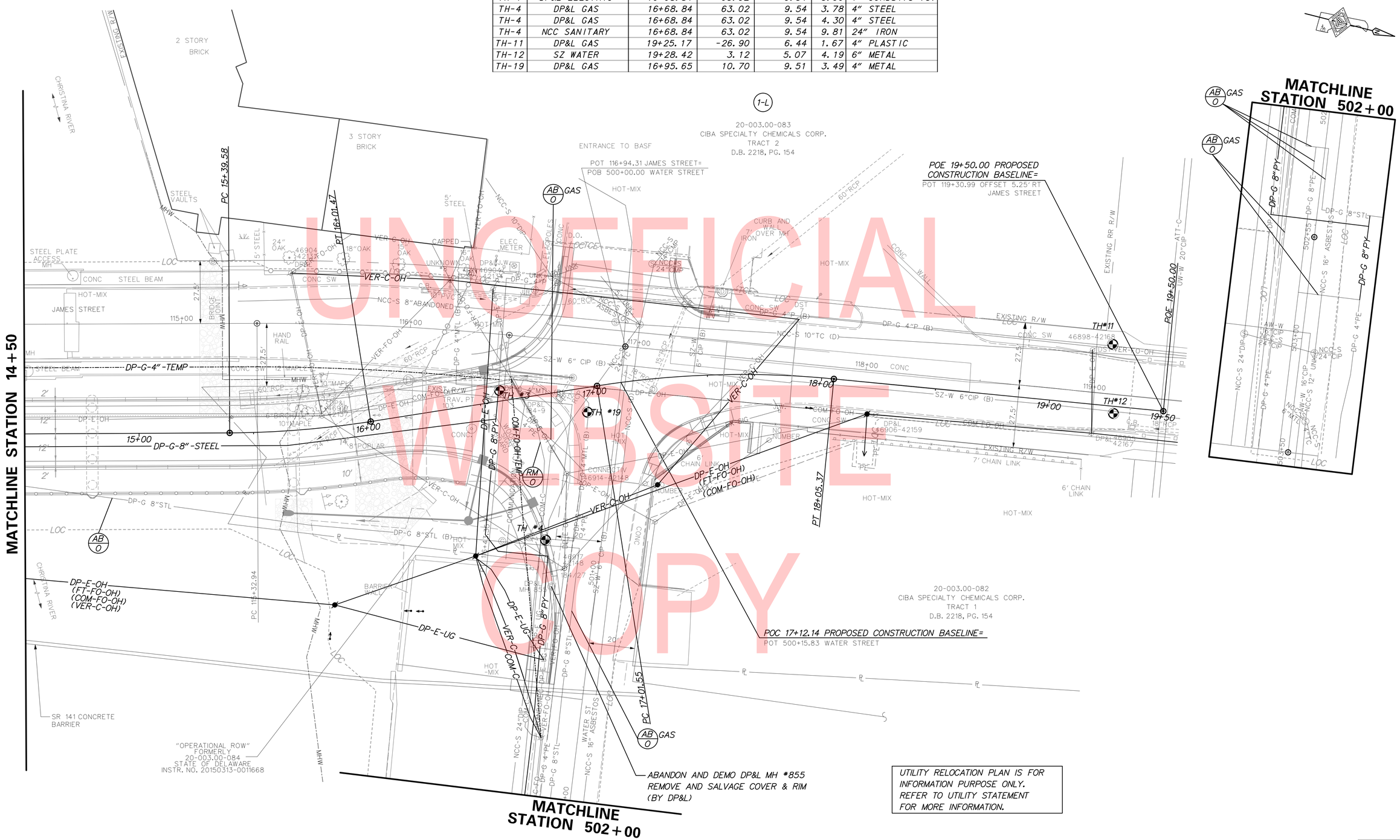

ADDENDA / REVISIONS	SCALE 0 20 40 60 FEET	BR 1-159 ON JAMES STREET OVER CHRISTINA RIVER	CONTRACT T201207101	BRIDGE NO. 1-159	UTILITY RELOCATION PLAN	UT-02 SECTION McT SHEET NO. 84
			COUNTY NEW CASTLE	DESIGNED BY: SFR CHECKED BY: DLH		

3/18/2019 12:49:05 PM ...\Roadway\UT002_BR159.dgn

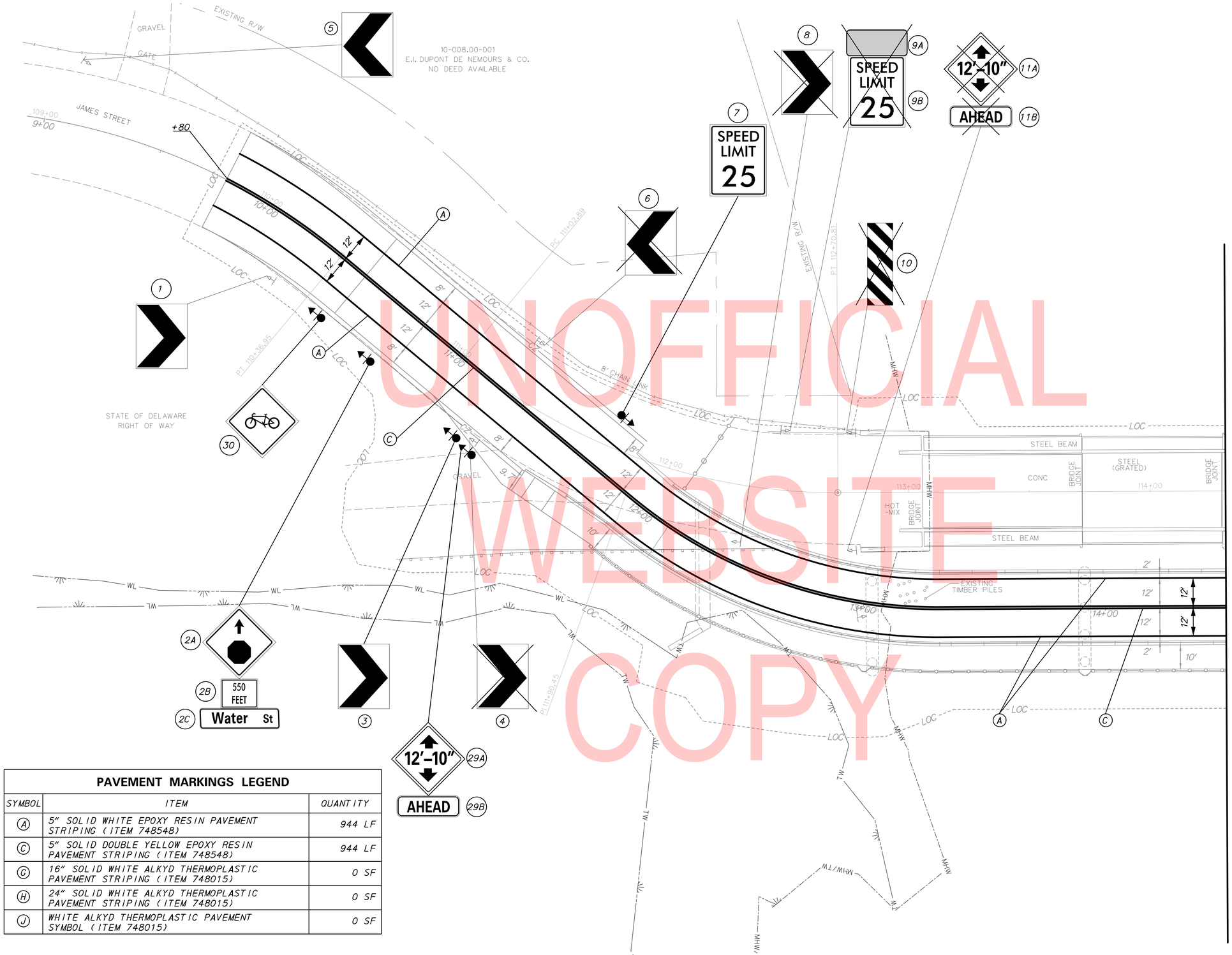

UNOFFICIAL WEBSITE COPY

PAVEMENT MARKINGS LEGEND

SYMBOL	ITEM	QUANTITY
A	5" SOLID WHITE EPOXY RESIN PAVEMENT STRIPING (ITEM 748548)	944 LF
C	5" SOLID DOUBLE YELLOW EPOXY RESIN PAVEMENT STRIPING (ITEM 748548)	944 LF
G	16" SOLID WHITE ALKYD THERMOPLASTIC PAVEMENT STRIPING (ITEM 748015)	0 SF
H	24" SOLID WHITE ALKYD THERMOPLASTIC PAVEMENT STRIPING (ITEM 748015)	0 SF
J	WHITE ALKYD THERMOPLASTIC PAVEMENT SYMBOL (ITEM 748015)	0 SF

NOTES:
1. FOR SANITARY SEWER PROTECTION MEASURES SEE SHEETS PN-01, PN-02 AND CS-01 THRU CS-05.

ADDENDA / REVISIONS

SCALE 0 20 40 60 FEET

BR 1-159 ON JAMES STREET OVER CHRISTINA RIVER

CONTRACT	BRIDGE NO.	1-159
T201207101	DESIGNED BY: SFR	
COUNTY		
NEW CASTLE	CHECKED BY: DLH	

SIGNING, STRIPING AND CONDUIT PLAN

SS-01
SECTION McT
SHEET NO. 85

3/15/2019
6:04:46 PM
...\Roadway\SS001_BR159.dgn

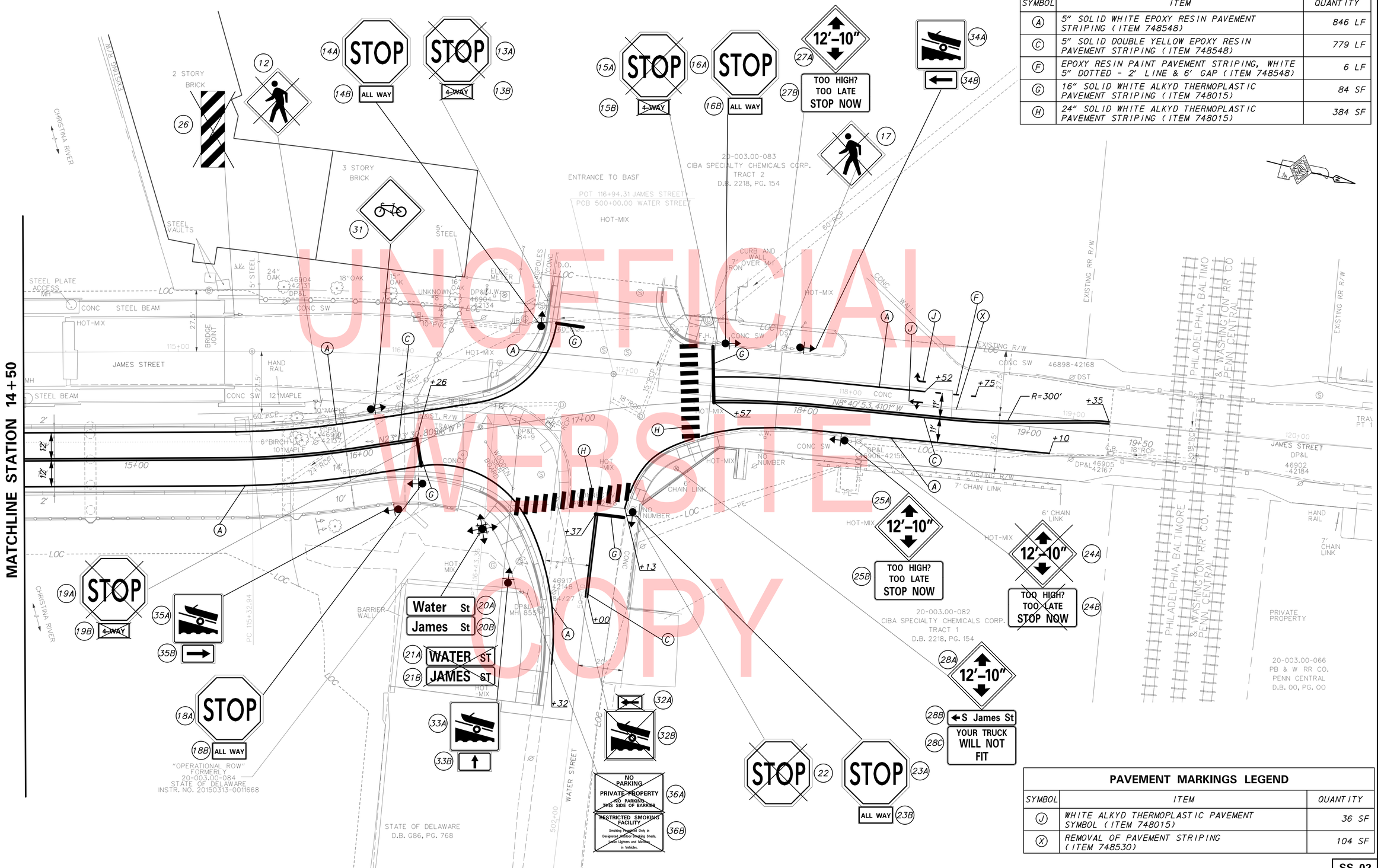

UNOFFICIAL WEBSITE COPY

PAVEMENT MARKINGS LEGEND

SYMBOL	ITEM	QUANTITY
A	5" SOLID WHITE EPOXY RESIN PAVEMENT STRIPING (ITEM 748548)	846 LF
C	5" SOLID DOUBLE YELLOW EPOXY RESIN PAVEMENT STRIPING (ITEM 748548)	779 LF
F	EPOXY RESIN PAINT PAVEMENT STRIPING, WHITE 5" DOTTED - 2' LINE & 6' GAP (ITEM 748548)	6 LF
G	16" SOLID WHITE ALKYD THERMOPLASTIC PAVEMENT STRIPING (ITEM 748015)	84 SF
H	24" SOLID WHITE ALKYD THERMOPLASTIC PAVEMENT STRIPING (ITEM 748015)	384 SF

PAVEMENT MARKINGS LEGEND

SYMBOL	ITEM	QUANTITY
J	WHITE ALKYD THERMOPLASTIC PAVEMENT SYMBOL (ITEM 748015)	36 SF
X	REMOVAL OF PAVEMENT STRIPING (ITEM 748530)	104 SF

ADDENDA / REVISIONS

SCALE 0 20 40 60 FEET

BR 1-159 ON JAMES STREET OVER CHRISTINA RIVER

CONTRACT	BRIDGE NO. 1-159
T201207101	DESIGNED BY: SFR
COUNTY	CHECKED BY: DLH
NEW CASTLE	

SIGNING, STRIPING AND CONDUIT PLAN

SS-02

SECTION McT

SHEET NO. 86

3/15/2019
6:04:46 PM
...\Roadway\SS002_BR159.dgn

SIGN SCHEDULE

#	SHEET NO.	PLAN INDICATOR	CODE	QTY.	DESCRIPTION	ASSEMBLY NO.	SIGN WIDTH (IN)	SIGN HEIGHT (IN)	SIGN AREA (SF)	ITEM 749687 SINGLE POST (EACH)			ITEM 749690 MULTI POST (SF)			POST INSTALLATION TYPE	Code X11 12' Post (W/ Basepost)	ITEM 749688 4" HOLE, 0-6" (EACH)	ITEM 749689 4" HOLE, >6" (EACH)	REMARKS
										SIGN DISPOSTION	REMOVE	INSTALL	SIGN DISPOSTION	REMOVE	INSTALL					
780	SS-01	1	W1-8(18)	2	CHEVRON ALIGNMENT - 18x24	1				REMAIN							0	0	0	2 SIGNS, BACK TO BACK
871	SS-01	2A	W3-1(30)	1	STOP AHEAD (Symbol) - 30x30	2	30"	30"	6.25	NEW		1				SOIL	1	0	0	
1336	SS-01	2B	W16-2P(24)	1	XXFEET (plaque) - 24x18	2	24"	18"	3	NEW		1					0	0	0	550'
1367	SS-01	2C	W16-8P	1	ADVANCE STREET NAME (1 - line plaque)	2	30"	8"	1.67	NEW		1					0	0	0	Water Street
780	SS-01	3	W1-8(18)	2	CHEVRON ALIGNMENT - 18x24	3	18"	24"	6	NEW		2				SOIL	1	0	0	2 SIGNS, BACK TO BACK
780	SS-01	4	W1-8(18)	2	CHEVRON ALIGNMENT - 18x24	4				REMOVE	2						0	0	0	2 SIGNS, BACK TO BACK
780	SS-01	5	W1-8(18)	2	CHEVRON ALIGNMENT - 18x24	5				REMAIN							0	0	0	
780	SS-01	6	W1-8(18)	2	CHEVRON ALIGNMENT - 18x24	6				REMOVE	2						0	0	0	2 SIGNS, BACK TO BACK
42	SS-01	7	R2-1-25(24)	1	SPEED LIMIT (25 MPH - 24x30)	7	24"	30"	5	NEW		1				SOIL	1	0	0	
780	SS-01	8	W1-8(18)	2	CHEVRON ALIGNMENT - 18x24	8				REMOVE	2						0	0	0	2 SIGNS, BACK TO BACK
XXX	SS-01	9A	W3-9DE	1	SUPPLEMENTAL WARNING	9				REMOVE	1						0	0	0	
42	SS-01	9B	R2-1-25(24)	1	SPEED LIMIT (25 MPH - 24x30)	9				REMOVE	1						0	0	0	
1959	SS-01	10	OM3-L	1	TYPE 3 OBJECT MARKER	10				REMOVE	1						0	0	0	
1276	SS-01	11A	W12-2(36)	1	LOW CLEARANCE (Arrow) - 36x36	11				REMOVE	1						0	0	0	12'-10"
245	SS-01	11B	R3-17aP	1	AHEAD (plaque)	11				REMOVE	1						0	0	0	
1276	SS-01	29A	W12-2(36)	1	LOW CLEARANCE (Arrow) - 36x36	29	36"	36"	9	NEW		1				SOIL	1	0	0	12'-10"
245	SS-01	29B	R3-17aP	1	AHEAD (plaque)	29	24"	8"	1.33	NEW		1					0	0	0	
1164	SS-01	30	W11-1(30)	1	BICYCLE (Symbol) - 30x30	30	30"	30"	6.25	NEW		1				SOIL	1	0	0	
1169	SS-02	12	W11-2(30)	1	PEDESTRIAN (Symbol) - 30x30	12				REMOVE	1						0	0	0	
4	SS-02	13A	R1-1(36)	1	STOP	13				REMOVE	1						0	0	0	
18	SS-02	13B	R1-3P(18)	1	4-WAY (plaque)	13				REMOVE	1						0	0	0	
4	SS-02	14A	R1-1(36)	1	STOP	14	36"	36"	9	NEW		1				SOIL	1	0	0	
18	SS-02	14B	R1-3P(18)	1	ALL WAY(plaque)	14	18"	6"	0.75	NEW		1					0	0	0	
4	SS-02	15A	R1-1(36)	1	STOP	15				REMOVE	1						0	0	0	
18	SS-02	15B	R1-3P(18)	1	4-WAY (plaque)	15				REMOVE	1						0	0	0	
4	SS-02	16A	R1-1(36)	1	STOP	16	36"	36"	9	NEW		1				CONCRETE	1	1	0	
18	SS-02	16B	R1-3P(18)	1	ALL WAY(plaque)	16	18"	6"	0.75	NEW		1					0	0	0	
1169	SS-02	17	W11-2(30)	1	PEDESTRIAN (Symbol) - 30x30	17				REMOVE	1						0	0	0	
4	SS-02	18A	R1-1(36)	1	STOP	18	36"	36"	9	NEW		1				CONCRETE	1	1	0	
18	SS-02	18B	R1-3P(18)	1	ALL WAY(plaque)	18	18"	6"	0.75	NEW		1					0	0	0	
4	SS-02	19A	R1-1(36)	1	STOP	19				REMOVE	1						0	0	0	
18	SS-02	19B	R1-3P(18)	1	4-WAY (plaque)	19				REMOVE	1						0	0	0	
1673	SS-02	20A	D3-1(9)	2	STREET NAME (1 Line)	20	30"	9"	3.75	NEW		2				SOIL	1	0	0	Water St 2 SIGNS, BACK TO BACK
1673	SS-02	20B	D3-1(9)	2	STREET NAME (1 Line)	20	30"	9"	3.75	NEW		2					0	0	0	James St 2 SIGNS, BACK TO BACK
1673	SS-02	21A	D3-1(9)	1	STREET NAME (1 Line)	21				REMOVE	1						0	0	0	WATER ST
1673	SS-02	21B	D3-1(9)	1	STREET NAME (1 Line)	21				REMOVE	1						0	0	0	JAMES ST
4	SS-02	22	R1-1(36)	1	STOP	22				REMOVE	1						0	0	0	
4	SS-02	23A	R1-1(36)	1	STOP	23	36"	36"	9	NEW		1				HOTMIX	1	0	1	
18	SS-02	23B	R1-3P(18)	1	ALL WAY(plaque)	23	18"	6"	0.75	NEW		1					0	0	0	
1276	SS-02	24A	W12-2(36)	1	LOW CLEARANCE (Arrow) - 36x36	24				REMOVE	1						0	0	0	12'-10"
	SS-02	24B		1	TOO HIGH? WARNING SIGN	24				REMOVE	1						0	0	0	TOO HIGH?, TOO LATE, STOP NOW
1276	SS-02	25A	W12-2(36)	1	LOW CLEARANCE (Arrow) - 36x36	25	36"	36"	9	NEW		1				CONCRETE	1	1	0	12'-10"
	SS-02	25B		1	TOO HIGH? WARNING SIGN	25	40"	20"	5.56	NEW		1					0	0	0	TOO HIGH?, TOO LATE, STOP NOW
1963	SS-02	26	OM3-R	1	TYPE 3 OBJECT MARKER	26				REMOVE	1						0	0	0	
1276	SS-02	27A	W12-2(36)	1	LOW CLEARANCE (Arrow) - 36x36	27				REMAIN							0	0	0	12'-10"
	SS-02	27B		1	TOO HIGH? WARNING SIGN	27				REMAIN							0	0	0	TOO HIGH?, TOO LATE, STOP NOW
1276	SS-02	28A	W12-2(36)	1	LOW CLEARANCE (Arrow) - 36x36	28				REMAIN							0	0	0	12'-10"
1367	SS-02	28B	W16-8P	1	ADVANCE STREET NAME (1 - line plaque)	28				REMAIN							0	0	0	S James St
	SS-02	28C		1	WARNING SIGN	28				REMAIN							0	0	0	YOUR TRUCK WILL NOT FIT
1164	SS-02	31	W11-1(30)	1	BICYCLE (Symbol) - 30x30	31	30"	30"	6.25	NEW		1				SOIL	1	0	0	
1603	SS-02	32A	M6-1_L(B)	1	DIRECTIONAL ARROW	32			0.75	REMOVE		1				SOIL	0	0	0	
	SS-02	32B		1	BOAT RAMP	32				REMOVE		1					0	0	0	RS-054 24"x24"
	SS-02	33A		1	BOAT RAMP	33	24"	24"	4	NEW		1				SOIL	1	0	0	RS-054 24"x24"Brown Background, white legend
1619	SS-02	33B	M6-3(21)	1	DIRECTIONAL ARROW	33	21"	15"	2.2	NEW		1				SOIL	1	0	0	Brown Background, white legend
	SS-02	34A		1	BOAT RAMP	34	24"	24"	4	NEW		1				SOIL	1	0	0	RS-054 24"x24"Brown Background, white legend
1605	SS-02	34B	M6-1_L(21)	1	DIRECTIONAL ARROW	34	21"	15"	2.2	NEW		1				SOIL	1	0	0	Brown Background, white legend
	SS-02	35A		1	BOAT RAMP	35	24"	24"	4	NEW		1				SOIL	1	0	0	RS-054 24"x24"Brown Background, white legend
1604	SS-02	35B	M6-1_R(21)	1	DIRECTIONAL ARROW	35			2.2	NEW		1				SOIL	1	0	0	Brown Background, white legend
	SS-02	36A		1	NO PARKING PRIVATE PROPERTY	36				REMOVE	1					SOIL	0	0	0	
	SS-02	36B		1	RESTRICTED SMOKING FACILITY	36				REMOVE	1					SOIL	0	0	0	
					PAGE TOTALS				125.16		27	32		0	0		18	3	1	

UNOFFICIAL WEBSITE COPY

ADDENDA / REVISIONS

NOT TO SCALE

BR 1-159 ON JAMES STREET OVER CHRISTINA RIVER

CONTRACT	BRIDGE NO. 1-159
T201207101	DESIGNED BY: SFR
COUNTY	
NEW CASTLE	CHECKED BY: DLH

SIGNING, STRIPING AND CONDUIT PLAN

SS-03

SECTION McT

SHEET NO. 87

3/15/2019
6:07:27 PM
...\Roadway\SS003_BR159.dgn

OVERHEAD RUN SCHEDULE

OH#	LENGTH	AMOUNT AND TYPE OF CABLE/WIRE
*1	175'	<REMOVE EXISTING CABLES>, NEW (1)#6/#14

* DENOTES EXISTING OVERHEAD RUN

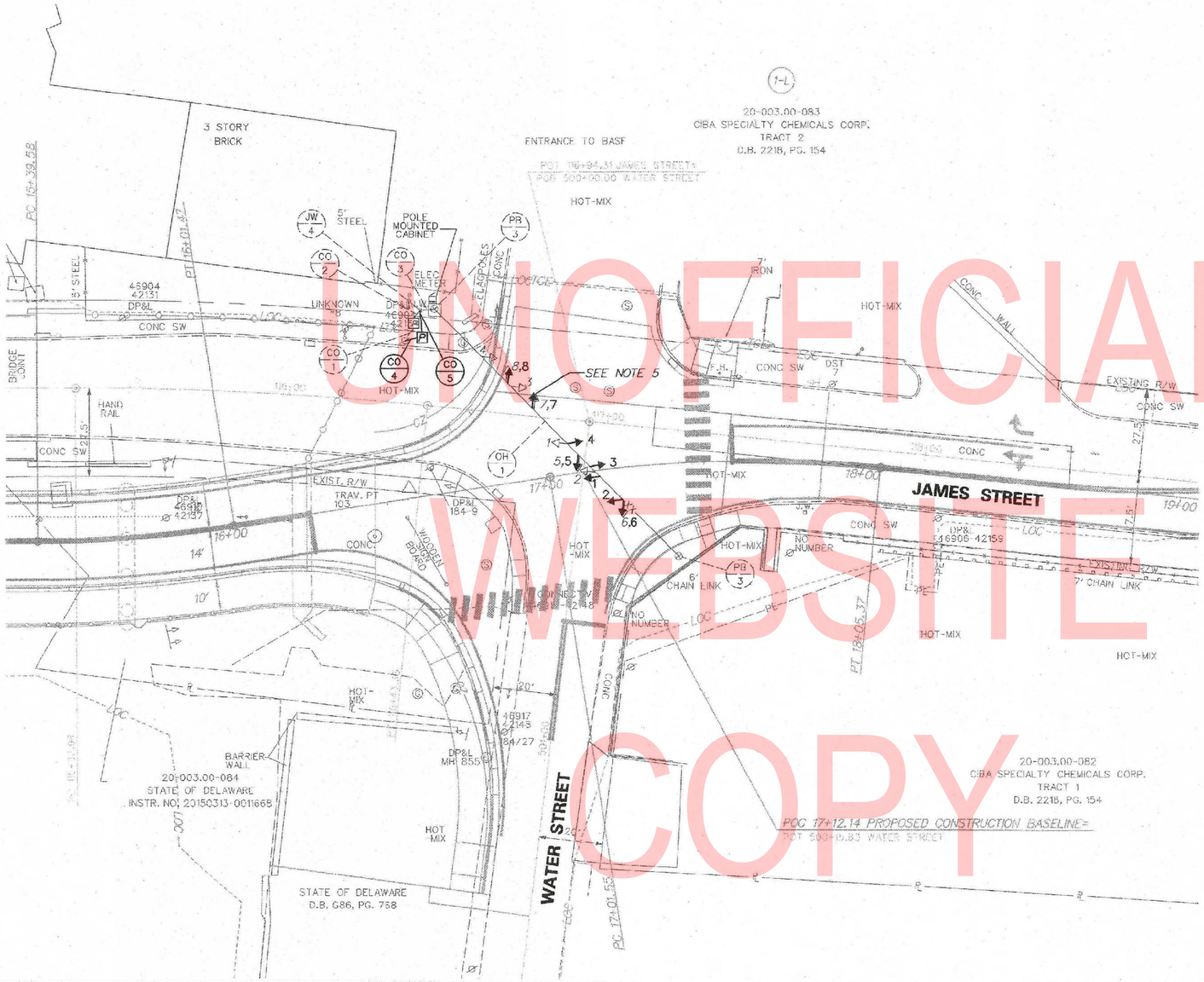

CONDUIT RUN SCHEDULE

CO#	# OF CONDUITS	SIZE	LENGTH	B/T/O	AMOUNT AND TYPE OF CABLE/WIRE
*1	1	UNK	6'	-	<REMOVE EX. ELECTRICAL SERVICE CABLES>
*2	1	UNK	4'	-	<REMOVE EX. ELECTRICAL SERVICE CABLES>
*3	1	UNK	5'	-	<REMOVE EX. ELECTRICAL SERVICE CABLES>, NEW 2/#8 U.F. W/ GROUND
4	1	2"	10'	T	NEW 2/#8 U.F. W/ GROUND
5	1	2"	10'	T	NEW 2/#8 U.F. W/ GROUND

* DENOTES EXISTING CONDUIT RUN

ADDITIONAL SIGNAL NOTES

4. ALL UNDERGROUND AND OVERHEAD UTILITIES SHOWN ON THESE PLANS ARE SCHEMATIC ONLY AND MAY NOT BE COMPLETE. THE CONTRACTOR SHALL BE RESPONSIBLE FOR NOTIFYING MISS UTILITY, AND/OR THE APPROPRIATE UTILITY PRIOR TO THE BEGINNING OF CONSTRUCTION FOR THE UTILITY MARKOUTS. IF THE CONTRACTOR PERCEIVES THAT A CONFLICT BETWEEN UTILITIES AND THE TRAFFIC SIGNAL WILL OCCUR, THE CONTRACTOR SHALL NOTIFY DELDOT TRAFFIC IMMEDIATELY BEFORE CONSTRUCTION.

5. ALL FLASHER SIGNAL HEADS AND CABLES TO BE REPLACED. SIGNAL HEADS 1, 2, 3 AND 4 TO BE RELOCATED AS SHOWN ON THE PLAN. SIGNAL HEADS 5, 6, 7 AND 8 TO BE REPLACED IN CURRENT LOCATION ON SPAN. SPAN WIRE TO REMAIN.

SIGNAL PHASING

ALL-WAY RED FLASHER

SIGNAL HEAD DIAGRAM

1, 2, 3, 4, 5, 6, 7, 8

FLASHER

LEGEND

AB	ABANDON	OH	EXISTING OVERHEAD RUN IDENTIFIER (* OF OVERHEAD RUN)
CA X	EXISTING CABINET IDENTIFIER (TYPE OF CABINET)	OH *	PROPOSED OVERHEAD RUN IDENTIFIER (* OF OVERHEAD RUN)
CA X	PROPOSED CABINET IDENTIFIER (TYPE OF CABINET)	PB X	EXISTING POLE BASE IDENTIFIER (TYPE OF POLE BASE)
CO *	EXISTING CONDUIT RUN IDENTIFIER (* OF CONDUIT RUN)	PB X	PROPOSED POLE BASE IDENTIFIER (TYPE OF POLE BASE)
CO *	PROPOSED CONDUIT RUN IDENTIFIER (* OF CONDUIT RUN)	PL X	EXISTING POLE IDENTIFIER (* OF POLE)
JW X	EXISTING JUNCTION WELL IDENTIFIER (TYPE OF JUNCTION WELL)	PL X	PROPOSED POLE IDENTIFIER (* OF POLE)
JW X	PROPOSED JUNCTION WELL IDENTIFIER (TYPE OF JUNCTION WELL)	RM C	REMOVE BY CONTRACTOR
MA XX	EXISTING MAST ARM IDENTIFIER (LENGTH OF ARM)	RM O	REMOVE BY OTHERS
MA XX	PROPOSED MAST ARM IDENTIFIER (LENGTH OF ARM)	RM TC	REMOVE BY TRAFFIC CONTRACTOR

	EXISTING SYMBOL	PROPOSED SYMBOL
JUNCTION WELL	J.W.	
LOOP DETECTOR, TYPE 1		
LOOP DETECTOR, TYPE 2		
LUMINAIRE		
MAST ARM		
MICROWAVE DETECTION		
OPTICOM RECEIVER		
OVERHEAD SIGNING		
PEDESTRIAN POLE/BASE		
PEDESTRIAN PUSHBUTTON		
PEDESTRIAN SIGNAL HEAD		
RIGHT-OF-WAY		R/W
SERVICE PEDESTAL	P	P
SIGNAL CABINET		
SIGNAL HEAD		
SIGNAL POLE/BASE		
CCTV CAMERA		
SPAN WIRE	XX	
UTILITY POLE		
VIDEO DETECTION		

GENERAL SIGNAL NOTES

1. ALL SIGNAL EQUIPMENT REMOVED FROM A PROJECT IS TO BE RETURNED TO DELDOT TRAFFIC - DOVER, DELAWARE.

2. POLE BASES, CABINET BASE AND/OR CONDUIT JUNCTION WELLS SHALL BE REMOVED AS SHOWN ON THE PLAN. REMOVAL WORK SHOULD BE INCIDENTAL TO STANDARD ITEM 210001 REMOVAL OF STRUCTURES AND OBSTRUCTIONS. EXISTING CONDUIT IS TO BE ABANDONED.

3. ALL GALVANIZED CONDUIT (GRC) SHALL BE REAMED AND THREADED. ALL GRC SHALL BE THREADED TOGETHER WITH APPROVED COUPLINGS. SET SCREW, BOLTED, AND COMPRESSION FITTING ARE NOT ACCEPTABLE.

PREPARED BY

McCORMICK TAYLOR

12/7/2018
DATE

THIS SEAL APPLIES TO ALL SHEETS BEARING THE "McT-TD" SECTION DESIGNATION.

DENIS HEHMAN JR. LICENSE No. 11886 DELAWARE PROFESSIONAL ENGINEER

SEAL

APPROVED FOR INSTALLATION

12/19/18
DATE

CHIEF TRAFFIC ENGINEER

SG-01

ADDENDA / REVISIONS	

SCALE 0 20 40 60 FEET

BR 1-159 ON JAMES STREET OVER CHRISTINA RIVER

CONTRACT	PERMIT NO.	N682
T201207101	DESIGNED BY: AJP	
COUNTY		
NEW CASTLE	CHECKED BY: DLH	

SIGNAL PLAN

JAMES ST AT WATER ST

SECTION McT-TD

SHEET NO. 88

12/7/2018
11:49:06 PM
...\Roadway\SG001_BR159.dgn

UNOFFICIAL WEBSITE COPY

ASSESSMENT NUMBER	OWNERSHIP OF RECORD	TYPE OF ACQUISITION	TITLE SOURCE	PARCEL AREA (ACRES)
20-003.00-083	(1-L) CIBA SPECIALTY CHEMICALS CORP.	TCE	D.B. 2218, PG. 154	8.835

ALIGNMENT NUMBER & DESCRIPTION: 1000 - JAMES STREET

PT. NO.	ALIGN. NO.	STATION	OFFSET *	NORTH	EAST	BEARING	DISTANCE	CHORD BEARING	CHORD LENGTH	ARC LENGTH	RADIUS **
70000	1000	16+84.56	-51.78	623280.4977	602033.7442	S 81°19'06.59" W	15.0000				
70001	1000	16+88.32	-66.30	623278.2336	602018.9160	N 8°40'53.41" W	63.1535				
70002	1000	17+44.04	-52.93	623340.6635	602009.3836	N 56°19'55.58" E	14.3423				
70003	1000	17+47.74	-39.19	623348.6145	602021.3202	N 8°40'53.41" W	26.4429				
70004	1000	17+71.80	-36.25	623374.7544	602017.3288	N 81°19'06.59" E	2.0000				
70005	1000	17+71.65	-34.25	623375.0563	602019.3059	S 8°40'53.41" E	95.6546				
70000	1000	16+84.56	-51.78	623280.4977	602033.7442						

FIGURE 1-L TCE AREA = 1051.6828 SQ. FT. (0.0241 ACRES)

ASSESSMENT NUMBER	OWNERSHIP OF RECORD	TYPE OF ACQUISITION	TITLE SOURCE	PARCEL AREA (ACRES)
20-003.00-084	(1-R) DELMARVA POWER & LIGHT CO.	FEE	D.B. T36, PG. 218	0.216

ALIGNMENT NUMBER & DESCRIPTION: 1000 - JAMES STREET

PT. NO.	ALIGN. NO.	STATION	OFFSET *	NORTH	EAST	BEARING	DISTANCE	CHORD BEARING	CHORD LENGTH	ARC LENGTH	RADIUS **
40000	1000	15+27.46	-20.07	623149.2878	602117.7280			N 12°15'21.33" W	131.7923	131.8779	1056.9600
40001	1000	16+60.25	-1.27	623278.0765	602089.7513	N 8°40'53.41" W	30.3057				
40002	1000	16+89.58	6.34	623308.0350	602085.1769	N 82°40'08.59" E	69.8700				
40003	1000	16+70.45	73.54	623316.9505	602154.4758	S 7°22'05.02" E	143.0000				
40004	1000	15+38.63	39.74	623175.1312	602172.8145	N 74°11'50.82" W	33.4844				
40005	1000	15+55.13	11.15	623184.2498	602140.5956	S 33°11'14.93" W	41.7764				
40000	1000	15+27.46	-20.07	623149.2878	602117.7280						

FIGURE 1-R FEE AREA = 9426.4475 SQ. FT. (0.2164 ACRES)

ASSESSMENT NUMBER	OWNERSHIP OF RECORD	TYPE OF ACQUISITION	TITLE SOURCE	PARCEL AREA (ACRES)
20-003.00-082	(2-R) CIBA SPECIALTY CHEMICALS CORP.	P/E	D.B. 2218, PG. 154	0.504

ALIGNMENT NUMBER & DESCRIPTION: 1000 - JAMES STREET

PT. NO.	ALIGN. NO.	STATION	OFFSET *	NORTH	EAST	BEARING	DISTANCE	CHORD BEARING	CHORD LENGTH	ARC LENGTH	RADIUS **
70006	1000	17+62.19	20.09	623378.9303	602074.3519	N 8°40'53.41" W	62.5841				
70007	1000	18+26.97	22.25	623440.7974	602064.9053	N 81°19'06.59" E	15.0000				
70008	1000	18+26.97	37.25	623443.0615	602079.7334	S 8°40'53.41" E	10.0000				
70009	1000	18+16.97	37.25	623433.1761	602081.2429	S 81°19'06.59" W	10.2342				
70010	1000	18+16.97	27.02	623431.6313	602071.1259	S 34°26'52.57" E	94.7994				
70011	1000	17+18.17	60.33	623353.4558	602124.7499	S 82°40'08.59" W	16.8467				
70012	1000	17+22.60	43.93	623351.3062	602108.0409			N 66°18'39.64" W	25.7668	27.0700	25.0000
70013	1000	17+41.66	24.97	623361.6586	602084.4452			N 30°18'04.90" W	20.0047	20.0300	115.0000
70006	1000	17+62.19	20.09	623378.9303	602074.3519						

FIGURE 2-R PE AREA = 2048.9141 SQ. FT. (0.0470 ACRES)

LEGEND

FEE AREA OF ACQUISITION
R/W AREA OCCUPIED BY EXISTING R/W
P/E PERMANENT EASEMENT
TCE TEMPORARY CONSTRUCTION EASEMENT

* "-" OFFSET IS LEFT OF BASELINE
** "-" CURVE TURNS TO THE LEFT

PLANS WERE ORIGINALLY SIGNED AS NOTED BELOW.
FEE AND PE HAVE BEEN ACQUIRED AS FOLLOWS:
1-R FEE: INSTR. NO. 20150313-0011668
2-R PE: INSTR. NO. 20140909-0039970

UNOFFICIAL WEBSITE COPY

PREPARED BY
THE CONSULTING FIRM OF
McCormick Taylor
Engineers & Planners Since 1946

MICHAEL A. ANGELO REGISTERED NO. 6726 DELAWARE PROFESSIONAL ENGINEER

PROJECT MANAGER — DATE 3/15/2013

RECOMMENDED

TEAM SUPPORT SQUAD MANAGER — DATE 3-28-13
TEAM SUPPORT ENGINEER — DATE 4-3-13
ASSISTANT DIRECTOR, ENGINEERING SUPPORT — DATE 4/5/13

"AS-ACQUIRED" PLANS

I CERTIFY THAT ALL PROPOSED RIGHT-OF-WAY HAS BEEN ACQUIRED IN THE NAME OF THE STATE OF DELAWARE AND THAT THESE PLANS ACCURATELY DEPICT THE NATURE AND EXTENT OF THE REAL ESTATE SECTION ACQUISITION UNDER THIS PROJECT.

CHIEF, REAL ESTATE — DATE

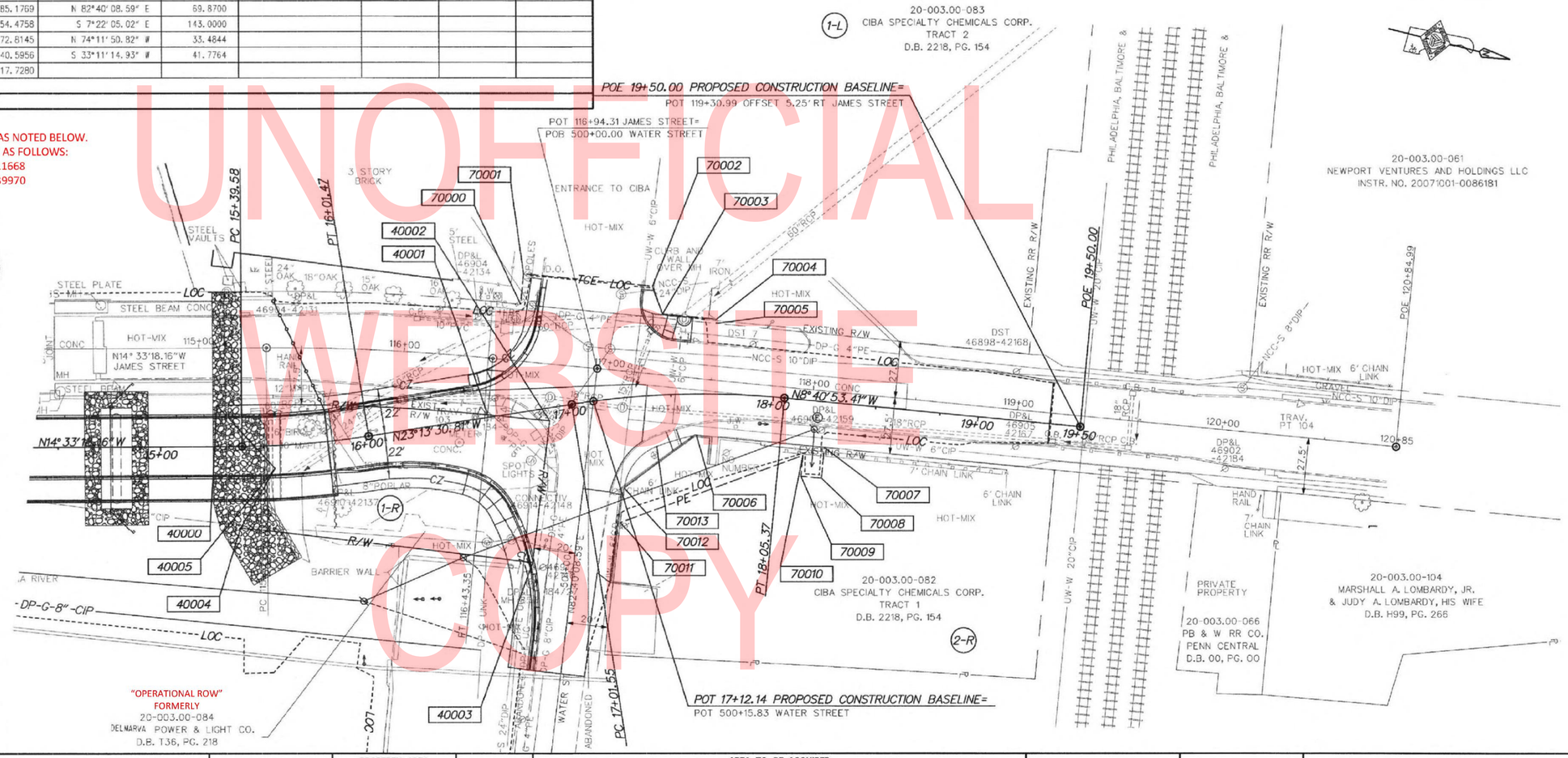

ACQUISITION CODES

FEE - ACQUISITION
R/W - AREA OCCUPIED BY EXISTING R/W
P/E - PERMANENT EASEMENT
TCE - TEMPORARY EASEMENT

COUNTY ASSESSMENT PARCEL NUMBER	PLAN SHEET NUMBER	OWNERSHIP OF RECORD	TITLE SOURCE	PROPERTY AREA BEFORE ACQUISITION (ACRE) D=DEED C=CALCULATED A=ASSESMENT	ACQUISITION CODE FEE, R/W, P/E, TCE	AREA TO BE ACQUIRED: ACQUISITION (SQ. FEET /ACRES)	AREA OCCUPIED BY EXISTING RIGHT OF WAY (SQ. FEET /ACRES)	EASEMENT: PERMANENT (SQ. FEET /ACRES)	EASEMENT: TEMPORARY (SQ. FEET /ACRES)	PROPERTY AREA REMAINING (SQ. FEET /ACRES)	DEED RECORD OF ACQUISITION	REMARKS
20-003.00-083	CP-02	(1-L) CIBA SPECIALTY CHEMICALS CORP.	D.B. 2218, PG. 154	D - 8.835	TCE				1051.6828 / 0.02	864578.88 / 19.85		
20-003.00-084	CP-02	(1-R) DELMARVA POWER & LIGHT CO.	D.B. T36, PG. 218	C - 0.22	FEE	9426.4475 / 0.22				0.0000 / 0.00		
20-003.00-082	CP-02	(2-R) CIBA SPECIALTY CHEMICALS CORP.	D.B. 2218, PG. 154	D - 0.50	P/E			2048.9141 / 0.05		21954.24 / 0.50		

DELAWARE DEPARTMENT OF TRANSPORTATION

ADDENDUMS / REVISIONS

SCALE 0 30 60 90 FEET

BR 1-159 ON JAMES STREET OVER CHRISTINA RIVER

CONTRACT T201207101 | COUNTY NEW CASTLE | BRIDGE NO. 1-159 | DESIGNED BY: JJK/LB | CHECKED BY: MAA

RIGHT OF WAY PLAN

RW-01 | SECTION McT | SHEET NO. 89

3/13/2013
\final plans\RW002_BR159.dgn