Department of Natural Resources and Environmental Control

89 KINGS HIGHWAY
DOVER, DELAWARE 19901

PROPOSED EMBANKMENT REPAIR - HEARNS POND

SEAFORD ~ SUSSEX COUNTY ~ DELAWARE

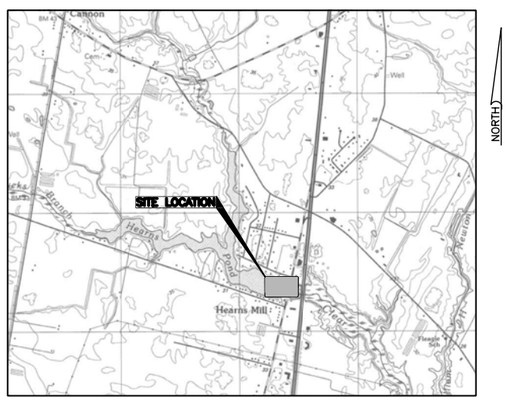

LOCATION PLAN SCALE: 1"=2000'

THIS LOCATION SKETCH IS ADAPTED FROM THE U.S.G.S. TOPOGRAPHIC MAP, 7.5 MINUTE SERIES, FOR SEAFORD (EAST), DE. (1993).

INDEX OF SHEETS

PROJECT INFORMATION

GENERAL NOTES:

1. THESE DRAWINGS WERE ORIGINALLY ISSUED IN 2002 FOR REPAIR OF THE HEARNS POND DAM DAMAGED IN 2001. THESE DRAWINGS HAS BEEN REVISED FOR NECESSARY REPAIRS FOLLOWING STORM DAMAGE TO THE DAM IN JUNE 2006. NOTES AND DETAILS ON THESE DRAWINGS WHICH ARE NOT PART OF THE CURRENT REPAIRS ARE NOTATED "NOT IN CONTRACT" AND ARE BEING PROVIDED TO THE CONTRACTOR AS BACKGROUND INFORMATION ON THE 2002 DAM CONSTRUCTION TO ASSIST DURING THE CURRENT REPAIRS.

2. BASE PLAN INFORMATION IS ADAPTED FROM TOPOGRAPHY DEVELOPED BY THE DIVISION OF SOIL AND WATER, BETWEEN OCTOBER 11 AND OCTOBER 17, 2001, AND IN JULY 2006.

3. A SITE BENCHMARK WILL BE SET BY DNREC. A PERMANENT BENCHMARK (MON. #SMOT) IS LOCATED AT THE SEAFORD MAINTENANCE YARD, APPROXIMATELY ONE-THIRD OF A MILE NORTH ON RT. 13-A.

   THE VERTICAL DATUM FOR THESE PLANS IS NAVD 88.

4. THE INFORMATION DEPICTED ON THESE DRAWINGS REPRESENTS THE RESULTS OF SURVEYS MADE ON THE DATES INDICATED AND CAN ONLY BE CONSIDERED AS INDICATING THE GENERAL CONDITIONS EXISTING AT THAT TIME.

5. THE CONTRACTOR IS RESPONSIBLE FOR FIELD VERIFICATION OF ALL COMPONENTS OF THE WORK HEREIN. UNDER NO CIRCUMSTANCES SHALL THE CONTRACTOR RELY ON DISTANCES SCALED FROM THE DRAWINGS.

6. AS PART OF THEIR BID, THE CONTRACTOR SHALL DEMOLISH, REMOVE, REPAIR AND ADJUST ALL ITEMS, AS NECESSARY, WITHIN THE CONTRACT LIMITS SHOWN SO AS TO FACILITATE INSTALLATION OF NEW COMPONENTS SHOWN IN THE CONTRACT DRAWINGS.

7. CONTRACTOR TO MAINTAIN TEMPORARY WATER DIVERSION AROUND THE WORK AREA DURING CONSTRUCTION. UTILITIES EXIST OR TFALL STRUCTURE AS COORDINATED WITH DNREC.

8. CONTRACTOR IS RESPONSIBLE FOR DEWATERING OF WORK AREA DURING CONSTRUCTION.

TRAFFIC CONTROL:

THE CONTRACTOR SHALL PROVIDE TRAFFIC BARRICADES, SIGNAGE AND FLAGGERS AND SHALL COORDINATE DEMOLITION AND CONSTRUCTION ACTIVITIES WITH DNREC AND DELDOT SO AS TO MINIMIZE DISRUPTION TO TRAFFIC ON PUBLIC ROADWAYS, IN ACCORDANCE WITH THE DELDOT TRAFFIC CONTROL MANUAL.

EQUIVALENCY:

"APPROVED EQUIVALENT": THE CONTRACTOR SHALL SUBMIT PRODUCT INFORMATION TO THE ENGINEER FOR REVIEW. SUBMITTED ITEMS WILL BE REVIEWED FOR GENERAL CONFORMANCE TO THE DESIGN INTENT. THE CONTRACTOR IS RESPONSIBLE FOR: DIMENSIONS WHICH SHALL BE CONFIRMED AT THE JOB SITE; FABRICATION PROCESSES AND TECHNIQUES OF CONSTRUCTION; COORDINATION OF WORK BETWEEN TRADES; AND SATISFACTORY COMPLETION OF THE WORK.

SITE UTILITIES:

1. THESE PLANS ARE MADE FROM AVAILABLE INFORMATION AT THE TIME THE PLANS WERE PREPARED. COMPLETENESS OR CORRECTNESS THEREOF IS NOT GUARANTEED. IT SHALL BE THE CONTRACTOR'S RESPONSIBILITY TO CONTACT MISS-UTILITY OF DELMARVA (TELEPHONE 1-800-282-8555) NO LESS THAN 72 HOURS PRIOR TO INITIATING INTRUSIVE WORK. THE CONTRACTOR SHALL CONTACT THE OWNERS OF UTILITIES AT RISK AS A RESULT OF CONDUCTING THE WORK HEREIN. THE CONTRACTOR SHALL CONSULT WITH UTILITY OWNERS TO OBTAIN THE MOST ACCURATE INFORMATION AVAILABLE WITH REGARD TO UTILITY ELEVATION AND LOCATION.

2. DURING PERFORMANCE OF THE WORK DESCRIBED HEREIN, THE CONTRACTOR SHALL TAKE NECESSARY PRECAUTIONS TO PROTECT EXISTING UTILITIES, OR RELOCATE AS NECESSARY, AND MAINTAIN UNINTERRUPTED SERVICE.

3. DAMAGE TO UTILITIES RESULTING FROM THE NEGLIGENCE OF THE CONTRACTOR SHALL BE IMMEDIATELY AND COMPLETELY REPAIRED AT THE CONTRACTOR'S SOLE EXPENSE.

4. THE CONTRACTOR SHALL ASSUME THAT NO UTILITY SERVICE WILL BE PROVIDED ON-SITE TO SUPPORT THIS PROJECT.

CONSTRUCTION STANDARDS:

1. EXCEPT AS MODIFIED BY NOTATION ON THESE DRAWINGS, ALL WORK SHALL BE IN ACCORDANCE WITH THE STATE OF DELAWARE DEPARTMENT OF HIGHWAYS AND TRANSPORTATION "STANDARD SPECIFICATIONS", DATED AUGUST, 2001.

2. ALL ITEMS TO BE REMOVED ARE TO BE DISPOSED OF OFF-SITE. OFF-SITE DISPOSAL OF ALL SOILS OR DEBRIS REMOVED OR EXCAVATED DURING CONSTRUCTION SHALL BE PERFORMED IN ACCORDANCE WITH ALL APPLICABLE REGULATIONS.

3. ALL WORK SHALL BE PERFORMED IN ACCORDANCE WITH OSHA GUIDELINES AND THE HEALTH AND SAFETY REQUIREMENTS OF THE OWNER. THE CONTRACTOR SHALL BE RESPONSIBLE FOR MAINTAINING STABLE EXCAVATIONS DURING THE PERIOD OF CONSTRUCTION.

4. ALL SITE WORK ACTIVITIES AND CONSTRUCTION SCHEDULING SHALL BE COORDINATED WITH THE OWNER OR THE OWNER'S REPRESENTATIVE BEFORE PROCEEDING WITH THE WORK.

5. THE CONTRACTOR SHALL EXERCISE EXTREME CARE DURING EXCAVATION SO AS NOT TO DISTURB EXISTING UTILITIES AND STRUCTURES DESIGNATED TO REMAIN. CONTRACTOR TO MAINTAIN EXISTING SPILLWAY BRIDGE CROSSING DURING CONSTRUCTION. ALL DAMAGE DUE TO CONSTRUCTION ACTIVITY IS TO BE REPAIRED BY THE CONTRACTOR. EXISTING MILL BUILDING IS OUTSIDE THE LIMITS OF DISTURBANCE EXCEPT AS NOTED ON THESE DRAWINGS.

DATA COLUMN:

OWNER:	DEPARTMENT OF NATURAL RESOURCES AND ENVIRONMENTAL CONTROL 89 KINGS HIGHWAY DOVER, DELAWARE 19901
GROSS ACREAGE OF PROJECT LIMITS:	±0.216 ACRES
DATUM:	VERTICAL NAVD 88

No.	REVISION	CHK'D BY DATE
1	ISSUED AS PRELIMINARY FOR REVIEW BY DNREC	KAR 11-21-01
2	RE-ISSUED FOR REVIEW BY DNREC	JFC 12-05-01
3	ISSUED FOR BIDS	KAR 12-19-01
4	ADDENDUM #1 TO BID SET ISSUED 12-27-01	KAR 12-27-01
5	ADDENDUM #2 TO BID SET ISSUED 01-07-02	KAR 01-07-02
6	REVISED FOR 2006 DAM REPAIRS	JFC 09-29-06

JAMES F. CLOONAN, JR.

STATE: DELAWARE P.E. 7384

DUFFIELD ASSOCIATES

DUFFIELD ASSOCIATES, INC.
CONSULTANTS IN THE GEOSCIENCES
5400 LIMESTONE ROAD
WILMINGTON, DELAWARE 19808-1232
TEL. (302)239-6634 FAX (302)239-8485
E-MAIL: DUFFIELD@DUFFNET.COM

TECHNICAL SPECIFICATIONS

1.0 EXCAVATION

1.1 PRIOR TO THE PLACEMENT OF ANY FILL MATERIALS OR GEOTEXTILE ON THE SITE, THE AREA DESIGNATED TO RECEIVE FILL SHALL BE EXCAVATED TO THE LINES AND GRADES INDICATED ON THE DRAWINGS. GRANULAR MATERIALS CONSISTING OF PREVIOUSLY PLACED TYPE G BORROW, RIPRAP, AND DE NO.57 SHALL BE STOCKPILED ON SITE FOR REUSE. MISCELLANOUS DEBRIS AND DAM COMPONENTS (GEOTEXTILE, DRAINAGE PIPE, ETC.) TO BE REPLACED SHALL BE DISPOSED OF OFF-SITE BY THE CONTRACTOR. THE EXPOSED SUBGRADE SHALL THEN BE REVIEWED BY THE OWNER'S REPRESENTATIVE PRIOR TO THE PLACEMENT OF THE SUBGRADE GEOTEXTILE SEPARATION LAYER. SURFICIAL SOFT OR LOOSE SUBGRADE AREAS ENCOUNTERED DURING THE REVIEW SHALL BE EXCAVATED TO A FIRM SUBGRADE AS RECOMMENDED BY THE OWNER'S DESIGNATED REPRESENTATIVE AND BACKFILLED AS INDICATED HEREIN.

2.0 GEOTEXTILE

2.1 THE GEOTEXTILE UTILIZED FOR PLACEMENT OVER BASE OF SPECIFIED DAM REPAIR AREA SHALL CONSIST OF WOVEN POLYPROPYLENE GEOTEXTILE HUESTER COMTRAC P80/80 OR APPROVED EQUIVALENT. THE CONTRACTOR SHALL SUBMIT A MANUFACTURER'S CERTIFICATE THAT THE SUPPLIED GEOTEXTILE MEETS THE CRITERIA OF THESE SPECIFICATIONS AS MEASURED IN FULL ACCORDANCE WITH ALL TEST METHODS AND STANDARDS HEREIN AND IN ACCORDANCE WITH THE MANUFACTURER'S TECHNICAL SPECIFICATIONS FOR THE APPROVED GEOTEXTILE. THE CERTIFICATES SHALL INCLUDE THE FOLLOWING INFORMATION ABOUT EACH GEOTEXTILE ROLL
DELIVERED;

MANUFACTURER'S NAME AND CURRENT ADDRESS
FULL PRODUCT NAME
STYLE, MERGE OR PRODUCT CODE NUMBER,
GEOTEXTILE ROLL NUMBER,
GEOTEXTILE POLYMER TYPE, AND
MANUFACTURER'S CERTIFICATION STATEMENT

IN CASE OF DISPUTE OVER THE VALIDITY OF TEST RESULTS, THE OWNER CAN REQUIRE THE CONTRACTOR TO SUPPLY TEST DATA FROM AN APPROVED LABORATORY TO SUPPORT THE VALUES SUBMITTED.

2.2 PRIOR TO THE PLACEMENT OF GEOTEXTILE, THE SUBGRADE SHALL BE PREPARED IN ACCORDANCE WITH THE SPECIFICATIONS DESCRIBED IN ITEM 1.1 ABOVE.

2.3 THE GEOTEXTILE SHALL BE UNROLLED AND LAID SMOOTH WITHOUT WRINKLES. UNDER NO CIRCUMSTANCES SHALL THE GEOTEXTILE BE DRAGGED THROUGH THE MUD OR OVER SHARP OBJECTS WHICH COULD DAMAGE THE GEOTEXTILE. THE GEOTEXTILE SHALL BE PLACED (UNROLLED) IMMEDIATELY AHEAD OF THE COVERING OPERATION. GEOTEXTILES SHALL BE PLACED CONTINUOUS PERPENDICULAR TO THE DAM ALIGNMENT, WITH NO SEAMS. ALL SEAMS ORIENTED TRANSVERSE (PERPENDICULAR) TO THE SLOPE FACE SHALL BE OVERLAPPED A MINIMUM OF 2 FEET.

2.4 THE OWNERS REPRESENTATIVE SHALL PERMITTED TO REVIEW THE GEOTEXTILE IMMEDIATELY PRIOR TO PLACEMENT OF ANY FILL. SHOULD THE GEOTEXTILE BE TORN OR PUNCTURED OR THE OVERLAPS DISTURBED AS EVIDENCED BY VISIBLE GEOTEXTILE DAMAGE, SUBGRADE PUMPING, INTRUSION OR DISTORTION, THE BACKFILL AROUND THE DAMAGED OR DISPLACED AREA SHALL BE REMOVED AND THE DAMAGED GEOTEXTILE REPLACED AT NO ADDITIONAL COST TO THE OWNER.

GEOTEXTILE REPLACEMENT SHALL BE ACCOMPLISHED SUCH THAT ALL SEAMS ARE PERPENDICULAR TO THE SLOPE FACE AND MEET ALL PREVIOUSLY NOTED REQUIREMENTS FOR SEAMS.

2.5 GEOTEXTILE SAND BAGS (GEOBAGS) SHALL CONSIST OF ONE-CUBIC YARD CAPACITY WOVEN POLYPROPYLENE BAGS WITH DRAWSTRINGS AND LIFT HANDELS AS PROVIDED BY ACF ENVIRONMENTAL OR APPROVED EQUILAVENT. MINIMUM WEIGHT OF GEOTEXTILE SAND BAG SIDES AND BOTTOM SHALL BE 6.5 OUNCES PER SQUARE YARD. APPROXIMATE BOTTOM DIMENSION OF EACH GEOBAG SHALL BE 3 FT X 3 FT.

3.0 GEOCELLS

3.1 GEOCELLS SHALL CONSIST OF 6 INCH DEEP GW 30Y POLYETHYLENE PERFORATED GEOWEB GEOCELLS AS MANUFACTURED BY PRESTO PRODUCTS COMPANY, GEOSYSTEM PRODUCTS; P.O. BOX 2399, APPLETON, WI 54913-2399 OR APPROVED EQUILVALENT. THE CONTRACTOR SHALL SUBMIT A MANUFACTURER'S CERTIFICATE THAT THE SUPPLIED GEOCELLS MEET THE CRITERIA OF THESE SPECIFICATIONS.

3.2 EXPAND GEOWEB SECTIONS, DIMENSIONED ACCORDING TO THE CONSTRUCTION DRAWINGS INTO POSITION USING STRETCHER FRAMES, TEMPORARY STAKES OR OTHER SUITABLE METHOD TO TEMPORARILY HOLD IN PLACE. INTERLEAF OR OVERLAP EDGES OF ADJACENT SECTIONS IN EACH LAYER. ENSURE THAT ALL ADJOINING SECTIONS ARE FLUSH AT THE JOINTS AND ADJOINING CELLS ARE FULLY STAPLED.

3.3 FILL GEOWEB CELLS WITH THE DE NO. 3 DRAINAGE STONE INFILL MATERIAL.

4.0 BACKFILL

4.1 FILL UTILIZED FOR THE RECONSTRUCTION OF THE DAM SHALL CONSIST OF DELAWARE SELECT BORROW TYPE G AND EXCAVATED PREVIOUSLY PLACED GRANULAR MATERIALS.

4.2 BACKFILL SHALL BE PLACED IN SUCH A MANNER AS TO PREVENT WRINKLES AND FOLDS FROM DEVELOPING IN THE GEOTEXTILE. THE BACKFILL SHALL BE PLACED IN ACCORDANCE WITH THE CONSTRUCTION DETAILS AND THE SPECIFICATIONS NOTED HEREIN. THE BACKFILL LIFT THICKNESS WITHIN THE REBUILT PORTION OF THE DAM SHALL NOT EXCEED 12 INCHES. THE BACKFILL SHALL BE PLACED IN SUCH A MANNER THAT A MINIMUM OF 12 INCHES OF MATERIAL WILL BE BETWEEN THE VEHICLE OR EQUIPMENT TIRES OR TRACKS AND THE GEOTEXTILE AT ALL TIMES. MANEUVERING OF VEHICLES ON THE FIRST LIFT OF BACKFILL OVER THE GEOTEXTILE SHALL NOT BE PERMITTED.

4.3 EACH BACKFILL LIFT SHALL BE COMPACTED TO A MINIMUM OF 90% OF MODIFIED PROCTOR DENSITY IN ACCORDANCE WITH ASTM D1557. MOISTURE CONTENT OF THE BACKFILL AT THE TIME OF PLACEMENT AND COMPACTION SHALL BE WITHIN 3 PERCENT OF THE MATERIAL OPTIMUM MOISTURE CONTENT AS DETERMINED BY ASTM D1557. MECHANICAL COMPACTION EQUIPMENT SHALL BE USED IN SUCH A MANNER WHICH CAUSES NO DAMAGE OR DISTORTION TO THE SLOPE FACE. SHEEPSFOOT ROLLERS OR OTHER ROLLERS WITH PROTRUSIONS SHALL NOT BE USED. SIMILARLY, ROLLERS WITH A VIBRATORY MECHANISM SHALL NOT HAVE THIS MECHANISM OPERATIONAL DURING COMPACTION OF THE FIRST LIFT OF MATERIAL OVER THE GEOTEXTILE. THE CONTRACTOR SHALL DEMONSTRATE TO THE OWNER AND ENGINEER, THEIR PROPOSED METHOD OF COMPACTION FOR COMPLIANCE TO THESE SPECIFICATIONS DURING INSTALLATION OF THE INITIAL LAYERS OF BACKFILL. BACKFILL MATERIALS NOT IN COMPLIANCE WITH THESE SPECIFICATIONS SHALL BE REWORKED OR REMOVED AND REPLACED BY THE CONTRACTOR AT NO ADDITIONAL COST TO THE OWNER. DRYING OR REWORKING THE BACKFILL MATERIAL WITH MECHANICAL EQUIPMENT OPERATING OVER THE GEOTEXTILE OR GCL REINFORCING SHALL NOT BE PERMITTED.

4.4 THE CONTRACTOR SHALL BE RESPONSIBLE FOR MAINTAINING THE DAM SLOPE DURING CONSTRUCTION.

5.0 CLAY SEALANT

5.1 CLAY SEALANT SHALL CONSIST OF A HIGH-SWELLING, LOW DUST GRANULAR SODIUM BENTONITE SUCH AS VOLCLAY CG-50 OR APPROVED EQUIVALENT. CLAY SEALANT SHALL BE PLACED DRY AT LOCATIONS SHOWN ON DRAWINGS AND AS DESIGNATED IN THE FIELD BY OWNER'S REPRESENTATIVE. FOLLOWING PLACEMENT CONTRACTOR SHALL IMMEDIATELY COVER SEALANT WITH PERMANENT COVER, SUCH AS GEOTEXTILE, AS SHOWN ON THESE DRAWINGS.

6.0 QUARRY DUST

6.1 MATERIAL UTILIZED FOR THE CREST SURFACE OF THE REBUILT DAM SECTION SHALL CONSIST OF QUARRY DUST MEETING THE FOLLOWING GRADATIONAL SPECIFICATIONS;

U.S. STANDARD SIEVE NUMBER	% FINER BY WEIGHT
3/8"	100
30	20 - 65
200	0 - 10

CONTRACTOR SHALL SUBMIT GRADATIONAL ANALYSIS AND SOURCE OF PROPOSED QUARRY DUST A MINIMUM OF 15 DAYS PRIOR TO CONSTRUCTION FOR OWNER REVIEW AND COMMENT.

6.2 QUARRY DUST SHALL BE PLACED IN A SINGLE LIFT SUCH THAT A MINIMUM THICKNESS OF 2 INCHES IS ATTAINED FOLLOWING COMPACTION. THE LIFT SHALL BE COMPACTED TO A MINIMUM OF 90% OF MODIFIED PROCTOR DENSITY IN ACCORDANCE WITH ASTM D1557. MECHANICAL COMPACTION EQUIPMENT SHALL BE USED IN SUCH A MANNER WHICH CAUSES NO DAMAGE OR DISTORTION TO THE SLOPE FACE. QUARRY DUST MATERIALS NOT IN COMPLIANCE WITH THESE SPECIFICATIONS SHALL BE REWORKED OR REMOVED AND REPLACED BY THE CONTRACTOR AT NO ADDITIONAL COST TO THE OWNER.

7.0 STONE

7.1 RIP-RAP FOR THE INTERIOR OF DAM SLOPE FACE PROTECTION SHALL CONSIST OF MATERIAL MEETING DELAWARE DEPARTMENT OF TRANSPORTATION STANDARDS AND SPECIFICATIONS AUGUST 2001 SECTION 712.04 R-7 RIP-RAP. THIS RIP-RAP SHALL BE PLACED OVER THE GEOTEXTILE IN SUCH A MANNER AS TO PREVENT DISTORTION OR DAMAGE TO THE GEOTEXTILE. GEOTEXTILE TO CONSIST OF COMTRAC P 80/80 OR APPROVED EQUIVALENT. AT NO TIME WILL CONSTRUCTION EQUIPMENT BE PERMITTED TO TRAVERSE OVER THE TOP OF THE RIP-RAP OR GEOTEXTILE ON WHICH THE RIP-RAP IS PLACED. IF THE GEOTEXTILE IS DAMAGED DURING THE PLACEMENT OF RIP-RAP THIS SECTION OF GEOTEXTILE SHALL BE REPLACED AT NO ADDITIONAL COST TO THE OWNER.

7.2 STONE FOR THE 12 INCH STONE DRAINAGE BLANKET SHALL CONSIST OF AASHTO SP-57 STONE. GEOTEXTILE SHALL CONSIST OF WOVEN POLYPROPYLENE COMTRAC P80/80 OR APPROVED EQUIVALENT.

NOT IN CONTRACT 6

8.0 FLOW CONTROL GATES

8.1 DIMENSIONS AND FABRICATION INFORMATION FOR FLOW CONTROL GATES SHALL BE DETERMINED IN THE FIELD BY THE CONTRACTOR.

8.2 THE CONTRACTOR SHALL SUBMIT SHOP DRAWINGS OF THE FLOW CONTROL GATES TO THE OWNER FOR REVIEW. FABRICATION OF THE FLOW CONTROL GATES SHALL NOT COMMENCE UNTIL THE SHOP DRAWINGS HAVE BEEN APPROVED.

8.3 THE 48" RCP REPLACEMENT PIPE FOR THE RACEWAY SHALL RECIEVE A NEW INTAKE FLOW CONTROL GATE CONSISTING OF A SQUARE, MANUALLY OPERATED, TOP-CLOSING (TOP FULL-OPEN) METAL GATE SYSTEM. THE CONTRACTOR SHALL INCLUDE THIS ITEM IN THIS BASE BID. THE ITEM INCLUDES, BUT IS NOT LIMITED TO, MATERIALS, FABRICATION, INSTALLATION, TESTING, AND ADJUSTMENT.

8.4 EXISTING OPENINGS FOR FLOW CONTROL GATES IN THE SPILLWAY STRUCTURE CONSIST OF TWO 5'-6" WIDE BY 9'-0" TALL OPENINGS (APPROXIMATE DIMENSIONS). REPLACEMENT FLOW CONTROL GATES SHALL CONSIST OF A DOUBLE-HUNG, MANUALLY OPERATED, TOP-CLOSING (TOP FULL-OPEN) METAL GATE SYSTEM. THE CONTRACTOR SHALL PROVIDE AN ADD-ALTERNATE BID PRICE FOR THESE GATES. THE WORK RELATED TO THIS ITEM INCLUDES, BUT IS NOT LIMITED TO, MATERIALS, FABRICATION, INSTALLATION, TESTING, AND ADJUSTMENT.

8.5 ALL FLOW GATES SHALL BE AS MANUFACTURED BY CRAFT MACHINE WORKS, INC., 2102 48TH STREET, HAMPTON, VA 23611, (757-380-8615, CONTACT: MR. JIM EDWARDS, (OR) WATERMAN INDUSTRIES, INC., 1-800-331-0808, VIA JOHN B. ATHERHOLT, INC., 1000 CONSHOHOCKEN ROAD, CONSHOHOCKEN, PA 19438, (610) 828-4140, OR APPROVED EQUIVALENT.

NOT IN CONTRACT 6

9.0 STEEL SHEET PILING

9.1 ALL STEEL SHEET PILING SHALL CONFORM TO THE REQUIREMENTS OF ASTM A 572/A 572M WITH CONTINUOUS INTERLOCKS.

9.2 STEEL SHEET PILING SHALL BE INSTALLED BY VIBRATION METHODS ONLY.

9.3 CONTRACTOR SHALL PREPARE AND SUBMIT PHOTOGRAPHS OR VIDEOTAPE, SUFFICENTLY DETAILED, OF EXISTING CONDITIONS OF THE MILL BUILDINGS, ALL FOUNDATIONS, THE SPILLWAY, AND ADJOINING AREAS OF CONSTRUCTION THAT MIGHT BE MISCONSTRUED AS DAMAGE CAUSED BY THE INSTALLATION OF THE STEEL SHEET PILING WALL SYSTEM.

9.4 SHEET PILE WALL SHALL BE INSTALLED TO THE LENGTHS AND ELEVATIONS SHOWN ON THE DRAWINGS.

NOT IN CONTRACT 6

10.0 CONCRETE

10.1 ALL REINFORCED CONCRETE MATERIALS AND CONSTRUCTION SHALL BE IN ACCORDANCE WITH THE REQUIREMENTS OF ACI 318 (LATEST EDITION), "BUILDING CODE REQUIREMENTS FOR REINFORCED CONCRETE" AND SHALL CONFORM TO THE FOLLOWING REQUIREMENTS:

28 DAY COMPRESSIVE STRENGTH	4,000 PSI
AIR ENTRAINMENT	5
MAXIMUM DESIGN SLUMP	3 INCHES ± 1 INCH
MAXIMUM WATER-CEMENT RATIO	0.45 (BY WEIGHT)

10.2 CAST-IN-PLACE ARCHITECTURAL CONCRETE:

ARCHITECTURAL CONCRETE FINISH: PROVIDE COMBINATION OF COLORED CONCRETE AND EXPOSED AGGREGATE FINISH TO SIMULATE APPEARANCE OF EXISTING WEATHERED CONCRETE SURFACES ON ADJACENT STRUCTURES AT THE SITE.

SAMPLE PANELS: BEFORE CASTING ARCHITECTURAL CONCRETE, CONSTRUCT AN APPROXIMATELY 48" X 48" X 6" SAMPLE PANEL TO DEMONSTRATE THE EXPECTED RANGE OF FINISH, COLOR, AND TEXTURE VARIATIONS.

DEMONSTRATE METHODS OF CURING, AGGREGATE EXPOSURE, SEALERS, AND COATINGS, AS APPLICABLE. IN PRESENCE OF OWNER'S REPRESENTATIVE, DAMAGE PART OF AN EXPOSED-FACE SURFACE AND DEMONSTRATE MATERIALS AND TECHNIQUES PROPOSED FOR REPAIR OF TIE HOLES AND SURFACE BLEMISHES TO MATCH ADJACENT UNDAMAGED SURFACES. MAINTAIN SAMPLE PANELS DURING CONSTRUCTION IN AN UNDISTURBED CONDITION AS A STANDARD FOR EVALUATING THE COMPLETED WORK. DEMOLISH AND REMOVE SAMPLE PANELS WHEN DIRECTED.

10.3 CONCRETE MATERIALS

PORTLAND CEMENT: ASTM C 150, TYPE I, GRAY OR WHITE COLOR, OF SAME TYPE, BRAND, AND SOURCE FOR ENTIRE PROJECT.

NORMAL-WEIGHT COARSE AGGREGATE: ASTM C 33, FROM THE SAME SOURCE FOR ENTIRE PROJECT, AND AS FOLLOWS:

GRADATION: MEET GRADATION REQUIREMENTS OF ASHTO SP-57 STONE.
AGGREGATE TYPE: WASHED GRAVEL NOT CRUSHED STONE.

NORMAL-WEIGHT FINE AGGREGATE: ASTM C 33, MANUFACTURED OR NATURAL SAND, FROM THE SAME SOURCE FOR ENTIRE PROJECT.

CHEMICAL ADMIXTURES: CERTIFIED BY MANUFACTURER TO CONTAIN NOT MORE THAN 0.1 PERCENT WATER-SOLUBLE CHLORIDE IONS BY MASS OF CEMENTITIOUS MATERIAL AND TO BE COMPATIBLE WITH OTHER ADMIXTURES AND CEMENTITIOUS MATERIALS. DO NOT USE ADMIXTURES CONTAINING CALCIUM CHLORIDE.

AIR-ENTRAINING ADMIXTURE: ASTM C 260.
WATER-REDUCING ADMIXTURE: ASTM C 494, TYPE A.
WATER-REDUCING AND ACCELERATING ADMIXTURE: ASTM C 494, TYPE E.
COLORING ADMIXTURE: ASTM C 979, SYNTHETIC MINERAL-OXIDE PIGMENTS OR COLORED WATER-REDUCING ADMIXTURES, FREE OF CARBON BLACK; COLOR STABLE, NONFADING, AND RESISTANT TO LIME AND OTHER ALKALIS.

10.4 REINFORCING STEEL SHALL CONFORM TO THE REQUIREMENTS OF ASTM A615, GRADE 60, DEFORMED.

10.5 REINFORCING STEEL DIMENSIONS ARE TO THE CENTERLINE OF BAR UNLESS NOTED OTHERWISE.

10.6 REINFORCING STEEL SHALL BE SPLICED ONLY AS INDICATED ON THIS DRAWING UNLESS OTHERWISE APPROVED IN WRITING BY THE STRUCTURAL ENGINEER.

10.7 CONSTRUCTION JOINTS SHALL BE PERMITTED ONLY AS INDICATED ON THIS DRAWING UNLESS OTHERWISE APPROVED BY THE STRUCTURAL ENGINEER.

10.8 REINFORCING STEEL SHOP DRAWINGS SHALL BE SUBMITTED TO THE OWNER'S REPRESENTATIVE FOR REVIEW A MINIMUM OF TEN (10) WORKING DAYS PRIOR TO THE START OF FABRICATION.

10.9 REINFORCING STEEL PLACEMENT SHALL BE REVIEWED BY THE OWNER'S REPRESENTATIVE A MINIMUM OF 24 HOURS PRIOR TO CONCRETE PLACEMENT.

10.10 CONCRETE MIX DESIGNS SHALL BE SUBMITTED TO THE OWNER'S REPRESENTATIVE FOR REVIEW A MINIMUM OF 48 HOURS PRIOR TO CONCRETE PLACEMENT.

10.11 THE RECOMMENDATIONS CONTAINED IN ACI COMMITTEE REPORT 306R (LATEST EDITION), "COLD WEATHER CONCRETING," SHALL BE OBSERVED.

10.12 THE RECOMMENDATIONS CONTAINED IN ACI COMMITTEE REPORT 305R (LATEST EDITION), "HOT WEATHER CONCRETING," SHALL BE OBSERVED.

10.13 SUBBASE AND FORMS SHALL BE PREWETTED PRIOR TO CONCRETE PLACEMENT.

10.14 CONCRETE FINISHES

ARCHITECTURAL CONCRETE FINISH:

PROVIDE ARCHITECTURAL CONCRETE FINISH ON ALL SURFACES EXPOSED TO VIEW IN THE COMPLETED WORK.

RELATED UNFORMED SURFACES: AT TOPS OF WALLS, HORIZONTAL OFFSETS, AND SIMILAR UNFORMED SURFACES ADJACENT TO FORMED SURFACES, STRIKE OFF SMOOTH AND FINISH WITH A TEXTURE MATCHING ADJACENT FORMED SURFACES.

AS-CAST FORMED FINISHES:

FOR ALL FORMED SURFACES NOT EXPOSED TO VIEW IN THE COMPLETED WORK, PROVIDE ROUGH-FORMED FINISH AS FOLLOWS:

AS-CAST CONCRETE TEXTURE IMPARTED BY FORM-FACING MATERIAL WITH TIE HOLES AND DEFECTIVE AREA REPAIRED AND PATCHED. REMOVE FINS AND OTHER PROJECTIONS EXCEEDING ACI 347R LIMITS.

EXPOSED-AGGREGATE FINISHES:

EXPOSED AGGREGATED FINISHES MAY BE ACHIEVED BY ANY OF THE FOLLOWING METHODS IF SATISFACTORILY DEMONSTRATED IN THE CONSTRUCTION OF THE SAMPLE PANEL:

SCRUBBED FINISH: AFTER CONCRETE HAS ACHIEVED A COMPRESSIVE STRENGTH FROM 1000 TO 1500 PSI , WET CONCRETE SURFACES THOROUGHLY AND SCRUB WITH STIFF FIBER OR WIRE BRUSHES, USING WATER FREELY, UNTIL TOP MORTAR SURFACE IS REMOVED AND AGGREGATE IS UNIFORMLY EXPOSED.

HIGH-PRESSURE WATER-JET FINISH: PERFORM HIGH-PRESSURE WATER JETTING ON CONCRETE THAT HAS ACHIEVED A MINIMUM COMPRESSIVE STRENGTH OF 4500 PSI. COORDINATE WITH FORMWORK REMOVAL TO ENSURE THAT SURFACES TO BE HIGH-PRESSURE WATER-JET FINISHED ARE TREATED AT THE SAME AGE FOR UNIFORM RESULTS.

ABRASIVE-BLAST FINISH: PERFORM ABRASIVE BLASTING AFTER THE COMPRESSIVE STRENGTH OF CONCRETE EXCEEDS 2000 PSI. COORDINATE WITH FORMWORK REMOVAL TO ENSURE THAT SURFACES TO BE ABRASIVE BLASTED ARE TREATED AT THE SAME AGE FOR UNIFORM RESULTS.

BUSHHAMMER FINISH: ALLOW CONCRETE TO CURE AT LEAST 14 DAYS BEFORE STARTING BUSHHAMMER SURFACE FINISH OPERATIONS.

10.15 PROVIDE CONCRETE CURING AND PROTECTION AS FOLLOWS:
CURE CONCRETE BY MOIST CURING OR BY MOISTURE RETAINING COVER CURING, OR BY COMBINING THESE METHODS, AS SPECIFIED. START INITIAL CURING AS SOON AS FREE WATER HAS DISAPPEARED FROM CONCRETE SURFACE AFTER

PLACING AND FINISHING. WEATHER PERMITTING, KEEP CONTINUOUSLY MOIST FOR NOT LESS THAN 7 DAYS.

11.0 ADMINISTRATIVE PROCEDURES

11.1 ALL ADMINISTRATIVE PROCEDURES SHALL BE IN ACCORDANCE WITH THE REQUIREMENTS SET FORTH IN THE CONTRACT DOCUMENTS, ISSUED BY DNREC.

11.2 CONTRACT DOCUMENTS CONSIST OF GENERAL CONDITIONS, ADDENDA OR CLARIFICATIONS AS ISSUED BY DNREC OR THEIR REPRESENTATIVE AND ARE INCORPORATED INTO THESE DRAWINGS BY REFERENCE.

11.3 UPON COMPLETION OF CONSTRUCTION, CONTRACTOR SHALL FURNISH TO BOTH DNREC AND THE ENGINEER, ONE ELECTRONIC COPY AND TWO HARD COPIES OF AS-BUILT SURVEY, DEPICTING ALL IMPROVEMENTS MADE TO THE DAM UNDER THIS CONTRACT. THE SURVEY SHALL BE SIGNED AND SEALED BY A SURVEYOR LICENSED IN DELAWARE.

DUFFIELD ASSOCIATES
Consultants in the Geosciences
5400 LIMESTONE ROAD
WILMINGTON, DE 19808-1232
TEL: (302)239-4464
FAX: (302)239-8485
1528 WALNUT STREET, SUITE 725
PHILADELPHIA, PA 19102
E-MAIL: DUFFIELD@DUFFNET.COM

DESIGNED BY: KAR/JFC
CHECKED BY: JFC
DRAWN BY: BTP/SSJ
FILE NAME: D4570PG01
JAMES F. CLOONAN
STATE: DELAWARE P.E. 7384

No.	REVISION	CHECKED BY	DATE
1	ISSUED AS PRELIMINARY FOR REVIEW BY DNREC	KAR	12-12-01
2	RE-ISSUED FOR REVIEW BY DNREC	JFC	12-14-01
3	ISSUED FOR BIDS	KAR	12-19-01
4	ADDENDUM #1 TO BID SET	KAR	01-15-02
5	ADDENDUM #2 TO BID SET	KAR	01-24-02
6	ISSUED FOR 2006 CONSTRUCTION	KAR	07-05-05
7	REVISED FOR 2006 BIDDING	JFC	05-26-06

PREPARED FOR:

DE STATE DEPARTMENT OF NATURAL RESOURCES AND ENVIRONMENTAL CONTROL

NOTES AND SPECIFICATIONS
PROPOSED EMBANKMENT REPAIR - HEARNS POND
SUSSEX COUNTY ~ DELAWARE

DATE:	12-19-01
SCALE:	N/A
W.O. NO.	4570.CD
SHEET:	C-2

NORTH

LEGEND:

- EXISTING CONTOURS (INTERMEDIATE)
- EXISTING CONTOURS (INDEX)
- EXISTING TREE LINE
- EXISTING TREE
- 17.26 X EXISTING SPOT ELEVATION
- PHOTO LOCATION AND DIRECTION

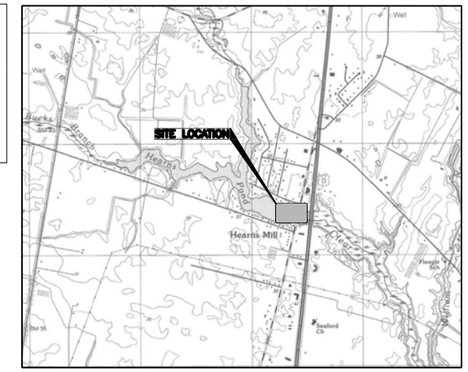

LOCATION PLAN SCALE: 1"=2000'

THIS LOCATION SKETCH IS ADAPTED FROM THE U.S.G.S. TOPOGRAPHIC MAP, 7.5 MINUTE SERIES, FOR SEAFORD (EAST), DE. (1993).

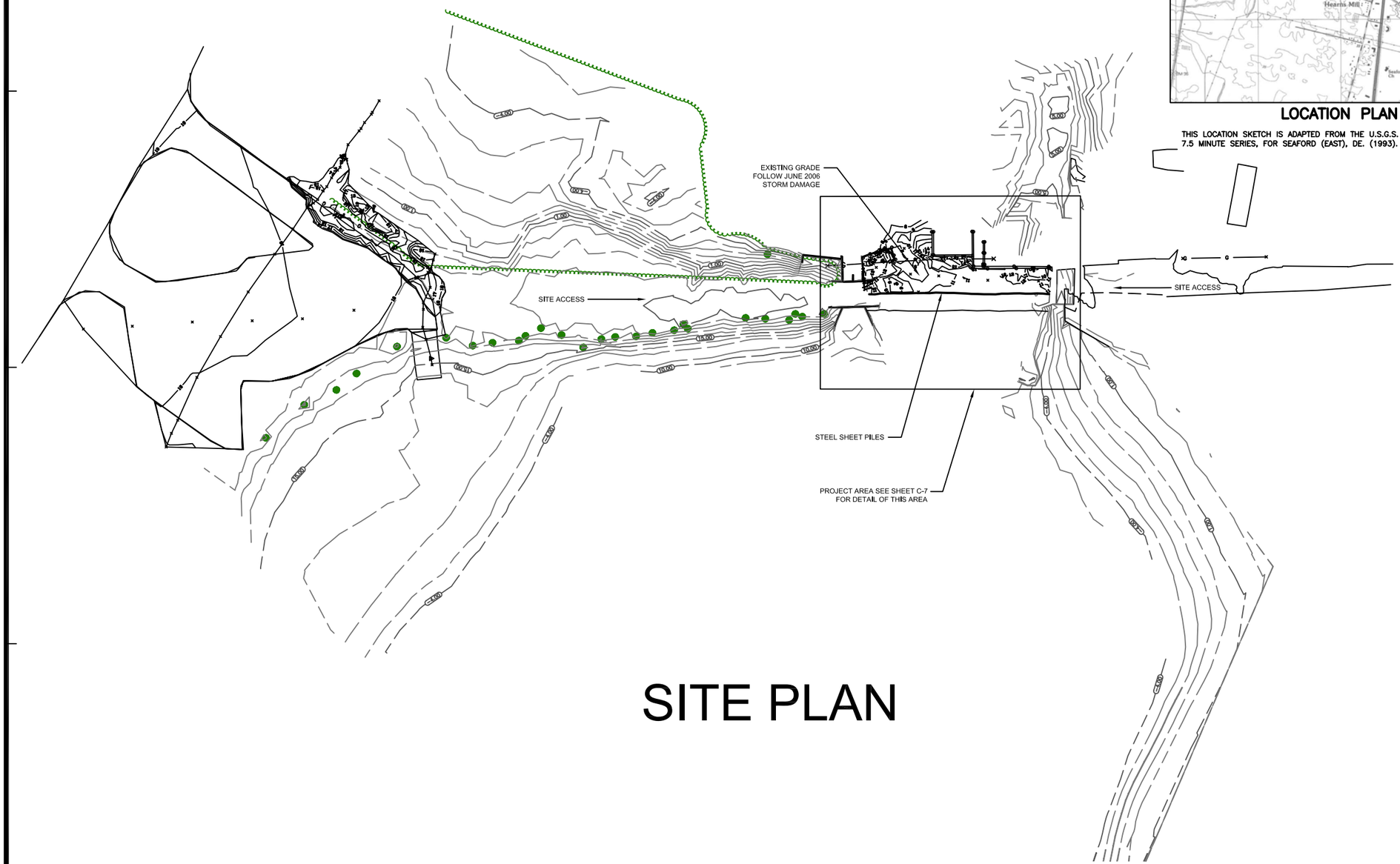

SITE PLAN

NOTES:

1. PLEASE REFER TO THE COVER SHEET OF THIS PLAN SET FOR GENERAL NOTES.
2. PHOTOS OF HEARNS POND ARE PROVIDED TO THE CONTRACTOR FOR INFORMATION ONLY. CONTRACTOR RESPONSIBLE TO VERIFY ACTUAL FIELD CONDITIONS.

DUFFIELD ASSOCIATES
Consultants in the Geosciences
5400 LIMESTONE ROAD
WILMINGTON, DE 19808-1232
TEL: (302)239-6634
FAX: (302)239-8485
1528 WALNUT STREET, SUITE 725
PHILADELPHIA, PA 19102
E-MAIL: DUFFIELD@DUFFNET.COM

DESIGNED BY: KAR/JFC
CHECKED BY: JFC
DRAWN BY: BTP/SSJ
FILE NAME: D4570PG01
JAMES F. CLOONAN
STATE: DELAWARE
P.E. 7384

No.	REVISION	CHECKED BY	DATE
1	ISSUED AS PRELIMINARY FOR REVIEW BY DNREC	KAR	12/21/01
2	RE-ISSUED FOR REVIEW BY DNREC	JFC	03/14/02
3	ISSUED FOR BIDS	KAR	12/19/05
4	ADDENDUM #1 TO BID SET	KAR	
5	ADDENDUM #2 TO BID SET	KAR	
6	ISSUED 05-09	KAR	05/09/06
7	REVISED FOR 2006 DAMAGES	KAR	06/26/06

PREPARED FOR:

SITE PLAN
EXISTING CONDITIONS
PROPOSED EMBANKMENT
REPAIR - HEARNS POND
SUSSEX COUNTY ~ DELAWARE

DATE:	12-19-01
SCALE:	1" = 30'
W.O. NO.	4570.CD
SHEET:	C-3

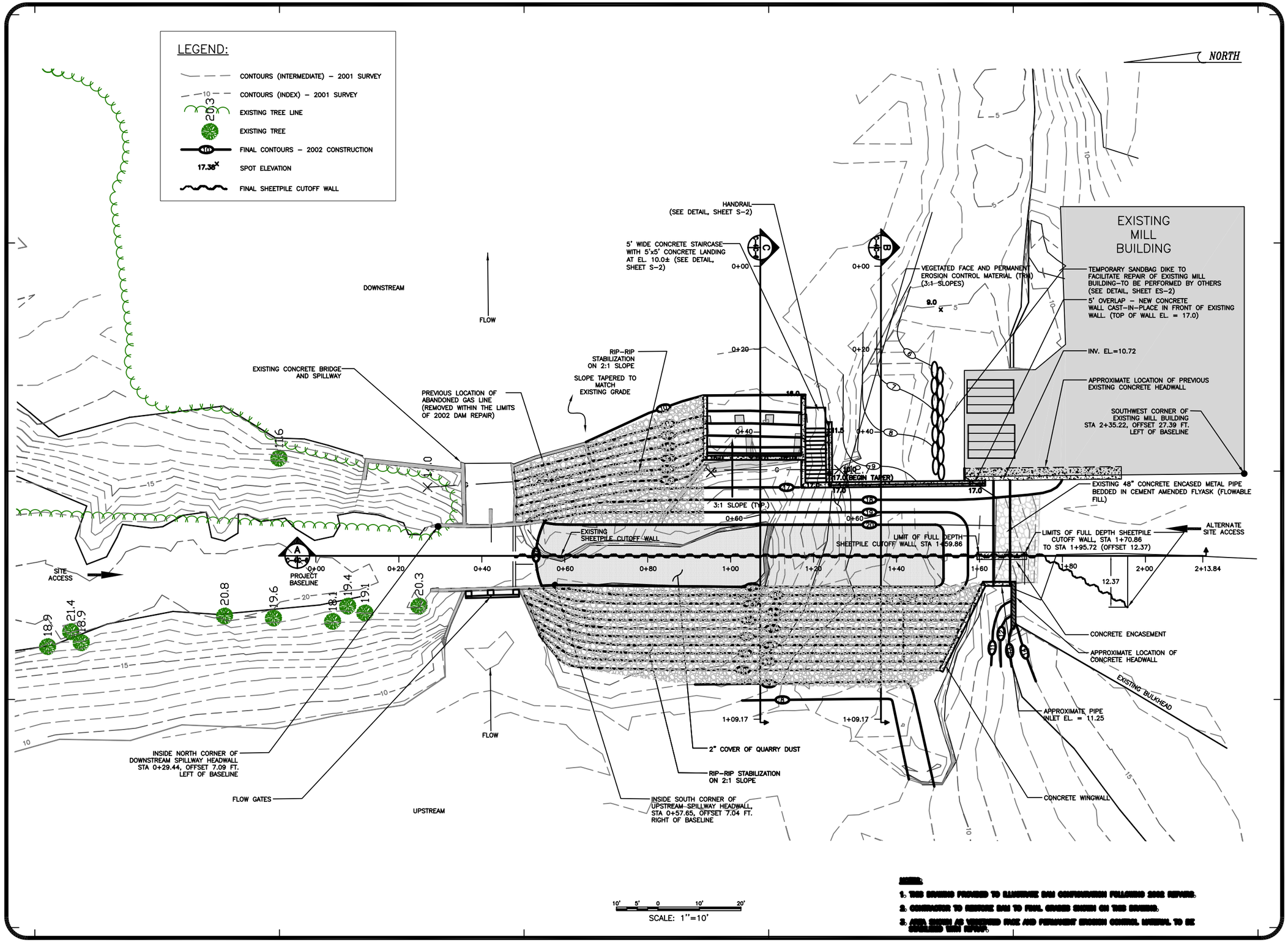

NOTES:

1. THIS DRAWING PROVIDED TO ILLUSTRATE DAM CONFIGURATION FOLLOWING 2002 REPAIRS.
2. CONTRACTOR TO RESTORE DAM TO FINAL GRADES SHOWN ON THIS DRAWING.
3. AREA SHOWN AS VEGETATED FACE AND PERMANENT EROSION CONTROL MATERIAL TO BE INSTALLED THIS REPAIR.

DUFFIELD ASSOCIATES
Consultants in the Geosciences
5400 LIMESTONE ROAD
WILMINGTON, DE 19808-1232
TEL: (302)239-6634
FAX: (302)239-8485
1528 WALNUT STREET, SUITE 725
PHILADELPHIA, PA 19102
E-MAIL: DUFFIELD@DUFFNET.COM

DESIGNED BY: KAR/JFC
DRAWN BY: BTP/SSJ
CHECKED BY: JFC
FILE NAME: D4570PG01

JAMES F. CLOONAN
STATE: DELAWARE
P.E. 7384

No.	REVISION	CHK'D BY	DATE
1	ISSUED AS PRELIMINARY FOR REVIEW BY DNREC	KAR	12/21/00
2	RE-ISSUED FOR REVIEW BY DNREC	JFC	4/9/01
3	ISSUED FOR BIDS	KAR	7/26/01
4	ADDENDUM #1 TO BID SET	KAR	8/28/01
5	ADDENDUM #2 TO BID SET	KAR	9/5/01
6	ISSUED AS-BUILT	KAR	10/24/01
7	REVISED TO NOTE CUT POST DREDGE CONS.	KAR	12/19/01

PREPARED FOR:

SITE PLAN
CONDITIONS FOLLOWING 2002 REPAIRS
PROPOSED EMBANKMENT REPAIR - HEARNS POND
SUSSEX COUNTY ~ DELAWARE

DATE:	12-19-01
SCALE:	1" = 10'
W.O. NO.	4570.CD
SHEET:	C-4

DETAIL: STEEL BRACE

SCALE: NONE

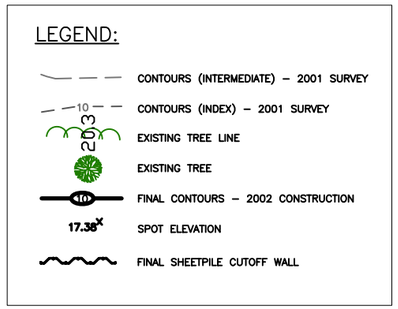

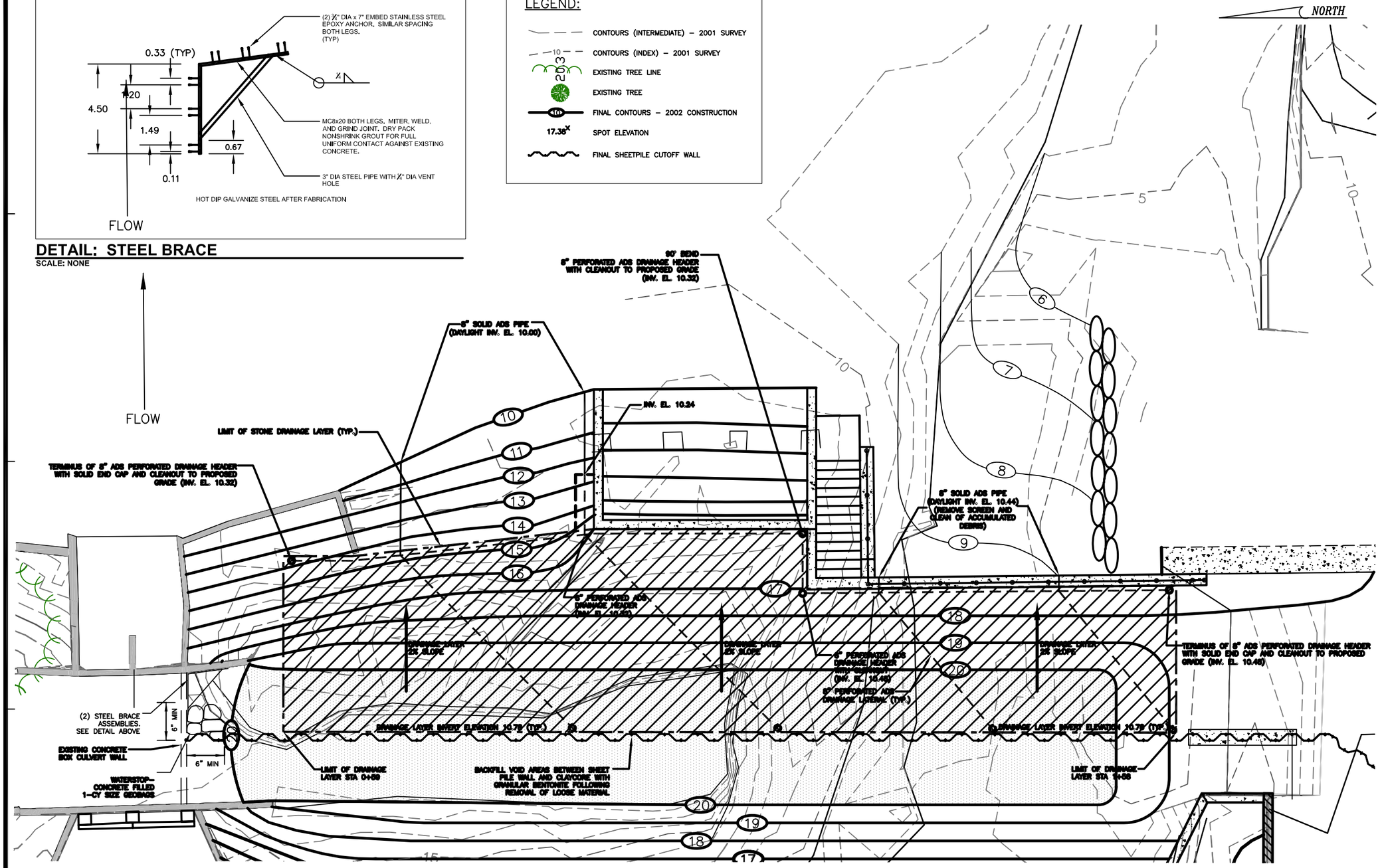

6

NOTES:

1. CONTRACTOR TO RECONSTRUCT DRAINAGE LAYER AND PIPING AS SHOWN ON DRAWING C-5.
2. PLEASE REFER TO THE COVER SHEET OF THIS PLAN SET FOR GENERAL NOTES.
3. CONTRACTOR TO PREVENT EROSION SPILLWAY DURING CROSSING FROM DAMAGE DURING CONSTRUCTION.

DUFFIELD ASSOCIATES
Consultants in the Geosciences
5400 LIMESTONE ROAD
WILMINGTON, DE 19808-1232
TEL: (302)239-6634
FAX: (302)239-8485
1528 WALNUT STREET, SUITE 725
PHILADELPHIA, PA 19102
E-MAIL: DUFFIELD@DUFFNET.COM

CHECKED BY: JFC
DESIGNED BY: KAR/JFC
DRAWN BY: BTP/SSJ
FILE NAME: D4570PG01
JAMES F. CLOONAN
STATE: DELAWARE
P.E. 7384

No.	REVISION	CHK'D BY	DATE
1	ISSUED AS PRELIMINARY FOR REVIEW BY DNREC	KAR	12/21/01
2	RE-ISSUED FOR REVIEW BY DNREC	JFC	1/24/02
3	ISSUED FOR BIDS	KAR	2/15/02
4	ADDENDUM #1 TO BID SET	KAR	3/5/02
5	ADDENDUM #2 TO BID SET	KAR	4/9/02
6	ISSUED FOR 2006 REPAIRS	KAR	10/25/06

PREPARED FOR:

DAM DRAINAGE LAYER
PROPOSED CONDITIONS
PROPOSED EMBANKMENT REPAIR - HEARNS POND
SUSSEX COUNTY ~ DELAWARE

DATE:	12-19-01
SCALE:	1" = 5'
W.O. NO.	4570.CD
SHEET:	C-5

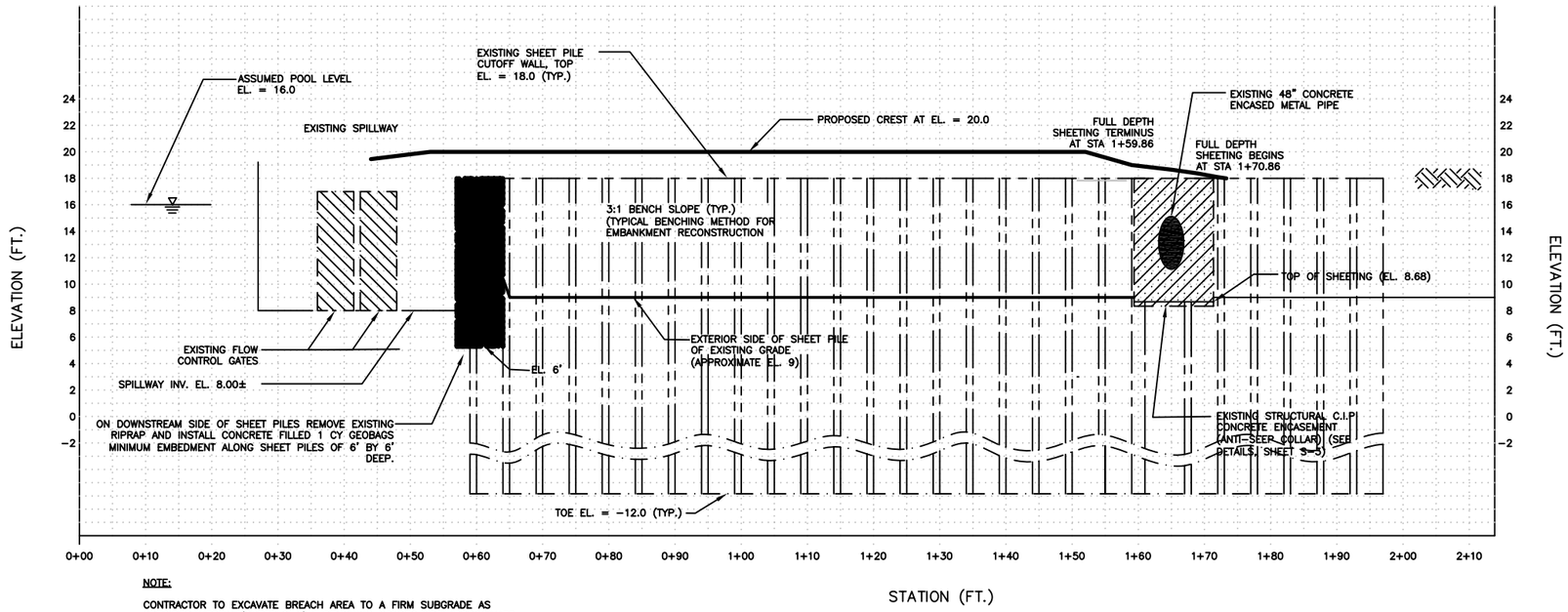

NOTE:

CONTRACTOR TO EXCAVATE BREACH AREA TO A FIRM SUBGRADE AS SPECIFIED HEREIN (SHEET C-2). BENCHING GRADES ARE APPROXIMATE. EXISTING DEBRIS MATERIALS (SOIL, ROCK, DEBRIS) ARE TO BE DISPOSED OF OFF-SITE BY THE CONTRACTOR.

SECTION A 6

SCALE: HORIZONTAL 1" = 10'
VERTICAL 1" = 5'

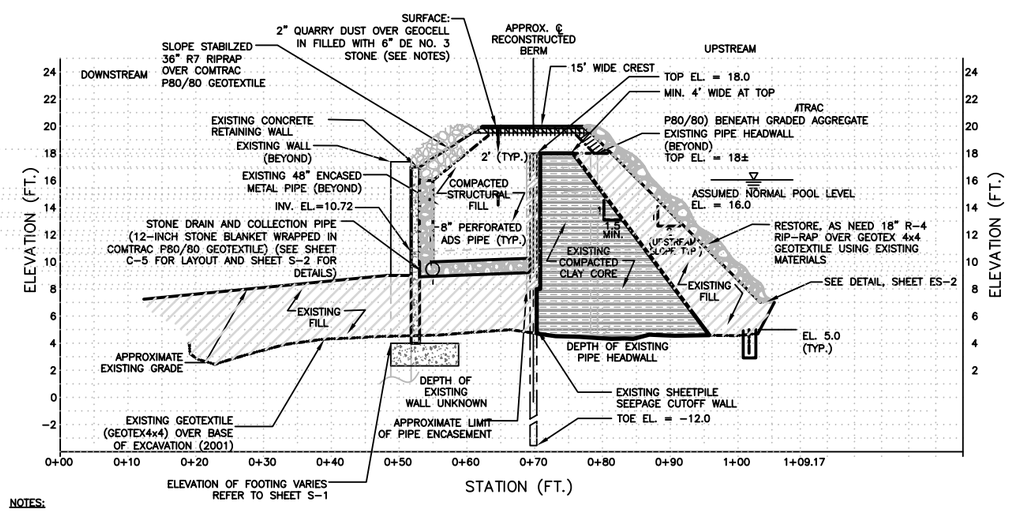

NOTES:

1. NEW STRUCTUAL FILL TO CONSIST OF DELAWARE SELECT BORROW, TYPE G.
2. DRAIN AND COLLECTOR PIPE TO BE CONTINUOUS ALONG LENGTH OF NEW EMBANKMENT. COLLECTION PIPE TO BE 8-INCH PERFORATED POLYETHYLENE PIPE (ADS OR APPROVED EQUIVALENT). REFER TO SHEET C-5 FOR LAYOUT AND SHEET S-2 FOR DETAILS.
3. THE INVERT ELEVATION OF THE STONE DRAIN SHALL BE THE SAME AS, AND FOLLOW THE GRADE OF, THE ELEVATION AT THE TOE OF SLOPE ALONG THE EXTERIOR (3:1) SLOPE OF THE RECONSTRUCTED DAM.
4. PROVIDE OVER LAP OF 24" BETWEEN EXISTING GEOTEXTILE UNDERLYING NO. 4 RIPRAP AND PROPOSED GEOTEXTILE LAYER UNDERLYING CREST AND R7 RIPRAP. GEOTEXTILE LAYER SHALL BE ANCHORED A MINIMUM OF 24 INCHES ALONG PERIMETER OF INSTALLATION.
5. GEOCELL TO BE INSTALLED ALONG CREST SHALL BE ANCHORED UNDER SIDE SLOPE RIPRAP AREAS FOR A MINIMUM OF 2' FOR LENGTH OF CREST. PRESTO "ATRA ANCHORS" AT MINIMUM 18" INTERVALS ALONG ANCHORAGE IN ACCORDANCE WITH MANUFACTURER GUIDELINES.

SECTION B - TYPICAL DETAIL 6

SCALE: HORIZONTAL 1" = 10'
VERTICAL 1" = 5'

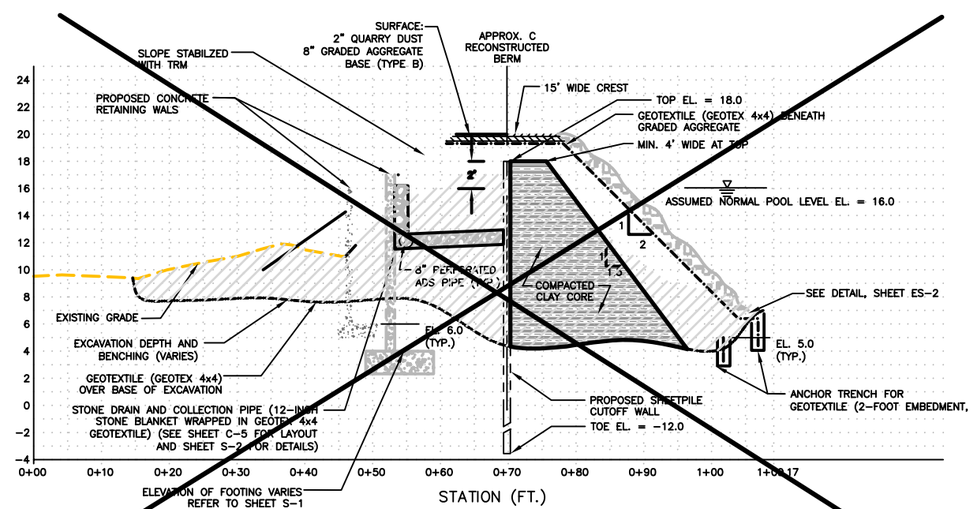

NOT IN CONTRACT 6

NOTE:

PLEASE REFER TO SECTION B FOR TYPICAL SECTION DETAIL.

SECTION C

SCALE: HORIZONTAL 1" = 10'
VERTICAL 1" = 5'

DUFFIELD ASSOCIATES
Consultants in the Geosciences
5400 LIMESTONE ROAD
WILMINGTON, DE 19808-1232
TEL: (302)239-6634
FAX: (302)239-8485
1528 WALNUT STREET, SUITE 725
PHILADELPHIA, PA 19102
E-MAIL: DUFFIELD@DUFFNET.COM

DESIGNED BY:	CHECKED BY:
KAR/JFC	JFC
DRAWN BY:	FILE NAME:
BTP/SSJ	D4570PG01

JAMES F. CLOONAN

STATE: DELAWARE P.E. 7384

No.	REVISION	CHK'D BY	DATE
1	ISSUED AS PRELIMINARY FOR REVIEW BY DNREC	KAR	12/21/01
2	RE-ISSUED FOR REVIEW BY DNREC	JFC	1/28/02
3	ISSUED FOR BIDS	KAR	7/15/02
4	ADDENDUM #1 TO BID SET	KAR	7/25/02
5	ADDENDUM #2 TO BID SET	KAR	8/7/02
6	ISSUED FOR 2006 REPAIRS	KAR	12/19/06

PREPARED FOR:

PROFILES

PROPOSED EMBANKMENT REPAIR - HEARNS POND

SUSSEX COUNTY ~ DELAWARE

DATE:	12-19-01
SCALE:	AS NOTED
W.O. NO.	4570.CD
SHEET:	C-6

PARTS LIST	
No.	Name
1	Standard Flangeback
1A	Extended Flangeback
2	Cover
3	Thrust Nut
4	Wedge Assembly
5	Guide Rail
6	Bronze Seats (Optional)
7	Self-Contained Frame w/Lift (Optional)
8	Non-Rising Stem (Optional)

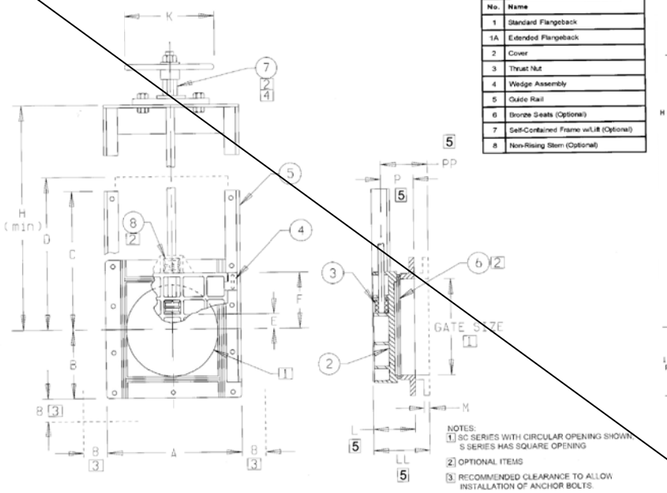

NOTES:
1. SC SERIES WITH CIRCULAR OPENING SHOWN. S SERIES HAS SQUARE OPENING
2. OPTIONAL ITEMS
3. RECOMMENDED CLEARANCE TO ALLOW INSTALLATION OF ANCHOR BOLTS.
4. GEARED, CRANK TYPE LIFTS REQUIRED ON 54" AND LARGER GATES.
5. IF GROUT PAD MOUNTING IS USED, ADD GROUT THICKNESS TO DIMENSION.

GATE DIMENSIONS IN INCHES

GATE SIZE	A	B	C	D	E	F	H	J	K	L	M	P	LL	PP
12 X 12	19	9½	18	29	3½	6½	30	4¼	15	8	⅛	5	11	8
14 X 14	20¾	10⅛	21	33	1½	8	34	4¼	15	7½	⅝	4½	10½	7½
15 X 15	20¾	10⅛	21	33½	1½	8	34	4¼	15	7½	⅝	4¼	10½	7½
16 X 16	23¼	11⅝	21	35	2	8½	36	4¼	15	8	¾	5¼	11½	8½
18 X 18	24	12	22	38	6¼	9½	40	6	18	8½	¾	5½	12	9
20 X 20	26¾	13⅜	29	42	1½	12	44	6	18	8½	¾	5½	12	9¼
21 X 21	26¾	13⅜	29	42½	7½	12	44	6	18	8½	¾	5½	12	9¼
24 X 24	30	16	32	47	9	12½	48	6	24	9	¾	5¾	12¾	9½
30 X 30	38	19	37	56	5¾	16½	58	6	24	10	⅞	6	14	10
36 X 36	44	22	42	65	7	20	67	6	30	10	⅞	6¼	14½	10½
42 X 42	50¼	25⅛	45¾	74	8	23	76	NA	NA	11½	1	7	15½	11
48 X 48	57	28½	47¼	83	5½	26	85	NA	NA	12	1	7¾	16	11½
54 X 54	62½	31¼	64	93	15	29½	95	NA	NA	12½	1	7½	16½	11½
60 X 60	69	34½	70½	102	17¼	32	104	NA	NA	12½	1¼	7	16½	11
66 X 66	82	41	83	112	21	35	116	NA	NA	13½	1½	8½	17½	12½
72 X 72	81	40½	83	120	21	38	124	NA	NA	13	1½	8	17	12

NOTE: FOR PRELIMINARY DESIGN PURPOSES ONLY DO NOT USE FOR INSTALLATION UNLESS PART OF CERTIFIED & APPROVED SUBMITTAL

DETAIL: 48" FLOW GATE – PART OF BASE BID
SCALE: NONE

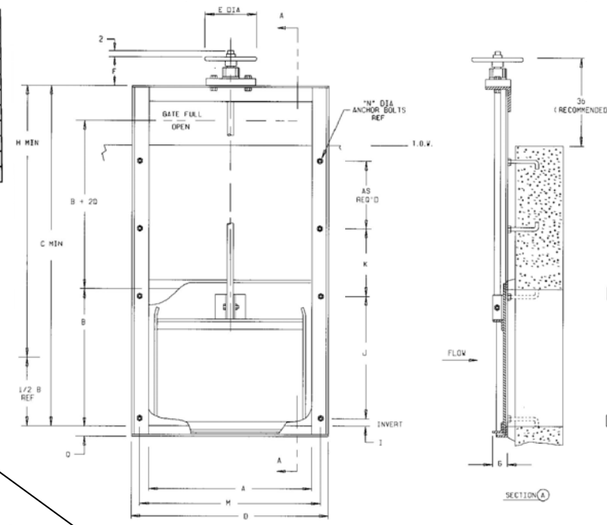

NOTES:
1. Dimensions "J" & "K" are the number of spaces and the dimension between anchor bolts, respectively, as located from anchor bolt shown.
2. Lifts and corresponding dimensions shown are sized to operate gate against the design capacity. When ordering, please indicate actual operating head expected. Lifts will be sized against operating conditions.
3. "R" dimension represents spigot length. (spigot not shown)

SR-5f-Y & SR-5sb-Y
FABRICATED STEEL SLIDE GATES

GATE DIMENSIONS IN INCHES

A x B	C	D	E	F	G	H	I	J 1	K 1	M	N	Q	R 3
8 X 8	H + 4	12	12	3¾	3	24	1	1 @ 6	1 @ 10	10¼	½	2	1¼
10 X 10	H + 5	14	12	3¾	3	24	1	1 @ 8	1 @ 10	12¼	½	2	1¼
12 X 12	H + 6	16	12	3¾	3	24	1	1 @ 10	1 @ 10	14¼	½	2	1¼
12 X 15	H + 7½	16	12	3¾	3	30	1	1 @ 13	1 @ 12	14¼	½	2	1¼
12 X 18	H + 9	16	12	3¾	3	36	1	2 @ 8	1 @ 13	14¼	½	2	1¼
12 X 24	H + 12	16	12	3¾	3	42	1	2 @ 11	1 @ 17	14 ¼	½	2	1¼
15 X 12	H + 6	19	12	3¾	3	24	1	1 @ 10	1 @ 10	17¼	½	2	1¼
15 X 15	H + 7½	19	12	3¾	3	30	1	1 @ 13	1 @ 12	17¼	½	2	1¼
15 X 18	H + 9	19	12	3¾	3	36	1	2 @ 8	1 @ 13	17¼	½	2	1¼
15 X 24	H + 12	19	12	3¾	3	42	1	2 @ 11	1 @ 17	17¼	½	2	1¼
15 X 30	H + 15	19	12	3¾	3	54	1	2 @ 14	1 @ 20	17¼	½	2	1¼
18 X 12	H + 6	22	12	3¾	3	24	1	1 @ 10	1 @ 10	20¼	½	2	1¼
18 X 18	H + 9	22	12	3¾	3	36	1	2 @ 8	1 @ 13	20¼	½	2	1¼
18 X 24	H + 12	22	12	3¾	3	42	1	2 @ 11	1 @ 17	20¼	½	2	1¼
18 X 30	H + 15	22	12	3¾	3	54	1	2 @ 14	1 @ 20	20¼	½	2	1¼
18 X 36	H + 18	22	12	3¾	3	60	1	2 @ 17	2 @ 14	20¼	½	2	1¼
21 X 21	H + 10½	25	12	3¾	3	40	1½	2 @ 9	1 @ 16	23¼	½	2	1¼
24 X 12	H + 6	28	12	3¾	3	24	1	1 @ 10	1 @ 10	26¼	½	2	1¼
24 X 18	H + 9	28	12	3¾	3	36	1	2 @ 8	1 @ 13	26¼	½	2	1¼
24 X 24	H + 12	28	12	3¾	3	42	1	2 @ 11	1 @ 17	26¼	½	2	1¼
24 X 30	H + 15	28	12	3¾	3	54	1	2 @ 14	1 @ 20	26¼	½	2	1¼
24 X 36	H + 18	28	12	3¾	3	60	1	2 @ 17	2 @ 14	26¼	½	2	1¼
24 X 42	H + 21	29	18	6	3½	72	1½	3 @ 13	2 @ 15	27	½	2½	1¾
24 X 48	H + 24	29	18	6	3½	78	1½	3 @ 15	2 @ 16	27	½	2½	1¾

NOTE: FOR PRELIMINARY DESIGN PURPOSES ONLY DO NOT USE FOR INSTALLATION UNLESS PART OF CERTIFIED & APPROVED SUBMITTAL

SR-5f-Y & SR-5sb-Y
FABRICATED STEEL SLIDE GATES

GATE DIMENSIONS IN INCHES

A x B	C	D	E	F	G	H	I	J 1	K 1	M	N	Q	R 3
30 x 18	H + 9	34	12	3¾	3	36	1	2 @ 8	1 @ 13	32¼	½	2	1¼
30 x 24	H + 12	34	12	3¾	3	42	1	2 @ 11	1 @ 17	32¼	½	2	1¼
30 x 30	H + 15	35	12	3¾	3	54	1	2 @ 14	1 @ 20	33	½	2½	1¾
30 x 36	H + 18	35	15	4	3	60	1	2 @ 17	2 @ 14	33	½	2½	1¾
30 x 42	H + 21	35	18	6	3½	72	1½	3 @ 13	2 @ 15	33	½	2½	1¾
30 x 48	H + 24	35	18	6	3½	78	1½	3 @ 15	2 @ 16	33	½	2½	1¾
36 x 24	H + 12	41	12	3¾	3	42	1	2 @ 11	1 @ 17	39	½	2½	1¾
36 x 30	H + 15	41	15	4	3	54	1	2 @ 14	1 @ 20	39	½	2½	1¾
36 x 36	H + 18	41	15	4	3	60	1	2 @ 17	2 @ 14	39	½	2½	1¾
36 x 42	H + 21	42	18	6	3½	72	1½	3 @ 13	2 @ 15	40	⅝	3	1¾
36 x 48	H + 24	42	18	6	3½	78	1½	3 @ 15	2 @ 16	40	⅝	3	1¾
36 x 54	H + 27	42	24	6	3½	90	1	4 @ 13	2 @ 18	40	⅝	3	1¾
36 x 60	H + 30	42	24	6	3½	96	2	4 @ 14	2 @ 21	40	⅝	3	1¾
42 x 24	H + 12	47	15	4	3	42	1	2 @ 11	1 @ 17	45	½	2½	1¾
42 x 30	H + 15	47	15	4	3	54	1	2 @ 14	1 @ 20	45	½	2½	1 ¾
42 x 36	H + 18	48	18	6	3½	60	1	2 @ 17	2 @ 14	46	⅝	3	1¾
42 x 42	H + 21	48	18	6	3½	72	1½	3 @ 13	2 @ 15	46	⅝	3	1¾
42 x 48	H + 24	48	24	6	3½	78	1½	3 @ 15	2 @ 16	46	⅝	3	1 ¾
42 x 54	H + 27	48	24	6	3½	90	1	4 @ 13	2 @ 18	46	⅝	3	1¾
42 x 60	H + 30	49	30	6	3½	100	2	4 @ 14	2 @ 21	46½	⅝	3½	2¾
48 x 24	H + 12	54	18	6	3½	42	1	2 @ 11	1 @ 17	52	⅝	3	2 ¾
48 x 30	H + 15	54	18	6	3½	54	1	2 @ 14	1 @ 20	52	⅝	3	2¾
48 x 36	H + 18	54	18	6	3½	60	1	2 @ 17	2 @ 14	52	⅝	3	2¾
48 x 42	H + 21	54	24	6	3½	72	1½	3 @ 13	2 @ 15	52	⅝	3	2¾

SR-5f-Y & SR-5sb-Y
FABRICATED STEEL SLIDE GATES

GATE DIMENSIONS IN INCHES

A x B	C	D	E*	F	G	H	I	J 1	K 1	M	N	Q	R 4
48 X 48	H + 24	55	24	6	3½	78	1½	3 @ 15	2 @ 16	52½	⅝	3½	2¾
48 X 54	H + 27	55	30	6	3½	90	1	4 @ 13	2 @ 18	52½	⅝	3½	2¾
48 X 60	H + 30	55	30	6	3½	100	2	4 @ 14	2 @ 21	52½	⅝	3½	2¾
48 X 72	H + 36	55	30B	6¼	3½	120	2	4 @ 17	2 @ 24	52½	⅝	3½	2¾
54 X 30	H + 15	60	24	6	3½	54	1	2 @ 14	1 @ 20	58	⅝	3	2¾
54 X 36	H + 18	60	24	6	3½	66	1	2 @ 17	2 @ 14	58	⅝	3	2¾
54 X 42	H + 21	61	24	6	3½	72	1½	3 @ 13	2 @ 15	58½	⅝	3½	2¾
54 X 48	H + 24	61	30	6	3½	84	1½	3 @ 15	2 @ 16	58½	⅝	3½	2¾
54 X 54	H + 27	61	30	6	3½	96	1	4 @ 13	2 @ 18	58½	⅝	3½	2¾
54 X 60	H + 30	61	3ESL-2:1	3½ 3	3½	100	2	4 @ 14	2 @ 21	58½	⅝	3½	2¾
54 X 72	H + 36	61	3EN-2:1	5¼ 3	3½	120	2	4 @ 17	2 @ 24	58½	⅝	3½	2¾
60 X 30	H + 15	67	24	6	3½	54	1	4 @ 14	1 @ 20	64½	⅝	3½	2¾
60 X 36	H + 18	67	24	6	3½	66	1	2 @ 17	2 @ 14	64½	⅝	3½	2¾
60 X 42	H + 21	67	30	6	3½	72	1½	3 @ 13	2 @ 15	64½	⅝	3½	2¾
60 X 48	H + 24	67	30	6	3	54	1	2 @ 14	1 @ 20	64½	½	2½	1¾
60 X 54	H + 27	67	24B	6¼	3½	96	1	4 @ 13	2 @ 18	64½	⅝	3½	2¾
60 X 60	H + 30	67	3ESL-2:1	3½ 3	3½	100	3	4 @ 14	2 @ 21	64½	⅝	3½	2¾
60 X 72	H + 36	67	3EN-2:1	5¼ 3	3½	120	2	4 @ 17	2 @ 24	64½	⅝	3	2¾
72 X 36	H + 18	79	30	6	3½	66	1	2 @ 17	2 @ 14	76½	⅝	3½	3
72 X 42	H + 21	79	24B	6¼	3½	72	1½	3 @ 13	2 @ 15	76½	⅝	3½	3
72 X 48	H + 24	79	24B	6¼	3½	84	1½	3 @ 15	2 @ 16	76½	⅝	3½	3
72 X 54	H + 27	79	30B	6¼	3½	96	1	4 @ 13	2 @ 18	76½	⅝	3½	3
72 X 60	H + 30	79	3ESL-2:1	3½ 3	3½	100	2	4 @ 14	2 @ 21	76½	⅝	3½	3
72 X 72	H + 36	79	3EN-2:1	5¼ 3	3½	120	2	4 @ 17	2 @ 24	76½	⅝	3½	3

* "B" indicates ball bearing; ratio indicates geared lift (example 2:1)

Note: Larger and odd sizes also available

DETAIL: SLIDE GATE – AS PART OF ADD ALTERNATE TO BASE BID
SCALE: NONE

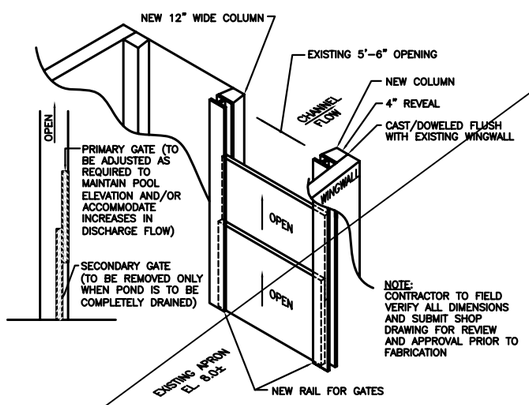

TYPICAL GATE CONFIGURATION – SLIDE GATE
SCALE: NONE

6 NOT PART OF THIS CONTRACT
PROVIDED FOR INFORMATION PURPOSES.
CONSTRUCTION COMPLETED IN 2002.

NOTE:
PLEASE REFER TO THE COVER SHEET OF THIS PLAN SET FOR GENERAL NOTES.

DUFFIELD ASSOCIATES
Consultants in the Geosciences
5400 LIMESTONE ROAD
WILMINGTON, DE 19808-1232
PHONE (302) 239-6634
FAX (302)239-8485
1528 WALNUT STREET, SUITE 725
PHILADELPHIA, PA 19102
E-MAIL: DUFFIELD@DUFFNET.COM

CHECKED BY:	JFC
DESIGNED BY:	KAR/JFC
DRAWN BY:	BTP/SSJ
FILE NAME:	D4570PG01
STATE: DELAWARE	P.E.

No.	REVISION	CHK'D BY	DATE
1	ISSUED AS PRELIMINARY FOR REVIEW BY DNREC	KAR	12/21/01
2	RE-ISSUED FOR REVIEW BY DNREC	JFC	12/26/01
3	ISSUED FOR BIDS	KAR	12/31/01
4	ADDENDUM #1 TO BID SET	KAR	1/8/02
5	ADDENDUM #2 TO BID SET	KAR	1/10/02
6	ISSUED FOR CONSTRUCTION	KAR	1/25/06
7	REISSUED WITH 2006 REPAIR DRAWINGS	KAR	06/26/06

PREPARED FOR:

DETAILS - FLOW GATES
PROPOSED EMBANKMENT REPAIR - HEARNS POND
SUSSEX COUNTY ~ DELAWARE

DATE:	12-19-01
SCALE:	NOT TO SCALE
W.O. NO.	4570.CD
SHEET:	C-7

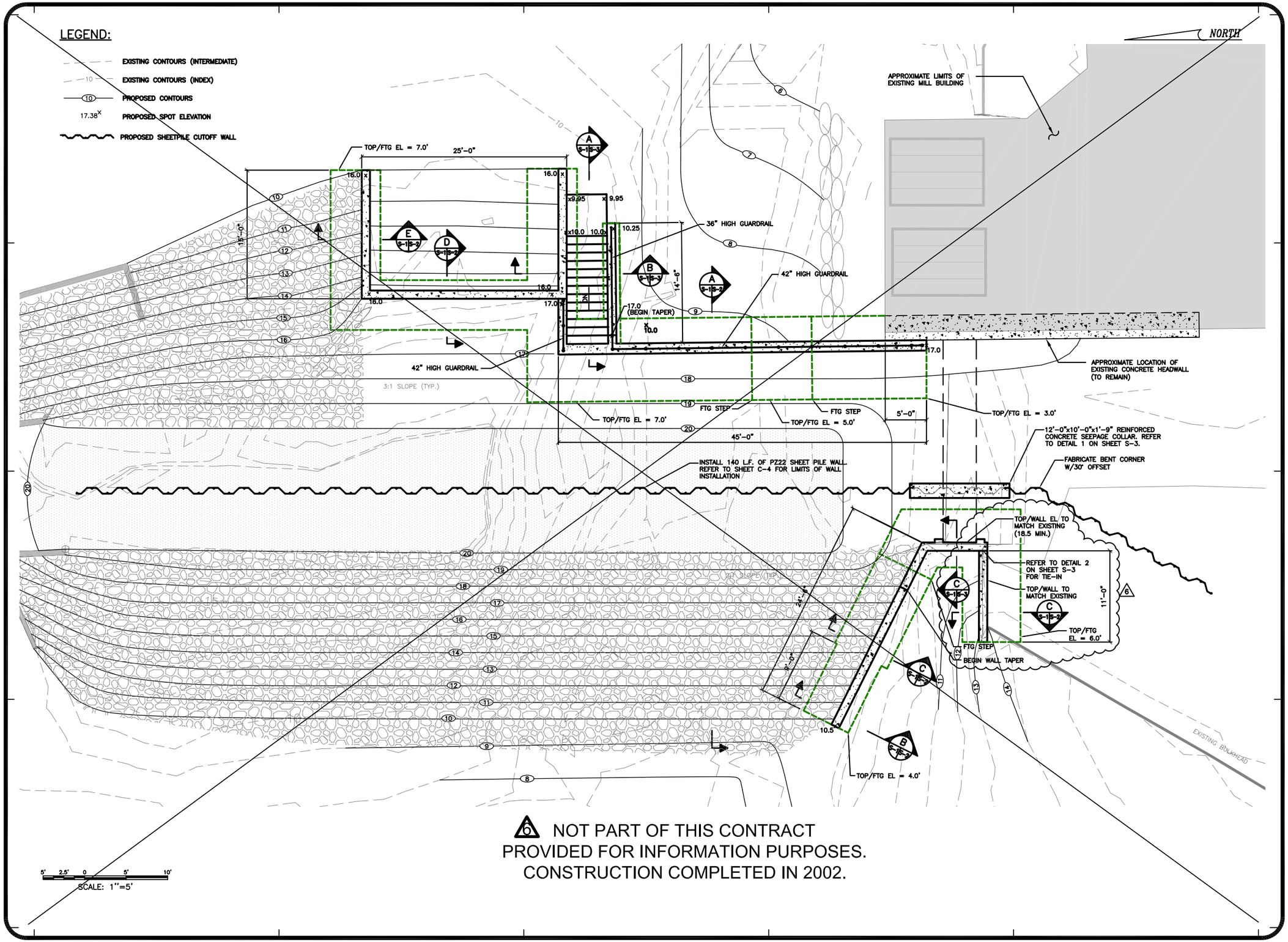

NOT PART OF THIS CONTRACT
PROVIDED FOR INFORMATION PURPOSES.
CONSTRUCTION COMPLETED IN 2002.

DUFFIELD ASSOCIATES
Consultants in the Geosciences
5400 LIMESTONE ROAD
WILMINGTON, DE 19808-1232
TEL. (302)239-6634
FAX (302)239-8485
1528 WALNUT STREET, SUITE 725
PHILADELPHIA, PA 19102
E-MAIL: DUFFIELD@DUFFNET.COM

CHECKED BY: JFC
DESIGNED BY: KAR
DRAWN BY: JGE
FILE NAME: D4570PG51

No.	REVISION	CHK'D BY	DWN BY
1	ISSUED AS PRELIMINARY FOR REVIEW BY DNREC	JFC	JGE
2	RE-ISSUED FOR REVIEW BY DNREC	JFC	JGE
3	ISSUED FOR BIDS	JFC	JGE
4	ADDENDUM #1 TO BID SET	KAR	KAR
5	ADDENDUM #2 TO BID SET	KAR	KAR
6	ISSUED AS "AS-BUILT"	JFC	JGE
7	ADDED RETAINING WALL DETAILS	JFC	JGE
8	REISSUED WITH 2006 REPAIR DRAWINGS.	JFC	JGE

PREPARED FOR:

SITE PLAN - STRUCTURAL

PROPOSED EMBANKMENT REPAIR - HEARNS POND

SUSSEX COUNTY ~ DELAWARE

DATE:	12-19-01
SCALE:	1" = 5'
W.O. NO.	4570.CD
SHEET:	S-1

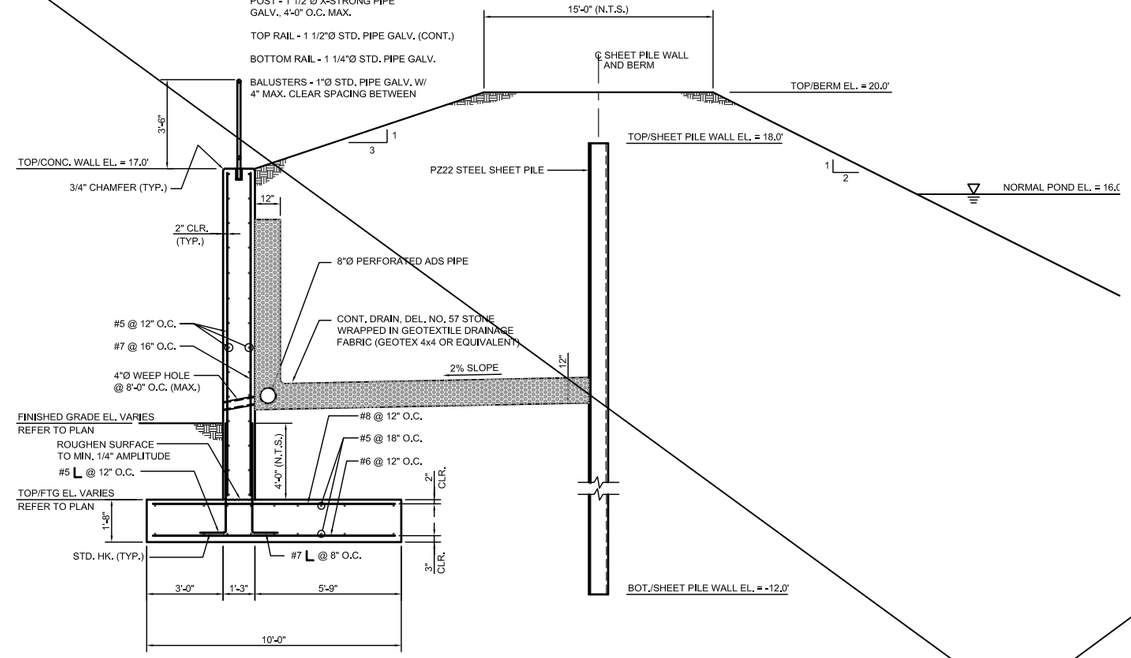

SECTION
SCALE: 3/8" = 1'-0"
A S-1 S-2

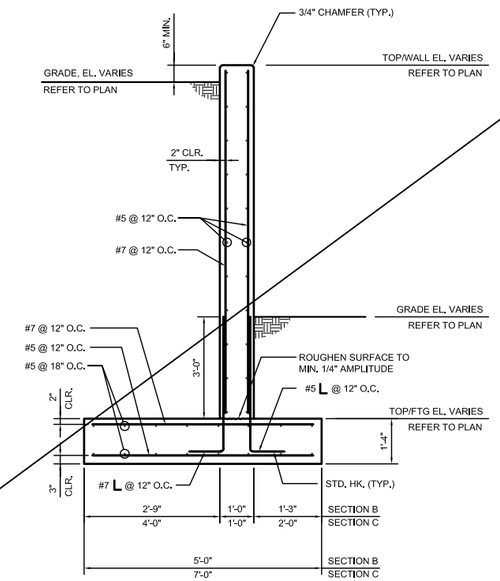

SECTION
SCALE: 1/2" = 1'-0"
B S-1 S-2 C S-1 S-2

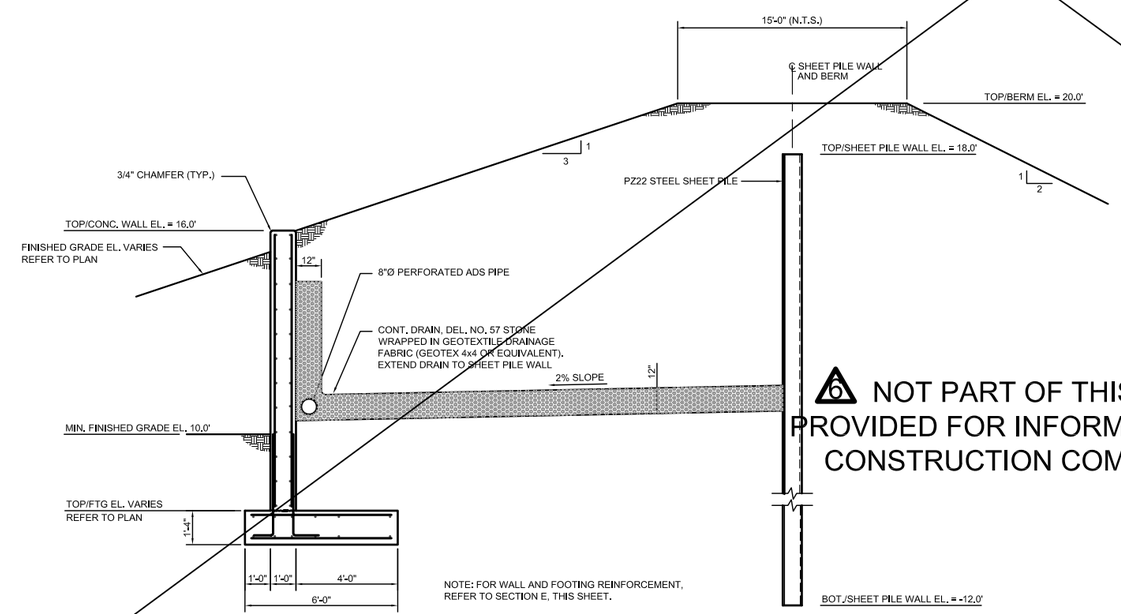

SECTION
SCALE: 3/8" = 1'-0"
D S-1 S-2

NOT PART OF THIS CONTRACT
PROVIDED FOR INFORMATION PURPOSES.
CONSTRUCTION COMPLETED IN 2002.

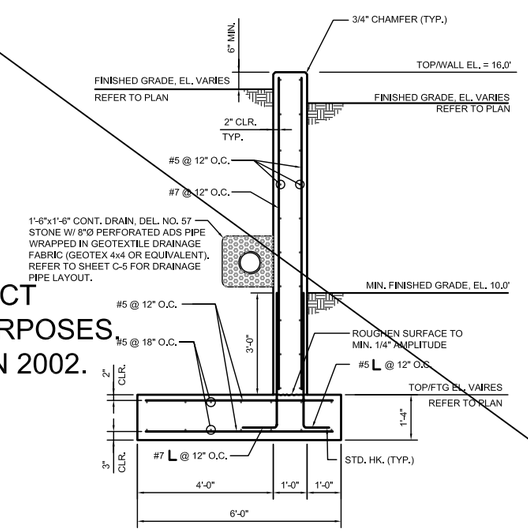

SECTION
SCALE: 1/2" = 1'-0"
E S-1 S-2

DUFFIELD ASSOCIATES
Consultants in the Geosciences
5400 LIMESTONE ROAD
WILMINGTON, DE 19808-1232
TEL. (302)239-6634
FAX (302)239-8485
1528 WALNUT STREET, SUITE 725
PHILADELPHIA, PA 19102
E-MAIL: DUFFIELD@DUFFNET.COM

CHECKED BY:	RMH
DESIGNED BY:	SQC
DRAWN BY:	SQC
FILE NAME:	C4570PGS2
P.E.	
STATE:	

No.	REVISION	CHK'D BY	DWN BY
1	ISSUED AS PRELIMINARY FOR REVIEW BY DNREC	RMH 12-21-01	SQC 12-21-01
2	RE-ISSUED FOR REVIEW BY DNREC	JHL 12-28-01	SQC 12-28-01
3	ISSUED FOR BIDS	CS 1-9-01	CS 1-9-01
4	ADDENDUM #1 TO BID SET	KAR 2-7-02	KAR 2-7-02
5	ADDENDUM #2 TO BID SET	KAR 2-07-02	KAR 2-07-02
6	REISSUED WITH 2006 REPAIR DRAWINGS	GS 2-20-06	GS 2-20-06

PREPARED FOR:

SECTIONS AND DETAILS-
STRUCTURAL
PROPOSED EMBANKMENT REPAIR - HEARNS POND
SUSSEX COUNTY ~ DELAWARE

DATE:	12-19-01
SCALE:	AS NOTED
W.O. NO.	4570.CD
SHEET:	S-2

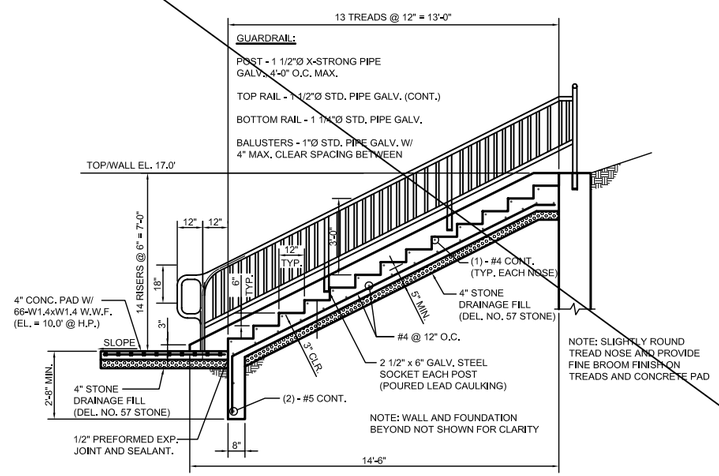

SECTION A (S-1 | S-3)
SCALE: 1/2" = 1'-0"

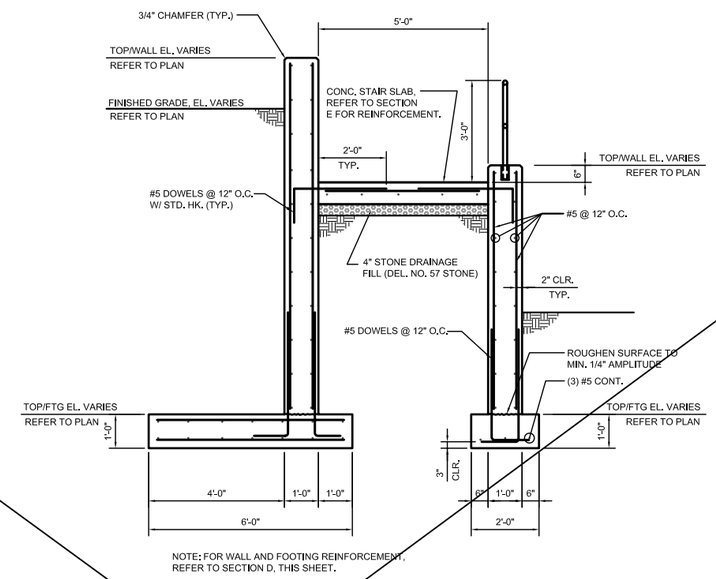

SECTION B (S-1 | S-3)
SCALE: 1/2" = 1'-0"

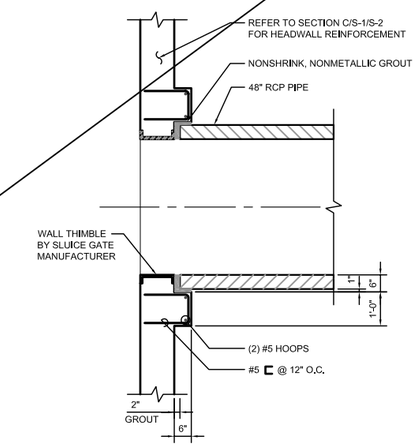

SECTION C (S-1 | S-3)
SCALE: 1/2" = 1'-0"

⚠6 NOT PART OF THIS CONTRACT
PROVIDED FOR INFORMATION PURPOSES.
CONSTRUCTION COMPLETED IN 2002.

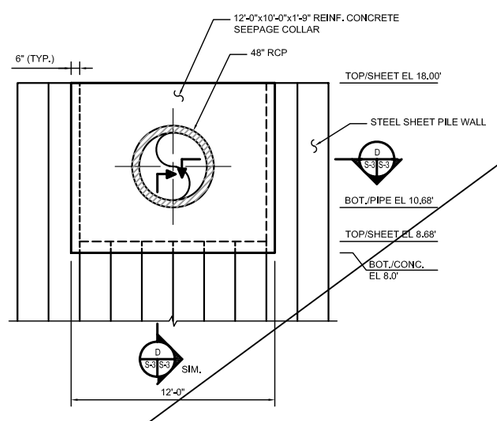

DETAIL 1 (S-1 | S-3)
SCALE: 3/4" = 1'-0"

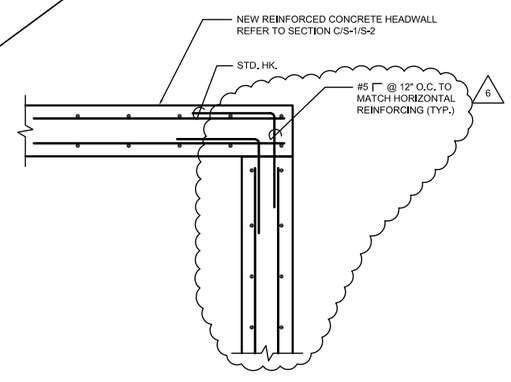

DETAIL 2 (S-1 | S-3)
SCALE: 3/4" = 1'-0"

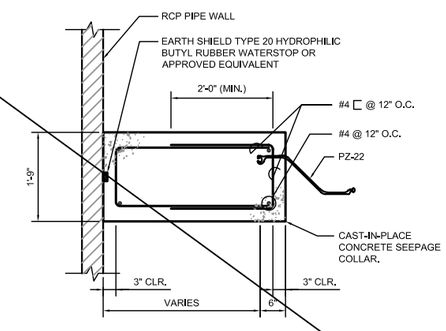

SECTION 3 (S-1 | S-3)
SCALE: 3/4" = 1'-0"

DUFFIELD ASSOCIATES
Consultants in the Geosciences
5400 LIMESTONE ROAD
WILMINGTON, DE 19808-1232
TEL. (302)239-6634
FAX (302)239-8485
1528 WALNUT STREET, SUITE 725
PHILADELPHIA, PA 19102
E-MAIL: DUFFIELD@DUFFNET.COM

CHECKED BY:	RMH
DESIGNED BY:	SQC
DRAWN BY:	SQC
FILE NAME:	C4570PGS3
STATE:	P.E.

No.	REVISION	CHK'D BY	DWN BY
1	ISSUED AS PRELIMINARY FOR REVIEW BY DNREC	RMH 12/21/01	SQC 12/21/01
2	RE-ISSUED FOR REVIEW BY DNREC	JHL 12/28/01	SQC 12/28/01
3	ISSUED FOR BIDS	RMH 1/31/02	SQC 1/31/02
4	ADDENDUM #1 TO BID SET	RMH 2/7/02	SQC 2/7/02
5	ADDENDUM #2 TO BID SET	RMH 2/14/02	SQC 2/14/02
6	REVISED DETAIL 2	RMH 3/4/02	SQC 3/4/02
7	REISSUED WITH 2006 REPAIR DRAWINGS.	RMH 2/26/06	SQC 2/26/06

PREPARED FOR:

DELAWARE DEPARTMENT OF NATURAL RESOURCES AND ENVIRONMENTAL CONTROL

SECTIONS AND DETAILS- STRUCTURAL
PROPOSED EMBANKMENT REPAIR - HEARNS POND
SUSSEX COUNTY ~ DELAWARE

DATE:	12-19-01
SCALE:	AS NOTED
W.O. NO.	4570.CD
SHEET:	S-3

LOCATION PLAN SCALE: 1"=1 MILE

THIS LOCATION SKETCH IS ADAPTED FROM DELDOT GENERAL HIGHWAY MAP OF SUSSEX COUNTY, DELAWARE, DATED 1992 AND REVISED MARCH 1, 1996.

LEGEND:

- CONTOURS (INTERMEDIATE) – 2001 SURVEY
- CONTOURS (INDEX) – 2001 SURVEY
- EXISTING TREE LINE
- EXISTING TREE
- FINAL CONTOURS – 2002 CONSTRUCTION
- 17.38 SPOT ELEVATION
- FINAL SHEETPILE CUTOFF WALL
- SF PROPOSED SILT FENCE
- LOD LIMIT OF DISTURBANCE
- STABILIZED CONSTRUCTION ENTRANCE

FLOW

NORTH

EXISTING MILL BUILDING

STABILIZED CONSTRUCTION ENTRANCE SEE DETAIL, SHEET ES-2

R7 RIP-RIP STABILIZATION ON SLOPE

17.0 (BEGIN TAPER)

ALTERNATE SITE ACCESS

SITE ACCESS

APPROXIMATE EDGE EXISTING PAVEMENT. CONTRACTOR TO BACKFILL TO PAVEMENT SUBGRADE WITH MIXTURE OF DRAINAGE STONE AND SAND EXCAVATED DURING PREPARATION OF NEW DRAINAGE LAYER SEE SHEET C-5. PAVEMENT SECTION TO CONSIT OF
- SAW CUT EDGE
- GEOTEXTILE (CONTRAC P80/80) OVER PREPARED SUBGRADE (ANCHOR 2' ALONG EDGE)
- SUBBASE: 6" TYPE B GRADED AGGREGATE
- WEARING SURFACE: 2" TYPE C BITUMINOUS CONCRETE (BY OTHERS)

REMOVE GATES TO PERMIT BASE FLOW TO PASS

FLOW

2" COVER OF QUARRY DUST

RIP-RIP STABILIZATION ON 2:1 SLOPE

ASSUMED PERMANENT POOL ELEVATION = 16.0±

SCALE: 1"=10'

CERTIFICATION BY OWNER

I, THE UNDERSIGNED, CERTIFY THAT ALL LAND CLEARING, CONSTRUCTION AND DEVELOPMENT SHALL BE PURSUANT TO THE APPROVED PLAN AND THAT RESPONSIBLE PERSONNEL INVOLVED WILL HAVE A CERTIFICATE OF TRAINING FROM DNREC. CITY OF WILMINGTON PERSONNEL SHALL HAVE THE RIGHT TO CONDUCT ON-SITE INSPECTIONS.

DATE | DAVID R. TWING P.E. DIVISION OF SOIL AND WATER CONSERVATION 89 KINGS HIGHWAY DOVER, DE 19901 (302) 739-4411 | TITLE

NOTES:

1. PLEASE REFER TO THE COVER SHEET OF THIS PLAN SET FOR GENERAL NOTES.
2. CONTRACTOR TO MAINTAIN EXISTING SPILLWAY BRIDGE CROSSING DURING CONSTRUCTION.
3. PLEASE REFER TO SHEET ES-2 FOR EROSION AND SEDIMENT CONTROL NOTES AND DETAILS.

DUFFIELD ASSOCIATES
Consultants in the Geosciences
5400 LIMESTONE ROAD
WILMINGTON, DE 19808-1232
TEL: (302)239-6634
FAX (302)239-8485
1528 WALNUT STREET, SUITE 725
PHILADELPHIA, PA 19102
E-MAIL: DUFFIELD@DUFFNET.COM

DESIGNED BY:	KAR/JFC
DRAWN BY:	BTP/SSJ
CHECKED BY:	JFC
FILE NAME:	D4570PG01

JAMES F. CLOONAN

STATE: DELAWARE P.E. 7384

No.	REVISION	CHK'D BY	DATE
1	ISSUED AS PRELIMINARY FOR REVIEW BY DNREC	JFC	12-21-01
2	RE-ISSUED FOR REVIEW BY DNREC	JFC	12-28-01
3	ISSUED FOR BIDS	KAR	12-19-01
4	ADDENDUM #1 TO BID SET	KAR	02-27-02
5	ADDENDUM #2 TO BID SET	KAR	03-05-02
6	ISSUED AS AS-BUILT	JFC	07-07-07
7	REVISED FOR 2006 REPAIRS	JFC	06-29-06

PREPARED FOR:

EROSION AND SEDIMENT CONTROL PLAN
PROPOSED EMBANKMENT REPAIR - HEARNS POND
SUSSEX COUNTY ~ DELAWARE

DATE:	12-19-01
SCALE:	1" = 10'
W.O. NO.	4570.CD
SHEET:	ES-1

EROSION AND SEDIMENT CONTROL NOTES:

1. ALL EROSION & SEDIMENT CONTROL MEASURES SHALL BE IN ACCORDANCE WITH THE DELAWARE EROSION & SEDIMENT CONTROL HANDBOOK (1989).
2. A PRE-CONSTRUCTION MEETING MUST BE HELD WITH THE DELAWARE DEPARTMENT OF NATURAL RESOURCES AND ENVIRONMENTAL CONTROL (DNREC) PRIOR TO COMMENCING WITH CONSTRUCTION. FAILURE TO DO SO CONSTITUTES A VIOLATION OF THE APPROVED SEDIMENT AND STORMWATER MANAGEMENT PLAN.
3. NO GRADING OR SITE WORK CAN COMMENCE UNTIL ALL PERIMETER EROSION AND SEDIMENT CONTROLS ARE IN PLACE, AND APPROVED BY DNREC.
4. REVIEW AND OR APPROVAL OF THE SEDIMENT AND STORMWATER MANAGEMENT PLAN SHALL NOT RELIEVE THE CONTRACTOR FROM HIS OR HER RESPONSIBILITIES FOR COMPLIANCE WITH THE REQUIREMENTS OF THE SEDIMENT AND STORMWATER REGULATIONS, NOR SHALL IT RELIEVE THE CONTRACTOR FROM ERRORS OR OMISSIONS IN THE APPROVED PLAN.
5. ACREAGE OF DISTURBED AREA = 0.22± ACRES.
6. IF THE APPROVED PLAN NEEDS TO BE MODIFIED, ADDITIONAL SEDIMENT AND STORMWATER CONTROL MEASURES MAY BE REQUIRED AS DEEMED NECESSARY BY DNREC.
7. PERMANENT OR TEMPORARY STABILIZATION OF THE SURFACE OF ALL PERIMETER SEDIMENT CONTROLS, TOPSOIL STOCKPILES AND ALL OTHER DISTURBED OR GRADED AREAS ON THE PROJECT SITE SHALL BE COMPLETED WITHIN 14 CALENDAR DAYS FOLLOWING SOIL DISTURBANCE OR REDISTURBANCE UNLESS ALTERNATE MEASURES ARE REVIEWED AND APPROVED IN THE FIELD. SUCH ALTERNATES MAY INCLUDE, BUT NOT BE LIMITED TO THE USE OF ANCHORED PLASTIC SHEETING, PAVING OR OTHER MEANS FOR TEMPORARY STABILIZATION.
8. TEMPORARY VEGETATIVE STABILIZATION IF REQUIRED SHALL CONSIST OF SEED, AND MULCH. PERMANENT STABILIZATION TO CONSIST OF RIPRAP, OR STONE STABILIZED PAVEMENT AS DETAILED IN THESE DRAWINGS.

   CONSTRUCTION METHODS FOR VEGETATIVE STABILIZATION SHALL CONFORM TO THE REQUIREMENTS OF THE DELAWARE EROSION AND SEDIMENT CONTROL HANDBOOK (1989), STANDARDS AND SPECIFICATIONS FOR VEGETATIVE STABILIZATION AND MANUFACTURER'S GUIDELINES FOR INSTALLATION AND VEGETATION OF TRM.
9. ALL EROSION & SEDIMENT CONTROL MEASURES SHALL BE INSPECTED BY THE SITE SUPERINTENDENT/GENERAL CONTRACTOR AFTER EACH RUNOFF PRODUCING RAINFALL EVENT AND REPLACED OR REPAIRED AS NECESSARY TO OBTAIN THE CONSTRUCTION STANDARD REQUIRED.
10. ALL PERIMETER SEDIMENT AND EROSION CONTROL MEASURES SHALL BE IN PLACE PRIOR TO ANY OTHER LAND DISTURBING ACTIVITIES.
11. NO PERMANENT FINAL GRADES SHALL EXCEED 2:1. TEMPORARY CUTS STEEPER THAN 2:1 MAY BE REQUIRED TO FACILITATE CONSTRUCTION/REPAIR OF UTILITIES AND OR FOUNDATIONS. THE CONTRACTOR SHALL ASSUME ALL LIABILITY FOR EXCAVATING AND SHORING TRENCHES IN ACCORDANCE WITH THE REQUIREMENTS OF THE OCCUPATIONAL SAFETY AND HEALTH ADMINISTRATION (OSHA).
12. ON-SITE SOILS ARE MAPPED AS JOHNSTON SILT LOAM (Jo), EVESBORO LOAMY SAND, 5-15 PERCENT SLOPES (EsD), AND EVESBORO LOAMY SAND, LOAMY SUBSTRATUM, 0-2 PERCENT SLOPES (EvA) BASED ON THE USGS SOIL SURVEY FOR SUSSEX COUNTY, DELAWARE, 1974, MAP #32.
13. THE SITE IS LOCATED WITHIN THE 100-YEAR FLOODPLAIN AS DEPICTED ON PANEL 261 OF 660 OF THE FEMA FLOOD INSURANCE RATE MAP FOR SUSSEX COUNTY DATED JUNE 16, 1995, MAP NUMBER 10005C0261F. FLOOD ELEVATIONS SHOWN SHOWN ON THIS MAP HAVE NOT BEEN CORRELATED TO THE SITE BENCHMARK USED FOR THE SURVEY PERFORMED BY DNREC FOR THIS PROJECT.
14. THERE ARE NO WATER RESOURCE PROTECTION AREAS (WRPA'S) LOCATED ON THE PROJECT SITE.
15. WETLANDS ARE BELIEVED TO EXIST IN THE VICINITY OF THE PROJECT SITE.
16. NON-STABILIZED AREAS SHALL BE SPRINKLED WITH WATER UNTIL THE SURFACE IS MOIST TO CONTROL DUST AS NECESSARY.
17. A COPY OF THE APPROVED PLANS MUST BE MAINTAINED ON THE SITE AT ALL TIMES.

6 NARRATIVE REPORT

THE PURPOSE OF THIS PLAN IS TO PRESENT THE ELEMENTS REQUIRED TO RETAIN ON SITE ALL SEDIMENT PRODUCED DURING SITE EARTHWORK ACTIVITIES. THE PROJECT CONSISTS OF EXCAVATING AND REMOVING THE REMNANTS OF THE HEARNS POND DAM DAMAGED IN JUNE 2006, AND RESTORING THE DAM WITH SOIL FILL AND STONE RIPRAP TO THE LINES AND GRADES SHOWN ON THESE DRAWINGS ORIGINALLY ISSUED FOR CONSTRUCTION IN JANUARY 2002 AND REVISED FOR THE PROPOSED REPAIRS IN OCTOBER 2006. METHODS OF SEDIMENT AND EROSION CONTROL THAT WILL BE USED FOR THIS PROJECT INCLUDE, BUT ARE NOT LIMITED TO, THE PLACEMENT AND MAINTENANCE OF SILT FENCE, AND A STABILIZED CONSTRUCTION ENTRANCE.

SEQUENCE OF CONSTRUCTION

1. PRE-CONSTRUCTION MEETING.
2. MOBILIZE.
3. CLEAR AND GRUB FOR EROSION CONTROL MEASURES.
4. INSTALL PERIMETER CONTROLS.
5. PERFORM EARTHWORK/EXCAVATION.
6. INSTALL BASE, GEOTEXTILE, AND DRAINAGE LAYER.
7. PLACE FILL.
8. INSTALL SIDESLOPE GOETEXTILE, AND CREST GEOCELL LAYER.
9. INSTALL RIPRAP AND STONE ALONG CREST.
10. REMOVE EROSION AND SEDIMENT CONTROLS (AS DIRECTED).
11. DEMOBILIZE.

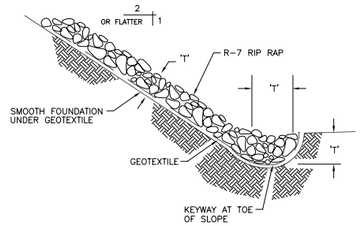

TYPICAL SECTION

NOTE:
"T" = THICKNESS : 2 X 18" (d50) = 36" MINIMUM
GEOTEXTILE TO BE COMTRAC P80/80 AS SPECIFIED ON THE DRAWINGS.

DETAIL: RIP RAP PROTECTION
SCALE: NONE

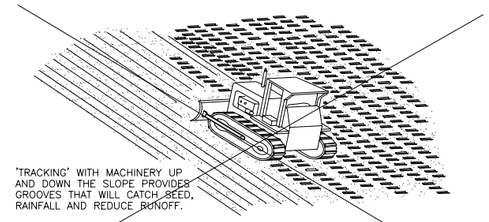

DETAIL: SURFACE PREPARATION
SCALE: NONE

NOT PART OF CONTRACT

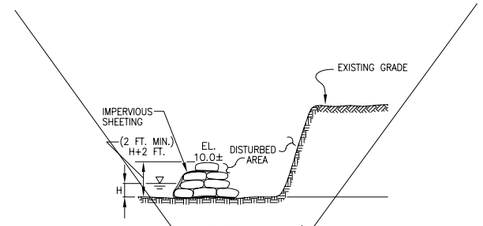

SECTION A – A'

CONSTRUCTION SPECIFICATIONS

I. DESCRIPTION
THE WORK SHALL CONSIST OF INSTALLING FLOW DIVERSIONS FOR THE PURPOSE OF EROSION CONTROL WHEN CONSTRUCTION ACTIVITIES TAKE PLACE WITHIN THE STREAM CHANNEL SUCH AS BANK STABILIZATION OR BRIDGE ABUTMENT CONSTRUCTION. CONTRACTOR SHALL BE RESPONSIBLE FOR DESIGN, INSTALLATION, AND MAINTENANCE OF SANDBAG/STONE DIVERSION AS DESCRIBED HEREIN.

II. MATERIAL SPECIFICATIONS
1. SANDBAGS: SANDBAGS SHALL CONSIST OF MATERIALS WHICH ARE RESISTENT TO ULTRA-VIOLET RADIATION, TEARING AND PUNCTURE AND WOVEN TIGHTLY ENOUGH TO PREVENT LEAKAGE OF FILL MATERIAL (I.E./ SAND, FINE GRAVEL, ETC.).
2. STONE: STONE SHALL BE WASHED AND HAVE A MINIMUM DIAMETER OF 6" (R-6).
3. SHEETING: SHEETING SHALL CONSIST OF POLYETHYLENE OR OTHER MATERIAL WHICH IS IMPERVIOUS AND RESISTENT TO PUNCTURE AND TEARING.

III. CONSTRUCTION REQUIREMENTS
1. ALL EROSION AND SEDIMENT CONTROL DEVICES SHALL BE INSTALLED PRIOR TO ANY SITE DISTURBANCE.
2. THE DIVERSION STRUCTURE SHALL BE INSTALLED FROM UPSTREAM TO DOWNSTREAM.
3. THE HEIGHT OF THE DIVERSION STRUCTURE SHALL BE DETERMINED BY THE CONTRACTOR AND APPROVED BY DNREC.
4. ALL EXCAVATED MATERIALS NOT NEEDED IN CONSTRUCTION SHALL BE REMOVED AND DISPOSED OF IN AN APPROVED DISPOSAL AREA OUTSIDE THE 100-YEAR FLOODPLAIN.
5. CONTRACTOR TO PROVIDE MEANS FOR DEWATERING AS APPROVED BY DNREC.
6. SHEETING SHALL BE OVERLAPPED SUCH THAT THE UPSTREAM PORTION COVERS THE DOWNSTREAM PORTION WITH AT LEAST AN 18-INCH OVERLAP.
7. SEDIMENT CONTROL DEVICES ARE TO REMAIN IN PLACE UNTIL ALL DISTURBED AREAS ARE STABILIZED IN ACCORDANCE WITH AN APPROVED SEDIMENT AND EROSION CONTROL PLAN.

DETAIL: SANDBAG/STONE DIVERSION
SCALE: NONE

NOT PART OF CONTRACT

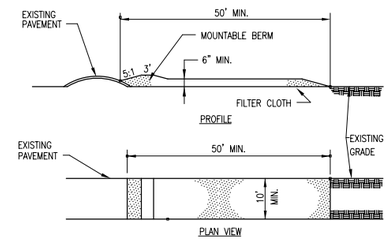

CONSTRUCTION NOTES FOR THE STABILIZED CONSTRUCTION ENTRANCE

1. PLACE 2-INCH STONE OR RECLAIMED OR RECYCLED CONCRETE EQUIVALENT TO A MINIMUM DEPTH OF SIX (6) INCHES FOR A LENGTH OF 50 FEET AND A WIDTH OF 10 FEET AT THE DESIGNATED PLAN LOCATION, UNLESS DIMENSIONS INDICATED ON PLAN ARE DIFFERENT.
2. PLACE FILTER CLOTH OVER THE ENTIRE AREA PRIOR TO PLACING OF STONE.
3. MAINTENANCE SHALL BE PERFORMED AS NEEDED TO PREVENT TRACKING ONTO PUBLIC RIGHTS-OF-WAY. ALL SEDIMENT SPILLED, DRIPPED, WASHED OR TRACKED ONTO PUBLIC RIGHTS-OF-WAY WILL BE REMOVED IMMEDIATELY.
4. WASHING – WHEELS SHALL BE CLEANED TO REMOVE SEDIMENT PRIOR TO ENTRANCE ONTO PUBLIC RIGHT-OF-WAY. WHEN WASHING IS REQUIRED, IT SHALL BE DONE ON AN AREA STABILIZED WITH STONE AND WHICH DRAINS INTO AN APPROVED SEDIMENT TRAPPING DEVICE.
5. PERIODIC INSPECTION AND NEEDED MAINTENANCE SHALL BE PROVIDED AFTER EACH RAIN.

CRITERIA FOR FILTER CLOTH

THE FILTER CLOTH SHALL BE A WOVEN OR NONWOVEN FABRIC CONSISTING ONLY OF CONTINUOUS CHAIN POLYMERIC FILAMENTS OR YARNS. THE FABRIC SHALL BE INERT TO COMMONLY ENCOUNTERED CHEMICALS AND HYDROCARBONS, BE MILDEW AND ROT RESISTANT, AND CONFORM TO THE PROPERTIES OF THE FOLLOWING TABLE:

FABRIC PROPERTIES	MINIMUM ACCEPTABLE VALUE	TEST METHOD
GRAB TENSILE STRENGTH (LBS)	200	ASTM D1682
ELONGATION AT FAILURE (%)	50	ASTM D1682
MULLEN BURST STRENGTH (PSI)	190	ASTM D3786
PUNCTURE STRENGTH (LBS)	40	ASTM D751 MODIFIED
EQUIVALENT OPENING SIZE	40-80	US STD SIEVE CW-02215
AGGREGATE DEPTH (IN)	6	--------

DETAIL: STABILIZED CONSTRUCTION ENTRANCE
SCALE: NONE

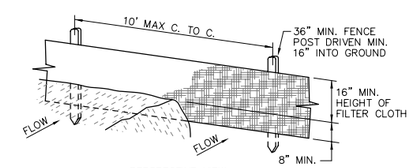

PERSPECTIVE VIEW

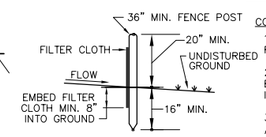

SECTION

CONSTRUCTION NOTES FOR FABRICATED SILT FENCE

1. FILTER CLOTH TO BE FASTENED SECURELY TO FENCE POSTS WITH WIRE TIES OR STAPLES.
2. WHEN TWO SECTIONS OF FILTER CLOTH ADJOIN EACH OTHER THEY SHALL BE OVERLAPPED BY SIX INCHES AND FOLDED.
3. MAINTENANCE SHALL BE PERFORMED AS NEEDED AND MATERIAL REMOVED WHEN "BULGES" DEVELOP IN THE SILT FENCE.

CRITERIA FOR SILT FENCE MATERIALS

1. SILT FENCE FABRIC: THE FABRIC SHALL MEET THE FOLLOWING SPECIFICATIONS:

FABRIC PROPERTIES	MINIMUM ACCEPTABLE VALUE	TEST METHOD
GRAB TENSILE STRENGTH (LBS)	90	ASTM D1682
ELONGATION AT FAILURE (%)	50	ASTM D1682
MULLEN BURST STRENGTH (PSI)	190	ASTM D3786
PUNCTURE STRENGTH (LBS)	40	ASTM D751 MODIFIED
SLURRY FLOW RATE (GAL/MIN/SF)	0.3	
EQUIVALENT OPENING SIZE	40-80	US STD SIEVE CW-02215
ULTRAVIOLET RADIATION STABILITY (%)	90	ASTM-G-26

2. FENCE POSTS (FOR FABRICATED UNITS): THE LENGTH SHALL BE A MINIMUM OF 36 INCHES. WOOD POSTS SHALL BE OF SOUND QUALITY HARDWOOD WITH A MINIMUM CROSS SECTIONAL AREA OF 3.0 SQUARE INCHES. STEEL POSTS SHALL BE A STANDARD T AND U SECTION WEIGHING NOT LESS THAN 1.00 POUND PER LINEAR FOOT.

3. PREFABRICATED UNITS: ENVIRONFENCE OR APPROVED EQUIVALENT MAY BE USED IN LIEU OF THE ABOVE METHODS PROVIDING THE UNIT IS INSTALLED PER MANUFACTURER'S INSTRUCTIONS.

DETAIL: SILT FENCE
SCALE: NONE

DUFFIELD ASSOCIATES
Consultants in the Geosciences
5400 LIMESTONE ROAD
WILMINGTON, DE 19808-1232
TEL. (302)239-6634
FAX (302)239-8485
1528 WALNUT STREET, SUITE 725
PHILADELPHIA, PA 19102
E-MAIL: DUFFIELD@DUFFNET.COM

DESIGNED BY:	DRAWN BY:	CHECKED BY:	FILE NAME:
KAR/JFC	BTP/SSJ	JFC	D4570PG01

JAMES F. CLOONAN
STATE: DELAWARE P.E. 7384

No.	REVISION	CHK'D BY	DATE
1	ISSUED AS PRELIMINARY FOR REVIEW BY DNREC	KAR	12-19-01
2	RE-ISSUED FOR REVIEW BY DNREC	JFC	12-24-01
3	ISSUED FOR BIDS	KAR	3-5-02
4	ADDENDUM #1 TO BID SET	KAR	3-22-02
5	ADDENDUM #2 TO BID SET	KAR	3-26-02
6	ISSUED 10-7-07	JFC	10-7-07
7	REVISED FOR 2006 REPAIRS	JFC	06-26-08

PREPARED FOR:

EROSION AND SEDIMENT CONTROL NOTES
PROPOSED EMBANKMENT REPAIR - HEARNS POND
SUSSEX COUNTY ~ DELAWARE

DATE:	12-19-01
SCALE:	N/A
W.O. NO.	4570.CD
SHEET:	ES-2