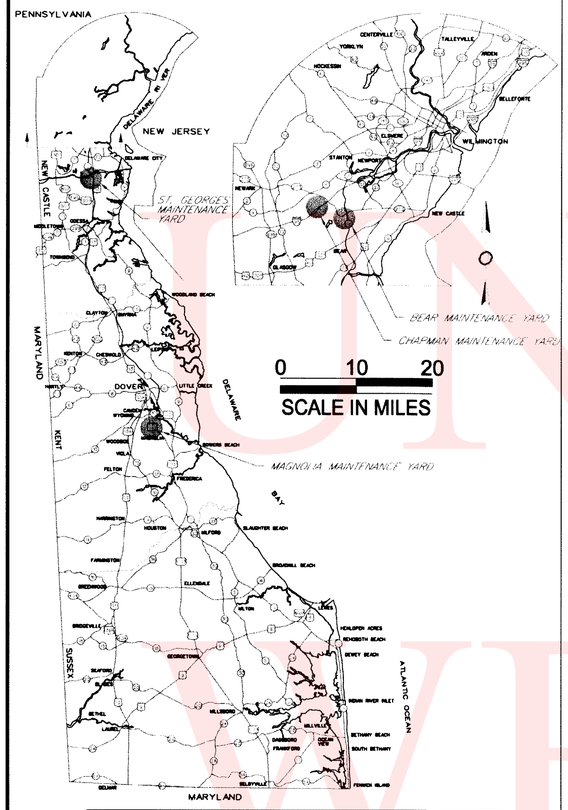

GENERAL LOCATION OF CONTRACT

THE STATE OF DELAWARE DEPARTMENT OF TRANSPORTATION

U.S. CUSTOMARY UNITS

CONSTRUCTION PLANS FOR:

STATEWIDE HOPPER RACKS & CANAL DISTRICT FUEL CANOPY

CONTRACT NUMBER: T201280102

COUNTY: VARIES AGREEMENT NUMBER 1307

CONSTRUCTION SPECIFICATIONS

CONSTRUCTIONCONSTRUCTION ON THIS SITE SHALL BE IN CONFORMANCE WITH THE DELAWARE DEPARTMENT OF TRANSPORTATION SPECIFICATIONS FOR ROAD AND BRIDGE CONSTRUCTION, DATED AUGUST 2001, WITH SPECIFICATION SECTIONS INDICATED BELOW:

DIVISION 03 – CONCRETE
033053 MISCELLANEOUS CAST-IN-PLACE CONCRETE – FERENCE TO SECTION 602

DIVISION 31 – EARTHWORK
311000 SITE CLEARING – REFERENCE TO SECTIONS 201 & 762
312000 EARTH MOVING – REFERENCE TO SETIONS 202, 207, 208, 209, 210, 250, 251, 252 & 268
312500 SOIL EROSION AND SEDIMENT CONTROL – REFERENCE SECTIONS 110, 251, 252, 266, & 268

DIVISION 32 – EXTERIOR IMPROVEMENTS
321216 ASPHALT PAVING – REFERENCE TO SECTIONS 302 & 401
321313 CONCRETE PAVING – REFERENCE TO SECTIONS 301, 701 & 705
334100 STORM UTILITY DRAINAGE PIPING – REFERENCE TO SECTIONS 208 & 708

DESIGN DESIGNATION

FUNCTIONAL CLASS:	D.H.V. PROJECTED:	YEAR:
TYPE OF CONSTRUCTION:	DESIGN SPEED: M.P.H.	
A.A.D.T. CURRENT: YEAR:	TRUCKS: %	
A.A.D.T. PROJECTED: YEAR:	DIRECTION OF DISTRIBUTION: %	

INDEX OF SHEETS

TOTAL SHEETS: 7

APPROVED DESIGN EXCEPTIONS

DESIGN PARAMETER	REQUIRED	PROVIDED	DATE
N/A			

ADDENDA & REVISIONS

DESCRIPTION	NAME & DATE

ASSOCIATED CONTRACTS

CONTRACT NO.	CONTRACT NAME

RECOMMENDED

MAINTENANCE IMPROVEMENT ENGINEER — DATE 11/18/11

ASSISTANT DIRECTOR STATEWIDE SUPPORT SERVICES — DATE 11/18/11

DIRECTOR MAINTENANCE AND OPERATIONS — DATE 11/18/11

RECOMMENDED AS TO PROCESS

Natalie Barnhart
CHIEF ENGINEER

DATE 1/4/12

RECOMMENDED

STORMWATER ENGINEER

DATE

SEAL

PREPARED BY ARCHITECT
BECKER MORGAN GROUP, INC.
309 S. GOVERNORS AVE.
DOVER, DE 19904
302.734.7950

RECOMMENDED

SEAL — DATE 8-31-11

PREPARED BY STRUCTURAL ENGINEER
BAKER, INGRAM & ASSOC., INC.
1050 S. STATE ST.
DOVER, DE 19901
302.734.7400

RECOMMENDED

SEAL — DATE 8/31/11

CONSTRUCTION PLANS

Last Modified On: XX/XX/2011

EROSION SEDIMENT CONTROL LEGEND

LIMIT OF DISTURBANCE	LOD — LOD — LOD — LOD — LOD

LEGEND

ITEM	EXISTING	PROPOSED	ITEM	EXISTING	PROPOSED
SANITARY GRAVITY SEWER LINE, SIZE & FLOW DIRECTION	EX. 8"S	N/A	CONCRETE CURB & GUTTER		N/A
SANITARY SEWER MANHOLE (S.M.H.)		N/A	CONCRETE SIDEWALK, SLAB / PAVING		N/A
SANITARY SEWER CLEANOUT	C.O.	N/A	CONCRETE BARRIER / WALL		N/A
WATER MAIN & SIZE	EX. 6"W	6"W	IMPERVIOUS SURFACED ROAD, DRIVE OR LOT		
FIRE HYDRANT	F.H.	F.H.	INDIVIDUAL TREE OR BUSH	EVERGREEN DECIDUOUS	N/A
WATER VALVE (W.V.) OR METER (W.M.)	W.M. W.V.	W.M. W.V.	FENCE		N/A
STORM DRAIN MANHOLE (S.D.M.H.)		N/A	STRUCTURE (CONCRETE, WOOD, METAL, ETC.)		
STORM DRAIN LINE (CMP OR RCP)			CONTOUR	49	28
CATCH BASIN			CENTERLINE DITCH / SWALE / STREAM		N/A
UTILITY POLE W/ OVERHEAD SERVICE (TELEPHONE OR ELECTRIC OR BOTH)	OE OE	N/A	PROPERTY OR RIGHT-OF-WAY LINE		N/A
UNDERGROUND ELECTRIC	UE	N/A	FOUND CONCRETE MONUMENT	FCM	N/A
UNDERGROUND TELEPHONE	UT	N/A	FOUND IRON ROD OR IRON PIPE	FIR, FIP	N/A
UNDERGROUND COMMUNICATIONS SERVICE	U/D/ATA	N/A	UNMARKED POINT		N/A
UNDERGROUND FIBER OPTIC SERVICE	FO	N/A	LIGHT POLE		N/A
TELEPHONE PEDESTAL		N/A	BENCH MARK		N/A
TELEPHONE PEDESTAL W/ BOLLARDS		N/A	SIGN		N/A
EDGE OF WOODS		N/A	CRITICAL NATURAL AREA	CNA	N/A
WETLANDS		N/A	GROSS FLOOR AREA	GFA	GFA
STONE OUTLET PROTECTION			GENERATOR	GEN.	N/A
			CONCRETE MASONRY UNIT	CMU	N/A

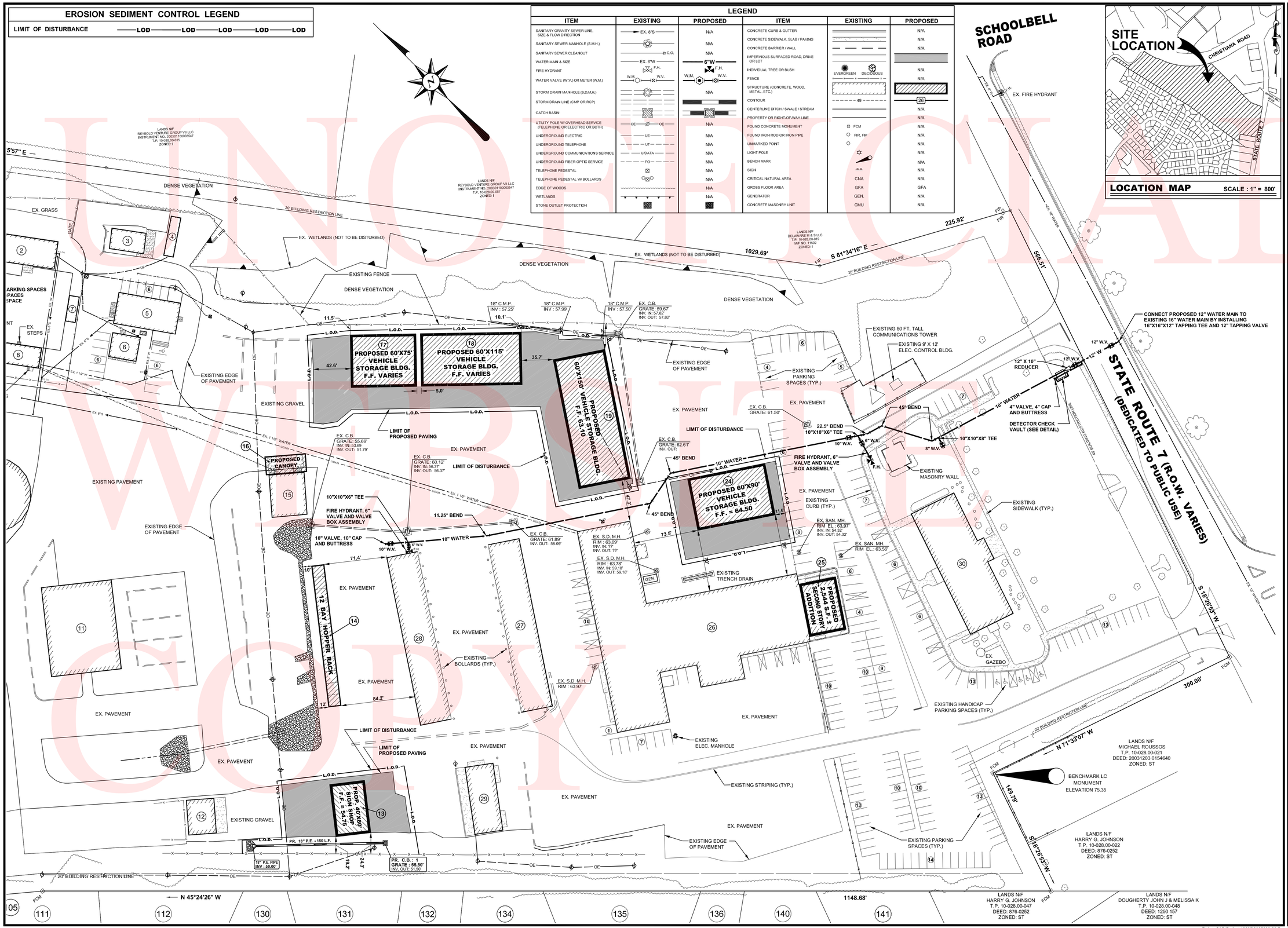

LOCATION MAP SCALE : 1" = 800'

BECKER MORGAN GROUP

ARCHITECTURE ENGINEERING

Dover
309 S. Governors Ave.
Dover, DE 19904
Ph. 302.734.7950
Fax 302.734.7965

Salisbury
312 West Main St. Suite 300
Salisbury, MD 21801
Ph. 410.546.9100
Fax 410.546.5824

Wilmington
3205 Randall Parkway, Suite 211
Wilmington, North Carolina 28403
Ph. 910.341.7600
Fax 910.341.7506

www.beckermorgan.com

PROJECT TITLE

DELDOT BEAR MAINTENANCE YARD / STORAGE BUILDINGS

250 BEAR CHRISTIANA ROAD
BEAR, DELAWARE
NEW CASTLE HUNDRED
NEW CASTLE COUNTY, DE

SHEET TITLE

SITE PLAN

0 25 50 100

SCALE : 1" = 50'

APPLICATION No. 2011-0114-S

ISSUE BLOCK

MARK	DATE	DESCRIPTION
4	06-07-11	REVISED PER FIRE MARSHAL COMMENT VIA EMAIL. DATED 05-27-11
3	06-03-11	REVISED PER NCC COMMENTS. DATED 05-04-11
2	05-19-11	REVISED PER FIRE MARSHAL COMMENTS. DATED 03-11-11
1	04-18-11	REVISED PER NCC COMMENTS. DATED 03-24-11

LAYER STATE : C-201

PROJECT NO.: 2005009.20
DATE: 03-08-11
SCALE: 1"= 50'
DRAWN BY: R.P.H. PROJ. MGR.: G.E.J.

SHEET
C-201

F:\AutoCAD\Projects\2005\2005009-20-Bear\dwg\2005009-20-BEAR-SITE-03-08-11.dwg, Sep 01, 2011 - 12:22pm

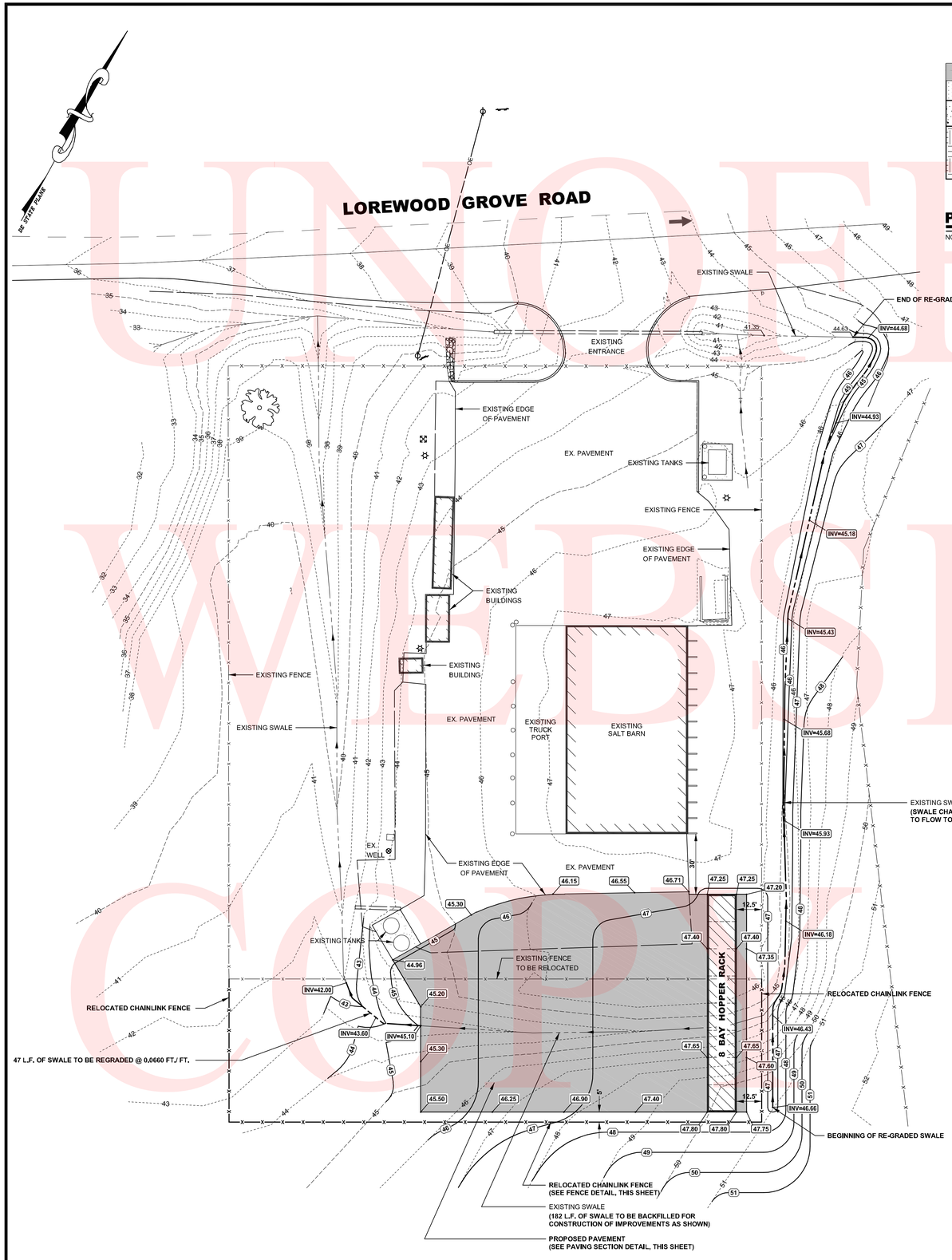

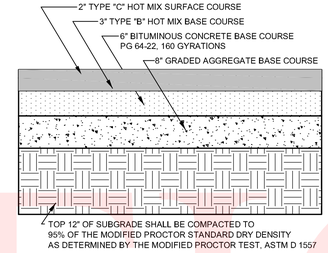

PAVEMENT SECTION DETAIL

NO SCALE — BMG NO. : SW-

LEGEND

ITEM	EXISTING	PROPOSED
CONCRETE CURB & GUTTER		N/A
CONCRETE SIDEWALK, SLAB / PAVING		N/A
IMPERVIOUS SURFACED ROAD, DRIVE OR LOT		
CHAINLINK FENCE	x x x	x x x
STRUCTURE (CONCRETE, WOOD, METAL, ETC.)		
DRAINAGE DITCH OR SWALE		
CONTOUR	49	55
ELEVATION SPOT SHOT	43.55	25.15 — 25.50 T.C. / 25.00 B.C.
LIGHT POLE		N/A
STORM DRAIN LINE (CMP OR RCP)		N/A
GRAVEL AREA TO BE REMOVED	N/A	
UTILITY POLE W/ OVERHEAD SERVICE (TELEPHONE OR ELECTRIC OR BOTH)		N/A

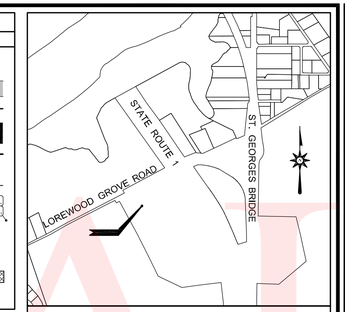

LOCATION MAP

SCALE : 1" = 1,000'

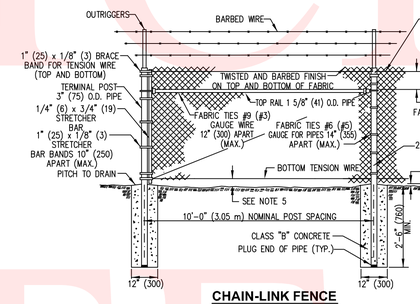

CHAIN-LINK FENCE

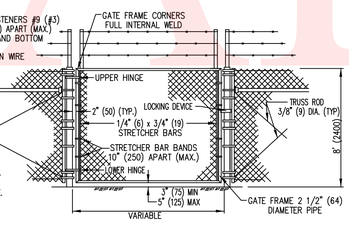

GATES, CHAIN-LINK FENCE

TENSION WIRE CONNECTION AT ROUND INTERMEDIATE OR CORNER POST

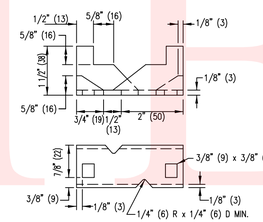

ANCHOR SHOE

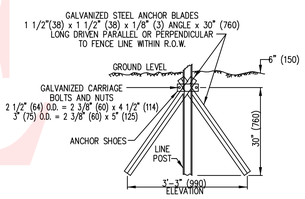

DRIVE ANCHOR SHOE ASSEMBLY (SEE NOTE 4)

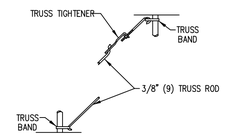

3/8" (9) TRUSS ROD ASSEMBLY

CHAIN-LINK FENCE ASSEMBLIES

GENERAL NOTES

1). POSTS

	TERMINAL, CORNER AND GATE POSTS	LINE POSTS	TOP OR BRACE RAIL
	3" (75) O.D. PIPE	2 1/2" (64) O.D. PIPE	1 5/8" (41) O.D. PIPE
AASHTO TYPE	I OR II	I OR II	I OR II
AASHTO GRADE	1 OR 2	1 OR 2	1 OR 2
MINIMUM LENGTH OF POST:	10'-8" (3250)	10'-8" (3250)	N/A
ACTUAL OUTSIDE DIAMETER	2.8" (73)	2 3/8" (60)	1.660" (42)
WALL THICKNESS	GRADE 1 = .203" (5.2) GRADE 2 = .160" (4)	GRADE 1 = .154" (3.9) GRADE 2 = .120" (3)	GRADE 1 = .140" (3.5) GRADE 2 = .111" (2.8)

2). THE DEPTH OF CONCRETE FOOTERS IN SOLID ROCK MAY BE REDUCED TO 12" (300) BELOW THE TOP OF ROCK AND THE DIAMETER OF THE HOLE IN ROCK MAY BE REDUCED TO 6" (152).
3). BRACE BANDS AND STRETCHER BAR BANDS SHALL BE FURNISHED WITH 5/8" (8) DIA. CARRIAGE BOLTS AND ELASTIC STOP NUTS.
4). DRIVE ANCHOR SHOE ASSEMBLY ONLY TO BE USED IN WET AREAS AND WITH PRIOR APPROVAL OF THE ENGINEER.
5). THE BOTTOM OF THE FENCE SHALL BE 2" (50) MAX ABOVE HARD GROUND OR PAVEMENT. WHERE THERE IS SOFT GROUND, THE BOTTOM OF THE FENCE SHALL EXTEND INTO THE GROUND IN ORDER TO BE FIRM DUE TO SHIFTING SOIL OR SAND.
6). NUTS AND BOLTS SHALL BE TACK WELDED OR BURRED TO PREVENT REMOVAL.
7). IF THERE ARE ANY OPENINGS IN THE FENCE LARGER THAN 96 SQ. IN. (620 sq. cm) DUE TO UTILITIES OR GRADED TERRAIN, THE OPENINGS SHALL BE SECURED WITH A METAL GRILL THAT IS LOCKED OR PERMANENTLY WELDED.
8). VEGETATION AND PERMANENT STRUCTURES (SUCH AS BUILDINGS, LIGHT POLES, AND UTILITY POLES) SHALL BE AT LEAST 14' (4.2 m) FROM THE FENCE. ANY EXCEPTIONS SHALL REQUIRE THE CONSTRUCTION OF TOP GUARDS.

CHAIN LINK FENCE DETAILS

NO SCALE — DELDOT STD. No. M-7 (2006)

BECKER MORGAN GROUP
ARCHITECTURE ENGINEERING

Dover
309 S. Governors Ave.
Dover, DE 19904
Ph. 302.734.7950
Fax 302.734.7965

Salisbury
312 West Main St. Suite 300
Salisbury, MD 21801
Ph. 410.546.9100
Fax 410.546.5824

Wilmington
3205 Randall Parkway, Suite 211
Wilmington, North Carolina 28403
Ph. 910.341.7600
Fax 910.341.7506

www.beckermorgan.com

PROJECT TITLE

ST. GEORGES MAINTENANCE FACILITY IMPROVEMENTS

LOREWOOD GROVE ROAD
NEW CASTLE COUNTY
DELAWARE

SHEET TITLE

SITE PLAN / GRADING PLAN

0 15 30 60
SCALE : 1" = 30'

ISSUE BLOCK

MARK	DATE	DESCRIPTION
2.	08-31-11	REVISED PER DELDOT'S COMMENTS
1.	06-28-11	REVISED LOCATION OF HOPPER RACKS PER DELDOT

LAYOUT1 - LREDGRADES PLAN1200#

PROJECT NO.: 2005009.20
DATE: 08-26-10
SCALE: 1" = 30'
DRAWN BY: R.P.H. | PROJ. MGR.: G.E.J.

SHEET
C-102

F:\AutoCAD\Projects\2005\2005009-20-ST. GEORGES\dwg\2005009-ST. GEORGES-SITE.dwg, Sep 01, 2011 - 12:13pm

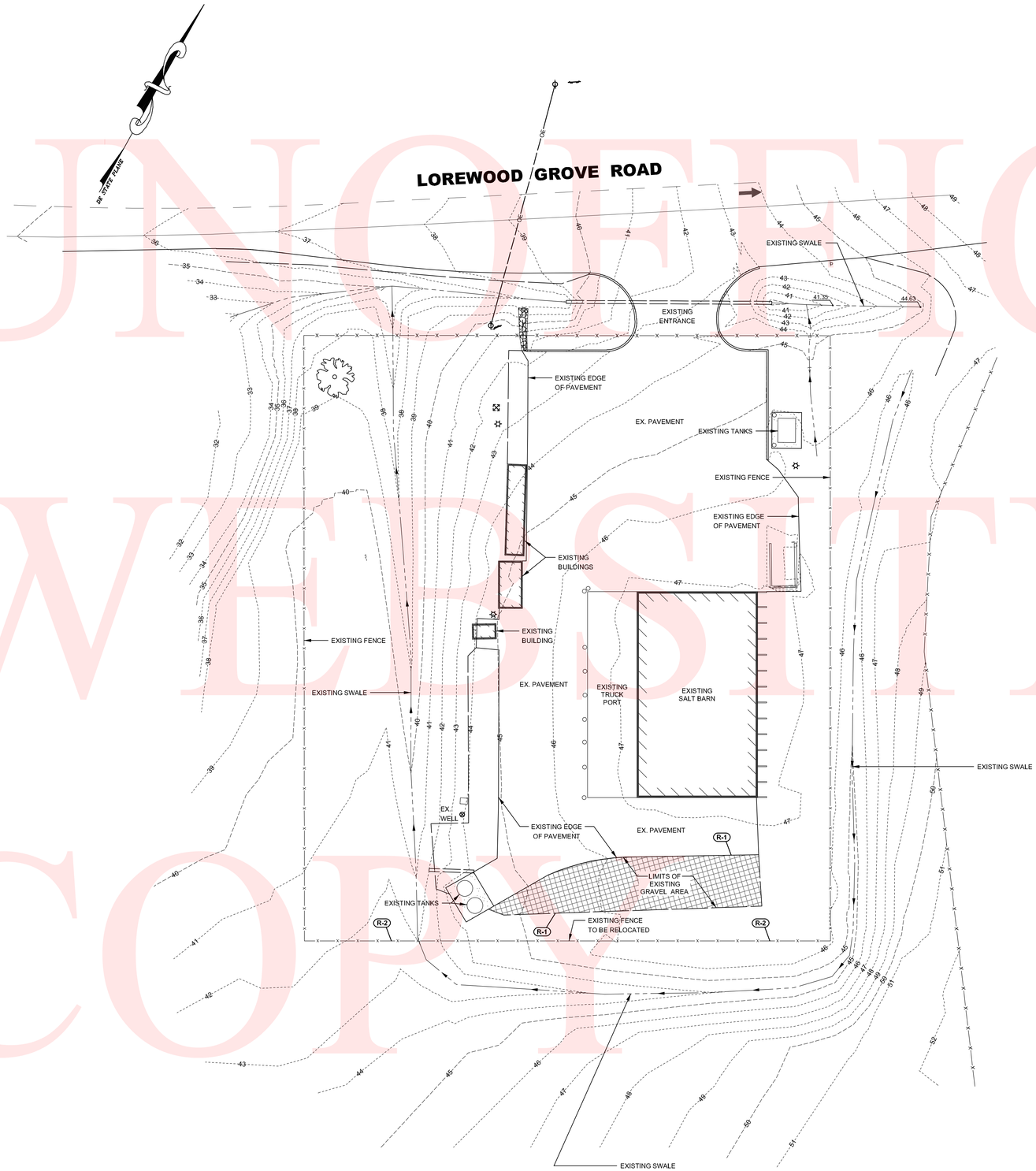

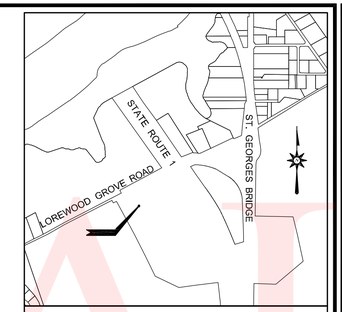

LOCATION MAP SCALE : 1" = 1,000'

DEMOLITION CONSTRUCTION NOTES

R-1 REMOVE EXISTING GRAVEL AREA WITHIN THE AREA OF THE PROPOSED IMPROVEMENTS AS SHOWN.

R-2 REMOVE / RELOCATE APPROXIMATELY 264 L.F. OF EXISTING CHAINLINK FENCE.

GENERAL DEMOLITION NOTES

1. CONTRACTOR TO TAKE ADDITIONAL CARE DURING DEMOLITION ACTIVITIES NOT TO DISTURB OR UNDERMINE ANY EXISTING UTILITIES ABOVE AND BELOW GROUND. CONTRACTOR IS ALSO TO TAKE CARE TO INSURE THE PROPER PROTECTION OF ALL UTILITIES FROM DAMAGE OR SEDIMENTS.
2. CONTRACTOR TO TAKE PROPER CARE IN REMOVING EXISTING DEBRIS AND MATERIALS, AND TO INSURE DISPOSAL OF OFFSITE IN ACCORDANCE WITH ALL APPLICABLE LAWS AND STANDARDS.
3. CONTRACTOR TO COORDINATE THE REMOVAL, RELOCATION AND DISCONNECTION OF UTILITIES NECESSARY FOR CONSTRUCTION WITH APPROPRIATE UTILITY COMPANY.
4. THE EXISTING UTILITIES SHOWN WERE TAKEN FROM THE BEST AVAILABLE RECORDS. THE CONTRACTOR SHALL CONTACT MISS UTILITY OF DELMARVA (1-800-282-8555) TO VERIFY THEIR EXACT LOCATION PRIOR TO THE START OF ANY CONSTRUCTION. ANY DAMAGE INCURRED TO ANY UTILITIES SHALL BE REPAIRED IMMEDIATELY AT THE CONTRACTORS EXPENSE. IF THE CONTRACTOR RELIES ON THE UTILITY LOCATIONS SHOWN HEREON, HE DOES SO AT HIS OWN RISK AND WILL NOT BE ENTITLED TO ADDITIONAL COMPENSATION DUE TO TIME DELAYS FROM SAID RELIANCE.

BECKER MORGAN GROUP

ARCHITECTURE ENGINEERING

Dover
309 S. Governors Ave.
Dover, DE 19904
Ph. 302.734.7950
Fax 302.734.7965

Salisbury
312 West Main St. Suite 300
Salisbury, MD 21801
Ph. 410.546.9100
Fax 410.546.5824

Wilmington
3205 Randall Parkway, Suite 211
Wilmington, North Carolina 28403
Ph. 910.341.7600
Fax 910.341.7506

www.beckermorgan.com

PROJECT TITLE

ST. GEORGES MAINTENANCE FACILITY IMPROVEMENTS

LOREWOOD GROVE ROAD
NEW CASTLE COUNTY
DELAWARE

SHEET TITLE

EXISTING CONDITIONS AND DEMOLITION PLAN

0 15 30 60

SCALE : 1" = 30'

ISSUE BLOCK

MARK	DATE	DESCRIPTION
2.	08-31-11	REVISED PER DELDOT'S COMMENTS
1.	06-28-11	REVISED LOCATION OF HOPPER RACKS PER DELDOT

LAYOUT:ISSUE1 - D:\FSI\ASMD 22x34

PROJECT NO.: 2005009.20
DATE: 08-26-10
SCALE: 1" = 30'
DRAWN BY: **R.P.H.** PROJ. MGR.: **G.E.J.**

SHEET
C-101

F:\AutoCAD\Projects\2005\2005009-20-ST. GEORGES\dwg\2005009-ST. GEORGES-SITE.dwg, Sep 01, 2011 - 12:07pm

CONTRACT	COUNTY	F.A.P. NO.	SHEET NO.	TOTAL SHTS.
T201280102	VARIES	X	7	7

STATEWIDE HOPPER RACKS & CANAL DISTRICT FUEL CANOPY

VARIOUS LOCATIONS

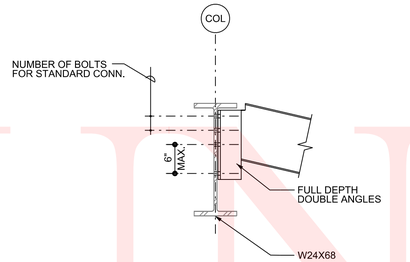

4 SECTION

SCALE: 3/4" = 1'0"

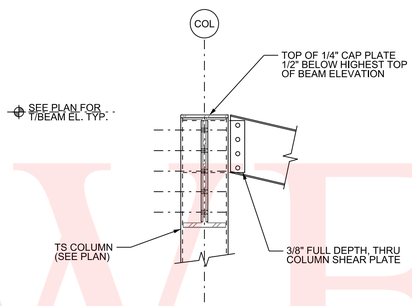

3 SECTION

SCALE: 3/4" = 1'0"

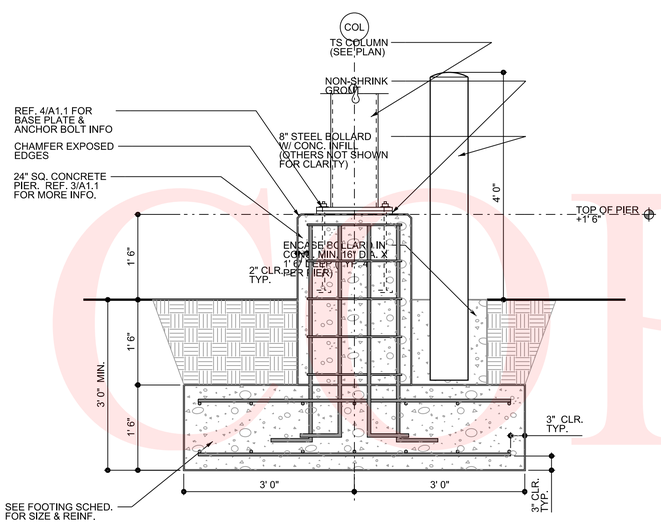

2 SECTION

SCALE: 3/4" = 1'0"

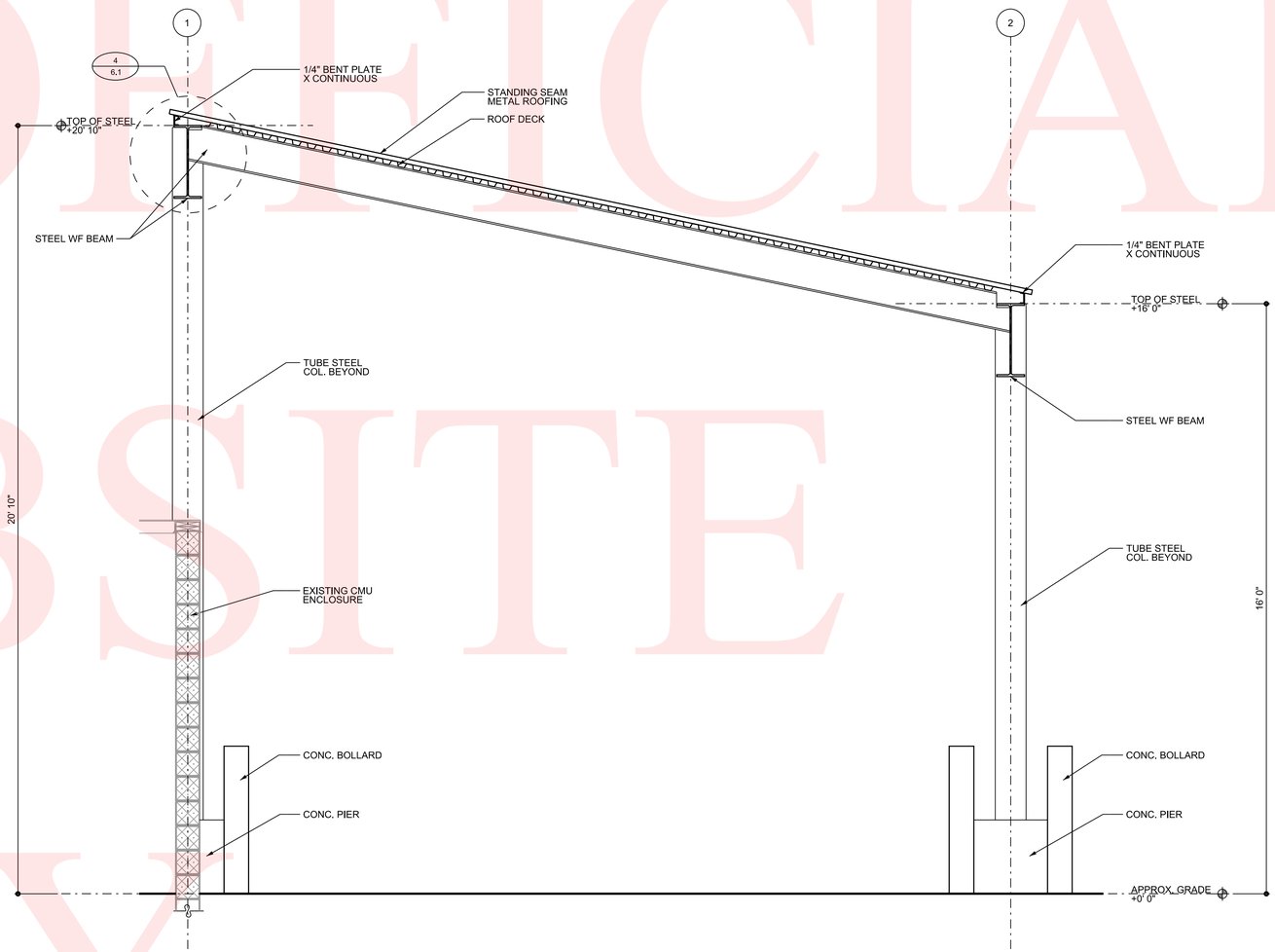

1 CANOPY SECTION

SCALE: 1/2" = 1'0"

CONSTRUCTION PLANS

DRAWING TITLE

CANOPY SECTION & DETAILS

DATE	SCALE	DRAWING NO.
August 31, 2011	AS NOTED	7 OF 7

8/1/2011 F:\Projects\2012\2012000\2012_Bear Canopy\2012000\2012_A100.dgn

CONTRACT	COUNTY	F.A.P. NO.	SHEET NO.	TOTAL SHTS.
T201280102	VARIES	X	6	7

STATEWIDE HOPPER RACKS & CANAL DISTRICT FUEL CANOPY

VARIOUS LOCATIONS

GENERAL NOTES

1. THE NOTES ON THESE DRAWINGS ARE NOT INTENDED TO REPLACE SPECIFICATIONS. SEE SPECIFICATIONS FOR REQUIREMENTS IN ADDITION TO GENERAL NOTES. FOR INCONSISTENCIES BETWEEN THESE DRAWINGS AND THE SPECIFICATIONS, THE STRICTER REQUIREMENT SHALL APPLY, AND THE ENGINEER SHALL BE NOTIFIED PRIOR TO PROCEEDING WITH THE AFFECTED PORTION OF THE WORK.

2. STRUCTURAL DRAWINGS SHALL BE USED IN CONJUNCTION WITH JOB SPECIFICATIONS AND ARCHITECTURAL, MECHANICAL, ELECTRICAL, PLUMBING, AND SITE DRAWINGS. CONSULT THESE DRAWINGS FOR LOCATIONS AND DIMENSIONS OF OPENINGS, CHASES, INSERTS, REGLETS, SLEEVES, DEPRESSIONS, AND OTHER DETAILS NOT SHOWN ON STRUCTURAL DRAWINGS. ALL DIMENSIONS AND CONDITIONS MUST BE VERIFIED IN THE FIELD. ANY DISCREPANCIES SHALL BE BROUGHT TO THE ATTENTION OF THE ENGINEER BEFORE PROCEEDING WITH THE AFFECTED PART OF THE WORK.

3. THE STRUCTURE IS DESIGNED TO BE SELF SUPPORTING AND STABLE AFTER THE BUILDING IS COMPLETE. IT IS THE CONTRACTOR'S SOLE RESPONSIBILITY TO DETERMINE ERECTION PROCEDURES AND SEQUENCE TO INSURE THE SAFETY OF THE BUILDING AND ITS COMPONENTS DURING ERECTION. THIS INCLUDES, BUT IS NOT LIMITED TO, THE ADDITION OF NECESSARY SHORING, SHEETING, TEMPORARY BRACING, GUYS OR TIEDOWNS. PROVIDE ALL SHORING AND BRACING REQUIRED TO STABILIZE AND PROTECT EXISTING AND ADJACENT STRUCTURES AND SYSTEMS DURING COURSE OF DEMOLITION AND CONSTRUCTION. SUCH MATERIAL SHALL REMAIN THE PROPERTY OF THE CONTRACTOR AFTER COMPLETION OF THE PROJECT.

4. SECTIONS AND DETAILS SHOWN ON ANY STRUCTURAL DRAWINGS SHALL BE CONSIDERED TYPICAL FOR SIMILAR CONDITIONS.

5. ALL APPLICABLE FEDERAL, STATE AND MUNICIPAL REGULATIONS SHALL BE FOLLOWED, INCLUDING THE FEDERAL DEPARTMENT OF LABOR OCCUPATIONAL SAFETY AND HEALTH ACT.

6. ANY AND ALL MODIFICATIONS TO THE STRUCTURAL ELEMENTS INDICATED ON THESE DRAWINGS MUST BE APPROVED IN ADVANCE BY BAKER, INGRAM & ASSOCIATES.

DESIGN LOADS

1. BUILDING CODE: INTERNATIONAL BUILDING CODE (2003 EDITION).

2. DESIGN LIVE LOADS:

   ROOF 30 PSF MIN. + DRIFT

3. SNOW LOADING IS BASED ON THE FOLLOWING. DRIFTING OR SLIDING SNOW LOADS HAVE BEEN CONSIDERED WHERE APPROPRIATE.

   GROUND SNOW LEVEL 20 PSF
   FLAT-ROOF SNOW LOAD 14 PSF
   SNOW EXPOSURE FACTOR 1.0
   SNOW THERMAL FACTOR 1.0
   SNOW LOAD IMPORTANCE FACTOR 1.0

4. WIND LOADING IS BASED ON THE FOLLOWING:

   BASIC WIND SPEED 95 MPH
   EXPOSURE CATEGORY B
   IMPORTANCE FACTOR 1.0
   BUILDING CATEGORY SIMPLE DIAPHRAGM, LOW-RISE, ENCLOSED RIGID STRUCTURE
   INTERNAL PRESSURE COEFF. □.18

5. DESIGN EARTHQUAKE LOADS ARE BASED ON IBC 2003.

   SITE CLASS D
   SEISMIC IMPORTANCE FACTOR 1.0
   SEISMIC USE GROUP I
   SPECTRAL RESPONSE ACCEL. (S_S) 0.200g
   SPECTRAL RESPONSE ACCEL. (S_1) 0.065g
   SPECTRAL RESPONSE COEFF. (S_{DS}) 0.213g
   SPECTRAL RESPONSE COEFF. (S_{D1}) 0.104g
   RESPONSE MODIFICATION FACTOR (R) 3.0
   SEISMIC DESIGN CATEGORY B

CONCRETE

1. ALL CONCRETE WORK SHALL CONFORM TO ACI 318 (LATEST EDITION).

2. CONCRETE COMPRESSIVE STRENGTH AT 28 DAYS SHALL BE:

   FOOTINGS: 3000 PSI
   SLABS: 4000 PSI
   PIERS: 4000 PSI

   ALL CONC. TO BE NORMAL WEIGHT UNLESS NOTED OTHERWISE.

   ALL EXTERIOR CONCRETE SHALL BE AIR-ENTRAINED (6 □)% PER ASTM C260.

   MAXIMUM WATER/CEMENT RATIO =
   0.50 FOR 3000 PSI CONC.
   0.45 FOR 4000 PSI CONC.

3. CONCRETE REINFORCING SHALL CONFORM TO THE FOLLOWING DESIGNATIONS:
   DEFORMED BARS ASTM A615, GRADE 60
   WELDED WIRE FABRIC ASTM A185

4. LAP DEFORMED BARS 40 DIA., UNO. HOOKS SHALL BE STANDARD HOOKS, UNO. LAP WELDED WIRE FABRIC SUCH THAT THE OVERLAP OF THE OUTERMOST CROSS WIRES FOR EACH ADJOINING SHEET IS NOT LESS THAN THE SPACING OF THE CROSS WIRES PLUS TWO IN., UNO.

5. CONCRETE PROTECTION FOR REINFORCEMENT (UNLESS NOTED OTHERWISE):
   CONCRETE CAST AGAINST AND PERMANENTLY EXPOSED TO EARTH: 3 IN.
   CONCRETE EXPOSED TO EARTH OR WEATHER:
   NO. 6 THROUGH NO. 18 BARS: 2 IN.
   NO. 5 BAR AND SMALLER: 1" IN.

6. REINFORCING FOR SLABS ON GRADE, WHERE NOT OTHERWISE SPECIFIED, SHALL BE AS FOLLOWS:
   REINFORCING BARS: SEE FOUNDATION AND TYPICAL DETAILS.
   WIRE MESH: 6x6-W2.1 x W2.1 WWF. REINFORCING SHALL BE SUPPORTED AT MID-DEPTH OF SLAB.

7. REINFORCING FOR CONCRETE TOPPING, WHERE NOT OTHERWISE SPECIFIED, SHALL BE AS FOLLOWS:
   REINFORCING BARS: SEE FRAMING AND TYPICAL DETAILS.
   WIRE MESH: 6x6-W1.4 x W1.4 WWF. REINFORCING SHALL BE SUPPORTED 1 IN. BELOW TOP OF SLAB.

8. WELDING OF REINFORCEMENT IS NOT PERMITTED UNLESS SPECIFICALLY INDICATED ON DRAWINGS. WELDING, WELDING ELECTRODES AND FLUXES SHALL CONFORM TO AWS D1.4-92, "STRUCTURAL WELDING CODE - REINFORCED STEEL". ELECTRODES SHALL HAVE A MINIMUM TENSILE STRENGTH OF 70 KSI. ASTM A706 BARS SHALL BE USED IN ALL WELDED APPLICATIONS.

9. COMPLETE SHOP DRAWINGS AND SCHEDULES OF ALL REINFORCING STEEL SHALL BE PREPARED BY THE CONTRACTOR AND SUBMITTED TO THE ENGINEER FOR REVIEW. REFER TO SPECIFICATIONS.

10. CONCRETE SHALL NOT BE PLACED IN WATER OR ON FROZEN GROUND.

11. JOINTS IN SLABS ON GRADE:

    a) CONTROL JOINTS SHALL BE LOCATED AS SHOWN ON FOUNDATION PLAN. IF NOT SHOWN, PROVIDE JOINTS IN A RECTANGULAR CONFIGURATION, WITH THE LONGER SIDE NO MORE THAN ONE-AND ONE-HALF TIMES THE LENGTH OF THE SHORTER SIDE. SPACE CONTROL JOINTS NO MORE THAN 10 FEET APART. DISCONTINUE WELDED WIRE FABRIC AT CONTROL JOINTS.

    b) CONTROL JOINTS SHALL BE SAW CUT OR FORMED "" WIDE x (1/3 SLAB THICKNESS) DEEP AND FILLED WITH JOINT SEALER. CUT JOINTS AS SOON AS POSSIBLE WITHOUT FRAYING THE CONCRETE SURFACE.

    c) CONSTRUCTION JOINTS SHALL INCLUDE A 1"x2" SHEAR KEY AT MID-HEIGHT OF SLAB.

    d) ISOL. JT.: PRE-MOLDED JOINT FILLER. USE AROUND ALL PILING, PIERS AND AT FOUNDATION WALLS.

12. ANCHOR BOLTS SHALL CONFORM TO ASTM A307 UNLESS NOTED OTHERWISE.

13. CURING REQUIREMENTS:

    a) SLABS TO BE COVERED WITH A FINISH MATERIAL MAY BE SPRAYED WITH A CURING COMPOUND OR WET CURED AT CONTRACTOR'S OPTION. CONTRACTOR TO VERIFY COMPATIBILITY OF CURING COMPOUND WITH FINISH MATERIAL.

    b) ALL SLABS AND WALLS EXPOSED TO VIEW SHALL BE WET CURED FOR A MINIMUM OF 7 DAYS.

FOUNDATION

1. PRESUMPTIVE BEARING CAPACITY: 2000 PSF

2. CONTRACTOR, AT HIS EXPENSE, SHALL RETAIN THE SERVICES OF A GEOTECHNICAL ENGINEER LICENSED IN THE STATE WHERE THE PROJECT IS LOCATED, TO VERIFY THE SUITABILITY OF THE SUBGRADE FOR THE PROPOSED FOUNDATION SYSTEM & BUILDING.

3. FOUNDATION DESIGN IS BASED ON SHALLOW SPREAD FOOTINGS BEARING ON SUITABLE NATURAL SOILS AND/OR NEW COMPACTED STRUCTURAL FILL.

4. ALL ORGANIC MATERIALS, EXCESSIVELY SOFT OR LOOSE SOILS, TREES, ASPHALT, CONCRETE, DEBRIS AND OTHER DELETERIOUS MATERIALS SHOULD BE REMOVED WITHIN AND AT LEAST 5 FEET BEYOND THE BUILDING LIMIT. THE EXISTING ORGANIC SOIL SHOULD BE STRIPPED AND CAN BE STOCKPILED FOR REUSE IN LANDSCAPE AREAS. PROOF ROLL ALL SUBGRADES, UNDER THE OBSERVATION OF THE GEOTECHNICAL ENGINEER. UNSUITABLE AREAS SHALL BE REMOVED AND REPLACED AS DIRECTED BY THE GEOTECHNICAL ENGINEER. NO FILL FOR BUILDING SUPPORT SHALL BE PLACED UNTIL SUBGRADES AND FILL MATERIAL HAVE BEEN OBSERVED AND APPROVED BY THE GEOTECHNICAL ENGINEER.

5. AREAS REQUIRING UNDERCUT AND FILL MATERIAL DUE TO THE PRESENCE OF UNSUITABLE MATERIAL SHALL BE BACKFILLED TO THE DESIGN FOOTING SUBGRADE WITH NEW COMPACTED STRUCTURAL FILL.

6. COMPACTED STRUCTURAL FILL FOR BUILDING AND SLAB SUPPORT APPROVED FOR USE INCLUDE:

   GRANULAR SOILS INCLUDING GW, GP, GM, SW, SP AND SM CLASSIFIED IN ACCORDANCE WITH THE UNIFIED SOIL CLASSIFICATION SYSTEM (USCS). FURTHERMORE, THE MATERIAL TO BE UTILIZED AS STRUCTURAL FILL SHOULD HAVE A PLASTICITY INDEX (PI) LESS THAN 20.

   A MATERIAL UTILIZED FOR STRUCTURAL FILL MUST BE APPROVED BY THE GEOTECHNICAL ENGINEER. IF THERE IS NOT SUFFICIENT FILL MATERIAL ON SITE, CONTRACTOR SHALL TRANSPORT APPROVED BORROW MATERIAL FROM AN OFF SITE SOURCE.

7. SLABS ON GRADE MAY BE SUPPORTED ON FIRM SUITABLE NATURAL SOILS, OR ON COMPACTED STRUCTURAL FILL FOLLOWING STRIPPING OF TOPSOIL, VEGETATION, ASPHALT AND ANY SOFT OR DISTURBED SOILS WITHIN THE BUILDING AREA. A MINIMUM 4 INCH WASHED GRAVEL OR CRUSHED STONE LAYER CORRESPONDING TO AASHTO SIZE NO. 57 AGGREGATE SHOULD BE USED BENEATH ALL FLOOR SLABS ON GRADE. (REF. DWGS. FOR AREAS OF THICKER STONE BASE).

8. COMPACTED STRUCTURAL FILL BENEATH ALL FOUNDATIONS, SLABS ON GRADE AND ADJACENT TO FOUNDATION WALLS SHALL BE PLACED IN LIFTS NOT EXCEEDING 8 INCHES IN LOOSE THICKNESS AND BE COMPACTED TO 95 PERCENT OF MAXIMUM DRY DENSITY PER ASTM D-1557, MODIFIED PROCTOR TEST.

9. THE EXCAVATION FOR PLACEMENT OF COMPACTED STRUCTURAL FILL SHOULD EXTEND BEYOND THE EDGE OF FOOTINGS A MINIMUM DISTANCE EQUAL TO THE DEPTH OF FILL.

10. EXTEND BOTTOM OF EXTERIOR FOOTINGS AT LEAST 3'-0" BELOW THE EXTERIOR FINISH GRADE FOR PROTECTION AGAINST FROST.

11. ALL SUBGRADES AND UNDERCUTS SHALL BE APPROVED BY THE GEOTECHNICAL ENGINEER. SOILS EXPOSED AT THE BASES OF ALL APPROVED FOUNDATION EXCAVATIONS SHOULD BE PROTECTED AGAINST ANY DETRIMENTAL CHANGE IN CONDITION, SUCH AS DISTURBANCE FROM RAIN OR FROST. SURFACE RUNOFF SHOULD BE DRAINED AWAY FROM THE EXCAVATIONS AND NOT BE ALLOWED TO POND. FOUNDATION EXCAVATIONS SHOULD BE PROTECTED FROM RAINFALL OR FREEZING CONDITIONS. SLOPE FOOTING EXCAVATIONS AS REQUIRED FOR STABILITY AND SAFETY OR PROVIDE SHEETING OR SHORING IN ACCORDANCE WITH OSHA REQUIREMENTS. IN THE EVENT THAT THE CONTRACTOR DETERMINES THAT SHEETING AND SHORING IS REQUIRED FOR EXCAVATION, THE CONTRACTOR SHALL RETAIN THE SERVICES OF A REGISTERED PROFESSIONAL STRUCTURAL ENGINEER FOR DESIGN AND DOCUMENTATION OF ALL SHEETING AND SHORING REQUIRED FOR THE WORK.

STRUCTURAL STEEL

1. STRUCTURAL STEEL FABRICATION, ERECTION, AND CONNECTION DESIGN SHALL CONFORM TO AISC "SPECIFICATION FOR THE DESIGN, FABRICATION, AND ERECTION OF STRUCTURAL STEEL FOR BUILDINGS" LATEST EDITION.

2. STRUCTURAL STEEL SHALL CONFORM TO THE FOLLOWING DESIGNATIONS:
   STRUCTURAL STEEL WF SHAPES: ASTM A992
   OTHER STRUCTURAL STEEL SHAPES: ASTM A36, U.N.O.
   STEEL BARS, ANGLES & PLATES: ASTM A36, U.N.O.
   ROUND PIPE: ASTM A53, TYPE E OR S
   SQUARE OR RECTANGULAR TUBING: ASTM A500, GRADE B

3. FIELD CONNECTIONS SHALL BE BOLTED USING "" DIAMETER ASTM A325N HIGH STRENGTH BOLTS (UNO) EXCEPT WHERE SLIP CRITICAL CONNECTIONS ARE REQUIRED AND NOTED BY A325(SC) ON THE DRAWINGS.

4. FULL DEPTH CONNECTIONS ARE TO BE USED ON ALL GIRDER AND BEAM CONNECTIONS TO COLUMNS. BOLTS TO BE AT 3" O.C. VERTICAL.

5. PROVIDE A MINIMUM "" THICK FULL DEPTH THRU-PLATE FOR ALL PIPE AND TUBE COLUMN CONNECTIONS.

6. DESIGN CONNECTIONS FOR THE MINIMUM SHEAR CAPACITIES NOTED IN THE AISC BEAM TABLES, OR FOR THE REACTIONS SHOWN ON THE DRAWINGS, WHICHEVER IS GREATER.

7. ALL WELDING SHALL CONFORM TO AWS D1.1-LATEST EDITION. ELECTRODES SHALL BE E70XX.

8. ALL ALUMINUM AND STEEL MEMBERS TO BE TREATED OR PROPERLY SEPARATED TO PREVENT GALVANIC AND CORROSIVE EFFECTS.

9. SUBMIT ALL STEEL SHOP DRAWINGS FOR APPROVAL PRIOR TO ANY FABRICATION.

10. STEEL FABRICATOR IS SOLELY RESPONSIBLE FOR SURVEYING AND VERIFICATION OF EXISTING CONDITIONS INCLUDING, BUT NOT LIMITED TO THE LOCATION, ELEVATION, AND DIMENSIONS OF EXISTING WALLS AND FRAMING.

11. THERE SHALL BE NO FIELD CUTTING OF STRUCTURAL STEEL MEMBERS FOR THE WORK OF OTHER TRADES WITHOUT THE PRIOR APPROVAL OF THE DESIGN PROFESSIONAL.

12. FABRICATE BEAMS WITH THE NATURAL CAMBER UP. (PROVIDE CAMBER AS INDICATED).

13. ALL STEEL NOT RECEIVING FIREPROOFING SHALL BE PAINTED WITH THE FABRICATOR'S RUST INHIBITIVE PRIMER. ALL STEEL EXPOSED TO WEATHER SHALL BE PAINTED WITH RUST INHIBITIVE PRIMER AND TOP COATED OR HOT DIPPED GALVANIZED AS INDICATED ON THE DRAWINGS.

CONSTRUCTION PLANS

DRAWING TITLE

CANOPY STRUCTURAL NOTES

DATE	SCALE	DRAWING NO.
August 31, 2011	AS NOTED	6 OF 7

CONTRACT	COUNTY	F.A.P. NO.	SHEET NO.	TOTAL SHTS.
T201280102	VARIES	X	5	7

STATEWIDE HOPPER RACKS & CANAL DISTRICT FUEL CANOPY

VARIOUS LOCATIONS

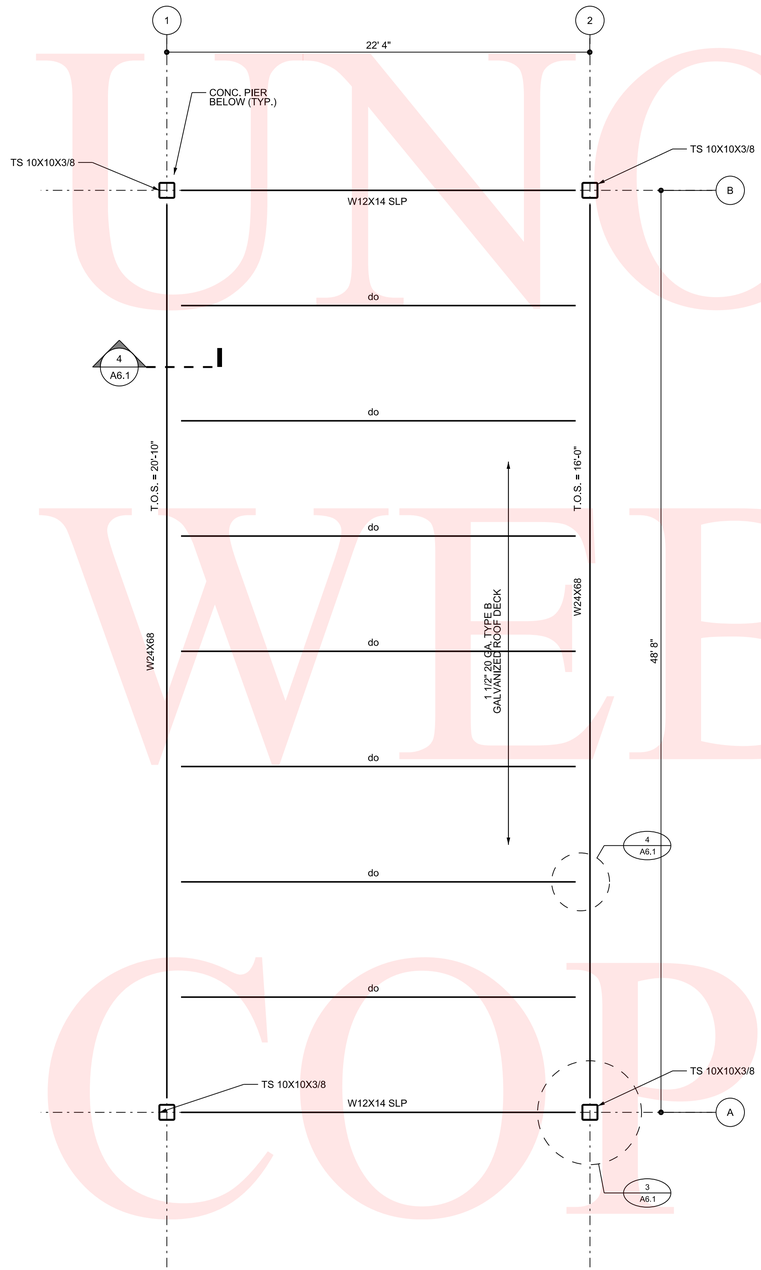

2 CANOPY FRAMING PLAN

SCALE: 1/4" = 1'0"

NOTES: ALL STEEL TO BE GALVANIZED UNLESS NOTED OTHERWISE.

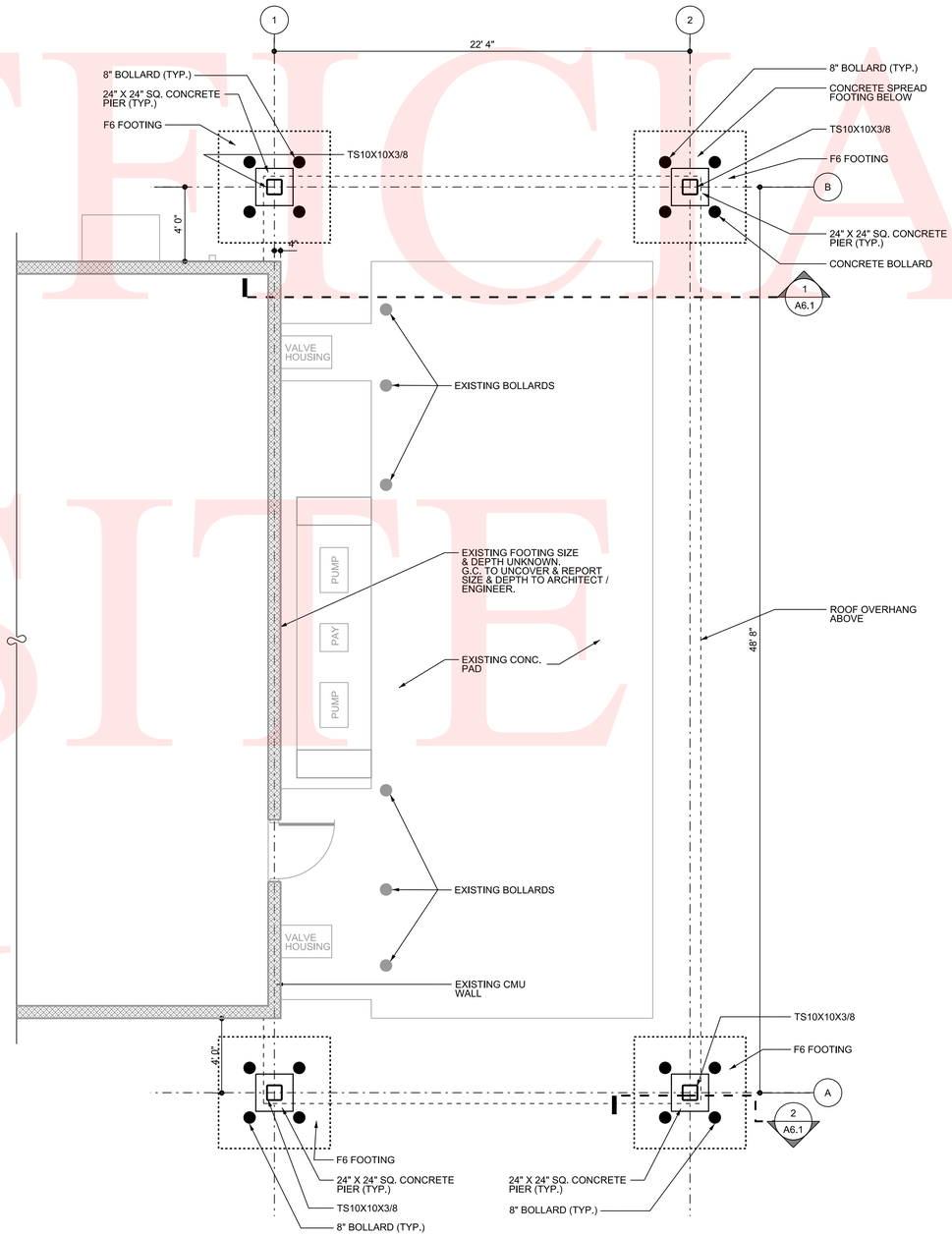

1 FLOOR PLAN

SCALE: 1/4" = 1'0"

NOTES: ALL STEEL TO BE GALVANIZED UNLESS NOTED OTHERWISE.

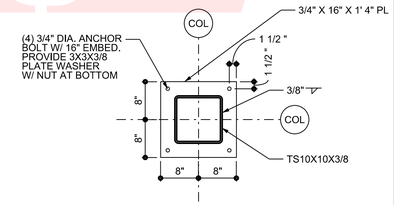

4 BASE PLATE DETAIL

SCALE: 3/4" = 1'0"

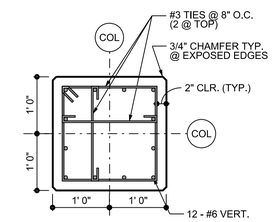

3 PIER PLAN DETAIL

SCALE: 3/4" = 1'0"

FOOTING SCHEDULE			
MARK	SIZE	THICK	REINFORCING
F6	6' 0" X 6' 0"	1' 6"	(7) #5 E.W. TOP & BOTT.

NOTE: PRESUMPTIVE ALLOWABLE SOIL BEARING CAPACITY = 2000 PSF. TO BE VERIFIED IN FIELD BY A GEOTECHNICAL ENGINEER PRIOR TO CASTING FOOTING CONCRETE.

CONSTRUCTION PLANS

DRAWING TITLE

CANOPY PLANS & PLAN DETAILS

DATE	SCALE	DRAWING NO.
August 31, 2011	AS NOTED	5 OF 7

9/1/2011 F:\Drf\Projects\2005\2005\2005\Sign\Base Canopy\2005\2005_A100.dgn

CONTRACT	COUNTY	F.A.P. NO.	SHEET NO.	TOTAL SHTS.
T201280102	X	X	4	7

STATEWIDE HOPPER RACKS & CANAL DISTRICT FUEL CANOPY

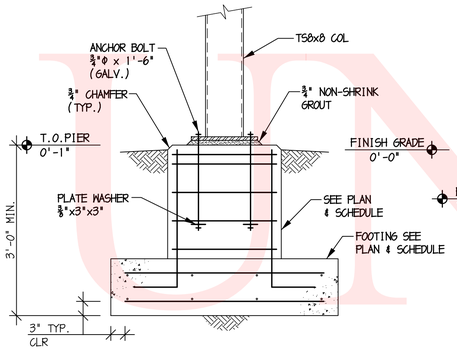

1 S102 SECTION
¾" = 1'-0"

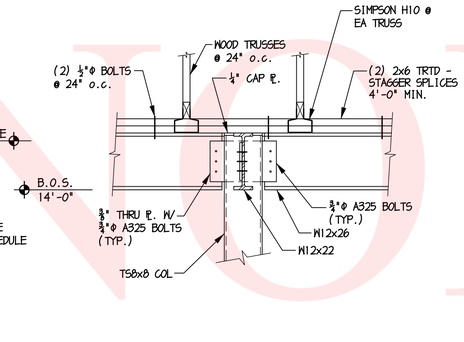

2 S102 SECTION
¾" = 1'-0"

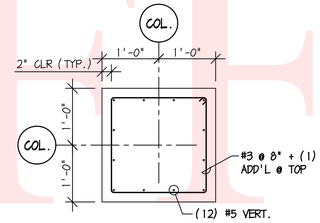

3 S102 PIER P1
¾" = 1'-0"

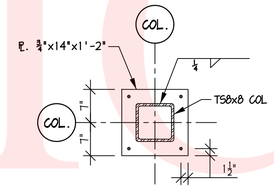

4 S102 BASE PL. BP1
¾" = 1'-0"

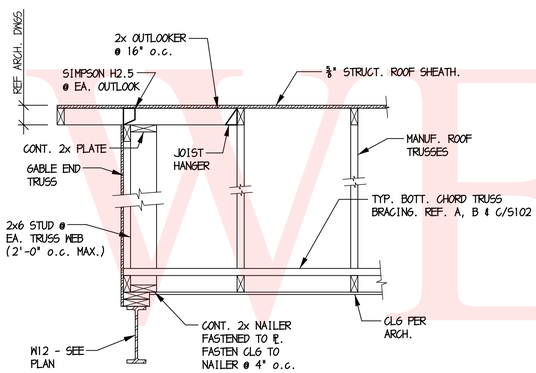

5 S102 TYPICAL GABLE END
¾" = 1'-0"

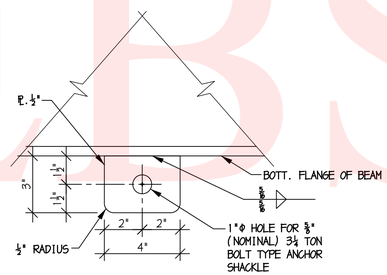

6 S102 TYPICAL PAD EYE
3" = 1'-0"

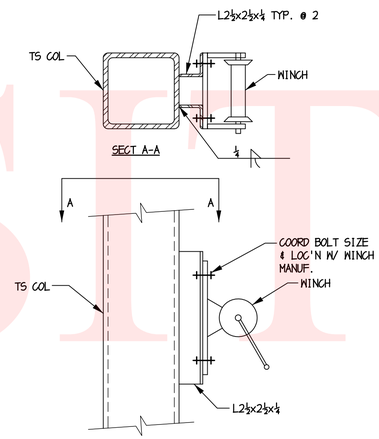

6 S102 TYPICAL WINCH MOUNT
1½" = 1'-0"

7 S102 PARTIAL ELEVATION
¼" = 1'-0"

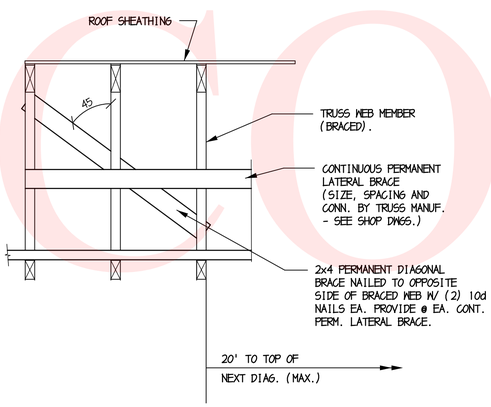

A S102 PERM. DIAG. BRACE @ CONT.
PERM. LAT. BRACE

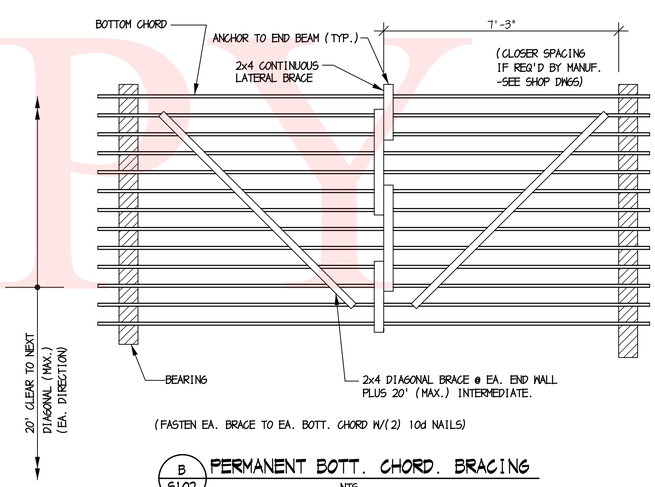

B S102 PERMANENT BOTT. CHORD. BRACING
NTS

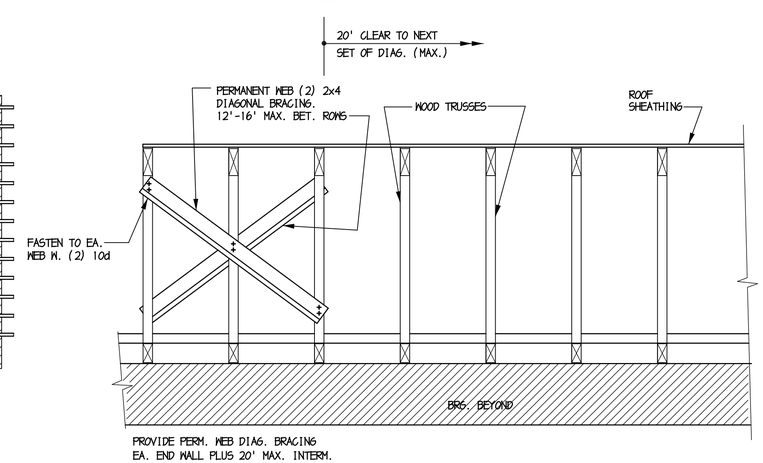

C S102 PERM. WEB DIAG. BRACING
NTS

CONSTRUCTION PLANS

DRAWING TITLE
HOPPER RACKS TYPICAL DETAILS & SECTIONS

DATE	SCALE	DRAWING NO.
August 31, 2011	AS NOTED	4 OF 7

$DATE$ $FILES

CONTRACT	COUNTY	F.A.P. NO.	SHEET NO.	TOTAL SHTS.
T201280102	X	X	3	7

STATEWIDE HOPPER RACKS & CANAL DISTRICT FUEL CANOPY

FOOTING SCHEDULE

MARK	SIZE	THICK.	REINFORCING
F5	5'-0" x 5'-0"	1'-0"	7 #4 E.W. TOP & BOTT.

NOTE:
PRESUMPTIVE ALLOWABLE SOIL BEARING PRESSURE = 1500 PSF, TO BE VERIFIED IN FIELD BY A GEOTECHNICAL ENGINEER PRIOR TO CASTING FOOTING CONCRETE.

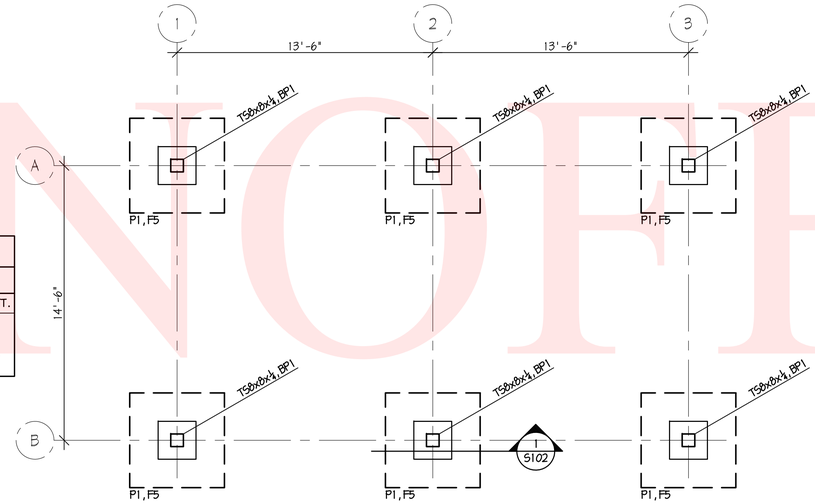

P1 / S101 FOUNDATION PLAN
¼" = 1'-0"

NOTES:
1. HIGH POINT OF FINISH GRADE REF. ELEV.: 0'-0".
2. TOP OF PIER ELEVATION: +0'-1" ABOVE FINISH
3. TOP OF FOOTING ELEVATION: -2'-0" BELOW FINISH GRADE AT FOOTING.
4. REF. SECTION 3 & 4/S102 FOR PIER & BASE PL. DETAILS.

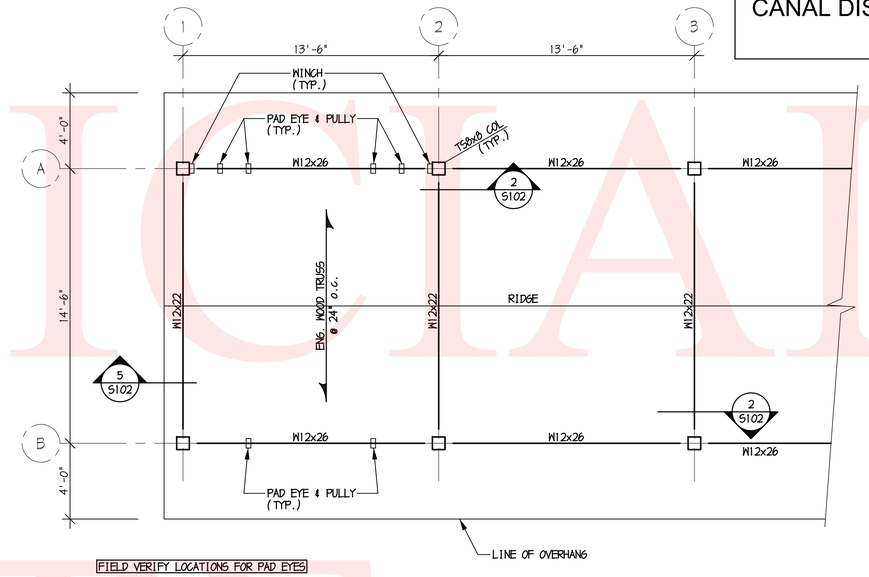

FIELD VERIFY LOCATIONS FOR PAD EYES

P2 / S101 TYPICAL ROOF FRAMING PLAN
¼" = 1'-0"

NOTES:
1. ALL STEEL TO BE HOT-DIPPED GALVANIZED.
2. TOP OF STEEL ELEVATION: +15'-0" ABOVE HIGH POINT OF FINISH GRADE.
3. REF. A, B & C/S102 FOR PERMANENT TRUSS BRACING DETAILS.
4. ALL HANGING COMPONENTS TO HAVE MINIMUM ALLOWABLE CAPACITY OF 3000 LBS. THIS INCLUDES: WINCHES, CHAIN, CABLES, PULLEYS AND ALL ASSOCIATED ACCESSORIES.
5. PROVIDE MIN. 30' CABLE FOR ALL WINCHES.
6. PROVIDE MIN. 6' CHAIN AT ALL CHAIN HANGERS.

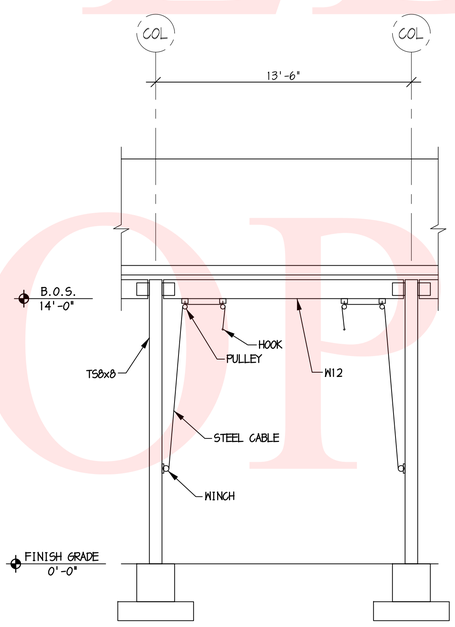

E1 / S101 PARTIAL REAR ELEVATION
¼" = 1'-0"

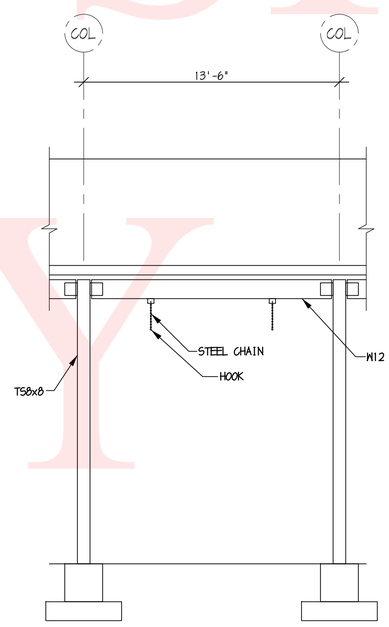

E2 / S101 PARTIAL FRONT ELEVATION
¼" = 1'-0"

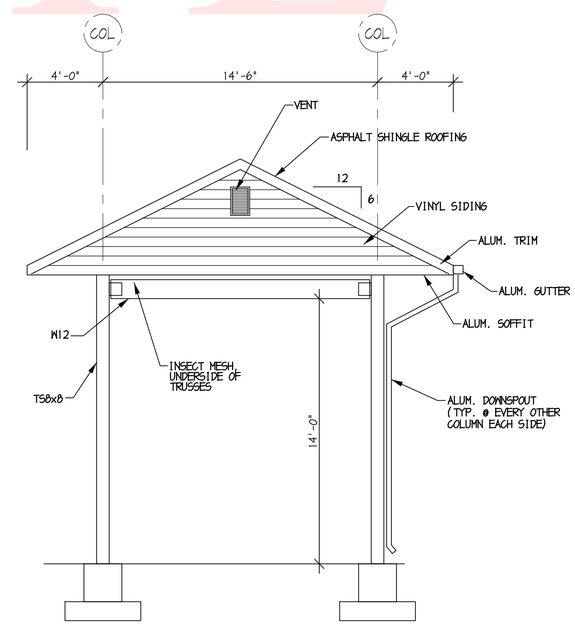

E3 / S101 END ELEVATION
¼" = 1'-0"

CONSTRUCTION PLANS

DRAWING TITLE
HOPPER RACKS STRUCTURAL FRAMING PLANS & ELEVATIONS

DATE	SCALE	DRAWING NO.
August 31, 2011	AS NOTED	3 OF 7

SDATES $FILES

CONTRACT	COUNTY	F.A.P. NO.	SHEET NO.	TOTAL SHTS.
T201280102	X	X	2	7

STATEWIDE HOPPER RACKS & CANAL DISTRICT FUEL CANOPY

GENERAL NOTES

1. THE NOTES ON THESE DRAWINGS ARE NOT INTENDED TO REPLACE SPECIFICATIONS. SEE SPECIFICATIONS FOR REQUIREMENTS IN ADDITION TO GENERAL NOTES. FOR INCONSISTENCIES BETWEEN THESE DRAWINGS AND THE SPECIFICATIONS, THE STRICTER REQUIREMENT SHALL APPLY, AND THE ENGINEER SHALL BE NOTIFIED PRIOR TO PROCEEDING WITH THE AFFECTED PORTION OF THE WORK.

2. STRUCTURAL DRAWINGS SHALL BE USED IN CONJUNCTION WITH JOB SPECIFICATIONS AND ARCHITECTURAL, MECHANICAL, ELECTRICAL, PLUMBING, AND SITE DRAWINGS. CONSULT THESE DRAWINGS FOR LOCATIONS AND DIMENSIONS OF OPENINGS, CHASES, INSERTS, REGLETS, SLEEVES, DEPRESSIONS, AND OTHER DETAILS NOT SHOWN ON STRUCTURAL DRAWINGS. ALL DIMENSIONS AND CONDITIONS MUST BE VERIFIED IN THE FIELD. ANY DISCREPANCIES SHALL BE BROUGHT TO THE ATTENTION OF THE ENGINEER BEFORE PROCEEDING WITH THE AFFECTED PART OF THE WORK.

3. THE STRUCTURE IS DESIGNED TO BE SELF SUPPORTING AND STABLE AFTER THE BUILDING IS COMPLETE. IT IS THE CONTRACTOR'S SOLE RESPONSIBILITY TO DETERMINE ERECTION PROCEDURES AND SEQUENCE TO INSURE THE SAFETY OF THE BUILDING AND ITS COMPONENTS DURING ERECTION. THIS INCLUDES, BUT IS NOT LIMITED TO, THE ADDITION OF NECESSARY SHORING, SHEETING, TEMPORARY BRACING, GUYS OR TIEDOWNS. PROVIDE ALL SHORING AND BRACING REQUIRED TO STABILIZE AND PROTECT EXISTING AND ADJACENT STRUCTURES AND SYSTEMS DURING COURSE OF DEMOLITION AND CONSTRUCTION. SUCH MATERIAL SHALL REMAIN THE PROPERTY OF THE CONTRACTOR AFTER COMPLETION OF THE PROJECT.

4. SECTIONS AND DETAILS SHOWN ON ANY STRUCTURAL DRAWINGS SHALL BE CONSIDERED TYPICAL FOR SIMILAR CONDITIONS.

5. ALL APPLICABLE FEDERAL, STATE AND MUNICIPAL REGULATIONS SHALL BE FOLLOWED, INCLUDING THE FEDERAL DEPARTMENT OF LABOR OCCUPATIONAL SAFETY AND HEALTH ACT.

6. ANY AND ALL MODIFICATIONS TO THE STRUCTURAL ELEMENTS INDICATED ON THESE DRAWINGS MUST BE APPROVED IN ADVANCE BY BAKER, INGRAM & ASSOCIATES.

DESIGN LOADS

1. BUILDING CODE: INTERNATIONAL BUILDING CODE (2006 EDITION).

2. DESIGN LIVE LOADS:

ROOF	30 PSF MIN. + DRIFT

3. SNOW LOADING IS BASED ON THE FOLLOWING. DRIFTING OR SLIDING SNOW LOADS HAVE BEEN CONSIDERED WHERE APPROPRIATE.

GROUND SNOW LEVEL	20 PSF
FLAT-ROOF SNOW LOAD	14 PSF
SNOW EXPOSURE FACTOR	1.0
SNOW THERMAL FACTOR	1.0
SNOW LOAD IMPORTANCE FACTOR	1.0

4. WIND LOADING IS BASED ON THE FOLLOWING:

BASIC WIND SPEED	120 MPH
EXPOSURE CATEGORY	B
IMPORTANCE FACTOR	1.0
BUILDING CATEGORY	SIMPLE DIAPHRAGM, LOW-RISE, ENCLOSED RIGID STRUCTURE
INTERNAL PRESSURE COEFF.	±0.18

5. DESIGN EARTHQUAKE LOADS ARE BASED ON IBC 2003.

SITE CLASS	D
SEISMIC IMPORTANCE FACTOR	1.0
SEISMIC USE GROUP	I
SPECTRAL RESPONSE ACCEL. (S_S)	0.150g
SPECTRAL RESPONSE ACCEL. (S_1)	0.055g
SPECTRAL RESPONSE COEFF. (S_{DS})	0.160g
SPECTRAL RESPONSE COEFF. (S_{D1})	0.088g
RESPONSE MODIFICATION FACTOR (R)	6.0
SEISMIC DESIGN CATEGORY	B

FOUNDATION

1. PRESUMPTIVE BEARING CAPACITY: 1500 PSF

2. CONTRACTOR, AT HIS EXPENSE, SHALL RETAIN THE SERVICES OF A GEOTECHNICAL ENGINEER LICENSED IN THE STATE WHERE THE PROJECT IS LOCATED, TO VERIFY THE SUITABILITY OF THE SUBGRADE FOR THE PROPOSED FOUNDATION SYSTEM & BUILDING.

3. FOUNDATION DESIGN IS BASED ON SHALLOW SPREAD FOOTINGS BEARING ON SUITABLE NATURAL SOILS AND/OR NEW COMPACTED STRUCTURAL FILL.

4. ALL ORGANIC MATERIALS, EXCESSIVELY SOFT OR LOOSE SOILS, TREES, ASPHALT, CONCRETE, DEBRIS AND OTHER DELETERIOUS MATERIALS SHOULD BE REMOVED WITHIN AND AT LEAST 5 FEET BEYOND THE BUILDING LIMIT. THE EXISTING ORGANIC SOIL SHOULD BE STRIPPED AND CAN BE STOCKPILED FOR REUSE IN LANDSCAPE AREAS. PROOF ROLL ALL SUBGRADES, UNDER THE OBSERVATION OF THE GEOTECHNICAL ENGINEER. UNSUITABLE AREAS SHALL BE REMOVED AND REPLACED AS DIRECTED BY THE GEOTECHNICAL ENGINEER. NO FILL FOR BUILDING SUPPORT SHALL BE PLACED UNTIL SUBGRADES AND FILL MATERIAL HAVE BEEN OBSERVED AND APPROVED BY THE GEOTECHNICAL ENGINEER.

5. AREAS REQUIRING UNDERCUT AND FILL MATERIAL DUE TO THE PRESENCE OF UNSUITABLE MATERIAL SHALL BE BACKFILLED TO THE DESIGN FOOTING SUBGRADE WITH NEW COMPACTED STRUCTURAL FILL.

6. COMPACTED STRUCTURAL FILL FOR BUILDING APPROVED FOR USE INCLUDE:

   GRANULAR SOILS INCLUDING GW, GP, GM, SW, SP AND SM CLASSIFIED IN ACCORDANCE WITH THE UNIFIED SOIL CLASSIFICATION SYSTEM (USCS). FURTHERMORE, THE MATERIAL TO BE UTILIZED AS STRUCTURAL FILL SHOULD HAVE A PLASTICITY INDEX (PI) LESS THAN 20.

   A MATERIAL UTILIZED FOR STRUCTURAL FILL MUST BE APPROVED BY THE GEOTECHNICAL ENGINEER. IF THERE IS NOT SUFFICIENT FILL MATERIAL ON SITE, CONTRACTOR SHALL TRANSPORT APPROVED BORROW MATERIAL FROM AN OFF SITE SOURCE.

7. COMPACTED STRUCTURAL FILL BENEATH ALL FOUNDATIONS AND SHALL BE PLACED IN LIFTS NOT EXCEEDING 8 INCHES IN LOOSE THICKNESS AND BE COMPACTED TO 95 PERCENT OF MAXIMUM DRY DENSITY PER ASTM D-1557, MODIFIED PROCTOR TEST.

8. THE EXCAVATION FOR PLACEMENT OF COMPACTED STRUCTURAL FILL SHOULD EXTEND BEYOND THE EDGE OF FOOTINGS A MINIMUM DISTANCE EQUAL TO THE DEPTH OF FILL.

9. EXTEND BOTTOM OF EXTERIOR FOOTINGS AT LEAST 3'-0" BELOW THE EXTERIOR FINISH GRADE FOR PROTECTION AGAINST FROST.

10. ALL SUBGRADES AND UNDERCUTS SHALL BE APPROVED BY THE GEOTECHNICAL ENGINEER. SOILS EXPOSED AT THE BASES OF ALL APPROVED FOUNDATION EXCAVATIONS SHOULD BE PROTECTED AGAINST ANY DETRIMENTAL CHANGE IN CONDITION, SUCH AS DISTURBANCE FROM RAIN OR FROST. SURFACE RUNOFF SHOULD BE DRAINED AWAY FROM THE EXCAVATIONS AND NOT BE ALLOWED TO POND. FOUNDATION EXCAVATIONS SHOULD BE PROTECTED FROM RAINFALL OR FREEZING CONDITIONS. SLOPE FOOTING EXCAVATIONS AS REQUIRED FOR STABILITY AND SAFETY OR PROVIDE SHEETING OR SHORING IN ACCORDANCE WITH OSHA REQUIREMENTS. IN THE EVENT THAT THE CONTRACTOR DETERMINES THAT SHEETING AND SHORING IS REQUIRED FOR EXCAVATION, THE CONTRACTOR SHALL RETAIN THE SERVICES OF A REGISTERED PROFESSIONAL STRUCTURAL ENGINEER FOR DESIGN AND DOCUMENTATION OF ALL SHEETING AND SHORING REQUIRED FOR THE WORK.

11. TESTING: CONTRACTOR TO PROVIDE SOIL TESTING SERVICES.

CONCRETE

1. ALL CONCRETE WORK SHALL CONFORM TO ACI 318 (LATEST EDITION).

2. CONCRETE COMPRESSIVE STRENGTH AT 28 DAYS SHALL BE:

   FOOTINGS: 3000 PSI
   PIERS: 4000 PSI

   ALL CONC. TO BE NORMAL WEIGHT UNLESS NOTED OTHERWISE.

   ALL EXTERIOR CONCRETE SHALL BE AIR-ENTRAINED (6 ±1)% PER ASTM C260.

   MAXIMUM WATER/CEMENT RATIO =
   0.50 FOR 3000 PSI CONC.
   0.45 FOR 4000 PSI CONC.

3. CONCRETE REINFORCING SHALL CONFORM TO THE FOLLOWING DESIGNATIONS:
   DEFORMED BARS ASTM A615, GRADE 60

4. LAP DEFORMED BARS 40 DIA., UNO. HOOKS SHALL BE STANDARD HOOKS, UNO.

5. CONCRETE PROTECTION FOR REINFORCEMENT (UNLESS NOTED OTHERWISE):
   CONCRETE CAST AGAINST AND PERMANENTLY EXPOSED TO EARTH: 3 IN.
   CONCRETE EXPOSED TO EARTH OR WEATHER:
   NO. 6 THROUGH NO. 18 BARS: 2 IN.
   NO. 5 BAR AND SMALLER: 1½ IN.

6. WELDING OF REINFORCEMENT IS NOT PERMITTED UNLESS SPECIFICALLY INDICATED ON DRAWINGS. WELDING, WELDING ELECTRODES AND FLUXES SHALL CONFORM TO AWS D1.4-92, "STRUCTURAL WELDING CODE - REINFORCED STEEL". ELECTRODES SHALL HAVE A MINIMUM TENSILE STRENGTH OF 70 KSI. ASTM A706 BARS SHALL BE USED IN ALL WELDED APPLICATIONS.

7. COMPLETE SHOP DRAWINGS AND SCHEDULES OF ALL REINFORCING STEEL SHALL BE PREPARED BY THE CONTRACTOR AND SUBMITTED TO THE ENGINEER FOR REVIEW. REFER TO SPECIFICATIONS.

8. CONCRETE SHALL NOT BE PLACED IN WATER OR ON FROZEN GROUND.

9. ANCHOR BOLTS SHALL CONFORM TO ASTM A36 UNLESS NOTED OTHERWISE. GALVANIZE ALL ANCHOR BOLTS.

10. TESTING: CONTRACTOR TO PROVIDE CONCRETE TESTING SERVICES.

STRUCTURAL STEEL

1. STRUCTURAL STEEL FABRICATION, ERECTION, AND CONNECTION DESIGN SHALL CONFORM TO AISC "SPECIFICATION FOR THE DESIGN, FABRICATION, AND ERECTION OF STRUCTURAL STEEL FOR BUILDINGS" LATEST EDITION.

2. STRUCTURAL STEEL SHALL CONFORM TO THE FOLLOWING DESIGNATIONS:
   STRUCTURAL STEEL WF SHAPES: ASTM A992
   STEEL BARS, ANGLES & PLATES: ASTM A36, U.N.O.
   SQUARE OR RECTANGULAR TUBING: ASTM A500, GRADE B

3. FIELD CONNECTIONS SHALL BE BOLTED USING ¾" DIAMETER ASTM A325N HIGH STRENGTH BOLTS (UNO).

4. FULL DEPTH CONNECTIONS ARE TO BE USED ON ALL GIRDER AND BEAM CONNECTIONS TO COLUMNS. BOLTS TO BE AT 3" O.C. VERTICAL.

5. PROVIDE A MINIMUM ⅜" THICK FULL DEPTH THRU-PLATE FOR ALL PIPE AND TUBE COLUMN CONNECTIONS.

6. DESIGN CONNECTIONS FOR THE MINIMUM SHEAR CAPACITIES NOTED IN THE AISC BEAM TABLES, OR FOR THE REACTIONS SHOWN ON THE DRAWINGS, WHICHEVER IS GREATER.

8. ALL WELDING SHALL CONFORM TO AWS D1.1-LATEST EDITION. ELECTRODES SHALL BE E70XX.

10. ALL ALUMINUM AND STEEL MEMBERS TO BE TREATED OR PROPERLY SEPARATED TO PREVENT GALVANIC AND CORROSIVE EFFECTS.

11. SUBMIT ALL STEEL SHOP DRAWINGS FOR APPROVAL PRIOR TO ANY FABRICATION.

12. STEEL FABRICATOR IS SOLELY RESPONSIBLE FOR SURVEYING AND VERIFICATION OF EXISTING CONDITIONS INCLUDING, BUT NOT LIMITED TO THE LOCATION, ELEVATION, AND DIMENSIONS OF EXISTING WALLS AND FRAMING.

14. THERE SHALL BE NO FIELD CUTTING OF STRUCTURAL STEEL MEMBERS FOR THE WORK OF OTHER TRADES WITHOUT THE PRIOR APPROVAL OF THE DESIGN PROFESSIONAL.

15. FABRICATE BEAMS WITH THE NATURAL CAMBER UP.

16. ALL STEEL HOT DIPPED GALVANIZED AS INDICATED ON THE DRAWINGS.

WOOD TRUSSES

1. COMPLY WITH TRUSS PLATE INSTITUTE (TPI) "DESIGN SPECIFICATIONS FOR METAL PLATE CONNECTED WOOD TRUSSES" (LATEST EDITION).

2. ROOF TRUSS LAYOUT SHOWN IS CONCEPTUAL AND MUST BE VERIFIED BY THE TRUSS MANUFACTURER AND SHOWN ON SHOP DRAWINGS FOR APPROVAL. ANY REVISIONS TO THE TRUSS LAYOUT MAY AFFECT OTHER FRAMING AND THEREFORE MUST BE APPROVED BY BAKER, INGRAM & ASSOCIATES.

3. CONNECTOR PLATES: ASTM A446, GRADE A, GALVANIZE PER ASTM A525 G60.

4. ALL TRUSSES SHALL BE ERECTED AND INSTALLED IN ACCORDANCE WITH THE MANUFACTURER'S SPECIFICATIONS AND AS RECOMMENDED BY "HIB-91: HANDLING, INSTALLING AND BRACING METAL PLATE CONNECTED WOOD TRUSSES" BY TPI.

5. CONTRACTOR TO SUBMIT SEALED SHOP DRAWINGS FOR ALL TRUSS TYPES FOR ENGINEER'S APPROVAL PRIOR TO MANUFACTURING.

6. EACH END OF EACH TRUSS SHALL BE ATTACHED TO SUPPORTING MEMBER WITH (4) 12d TOE NAILS PLUS A GALVANIZED STEEL HURRICANE ANCHORS (SIMPSON TS-18 OR EQUIVALENT). USE TWO AT EACH END OF ALL GIRDER TRUSSES.

7. ROOF TRUSS MINIMUM DESIGN REQ'MTS:

TOP CHORD LIVE LOAD	30 PSF
TOP CHORD DEAD LOAD	10 PSF
BOTTOM CHORD LIVE LOAD	0 PSF
BOTTOM CHORD DEAD LOAD	10 PSF
MAX. TOTAL LOAD DEFLECTION:	L/240
MAX. LIVE LOAD DEFLECTION:	L/360

   FLOOR TRUSS MINIMUM DESIGN REQ'MTS:

TOP CHORD LIVE LOAD	40 PSF
TOP CHORD DEAD LOAD	10 PSF
BOTTOM CHORD LIVE LOAD	0 PSF
BOTTOM CHORD DEAD LOAD	10 PSF
MAX. TOTAL LOAD DEFLECTION:	L/360
MAX. LIVE LOAD DEFLECTION:	L/480

8. GENERAL CONTRACTOR TO COORDINATE MECHANICAL EQUIPMENT LOADS AND LOCATIONS WITH THE TRUSS MANUFACTURER AS REQUIRED.

CONSTRUCTION PLANS

DRAWING TITLE
HOPPER RACKS STRUCTURAL NOTES

DATE	SCALE	DRAWING NO.
August 31, 2011	AS NOTED	2 OF 7

$DATE$ $FILE$

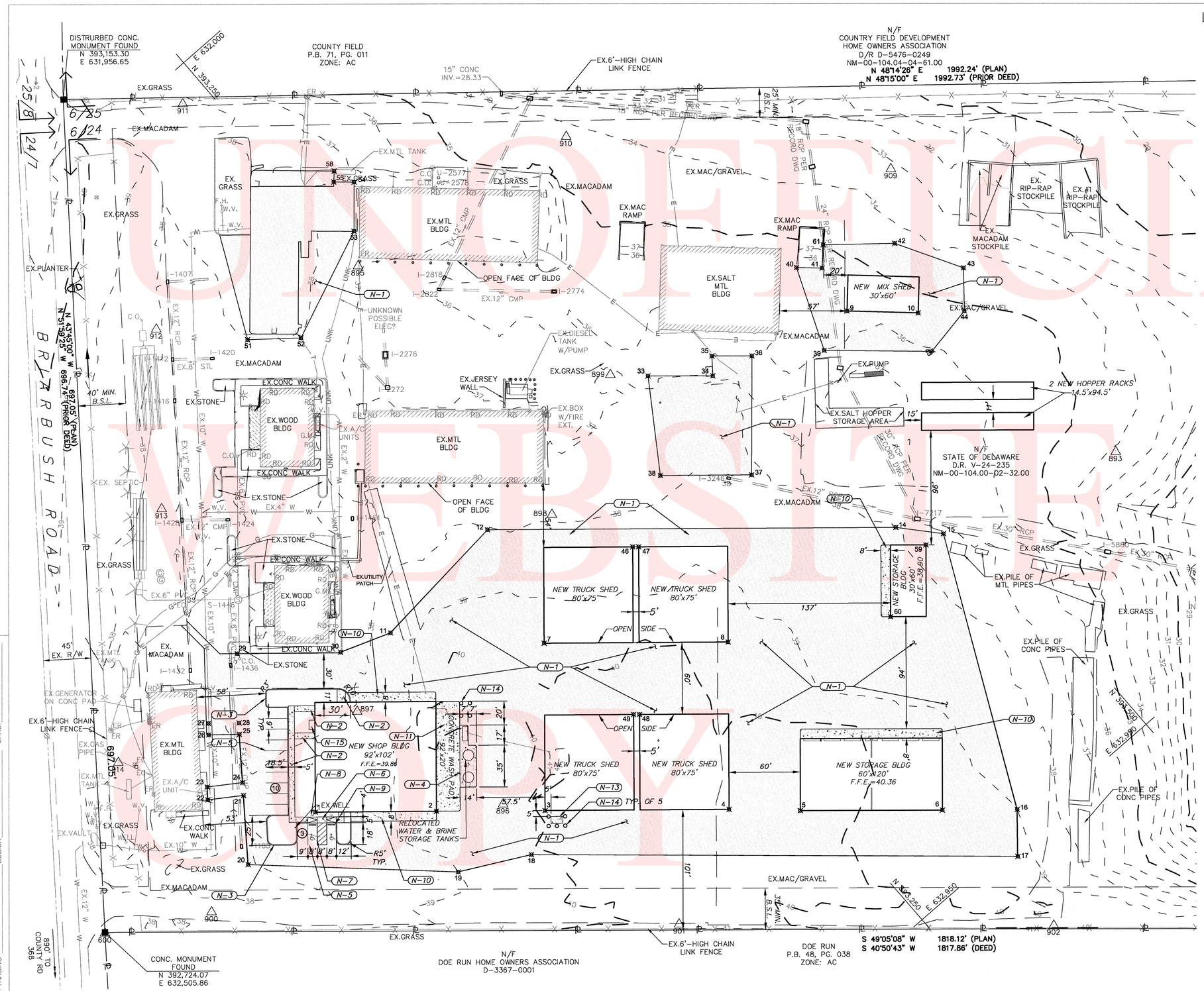

LAYOUT, SIGNAGE, AND STRIPING PLAN

CONTRACT	COUNTY	F.A.P. NO.	SHEET NO.	TOTAL SHTS
30-801-01	KENT	SEE TITLE SHEET	C301	-

DELAWARE DEPARTMENT OF TRANSPORTATION

MAGNOLIA MAINTENANCE YARD

REVISIONS

04/11/11 - COUNTY SUBMISSION

GRAPHIC SCALE

40 0 20 40 80

(IN FEET)
1 inch = 40 ft.

PHILIP DEE CHRISTOPHER No. 8954 DELAWARE PROFESSIONAL ENGINEER
9/30/11

WHITNEY BAILEY COX & MAGNANI, LLC
849 Fairmount Ave Suite 100 Baltimore, MD 21286
MAIN 410.512.4500 FAX 410.324.4100
www.wbcm.com
WBCM
ARCHITECTURE ENGINEERING CONSTRUCTION

CONSTRUCTION NOTES

N-1 NEW BITUMINOUS CONCRETE PAVING. SEE DETAIL 1, SHEET C6.0.
N-2 NEW 5-FOOT WIDE CONCRETE WALK. SEE DETAIL 4, SHEET C6.0.
N-3 NEW CONCRETE CURB. SEE DETAIL 6, SHEET C6.0.
N-4 NEW CONCRETE TANK PAD. SEE STRUCTURAL PLAN S201 FOR DETAILS.
N-5 NEW PAINT PARKING SPACE STRIPING. SEE DETAIL 8, SHEET C6.0.
N-6 NEW CONCRETE PEDESTRIAN RAMP WITH DETECTABLE WARNING STRIP. SEE DETAIL 7, SHEET C6.0.
N-7 NEW HANDICAPPED PAVEMENT MARKING. SEE DETAIL 3, SHEET C6.0.
N-8 NEW HANDICAPPED PARKING SIGN. SEE DETAIL 9, SHEET C6.0.
N-9 NEW CONCRETE WHEEL STOP. SEE DETAIL 10, SHEET C6.0.
N-10 NEW CONCRETE APRON. CHAMFER ALL OUTSIDE CONCRETE APRON CORNERS. SEE ARCHITECTURAL PLANS FOR DETAILS.
N-11 NEW CONCRETE WASH PAD. SEE STRUCTURAL PLAN S201 FOR DETAILS.
N-12 NEW BITUMINOUS PAVING REPAIR. SEE DETAIL 2, SHEET C6.0.
N-13 NEW CONCRETE GENERATOR PAD. SEE STRUCTURAL PLAN S____ FOR DETAILS.
N-14 NEW CONCRETE-FILLED 4-INCH STEEL BOLLARD.
N-15 NEW 5' X 8' CONCRETE PAD.

NOTES:

1. SEE SHEET NO. C1.0 FOR LEGEND AND C2.0 FOR PROJECT NOTES.
2. LIGHTING SHALL BE WALL PACKS ON PROPOSED BUILDING.

GEOMETRY POINT TABLE

PT #	DESCRIPTION	NORTHING	EASTING
1	BUILDING CORNER	392923.83	632546.22
2	BUILDING CORNER	393001.17	632612.66
3	BUILDING CORNER	393070.57	632672.28
4	BUILDING CORNER	393188.15	632773.28
5	BUILDING CORNER	393232.75	632813.44
6	BUILDING CORNER	393323.30	632891.73
7	BUILDING CORNER	393162.04	632565.81
8	BUILDING CORNER	393279.61	632666.81
9	BUILDING CORNER	393536.33	632523.38
10	BUILDING CORNER	393580.58	632563.91
11	SAWCUT	393070.10	632474.40
12	SAWCUT	393188.07	632462.93
14	SAWCUT	393448.99	632687.07
15	SAWCUT	393475.82	632717.37
16	SAWCUT	393371.28	632932.73
17	SAWCUT	393345.69	632962.88
18	SAWCUT	393037.60	632692.86
19	SAWCUT	392981.55	632663.25
20	SAWCUT	392852.27	632542.23
21	SAWCUT	392887.33	632495.80
22	SAWCUT	392862.22	632478.83
23	SAWCUT	392868.93	632470.38
24	SAWCUT	392893.80	632487.22
25	SAWCUT	392918.25	632454.84
26	SAWCUT	392898.47	632438.20
27	SAWCUT	392904.60	632430.88

GEOMETRY POINT TABLE

PT #	DESCRIPTION	NORTHING	EASTING
28	SAWCUT	392924.36	632447.44
29	SAWCUT	392961.28	632402.48
30	SAWCUT	393027.77	632458.88
33	SAWCUT	393374.10	632454.67
34	SAWCUT	393415.41	632490.33
35	SAWCUT	393425.68	632477.28
36	SAWCUT	393451.22	632499.30
37	SAWCUT	393386.11	632574.19
38	SAWCUT	393327.73	632524.21
39	SAWCUT	393500.24	632535.72
40	SAWCUT	393527.92	632468.07
41	SAWCUT	393543.88	632482.54
42	SAWCUT	393603.62	632507.03
43	SAWCUT	393634.05	632560.48
44	SAWCUT	393611.05	632588.12
45	SAWCUT	393568.17	632595.78
46	BUILDING CORNER	393271.06	632554.00
47	BUILDING CORNER	393274.85	632557.25
48	BUILDING CORNER	393183.39	632663.73
49	BUILDING CORNER	393179.59	632660.47
51	SAWCUT	393139.22	632210.39
52	SAWCUT	393174.14	632238.77
53	SAWCUT	393266.05	632200.92
54	SAWCUT	393293.00	632169.85
55	SAWCUT	393280.17	632158.57
58	SAWCUT	393286.41	632151.75
59	SAWCUT	393458.56	632714.78
60	SAWCUT	393396.77	632740.68