EXISTING SYMBOLS

DRAINAGE

	DITCH OR STREAM CENTERLINE
	DIRECTIONAL STREAM FLOW ARROW
C.B.	DRAINAGE CATCH BASIN
J.B.	DRAINAGE JUNCTION BOX
D	DRAINAGE MANHOLE
SIZE/TYPE LABEL	DRAINAGE PIPE AND FLOW ARROW
	DRAINAGE PIPE HEADWALL
	RIPRAP - AREA FEATURE
	RIPRAP - LINEAR FEATURE

MANMADE ROADSIDE FEATURES

(TYPE LABEL)	CURB
(TYPE LABEL)	CURB AND GUTTER
	FENCE - CHAINLINK OR STRANDED
	FENCE - STOCKADE OR SPLIT RAIL
FP	FLAG POLE
	GUARDRAIL - STEEL BEAM
	GUARDRAIL - WIRE ROPE
LAMP	LAMP AND POST - RESIDENTIAL
MB	MAILBOX
PM	PARKING METER AND POST
	PAVEMENT - FLEXIBLE
	PAVEMENT - RIGID
	PILE - BRIDGE
	PILLAR OR MISCELLANEOUS POST
	TRAFFIC SIGN AND POST
	WALL - BRICK OR BLOCK
	WALL - STONE

NATURAL ROADSIDE FEATURES

	GRASS LAWN
	HEDGEROW OR THICKET
	MARSH BOUNDARY LINE
	TREE - CONIFEROUS
	TREE - DECIDUOUS
	TREE STUMP
	SHRUBBERY
WL	DELINEATED WETLAND BOUNDARY LINE
	WOODS LINE BOUNDARY

SURVEY CONTROL & MONUMENTATION

B.M.	SURVEY BENCHMARK LOCATION
T.P.	SURVEY TIE POINT LOCATION
	SURVEY TRAVERSE POINT
	POINT OF CURVATURE OR TANGENCY
	POINT OF INTERSECTING TANGENTS
C.M.	PROPERTY MARKER - CONCRETE MON.
I.P.	PROPERTY MARKER - IRON PIPE

UTILITY

	SOIL BORING LOCATION
	UTILITY TEST HOLE LOCATION
TV	CABLE TV DISTRIBUTION BOX
E	ELECTRIC MANHOLE
E	ELECTRIC TRANSFORMER
	POLE MOUNTED LUMINAIRE
G	GAS MANHOLE
G.M.	GAS METER
G.V.	GAS VALVE
G.P.	GAS PUMP - SERVICE STATION
	RAILROAD TRACKS
S	SANITARY SEWER MANHOLE
S.V.	SANITARY SEWER VALVE
VENT	SANITARY SEWER VENT OR CLEANOUT
S.D.F.	SEPTIC DRAIN FIELD
B	TELEPHONE BOOTH
T	TELEPHONE MANHOLE
T	TELEPHONE TEST POINT
J.W.	TRAFFIC - CONDUIT JUNCTION WELL
	TRAFFIC - LIGHT POLE AND BASE
	TRAFFIC - PEDESTRIAN POLE & BASE
	TRAFFIC - SIGNAL CABINET & BASE
	TRAFFIC - SIGNAL POLE AND BASE
U	UTILITY BOX
	UTILITY POLE GUY WIRE ANCHOR
	UTILITY POLE
F.H.	WATER - FIRE HYDRANT
W.M.	WATER METER
W.V.	WATER VALVE
WELL	WELL HEAD
C.O.	CLEAN OUT

UTILITY COMPANY FACILITIES

VER-C	VERIZON TELEPHONE
COM-C	COMCAST CABLE
CU-G	CHESAPEAKE UTILITIES (GAS)
DP-E	DELMARVA POWER (ELECTRIC)
TM-W	TOWN OF MIDDLETOWN WATER

PROPOSED SYMBOLS

CONSTRUCTION

	CONCRETE SAFETY BARRIER - PERMANENT
BFS	BIOFILTRATION SWALE
	BUTT JOINT
100+00	CONSTRUCTION BASELINE
	CURB, TYPE 1& TYPE 3
	CURB, TYPE 2
	CURB & GUTTER, TYPE 1
	CURB & GUTTER, TYPE 2
	CURB & GUTTER, TYPE 3
	CURB & GUTTER, TYPE 4
CZ	CLEAR ZONE
	DITCH
	FENCE - METAL
	FENCE - WOOD
	FLARED END SECTION
	GUARDRAIL, TYPES 1& 3
	GUARDRAIL, TYPE 2
	GUARDRAIL END TREATMENT - PARALLEL
	GUARDRAIL END TREATMENT - PARABOLIC
HC	HORIZONTAL CLEARANCE
	JUNCTION BOX - DRAINAGE
LOC	LIMIT OF CONSTRUCTION
	MANHOLE
	PAVEMENT PATCH
	PIPE & DIRECTIONAL FLOW ARROW
	RIPRAP
	P.C.C. SIDEWALK @ 4"
	P.C.C. SIDEWALK @ 6"
	UNDERDRAIN
	UNDERDRAIN OUTLET

CONSTRUCTION PHASING SYMBOLS

	BARRICADE, TYPE 3
	CONCRETE SAFETY BARRIER - PORTABLE

LANDSCAPING

	SHRUBBERY
	CONIFEROUS TREE
	DECIDUOUS TREE

UTILITY

VENT	SANITARY SEWER VENT OR CLEANOUT
F.H.	WATER - FIRE HYDRANT
W.V.	WATER VALVE
W.M.	WATER METER
G	GAS METER
G.V.	GAS VALVE
	LIGHT POLE

EROSION & SEDIMENT CONTROL

DWB	DEWATERING BASIN
	EROSION CONTROL BLANKET
ED	EARTH DIKE
	INLET SEDIMENT CONTROL
	PERIMETER DIKE/SWALE
PST	PORTABLE SEDIMENT TANK
RSF	REINFORCED SILT FENCE
SBD	SANDBAG DIKE
SB	SANDBAG DIVERSION
	STONE CHECK DAM
SCE	STABILIZED CONSTRUCTION ENTRANCE
SF	SILT FENCE
SP-1	SUMP PIT, TYPE 1
SP-2	SUMP PIT, TYPE 2
ST	SEDIMENT TRAP
ST	SEDIMENT TRAP WITH INLET AS OUTLET
ST	SEDIMENT TRAP PIPE OUTLET
SW	STILLING WELL
	TEMPORARY SWALE
TSD	TEMPORARY SLOPE DRAIN

IDENTIFIERS

A/C	ADJUST BY CONTRACTOR
A/O	ADJUST BY OTHERS
B	CONCRETE SAFETY BARRIER
C	CURB OR CURB & GUTTER
C/JB	CONVERT TO JUNCTION BOX
C/MH	CONVERT TO DRAINAGE MANHOLE
C/O	CURB OPENING
CR	CURB RAMP / TYPE
CR-W	CURB RAMP / TYPE - WITHOUT SIDEWALK SURFACE DETECTABLE WARNING SYSTEM
DI	DRAINAGE INLET
DND	DO NOT DISTURB
F.E.S.	FLARED END SECTION
FS	FILTRATION STRUCTURE
FF/C	FLOWABLE FILL BY CONTRACTOR
GR	GUARDRAIL
JB	JUNCTION BOX
LS	LANDSCAPE PLANTINGS
MH	MANHOLE
M	MONUMENT - RIGHT-OF-WAY
P	PIPE
RL/C	RELOCATE BY CONTRACTOR
RL/O	RELOCATE BY OTHERS
RM/C	REMOVE BY CONTRACTOR
RM/O	REMOVE BY OTHERS
ST	SEDIMENT TRAP
SF	SILT FENCE
UD	UNDERDRAIN

PAVEMENT SECTION(S)

	2" MILL & OVERLAY PAVEMENT
	PERMEABLE PAVEMENT - SEE PAVEMENT SECTION ON DETAILS SHEET
	PAVEMENT SECTION "A" - SEE PAVEMENT SECTION ON DETAIL SHEET
	PAVEMENT SECTION "B" - SEE PAVEMENT SECTION ON DETAIL SHEET

RIGHT-OF-WAY SYMBOLS

	PROPOSED RIGHT-OF-WAY MONUMENT
PD	EXISTING PROPERTY LINE
EASEMENT TYPE	EXISTING EASEMENT
	EXISTING RIGHT-OF-WAY
DA	PROPOSED DENIAL OF ACCESS
PE	PROPOSED PERMANENT EASEMENT
R/W	PROPOSED RIGHT-OF-WAY
R/W-DA	PROPOSED R/W & DENIAL OF ACCESS
TCE	TEMPORARY CONSTRUCTION EASEMENT
100+00	PROPOSED RIGHT-OF-WAY BASELINE
100+00	HISTORIC RIGHT-OF-WAY BASELINE

TRAFFIC

ITMS-CON	ITMS CONDUIT
SIG-CON	SIGNAL CONDUIT
	CONDUIT JUNCTION WELL
	POLE MOUNTED LUMINAIRE
	PAVEMENT MARKINGS
	PAVEMENT STRIPING
	TRAFFIC SIGN
	BUS SHELTER
	N-E-A-T SYSTEM
	PEDESTRIAN FLOW ARROW

UTILITY COMPANY FACILITIES

TM-W	TOWN OF MIDDLETOWN (WATER)
W	ON-SITE WATER
TM-S	TOWN OF MIDDLETOWN (SEWER)
S	SANITARY SEWER LATERAL
VER-C	VERIZON TELEPHONE
COM-C	COMCAST CABLE
CU-G	CHESAPEAKE UTILITIES (GAS)
DP-E	DELMARVA POWER (ELECTRIC)
T	PRIVATE TELEPHONE

MISCELLANEOUS

CSF	CONSTRUCTION SAFTEY FENCE
	STAMPED ASPHALT DECORATIVE PAVEMENT SYSTEM
	DECORATIVE CHAIN & POST FENCE
	CONCRETE AND BRICK SIDEWALK
AB/C	ABANDON BY CONTRACTOR
W/O	WORK BY OTHERS
	UNIT PAVER, TYPE C

Unofficial Website Copy

C-1

PLOTTED BY: BDOUGHERTY DATE: 8/12/2014
FILE LOCATION: Q:\NDE\101552_001_DELDOT MIDDLETOWN YARD\CADD\LG01.DGN [SHEET: 02]

DELAWARE
DEPARTMENT OF TRANSPORTATION

ADDENDUMS / REVISIONS

NOT TO SCALE

MIDDLETOWN CREW QUARTERS AND MAINTENANCE SHOP

CONTRACT	T201280103
COUNTY	NEW CASTLE
BRIDGE NO.	
DESIGNED BY: SRM	
CHECKED BY: BPH	

LEGEND

SHEET NO.	2
TOTAL SHTS.	54

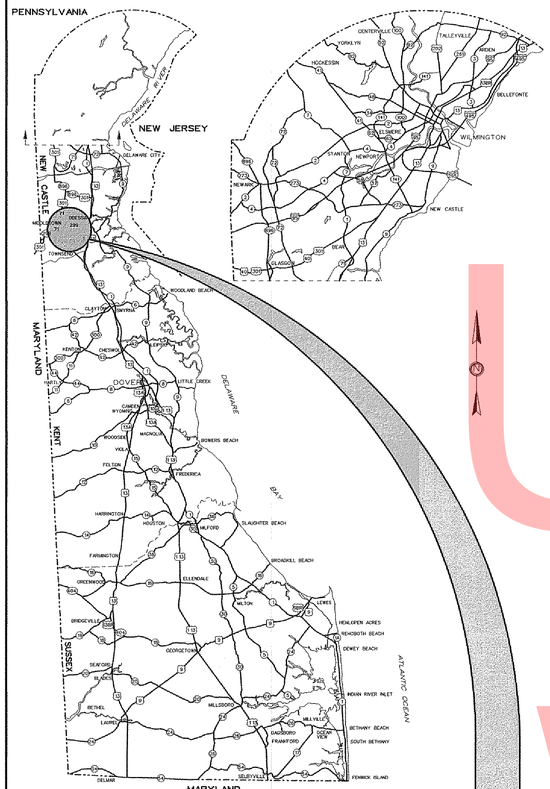

GENERAL LOCATION OF CONTRACT

THE STATE OF DELAWARE
DEPARTMENT OF TRANSPORTATION

U.S. CUSTOMARY UNITS

CONSTRUCTION PLANS FOR:

MIDDLETOWN CREW QUARTERS AND MAINTENANCE SHOP

CONTRACT NUMBER: T201280103

FEDERAL AID PROJECT NUMBER: ——

COUNTY: NEW CASTLE M.R. #: ——

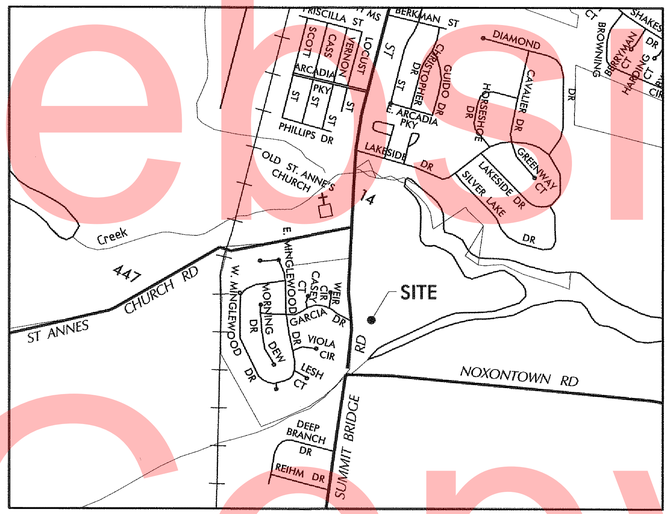

LOCATION MAP

SCALE: N. T. S.

RECOMMENDED

MAINTENANCE ENGINEER — DATE 8/22/14

DISTRICT ENGINEER — DATE 8/22/14

MAINTENANCE IMPROVEMENT ENGINEER — DATE 8/21/14

ASSISTANT DIRECTOR, STATEWIDE SUPPORT SERVICES — DATE 8/21/14

DIRECTOR, MAINTENANCE AND OPERATIONS — DATE 9/2/14

RECOMMENDED AS TO PROCESS

Robert B. McCleary
CHIEF ENGINEER

DATE 9/2/14

RECOMMENDED

Vincent W. Davis
STORMWATER ENGINEER

DATE 27 Aug 2014

VINCENT W. DAVIS REGISTERED No. 12898 DELAWARE PROFESSIONAL ENGINEER
SEAL

PREPARED BY
CIVIL/STRUCTURAL ENGINEER

JOHNSON, MIRMIRAN & THOMPSON
Engineering A Brighter Future®
131 Continental Drive, Suite 109 Newark, DE 19713

BRADLEY P. HEITZ REGISTERED No. 13305 DELAWARE PROFESSIONAL ENGINEER
SEAL

RECOMMENDED Brad P. Heitz DATE 8/19/14

PREPARED BY
ARCHITECT

JOHNSON, MIRMIRAN & THOMPSON
Engineering A Brighter Future®
131 Continental Drive, Suite 109 Newark, DE 19713

BARRY ALAN MILLER NO. 7317 STATE OF DELAWARE REGISTERED ARCHITECT
SEAL

RECOMMENDED Barry A. Miller DATE 8/11/2014

PREPARED BY
MECHANICAL/ELECTRICAL ENGINEER

JOHNSON, MIRMIRAN & THOMPSON
Engineering A Brighter Future®
131 Continental Drive, Suite 109 Newark, DE 19713

JEROME F. JURICK LICENSE No. 14794 DELAWARE PROFESSIONAL ENGINEER
SEAL

RECOMMENDED Jerry Jurick DATE 8/11/2014

DESIGN DESIGNATION

FUNCTIONAL CLASS: N/A	D.H.V. PROJECTED: N/A	YEAR: N/A
TYPE OF CONSTRUCTION: N/A	DESIGN SPEED: N/A	
A.A.D.T. CURRENT: N/A YEAR: N/A	TRUCKS: N/A	
A.A.D.T. PROJECTED: N/A YEAR: N/A	DIRECTION OF DISTRIBUTION: N/A	

INDEX OF SHEETS

DWG. No.	SHT. No.	TABLE OF CONTENTS	DWG. No.	SHT. No.	TABLE OF CONTENTS
	——	SITE DRAWINGS	M-001	36	MECHANICAL SYMBOLS, ABBREVIATIONS AND GENERAL NOTES
T-1	1	TITLE			
C-1	2	LEGEND	M-101	37	MECHANICAL FIRST FLOOR PLAN
C-2	3	NOTES	M-401	38	MECHANICAL PART PLAN - MECHANICAL ROOM
C-3	4	EXISTING CONDITIONS AND DEMOLITION PLAN			
C-4	5	SITE PLAN	M-501	39	MECHANICAL DETAILS
C-5	6	CONSTRUCTION PLAN	M-601	40	MECHANICAL SCHEDULES AND CONTROLS
C-6	7	CONSTRUCTION DETAILS	M-701	41	MECHANICAL GEOTHERMAL PIPING SCHEMATIC AND DETAILS
C-7	8	GRADING PLAN			
C-8	9	STORMWATER MANAGEMENT DETAILS			
C-9	10	LANDSCAPING PLAN	P-101	42	PLUMBING FIRST FLOOR PLAN
C-10	11	CONSTRUCTION PHASING M.O.T. AND EROSION CONTROL PLANS	P-201	43	PLUMBING RISER DIAGRAMS
			P-501	44	PLUMBING DETAILS AND SCHEDULES
C-11	12	UTILITY PLAN			
C-12	13	UTILITY DETAILS	FP-101	45	FIRE PROTECTION FIRST FLOOR PLAN & DETAILS
C-13	14	UTILITY DETAILS			
		CREW OPERATIONS BUILDING	EG-001	46	ELECTRICAL TITLE SHEET LEGENDS & ABBREVIATIONS
ALS-01	15	LIFE SAFETY PLAN			
A-101	16	FLOOR PLAN	ED-101	47	ELECTRICAL SITE PLAN - DEMOLITION WORK
A-102	17	ROOF PLAN			
A-201	18	REFLECTED CEILING PLAN	EP-101	48	ELECTRICAL SITE NEW WORK PLAN
A-301	19	FINISH PLAN	EP-102	49	ELECTRICAL POWER AND SPECIAL SYSTEMS PLAN
A-401	20	EXTERIOR ELEVATIONS			
A-402	21	EXTERIOR ELEVATIONS	EL-101	50	ELECTRICAL LIGHTING PLAN
A-501	22	BUILDING SECTIONS	EE-201	51	ELECTRICAL SINGLE LINE DIAGRAM: DEMOLITION AND NEW WORK
A-510	23	WALL SECTIONS			
A-601	24	TOILET ROOM PLANS, ELEVATIONS AND DETAILS	EE-301	52	ELECTRICAL PANEL SCHEDULES
			EE-302	53	ELECTRICAL SCHEDULES & DETAILS
A-701	25	INTERIOR ELEVATIONS	EE-303	54	ELECTRICAL DETAILS
A-801	26	SECTIONS AND DETAILS			
A-802	27	DETAILS			
A-901	28	SCHEDULES - WINDOW AND DOOR TYPES			
S-001	29	STRUCTURAL GENERAL NOTES, ABBREVIATIONS AND SYMBOLS			
S-101	30	FOUNDATION PLAN			
S-102	31	ATTIC FRAMING PLAN			
S-103	32	ROOF FRAMING PLAN			
S-201	33	FOUNDATION DETAILS			
S-202	34	FRAMING DETAILS			
S-203	35	WALL SECTIONS			

TOTAL SHEETS: 54

APPROVED DESIGN EXCEPTIONS

DESIGN PARAMETER	REQUIRED	PROVIDED	DATE

ADDENDA & REVISIONS

DESCRIPTION	NAME & DATE

ASSOCIATED CONTRACTS

CONTRACT NO.	CONTRACT NAME
T200950001	MIDDLETOWN YARD, STORMWATER RETROFIT

CONSTRUCTION SPECIFICATIONS

CONSTRUCTION ON THIS SITE SHALL BE IN CONFORMANCE WITH THE DELAWARE DEPARTMENT OF TRANSPORTATION SPECIFICATIONS FOR ROAD AND BRIDGE CONSTRUCTION DATED AUGUST 2001, WITH SPECIFICATION SECTIONS AS INDICATED WITHIN THE PROJECT NOTES.

T-1

Unofficial Website Copy

SUBMISSION STATUS: PS&E
DATE PLOTTED: 8/19/2014
JMT FILE LOCATION: Q:\NDE\101552_001_DelDOT Middletown Yard\CADD\TC01.dgn

08/19/2014 - T201280103

GENERAL NOTES

1. THIS PROJECT IS TO BE CONSTRUCTED IN ACCORDANCE WITH THE DELAWARE DEPARTMENT OF TRANSPORTATION "STANDARD SPECIFICATIONS", DATED AUGUST 2001 AND THE DELAWARE DEPARTMENT OF TRANSPORTATION "STANDARD CONSTRUCTION DETAILS", DATED 2001, INCLUDING ALL REVISIONS UP TO THE DATE OF ADVERTISEMENT.

2. THE CONTRACTOR SHALL GIVE TWO (2) WEEKS NOTICE TO THE PROPERTY OWNER WHEN ANY FIXTURE, SHRUB OR OTHER OBJECT MUST BE REMOVED FROM THE RIGHT OF WAY OR EASEMENT AREA. IF THE OWNER HAS NOT ATTEMPTED TO SALVAGE THIS PROPERTY, THE CONTRACTOR SHALL REMOVE IT WITHOUT OBLIGATION. COMPENSATION SHALL BE INCIDENTAL TO THE CONTRACT.

3. THE ENDS OF ALL CURBS SHALL BE DEPRESSED FLUSH WITH THE PAVEMENT AT A RATIO OF TWELVE TO ONE (12:1) UNLESS OTHERWISE DIRECTED BY THE ENGINEER.

4. THE CONTRACTOR SHALL PROVIDE AND INSTALL PVC SLEEVES (4" INSIDE MINIMUM DIAMETER, 6" INSIDE MAXIMUM DIAMETER) IN PROPOSED CONCRETE SIDEWALKS, ISLANDS, AND MEDIANS FOR FUTURE TRAFFIC SIGN POSTS AS DIRECTED BY THE ENGINEER. THE LOWER END OF THE SLEEVE SHALL SIT ON THE TOP OF THE SUBBASE MATERIAL. THE COST SHALL BE INCIDENTAL TO THE CONTRACT.

5. STAGING AREAS - PROPER EROSION AND SEDIMENT CONTROL MEASURES AS DETERMINED BY THE ENGINEER SHALL BE INSTALLED IN ALL STAGING AREAS. ALL AREAS USED BY THE CONTRACTOR FOR STAGING OPERATIONS SHALL BE FULLY RESTORED BY THE CONTRACTOR UPON COMPLETION OF THE CONTRACT. IF THE STAGING AREA IS PAVED, IT SHALL BE RESTORED TO ITS ORIGINAL CONDITION. IF THE AREA IS UNPAVED, IT SHALL BE RE-GRADED, TOPSOILED, SEEDED AND MULCHED IN ACCORDANCE WITH DELAWARE STANDARD SPECIFICATIONS 732, 734 AND 735, FOR TOPSOIL, SEED AND MULCH RESPECTIVELY, TO THE SATISFACTION OF THE ENGINEER. THE SEED SHALL ADHERE TO THE SPECIFICATIONS OF SECTION 734 FOR PERMANENT GRASS SEEDING - DRY GROUND. ALL COSTS ASSOCIATED WITH RESTORATION OF THE STAGING AREA SHALL BE AT THE CONTRACTOR'S EXPENSE. IF THE ENGINEER DETERMINES THAT A SATISFACTORY STAND OF GRASS DOES NOT EXIST AT THE TIME OF FINAL INSPECTION, ALL COSTS ASSOCIATED WITH REESTABLISHING A SATISFACTORY STAND OF GRASS SHALL BE AT THE CONTRACTOR'S EXPENSE.

6. SITE REVIEWER - AN EROSION CONTROL SITE REVIEWER SHALL BE A PERSON FROM THE CONTRACTOR'S STAFF ASSIGNED TO EROSION AND SEDIMENT CONTROL IMPLEMENTATION AND MAINTENANCE AND SHALL BE REQUIRED ON SPECIFIC PROJECTS. THE NAME AND DNREC CERTIFICATION NUMBER OF EACH SITE REVIEWER SO REQUIRED SHALL BE SUBMITTED TO THE DEPARTMENT AT THE TIME OF BID. THE NAME OF THE DELAWARE REGISTERED PROFESSIONAL ENGINEER PROVIDING DIRECTION AND SUPERVISION OF THE SITE REVIEWER, AS REQUIRED IN SECTION 12.3 OF THE DELAWARE SEDIMENT AND STORMWATER REGULATIONS, SHALL ALSO BE SUBMITTED TO THE DEPARTMENT AT THE TIME OF BID. THE SITE REVIEWER REQUIREMENTS IN EFFECT ON THIS PROJECT SHALL BE MARKED WITH AN "X" BELOW:

EROSION POTENTIAL FOR THIS PROJECT	SITE REVIEWER REQUIREMENT
( ) INSIGNIFICANT	NONE
( ) MINOR	CONTRACTOR CERTIFICATION COURSE TRAINING ONLY, AS DEFINED IN SECTION 13 OF THE DELAWARE SEDIMENT AND STORMWATER REGULATIONS.
(X) MEDIUM	AT THE TIME OF BID OF THE CONTRACT, EITHER THE SUPERINTENDENT OR A SEPARATE INDIVIDUAL FROM THE CONTRACTOR'S STAFF SHALL BE A CERTIFIED CONSTRUCTION REVIEWER (CCR), AS DEFINED IN SECTION 12 OF THE DELAWARE SEDIMENT AND STORMWATER REGULATIONS.
( ) MAJOR	SUPERINTENDENT AND AN INDIVIDUAL FROM CONTRACTOR'S STAFF SHALL BE CCR. ONE INDIVIDUAL FROM THE CONTRACTOR'S STAFF MUST BE A CCR AT THE TIME OF BID OF THE CONTRACT. THE SUPERINTENDENT MUST BECOME A CCR WITHIN ONE YEAR AFTER THE AWARD OF CONTRACT.

7. ELECTRONIC PROJECT FILES THAT WILL BE MADE AVAILABLE TO THE CONTRACTOR INCLUDE:

(X)	NONE
( )	ASCII DATA FILES WITH COORDINATES AND ELEVATIONS FOR PROPOSED POINTS AS SELECTED BY THE ENGINEER.
( )	RASTER FILES, IN .CAL FILE FORMAT, FOR ALL PLAN SHEETS.
( )	EXISTING DIGITAL TERRAIN MODEL, IN .DTM FILE FORMAT, COMPATIBLE WITH SOFTWARE CURRENTLY USED BY DELDOT.
( )	PROPOSED DIGITAL TERRAIN MODEL, IN .DTM FILE FORMAT, COMPATIBLE WITH SOFTWARE CURRENTLY USED BY DELDOT.
( )	DESIGN FILE, IN .DGN FILE FORMAT, CONTAINING ONLY THE PROPOSED 3D TRIANGLES OF THE PROPOSED DIGITAL TERRAIN MODEL (DTM).

NOTE: THE DOCUMENT ENTITLED "RELEASE FOR DELIVERY OF DOCUMENTS IN ELECTRONIC FORM TO A CONTRACTOR" MUST BE SIGNED BY ALL PARTIES PRIOR TO THE DELIVERY OF ANY ELECTRONIC PROJECT FILES.

8. AMERICAN TRAFFIC SAFETY SERVICES ASSOCIATION (ATSSA) CERTIFIED TRAFFIC CONTROL SUPERVISOR REQUIREMENT FOR THIS PROJECT.

(X)	THE CONTRACTOR SHALL NOT BE REQUIRED TO HAVE AN ATSSA SUPERVISOR ASSIGNED TO THIS PROJECT.
( )	THE CONTRACTOR SHALL HAVE AN ATSSA SUPERVISOR ASSIGNED TO THIS PROJECT. THE CONTRACTOR'S GENERAL SUPERINTENDENT FOR THIS PROJECT OR ANOTHER ATSSA CERTIFIED MEMBER OF THE CONTRACTOR'S PROJECT STAFF MAY BE THE ATSSA SUPERVISOR.
( )	THE CONTRACTOR SHALL HAVE AN ATSSA SUPERVISOR ASSIGNED TO THIS PROJECT. THE ATSSA SUPERVISOR'S SOLE JOB SHALL BE SUPERVISION OF THE INSTALLATION, OPERATION AND MAINTENANCE OF TRAFFIC CONTROL DEVICES FOR THIS PROJECT. THE CONTRACTOR'S GENERAL SUPERINTENDENT FOR THIS PROJECT SHALL NOT BE THE ATSSA SUPERVISOR.

9. THE DISTURBED AREA FOR THIS PROJECT IS 2 ACRES +/-.

10. THE CONTRACTOR SHALL BE RESPONSIBLE FOR ADHERING TO THE CONSTRUCTION SITE POLLUTION PREVENTION SPECIFICATIONS AS DETAILED IN SECTION 3.6 OF THE "DELAWARE EROSION AND SEDIMENT CONTROL HANDBOOK". ALL COSTS ASSOCIATED WITH ADHERING TO THE STANDARDS SHALL BE INCIDENTAL TO THE OVERALL CONTRACT COSTS.

11. THE EROSION AND SEDIMENT CONTROL PLANS HAVE BEEN APPROVED BY DELDOT'S STORMWATER ENGINEER UNDER DELDOT'S DELEGATED AUTHORITY. THE EROSION AND SEDIMENT CONTROL PLANS ARE VALID FOR A THREE YEAR PERIOD, BEGINNING ON THE DATE THE STORMWATER ENGINEER SIGNED THE CONSTRUCTION TITLE SHEET. IF THE FINAL ACCEPTANCE OF THE PROJECT IS ANTICIPATED TO EXTEND BEYOND THE THREE YEARS, THE CONTRACTOR SHALL INFORM THE ENGINEER THREE MONTHS PRIOR TO THE EXPIRATION OF THE EROSION AND SEDIMENT CONTROL PLAN APPROVAL. DELDOT WILL REVIEW THE CURRENT EROSION AND SEDIMENT CONTROL PLAN AND ISSUE AN EXTENSION WITH ANY APPROPRIATE MODIFICATIONS.

PROJECT NOTES

SECTION 100

1. ANY DAMAGE TO ITEMS NOTED TO BE RELOCATED OR RESET BY THE CONTRACTOR, AT THE DISCRETION OF THE ENGINEER, SHALL BE REPAIRED AND/OR REPLACED IN KIND AT THE CONTRACTOR'S EXPENSE.

SECTION 200

2. THE PROJECT IS COVERED UNDER THE NPDES GENERAL PERMIT FOR CONSTRUCTION, UNDER THE GENERAL PERMIT. COMPLIANCE WITH DELDOT'S APPROVED SEDIMENT AND STORMWATER MANAGEMENT PLANS WILL CONSTITUTE COMPLIANCE WITH THE NPDES INDUSTRIAL PERMITTING REQUIREMENTS FOR THIS CONSTRUCTION PROJECT. A COPY OF THE NPDES GENERAL PERMIT AND NOI IS KEPT ON FILE IN EACH OF THE CONSTRUCTION OFFICES AND THE DEPARTMENT'S TEAM SUPPORT SECTION. A COPY OF THE GENERAL PERMIT OR NOI CAN BE OBTAINED UPON REQUEST FORM EITHER THE DEPARTMENT'S STORMWATER ENGINEER OR THE APPROPRIATE CONSTRUCTION ENGINEER.

3. POOR SUBGRADE SOILS THAT ARE ENCOUNTERED AND DETERMINED BY THE ENGINEER TO REQUIRE UNDERCUT EXCAVATION SHALL BE EXCAVATED TO THE DEPTH DETERMINED BY THE ENGINEER AND SHALL BE PAID UNDER ITEM 999901 - SITE WORK.

4. ALL SUITABLE EXCESS EXCAVATION FROM ANY WORK IN THIS CONTRACT SHALL BE UTILIZED BY THE CONTRACTOR IN BACKFILL FOR THE PROJECT. IT SHALL BE THE RESPONSIBILITY OF THE CONTRACTOR TO DRY OR WET THE MATERIAL OBTAINED UNDER THE EXCAVATION, IF NEEDED, SO THAT THE MATERIALS WILL MEET THE REQUIREMENTS OF THE DELAWARE DEPARTMENT OF TRANSPORTATION STANDARD SPECIFICATIONS. ALL EXCESS MATERIAL WHICH IS UNSUITABLE FOR BACKFILL SHALL BE SUBSEQUENTLY REMOVED AND DISPOSED OF BY THE CONTRACTOR. MOISTURE CONTENT ALONE SHALL NOT BE A REASON TO DECLARE MATERIAL AS BEING UNSUITABLE FOR BACKFILL.

5. ITEMS TO BE REMOVED UNDER ITEM 211000 - REMOVAL OF STRUCTURES AND OBSTRUCTIONS SHALL INCLUDE, BUT NOT BE LIMITED TO THE FOLLOWING:
   - LIGHT POLE
   - UTILITY POLE
   - FLAG POLE
   - SEPTIC SYSTEM
   - TRAILER

SECTION 600

6. THE DEPARTMENT AND THE CONTRACTOR SHALL INSPECT ALL EXISTING PIPES AND DRAINAGE STRUCTURES TO BE USED IN THE FINAL DRAINAGE SYSTEM AND AGREE ON THE CONDITION PRIOR TO THE START OF CONSTRUCTION. EXISTING PIPES AND DRAINAGE STRUCTURES DAMAGED DUE TO CONTRACTOR OPERATIONS SHALL BE REPAIRED OR REPLACED IN-KIND AT THE CONTRACTOR'S EXPENSE. THE DEPARTMENT WILL VIDEO INSPECT NEW PIPE RUNS TO CONFIRM CONDITION PRIOR TO ACCEPTANCE. PIPE CLEANING PRIOR TO VIDEO INSPECTION AND MAINTENANCE OF TRAFFIC DURING THE VIDEO INSPECTION ARE THE RESPONSIBILITY OF THE CONTRACTOR AND INCIDENTAL TO THE PIPE ITEM THAT IS BEING VIDEO INSPECTED.

SECTION 700

7. ALL PAVED AREAS TO BE RECONSTRUCTED OR WIDENED SHALL BE SAWCUT AT THE POINT WHERE THE NEW PAVEMENT IS TO TIE INTO THE EXISTING PAVEMENT.

8. ALL HOT-MIX SAW CUTTING SHALL BE FULL DEPTH, UNLESS OTHERWISE NOTED ON THE PLANS, OR AS DIRECTED THE ENGINEER.

MISCELLANEOUS

9. ALL EXISTING DRAINAGE SYSTEMS SHOWN WITHIN WORK AREA ARE TO REMAIN OPERATIONAL UNLESS DENOTED FOR ABANDONMENT.

10. THE EXISTING PAVEMENT OF THE MIDDLETOWN YARD FACILITY SHALL NOT BE DAMAGED DURING CONSTRUCTION OF THIS PROJECT, EXCEPT AS REQUIRED TO CONSTRUCT THE PROPOSED IMPROVEMENTS. A WALKTHROUGH SHALL BE HELD PRIOR TO CONSTRUCTION. ANY AREAS OF THE SITE DAMAGED DURING CONSTRUCTION SHALL BE RESTORED TO THE PRE-CONSTRUCTION CONDITIONS AS DETERMINED BY THE ENGINEER. COST ASSOCIATED WITH THE REPAIR OF SAID ITEMS SHALL BE AT THE CONTRACTOR'S EXPENSE.

EROSION AND SEDIMENT CONTROL NOTES

1. DUST CONTROL: DUST IS TO BE CONTROLLED EXCLUSIVELY THROUGH THE USE OF WATER. COST ASSOCIATED WITH THE FURNISHINGS AND APPLICATION OF WATER FOR DUST CONTROL SHALL BE INCIDENTAL TO ALL THE CONTRACT BID ITEMS.

2. CONSTRUCTION ENTRANCES: IT IS INTENDED THAT MUD TRACKING BE ELIMINATED ON ALL STATE MAINTAINED ROADWAYS ADJOINING THE PROJECT. ALL PAVED SURFACES ADJOINING THE PROJECTS LIMITS SHALL BE LEFT IN A BROOM-CLEAN CONDITION AT THE END OF EACH WORKDAY.

3. SOIL STOCKPILES: STOCKPILES OF SOIL SHALL BE STABILIZED WITH TEMPORARY GRASS SEEDING, DRY GROUND.

4. REVIEW AND OR APPROVAL OF THE SEDIMENT AND STORMWATER MANAGEMENT PLAN SHALL NOT RELIEVE THE CONTRACTOR FROM HIS OR HER RESPONSIBILITIES FOR COMPLIANCE WITH REQUIREMENTS OF THE SEDIMENT AND STORMWATER REGULATIONS, NOR SHALL IT RELIEVE THE CONTRACTOR FROM ERRORS OR OMISSIONS IN THE APPROVED PLAN.

5. FOLLOWING SOIL DISTURBANCE OR REDISTURBANCE, PERMANENT OR TEMPORARY STABILIZATION SHALL BE COMPLETED WITHIN 14 CALENDAR DAYS AS TO THE SURFACE OF ALL PERIMETER SEDIMENT CONTROLS, SOIL STOCKPILES, AND ALL OTHER DISTURBED OR GRADED AREAS ON THE PROJECT SITE.

EARTHWORK SUMMARY

EXCAVATION	
EXCAVATION FROM CROSS SECTIONS	0 C.Y.
OTHER EXCAVATION - SEE NOTE 2	2,465 C.Y.
TOPSOIL STRIPPING	592 C.Y.
TOTAL EXCAVATION	3,057 C.Y.
EXCAVATION AVAILABLE FOR EMBANKMENT	
EXCAVATION MEETING BORROW TYPE 'C'	0 C.Y.
EXCAVATION MEETING BORROW TYPE 'F'	2,330 C.Y.
EXCAVATION MEETING TOPSOIL	592 C.Y.
EMBANKMENT REQUIREMENTS	
BORROW TYPE 'C' REQUIRED	923 C.Y.
BORROW TYPE 'F' REQUIRED	29 C.Y.
TOPSOIL REQUIRED	560 C.Y.
TOTAL REQUIRED	1,512 C.Y.
MATERIAL BALANCE ("+" = EXCESS, "-" = NEED)	
BORROW TYPE 'C'	-923 C.Y.
BORROW TYPE 'F'	2,301 C.Y.
TOPSOIL	32 C.Y.
UNSUITABLE MATERIAL	135 C.Y.

NOTES:
1) THE VALUES LISTED IN THE EARTHWORK SUMMARY ARE APPROXIMATE AND ARE NOT TO BE USED AS A BASIS OF PAYMENT. THE EARTHWORK SUMMARY IS CONSIDERED FOR INFORMATIONAL PURPOSES ONLY.

2) OTHER SOURCES OF EXCAVATION MAY INCLUDE PIPE TRENCH EXCAVATION, STRUCTURE EXCAVATION, UNDERCUT EXCAVATION, STORMWATER MANAGEMENT POND EXCAVATION, ENVIRONMENTAL SITE EXCAVATION, MAINTENANCE OF TRAFFIC EXCAVATION, ETC.

3) UNSUITABLE MATERIALS INCLUDE UNDERCUT SOILS, BITUMINOUS PAVEMENT, ETC.

Unofficial Website Copy

PLOTTED BY: BDOUGHERTY DATE: 8/12/2014
FILE LOCATION: Q:\NDE\101552_001_DELDOT MIDDLETOWN YARD\CADD\PN01.DGN [SHEET: 03]

DELAWARE
DEPARTMENT OF TRANSPORTATION

ADDENDUMS / REVISIONS

NOT TO SCALE

MIDDLETOWN CREW QUARTERS AND MAINTENANCE SHOP

CONTRACT T201280103
COUNTY NEW CASTLE
BRIDGE NO.
DESIGNED BY: SRM
CHECKED BY: BPH

NOTES

SHEET NO. 3
TOTAL SHTS. 54

Unofficial Website Copy

DEMOLITION NOTES

D-1	LIMIT OF SAWCUT
D-2	REMOVE EXISTING HOT-MIX PAVING
D-3	REMOVE/RECONNECT ELECTRIC
D-4	RELOCATE EXISTING FLAG POLES
D-5	REMOVE EXISTING UTILITY/LIGHT POLE
D-6	CAP/ABANDON EXISTING WELL
D-7	REMOVE EXISTING TREE
D-8	ABANDON EXISTING SEPTIC SYSTEM
D-9	REMOVE EXISTING STONE
D-10	REMOVE EXISTING TRAILER

EXISTING GARAGE
FF=53.15

EXISTING CREW OPERATIONS AND MAINTENANCE BUILDING
FF=52.45

EXISTING LIGHT POLE

EXISTING UNDERGROUND ELECTRIC

EXISTING LIGHT POLE

EXISTING ELECTRIC FEED INTO SITE

EXISTING WASH BAY BLDG
FF=47.10

EXISTING CONCRETE WASH PAD

EXISTING STONE DRIVEWAY

EXISTING STORAGE BUILDING

SUMMIT BRIDGE ROAD

EXIST. R.O.W. LINE

15' BUILDING RESTRICTION LINE

HOTMIX

Gate

8" PVC INV. EL.= 37.08'
RIM ELEV.=45.77

D-1 D-2 D-3 D-4 D-6 D-7 D-8 D-9 D-10

C-3

DELAWARE DEPARTMENT OF TRANSPORTATION	ADDENDUMS / REVISIONS	SCALE 0 30 60 90 FEET	MIDDLETOWN CREW QUARTERS AND MAINTENANCE SHOP	CONTRACT T201280103	BRIDGE NO.	EXISTING CONDITIONS AND DEMOLITION PLAN
				COUNTY NEW CASTLE	DESIGNED BY: SRM	SHEET NO. 4
					CHECKED BY: BPH	TOTAL SHTS. 54

PLOTTED BY: BDOUGHERTY DATE: 8/12/2014
FILE LOCATION: Q:\NDE\101552_001_DELDOT MIDDLETOWN YARD\CADD\CP01.DGN [SHEET: 04]

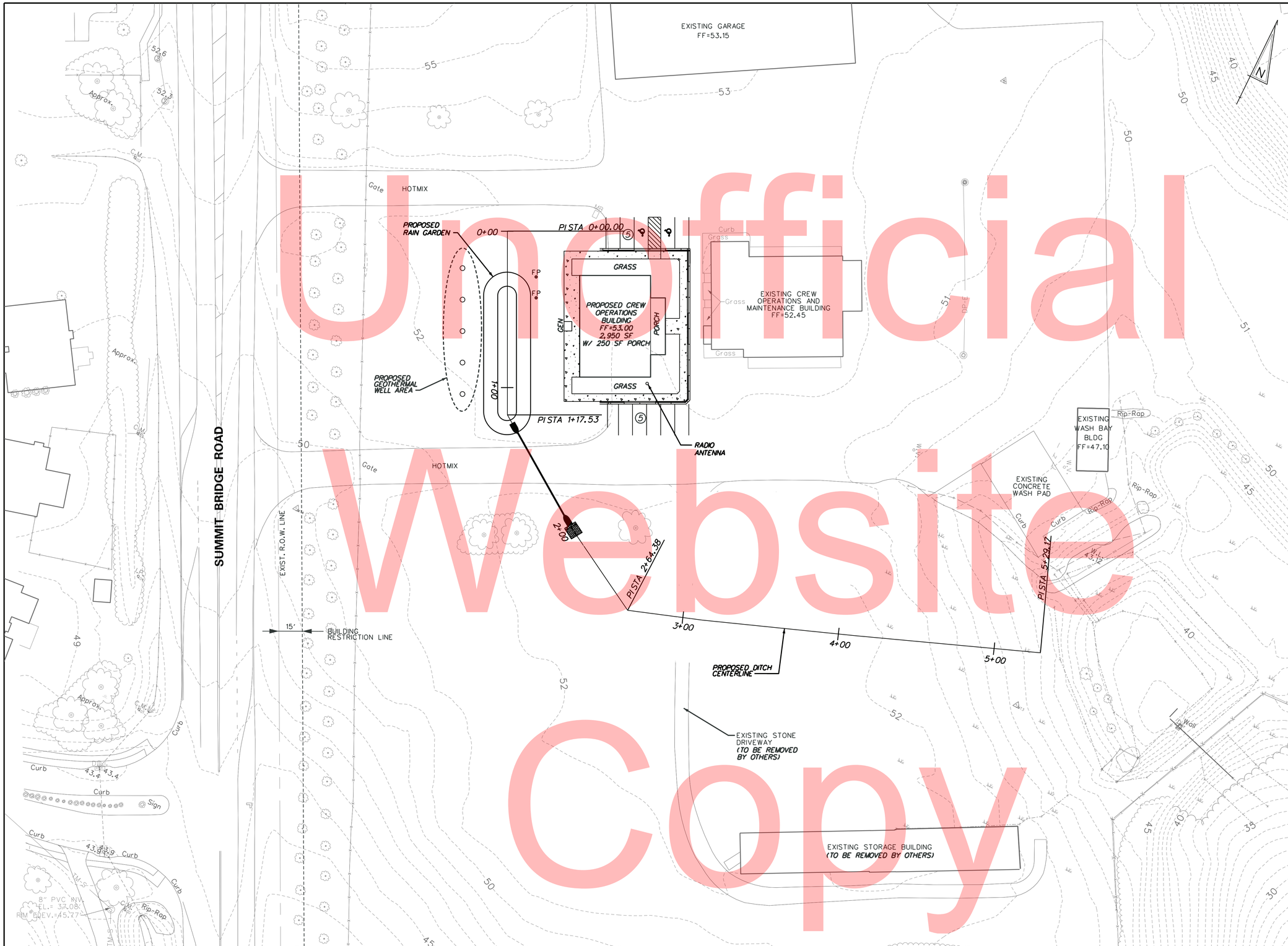

Unofficial Website Copy

C-4

PLOTTED BY: BDOUGHERTY DATE: 8/12/2014
FILE LOCATION: Q:\NDE\101552_001_DELDOT MIDDLETOWN YARD\CADD\CP01.DGN [SHEET: 05]

DELAWARE DEPARTMENT OF TRANSPORTATION	ADDENDUMS / REVISIONS	SCALE 0 30 60 90 FEET	MIDDLETOWN CREW QUARTERS AND MAINTENANCE SHOP	CONTRACT T201280103	BRIDGE NO.	SITE PLAN	SHEET NO. 5
				COUNTY NEW CASTLE	DESIGNED BY: SRM		TOTAL SHTS. 54
					CHECKED BY: BPH		

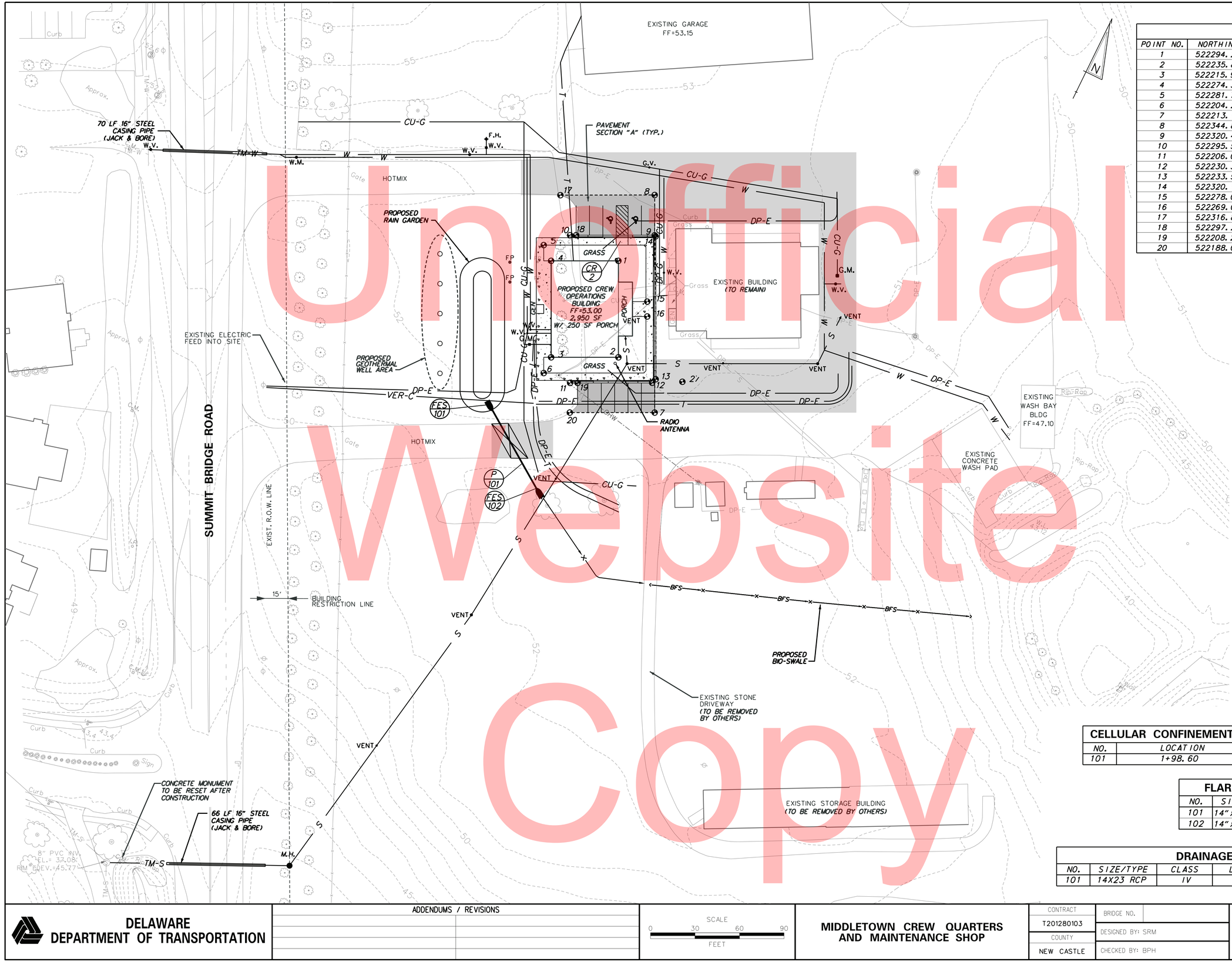

COORDINATE LIST

POINT NO.	NORTHING	EASTING	EASTING DESCRIPTION
1	522294.26	573270.35	BUILDING CORNER
2	522235.84	573298.85	BUILDING CORNER
3	522215.97	573258.10	BUILDING CORNER
4	522274.39	573229.61	BUILDING CORNER
5	522281.73	573220.46	CORNER SIDEWALK
6	522204.26	573258.25	CORNER SIDEWALK
7	522213.10	573337.16	LIMITS FULL DEPTH PAVE
8	522344.86	573272.89	LIMITS FULL DEPTH PAVE
9	522320.42	573284.81	BOT. FACE CURB @EOP
10	522295.51	573233.54	BOT. FACE CURB - END
11	522206.08	573277.16	BOT. FACE CURB - END
12	522230.38	573326.81	BOT. FACE CURB @EOP
13	522233.58	573327.91	BOT. FACE CURB @EOP
14	522320.11	573285.70	BOT. FACE CURB @EOP
15	522278.08	573299.90	CORNER SIDEWALK
16	522269.09	573304.28	CORNER SIDEWALK
17	522316.89	573215.82	LIMITS FULL DEPTH PAVE
18	522297.29	573237.19	LIMITS FULL DEPTH PAVE
19	522208.27	573281.65	LIMITS FULL DEPTH PAVE
20	522188.01	573285.74	LIMITS FULL DEPTH PAVE

CELLULAR CONFINEMENT SLOPE PROTECTION SCHEDULE

NO.	LOCATION	LENGTH	WIDTH	AREA, SQ. FT(SY)
101	1+98.60	8.0'	8.0'	64(7.1)

FLARED END SECTION SCHEDULE

NO.	SIZE / TYPE	SLOPE	SAFETY GRATE
101	14" x 23" CONC.	0.0034	NO
102	14" x 23" CONC.	0.0034	NO

DRAINAGE PIPE SCHEDULE

NO.	SIZE/TYPE	CLASS	LENGTH	SLOPE	INV. EL.	DS EL.
101	14X23 RCP	IV	60'	0.85%	49.50	49.00

Unofficial Website Copy

C-5

PLOTTED BY: BDOUGHERTY DATE: 8/12/2014
FILE LOCATION: Q:\NDE\101552_001_DELDOT MIDDLETOWN YARD\CADD\CP01.DGN [SHEET: 06]

DELAWARE
DEPARTMENT OF TRANSPORTATION

ADDENDUMS / REVISIONS

SCALE
0 30 60 90
FEET

MIDDLETOWN CREW QUARTERS AND MAINTENANCE SHOP

CONTRACT	BRIDGE NO.	
T201280103	DESIGNED BY: SRM	CONSTRUCTION PLAN
COUNTY	CHECKED BY: BPH	
NEW CASTLE		

SHEET NO.
6
TOTAL SHTS.
54

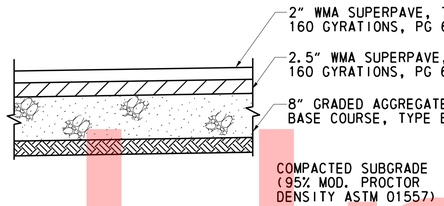

PAVING SECTION 'A'
N.T.S.

NOTES:

1. MARK IN 5' SQUARES, USE CORK EXPANSION JOINTS AT INTERVALS NOT GREATER THAN 15'.
2. CONCRETE SIDEWALKS SHALL BE CONSTRUCTED AS PER DELDOT SPECIFICATIONS.
3. SIDEWALK TO BE CONSTRUCTED AT GRADE. SIDEWALK SHALL BE SLOPED AWAY FROM BUILDING AT 1.5% (MIN.) TO 2% (MAX.) IN ORDER TO ASSURE POSITIVE DRAINAGE.

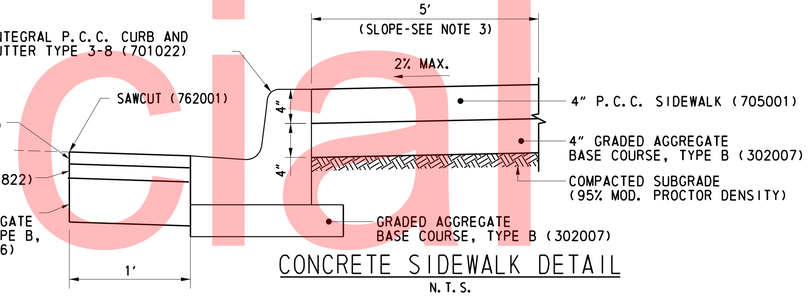

CONCRETE SIDEWALK DETAIL
N.T.S.

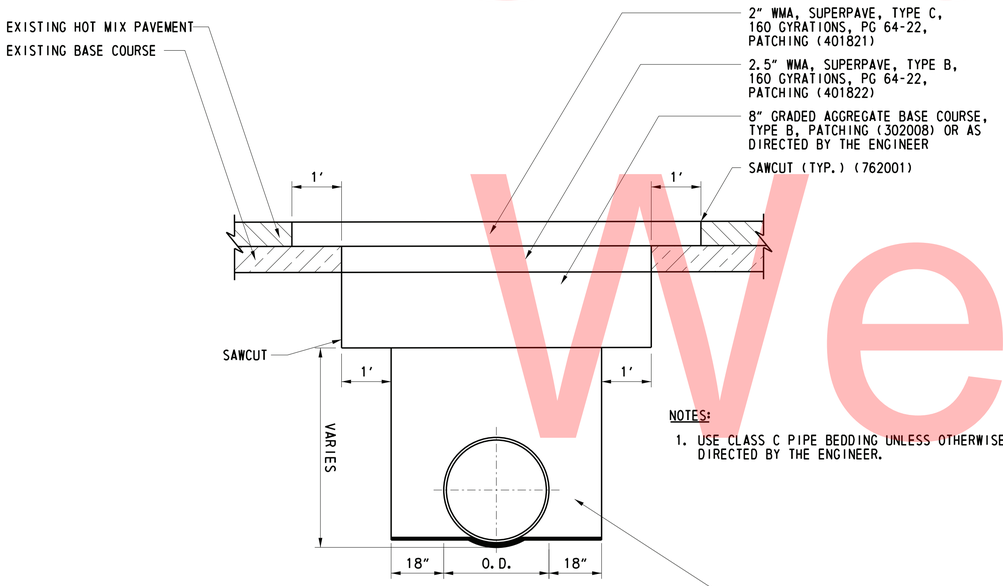

NOTES:

1. USE CLASS C PIPE BEDDING UNLESS OTHERWISE DIRECTED BY THE ENGINEER.

NOTE:

1. THIS DETAIL IS TO BE USED FOR GENERAL UTILITY TRENCHING IN PAVED AREAS. SEE CONSTRUCTION PLAN FOR SPECIFICATION OF UTILITIES.

PIPE/CONDUIT TRENCH PAVING SECTION
N.T.S.

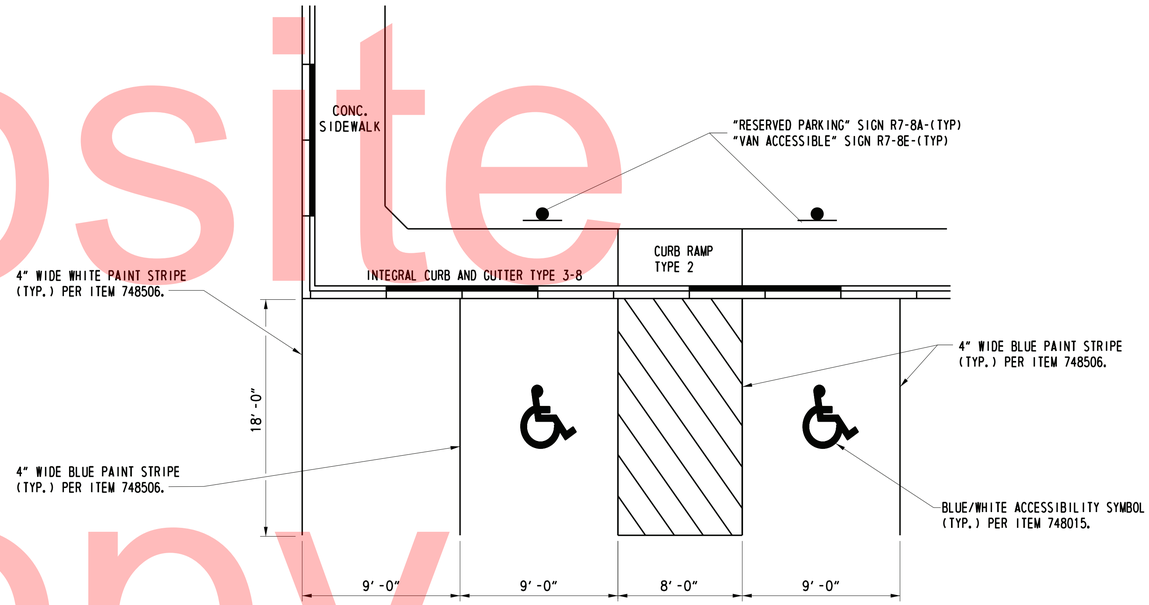

VAN-ACCESSIBLE PARKING DETAIL
N.T.S.

Unofficial Website Copy

C-6

PLOTTED BY: BDOUGHERTY DATE: 8/12/2014
FILE LOCATION: Q:\NDE\101552_001_DELDOT MIDDLETOWN YARD\CADD\CP01.DGN [SHEET: 07]

DELAWARE DEPARTMENT OF TRANSPORTATION	ADDENDUMS / REVISIONS	NOT TO SCALE	MIDDLETOWN CREW QUARTERS AND MAINTENANCE SHOP	CONTRACT T201280103	BRIDGE NO.	CONSTRUCTION DETAILS	SHEET NO. 7
				COUNTY NEW CASTLE	DESIGNED BY: SRM		TOTAL SHTS. 54
					CHECKED BY: BPH		

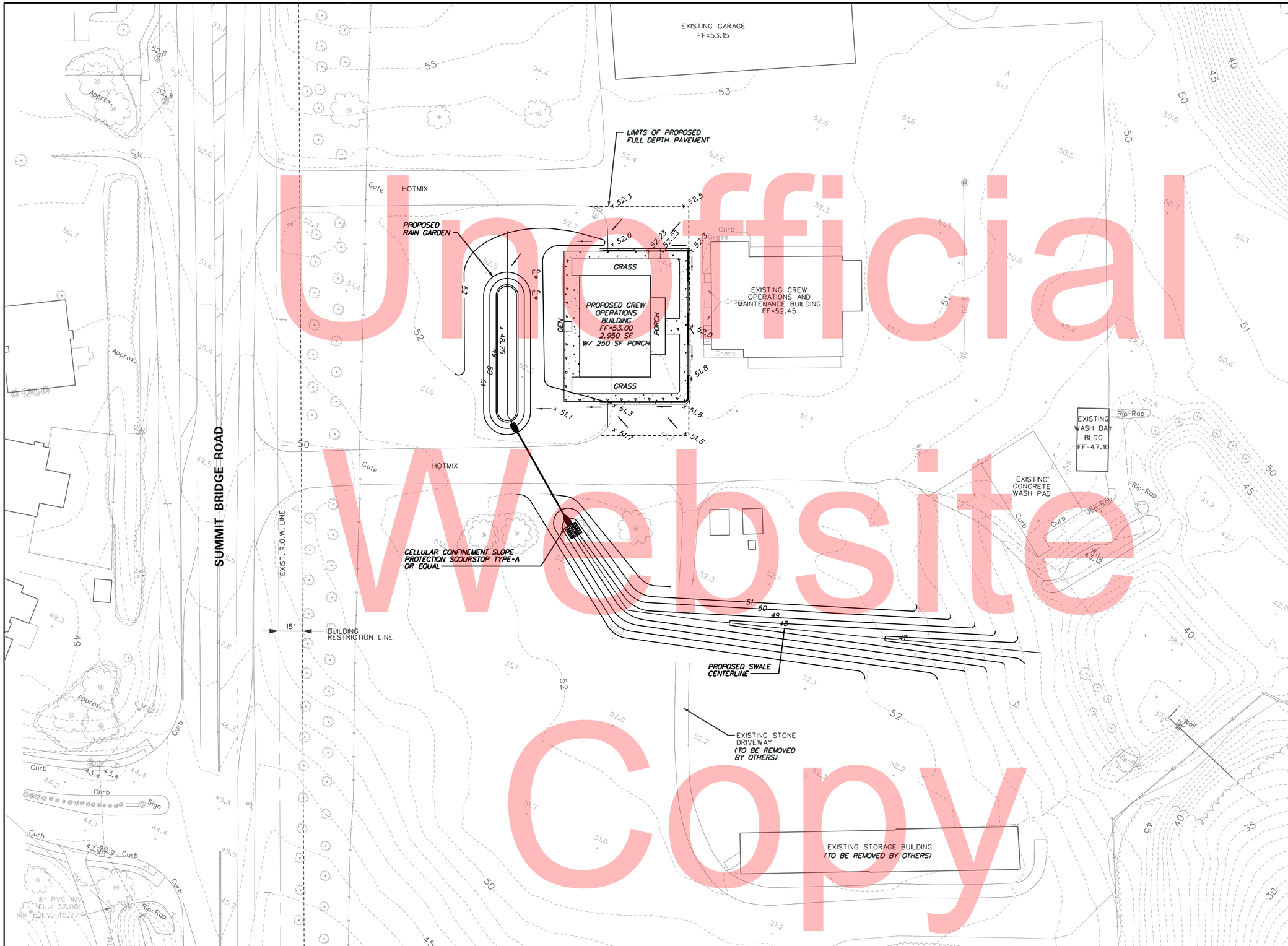

Unofficial Website Copy

C-7

PLOTTED BY: BDOUGHERTY DATE: 8/12/2014
FILE LOCATION: Q:\NDE\101552_001_DELDOT MIDDLETOWN YARD\CADD\CP01.DGN [SHEET: 08]

DELAWARE DEPARTMENT OF TRANSPORTATION	ADDENDUMS / REVISIONS	SCALE 0 30 60 90 FEET	MIDDLETOWN CREW QUARTERS AND MAINTENANCE SHOP	CONTRACT T201280103	BRIDGE NO.	GRADING PLAN	SHEET NO. 8
				COUNTY NEW CASTLE	DESIGNED BY: SRM		TOTAL SHTS. 54
					CHECKED BY: BPH		

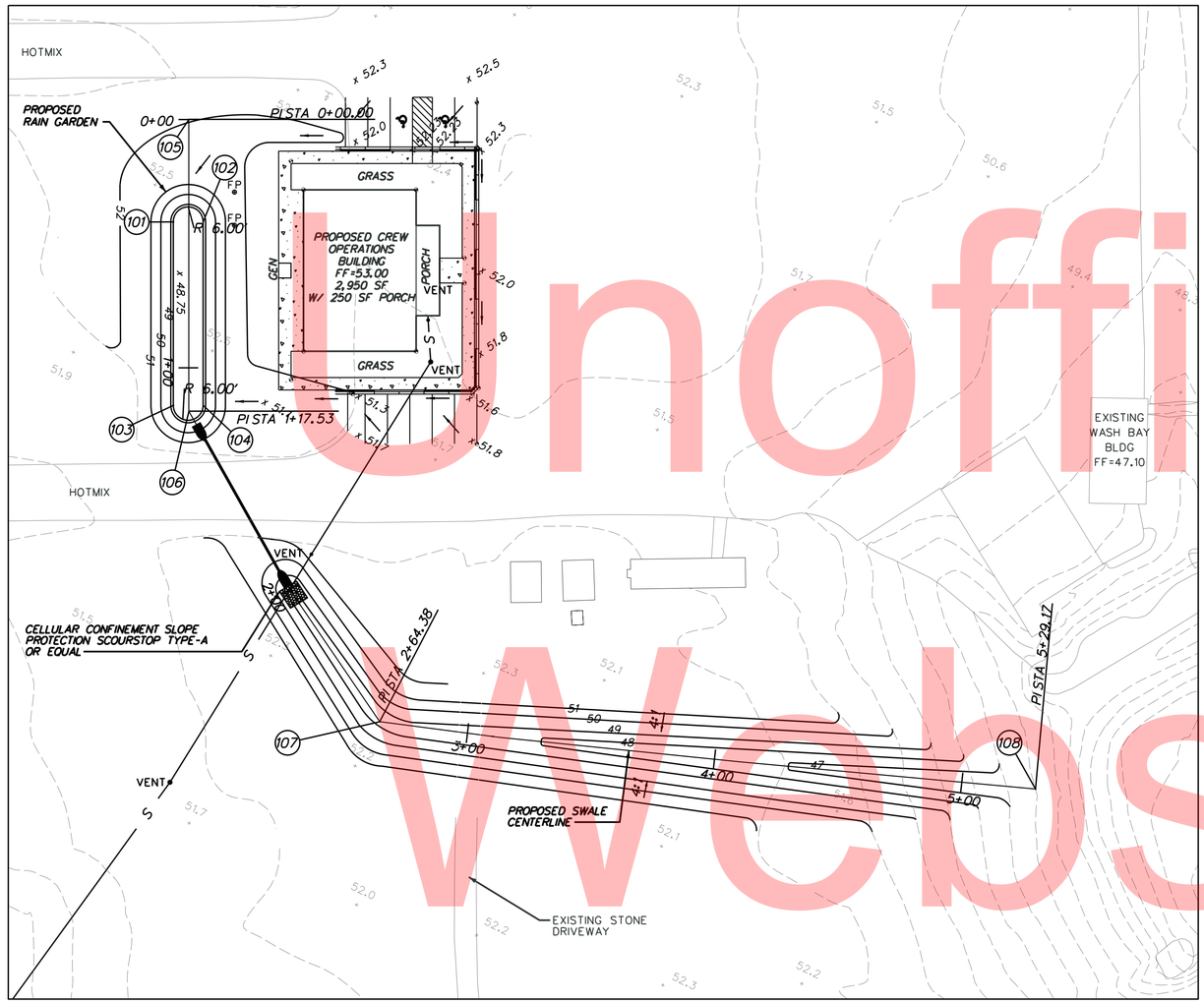

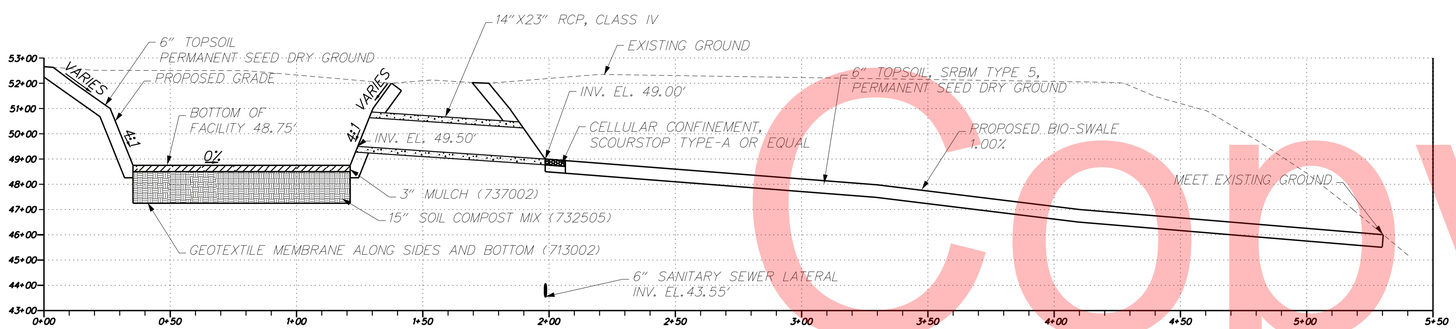

RAIN GARDEN AND SWALE PROFILE

RAIN GARDEN GRADING TABLE			
NO.	EASTING	NORTHING	ELEVATION
101	573188.1430	522239.8461	48.75'
102	573198.9286	522245.1066	48.75'
103	573220.5404	522173.4216	48.75'
104	573231.3260	522178.6821	48.75'
105	573175.6578	522279.6597	52.00'
106	573227.1806	522174.0225	48.75'
107	573351.0452	522095.3781	48.50'
108	573600.2038	522186.6939	46.00'

GRADING POINTS ARE DENOTED BY NUMBERS ENCLOSED IN CIRCLE.

SEQUENCE OF CONSTRUCTION FOR RAIN GARDEN:

1. CLEAR AND GRUB AREA FOR RAIN GARDEN CONSTRUCTION.
2. FOLLOWING ROTO-TILLING OF THE FACILITY BOTTOM, GEOTEXTILE SHALL BE PLACED TIGHTLY ON ALL SIDES OF THE RAIN GARDEN AREAS, EXCLUDING FACILITY BOTTOM, AS SPECIFIED IN THE CONTRACT DOCUMENTS. GEOTEXTILE SHALL BE PLACED TIGHTLY TO ELIMINATE VOIDS BENEATH THE GEOTEXTILE. WRINKLES AND FOLDS SHALL BE AVOIDED. A MINIMUM 6 INCH OVERLAP AT THE GEOTEXTILE JOINT ENDS OR BREAKS SHALL BE MAINTAINED.
3. CONSTRUCT THE RAIN GARDEN FACILITY TO LINES, GRADES AND DETAILS AS SHOWN ON THE CONSTRUCTION PLANS AND STABILIZE IMMEDIATELY AFTER CONSTRUCTION. STABILIZE ALL AREAS UPSTREAM OF THE RAIN GARDEN AREA BEFORE INSTALLING THE SOIL COMPOST MIX.
4. STABILIZE REMAINING BARE AREAS IMMEDIATELY AFTER CONSTRUCTION.

RAIN GARDEN NOTES:

1. THE CONTRACTOR SHALL INSPECT THE RAIN GARDEN AREA IMMEDIATELY AFTER EVERY RAIN AND MAKE REPAIRS AS NECESSARY. THIS WORK SHALL BE INCIDENTAL TO ITEM 250000, SEDIMENT REMOVAL.
2. ENTIRE DISTURBED AREA EXCEPT THE AREA COVERED WITH COMPOST SOIL MIX AND MULCH SHALL RECEIVE 4" TOPSOIL AND SEED AND MULCH AS PER CONTRACT DRAWINGS

BIOFILTRATION SWALE NOTES:

1. THE SWALE SHALL BE CONSTRUCTED FROM THE DOWNSTREAM END, STABILIZING THE DISTURBED AREA BEFORE PROCEEDING UPSTREAM.
2. OVER EXCAVATE THE SIDES AND BOTTOM OF BFS 6" FOR TOPSOIL PLACEMENT.
3. BFS SHALL BE COMPLETELY CONSTRUCTED AND STABILIZED PRIOR TO THE PROPOSED DEMOLITION OF EXISTING BUILDINGS.

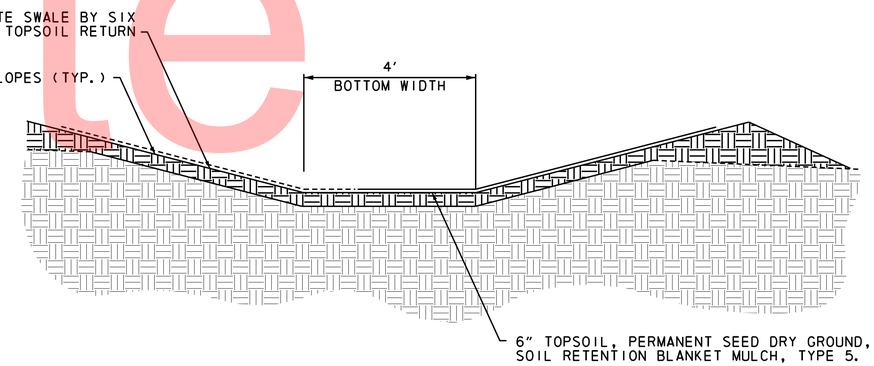

TYPICAL BIOFILTRATION SWALE DETAIL

DELDOT SWM FACILITY SCHEDULE		
NO.	TYPE / DESCRIPTION	LOCATION
1	BIOFILTRATION SWALE	STA. 3+00 TO STA. 5+18

C-8

SCALE 0 10 20 30 FEET

Unofficial Website Copy

PLOTTED BY: BDOUGHERTY DATE: 8/12/2014
FILE LOCATION: Q:\NDE\101552_001_DELDOT MIDDLETOWN YARD\CADD\SW01.DGN [SHEET: 09]

DELAWARE DEPARTMENT OF TRANSPORTATION

ADDENDUMS / REVISIONS

SCALE 0 30 60 90 FEET

MIDDLETOWN CREW QUARTERS AND MAINTENANCE SHOP

CONTRACT T201280103 | BRIDGE NO. | DESIGNED BY: SRM | COUNTY NEW CASTLE | CHECKED BY: BPH

STORMWATER MANAGEMENT DETAILS

SHEET NO. 9 | TOTAL SHTS. 54

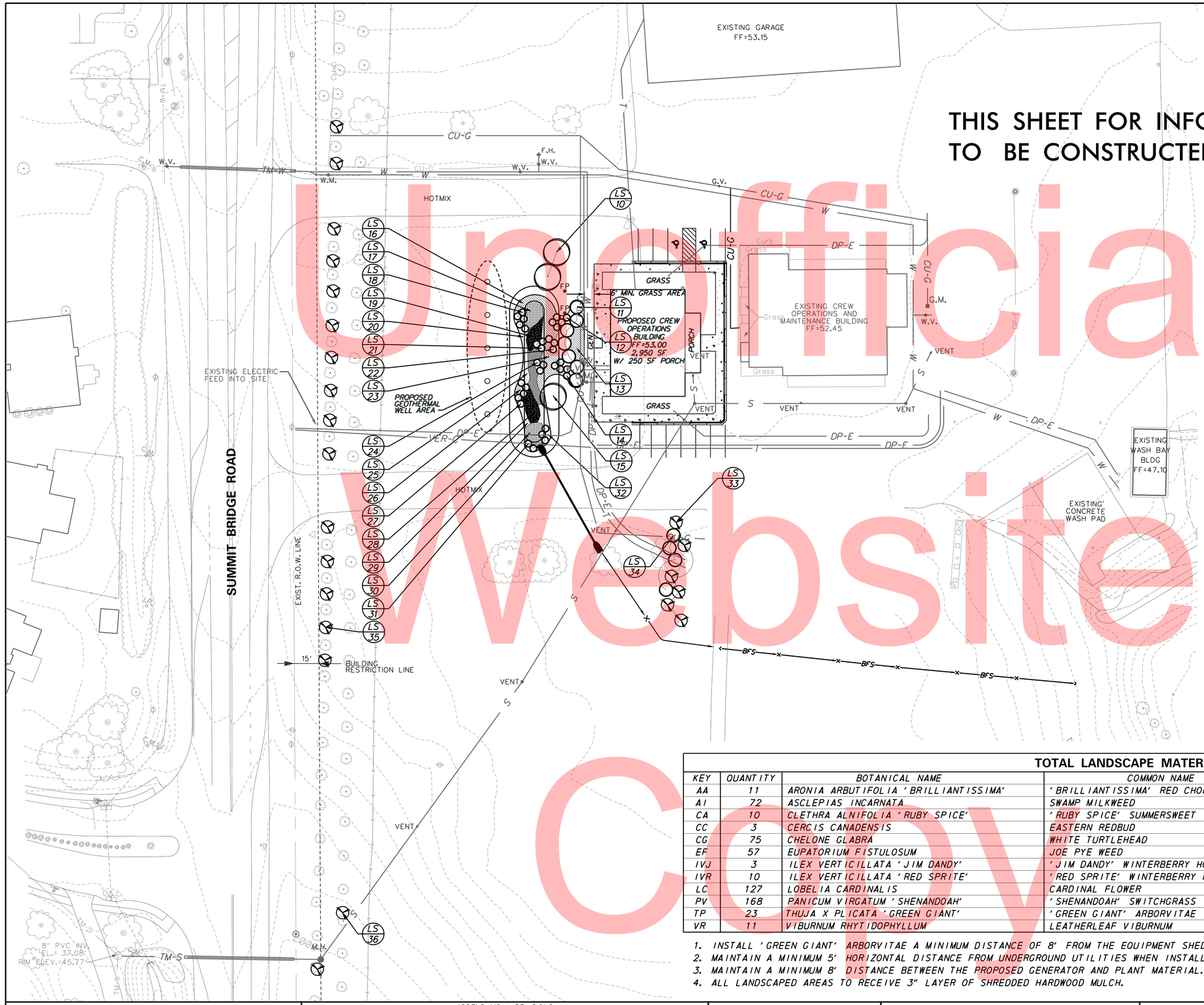

Unofficial Website Copy

LANDSCAPE MATERIAL

NO.	ITEM	QUANTITY
10	CERCIS CANADENSIS	2
11	VIBURNUM RHYTIDOPHYLLUM	7
12	ILEX VERTICILLATA 'RED SPRITE'	5
13	PANICUM VIRGATUM 'SHENANDOAH'	41
14	ILEX VERTICILLATA 'RED SPRITE'	5
15	CERCIS CANADENSIS	1
16	PANICUM VIRGATUM 'SHENANDOAH'	70
17	CHELONE GLABRA	41
18	CLETHRA ALNIFOLIA 'RUBY SPICE'	5
19	ASCLEPIAS INCARNATA	32
20	LOBELIA CARDINALIS	63
21	ARONIA ARBUTIFOLIA 'BRILLIANTISSIMA'	3
22	ILEX VERTICILLATA 'JIM DANDY'	3
23	PANICUM VIRGATUM 'SHENANDOAH'	50
24	ARONIA ARBUTIFOLIA 'BRILLIANTISSIMA'	3
25	EUPATORIUM FISTULOSUM	57
26	PANICUM VIRGATUM 'SHENANDOAH'	7
27	CLETHRA ALNIFOLIA 'RUBY SPICE'	5
28	ASCLEPIAS INCARNATA	40
29	LOBELIA CARDINALIS	22
30	CHELONE GLABRA	34
31	ARONIA ARBUTIFOLIA 'BRILLIANTISSIMA'	5
32	LOBELIA CARDINALIS	42
33	THUJA X PLICATA 'GREEN GIANT'	6
34	VIBURNUM RHYTIDOPHYLLUM	4
35	THUJA X PLICATA 'GREEN GIANT'	15
36	THUJA X PLICATA 'GREEN GIANT'	2

TOTAL LANDSCAPE MATERIAL

KEY	QUANTITY	BOTANICAL NAME	COMMON NAME	SIZE	ROOT	REMARKS
AA	11	ARONIA ARBUTIFOLIA 'BRILLIANTISSIMA'	'BRILLIANTISSIMA' RED CHOKEBERRY	24" HGT.	CONT.	4' O.C.
AI	72	ASCLEPIAS INCARNATA	SWAMP MILKWEED	1 GALLON	CONT.	2' O.C.
CA	10	CLETHRA ALNIFOLIA 'RUBY SPICE'	'RUBY SPICE' SUMMERSWEET	24" HGT.	CONT.	4' O.C.
CC	3	CERCIS CANADENSIS	EASTERN REDBUD	2½" CAL.	B & B	AS SHOWN
CG	75	CHELONE GLABRA	WHITE TURTLEHEAD	1 GALLON	CONT.	2' O.C.
EF	57	EUPATORIUM FISTULOSUM	JOE PYE WEED	1 GALLON	CONT.	2' O.C.
IVJ	3	ILEX VERTICILLATA 'JIM DANDY'	'JIM DANDY' WINTERBERRY HOLLY	24" HGT.	CONT.	MALE PLANT, 4' O.C.
IVR	10	ILEX VERTICILLATA 'RED SPRITE'	'RED SPRITE' WINTERBERRY HOLLY	24" HGT.	CONT.	FEMALE PLANT, 4' O.C.
LC	127	LOBELIA CARDINALIS	CARDINAL FLOWER	1 GALLON	CONT.	18" O.C.
PV	168	PANICUM VIRGATUM 'SHENANDOAH'	'SHENANDOAH' SWITCHGRASS	3 GALLON	CONT.	2' O.C.
TP	23	THUJA X PLICATA 'GREEN GIANT'	'GREEN GIANT' ARBORVITAE	8' HGT.	B & B	AS SHOWN
VR	11	VIBURNUM RHYTIDOPHYLLUM	LEATHERLEAF VIBURNUM	24" HGT.	CONT.	8' O.C.

1. INSTALL 'GREEN GIANT' ARBORVITAE A MINIMUM DISTANCE OF 8' FROM THE EQUIPMENT SHED BUILDING.
2. MAINTAIN A MINIMUM 5' HORIZONTAL DISTANCE FROM UNDERGROUND UTILITIES WHEN INSTALLING TREES.
3. MAINTAIN A MINIMUM 8' DISTANCE BETWEEN THE PROPOSED GENERATOR AND PLANT MATERIAL.
4. ALL LANDSCAPED AREAS TO RECEIVE 3" LAYER OF SHREDDED HARDWOOD MULCH.

C-09

PLOTTED BY: BDOUGHERTY DATE: 8/12/2014
FILE LOCATION: Q:\NDE\101552_001_DELDOT MIDDLETOWN YARD\CADD\CP01.DGN [SHEET: 06]

DELAWARE
DEPARTMENT OF TRANSPORTATION

ADDENDUMS / REVISIONS

SCALE
0 30 60 90
FEET

MIDDLETOWN CREW QUARTERS
AND MAINTENANCE SHOP

CONTRACT	BRIDGE NO.	
T201280103	DESIGNED BY: SRM	
COUNTY	CHECKED BY: BPH	
NEW CASTLE		

LANDSCAPING PLAN

SHEET NO.
10
TOTAL SHTS.
54

Unofficial Website Copy

SEQUENCE OF CONSTRUCTION:

1. INSTALL PERIMETER EROSION AND SEDIMENTATION CONTROLS AS SHOWN ON THIS SHEET. INSTALL SILT FENCE AROUND CONSTRUCTION STAGING AREA AT A LOCATION AS DIRECTED BY DELDOT.

2. INSTALL ELECTRIC AND TELEPHONE CONNECTIONS TO EXISTING OPERATIONS BUILDING AND GARAGE.

3. INSTALL GAS LINES UP TO PROPOSED BUILDING LOCATIONS AS SHOWN.

4. INSTALL WATER LINE AS SHOWN. INSTALL CONNECTION TO EXISTING OPERATIONS BUILDING, AND WASH PAD AS SHOWN ON UTILITY SHEETS.

5. INSTALL SANITARY SEWER, TAKING CARE NOT TO DISTURB EXISTING SEPTIC LINE AND ASSOCIATED ELECTRIC LINE IN PARKING LOT.

6. CAP/ABANDON EXISTING WATER WELL.

7. CLEAR AND GRUB AS NECESSARY FOR CONSTRUCTION OF OPERATIONS BUILDING AND STORMWATER FACILITY & DITCH.

8. CONSTRUCT DITCH AND INSTALL OUTFALL PIPE UNDER DRIVEWAY. TEMPORARILY PLUG UPSTREAM END OF OUTFALL PIPE.

9. INSTALL REMAINDER OF UTILITIES, AND INSTALL ELECTRIC CONNECTION TO EXISTING OPERATIONS BUILDING. ELECTRICAL SERVICE SHALL BE MAINTAINED TO EXISTING BUILDING AT ALL TIMES DURING CONSTRUCTION.

10. REMOVE/ABANDON EXISTING UTILITIES AS NECESSARY WITHIN CONSTRUCTION AREA.

11. CONSTRUCT PROPOSED OPERATIONS BUILDING, SIDEWALK, CURB AND PAVING PER DETAIL WHILE MAINTAINING USE OF EXISTING OPERATIONS BUILDING. COMPLETE CONNECTION OF ALL UTILITIES TO BUILDING, AND INSTALL RADIO ANTENNA AND GENERATOR.

12. CONSTRUCT GEOTHERMAL WELLS, ENSURING THAT LATERAL CONNECTIONS TO BUILDING ARE BELOW BOTTOM OF RAIN GARDEN SOIL COMPOST MIX.

13. CONSTRUCT RAIN GARDEN AND UNCAP OUTFALL PIPE.

NOTES:

1. ALL MAINTENANCE OF TRAFFIC DURING CONSTRUCTION SHALL BE IN ACCORDANCE WITH THE LATEST VERSION OF THE DELAWARE MUTCD.

2. DURING BORING OPERATIONS FOR INSTALLATION OF WATER AND SANITARY SEWER CROSSINGS OF SR 71, TYPICAL APPLICATION NO. 10 FROM THE DE MUTCD SHALL BE USED FOR ANY WORK WITHIN 10' OF THE TRAVEL LANE. ANY OPEN EXCAVATION WILL NEED TO BE BACKFILLED OR COVERED WITH STEEL PLATE(S) AT THE END OF EACH WORKING DAY.

C-10

PLOTTED BY: BDOUGHERTY DATE: 8/12/2014
FILE LOCATION: Q:\NDE\101552_001_DELDOT MIDDLETOWN YARD\CADD\CS01.DGN [SHEET: 12]

DELAWARE DEPARTMENT OF TRANSPORTATION	ADDENDUMS / REVISIONS	SCALE 0 30 60 90 FEET	MIDDLETOWN CREW QUARTERS AND MAINTENANCE SHOP	CONTRACT T201280103	BRIDGE NO.	CONSTRUCTION PHASING, M.O.T., AND EROSION CONTROL PLAN
				COUNTY NEW CASTLE	DESIGNED BY: SRM	SHEET NO. 11
					CHECKED BY: BPH	TOTAL SHTS. 54

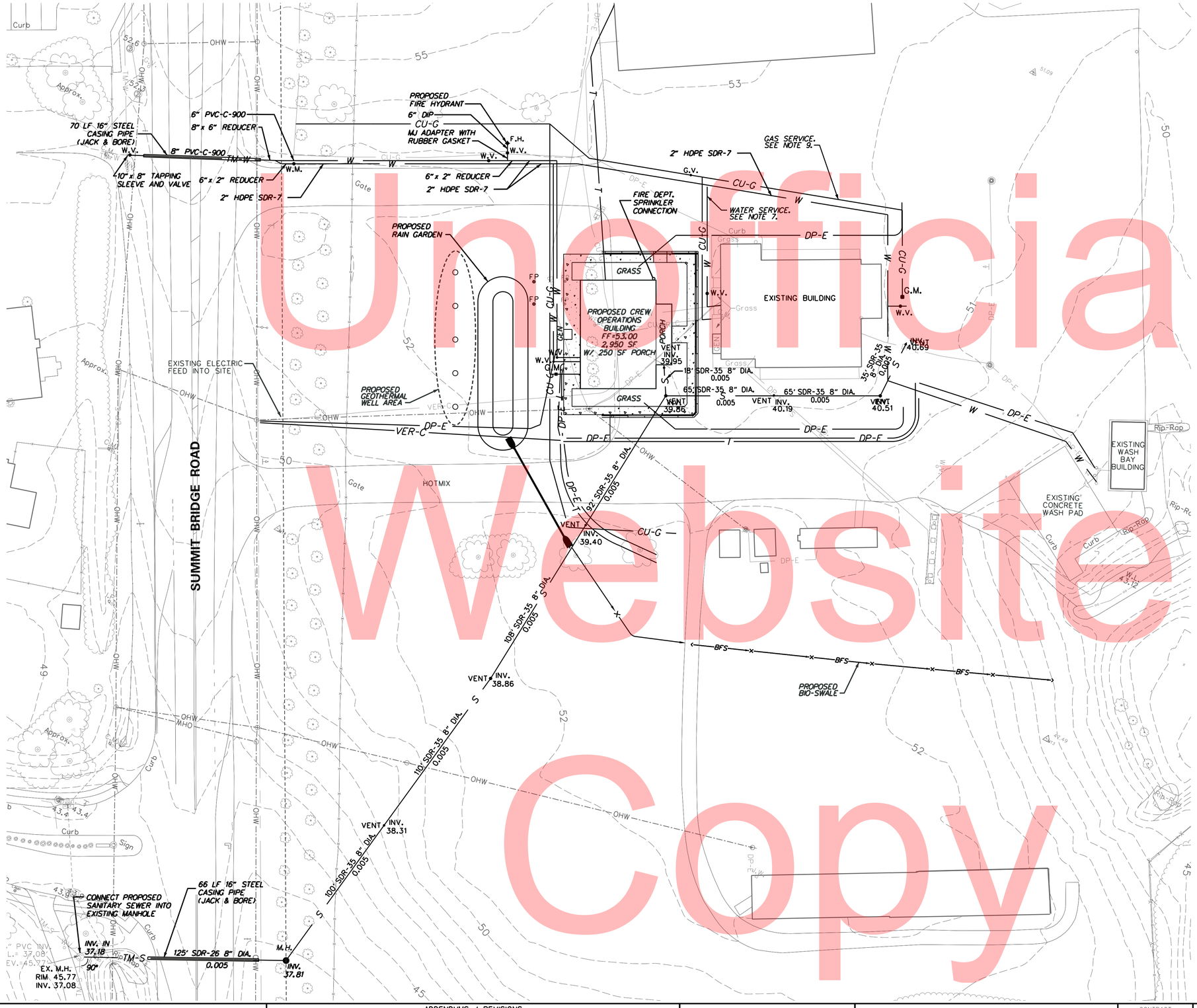

NOTES:

1. ALL WATER AND SEWER SERVICE CONNECTIONS ARE APPROXIMATE. CONTRACTOR TO VERIFY LOCATIONS.
2. ALL WORK SHOULD BE IN ACCORDANCE WITH UTILITY OWNER'S DESIGN STANDARDS AND SPECIFICATIONS.
3. ONLY UTILITY OWNER SHALL OPERATE EXISTING VALVES. CONTRACTOR WILL NOTIFY THE TOWN OF MIDDLETOWN'S INSPECTOR TO ARRANGE SHUTDOWN AT LEAST 7 DAYS PRIOR TO WORK.
4. PROVIDE THRUST BLOCKS AND RESTRAINTS PER CONSTRUCTION DETAILS.
5. CONNECT TO EXISTING WATER MAIN. INSTALL AND RESTRAIN NEW WATER VALVE TO EXISTING WATER MAIN.
6. CONNECT SANITARY SEWER TO EXISTING MANHOLE. MANHOLE TO BE CORED IN FIELD.
7. WATER SERVICE SHALL BE INSTALLED TO EXISTING BUILDING SUCH THAT WATER SERVICE IS MAINTAINED TO EXISTING BUILDING AT ALL TIMES DURING CONSTRUCTION.
8. EXISTING SEPTIC SYSTEM SHALL BE DECOMMISSIONED BY CONTRACTOR IN ACCORDANCE WITH UTILITY OWNERS DESIGN STANDARDS AND SPECIFICATIONS.
9. GAS SERVICE TO BE INSTALLED BY CHESAPEAKE UTILITIES. CALL 302-736-7846 TO COORDINATE INSTALLATION. SERVICE SHALL BE INSTALLED TO EXISTING BUILDING SUCH THAT GAS SERVICE IS MAINTAINED TO BUILDING AT ALL TIMES DURING CONSTRUCTION.
10. FOLLOWING TRENCHING OPERATIONS FOR ALL UTILITIES, EXISTING PAVEMENT TO BE RESTORED PER PIPE/CONDUIT TRENCH PAVING SECTION DETAIL.
11. DURING BORING OPERATIONS FOR INSTALLATION OF WATER AND SANITARY SEWER CROSSINGS OF SR 71, TYPICAL APPLICATION NO. 10 FROM THE DE MUTCD SHALL BE USED FOR ANY WORK WITHIN 10' OF THE TRAVEL LANE. ANY OPEN EXCAVATION SHALL BE BACKFILLED OR COVERED WITH STEEL PLATE(S) AT THE END OF EACH WORKING DAY.
12. THE STATE OF DELAWARE SHALL BE RESPONSIBLE TO OPERATE AND MAINTAIN THE WATER LINES AND SANITARY SEWER OUTSIDE OF THE RIGHT OF WAY ON THE MAINTENANCE YARD SITE. THE TOWN OF MIDDLETOWN SHALL BE RESPONSIBLE TO OPERATE AND MAINTAIN THE WATER LINE AND SANITARY SEWER WITHIN THE RIGHT OF WAY OF SUMMIT BRIDGE ROAD, AND ON THE WEST SIDE OF SUMMIT BRIDGE ROAD UP TO AND INCLUDING THE CONNECTIONS TO THE EXISTING UTILITIES.

Unofficial Website Copy

PLOTTED BY: BDOUGHERTY DATE: 8/12/2014
FILE LOCATION: Q:\NODE\101552_001_DELDOT MIDDLETOWN YARD\CADD\UT01.DGN [SHEET: 12]

C-11

DELAWARE
DEPARTMENT OF TRANSPORTATION

ADDENDUMS / REVISIONS

SCALE
0 30 60 90
FEET

MIDDLETOWN CREW QUARTERS AND MAINTENANCE SHOP

CONTRACT	BRIDGE NO.		SHEET NO.
T201280103	DESIGNED BY: SRM	UTILITY PLAN	12
COUNTY	CHECKED BY: BPH		TOTAL SHTS.
NEW CASTLE			54

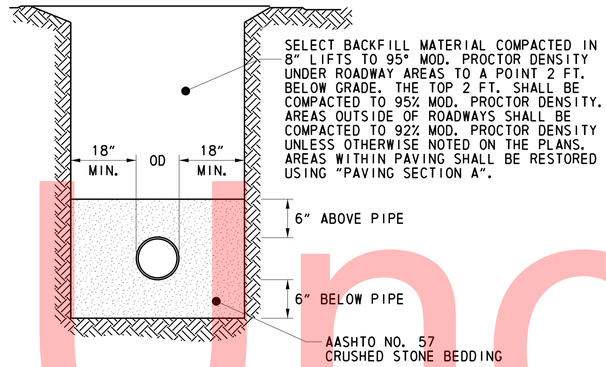

NOTES:
1. TRENCH SHALL BE BRACED OR SHEETED IN ACCORDANCE WITH OSHA REGULATIONS.
2. PROVIDE BEARING FULL LENGTH OF BARREL.
3. DIG BELL HOLES.

SANITARY SEWER PIPE BEDDING & TRENCH DETAIL

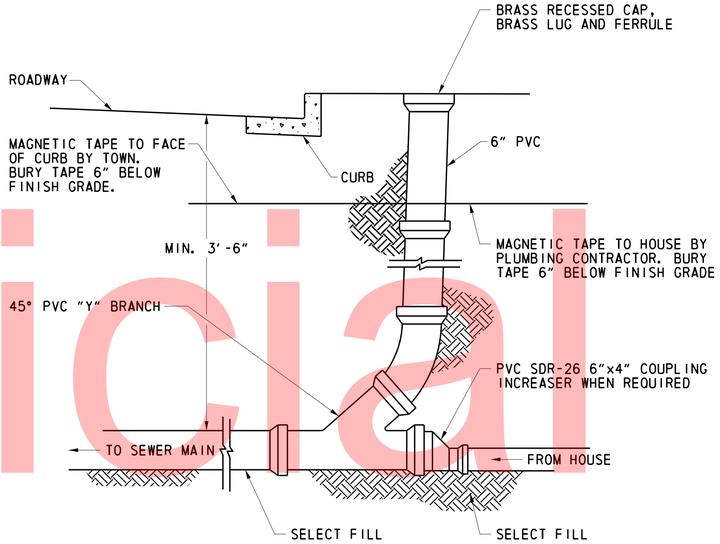

TYPICAL CLEANOUT

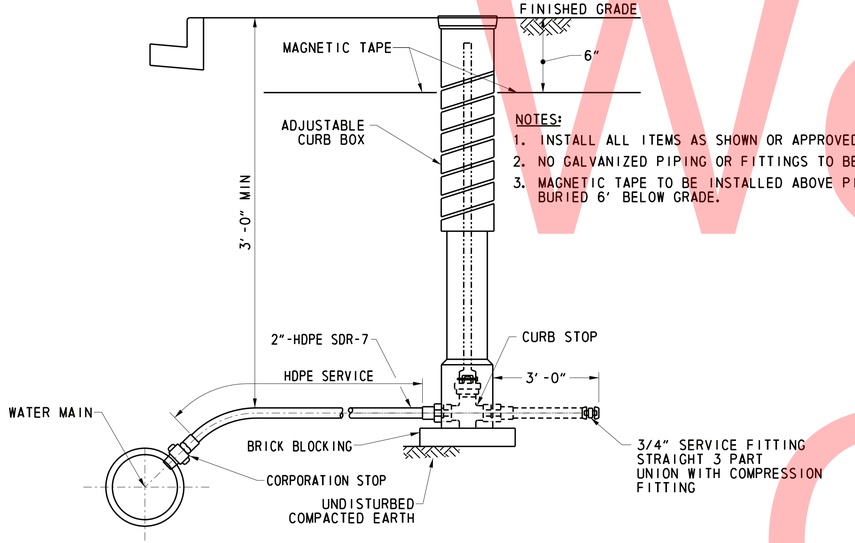

NOTES:
1. INSTALL ALL ITEMS AS SHOWN OR APPROVED EQUAL.
2. NO GALVANIZED PIPING OR FITTINGS TO BE USED.
3. MAGNETIC TAPE TO BE INSTALLED ABOVE PIPING, BURIED 6' BELOW GRADE.

SERVICE	CORPORATION STOP	CURB STOP	CURB BOX
3/4" (MINIMUM ALLOWABLE SIZE PER DPW)	MUELLER H-15000 OR COMP. ASSEMBLY H-15008	MUELLER TYPE H-15204	MUELLER H-10350 SIZE 93D, 33' TO 48'

STANDARD SERVICE CONNECTION WITH CURB BOX

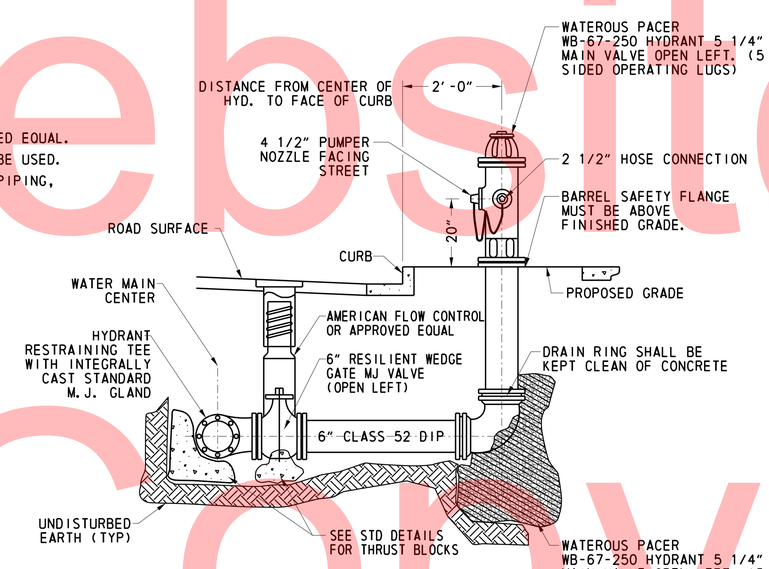

NOTES:
1. ALL ITEM TO BE AS SHOWN OR APPROVED EQUAL.
2. HYDRANT MUST BE STRAPPED AND MECHANICALLY RESTRAINED (I.E. MEGA LUG).

STANDARD FIRE HYDRANT INSTALLATION

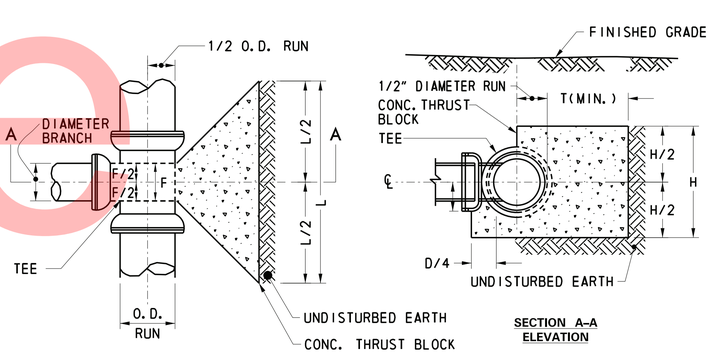

	NOMINAL DIAMETER OF BRANCH					
	6"	8"	10"	12"	14"	16"
L	1'-0"	1'-4"	2'-0"	2'-0"	2'-4"	2'-8"
H	1'-4"	1'-8"	2'-0"	2'-6"	3'-0"	3'-4"
T	8"	9"	10"	1'-0"	1'-1"	1'-2"
F	1'-0"	1'-4"	1'-4"	1'-4"	1'-6"	1'-8"

NOTES:
1. MECHANICAL JOINTS (I.E. MEGA LUGS) MAY BE USED IN LIEU OF THRUST BLOCKS FOR MECHANICAL BENDS.

THRUST BLOCKS FOR TEES & TAPPING SLEEVES

Unofficial Website Copy

PLOTTED BY: BDOUGHERTY DATE: 8/12/2014
FILE LOCATION: Q:\NDE\101552_001_DELDOT MIDDLETOWN YARD\CADD\UT02.DGN [SHEET: 15]

C-12

DELAWARE DEPARTMENT OF TRANSPORTATION

ADDENDUMS / REVISIONS

NOT TO SCALE

MIDDLETOWN CREW QUARTERS AND MAINTENANCE SHOP

CONTRACT T201280103 | COUNTY NEW CASTLE | BRIDGE NO. | DESIGNED BY: SRM | CHECKED BY: BPH

UTILITY DETAILS – 1

SHEET NO. 13 | TOTAL SHTS. 54

BEND TYPE	PIPE DIAMETER	THRUST BLOCK DIMENSIONS			
		6"	H	F	T
1/32	6"	1'-0"	1'-2"	8"	7"
	8"	1'-4"	1'-4"	8"	7"
	10"	1'-8"	1'-6"	8"	8"
	12"	2'-0"	1'-8"	8"	8"
	14"	2'-4"	1'-10"	10"	9"
	16"	2'-6"	2'-0"	11"	9"
1/16	6"	1'-6"	1'-2"	8"	8"
	8"	2'-0"	1'-4"	8"	9"
	10"	3'-0"	1'-6"	8"	10"
	12"	3'-6"	1'-8"	8"	11"
	14"	4'-0"	1'-10"	10"	1'-0"
	16"	4'-6"	2'-0"	11"	1'-2"
1/8	6"	1'-3"	1'-2"	8"	8"
	8"	1'-8"	1'-4"	8"	9"
	10"	2'-1"	1'-6"	8"	10"
	12"	2'-6"	1'-10"	8"	11"
	14"	2'-9"	2'-2"	10"	1'-0"
	16"	3'-4"	2'-6"	11"	1'-2"
1/4	6"	1'-0"	1'-2"	8"	1'-8"
	8"	1'-4"	1'-4"	8"	1'-7"
	10"	1'-6"	2'-1"	8"	1'-7"
	12"	1'-8"	2'-6"	8"	1'-6"
	14"	2'-1"	2'-6"	10"	1'-8"
	16"	2'-5"	3'-0"	11"	1'-8"

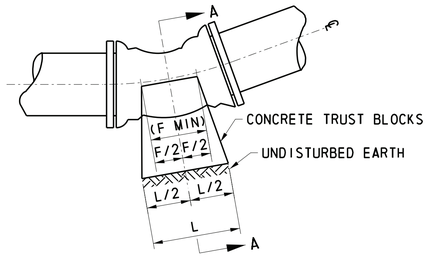

ELEVATION

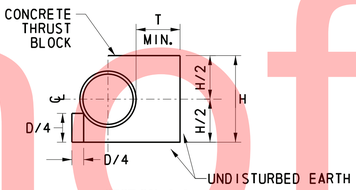

SECTION A-A

NOTES:

1. CONCRETE STRENGTH - MIN. = 3,000 PSI AT 28 DAYS.
2. STANDARD THRUST BLOCKING IS BASED ON THE FOLLOWING ASSUMPTIONS AND LIMITATIONS. IF THESE CONDITIONS ARE NOT MET, SPECIAL DESIGN IS REQUIRED:
   A) STATIC PRESSURE IS 150 PSI OR LOWER.
   B) DEPTH FROM FINISHED GRADE TO TOP OF PIPE ASSUMED TO BE BELOW BOTTOM OF THE BLOCK.
   C) ELEVATION OF GROUNDWATER TABLE ASSUMED TO BE BELOW BOTTOM OF THE BLOCK.
3. IF SOIL CONDITIONS ARE SOFT OR ORGANIC SPECIAL DESIGN IS REQUIRED (MIN. SOIL BEARING PRESSURE OF 3,000 PSF).
4. FOR LARGER PIPE DIAMETER, SEE DRAWINGS FOR SPECIAL DETAILS.
5. ALL DIMENSIONS ARE MINIMUMS EXCEPT WHERE LARGER DIMENSIONS WILL INTERFERE WITH THE PIPE JOINTS OF NOT FACILITATE BOLT REMOVAL ON MECHANICAL JOINT FITTINGS.
6. MECHANICAL JOINTS (I.E. MEGA LUGS) MAY BE USED IN LIEU OF THRUST BLOCKS FOR HORIZONTAL BENDS.

THRUST BLOCKS FOR HORIZONTAL BENDS

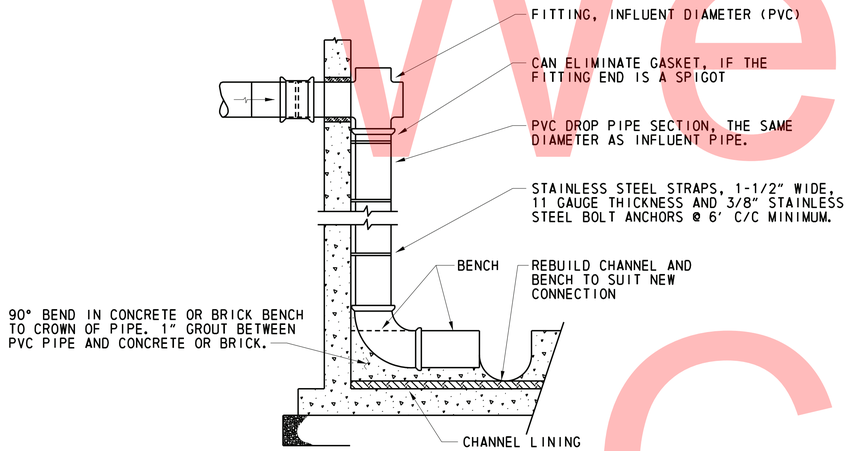

NOTES:

1. ONLY ONE INSIDE DROP CONNECTION PER MANHOLE WILL BE ALLOWED, UNLESS APPROVED BY THE TOWN.
2. THE DROP FITTING SHALL NOT EXTEND INTO THE MANHOLE BOTTOM. IF NECESSARY, MANHOLE FRAME, COVER, CONE SECTION, AND STEPS SHALL BE REMOVED AND PLACED TO ALLOW FOR UNOBSTRUCTED ENTRY AND EXIT.
3. INFLUENT PIPE SLOPE SHALL NOT EXCEED 5%.
4. MAXIMUM SIZE OF INFLUENT PIPE IS 8".
5. PROPOSED MANHOLE OF LESS THAN 5' DIAMETER WILL BE REVIEWED ON A CASE BY CASE BASIS.

INSIDE DROP MANHOLE CONNECTION

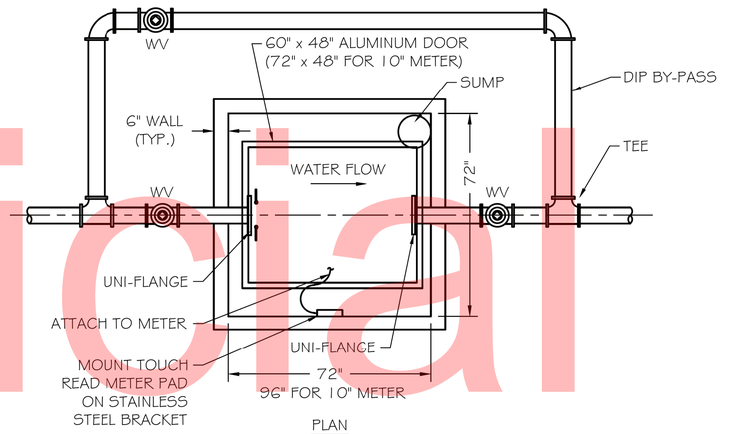

PLAN

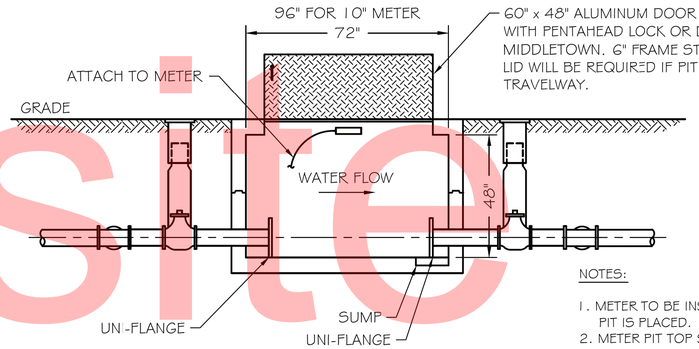

ELEVATION

NOTES:

1. METER TO BE INSTALLED BEFORE TOP HALF OF PIT IS PLACED.
2. METER PIT TOP SLAB, FLOOR SLAB, AND WALLS TO BE REINFORCED.
3. BACKFLOW PREVENTERS ON A PER JOB BASIS.
4. METER SHALL BE PURCHASED BY OWNER THROUGH THE TOWN OF MIDDLETOWN.
5. OWNER SHALL SUBMIT A DESIGN FOR REVIEW AND APPROVAL BY THE TOWN OF MIDDLETOWN FOR ANY METERS LARGER THAN 10".
6. TOUCH READ METER PAD SHALL BE INSTALLED AS PER STANDARD DETAIL W-12.

COMBINED COMPACT FIRE & DOMESTIC SERVICE WATER METER ASSEMBLIES (REDUCED SIZE METER PIT)

Unofficial Website Copy

PLOTTED BY: BDOUGHERTY DATE: 8/12/2014
FILE LOCATION: Q:\NDE\101552_001_DELDOT MIDDLETOWN YARD\CADD\UT02.DGN [SHEET: 16]

C-13

DELAWARE DEPARTMENT OF TRANSPORTATION	ADDENDUMS / REVISIONS	NOT TO SCALE	MIDDLETOWN CREW QUARTERS AND MAINTENANCE SHOP	CONTRACT T201280103	BRIDGE NO.	UTILITY DETAILS – 2	SHEET NO. 14
				COUNTY NEW CASTLE	DESIGNED BY: SRM		TOTAL SHTS. 54
					CHECKED BY: BPH		

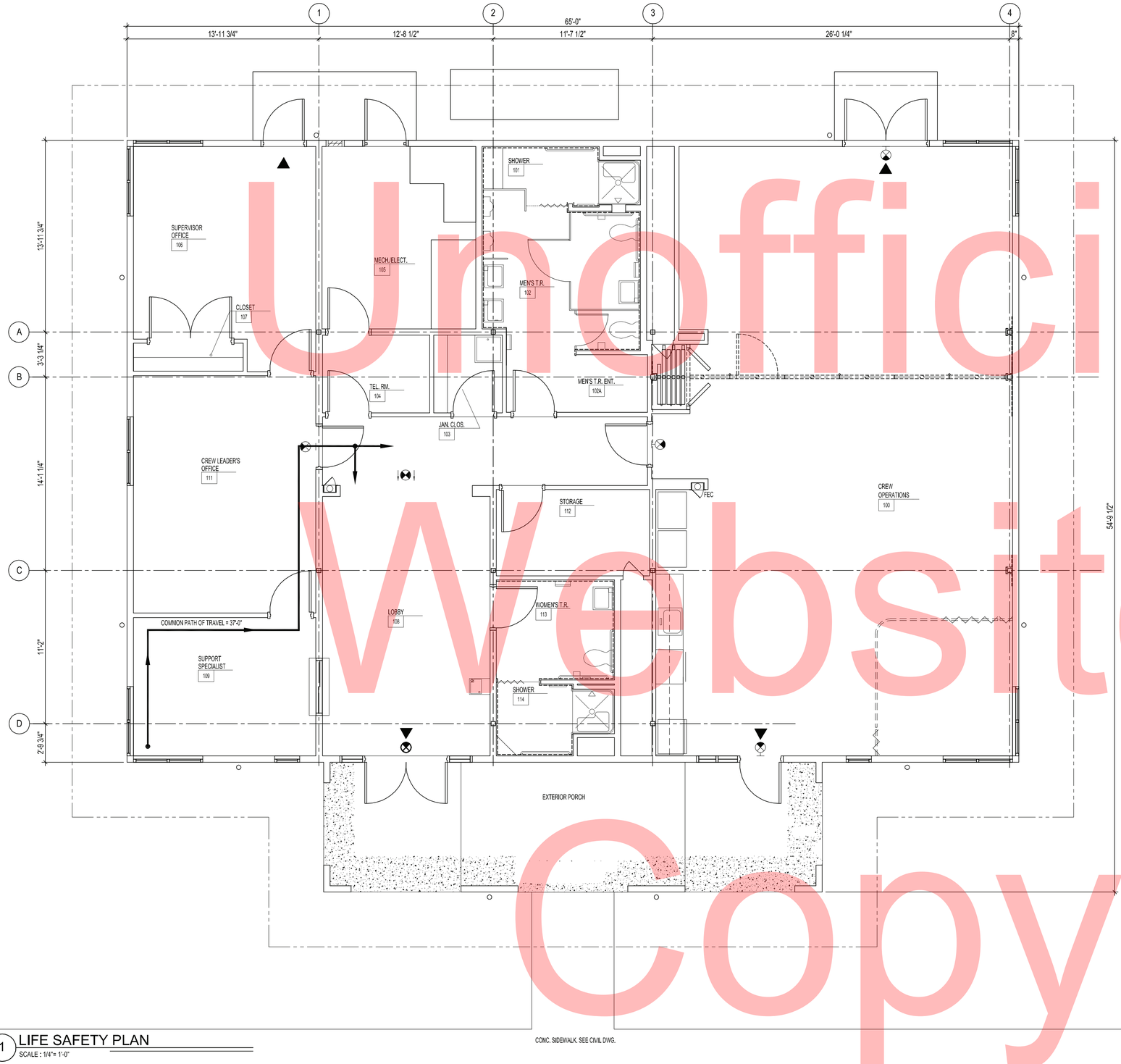

1 LIFE SAFETY PLAN
SCALE : 1/4"= 1'-0"

CODE SYNOPSIS

SITE LOCATION: MIDDLETOWN MAINTENANCE YARD
STATE ROAD 71
NEW CASTLE COUNTY, DELAWARE

BUILDING OWNER: DELAWARE DEPARTMENT OF TRANSPORTATION (DELDOT)

APPLICANT: JOHNSON, MIRMIRAN AND THOMPSON
131 CONTINENTAL DRIVE, SUITE 109
NEWARK, DELAWARE 19713
ATTENTION: SEAN MCEVILLY

DESIGN PROFESSIONAL: SAME AS APPLICANT

BUILDING OCCUPANCY AND OPERATIONAL NARRATIVE:
THE FACILITY IS TO BE OPEN MONDAY THRU FRIDAY DURING THE HOURS OF 7:00 AM TO 4:00 PM FOR THE ADMINISTRATIVE USE OF THE MIDDLETOWN DELDOT EMPLOYEES. THESE HOURS MAY BE EXTENDED TO POSSIBLY 24 HOURS DURING SNOW EMERGENCIES.

APPLICABLE CODES: INTERNATIONAL BUILDING CODE 2009
NFPA 101 LIFE SAFETY CODE, 2009

HANDICAPPED ACCESSIBILITY: STATE OF DELAWARE ARCHITECTURAL ACCESSIBILITY STANDARDS

BUILDING'S TOTAL AREA : ONE STORY - 2,950 GSF ENCLOSED W/ 350 S.F. COVERED PORCH

OCCUPANCY : B- BUSINESS (NEW)

CONSTRUCTION TYPE : 5 B, UNPROTECTED

ALLOWABLE STORIES PER TABLE 503 - 2 STORIES
ACTUAL STORIES - 1 STORY
ALLOWABLE SQUARE FOOTAGE PER TABLE 503 - 9,000 S.F.
ACTUAL SQUARE FOOTAGE - 2,950 S.F. THUS NO AREA MODIFICATIONS ARE NEEDED

OCCUPANTS: OFFICES 1,820 GSF = 18 OCCUPANTS (100 SF/OCC.)
CREW OPERATIONS ROOM = WILL NOT EVER HAVE GATHERINGS OF MORE THAN 50 OCCUPANTS

EXITS REQD./ PROVIDED: ENTIRE BLDG. - BUSINESS: 2 / 4
CREW OPERATIONS ROOM - 2 EXITS DIRECTLY TO EXTERIOR
OPERABLE WALL DIVIDES ROOM INTO TWO ROOMS, EACH WITH 1 EXIT DIRECTLY TO EXTERIOR

ALL EGRESS DOORS ARE A MINIMUM OF 36" WIDE.

MAXIMUM TRAVEL DISTANCE WITH SPRINKLER IS 300'.

EGRESS CORRIDORS FOR B OCCUPANCY ARE NOT REQUIRED TO BE RATED PER IBC 1016.1.4

EGRESS AISLES & PASSAGEWAYS WILL BE KEPT FREE AND CLEAR OF EQUIPMENT AND BARRIERS THAT WOULD LIMIT READY ACCESS TO AND THE USE OF FIRE FIGHTING EQUIPMENT.

NO DEAD END CORRIDORS OVER 20 FEET IN LENGTH.

EGRESS DOORS WILL BE SELF-CLOSING.

PORTABLE FIRE EXTINGUISHERS ARE PROVIDED.

ATTIC WILL NOT BE USED FOR COMBUSTIBLE STORAGE & REQUIRES NO DRAFT STOPPING IF UNDER 3,000 SF

THE MECHANICAL ROOM WILL NOT BE USED FOR STORAGE PURPOSES.

FLAMMABLE LIQUIDS WILL NOT BE STORED IN ANY AMOUNTS

SMOKE DETECTION IS REQUIRED DUE TO OCCASIONAL SLEEPING IN THE FACILITY.

THE BUILDING IS NOT REQUIRED TO HAVE : FIRE ALARM SYSTEM, PER IBC 907.2
SPRINKLER SYSTEM, PER IBC TABLE 503 AND IBC 903.2

FIRE SUPPRESSION SPRINKLERING IS PROVIDED IN ACCORDANCE WITH NFPA 13R IN COMPLIANCE WITH LOCAL AUTHORITY REQUESTS.

LEGEND

▼	DIRECTION TO PATH OF TRAVEL	WOMEN'S T.R. 113	ROOM NAME
	COMMON PATH OF TRAVEL		
FEC	FIRE EXTINGUISHER CABINET		
	EXIT SIGN - CEILING MOUNTED DIRECTIONAL		
	EXIT SIGN - WALL MOUNTED		

Unofficial Website Copy

BARRY ALAN MILLER NO. 7377 STATE OF DELAWARE REGISTERED ARCHITECT

ALS-01

O:\SMD\101552_001_DelDOT_Middletown_Yd\CADD\Arch\DelDOT Middletown_YA\Sheets\ALS-01 CREW OPERATION BUILDING LIFE SAFETY PLAN.dwg

DELAWARE
DEPARTMENT OF TRANSPORTATION

ADDENDUMS / REVISIONS	

MIDDLETOWN CREW QUARTERS AND MAINTENANCE SHOP

CONTRACT	T201280103	BRIDGE NO.	
COUNTY	NEW CASTLE	DESIGNED BY: CJB	
		CHECKED BY: CJB	

CREW OPERATION BUILDING LIFE SAFETY PLAN

SHEET NO.	15
TOTAL SHTS.	54

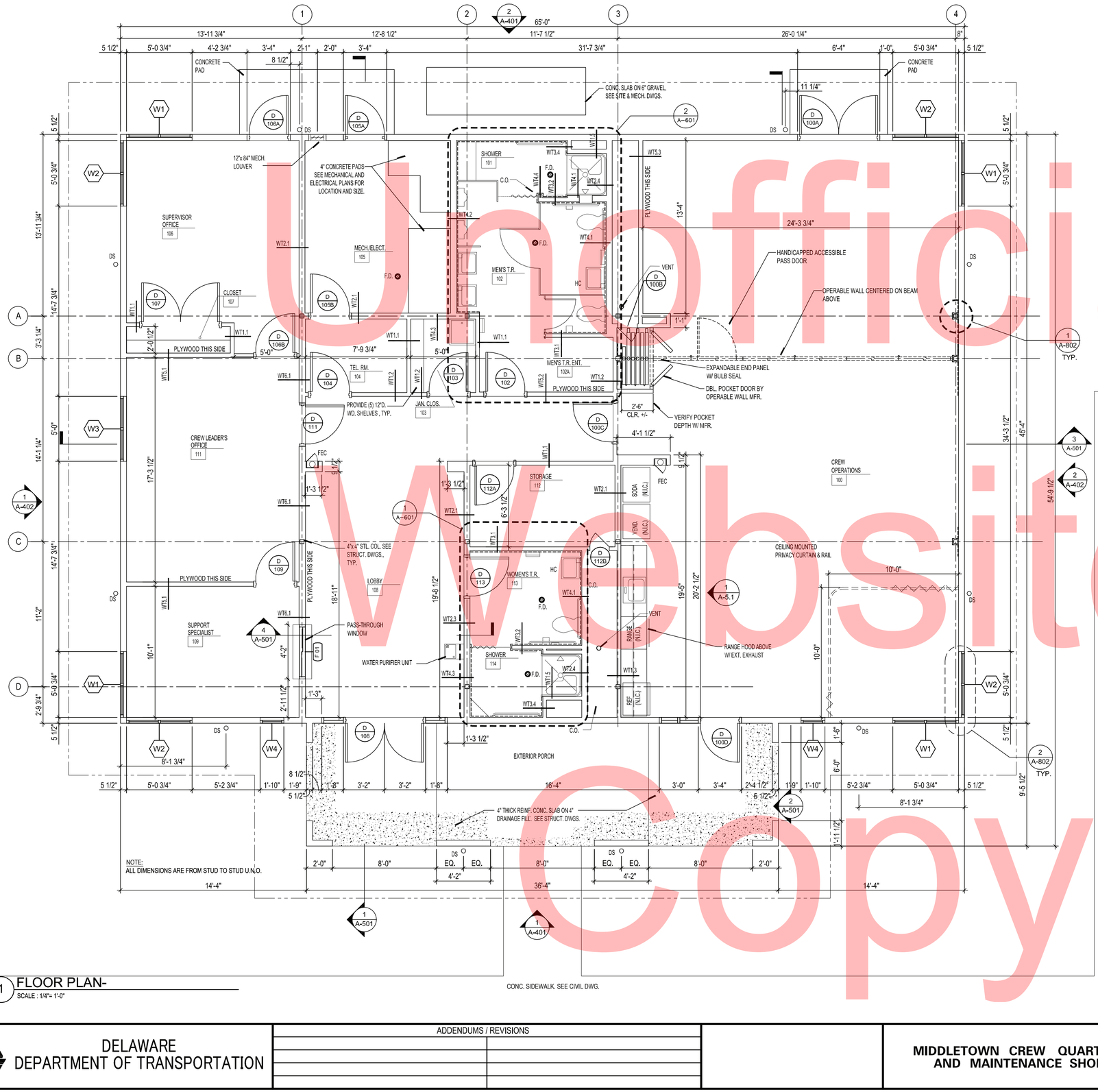

1 FLOOR PLAN-
SCALE : 1/4"= 1'-0"

NOTES

LEGEND

- D 100D — NEW DOOR WITH DOOR TAG
- WT1.3 — NEW WALL WITH DOOR TAG
- W4 — WINDOW TAG
- WOMEN'S T.R. 113 D T 2 — ROOM NAME AND TAG FINISH TAG
- 2 A-402 — EXTERIOR ELEVATION SYMBOL
- 1 A-301 — INTERIOR ELEVATION SYMBOL
- 3 A-501 — DRAWING SECTION SYMBOL
- 2 A-510 — ENLARGED VIEW SYMBOL
- FEC — FIRE EXTINGUISHER CABINET

Unofficial Website Copy

BARRY ALAN MILLER NO. 7377 STATE OF DELAWARE REGISTERED ARCHITECT

A-101

$DATE_USER$ $FILE_SHEET$ Q:\SMD\101592_001_DelDOT_Middletown_Yd\CADD\Arch\DelDOT Middletown_VA\Sheets\A-101 FLOOR PLAN.dwg

DELAWARE DEPARTMENT OF TRANSPORTATION

ADDENDUMS / REVISIONS

MIDDLETOWN CREW QUARTERS AND MAINTENANCE SHOP

CONTRACT	BRIDGE NO.	
T201280103	DESIGNED BY:	CJB
COUNTY	CHECKED BY:	CJB
NEW CASTLE		

CREW OPERATION BUILDING FLOOR PLAN

SHEET NO.
16
TOTAL SHTS.
54

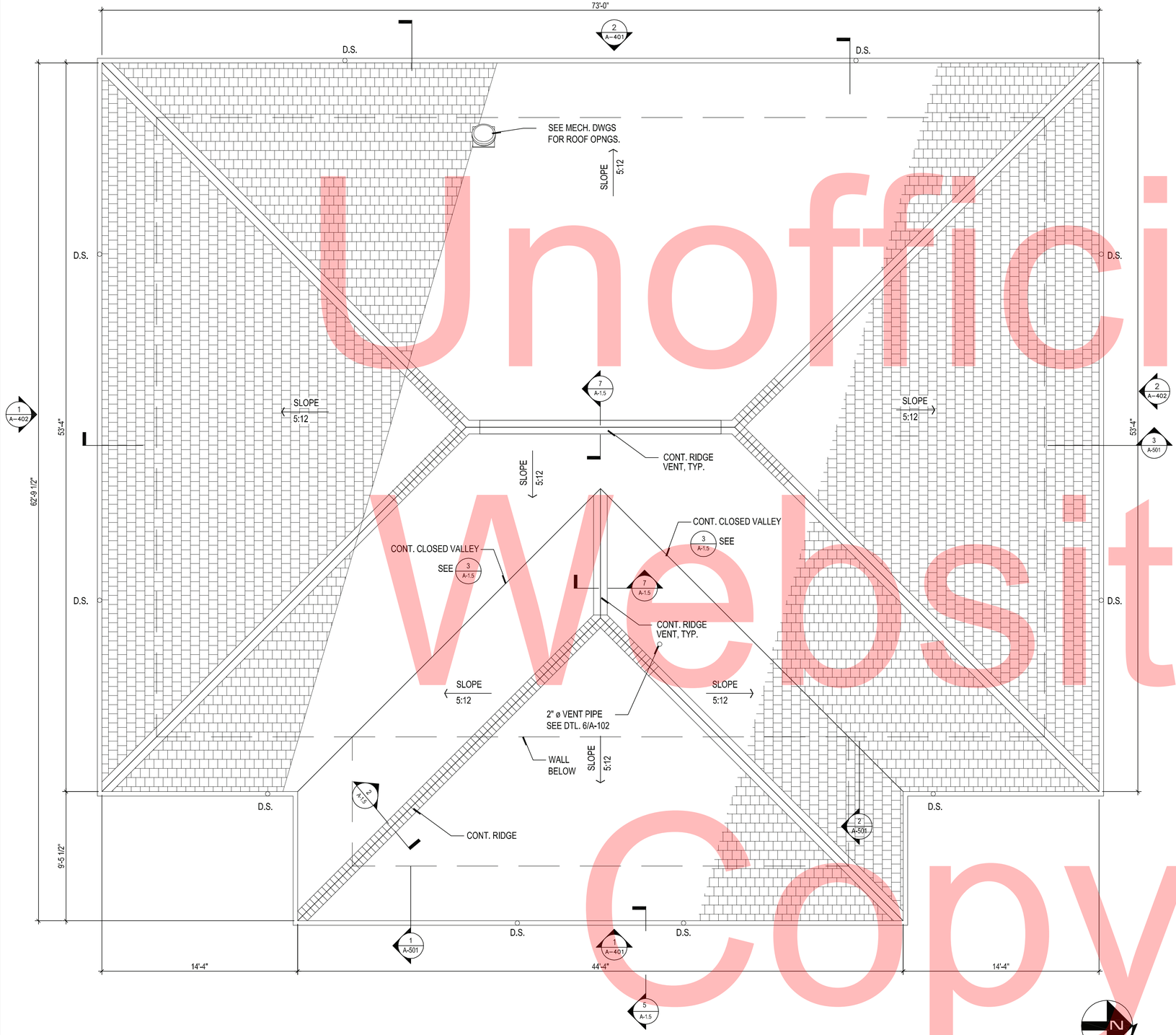

1 ROOF PLAN
SCALE : 1/4"= 1'-0"

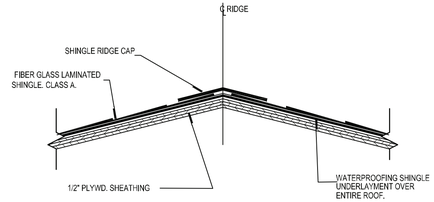

1. ALL UNDERLAYMENT, SEALANT, AND FASTENERS, ARE ITEMS TO BE FURNISHED AND INSTALLED BY THE ROOFING INSTALLER.

F = FINISH SIDE

RIDGE/HIP CAP

2 RIDGE AND HIP DETAIL
NOT TO SCALE

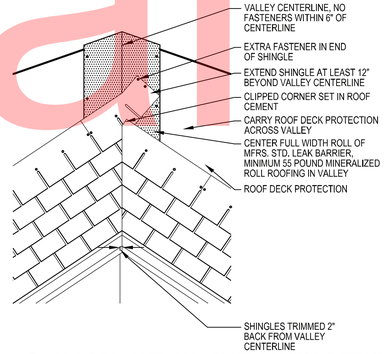

3 CLOSED CUT VALLEY FLASHING DETAIL
NOT TO SCALE

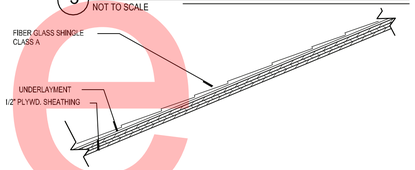

4 TYP. ROOF ASSEMBLY
NOT TO SCALE

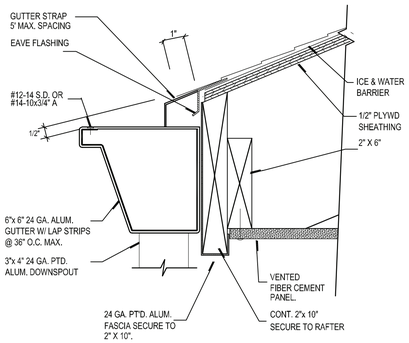

5 TYP. EAVE DETAIL W/ GUTTER
NOT TO SCALE

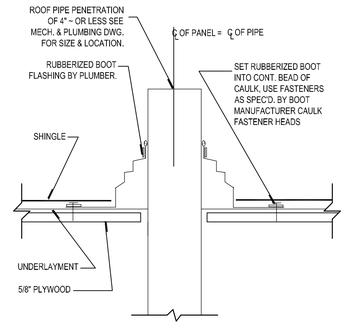

NOTES:

1. NOTE: POSITION SQUARE BASED BOOTS IN A DIAMOND ORIENTATION WHERE POSSIBLE TO AID IN DIVERTING WATER.

6 PIPE PENETRATION DETAIL
NOT TO SCALE

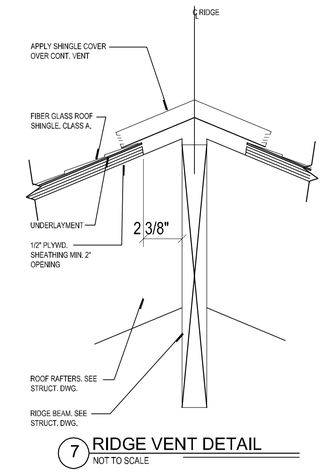

7 RIDGE VENT DETAIL
NOT TO SCALE

BARRY ALAN MILLER
NO. 7377
STATE OF DELAWARE
REGISTERED ARCHITECT

A-102

Unofficial Website Copy

$DATE_USER$ $FILE_SHEET$ O:\SMD\101552_001_DelDOT_Middletown_Va\CADD\Arch\DelDOT Middletown_VA\Sheets\A-102 CREW OPERATION BUILDING ROOF PLAN.dwg

DELAWARE
DEPARTMENT OF TRANSPORTATION

ADDENDUMS / REVISIONS

MIDDLETOWN CREW QUARTERS AND MAINTENANCE SHOP

CONTRACT T201280103	BRIDGE NO.	CREW OPERATION BUILDING ROOF PLAN	SHEET NO. 17
COUNTY NEW CASTLE	DESIGNED BY: CJB		TOTAL SHTS. 54
	CHECKED BY: CJB		

GENERAL NOTES:

1. G.C. TO COORDINATE FIXTURES SHOWN WITH ELECTRICAL PLANS AND SPECIFICATIONS.
2. G.C. TO SUPPLY ALL WOOD BLOCKING AND/ OR SUPPORTS FOR ALL LIGHTING FIXTURES.
3. ALL CEILING HEIGHTS SHALL BE 8'-6" ABOVE FINISH FLOOR UNLESS NOTED OTHERWISE
4. PROVIDE CONTINUOUS NON-COMBUSTIBLE SUPPORT TO UNDERSIDE OF FIBERGLASS BATT INSULATION IN ALL LOCATIONS.

CEILING FINISH LEGEND

- CEILING SLOPE DOWN
- 2'x 2' SUSPENDED ACOUSTICAL CEILING SYSTEM
- "E" EXPOSED TO STRUCTURE ABOVE
- "F" 5/8" SUSPENDED GWB CEILING PER DETAIL 2/A-201. TAPE. SPACKLE. PAINT.
- "G" 5/8" GWB CEILING ATTACHED DIRECTLY TO CEILING JOISTS. TAPE. SPACKLE. PAINT.
- PARABOLIC TROFFER FIXTURE
- SURFACE MOUNT FLUORESCENT FIXTURE
- SURFACE WALL MOUNT FLUORESCENT FIXTURE
- OPEN DOWNLIGHT FLUORESCENT FIXTURE SEE ELECT. DWG.
- STANDARD FLUORESCENT FIXTURE
- EMERGENCY LIGHT FIXTURE
- REMOTE EMERGENCY FIXTURE
- EXIT SIGN
- OUTDOOR LED WALL MOUNT FIXTURE
- SUPPLY AIR DIFFUSER
- RETURN AIR DIFFUSER
- EXHAUST LOUVER

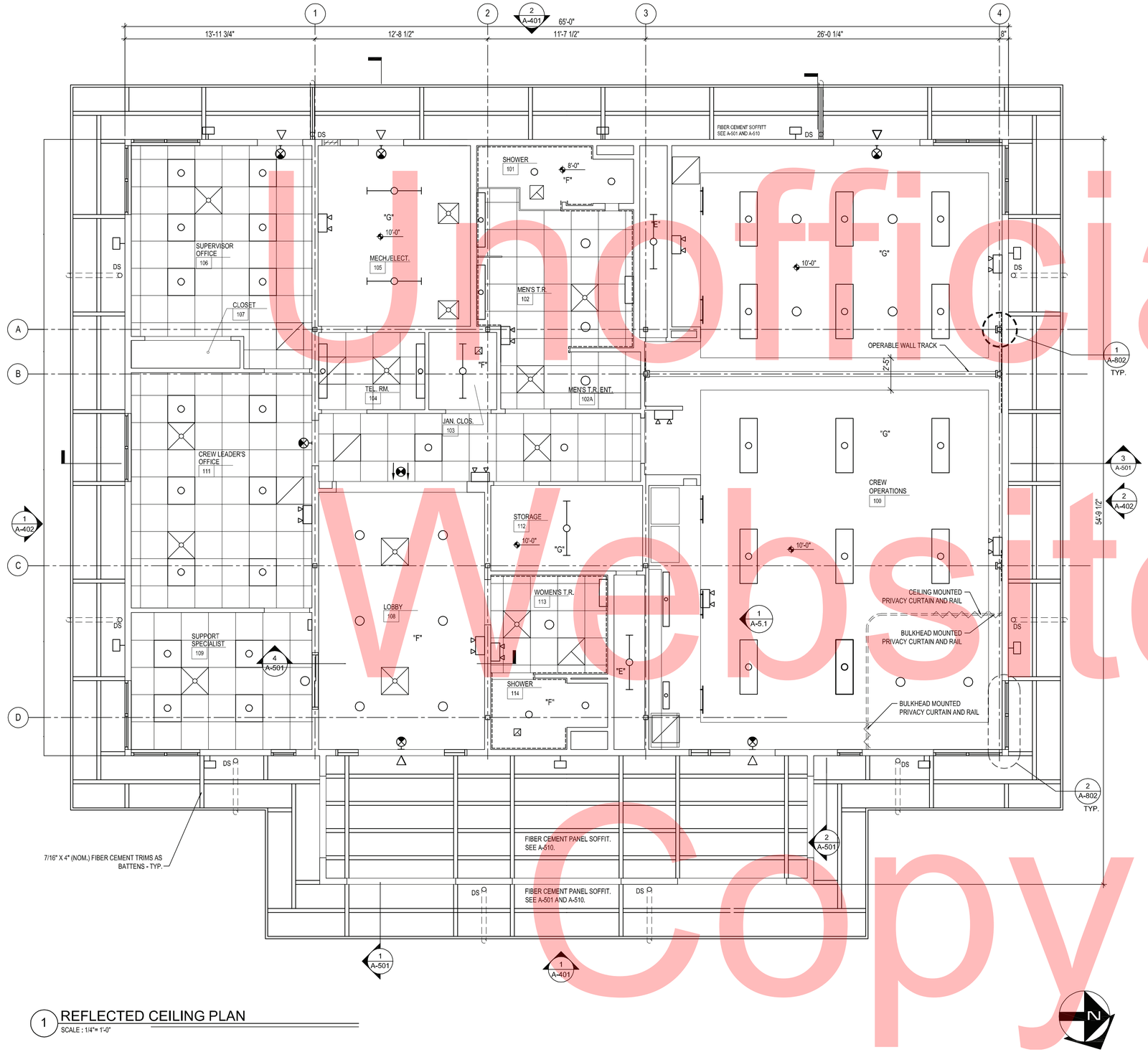

1 REFLECTED CEILING PLAN
SCALE : 1/4"= 1'-0"

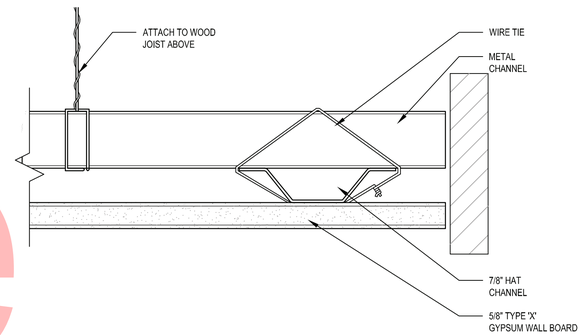

2 HORIZONTAL PARTITION
SCALE : 6" = 1'-0"

BARRY ALAN MILLER NO. 7377 STATE OF DELAWARE REGISTERED ARCHITECT

A-201

Unofficial Website Copy

DELAWARE DEPARTMENT OF TRANSPORTATION

ADDENDUMS / REVISIONS	

MIDDLETOWN CREW QUARTERS AND MAINTENANCE SHOP

CONTRACT	T201280103	BRIDGE NO.	
COUNTY	NEW CASTLE	DESIGNED BY: CJB	
		CHECKED BY: CJB	

CREW OPERATION BUILDING REFLECTED CEILING PLAN

SHEET NO.	18
TOTAL SHTS.	54

$DATE_USER$ $FILE_SHEET$ Q:\SMD\101552_001_DelDOT_Middletown_Yal\CADD\Arch\DelDOT Middletown_VA\Sheets\A-201 CREW OPERATION BUILDING REFLECTED CEILING PLAN.dwg

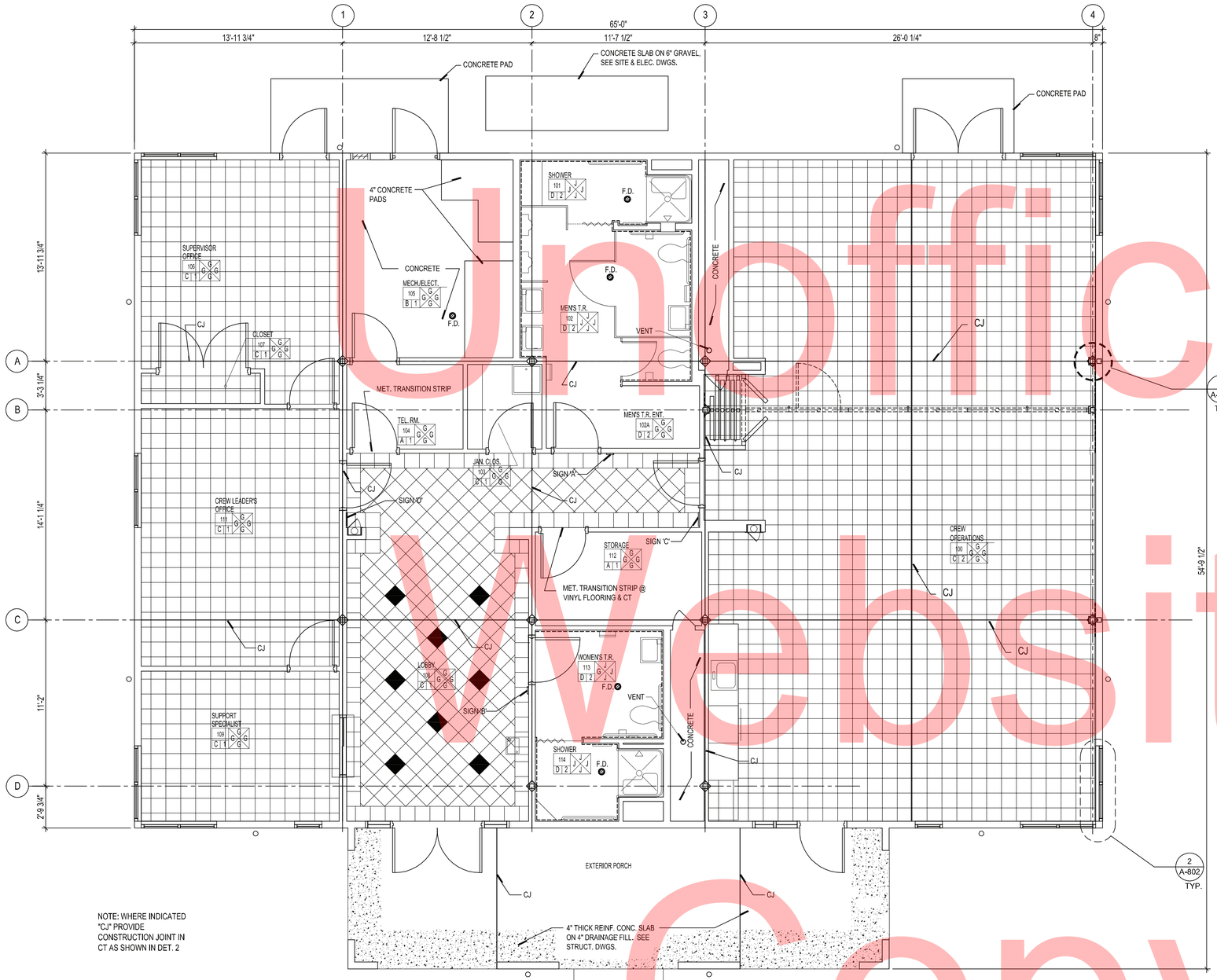

NOTE: WHERE INDICATED "CJ" PROVIDE CONSTRUCTION JOINT IN CT AS SHOWN IN DET. 2

1 FINISH PLAN
SCALE : 1/4"= 1'-0"

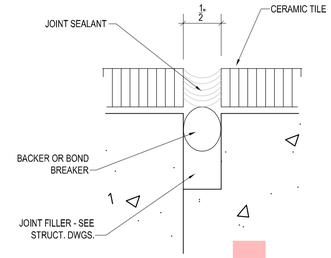

2 TILE DETAIL @ CONSTRUCTION JOINT
SCALE : NOT TO SCALE

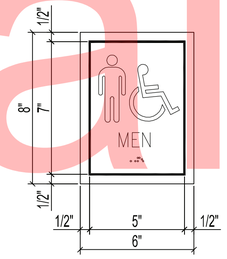

SIGN 'A'

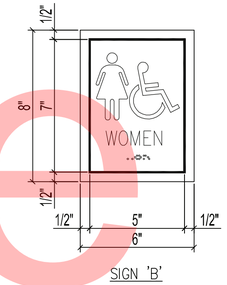

SIGN 'B'

3 TOILET ROOM SIGNAGE ELEVATION
SCALE : 1/4" = 1'-0"

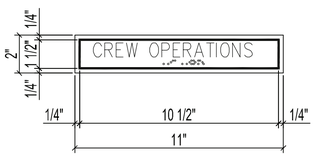

SIGN 'C'

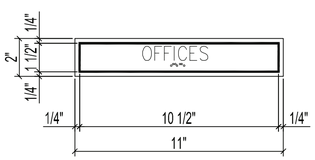

SIGN 'D'

4 ROOM SIGNAGE ELEVATION
SCALE : 1/4" = 1'-0"

ROOM FINISH LEGEND

NOTES:
SEE REFLECTED CEILING PLANS FOR CEILING FINISHES

ROOM NO. — LOBBY 126
FLOOR FIN. — A 1
BASE FIN. — 1
WALL FIN. (N,S,E,W) — H H H H

FLOORS
- A SHEET VINYL
- B SEALED CONCRETE
- C 12" X 12" CERAMIC TILE
- D 2" X 2" CERAMIC TILE

BASE
- 1 VINYL COVE BASE
- 2 CERAMIC TILE COVE TO MATCH FLR

WALLS
- G GWB/PAINTED
- J 4" X 4" CERAMIC TILE

Unofficial Website Copy

BARRY ALAN MILLER NO. 7377 STATE OF DELAWARE REGISTERED ARCHITECT

A-301

$DATE_USER$ $FILE_SHEET$ O:\SMD\101552_001_DelDOT_Middletown_Yd\CADD\Arch\DelDOT Middletown_VA\Sheets\A-301 CREW OPERATION BUILDING FINISH PLAN.dwg

DELAWARE DEPARTMENT OF TRANSPORTATION

ADDENDUMS / REVISIONS

MIDDLETOWN CREW QUARTERS AND MAINTENANCE SHOP

CONTRACT	BRIDGE NO.	
T201280103	DESIGNED BY:	CJB
COUNTY	CHECKED BY:	CJB
NEW CASTLE		

CREW OPERATION BUILDING FINISH PLAN

SHEET NO.
19
TOTAL SHTS.
54

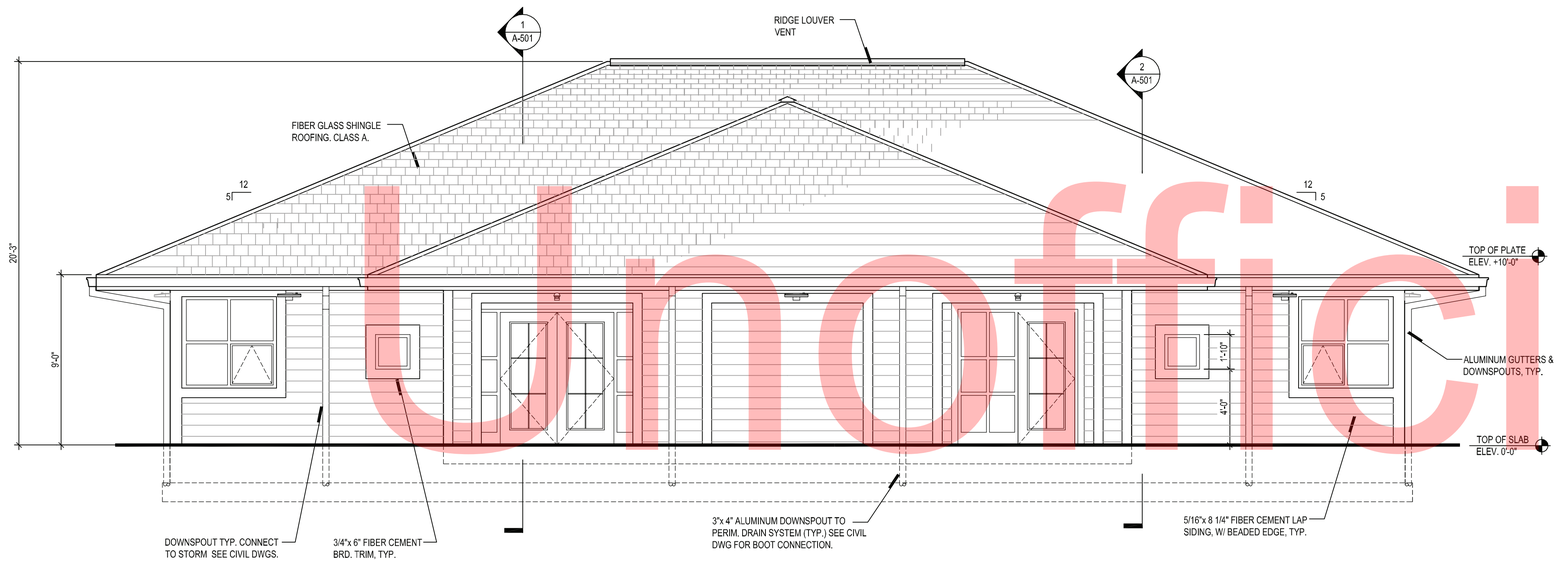

1 EAST ELEVATION
SCALE : 1/4"= 1'-0"

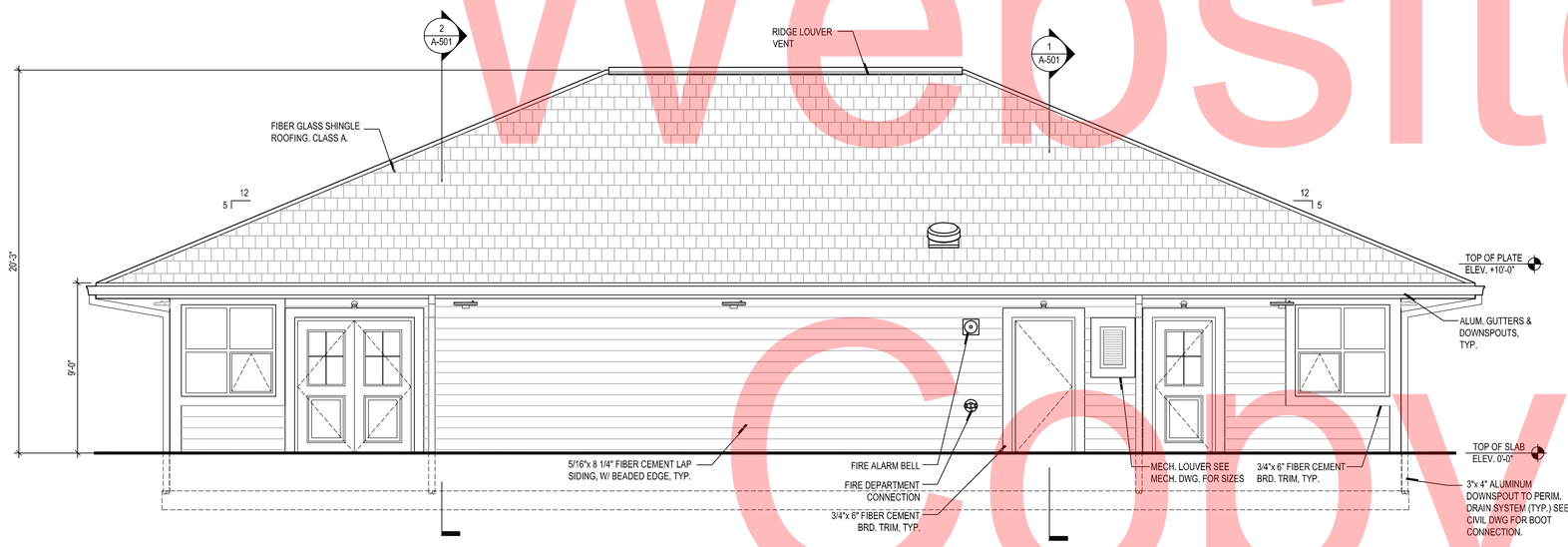

2 WEST ELEVATION
SCALE : 1/4"= 1'-0"

Unofficial Website Copy

BARRY ALAN MILLER
NO. 7377
STATE OF DELAWARE
REGISTERED ARCHITECT

A-401

DELAWARE DEPARTMENT OF TRANSPORTATION	ADDENDUMS / REVISIONS		MIDDLETOWN CREW QUARTERS AND MAINTENANCE SHOP	CONTRACT T201280103	BRIDGE NO.	CREW OPERATION BUILDING EXTERIOR ELEVATIONS
				COUNTY NEW CASTLE	DESIGNED BY: CJB	SHEET NO. 20
					CHECKED BY: CJB	TOTAL SHTS. 54

$DATE_USER$ $FILE_SHEET$ Q:\SMD\101552_001_DelDOT_Middletown_Yo\CADD\Arch\DelDOT Middletown_VA\Sheets\A-401 CREW OPERATION BUILDING EXTERIOR ELEVATIONS.dwg

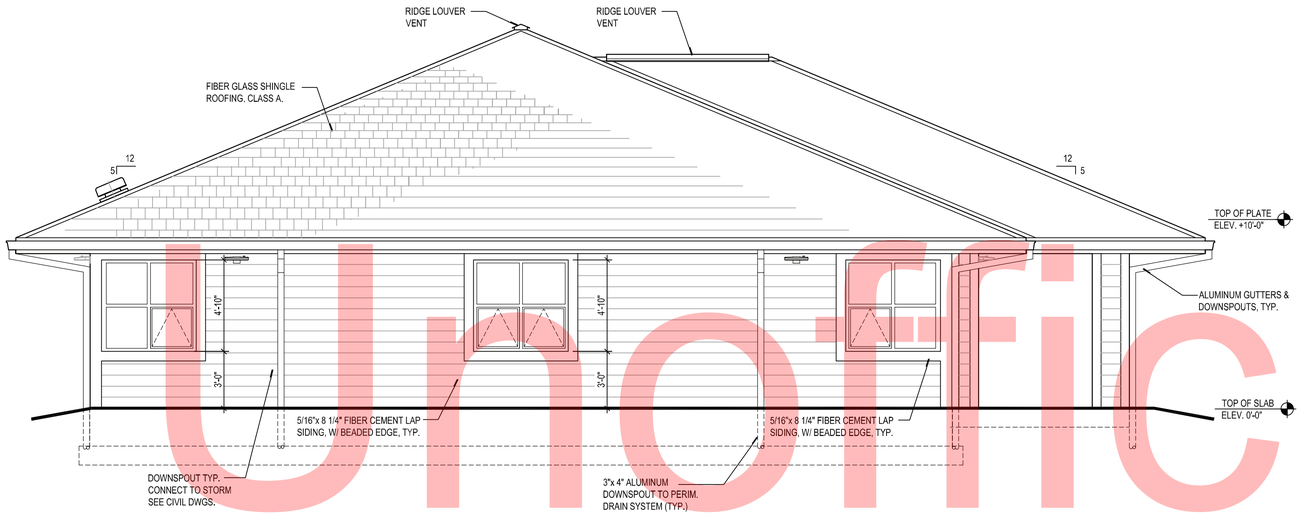

1 SOUTH ELEVATION
SCALE : 1/4"= 1'-0"

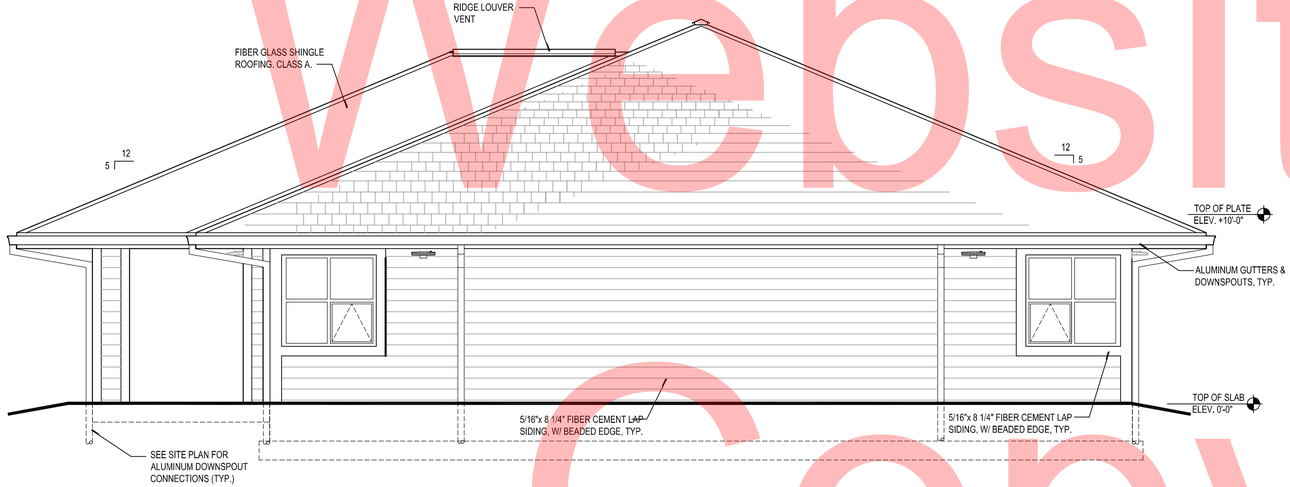

2 NORTH ELEVATION
SCALE : 1/4"= 1'-0"

Unofficial Website Copy

DARRYL ALAN MILLER NO. 7377 STATE OF DELAWARE REGISTERED ARCHITECT

A-402

$DATE_USER$ $FILE_SHEET$ Q:\SMD\101552_001_DelDOT_Middletown_Yd\CADD Arch\DelDOT Middletown_VA\Sheets\A-402 CREW OPERATION BUILDING EXTERIOR ELEVATIONS.dwg

DELAWARE
DEPARTMENT OF TRANSPORTATION

ADDENDUMS / REVISIONS	

MIDDLETOWN CREW QUARTERS AND MAINTENANCE SHOP

CONTRACT	T201280103	BRIDGE NO.	
COUNTY	NEW CASTLE	DESIGNED BY: CJB	
		CHECKED BY: CJB	

CREW OPERATION BUILDING EXTERIOR ELEVATIONS

SHEET NO.	21
TOTAL SHTS.	54

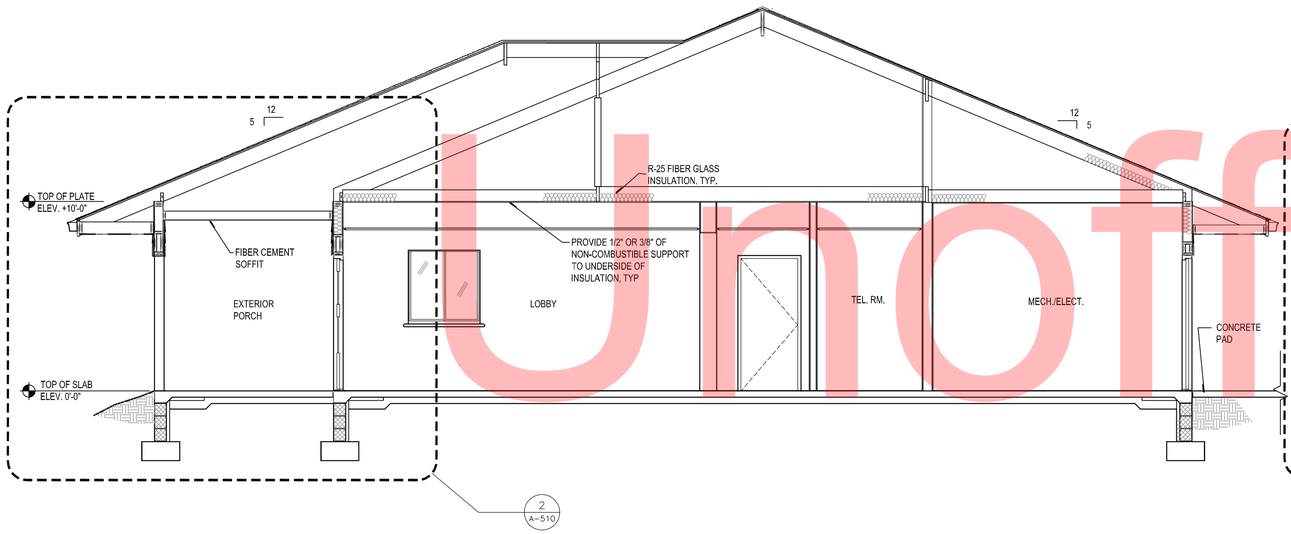

1 BUILDING SECTION
SCALE : 1/4"= 1'-0"

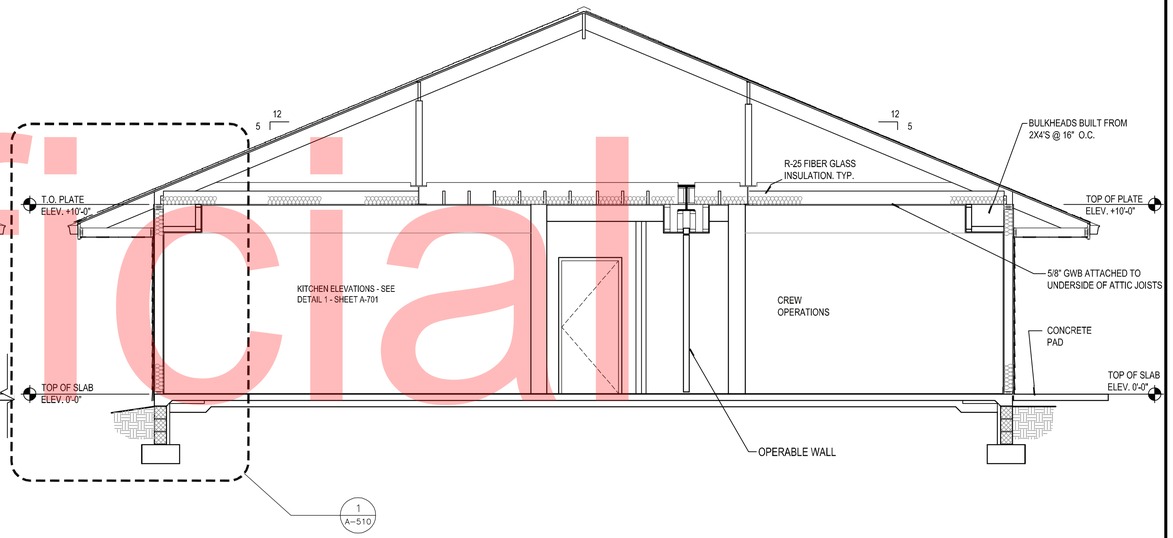

2 BUILDING SECTION
SCALE : 1/4"= 1'-0"

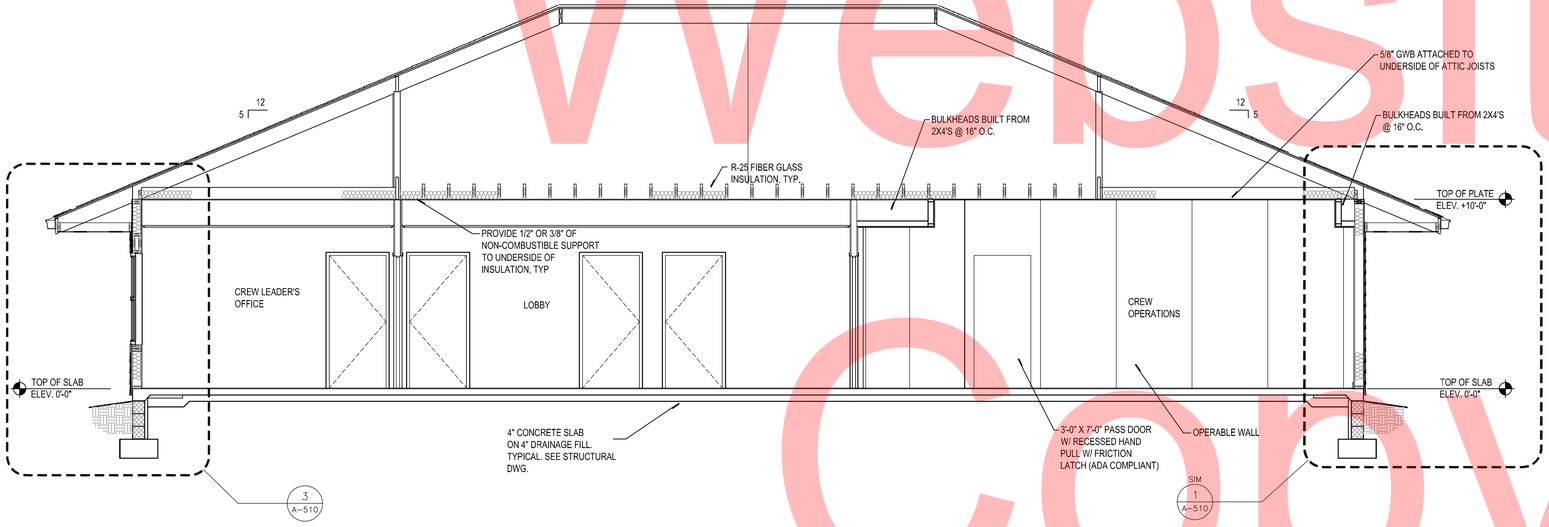

3 BUILDING SECTION
SCALE : 1/4"= 1'-0"

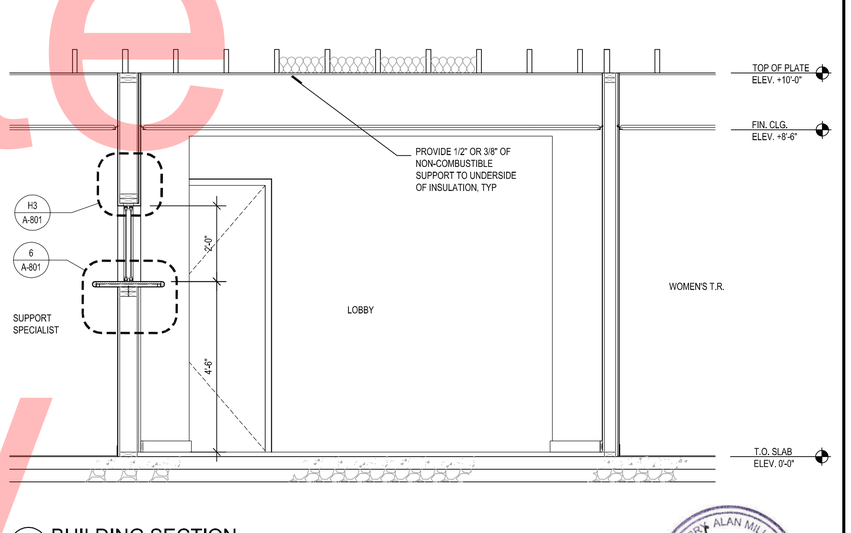

4 BUILDING SECTION
SCALE : 1/2"= 1'-0"

Unofficial Website Copy

BARRY ALAN MILLER
NO. 7377
STATE OF DELAWARE
REGISTERED ARCHITECT

A-501

$DATE $USER$
$FILE_SHEET$
O:\SMD\101552_001_DelDOT_Middletown_Yo\CADD\Arch\DelDOT Middletown_VA\Sheets\A-501 CREW OPERATION BUILDING BUILDING SECTIONS.dwg

DELAWARE
DEPARTMENT OF TRANSPORTATION

ADDENDUMS / REVISIONS	

MIDDLETOWN CREW QUARTERS AND MAINTENANCE SHOP

CONTRACT	BRIDGE NO.	
T201280103	DESIGNED BY:	CJB
COUNTY	CHECKED BY:	CJB
NEW CASTLE		

CREW OPERATION BUILDING
BUILDING SECTIONS

SHEET NO.
22
TOTAL SHTS.
54

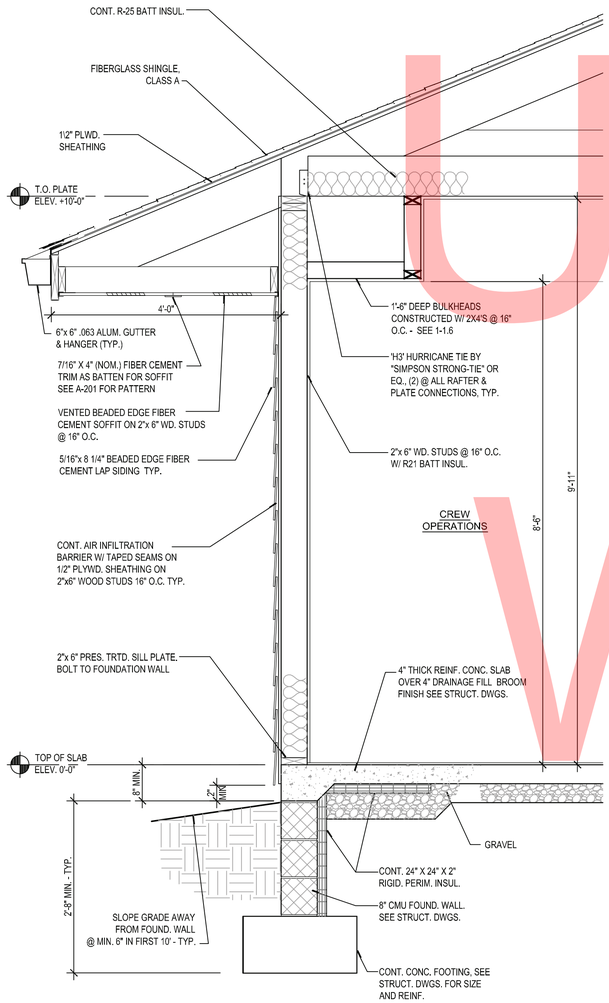

1 WALL SECTION
SCALE : 3/4"= 1'-0"

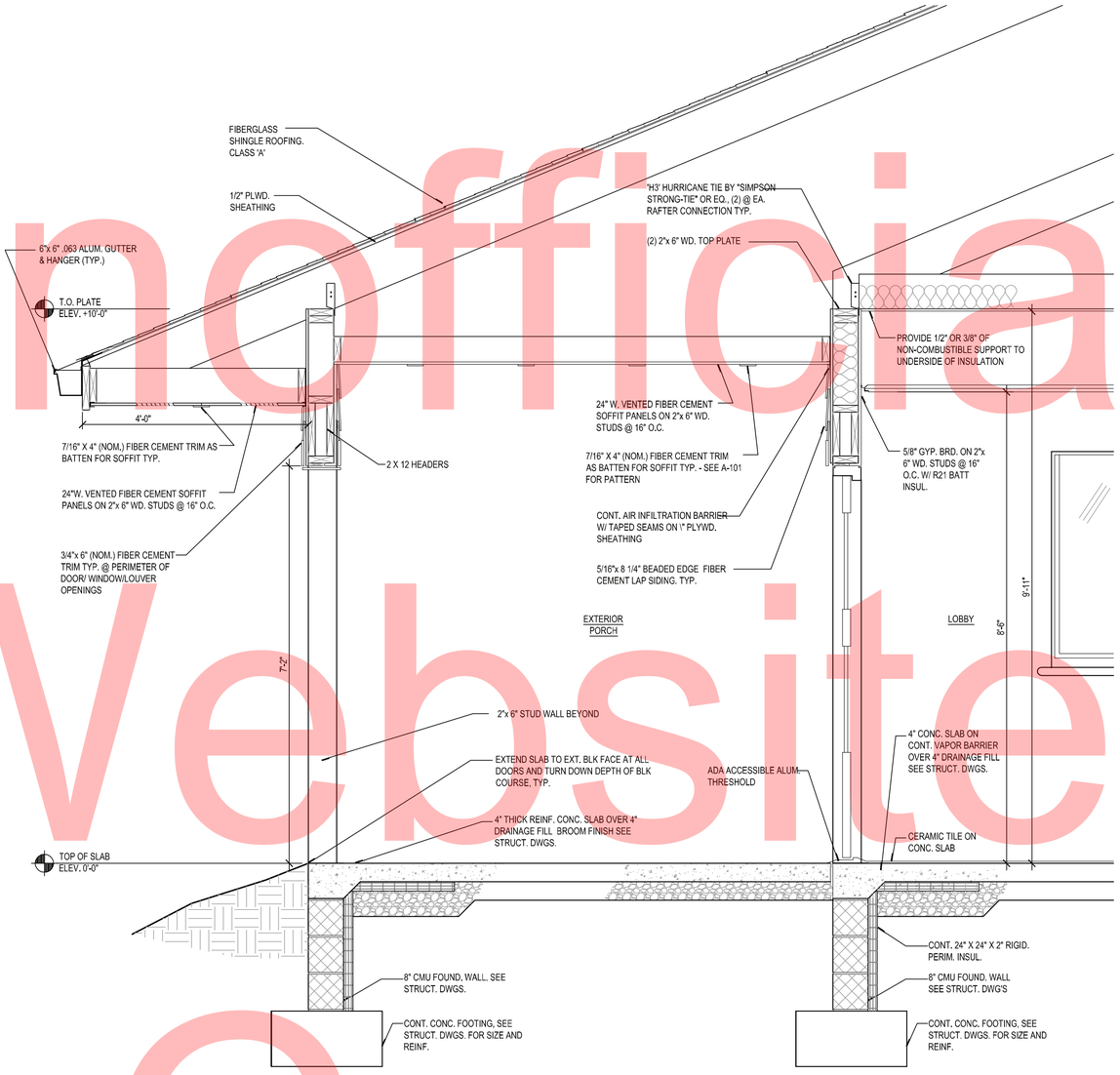

2 WALL SECTION
SCALE : 3/4"= 1'-0"

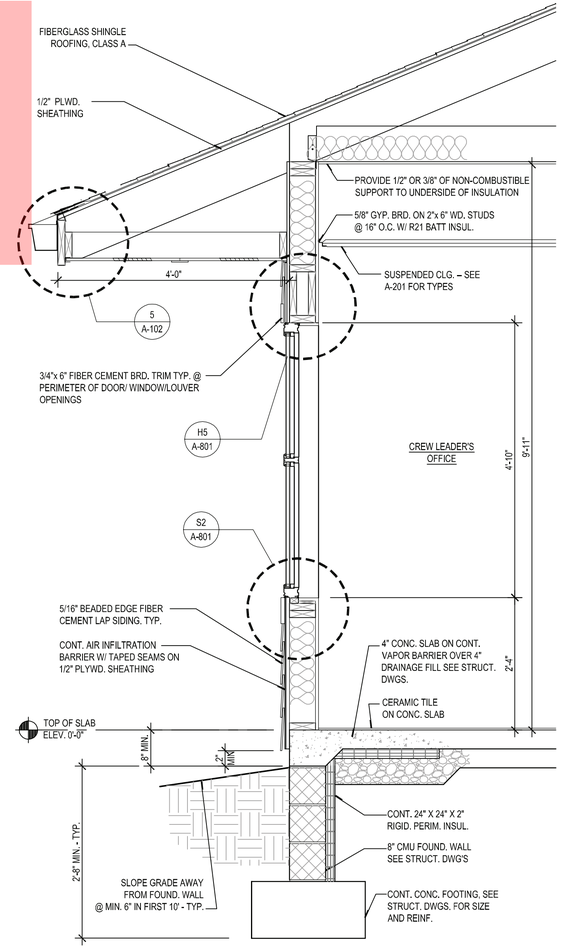

3 WALL SECTION
SCALE : 3/4"= 1'-0"

Unofficial Website Copy

BARRY ALAN MILLER NO. 7377 STATE OF DELAWARE REGISTERED ARCHITECT

A-510

O:\SMD\101552_001_DelDOT_Middletown_Yo\CADD\Arch\DelDOT Middletown_VA\Sheets\A-510 CREW OPERATION BUILDING WALL SECTIONS.dwg

$DATE_USER$ $FILE_SHEET$

DELAWARE DEPARTMENT OF TRANSPORTATION

ADDENDUMS / REVISIONS	

MIDDLETOWN CREW QUARTERS AND MAINTENANCE SHOP

CONTRACT	BRIDGE NO.	
T201280103	DESIGNED BY:	CJB
COUNTY	CHECKED BY:	CJB
NEW CASTLE		

CREW OPERATION BUILDING WALL SECTIONS

SHEET NO.
23
TOTAL SHTS.
54

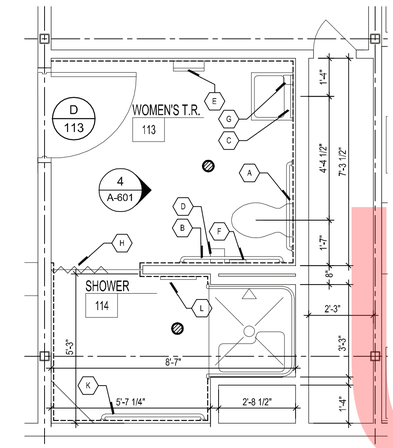

1 WOMENS TOILETROOM
3/8" = 1'-0"

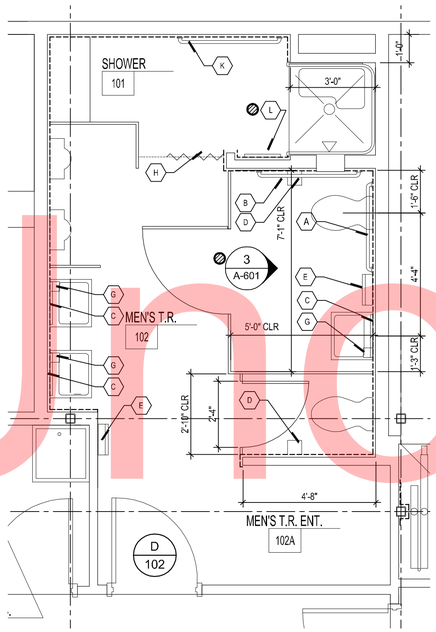

2 MENS TOILET ROOM
3/8" = 1'-0"

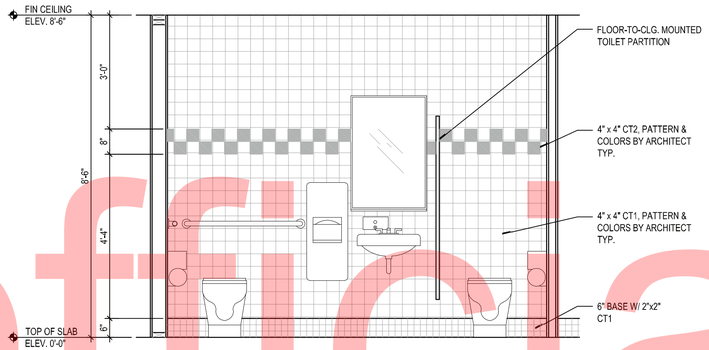

3 MENS TOILET ROOM ELEVATION
1/2"=1'-0"

4 WOMENS TOILETROOM ELEVATION
1/2" = 1'-0"

4 TYPICAL SECTION @ SHOWER BENCH
1/2" = 1'-0"

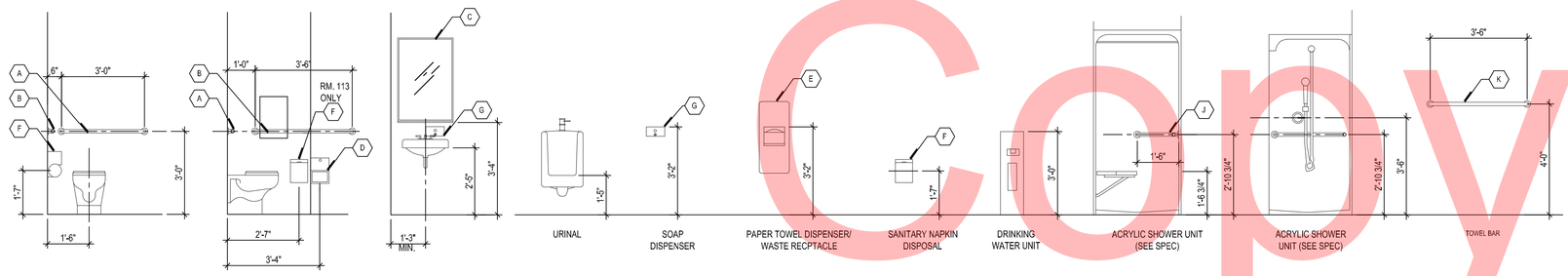

2 ELEVATION- TYPICAL ROILET ROOM ACCESSORY MOUNTING LOCATIONS
SCALE : 3/8" = 1'-0"

NOTE:
ALL EXPOSED SINK PIPES TO BE ENCASED
W/ REMOVABLE ADA COMPLIANT INSULATION

TOILET ACCESSORIES SCHEDULE

MARK	ITEM	MNT. HGT.	BOBRICK CATALOG NO.
A	1-1/2" GRAB BAR	36" AFF TO CENTERLINE	B-6806 X 36
B	1-1/2" GRAB BAR	36" AFF TO CENTERLINE	B-6806 X 42
C	MIRROR W/ STAINLESS STL. ANGLE FRAME, TEMPERED GLASS	40" AFF TO BOT. OF REFLECTIVE SURFACE	B-165 2436
D	TOILET PAPER DISPENSER	19" TO CENTERLINE	B-4288
E	PAPER TOWEL DISPENSER/WASTE RECEPTACLE, SURFACE MOUNTED	38" AFF TO BOT.	B-43699
F	SANITARY NAPKIN DISPOSAL	19" TO CENTERLINE	B-270
G	SOAP DISPENSER, SURFACE MOUNTED	38" AFF TO BOT.	B-2112
H	HEAVY DUTY SHOWER CURTIAN ROD, HOOKS & VINYL PRIVACY CURTAIN	78" AFF TO CENTERLINE	B-6107/ B-204-1/B-204-2
J	1-1/2" GRAB BAR	36" AFF TO CENTERLINE	BY SHOWER MANUF.
K	TOWEL BAR	48" AFF TO CENTERLINE	B-205-24
L	18" CLOTHES HOOK STRIP	60" AFF TO CENTERLINE	B-985

Unofficial Website Copy

BARRY ALAN MILLER
NO. 7377
STATE OF DELAWARE
REGISTERED ARCHITECT

A-601

Q:\SMD\1011552_001_DelDOT_Middletown_Yd\CADD\Arch\DelDOT Middletown_V\AISheets\A-601 TOILET ROOM PLANS, ELEVATIONS AND DETAILS.dwg

DELAWARE
DEPARTMENT OF TRANSPORTATION

ADDENDUMS / REVISIONS

MIDDLETOWN CREW QUARTERS AND MAINTENANCE SHOP

CONTRACT	BRIDGE NO.	
T201280103	DESIGNED BY:	CJB
COUNTY	CHECKED BY:	CJB
NEW CASTLE		

TOILET ROOM PLANS, ELEVATIONS AND DETAILS

SHEET NO.
24
TOTAL SHTS.
54

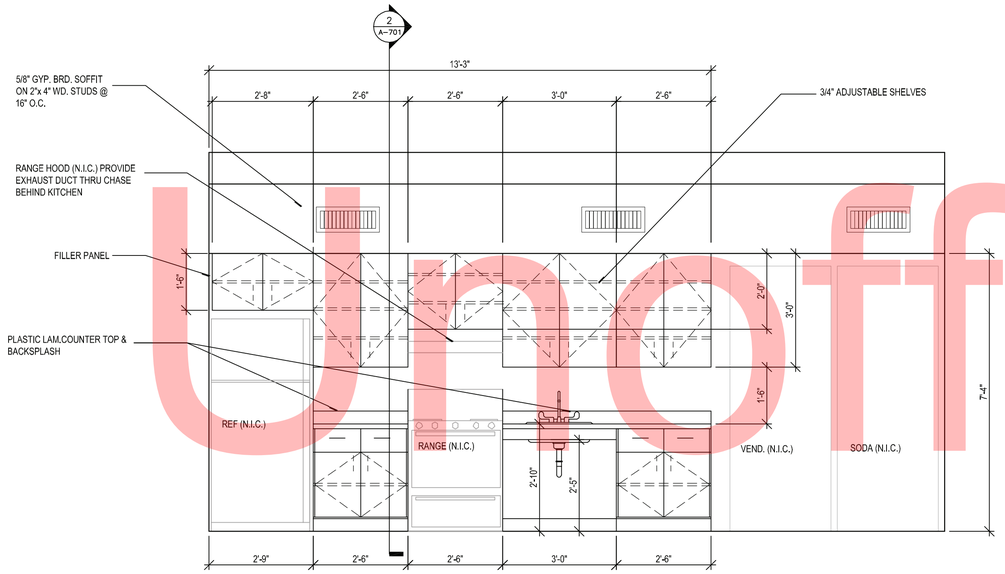

1 ELEVATION- CABINETS IN CREW OPERATIONS ROOM

SCALE : 1/2"= 1'-0"

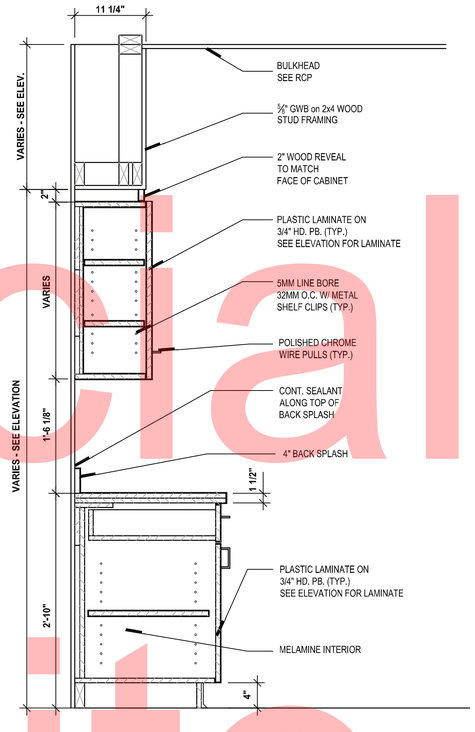

2 SECTION-

SCALE : 1"= 1'-0"

Unofficial Website Copy

BARRY ALAN MILLER NO. 7377 STATE OF DELAWARE REGISTERED ARCHITECT

A-701

Q:\SMD\101552_001_DelDOT_Middletown_Yo\CADD\Arch\DelDOT Middletown_VA\Sheets\A-701 CREW OPERATION BUILDING INTERIOR ELEVATIONS.dwg

DELAWARE DEPARTMENT OF TRANSPORTATION

ADDENDUMS / REVISIONS	

MIDDLETOWN CREW QUARTERS AND MAINTENANCE SHOP

CONTRACT	BRIDGE NO.		SHEET NO.
T201280103			25
COUNTY	DESIGNED BY: CJB	CREW OPERATION BUILDING INTERIOR ELEVATIONS	TOTAL SHTS.
NEW CASTLE	CHECKED BY: CJB		54

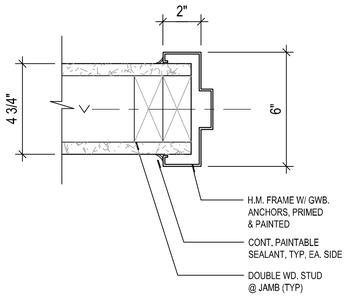

J1 H1 DETAIL- TYP. 2"x 4" GWB PARTITION
SCALE : 3"= 1'-0"

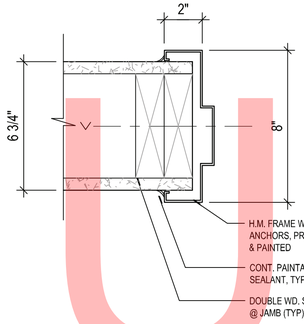

J2 H2 DETAIL- TYP. 2"x 6" GWB PARTITION
SCALE : 3"= 1'-0"

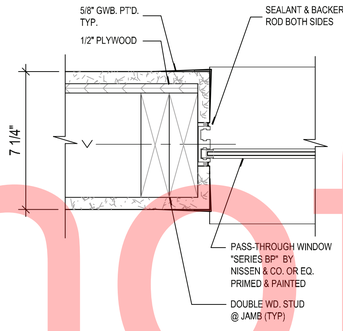

J3 DETAIL- @ PASS-THROUGH WINDOW
SCALE : 3"= 1'-0"

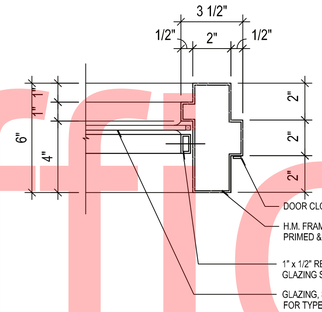

J4 DETAIL-
SCALE : 3"= 1'-0"

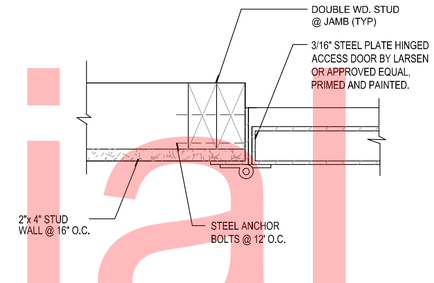

J5 DETAIL- ACCESS DOOR AT 112B
SCALE : 3"= 1'-0"

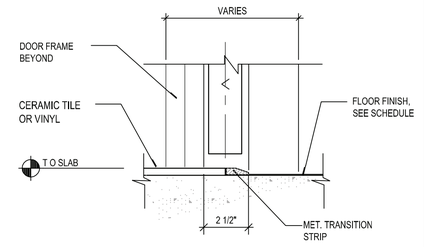

S1 DETAIL- TYP. DOOR SILL
SCALE : 3"= 1'-0"

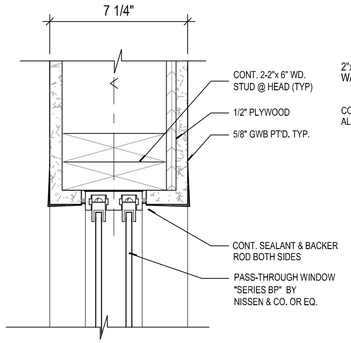

H3 DETAIL- @ PASS-THROUGH WINDOW
SCALE : 3"= 1'-0"

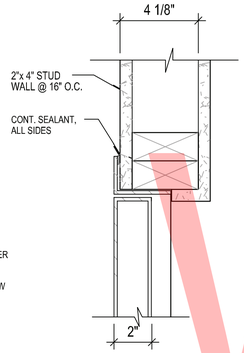

H4 DETAIL- ACCESS DOOR
SCALE : 3"= 1'-0"

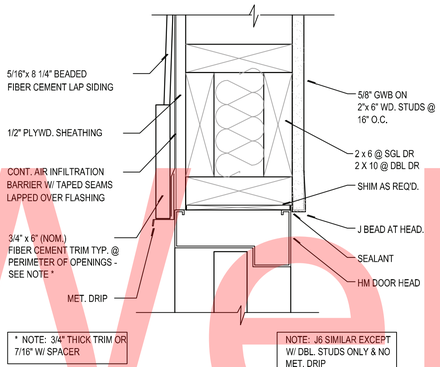

J6 H5 DETAIL- TYP. EXTERIOR DOOR
SCALE : 3"= 1'-0"

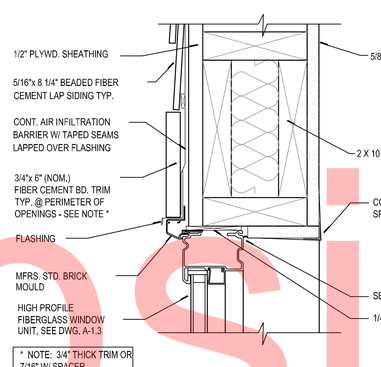

H6 DETAIL- TYP. EXTERIOR WINDOW
SCALE : 3"= 1'-0"

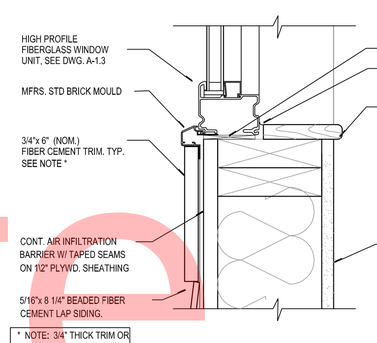

S2 DETAIL- TYP. EXTERIOR WINDOW
SCALE : 3"= 1'-0"

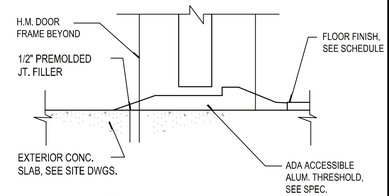

S3 DETAIL- TYP. EXTERIOR SILL
SCALE : 3"= 1'-0"

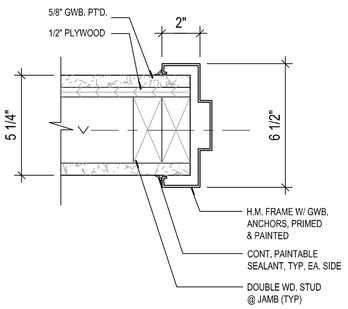

J7 H7 DETAIL- 2"x 4" GWB PARTITION AT SHEAR WALL
SCALE : 3"= 1'-0"

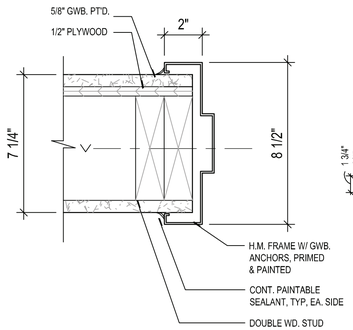

J8 H8 DETAIL- 2"x 6" GWB PARTITION AT SHEAR WALL
SCALE : 3"= 1'-0"

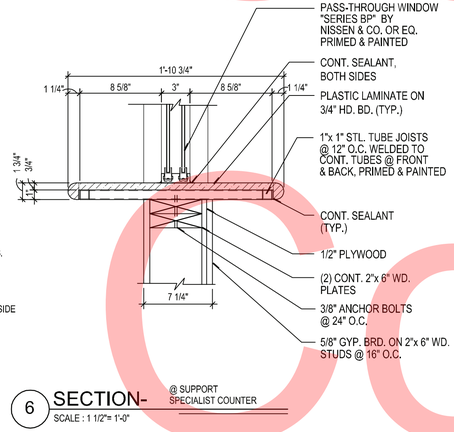

6 SECTION- @ SUPPORT SPECIALIST COUNTER
SCALE : 1 1/2"= 1'-0"

BARRY ALAN MILLER NO. 7377 STATE OF DELAWARE REGISTERED ARCHITECT

A-801

Unofficial Website Copy

O:\SMD\101552_001_DelDOT_Middletown_Yo\CADD\Arch\DelDOT Middletown_VA\Sheets\A-801 CREW OPERATION BUILDING - SECTIONS & DETAILS.dwg
$DATE_USER$
$FILE_SHEET$

DELAWARE
DEPARTMENT OF TRANSPORTATION

ADDENDUMS / REVISIONS	

MIDDLETOWN CREW QUARTERS AND MAINTENANCE SHOP

CONTRACT	T201280103	BRIDGE NO.	
COUNTY	NEW CASTLE	DESIGNED BY: CJB	
		CHECKED BY: CJB	

CREW OPERATION BUILDING - SECTIONS & DETAILS

SHEET NO.	26
TOTAL SHTS.	54

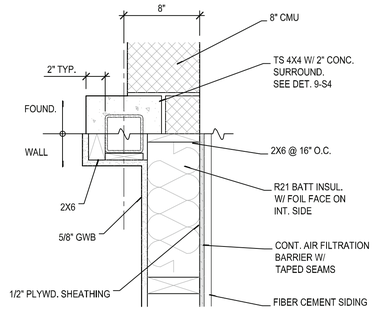

1 DETAIL — TYP. EXT. COL.
SCALE : 1-1/2"= 1'-0"

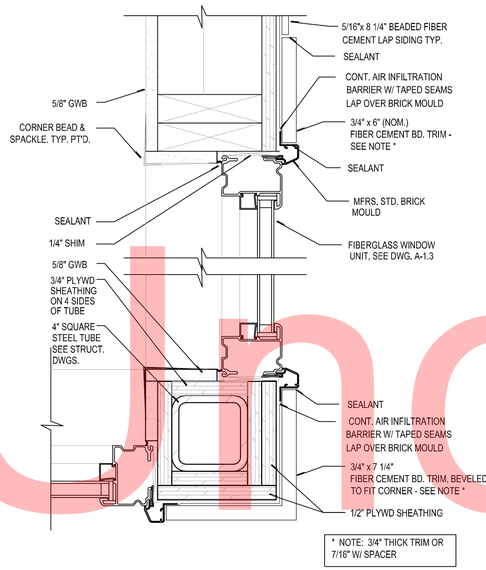

2 DETAIL — TYP. EXT. CORNER @ WINDOW
SCALE : 3"= 1'-0"

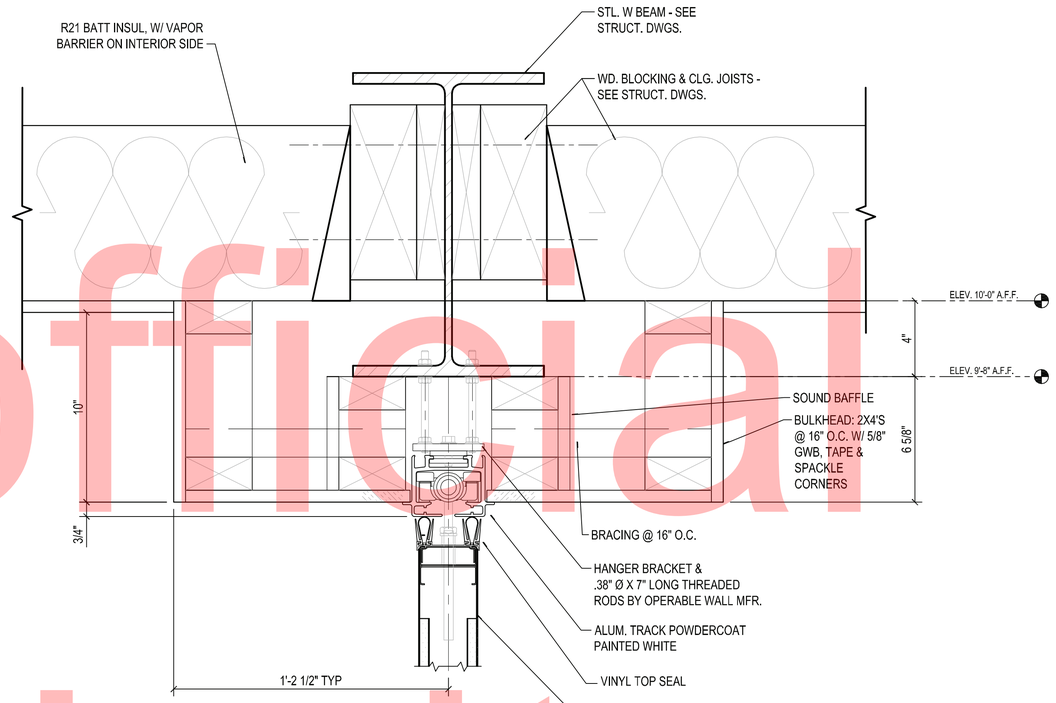

3 SECTION DETAIL — HEAD @ OPERABLE WALL
SCALE : 3"= 1'-0"

Unofficial Website Copy

A-802

DELAWARE
DEPARTMENT OF TRANSPORTATION

ADDENDUMS / REVISIONS	

MIDDLETOWN CREW QUARTERS AND MAINTENANCE SHOP

CONTRACT	BRIDGE NO.	
T201280103	DESIGNED BY:	CJB
COUNTY	CHECKED BY:	CJB
NEW CASTLE		

CREW OPERATION BUILDING - DETAILS

SHEET NO.
27
TOTAL SHTS.
54

$DATE_USER$
$FILE_SHEET$
O:\SMD\101552_001_DelDOT_Middletown_Yo\CADD\Arch\DelDOT Middletown_VA\Sheets\A-802 CREW OPERATION BUILDING - DETAILS.dwg

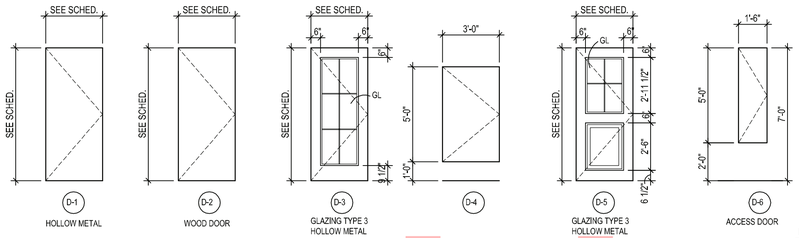

DOOR TYPES

SCALE : 1/4" = 1'-0"

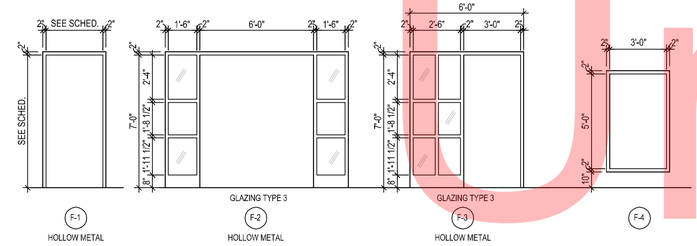

FRAME TYPES

SCALE : 1/4" = 1'-0"

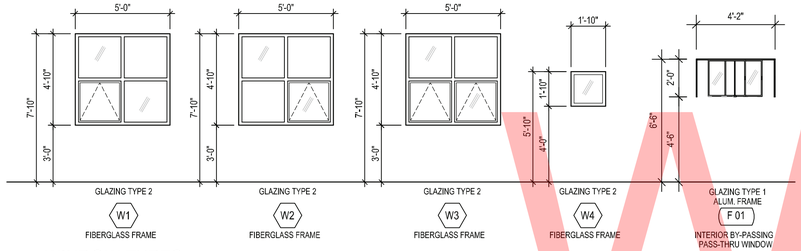

WINDOW TYPES

SCALE : 1/4" = 1'-0"

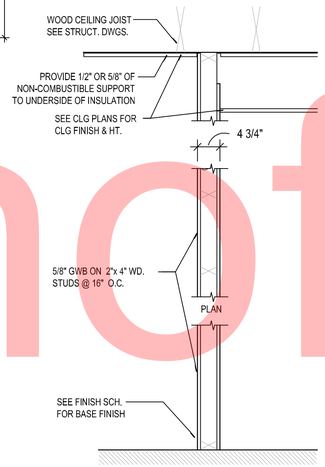

WT1.1 2"x 4" WD. STUDS @ 16" O.C. W/ 5/8" GWB BOTH SIDES.
HT. OF STUDS: 10'-0".
WALL THICKNESS: 4 3/4"

WT1.2 SAME AS WT1.1 W/ ACOUSTIC BATT INSUL.
FULL HT.

WT1.3 2"x 4" WD. STUDS @ 16" O.C. W/ 5/8" GWB ONE SIDE
HT. OF STUDS: 10'-0"
WALL THICKNESS: 4 1/8"

WT1.4 NOT USED

WT1.5 2"x 4" WD. STUDS @ 16" O.C.
SHOWER WALL ONE SIDE, NOTHING ON OTHER SIDE
HT. OF STUDS: 10'-0"
WALL THICKNESS: 3 1/2"

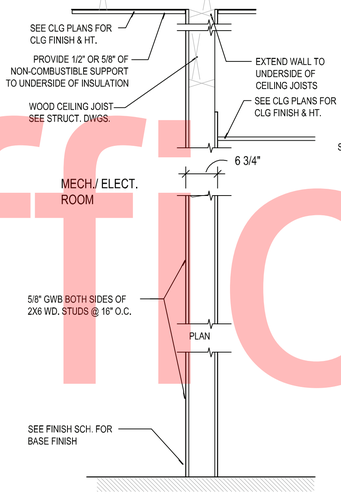

WT2.1 2"x 6" WD. STUDS @ 16" O.C. W/
5/8" GWB BOTH SIDES
HT. OF STUDS: 10'-0"
WALL THICKNESS: 6 3/4"

WT2.2 NOT USED

WT2.3 2"x 6" WD. STUDS @ 16" O.C. W/
5/8" GWB BOTH SIDES
HT. OF STUDS: 10'-0"
WALL THICKNESS: 6 3/4"

WT2.4 2"x 6" WD. STUDS @ 16" O.C. W/
SHOWER WALL ONE SIDE, NOTHING ON OTHER SIDE
HT. OF STUDS: 10'-0"
WALL THICKNESS: 6 3/4"

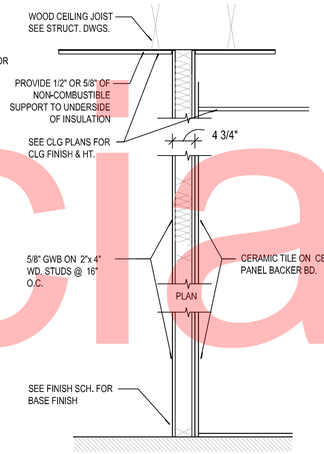

WT3.1 2"x 4" WD. STUDS @ 16" O.C., 5/8" GWB ONE SIDE, ON
OTHER SIDE 1/4" CERAMIC TILE, 1/2" CEMENT PANEL
BACKER BD.
HT. OF STUDS: 10'-0".
WALL THICKNESS: 5"

WT3.2 2" X 4" WD. STUDS @ 16" OC W/ CEMENT PANEL BACKER
BD. & CERAMIC TILE, BOTH SIDES. NO BATTS
HT. OF STUDS: 10'-0"
WALL THICKNESS: 5 1/4"

WT3.3 NOT USED

WT3.4 2" X 4" WD. STUDS @ 16" OC W/ CEMENT PANEL BACKER
BD. & CERAMIC TILE ON ONE SIDE & NOTHING ON THE
OTHER SIDE.
HT. OF STUDS: 10'-0"
WALL THICKNESS: 4 1/4"

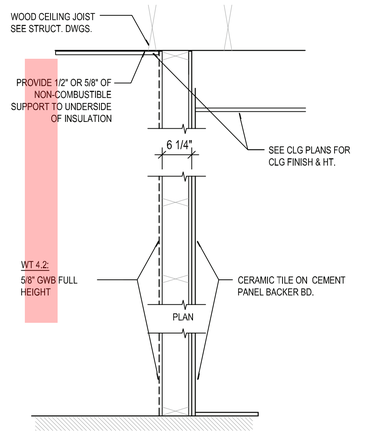

WT4.1 2"x 6" WD. STUDS @ 16" O.C. W/
CEMENT PANEL BACKER BD. & CERAMIC TILE ON ONE SIDE &
NOTHING ON THE OTHER SIDE.
HT. OF WALL: 10'-0".
WALL THICKNESS: 6 1/2"

WT4.2 2"x 6" WD. STUDS @ 16" O.C., CEMENT PANEL BACKER BD. & 1/4"
CERAMIC TILE ON ONE SIDE & 5/8" GWB ON THE OTHER SIDE.
HT. OF WALL: 10'-0".
WALL THICKNESS: 7"

WT4.3 2"x 6" WD. STUDS @ 16" O.C. W/
5/8" GWB ONE SIDE & CERAMIC TILE ON 1/2" CEMENT
PANEL BACKER BD. ON OTHER SIDE.
HT. OF WALL: 10'-0".
WALL THICKNESS: 7 1/4"

WT4.4 2"x 6" WD. STUDS @ 16" O.C. W/
CERAMIC TILE ON 1/2" CEMENT PANEL BACKER BD. ON
BOTH SIDES
HT. OF WALL: 10'-0".
WALL THICKNESS: 7 1/4"

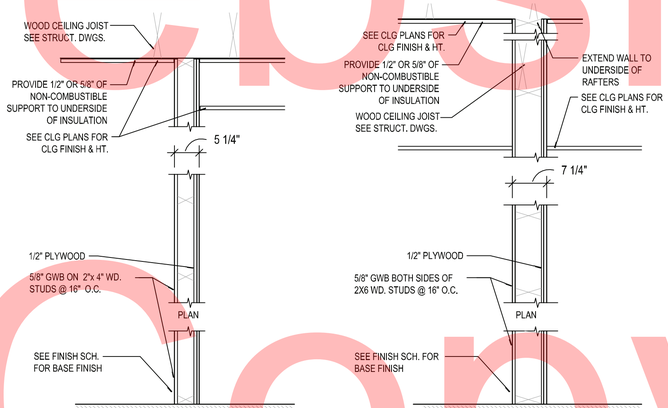

WT5.1 2"x 4" WD. STUDS @ 16" O.C. W/ 5/8" GWB BOTH SIDES.
1/2" PLYWOOD ONE SIDE
HT. OF STUDS: 10'-0".
WALL THICKNESS: 5 1/4"

WT5.2 SAME AS WT1.1 W/ ACOUSTIC BATT INSUL.
FULL HT.

WT5.3 2"x 4" WD. STUDS @ 16" O.C. W/ 5/8" GWB AND
1/2" PLYWOOD ONE SIDE
HT. OF STUDS: 10'-0"
WALL THICKNESS: 4 5/8"

WT6.1 2"x 6" WD. STUDS @ 16" O.C. W/
5/8" GWB BOTH SIDES
1/2" PLYWOOD LOBBY SIDE
HT. OF STUDS: 10'-0"
WALL THICKNESS: 7 1/4"

2 WALL TYPES

SCALE : 3/4" = 1'-0"

GLAZING SCHEDULE

TYPE NO.	DESCRIPTION
1	1/4" CLEAR GLASS, FULLY TEMPERED
2	1" INSULATED UNIT W/ 1/4" CLEAR INNER LITE, 1/2" ARGON GAS FILLED, & 1/4"-"LOW E" GLAZING
3	1/4" CLEAR LEXAN - 9034

DOOR SCHEDULE-

EXTERIOR DOOR	MARK	SIZE		TYPE				DETAILS			GLAZING TYPE	HARDWARE SET	FIRE RATING	REMARKS
				DOOR		FRAME								
		WIDTH X HEIGHT	THK.	TYPE	MTL.	TYPE	MTL.	H	J	S				
●	100A	(2) 3-0 x 7-0	1-3/4	D5	16 GA. HM.	F1	14 GA. HM.	H5	J6	S3	3	H12		
	100B	1'-6"x 5'-0"	-	D6	-	-	-	H4	J5	-	-	-		REFER TO SECTION 083113
	100C	3-0 x 7-0	1-3/4	D2	WD	F1	16 GA. HM.	H1	J1	-	-	H1		
●	100D	3-0 x 7-0	1-3/4	D3	16 GA. HM.	F3	14 GA. HM.	H5	J6	S3	3	H11		
	102	3-0 x 7-0	1-3/4	D2	WD	F1	16 GA. HM.	H7	J7	-	-	H3		
	103	3-0 x 7-0	1-3/4	D2	WD	F1	16 GA. HM.	H1	J1	S1	-	H2		
	104	3-0 x 7-0	1-3/4	D2	WD	F1	16 GA. HM.	H1	J1	S1	-	H2		
●	105A	3-0 x 7-0	1-3/4	D1	16 GA. HM.	F1	14 GA. HM.	H5	J6	S3	-	H11		
	105B	3-0 x 7-0	1-3/4	D1	18 GA. HM	F1	16 GA. HM.	H2	J2	S1	-	H2		
●	106A	3-0 x 7-0	1-3/4	D5	16 GA. HM.	F1	14 GA. HM.	H5	J6	S3	3	H11		
	106B	3-0 x 7-0	1-3/4	D2	WD	F1	16 GA. HM.	H1	J1	-	-	H1		
	107	(2) 3-0 x 7-0	1-3/4	D2	WD	F1	16 GA. HM.	H1	J1	-	-	H4		
●	108	(2) 3-0 x 7-0	1-3/4	D3	16 GA. HM.	F2	14 GA. HM.	H5	J4/ J6	S3	3	H12		
	109	3-0 x 7-0	1-3/4	D2	WD	F1	16 GA. HM.	H7	J7	-	-	H1		
	111	3-0 x 7-0	1-3/4	D2	WD	F1	16 GA. HM.	H8	J8	-	-	H1		
	112A	3-0 x 7-0	1-3/4	D2	WD	F1	16 GA. HM.	H1	J1	S1	-	H2		
	112B	1'-6"x 5'-0"	-	D6	-	-	-	H4	J5	-	-	-		REFER TO SECTION 083113
	113	3-0 x 7-0	1-3/4	D2	WD	F1	16 GA. HM.	H2	J2	-	-	H3		

BARRY ALAN MILLER NO. 7377 STATE OF DELAWARE REGISTERED ARCHITECT

A-901

Unofficial Website Copy

Unofficial Website Copy

GENERAL NOTES

GENERAL

THE STRUCTURE IS DESIGNED TO BE SELF-SUPPORTING AND STABLE AFTER THE BUILDING IS FULLY COMPLETED. IT IS SOLELY THE CONTRACTOR'S RESPONSIBILITY TO DETERMINE ERECTION PROCEDURES AND SEQUENCE, AND TO ENSURE THE STABILITY OF THE BUILDING AND ITS COMPONENT PARTS, AND THE ADEQUACY OF TEMPORARY OR INCOMPLETE CONNECTIONS, DURING ERECTION. THIS INCLUDES THE ADDITION OF ANY SHORING, TEMPORARY GUYS, BRACING OR TIEDOWNS THAT MIGHT BE NECESSARY. SUCH MATERIAL IS NOT SHOWN ON THE DRAWINGS. IF APPLIED, THEY SHALL BE REMOVED AS CONDITIONS PERMIT AND SHALL REMAIN THE CONTRACTOR'S PROPERTY. THE ENGINEER HAS NO EXPERTISE IN, AND TAKES NO RESPONSIBILITY FOR, CONSTRUCTION MEANS AND METHODS OR JOB SITE SAFETY DURING CONSTRUCTION. PROCESSING AND/OR APPROVING SUBMITTALS MADE BY THE CONTRACTOR WHICH MAY CONTAIN INFORMATION RELATED TO CONSTRUCTION METHODS OR SAFETY ISSUES, OR PARTICIPATION IN MEETINGS WHERE SUCH ISSUES MIGHT BE DISCUSSED, SHALL NOT BE CONSTRUED AS VOLUNTARY ASSUMPTION BY THE ENGINEER OR ANY RESPONSIBILITY FOR SAFETY PROCEDURES. IT IS SOLELY THE RESPONSIBILITY OF EACH CONTRACTOR TO FOLLOW ALL APPLICABLE SAFETY CODES AND REGULATIONS DURING ALL PHASE OF CONSTRUCTION. THE ENGINEER IS NOT ENGAGED IN, AND DOES NOT SUPERVISE CONSTRUCTION.

UTILITIES

1. CONTRACTOR IS TO VERIFY LOCATIONS OF ALL UNDERGROUND UTILITIES PRIOR TO PERFORMING ANY SUBSURFACE OR EXCAVATION WORK.

2. PROTECTION: PROTECT EXISTING UTILITIES TO REMAIN DURING EXCAVATION, TO PREVENT DAMAGE.

CONTROLLED FILL AND BACKFILL:

SAMPLES OF ALL MATERIALS THAT THE CONTRACTOR PROPOSES TO USE FOR COMPACTED FILL SHALL BE APPROVED BY THE GEOTECHNICAL ENGINEER AND STRUCTURAL ENGINEER. COMPACTED FILL SHALL CONSIST OF LOCAL MATERIAL FREE OF DELETERIOUS MATTER AND CLASSIFIED CL, SC, GC, GM, OR SM PER ASTM D-2487. THE CONTROL OF THE MOISTURE FOR PLACING THE FILL WILL BE BASED ON THE RESULTS OF COMPACTION TESTS PER ASTM D-1557. ALL COMPACTED FILL SHALL HAVE A DENSITY OF AT LEAST 95% FOR COHESIONLESS SOILS AND 90% FOR COHESIVE SOILS OF THE MODIFIED PROCTOR MAXIMUM DRY DENSITY AS DETERMINED BY ASTM D-1557.

GROUNDWATER:

THE DEPTH TO GROUNDWATER WAS NOTED DURING THE DRILLING OPERATIONS AND THE GROUNDWATER LEVELS WERE MEASURED AT THE COMPLETION OF DRILLING. THE GROUNDWATER WAS NOT ENCOUNTERED FOR ALL THE BORINGS.

GROUNDCOVER:

THE EXISTING SURFACE DIVIDED TO TWO CATEGORY GRASS AREA INDICATED 12- INCH TOP SOIL, AND PAVEMENT AREA INDICATED 2" TO 8" INCHES IN THICKNESS OF ASPHALT OR 2" INCHES OF CONCRETE 2" IN THICKNESS OF CRUSHED RUN FOR ALL THE BORINGS.

PRIOR TO PLACEMENT OF ANY FILLS, THE SITE SHALL BE STRIPPED OF ALL TOPSOIL, VEGETATION, ROCKS, AND ORGANIC MATERIALS AND THE EXPOSED SUBGRADE SHALL BE COMPACTED IN PLACE TO A CONFIRMED DENSITY OF 95% OF THE MODIFIED PROCTOR MAXIMUM DRY DENSITY AS DETERMINED BY ASTM D-1557.

FILL MATERIAL SHALL BE PLACED IN LOOSE LIFTS NOT EXCEEDING 8" IN THICKNESS AND SHALL BE MIXED, SPREAD AND PLACED IN SUCH A WAY AS TO PRODUCE A UNIFORM THICKNESS OF MATERIAL AFTER PLACING. EACH LAYER OF FILL SHALL BE COMPACTED WITH A MINIMUM OF 6 COMPLETE PASSES ON ALL PORTIONS OF THE SURFACE OF EACH LIFT OF FILL BY RUBBER-TIRED ROLLERS, SHEEPS-FOOT ROLLERS OR OTHER MECHANICAL EQUIPMENT APPROVED BY THE GEOTECHNICAL ENGINEER AND THE STRUCTURAL ENGINEER. COMPACTED FILL PLACED WITHIN 4 FEET OF STRUCTURES AND PIPES SHOULD BE PLACED IN HORIZONTAL LIFTS NOT TO EXCEED 4 INCHES THICKNESS AND COMPACTED WITH HAND TAMPERS OR LIGHT COMPACTION EQUIPMENT TO THE SAME STANDARD. HEAVY COMPACTION EQUIPMENT SHOULD NOT BE ALLOWED WITHIN 4 FEET OF STRUCTURES UNLESS A MINIMUM 2 FEET DEPTH OF FILL COVERS THE STRUCTURES.

WHENEVER IN PLACE DENSITIES ARE FOUND BELOW ACCEPTABLE LIMITS, ADDITIONAL ROLLING TO PRODUCE THE SPECIFIED DENSITIES SHALL BE REQUIRED.

THE CONTRACTOR SHALL TAKE ALL MEASURES REQUIRED TO PROVIDE FOR FREE DRAINAGE OF THE SITE AND TO PREVENT PONDING OF WATER. SEDIMENT CONTROL MEASURES SHALL BE MAINTAINED AT ALL TIMES.

PLACING OF FILL CONTAINING ORGANIC MATTER; PLACING OF FILL WITH MOISTURE CONTENT TOO HIGH OR TOO LOW FOR PROPER COMPACTION; PLACING OF FILL WHEN FREE WATER IS STANDING ON THE EXISTING FILL SURFACE; PLACING OF FILL IN A FROZEN CONDITION OR ON TOP OF FROZEN MATTER WILL NOT BE PERMITTED.

THE GEOTECHNICAL ENGINEER SHALL SUPERVISE THE PLACING OF THE COMPACTED FILL AND ALL THE MATERIAL AND EQUIPMENT USED FOR THIS PURPOSE AND SHALL MAKE SUCH SOILS TESTS AS MAY BE REQUIRED FOR THE COMPLETION OF THE WORK PERFORMING AT LEAST 6 IN PLACE DENSITY TESTS DURING EACH EIGHT HOUR SHIFT.

DESIGN CODES AND SPECIFICATIONS:

1. 2009 INTERNATIONAL BUILDING CODE (IBC)
2. AMERICAN CONCRETE INSTITUTE (ACI)
3. AMERICAN INSTITUTE OF STEEL CONSTRUCTION (AISC)
4. NATIONAL DESIGN SPECIFICATIONS FOR WOOD (NDS 2012)

DESIGN DATA:

Fy = 36,000 PSI/50,000 PSI

ROOF LIVE LOAD IBC 2009

ROOF LIVE LOAD = 30 PSF

ROOF SNOW LOAD ASCE 7-02

1. GROUND SNOW LOAD PG = 25 PSF
2. SNOW EXPOSURE FACTOR Ce = 1.0
3. SNOW LOAD IMPORTANCE FACTOR I = 1.0
4. THERMAL FACTOR Ct = 1.0
5. FLAT-ROOF SNOW LOAD Pf = 17.5 PSF

ROOF DEAD LOADS

ROOF DEAD LOAD = 15 PSF

EARTHQUAKE LOAD IBC-2009

1. SEISMIC OCCUPANCY CATEGORY = II, IE = I.0
2. Ss = 0.20g , S1 = 0.046g
3. SITE CLASS = D
4. SDS = 0.213g, SDI = 0.074g
5. SEISMIC DESIGN CATEGORY B
6. LIGHT FRAME WALLS WITH SHEAR PANELS-ALL OTHER MATERIALS
7. DESIGN BASE SHEAR = 0.107W
8. Cs =0.107
9. RESPONSE MODIFICATION FACTOR R = 3.0
10. EQUIVALENT LATERAL FORCE DESIGN METHOD
11. LONG PERIOD TRANSITION PERIOD (TL) ASCE 7 MAP=6
12. FUNDAMENTAL PERIOD (T)=0.175 SEC

WIND LOAD ASCE 7-02

1. BASIC WIND SPEED = 100 MPH
2. BUILDING CATEGORY = II
3. IMPORTANCE FACTOR = 1.15
4. WIND EXPOSURE = B
5. GUST FACTOR: G = 0.85
6. INTERNAL PRESSURE COEFFICIENT = ± 0.18
7. WIND TOPOGRAPHIC FACTOR (Kzt) = 1.0
8. COMPONENTS AND CLADDING = AS FOLLOWS:
9. BASE PRESSURE (gh)=17.5 PSF COMPONENTS AND CLADDING

ROOF	SURFACE PRESSURE (psf)		
AREA	10 SF	50 SF	100 SF
NEGATIVE ZONE 1	-18.9 PSF	-17.7 PSF	-17.2 PSF
NEGATIVE ZONE 2	-28.0 PSF	-26.8 PSF	-24.2 PSF
NEGATIVE ZONE 3	-33.0 PSF	-26.8 PSF	-24.2 PSF
POSITIVE ALL ZONES	+11.9 PSF	+10.0 PSF	+10.0 PSF
OVERHANG ZONE 2	-38.6 PSF	-38.6 PSF	-38.6 PSF
OVERHANG ZONE 2	-38.6 PSF	-38.6 PSF	-38.6 PSF

COMPONENTS AND CLADDING

WALLS	SURFACE PRESSURE (psf)		
AREA	10 SF	100 SF	500 SF
NEGATIVE ZONE 4	-22.4 PSF	-19.3 PSF	-17.2 PSF
NEGATIVE ZONE 5	-27.7 PSF	-21.5 PSF	-17.2 PSF
POSITIVE ZONE 4 & 5	+18.0 PSF	+15.3 PSF	+15.4 PSF

FOUNDATION:

1. ALL FOUNDATIONS SHALL BEAR ON OVER UNDISTURBED SOIL WITH ALLOWABLE BEARING CAPACITY SPECIFIED.

2. CONCRETE SHALL NOT BE POURED ON FROZEN GROUND.

3. FILL ALL VOIDS AND REPLACE DISTURBED SOIL WITH LEAN CONCRETE.

FOUNDATIONS-SPREAD FOOTINGS:

BOTTOM OF ALL FOOTINGS SHALL BE A MINIMUM OF 4'-0" BELOW ORIGINAL GRADE OR PLACED IN APPROVED COMPACTED FILL. BOTTOM OF ALL EXTERIOR FOOTINGS SHALL BE A MINIMUM OF 3'-0" BELOW FINISHED GRADE. A SOIL BEARING CAPACITY AS INDICATED BELOW WAS USED IN THE FOUNDATION DESIGN, AND MUST BE FIELD VERIFIED BY A REGISTERED GEOTECHNICAL ENGINEER PRIOR TO PLACEMENT OF THE FOUNDATIONS. IF SOIL OF THIS BEARING CAPACITY IS NOT ENCOUNTERED AT THE ELEVATIONS INDICATED ON THE CONTRACT DRAWINGS, FOOTINGS SHALL BE LOWERED OR INCREASED IN SIZE AS DIRECTED BY THE STRUCTURAL ENGINEER. ELEVATIONS SHOWN ON PLAN ARE TO THE BOTTOM OF THE FOOTINGS.

BEARING CAPACITY:

BUILDING: 4,000 PSF   MODULUS OF SUBGRADE REACTION (K) FOR SLAB-ON-GRADE: 200 POUNDS PER CUBIC INCH

GEOTECHNICAL REPORT:

A GEOTECHNICAL INVESTIGATION AND REPORT DATED JANUARY 23, 2012 HAS BEEN PREPARED BY DeLDOT AND SHALL BE CONSIDERED PART OF THE PROJECT DOCUMENTS. IF DIFFERENCES IN REQUIREMENTS BETWEEN THE GEOTECHNICAL REPORT AND THESE DRAWINGS EXIST, THE MORE STRINGENT REQUIREMENT SHALL APPLY. THE GEOTECHNICAL REPORT IS AVAILABLE FROM DeLDOT FOR THE CONTRACTORS USE. THE GEOTECHNICAL REPORT AND BORINGS AND CORRELATED INFORMATION CONTAINED WITHIN THE STRUCTURAL DOCUMENTS INDICATES THE SOIL CONDITION ONLY AT SPECIFIC LOCATIONS AND WEATHER CONDITIONS AND ONLY TO DEPTH PENETRATED; THESE SAMPLES DO NOT REFLECT THE STRATA VARIATION THAT MAY EXIST BETWEEN TEST LOCATIONS. NO WARRANTY, EXPRESS OR IMPLIED, IS MADE.

SHOP DRAWINGS:

SHOP DRAWINGS FOR ALL STRUCTURAL ELEMENTS SHOWN ON THE CONTRACT DOCUMENTS MUST BE SUBMITTED BY THE GENERAL CONTRACTOR AND REVIEWED BY THE ENGINEER. ALL CONTRACTOR MODIFICATIONS (INCLUDING PRODUCTS SUBMISSION) MUST BE IDENTIFIED IN WRITING AS A PROPOSED "AS EQUAL" CHANGES AT TIME OF SUBMISSION. IF A CONTRACTOR OR OWNER FAILS TO SUBMIT THE SHOP DRAWINGS OR FAILS TO FOLLOW THE ABOVE "AS EQUAL" PROCEDURE, JMT WILL NOT BE RESPONSIBLE FOR THE STRUCTURAL CERTIFICATION AND DESIGN OF THE PROJECT. SHOP DRAWINGS ARE REVIEWED BY THE ENGINEER AS A CONVENIENCE TO THE CONTRACTOR AND ARE NOT A CONTRACT DOCUMENT.

INSPECTION:

ALL WORK SPECIFIED HEREIN SHALL BE INSPECTED IN ACCORDANCE WITH THE BUILDING CODE AND ALL LOCAL ORDINANCES. THE CONTRACTOR SHALL HIRE AN EXPERIENCED QUALIFIED INSPECTOR TO PERFORM ALL REQUIRED INSPECTION WORK. INSPECTION SHALL CONSIST OF, BUT NOT BE LIMITED TO, VISUAL OBSERVATIONS AND TESTING OF MATERIALS, EQUIPMENT OR CONSTRUCTION WORK FOR THE PURPOSE OF ASCERTAINING THAT THE WORK IS IN SUBSTANTIAL CONFORMANCE WITH THE CONTRACT DOCUMENTS AND WITH THE DESIGN INTENT. THE ENGINEER WILL NOT PERFORM THE REQUIRED INSPECTION AS PART OF THIS PRESENT CONTRACT WITH THE OWNER. UNDER THIS PRESENT CONTRACT, THE ENGINEER MAY VISIT THE SITE TO ASCERTAIN GENERAL CONFORMANCE TO THE CONTRACT DOCUMENTS. HOWEVER, SUCH VISITS SHALL NOT BE RELIED UPON BY OTHERS AS ACCEPTANCE OF THE WORK, NOR SHOULD IT BE CONSTRUED TO RELIEVE THE CONTRACTOR IN ANY WAY FROM HIS OBLIGATIONS AND RESPONSIBILITIES UNDER THE CONSTRUCTION CONTRACT.

OWNERSHIP OF DOCUMENTS:

THE CONTRACTOR ACKNOWLEDGES THESE PLANS AND SPECIFICATIONS PREPARED BY JMT, AS INSTRUMENTS OF PROFESSIONAL SERVICE. NEVERTHELESS, THE PLANS AND SPECIFICATIONS PREPARED UNDER THIS AGREEMENT SHALL REMAIN THE PROPERTY OF JMT. UPON COMPLETION OF THE WORK. THE CONTRACTOR AGREES TO HOLD HARMLESS AND INDEMNIFY AGAINST ALL DAMAGES, CLAIMS, AND LOSSES, INCLUDING DEFENSE COSTS, ARISING OUT OF ANY REUSE OF THE PLANS AND SPECIFICATIONS WITHOUT THE WRITTEN AUTHORIZATION OF JMT.

REINFORCING STEEL:

REINFORCING STEEL SHALL BE DEFORMED BARS IN ACCORDANCE WITH ASTM A-615, GRADE 60. BENDS ARE TO BE FABRICATED AS PER DETAILS. PLACE MAIN REINFORCING STEEL SO AS TO PROVIDE 3" MINIMUM COVER FOR FOUNDATIONS POURED ON EARTH, AND 2" FOR ALL REBAR IN EXPOSED CONCRETE (EXCEPT AS OTHERWISE DETAILED). ALL WALL STEEL SHALL HAVE A MINIMUM EXTENSION INTO THE SUPPORTS IN ACCORDANCE WITH THE LATEST ADDITION OF THE ACI CODE, PROVIDE ACCESSORIES AND BAR SUPPORTS IN ACCORDANCE WITH THE MANUAL OF STANDARD PRACTICE FOR DETAILING REINFORCED CONCRETE STRUCTURES (ACI 315).

REINFORCING INDICATED TO BE EPOXY-COATED CONFORMING TO ASTM A-775 FOR BARS AND ASTM A-884 FOR WELDED WIRE FABRIC. DAMAGED AND CUT EPOXY-COATING SHALL BE REPAIRED WITH PATCHING MATERIAL CONFORMING TO ASTM A-775. EPOXY-COATED REINFORCING BARS SHALL REST ON COATED WIRE BAR SUPPORTS MADE OF DILLECTIC MATERIAL FOR A MINIMUM DISTANCE OF 2 INCHES FROM POINT OF CONTACT WITH EPOXY-COATED REBARS. EPOXY-COATED REINFORCING SHALL BE FASTENED WITH NYLON-, EPOXY-, OR PLASTIC-COATED TIE WIRE.

STRUCTURAL STEEL:

1. STRUCTURAL STEEL PLATES, ANGLES, CHANNELS, AND BARS SHALL CONFORM TO ASTM A-36.
2. ROLLED WIDE FLANGE SHAPES SHALL CONFORM TO ASTM A-992, GRADE 50.
3. STRUCTURAL STEEL TUBULAR SHAPES SHALL CONFORM TO ASTM A-500, GRADE B (FY=46KSI)
4. AND STRUCTURAL STEEL PIPES SHAPES SHALL CONFORM TO ASTM A-53, TYPES E OR S, GRADE B (FY=35KSI). ANCHOR BOLTS SHALL CONFORM TO ASTM F1554, GRADE 36.

ALL CONNECTIONS WITH SLOTTED AND OVERSIZE HOLES SHALL HAVE SLIP CRITICAL CONNECTIONS. ALL OTHER CONNECTIONS MAY BE BEARING TYPE CONNECTIONS. ALL BOLTS SHALL CONFORM TO ASTM A-325. WELDS SHALL CONFORM TO ALL THE PROVISIONS OF THE STRUCTURAL WELDING CODE, AWS D1.1-77 OF THE AMERICAN WELDING SOCIETY EXCEPT SECTIONS 2.3, 2.4, 2.5, 8.13.1.2 AND 9. HEADED STUD TYPE SHEAR CONNECTORS SHALL BE COLD FINISHED CARBON STEEL COMPLYING WITH ASTM A-108, GRADE 1015 OR 1020, WITH DIMENSIONS COMPLYING WITH AISC SPECIFICATIONS. NO OPENINGS IN BEAMS SHALL BE PERMITTED WITHOUT WRITTEN APPROVAL FROM THE STRUCTURAL ENGINEER.

CONCRETE:

ALL CONCRETE WORK SHALL CONFORM TO ALL THE PROVISIONS OF THE "SPECIFICATIONS FOR STRUCTURAL CONCRETE FOR BUILDINGS" (ACI 301), AND TO THE "BUILDING CODE REQUIREMENTS FOR REINFORCED CONCRETE" (ACI 318-02). ALL STRUCTURAL CONCRETE SHALL HAVE A MINIMUM 28 DAY COMPRESSIVE STRENGTH OF 4,000 PSI UNLESS NOTED OTHERWISE. ADDITIONALLY, THE CONCRETE SHALL CONFORM TO ALL THE PROVISIONS OF "RECOMMENDED PRACTICE FOR HOT WEATHER CONCRETING" (ACI 305-R82) AND "RECOMMENDED PRACTICE FOR COLD WEATHER CONCRETING" (ACI 306-R83). ALL FORMWORK SHALL BE IN ACCORDANCE WITH THE AMERICAN CONCRETE INSTITUTE "FORMWORK FOR CONCRETE" SPECIAL PUBLICATION NO. 4 AND ACI'S "STANDARD RECOMMENDED PRACTICE FOR CONCRETE FORMWORK" (ACI-347-LATEST EDITION). ALL CONCRETE EXPOSED TO THE WEATHER SHALL HAVE AN AIR ENTRAINMENT OF 6% ± 1%. NO ADMIXTURES CONTAINING CALCIUM CHLORIDE SHALL BE PERMITTED. THE MAXIMUM SLUMP OF ALL CONCRETE SHALL BE 4". FLOOR SLABS SHALL BE FINISHED TO A MINIMUM FLATNESS F- NUMBER Ff = 20 AND A MINIMUM LEVELNESS F-NUMBER F1 = 17 IN ANY DIRECTION. ALL CONCRETE SHALL BE CURED WITH LIQUID SEALING COMPOUND CONFORMING TO ASTM C-309, TYPE I AND FEDERAL SPECIFICATION TT-C-00800 OR OTHER APPROVED METHOD WHICH IS COMPATIBLE WITH FLOORING ADHESIVES AND OTHER SURFACE TREATMENTS. ALL CONCRETE LEFT EXPOSED AT THE COMPLETION OF THE PROJECT SHALL BE TREATED WITH A CLEAR, PENETRATING ACRYLIC BASE POLYMER CAPABLE OF PREVENTING INFILTRATION OF WATER BORNE CHLORIDES SUCH AS CONSPEC #1 BY CONSPEC MARKETING & MANUFACTURING COMPANY OR APPROVED EQUAL. LOADS GREATER THAN THE DESIGN LIVE LOADS SHALL NOT BE PLACED ON THE STRUCTURE. A CONCRETE STRUCTURE MAY NOT SUPPORT ITS DESIGN LIVE LOAD FOR 28 DAYS. CONTRACTOR SHALL SUPPORT ADJACENT STRUCTURES, UTILITIES, AND EXCAVATIONS AS REQUIRED FOR COMPLETION OF WORK. ONE SET OF COMPRESSIVE TEST CYLINDERS FOR EACH 100 CUBIC YARDS POURED, BUT NOT LESS THAN ONE SET FOR EACH DAY'S POUR AND EACH CLASS OF CONCRETE, ALONG WITH SLUMP TEST SHALL BE PERFORMED BY A TESTING LABORATORY APPROVED BY THE STRUCTURAL ENGINEER.

MASONRY:

SOLID MASONRY SHALL BE GRADE N1 IN ACCORDANCE WITH ASTM C-145 AND MAY BE 75% SOLID UNLESS OTHERWISE NOTED. HOLLOW MASONRY UNITS SHALL BE GRADE N1 CONFORMING TO ASTM C-90. MASONRY UNITS SHALL HAVE A MINIMUM COMPRESSIVE STRENGTH OF 2000 PSI BASED ON THE NET CROSS SECTIONAL AREA OF THE INDIVIDUAL BLOCK UNITS. ALL MORTAR BELOW GRADE SHALL BE TYPE "M" CONFORMING TO ASTM C-270 WITH A MINIMUM COMPRESSIVE STRENGTH OF 2,500 PSI. ALL OTHER MORTAR SHALL BE TYPE "S" CONFORMING TO ASTM C-270 WITH MINIMUM COMPRESSIVE STRENGTH OF 1800 PSI AT 28 DAYS. PROVIDE A MINIMUM OF 3 COURSES OF SOLID BRICK OR ONE COURSE OF 100% SOLID BLOCK UNDER WALL BEARING ENDS OF ALL JOISTS, THE FULL WIDTH OF THE WALL, UNLESS NOTED OTHERWISE. IN BEARING WALLS, PROVIDE SOLID BRICK OR 100% BLOCK EXTENDING 8" BEYOND WALL OPENINGS THE FULL WALL THICKNESS DOWN TO THE FLOOR, UNLESS NOTED OTHERWISE. ALL PORTIONS OF MASONRY WALLS HAVING A HORIZONTAL CROSS SECTION OF 4 SQ. FT. OR LESS SHALL BE OF SOLID MASONRY DOWN TO FOOTINGS. PROVIDE HORIZONTAL MASONRY REINFORCING (DUR-O-WALL OR EQUAL) AT 16" O.C. IN ALL MASONRY WALLS UNLESS NOTED OTHERWISE. ALL MASONRY WALLS SHALL HAVE MASONRY CONTROL JOINTS AT 25'-0" ON CENTER MAXIMUM. ALL MORTAR JOINTS IN MASONRY WALLS (HORIZONTAL AND VERTICAL) SHALL BE FILLED 100% WITH MORTAR. USE BUCKETS TO MEASURE MATERIALS FOR MIXING MORTAR.

FRAMING LUMBER:

FRAMING LUMBER SHALL BE KILN DRIED OR MC-15, (MAXIMUM MOISTURE CONTENT OF 15 PERCENT) AND GRADED AND MARKED IN CONFORMANCE WITH WCLIB STANDARD GRADING RULES FOR WEST COAST LUMBER NO.17, LATEST EDITION. ALL WOOD FRAME CONSTRUCTION SHALL CONFORM TO THE STANDARDS OF THE IBC AS A MINIMUM REQUIREMENT. FURNISH TO THE FOLLOWING MINIMUM STANDARDS:

JOISTS: (2x8 AND SMALLER)	SOUTHERN YELLOW PINE (SYP) NO. 1 MINIMUM BASE VALUE, FB = 1500 PSI
JOIST AND BEAMS: (2x10 AND LARGER)	SOUTHERN YELLOW PINE (SYP) NO.1 MINIMUM BASE VALUE, FB = 1300 PSI
POSTS AND TIMBERS: (4x4 AND LARGER)	SOUTHERN YELLOW PINE (SYP) NO.1 MINIMUM BASE VALUE, FB = 1200 PSI
STUDS, PLATES & MISC.FRAMING:	SOUTHERN YELLOW PINE (SYP) NO. 1
TOP AND BOTTOM PLATES AT BEARING WALLS:	SOUTHERN YELLOW PINE (SYP) NO. 1
2x6 STUDS AND PLATES:	SOUTHERN YELLOW PINE (SYP) NO. 1 MINIMUM BASE VALUE, FB = 1650 PSI

ENGINEERED LUMBER MEMBERS SHALL BE MANUFACTURED UNDER A PROCESS BY THE NATIONAL RESEARCH BOARD. EACH PIECE SHALL BEAR A STAMP OR STAMPS NOTING THE NAME AND PLANT NUMBER OF THE MANUFACTURER, THE GRADE, THE NATIONAL RESEARCH BOARD NUMBER, AND THE QUALITY CONTROL AGENCY. ALL LUMBER SHALL BE MANUFACTURED IN ACCORDANCE WITH THE APPROPRIATE NER REPORT AND GLUED WITH A WATERPROOFING ADHESIVE MEETING THE REQUIREMENTS OF ASTM D2559 WITH ALL GRAIN PARALLEL WITH THE LENGTH OF THE MEMBER.

LVL MATERIAL: FB = 3100 PSI   E= 2000 KSI   FV=290 PSI

DESIGN SHOWN ON PLANS IS BASED ON LUMBER MANUFACTURED BY THE TRUS-JOIST CORPORATION. ALTERNATE MANUFACTURERS MAY BE USED SUBJECT TO REVIEW AND APPROVAL BY THE STRUCTURAL ENGINEER. ALTERNATE JOIST HANGERS AND OTHER HARDWARE MAY BE SUBSTITUTED FOR ITEMS SHOWN PROVIDED THEY HAVE ICBO APPROVAL FOR EQUAL OR GREATER LOAD CAPACITIES. ALL JOIST HANGERS AND OTHER HARDWARE SHALL BE COMPATIBLE IN SIZE WITH MEMBERS PROVIDED.

ALL WOOD IN DIRECT CONTACT WITH CONCRETE OR MASONRY SHALL BE PRESSURE TREATED WITH AN APPROVED PRESERVATIVE OR (2) LAYERS OF ASPHALT IMPREGNATED BUILDING PAPER SHALL BE PROVIDED BETWEEN UNTREATED WOOD AND CONCRETE OR MASONRY. ALL WOOD EXPOSED TO WEATHER WITHOUT THE ADEQUATE PROTECTION OF A ROOF OR EAVE SHALL BE AN APPROVED WOOD OF NATURAL RESISTANCE TO DECAY OR PRESSURE TREATED. SUCH MEMBERS INCLUDE HORIZONTAL MEMBERS SUCH AS JOISTS, OR VERTICAL MEMBERS SUCH AS POSTS, AND COLUMNS.

WOOD FRAMING NOTES:

THE FOLLOWING APPLY UNLESS NOTED OTHERWISE ON THE PLANS.

ALL WOOD FRAMING DETAILS NOT SHOWN OTHERWISE SHALL BE CONSTRUCTED TO THE MINIMUM STANDARDS OF THE INTERNATIONAL BUILDING CODE. MINIMUM NAILING, UNLESS NOTED OTHERWISE, SHALL CONFORM TO TABLE 2304.9.1 OF THE INTERNATIONAL BUILDING CODE. UNLESS NOTED OTHERWISE, ALL NAILS SHALL BE COMMON TYPE NAILS. COORDINATE THE SIZE AND LOCATION OF ALL OPENINGS WITH MECHANICAL AND ARCHITECTURAL DRAWINGS. PROVIDE PLATE ¼x2x2 WASHERS UNDER THE HEADS AND NUTS OF ALL BOLTS AND LAG SCREWS USED AS CONNECTIONS TO WOOD.

WALL FRAMING: TWO STUDS MINIMUM SHALL BE PROVIDED AT THE END OF ALL WALLS AND A MINIMUM OF TWO STUDS SHALL BE PROVIDED AT EACH SIDE OF ALL OPENINGS. TWO 2 X 8 INSULATED HEADERS SHALL BE PROVIDED OVER ALL OPENINGS NOT OTHERWISE NOTED. SOLID BLOCKING FOR WOOD COLUMNS SHALL BE PROVIDED THROUGH THE FLOOR OR ROOF TO SUPPORTS BELOW. WALLS SHALL HAVE A SINGLE BOTTOM PLATE AND A DOUBLE SPLICED TOP PLATE. END NAIL TOP PLATE TO EACH STUD WITH TWO 16D NAILS, AND TOENAIL OR END NAIL EACH STUD TO BOTTOM PLATE WITH TWO 16D NAILS. SPLICE TOP PLATE WITH SIMPSON CS 16"x 24". ALL STUD WALLS SHALL HAVE THEIR LOWER WOOD PLATES ATTACHED TO WOOD FRAMING BELOW WITH 16D NAILS AT 12" O.C. STAGGERED OR BOLTED TO CONCRETE WITH 5/8" DIAMETER ANCHOR BOLTS (WITH 7" MINIMUM EMBEDMENT) AT 4'-0' O.C. UNLESS NOTED OTHERWISE. INDIVIDUAL MEMBERS OF BUILT-UP POSTS SHALL BE NAILED TO EACH OTHER WITH 16D NAILS AT 9' O.C. STAGGERED. REFER TO THE PLANS AND WALL SCHEDULE FOR REQUIRED SHEATHING AND NAILING/SCHEDULES.

USE FULL LENGTH STUDS AT ALL WALLS. SPLICES WILL NOT BE PERMITTED AT WALL STUDS.

ALL COLUMNS AND POSTS SUPPORTING BEAMS NOT SPECIFIED FOR SIZE ON PLANS SHALL CONSIST OF 2 STUDS SPIKED TOGETHER WITH 16D NAILS 9" O.C.

ATTIC AND ROOF FRAMING: PROVIDE DOUBLE JOISTS AROUND ALL OPENINGS IN ATTICS OR ROOFS UNLESS OTHERWISE NOTED. PROVIDE SOLID BLOCKING AT ALL BEARING POINTS. TOENAIL JOISTS TO SUPPORTS WITH TWO 16D NAILS. ATTACH TIMBER JOISTS TO FLUSH HEADERS OR BEAMS WITH SIMPSON METAL JOIST HANGERS.

TIMBER CONNECTORS CALLED OUT BY LETTERS AND NUMBERS SHALL BE 'STRONG-TIE' BY THE SIMPSON COMPANY, AS SPECIFIED IN THEIR MOST RECENT CATALOG. PROVIDE NUMBER AND SIZE OF FASTENERS AS SPECIFIED BY MANUFACTURER. CONNECTORS SHALL BE INSTALLED IN ACCORDANCE WITH THE MANUFACTURER'S RECOMMENDATIONS. WHERE CONNECTOR STRAPS CONNECT TWO MEMBERS, PLACE ONE-HALF OF THE NAILS OR BOLTS IN EACH MEMBER. ALL BOLTS IN WOOD MEMBERS SHALL CONFORM TO ASTM A307. PROVIDE WASHERS UNDER THE HEADS AND NUTS OF ALL BOLTS AND LAG SCREWS CONNECTING TO WOOD UNLESS NOTED OTHERWISE. ALL NAILS SHALL BE COMMON NAILS. ALL SHIMS SHALL BE SEASONED AND DRIED AND THE SAME GRADE (MINIMUM) AS MEMBERS CONNECTED. HANGERS IN DIRECT CONTACT WITH PRESERVATIVE TREATED WOOD SHALL BE EITHER STAINLESS STEEL (SST300),POST HOT-DIPPED GALVANIZED (HDG) OR GALVANIZED WITH A MINIMUM OF 1.85 OZ ZINC PER SQUARE INCH (MAX). UNLESS NOTED OTHERWISE, ALL LUMBER JOISTS SHALL BE CONNECTED TO FLUSH BEAMS WITH 'LUS' SERIES JOIST HANGERS.

SHEATHING:

PLYWOOD SHEATHING SHALL BE GRADE C-D, EXTERIOR GLUE OR STRUCTURAL I, EXTERIOR GLUE SHALL BE IN CONFORMANCE WITH APA STANDARDS.

ROOF SHEATHING SHALL BE 5/8" (NOM) WITH SPAN RATING 24/16

WALL SHEATHING SHALL BE 1/2" (NOM) WITH SPAN RATING 24/16

PLYWOOD SHEATHING TO BE LAID UP WITH GRAIN PERPENDICULAR TO SUPPORTS AND NAILED WITH 8D NAILS AT 6" O.C. (UNLESS NOTED OTHERWISE) TO FRAMED PANEL EDGES AND OVER STUD WALLS AS SHOWN ON PLANS AND AT 12" O.C.TO INTERMEDIATE SUPPORTS UNLESS NOTED OTHERWISE. PROVIDE APPROVED PLYWOOD EDGE CUPS AT 16"O.C.AT UNBLOCKED ROOF SHEATHING EDGES. TOE NAIL BLOCKING TO SUPPORTS WITH 16D@ 12" O.C.UNLESS NOTED OTHERWISE. AT BLOCKED WALL AND ROOF DIAPHRAGMS PROVIDE FLAT 2X BLOCKING AT ALL UNFRAMED PLYWOOD PANEL EDGES AND NAIL WITH EDGE NAILING SPECIFIED.

TYPICAL NAILING SCHEDULE

CONNECTION	NAILING
JOIST TO SILL OR GIRDER	(3) 8d TOENAIL
BRIDGING TO JOIST	(2) 8d TOENAIL EACH END
SOLE PLATE TO JOIST OR BLOCKING	16d @16" FACE NAIL
TOP PLATE TO STUD	(2) 16d END NAIL
DOUBLE STUDS	16d @ 12" FACE NAIL
DOUBLE TOP PLATES	16d @ 12" FACE NAIL
TOP PLATE INTERSECTIONS	(2) 16d FACE NAIL
CONTINUOUS HEADER, TWO PIECES	16d @12" ALONG EACH EDGE
ATTIC JOISTS TO PLATE	(3) 8d TOENAIL
RAFTER TO PLATE	(3) 8d TOENAIL
BUILT-UP CORNER STUDS	16d @ 12"
BUILT-UP GIRDER AND BEAMS	20d @ 12"
BLOCKING BETWEEN JOISTS OR	
RAFTERS TO TOP PLATE	(3) 8d TOENAIL
RIM JOISTS TOP PLATE, TOENAIL	8d @ 6"
POST AND BEAM OR GIRDER CONSTRUCTION	PROVIDE POSITIVE CONNECTION AGAINST UPLIFT AND LATERAL DISPLACEMENT
BUILT-UP RIM JOIST	(2) ROWS 16d @ 12"

NOTES: REFER TO 2009 IBC TABLE 2304.9.1 FOR ADDITIONAL NAILING REQUIREMENTS

ABBREVIATIONS

@ At
AB: Anchor Bolt; Asbestos Board
ABV: Above
ACF: Architectural Concrete Finish
ACI: American Concrete Institute
ADD: Addendum; Addition
ADDL: Additional
ADH: Adhesive
AF: Above the Floor
AFF: Above Finished Floor
AGG: Aggregate
AISC: American Institute of Steel Construction
ALUM: Aluminum
ALS: Acrylic Latex Sealant
AN: Anode
ANCH: Anchor, Anchorage
APPD: Approved
APPROX: Approximate
APRVD: Approved
ARCH: Architect, Architectural
ASPH: Asphalt
ASSY: Assembly
ASTM: American Society for Testing Materials
AVG: Average
AWS: American Welding Society

BAF: Baffle
BEL: Below
BET: Between
BETW: Between
BEV: Bevel
BHD: Bulkhead
BIT: Bituminous
BLDG: Building
BLK: Block
BM: Beam, Bench Mark
BOT: Bottom
BP: Base Plate
BPL: Bearing Plate
BRDG: Bridge, Bridging
BRG: Bearing
BRK: Brick

CAD: Cadmium, Computer-Aided Drafting
CAIS: Caisson

CCW: Counter Clockwise
C.I.: Cast Iron
CIR: Circle, Circular,
CIRC: Circumference
CJ: Control Joint
CL: Centerline,
CLR: Clear
CLR OPG: Clear Opening
CMP: Corrugated Metal Pipe
CMU: Concrete Masonry Unit
CNTR: Center, Counter
CO: Company, Cleanout,
CO & DP: Cleanout & Deck Plate
COEF: Coefficient
COL: Column
CONC: Concrete
CONST: Construction
CONSTR: Construction
CONT: Continuous, Continue, Control
CONTR: Contractor
CTR: Center, Counter

DEM: Demolish
DEMO: Demolition
DET: Detail
DIAG: Diagonal
DIA: Diameter
DIM: Dimension
DL: Dead Load
DMH: Drop Manhole
DN: Down
DR: Drain
DT: Drain Tile
DVTL: Dovetail
DWG: Drawing
DS: Downspout

E TO E: End to End
EA: Each
EB: Expansion Bolt
EE: Each End
EF: Each Face
EIFS: Exterior Insulation and Finish System

EJ: Expansion Joint
EL: Elevation
ELB: Elbow
ELEC: Electrical
ELECT: Electrical
ELEV: Elevator, Elevation
ENG: Engineer
ENGR: Engineer
EQ: Equal
EQUIP: Equipment
EW: Each Way
EX: Existing
EXCAV: Excavate
EXP: Expansion, Exposed
EXT: Exterior

FBRK: Fire Brick
FD: Floor drain
FDN: Foundation
FF: Far Face, Finished Floor
FFE: Finished Floor Elevation
FFL: Finished Floor Line
FHY: Fire Hydrant
FIL: Fillet
FIN: Finish, finished
FLG: Flooring
FOC: Face of Concrete
FOS: Face of Studs
FPRF: Fireproof
FRG: Forged
FRM: Frame
FRPF: Fireproof
FRT: Fire Retardant
FS: Full Size, Far Side
FSCW: Flush Solid Core Wood
FT: Foot, Feet, Fully Tempered
FTG: Footing

GA: Gauge, Gage
GALV: Galvanized
GC: General Contractor
GD: Guard, Grade
GEN: General, Generator
GRND: Ground
GRTG: Grating
GVL: Gravel
GYP: Gypsum

HGT: Height
HOR: Horizontal
HT: Height
HVAC: Heating, Ventilating & Air Conditioning
HVY: Heavy

ID: Inside Diameter
INFO: Information
INT: Interior, Internal

JST: Joist
JT: Joint

KIP: Kilopound (1000 pounds)
KO: Knockout
KP: Kickplate

L: Angle, Left, Length
LAD: Ladder
LAT: Lateral
LB: Pound (weight)
LL: Live Load
LMS: Limestone
LN: Length
LNDG: Landing
LNTL: Lintel
LOC: Locate
LOCS: Locations
LVR: Louver
LW: Light Weight
LWC: Light Weight Concrete

M: Bending Moment
MAINT: Maintenance
MAN; Manual
MAS: Masonry
MAT: Material
MATL: Material
MAX: Maximum
ME: Mechanical Engineer
MECH: Mechanical
MEMB: Membrane
MET: Metal
MEZZ: Mezzanine
MFD: Manufactured, Metal Floor Deck
MFG: Manufacturer, Manufacturing
MFR: Manufacture, Manufacturer

MH: Manhole
MIN: Minimum
MISC: Miscellaneous
MM: Millimeter
MMB: Membrane
MO: Masonry Opening
MOD: Module
MONO: Monolithic
MOV: Movable
MRD: Metal Roof Deck
MT: Mount, Mounted
MTD: Mounted
MTL: Metal

N: North,
NF: Near Face
NI: Nickel
NS: Near Side
NTS: Not To Scale

O TO O: Out to Out
OBS: Obscure
OC: On Center
OD: Outside Diameter
OF: Outside Face
OH: Overhead
OHD: Overhead Door
OPNG: Opening
OPP: Opposite
OVFL: Overflow
OW: Open Waste

P SL: Pipe Sleeve
PAF: Powder Actuated Fasteners
PAR: Parallel
PC: Precast Concrete
PCF: Pounds per cubic foot
PCPL: Portland Cement Plaster
PE: Professional Engineer
PED: Pedestal
PERIM: Perimeter
PERP: Perpendicular
PFN: Prefinished
PJF: Preformed Joint Filler
PKG: Parking
PKWY: Parkway
PL: Plate, Plan, Property Line
PLBG: Plumbing
PLF: Pounds Per Lineal Foot

PLTF: Platform
PLWD: Plywood

PNT: Paint
PRC: Precast
PRE: Prefinished
PREFAB: Prefabricated
PRES: Pressure
PRF: Preformed
PRI: Primary
PSC: Prestressed Concrete
PSF: Pounds per square foot
PSI: Pounds per square inch
PT: Pressure Treated
PTC: Post-Tensioned Concrete
PVG: Paving
PVMT: Pavement
PVT: Private

QUAL: Quality
QTR: Quarter
QTY: Quantity

RAD: Radius
RCP: Reinforced Concrete Pipe
RD: Roof Drain, Round
REBAR: Reinforcing Bar
REFL: Reflected, Reflector
REINF: Reinforcement, or Reinforce
REM: Remove, Removable
REQD: Required
RET: Retaining
REV: Revise, Revision
RF: Roof
RFG: Roofing
RGH: Rough
RGH OPNG:Rough Opening

SSCFT: Structural Clay Facing Tile
SCHED: Schedule
SE: Structural Engineer
SEAL: Sealant
SECT: Section
SHTH: Sheathing
SHTHG: Sheathing
SIM: Similar
SJS: Silicone Joint Sealant
SLOT: Slotted
SLV: Sleeve

SPECS: Specifications
SQ: Square
SS: Stainless Steel
SSD: Sub-soil Drain
SSGS: Silicone Structural Glazing Sealant
ST: Straight
STA: Station
STD: Standard
STIFF: Stiffener
STL: Steel
STR: Structural
SUR: Surface
SUSP: Suspended, Suspend

TC: Top of Curb
TD: Trench Drain
THK: Thick, Thickness
THRU: Through
TP: Top of Pavement
T.O. SLAB: Top of Slab
T.O.S: Top of Steel

UNEXC: Unexcavated
UNFIN: Unfinished
UNO: Unless Noted Otherwise
USS: United States Standard
UT: Utility

VB: Vapor Barrier
VBC: Vinyl Base (Coved)
VERT: Vertical
VEST: Vestibule
VF: Vinyl Fabric
VIF: Verify In the Field
VNR: Veneer
VP: Vent Pipe

W/: With
W/O: Without
WM: Wire Mesh
WP: Working Point
WPR: Waterproofing
WT: Weight
WWF: Welded Wire Fabric

XH: Extra Heavy
XS: Extra Strong
XXS: Double Extra Strong

S-001

Q:\SMD\101552_001_DelDOT_Middletown_Ya\CADD\Arch\DelDOT Middletown_VA\Sheets\S-001 GENERAL NOTES.dwg

JMT

DELAWARE DEPARTMENT OF TRANSPORTATION

ADDENDUMS / REVISIONS

JEFFREY CERQUETTI LICENSE No. 16465 DELAWARE PROFESSIONAL ENGINEER

11/9/12

MIDDLETOWN CREW QUARTERS AND MAINTENANCE SHOP

CONTRACT	BRIDGE NO.	
T201280103	DESIGNED BY: TNB	
COUNTY		
NEW CASTLE	CHECKED BY: JHB	

STRUCTURAL GENERAL NOTES, ABBREVIATIONS AND SYMBOLS

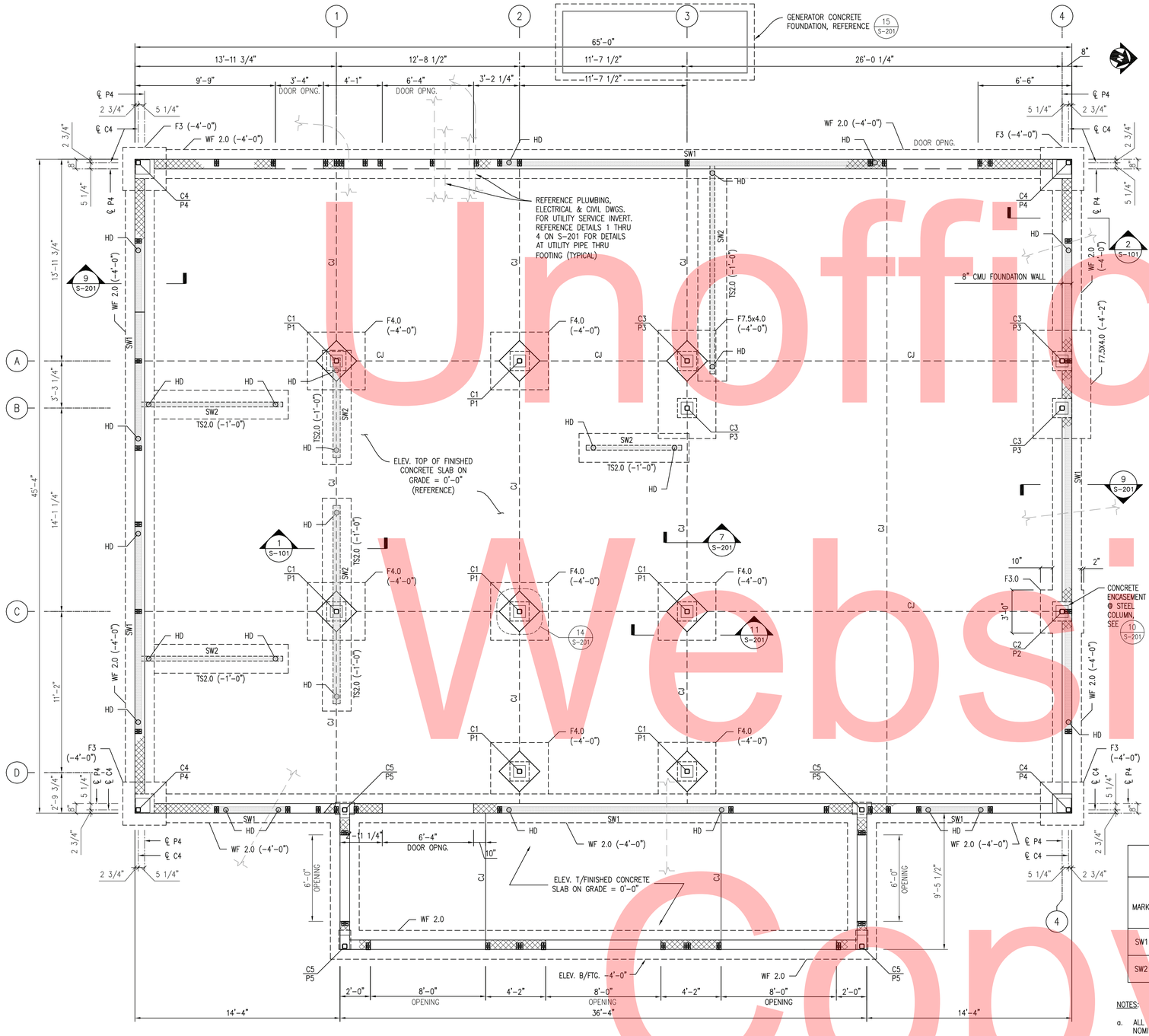

1 FIRST FLOOR AND FOUNDATION PLAN
1/4" = 1'-0"

FIRST FLOOR AND FOUNDATION PLAN – NOTES

1. STRUCTURAL SLAB SHALL BE 5-INCH NORMAL WEIGHT CONCRETE WITH A 28-DAY COMPRESSIVE STRENGTH (f'c) OF 4,000 PSI, REINFORCED WITH 6"x 6" – W2.9xW2.9 WELDED WIRE FABRIC OVER A 10 MIL VAPOR BARRIER, OVER 5-INCH MINIMUM POROUS STONE FILL OVER A COMPACTED SUB-GRADE (U.N.O.).
2. LIVE LAOD = 100 PSF.
3. COORDINATE SIZE AND LOCATION OF FOUNDATION PENETRATIONS WITH CIVIL, MECHNICAL, PLUMBING, AND ELECTRICAL DRAWINGS. REFERENCE THOSE DRAWINGS FOR EXACT LOCATION AND SIZE.
4. THE FOUNDATION HAVE BEEN DESIGNED FOR AN ALLOWABLE BEARING CAPACITY OF 4,000 POUNDS PER SQUARE FOOT. THE BEARING CAPACITY SHALL BE VERIFIED DURING CONSTRUCTION BY A REGISTERED PROFESSIONAL GEOTECHNICAL ENGINEER IN THE STATE OF DELAWARE PRIOR TO PLACEMENT OF THE FOUNDATIONS.
5. THE SLAB-ON-GRADE HAS BEEN DESIGNED WITH A MODULUS OF SUBGRADE REACTION (kc) OF 200 POUNDS PER CUBIC INCH. THE MODULUS OF SUBGRADE REACTION SHALL BE VERIFIED DURING CONSTRUCTION BY A REGISTERED PROFESSIONAL ENGINEER IN THE STATE OF DELAWARE PRIOR TO PLACEMENT OF THE SLAB-ON-GRADE.
6. FOOTING ELEVATIONS NOTED ON PLAN ARE TO THE BOTTOM OF THE FOUNDATIONS UNLESS NOTED OTHERWISE.
7. SEE CIVIL DRAWINGS FOR ELEVATION TOP OF SLAB.
8. ELEVATION BOTTOM OF FOUNDATION IS SHOWN ON PLAN THUS: (-4'-0") & REFERENCED FROM TOP OF SLAB

FOOTING SCHEDULE

MARK	SIZE	REINFORCING	REMARKS
WF2.0	2'-0" WIDE x 12" THICK x CONTINUOUS	3#5 L.W. WITH #5 TIE BARS @ 12" O.C.	BARS @ BOTTOM
F3.0	3'-0"x 3'-0"x 12" THICK	4#4 E.W. BOTTOM	BARS @ BOTTOM
F4.0	4'-0"x 4'-0"x 12" THICK	4#5 E.W. BOTTOM	BARS @ BOTTOM
F7.5x4.0	7'-6"x 4'-0"x 14" THICK	6#7 SHORT WAY T & B 4#7 LONG WAY T & B	BARS @ TOP & BOTTOM
TS2.0	2'-0" WIDE x 12" THICK x CONTINUOUS	3#5 L.W. WITH #5 TIE BARS @ 12" O.C.	BARS @ BOTTOM

COLUMN SCHEDULE

MARK	SIZE	BASE PLATE	REMARKS
C1	4 x 4 x 5/16	10"x 10"x 3/4"	12/S-201
C2	4 x 4 x 5/16	10"x 10"x 3/4"	10/S-201
C3	4 x 4 x 5/16	10"x 10"x 1"	10/S-201
C4	4 x 4 x 5/16	12"x 12"x 3/4"	A/S-101
C5	4 x 4 x 5/16	8"x 12"x 3/4"	(4) – 3/4"ø x 1'-0" WELDED HEADED STUDS TO B.P.

CONCRETE PIER SCHEDULE

MARK	SIZE	REINFORCING	REMARKS
P1	16"x 16"	4#8 VERT. WITH #4 TIES AT 6" O.C.	12/S-201
P2	16"x 16"	4#8 VERT. WITH #4 TIES AT 6" O.C.	10/S-201
P3	16"x 16"	4#8 VERT. WITH #4 TIES AT 6" O.C.	10/S-201
P4	16"x 16"	4#8 VERT. WITH #4 TIES AT 6" O.C.	2/S-101 SIM.
P5	8"x 16"	2#6 VERT. WITH #3 TIES AT 8" O.C. SET IN 3000 PSI GROUT	10/S-201 SIM.

PLYWOOD SHEAR WALL SCHEDULE

MARK	PLYWOOD GRADE	PLYWOOD THICKNESS	NAIL PENETRATION IN FRAMING	PLYWOOD APPLIED DIRECT TO STUD FRAMING		SHEARWALL BOUNDARY	
				NAIL SIZE (COMMON OR GALVANIZED BOX)	NAIL SPACING AT PLYWOOD PANEL EDGES (IN.)	STUDS	HOLD DOWN
SW1	STRUCTURAL I C-C EXT-APA	1/2	1-5/8	10d	6"	2-2x6	SIMPSON HD9 BOTTOM SIMPSON MGT W/ HDU4 TOP
SW2	STRUCTURAL I C-C EXT-APA	1/2	1-5/8	10d	4"	3-2x6	SIMPSON HD9 BOTTOM SIMPSON H15 TOP

NOTES:

a. ALL PANEL EDGES BACKED WITH 2-INCH NOMINAL OR WIDER FRAMING.
b. PLYWOOD INSTALLED HORIZONTALLY.
c. SPACE NAILS AT 12 IN. ON CENTER ALONG INTERMEDIATE FRAMING MEMBERS.
d. HOLD DOWNS (HD) ARE SHOWN THUS: HD

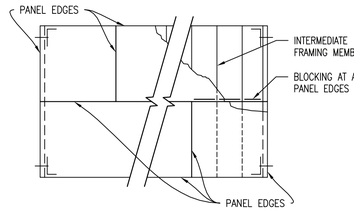

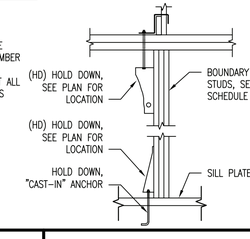

LEGEND

PLANT NORTH
TRUE NORTH
SECTION/DETAIL NUMBER/LETTER
DRAWING WHERE SECTION/DETAILS IS SHOWN
SECTION NUMBER — 1/S-101 SECTION SCALE: 3/8"= 1'-0"
DRAWING WHERE SECTION IS SHOWN
DETAIL LETTER. — A/S-101 DETAIL A SCALE: 3/4" = 1'-0"
DRAWING WHERE DETAIL IS SHOWN
UTILITY LINE

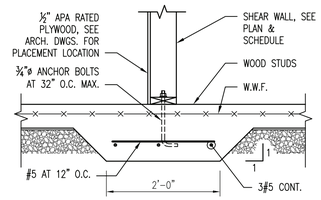

1/S-101 THICKENED SLAB AT SHEAR WALL
SCALE: 3/4"=1'-0"

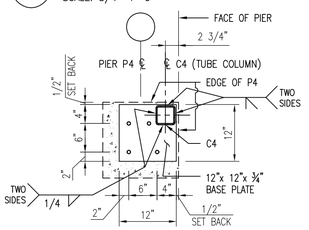

A/S-101 BASE PLATE AT C4
SCALE: 3/4"=1'-0"

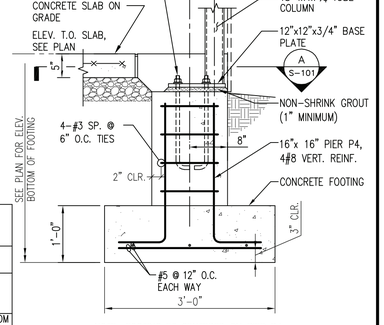

NOTE: FOOTING F3 CENTERED ON PIER P4

2/S-101 EXTERIOR COLUMN FTG. AT CORNER
SCALE: 3/4"=1'-0"

Unofficial Website Copy

JEFFREY CERQUEIRA LICENSE No. 16465 PROFESSIONAL ENGINEER STATE OF DELAWARE
11/9/12

S-101

DELAWARE DEPARTMENT OF TRANSPORTATION	ADDENDUMS / REVISIONS	MIDDLETOWN CREW QUARTERS AND MAINTENANCE SHOP	CONTRACT T201280103	BRIDGE NO.	FOUNDATION PLAN	SHEET NO. 30
			COUNTY NEW CASTLE	DESIGNED BY: TNB		TOTAL SHTS. 54
				CHECKED BY: JHB		

Q:\SMO\101552_001_DelDOT_Middletown_Yo\CADD\Arch\DelDOT Middletown_VA\Sheets\S-101 FOUNDATION PLAN.dwg