C-40	CONTRACT	COUNTY	F.A.P. NO.	SHEET NO.	TOTAL SHTS.
	T201280104	SUSSEX	SEE TITLE SHEET	41	80

BRIDGEVILLE MAINTENANCE YARD DEVELOPMENT

REVISIONS

ADDENDUM 2 4/9/14	

SIGNING AND STRIPING

SCALE

0 40 80 120

FEET

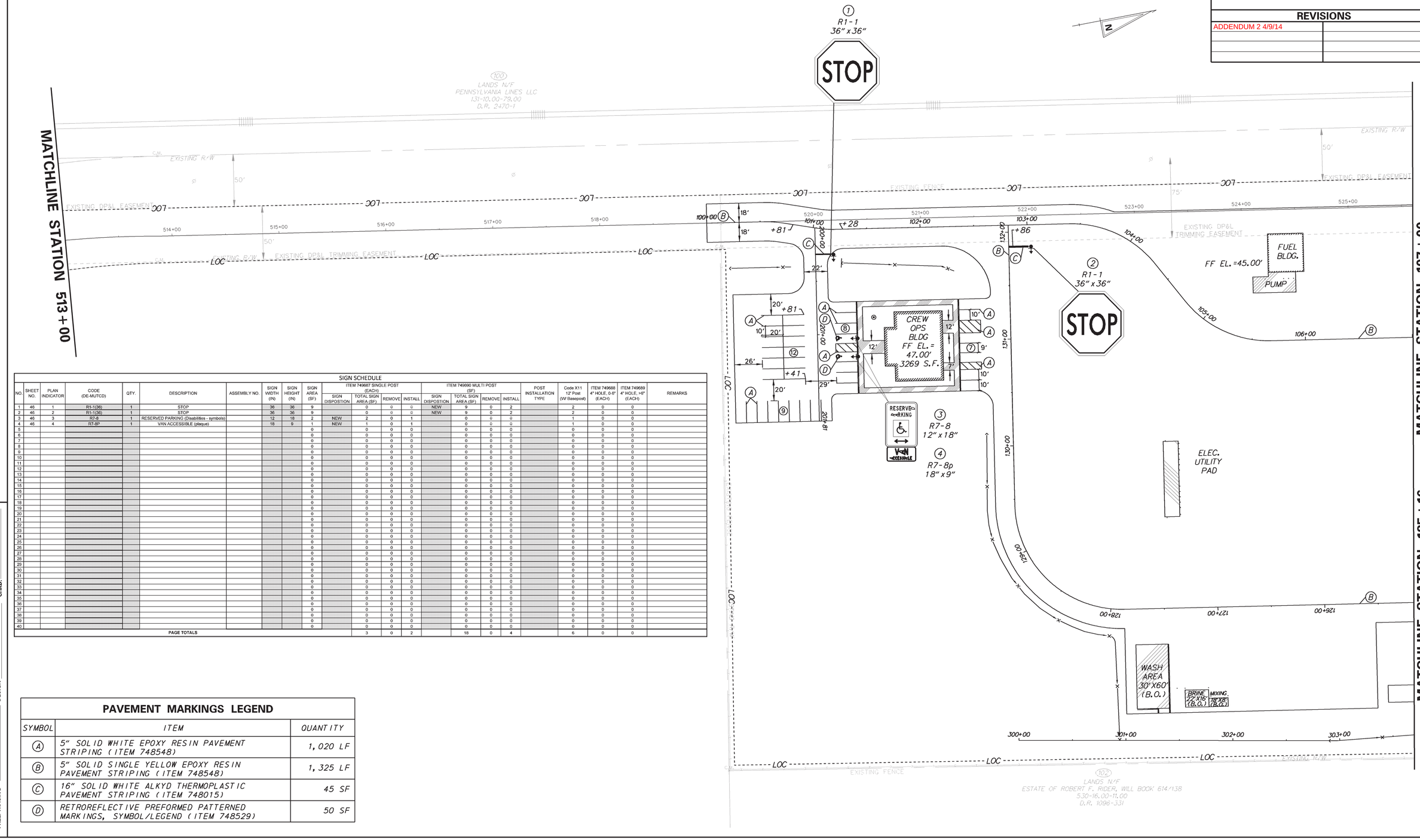

SIGN SCHEDULE

NO.	SHEET NO.	PLAN INDICATOR	CODE (DE-MUTCD)	QTY.	DESCRIPTION	ASSEMBLY NO.	SIGN WIDTH (IN)	SIGN HEIGHT (IN)	SIGN AREA (SF)	ITEM 749687 SINGLE POST (EACH)				ITEM 749990 MULTI POST (SF)				POST INSTALLATION TYPE	Code X11 12' Post (W/ Basepost)	ITEM 749688 4" HOLE, 0-6' (EACH)	ITEM 749689 4" HOLE, >6' (EACH)	REMARKS
										SIGN DISPOSTION	TOTAL SIGN AREA (SF)	REMOVE	INSTALL	SIGN DISPOSTION	TOTAL SIGN AREA (SF)	REMOVE	INSTALL					
1	46	1	R1-1(36)	1	STOP		36	36	9		0	0	0	NEW	9	0	2		2	0	0	
2	46	2	R1-1(36)	1	STOP		36	36	9		0	0	0	NEW	9	0	2		2	0	0	
3	46	3	R7-8	1	RESERVED PARKING (Disabilities - symbols)		12	18	2	NEW	2	0	1		0	0	0		1	0	0	
4	46	4	R7-8P	1	VAN ACCESSIBLE (plaque)		18	9	1	NEW	1	0	1		0	0	0		1	0	0	
5									0		0	0	0		0	0	0		0	0	0	
6									0		0	0	0		0	0	0		0	0	0	
7									0		0	0	0		0	0	0		0	0	0	
8									0		0	0	0		0	0	0		0	0	0	
9									0		0	0	0		0	0	0		0	0	0	
10									0		0	0	0		0	0	0		0	0	0	
11									0		0	0	0		0	0	0		0	0	0	
12									0		0	0	0		0	0	0		0	0	0	
13									0		0	0	0		0	0	0		0	0	0	
14									0		0	0	0		0	0	0		0	0	0	
15									0		0	0	0		0	0	0		0	0	0	
16									0		0	0	0		0	0	0		0	0	0	
17									0		0	0	0		0	0	0		0	0	0	
18									0		0	0	0		0	0	0		0	0	0	
19									0		0	0	0		0	0	0		0	0	0	
20									0		0	0	0		0	0	0		0	0	0	
21									0		0	0	0		0	0	0		0	0	0	
22									0		0	0	0		0	0	0		0	0	0	
23									0		0	0	0		0	0	0		0	0	0	
24									0		0	0	0		0	0	0		0	0	0	
25									0		0	0	0		0	0	0		0	0	0	
26									0		0	0	0		0	0	0		0	0	0	
27									0		0	0	0		0	0	0		0	0	0	
28									0		0	0	0		0	0	0		0	0	0	
29									0		0	0	0		0	0	0		0	0	0	
30									0		0	0	0		0	0	0		0	0	0	
31									0		0	0	0		0	0	0		0	0	0	
32									0		0	0	0		0	0	0		0	0	0	
33									0		0	0	0		0	0	0		0	0	0	
34									0		0	0	0		0	0	0		0	0	0	
35									0		0	0	0		0	0	0		0	0	0	
36									0		0	0	0		0	0	0		0	0	0	
37									0		0	0	0		0	0	0		0	0	0	
38									0		0	0	0		0	0	0		0	0	0	
39									0		0	0	0		0	0	0		0	0	0	
40									0		0	0	0		0	0	0		0	0	0	
PAGE TOTALS											3	0	2		18	0	4		6	0	0	

PAVEMENT MARKINGS LEGEND

SYMBOL	ITEM	QUANTITY
A	5" SOLID WHITE EPOXY RESIN PAVEMENT STRIPING (ITEM 748548)	1,020 LF
B	5" SOLID SINGLE YELLOW EPOXY RESIN PAVEMENT STRIPING (ITEM 748548)	1,325 LF
C	16" SOLID WHITE ALKYD THERMOPLASTIC PAVEMENT STRIPING (ITEM 748015)	45 SF
D	RETROREFLECTIVE PREFORMED PATTERNED MARKINGS, SYMBOL/LEGEND (ITEM 748529)	50 SF

DESIGN

CHKD.

PREL. TRACING

8/13/2013
C:\PROJECTS\115005.DE (DeDOT A&E Open-End)\115005.01 (Task 1, Bridgeville Maintenance Yard)\CADD FILES\SS02.dgn
10:27:22

C-41	CONTRACT	COUNTY	F.A.P. NO.	SHEET NO.	TOTAL SHTS.
	T201280104	SUSSEX	SEE TITLE SHEET	42	80

BRIDGEVILLE MAINTENANCE YARD DEVELOPMENT

REVISIONS

ADDENDUM 2 4/9/14	

PAVEMENT MARKINGS LEGEND

SYMBOL	ITEM	QUANTITY
(A)	5" SOLID WHITE EPOXY RESIN PAVEMENT STRIPING (ITEM 748548)	0 LF
(B)	5" SOLID SINGLE YELLOW EPOXY RESIN PAVEMENT STRIPING (ITEM 748548)	730 SF
(C)	16" SOLID WHITE ALKYD THERMOPLASTIC PAVEMENT STRIPING (ITEM 748015)	0 SF
(D)	RETROREFLECTIVE PREFORMED PATTERNED MARKINGS, SYMBOL/LEGEND (ITEM 748529)	0 SF

SIGNING AND STRIPING

SCALE

0 40 80 120

FEET

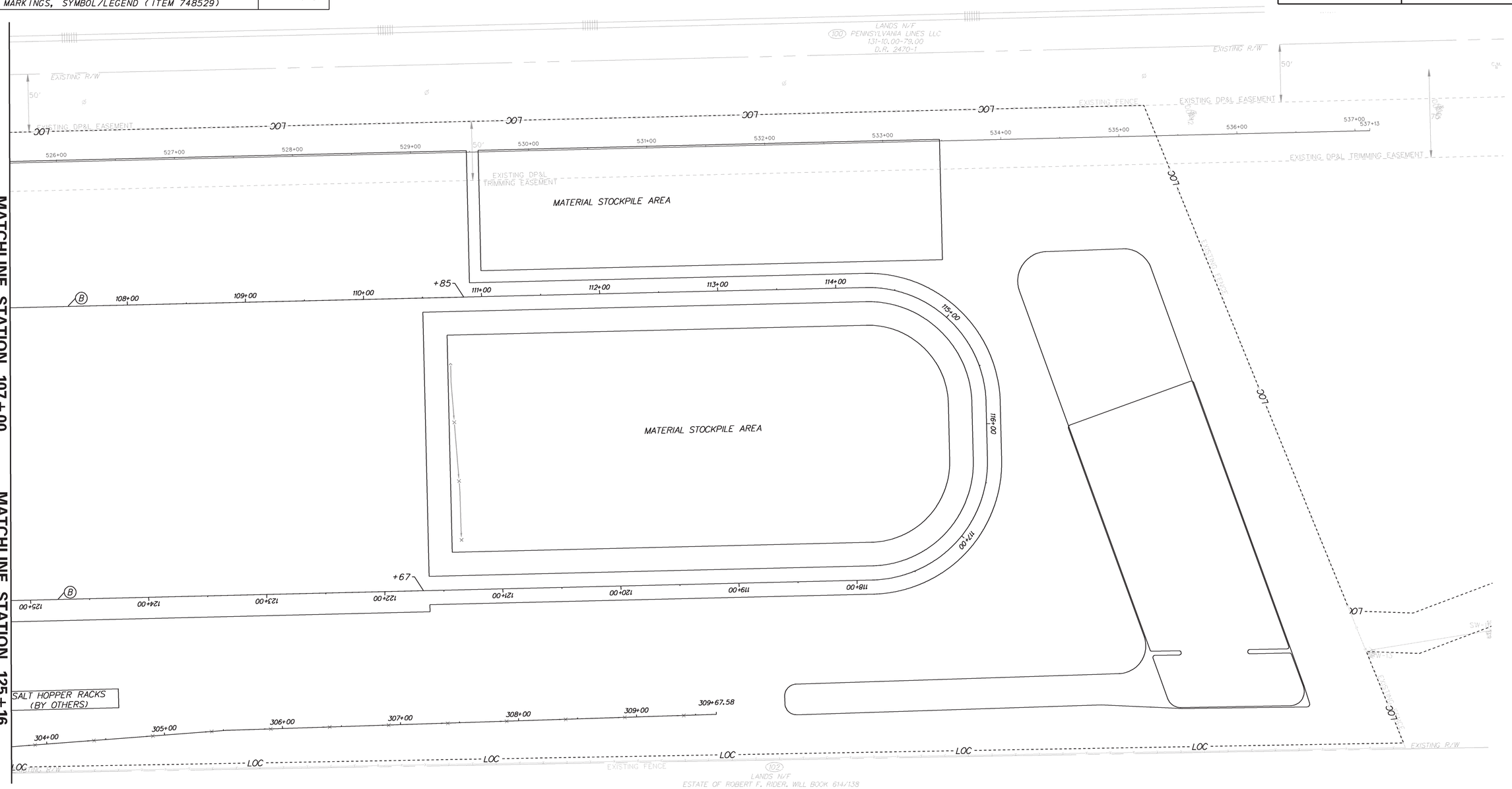

DESIGN

CHKD.

PREL. TRACING

8/13/2015
C:\PWWORKING\DOT\D0966\CTS\115005.0E (DeBDOT A&E Open-Ends)\115005.01 (Task 1, Bridgeville Maintenance Yard)\CADD FILES\SS03.dgn
10:43:22

CREW OPERATION BUILDING
CODE PLAN

DRAWING NO.	CONTRACT	COUNTY	F.A.P. NO.	SHEET NO.	TOTAL SHTS.
A-1.2	T201280104	SUSSEX		43	80

BRIDGEVILLE MAINTENACE YARD DEVELOPMENT

REVISIONS

1 03/14/13 FM REVIEW REVISIONS	
ADDENDUM 2 4/9/14	

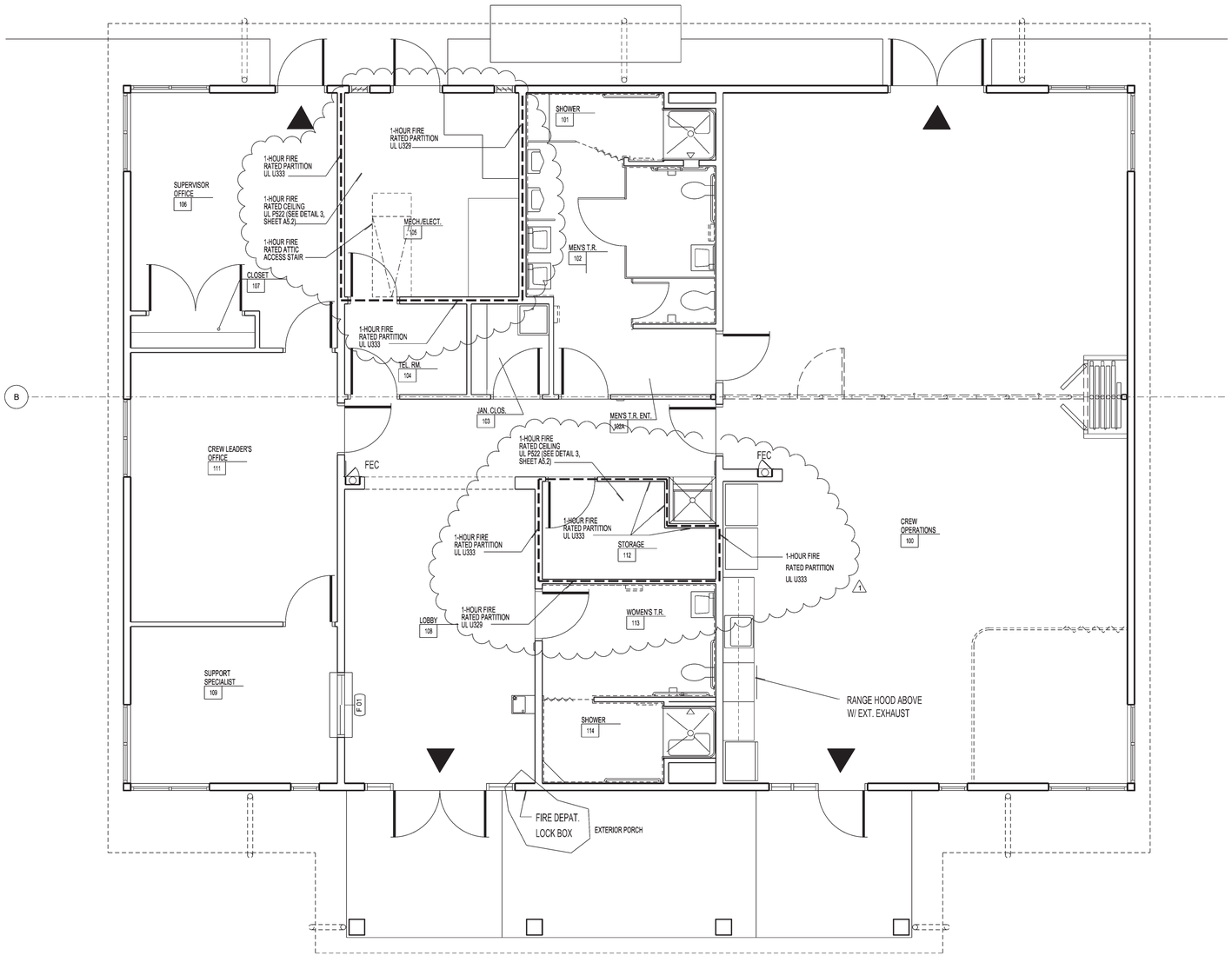

CODE SYNOPSIS

SITE LOCATION: SUSSEX COUNTY, DELAWARE

APPLICABLE CODES: INTERNATIONAL BUILDING CODE 2003
NFPA 101 LIFE SAFETY CODE, 2009
STATE OF DELAWARE FIRE PREVENTION REGULATION, 2009

HANDICAPPED ACCESSIBILITY: STATE OF DELAWARE ARCHITECTURAL ACCESSIBILITY STANDARDS

BUILDING'S TOTAL AREA : ONE STORY - 2,950 GSF ENCLOSED W/ 350 S.F. COVERED PORCH

OCCUPANCY : B- BUSINESS (NEW)

CONSTRUCTION TYPE : 5 B, UNPROTECTED

OCCUPANTS: OFFICES 1,820 GSF = 18 OCCUPANTS (100 SF/OCC.)
CREW OPERATIONS ROOM = WILL NOT EVER HAVE GATHERINGS OF MORE THAN 50 OCCUPANTS

EXITS REQD./ PROVIDED: ENTIRE BLDG. - BUSINESS: 2 / 4
CREW OPERATIONS ROOM - 2 EXITS DIRECTLY TO EXTERIOR
OPERABLE WALL DIVIDES ROOM INTO TWO ROOMS,
EACH W/ 1 EXIT DIRECTLY TO EXTERIOR

MAXIMUM TRAVEL DISTANCE W/OUT SPRINKLER IS 200'.

EGRESS CORRIDORS FOR B OCCUPANCY ARE NOT REQUIRED TO BE RATED PER IBC 1016.1.4

EGRESS AISLES & PASSAGEWAYS WILL BE KEPT FREE AND CLEAR OF EQUIPMENT AND BARRIERS THAT WOULD LIMIT READY ACCESS TO AND THE USE OF FIRE FIGHTING EQUIPMENT.

NO DEAD END CORRIDORS OVER 20 FEET IN LENGTH.

EGRESS DOORS WILL BE SELF-CLOSING.

PORTABLE FIRE EXTINGUISHERS ARE PROVIDED.

ATTIC WILL NOT BE USED FOR COMBUSTIBLE STORAGE & REQUIRES NO DRAFTSTOPPING IF UNDER 3,000 SF

FIRE SEPARATION ASSEMBLIES OF ONE HOUR RATING WILL BE EMPLOYED AT THE FOLLOWING ROOM LOCATIONS:
A.) MECHANICAL ROOMS WITH A BOILER OR FURNACE
B.) STORAGE ROOMS GREATER THAN 50 SF

THE MECHANICAL ROOM WILL NOT BE USED FOR STORAGE PURPOSES.

FLAMMABLE LIQUIDS WILL NOT BE STORED IN ANY AMOUNTS

SMOKE DETECTION IS REQUIRED DUE TO OCCASSIONAL SLEEPING IN THE FACILITY.

THE BUILDING IS NOT REQUIRED TO HAVE : FIRE ALARM SYSTEM, PER IBC 907.2
SPRINKLER SYSTEM, PER IBC 903.2.1.3

LEGEND

▼	DIRECTION TO PATH OF TRAVEL
▬	1 HR FIRE RATED ASSEMBLY
FEC ←	FIRE EXTINGUISHER CABINET

PREL. TRACING ____ DESIGN ____ CHKD ____

CREW OPERATION BUILDING
FLOOR PLAN

DRAWING NO.	CONTRACT	COUNTY	F.A.P. NO.	SHEET NO.	TOTAL SHTS.
A-1.3	T201280104	SUSSEX		44	80

BRIDGEVILLE MAINTENACE YARD DEVELOPMENT

REVISIONS

1	02/14/13 AAB REVIEW REVISIONS
2	03/14/13 FM REVIEW REVISIONS
	ADDENDUM 2 4/9/14

ROOM FINISH LEGEND

NOTES:
SEE REFLECTED CEILING PLANS FOR CEILING FINISHES

ROOM NO. — LOBBY 126
FLOOR FIN. — A1
BASE FIN. — H
WALL FIN. (N,S,E,W) — H H H H

FLOORS
- A SHEET VINYL
- B SEALED CONCRETE
- C 12" X 12" CERAMIC TILE
- D 2" X 2" CERAMIC TILE

BASE
- 1 VINYL COVE BASE
- 2 CERAMIC TILE COVE TO MATCH FLR

WALLS
- G GWB/PAINTED
- J 4" X 4" CERAMIC TILE

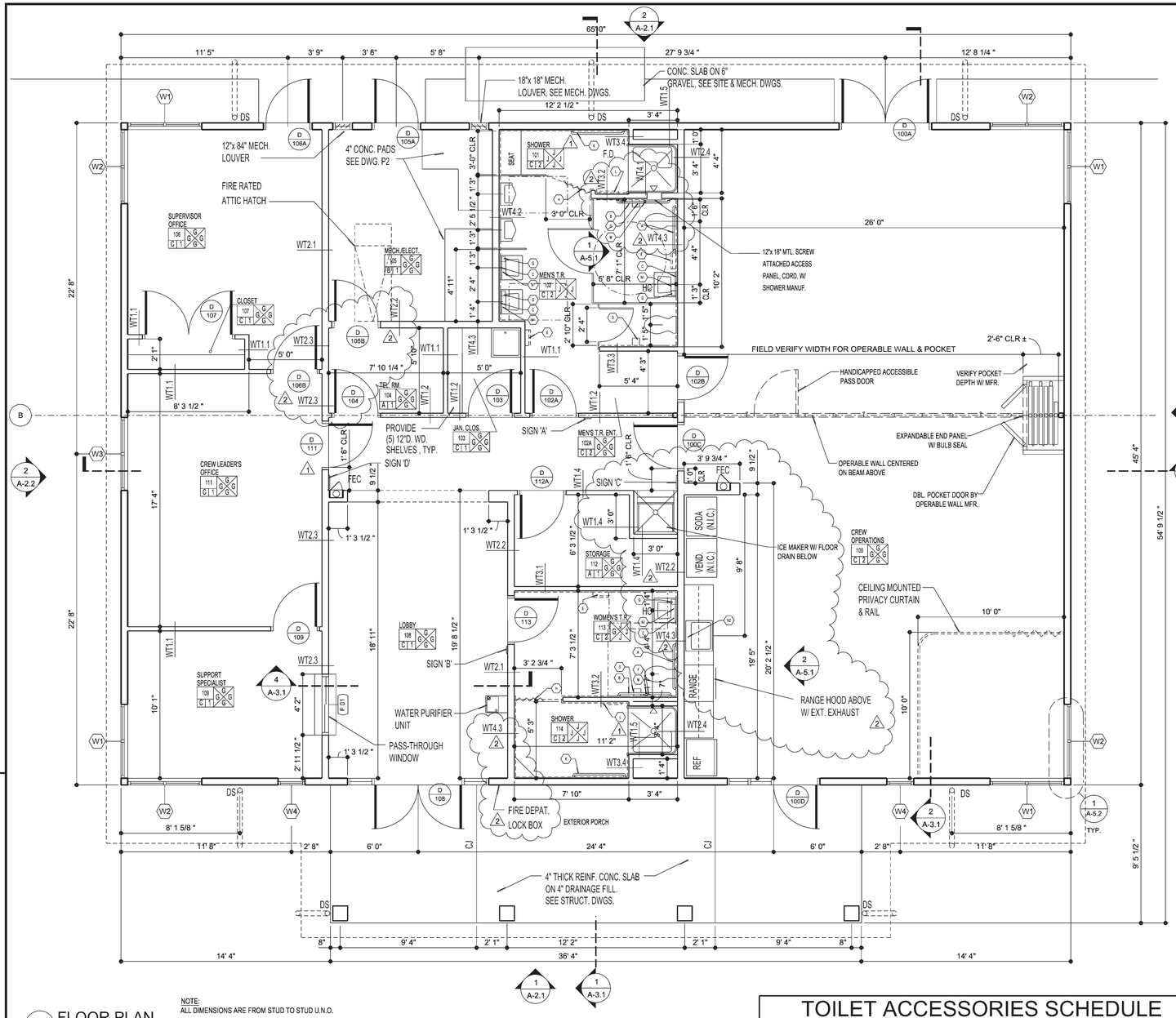

1 FLOOR PLAN-
SCALE : 1/4"= 1'-0"

NOTE:
ALL DIMENSIONS ARE FROM STUD TO STUD U.N.O.

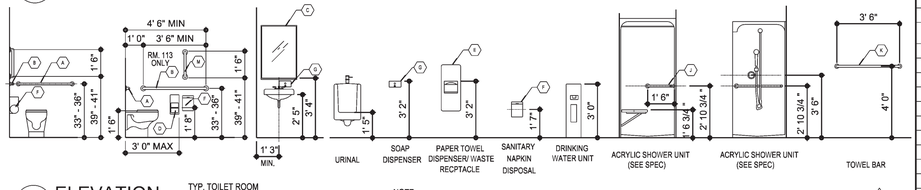

2 ELEVATION-
SCALE : 1/4" = 1'-0"
TYP. TOILET ROOM ACCESSORY MOUNTING LOCATIONS

NOTE:
ALL EXPOSED SINK PIPES TO BE ENCASED W/ REMOVABLE ADA COMPLIANT INSULATION

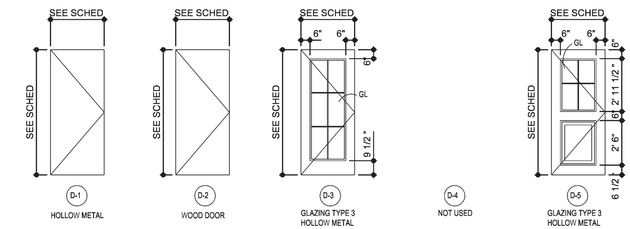

DOOR TYPES
SCALE : 1/4" = 1'-0"

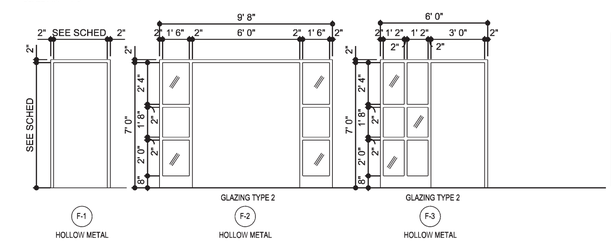

FRAME TYPES
SCALE : 1/4" = 1'-0"

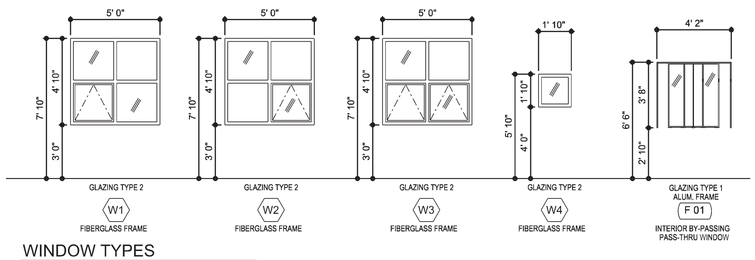

WINDOW TYPES
SCALE : 1/4" = 1'-0"

HARDWARE NOTE: DOORS SHALL BE NON-KEYED FROM THE INSIDE 2

GLAZING SCHEDULE

TYPE NO.	DESCRIPTION
1	1/4" CLEAR GLASS, FULLY TEMPERED
2	1" INSULATED UNIT W/ 1/4" CLEAR INNER LITE, 1/2" ARGON GAS FILLED, & 1/4"-"LOW E" GLAZING
3	1/4" CLEAR LEXAN - 9034

DOOR SCHEDULE-
SEE DRAWING A-5.1 FOR HEAD, JAMB & SILL DETAILS

EXTERIOR DOOR	MARK	SIZE		TYPE				DETAILS			GLAZING TYPE	HARDWARE SET	FIRE RATING	REMARKS
		WIDTH X HEIGHT	THK.	DOOR TYPE	DOOR MTL.	FRAME TYPE	FRAME MTL.	H	J	S				
●	100A	(2) 3-0 x 7-0	1-3/4	D5	16 GA. HM.	F1	14 GA. HM.	H5	J6	S3	3	1		W/ CLOSER
	100C	3-0 x 7-0	1-3/4	D2	WD	F1	16 GA. HM.	H1	J1	-	-	4		W/ CLOSER
●	100D	3-0 x 7-0	1-3/4	D3	16 GA. HM.	F3	14 GA. HM.	H5	J6	S3	3	2		W/ CLOSER
	102A	3-0 x 7-0	1-3/4	D2	WD	F1	16 GA. HM.	H1	J1		-	12		W/ CLOSER
	102B	3-0 x 7-0	1-3/4	D2	WD	F1	16 GA. HM.	H1	J1			12		W/ CLOSER
	103	3-0 x 7-0	1-3/4	D2	WD	F1	16 GA. HM.	H1	J1	S1	-	6		
	104	3-0 x 7-0	1-3/4	D2	WD	F1	16 GA. HM.	H1	J1	S1	-	6		
●	105A	3-0 x 7-0	1-3/4	D1	16 GA. HM.	F1	14 GA. HM.	H5	J6	S3	-	3		W/ CLOSER
	105B	3-0 x 7-0	1-3/4	D1	18 GA. HM	F1	16 GA. HM.	H2	J2	S1	-	7	45 MIN.	W/ CLOSER
●	106A	3-0 x 7-0	1-3/4	D5	16 GA. HM.	F1	14 GA. HM.	H5	J6	S3	3	3		W/ CLOSER
	106B	3-0 x 7-0	1-3/4	D2	WD	F1	16 GA. HM.	H1	J1	-	-	9		
	107	(2) 3-0 x 7-0	1-3/4	D2	WD	F1	16 GA. HM.	H1	J1	-	-	5		
●	108	(2) 3-0 x 7-0	1-3/4	D3	16 GA. HM.	F2	14 GA. HM.	H5	J4/ J6	S3	3	1		W/ CLOSER
	109	3-0 x 7-0	1-3/4	D2	WD	F1	16 GA. HM.	H1	J1	-	-	10		
	111	3-0 x 7-0	1-3/4	D2	WD	F1	16 GA. HM.	H2	J2	-	-	11		W/ CLOSER
	112A	3-0 x 7-0	1-3/4	D1	WD	F1	16 GA. HM.	H1	J1	S1	-	7	45 MIN.	W/ CLOSER
	113	3-0 x 7-0	1-3/4	D2	WD	F1	16 GA. HM.	H2	J2	-	-	12		W/ CLOSER

TOILET ACCESSORIES SCHEDULE

MARK	ITEM	MNT. HGT.	BOBRICK CATALOG NO.
A	1-1/2" GRAB BAR	SEE ELEVATION	B-6806 X 36
B	1-1/2" GRAB BAR	SEE ELEVATION	B-6806 X 42
C	MIRROR W/ STAINLESS STL. ANGLE FRAME, TEMPERED GLASS	40" AFF TO BOT. OF REFLECTIVE SURFACE	B-165 2436
D	TOILET PAPER DISPENSER	19" TO CENTERLINE	B-4288
E	PAPER TOWEL DISPENSER/WASTE RECEPTACLE, SURFACE MOUNTED	38" AFF TO BOT.	B-43699
F	SANITARY NAPKIN DISPOSAL	19" TO CENTERLINE	B-270
G	SOAP DISPENSER, SURFACE MOUNTED	38" AFF TO BOT.	B-2112
H	HEAVY DUTY SHOWER CURTIAN ROD, HOOKS & VINYL PRIVACY CURTAIN	78" AFF TO CENTERLINE	B-6107/ B-204-1/B-204-2
J	1-1/2" GRAB BAR	36" AFF TO CENTERLINE	BY SHOWER MANUF.
K	TOWEL BAR	48" AFF TO CENTERLINE	B-205-24
L	18" CLOTHES HOOK STRIP	60" AFF TO CENTERLINE	B-985
M	1-1/2" GRAB BAR	SEE ELEVATION	B-6806 X 18
N1	LAVATORY PROTECTIVE ENCLOSURE (TRUEBRO)		LAV SHIELD
N2	UNDERSINK PROTECTIVE ENCLOSURE (TRUEBRO)		BASIN GUARD

CHKD. ____ DESIGN ____ PREL. TRACING ____

CREW OPERATION BUILDING ATTIC PLAN	DRAWING NO.	CONTRACT	COUNTY	F.A.P. NO.	SHEET NO.	TOTAL SHTS.
	A-1.4	T201280104	SUSSEX		45	80

BRIDGEVILLE MAINTENACE YARD DEVELOPMENT

REVISIONS

1 03/14/13 FM REVIEW REVISIONS	
ADDENDUM 2 4/9/14	

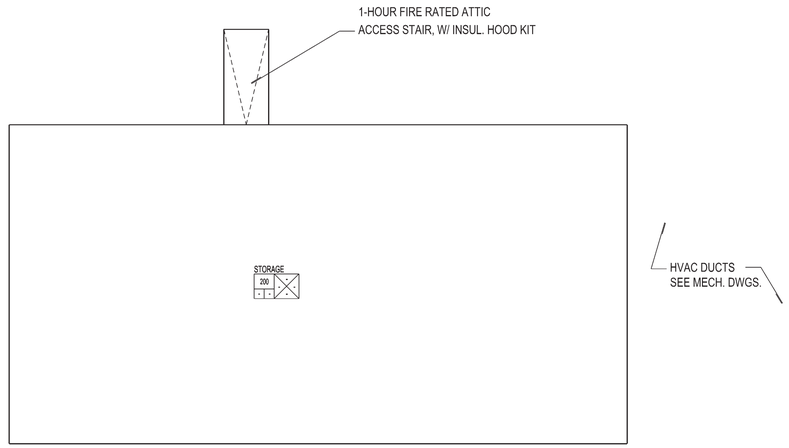

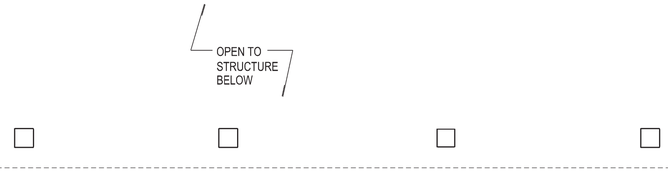

1 ATTIC PLAN
SCALE : 1/4"= 1'-0"
NOTE: ATTIC IS UNOCCUPIED

GENERAL WALL TYPE NOTES:

1. FIRE RATED AND SMOKE PARTITIONS SHALL BE SEALED CONTINUOUSLY ALONG TOP AND BASE.

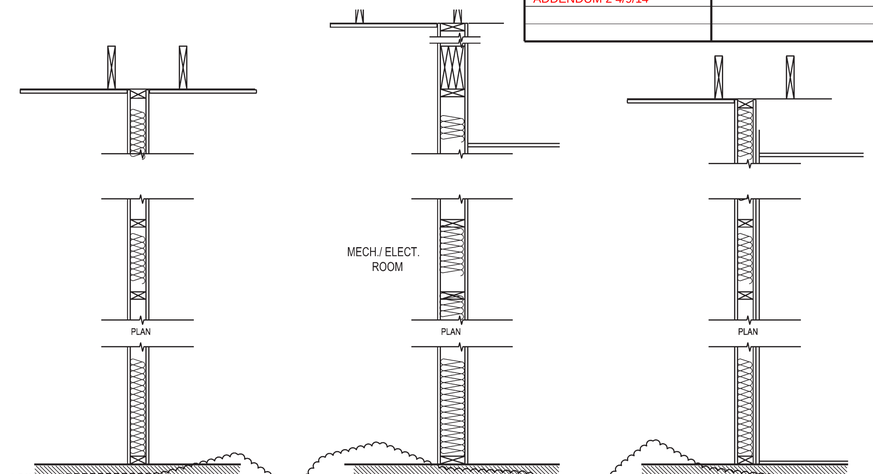

WT1.1 2"x 4" WD. STUDS @ 16" O.C. W/ 5/8" GWB BOTH SIDES.
HT. OF STUDS: 10'-0".
WALL THICKNESS: 4 3/4"

WT1.2 SAME AS WT1.1 W/ ACOUSTIC BATT INSUL.
FULL HT.

WT1.3 2"x 4" WD. STUDS @ 16" O.C. W/ 5/8" GWB ONE SIDE
HT. OF STUDS: 10'-0"
WALL THICKNESS: 4 1/8"

WT1.4 2"x 4" WD. STUDS @ 16" O.C. W/ 5/8" TYPE 'X' GWB BOTH SIDES.
HEIGHT OF STUDS: 10'-0".
WALL THICKNESS: 4 3/4"
UL DESIGN NO. U333 - 1 HR. RATED 1

WT1.5 2"x 4" WD. STUDS @ 16" O.C.
SHOWER WALL ONE SIDE, NOTHING ON OTHER SIDE
HT. OF STUDS: 10'-0"
WALL THICKNESS: 3 1/2"

WT2.1 2"x 6" WD. STUDS @ 16" O.C., W/ 3 1/2" UL RATED ACOUSTIC BATT INSUL. FULL HT. W/ 5/8" TYPE 'X' GWB BOTH SIDES, PERIMETER CAULK @ BASE & TOP PLATE.
HT. OF STUDS: UNDERSIDE OF TRUSSES
WALL THICKNESS: 6 3/4"
UL DESIGN NO. U333 - 1HR. RATED

WT2.2 SAME AS WT.2.1 BUT NO ACOUSTIC BATT INSUL. OR PERIMETER CAULK @ BASE & TOP PLATE.
UL DESIGN NO. U333 - 1HR. RATED

WT2.3 2"x 6" WD. STUDS @ 16" O.C. W/ 5/8" GWB BOTH SIDES
HT. OF STUDS: 10'-0"
WALL THICKNESS: 6 3/4"
NOT UL RATED 1

WT2.4 2"x 6" WD. STUDS @ 16" O.C. W/ SHOWER WALL ONE SIDE, 5 /8" GWB ON OTHER SIDE, W/ ACOUSTIC INSUL. FULL HT.
HT. OF STUDS: 10'-0"
WALL THICKNESS: 6 3/4"

WT3.1 2"x 4" WD. STUDS @ 16" O.C., W/ 3 1/2" UL RATED ACOUSTIC BATT INSUL. FULL HT., W/ 5/8" TYPE 'X' GWB ONE SIDE, & 1/4" CERAMIC TILE ON 1/2" CEMENT PANEL BACKER BD ON OTHER SIDE.
HT. OF STUDS: 10'-0".
WALL THICKNESS: 5"
UL DESIGN NO. U329 - 1HR. RATED

WT3.2 2" X 4" WD. STUDS @ 16" OC W/ 1/4" CERAMIC TILE ON 1/2" CEMENT PANEL BACKER BD., BOTH SIDES. NO BATTS
HT. OF STUDS: 10'-0"
WALL THICKNESS: 5 1/4"
NOT UL RATED

WT3.3 SAME AS 3.1 W/ REG. GWB & NO BATTS. 1
HT. OF STUDS: 10'-0".
WALL THICKNESS: 5"
NOT UL RATED

WT3.4 2" X 4" WD. STUDS @ 16" OC W/ 1/4" CERAMIC TILE ON 1/2" CEMENT PANEL BACKER BD., ON ONE SIDE, NOTHING ON OTHER SIDE, NO BATTS
HT. OF STUDS: 10'-0"
WALL THICKNESS: 5 1/4"
NOT UL RATED

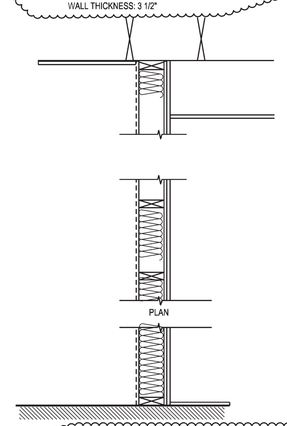

WT4.1 2"x 6" WD. STUDS @ 16" O.C. W/ 1/4" CERAMIC TILE ON 1/2" CEMENT PANEL BACKER BD., ONE SIDE & NOTHING ON THE OTHER SIDE.
HT. OF WALL: 10'-0".
WALL THICKNESS: 6 1/2"

WT4.2 2"x 6" WD. STUDS @ 16" O.C. W/ 1/4" CERAMIC TILE ON 1/2" CEMENT PANEL BACKER BD., ONE SIDE & 5/8" TYPE "X" GWB ON THE OTHER SIDE, W/ 3 1/2" UL RATED ACOUSTIC INSUL. FULL HT.
HT. OF WALL: 10'-0".
WALL THICKNESS: 6 1/2"
UL DESIGN U329 - 1 HR RATED

WT4.3 2"x 6" WD. STUDS @ 16" O.C. W/ 1/4" CERAMIC TILE ON 1/2" CEMENT PANEL BACKER BD., ONE SIDE & 5/8" GWB ON THE OTHER SIDE, W/ 3 1/2" ACOUSTIC INSUL. FULL HT.
HT. OF WALL: 10'-0".
WALL THICKNESS: 6 1/2" 1

2 WALL TYPES
SCALE : 3/4"= 1'-0"

PREL. TRACING ____ DESIGN ____ CHKD ____

CREW OPERATION BUILDING
ROOF PLAN

DRAWING NO.	CONTRACT	COUNTY	F.A.P. NO.	SHEET NO.	TOTAL SHTS.
A-1.5	T201280104	SUSSEX		46	80

BRIDGEVILLE MAINTENACE YARD DEVELOPMENT

REVISIONS

ADDENDUM 2 4/9/14

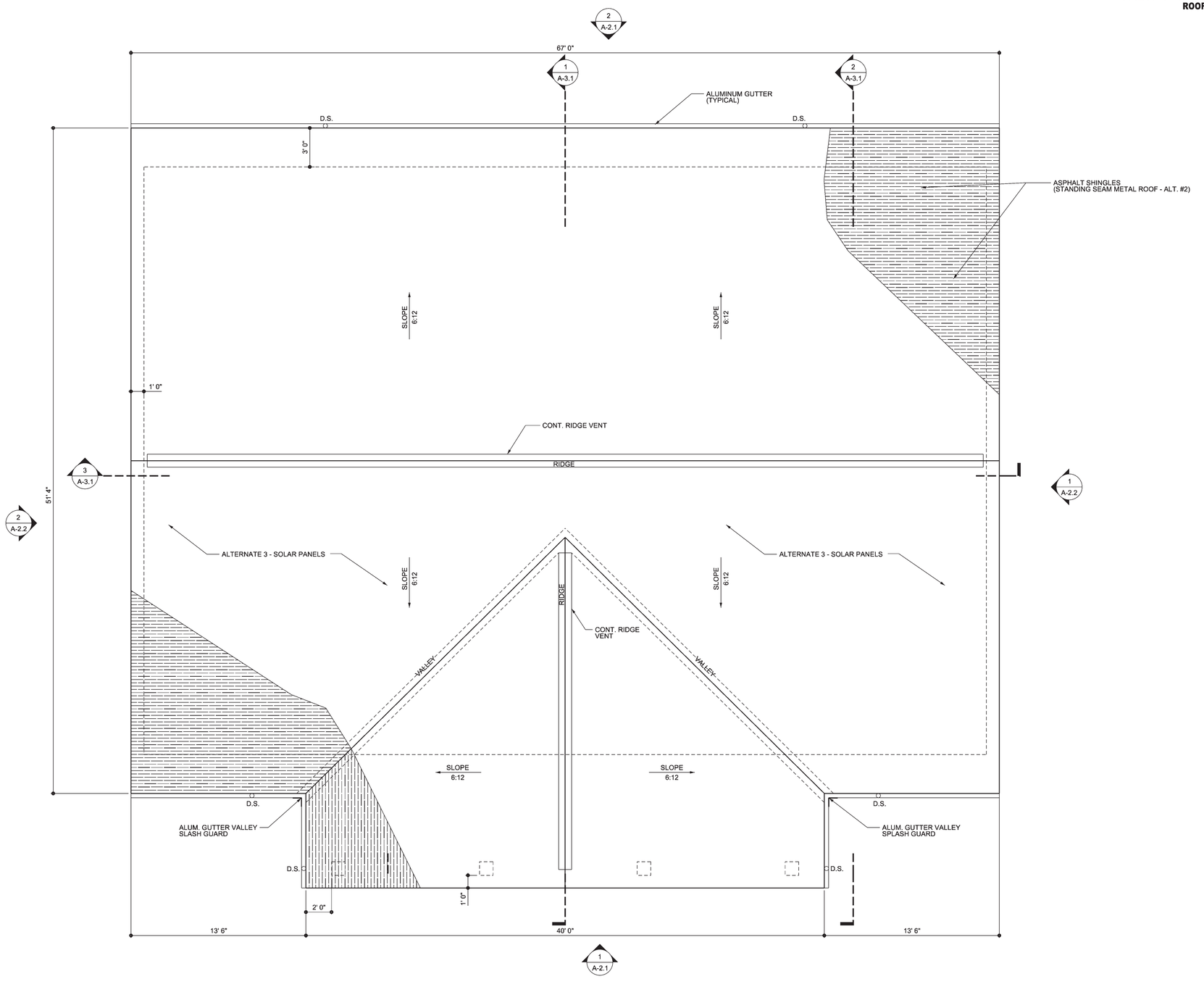

1 ROOF PLAN
SCALE : 1/4"= 1'-0"

PREL. TRACING ____ DESIGN ____ CHKD. ____

CREW OPERATION BUILDING
REFLECTED CEILING PLAN

DRAWING NO.	CONTRACT	COUNTY	F.A.P. NO.	SHEET NO.	TOTAL SHTS.
A-1.6	T201280104	SUSSEX		47	80

BRIDGEVILLE MAINTENACE YARD DEVELOPMENT

REVISIONS

1 03/14/13 FM REVIEW REVISIONS	
ADDENDUM 2 4/9/14	

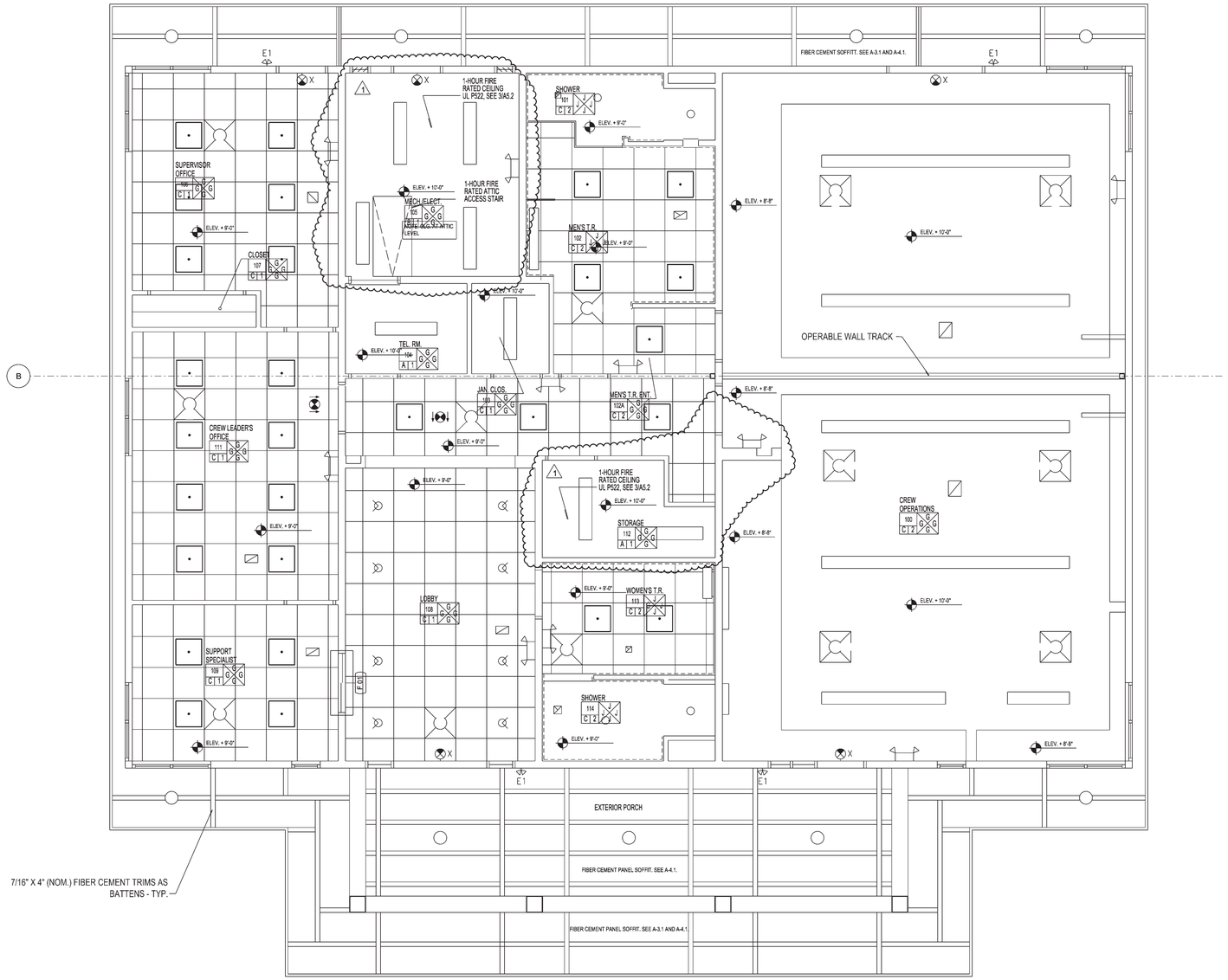

1 REFLECTED CEILING PLAN
SCALE : 1/4"= 1'-0"

REFLECTED CEILING PLAN LEGEND

SYMBOL	DESCRIPTION
	HVAC SUPPLY
	2X2 LIGHT FIXTURE
	DIRECTIONAL SPOT FIXTURE
	EXIT LIGHT
	EMERGENCY LIGHT PACK
	EMERGENCY LIGHT
	FLUORESCENT FIXTURE
	SPOT FIXTURE

NOTES:
REFER TO MECHANICAL AND ELECTRICAL FOR FIXTURE SCHEDULES AND SYSTEM INFORMATION

CHKD. ____ DESIGN ____ PREL. TRACING ____

CREW OPERATION BUILDING
FINISH FLOOR PLAN

DRAWING NO.	CONTRACT	COUNTY	F.A.P. NO.	SHEET NO.	TOTAL SHTS.
A-1.7	T201280104	SUSSEX		48	80

BRIDGEVILLE MAINTENACE YARD DEVELOPMENT

REVISIONS

ADDENDUM 2 4/9/14

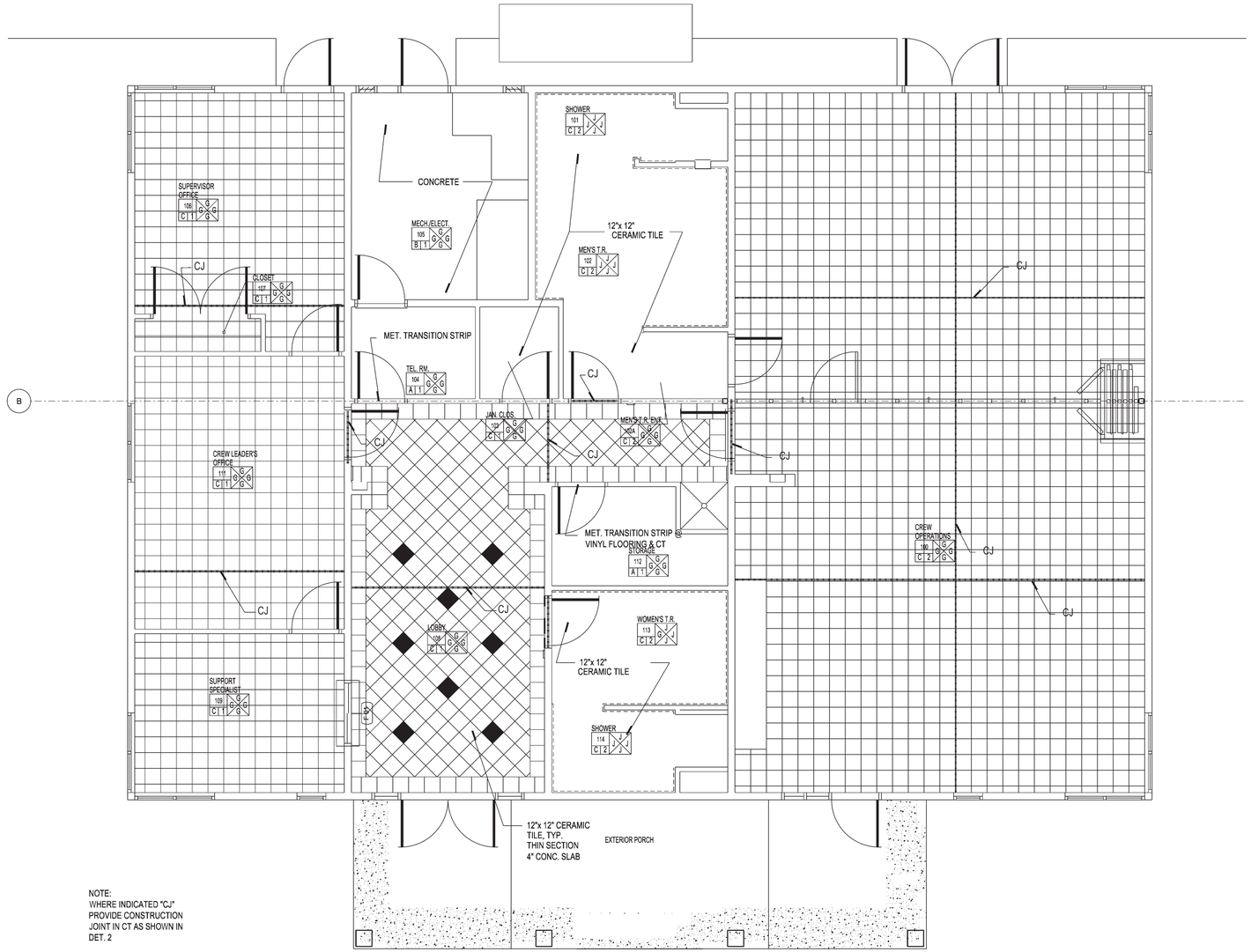

1 FINISH FLOOR PLAN
SCALE : 1/4"= 1'-0"

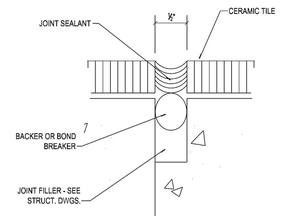

2 CONTROL JOINT DETAIL
SCALE : NTS

NOTE:
WHERE INDICATED "CJ" PROVIDE CONSTRUCTION JOINT IN CT AS SHOWN IN DET. 2

NOTE:
COORDINATE SLAB CONTROL JOINT LOCATIONS WITH TILE CONSTRUCTION JOINTS IN TILE

PREL. TRACING ____ DESIGN ____ CHKD. ____

CREW OPERATION BUILDING
BUILDING ELEVATIONS

DRAWING NO.	CONTRACT	COUNTY	F.A.P. NO.	SHEET NO.	TOTAL SHTS.
A-2.1	T201280104	SUSSEX		49	80

BRIDGEVILLE MAINTENACE YARD DEVELOPMENT

REVISIONS

ADDENDUM 2 4/9/14

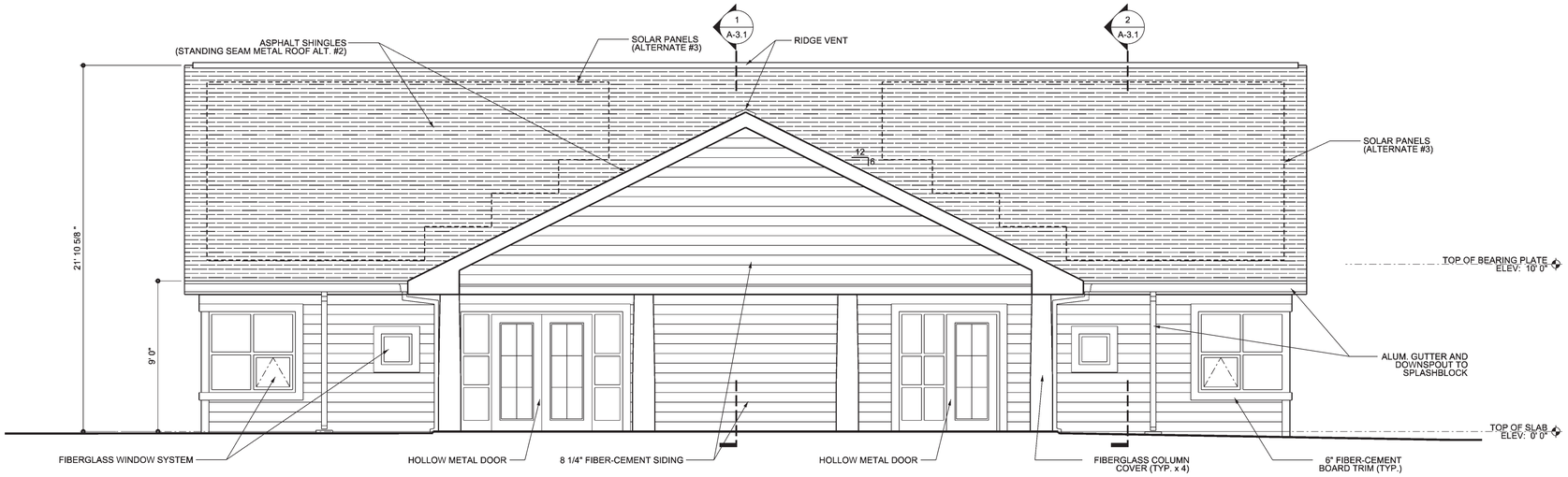

1 FRONT ELEVATION

SCALE: 1/4" = 1'0"

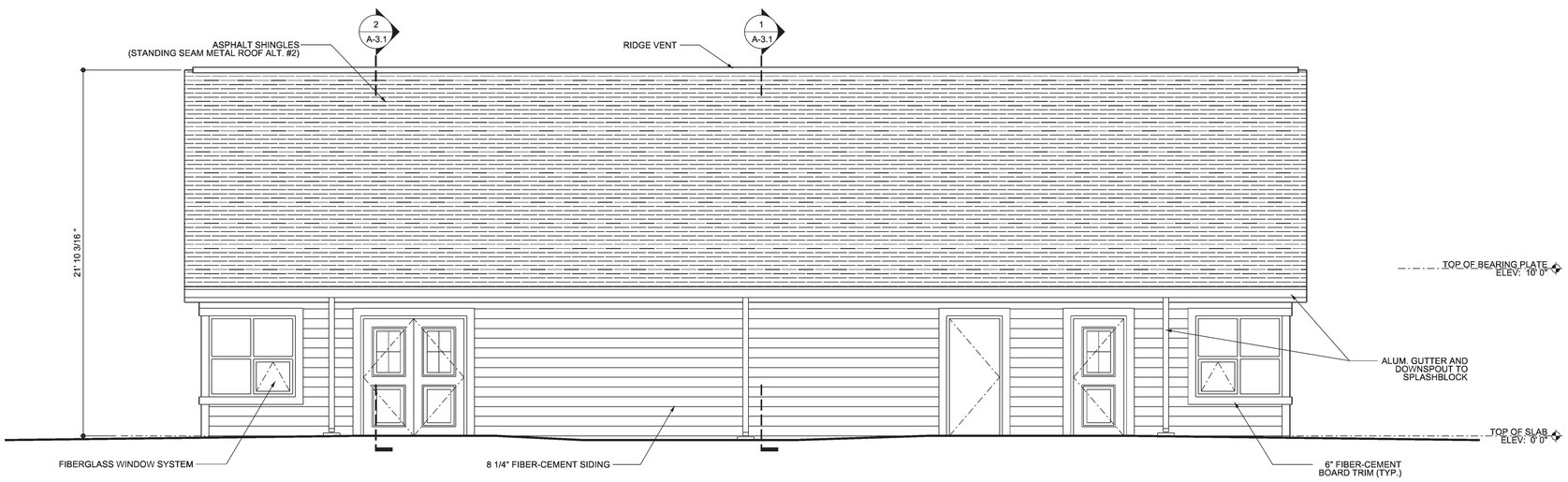

2 REAR ELEVATION

SCALE: 1/4" = 1'0"

PREL. TRACING ____ DESIGN ____ CHKD. ____

CREW OPERATION BUILDING
BUILDING ELEVATIONS

DRAWING NO.	CONTRACT	COUNTY	F.A.P. NO.	SHEET NO.	TOTAL SHTS.
A-2.2	T201280104	SUSSEX		50	80

BRIDGEVILLE MAINTENACE YARD DEVELOPMENT

REVISIONS

ADDENDUM 2 4/9/14

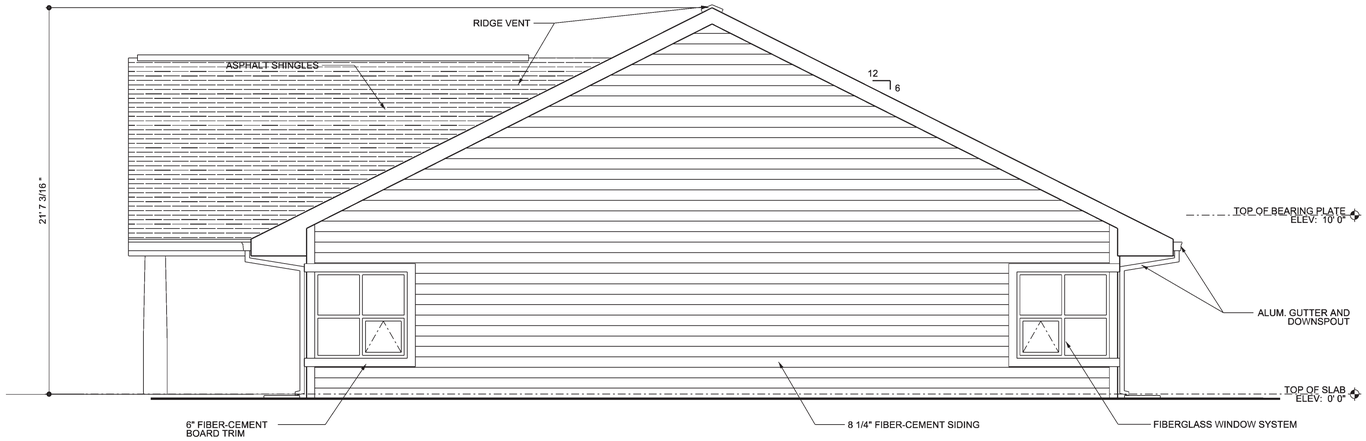

1 SIDE ELEVATION

SCALE: 1/4" = 1'0"

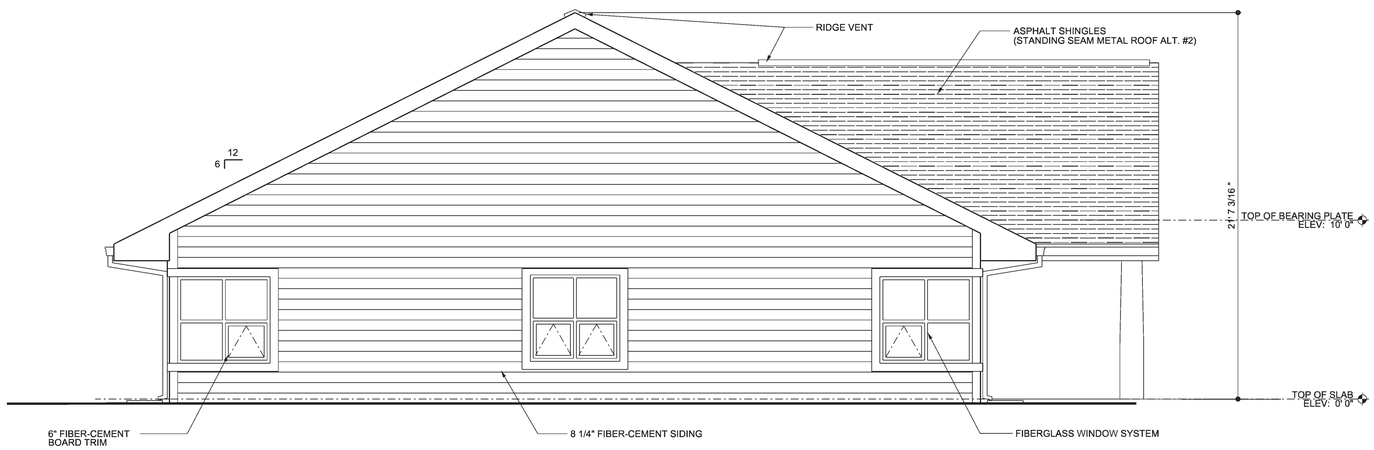

2 SIDE ELEVATION

SCALE: 1/4" = 1'0"

CHKD.

DESIGN

PREL. TRACING

CREW OPERATION BUILDING
BUILDING SECTIONS

DRAWING NO.	CONTRACT	COUNTY	F.A.P. NO.	SHEET NO.	TOTAL SHTS.
A-3.1	T201280104	SUSSEX		51	80

BRIDGEVILLE MAINTENACE YARD DEVELOPMENT

REVISIONS

1 03/14/13 FM REVIEW REVISIONS	
ADDENDUM 2 4/9/14	

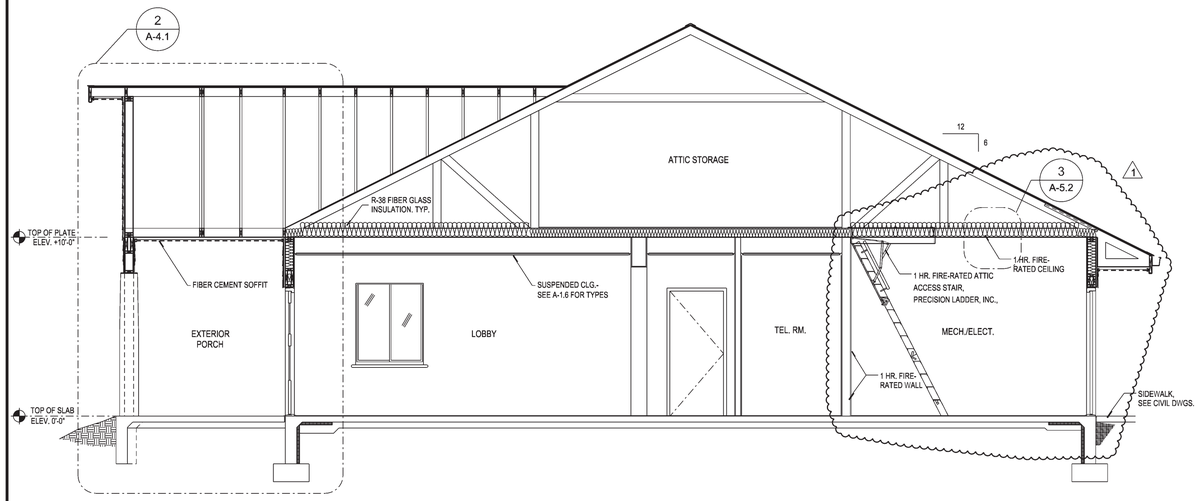

1 BUILDING SECTION
SCALE : 1/4"= 1'-0"

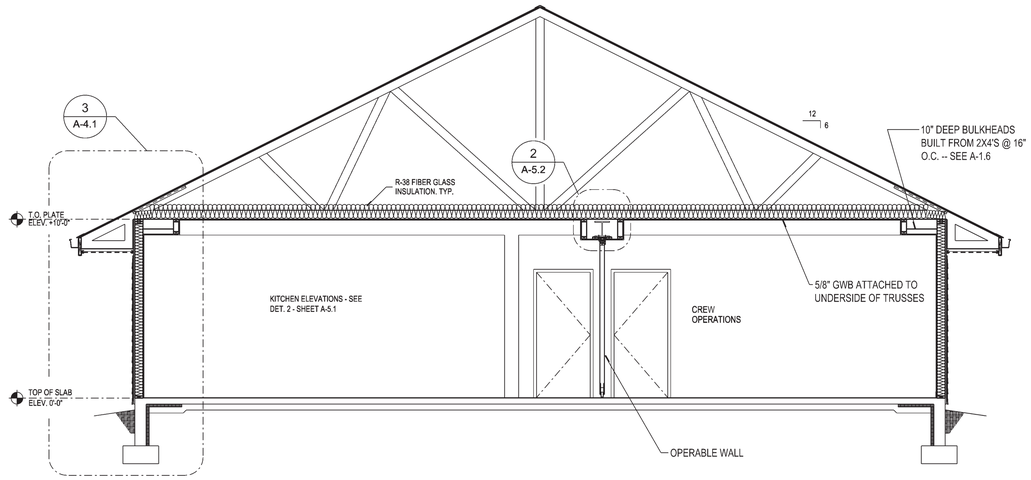

2 BUILDING SECTION
SCALE : 1/4"= 1'-0"

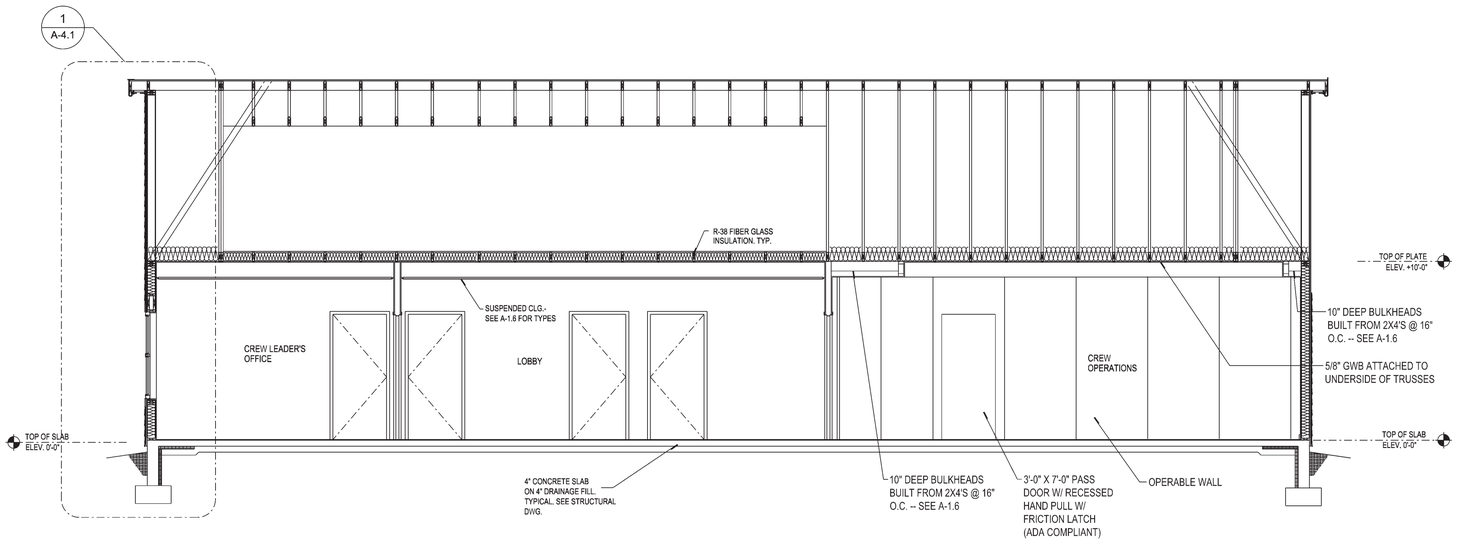

3 BUILDING SECTION
SCALE : 1/4"= 1'-0"

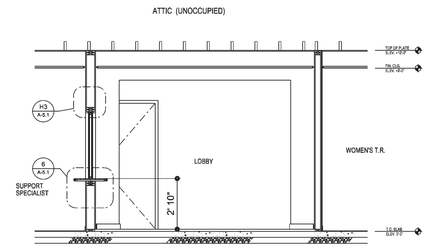

4 BUILDING SECTION
SCALE : 1/4"= 1'-0"

CHKD.
DESIGN
PREL. TRACING

CREW OPERATION BUILDING
WALL SECTIONS

DRAWING NO.	CONTRACT	COUNTY	F.A.P. NO.	SHEET NO.	TOTAL SHTS.
A-4.1	T201280104	SUSSEX		52	80

BRIDGEVILLE MAINTENACE YARD DEVELOPMENT

REVISIONS

ADDENDUM 2 4/9/14

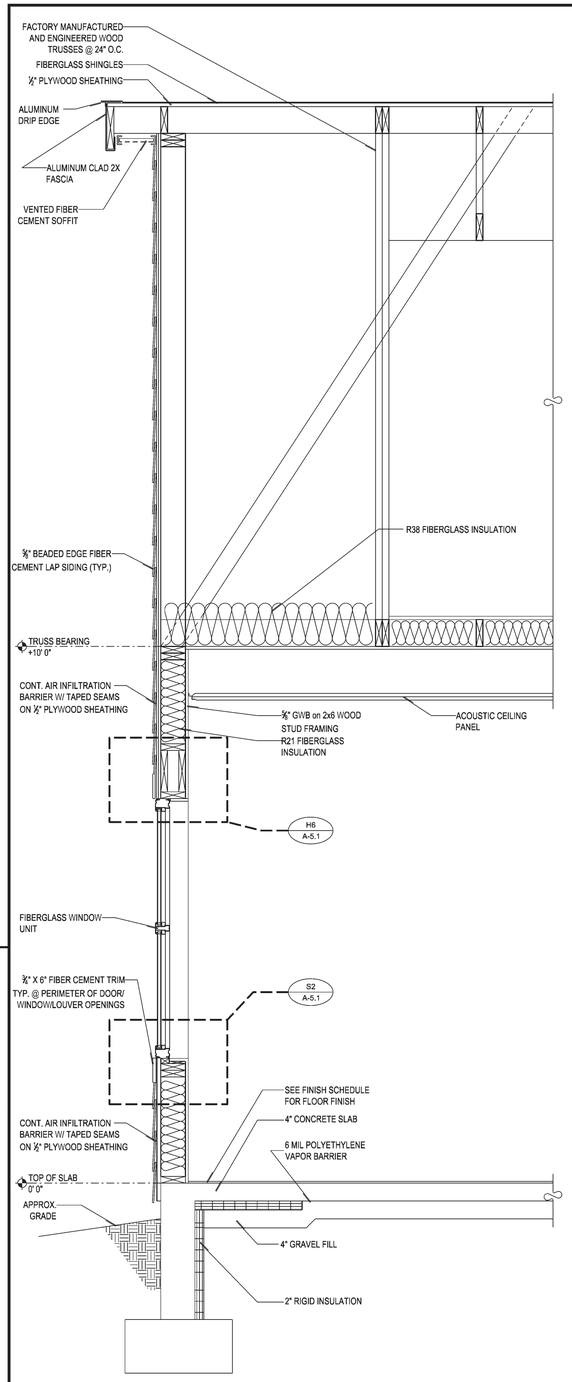

1 WALL SECTION
SCALE : 3/4"= 1'-0"

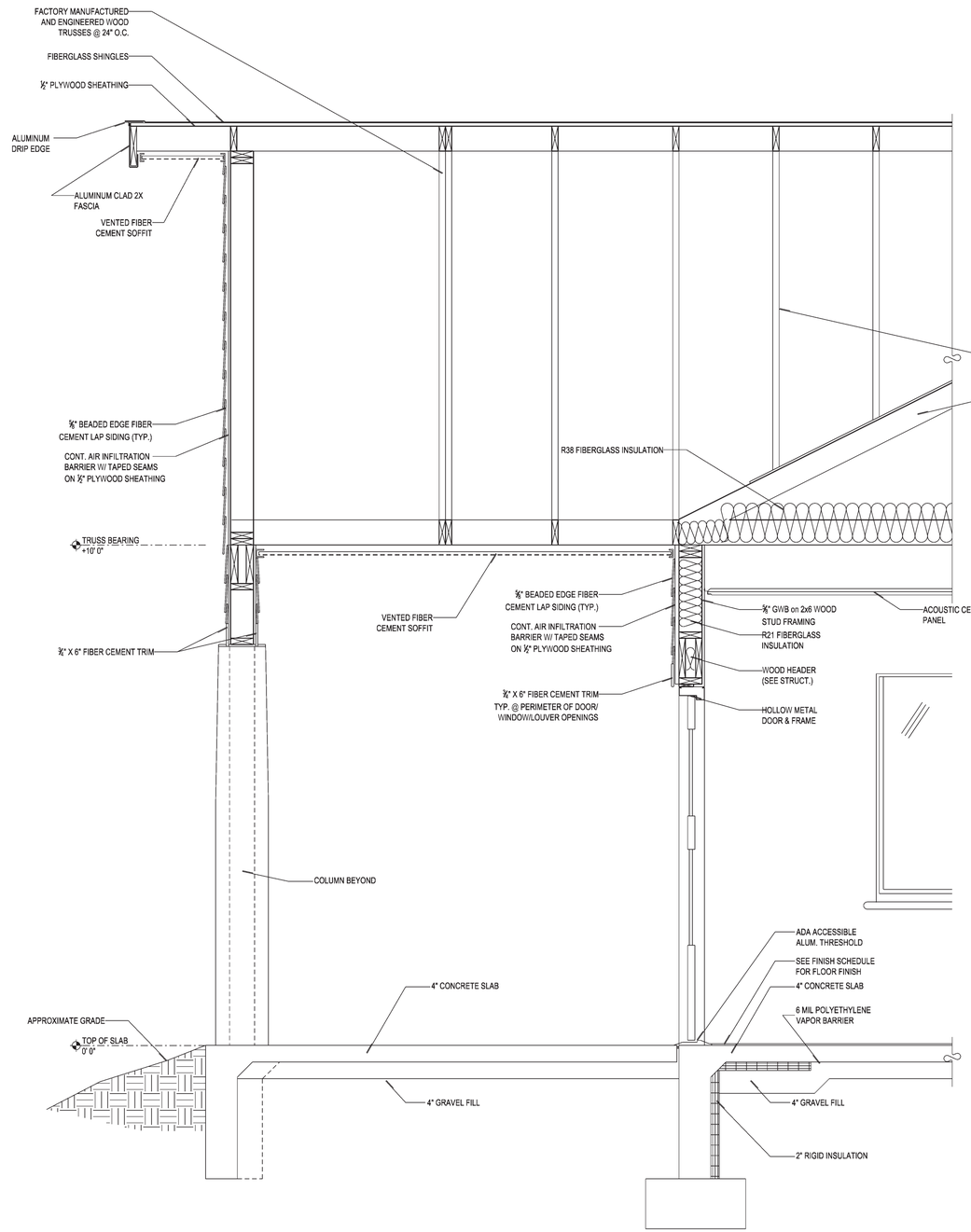

2 WALL SECTION
SCALE : 3/4"= 1'-0"

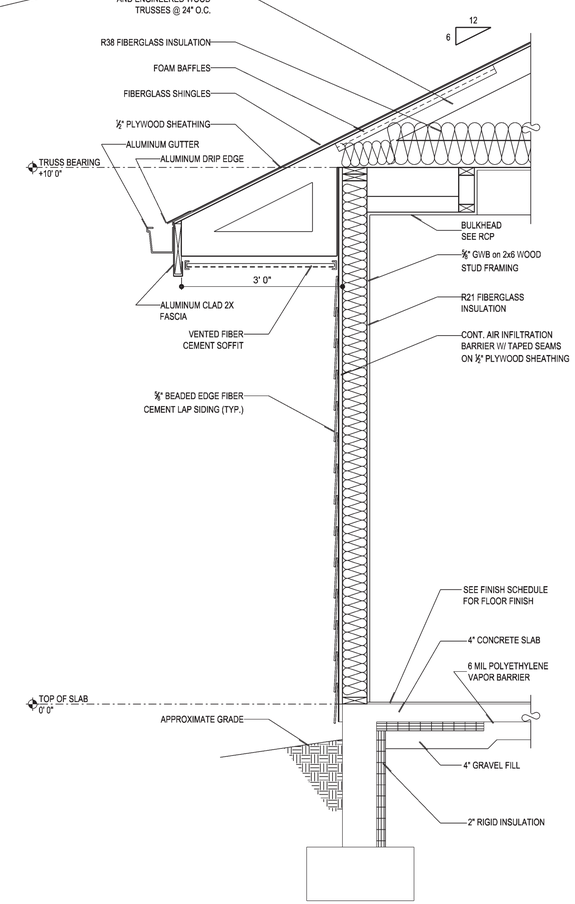

3 WALL SECTION
SCALE : 3/4"= 1'-0"

CHKD
DESIGN
PREL. TRACING

CREW OPERATION BUILDING
SECTIONS & DETAILS

DRAWING NO.	CONTRACT	COUNTY	F.A.P. NO.	SHEET NO.	TOTAL SHTS.
A-5.1	T201280104	SUSSEX		53	80

BRIDGEVILLE MAINTENACE YARD DEVELOPMENT

REVISIONS

1 02/14/13 AAB REVIEW REVISIONS	
ADDENDUM 2 4/9/14	

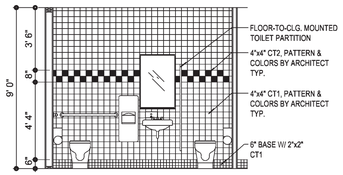

1 ELEVATION- TYP. TOILET RM. TILE PATTERN
SCALE : 1/4"= 1'-0"

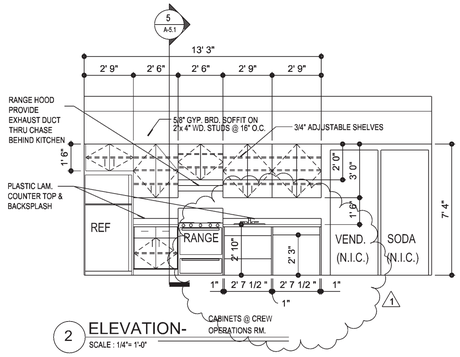

2 ELEVATION- CABINETS @ CREW OPERATIONS RM.
SCALE : 1/4"= 1'-0"

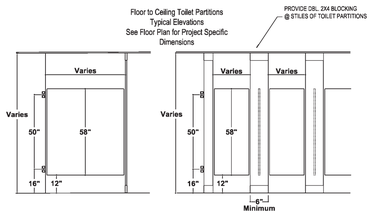

3 ELEVATION- TOILET PARTITIONS
SCALE : NOT TO SCALE

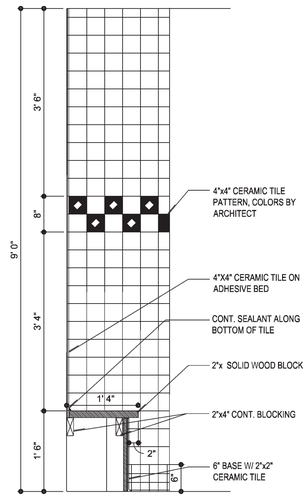

4 SECTION TYP. BENCH @ SHOWER
SCALE : 3/4"= 1'-0"

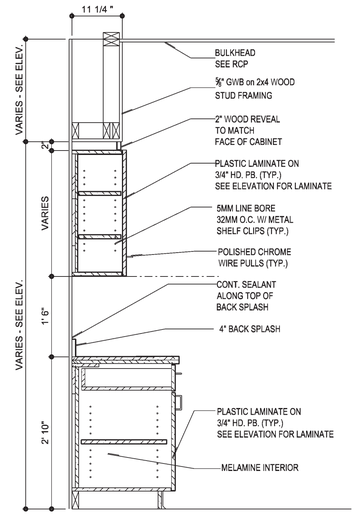

5 SECTION CABINETS @ CREW OPERATIONS RM.
SCALE : 3/4"= 1'-0"

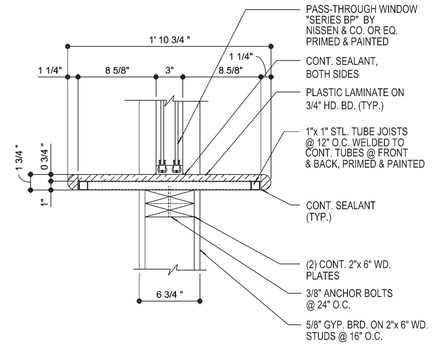

6 SECTION @ SUPPORT SPECIALIST COUNTER
SCALE : 1 1/2"= 1'-0"

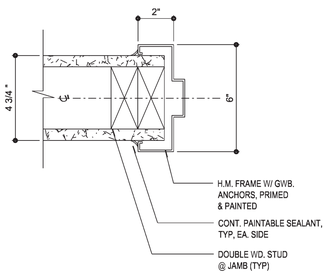

J1 H1 DETAIL- TYP. 2"x 4" GWB PARTITION
SCALE : 3"= 1'-0"

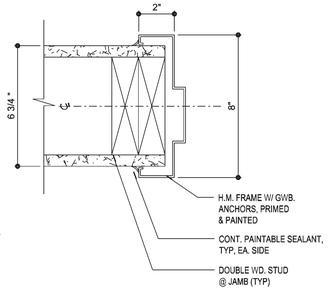

J2 H2 DETAIL- TYP. 2"x 6" GWB PARTITION
SCALE : 3"= 1'-0"

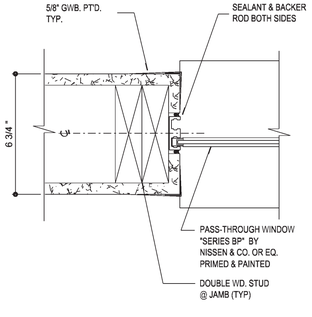

J3 DETAIL- @ PASS-THROUGH WINDOW
SCALE : 3"= 1'-0"

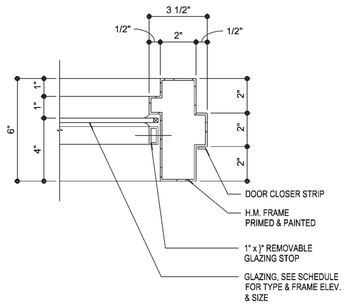

J4 DETAIL-
SCALE : 3"= 1'-0"

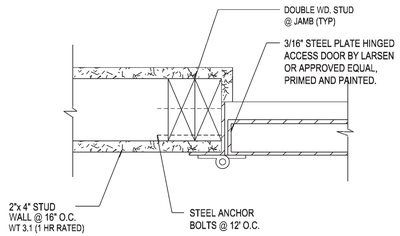

J5 DETAIL- 45 MINUTE RATED ACCESS DOOR
SCALE : 3"= 1'-0"

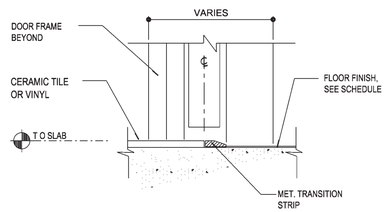

S1 DETAIL- TYP. DOOR SILL
SCALE : 3"= 1'-0"

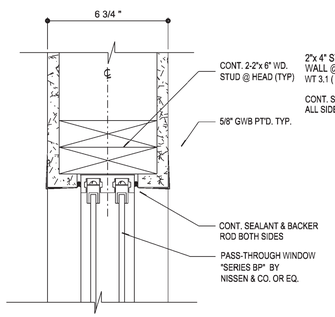

H3 DETAIL- @ PASS-THROUGH WINDOW
SCALE : 3"= 1'-0"

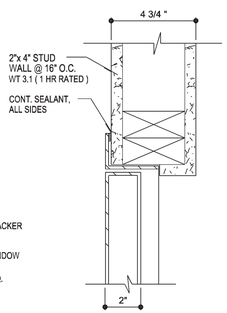

H4 DETAIL- 45 MINUTE RATED ACCESS DOOR
SCALE : 3"= 1'-0"

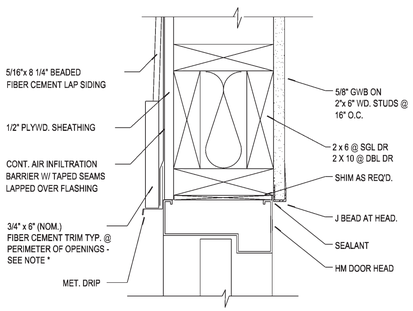

* NOTE: 3/4" THICK TRIM OR 7/16" W/ SPACER

NOTE: J6 SIMILAR EXCEPT W/ DBL. STUDS ONLY & NO MET. DRIP

J6 H5 DETAIL- TYP. EXTERIOR DOOR
SCALE : 3"= 1'-0"

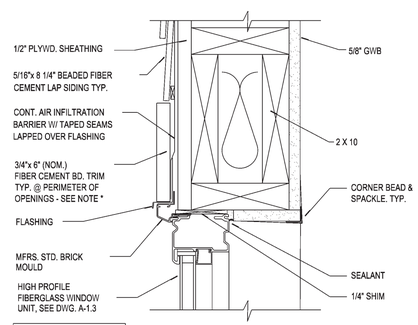

* NOTE: 3/4" THICK TRIM OR 7/16" W/ SPACER

H6 DETAIL- TYP. EXTERIOR WINDOW
SCALE : 3"= 1'-0"

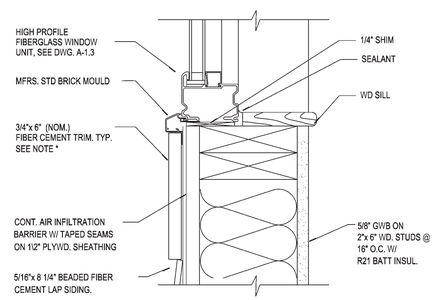

* NOTE: 3/4" THICK TRIM OR 7/16" W/ SPACER

S2 DETAIL- TYP. EXTERIOR WINDOW
SCALE : 3"= 1'-0"

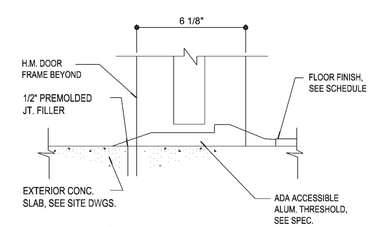

S3 DETAIL- TYP. EXTERIOR SILL
SCALE : 3"= 1'-0"

CHKD
DESIGN
PREL. TRACING

CREW OPERATION BUILDING
DETAILS

DRAWING NO.	CONTRACT	COUNTY	F.A.P. NO.	SHEET NO.	TOTAL SHTS.
A-5.2	T201280104	SUSSEX		54	80

BRIDGEVILLE MAINTENACE YARD DEVELOPMENT

REVISIONS

1 03/14/13 FM REVIEW REVISIONS	
ADDENDUM 2 4/9/14	

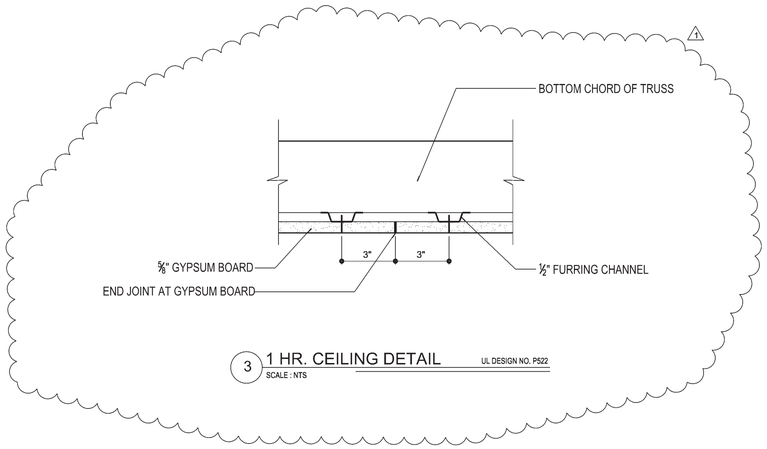

3 1 HR. CEILING DETAIL UL DESIGN NO. P522
SCALE : NTS

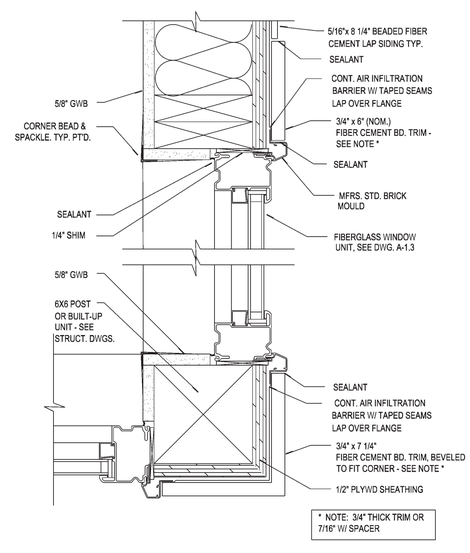

1 DETAIL - TYP. EXT. CORNER @ WINDOW
SCALE : 3"= 1'-0"

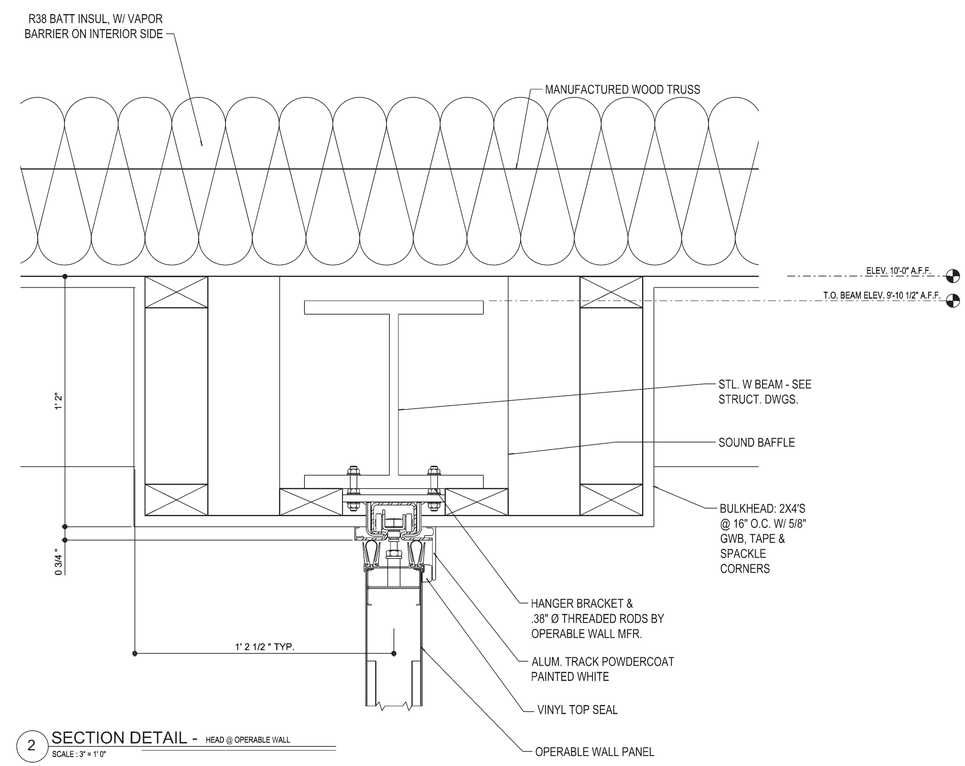

2 SECTION DETAIL - HEAD @ OPERABLE WALL
SCALE : 3" = 1' 0"

PREL. TRACING ____ DESIGN ____ CHKD ____

S-01	CONTRACT	COUNTY	F.A.P. NO.	SHEET NO.	TOTAL SHTS.
	T201280104	SUSSEX	SEE TITLE SHEET	55	80

STRUCTURAL NOTES

BRIDGEVILLE MAINTENANCE YARD DEVELOPMENT

REVISIONS

ADDENDUM 2 4/9/14

DESIGN CRITERIA

THE DESIGN OF THE STRUCTURE IS IN ACCORDANCE WITH INTERNATIONAL BUILDING CODE (IBC), 2003.

1. DESIGN LIVE LOADS
   - A. CORRIDORS / DECK / PUBLIC SPACES: 100 PSF
   - B. STAIRS: 100 PSF
   - C. ROOF: 25 PSF MINIMUM
   - D. LIVE LOAD REDUCTION HAS BEEN TAKEN AS PERMITED.
   - E. ATTIC: 125 PSF.
3. SNOW LOADING:
   - A. GROUND SNOW LOAD (Pg): 20 PSF
   - B. FLAT ROOF SNOW LOAD (Pf): 24 PSF
   - C. SNOW EXPOSURE FACTOR (Ce): 1.0
   - D. IMPORTANCE FACTOR (Is): 1.2
   - E. THERMAL FACTOR (Ct): 1.2
   - F. ADDITIONAL LOADING DUE TO DRIFTING SNOW AND SLIDING SNOW HAS BEEN ACCOUNTED FOR WHERE APPLICABLE.
4. WIND LOADING ON MAIN WIND FORCE - RESISTING SYSTEM:
   - A. BASIC WIND SPEED: 100 MPH
   - B. IMPORTANCE FACTOR (Iw): 1.0
   - C. WIND EXPOSURE: C
   - D. BUILDING CATEGORY: I
   - E. DESIGN WIND PRESSURES
     - I. MWFRS: -16.6 PSF, +19.7 PSF MAXIMUM
     - II. OVERHANGS: -31.4 PSF

MISCELLANEOUS

1. CONTRACTOR SHALL VERIFY CONDITIONS IN THE FIELD AND IMMEDIATELY NOTIFY ENGINEER OR ARCHITECT OF ANY CONDITIONS NOT AS SHOWN. CONTRACTOR SHALL TAKE FIELD MEASUREMENTS AS REQUIRED.
2. CONTRACTOR SHALL COORDINATE DETAILING, FABRICATION AND ERECTION WITH ALL RELATED TRADES PRIOR TO SUBMITTING SHOP DRAWINGS FOR APPROVAL. ALL SHOP DRAWINGS USED FOR WORK SHALL BEAR THE STAMP OF THE ARCHITECT/ENGINEER. NO SHOP DRAWINGS SHALL BE USED WHICH ARE MARKED "REVISE AND RESUBMIT", "REJECTED", "RETURNED FOR CORRECTION", OR WORDS TO THAT EFFECT.
3. ALL STRUCTURAL WORK SHALL BE COORDINATED WITH ARCHITECTURAL, MECHANICAL, ELECTRICAL, AND PLUMBING REQUIREMENTS. DISCREPANCIES AND/OR INTERFERENCES SHALL BE REPORTED TO THE ARCHITECT/ENGINEER.
4. SUPPORT DETAILS FOR ARCHITECTURAL, MECHANICAL, ELECTRICAL AND PLUMBING EQUIPMENT IS BASED UPON AVAILABLE INFORMATION OF MANUFACTURER. CONTRACTOR SHALL COORDINATE REQUIREMENTS OF ACTUAL EQUIPMENT SUPPLIED WITH DETAILS AND SHALL PROVIDE ANY ADDITIONAL FRAMING REQUIRED AT NO ADDITIONAL COST TO OWNER. ANY REDESIGN COSTS SHALL BE PAID BY THE CONTRACTOR.
5. THE DESIGN LIVE LOADS SHALL NOT BE EXCEEDED DURING CONSTRUCTION. CONTRACTOR SHALL BE RESPONSIBLE FOR PROVIDING ADEQUATE SHORING AND/OR BRACING DURING CONSTRUCTION TO ACCOUNT FOR ALL LOADING, INCLUDING BUT NOT LIMITED TO GRAVITY, WIND, EARTHQUAKE, EARTH AND CONSTRUCTION LOADING. BRACING MEMBERS SHOWN ARE THOSE REQUIRED FOR THE FINISHED STRUCTURE AND MAY NOT BE ADEQUATE FOR CONSTRUCTION LOADS.
6. NO OPENINGS SHALL BE MADE IN ANY STRUCTURAL MEMBER, UNLESS SPECIFICALLY SHOWN ON THE STRUCTURAL DRAWINGS, WITHOUT WRITTEN APPROVAL FROM THE ENGINEER. NO SLEEVES SHALL BE PLACED HORIZONTALLY OR VERTICALLY IN BEAMS OR JOISTS, UNLESS SPECIFICALLY SHOWN ON THE STRUCTURAL DRAWINGS, WITHOUT WRITTEN APPROVAL FROM THE ENGINEER.
7. THE CONTRACTOR SHALL BE RESPONSIBLE FOR FOR THE DESIGN, INSTALLATION, MAINTENANCE, AND REMOVAL OF ALL SHORING, BRACING, AND DEWATERING REQUIRED FOR ALL ASPECTS OF CONSTRUCTION TO CONSTRUCT NEW AND PROTECT ADJACENT STRUCTURES, PAVEMENTS AND UTILITIES. DO NOT REMOVE SHORING, SUCH AS SHEET PILING, IF IT WILL CAUSE SETTLEMENT OR DAMAGE TO EXISTING OR NEW STRUCTURES, PAVEMENT AND/OR UTILITIES.
8. MANUFACTURER'S PRODUCTS REFERRED TO WITHIN THESE PLANS ARE FOR REFERENCE ONLY. THE CONTRACTOR MAY SUBMIT ALTERNATE PRODUCTS THAT MEET THE PERFORMANCE OF THE PRODUCT(S) LISTED.

STRUCTURAL TESTS AND SPECIAL INSPECTIONS

1. DELDOT SHALL INSPECT, MONITOR AND/OR TEST THE FOLLOWING IN ACCORDANCE WITH THE PROJECT SPECIFICATIONS: REPORTS OF INSPECTIONS SHALL BE SUBMITTED TO THE ENGINEER AND BUILDING OFFICIAL.
   - A. STRUCTURAL STEEL
   - A.1. TESTING AND INSPECTION OF STRUCTURAL STEEL WORK SHALL COMPLY WITH TABLE 1704.3-REQUIRED VERIFICATION AND INSPECTION OF STEEL CONSTRUCTION OF THE IBC.
   - A.2. VERIFY WELDING MATERIALS, WELDING PROCEDURES AND QUALIFICATIONS OF WELDERS IN ACCORDANCE WITH AWS D1.1 PRIOR TO START OF FABRICATION.
   - A.3. INSPECT WELDING AT THE FABRICATION SHOP PRIOR TO SHIPMENT.
   - A.4. VERIFY MATERIALS FOR STRUCTURAL STEEL, HIGH STRENGTH STEEL BOLTS, NUTS AND WASHERS, AND WELD FILLER MATERIALS.
   - A.5. INSPECT INSTALLATION OF HIGH STRENGTH BOLTS IN ACCORDANCE WITH AISC SPECIFICATIONS.
   - A.6. INSPECT JOINT FIT-UP PRIOR TO WELDING.
   - A.7. INSPECT ALL JOINTS AND CONNECTIONS TO VERIFY COMPLIANCE WITH APPROVED DETAILS SHOWN ON SHOP DRAWINGS AND/OR CONSTRUCTION DOCUMENTS.
   - A.8. INSPECT STEEL STAIR CONSTRUCTION AND GUARDRAILS.
2. DELDOT SHALL PROVIDE MONITORING AND OR INSPECTION OF SOILS, CONCRETE, REINFORCING STEEL, AND ASPHALT. THE CONTRACTOR SHALL SUBMIT CONCRETE MIX DESIGNS FOR APPROVAL PRIOR TO CONSTRUCTION. TESTING BY DELDOT SHALL INCLUDE, BUT NOT BE LIMITED TO:
   - B. SOILS
   - B.1. SITE PREPARATION, INCLUDING PROOFROLLING SUBGRADE.
   - B.2. FILL AND/OR BACKFILL PLACEMENT AND COMPACTION, INCLUDING TESTING OF IN-PLACE DENSITY.
   - B.3. VERIFICATION OF SOIL BEARING CAPACITY FOR FOOTINGS AND FOUNDATIONS.
   - C. CONCRETE CONSTRUCTION
   - C.1. MONITOR, INSPECT AND TEST IN ACCORDANCE WITH TABLE 1704.4 OF IBC.
   - C.2. INSPECT REINFORCING STEEL AND ANCHOR BOLT PLACEMENT.
   - C.3. SAMPLING AND TESTING OF CONCRETE MATERIALS.
   - C.4. INSPECTION OF CONCRETE PLACEMENT.
   - C.5. VERIFICATION OF CURING TEMPERATURES AND CURING METHODS.

CONCRETE

1. ALL CONCRETE WORK SHALL BE IN ACCORDANCE WITH ACI 301 - "SPECIFICATIONS FOR STRUCTURAL CONCRETE" AND ACI 318 - "BUILDING CODE REQUIREMENTS FOR STRUCTURAL CONCRETE."
2. CONCRETE DESIGN MIXES/STRENGTHS SHALL BE AS INDICATED IN THE SPECIFICATIONS OR PLANS. ALL CONCRETE SHALL CONTAIN A WATER-REDUCING ADMIXTURE. CALCIUM CHLORIDE IS PROHIBITED.
3. REPRESENTATIVE TEST CYLINDERS WILL BE TAKEN FROM THE CONCRETE PLACED EACH DAY IN ACCORDANCE WITH SPECIFICATIONS.
4. REINFORCING STEEL SHALL BE DEFORMED BARS OF NEW BILLET STEEL CONFORMING TO ASTM A615, GRADE 60, EXCEPT PIER TIES MAY BE GRADE 40. REINFORCING STEEL FOR WELDED APPLICATIONS SHALL BE DEFORMED BARS CONFORMING TO ASTM A706.
5. ALL WELDING OF REINFORCING STEEL SHALL BE DONE BY CERTIFIED WELDERS IN ACCORDANCE WITH AWS D1.4 - STRUCTURAL WELDING CODE-REINFORCING STEEL.
6. ALL HOOKS SHALL BE STANDARD HOOKS, UNLESS OTHERWISE NOTED.
7. WELDED WIRE FABRIC SHALL CONFORM TO ASTM A185. ALL WELDED WIRE FABRIC SHALL BE SPLICED SO THAT THE OVERLAP OF THE OUTERMOST CROSS WIRES OF EACH ADJOINING SHEET IS NOT LESS THAN THE SPACING OF THE CROSS WIRES PLUS TWO INCHES, UNLESS OTHERWISE SHOWN ON DRAWINGS.
8. FOR ALL SLABS ON GRADE WHERE NOT OTHERWISE SPECIFIED, USE 6 X 6 - W2.9 X W2.9 W.W.F.
9. CONCRETE COVER OVER REINFORCING UNLESS OTHERWISE SHOWN, SHALL BE 1" FOR INTERIOR FACE OF WALLS NOT EXPOSED TO EARTH, 2" FOR EXTERIOR FACE OF WALLS, 3" FOR FOOTINGS AND OTHER STRUCTURAL CONCRETE DEPOSITED AGAINST GROUND, 2" FOR CONCRETE PERMANENTLY EXPOSED TO EARTH OR WEATHER, 3/4" FOR SLABS, 1-1/2" FOR BEAM STIRRUPS AND COLUMN TIES, 2" FOR VERTICAL COLUMN REINFORCING.
10. ALL STRUCTURAL MEMBERS SHALL BE POURED FOR THEIR FULL DEPTHS IN ONE OPERATION. NO HORIZONTAL JOINTS SHALL BE PLACED IN WALLS EXCEPT AS SHOWN ON THE DRAWINGS WITHOUT APPROVAL OF THE ENGINEER.
11. NO CONCRETE SHALL BE PLACED IN WATER OR ON FROZEN SUBGRADE.
12. ALL SLABS-ON-GRADE SHALL HAVE THICKENED SECTIONS, DEPRESSIONS, JOINTS, PENETRATIONS, ETC. AS SHOWN IN TYPICAL DETAILS OR AS REQUIRED BY VARIOUS TRADES.
13. PROVIDE WATER STOPS AT LOCATIONS SHOWN ON DRAWINGS.
14. FOR ADDITIONAL CONCRETE WORK NOT SHOWN ON STRUCTURAL DRAWINGS, SEE ARCHITECTURAL, CIVIL (SITE WORK), MECHANICAL, ELECTRICAL AND PLUMBING DRAWINGS.
15. ALL FRAMED SLABS SHALL HAVE SLOPES, DEPRESSIONS, OPENINGS, ETC. AS SHOWN HEREIN OR ON ARCHITECTURAL, MECHANICAL, ELECTRICAL & PLUMBING DRAWINGS. PROVIDE ADDITIONAL STEEL AS SHOWN IN TYPICAL DETAILS.
16. PROVIDE BAR SUPPORTS AND SPACERS IN ACCORDANCE WITH CRSI MANUAL OF STANDARD PRACTICE AND PROJECT SPECIFICATIONS.
17. THE REQUIRED AIR CONTENT FOR ALL CONCRETE EXPOSED TO FREEZE - THAW CYCLES SHALL BE 3 TO 7%.
18. CURING OF CONCRETE SLABS ON GRADE SHALL BE BY POLYETHELENE PLASTIC SHEETING. NO CURING COMPOUND SHALL BE ALLOWED.

STRUCTURAL STEEL

1. STRUCTURAL STEEL WORK SHALL CONFORM TO THE AISC SPECIFICATION FOR STRUCTURAL STEEL BUILDINGS, ALLOWABLE STRESS DESIGN AND PLASTIC DESIGN (AISC 335) AND AISC SPECIFICATION FOR THE DESIGN OF STEEL HOLLOW STRUCTURAL SECTIONS (AISC-HSS).
2. STRUCTURAL STEEL MATERIALS SHALL CONFORM TO THE FOLLOWING ASTM DESIGNATIONS:
   - A. STRUCTURAL STEEL WIDE FLANGE SHAPES: A992 HAVING A MINIMUM YIELD STRENGTH OF 50 KSI.
   - B. OTHER STRUCTURAL STEEL SHAPES, BARS AND PLATES: A36 HAVING A MINIMUM YIELD STRENGTH OF 36 KSI.
   - C. SQUARE AND RECTANGULAR TUBING: A500, GRADE B HAVING A MINIMUM YIELD STRENGTH OF 46 KSI.
3. BOLTS SHALL CONFORM TO THE FOLLOWING ASTM DESIGNATIONS:
   - A. HIGH STRENGTH BOLTS: A325.
   - B. ANCHOR RODS: F1554.
4. ALL WELDING SHALL BE DONE BY CERTIFIED WELDERS IN ACCORDANCE WITH AWS D.1.1, STRUCTURAL WELDING CODE - STEEL. ALL WELDING ELECTRODES SHALL CONFORM TO THE E-70 SERIES OF THE AWS.
5. ALL BOLTS SHALL BE MINIMUM 3/4" DIAMETER, INSTALLED IN STANDARD HOLES UNLESS OTHERWISE SHOWN OR NOTED.
6. ALL HIGH STRENGTH BOLTS IN STANDARD HOLES SHALL BE CONSIDERED TYPE N BOLTS, UNLESS NOTED OTHERWISE. ALL HIGH STRENGTH BOLTS IN OVERSIZED HOLES, IN CONNECTIONS WITHIN LATERAL FORCE RESISTING FRAMES, AND IN CONNECTIONS OF TRUSSES SHALL BE CONSIDERED "SLIP CRITICAL," UNLESS NOTED OTHERWISE.
7. ALL HIGH STRENGTH BOLTS SHALL BE INSTALLED WITH FULL PRETENSION UNLESS SPECIFICALLY NOTED AS "SNUG TIGHT" ON THE DRAWINGS. TIGHTEN BOLTS BY THE TURN-OF-NUT METHOD BY USING A DIRECT TENSION INDICATOR, OR BY CALIBRATED WRENCH.
8. ALL FIELD CONNECTIONS SHALL BE HIGH STRENGTH BOLTED EXCEPT WHERE DETAILS INDICATE WELDING.
9. NO PENETRATIONS ARE PERMITTED THROUGH STRUCTURAL STEEL MEMBERS UNLESS INDICATED ON STRUCTURAL DRAWINGS OR WITH WRITTEN APPROVAL OF ENGINEER.
10. DURING ERECTION, STRUCTURAL STEEL FRAME SHALL BE ADEQUATELY BRACED.

STRUCTURAL STEEL (CONTINUED)

11. CONNECTIONS NOT SHOWN SHALL BE DESIGNED IN ACCORDANCE WITH AISC "MANUAL FOR STEEL CONSTRUCTION", THIRTEENTH ED. SHEAR CONNECTIONS SHALL BE DESIGNED PER AISC FOR REACTION EQUAL TO 1/2 THE ALLOWABLE UNIFORM LOAD ON BEAM PER PART 2 OF MANUAL (MINIMUM OF 6 KIPS), UNLESS NOTED OTHERWISE. REACTIONS GREATER THAN CAPACITY OF UNIFORMLY LOADED MEMBER ARE INDICATED THUS: (R=60K) ON PLAN.
12. GROUT UNDER STEEL PLATES SHALL BE NON-SHRINK AND SHALL HAVE A MINIMUM COMPRESSIVE STRENGTH OF 5,000 PSI, UNLESS NOTED OTHERWISE.
13. FOR MISCELLANEOUS STEEL CONSTRUCTION NOT SHOWN ON STRUCTURAL DRAWINGS, SEE ARCHITECTURAL, MECHANICAL, ELECTRICAL AND PLUMBING DRAWINGS.
14. REFER TO SPECIFICATIONS FOR FINISH REQUIREMENTS.
15. PROVIDE HOLES AS REQUIRED FOR ATTACHMENT OF WORK OF OTHER TRADES.

FOUNDATIONS

1. THE FOUNDATION DESIGN IS BASED ON SOILS BORINGS AND LAB RESULTS PROVIDED BY DELDOT. SOIL BEARING CAPACITY IS BY CENTURY ENGINEERING BASED ON DELDOT LAB RESULTS.
2. ALL EXISTING UNSUITABLE FILL MATERIALS, CONSISTING OF GRAVEL, WOOD CHIPS, OR MULCH SHALL BE REMOVED IN THE REGIONS OF ALL FOUNDATIONS AND UNDER AREAS OF SLAB-ON-GRADE.
3. PROOF ROLL SLAB SUBGRADE UNDER THE DIRECTION OF THE ENGINEER. REMOVE ALL UNSUITABLE AREAS AND REPLACE WITH COMPACTED STRUCTURAL FILL MATERIALS. PLACE WALL BACKFILL MATERIALS IN 4" LIFTS AND COMPACT TO AT LEAST 92% OF THE MAXIMUM DENSITY AS DETERMINED BY THE ASTM D1557 MODIFIED PROCTOR TEST. PLACE FILL IN OTHER STRUCTURAL AREAS IN 8" LIFTS AND COMPACT FILL TO AT LEAST 95% OF THE MAXIMUM DENSITY AS DETERMINED BY THE ASTM D1557 MODIFIED PROCTOR TEST. FILL MATERIAL SHALL BE SM OR BETTER AS CLASSIFIED PER ASTM D2487.
4. SHALLOW FOUNDATIONS AND/OR CONTINUOUS FOOTINGS SHALL BE SPREAD TO BEAR ON NATURAL SOILS OR CONTROLLED STRUCTURAL FILL HAVING A MINIMUM SAFE BEARING CAPACITY OF 2.0 KSF.
5. THE ENGINEER SHALL VERIFY SOIL BEARING CAPACITY AT EACH FOOTING PRIOR TO INSTALLATION OF FOOTING. NOTIFY ENGINEER OF ANY VARIATION FROM ANTICIPATED BEARING CAPACITY FOR APPROPRIATE REDESIGN OR LOWERING OF FOOTING.
6. THE BOTTOMS OF ALL EXTERIOR FOOTINGS SHALL BE 2'-8" MINIMUM BELOW FINISHED GRADE UNLESS ROCK OF SPECIFIED BEARING CAPACITY IS ENCOUNTERED AT A HIGHER ELEVATION, IN WHICH CASE FOOTING MAY BE RAISED IF APPROVED BY THE ENGINEER. FOR INTERIOR FOOTINGS EXPOSED TO FREEZING DURING CONSTRUCTION, LOWER BOTTOMS OF FOOTINGS BELOW FROST DEPTH FROM CONSTRUCTION GRADE OR PROVIDE HEAT AND CONTINUOUS PROTECTION FOR GROUND SURROUNDING FOOTINGS.
7. EDGES OF FOOTINGS SHALL NOT BE PLACED AT A GREATER THAN 1 (VERTICAL) TO 2 (HORIZONTAL) SLOPE WITH RESPECT TO ANY ADJACENT FOOTING OR EXCAVATION, WITHOUT UNDERPINNING, SHORING OR BRACING.
8. ALL ADJACENT FOOTINGS THAT ABUT SHALL BE SEPARATED BY A PAPER JOINT TO PREVENT BOND.
9. BACKFILLING AGAINST WALLS SHALL NOT BE DONE UNTIL CONCRETE AND/OR MASONRY HAS BEEN CURED TO ATTAIN SUFFICIENT STRENGTH (7 DAYS MINIMUM) AND WALLS ARE PROPERLY SHORED AND/OR BRACED. BACKFILL FOUNDATION WALLS WITH EARTH ON BOTH SIDES OF THE WALL BY ALTERNATELY PLACING BACKFILL ON EACH SIDE SO THAT HEIGHT OF BACKFILL DOES NOT DIFFER BY MORE THAN 1'-6" FROM OTHER SIDE.
10. THE CONTRACTOR SHALL SAFEGUARD AND PROTECT ALL EXCAVATIONS, AND ADJACENT STRUCTURES, PAVEMENTS, AND UTILITIES. ALL EXCAVATIONS SHALL BE KEPT FREE OF WATER. THE CONTRACTOR IS RESPONSIBLE FOR THE DESIGN, INSTALLATION, MAINTENANCE, AND REMOVAL OF ALL SHORING, BRACING, AND DEWATERING REQUIRED TO PROPERLY CONSTRUCT THE FOUNDATIONS AND TO PROTECT ADJACENT STRUCTURES, PAVEMENTS AND UTILITIES. DO NOT REMOVE SHORING SUCH AS SHEET PILING IF IT WILL CAUSE SETTLEMENT OR DAMAGE TO EXISTING OR NEW STRUCTURES, PAVEMENT, AND/OR UTILITIES.
11. MAXIMUM LENGTH OF FOUNDATION WALL OR GRADE BEAM PLACED IN ONE OPERATION SHALL NOT EXCEED 60 FEET.
12. THE CONTRACTOR SHALL REFER TO THE CIVIL, ARCHITECTURAL, PLUMBING, MECHANICAL AND ELECTRICAL DRAWINGS FOR ALL LOCATIONS OF TRENCHES, PITS, CONDUITS, ETC. NOT SHOWN ON THE STRUCTURAL DRAWINGS.
13. FOUNDATIONS SHALL BE POURED WITHIN 24 HOURS OF FOUNDATION EXCAVATION, UNLESS APPROVED BY THE ENGINEER.

TIMBER CONSTRUCTION

1. STRUCTURAL ROOF DECK SHALL BE 1½" 4-PLY PLYWOOD PS-1-83 APA RATED SHEATHING GRADE C-C PLUGGED EXTERIOR TYPE WITH EXTERIOR GLUE (PANEL INDEX 40-20).
2. COMPLY WITH THE APPLICABLE REQUIREMENTS OF THE NLMA'S "NATIONAL DESIGN SPECIFICATIONS FOR STRESS GRADED LUMBER AND ITS FASTENINGS" AND THE TRUSS PLATE INSTITUTE'S "LIGHT METAL CONNECTED WOOD TRUSSES."
3. PROVIDE TRUSS MANUFACTURER'S DESIGN AND ENGINEERING DATA FOR THE REQUIRED TRUSSES, INCLUDING STRESS DIAGRAMS, UNDER THE SIGNATURE & SEAL OF A LICENSED PROFESSIONAL STRUCTURAL ENGINEER REGISTERED IN THE STATE OF DELAWARE. TRUSS MANUFACTURER'S DESIGN SHALL SHOW ADDITIONAL BRIDGING REQUIRED BY HIS PARTICULAR DESIGN. TRUSS DESIGN SHALL INCLUDE THE EFFECT OF ECCENTRICITY AT ALL CONNECTIONS.
4. TRUSS MANUFACTURER'S LICENSED PROFESSIONAL STRUCTURAL ENGINEER SHALL INSPECT THE FABRICATION AND ERECTION OF TRUSSES AND CERTIFY BY SEAL AND SIGNATURE THAT THE TRUSSES AS FABRICATED AND ERECTED COMPLY WITH HIS DESIGN AND GOOD ENGINEERING PRACTICE.
5. TRUSS MEMBERS SHALL CONSIST OF DOUGLAS FIR, WESTERN HEMLOCK (WWPA OR WCLA) OR SOUTHERN PINE (SPIB), MAXIMUM MOISTURE CONTENT KILN DRIED = 19%, GRADE NUMBER 2 (MINIMUM). TOP AND BOTTOM CHORDS SHALL BE 2x6 MINIMUM SIZE. OUT OF PLANE TOLERANCES FOR PLANE OF ROOF PLYWOOD & DRYWALL SURFACES SHALL BE ±1/8".
6. PROVIDE TEMPORARY SUPPORTS AND BRACING DURING TRUSS ERECTION.
7. CONNECT WOOD TRUSSES TO SUPPORTS WITH HOT DIPPED GALVANIZED FRAMING ANCHOR AS MANUFACTURED BY SIMPSON STRONG-TIE, OR AN APPROVED EQUAL.
8. MISCELLANEOUS WALL AND RAFTER FRAMING:
   - A. SOUTHERN PINE No. 2 GRADE.
   - B. ALLOWABLE EXTREME FIBER STRESS IN BENDING (Fb): 1,200 PSI.
   - C. MODULUS OF ELASTICITY (E): 1,600,000 PSI. D. MAXIMUM MOISTURE CONTENT SURFACED DRY: 19%.
   - E. PROVIDE JOIST HANGERS OR HURRICANE TIES AT EACH END.

TIMBER CONSTRUCTION (CONTINUED)

1. NAILING PATTERNS FOR UNBLOCKED ROOF SHEATHING IS 6" O.C. AT SUPPORTED EDGES AND 12" O.C. AT OTHER SUPPORTS WITH 8d, RING SHANK NAILS. NO EDGE CLIPS ARE REQUIRED. PROVIDE 1/8" MINIMUM GAP BETWEEN PLYWOOD PANEL EDGES.
2. PROVIDE FULL SIZE 2X BLOCKING AT ALL HIPS AND VALLEYS.
3. CONTRACTOR SHALL ACCOUNT FOR UNBALANCED SNOW LOADS PER LOCAL CODES.
4. BOLTS FOR TIMBER CONNECTIONS SHALL CONFORM TO ASTM A307.
5. SILL PLATES SHALL BE TREATED WITH CHROMATED COPPER ARSENATE (CCA) WITH A MINIMUM RETENTION OF 2.5 LBS/FT3.
6. THE CONTRACTOR SHALL PROVIDE THE TRUSS MANUFACTURER A COMPLETE COPY OF THE BUILDING PLANS TO AID IN THE DESIGN OF THE TRUSSES.

ENGINEERED LUMBER

1. THE CONTRACTOR SHALL USE APPROVED HARDWARE AND CONNECTIONS AS SPECIFIED IN THE PLANS.
2. ENGINEERED LUMBER SHALL BE PROTECTED FROM DIRECT EXPOSURE TO WEATHER AT ALL TIMES.
3. NOTCHING AND DRILLING OF ENGINEERED LUMBER SHALL NOT BE ALLOWED EXCEPT FOR THE INSTALLATION OF CONNECTION BOLTS OR AS SHOWN ON THE PLAN DETAILS.
4. ENGINEERED LUMBER SHALL BE PROVIDED IN THE LENGTHS AND SIZES SHOWN ON THE CONTRACT PLANS. NO SUBSTITUTIONS SHALL BE ALLOWED EXCEPT AS APPROVED BY THE ENGINEER.

<u>LAMINNATED VENEER LUMBER (LVL</u>

1. LVL SHALL BE MANUFACTURED IN ACCORDANCE WITH ASTM STANDARD SPECIFICATION D5456 FOR COMPOSITE LUMBER. LVL SHALL BE FURNISHED AND INSTALLED AS SHOWN ON THE APPROVED BUILDING PLANS AND IN ACCORDANCE WITH THE SPECIFICATIONS OF THE LVL MANUFACTURER.
2. PRODUCT QUALITY SHALL CONFORM TO THE MANUFACTURER'S APPROVED QUALITY CONTROL MANUAL, WITH CERTIFICATION SERVICES PROVIDE BY APA EWS IN ACCORDANCE WITH BUILDING CODE REQUIREMENTS AND THE APPLICABLE CODE EVALUATION REPORT.
3. LVL SHALL BE MARKED WITH THE APA EWS TRADEMARE, INDICATING CONFORMANCE WITH THE MANUFACTURER'S EVALUATION REPORT.
4. LVL SHALL CONFORM TO THE FOLLOWING CRITERIA:
   - A. ALLOWABLE EXTREME FIBER STRESS IN BENDING (Fb): 2,900 PSI.
   - B. ALLOWABLE SHEAR STRESS (Fv): 285 PSI.
   - C. MODULUS OF ELASTICITY (E): 2,000,000 PSI.

<u>GLUED LAMINATED TIMBER (GLULAM)</u>

1. GLULAM TIMBERS SHALL BE MANUFACTURED AND IDENTIFIED AS REQUIRED IN ANSI STANDARD A190.1, AMERICAN NATIONAL STANDARD FOR STRUCTURAL GLUED LAMINATED TIMBER, AND ASTM D3737.
2. LAMINATING ADHESIVES USED IN THE MANUFACTURE OF STRUCTURAL GLUED LAMINATED TIMBER SHALL MEET REQUIREMENTS FOR (WET-USE) SERVICE CONDITIONS.
3. GLULAM TIMBERS SHALL BE PRESSURE TREATED AFTER MANUFACTURE IN ACCORDANCE WITH AMERICAN WOOD-PRESERVERS' ASSOCIATION (AWPA) STANDARD C28 WITH PRESERVATIVES AS REQUIRED FOR SOIL CONTACT AND ABOVE GROUND EXPOSURE.
4. GLULAM TIMBERS SHALL BE QUALIFIED BY THE FOLLOWING TESTS AS DESCRIBED IN AITC 200-92:
   - A. AITC TEST T107 SHEAR
   - B. AITC TEST 110 CYCLIC DELAMINATION.
   - C. AITC TEST T119 END JOINT TENSION.
5. PRODUCT QUALITY SHALL CONFORM TO THE MANUFACTURER'S APPROVED QUALITY CONTROL MANUAL, WITH CERTIFICATION SERVICES PROVIDE BY APA EWS IN ACCORDANCE WITH BUILDING CODE REQUIREMENTS AND THE APPLICABLE CODE EVALUATION REPORT.
6. GLULAM TIMBERS SHALL BE PRESSURE-TREATED IN ACCORDANCE WITH AMERICAN WOOD PRESERVERS ASSOCIATION (AWPA) STANDARD AWPA C28. COMPLY WITH AWPA M4 FOR APPLYING FIELD TREATMENT TO CUT SURVACES OF PRESERVATIVE TREATED LUMBER.
7. GLULAM TIMBERS SHALL CONFORM TO THE FOLLOWING CRITERIA:
   - A. ALLOWABLE EXTREME FIBER STRESS IN BENDING (Fb): 2,350 PSI.
   - B. ALLOWABLE COMPRESSIVE STRESS (Fc): 2,150 PSI.
   - C. MODULUS OF ELASTICITY (E): 1,700,000 PSI.

METAL-PLATE CONNECTED WOOD TRUSSES

1. WOOD TRUSS WORK SHALL BE IN ACCORDANCE WITH TRUSS PLATE INSTITUTE (TPI) TPI 1, ½NATIONAL DESIGN STANDARD FOR METAL PLATE CONNECTED WOOD TRUSS CONSTRUCTION½.
2. CONTRACTOR SHALL BE RESPONSIBLE FOR THE DESIGN, FABRICATION, AND ERECTION OF WOOD TRUSSES.
3. TRUSSES SHALL BE DESIGNED FOR THE LOADS INDICATED. TRUSS CONFIGURATIONS SHOWN ARE FOR ILLUSTRATIVE PURPOSES ONLY, UNLESS SPECIFIC CONFIGURATION IS REQUIRED FOR COORDINATION WITH OTHER TRADES. TRUSS DESIGNS SHALL INCLUDE PERMANENT BRACING FOR INDIVIDUAL TRUSS MEMBERS AND ALL CONNECTIONS BETWEEN MEMBERS. SUBMIT INDIVIDUAL TRUSS DESIGNS AND COMPUTATIONS, SIGNED AND SEALED BY A PROFESSIONAL ENGINEER REGISTERED IN THE STATE OF THE PROJECT LOCATION.
4. CONTRACTOR SHALL BE RESPONSIBLE FOR THE HANDLING, INSTALLATION, AND TEMPORARY BRACING OF THE TRUSSES IN ACCORDANCE WITH THE RECOMMENDATIONS IN WTCA/TPI-BUILDING COMPONENT SAFETY INFORMATION BCSI 1.
5. PROVIDE PERMANENT BRACING OF TRUSSES AS INDICATED ON DRAWINGS. ATTACH BRACING TO BUILDING ELEMENTS AS INDICATED. TEMPORARY BRACING MAY REMAIN IN PLACE AND ACT AS PERMANENT BRACING, PROVIDED IT DOES NOT INTERFERE WITH OTHER CONSTRUCTION.
6. CONNECTORS SHALL BE FABRICATED FROM HOT-DIPPED, ZINC COATED STEEL CONFORMING TO ASTM A653, G60 COATING DESIGNATION [STAINLESS STEEL SHEET CONFORMING TO ASTM A666 FOR EXTERIOR LOCATIONS AND WHERE INDICATED]. INSTALL CONNECTORS IN ACCORDANCE WITH MANUFACTURER'S WRITTEN INSTRUCTIONS.

PREL. TRACING ____ DESIGN ____ CHKD ____

S-02	CONTRACT	COUNTY	F.A.P. NO.	SHEET NO.	TOTAL SHTS.
	T201280104	SUSSEX	SEE TITLE SHEET	56	80

CREW OPERATION BUILDING
FOUNDATION PLAN

BRIDGEVILLE MAINTENANCE YARD DEVELOPMENT

REVISIONS

ADDENDUM 2 4/9/14

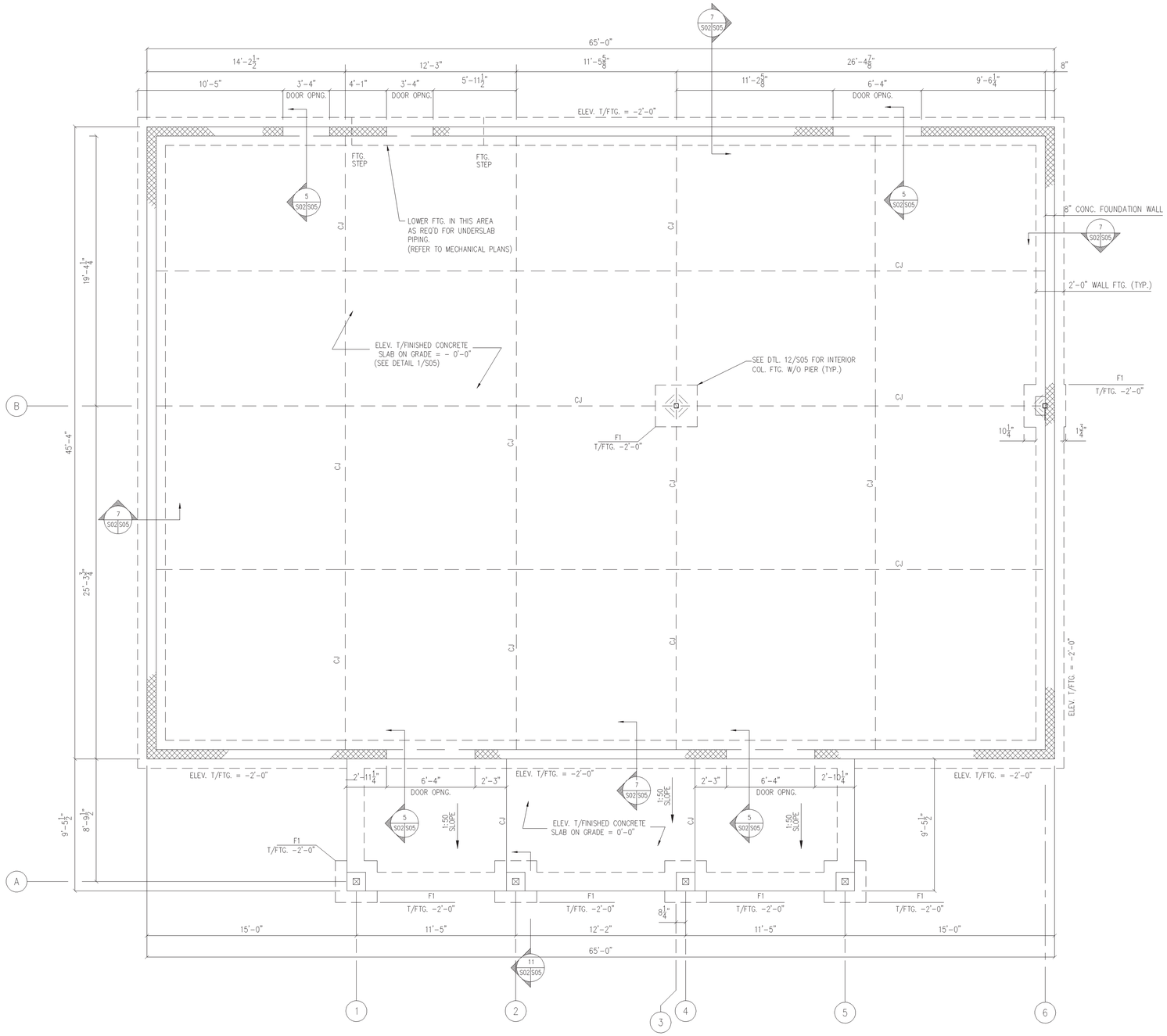

PLAN: FOUNDATION AND SLAB ON GRADE PLAN
SCALE: 1/4" = 1'-0"

NOTES:

1. PROVIDE MIN. 4" THICK CONCRETE SLAB ON GRADE REINFORCED WITH #3@18" O.C. ON VAPOR RETARDER & 4" DRAINAGE FILL (SEE SHEET S-5).
2. ELEVATION TO TOP OF FINISHED SLAB SHALL BE 47.50 FT. (= REF. ELEVATION 0'-0").
3. ELEVATION TO TOP OF EXTERIOR WALL FTG. SHALL BE -2'-6" TYP UNO.
4. STEP EXTERIOR WALL FTG. DOWN AS REQ'D FOR UNDERSLAB PIPING (SEE SHEET S-05).
5. PROVIDE 8 ADD'L #3 BARS X 1'-0" LONG PLACED IN SLAB @ EACH INTERIOR COLUMN.
6. SEE MECHANICAL FLOOR PLAN FOR LOCATIONS OF FLOOR DRAINS AND CLEANOUTS.
7. PROVIDE CONTROL OR CONSTRUCTION JOINT PER DETAILS 2/S-05 AND 3/S-05 WHERE INDICATED "CJ" ON PLAN.
8. SEE DETAIL 6/S-05 FOR SLAB ISOLATION JOINT DETAIL AT FOUNDATION WALLS.
9. SEE FOOTING SCHEDULE THIS DRAWING FOR FOOTING SIZE AND REINFORCEMENT.
10. COORDINATE THIS DRAWING WITH CIVIL, ARCHITECTURAL, AND MEP DRAWINGS FOR ITEMS EMBEDDED IN, PLACED UNDER, OR PENETRATING THE CONCRETE SLAB.
11. ISOLATION PADS AT COLUMNS NOT SHOWN FOR CLARITY.
12. JOINT FILLERS: PROVIDE A NEOPRENE, CLOSED CELL, BLACK JOINT FILLER, WITH A DENSITY OF FOUR TO FIVE PCF WHERE INDICATED ON DRAWINGS. JOINT FILLER SHALL MEET ALL APPLICABLE REQUIREMENTS OF ASTM D1056. PROVIDE WILLIAMS 1056 JOINT FILLER BY WILLIAMS PRODUCTS, INC. OR AN APPROVED EQUIVALENT. FOLLOW ALL MANUFACTURER'S WRITTEN INSTRUCTIONS.
12. JOINT SEALANTS: PROVIDE A TWO-COMPONENT, PREMIUM-GRADE, POLYURETHANE-BASED, ELASTOMERIC SEALANT WHERE INDICATED ON DRAWINGS. PROVIDE SIKAFLEX-2C NS BY SIKA CORPORATION OR AN APRROVED EQUIVALENT.
13. SEE ARCHITECTURAL PLANS FOR FOUNDATION WALL OPENINGS LOCATIONS.
14. SEE CIVIL PLANS FOR STEP FOOTING LOCATION FOR UTILITY PLACEMENT.

FOOTING SCHEDULE

MARK	SIZE	BOTTOM REINF.
F1	3'-0" x 3'-0" x 1'-0"	#5@12" O.C. E.W.

PREL. TRACING _____ DESIGN _____ CHKD _____

S-03	CONTRACT	COUNTY	F.A.P. NO.	SHEET NO.	TOTAL SHTS.
	T201280104	SUSSEX	SEE TITLE SHEET	57	80

CREW OPERATION BUILDING
CEILING FRAMING PLAN

BRIDGEVILLE MAINTENANCE YARD DEVELOPMENT

REVISIONS

ADDENDUM 2 4/9/14

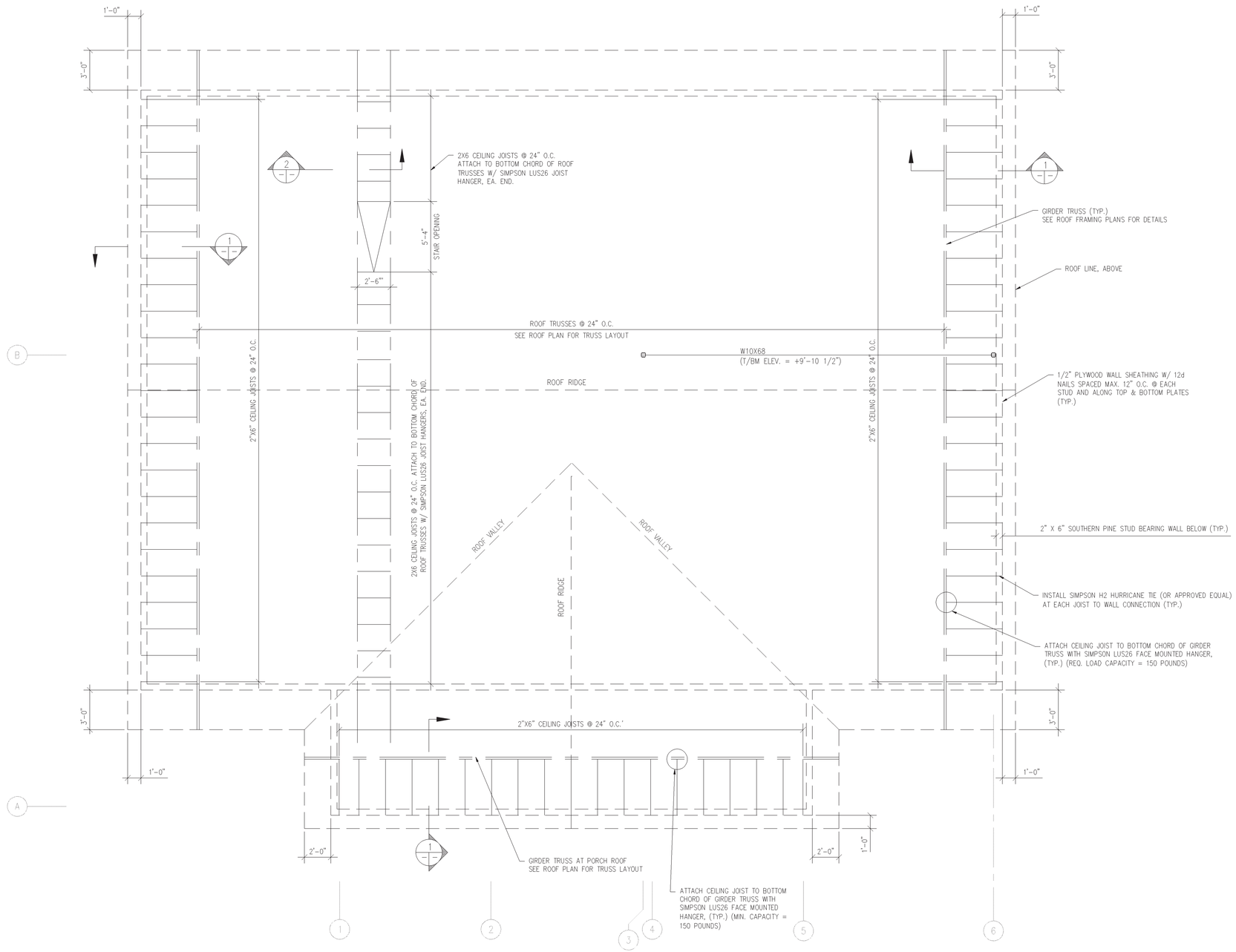

CEILING FRAMING PLAN

SCALE: 1/4"=1'-0"

NOTES

1. SEE PROJECT SPECIFICATIONS AND GENERAL NOTES FOR LUMBER GRADE AND SPECIES.
2. SPACE JOIST @ MAX. 24" O.C. UNLESS NOTED OTHERWISE.
3. ALL ELEVATIONS ARE REFERENCED FROM TOP OF FINISHED SLAB ON GRADE ELEV. = 47.50' (=REF. ELEVATION 0'-0"),
4. ALL COLUMNS ARE HSS 3 1/2"x3 1/2"x1/4".
5. BOTTOM OF ALL DIMENSIONAL LUMBER FOR CEILING JOISTS ELEV. = 10'-0".
6. PROVIDE CONTINUOUS JOIST BRIDGING PER SPECIFICATIONS @ MAX. 8'-0" O.C. (NOT SHOWN ON PLAN).
7. PROVIDE SIMPSON STRONG-TIE JOIST HANGARS LUS26 AT JOIST TO ROOF TRUSS CONNECTION.
8. PROVIDE SIMPSON STRONG-TIE H2 HURRICANE TIES AT JOIST TO EXTERIOR WALL CONNECTION.
9. COORDINATE THIS DRAWING WITH ARCHITECTURAL AND MEP DRAWINGS FOR ITEMS AFFECTING THE FRAMING INSTALLATION.
10. BOTTOM CHORD OF ROOF TRUSSES SHALL BE USED FOR CEILING SUPPORT BELOW.

NOTE:
GABLE WALL STUDS NOT SHOWN FOR CLARITY.

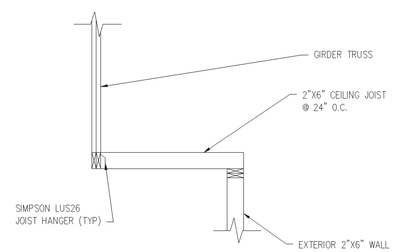

1 CEILING JOIST SECTION

SCALE: 1/2"=1'-0"

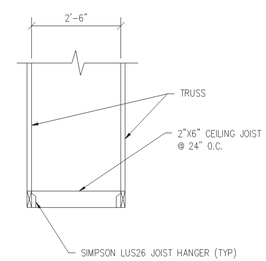

2 CEILING JOIST SECTION

SCALE: 1/2"=1'-0"

PREL. TRACING ____ DESIGN ____ CHKD ____

S-04	CONTRACT	COUNTY	F.A.P. NO.	SHEET NO.	TOTAL SHTS.
	T201280104	SUSSEX	SEE TITLE SHEET	58	80

CREW OPERATIONS BUILDING
ROOF FRAMING PLAN

BRIDGEVILLE MAINTENANCE YARD DEVELOPMENT

REVISIONS

ADDENDUM 2 4/9/14

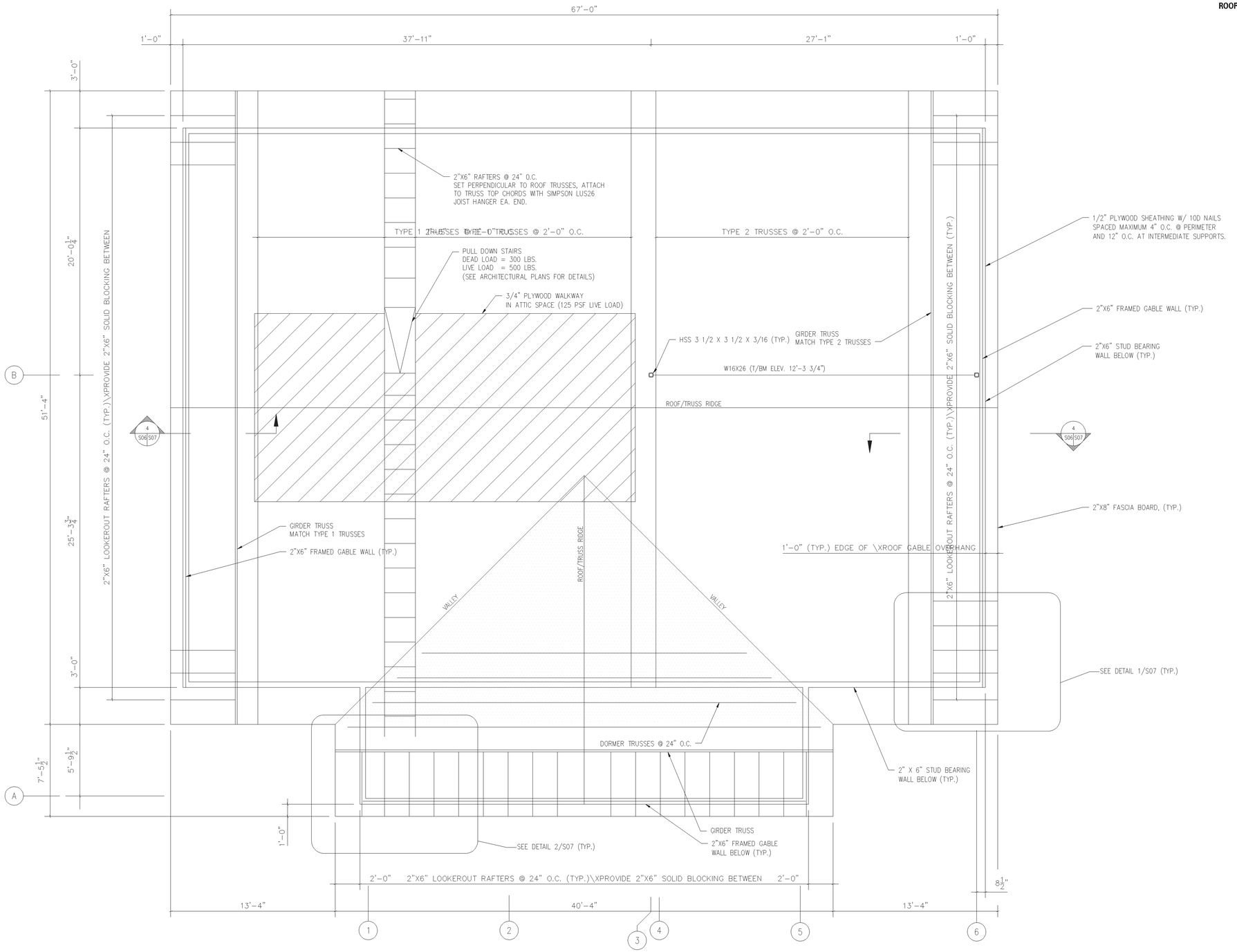

ROOF FRAMING PLAN

SCALE: 1/4"=1'-0"

ROOF NOTES

1. ELEVATION ROOF TRUSS BEARING INDICATED ON PLAN THUS: (+0'-0") IS MEASURED FROM FIRST FLOOR ELEVATION.

2. STRUCTURAL ROOF DECK SHALL BE 1/2" 4-PLY PLYWOOD PS-1-83 APA RATED SHEATHING GRADE C-C PLUGGED EXTERIOR TYPE WITH EXTERIOR GLUE (PANEL INDEX 40-20).

3. COMPLY WITH THE APPLICABLE REQUIREMENTS OF THE NLMA'S "NATIONAL DESIGN SPECIFICATIONS FOR STRESS GRADED LUMBER AND ITS FASTENINGS" AND THE TRUSS PLATE INSTITUTE'S "LIGHT METAL CONNECTED WOOD TRUSSES."

4. PROVIDE TRUSS MANUFACTURER'S DESIGN AND ENGINEERING DATA FOR ALL TRUSSES, INCLUDING STRESS DIAGRAMS AND REACTIONS, UNDER THE SIGNATURE AND SEAL OF A LICENSED PROFESSIONAL ENGINEER REGISTERED IN THE STATE OF DELAWARE. TRUSS MANUFACTURER'S DESIGN SHALL SHOW ADDITIONAL BRIDGING AND BRACING AS REQUIRED BY HIS/HER PARTICULAR DESIGN. TRUSS DESIGN SHALL INCLUDE THE EFFECTS OF ECCENTRICITY AT ALL CONNECTIONS.

5. TRUSS MANUFACTURER'S LICENSED PROFESSIONAL ENGINEER SHALL INSPECT THE FABRICATION AND ERECTION OF TRUSSES AND CERTIFY BY SEAL AND SIGNATURE THAT THE TRUSSES AS FABRICATED AND ERECTED COMPLY WITH HIS/HER DESIGN AND GOOD ENGINEERING PRACTICE.

6. TRUSS MEMBERS SHALL CONSIST OF DOUGLAS FIR, WESTERN HEMLOCK (WWPA OR WCLA) OR SOUTHERN PINE (SPIB), MAXIMUM MOISTURE CONTENT KILN DRIED = 19%, GRADE NUMBER 2 (MINIMUM). TOP AND BOTTOM CHORDS SHALL BE 2"X6" MINIMUM SIZE. OUT OF PLANE TOLERANCES FOR PLANE OF ROOF PLYWOOD & DRYWALL SURFACES SHALL BE ±1/8".

7. TRUSS LAYOUT INDICATED ON THESE DRAWINGS ARE INTENDED AS A SCHEMATIC REPRESENTATION INDICATING GENERAL SPAN CONFIGURATION AND SUPPORT CONDITIONS. ANY MODIFICATION OF TRUSS LAYOUT SHALL BE APPROVED BY THE ARCHITECT AND ENGINEER AND SHALL BE FULLY COORDINATED BY THE CONTRACTOR WITH MECHANICAL AND ELECTRICAL WORK.

8. DESIGN DATA:
   SUPERIMPOSED DESIGN LOADS:
   - LL = 25 PSF SNOW TYPICAL
   - LL = 30 PSF SNOW AT VALLEY AREAS
   - LL = 80 PSF ATTIC SPACE (BOTTOM CHORDS IN AREA OF PLYWOOD WALKWAY, ONLY)
   - DL = 9 PSF SLOPED ROOFS (TOP CHORD)
   - DL = 6 PSF CEILINGS (BOTTOM CHORD)
   - DL = 5 PSF SPRINKLER & MECHANICAL (BOTTOM CHORD)
   - WL = DIRECT AND SUCTION PER IBC 2003 & AISC 7-05

   DESIGN OF TRUSSES SHALL INCLUDE LOADS INDICATED ABOVE PLUS SELF WEIGHT OF TRUSSES.

9. TRUSS MANUFACTURER SHALL ACCOUNT FOR UNBALANCED SNOW LOADS PER LOCAL CODES.

10. TRUSS MANUFACTURER SHALL DESIGN GABLE TRUSSES TO RESIST A MINIMUM UPLIFT FORCE OF 675 POUNDS PER LINEAR FOOT APPLIED ALONG THE ENTIRE LENGTH OF THE TOP CHORD.

11. PROVIDE TEMPORARY AND PERMANENT SUPPORTS AND BRACING DURING TRUSS ERECTION IN ACCORDANCE WITH THE TRUSS PLATE INSTITUTE, INC., AND OCCUPATIONAL SAFETY AND HEALTH ADMINISTRATION (OSHA.)

12. CONNECT WOOD TRUSSES TO SUPPORTS WITH HOT DIPPED GALVANIZED FRAMING ANCHOR AS MANUFACTURED BY SIMPSON, OR APPROVED EQUAL. TRUSS MANUFACTURER SHALL DESIGN ALL UPLIFT ANCHORS AT ALL TRUSS, RAFTER AND TRUSS GIRDER LOCATIONS.

13. MISCELLANEOUS FRAMING:

    A. SOUTHERN PINE NO. 2 GRADE.
    B. ALLOWABLE EXTREME FIBER STRESS IN BENDING (Fb): 1,200 PSI,
    C. MODULUS OF ELASTICITY (E): 1,600,000 PSI.
    D. MAXIMUM MOISTURE CONTENT SURFACED DRY: 19%.
    E. PROVIDE JOIST HANGERS CAPABLE OF RESISTING BOTH UPLIFT AND DOWNWARD VERTICAL LOADS.

21. NAILING PATTERNS FOR UNBLOCKED ROOF SHEATHING IS 6" O.C. AT SUPPORTED EDGES AND 12" O.C. AT OTHER SUPPORTS WITH 8d NAILS. NO EDGE CLIPS ARE REQUIRED. PROVIDE 1/8" MINIMUM GAP BETWEEN PLYWOOD PANEL EDGES.

22. PROVIDE 2"X8" BLOCKING AT ALL HIPS AND VALLEYS.

23. GIRDER TRUSSES SHALL HAVE MINIMUM 2"X12" BOTTOM CHORDS AND 2"X8" TOP CHORDS.

24. EXTERIOR WALL FRAMING BELOW ROOF SHALL BE 2"X6" STUDS AT 24" O.C.

25. SEE PROJECT SPECIFICATIONS AND GENERAL NOTES FOR LUMBER GRADE AND SPECIES.

26. SPACE TRUSSES @ MAX. 24" O.C. UNLESS NOTED OTHERWISE.

27. ALL COLUMNS SHALL BE HSS 4"x4"x$\frac{3}{16}$", UNLESS NOTED OTHERWISE.

28. PROVIDE SIMPSON STRONG-TIE H2A HURRICANE TIE (OR EQUIVALENT) WHERE TRUSS IS SUPPORTED @ BEARING WALL (TYP.).

29. PROVIDE CONTINUOUS TRUSS BRIDGING PER TRUSS MANUFACTURER'S REQUIREMENTS.

30. INSTALL 2"X8" SOLID BLOCKING BETWEEN OUTLOOKER RAFTERS AT SUPPORTING GABLE TRUSSES AND/OR WALLS.

31. TRUSS MANUFACTURER SHALL CONFIGURE TYPE 1 TRUSS WEBS TO ALLOW PLACEMENT OF PLYWOOD WALKWAY.

32. HATCHED AREA SHOWN THUS [ ] INDICATES OVERFRAMING FOR ROOF TRUSSES.

33. CEILING JOISTS AND LOOKOUT RAFTERS TO FRAME INTO GIRDER TRUSSES AT END WALLS OF BUILDING. SEE ATTIC FRAMING PLAN FOR CEILING JOIST CONNECTIONS.

34. REFER TO FOUNDATION PLAN FOR COLUMN GRID DIMENSIONS.

PREL. TRACING ____ DESIGN ____ CHKD. ____

S-05	CONTRACT	COUNTY	F.A.P. NO.	SHEET NO.	TOTAL SHTS.
	T201280104	SUSSEX	SEE TITLE SHEET	59	80

CREW OPERATION
FOOTING DETAILS

BRIDGEVILLE MAINTENANCE YARD DEVELOPMENT

REVISIONS

ADDENDUM 2 4/9/14

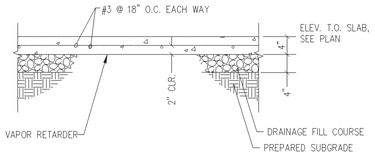

1 / – S05 **4" THICK SLAB ON GRADE**
SCALE: 3/4"=1'-0"

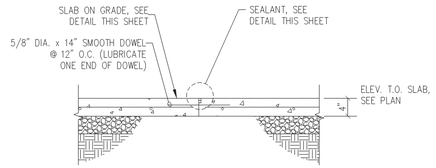

2 / S02 S05 **CONSTRUCTION JOINT SLAB ON GRADE**
SCALE: 3/4"=1'-0"

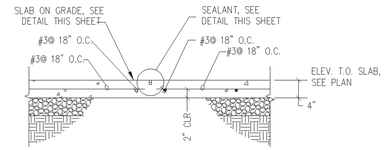

3 / S02 S05 **CONTROL JOINT SLAB ON GRADE**
SCALE: 3/4"=1'-0"

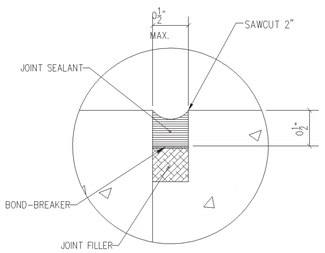

4 / – S05 **SEALANT @ SLAB JOINT**
SCALE: 3/4"=1'-0"

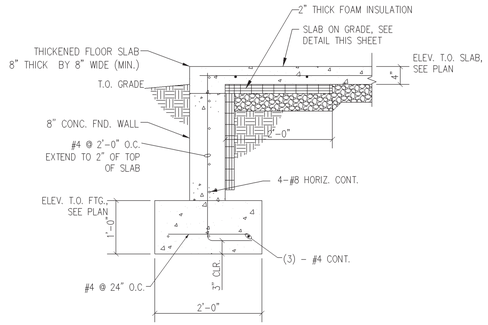

5 / S02 S05 **SLAB @ WALL OPENING**
SCALE: 3/4"=1'-0"

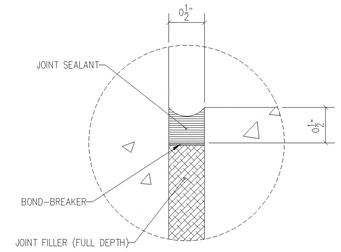

6 / – S05 **SEALANT @ ISOLATION JOINT**
SCALE: 3/4"=1'-0"

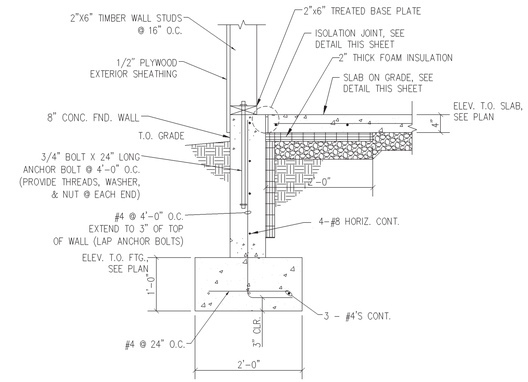

7 / S02 S05 **WALL FOOTING**
SCALE: 3/4"=1'-0"

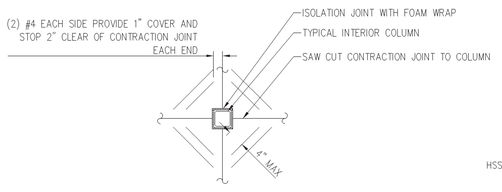

8 / S02 S05 **COLUMN ISOLATION DETAIL**
SCALE: 3/4"=1'-0"

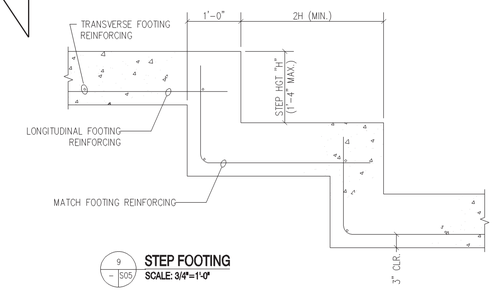

9 / – S05 **STEP FOOTING**
SCALE: 3/4"=1'-0"

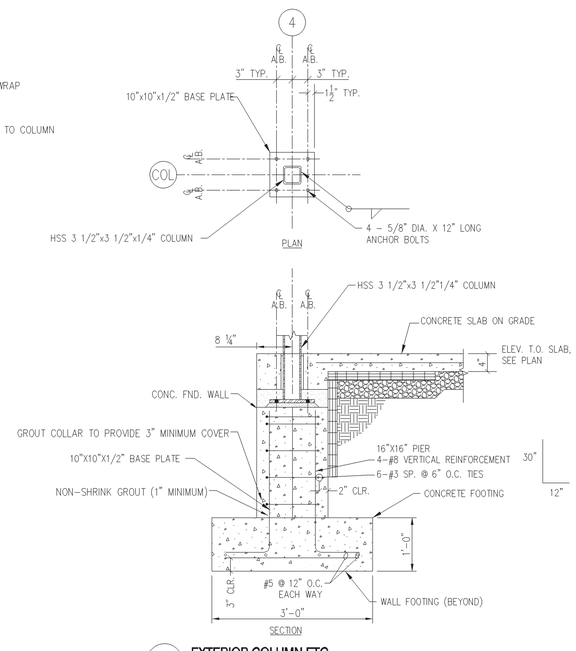

10 / S02 S13 **EXTERIOR COLUMN FTG.**
SCALE: 3/4"=1'-0"

NOTES: ∘COLUMN & FOOTING ARE CENTERED ON COLUMN LINE

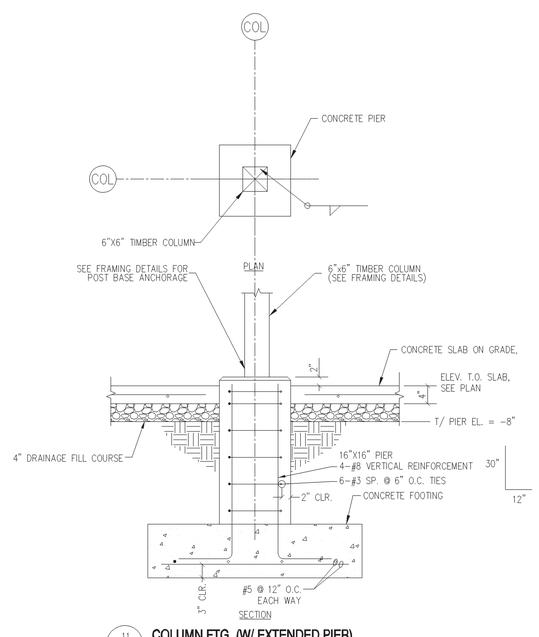

11 / S02 S05 **COLUMN FTG. (W/ EXTENDED PIER)**
SCALE: 3/4"=1'-0"

NOTES: ∘COLUMN, PIER, & FOOTING ARE CENTERED ON COLUMN LINE

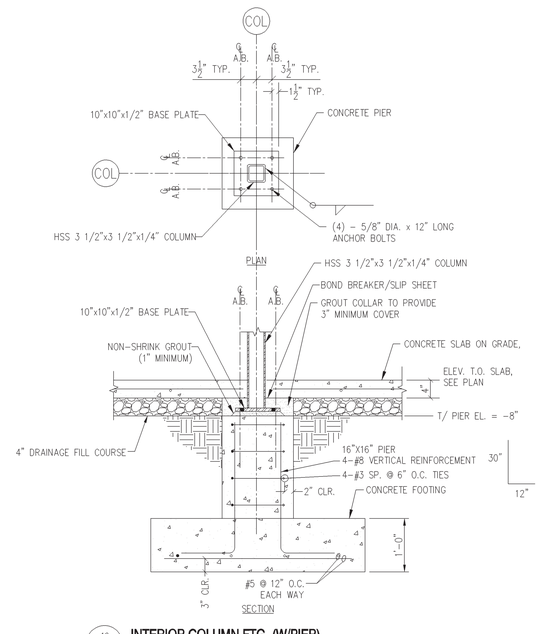

12 / S02 S05 **INTERIOR COLUMN FTG. (W/PIER)**
SCALE: 3/4"=1'-0"

NOTES: ∘COLUMN, PIER, & FOOTING ARE CENTERED ON COLUMN LINE

CHK'D
DESIGN
PREL. TRACING

S-06	CONTRACT	COUNTY	F.A.P. NO.	SHEET NO.	TOTAL SHTS.
	T201280104	SUSSEX	SEE TITLE SHEET	60	80

CREW OPERATION BUILDING
ROOF DETAILS

BRIDGEVILLE MAINTENANCE YARD DEVELOPMENT

REVISIONS

ADDENDUM 2 4/9/14

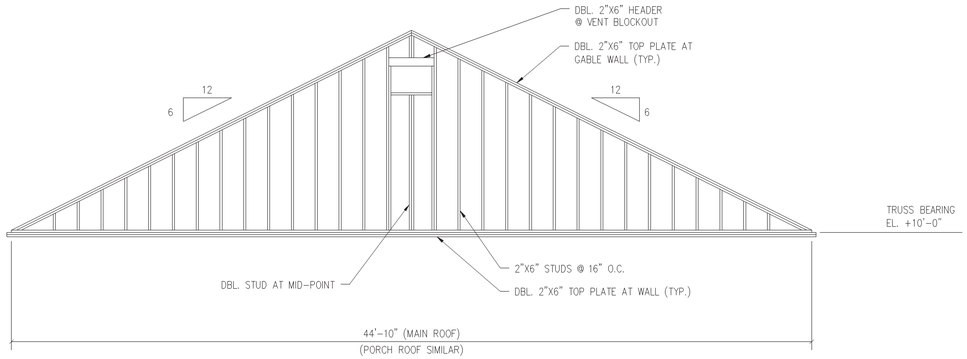

1 S04|S06 **GABLE WALL**
SCALE: 1/4"= 1'-0"

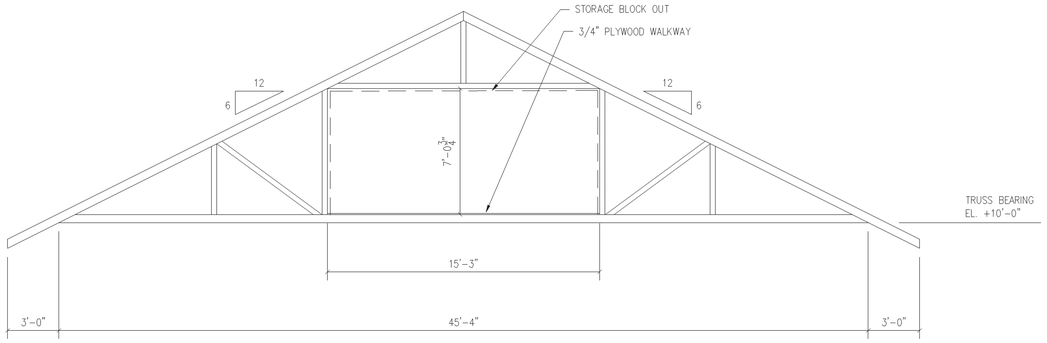

2 S04|S06 **TYPE 1 TRUSS**
SCALE: 1/4"= 1'-0"

NOTES:
1. TRUSS WEBS SHOWN FOR GENERAL REPRESENTATION ONLY. TRUSS MANUFACTURER SHALL BE RESPONSIBLE FOR COMPLETE TRUSS DESIGN.

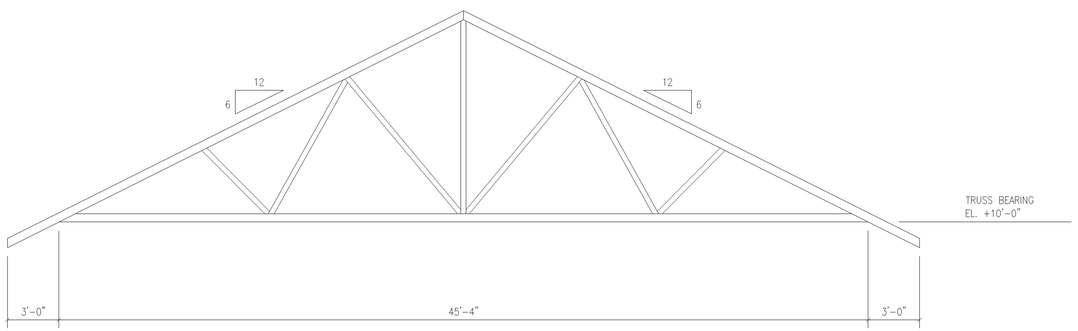

3 S04|S06 **TYPE 2 TRUSS**
SCALE: 1/4"= 1'-0"

NOTE:
SEE ROOF FRAMING PLAN AND CEILING FRAMING PLAN FOR ADDITIONAL DETAILS.

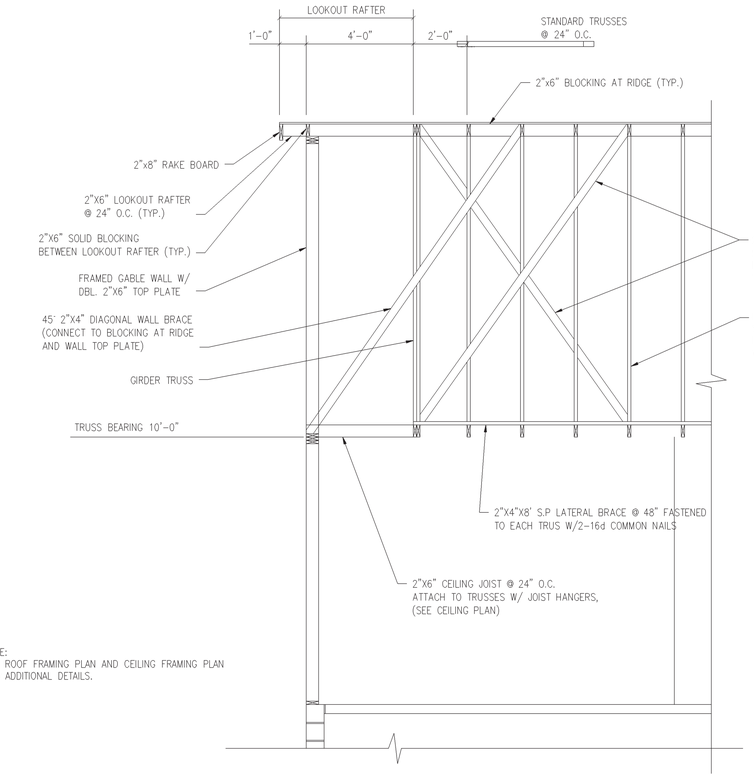

4 S04|S06 **SECTION AT MAIN ROOF GABLE**
SCALE: 3/8"= 1'-0"

PREL. TRACING ____ DESIGN ____ CHKD ____

S-07	CONTRACT	COUNTY	F.A.P. NO.	SHEET NO.	TOTAL SHTS.
	T201280104	SUSSEX	SEE TITLE SHEET	61	80

CREW OPERATION BUILDING
ROOF FRAMING DETAILS

BRIDGEVILLE MAINTENANCE YARD DEVELOPMENT

REVISIONS

ADDENDUM 2 4/9/14

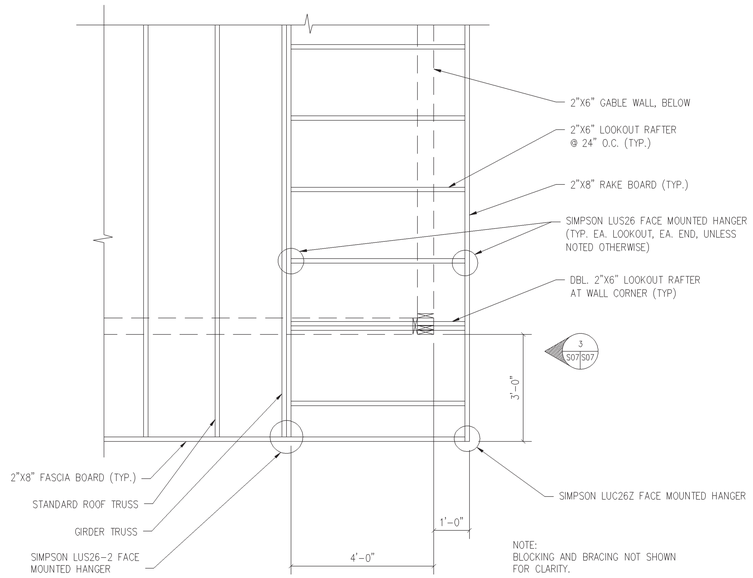

1 S04 S07 **PLAN / DETAIL AT MAIN GABLE**
SCALE: 1/2"= 1'-0"

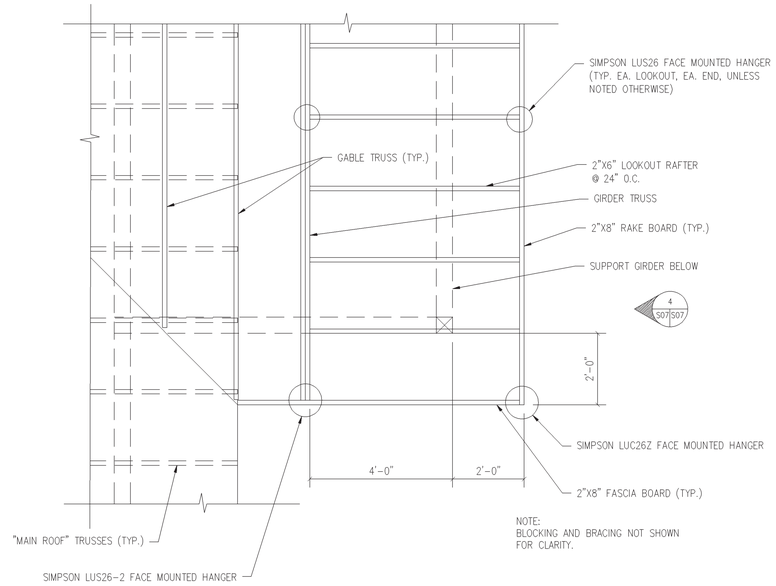

2 S04 S07 **PLAN / DETAIL AT PORCH GABLE**
SCALE: 1/2"= 1'-0"

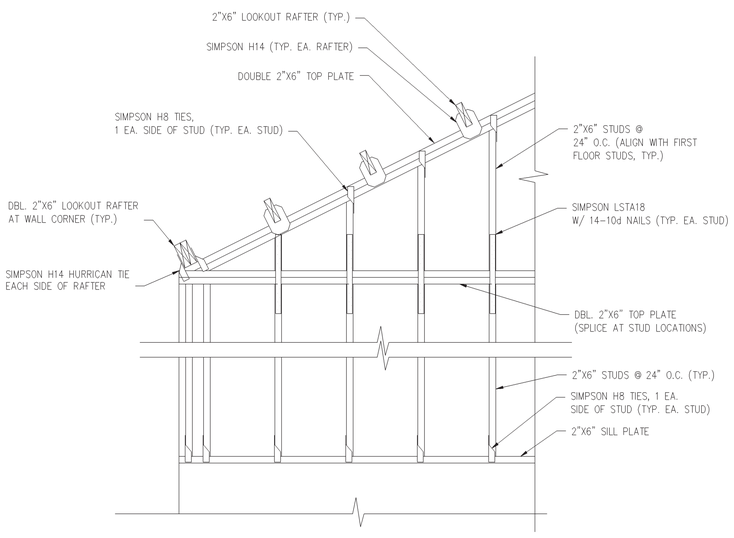

3 S04 S07 **ELEVATION AT MAIN GABLE**
SCALE: 3/4"= 1'-0"

NOTE:
EAVE LOOKOUT RAFTERS NOT SHOWN FOR CLARITY.

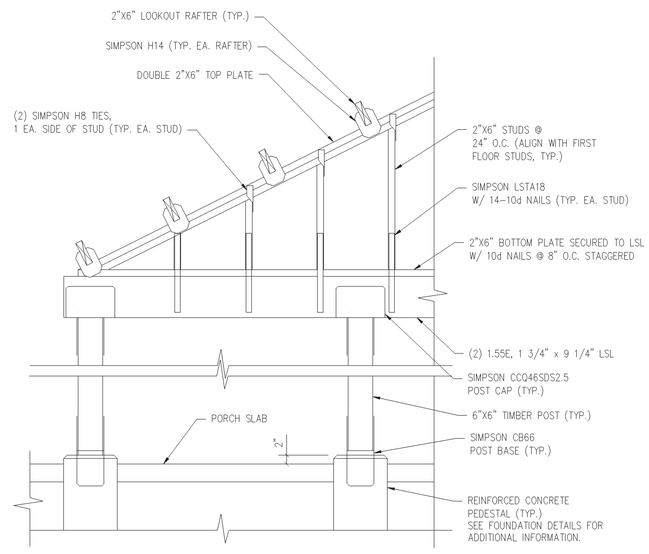

4 S04 S07 **ELEVATION AT PORCH GABLE**
SCALE: 3/4"= 1'-0"

NOTES:
1. EAVE LOOKOUT RAFTERS NOT SHOWN FOR CLARITY.
2. SEE ARCHITECTURAL PLANS FOR TREATMENT OF POSTS.

PREL. TRACING DESIGN CHKD

CREW OPERATION BUILDING
ROOF BRACING DETAILS

S-08	CONTRACT	COUNTY	F.A.P. NO.	SHEET NO.	TOTAL SHTS.
	T201280104	SUSSEX	SEE TITLE SHEET	62	80

BRIDGEVILLE MAINTENANCE YARD DEVELOPMENT

REVISIONS

ADDENDUM 2 4/9/14

Bracing For Three Planes of Roof Trusses

NOTE: THIS BRACING METHOD IS FOR ALL TRUSSES EXCEPT 3X2 AND 4X2 PARALLEL CHORD TRUSSES.

1) TOP CHORD TEMPORARY BRACING

TRUSS SPAN	TOP CHORD TEMPORARY LATERAL BRACE (TCTLB) SPACING
UP TO 30'	10' O.C. MAX. SPACING
30' TO 45'	8' O.C. MAX. SPACING
45' TO 60'	6' O.C. MAX. SPACING
60' TO 80'*	4' O.C. MAX. SPACING

*CONSULT A PROFESSIONAL ENGINEER FOR TRUSSES LONGER THAN 60'.

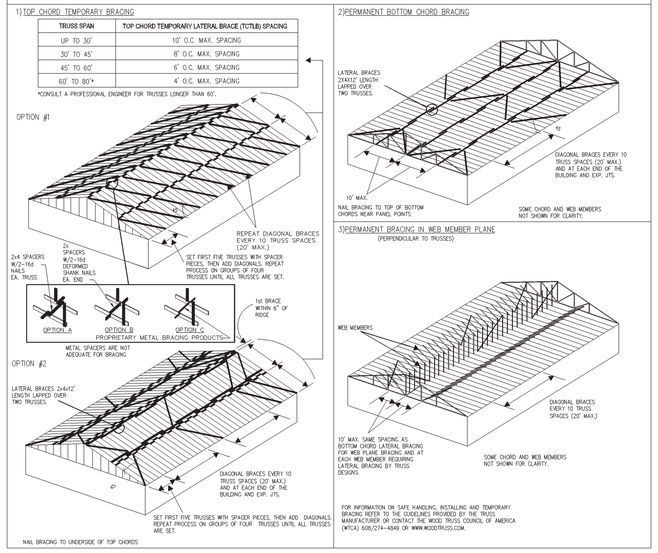

2) PERMANENT BOTTOM CHORD BRACING

3) PERMANENT BRACING IN WEB MEMBER PLANE
(PERPENDICULAR TO TRUSSES)

FOR INFORMATION ON SAFE HANDLING, INSTALLING AND TEMPORARY BRACING REFER TO THE GUIDELINES PROVIDED BY THE TRUSS MANUFACTURER OR CONTACT THE WOOD TRUSS COUNCIL OF AMERICA (WTCA) 608/274-4849 OR WWW.WOODTRUSS.COM.

NOTES:
1. PROVIDE TOP CHORD BRACING AT SPACING INDICATED AND AT CHANGES IN PITCH (SLOPE) OF TOP CHORD. PROVIDE BRACE AT END BEARING LOCATION IF HEIGHT OF TRUSS IS 10" OR MORE.
2. NAIL BRACING TO UNDERSIDE OF TOP CHORDS IF BRACING IS CONSIDERED TO BE PERMANENT. REMOVE TEMPORARY TOP CHORD BRACING AS SHEATHING IS INSTALLED.
3. CONNECT END OF LATERAL BRACES TO END WALL AND END TRUSS.
4. INSTALL WEB MEMBER BRACES AT OR NEAR BOTTOM CHORD BRACES.
5. SEE "ELEVATION OF WEB MEMBER BRACES OF TRUSSES" FOR PERMANENT BRACING AT WEB MEMBERS WITH LATERAL BRACE AND FOR X-BRACING IN THE WEB PLANE.
6. PROVIDE DIAGONAL BRACING AT THE HIGH ENDS OF MONO SLOPE OR VERTICAL END TRUSSES.

1 X|X **BRACING FOR THREE PLANES OF ROOF TRUSS**
SCALE: NONE

Temporary Ground Bracing for Trusses

LOCATE GROUND BRACES FOR FIRST TRUSS DIRECTLY IN LINE WITH ALL ROWS OF TOP CHORD TEMPORARY LATERAL BRACING.

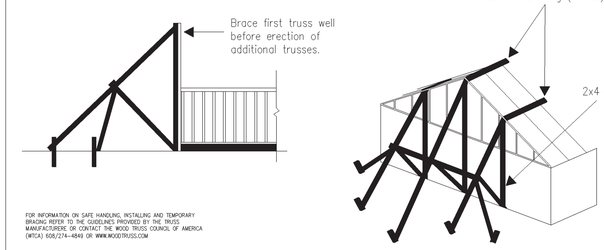

FOR INFORMATION ON SAFE HANDLING, INSTALLING AND TEMPORARY BRACING REFER TO THE GUIDELINES PROVIDED BY THE TRUSS MANUFACTURERE OR CONTACT THE WOOD TRUSS COUNCIL OF AMERICA (WTCA) 608/274-4849 OR WWW.WOODTRUSS.COM

NOTES:
1. "GROUND BRACING" MA;Y ALSO BE PROVIDED ON THE INTERIOR SIDE.
2. GROUND BRACING IS SOLELY THE RESPONSIBILITY OF THE ERECTION / INSTALLATION CONTRACTOR.

2 X|X **TEMPORARY GROUND BRACING FOR TRUSSES**
SCALE: NONE

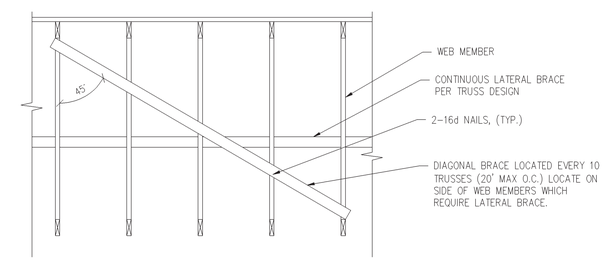

ELEVATION OF WEB MEMBER BRACE
SCALE: NONE

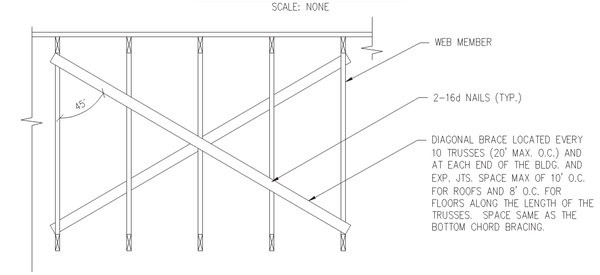

ELEVATION OF X-BRACE IN THE WEB PLANE
SCALE: NONE

3 X|X **ELEVATION OF BRACING IN THE WEB MEMBER PLANE OF TRUSSES**
SCALE: NONE

PREL. TRACING ____ DESIGN ____ CHKD ____

S-09	CONTRACT	COUNTY	F.A.P. NO.	SHEET NO.	TOTAL SHTS.
	T201280104	SUSSEX	SEE TITLE SHEET	63	80

CREW OPERATION BUILDING DETAILS

BRIDGEVILLE MAINTENANCE YARD DEVELOPMENT

REVISIONS

ADDENDUM 2 4/9/14

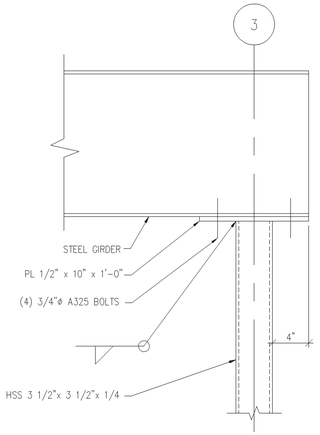

1 / S09 **GIRDER TO COLUMN CONNECTION**
SCALE: 1 1/2"=1'-0"

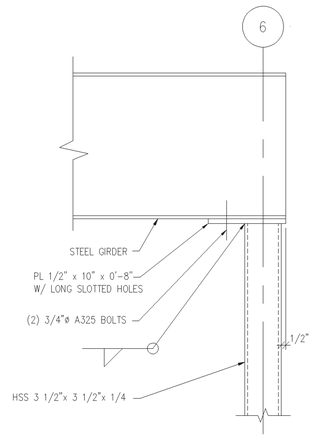

2 / S09 **GIRDER TO COLUMN CONNECTION**
SCALE: 1 1/2"=1'-0"

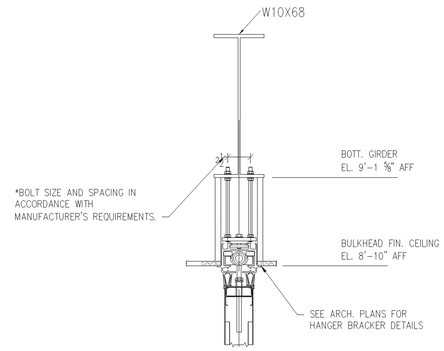

3 / S09 **MODERNFOLD WALL TO BEAM DETAIL**
SCALE: NONE

NOTES:

1. ALL BOLTS SHALL BE ASTM A325 FOR WOOD CONNECTIONS. HAND TIGHTEN ONLY AT WOOD CONNECTIONS.
2. SEE CEILING FRAMING PLAN AND ROOF FRAMING PLAN FOR ADDITIONAL INFORMATION.
3. WALL TOP PLATE SHALL BE DOUBLE 2X6 SOUTHERN PINE, NO. 2 OR BETTER, SECURELY SPIKED TOGETHER USING 10d NAILS AT 8 INCHES ON CENTER. LOCATE SPLICES OVER STUDS. SPLICES AT TOP PLATE SHALL BE STAGGERED A MINIMUM OF 48 INCHES.

HEADER SCHEDULE		
LENGTH	TYPE	JACK STUD (EA. SIDE)
9'-8"	(1) 1.55E, 3 1/2"X 14" LSL	4X6 S. PINE
6'-4"	(2) 1.55E, 1 3/4"X 9" LSL	(2) 2X6 S. PINE
3'-4"	(2) 2X8 S. PINE	(2) 2X6 S. PINE

NOTE:
HEADERS NOT CALLED OUT ON THE PLAN SHALL BE CONSTRUCTED OF (2) 2"X6" MEMBERS WITH PLYWOOD SPACERS AND A SINGLE 2X6 JACK STUD SUPPORT ON EACH END.

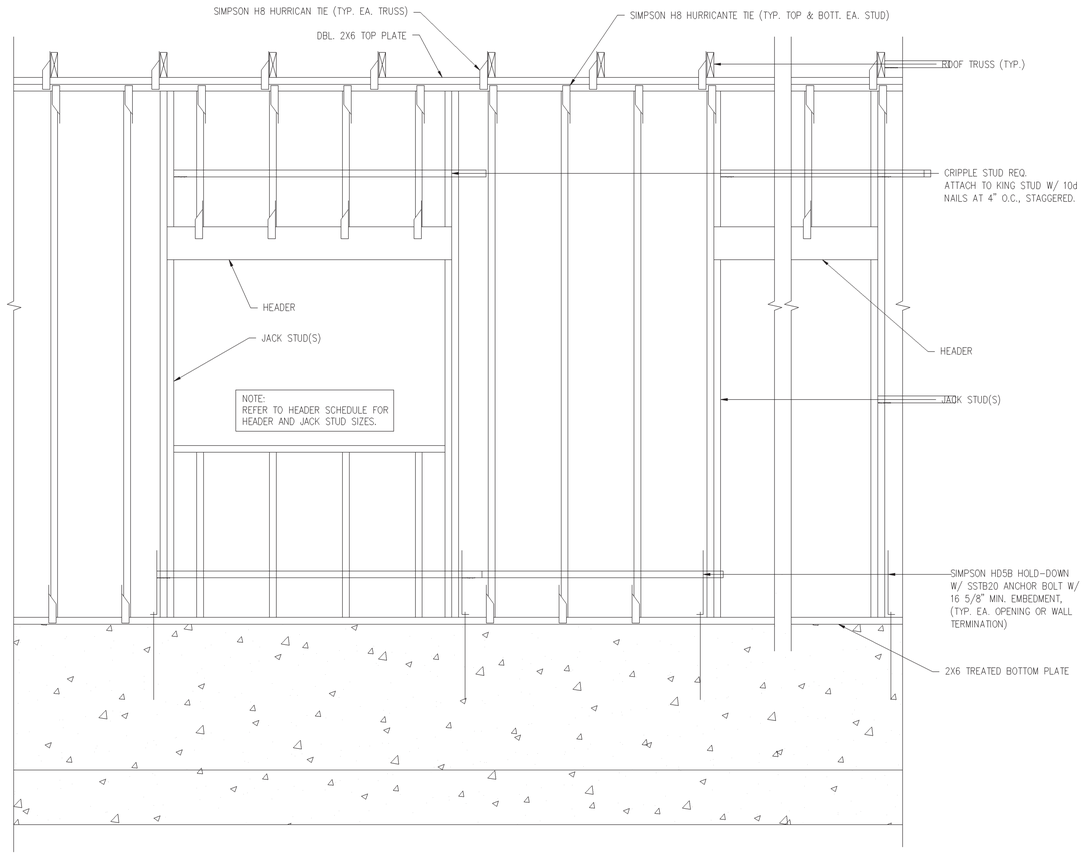

3 / S09 **WALL FRAMING DETAIL**
SCALE: 3/4"=1'-0"

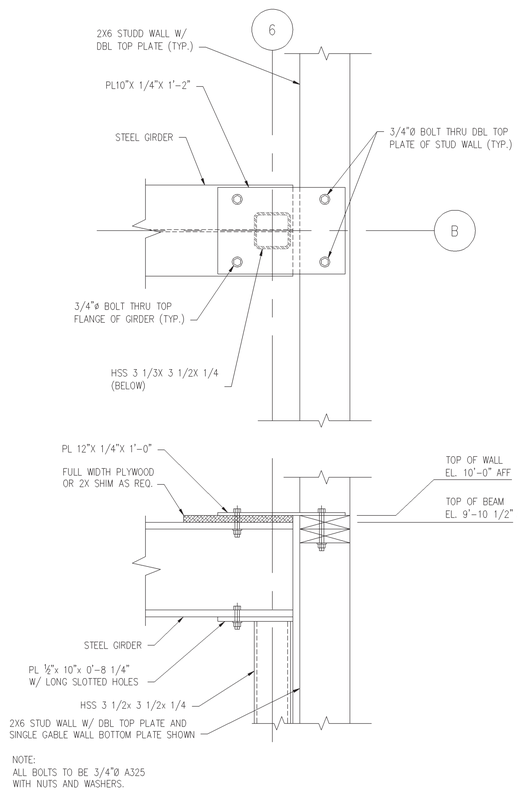

NOTE:
ALL BOLTS TO BE 3/4"Ø A325 WITH NUTS AND WASHERS.

4 / S09 **COLUMN TO EXTERIOR WALL CONNECTION**
SCALE: 1 1/2"=1'-0"

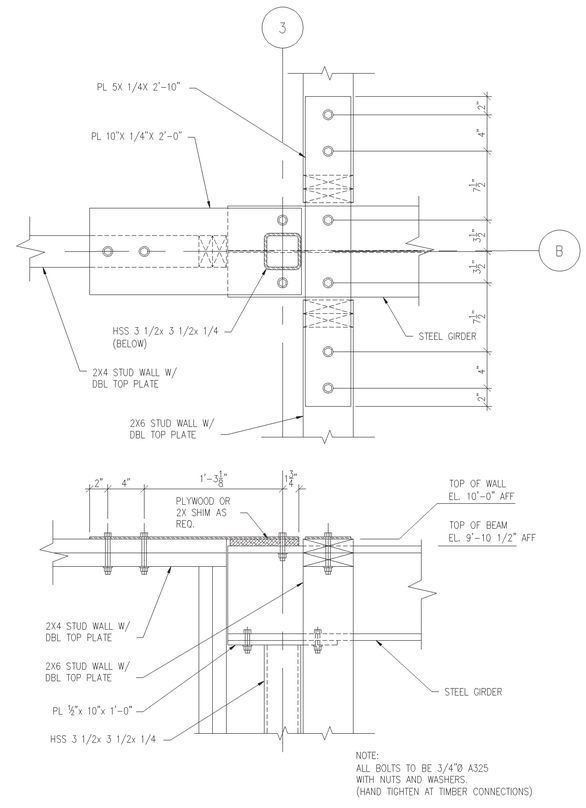

NOTE:
ALL BOLTS TO BE 3/4"Ø A325 WITH NUTS AND WASHERS. (HAND TIGHTEN AT TIMBER CONNECTIONS)

5 / S09 **COLUMN TO INTERIOR WALL CONNECTION**
SCALE: 1 1/2"=1'-0"

PREL. TRACING ____ DESIGN ____ CHKD ____

CREW OPERATION BUILDING
MECHANICAL - GEOTHERMAL SITE PLAN

M-01	CONTRACT	COUNTY	F.A.P. NO.	SHEET NO.	TOTAL SHTS.
	T201280104	SUSSEX		64	80

BRIDGEVILLE MAINTENANCE FACILITY IMPROVEMENTS

REVISIONS

ADDENDUM 2 4/9/14	

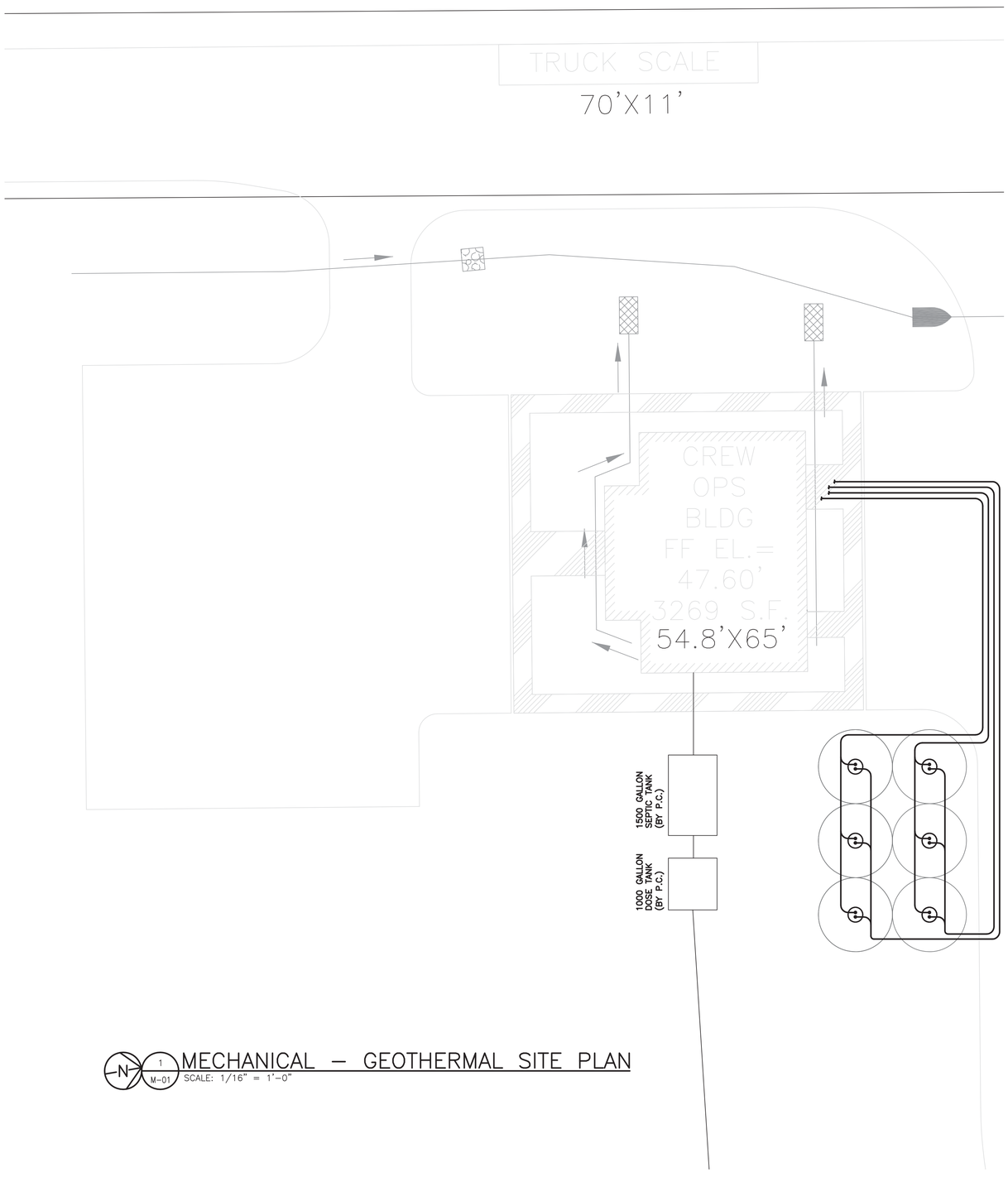

N 1 M-01 MECHANICAL – GEOTHERMAL SITE PLAN
SCALE: 1/16" = 1'-0"

PREL. TRACING _____ DESIGN _____ CHKD. _____

CREW OPERATION BUILDING
MECHANICAL - HVAC PLAN

M-02

CONTRACT	COUNTY	F.A.P. NO.	SHEET NO.	TOTAL SHTS.
T201280104	SUSSEX		65	80

BRIDGEVILLE MAINTENANCE FACILITY IMPROVEMENTS

REVISIONS

ADDENDUM 2 4/9/14

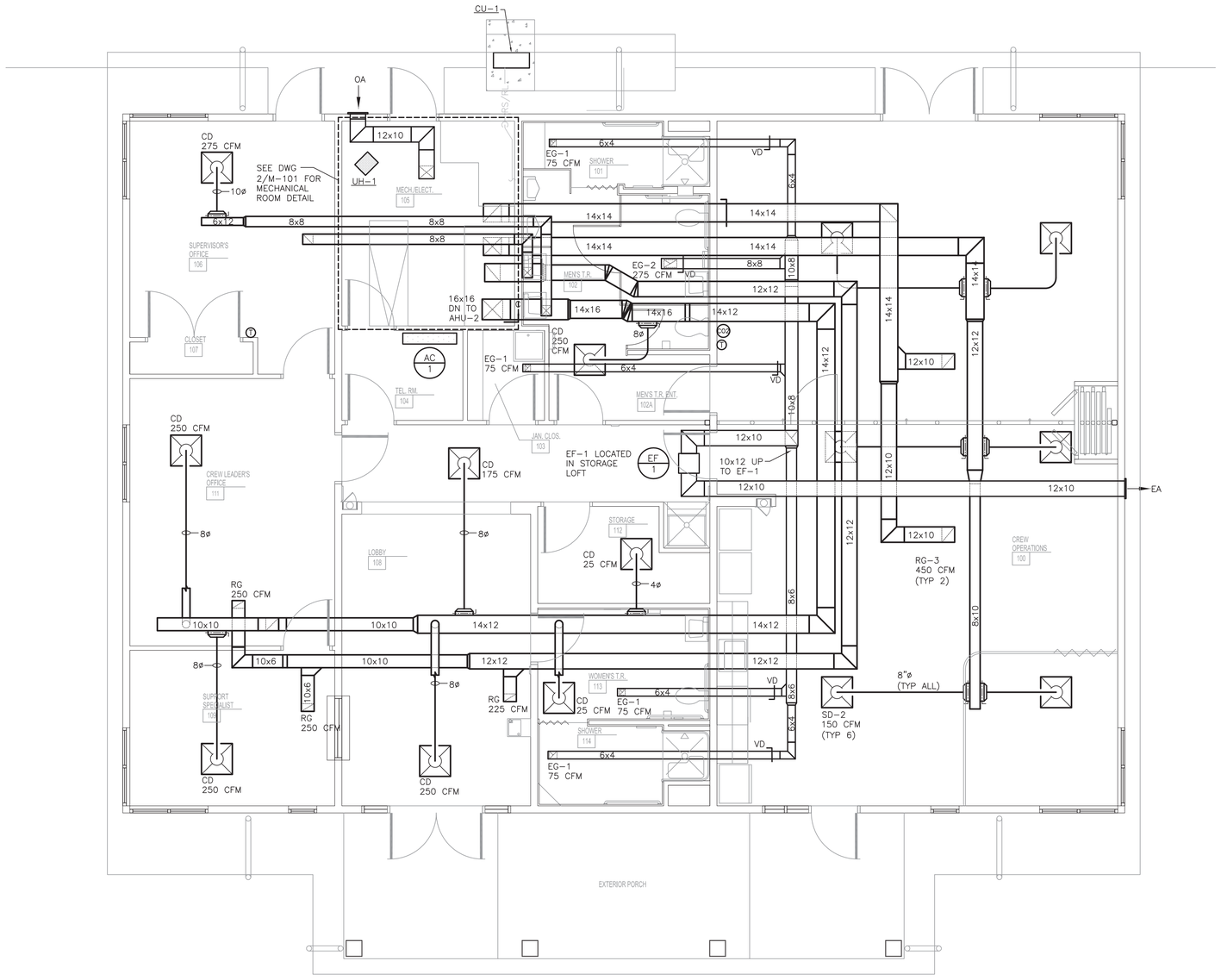

1 M-02 MECHANICAL – NEW MECHANICAL PLAN
SCALE: 1/4"=1'-0"

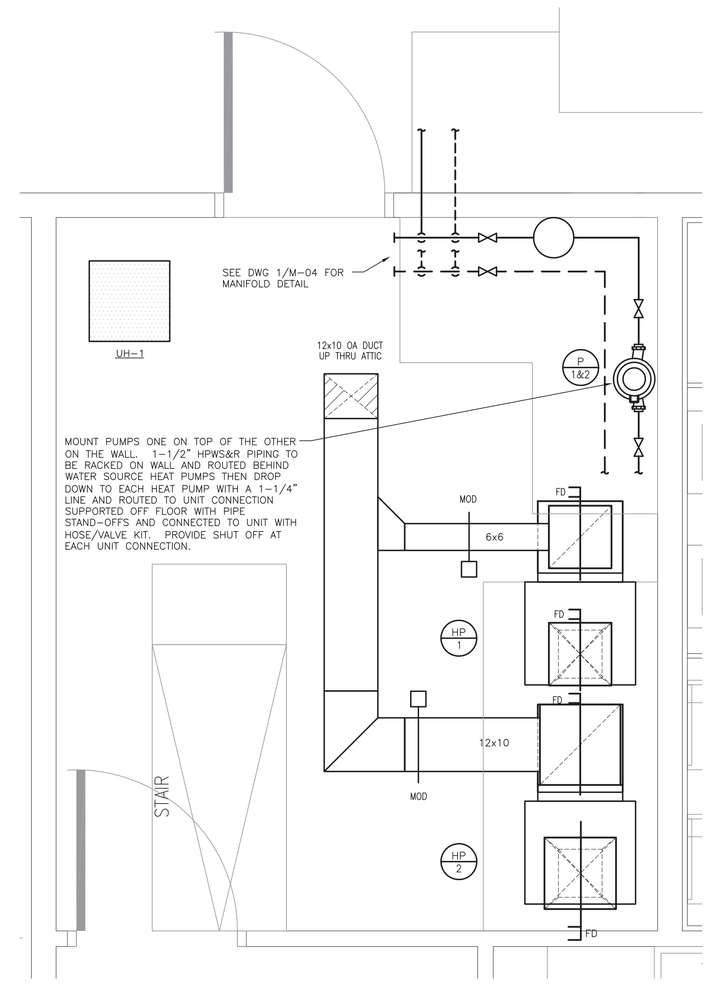

2 M-02 MECHANICAL – NEW PARTIAL MECHANICAL PLAN
SCALE: 3/4"=1'-0"

PREL. TRACING ____ DESIGN ____ CHKD. ____

BRIDGEVILLE MAINTENANCE FACILITY IMPROVEMENTS

REVISIONS

ADDENDUM 2 4/9/14	

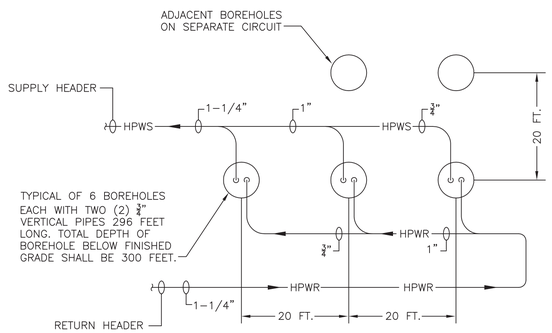

1 / M-03 TYPICAL LAYOUT FOR GEOTHERMAL EARTH HEAT EXCHANGER

SCALE: NONE

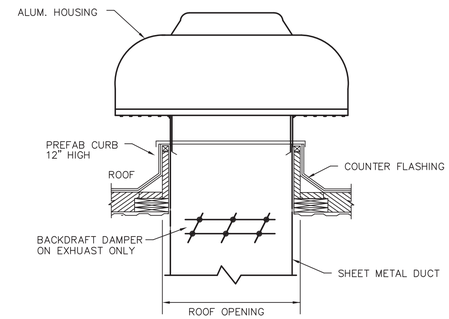

3 / M-03 GRAVITY INTAKE/EXHAUST VENTILATOR DETAIL

SCALE: NO SCALE

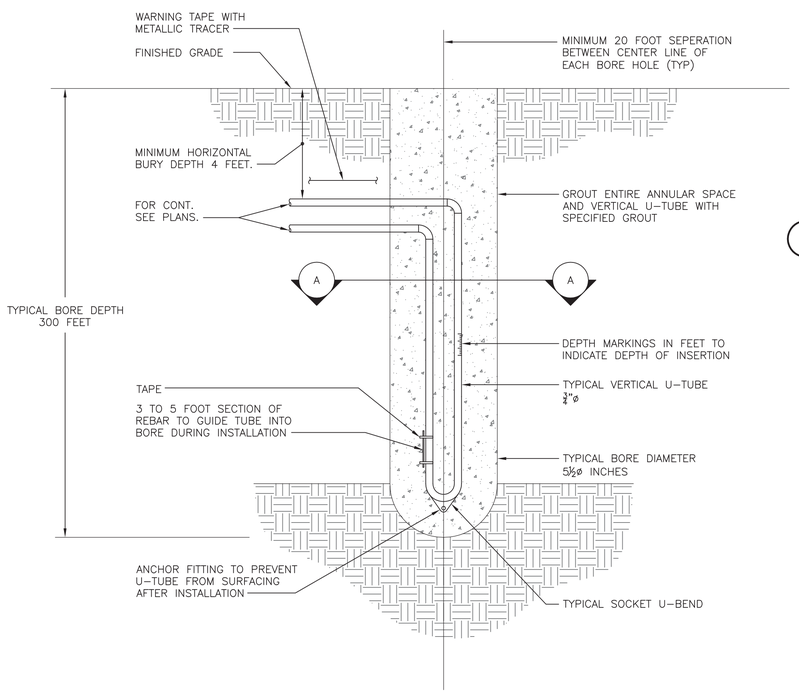

2 / M-03 TYPICAL GEOTHERMAL VERTICAL U-TUBE INSTALLATION

SCALE: NONE

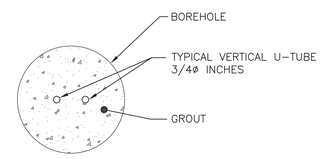

A PIPE CONFIGURATION IN BORE HOLE – SECTION

NOTES:

MINIMUM DISTANCE FROM LOT LINES, UTILITIES, FOUNDATIONS = 10 FEET

MINIMUM DISTANCE FROM NONPUBLIC WELLS = 20 FEET

MINIMUM DISTANCE FROM SEPTIC TANKS = 50 FEET

MINIMUM DISTANCE FROM PUBLIC WELLS, SESS POOLS, SEWAGE FIELDS = 100 FEET

MAXIMUM U-TUBE PIPE DIAMETER PER BORE DIAMETER SHALL BE AS FOLLOWS:

BORE DIAMETER (INCHES)	MAX U-TUBE PIPE DIAMETER (INCHES)
5.5"	3/4"

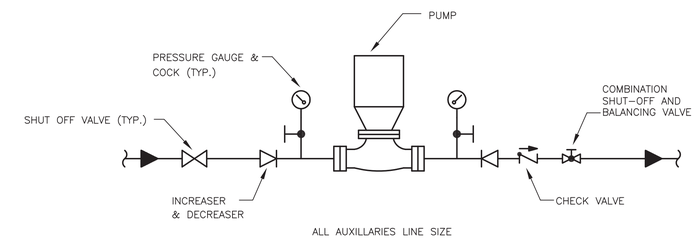

4 / M-03 TYPICAL INLINE PUMP DETAIL

SCALE: NONE

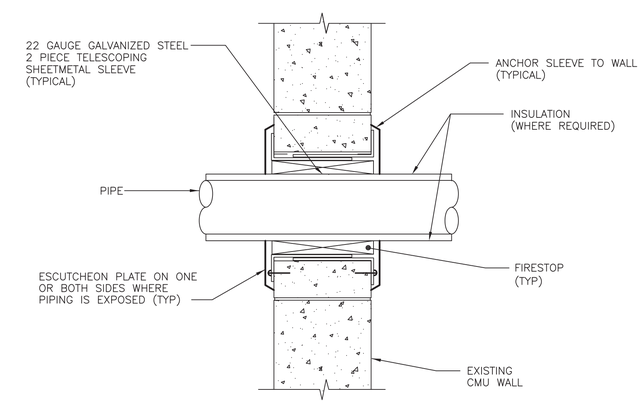

NOTE:
MECHANICAL CONTRACTOR SHALL INSURE BUILDING FIRE RATINGS ARE MAINTAINED BY PROVIDING INTUMESCENT CAULK AT ALL LOCATIONS WHERE PIPING PENETRATES FIRE-RATED WALLS AND FLOORS.

5 / M-03 PIPE PENETRATION DETAIL

SCALE: NONE

PREL. TRACING _____ DESIGN _____ CHKD. _____

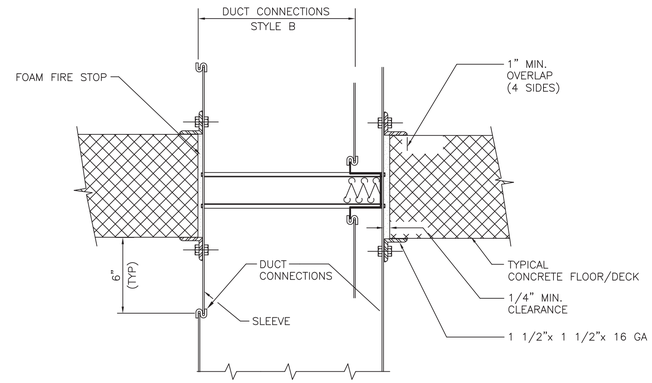

1 / M-04 FIRE DAMPER – HORIZONTAL INSTALLATION

SCALE: NONE

NOTES:

1. INSTALLATION SHALL COMPLY WITH NFPA
2. PROVIDE ACCESS DOORS IN DUCT ON BOTH SIDES OF FIRE DAMPERS.

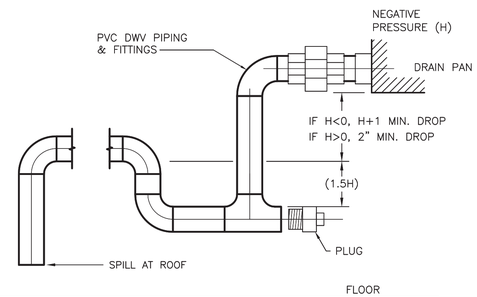

NOTE:

1. PIPE TO ROOF DRAIN.
2. VERTICAL DROP MAY NOT BE IN THE SAME PLANE AS THE CLEANOUT.
3. H = ABSOLUTE VALUE OF THE DESIGN STATIC PRESSURE INSIDE AIR HANDLING UNIT OR COIL SECTION. (H=+H=−H)
4. SIZE PIPE TO MATCH PAN FITTING.

3 / M-04 CONDENSATE TRAP DETAIL

SCALE: NONE

ELECTRIC HEATER SCHEDULE

TAG	DESCRIPTION	MBH	KW	VOLTAGE PHASE	REMARKS
UH 1	ELECTRIC UNIT HEATER MARKELL HF 560ST	12.8	3.75	208V/1ø	PROVIDE WITH DISCONNECT

EF – EXHAUST FAN SCHEDULE

TAG	TYPE	MANUFACTURER	MODEL NO.	CFM	STATIC PRESSURE INCH (H_2O)	RPM	DRIVE	HP	VOLTAGE (V/PH/HZ)	COMMENTS
EF-1	INLINE	GREENHECK	G-095-G	575	.25	1300	DIRECT	1/12	120/1/60	ALL NOTES

1. PROVIDE DISCONNECT SWITCH.
2. GRAVITY BACKDRAFT DAMPER.
3. PROVIDE ROOF CURB.
4. PROVIDE SOLID STATE SPEED CONTROL.
5. MOTOR SHALL BE THERMALLY PROTECTED.

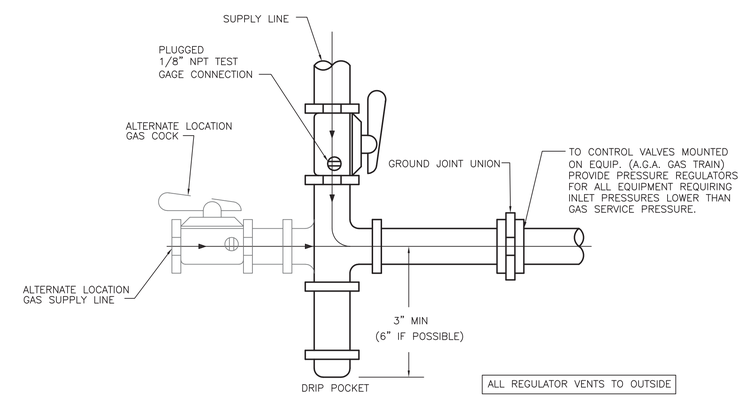

1 / M-04 GAS CONNECTION DETAIL

SCALE: NONE

PUMP SCHEDULE

UNIT NO.	TYPE	MANUFACTURER	MODEL	LOCATION	SERVICE	TYPE	FLOW (GPM)	TDH	MOTOR H.P.	RPM	ELECTRICAL V/PH/HZ	REMARKS
P 1&2	GEOTHERMAL LOOP	BELL & GOSSETT	SERIES 90 1-1/2 BC	MECHANICAL ROOM	CHILLED WATER	IN-LINE	20.0	40'	3.0	1750	208/3/60	INVERTER DUTY RATED MOTOR. VFD BY CONTROLS CONTRACTOR.

* OR APPROVED EQUAL

INDOOR WATER SOURCE HEAT PUMP SCHEDULE

NO.	TYPE	LOCATION	MANUFACTURER*	MODEL NO. BLOWER/COIL	WEIGHT LBS.	CFM	O.A. CFM (MIN.)	COOLING EQUIP.* PERFORMANCE (MBH)		HR	HEATING EQUIP. PERFORMANCE (MBH)		HA	GPM	UNIT					COMPRESSOR		BLOWER		NOTES
								TC/SC	EER		GROSS TOTAL	COP			VOLT	PH.	HZ	MCA	MOP	RLA	LRA	HP	FLA	
HP-1	WATER SOURCE HEAT PUMP	MECHANICAL ROOM	MCQUAY	WVFW1030	259	1000	100	30.2/24.3	18.42	35.8	23.4	4.31	18.3	7.3	208	1	60	21.1	17.6	14.1	73	0.5	3.5	1,3,4,6
HP-2	WATER SOURCE HEAT PUMP	MECHANICAL ROOM	MCQUAY	WVFW1036	262	1300	575	41.1/32.2	17.8	48.9	32.0	4.05	24.6	9.5	208	1	60	25.9	21.4	17.9	112	0.5	3.5	1,3,4,6

DUCTLESS SPLIT-SYSTEM AIR CONDITIONER SCHEDULE

AC # (INDOOR) CU # (OUTDOOR)

NO.	TYPE	LOCATION	MANUFACTURER	MODEL NO.	TOTAL COOLING (BTUH)	TOTAL HEATING (BTUH)	SEER	REFRIG.	ELECTRICAL			INDOOR UNITS (EACH)			OUTDOOR UNIT		REMARKS
									VOLTAGE (V/PH/HZ)	MOCP	RLA COOLING/HEATING	MODEL	WT.	AUX. ELEC. HEATER (KW)	MODEL	WT.	
AC-3 CU-3	INDOOR/OUTDOOR	TEL RM 105	SAMSUNG	KHS1271 & CH1271	11,900	14,300	17.0	R-410A	115/1/60	20	9.8/11.7	KHS1271	19.8	–	CH1271	77.2	PROVIDE DISCONNECT SWITCH (INDOOR & OUTDOOR UNITS). MANUFACTURER'S PRE-CHARGED R-410A REFRIGERANT LINE SETS, & WIRELESS REMOTE FOR CONTROL. PROVIDE & FIELD INSTALL HEAD PRESSURE CONTROL KIT FOR LOW AMBIENT OPERATION DOWN TO 0°F, & WALL BRACKETS.

PREL. TRACING ____ DESIGN ____ CHKD. ____

CREW OPERATION BUILDING
MECHANICAL - GEOTHERMAL PIPING DETAIL

M-05	CONTRACT	COUNTY	F.A.P. NO.	SHEET NO.	TOTAL SHTS.
	T201280104	SUSSEX		68	80

BRIDGEVILLE MAINTENANCE FACILITY IMPROVEMENTS

REVISIONS

ADDENDUM 2 4/9/14

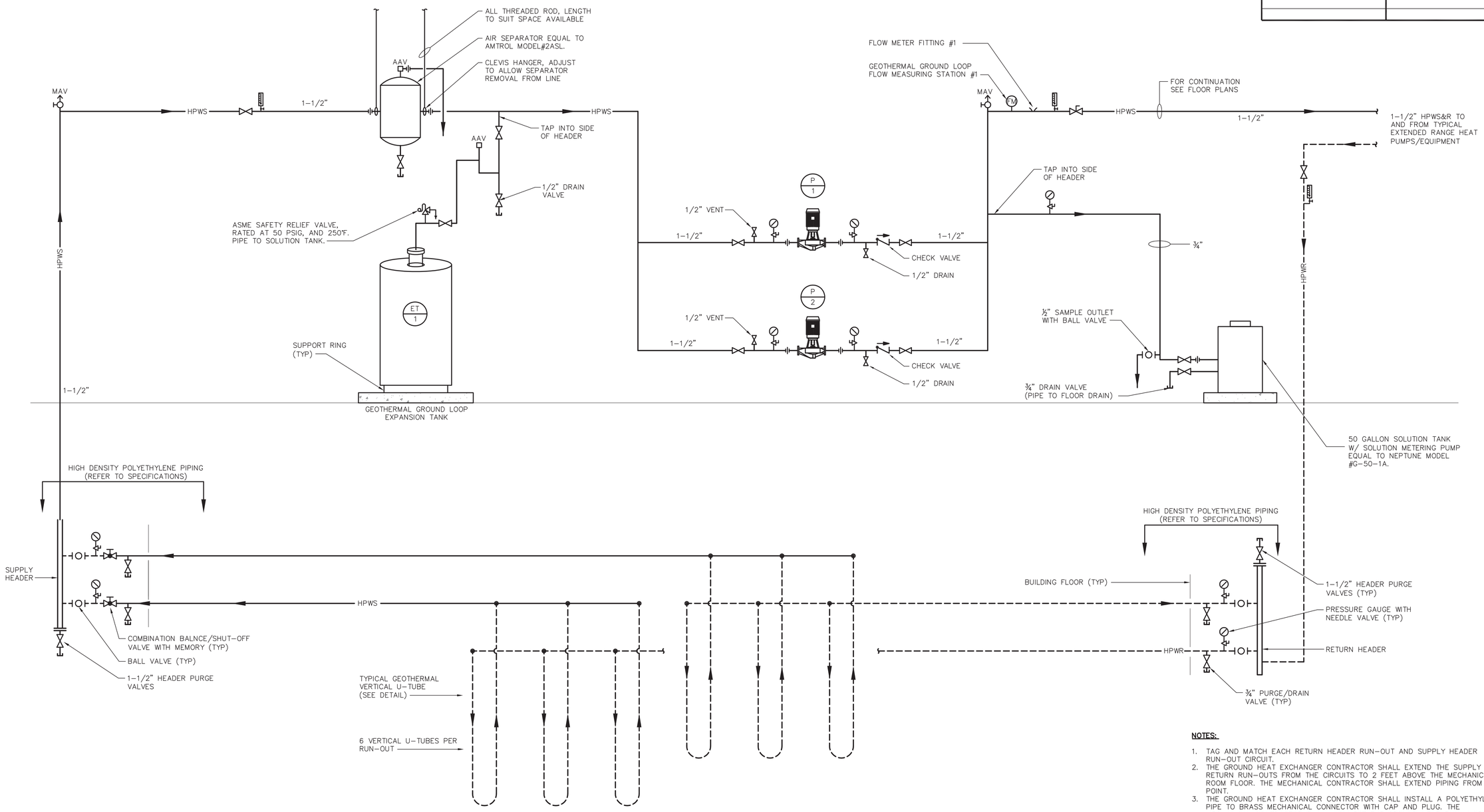

1 M-04 GEOTHERMAL SYSTEM CENTRAL PLANT DETAIL

SCALE: NONE

NOTES:

1. TAG AND MATCH EACH RETURN HEADER RUN-OUT AND SUPPLY HEADER RUN-OUT CIRCUIT.
2. THE GROUND HEAT EXCHANGER CONTRACTOR SHALL EXTEND THE SUPPLY AND RETURN RUN-OUTS FROM THE CIRCUITS TO 2 FEET ABOVE THE MECHANICAL ROOM FLOOR. THE MECHANICAL CONTRACTOR SHALL EXTEND PIPING FROM THIS POINT.
3. THE GROUND HEAT EXCHANGER CONTRACTOR SHALL INSTALL A POLYETHYLENE PIPE TO BRASS MECHANICAL CONNECTOR WITH CAP AND PLUG. THE MECHANICAL CONTRACTOR SHALL CONNECT THE GROUND HEAT EXCHANGER AT THIS POINT.
4. TO DETERMINE FLOW RATE FOR EACH CIRCUIT, DIVIDE THE PUMP TOTAL FLOW RATE BY THE TOTAL NUMBER OF VERTICAL U-TUBES. THEN MULTIPLY THE VALUE BY THE NUMBER OF VERTICAL U-TUBES PER CIRCUIT.

PREL. TRACING ____ DESIGN ____ CHKD. ____

CREW OPERATION BUILDING
PLUMBING - SANITARY SITE PLAN

P-01	CONTRACT	COUNTY	F.A.P. NO.	SHEET NO.	TOTAL SHTS.
	T201280104	SUSSEX		69	80

BRIDGEVILLE MAINTENANCE FACILITY IMPROVEMENTS

REVISIONS

ADDENDUM 2 4/9/14

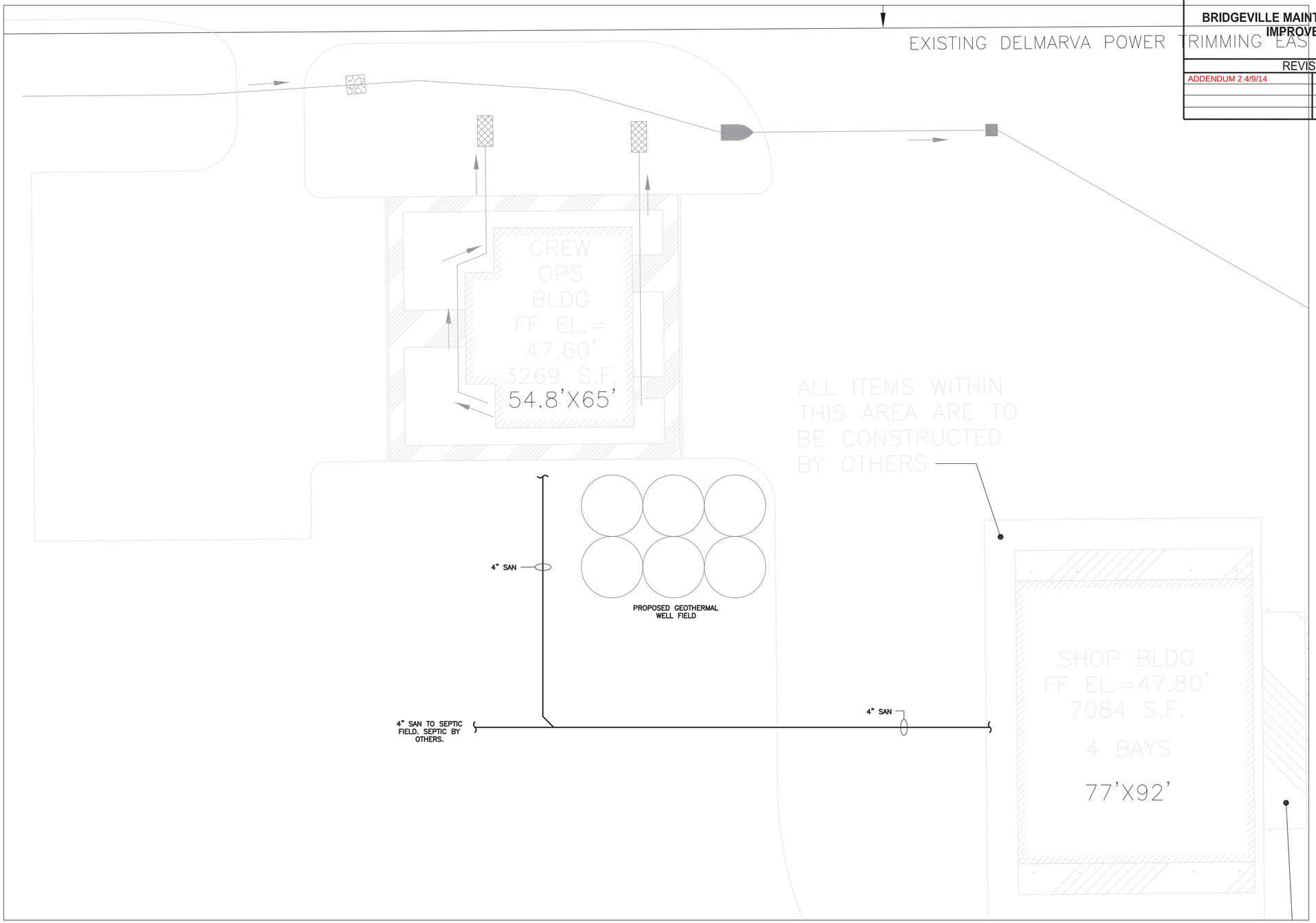

PREL. TRACING _____ DESIGN _____ CHKD. _____

CREW OPERATION BUILDING
PLUMBING - SANITARY PIPING PLAN

P-02	CONTRACT	COUNTY	F.A.P. NO.	SHEET NO.	TOTAL SHTS.
	T201280104	SUSSEX		70	80

BRIDGEVILLE MAINTENANCE FACILITY IMPROVEMENTS

REVISIONS

ADDENDUM 2 4/9/14

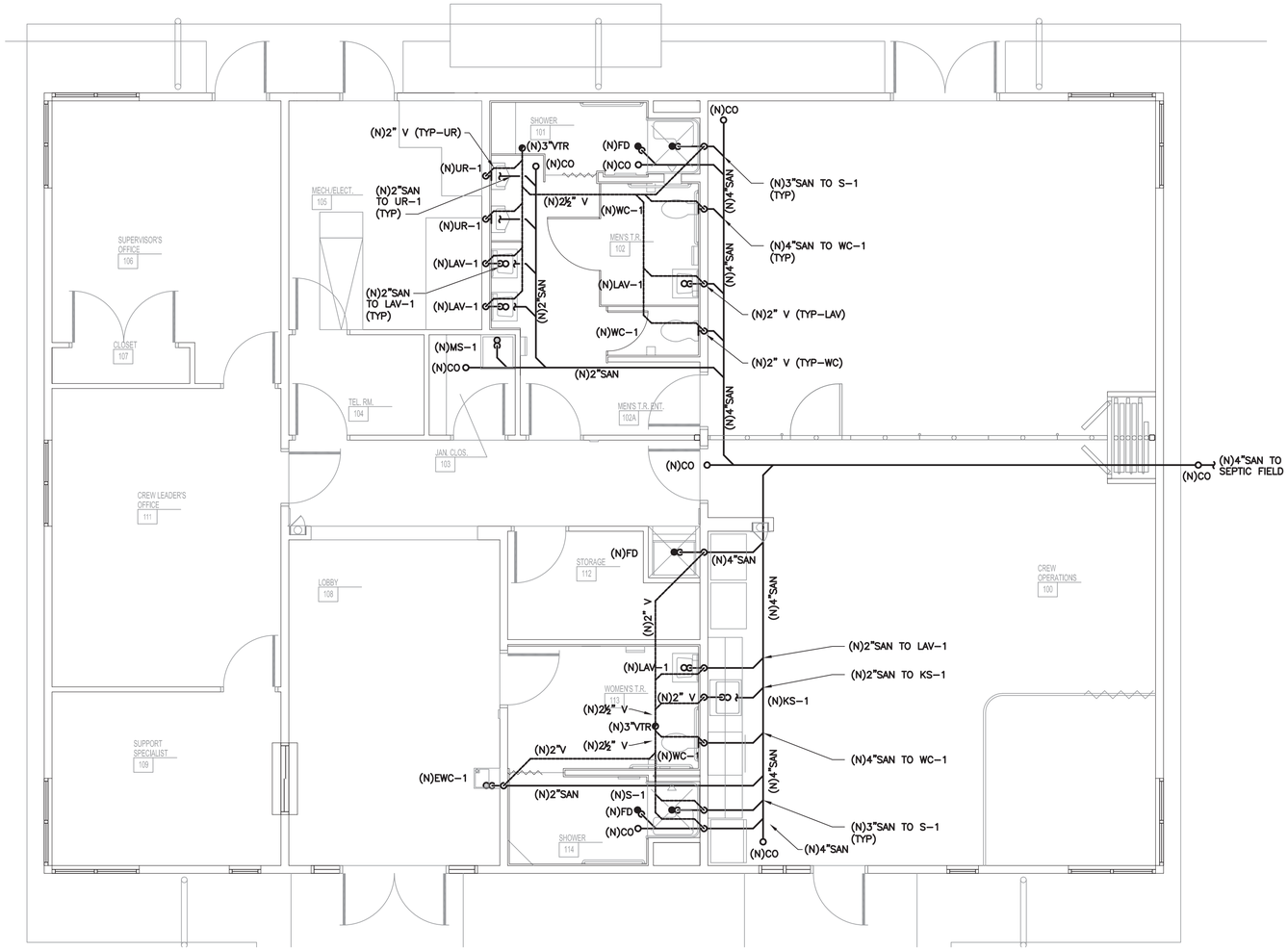

1 P-02 PLUMBING – NEW SANITARY PIPING PLAN
SCALE: 1/4"=1'-0"

PLUMBING FIXTURE SCHEDULE

TAG	BASIS OF DESIGN	FLUSH VALVE OR FAUCET	CONNECTION SIZES CW	HW	DRAIN	REMARKS
WC-1	KOHLER MODEL# K-4330	SLOAN MODEL 8111 (BATTERY POWERED SENSOR FLUSH VALVE)	1"	–	4"	WHITE FINISH, WALL MOUNTED. PROVIDE KOHLER K-4670-C SEAT.
WC-2	KOHLER MODEL# K-4330	SLOAN MODEL 8111 (BATTERY POWERED SENSOR FLUSH VALVE)	1"	–	4"	WHITE FINISH, WALL MOUNTED. PROVIDE KOHLER K-4670-C SEAT.
UR-1	KOHLER MODEL# K-4960-ET	SLOAN ROYAL 186-0.5	3/4"	–	2"	WHITE FINISH, WALL MOUNTED AT ADA HEIGHT. PROVIDE WADE WALL HANGER. PROVIDE FLUSH VALVE RATED FOR 0.5 GPF.
LAV-1	KOHLER MODEL# K-1724	SPEAKMAN MODEL# SC-3062-REV-BO	1/2"	1/2"	1-1/4"	WHITE FINISH, WALL MOUNTED, 4" CENTERS AND GRID STRAINER. PROVIDE ADA COMPLIANT HANDLES AND VANDAL-RESISTANT 0.5 GPM FLOW CONTROL ON FAUCET.
LAV-2	KOHLER MODEL# K-1724	SPEAKMAN MODEL# SC-3062-REV-BO	1/2"	1/2"	1-1/4"	WHITE FINISH, WALL MOUNTED AT ADA HEIGHT, 4" CENTERS AND GRID STRAINER. PROVIDE ADA COMPLIANT HANDLES AND VANDAL-RESISTANT 0.5 GPM FLOW CONTROL ON FAUCET.
KS-1	ELKAY MODEL# PSRADQ191955L	SPEAKMAN MODEL# SC-5722-REV-GB	1/2"	1/2"	1-1/2"	19½"x19" SINGLE BOWL STAINLESS STEEL SELF-RIMMING SINK. PROVIDE ADA COMPLIANT HANDLES & 1.5 GPM FLOW CONTROL ON FAUCET.
S-1	FLORESTONE 40-40H	PROVIDED WITH SHOWER	1/2"	1/2"	3"	–
EWC-1	HALSEY TAYLOR MODEL# HRFSER-Q	–	1/2"	–	1-1/2"	UNIT TO BE INSTALLED TO SATISFY ADA REQUIREMENTS. 120V/1P/60HZ, 10 AMP. PROVIDE WITH WATER FILTER.
MS-1	FIAT MODEL# MSB-2424	SPEAKMAN MODEL# SC-5812	1/2"	1/2"	3"	24"X24"X12" MOLDED STONE W/10" HIGH WALLS. PROVIDE VACUUM BRKR, INTERGRAL STOPS, WALL BRACE, & 3/4" HOSE THREAD SPOUT WITH FAUCET

* OR APPROVED EQUAL
**FIXTURES HAVE BEEN SELECTED FOR WATER SAVINGS. ANY SUBSTITUTIONS MUST HAVE EQUAL OR LESS WATER CONSUMPTION.

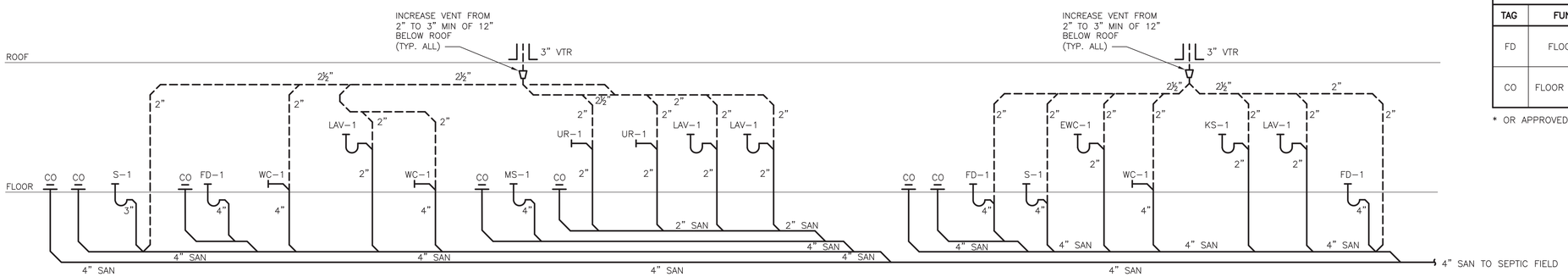

2 P-02 PLUMBING – SANITARY RISER DIAGRAM
SCALE: NO SCALE

DRAIN SCHEDULE

TAG	FUNCTION	BASIS OF DESIGN	PIPE SIZE	REMARKS
FD	FLOOR DRAIN	JR SMITH 2005	FULL	PROVIDE UNIT WITH FULL LINE SIZE CONNECTION.
CO	FLOOR CLEAN OUT	JR SMITH 4020	FULL	PROVIDE UNIT WITH FULL LINE SIZE CONNECTION.

* OR APPROVED EQUAL

CHKD. ____ DESIGN ____ PREL. TRACING ____

CREW OPERATION BUILDING
PLUMBING - DOMESTIC WATER PIPING PLAN

P-03	CONTRACT	COUNTY	F.A.P. NO.	SHEET NO.	TOTAL SHTS.
	T201280104	SUSSEX		71	80

BRIDGEVILLE MAINTENANCE FACILITY IMPROVEMENTS

REVISIONS

ADDENDUM 2 4/9/14

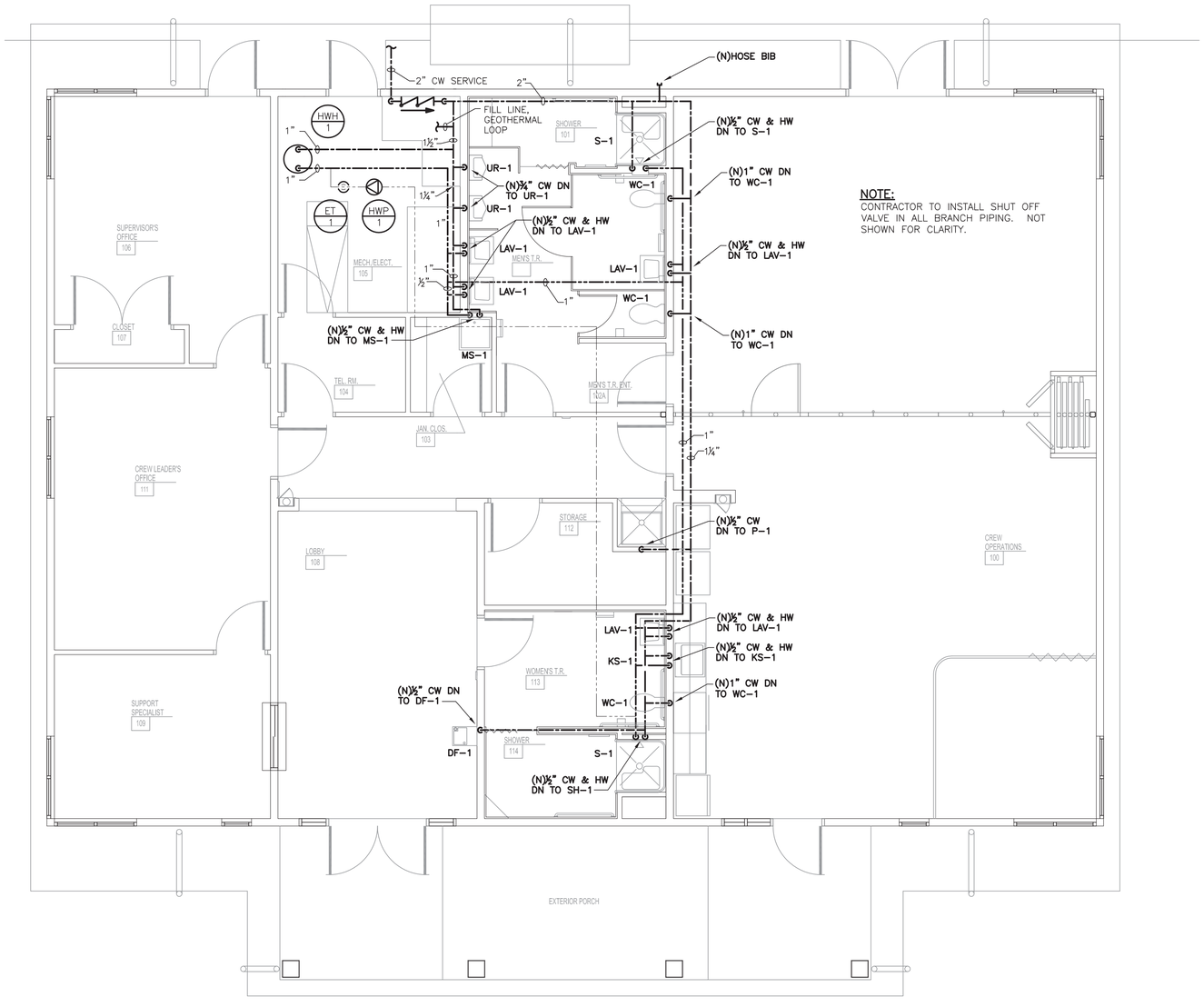

NOTE:
CONTRACTOR TO INSTALL SHUT OFF VALVE IN ALL BRANCH PIPING. NOT SHOWN FOR CLARITY.

1 / P-03 PLUMBING – NEW PLUMBING PLAN
SCALE: 1/4"=1'-0"

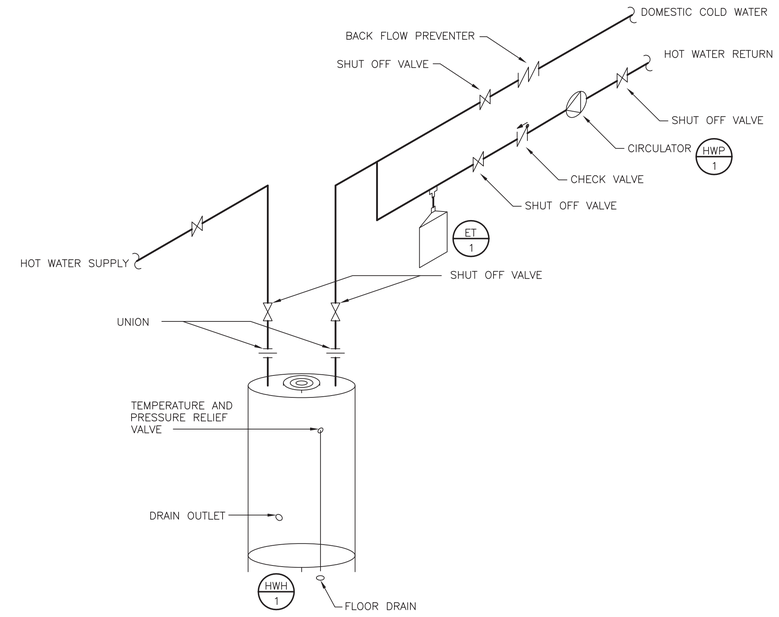

2 / P-03 WATER HEATER PIPING DIAGRAM
SCALE: NONE

HEATING HOT WATER EXPANSION TANK

TAG	TYPE	MANUFACTURER	MODEL	TANK VOLUME	TANK CAPACITY	WT.(LBS.) SHIP	REMARKS
ET 1	WH EXPANSION TANK	AMTROL	ST-5	2.0	0.9	5.0	–

* OR APPROVED EQUAL

PUMP SCHEDULE

UNIT NO.	TYPE	MANUFACTURER	MODEL	LOCATION	SERVICE	TYPE	FLOW (GPM)	TDH	MOTOR H.P.	RPM	ELECTRICAL V/PH/HZ	REMARKS
HWP 1	IN-LINE	BELL & GOSSETT	SERIES 90 1AA	MECH/ELEC 105	HOT WATER	END SUCTION	5	19	1/4	1725	-	1,2,3

* OR APPROVED EQUAL

NOTES:
1. PROVIDE CIRCUIT BREAKER TYPE NEMA 1 ENCLOSED, SIZE 0 COMBINATION STARTER WITH PRIMARY AND SECONDARY FUSED CONTROL POWER TRANSFORMER AND DOOR MOUNTED H-O-A SELECTOR SWITCH AND GREEN LED PILOT LIGHT.
2. PUMP SHALL BE BRONZE FITTED.
3. MAXIMUM WORKING PRESSURE 175PSI.

HOT WATER HEATER SCHEDULE

TAG	DESCRIPTION	STORAGE CAPACITY	RECOVERY(GPH) @ 100°F RISE	HEATING ELEMENT	VOLTAGE PHASE	REMARKS
HWH 1	GAS HOT WATER HEATER BRADFORD WHITE MODEL LD65R3-3	65	18	4.5kW (x2)	240V/3ø	–

PREL. TRACING ____ DESIGN ____ CHKD. ____

CREW OPERATION BUILDING ELECTRICAL - LEGEND AND ABBREVIATIONS	E-0.0	CONTRACT	COUNTY	F.A.P. NO.	SHEET NO.	TOTAL SHTS.
		T201280104	SUSSEX		72	80

BRIDGEVILLE MAINTENANCE FACILITY IMPROVEMENTS

REVISIONS	
ADDENDUM 2 4/9/14	

ELECTRICAL LEGEND:

- A B — LIGHTING FIXTURE – RECESSED, SURFACE OR PENDANT MOUNTED – LETTER INDICATES FIXTURE TYPE
- C D — LIGHTING FIXTURE – WALL MOUNTED – LETTER INDICATES FIXTURE TYPE
- F — LIGHTING FIXTURE – WALLWASH – LETTER INDICATES FIXTURE TYPE
- E — EMERGENCY LIGHTING BATTERY UNIT – LETTER INDICATES FIXTURE TYPE – CONNECT UNSWITCHED LINE CONDUCTOR TO INPUT
- E1 — EMERGENCY REMOTE DUAL LIGHTING HEAD – LETTER INDICATES FIXTURE TYPE
- X, X1 — ILLUMINATED EXIT SIGN – WALL MOUNTED, CEILING MOUNTED – FACES AND DIRECTIONAL ARROWS AS INDICATED – LETTER INDICATES FIXTURE TYPE – CONNECT UNSWITCHED LEG OF LIGHTING BRANCH CIRCUIT TO INPUT
- DEVICE BOX – FLUSH MOUNTED WITH SINGLE-GANG TILE RING, SURFACE MOUNTED
- DEVICE BOXES IN DUAL-GANGED CONFIGURATION – FLUSH MOUNTED WITH DUAL-GANG TILE RING, SURFACE MOUNTED
- CH — DEVICE BOX MOUNTED 6" ABOVE COUNTERTOP BACKSPLASH LEVEL
- +48" — DEVICE BOX MOUNTED 48" A.F.F. (MOUNTING HEIGHT TO BE AS INDICATED)
- R — DUPLEX RECEPTACLE OUTLET WITH STAINLESS STEEL DEVICE COVER PLATE. RECEPTACLE SHALL BE EXTRA HEAVY DUTY SPECIFICATION GRADE, STRAIGHT BLADE, 20 AMPERE, 125 VOLT, 2 POLE, 3 WIRE GROUNDING TYPE, NEMA 5-20R, WITH COLOR AS DIRECTED BY ARCHITECT. PROVIDE HUBBELL CAT. NO. HBL5362__ OR EQUAL BY BRYANT, LEVITON OR PASS & SEYMOUR. MOUNT 18" A.F.F. UNLESS OTHERWISE NOTED.
- RT — RECEPTACLE OUTLET (NEMA TYPE 14-50R CONFIGURATION) WITH STAINLESS STEEL DEVICE COVER PLATE. RECEPTACLE SHALL BE STRAIGHT BLADE, 50 AMPERE, 125/250 VOLT, 3 POLE, 4 WIRE GROUNDING TYPE. PROVIDE HUBBELL CAT. NO. HBL9450A OR EQUAL BY BRYANT, LEVITON OR PASS & SEYMOUR. EXACT MOUNTING LOCATION TO BE FIELD-COORDINATED.
- G — GFCI RECEPTACLE OUTLET WITH STAINLESS STEEL DEVICE COVER PLATE. RECEPTACLE SHALL BE EXTRA HEAVY DUTY SPECIFICATION GRADE, WEATHER-RESISTANT, STRAIGHT BLADE, 20 AMPERE, 125 VOLT, 2 POLE, 3 WIRE GROUNDING TYPE, NEMA 5-20R, WITH COLOR AS DIRECTED BY ARCHITECT. PROVIDE HUBBELL CAT. NO. GFR5362SG_ OR EQUAL BY BRYANT, LEVITON OR PASS & SEYMOUR. MOUNT 18" A.F.F. UNLESS OTHERWISE NOTED.
- GWP — GFCI RECEPTACLE OUTLET AS ABOVE WITH HORIZONTAL WEATHERPROOF WHILE-IN-USE DEVICE COVER. DEVICE COVER SHALL BE HEAVY DUTY GRAY DIE-CAST ALUMINUM OR ZINC (PROVIDE HUBBELL CAT. #WP826H OR EQUAL BY PASS & SEYMOUR). MOUNT 18" A.F.F. UNLESS OTHERWISE NOTED.
- G1 — GFCI RECEPTACLE OUTLET WITH STAINLESS STEEL DEVICE COVER PLATE. RECEPTACLE SHALL BE EXTRA HEAVY DUTY SPECIFICATION GRADE, WEATHER-RESISTANT, STRAIGHT BLADE, 15 AMPERE, 125 VOLT, 2 POLE, 3 WIRE GROUNDING TYPE, NEMA 5-15R, WITH COLOR AS DIRECTED BY ARCHITECT. PROVIDE HUBBELL CAT. NO. GFR5262SG_ OR EQUAL BY BRYANT, LEVITON OR PASS & SEYMOUR. MOUNTING HEIGHT TO BE AS INDICATED.
- S, S3, S4 — SINGLE-POLE/3-WAY/4-WAY TOGGLE SWITCH AS INDICATED WITH STAINLESS STEEL DEVICE COVER PLATE. SWITCH SHALL BE EXTRA HEAVY DUTY SPECIFICATION GRADE, 20 AMPERE, 1 HP, 120-277 VOLT WITH GROUND SCREW AND TOGGLE COLOR AS DIRECTED BY ARCHITECT. PROVIDE HUBBELL CAT. NO. HBL122(1/3/4)_ OR EQUAL BY BRYANT, LEVITON OR PASS & SEYMOUR. MOUNT 48" A.F.F. UNLESS OTHERWISE NOTED.
- SPL — SINGLE-POLE TOGGLE SWITCH WITH RED PILOT LIGHT TOGGLE (LIGHT ON WITH LOAD ON) WITH STAINLESS STEEL DEVICE COVER PLATE. SWITCH SHALL BE EXTRA HEAVY DUTY SPECIFICATION GRADE, 20 AMPERE, 1 HP, 120-277 VOLT WITH GROUND SCREW AND TOGGLE COLOR AS DIRECTED BY ARCHITECT. PROVIDE HUBBELL CAT. NO. HBL122(1/3/4)_ OR EQUAL BY BRYANT, LEVITON OR PASS & SEYMOUR. MOUNT 48" A.F.F. UNLESS OTHERWISE NOTED.
- SF — FAN SPEED CONTROL – EXACT MOUNTING LOCATION TO BE FIELD-COORDINATED
- M — FRACTIONAL HORSEPOWER MOTOR STARTER WITH SINGLE-POLE TOGGLE DISCONNECT SWITCH, LOCKABLE TOGGLE GUARD KIT, THERMAL OVERLOAD RELAY AND RED PILOT LIGHT IN SINGLE-GANG SURFACE MOUNTED NEMA 1 ENCLOSURE. SWITCH SHALL BE RATED 1 HORSEPOWER (16 AMPERES CONTINUOUS CURRENT) @ 115-230/277 VOLTS. PROVIDE SQUARE D CLASS 2510 TYPE F OR APPROVED EQUAL. TOGGLE GUARD SHALL BE SQUARE D CAT. #2510FL1 OR APPROVED EQUAL. PROVIDE OVERLOAD RELAY PER MOTOR NAMEPLATE FULL LOAD CURRENT. MOUNT 48" A.F.F. UNLESS OTHERWISE NOTED.
- FLUSH-MOUNTED TELECOMMUNICATION OUTLET – PROVIDE FLUSH-MOUNTED DUAL-GANG OUTLET BOX WITH SINGLE-GANG PLASTER RING AND (1) 1" EMT CONDUIT CONCEALED IN WALL EXTENDING FROM BOX TO 6" ABOVE FINISHED CEILING LEVEL. PROVIDE EMT BOX CONNECTORS WITH PLASTIC BUSHINGS ON CONDUIT ENDS ABOVE CEILING. MOUNT 18" A.F.F. UNLESS OTHERWISE NOTED. TELECOMMUNICATION WIRING, JACKS AND DEVICE PLATE TO BE PROVIDED BY OTHERS.
- PC — PHOTOSENSOR AS INDICATED
- J — JUNCTION BOX
- SAFETY SWITCH AS INDICATED – EXACT MOUNTING LOCATION TO BE FIELD-COORDINATED
- VFD — VARIABLE FREQUENCY DRIVE – EXACT MOUNTING LOCATION TO BE FIELD-COORDINATED
- INV — INVERTER – EXACT MOUNTING LOCATION TO BE FIELD-COORDINATED
- MOTOR OUTLET
- DIRECT CONNECTION TO EQUIPMENT
- GROUND CONNECTION
- BRANCH CIRCUIT EXPOSED OR CONCEALED IN CEILING OR WALL CONSTRUCTION – THREE #12 AWG CONDUCTORS (LINE, NEUTRAL OR LINE, GREEN INSULATED GROUND) IN 3/4" CONDUIT UNLESS OTHERWISE NOTED
- BRANCH CIRCUIT AS ABOVE CONCEALED UNDER FLOOR CONSTRUCTION OR UNDERGROUND
- HOMERUN TO PANELBOARD – NUMBER OF ARROWS INDICATES NUMBER OF CIRCUITS
- OH — OVERHEAD AERIAL CONDUCTOR(S)
- LOW-VOLTAGE WIRING
- CONDUIT TURNS UP, CONDUIT TURNS DOWN
- PANELBOARD, 208Y/120V – SURFACE MOUNTED, FLUSH MOUNTED – MOUNT TOP OF PANEL 6'-0" A.F.F. UNLESS OTHERWISE NOTED

ELECTRICAL ABBREVIATIONS:

NOTE: REFER TO MECHANICAL DRAWINGS FOR MECHANICAL EQUIPMENT ABBREVIATIONS

A	AMPERES
AFF	ABOVE FINISHED FLOOR
AFG	ABOVE FINISHED GRADE
AIC	AMPERE INTERRUPTING CAPACITY
ATS	AUTOMATIC TRANSFER SWITCH
AWG	AMERICAN WIRE GAUGE
BAS	BUILDING AUTOMATION SYSTEM
BLDG	BUILDING
C	CONDUIT
CB	CIRCUIT BREAKER
DWG	DRAWING
EC	ELECTRICAL CONTRACTOR
EGC	EQUIPMENT GROUNDING CONDUCTOR
EQPM	EQUIPMENT
FLR	FLOOR
FSS	FUSED SAFETY SWITCH
G/GND	GROUND
GEC	GROUNDING ELECTRODE CONDUCTOR
GFCI	GROUND FAULT CIRCUIT INTERRUPTING
HACR	HEATING, AIR CONDITIONING, REFRIGERATION RATED
H-O-A	HAND-OFF-AUTO
HP	HORSEPOWER
JB	JUNCTION BOX
K	THOUSAND
KCMIL	THOUSAND CIRCULAR MILS
MCB	MAIN CIRCUIT BREAKER
MCC	MOTOR CONTROL CENTER
MCP	MOTOR CIRCUIT PROTECTOR
MCS	MOLDED CASE SWITCH
MH	MOUNTING HEIGHT
MLO	MAIN LUGS ONLY
MTD	MOUNTED
MTS	MANUAL TRANSFER SWITCH
NEC	NATIONAL ELECTRICAL CODE (NFPA 70)
NEMA	NATIONAL ELECTRICAL MANUFACTURERS ASSOCIATION
NC	NORMALLY CLOSED
NIC	NOT IN CONTRACT
NO	NORMALLY OPEN
OH	OVERHEAD
OL	OVERLOAD
P	POLE
PV	PHOTOVOLTAIC
ø	PHASE
SCCR	SHORT CIRCUIT CURRENT RATING
SE	SERVICE ENTRANCE
SPD	SURGE PROTECTIVE DEVICE
SWBD	SWITCHBOARD
T'STAT	THERMOSTAT
TYP	TYPICAL
UL	UNDERWRITERS LABORATORIES
UON	UNLESS OTHERWISE NOTED
UV	ULTRAVIOLET
V	VOLTS
VFD	VARIABLE FREQUENCY DRIVE
W	WIRE
WP	WEATHERPROOF
XFMR	TRANSFORMER

BRANCH CIRCUIT IDENTIFICATION:

EXAMPLE: CO – 1

ELECTRICAL PANEL — CIRCUIT BREAKER WITHIN PANEL SERVING BRANCH CIRCUIT. BRANCH CIRCUIT SHALL CONSIST OF THREE #12 AWG CONDUCTORS (LINE, NEUTRAL OR LINE, GREEN INSULATED GROUND) IN 3/4" CONDUIT UNLESS OTHERWISE NOTED.

LIGHTING CONTROL IDENTIFICATION:

EXAMPLES:

FIXTURE "a" CONTROL — S S — FIXTURE "b" CONTROL

a b — CONTROL IDENTIFIER (TYP.) — LIGHTING FIXTURE (TYP.)

INBOARD LAMP CONTROL — S S — OUTBOARD LAMP CONTROL

i,o — FLUORESCENT LIGHTING FIXTURE WITH 3-LAMP CROSS SECTION AND (2) BALLASTS WIRED FOR INBOARD/OUTBOARD SWITCHING OPERATION

LEFT LAMP CONTROL — S S — RIGHT LAMP CONTROL

l,r — FLUORESCENT LIGHTING FIXTURE WITH 2-LAMP CROSS SECTION AND (2) BALLASTS WIRED FOR LEFT/RIGHT SWITCHING OPERATION

PREL. ____ TRACING ____ DESIGN ____ CHKD. ____

BRIDGEVILLE MAINTENANCE FACILITY IMPROVEMENTS

REVISIONS

ADDENDUM 2 4/9/14

LIGHTING FIXTURE SCHEDULE

FIXTURE TYPE	MANUFACTURER MODEL NO.	LAMPS QTY.	LAMPS TYPE	BALLASTS QTY.	BALLASTS TYPE	INPUT VOLTS	INPUT WATTS	INPUT VA	DESCRIPTION
A	FINELITE S10-PLV-16'-2T8-DC-91W-OPEN-120-FA-FE (OR APPROVED EQUAL BY PEERLESS OR LEDALITE)	8	32 WATT T8 LINEAR FLUORESCENT 3500K	2	ELECTRONIC LINEAR FLUORESCENT INSTANT START <10% THD .88 BALLAST FACTOR	120	224	226	16' LONG LINEAR PENDANT-MOUNTED DIRECT/INDIRECT FLUOR. LUMINAIRE WITH STEEL HOUSING (WHITE FINISH), 2-LAMP CROSS SECTION, PARABOLIC LOUVERS, EXTENDED PERFORMANCE SPECULAR SIDE REFLECTORS, OPEN UPLIGHT OPTICS, DUAL CIRCUITING AND FULLY ADJUSTABLE AIRCRAFT MOUNTING CABLE. SUSPEND 18" BELOW FINISHED CEILING LEVEL. PROVIDE ALL MOUNTING ACCESSORIES AND HARDWARE AS REQUIRED.
A1	FINELITE S10-PLV-8'-3T8-DC-91W-OPEN-120-FA-FE (OR APPROVED EQUAL BY PEERLESS OR LEDALITE)	4	32 WATT T8 LINEAR FLUORESCENT 3500K	2	ELECTRONIC LINEAR FLUORESCENT INSTANT START <10% THD .88 BALLAST FACTOR	120	118	118	SAME AS TYPE "A" EXCEPT 8' LONG.
A2	FINELITE S10-PLV-4'-3T8-DC-91W-OPEN-120-FA-FE (OR APPROVED EQUAL BY PEERLESS OR LEDALITE)	2	32 WATT T8 LINEAR FLUORESCENT 3500K	2	ELECTRONIC LINEAR FLUORESCENT INSTANT START <10% THD .88 BALLAST FACTOR	120	62	62	SAME AS TYPE "A" EXCEPT 4' LONG.
B	COLUMBIA P4D22-317G-MA33-S-EU (OR APPROVED EQUAL BY LITHONIA OR DAY-BRITE)	3	17 WATT T8 LINEAR FLUORESCENT 3500K	2	ELECTRONIC LINEAR FLUORESCENT INSTANT START <10% THD .88 BALLAST FACTOR	120	47	48	2'x2' RECESSED PARABOLIC STATIC TROFFER WITH 3-LAMP CROSS SECTION AND (9) MATTE ANODIZED LOW-IRIDESCENT SEMI-SPECULAR LOUVER CELLS ARRANGED IN 3x3 CONFIGURATION.
C	COLUMBIA ST822-217G-FAA12.125-EU (OR APPROVED EQUAL BY LITHONIA OR DAY-BRITE)	2	17 WATT T8 LINEAR FLUORESCENT 3500K	1	ELECTRONIC LINEAR FLUORESCENT INSTANT START <10% THD .88 BALLAST FACTOR	120	31	31	2'x2' RECESSED LENSED SHALLOW STATIC TROFFER, SPECIFICATION GRADE WITH 2-LAMP CROSS SECTION, .125" THICK PATTERN #12 ACRYLIC LENS AND FLUSH WHITE ALUMINUM DOOR.
D	COLUMBIA WC4-232-EU (OR APPROVED EQUAL BY LITHONIA OR DAY-BRITE)	2	32 WATT T8 LINEAR FLUORESCENT 3500K	1	ELECTRONIC LINEAR FLUORESCENT INSTANT START <10% THD .88 BALLAST FACTOR	120	59	59	4' LONG x 10" WIDE SURFACE-MOUNTED WRAPAROUND LUMINAIRE WITH 2-LAMP CROSS SECTION, CLEAR ACRYLIC PRISMATIC DIFFUSER AND INJECTION MOLDED GLOW ENDS.
E	EMERGI-LITE LSM54-2ZD-AD (OR APPROVED EQUAL BY LITHONIA OR McPHILBEN)	2	9 WATT T-5 6 VOLT EF-11 INCANDESCENT	–	–	120	36	36	EMERGENCY LIGHTING UNIT WITH STEEL HOUSING (OFF-WHITE FINISH), (2) INTEGRAL LIGHTING HEADS, REMOTE CAPABILITY (54 WATTS FOR 90 MINUTES), SEALED MAINTENANCE-FREE LEAD CALCIUM BATTERY, ADVANCED SELF-TESTING DIAGNOSTICS AND 15 MINUTE TIME DELAY. MOUNT ON WALL 7'-0" A.F.F.
E1	EMERGI-LITE EF11D-ZD-WT (OR APPROVED EQUAL BY LITHONIA OR McPHILBEN)	2	9 WATT T-5 6 VOLT EF-11 INCANDESCENT	–	–	6	18	18	EMERGENCY LIGHTING REMOTE DUAL HEAD ASSEMBLY WITH OFF-WHITE FINISH AND WET LOCATION LISTING. MOUNT ON EXTERIOR WALL 7'-0" A.F.F.
F	COLUMBIA WAL4-1UD32-EU (OR APPROVED EQUAL BY LITHONIA OR DAY-BRITE)	1	32 WATT T8 LINEAR FLUORESCENT 3500K	1	ELECTRONIC LINEAR FLUORESCENT INSTANT START <10% THD .88 BALLAST FACTOR	120	31	31	4' LONG LOW-PROFILE WALL-MOUNT LUMINAIRE WITH STEEL HOUSING (WHITE FINISH), THERMOPLASTIC END CAPS AND 1-LAMP CROSS SECTION WITH UPLIGHT/DOWNLIGHT DISTRIBUTION. MOUNT ON WALL ABOVE BATHROOM MIRROR; EXACT MOUNTING HEIGHT TO BE COORDINATED WITH ARCHITECTURAL PLANS.
F1	COLUMBIA WAL2-1UD17-EU (OR APPROVED EQUAL BY LITHONIA OR DAY-BRITE)	1	17 WATT T8 LINEAR FLUORESCENT 3500K	1	ELECTRONIC LINEAR FLUORESCENT INSTANT START <10% THD .88 BALLAST FACTOR	120	16	17	SAME AS TYPE "F" EXCEPT 2' LONG.
G	PRESCOLITE CFT632HEB-STF602HPLTRG (OR APPROVED EQUAL BY LITHONIA, CAPRI OR OMEGA)	1	32 WATT PL-T COMPACT FLUORESCENT 3500K	1	ELECTRONIC COMPACT FLUORESCENT 26/32/42 WATT <10% THD .98 BALLAST FACTOR	120	36	37	6" RECESSED DOWNLIGHT LISTED FOR USE IN WET LOCATIONS WITH CLEAR SPECULAR SELF-TRIM REFLECTOR, REGRESSED PRISMATIC ACRYLIC LENS AND TRIM RING GASKET. PROVIDE BAR HANGERS AND ALL MOUNTING ACCESSORIES & HARDWARE AS REQUIRED.
G1	PRESCOLITE CFT632HEB-STF602H (OR APPROVED EQUAL BY LITHONIA, CAPRI OR OMEGA)	1	32 WATT PL-T COMPACT FLUORESCENT 3500K	1	ELECTRONIC COMPACT FLUORESCENT 26/32/42 WATT <10% THD .98 BALLAST FACTOR	120	36	37	6" RECESSED DOWNLIGHT WITH CLEAR SPECULAR SELF-TRIM REFLECTOR. PROVIDE BAR HANGERS AND ALL MOUNTING ACCESSORIES & HARDWARE AS REQUIRED.
G2	PRESCOLITE CFT632HEB-STF602HWW (OR APPROVED EQUAL BY LITHONIA, CAPRI OR OMEGA)	1	32 WATT PL-T COMPACT FLUORESCENT 3500K	1	ELECTRONIC COMPACT FLUORESCENT 26/32/42 WATT <10% THD .98 BALLAST FACTOR	120	36	37	6" RECESSED DOWNLIGHT WITH CLEAR SPECULAR SELF-TRIM WALL WASH REFLECTOR. PROVIDE BAR HANGERS AND ALL MOUNTING ACCESSORIES & HARDWARE AS REQUIRED.
H	COLUMBIA UC48-132-EU (OR APPROVED EQUAL BY LITHONIA OR DAY-BRITE)	1	32 WATT T8 LINEAR FLUORESCENT 3500K	1	ELECTRONIC LINEAR FLUORESCENT INSTANT START <10% THD .88 BALLAST FACTOR	120	31	31	4' LONG SURFACE-MOUNTED UNDERCABINET LUMINAIRE WITH 1-LAMP CROSS SECTION, STEEL HOUSING (WHITE FINISH) AND WHITE ACRYLIC DIFFUSER.
H1	COLUMBIA UC24-117-EU (OR APPROVED EQUAL BY LITHONIA OR DAY-BRITE)	1	17 WATT T8 LINEAR FLUORESCENT 3500K	1	ELECTRONIC LINEAR FLUORESCENT INSTANT START <10% THD .88 BALLAST FACTOR	120	16	17	SAME AS TYPE "H" EXCEPT 2' LONG.
J	COLUMBIA CH4-132-EU-CHWG4 (OR APPROVED EQUAL BY LITHONIA OR DAY-BRITE)	1	32 WATT T8 LINEAR FLUORESCENT 3500K	1	ELECTRONIC LINEAR FLUORESCENT INSTANT START <10% THD .88 BALLAST FACTOR	120	31	31	4' LONG HEAVY-DUTY NARROW CHANNEL STRIP LUMINAIRE WITH 1-LAMP CROSS SECTION AND WIREGUARD. PROVIDE ALL MOUNTING ACCESSORIES AND HARDWARE AS REQUIRED.
K	PRESCOLITE LFHL-H10-50MH-50MHFE-10FFR-TLG (OR APPROVED EQUAL BY LITHONIA, CAPRI OR OMEGA)	1	50 WATT ED17 PROTECTED/COATED METAL HALIDE 3000K	1	MAGNETIC HPF CWA	120	72	120 (MAX)	10" RECESSED DOWNLIGHT LISTED FOR USE IN WET LOCATIONS WITH CLEAR SPECULAR REFLECTOR, CAST FLUSH WHITE TRIM, FLUSH GLASS FRESNEL LENS AND TRIM LENS GASKET. PROVIDE BAR HANGERS AND ALL MOUNTING ACCESSORIES & HARDWARE AS REQUIRED.
L	KIM AFL14-150PMH120-BL-HDS-A30-FS/BL-SM18/BL (OR APPROVED EQUAL BY LITHONIA OR GARDCO)	1	150 WATT ED17 CLEAR PULSE START METAL HALIDE	1	PUSLE START METAL HALIDE	120	185	444 (MAX)	ARCHITECTURAL OUTDOOR FLOODLIGHT WITH NARROW DISTRIBUTION, CAST ALUMINUM HOUSING (BLACK FINISH), CLEAR TEMPERED GLASS LENS, HEAVY DUTY SWIVEL, INTEGRAL 120V PHOTOCELL, FULL SHIELD, AND 18" STANCHION MOUNT ASSEMBLY.
X	EMERGI-LITE BA-PXN-1-R (OR APPROVED EQUAL BY LITHONIA OR McPHILBEN)	–	LED	–	–	120	3	3	UNIVERSALLY-MOUNTED SINGLE-FACE LED EXIT SIGN WITH CAST ALUMINUM HOUSING (BLACK FINISHED BODY/ALUMINUM FACE), RED LETTERS, UNIVERSAL KNOCK-OUT CHEVRONS, MAINTENANCE-FREE NICKEL-CADMIUM BATTERY, TEST SWITCH AND SELF-TESTING DIAGNOSTICS. MOUNT BOTTOM OF SIGN 7'-6" A.F.F.
X1	EMERGI-LITE BA-PXN-2-R (OR APPROVED EQUAL BY LITHONIA OR McPHILBEN)	–	LED	–	–	120	3	3	SAME AS TYPE "X" EXCEPT WITH DOUBLE-FACE.

LIGHTING CONTROL PANEL "LC" RELAY SCHEDULE

LOCATION: CREW OPS. BLDG. MECH/ELEC RM. 105 MOUNTING: SURFACE POWER SUPPLY: 120 VAC

CONTROL PANEL FEATURES: ASTRONOMICAL TIME CLOCK, GRAPHICAL USER INTERFACE

RELAY NO.	AMPERES/POLES	VOLTS	CONTROL	AREA SERVED	PANELBOARD CIRCUIT
1	30/1	120	PHOTO ON/TIME CLOCK OFF	BUILDING EXTERIOR LIGHTING	CO-9
2	30/1	–	TIME CLOCK ON/OFF	EXHAUST FAN EF/1	CO-51
3	30/1	–	-	SPARE RELAY	–
4	30/1	–	-	SPARE RELAY	–

LIGHTING CONTROL PANEL NOTES:

1. ALL RELAYS SHALL BE LATCHING-TYPE RATED 30A FOR HID & FLUORESCENT BALLASTS AND 1HP @ 120 VAC.

PANELBOARD "CO" SCHEDULE

LOCATION: CREW OPS. BLDG. MECH./ELEC. RM. 105 TYPE: 208Y/120V 3ø, 4W

SOURCE: 1200A OUTDOOR SWITCHBOARD MAIN BREAKER: 225A

DESCRIPTION	BRKR SIZE	CIR NO	CIR NO	BRKR SIZE	DESCRIPTION
LTG – OFFICES	20	1	2	30	PV INVERTER OUTPUT CONNECTION (ALTERNATE)
LTG – MECH./ELEC., MEN'S	20	3	4		
LTG – LOBBY, WOMEN'S	20	5	6	20	REC – SUPERVISOR OFC.
LTG – CREW OPS. ROOM	20	7	8	20	REC – CREW LEADER OFC.
LTG – BLDG. EXTERIOR	20	9	10	20	REC – SUPPORT SPECIALIST
LTG – FLAGPOLE FLOOD	20	11	12	20	REC – LOBBY, CORRIDOR
LTG. CONTROL PANEL "LC"	20	13	14	20	REC – WOMEN'S, STORAGE
DUCTLESS S.S. CU/1, AC/1	20	15	16	20	REC – MECH./ELEC. RM.
H.W. CIRC. PUMP HWP/1	15	17	18	20	REC – MEN'S, JANITOR
ELECTRIC WATER HEATER HWH/1	20	19	20	15	REC – ICE MACHINE
		21	22	20	REC – CREW OPERATIONS
		23	24	20	REC – CREW OPERATIONS
ELECTRIC UNIT HEATER UH/1	15	25	26	20	REC – SODA MACHINE
		27	28	20	REC – VENDING MACHINE
		29	30	20	REC – KITCHENETTE CTR.
GEOTHERMAL LOOP PUMP P/1	20	31	32	20	REC – KITCHENETTE CTR.
		33	34	20	REC – REFRIGERATOR
		35	36	50	REC – RANGE
GEOTHERMAL LOOP PUMP P/2	20	37	38		
		39	40	20	RANGE HOOD
		41	42	15	ELECTRIC WATER COOLER
WATER SOURCE HEAT PUMP HP/1	35	43	44	20	REC – TEL./DATA EQPM.
		45	46	20	REC – TEL./DATA EQPM.
WATER SOURCE HEAT PUMP HP/2	40	47	48	20	REC – ATTIC
		49	50	20	SPARE
EXHAUST FAN EF/1	15	51	52	20	SPARE
SPARE	20	53	54	20	SPARE
SPARE	20	55	56	20	SPARE
SPARE	20	57	58	20	SPARE
SPARE	20	59	60	20	SPARE
PREPARED SPACE	–	61	62	–	PREPARED SPACE
PREPARED SPACE	–	63	64	–	PREPARED SPACE
PREPARED SPACE	–	65	66	–	PREPARED SPACE
PREPARED SPACE	–	67	68	–	PREPARED SPACE
PREPARED SPACE	–	69	70	–	PREPARED SPACE
PREPARED SPACE	–	71	72	–	PREPARED SPACE

BACKFEED BREAKER

GFCI BREAKER

PANELBOARD NOTES:

1. PANELBOARD ASSEMBLY SHALL BE SUITABLE FOR USE AS SERVICE EQUIPMENT.
2. PANELBOARD ASSEMBLY SHALL BE FULLY-RATED. SHORT CIRCUIT CURRENT RATING OF PANELBOARD AND INTERRUPT RATING OF ALL CIRCUIT BREAKERS WITHIN PANELBOARD SHALL BE MINIMUM OF 10kA AT APPLIED VOLTAGES PER UL LISTING.
3. ALL CIRCUIT BREAKERS WITHIN PANELBOARD SHALL BE HACR RATED.
4. PANELBOARD SHALL BE PROVIDED WITH 160kA INTEGRAL SURGE PROTECTIVE DEVICE.

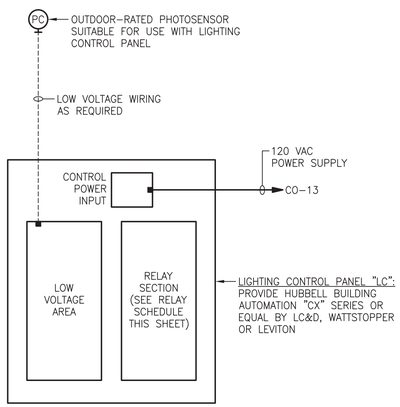

LIGHTING CONTROL PANEL "LC" RISER DIAGRAM

PREL. TRACING ____ DESIGN ____ CHKD. ____

CREW OPERATION BUILDING
ELECTRICAL - PARTIAL SITE PLAN

E-01	CONTRACT	COUNTY	F.A.P. NO.	SHEET NO.	TOTAL SHTS.
	T201280104	SUSSEX		74	80

BRIDGEVILLE MAINTENANCE FACILITY IMPROVEMENTS

REVISIONS

ADDENDUM 2 4/9/14

GENERAL NOTES:

1. ALL UNDERGROUND CONDUITS SHALL BE CONCRETE-ENCASED (SEE UNDERGROUND CONDUIT DETAILS ON E-04).
2. SEE E-02 FOR POWER AND VOICE/DATA/SECURITY DISTRIBUTION SHEET NOTES.

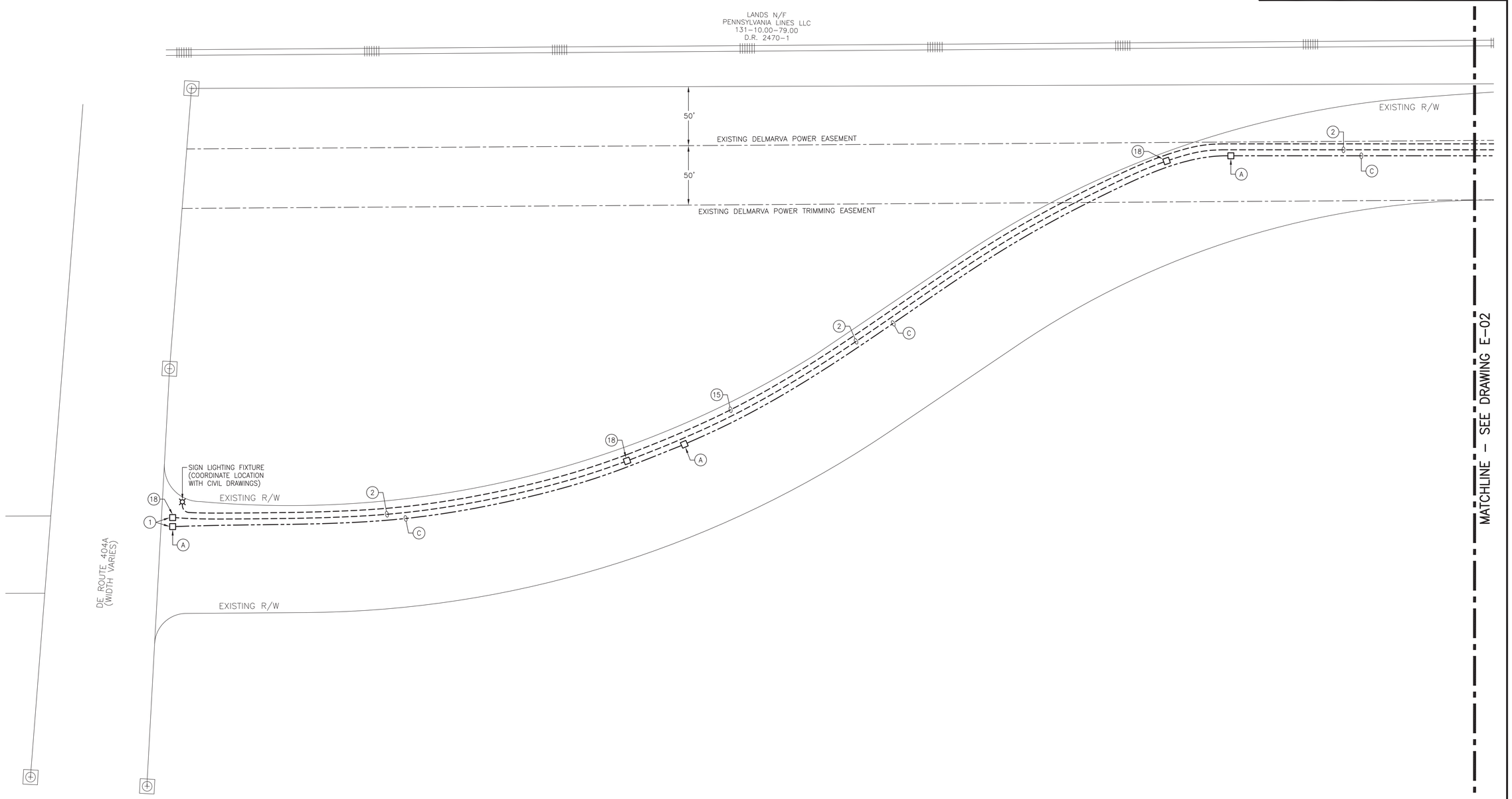

ELECTRICAL - PARTIAL SITE PLAN

1 / E-01 SCALE: 1" = 40'-0"

PREL. TRACING ____ DESIGN ____ CHKD. ____

CREW OPERATION BUILDING
ELECTRICAL - PARTIAL SITE PLAN

E-02	CONTRACT	COUNTY	F.A.P. NO.	SHEET NO.	TOTAL SHTS.
	T201280104	SUSSEX		75	80

BRIDGEVILLE MAINTENANCE FACILITY IMPROVEMENTS

REVISIONS

ADDENDUM 2 4/9/14

GENERAL NOTES:

1. ALL UNDERGROUND CONDUITS SHALL BE CONCRETE-ENCASED (SEE UNDERGROUND CONDUIT DETAILS ON E-04).

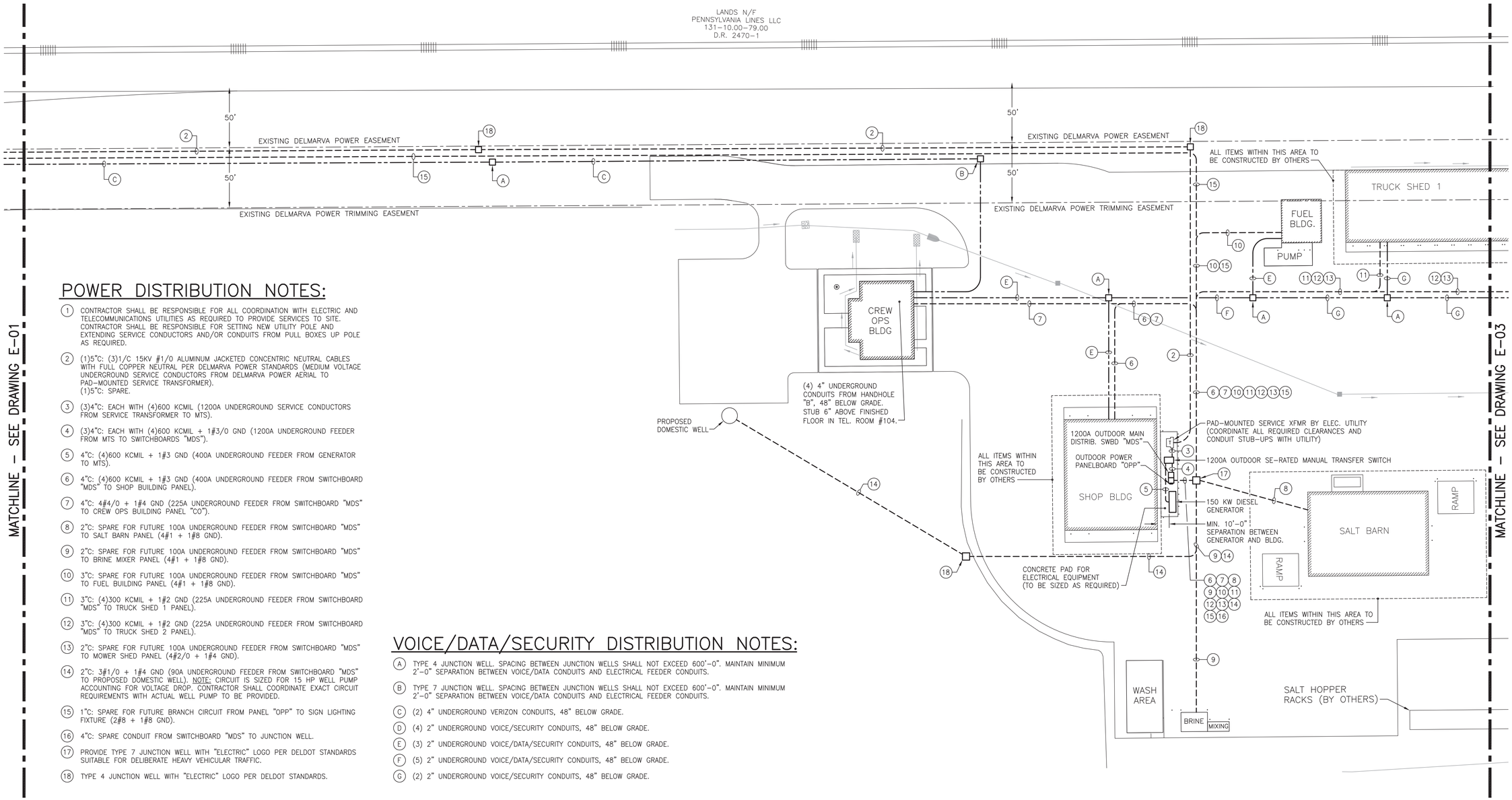

POWER DISTRIBUTION NOTES:

1. CONTRACTOR SHALL BE RESPONSIBLE FOR ALL COORDINATION WITH ELECTRIC AND TELECOMMUNICATIONS UTILITIES AS REQUIRED TO PROVIDE SERVICES TO SITE. CONTRACTOR SHALL BE RESPONSIBLE FOR SETTING NEW UTILITY POLE AND EXTENDING SERVICE CONDUCTORS AND/OR CONDUITS FROM PULL BOXES UP POLE AS REQUIRED.
2. (1)5"C: (3)1/C 15KV #1/0 ALUMINUM JACKETED CONCENTRIC NEUTRAL CABLES WITH FULL COPPER NEUTRAL PER DELMARVA POWER STANDARDS (MEDIUM VOLTAGE UNDERGROUND SERVICE CONDUCTORS FROM DELMARVA POWER AERIAL TO PAD-MOUNTED SERVICE TRANSFORMER). (1)5"C: SPARE.
3. (3)4"C: EACH WITH (4)600 KCMIL (1200A UNDERGROUND SERVICE CONDUCTORS FROM SERVICE TRANSFORMER TO MTS).
4. (3)4"C: EACH WITH (4)600 KCMIL + 1#3/0 GND (1200A UNDERGROUND FEEDER FROM MTS TO SWITCHBOARDS "MDS").
5. 4"C: (4)600 KCMIL + 1#3 GND (400A UNDERGROUND FEEDER FROM GENERATOR TO MTS).
6. 4"C: (4)600 KCMIL + 1#3 GND (400A UNDERGROUND FEEDER FROM SWITCHBOARD "MDS" TO SHOP BUILDING PANEL).
7. 4"C: 4#4/0 + 1#4 GND (225A UNDERGROUND FEEDER FROM SWITCHBOARD "MDS" TO CREW OPS BUILDING PANEL "CO").
8. 2"C: SPARE FOR FUTURE 100A UNDERGROUND FEEDER FROM SWITCHBOARD "MDS" TO SALT BARN PANEL (4#1 + 1#8 GND).
9. 2"C: SPARE FOR FUTURE 100A UNDERGROUND FEEDER FROM SWITCHBOARD "MDS" TO BRINE MIXER PANEL (4#1 + 1#8 GND).
10. 3"C: SPARE FOR FUTURE 100A UNDERGROUND FEEDER FROM SWITCHBOARD "MDS" TO FUEL BUILDING PANEL (4#1 + 1#8 GND).
11. 3"C: (4)300 KCMIL + 1#2 GND (225A UNDERGROUND FEEDER FROM SWITCHBOARD "MDS" TO TRUCK SHED 1 PANEL).
12. 3"C: (4)300 KCMIL + 1#2 GND (225A UNDERGROUND FEEDER FROM SWITCHBOARD "MDS" TO TRUCK SHED 2 PANEL).
13. 2"C: SPARE FOR FUTURE 100A UNDERGROUND FEEDER FROM SWITCHBOARD "MDS" TO MOWER SHED PANEL (4#2/0 + 1#4 GND).
14. 2"C: 3#1/0 + 1#4 GND (90A UNDERGROUND FEEDER FROM SWITCHBOARD "MDS" TO PROPOSED DOMESTIC WELL). NOTE: CIRCUIT IS SIZED FOR 15 HP WELL PUMP ACCOUNTING FOR VOLTAGE DROP. CONTRACTOR SHALL COORDINATE EXACT CIRCUIT REQUIREMENTS WITH ACTUAL WELL PUMP TO BE PROVIDED.
15. 1"C: SPARE FOR FUTURE BRANCH CIRCUIT FROM PANEL "OPP" TO SIGN LIGHTING FIXTURE (2#8 + 1#8 GND).
16. 4"C: SPARE CONDUIT FROM SWITCHBOARD "MDS" TO JUNCTION WELL.
17. PROVIDE TYPE 7 JUNCTION WELL WITH "ELECTRIC" LOGO PER DELDOT STANDARDS SUITABLE FOR DELIBERATE HEAVY VEHICULAR TRAFFIC.
18. TYPE 4 JUNCTION WELL WITH "ELECTRIC" LOGO PER DELDOT STANDARDS.

VOICE/DATA/SECURITY DISTRIBUTION NOTES:

- (A) TYPE 4 JUNCTION WELL. SPACING BETWEEN JUNCTION WELLS SHALL NOT EXCEED 600'-0". MAINTAIN MINIMUM 2'-0" SEPARATION BETWEEN VOICE/DATA CONDUITS AND ELECTRICAL FEEDER CONDUITS.
- (B) TYPE 7 JUNCTION WELL. SPACING BETWEEN JUNCTION WELLS SHALL NOT EXCEED 600'-0". MAINTAIN MINIMUM 2'-0" SEPARATION BETWEEN VOICE/DATA CONDUITS AND ELECTRICAL FEEDER CONDUITS.
- (C) (2) 4" UNDERGROUND VERIZON CONDUITS, 48" BELOW GRADE.
- (D) (4) 2" UNDERGROUND VOICE/SECURITY CONDUITS, 48" BELOW GRADE.
- (E) (3) 2" UNDERGROUND VOICE/DATA/SECURITY CONDUITS, 48" BELOW GRADE.
- (F) (5) 2" UNDERGROUND VOICE/DATA/SECURITY CONDUITS, 48" BELOW GRADE.
- (G) (2) 2" UNDERGROUND VOICE/SECURITY CONDUITS, 48" BELOW GRADE.

ELECTRICAL - PARTIAL SITE PLAN

1 / E-02

SCALE: 1" = 40'-0"

PREL. TRACING ____ DESIGN ____ CHKD. ____

CREW OPERATION BUILDING
ELECTRICAL - PARTIAL SITE PLAN

E-03	CONTRACT	COUNTY	F.A.P. NO.	SHEET NO.	TOTAL SHTS.
	T201280104	SUSSEX		76	80

BRIDGEVILLE MAINTENANCE FACILITY IMPROVEMENTS

REVISIONS

ADDENDUM 2 4/9/14	

GENERAL NOTES:

1. ALL UNDERGROUND CONDUITS SHALL BE CONCRETE-ENCASED (SEE UNDERGROUND CONDUIT DETAILS ON E-04).
2. SEE E-02 FOR POWER AND VOICE/DATA/SECURITY DISTRIBUTION SHEET NOTES.

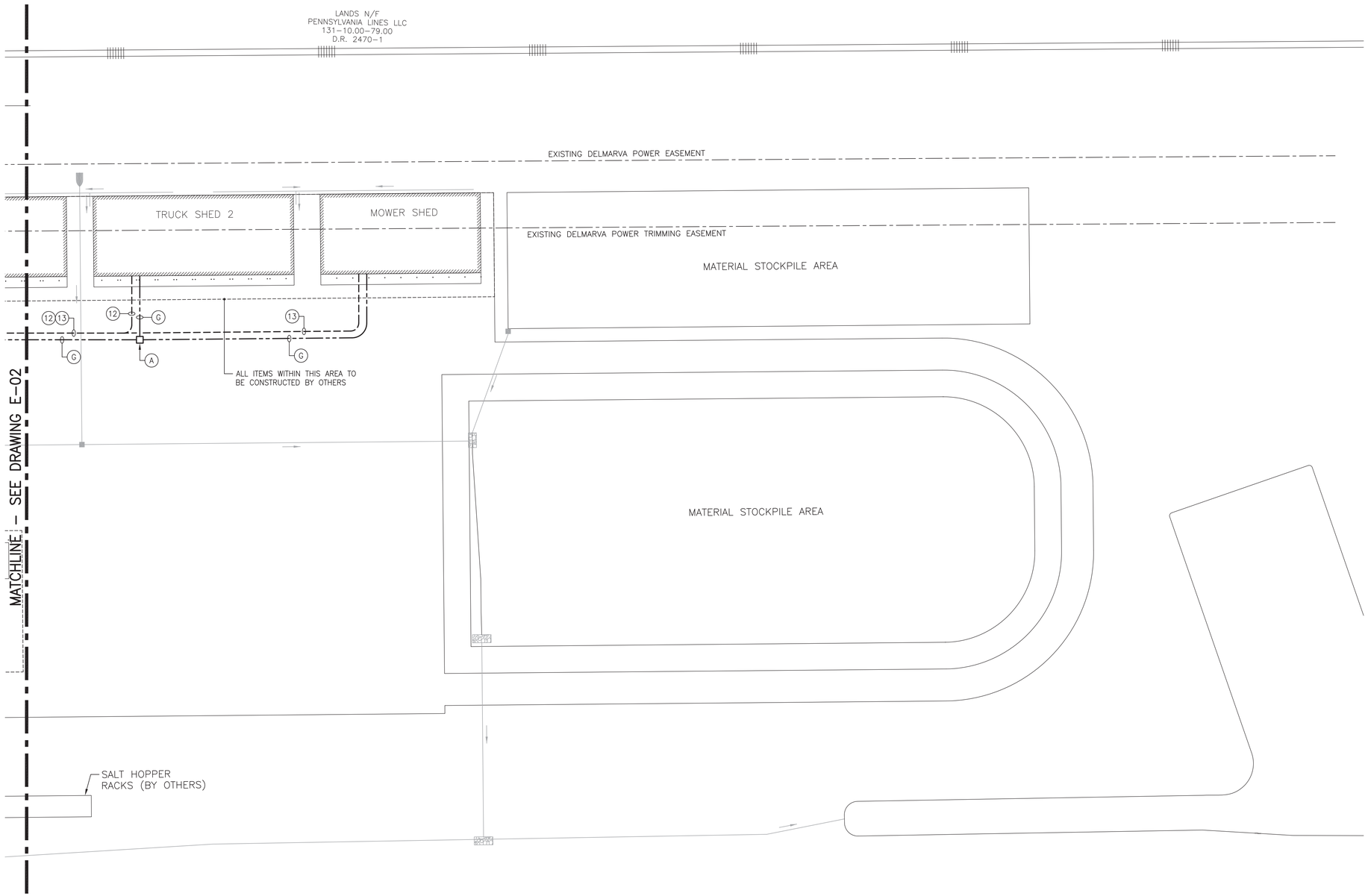

N 1 E-03 ELECTRICAL – PARTIAL SITE PLAN
SCALE: 1" = 40'-0"

PREL. TRACING _____ DESIGN _____ CHKD. _____

CREW OPERATION BUILDING
ELECTRICAL - DIAGRAMS

E-04	CONTRACT	COUNTY	F.A.P. NO.	SHEET NO.	TOTAL SHTS.
	T201280104	SUSSEX		77	80

BRIDGEVILLE MAINTENANCE FACILITY IMPROVEMENTS

REVISIONS

ADDENDUM 2 4/9/14

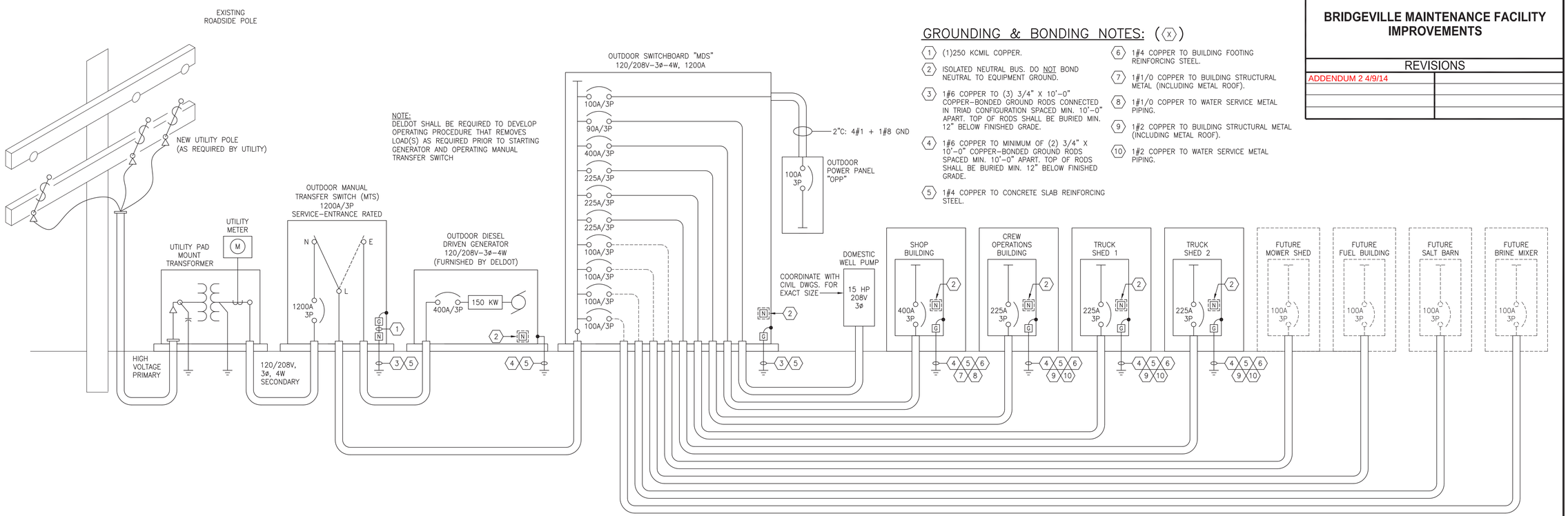

GROUNDING & BONDING NOTES: (X)

1. (1)250 KCMIL COPPER.
2. ISOLATED NEUTRAL BUS. DO NOT BOND NEUTRAL TO EQUIPMENT GROUND.
3. 1#6 COPPER TO (3) 3/4" X 10'-0" COPPER-BONDED GROUND RODS CONNECTED IN TRIAD CONFIGURATION SPACED MIN. 10'-0" APART. TOP OF RODS SHALL BE BURIED MIN. 12" BELOW FINISHED GRADE.
4. 1#6 COPPER TO MINIMUM OF (2) 3/4" X 10'-0" COPPER-BONDED GROUND RODS SPACED MIN. 10'-0" APART. TOP OF RODS SHALL BE BURIED MIN. 12" BELOW FINISHED GRADE.
5. 1#4 COPPER TO CONCRETE SLAB REINFORCING STEEL.
6. 1#4 COPPER TO BUILDING FOOTING REINFORCING STEEL.
7. 1#1/0 COPPER TO BUILDING STRUCTURAL METAL (INCLUDING METAL ROOF).
8. 1#1/0 COPPER TO WATER SERVICE METAL PIPING.
9. 1#2 COPPER TO BUILDING STRUCTURAL METAL (INCLUDING METAL ROOF).
10. 1#2 COPPER TO WATER SERVICE METAL PIPING.

1 / E-04 SITE POWER DISTRIBUTION SINGLE LINE DIAGRAM
SCALE: NONE

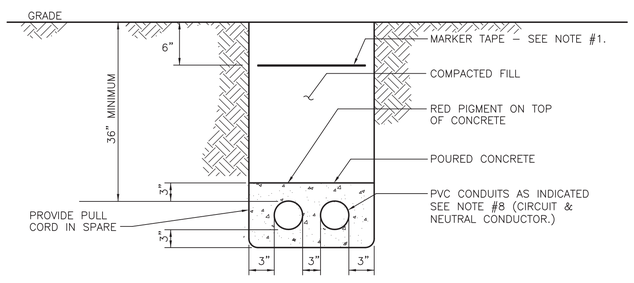

UTILITY HIGH VOLTAGE PRIMARY

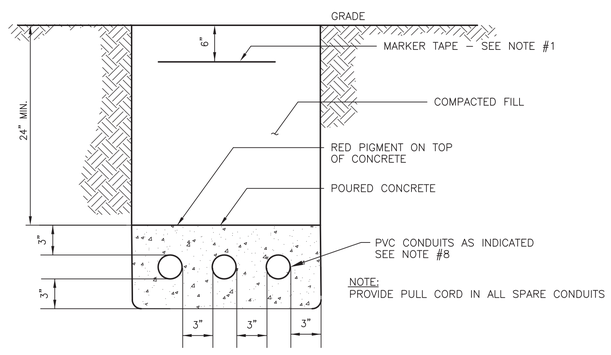

208 VOLTS AND LESS

2 / E-04 UNDERGROUND CONDUIT DETAILS
SCALE: NONE

UNDERGROUND CONDUIT DETAIL NOTES:

1. BURIED WARNING MARKER TAPE SHALL BE METAL CORE TYPE AND SHALL BARE LABEL OF UTILITY BEING INSTALLED. TAPE SHALL BE 2" WIDE WITH POLYETHYLENE OUTER COVER IN COLORS INDICATED BELOW. TAPE AS MANUFACTURED BY EMED CO INC.

WORDING	COLOR	
"CAUTION BURIED ELECTRIC LINE BELOW"	RED	MT27737
"CAUTION BURIED TELEPHONE LINE BELOW"	ORANGE	MT27742

2. BENDS IN THE CONDUIT SHOULD BE MADE OF A LARGE RADIUS AND LOCATED NEAR A MANHOLE WHEREVER POSSIBLE.
3. ALL METALLIC CONDUITS SHALL BE PROPERLY GROUNDED.
4. AT LEAST 12" SPACING SHOULD BE MAINTAINED BETWEEN NON-METALLIC CONDUIT AND GROUNDING CONDUCTORS INSTALLED FOR LIGHTNING PROTECTION.
5. ALUMINUM CONDUIT IS NOT PERMITTED FOR DIRECT BURIAL.
6. WHERE RIGID STEEL CONDUIT IS INSTALLED UNDERGROUND IT SHALL BE U.L. LISTED FOR DIRECT BURIAL APPLICATION.
7. DUE TO MAGNETIC INDUCTION, UNDER NO CIRCUMSTANCES SHALL REINFORCEMENT ROD OR MAGNETIC TYPE MATERIAL BE USED TO SUPPORT CONDUIT OR USED BETWEEN DUCT LINES.
8. RIGID GALV. STEEL CONDUIT SHALL BE USED FOR EXTENSIONS FROM UNDERGROUND DUCTS WHICH TERMINATE ABOVE GRADE. PVC SHALL NOT BE USED ABOVE GRADE.
9. 90° SWEEPS AT THE CITY OF NEWARK RISER POLE SHALL BE RIGID GALVANIZED STEEL.

PREL. TRACING _____ DESIGN _____ CHKD. _____

BRIDGEVILLE MAINTENANCE FACILITY IMPROVEMENTS

REVISIONS

ADDENDUM 2 4/9/14	
1 3/4/13 F/A DEVICES SHOWN	

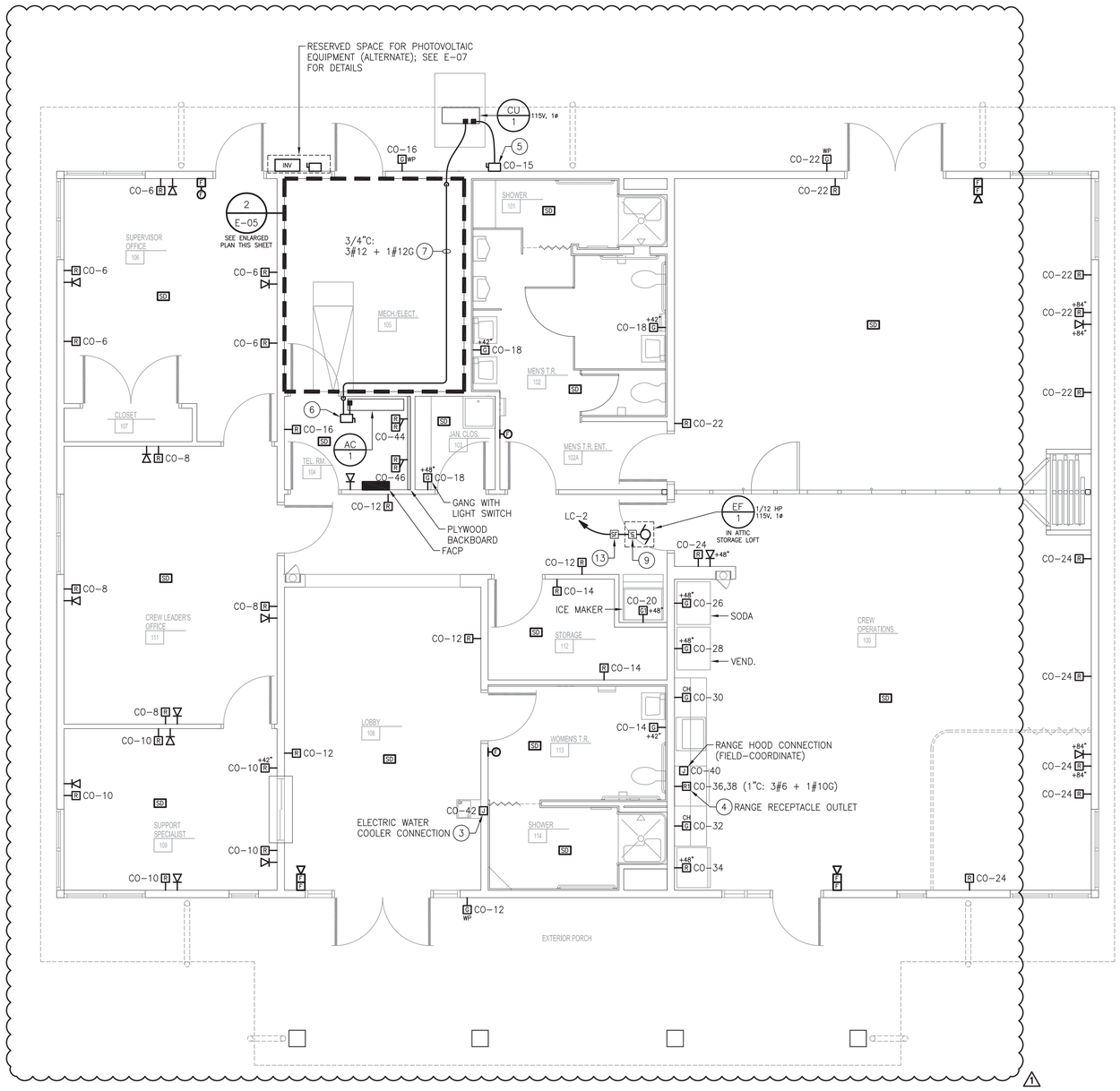

1 E-05 ELECTRICAL – POWER PLAN
SCALE: 1/4"=1'-0"

FIRE ALARM DEVICE LEGEND:

- SD — SMOKE DETECTOR, CEILING MOUNTED
- F — MANUAL PULL STATION, MOUNT AT 48" AFF
- FLASHING LIGHT, MOUNT AT 6'-8" AFF
- F — HORN/FLASHING LIGHT COMBINATION, MOUNT AT 6'-8" AFF
- FIRE ALARM CONTROL PANEL (FACP)

1

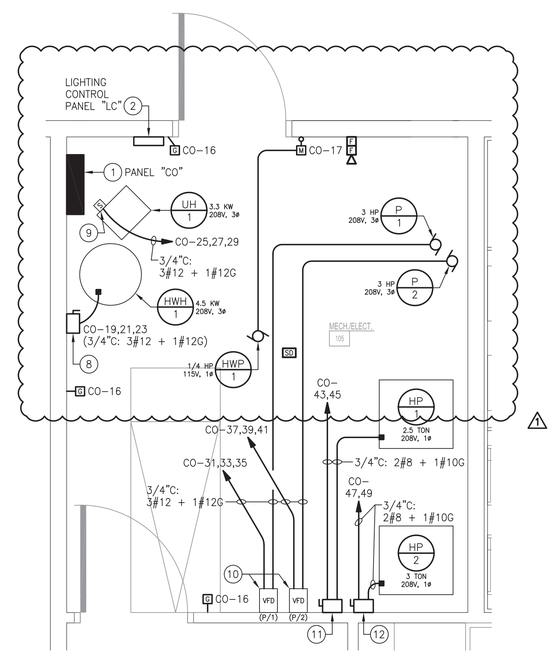

1

2 E-05 ELECTRICAL – MECH./ELEC. RM. PLAN
SCALE: 1/2"=1'-0"

SHEET NOTES:

1. SEE PANEL SCHEDULE ON E-0.1.
2. SEE LIGHTING CONTROL PANEL "LC" RELAY SCHEDULE AND RISER DIAGRAM ON E-0.1 FOR DETAILS.
3. COORDINATE ELECTRICAL CONNECTION WITH ELECTRIC WATER COOLER MANUFACTURER'S INSTALLATION INSTRUCTIONS. WATER COOLER CIRCUIT SHALL BE SUPPLIED FROM GFCI-PROTECTED CIRCUIT BREAKER (SEE PANEL SCHEDULE ON E-0.1).
4. COORDINATE EXACT CONFIGURATION AND MOUNTING LOCATION OF OUTLET WITH ELECTRIC RANGE MANUFACTURER'S INSTALLATION INSTRUCTIONS.
5. FUSED SAFETY SWITCH: 30A/2P, 240V, HEAVY DUTY IN NEMA 3R ENCLOSURE (PROVIDE SQUARE D CLASS 3110 OR APPROVED EQUAL). PROVIDE 20A CLASS R FUSE.
6. NON-FUSED SAFETY SWITCH: 30A/2P, 240V, HEAVY DUTY IN NEMA 1 ENCLOSURE (PROVIDE SQUARE D CLASS 3110 OR APPROVED EQUAL).
7. POWER SUPPLY & CONTROL CIRCUIT FOR INDOOR UNIT AC/1 (FED DIRECTLY FROM OUTDOOR UNIT CU/1).
8. NON-FUSED SAFETY SWITCH: 30A/3P, 240V, HEAVY DUTY IN NEMA 1 ENCLOSURE (PROVIDE SQUARE D CLASS 3110 OR APPROVED EQUAL).
9. FACTORY-INSTALLED DISCONNECT SWITCH PROVIDED BY MECHANICAL EQUIPMENT MANUFACTURER.
10. VARIABLE FREQUENCY DRIVE CONTROLLER FURNISHED BY MECHANICAL EQUIPMENT VENDOR AND INSTALLED BY ELECTRICAL CONTRACTOR.
11. FUSED SAFETY SWITCH (HP/1): 60A/2P, 240V, HEAVY DUTY IN NEMA 1 ENCLOSURE (PROVIDE SQUARE D CLASS 3110 OR APPROVED EQUAL). PROVIDE 35A CLASS R FUSES.
12. FUSED SAFETY SWITCH (HP/2): 60A/2P, 240V, HEAVY DUTY IN NEMA 1 ENCLOSURE (PROVIDE SQUARE D CLASS 3110 OR APPROVED EQUAL). PROVIDE 40A CLASS R FUSES.
13. FAN SPEED CONTROL FURNISHED BY MECHANICAL EQUIPMENT MANUFACTURER AND INSTALLED BY ELECTRICAL CONTRACTOR.

PREL. TRACING ____ DESIGN ____ CHKD. ____

E-06	CONTRACT	COUNTY	F.A.P. NO.	SHEET NO.	TOTAL SHTS.
	T201280104	SUSSEX		79	80

BRIDGEVILLE MAINTENANCE FACILITY IMPROVEMENTS

REVISIONS

ADDENDUM 2 4/9/14	
1 3/6/13 REVISED EXIT LIGHTING	

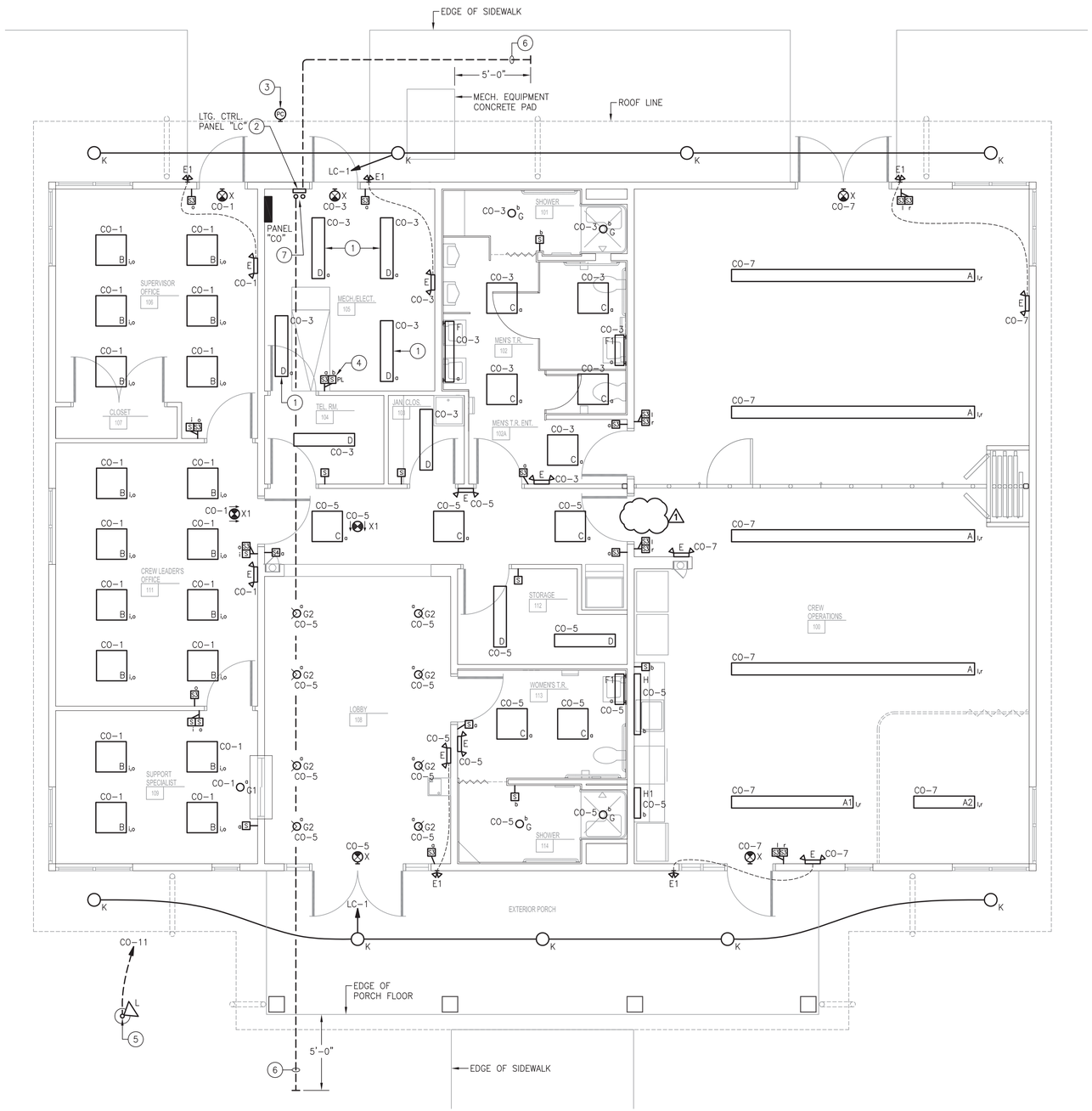

1 E-06 ELECTRICAL – LIGHTING PLAN
SCALE: 1/4"=1'-0"

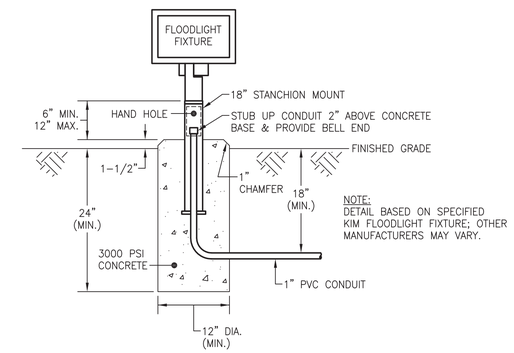

3 E-06 STANCHION MOUNT FOOTING DETAIL
SCALE: NONE

SHEET NOTES:

1. EXACT LOCATION OF LIGHTING FIXTURE(S) TO BE COORDINATED WITH MECHANICAL DUCTWORK AND PIPING.
2. SEE LIGHTING CONTROL PANEL "LC" RELAY SCHEDULE AND RISER DIAGRAM ON E-0.1 FOR DETAILS.
3. OUTDOOR PHOTOSENSOR FOR CONTROL OF TYPE "K" LIGHTING FIXTURES (SEE LIGHTING CONTROL PANEL "LC" RISER DIAGRAM ON E-0.1 FOR DETAILS). EXACT MOUNTING LOCATION TO BE FIELD-DETERMINED PER MANUFACTURER'S RECOMMENDATIONS.
4. PILOT LIGHT TOGGLE SWITCH FOR CONTROL OF ATTIC LIGHTING FIXTURES.
5. SEE STANCHION MOUNT FOOTING DETAIL THIS SHEET FOR MOUNTING OF TYPE "L" FLOODLIGHT FIXTURE. LOCATE NEAR FLAGPOLE PER ARCHITECTURAL/CIVIL SITE PLAN DRAWINGS. EXACT DISTANCE FROM FLAGPOLE TO BE DETERMINED PER FLOODLIGHT MANUFACTURER'S RECOMMENDATIONS.
6. EMPTY 1" SCHEDULE 80 PVC UNDERGROUND CONDUIT STUB-OUT WITH PULL STRING (SPARE FOR FUTURE PARKING LOT LIGHTING). TOP OF CONDUIT SHALL BE BURIED MINIMUM 36" BELOW FINISHED GRADE. PROVIDE CONTINUOUS DETECTABLE RED WARNING TAPE IN BACKFILL 12" BELOW FINISHED GRADE ("CAUTION – BURIED ELECTRIC LINE BELOW").
7. STUB UP SPARE CONDUITS UNDER LIGHTING CONTROL PANEL "LC" MINIMUM 6" A.F.F. AND CAP.

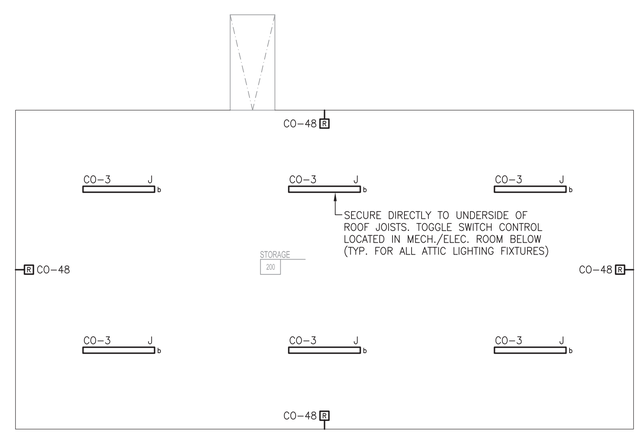

2 E-06 ELECTRICAL – ATTIC LIGHTING & RECEPTACLE PLAN
SCALE: 1/4"=1'-0"

PREL. TRACING ____ DESIGN ____ CHKD. ____

BRIDGEVILLE MAINTENANCE FACILITY IMPROVEMENTS

REVISIONS

ADDENDUM 2 4/9/14

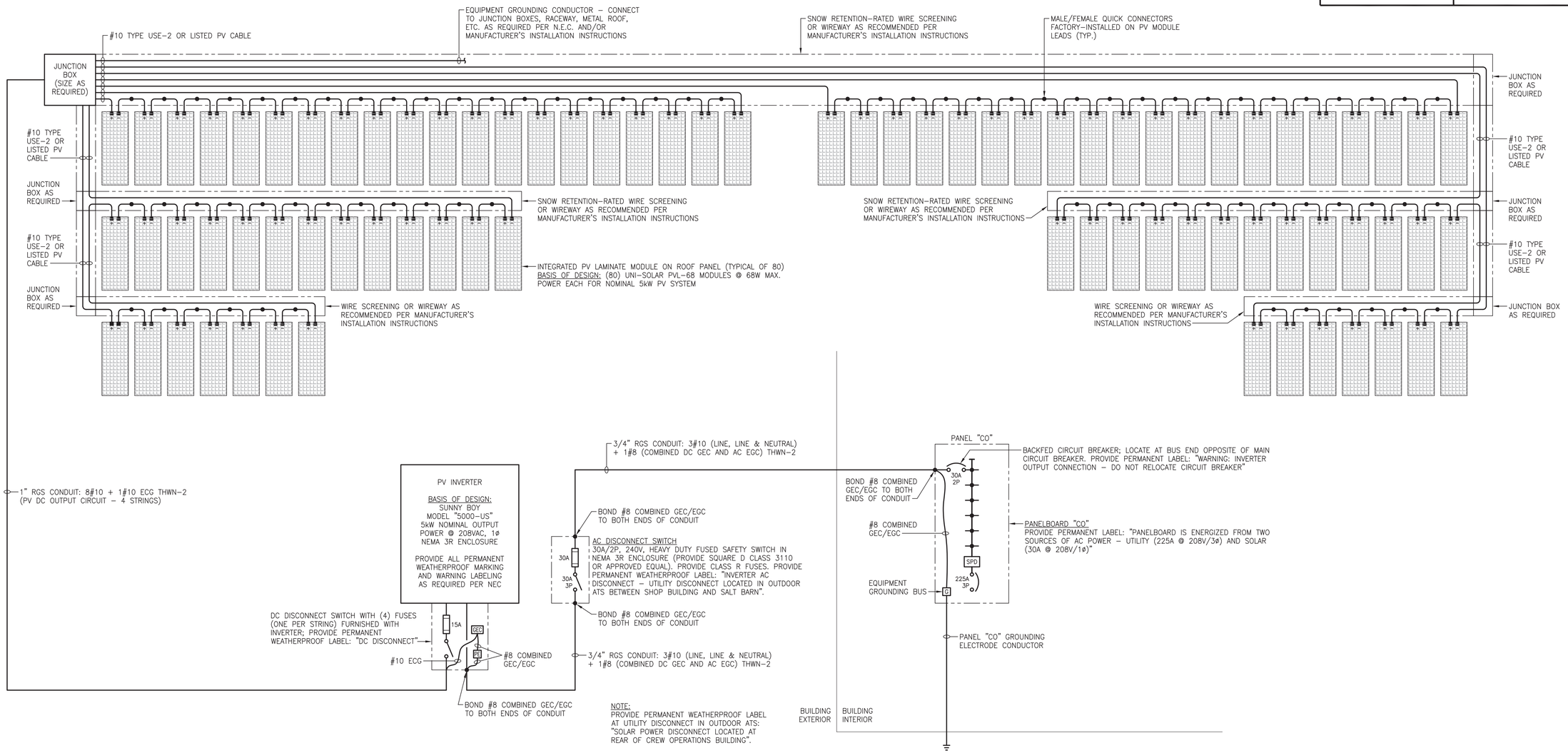

1 E-07 ELECTRICAL PHOTOVOLTAIC SYSTEM SINGLE-LINE DIAGRAM (ALTERNATE)

SCALE: NONE

PREL. TRACING _____ DESIGN _____ CHKD. _____