THE STATE OF DELAWARE
DEPARTMENT OF TRANSPORTATION

U.S. CUSTOMARY UNITS

CONSTRUCTION & RIGHT-OF-WAY PLANS FOR:

BR 1-567A ON N501 HAY ROAD OVER SHELLPOT CREEK, CITY OF WILMINGTON

CONTRACT NUMBER: T201307101

FEDERAL AID PROJECT NUMBER: EBROS-N501(01)

COUNTY: NEW CASTLE **M.R. #:** N501

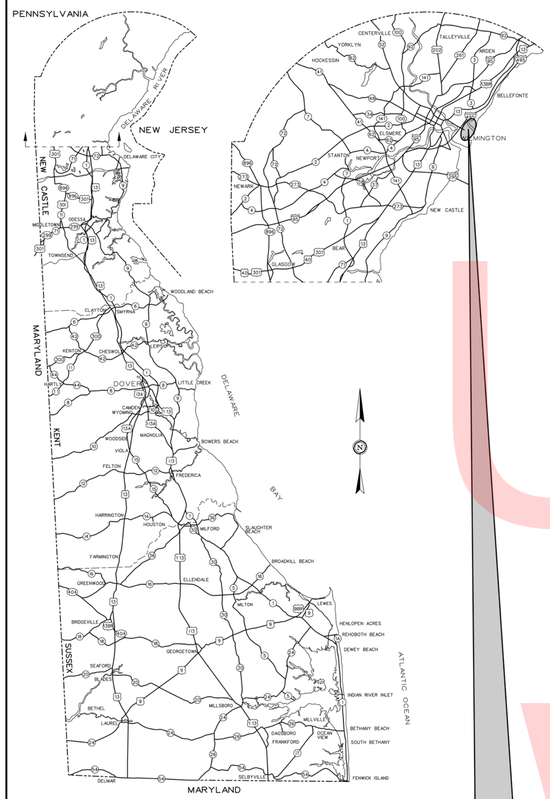

GENERAL LOCATION OF CONTRACT

END CONTRACT STATION 34+60.00

BEGIN CONTRACT STATION 27+50.00

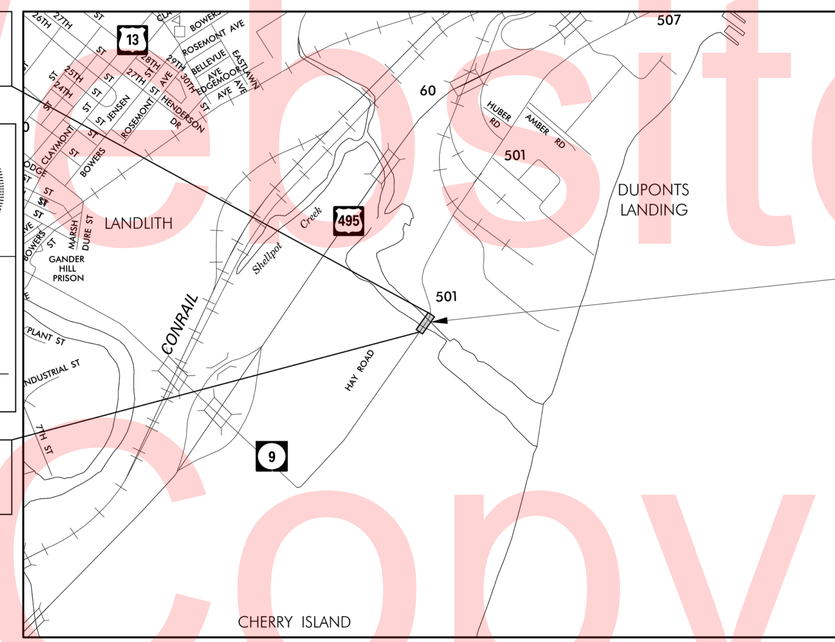

PROJECT LOCATION

DESIGN DESIGNATION

FUNCTIONAL CLASS: URBAN LOCAL ROAD	D.H.V. PROJECTED: 54	YEAR: 2040
TYPE OF CONSTRUCTION: BRIDGE REPLACEMENT	DESIGN SPEED: 30 MPH	
A.A.D.T. CURRENT: 754 YEAR: 2012	TRUCKS: 9%	
A.A.D.T. PROJECTED: 900 YEAR: 2040	DIRECTION OF DISTRIBUTION: 60%	

INDEX OF SHEETS

SHEET Nº	TABLE OF CONTENTS
1	TITLE
2	LEGEND
3	NOTES
4	TYPICAL SECTIONS
5	HORIZONTAL AND VERTICAL CONTROL
6	CONSTRUCTION PLAN
7	PROFILES
8	GRADES AND GEOMETRICS
9	GENERAL PLAN AND ELEVATION
10	GEOMETRIC LAYOUT PLAN
11-16	BRIDGE ABUTMENT DETAILS
17	PIER PLAN AND ELEVATION
18-19	MISCELLANOUS DETAILS
20	BEAM NOTES AND BEARING DETAILS
21	BEAM PLAN, ELEVATION, AND DETAILS
22	FRAMING PLAN
23-24	DECK DETAILS
25-27	APPROACH SLAB DETAILS
28	UTILITY SUPPORT DETAIL
29	BORING LOG
30-31	REINFORCEMENT BAR LISTS
32-33	ENVIRONMENTAL COMPLIANCE PLAN
34-42	CONSTRUCTION PHASING, M.O.T. AND EROSION CONTROL PLAN
43	DETOUR PLAN
44-45	SIGNING, STRIPING, AND CONDUIT PLAN
46	PIPE RELOCATION SITE PLAN AND PROFILE
47	PIPE RELOCATION DETAILS
48	RIGHT OF WAY PLAN
49	RIGHT OF WAY DATA
50	RIGHT OF WAY TABULATION

TOTAL SHEETS: 50

APPROVED DESIGN EXCEPTIONS

DESIGN PARAMETER	REQUIRED	PROVIDED	DATE

ADDENDA & REVISIONS

DESCRIPTION	NAME & DATE

ASSOCIATED CONTRACTS

CONTRACT NO.	CONTRACT NAME
78-021-11	HAY ROAD IMPROVEMENTS
1034	HAY ROAD EXTENSION
*3(C.O.W.)	CITY OF WILMINGTON SEWER TREATMENT PROGRAM HAY ROAD BRIDGE

PREPARED BY THE CONSULTING FIRM OF McCORMICK TAYLOR

MICHAEL A. ANGELO REGISTERED NO. 6726 DELAWARE PROFESSIONAL ENGINEER — SEAL

RECOMMENDED — DATE 6/1/16

PREPARED BY THE CONSULTING FIRM OF BARTON & LOGUIDICE, D.P.C.

JOHN F. BRUSA JR. LICENSED No. 17242 DELAWARE PROFESSIONAL ENGINEER — SEAL

RECOMMENDED (SHEETS 45-46) — DATE May 20, 2016

RECOMMENDED

SQUAD MANAGER, CONSTRUCTION — DATE 6/16/16

GROUP ENGINEER, CONSTRUCTION — DATE 6/16/16

ASSISTANT DIRECTOR, TRANSPORTATION SOLUTIONS (CONSTRUCTION) — DATE 6-7-16

RECOMMENDED

STORMWATER ENGINEER — DATE 8 JUNE 2016

VINCENT W. DAVIS REGISTERED No. 12898 DELAWARE PROFESSIONAL ENGINEER — SEAL

RECOMMENDED

PROJECT MANAGER, BRIDGE DESIGN — DATE 6/7/16

STEPHEN DIRK RICHTER REGISTERED NO. 9235 DELAWARE PROFESSIONAL ENGINEER — SEAL

RECOMMENDED

BRIDGE DESIGN ENGINEER — DATE 6/7/16

MICHAEL J. GETTINGS LICENSED No. 16274 DELAWARE PROFESSIONAL ENGINEER — SEAL

RECOMMENDED

ASSISTANT DIRECTOR, BRIDGE DESIGN — DATE JUNE 20, 2016

BARRY A. BENTON REGISTERED No. 10774 DELAWARE PROFESSIONAL ENGINEER — SEAL

APPROVED

CHIEF ENGINEER — DATE 6/20/16

SHANTE A. HASTINGS REGISTERED No. 13540 DELAWARE PROFESSIONAL ENGINEER — SEAL

Unofficial Website Copy

EXISTING SYMBOLS

DRAINAGE

OHW	ORDINARY HIGH WATER
	DIRECTIONAL STREAM FLOW ARROW
C.B.	DRAINAGE CATCH BASIN
J.B.	DRAINAGE JUNCTION BOX
D	DRAINAGE MANHOLE
SIZE/TYPE LABEL	DRAINAGE PIPE AND FLOW ARROW
	DRAINAGE PIPE HEADWALL
	RIPRAP - AREA FEATURE
	RIPRAP - LINEAR FEATURE

MANMADE ROADSIDE FEATURES

(TYPE LABEL)	CURB
(TYPE LABEL)	CURB AND GUTTER
	FENCE - CHAINLINK OR STRANDED
	FENCE - STOCKADE OR SPLIT RAIL
FP	FLAG POLE
	GUARDRAIL - STEEL BEAM
	GUARDRAIL - WIRE ROPE
LAMP	LAMP AND POST - RESIDENTIAL
MB	MAILBOX
PM	PARKING METER AND POST
	PAVEMENT - FLEXIBLE
	PAVEMENT - RIGID
	PILE - BRIDGE
	PILLAR OR MISCELLANEOUS POST
	TRAFFIC SIGN AND POST
	WALL - BRICK OR BLOCK
	WALL - STONE

NATURAL ROADSIDE FEATURES

	HEDGEROW OR THICKET
	MARSH BOUNDARY LINE
	TREE - CONIFEROUS
	TREE - DECIDUOUS
	TREE STUMP
	SHRUBBERY
WL	DELINEATED WETLAND BOUNDARY LINE
	WOODS LINE BOUNDARY

SURVEY CONTROL & MONUMENTATION

B.M.	SURVEY BENCHMARK LOCATION
T.P.	SURVEY TIE POINT LOCATION
	SURVEY TRAVERSE POINT
	POINT OF CURVATURE OR TANGENCY
	POINT OF INTERSECTING TANGENTS
C.M.	PROPERTY MARKER - CONCRETE MON.
I.P.	PROPERTY MARKER - IRON PIPE

UTILITY

	SOIL BORING LOCATION
	UTILITY TEST HOLE LOCATION
TV	CABLE TV DISTRIBUTION BOX
E	ELECTRIC MANHOLE
EM	ELECTRIC METER
E	ELECTRIC TRANSFORMER
	POLE MOUNTED LUMINAIRE
G	GAS MANHOLE
G.M.	GAS METER
G.V.	GAS VALVE
G.P.	GAS PUMP - SERVICE STATION
	RAILROAD TRACKS
S	SANITARY SEWER MANHOLE
S.V.	SANITARY SEWER VALVE
VENT	SANITARY SEWER VENT OR CLEANOUT
S.D.F.	SEPTIC DRAIN FIELD
B	TELEPHONE BOOTH
T	TELEPHONE MANHOLE
T	TELEPHONE TEST POINT
J.W.	TRAFFIC - CONDUIT JUNCTION WELL
	TRAFFIC - LIGHT POLE AND BASE
	TRAFFIC - PEDESTRIAN POLE & BASE
	TRAFFIC - SIGNAL CABINET & BASE
	TRAFFIC - SIGNAL POLE AND BASE
U	UTILITY BOX
	UTILITY POLE GUY WIRE ANCHOR
	UTILITY POLE
F.H.	WATER - FIRE HYDRANT
W.M.	WATER METER
W.V.	WATER VALVE
WELL	WELL HEAD

UTILITY COMPANY FACILITIES

DP-GAS	DELMARVA POWER (GAS)
DP-E-DIST	DELMARVA POWER (ELECTRIC-DIST)
DP-E-TRANS	DELMARVA POWER (ELECTRIC-TRANS)
NCC-SS	NEW CASTLE COUNTY SEWER
VER-UG	VERIZON TELEPHONE (UNDERGROUND)
UW-W	UNITED WATER
COM-C	COMCAST CABLE
DSWA-G	DELAWARE SOLID WASTE AUTH. (GAS)
MAGELLAN	MAGELLAN MIDSTREAM PARTNERS

PROPOSED SYMBOLS

CONSTRUCTION

	CONCRETE SAFETY BARRIER - PERMANENT
BFS	BIOFILTRATION SWALE
	BUTT JOINT
100+00	CONSTRUCTION BASELINE
	CURB, TYPE 1 & TYPE 3
	CURB, TYPE 2
	CURB & GUTTER, TYPE 1
	CURB & GUTTER, TYPE 2
	CURB & GUTTER, TYPE 3
	CURB & GUTTER, TYPE 4
CZ	CLEAR ZONE
	DRAINAGE INLET
	DITCH
	FENCE - METAL
	FENCE - WOOD
	FLARED END SECTION
	GUARDRAIL, TYPES 1 & 3
	GUARDRAIL, TYPE 2
	GUARDRAIL END TREATMENT - PARALLEL
	GUARDRAIL END TREATMENT - PARABOLIC
HC	HORIZONTAL CLEARANCE
	JUNCTION BOX - DRAINAGE
LOC	LIMIT OF CONSTRUCTION
	MANHOLE
	PAVEMENT PATCH
	PIPE & DIRECTIONAL FLOW ARROW
	RIPRAP
	P.C.C. SIDEWALK @ 4"
	P.C.C. SIDEWALK @ 6"
	UNDERDRAIN
	UNDERDRAIN OUTLET
	SOIL RETENTION BLANKET MULCH, TYPE 5

CONSTRUCTION PHASING SYMBOLS

	BARRICADE, TYPE 3
	CONCRETE SAFETY BARRIER - PORTABLE
	CONSTRUCTION WARNING SIGN LOCATION
END ROAD WORK	CONSTRUCTION WARNING SIGN
	CRASH CUSHION ARRAY
	DRUM - TRAFFIC CONTROL
PHASE	PHASING TRAFFIC FLOW ARROW

LANDSCAPING

	SHRUBBERY
	CONIFEROUS TREE
	DECIDUOUS TREE

EROSION & SEDIMENT CONTROL

DWBAG	DEWATERING BAG
DWB	DEWATERING BASIN
ED	EARTH DIKE
	INLET SEDIMENT CONTROL
	PERIMETER DIKE/SWALE
PST	PORTABLE SEDIMENT TANK
SBD	SANDBAG DIKE
SB	SANDBAG DIVERSION
	STONE CHECK DAM
SCE	STABILIZED CONSTRUCTION ENTRANCE
SF	SILT FENCE / LENGTH
SF	SILT FENCE
RSF	SILT FENCE - REINFORCED
SP	SUMP PIT
ST	SEDIMENT TRAP / NUMBER
ST	SEDIMENT TRAP
ST	SEDIMENT TRAP WITH INLET AS OUTLET
ST	SEDIMENT TRAP PIPE OUTLET
SW	STILLING WELL
	TEMPORARY SWALE
TSD	TEMPORARY SLOPE DRAIN
XXX	TURBIDITY CURTAIN / LENGTH
T	TURBIDITY CURTAIN

IDENTIFIERS

A C	ADJUST BY CONTRACTOR
A O	ADJUST BY OTHERS
B	CONCRETE SAFETY BARRIER
C	CURB OR CURB & GUTTER
C/JB	CONVERT TO JUNCTION BOX
C/MH	CONVERT TO DRAINAGE MANHOLE
C O	CURB OPENING
CR	CURB RAMP / TYPE
CR-W	CURB RAMP / TYPE - WITHOUT SIDEWALK SURFACE DETECTABLE WARNING SYSTEM
DI	DRAINAGE INLET
DND	DO NOT DISTURB
FES	FLARED END SECTION
FS	FILTRATION STRUCTURE
GR	GUARDRAIL
JB	JUNCTION BOX
LS	LANDSCAPE PLANTINGS
MH	MANHOLE
M	MONUMENT - RIGHT-OF-WAY
P	PIPE
RL C	RELOCATE BY CONTRACTOR
RL O	RELOCATE BY OTHERS
RM C	REMOVE BY CONTRACTOR
RM O	REMOVE BY OTHERS
ST	SEDIMENT TRAP
SF	SILT FENCE
UD	UNDERDRAIN

PAVEMENT SECTION(S)

	REMOVAL
	2" WMA, SUPERPAVE TYPE C 3" WMA, SUPERPAVE TYPE B 4" WMA, BCBC 8" GRADED AGGREGATE BASE COURSE
	2" WMA, SUPERPAVE, TYPE C 6" GABC

RIGHT-OF-WAY SYMBOLS

	PROPOSED RIGHT-OF-WAY MONUMENT
PL	EXISTING PROPERTY LINE
EASEMENT TYPE	EXISTING EASEMENT
	EXISTING RIGHT-OF-WAY
DA	PROPOSED DENIAL OF ACCESS
PE	PROPOSED PERMANENT EASEMENT
R/W	PROPOSED RIGHT-OF-WAY
R/W-DA	PROPOSED R/W & DENIAL OF ACCESS
TCE	TEMPORARY CONSTRUCTION EASEMENT
100+00	PROPOSED RIGHT-OF-WAY BASELINE
100+00	HISTORIC RIGHT-OF-WAY BASELINE

TRAFFIC

ITMS-CON	ITMS CONDUIT
SIG-CON	SIGNAL CONDUIT
	CONDUIT JUNCTION WELL
	LUMINAIRE
	PAVEMENT MARKINGS
	PAVEMENT STRIPING
	TRAFFIC SIGN

Unofficial Website Copy

P:\1559 BRIDGE DESIGN\WO 9 - BR 1-567A\DESIGN\PS&E_PLANS\REF\SB_BR_1_567A.DGN

DELAWARE DEPARTMENT OF TRANSPORTATION

ADDENDUMS / REVISIONS

NOT TO SCALE

BR 1-567A ON N501 HAY ROAD OVER SHELLPOT CREEK, CITY OF WILMINGTON

CONTRACT	BRIDGE NO. 1-567A
T201307101	DESIGNED BY: SSMG
COUNTY	CHECKED BY: MAA
NEW CASTLE	

LEGEND

LG-01

SHEET NO. 2

TOTAL SHTS. 50

GENERAL NOTES

1. THIS PROJECT IS TO BE CONSTRUCTED IN ACCORDANCE WITH THE DELAWARE DEPARTMENT OF TRANSPORTATION "STANDARD SPECIFICATIONS", DATED AUGUST 2001 AND THE DELAWARE DEPARTMENT OF TRANSPORTATION "STANDARD CONSTRUCTION DETAILS", DATED 2001, INCLUDING ALL REVISIONS UP TO THE DATE OF ADVERTISEMENT.

2.

EROSION POTENTIAL FOR THIS PROJECT	CONTRACTOR ESC SUPERVISOR REQUIREMENT
( ) INSIGNIFICANT	NONE
( ) MINOR	CONTRACTOR TRAINING PROGRAM, AS DEFINED IN SECTION 6.2 OF THE DELAWARE SEDIMENT AND STORMWATER REGULATIONS.
( ) MEDIUM	CONTRACTOR TRAINING PROGRAM, AS DEFINED IN SECTION 6.2 OF THE DELAWARE SEDIMENT AND STORMWATER REGULATIONS.
(X) MAJOR	CERTIFIED CONSTRUCTION REVIEWER (CCR), AS DEFINED IN SECTION 6.3 OF THE DELAWARE SEDIMENT AND STORMWATER REGULATIONS.

3. ELECTRONIC PROJECT FILES THAT WILL BE MADE AVAILABLE TO THE AWARDED CONTRACTOR, INCLUDE:

( )	NONE
( )	ASCII DATA FILES WITH COORDINATES AND ELEVATIONS FOR PROPOSED POINTS AS SELECTED BY THE ENGINEER.
(x)	ALL PLAN SHEETS, IN PDF FORMAT.
( )	EXISTING DIGITAL TERRAIN MODEL, IN .DTM FILE FORMAT, COMPATIBLE WITH SOFTWARE CURRENTLY USED BY DELDOT.
( )	PROPOSED DIGITAL TERRAIN MODEL, IN .DTM FILE FORMAT, COMPATIBLE WITH SOFTWARE CURRENTLY USED BY DELDOT.
( )	DESIGN FILE, IN .DGN FILE FORMAT, CONTAINING ONLY THE PROPOSED 3D TRIANGLES OF THE PROPOSED DIGITAL TERRAIN MODEL (DTM).

NOTE: THE DOCUMENT ENTITLED "RELEASE FOR DELIVERY OF DOCUMENTS IN ELECTRONIC FORM TO A CONTRACTOR" MUST BE SIGNED BY ALL PARTIES PRIOR TO THE DELIVERY OF ANY ELECTRONIC PROJECT FILES.

4. PROJECT FILES THAT WILL BE MADE AVAILABLE TO THE CONTRACTOR, INCLUDE:

(x)	CROSS SECTIONS (FOR INFORMATION ONLY)
(x)	RIGHT-OF-WAY PLANS (INCLUDED IN PLAN SET)

5. AMERICAN TRAFFIC SAFETY SERVICES ASSOCIATION (ATSSA) CERTIFIED TRAFFIC CONTROL SUPERVISOR REQUIREMENT FOR THIS PROJECT.

( )	THE CONTRACTOR SHALL NOT BE REQUIRED TO HAVE AN ATSSA SUPERVISOR ASSIGNED TO THIS PROJECT.
(x)	THE CONTRACTOR SHALL HAVE AN ATSSA SUPERVISOR ASSIGNED TO THIS PROJECT. THE CONTRACTOR'S GENERAL SUPERINTENDENT FOR THIS PROJECT OR ANOTHER ATSSA CERTIFIED MEMBER OF THE CONTRACTOR'S PROJECT STAFF MAY BE THE ATSSA SUPERVISOR. PAYMENT FOR ATSSA SUPERVISOR IS INCIDENTAL TO ITEM 743000.
( )	THE CONTRACTOR SHALL HAVE AN ATSSA SUPERVISOR ASSIGNED TO THIS PROJECT. THE ATSSA SUPERVISOR'S SOLE JOB SHALL BE SUPERVISION OF THE INSTALLATION, OPERATION AND MAINTENANCE OF TRAFFIC CONTROL DEVICES FOR THIS PROJECT. THE CONTRACTOR'S GENERAL SUPERINTENDENT FOR THIS PROJECT SHALL NOT BE THE ATSSA SUPERVISOR. PAYMENT FOR ATSSA SUPERVISOR SHALL BE PAID FOR UNDER ITEM 743031.

6. THE DISTURBED AREA FOR THIS PROJECT IS 1.13 ACRES.

7. THE SEDIMENT AND STORMWATER MANAGEMENT PLANS HAVE BEEN APPROVED BY DELDOT'S STORMWATER ENGINEER UNDER DELDOT'S DELEGATED AUTHORITY. THE SEDIMENT AND STORMWATER MANAGEMENT PLANS ARE VALID FOR A THREE YEAR PERIOD, BEGINNING ON THE DATE THE STORMWATER ENGINEER SIGNED THE CONSTRUCTION TITLE SHEET. IF THE FINAL ACCEPTANCE OF THE PROJECT IS ANTICIPATED TO EXTEND BEYOND THE THREE YEARS, THE CONTRACTOR WILL INFORM THE ENGINEER THREE MONTHS PRIOR TO THE EXPIRATION OF THE APPROVED SEDIMENT AND STORMWATER MANAGEMENT PLANS. THE STORMWATER ENGINEER WILL REVIEW THE CURRENT SEDIMENT AND STORMWATER MANAGEMENT PLAN AND ISSUE AN EXTENSION WITH ANY APPROPRIATE MODIFICATIONS.

PROJECT NOTES

SECTION 200

1. THE ENGINEER MAY REQUIRE THE CONTRACTOR TO EXCAVATE TEST PITS ALONG PROPOSED DRAINAGE RUNS, AT POINTS OF POSSIBLE UTILITY CONFLICTS, TO DETERMINE IF A CONFLICT EXISTS. ANY CONFLICTS SHALL BE COORDINATED BY THE CONTRACTOR, WITH THE ENGINEER AND THE UTILITY COMPANY INVOLVED. THE ENGINEER SHALL ULTIMATELY DETERMINE THE SOLUTION TO THE UTILITY CONFLICT. TEST HOLES SHALL BE MEASURED AND PAID FOR IN ACCORDANCE WITH ITEM 202000 - EXCAVATION AND EMBANKMENT, BUT ONLY TO THE ACTUAL DEPTH EXCAVATED.

2. ITEMS TO BE REMOVED UNDER ITEM 211000 - REMOVAL OF STRUCTURES AND OBSTRUCTIONS SHALL INCLUDE, BUT NOT BE LIMITED TO THE FOLLOWING:
   - -EXISTING CONCRETE BRIDGE TO BEYOND PROPOSED ABUTMENT LOCATIONS/BRIDGE PIERS/CONCRETE ABUTMENT
   - -EXISTING TEMPORARY STEEL TRUSS BRIDGE TO BEYOND ABUTMENT LOCATIONS/CONCRETE ABUTMENT
   - -EXISTING GUARDRAIL (STA. 29+40 TO STA. 34+30)
   - -EXISTING CONCRETE BARRIER WALLS
   - -EXISTING TIMBER PILES AND 14" C.I.P. CONCRETE PILES TO 1' BELOW GRADE

3. ITEM 201000 INCLUDES REMOVAL OF TRASH AND DEBRIS WITHIN THE LOC AND AROUND PIPE INLETS AND OUTLETS.

PROJECT NOTES (CONT.)

SECTION 300

4. A. THE CONTRACTOR MAY ELECT TO USE ANY OF THE FOLLOWING MATERIALS TO MEET THE REQUIREMENTS OF ITEM 302007 - GRADED AGGREGATE BASE COURSE, TYPE 'B':
a. CRUSHED STONE (PER STANDARD SPECIFICATION 821)
b. CRUSHED CONCRETE (PER STANDARD SPECIFICATION 821)
c. HOT-MIX MILLINGS (PER SPECIAL PROVISION 302514 MILLED HOT-MIX BASE COURSE)

THE CONTRACTOR WILL NOT BE ALLOWED TO MIX DIFFERENT MATERIALS (OR SIMILAR MATERIALS FROM DIFFERENT SOURCES) TO MEET THE REQUIREMENTS OF ITEM 302007 - GRADED AGGREGATE BASE COURSE, TYPE 'B'.

ALL OF THE ABOVE LISTED MATERIALS ARE PERMITTED FOR USE ON THE JOB, PROVIDED THEY ARE SEPARATED INTO APPROVED AREAS. EACH AREA OF BASE COURSE MUST BE CONSTRUCTED USING MATERIALS FROM A SINGULAR SOURCE, FULL DEPTH, IN ORDER THAT PROPER TESTING MAY BE ACCOMPLISHED. THE CONTRACTOR AND DELDOT'S PROJECT ENGINEER SHALL AGREE ON THE LIMITS OF EACH SOURCE OF MATERIAL PRIOR TO PLACEMENT.

B. THE QUANTITY USED FOR BASE OF EACH OF THE ABOVE LISTED MATERIALS WILL BE THE CONTRACTOR'S CHOICE, WITH THE TOTAL MEETING THE ADVERTISED QUANTITY OF ITEM 302007 - GRADED AGGREGATE BASE COURSE, TYPE 'B'.

C. THE CONTRACTOR MAY ALSO ELECT TO RECYCLE MILLINGS FOR USE IN HOT-MIX AS PERMITTED BY THE STANDARD SPECIFICATIONS. THE CHOICE OF THE QUANTITY OF MILLINGS USED FOR THIS PURPOSE, OR FOR BASE COURSE, LIES WITH THE CONTRACTOR. ALL MILLING MATERIAL SHALL BECOME PROPERTY OF THE CONTRACTOR.

D. HOT-MIX MILLINGS MAY BE GENERATED FROM THE FOLLOWING SOURCES:
a. MATERIAL MILLED ON THIS CONTRACT AT THE CONTRACTOR'S CHOICE UNDER ITEM 202000.
b. MILLED MATERIAL FURNISHED ON THE JOB FROM THE CONTRACTOR'S YARD OR OTHER OUTSIDE SOURCE.
ALL MILLED MATERIALS SHALL MEET THE MATERIAL REQUIREMENTS OF ITEM 302514 - MILLED HOT-MIX BASE COURSE.

E. PAYMENT CLARIFICATION:
a. SHOULD THE CONTRACTOR ELECT TO MILL PORTIONS OF HOT-MIX SHOWN ON THE PLANS TO BE REMOVED UNDER ITEM 202000 - EXCAVATION AND EMBANKMENT THE COST OF MILLING THIS HOT-MIX WILL BE PAID AS ITEM 202000 - EXCAVATION AND EMBANKMENT. THE MILLINGS GENERATED MAY BE RECYCLED INTO HOT-MIX, UTILIZED FOR BASE COURSE, OR DISPOSED OF TO AN APPROVED SITE. HAULING COSTS FOR DISPOSAL AND/OR RECYCLING ARE INCIDENTAL TO ITEM 202000 - EXCAVATION AND EMBANKMENT.

b. SHOULD THE CONTRACTOR ELECT TO TEMPORARILY STOCKPILE MILLINGS ON THE JOB SITE FOR LATER USE, ALL COSTS FOR STOCKPILING AND SUBSEQUENT REHANDLING SHALL BE INCIDENTAL TO ITEM 202000 - EXCAVATION AND EMBANKMENT.

c. MILLINGS USED FOR BASE COURSE SHALL BE PLACED IN ACCORDANCE WITH THE REQUIREMENTS OF SPECIAL PROVISION 302514 - MILLED HOT-MIX BASE COURSE. NO SEPARATE PAYMENT WILL BE MADE TO FURNISH MILLINGS FROM AN OUTSIDE SOURCE OR TRANSPORT MILLINGS WITHIN THE PROJECT LIMITS. MILLINGS USED FOR BASE COURSE WILL BE PAID IN PLACE AT THE UNIT BID PRICE FOR ITEM 302007 - GRADED AGGREGATE BASE COURSE, TYPE 'B'.

d. ALL COSTS TO UTILIZE MILLINGS IN RECYCLED HOT-MIX WILL BE INCIDENTAL TO THE UNIT PRICE BID FOR THE HOT-MIX ITEM USING THE RECYCLED MATERIAL.

e. SPECIAL PROVISION 302514 - MILLED HOT-MIX BASE COURSE IS PROVIDED TO SPECIFY THE MEANS OF LAY DOWN AND COMPACTION AS WELL AS THE MATERIAL REQUIREMENTS FOR MILLINGS USED AS BASE COURSE. ALL COSTS TO BRING THE MILLINGS INTO COMPLIANCE WITH THE REQUIREMENTS OF ITEM - 302514 MILLED HOT-MIX BASE COURSE ARE INCIDENTAL TO ITEM 302007 - GRADED AGGREGATE BASE COURSE, TYPE 'B'. NO PAYMENT WILL BE MADE FOR ITEM 302514 - MILLED HOT-MIX BASE COURSE. THE QUANTITY OF MILLINGS USED FOR BASE COURSE WILL BE PAID FOR UNDER ITEM 302007 - GRADED AGGREGATE BASE COURSE.

SECTION 600

5. THE DEPARTMENT AND THE CONTRACTOR SHALL INSPECT ALL EXISTING PIPES AND DRAINAGE STRUCTURES TO BE USED IN THE FINAL DRAINAGE SYSTEM AND AGREE ON THE CONDITION PRIOR TO THE START OF CONSTRUCTION. EXISTING PIPES AND DRAINAGE STRUCTURES DAMAGED DUE TO CONTRACTOR OPERATIONS SHALL BE REPAIRED OR REPLACED IN-KIND AT THE CONTRACTOR'S EXPENSE. THE DEPARTMENT WILL VIDEO INSPECT NEW PIPE RUNS TO CONFIRM CONDITION PRIOR TO ACCEPTANCE. PIPE CLEANING PRIOR TO VIDEO INSPECTION AND MAINTENANCE OF TRAFFIC DURING THE VIDEO INSPECTION ARE THE RESPONSIBILITY OF THE CONTRACTOR AND INCIDENTAL TO THE PIPE ITEM THAT IS BEING VIDEO INSPECTED.

6. ALL CONCRETE PROPERTIES SHALL BE IN ACCORDANCE WITH SECTION 812 OF THE DELAWARE DEPARTMENT OF TRANSPORTATION STANDARD SPECIFICATIONS.

CLASS A - ABUTMENTS, PIER CAP, WINGWALLS AND PARAPETS (f'c = 4,500 PSI).
CLASS D - CONCRETE DECK SLAB, APPROACH SLAB, SLEEPER SLAB AND MOMENT SLAB, (f'c = 4,500 PSI).

ALL EXPOSED EDGES SHALL BE CHAMFERED 3/4" UNLESS NOTED OTHERWISE.

7. CONCRETE FOR ITEM 602013 - P.C.C. MASONRY, SUPERSTRUCTURE, CLASS D AND ITEM 602017 - P.C.C. MASONRY, PARAPET, CLASS A SHALL INCLUDE A SHRINKAGE REDUCING/COMPENSATING ADMIXTURE. THE ADMIXTURE MAY BE ONE PRODUCT OR TWO SEPARATE PRODUCTS THAT PROVIDES BOTH EXPANSION AND PORE WATER SURFACE TENSION REDUCTION. THE ADMIXTURE SHALL HAVE THE FOLLOWING CHARACTERISTICS: 1) EXPANDS AT A RATE THAT CLOSELY COMPENSATES FOR THE SHRINKAGE OF THE CONCRETE MIX; 2) REDUCES THE CAPILLARY SURFACE TENSION OF THE CONCRETE PORE WATER; 3) PROVIDES AT LEAST 80% SHRINKAGE REDUCTION AS MEASURED AND DOCUMENTED BY FIELD PERFORMANCE; AND IS FORMULATED FOR USE IN FREEZING AND THAWING WEATHER. ALL ADMIXTURES MUST BE COMPATIBLE WITH THE OVERALL MIX DESIGN. CALCIUM CHLORIDE IS NOT PERMITTED AND NO CHEMICAL ADMIXTURES CONTAINING MORE THAN 0.17 CHLORIDE BY WEIGHT ARE PERMITTED. DOSAGE SHALL BE RECOMMENDED BY THE MANUFACTURER. COST TO PROVIDE THE ADMIXTURE SHALL BE INCLUDED IN THE BID PRICE FOR ITEMS 602013 AND 602017.

8. ALL REINFORCING STEEL SHALL BE AASHTO M31 (ASTM A615), GRADE 60, AND UNLESS NOTED OTHERWISE, SHALL BE PROTECTED WITH FUSION BONDED EPOXY CONFORMING TO AASHTO M284 (ASTM D3963). MINIMUM CONCRETE COVER FOR REINFORCING STEEL SHALL BE:

FOUNDATION ELEMENTS: 2" FOR FORMED CONCRETE
3" WHERE CONCRETE IS PLACED AGAINST SOIL, UNLESS NOTED OTHERWISE
DECK SLABS: 2-1/2" TOP OF SLAB (INCLUDES 1/2" INTEGRAL WEARING SURFACE)

PROJECT NOTES (CONT.)

SECTION 600 CONTINUED

9. ELASTOMERIC BEARINGS SHALL SHALL CONFORM TO AASHTO M251. ELASTOMER SHALL BE 50 DUROMETER. SHIMS SHALL BE 11 GAGE MILD STEEL CONFORMING TO AASHTO M270, GRADE 36.

10. KEYED CONSTRUCTION JOINTS SHALL BE 2" X 4" OR AS NOTED. ALL EXPOSED CONSTRUCTION JOINT EDGES SHALL HAVE A 3/4" V-NOTCH UNLESS NOTED OTHERWISE.

11. BRIDGE DESIGN CRITERIA:

2012 AASHTO LRFD BRIDGE DESIGN SPECIFICATIONS AND SUPPLEMENTED BY THE DELAWARE DEPARTMENT OF TRANSPORTATION 2005 BRIDGE DESIGN MANUAL, INCLUDING REVISIONS THROUGH 2009. PROVIDE MATERIAL AND PERFORM WORK IN ACCORDANCE TO THE CURRENT DELAWARE DEPARTMENT OF TRANSPORTATION STANDARD SPECIFICATIONS, CONSTRUCTION DETAILS, AND CONTRACT SPECIAL PROVISIONS.

12. LOADING CRITERIA:

LIVE LOAD: AASHTO HL-93 AND DELAWARE LEGAL LOADS
FUTURE OVERLAY = 25 PSF
S.I.P. DECK FORMS = 15 PSF
FILL SOIL = 120 PCF
SEISMIC DESIGN AND REQUIREMENTS SHALL BE IN ACCORDANCE WITH 2012 AASHTO LRFD BRIDGE DESIGN SPECIFICATIONS

LOAD RATING SUMMARY

DESIGN VEHICLE	RATING FACTOR	RATING WEIGHT (TONS)	CONTROLLING MEMBER	CONTROLLING POINT	LOAD AFFECT
HL-93 TRKTRA+LANE (INVENTORY)	1.09	N/A	SPAN 1: BEAM 1	110.000	CON. STRESS
HL-93 TANTRA+LANE (INVENTORY)	1.20	N/A	SPAN 1: BEAM 1	110.000	CON. STRESS
HL-93 TANTRA+LANE (INVENTORY)	N/A	N/A	SPAN 1: BEAM 1	110.000	CON. STRESS
HS20 (INVENTORY)	2.47	88.93	SPAN 1: BEAM 1	110.000	CON. STRESS
HL-93 TRKTRA+LANE (OPERATING)	1.95	N/A	SPAN 1: BEAM 1	109.642	LONG. REIN.
HL-93 TANTRA+LANE (OPERATING)	2.07	N/A	SPAN 1: BEAM 1	109.642	LONG. REIN.
HL-93 TRUCK TRAIN (OPERATING)	N/A	N/A	SPAN 1: BEAM 1	109.642	LONG. REIN.
HS20 (OPERATING)	3.28	118.12	SPAN 1: BEAM 1	109.642	LONG. REIN.
DE S220 & LEGAL-LANE (LEGAL)	1.85	36.92	SPAN 1: BEAM 1	110.000	CON. STRESS
DE S335 & LEGAL-LANE (LEGAL)	1.16	40.54	SPAN 1: BEAM 1	110.000	CON. STRESS
DE S437 & LEGAL-LANE (LEGAL)	1.10	40.36	SPAN 1: BEAM 1	110.000	CON. STRESS
DE T330 & LEGAL-LANE (LEGAL)	1.48	44.29	SPAN 1: BEAM 1	110.000	CON. STRESS
DE T435 & LEGAL-LANE (LEGAL)	1.30	45.65	SPAN 1: BEAM 1	110.000	CON. STRESS
DE T540 & LEGAL-LANE (LEGAL)	1.19	47.64	SPAN 1: BEAM 1	110.000	CON. STRESS

NOTE: LOAD RATING DOES NOT INCLUDE FUTURE WEARING SURFACE AS NOTED IN THE PLANS.

13. BRIDGE PIER AND ABUTMENT SEATS SHALL BE SEALED WITH AN EPOXY PROTECTIVE COATING (ITEM 602520). ALL OTHER EXPOSED SURFACES OF BRIDGE PIERS AND ABUTMENTS SHALL BE SEALED WITH A SILICONE ACRYLIC CONCRETE SEALER (ITEM 602646). BRIDGE BARRIER SURFACES AND BOX BEAM FASCIA SURFACES WILL ALSO BE SEALED WITH A SILICONE ACRYLIC CONCRETE SEALER (ITEM 602646), AS NOTED ON THE PLANS.

SECTION 700

14. ALL PAVED AREAS TO BE RECONSTRUCTED OR WIDENED SHALL BE SAWCUT AT THE POINT WHERE THE NEW PAVEMENT IS TO TIE INTO THE EXISTING PAVEMENT. ALL HOT-MIX SAWCUTTING SHALL BE FULL DEPTH, UNLESS OTHERWISE NOTED ON THE PLANS, OR AS DIRECTED BY THE ENGINEER. HOT-MIX SAWCUTTING SHALL BE PAID FOR UNDER ITEM 762001 - SAWCUTTING, BITUMINOUS CONCRETE.

SECTION 900

15. THIS PROJECT IS COVERED UNDER AN NPDES GENERAL PERMIT FOR CONSTRUCTION. UNDER THE GENERAL PERMIT, COMPLIANCE WITH DELDOT'S APPROVED SEDIMENT AND STORMWATER MANAGEMENT PLANS WILL CONSTITUTE COMPLIANCE WITH THE NPDES INDUSTRIAL PERMITTING REQUIREMENTS FOR THIS CONSTRUCTION PROJECT. A COPY OF THE NPDES GENERAL PERMIT AND NOI IS KEPT ON FILE IN EACH OF THE CONSTRUCTION OFFICES AND THE DEPARTMENT'S TEAM SUPPORT SECTION. A COPY OF THE GENERAL PERMIT OR THE NOI CAN BE OBTAINED UPON REQUEST FROM EITHER THE DEPARTMENT'S STORMWATER ENGINEER OR THE APPROPRIATE CONSTRUCTION ENGINEER.

MISCELLANEOUS

16. THE CONTRACTOR SHALL CONTACT WILLIAM LOTHARP, THE CHIEF OF SCHEDULING FOR DART FIRST STATE, 14 DAYS PRIOR TO THE START OF CONSTRUCTION AT 302-576-6006.

17. WIDTH OF EXISTING RIGHT OF WAY DEVELOPED FROM DEED RESEARCH AND CITY OF WILMINGTON STREET AND SEWER DEPARTMENT SEWER TREATMENT PROGRAM CONTRACT NO. 3 HAY ROAD BRIDGE DATED FEBRUARY 1951.

18. SCOUR NOTE: THE PROPOSED STRUCTURE HAS BEEN ANALYZED FOR THE EFFECTS OF SCOUR IN ACCORDANCE WITH HEC-18 - 'EVALUATING SCOUR AT BRIDGES' AND HEC-23 - 'BRIDGE SCOUR AND STREAM INSTABILITY COUNTERMEASURES.' SCOUR COUNTERMEASURES HAVE BEEN DESIGNED FOR THE WORST CASE OF THE OVERTOPPING FLOOD OR THE 100-YR FLOOD EVENT.

DESIGN EVENT	100 YR	DESIGN VELOCITY	6.79 FT/S
DESIGN DISCHARGE	6083 CFS	DESIGN DEPTH OF FLOW	9.35 FT

19. HYDRAULIC DATA:

DRAINAGE AREA	9.74 SQ. MILES		
DESIGN FREQUENCY	25 YEARS	25 YR FLOOD ELEVATION	6.70
DESIGN DISCHARGE	3651 CFS	PROPOSED OPENING	1096 SF

20. ENVIRONMENTAL COMPLIANCE: SEE ENVIRONMENTAL COMPLIANCE PLAN FOR FURTHER RESTRICTIONS/GUIDANCE ASSOCIATED WITH THIS PROJECT.

21. REMOVAL OF SURCHARGE AT ABUTMENTS TO BE PAID UNDER ITEM 202000 - EXCAVATION AND EMBANKMENT

22. DUE TO EXISTING ENVIRONMENTAL COVENANT, DNREC SOLID AND HAZARDOUS WASTE MANAGEMENT SECTION MUST BE NOTIFIED PRIOR TO THE START OF CONSTRUCTION.

Unofficial Website Copy

LEGEND

- (A) ITEM 401807 - BITUMINOUS CONCRETE, SUPERPAVE, TYPE C, 160 GYRATIONS, PG 76-22 (CARBONATE STONE)
- (B) ITEM 401816 - BITUMINOUS CONCRETE, SUPERPAVE TYPE B, 160 GYRATIONS, PG 76-22
- (C) ITEM 401819 - BITUMINOUS CONCRETE, SUPERPAVE, BITUMINOUS CONCRETE BASE COURSE, 160 GYRATIONS, PG 64-22
- (D) ITEM 302007 - GRADED AGGREGATE BASE COURSE, TYPE B
- (E) ITEM 908004 - TOPSOIL, 6" DEPTH
  ITEM 908014 - PERMANENT GRASS SEEDING, DRY GROUND
- (F) ITEM 720050 - GALVANIZED STEEL BEAM GUARDRAIL TYPE 1-31
- (G) ITEM 302011 - DEL. NO. 3 STONE
  ITEM 713003 - GEOTEXTILES, RIPRAP
- (H) ITEM 209001 - BORROW, TYPE A
- (I) ITEM 209006 - BORROW, TYPE F

THE LIFTS FOR THE INDIVIDUAL PAVING MATERIALS ARE:

	MIN.	MAX.
SUPERPAVE TYPE C	1.25"	2"
SUPERPAVE TYPE B	2.25"	4"
SUPERPAVE BCBC	3"	6"
GABC	-	8"

*TRANSITION OVER 50' TO 2% AT APPROACH SLAB

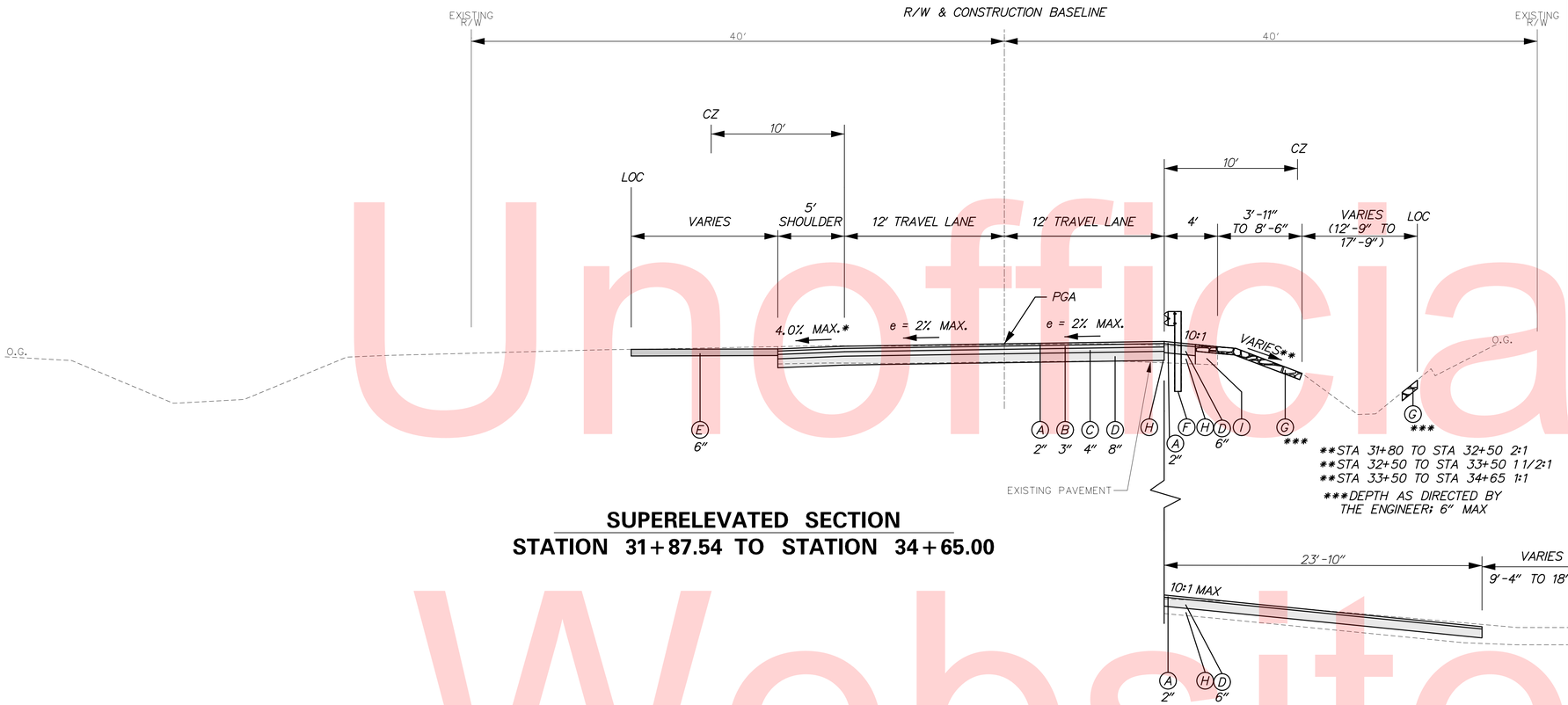

SUPERELEVATED SECTION
STATION 31+87.54 TO STATION 34+65.00

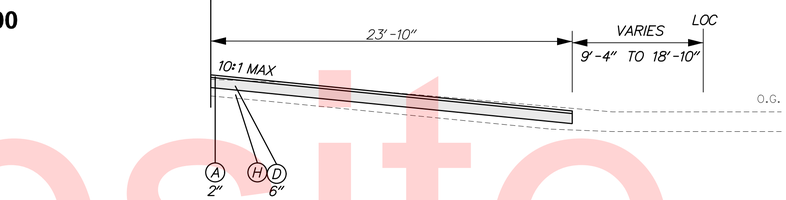

DRIVEWAY
STATION 31+28.00 TO STATION 31+82.00

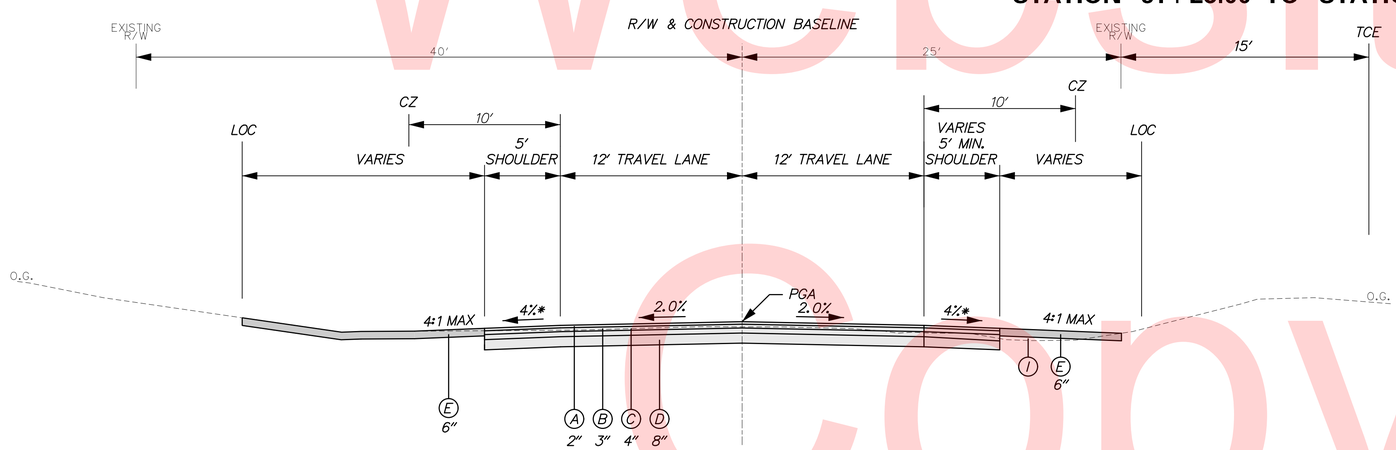

NORMAL CROWN
STATION 28+00 TO STATION 29+49.77

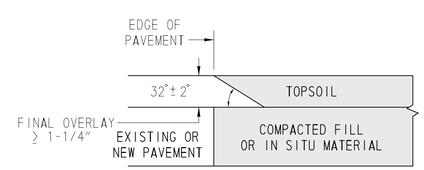

HOT-MIX PAVEMENTS AND OVERLAYS
NOT TO SCALE

SAFETY EDGE DETAIL
NOT TO SCALE

Unofficial Website Copy

TS-01

DELAWARE DEPARTMENT OF TRANSPORTATION	ADDENDUMS / REVISIONS	SCALE 0 5 10 15 FEET	BR 1-567A ON N501 HAY ROAD OVER SHELLPOT CREEK, CITY OF WILMINGTON	CONTRACT T201307101	BRIDGE NO. 1-567A	TYPICAL SECTIONS	SHEET NO. 4
				COUNTY NEW CASTLE	DESIGNED BY: SSMG		TOTAL SHTS. 50
					CHECKED BY: MAA		

Unofficial Website Copy

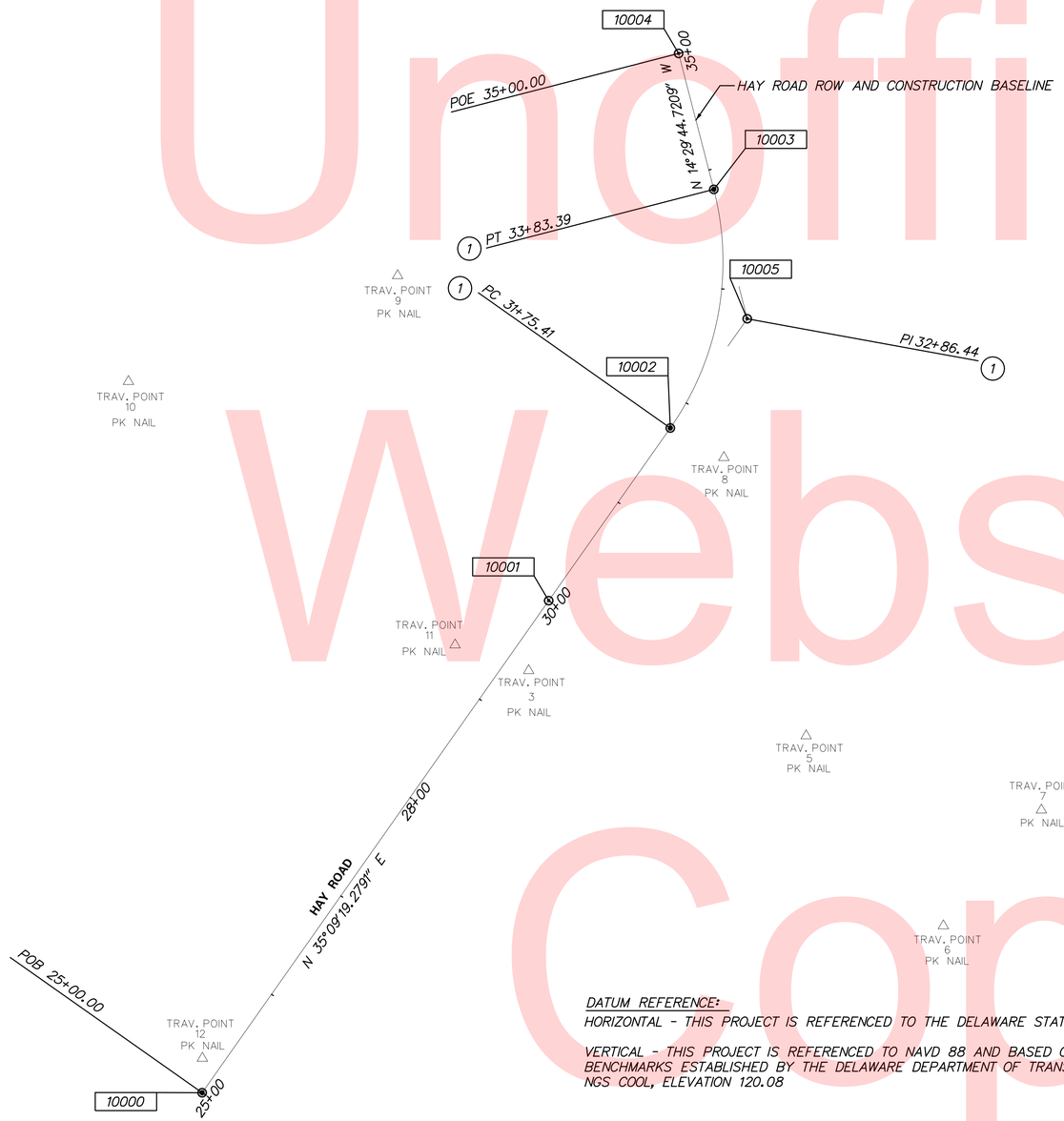

HORIZONTAL / VERTICAL CONTROL DATA					
POINT	STATION	OFFSET	NORTHING	EASTING	ELEVATION
TP 3	29+42.8895	19.8874	633346.4976	629667.4516	6.8435
TP 5	30+31.2871	239.4983	633292.3200	629897.9031	0.6143
TP 6	29+67.9401	423.6250	633134.5085	630011.9690	6.1594
TP 7	30+93.4023	434.7819	633230.6616	630093.3314	6.7398
TP 8	31+81.0298	50.5740	633523.5683	629829.6072	6.8956
TP 9	31+48.4657	-258.0467	633674.6086	629558.5843	6.5603
TP 10	29+47.8335	-390.2488	633586.6943	629334.9735	10.1405
TP 11	29+25.1097	-42.3885	633367.8191	629606.2977	7.6167
TP 12	25+23.6210	-16.4250	633024.5107	629396.4176	8.0921

CONSTRUCTION ALIGNMENT CONTROL				
POINT	STATION	OFFSET	NORTHING	EASTING
10000	25+00.00	0.0000	632995.8450	629396.1781
10001	30+00.00	0.0000	633404.6419	629684.0758
10002	31+75.41	0.0000	633548.0590	629785.0782
10003	33+83.39	0.0000	633746.3239	629821.2155
10004	35+00.00	0.0000	633859.2200	629792.0275
10005	32+86.44	24.4365	633638.8328	629849.0062

CIRCULAR CURVE NO. 1

POINT	STATION	NORTHING	EASTING
		Element: Circular	
PC (10002)	31+75.41	633548.0590	629785.0782
PI (10005)	32+86.44	633638.8328	629849.0062
CC ( )		633686.2499	629588.8557
PT (10003)	33+83.39	633746.3239	629821.2155

Radius:	240.00
Delta:	49° 39' 04.0000" Left
Degree of Curvature(Arc):	23° 52' 23.6693"
Length:	207.98
Tangent:	111.03
Chord:	201.53
Middle Ordinate:	22.18
External:	24.44
Tangent Direction:	N 35° 09' 19.2791" E
Radial Direction:	S 54° 50' 40.7209" E
Chord Direction:	N 10° 19' 47.2791" E
Radial Direction:	N 75° 30' 15.2791" E
Tangent Direction:	N 14° 29' 44.7209" W

DATUM REFERENCE:

HORIZONTAL - THIS PROJECT IS REFERENCED TO THE DELAWARE STATE PLANE COORDINATE SYSTEM (NAD 83/91).

VERTICAL - THIS PROJECT IS REFERENCED TO NAVD 88 AND BASED ON THE FOLLOWING STATE OF DELAWARE BENCHMARKS ESTABLISHED BY THE DELAWARE DEPARTMENT OF TRANSPORTATION:
NGS COOL, ELEVATION 120.08

HVC-01

DELAWARE DEPARTMENT OF TRANSPORTATION

ADDENDUMS / REVISIONS

SCALE 0 60 120 180 FEET

BR 1-567A ON N501 HAY ROAD OVER SHELLPOT CREEK, CITY OF WILMINGTON

CONTRACT	BRIDGE NO. 1-567A
T201307101	DESIGNED BY: SSMG
COUNTY	CHECKED BY: MAA
NEW CASTLE	

HORIZONTAL AND VERTICAL CONTROL

SHEET NO. 5

TOTAL SHTS. 50

NOTE: SEE BRIDGE PLANS AND ENVIRONMENTAL COMPLIANCE PLAN FOR LOCATION OF RIPRAP.

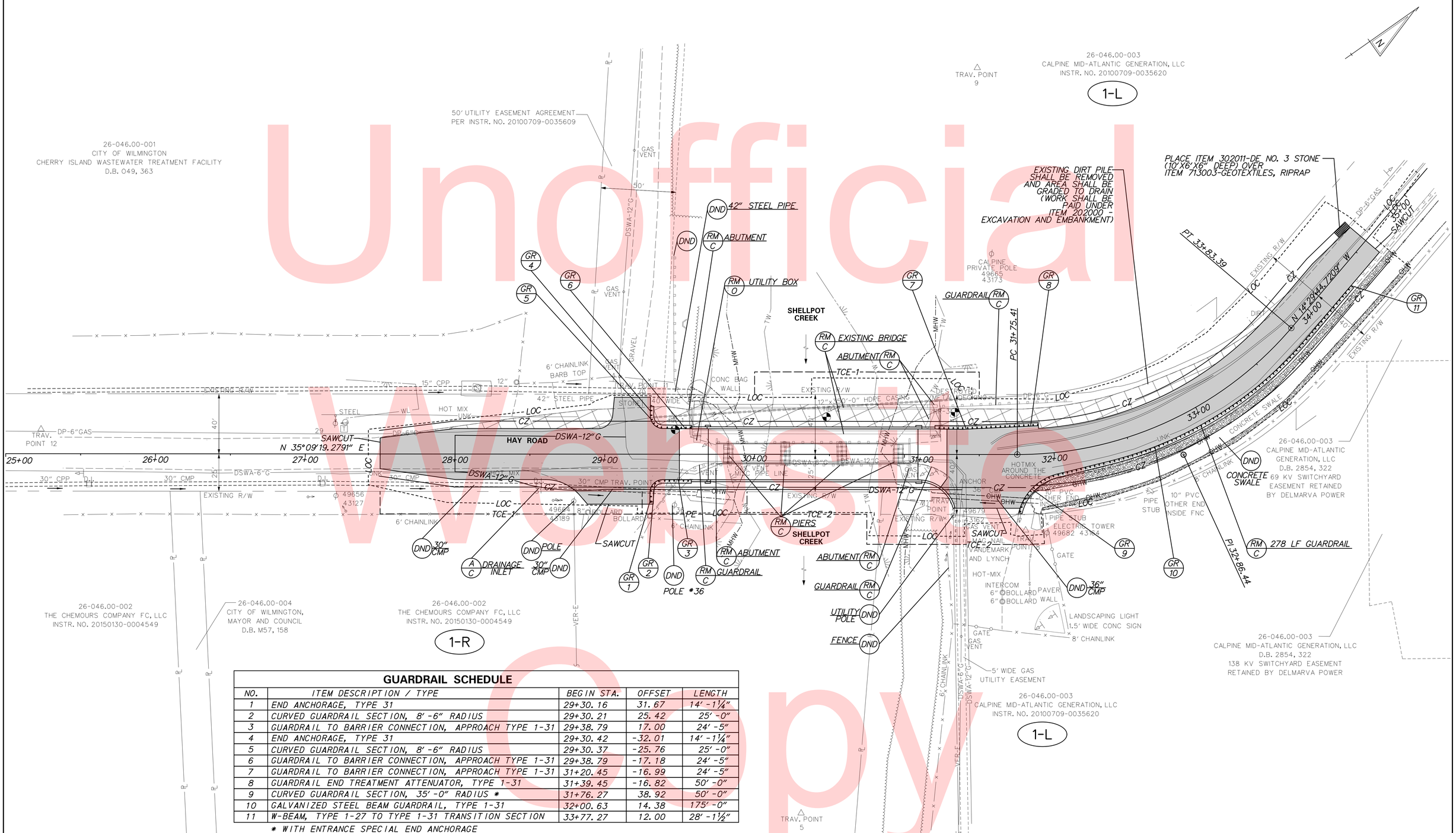

GUARDRAIL SCHEDULE

NO.	ITEM DESCRIPTION / TYPE	BEGIN STA.	OFFSET	LENGTH
1	END ANCHORAGE, TYPE 31	29+30.16	31.67	14'-1¼"
2	CURVED GUARDRAIL SECTION, 8'-6" RADIUS	29+30.21	25.42	25'-0"
3	GUARDRAIL TO BARRIER CONNECTION, APPROACH TYPE 1-31	29+38.79	17.00	24'-5"
4	END ANCHORAGE, TYPE 31	29+30.42	-32.01	14'-1¼"
5	CURVED GUARDRAIL SECTION, 8'-6" RADIUS	29+30.37	-25.76	25'-0"
6	GUARDRAIL TO BARRIER CONNECTION, APPROACH TYPE 1-31	29+38.79	-17.18	24'-5"
7	GUARDRAIL TO BARRIER CONNECTION, APPROACH TYPE 1-31	31+20.45	-16.99	24'-5"
8	GUARDRAIL END TREATMENT ATTENUATOR, TYPE 1-31	31+39.45	-16.82	50'-0"
9	CURVED GUARDRAIL SECTION, 35'-0" RADIUS *	31+76.27	38.92	50'-0"
10	GALVANIZED STEEL BEAM GUARDRAIL, TYPE 1-31	32+00.63	14.38	175'-0"
11	W-BEAM, TYPE 1-27 TO TYPE 1-31 TRANSITION SECTION	33+77.27	12.00	28'-1½"

* WITH ENTRANCE SPECIAL END ANCHORAGE

Unofficial Website Copy

CP-01

DELAWARE DEPARTMENT OF TRANSPORTATION

ADDENDUMS / REVISIONS

SCALE 0 30 60 90 FEET

BR 1-567A ON N501 HAY ROAD OVER SHELLPOT CREEK, CITY OF WILMINGTON

CONTRACT	BRIDGE NO.	1-567A
T201307101	DESIGNED BY: SSMG	
COUNTY	CHECKED BY: MAA	
NEW CASTLE		

CONSTRUCTION PLAN

SHEET NO. 6

TOTAL SHTS. 50

Unofficial Website Copy

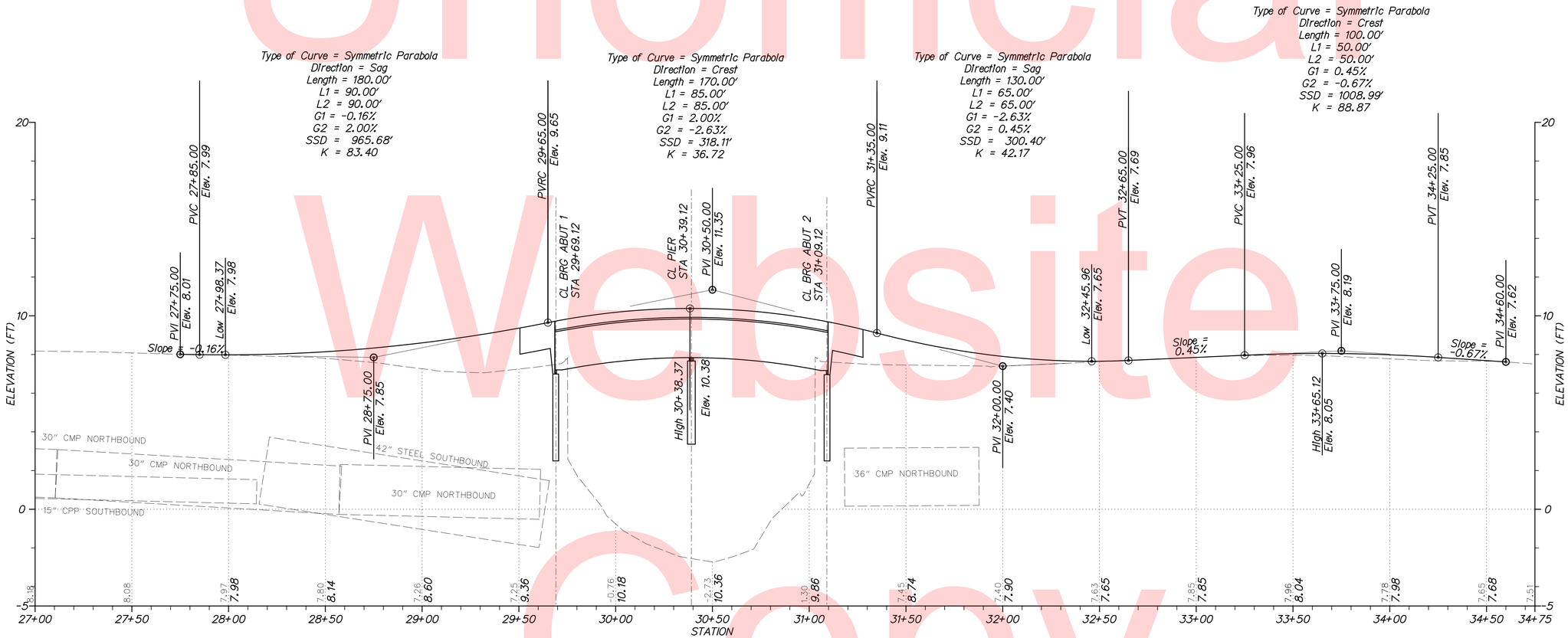

HAY ROAD

VERTICAL SCALE FEET 0 3 6 9

PR-01

DELAWARE DEPARTMENT OF TRANSPORTATION	ADDENDUMS / REVISIONS	SCALE 0 30 60 90 FEET	**BR 1-567A ON N501 HAY ROAD OVER SHELLPOT CREEK, CITY OF WILMINGTON**	CONTRACT T201307101	BRIDGE NO. **1-567A**	**PROFILES**	SHEET NO. 7
				COUNTY NEW CASTLE	DESIGNED BY: SSMG		TOTAL SHTS. 50
					CHECKED BY: MAA		

COORDINATE LIST				
POINT NO.	STATION	OFFSET	NORTHING	EASTING
80001	27+50.00	-10.72	633206.4183	629531.3590
80002	28+00.00	-17.00	633250.9116	629555.0176
80003	28+95.29	-17.00	633328.8242	629609.8880
80004	28+95.29	-27.00	633334.5821	629601.7120
80005	29+05.25	-26.07	633342.1874	629608.2050
80006	29+06.37	-38.00	633349.9669	629599.0928
80007	29+30.48	-38.00	633369.6826	629612.9776
80011	29+38.79	-17.18	633364.4892	629634.7850
80013	29+30.42	-32.01	633366.1871	629617.8460
80014	29+32.76	-31.99	633368.0825	629619.2069
80015	29+30.37	-25.76	633362.5420	629622.9230
80016	29+38.87	-25.68	633369.4466	629627.8804
80017	29+57.79	-19.34	633381.2656	629643.9579
80018	29+57.78	-17.01	633379.9187	629645.8632
80019	31+20.45	-16.99	633512.9056	629739.5368
80020	31+20.47	-19.33	633514.2664	629737.6415
80021	31+39.40	-19.15	633529.6467	629748.6843
80022	31+39.45	-16.82	633528.3401	629750.6186
80023	31+90.69	-21.12	633571.8576	629775.4678
80024	31+90.62	-17.00	633569.6515	629778.9446
80025	33+83.39	-17.00	633742.0686	629804.7567
80026	34+25.00	-17.00	633782.3523	629794.3418
80027	34+60.00	-13.62	633817.0837	629788.8516

*NOTE:
SOUTHBOUND CROSS SLOPE
TRANSITIONS FROM -2% TO 0%
TO MATCH EXISTING

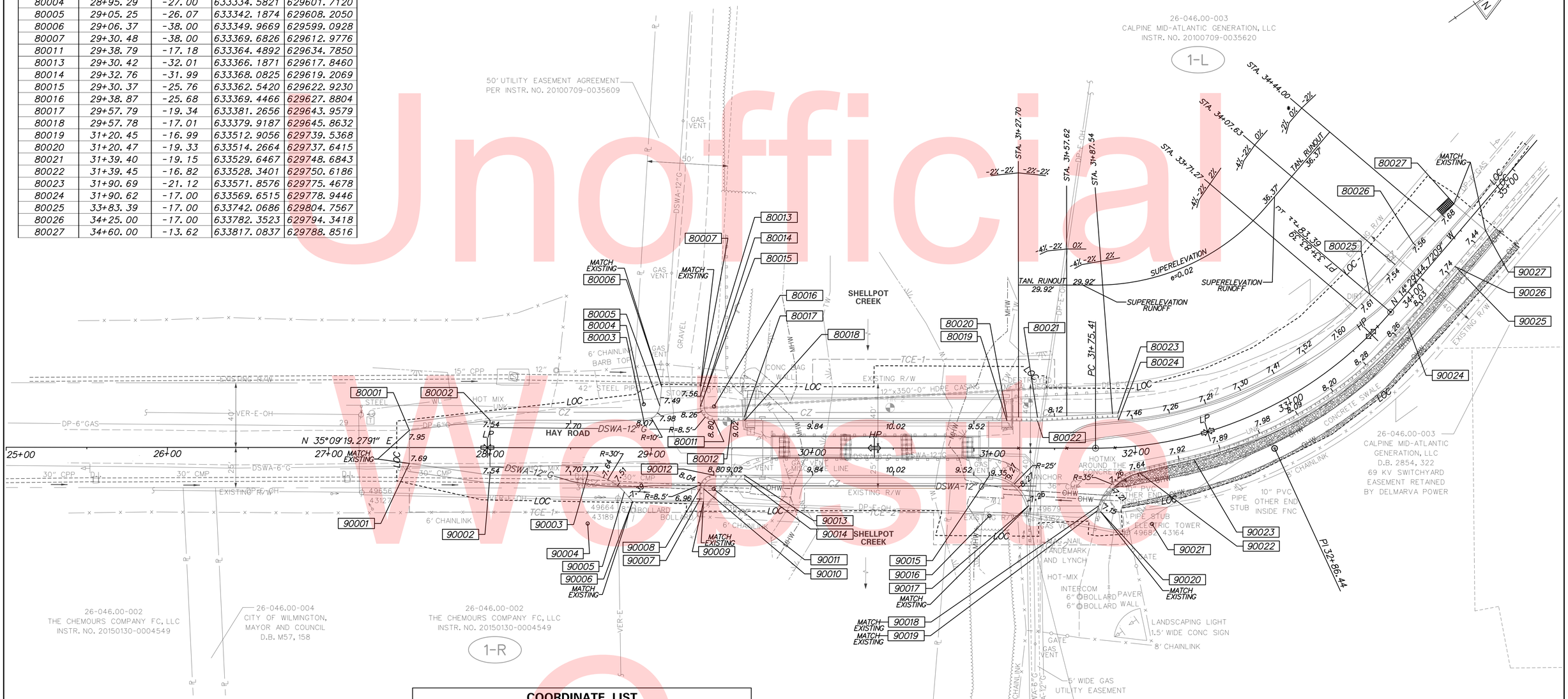

COORDINATE LIST				
POINT NO.	STATION	OFFSET	NORTHING	EASTING
90001	27+50.00	9.81	633194.5927	629548.1506
90002	27+99.93	17.00	633231.3346	629582.8158
90003	28+60.59	17.00	633280.8720	629617.7028
90004	28+60.59	47.00	633263.5981	629642.2306
90005	28+83.32	27.42	633293.4554	629639.3076
90006	28+88.45	33.37	633294.2212	629647.1305
90007	29+30.16	31.67	633329.3012	629669.7546
90008	29+30.21	25.42	633332.9464	629664.6776
90009	29+32.37	33.33	633330.1548	629672.3876
90010	29+32.49	31.69	633331.1966	629671.1154
90011	29+38.69	25.48	633339.8459	629669.6062
90012	29+38.79	17.00	633344.8084	629662.7304
90013	29+57.78	17.00	633360.3378	629673.6671

COORDINATE LIST				
POINT NO.	STATION	OFFSET	NORTHING	EASTING
90014	29+57.78	19.33	633358.9943	629675.5748
90015	31+09.70	17.00	633484.5434	629761.1396
90016	31+09.70	42.00	633470.1485	629781.5795
90017	31+33.93	35.85	633493.5011	629790.5045
90018	31+77.04	35.86	633528.9450	629815.4661
90019	31+76.27	38.92	633526.4647	629817.4713
90020	31+78.22	39.47	633528.0128	629819.2171
90021	32+04.59	49.09	633549.6862	629843.6584
90022	32+00.92	16.69	633561.5486	629813.2216
90023	32+33.48	14.33	633593.8929	629825.8274
90024	33+83.39	14.33	633749.9116	629835.0926
90025	34+30.75	14.33	633795.7611	629823.2387
90026	34+30.77	12.00	633795.1953	629820.9751
90027	34+60.00	12.00	633823.4971	629813.6579

Unofficial Web Copy

GG-01

DELAWARE
DEPARTMENT OF TRANSPORTATION

ADDENDUMS / REVISIONS

SCALE 0 30 60 90 FEET

BR 1-567A ON N501 HAY ROAD
OVER SHELLPOT CREEK,
CITY OF WILMINGTON

CONTRACT	BRIDGE NO.	1-567A
T201307101	DESIGNED BY: SSMG	
COUNTY		
NEW CASTLE	CHECKED BY: MAA	

GRADES AND GEOMETRICS

SHEET NO. 8
TOTAL SHTS. 50

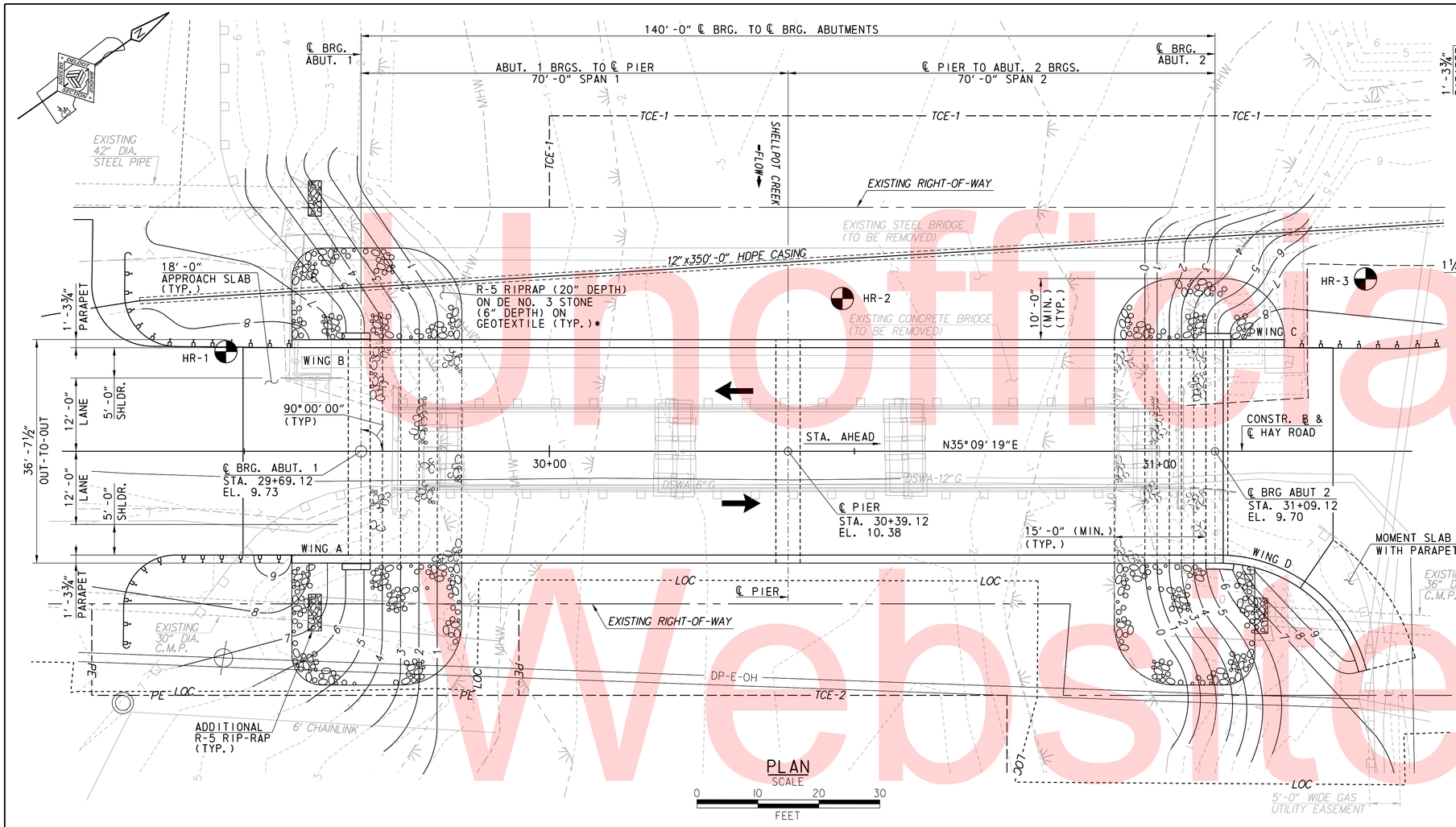

PLAN

SCALE

0 10 20 30

FEET

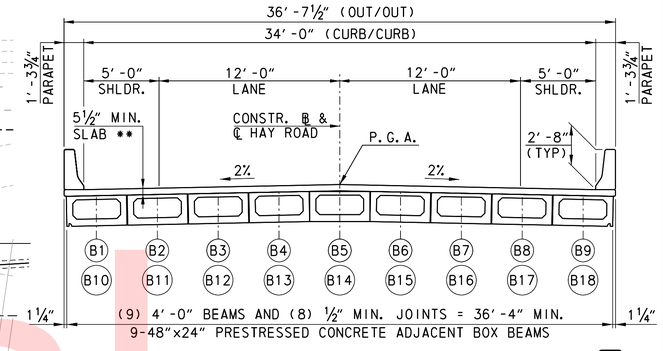

**INCLUDES ½" INTEGRAL WEARING SURFACE

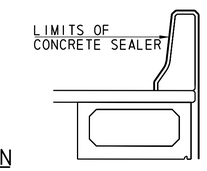

TYPICAL SECTION

SCALE

0 5 10 20

FEET

HORIZONTAL CURVE DATA

BRIDGE IS ON A TANGENT
BEARING N 35°09'19" E

VERTICAL CURVE DATA

P.V.I.
STA. 30+50.00
EL. 11.35

2.00% -2.64%

P.V.R.C.	L.V.C. = 170.00'	PVRC
STA. 29+65.00	G_1 = 2.00%	STA. 31+35.00
EL. 9.65	G_2 = -2.63%	EL. 9.11
	K = 36.72	
	SSD = 318.11	

NOTE:
* SEE ENVIRONMENTAL COMPLIANCE NOTES FOR GUIDANCE ON STREAM RESTORATION AND RIPRAP SLOPE TREATMENT.

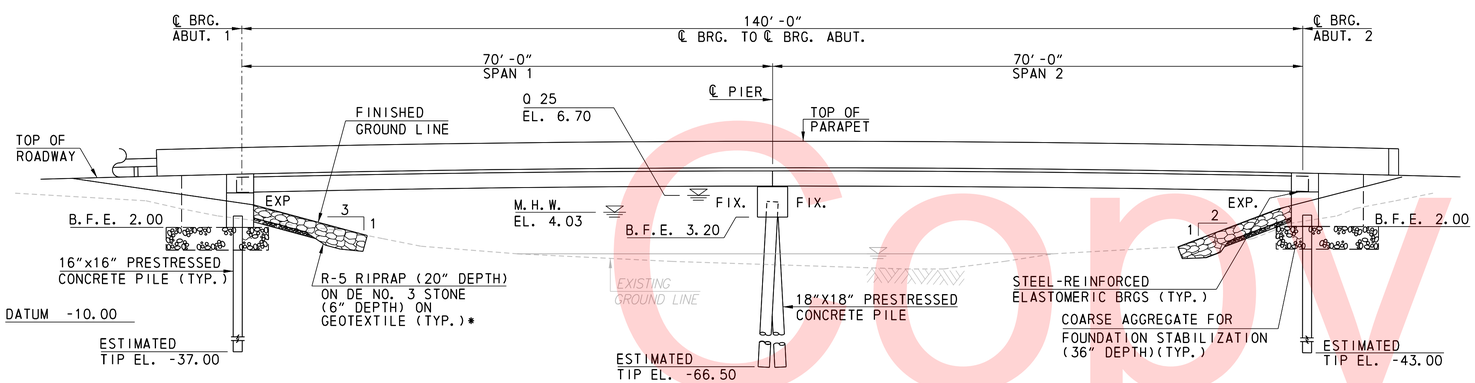

ELEVATION

SCALE

0 10 20 30

FEET

LEGEND:

ABUT.	=	ABUTMENT
B.F.E.	=	BOTTOM OF FOOTING ELEVATION
BRG.	=	BEARING
C.M.P.	=	CORRUGATED METAL PIPE
CONSTR.	=	CONSTRUCTION
DIA.	=	DIAMETER
EL.	=	ELEVATION
EXP.	=	EXPANSION
FIX.	=	FIXED
MAX.	=	MAXIMUM
MIN.	=	MINIMUM
M.H.W.	=	MEAN HIGH WATER
Q	=	FLOW
P.G.A.	=	POINT OF GRADE APPLICATION
SHLDR.	=	SHOULDER
STA.	=	STATION
TYP.	=	TYPICAL
⊕	=	BORING LOCATION

Unofficial Website Copy

DELAWARE DEPARTMENT OF TRANSPORTATION	ADDENDUMS / REVISIONS	SCALE: AS NOTED	BR 1-567 ON N501 HAY ROAD OVER SHELLPOT CREEK, CITY OF WILMINGTON	CONTRACT T201307101	BRIDGE NO. 1-567A	GENERAL PLAN AND ELEVATION	PE-01
				COUNTY NEW CASTLE	DESIGNED BY: BJH		SHEET NO. 9
					CHECKED BY: CC-C		TOTAL SHTS. 50

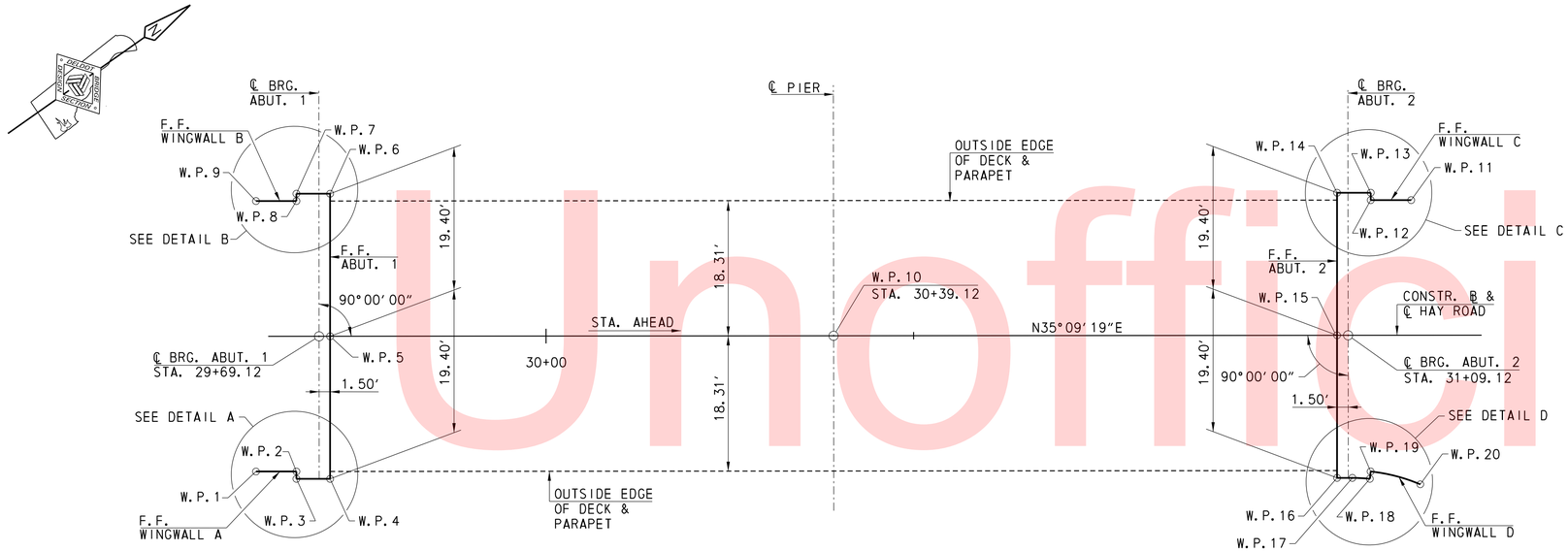

PLAN
SCALE
0 10 20 30
FEET

WORK POINT COORDINATES				
W.P.	NORTHING	EASTING	STATION	OFFSET (FT.)
1	633361.8327	629676.3252	29+60.54	18.31 RT
2	633366.3295	629679.4921	29+66.04	18.31 RT
3	633365.7057	629680.3778	29+66.04	19.40 RT
4	633369.4530	629683.0168	29+70.62	19.40 RT
5	633380.6210	629667.1590	29+70.62	0.00
6	633391.7890	629651.3011	29+70.62	19.40 LT
7	633388.0417	629648.6620	29+66.04	19.40 LT
8	633387.4180	629649.5477	29+66.04	18.31 LT
9	633382.9212	629646.3808	29+60.54	18.31 LT
10	633436.6262	629706.6009	30+39.12	0.00
11	633511.4196	629736.8767	31+17.70	18.31 LT
12	633506.9229	629733.7098	31+12.20	18.31 LT
13	633507.5466	629732.8241	31+12.20	19.40 LT
14	633503.7994	629730.1850	31+07.62	19.40 LT
15	633492.6313	629746.0429	31+07.62	0.00
16	633481.4633	629761.9008	31+07.62	19.40 RT
17	633483.1666	629763.1004	31+09.70	19.40 RT
18	633485.0439	629764.5798	31+12.09	19.52 RT
19	633485.7555	629763.7604	31+12.20	18.44 RT
20	633490.2682	629769.0756	31+18.95	20.19 RT

NOTE:
FOUR PLACE COORDINATES ARE FOR COMPUTATIONAL PURPOSES ONLY AND DO NOT IMPLY A PRECISION BEYOND TWO DECIMAL PLACES.

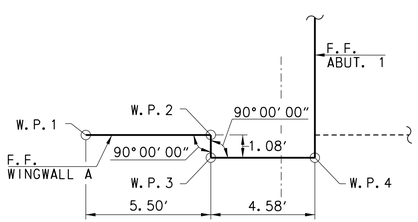

DETAIL A
NOT TO SCALE

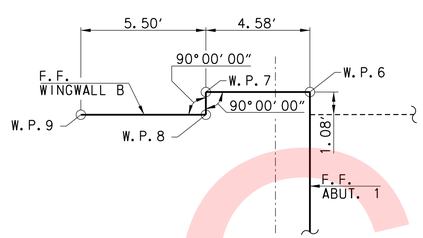

DETAIL B
NOT TO SCALE

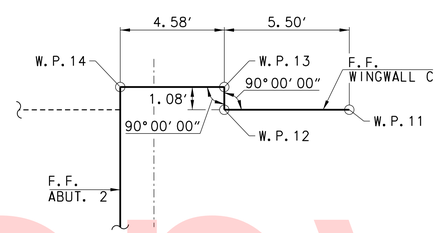

DETAIL C
NOT TO SCALE

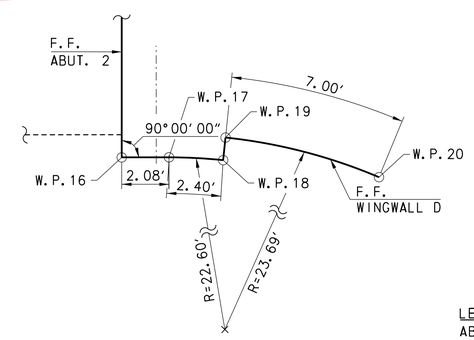

DETAIL D
NOT TO SCALE

LEGEND:

ABUT.	=	ABUTMENT
BRG.	=	BEARING
CONSTR.	=	CONSTRUCTION
F.F.	=	FRONT FACE
LT.	=	LEFT
R	=	RADIUS
RT.	=	RIGHT
STA.	=	STATION
W.P.	=	WORK POINT

PE-02

DELAWARE DEPARTMENT OF TRANSPORTATION

ADDENDUMS / REVISIONS

SCALE: AS NOTED

BR 1-567 ON N501 HAY ROAD OVER SHELLPOT CREEK, CITY OF WILMINGTON

CONTRACT T201307101
COUNTY NEW CASTLE
BRIDGE NO. 1-567A
DESIGNED BY: MDM/SNL
CHECKED BY: BJH

GEOMETRIC LAYOUT PLAN

SHEET NO. 10
TOTAL SHTS. 50

Unofficial Website Copy

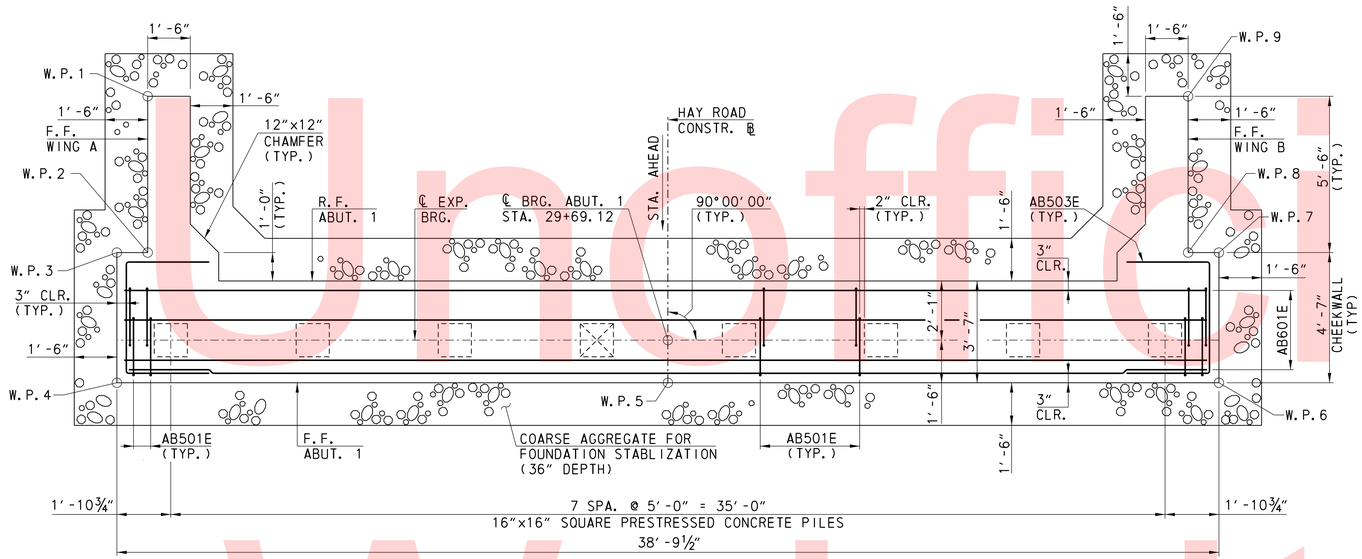

FOOTING PLAN

SCALE
0 2 4 6
FEET

NOTES:

- WORK THIS SHEET WITH SHEETS AB-02 AND AB-03.
- FOR WORK POINTS, SEE SHEET PE-02.
- FOR REINFORCEMENT BAR LIST, SEE SHEET BR-01.
- FOR PILE DETAILS, SEE SHEET MT-02.

LEGEND:

ABUT.	=	ABUTMENT
BRG.	=	BEARING
CLR.	=	CLEAR
CONSTR.	=	CONSTRUCTION
EXP.	=	EXPANSION
F.F.	=	FRONT FACE
R.F.	=	REAR FACE
SPA.	=	SPACE
STA.	=	STATION
TYP.	=	TYPICAL
W.P.	=	WORK POINT
	=	TEST PILE

Unofficial Website Copy

DELAWARE
DEPARTMENT OF TRANSPORTATION

ADDENDUMS / REVISIONS

SCALE: AS NOTED

BR 1-567 ON N501 HAY ROAD
OVER SHELLPOT CREEK,
CITY OF WILMINGTON

CONTRACT	BRIDGE NO.	1-567A
T201307101	DESIGNED BY: ZME	
COUNTY		
NEW CASTLE	CHECKED BY: SBM	

ABUTMENT 1
FOOTING PLAN

AB-01

SHEET NO.
11
TOTAL SHTS.
50

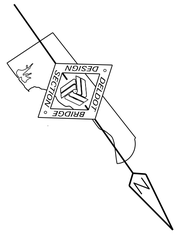

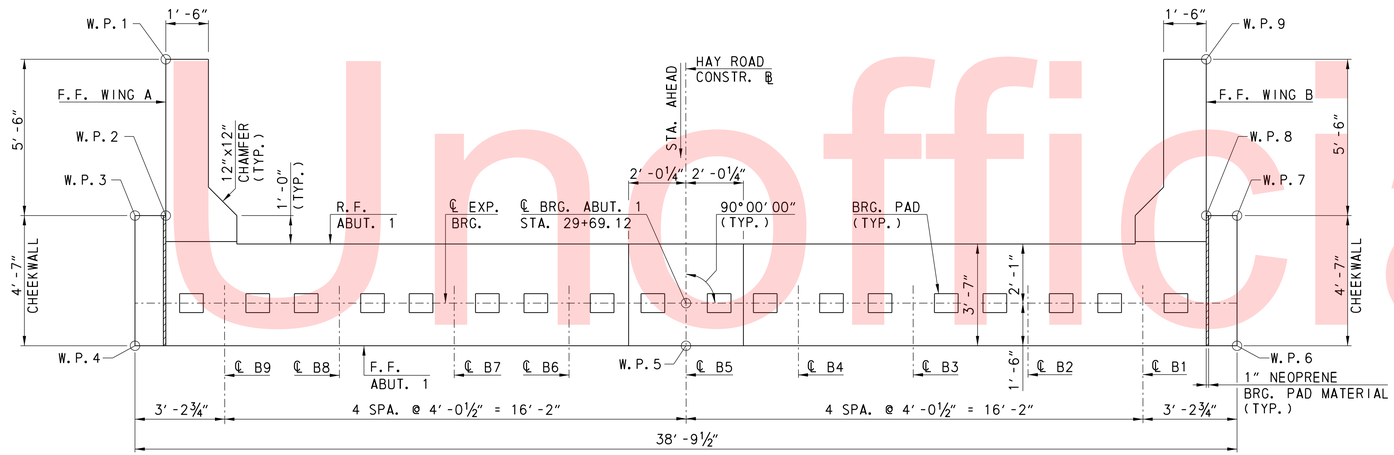

PLAN

SCALE
0 2 4 6
FEET

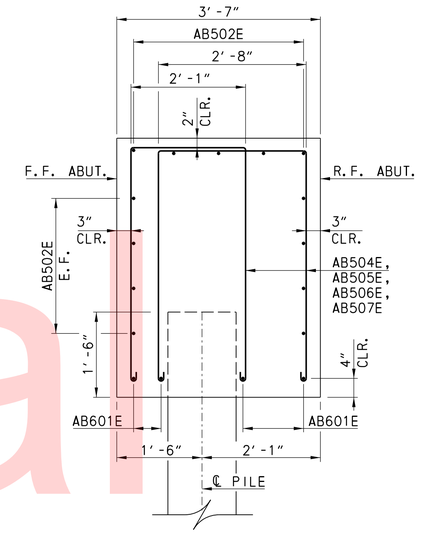

SECTION A-A

SCALE
0 1 2 3
FEET

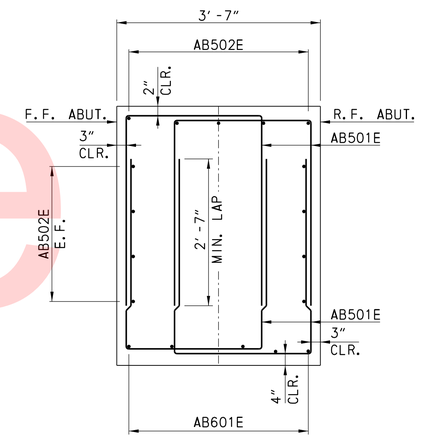

SECTION B-B

SCALE
0 1 2 3
FEET

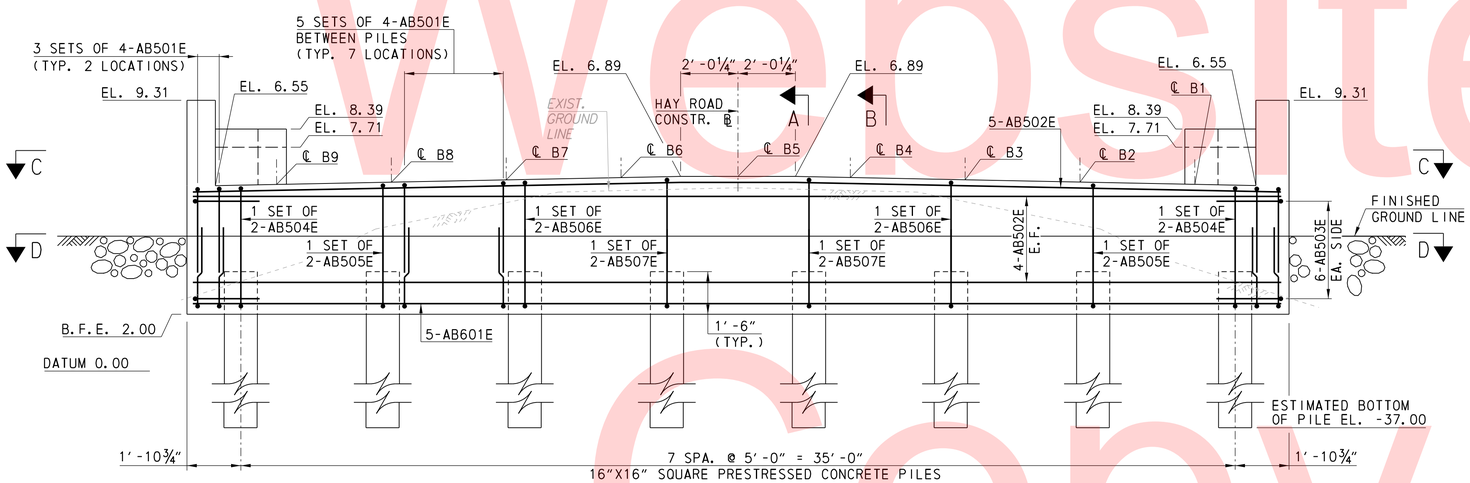

ELEVATION

SCALE
0 2 4 6
FEET

TABLE OF BRIDGE SEAT ELEVATIONS AT ℄ BEAM									
LOCATION	B1	B2	B3	B4	B5	B6	B7	B8	B9
ELEVATION	6.60	6.68	6.76	6.84	6.88	6.84	6.76	6.68	6.60

NOTES:
- FOR FOOTING PLAN, SEE SHEET AB-01.
- FOR REINFORCEMENT BAR LIST, SEE SHEET BR-01.
- FOR SECTIONS C-C AND D-D, SEE SHEET AB-03.
- FOR WORK POINTS, SEE SHEET PE-02.
- FOR PILE DETAILS, SEE SHEET MT-02.

LEGEND:

ABUT.	=	ABUTMENT
B.F.E.	=	BOTTOM OF FOOTING ELEVATION
BRG.	=	BEARING
CLR.	=	CLEAR
CONSTR.	=	CONSTRUCTION
EA.	=	EACH
EL.	=	ELEVATION
E.F.	=	EACH FACE
EXIST.	=	EXISTING
EXP.	=	EXPANSION
F.F.	=	FRONT FACE
MIN.	=	MINIMUM
R.F.	=	REAR FACE
SPA.	=	SPACE
STA.	=	STATION
TYP.	=	TYPICAL
W.P.	=	WORK POINT

Unofficial Website Copy

DELAWARE DEPARTMENT OF TRANSPORTATION

ADDENDUMS / REVISIONS

SCALE: AS NOTED

BR 1-567 ON N501 HAY ROAD OVER SHELLPOT CREEK, CITY OF WILMINGTON

CONTRACT	BRIDGE NO.	1-567A
T201307101	DESIGNED BY: ZME	
COUNTY		
NEW CASTLE	CHECKED BY: SBM	

ABUTMENT 1 PLAN, ELEVATION AND SECTIONS

AB-02

SHEET NO. 12

TOTAL SHTS. 50

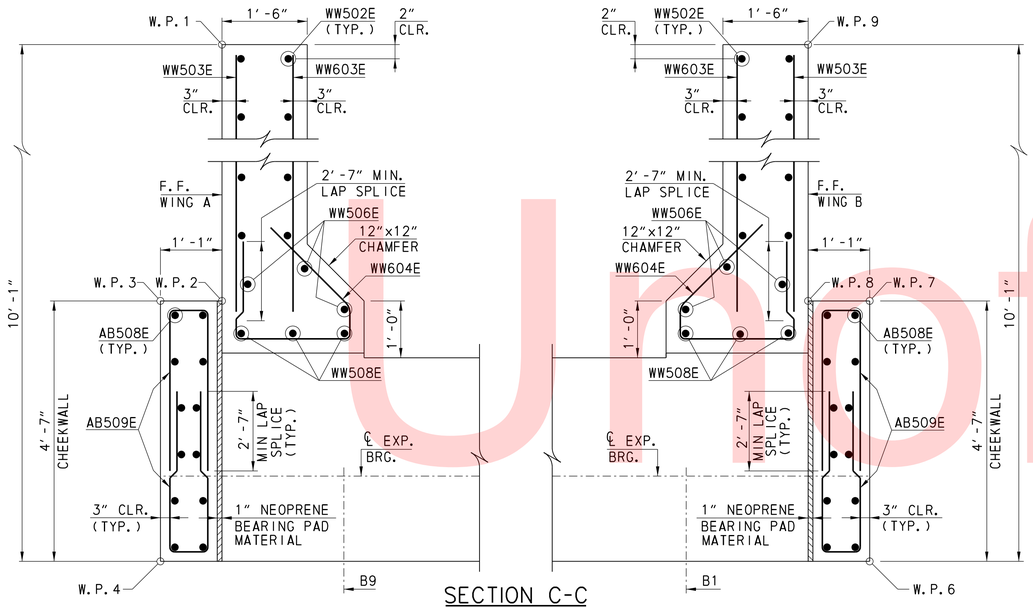

SECTION C-C

SCALE 0 1 2 3 FEET

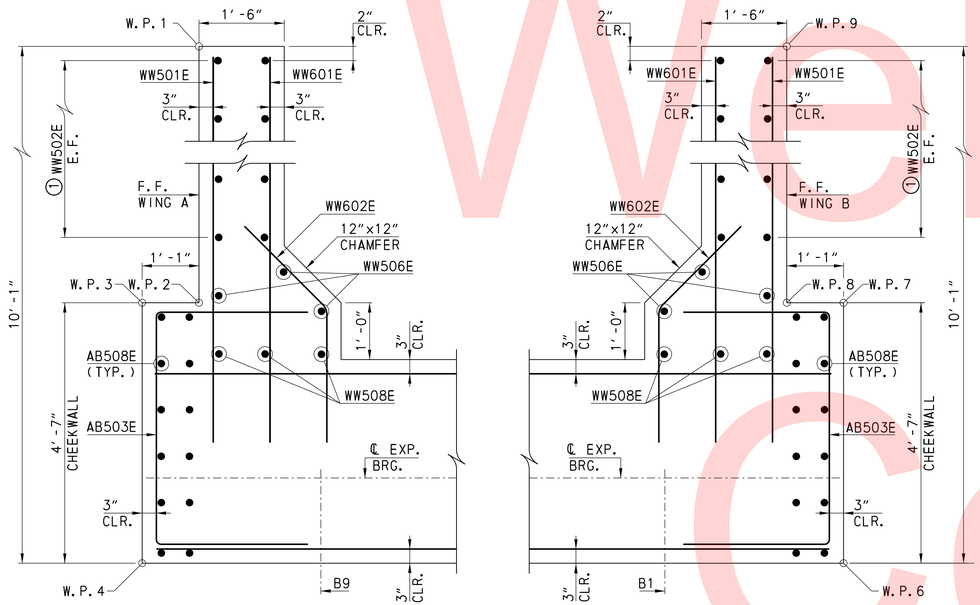

SECTION D-D

SCALE 0 1 2 3 FEET

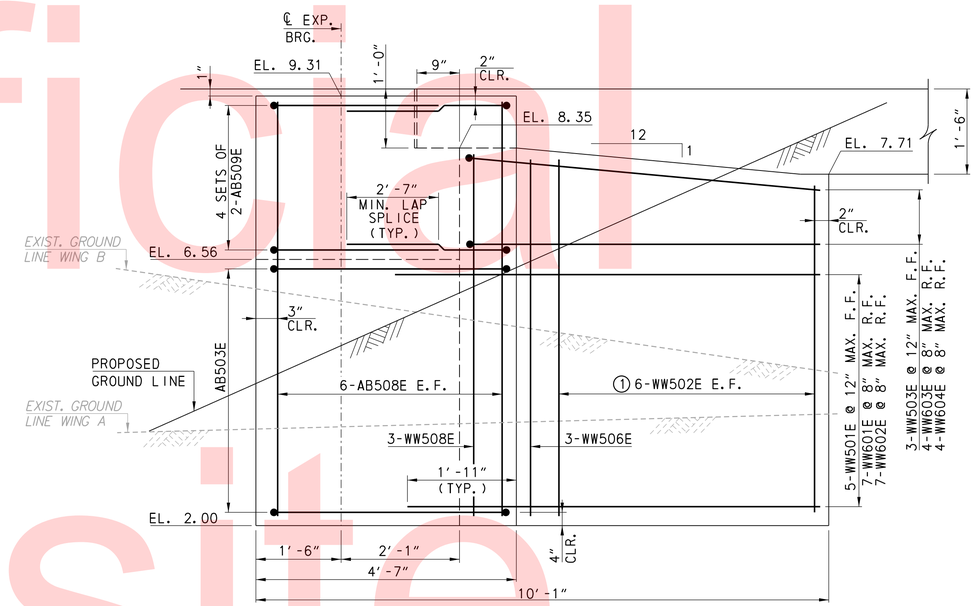

WINGWALL AND CHEEKWALL ELEVATION

(WING B SHOWN, WING A SIMILAR AND OPPOSITE HAND)

SCALE 0 1 2 3 FEET

① VARY 2 BARS EACH BY ¾″ AT WING A AND WING B

NOTES:

- FOR REINFORCEMENT BAR LIST, SEE SHEET BR-01.
- FOR WORK POINTS, SEE SHEET PE-02.
- WORK THIS SHEET WITH SHEETS AB-01 AND AB-02.
- FOR LOCATION OF SECTIONS C-C AND D-D, SEE SHEET AB-02.

LEGEND:

BRG.	=	BEARING
CLR.	=	CLEARANCE
E.F.	=	EACH FACE
EL.	=	ELEVATION
EXIST.	=	EXISTING
EXP.	=	EXPANSION
F.F.	=	FRONT FACE
MAX.	=	MAXIMUM
MIN.	=	MINIMUM
R.F.	=	REAR FACE
TYP.	=	TYPICAL
W.P.	=	WORK POINT

Unofficial Website Copy

DELAWARE DEPARTMENT OF TRANSPORTATION	ADDENDUMS / REVISIONS	SCALE: AS NOTED	BR 1-567 ON N501 HAY ROAD OVER SHELLPOT CREEK, CITY OF WILMINGTON	CONTRACT T201307101 / COUNTY NEW CASTLE	BRIDGE NO. 1-567A / DESIGNED BY: ZME / CHECKED BY: SBM	ABUTMENT 1 SECTIONS	AB-03 / SHEET NO. 13 / TOTAL SHTS. 50

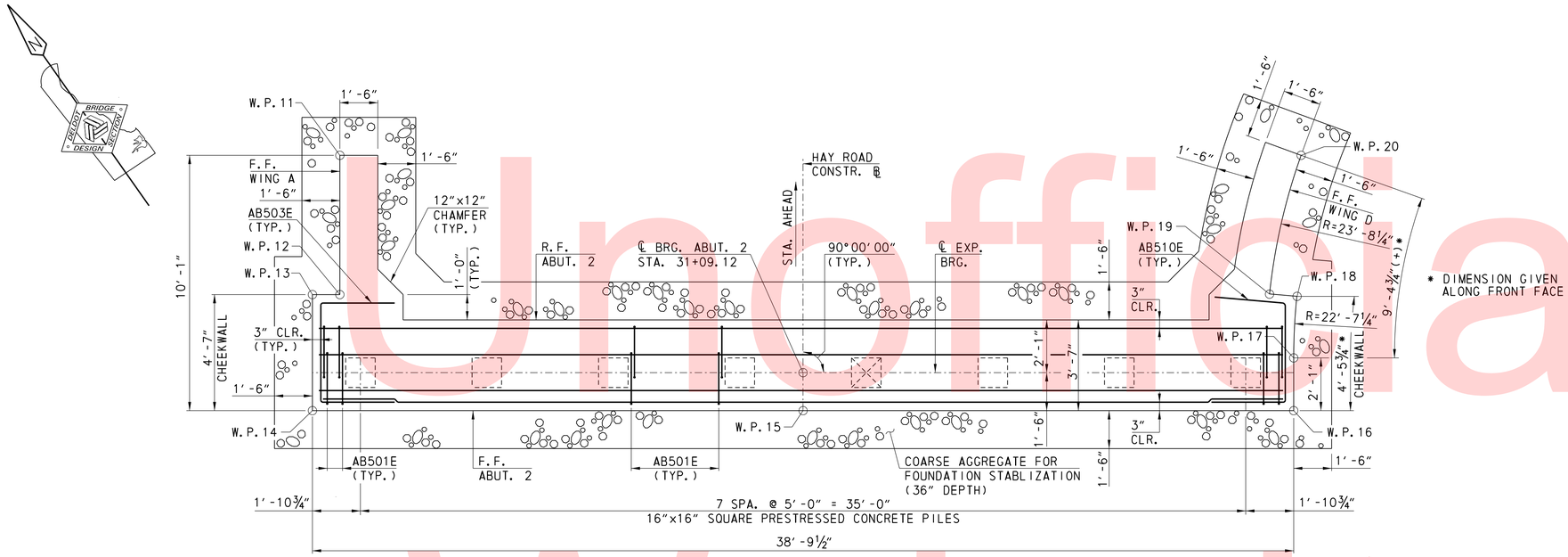

FOOTING PLAN

SCALE
0 2 4 6
FEET

Unofficial Website Copy

NOTES:
- WORK THIS SHEET WITH AB-05 AND AB-06.
- FOR WORK POINTS, SEE SHEET PE-02.
- FOR REINFORCEMENT BAR LIST, SEE SHEET BR-01.
- FOR PILE DETAILS, SEE SHEET MT-02.

LEGEND:

ABUT.	=	ABUTMENT
BRG.	=	BEARING
CONSTR.	=	CONSTRUCTION
CLR.	=	CLEAR
EXP.	=	EXPANSION
F.F.	=	FRONT FACE
R	=	RADIUS
R.F.	=	REAR FACE
SPA.	=	SPACE
STA.	=	STATION
TYP.	=	TYPICAL
W.P.	=	WORK POINT
	=	TEST PILE

AB-04

DELAWARE DEPARTMENT OF TRANSPORTATION	ADDENDUMS / REVISIONS	SCALE: AS NOTED	BR 1-567 ON N501 HAY ROAD OVER SHELLPOT CREEK, CITY OF WILMINGTON	CONTRACT T201307101	BRIDGE NO. 1-567A	ABUTMENT 2 FOOTING PLAN	SHEET NO. 14
				COUNTY NEW CASTLE	DESIGNED BY: ZME		TOTAL SHTS. 50
					CHECKED BY: SBM		

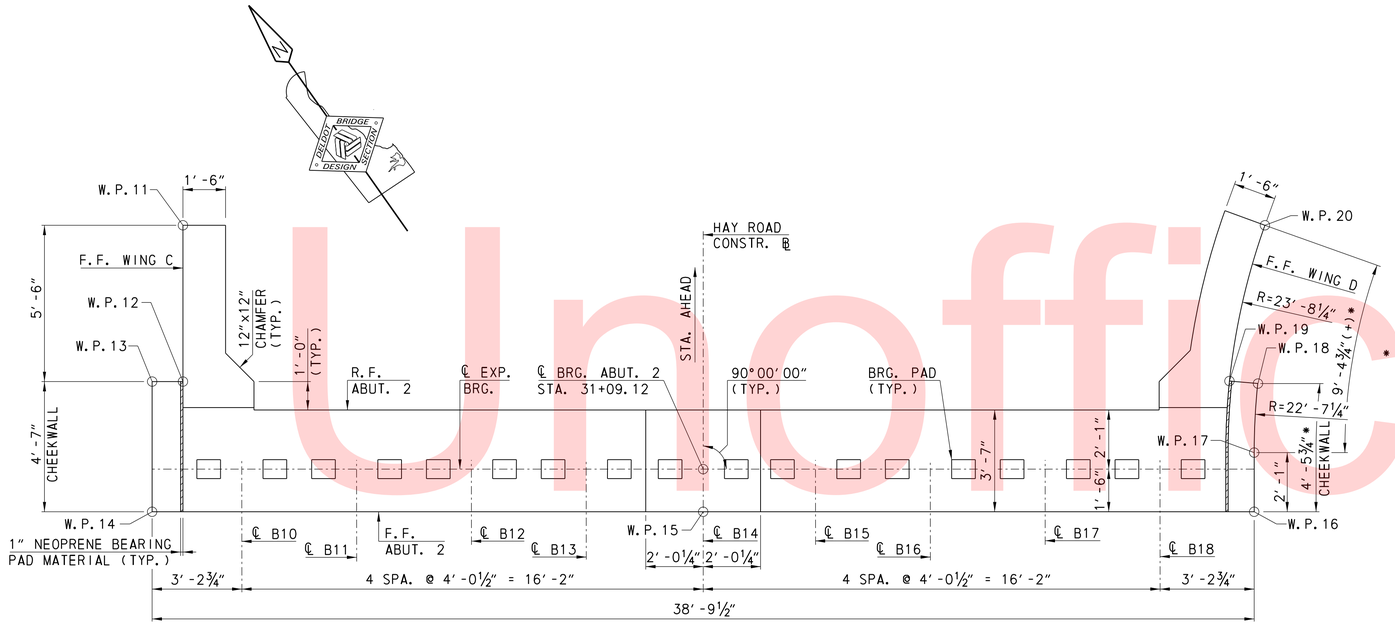

* DIMENSION GIVEN ALONG FRONT FACE

PLAN

SCALE 0 2 4 6 FEET

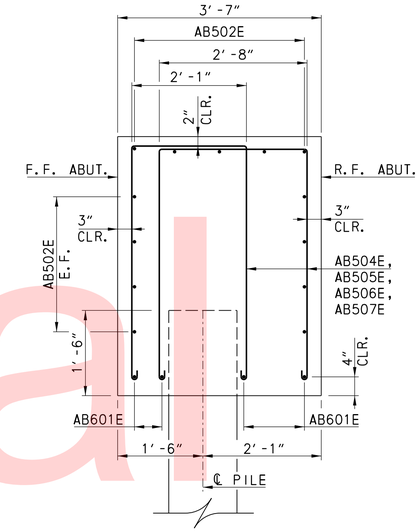

SECTION A-A

SCALE 0 1 2 3 FEET

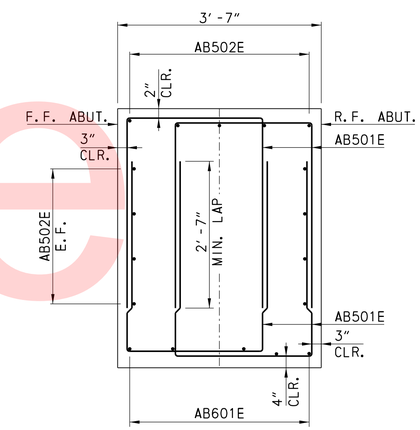

SECTION B-B

SCALE 0 1 2 3 FEET

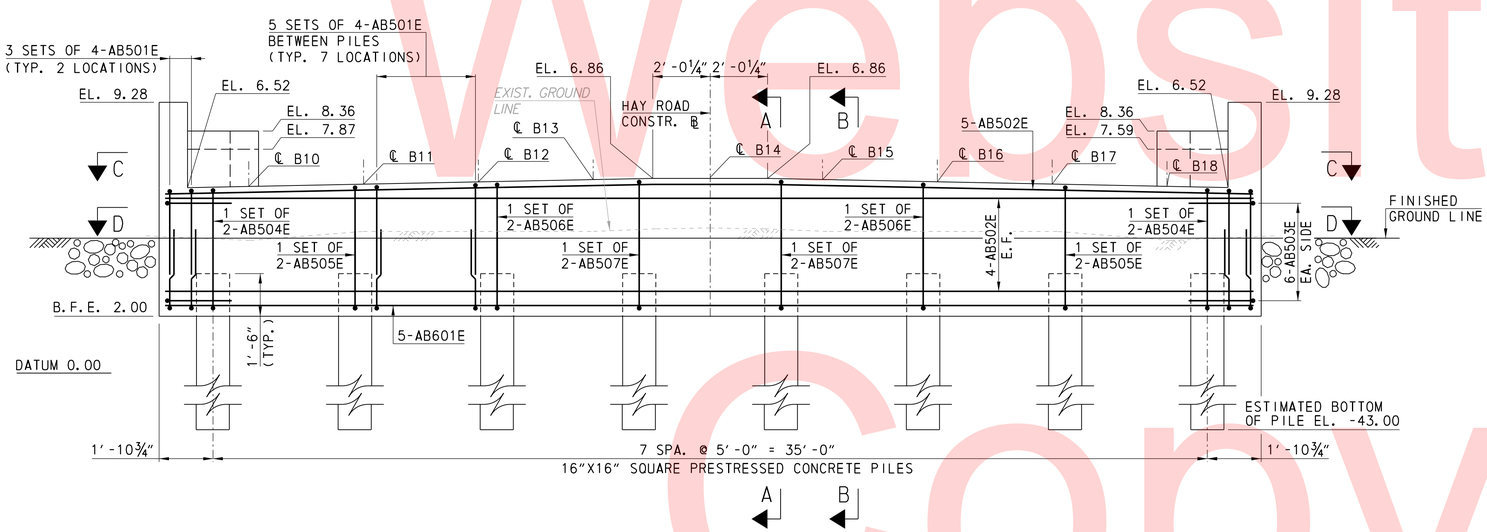

ELEVATION

SCALE 0 2 4 6 FEET

TABLE OF BRIDGE SEAT ELEVATIONS AT ℄ BEAM									
LOCATION	B10	B11	B12	B13	B14	B15	B16	B17	B18
ELEVATION	6.56	6.64	6.73	6.81	6.85	6.81	6.73	6.64	6.56

NOTES:
- FOR FOOTING PLAN, SEE SHEET AB-04.
- FOR REINFORCEMENT BAR LIST, SEE SHEET BR-01.
- FOR SECTIONS C-C AND D-D, SEE SHEET AB-06.
- FOR WORK POINTS, SEE SHEET PE-02.
- FOR PILE DETAIL, SEE SHEET MT-02.

LEGEND:

ABUT.	=	ABUTMENT
B.F.E.	=	BOTTOM OF FOOTING ELEVATION
BRG.	=	BEARING
CLR.	=	CLEAR
CONSTR.	=	CONSTRUCTION
EA.	=	EACH
E.F.	=	EACH FACE
EL.	=	ELEVATION
EXIST.	=	EXISTING
EXP.	=	EXPANSION
F.F.	=	FRONT FACE
MIN.	=	MINIMUM
R	=	RADIUS
R.F.	=	REAR FACE
SPA.	=	SPACE
STA.	=	STATION
TYP.	=	TYPICAL
W.P.	=	WORK POINT

AB-05

DELAWARE DEPARTMENT OF TRANSPORTATION

ADDENDUMS / REVISIONS

SCALE: AS NOTED

BR 1-567 ON N501 HAY ROAD OVER SHELLPOT CREEK, CITY OF WILMINGTON

CONTRACT	BRIDGE NO.	1-567A
T201307101	DESIGNED BY: ZME	
COUNTY		
NEW CASTLE	CHECKED BY: SBM	

ABUTMENT 2 PLAN, ELEVATION AND SECTIONS

SHEET NO. 15 / TOTAL SHTS. 50

Unofficial Website Copy

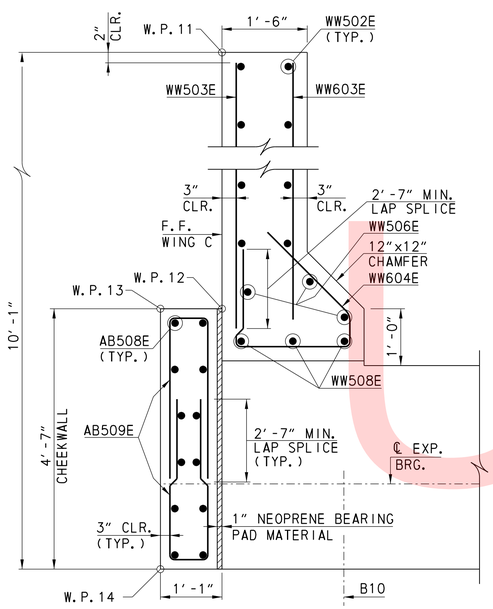

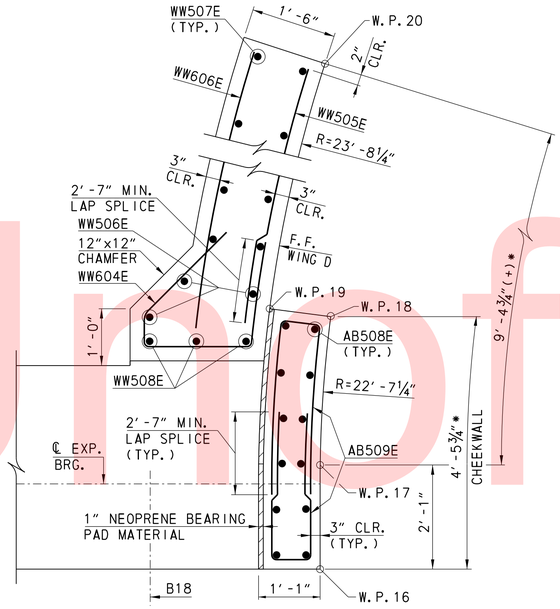

SECTION C-C

SCALE 0 1 2 3 FEET

* DIMENSION GIVEN ALONG FRONT FACE

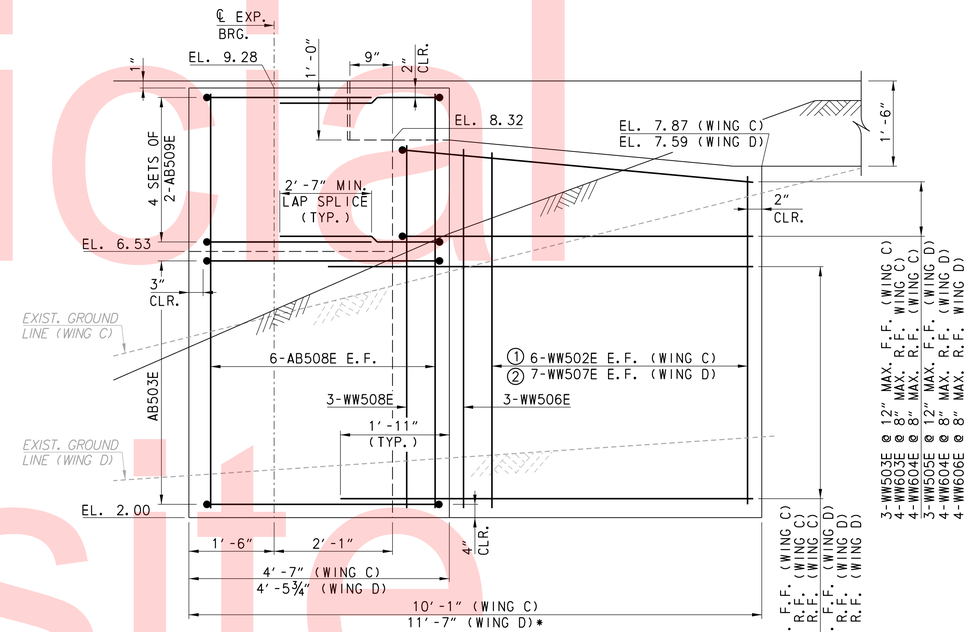

WINGWALL AND CHEEKWALL ELEVATION

(WING D SHOWN, WING C SIMILAR AND OPPOSITE HAND)

SCALE 0 1 2 3 FEET

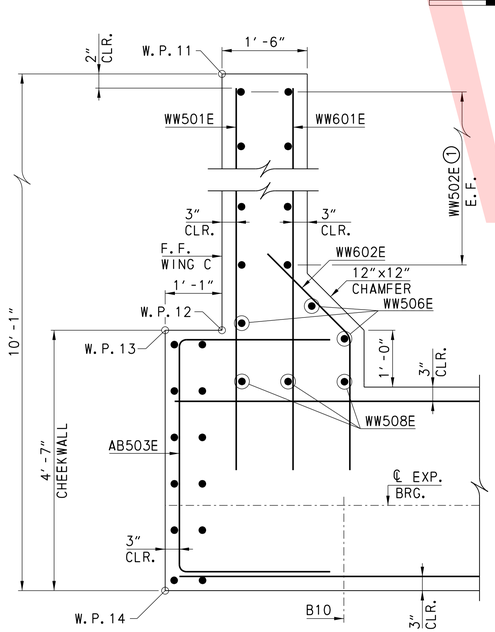

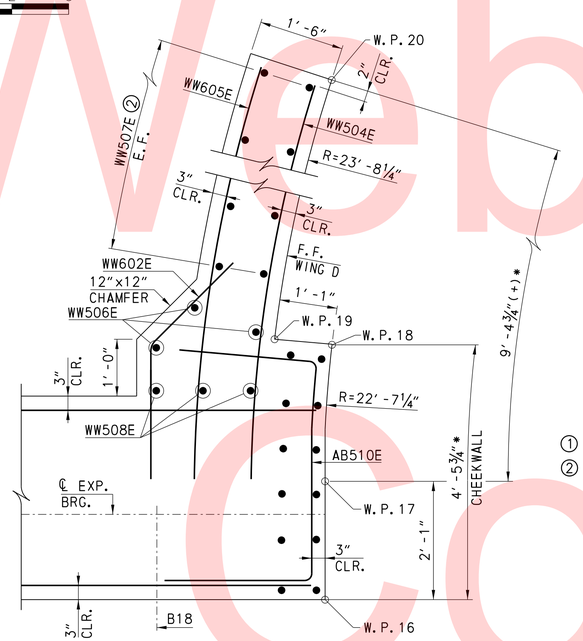

SECTION D-D

SCALE 0 1 2 3 FEET

① VARY 2 BARS EACH BY ¾" AT WING C

② VARY 2 BARS EACH BY 1" AT WING D

NOTES:

- FOR REINFORCEMENT BAR LIST, SEE SHEET BR-01.
- FOR WORK POINTS, SEE SHEET PE-02.
- WORK THIS SHEET WITH SHEETS AB-04 AND AB-05.
- FOR LOCATIONS OF SECTIONS C-C AND D-D, SEE SHEET AB-05.

LEGEND:

BRG.	=	BEARING
CLR.	=	CLEARANCE
E.F.	=	EACH FACE
EL.	=	ELEVATION
EXIST.	=	EXISTING
EXP.	=	EXPANSION
F.F.	=	FRONT FACE
MAX.	=	MAXIMUM
MIN.	=	MINIMUM
R	=	RADIUS
R.F.	=	REAR FACE
TYP.	=	TYPICAL
W.P.	=	WORK POINT

Unofficial Website Copy

AB-06

DELAWARE DEPARTMENT OF TRANSPORTATION

ADDENDUMS / REVISIONS

SCALE: AS NOTED

BR 1-567 ON N501 HAY ROAD OVER SHELLPOT CREEK, CITY OF WILMINGTON

CONTRACT	BRIDGE NO.	1-567A
T201307101	DESIGNED BY: ZME	
COUNTY		
NEW CASTLE	CHECKED BY: SBM	

ABUTMENT 2 SECTIONS

SHEET NO. 16

TOTAL SHTS. 50

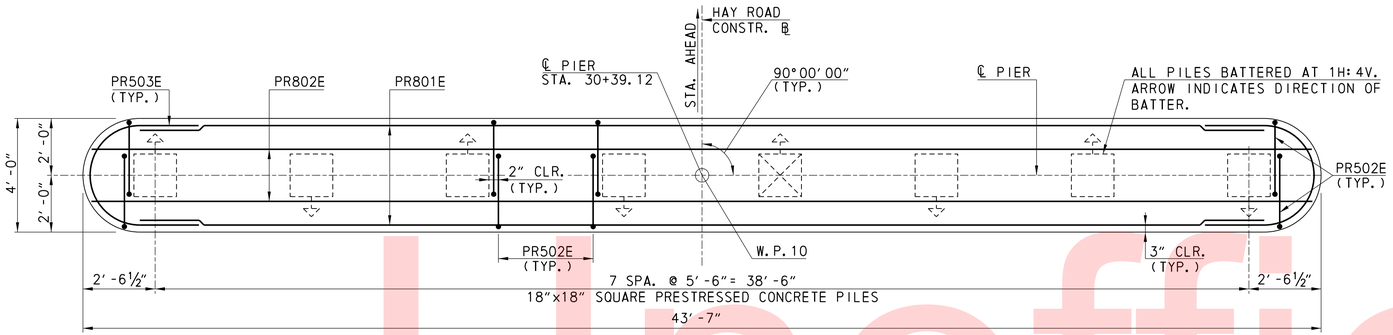

FOOTING PLAN

SCALE 0 2 4 6 FEET

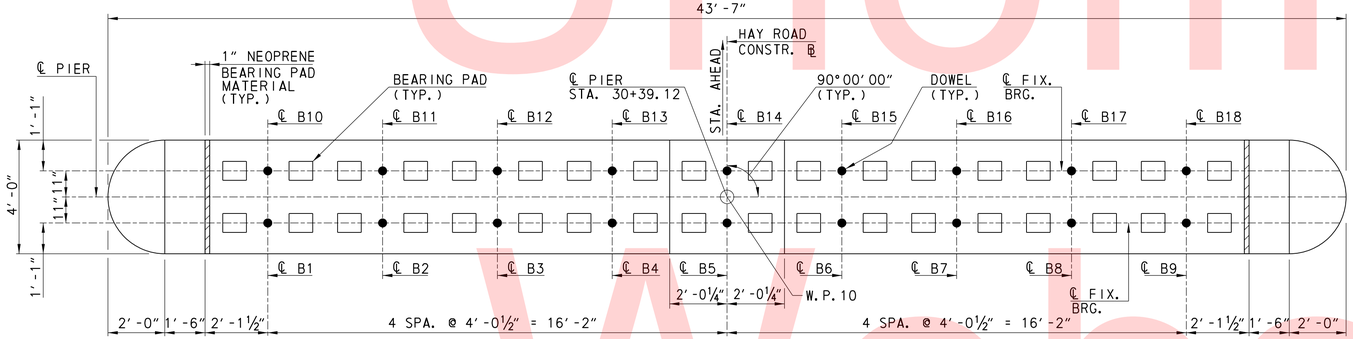

PLAN

SCALE 0 2 4 6 FEET

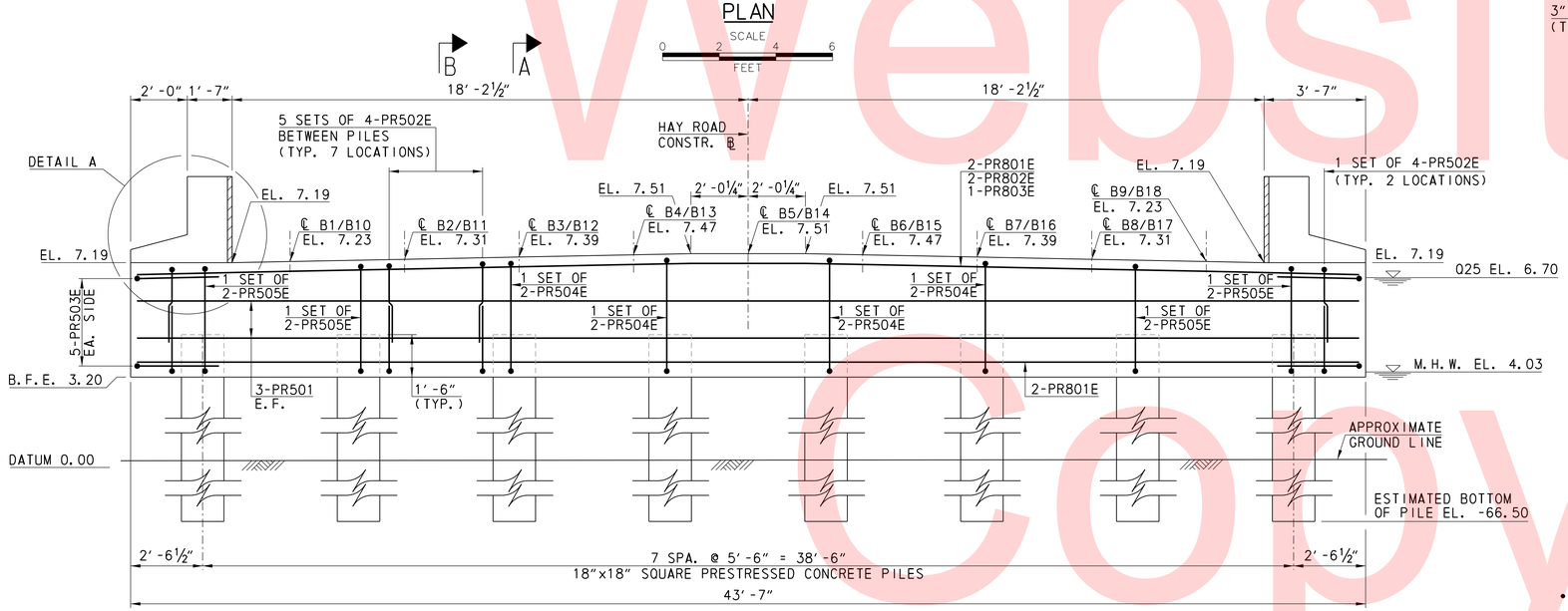

ELEVATION

SCALE 0 2 4 6 FEET

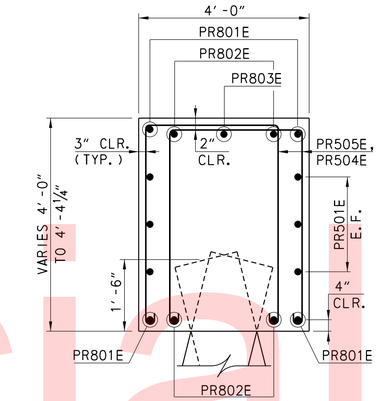

SECTION A-A

NOT TO SCALE

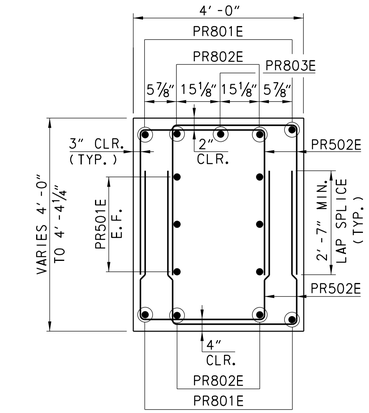

SECTION B-B

NOT TO SCALE

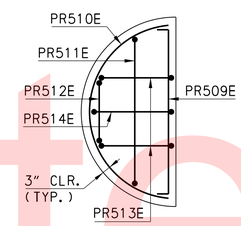

SECTION C-C

NOT TO SCALE

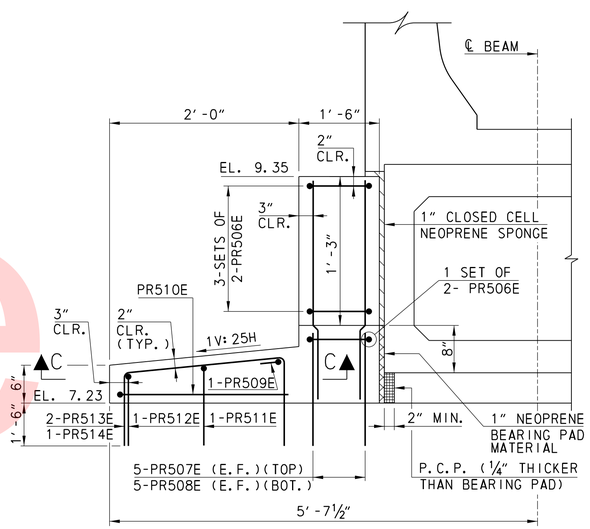

DETAIL A

NOT TO SCALE

LEGEND:

B.F.E.	=	BOTTOM OF FOOTING ELEVATION
BOT.	=	BOTTOM
BRG.	=	BEARING
CLR.	=	CLEAR
CONSTR.	=	CONSTRUCTION
EA.	=	EACH
E.F.	=	EACH FACE
EL.	=	ELEVATION
FIX.	=	FIXED
M.H.W.	=	MEAN HIGH WATER
MIN.	=	MINIMUM
P.C.P.	=	PREFORMED CELLULAR POLYSTYRENE
SPA.	=	SPACE
STA.	=	STATION
TYP.	=	TYPICAL
W.P.	=	WORK POINT
⊠	=	TEST PILE
⊡	=	BATTER PILE 1H:4V

NOTES:

- FOR REINFORCEMENT BAR LIST, SEE SHEET BR-01.
- FOR PILE DETAILS, SEE SHEET MT-02.

Unofficial Website Copy

PR-01

DELAWARE DEPARTMENT OF TRANSPORTATION

ADDENDUMS / REVISIONS

SCALE: AS NOTED

BR 1-567 ON N501 HAY ROAD OVER SHELLPOT CREEK, CITY OF WILMINGTON

CONTRACT	BRIDGE NO.	1-567A
T201307101	DESIGNED BY: ZME	
COUNTY		
NEW CASTLE	CHECKED BY: BJH	

PIER PLAN AND ELEVATION

SHEET NO.
17
TOTAL SHTS.
50

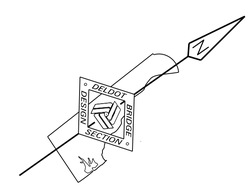

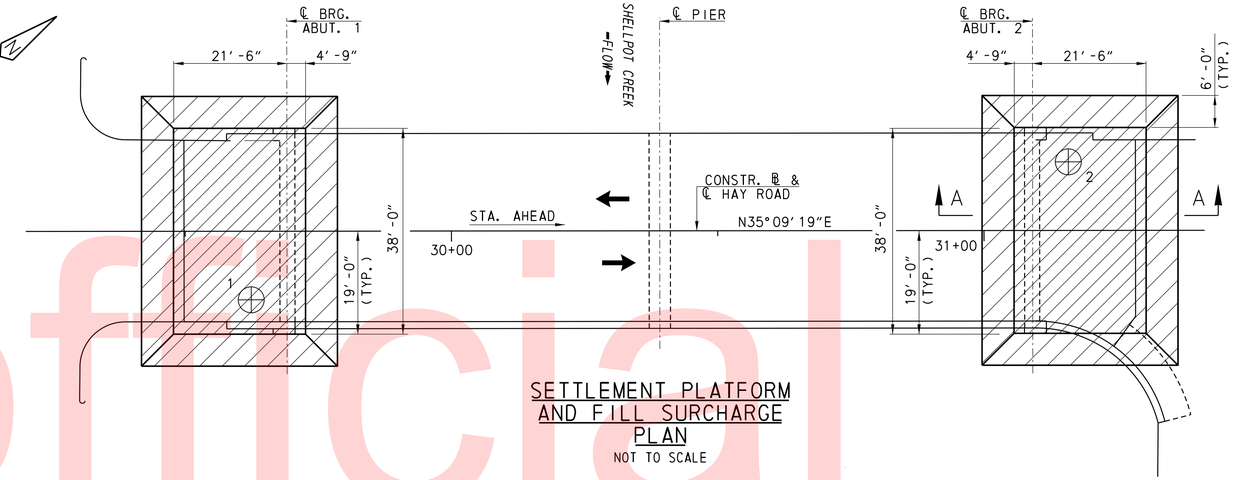

SETTLEMENT PLATFORM AND FILL SURCHARGE PLAN

NOT TO SCALE

SETTLEMENT PLATFORM LOCATION		
⊕	STATION	OFFSET (FT.)
1	29+62.50	12.8 RT.
2	31+15.80	12.8 LT.

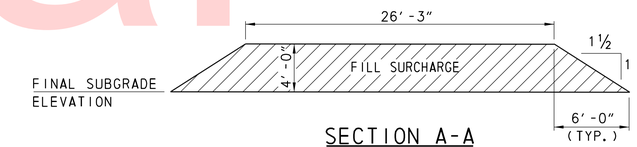

SECTION A-A

NOT TO SCALE

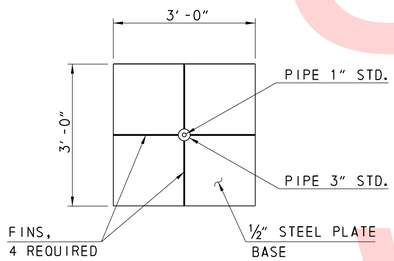

PLAN

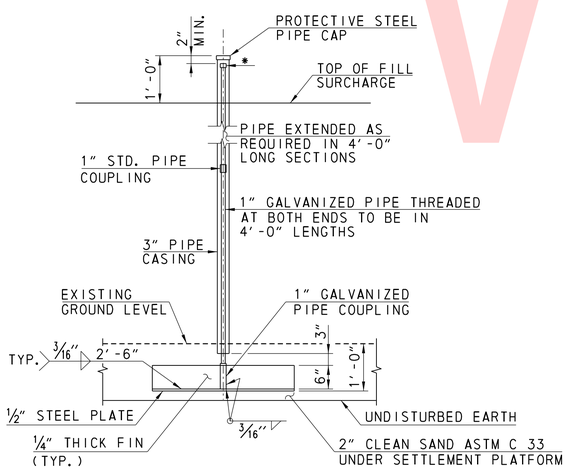

ELEVATION

* PIPE CAP WITH ¼″ DIA. ROUND HEAD STAINLESS STEEL BOLT SET SECURELY IN CAP. TACK WELD CAP TO PIPE.

SETTLEMENT PLATFORM DETAIL

NOT TO SCALE

NOTES:

1. THIS PROJECT INCLUDES THE INSTALLATION OF SETTLEMENT PLATFORMS IN SURCHARGE AREAS. THE CONTRACTOR IS REQUIRED TO OBTAIN, RECORD, COMPILE AND ANALYZE THE SETTLEMENT READINGS.
2. LOCATE SETTLEMENT PLATFORMS HORIZONTALLY AND VERTICALLY AT THE DIRECTION OF THE ENGINEER. PROVIDE A TEMPORARY BENCHMARK FOR THE MONITORING OF THIS WORK. LOCATE THE BENCHMARKIN A PROTECTED AREA OUTSIDE OF THE AREA OF ANTICIPATED SETTLEMENT.
3. ALLOW A MINIMUM OF 45 DAYS QUARANTINE PERIOD FOR SETTLEMENT MONITORING.
4. BEGIN THE QUARANTINE PERIOD WHEN THE SETTLEMENT PLATFORMS ARE COMPLETELY CONSTRUCTED. SEE SPECIAL PROVISION 202505. THE ENGINEER WILL DETERMINE THE DURATION OF THE QUARANTINE PERIOD BASED ON THE SETTLEMENT READINGS.
5. THE ENGINEER WILL NOTIFY THE CONTRACTOR, IN WRITING, WHEN THE QUARANTINE PERIOD CAN BE LIFTED AND WILL BE BASED ON THE RESULTS OF THE SETTLEMENT READINGS.
6. THE INFORMATION DERIVED FROM THE SETTLEMENT PLATFORMS WILL BE USED AS A GUIDE TO DETERMINE HOW LONG THE WAITING PERIOD WILL BE.
7. PROVIDE QUALIFIED PERSONNEL WITH EXPERIENCE IN SETTLEMENT MONITORING AND THE NECESSARY EQUIPMENT AND MATERIALS TO OBTAIN, RECORD, COMPILE AND ANALYZE THE VERTICAL SETTLEMENT READINGS AS SPECIFIED OR DIRECTED. SEE SPECIAL PROVISION 202505.
8. OBTAIN WRITTEN APPROVAL OF THE ENGINEER BEFORE FIRST (INITIAL) SETTLEMENT READING AND COORDINATE SUBSEQUENT READINGS. PROVIDE THE RESULTS WITHIN 24 HOURS AFTER THE READINGS ARE OBTAINED IN A FORMAT SUCH THAT IMMEDIATE EVALUATION OF THE CONDITIONS CAN BE MADE.
9. TAKE READINGS AT EACH OF THE LOCATIONS IMMEDIATELY AFTER CONSTRUCTION OF THE SURCHARGE AND THE SETTLEMENT PLATFORMS ARE INSTALLED.
10. TAKE READINGS AT THE INTERVALS AS SPECIFIED.
11. DO NOT ALLOW CONSTRUCTION ACTIVITY, OTHER THAN MONITORING, WITHIN THE QUARANTINE AREAS DURING THE QUARANTINE TIME PERIOD.

LEGEND:

ABUT. = ABUTMENT
BRG. = BEARING
CONSTR. = CONSTRUCTION
DIA. = DIAMETER
MIN. = MINIMUM
STA. = STATION
STD. = STANDARD
TYP. = TYPICAL

Unofficial Website Copy

MT-01

DELAWARE DEPARTMENT OF TRANSPORTATION	ADDENDUMS / REVISIONS	SCALE: AS NOTED	BR 1-567 ON N501 HAY ROAD OVER SHELLPOT CREEK, CITY OF WILMINGTON	CONTRACT T201307101	BRIDGE NO. 1-567A	MISCELLANEOUS DETAILS – 1	SHEET NO. 18
				COUNTY NEW CASTLE	DESIGNED BY: SJM		TOTAL SHTS. 50
					CHECKED BY: CC-C		

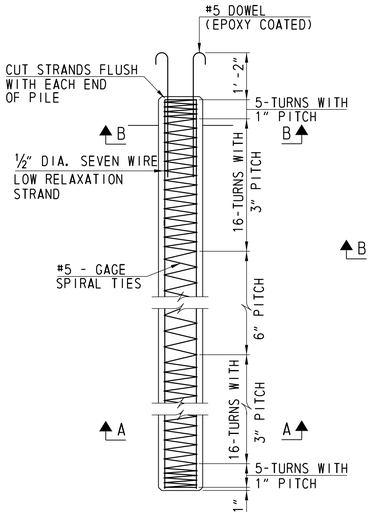

PRECAST PRESTRESSED CONCRETE PILE DETAILS

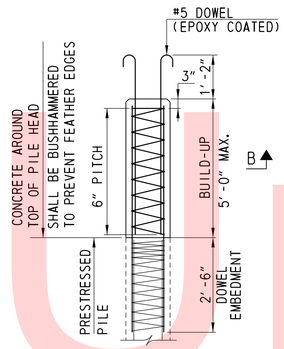

PILE BUILT-UP DETAIL

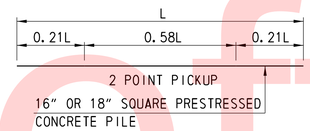

PILE PICKUP DATA

NOT TO SCALE

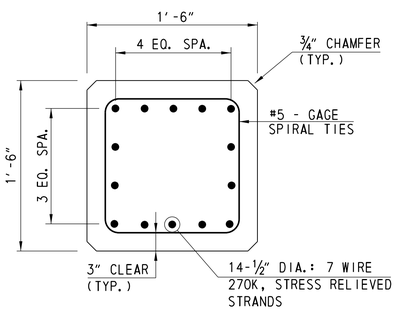

SECTION A-A

(SQUARE PILE)

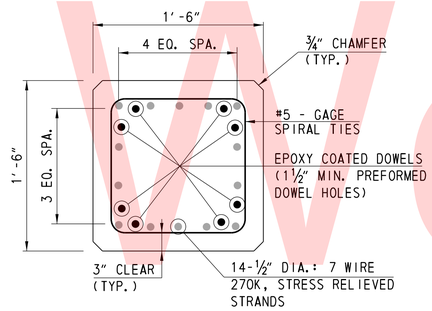

SECTION B-B

(SQUARE PILE)

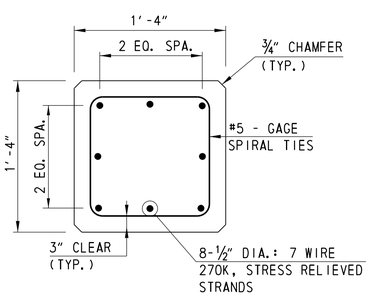

SECTION A-A

(SQUARE PILE)

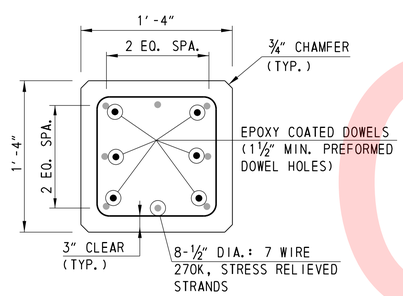

SECTION B-B

(SQUARE PILE)

PILE INSTALLATION DATA*						
SUBSTR. UNIT	PILE TYPE	NOMINAL PILE DRIVING RESISTANCE (Rndr)(KIPS)	ESTIMATED TIP ELEVATION	MINIMUM TIP ELEVATION	AVERAGE ACTUAL MINIMUM TIP ELEVATION	AVERAGE ACTUAL MAXIMUM TIP ELEVATION
ABUT. 1	16"x16" S.P.P.C.P.	305	-37.00			
PIER	18"x18" S.P.P.C.P.	499	-66.50			
ABUT. 2	16"x16" S.P.P.C.P.	305	-43.00			

PILE DRIVING INFORMATION*			
PILE SIZE AND TYPE		16" S.P.P.C.P.	18" S.P.P.C.P.
ACTUAL BEARING OBTAINED	ABUT. 1		
	PIER		
	ABUT. 2		
HAMMER TYPE	ABUT. 1		
	PIER		
	ABUT. 2		
PILE HAMMER ENERGY	ABUT. 1		
	PIER		
	ABUT. 2		
SPECIAL DRIVING CONDITIONS AND COMMENTS	ABUT. 1		
	PIER		
	ABUT. 2		

* CONTRACTOR TO PROVIDE DATA

PILE NOTES

1. ALL PILES SHALL BE 16" SQUARE PRECAST PRESTRESSED CONCRETE PILES AND 18" SQUARE PRECAST PRESTRESSED CONCRETE PILES.
2. ALL PILES SHALL BE DRIVEN TO THE NOMINAL PILE DRIVING RESISTANCE (Rndr), LISTED IN THE PILE INSTALLATION DATA TABLE, OR REFUSAL AS DEFINED IN SECTION 619 OF THE DELAWARE DEPARTMENT OF TRANSPORTATION STANDARD SPECIFICATIONS, AUGUST 2001, AND ADDENDUMS.
3. TEST PILES SHALL BE DYNAMICALLY TESTED BY THE CONTRACTOR IN ACCORDANCE WITH SPECIAL PROVISION 619519. THE NEED TO RESTRIKE EITHER A TEST PILE OR A PRODUCTION PILE SHALL BE THE SOLE DECISION OF THE ENGINEER.
4. THE CONTRACTOR SHALL BE RESPONSIBLE FOR SUBMITTING A WAVE EQUATION ANALYSIS AND ALL OTHER INCIDENTALS IN ACCORDANCE WITH THE PROJECT SPECIFICATIONS. THE WAVE EQUATION AND HIGH-STRAIN DYNAMIC PILE TESTING MUST BE SIGNED AND STAMPED BY A PROFESSIONAL ENGINEER LICENSED IN THE STATE OF DELAWARE IN ACCORDANCE WITH THE PROJECT SPECIFICATIONS.

5a. A QUARANTINE PERIOD IS REQUIRED AFTER THE CONSTRUCTION OF THE FILL SURCHARGE AT THE ABUTMENTS IS COMPLETED. SEE SHEET MT-01. DO NOT DRIVE PILES UNTIL AFTER COMPLETION OF THE QUARANTINE PERIOD.

5b. AFTER THE SETTLEMENT HAS BEEN ACHIEVED AND THE QUARANTINE AREA HAS BEEN RELEASED BY THE ENGINEER. OVEREXCAVATE AND PLACE COARSE AGGREGATE FOR FOUNDATION STABILIZATION. SEE SHEETS PE-01, AB-01 AND AB-04. DRIVE TEST PILE AND PERFORM DYNAMIC TESTING. RESTRIKE TEST PILE AS DIRECTED BY THE ENGINEER. PRODUCTION PILES MAY NOT BE INSTALLED UNTIL AFTER DRIVING THE TEST PILE.

6. A MINIMUM OF ONE (1) TEST PILE PER SUBSTRUCTURE, AS SHOWN ON THE PLANS, SHALL BE DYNAMICALLY TESTED BY THE CONTRACTOR IN ACCORDANCE WITH SPECIAL PROVISION 619519. TEST AND PRODUCTION PILE RESTRIKES WILL BE PAID AS FOLLOWS:
   a). ALL TEST PILE(S) WILL BE RESTRUCK AFTER A WAITING PERIOD OF AT LEAST 48 HOURS. TEST PILE RESTRIKES SHALL BE INCIDENTAL TO THE INITIAL INSTALLATION OF THE PILE PROVIDED THEY ARE REQUESTED WITHIN FIVE WORKING DAYS FROM THE COMPLETION OF THE INITIAL DRIVE. IF TEST PILE RESTRIKES ARE REQUESTED AFTER THE FIVE WORKING DAYS FROM THE COMPLETION OF THE INITIAL DRIVE THEN THE TEST PILE RESTRIKE SHALL BE PAID AS NOTED IN SPECIAL PROVISION 619502 TEST PILE RESTRIKE.
   b). IF DIRECTED BY THE ENGINEER TO RESTRIKE A PRODUCTION PILE, THE RESTRIKE BEYOND THE FIRST TEN (10) PRODUCTION PILE RESTRIKES SHALL BE PAID SEPARATELY UNDER ITEM 619501 PRODUCTION PILE RESTRIKE. THE FIRST TEN (10) PRODUCTION PILE RESTRIKES SHALL BE PAID IN ACCORDANCE WITH SECTION 619.14.
   c). DYNAMIC TESTING OF PRODUCTION PILE RESTRIKES SHALL BE PAID UNDER ITEM 619519 DYNAMIC PILE TESTING BY CONTRACTOR.
7. THE DEPARTMENT RESERVES THE RIGHT TO REQUIRE DYNAMIC TESTING OF RESTRIKES.
8. USE TYPE II (SULPHATE RESISTANT) CEMENT FOR ALL PRECAST-PRESTRESSED CONCRETE PILES.

16" SQUARE PRECAST PRESTRESSED CONCRETE PILES (S.P.P.C.P.)

A. THE ESTIMATED PILE LENGTH = 41'-0" (ABUT. 1) / 47'-0" (ABUT. 2)
B. THE ESTIMATED TEST PILE LENGTH = 51'-0" (ABUT. 1) / 57'-0" (ABUT. 2)
C. MINIMUM GROUT COMPRESSIVE STRENGTH F'c = 6,000 psi.
DOWEL HOLES SHALL BE POSITIONED TO MAINTAIN 1" CLEAR TO ALL PRESTRESSING STRANDS IN THE CONCRETE PILE.
PREFORMED HOLES SHALL BE FREE OF ANY OBSTRUCTIONS BEFORE GROUTING WITH AN APPROVED NON-SHRINK GROUT.
D. THE CAST-IN-PLACE CONCRETE PILE BUILD-UP SHALL BE USED WHERE PILES MUST BE DRIVEN TO AN ELEVATION WHICH RESULTS IN THE TOP OF PILE BEING LOWER THAN THE BOTTOM OF CAP TO ACHIEVE THE REQUIRED NOMINAL RESISTANCE. PILE BUILD-UP WILL BE MEASURED AND PAID FOR IN CONFORMANCE WITH SECTION 618 OF THE DELAWARE DEPARTMENT OF TRANSPORTATION STANDARD SPECIFICATIONS. MINIMUM COMPRESSIVE STRENGTH F'c = 6,000 psi.

18" SQUARE PRECAST PRESTRESSED CONCRETE PILES (S.P.P.C.P.)

A. THE ESTIMATED PILE LENGTH = 74'-0"
B. THE ESTIMATED TEST PILE LENGTH = 84'-0"
C. MINIMUM GROUT COMPRESSIVE STRENGTH F'c = 6,000 psi.
DOWEL HOLES SHALL BE POSITIONED TO MAINTAIN 1" CLEAR TO ALL PRESTRESSING STRANDS IN THE CONCRETE PILE.
PREFORMED HOLES SHALL BE FREE OF ANY OBSTRUCTIONS BEFORE GROUTING WITH AN APPROVED NON-SHRINK GROUT.
D. THE CAST-IN-PLACE CONCRETE PILE BUILD-UP SHALL BE USED WHERE PILES MUST BE DRIVEN TO AN ELEVATION WHICH RESULTS IN THE TOP OF PILE BEING LOWER THAN THE BOTTOM OF CAP TO ACHIEVE THE REQUIRED NOMINAL RESISTANCE. PILE BUILD-UP WILL BE MEASURED AND PAID FOR IN CONFORMANCE WITH SECTION 618 OF THE DELAWARE DEPARTMENT OF TRANSPORTATION STANDARD SPECIFICATIONS. MINIMUM COMPRESSIVE STRENGTH F'c = 6,000 psi.

LEGEND:

ABUT.	=	ABUTMENT
DIA.	=	DIAMETER
EQ.	=	EQUAL
MAX.	=	MAXIMUM
MIN.	=	MINIMUM
SPA.	=	SPACE
S.P.P.C.P.	=	SQUARE PRECAST PRESTRESSED CONCRETE PILE
SUBSTR.	=	SUBSTRUCTURE
TYP.	=	TYPICAL

Unofficial Website Copy

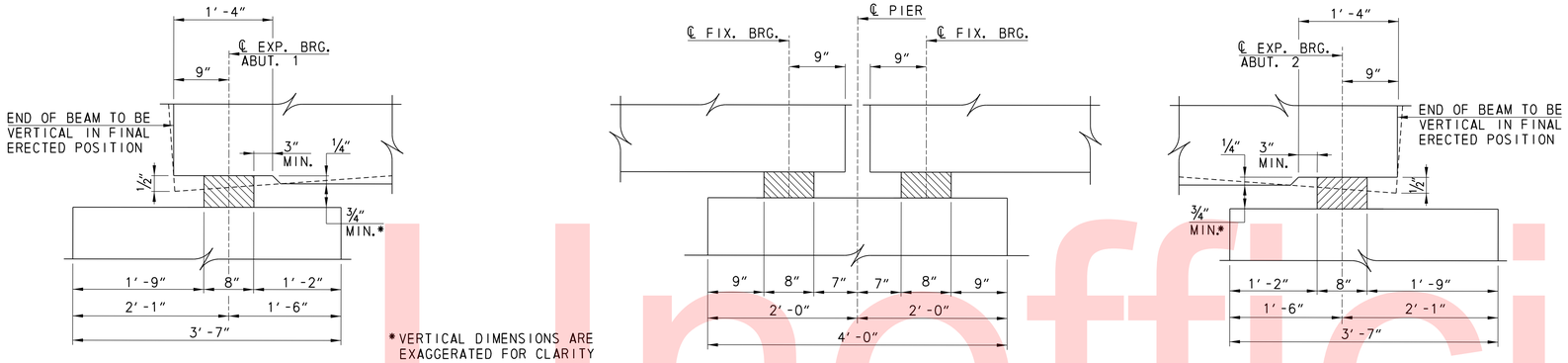

BEAM DAP DETAILS

NOT TO SCALE

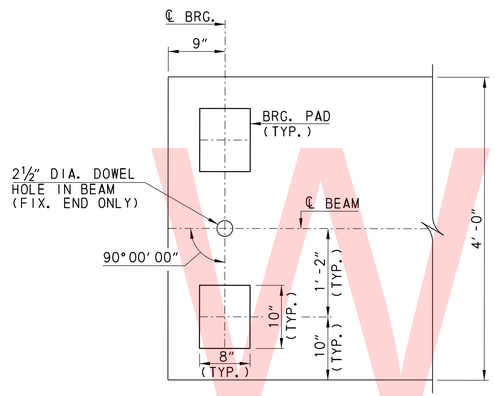

PLAN

NOT TO SCALE

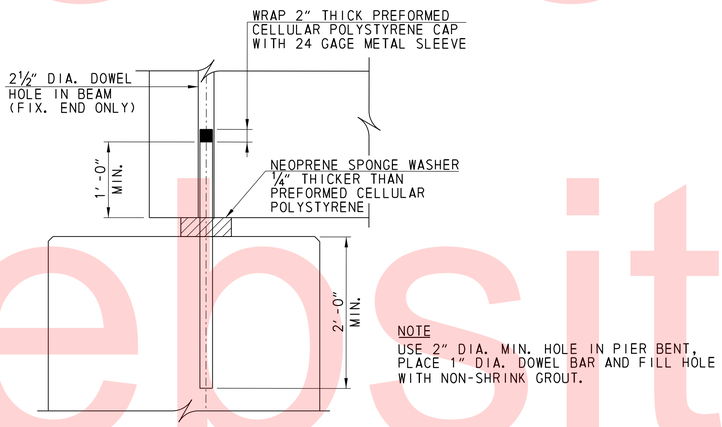

NOTE

USE 2" DIA. MIN. HOLE IN PIER BENT, PLACE 1" DIA. DOWEL BAR AND FILL HOLE WITH NON-SHRINK GROUT.

DOWEL DETAIL

NOT TO SCALE

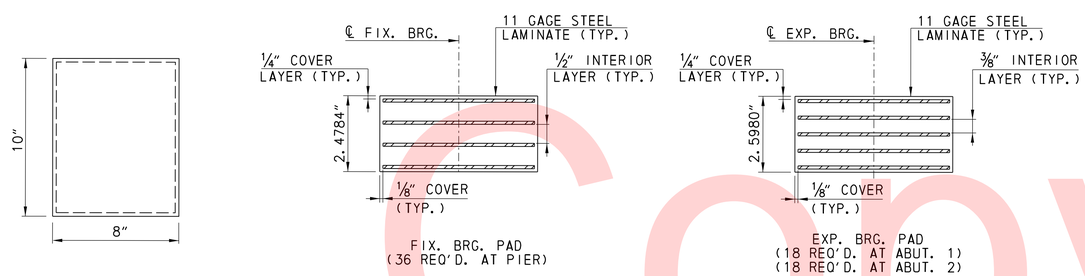

LAMINATED ELASTOMERIC BEARING PAD DETAILS

NOT TO SCALE

BEAM NOTES

- GIRDERS ARE PRESTRESSED ADJACENT BOX BEAM SIZE 24" DEEP BY 48" WIDE.
- CONCRETE STRENGTH AT STRAND RELEASE (f'ci) = 6.8 ksi
- CONCRETE STRENGTH AT 28 DAYS (f'c) = 8.0 ksi
  JACKING PRESTRESS STRESS (f pj) PER STRAND = 202.50 ksi
  USE LOW RELAXATION 270 ksi, 0.6" DIAMETER STRANDS (A = 0.217 in^2)
- MINIMUM COVER ON REINFORCEMENT BARS:
  STIRRUPS - 1" MIN.
  ALL OTHERS - 1½" MIN. UNLESS OTHERWISE NOTED
- PROVIDE MILD STEEL REINFORCEMENT CONFORMING TO AASHTO M31, GRADE 60.
- END ZONE REINFORCEMENT MAY BE INCREASED BY FABRICATOR TO REFLECT FABRICATOR'S EXPERIENCE AND/OR TO CONTROL CRACKING. WIRE MESH OF EQUIVALENT AREA IS PERMISSIBLE FOR CRACK CONTROL REINFORCEMENT.
- CAST ENDS OF BEAMS TO BE TRULY VERTICAL IN FINAL ERECTED POSITION.
- CLEAN TOP OF BEAMS BEFORE DECK SLAB IS PLACED.
- SHOW PLAN, ELEVATION, SECTIONS AND ALL REINFORCEMENT DETAILS ON SHOP DRAWINGS.
- SHOW DESIGN LENGTH AND CASTING LENGTH ON SHOP DRAWINGS.
- SHOW DETAILS OF GIRDER LIFTING DEVICES WITH ITS TYPE, SIZE AND LOCATION ON THE SHOP DRAWINGS.
- AT THE SHOP DRAWING STAGE PROVIDE CRACK CONTROL DEBONDING.
- SHOW ON THE SHOP DRAWINGS THE TYPE AND LOCATION OF TEMPORARY STORAGE SUPPORT AND THE TYPE AND LOCATION OF TEMPORARY TRANSPORTATION BRACING AND SUPPORTS.
- SHOW ANY MODIFICATIONS TO REINFORCEMENT SPLICE AND BENDING DETAILS ON SHOP DRAWINGS.
- ALL MILD STEEL REINFORCEMENT IN GIRDERS SHALL BE EPOXY COATED.
- GIRDER LENGTHS IN CASTING BED SHALL BE DETERMINED AND DEPICTED IN SHOP DRAWINGS TO COMPENSATE FOR GRADE SHORTENING DUE TO PRESTRESS EFFECT.
- TOP SURFACE OF ALL GIRDERS SHALL BE ROUGH FINISHED TO A FULL AMPLITUDE OF 1/4" AND SCRUBBED TRANSVERSELY WITH A COARSE WIRE BRUSH TO REMOVE ALL LAITANCE AND TO PRODUCE A ROUGHENED SURFACE FOR BONDING.
- NO CLEAR COVER LESS THAN AS SHOWN ON THESE PLANS WILL BE ACCEPTED.
- PREFORMED CELLULAR POLYSTYRENE, METAL SLEEVE AND NEOPRENE SPONGE WASHER ARE INCIDENTAL TO ITEM 623002 PRESTRESSED REINFORCED CONCRETE MEMBERS, BOX BEAMS.

BEARING PAD NOTES

- SMOOTH CUT AND DEBURR METAL SHIMS.
- GRIT BLAST AND DEGREASE METAL SHIMS.
- ALL BEARING PADS ARE TO BE MOLDED TO DESIGN DIMENSIONS. CUTTING TO SIZE AFTER FABRICATION IS PROHIBITED.
- MEET THE MATERIAL SPECIFICATIONS FOR ELASTOMERIC BEARING REQUIREMENTS OF AASHTO M251. BEARING PADS SHALL BE SAMPLED FOR TESTING ACCORDING TO AASHTO M251, AS DIRECTED.
- PROVIDE NEOPRENE 50 ±5 DUROMETER.
- PROVIDE INTERNAL SHIMS PER AASHTO M270, GRADE 36.
- VULCANIZE PATCH PIN GROOVES.
- SANDBLAST CLEAN THE CONCRETE BEARING SURFACES TO ACHIEVE A ROUGH TEXTURE. DO NOT EPOXY COAT BEARING SURFACES.
- BEARING PADS ARE INCIDENTAL TO ITEM 623002 PRESTRESSED REINFORCED CONCRETE MEMBERS, BOX BEAMS.

LEGEND:

ABUT.	=	ABUTMENT
BRG.	=	BEARING
DIA.	=	DIAMETER
EXP.	=	EXPANSION
FIX.	=	FIXED
MIN.	=	MINIMUM
REQ'D.	=	REQUIRED
TYP.	=	TYPICAL

Unofficial Website Copy

DELAWARE DEPARTMENT OF TRANSPORTATION	ADDENDUMS / REVISIONS	SCALE: AS NOTED	BR 1-567 ON N501 HAY ROAD OVER SHELLPOT CREEK, CITY OF WILMINGTON	CONTRACT T201307101	BRIDGE NO. 1-567A	BEAM NOTES AND BEARING DETAILS
				COUNTY NEW CASTLE	DESIGNED BY: ZME	
					CHECKED BY: BJH	

BB-01

SHEET NO. 20

TOTAL SHTS. 50

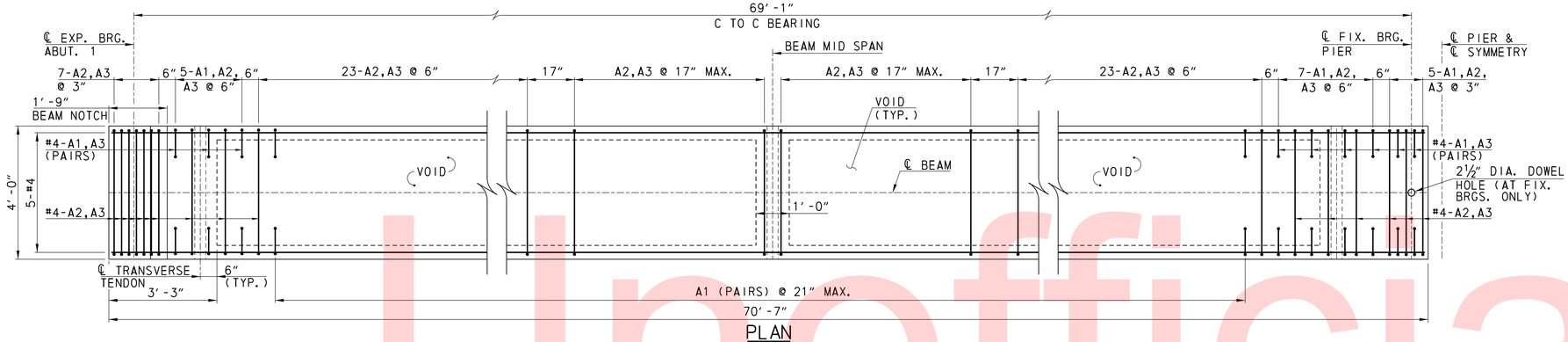

PLAN

SCALE 0 2 4 6 FEET

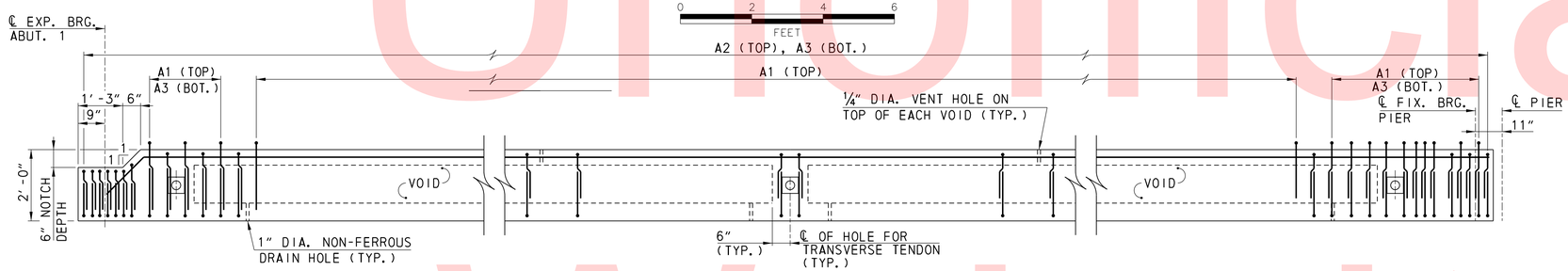

ELEVATION

SCALE 0 2 4 6 FEET

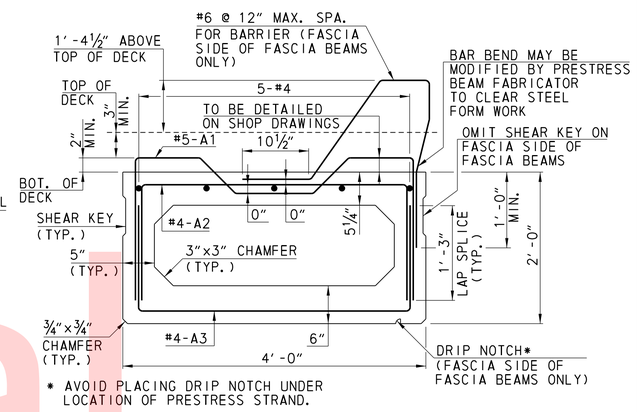

TYPICAL SECTION

SCALE 0 1 2 3 FEET

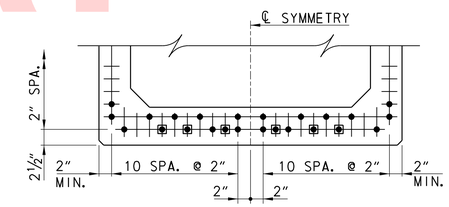

● STRAND LOCATION
▣ DEBOND LENGTH = 3'-3" FROM BEAM ENDS

TYPICAL STRAND GRID

SCALE 0 1 2 3 FEET

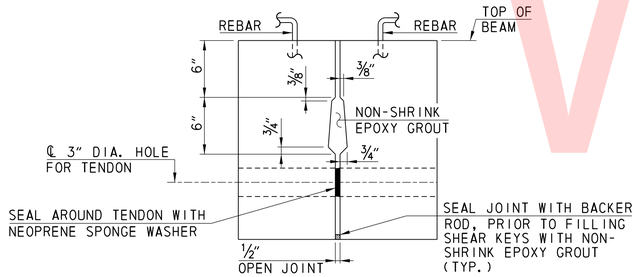

SHEAR KEY DETAIL

NOT TO SCALE

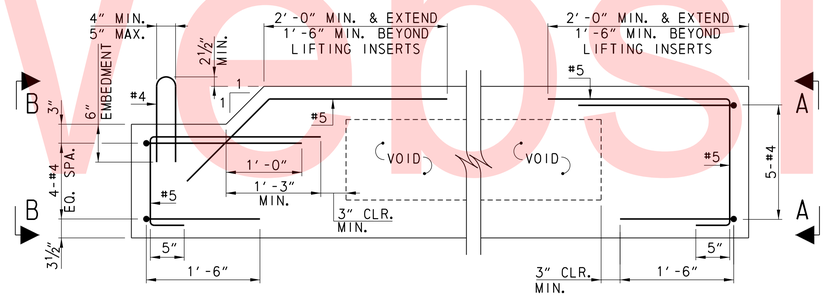

EXP. END — END ELEVATION — FIX. END

NOT TO SCALE

ADJACENT BOX BEAM TRANSVERSE POST-TENSIONING DETAIL NOTES

- TENDONS TO BE 0.6" DIA. STRANDS, 270 ksi POLYSTRAND OR AN APROVED EQUAL AND TO BE TENSIONED TO A FORCE OF 40,000 lbs 24 HOURS AFTER THE PLACEMENT OF THE SHEAR KEYS BUT NOT BEFORE THE GROUT HAS OBTAINED ITS MINIMUM STRENGTH OF 2500 psi. TIGHTEN TENDON AT CENTERLINE OF SPAN FIRST AND THEN PROGRESS TOWARD ENDS OF BEAM.
- TENSION THE TENDONS IN ACCORDANCE WITH SPECIFICATIONS.
- PLUG ¼" DIA. VENT HOLE WITH NON-SHRINK GROUT AFTER REMOVAL OF BEAMS FROM THE FORMS.
- FORM TENDON HOLES WITH NONMETALLIC PIPE.
- PROVIDE SILICONE SEALANT MATERIAL IN ACCORDANCE WITH SPECIFICATIONS.
- FOR SHEAR KEY CLEANING AND GROUTING, OMIT SOAKING JOINTS WITH WATER, SPADING GROUT AND OVERFILLING THE SHEAR KEYS DUE TO THE USE OF NON-SHRINK EPOXY GROUT.
- PROVIDE NON-SHRINK EPOXY GROUT FOR SHEAR KEYS. USE EPOXY GROUT WITHIN THE SHELF LIFE AND TEMPERATURE LIMITATIONS SET BY THE MANUFACTUER. CURE THE EPOXY GROUT IN ACCORDANCE WITH MANUFACTURER'S RECOMMENDATIONS. DO NOT PERMIT CONSTRUCTION ACTIVITY OR OTHER LOADINGS ON BRIDGE FOR AT LEAST 24 HOURS AFTER SHEAR KEY EPOXY GROUT HAS BEEN PLACED.

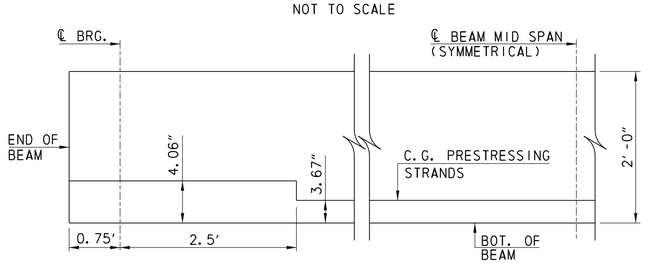

DEBONDING DIAGRAM

NOT TO SCALE

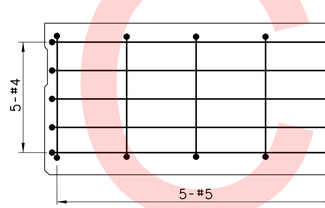

SECTION A-A

SCALE 0 1 2 3 FEET

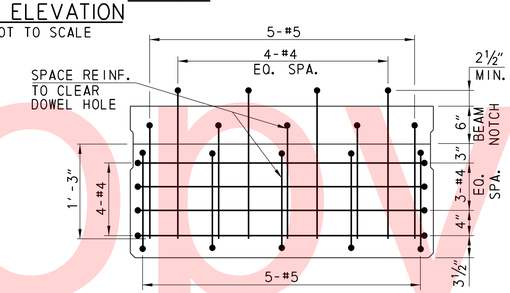

SECTION B-B

SCALE 0 1 2 3 FEET

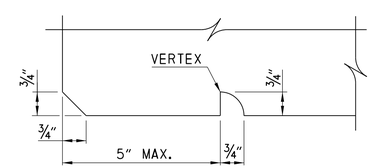

DRIP NOTCH DETAIL

NOT TO SCALE

NOTES:

- FOR DOWEL DETAIL, SEE SHEET BB-01.
- FOR TENDON PLACEMENT, SEE SHEET FR-01.
- FOR BEAM NOTES, SEE SHEET BB-01.

LEGEND

ABUT.	=	ABUTMENT
BOT.	=	BOTTOM
BRG.	=	BEARING
C TO C	=	CENTER TO CENTER
CLR.	=	CLEAR
C.G.	=	CENTER OF GRAVITY
DIA.	=	DIAMETER
EQ.	=	EQUAL
EXP.	=	EXPANSION
FIX.	=	FIXED
MAX.	=	MAXIMUM
MIN.	=	MINIMUM
REINF.	=	REINFORCEMENT
SPA.	=	SPACING
TYP.	=	TYPICAL

BM-01

DELAWARE DEPARTMENT OF TRANSPORTATION

ADDENDUMS / REVISIONS

SCALE: AS NOTED

BR 1-567 ON N501 HAY ROAD OVER SHELLPOT CREEK, CITY OF WILMINGTON

CONTRACT	BRIDGE NO.	1-567A
T201307101	DESIGNED BY: ZME	
COUNTY		
NEW CASTLE	CHECKED BY: BJH/PJR	

BEAM PLAN, ELEVATION AND DETAILS

SHEET NO. 21 / TOTAL SHTS. 50

Unofficial Website Copy

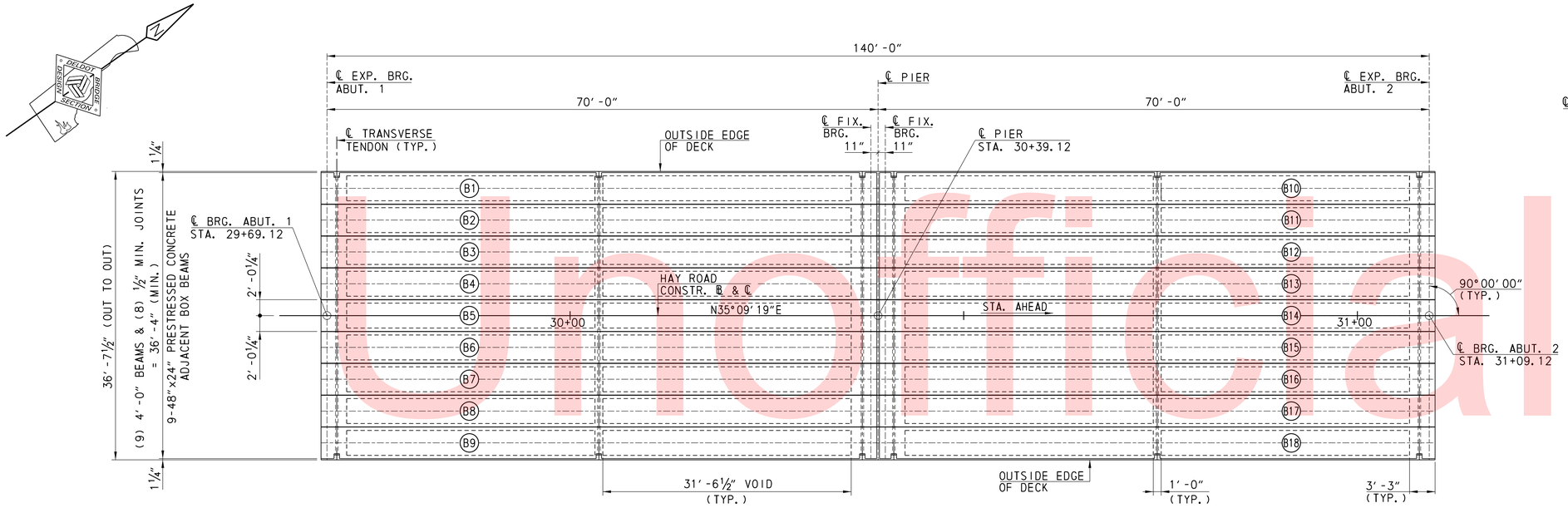

FRAMING PLAN

SCALE

0 10 20 30

FEET

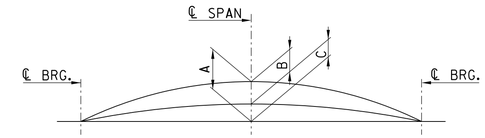

BEAM CAMBER DESIGN

NOT TO SCALE

CAMBER TABLE			
BEAM	A(in)	B(in)	C(in)
B1	2.08	0.76	1.32
B2	2.08	0.74	1.34
B3	2.08	0.74	1.34
B4	2.08	0.64	1.44
B5	2.08	0.65	1.43
B6	2.08	0.64	1.44
B7	2.08	0.74	1.34
B8	2.08	0.74	1.34
B9	2.08	0.76	1.32
B10	2.08	0.75	1.33
B11	2.08	0.74	1.34
B12	2.08	0.74	1.34
B13	2.08	0.64	1.44
B14	2.08	0.65	1.43
B15	2.08	0.64	1.44
B16	2.08	0.74	1.34
B17	2.08	0.74	1.34
B18	2.08	0.75	1.33

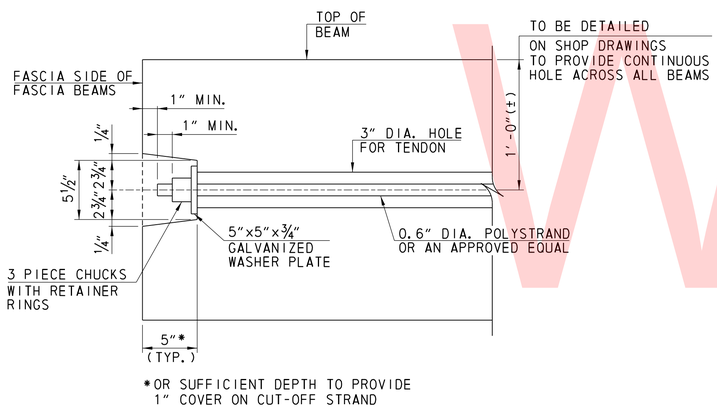

TYPICAL SECTION OF TENDON POCKET

CUT OFF TENDON 1" MIN. FROM THE END OF CHUCK (BURNING THE TENDON OFF IS NOT PERMITTED)

NOT TO SCALE

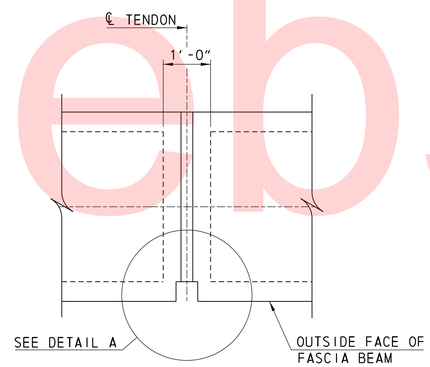

TYPICAL TENDON PLACEMENT

NOT TO SCALE

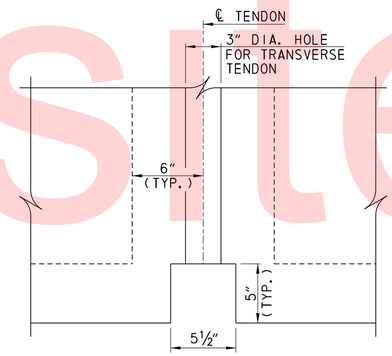

DETAIL A

CAMBER NOTES

A = ESTIMATED PRESTRESS CAMBER LESS DEFLECTION DUE TO DEAD LOAD OF BEAM TIMES CREEP FACTOR OF 1.6 AND INITIAL P/S LOSS OF 10%.

B = DEFLECTION DUE TO DEAD LOAD OF SLAB, PERMANENT METAL FORMS AND SUPERIMPOSED DEAD LOAD.

C = NET FINAL CAMBER (A-B).

- CAMBER VALUES ARE THEORETICAL AND MAY VARY WITH ACTUAL CONCRETE STRENGTH (AGE), VARIOUS PRESTRESSING CONDITIONS, CREEP FACTOR AND PRESTRESS LOSSES.
- BEARING SEAT ELEVATIONS AND HAUNCH THICKNESS HAVE BEEN CALCULATED USING THE NET FINAL CAMBER "C".

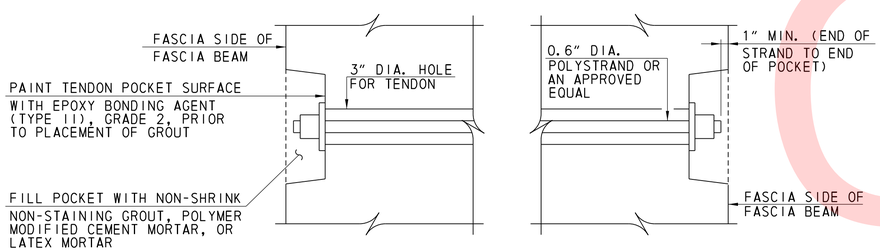

TYPICAL SECTION OF TENDON PLACEMENT

NOT TO SCALE

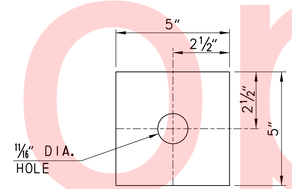

WASHER PLATE DETAIL

NOT TO SCALE

NOTES:

- FOR TYPICAL SECTION, SEE SHEET DK-02.
- FOR BEAM DETAILS, SEE SHEET BM-01.
- FOR TRANSVERSE TENDON NOTES, SEE SHEET BM-01.
- FOR DIAPHRAGM DETAILS, SEE SHEET DK-02

LEGEND

ABUT.	=	ABUTMENT
BRG.	=	BEARING
CONSTR.	=	CONSTRUCTION
DIA.	=	DIAMETER
EXP.	=	EXPANSION
FIX.	=	FIXED
MIN.	=	MINIMUM
STA.	=	STATION
TYP.	=	TYPICAL

Unofficial Website Copy

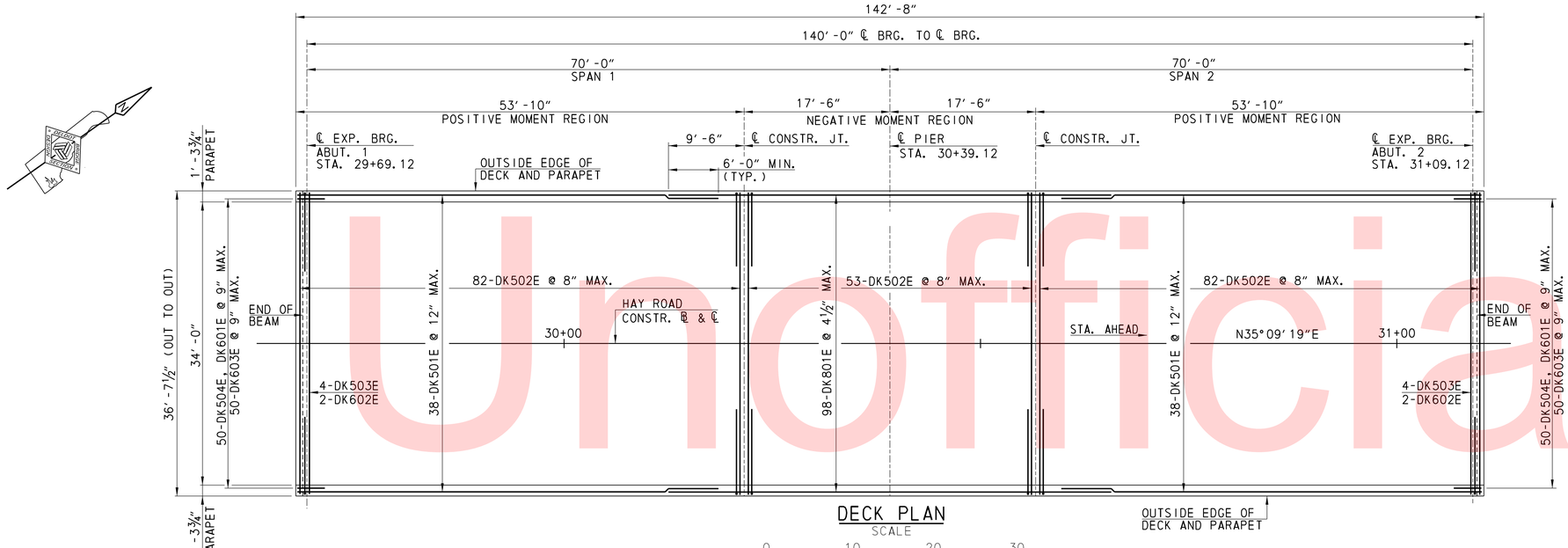

DECK PLAN

SCALE

0 10 20 30

FEET

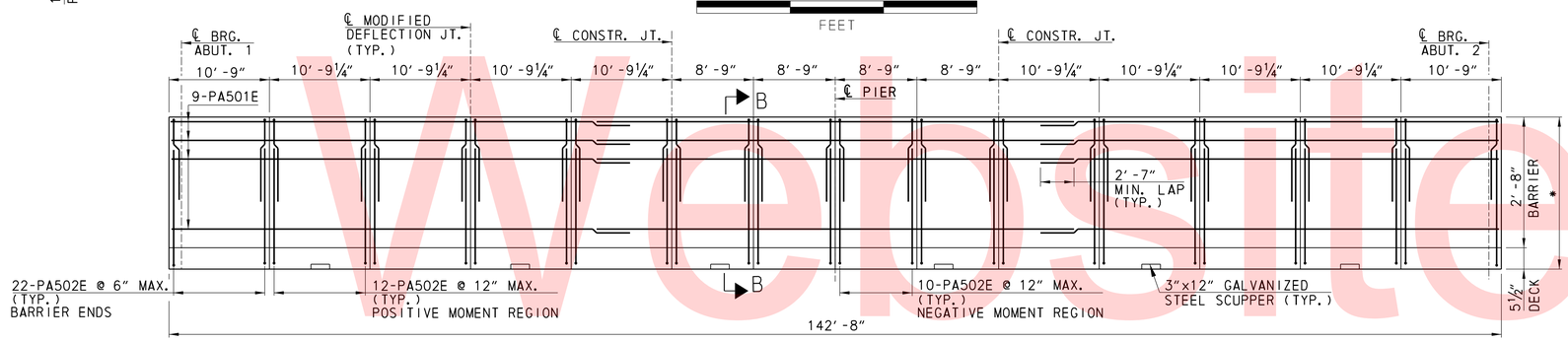

PARAPET ELEVATION

SCALE

0 10 20 30

FEET

* VERTICAL SCALE EXAGGERATED FOR CLARITY

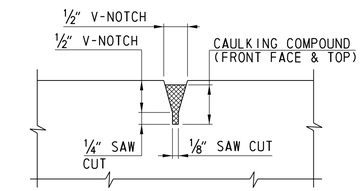

SECTION A-A

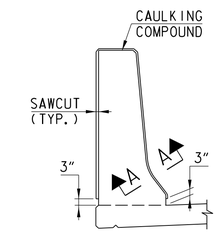

NOTES:

1. LONGITUDINAL REINFORCEMENT IS CONTINUOUS THROUGH THE JOINT.
2. PROVIDE CAULKING COMPOUND IN ACCORDANCE WITH ASTM C834 OR C920.
3. COMPLETE SAWCUTS 3″ ABOVE THE TOP OF THE DECK SLAB OR PAVEMENT SURFACE.
4. SAW CUT JOINT SAME DAY AS CONCRETE IS POURED.

MODIFIED DEFLECTION JOINT DETAIL

NOT TO SCALE

TOP OF DECK ELEVATION ALONG CENTERLINE OF BEAM AT 10th POINTS											
BEAM	0	1	2	3	4	5	6	7	8	9	10
B1	9.41	9.53	9.64	9.74	9.82	9.89	9.95	10.00	10.03	10.05	10.06
B2	9.49	9.61	9.72	9.82	9.90	9.98	10.03	10.08	10.11	10.13	10.14
B3	9.57	9.69	9.80	9.90	9.98	10.06	10.12	10.16	10.19	10.21	10.22
B4	9.65	9.77	9.88	9.98	10.07	10.14	10.20	10.24	10.27	10.29	10.30
B5	9.73	9.85	9.96	10.06	10.15	10.22	10.28	10.32	10.36	10.38	10.38
B6	9.65	9.77	9.88	9.98	10.07	10.14	10.20	10.24	10.27	10.29	10.30
B7	9.57	9.69	9.80	9.90	9.98	10.06	10.12	10.16	10.19	10.21	10.22
B8	9.49	9.61	9.72	9.82	9.90	9.98	10.03	10.08	10.11	10.13	10.14
B9	9.41	9.53	9.64	9.74	9.82	9.89	9.95	10.00	10.03	10.05	10.06
B10	10.06	10.05	10.03	9.99	9.94	9.88	9.80	9.72	9.61	9.50	9.37
B11	10.14	10.13	10.11	10.07	10.02	9.96	9.88	9.80	9.70	9.58	9.45
B12	10.22	10.21	10.19	10.15	10.10	10.04	9.97	9.88	9.78	9.66	9.54
B13	10.30	10.29	10.27	10.23	10.18	10.12	10.05	9.96	9.86	9.74	9.62
B14	10.38	10.37	10.35	10.31	10.26	10.20	10.13	10.04	9.94	9.82	9.70
B15	10.30	10.29	10.27	10.23	10.18	10.12	10.05	9.96	9.86	9.74	9.62
B16	10.22	10.21	10.19	10.15	10.10	10.04	9.97	9.88	9.78	9.66	9.54
B17	10.14	10.13	10.11	10.07	10.02	9.96	9.88	9.80	9.70	9.58	9.45
B18	10.06	10.05	10.03	9.99	9.94	9.88	9.80	9.72	9.61	9.50	9.37

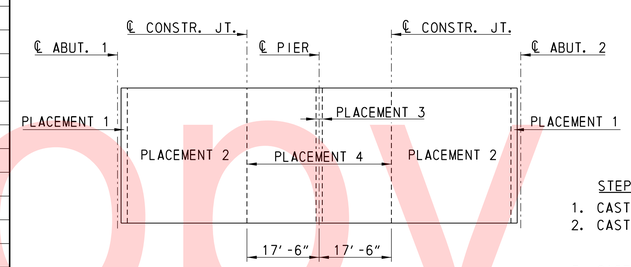

DECK PLACEMENT SEQUENCE

NOT TO SCALE

NOTES

- FOR SECTION B-B, SEE SHEET DK-02.
- FOR DECK SECTION, SEE SHEET DK-02.
- FOR REINFORCEMENT BAR SCHEDULE, SEE SHEET BR-02.
- SLIP FORMING FOR PARAPETS IS NOT PERMITTED.

PLACEMENT SEQUENCE

STEP NO.	ITEM
1. CAST PLACEMENT 1	(END DIAPHRAGMS)
2. CAST PLACEMENT 2	(POSITIVE MOMENT REGION) MINIMUM 2 HOURS PRIOR TO PLACING DECK CONCRETE OVER END DIAPHRAGM
3. CAST PLACEMENT 3	(CONTINUITY DIAPHRAGM AT PIER)
4. CAST PLACEMENT 4	(NEGATIVE MOMENT REGION) MINIMUM TWO HOURS AFTER PLACEMENT OF CONTINUITY DIAPHRAGM
5. CAST PARAPETS IN POSITIVE MOMENT REGION THEN NEGATIVE MOMENT REGION, UNLESS CONTINUOUS CASTING CAN BE MAINTAINED	

LEGEND

ABUT.	=	ABUTMENT
BRG.	=	BEARING
CONSTR.	=	CONSTRUCTION
EXP.	=	EXPANSION
JT.	=	JOINT
MAX.	=	MAXIMUM
MIN.	=	MINIMUM
STA.	=	STATION
TYP.	=	TYPICAL

DK-01

DELAWARE DEPARTMENT OF TRANSPORTATION

ADDENDUMS / REVISIONS

SCALE: AS NOTED

BR 1-567 ON N501 HAY ROAD OVER SHELLPOT CREEK, CITY OF WILMINGTON

CONTRACT T201307101

COUNTY NEW CASTLE

BRIDGE NO. 1-567A

DESIGNED BY: AKW

CHECKED BY: BJH/PJR

DECK PLAN AND PARAPET ELEVATION

SHEET NO. 23

TOTAL SHTS. 50

Unofficial Website Copy

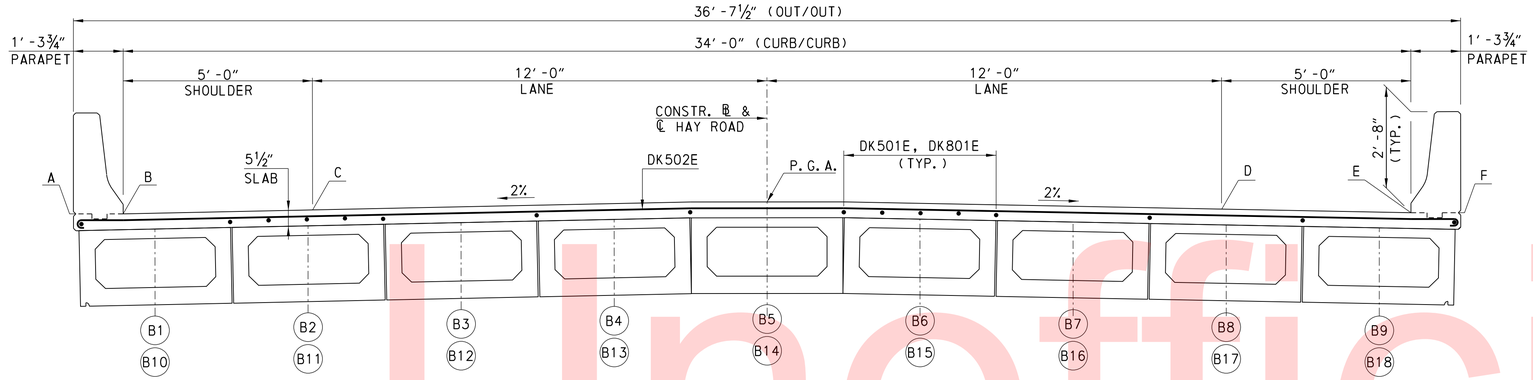

DECK SECTION

SCALE

0 5 10

FEET

TOP OF DECK ELEVATION							
STATION	A	B	C	P.G.A.	D	E	F
29+40.00	8.85	8.85	8.95	9.19	8.95	8.85	8.85
29+50.00	9.02	9.02	9.12	9.36	9.12	9.02	9.02
29+60.00	9.21	9.21	9.31	9.55	9.31	9.21	9.21
29+69.12	9.39	9.39	9.49	9.73	9.49	9.39	9.39
29+70.00	9.41	9.41	9.51	9.75	9.51	9.41	9.41
29+80.00	9.58	9.58	9.68	9.92	9.68	9.58	9.58
29+90.00	9.72	9.72	9.82	10.06	9.82	9.72	9.72
30+00.00	9.84	9.84	9.94	10.18	9.94	9.84	9.84
30+10.00	9.93	9.93	10.03	10.27	10.03	9.93	9.93
30+20.00	10.00	10.00	10.10	10.34	10.10	10.00	10.00
30+30.00	10.03	10.03	10.13	10.37	10.13	10.03	10.03
30+39.12	10.04	10.04	10.14	10.38	10.14	10.04	10.04
30+40.00	10.04	10.04	10.14	10.38	10.14	10.04	10.04
30+50.00	10.03	10.03	10.13	10.37	10.13	10.03	10.03
30+60.00	9.98	9.98	10.08	10.32	10.08	9.98	9.98
30+70.00	9.91	9.91	10.01	10.25	10.01	9.91	9.91
30+80.00	9.81	9.81	9.91	10.15	9.91	9.81	9.81
30+90.00	9.68	9.68	9.78	10.02	9.78	9.68	9.68
31+00.00	9.53	9.53	9.63	9.87	9.63	9.53	9.53
31+09.12	9.36	9.36	9.46	9.70	9.46	9.36	9.36
31+10.00	9.34	9.34	9.44	9.68	9.44	9.34	9.34
31+20.00	9.13	9.13	9.23	9.47	9.23	9.09	9.09

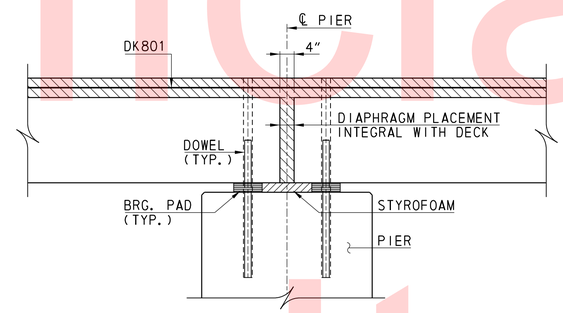

CONTINUITY DIAPHRAGM AT PIER

NOT TO SCALE

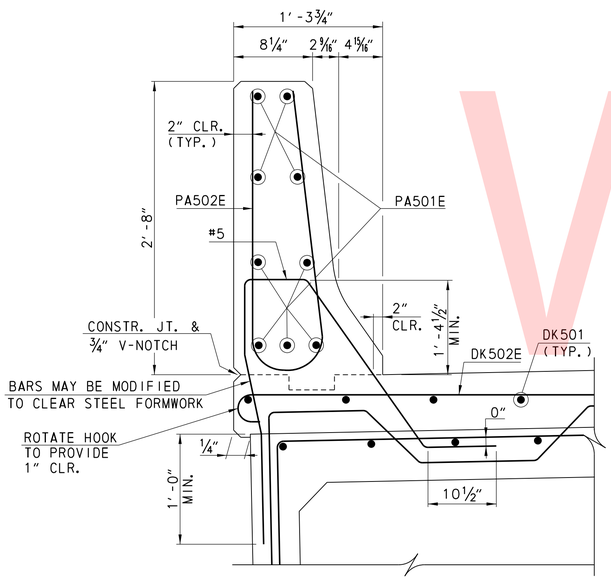

PARAPET DETAIL

NOT TO SCALE

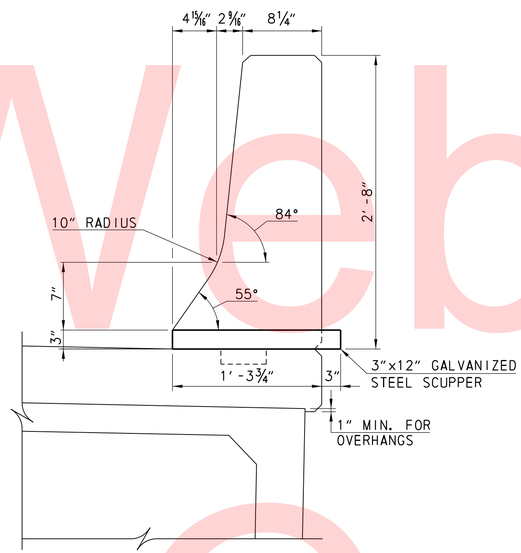

SECTION B-B

NOT TO SCALE

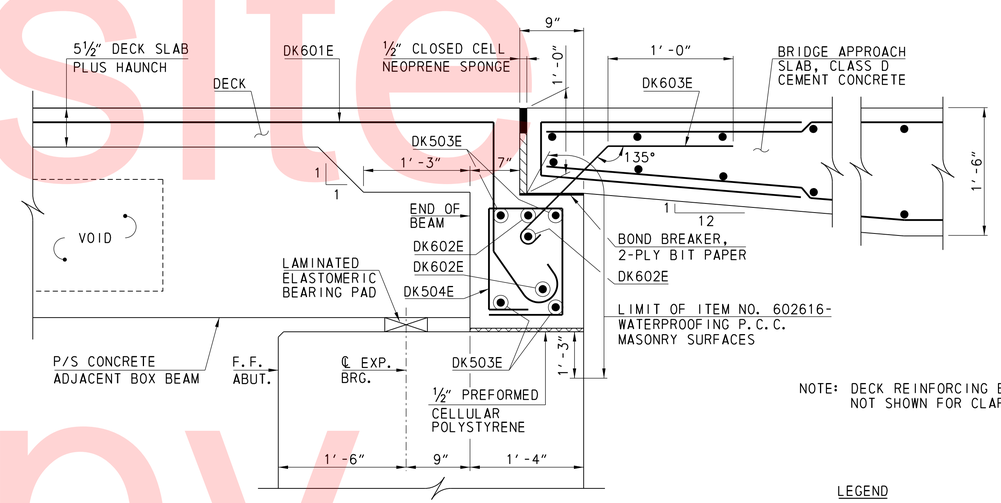

NOTE: DECK REINFORCING BARS NOT SHOWN FOR CLARITY.

DECK DETAIL AT APPROACH SLAB

NOT TO SCALE

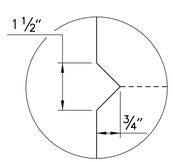

V-NOTCH DETAIL

NOT TO SCALE

NOTES

- FOR LOCATION OF SECTION B-B, SEE SHEET DK-01.
- FOR REINFORCEMENT BAR LIST, SEE SHEET BR-02.
- FOR BEAM REINFORCEMENT DETAILS, SEE SHEET BM-01.

LEGEND

ABUT.	=	ABUTMENT
BRG.	=	BEARING
CLR.	=	CLEAR
CONSTR.	=	CONSTRUCTION
EXP.	=	EXPANSION
F.F.	=	FRONT FACE
JT.	=	JOINT
MIN.	=	MINIMUM
P.C.C.	=	PORTLAND CEMENT CONCRETE
P.G.A.	=	POINT OF GRADE APPLICATION
TYP.	=	TYPICAL

DK-02

Unofficial Website Copy

DELAWARE DEPARTMENT OF TRANSPORTATION

ADDENDUMS / REVISIONS

SCALE: AS NOTED

BR 1-567 ON N501 HAY ROAD OVER SHELLPOT CREEK, CITY OF WILMINGTON

CONTRACT	BRIDGE NO.	1-567A
T201307101	DESIGNED BY: AKW	
COUNTY		
NEW CASTLE	CHECKED BY: BJH	

DECK SECTION AND DETAILS

SHEET NO. 24

TOTAL SHTS. 50

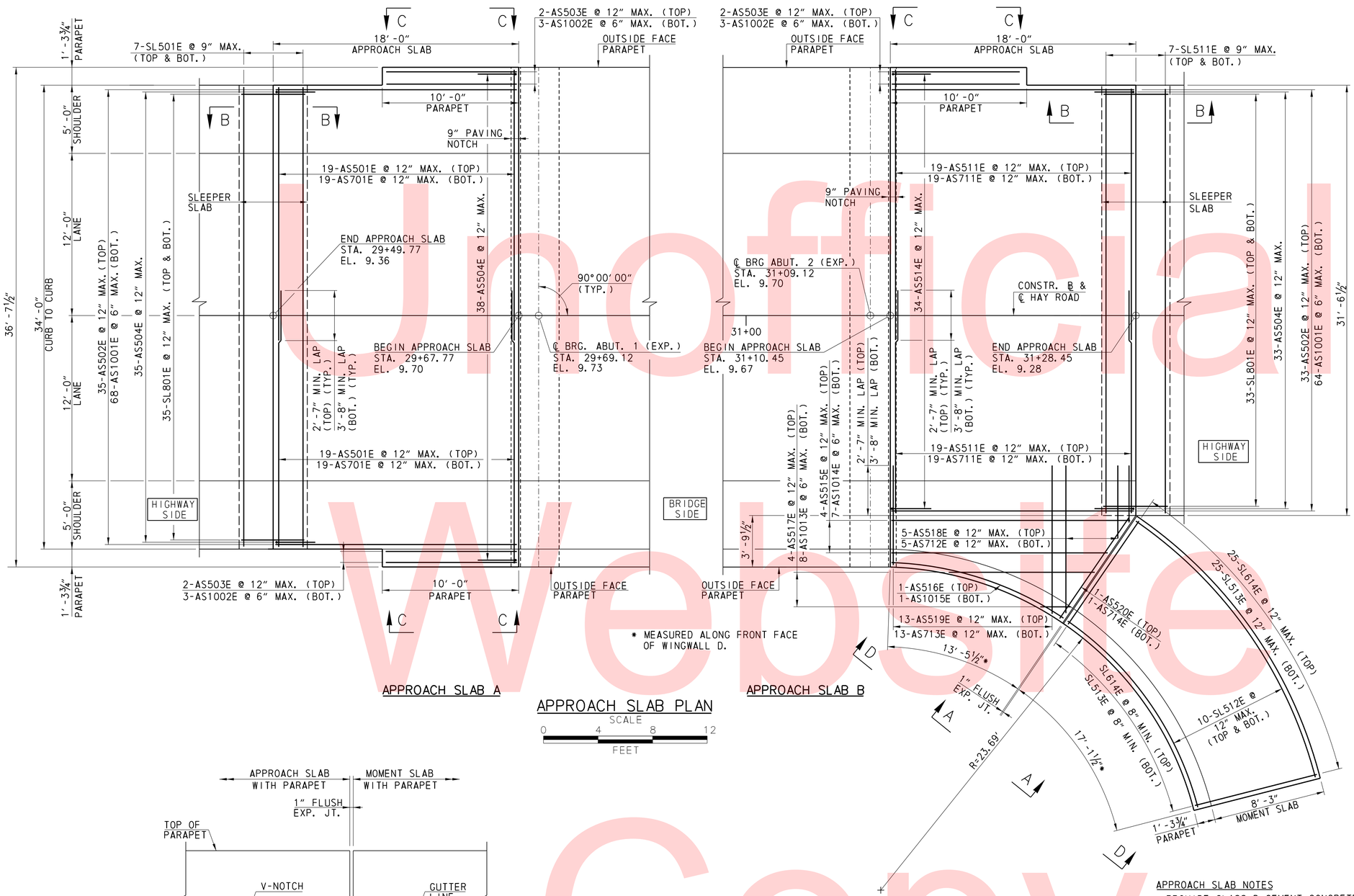

APPROACH SLAB A

APPROACH SLAB PLAN

SCALE

0 4 8 12

FEET

APPROACH SLAB B

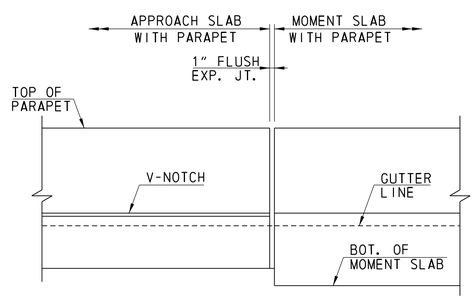

SECTION A-A

NOT TO SCALE

LEGEND

BOT.	=	BOTTOM
GALV.	=	GALVANIZED
CONSTR.	=	CONSTRUCTION
DIA.	=	DIAMETER
EL.	=	ELEVATION
EXP.	=	EXPANSION
JT.	=	JOINT
MAX.	=	MAXIMUM
MIN.	=	MINIMUM
R	=	RADIUS
STA.	=	STATION
TYP.	=	TYPICAL
W/	=	WITH

NOTES:

- FOR TYPICAL SECTIONS AND SECTION B-B, SEE SHEET AS-02
- FOR REINFORCEMENT BAR LIST, SEE SHEET BR-02.
- FOR APPROACH SLAB JOINT DETAILS AT END OF BRIDGE DECK, SEE SHEET AS-02.
- FOR PARAPET DETAIL AND MOMENT SLAB DETAIL, SEE SHEET AS-03.
- FOR SECTIONS C-C AND D-D, SEE SHEET AS-03.

APPROACH SLAB NOTES

- PROVIDE CLASS D CEMENT CONCRETE IN APPROACH SLAB, SLEEPER SLAB AND MOMENT SLAB.
- PROVIDE CLASS A CEMENT CONCRETE IN PARAPETS.
- A HIGHER CLASS OF CONCRETE MAY BE SUBSTITUTED FOR A LOWER CLASS OF CONCRETE AT NO ADDITIONAL COST TO THE DEPARTMENT.
- PLACE APPROACH SLAB CONCRETE WITH A MOTORIZED, MECHANICAL FINISHING MACHINE.
- PLACE CONCRETE IN ONE CONTINUOUS OPERATION, UNLESS OTHERWISE INDICATED OR DIRECTED.
- LONGITUDINAL KEYED CONSTRUCTION JOINTS ARE PERMITTED IN THE APPROACH SLAB BETWEEN THE SHOULDER AND THE LANE LINE.
- CONSTRUCT BRIDGE APPROACH SLAB AFTER THE BRIDGE DECK SLAB IS CONSTRUCTED.
- PROVIDE GRADE 60 DEFORMED REINFORCING BARS THAT MEET THE REQUIREMENTS OF AASHTO M31.
- EPOXY COAT ALL REINFORCEMENT BARS.

AS-01

DELAWARE DEPARTMENT OF TRANSPORTATION	ADDENDUMS / REVISIONS	SCALE: AS NOTED	BR 1-567 ON N501 HAY ROAD OVER SHELLPOT CREEK, CITY OF WILMINGTON	CONTRACT T201307101 / COUNTY NEW CASTLE	BRIDGE NO. 1-567A / DESIGNED BY: SNL / CHECKED BY: BJH	APPROACH SLABS PLAN	SHEET NO. 25 / TOTAL SHTS. 50

Unofficial Website Copy

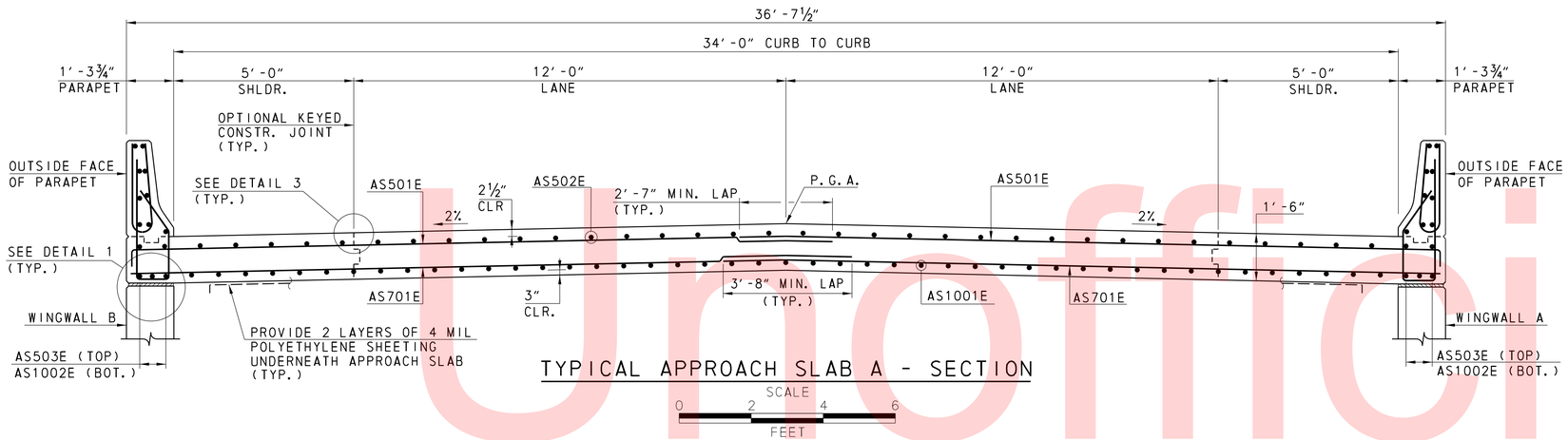

TYPICAL APPROACH SLAB A - SECTION

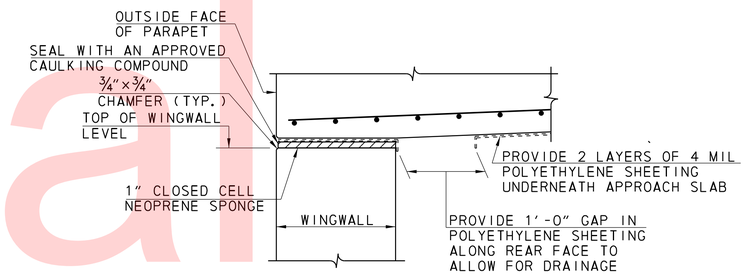

DETAIL 1
NOT TO SCALE

NOTE:

SEE "DETAIL BEYOND WINGWALL LIMITS" FOR PORTIONS OF APPROACH SLABS NOT SUPPORTED ON WINGWALLS. FOR WINGWALL LIMITS, SEE SHEET AB-01 THROUGH AB-06.

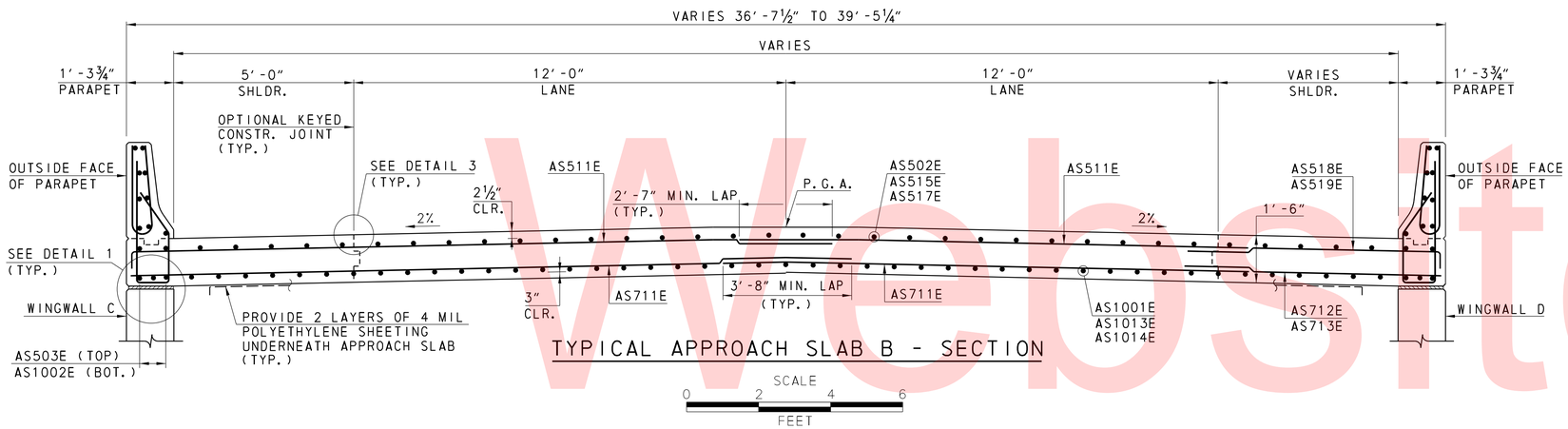

TYPICAL APPROACH SLAB B - SECTION

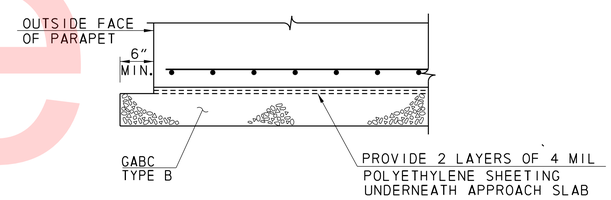

DETAIL BEYOND WINGWALL LIMITS
NOT TO SCALE

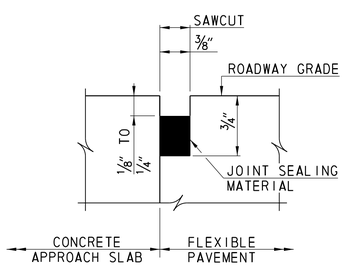

DETAIL 2
NOT TO SCALE

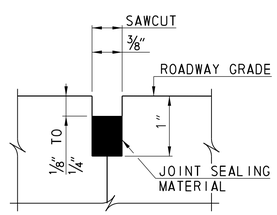

DETAIL 3
NOT TO SCALE

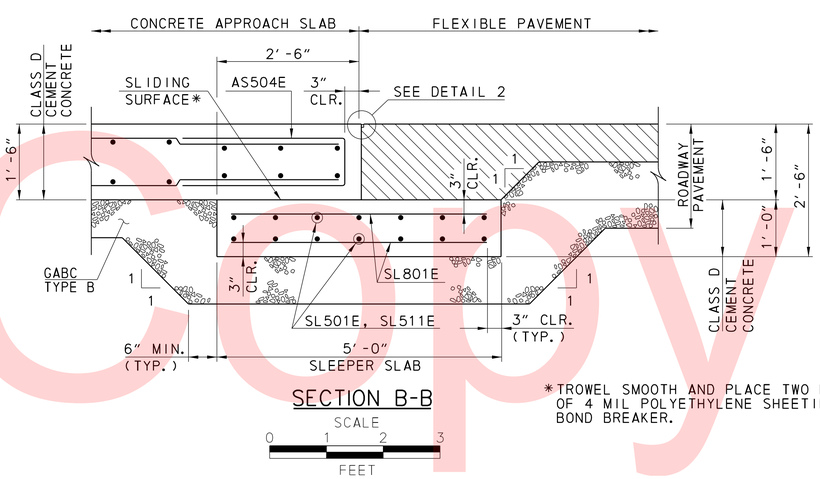

SECTION B-B

*TROWEL SMOOTH AND PLACE TWO LAYERS OF 4 MIL POLYETHYLENE SHEETING AS BOND BREAKER.

LEGEND

BOT.	=	BOTTOM
CLR.	=	CLEAR
CONSTR.	=	CONSTRUCTION
GABC	=	GRADED AGGREGATE BASE COURSE
P.G.A.	=	PROFILE GRADE APPLICATION
MIN.	=	MINIMUM
SHLDR.	=	SHOULDER
TYP.	=	TYPICAL

NOTES:

- FOR REINFORCEMENT BAR LIST, SEE SHEET BR-02.
- FOR LOCATION OF SECTION B-B, SEE SHEET AS-01.
- FOR PARAPET DETAIL, SEE SHEET AS-03.

AS-02

DELAWARE DEPARTMENT OF TRANSPORTATION

ADDENDUMS / REVISIONS

SCALE: AS NOTED

BR 1-567 ON N501 HAY ROAD OVER SHELLPOT CREEK, CITY OF WILMINGTON

CONTRACT	BRIDGE NO.	1-567A
T201307101	DESIGNED BY: SNL	
COUNTY		
NEW CASTLE	CHECKED BY: BJH	

APPROACH SLAB – 2

SHEET NO. 26
TOTAL SHTS. 50

Unofficial Website Copy

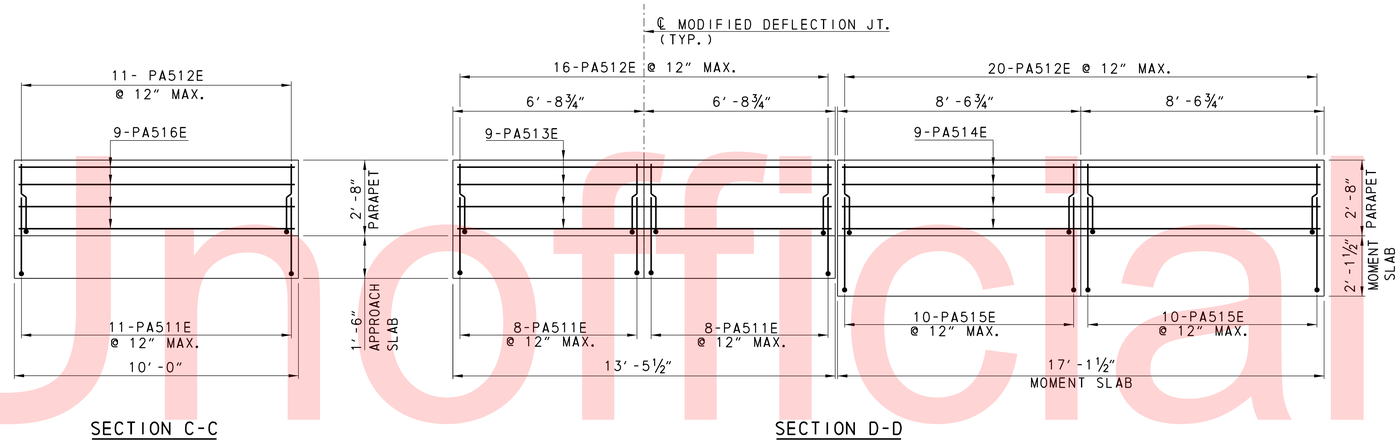

SECTION C-C

SECTION D-D

PARAPET ELEVATION

SCALE
0 3 6 9
FEET

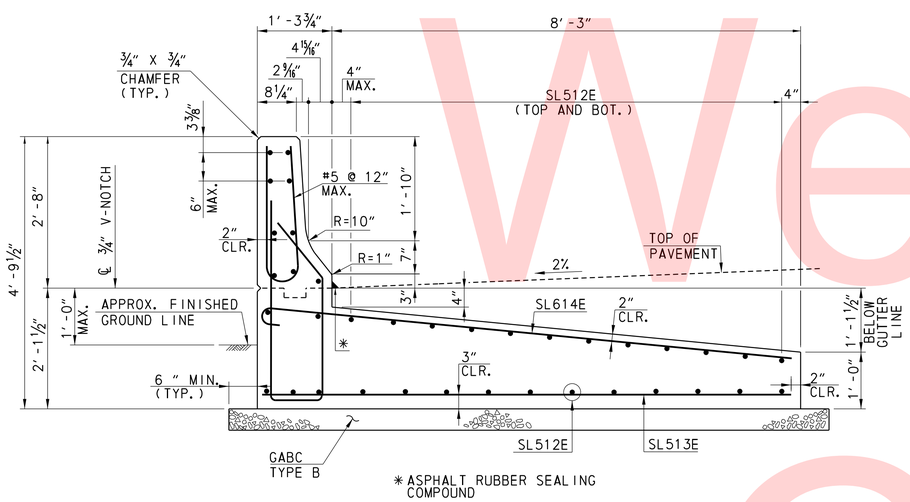

MOMENT SLAB DETAIL

SCALE
0 1 2 3
FEET

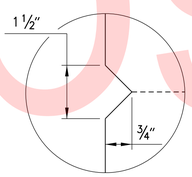

V-NOTCH DETAIL

NOT TO SCALE

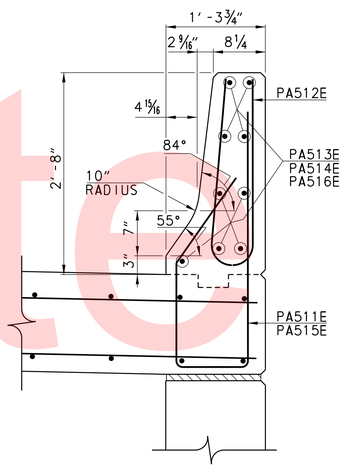

PARAPET DETAIL

NOT TO SCALE

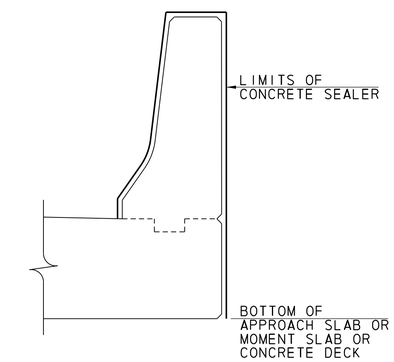

LIMITS OF CONCRETE SEALER

NOT TO SCALE

NOTES:

- FOR LOCATION OF SECTIONS C-C AND D-D, SEE SHEET AS-01.
- FOR REINFORCEMENT BAR LIST, SEE SHEET BR-02.
- SLIP FORMING FOR PARAPETS IS NOT PERMITTED.

LEGEND

APPROX.	=	APPROXIMATE
BOT.	=	BOTTOM
CLR.	=	CLEAR
GABC	=	GRADED AGGREGATE BASE COURSE
JT.	=	JOINT
MAX.	=	MAXIMUM
MIN.	=	MINIMUM
TYP.	=	TYPICAL

AS-03

DELAWARE
DEPARTMENT OF TRANSPORTATION

ADDENDUMS / REVISIONS

SCALE: AS NOTED

BR 1-567 ON N501 HAY ROAD
OVER SHELLPOT CREEK,
CITY OF WILMINGTON

CONTRACT	BRIDGE NO.	1-567A
T201307101	DESIGNED BY: SNL	
COUNTY		
NEW CASTLE	CHECKED BY: BJH	

APPROACH SLAB - 3

SHEET NO. 27
TOTAL SHTS. 50

Unofficial Website Copy

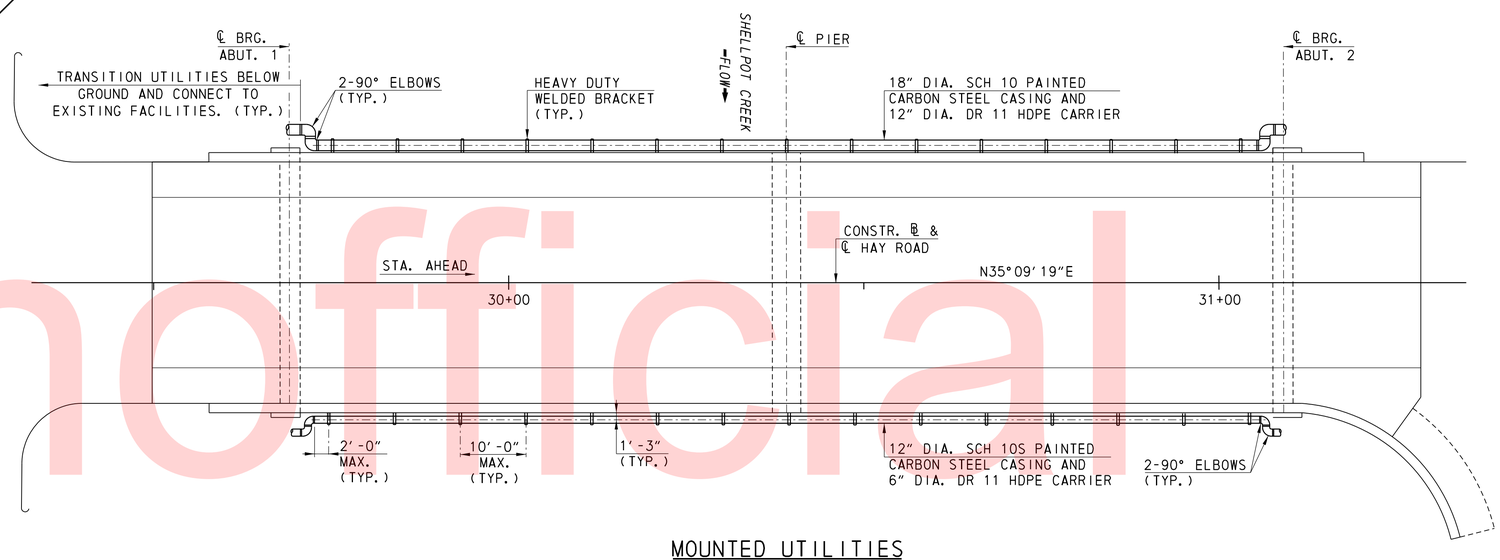

MOUNTED UTILITIES PLAN

NOT TO SCALE

NOTES

- UTILITY ATTACHMENT EQUIVALENT LOADS ARE 0.036 KLF (EAST BARRIER) AND 0.074 KLF (WEST BARRIER). THESE LOADS ARE DISTRIBUTED 50% TO THE EXTERIOR BEAM AND 25% TO THE NEXT TWO ADJACENT BEAMS.
- SUBMIT SHOP DRAWINGS AND CATALOG CUTS FOR UTILITY ATTACHMENTS AND PIPES TO THE ENGINEER FOR REVIEW BY DSWA.
- UTILITY PIPES AND UTILITY ATTACHMENTS INCLUDING ALL APPURTENANCES ARE INCIDENTAL TO ITEM 614505 GAS LINE RELOCATION.

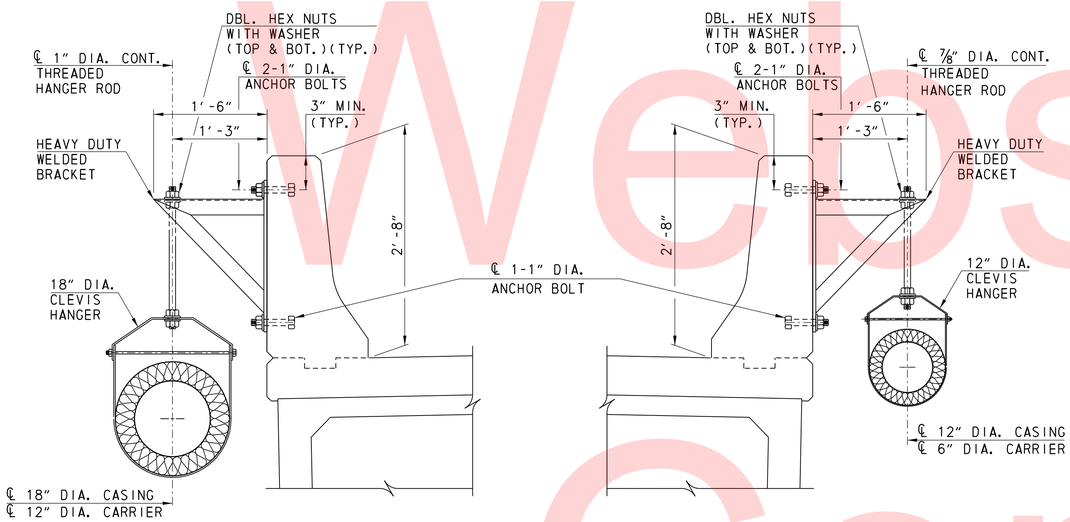

WEST BARRIER

EAST BARRIER

UTILITY ATTACHMENT

1 0 1 2 FEET

SCALE: 1" = 1'-0"

GAS FACILITIES

MATERIAL	UNIT	QTY.
6" DIA. DR 11 HDPE PIPE	FT	140
12" DIA. SCH 10S PAINTED CARBON STEEL PIPE	FT	140
12" DIA. DR 11 HDPE PIPE	FT	140
18" DIA. SCH 10 PAINTED CARBON STEEL PIPE	FT	140
6" DIA. DR 11 HDPE 90 DEG. ELBOW	EA	4
12" DIA. SCH 10S PAINTED CARBON STEEL 90 DEG. ELBOW	EA	4
12" DIA. DR 11 HDPE 90 DEG. ELBOW	EA	4
18" DIA. SCH 10 PAINTED CARBON STEEL 90 DEG. ELBOW	EA	4
HEAVY DUTY WELDED BRACKET (1)	EA	30
12" DIA. CLEVIS HANGER (2)	EA	15
18" DIA. CLEVIS HANGER (3)	EA	15
7/8" DIA. HANGER ROD (4)	EA	15
1" DIA. HANGER ROD (4)	EA	15
1" DIA. ANCHOR BOLT (4)	EA	90

(1) EATON B-LINE PART B3067-1 OR ANVIL INTERNATIONAL FIGURE 199-1 OR APPROVED EQUAL
(2) EATON B-LINE PART B3100-12 OR ANVIL INTERNATIONAL FIGURE 260-12 OR APPROVED EQUAL
(3) EATON B-LINE PART B3100-18 OR ANVIL INTERNATIONAL FIGURE 260-18 OR APPROVED EQUAL
(4) INCLUDES HEX NUTS AND WASHERS

MATERIAL NOTES

- ANCHOR BOLTS SHALL MEET THE REQUIREMENTS OF AASHTO M183, AND SHALL HAVE HEX NUTS AND WASHERS. WHEN AN ANCHOR BOLT GOES THROUGH THE SOLE PLATE, THE NUT IS TO BE 0.25" CLEAR. BURR THREADS AT FACE OF NUT. ANCHOR BOLT HARDWARE SHALL BE GALVANIZED.
- ANCHOR BOLTS SHALL BE CAST-IN-PLACE.
- MATERIALS FOR UTILITY ATTACHMENTS SHALL BE HOT-DIPPED GALVANIZED.

LEGEND

ABUT. = ABUTMENT
BOT. = BOTTOM
BRG. = BEARING
DBL. = DOUBLE
DIA. = DIAMETER
CONSTR = CONSTRUCTION
CONT. = CONTINUOUS
MAX. = MAXIMUM
STA. = STATION
TYP. = TYPICAL

MT-01

DELAWARE DEPARTMENT OF TRANSPORTATION

ADDENDUMS / REVISIONS

SCALE: AS NOTED

BR 1-567 ON N501 HAY ROAD OVER SHELLPOT CREEK, CITY OF WILMINGTON

CONTRACT T201307101 | COUNTY NEW CASTLE | BRIDGE NO. 1-567A | DESIGNED BY: SBM | CHECKED BY: BJH

UTILITY SUPPORT DETAILS

SHEET NO. 28 | TOTAL SHTS. 50

Unofficial Website Copy

BORING: HR-1 | DATE DRILLED: 7/22/13
STATION: 29+47.00 | OFFSET: 16.00' LT | ELEVATION: 7.50 | NORTHING: 633370.713 | EASTING: 629640.195
COMMENTS: N/A

SAMPLE INFORMATION

NO.	DEPTH	BLOWS / 6"	DESCRIPTION	CLASS / G. I.	REMARKS
1	1.0 2.0	11 9	WET MEDIUM DENSE BROWN FINE GRAVEL AND COARSE SAND W/SOME FINE SAND AND SILT.	A-1-B	
2	2.0 4.0	12 7 6 6	WET MEDIUM DENSE BROWN COARSE SANDY FINE GRAVEL W/SOME FINE SAND, TRACE OF SILT.	A-1-A	
3	4.0 6.0	11 6 4 12	SATURATED STIFF BROWN CLAYEY FINE GRAVELLY SILT W/SOME COARSE SAND, TRACE OF FINE SAND.	A-4(1)	
4A	6.0 7.0	3 3	SATURATED FIRM BROWN CLAY W/SOME SILT, TRACE OF COARSE TO FINE SAND.	A-7-5(13)	
4B	7.0 8.0	3 2	SATURATED FIRM BLACK CLAY W/SOME SILT, TRACE OF COARSE TO FINE SAND AND FINE GRAVEL.	A-7-6(15)	
5	8.0 10.0	5 4 3 3	SATURATED FIRM BLACK CLAY W/SOME FINE GRAVEL AND COARSE SAND, TRACE OF SILT AND FINE SAND.	A-7-6(7)	
6	10.0 12.0	2 2 2 3	SATURATED SOFT BLACK CLAY W/SOME SILT, TRACE OF COARSE TO FINE SAND.	A-7-5(22)	
U-1	12.0 14.0				
7	14.0 16.0	1 1 1 2	SATURATED SOFT BLACK CLAY W/SOME SILT, TRACE OF COARSE TO FINE SAND.	A-7-5(19)	
8	16.0 18.0	1 2 2 3	NO SIEVE ANALYSIS - INDICATION OF SATURATED SOFT BLACK ORGANIC CLAY W/SOME SILT, TRACE OF FINE TO COARSE SAND.		
9	18.0 20.0	WH 1 1 2	SATURATED SOFT BLACK ORGANIC CLAY W/SOME SILT, TRACE OF FINE TO COARSE SAND.	A-7-5(18)	
10	24.0 26.0	1 1 2 3	SATURATED SOFT BLACK ORGANIC CLAY W/SOME SILT AND COARSE SAND, TRACE OF FINE SAND.	A-7-5(18)	
U-2	26.0 28.0				
11	29.0 31.0	3 3 4 7	SATURATED FIRM BLACK ORGANIC SILT W/SOME CLAY AND FINE SAND, TRACE OF COARSE SAND.	A-4(3)	
12	34.0 36.0	29 25 24 17	SATURATED DENSE GRAY COARSE SANDY FINE GRAVEL W/SOME FINE SAND, TRACE OF SILT.	A-1-A	
13	39.0 41.0	20 15 7 6	SATURATED MEDIUM DENSE GRAY FINE SAND W/SOME COARSE SAND, FINE GRAVEL AND SILT.	A-1-B	
14	44.0 46.0	16 9 11 12	NO SIEVE ANALYSIS - INDICATION OF SATURATED MEDIUM DENSE GRAY FINE SAND W/SOME COARSE SAND AND SILT.		EPTE -37.0
15	49.0 51.0	14 7 16 16	SATURATED MEDIUM DENSE GRAY FINE GRAVELLY COARSE SAND W/SOME FINE SAND, TRACE OF SILT.	A-1-B	
16	54.0 56.0	9 8 13 11	SATURATED VERY STIFF GRAY FINE SANDY SILT W/TRACE OF COARSE SAND.	A-4(0)	
17	59.0 61.0	8 9 13	SATURATED MEDIUM DENSE GRAY FINE SAND W/SOME SILT, TRACE OF COARSE SAND.	A-2-4(0)	
18	64.0 66.0	6 7 8 10	SATURATED MEDIUM DENSE GRAY FINE SAND W/SOME SILT, TRACE OF COARSE SAND AND FINE GRAVEL.	A-2-4(0)	
19	69.0 71.0	6 7 7 9	SATURATED MEDIUM DENSE GRAY FINE TO COARSE SAND W/SOME SILT, TRACE OF FINE GRAVEL.	A-2-4(0)	
20	73.0 75.0	7 11 18 20	SATURATED MEDIUM DENSE GRAY FINE GRAVEL W/SOME COARSE SAND, TRACE OF FINE SAND AND SILT.	A-1-A	
			END BORING		

BORING: HR-2 | DATE DRILLED: 7/22/13
STATION: 30+48.00 | OFFSET: 25.00' LT | ELEVATION: -3.00 | NORTHING: 633458.337 | EASTING: 629691.261
COMMENTS: RIVERBED IS APPROXIMATELY 10.5' FROM THE TOP OF THE BRIDGE DECK. SAMPLING STARTED AT 24.0' DUE TO CASING DISTURBANCE IN MUCK.

SAMPLE INFORMATION

NO.	DEPTH	BLOWS / 6"	DESCRIPTION	CLASS / G. I.	REMARKS
1	24.0 26.0	WH WH WH WH	NO SIEVE ANALYSIS - INDICATION OF SATURATED SOFT BLACK SILTY CLAY W/TRACE OF SAND.		
2	26.0 28.0	2 3 3 3	SATURATED FIRM BLACK SILTY CLAY W/SOME FINE SAND, TRACE OF COARSE SAND.	A-6(9)	
U-1	28.0 30.0		SATURATED BLACK CLAYEY SILT W/SOME ORGANIC MATTER AND FINE SAND, TRACE OF COARSE SAND AND FINE GRAVEL.	A-4(3)	
3	30.0 32.0	6 19 20 14	SATURATED DENSE BLACK FINE GRAVEL W/SOME FINE TO COARSE SAND AND SILT.	A-1-B	
4	32.0 34.0	8 18 19 18	NO SIEVE ANALYSIS - INDICATION OF SATURATED DENSE BLACK SANDY FINE GRAVEL W/SOME SILT.		
5	34.0 36.0	2 3 11 23	SATURATED MEDIUM DENSE BLACK COARSE SANDY FINE GRAVEL W/SOME FINE SAND, TRACE OF SILT.	A-1-A	
6	36.0 38.0	10 12 13 11	SATURATED MEDIUM DENSE BLACK FINE GRAVEL W/SOME FINE TO COARSE SAND, TRACE OF SILT.	A-1-A	
7	38.0 40.0	5 13 31 18	SATURATED DENSE BLACK FINE SANDY FINE GRAVEL W/SOME COARSE SAND, TRACE OF SILT.	A-1-B	
8	40.0 42.0	9 11 14 14	SATURATED MEDIUM DENSE BLACK FINE GRAVEL W/SOME FINE TO COARSE SAND, TRACE OF SILT.	A-1-A	
9	44.0 46.0	6 5 8 20	SATURATED STIFF GRAYISH BROWN FINE SANDY FINE GRAVELLY SILT W/TRACE OF COARSE SAND.	A-4(0)	
10	49.0 51.0	2 4 9 18	SATURATED MEDIUM DENSE GRAYISH BROWN COARSE SAND AND FINE GRAVEL W/SOME FINE SAND, TRACE OF SILT.		
11	54.0 56.0	8 7 8 10	SATURATED STIFF BROWN FINE SANDY SILT W/TRACE OF COARSE SAND.	A-4(0)	
12	59.0 61.0	7 8 9 10	SATURATED MEDIUM DENSE BROWN SILTY FINE SAND W/TRACE OF COARSE SAND.	A-2-4(0)	
13	64.0 66.0	3 5 8 14	SATURATED MEDIUM DENSE BROWN FINE SAND W/SOME SILT, TRACE OF COARSE SAND AND FINE GRAVEL.	A-2-4(0)	
14	69.0 71.0	5 8 5 8	SATURATED STIFF BROWN CLAYEY FINE SANDY SILT W/TRACE OF COARSE SAND.	A-4(2)	
15	74.0 76.0	11 17 15 11	SATURATED DENSE BROWN FINE SAND W/SOME COARSE SAND AND SILT, TRACE OF FINE GRAVEL.	A-2-4(0)	EPTE -66.5
			END BORING		

BORING: HR-3 | DATE DRILLED: 7/25/13
STATION: 31+34.00 | OFFSET: 28.00' LT | ELEVATION: 7.50 | NORTHING: 633530.306 | EASTING: 629738.009
COMMENTS: N/A

SAMPLE INFORMATION

NO.	DEPTH	BLOWS / 6"	DESCRIPTION	CLASS / G. I.	REMARKS
1	1.0 2.0	9 6	MOIST MEDIUM DENSE BROWN COARSE SAND AND FINE GRAVEL W/SOME FINE SAND AND SILT.	A-1-B	
2	2.0 4.0	8 5 4 4	MOIST LOOSE BROWN SILTY COARSE SAND W/SOME FINE GRAVEL AND FINE SAND.	A-1-B	
3	4.0 6.0	3 3 1 2	MOIST VERY LOOSE BROWN SILTY COARSE SAND W/SOME FINE GRAVEL AND FINE SAND.	A-1-B	
4	6.0 8.0	1 2 1 3	WET SOFT BLACK CLAYEY COARSE TO FINE SANDY SILT W/TRACE OF FINE GRAVEL.	A-4(0)	
5	8.0 10.0	1 1 1 1	SATURATED SOFT BLACK ORGANIC CLAY W/SOME SILT, TRACE OF FINE SAND.	A-7-5(23)	
6	10.0 12.0	2 3 2 3	SATURATED FIRM BLACK CLAYEY SILT W/TRACE OF FINE SAND.	A-4(11)	
7	12.0 14.0	WH WH 1 1	SATURATED SOFT BLACK CLAY W/SOME SILT, TRACE OF FINE TO COARSE SAND.	A-7-5(18)	
U-1	14.0 16.0		SATURATED BLACK ORGANIC SILTY CLAY W/TRACE OF FINE TO COARSE SAND.	A-7-5(16)	
8	16.0 18.0	1 1 1 2	NO SIEVE ANALYSIS - INDICATION OF SATURATED SOFT BLACK CLAY W/SOME SILT, TRACE OF SAND.		
9	18.0 20.0	WH WH 2 2	SATURATED SANDY BLACK ORGANIC CLAY W/SOME SILT, TRACE OF FINE TO COARSE SAND.	A-7-6(18)	
U-2	20.0 22.0				
10	24.0 26.0	WH WH 1 3	SATURATED SOFT GRAY CLAYEY SILT W/TRACE OF FINE TO COARSE SAND.	A-4(5)	
11	29.0 31.0	8 9 14 11	SATURATED MEDIUM DENSE GRAY COARSE SANDY FINE GRAVEL W/SOME FINE SAND AND SILT.	A-1-A	
12	34.0 36.0	9 17 15 11	SATURATED DENSE GRAY COARSE SANDY FINE GRAVEL W/SOME FINE SAND, TRACE OF SILT.	A-1-B	
13	39.0 41.0	7 13 10 7	SATURATED MEDIUM DENSE BROWN FINE GRAVELLY COARSE SAND W/SOME FINE SAND, TRACE OF SILT.	A-1-B	
14	44.0 46.0	6 6 6 8	SATURATED STIFF BROWN FINE SANDY SILT W/TRACE OF COARSE SAND.	A-4(0)	
15	49.0 51.0	14 16 8 11	SATURATED MEDIUM DENSE BROWN COARSE TO FINE SAND AND FINE GRAVEL W/SOME SILT.	A-1-B	EPTE -43.0
16	54.0 56.0	15 17 22 14	SATURATED DENSE BROWN COARSE TO FINE SAND W/SOME FINE GRAVEL, TRACE OF SILT.	A-1-B	
17	59.0 61.0	7 8 10 14	SATURATED MEDIUM DENSE BROWN COARSE TO FINE SAND W/SOME FINE GRAVEL AND SILT.	A-1-B	
18	64.0 66.0	17 19 21 22	SATURATED DENSE BROWN SILTY FINE SANDY FINE GRAVEL W/SOME COARSE SAND.	A-1-B	
19	69.0 71.0	15 17 16 19	SATURATED DENSE BROWN SILTY FINE SAND W/SOME COARSE SAND, TRACE OF FINE GRAVEL.	A-2-4(0)	
20	73.0 75.0	9 11 15 14	SATURATED MEDIUM DENSE BROWN FINE TO COARSE SAND W/SOME SILT, TRACE OF FINE GRAVEL.	A-2-4(0)	
			END BORING		

Unofficial Website Copy

BO-01

DELAWARE DEPARTMENT OF TRANSPORTATION

ADDENDUMS / REVISIONS

NOT TO SCALE

BR 1-567 ON N501 HAY ROAD OVER SHELLPOT CREEK, CITY OF WILMINGTON

CONTRACT: T201307101
COUNTY: NEW CASTLE
BRIDGE NO.: 1-567A
DESIGNED BY: BO
CHECKED BY: SJM

BORING LOG

SHEET NO. 29
TOTAL SHTS. 50

① ANY MARK NUMBER WITH SUFFIX 'E' DENOTES EPOXY COATED REINFORCING STEEL.

② ALL MARK 'LOCATION PREFIXES' SHALL CONSIST OF TWO LETTERS AND ARE AS FOLLOWS: AB = ABUTMENT, AS = APPROACH SLAB, BC = BOX CULVERT, BW = BACKWALL, CL = COLUMN, DK = DECK, DL = DOWEL, FT = FOOTING, HW = HEADWALL, MS = MISC. BARS, PA = PARAPET, PR = PIER, SC = SHEETPILE CAP, SL = SLAB, TW = TOEWALL, WL = WALL (UNIQUE LOCATION), WW = WINGWALL

SPECIFICATIONS					BENDING DIMENSIONS (FEET-INCHES /QUARTER INCH)										
QTY.	SIZE	LENGTH	MARK	TYPE	A	B	C	D	E	F/R	G	H	J	K	O
328	5	9-20	AB501E	17		3-60	2-20	3-60							
26	5	38-32	AB502E	STR		38-32									
18	5	8-110	AB503E	17		2-50	4-10	2-50							
4X2	5	11-12	AB504E	S3	0-52	4-03	2-10	4-03			0-52	0-33			
		TO			TO	TO	TO	TO			TO	TO			
		11-82			0-52	4-03	2-80	4-03			0-52	0-33			
4X2	5	11-40	AB505E	S3	0-52	4-20	2-10	4-20			0-52	0-33			
		TO			TO	TO	TO	TO			TO	TO			
		11-110			0-52	4-20	2-80	4-20			0-52	0-33			
4X2	5	11-62	AB506E	S3	0-52	4-31	2-10	4-31			0-52	0-33			
		TO			TO	TO	TO	TO			TO	TO			
		12-12			0-52	4-31	2-80	4-31			0-52	0-33			
4X2	5	11-80	AB507E	S3	0-52	4-40	2-10	4-40			0-52	0-33			
		TO			TO	TO	TO	TO			TO	TO			
		12-30			0-52	4-40	2-80	4-40			0-52	0-33			
48	5	6-92	AB508E	STR		6-92									
32	5	7-30	AB509E	17		3-40	0-70	3-40							
6	5	8-93	AB510E	17		2-50	3-113	2-50							
10	6	38-32	AB601E	STR		38-32									
15	5	7-30	WW501E	STR		7-30									
6X6	5	5-22	WW502E	STR		5-22									
		TO				TO									
		5-63				5-63									
9	5	6-20	WW503E	STR		6-20									
5	5	7-20	WW504E	STR		7-20									
3	5	7-80	WW505E	STR		7-80									
12	5	5-83	WW506E	STR		5-83									
2X7	5	5-10	WW507E	STR		5-10									
		TO				TO									
		5-80				5-80									
12	5	5-93	WW508E	STR		5-93									
21	6	7-20	WW601E	STR		7-20									
28	6	3-100	WW602E	16			1-110	1-110				1-41		1-41	3-31
12	6	6-20	WW603E	STR		6-20									
16	6	7-20	WW604E	16	2-90	2-00	0-60	1-110				1-41		1-41	1-101
7	6	7-20	WW605E	STR		7-20									

SPECIFICATIONS					BENDING DIMENSIONS (FEET-INCHES /QUARTER INCH)										
QTY.	SIZE	LENGTH	MARK	TYPE	A	B	C	D	E	F/R	G	H	J	K	O
4	6	7-80	WW606E	STR		7-80									
6	5	39-70	PR501E	STR		39-70									
148	5	9-61	PR502E	17		3-30	3-01	3-30							
10	5	15-00	PR503E	10		5-60	4-90	4-90		1-90					3-60
8	5	11-42	PR504E	S3	0-52	3-81	3-10	3-81			0-52	0-33			
8	5	10-102	PR505E	S3	0-52	3-51	3-10	3-51			0-52	0-33			
16	5	7-10	PR506E	17		3-02	1-00	3-02							
20	5	2-20	PR507E	STR		2-20									
20	5	2-60	PR508E	STR		2-60									
2	5	5-20	PR509E	17		0-100	3-60	0-100							
2	5	5-60	PR510E	10		5-60				1-90					3-60
2	5	7-40	PR511E	17		2-00	3-40	2-00							
2	5	5-80	PR512E	17		2-00	1-80	2-00							
4	5	5-70	PR513E	17		2-00	1-70	2-00							
2	5	5-100	PR514E	17		2-00	1-100	2-00							
4	8	39-70	PR801E	STR		39-70									
4	8	42-00	PR802E	STR		42-00									
1	8	43-10	PR803E	STR		43-10									
18	8	3-30	DOWEL	STR		3-30									

SPECIFICATIONS					BENDING DIMENSIONS (FEET-INCHES /QUARTER INCH)										
QTY.	SIZE	LENGTH	MARK	TYPE	A	B	C	D	E	F/R	G	H	J	K	O

ASTM STANDARD ENGLISH REINFORCING BARS				RECOMMENDED END HOOKS, APPLICABLE TO ALL GRADES				STIRRUP AND TIE HOOKS, APPLICABLE TO ALL GRADES			
	NOMINAL DIMENSIONS				180° HOOKS		90° HOOKS		90° HOOK	135° HOOK	
BAR SIZE	DIAMETER (INCHES)	AREA (INCHES²)	WEIGHT (LBS./FT.)	D	A OR G	J	A OR G	D	A OR G	A OR G	A OR G
3	0.375	0.110	0.376	2¼"	5"	3"	6"	1½"	4"	4"	2½"
4	0.500	0.200	0.668	3"	6"	4"	8"	2"	4½"	4½"	3"
5	0.625	0.310	1.043	3¾"	7"	5"	10"	2½"	6"	5½"	3¾"
6	0.750	0.440	1.502	4½"	8"	6"	1-0"	4½"	1-0"	8"	4½"
7	0.875	0.600	2.044	5¼"	10"	7"	1-2"	5¼"	1-2"	9"	5¼"
8	1.000	0.790	2.670	6"	11"	8"	1-4"	6"	1-4"	10½"	6"
9	1.128	1.000	3.400	9½"	1-3"	11¾"	1-7"				
10	1.270	1.270	4.303	10¾"	1-5"	1-1¼"	1-10"				
11	1.410	1.560	5.313	1-0"	1-7"	1-2¾"	2-0"				
14	1.693	2.250	7.650	1-6¼"	2-3"	1-9¾"	2-7"				
18	2.257	4.000	13.600	2-0"	3-0"	2-4½"	3-5"				

NOTES:

1. FIGURES SHOWN IN CIRCLES REPRESENT BAR BEND TYPES.
2. STANDARD BAR BENDS INCLUDE ONLY THOSE TYPES BELOW, INDICATED AS SUCH.
3. ALL DIMENSIONS OUT-TO-OUT, EXCEPT "A" AND "G" ON STD. 180° AND 135° HOOKS.
4. "J" DIMENSIONS ON 180° HOOKS TO BE SHOWN ONLY WHERE NECESSARY TO RESTRICT HOOK SIZE, OTHERWISE STANDARD 'ACI' HOOKS ARE TO BE USED.
5. WHERE "J" IS NOT SHOWN, "J" WILL BE KEPT EQUAL TO OR LESS THAN "H" ON TYPES 3, 5 AND 22. WHERE "J" CAN EXCEED "H", IT SHALL BE SHOWN.
6. "H" DIMENSIONS OF STIRRUPS TO BE SHOWN AS NEEDED TO FIT WITHIN THE CONCRETE.
7. UNLESS OTHERWISE NOTED, DIAMETER "D" IS THE SAME FOR ALL BENDS AND HOOKS ON A BAR (EXCEPT FOR BEND TYPES 11 AND 13).
8. WHERE SLOPE DIFFERS FROM 45° OFFSET, "H" AND "K" MUST BE SHOWN.
9. WHERE BARS ARE TO BE BENT MORE ACCURATELY THAN STANDARD BENDING TOLERANCES, BENDING DIMENSIONS REQUIRING CLOSER FABRICATION SHOULD HAVE LIMITS INDICATED.
10. FOR RECOMMENDED DIAMETER "D", OF BENDS, HOOKS, ETC., REFER TO TABLE ABOVE, 'CRSI' OR 'ACI' TABLES WHERE APPLICABLE AND REQUIRED.
11. TYPE S1-S6, S11, T1-T3 AND T6-T9 APPLICABLE TO BAR SIZES #3 THROUGH #8.

STIRRUP AND TIE HOOKS

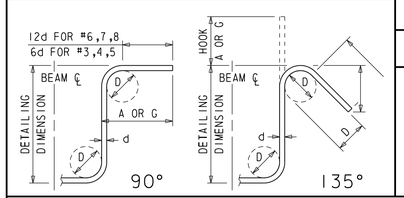

180° AND 90° END HOOKS

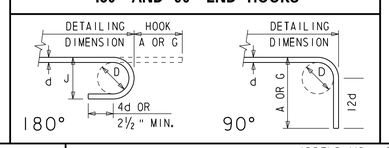

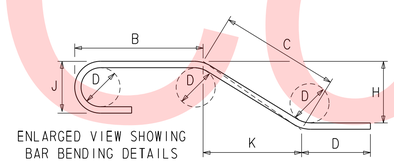

STANDARD BAR BENDS

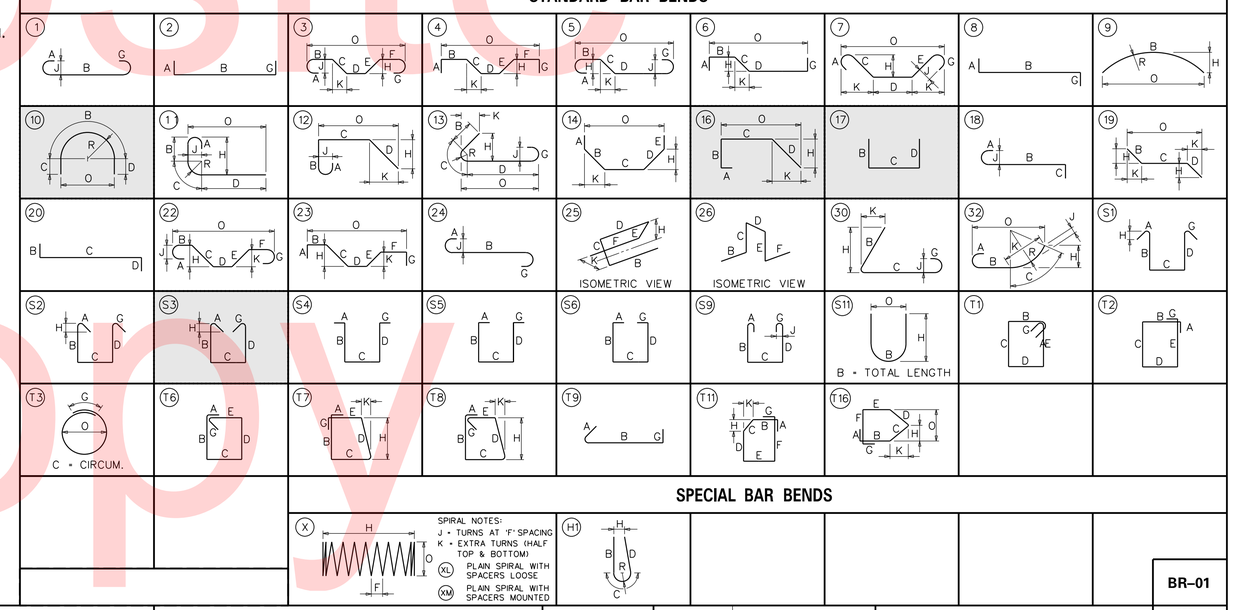

SPECIAL BAR BENDS

DELAWARE DEPARTMENT OF TRANSPORTATION

ADDENDUMS / REVISIONS

NOT TO SCALE

BR 1-567 ON N501 HAY ROAD OVER SHELLPOT CREEK, CITY OF WILMINGTON

CONTRACT	BRIDGE NO.	1-567A
T201307101	DESIGNED BY:	ZME
COUNTY	CHECKED BY:	SBM
NEW CASTLE		

SUBSTRUCTURE REINFORCEMENT BAR LIST

BR-01

SHEET NO. 30

TOTAL SHTS. 50

Y:\BRIDGES\DELDOT\BR1-567A N501 HAY RD\STRUCTURES\FINAL DRAWINGS\30_NPBBR01.DGN

Unofficial Website Copy

(1) ANY MARK NUMBER WITH SUFFIX 'E' DENOTES EPOXY COATED REINFORCING STEEL.
(2) ALL MARK 'LOCATION PREFIXES' SHALL CONSIST OF TWO LETTERS AND ARE AS FOLLOWS: AB = ABUTMENT, AS = APPROACH SLAB, BC = BOX CULVERT, BW = BACKWALL, CL = COLUMN, DK = DECK, DL = DOWEL, FT = FOOTING, HW = HEADWALL, MS = MISC. BARS, PA = PARAPET, PR = PIER, SC = SHEETPILE CAP, SL = SLAB, TW = TOEWALL, WL = WALL (UNIQUE LOCATION), WW = WINGWALL

SPECIFICATIONS					BENDING DIMENSIONS (FEET-INCHES /QUARTER INCH)										
QTY.	SIZE	LENGTH	MARK	TYPE	A	B	C	D	E	F/R	G	H	J	K	O
76	5	50-20	DK501E	STR		50-20									
217	5	37-52	DK502E	1	0-70	36-32					0-70		0-50		
8	5	36-32	DK503E	STR		36-32									
100	5	4-60	DK504E	T6	0-60	1-20	0-100	1-20	0-100						
100	6	7-11 2	DK601E	33	0-80	1-00	1-02	0-60	5-30						
6	6	36-32	DK602E	STR		36-32									
100	6	3-60	DK603E	34	0-80	1-100	1-00	0-60							
98	8	54-00	DK801E	STR		54-00									
54	5	49-20	PA501E	STR		49-20									
360	5	5-91	PA502E	H1		2-30	1-33	2-22		0-43		0-41			
38	5	20-40	AS501E	2	0-100	19-60									
68	5	17-80	AS502E	STR		17-80									
6	5	9-80	AS503E	STR		9-80									
68	5	6-62	AS504E	17		2-90	1-02	2-90							
38	7	20-00	AS701E	STR		20-00									
132	1	17-11	AS1001E	6			6-01	11-10				0-60		6-00	17-10
9	1	9-11	AS1002E	6			6-01	3-10				0-60		6-00	9-10
14	5	33-60	SL501E	STR		33-60									
136	8	4-60	SL801E	STR		4-60									
27	5	9-80	PA516E	STR		9-80									
38	5	18-70	AS511E	2	0-100	17-90									
1X4	5	15-63	AS515E	STR		15-63									
		TO				TO									
		17-52				17-52									
1	5	13-30	AS516E	9		13-30				23-11 1		0-11 0			13-10
1X4	5	2-20	AS517E	STR		2-20									
		TO				TO									
		11-92				11-92									

SPECIFICATIONS					BENDING DIMENSIONS (FEET-INCHES /QUARTER INCH)										
QTY.	SIZE	LENGTH	MARK	TYPE	A	B	C	D	E	F/R	G	H	J	K	O
1X5	5	5-20	AS518E	2	0-100	4-40									
		TO			TO	TO					TO				
		10-100			0-100	10-00									
1X13	5	7-100	AS519E	2	0-100	7-00									
		TO			TO	TO					TO				
		10-100			0-100	10-00									
1	5	11-11 3	AS520E	6		9-30	2-83					1-62		2-30	11-60
38	7	20-00	AS711E	STR		20-00									
1X5	7	5-50	AS712E	STR		5-50									
		TO				TO									
		11-10				11-10									
1X13	7	8-10	AS713E	STR		8-10									
		TO				TO									
		11-10				11-10									
1	7	13-10	AS714E	6		9-30	3-100					2-20		3-20	12-50
1X8	1	1-12	AS1013E	STR		1-12									
		TO				TO									
		13-100				13-100									
1X7	1	15-51	AS1014E	STR		15-51									
		TO				TO									
		17-52				17-52									
1	1	13-30	AS1015E	9		13-30				23-11 1		0-11 0			13-10
14	5	31-02	SL511E	STR		31-02									
1X20	5	16-11 3	SL512E	9		16-11 3				23-11 1		1-60			16-72
		TO				TO				TO		TO			TO
		22-11 3				22-11 3				32-11 1		1-11 3			22-61
25	5	9-23	SL513E	STR		9-23									
25	6	9-103	SL614E	1	0-80	9-23							0-60		
49	5	7-03	PA511E	T11		0-00	1-00	1-60	0-93	3-90		0-81		0-83	
69	5	5-91	PA512E	H1		2-30	1-33	2-22		0-43		0-41			
9	5	13-12	PA513E	STR		13-12									
9	5	16-92	PA514E	STR		16-92									
20	5	8-23	PA515E	T11		0-00	1-00	2-12	0-93	4-32		0-81		0-83	

SPECIFICATIONS					BENDING DIMENSIONS (FEET-INCHES /QUARTER INCH)										
QTY.	SIZE	LENGTH	MARK	TYPE	A	B	C	D	E	F/R	G	H	J	K	O

ASTM STANDARD ENGLISH REINFORCING BARS

BAR SIZE	NOMINAL DIMENSIONS: DIAMETER (INCHES)	AREA (INCHES²)	WEIGHT (LBS./FT.)	RECOMMENDED END HOOKS, APPLICABLE TO ALL GRADES: 180° HOOKS D	180° HOOKS A OR G	180° HOOKS J	90° HOOKS A OR G	STIRRUP AND TIE HOOKS, APPLICABLE TO ALL GRADES: 90° HOOK D	90° HOOK A OR G	135° HOOK A OR G	135° HOOK A OR G
3	0.375	0.110	0.376	2¼"	5"	3"	6"	1½"	4"	4"	2½"
4	0.500	0.200	0.668	3"	6"	4"	8"	2"	4½"	4½"	3"
5	0.625	0.310	1.043	3¾"	7"	5"	10"	2½"	6"	5½"	3¾"
6	0.750	0.440	1.502	4½"	8"	6"	1-0"	4½"	1-0"	8"	4½"
7	0.875	0.600	2.044	5¼"	10"	7"	1-2"	5¼"	1-2"	9"	5¼"
8	1.000	0.790	2.670	6"	11"	8"	1-4"	6"	1-4"	10½"	6"
9	1.128	1.000	3.400	9½"	1-3"	11¾"	1-7"				
10	1.270	1.270	4.303	10¾"	1-5"	1-1¼"	1-10"				
11	1.410	1.560	5.313	1-0"	1-7"	1-2¾"	2-0"				
14	1.693	2.250	7.650	1-6¼"	2-3"	1-9¾"	2-7"				
18	2.257	4.000	13.600	2-0"	3-0"	2-4½"	3-5"				

NOTES:
1. FIGURES SHOWN IN CIRCLES REPRESENT BAR BEND TYPES.
2. STANDARD BAR BENDS INCLUDE ONLY THOSE TYPES BELOW, INDICATED AS SUCH.
3. ALL DIMENSIONS OUT-TO-OUT, EXCEPT "A" AND "G" ON STD. 180° AND 135° HOOKS.
4. "J" DIMENSIONS ON 180° HOOKS TO BE SHOWN ONLY WHERE NECESSARY TO RESTRICT HOOK SIZE, OTHERWISE STANDARD 'ACI' HOOKS ARE TO BE USED.
5. WHERE "J" IS NOT SHOWN, "J" WILL BE KEPT EQUAL TO OR LESS THAN "H" ON TYPES 3, 5 AND 22. WHERE "J" CAN EXCEED "H", IT SHALL BE SHOWN.
6. "H" DIMENSIONS OF STIRRUPS TO BE SHOWN AS NEEDED TO FIT WITHIN THE CONCRETE.
7. UNLESS OTHERWISE NOTED, DIAMETER "D" IS THE SAME FOR ALL BENDS AND HOOKS ON A BAR (EXCEPT FOR BEND TYPES 11 AND 13).
8. WHERE SLOPE DIFFERS FROM 45° OFFSET, "H" AND "K" MUST BE SHOWN.
9. WHERE BARS ARE TO BE BENT MORE ACCURATELY THAN STANDARD BENDING TOLERANCES, BENDING DIMENSIONS REQUIRING CLOSER FABRICATION SHOULD HAVE LIMITS INDICATED.
10. FOR RECOMMENDED DIAMETER "D", OF BENDS, HOOKS, ETC., REFER TO TABLE ABOVE, 'CRSI' OR 'ACI' TABLES WHERE APPLICABLE AND REQUIRED.
11. TYPE S1-S6, S11, T1-T3 AND T6-T9 APPLICABLE TO BAR SIZES #3 THROUGH #8.

STANDARD BAR BENDS

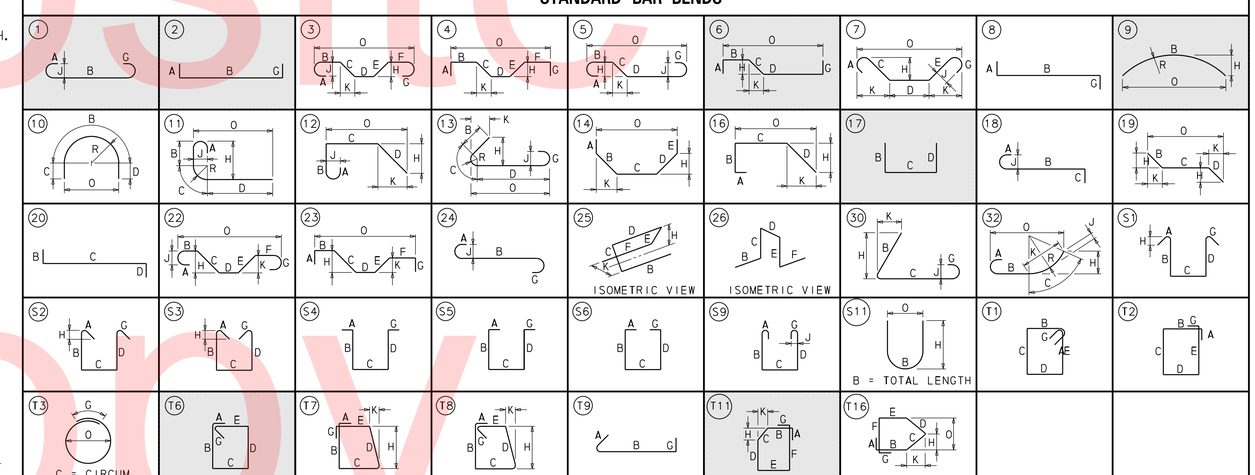

SPECIAL BAR BENDS

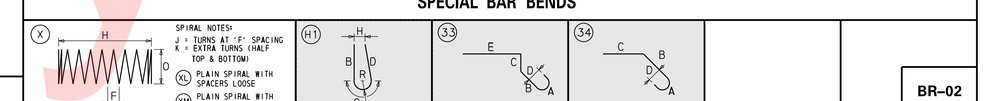

STIRRUP AND TIE HOOKS

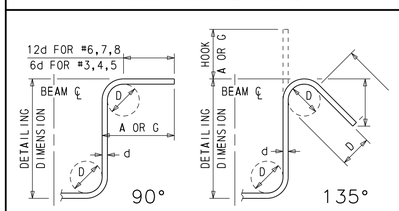

180° AND 90° END HOOKS

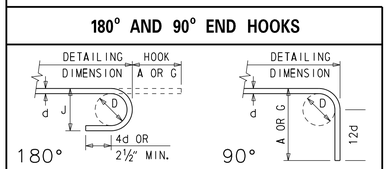

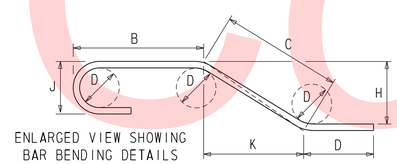

ENLARGED VIEW SHOWING BAR BENDING DETAILS

DELAWARE DEPARTMENT OF TRANSPORTATION

ADDENDUMS / REVISIONS

NOT TO SCALE

BR 1-567 ON N501 HAY ROAD OVER SHELLPOT CREEK, CITY OF WILMINGTON

CONTRACT	BRIDGE NO. 1-567A
T201307101	DESIGNED BY: ZME
COUNTY: NEW CASTLE	CHECKED BY: SBM

SUPERSTRUCTURE REINFORCEMENT BAR LIST

BR-02

SHEET NO.	TOTAL SHTS.
31	50

Unofficial Website Copy

ENVIRONMENTAL COMPLIANCE NOTES

1. GENERAL NOTES:

A. THE PURPOSE OF THESE SHEETS IS TO IDENTIFY THOSE ITEMS ASSOCIATED WITH ENVIRONMENTAL COMPLIANCE. IMPACT CALCULATIONS ARE FOR THE AGENCY PERMIT REPORTING PURPOSES ONLY AND ARE NOT TO BE USED FOR BIDDING PURPOSES.

B. IF A DEPARTURE FROM THE APPROVED PLANS (WHICH WOULD AFFECT ANY NATURAL AND/OR CULTURAL RESOURCES)IS NECESSARY, THE ENVIRONMENTAL STUDIES SECTION SHALL BE CONTACTED AT (302)760-2264 TO ALLOW FOR COORDINATION WITH THE APPROPRIATE RESOURCE AGENCIES AND APPROVAL.

C. USE OF THESE SHEETS DOES NOT ALLEVIATE THE CONTRACTOR'S RESPONSIBILITY TO COMPLY WITH ALL CONDITIONS SET FORTH IN THE ENVIRONMENTAL STATEMENT AND PERMITS.

2. NATURAL RESOURCE ISSUES:

A. PERMIT REQUIREMENTS/APPROVALS*:
U.S. ARMY CORPS OF ENGINEERS (COE): - *3(a) AND (c) (NO PCN)
DNREC - WETLAND AND SUBAQUEOUS LANDS (WLSL): - SUBAQUEOUS LANDS PERMIT**
DNREC - WATER QUALITY (WQC) & COASTAL ZONE CONSISTENCY (CZM):
ISSUED-PROJECT IS NOT LOCATED IN CRW
CITY OF WILMINGTON - FLOODPLAIN APPROVAL**

* THE PERMITS/APPROVALS LISTED ARE THOSE REQUIRED FOR THIS PROJECT. THE ENVIRONMENTAL STUDIES SECTION IS RESPONSIBLE FOR COORDINATING AND/OR OBTAINING THIS APPROVAL.
** THE CONTRACTOR MUST ENSURE THAT THESE PERMITS/APPROVALS (COE, DNREC, NCC, CITY OF WILMINGTON) ARE IN THEIR POSSESSION PRIOR TO BEGINNING CONSTRUCTION IN THE PERMITTED AREA(S) AND ENSURE THEY ARE DISPLAYED ON-SITE DURING THE ENTIRE CONSTRUCTION PERIOD.
NOTE: THE ABSENCE OF ASTERISKS AFTER A PERMIT (WQZ, CZM) INDICATES THAT COORDINATION HAS BEEN DONE WITH THAT AGENCY, BUT NO WRITTEN AUTHORIZATION WAS REQUIRED. AS SUCH, NO PAPERWORK FROM THAT AGENCY SHOULD BE ANTICIPATED.

B. CONSTRUCTION RESTRICTIONS:
FISHERIES - NONE
ENDANGERED SPECIES - NONE
MIGRATORY BIRDS - APRIL 15 - AUGUST 1 (INCLUSIVE) EITHER BEGIN WORK ON THE UNDERSIDE OF THE STRUCTURE PRIOR TO 4/15 (TO PREVENT BIRDS FROM NESTING) OR WAIT UNTIL AFTER 8/1 (AFTER HATCHLINGS HAVE LEFT) TO BEGIN WORK TO UNDERSIDE. IF NEITHER OF THESE OPTIONS IS PRACTICABLE, THEN DETERRENT NETTING OR SIMILAR DEVICE SHALL BE INSTALLED PRIOR TO 4/15.

3. CULTURAL RESOURCE ISSUES:

A. AS A RESULT OF THE CURRENT PROJECT COORDINATION, THIS PROJECT IS CONSISTENT WITH STIPULATION II.B.2 OF DELDOT'S PROGRAMMATIC AGREEMENT WITH DE STATE HISTORIC PRESERVATION OFFICE (DE SHPO), FEDERAL HIGHWAY ADMINISTRATION (FHWA) AND ADVIROSRY COUNCIL ON HISTORIC PRESERVATION (ACHP). THERE ARE NO CULTURAL RESOURCE CONCERNS AS LONG AS THE PROJECT SCOPE IS NOT MODIFIED. SHOULD IT BE NECESSARY TO ADD ADDITIONAL ACCESS LCOATIONS OR OTHER STOCKPILING/STAGING AREAS, DELDOT ENVIRONMENTAL STAFF WILL NEED TO REVIEW THESE AREAS FOR POTENTIAL CULTURAL AND/OR NATURAL RESOURCES CONCERNS.

4. STREAM RESTORATION AND RIPRAP TREATMENTS:

A. THE CONTRACTOR SHALL FOLLOW THE SPECIAL PROVISIONS OF ITEM *712531 - CHANNEL BED FILL IN REGARDS TO THE SALVAGING OF ON-SITE NATURAL STREAM BOTTOM MATERIAL OR THE FURNISHING OF OFF-SITE MATERIAL. IF SUFFICIENT SOURCES FOR CHANNEL BED FILL DO NOT EXIST ON-SITE, ANY NEW MATERIAL SHALL CONFORM TO THE REQUIREMENTS OF ITEM *712531 - CHANNEL BED FILL. ALL RIPRAP IN THE CHANNEL BOTTOM (I.E. BELOW THE WATER LINE) SHALL BE RECESSED ONE FOOT BELOW STREAM BED ELEVATION AND CHOKED WITH BORROW TYPE 'B' SO THAT ALL OF THE VOIDS IN THE RIPRAP ARE FILLED WITH MATERIAL. PAYMENT UNDER ITEM *209002 - BORROW TYPE 'B'. THE RIPRAP SHALL THEN BE COVERED WITH A MINIMUM OF 12" CHANNEL BED FILL. FINAL CHANNEL ELEVATIONS SHALL MATCH EXISTING ELEVATIONS AT THE UPSTREAM AND DOWNSTREAM PROJECT LIMITS. THROUGH THE STRUCTURE, ELEVATIONS SHALL BE AS NOTED ON THE PLANS. PAYMENT UNDER ITEM *712531 - CHANNEL BED FILL.

B. OTHER AREAS OF THE CHANNEL BOTTOM AFFECTED BY CONSTRUCTION (INCLUDING, BUT NOT LIMITED TO, THE LOCATION OF SUMP PITS, STABILIZED OUTFALLS, TEMPORARY PIPES AND/OR SANDBAG DIKES AND DIVERSIONS) SHALL BE RESTORED TO EXISTING CONDITIONS. ANY CAVITIES OR SCOUR HOLES RESULTING FROM CONSTRUCTION ACTIVITIES SHALL BE FILLED WITH CHANNEL BED FILL. PAYMENT UNDER ITEM *712531 - CHANNEL BED FILL.

C. WHEN ALL EROSION AND SEDIMENT CONTROL MEASURES ARE REMOVED AND THE STREAM RETURNS TO ITS NATURAL FLOW CONDITIONS, THE FLOW MUST REMAIN ABOVE GROUND AND ABOVE THE RIPRAP (I.E. THE FLOW CANNOT BE "LOST" IN THE RIPRAP OR BENEATH THE STRUCTURE). IF THIS IS NOT ACHIEVED, THE CONTRACTOR WILL BE REQUIRED TO TAKE CORRECTIVE ACTION AT THE CONTRACTOR'S EXPENSE.

D. ALL RIPRAP ON THE STREAM BANK, OUTSIDE THE CHANNEL BED AND ABOVE MEAN HIGH WATER, SHALL BE CHOKED WITH DELAWARE *57 STONE. PLACE JUST ENOUGH CHOKE MATERIAL TO PREVENT THE LOSS OF CHANNEL BED FILL OR TOPSOIL (DEPENDING ON LOCATION AS INDICATED BELOW) THROUGH THE RIPRAP.

- BENEATH THE BRIDGE: AFTER PLACING THE DELAWARE *57 STONE, DO A FINAL CHOKE OF CHANNEL BED FILL SO THAT THE RIPRAP PEAKS ARE BARELY VISIBLE. PAYMENT UNDER ITEM *712531 CHANNEL BED FILL. DELAWARE *57 STONE SHALL BE INCIDENTAL TO THE RIPRAP ITEM.

- ALL OTHER LOCATIONS: FINISH FILLING THE VOIDS WITH TOPSOIL SO THAT THE RIPRAP PEAKS ARE BARELY VISIBLE. AN ADDITIONAL 4-INCH TOPSOIL LAYER SHALL BE PLACED ON TOP OF THE RIPRAP. SLOPE SEEDING SHALL BE WITH ITEM *908019 - STREAMBANK SEED MIX, SEEDING. FOLLOWING THE SEEDING OPERATION, ITEM *908020 - EROSION CONTROL BLANKET MULCH, OR OTHER BLANKET AS SHOWN ON THE PLANS SHALL BE INSTALLED. ALL WORK, STARTING WITH THE INITIAL CHOKING WITH TOPSOIL THROUGH THE SEEDING SHALL BE COMPLETED PRIOR TO ANY RAIN EVENT. DELAWARE *57 STONE SHALL BE INCIDENTAL TO THE RIPRAP ITEM. ALL OTHER ITEMS SHALL BE PAID FOR UNDER THEIR RESPECTIVE ITEMS.

E. THE TOPSOIL/SEED/MULCH CAN BE PLACED BEFORE OR AFTER THE REMOVAL OF THE STREAM DIVERSION. IF IT OCCURS AFTER STREAM DIVERSION REMOVAL, A TURBIDITY CURTAIN SHALL BE USED TO MINIMIZE IN-STREAM SEDIMENTATION. PAYMENT SHALL BE INCIDENTAL TO ITEM *909004 - TURBIDITY CURTAIN, FLOATING.

5. PROTECTION OF RESOURCES:

A. CLEARING IN WETLAND AREAS SHALL BE KEPT TO A MINIMUM ABSOLUTELY NECESSARY FOR CONSTRUCTION ACCESS. ALL EQUIPMENT TRAVERSING WETLANDS AND SUBAQUEOUS LAND SHALL BE SUPPORTED ON MATS. PAYMENT FOR MATS SHALL BE MADE UNDER ITEM * 601520 - TIMBER MAT. IN WETLAND AREAS THAT ARE CLEARED, THERE SHALL BE NO GRUBBING EXCEPT WHERE NECESSARY TO CONSTRUCT PROJECT COMPONENTS SUCH AS FOUNDATIONS AND RIPRAP PROTECTION. VEGETATION SHALL BE CUT FLUSH WITH THE GROUND (I.E. NO DISTURBANCE OF THE ROOT MAT. TEMPORARILY DISTURBED WETLAND AREAS SHALL BE RESTORED TO GRADE AND SEEDED WITH TEMPORARY GRASS SEEDING - DRY GROUND, (PAYMENT UNDER ITEM *908017).

B. SILT FENCE OR CONSTRUCTION SAFETY FENCE SHALL BE USED ALONG THE LIMITS OF CONSTRUCTION IN ALL AREAS WHERE WATER/WETLANDS ARE BEING IMPACTED (AS SHOWN ON EC SHEETS), AND ALSO IN ANY AREA WHERE WATER/WETLANDS EXIST WITHIN 20 FEET OF THE LOC (AS SHOWN ON CONSTRUCTION PLANS). CONTRACTOR ACCESS BEYOND THE LOC IS STRICTLY PROHIBITED.

C. SILT FENCE INSTALLATION ADJACENT TO WOODED UPLANDS/WETLANDS: SANDBAGS SHALL BE USED TO SECURE SILT FENCE IN LIEU OF TRENCHING PROVIDED PROPER EROSION & SEDIMENT CONTROL CAN BE MAINTAINED. SANDBAGS USED TO SECURE SILT FENCE SHALL BE INCIDENTAL TO ITEM * 905001 - SILT FENCE. THE ENVIRONMENTAL STUDIES SECTION (CAROL SULLIVAN, 302-760-2129) CAN PROVIDE FURTHER GUIDANCE REGARDING THIS METHOD OF INSTALLATION.

D. ALL TREES TO BE REMOVED SHALL BE CLEARLY MARKED WITH PAINT PRIOR TO EROSION AND SEDIMENT CONTROL/ENVIRONMENTAL MEETING.

6. PLANTING GUIDANCE (INFORMATIONAL ONLY, WORK TO BE DONE BY OTHERS. THERE SHALL BE NO PAYMENT FOR PLANTING ON THIS CONTRACT.):

UPON FINAL ACCEPTANCE OF THE CONTRACT, APPROPRIATE TREES AND/OR SHRUBS SHALL BE PLANTED IN A NATURALIZED PATTERN (MINIMUM 8', MAXIMUM 12' CENTERS) IN TEMPORARILY DISTURBED WOODED WETLAND AREAS WITHIN THE LOC. FINAL PLANT COUNTS WILL BE BASED ON FIELD CONDITIONS AND DETERMINED BY THE ROADSIDE ENVIRONMENTAL ADMINISTRATOR OR HIS DESIGNEE. SPECIFIC PLANT SELECTION IS ALSO AT HIS DISCRETION BUT SHALL BE A NATIVE SPECIES APPROVED BY THE DELAWARE DEPARTMENT OF NATURAL RESOURCES. ON THIS PROJECT, DNREC WLSL REQUIRES THAT A PLANTING PLAN BE SUBMITTED TO THEM FOR APPROVAL PRIOR TO ACTUAL WORK.

7. NO PERMANENT SEDIMENT, RIPRAP OR OTHER FILL MATERIAL SHALL BE PLACED IN THE EXISTING CONCRETE CHANNEL LOCATED BETWEEN 31+90 TO 34+60 RIGHT.

PERMANENT OPEN WATER IMPACT AREA SCHEDULE

ID	IMPACT DESCRIPTION	AREA (SF)	AREA (AC)	VOLUME (CY)	JURISDICTION
2-01	RIPRAP	64.40	0.0015	2.39	DNREC
2-02	PIER PLACEMENT	146.50	0.0034	5.43	COE/DNREC
2-03	RIPRAP	116.71	0.0027	4.32	COE/DNREC
2-04	RIPRAP	120.43	0.0028	4.46	DNREC
2-05	RIPRAP	118.44	0.0027	4.39	COE/DNREC
TOTAL PERMANENT OPEN WATER IMPACTS		381.65	0.0088	14.14	COE
TOTAL PERMANENT OPEN WATER IMPACTS		566.48	0.0131	20.99	DNREC

TEMPORARY OPEN WATER IMPACT AREA SCHEDULE

ID	IMPACT DESCRIPTION	AREA (SF)	AREA (AC)	VOLUME (CY)	JURISDICTION
2-OT1	TEMPORARY COFFERDAM	686.49	0.0158	127.13	DNREC
2-OT2	TEMPORARY COFFERDAM	411.46	0.0094	76.20	DNREC
2-OT3	TEMPORARY COFFERDAM	3123.44	0.0717	578.41	COE/DNREC
2-OT4	RIPRAP (CULVERT INLET PROTECTION)	97.73	0.0022	3.62	DNREC
TOTAL TEMPORARY OPEN WATER IMPACTS		3123.44	0.0717	578.41	COE
TOTAL TEMPORARY OPEN WATER IMPACTS		4319.12	0.0992	785.36	DNREC

PERMANENT TIDAL WETLAND IMPACT AREA SCHEDULE

ID	IMPACT DESCRIPTION	AREA (SF)	AREA (AC)	VOLUME (CY)	JURISDICTION
2-W1	RIPRAP	226.14	0.0052	26.52	COE
2-W2	RIPRAP	64.40	0.0015	7.55	COE
2-W3	RIPRAP	162.48	0.0037	19.06	COE
2-W4	RIPRAP	86.70	0.0020	10.17	COE
2-W5	RIPRAP	102.96	0.0024	12.08	COE
2-W6	RIPRAP	120.43	0.0026	14.12	COE
TOTAL PERMANENT TIDAL WETLAND IMPACTS		763.11	0.0175	89.50	COE

TEMPORARY TIDAL WETLAND IMPACT AREA SCHEDULE

ID	IMPACT DESCRIPTION	AREA (SF)	AREA (AC)	VOLUME (CY)	JURISDICTION
2-WT1	TEMPORARY COFFERDAM	686.49	0.0158	127.13	COE
2-WT2	TEMPORARY COFFERDAM	411.49	0.0094	76.20	COE
2-WT3	TEMPORARY COFFERDAM	265.45	0.0061	49.16	COE
2-WT4	TEMPORARY COFFERDAM	143.06	0.0033	26.49	COE
TOTAL TEMPORARY TIDAL WETLAND IMPACTS		1506.49	0.0346	278.98	COE

OPEN WATER CREATION AREA SCHEDULE

ID	IMPACT DESCRIPTION	AREA (SF)	AREA (AC)	VOLUME (CY)	JURISDICTION
2-OC1	PIER/PILE REMOVAL	107.66	0.0025	3.99	COE/DNREC
2-OC2	PIER/PILE REMOVAL	106.91	0.0025	3.96	COE/DNREC
TOTAL OPEN WATER CREATION AREAS		214.57	0.0050	7.95	COE/DNREC

WETLANDS DELINEATED BY MCCORMICK TAYLOR ON JULY 26, 2013 IN ACCORDANCE WITH THE 1987 CORPS OF ENGINEERS WETLAND DELINEATION MANUAL AND REGIONAL SUPPLEMENTS.

SHEET PREPARED BY: MCCORMICK TAYLOR DATE: 1/27/14
SHEET LAST UPDATED: 08/01/2016

EC-01

Unofficial Website Copy

LEGEND

- PERMANENT IMPACT AREA
- TEMPORARY IMPACT AREA
- CREATION AREA
- TW — TIDAL WETLAND
- OHW — ORDINARY HIGH WATER
- XX / ?X — IMPACT AREA TYPE ID. (SEE BELOW) / IMPACT AREA ID. AND/OR NUMBER

T = TEMPORARY IMPACT O = OPEN WATER IMPACT
W = WETLAND IMPACT C = CREATION AREA

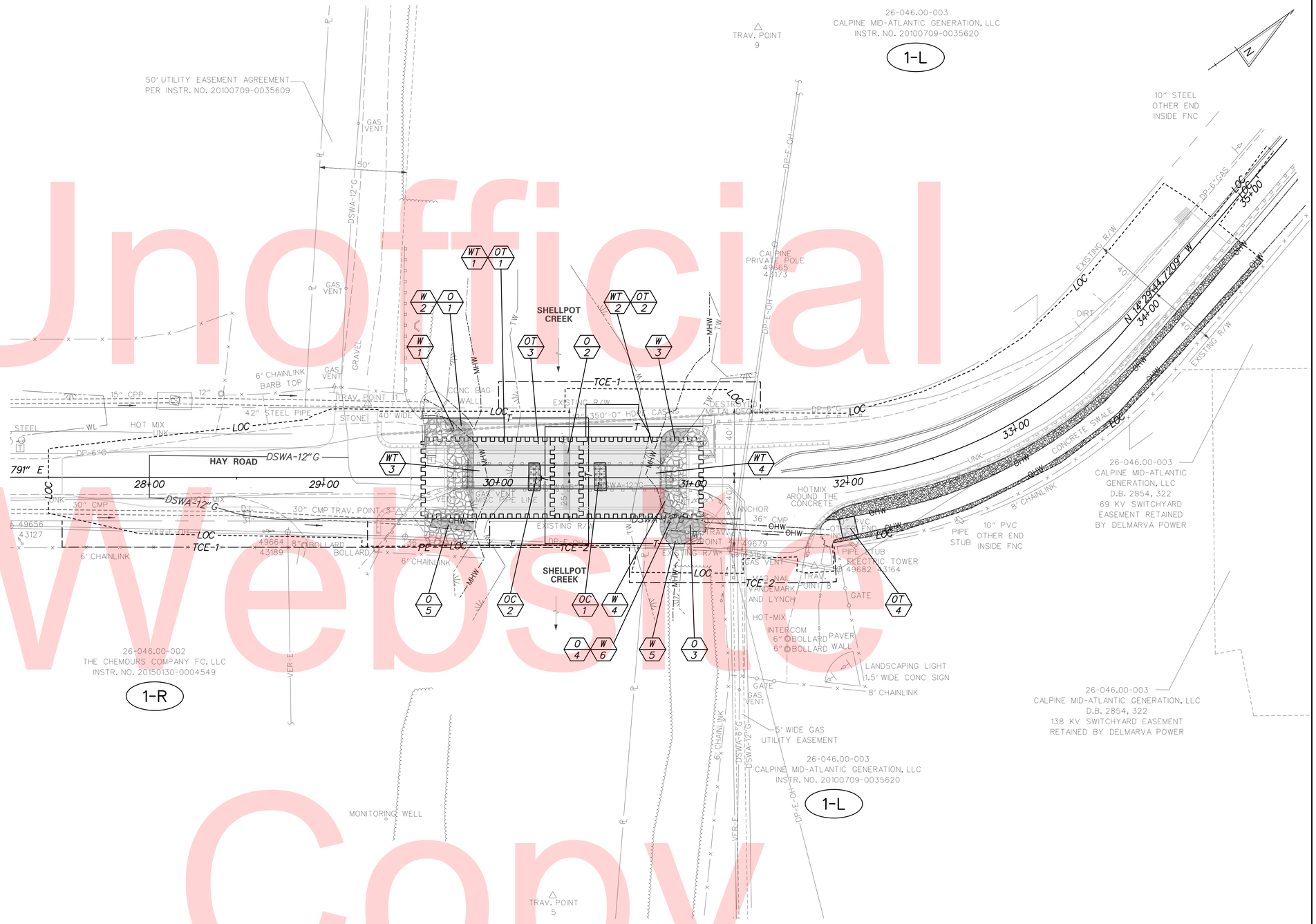

Unofficial Website Copy

DELAWARE DEPARTMENT OF TRANSPORTATION	ADDENDUMS / REVISIONS	SCALE 0 30 60 90 FEET	BR 1-567A ON N501 HAY ROAD OVER SHELLPOT CREEK, CITY OF WILMINGTON	CONTRACT T201307101 / COUNTY NEW CASTLE	BRIDGE NO. 1-567A / DESIGNED BY: SSMG / CHECKED BY: MAA	ENVIRONMENTAL COMPLIANCE PLAN

EC-02

SHEET NO. 33
TOTAL SHTS. 50

EROSION & SEDIMENT CONTROL	
PST	PORTABLE SEDIMENT TANK
SF	SILT FENCE / LENGTH
—SF—	SILT FENCE
SP	SUMP PIT
—T—	TURBIDITY CURTAIN
CIP	CULVERT INLET PROTECTION
■	INLET SEDIMENT CONTROL

CONSTRUCTION PHASING & M.O.T	
	BARRICADE, TYPE 3
	CONCRETE SAFETY BARRIER - PORTABLE
CSF XXX	CONSTRUCTION SAFETY FENCE / LENGTH
—CSF—	CONSTRUCTION SAFETY FENCE
	CONSTRUCTION WARNING SIGN LOCATION
END ROAD WORK	CONSTRUCTION WARNING SIGN
	CRASH CUSHION ARRAY
	DRUM - TRAFFIC CONTROL
	FLAGGER LOCATION
PHASE	PHASING TRAFFIC FLOW ARROW
	TEMPORARY CONSTRUCTION
	TEMPORARY PAVEMENT MARKING ARROW
	TRUCK WITH MOUNTED ATTENUATOR
	WORK AREA - ACTIVE PHASE
	TEMPORARY SHEETPILE COFFERDAM
	STAGING AREA

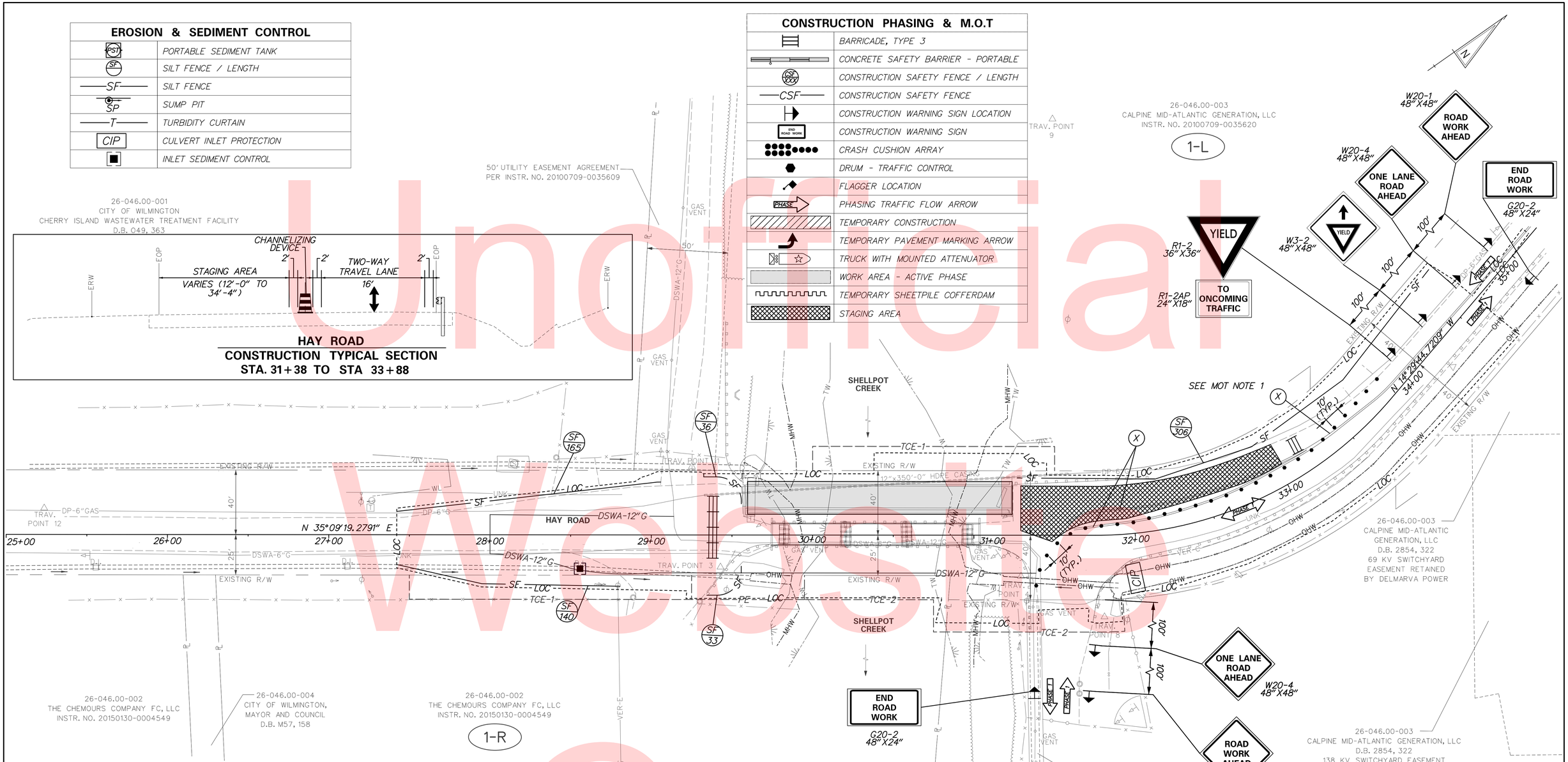

Unofficial Website Copy

SEQUENCE OF CONSTRUCTION

1. PLACE ADVANCE WARNING SIGNS, AND SET TRAFFIC CONTROLS.
2. PLACE PERIMETER E&S CONTROLS.
3. DISMANTLE EXISTING MODULAR STEEL BRIDGE SUPERSTRUCTURE AND ABUTMENTS. CUT EXISTING STEEL H-PILES 1' BELOW GRADE.
4. REMOVE EXISTING CONCRETE SUPERSTRUCTURE SPAN 3.
5. REMOVE EXISTING SUPERSTRUCTURE SPAN 1 AND 2.
6. PLACE TEMPORARY SHEETPILE COFFERDAM AT ABUTMENT 2.
7. PLACE SURCHARGE LOAD AT ABUTMENT 2 AND QUARANTINE.
8. REMOVE PIER 3 AND PIER 4. CUT TIMBER PILES 1' BELOW STREAM BED.
9. CONSTRUCT ABUTMENT 2.
10. PLACE RIP RAP AT ABUTMENT 2. REMOVE TEMPORARY COFFERDAM AT ABUTMENT 2.
11. PLACE TEMPORARY SHEETPILE COFFERDAM AT ABUTMENT 1.
12. PLACE SURCHARGE LOAD AT ABUTMENT 1 AND QUARANTINE.
13. REMOVE PIER 1 AND PIER 2. REMOVE TIMBER PILES 1' BELOW STREAMBED.
14. CONSTRUCT ABUTMENT 1 AND PIER.

SEQUENCE OF CONSTRUCTION CONT.

15. REMOVE PORTION OF COFFERDAM IN SPAN 2.
16. PLACE PRESTRESSED CONCRETE BOX BEAMS SPAN 2.
17. PLACE RIP RAP AT ABUTMENT 1.
18. REMOVE REMAINING TEMPORARY COFFERDAM AT ABUTMENT 1.
19. PLACE PRESTRESSED CONCRETE BOX BEAMS SPAN 1.
20. CONSTRUCT REMAINING SUPERSTRUCTURE AND APPROACH SLABS.
21. CONSTRUCT DELAWARE SOLID WASTE AUTHORITY (DSWA) GAS LINE.
22. RECONSTRUCT ROADWAY SOUTH OF BRIDGE USING DETOUR.
23. RECONSTRUCT ROADWAY NORTH OF BRIDGE USING HALF-WIDTH CONSTRUCTION AS SHOWN ON THIS SHEET.
24. STABILIZE DITCH STA. 31+50 TO STA. 34+60.
25. PLACE GUARDRAIL, STRIPING, SEED AND MULCH.
26. REMOVE TEMPORARY TRAFFIC CONTROLS.
27. REMOVE E&S CONTROLS AFTER CONCURRENCE FROM THE STORMWATER ENGINEER.

PAVEMENT MARKINGS LEGEND		
SYMBOL	ITEM	QUANTITY
X	REMOVAL OF PAVEMENT STRIPING (ITEM 748530)	330 SF

MOT NOTES:

1. REMOVE CENTERLINE STRIPING FROM THE NORTH SIDE OF THE BRIDGE TO STATION 34+00.

DELAWARE DEPARTMENT OF TRANSPORTATION

ADDENDUMS / REVISIONS

SCALE 0 30 60 90 FEET

BR 1-567A ON N501 HAY ROAD OVER SHELLPOT CREEK, CITY OF WILMINGTON

CONTRACT	BRIDGE NO. 1-567A
T201307101	DESIGNED BY: SSMG
COUNTY	
NEW CASTLE	CHECKED BY: MAA

CONSTRUCTION PHASING, M.O.T., AND EROSION CONTROL PLAN

CS-01

SHEET NO. 34

TOTAL SHTS. 50

EROSION & SEDIMENT CONTROL	
PST	PORTABLE SEDIMENT TANK
SF	SILT FENCE / LENGTH
—SF—	SILT FENCE
SP	SUMP PIT
—T—	TURBIDITY CURTAIN
CIP	CULVERT INLET PROTECTION
■	INLET SEDIMENT CONTROL

CONSTRUCTION PHASING & M.O.T	
	BARRICADE, TYPE 3
	CONCRETE SAFETY BARRIER - PORTABLE
CSF XXX	CONSTRUCTION SAFETY FENCE / LENGTH
—CSF—	CONSTRUCTION SAFETY FENCE
	CONSTRUCTION WARNING SIGN LOCATION
END ROAD WORK	CONSTRUCTION WARNING SIGN
	CRASH CUSHION ARRAY
	DRUM - TRAFFIC CONTROL
	FLAGGER LOCATION
PHASE	PHASING TRAFFIC FLOW ARROW
	TEMPORARY CONSTRUCTION
	TEMPORARY PAVEMENT MARKING ARROW
	TRUCK WITH MOUNTED ATTENUATOR
	WORK AREA - ACTIVE PHASE
	TEMPORARY SHEETPILE COFFER DAM
	STAGING AREA

HAY ROAD
CONSTRUCTION TYPICAL SECTION
STA. 31+38 TO STA 33+88

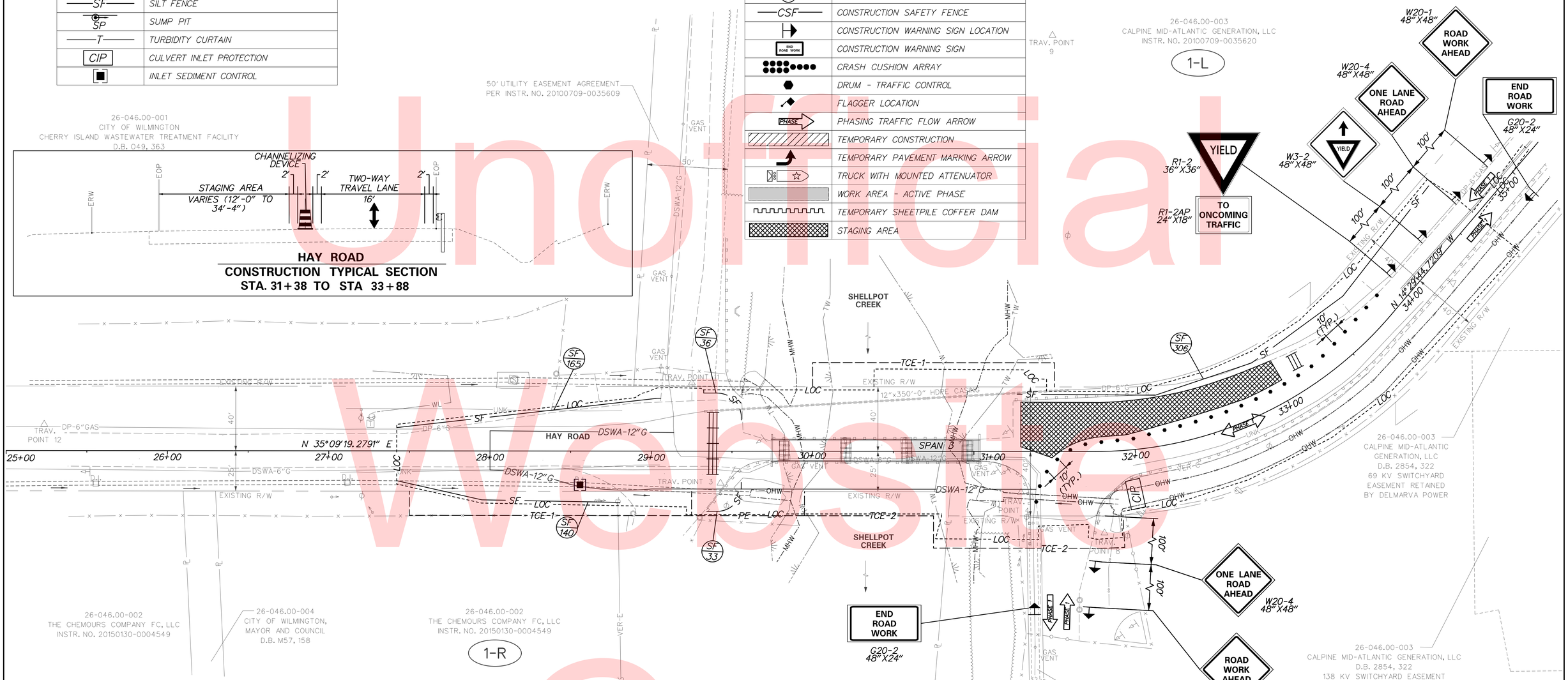

Unofficial Website Copy

SEQUENCE OF CONSTRUCTION

1. PLACE ADVANCE WARNING SIGNS, AND SET TRAFFIC CONTROLS.
2. PLACE PERIMETER E&S CONTROLS.
3. DISMANTLE EXISTING MODULAR STEEL BRIDGE SUPERSTRUCTURE AND ABUTMENTS. CUT EXISTING STEEL H-PILES 1' BELOW GRADE.
4. REMOVE EXISTING CONCRETE SUPERSTRUCTURE SPAN 3.
5. REMOVE EXISTING SUPERSTRUCTURE SPAN 1 AND 2.
6. PLACE TEMPORARY SHEETPILE COFFERDAM AT ABUTMENT 2.
7. PLACE SURCHARGE LOAD AT ABUTMENT 2 AND QUARANTINE.
8. REMOVE PIER 3 AND PIER 4. CUT TIMBER PILES 1' BELOW STREAM BED.
9. CONSTRUCT ABUTMENT 2.
10. PLACE RIP RAP AT ABUTMENT 2. REMOVE TEMPORARY COFFERDAM AT ABUTMENT 2.
11. PLACE TEMPORARY SHEETPILE COFFERDAM AT ABUTMENT 1.
12. PLACE SURCHARGE LOAD AT ABUTMENT 1 AND QUARANTINE.
13. REMOVE PIER 1 AND PIER 2. REMOVE TIMBER PILES 1' BELOW STREAMBED.
14. CONSTRUCT ABUTMENT 1 AND PIER.

SEQUENCE OF CONSTRUCTION CONT.

15. REMOVE PORTION OF COFFERDAM IN SPAN 2.
16. PLACE PRESTRESSED CONCRETE BOX BEAMS SPAN 2.
17. PLACE RIP RAP AT ABUTMENT 1.
18. REMOVE REMAINING TEMPORARY COFFERDAM AT ABUTMENT 1.
19. PLACE PRESTRESSED CONCRETE BOX BEAMS SPAN 1.
20. CONSTRUCT REMAINING SUPERSTRUCTURE AND APPROACH SLABS.
21. CONSTRUCT DELAWARE SOLID WASTE AUTHORITY (DSWA) GAS LINE.
22. RECONSTRUCT ROADWAY SOUTH OF BRIDGE USING DETOUR.
23. RECONSTRUCT ROADWAY NORTH OF BRIDGE USING HALF-WIDTH CONSTRUCTION AS SHOWN ON THIS SHEET.
24. STABILIZE DITCH STA. 31+50 TO STA. 34+60.
25. PLACE GUARDRAIL, STRIPING, SEED AND MULCH.
26. REMOVE TEMPORARY TRAFFIC CONTROLS.
27. REMOVE E&S CONTROLS AFTER CONCURRENCE FROM THE STORMWATER ENGINEER.

DELAWARE DEPARTMENT OF TRANSPORTATION

ADDENDUMS / REVISIONS

SCALE 0 30 60 90 FEET

BR 1-567A ON N501 HAY ROAD OVER SHELLPOT CREEK, CITY OF WILMINGTON

CONTRACT	BRIDGE NO. 1-567A
T201307101	DESIGNED BY: SSMG
COUNTY	
NEW CASTLE	CHECKED BY: MAA

CONSTRUCTION PHASING, M.O.T., AND EROSION CONTROL PLAN

CS-02

SHEET NO. 35

TOTAL SHTS. 50

EROSION & SEDIMENT CONTROL	
PST	PORTABLE SEDIMENT TANK
SF	SILT FENCE / LENGTH
—SF—	SILT FENCE
SP	SUMP PIT
—T—	TURBIDITY CURTAIN
CIP	CULVERT INLET PROTECTION
■	INLET SEDIMENT CONTROL

CONSTRUCTION PHASING & M.O.T	
	BARRICADE, TYPE 3
	CONCRETE SAFETY BARRIER - PORTABLE
CSF XXX	CONSTRUCTION SAFETY FENCE / LENGTH
—CSF—	CONSTRUCTION SAFETY FENCE
	CONSTRUCTION WARNING SIGN LOCATION
END ROAD WORK	CONSTRUCTION WARNING SIGN
	CRASH CUSHION ARRAY
	DRUM - TRAFFIC CONTROL
	FLAGGER LOCATION
PHASE	PHASING TRAFFIC FLOW ARROW
	TEMPORARY CONSTRUCTION
	TEMPORARY PAVEMENT MARKING ARROW
	TRUCK WITH MOUNTED ATTENUATOR
	WORK AREA - ACTIVE PHASE
	TEMPORARY SHEETPILE COFFER DAM
	STAGING AREA

HAY ROAD
CONSTRUCTION TYPICAL SECTION
STA. 31+38 TO STA 33+88

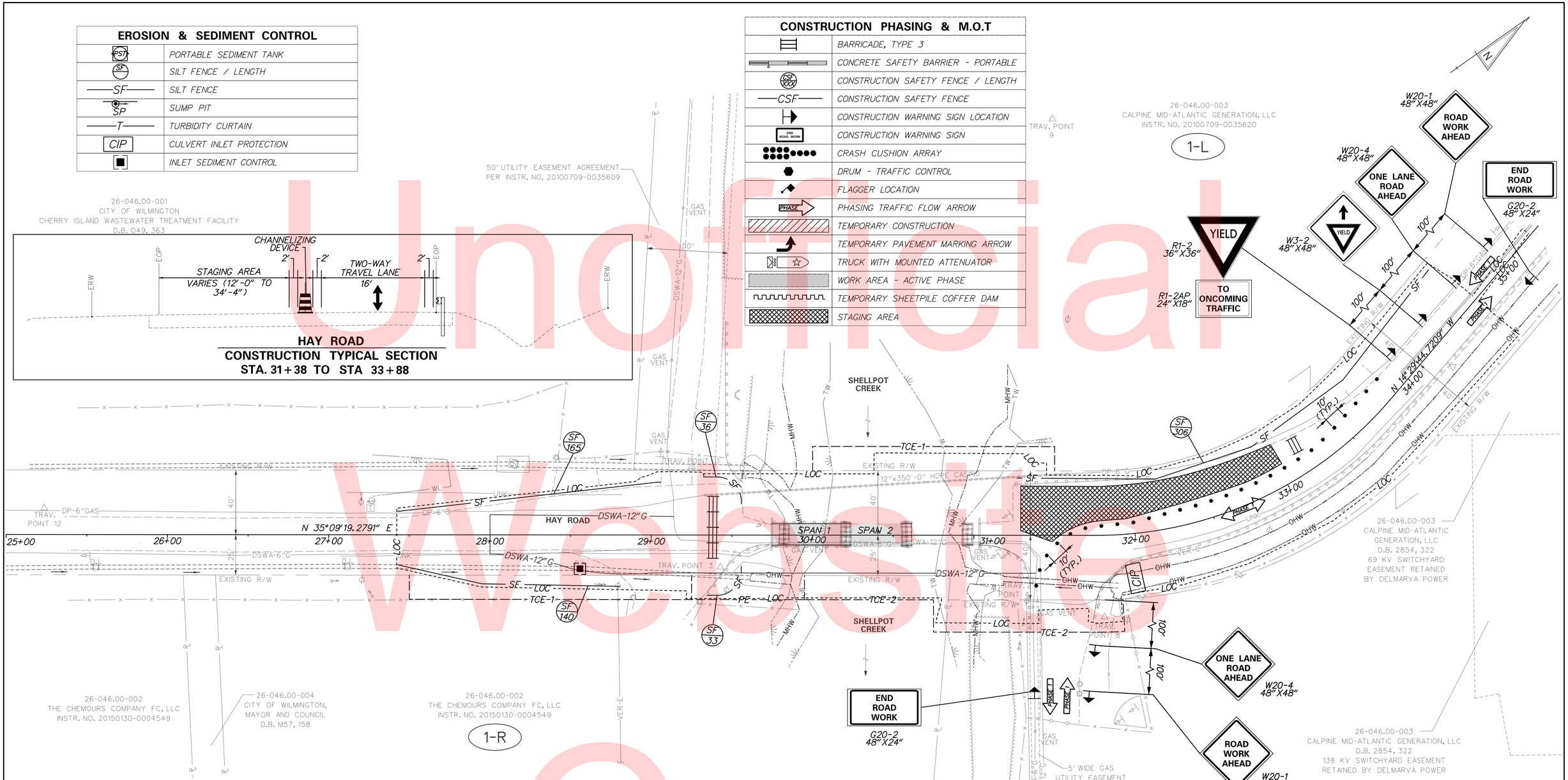

Unofficial Website Copy

SEQUENCE OF CONSTRUCTION

1. PLACE ADVANCE WARNING SIGNS, AND SET TRAFFIC CONTROLS.
2. PLACE PERIMETER E&S CONTROLS.
3. DISMANTLE EXISTING MODULAR STEEL BRIDGE SUPERSTRUCTURE AND ABUTMENTS. CUT EXISTING STEEL H-PILES 1' BELOW GRADE.
4. REMOVE EXISTING CONCRETE SUPERSTRUCTURE SPAN 3.
5. REMOVE EXISTING SUPERSTRUCTURE SPAN 1 AND 2.
6. PLACE TEMPORARY SHEETPILE COFFERDAM AT ABUTMENT 2.
7. PLACE SURCHARGE LOAD AT ABUTMENT 2 AND QUARANTINE.
8. REMOVE PIER 3 AND PIER 4. CUT TIMBER PILES 1' BELOW STREAM BED.
9. CONSTRUCT ABUTMENT 2.
10. PLACE RIP RAP AT ABUTMENT 2. REMOVE TEMPORARY COFFERDAM AT ABUTMENT 2.
11. PLACE TEMPORARY SHEETPILE COFFERDAM AT ABUTMENT 1.
12. PLACE SURCHARGE LOAD AT ABUTMENT 1 AND QUARANTINE.
13. REMOVE PIER 1 AND PIER 2. REMOVE TIMBER PILES 1' BELOW STREAMBED.
14. CONSTRUCT ABUTMENT 1 AND PIER.

SEQUENCE OF CONSTRUCTION CONT.

15. REMOVE PORTION OF COFFERDAM IN SPAN 2.
16. PLACE PRESTRESSED CONCRETE BOX BEAMS SPAN 2.
17. PLACE RIP RAP AT ABUTMENT 1.
18. REMOVE REMAINING TEMPORARY COFFERDAM AT ABUTMENT 1.
19. PLACE PRESTRESSED CONCRETE BOX BEAMS SPAN 1.
20. CONSTRUCT REMAINING SUPERSTRUCTURE AND APPROACH SLABS.
21. CONSTRUCT DELAWARE SOLID WASTE AUTHORITY (DSWA) GAS LINE.
22. RECONSTRUCT ROADWAY SOUTH OF BRIDGE USING DETOUR.
23. RECONSTRUCT ROADWAY NORTH OF BRIDGE USING HALF-WIDTH CONSTRUCTION AS SHOWN ON THIS SHEET.
24. STABILIZE DITCH STA. 31+50 TO STA. 34+60.
25. PLACE GUARDRAIL, STRIPING, SEED AND MULCH.
26. REMOVE TEMPORARY TRAFFIC CONTROLS.
27. REMOVE E&S CONTROLS AFTER CONCURRENCE FROM THE STORMWATER ENGINEER.

CS-03

DELAWARE DEPARTMENT OF TRANSPORTATION

ADDENDUMS / REVISIONS

SCALE 0 30 60 90 FEET

BR 1-567A ON N501 HAY ROAD OVER SHELLPOT CREEK, CITY OF WILMINGTON

CONTRACT	BRIDGE NO. 1-567A
T201307101	DESIGNED BY: SSMG
COUNTY	
NEW CASTLE	CHECKED BY: MAA

CONSTRUCTION PHASING, M.O.T., AND EROSION CONTROL PLAN

SHEET NO. 36
TOTAL SHTS. 50

EROSION & SEDIMENT CONTROL	
PST	PORTABLE SEDIMENT TANK
SF	SILT FENCE / LENGTH
—SF—	SILT FENCE
SP	SUMP PIT
—T—	TURBIDITY CURTAIN
CIP	CULVERT INLET PROTECTION
■	INLET SEDIMENT CONTROL

CONSTRUCTION PHASING & M.O.T	
	BARRICADE, TYPE 3
	CONCRETE SAFETY BARRIER - PORTABLE
CSF XXX	CONSTRUCTION SAFETY FENCE / LENGTH
—CSF—	CONSTRUCTION SAFETY FENCE
	CONSTRUCTION WARNING SIGN LOCATION
END ROAD WORK	CONSTRUCTION WARNING SIGN
	CRASH CUSHION ARRAY
	DRUM - TRAFFIC CONTROL
	FLAGGER LOCATION
PHASE	PHASING TRAFFIC FLOW ARROW
	TEMPORARY CONSTRUCTION
	TEMPORARY PAVEMENT MARKING ARROW
	TRUCK WITH MOUNTED ATTENUATOR
	WORK AREA - ACTIVE PHASE
	TEMPORARY SHEETPILE COFFER DAM
	STAGING AREA

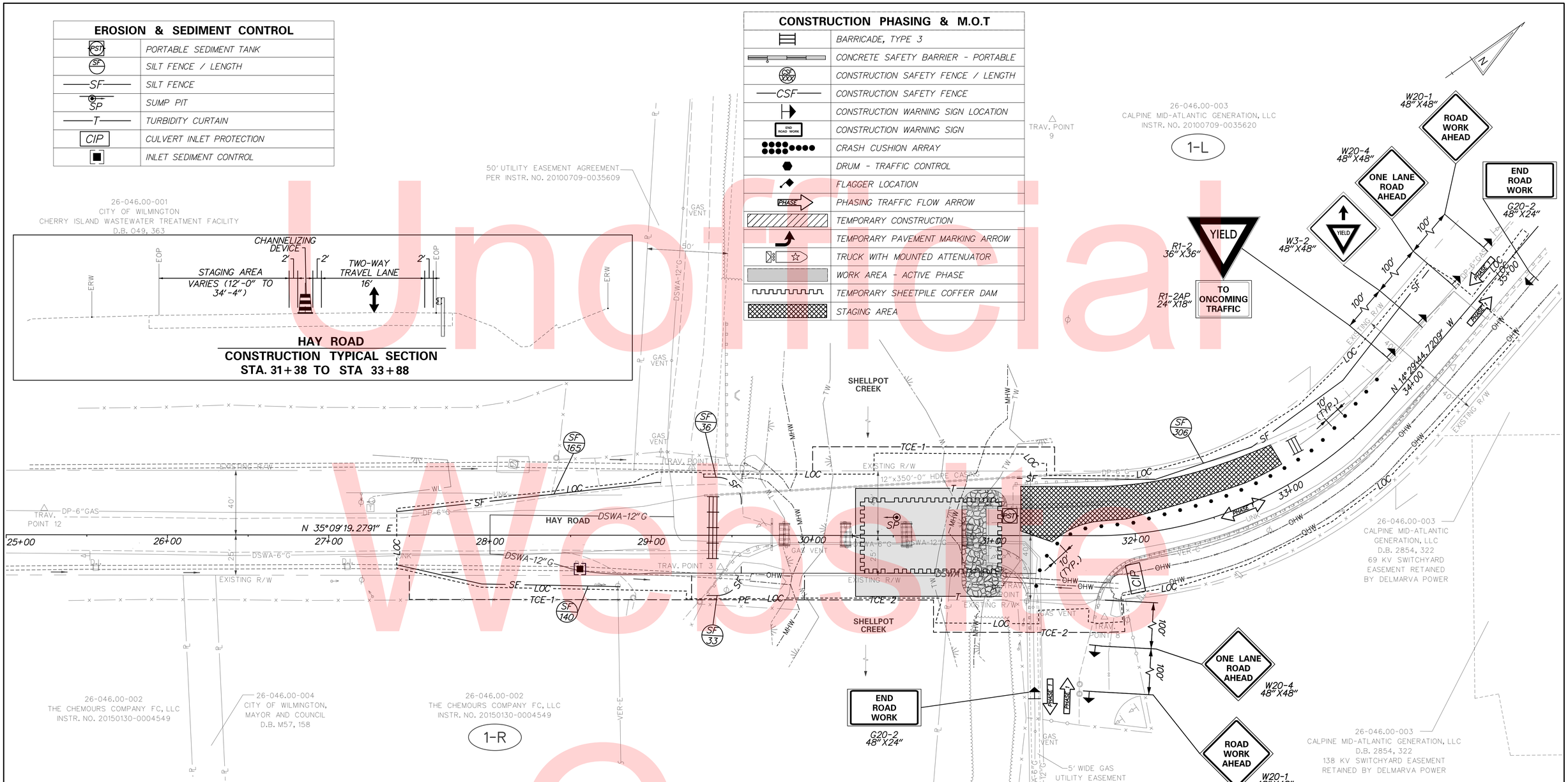

SEQUENCE OF CONSTRUCTION

1. PLACE ADVANCE WARNING SIGNS, AND SET TRAFFIC CONTROLS.
2. PLACE PERIMETER E&S CONTROLS.
3. DISMANTLE EXISTING MODULAR STEEL BRIDGE SUPERSTRUCTURE AND ABUTMENTS. CUT EXISTING STEEL H-PILES 1' BELOW GRADE.
4. REMOVE EXISTING CONCRETE SUPERSTRUCTURE SPAN 3.
5. REMOVE EXISTING SUPERSTRUCTURE SPAN 1 AND 2.
6. PLACE TEMPORARY SHEETPILE COFFERDAM AT ABUTMENT 2.
7. PLACE SURCHARGE LOAD AT ABUTMENT 2 AND QUARANTINE.
8. REMOVE PIER 3 AND PIER 4. CUT TIMBER PILES 1' BELOW STREAM BED.
9. CONSTRUCT ABUTMENT 2.
10. PLACE RIP RAP AT ABUTMENT 2. REMOVE TEMPORARY COFFERDAM AT ABUTMENT 2.
11. PLACE TEMPORARY SHEETPILE COFFERDAM AT ABUTMENT 1.
12. PLACE SURCHARGE LOAD AT ABUTMENT 1 AND QUARANTINE.
13. REMOVE PIER 1 AND PIER 2. REMOVE TIMBER PILES 1' BELOW STREAMBED.
14. CONSTRUCT ABUTMENT 1 AND PIER.

SEQUENCE OF CONSTRUCTION CONT.

15. REMOVE PORTION OF COFFERDAM IN SPAN 2.
16. PLACE PRESTRESSED CONCRETE BOX BEAMS SPAN 2.
17. PLACE RIP RAP AT ABUTMENT 1.
18. REMOVE REMAINING TEMPORARY COFFERDAM AT ABUTMENT 1.
19. PLACE PRESTRESSED CONCRETE BOX BEAMS SPAN 1.
20. CONSTRUCT REMAINING SUPERSTRUCTURE AND APPROACH SLABS.
21. CONSTRUCT DELAWARE SOLID WASTE AUTHORITY (DSWA) GAS LINE.
22. RECONSTRUCT ROADWAY SOUTH OF BRIDGE USING DETOUR.
23. RECONSTRUCT ROADWAY NORTH OF BRIDGE USING HALF-WIDTH CONSTRUCTION AS SHOWN ON THIS SHEET.
24. STABILIZE DITCH STA. 31+50 TO STA. 34+60.
25. PLACE GUARDRAIL, STRIPING, SEED AND MULCH.
26. REMOVE TEMPORARY TRAFFIC CONTROLS.
27. REMOVE E&S CONTROLS AFTER CONCURRENCE FROM THE STORMWATER ENGINEER.

Unofficial Website Copy

DELAWARE DEPARTMENT OF TRANSPORTATION	ADDENDUMS / REVISIONS	SCALE 0 30 60 90 FEET	BR 1-567A ON N501 HAY ROAD OVER SHELLPOT CREEK, CITY OF WILMINGTON	CONTRACT T201307101 / COUNTY NEW CASTLE	BRIDGE NO. 1-567A / DESIGNED BY: SSMG / CHECKED BY: MAA	CONSTRUCTION PHASING, M.O.T., AND EROSION CONTROL PLAN

CS-04

SHEET NO. 37 / TOTAL SHTS. 50

EROSION & SEDIMENT CONTROL	
PST	PORTABLE SEDIMENT TANK
SF	SILT FENCE / LENGTH
—SF—	SILT FENCE
SP	SUMP PIT
—T—	TURBIDITY CURTAIN
CIP	CULVERT INLET PROTECTION
■	INLET SEDIMENT CONTROL

CONSTRUCTION PHASING & M.O.T	
	BARRICADE, TYPE 3
	CONCRETE SAFETY BARRIER - PORTABLE
CSF XXX	CONSTRUCTION SAFETY FENCE / LENGTH
—CSF—	CONSTRUCTION SAFETY FENCE
	CONSTRUCTION WARNING SIGN LOCATION
END ROAD WORK	CONSTRUCTION WARNING SIGN
	CRASH CUSHION ARRAY
	DRUM - TRAFFIC CONTROL
	FLAGGER LOCATION
PHASE	PHASING TRAFFIC FLOW ARROW
	TEMPORARY CONSTRUCTION
	TEMPORARY PAVEMENT MARKING ARROW
TMA	TRUCK WITH MOUNTED ATTENUATOR
	WORK AREA - ACTIVE PHASE
	TEMPORARY SHEETPILE COFFER DAM
	STAGING AREA

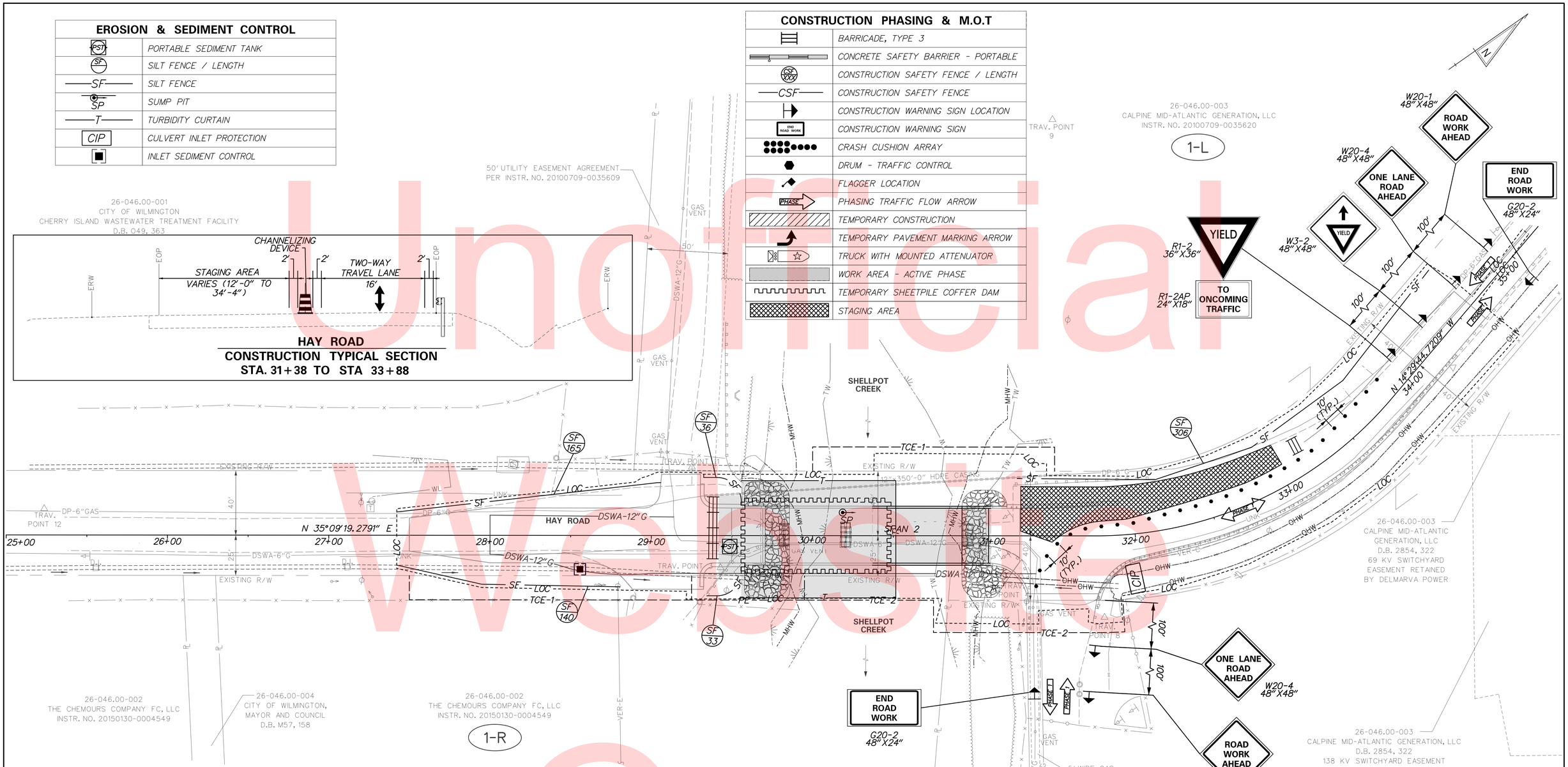

Unofficial Website Copy

SEQUENCE OF CONSTRUCTION

1. PLACE ADVANCE WARNING SIGNS, AND SET TRAFFIC CONTROLS.
2. PLACE PERIMETER E&S CONTROLS.
3. DISMANTLE EXISTING MODULAR STEEL BRIDGE SUPERSTRUCTURE AND ABUTMENTS. CUT EXISTING STEEL H-PILES 1' BELOW GRADE.
4. REMOVE EXISTING CONCRETE SUPERSTRUCTURE SPAN 3.
5. REMOVE EXISTING SUPERSTRUCTURE SPAN 1 AND 2.
6. PLACE TEMPORARY SHEETPILE COFFERDAM AT ABUTMENT 2.
7. PLACE SURCHARGE LOAD AT ABUTMENT 2 AND QUARANTINE.
8. REMOVE PIER 3 AND PIER 4. CUT TIMBER PILES 1' BELOW STREAM BED.
9. CONSTRUCT ABUTMENT 2.
10. PLACE RIP RAP AT ABUTMENT 2 REMOVE TEMPORARY COFFERDAM AT ABUTMENT 2.
11. PLACE TEMPORARY SHEETPILE COFFERDAM AT ABUTMENT 1.
12. PLACE SURCHARGE LOAD AT ABUTMENT 1 AND QUARANTINE.
13. REMOVE PIER 1 AND PIER 2. REMOVE TIMBER PILES 1' BELOW STREAMBED.
14. CONSTRUCT ABUTMENT 1 AND PIER.

SEQUENCE OF CONSTRUCTION CONT.

15. REMOVE PORTION OF COFFERDAM IN SPAN 2.
16. PLACE PRESTRESSED CONCRETE BOX BEAMS SPAN 2.
17. PLACE RIP RAP AT ABUTMENT 1.
18. REMOVE REMAINING TEMPORARY COFFERDAM AT ABUTMENT 1.
19. PLACE PRESTRESSED CONCRETE BOX BEAMS SPAN 1.
20. CONSTRUCT REMAINING SUPERSTRUCTURE AND APPROACH SLABS.
21. CONSTRUCT DELAWARE SOLID WASTE AUTHORITY (DSWA) GAS LINE.
22. RECONSTRUCT ROADWAY SOUTH OF BRIDGE USING DETOUR.
23. RECONSTRUCT ROADWAY NORTH OF BRIDGE USING HALF-WIDTH CONSTRUCTION AS SHOWN ON THIS SHEET.
24. STABILIZE DITCH STA. 31+50 TO STA. 34+60.
25. PLACE GUARDRAIL, STRIPING, SEED AND MULCH.
26. REMOVE TEMPORARY TRAFFIC CONTROLS.
27. REMOVE E&S CONTROLS AFTER CONCURRENCE FROM THE STORMWATER ENGINEER.

CS-05

DELAWARE DEPARTMENT OF TRANSPORTATION

ADDENDUMS / REVISIONS

SCALE 0 30 60 90 FEET

BR 1-567A ON N501 HAY ROAD OVER SHELLPOT CREEK, CITY OF WILMINGTON

CONTRACT	BRIDGE NO. 1-567A
T201307101	DESIGNED BY: SSMG
COUNTY	
NEW CASTLE	CHECKED BY: MAA

CONSTRUCTION PHASING, M.O.T., AND EROSION CONTROL PLAN

SHEET NO. 38
TOTAL SHTS. 50

EROSION & SEDIMENT CONTROL	
PST	PORTABLE SEDIMENT TANK
SF	SILT FENCE / LENGTH
—SF—	SILT FENCE
SP	SUMP PIT
—T—	TURBIDITY CURTAIN
CIP	CULVERT INLET PROTECTION
■	INLET SEDIMENT CONTROL

CONSTRUCTION PHASING & M.O.T	
	BARRICADE, TYPE 3
	CONCRETE SAFETY BARRIER - PORTABLE
CSF XXX	CONSTRUCTION SAFETY FENCE / LENGTH
—CSF—	CONSTRUCTION SAFETY FENCE
	CONSTRUCTION WARNING SIGN LOCATION
END ROAD WORK	CONSTRUCTION WARNING SIGN
	CRASH CUSHION ARRAY
	DRUM - TRAFFIC CONTROL
	FLAGGER LOCATION
PHASE	PHASING TRAFFIC FLOW ARROW
	TEMPORARY CONSTRUCTION
	TEMPORARY PAVEMENT MARKING ARROW
	TRUCK WITH MOUNTED ATTENUATOR
	WORK AREA - ACTIVE PHASE
	TEMPORARY SHEETPILE COFFER DAM
	STAGING AREA

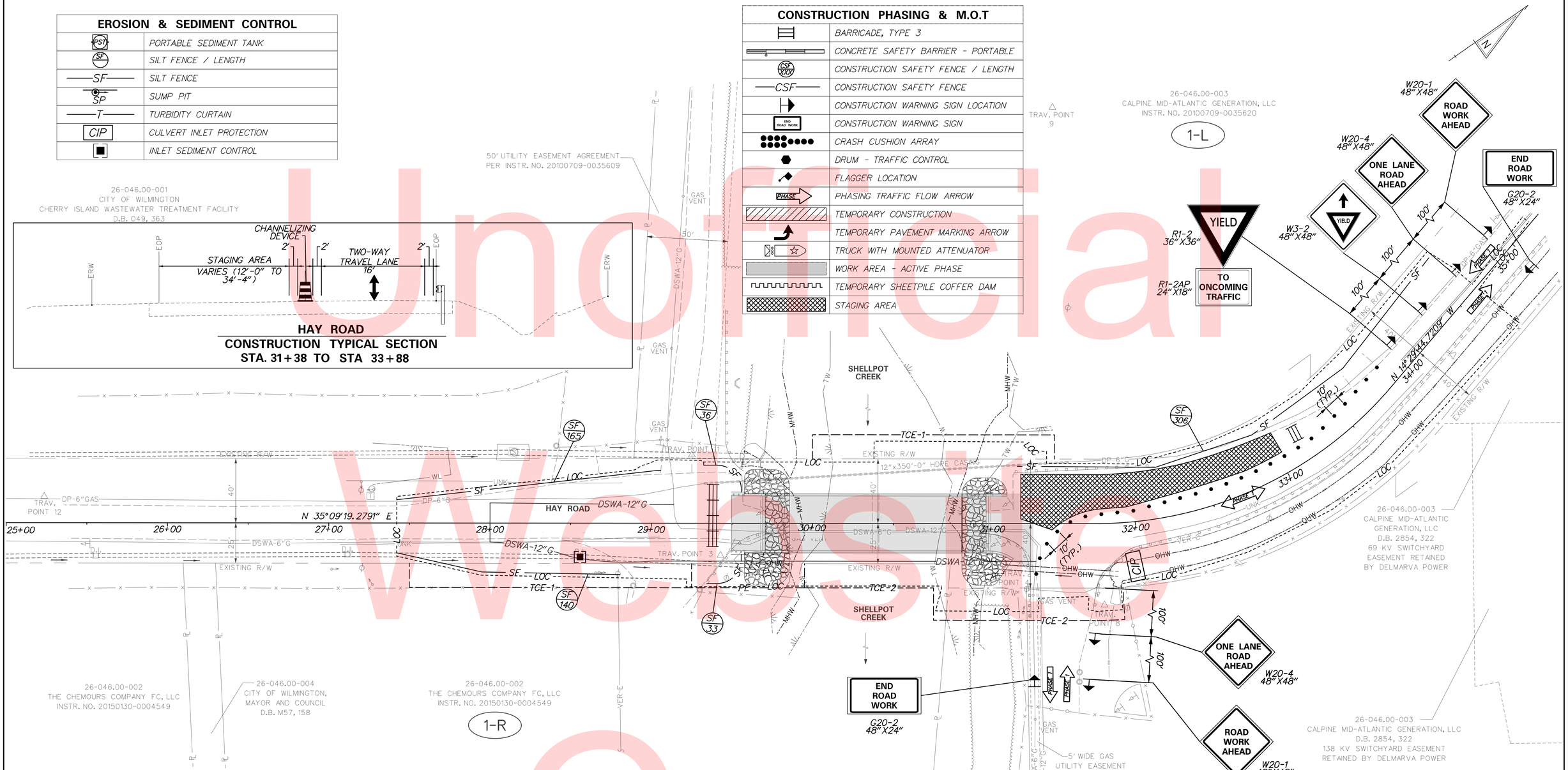

SEQUENCE OF CONSTRUCTION

1. PLACE ADVANCE WARNING SIGNS, AND SET TRAFFIC CONTROLS.
2. PLACE PERIMETER E&S CONTROLS.
3. DISMANTLE EXISTING MODULAR STEEL BRIDGE SUPERSTRUCTURE AND ABUTMENTS. CUT EXISTING STEEL H-PILES 1' BELOW GRADE.
4. REMOVE EXISTING CONCRETE SUPERSTRUCTURE SPAN 3.
5. REMOVE EXISTING SUPERSTRUCTURE SPAN 1 AND 2.
6. PLACE TEMPORARY SHEETPILE COFFERDAM AT ABUTMENT 2.
7. PLACE SURCHARGE LOAD AT ABUTMENT 2 AND QUARANTINE.
8. REMOVE PIER 3 AND PIER 4. CUT TIMBER PILES 1' BELOW STREAM BED.
9. CONSTRUCT ABUTMENT 2.
10. PLACE RIP RAP AT ABUTMENT 2 REMOVE TEMPORARY COFFERDAM AT ABUTMENT 2.
11. PLACE TEMPORARY SHEETPILE COFFERDAM AT ABUTMENT 1.
12. PLACE SURCHARGE LOAD AT ABUTMENT 1 AND QUARANTINE.
13. REMOVE PIER 1 AND PIER 2. REMOVE TIMBER PILES 1' BELOW STREAMBED.
14. CONSTRUCT ABUTMENT 1 AND PIER.

SEQUENCE OF CONSTRUCTION CONT.

15. REMOVE PORTION OF COFFERDAM IN SPAN 2.
16. PLACE PRESTRESSED CONCRETE BOX BEAMS SPAN 2.
17. PLACE RIP RAP AT ABUTMENT 1.
18. REMOVE REMAINING TEMPORARY COFFERDAM AT ABUTMENT 1.
19. PLACE PRESTRESSED CONCRETE BOX BEAMS SPAN 1.
20. CONSTRUCT REMAINING SUPERSTRUCTURE AND APPROACH SLABS.
21. CONSTRUCT DELAWARE SOLID WASTE AUTHORITY (DSWA) GAS LINE.
22. RECONSTRUCT ROADWAY SOUTH OF BRIDGE USING DETOUR.
23. RECONSTRUCT ROADWAY NORTH OF BRIDGE USING HALF-WIDTH CONSTRUCTION AS SHOWN ON THIS SHEET.
24. STABILIZE DITCH STA. 31+50 TO STA. 34+60.
25. PLACE GUARDRAIL, STRIPING, SEED AND MULCH.
26. REMOVE TEMPORARY TRAFFIC CONTROLS.
27. REMOVE E&S CONTROLS AFTER CONCURRENCE FROM THE STORMWATER ENGINEER.

Unofficial Website Copy

DELAWARE DEPARTMENT OF TRANSPORTATION	ADDENDUMS / REVISIONS	SCALE 0 30 60 90 FEET	BR 1-567A ON N501 HAY ROAD OVER SHELLPOT CREEK, CITY OF WILMINGTON	CONTRACT T201307101 / COUNTY NEW CASTLE	BRIDGE NO. 1-567A / DESIGNED BY: SSMG / CHECKED BY: MAA
CONSTRUCTION PHASING, M.O.T., AND EROSION CONTROL PLAN	CS-06	SHEET NO. 39	TOTAL SHTS. 50		

EROSION & SEDIMENT CONTROL	
PST	PORTABLE SEDIMENT TANK
SF	SILT FENCE / LENGTH
—SF—	SILT FENCE
SP	SUMP PIT
—T—	TURBIDITY CURTAIN
CIP	CULVERT INLET PROTECTION
■	INLET SEDIMENT CONTROL

CONSTRUCTION PHASING & M.O.T	
	BARRICADE, TYPE 3
	CONCRETE SAFETY BARRIER - PORTABLE
CSF XXX	CONSTRUCTION SAFETY FENCE / LENGTH
—CSF—	CONSTRUCTION SAFETY FENCE
	CONSTRUCTION WARNING SIGN LOCATION
END ROAD WORK	CONSTRUCTION WARNING SIGN
	CRASH CUSHION ARRAY
	DRUM - TRAFFIC CONTROL
	FLAGGER LOCATION
PHASE	PHASING TRAFFIC FLOW ARROW
	TEMPORARY CONSTRUCTION
	TEMPORARY PAVEMENT MARKING ARROW
	TRUCK WITH MOUNTED ATTENUATOR
	WORK AREA - ACTIVE PHASE
	TEMPORARY SHEETPILE COFFER DAM
	STAGING AREA

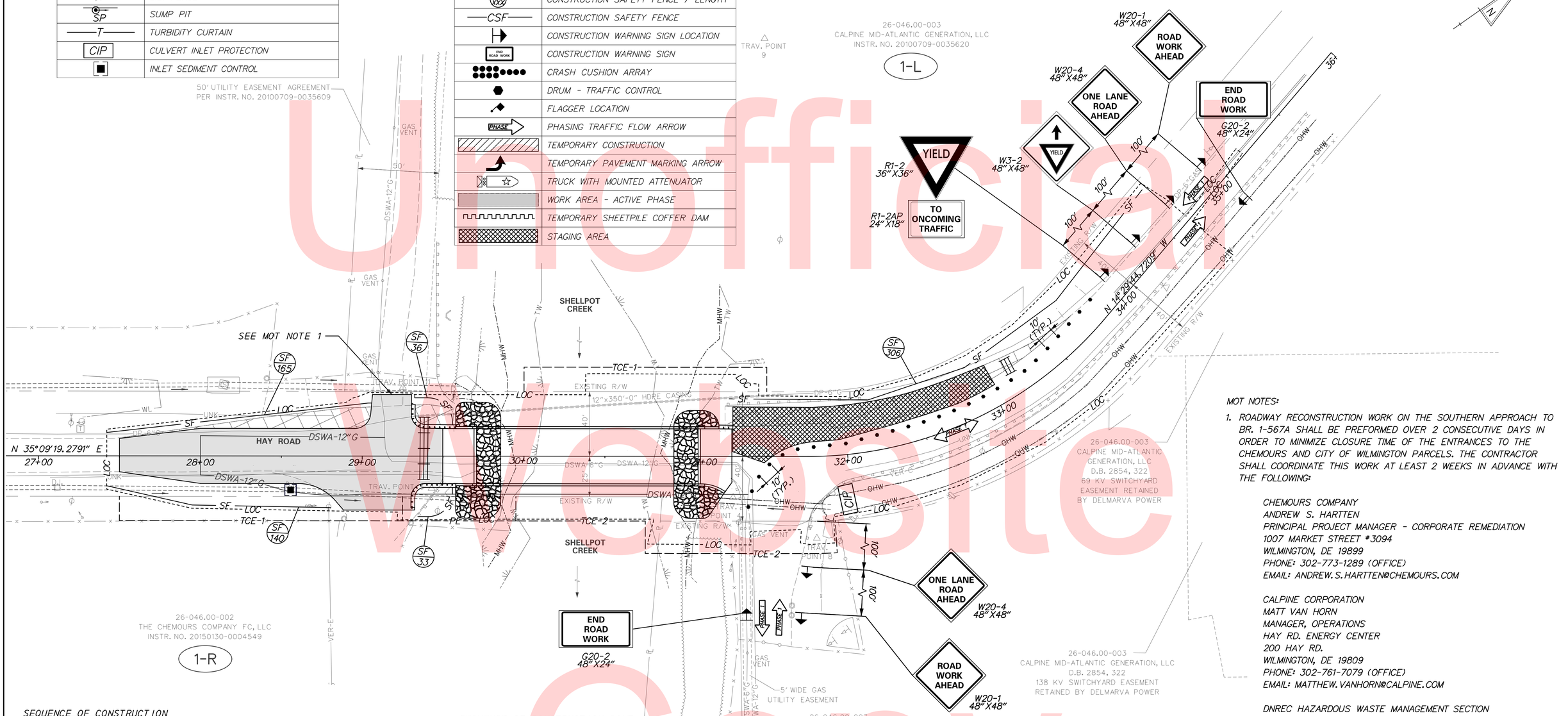

Unofficial Website Copy

MOT NOTES:

1. ROADWAY RECONSTRUCTION WORK ON THE SOUTHERN APPROACH TO BR. 1-567A SHALL BE PREFORMED OVER 2 CONSECUTIVE DAYS IN ORDER TO MINIMIZE CLOSURE TIME OF THE ENTRANCES TO THE CHEMOURS AND CITY OF WILMINGTON PARCELS. THE CONTRACTOR SHALL COORDINATE THIS WORK AT LEAST 2 WEEKS IN ADVANCE WITH THE FOLLOWING:

CHEMOURS COMPANY
ANDREW S. HARTTEN
PRINCIPAL PROJECT MANAGER - CORPORATE REMEDIATION
1007 MARKET STREET *3094
WILMINGTON, DE 19899
PHONE: 302-773-1289 (OFFICE)
EMAIL: ANDREW.S.HARTTEN@CHEMOURS.COM

CALPINE CORPORATION
MATT VAN HORN
MANAGER, OPERATIONS
HAY RD. ENERGY CENTER
200 HAY RD.
WILMINGTON, DE 19809
PHONE: 302-761-7079 (OFFICE)
EMAIL: MATTHEW.VANHORN@CALPINE.COM

DNREC HAZARDOUS WASTE MANAGEMENT SECTION
FRANK GAVAS
89 KINGS HIGHWAY
DOVER, DE 19901
PHONE: 302-739-9403
EMAIL: FRANK.GAVAS@STATE.DE.US

CITY OF WILMINGTON
BRIAN MITCHELL
TRANSPORTATION ENGINEER
DEPARTMENT OF PUBLIC WORKS
LOUIS L. REDDING CITY/COUNTY BUILDING
800 N. FRENCH ST., 6TH FLOOR
WILMINGTON, DE 19801
PHONE: 302-576-3089
EMAIL: BMITCHELL@WILMINGTONDE.GOV

SEQUENCE OF CONSTRUCTION

1 PLACE ADVANCE WARNING SIGNS, AND SET TRAFFIC CONTROLS.
2 PLACE PERIMETER E&S CONTROLS.
3 DISMANTLE EXISTING MODULAR STEEL BRIDGE SUPERSTRUCTURE AND ABUTMENTS. CUT EXISTING STEEL H-PILES 1' BELOW GRADE.
4 REMOVE EXISTING CONCRETE SUPERSTRUCTURE SPAN 3.
5 REMOVE EXISTING SUPERSTRUCTURE SPAN 1 AND 2.
6 PLACE TEMPORARY SHEETPILE COFFERDAM AT ABUTMENT 2.
7 PLACE SURCHARGE LOAD AT ABUTMENT 2 AND QUARANTINE.
8 REMOVE PIER 3 AND PIER 4. CUT TIMBER PILES 1' BELOW STREAM BED.
9 CONSTRUCT ABUTMENT 2.
10 PLACE RIP RAP AT ABUTMENT 2 REMOVE TEMPORARY COFFERDAM AT ABUTMENT 2.
11 PLACE TEMPORARY SHEETPILE COFFERDAM AT ABUTMENT 1.
12 PLACE SURCHARGE LOAD AT ABUTMENT 1 AND QUARANTINE.
13 REMOVE PIER 1 AND PIER 2. REMOVE TIMBER PILES 1' BELOW STREAMBED.
14 CONSTRUCT ABUTMENT 1 AND PIER.

SEQUENCE OF CONSTRUCTION CONT.

15 REMOVE PORTION OF COFFERDAM IN SPAN 2.
16 PLACE PRESTRESSED CONCRETE BOX BEAMS SPAN 2.
17 PLACE RIP RAP AT ABUTMENT 1.
18 REMOVE REMAINING TEMPORARY COFFERDAM AT ABUTMENT 1.
19 PLACE PRESTRESSED CONCRETE BOX BEAMS SPAN 1.
20 CONSTRUCT REMAINING SUPERSTRUCTURE AND APPROACH SLABS.
21 CONSTRUCT DELAWARE SOLID WASTE AUTHORITY (DSWA) GAS LINE.
22 RECONSTRUCT ROADWAY SOUTH OF BRIDGE USING DETOUR.
23 RECONSTRUCT ROADWAY NORTH OF BRIDGE USING HALF-WIDTH CONSTRUCTION AS SHOWN ON THIS SHEET.
24 STABILIZE DITCH STA. 31+50 TO STA. 34+60.
25 PLACE GUARDRAIL, STRIPING, SEED AND MULCH.
26 REMOVE TEMPORARY TRAFFIC CONTROLS.
27 REMOVE E&S CONTROLS AFTER CONCURRENCE FROM THE STORMWATER ENGINEER.

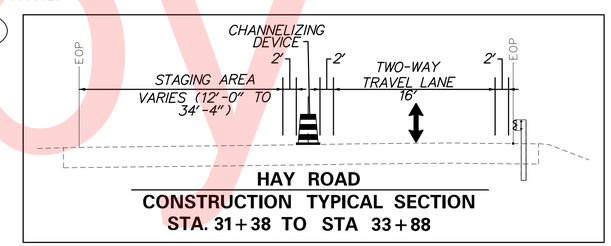

HAY ROAD
CONSTRUCTION TYPICAL SECTION
STA. 31+38 TO STA 33+88

DELAWARE DEPARTMENT OF TRANSPORTATION

ADDENDUMS / REVISIONS

SCALE 0 30 60 90 FEET

BR 1-567A ON N501 HAY ROAD OVER SHELLPOT CREEK, CITY OF WILMINGTON

CONTRACT	BRIDGE NO.	1-567A
T201307101	DESIGNED BY: SSMG	
COUNTY		
NEW CASTLE	CHECKED BY: MAA	

CONSTRUCTION PHASING, M.O.T., AND EROSION CONTROL PLAN

CS-07

SHEET NO.
40
TOTAL SHTS.
50

EROSION & SEDIMENT CONTROL	
PST	PORTABLE SEDIMENT TANK
SF	SILT FENCE / LENGTH
—SF—	SILT FENCE
SP	SUMP PIT
—T—	TURBIDITY CURTAIN
CIP	CULVERT INLET PROTECTION
■	INLET SEDIMENT CONTROL

CONSTRUCTION PHASING & M.O.T	
	BARRICADE, TYPE 3
	CONCRETE SAFETY BARRIER - PORTABLE
CSF XXX	CONSTRUCTION SAFETY FENCE / LENGTH
—CSF—	CONSTRUCTION SAFETY FENCE
	CONSTRUCTION WARNING SIGN LOCATION
END ROAD WORK	CONSTRUCTION WARNING SIGN
	CRASH CUSHION ARRAY
	DRUM - TRAFFIC CONTROL
	FLAGGER LOCATION
PHASE	PHASING TRAFFIC FLOW ARROW
	TEMPORARY CONSTRUCTION
	TEMPORARY PAVEMENT MARKING ARROW
	TRUCK WITH MOUNTED ATTENUATOR
	WORK AREA - ACTIVE PHASE
	TEMPORARY SHEETPILE COFFER DAM
	STAGING AREA

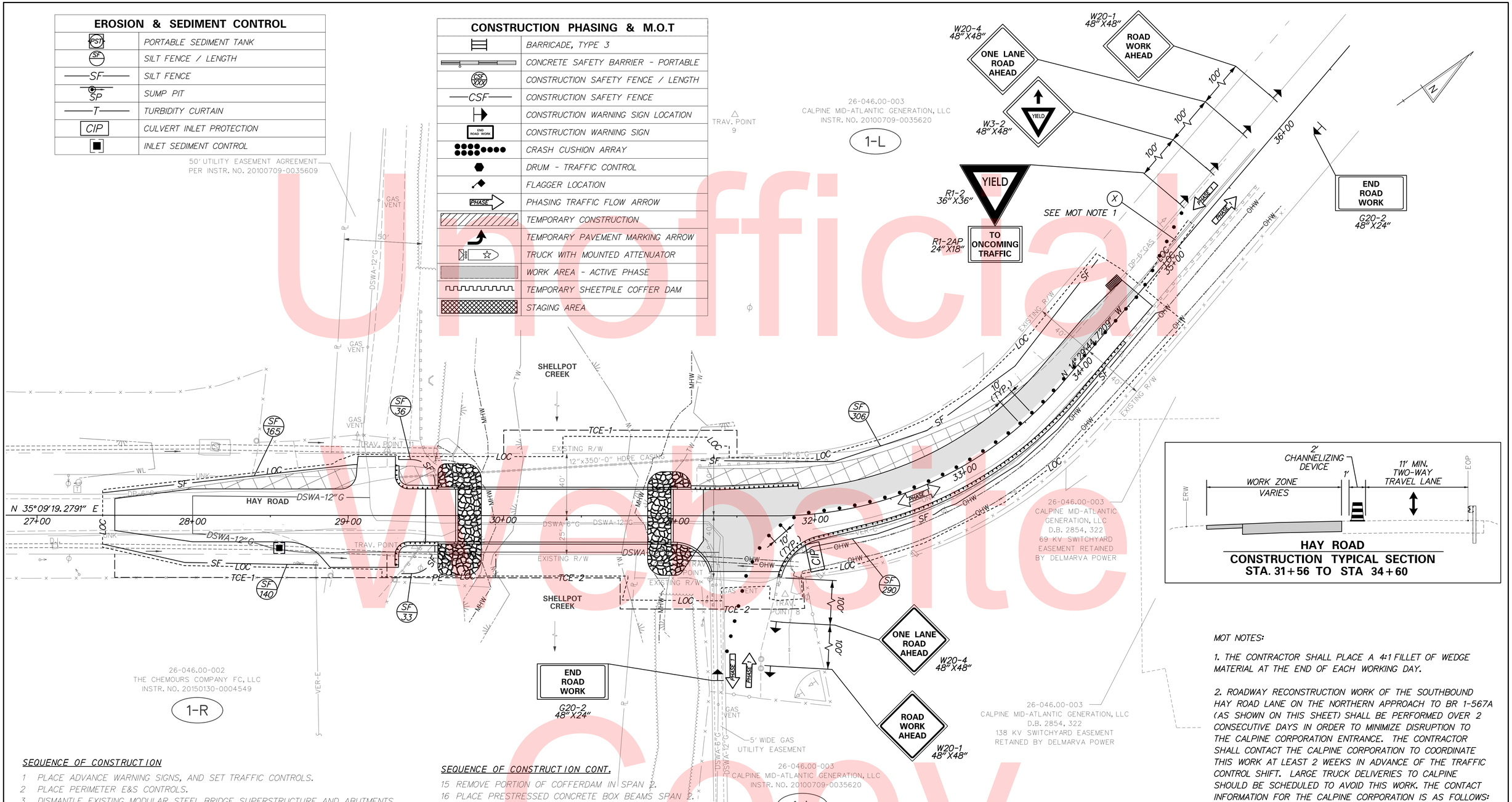

HAY ROAD
CONSTRUCTION TYPICAL SECTION
STA. 31+56 TO STA 34+60

MOT NOTES:

1. THE CONTRACTOR SHALL PLACE A 4:1 FILLET OF WEDGE MATERIAL AT THE END OF EACH WORKING DAY.

2. ROADWAY RECONSTRUCTION WORK OF THE SOUTHBOUND HAY ROAD LANE ON THE NORTHERN APPROACH TO BR 1-567A (AS SHOWN ON THIS SHEET) SHALL BE PERFORMED OVER 2 CONSECUTIVE DAYS IN ORDER TO MINIMIZE DISRUPTION TO THE CALPINE CORPORATION ENTRANCE. THE CONTRACTOR SHALL CONTACT THE CALPINE CORPORATION TO COORDINATE THIS WORK AT LEAST 2 WEEKS IN ADVANCE OF THE TRAFFIC CONTROL SHIFT. LARGE TRUCK DELIVERIES TO CALPINE SHOULD BE SCHEDULED TO AVOID THIS WORK. THE CONTACT INFORMATION FOR THE CALPINE CORPORATION IS AS FOLLOWS:

MATT VAN HORN
MANAGER, OPERATIONS
HAY ROAD ENERGY CENTER
200 HAY ROAD
WILMINGTON, DE 19809
PHONE: 302-761-7079 (OFFICE)
EMAIL: MATTHEW.VANHORN@CALPINE.COM

SEQUENCE OF CONSTRUCTION

1 PLACE ADVANCE WARNING SIGNS, AND SET TRAFFIC CONTROLS.
2 PLACE PERIMETER E&S CONTROLS.
3 DISMANTLE EXISTING MODULAR STEEL BRIDGE SUPERSTRUCTURE AND ABUTMENTS. CUT EXISTING STEEL H-PILES 1' BELOW GRADE.
4 REMOVE EXISTING CONCRETE SUPERSTRUCTURE SPAN 3.
5 REMOVE EXISTING SUPERSTRUCTURE SPAN 1 AND 2.
6 PLACE TEMPORARY SHEETPILE COFFERDAM AT ABUTMENT 2.
7 PLACE SURCHARGE LOAD AT ABUTMENT 2 AND QUARANTINE.
8 REMOVE PIER 3 AND PIER 4. CUT TIMBER PILES 1' BELOW STREAM BED.
9 CONSTRUCT ABUTMENT 2.
10 PLACE RIP RAP AT ABUTMENT 2 REMOVE TEMPORARY COFFERDAM AT ABUTMENT 2.
11 PLACE TEMPORARY SHEETPILE COFFERDAM AT ABUTMENT 1.
12 PLACE SURCHARGE LOAD AT ABUTMENT 1 AND QUARANTINE.
13 REMOVE PIER 1 AND PIER 2. REMOVE TIMBER PILES 1' BELOW STREAMBED.
14 CONSTRUCT ABUTMENT 1 AND PIER.

SEQUENCE OF CONSTRUCTION CONT.

15 REMOVE PORTION OF COFFERDAM IN SPAN 2.
16 PLACE PRESTRESSED CONCRETE BOX BEAMS SPAN 2.
17 PLACE RIP RAP AT ABUTMENT 1.
18 REMOVE REMAINING TEMPORARY COFFERDAM AT ABUTMENT 1.
19 PLACE PRESTRESSED CONCRETE BOX BEAMS SPAN 1.
20 CONSTRUCT REMAINING SUPERSTRUCTURE AND APPROACH SLABS.
21 CONSTRUCT DELAWARE SOLID WASTE AUTHORITY (DSWA) GAS LINE.
22 RECONSTRUCT ROADWAY SOUTH OF BRIDGE USING DETOUR.
23 RECONSTRUCT ROADWAY NORTH OF BRIDGE USING HALF-WIDTH CONSTRUCTION AS SHOWN ON THIS SHEET.
24 STABILIZE DITCH STA. 31+50 TO STA. 34+60.
25 PLACE GUARDRAIL, STRIPING, SEED AND MULCH.
26 REMOVE TEMPORARY TRAFFIC CONTROLS.
27 REMOVE E&S CONTROLS AFTER CONCURRENCE FROM THE STORMWATER ENGINEER.

PAVEMENT MARKINGS LEGEND		
SYMBOL	ITEM	QUANTITY
X	REMOVAL OF PAVEMENT STRIPING (ITEM 748530)	100 SF

Unofficial Website Copy

DELAWARE DEPARTMENT OF TRANSPORTATION

ADDENDUMS / REVISIONS

SCALE 0 30 60 90 FEET

BR 1-567A ON N501 HAY ROAD OVER SHELLPOT CREEK, CITY OF WILMINGTON

CONTRACT	BRIDGE NO. 1-567A
T201307101	DESIGNED BY: SSMG
COUNTY	
NEW CASTLE	CHECKED BY: MAA

CONSTRUCTION PHASING, M.O.T., AND EROSION CONTROL PLAN

CS-08

SHEET NO. 41

TOTAL SHTS. 50

EROSION & SEDIMENT CONTROL	
PST	PORTABLE SEDIMENT TANK
SF	SILT FENCE / LENGTH
—SF—	SILT FENCE
SP	SUMP PIT
—T—	TURBIDITY CURTAIN
CIP	CULVERT INLET PROTECTION
■	INLET SEDIMENT CONTROL

CONSTRUCTION PHASING & M.O.T	
	BARRICADE, TYPE 3
	CONCRETE SAFETY BARRIER - PORTABLE
CSF XXX	CONSTRUCTION SAFETY FENCE / LENGTH
—CSF—	CONSTRUCTION SAFETY FENCE
	CONSTRUCTION WARNING SIGN LOCATION
END ROAD WORK	CONSTRUCTION WARNING SIGN
	CRASH CUSHION ARRAY
	DRUM - TRAFFIC CONTROL
	FLAGGER LOCATION
PHASE	PHASING TRAFFIC FLOW ARROW
	TEMPORARY CONSTRUCTION
	TEMPORARY PAVEMENT MARKING ARROW
	TRUCK WITH MOUNTED ATTENUATOR
	WORK AREA - ACTIVE PHASE
	TEMPORARY SHEETPILE COFFER DAM
	STAGING AREA

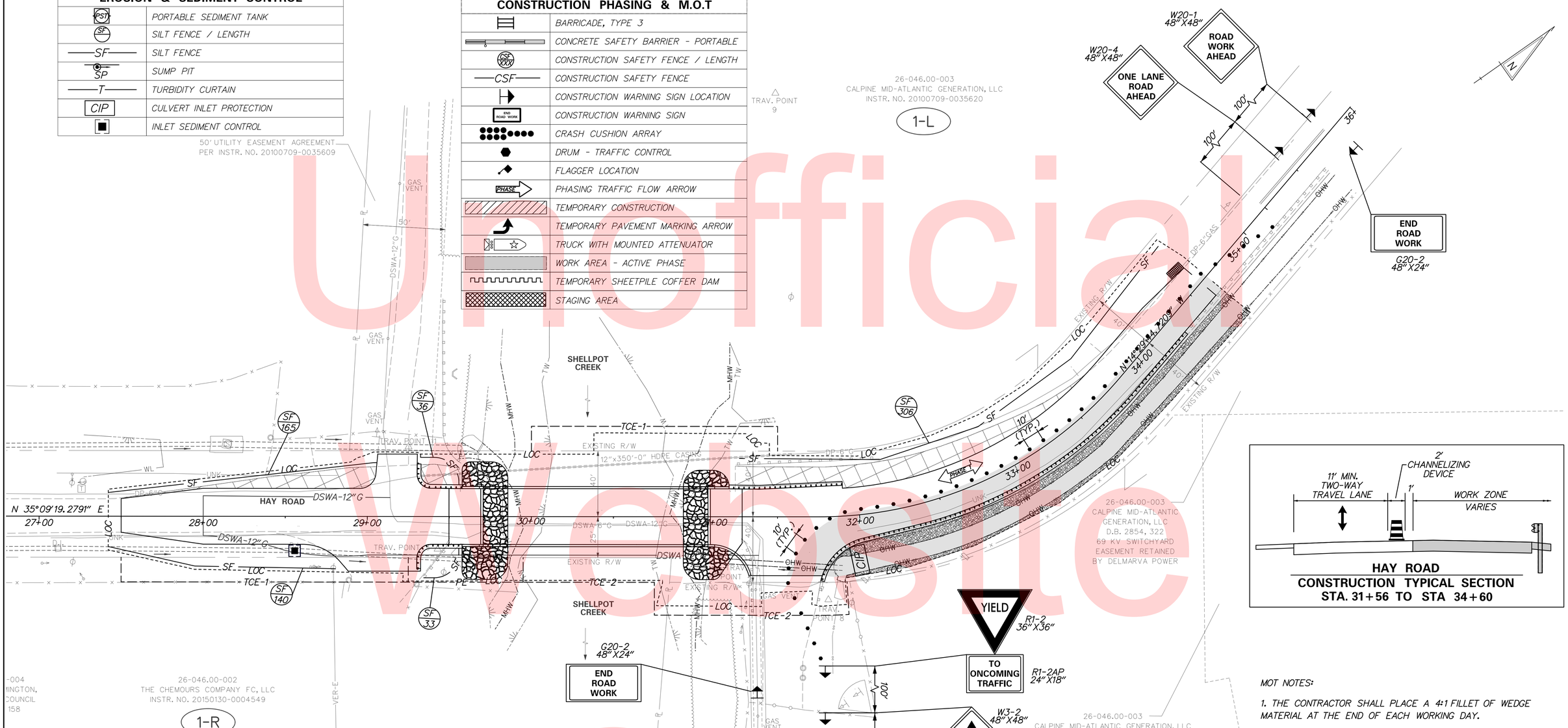

HAY ROAD
CONSTRUCTION TYPICAL SECTION
STA. 31+56 TO STA 34+60

SEQUENCE OF CONSTRUCTION

1. PLACE ADVANCE WARNING SIGNS, AND SET TRAFFIC CONTROLS.
2. PLACE PERIMETER E&S CONTROLS.
3. DISMANTLE EXISTING MODULAR STEEL BRIDGE SUPERSTRUCTURE AND ABUTMENTS. CUT EXISTING STEEL H-PILES 1' BELOW GRADE.
4. REMOVE EXISTING CONCRETE SUPERSTRUCTURE SPAN 3.
5. REMOVE EXISTING SUPERSTRUCTURE SPAN 1 AND 2.
6. PLACE TEMPORARY SHEETPILE COFFERDAM AT ABUTMENT 2.
7. PLACE SURCHARGE LOAD AT ABUTMENT 2 AND QUARANTINE.
8. REMOVE PIER 3 AND PIER 4. CUT TIMBER PILES 1' BELOW STREAM BED.
9. CONSTRUCT ABUTMENT 2.
10. PLACE RIP RAP AT ABUTMENT 2 REMOVE TEMPORARY COFFERDAM AT ABUTMENT 2.
11. PLACE TEMPORARY SHEETPILE COFFERDAM AT ABUTMENT 1.
12. PLACE SURCHARGE LOAD AT ABUTMENT 1 AND QUARANTINE.
13. REMOVE PIER 1 AND PIER 2. REMOVE TIMBER PILES 1' BELOW STREAMBED.
14. CONSTRUCT ABUTMENT 1 AND PIER.

SEQUENCE OF CONSTRUCTION CONT.

15. REMOVE PORTION OF COFFERDAM IN SPAN 2.
16. PLACE PRESTRESSED CONCRETE BOX BEAMS SPAN 2.
17. PLACE RIP RAP AT ABUTMENT 1.
18. REMOVE REMAINING TEMPORARY COFFERDAM AT ABUTMENT 1.
19. PLACE PRESTRESSED CONCRETE BOX BEAMS SPAN 1.
20. CONSTRUCT REMAINING SUPERSTRUCTURE AND APPROACH SLABS.
21. CONSTRUCT DELAWARE SOLID WASTE AUTHORITY (DSWA) GAS LINE.
22. RECONSTRUCT ROADWAY SOUTH OF BRIDGE USING DETOUR.
23. RECONSTRUCT ROADWAY NORTH OF BRIDGE USING HALF-WIDTH CONSTRUCTION AS SHOWN ON THIS SHEET.
24. STABILIZE DITCH STA. 31+50 TO STA. 34+60.
25. PLACE GUARDRAIL, STRIPING, SEED AND MULCH.
26. REMOVE TEMPORARY TRAFFIC CONTROLS.
27. REMOVE E&S CONTROLS AFTER CONCURRENCE FROM THE STORMWATER ENGINEER.

MOT NOTES:

1. THE CONTRACTOR SHALL PLACE A 4:1 FILLET OF WEDGE MATERIAL AT THE END OF EACH WORKING DAY.

2. ROADWAY RECONSTRUCTION WORK OF THE NORTHBOUND HAY ROAD LANE ON THE NORTHERN APPROACH TO BR 1-567A (AS SHOWN ON THIS SHEET) SHALL BE PERFORMED OVER 2 CONSECUTIVE DAYS IN ORDER TO MINIMIZE DISRUPTION TO THE CALPINE CORPORATION ENTRANCE. THE CONTRACTOR SHALL CONTACT THE CALPINE CORPORATION TO COORDINATE THIS WORK AT LEAST 2 WEEKS IN ADVANCE OF THE TRAFFIC CONTROL SHIFT. LARGE TRUCK DELIVERIES TO CALPINE SHOULD BE SCHEDULED TO AVOID THIS WORK. THE CONTACT INFORMATION FOR THE CALPINE CORPORATION IS AS FOLLOWS:

MATT VAN HORN
MANAGER, OPERATIONS
HAY ROAD ENERGY CENTER
200 HAY ROAD
WILMINGTON, DE 19809
PHONE: 302-761-7079 (OFFICE)
EMAIL: MATTHEW.VANHORN@CALPINE.COM

CS-09

DELAWARE DEPARTMENT OF TRANSPORTATION

ADDENDUMS / REVISIONS

SCALE 0 30 60 90 FEET

BR 1-567A ON N501 HAY ROAD OVER SHELLPOT CREEK, CITY OF WILMINGTON

CONTRACT	BRIDGE NO. 1-567A
T201307101	DESIGNED BY: SSMG
COUNTY	CHECKED BY: MAA
NEW CASTLE	

CONSTRUCTION PHASING, M.O.T., AND EROSION CONTROL PLAN

SHEET NO. 42
TOTAL SHTS. 50

Unofficial Website Copy

PORTABLE CHANGEABLE MESSAGE SIGNS

PRIOR TO DETOUR
(10 DAYS PRIOR TO BEGINNING OF DETOUR)

PCMS-1

HAY RD BRIDGE CLOSING	STARTING XX/XX

DURING DETOUR
(DISPLAY FOR 5 DAYS AFTER IMPLEMENTATION OF DETOUR)

PCMS-2

HAY RD BRIDGE CLOSED	FOLLOW DETOUR

SPECIAL SIGNS

Z 48"

Hay Road	6" C
BRIDGE	6" C
CLOSED	6" C
FOLLOW	6" C
DETOUR	6" C

48"

ALL REFLECTIVE SIGNS SHALL BE BLACK ON RETROREFLECTIVE FLUORESCENT ORANGE.

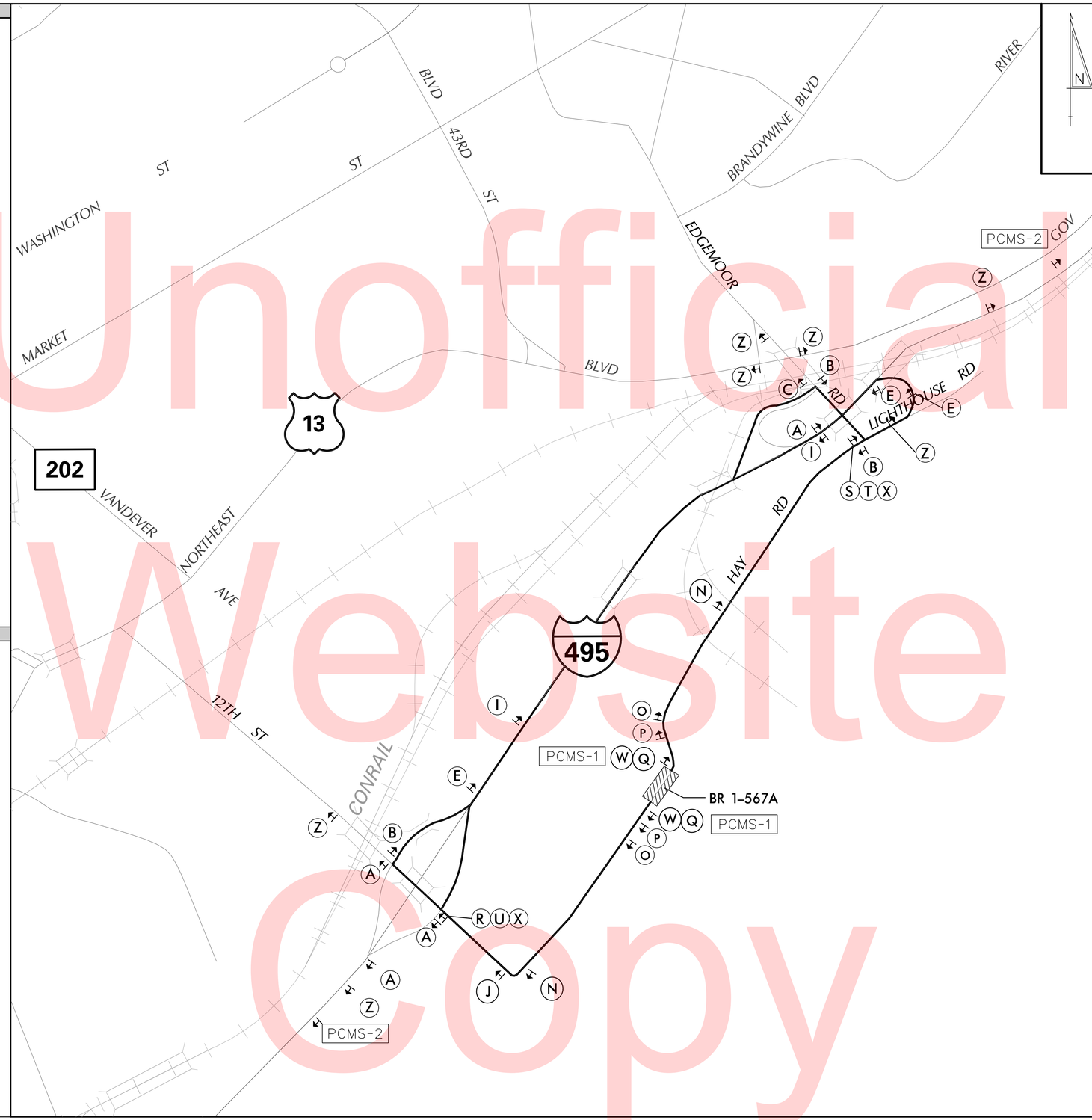

LEGEND

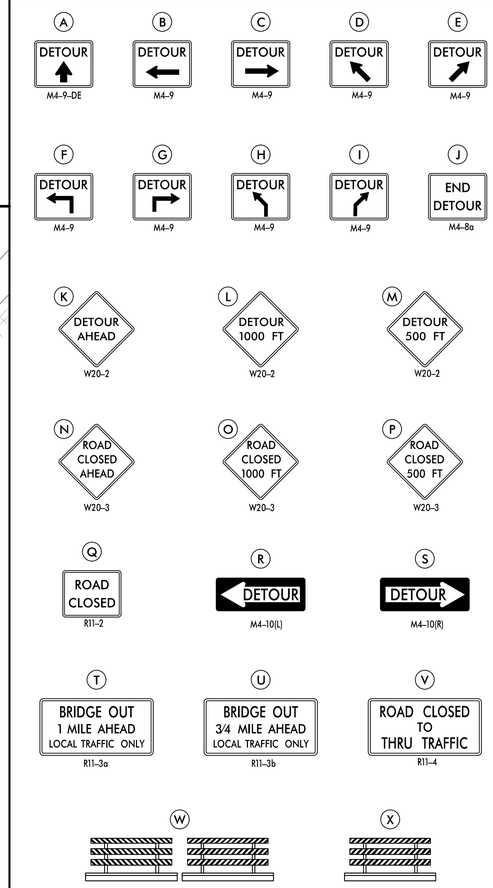

GENERAL NOTES

1. ALL DETOUR SIGNING, INCLUDING TRAILBLAZERS, ARE TO BE SUPPLIED AND MAINTAINED BY THE GENERAL CONTRACTOR IN COMPLIANCE WITH "THE DELAWARE MANUAL OF UNIFORM TRAFFIC CONTROL DEVICES" (DE MUTCD.)
2. THE CONTRACTOR SHALL COMPLY WITH GUIDELINES IN "THE DELAWARE MANUAL ON UNIFORM TRAFFIC CONTROL DEVICES" (DE MUTCD PART 6) FOR BARRICADES AND SIGNS (AS PER LATEST REVISION.)
3. DESIGN OF ALL SIGNS SHALL BE IN ACCORDANCE WITH THE FHWA STANDARD HIGHWAY SIGNS BOOK.
4. SIZES OF ALL SIGNS SHALL BE IN ACCORDANCE WITH "THE DELAWARE MANUAL OF UNIFORM TRAFFIC CONTROL DEVICES" (DE MUTCD.) SIZE OF SIGN SHALL BE BASED ON TYPE OF ROADWAY ON WHICH THE SIGN IS INSTALLED.
5. SIGNS NO LONGER IN USE SHALL BE COMPLETELY COVERED WITH NO RETROREFLECTIVE MATERIAL SHOWING, OR SHALL BE REMOVED, AS DIRECTED BY THE ENGINEER.
6. FIELD CONDITIONS MAY DICTATE CHANGES AT SOME TIME DURING THE LIFE OF THE CONTRACT. IN THE EVENT OF OMISSIONS OR CORRECTIONS, THE SIGNING PROVISIONS OF "THE DELAWARE MANUAL ON UNIFORM TRAFFIC CONTROL DEVICES" (DE MUTCD) WILL PREVAIL.
7. SIGNS "N" THROUGH "Q" AND "T" AND "V", THE WORD "ROAD" SHOULD BE CHANGED TO "RAMP", "RR XING", OR "BRIDGE" WHERE APPLICABLE.
8. WARNING SIGNS AND DETOUR TRAILBLAZERS SHALL BE MOUNTED ON BREAKAWAY POSTS AND HAVE RETROREFLECTIVE FLUORESCENT ORANGE SHEETING.
9. "W" BARRICADES SHALL COMPLETELY RUN THE FULL WIDTH OF THE ROADWAY.
10. BARRICADES SHALL BE A MINIMUM OF 6 FEET WIDE UNLESS DIRECTED BY THE ENGINEER.
11. SIGNS A THROUGH J INSTALLED ON INTERSTATE 495 SHALL BE 48"X36". ALL OTHER ROAD SIGNS SHALL BE 30"X24".

Unofficial Website Copy

RECOMMENDED _____ DATE: _____ | RECOMMENDED _____ DATE: _____ | RECOMMENDED _____ DATE: _____ | APPROVED CHIEF SAFETY OFFICER _____ DATE: _____ | APPROVED TRAFFIC ENGINEER _____ DATE: _____

DELAWARE DEPARTMENT OF TRANSPORTATION

ADDENDUM / REVISIONS

NOT TO SCALE

BR 1-567A ON N501 HAY ROAD OVER THE SHELLPOT CREEK, CITY OF WILMINGTON

CONTRACT	PERMIT NO.	X
T201307101	DESIGNED BY: SSMG	
COUNTY		
NEW CASTLE	CHECKED BY: MAA	

VEHICULAR DETOUR PLAN
HAY ROAD
SHELLPOT CREEK

SHEET NO. 43
TOTAL SHTS. 50

P:\559 BRIDGE DESIGN\WO 9 - BR 1-567A\DESIGN\PS&E_PLANS\DP001_BR 1-567A.DGN

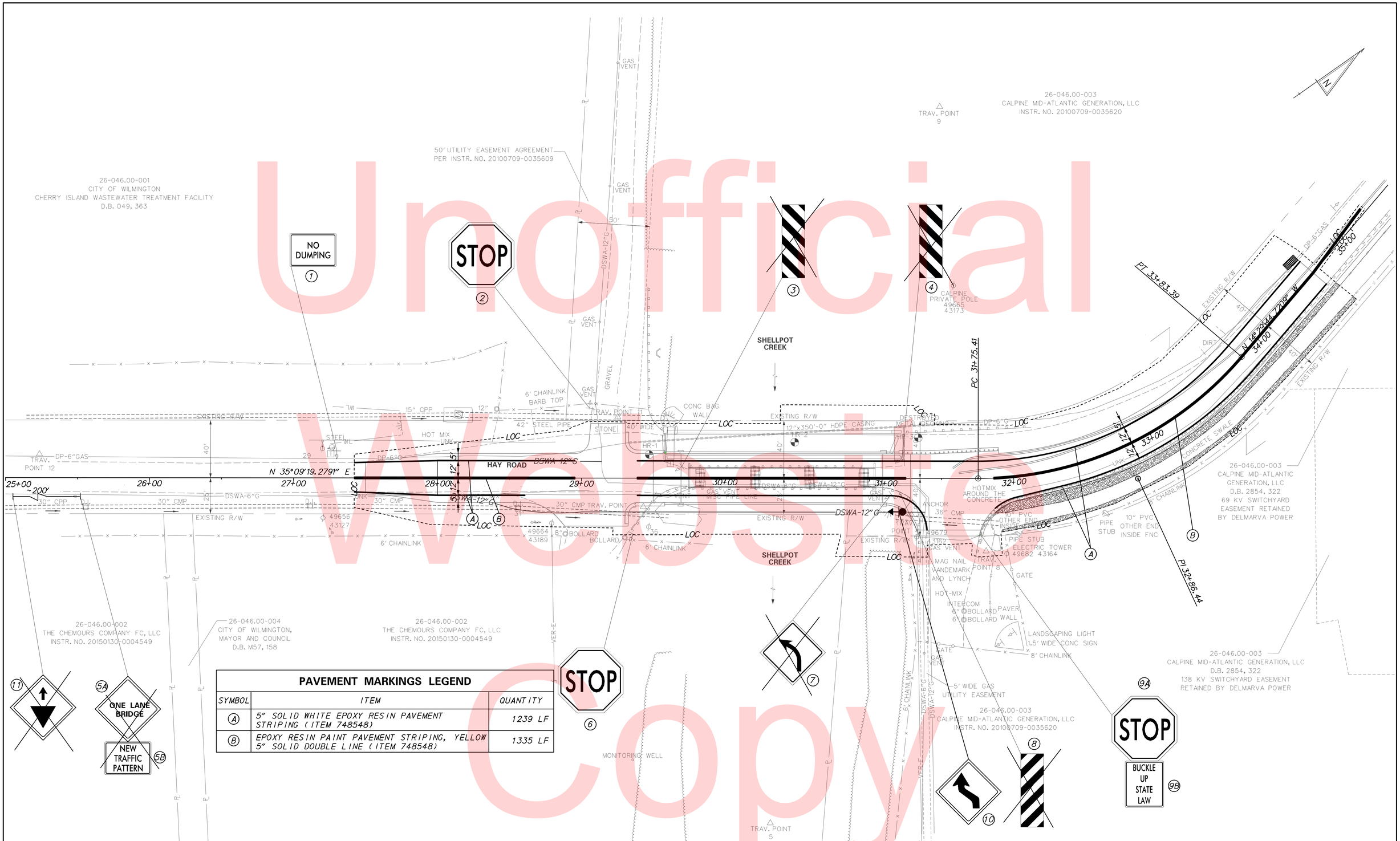

PAVEMENT MARKINGS LEGEND		
SYMBOL	ITEM	QUANTITY
A	5" SOLID WHITE EPOXY RESIN PAVEMENT STRIPING (ITEM 748548)	1239 LF
B	EPOXY RESIN PAINT PAVEMENT STRIPING, YELLOW 5" SOLID DOUBLE LINE (ITEM 748548)	1335 LF

Unofficial Website Copy

SS-01

DELAWARE DEPARTMENT OF TRANSPORTATION

ADDENDUMS / REVISIONS

SCALE 0 30 60 90 FEET

BR 1-567A ON N501 HAY ROAD OVER SHELLPOT CREEK, CITY OF WILMINGTON

CONTRACT	BRIDGE NO.	1-567A
T201307101	DESIGNED BY: SSMG	
COUNTY	CHECKED BY: MAA	
NEW CASTLE		

SIGNING, STRIPING AND CONDUIT PLAN

SHEET NO. 44

TOTAL SHTS. 50

PERMANENT SIGN SCHEDULE

SHEET NO.	NO.	CODE	DESCRIPTION	ASSEMBLY NO.	SIGN HEIGHT (IN)	SIGN WIDTH (IN)	SIGN AREA (SF)	SIGN DISPOSITION	ITEM 749687 SINGLE POST EACH		ITEM 749690 MULTI-POST (SF)		POST INSTALLATION TYPE	CODE X11 12' POST W/ BASEPOST (EACH)	ITEM 749688 4" HOLE, 0-6" (EACH)	ITEM 749689 4" HOLE, >6" (EACH)	REMARKS
									REMOVE	INSTALL	REMOVE	INSTALL					
SS-01	1	N/A	NO DUMPING, MAYOR & COUNCIL CITY OF WILMINGTON	1				REMAIN									
	2	R1-1(30)	"STOP"	2	30"	30"		REMAIN									
	3	OM3-L	TYPE 3 OBJECT MARKER	3	36"	12"		REMOVE	1								
	4	OM3-L	TYPE 3 OBJECT MARKER	4	36"	12"		REMOVE	1								
	5A	W5-3 (30)	ONE LANE BRIDGE - 30X30	5	30"	30"		REMOVE	1								
	5B	N/A	NEW TRAFFIC PATTERN AHEAD	5				REMOVE	1								
	6	R1-1(30)	"STOP"	6	30"	30"		REMAIN									
	7	W1-2-L(30)	CURVE (LEFT) - 30X30	7	30"	30"		REMOVE	1								
	8	OM3-R (B)	TYPE 3 OBJECT MARKER	8	36"	12"		REMOVE	1								
	9A	R1-1(30)	"STOP"	9	30"	30"		REMAIN									
	9B	N/A	BUCKLE UP STATE LAW	9				REMAIN									
	10	W1-4-L(30)	REVERSE CURVE (LEFT) - 30X30	10	30"	30"	6.25	NEW		1			SOIL	1			
	11	W3-2	YIELD AHEAD	11	30"	30"		REMOVE	1								
						TOTAL	6.25		7	1				1			

Unofficial Website Copy

SS-02

DELAWARE
DEPARTMENT OF TRANSPORTATION

ADDENDUMS / REVISIONS

SCALE
0 30 60 90
FEET

BR 1-567A ON N501 HAY ROAD
OVER SHELLPOT CREEK,
CITY OF WILMINGTON

CONTRACT T201307101
COUNTY NEW CASTLE
BRIDGE NO. 1-567A
DESIGNED BY: SSMG
CHECKED BY: MAA

SIGNING, STRIPING AND CONDUIT PLAN

SHEET NO. 45
TOTAL SHTS. 50

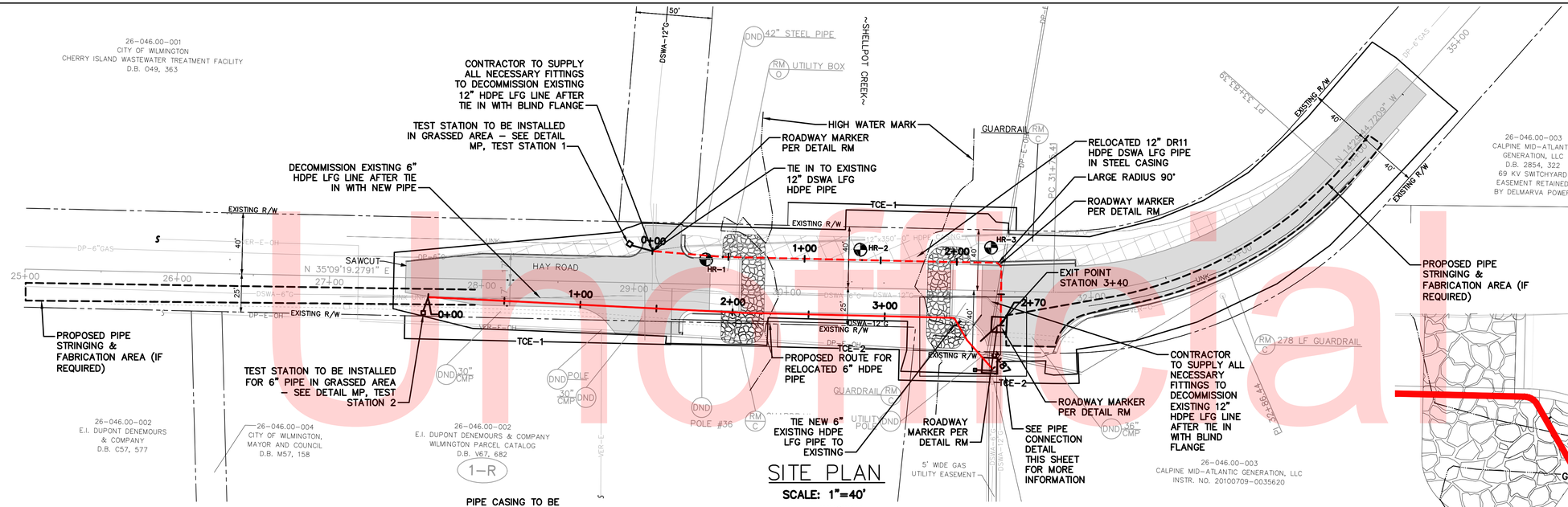

SITE PLAN

SCALE: 1"=40'

NOTES:

1. BASE DRAWING INFORMATION PROVIDED BY DELAWARE DEPARTMENT OF TRANSPORTATION AND WAS PREPARED BY McCORMICK TAYLOR CIRCA 2012.
2. FOR EROSION AND SEDIMENT CONTROL SEE SHEETS CS-01 TO CS-09 OF McCORMICK TAYLOR SET.
3. ALL NEW PIPING SHALL HAVE A MINIMUM 2' SEPARATION FROM ALL EXISTING SITE UTILITIES AND FEATURES.
4. SEE TEST BORE DATA ON SHEET 29 OF McCORMICK TAYLOR SET.
5. EXCAVATED TRENCHES IN EXISTING PAVEMENT TO BE FILLED WITH GRAVEL. FINAL PAVEMENT TO BE INSTALLED DURING FINAL PAVEMENT RESTORATION.

SEQUENCE OF CONSTRUCTION:

1. AN EXISTING 6" AND 12" HDPE PIPE MUST BE RELOCATED AS PART OF THE NEW BRIDGE CONSTRUCTION.
2. THE PIPE WILL BE RELOCATED OVER SHELLPOT CREEK BY THE ATTACHMENT TO PROPOSED BRIDGE PIPE TO THE LINES AND GRADES SHOWN ON THE DRAWINGS.
3. THE GENERAL SITE FEATURES AND LIMITATIONS OF THE SOILS IN THE AREA OF THE WORK ARE INCLUDED WITH THE CONSTRUCTION DRAWING SET AND APPLICABLE SUPPORTING DOCUMENTATION FOR THE CONSTRUCTION OF THE BRIDGE.
4. THE CONTRACTOR WILL CUT INTO THE EXISTING PIPE AT LOCATIONS SHOWN ON THE DRAWINGS, RELOCATE, RECONNECT AND PRESSURE TEST THE PIPES AS SHOWN ON THE DRAWINGS.
5. THE CONTRACTOR SHALL ENSURE ALL NECESSARY STATE AND LOCAL PERMITS HAVE BEEN OBTAINED PRIOR TO COMMENCEMENT OF WORK, AND SHALL FOLLOW APPLICABLE REQUIREMENTS IN THE CONSTRUCTION DRAWING SET AND TECHNICAL SPECIFICATIONS.
6. THE CONTRACTOR SHALL MAINTAIN AT LEAST 1' OF CLEARANCE BETWEEN THE TWO HDPE PIPES, AND MINIMUM 2' FROM OTHER STRUCTURES OR UTILITIES WHEN THE PIPE IS NOT WITHIN A CASING.

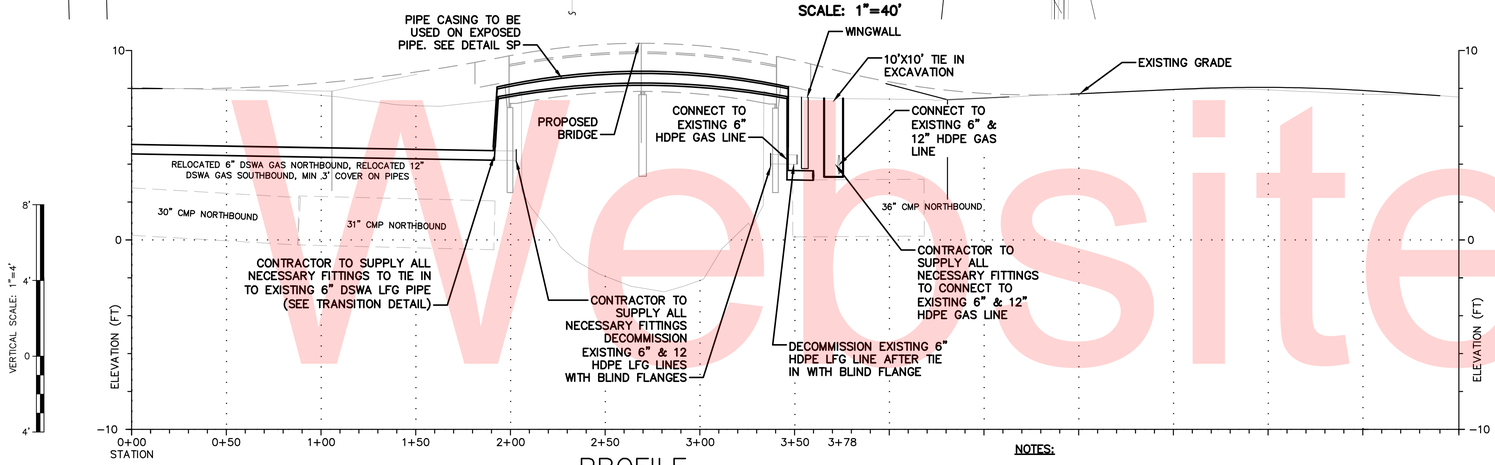

PROFILE

HORIZONTAL SCALE: 1"=40'
VERTICAL SCALE: 1"=4'

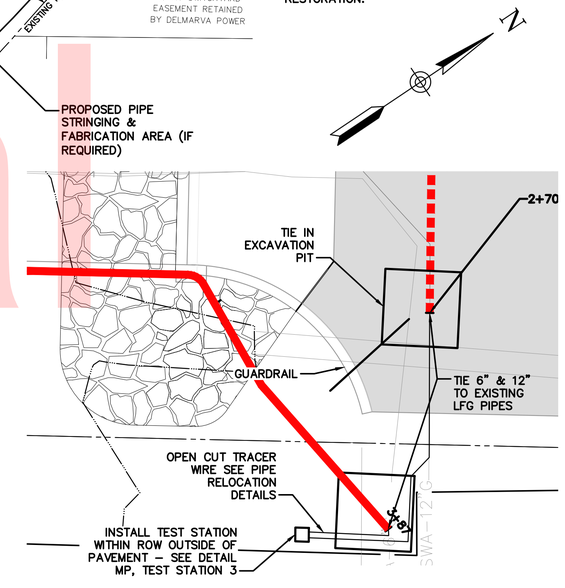

PIPELINE CONNECTION DETAIL

NOT TO SCALE

NOTE:

1. FOR TEST STATION AND TRACER WIRE INSTALLATION SEE PIPE RELOCATION DETAILS
2. PREFABRICATED PIPE SECTIONS TO BE PRESSURE TESTED PRIOR TO INSTALLATION.

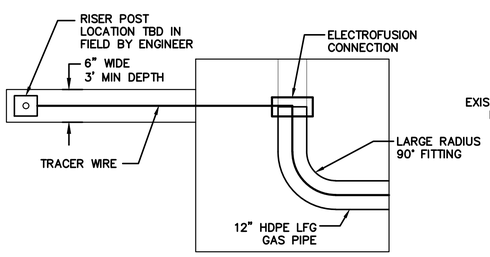

TEST STATION 1

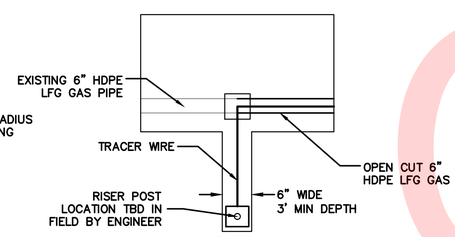

TEST STATION 2

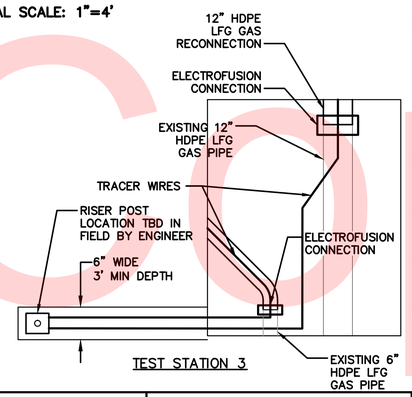

TEST STATION 3

TRENCH DETAIL–MARKER PLAN (MP)

NOT TO SCALE

NOTES:

1. TRACER WIRE SHALL BE INSTALLED ON TOP OF BURIED HDPE PIPE (PER DETAIL UA & PA RESPECTIVELY) WITHIN THE PIPELINE RIGHT-OF-WAY. TRACER WIRE MUST REMAIN A MINIMUM OF 3' BELOW GROUND LEVEL.
2. TEST STATIONS SHALL HAVE INTERNAL TERMINALS CONTAINING CONNECTIONS FOR UP TO FOUR TRACER WIRE TERMINATIONS, TRACER WIRE TEST STATION AND PIPE MARKER SHALL BE YELLOW IN COLOR WITH A 3" REFLECTIVE BAND, BLACK CAP COVER WITH CAP LOCK, AND INCLUDES TRACE WIRE, WHICH SHALL CONSIST OF A 10 GAUGE PRO-TRACE HDD-CCS PE45 WATERPROOF COPPER WIRE OR STAINLESS STEEL WIRE, AS NOTED IN THE SPECIFICATIONS. WIRE SHALL BE CONNECTED INTO THE TEST STATIONS LOCATED IN THE PIPELINE RIGHT-OF-WAY. INSTALL TEST STATION OVER #5 RE-BAR BASE WHICH IS USED FOR GROUNDING ROD.
3. TEST STATIONS SHALL READ "WARNING: BURIED GAS PIPELINE, BEFORE DIGGING IN THIS AREA OR IN AN EMERGENCY CALL: 1-XXX-XXX-XXXX". TELEPHONE NUMBER SHALL BE CONFIRMED PRIOR TO ORDERING.
4. A MAXIMUM SPACING OF 2000' IS ALLOWED BETWEEN TEST STATIONS, AS DETAILED ON THE DRAWINGS, OR AS APPROVED BY THE ENGINEER OR AS LOCATED ON DRAWINGS.
5. TRACER WIRE: TRENCH BOTTOM TO A DEPTH OF 3' AND A MINIMUM OF 6" WIDE, FREE OF WATER BEFORE PLACING TRACE WIRE. WIRE MUST REMAIN A MINIMUM OF 3' BELOW GROUND LEVEL, AS SHOWN ON THE DRAWINGS.
6. TRACER WIRE MUST CONNECT INTO TEST STATIONS. WIRE SHALL BE 10 GAUGE PRO-TRACE HDD-CCS PE45 SOLID COPPER WITH YELLOW INSULATION COLOR OR STAINLESS STEEL AS NOTED IN THE SPECIFICATIONS.
7. CONTRACTOR SHALL DEMONSTRATE ELECTRICAL CONTINUITY BETWEEN TEST STATIONS PRIOR TO PIPE BEING ACCEPTED BY ENGINEER.

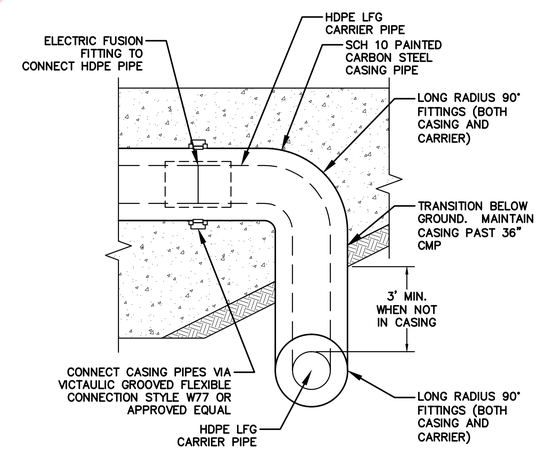

CASING & CARRIER TRANSITION DETAIL (TYP) DETAIL (CT)

NOT TO SCALE

Unofficial Website Copy

DELAWARE DEPARTMENT OF TRANSPORTATION	ADDENDUMS / REVISIONS		40' 0 40' 80' HORIZONTAL SCALE: 1"=40'	BR 1-567A ON N501 HAY ROAD OVER SHELLPOT CREEK, CITY OF WILMINGTON	CONTRACT T201307101	BRIDGE NO. 1-567A	PIPE RELOCATION SITE PLAN AND PROFILE	SHEET NO. 46
	JUNE 2016: COMBINED BORES AND ADDED NOTES				COUNTY NEW CASTLE	DESIGNED BY: AND, JCS2		TOTAL SHTS. 50
	JULY 2016: BRIDGE ATTACHMENT AND UPDATE DETAILS					CHECKED BY: SCS, JFB		
	AUGUST 2016: UPDATE NOTES							

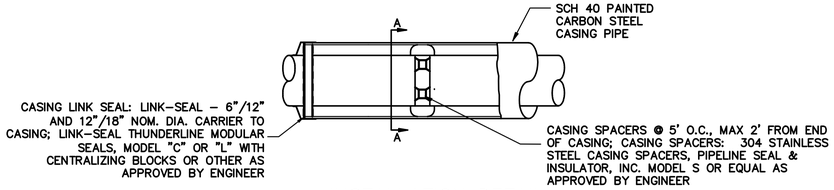

INSTALLATION DETAIL

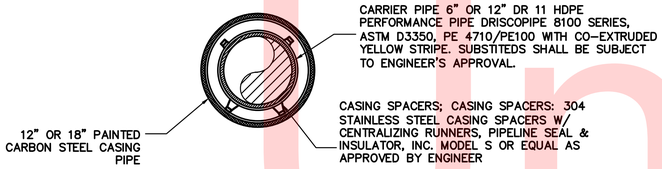

SECTION "A-A"

PIPE CASING DETAIL (SP)

NOT TO SCALE

NOTES:

1. INSTALL STEEL PIPE CASING ALONG EXPOSED SECTION OF PIPE ATTACHED TO THE NEW BRIDGE & ON BOTH SIDES AS SHOWN ON THE DRAWINGS.
2. CARRIER DR 11 HDPE/CASING SCH 40 PAINTED CARBON STEEL: 6"/12" OR 12"/18".
3. CASING PIPE: 18-INCH NOM. DIAMETER, 0.250" WALL THICKNESS, OR 12-INCH NOM. DIAMETER, 0.180" WALL THICKNESS, 35,000 PSI YIELD STRENGTH, ASTM A 53, GRADE A OR B ERW, OR API 5L.
   COATING: PREPARE CASING PIPE SURFACE, AND APPLY TWO COAT EPOXY-POLYAMIDE & ALIPHATIC POLYESTER POLYURETHANE PAINT SYSTEM IN OSHA SAFETY YELLOW TO THE THICKNESS PROVIDED IN THE PAINTING SPECIFICATIONS FOR EXTERIOR SEVERE OUTDOOR ABOVEGROUND APPLICATION. FOR PORTIONS OF THE CASING IN CONTACT WITH EARTH, APPLY COAL TAR EPOXY COATING SYSTEM OR APPROVED EQUAL.

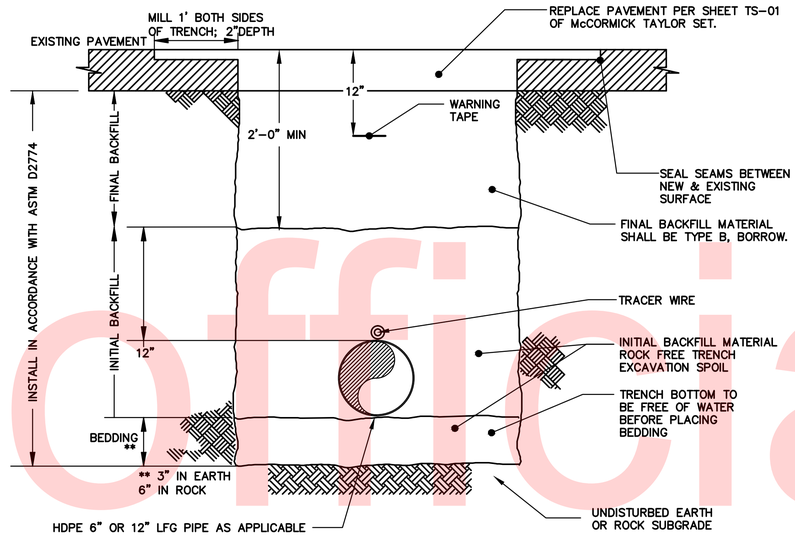

TRENCH DETAIL-PAVED AREAS (PA)

NOT TO SCALE

NOTES:

1. MINIMUM 3' SOIL COVER REQUIRED OVER PIPE. SOIL DEPTH CAN BE ACHIEVED WITH EARTH FILL IF COMPATIBLE WITH ADJACENT TOPOGRAPHY.
2. THE TRACER WIRE SHALL BE A 10 GAUGE WATERPROOF COPPER WIRE OR STAINLESS STEEL AS NOTED IN THE SPECIFICATIONS. TRACER WIRE SHALL BE CONNECTED INTO THE TEST STATIONS, LOCATED, AS PER DRAWING DETAIL (MP).
3. PIPES SHALL BE INSTALLED IN CENTER LINE OF TRENCH, AS SHOWN ON THE DRAWINGS.
4. FOR NEW PIPE INSTALLATIONS, WARNING TAPE SHALL BE BRIGHT YELLOW IN COLOR, CONTINUOUSLY PRINTED WITH "CAUTION BURIED LANDFILL GAS PIPELINE BELOW," MINIMUM OF 6" BY 4 MILS THICK, MANUFACTURED FOR DIRECT BURIAL. COLOR AND PRINTING SHALL BE PERMANENT, UNAFFECTED BY MOISTURE AND SOIL. TAPE SHALL BE PLACED 24" ABOVE HDPE PIPE OR TRACE WIRE.
5. DO NOT PLACE FINAL PAVEMENT FOR A MINIMUM OF 60 DAYS TO ALLOW FOR SETTLEMENT OF BACKFILL.
6. EXCAVATED SOILS TO REMAIN ON SITE UNLESS OFFSITE DISPOSAL APPROVED BY ENGINEER & LANDOWNER.
7. BRING BACKFILL UP TO PAVED SURFACE W/AGGREGATE FOR 60 DAYS, THEN REMOVE ENOUGH AGGREGATE TO INSTALL ASPHALT PER THE DETAIL.

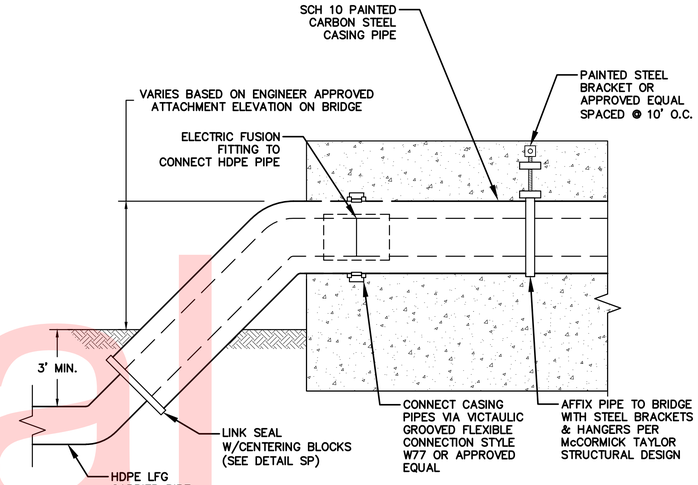

CASING & CARRIER TRANSITION DETAIL (TYP) DETAIL (CT)

NOT TO SCALE

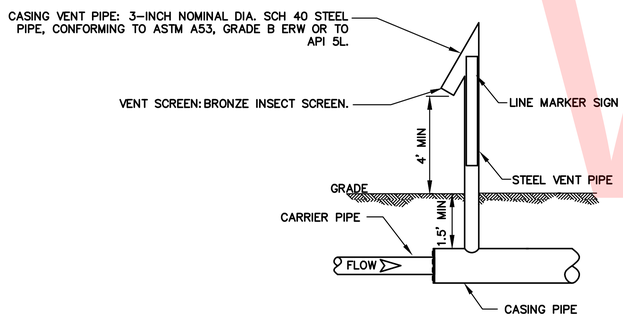

CASING VENT PIPE DETAIL (CV)

NOT TO SCALE

NOTES:

1. CASING VENT PIPE WILL BE 3" STEEL PIPE WITH A 3.5" RHINO VENTGUARD™ UTILITY MARKER FITTED OVER TOP THE STEEL PIPE. THE VENTGUARD™ MARKER SHALL BE 5.5' IN HEIGHT AND WILL INCLUDE A STICKER THAT READS "WARNING: BURIED GAS PIPELINE – FOR EMERGENCY CALL DSWA 302 XXX-XXXX – BEFORE DIGGING CALL 811 (INCLUDE 811 LOGO) – LETTERING TO BE PROVIDED/APPROVED BY DSWA.
2. PAINT TOP 1'-6" OF VENT PIPE WITH 2 COATS OF WHITE PAINT, PAINT REST OF PIPE WITH 2 COATS OSHA YELLOW
3. ALL PAINT AND PRIMER SUPPLIED BY CONTRACTOR.
4. LINE MARKER SIGN TO BE INSTALLED FACING THE ROAD.
5. EXTEND VENT LINES IN LOCATIONS SUBJECT TO HIGH WATER ABOVE THE MAXIMUM ELEVATION OF HIGH WATER AND SUPPORT AND PROTECT.
6. INSTALL VENT LINES MINIMUM OF 4 FEET VERTICALLY FROM AERIAL ELECTRICAL WIRES OR GREATER IF REQUIRED BY NATIONAL ELECTRICAL SAFETY CODE.
7. LOCATE VENTS AT LOCATIONS TO MINIMIZE IMPACT WITH EXISTING LAND USE.

NOTES:

1. PAVEMENT MARKER SHALL BE A RHINO ASPHALT MAGNAIL™ AND STAMPED WASHER, OR ENGINEER APPROVED EQUAL.
2. MARKER SHALL HAVE THE LABEL "WARNING BURIED GAS PIPELINE" STAMPED INTO IT.
3. THE MAGNETIZED NAIL SHALL BE 1.5" MINIMUM IN LENGTH.
4. MARKER AND NAIL SHALL BE STAINLESS STEEL.
5. TOP OF MARKER SHALL BE FLUSH WITH PAVED SURFACE. MARKER SHALL NOT BE LOCATED ABOVE PAVED SURFACE IN ORDER TO FACILITATE THE PLOWING OF SNOW.
6. INSTALL AT LOCATIONS SHOWN ON SHEET 45 DURING FINAL PAVEMENT RESTORATION.

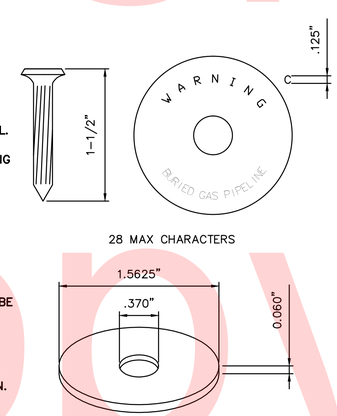

ROADWAY MARKER DETAIL (RM)

NOT TO SCALE

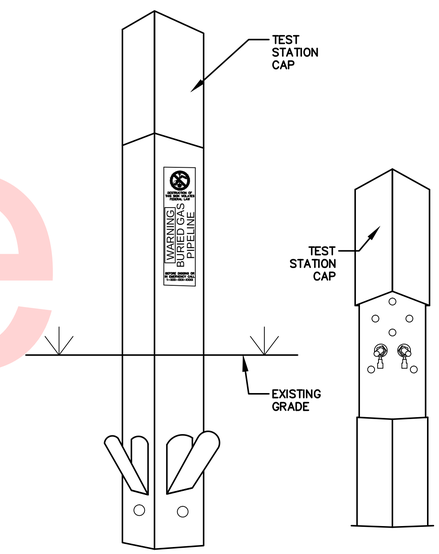

TRACER WIRE TEST STATION DETAIL (TS)

NOT TO SCALE

NOTES:

1. TEST STATION SHALL BE LABELED WITH "WARNING BURIED FIBER OPTIC LINE CALL XXX-XXXX BEFORE DIGGING IN THIS AREA." OWNER TO SUPPLY CALL NUMBER AND APPROVE TEST STATION DESIGN PRIOR TO ORDERING.
2. MARKER POST SHALL BE YELLOW IN COLOR.
3. INSTALL TEST STATION OVER U-CHANNEL POST.
4. INSTALL TEST STATION OVER #5 RE-BAR BASE WHICH IS USED FOR GROUNDING.
5. ATTACH TRACER WIRE TO TEST STATION AS SPECIFIED BY MANUFACTURER.
6. CONTRACTOR TO TEST CONTINUITY OF EACH LENGTH OF TRACER WIRE TO THE SATISFACTION OF THE ENGINEER.

Unofficial Website Copy

RECOMMENDED AS TO ENGINEERING NEED

MANAGER, TEAM SUPPORT — DATE 4.14.15

PROGRAM MANAGER, TEAM SUPPORT — DATE 4/14/15

TECHNICAL REVIEWER, TEAM SUPPORT — DATE 4-14-15

THIS SHEET PREPARED BY THE CONSULTING FIRM OF McCORMICK TAYLOR

PROJECT ENGINEER — DATE 4/10/2015

MICHAEL A. ANGELO REGISTERED NO. 8725 DELAWARE PROFESSIONAL ENGINEER

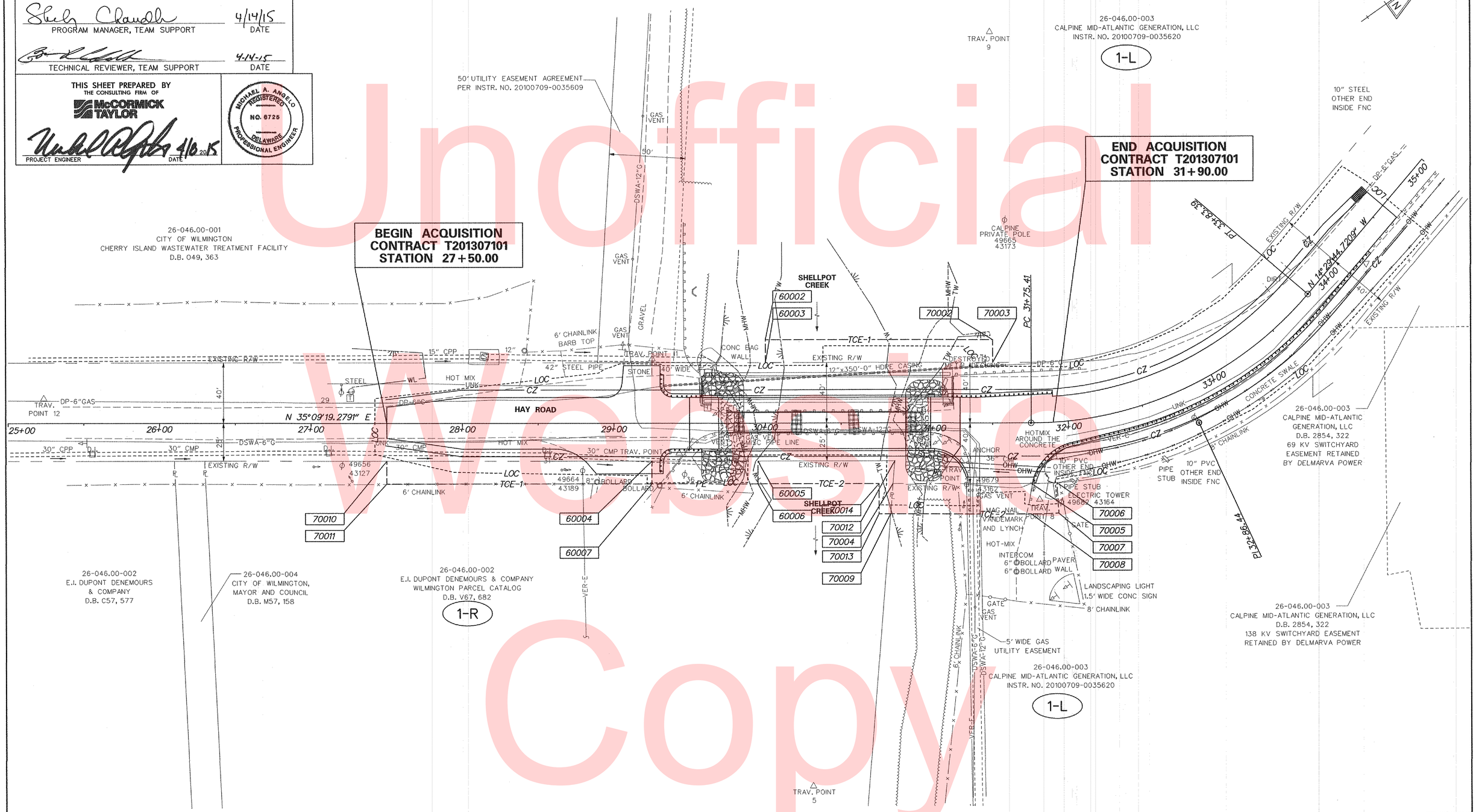

Unofficial Web Copy

DELAWARE DEPARTMENT OF TRANSPORTATION

ADDENDUMS / REVISIONS

SCALE 0 30 60 90 FEET

BR 1-567A ON N501 HAY ROAD OVER SHELLPOT CREEK, CITY OF WILMINGTON

CONTRACT	BRIDGE NO. 1-567A
T201307101	DESIGNED BY: SSMG
COUNTY	CHECKED BY: MAA
NEW CASTLE	

RIGHT OF WAY PLAN

RW-01
SHEET NO. 48
TOTAL SHTS. 50

ASSESSMENT NUMBER	OWNERSHIP OF RECORD	TYPE OF ACQUISITION	TITLE SOURCE	PARCEL AREA (ACRES)
26-046.00-003	(1-L) CALPINE MID-ATLANTIC GENERATION, LLC	TCE-1	20100709-0035620	105.880

ALIGNMENT NUMBER & DESCRIPTION: 1000 - HAY ROAD

PT. NO.	ALIGN. NO.	STATION	OFFSET *	NORTH	EAST	BEARING	DISTANCE	CHORD BEARING	CHORD LENGTH	ARC LENGTH	RADIUS **
60003	1000	30+00.00	-40.00	633427.6737	629651.3720	N 54°50'40.72" W	15.00				
60002	1000	30+00.00	-55.00	633436.3106	629639.1081	N 35°09'19.28" E	150.00				
70002	1000	31+50.00	-55.00	633558.9497	629725.4774	S 54°50'40.72" E	15.00				
70003	1000	31+50.00	-40.00	633550.3127	629737.7413	S 35°09'19.28" W	150.00				
60003	1000	30+00.00	-40.00	633427.6737	629651.3720						

FIGURE 1-L TCE1 AREA = 2250.0000 SQ. FT. (0.0517 ACRES)

ASSESSMENT NUMBER	OWNERSHIP OF RECORD	TYPE OF ACQUISITION	TITLE SOURCE	PARCEL AREA (ACRES)
26-046.00-003	(1-L) CALPINE MID-ATLANTIC GENERATION, LLC	TCE-2	20100709-0035620	105.880

ALIGNMENT NUMBER & DESCRIPTION: 1000 - HAY ROAD

PT. NO.	ALIGN. NO.	STATION	OFFSET *	NORTH	EAST	BEARING	DISTANCE	CHORD BEARING	CHORD LENGTH	ARC LENGTH	RADIUS **
70004	1000	30+84.21	40.00	633450.4571	629765.2655	N 35°09'19.28" E	91.21				
70005	1000	31+75.41	40.00	633525.0272	629817.7819			N 33°24'51.27" E	17.01	17.02	-280.00
70006	1000	31+90.00	40.00	633539.2296	629827.1518	S 58°19'36.74" E	20.00				
70007	1000	31+90.00	60.00	633528.7281	629844.1729			S 33°24'51.27" W	18.23	18.23	300.00
70008	1000	31+75.41	60.00	633513.5113	629834.1338	S 35°09'19.28" W	92.80				
70009	1000	30+82.61	60.00	633437.6351	629780.6975	N 50°16'40.00" W	20.06				
70004	1000	30+84.21	40.00	633450.4571	629765.2655						

FIGURE 1-L TCE2 AREA = 2192.6126 SQ. FT. (0.0503 ACRES)

ASSESSMENT NUMBER	OWNERSHIP OF RECORD	TYPE OF ACQUISITION	TITLE SOURCE	PARCEL AREA (ACRES)
26-046.00-002	(1-R) THE CHEMOURS COMPANY FC, LLC	P/E	Y61, 115	20.880

ALIGNMENT NUMBER & DESCRIPTION: 1000 - HAY ROAD

PT. NO.	ALIGN. NO.	STATION	OFFSET *	NORTH	EAST	BEARING	DISTANCE	CHORD BEARING	CHORD LENGTH	ARC LENGTH	RADIUS **
60004	1000	29+25.00	25.00	633328.9274	629661.3310	N 35°09'19.28" E	70.00				
60005	1000	29+95.00	25.00	633386.1590	629701.6367	S 54°50'40.72" E	15.00				
60006	1000	29+95.00	40.00	633377.5221	629713.9006	S 35°09'19.28" W	70.00				
60007	1000	29+25.00	40.00	633320.2905	629673.5949	N 54°50'40.72" W	15.00				
60004	1000	29+25.00	25.00	633328.9274	629661.3310						

FIGURE 1-R PE AREA = 1050.0000 SQ. FT. (0.0241 ACRES)

ASSESSMENT NUMBER	OWNERSHIP OF RECORD	TYPE OF ACQUISITION	TITLE SOURCE	PARCEL AREA (ACRES)
26-046.00-002	(1-R) THE CHEMOURS COMPANY FC, LLC	TCE-1	Y61, 115	20.880

ALIGNMENT NUMBER & DESCRIPTION: 1000 - HAY ROAD

PT. NO.	ALIGN. NO.	STATION	OFFSET *	NORTH	EAST	BEARING	DISTANCE	CHORD BEARING	CHORD LENGTH	ARC LENGTH	RADIUS **
70010	1000	27+50.00	25.00	633185.8485	629560.5668	N 35°09'19.28" E	175.00				
60004	1000	29+25.00	25.00	633328.9274	629661.3310	S 54°50'40.72" E	15.00				
60007	1000	29+25.00	40.00	633320.2905	629673.5949	S 35°09'19.28" W	175.00				
70011	1000	27+50.00	40.00	633177.2116	629572.8307	N 54°50'40.72" W	15.00				
70010	1000	27+50.00	25.00	633185.8485	629560.5668						

FIGURE 1-R TCE1 AREA = 2625.0000 SQ. FT. (0.0603 ACRES)

ASSESSMENT NUMBER	OWNERSHIP OF RECORD	TYPE OF ACQUISITION	TITLE SOURCE	PARCEL AREA (ACRES)
26-046.00-002	(1-R) THE CHEMOURS COMPANY FC, LLC	TCE-2	Y61, 115	20.880

ALIGNMENT NUMBER & DESCRIPTION: 1000 - HAY ROAD

PT. NO.	ALIGN. NO.	STATION	OFFSET *	NORTH	EAST	BEARING	DISTANCE	CHORD BEARING	CHORD LENGTH	ARC LENGTH	RADIUS **
60005	1000	29+95.00	25.00	633386.1590	629701.6367	N 35°09'19.28" E	90.41				
70012	1000	30+85.41	25.00	633460.0736	629753.6915	S 50°16'40.00" E	35.11				
70009	1000	30+82.61	60.00	633437.6351	629780.6975	S 35°09'19.28" W	7.61				
70013	1000	30+75.00	60.00	633431.4137	629776.3161	N 54°50'40.72" W	20.00				
70014	1000	30+75.00	40.00	633442.9296	629759.9642	S 35°09'19.28" W	80.00				
60006	1000	29+95.00	40.00	633377.5221	629713.9006	N 54°50'40.72" W	15.00				
60005	1000	29+95.00	25.00	633386.1590	629701.6367						

FIGURE 1-R TCE2 AREA = 1515.2540 SQ. FT. (0.0348 ACRES)

Unofficial Website Copy

RW-02

LEGEND

FEE AREA OF ACQUISITION
RW AREA OCCUPIED BY EXISTING RW
P/E PERMANENT EASEMENT
TCE TEMPORARY CONSTRUCTION EASEMENT

* "-" OFFSET IS LEFT OF BASELINE
** "-" CURVE TURNS TO THE LEFT

P:\1559 BRIDGE DESIGN\WO 9 - BR 1-567A\DESIGN\PS&E_PLANS\REF\SB_BR_1_567A.DGN

COUNTY ASSESSMENT PARCEL NUMBER	PLAN SHEET NUMBER	OWNERSHIP OF RECORD	TITLE SOURCE	PROPERTY AREA BEFORE ACQUISITION (ACRE) D=DEED C=CALCULATED A=ASSESMENT	ACQUISITION CODE FEE, R/W, P/E, TCE	AREA TO BE ACQUIRED				PROPERTY AREA REMAINING (SQ. FEET /ACRES)	DEED RECORD OF ACQUISTITION	REMARKS
						ACQUISITION (SQ. FEET /ACRES)	AREA OCCUPIED BY EXISTING RIGHT OF WAY (SQ. FEET /ACRES)	EASEMENT				
								PERMANENT (SQ. FEET /ACRES)	TEMPORARY (SQ. FEET /ACRES)			
26-046.00-003	6	(1-L) CALPINE MID-ATLANTIC GENERATION, LLC	20100709-0035620	A - 105.88	TCE-1				2250.00 / 0.05			
					TCE-2				2192.6126 / 0.05	4612133 / 105.88		A PORTION OF TCE-2 ENCOMPASSES AN EXISTING
												DELMARVA POWER GAS EASEMENT AT 75.0124 SF (0.0017 AC)
26-046.00-002	6	(1-R) THE CHEMOURS COMPANY FC, LLC	Y61, 115	D - 20.88	P/E			1050.00 / 0.02				
					TCE-1				2625.00 / 0.06			
					TCE-2				1515.254 / 0.03	909532.80 / 20.88		

Unofficial Website Copy

RW-03

ACQUISITION CODES

FEE – ACQUISITION
R/W – AREA OCCUPIED BY EXISTING R/W
P/E – PERMANENT EASEMENT
TCE – TEMPORARY EASEMENT

DELAWARE DEPARTMENT OF TRANSPORTATION

ADDENDUMS / REVISIONS

NOT TO SCALE

BR 1-567A ON N501 HAY ROAD OVER SHELLPOT CREEK, CITY OF WILMINGTON

CONTRACT T201307101
COUNTY NEW CASTLE
BRIDGE NO. 1-567A
DESIGNED BY: SSMG
CHECKED BY: MAA

RIGHT OF WAY TABULATION

SHEET NO. 50
TOTAL SHTS. 50

P:\559 BRIDGE DESIGN\WO 9 - BR 1-567A\DESIGN\PS&E_PLANS\REF\SB_BR_1_567A.DGN