Delaware Department
of Transportation

Underwater Inspection of
Main Street/ SR-299 over Appoquinimink River
Bridge No. 1-393-441
March 11 & 26, 2013

Submitted by:

Mark A. Bostick, P.E.
Delaware P.E. No. 16696

Delaware Department of Transportation

Bridge No. 1-393-441

Main Street/ SR-299 over Appoquinimink River

TABLE OF CONTENTS

SIGNIFICANT FINDINGS SUMMARY **1**

1.0 INTRODUCTION **2**

1.1 PURPOSE AND SCOPE 2
1.2 GENERAL DESCRIPTION OF THE STRUCTURE 2
1.3 METHOD OF INVESTIGATION 3

2.0 EXISTING CONDITIONS **4**

3.0 CONCLUSIONS AND RECOMMENDATIONS **6**

3.1 EVALUATION AND ASSESSMENTS 6
3.2 RECOMMENDED NBI CONDITION RATINGS 7
3.3 RECOMMENDATIONS 8

APPENDIX A: Location Map A-1

APPENDIX B: Photographs

Photograph 1. Overall View of South Elevation, Looking North.
Photograph 2. Overall View of North Elevation, Looking South.
Photograph 3. View of West Abutment, Looking Northwest.
Photograph 4. View of East Side of Pier 1, Looking Northwest.
Photograph 5. View of West Side of Pier 1, Looking East.
Photograph 6. View of Timber Core from Southwest Quadrant Perimeter Pile of Pier 1.
Photograph 7. View of Timber Core from Northwest Corner of Pier 1 Interior Pile.

Photograph 8. View of East Abutment, Looking Northeast.

Photograph 9. View of Southwest Embankment, Looking Southwest.

Photograph 10. View of Corrosion on Steel Sheet Pile Wall Along Southwest Embankment, with Holes in Sheet Pile Wall, Looking Southwest.

Photograph 11. View of Southeast Embankment, Looking East.

Photograph 12. View of Northwest Embankment, Looking Northwest.

Photograph 13. View of Erosion on Northwest Embankment, Looking Northwest.

Photograph 14. View of Northwest Embankment, 100' From Bridge, Looking Northwest.

Photograph 15. View of Northeast Embankment, Looking Northeast.

Photograph 16. Channel View, Looking South.

Photograph 17. Channel View, Looking North.

Photograph 18. View of Timber Piles in Channel, Looking West.

APPENDIX C: Figures

Sounding Plan..... Figure 1

West Abutment Inspection Details..... Figure 2

Pier 1 Inspection Details..... Figure 3

East Abutment Inspection Details ..... Figure 4

APPENDIX D: Pontis Element Ratings

SIGNIFICANT FINDINGS SUMMARY

A routine underwater inspection of Bridge No. 1-393-441 was started on March 11, 2013, and completed on March 26, 2013. The channel bottom at Pier 1 has scoured, resulting in the complete undermining of the pier with opening heights of 2.5 to 5.5 feet around the pier's perimeter. These are approximately the same opening a heights as those observed during the February 2011, inspection. The channel bottom has scoured approximately 8 to 12 feet since the design drawings dated 1928.

The fiberglass jacket/form on the pier extended from above the high water mark down to approximately 1 foot to 2 feet above the tremie seal. The tremie seal at the pier typically exhibited soft concrete and areas of rough and deteriorated concrete up to 1 foot deep. The east face of the tremie seal exhibited an area of concrete section loss which measured 3 feet high by 3 feet wide by 2 feet deep. The previous underwater inspection identified the top of a jagged timber pile within this area of concrete section loss; however, due to limited visibility and high currents the presence of the timber pile could not be verified. The concrete surfaces within the void were very rough. Two piles were cored at the request of the Department and the results showed that there was good penetration of the preservative and there were no indications of marine borer activity.

At this time, the structural stability of the pier does not appear to be significantly affected by the undermining; however, the scour void under the pier should be filled and scour countermeasures should be installed in the vicinity of the pier to prevent further scour and channel bottom degradation. A structural analysis may become necessary if the scour at the pier continues to progress.

In accordance with the National Bridge Inspection Standards, DelDOT Underwater Bridge Inspection Guidelines, and based on the inspection findings it is recommended that the submerged substructure units of Bridge No. 1-393-441 have a complete underwater

inspection at an interval not to exceed 24 months. Additionally, soundings should be performed annually around the pier to monitor for advancement of scour and increased opening heights in the undermining around the pier.

1.0 INTRODUCTION

1.1 Purpose and Scope

DelDOT Bridge No. 1-393-441 carries State Route 299 over Appoquinimink River in New Castle County, DE. On March 11, 2013, and March 26, 2013, Collins Engineers, Inc. performed a routine underwater investigation at the bridge to evaluate the condition of all substructure units (SSUs) from the high water mark to the channel bottom, which included the West Abutment, Pier 1, and the East Abutment. This report includes a description of the structure, the method of investigation, and a detailed description of the conditions noted. In addition, this report contains a condition assessment of the bridge components evaluated and presents recommendations for follow-up actions as needed. Sounding Data was collected around the substructure units, along the centerline of the bridge, along each fascia, and at cross sections of the channel 50 feet and 100 feet upstream and downstream of the bridge.

The scope of the inspection was expanded to include obtaining cores from two timber support piles during the inspection to check for possible marine borer activity. This testing was requested to provide information in support of the development of repair plans for the bridge.

1.2 General Description of the Structure

DelDOT Bridge No. 1-393-441 is a two span, fixed span steel girder bridge over Appoquinimink River. The bridge was originally constructed in 1928 as a two span steel

swing bridge and was rehabilitated and converted to a fixed span steel girder bridge in 1991. The bridge is supported on two abutments and an intermediate pier. The West Abutment and the East Abutment are constructed of reinforced concrete founded on 14 inch diameter timber piles of unknown length. The pier is constructed of a reinforced concrete rectangular beam seat resting on a reinforced concrete cell pile cap with a fiberglass jacket installed and supported on thirty-seven 14 inch diameter timber piles of unknown length. There is also a tremie seal measuring 6.5 feet tall by 21 feet diameter under the cap. Refer to Appendix A for a location map of the bridge and Photographs 1 and 2 in Appendix B for overall views of the bridge. Refer to Figure 1 in Appendix C for a sketch of the bridge site.

1.3 Method of Investigation

A dive team consisting of commercially trained divers, led by a registered Professional Engineer in the State of Delaware, conducted the underwater investigation. The team members and their duties for this inspection were as follows: Mark Bostick, PE – Team Leader/Inspection Diver; Kurt Lingo - Standby Diver/Tender; and Jacob Douglass – Notetaker. The inspection was conducted using commercial surface supplied air (SSA) diving equipment. During the inspection, the diver worked from shore and a notetaker on shore recorded the inspection notes.

The underwater investigation generally consisted of a Level I visual inspection of 100 percent of the accessible SSU surfaces from the high-water mark to the channel bottom. A Level II visual/tactile inspection, which included removing marine growth at the waterline, mid-depth and channel bottom, was performed at various locations to facilitate an evaluation of the underlying surfaces and provide an overall condition of the structure. Particular attention was given to any observed areas of excessive deterioration or apparent distress, and the condition of any repairs was noted. A Level III inspection, consisting of coring piles and checking for marine borer activity, was performed on two of the Pier's

timber piles. An increment borer was used to take the borings; the cored material was retained and examined. A small wire probe was used to check the cored hole, and then the hole was filled with a treated plug.

A cursory assessment of the waterway and channel bottom conditions in the vicinity of the bridge was also performed. The type of channel bottom material was noted, as well as the location and extent of any observed scour, riprap, or debris. The location of the waterline with respect to a fixed reference on the bridge was noted at the time of inspection.

2.0 EXISTING CONDITIONS

At the time the sounding data was collected on March 26, 2013, the waterline reference was measured from the waterline to the south end of the West Abutment beam seat and measured 4.0 feet. Sounding Data indicated that the maximum water depth at the bridge was 15.9 feet at the southeast quadrant of Pier 1. At the time of inspection there was less than 6 inches of visibility and a water velocity of approximately 1 foot per second. The river is tidally influenced. Refer to Figure 1 in Appendix C for a Sounding Plan of the bridge.

Overall, the West Abutment was in good condition from the mean high waterline to the channel bottom. The channel bottom in the vicinity of the abutment consisted of riprap which measured 1.5 to 2 feet on a side and extended from the abutment out 10 feet on a steep slope. The concrete exhibited scaling up to 1/4 inch deep extending from 4 feet below the beam seat to the channel bottom. Refer to Photograph 3 in Appendix B for a view of the West Abutment. Refer to Figure 2 in Appendix C for detailed inspection results of the West Abutment.

Overall, the Pier was in poor condition. The upper portion of the substructure unit consisted of a reinforced concrete cap that rested on the (cylindrical) pivot pier. According

to plans, the pivot pier was rehabilitated by encasing the original pier with a structural (reinforced) concrete jacket with a stay-in-place fiberglass jacket. The fiberglass jacket was still in place, was covered with a light barnacle growth, and was generally in satisfactory condition. The fiberglass jacket appeared to end approximately 1 to 1.5 feet above the top of the tremie seal. In general, the tremie seal was in poor condition. The tremie concrete typically exhibited soft concrete throughout, along with areas of rough and heavily deteriorated concrete up to 1 foot deep. The previous underwater inspection in 2011 identified a void in the east side of the seal measuring 3 feet high by 3 feet wide by 2 feet deep with an exposed jagged top of a timber pile. The presence of the void was verified; however, the top of the pile was not confirmed. The interior of the void was very rough and narrowed moving inward from the perimeter and the visibility was extremely limited. The seal/pier was completely undermined, exhibiting opening heights of 2.5 to 5.5 feet around the pier perimeter. The timber piles encountered under the pier were in satisfactory to good condition. Two of the outer (perimeter) piles in the southwest quadrant of the pier were approximately 9 inches in diameter. It is not known if the 9 inch diameter piles were originally larger and eroded over the years, but there was no widening evident in these piles at the juncture with the tremie seal or at the channel bottom. The interior piles were typically 12 to 14 inches in diameter. The timber piles appeared to be sound when struck with a hammer. Two piles were cored, one in the southwest quadrant (a perimeter pile) and one interior pile in the northwest quadrant. Both exhibited good penetration of the preservative and there were no internal (or external) indications of marine borers. The channel bottom in the vicinity of the pier consisted of riprap measuring 1.5 to 2 feet on a side. There appeared to be some timber formwork elements embedded in the channel bottom around the pier. The channel bottom appeared to deepen under the pier. Refer to Photographs 4 and 5 in Appendix B for views of the Pier. Also, refer to Photographs 6 and 7 in Appendix B for views of the timber cores. Refer to Figure 3 in Appendix C for detailed inspection results of the pier.

Overall, the East Abutment was in good condition from the mean high waterline to the channel bottom. The channel bottom in the vicinity of the abutment consisted of riprap which measured 1.5 to 2 feet on a side and extended from the abutment out 10 feet on a steep slope. The concrete exhibited scaling up to 1/4 inch deep extending from 4 feet below the beam seat to the channel bottom. Refer to Photograph 8 in Appendix B for a view of the East Abutment. Refer to Figure 4 in Appendix C for detailed inspection results of the East Abutment.

The northwest and northeast embankments consisted of riprap which measured 6 to 12 inches on a side with scattered concrete construction debris which measured up to 3 feet on a side. The embankments above the riprap protection consisted of vertical cut banks up to 2 feet high with exposed tree roots. The southeast embankment extending from the bridge to 50 feet south of the bridge consisted of riprap which measured 6 to 18 inches in diameter. The southeast embankment extending from 50 feet south of the bridge to the south exhibited slumping banks with no significant erosion. The southwest embankment consisted of a steel sheet pile wall which exhibited heavy corrosion and areas of 100 percent section loss (localized small holes) along the channel bottom with no significant loss of fill observed. The channel had abandoned timber piles scattered throughout from previous fender systems. Refer to Photographs 9 through 15 in Appendix B for views of the embankments and Photographs 16 through 18 for channel views. Refer to Figure 1 in Appendix C for detailed inspection results showing the embankments and deficiencies noted.

3.0 CONCLUSIONS AND RECOMMENDATIONS

3.1 Evaluation and Assessments

Overall, the submerged substructure units of Bridge No. 1-393-441 were in poor condition below the mean high waterline. A comparison of the soundings recorded during the

previous inspection on February 15, 2011 and the soundings recorded during this inspection shows that there has not been any significant degradation or aggradation in the channel bottom. The pier was completely undermined with opening heights ranging from 2.5 to 5.5 feet; these opening heights were similar to the 3 to 6 feet documented during the 2011 underwater inspection. The exposed piles appeared to be sound and cores taken at two piles did not show any evidence of marine borers. The channel bottom has scoured approximately 8 to 12 feet as compared to the original channel bottom elevations shown on the original design drawings dated 1928. If the channel bottom continues to exhibit signs of scour it may be necessary to analyze the structural integrity of the pier to ensure that the length of the exposed piles is not exceeding the maximum unbraced design length.

The tremie seal concrete is soft and will continue to erode over time, leaving the potential to expose more of the piles.

The timber piles in the waterway do not constitute an effective fender system. At high tide, most of the timber piles are submerged and can pose a threat to the small boat traffic that use the waterway.

3.2 Recommended NBI Condition Ratings

Substructure Code (Item 60)	Channel and Channel Protection Code (Item 61)	Underwater Inspection Code (Item 92B) (months)	Special Inspection Code (Item 92C) (months)
4	5	24	12

An NBI Rating of 4 for Item 60 (Substructure) is recommended. The tremie seal at Pier 1 was in poor condition and exhibited heavy deterioration throughout with voids up to 2 feet

deep. In addition, the pier is completely undermined with up to 5.5 feet of pile exposure beneath the tremie seal.

An NBI Rating of 5 for Item 61 (Channel and Channel Protection Code) is recommended. Although the channel bottom in the vicinity of the pier has not changed significantly since the previous underwater inspection in 2011, there has been significant scour since the bridge was constructed. In addition, there is some cut bank erosion exhibited in the northwest embankment. The abandoned timber piles from prior fender systems in the channel should be removed and consideration be given to installing a new fender system.

It is recommended that the submerged substructure units of Bridge No. 1-393-441 have a complete underwater inspection at an interval not to exceed 24 months. Furthermore, a special inspection of Bridge No. 1-393-441 should be performed to record detailed sounding depths and to monitor any changes in the channel bottom at Pier 1 that may occur at an interval not to exceed 12 months.

Refer to Appendix D for PONTIS condition state ratings and quantities for the substructure elements from the high water mark to the mudline.

3.3 Recommendations

The pier undermining should be repaired by filling the void with tremie concrete and scour countermeasures should be installed in the vicinity of the pier to prevent further scour and channel bottom degradation. Due to the soft nature of the concrete and the extent of the deterioration, the seal should be repaired/protected from further deterioration similar to the encasement that was done on the original pivot pier.

In accordance with the National Bridge Inspection Standards, DelDOT Underwater Bridge Inspection Guidelines, and based on the inspection findings It is recommended that the submerged substructure units of Bridge No. 1-393-441 have a complete underwater

inspection at an interval not to exceed 24 months. Furthermore, a special inspection of Bridge No. 1-393-441 should be performed to record detailed sounding depths and to monitor any changes in the channel bottom at the Pier that may occur at an interval not to exceed 12 months. It is also recommended that soundings be recorded at the substructure units during or immediately following any significant high water event to check if any additional scour is occurring.

Originated By: Jacob Douglass, E.I.T.

APPENDIX A – LOCATION MAP

Delaware Department of Transportation

Bridge No. 1-393-441

Main Street/ SR-299 Over Appoquinimink River

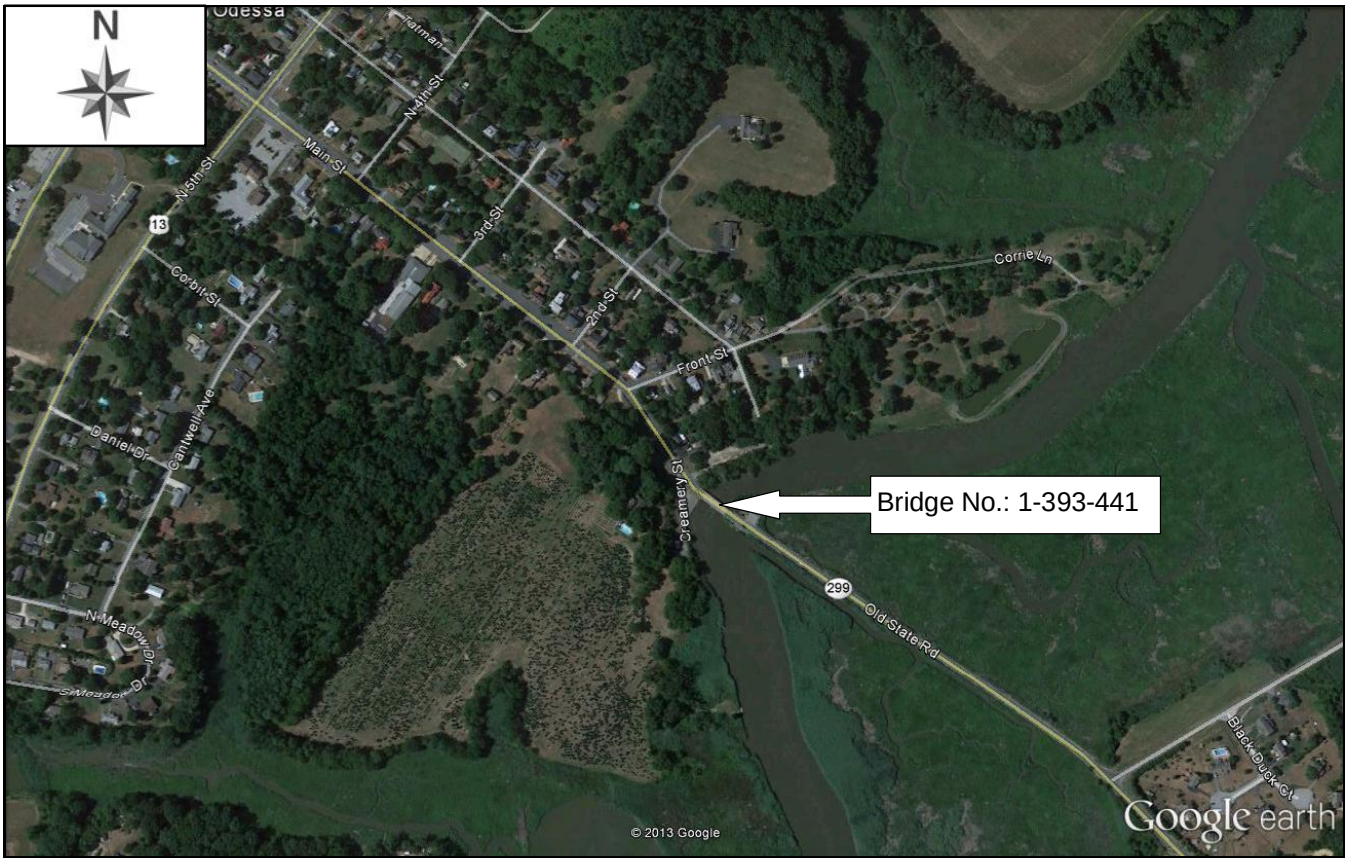

DELAWARE DEPARTMENT OF TRANSPORTATION		
MAIN STREET/ SR-299 OVER APPOQUINIMINK RIVER BRIDGE NO. 1-393-441 **LOCATION MAP**		
		DATE: 3/11/2013
		SCALE: N.T.S.
		Appendix A-1

APPENDIX B – PHOTOGRAPHS

Photograph 1. Overall View of South Elevation, Looking North.

Photograph 2. Overall View of North Elevation, Looking South.

Photograph 3. View of West Abutment, Looking Northwest.

Photograph 4. View of East Side of Pier 1, Looking Northwest.

Photograph 5. View of West Side of Pier 1, Looking East.

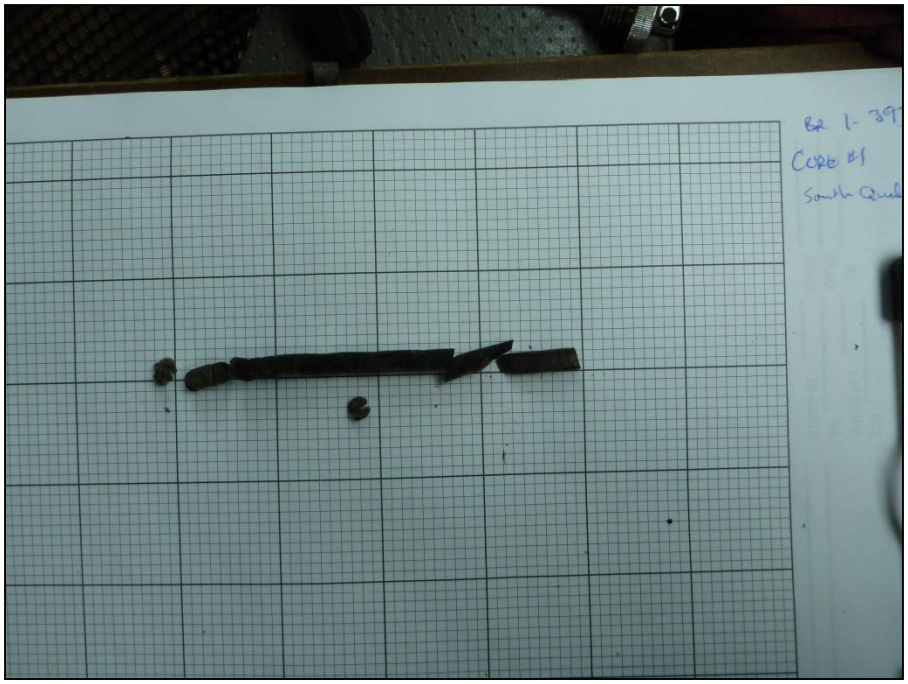

Photograph 6. View of Timber Core from Southwest Quadrant Perimeter Pile of Pier 1.

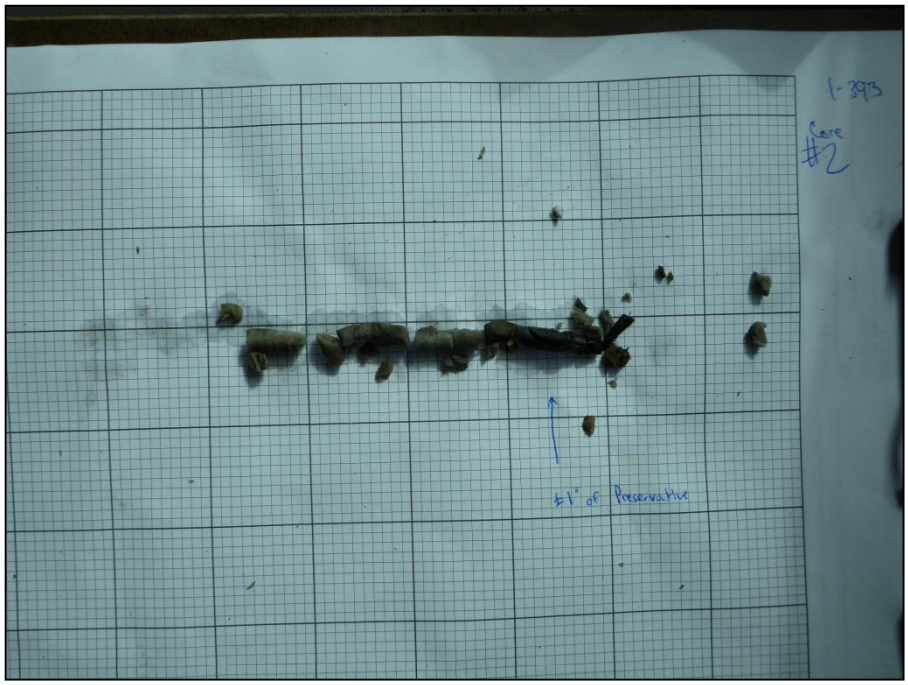

Photograph 7. View of Timber Core from Northwest Corner of Pier 1 Interior Pile.

Photograph 8. View of East Abutment, Looking Northeast.

Photograph 9. View of Southwest Embankment, Looking Southwest.

Photograph 10. View of Corrosion on Steel Sheet Pile Wall Along Southwest Embankment, with Holes in Sheet Pile Wall, Looking Southwest.

Photograph 11. View of Southeast Embankment, Looking East.

Photograph 12. View of Northwest Embankment, Looking Northwest.

Photograph 13. View of Erosion on Northwest Embankment, Looking Northwest.

Photograph 14. View of Northwest Embankment, 100' From Bridge, Looking Northwest.

Photograph 15. View of Northeast Embankment, Looking Northeast.

Photograph 16. Channel View, Looking South.

Photograph 17. Channel View, Looking North.

Photograph 18. View of Timber Piles in Channel, Looking West.

APPENDIX C – FIGURES

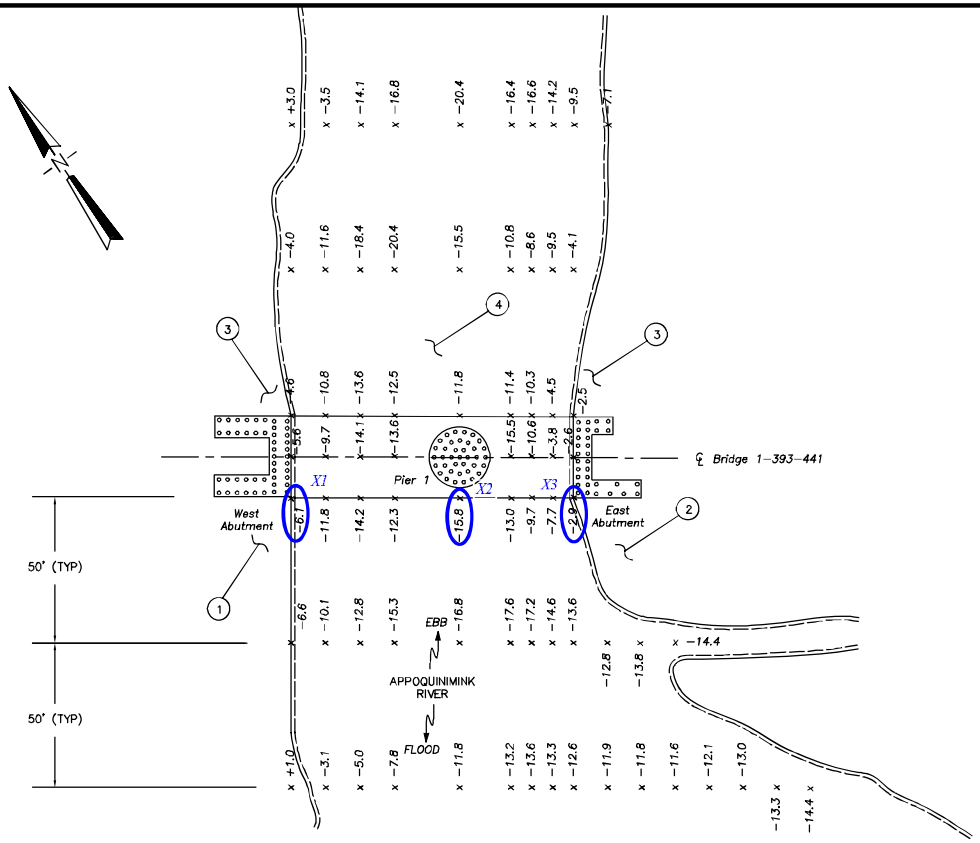

SOUNDING PLAN

Survey EL @ West Abutment Beam Seat = 6.98' (NAVD'88)

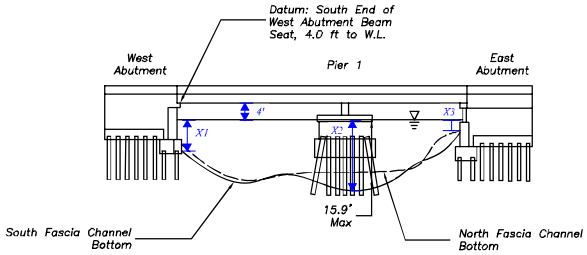

WEST ELEVATION

GENERAL NOTES:

1. At the time of the sounding data collection on March 26, 2013 the waterline was located approximately 4.0 feet below the south end of the West Abutment beam seat. Sounding data indicated that the maximum water depth in the vicinity of the bridge was 15.9 feet, located at the southeast quadrant at Pier 1.
2. The river is tidally influenced.

INSPECTION NOTES:

1. The southwest embankment consisted of a steel sheet pile wall which exhibited heavy corrosion and areas of 100 percent section loss along the channel bottom with no significant loss of fill.
2. The southeast embankment extending from the bridge to 50 feet south of the bridge consisted of riprap which measured 6 to 18 inches on a side. The embankment extending from 50 feet south of the bridge to the south exhibited slumping banks with no significant erosion.
3. The northwest and northeast embankments consisted of riprap which measured 6 to 12 inches on a side with scattered concrete construction debris which measured up to 3 feet on a side. The embankments above the riprap protection consisted of vertical cut banks up to 2 feet high with exposed tree roots.
4. The channel had abandoned timber piles scattered throughout from previous fender systems.

Channel Ground El at
West Abutment, Pier, & East Abutment
= 6.98' - 4' - X_S

At West Abutment:
6.98' - 4' - 6.1' = -3.1' (NAVD'88)

At Pier:
6.98' - 4' - 15.8' = -12.8' (NAVD'88)

At East Abutment:
6.98' - 4' - 2.9' = -0.1' (NAVD'88)

LEGEND:

x −1.5 Indicates Water Depth at the Time of Inspection in Feet

(x) Inspection note number

DELAWARE
DEPARTMENT OF TRANSPORTATION

MAIN STREET SR-299 OVER APPOQUINIMINK RIVER
BRIDGE NO. 1-393-441
SOUNDING PLAN

DRAWN BY: JMD	COLLINS ENGINEERS	10201 Fairfax Boulevard Suite 530 Fairfax, VA 22030 www.collinsengr.com	DATE: 3/11/13
CHECKED BY: MAB			SCALE: N.T.S.
JOB NO.: 35-06428			FIGURE NO.: 1

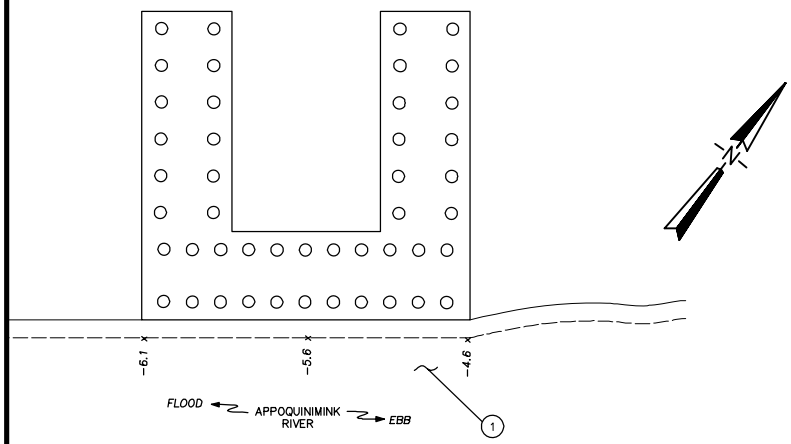

GENERAL NOTES:

1. At the time of the sounding data collection on March 26, 2013 the waterline was located approximately 4.0 feet below the south end of the West Abutment beam seat.

INSPECTION NOTES:

(1) The channel bottom in the vicinity of the abutment consisted of riprap which measured 1.5 to 2 feet on a side and extended from the abutment out 10 feet on a steep angle.

(2) The concrete exhibited scaling up to 1/4 inch deep with random popouts up to 1/2 inch deep extending from 4 feet below the beam seat to the channel bottom.

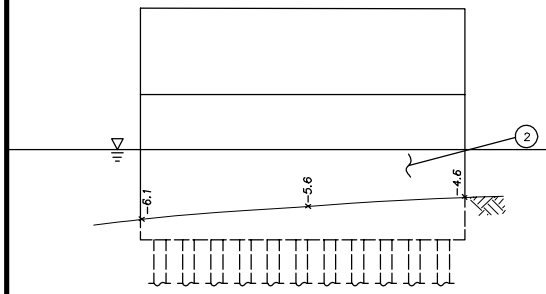

EAST ELEVATION

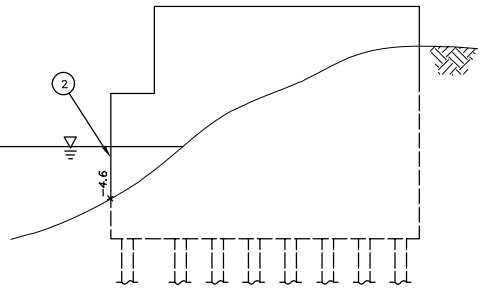

NORTH ELEVATION

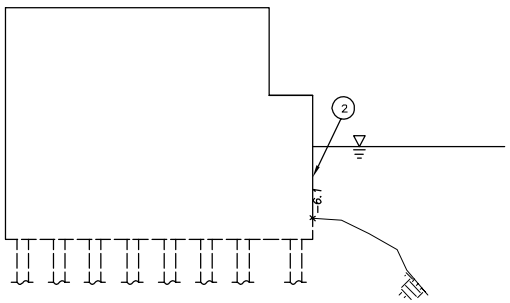

SOUTH ELEVATION

LEGEND:

x −1.5 Indicates Water Depth at the Time of Inspection in Feet

(x) Inspection Note Number

○ 14 in. Diameter Timber Pile

DELAWARE
DEPARTMENT OF TRANSPORTATION

MAIN STREET/ SR-299 OVER APPOQUINIMINK RIVER
BRIDGE NO. 1-393-441
WEST ABUTMENT INSPECTION DETAILS

DRAWN BY: JMD	COLLINS ENGINEERS	10201 Fairfax Boulevard Suite 530 Fairfax, VA 22030 www.collinseng.com	DATE: 3/11/13
CHECKED BY: MAB			SCALE: N.T.S.
JOB NO.: 35-06428			FIGURE NO.: 2

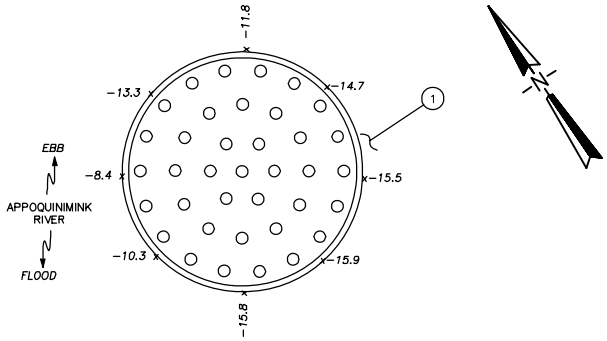

PLAN

GENERAL NOTES:

1. At the time of the sounding data collection on March 26, 2013 the waterline was located approximately 4.0 feet below the south end of the West Abutment beam seat.

INSPECTION NOTES:

1. The channel bottom in the vicinity of the pier consisted of riprap which measured 1.5 to 2 feet on a side and timber debris.
2. The pier was undermined 5.5 ft on the south side, 4 ft on the east side, 2.5 ft on the north side, and 3 ft on the west side.
3. Timber piles appeared to be sound.
4. The seal typically exhibited soft concrete and areas of rough and heavily deteriorated concrete up to 1 foot deep.
5. The east face of the seal exhibited an area of concrete section loss which measured 3 feet high by 3 feet wide by 2 feet deep and narrowed as it went inwards.
6. The fiberglass form ended 4.7 ft below the top of the pier.
7. The fiberglass form exhibited very light barnacle growth.

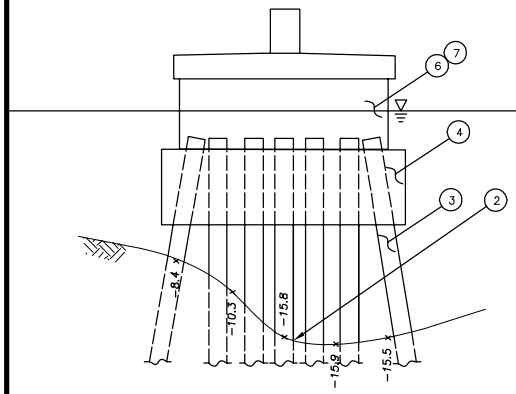

SOUTH ELEVATION

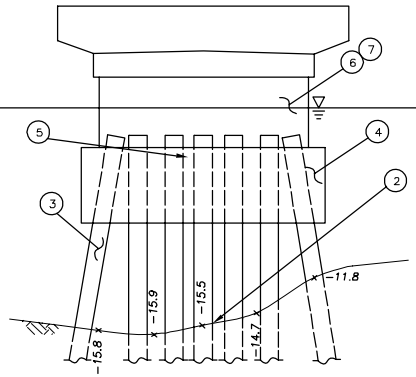

EAST ELEVATION

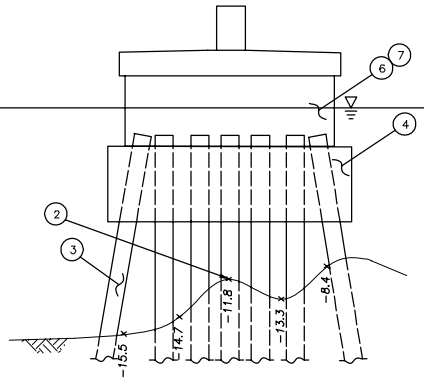

NORTH ELEVATION

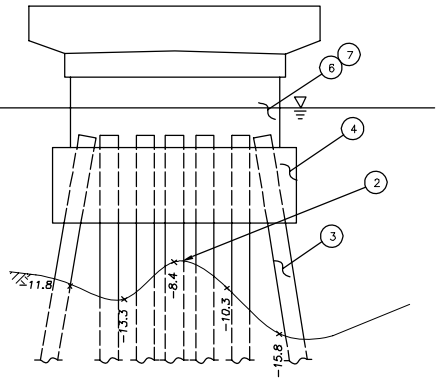

WEST ELEVATION

LEGEND:

x -1.5 Indicates Water Depth at the Time of Inspection in Feet

(x) Inspection Note Number

○ 14 in. Diameter Timber Pile

DELAWARE
DEPARTMENT OF TRANSPORTATION

MAIN STREET SR-9 OVER APPOQUINIMINK RIVER
BRIDGE NO. 1-393-441
PIER 1 INSPECTION DETAILS

DRAWN BY: JMD	COLLINS ENGINEERS	10201 Fairfax Boulevard Suite 530 Fairfax, VA 22030 www.collinseng.com	DATE: 3/11/13
CHECKED BY: MAB			SCALE: N.T.S.
JOB NO.: 35-06428			FIGURE NO.: 3

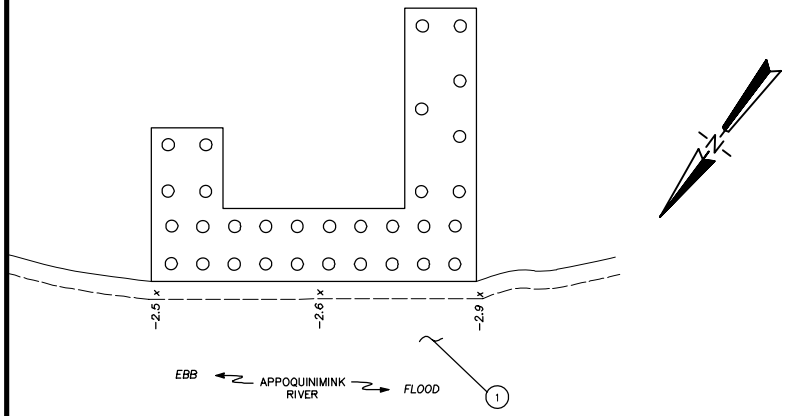

GENERAL NOTES:

1. At the time of the sounding data collection on March 26, 2013 the waterline was located approximately 4.0 feet below the south end of the West Abutment beam seat.

INSPECTION NOTES:

(1) The channel bottom in the vicinity of the abutment consisted of riprap which measured 1.5 to 2 feet on a side and extended from the abutment out 10 feet on a steep angle.

(2) The concrete exhibited scaling up to 1/4 inch deep with random popouts up to 1/2 inch deep extending from 4 feet below the beam seat to the channel bottom.

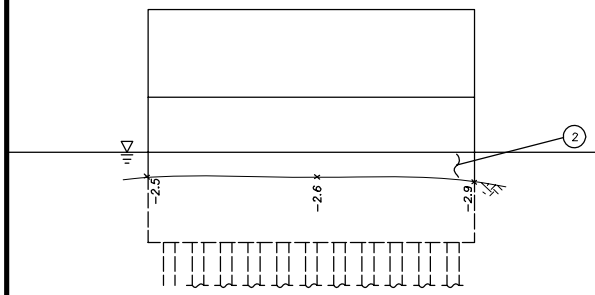

WEST ELEVATION

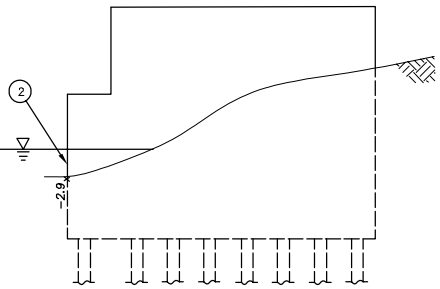

SOUTH ELEVATION

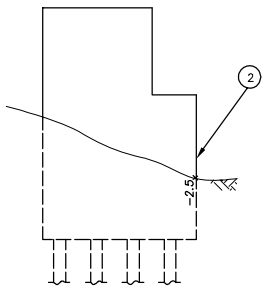

NORTH ELEVATION

LEGEND:

x −1.5 Indicates Water Depth at the Time of Inspection in Feet

(x) Inspection Note Number

○ 14 in. Diameter Timber Pile

DELAWARE
DEPARTMENT OF TRANSPORTATION

MAIN STREET/ SR-299 OVER APPOQUINIMINK RIVER
BRIDGE NO. 1-393-441
EAST ABUTMENT INSPECTION DETAILS

DRAWN BY: JMD	COLLINS ENGINEERS	10201 Fairfax Boulevard Suite 530 Fairfax, VA 22030 www.collinseng.com	DATE: 3/11/13
CHECKED BY: MAB			SCALE: N.T.S.
JOB NO.: 35-06428			FIGURE NO.: 4

APPENDIX D – PONTIS ELEMENT RATINGS

PONTIS DATA SUMMARY

ELEM	DESCRIPTION	UNITS	TOTAL	CS1	CS2	CS3	CS4	CS5	COMMENTS
206	Timber Column	(LF)	81	81	0	0	0	0	See Span Details
210	R/Conc Pier Wall	(EA)	21	0	0	21	0	0	See Span Details
215	R/Conc Abutment	(LF)	58	58	0	0	0	0	See Span Details
390	R/Conc Wingwall	(LF)	94	94	0	0	0	0	See Span Details
361	Scour Smart Flag	(EA)	1	1	0	0	0	0	See Span Details

NOTES:

1. The elements and quantities listed above only reflect the limits of the element from the high water mark to the channel bottom.

SPAN 1 – PONTIS DATA

ELEM	DESCRIPTION	UNITS	TOTAL	CS1	CS2	CS3	CS4	CS5	COMMENTS
206	Timber Column	(LF)	81	81	0	0	0	0	CS-1, 81 LF; NDN; Cores extracted from two piles (2013 UW inspection) show good penetration of preservative and no indications of marine borer activity. Timber piles ranged in diameter from approximately 9 inches to 14 inches.
210	R/Conc Pier Wall	(LF)	21	0	0	21	0	0	CS-3, 21 LF; The concrete seal typically exhibited soft concrete and areas of rough and heavily deteriorated concrete up to 1 foot deep. The east face of the seal exhibited an area of concrete section loss which measured 3 feet wide by 3 feet high by 2 feet deep that narrowed as it went inwards.
215	R/Conc Abutment	(LF)	29	29	0	0	0	0	CS-1, 29 LF; Concrete exhibited scaling up to 1/4 inch deep with up to 1/2 inch random popouts extending from 4 feet below the beam seat to the channel bottom.
390	R/Conc Wingwalls	(LF)	50	50	0	0	0	0	CS-1, 50 LF; NDN
361	Scour Smart Flag	(EA)	1	0	1	0	0	0	CS-2, 1 EA; The entire pier was undermined 2.5 to 5.5 feet high. The channel has scoured approximately 8 to 12 feet since original design drawings dated 1928.

SPAN 2 – PONTIS DATA

ELEM	DESCRIPTION	UNITS	TOTAL	CS1	CS2	CS3	CS4	CS5	COMMENTS
215	R/Conc Abutment	(LF)	29	29	0	0	0	0	CS-1, 29 LF; Concrete exhibited scaling up to 1/4 inch deep with up to 1/2 inch random popouts extending from 4 feet below the beam seat to the channel bottom.
390	Reinf Conc Wingwalls	(LF)	44	44	0	0	0	0	CS-1, 44 LF; NDN