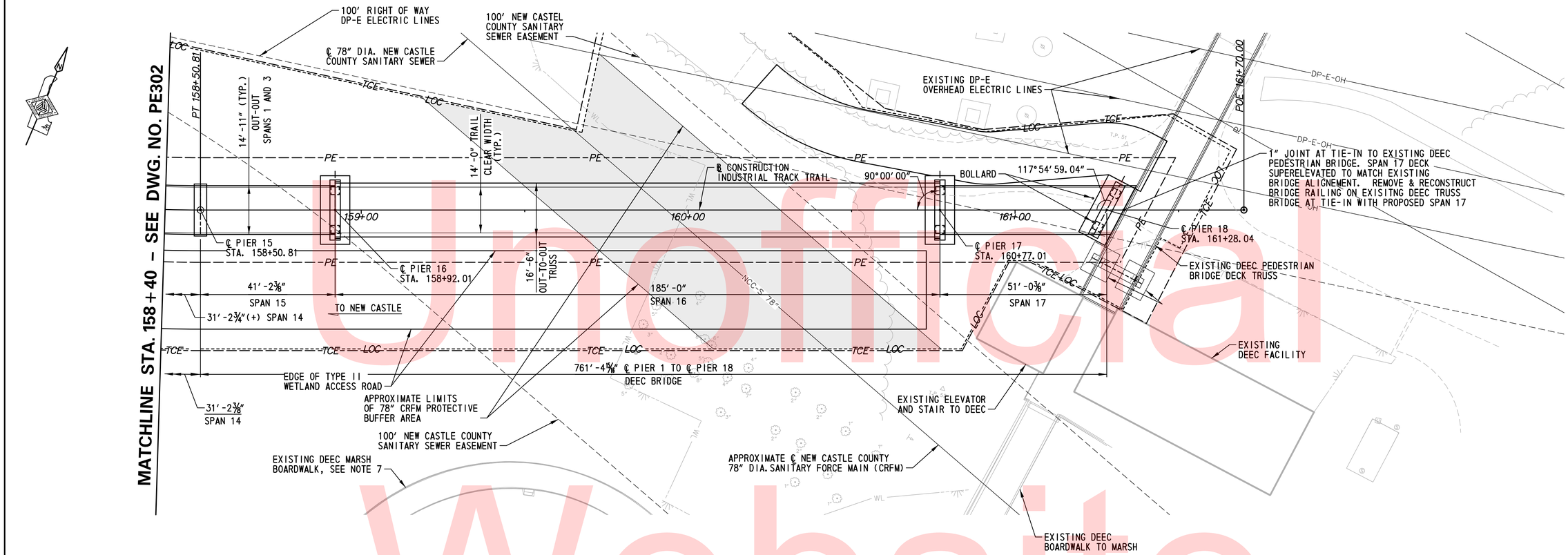

PLAN
SCALE: 1/16"=1'-0"

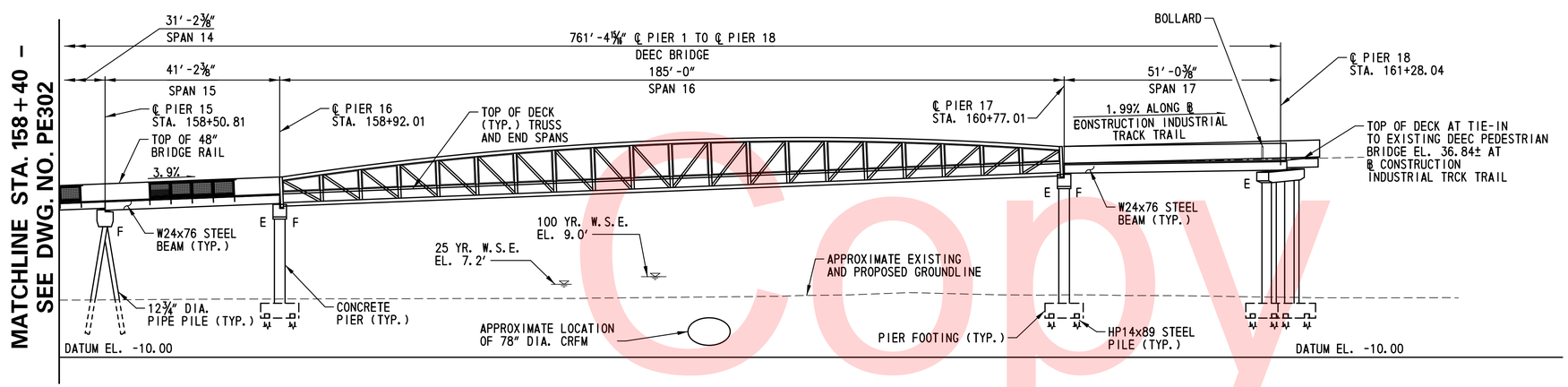

ELEVATION
SCALE: 1/16"=1'-0"

NOTES:

1. ALL SPAN LENGTHS MEASURED ALONG BASELINE OF CONSTRUCTION AT ℄ PIER. SEE DWG NOS. FR 301 THROUGH FR-303 FOR CENTER-CENTER BEARING LENGTH OF EACH SPAN.
2. FOR PIER STATIONS, WORKING POINTS, AND COORDINATES, SEE DWG. NOS. FT-301 THROUGH FT-306.
3. SEE DWG. NOS. PR-302 THROUGH PR-304 FOR DETAILS OF PIERS 16-18.
4. FOR PILE LAYOUT OF PIERS 16-18 SEE DWG. NOS. PL-303 AND PL-304.
5. SEE DWG. NO. PN-301 FOR MAXIMUM UNFACTORED REACTIONS PER TRUSS BEARING. SEE SPECIAL PROVISIONS FOR MORE INFORMATION.
6. RALING NOT SHOWN THROUGHOUT ALL SPANS FOR CLARITY.
7. DEEC MARSH BOARDWALK TO REMAIN. CONTRACTOR SHALL NOT DISTURB THIS BOARDWALK AT ANY TIME. ANY DAMAGE INCURRED TO THE BOARDWALK AS A RESULT OF THE CONTRACTOR'S ACTIONS SHALL BE REPAIRED TO THE SATISFACTION OF THE DEPARMENT ALL AT THE CONTRACTOR'S EXPENSE.

Unofficial Website Copy

N:\31896-002\CADD\BRIDGE\PE303_ITG.DGN

DELAWARE DEPARTMENT OF TRANSPORTATION	ADDENDUMS / REVISIONS	0 8' 16' 32' SCALE: 1/16" = 1'-0"	NEW CASTLE INDUSTRIAL TRACK TRAIL, PHASE 3	CONTRACT T201330009	BRIDGE NO. X	DEEC BRIDGE GENERAL PLAN AND ELEVATION – 3	PE-303
				COUNTY NEW CASTLE	DESIGNED BY: NAH		SHEET NO. 121
					CHECKED BY: WAG		TOTAL SHTS. 207

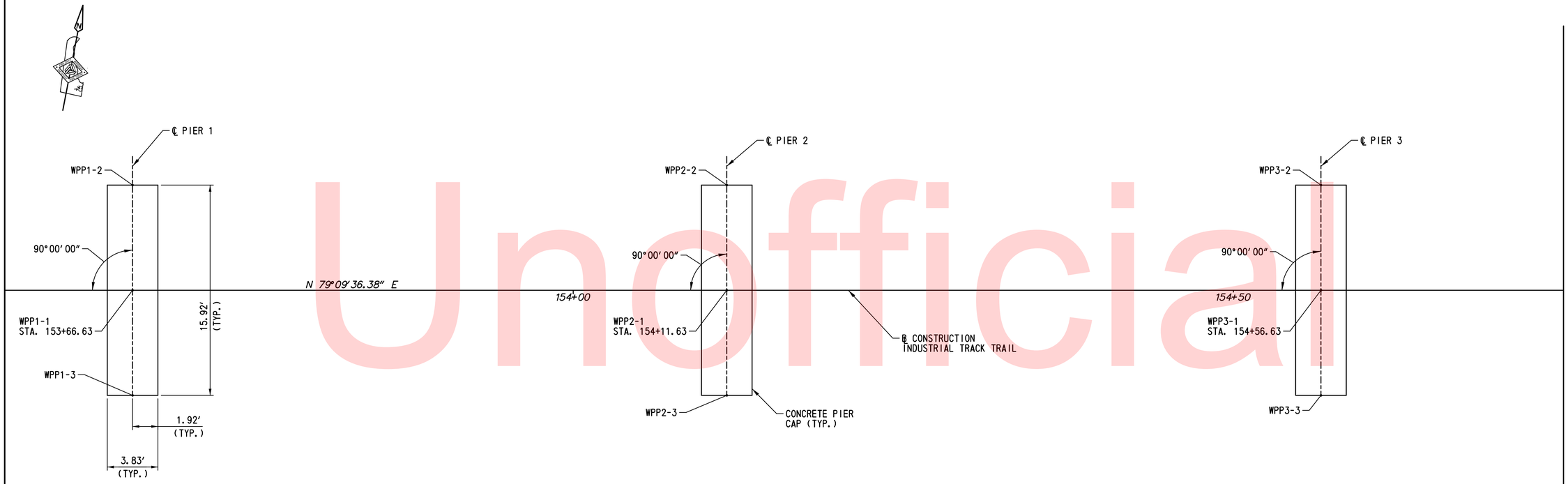

GEOMETRIC AND PIER CAP LAYOUT PLAN

SCALE: 1/4″=1′-0″

WORKING POINT	COORDINATES	
	NORTHING	EASTING
WPP1-1	627475.3812	614690.5548
WPP1-2	627483.1976	614689.0581
WPP1-3	627467.5648	614692.0515
WPP2-1	627483.8441	614734.7518
WPP2-2	627491.6605	614733.2551
WPP2-3	627476.0277	614736.2485
WPP3-1	627492.3071	614778.9489
WPP3-2	627500.1235	614777.4522
WPP3-3	627484.4907	614780.4456

WORKING POINT LEGEND:

WPP1-1 = WORKING POINT 1, PIER 1
WPP1-2 = WORKING POINT 2, PIER 1
WPP1-3 = WORKING POINT 3, PIER 1
POINT 1 = ℄ PIER AT ℄ CONSTRUCTION
POINT 2 = ℄ PIER AT LEFT END OF PIER CAP
POINT 3 = ℄ PIER AT RIGHT END OF PIER CAP

OTHER TABULATED POINTS SIMILAR

*ALL COORDINATES SET PERPENDICULAR TO ℄ CONSTRUCTION INDUSTRIAL TRACK TRAIL LOOKING AHEAD STATION.

NOTES:

1. PIER CAP DIMENSIONS TYPICAL AT PIERS 1-15.
2. SEE DWG. NO. PL-301 FOR STEEL PIPE PILE DETAILS, LAYOUT, AND BATTER.
3. SEE DWG. NO. PR-301 FOR PIER CAP DETAILS.

Unofficial Website Copy

N:\31896-002\CADD\BRIDGE\FT301_ITG.DGN

DELAWARE DEPARTMENT OF TRANSPORTATION	ADDENDUMS / REVISIONS	SCALE 0 4 8 12 1/4"=1'-0"	NEW CASTLE INDUSTRIAL TRACK TRAIL, PHASE 3	CONTRACT T201330009	BRIDGE NO. X	GEOMETRIC AND PIER CAP LAYOUT PLAN – 1	FT-301
				COUNTY NEW CASTLE	DESIGNED BY: ADD		SHEET NO. 122
					CHECKED BY: WAG		TOTAL SHTS. 207

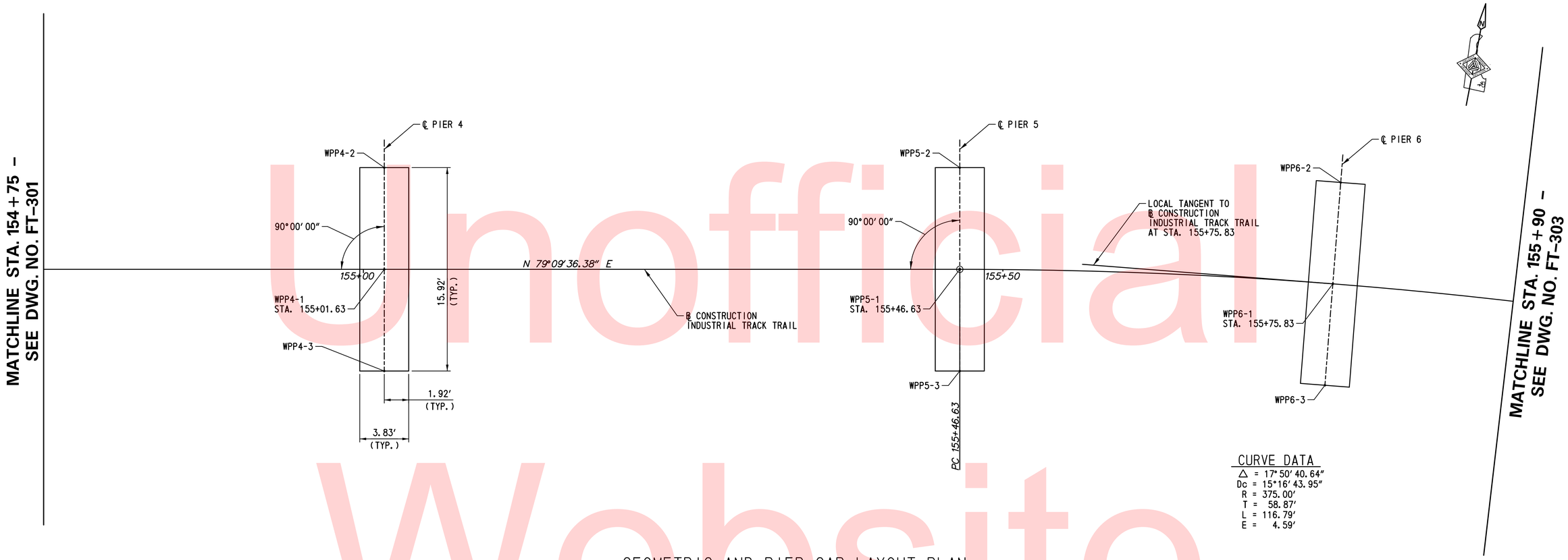

GEOMETRIC AND PIER CAP LAYOUT PLAN

SCALE: 1/4″=1′-0″

CURVE DATA

△ = 17°50′40.64″
Dc = 15°16′43.95″
R = 375.00′
T = 58.87′
L = 116.79′
E = 4.59′

WORKING POINT LEGEND

WPP4-1 = WORKING POINT 1, PIER 4
WPP4-2 = WORKING POINT 2, PIER 4
WPP4-3 = WORKING POINT 3, PIER 4
POINT 1 = ℄ PIER AT ℄ CONSTRUCTION
POINT 2 = ℄ PIER AT LEFT END OF PIER CAP
POINT 3 = ℄ PIER AT RIGHT END OF PIER CAP

OTHER TABULATED POINTS SIMILAR

*ALL COORDINATES SET PERPENDICULAR TO ℄ CONSTRUCTION INDUSTRIAL TRACK TRAIL LOOKING AHEAD STATION.

WORKING POINT	COORDINATES	
	NORTHING	EASTING
WPP4-1	627500.7700	614823.1459
WPP4-2	627508.5864	614821.6492
WPP4-3	627492.9536	614824.6426
WPP5-1	627509.2329	614867.3430
WPP5-2	627517.0493	614865.8462
WPP5-3	627501.4165	614868.8396
WPP6-1	627513.6027	614896.2049
WPP6-2	627521.5097	614895.3209
WPP6-3	627505.6915	614897.0893

NOTES

1. PIER CAP DIMENSIONS TYPICAL AT PIERS 1-15.
2. SEE DWG. NO. PL-301 FOR STEEL PIPE PILE DETAILS, LAYOUT, AND BATTER.
3. SEE DWG. NO. PR-301 FOR PIER CAP DETAILS.

Unofficial Website Copy

N:\31896-002\CADD\BRIDGE\FT302_JTG.DGN

DELAWARE DEPARTMENT OF TRANSPORTATION	ADDENDUMS / REVISIONS	SCALE 0 4 8 12 1/4″=1′-0″	NEW CASTLE INDUSTRIAL TRACK TRAIL, PHASE 3	CONTRACT T201330009	BRIDGE NO. X	GEOMETRIC AND PIER CAP LAYOUT PLAN – 2	FT-302
				COUNTY NEW CASTLE	DESIGNED BY: ADD		SHEET NO. 123
					CHECKED BY: WAG		TOTAL SHTS. 207

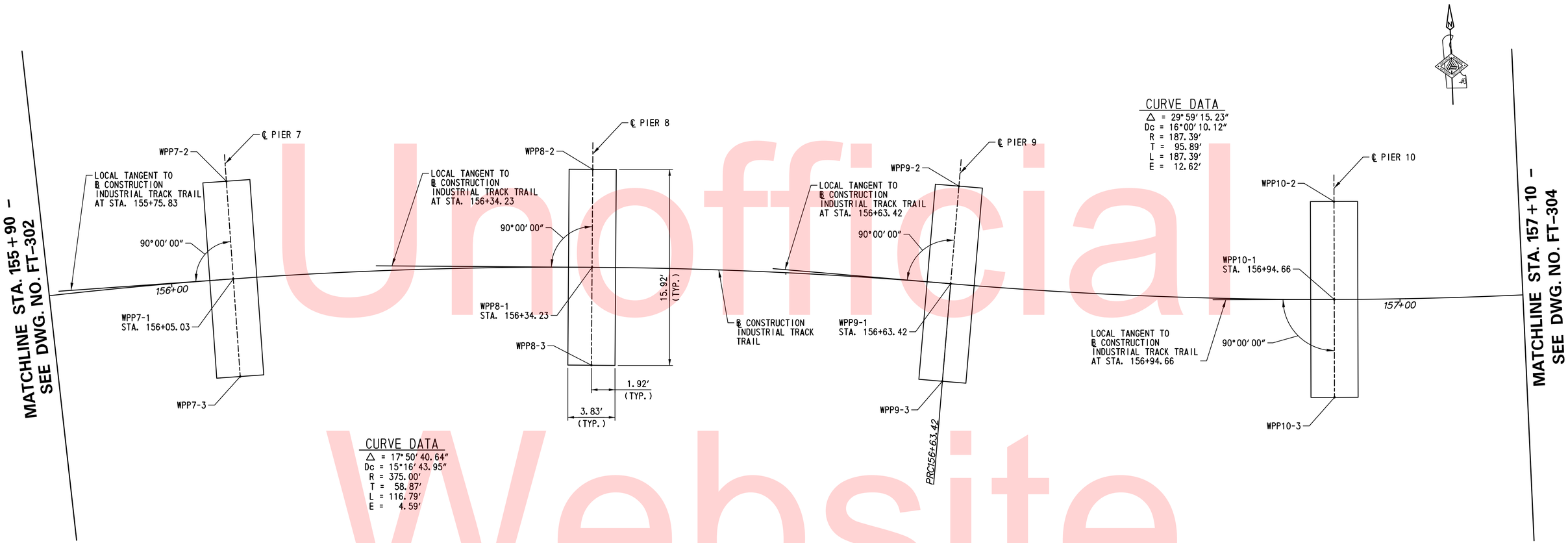

CURVE DATA
△ = 17°50′40.64″
Dc = 15°16′43.95″
R = 375.00′
T = 58.87′
L = 116.79′
E = 4.59′

CURVE DATA
△ = 29°59′15.23″
Dc = 16°00′10.12″
R = 187.39′
T = 95.89′
L = 187.39′
E = 12.62′

GEOMETRIC AND PIER CAP LAYOUT PLAN

SCALE: ¼″=1′-0″

WORKING POINT LEGEND

WPP7-1 = WORKING POINT 1, PIER 7
WPP7-2 = WORKING POINT 2, PIER 7
WPP7-3 = WORKING POINT 3, PIER 7
POINT 1 = ℄ PIER AT ℬ CONSTRUCTION
POINT 2 = ℄ PIER AT LEFT END OF PIER CAP
POINT 3 = ℄ PIER AT RIGHT END OF PIER CAP

OTHER TABULATED POINTS SIMILAR

*ALL COORDINATES SET PERPENDICULAR TO ℬ CONSTRUCTION INDUSTRIAL TRACK TRAIL LOOKING AHEAD STATION.

WORKING POINT	COORDINATES	
	NORTHING	EASTING
WPP7-1	627515.7142	614925.3192
WPP7-2	627523.6661	614925.0530
WPP7-3	627507.7582	614925.5856
WPP8-1	627515.5548	614954.5096
WPP8-2	627523.5032	614954.8627
WPP8-3	627507.6021	614954.1563
WPP9-1	627513.1253	614983.5991
WPP9-2	627521.0243	614984.5696
WPP9-3	627505.2263	614982.6286
WPP10-1	627510.6725	615014.7243
WPP10-2	627518.6282	615015.0030
WPP10-3	627502.7212	615014.4456

NOTES

1. PIER CAP DIMENSIONS TYPICAL AT PIERS 1-15.
2. SEE DWG. NO. PL-301 FOR STEEL PIPE PILE DETAILS, LAYOUT, AND BATTER.
3. SEE DWG. NO. PR-301 FOR PIER CAP DETAILS.

Unofficial Website Copy

N:\31896-002\CADD\BRIDGE\FT303_ITG.DGN

DELAWARE DEPARTMENT OF TRANSPORTATION

ADDENDUMS / REVISIONS

SCALE 0 4 8 12 ¼″=1′-0″

NEW CASTLE INDUSTRIAL TRACK TRAIL, PHASE 3

CONTRACT	BRIDGE NO.	X
T201330009	DESIGNED BY: ADD	
COUNTY		
NEW CASTLE	CHECKED BY: WAG	

GEOMETRIC AND PIER CAP LAYOUT PLAN – 3

FT-303
SHEET NO.
124
TOTAL SHTS.
207

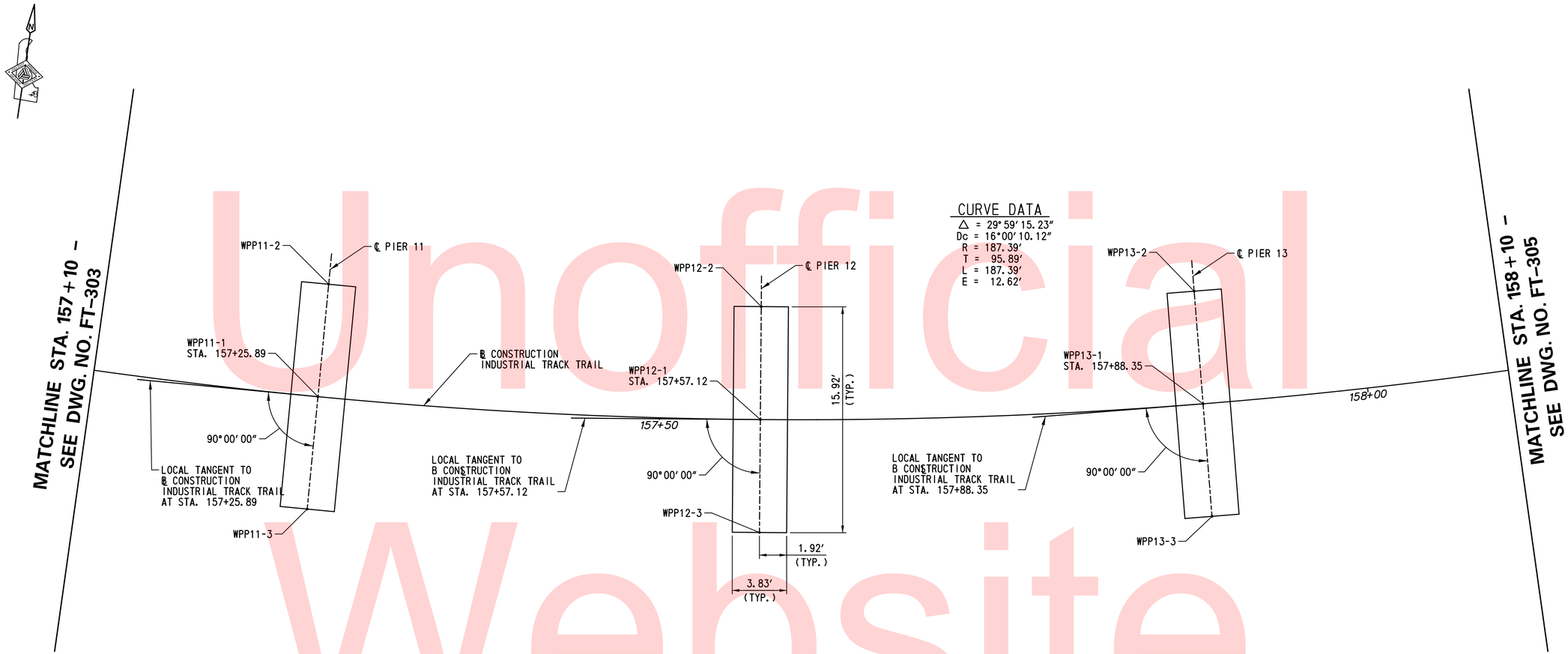

GEOMETRIC AND PIER CAP LAYOUT PLAN

SCALE: ¼″=1′-0″

NOTES:

1. PIER CAP DIMENSIONS TYPICAL AT PIERS 1-15.
2. SEE DWG. NO. PL-301 FOR STEEL PIPE PILE DETAILS, LAYOUT, AND BATTER.
3. SEE DWG. NO. PR-301 FOR PIER CAP DETAILS.

WORKING POINT LEGEND

WPP11-1 = WORKING POINT 1, PIER 11
WPP11-2 = WORKING POINT 2, PIER 11
WPP11-3 = WORKING POINT 3, PIER 11
POINT 1 = ℄ PIER AT ℄ CONSTRUCTION
POINT 2 = ℄ PIER AT LEFT END OF PIER CAP
POINT 3 = ℄ PIER AT RIGHT END OF PIER CAP

OTHER TABULATED POINTS SIMILAR

*ALL COORDINATES SET PERPENDICULAR TO ℄ CONSTRUCTION INDUSTRIAL TRACK TRAIL LOOKING AHEAD STATION.

WORKING POINT	COORDINATES	
	NORTHING	EASTING
WPP11-1	627510.9407	615045.9448
WPP11-2	627518.8904	615045.5294
WPP11-3	627502.9953	615046.3599
WPP12-1	627513.9278	615077.0232
WPP12-2	627521.8111	615075.9168
WPP12-3	627506.0488	615078.1290
WPP13-1	627519.6110	615107.7232
WPP13-2	627527.3680	615105.9342
WPP13-3	627511.8584	615109.5112

Unofficial Website Copy

N:\31896-002\CADD\BRIDGE\FT304_ITG.DGN

DELAWARE DEPARTMENT OF TRANSPORTATION

ADDENDUMS / REVISIONS

SCALE 0 4 8 12 ¼″=1′-0″

NEW CASTLE INDUSTRIAL TRACK TRAIL, PHASE 3

CONTRACT	BRIDGE NO.	X
T201330009	DESIGNED BY: ADD	
COUNTY		
NEW CASTLE	CHECKED BY: WAG	

GEOMETRIC AND PIER CAP LAYOUT PLAN – 4

FT-304

SHEET NO.
125
TOTAL SHTS.
207

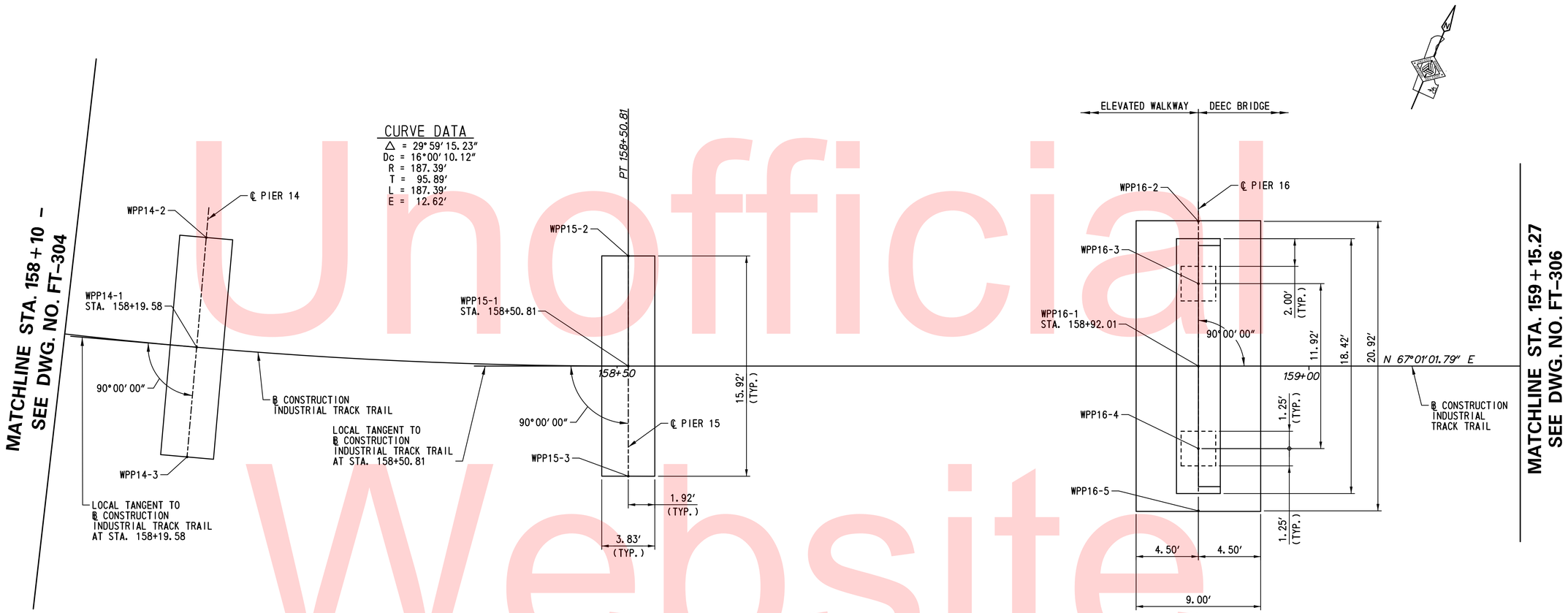

GEOMETRIC, PIER CAP AND FOOTING LAYOUT PLAN

SCALE: ¼″=1′-0″

WORKING POINT LEGEND

WPP14-1 = WORKING POINT 1, PIER 14
WPP14-2 = WORKING POINT 2, PIER 14
WPP14-3 = WORKING POINT 3, PIER 14
POINT 1 = ℄ PIER AT ℄ CONSTRUCTION
POINT 2 = ℄ PIER AT LEFT END OF PIER CAP
POINT 3 = ℄ PIER AT RIGHT END OF PIER CAP

OTHER TABULATED POINTS SIMILAR

*ALL COORDINATES SET PERPENDICULAR TO ℄ CONSTRUCTION INDUSTRIAL TRACK TRAIL LOOKING AHEAD STATION.

WORKING POINT	COORDINATES	
	NORTHING	EASTING
WPP14-1	627527.9473	615137.8114
WPP14-2	627535.5189	615135.3534
WPP14-3	627520.3799	615140.2680
WPP15-1	627538.8731	615167.0590
WPP15-2	627546.2008	615163.9511
WPP15-3	627531.5475	615170.1659
WPP16-1	627554.9580	615204.9842
WPP16-2	627564.5862	615200.9007
WPP16-3	627560.4434	615202.6577
WPP16-4	627549.4727	615207.3106
WPP16-5	627545.3299	615209.0677

NOTES:

1. PIER CAP DIMENSIONS TYPICAL AT PIERS 1-15.
2. SEE DWG. NO. PL-301 FOR STEEL PIPE PILE DETAILS, LAYOUT, AND BATTER AT PIERS 1-15..
3. SEE DWG. NO. PR-301 FOR PIER CAP DETAILS FOR PIERS 1-15.
4. SEE DWG. NOS. PR-302 THROUGH PR-304 FOR PIER 16-18 DETAILS.
5. SEE DWG. NOS. PL-303 AND PL-304 FOR PILE LAYOUT AND PILE DETAILS AT PIERS 16-18.

Unofficial Website Copy

N:\31896-002\CADD\BRIDGE\FT305_JTG.DGN

DELAWARE DEPARTMENT OF TRANSPORTATION	ADDENDUMS / REVISIONS	SCALE 0 4 8 12 ¼"=1'-0"	NEW CASTLE INDUSTRIAL TRACK TRAIL, PHASE 3	CONTRACT T201330009	BRIDGE NO. X	GEOMETRIC, PIER CAP AND FOOTING LAYOUT PLAN – 5	FT-305
				COUNTY NEW CASTLE	DESIGNED BY: ADD		SHEET NO. 126
					CHECKED BY: WAG		TOTAL SHTS. 207

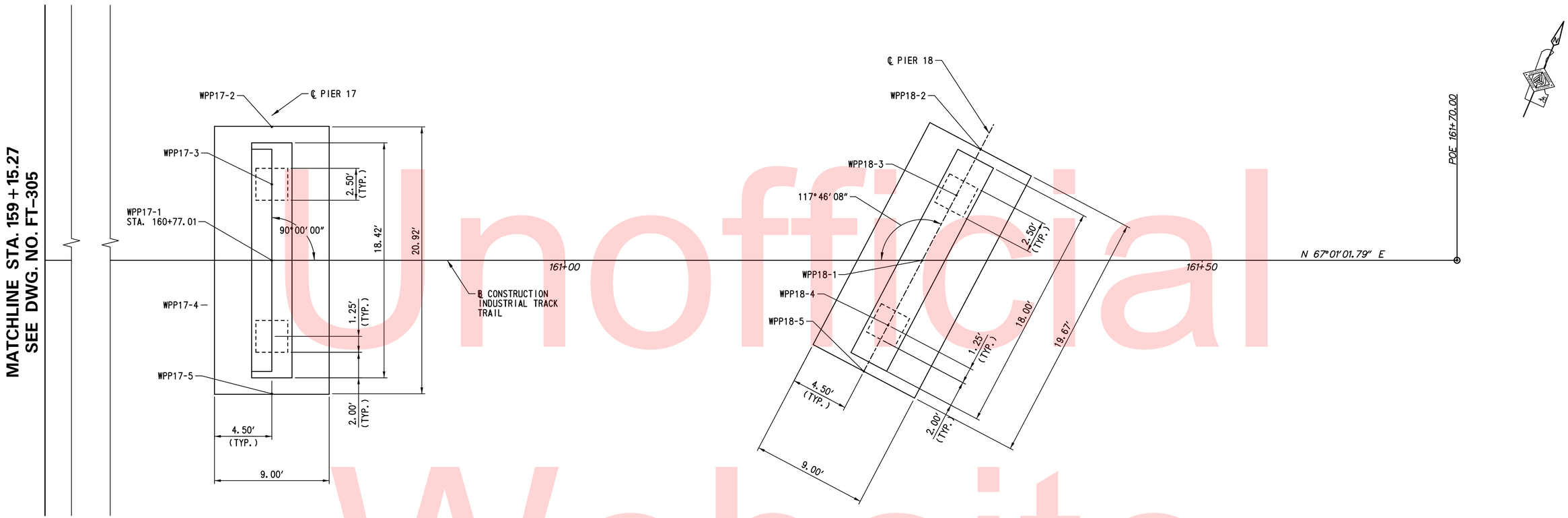

GEOMETRIC AND FOOTING LAYOUT PLAN

SCALE: 1/4"=1'-0"

WORKING POINT LEGEND

WPP17-1 = WORKING POINT 1, PIER 17
WPP17-2 = WORKING POINT 2, PIER 17
WPP17-3 = WORKING POINT 3, PIER 17
POINT 1 = ℄ PIER AT ℄ CONSTRUCTION
POINT 2 = ℄ PIER AT LEFT END OF PIER CAP
POINT 3 = ℄ PIER AT RIGHT END OF PIER CAP

OTHER TABULATED POINTS SIMILAR

*ALL COORDINATES SET PERPENDICULAR TO ℄ CONSTRUCTION INDUSTRIAL TRACK TRAIL LOOKING AHEAD STATION.

WORKING POINT	COORDINATES	
	NORTHING	EASTING
WPP17-1	627627.1923	615375.2992
WPP17-2	627636.8239	615371.2240
WPP17-3	627632.6798	615372.9795
WPP17-4	627621.6933	615377.6519
WPP17-5	627617.5641	615379.3827
WPP18-1	627647.1170	615422.2781
WPP18-2	627656.9160	615423.0985
WPP18-3	627652.8584	615422.7588
WPP18-4	627641.3853	615421.7982
WPP18-5	627637.3179	615421.4576

NOTES:

1. SEE DWG. NOS. PR-302 THROUGH PR-304 FOR PIER 16-18 DETAILS.
2. SEE DWG. NOS. PL-303 AND PL-304 FOR PILE LAYOUT AND PILE DETAILS AT PIERS 16-18.

Unofficial Website Copy

N:\31896-002\CADD\BRIDGE\FT306_ITG.DGN

DELAWARE DEPARTMENT OF TRANSPORTATION

ADDENDUMS / REVISIONS

SCALE 0 4 8 12 1/4"=1'-0"

NEW CASTLE INDUSTRIAL TRACK TRAIL, PHASE 3

CONTRACT	BRIDGE NO.	X
T201330009	DESIGNED BY: ADD	
COUNTY		
NEW CASTLE	CHECKED BY: WAG	

GEOMETRIC AND FOOTING LAYOUT PLAN - 6

FT-306
SHEET NO.
127
TOTAL SHTS.
207

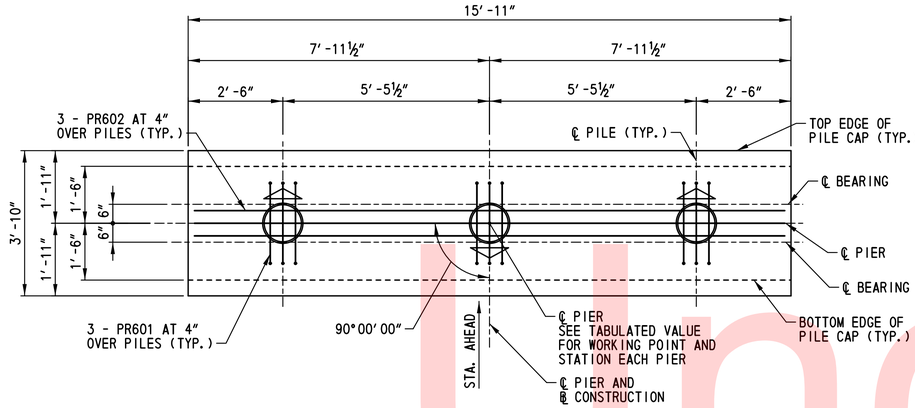

PILE LAYOUT PLAN - PIER 1

SCALE: ½″=1′-0″

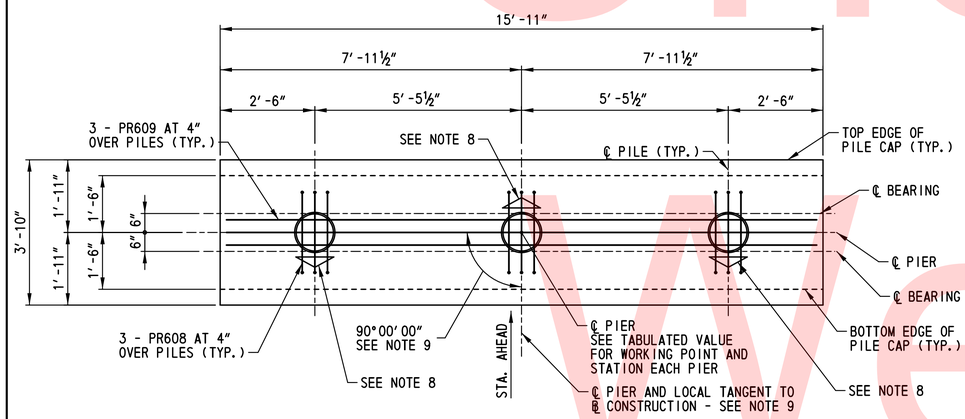

TYPICAL PILE LAYOUT PLAN - PIERS 2-14

SCALE: ½″=1′-0″

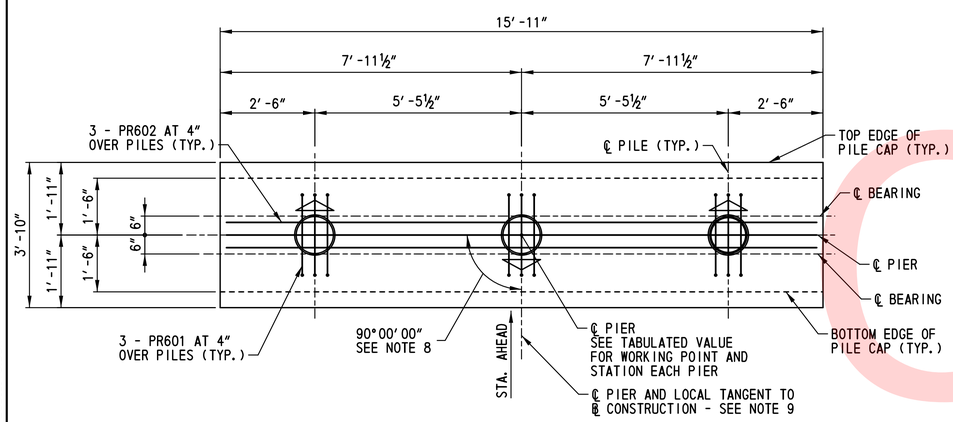

PILE LAYOUT PLAN - PIER 15

SCALE: ½″=1′-0″

STATIONING REFERENCE TABLE		
PIER NO.	WORKING POINT	STATION
1	WPP1	153+66.63
2	WPP2	154+11.63
3	WPP3	154+56.63
4	WPP4	155+1.63
5	WPP5	155+46.63
6	WPP6	155+75.83
7	WPP7	156+5.83
8	WPP8	156+34.23
9	WPP9	156+63.43
10	WPP10	156+94.66
11	WPP11	157+25.89
12	WPP12	157+57.12
13	WPP13	157+88.35
14	WPP14	158+19.58
15	WPP15	158+50.81

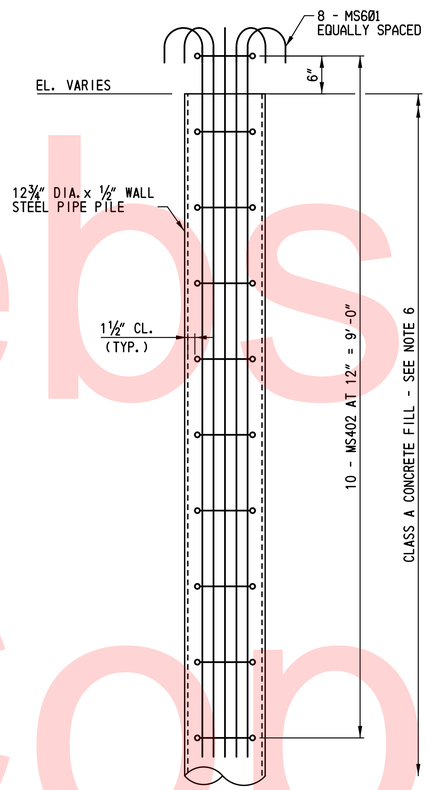

STEEL PIPE PILE ELEVATION

SCALE: 1 ″=1′-0″

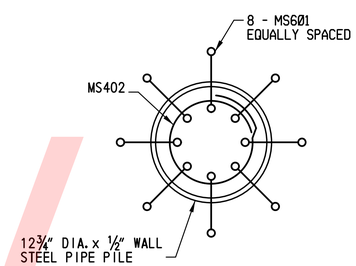

STEEL PIPE PILE PLAN

SCALE: 1-1/2 ″=1′-0″

PILE TIP DATA				
	DESIGN DATA		ACTUAL FIELD DATA	
SUBSTRUCTURE UNIT	MINIMUM TIP ELEVATION	ESTIMATED TIP ELEVATION	AVERAGE ACTUAL MINIMUM TIP ELEVATION	AVERAGE ACTUAL MAXIMUM TIP ELEVATION
PIER 1	-57.0	-71.0		
PIER 2	-57.0	-71.0		
PIER 3	-57.0	-71.0		
PIER 4	-57.0	-71.0		
PIER 5	-57.0	-71.0		
PIER 6	-57.0	-71.0		
PIER 7	-57.0	-71.0		
PIER 8	-57.0	-71.0		
PIER 9	-57.0	-71.0		
PIER 10	-57.0	-71.0		
PIER 11	-36.0	-51.0		
PIER 12	-36.0	-51.0		
PIER 13	-36.0	-51.0		
PIER 14	-36.0	-51.0		
PIER 15	-40.0	-51.0		

PILE LEGEND:

1. ⌂ DENOTES BATTERED 12¾″ DIA. STEEL CLOSED END PIPE PILE BATTERED 6:1 IN DIRECTION OF ARROW

STEEL PIPE PILE NOTES:

1. THE FACTORED RESISTANCE OF THE 12¾″ INCH DIAMETER STEEL (0.5 INCH WALL THICKNESS) PILING IS 62 TONS FOR PIERS 1 THRU 15. PILES SHALL BE DRIVEN IN CONFORMANCE WITH THE STANDARD SPECIFICATIONS SECTION 619 TO A NOMINAL PILE DRIVING RESISTANCE OF 124 TONS FOR PIERS 1 AND 15.
2. PILES SHALL BE DRIVEN TO THE DRIVING CRITERIA DEVELOPED FROM WAVE EQUATION ANALYSIS AND AS SPECIFIED BY THE ENGINEER TO ACHIEVE A NOMINAL PILE DRIVING RESISTANCE AS SPECIFIED IN NOTE 1 BELOW THE SPECIFIED MINIMUM TIP ELEVATION. PILES MEETING THE AFOREMENTIONED CRITERIA WILL BE CONSIDERED SATISFACTORY.
3. THE CONTRACTOR SHALL BE RESPONSIBLE FOR SUBMITTING A WAVE EQUATION ANALYSIS AND ALL OTHER INCIDENTALS IN ACCORDANCE WITH THE SPECIAL PROVISIONS. THE WAVE EQUATION ANALYSIS SHALL BE SIGNED AND SEALED BY A REGISTERED PROFESSIONAL ENGINEER LICENSED IN THE STATE OF DELAWARE IN ACCORDANCE WITH STANDARD SPECIFICATIONS SECTION 619.
4. THE DEPARTMENT RESERVES THE RIGHT TO PERFORM DYNAMIC PILE TESTING OF RESTRIKES.
5. ALL PILES ARE TO BE DRIVEN CLOSED-ENDED. THE CONTRACTOR SHALL PROVIDE DETAILS OF THE PROPOSED PILE TIP, INCLUDING WELD CONNECTIONS TO THE PILE.
6. STEEL PIPE PILES TO BE FILLED WITH CLASS A CONCRETE.
7. THE CONTRACTOR SHALL CONSTRUCT A FIXED TEMPLATE AT EACH PIER LOCATION IN ORDER TO DRIVE PILES AT THE SPECIFIED ALIGNMENT AND LOCATION.
8. THE PILE BATTER DIRECTION SHOWN IN THE TYPICAL PILE LAYOUT PLAN - PIERS 2-14 DETAIL, THIS SHEET, IS FOR PIER NOS. 2, 4, 6, 8, 10, 12, AND 14. THE BATTER DIRECTION FOR EACH PILE SHALL BE REVERSED BY 180° FOR PIERS 3, 5, 7, 9, 11, AND 13.
9. APPLY PROTECTIVE COATING TO PILES OUTER SURFACES WITHIN THE UPPER 35.0′ OF DRIVEN SECTION BELOW THE GROUND SURFACE. COATING SHALL CONSIST OF COAL TAR EPOXY MEETING THE REQUIREMENTS OF SECTION 618.10.

SPECIFICATIONS					BENDING DIMENSIONS (FEET-INCHES)			
QTY.*	SIZE	LENGTH	MARK	TYPE	A /C	B	G	O /J
ALL PILES, PIERS 1 THRU 15								
8	6	10-40	MS601	1	0-60	9-72		0-60
10	4	03-92	MS402	T3			1-60	2-32

BAR BENDS

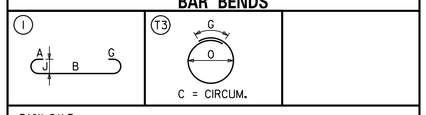

*EACH PILE

NOTE: ALL BAR BENDS ARE MEASURED OUT TO OUT

Unofficial Website Copy

N:\31896-002\CADD\BRIDGE\PL301_ITG.DGN

DELAWARE DEPARTMENT OF TRANSPORTATION

ADDENDUMS / REVISIONS

SCALE 0 2 4 6 ½″ = 1′-0″

NEW CASTLE INDUSTRIAL TRACK TRAIL, PHASE 3

CONTRACT	BRIDGE NO.	X
T201330009	DESIGNED BY: NAH	
COUNTY		
NEW CASTLE	CHECKED BY: WAG	

PILE LAYOUT PLAN – 1

PL-301

SHEET NO. 128

TOTAL SHTS. 207

PIER 1 PILE DRIVING INFORMATION
PILE SIZE AND TYPE: 12¾" DIA. STEEL CLOSED END PIPE PILE
ACTUAL BEARING OBTAINED:
HAMMER TYPE:
AVERAGE ACTUAL BLOWS/FT.:
PILE HAMMER ENERGY: 60,000 LB-FT TO 110,000 LB-FT
SPECIAL DRIVING CONDITIONS AND COMMENTS: X

PIER 2 PILE DRIVING INFORMATION
PILE SIZE AND TYPE: 12¾" DIA. STEEL CLOSED END PIPE PILE
ACTUAL BEARING OBTAINED:
HAMMER TYPE:
AVERAGE ACTUAL BLOWS/FT.:
PILE HAMMER ENERGY: 60,000 LB-FT TO 110,000 LB-FT
SPECIAL DRIVING CONDITIONS AND COMMENTS: X

PIER 3 PILE DRIVING INFORMATION
PILE SIZE AND TYPE: 12¾" DIA. STEEL CLOSED END PIPE PILE
ACTUAL BEARING OBTAINED:
HAMMER TYPE:
AVERAGE ACTUAL BLOWS/FT.:
PILE HAMMER ENERGY: 60,000 LB-FT TO 110,000 LB-FT
SPECIAL DRIVING CONDITIONS AND COMMENTS: X

PIER 4 PILE DRIVING INFORMATION
PILE SIZE AND TYPE: 12¾" DIA. STEEL CLOSED END PIPE PILE
ACTUAL BEARING OBTAINED:
HAMMER TYPE:
AVERAGE ACTUAL BLOWS/FT.:
PILE HAMMER ENERGY: 60,000 LB-FT TO 110,000 LB-FT
SPECIAL DRIVING CONDITIONS AND COMMENTS: X

PIER 5 PILE DRIVING INFORMATION
PILE SIZE AND TYPE: 12¾" DIA. STEEL CLOSED END PIPE PILE
ACTUAL BEARING OBTAINED:
HAMMER TYPE:
AVERAGE ACTUAL BLOWS/FT.:
PILE HAMMER ENERGY: 60,000 LB-FT TO 110,000 LB-FT
SPECIAL DRIVING CONDITIONS AND COMMENTS: X

PIER 6 PILE DRIVING INFORMATION
PILE SIZE AND TYPE: 12¾" DIA. STEEL CLOSED END PIPE PILE
ACTUAL BEARING OBTAINED:
HAMMER TYPE:
AVERAGE ACTUAL BLOWS/FT.:
PILE HAMMER ENERGY: 60,000 LB-FT TO 110,000 LB-FT
SPECIAL DRIVING CONDITIONS AND COMMENTS: X

PIER 7 PILE DRIVING INFORMATION
PILE SIZE AND TYPE: 12¾" DIA. STEEL CLOSED END PIPE PILE
ACTUAL BEARING OBTAINED:
HAMMER TYPE:
AVERAGE ACTUAL BLOWS/FT.:
PILE HAMMER ENERGY: 60,000 LB-FT TO 110,000 LB-FT
SPECIAL DRIVING CONDITIONS AND COMMENTS: X

PIER 8 PILE DRIVING INFORMATION
PILE SIZE AND TYPE: 12¾" DIA. STEEL CLOSED END PIPE PILE
ACTUAL BEARING OBTAINED:
HAMMER TYPE:
AVERAGE ACTUAL BLOWS/FT.:
PILE HAMMER ENERGY: 60,000 LB-FT TO 110,000 LB-FT
SPECIAL DRIVING CONDITIONS AND COMMENTS: X

PIER 9 PILE DRIVING INFORMATION
PILE SIZE AND TYPE: 12¾" DIA. STEEL CLOSED END PIPE PILE
ACTUAL BEARING OBTAINED:
HAMMER TYPE:
AVERAGE ACTUAL BLOWS/FT.:
PILE HAMMER ENERGY: 60,000 LB-FT TO 110,000 LB-FT
SPECIAL DRIVING CONDITIONS AND COMMENTS: X

PIER 10 PILE DRIVING INFORMATION
PILE SIZE AND TYPE: 12¾" DIA. STEEL CLOSED END PIPE PILE
ACTUAL BEARING OBTAINED:
HAMMER TYPE:
AVERAGE ACTUAL BLOWS/FT.:
PILE HAMMER ENERGY: 60,000 LB-FT TO 110,000 LB-FT
SPECIAL DRIVING CONDITIONS AND COMMENTS: X

PIER 11 PILE DRIVING INFORMATION
PILE SIZE AND TYPE: 12¾" DIA. STEEL CLOSED END PIPE PILE
ACTUAL BEARING OBTAINED:
HAMMER TYPE:
AVERAGE ACTUAL BLOWS/FT.:
PILE HAMMER ENERGY: 60,000 LB-FT TO 110,000 LB-FT
SPECIAL DRIVING CONDITIONS AND COMMENTS: X

PIER 12 PILE DRIVING INFORMATION
PILE SIZE AND TYPE: 12¾" DIA. STEEL CLOSED END PIPE PILE
ACTUAL BEARING OBTAINED:
HAMMER TYPE:
AVERAGE ACTUAL BLOWS/FT.:
PILE HAMMER ENERGY: 60,000 LB-FT TO 110,000 LB-FT
SPECIAL DRIVING CONDITIONS AND COMMENTS: X

PIER 13 PILE DRIVING INFORMATION
PILE SIZE AND TYPE: 12¾" DIA. STEEL CLOSED END PIPE PILE
ACTUAL BEARING OBTAINED:
HAMMER TYPE:
AVERAGE ACTUAL BLOWS/FT.:
PILE HAMMER ENERGY: 60,000 LB-FT TO 110,000 LB-FT
SPECIAL DRIVING CONDITIONS AND COMMENTS: X

PIER 14 PILE DRIVING INFORMATION
PILE SIZE AND TYPE: 12¾" DIA. STEEL CLOSED END PIPE PILE
ACTUAL BEARING OBTAINED:
HAMMER TYPE:
AVERAGE ACTUAL BLOWS/FT.:
PILE HAMMER ENERGY: 60,000 LB-FT TO 110,000 LB-FT
SPECIAL DRIVING CONDITIONS AND COMMENTS: X

PIER 15 PILE DRIVING INFORMATION
PILE SIZE AND TYPE: 12¾" DIA. STEEL CLOSED END PIPE PILE
ACTUAL BEARING OBTAINED:
HAMMER TYPE:
AVERAGE ACTUAL BLOWS/FT.:
PILE HAMMER ENERGY: 60,000 LB-FT TO 110,000 LB-FT
SPECIAL DRIVING CONDITIONS AND COMMENTS: X

NOTES:

1. SEE DWG. NO. PL-301 FOR PILE LAYOUT PLAN FOR PIERS 1 THROUGH 15.

Unofficial Website Copy

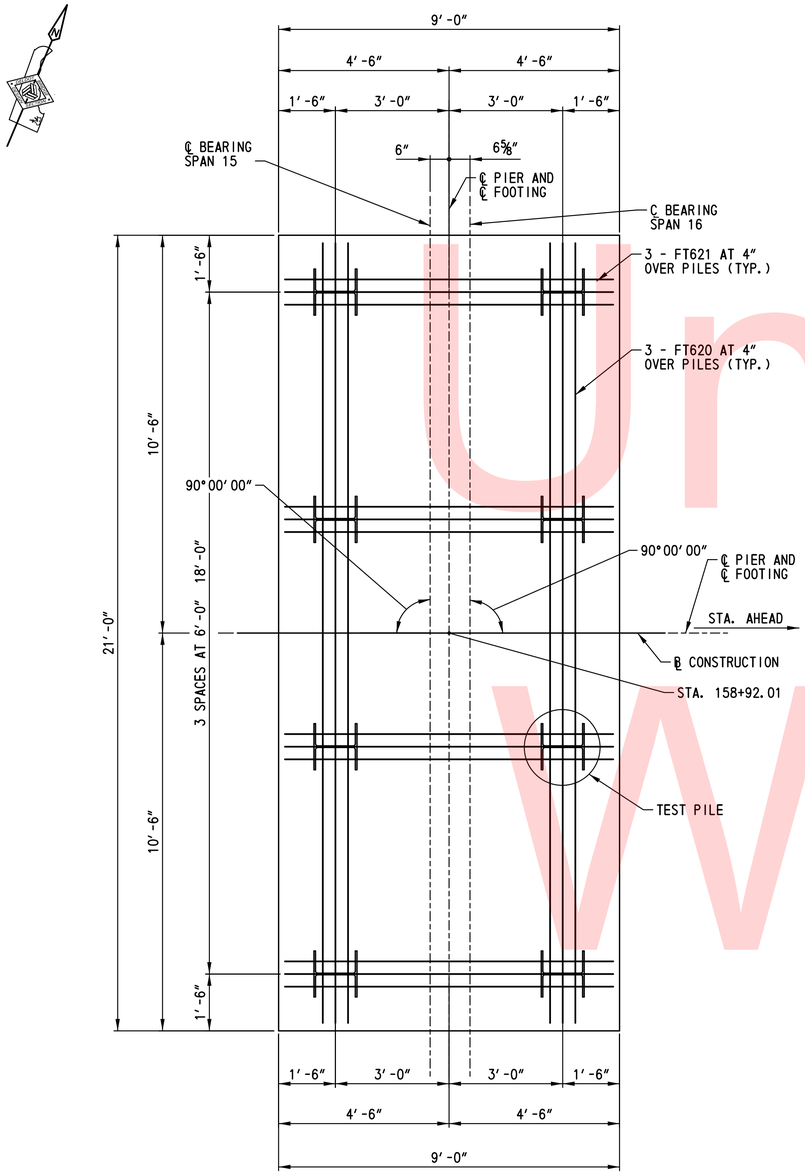

PIER 16
SCALE: ½″ = 1′-0″

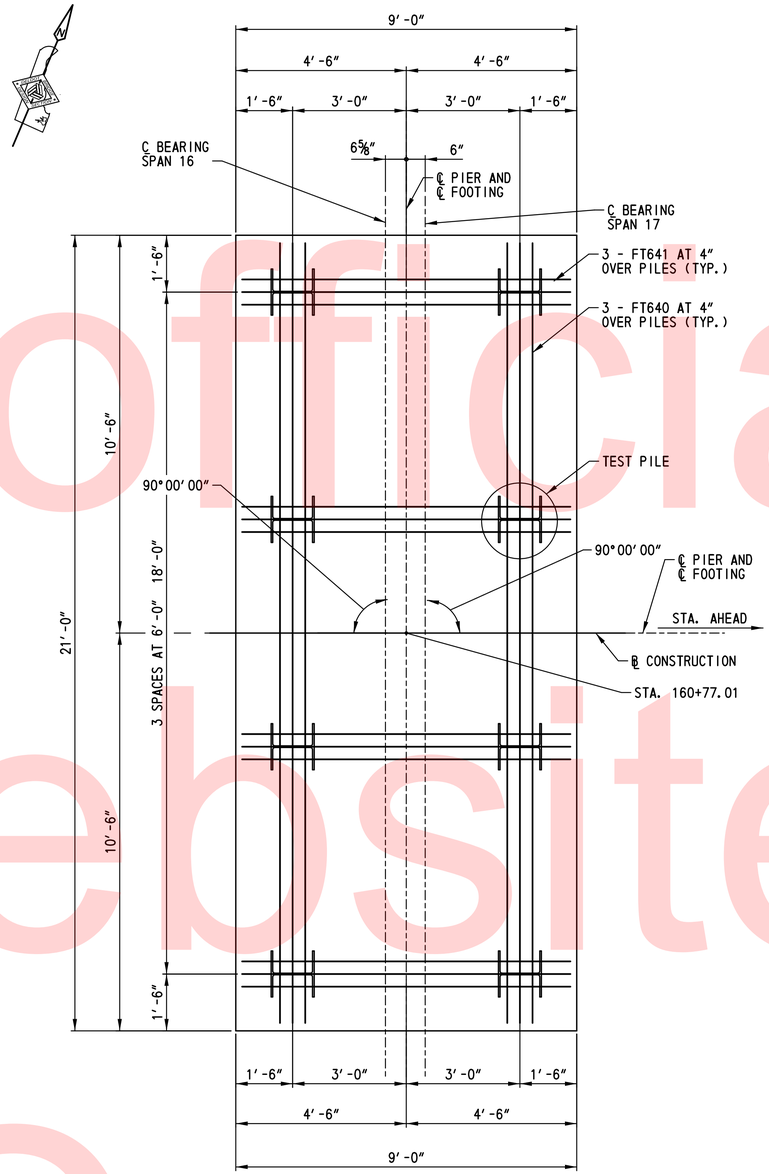

PIER 17
SCALE: ½″ = 1′-0″

PIER 16 PILE DRIVING INFORMATION

PILE SIZE AND TYPE:	HP14X89
ACTUAL BEARING OBTAINED:	
HAMMER TYPE:	
AVERAGE ACTUAL BLOWS/FT.:	
PILE HAMMER ENERGY:	60,000 LB-FT TO 110,000 LB-FT
SPECIAL DRIVING CONDITIONS AND COMMENTS:	X

PIER 17 PILE DRIVING INFORMATION

PILE SIZE AND TYPE:	HP14X89
ACTUAL BEARING OBTAINED:	
HAMMER TYPE:	
AVERAGE ACTUAL BLOWS/FT.:	
PILE HAMMER ENERGY:	60,000 LB-FT TO 110,000 LB-FT
SPECIAL DRIVING CONDITIONS AND COMMENTS:	X

PILE LEGEND:

1. H — DENOTES PLUMB HP14x89 STEEL PILE.
2. Ⓗ — DENOTES LOCATION OF PLUMB HP 14x89 PILE, DYNAMIC PILE TESTING AND SIGNAL MATCHING ANALYSIS.

PILE NOTES:

1. THE FACTORED RESISTANCE OF THE HP 14x89 STEEL PILING IS 89 TONS. PILES SHALL BE DRIVEN IN CONFORMANCE WITH STANDARD SPECIFICATIONS SECTION 619 TO A NOMINAL PILE DRIVING RESISTANCE OF 137 TONS.
2. PILES SHALL BE DRIVEN TO THE DRIVING CRITERIA DEVELOPED FROM DYNAMIC PILE TESTING AND AS SPECIFIED BY THE ENGINEER TO ACHIEVE A NOMINAL PILE DRIVING RESISTANCE AS SPECIFIED IN NOTE 1 BELOW THE SPECIFIED MINIMUM TIP ELEVATION. PILES MEETING THE AFOREMENTIONED CRITERIA WILL BE CONSIDERED SATISFACTORY.
3. THE CONTRACTOR SHALL BE RESPONSIBLE FOR SUBMITTING A WAVE EQUATION ANALYSIS AND ALL OTHER INCIDENTALS IN ACCORDANCE WITH SECTION 619 AND THE SPECIAL PROVISIONS. THE WAVE EQUATION ANALYSIS AND DYNAMIC PILE TESTING MUST BE SIGNED AND SEALED BY A REGISTERED PROFESSIONAL ENGINEER LICENSED IN THE STATE OF DELAWARE IN ACCORDANCE WITH THE SPECIAL PROVISIONS.
4. THE DEPARTMENT RESERVES THE RIGHT TO PERFORM DYNAMIC PILE TESTING OF RESTRIKES.
5. THE CONTRACTOR SHALL CONSTRUCT A FIXED TEMPLATE AT EACH PIER LOCATION IN ORDER TO DRIVE PILES AT THE SPECIFIED ALIGNMENT AND LOCATION.

PILE TIP DATA

	DESIGN DATA		ACTUAL FIELD DATA	
SUBSTRUCTURE UNIT	MINIMUM TIP ELEVATION	ESTIMATED TIP ELEVATION	AVERAGE ACTUAL MINIMUM TIP ELEVATION	AVERAGE ACTUAL MAXIMUM TIP ELEVATION
PIER 16	-46.0	-51.0		
PIER 17	-46.0	-51.0		

Unofficial Website Copy

N:\31896-002\CADD\BRIDGE\PL303_ITG.DGN

DELAWARE DEPARTMENT OF TRANSPORTATION

ADDENDUMS / REVISIONS

SCALE 0 2 4 6 ½″ = 1′-0″

NEW CASTLE INDUSTRIAL TRACK TRAIL, PHASE 3

CONTRACT	BRIDGE NO.	X
T201330009	DESIGNED BY: NAH	
COUNTY		
NEW CASTLE	CHECKED BY: WAG	

PILE LAYOUT PLAN – 3

PL-303

SHEET NO. 130

TOTAL SHTS. 207

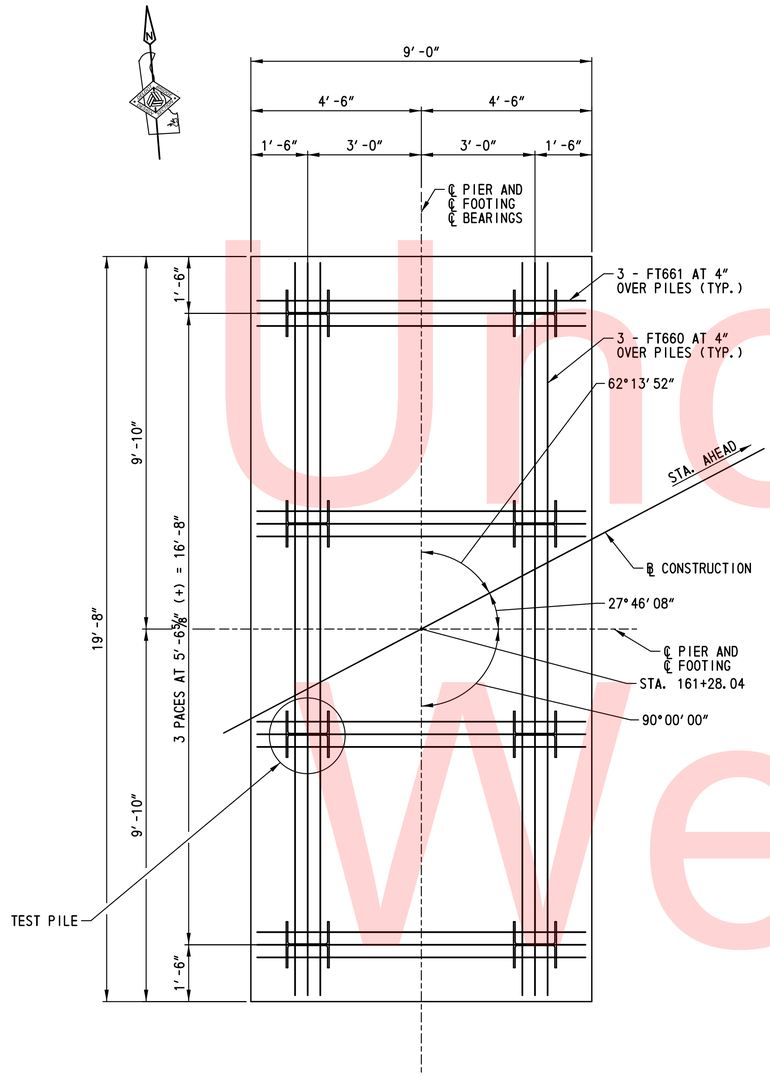

PIER 18
SCALE: ½" = 1'-0"

PIER 18 PILE DRIVING INFORMATION	
PILE SIZE AND TYPE:	HP14X89
ACTUAL BEARING OBTAINED:	
HAMMER TYPE:	
AVERAGE ACTUAL BLOWS/FT.:	
PILE HAMMER ENERGY:	60,000 LB-FT TO 110,000 LB-FT
SPECIAL DRIVING CONDITIONS AND COMMENTS: X	

PILE LEGEND:

1. H — DENOTES PLUMB HP14x89 STEEL PILE.
2. Ⓗ — DENOTES LOCATION OF PLUMB HP 14x89 PILE, DYNAMIC PILE TESTING AND SIGNAL MATCHING ANALYSIS.

PILE NOTES:

1. THE FACTORED RESISTANCE OF THE HP 14x89 STEEL PILING IS 89 TONS. PILES SHALL BE DRIVEN IN CONFORMANCE WITH STANDARD SPECIFICATIONS SECTION 619 TO A NOMINAL PILE DRIVING RESISTANCE OF 137 TONS.
2. PILES SHALL BE DRIVEN TO THE DRIVING CRITERIA DEVELOPED FROM DYNAMIC PILE TESTING AND AS SPECIFIED BY THE ENGINEER TO ACHIEVE A NOMINAL PILE DRIVING RESISTANCE AS SPECIFIED IN NOTE 1 BELOW THE SPECIFIED MINIMUM TIP ELEVATION. PILES MEETING THE AFOREMENTIONED CRITERIA WILL BE CONSIDERED SATISFACTORY.
3. THE CONTRACTOR SHALL BE RESPONSIBLE FOR SUBMITTING A WAVE EQUATION ANALYSIS AND ALL OTHER INCIDENTALS IN ACCORDANCE WITH SECTION 619 AND THE SPECIAL PROVISIONS. THE WAVE EQUATION ANALYSIS AND DYNAMIC PILE TESTING MUST BE SIGNED AND SEALED BY A REGISTERED PROFESSIONAL ENGINEER LICENSED IN THE STATE OF DELAWARE IN ACCORDANCE WITH THE SPECIAL PROVISIONS.
4. THE DEPARTMENT RESERVES THE RIGHT TO PERFORM DYNAMIC PILE TESTING OF RESTRIKES.
5. THE CONTRACTOR SHALL CONSTRUCT A FIXED TEMPLATE AT EACH PIER LOCATION IN ORDER TO DRIVE PILES AT THE SPECIFIED ALIGNMENT AND LOCATION.

PILE TIP DATA

	DESIGN DATA		ACTUAL FIELD DATA	
SUBSTRUCTURE UNIT	MINIMUM TIP ELEVATION	ESTIMATED TIP ELEVATION	AVERAGE ACTUAL MINIMUM TIP ELEVATION	AVERAGE ACTUAL MAXIMUM TIP ELEVATION
PIER 18	-46.0	-51.0		

Unofficial Website Copy

N:\31896-002\CADD\BRIDGE\PL304_ITG.DGN

DELAWARE DEPARTMENT OF TRANSPORTATION	ADDENDUMS / REVISIONS	SCALE 0 2 4 6 ½" = 1'-0"	NEW CASTLE INDUSTRIAL TRACK TRAIL, PHASE 3	CONTRACT T201330009 / COUNTY NEW CASTLE	BRIDGE NO. X / DESIGNED BY: NAH / CHECKED BY: WAG	PILE LAYOUT PLAN – 4

PL-304
SHEET NO. 131
TOTAL SHTS. 207

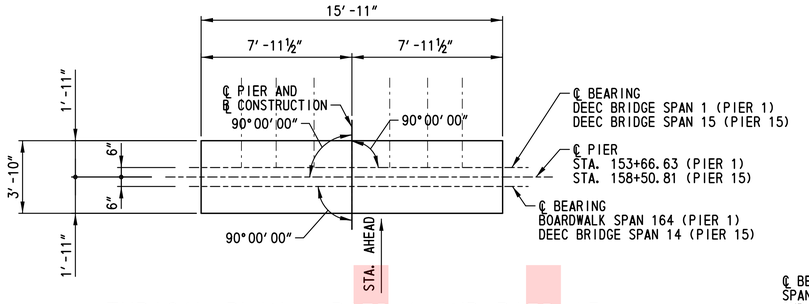

TYPICAL PLAN - PIER 1 AND PIER 15

SCALE: ¼″=1′-0″

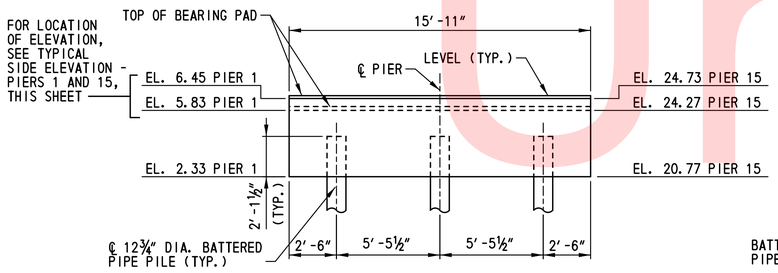

TYPICAL ELEVATION - PIERS 1 AND 15

SCALE: ¼″=1′-0″

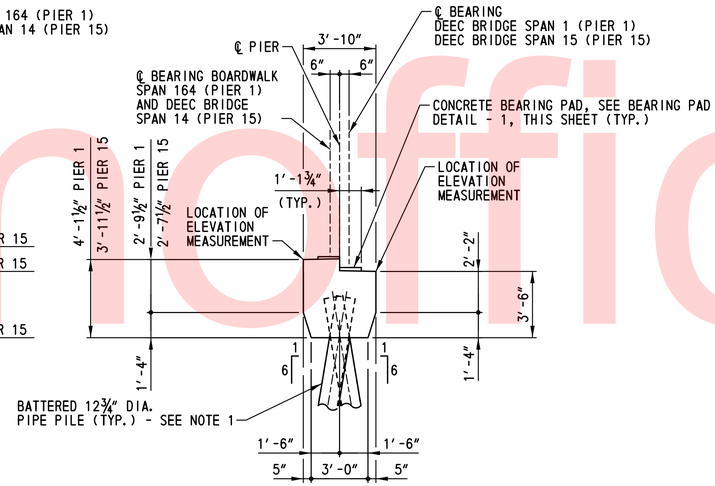

TYPICAL SIDE ELEVATION - PIERS 1 AND 15

SCALE: ¼″=1′-0″

DIMENSION REFERENCE TABLE - SEE NOTE 4					
PIER NO.	EL. A	EL. B	EL. C	EL. D	STATION X
2	4.08	7.58	7.75	7.79	154+11.63
3	5.84	9.34	9.51	9.55	154+56.63
4	7.59	11.09	11.26	11.30	155+1.63
5	9.35	12.85	13.02	13.06	155+46.63
6	10.49	13.99	14.16	14.20	155+75.83
7	11.63	15.13	15.30	15.34	156+5.83
8	12.77	16.27	16.44	16.48	156+34.23
9	13.90	17.40	17.57	17.61	156+63.43
10	14.12	18.62	18.79	18.83	156+94.66
11	16.34	19.84	20.01	20.05	157+25.89
12	17.56	21.06	21.23	21.27	157+57.12
13	18.78	22.28	22.45	22.49	157+88.35
14	20.00	23.50	23.67	23.71	158+19.58

NOTES:

1. FOR PILE LAYOUT PLAN, SEE DWG. NO. PL-301.
2. FOR PIER REINFORCEMENT DETAILS, SEE DWG. NO. PR-308.
3. PIER ORIENTATION VARIES. SEE DWG. NOS. FT-301 AND FT-302 FOR PIER GEOMETRIC AND FOOTING LAYOUT PLANS.
4. THE TABLULATED VALUES (EL. A, EL. B, EL. C, EL. D, STA. X) APPLY TO PIERS 2 THROUGH 14.
5. LOCATION OF ℄ BEAM VARIES. SEE DWG. NOS. FR-301 THROUGH FR-304 FOR DETAILS.

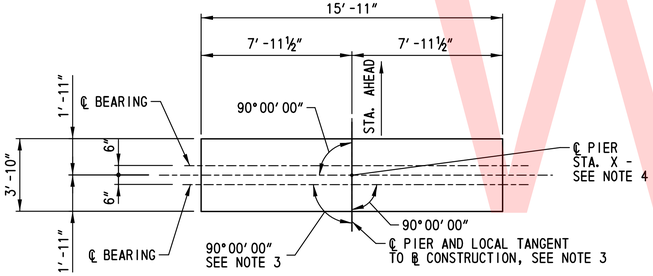

TYPICAL PLAN - PIERS 2-14

SCALE: ¼″=1′-0″

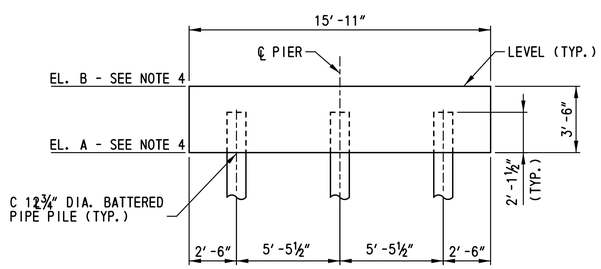

TYPICAL ELEVATION - PIERS 2-14

SCALE: ¼″=1′-0″

NOTE:

CONCRETE BEARING PADS NOT SHOWN FOR CLARITY. BEARING PADS ARE FULL WIDTH OF PILE CAP.

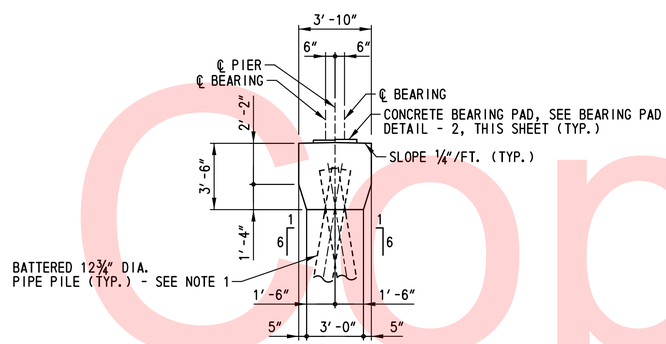

TYPICAL SIDE ELEVATION - PIERS 2-14

SCALE: ¼″=1′-0″

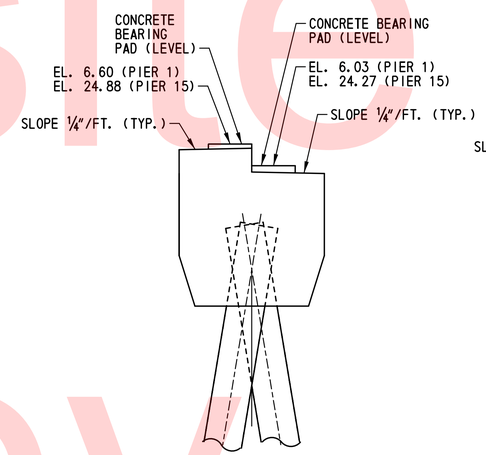

BEARING PAD DETAIL - 1

SCALE: ½″=1′-0″

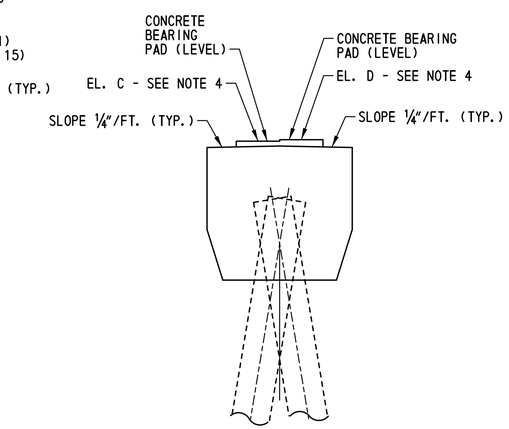

BEARING PAD DETAIL - 2

SCALE: ½″=1′-0″

Unofficial Website Copy

N:\31896-002\CADD\BRIDGE\PR301_ITG.DGN

DELAWARE
DEPARTMENT OF TRANSPORTATION

ADDENDUMS / REVISIONS

SCALE 0 4 8 12 ¼″ = 1′-0″

NEW CASTLE INDUSTRIAL TRACK TRAIL, PHASE 3

CONTRACT	BRIDGE NO.	X
T201330009	DESIGNED BY: NAH	
COUNTY		
NEW CASTLE	CHECKED BY: WAG	

PIERS 1–15
TYPICAL PIER BENT
PLAN AND ELEVATIONS

PR-301

SHEET NO.
132
TOTAL SHTS.
207

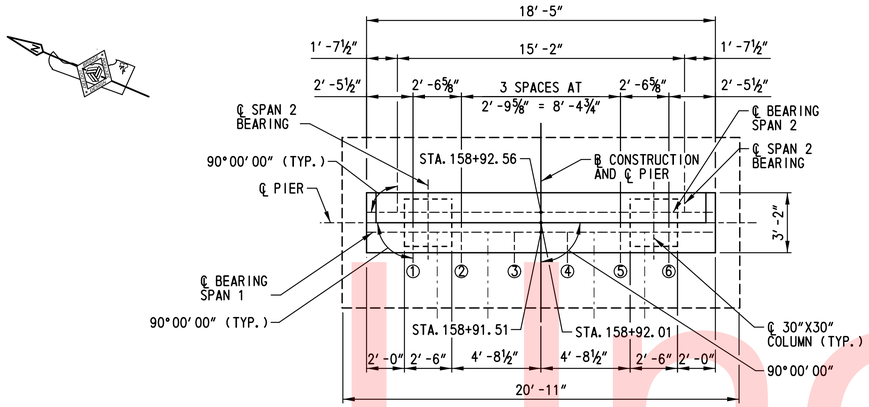

PLAN
SCALE: ¼" = 1'-0"

NOTES:
1. FOR PILE LAOUT PLAN, SEE DWG. NO. PL-301.
2. FOR PIER REINFORCEMENT DETAILS, SEE DWG. NO. PR-304.

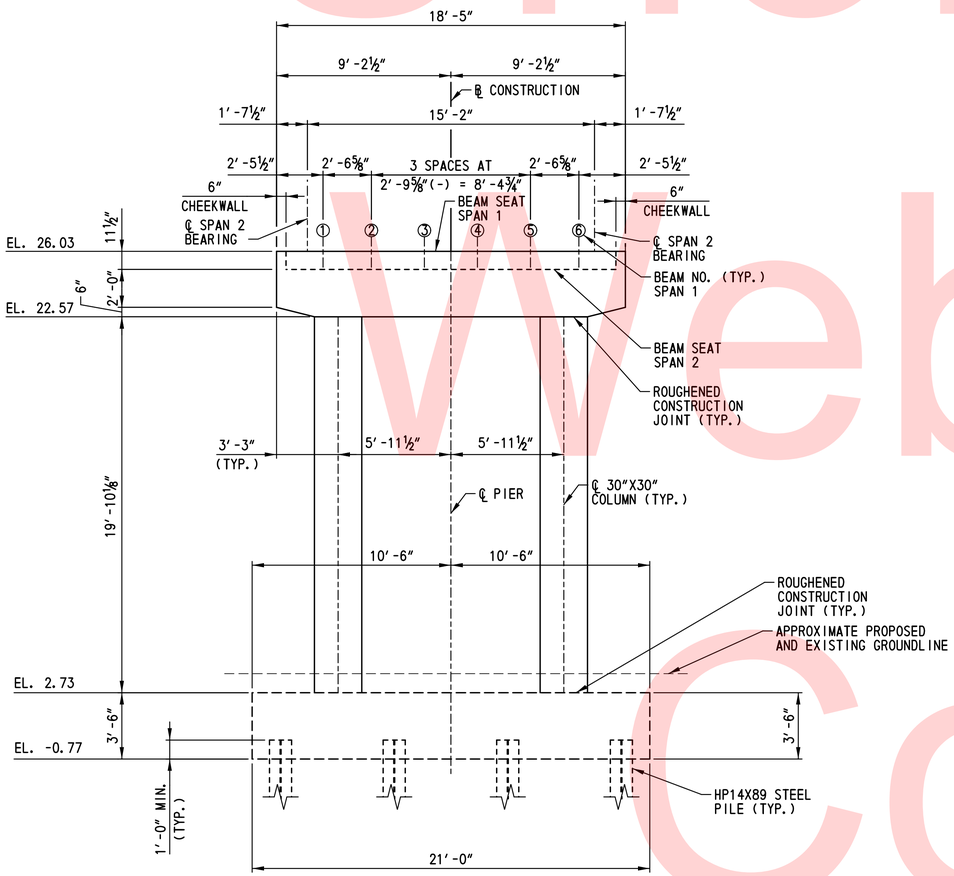

ELEVATION (LOOKING UPSTATION)
SCALE: ¼" = 1'-0"

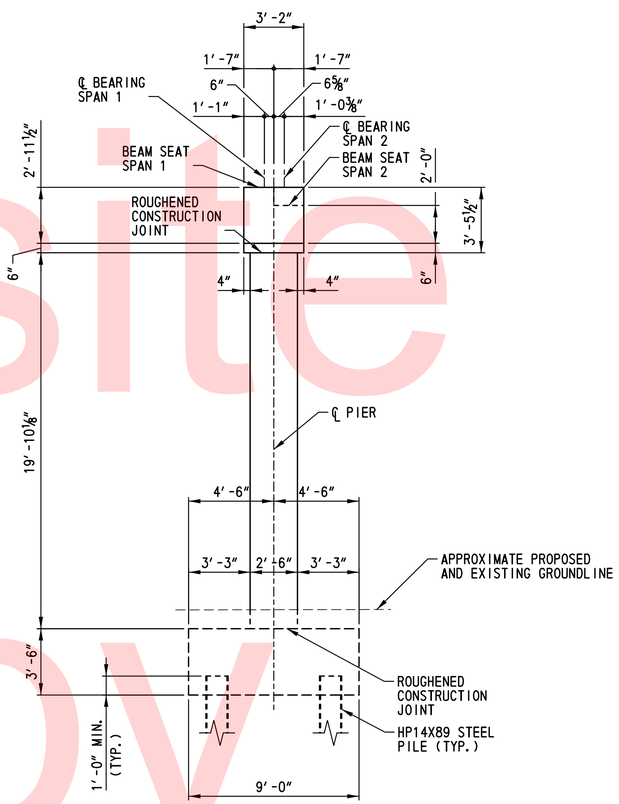

SIDE ELEVATION
SCALE: ¼" = 1'-0"

Unofficial Website Copy

N:\31896-002\CADD\BRIDGE\PR302_ITG.DGN

DELAWARE DEPARTMENT OF TRANSPORTATION	ADDENDUMS / REVISIONS	SCALE 0 4 8 12 ¼" = 1'-0"	NEW CASTLE INDUSTRIAL TRACK TRAIL, PHASE 3	CONTRACT T201330009 / COUNTY NEW CASTLE	BRIDGE NO. X / DESIGNED BY: NAH / CHECKED BY: WAG	PIER 16 PLAN AND ELEVATION

PR-302
SHEET NO. 133
TOTAL SHTS. 207

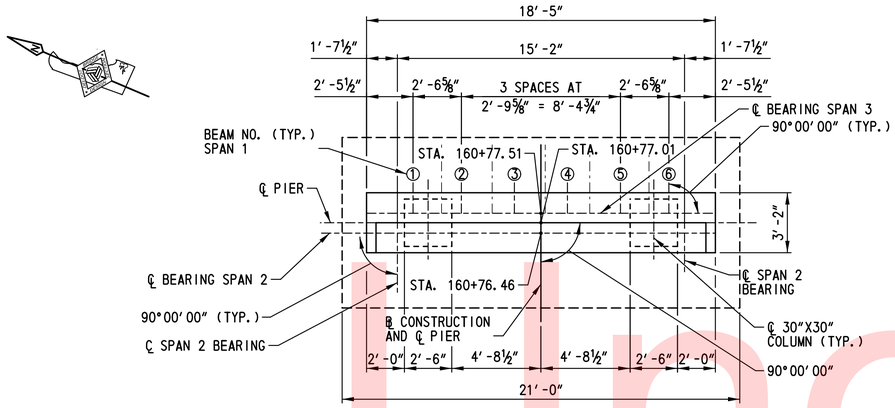

PLAN

SCALE: ¼" = 1'-0"

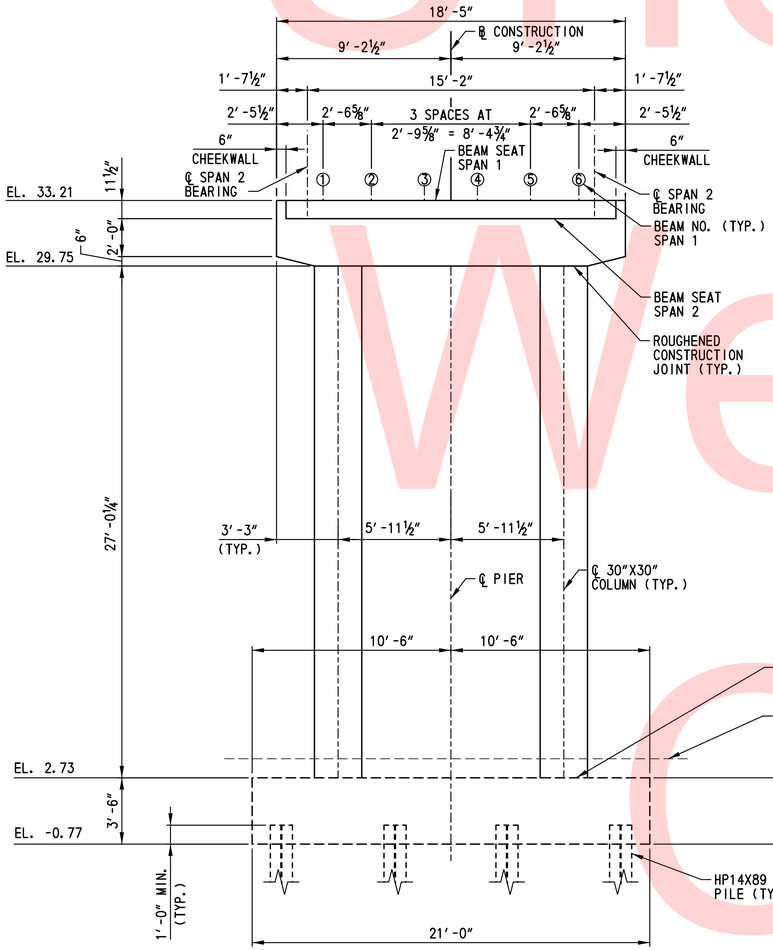

ELEVATION (LOOKING UPSTATION)

SCALE: ¼" = 1'-0"

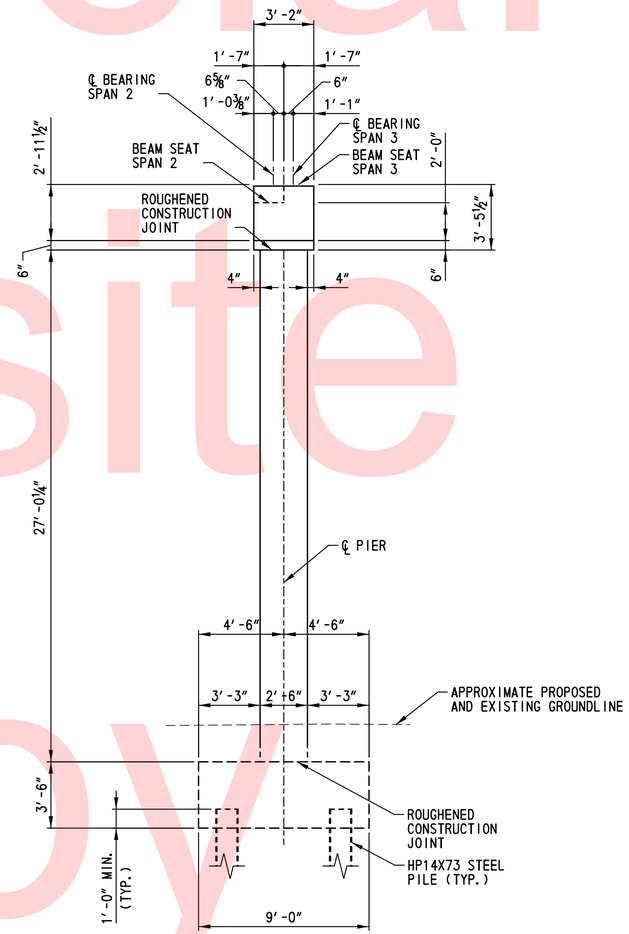

SIDE ELEVATION

SCALE: ¼" = 1'-0"

NOTES:

1. FOR PILE LAYOUT PLAN, SEE DWG. NO. PL-301.
2. FOR PIER REINFORCEMENT DETAILS, SEE DWG. NO. PR-304.

Unofficial Website Copy

N:\31896-002\CADD\BRIDGE\PR303_ITG.DGN

DELAWARE DEPARTMENT OF TRANSPORTATION	ADDENDUMS / REVISIONS	SCALE 0 4 8 12 ¼" = 1'-0"	NEW CASTLE INDUSTRIAL TRACK TRAIL, PHASE 3	CONTRACT T201330009	BRIDGE NO. X	PIER 17 PLAN AND ELEVATION	PR-303
				COUNTY NEW CASTLE	DESIGNED BY: NAH		SHEET NO. 134
					CHECKED BY: WAG		TOTAL SHTS. 207

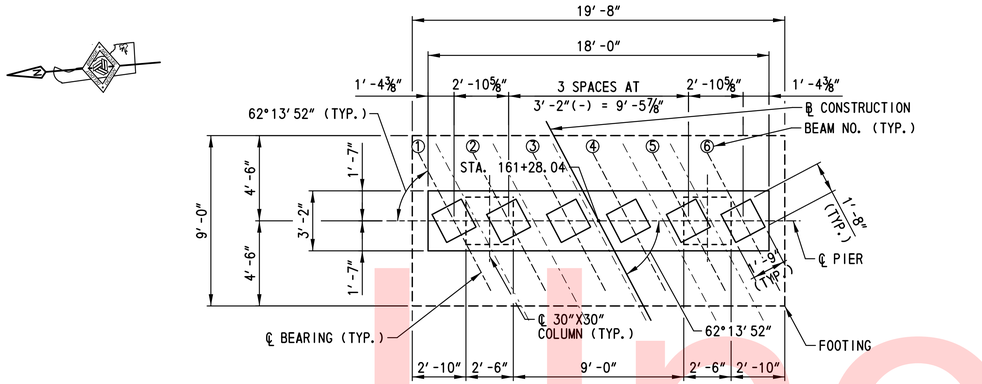

PLAN
SCALE: ¼″ = 1′-0″

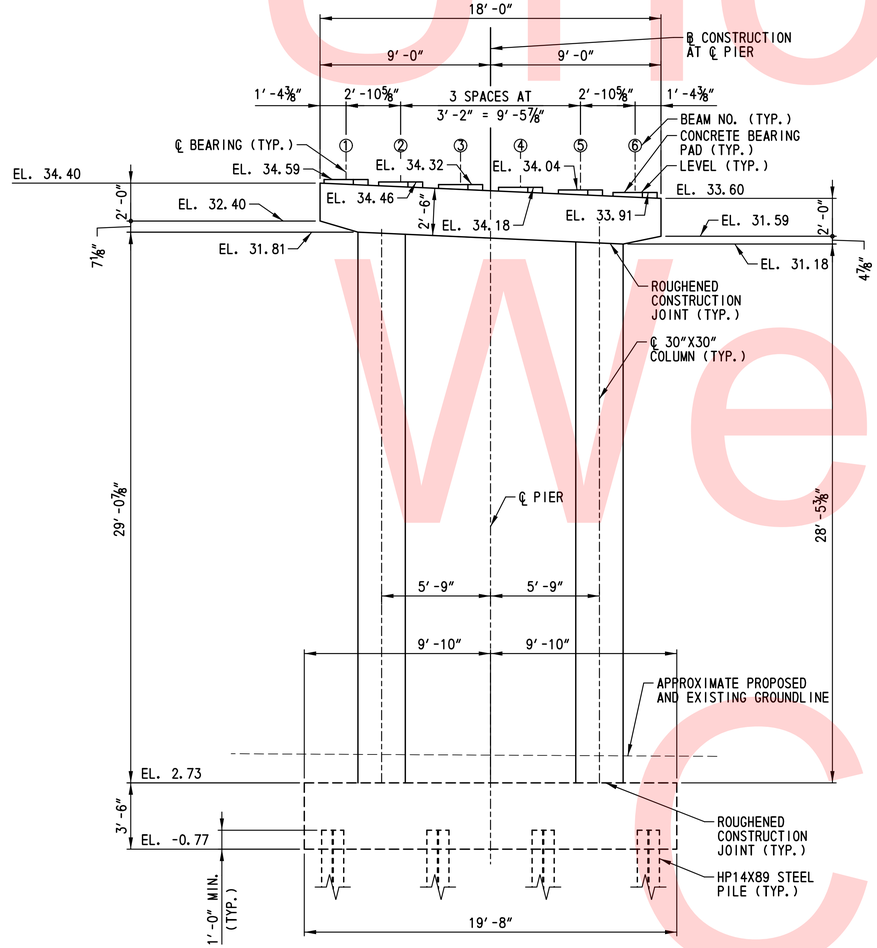

ELEVATION (LOOKING UPSTATION)
SCALE: ¼″ = 1′-0″

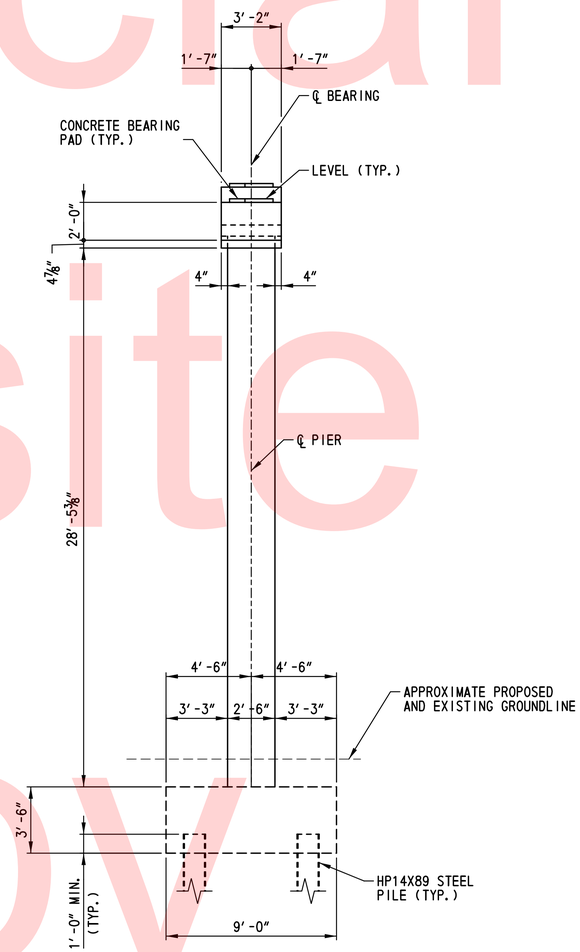

SIDE ELEVATION
SCALE: ¼″ = 1′-0″

NOTES:

1. FOR PILE LAOUT PLAN, SEE DWG. NO. PL-302.
2. FOR PIER REINFORCEMENT DETAILS, SEE DWG. NO. PR-307.
3. ALL PIER CAP AND AND BEARING PAD ELEVATIONS ARE APPROXIMATE. CONTRACTOR SHALL FIELD VERIFY EXISTING BRIDGE DECK ELEVATIONS AND ADJUST PIER CAP AND/OR CONCRETE BEARING PAD DIMENSIONS AS NECESSARY.

Unofficial Website Copy

N:\31896-002\CADD\BRIDGE\PR304_ITG.DGN

DELAWARE DEPARTMENT OF TRANSPORTATION	ADDENDUMS / REVISIONS	SCALE 0 4 8 12 FEET	NEW CASTLE INDUSTRIAL TRACK TRAIL, PHASE 3	CONTRACT T201330009	BRIDGE NO. X	PIER 18 PLAN AND ELEVATION	PR-304
				COUNTY NEW CASTLE	DESIGNED BY: NAH		SHEET NO. 135
					CHECKED BY: WAG		TOTAL SHTS. 207

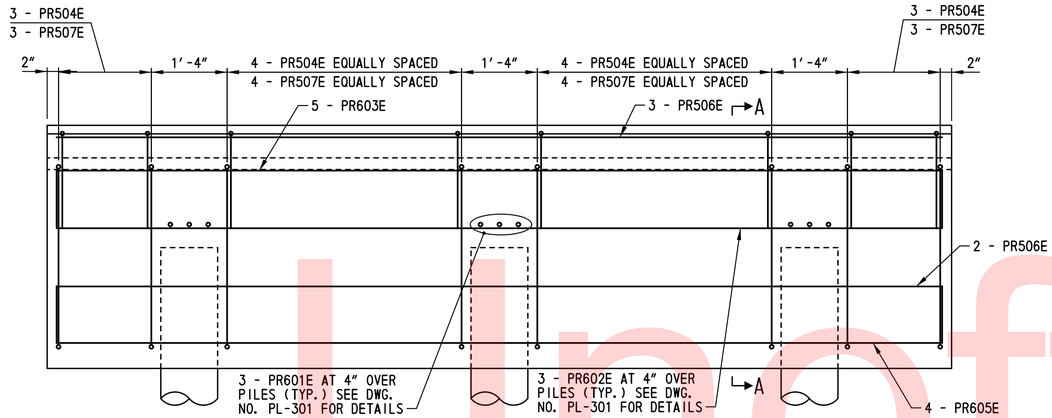

PIER 1 ELEVATION
SCALE: ¾"=1'-0"

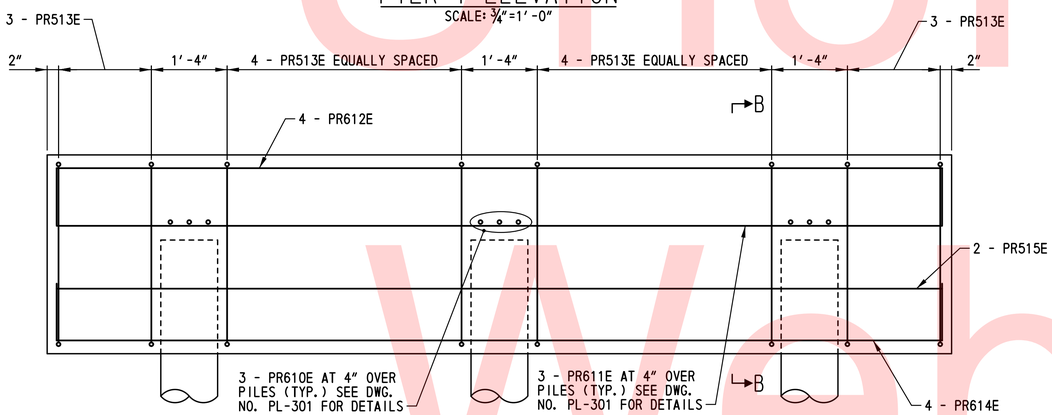

PIERS 2-14 TYPICAL ELEVATION
SCALE: ¾"=1'-0"

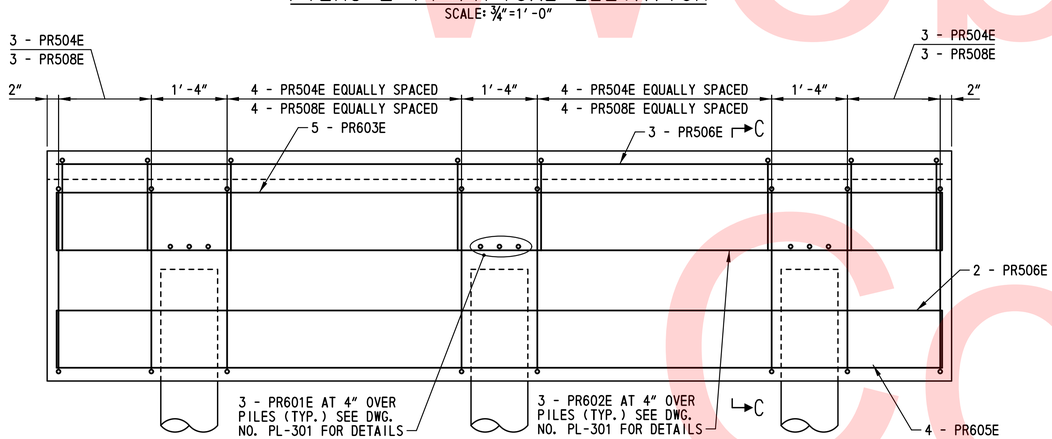

PIER 15 ELEVATION
SCALE: ¾"=1'-0"

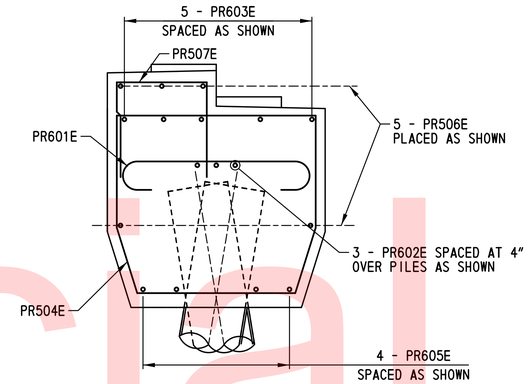

SECTION A-A
SCALE: ¾"=1'-0"

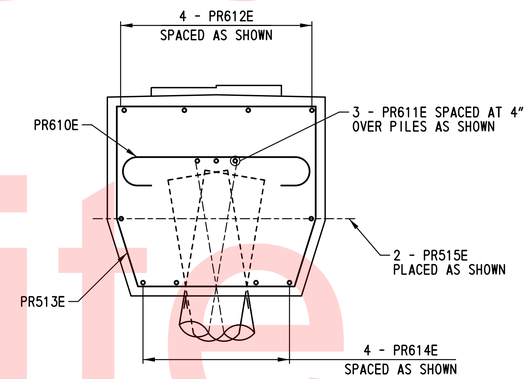

SECTION B-B
SCALE: ¾"=1'-0"

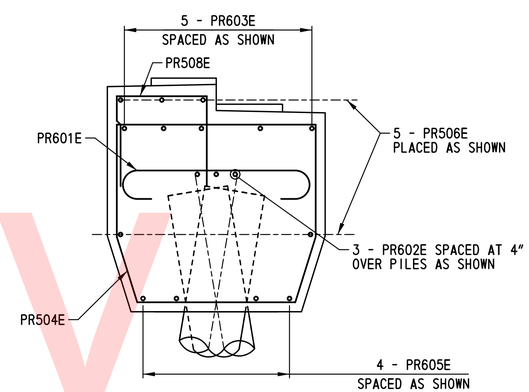

SECTION C-C
SCALE: ¾"=1'-0"

NOTES:

1. SPACE REINFORCING STEEL AS NECESSARY TO CLEAR ANCHOR BOLTS. FOR PIER PLAN AND ELEVATIONS, SEE DWG. NO. PR-301.
2. REINFORCEMENT IN PILES IS NOT SHOWN FOR CLARITY. FOR PILE REINFORCEMENT DETAILS, SEE DWG. NO. PL-301.

Unofficial Website Copy

N:\31896-002\CADD\BRIDGE\PR305_ITG.DGN

DELAWARE DEPARTMENT OF TRANSPORTATION	ADDENDUMS / REVISIONS	SCALE 0 1 3 4 ¾"=1'-0"	NEW CASTLE INDUSTRIAL TRACK TRAIL, PHASE 3	CONTRACT T201330009	BRIDGE NO. X	PIERS 1–15 REINFORCEMENT DETAILS
				COUNTY NEW CASTLE	DESIGNED BY: NAH	
					CHECKED BY: WAG	

PR-305
SHEET NO. 136
TOTAL SHTS. 207

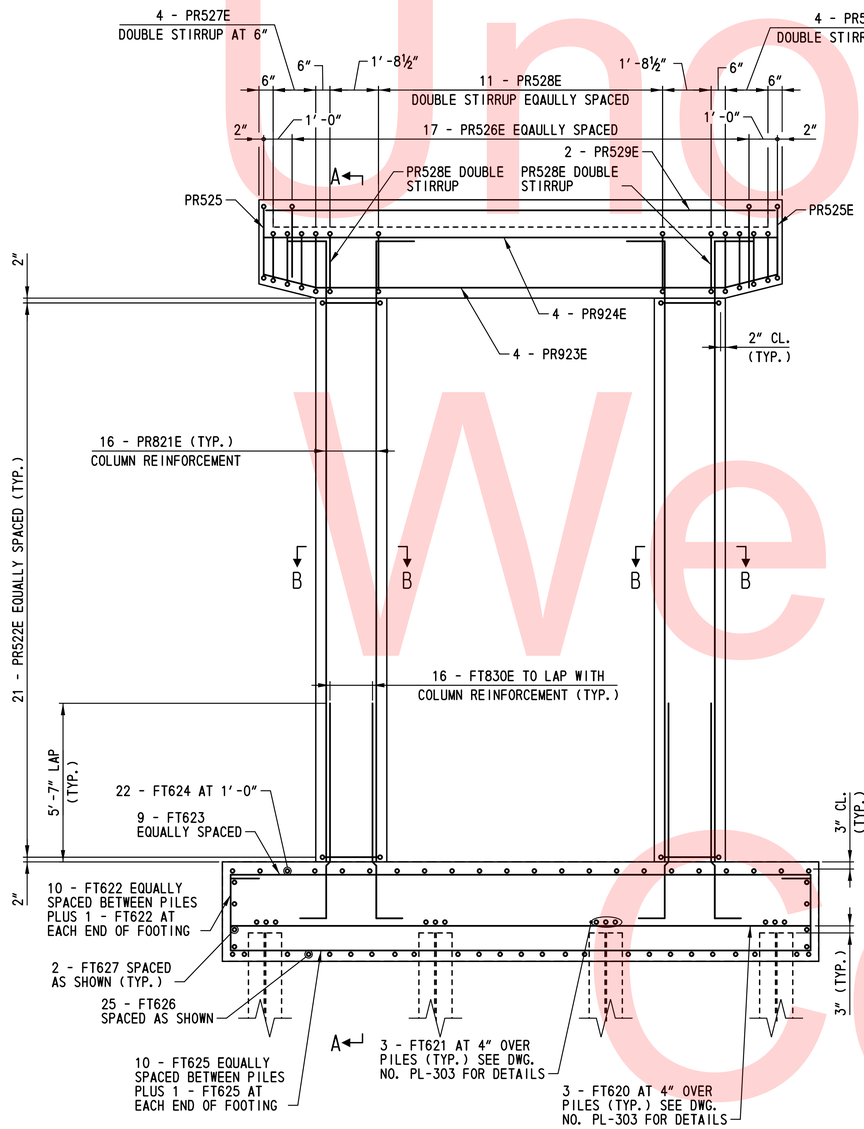

ELEVATION
SCALE: ⅜"=1'-0"

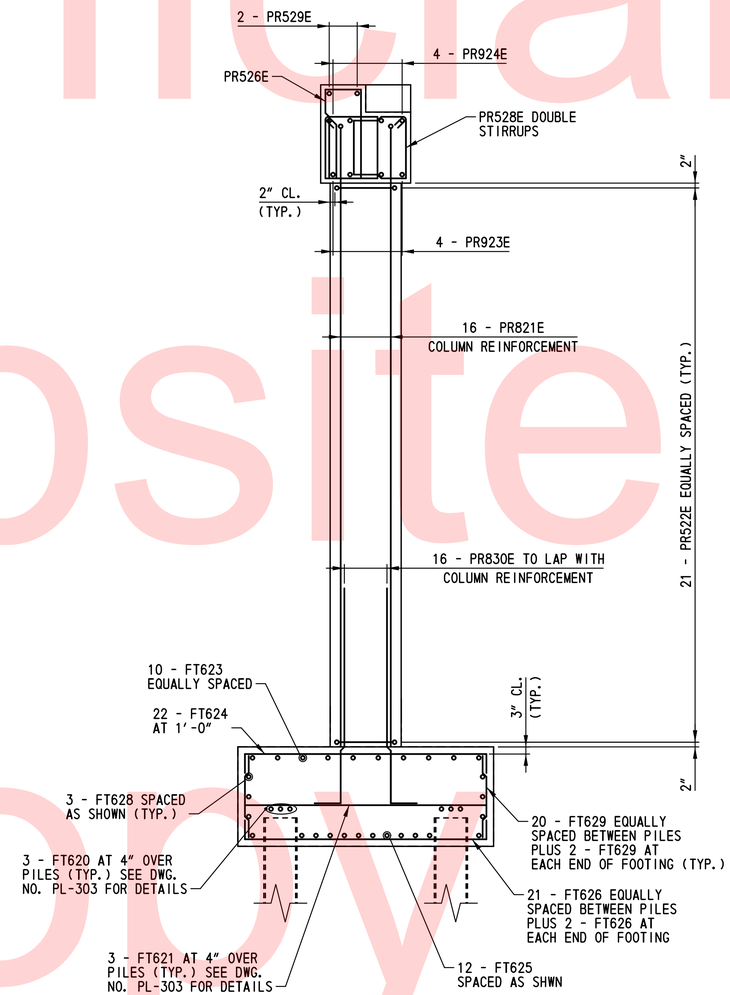

SECTION A-A
SCALE: ⅜"=1'-0"

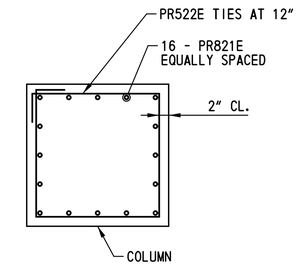

SECTION B-B
SCALE: ¾"=1'-0"

NOTES:

1. SPACE REINFORCING STEEL AS NECESSARY TO CLEAR ANCHOR BOLTS. FOR ADDITIONAL INFORMATION, SEE DWG. NO. PR-301.

Unofficial Website Copy

DELAWARE DEPARTMENT OF TRANSPORTATION	ADDENDUMS / REVISIONS	SCALE 0 3 5 8 ⅜"=1'-0"	NEW CASTLE INDUSTRIAL TRACK TRAIL, PHASE 3	CONTRACT T201330009 / COUNTY NEW CASTLE	BRIDGE NO. X / DESIGNED BY: NAH / CHECKED BY: WAG	PIER 16 REINFORCEMENT DETAILS

PR-306
SHEET NO. 137
TOTAL SHTS. 207

N:\31896-002\CADD\BRIDGE\PR306_LTG.DGN

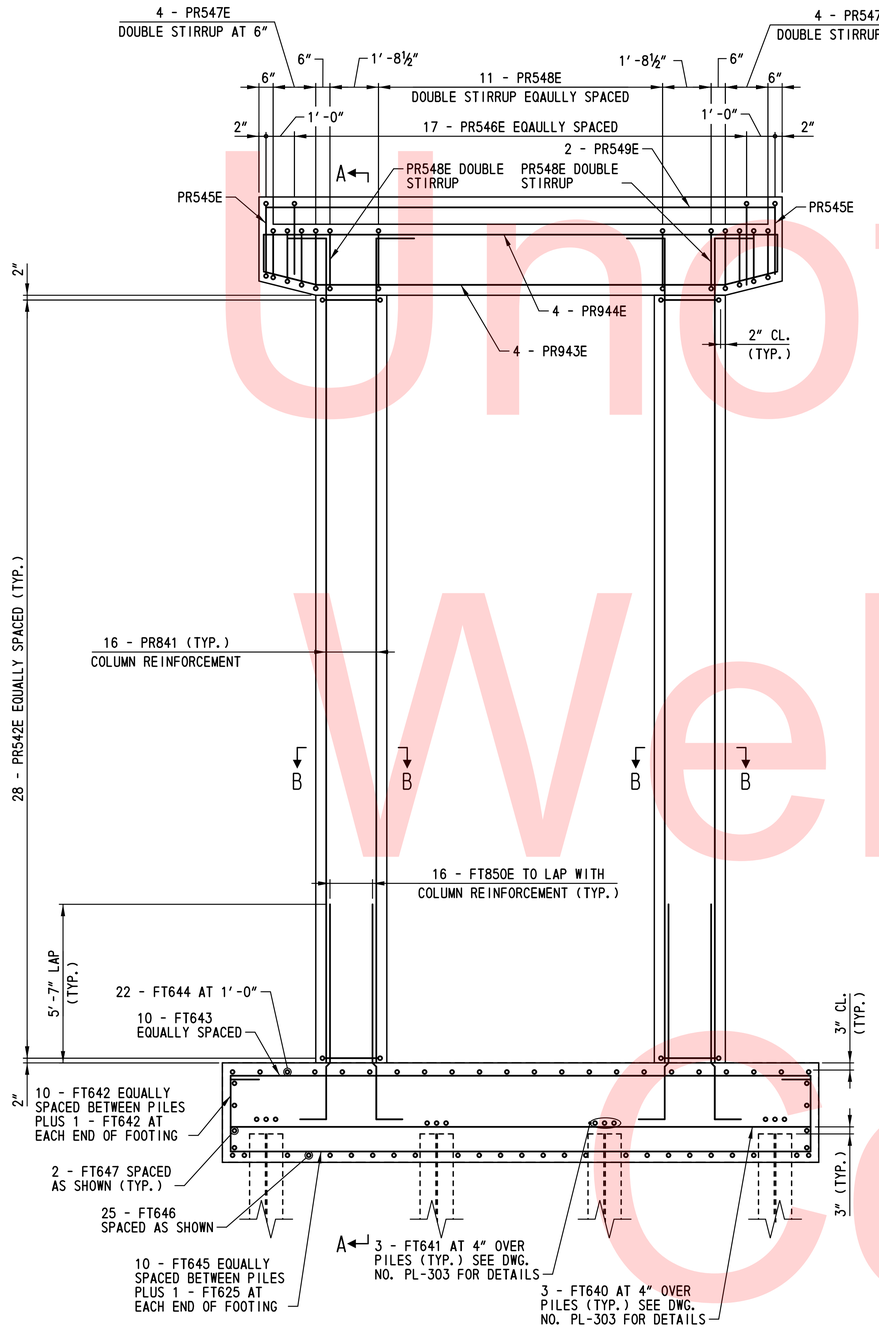

ELEVATION
SCALE: ⅜"=1'-0"

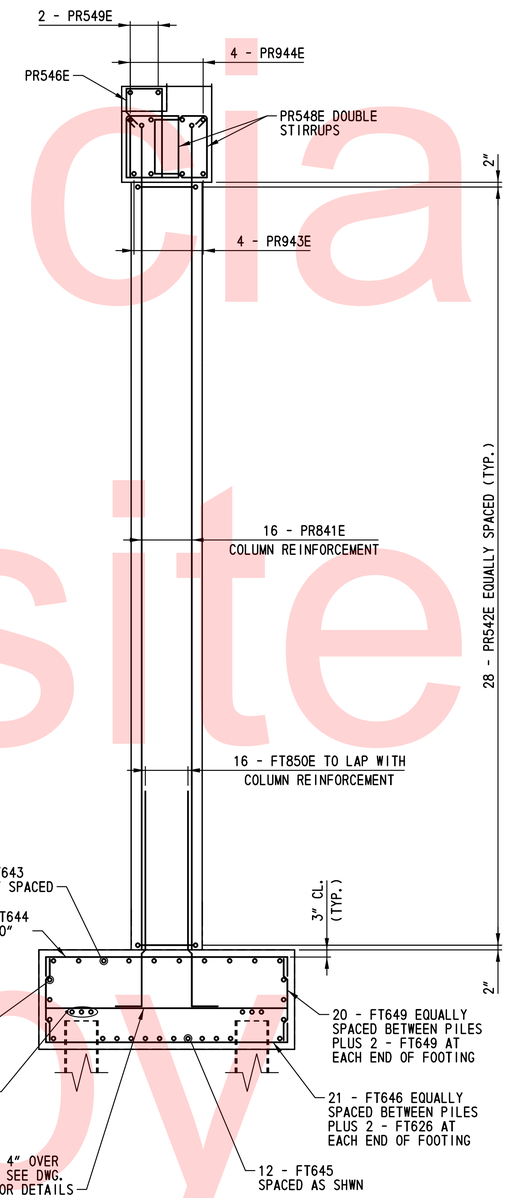

SECTION A-A
SCALE: ⅜"=1'-0"

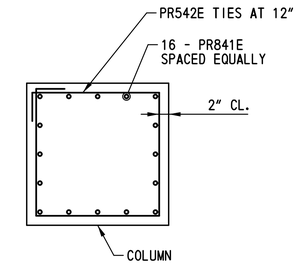

SECTION B-B
SCALE: ¾"=1'-0"

NOTES:

1. SPACE REINFORCING STEEL AS NECESSARY TO CLEAR ANCHOR BOLTS. FOR ADDITIONAL INFORMATION, SEE DWG. NO. PR-302.

Unofficial Website Copy

DELAWARE DEPARTMENT OF TRANSPORTATION	ADDENDUMS / REVISIONS	SCALE 0 3 5 8 ⅜"=1'-0"	NEW CASTLE INDUSTRIAL TRACK TRAIL, PHASE 3	CONTRACT T201330009 / COUNTY NEW CASTLE	BRIDGE NO. X / DESIGNED BY: NAH / CHECKED BY: WAG	PIER 17 REINFORCEMENT DETAILS

PR-307
SHEET NO. 138
TOTAL SHTS. 207

N:\31896-002\CADD\BRIDGE\PR307_ITG.DGN

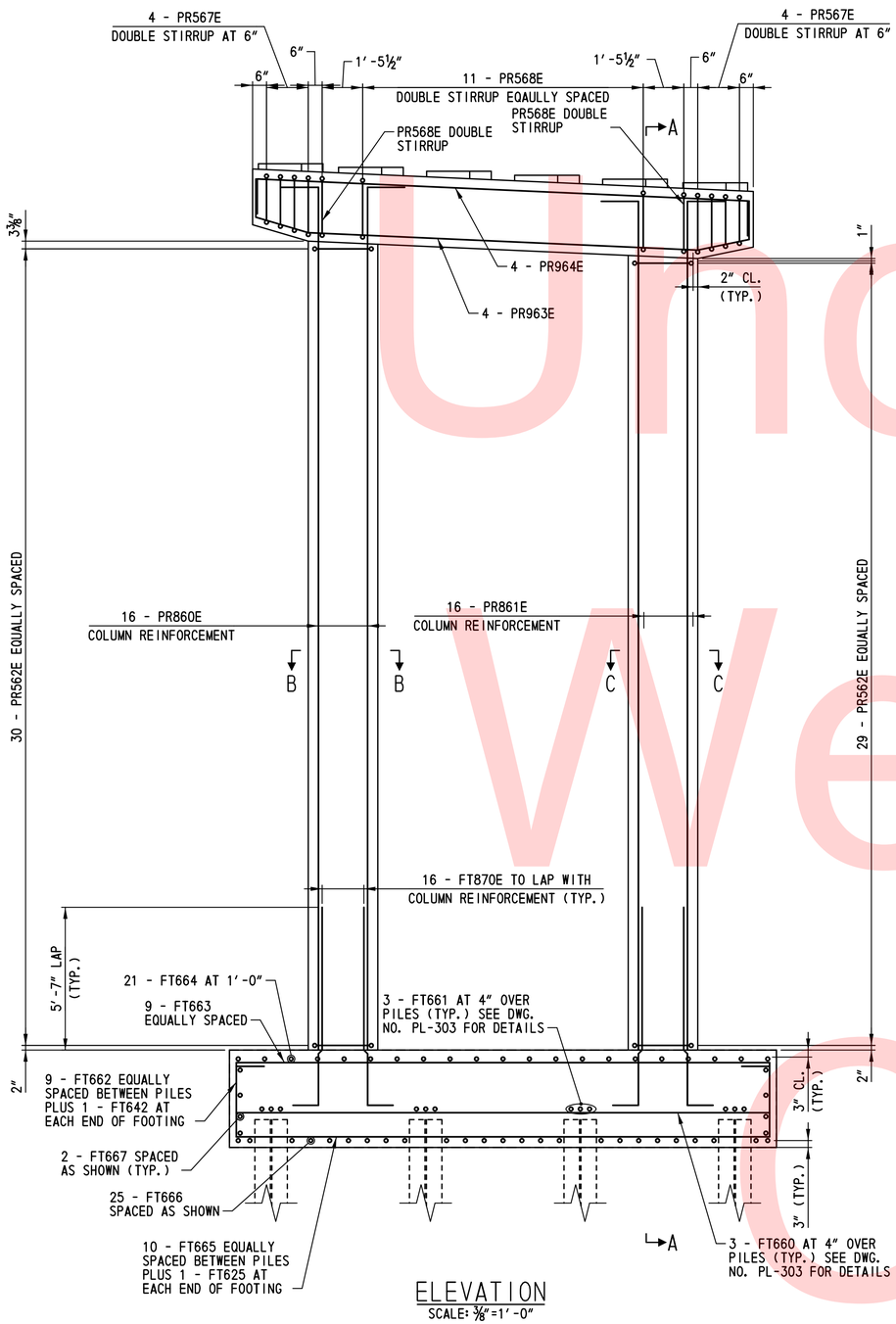

ELEVATION
SCALE: ⅜"=1'-0"

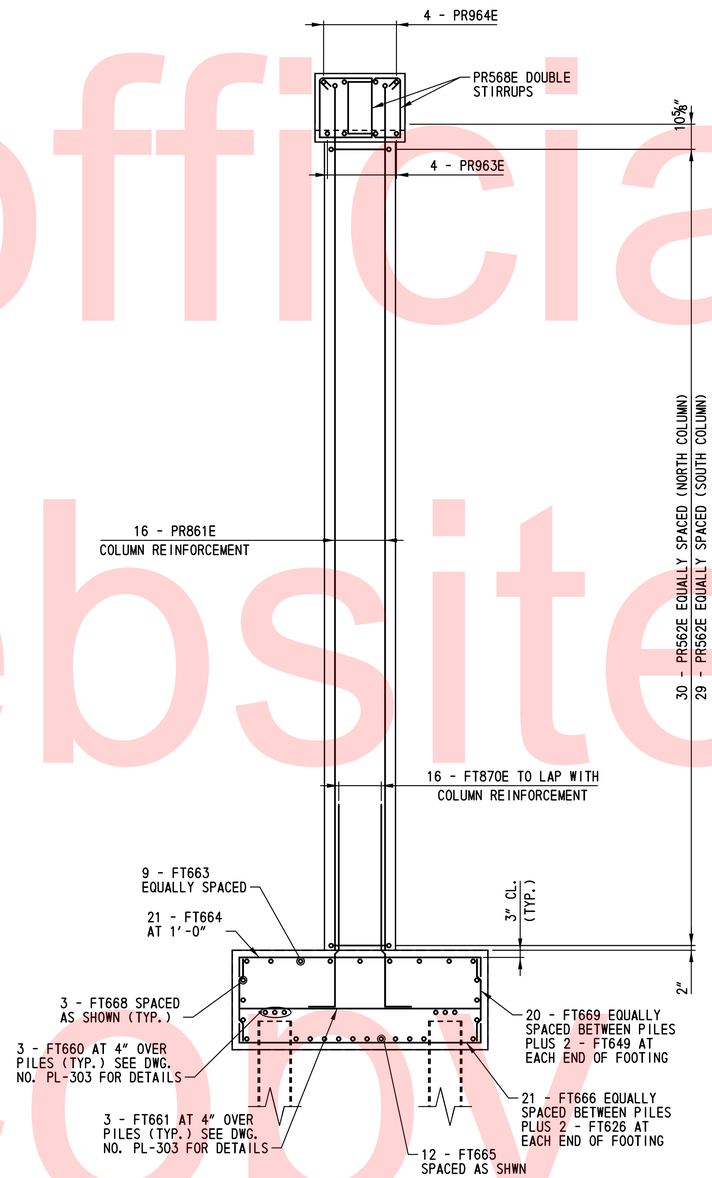

SECTION A-A
SCALE: ⅜"=1'-0"

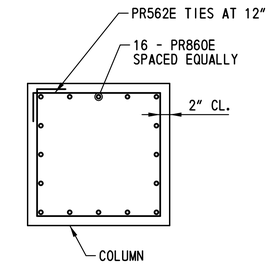

SECTION B-B
SCALE: ¾"=1'-0"

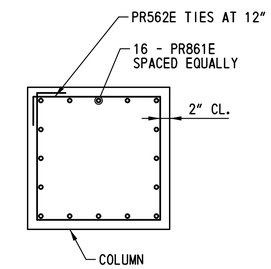

SECTION C-C
SCALE: ¾"=1'-0"

NOTES:

1. SPACE REINFORCING STEEL AS NECESSARY TO CLEAR ANCHOR BOLTS. FOR ADDITIONAL INFORMATION, SEE DWG. NO. PR-303.

Unofficial Website Copy

DELAWARE DEPARTMENT OF TRANSPORTATION	ADDENDUMS / REVISIONS	SCALE 0 3 5 8 ⅜"=1'-0"	NEW CASTLE INDUSTRIAL TRACK TRAIL, PHASE 3	CONTRACT T201330009 / COUNTY NEW CASTLE	BRIDGE NO. X / DESIGNED BY: NAH / CHECKED BY: WAG	PIER 18 REINFORCEMENT DETAILS

PR-308

SHEET NO. 139

TOTAL SHTS. 207

① ANY MARK NUMBER WITH SUFFIX 'E' DENOTES EPOXY COATED REINFORCING STEEL.

② ALL MARK 'LOCATION PREFIXES' SHALL CONSIST OF TWO LETTERS AND ARE AS FOLLOWS: AB = ABUTMENT, AS = APPROACH SLAB, BC = BOX CULVERT, BW = BACKWALL, CL = COLUMN, DK = DECK, DL = DOWEL, FT = FOOTING, HW = HEADWALL, MS = MISC. BARS, PA = PARAPET, PR = PIER, SC = SHEETPILE CAP, SL = SLAB, TW = TOEWALL, WL = WALL (UNIQUE LOCATION), WW = WINGWALL

SPECIFICATIONS					BENDING DIMENSIONS (FEET-INCHES /QUARTER INCH)										
QTY.	SIZE	LENGTH	MARK	TYPE	A	B	C	D	E	F/R	G	H	J	K	O
PIERS 1 AND 15															
18	6	4-62	PR601E	1	0-80	3-42					0-80		0-60		
6	6	15-70	PR602E	STR		15-70									
10	6	17-70	PR603E	2	1-00	15-70					1-00				
28	5	14-42	PR504E	A	0-100	1-30	2-90	1-30	1-113	1-113	0-100	1-21	3-60	0-42	3-60
8	6	17-70	PR605E	2	1-00	15-70					1-00				
10	5	15-70	PR506E	STR		15-70									
14	5	4-100	PR507E	17		1-72	1-70	1-72							
14	5	4-60	PR508E	17		1-52	1-70	1-52							
PIERS 2 THROUGH 14															
117	6	4-82	PR610E	1	0-80	3-42					0-80		0-60		
39	6	15-70	PR611E	STR		15-70									
52	6	17-70	PR612E	2	1-00	15-70					1-00				
182	5	14-42	PR513E	A	0-100	1-30	2-90	1-30	1-113	1-113	0-100	1-21	3-60	0-42	3-60
52	6	17-70	PR614E	2	1-00	15-70					1-00				
PIER 16															
6	6	20-60	FT620	STR		20-60									
12	6	8-60	FT621	STR		8-60									
24	6	4-00	FT622	17		3-00	1-00								
10	6	22-60	FT623	2	1-00	20-60					1-00				
22	6	10-60	FT624	2	1-00	8-60					1-00				
12	6	22-60	FT625	2	1-00	20-60					1-00				
25	6	10-60	FT626	2	1-00	8-60					1-00				
4	6	8-60	FT627	STR		8-60									
6	6	20-60	FT628	STR		20-60									
48	6	3-00	FT629	STR		3-00									
32	8	7-20	FT830E	17		1-40	5-100								
32	8	23-41	PR821E	17		1-40	22-01								
42	5	9-80	PR522E	T2	0-60	2-20	2-20	2-20	2-20		0-60				
4	9	21-42	PR923E	14	1-70	1-103	14-50	1-103	1-70			0-60		1-100	18-10
4	9	21-30	PR924E	2	1-70	18-10					1-70				
2	5	11-100	PR525E	T1	0-52	2-100	2-72	2-100	2-72		0-52				
17	5	7-60	PR526E	17		3-12	1-30	3-12							
4X4	5	8-20	PR527E	T1	0-52	1-100	1-92	1-100	1-92		0-52				
		T0			T0	T0	T0	T0	T0		T0				
		8-110			0-52	1-100	2-20	1-100	2-20		0-52				
26	5	8-110	PR528E	T1	0-52	1-100	2-20	1-100	2-20		0-52				

SPECIFICATIONS					BENDING DIMENSIONS (FEET-INCHES /QUARTER INCH)										
QTY.	SIZE	LENGTH	MARK	TYPE	A	B	C	D	E	F/R	G	H	J	K	O
2	5	18-10	PR529E	STR		18-10									
PIER 17															
6	6	20-60	FT640	STR		20-60									
12	6	8-60	FT641	STR		8-60									
24	6	4-00	FT642	17		3-00	1-00								
10	6	22-60	FT643	2	1-00	20-60					1-00				
22	6	10-60	FT644	2	1-00	8-60					1-00				
12	6	22-60	FT645	2	1-00	20-60					1-00				
25	6	10-60	FT646	2	1-00	8-60					1-00				
4	6	8-60	FT647	STR		8-60									
6	6	20-60	FT648	STR		20-60									
48	6	3-00	FT649	STR		3-00									
32	8	7-20	FT850E	17		1-40	5-100								
32	8	30-61	PR841E	17		1-40	29-21								
56	5	9-80	PR542E	T2	0-60	2-20	2-20	2-20	2-20		0-60				
4	9	21-42	PR943E	14	1-70	1-103	14-50	1-103	1-70			0-60		1-100	18-10
4	9	21-30	PR944E	2	1-70	18-10					1-70				
2	5	11-100	PR545E	T1	0-52	2-100	2-72	2-100	2-72		0-52				
17	5	7-60	PR546E	17		3-12	1-30	3-12							
4X4	5	8-20	PR547E	T1	0-52	1-100	1-92	1-100	1-92		0-52				
		T0			T0	T0	T0	T0	T0		T0				
		8-110			0-52	1-100	2-20	1-100	2-20		0-52				
26	5	8-110	PR548E	T1	0-52	1-100	2-20	1-100	2-20		0-52				
2	5	18-10	PR549E	STR		18-10									
PIER 18															
6	6	19-20	FT660	STR		19-20									
12	6	8-60	FT661	STR		8-60									
22	6	4-00	FT662	17		3-00	1-00								
9	6	21-20	FT663	2	1-00	19-20					1-00				
21	6	10-60	FT664	2	1-00	8-60					1-00				
12	6	21-20	FT665	2	1-00	19-20					1-00				
25	6	10-60	FT666	2	1-00	8-60					1-00				
4	6	8-60	FT667	STR		8-60									
6	6	19-20	FT668	STR		19-20									
48	6	3-00	FT669	STR		3-00									
32	6	7-20	FT670E	17		1-40	5-100								

SPECIFICATIONS					BENDING DIMENSIONS (FEET-INCHES /QUARTER INCH)										
QTY.	SIZE	LENGTH	MARK	TYPE	A	B	C	D	E	F/R	G	H	J	K	O
16	8	32-82	PR860E	17		1-40	31-42								
16	8	32-20	PR861E	17		1-40	30-100								
59	5	9-80	PR562E	T2	0-60	2-20	2-20	2-20	2-20		0-60				
4	9	20-111	PR963E	14	1-70	1-103	13-113	1-103	1-70			0-60		1-100	17-73
4	9	20-92	PR964E	2	1-70	17-72					1-70				
4X4	5	8-20	PR567E	T1	0-52	1-100	1-92	1-100	1-92		0-52				
		T0			T0	T0	T0	T0	T0		T0				
		8-110			0-52	1-100	2-20	1-100	2-20		0-52				
26	5	8-110	PR568E	T1	0-52	1-100	2-20	1-100	2-20		0-52				

ASTM STANDARD ENGLISH REINFORCING BARS

BAR SIZE	NOMINAL DIMENSIONS: DIAMETER (INCHES)	AREA (INCHES²)	WEIGHT (LBS./FT.)	RECOMMENDED END HOOKS, APPLICABLE TO ALL GRADES: 180° HOOKS D	180° HOOKS A OR G	180° HOOKS J	90° HOOKS A OR G	STIRRUP AND TIE HOOKS, APPLICABLE TO ALL GRADES: 90° HOOK D	90° HOOK A OR G	135° HOOK A OR G	135° HOOK A OR G
3	0.375	0.110	0.376	2¼"	5"	3"	6"	1½"	4"	4"	2½"
4	0.500	0.200	0.668	3"	6"	4"	8"	2"	4½"	4½"	3"
5	0.625	0.310	1.043	3¾"	7"	5"	10"	2½"	6"	5½"	3¾"
6	0.750	0.440	1.502	4½"	8"	6"	1-0"	4½"	1-0"	8"	4½"
7	0.875	0.600	2.044	5¼"	10"	7"	1-2"	5¼"	1-2"	9"	5¼"
8	1.000	0.790	2.670	6"	11"	8"	1-4"	6"	1-4"	10½"	6"
9	1.128	1.000	3.400	9½"	1-3"	11¾"	1-7"				
10	1.270	1.270	4.303	10¾"	1-5"	1-1¼"	1-10"				
11	1.410	1.560	5.313	1-0"	1-7"	1-2¾"	2-0"				
14	1.693	2.250	7.650	1-6¼"	2-3"	1-9¾"	2-7"				
18	2.257	4.000	13.600	2-0"	3-0"	2-4½"	3-5"				

NOTES:

1. FIGURES SHOWN IN CIRCLES REPRESENT BAR BEND TYPES.
2. STANDARD BAR BENDS INCLUDE ONLY THOSE TYPES BELOW, INDICATED AS SUCH.
3. ALL DIMENSIONS OUT-TO-OUT, EXCEPT "A" AND "G" ON STD. 180° AND 135° HOOKS.
4. "J" DIMENSIONS ON 180° HOOKS TO BE SHOWN ONLY WHERE NECESSARY TO RESTRICT HOOK SIZE, OTHERWISE STANDARD 'ACI' HOOKS ARE TO BE USED.
5. WHERE "J" IS NOT SHOWN, "J" WILL BE KEPT EQUAL TO OR LESS THAN "H" ON TYPES 3, 5 AND 22. WHERE "J" CAN EXCEED "H", IT SHALL BE SHOWN.
6. "H" DIMENSIONS OF STIRRUPS TO BE SHOWN AS NEEDED TO FIT WITHIN THE CONCRETE.
7. UNLESS OTHERWISE NOTED, DIAMETER "D" IS THE SAME FOR ALL BENDS AND HOOKS ON A BAR (EXCEPT FOR BEND TYPES 11 AND 13).
8. WHERE SLOPE DIFFERS FROM 45° OFFSET, "H" AND "K" MUST BE SHOWN.
9. WHERE BARS ARE TO BE BENT MORE ACCURATELY THAN STANDARD BENDING TOLERANCES, BENDING DIMENSIONS REQUIRING CLOSER FABRICATION SHOULD HAVE LIMITS INDICATED.
10. FOR RECOMMENDED DIAMETER "D", OF BENDS, HOOKS, ETC., REFER TO TABLE ABOVE, 'CRSI' OR 'ACI' TABLES WHERE APPLICABLE AND REQUIRED.
11. TYPE S1-S6, S11, T1-T3 AND T6-T9 APPLICABLE TO BAR SIZES #3 THROUGH #8.

STANDARD BAR BENDS

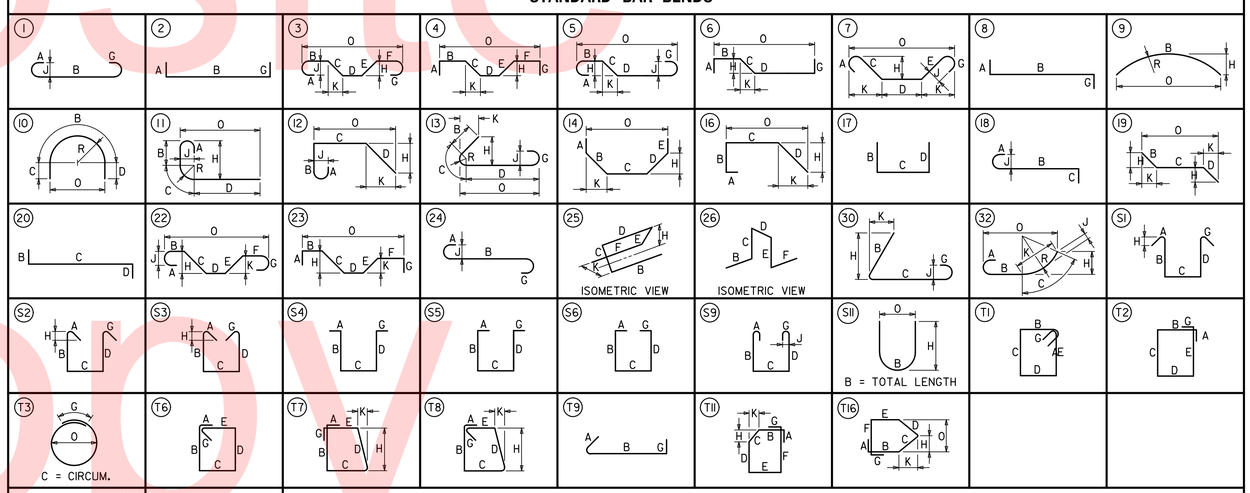

SPECIAL BAR BENDS

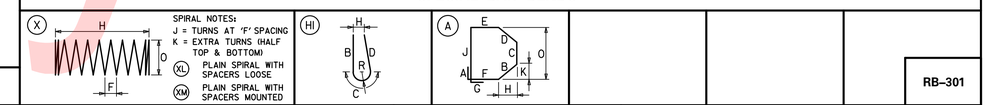

STIRRUP AND TIE HOOKS

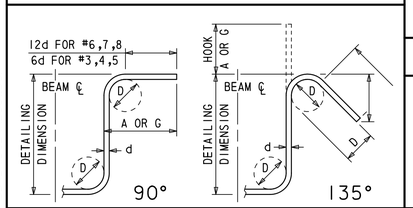

180° AND 90° END HOOKS

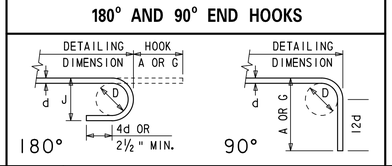

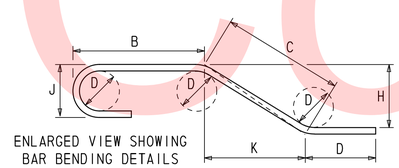

Unofficial Website Copy

DELAWARE DEPARTMENT OF TRANSPORTATION

ADDENDUMS / REVISIONS

SCALE: NONE

NEW CASTLE INDUSTRIAL TRACK TRAIL, PHASE 3

CONTRACT	BRIDGE NO.	X
T201330009	DESIGNED BY: NAH	
COUNTY: NEW CASTLE	CHECKED BY: WAG	

PIER REINFORCEMENT LIST

RB-301

SHEET NO. 140

TOTAL SHTS. 207

N:\31896-002\CADD\BRIDGE\RB301.DGN

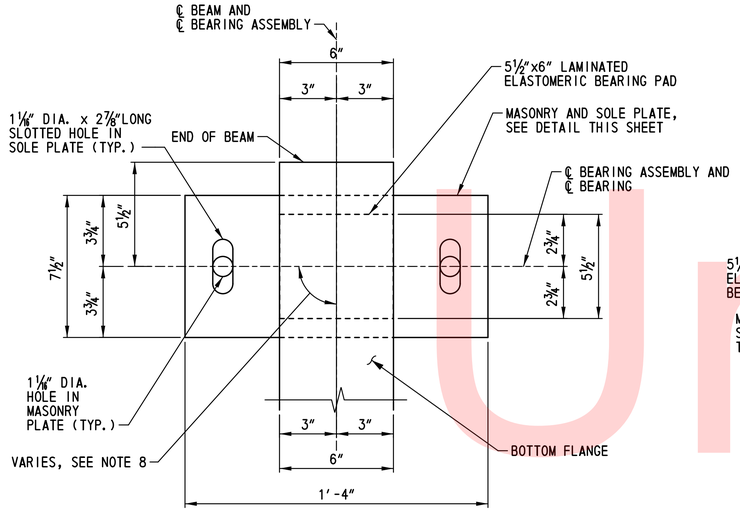

EXPANSION BEARING PLAN
SCALE: 1½"=1'-0"

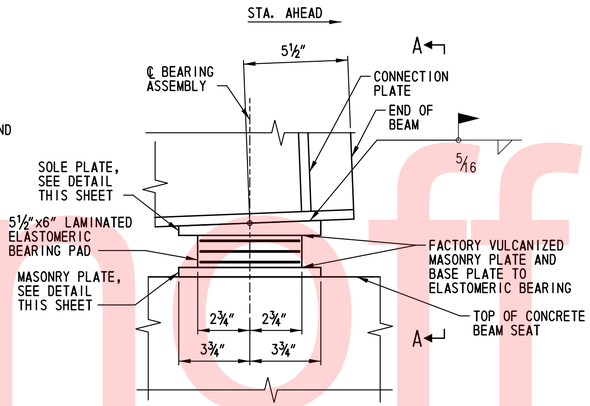

EXPANSION BEARING ELEVATION
SCALE: 1½"=1'-0"

NOTE:
ANCHOR BOLTS, NUTS, AND PLATE WASHERS NOT SHOWN FOR CLARITY.

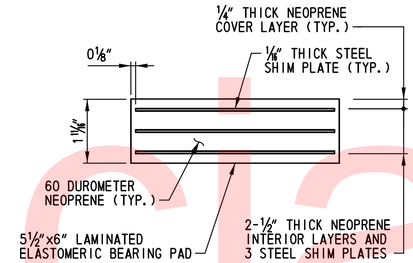

BEARING PAD DETAIL
SCALE: 3"=1'-0"

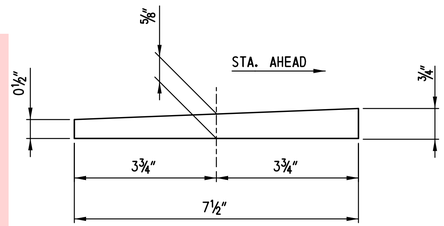

SECTION B-B
SCALE: 3"=1'-0"

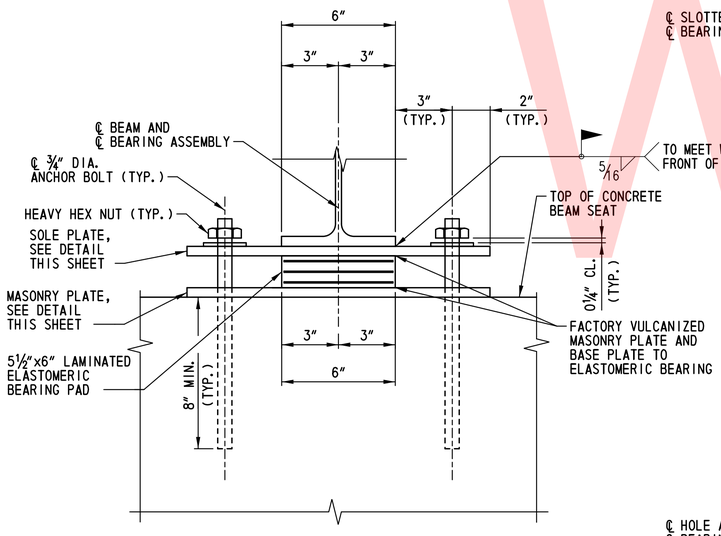

VIEW A-A
SCALE: 1½"=1'-0"

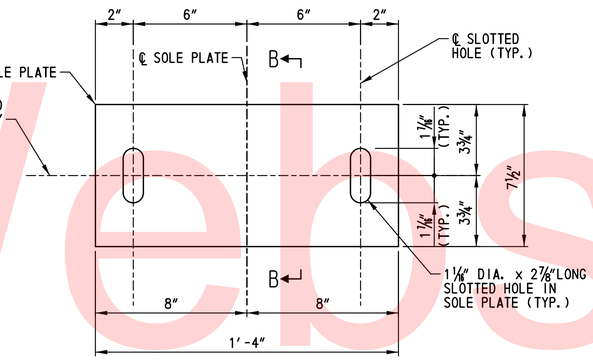

SOLE PLATE
SCALE: 1½"=1'-0"

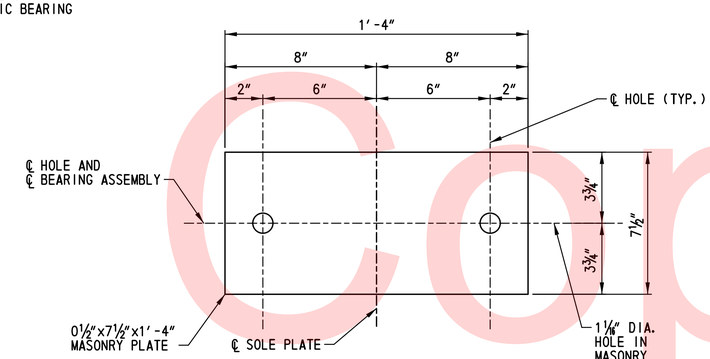

MASONRY PLATE
SCALE: 1½"=1'-0"

NOTES:

1. BEARING ASSEMBLIES SHALL BE PLACED PERPENDICULAR TO THE CENTERLINE OF GIRDER.
2. SOLE PLATES, BASE PLATES AND MASONRY PLATES SHALL BE ASTM A 709,GRADE 36 STEEL PAINTED TO MATCH WEATHERING STEEL COLOR.
3. FILL SLOTS AND HOLES AROUND ANCHOR BOLTS WITH NONHARDENING CAULKING COMPOUND OR ELASTIC JOINT SEALER.
4. ANCHOR BOLTS SHALL BE UNPAINTED ASTM F 1554, GRADE 105 GALVANIZED STEEL. PLATE WASHERS SHALL BE UNPAINTED ASTM A 709, GRADE 36 GALVANIZED STEEL. NUTS SHALL BE UNPAINTED ASTM A 563 GALVANIZED STEEL.
5. ELASTOMERIC BEARINGS SHALL CONFORM TO M 251 AND THE ELASTOMER SHALL BE 60 DUROMETER NEOPRENE. SHIMS SHALL BE 11 GAGE STEEL.
6. THE BASE PLATE AND MASONRY PLATE SHALL BE FACTORY VULCANIZED TO THE ELASTOMERIC BEARING, AND BEARINGS ARE TO BE SHIPPED ASSEMBLED AS UNITS.
7. CONTRACTOR SHALL TOUCH UP SOLE PLATE PAINT SYSTEM AFTER WELDING THE SOLE PLATE TO THE GIRDER.
8. SKEW ANGLE BETWEEN ℄ BEARING AND ℄ BEAM VARIES IN SPANS 1 THROUGH 15. SEE DWG. NOS. FR-301 THRU FR-303.

Unofficial Website Copy

N:\31896-002\CADD\BRIDGE\BB301_ITG.DGN

DELAWARE DEPARTMENT OF TRANSPORTATION	ADDENDUMS / REVISIONS	SCALE AS NOTED	NEW CASTLE INDUSTRIAL TRACK TRAIL, PHASE 3	CONTRACT T201330009	BRIDGE NO. X	EXPANSION BEARING DETAILS – PIERS 2–15
				COUNTY NEW CASTLE	DESIGNED BY: NAH	
					CHECKED BY: WAG	

BB-301

SHEET NO.	TOTAL SHTS.
141	207

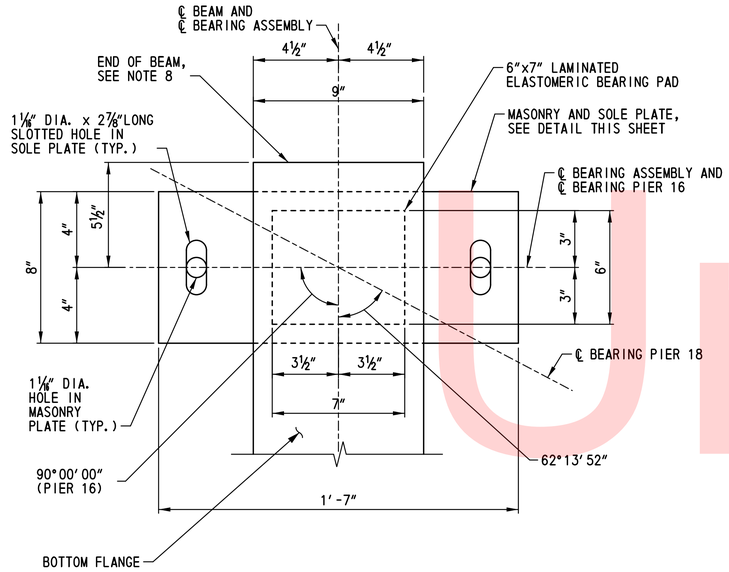

EXPANSION BEARING PLAN

SCALE: 1½"=1'-0"

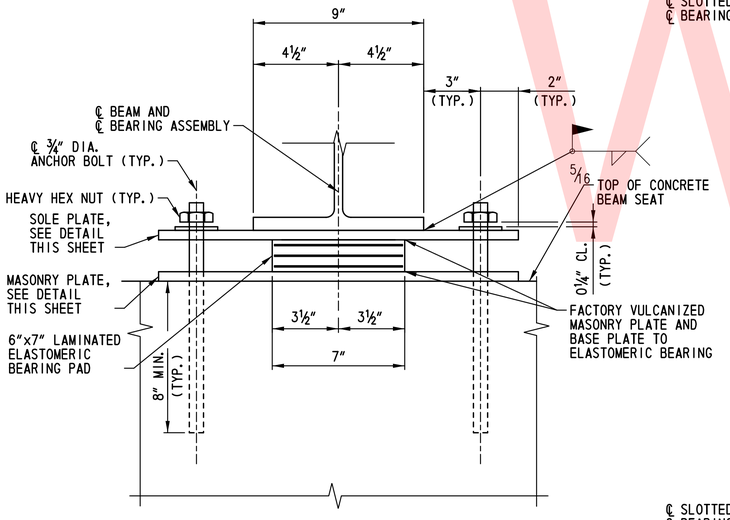

VIEW A-A

SCALE: 1½"=1'-0"

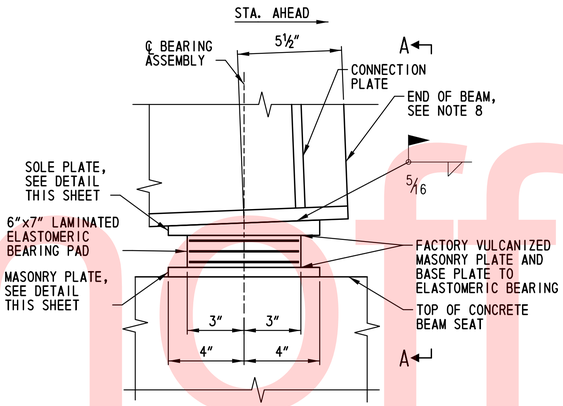

EXPANSION BEARING ELEVATION

SCALE: 1½"=1'-0"

NOTE:
ANCHOR BOLTS, NUTS, AND PLATE WASHERS NOT SHOWN FOR CLARITY.

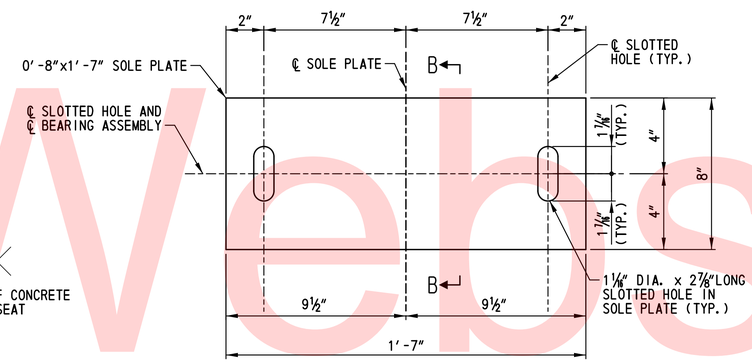

SOLE PLATE

SCALE: 1½"=1'-0"

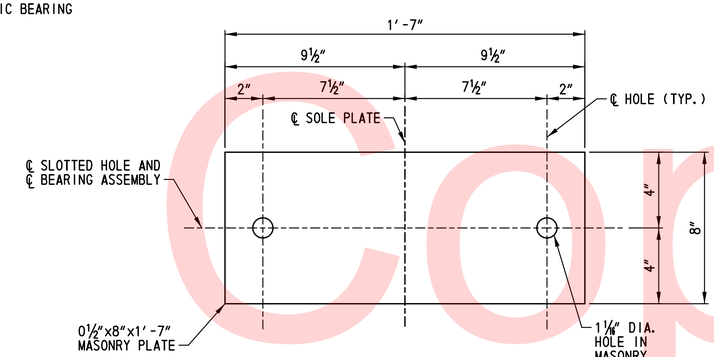

MASONRY PLATE

SCALE: 1½"=1'-0"

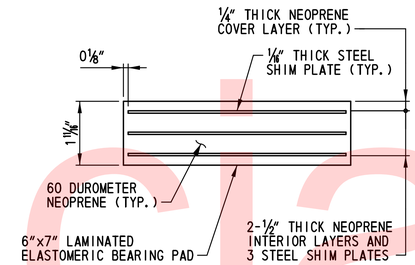

BEARING PAD DETAIL

SCALE: 3"=1'-0"

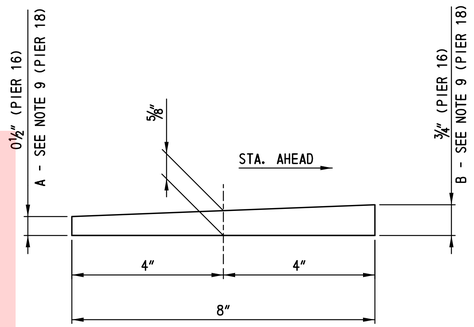

SECTION B-B

SCALE: 3"=1'-0"

DIMENSION REFERENCE TABLE - SEE NOTE 9		
BEAM	A	B
1	½"	¾"
2	9/16"	11/16"
3	9/16"	11/16"
4	9/16"	11/16"
5	9/16"	11/16"
6	9/16"	11/16"

NOTES:

1. BEARING ASSEMBLIES SHALL BE PLACED PERPENDICULAR TO THE CENTERLINE OF GIRDER.
2. SOLE PLATES, BASE PLATES AND MASONRY PLATES SHALL BE ASTM A 709,GRADE 36 STEEL PAINTED TO MATCH WEATHERING STEEL COLOR.
3. FILL SLOTS AND HOLES AROUND ANCHOR BOLTS WITH NONHARDENING CAULKING COMPOUND OR ELASTIC JOINT SEALER.
4. ANCHOR BOLTS SHALL BE UNPAINTED ASTM F 1554, GRADE 105 GALVANIZED STEEL. PLATE WASHERS SHALL BE UNPAINTED ASTM A 709, GRADE 36 GALVANIZED STEEL. NUTS SHALL BE UNPAINTED ASTM A 563 GALVANIZED STEEL.
5. ELASTOMERIC BEARINGS SHALL CONFORM TO M 251 AND THE ELASTOMER SHALL BE 60 DUROMETER NEOPRENE. SHIMS SHALL BE 11 GAGE STEEL.
6. THE BASE PLATE AND MASONRY PLATE SHALL BE FACTORY VULCANIZED TO THE ELASTOMERIC BEARING, AND BEARINGS ARE TO BE SHIPPED ASSEMBLED AS UNITS.
7. CONTRACTOR SHALL TOUCH UP SOLE PLATE PAINT SYSTEM AFTER WELDING THE SOLE PLATE TO THE GIRDER.
8. END OF BEAM IS SHOWN FOR EXPANSION BEARINGS AT PIER 16. BEAMS ARE CONTINUOUS OVER EXPANSION BEARINGS AT PIER 18.
9. DIMENSION "A" AND "B" VARIES BY BEAM. SEE TABULATED VALUES FOR DIMENSION "A" ON PIER 18 SOLE PLATES. CONTRACTOR SHALL VERIFY AND ADJUST DIMENSION "A" AS NECESSARY BASED UPON FIELD VERIFICATION OF TIE-IN ELEVATIONS TO EXISTING BRIDGE.

Unofficial Website Copy

N:\31896-002\CADD\BRIDGE\BB302_ITG.DGN

DELAWARE DEPARTMENT OF TRANSPORTATION	ADDENDUMS / REVISIONS	SCALE AS NOTED	NEW CASTLE INDUSTRIAL TRACK TRAIL, PHASE 3	CONTRACT T201330009	BRIDGE NO. X	EXPANSION BEARING DETAILS – PIERS 16 AND 18	BB-302
				COUNTY NEW CASTLE	DESIGNED BY: NAH		SHEET NO. 142
					CHECKED BY: WAG		TOTAL SHTS. 207

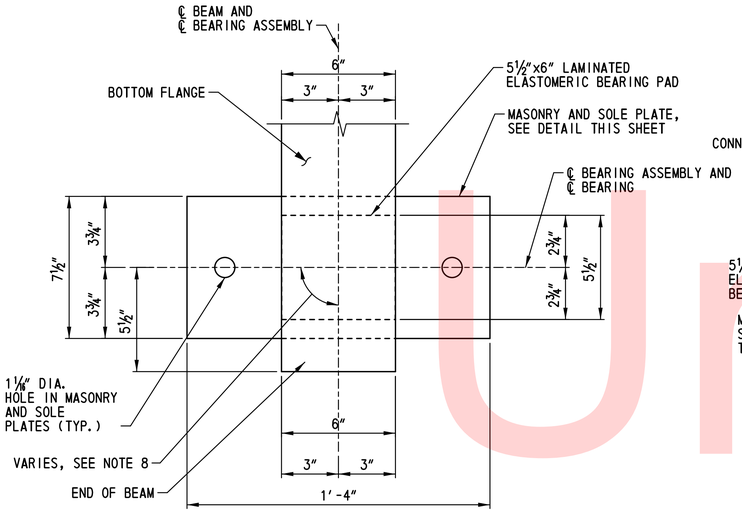

FIXED BEARING PLAN
SCALE: 1½"=1'-0"

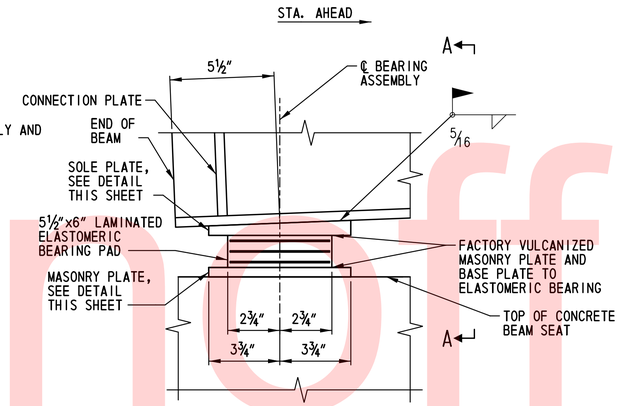

FIXED BEARING ELEVATION
SCALE: 1½"=1'-0"

NOTE:
ANCHOR BOLTS, NUTS, AND PLATE WASHERS NOT SHOWN FOR CLARITY.

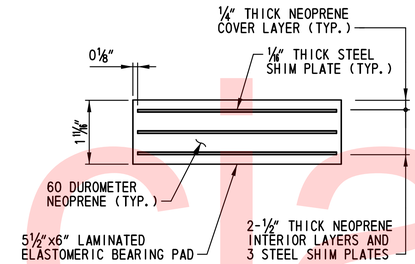

BEARING PAD DETAIL
SCALE: 3"=1'-0"

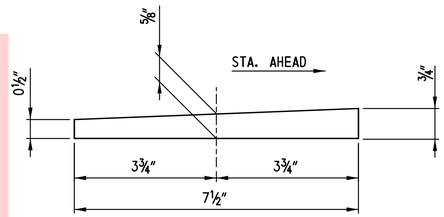

SECTION B-B
SCALE: 3"=1'-0"

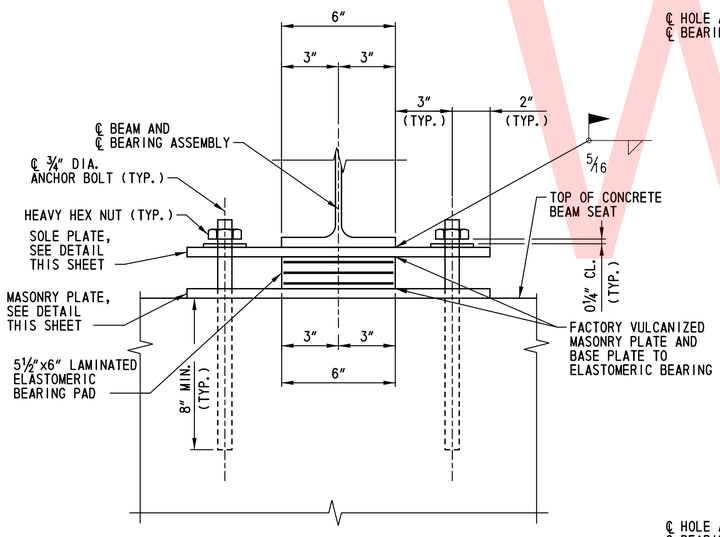

VIEW A-A
SCALE: 1½"=1'-0"

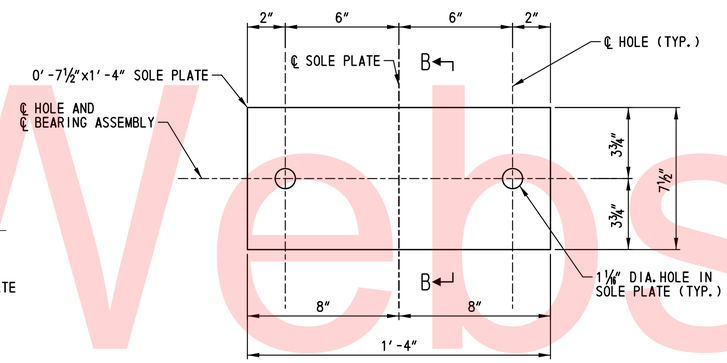

SOLE PLATE
SCALE: 1½"=1'-0"

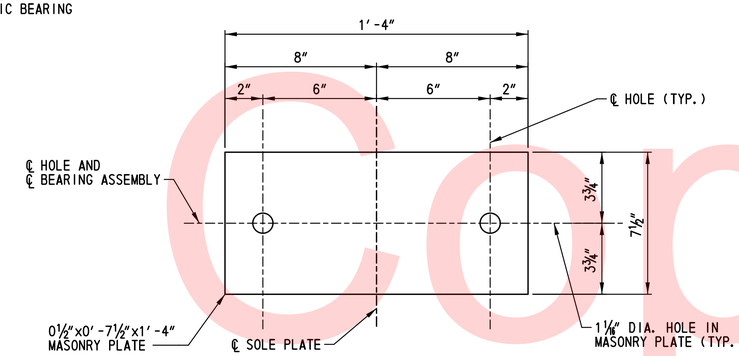

MASONRY PLATE
SCALE: 1½"=1'-0"

NOTES:

1. BEARING ASSEMBLIES SHALL BE PLACED PERPENDICULAR TO THE CENTERLINE OF GIRDER.
2. SOLE PLATES, BASE PLATES AND MASONRY PLATES SHALL BE ASTM A 709,GRADE 36 STEEL PAINTED TO MATCH WEATHERING STEEL COLOR.
3. FILL SLOTS AND HOLES AROUND ANCHOR BOLTS WITH NONHARDENING CAULKING COMPOUND OR ELASTIC JOINT SEALER.
4. ANCHOR BOLTS SHALL BE UNPAINTED ASTM F 1554, GRADE 105 GALVANIZED STEEL. PLATE WASHERS SHALL BE UNPAINTED ASTM A 709, GRADE 36 GALVANIZED STEEL. NUTS SHALL BE UNPAINTED ASTM A 563 GALVANIZED STEEL.
5. ELASTOMERIC BEARINGS SHALL CONFORM TO M 251 AND THE ELASTOMER SHALL BE 60 DUROMETER NEOPRENE. SHIMS SHALL BE 11 GAGE STEEL.
6. THE BASE PLATE AND MASONRY PLATE SHALL BE FACTORY VULCANIZED TO THE ELASTOMERIC BEARING, AND BEARINGS ARE TO BE SHIPPED ASSEMBLED AS UNITS.
7. CONTRACTOR SHALL TOUCH UP SOLE PLATE PAINT SYSTEM AFTER WELDING THE SOLE PLATE TO THE GIRDER.
8. SKEW ANGLE BETWEEN ℄ BEARING AND ℄ BEAM VARIES IN SPANS 1 THROUGH 15. SEE DWG. NOS. FR-301 THRU FR-303.

Unofficial Website Copy

N:\31896-002\CADD\BRIDGE\BB303_ITG.DGN

DELAWARE DEPARTMENT OF TRANSPORTATION	ADDENDUMS / REVISIONS	SCALE AS NOTED	NEW CASTLE INDUSTRIAL TRACK TRAIL, PHASE 3	CONTRACT T201330009	BRIDGE NO. X	FIXED BEARING DETAILS – PIERS 1–14	BB-303
				COUNTY NEW CASTLE	DESIGNED BY: NAH		SHEET NO. 143
					CHECKED BY: WAG		TOTAL SHTS. 207

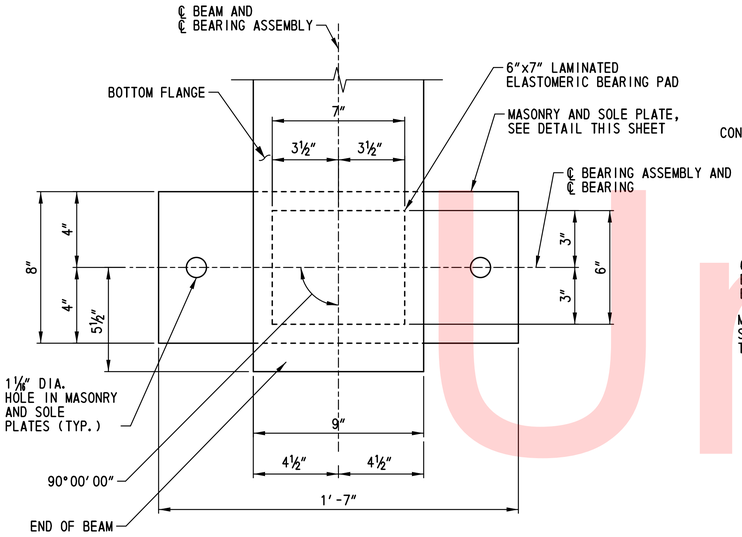

FIXED BEARING PLAN
SCALE: 1½"=1'-0"

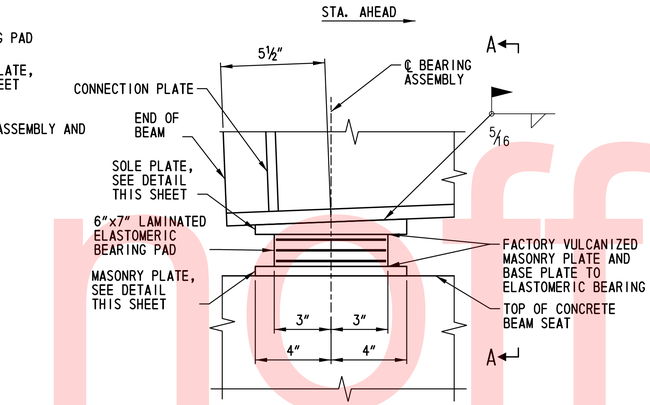

FIXED BEARING ELEVATION
SCALE: 1½"=1'-0"

NOTE:
ANCHOR BOLTS, NUTS, AND PLATE
WASHERS NOT SHOWN FOR CLARITY

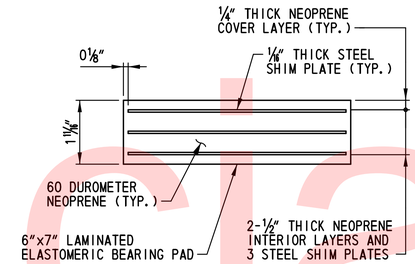

BEARING PAD DETAIL
SCALE: 3"=1'-0"

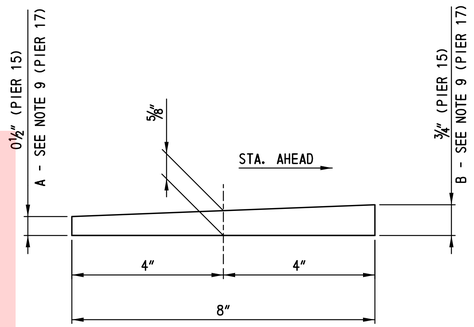

SECTION B-B
SCALE: 3"=1'-0"

DIMENSION REFERENCE TABLE - SEE NOTE 9		
BEAM	A	B
1	½"	¾"
2	5/16"	11/16"
3	5/16"	11/16"
4	5/16"	11/16"
5	5/16"	11/16"
6	5/16"	11/16"

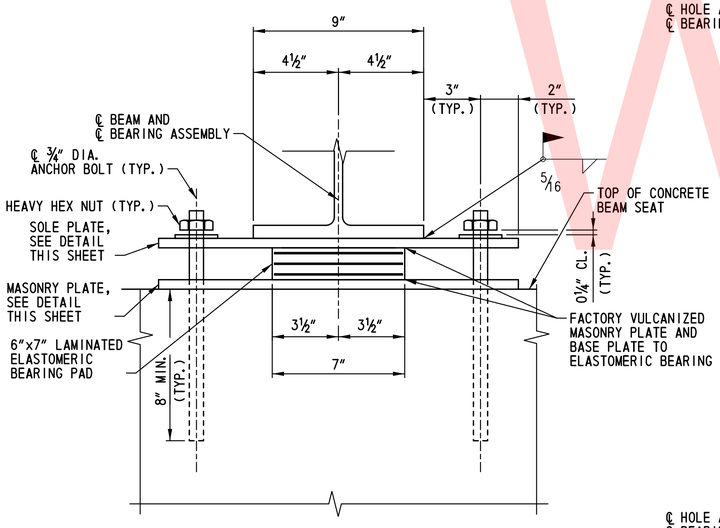

VIEW A-A
SCALE: 1½"=1'-0"

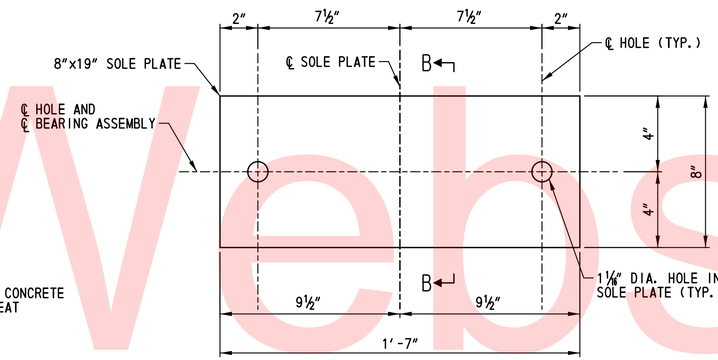

SOLE PLATE
SCALE: 1½"=1'-0"

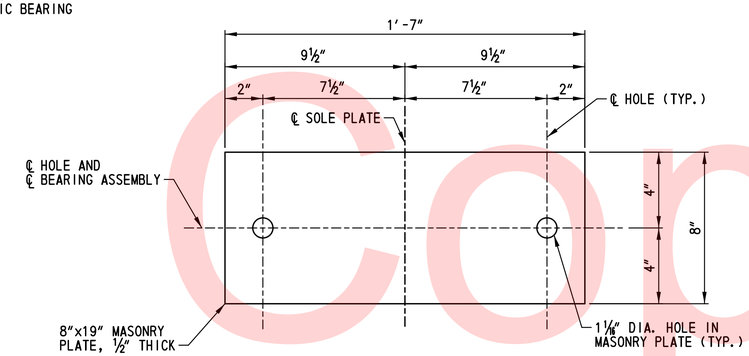

MASONRY PLATE
SCALE: 1½"=1'-0"

NOTES:

1. BEARING ASSEMBLIES SHALL BE PLACED PERPENDICULAR TO THE CENTERLINE OF GIRDER.
2. SOLE PLATES, BASE PLATES AND MASONRY PLATES SHALL BE ASTM A 709,GRADE 36 STEEL PAINTED TO MATCH WEATHERING STEEL COLOR.
3. FILL SLOTS AND HOLES AROUND ANCHOR BOLTS WITH NONHARDENING CAULKING COMPOUND OR ELASTIC JOINT SEALER.
4. ANCHOR BOLTS SHALL BE UNPAINTED ASTM F 1554, GRADE 105 GALVANIZED STEEL. PLATE WASHERS SHALL BE UNPAINTED ASTM A 709, GRADE 36 GALVANIZED STEEL. NUTS SHALL BE UNPAINTED ASTM A 563 GALVANIZED STEEL.
5. ELASTOMERIC BEARINGS SHALL CONFORM TO M 251 AND THE ELASTOMER SHALL BE 60 DUROMETER NEOPRENE. SHIMS SHALL BE 11 GAGE STEEL.
6. THE BASE PLATE AND MASONRY PLATE SHALL BE FACTORY VULCANIZED TO THE ELASTOMERIC BEARING, AND BEARINGS ARE TO BE SHIPPED ASSEMBLED AS UNITS.
7. CONTRACTOR SHALL TOUCH UP SOLE PLATE PAINT SYSTEM AFTER WELDING THE SOLE PLATE TO THE GIRDER.

Unofficial Website Copy

N:\31896-002\CADD\BRIDGE\BB304_ITG.DGN

DELAWARE DEPARTMENT OF TRANSPORTATION	ADDENDUMS / REVISIONS	SCALE AS NOTED	NEW CASTLE INDUSTRIAL TRACK TRAIL, PHASE 3	CONTRACT T201330009	BRIDGE NO. X	FIXED BEARING DETAILS – PIERS 15 AND 17	BB-304
				COUNTY NEW CASTLE	DESIGNED BY: NAH		SHEET NO. 144
					CHECKED BY: WAG		TOTAL SHTS. 207

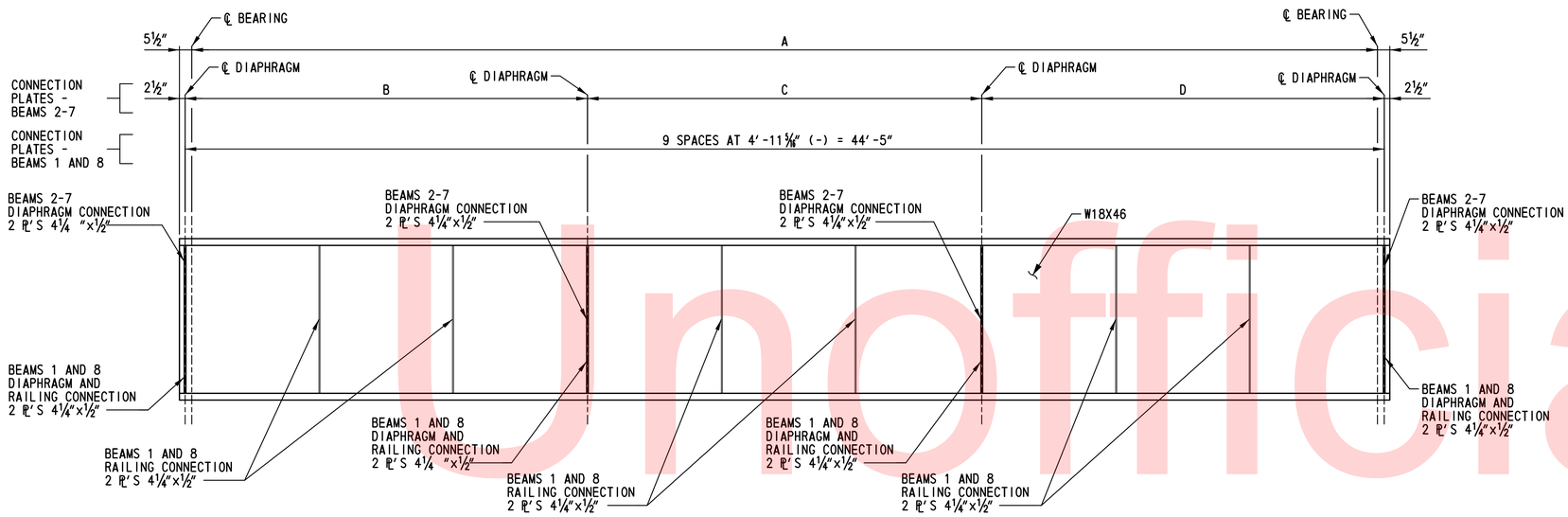

BEAM ELEVATION - SPANS 1-4

SCALE: NOT TO SCALE

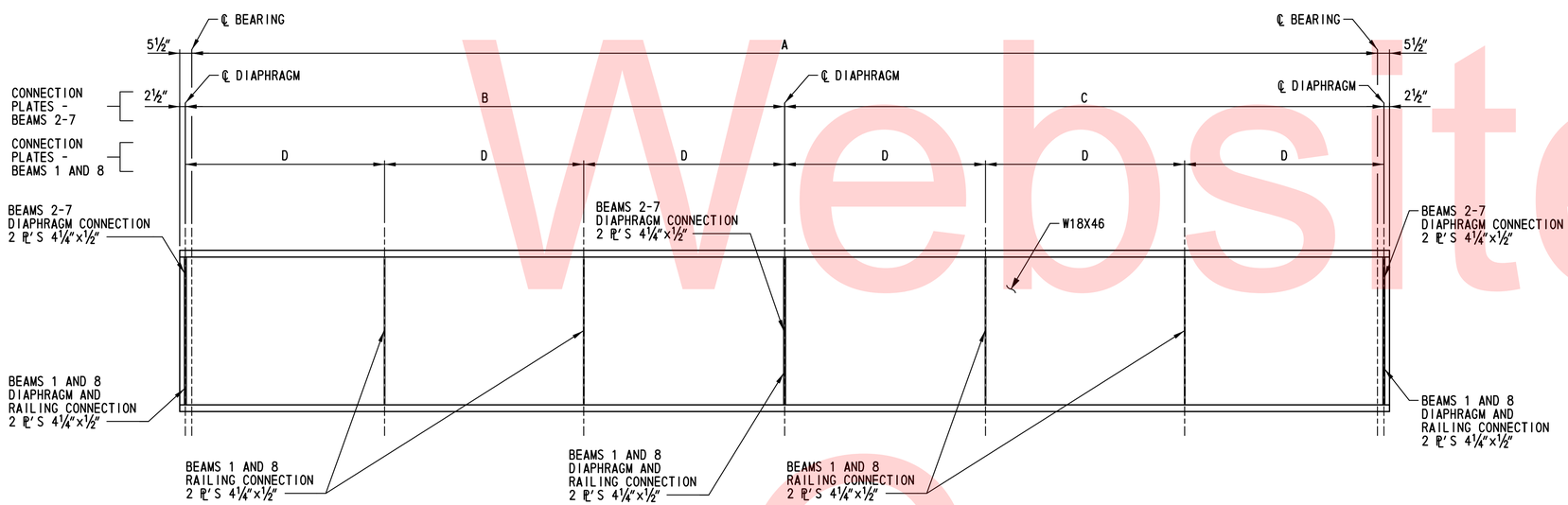

BEAM ELEVATION - SPANS 5-14

SCALE: NOT TO SCALE

BEAM ELEVATION SCHEDULE - SPANS 1-4

BEAM	A	B	C	D
1	44'-0"	14'-10"	14'-10"	14'-10"
2	44'-0"	14'-10"	14'-10"	14'-10"
3	44'-0"	14'-10"	14'-10"	14'-10"
4	44'-0"	14'-10"	14'-10"	14'-10"
5	44'-0"	14'-10"	14'-10"	14'-10"
6	44'-0"	14'-10"	14'-10"	14'-10"
7	44'-0"	14'-10"	14'-10"	14'-10"
8	44'-0"	14'-10"	14'-10"	14'-10"

BEAM ELEVATION SCHEDULE - SPANS 5-8

BEAM	A	B	C	D
1	28'-8 5/8"			4'-10 7/16"
2	28'-7 1/16" (+)	14'-6 3/16" (-)	14'-6 3/16" (-)	
3	28'-5 3/16" (+)	14'-5 5/8" (-)	14'-5 5/8" (-)	
4	28'-3 5/16" (+)	14'-4 11/16" (-)	14'-4 11/16" (-)	
5	28'-1 7/16" (+)	14'-3 3/4" (-)	14'-3 3/4" (-)	
6	27'-11 9/16" (+)	14'-2 13/16" (-)	14'-2 13/16" (-)	
7	27'-9 3/4" (-)	14'-1 7/8" (-)	14'-1 7/8" (-)	
8	27'-8 3/16" (-)			4'-8 3/8" (-)

BEAM ELEVATION SCHEDULE - SPANS 9-14

BEAM	A	B	C	D
1	29'-7 7/8" (-)			5'-0 5/16"
2	29'-9 5/8" (-)	15'-1 13/16" (-)	15'-1 13/16" (-)	
3	29'-11 11/16" (+)	15'-2 7/8" (-)	15'-2 7/8" (-)	
4	30'-1 13/16" (-)	15'-3 7/8" (-)	15'-3 7/8" (-)	
5	30'-3 7/8" (+)	15'-4 15/16" (+)	15'-4 15/16" (+)	
6	30'-6" (-)	15'-6" (+)	15'-6" (+)	
7	30'-8 1/16" (+)	15'-7 1/16"	15'-7 1/16"	
8	30'-9 13/16" (+)			5'-2 5/8" (+)

NOTES:

1. STRUCTURAL STEEL SHALL BE AASHTO M270 (ASTM A 709) GRADE 50W.
2. FOR INTERMEDIATE AND END DIAPHRAGM CONNECTION PLATE DETAILS, SEE DWG. NO. BM-304.
3. FOR RAILING CONNECTION PLATE DETAILS, SEE DWG. NOS. RL-301 AND RL-302.
4. FOR BEAM NUMBERING AND SPAN NUMBERING, SEE DWG. NOS. FR-301 THRU FR-303.
5. BEAM ENDS, BEARING STIFFENERS, AND CONNECTION PLATES ARE REQUIRED TO BE VERTICAL UNDER FULL DEAD LOAD.

Unofficial Website Copy

N:\31896-002\CADD\BRIDGE\BM301_LTG.DGN

DELAWARE DEPARTMENT OF TRANSPORTATION	ADDENDUMS / REVISIONS	SCALE: NONE	NEW CASTLE INDUSTRIAL TRACK TRAIL, PHASE 3	CONTRACT T201330009	BRIDGE NO. X	BEAM ELEVATIONS – 1	BM-301
				COUNTY NEW CASTLE	DESIGNED BY: NAH		SHEET NO. 145
					CHECKED BY: WAG		TOTAL SHTS. 207

BEAM ELEVATION SCHEDULE - SPAN 15				
BEAM	A	B	C	D
1	40'-2⅜"	13'-6¹³⁄₁₆" (-)	13'-6¹³⁄₁₆" (-)	13'-6¹³⁄₁₆" (-)
2	40'-2⅜"	13'-6¹³⁄₁₆" (-)	13'-6¹³⁄₁₆" (-)	13'-6¹³⁄₁₆" (-)
3	40'-2⅜"	13'-6¹³⁄₁₆" (-)	13'-6¹³⁄₁₆" (-)	13'-6¹³⁄₁₆" (-)
4	40'-2⅜"	13'-6¹³⁄₁₆" (-)	13'-6¹³⁄₁₆" (-)	13'-6¹³⁄₁₆" (-)
5	40'-2⅜"	13'-6¹³⁄₁₆" (-)	13'-6¹³⁄₁₆" (-)	13'-6¹³⁄₁₆" (-)
6	40'-2⅜"	13'-6¹³⁄₁₆" (-)	13'-6¹³⁄₁₆" (-)	13'-6¹³⁄₁₆" (-)

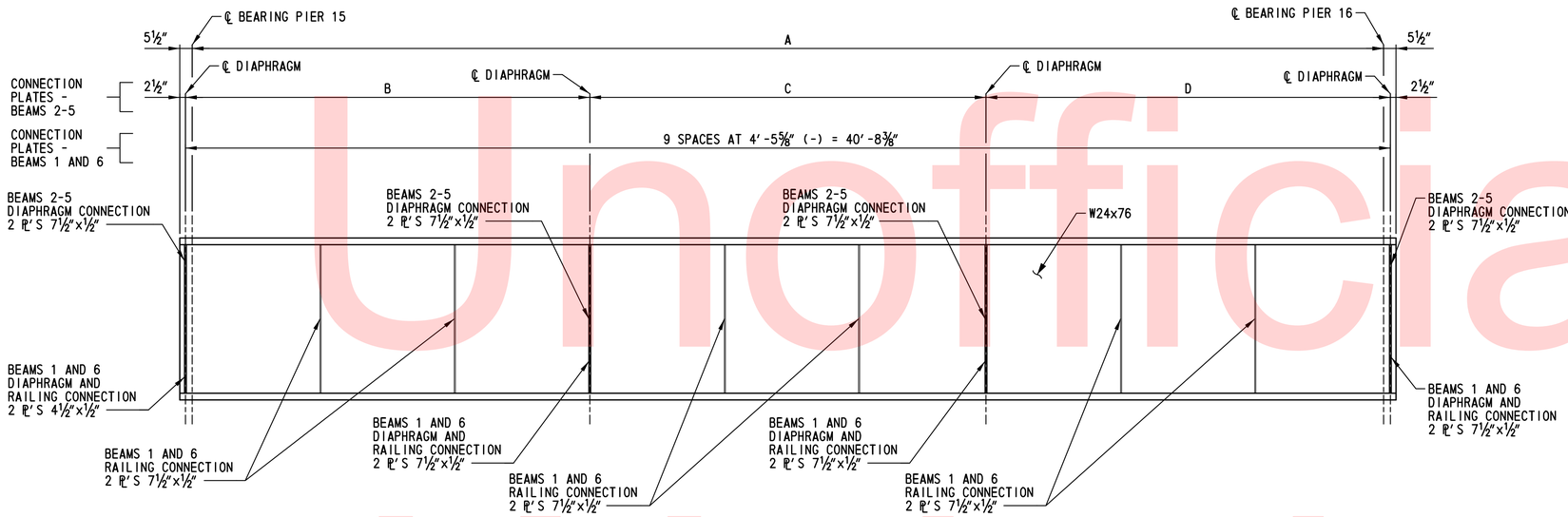

BEAM ELEVATION - SPAN 15

SCALE: NOT TO SCALE

NOTES:

1. STRUCTURAL STEEL SHALL BE AASHTO M270 (ASTM A 709) GRADE 50W.
2. FOR INTERMEDIATE AND END DIAPHRAGM CONNECTION PLATE DETAILS, SEE DWG. BM-304.
3. FOR RAILING CONNECTION PLATE DETAILS, SEE DWG. NOS. RL-301 AND RL-302.
4. FOR BEAM NUMBERING AND SPAN NUMBERING, SEE DWG. NO. FR-304.
5. BEAM ENDS, BEARING STIFFENERS, AND CONNECTION PLATES ARE REQUIRED TO BE VERTICAL UNDER FULL DEAD LOAD.

Unofficial Website Copy

N:\31896-002\CADD\BRIDGE\BM302_LTG.DGN

DELAWARE DEPARTMENT OF TRANSPORTATION	ADDENDUMS / REVISIONS	SCALE: NONE	NEW CASTLE INDUSTRIAL TRACK TRAIL, PHASE 3	CONTRACT T201330009	BRIDGE NO. X	BEAM ELEVATIONS - 2	BM-302
				COUNTY NEW CASTLE	DESIGNED BY: NAH		SHEET NO. 146
					CHECKED BY: WAG		TOTAL SHTS. 207

BEAM ELEVATION SCHEDULE - SPAN 17					
BEAM	A	B	C	D	E
1	54′-1″	13′-7⅞″	13′-7⅞″	13′-7⅞″	13′-4⅜″
2	52′-8⅞″ (+)	13′-7⅞″	13′-7⅞″	13′-7⅞″	12′-0¼″ (+)
3	51′-3¹⁄₁₆″ (+)	13′-7⅞″	13′-7⅞″	13′-7⅞″	10′-6⁹⁄₁₆″ (+)
4	49′-9½″ (+)	13′-7⅞″	13′-7⅞″	13′-7⅞″	9′-0⅞″ (+)
5	48′-3¹³⁄₁₆″ (+)	13′-7⅞″	13′-7⅞″	13′-7⅞″	7′-7⅜″ (+)
6	46′-11¹¹⁄₁₆″ (+)	13′-7⅞″	13′-7⅞″	13′-7⅞″	6′-3¹⁄₁₆″ (+)

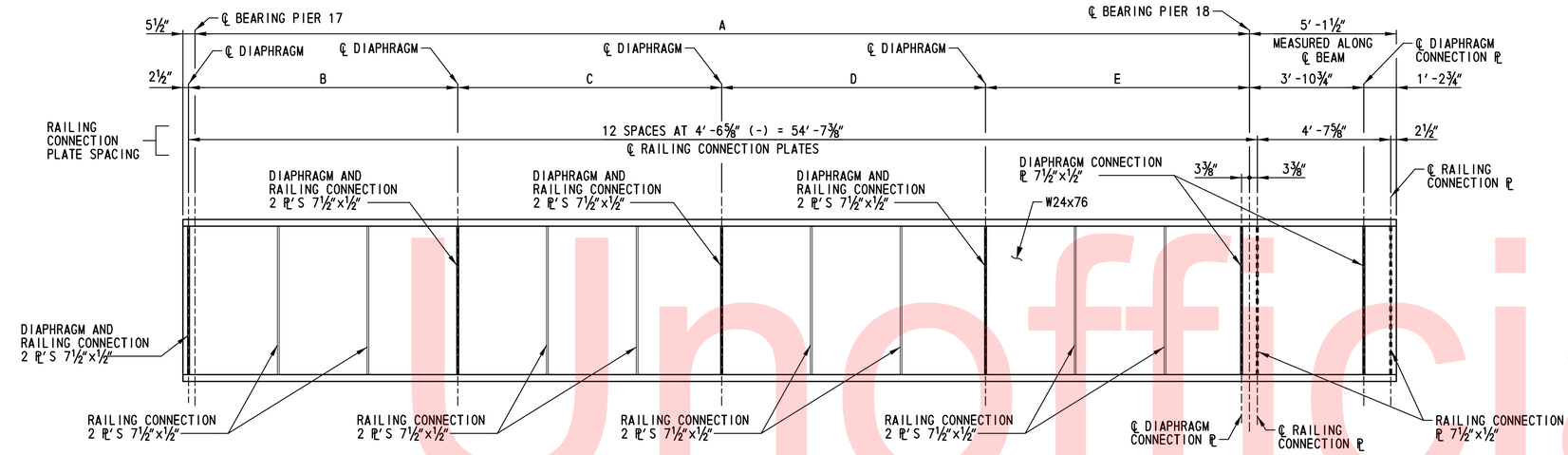

BEAM 1 ELEVATION - SPAN 17

SCALE: NOT TO SCALE

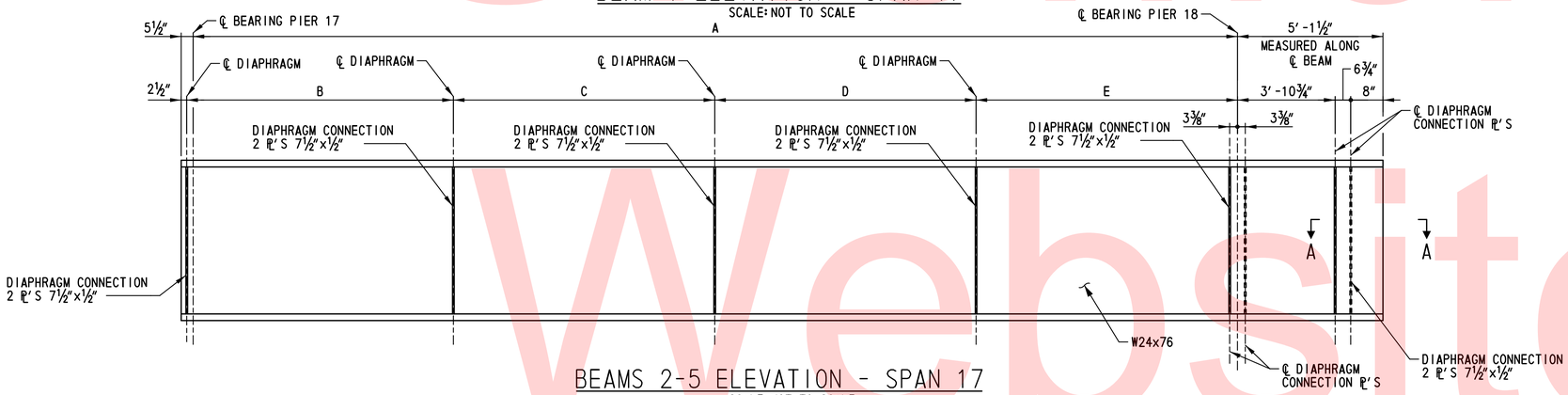

BEAMS 2-5 ELEVATION - SPAN 17

SCALE: NOT TO SCALE

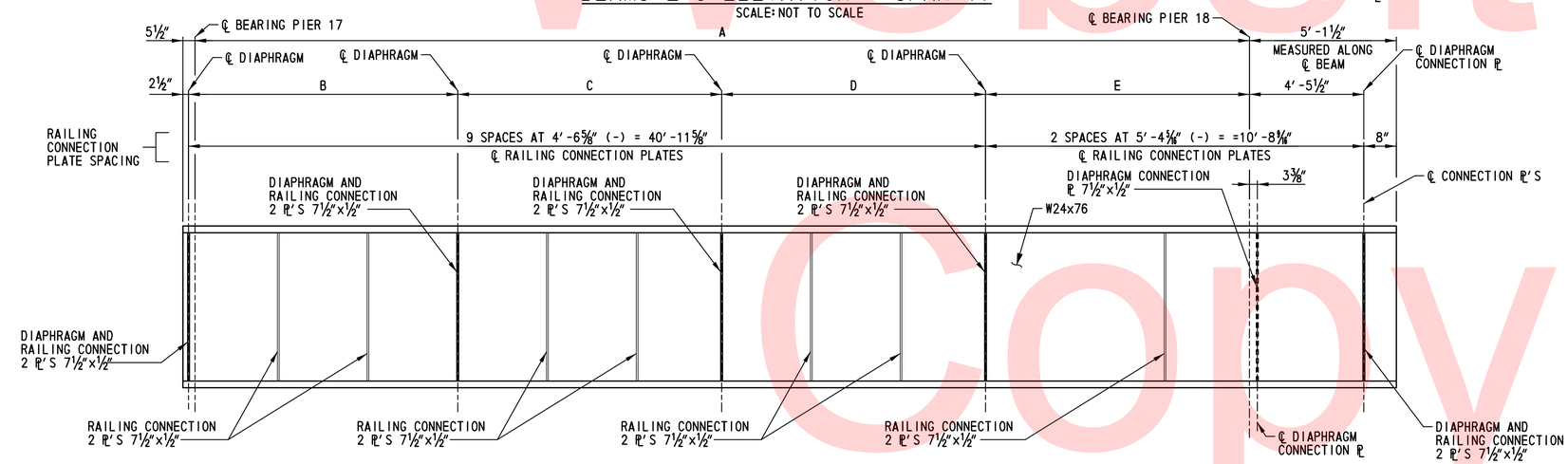

BEAM 6 ELEVATION - SPAN 17

SCALE: NOT TO SCALE

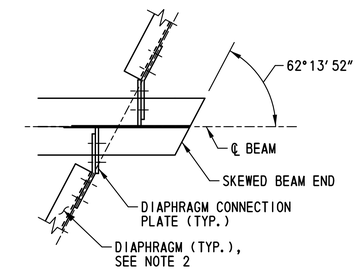

SECTION A-A

SCALE: NOT TO SCALE

NOTES:

1. STRUCTURAL STEEL SHALL BE AASHTO M270 (ASTM A 709) GRADE 50W.
2. FOR INTERMEDIATE AND END DIAPHRAGM CONNECTION PLATE DETAILS, SEE DWG. BM-304.
3. FOR RAILING CONNECTION PLATE DETAILS, SEE DWG. NOS. RL-301 AND RL-302.
4. FOR BEAM NUMBERING AND SPAN NUMBERING, SEE DWG. NO. FR-304.
5. BEAM ENDS, BEARING STIFFENERS, AND CONNECTION PLATES ARE REQUIRED TO BE VERTICAL UNDER FULL DEAD LOAD.

Unofficial Website Copy

N:\31896-002\CADD\BRIDGE\BM303_ITG.DGN

DELAWARE DEPARTMENT OF TRANSPORTATION	ADDENDUMS / REVISIONS	SCALE: NONE	NEW CASTLE INDUSTRIAL TRACK TRAIL, PHASE 3	CONTRACT T201330009	BRIDGE NO. X	BEAM ELEVATIONS – 3	BM-303
				COUNTY NEW CASTLE	DESIGNED BY: NAH		SHEET NO. 147
					CHECKED BY: WAG		TOTAL SHTS. 207

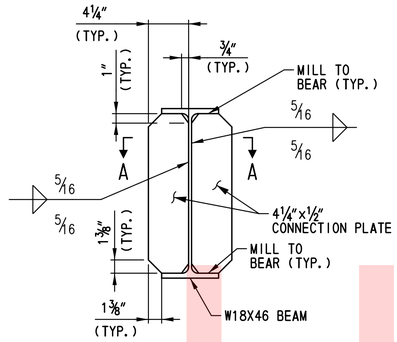

RAILING, INTERMEDIATE AND END
DIAPHRAGM CONNECTION PLATES - SPANS 1-14
SCALE: 1½"=1'-0"

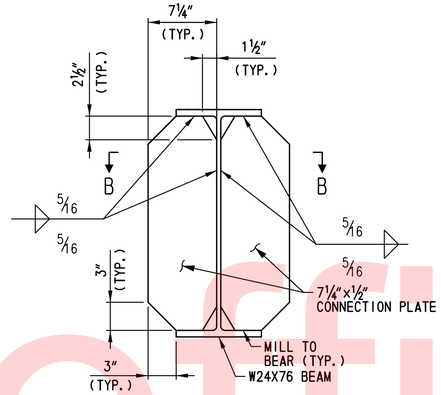

RAILING, INTERMEDIATE AND END
DIAPHRAGM CONNECTION PLATES - SPANS 15 AND 17
SCALE: 1½"=1'-0"

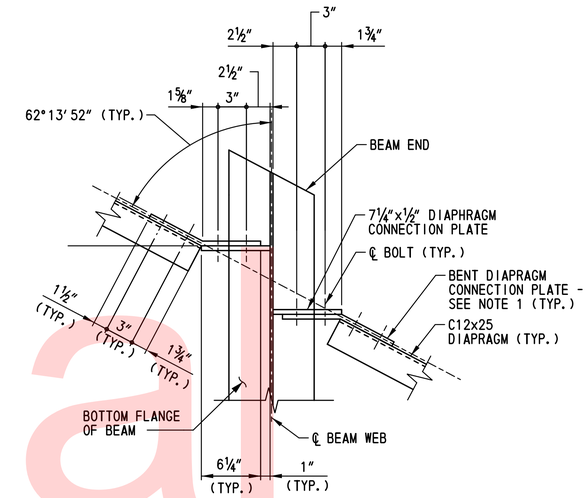

SECTION C-C
SCALE: 1½"=1'-0"

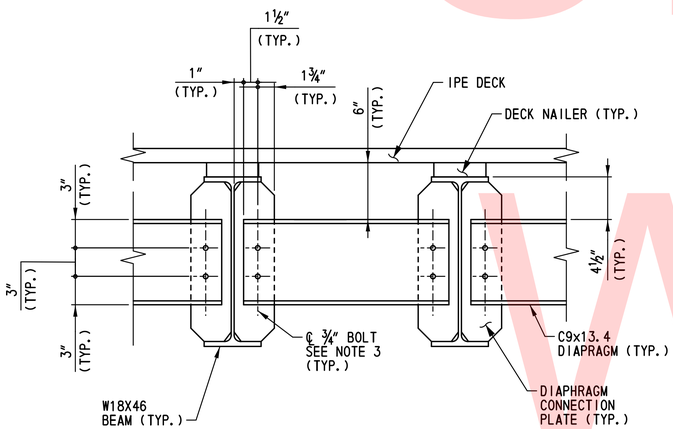

INTERMEDIATE AND END
DIAPHRAGM DETAIL - SPANS 1-14
SCALE: 1½"=1'-0"

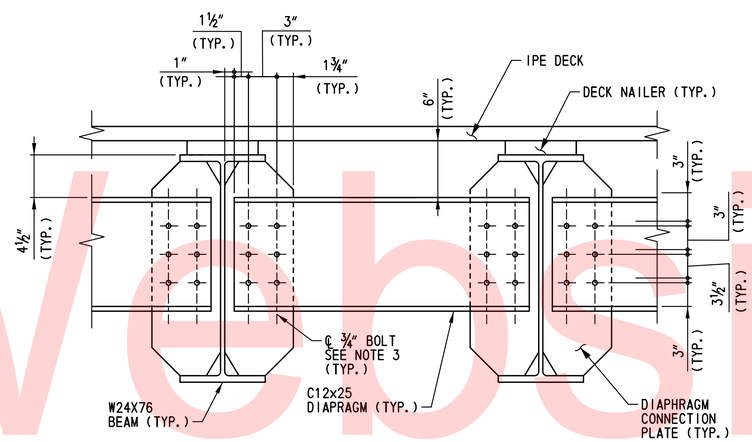

INTERMEDIATE AND END
DIAPHRAGM DETAIL - SPAN 15
SCALE: 1½"=1'-0"

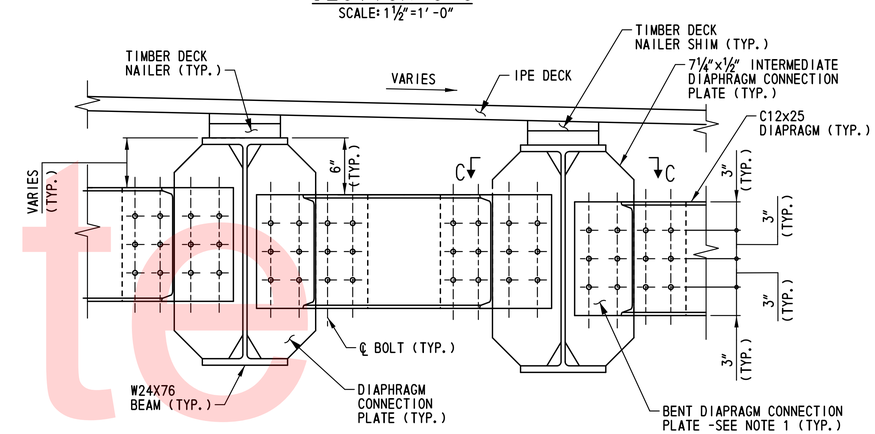

INTERMEDIATE AND END
DIAPHRAGM DETAIL - SPAN 17
SCALE: 1½"=1'-0"

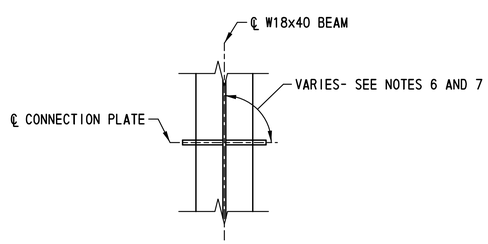

SECTION A-A
SCALE: 1½"=1'-0"

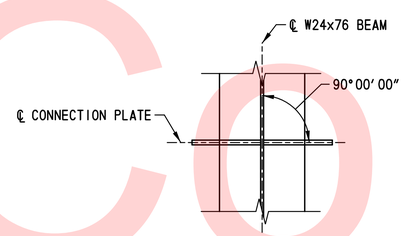

SECTION B-B
SCALE: 1½"=1'-0"

NOTES:

1. BENT CONENCTION PLATES ARE ONLY REQUIRED AT PIER 18 AND LAST DIAPHRAGM AT TIE-IN TO EXISTING BRIDGE. ALL OTHER CONNECTIONS IN SPAN 17 WILL BE AS SHOWN FOR THE DIAPHRAGM DETAIL - SPAN 15, EXCEPT THAT DIAPHRGMS ARE STEPPED TO ACCOMDATE DECK SLOPE AS SHOWN IN DIAPRARGM DETAIL - SPAN 17. OMIT BENT CONNECTION PLATE AT EXTERIOR FACE OF EXTERIOR BEAMS.
2. FOR DIAPHRAGM LOCATIONS, SEE DWG. NOS. FR-301 THRU FR-304.
3. ALL BOLTS TO BE ¾" DIA. HIGH STRENGTH BOLTS CONFORMING TO A325, HOT-DIPPED GALVANIZED. ALL BOLT HOLES SHALL BE 15/16" DIA.
4. THE MINIMUM ACCEPTABLE EDGE DISTANCE FOR ANY HOLE SHALL BE 1½".
5. BOLTS NOT SHOWN IN DIAPHRAGMS AND CONNECTION PLATES.
6. CONNECTION PLATES FOR END DIAPHRAGMS SHALL MATCH ANGLE BETWEEN ℄ BEARING AND ℄ BEAM AS SHOWN IN DWG. NOS. FR-301 THROUGH FR-303. CONNECTION PLATES FOR ALL INTERMEDIATE DIAPHRAGMS SHALL BE PLACED AT 90°00'00" TO ℄ BEAM.
7. FOR RAILING DETAILS, SEE RL-301. ALL RAILING CONNECTION PLATES SHALL BE PLACED PERPENDICULAR TO BEAM WEB.
8. STEEL TUBE STRINGERS NOT SHOWN FOR CLARITY. FOR STEEL TUBE STRINGER DETAILS, REFER TO DWG. NO. SD-301.

Unofficial Website Copy

N:\31896-002\CADD\BRIDGE\BM304_ITG.DGN

DELAWARE DEPARTMENT OF TRANSPORTATION	ADDENDUMS / REVISIONS	SCALE 0 1 2 1½"=1'-0"	NEW CASTLE INDUSTRIAL TRACK TRAIL, PHASE 3	CONTRACT T201330009 / COUNTY NEW CASTLE	BRIDGE NO. X / DESIGNED BY: NAH / CHECKED BY: WAG	DIAPHRAGM DETAILS	BM-304 / SHEET NO. 148 / TOTAL SHTS. 207

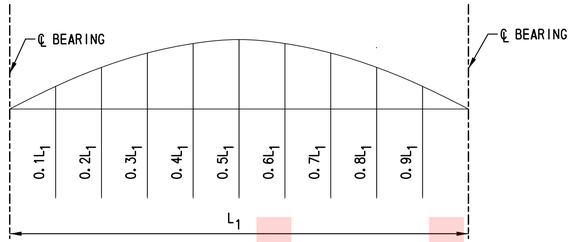

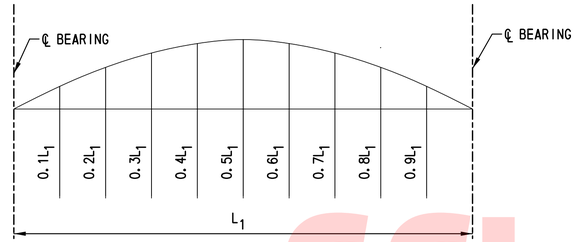

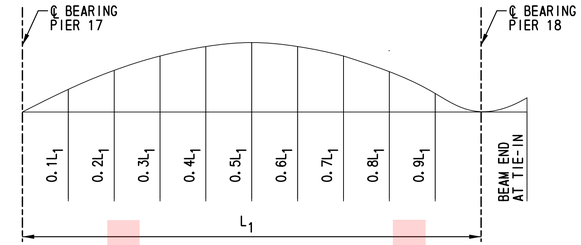

SPANS 1-4

DEFLECTION AND TOTAL CAMBERS (IN.)

LOCATION		℄ BRG.	0.1L1	0.2L1	0.3L1	0.4L1	0.5L1	0.6L1	0.7L1	0.8L1	0.9L1	℄ BRG.
BEAMS 1, 2,4,5,7,8	DLS	0					3/16					0
	SDL	0					3/16					0
	TD&C	0					3/8					0

LOCATION		℄ BRG.	0.1L1	0.2L1	0.3L1	0.4L1	0.5L1	0.6L1	0.7L1	0.8L1	0.9L1	℄ BRG.
BEAMS 3 & 6	DLS	0					3/16					0
	SDL	0					1/4					0
	TD&C	0					1/2					0

SPANS 5-8

DEFLECTION AND TOTAL CAMBERS (IN.)

LOCATION		℄ BRG.	0.1L1	0.2L1	0.3L1	0.4L1	0.5L1	0.6L1	0.7L1	0.8L1	0.9L1	℄ BRG.
BEAMS 1,6-8	DLS	0					1/16					0
	SDL	0					0					0
	TD&C	0					1/16					0

LOCATION		℄ BRG.	0.1L1	0.2L1	0.3L1	0.4L1	0.5L1	0.6L1	0.7L1	0.8L1	0.9L1	℄ BRG.
BEAMS 3-5	DLS	0					1/16					0
	SDL	0					1/16					0
	TD&C	0					1/16					0

SPANS 9-14

DEFLECTION AND TOTAL CAMBERS (IN.)

LOCATION		℄ BRG.	0.1L1	0.2L1	0.3L1	0.4L1	0.5L1	0.6L1	0.7L1	0.8L1	0.9L1	℄ BRG.
BEAMS 1, 2,4,5,7,8	DLS	0					1/16					0
	SDL	0					1/16					0
	TD&C	0					1/16					0

LOCATION		℄ BRG.	0.1L1	0.2L1	0.3L1	0.4L1	0.5L1	0.6L1	0.7L1	0.8L1	0.9L1	℄ BRG.
BEAMS 3 & 6	DLS	0					1/16					0
	SDL	0					1/16					0
	TD&C	0					1/8					0

SPAN 15

DEFLECTION AND TOTAL CAMBERS (IN.)

LOCATION		℄ BRG.	0.1L1	0.2L1	0.3L1	0.4L1	0.5L1	0.6L1	0.7L1	0.8L1	0.9L1	℄ BRG.
BEAMS 1-6	DLS	0					1/16					0
	SDL	0					1/16					0
	TD&C	0					1/8					0

SPAN 17

DEFLECTION AND TOTAL CAMBERS (IN.)

LOCATION		℄ BRG. PIER 17	0.1L1	0.2L1	0.3L1	0.4L1	0.5L1	0.6L1	0.7L1	0.8L1	0.9L1	℄ BRG. PIER 18	BEAM END AT TIE-IN
BEAM 1	DLS	0					1/4					0	0
	SDL	0					3/16					0	0
	TD&C	0					7/16					0	0

LOCATION		℄ BRG. PIER 17	0.1L1	0.2L1	0.3L1	0.4L1	0.5L1	0.6L1	0.7L1	0.8L1	0.9L1	℄ BRG. PIER 18	BEAM END AT TIE-IN
BEAM 2	DLS	0					3/16					0	0
	SDL	0					3/16					0	0
	TD&C	0					7/16					0	0

LOCATION		℄ BRG. PIER 17	0.1L1	0.2L1	0.3L1	0.4L1	0.5L1	0.6L1	0.7L1	0.8L1	0.9L1	℄ BRG. PIER 18	BEAM END AT TIE-IN
BEAMS 3-4	DLS	0					3/16					0	0
	SDL	0					1/8					0	0
	TD&C	0					5/16					0	0

LOCATION		℄ BRG. PIER 17	0.1L1	0.2L1	0.3L1	0.4L1	0.5L1	0.6L1	0.7L1	0.8L1	0.9L1	℄ BRG. PIER 18	BEAM END AT TIE-IN
BEAM 5	DLS	0					1/8					0	0
	SDL	0					1/8					0	0
	TD&C	0					5/16					0	0

LOCATION		℄ BRG. PIER 17	0.1L1	0.2L1	0.3L1	0.4L1	0.5L1	0.6L1	0.7L1	0.8L1	0.9L1	℄ BRG. PIER 18	BEAM END AT TIE-IN
BEAM 6	DLS	0					1/8					0	0
	SDL	0					1/8					0	0
	TD&C	0					1/4					0	0

NOTES:

1. BEAM DEAD LOAD DEFLECTIONS AND CAMBERS ARE SHOWN FOR INFORMATION ONLY. THE CONTRACTOR SHALL INSTALL BEAMS CAMBER UP AND INSTALL SHIMS BETWEEN THE DECK BOARDS AND BEAM NAILER AS NECESSARY TO MATCH PROPOSED GRADE. FOR DECK DETAILS, REFER TO DWG. NOS. DK-301 AND DK-302.
2. CAMBERS ARE SHOWN IN INCHES.
3. POSITIVE DEFLECTIONS ARE MEASURED IN THE DOWNWARD DIRECTION.

LEGEND:

DLS - DENOTES DEFLECTION DUE TO STRUCTURAL STEEL

SDL - DENOTES DEFLECTION DUE TO DECK, RAILING, STRINGERS

TD&C - DENOTES TOTAL DEAD LOAD DEFLECTION AND CAMBER

Unofficial Website Copy

N:\31896-002\CADD\BRIDGE\CT301_ITG.DGN

DELAWARE DEPARTMENT OF TRANSPORTATION

ADDENDUMS / REVISIONS

SCALE: NONE

NEW CASTLE INDUSTRIAL TRACK TRAIL, PHASE 3

CONTRACT T201330009 | COUNTY NEW CASTLE | BRIDGE NO. X | DESIGNED BY: NAH | CHECKED BY: WAG

CAMBER DIAGRAMS

CT-301 | SHEET NO. 149 | TOTAL SHTS. 207

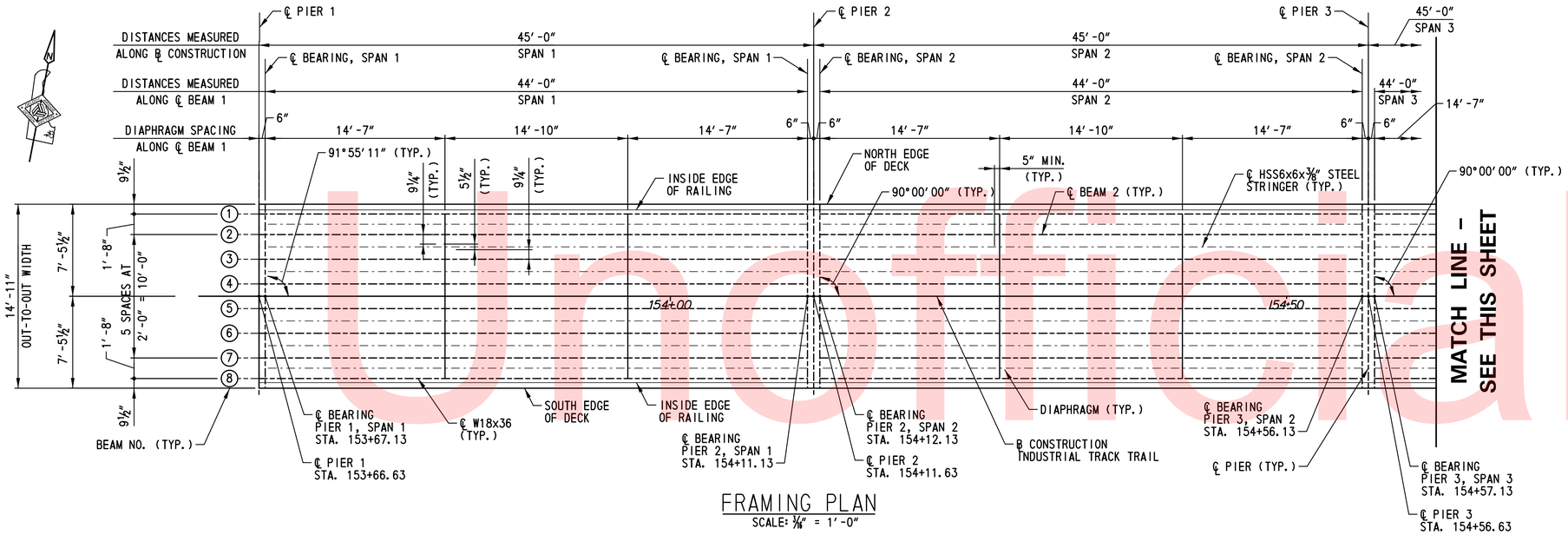

FRAMING PLAN

SCALE: 3/16″ = 1′-0″

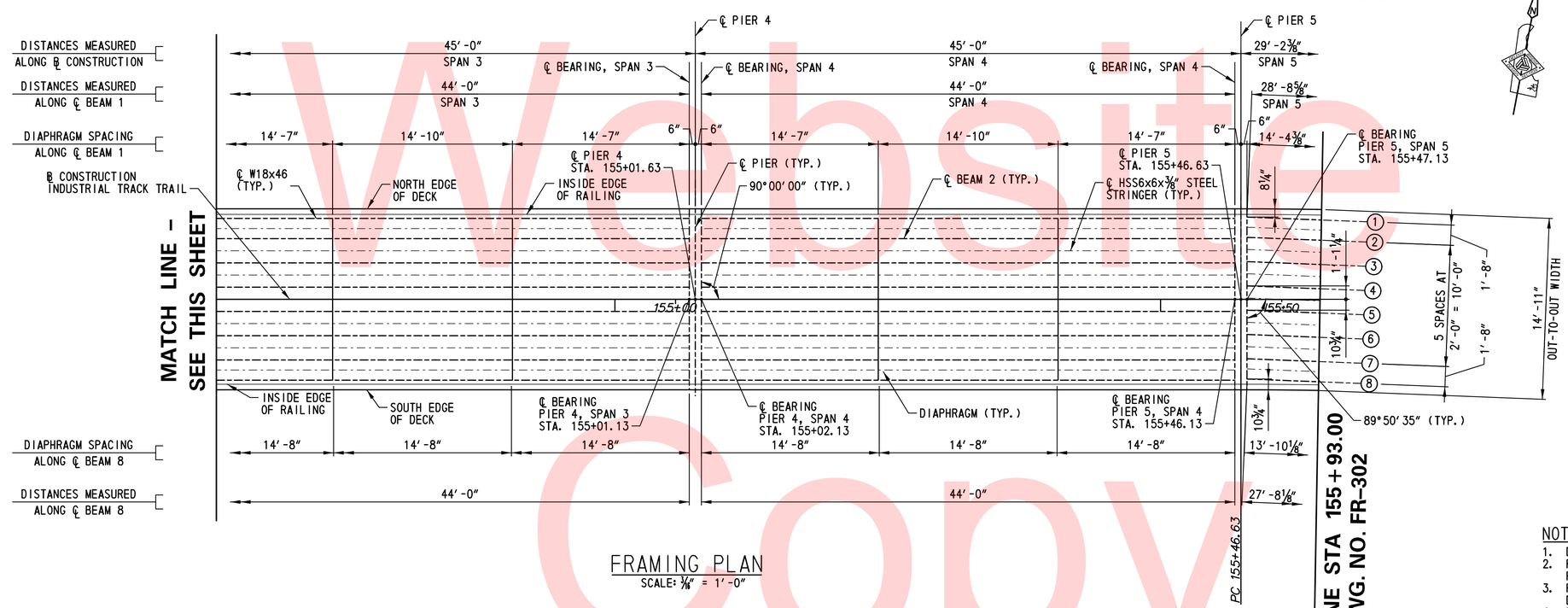

FRAMING PLAN

SCALE: 3/16″ = 1′-0″

NOTES:

1. DIAPHRAGMS ARE PERPENDICULAR TO BEAMS.
2. RAILING POST AND CONNECTION PLATES ARE NOT SHOWN. FOR RAILING DETAILS, SEE DWG. NO. RL-301.
3. FOR CONNECTION PLATE AND DIAPHRAGM DETAILS, SEE DWG. NO. BM-304.
4. FOR BEAM ELEVATIONS, SEE DWG. NO. BM-301.
5. FOR HSS6x6x⅜ STRINGER DETAILS, SEE DWG. NO. SD-301.

Unofficial Website Copy

N:\31896-002\CADD\BRIDGE\FR301_LTG.DGN

DELAWARE DEPARTMENT OF TRANSPORTATION	ADDENDUMS / REVISIONS	SCALE 0 5 11 16 3/16 = 1′-0″	NEW CASTLE INDUSTRIAL TRACK TRAIL, PHASE 3	CONTRACT T201330009 / COUNTY NEW CASTLE	BRIDGE NO. X / DESIGNED BY: NAH / CHECKED BY: WAG	DEEC BRIDGE FRAMING PLAN – 1

FR-301

SHEET NO. 150

TOTAL SHTS. 207

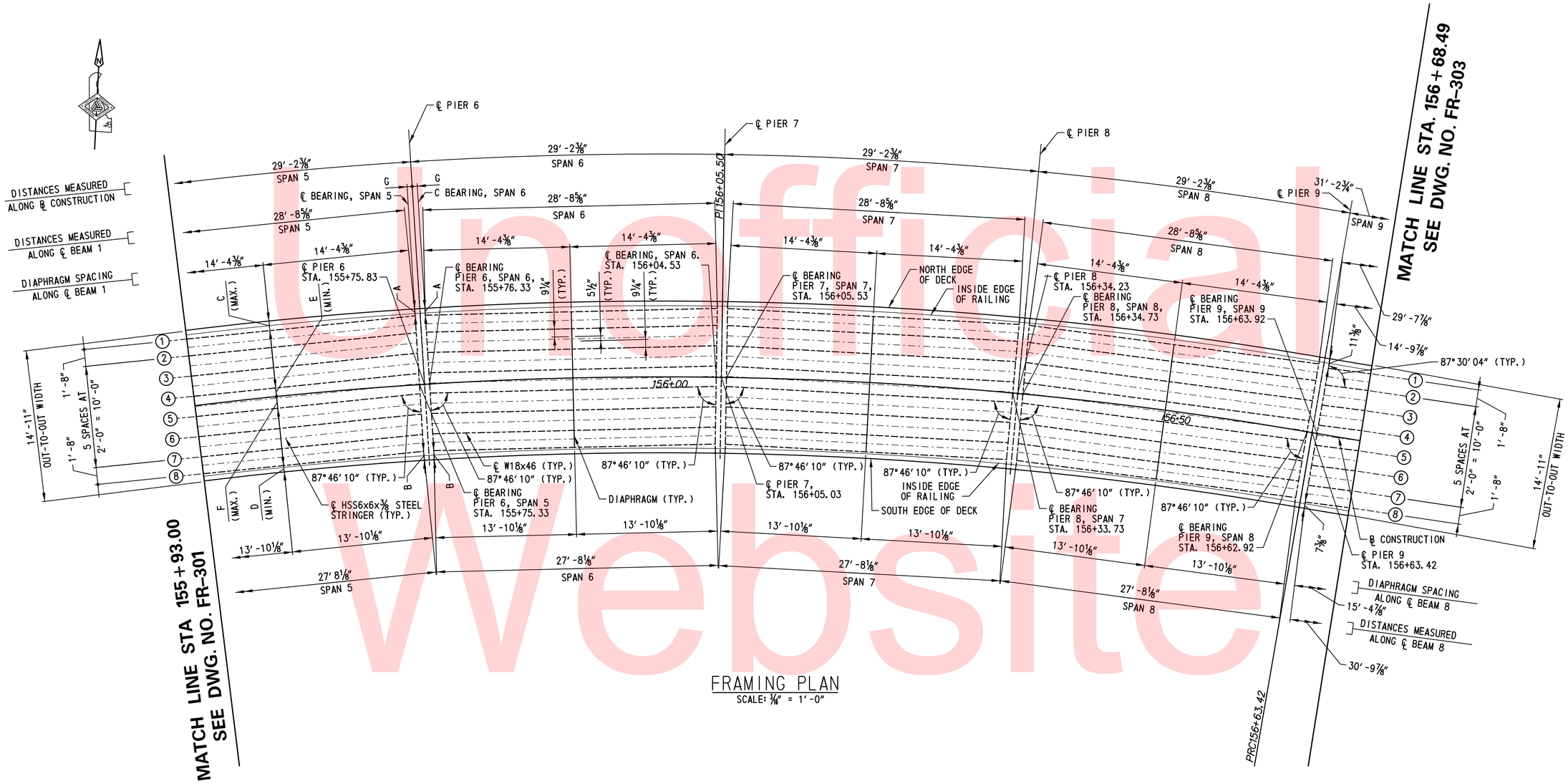

FRAMING PLAN
SCALE: 3/16″ = 1′-0″

DIMENSION REFERENCE TABLE - SEE NOTE 6	
DIMENSION	DIMENSION
A	0′-8¼″
B	0′-10⅝″
C	0′-11⅜″
D	0′-7⅝″
E	0′-10⅛″
F	1′-1⅞″
G	0′-6″

NOTES:

1. DIAPHRAGMS ARE PERPENDICULAR TO BEAMS.
2. RAILING POST AND CONNECTION PLATES ARE NOT SHOWN. FOR RAILING DETAILS, SEE DWG. NO. RL-301.
3. FOR CONNECTION PLATE AND DIAPHRAGM DETAILS, SEE DWG. NO. BM-304.
4. FOR BEAM ELEVATIONS, SEE DWG. NO. BM-301.
5. FOR HSS6x6x⅜ STRINGER DETAILS, SEE DWG. NO. SD-301.
6. THE TABULATED DIMENSIONS ARE TYPICAL FOR SPANS 5 THROUGH 8.

Unofficial Website Copy

N:\31896-002\CADD\BRIDGE\FR302_ITG.DGN

DELAWARE DEPARTMENT OF TRANSPORTATION	ADDENDUMS / REVISIONS	SCALE 0 5 11 16 3/16 = 1′-0″	NEW CASTLE INDUSTRIAL TRACK TRAIL, PHASE 3	CONTRACT T201330009	BRIDGE NO. X	DEEC BRIDGE FRAMING PLAN – 2	FR-302
				COUNTY NEW CASTLE	DESIGNED BY: NAH		SHEET NO. 151
					CHECKED BY: WAG		TOTAL SHTS. 207

DIMENSION REFERENCE TABLE - SEE NOTE 6	
DIMENSION	DIMENSION
H	0′-7⅜″
I	0′-11⅜″
J	0′-11⅜″
K	0′-7⅝″
L	0′-10⅛″
M	1′-1⅞″
N	0′-6″

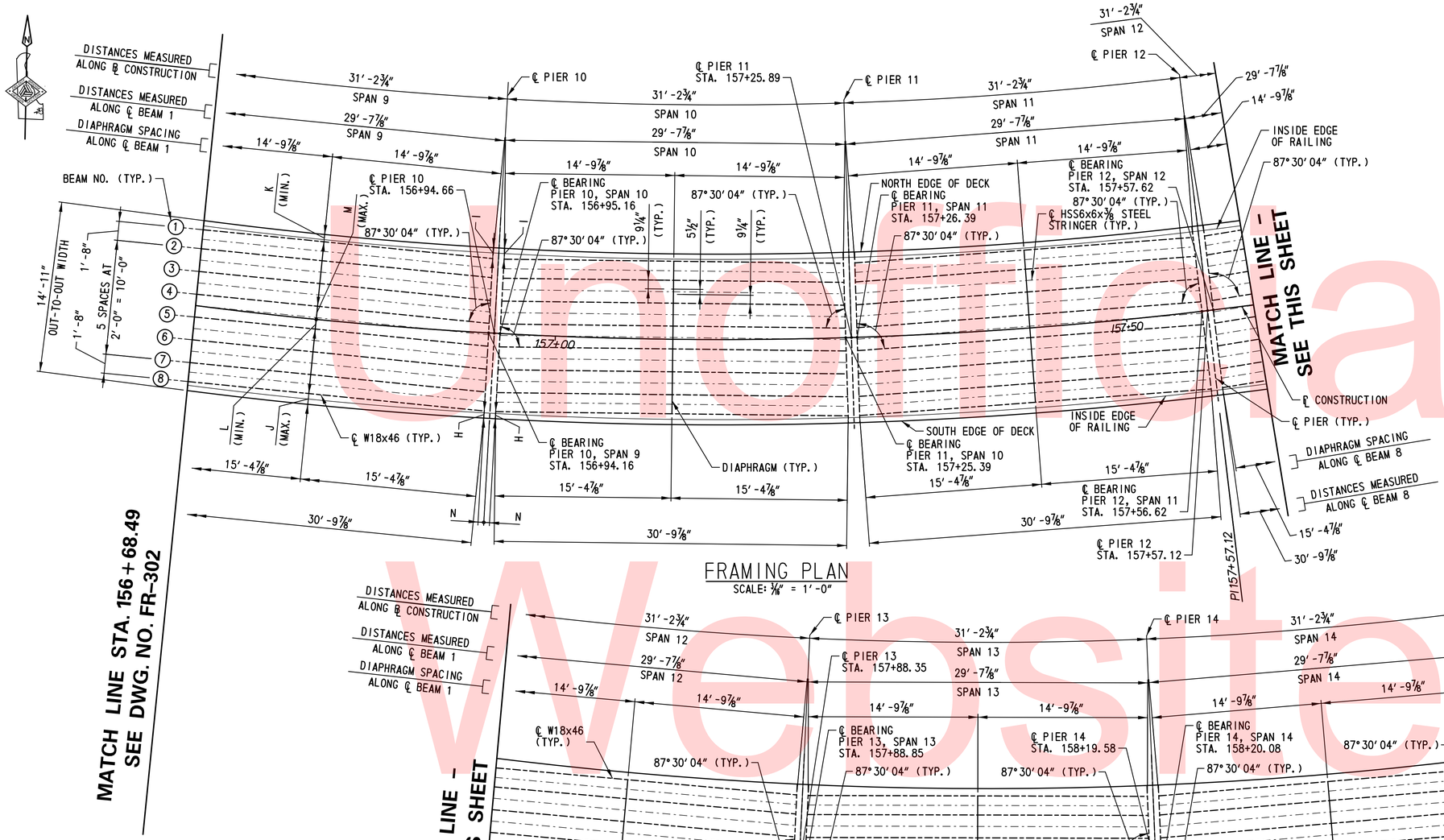

FRAMING PLAN
SCALE: 3/16″ = 1′-0″

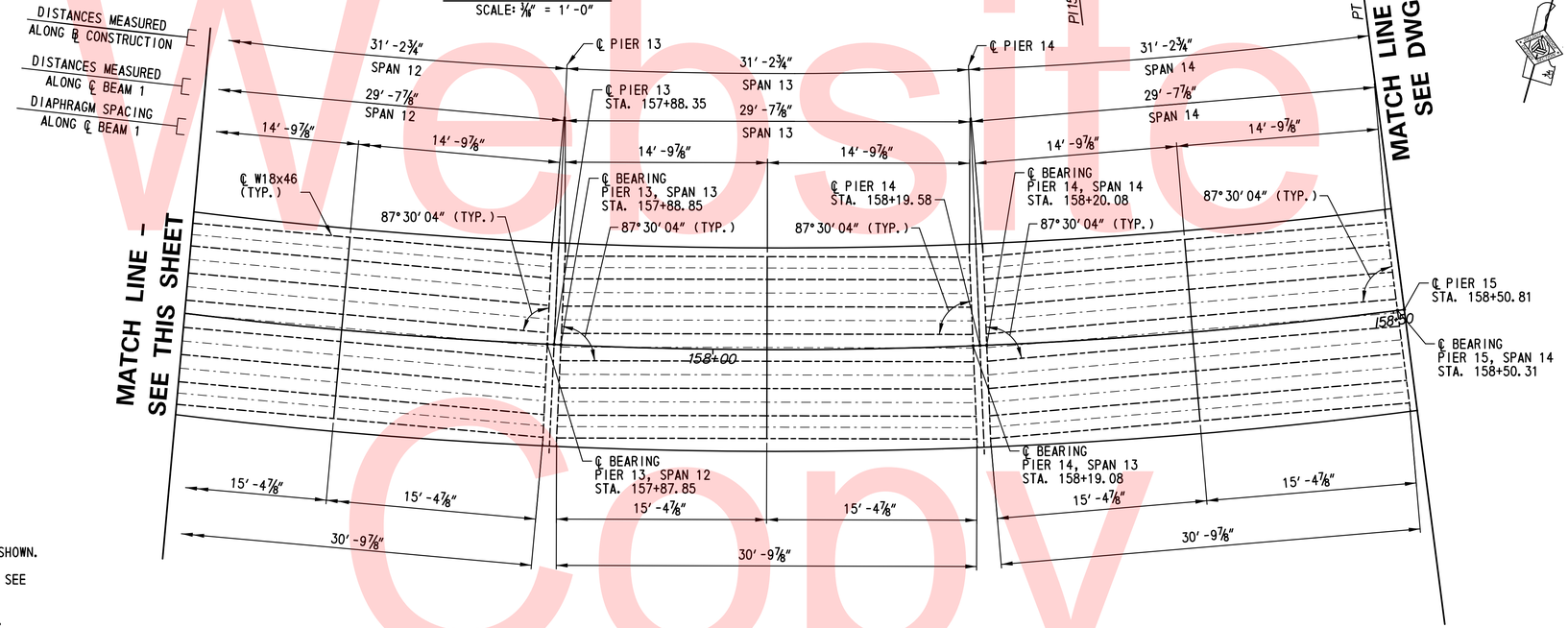

FRAMING PLAN
SCALE: 3/16″ = 1′-0″

NOTES:

1. DIAPHRAGMS ARE PERPENDICULAR TO BEAMS.
2. RAILING POST AND CONNECTION PLATES ARE NOT SHOWN. FOR RAILING DETAILS, SEE DWG. NO. RL-301.
3. FOR CONNECTION PLATE AND DIAPHRAGM DETAILS, SEE DWG. NO. BM-304.
4. FOR BEAM ELEVATIONS, SEE DWG. NO. BM-301.
5. FOR HSS6x6x⅜ STRINGER DETAILS, SEE DWG. NO. SD-301.
6. THE TABULATED DIMENSIONS ARE TYPICAL FOR SPANS 5 THROUGH 8.

Unofficial Website Copy

N:\31896-002\CADD\BRIDGE\FR303_ITG.DGN

DELAWARE DEPARTMENT OF TRANSPORTATION

ADDENDUMS / REVISIONS

SCALE 0 5 11 16 — 3/16 = 1′-0″

NEW CASTLE INDUSTRIAL TRACK TRAIL, PHASE 3

CONTRACT	BRIDGE NO.	X
T201330009	DESIGNED BY: NAH	
COUNTY	CHECKED BY: WAG	
NEW CASTLE		

DEEC BRIDGE FRAMING PLAN – 3

FR-303
SHEET NO. 152
TOTAL SHTS. 207

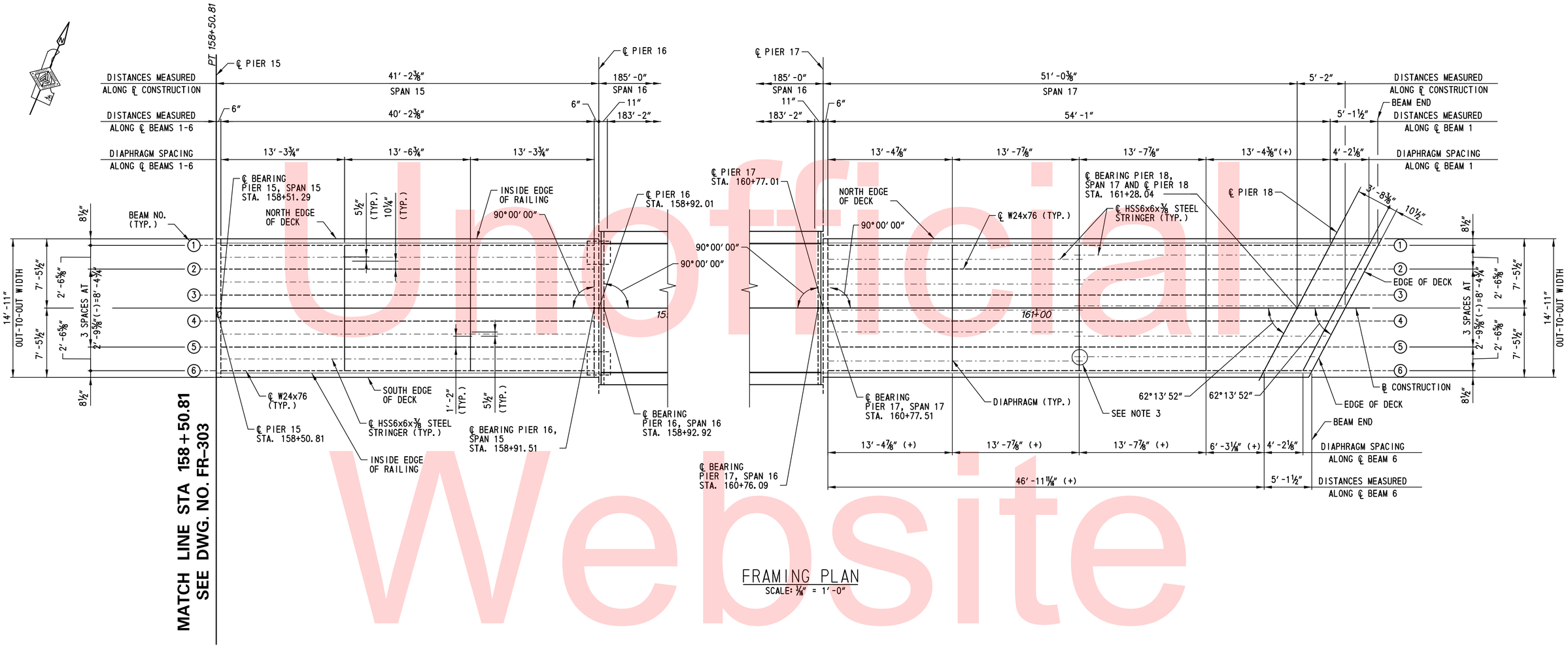

FRAMING PLAN
SCALE: 3/16″ = 1′-0″

NOTES:

1. DIAPHRAGMS ARE PERPENDICULAR TO BEAMS EXCEPT AS NOTED.
2. RAILING POST AND CONNECTION PLATES ARE NOT SHOWN. FOR RAILING DETAILS, SEE DWG. NO. RL-301.
3. HSS6x6x⅜ STRINGERS ALTERNATED EACH BETWEEN BEAM DIAPHRAGMS IN SPAN 17 AS SHOWN. EXTEND STRINGERS MIN. 6″ BEYOND DIAPHRGAM.
4. FOR CONNECTION PLATE AND DIAPHRAGM DETAILS, SEE DWG. NO. BM-304.
5. FOR BEAM ELEVATIONS, SEE DWG. NOS. BM-302 AND BM-303.
6. FOR HSS6x6x⅜ STRINGER DETAILS, SEE DWG. NO. SD-301.

Unofficial Website Copy

N:\31896-002\CADD\BRIDGE\FR304_ITG.DGN

DELAWARE DEPARTMENT OF TRANSPORTATION	ADDENDUMS / REVISIONS	SCALE 0 5 11 16 3/16 = 1′-0″	NEW CASTLE INDUSTRIAL TRACK TRAIL, PHASE 3	CONTRACT T201330009 / COUNTY NEW CASTLE	BRIDGE NO. X / DESIGNED BY: NAH / CHECKED BY: WAG	DEEC BRIDGE FRAMING PLAN – 4

FR-304
SHEET NO. 153
TOTAL SHTS. 207

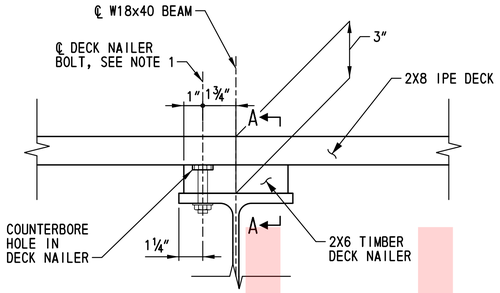

DECK TO BEAM CONNECTION DETAIL SPANS 1-14

SCALE: 3"=1'-0"

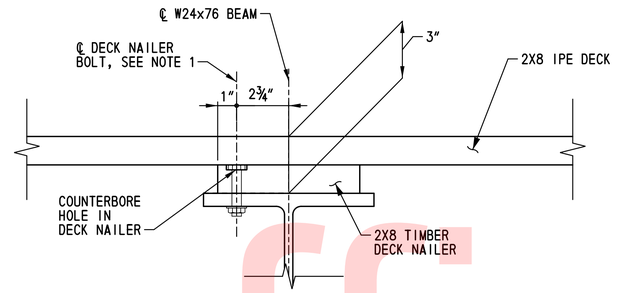

DECK TO BEAM CONNECTION DETAIL SPAN 15

SCALE: 3"=1'-0"

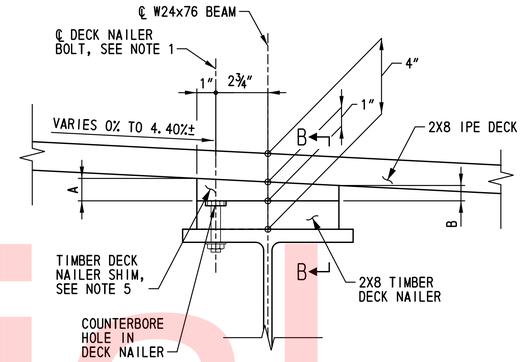

DECK TO BEAM CONNECTION DETAIL SPAN 17

SCALE: 3"=1'-0"

NOTE:
VIEW IS LOOKING UPSTATION.

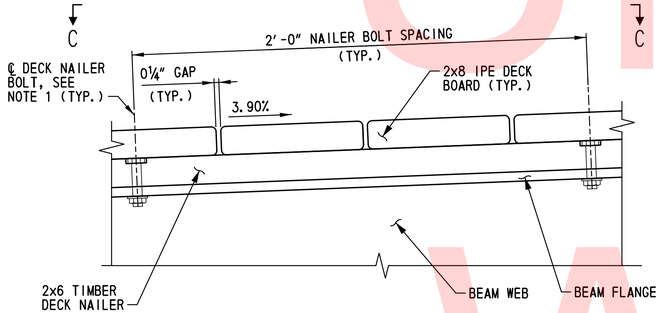

SECTION A-A

SCALE: 3"=1'-0"

NOTE:
SECTION A-A APPLIES TO SPANS 1-14.
SPAN 15 SIMILAR.

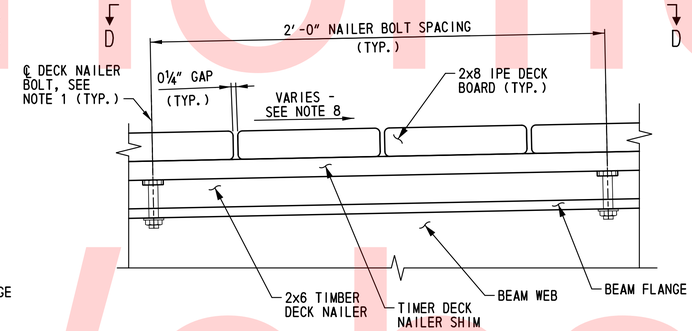

SECTION B-B

SCALE: 3"=1'-0"

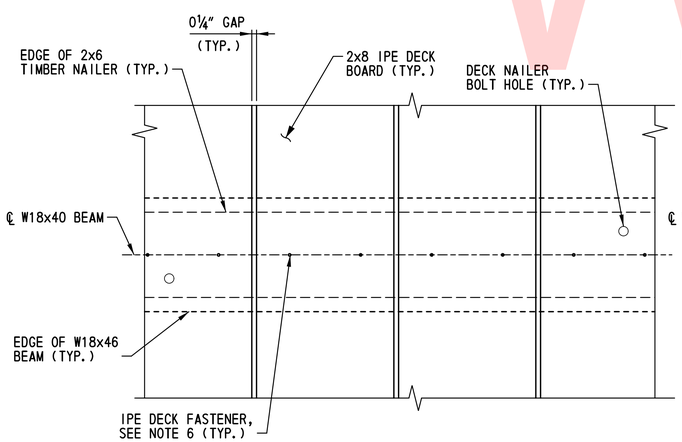

VIEW C-C

SCALE: 3"=1'-0"

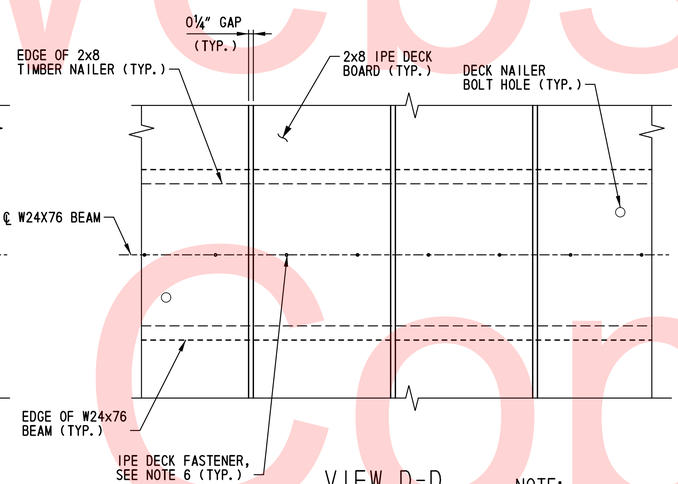

VIEW D-D

SCALE: 3"=1'-0"

NOTE:
VIEW D-D APPLIES TO SPAN 17. SPAN 15 SIMILAR.

DECK NAILER SHIM DIMENSION SCHEDULE - SPAN 17

DIMENSION A

BEAM	℄ BRG. PIER 17	0.1L	0.2L	0.3L	0.4L	0.5L	0.6L	0.7L	0.8L	0.9L	℄ BRG. PIER 18	TIE-IN
1	1"	1"	1"	1 1/16"	1 1/16"	1 1/16"	1 1/16"	1 1/8"	1 1/8"	1 1/8"	1 1/8"	1 3/16"
2	1"	1"	1"	1 1/16"	1 1/16"	1 1/16"	1 1/16"	1 1/8"	1 1/8"	1 1/8"	1 1/8"	1 3/16"
3	1"	1"	1"	1 1/16"	1 1/16"	1 1/16"	1 1/16"	1 1/8"	1 1/8"	1 1/8"	1 1/8"	1 3/16"
4	1"	1"	1"	1 1/16"	1 1/16"	1 1/16"	1 1/16"	1 1/8"	1 1/8"	1 1/8"	1 1/8"	1 1/8"
5	1"	1"	1"	1 1/16"	1 1/16"	1 1/16"	1 1/16"	1 1/8"	1 1/8"	1 1/8"	1 1/8"	1 1/8"
6	1"	1"	1"	1 1/16"	1 1/16"	1 1/16"	1 1/16"	1 1/8"	1 1/8"	1 1/8"	1 1/8"	1 1/8"

DIMENSION B

BEAM	℄ BRG. PIER 17	0.1L	0.2L	0.3L	0.4L	0.5L	0.6L	0.7L	0.8L	0.9L	℄ BRG. PIER 18	TIE-IN
1	1"	1"	1"	15/16"	15/16"	15/16"	15/16"	7/8"	7/8"	7/8"	7/8"	13/16"
2	1"	1"	1"	15/16"	15/16"	15/16"	15/16"	7/8"	7/8"	7/8"	7/8"	13/16"
3	1"	1"	1"	15/16"	15/16"	15/16"	15/16"	7/8"	7/8"	7/8"	7/8"	13/16"
4	1"	1"	1"	15/16"	15/16"	15/16"	15/16"	7/8"	7/8"	7/8"	7/8"	7/8"
5	1"	1"	1"	15/16"	15/16"	15/16"	15/16"	7/8"	7/8"	7/8"	7/8"	7/8"
6	1"	1"	1"	15/16"	15/16"	15/16"	15/16"	15/16"	7/8"	7/8"	7/8"	7/8"

NOTES:

1. DECK NAILER BOLTS SHALL BE LONGITUDINALLY SPACED AT NOT MORE THAN 2'-0" CENTER-TO-CENTER, ALTERNATE SIDES OF BEAM.
2. ALL DECK NAILER BOLTS SHALL BE ½" DIA. HIGH STRENGTH BOLTS CONFORMING TO A325, HOT-DIP GALVANIZED. ALL BOLT HOLES SHALL BE 9/16" DIA.
3. COUNTERBORE HOLES IN DECK NAILERS SHALL BE SIZED TO RECESS DECK NAILER BOLTS BELOW TOP SURFACE OF DECK NAILER.
4. THE MINIMUM ACCEPTABLE EDGE DISTANCE FOR ANY HOLE SHALL BE 1".
5. REFER TO TABLUATED VALUES FOR DIMENSIONS "A" AND "B", WHICH ARE APPROXIMATE AND VARY ALONG BEAM LENGTH. CONTRACTOR SHALL VERIFY AND ADJUST DIMENSION "A" AS NECESSARY BASED UPON FIELD VERIFICATION OF TIE-IN ELEVATIONS TO EXISTING BRIDGE. DIMENSIONS FOR LUMBER DECK SHIMS ABOVE STEEL TUBE STRINGERS IN SPAN 17 ARE NOT SHOWN, BUT DIMENSIONS ARE SIMILAR TO THE TABULATED VALUES. FOR STEEL TUBE STRINGER DETAILS, SEE DWG. NO. SD-301.
6. IPE DECK FASTENERS SHALL BE STAINLESS STEEL GRADE 305 OR 316 SELF-TAPPING SCREWS, MINIMUM SCREW SIZE #8 (0.16" DIA.). REFER TO SPECIAL PROVISIONS. A MINIMUM OF TWO (2) IPE DECK FASTENERS SHALL BE PROVIDED FOR EACH IPE DECK BOARD ABOVE BEAMS 1,3,4, AND 6.
7. FOR ADDITIONAL IPE DECK DETAILS, SEE DWG. DK-302.
8. REFER TO TABULATED FINISHED BRIDGE DECK ELEVATIONS ON FD-302.

Unofficial Website Copy

N:\31896-002\CADD\BRIDGE\DK301_ITG.DGN

DELAWARE DEPARTMENT OF TRANSPORTATION

ADDENDUMS / REVISIONS

SCALE 0 1 2 — 1½"=1'-0"

NEW CASTLE INDUSTRIAL TRACK TRAIL, PHASE 3

CONTRACT	BRIDGE NO.	X
T201330009	DESIGNED BY: NAH	
COUNTY		
NEW CASTLE	CHECKED BY: WAG	

IPE TIMBER DECK DETAILS – 1

DK-301

SHEET NO. 154

TOTAL SHTS. 207

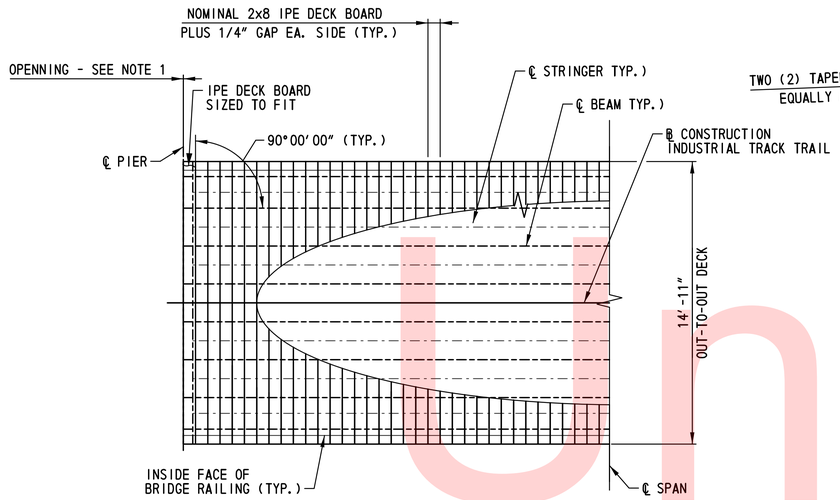

SPANS 1-4 TYPICAL HALF-DECK PLAN

SCALE: 1/4"=1'-0"

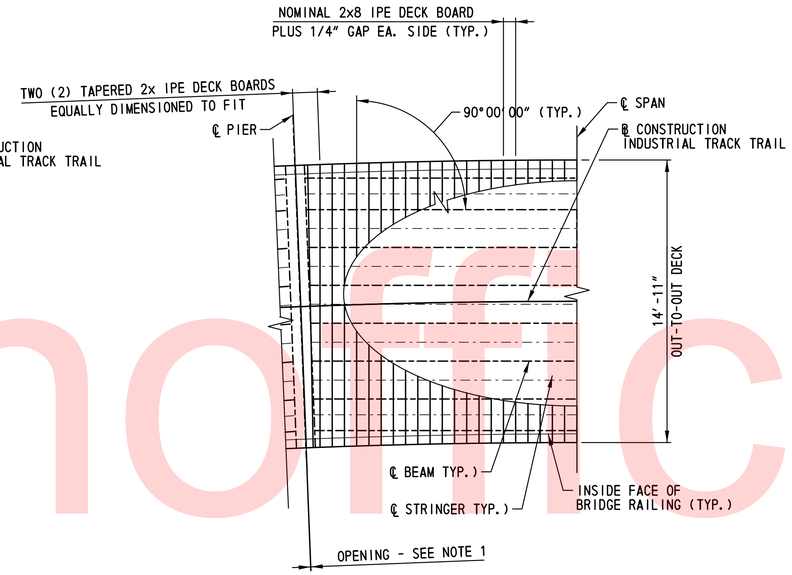

SPANS 5-8 TYPICAL HALF-DECK PLAN

SCALE: 1/4"=1'-0"

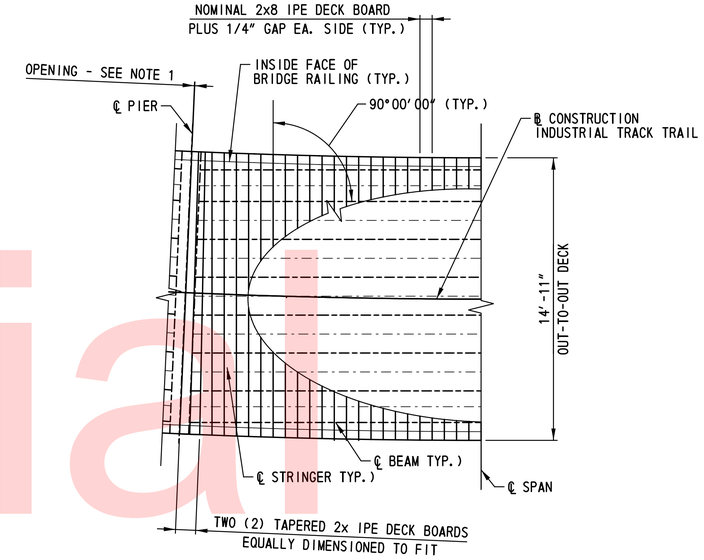

SPANS 9-14 TYPICAL HALF-DECK PLAN

SCALE: 1/4"=1'-0"

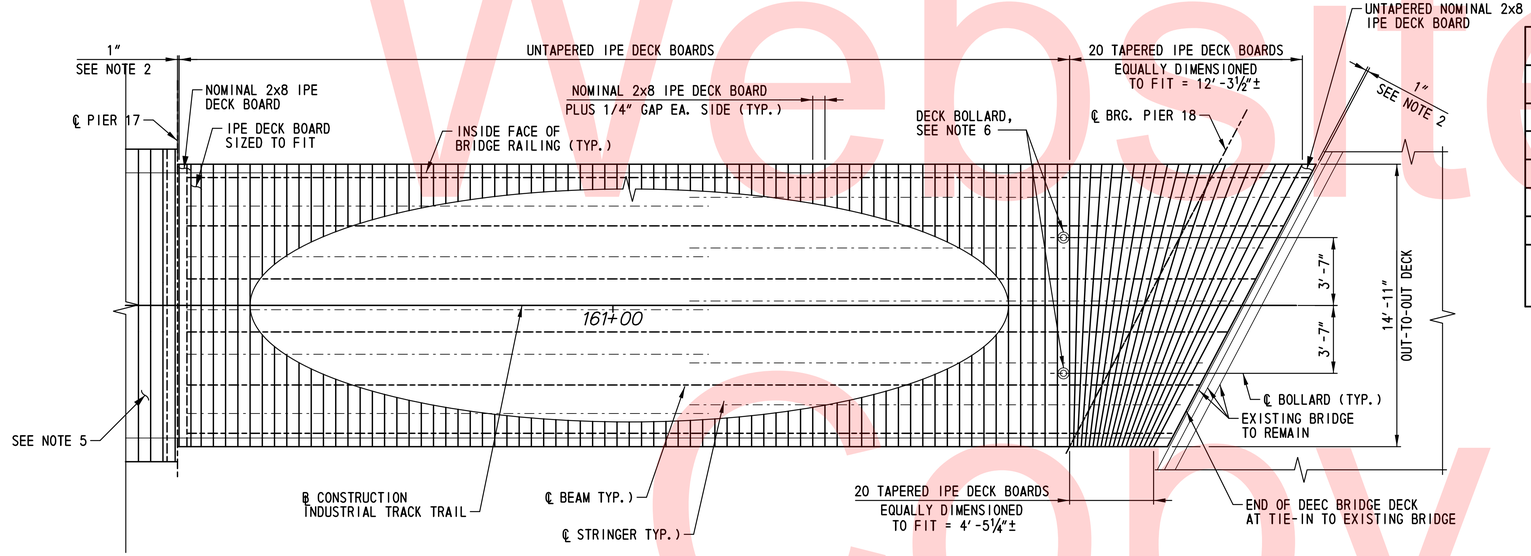

SPAN 17 DECK PLAN

SCALE: 1/4"=1'-0"

DIMENSION REFERENCE TABLE - SEE NOTE 1	
INSTALLATION TEMPERATURE (°F)	OPENING BETWEEN DECK BOARDS
0	1/2"
30	3/8"
60	1/4"
90	1/8"
120	0"
NOTE: SEE DECK OPENING DETAIL, THIS DRAWING, FOR ADDITIONAL INFORMATION	

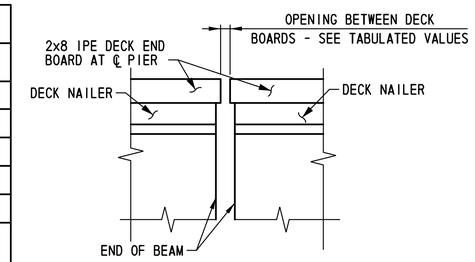

DECK OPENING DETAIL

SCALE: NONE

NOTES:

1. FOR THE CLEAR OPENING BETWEEN IPE DECK BOARDS AT PIERS, SEE TABULATED VALUES THIS DRAWING.
2. FOR JOINT THRESHOLD DETAIL AT PIER 17 AND TIE-IN TO EXISTING BRIDGE, SEE DWG. NO. SD-301.
3. FOR ADDITIONAL IPE DECK DETAILS, SEE DWG. DK-301.
4. DECK PLAN FOR SPAN 15 IS NOT SHOWN, BUT SIMILAR TO DECK PLAN FOR SPANS 1-4.
5. IPE DECK DETAILS FOR PREFABRICATED TRUSS, SPAN 16, SHALL BE SUBMITTED BY THE CONTRACTOR FOR REVIEW AND APPROVAL BY THE ENGINEER. DECK DETAILS FOR PREFABRICATED TRUSS SHALL BE SIMILAR TO DETAILS INCLUDED ON THIS DRAWING AND DWG. NO DK-301. IPE DECK BOARDS AT EACH END OF TRUSS SHALL BE FULL WIDTH (NOMINAL 8" WIDE).
6. FOR DECK BOLLARD DETAILS, SEE DWG. NO. SD-301.

Unofficial Website Copy

N:\31896-002\CADD\BRIDGE\DK302_ITG.DGN

DELAWARE DEPARTMENT OF TRANSPORTATION

ADDENDUMS / REVISIONS

SCALE 0 4 8 12 1/4"=1'-0"

NEW CASTLE INDUSTRIAL TRACK TRAIL, PHASE 3

CONTRACT	BRIDGE NO.	X
T201330009	DESIGNED BY: NAH	
COUNTY		
NEW CASTLE	CHECKED BY: WAG	

IPE TIMBER DECK DETAILS – 2

DK-302
SHEET NO.
155
TOTAL SHTS.
207

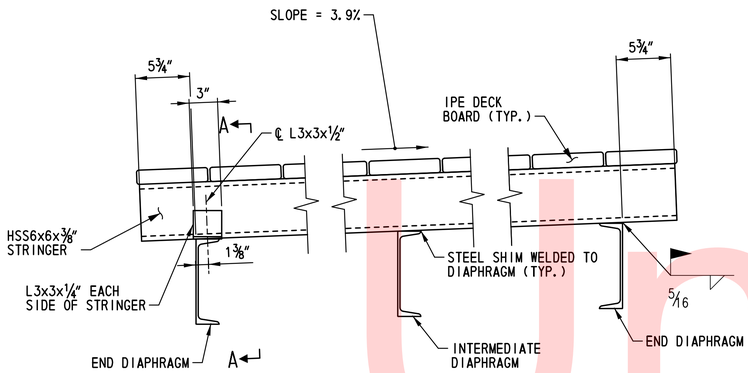

STEEL STRINGER TYPICAL ELEVATION (SPANS 1-15)

SCALE: 1 1/2 "=1'-0"

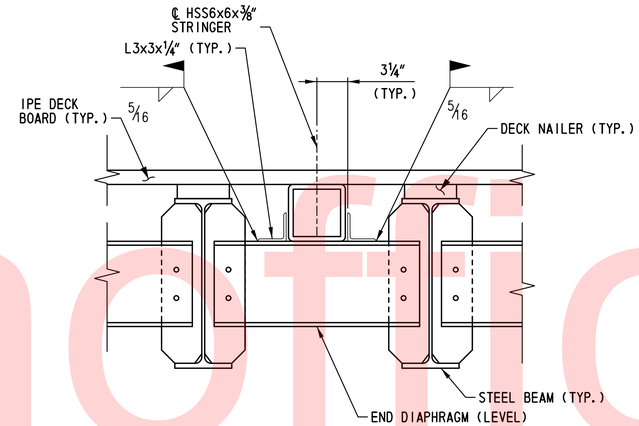

SECTION A-A

SCALE: 1½"=1'-0"

NOTE:

TYPICAL ELEVATION FOR SPANS 1-14 IS SHOWN. TYPICAL ELEVATION FOR SPAN 15 IS NOT SHOWN, BUT SIMILAR.

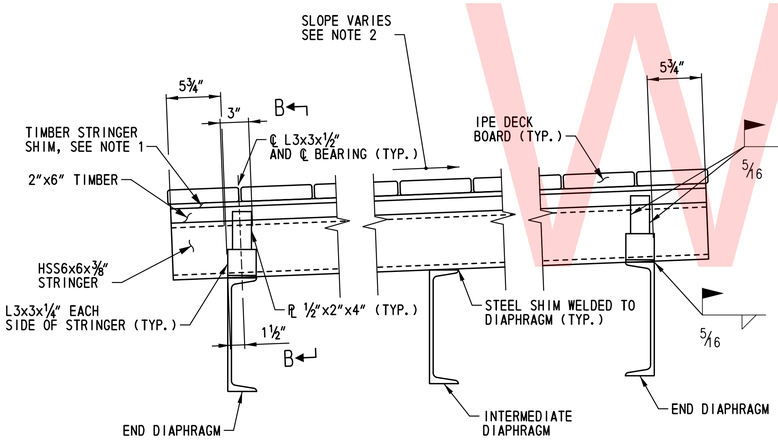

STEEL STRINGER TYPICAL ELEVATION (SPAN 17)

SCALE: 1 1/2 "=1'-0"

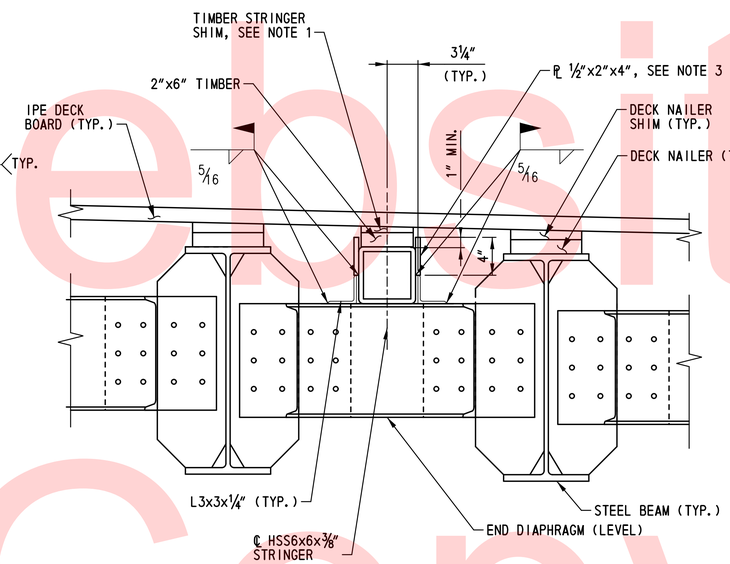

SECTION B-B

SCALE: 1 1/2 "=1'-0"

NOTES:

1. BEVELED TIMBER SHIMS ABOVE STEEL TUBE STRINGERS IN SPAN 17 SHALL BE FIELD SIZED AND CUT TO FIT TIGHT BETWEEN IPE DECK AND 2"x6" TIMBER. FOR APPROXIMATE SHIM CROSS-SLOPES, SEE DECK NAILER SHIM DETAILS FOR STEEL BEAMS IN SPAN 17, DWG. NO. DK-301.
2. FOR DECK ELEVATIONS IN SPAN 17, SEE DWG. NO. FD-302.
3. FOR LOCATION OF STEEL TUBE STRINGERS, SEE DWG. NOS. FR-301 THROUGH FR-304.
4. PLATES WELDED TO TUBE STRINGERS IN SPAN 17 SHALL BE PLACED AT 4'-0" CENTER-TO-CENTER, STAGGERED EACH SIDE. PLATES NOT SHOWN IN STEEL STRINGER TYPICAL ELEVATION (SPAN 17), THIS SHEET.

Unofficial Website Copy

N:\31896-002\CADD\BRIDGE\SD301_ITG.DGN

DELAWARE DEPARTMENT OF TRANSPORTATION	ADDENDUMS / REVISIONS	SCALE AS NOTED	NEW CASTLE INDUSTRIAL TRACK TRAIL, PHASE 3	CONTRACT T201330009	BRIDGE NO. X	SUPERSTRUCTURE DETAILS – 1	SD-301
				COUNTY NEW CASTLE	DESIGNED BY: NAH		SHEET NO. 156
					CHECKED BY: WAG		TOTAL SHTS. 207

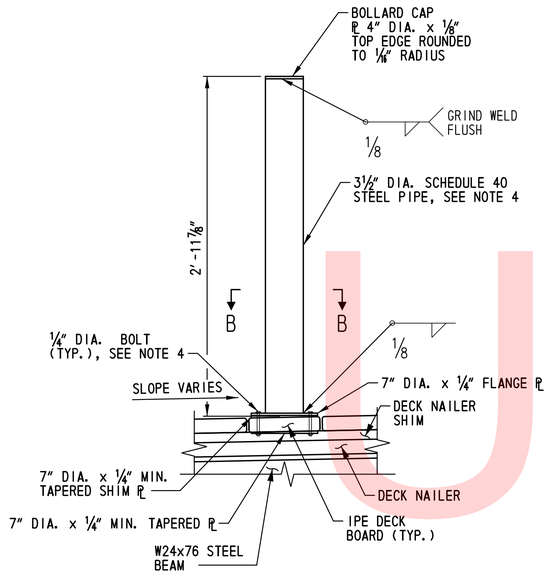

BOLLARD DETAIL

SCALE: 1 1/2"=1'-0"

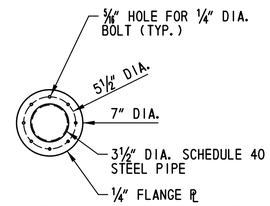

SECTION B-B

SCALE: 1 1/2"=1'-0"

NOTE:

DECK AND DECK BOLT ARE NOT SHOWN FOR CLARITY. SEE DRAWING NO. DK-302 FOR LCOATION OF BOLLARDS.

DIMENSION REFERENCE TABLE		
INSTALLTION TEMPERATURE (°F)	A	B
0	2 5/8"	1 3/16"
30	2 1/8"	1 7/16"
60	1 5/8"	1 1/4"
90	1 1/8"	1 1/8"
120	5/8"	15/16"

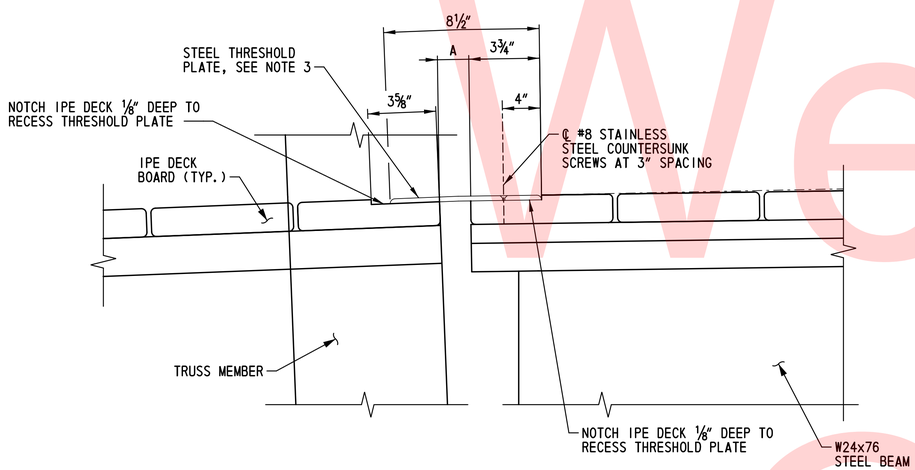

PIER 17 THRESHOLD DETAIL

SCALE: 3"=1'-0"

NOTE:

VIEW IS PERPENDICULAR TO ℄ CONSTRUCTION, INDUSTRIAL TRACK TRAIL.

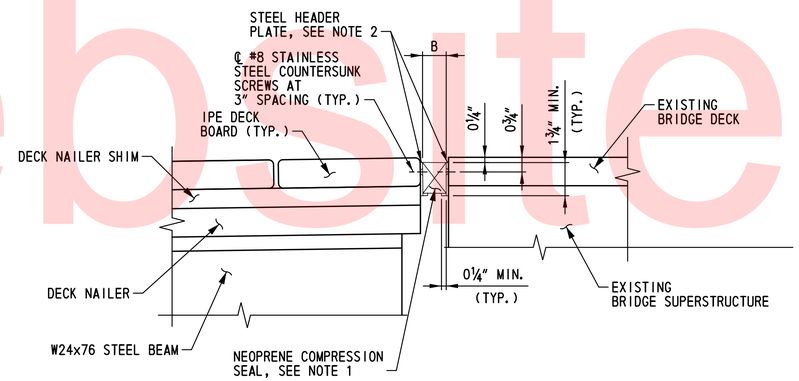

JOINT DETAIL AT TIE-IN TO EXISTING BRIDGE

SCALE: 3"=1'-0"

NOTE:

VIEW IS PERPENDICULAR TO ℄ CONSTRUCTION, INDUSTRIAL TRACK TRAIL.

NOTES:

1. NEOPRENE COMPRESSION SEAL SHALL HAVE A MOVEMENT CAPACITY OF MINIMUM 1/2".
2. STEEL HEADER PLATE SHALL BE MINIMUM 1/8" THICK GALVANIZED STEEL WITH COUNTERSUNK HOLES TO ACCOMDATE #8 COUNTERSUNK SCREWS.
3. STEEL THRESHOLD PLATE SHALL BE 1/4" GALVANIZED STEEL PLATE WITH COUNTERSUNK HOLES TO ACCOMDATE #8 COUNTERSUNK SCREWS. THE TOP SURFACE OF THE PLATE SHALL HAVE A SHOP-APPLIED EPOXY COATING WITH GRIT TO PRODUCE A NON-SKID SURFACE. BEND PLATE TO FIT GRADE.
4. STEEL PIPE AND PLATE FOR DECK BOLLARD SHALL BE HOT-DIP GALVANIZED IN ACCORDANCE WITH ASTM A123. OBJECT MARKERS SHALL BE AFFIXED TO THE UPSTATION AND DOWNSTATION SIDE OF EACH BOLLARD. OBJECT MARKERS SHALL BE TYPE TYPE 3 IN COMPLIANCE WITH DELAWARE MANUAL ON UNIFORM TRAFFIC CONTROL DEVICES (MUTCD) SECTION 2C.63. 1/4" SCREWS SHALL BE HOT DIP GALVANIZED IN ACCORDANCE WITH AASHTO M232M/M 232 (ASTM A153/A153M).
5. PAYMENT FOR THRESHOLD AND JOINTS SHALL BE INCIDENTAL TO ITEM 601537 (HARDWOOD IPE PLANK DECKING).
6. PAYMENT FOR BOLLARDS SHALL BE INCIDENTAL TO ITEM 606701.

Unofficial Website Copy

N:\31896-002\CADD\BRIDGE\SD302_ITG.DGN

DELAWARE DEPARTMENT OF TRANSPORTATION	ADDENDUMS / REVISIONS	SCALE AS NOTED	NEW CASTLE INDUSTRIAL TRACK TRAIL, PHASE 3	CONTRACT T201330009	BRIDGE NO. X	SUPERSTRUCTURE DETAILS – 2	SD-302
				COUNTY NEW CASTLE	DESIGNED BY: NAH		SHEET NO. 157
					CHECKED BY: WAG		TOTAL SHTS. 207

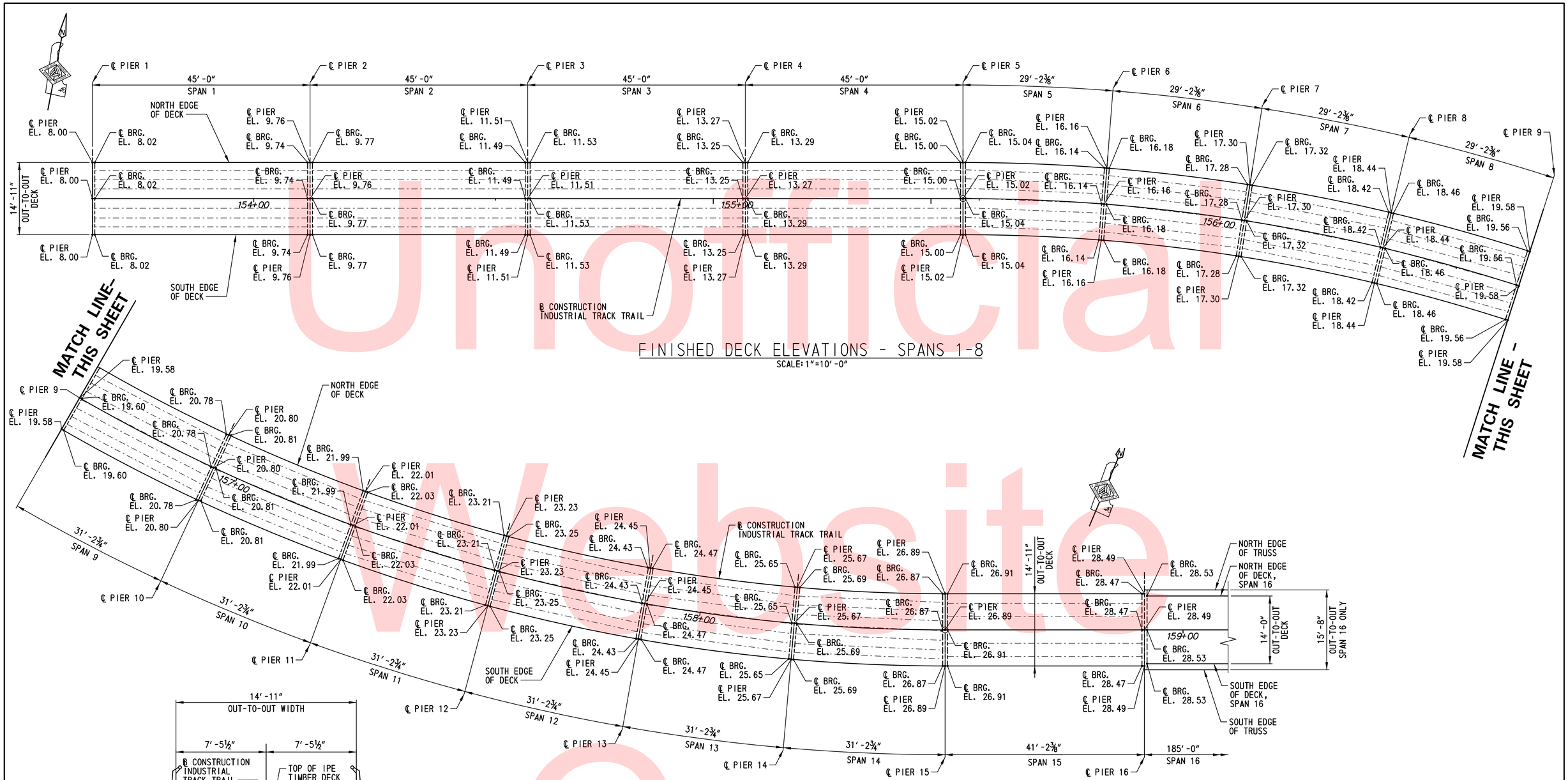

FINISHED DECK ELEVATIONS - SPANS 1-8

SCALE: 1″=10′-0″

FINISHED DECK ELEVATIONS - SPANS 9-16

SCALE: 1″=10′-0″

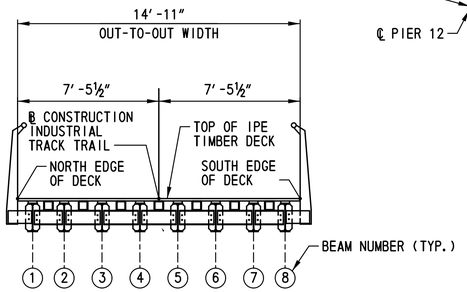

LOCATION OF FINISHED DECK ELEVATIONS

SCALE: ¼″=1′-0″

NOTE:

TYPICAL SECTION FOR SPANS 1-14 IS SHOWN. LOCATION OF FINISHED DECK ELEVATIONS IS SIMILAR FOR SPANS 15 AND 16.

NOTES:

1. FINISHED BRIDGE DECK ELEVATIONS SHOWN ARE TOP OF OF PROPOSED IPE TIMBER DECK.
2. FOR VERTICAL GRADE DATA, SEE DWG. NOS. PE-301 THRU PE-303.
3. ALL LINES OF ELEVATIONS SHOWN ARE PERPENDICULAR TO ℄ CONSTRUCTION.
4. BRIDGE RAILING IS NOT SHOWN IN DECK PLANS.
5. FOR ADDITIONAL FINSIHED DECK ELEVATIONS, SEE DWG. NO. FD-302.

Unofficial Website Copy

N:\31896-002\CADD\BRIDGE\FD301_ITG.DGN

DELAWARE DEPARTMENT OF TRANSPORTATION	ADDENDUMS / REVISIONS	SCALE AS NOTED	NEW CASTLE INDUSTRIAL TRACK TRAIL, PHASE 3	CONTRACT T201330009	BRIDGE NO. X	FINISHED BRIDGE DECK ELEVATIONS – 1	FD-301
				COUNTY NEW CASTLE	DESIGNED BY: NAH		SHEET NO. 158
					CHECKED BY: WAG		TOTAL SHTS. 207

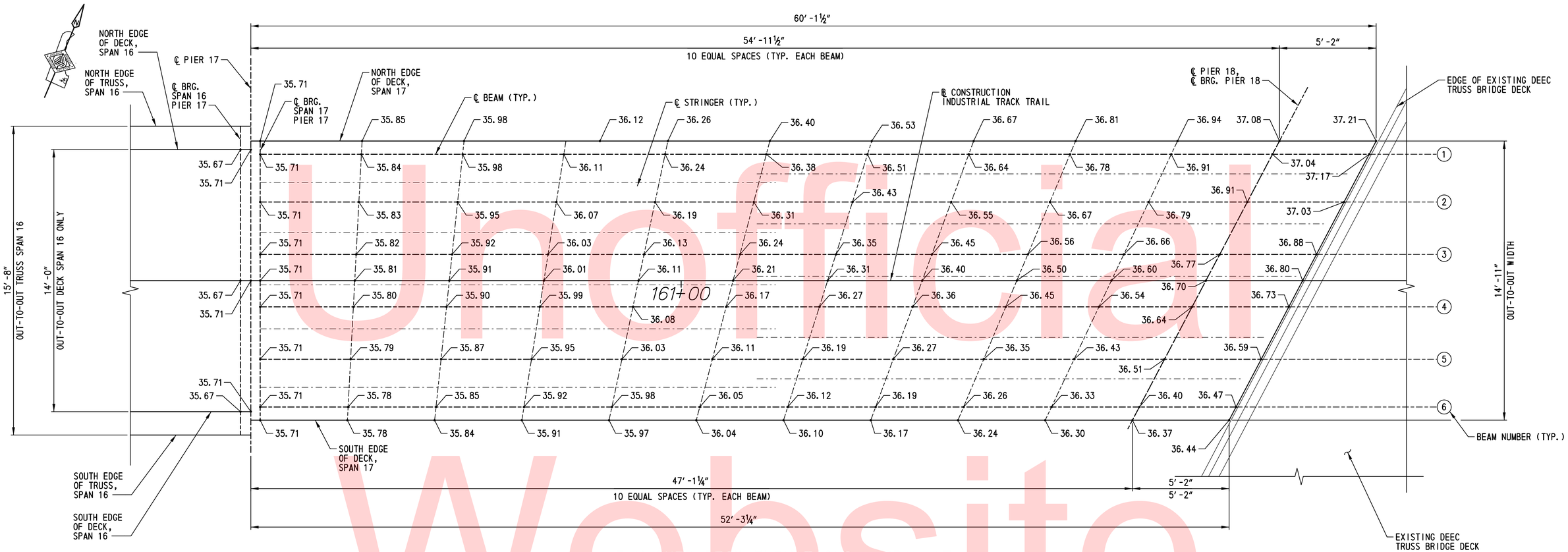

FINISHED DECK ELEVATIONS - SPAN 17

SCALE: ⅜″=1′-0″

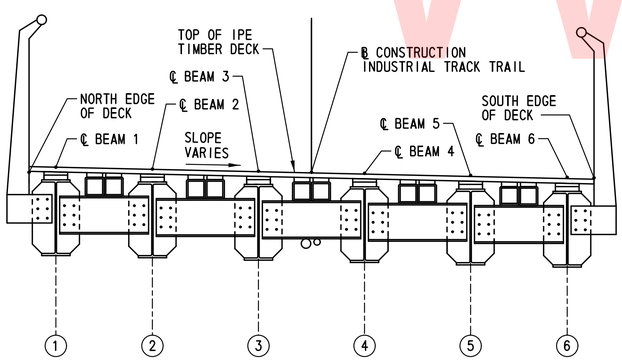

LOCATION OF FINISHED DECK ELEVATIONS

SCALE: ½″=1′-0″

NOTE:

TYPICAL SECTION FOR SPAN 17 IS SHOWN.

NOTES:

1. FINSIHED BRIDGE DECK ELEVATIONS SHOWN ARE TOP OF OF PROPOSED IPE TIMBER DECK.
2. FOR VERTICAL GRADE DATA, SEE DWG. NO. PE-303.
3. ALL LINES OF ELEVATIONS SHOWN ARE PERPENDICULAR TO ℄ CONSTRUCTION.
4. BRIDGE RAILING IS NOT SHOWN IN DECK PLANS.
5. FOR ADDITIONAL FINISHED DECK ELEVATIONS, SEE DWG. NO. FD-301.
6. ALL DECK ELEVATIONS IN SPAN 17 ARE APPROXIMATE. CONTRACTOR SHALL FIELD VERIFY EXISTING BRIDGE DECK ELEVATIONS AND ADJUST FINSIHED BRIDGE DECK ELEVATIONS AS NECESSARY.

Unofficial Website Copy

N:\31896-002\CADD\BRIDGE\FD302_ITG.DGN

DELAWARE DEPARTMENT OF TRANSPORTATION	ADDENDUMS / REVISIONS	SCALE AS NOTED	NEW CASTLE INDUSTRIAL TRACK TRAIL, PHASE 3	CONTRACT T201330009	BRIDGE NO. X	FINISHED BRIDGE DECK ELEVATIONS – 2	FD-302	
				COUNTY NEW CASTLE	DESIGNED BY: NAH		SHEET NO. 159	
					CHECKED BY: WAG		TOTAL SHTS. 207	

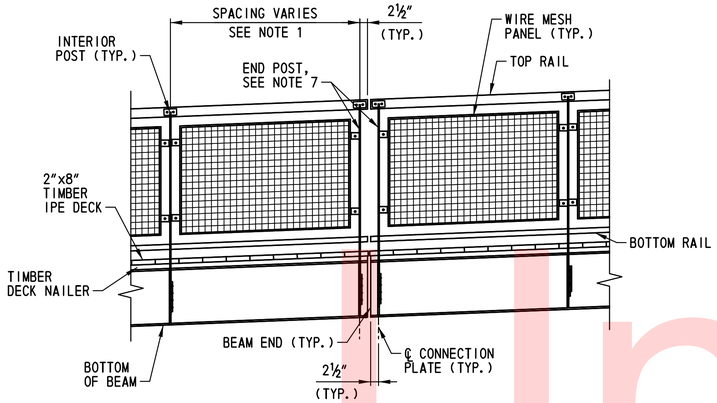

TYPICAL RAILING LAYOUT - ELEVATION

SCALE: ½"=1'-0"

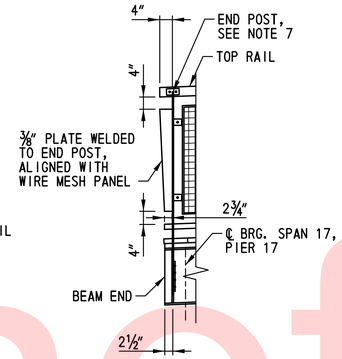

DETAIL A

SCALE: ½"=1'-0"

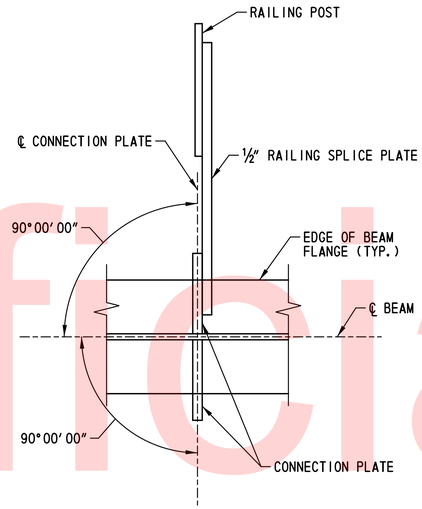

INTERIOR POST CONNECTION PLATE - PLAN

SCALE: 3"=1'-0"

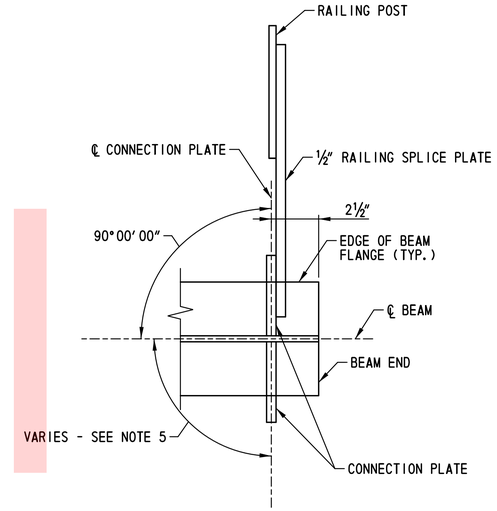

END POST CONNECTION PLATE - PLAN

SCALE: 3"=1'-0"

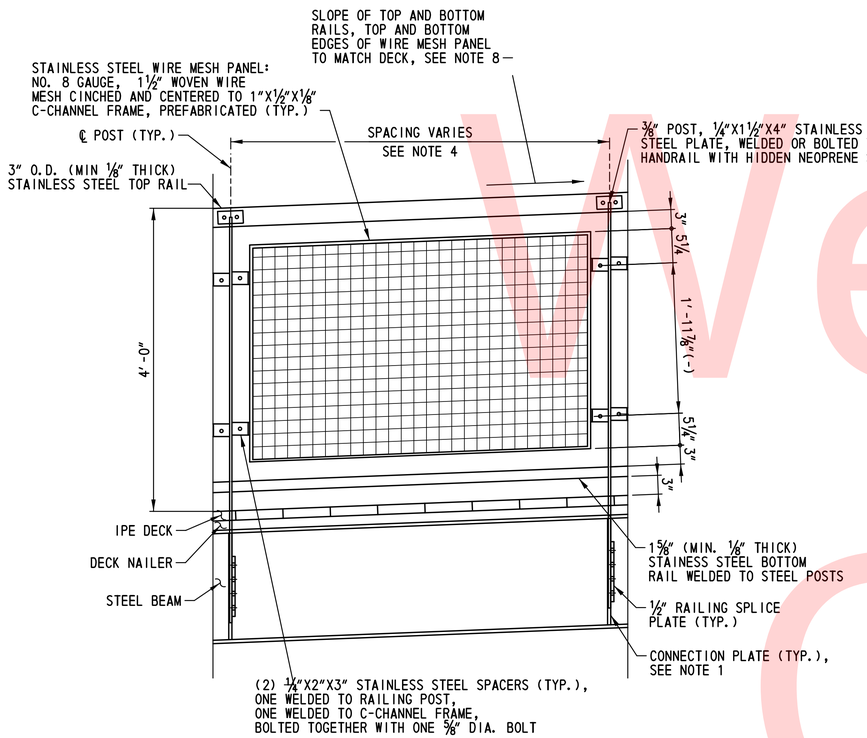

RAILING DETAIL ELEVATION

SCALE: 1"=1'-0"

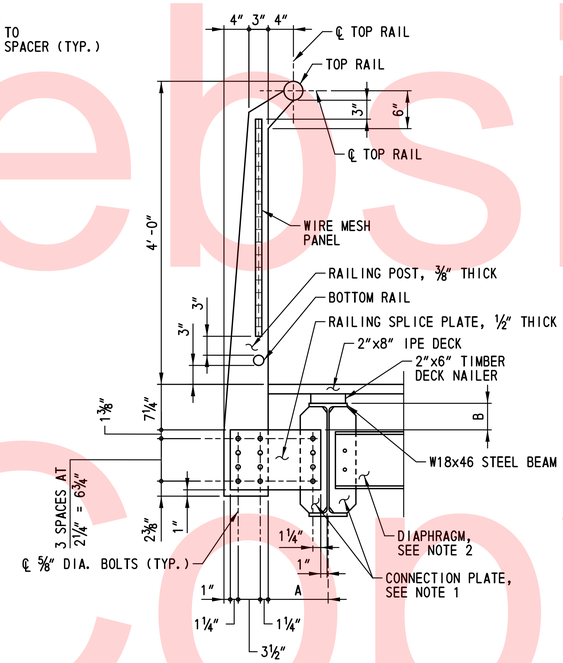

TYPICAL RAILING SECTION

SCALE: 1"=1'-0"

NOTE:

TYPICAL RAILING SECTION FOR SPANS 1-14 IS SHOWN. TYPICAL RAILING SECTION FOR SPANS 15 AND 17 IS SIMILAR.

DIMENSION REFERENCE TABLE						
SPAN	A (MIN./MAX.) NORTH RAILING	A (MIN./MAX) SOUTH RAILING	B (MIN./MAX.) NORTH RAILING SEE NOTE 6	B (MIN./MAX) SOUTH RAILING SEE NOTE 6	SLOPE NORTH RAILING	SLOPE SOUTH RAILING
1-4	9½" / 9½"	9½" / 9½"	4¼" / 4¼"	4¼" / 4¼"	3.9%	3.9%
5-8	8¼" / 11⅜"	7⅝" / 10¾"	4¼" / 4¼"	4¼" / 4¼"	3.9%	3.9%
9-14	7⅝" / 11⅜"	7⅜" / 11⅜"	4¼" / 4¼"	4¼" / 4¼"	3.9%	3.9%
15	8½" / 8½"	8½" / 8½"	4¼" / 4¼"	4¼" / 4¼"	3.9%	3.9%
17	8½" / 8½"	8½" / 8½"	2⅞" / 3¼"	3⅛" / 3⅜"	2.52% ±	1.41% ±

NOTES:

1. TWO CONNECTION PLATES SHALL BE PROVIDED AT EACH RAILING POST CONNECTION LOCATION, INCLUDING LOCATIONS WITHOUT DIAPHRAGMS. FOR CONNECTION PLATE DETAILS, SEE DWG. NOS. BM-301 THRU BM-303.
2. FOR LOCATION OF DIAPHRAGMS, SEE DWG. NOS. FR-301 THRU FR-304. FOR DIAPHRAGM CONNECTION PLATE AND DIAPHRAGM DETAILS, SEE DWG. NOS. BM-301 THRU BM-304.
3. RAILING SPLICE PLATE LENGTH VARIES, SEE TABULATED VALUES.
4. POST SPACING VARIES. FOR LOCATION OF RAILING CONNECTION PLATES, SEE DWG. NOS. BM-301 THRU BM-303.
5. THE ANGLE BETWEEN THE CONNECTION PLATE AND BEAM WEB FOR END DIAPHRAGMS VARIES. FOR ADDITIONAL DETAILS, SEE DWG. NO. BM-304.
6. DIMENSION "B" IS APPROXIMATE AND PROVIDED FOR INFORMATION ONLY. DIMENSION "B" SHALL BE ADJUSTED IF NECESSARY TO ENRURE THAT THE TOP OF THE TOP RAIL IS 4'-0" ABOVE THE TOP OF DECK.
7. END POST LAYOUT AND DETAILS SHOWN IN "TYPICAL RAILING LAYOUT - ELEVATION", THIS SHEET, APPLIES TO ALL END POSTS EXCEPT THE END POSTS AT SPAN 17, PIER 17. FOR END POST DETAILS AT SPAN 17, PIER 17, SEE DETAIL A.
8. SEE TABULATED VALUES FOR SLOPE OF TOP AND BOTTOM RAILS, TOP AND BOTTOM EDGES OF WIRE MESH PANEL, WHICH SHALL BE SLOPED TO MATCH BRIDGE DECK. ALL OTHER RAILING ELEMENTS SHALL BE PLACED PLUMB.
9. ALL BOLTS SHALL BE ⅝" DIA. STAINLESS STEEL CONFORMING TO ASTM A193 B8 CLASS 2. ALL HOLES SHALL BE 11/16" DIA. MISCELLANEOUS FASTENERS USED FOR SPACER AND RAILING CONNECTIONS SHALL BE TYPE 304 STAINLESS STEEL.
10. RAILING POST AND PLATE MATERIALS SHALL BE TYPE 304 STAINLESS STEEL, CONFORMING TO ASTM A240 OR APPROVED EQUAL. ALL STAINLESS STEEL TUBE SHALL BE TYPE 304 STAINLESS STEEL, CONFORMING TO ASTM A269 OR APPROVED EQUAL.
11. THE CONTRACTOR SHALL COORDINATE WITH THE SPAN 16 TRUSS FABRICATOR FOR DESIGN OF WIRE MESH PANELS BETWEEN TRUSS VERTICALS AND DIAGONALS INCLUDING CONNECTION OF WIRE MESH PANELS TO TRUSS MEMBERS. THE WIRE MESH PANELS BETWEEN TRUSS VERICALS AND DIAGONALS SHALL BE STAINLESS STEEL WIRE MESH PANEL NO. 8 GAUGE, 1½" WOVEN WIRE MESH CINCHED AND CENTERED TO 1"X½"X⅛"C-CHANNEL FRAME. SEE DWG. PN-301 FOR PREFABRICATED TRUSS DESIGN NOTES.
12. THE CONTRACTOR SHALL SUBMIT SHOP DRAWINGS OF RAILING SYSTEM FOR APPROVAL BY THE ENGINEER.

Unofficial Website Copy

N:\31896-002\CADD\BRIDGE\RL301_ITG.DGN

DELAWARE DEPARTMENT OF TRANSPORTATION

ADDENDUMS / REVISIONS

SCALE: AS NOTED

NEW CASTLE INDUSTRIAL TRACK TRAIL, PHASE 3

CONTRACT	BRIDGE NO.	X
T201330009	DESIGNED BY: NAH	
COUNTY		
NEW CASTLE	CHECKED BY: WAG	

RAILING LAYOUT AND DETAILS

RL-301

SHEET NO. 160

TOTAL SHTS. 207

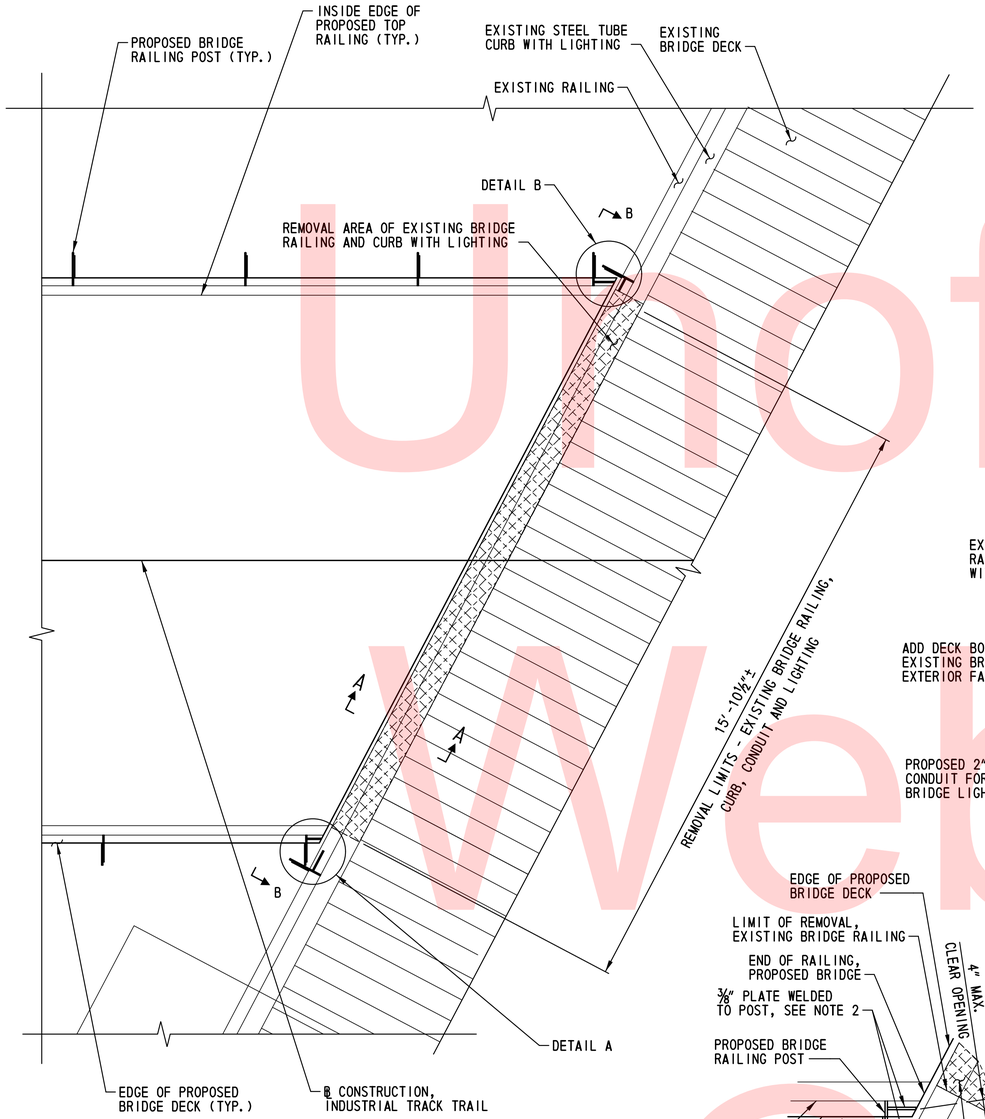

PARTIAL PLAN
SCALE: ½"=1'-0"

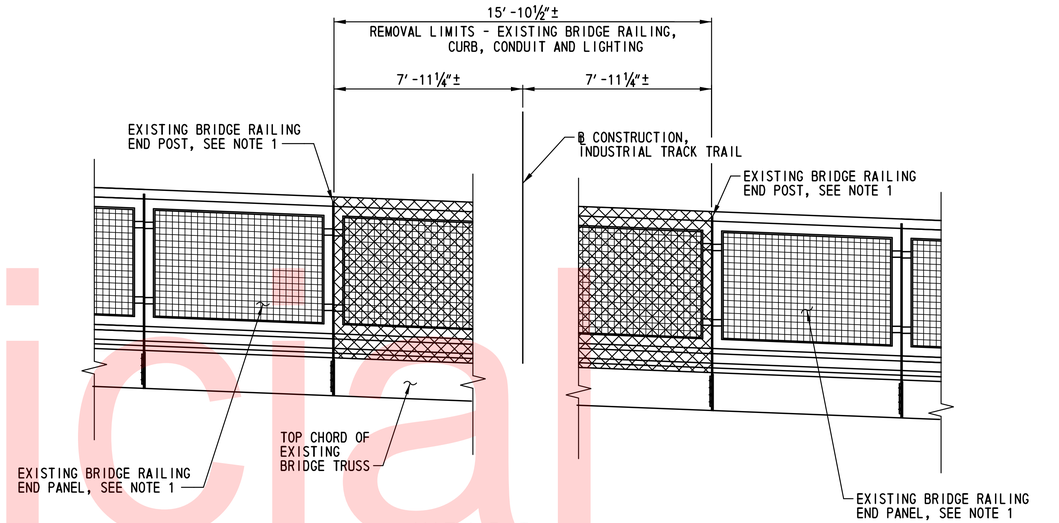

VIEW B-B
SCALE: ½"=1'-0"

NOTE:
VIEW IS LOOKING UPSTATION. PROPOSED STRUCTURES NOT SHOWN FOR CLARITY. DIMENSIONS ARE MEASURED ALONG SKEW.

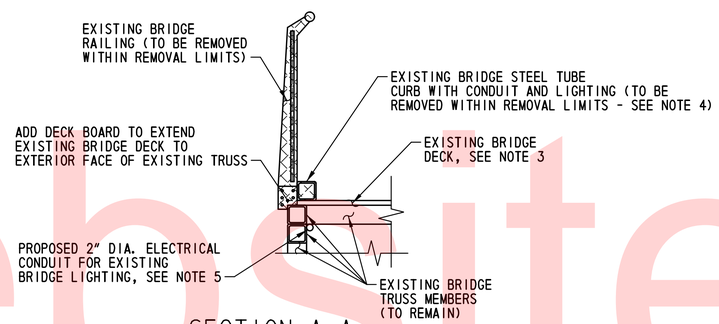

SECTION A-A
SCALE: ½"=1'-0"

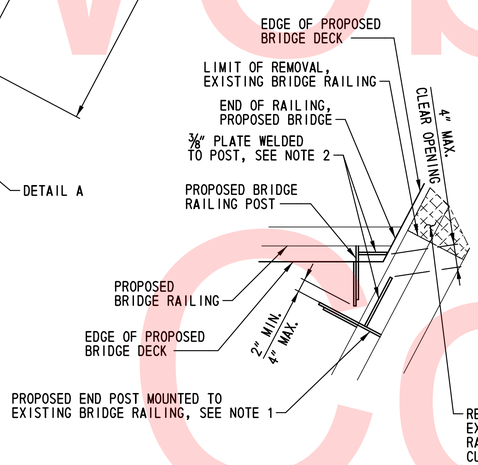

DETAIL A
SCALE: 1"=1'-0"

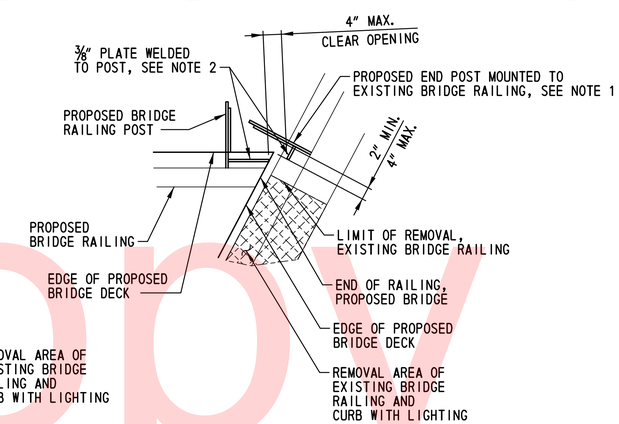

DETAIL B
SCALE: 1"=1'-0"

NOTES:

1. THE END POSTS AND END WIRE MESH PANELS CONNECTED TO THE EXISTING BRIDGE SHALL MATCH EXISTING RAILING AND PROVIDE A TIE-IN TO PROPOSED BRIDGE DECK AND RAILING.
2. PLATES WELDED TO END POSTS ON PROPOSED AND EXISTING BRIDGE RAILING SHALL NOTE EXCEED 12" IN WIDTH. THE PLATES SHALL BE PROPORTIONED TO ALLOW A 3" GAP BETWEEN THE BRIDGE DECK AND BOTTOM OF PLATE, AND A 3" GAP BETWEEN THE TOP OF THE PLATE AND BOTTOM OF THE TOP RAILING. ALL WELDS SHALL BE ⅛", FULL HEIGHT.
3. EXISTING BRIDGE DECK PLANKS WITHIN THE LIMITS OF RAILING REMOVAL SHALL BE RECONSTRUCTED AS NECESSARY IN ORDER TO EXTEND TO THE EXTERIOR FACE OF THE EXISTING TRUSS MEMBERS.
4. EXISTING LIGHTING SHALL BE MAINTAINED DURING CONSTRUCTION.
5. THE CONTRACTOR SHALL SUBMIT WORKING DRAWINGS FOR THE PROPOSED ELECTRICAL CONDUIT MOUNTED TO THE EXISTING BRIDGE. FLEXIBLE CONDUIT MAY BE PROVIDED TO SPLICE EXISTING CONDUIT BEYOND RAILING REMOVAL LIMITS WITH RE-LOCATED CONDUIT WITHIN RAILING REMOVAL LIMITS. THE CONTRACTOR SHALL WELD A COVER PLATE AT EACH CUT END OF THE CURB TUBES, WITH ALLOWANCE PROVIDED FOR CONDUIT TO PASS.
6. FOR RAILING DETAILS ON PROPOSED BRIDGE, SEE DWG. RL-301.
7. FOR DECK DETAILS ON THE PROPOSED BRIDGE, SEE DK-301 AND DK-302.
8. PAYMENT FOR EXISTING RAILING DEMOLITION AND RECONFIGURATION OF EXISTING BRIDGE RAILING SHALL BE INCIDENTAL TO ITEM 606701.
9. PAYMENT FOR DEMOLITION AND RECONFIGURATION OF EXISTING BRIDGE DECK SHALL BE INCIDENTAL TO ITEM 601537 (HARDWOOD IPE PLANK DECKING).
10. TEMPORARY RAILING SHALL BE INSTALLED AND MAINTAINED ON THE EXISTING BRIDGE DECK PRIOR TO DECK AND RAILING DEMOLITION AND REMAIN IN PLACE UNTIL NEW BRIDGE CONSTRUCTION IS COMPLETED. THE TEMPORARY RAILING SYSTEM SHALL BE DESIGNED IN ACCORDANCE WITH AASHTO LRFD REQUIREMENTS, AND MAINTAIN AT LEAST 8'-0" CLEAR PATH ON THE EXISTING BRIDGE DECK. HIGH VISIBILITY OBJECT MARKERS SHALL BE INSTALLED AND MAINTAINED ON TEMPORARY RAILING. TEMPORARY RAILING DESIGN AND WORKING DRAWINGS SHALL BE SUBMITTED TO THE ENGINEER FOR APPROVAL. PAYMENT FOR TEMPORARY RAILING SHALL BE INCIDENTAL TO ITEM 606701.

Unofficial Website copy

N:\31896-002\CADD\BRIDGE\DE301_ITG.DGN

DELAWARE DEPARTMENT OF TRANSPORTATION	ADDENDUMS / REVISIONS	SCALE: AS NOTED	NEW CASTLE INDUSTRIAL TRACK TRAIL, PHASE 3	CONTRACT T201330009	BRIDGE NO. X	DEMOLITION PLAN	DE-301
				COUNTY NEW CASTLE	DESIGNED BY: NAH		SHEET NO. 161
					CHECKED BY: WAG		TOTAL SHTS. 207

BORING: IT-10 | **DATE DRILLED:** 1/8/14
STATION: 154+47.47 | **OFFSET:** 22.60' LT. | **ELEVATION:** 2.89' | **NORTHING:** 627512.7845 | **EASTING:** 614765.6981
COMMENTS: N/A

SAMPLE INFORMATION

NO.	DEPTH	BLOWS /6"	DESCRIPTION	CLASS /G.I.	REMARKS
1	0.0 2.0	WH WH WH WH	NO RECOVERY		
2	2.0 4.0	WH WH WH WH	NO RECOVERY		
3	4.0 6.0	WH WH WH WH	SATURATED SOFT BLACK SILTY CLAY W/TRACE COARSE TO FINE SAND AND FINE GRAVEL.	A-7-5(15)	
4	6.0 8.0	WH WH WH WH	SATURATED SOFT BLACK SILTY CLAY W/SOME COARSE SAND, TRACE OF FINE SAND.	A-7-5(14)	
5	8.0 10.0	2 2 2 2	SATURATED SOFT BLACK SILTY CLAY W/SOME COARSE SAND, TRACE OF FINE SAND.	A-7-5(13)	
6	10.0 12.0	WH WH WH WH	SATURATED SOFT BLACK SILTY CLAY W/SOME COARSE SAND, TRACE OF FINE SAND.	A-7-5(17)	
7	12.0 14.0	2 1 1 1	SATURATED SOFT BLACK SILTY CLAY W/TRACE COARSE TO FINE SAND.	A-7-5(15)	
8	14.0 16.0	1 1 1 1	SATURATED SOFT BLACK SILTY CLAY W/SOME COARSE SAND, TRACE OF FINE SAND.	A-7-5(13)	
9	16.0 18.0	1 1 1 1	SATURATED SOFT BLACK SILTY CLAY W/SOME COARSE SAND, TRACE OF FINE SAND.	A-7-5(17)	
10	18.0 20.0	1 2 2 2	SATURATED SOFT BLACK SILTY CLAY W/SOME COARSE SAND, TRACE OF FINE SAND.	A-7-5(16)	
11	24.0 26.0	WR WR WR WR	SATURATED SOFT BLACK SILTY CLAY W/SOME COARSE SAND, TRACE OF FINE SAND.	A-7-5(17)	
U-1	29.0 31.0			A-7-5(20)	
12	31.0 33.0	WH WH WH WH	SATURATED SOFT GRAY SILTY CLAY W/SOME FINE SAND, TRACE OF COARSE SAND.	A-7-6(15)	
13	34.0 36.0	2 3 6 7	SATURATED LOOSE GRAY SILTY FINE SAND W/SOME COARSE SAND.	A-2-4(0)	
14	39.0 41.0	8 18 17 8	SATURATED DENSE GRAY COARSE SANDY FINE GRAVEL W/SOME FINE SAND, TRACE OF SILT.	A-1-B	
15	44.0 46.0	12 9 7 7	SATURATED MEDIUM DENSE GRAY SILTY FINE TO COARSE SAND W/TRACE FINE GRAVEL.	A-2-4(0)	
16	49.0 51.0	12 11 18 18	SATURATED VERY STIFF REDDISH GRAY SILTY FINE SANDY CLAY W/TRACE COARSE SAND.	A-6(7)	
17	54.0 56.0	12 12 19 24	SATURATED HARD RED SILTY FINE SANDY CLAY W/TRACE COARSE SAND.	A-6(10)	
18	59.0 61.0	10 15 11 13	SATURATED MEDIUM DENSE GRAY COARSE TO FINE SAND W/SOME SILT, TRACE OF FINE GRAVEL.	A-2-4(0)	EL.-57.00 MIN. 12.75" DIA. STEEL PIPE PILE (CLOSED-END) TIP ELEVATION PIERS 1 THROUGH 10.
19	64.0 66.0	12 10 6 11	SATURATED VERY STIFF BROWN FINE TO COARSE SANDY CLAY W/SOME SILT, TRACE OF FINE GRAVEL.	A-6(4)	EL.-64.00 ESTIMATED 12.75" DIA. STEEL PIPE PILE (CLOSED-END) TIP ELEVATION PIERS 1 THROUGH 10.
20	69.0 71.0	13 12 20 23	SATURATED HARD BROWN SILTY FINE SANDY CLAY W/TRACE COARSE SAND AND FINE GRAVEL.	A-6(5)	
21	74.0 76.0	50	SATURATED VERY DENSE BROWN SILTY FINE SAND W/SOME COARSE SAND AND CLAY, TRACE OF FINE GRAVEL.	A-2-4(0)	
22	78.0 80.0	21 20 37 50	SATURATED HARD BROWN FINE SANDY CLAY W/SOME SILT, TRACE OF COARSE SAND.	A-7-6(22)	

END BORING.

BORING: IT-11 | **DATE DRILLED:** 12/19/13
STATION: 157+81.51 | **OFFSET:** 5.80' LT. | **ELEVATION:** 3.21' | **NORTHING:** 627523.8142 | **EASTING:** 615099.8519
COMMENTS: BORING TERMINATED AT 80.0' PER WRA.

SAMPLE INFORMATION

NO.	DEPTH	BLOWS /6"	DESCRIPTION	CLASS /G.I.	REMARKS
1	2.0 4.0	1	NO SIEVE ANALYSIS - INDICATION OF SATURATED SOFT BLACK ORGANIC CLAY.		
2	4.0 6.0	1	NO SIEVE ANALYSIS - INDICATION OF SATURATED SOFT BLACK ORGANIC CLAY.		
3	6.0 8.0	1	NO SIEVE ANALYSIS - INDICATION OF SATURATED SOFT BLACK ORGANIC CLAY.		
4	8.0 10.0	WH WH WH WH	NO SIEVE ANALYSIS - INDICATION OF SATURATED SOFT BLACK ORGANIC CLAY.		
5	10.0 12.0	WH WH WH WH	SATURATED SOFT GRAY CLAYEY SILT W/SOME FINE TO COARSE SAND AND ORGANIC MATTER.	A-5(8)	
6	12.0 14.0	WH WH WH 2	SATURATED SOFT GRAY SILT W/SOME FINE SAND, CLAY AND ORGANIC MATTER, TRACE OF COARSE SAND.	A-4(5)	
7	14.0 16.0	1 1 2 3	SATURATED SOFT GRAY ORGANIC SILTY CLAY W/SOME FINE TO COARSE SAND.	A-6(7)	
8	16.0 18.0	2 1 2 1	SATURATED SOFT GRAY CLAYEY SILT W/SOME COARSE TO FINE SAND.	A-5(7)	
9	18.0 20.0	WH WH 1 2	SATURATED SOFT GRAY SILTY CLAY W/SOME FINE TO COARSE SAND.	A-6(8)	
U-1	24.0 26.0		SATURATED BLACK ORGANIC SILTY CLAY W/ TRACE OF COARSE TO FINE SAND.	A-6(12)	
10	26.0 28.0	WH WH WH WH	SATURATED SOFT GRAY CLAYEY SILT W/SOME COARSE SAND, TRACE OF FINE SAND.	A-5(5)	
11	34.0 36.0	1 1 1 1	SATURATED SOFT GRAY SILTY FINE TO COARSE SANDY CLAY W/TRACE FINE GRAVEL.	A-6(1)	
12	39.0 41.0	26 25 28 14	SATURATED VERY DENSE GRAY COARSE SAND AND FINE GRAVEL W/TRACE FINE SAND AND SILT.	A-1-B	EL.-36.00 MIN. 12.75" DIA. STEEL PIPE PILE (CLOSED-END) TIP ELEVATION PIERS 11 THROUGH 14.
13	44.0 46.0	19 17 18 23	SATURATED HARD RED CLAYEY FINE SANDY SILT W/SOME COARSE SAND, TRACE OF FINE GRAVEL.	A-4(2)	EL.-40.00 MIN. 12.75" DIA. STEEL PIPE PILE (CLOSED-END) TIP ELEVATION PIER 15.
14	49.0 51.0	20 24 24 19	NO SIEVE ANALYSIS - INDICATION OF SATURATED HARD RED CLAYEY SILT W/SOME SAND.		EL.-46.00 MIN. HP14x89 STEEL PILE TIP ELEVATION PIERS 16 AND 17.
15	54.0 56.0	35 47 48 33	SATURATED VERY DENSE BLUISH GRAY SILTY FINE SAND W/SOME COARSE SAND, TRACE OF FINE GRAVEL.	A-2-4(0)	EL.-51.00 ESTIMATED 12.75" DIA. STEEL PIPE PILE (CLOSED-END) TIP ELEVATION PIERS 11 THROUGH 15, AND HP14x89 PILES PIERS 16 AND 17.
16	59.0 61.0	22 22 16 14	SATURATED HARD TAN COARSE TO FINE SANDY CLAY W/SOME SILT, TRACE OF FINE GRAVEL.	A-6(1)	
17	64.0 66.0	9 14 18 18	SATURATED HARD REDDISH BROWN SILTY CLAY W/TRACE FINE TO COARSE SAND.	A-6(12)	
18	69.0 71.0	20 23 24 21	SATURATED HARD REDDISH BROWN CLAYEY FINE SANDY SILT W/TRACE COARSE SAND.	A-4(1)	
19	74.0 76.0	19 32 44 50	SATURATED HARD GRAY CLAYEY FINE SANDY SILT W/TRACE COARSE SAND.	A-4(0)	
20	78.0 80.0	50	SATURATED VERY DENSE GREEN CLAYEY FINE TO COARSE SAND W/TRACE FINE GRAVEL AND SILT.	A-2-6(1)	

END BORING.

BORING: IT-12 | **DATE DRILLED:** 9/24/13
STATION: 160+88.81 | **OFFSET:** 20.09' RT. | **ELEVATION:** 4.57' | **NORTHING:** 627613.3080 | **EASTING:** 615394.0110
COMMENTS: N/A

SAMPLE INFORMATION

NO.	DEPTH	BLOWS /6"	DESCRIPTION	CLASS /G.I.	REMARKS
1	0.0 2.0	13 10 9 5	WET MEDIUM DENSE BROWN COARSE SANDY FINE GRAVEL W/SOME FINE SAND AND SILT.	A-1-B	
2	2.0 4.0	5 4 3 2	SATURATED FIRM BROWN FINE SANDY SILT W/SOME COARSE SAND AND FINE GRAVEL.	A-2-4(0)	
3	4.0 6.0	5 2 2 2	SATURATED SOFT GRAY SILTY CLAY W/TRACE OF COARSE TO FINE SAND AND FINE GRAVEL.	A-6(12)	EL.-0.77 B.O.F. PIERS 16 THROUGH 18.
4	6.0 8.0	3 2 2 2	SATURATED SOFT GRAY CLAY W/SOME SILT AND ORGANIC MATTER, TRACE OF FINE SAND.	A-7-5(16)	
5	8.0 10.0	1 1 1 2	SATURATED SOFT GRAY CLAY W/SOME SILT AND ORGANIC MATTER, TRACE OF FINE TO COARSE SAND.	A-7-5(17)	
U-1	10.0 12.0				
6	12.0 14.0	WH WH WH 1	SATURATED SOFT GRAY CLAY W/SOME SILT AND ORGANIC MATTER, TRACE OF FINE TO COARSE SAND.	A-4(8)	
7	14.0 16.0	WR WR WH WH		A-6(12)	
8	16.0 18.0	WH WH WH 1	SATURATED SOFT GRAY SILT W/SOME CLAY AND ORGANIC MATTER, TRACE OF FINE TO COARSE SAND.	A-4(3)	
U-2	18.0 20.0		SATURATED BROWN SILTY CLAY W/ TRACE OF FINE TO COARSE SAND.	A-6(10)	
9	20.0 22.0	WR WR WR WH	SATURATED SOFT GRAY FINE SANDY SILT W/TRACE OF COARSE SAND.	A-4(0)	
10	24.0 26.0	2 3 3 4	SATURATED LOOSE GRAY FINE SAND W/SOME COARSE SAND AND SILT, TRACE OF FINE GRAVEL.	A-2-4(0)	
11	29.0 31.0	10 11 8 9	SATURATED MEDIUM DENSE BROWN COARSE SAND AND FINE GRAVEL W/SOME FINE SAND, TRACE OF SILT.	A-1-B	
12	34.0 36.0	31 18 12 17	SATURATED MEDIUM DENSE BROWN COARSE SANDY FINE GRAVEL W/SOME FINE SAND, TRACE OF SILT.	A-1-A	
13	39.0 41.0	10 6 10 14	SATURATED VERY STIFF BROWN FINE SANDY CLAY W/SOME SILT AND COARSE SAND.	A-6(5)	
14	44.0 46.0	8 9 11 14	SATURATED VERY STIFF BROWN SILTY FINE SANDY CLAY W/TRACE OF COARSE SAND.	A-6(8)	
15	49.0 51.0	4 7 11 11	SATURATED VERY STIFF BROWN CLAYEY FINE SANDY SILT W/SOME COARSE SAND.	A-4(1)	EL.-46.00 MIN. HP14x89 STEEL PILE TIP ELEVATION PIER 18.
16	54.0 56.0	4 6 8 12	SATURATED STIFF BROWN FINE SANDY CLAY W/SOME SILT, TRACE OF COARSE SAND.	A-6(2)	EL.-51.00 ESTIMATED HP14x89 STEEL PILE TIP ELEVATION PIER 18.
17	59.0 61.0	8 7 6 10	SATURATED MEDIUM DENSE BROWN SILTY FINE SAND W/SOME COARSE SAND, TRACE OF FINE GRAVEL.	A-2-4(0)	
18	64.0 66.0	2 6 7 15	SATURATED STIFF BROWN SILTY CLAY W/SOME FINE SAND, TRACE OF COARSE SAND.	A-6(11)	
19	69.0 71.0	7 11 10 8	SATURATED VERY STIFF BROWN FINE SANDY SILT W/SOME COARSE SAND AND CLAY, TRACE OF FINE GRAVEL.	A-4(0)	
20	74.0 76.0	15 22 24 24	SATURATED HARD BROWN CLAY W/SOME SILT, TRACE OF FINE TO COARSE SAND.	A-7-6(20)	
21	79.0 81.0	45 50	SATURATED VERY DENSE BROWN FINE TO COARSE SAND W/SOME SILT, TRACE OF FINE GRAVEL.	A-2-4(0)	
22	84.0 86.0	38 50	SATURATED VERY DENSE BROWN CLAYEY FINE SAND W/SOME SILT AND COARSE SAND, TRACE OF FINE GRAVEL.	A-2-6(0)	
23	88.0 90.0	5 15 19 22	SATURATED HARD BROWN FINE SANDY CLAY W/SOME SILT AND COARSE SAND.	A-6(6)	

END BORING

Unofficial Website Copy

N:\31896-002\CADD\BRIDGE\BO301_IT13.DGN

DELAWARE DEPARTMENT OF TRANSPORTATION

ADDENDUMS / REVISIONS

SCALE: NONE

NEW CASTLE INDUSTRIAL TRACK TRAIL, PHASE 3

CONTRACT	BRIDGE NO.	X
T201330009	DESIGNED BY: ADD	
COUNTY	CHECKED BY: WAG	
NEW CASTLE		

BORING LOG – 3

BO-301

SHEET NO. 162

TOTAL SHTS. 207

ENVIRONMENTAL COMPLIANCE NOTES

1. GENERAL NOTES:

A. THE PURPOSE OF THESE SHEETS IS TO IDENTIFY THOSE ITEMS ASSOCIATED WITH ENVIRONMENTAL COMPLIANCE. IMPACT CALCULATIONS ARE FOR THE AGENCY PERMIT REPORTING PURPOSES ONLY AND ARE NOT TO BE USED FOR BIDDING PURPOSES.

B. IF A DEPARTURE FROM THE APPROVED PLANS (WHICH WOULD AFFECT ANY NATURAL AND/OR CULTURAL RESOURCES) IS NECESSARY, THE ENVIRONMENTAL STUDIES SECTION SHALL BE CONTACTED AT (302) 760-2264 TO ALLOW FOR COORDINATION WITH THE APPROPRIATE RESOURCE AGENCIES AND APPROVAL.

C. USE OF THESE SHEETS DOES NOT ALLEVIATE THE CONTRACTOR'S RESPONSIBILITY TO COMPLY WITH ALL CONDITIONS SET FORTH IN THE ENVIRONMENTAL STATEMENT AND PERMITS.

2. NATURAL RESOURCE ISSUES:

A. PERMIT REQUIREMENTS/APPROVALS*:
U.S. ARMY CORPS OF ENGINEERS (USACE): NWP 23 **
DNREC - WETLANDS & SUBAQUEOUS LANDS (WLSL): WETLANDS AND SUBAQUEOUS LANDS PERMITS **
DNREC - WQC & CZM: ISSUED (PROJECT NOT LOCATED IN THE CRW)
NEW CASTLE COUNTY DEPT. OF LAND USE - FLOODPLAIN APPROVAL **
U.S. COAST GUARD - BRIDGE PERMIT FOR CHRISTINA RIVER AND ADVANCE APPROVAL FOR LITTLE MILL CREEK **

* THE PERMITS/APPROVALS LISTED ARE THOSE REQUIRED FOR THIS PROJECT. THE ENVIRONMENTAL STUDIES SECTION IS RESPONSIBLE FOR COORDINATING AND/OR OBTAINING THIS APPROVAL.

** THE CONTRACTOR MUST ENSURE THAT THESE PERMITS/APPROVALS ARE IN THEIR POSSESSION PRIOR TO BEGINNING CONSTRUCTION IN THE PERMITTED AREA(S) AND ENSURE THEY ARE DISPLAYED ON-SITE DURING THE ENTIRE CONSTRUCTION PERIOD.

B. CONSTRUCTION RESTRICTIONS:

FISHERIES - NO IN-WATER WORK CHRISTINA RIVER AND LITTLE MILL CREEK MARCH 15 TO JUNE 30 (INCLUSIVE)
ENDANGERED SPECIES - STATE RARE OSPREY, NESTING PLATFORMS NEAR PROJECT SITE WILL BE MOVED BY DNREC PRIOR TO CONSTRUCTION
MIGRATORY BIRDS - NONE
BALD EAGLE - IF NEST IS ACTIVE, AN EAGLE SPOTTER IS REQUIRED DECEMBER 15 TO JULY 1. CONTACT CAROL SULLIVAN AT CAROL.SULLIVAN@STATE.DE.US; (302)760-2129 TO ARRANGE AN EAGLE SPOTTER. TREE REMOVAL WITHIN 330' BUFFER SHALL OCCUR JULY 2 TO DECEMBER 14, 2016.

3. CULTURAL RESOURCE ISSUES: STATE HISTORIC PRESERVATION OFFICE ISSUED FINDING OF NO HISTORIC PROPERTIES AFFECTED MAY 15, 2015

A. DUE TO KNOWN ARCHAEOLOGICAL RESOURCES IN THE AREAS, STAGING AND STOCKPILING SHOULD BE LOCATED WITHIN THE LOC. ANY STAGING OR STOCKPILE LOCATIONS OUTSIDE OF THE LOC ARE TO BE IN NON-ARCHAEOLOGICALLY-SENSITIVE AREAS AND MUST BE REVIEWED AND APPROVED BY HEIDI E. KROFFT AT (302)760-2125 OR HEIDI.KROFFT@STATE.DE.US.

4. PROTECTION OF RESOURCES:

A. CLEARING IN WETLAND AREAS SHALL BE KEPT TO A MINIMUM ABSOLUTELY NECESSARY FOR CONSTRUCTION ACCESS. ALL EQUIPMENT TRAVERSING WETLANDS AND SUBAQUEOUS LAND SHALL BE SUPPORTED ON MATS. PAYMENT FOR MATS SHALL BE MADE UNDER ITEM 601520 - TEMPORARY TIMBER MAT. IN WETLAND AREAS THAT ARE CLEARED, THERE SHALL BE NO GRUBBING EXCEPT WHERE NECESSARY TO CONSTRUCT PROJECT COMPONENTS (SUCH AS FOUNDATIONS AND RIPRAP PROTECTION). VEGETATION SHALL BE CUT FLUSH WITH THE GROUND (I.E. NO DISTURBANCE OF THE ROOT MAT). ACCESS TO RESOURCE AREAS WHICH IS NOT SPECIFICALLY AUTHORIZED BY THE ACOE AND DNREC PERMITS (AS ILLUSTRATED ON THE ENVIRONMENTAL COMPLIANCE SHEETS) IS STRICTLY PROHIBITED.

B. SILT FENCE INSTALLATION ADJACENT TO WOODED UPLANDS/WETLANDS (EC-06 ONLY): SANDBAGS SHALL BE USED TO SECURE SILT FENCE IN LIEU OF TRENCHING PROVIDED PROPER EROSION & SEDIMENT CONTROL CAN BE MAINTAINED. SANDBAGS USED TO SECURE SILT FENCE SHALL BE INCIDENTAL TO ITEM 905001 - SILT FENCE. THE ENVIRONMENTAL STUDIES SECTION (CAROL SULLIVAN, 302-760-2129) CAN PROVIDE FURTHER GUIDANCE REGARDING THIS METHOD OF INSTALLATION.

CONTRACTOR ACCESS BEYOND THE LOC IS STRICTLY PROHIBITED.

C. IN PLACES WHERE THE WETLANDS COME WITHIN 25' OF THE LOC, THEY WILL NEED TO BE DELINEATED/IDENTIFIED WITH CONSTRUCTION SAFETY FENCE SO TO PREVENT INADVERTENT ENCROACHMENT. BOTH THE USACE AND DNREC-MAPPED WETLANDS MUST BE PROTECTED, BUT THE CONTRACTOR NEED ONLY IDENTIFY THE MORE CONSERVATIVE ONE.

5. RESTORATION:

A. RESTORATION OF WETLANDS IN WETLAND ACCESS ROAD AREAS: AFTER THE ROADWAY IS NO LONGER NEEDED, CAREFULLY REMOVE AND DISPOSE OF ALL MATERIALS INCLUDING GEOTEXTILE AT AN APPROVED OFFSITE LOCATION. RESTORE WETLAND AREAS DISTURBED DURING CONSTRUCTION TO THEIR PRECONSTRUCTION GRADE AND SEEDED, MAINTAINING SILT FENCE UNTIL THE GROUND IS STABILIZED. PAYMENT FOR SEEDING SHALL BE UNDER ITEM 908512 - TEMPORARY GRASS SEEDING - WET GROUND.

IN ADDITION, ALL OTHER WETLAND AREAS WITHIN THE LOC SHALL BE SEEDED AS DIRECTED BY THE ENGINEER. PAYMENT SHALL BE UNDER ITEM 908512 - TEMPORARY GRASS SEEDING - WET GROUND.

6. MITIGATION:

A. ALL DNREC WETLAND REPLACEMENT OBLIGATIONS WILL BE MET THROUGH MEMORANDUM OF AGREEMENT WITH DNREC, EXECUTED OCTOBER 14, 2015. THE PERMANENT OPEN WATER SHADING IMPACTS DO NOT REQUIRE MITIGATION. NO MITIGATION REQUIRED FOR USACE.

7. IF A DEPARTURE FROM THE APPROVED PLANS IS NECESSARY AND FOR ALL SUBMITTALS THAT MUST BE APPROVED BY A RESOURCE AGENCY (E.G. USACE, DNREC), THE CONTRACTOR SHALL CONTACT THE ENGINEER, WHO WILL THEN NOTIFY THE ENVIRONMENTAL STUDIES OFFICE (ESO). THE ESO WILL COORDINATE WITH THE APPROPRIATE RESOURCE AGENCIES. WORK SHALL NOT PROCEED UNTIL ALL THE NECESSARY APPROVALS, PERMITS OR MODIFICATIONS ARE OBTAINED. THIS RESOURCE AGENCY APPROVAL IS IN ADDITION TO ANY APPROVAL THAT NEEDS TO BE DERIVED FROM THE ENGINEER. APPROVAL MAY TAKE A SIGNIFICANT AMOUNT OF TIME TO COMPLETE AND ALL CHANGES MAY NOT BE APPROVED. THE CONTRACTOR SHALL HAVE NO CLAIM AGAINST THE DEPARTMENT FOR COST OR DELAYS ASSOCIATED WITH RESOURCE AGENCY APPROVAL OR REJECTION OF CHANGES OR DEVIATIONS FROM THESE PLANS.

TOTAL TEMPORARY WETLAND IMPACTS

SHEET	IMPACT DESCRIPTION	AREA (SF)	AREA (AC)	VOLUME (CY)	JURISDICTION
EC-02	DNREC IMPACTS	1,867.95	0.0429	N/A	DNREC
EC-02	USACE IMPACTS	3,602.13	0.0827	N/A	USACE
EC-03	DNREC IMPACTS	4,236.72	0.0973	N/A	DNREC
EC-03	USACE IMPACTS	7,441.86	0.1708	N/A	USACE
EC-04	USACE/DNREC IMPACTS	0.00	0.0000	N/A	USACE/DNREC
EC-05	USACE/DNREC IMPACTS	0.00	0.0000	N/A	USACE/DNREC
EC-06	DNREC IMPACTS	8,100.08	0.1860	N/A	DNREC
EC-06	USACE IMPACTS	22,305.29	0.5121	N/A	USACE
EC-07	DNREC IMPACTS	10,865.57	0.2494	N/A	DNREC
EC-07	USACE IMPACTS	17,942.74	0.4119	N/A	USACE
EC-08	DNREC IMPACTS	14,520.60	0.3333	N/A	DNREC
EC-08	USACE IMPACTS	25,001.60	0.5740	N/A	USACE
EC-09	DNREC IMPACTS	20,845.42	0.4786	N/A	DNREC
EC-09	USACE IMPACTS	32,032.59	0.7354	N/A	USACE
EC-10	DNREC IMPACTS	22,448.65	0.5154	N/A	DNREC
EC-10	USACE IMPACTS	36,327.90	0.8340	N/A	USACE
ALL	TOTAL DNREC IMPACTS	82,885.66	1.9028	N/A	DNREC
ALL	TOTAL USACE IMPACTS	144,655.11	3.3208	N/A	USACE

TOTAL PERMANENT WETLAND IMPACTS

SHEET	IMPACT DESCRIPTION	AREA (SF)	AREA (AC)	VOLUME (CY)	JURISDICTION
EC-03	DNREC IMPACTS	1,146.46	0.0263	70	DNREC
EC-03	USACE IMPACTS	1,262.67	0.0290	89	USACE
EC-06	DNREC IMPACTS	5,875.87	0.1349	0	DNREC
EC-07	DNREC IMPACTS	7,076.80	0.1625	0	DNREC
EC-08	DNREC IMPACTS	10,481.33	0.2406	0	DNREC
EC-09	DNREC IMPACTS	11,187.50	0.2968	0	DNREC
EC-10	DNREC IMPACTS	4,844.58	0.1112	0	DNREC
EC-10	USACE IMPACTS	189.00	0.0043	48	USACE
ALL	TOTAL DNREC IMPACTS	40,612.21	0.9323	70	DNREC
ALL	TOTAL USACE IMPACTS	1451.67	0.0333	137	USACE

TOTAL TEMPORARY OPEN WATER IMPACTS

SHEET	IMPACT DESCRIPTION	AREA (SF)	AREA (AC)	VOLUME (CY)	JURISDICTION
EC-03	DNREC IMPACTS	1,898.57	0.0056	79	DNREC
EC-03	USACE IMPACTS	1,898.57	0.0056	79	USACE
EC-06	DNREC IMPACTS	98.89	0.0023	0	DNREC
EC-06	USACE IMPACTS	121.57	0.0028	0	USACE
EC-07	DNREC IMPACTS	5,519.35	0.1267	0	DNREC
EC-07	USACE IMPACTS	9,431.32	0.2165	0	USACE
EC-08	DNREC IMPACTS	1,624.30	0.0373	0	DNREC
EC-08	USACE IMPACTS	2,333.42	0.0536	0	USACE
ALL	TOTAL DNREC IMPACTS	9,141.12	0.2099	79	DNREC
ALL	TOTAL USACE IMPACTS	13,784.89	0.3165	79	USACE

TOTAL PERMANENT OPEN WATER IMPACTS

SHEET	IMPACT DESCRIPTION	AREA (SF)	AREA (AC)	VOLUME (CY)	JURISDICTION
EC-03	DNREC IMPACTS	1,030.00	0.0236	596	DNREC
EC-03	USACE IMPACTS	1,030.00	0.0236	596	USACE
EC-06	DNREC IMPACTS	22.67	0.0005	0	DNREC
EC-07	DNREC IMPACTS	4,112.17	0.0944	0	DNREC
EC-08	DNREC IMPACTS	709.12	0.0163	0	DNREC
ALL	TOTAL DNREC IMPACTS	5,873.97	0.1348	596	DNREC
ALL	TOTAL USACE IMPACTS	1,030.00	0.0236	596	USACE

NOTES:
WETLANDS AND WATERS DELINEATED BY WHITMAN, REQUARDT & ASSOCIATES ON AUGUST 19, 23, AND 27, 2013 AND APRIL 7, 2015 IN ACCORDANCE WITH THE 1987 CORPS OF ENGINEERS MANUAL AND THE 2012 ATLANTIC AND GULF COASTAL PLAIN REGIONAL SUPPLEMENT. A USACE JURISDICTIONAL DETERMINATION HAS NOT BEEN CONDUCTED. DNREC JURSIDCTION APPEARS ON MAPS DNR 402 AND 403.

SHEET PREPARED BY: WHITMAN, REQUARDT & ASSOCIATES, LLP
DATE: OCTOBER 15, 2014
LAST UPDATED: NOVEMBER 10, 2015

Unofficial Website Copy

TEMPORARY WETLAND IMPACT AREA SCHEDULE						
ID	IMPACT DESCRIPTION	AREA (SF)	AREA (AC)	VOLUME (CY)	JURISDICTION	TYPE
2-WT-01	MATS, ACCESS, MSC WALL, STORAGE	1,378.14	0.0316	N/A	USACE	E2EM
2-WT-02	MATS, ACCESS, MSC WALL, STORAGE	1,867.95	0.0429	N/A	USACE/DNREC-M	E2EM
2-WT-03	MATS, SMALL VEHICLE, MSC WALL	356.03	0.0082	N/A	USACE	E2EM

TOTAL DNREC IMPACTS FOR THIS SHEET = 0.0429 AC. (ALL M)
TOTAL USACE IMPACTS FOR THIS SHEET = 0.0827 AC. (ALL E2EM)

LEGEND

- PERMANENT IMPACT AREA
- TEMPORARY IMPACT AREA
- MHW — MEAN HIGH WATER
- SML — STATE MAPPED LINE
- SMW — STATE MAPPED WETLAND
- WL — USACE WETLAND BOUNDARY

XX / 2X — IMPACT AREA TYPE ID. (SEE BELOW) / IMPACT AREA ID. AND/OR NUMBER

O = OPEN WATER IMPACT M = MARSH
T = TIDAL MUDFLATS LM = LOW MARSH
W = WETLAND IMPACT
WT = TEMPORARY WETLAND IMPACT
OT = TEMPORARY OPEN WATER IMPACT
E2EM = ESTUARINE INTERTIDAL EMERGENT

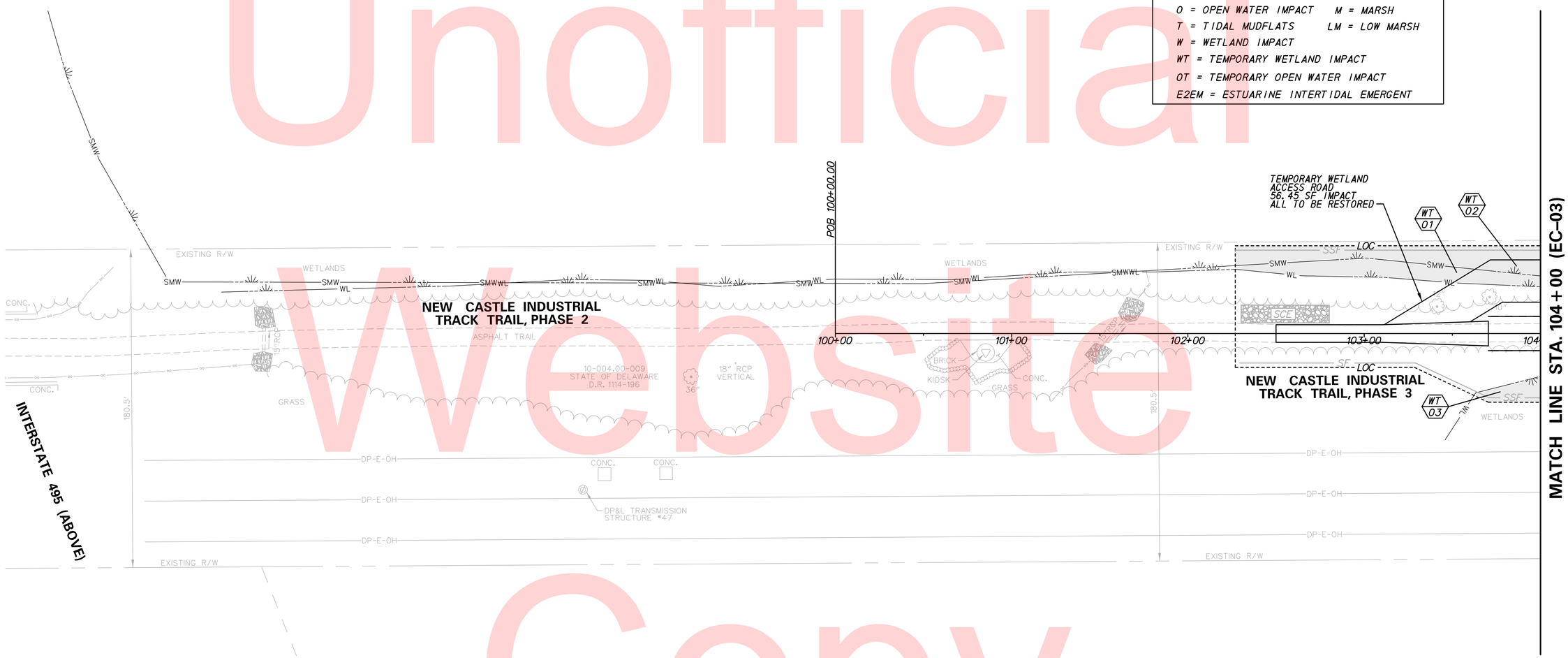

Unofficial Website Copy

N:\31896-002\CADD\EC02_ITT3.DGN

DELAWARE DEPARTMENT OF TRANSPORTATION	ADDENDUMS / REVISIONS	SCALE 0 30 60 90 FEET	NEW CASTLE INDUSTRIAL TRACK TRAIL, PHASE 3	CONTRACT T201330009	BRIDGE NO. X	ENVIRONMENTAL COMPLIANCE PLAN	EC-02
				COUNTY NEW CASTLE	DESIGNED BY: LCC		SHEET NO. 164
					CHECKED BY: JRR		TOTAL SHTS. 207

TEMPORARY WETLAND IMPACT AREA SCHEDULE

ID	IMPACT DESCRIPTION	AREA (SF)	AREA (AC)	VOLUME (CY)	JURISDICTION	TYPE
3-WT-01	MATS, ACCESS, MSE WALL, STORAGE	190.26	0.0044	N/A	USACE	E2EM
3-WT-02	WETLAND ACCESS RD, ACCESS	3241.99	0.0744	N/A	USACE/DNREC-M	E2EM
3-WT-03	MATS, ACCESS, MSE WALL, STORAGE	121.16	0.0028	N/A	DNREC-M	E2EM
3-WT-04	MATS, ACCESS, MSE WALL, STORAGE	57.11	0.0013	N/A	DNREC-M	E2EM
3-WT-05	MATS, ACCESS, MSE WALL, STORAGE	66.91	0.0015	N/A	USACE/DNREC-T	E2EM
3-WT-06	MATS, ACCESS, MSE WALL, STORAGE	55.75	0.0013	N/A	USACE/DNREC-T	E2EM
3-WT-07	WETLAND ACCESS RD, MSE WALL	12.27	0.0003	N/A	USACE	E2EM
3-WT-08	WETLAND ACCESS RD, MSE WALL	120.37	0.0028	N/A	USACE/DNREC-T	E2EM
3-WT-09	WETLAND ACCESS RD, MSE WALL	554.39	0.0127	N/A	USACE/DNREC-T	E2EM
3-WT-10	MATS, SMALL VEHICLE, MSE WALL	2122.36	0.0487	N/A	USACE	E2EM
3-WT-11	MATS, SMALL VEHICLE, MSE WALL	37.58	0.0009	N/A	USACE/DNREC-T	E2EM
3-WT-12	MATS, SMALL VEHICLE, MSE WALL	938.15	0.0215	N/A	USACE	E2EM
3-WT-13	MATS, SMALL VEHICLE, MSE WALL	101.83	0.0023	N/A	USACE/DNREC-T	E2EM

0.0785 AC. (DNREC M)
0.0187 AC. (DNREC T)

TOTAL TEMPORARY DNREC WETLAND IMPACTS THIS SHEET = 0.0973 AC.
TOTAL TEMPORARY USACE WETLAND IMPACTS THIS SHEET = 0.1708 AC. (ALL E2EM)

PERMANENT WETLAND IMPACT AREA SCHEDULE

ID	IMPACT DESCRIPTION	AREA (SF)	AREA (AC)	VOLUME (CY)	JURISDICTION	TYPE
3-W-01	BILLBOARD ACCESS RD	260.58	0.0060	28	USACE	E2EM
3-W-02	BILLBOARD ACCESS RD	1002.09	0.0230	61	USACE/DNREC-T	E2EM
3-W-03	BILLBOARD ACCESS RD	144.37	0.0033	9	DNREC-T	E2EM

TOTAL PERMANENT DNREC WETLAND IMPACTS THIS SHEET = 0.0263 AC. (ALL DNREC T)
TOTAL PERMANENT USACE WETLAND IMPACTS THIS SHEET = 0.0290 AC. (ALL E2EM)

LEGEND

- PERMANENT IMPACT AREA
- TEMPORARY IMPACT AREA
- MHW — MEAN HIGH WATER
- SML — STATE MAPPED LINE
- SMW — STATE MAPPED WETLAND
- WL — USACE WETLAND BOUNDARY
- XX / ?X — IMPACT AREA TYPE ID. (SEE BELOW) / IMPACT AREA ID. AND/OR NUMBER

O = OPEN WATER IMPACT M = MARSH
T = TIDAL MUDFLATS LM = LOW MARSH
W = WETLAND IMPACT
WT = TEMPORARY WETLAND IMPACT
OT = TEMPORARY OPEN WATER IMPACT
E2EM = ESTUARINE INTERTIDAL EMERGENT

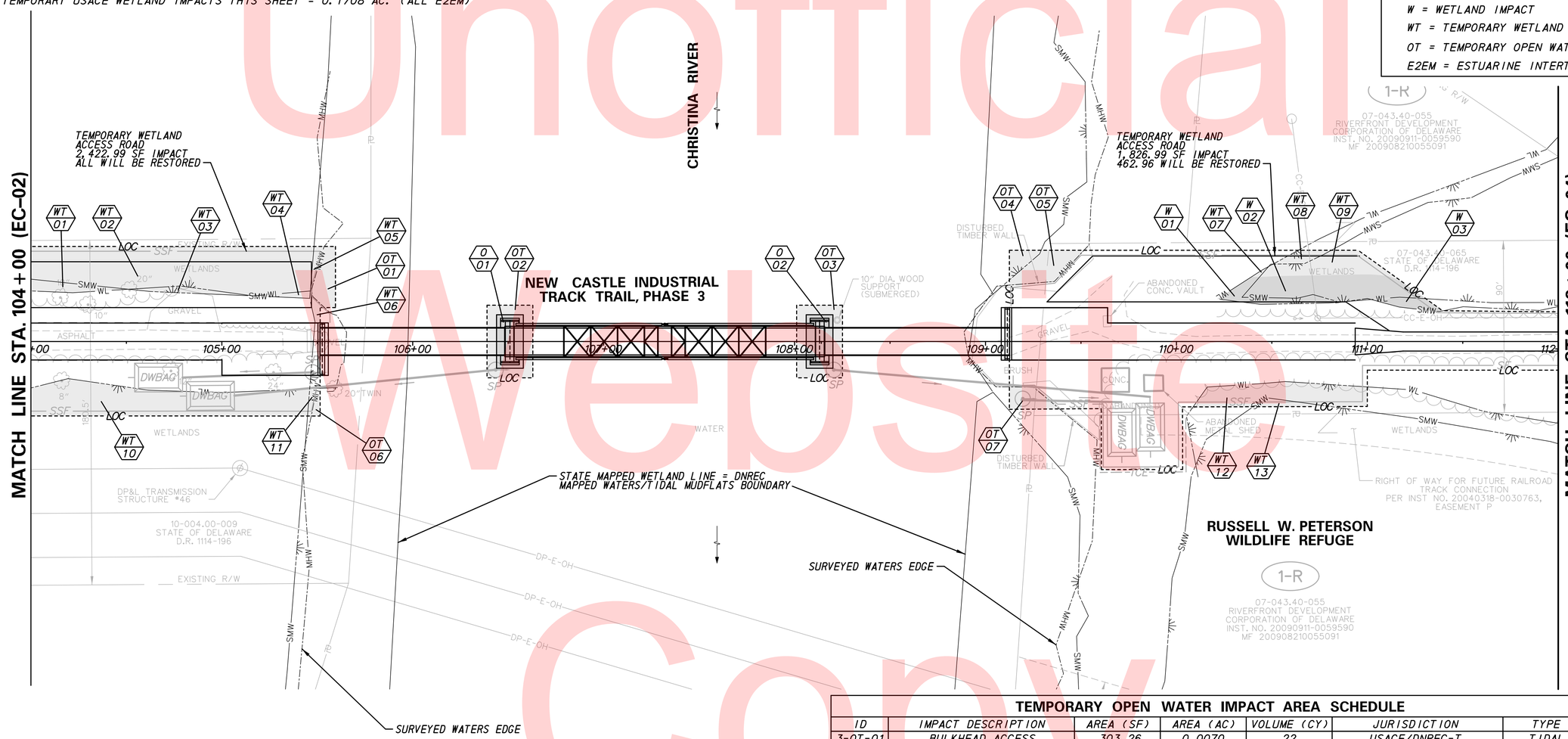

TEMPORARY OPEN WATER IMPACT AREA SCHEDULE

ID	IMPACT DESCRIPTION	AREA (SF)	AREA (AC)	VOLUME (CY)	JURISDICTION	TYPE
3-OT-01	BULKHEAD ACCESS	303.26	0.0070	22	USACE/DNREC-T	TIDAL
3-OT-02	BARGE ACCESS, PIER CONST	396.87	0.0119	0	USACE/DNREC-WATER	TIDAL
3-OT-03	BARGE ACCESS, PIER CONST	397.00	0.0119	0	USACE/DNREC-WATER	TIDAL
3-OT-04	BULKHEAD CONST, WTR ACCESS	139.21	0.0032	15	USACE/DNREC-T	TIDAL
3-OT-05	BULKHEAD CONST, WTR ACCESS	394.55	0.0091	42	USACE/DNREC-NOT MAPPED	TIDAL
3-OT-06	MSE WALL, BRIDGE ABUTMENT	42.97	0.0010	o	USACE/DNREC-T	TIDAL
3-OT-07	MSE WALL, BRIDGE ABUTMENT	224.71	0.0052	0	USACE/DNREC-NOT MAPPED	TIDAL

0.0182 AC. (DNREC WATER)
0.0111 AC. (DNREC T)
0.0142 AC. (DNREC NOT MAPPED)

TOTAL TEMPORARY DNREC AND USACE OPEN WATER IMPACTS THIS SHEET = 0.0436 AC.

PERMANENT OPEN WATER IMPACT AREA SCHEDULE

ID	IMPACT DESCRIPTION	AREA (SF)	AREA (AC)	VOLUME (CY)	JURISDICTION	TYPE
3-O-01	BRIDGE PIER/STEEL SHEETS	515.00	0.0118	270	USACE/DNREC-WATER	TIDAL
3-O-02	BRIDGE PIER/STEEL SHEETS	515.00	0.0118	326	USACE/DNREC-WATER	TIDAL

TOTAL PERMANENT DNREC AND USACE OPEN WATER IMPACTS THIS SHEET = 0.0236 AC. (ALL DNREC WATER)

Unofficial Website Copy

N:\31896-002\CADD\EC03_ITT3.DGN

DELAWARE DEPARTMENT OF TRANSPORTATION

ADDENDUMS / REVISIONS

SCALE 0 30 60 90 FEET

NEW CASTLE INDUSTRIAL TRACK TRAIL, PHASE 3

CONTRACT	BRIDGE NO.	X
T201330009	DESIGNED BY: LCC	
COUNTY		
NEW CASTLE	CHECKED BY: JRR	

ENVIRONMENTAL COMPLIANCE PLAN

EC-03
SHEET NO. 165
TOTAL SHTS. 207

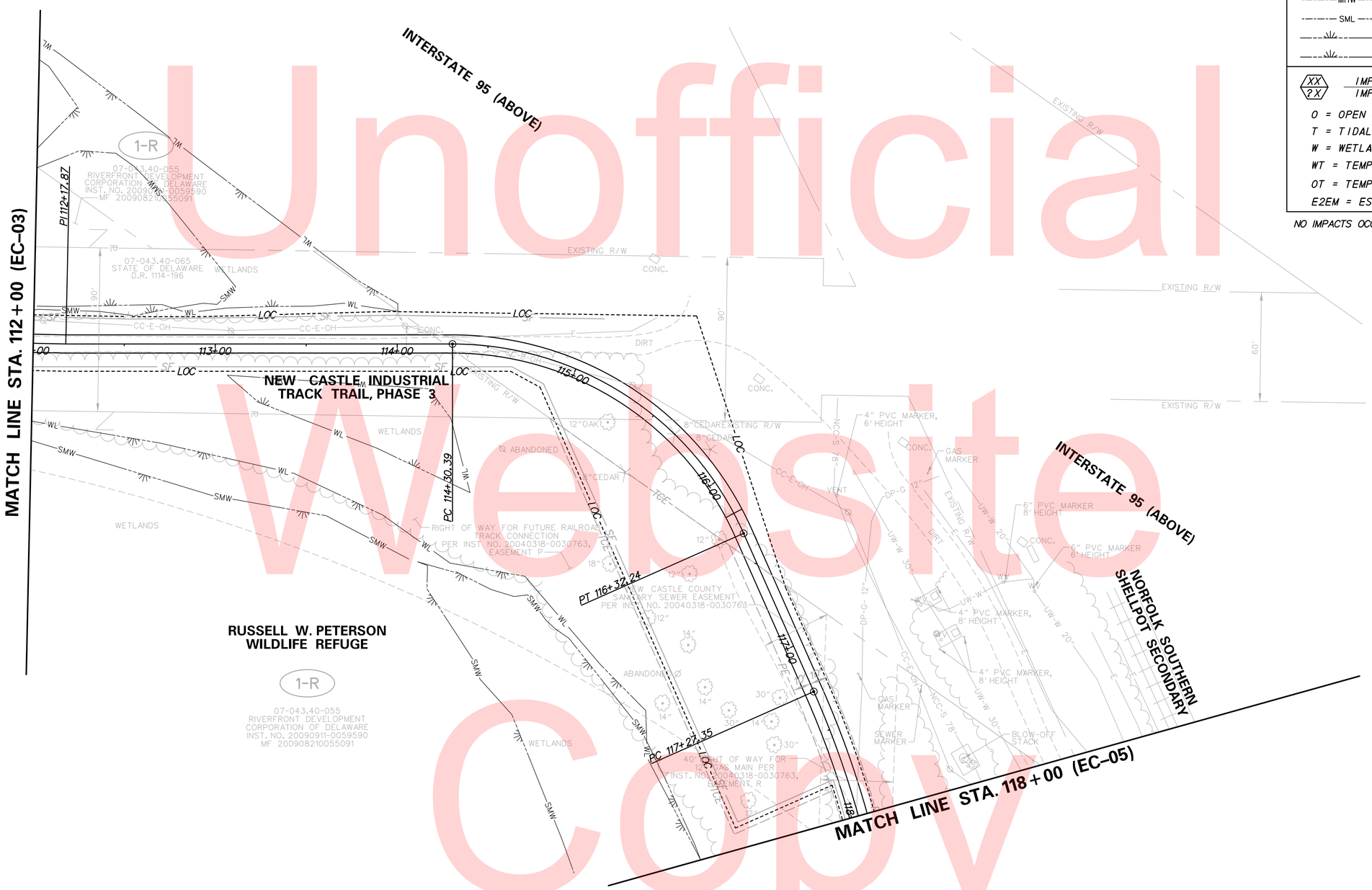

LEGEND

	PERMANENT IMPACT AREA
	TEMPORARY IMPACT AREA
MHW	MEAN HIGH WATER
SML	STATE MAPPED LINE
SMW	STATE MAPPED WETLAND
WL	USACE WETLAND BOUNDARY

XX / ?X — IMPACT AREA TYPE ID. (SEE BELOW) / IMPACT AREA ID. AND/OR NUMBER

O = OPEN WATER IMPACT M = MARSH
T = TIDAL MUDFLATS LM = LOW MARSH
W = WETLAND IMPACT
WT = TEMPORARY WETLAND IMPACT
OT = TEMPORARY OPEN WATER IMPACT
E2EM = ESTUARINE INTERTIDAL EMERGENT

NO IMPACTS OCCUR ON THIS SHEET.

Unofficial Website Copy

N:\31896-002\CADD\EC04_ITT3.DGN

DELAWARE DEPARTMENT OF TRANSPORTATION

ADDENDUMS / REVISIONS

SCALE 0 30 60 90 FEET

NEW CASTLE INDUSTRIAL TRACK TRAIL, PHASE 3

CONTRACT	BRIDGE NO.	X
T201330009	DESIGNED BY: LCC	
COUNTY		
NEW CASTLE	CHECKED BY: JRR	

ENVIRONMENTAL COMPLIANCE PLAN

EC-04

SHEET NO. 166

TOTAL SHTS. 207

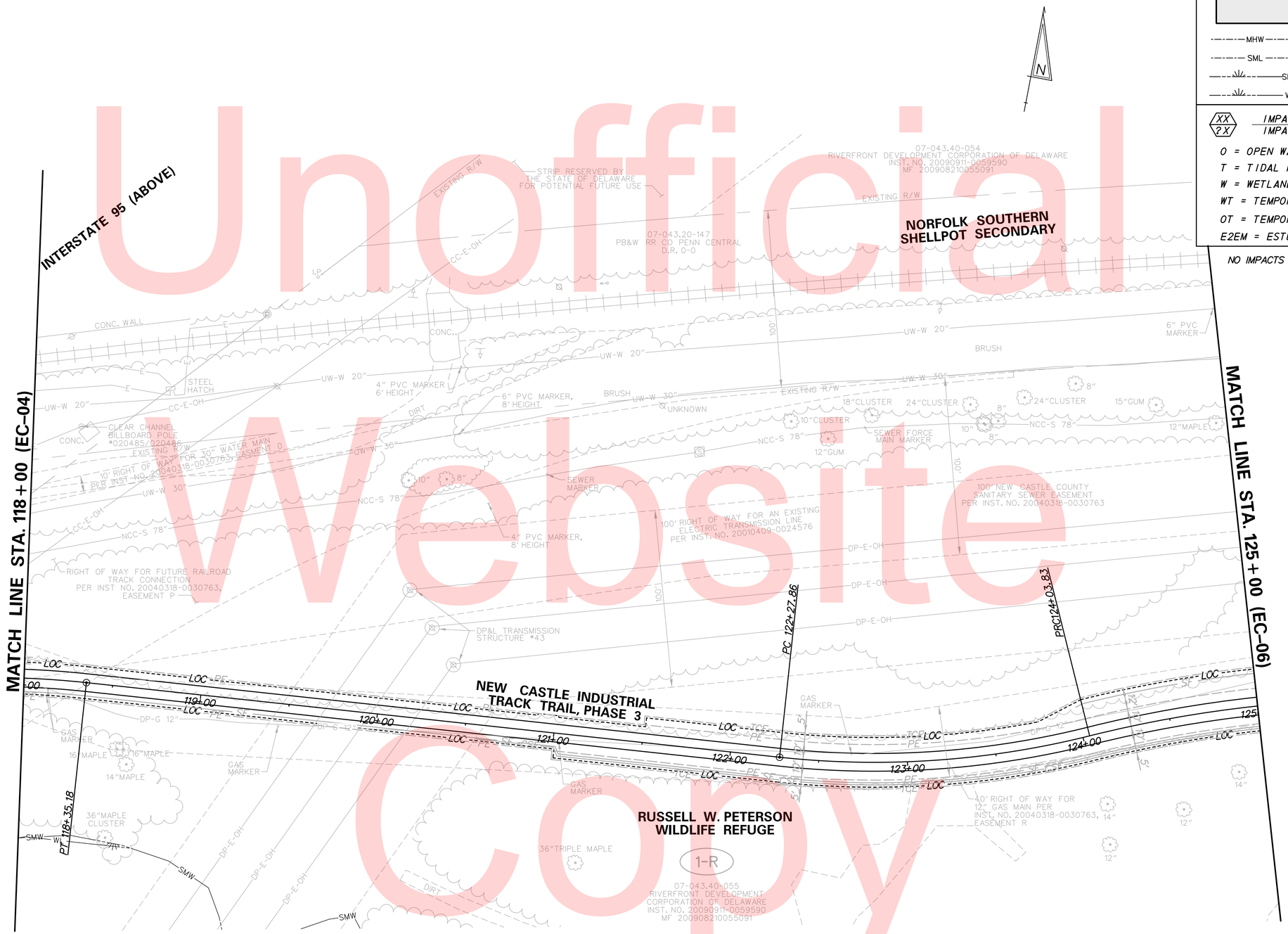

LEGEND

	PERMANENT IMPACT AREA
	TEMPORARY IMPACT AREA
MHW	MEAN HIGH WATER
SML	STATE MAPPED LINE
SMW	STATE MAPPED WETLAND
WL	USACE WETLAND BOUNDARY

XX / 2X — IMPACT AREA TYPE ID. (SEE BELOW) / IMPACT AREA ID. AND/OR NUMBER

O = OPEN WATER IMPACT M = MARSH
T = TIDAL MUDFLATS LM = LOW MARSH
W = WETLAND IMPACT
WT = TEMPORARY WETLAND IMPACT
OT = TEMPORARY OPEN WATER IMPACT
E2EM = ESTUARINE INTERTIDAL EMERGENT

NO IMPACTS OCCUR ON THIS SHEET.

Unofficial Website Copy

N:\31896-002\CADD\EC05_ITT3.DGN

DELAWARE DEPARTMENT OF TRANSPORTATION	ADDENDUMS / REVISIONS	SCALE 0 30 60 90 FEET	NEW CASTLE INDUSTRIAL TRACK TRAIL, PHASE 3	CONTRACT T201330009	BRIDGE NO. X	ENVIRONMENTAL COMPLIANCE PLAN	EC-05
				COUNTY NEW CASTLE	DESIGNED BY: LCC		SHEET NO. 167
					CHECKED BY: JRR		TOTAL SHTS. 207

TEMPORARY WETLAND IMPACT AREA SCHEDULE

ID	IMPACT DESCRIPTION	AREA (SF)	AREA (AC)	VOLUME (CY)	JURISDICTION	TYPE
6-WT-01	CRANE MAT, PILES, BOARDWALK	8329.35	0.1912	N/A	USACE	E2EM
6-WT-02	CRANE MAT, PILES, BOARDWALK	3405.15	0.0782	N/A	USACE/DNREC-M	E2EM
6-WT-03	CRANE MAT, PILES, BOARDWALK	364.25	0.0084	N/A	USACE/DNREC-T	E2EM
6-WT-04	CRANE MAT, PILES, BOARDWALK	4700.38	0.1079	N/A	USACE*	E2EM
6-WT-05	CRANE MAT, PILES, BOARDWALK	3196.62	0.0734	N/A	USACE/DNREC-M	E2EM
6-WT-06	CRANE MAT, PILES, BOARDWALK	1175.49	0.0270	N/A	USACE*	E2EM
6-WT-07	CRANE MAT, PILES, BOARDWALK	1134.06	0.0260	N/A	USACE/DNREC-T	E2EM
			0.1516 AC. (DNREC M)			
			0.0344 AC. (DNREC T)			

TOTAL TEMPORARY DNREC WETLAND IMPACTS THIS SHEET = 0.1860 AC.
TOTAL TEMPORARY USACE WETLAND IMPACTS THIS SHEET = 0.5121 AC. (ALL E2EM)

*THIS AREA IS ALSO DNREC JURISDICTIONAL AND IS BEING REPORTED AS PERMANENT IMPACT.

PERMANENT WETLAND IMPACT AREA SCHEDULE

ID	IMPACT DESCRIPTION	AREA (SF)	AREA (AC)	VOLUME (CY)	JURISDICTION	TYPE
6-W-01	BOARDWALK SHADING	4700.38	0.1079	N/A	DNREC-M	E2EM
6-W-02	BOARDWALK SHADING	1175.49	0.0270	N/A	DNREC-T	E2EM
			0.1079 AC. (DNREC M)			
			0.0270 AC. (DNREC T)			

TOTAL PERMANENT DNREC WETLAND IMPACTS THIS SHEET = 0.1349 AC.

LEGEND

- PERMANENT IMPACT AREA
- TEMPORARY IMPACT AREA
- MHW — MEAN HIGH WATER
- SML — STATE MAPPED LINE
- SMW — STATE MAPPED WETLAND
- WL — USACE WETLAND BOUNDARY
- XX / ?X — IMPACT AREA TYPE ID. (SEE BELOW) / IMPACT AREA ID. AND/OR NUMBER

O = OPEN WATER IMPACT M = MARSH
T = TIDAL MUDFLATS LM = LOW MARSH
W = WETLAND IMPACT
WT = TEMPORARY WETLAND IMPACT
OT = TEMPORARY OPEN WATER IMPACT
E2EM = ESTUARINE INTERTIDAL EMERGENT

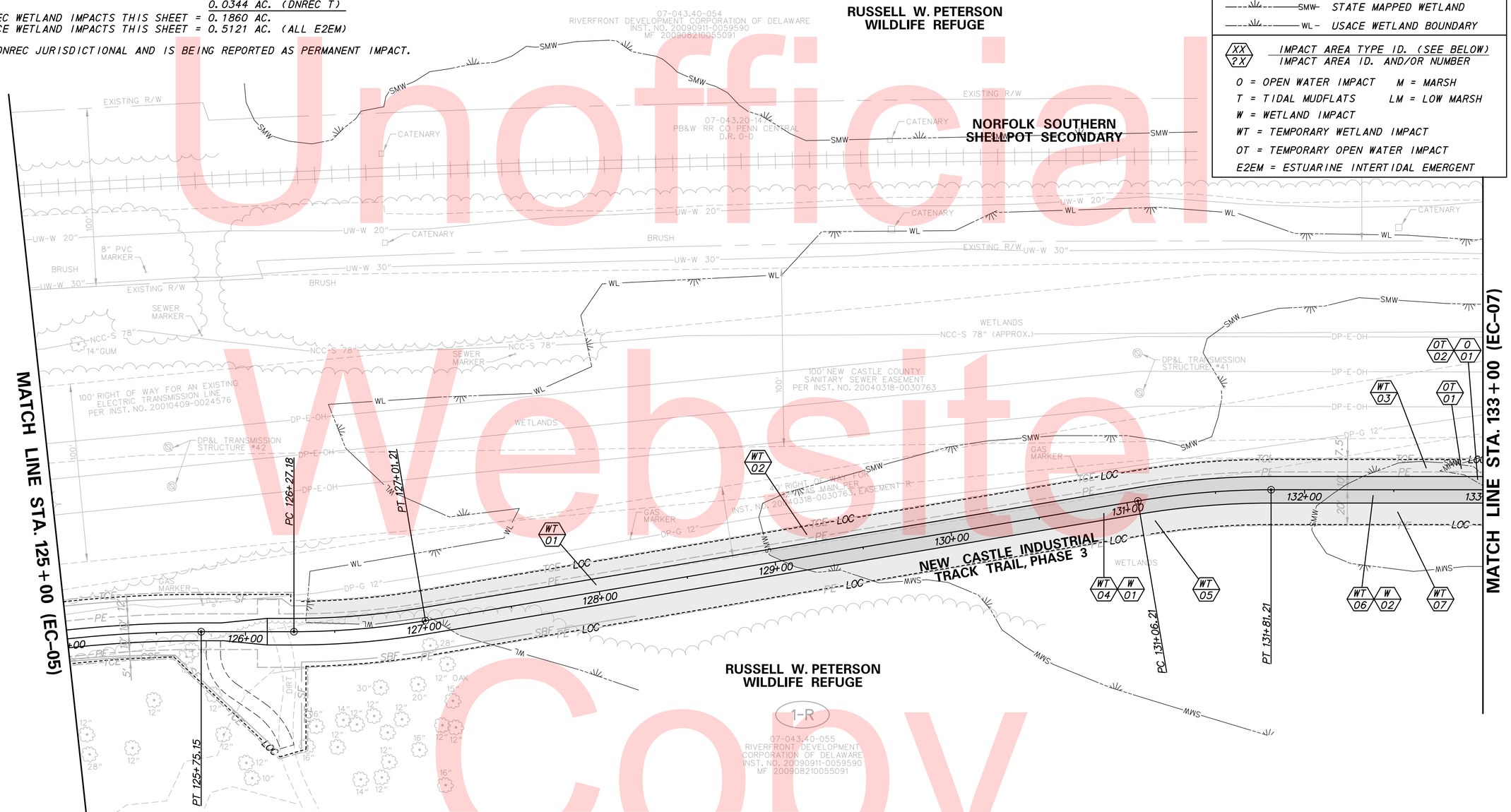

TEMPORARY OPEN WATER IMPACT AREA SCHEDULE

ID	IMPACT DESCRIPTION	AREA (SF)	AREA (AC)	VOLUME (CY)	JURISDICTION	TYPE
6-OT-01	CRANE MAT, PILES, BOARDWALK	98.89	0.0023	N/A	USACE/DNREC-T	TIDAL
6-OT-02	CRANE MAT, PILES, BOARDWALK	22.67	0.0005	N/A	USACE*	TIDAL

TOTAL TEMPORARY DNREC OPEN WATER IMPACTS THIS SHEET = 0.0023 AC. (ALL DNREC T)
TOTAL TEMPORARY USACE OPEN WATER IMPACTS THIS SHEET = 0.0028 AC. (ALL E2EM)

*THIS AREA IS ALSO DNREC JURISDICTIONAL AND IS BEING REPORTED AS PERMANENT IMPACT.

PERMANENT OPEN WATER IMPACT AREA SCHEDULE

ID	IMPACT DESCRIPTION	AREA (SF)	AREA (AC)	VOLUME (CY)	JURISDICTION	TYPE
6-O-01	BOARDWALK SHADING	22.67	0.0005	N/A	DNREC-T	TIDAL

TOTAL PERMANENT DNREC OPEN WATER IMPACTS THIS SHEET = 0.0005 AC. (ALL DNREC T)

EC-06

DELAWARE DEPARTMENT OF TRANSPORTATION

ADDENDUMS / REVISIONS

SCALE 0 30 60 90 FEET

NEW CASTLE INDUSTRIAL TRACK TRAIL, PHASE 3

CONTRACT	BRIDGE NO.	X
T201330009	DESIGNED BY: LCC	
COUNTY		
NEW CASTLE	CHECKED BY: JRR	

ENVIRONMENTAL COMPLIANCE PLAN

SHEET NO. 168
TOTAL SHTS. 207

N:\31896-002\CADD\EC06_ITT3.DGN

Unofficial Website Copy

TEMPORARY OPEN WATER IMPACT AREA SCHEDULE

ID	IMPACT DESCRIPTION	AREA (SF)	AREA (AC)	VOLUME (CY)	JURISDICTION	TYPE
7-OT-01	BARGE, PILES, BOARDWALK	763.75	0.0175	N/A	USACE/DNREC-T	TIDAL
7-OT-02	BARGE, PILES, BOARDWALK	2032.09	0.0467	N/A	USACE*	TIDAL
7-OT-03	BARGE, PILES, BOARDWALK	79.56	0.0018	N/A	USACE/DNREC-M	TIDAL
7-OT-04	BARGE, PILES, BOARDWALK	158.26	0.0036	N/A	USACE/DNREC-T	TIDAL
7-OT-05	BARGE, PILES, BOARDWALK	223.85	0.0051	N/A	USACE*	TIDAL
7-OT-06	BARGE, PILES, BOARDWALK	963.45	0.0221	N/A	USACE/DNREC-T	TIDAL
7-OT-07	BARGE, PILES, BOARDWALK	1656.04	0.0380	N/A	USACE*	TIDAL
7-OT-08	BARGE, PILES, BOARDWALK	54.04	0.0012	N/A	USACE/DNREC-LM	TIDAL
7-OT-09	BARGE, PILES, BOARDWALK	14.03	0.0003	N/A	USACE/DNREC-T	TIDAL
7-OT-10	BARGE, PILES, BOARDWALK	1245.95	0.0286	N/A	USACE/DNREC-T	TIDAL
7-OT-11	BARGE, PILES, BOARDWALK	146.15	0.0034	N/A	USACE/DNREC-M	TIDAL
7-OT-12	BARGE, PILES, BOARDWALK	74.66	0.0017	N/A	USACE/DNREC-M	TIDAL
7-OT-13	BARGE, PILES, BOARDWALK	176.00	0.0040	N/A	USACE/DNREC-T	TIDAL
7-OT-14	BARGE, PILES, BOARDWALK	1490.40	0.0342	N/A	USACE/DNREC-T	TIDAL
7-OT-15	BARGE, PILES, BOARDWALK	304.40	0.0070	N/A	USACE/DNREC-LM	TIDAL
7-OT-16	BARGE, PILES, BOARDWALK	48.70	0.0011	N/A	USACE/DNREC-T	TIDAL

0.0082 AC. (DNREC LM)
0.0069 AC. (DNREC M)
0.1116 AC. (DNREC T)

TOTAL TEMPORARY DNREC OPEN WATER IMPACTS THIS SHEET = 0.1267 AC.
TOTAL TEMPORARY USACE OPEN WATER IMPACTS THIS SHEET = 0.2165 AC. (ALL E2EM)

*THIS AREA IS ALSO DNREC JURISDICTIONAL AND IS BEING REPORTED AS PERMANENT IMPACT.

PERMANENT OPEN WATER IMPACT AREA SCHEDULE

ID	IMPACT DESCRIPTION	AREA (SF)	AREA (AC)	VOLUME (CY)	JURISDICTION	TYPE
7-O-01	BOARDWALK SHADING	2032.09	0.0467	N/A	DNREC-T	TIDAL
7-O-02	BOARDWALK SHADING	223.85	0.0051	N/A	DNREC-M	TIDAL
7-O-03	BOARDWALK SHADING	1656.04	0.0380	N/A	DNREC-T	TIDAL
7-O-04	BOARDWALK SHADING	54.04	0.0012	N/A	DNREC-LM	TIDAL
7-O-05	BOARDWALK SHADING	146.15	0.0034	N/A	DNREC-M	TIDAL

0.0012 AC. (DNREC LM)
0.0085 AC. (DNREC M)
0.0847 AC. (DNREC T)

TOTAL PERMANENT DNREC OPEN WATER IMPACTS THIS SHEET = 0.0944 AC.

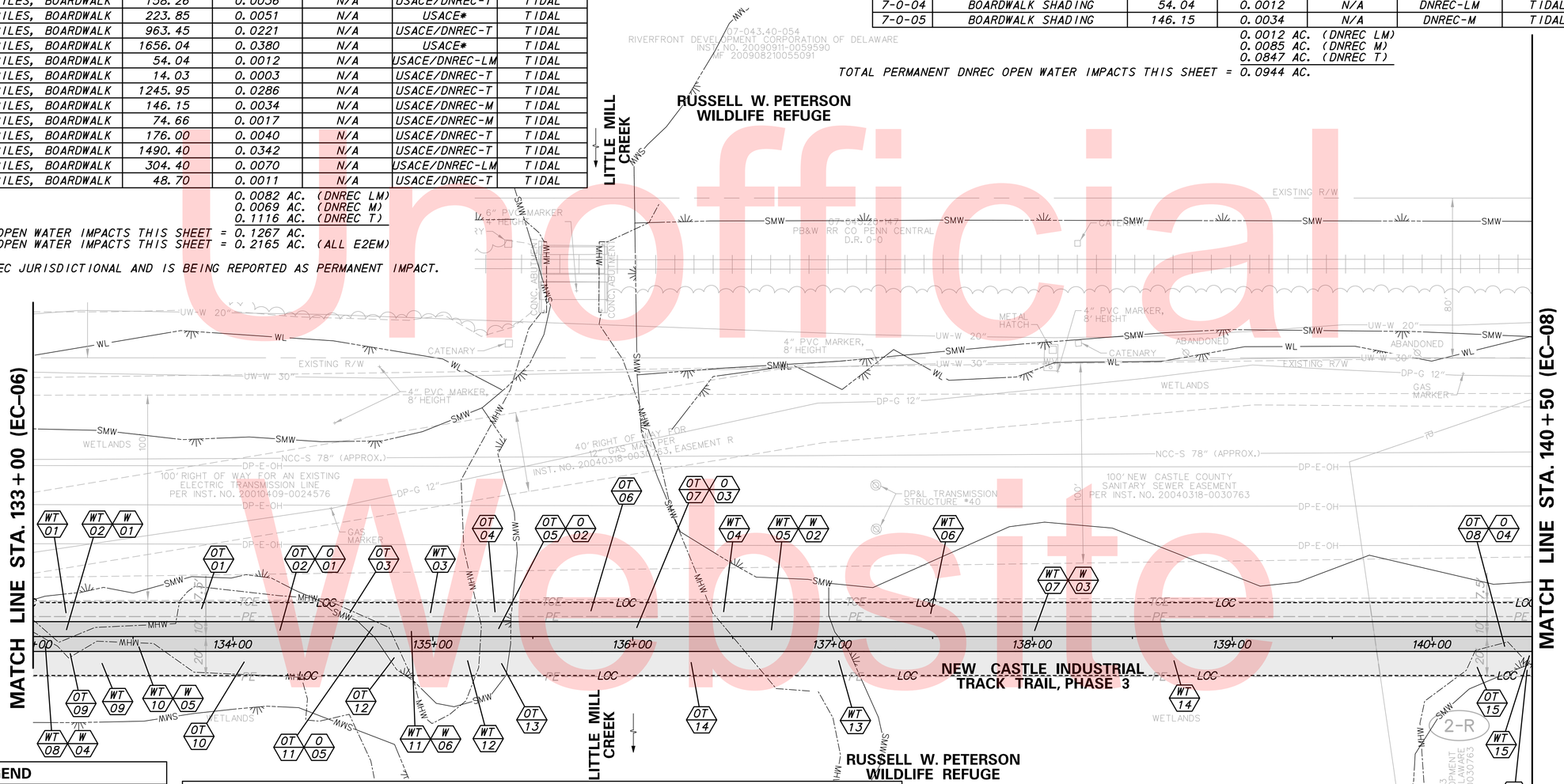

LEGEND

- PERMANENT IMPACT AREA
- TEMPORARY IMPACT AREA
- MHW — MEAN HIGH WATER
- SML — STATE MAPPED LINE
- SMW — STATE MAPPED WETLAND
- WL — USACE WETLAND BOUNDARY

XX — IMPACT AREA TYPE ID. (SEE BELOW)
?X — IMPACT AREA ID. AND/OR NUMBER

O = OPEN WATER IMPACT M = MARSH
T = TIDAL MUDFLATS LM = LOW MARSH
W = WETLAND IMPACT
WT = TEMPORARY WETLAND IMPACT
OT = TEMPORARY OPEN WATER IMPACT
E2EM = ESTUARINE INTERTIDAL EMERGENT

TEMPORARY WETLAND IMPACT AREA SCHEDULE

ID	IMPACT DESCRIPTION	AREA (SF)	AREA (AC)	VOLUME (CY)	JURISDICTION	TYPE
7-WT-01	CRANE MAT, PILES, BOARDWALK	687.67	0.0158	N/A	USACE/DNREC-M	E2EM
7-WT-02	CRANE MAT, PILES, BOARDWALK	259.48	0.0060	N/A	USACE*	E2EM
7-WT-03	CRANE MAT, PILES, BOARDWALK	589.92	0.0135	N/A	USACE/DNREC-M	E2EM
7-WT-04	CRANE MAT, PILES, BOARDWALK	553.12	0.0127	N/A	USACE/DNREC-T	E2EM
7-WT-05	CRANE MAT, PILES, BOARDWALK	793.68	0.0182	N/A	USACE*	E2EM
7-WT-06	CRANE MAT, PILES, BOARDWALK	3356.36	0.0771	N/A	USACE/DNREC-LM	E2EM
7-WT-07	CRANE MAT, PILES, BOARDWALK	5120.39	0.1175	N/A	USACE*	E2EM
7-WT-08	CRANE MAT, PILES, BOARDWALK	79.19	0.0018	N/A	USACE*	E2EM
7-WT-09	CRANE MAT, PILES, BOARDWALK	908.62	0.0209	N/A	USACE/DNREC-M	E2EM
7-WT-10	CRANE MAT, PILES, BOARDWALK	162.78	0.0037	N/A	USACE*	E2EM
7-WT-11	CRANE MAT, PILES, BOARDWALK	661.66	0.0152	N/A	USACE*	E2EM
7-WT-12	CRANE MAT, PILES, BOARDWALK	439.91	0.0101	N/A	USACE/DNREC-M	E2EM
7-WT-13	CRANE MAT, PILES, BOARDWALK	597.63	0.0137	N/A	USACE/DNREC-T	E2EM
7-WT-14	CRANE MAT, PILES, BOARDWALK	3702.63	0.0850	N/A	USACE/DNREC-LM	E2EM
7-WT-15	CRANE MAT, PILES, BOARDWALK	29.71	0.0007	N/A	USACE/DNREC-LM	E2EM

0.1627 AC. (DNREC LM)
0.0603 AC. (DNREC M)
0.0264 AC. (DNREC T)

TOTAL TEMPORARY DNREC WETLAND IMPACTS THIS SHEET = 0.2494 AC.
TOTAL TEMPORARY USACE WETLAND IMPACTS THIS SHEET = 0.4119 AC.
*THIS AREA IS ALSO DNREC JURISDICTIONAL AND IS BEING REPORTED AS PERMANENT IMPACT.

PERMANENT WETLAND IMPACT AREA SCHEDULE

ID	IMPACT DESCRIPTION	AREA (SF)	AREA (AC)	VOLUME (CY)	JURISDICTION	TYPE
7-W-01	BOARDWALK SHADING	259.48	0.0060	N/A	DNREC-M	E2EM
7-W-02	BOARDWALK SHADING	793.30	0.0182	N/A	DNREC-T	E2EM
7-W-03	BOARDWALK SHADING	5120.39	0.1175	N/A	DNREC-LM	E2EM
7-W-04	BOARDWALK SHADING	79.19	0.0018	N/A	DNREC-T	E2EM
7-W-05	BOARDWALK SHADING	162.78	0.0037	N/A	DNREC-T	E2EM
7-W-06	BOARDWALK SHADING	661.66	0.0152	N/A	DNREC-M	E2EM

0.1175 AC. (DNREC LM)
0.0211 AC. (DNREC M)
0.0238 AC. (DNREC T)

TOTAL PERMANENT DNREC WETLAND IMPACTS THIS SHEET = 0.1625 AC.

Unofficial Website Copy

N:\31896-002\CADD\EC07_LTT3.DGN

DELAWARE DEPARTMENT OF TRANSPORTATION

ADDENDUMS / REVISIONS

SCALE 0 30 60 90 FEET

NEW CASTLE INDUSTRIAL TRACK TRAIL, PHASE 3

CONTRACT T201330009 | COUNTY NEW CASTLE | BRIDGE NO. X | DESIGNED BY: LCC | CHECKED BY: JRR

ENVIRONMENTAL COMPLIANCE PLAN

EC-07 | SHEET NO. 169 | TOTAL SHTS. 207

TEMPORARY OPEN WATER IMPACT AREA SCHEDULE

ID	IMPACT DESCRIPTION	AREA (SF)	AREA (AC)	VOLUME (CY)	JURISDICTION	TYPE
8-OT-01	CRANE MAT, PILES, BOARDWALK	55.93	0.0013	N/A	USACE*	TIDAL
8-OT-02	CRANE MAT, PILES, BOARDWALK	224.97	0.0052	N/A	USACE/DNREC-T	TIDAL
8-OT-03	CRANE MAT, PILES, BOARDWALK	106.59	0.0024	N/A	USACE/DNREC-LM	TIDAL
8-OT-04	CRANE MAT, PILES, BOARDWALK	22.92	0.0005	N/A	USACE/DNREC-T	TIDAL
8-OT-05	CRANE MAT, PILES, BOARDWALK	521.44	0.0120	N/A	USACE/DNREC-T	TIDAL
8-OT-06	CRANE MAT, PILES, BOARDWALK	251.63	0.0058	N/A	USACE/DNREC-LM	TIDAL
8-OT-07	CRANE MAT, PILES, BOARDWALK	50.14	0.0012	N/A	USACE*	TIDAL
8-OT-08	CRANE MAT, PILES, BOARDWALK	108.04	0.0025	N/A	USACE/DNREC-LM	TIDAL
8-OT-09	CRANE MAT, PILES, BOARDWALK	366.59	0.0084	N/A	USACE*	TIDAL
8-OT-10	CRANE MAT, PILES, BOARDWALK	263.62	0.0061	N/A	USACE/DNREC-T	TIDAL
8-OT-11	CRANE MAT, PILES, BOARDWALK	125.09	0.0029	N/A	USACE/DNREC-LM	TIDAL
8-OT-12	CRANE MAT, PILES, BOARDWALK	236.46	0.0054	N/A	USACE*	TIDAL

0.0136 AC. (DNREC LM)
0.0237 AC. (DNREC T)

TOTAL TEMPORARY DNREC OPEN WATER IMPACTS THIS SHEET = 0.0373 AC.
TOTAL TEMPORARY USACE OPEN WATER IMPACTS THIS SHEET = 0.0536 AC. (ALL E2EM)

*THIS AREA IS ALSO DNREC JURISDICTIONAL AND IS BEING REPORTED AS PERMANENT IMPACT.

PERMANENT OPEN WATER IMPACT AREA SCHEDULE

ID	IMPACT DESCRIPTION	AREA (SF)	AREA (AC)	VOLUME (CY)	JURISDICTION	TYPE
8-O-01	BOARDWALK SHADING	55.93	0.0013	N/A	DNREC-LM	TIDAL
8-O-02	BOARDWALK SHADING	50.14	0.0012	N/A	DNREC-LM	TIDAL
8-O-03	BOARDWALK SHADING	366.59	0.0084	N/A	DNREC-T	TIDAL
8-O-04	BOARDWALK SHADING	236.46	0.0054	N/A	DNREC-T	TIDAL

0.0024 AC. (DNREC LM)
0.0138 AC. (DNREC T)

TOTAL PERMANENT DNREC OPEN WATER IMPACTS THIS SHEET = 0.0163 AC.

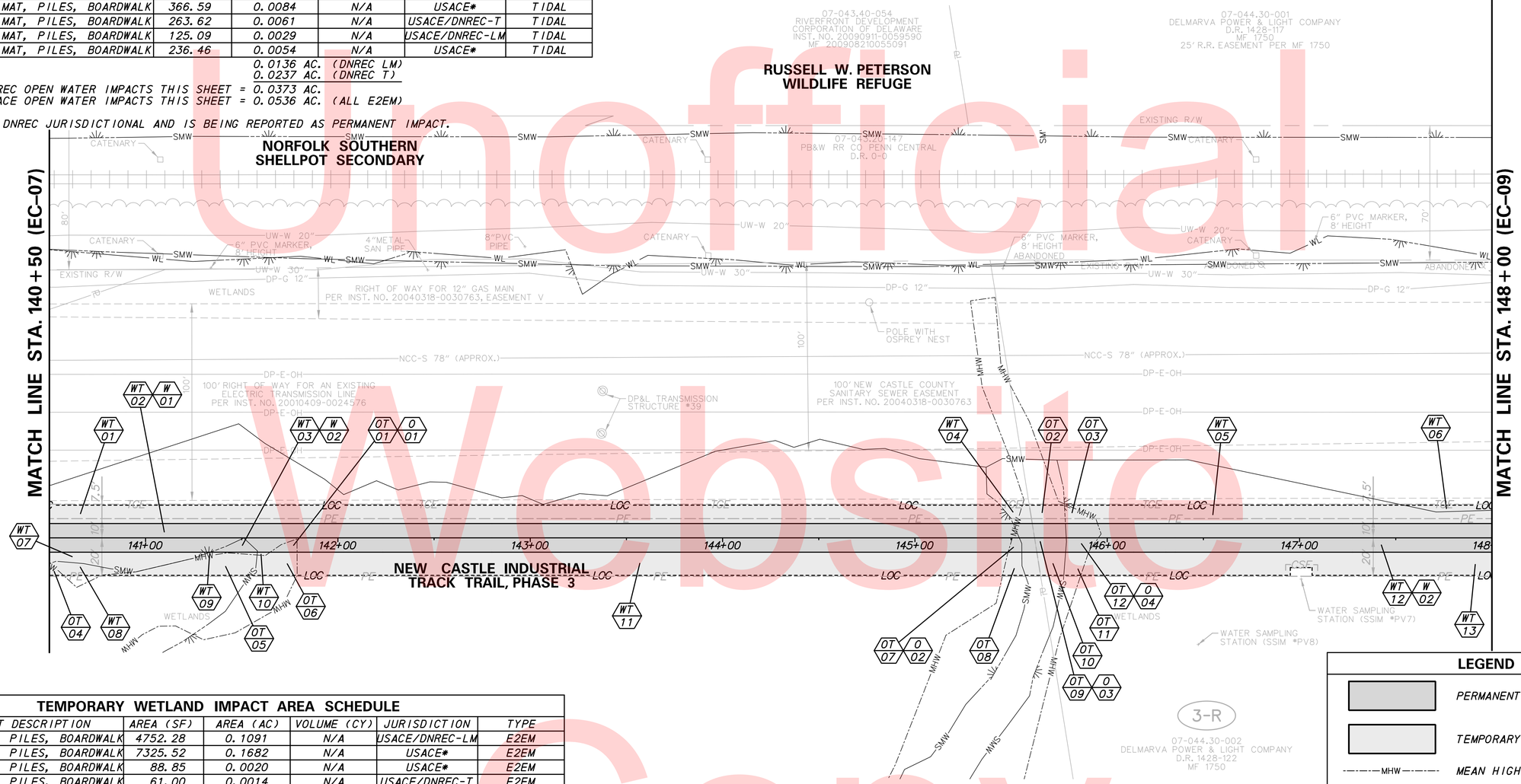

TEMPORARY WETLAND IMPACT AREA SCHEDULE

ID	IMPACT DESCRIPTION	AREA (SF)	AREA (AC)	VOLUME (CY)	JURISDICTION	TYPE
8-WT-01	CRANE MAT, PILES, BOARDWALK	4752.28	0.1091	N/A	USACE/DNREC-LM	E2EM
8-WT-02	CRANE MAT, PILES, BOARDWALK	7325.52	0.1682	N/A	USACE*	E2EM
8-WT-03	CRANE MAT, PILES, BOARDWALK	88.85	0.0020	N/A	USACE*	E2EM
8-WT-04	CRANE MAT, PILES, BOARDWALK	61.00	0.0014	N/A	USACE/DNREC-T	E2EM
8-WT-05	CRANE MAT, PILES, BOARDWALK	1891.56	0.0434	N/A	USACE/DNREC-LM	E2EM
8-WT-06	CRANE MAT, PILES, BOARDWALK	120.15	0.0028	N/A	USACE/DNREC-M	E2EM
8-WT-07	CRANE MAT, PILES, BOARDWALK	534.78	0.0123	N/A	USACE/DNREC-LM	E2EM
8-WT-08	CRANE MAT, PILES, BOARDWALK	181.74	0.0042	N/A	USACE/DNREC-T	E2EM
8-WT-09	CRANE MAT, PILES, BOARDWALK	30.30	0.0007	N/A	USACE/DNREC-T	E2EM
8-WT-10	CRANE MAT, PILES, BOARDWALK	8.95	0.0002	N/A	USACE/DNREC-LM	E2EM
8-WT-11	CRANE MAT, PILES, BOARDWALK	4435.65	0.1018	N/A	USACE/DNREC-LM	E2EM
8-WT-12	CRANE MAT, PILES, BOARDWALK	3066.96	0.0704	N/A	USACE*	E2EM
8-WT-13	CRANE MAT, PILES, BOARDWALK	2503.85	0.0575	N/A	USACE/DNREC-LM	E2EM

0.3243 AC. (DNREC LM)
0.0028 AC. (DNREC M)
0.0063 AC. (DNREC T)

TOTAL TEMPORARY DNREC WETLAND IMPACTS THIS SHEET = 0.3333 AC.
TOTAL TEMPORARY USACE WETLAND IMPACTS THIS SHEET = 0.5740 AC. (ALL E2EM)

*THIS AREA IS ALSO DNREC JURISDICTIONAL AND IS BEING REPORTED AS PERMANENT IMPACT.

PERMANENT WETLAND IMPACT AREA SCHEDULE

ID	IMPACT DESCRIPTION	AREA (SF)	AREA (AC)	VOLUME (CY)	JURISDICTION	TYPE
8-W-01	BOARDWALK SHADING	7325.52	0.1682	N/A	DNREC-LM	E2EM
8-W-02	BOARDWALK SHADING	88.85	0.0020	N/A	DNREC-T	E2EM
8-W-03	BOARDWALK SHADING	3066.96	0.0704	N/A	DNREC-LM	E2EM

0.2386 AC. (DNREC LM)
0.0020 AC. (DNREC T)

TOTAL PERMANENT DNREC WETLAND IMPACTS THIS SHEET = 0.2406 AC.

LEGEND

- PERMANENT IMPACT AREA
- TEMPORARY IMPACT AREA
- MHW — MEAN HIGH WATER
- SML — STATE MAPPED LINE
- SMW — STATE MAPPED WETLAND
- WL — USACE WETLAND BOUNDARY
- XX / ?X — IMPACT AREA TYPE ID. (SEE BELOW) / IMPACT AREA ID. AND/OR NUMBER
- O = OPEN WATER IMPACT
- M = MARSH
- T = TIDAL MUDFLATS
- LM = LOW MARSH
- W = WETLAND IMPACT
- WT = TEMPORARY WETLAND IMPACT
- OT = TEMPORARY OPEN WATER IMPACT
- E2EM = ESTUARINE INTERTIDAL EMERGENT

Unofficial Website Copy

N:\31896-002\CADD\EC08_TT3.DGN

DELAWARE DEPARTMENT OF TRANSPORTATION

ADDENDUMS / REVISIONS

SCALE 0 30 60 90 FEET

NEW CASTLE INDUSTRIAL TRACK TRAIL, PHASE 3

CONTRACT	BRIDGE NO.	X
T201330009	DESIGNED BY: LCC	
COUNTY		
NEW CASTLE	CHECKED BY: JRR	

ENVIRONMENTAL COMPLIANCE PLAN

EC-08

SHEET NO. 170
TOTAL SHTS. 207

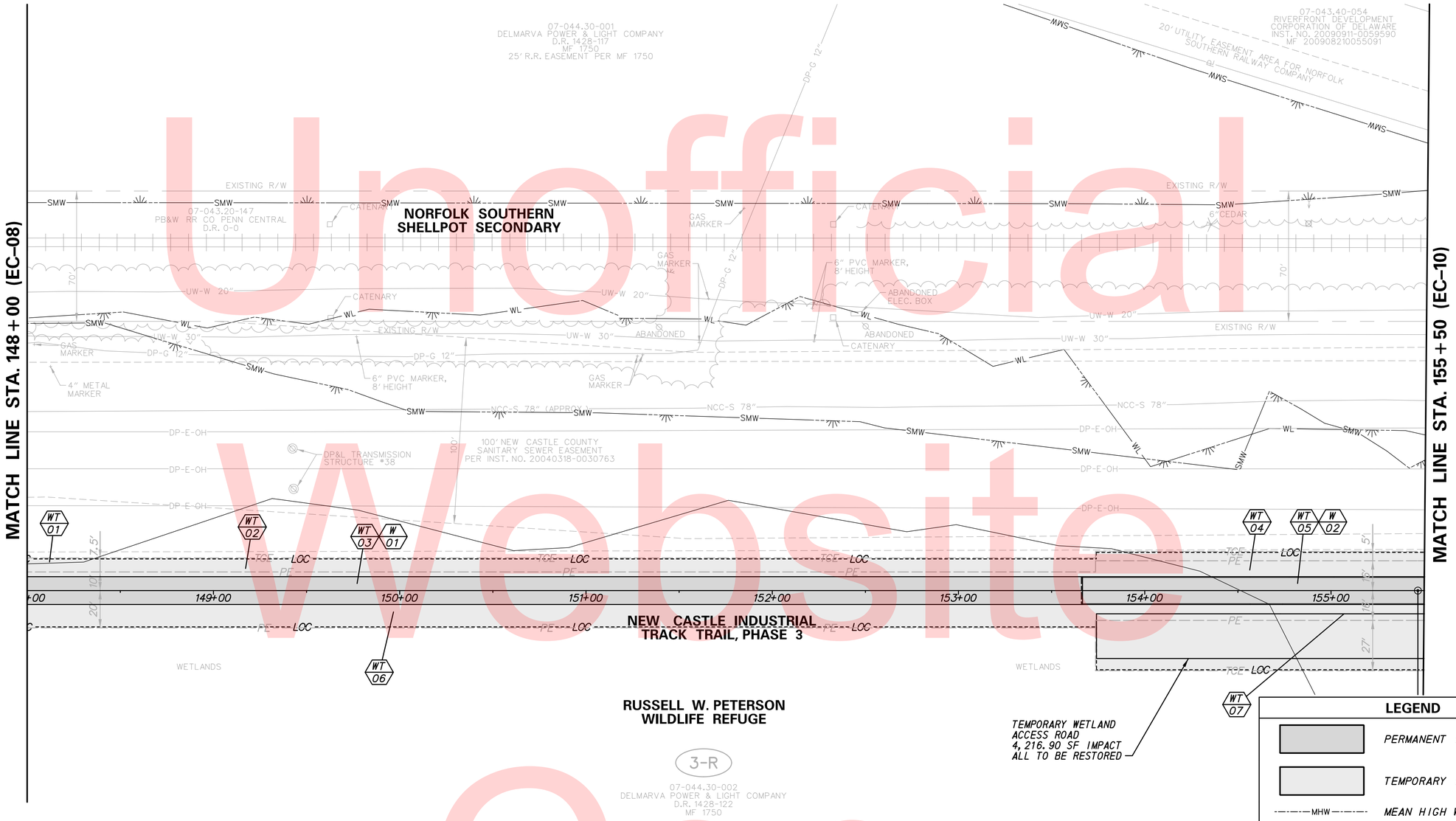

LEGEND

- PERMANENT IMPACT AREA
- TEMPORARY IMPACT AREA
- MHW — MEAN HIGH WATER
- SML — STATE MAPPED LINE
- SMW — STATE MAPPED WETLAND
- WL — USACE WETLAND BOUNDARY
- XX / ?X — IMPACT AREA TYPE ID. (SEE BELOW) / IMPACT AREA ID. AND/OR NUMBER

O = OPEN WATER IMPACT M = MARSH
T = TIDAL MUDFLATS LM = LOW MARSH
W = WETLAND IMPACT
WT = TEMPORARY WETLAND IMPACT
OT = TEMPORARY OPEN WATER IMPACT
E2EM = ESTUARINE INTERTIDAL EMERGENT

TEMPORARY WETLAND IMPACT AREA SCHEDULE

ID	IMPACT DESCRIPTION	AREA (SF)	AREA (AC)	VOLUME (CY)	JURISDICTION	TYPE
9-WT-01	CRANE MAT, PILES, BOARDWALK	70.66	0.0016	N/A	USACE/DNREC-M	E2EM
9-WT-02	CRANE MAT, PILES, BOARDWALK	5937.14	0.1363	N/A	USACE/DNREC-LM	E2EM
9-WT-03	CRANE MAT, PILES, BOARDWALK	9715.83	0.2230	N/A	USACE*	E2EM
9-WT-04	CRANE MAT, PILES, BOARDWALK	1767.05	0.0406	N/A	USACE/DNREC-M	E2EM
9-WT-05	CRANE MAT, PILES, BOARDWALK	1471.34	0.0338	N/A	USACE*	E2EM
9-WT-06	CRANE MAT, PILES, BOARDWALK	10477.82	0.2405	N/A	USACE/DNREC-LM	E2EM
9-WT-07	CRANE MAT, PILES, BOARDWALK	2593.76	0.0595	N/A	USACE/DNREC-M	E2EM

0.3768 AC. (DNREC LM)
0.1017 AC. (DNREC M)

TOTAL TEMPORARY DNREC WETLAND IMPACTS THIS SHEET = 0.4786 AC.
TOTAL TEMPORARY USACE WETLAND IMPACTS THIS SHEET = 0.7354 AC. (ALL E2EM)

*THIS AREA IS ALSO DNREC JURISDICTIONAL AND IS BEING REPORTED AS PERMANENT IMPACT.

PERMANENT WETLAND IMPACT AREA SCHEDULE

ID	IMPACT DESCRIPTION	AREA (SF)	AREA (AC)	VOLUME (CY)	JURISDICTION	TYPE
9-W-01	BOARDWALK SHADING	9715.83	0.2230	N/A	DNREC-LM	E2EM
9-W-02	BOARDWALK SHADING	1471.34	0.0338	N/A	DNREC-M	E2EM

0.2230 AC. (DNREC LM)
0.0338 AC. (DNREC M)

TOTAL PERMANENT DNREC WETLAND IMPACTS THIS SHEET = 0.2568 AC.

Unofficial Website Copy

N:\31896-002\CADD\EC09_ITT3.DGN

DELAWARE DEPARTMENT OF TRANSPORTATION

ADDENDUMS / REVISIONS

SCALE 0 30 60 90 FEET

NEW CASTLE INDUSTRIAL TRACK TRAIL, PHASE 3

CONTRACT	BRIDGE NO.	X
T201330009	DESIGNED BY: LCC	
COUNTY		
NEW CASTLE	CHECKED BY: JRR	

ENVIRONMENTAL COMPLIANCE PLAN

EC-09

SHEET NO. 171
TOTAL SHTS. 207

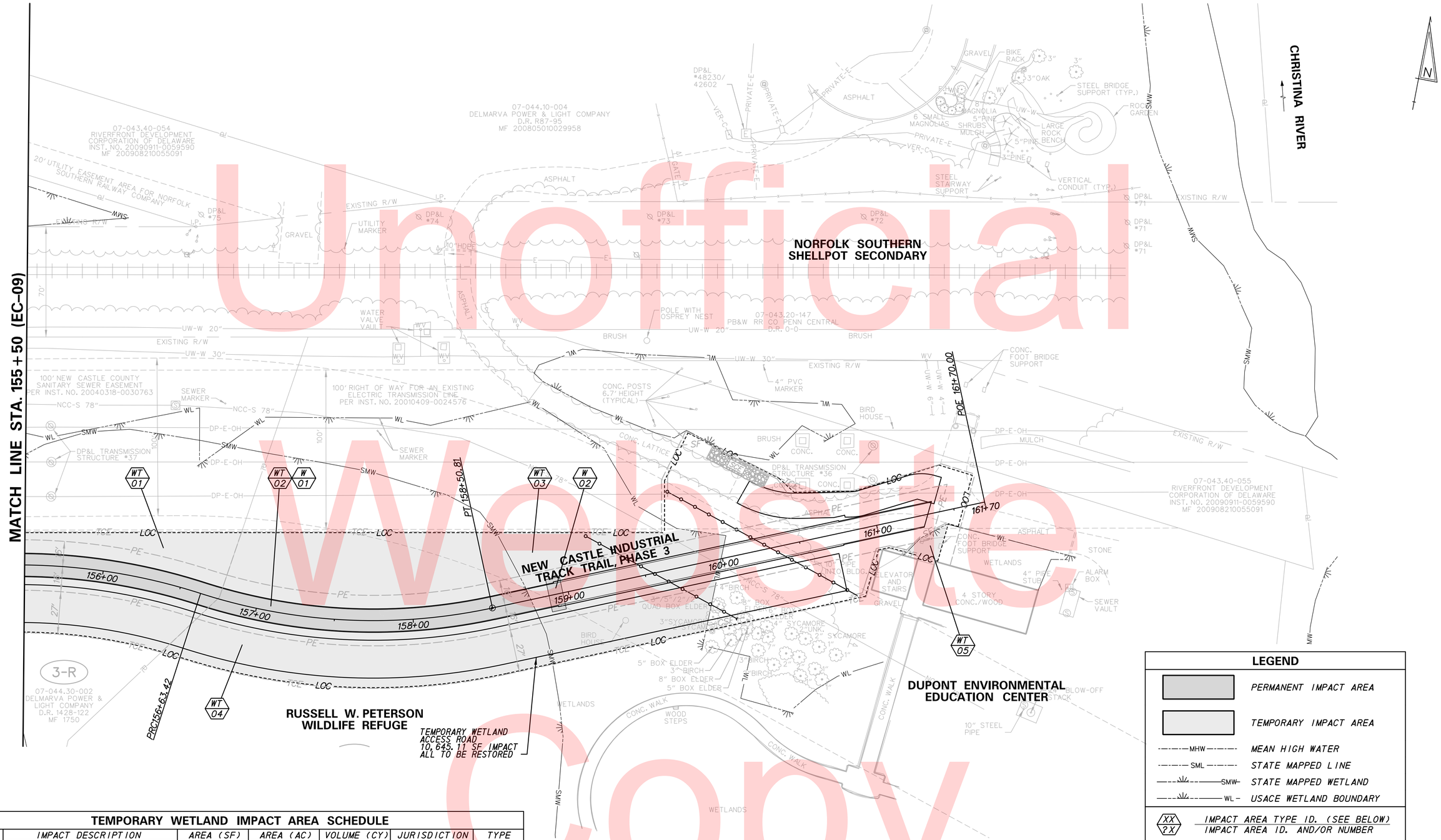

Unofficial Website Copy

LEGEND

- PERMANENT IMPACT AREA
- TEMPORARY IMPACT AREA
- MHW — MEAN HIGH WATER
- SML — STATE MAPPED LINE
- SMW — STATE MAPPED WETLAND
- WL — USACE WETLAND BOUNDARY
- XX / ?X — IMPACT AREA TYPE ID. (SEE BELOW) / IMPACT AREA ID. AND/OR NUMBER

O = OPEN WATER IMPACT M = MARSH
T = TIDAL MUDFLATS LM = LOW MARSH
W = WETLAND IMPACT
WT = TEMPORARY WETLAND IMPACT
OT = TEMPORARY OPEN WATER IMPACT
E2EM = ESTUARINE INTERTIDAL EMERGENT

TEMPORARY WETLAND IMPACT AREA SCHEDULE

ID	IMPACT DESCRIPTION	AREA (SF)	AREA (AC)	VOLUME (CY)	JURISDICTION	TYPE
10-WT-01	ACCESS, PILE, DEEC BRIDGE	10692.12	0.2455	N/A	USACE/DNREC-M	E2EM
10-WT-02	ACCESS, PILE, DEEC BRIDGE	4844.58	0.1112	N/A	USACE*	E2EM
10-WT-03	ACCESS, PILE, DEEC BRIDGE	8551.49	0.1963	N/A	USACE	E2EM
10-WT-04	ACCESS, PILE, DEEC BRIDGE	11756.53	0.2699	N/A	USACE/DNREC-M	E2EM
10-WT-05	ACCESS, PILE, DEEC BRIDGE	294.17	0.0068	N/A	USACE	E2EM

TOTAL TEMPORARY DNREC WETLAND IMPACTS THIS SHEET = 0.5154 AC. (ALL DNREC M)
TOTAL TEMPORARY USACE WETLAND IMPACTS THIS SHEET = 0.8296 AC.

*THIS AREA IS ALSO DNREC JURISDICTIONAL AND IS BEING REPORTED AS PERMANENT IMPACT.

PERMANENT WETLAND IMPACT AREA SCHEDULE

ID	IMPACT DESCRIPTION	AREA (SF)	AREA (AC)	VOLUME (CY)	JURISDICTION	TYPE
10-W-01	BOARDWALK SHADING	4844.58	0.1112	N/A	DNREC-M	E2EM
10-W-02	CONCRETE PILE CAP	189.00	0.0043	48	USACE	E2EM

TOTAL PERMANENT DNREC WETLAND IMPACTS THIS SHEET = 0.1112 AC. (ALL DNREC M)
TOTAL PERMANENT USACE WETLAND IMPACTS THIS SHEET = 0.0043 AC.

N:\31896-002\CADD\EC10_ITT3.DGN

DELAWARE DEPARTMENT OF TRANSPORTATION

ADDENDUMS / REVISIONS

SCALE 0 30 60 90 FEET

NEW CASTLE INDUSTRIAL TRACK TRAIL, PHASE 3

CONTRACT	BRIDGE NO.	X
T201330009	DESIGNED BY: LCC	
COUNTY		
NEW CASTLE	CHECKED BY: JRR	

ENVIRONMENTAL COMPLIANCE PLAN

EC-10

SHEET NO. 172
TOTAL SHTS. 207

WARNING SIGN LEGEND

W20-1-CUSTOM 48"x48" (1)

G20-2 MODIFIED (SEE SIGN DETAIL) (2)

R11-2-CUSTOM 48"x30" (3)

BARRICADE (FULL WIDTH OF TRAIL) (4)

BARRICADE (6-FOOT WIDTH NEXT TO TRAIL/SIDEWALK) (5)

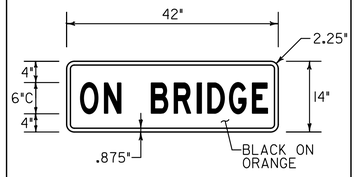

SIGN DETAIL

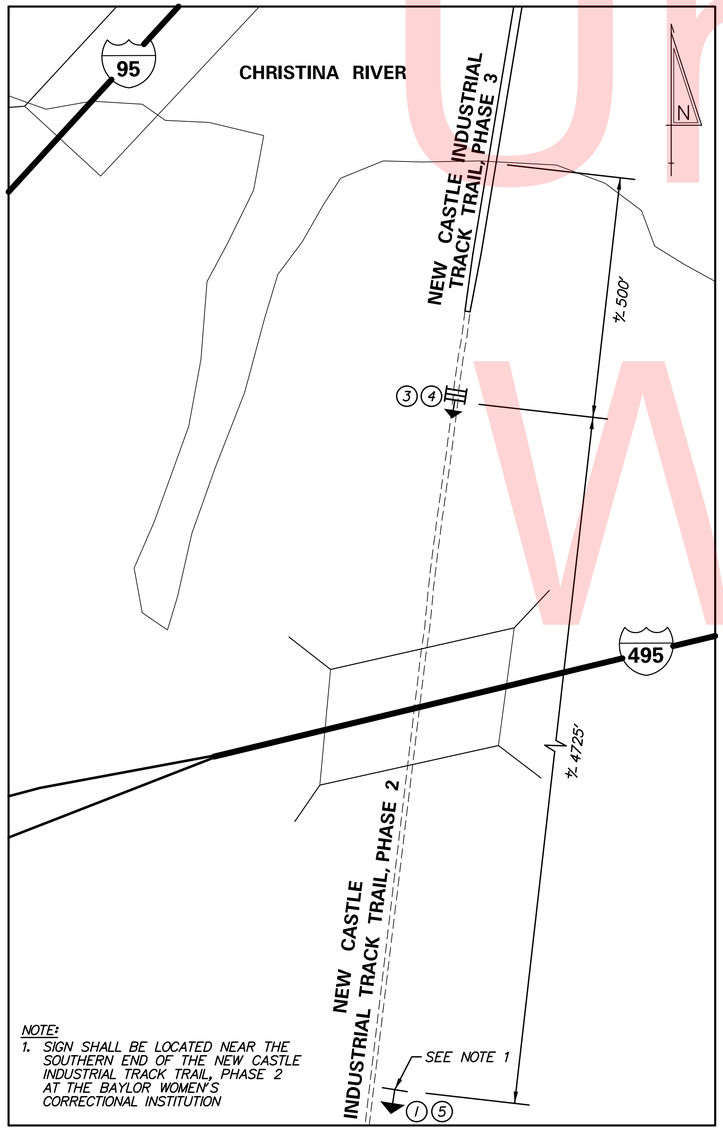

NOTE:
1. SIGN SHALL BE LOCATED NEAR THE SOUTHERN END OF THE NEW CASTLE INDUSTRIAL TRACK TRAIL, PHASE 2 AT THE BAYLOR WOMEN'S CORRECTIONAL INSTITUTION

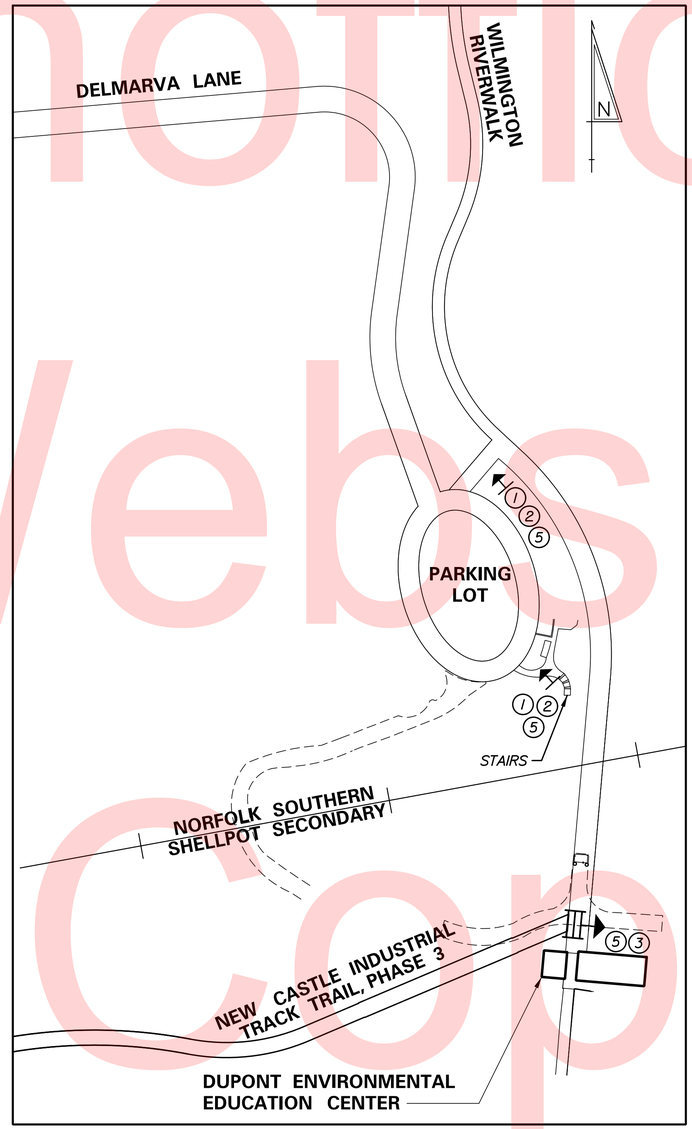

GENERAL TRAFFIC CONTROL NOTES

1. THE CONTRACTOR SHALL NOTIFY MR. JON HUSBAND WITH NEW CASTLE COUNTY AT (302) 395-5746 AT LEAST TWO WEEKS PRIOR TO THE START OF CONSTRUCTION.

2. DURING WORK AT THE PROPOSED TRAIL BRIDGE TIE-IN WITH THE EXISTING PEDESTRIAN BRIDGE AT THE DUPONT ENVIRONMENTAL EDUCATION CENTER, THE CONTRACTOR SHALL MAINTAIN PEDESTRIAN ACCESS TO AND FROM THE DUPONT ENVIRONMENTAL EDUCATION CENTER AS FOLLOWS:

- AT LEAST TWO WEEKS PRIOR TO WORK, THE CONTRACTOR SHALL CONTACT MR. JOHN HARROD, MANAGER OF THE DUPONT ENVIRONMENTAL EDUCATION CENTER, AT (302) 656-1490. THE CONTRACTOR SHALL PROVIDE MR. HARROD WITH WEEKLY UPDATES REGARDING WORK IN THE VICINITY OF THE CENTER.

- ONE FLAGGER SHALL BE POSITIONED AT EACH END OF THE WORK ZONE AND SHALL OPERATE EXCLUSIVELY FOR PEDESTRIANS. THE FLAGGERS SHALL GUIDE PEDESTRIANS THROUGH THE WORK ZONE. THE CONTRACTOR SHALL MAINTAIN A FIVE-FOOT WIDE WALKWAY AT ALL TIMES.

-DURING NON-WORKING HOURS, THE CONTRACTOR SHALL SECURE THE WORK ZONE IN ORDER TO PROHIBIT PEDESTRIANS FROM ENTERING THE WORK AREA. ALL MOT SHALL BE APPROVED BY THE ENGINEER AT THE END OF EACH WORK DAY. THE CONTRACTOR SHALL MAINTAIN A FIVE-FOOT WIDE WALKWAY AT ALL TIMES. ALL DEVICES AND MATERIALS USED TO SECURE THE WORK ZONE SHALL BE INCIDENTAL TO ITEM 743000 - MAINTENANCE OF TRAFFIC AND ARE TO BE APPROVED BY ENGINEER.

3. THE CONTRACTOR SHALL PROVIDE ACCESS FOR DELIVERIES ALONG THE ACCESS ROADWAY/DRIVEWAY BETWEEN THE DUPONT ENVIRONMENTAL EDUCATION CENTER PARKING LOT AND BUILDING. THE CONTRACTOR SHALL PROVIDE A CONTACT NAME AND PHONE NUMBER TO MR. JOHN HARROD, MANAGER OF THE DUPONT ENVIRONMENTAL EDUCATION CENTER, (302) 656-1490, TO COORDINATE DELIVERY DATES AND TIMES.

4. CONSTRUCTION SAFETY FENCE SHALL BE INSTALLED AS SHOWN ON THE PLANS. THE FENCE HEIGHT SHALL EXTEND FROM THE EXISTING GROUND UP TO A HEIGHT OF 8 FEET ABOVE EXISTING GROUND. THE ADDITIONAL HEIGHT OF THE FENCE POST AND THE ADDITIONAL ORANGE FENCE REQUIRED TO EXTEND THE FENCE UP TO 8 FEET SHALL BE INCIDENTAL TO ITEM 727014 - CONSTRUCTION SAFETY FENCE.

5. ALL COSTS ASSOCIATED WITH FURNISHING AND INSTALLATION OF PORTABLE CONCRETE SAFETY BARRIER SHALL BE INCIDENTAL TO ITEM 743000 - MAINTENANCE OF TRAFFIC

Unofficial Website Copy

N:\31896-002\CADD\CS00_ITT3.DGN

DELAWARE DEPARTMENT OF TRANSPORTATION	ADDENDUMS / REVISIONS	NOT TO SCALE	NEW CASTLE INDUSTRIAL TRACK TRAIL, PHASE 3	CONTRACT T201330009	BRIDGE NO. X	WARNING SIGN LOCATION AND M.O.T. NOTES PLAN	CS-00
				COUNTY NEW CASTLE	DESIGNED BY: BSS		SHEET NO. 173
					CHECKED BY: DAD		TOTAL SHTS. 207

EROSION & SEDIMENT CONTROL	
DWBAG	DEWATERING BAG
SCE	STABILIZED CONSTRUCTION ENTRANCE
SF XXX	SILT FENCE / LENGTH
—SF—	SILT FENCE
SSF XXX	SUPER SILT FENCE / LENGTH
—SSF—	SUPER SILT FENCE
SBF XXX	SANDBAG SILT FENCE / LENGTH
—SBF—	SANDBAG SILT FENCE
SP	SUMP PIT
T XXX	TURBIDITY CURTAIN / LENGTH
—T—	TURBIDITY CURTAIN

CONSTRUCTION PHASING & M.O.T	
	WORK AREA - ACTIVE PHASE
	BARRICADE, TYPE 3
	CONCRETE SAFETY BARRIER - PORTABLE
	CONSTRUCTION WARNING SIGN LOCATION
—CSF—	CONSTRUCTION SAFETY FENCE

SEQUENCE OF CONSTRUCTION

1. PLACE ALL PERTINENT TRAFFIC CONTROL DEVICES AS SHOWN ON THIS PLAN. COORDINATE ACTIVITIES DURING THIS PHASE WITH THE ENVIRONMENTAL COMPLIANCE PLANS.
2. INSTALL EROSION AND SEDIMENT CONTROL MEASURES AS SHOWN.
3. CONSTRUCT PROPOSED TRAIL AND STRUCTURES.
4. STABILIZE ALL DISTURBED AREAS AS DIRECTED ON THE PLANS. REMOVE EROSION AND SEDIMENT DEVICES AFTER CONCURRENCE FROM THE STORMWATER ENGINEER.

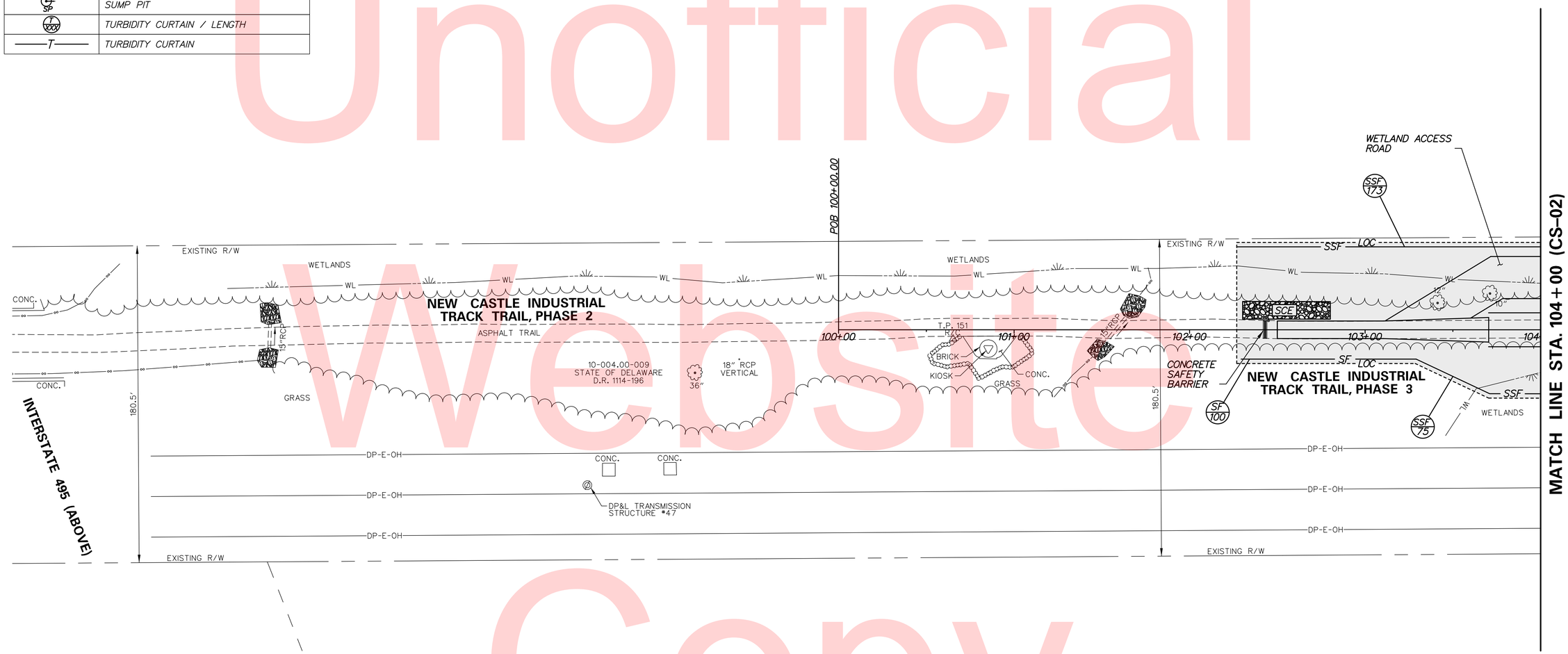

STABILIZED CONSTRUCTION ENTRANCE			
NO.	STATION	OFFSET	TONS
1	102+50	11' LT.	25

Unofficial Website Copy

N:\31896-002\CADD\CS01_ITT3.DGN

DELAWARE DEPARTMENT OF TRANSPORTATION

ADDENDUMS / REVISIONS

SCALE 0 30 60 90 FEET

NEW CASTLE INDUSTRIAL TRACK TRAIL, PHASE 3

CONTRACT	BRIDGE NO.	X
T201330009	DESIGNED BY: DAD	
COUNTY		
NEW CASTLE	CHECKED BY: JRR	

CONSTRUCTION PHASING, M.O.T., AND EROSION CONTROL PLAN

CS-01

SHEET NO. 174

TOTAL SHTS. 207

SEQUENCE OF CONSTRUCTION

1. PLACE ALL PERTINENT TRAFFIC CONTROL DEVICES AS SHOWN ON THIS PLAN. COORDINATE ACTIVITIES DURING THIS PHASE WITH THE ENVIRONMENTAL COMPLIANCE PLANS.
2. INSTALL EROSION AND SEDIMENT CONTROL MEASURES AS SHOWN.
3. CONSTRUCT PROPOSED TRAIL AND STRUCTURES.
4. STABILIZE ALL DISTURBED AREAS AS DIRECTED ON THE PLANS. REMOVE EROSION AND SEDIMENT DEVICES AFTER CONCURRENCE FROM THE STORMWATER ENGINEER.

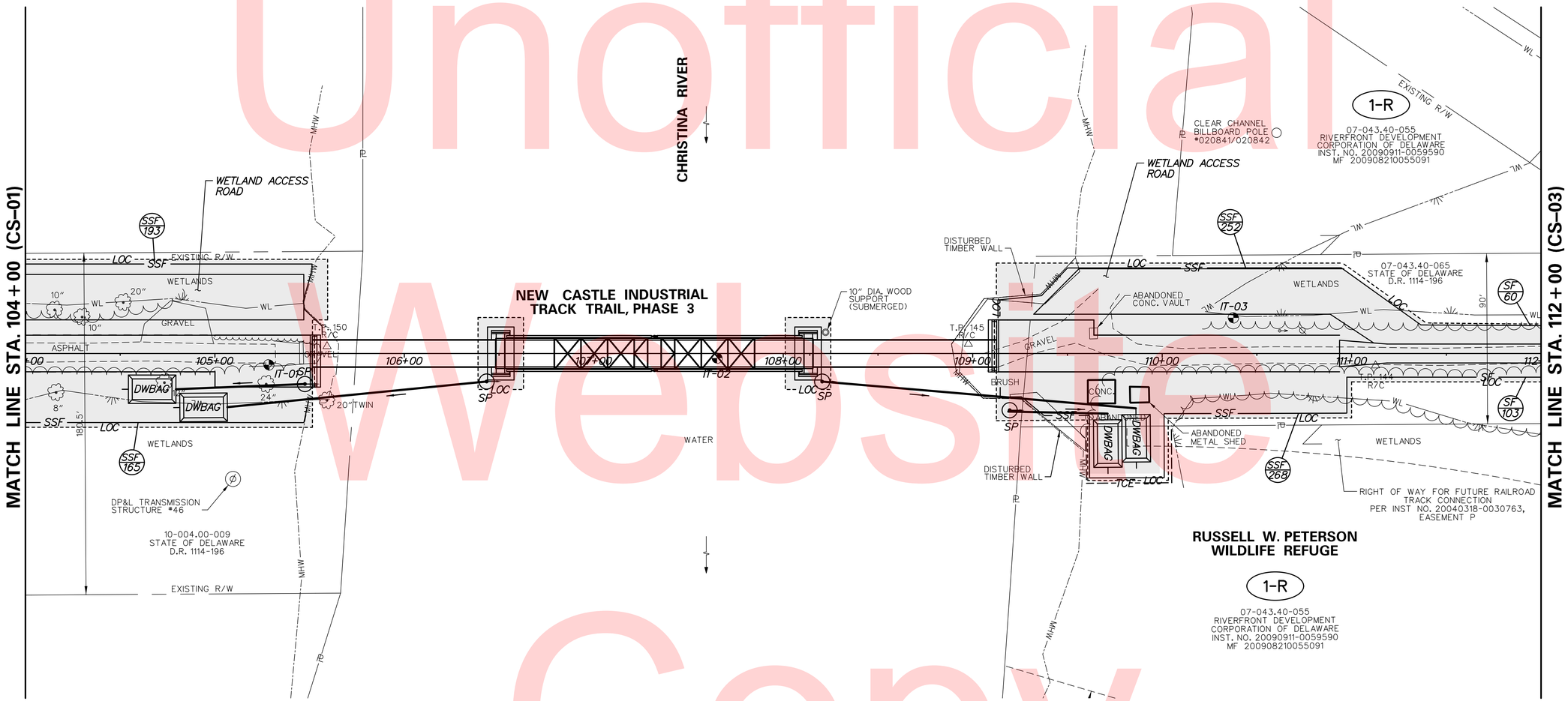

Unofficial Website Copy

N:\31896-002\CADD\CS02_ITT3.DGN

DELAWARE DEPARTMENT OF TRANSPORTATION	ADDENDUMS / REVISIONS	SCALE 0 30 60 90 FEET	NEW CASTLE INDUSTRIAL TRACK TRAIL, PHASE 3	CONTRACT T201330009	BRIDGE NO. X	CONSTRUCTION PHASING, M.O.T., AND EROSION CONTROL PLAN
				COUNTY NEW CASTLE	DESIGNED BY: DAD	
					CHECKED BY: JRR	

CS-02

SHEET NO. 175

TOTAL SHTS. 207

SEQUENCE OF CONSTRUCTION

1. PLACE ALL PERTINENT TRAFFIC CONTROL DEVICES AS SHOWN ON THIS PLAN. COORDINATE ACTIVITIES DURING THIS PHASE WITH THE ENVIRONMENTAL COMPLIANCE PLANS.
2. INSTALL EROSION AND SEDIMENT CONTROL MEASURES AS SHOWN.
3. CONSTRUCT PROPOSED TRAIL AND STRUCTURES.
4. STABILIZE ALL DISTURBED AREAS AS DIRECTED ON THE PLANS. REMOVE EROSION AND SEDIMENT DEVICES AFTER CONCURRENCE FROM THE STORMWATER ENGINEER.

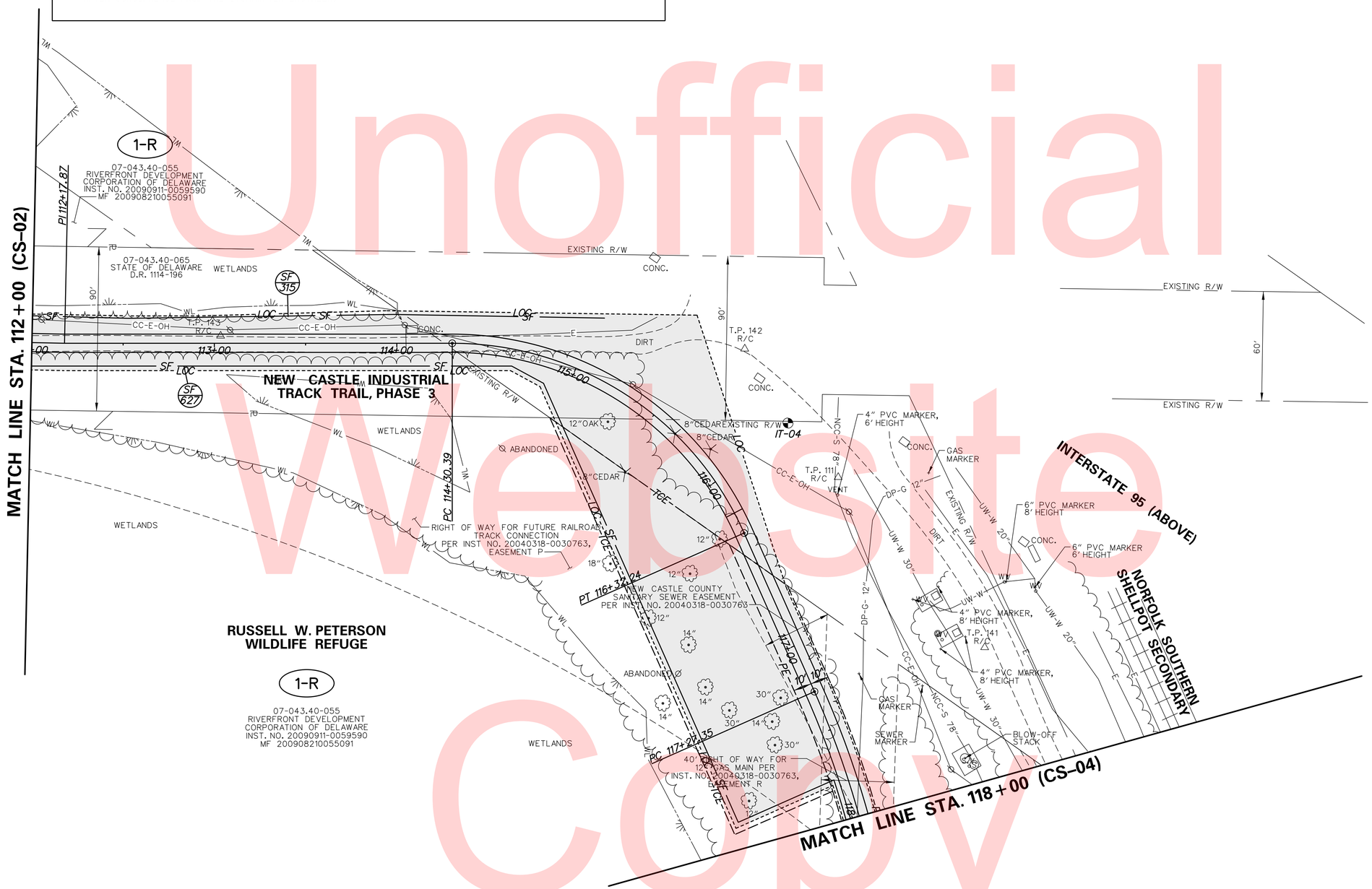

Unofficial Website Copy

N:\31896-002\CADD\CS03_ITT3.DGN

DELAWARE DEPARTMENT OF TRANSPORTATION	ADDENDUMS / REVISIONS	SCALE 0 30 60 90 FEET	NEW CASTLE INDUSTRIAL TRACK TRAIL, PHASE 3	CONTRACT T201330009	BRIDGE NO. X	CONSTRUCTION PHASING, M.O.T., AND EROSION CONTROL PLAN	CS-03
				COUNTY NEW CASTLE	DESIGNED BY: DAD		SHEET NO. 176
					CHECKED BY: JRR		TOTAL SHTS. 207

SEQUENCE OF CONSTRUCTION

1. PLACE ALL PERTINENT TRAFFIC CONTROL DEVICES AS SHOWN ON THIS PLAN. COORDINATE ACTIVITIES DURING THIS PHASE WITH THE ENVIRONMENTAL COMPLIANCE PLANS.
2. INSTALL EROSION AND SEDIMENT CONTROL MEASURES AS SHOWN.
3. CONSTRUCT PROPOSED TRAIL AND STRUCTURES.
4. STABILIZE ALL DISTURBED AREAS AS DIRECTED ON THE PLANS. REMOVE EROSION AND SEDIMENT DEVICES AFTER CONCURRENCE FROM THE STORMWATER ENGINEER.

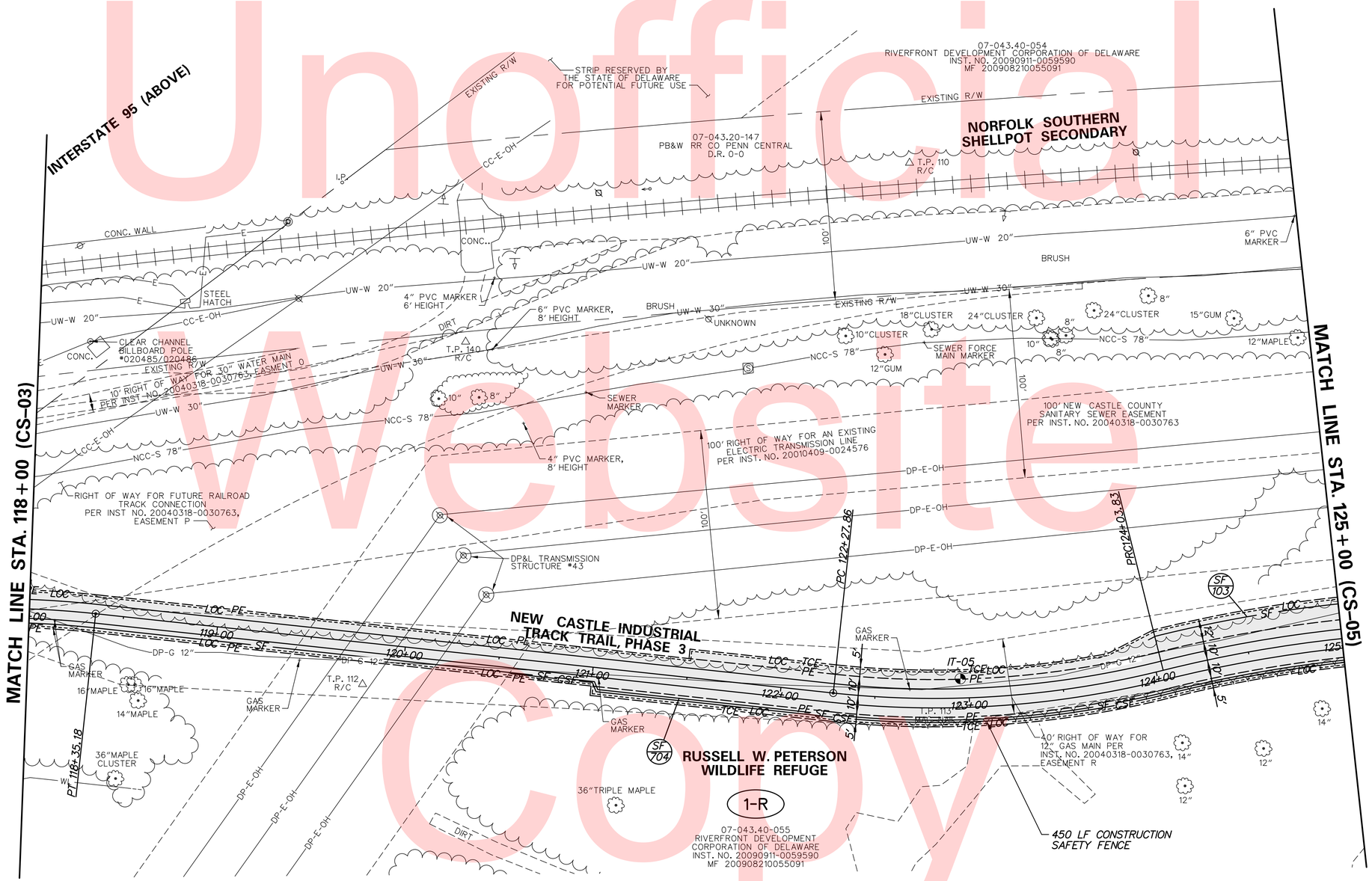

Unofficial Website Copy

N:\31896-002\CADD\CS04_ITT3.DGN

DELAWARE DEPARTMENT OF TRANSPORTATION	ADDENDUMS / REVISIONS	SCALE 0 30 60 90 FEET	NEW CASTLE INDUSTRIAL TRACK TRAIL, PHASE 3	CONTRACT T201330009	BRIDGE NO. X	CONSTRUCTION PHASING, M.O.T., AND EROSION CONTROL PLAN	CS-04
				COUNTY NEW CASTLE	DESIGNED BY: DAD		SHEET NO. 177
					CHECKED BY: JRR		TOTAL SHTS. 207

SEQUENCE OF CONSTRUCTION

1. PLACE ALL PERTINENT TRAFFIC CONTROL DEVICES AS SHOWN ON THIS PLAN. COORDINATE ACTIVITIES DURING THIS PHASE WITH THE ENVIRONMENTAL COMPLIANCE PLANS.
2. INSTALL EROSION AND SEDIMENT CONTROL MEASURES AS SHOWN.
3. CONSTRUCT PROPOSED TRAIL AND STRUCTURES.
4. STABILIZE ALL DISTURBED AREAS AS DIRECTED ON THE PLANS. REMOVE EROSION AND SEDIMENT DEVICES AFTER CONCURRENCE FROM THE STORMWATER ENGINEER.

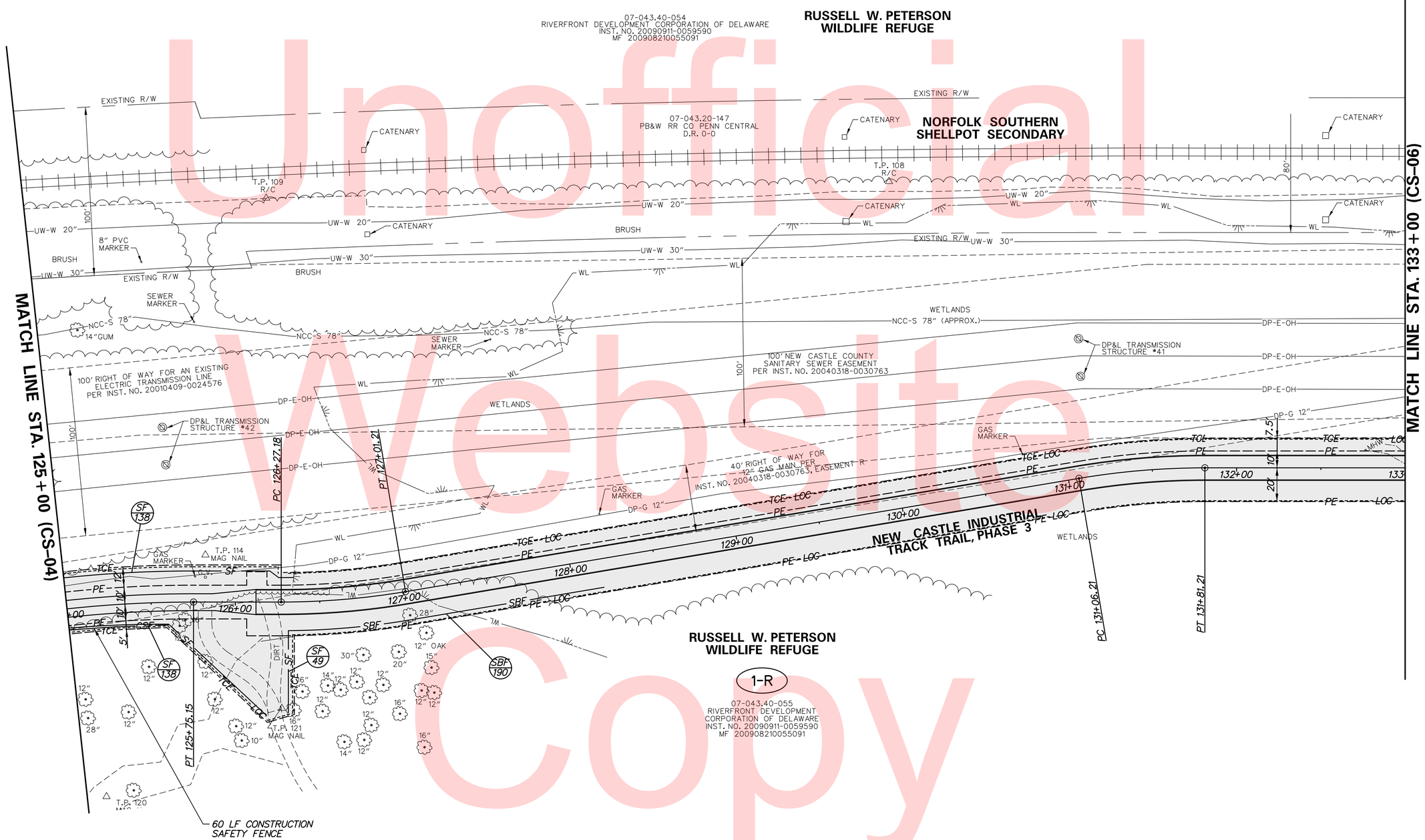

Unofficial Website Copy

DELAWARE DEPARTMENT OF TRANSPORTATION	ADDENDUMS / REVISIONS	SCALE 0 30 60 90 FEET	NEW CASTLE INDUSTRIAL TRACK TRAIL, PHASE 3	CONTRACT T201330009	BRIDGE NO. X	CONSTRUCTION PHASING, M.O.T., AND EROSION CONTROL PLAN	CS-05
				COUNTY NEW CASTLE	DESIGNED BY: DAD		SHEET NO. 178
					CHECKED BY: JRR		TOTAL SHTS. 207

N:\31896-002\CADD\CS05_ITT3.DGN

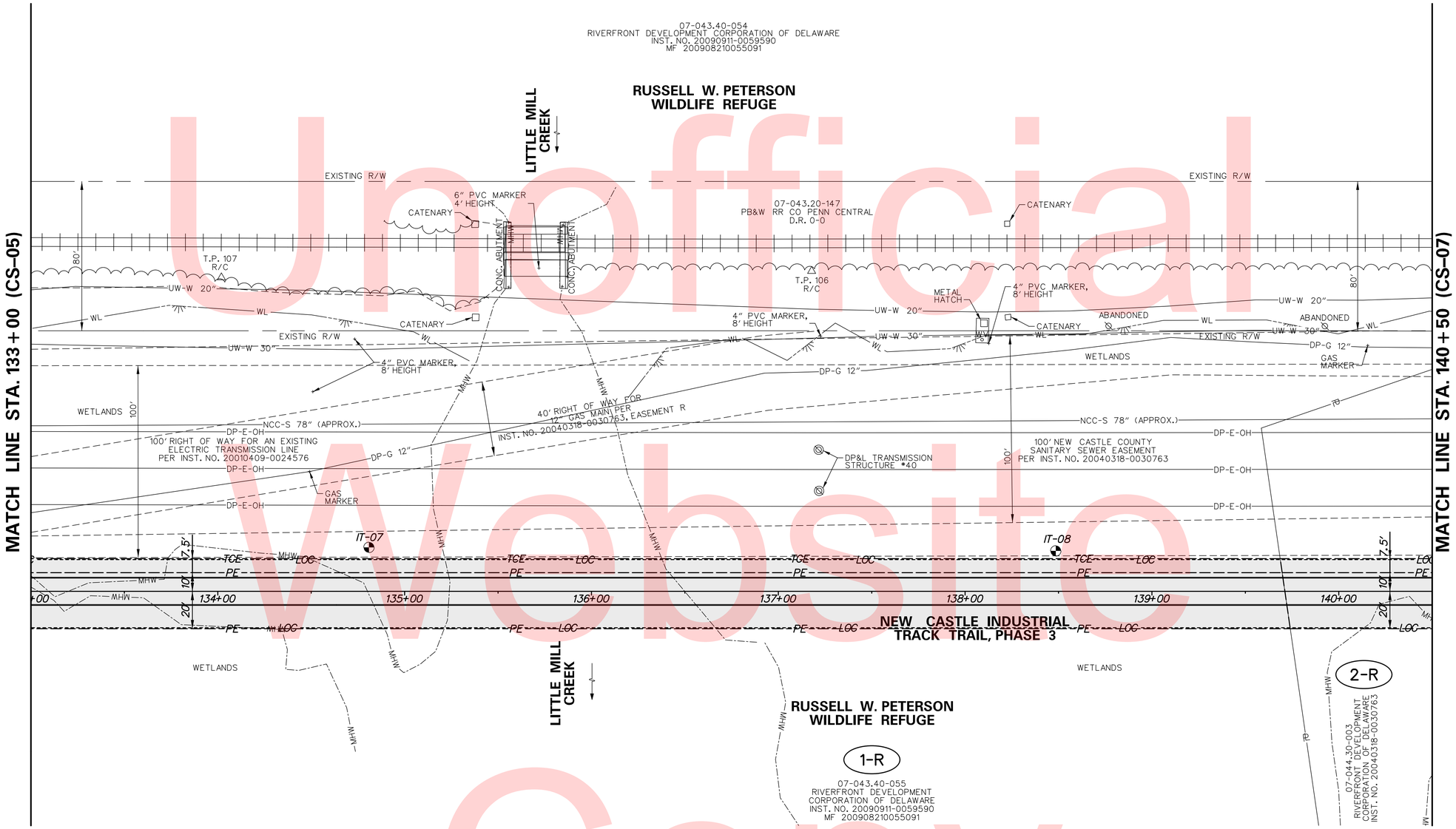

Unofficial Website Copy

SEQUENCE OF CONSTRUCTION
1. PLACE ALL PERTINENT TRAFFIC CONTROL DEVICES AS SHOWN ON THIS PLAN. COORDINATE ACTIVITIES DURING THIS PHASE WITH THE ENVIRONMENTAL COMPLIANCE PLANS.
2. INSTALL EROSION AND SEDIMENT CONTROL MEASURES AS SHOWN.
3. CONSTRUCT PROPOSED TRAIL AND STRUCTURES.
4. STABILIZE ALL DISTURBED AREAS AS DIRECTED ON THE PLANS. REMOVE EROSION AND SEDIMENT DEVICES AFTER CONCURRENCE FROM THE STORMWATER ENGINEER.

N:\31896-002\CADD\CS06_ITT3.DGN

DELAWARE DEPARTMENT OF TRANSPORTATION	ADDENDUMS / REVISIONS	SCALE 0 30 60 90 FEET	NEW CASTLE INDUSTRIAL TRACK TRAIL, PHASE 3	CONTRACT T201330009	BRIDGE NO. X	CONSTRUCTION PHASING, M.O.T., AND EROSION CONTROL PLAN	CS-06
				COUNTY NEW CASTLE	DESIGNED BY: DAD		SHEET NO. 179
					CHECKED BY: JRR		TOTAL SHTS. 207

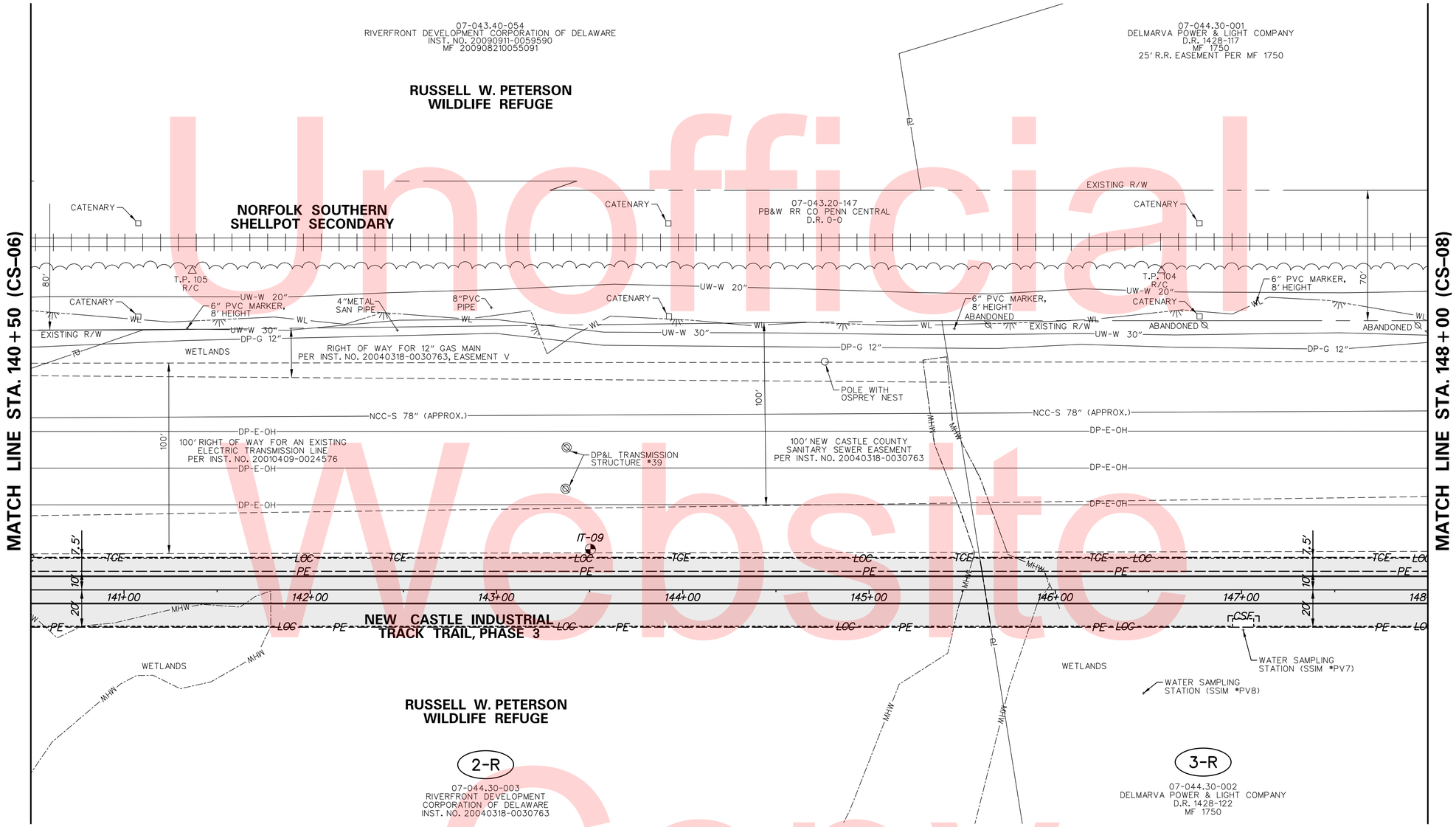

Unofficial Website Copy

SEQUENCE OF CONSTRUCTION

1. PLACE ALL PERTINENT TRAFFIC CONTROL DEVICES AS SHOWN ON THIS PLAN. COORDINATE ACTIVITIES DURING THIS PHASE WITH THE ENVIRONMENTAL COMPLIANCE PLANS.
2. INSTALL EROSION AND SEDIMENT CONTROL MEASURES AS SHOWN.
3. CONSTRUCT PROPOSED TRAIL AND STRUCTURES.
4. STABILIZE ALL DISTURBED AREAS AS DIRECTED ON THE PLANS. REMOVE EROSION AND SEDIMENT DEVICES AFTER CONCURRENCE FROM THE STORMWATER ENGINEER.

N:\31896-002\CADD\CS07_ITT3.DGN

DELAWARE DEPARTMENT OF TRANSPORTATION	ADDENDUMS / REVISIONS	SCALE 0 30 60 90 FEET	NEW CASTLE INDUSTRIAL TRACK TRAIL, PHASE 3	CONTRACT T201330009	BRIDGE NO. X	CONSTRUCTION PHASING, M.O.T., AND EROSION CONTROL PLAN	CS-07
				COUNTY NEW CASTLE	DESIGNED BY: DAD		SHEET NO. 180
					CHECKED BY: JRR		TOTAL SHTS. 207

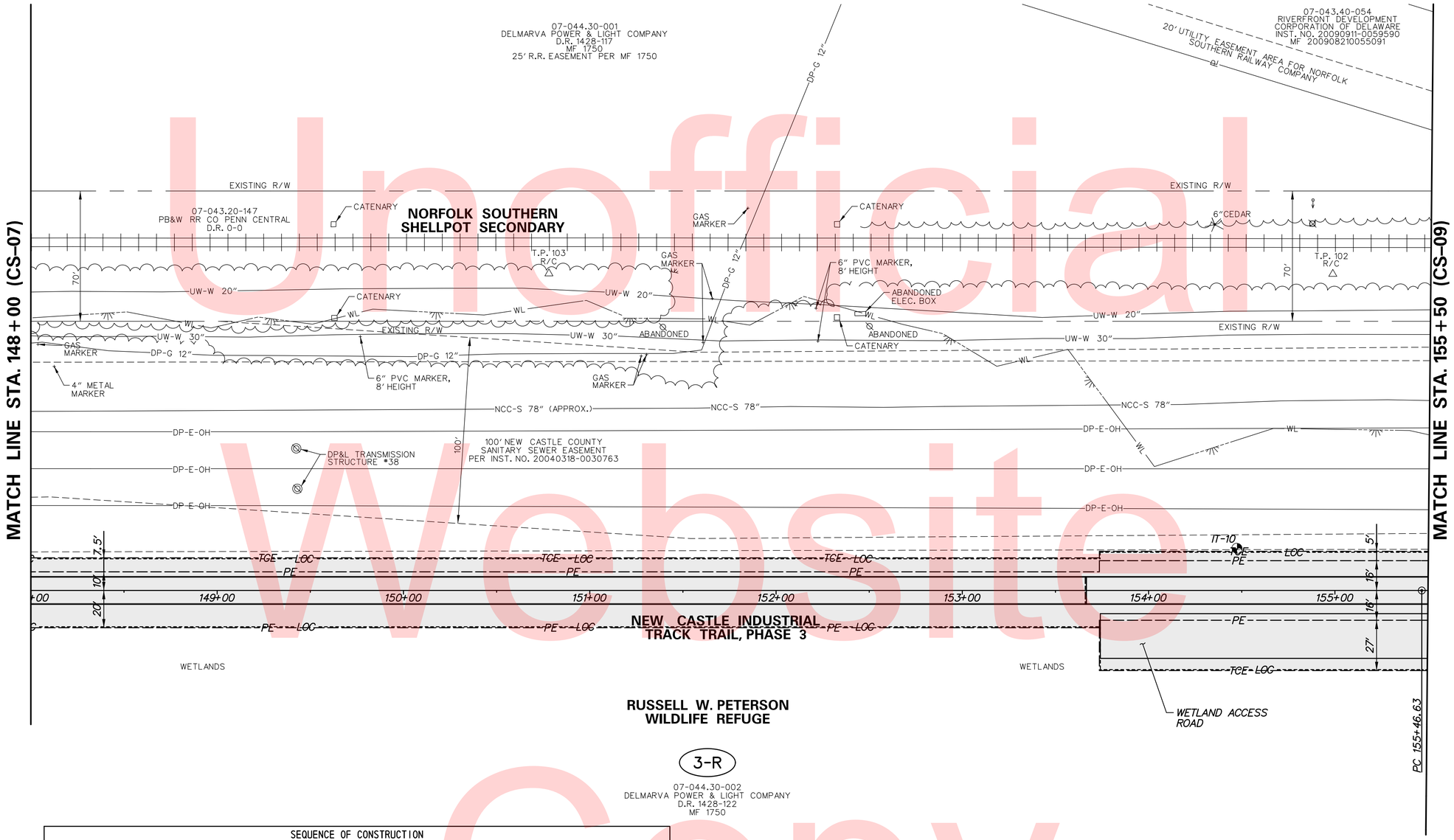

SEQUENCE OF CONSTRUCTION

1. PLACE ALL PERTINENT TRAFFIC CONTROL DEVICES AS SHOWN ON THIS PLAN. COORDINATE ACTIVITIES DURING THIS PHASE WITH THE ENVIRONMENTAL COMPLIANCE PLANS.
2. INSTALL EROSION AND SEDIMENT CONTROL MEASURES AS SHOWN.
3. CONSTRUCT PROPOSED TRAIL AND STRUCTURES.
4. STABILIZE ALL DISTURBED AREAS AS DIRECTED ON THE PLANS. REMOVE EROSION AND SEDIMENT DEVICES AFTER CONCURRENCE FROM THE STORMWATER ENGINEER.

Unofficial Website Copy

N:\31896-002\CADD\CS08_ITT3.DGN

DELAWARE DEPARTMENT OF TRANSPORTATION	ADDENDUMS / REVISIONS	SCALE 0 30 60 90 FEET	NEW CASTLE INDUSTRIAL TRACK TRAIL, PHASE 3	CONTRACT T201330009	BRIDGE NO. X	CONSTRUCTION PHASING, M.O.T., AND EROSION CONTROL PLAN	CS-08
				COUNTY NEW CASTLE	DESIGNED BY: DAD		SHEET NO. 181
					CHECKED BY: JRR		TOTAL SHTS. 207

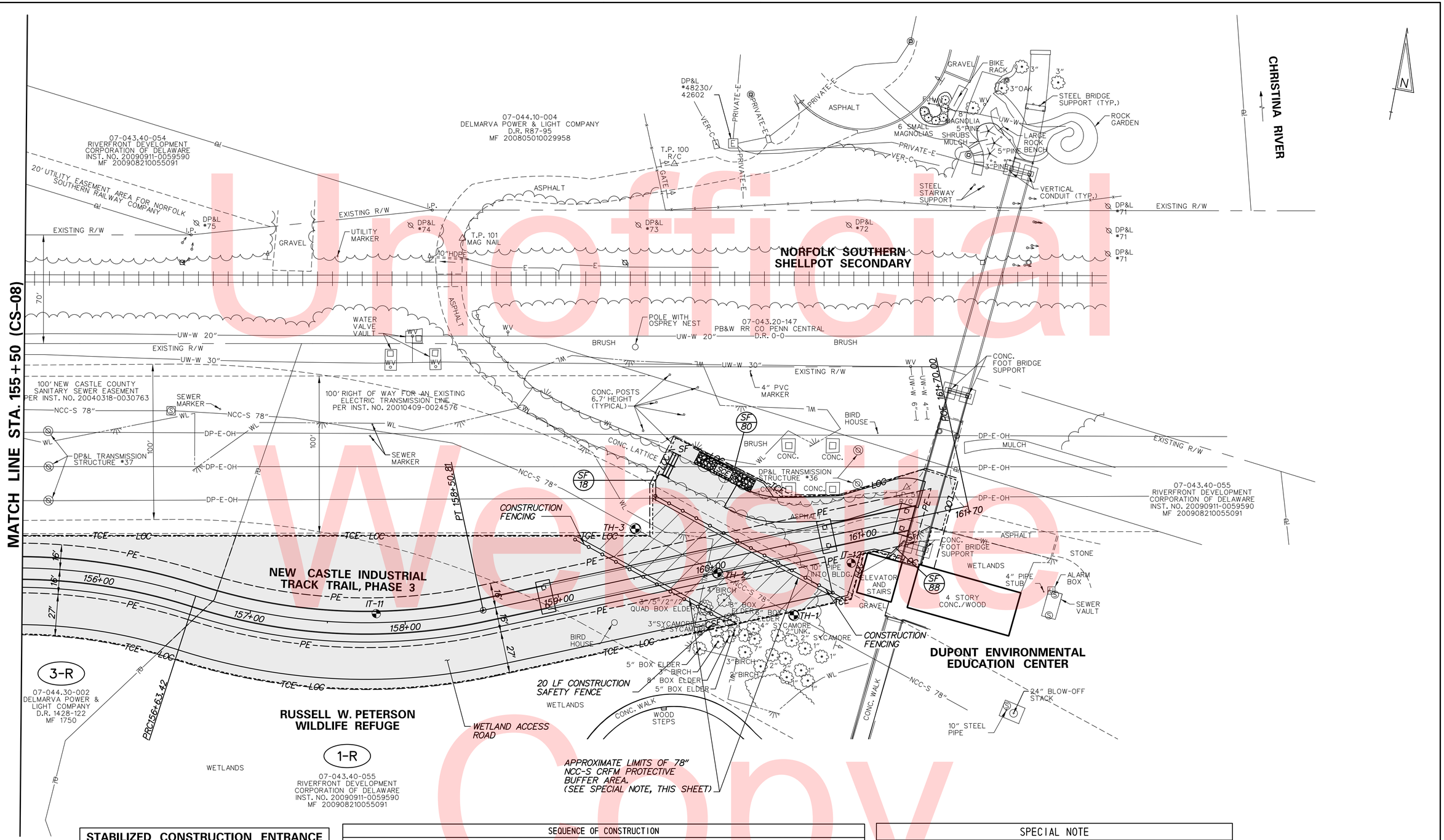

STABILIZED CONSTRUCTION ENTRANCE			
NO.	STATION	OFFSET	TONS
2	160+20	55' LT.	25

CONSTRUCTION PHASING & M.O.T	
	WORK AREA - ACTIVE PHASE
	SEWER PROTECTIVE BUFFER AREA (APPROX.)

SEQUENCE OF CONSTRUCTION

1. PLACE ALL PERTINENT TRAFFIC CONTROL DEVICES AS SHOWN ON THIS PLAN. COORDINATE ACTIVITIES DURING THIS PHASE WITH THE ENVIRONMENTAL COMPLIANCE PLANS.
2. INSTALL EROSION AND SEDIMENT CONTROL MEASURES AS SHOWN.
3. CONSTRUCT PROPOSED TRAIL AND STRUCTURES.
4. STABILIZE ALL DISTURBED AREAS AS DIRECTED ON THE PLANS. REMOVE EROSION AND SEDIMENT DEVICES AFTER CONCURRENCE FROM THE STORMWATER ENGINEER.

SPECIAL NOTE

THE CONTRACTOR SHALL STRICTLY ADHERE TO THE NEW CASTLE COUNTY CHRISTINA RIVER FORCE MAIN (CRFM) PROTECTIVE MEASURES AS NOTED IN THE PLANS AND SPECIFICATIONS.

Unofficial Website Copy

N:\31896-002\CADD\CS09_ITT3.DGN

DELAWARE DEPARTMENT OF TRANSPORTATION

ADDENDUMS / REVISIONS

SCALE 0 30 60 90 FEET

NEW CASTLE INDUSTRIAL TRACK TRAIL, PHASE 3

CONTRACT	BRIDGE NO.	X
T201330009	DESIGNED BY: DAD	
COUNTY		
NEW CASTLE	CHECKED BY: JRR	

CONSTRUCTION PHASING, M.O.T., AND EROSION CONTROL PLAN

CS-09
SHEET NO. 182
TOTAL SHTS. 207

LANDSCAPE PLANTING SCHEDULE

SYMBOL	QTY.	SCIENTIFIC NAME	COMMON NAME	SIZE	ROOT	REMARKS
SHADE TREES						
BN	4	BETULA NIGRA	RIVER BIRCH	3" CAL.	B&B	SPACE MINIMUM 30' O.C.
MV	5	MAGNOLIA VIRGINIANA	SWEETBAY MAGNOLIA	3" CAL.	B&B	SPACE MINIMUM 30' O.C.
PO	5	PLATANUS OCCIDENTALIS	AMERICAN SYCAMORE	3" CAL.	B&B	SPACE MINIMUM 30' O.C.
UNDERSTORY TREES/LARGE SHRUBS						
AA	12	AMELANCHIER ARBOREA	DOWNY SERVICEBERRY	NO. 25	CONTAINER	SPACE MINIMUM 10' O.C.
IV	24	ILEX VERTICILLATA	WINTERBERRY	NO. 20	CONTAINER	SPACE MINIMUM 10' O.C.
VD	11	VIBURNUM DENTATUM	ARROWWOOD VIBURNUM	NO. 25	CONTAINER	SPACE MINIMUM 10' O.C.

NOTES:

1. PLANT IN ACCORDANCE WITH THE DELDOT STANDARD DETAIL L-1, LATEST EDITION.
2. PLANTINGS MUST BE PLACED A MINIMUM OF 10 FEET OFFSET FROM THE EDGE OF THE PAVED TRAIL.
3. FOR FUTURE REFUGE ACCESS, MAINTAIN A 22-FOOT WIDE OPENING BETWEEN THE NORTH AND SOUTH PLANTING AREAS AS SHOWN.

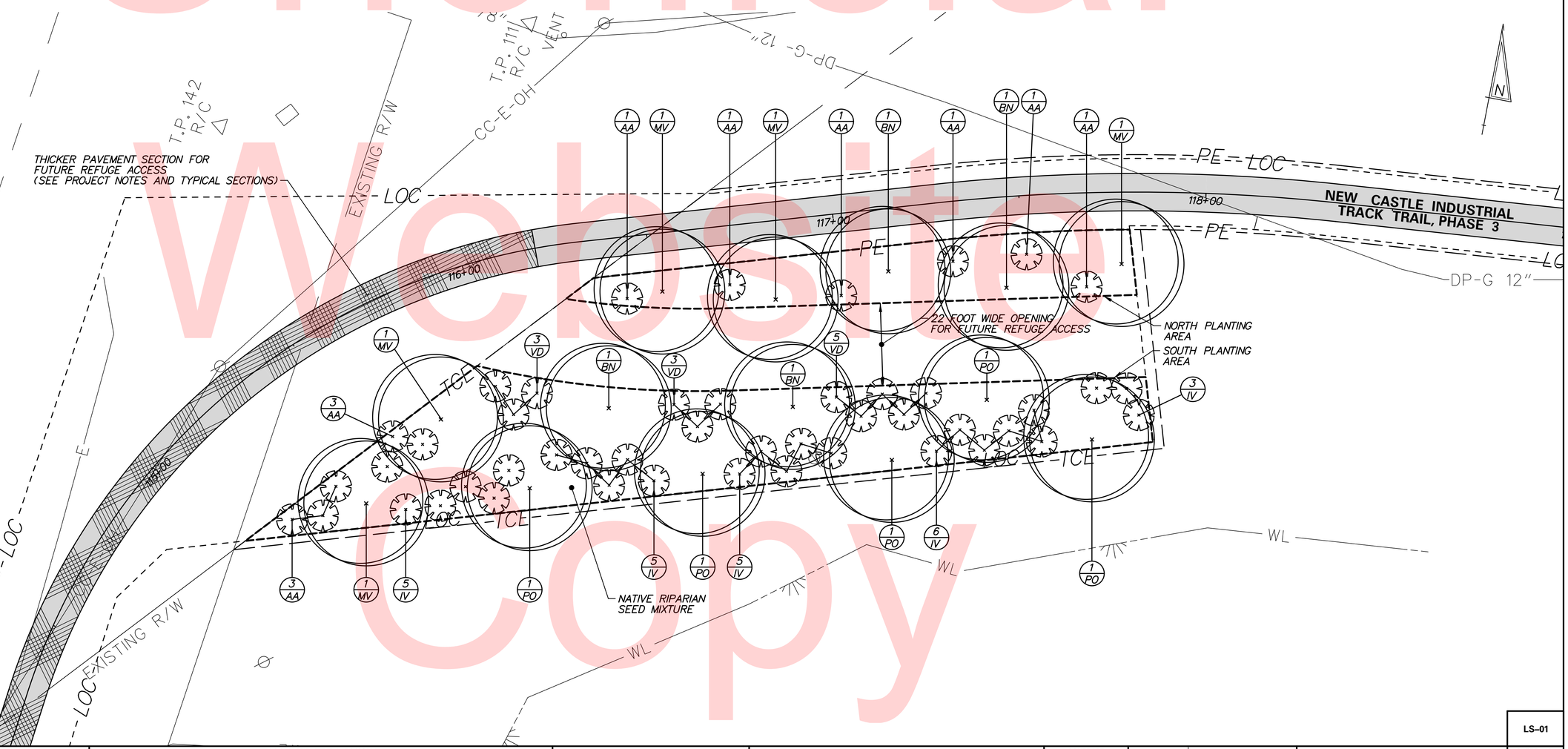

Unofficial Website Copy

N:\31896-002\CADD\LS01_ITT3.DGN

DELAWARE DEPARTMENT OF TRANSPORTATION	ADDENDUMS / REVISIONS	SCALE 0 15 30 45 FEET	NEW CASTLE INDUSTRIAL TRACK TRAIL, PHASE 3	CONTRACT T201330009	BRIDGE NO. X	LANDSCAPING PLAN	LS-01
				COUNTY NEW CASTLE	DESIGNED BY: MC		SHEET NO. 183
					CHECKED BY: DAD		TOTAL SHTS. 207

PROJECT LIGHTING NOTES:

1. CONDUIT RUNS ARE SHOWN IN APPROXIMATE LOCATIONS. THE CONTRACTOR SHALL LOCATE THE SERVICE RUNS IN A MANNER THAT AVOIDS CONFLICTS WITH ALL EXISTING AND PROPOSED FEATURES AS FIELD CONDITIONS DICTATE AND AS APPROVED BY THE ENGINEER.

2. THE CONTRACTOR SHALL VERIFY ALL DIMENSIONS AND CONDITIONS PRIOR TO WORK.

3. THE LIGHTING CONTRACTOR SHALL COORDINATE HIS WORK WITH ALL THE CONTRACTORS INVOLVED ON THIS PROJECT. THE LIGHTING CONTRACTOR SHALL COORDINATE WITH THE ENGINEER AND THE GENERAL SUPERINTENDENT ON THE LOCATIONS OF ALL CONDUIT, JUNCTION WELLS AND POLE BASES TO ELIMINATE CONSTRUCTION CONFLICTS.

4. EXISTING UTILITY LOCATIONS SHOWN ON THE PLANS ARE APPROXIMATE. IT SHALL BE THE RESPONSIBILITY OF THE CONTRACTOR TO VERIFY THE EXACT LOCATIONS PRIOR TO COMMENCING WORK.

5. THE CONTRACTOR SHALL USE CAUTION WHEN CROSSING EXISTING OR PROPOSED UTILITIES AND DRAINAGE PIPES WITH PROPOSED CONDUIT RUNS. THE CONTRACTOR SHALL HAND DIG TRENCHES IN THE VICINITY OF THESE FEATURES. IF A CONFLICT IS PERCEIVED THE CONTRACTOR SHALL NOTIFY THE ENGINEER TO DETERMINE THE PROPER RESOLUTION.

6. COLOR CODING SHALL BE PROVIDED THROUGHOUT THE ENTIRE NETWORK FOR SERVICE, FEEDER, BRANCH AND CONTROL CONDUCTORS. EACH PHASE SHALL BE AN INDEPENDENT COLOR. CONDUCTORS SHALL HAVE FACTORY IMPREGNATED COLOR THROUGHOUT THEIR ENTIRE LENGTH.

7. ALL CONDUITS SHALL BE BONDED IN A CONTINUOUS RUN FROM THE SOURCE BY A BARE COPPER GROUNDING CONDUCTOR WITH SIZE AS NOTED ON PLANS.

8. ALL LIGHTING FIXTURES, LAMPS AND RELATED DEVICES FURNISHED UNDER THIS CONTRACT SHALL CARRY THE APPROVAL LABEL OF UL OR ETL FOR THE SPECIFIC APPLICATION IN WHICH THEY ARE USED.

9. THE STATEMENT "FINISH SHALL BE SELECTED BY DESIGN PROFESSIONAL" SHALL BE INTERPRETED TO MEAN THAT THE FINISH OF THE LUMINAIRE SHALL MATCH THE APPEARANCE OF A PAINT CHIP, COLOR NUMBER, OR METAL SWATCH FURNISHED BY THE DESIGN PROFESSIONAL DURING THE SUBMITTAL REVIEW PROCESS.

10. WHITE L.E.D.'S SHALL MEET, AT A MINIMUM, CHROMATICITY STANDARDS SET BY ANSI/NEMA/ANSLG C79.377-2011. L.E.D. LUMEN MAINTENANCE SHALL BE MEASURED IN ACCORDANCE WITH IESNA LM-80 STANDARDS. PHOTOMETRIC TESTING FOR SOLID STATE LUMINAIRES SHALL BE IN ACCORDANCE WITH IESNA LM-79 STANDARDS.

11. CONTRACTOR SHALL CONFIRM FIXTURE VOLTAGES AND MOUNTING HARDWARE ARE COMPATIBLE WITH THEIR APPLICATION AS DETERMINED BY THE DESIGN PROFESSIONAL PRIOR TO ORDERING FIXTURES.

12. CONTRACTOR SHALL PROVIDE THE FOLLOWING WITH THEIR BID:
    - A. THE UNIT PRICE FOR EACH LIGHTING FIXTURE TYPE LISTED WITHIN THE LIGHTING FIXTURE SCHEDULE. THE UNIT PRICE SHALL BE FOR ONE OF THE LISTED MANUFACTURERS FOR THAT PARTICULAR FIXTURE. THE MANUFACTURER SHALL BE IDENTIFIED. SUBSTITUTIONS FOR FIXTURES PROVIDED BY MANUFACTURERS NOT LISTED IN THE SCHEDULE ARE NOT ACCEPTABLE. SEE BELOW FOR REQUIREMENTS ASSOCIATED WITH SUBMITTING LIGHTING FIXTURE SUBSTITUTIONS.
    - B. THE TOTAL QUANTITY OF EACH FIXTURE TYPE WITH THE EXTENDED COST FOR THAT QUANTITY.

13. WITHIN 21 DAYS OF CONTRACT AWARD, THE CONTRACTOR SHALL FURNISH SUBMITTALS FOR ALL SPECIFIED LIGHTING FIXTURES FOR REVIEW BY THE DESIGN PROFESSIONAL. THE SUBMITTALS SHALL INCLUDE LUMINAIRE CATALOG CUTS, SUBMITTAL SHEETS, OR MANUFACTURERS' SHOP DRAWINGS INCLUDING THE FOLLOWING:
    - A. MANUFACTURER'S NAME AND COMPLETE CATALOG NUMBER
    - B. FIXTURE TYPE, DIMENSIONS AND FINISHES
    - C. FIXTURE PHOTOMETRIC TEST DATA FROM AN INDEPENDENT TEST LABORATORY
    - D. FIXTURE ACCESSORIES, COMPONENTS, AND HARDWARE WHEN SPECIFIED
    - E. LAMP TYPE, QUANTITY, WATTAGE, LUMEN OUTPUT, RATED LIFE, COLOR TEMPERATURE, COLOR RENDERING INDEX, AND BEAM SPREAD AS APPLICABLE
    - F. BALLAST TYPE AND FIXTURE VOLTAGE

14. SUBMITTALS FOR LIGHTING FIXTURES MOUNTED WITHIN ARCHITECTURAL COVES OR CASEWORK, VARIABLE LENGTH FIXTURES, AND FOR NON-STANDARD, OR CUSTOM FIXTURES, SHALL ALSO INCLUDE SCALED DRAWINGS SHOWING THE LAYOUT AND DIMENSIONS OF ALL FIXTURE COMPONENTS AND ACCESSORIES, THE METHOD OF INSTALLATION, AND A COMPLETE BILL OF MATERIALS.

    LIGHTING FIXTURE SUBSTITUTION REQUESTS MUST BE SENT TO AND RECEIVED BY THE LIGHTING DESIGNER FOR REVIEW 14 DAYS PRIOR TO BID DATE. FAILURE TO SUBMIT WITHIN THIS DEADLINE SHALL CONSTITUTE A GUARANTEE THAT THE SPECIFIED FIXTURES WILL BE SUPPLIED. THE SUBMITTAL SHALL INCLUDE THE FOLLOWING:
    - A. SIX HARD COPIES OF THE SUBMITTALS REQUIRED ABOVE FOR BOTH THE SPECIFIED FIXTURE AND THE PROPOSED SUBSTITUTION.
    - B. ONE NON-RETURNABLE WORKING SAMPLE OF THE PROPOSED SUBSTITUTE FIXTURE WITH CORD AND PLUG CONNECTION FOR 120 VOLT OPERATION, AND SPECIFIED LAMP(S).
    - C. CONTRACTOR'S STATEMENT INDICATING THE EFFECT OF THE SUBSTITUTION ON THE CONSTRUCTION SCHEDULE COMPARED TO THE SCHEDULE WITHOUT THE APPROVAL OF THE PROPOSED SUBSTITUTION.
    - D. CONTRACTOR'S CERTIFICATION STATING THAT THE PROPOSED SUBSTITUTION CONFORMS TO THE REQUIREMENTS OF THE CONTRACT DOCUMENTS IN EVERY RESPECT AND IS APPROPRIATE FOR THE APPLICATIONS INDICATED IN THE DOCUMENTS.
    - E. CONTRACTOR'S CERTIFICATION STATING THAT ANY MODIFICATIONS TO ANY BUILDING SYSTEM OR EQUIPMENT THAT MAY RESULT FROM THE PROPOSED LIGHTING FIXTURE SUBSTITUTION WILL BE DESIGNED AND CONSTRUCTED AT THE CONTRACTOR'S EXPENSE.
    - F. CONTRACTOR'S WAIVER OF RIGHTS TO ADDITIONAL PAYMENT OR TIME THAT MAY BECOME NECESSARY SHOULD THE PROPOSED SUBSTITUTION FAIL TO PERFORM IN A MANNER THAT MATCHES THE SPECIFIED FIXTURE.
    - G. CONTRACTOR-NET UNIT PRICE FOR THE SPECIFIED FIXTURE AND FOR THE PROPOSED SUBSTITUTE FIXTURE.

LIGHTING DEFINITIONS:

1. CORRELATED COLOR TEMPERATURE (CCT): THE ABSOLUTE TEMPERATURE, MEASURED IN DEGREES KELVIN, OF A BLACKBODY RADIATOR HAVING CHROMATICITY RESEMBLING THAT OF AN ELECTRIC LIGHT SOURCE. FOR LED SOURCES CCT SHALL NOT DEVIATE FROM THE REFERENCE COLOR TEMPERATURE BY MORE THAN THREE MACADAM ELLIPSES, AS DEFINED BY NEMA/ANSI/ANSLG C38.377-2011

2. COLOR RENDERING INDEX (CRI): MEASURE OF COLOR SHIFT OBJECTS UNDERGO WHEN ILLUMINATED BY AN ELECTRIC LIGHT SOURCE AS COMPARED WITH THE COLOR OF THE SAME OBJECTS ILLUMINATED BY A REFERENCE SOURCE AT THE SAME COLOR TERMPERATURE. CRI VALUES FOR ELECTRIC LIGHT SOURCES RANGE FROM APPROXIMATELY 20 (LOW PRESSURE SODIUM) TO 99 (HALOGEN). CRI VALUES FOR LED SOURCES SHALL BE MEASURED AFTER 6000 HOURS AND SHALL NOT DEVIATE MORE THAN 3 POINTS FROM THE RATED VALUE.

3. LED LIGHT ENGINE: THE COMBINED LED LIGHT SOURCE AND ITS ASSOCIATED ELECTRONIC DRIVER. THE LED LIGHT ENGINE MAY HAVE AN INTEGRAL DRIVER OR THE DRIVER MAY BE HOUSED IN A SEPARATE ENCLOSURE.

4. LED DRIVER: CONTROL DEVICE THAT MAINTAINS CONSTANT AMOUNT OF CURRENT TO THE LED LIGHT SOURCE. LED DRIVERS GENERALLY OPERATE AT 12VDC OR 24VDC. SOME DRIVERS MAY BE DESIGNED TO ACCEPT BRANCH CIRCUIT VOLTAGE RANGING FROM 120VAC THROUGH 277VDC OR MAY REQUIRE A SEPARATE TRANSFORMER.

5. TRANSFORMER (LIGHTING): ELECTROMAGNETIC OR ELECTRONIC DEVICE THAT STEPS DOWN PRIMARY VOLTAGE TO A LOWER SECONDARY VOLTAGE. GENERALLY SECONDARY VOLTAGE WILL BE 12V OR 24V.

6. DIMMING: THE REDUCTION OF LIGHT INTENSITY OF A LIGHT SOURCE. ALL SOURCES SHALL HAVE A SMOOTH, FLICKER-FREE AND CONTINUOUS DIMMING CURVE FROM FULL-OFF TO 100% OUTPUT. LED SOURCES MAY BE DIMMED BY EITHER CONSTANT CURRENT REDUCTION (CCR) OR BY PULSE WIDTH MODULATION (PWM) DIMMING FOR CONSTANT CURRENT DRIVERS.

7. RATED LUMEN MAINTENANCE LIFE: THE ELAPSED OPERATING TIME OVER WHICH AN LED LIGHT SOURCE WILL MAINTAIN THE PERCENTAGE OF ITS INITIAL LUMEN OUTPUT.
   - L70: TIME, IN HOURS, TO 70% LUMEN MAINTENANCE
   - L50: TIME, IN HOURS, TO 50% LUMEN MAINTENANCE

Unofficial Website Copy

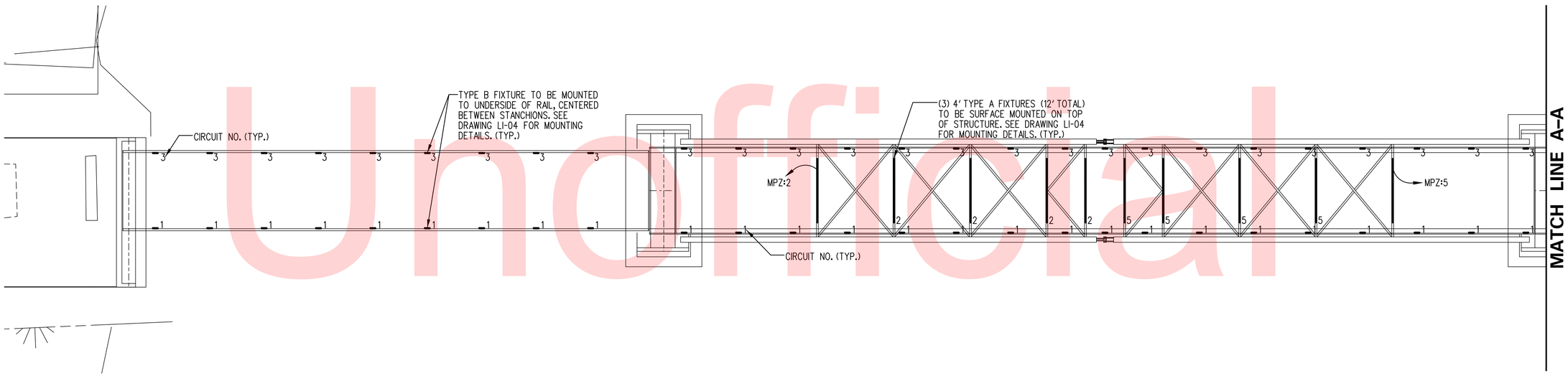

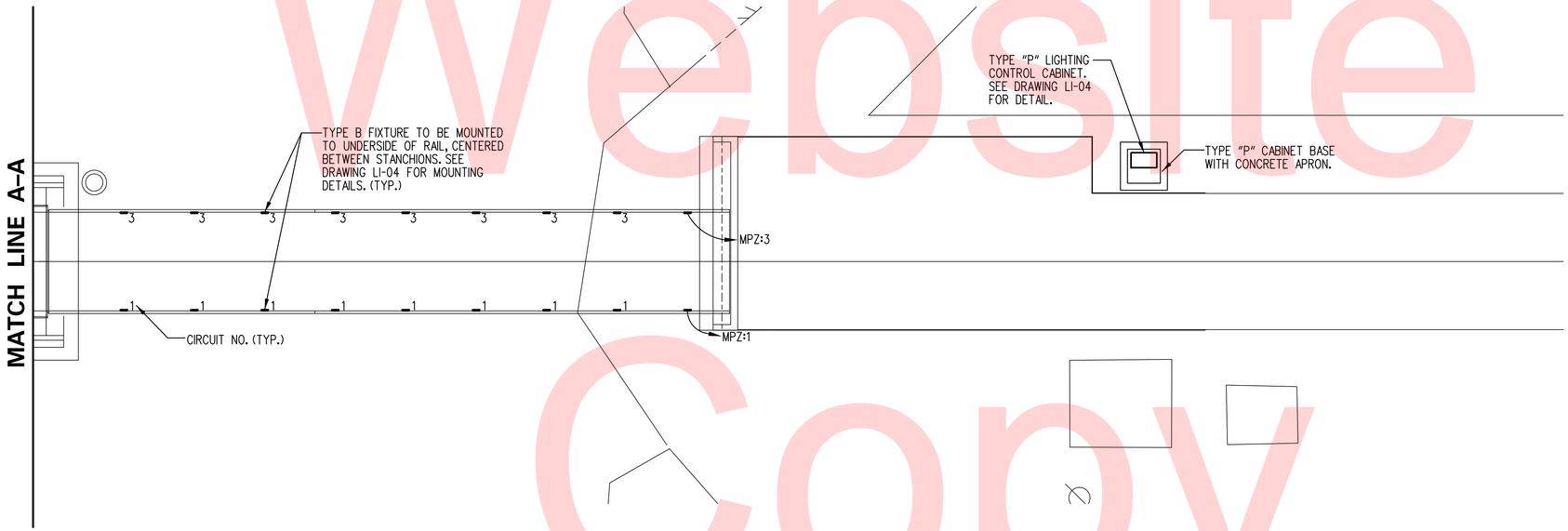

LEGEND

▬	*4' LED LIGHT FIXTURE (TYPE A)*
-	*1' LED LIGHT FIXTURE (TYPE B)*
PNL:#	*CIRCUIT HOMERUN INDICATOR (SOURCE PANEL:CKT NO.)*

Unofficial Website Copy

N:\31896-002\CADD\LI02_ITT3.DGN

DELAWARE DEPARTMENT OF TRANSPORTATION

ADDENDUMS / REVISIONS

SCALE 0 10 20 30 FEET

NEW CASTLE INDUSTRIAL TRACK TRAIL, PHASE 3

CONTRACT	BRIDGE NO.	X
T201330009	DESIGNED BY: AK	
COUNTY	CHECKED BY: IK	
NEW CASTLE		

BRIDGE LIGHTING PLAN

LI-02
SHEET NO. 185
TOTAL SHTS. 207

LIGHTING FIXTURE SCHEDULE

FIX. TYPE	DESCRIPTION	MOUNTING	LAMPS NO.	LAMPS WATTS	LAMPS TYPE	VOLTS	MAUNFACTURER AND CATALOG NUMBER
A	LED LINEAR DIRECT-VIEW LUMINAIRE, MAXIMUM 47.2 INCH LONG X 2.6 INCH WIDE X 3.5 INCHES HIGH, EXTRUDED ALUMINUM HOUSING, MACHINED ALUMINUM END CAPS WITH PLASTIC/RUBBER OVERMOLD, SILICONE SEALED FROSTED POLYCARBONATE LENS, MALE/FEMALE PIGTAIL PLUGS FOR CONTINUOUS END-TO-END POWER FEED, INTEGRAL LINE VOLTAGE POWER SUPPLY, CORROSION-RESISTANT SILVER POWDER COAT FINISH ACROSS MAIN FIXTURE HOUSING, ETL LISTED FOR WET LOCATION, IP 65 RATED, FIXTURE TO BE SURFACE MOUNTED END-TO-END ON TOP OF HORIZONTAL STRUCTURE, REFER TO DRAWINGS FOR MOUNTING DETAILS. ELECTRICAL CONTRACTOR TO PROVIDE LENGTH AND QUANTITY OF LEADER AND JUMPER CABLES AND MOUNTING ACCESSORIES AS REQUIRED. CONTRACTOR TO COORDINATE MOUNTING METHOD AS INDICATED IN MOUNTING DETAILS, AND PROVIDE ALL REQUIRED ACCESSORIES FOR FULLY FUNCTIONING SYSTEM. LED REQUIREMENTS: 2700K CORRELATED COLOR TEMPERATURE, L70 RATED LIFE OF 50,000 HOURS, AND 5-YEAR WARRANTY.	SURFACE	-	20	LEDs BY MANUFACTURER	120	ACCLAIM LIGHTING ABA.232.ABHN (MODIFIED TO STATIC 2700K) + LEADER/JUMPER CABLES OR APPROVED EQUAL
B	LED LINEAR LUMINAIRE, MAXIMUM 12 INCH LONG X 2.0 INCH WIDE X 2.0 INCH HIGH, EXTRUDED ALUMINUM HOUSING, MACHINED ALUMINUM END CAPS WITH SILICONE GASKETING, SILICONE-SEALED CLEAR TEMPERED GLASS LENS, STAINLESS STEEL HARDWARE, 120° x 120° BEAM OPTICS, INTEGRAL LINE VOLTAGE POWER SUPPLY, DIRECT CONDUIT CONNECTION, ETL LISTED FOR WET LOCATION, IP 66 RATED, FLAT MOUNTING BRACKETS FIXTURE TO BE MOUNTED TO UNDERSIDE OF HANDRAIL, REFER TO DRAWINGS FOR MOUNTING DETAILS. CONTRACTOR TO COORDINATE MOUNTING METHOD AS INDICATED IN MOUNTING DETAILS, AND PROVIDE ALL REQUIRED ACCESSORIES FOR FULLY FUNCTIONING SYSTEM. LED REQUIREMENTS: 2700K CORRELATED COLOR TEMPERATURE, 560 MINIMUM INITIAL DELIVERED LUMENS, 190 MINIMUM CENTERBEAM CANDLEPOWER, 80+ CRI, L70 RATED LIFE OF 60,000 HOURS, AND 5-YEAR WARRANTY.	SURFACE	-	8	LEDs BY MANUFACTURER	120	ECOSENSE HPEL-CC-12-27-120-120 MOUNTING: EXT-A-MNT-FLAT OR APPROVED EQUAL

BRIDGE POWER ZONE CENTER PANEL SCHEDULE

10, 000 RMS
NEMA ENCLOSURE: TYPE 3R

50 AMP BUS
208Y/120 VOLTS
SURFACE MOUNTED

50 AMP MCB
3 PHASE, 4 WIRE + GROUND
PANEL LOCATION - CONCRETE PAD

LOAD SERVED	LOAD (AMPS) A	LOAD (AMPS) B	LOAD (AMPS) C	CB TRIP	WIRE SIZE	CKT	PHASE A	PHASE B	PHASE C	CKT	WIRE SIZE	CB TRIP	LOAD (AMPS) A	LOAD (AMPS) B	LOAD (AMPS) C	LOAD SERVED
EAST RAILING LIGHTS	2.3			20	10	1				2	10	20	2.5			SOUTH BRIDGE TOP LIGHTS
WEST RAILING LIGHTS		2.3		20	10	3				4	12	20		1.5		RECEPTACLE
NORTH BRIDGE TOP LIGHTS			2.5	20	10	5				6		20				SPARE
SPACE				-		7				8		-				SPACE
SPACE				-		9				10		-				SPACE
SPACE				-		11				12		-				SPACE
TOTAL	2.3	2.3	2.5										2.5	1.5	0	TOTAL

TOTAL CONNECTED AMPS: A= 4.8 B= 3.8 C= 2.5

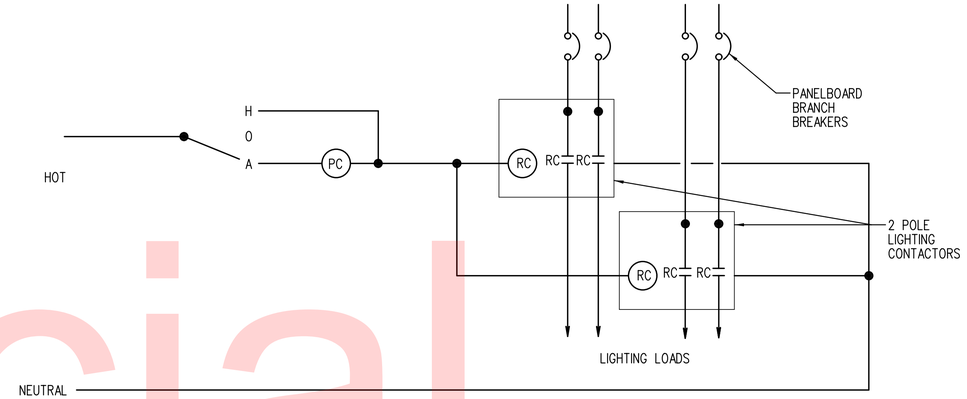

LIGHTING CONTROL DIAGRAM

SCALE: NOT TO SCALE

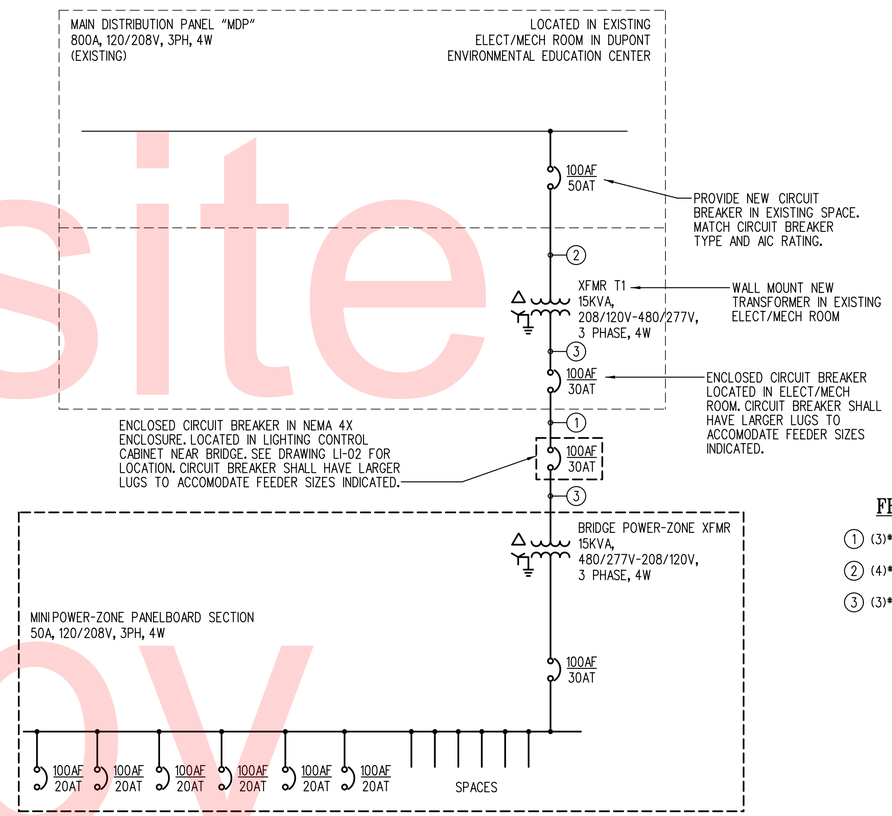

FEEDER SCHEDULE

1. (3)*1/0, (1)*6 GROUND, 2"C
2. (4)*6, (1)*10 GROUND, 1-1/4"C
3. (3)*10, (1)*10 GROUND, 3/4"C

ELECTRICAL SINGLE LINE DIAGRAM

SCALE: NOT TO SCALE

Unofficial Website Copy

N:\31896-002\CADD\LI03_LITT3.DGN

DELAWARE DEPARTMENT OF TRANSPORTATION	ADDENDUMS / REVISIONS	NOT TO SCALE	NEW CASTLE INDUSTRIAL TRACK TRAIL, PHASE 3	CONTRACT T201330009	BRIDGE NO. X	ELECTRICAL DETAILS	LI-03
				COUNTY NEW CASTLE	DESIGNED BY: AK		SHEET NO. 186
					CHECKED BY: IK		TOTAL SHTS. 207

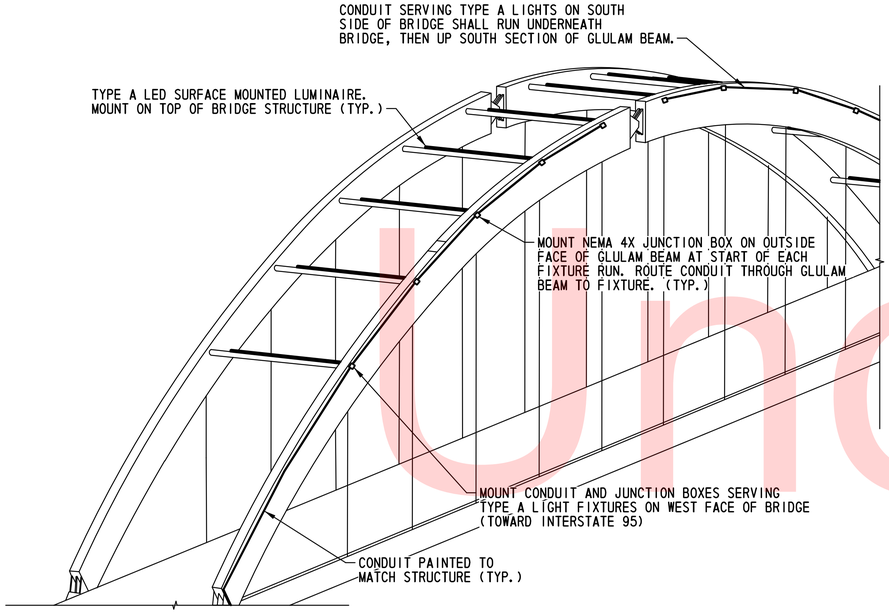

TYPE A FIXTURE INSTALLATION AND WIRING DIAGRAM

SCALE: NONE

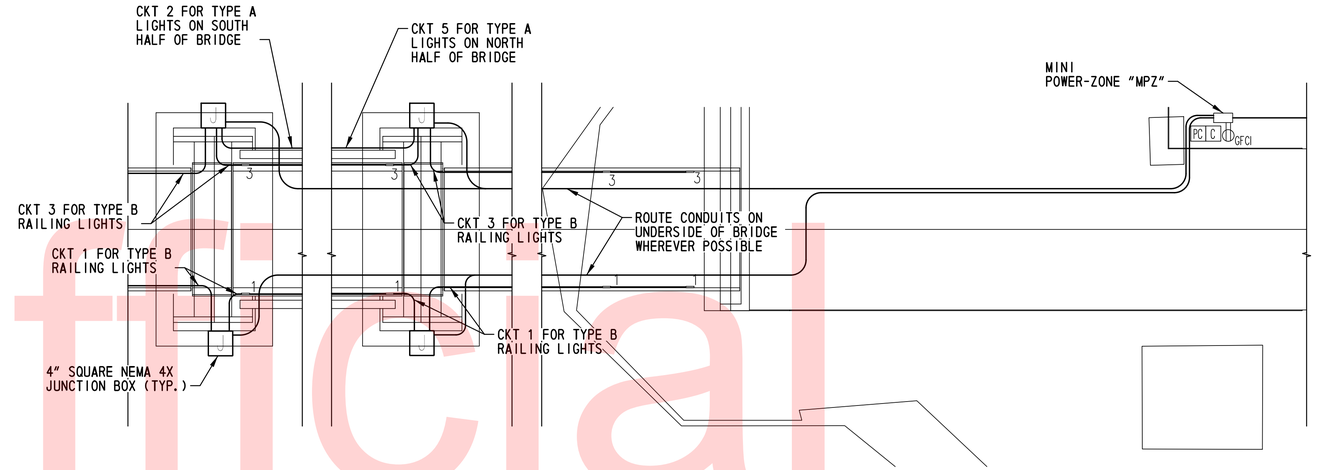

BRIDGE CONDUIT ROUTING DIAGRAM

SCALE: NONE

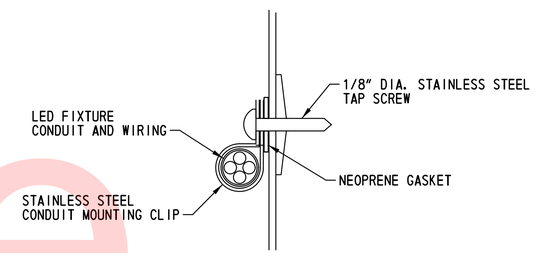

CONDUIT SUPPORT MOUNTING CLIP DETAIL AT RAILING

SCALE: NONE

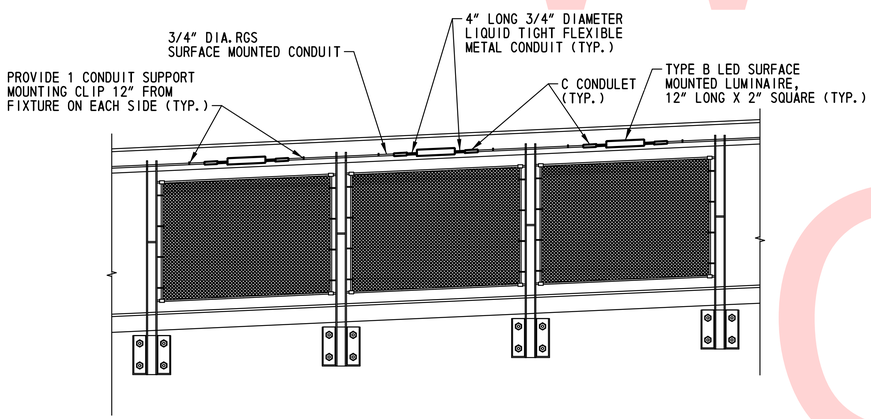

TYPE B FIXTURE INSTALLATION AT RAILING

SCALE: 1/2 " = 1'-0"

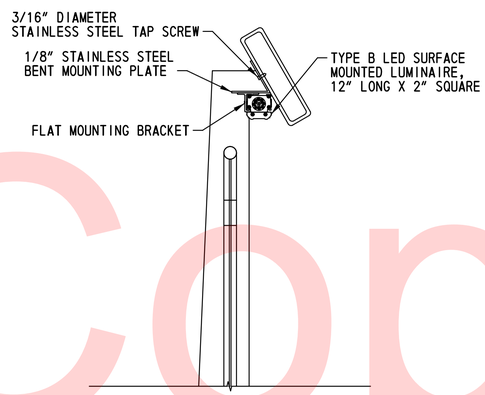

TYPE B INSTALLATION SECTION

SCALE: 2 " = 1'-0"

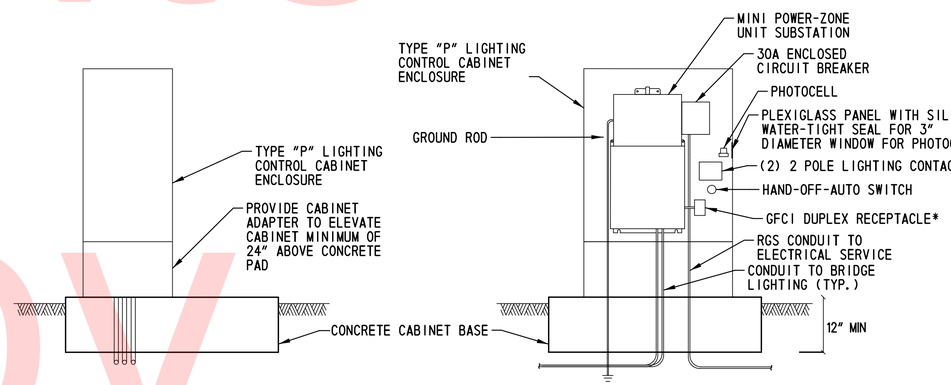

*PROVIDE HEAVY DUTY NEMA 5-20R GROUND FAULT CIRCUIT INTERRUPTING DUPLEX RECEPTACLE IN WEATHERPROOF WHILE IN USE ENCLOSURE.
RECEPTACLE: LEVITON, MODEL #G5362-WTE OR EQUAL.
ENCLOSURE: LEVITON, MODEL #002-05981-UGY OR EQUAL.

BRIDGE LIGHTING CONTROL AND DISTRIBUTION

SCALE: NONE

Unofficial Website Copy

N:\31896-002\CADD\LI04_ITT3.DGN

DELAWARE DEPARTMENT OF TRANSPORTATION	ADDENDUMS / REVISIONS	NOT TO SCALE	NEW CASTLE INDUSTRIAL TRACK TRAIL, PHASE 3	CONTRACT T201330009	BRIDGE NO. X	ELECTRICAL DETAILS	LI-04
				COUNTY NEW CASTLE	DESIGNED BY: AK		SHEET NO. 187
					CHECKED BY: IK		TOTAL SHTS. 207

LEGEND	
SR X	SERVICE RUN IDENTIFIER
JW X	JUNCTION WELL IDENTIFIER (TYPE OF JUNCTION WELL)
LI-CON	LIGHTING CONDUIT
C C C C	COMMUNICATIONS CONDUIT

LIGHTING SERVICE SCHEDULE

SERVICE RUN	DISTANCE (L.F.)	DESCRIPTION	INSTALLATION
31	358*	(3)#1/0, (1)#6 GROUND	2" SCH80 PVC IN TRENCH
32	362*	EMPTY	3" SCH80 PVC IN TRENCH

*DISTANCE CONTINUES ON ADJACENT PLAN SHEET
NOTE: SERVICE RUN DISTANCE REFLECTS CONDUIT LENGTH ONLY.

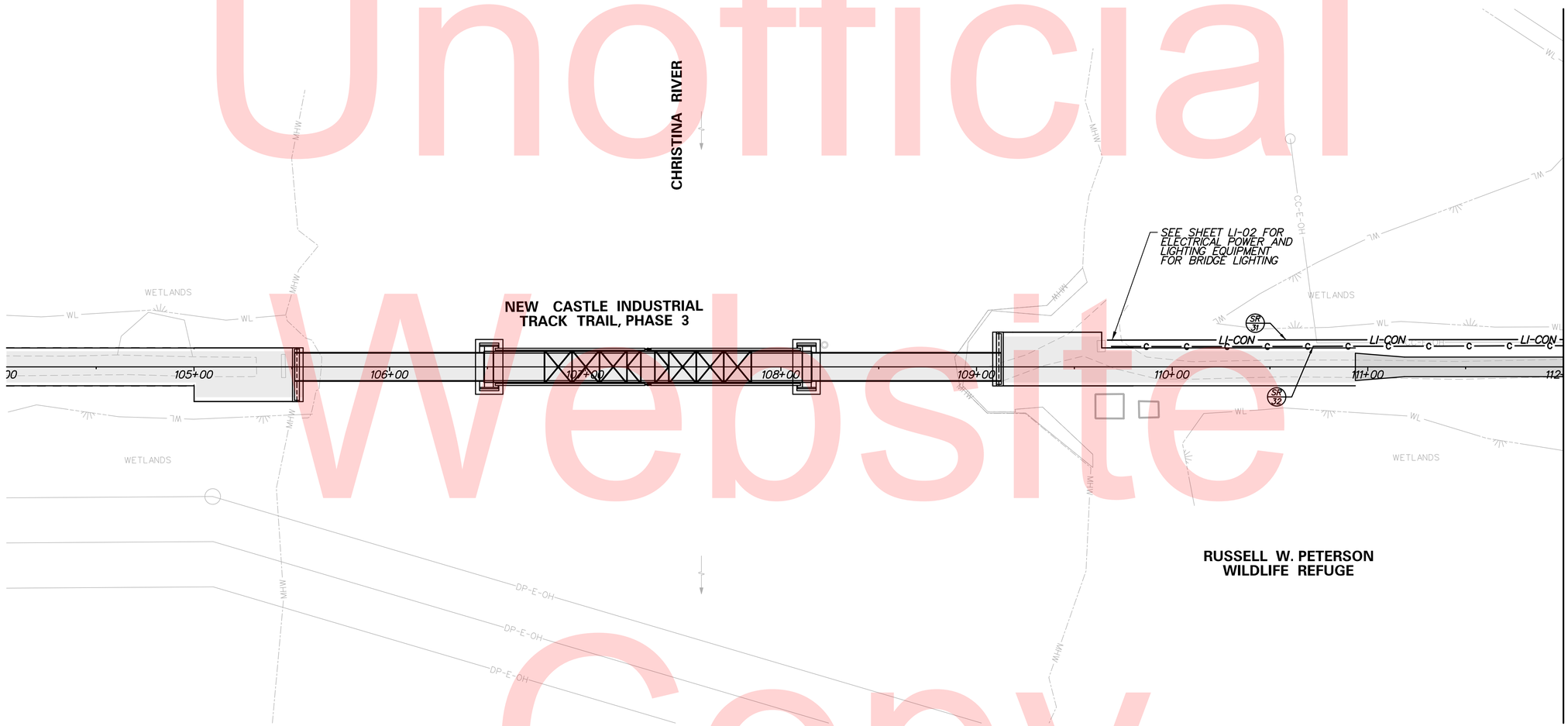

Unofficial Website Copy

N:\31896-002\CADD\LI05_ITT3.DGN

DELAWARE DEPARTMENT OF TRANSPORTATION	ADDENDUMS / REVISIONS	SCALE 0 30 60 90 FEET	NEW CASTLE INDUSTRIAL TRACK TRAIL, PHASE 3	CONTRACT T201330009	BRIDGE NO. X	LIGHTING AND CONDUIT PLAN	LI-05
				COUNTY NEW CASTLE	DESIGNED BY: AK		SHEET NO. 188
					CHECKED BY: IK		TOTAL SHTS. 207

LEGEND	
SR X	SERVICE RUN IDENTIFIER
JW X	JUNCTION WELL IDENTIFIER (TYPE OF JUNCTION WELL)
LI-CON	LIGHTING CONDUIT
C C C	COMMUNICATIONS CONDUIT

LIGHTING SERVICE SCHEDULE

SERVICE RUN	DISTANCE (L.F.)	DESCRIPTION	INSTALLATION
27	377*	(3)#1/0, (1)#6 GROUND	2" SCH80 PVC IN TRENCH
28	377*	EMPTY	3" SCH80 PVC IN TRENCH
29	399	(3)#1/0, (1)#6 GROUND	2" SCH80 PVC IN TRENCH
30	398	EMPTY	3" SCH80 PVC IN TRENCH
31	358*	(3)#1/0, (1)#6 GROUND	2" SCH80 PVC IN TRENCH
32	362*	EMPTY	3" SCH80 PVC IN TRENCH

*DISTANCE CONTINUES ON ADJACENT PLAN SHEET
NOTE: SERVICE RUN DISTANCE REFLECTS CONDUIT LENGTH ONLY.

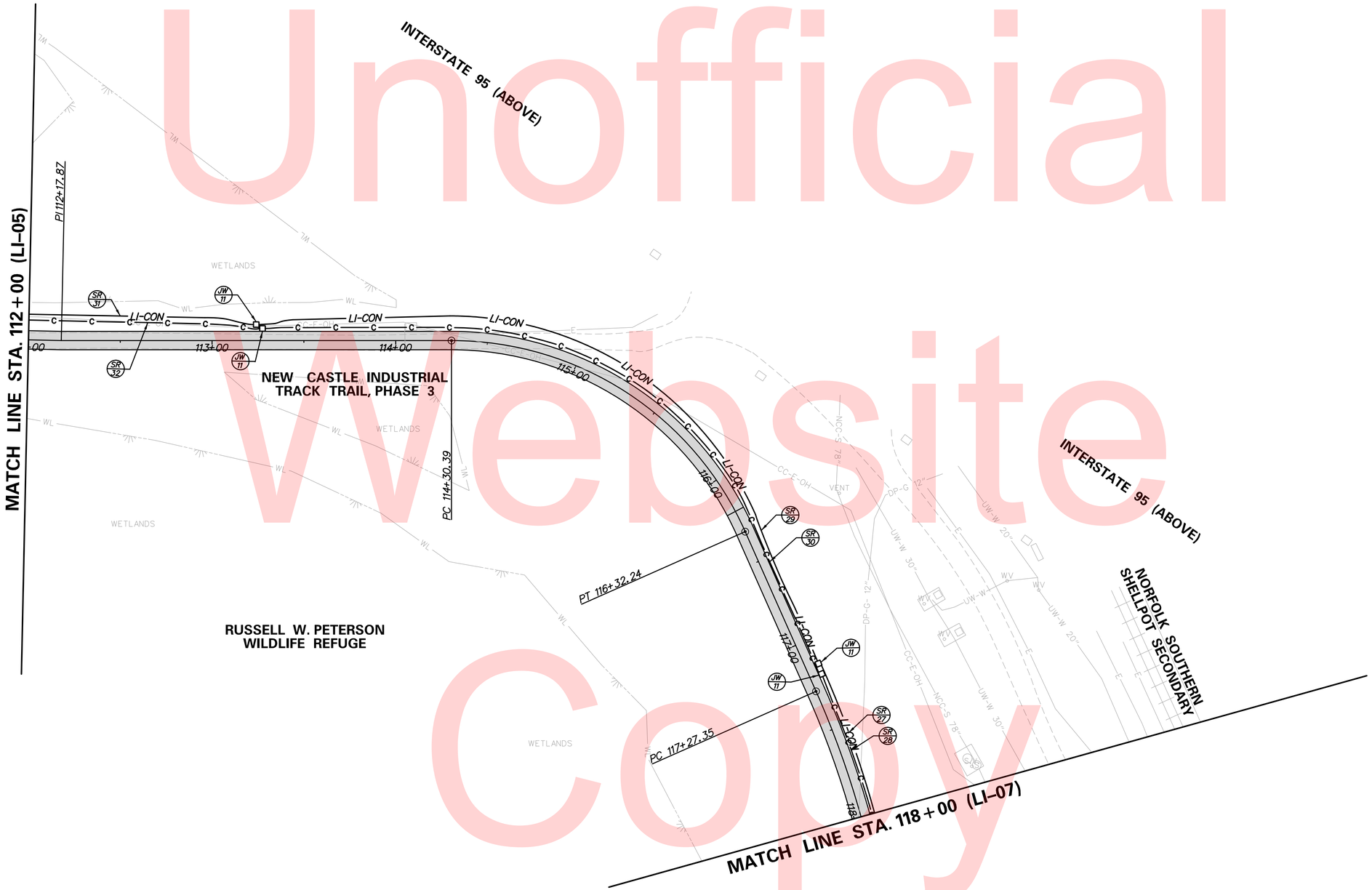

Unofficial Website Copy

N:\31896-002\CADD\LI06_ITT3.DGN

DELAWARE DEPARTMENT OF TRANSPORTATION	ADDENDUMS / REVISIONS	SCALE 0 30 60 90 FEET	NEW CASTLE INDUSTRIAL TRACK TRAIL, PHASE 3	CONTRACT T201330009	BRIDGE NO. X	LIGHTING AND CONDUIT PLAN	LI-06
				COUNTY NEW CASTLE	DESIGNED BY: AK		SHEET NO. 189
					CHECKED BY: IK		TOTAL SHTS. 207

LEGEND	
SR X	SERVICE RUN IDENTIFIER
JW X	JUNCTION WELL IDENTIFIER (TYPE OF JUNCTION WELL)
LI-CON	LIGHTING CONDUIT
C C C C	COMMUNICATIONS CONDUIT

LIGHTING SERVICE SCHEDULE

SERVICE RUN	DISTANCE (L.F.)	DESCRIPTION	INSTALLATION
25	428*	(3)#1/0, (1)#6 GROUND	2" SCH80 PVC IN TRENCH
26	428*	EMPTY	3" SCH80 PVC IN TRENCH
27	377*	(3)#1/0, (1)#6 GROUND	2" SCH80 PVC IN TRENCH
28	377*	EMPTY	3" SCH80 PVC IN TRENCH

*DISTANCE CONTINUES ON ADJACENT PLAN SHEET
NOTE: SERVICE RUN DISTANCE REFLECTS CONDUIT LENGTH ONLY.

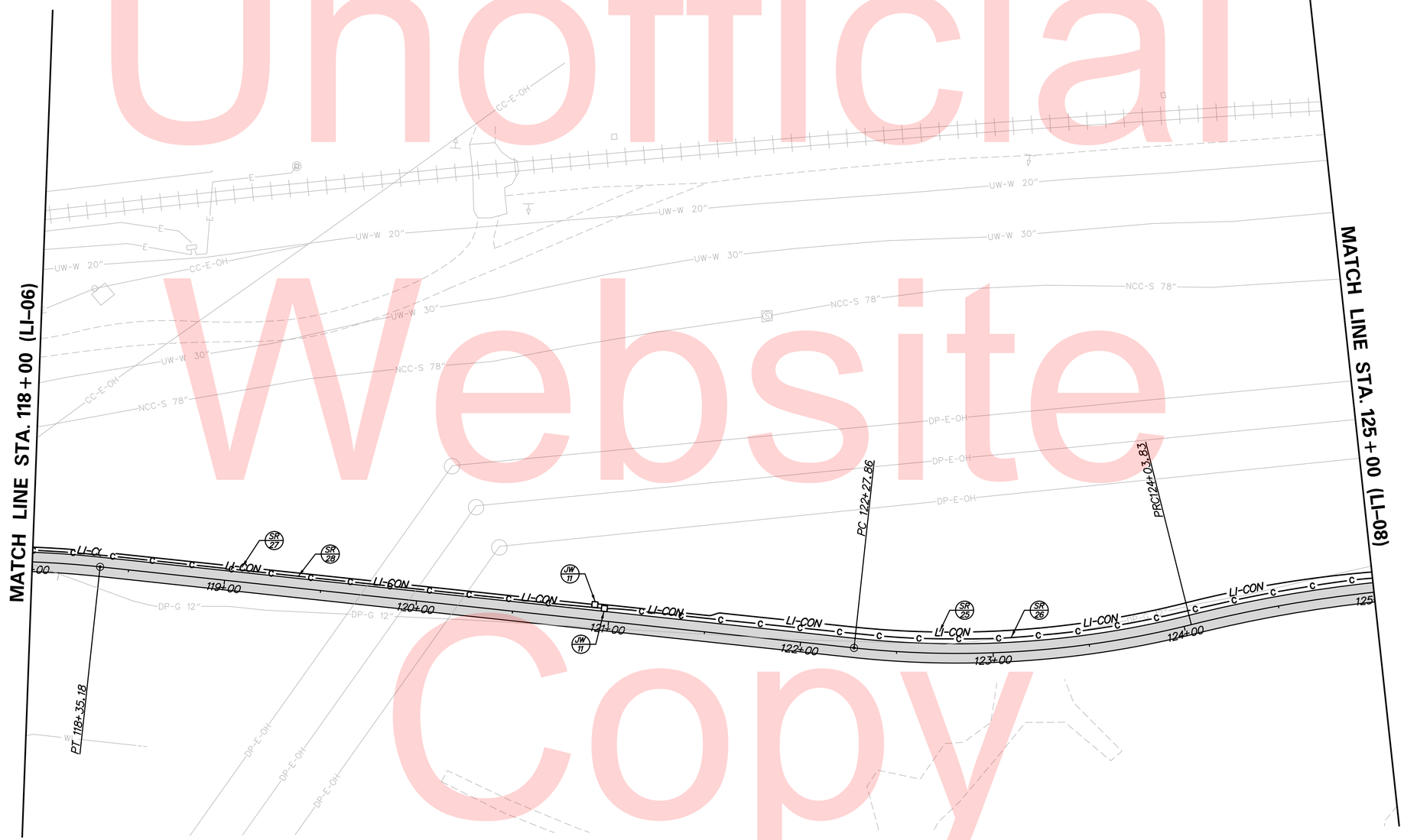

Unofficial Website Copy

N:\31896-002\CADD\LI07_ITT3.DGN

DELAWARE DEPARTMENT OF TRANSPORTATION	ADDENDUMS / REVISIONS	SCALE 0 30 60 90 FEET	NEW CASTLE INDUSTRIAL TRACK TRAIL, PHASE 3	CONTRACT T201330009 / COUNTY NEW CASTLE / BRIDGE NO. X / DESIGNED BY: AK / CHECKED BY: IK	LIGHTING AND CONDUIT PLAN

LI-07
SHEET NO. 190
TOTAL SHTS. 207

LEGEND

SR X	SERVICE RUN IDENTIFIER
JW X	JUNCTION WELL IDENTIFIER (TYPE OF JUNCTION WELL)
JB 4X	NEMA JUNCTION BOX IDENTIFIER (NEMA ENCLOSURE RATING)
LI-CON	LIGHTING CONDUIT
C C C	COMMUNICATIONS CONDUIT

LIGHTING SERVICE SCHEDULE

SERVICE RUN	DISTANCE (L.F.)	DESCRIPTION	INSTALLATION
19	404*	(3)#1/0, (1)#6 GROUND	2" PVC-CTD-RMC SUSPENDED
20	402*	EMPTY	3" PVC-CTD-RMC SUSPENDED
21	399	(3)#1/0, (1)#6 GROUND	2" PVC-CTD-RMC SUSPENDED
22	398	EMPTY	3" PVC-CTD-RMC SUSPENDED
23	87	(3)#1/0, (1)#6 GROUND	2" SCH80 PVC IN TRENCH
24	87	EMPTY	3" SCH80 PVC IN TRENCH
25	428*	(3)#1/0, (1)#6 GROUND	2" SCH80 PVC IN TRENCH
26	428*	EMPTY	3" SCH80 PVC IN TRENCH

*DISTANCE CONTINUES ON ADJACENT PLAN SHEET
NOTE: SERVICE RUN DISTANCE REFLECTS CONDUIT LENGTH ONLY.

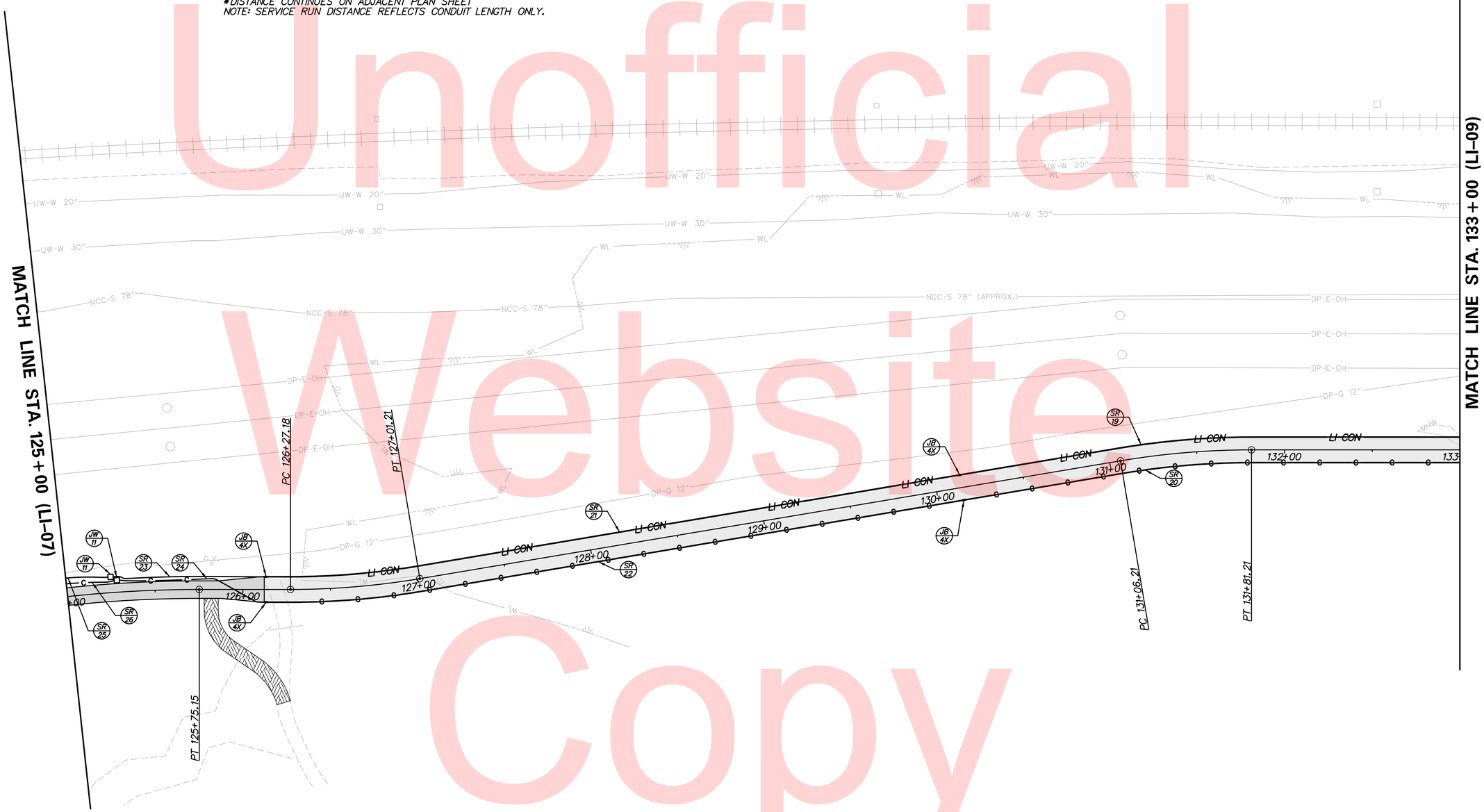

Unofficial Website Copy

N:\31896-002\CADD\LI08_ITT3.DGN

DELAWARE DEPARTMENT OF TRANSPORTATION	ADDENDUMS / REVISIONS	SCALE 0 30 60 90 FEET	NEW CASTLE INDUSTRIAL TRACK TRAIL, PHASE 3	CONTRACT T201330009	BRIDGE NO. X	LIGHTING AND CONDUIT PLAN
				COUNTY NEW CASTLE	DESIGNED BY: AK	
					CHECKED BY: IK	

LI-08

SHEET NO.
191
TOTAL SHTS.
207

LEGEND	
SR X	SERVICE RUN IDENTIFIER
JW X	JUNCTION WELL IDENTIFIER (TYPE OF JUNCTION WELL)
JB 4X	NEMA JUNCTION BOX IDENTIFIER (NEMA ENCLOSURE RATING)
LI-CON	LIGHTING CONDUIT
C C C C	COMMUNICATIONS CONDUIT

LIGHTING SERVICE SCHEDULE

SERVICE RUN	DISTANCE (L.F.)	DESCRIPTION	INSTALLATION
15	400*	(3)#1/0, (1)#6 GROUND	2"PVC-CTD-RMC SUSPENDED
16	400*	EMPTY	3"PVC-CTD-RMC SUSPENDED
17	400	(3)#1/0, (1)#6 GROUND	2"PVC-CTD-RMC SUSPENDED
18	400	EMPTY	3"PVC-CTD-RMC SUSPENDED
19	404*	(3)#1/0, (1)#6 GROUND	2"PVC-CTD-RMC SUSPENDED
20	402*	EMPTY	3"PVC-CTD-RMC SUSPENDED

*DISTANCE CONTINUES ON ADJACENT PLAN SHEET
NOTE: SERVICE RUN DISTANCE REFLECTS CONDUIT LENGTH ONLY.

Unofficial Website Copy

N:\31896-002\CADD\LI09_ITT3.DGN

DELAWARE DEPARTMENT OF TRANSPORTATION

ADDENDUMS / REVISIONS

SCALE 0 30 60 90 FEET

NEW CASTLE INDUSTRIAL TRACK TRAIL, PHASE 3

CONTRACT	BRIDGE NO.	X
T201330009	DESIGNED BY: AK	
COUNTY		
NEW CASTLE	CHECKED BY: IK	

LIGHTING AND CONDUIT PLAN

LI-09
SHEET NO.
192
TOTAL SHTS.
207

LEGEND

SR X	SERVICE RUN IDENTIFIER
JW X	JUNCTION WELL IDENTIFIER (TYPE OF JUNCTION WELL)
JB 4X	NEMA JUNCTION BOX IDENTIFIER (NEMA ENCLOSURE RATING)
LI-CON	LIGHTING CONDUIT
c c c c	COMMUNICATIONS CONDUIT

LIGHTING SERVICE SCHEDULE

SERVICE RUN	DISTANCE (L.F.)	DESCRIPTION	INSTALLATION
11	400*	(3)#1/0, (1)#6 GROUND	2" PVC-CTD-RMC SUSPENDED
12	400*	EMPTY	3" PVC-CTD-RMC SUSPENDED
13	400	(3)#1/0, (1)#6 GROUND	2" PVC-CTD-RMC SUSPENDED
14	400	EMPTY	3" PVC-CTD-RMC SUSPENDED
15	400*	(3)#1/0, (1)#6 GROUND	2" PVC-CTD-RMC SUSPENDED
16	400*	EMPTY	3" PVC-CTD-RMC SUSPENDED

*DISTANCE CONTINUES ON ADJACENT PLAN SHEET
NOTE: SERVICE RUN DISTANCE REFLECTS CONDUIT LENGTH ONLY.

Unofficial Website Copy

N:\31896-002\CADD\LI10_ITT3.DGN

DELAWARE DEPARTMENT OF TRANSPORTATION

ADDENDUMS / REVISIONS

SCALE 0 30 60 90 FEET

NEW CASTLE INDUSTRIAL TRACK TRAIL, PHASE 3

CONTRACT	BRIDGE NO.	X
T201330009	DESIGNED BY: AK	
COUNTY		
NEW CASTLE	CHECKED BY: IK	

LIGHTING AND CONDUIT PLAN

LI-10
SHEET NO.
193
TOTAL SHTS.
207

LEGEND	
SR X	SERVICE RUN IDENTIFIER
JW X	JUNCTION WELL IDENTIFIER (TYPE OF JUNCTION WELL)
JB 4X	NEMA JUNCTION BOX IDENTIFIER (NEMA ENCLOSURE RATING)
—— LI-CON ——	LIGHTING CONDUIT
—c—c—c—c—	COMMUNICATIONS CONDUIT

LIGHTING SERVICE SCHEDULE

SERVICE RUN	DISTANCE (L.F.)	DESCRIPTION	INSTALLATION
7	401*	(3)#1/0, (1)#6 GROUND	2" PVC-CTD-RMC SUSPENDED
8	403*	EMPTY	3" PVC-CTD-RMC SUSPENDED
9	400	(3)#1/0, (1)#6 GROUND	2" PVC-CTD-RMC SUSPENDED
10	400	EMPTY	3" PVC-CTD-RMC SUSPENDED
11	400*	(3)#1/0, (1)#6 GROUND	2" PVC-CTD-RMC SUSPENDED
12	400*	EMPTY	3" PVC-CTD-RMC SUSPENDED

*DISTANCE CONTINUES ON ADJACENT PLAN SHEET
NOTE: SERVICE RUN DISTANCE REFLECTS CONDUIT LENGTH ONLY.

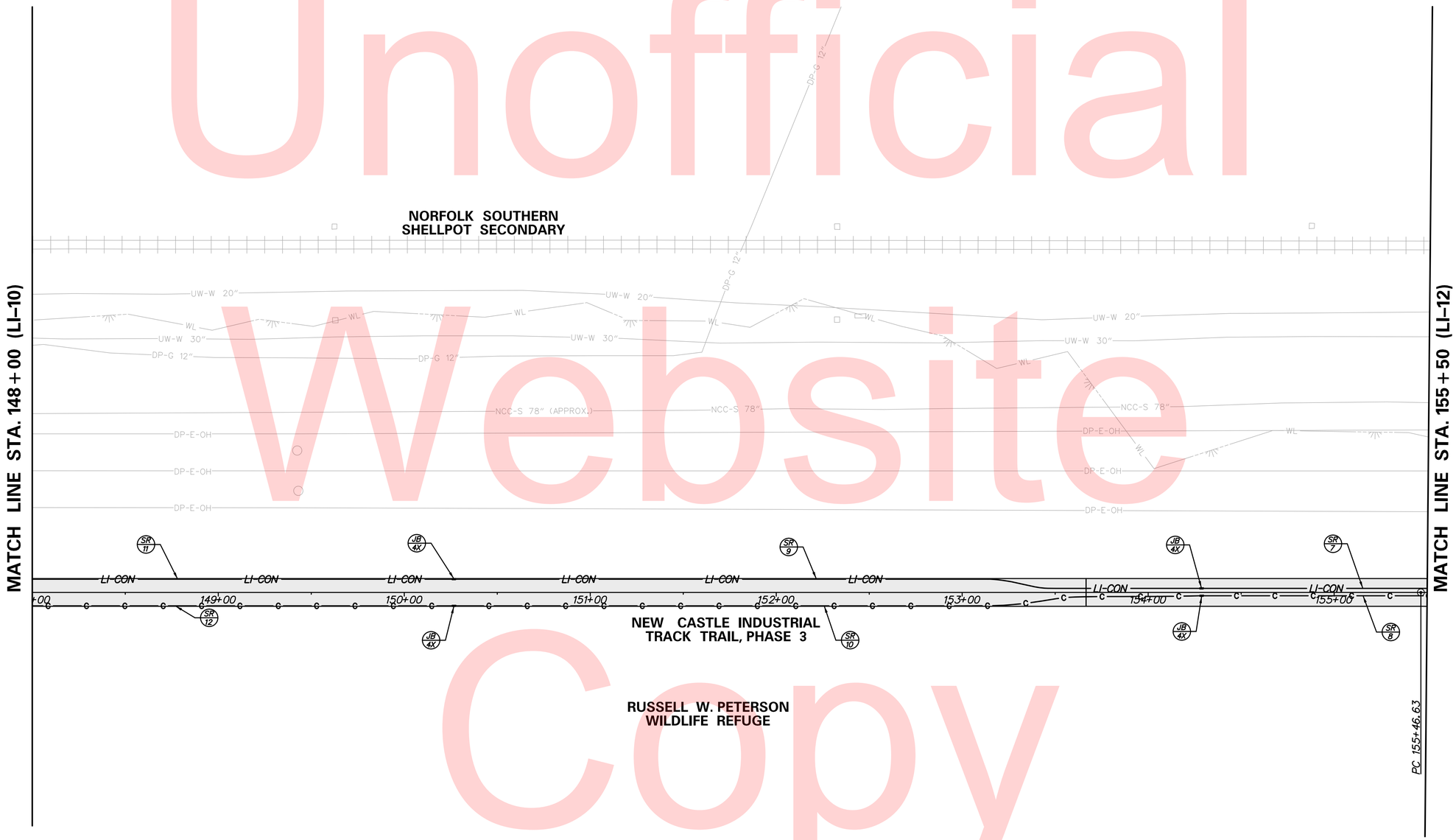

Unofficial Website Copy

N:\31896-002\CADD\LI11_LTT3.DGN

DELAWARE DEPARTMENT OF TRANSPORTATION

ADDENDUMS / REVISIONS

SCALE 0 30 60 90 FEET

NEW CASTLE INDUSTRIAL TRACK TRAIL, PHASE 3

CONTRACT	BRIDGE NO.	X
T201330009	DESIGNED BY: AK	
COUNTY	CHECKED BY: IK	
NEW CASTLE		

LIGHTING AND CONDUIT PLAN

LI-11
SHEET NO.
194
TOTAL SHTS.
207

LEGEND

LSR X	LIGHTING SERVICE IDENTIFIER
SR X	SERVICE RUN IDENTIFIER
JW X	JUNCTION WELL IDENTIFIER (TYPE OF JUNCTION WELL)
JB 4X	NEMA JUNCTION BOX IDENTIFIER (NEMA ENCLOSURE RATING)
—— LI-CON ——	LIGHTING CONDUIT
—c—c—c—c—	COMMUNICATIONS CONDUIT

LIGHTING SERVICE SCHEDULE

SERVICE RUN	DISTANCE (L.F.)	DESCRIPTION	INSTALLATION
1	25**	(3)#1/0, (1)#6 GROUND	2" PVC-CTD-RMC SUSPENDED
2	25**	EMPTY	3" PVC-CTD-RMC SUSPENDED
3	35	(3)#1/0, (1)#6 GROUND	2" PVC-CTD-RMC SUSPENDED
4	26	EMPTY	3" PVC-CTD-RMC SUSPENDED
5	310	(3)#1/0, (1)#6 GROUND	2" PVC-CTD-RMC SUSPENDED
6	301	EMPTY	3" PVC-CTD-RMC SUSPENDED
7	401*	(3)#1/0, (1)#6 GROUND	2" PVC-CTD-RMC SUSPENDED
8	403*	EMPTY	3" PVC-CTD-RMC SUSPENDED

*DISTANCE CONTINUES ON ADJACENT PLAN SHEET
**DISTANCE IS ESTIMATE, AND CONTINUES INTO BUILDING TO MAKE CONNECTION
NOTE: SERVICE RUN DISTANCE REFLECTS CONDUIT LENGTH ONLY.

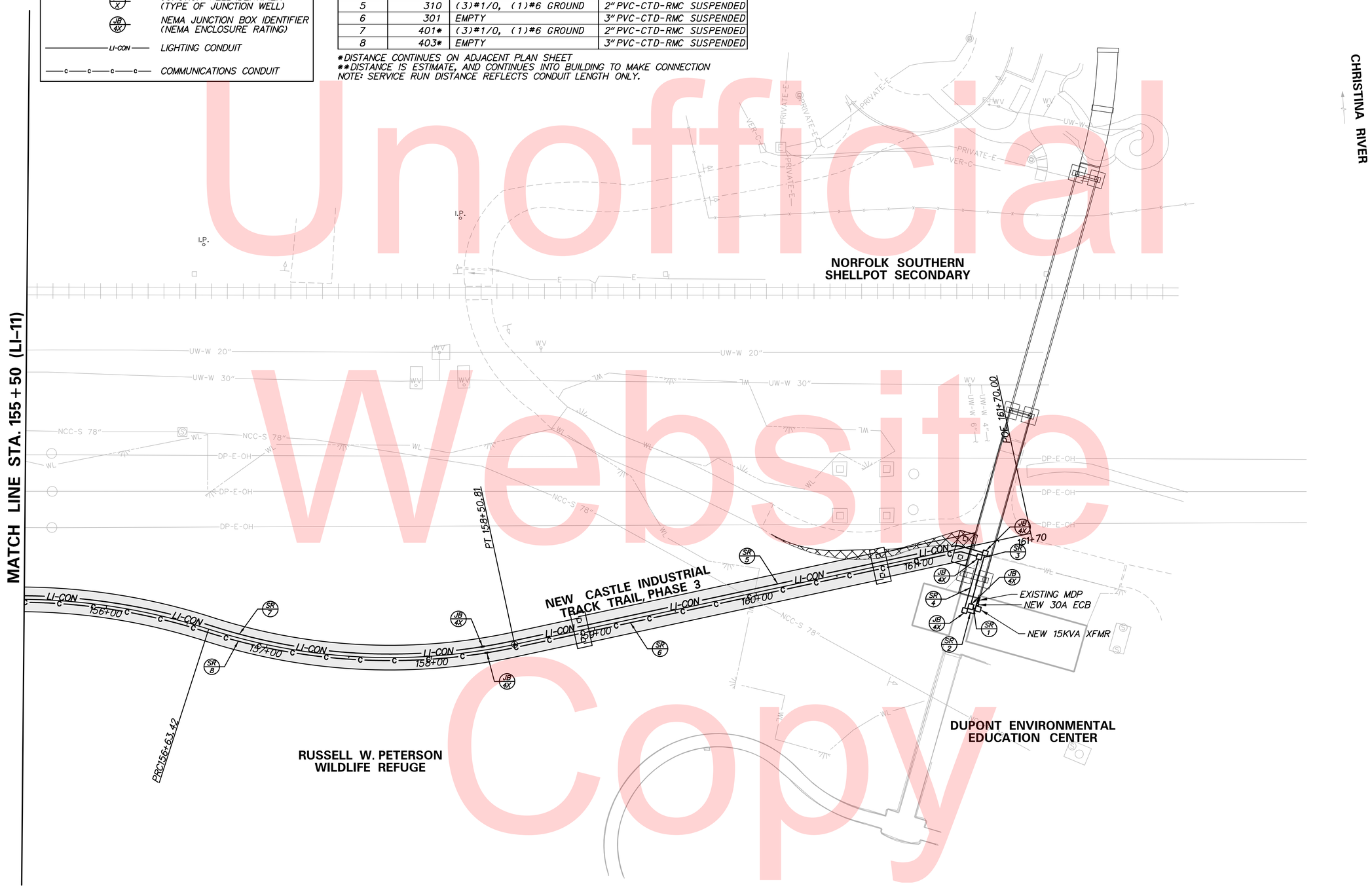

Unofficial Website Copy

N:\31896-002\CADD\LI12_ITT3.DGN

DELAWARE DEPARTMENT OF TRANSPORTATION	ADDENDUMS / REVISIONS	SCALE 0 30 60 90 FEET	NEW CASTLE INDUSTRIAL TRACK TRAIL, PHASE 3	CONTRACT T201330009	BRIDGE NO. X	LIGHTING AND CONDUIT PLAN
				COUNTY NEW CASTLE	DESIGNED BY: AK	
					CHECKED BY: IK	

LI-12
SHEET NO. 195
TOTAL SHTS. 207

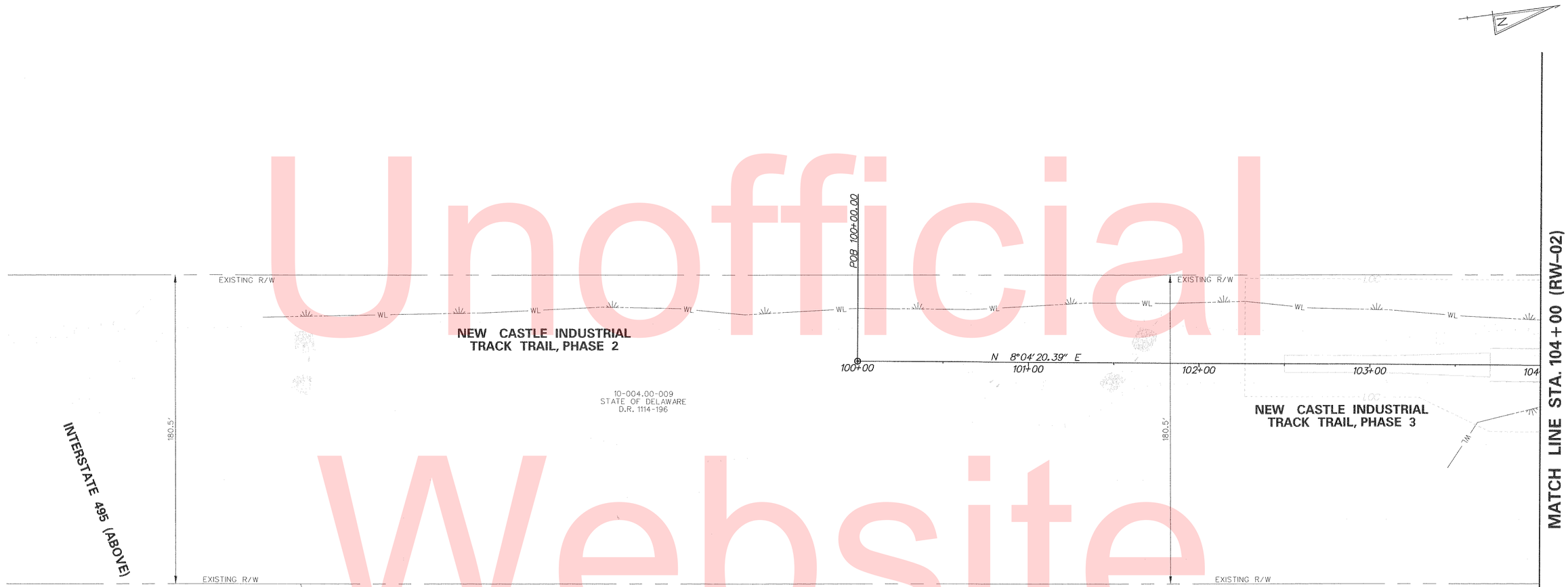

Unofficial Website Copy

PREPARED BY
THE CONSULTING FIRM OF

WRA
Whitman, Requardt & Associates, LLP
1013 Centre Road, Suite 302, Wilmington, Delaware 19805

JEFFREY R. RIEGNER
REGISTERED
No. 9840
DELAWARE
PROFESSIONAL ENGINEER

SEAL

RECOMMENDED

11/30/15
DATE

N:\31896-002\CADD\RW01_ITT3.DGN

DELAWARE
DEPARTMENT OF TRANSPORTATION

ADDENDUMS / REVISIONS

SCALE
0 30 60 90
FEET

NEW CASTLE INDUSTRIAL
TRACK TRAIL, PHASE 3

CONTRACT	BRIDGE NO.	X
T201330009	DESIGNED BY: DAD	
COUNTY		
NEW CASTLE	CHECKED BY: JRR	

RIGHT OF WAY PLAN
SHEET 1 OF 12

RW-01
SHEET NO.
196
TOTAL SHTS.
207

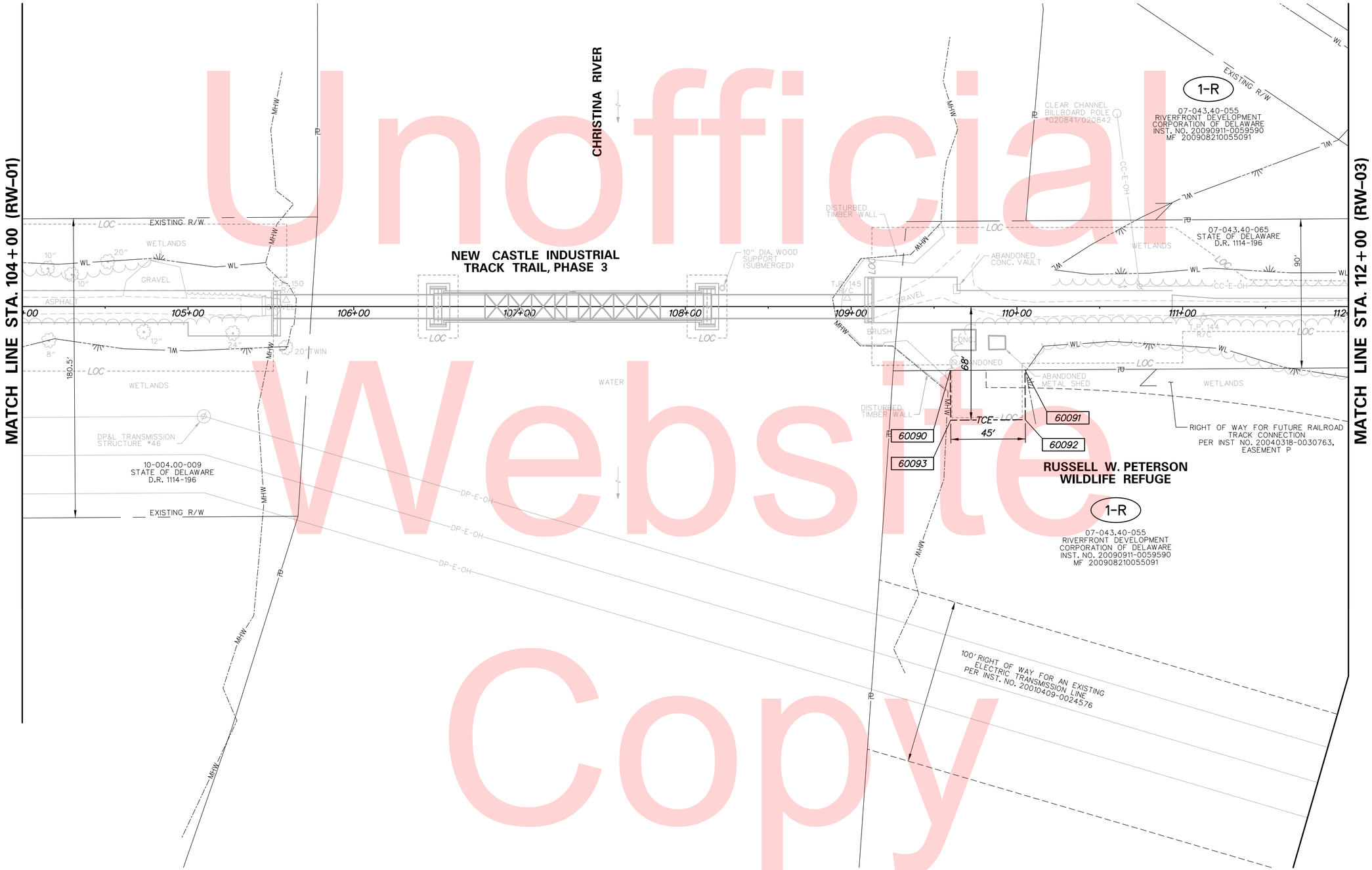

Unofficial Website Copy

N:\31896-002\CADD\RW02_ITT3.DGN

DELAWARE DEPARTMENT OF TRANSPORTATION	ADDENDUMS / REVISIONS	SCALE 0 30 60 90 FEET	NEW CASTLE INDUSTRIAL TRACK TRAIL, PHASE 3	CONTRACT T201330009	BRIDGE NO. X	RIGHT OF WAY PLAN SHEET 2 OF 12	RW-02
				COUNTY NEW CASTLE	DESIGNED BY: DAD		SHEET NO. 197
					CHECKED BY: JRR		TOTAL SHTS. 207

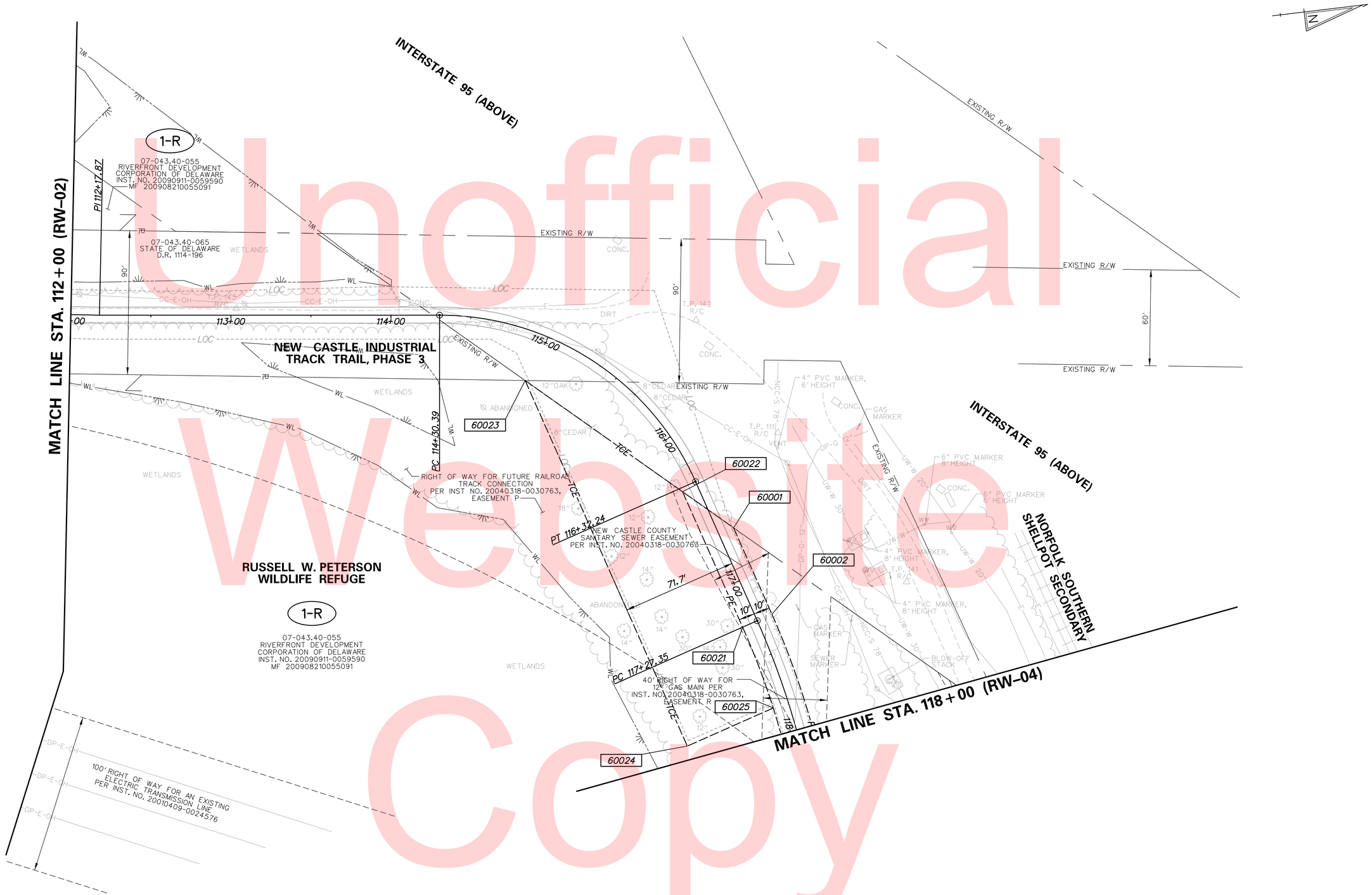

Unofficial Website Copy

N:\31896-002\CADD\RW03_ITT3.DGN

DELAWARE DEPARTMENT OF TRANSPORTATION	ADDENDUMS / REVISIONS	SCALE 0 30 60 90 FEET	NEW CASTLE INDUSTRIAL TRACK TRAIL, PHASE 3	CONTRACT T201330009	BRIDGE NO. X	RIGHT OF WAY PLAN SHEET 3 OF 12	RW-03
				COUNTY NEW CASTLE	DESIGNED BY: DAD		SHEET NO. 198
					CHECKED BY: JRR		TOTAL SHTS. 207

Unofficial Website Copy

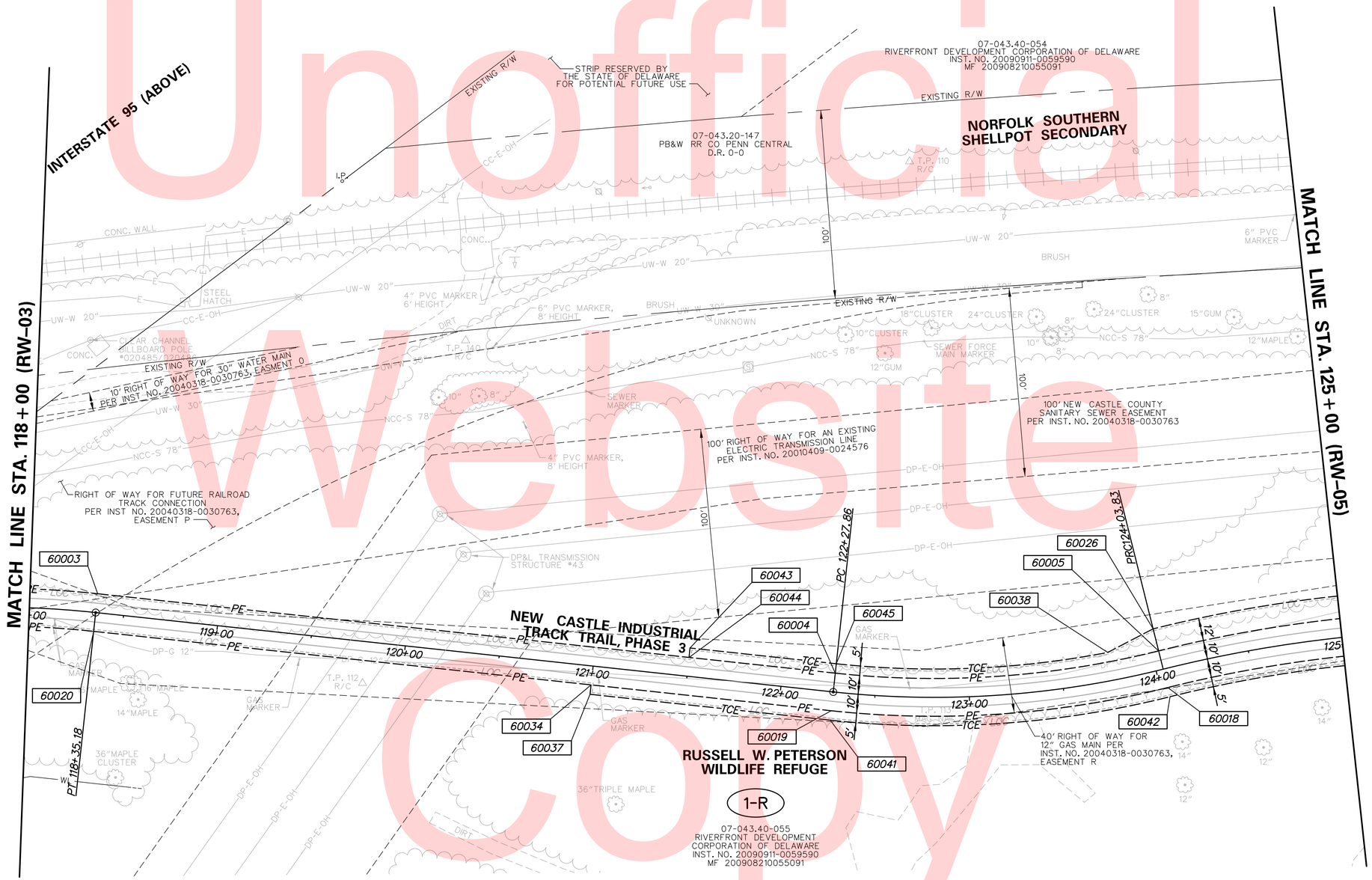

DELAWARE DEPARTMENT OF TRANSPORTATION	ADDENDUMS / REVISIONS	SCALE 0 30 60 90 FEET	NEW CASTLE INDUSTRIAL TRACK TRAIL, PHASE 3	CONTRACT T201330009 / COUNTY NEW CASTLE	BRIDGE NO. X / DESIGNED BY: DAD / CHECKED BY: JRR	RIGHT OF WAY PLAN SHEET 4 OF 12

RW-04
SHEET NO. 199
TOTAL SHTS. 207

N:\31896-002\CADD\RW04_ITT3.DGN

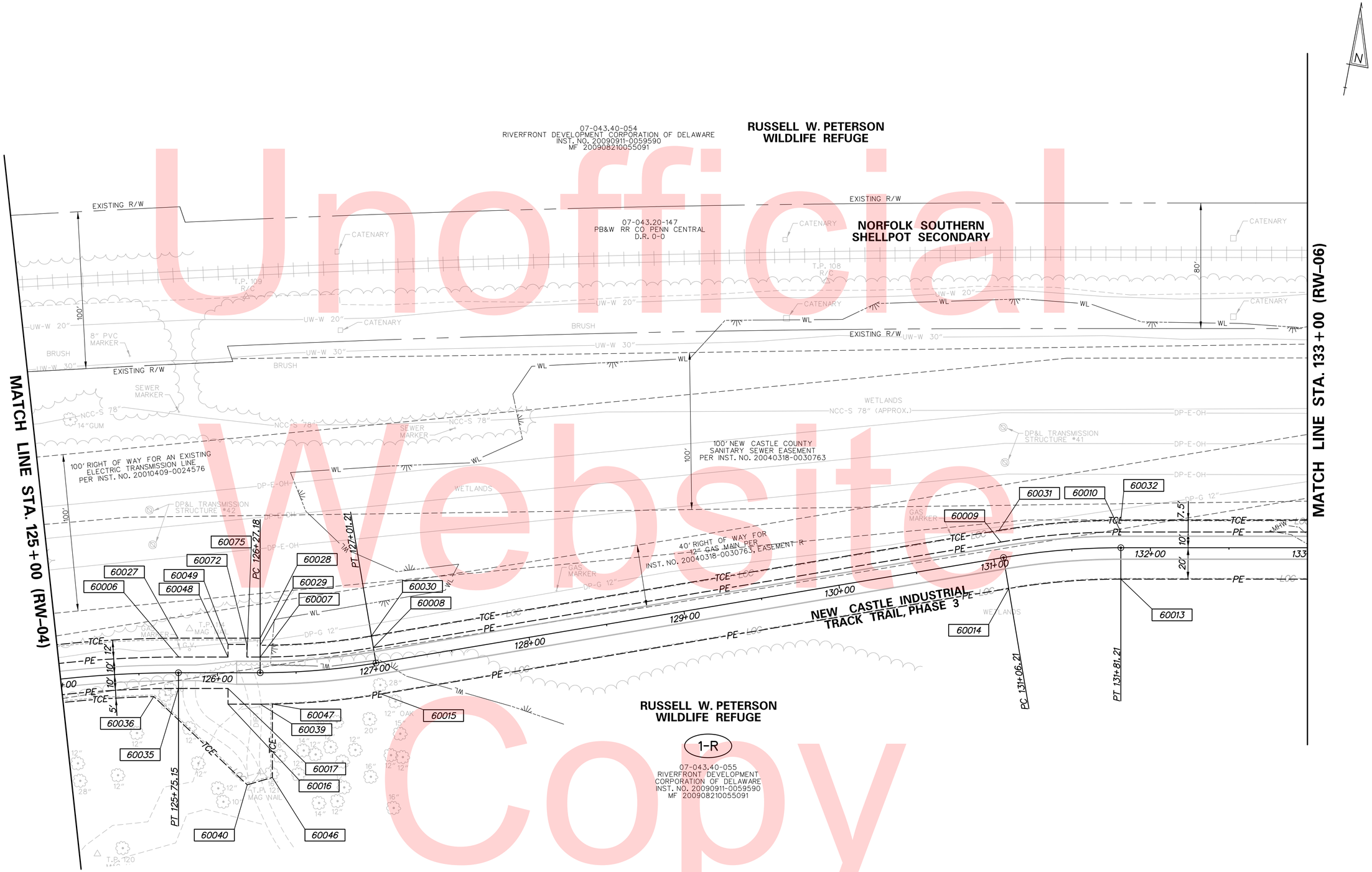

Unofficial Website Copy

T:\DELDOT_2010\ZCOMMON\SYMBOLS\CELLS_WRA_SB.CEL

DELAWARE DEPARTMENT OF TRANSPORTATION	ADDENDUMS / REVISIONS	SCALE 0 30 60 90 FEET	NEW CASTLE INDUSTRIAL TRACK TRAIL, PHASE 3	CONTRACT T201330009	BRIDGE NO. X	RIGHT OF WAY PLAN SHEET 5 OF 12	RW-05
				COUNTY NEW CASTLE	DESIGNED BY: DAD		SHEET NO. 200
					CHECKED BY: JRR		TOTAL SHTS. 207

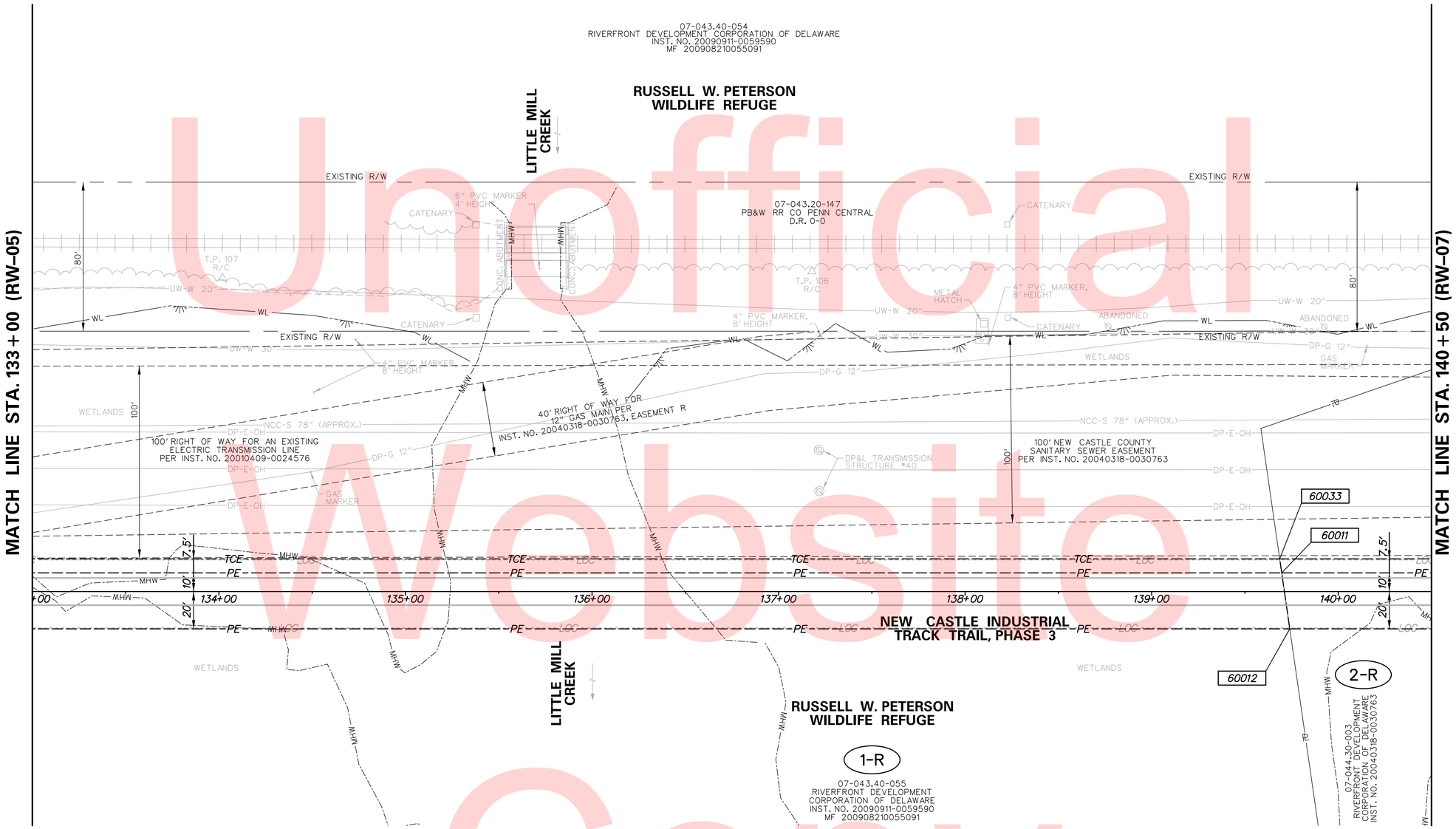

Unofficial Website Copy

N:\31896-002\CADD\RW06_ITT3.DGN

DELAWARE DEPARTMENT OF TRANSPORTATION	ADDENDUMS / REVISIONS	SCALE 0 30 60 90 FEET	NEW CASTLE INDUSTRIAL TRACK TRAIL, PHASE 3	CONTRACT T201330009	BRIDGE NO. X	RIGHT OF WAY PLAN SHEET 6 OF 12	RW-06
				COUNTY NEW CASTLE	DESIGNED BY: DAD		SHEET NO. 201
					CHECKED BY: JRR		TOTAL SHTS. 207

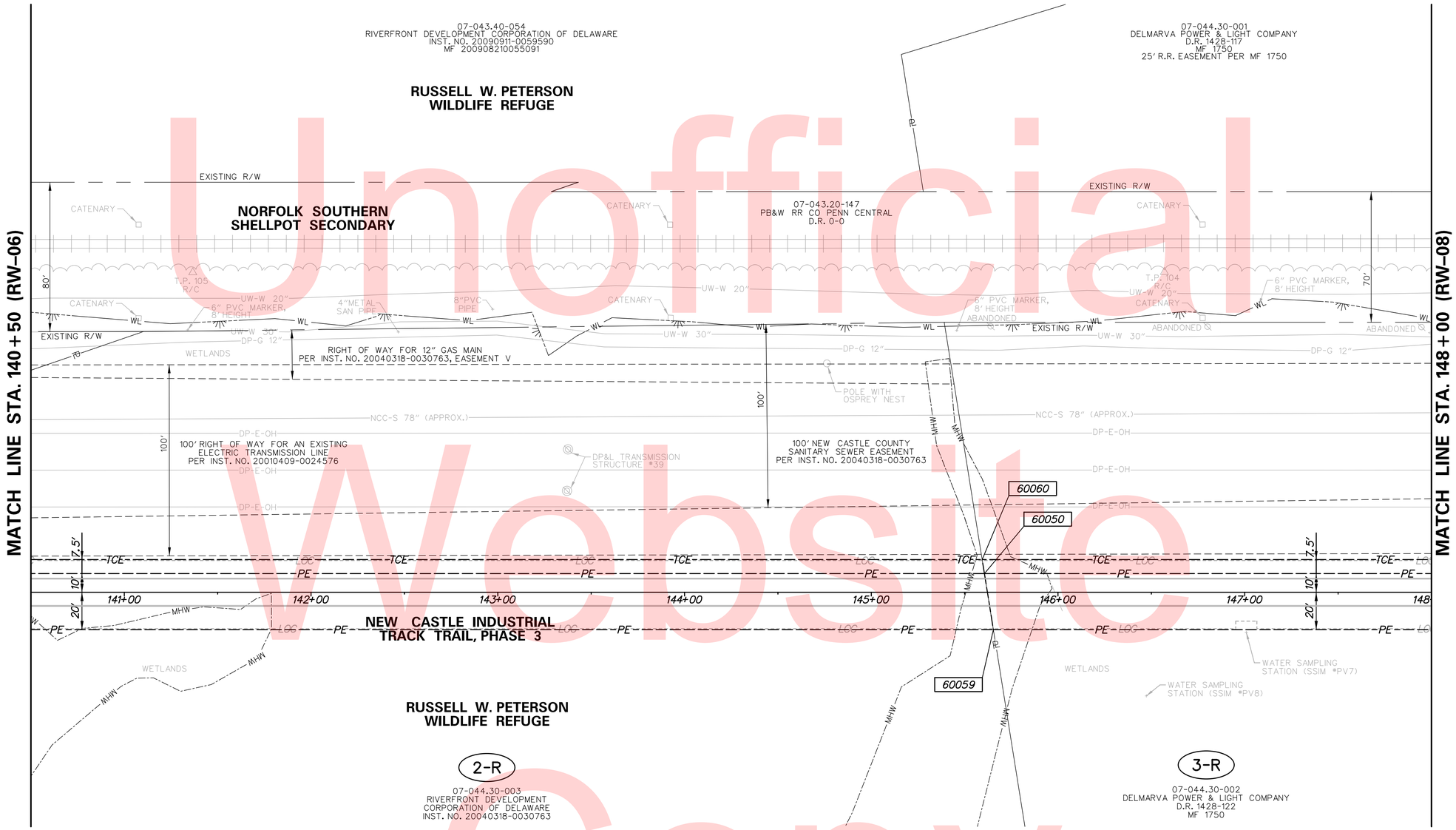

Unofficial Website Copy

T:\DELDOT_2010\ZCOMMON\SYMBOLS\CELLS_WRA_SB.CEL

DELAWARE DEPARTMENT OF TRANSPORTATION	ADDENDUMS / REVISIONS	SCALE 0 30 60 90 FEET	NEW CASTLE INDUSTRIAL TRACK TRAIL, PHASE 3	CONTRACT T201330009	BRIDGE NO. X	RIGHT OF WAY PLAN SHEET 7 OF 12
				COUNTY NEW CASTLE	DESIGNED BY: DAD	
					CHECKED BY: JRR	

RW-07
SHEET NO. 202
TOTAL SHTS. 207

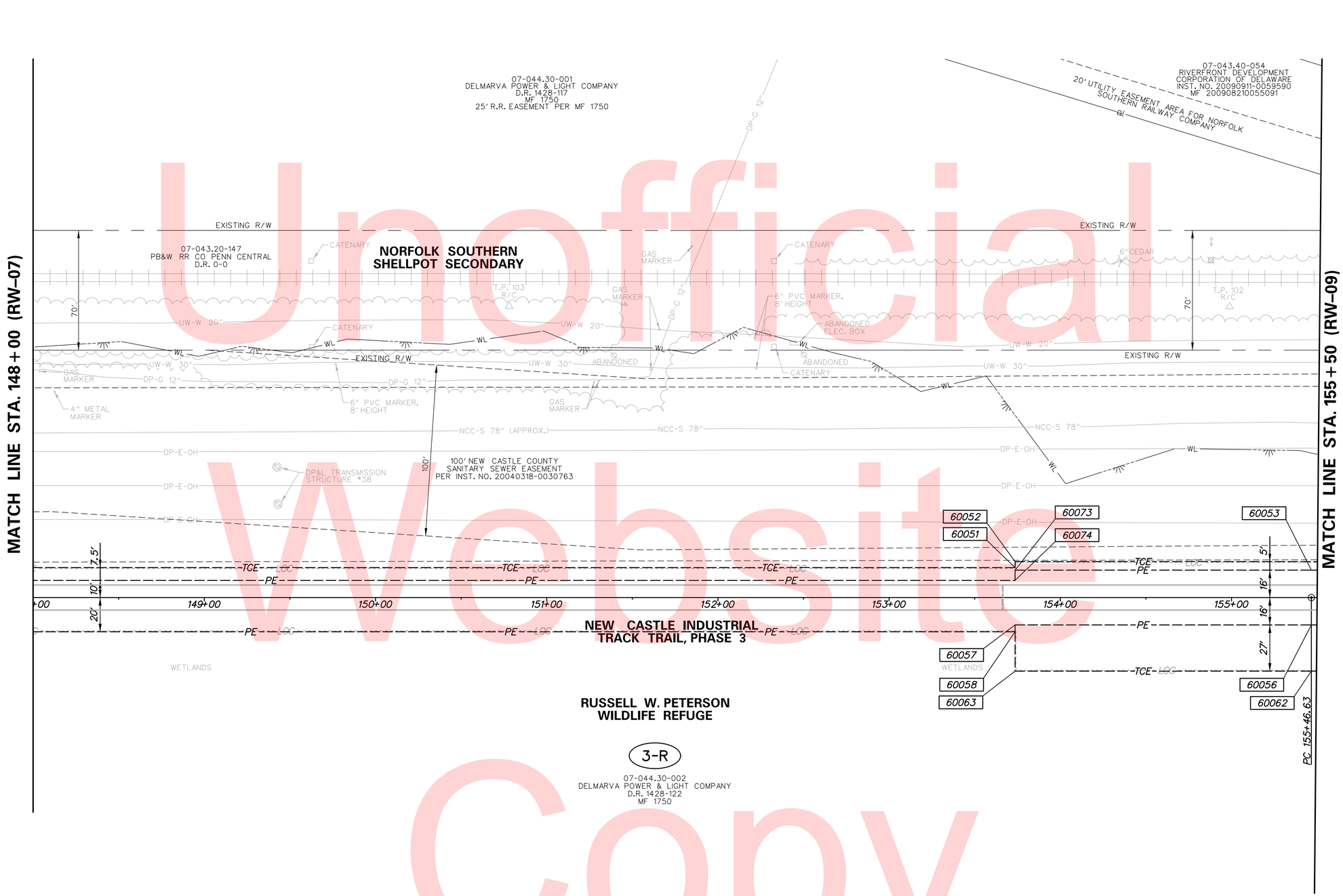

Unofficial Website Copy

N:\31896-002\CADD\RW08_ITT3.DGN

DELAWARE DEPARTMENT OF TRANSPORTATION	ADDENDUMS / REVISIONS	SCALE 0 30 60 90 FEET	NEW CASTLE INDUSTRIAL TRACK TRAIL, PHASE 3	CONTRACT T201330009	BRIDGE NO. X	RIGHT OF WAY PLAN SHEET 8 OF 12	RW-08
				COUNTY NEW CASTLE	DESIGNED BY: DAD		SHEET NO. 203
					CHECKED BY: JRR		TOTAL SHTS. 207

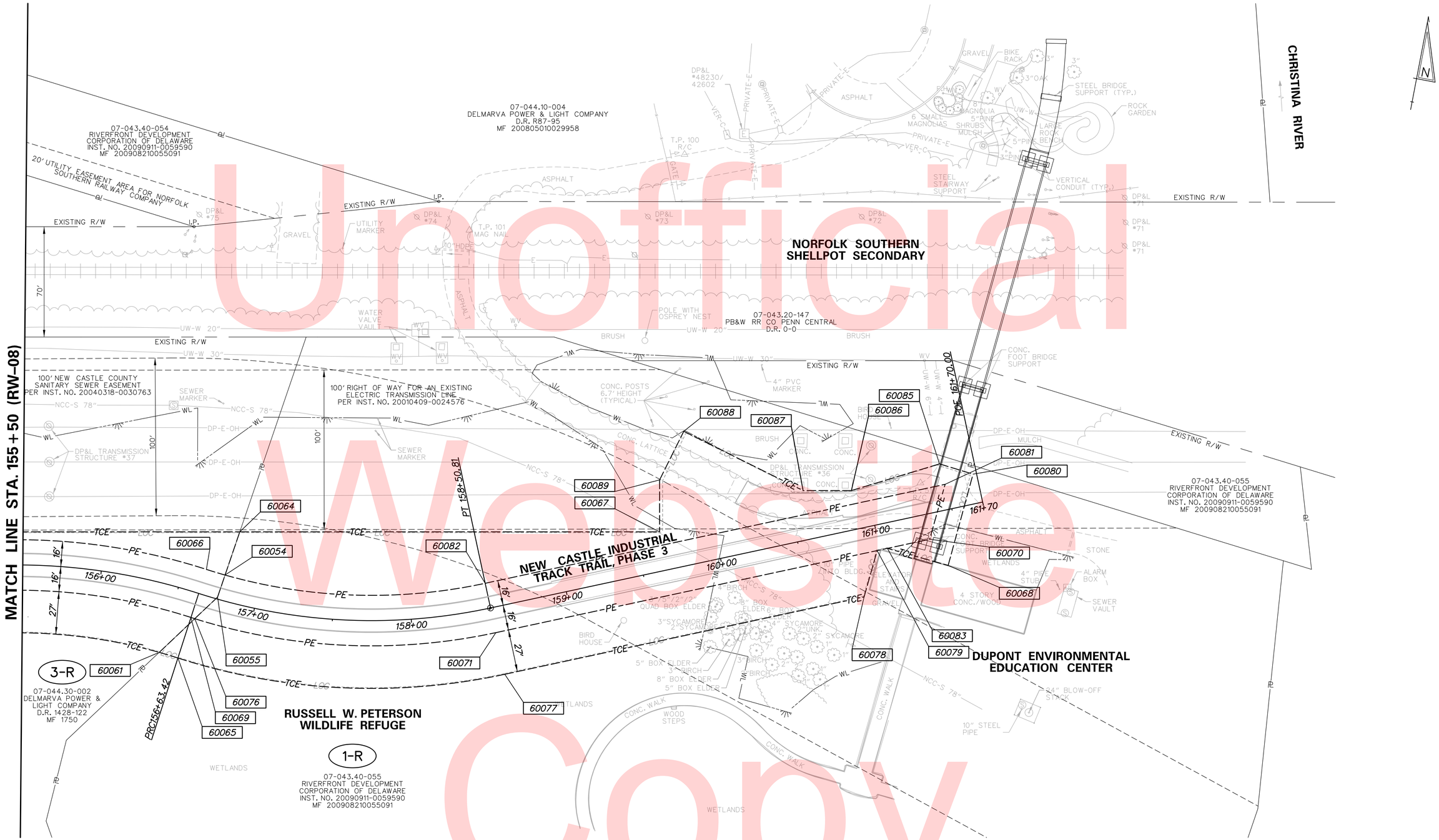

Unofficial Website Copy

N:\31896-002\CADD\RW09_ITT3.DGN

DELAWARE DEPARTMENT OF TRANSPORTATION	ADDENDUMS / REVISIONS	SCALE 0 30 60 90 FEET	NEW CASTLE INDUSTRIAL TRACK TRAIL, PHASE 3	CONTRACT T201330009	BRIDGE NO. X	RIGHT OF WAY PLAN SHEET 9 OF 12	RW-09
				COUNTY NEW CASTLE	DESIGNED BY: DAD		SHEET NO. 204
					CHECKED BY: JRR		TOTAL SHTS. 207

ASSESSMENT NUMBER	OWNERSHIP OF RECORD	TYPE OF ACQUISITION	TITLE SOURCE	PARCEL AREA (ACRES)
07-043.40-055	(1-R) RIVERFRONT DEVELOPMENT CORPORATION OF DELAWARE	P/E-1	20090911-0059590	117.578

ALIGNMENT NUMBER & DESCRIPTION:

PT. NO.	ALIGN. NO.	STATION	OFFSET *	NORTH	EAST	BEARING	DISTANCE	CHORD BEARING	CHORD LENGTH	ARC LENGTH	RADIUS **
60001	ITT	116+68.25	-10.00	626716.1314	611081.6246	N 72°56′41.67″ E	59.09				
60002	ITT	117+27.35	-10.00	626733.4633	611138.1203			N 79°07′23.74″ E	109.78	109.99	510.00
60003	ITT	118+35.18	-10.00	626754.1777	611245.9245	N 85°18′05.82″ E	392.67				
60004	ITT	122+27.86	-10.00	626786.3418	611637.2796			N 75°13′09.14″ E	171.56	172.45	-490.00
60005	ITT	124+03.83	-10.00	626830.1113	611803.1656			N 72°09′24.09″ E	173.54	173.98	710.00
60006	ITT	125+75.36	-10.00	626883.2877	611968.3616	N 79°09′36.38″ E	31.34				
60048	ITT	126+06.70	-10.00	626889.1812	611999.1400	N 10°50′23.57″ W	8.00				
60049	ITT	126+06.70	-18.00	626897.0385	611997.6355	N 79°09′36.43″ E	12.00				
60072	ITT	126+18.70	-18.00	626899.2953	612009.4213	S 10°50′23.57″ E	8.00				
60075	ITT	126+18.70	-10.00	626891.4380	612010.9259	N 79°09′36.43″ E	8.50				
60007	ITT	126+27.19	-10.00	626893.0361	612019.2718			N 74°23′07.70″ E	72.25	72.33	-434.00
60008	ITT	127+01.19	-10.00	626912.4831	612088.8548	N 69°36′39.02″ E	405.02				
60009	ITT	131+06.21	-10.00	627053.5893	612468.4978			N 74°23′07.70″ E	76.58	76.67	460.00
60010	ITT	131+81.21	-10.00	627074.2013	612542.2494	N 79°09′36.38″ E	788.49				
60011	ITT	139+69.70	-10.00	627222.4889	613316.6706	S 19°03′23.62″ E	30.31				
60012	ITT	139+74.03	20.00	627193.8389	613326.5672	S 79°09′36.38″ W	792.82				
60013	ITT	131+81.21	20.00	627044.7366	612547.8914			S 74°23′07.70″ W	71.58	71.67	-430.00
60014	ITT	131+06.21	20.00	627025.4689	612478.9497	S 69°36′39.02″ W	405.02				
60015	ITT	127+01.19	20.00	626884.3626	612099.3067			S 74°23′07.70″ W	77.24	77.33	464.00
60039	ITT	126+27.19	20.00	626863.5714	612024.9138	S 79°09′36.38″ W	20.50				
60016	ITT	126+06.70	20.00	626859.7166	612004.7819	N 10°50′23.62″ W	10.00				
60017	ITT	126+06.70	10.00	626869.5381	612002.9013	S 79°09′36.38″ W	31.54				
60035	ITT	125+75.15	10.00	626863.6063	611971.9225			S 72°08′54.45″ W	168.46	168.88	-690.00
60018	ITT	124+03.83	10.00	626811.9650	611811.5747			S 75°13′09.14″ W	178.57	179.49	510.00
60019	ITT	122+27.86	10.00	626766.4090	611638.9178	S 85°18′05.82″ W	392.67				
60020	ITT	118+35.18	10.00	626734.2449	611247.5627			S 79°07′23.74″ W	105.47	105.68	-490.00
60021	ITT	117+27.35	10.00	626714.3428	611143.9862	S 72°56′41.67″ W	92.61				
60022	ITT	116+34.73	10.00	626687.1799	611055.4449	N 42°07′18.38″ E	39.03				
60001	ITT	116+68.25	-10.00	626716.1314	611081.6246						

FIGURE RW_1R_PE1 AREA = 60155.1888 SQ. FT. (1.3810 ACRES)

ASSESSMENT NUMBER	OWNERSHIP OF RECORD	TYPE OF ACQUISITION	TITLE SOURCE	PARCEL AREA (ACRES)
07-043.40-055	(1-R) RIVERFRONT DEVELOPMENT CORPORATION OF DELAWARE	P/E-2	20090911-0059590	117.578

ALIGNMENT NUMBER & DESCRIPTION:

PT. NO.	ALIGN. NO.	STATION	OFFSET *	NORTH	EAST	BEARING	DISTANCE	CHORD BEARING	CHORD LENGTH	ARC LENGTH	RADIUS **
60054	ITT	156+76.35	-16.00	627527.7215	614997.8309			N 80°58′36.11″ E	165.02	166.67	-342.04
60082	ITT	158+50.81	-16.00	627553.6031	615160.8116	N 67°01′01.81″ E	298.28				
60081	ITT	161+49.09	-16.00	627670.0674	615435.4132	S 4°52′37.97″ W	36.20				
60070	ITT	161+32.18	16.00	627634.0032	615432.3359	S 67°01′01.81″ W	281.36				
60071	ITT	158+50.81	16.00	627524.1432	615173.3062			S 81°48′56.19″ W	191.07	193.21	374.04
60076	ITT	156+65.87	16.00	627496.9423	614984.1803	N 35°43′36.00″ E	19.86				
60055	ITT	156+75.56	-1.22	627513.0652	614995.7771	N 7°58′36.00″ E	14.80				
60054	ITT	156+76.35	-16.00	627527.7215	614997.8309						

FIGURE RW_1R_PE2 AREA = 14964.1954 SQ. FT. (0.3435 ACRES)

ASSESSMENT NUMBER	OWNERSHIP OF RECORD	TYPE OF ACQUISITION	TITLE SOURCE	PARCEL AREA (ACRES)
07-043.40-055	(1-R) RIVERFRONT DEVELOPMENT CORPORATION OF DELAWARE	TCE-1	20090911-0059590	117.578

ALIGNMENT NUMBER & DESCRIPTION:

PT. NO.	ALIGN. NO.	STATION	OFFSET *	NORTH	EAST	BEARING	DISTANCE	CHORD BEARING	CHORD LENGTH	ARC LENGTH	RADIUS **
60023	ITT	114+96.78	30.58	626597.8286	610974.6481	N 42°07′18.38″ E	120.46				
60022	ITT	116+34.73	10.00	626687.1799	611055.4449	N 72°56′41.67″ E	92.61				
60021	ITT	117+27.35	10.00	626714.3428	611143.9862			N 76°06′16.93″ E	54.02	54.05	490.00
60025	ITT	117+82.50	10.00	626727.3153	611196.4238	S 17°03′18.33″ E	58.75				
60024	ITT	117+89.99	68.34	626671.1514	611213.6539	S 72°56′41.67″ W	250.00				
60023	ITT	114+96.78	30.58	626597.8286	610974.6481						

FIGURE RW_1R_TCE1 AREA = 12185.0633 SQ. FT. (0.2797 ACRES)

ASSESSMENT NUMBER	OWNERSHIP OF RECORD	TYPE OF ACQUISITION	TITLE SOURCE	PARCEL AREA (ACRES)
07-043.40-055	(1-R) RIVERFRONT DEVELOPMENT CORPORATION OF DELAWARE	TCE-2	20090911-0059590	117.578

ALIGNMENT NUMBER & DESCRIPTION:

PT. NO.	ALIGN. NO.	STATION	OFFSET *	NORTH	EAST	BEARING	DISTANCE	CHORD BEARING	CHORD LENGTH	ARC LENGTH	RADIUS **
60043	ITT	121+50.00	-15.00	626784.9478	611559.2754	N 85°18′05.82″ E	77.86				
60045	ITT	122+27.86	-15.00	626791.3250	611636.8701			N 76°46′25.12″ E	143.84	144.38	-485.00
60038	ITT	123+76.70	-15.00	626824.2362	611776.8979	N 51°41′44.82″ E	27.04				
60026	ITT	124+03.83	-22.00	626840.9991	611798.1201			N 72°08′25.02″ E	176.07	176.51	722.00
60027	ITT	125+74.95	-22.00	626894.9965	611965.7021	N 79°09′36.38″ E	52.25				
60028	ITT	126+27.20	-22.00	626904.8220	612017.0152	S 10°50′23.74″ E	4.50				
60029	ITT	126+27.19	-17.50	626900.4023	612017.8615			N 74°23′07.64″ E	71.00	71.08	-426.50
60030	ITT	127+01.19	-17.50	626919.5132	612086.2418	N 69°36′39.02″ E	405.02				
60031	ITT	131+06.21	-17.50	627060.6194	612465.8849			N 74°23′07.70″ E	77.83	77.92	467.50
60032	ITT	131+81.21	-17.50	627081.5674	612540.8389	N 79°09′36.38″ E	787.41				
60033	ITT	139+68.62	-17.50	627229.6514	613314.1964	S 19°03′23.62″ E	7.58				
60011	ITT	139+69.70	-10.00	627222.4889	613316.6706	S 79°09′36.38″ W	788.49				
60010	ITT	131+81.21	-10.00	627074.2013	612542.2494			S 74°23′07.70″ W	76.58	76.67	-460.00
60009	ITT	131+06.21	-10.00	627053.5893	612468.4978	S 69°36′39.02″ W	405.02				
60008	ITT	127+01.19	-10.00	626912.4831	612088.8548			S 74°23′07.70″ W	72.25	72.33	434.00
60007	ITT	126+27.19	-10.00	626893.0361	612019.2718	S 79°09′36.43″ W	8.50				
60075	ITT	126+18.70	-10.00	626891.4380	612010.9259	N 10°50′23.57″ W	8.00				
60072	ITT	126+18.70	-18.00	626899.2953	612009.4213	S 79°09′36.43″ W	12.00				
60049	ITT	126+06.70	-18.00	626897.0385	611997.6355	S 10°50′23.57″ E	8.00				
60048	ITT	126+06.70	-10.00	626889.1812	611999.1400	S 79°09′36.38″ W	31.34				
60006	ITT	125+75.36	-10.00	626883.2877	611968.3616			S 72°09′24.08″ W	173.54	173.98	-710.00
60005	ITT	124+03.83	-10.00	626830.1113	611803.1656			S 75°13′09.14″ W	171.56	172.45	490.00
60004	ITT	122+27.86	-10.00	626786.3418	611637.2796	S 85°18′05.82″ W	77.86				
60044	ITT	121+50.00	-10.00	626779.9646	611559.6849	N 4°41′54.18″ W	5.00				
60043	ITT	121+50.00	-15.00	626784.9478	611559.2754						

FIGURE RW_1R_TCE2 AREA = 14038.4752 SQ. FT. (0.3223 ACRES)

ASSESSMENT NUMBER	OWNERSHIP OF RECORD	TYPE OF ACQUISITION	TITLE SOURCE	PARCEL AREA (ACRES)
07-043.40-055	(1-R) RIVERFRONT DEVELOPMENT CORPORATION OF DELAWARE	TCE-3	20090911-0059590	117.578

ALIGNMENT NUMBER & DESCRIPTION:

PT. NO.	ALIGN. NO.	STATION	OFFSET *	NORTH	EAST	BEARING	DISTANCE	CHORD BEARING	CHORD LENGTH	ARC LENGTH	RADIUS **
60034	ITT	121+00.00	10.00	626755.9363	611511.4911	N 85°18′05.82″ E	127.86				
60019	ITT	122+27.86	10.00	626766.4090	611638.9178			N 75°13′09.14″ E	178.57	179.49	-510.00
60018	ITT	124+03.83	10.00	626811.9650	611811.5747			N 72°08′54.45″ E	168.46	168.88	690.00
60035	ITT	125+75.15	10.00	626863.6063	611971.9225	N 79°09′36.38″ E	31.54				
60017	ITT	126+06.70	10.00	626869.5381	612002.9013	S 10°50′23.62″ E	10.00				
60016	ITT	126+06.70	20.00	626859.7166	612004.7819	N 79°09′36.38″ E	20.50				
60039	ITT	126+27.19	20.00	626863.5714	612024.9138			N 78°40′59.73″ E	7.72	7.72	-464.00
60047	ITT	126+34.58	20.00	626865.0870	612032.4869	S 10°50′23.62″ E	46.73				
60046	ITT	126+33.91	66.72	626819.1939	612041.2746	S 62°45′54.69″ W	16.62				
60040	ITT	126+18.97	71.35	626811.5878	612026.4968	N 57°29′31.62″ W	81.84				
60036	ITT	125+59.12	15.00	626855.5675	611957.4834			S 71°29′31.49″ W	151.65	151.96	-685.00
60042	ITT	124+03.83	15.00	626807.4285	611813.6769			S 75°13′09.14″ W	180.32	181.25	515.00
60041	ITT	122+27.86	15.00	626761.4259	611639.3274	S 85°18′05.82″ W	127.86				
60037	ITT	121+00.00	15.00	626750.9531	611511.9007	N 4°41′54.18″ W	5.00				
60034	ITT	121+00.00	10.00	626755.9363	611511.4911						

FIGURE RW_1R_TCE3 AREA = 4941.6246 SQ. FT. (0.1134 ACRES)

ASSESSMENT NUMBER	OWNERSHIP OF RECORD	TYPE OF ACQUISITION	TITLE SOURCE	PARCEL AREA (ACRES)
07-043.40-055	(1-R) RIVERFRONT DEVELOPMENT CORPORATION OF DELAWARE	TCE-4	20090911-0059590	117.578

ALIGNMENT NUMBER & DESCRIPTION:

PT. NO.	ALIGN. NO.	STATION	OFFSET *	NORTH	EAST	BEARING	DISTANCE	CHORD BEARING	CHORD LENGTH	ARC LENGTH	RADIUS **
60064	ITT	156+78.10	-44.88	627556.3692	615001.8451	N 79°09′36.38″ E	266.20				
60067	ITT	159+65.79	-24.62	627606.4326	615263.2975	N 10°50′23.62″ W	32.94				
60089	ITT	159+72.72	-56.82	627638.7848	615257.1027	N 15°34′42.89″ E	34.40				
60088	ITT	159+94.16	-83.72	627671.9205	615266.3410	S 74°25′17.11″ E	84.48				
60087	ITT	160+60.22	-31.06	627649.2331	615347.7155	N 79°09′36.38″ E	30.62				
60086	ITT	160+90.16	-24.62	627654.9925	615377.7934	N 62°18′25.34″ E	58.41				
60085	ITT	161+48.37	-29.42	627682.1356	615429.5089	S 83°47′30.52″ E	22.19				
60080	ITT	161+67.74	-18.59	627679.7357	615451.5714	S 4°23′07.04″ W	60.00				
60068	ITT	161+40.16	34.69	627619.9113	615446.9837	N 85°07′22.03″ W	40.00				
60083	ITT	161+04.80	16.00	627623.3122	615407.1285	N 67°01′01.81″ E	27.38				
60070	ITT	161+32.18	16.00	627634.0032	615432.3359	N 4°52′37.97″ E	36.20				
60081	ITT	161+49.09	-16.00	627670.0674	615435.4132	S 67°01′01.81″ W	298.28				
60082	ITT	158+50.81	-16.00	627553.6031	615160.8116			S 80°58′36.11″ W	165.02	166.67	342.04
60054	ITT	156+76.35	-16.00	627527.7215	614997.8309	N 7°58′36.00″ E	28.93				
60064	ITT	156+78.10	-44.88	627556.3692	615001.8451						

FIGURE RW_1R_TCE4 AREA = 14432.3829 SQ. FT. (0.3313 ACRES)

LEGEND

FEE AREA OF ACQUISITION
RW AREA OCCUPIED BY EXISTING RW
P/E PERMANENT EASEMENT
TCE TEMPORARY CONSTRUCTION EASEMENT

* "–" OFFSET IS LEFT OF BASELINE
** "–" CURVE TURNS TO THE LEFT

RW-10

DELAWARE DEPARTMENT OF TRANSPORTATION

ADDENDUMS / REVISIONS

NOT TO SCALE

NEW CASTLE INDUSTRIAL TRACK TRAIL, PHASE 3

CONTRACT T201330009
COUNTY NEW CASTLE
BRIDGE NO. X
DESIGNED BY: DAD
CHECKED BY: JRR

RIGHT OF WAY DATA SHEET SHEET 10 OF 12

SHEET NO. 205
TOTAL SHTS. 207

N:\31896-002\CADD\RW10_ITT3.DGN

Unofficial Web Site Copy

ASSESSMENT NUMBER	OWNERSHIP OF RECORD	TYPE OF ACQUISITION	TITLE SOURCE	PARCEL AREA (ACRES)
07-043.40-055	(1-R) RIVERFRONT DEVELOPMENT CORPORATION OF DELAWARE	TCE-5	20090911-0059590	117.578

ALIGNMENT NUMBER & DESCRIPTION:

PT. NO.	ALIGN. NO.	STATION	OFFSET *	NORTH	EAST	BEARING	DISTANCE	CHORD BEARING	CHORD LENGTH	ARC LENGTH	RADIUS **
60076	ITT	156+65.87	16.00	627496.9423	614984.1803			N 81°48′56.19″ E	191.07	193.21	-374.04
60071	ITT	158+50.81	16.00	627524.1432	615173.3062	N 67°01′01.81″ E	247.31				
60079	ITT	160+98.13	16.00	627620.7075	615400.9870	S 4°52′37.97″ W	30.54				
60078	ITT	160+83.85	43.00	627590.2782	615398.3905	S 67°01′01.81″ W	233.04				
60077	ITT	158+50.81	43.00	627499.2864	615183.8485			S 82°00′39.42″ W	207.51	209.89	401.04
60065	ITT	156+63.42	43.00	627470.4462	614978.3551			N 84°03′48.43″ W	12.38	12.38	-332.00
60061	ITT	156+49.44	43.00	627471.7265	614966.0431	N 35°43′36.00″ E	31.06				
60076	ITT	156+65.87	16.00	627496.9423	614984.1803						

FIGURE RW_1R_TCE5 AREA = 12093.0790 SQ. FT. (0.2776 ACRES)

ASSESSMENT NUMBER	OWNERSHIP OF RECORD	TYPE OF ACQUISITION	TITLE SOURCE	PARCEL AREA (ACRES)
07-043.40-055	(1-R) RIVERFRONT DEVELOPMENT CORPORATION OF DELAWARE	TCE-6	20090911-0059590	117.578

ALIGNMENT NUMBER & DESCRIPTION:

PT. NO.	ALIGN. NO.	STATION	OFFSET *	NORTH	EAST	BEARING	DISTANCE	CHORD BEARING	CHORD LENGTH	ARC LENGTH	RADIUS **
60090	ITT	109+59.88	38.54	626077.7578	610904.2599	N 7°42′28.00″ E	45.00				
60091	ITT	110+04.88	38.26	626122.3512	610910.2953	S 82°17′32.00″ E	30.00				
60092	ITT	110+05.07	68.26	626118.3276	610940.0243	S 7°42′28.00″ W	45.00				
60093	ITT	109+60.07	68.54	626073.7341	610933.9888	N 82°17′32.00″ W	30.00				
60090	ITT	109+59.88	38.54	626077.7578	610904.2599						

FIGURE RW_1R_TCE6 AREA = 1350.0000 SQ. FT. (0.0310 ACRES)

ASSESSMENT NUMBER	OWNERSHIP OF RECORD	TYPE OF ACQUISITION	TITLE SOURCE	PARCEL AREA (ACRES)
07-044.30-003	(2-R) RIVERFRONT DEVELOPMENT CORPORATION OF DELAWARE	P/E	20040318-0030763	4.580

ALIGNMENT NUMBER & DESCRIPTION:

PT. NO.	ALIGN. NO.	STATION	OFFSET *	NORTH	EAST	BEARING	DISTANCE	CHORD BEARING	CHORD LENGTH	ARC LENGTH	RADIUS **
60011	ITT	139+69.70	-10.00	627222.4889	613316.6706	N 79°09′36.38″ E	590.89				
60050	ITT	145+60.60	-10.00	627333.6156	613897.0215	S 19°56′11.62″ E	30.38				
60059	ITT	145+65.40	20.00	627305.0543	613907.3812	S 79°09′36.38″ W	591.37				
60012	ITT	139+74.03	20.00	627193.8389	613326.5672	N 19°03′23.62″ W	30.31				
60011	ITT	139+69.70	-10.00	627222.4889	613316.6706						

FIGURE RW_2R_PE AREA = 17733.9068 SQ. FT. (0.4071 ACRES)

ASSESSMENT NUMBER	OWNERSHIP OF RECORD	TYPE OF ACQUISITION	TITLE SOURCE	PARCEL AREA (ACRES)
07-044.30-003	(2-R) RIVERFRONT DEVELOPMENT CORPORATION OF DELAWARE	TCE	20040318-0030763	4.580

ALIGNMENT NUMBER & DESCRIPTION:

PT. NO.	ALIGN. NO.	STATION	OFFSET *	NORTH	EAST	BEARING	DISTANCE	CHORD BEARING	CHORD LENGTH	ARC LENGTH	RADIUS **
60033	ITT	139+68.62	-17.50	627229.6514	613314.1964	N 79°09′36.38″ E	590.78				
60060	ITT	145+59.40	-17.50	627340.7559	613894.4316	S 19°56′11.62″ E	7.60				
60050	ITT	145+60.60	-10.00	627333.6156	613897.0215	S 79°09′36.38″ W	590.89				
60011	ITT	139+69.70	-10.00	627222.4889	613316.6706	N 19°03′23.62″ W	7.58				
60033	ITT	139+68.62	-17.50	627229.6514	613314.1964						

FIGURE RW_2R_TCE AREA = 4431.2667 SQ. FT. (0.1017 ACRES)

ASSESSMENT NUMBER	OWNERSHIP OF RECORD	TYPE OF ACQUISITION	TITLE SOURCE	PARCEL AREA (ACRES)
07-044.30-002	(3-R) DELMARVA POWER & LIGHT COMPANY	P/E	1428-122	15.225

ALIGNMENT NUMBER & DESCRIPTION:

PT. NO.	ALIGN. NO.	STATION	OFFSET *	NORTH	EAST	BEARING	DISTANCE	CHORD BEARING	CHORD LENGTH	ARC LENGTH	RADIUS **
60050	ITT	145+60.60	-10.00	627333.6156	613897.0215	N 79°09′36.38″ E	812.98				
60074	ITT	153+73.57	-10.00	627486.5080	614695.4908	N 10°50′23.64″ W	6.00				
60073	ITT	153+73.57	-16.00	627492.4010	614694.3624	N 79°09′36.38″ E	173.06				
60053	ITT	155+46.63	-16.00	627524.9474	614864.3338			N 88°04′56.71″ E	121.28	121.78	391.00
60066	ITT	156+63.42	-16.00	627529.0058	614985.5502			S 84°01′46.28″ E	12.35	12.35	-342.04
60054	ITT	156+76.35	-16.00	627527.7215	614997.8309	S 7°58′36.00″ W	14.80				
60055	ITT	156+75.56	-1.22	627513.0652	614995.7771	S 35°43′36.00″ W	19.86				
60076	ITT	156+65.87	16.00	627496.9423	614984.1803			N 83°11′26.20″ W	2.55	2.55	374.04
60069	ITT	156+63.42	16.00	627497.2447	614981.6478			S 88°04′56.71″ W	111.36	111.81	-359.00
60056	ITT	155+46.63	16.00	627493.5184	614870.3519	S 79°09′36.38″ W	173.06				
60057	ITT	153+73.57	16.00	627460.9720	614700.3805	S 10°50′23.62″ E	4.00				
60058	ITT	153+73.57	20.00	627457.0433	614701.1328	S 79°09′36.38″ W	808.17				
60059	ITT	145+65.40	20.00	627305.0543	613907.3812	N 19°56′11.62″ W	30.38				
60050	ITT	145+60.60	-10.00	627333.6156	613897.0215						

FIGURE RW_3R_PE AREA = 33899.0243 SQ. FT. (0.7782 ACRES)

ASSESSMENT NUMBER	OWNERSHIP OF RECORD	TYPE OF ACQUISITION	TITLE SOURCE	PARCEL AREA (ACRES)
07-044.30-002	(3-R) DELMARVA POWER & LIGHT COMPANY	TCE-1	1428-122	15.225

ALIGNMENT NUMBER & DESCRIPTION:

PT. NO.	ALIGN. NO.	STATION	OFFSET *	NORTH	EAST	BEARING	DISTANCE	CHORD BEARING	CHORD LENGTH	ARC LENGTH	RADIUS **
60060	ITT	145+59.40	-17.50	627340.7559	613894.4316	N 79°09′36.38″ E	814.18				
60051	ITT	153+73.57	-17.50	627493.8742	614694.0804	N 10°50′23.62″ W	3.50				
60052	ITT	153+73.57	-21.00	627497.3118	614693.4221	N 79°09′36.38″ E	314.03				
60064	ITT	156+78.10	-44.88	627556.3692	615001.8451	S 7°58′36.00″ W	28.93				
60054	ITT	156+76.35	-16.00	627527.7215	614997.8309			N 84°01′46.28″ W	12.35	12.35	342.04
60066	ITT	156+63.42	-16.00	627529.0058	614985.5502			S 88°04′56.71″ W	121.28	121.78	-391.00
60053	ITT	155+46.63	-16.00	627524.9474	614864.3338	S 79°09′36.38″ W	173.06				
60073	ITT	153+73.57	-16.00	627492.4010	614694.3624	S 10°50′23.64″ E	6.00				
60074	ITT	153+73.57	-10.00	627486.5080	614695.4908	S 79°09′36.38″ W	812.98				
60050	ITT	145+60.60	-10.00	627333.6156	613897.0215	N 19°56′11.62″ W	7.60				
60060	ITT	145+59.40	-17.50	627340.7559	613894.4316						

FIGURE RW_3R_TCE1 AREA = 8740.8385 SQ. FT. (0.2007 ACRES)

ASSESSMENT NUMBER	OWNERSHIP OF RECORD	TYPE OF ACQUISITION	TITLE SOURCE	PARCEL AREA (ACRES)
07-044.30-002	(3-R) DELMARVA POWER & LIGHT COMPANY	TCE-2	1428-122	15.225

ALIGNMENT NUMBER & DESCRIPTION:

PT. NO.	ALIGN. NO.	STATION	OFFSET *	NORTH	EAST	BEARING	DISTANCE	CHORD BEARING	CHORD LENGTH	ARC LENGTH	RADIUS **
60057	ITT	153+73.57	16.00	627460.9720	614700.3805	N 79°09′36.38″ E	173.06				
60056	ITT	155+46.63	16.00	627493.5184	614870.3519			N 88°04′56.71″ E	111.36	111.81	359.00
60069	ITT	156+63.42	16.00	627497.2447	614981.6478			S 83°11′26.20″ E	2.55	2.55	-374.04
60076	ITT	156+65.87	16.00	627496.9423	614984.1803	S 35°43′36.00″ W	31.06				
60061	ITT	156+49.44	43.00	627471.7265	614966.0431			S 87°00′51.20″ W	90.74	91.02	-332.00
60062	ITT	155+46.63	43.00	627467.0002	614875.4298	S 79°09′36.38″ W	173.06				
60063	ITT	153+73.57	43.00	627434.4537	614705.4583	N 10°50′23.62″ W	27.00				
60057	ITT	153+73.57	16.00	627460.9720	614700.3805						

FIGURE RW_3R_TCE2 AREA = 7446.0111 SQ. FT. (0.1709 ACRES)

Unofficial Website Copy

LEGEND

FEE AREA OF ACQUISITION
RW AREA OCCUPIED BY EXISTING RW
P/E PERMANENT EASEMENT
TCE TEMPORARY CONSTRUCTION EASEMENT

* "–" OFFSET IS LEFT OF BASELINE
** "–" CURVE TURNS TO THE LEFT

RW-11

DELAWARE DEPARTMENT OF TRANSPORTATION

ADDENDUMS / REVISIONS

NOT TO SCALE

NEW CASTLE INDUSTRIAL TRACK TRAIL, PHASE 3

CONTRACT	BRIDGE NO.	X
T201330009	DESIGNED BY: DAD	
COUNTY		
NEW CASTLE	CHECKED BY: JRR	

RIGHT OF WAY DATA SHEET SHEET 11 OF 12

SHEET NO. 206
TOTAL SHTS. 207

N:\31896-002\CADD\RW11_ITT3.DGN

COUNTY ASSESSMENT PARCEL NUMBER	PLAN SHEET NUMBER	OWNERSHIP OF RECORD	TITLE SOURCE	PROPERTY AREA BEFORE ACQUISITION (ACRE) D=DEED C=CALCULATED A=ASSESMENT	ACQUISITION CODE FEE, R/W, P/E, TCE	AREA TO BE ACQUIRED				PROPERTY AREA REMAINING (SQ. FEET /ACRES)	DEED RECORD OF ACQUISTITION	REMARKS
						ACQUISITION (SQ. FEET /ACRES)	AREA OCCUPIED BY EXISTING RIGHT OF WAY (SQ. FEET /ACRES)	EASEMENT PERMANENT (SQ. FEET /ACRES)	EASEMENT TEMPORARY (SQ. FEET /ACRES)			
07-043.40-055	197-201,204	(1-R) RIVERFRONT DEVELOPMENT CORPORATION OF DELAWARE	20090911-0059590	D - 117.58	P/E-1			60155.1888 / 1.38				
					P/E-2			14964.1954 / 0.34				
					TCE-1				12185.0633 / 0.28			
					TCE-2				14038.4752 / 0.32			
					TCE-3				4941.6246 / 0.11			
					TCE-4				14432.3829 / 0.33			
					TCE-5				12093.079 / 0.28			
					TCE-6				1350.00 / 0.03	5121697.68 / 117.58		
07-044.30-003	201-202	(2-R) RIVERFRONT DEVELOPMENT CORPORATION OF DELAWARE	20040318-0030763	A - 4.58	P/E			17733.9068 / 0.41				
					TCE				4431.2667 / 0.10	199504.80 / 4.58		
07-044.30-002	202-204	(3-R) DELMARVA POWER & LIGHT COMPANY	1428-122	D - 15.23	P/E			33899.0243 / 0.78				
					TCE-1				8740.8385 / 0.20			
					TCE-2				7446.0111 / 0.17	663201.00 / 15.23		

Unofficial Website Copy

ACQUISITION CODES
FEE - ACQUISITION
R/W - AREA OCCUPIED BY EXISTING R/W
P/E - PERMANENT EASEMENT
TCE - TEMPORARY EASEMENT

RW-12

DELAWARE DEPARTMENT OF TRANSPORTATION

ADDENDUMS / REVISIONS

NOT TO SCALE

NEW CASTLE INDUSTRIAL TRACK TRAIL, PHASE 3

CONTRACT T201330009
COUNTY NEW CASTLE
BRIDGE NO. X
DESIGNED BY: DAD
CHECKED BY: JRR

RIGHT OF WAY DATA SHEET SHEET 12 OF 12

SHEET NO. 207
TOTAL SHTS. 207

N:\31896-002\CADD\RW12_ITT3.DGN