THE STATE OF DELAWARE
DEPARTMENT OF TRANSPORTATION

U.S. CUSTOMARY UNITS

CONSTRUCTION & RIGHT-OF-WAY PLANS FOR:

BR 2-388C ON SR 15 CANTERBURY ROAD OVER WARD BRANCH

CONTRACT NUMBER: T201407201

FEDERAL AID PROJECT NUMBER: EBROS-K388(03)

COUNTY: KENT **M.R. #:** K388

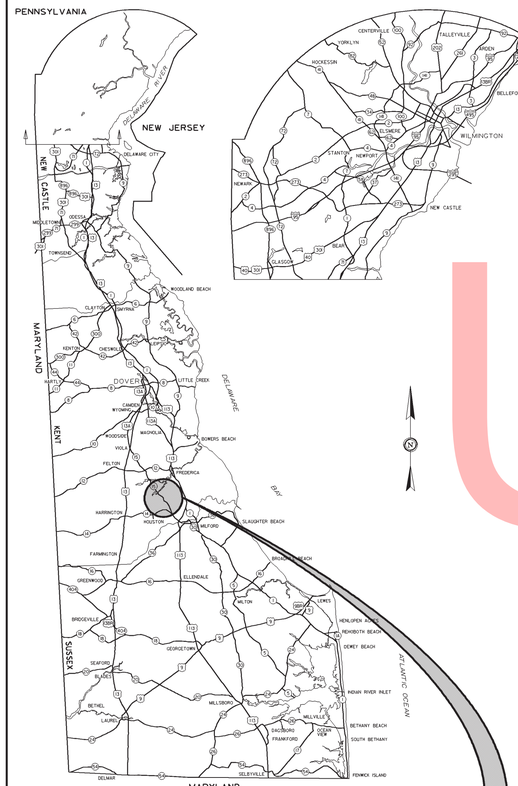

GENERAL LOCATION OF CONTRACT

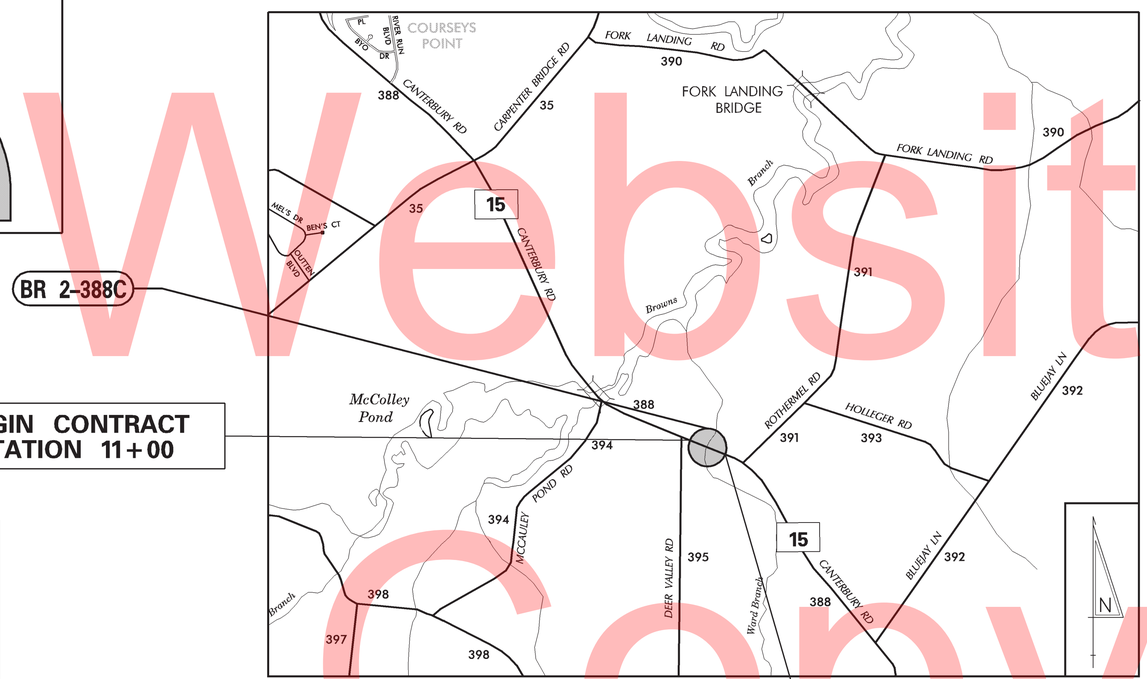

BR 2-388C

BEGIN CONTRACT STATION 11+00

END CONTRACT STATION 15+80

DESIGN DESIGNATION

FUNCTIONAL CLASS: RURAL MINOR ARTERIAL	D.H.V. PROJECTED: 568	YEAR: 2040
TYPE OF CONSTRUCTION: PIPE REPLACEMENT	DESIGN SPEED: 55 M.P.H.	
A.A.D.T. CURRENT: 6073 YEAR: 2012	TRUCKS: 8 %	
A.A.D.T. PROJECTED: 8900 YEAR: 2040	DIRECTION OF DISTRIBUTION: 58 %	

INDEX OF SHEETS

SHEET Nº	TABLE OF CONTENTS
1	TITLE SHEET
2	LEGEND
3	NOTES
4	TYPICAL SECTION
5	HORIZONTAL AND VERTICAL CONTROL
6	CONSTRUCTION PLAN
7	PROFILE
8	BRIDGE PLAN, SECTION, & ELEVATION
9	PRECAST & SHEETPILE DETAILS
10	SHEET PILE PLAN
11	SHEET PILE ELEVATION
12	SOIL BORINGS
13	ENVIRONMENTAL COMPLIANCE PLAN
14	CONSTRUCTION PHASING, M.O.T, AND EROSION CONTROL PLAN
15	DETOUR PLAN
16	UTILITY RELOCATION PLAN
17	SIGNING, STRIPING, AND CONDUIT PLAN
18-20	RIGHT-OF-WAY PLANS

TOTAL SHEETS: 20

APPROVED DESIGN EXCEPTIONS

DESIGN PARAMETER	REQUIRED	PROVIDED	DATE

ADDENDA & REVISIONS

DESCRIPTION	NAME & DATE

ASSOCIATED CONTRACTS

CONTRACT NO.	CONTRACT NAME

RECOMMENDED

SQUAD MANAGER, CONSTRUCTION — DATE 04/20/2015

GROUP ENGINEER, CONSTRUCTION — DATE 04/22/2015

ASSISTANT DIRECTOR, CONSTRUCTION — DATE 04/22/2015

RECOMMENDED

STORMWATER ENGINEER — DATE 04/20/2015

VINCENT W. DAVIS REGISTERED No. 12898 DELAWARE PROFESSIONAL ENGINEER — SEAL

RECOMMENDED

SQUAD MANAGER, BRIDGE DESIGN — DATE 04/16/2015

CRAIG A. STEVENS LICENSE No. 15250 DELAWARE PROFESSIONAL ENGINEER — SEAL

RECOMMENDED

BRIDGE DESIGN ENGINEER — DATE 04/22/2015

JASON N. HASTINGS REGISTERED No. 13545 DELAWARE PROFESSIONAL ENGINEER — SEAL

RECOMMENDED

ASSISTANT DIRECTOR, BRIDGE — DATE 04/22/2015

BARRY A. BENTON REGISTERED No. 10774 DELAWARE PROFESSIONAL ENGINEER — SEAL

APPROVED

CHIEF ENGINEER — DATE 04/23/2015

ROBERT BRIAN McCLEARY REGISTERED No. 8567 DELAWARE PROFESSIONAL ENGINEER — SEAL

LAST REVISED: 03/03/2011
Y:\KENT\388\BRIDGE\T201407201\PLANS\TC01.DGN

Unofficial Website Copy

EXISTING SYMBOLS

DRAINAGE

	DITCH OR STREAM CENTERLINE
	DIRECTIONAL STREAM FLOW ARROW
C.B. / D.I.	DRAINAGE INLET
J.B.	DRAINAGE JUNCTION BOX
D	DRAINAGE MANHOLE
SIZE/TYPE LABEL	DRAINAGE PIPE AND FLOW ARROW
	DRAINAGE PIPE HEADWALL
	RIPRAP - AREA FEATURE
	RIPRAP - LINEAR FEATURE

MANMADE ROADSIDE FEATURES

	BOLLARD - STEEL POLE
	BOLLARD - WOOD POST
(TYPE LABEL)	CURB
(TYPE LABEL)	CURB AND GUTTER
	FENCE - CHAINLINK OR STRANDED
	FENCE - STOCKADE OR SPLIT RAIL
FP	FLAG POLE
	GUARDRAIL - STEEL BEAM
	GUARDRAIL - WIRE ROPE
LAMP	LAMP AND POST - RESIDENTIAL
MB	MAILBOX
PM	PARKING METER AND POST
	PAVEMENT - FLEXIBLE
	PAVEMENT - RIGID
	PILE - BRIDGE
	PILLAR OR MISCELLANEOUS POST
	TRAFFIC SIGN AND POST
	WALL - BRICK OR BLOCK
	WALL - STONE

NATURAL ROADSIDE FEATURES

	GRASS LAWN
	HEDGEROW OR THICKET
	MARSH BOUNDARY LINE
	TREE - CONIFEROUS
	TREE - DECIDUOUS
	TREE STUMP
	SHRUBBERY
WL	DELINEATED WETLAND BOUNDARY LINE
	WOODS LINE BOUNDARY
	SURFACE BREAKLINES

RIGHT-OF-WAY SYMBOLS

C.M.	PROPERTY MARKER - CONCRETE MON.
I.P.	PROPERTY MARKER - IRON PIPE
100+00	HISTORIC RIGHT-OF-WAY BASELINE
	EXISTING RIGHT-OF-WAY
PL	EXISTING PROPERTY LINE
EASEMENT TYPE	EXISTING EASEMENT
DA	EXISTING DENIAL OF ACCESS
R/W-DA	EXISTING R/W & DENIAL OF ACCESS

SURVEY CONTROL & MONUMENTATION

B.M.	SURVEY BENCHMARK LOCATION
T.P.	SURVEY TIE POINT LOCATION
△	SURVEY TRAVERSE POINT
	POINT OF CURVATURE OR TANGENCY
	POINT OF INTERSECTING TANGENTS

UTILITY

	SOIL BORING LOCATION
	UTILITY TEST HOLE LOCATION
TV	CABLE TV DISTRIBUTION BOX
E	ELECTRIC MANHOLE
EM	ELECTRIC METER
E	ELECTRIC TRANSFORMER
	POLE MOUNTED LUMINAIRE
G	GAS MANHOLE
G.M.	GAS METER
G.V.	GAS VALVE
G.P.	GAS PUMP - SERVICE STATION
	RAILROAD TRACKS
S	SANITARY SEWER MANHOLE
S.V.	SANITARY SEWER VALVE
VENT	SANITARY SEWER VENT OR CLEANOUT
S.D.F.	SEPTIC DRAIN FIELD
B	TELEPHONE BOOTH
T	TELEPHONE MANHOLE
T	TELEPHONE TEST POINT
J.W.	TRAFFIC - CONDUIT JUNCTION WELL
	TRAFFIC - LIGHT POLE AND BASE
	TRAFFIC - PEDESTRIAN POLE & BASE
	TRAFFIC - SIGNAL CABINET & BASE
	TRAFFIC - SIGNAL POLE AND BASE
U	UTILITY BOX
	UTILITY POLE GUY WIRE ANCHOR
	UTILITY POLE
F.H.	WATER - FIRE HYDRANT
W.M.	WATER METER
W.V.	WATER VALVE
WELL	WELL HEAD
?	MANHOLE - UNDETERMINED OWNER

UTILITY COMPANY FACILITIES

VER-C	VERIZON
COM-C-OH	COMCAST
DEC-E-OH	DELAWARE ELECTRIC COOPERATIVE

PROPOSED SYMBOLS

CONSTRUCTION

	CONCRETE SAFETY BARRIER - PERMANENT
BFS	BIOFILTRATION SWALE
	BRICK PATTERNED SURFACE
	BUTT JOINT
100+00	CONSTRUCTION BASELINE
CSF	CONSTRUCTION SAFETY FENCE
	CURB, TYPE 1 & TYPE 3
	CURB, TYPE 2
	CURB & GUTTER, TYPE 1
	CURB & GUTTER, TYPE 2
	CURB & GUTTER, TYPE 3
	CURB & GUTTER, TYPE 4
CZ	CLEAR ZONE
	DRAINAGE INLET
	DITCH
	FENCE - METAL
	FENCE - WOOD
	FLARED END SECTION
	GUARDRAIL, TYPE 1
	GUARDRAIL, TYPE 2
	GUARDRAIL, TYPE 3
	GUARDRAIL END ANCHORAGE
	GUARDRAIL END TREATMENT, TYPE 1
	GUARDRAIL END TREATMENT, TYPE 2
	GUARDRAIL END TREATMENT, TYPE 3
HC	HORIZONTAL CLEARANCE
	IMPACT ATTENUATOR
	JUNCTION BOX - DRAINAGE
LOC	LIMIT OF CONSTRUCTION
MB	MAILBOX
	MANHOLE
	PAVEMENT PATCH
	PAVEMENT REMOVAL - TOPSOIL, SEED AND MULCH
	PIPE & DIRECTIONAL FLOW ARROW
	RIPRAP
T	TELEPHONE TEST POINT
	P.C.C. SIDEWALK - 4"
	P.C.C. SIDEWALK - 6" (USE 8" DEPTH FOR CHANNELIZATION ISLANDS.)
	UNDERDRAIN
	UNDERDRAIN OUTLET

RIGHT-OF-WAY SYMBOLS

	PROPOSED RIGHT-OF-WAY MONUMENT
DA	PROPOSED DENIAL OF ACCESS
PE	PROPOSED PERMANENT EASEMENT
R/W	PROPOSED RIGHT-OF-WAY
R/W-DA	PROPOSED R/W & DENIAL OF ACCESS
TCE	TEMPORARY CONSTRUCTION EASEMENT
100+00	PROPOSED RIGHT-OF-WAY BASELINE

IDENTIFIERS

A/C	ADJUST BY CONTRACTOR
A/O	ADJUST BY OTHERS
B	CONCRETE SAFETY BARRIER
C	CURB OR CURB & GUTTER
CJB	CONVERT TO JUNCTION BOX
CMH	CONVERT TO DRAINAGE MANHOLE
C/O	CURB OPENING
CR	CURB RAMP / TYPE
CR-N	CURB RAMP / TYPE - WITHOUT SIDEWALK SURFACE DETECTABLE WARNING SYSTEM
CSF	CONSTRUCTION SAFETY FENCE
DI	DRAINAGE INLET
DND	DO NOT DISTURB
ED	ENERGY DISSIPATOR
F	FENCE
FES	FLARED END SECTION
FF/C	FILL WITH FLOWABLE FILL
FS	FILTRATION STRUCTURE
GR	GUARDRAIL
JB	JUNCTION BOX
MH	MANHOLE
M	MONUMENT - RIGHT-OF-WAY
P	PIPE
RL/C	RELOCATE BY CONTRACTOR
RL/O	RELOCATE BY OTHERS
RM/C	REMOVE BY CONTRACTOR
RM/O	REMOVE BY OTHERS
UD	UNDERDRAIN / LENGTH
UDO	UNDERDRAIN OUTLET PIPE

LANDSCAPING

LS	LANDSCAPE PLANTINGS
	SHRUBBERY
	CONIFEROUS TREE
	DECIDUOUS TREE

TRAFFIC

ITMS-CON	ITMS CONDUIT
SIG-CON	SIGNAL CONDUIT
	CONDUIT JUNCTION WELL
	LUMINAIRE
	PAVEMENT MARKINGS
	PAVEMENT STRIPING
	TRAFFIC SIGN

MISCELLANEOUS

	PROPOSED BREAKLINE
	PROPOSED DITCH

PAVEMENT SECTION(S)

	2" SUPERPAVE TYPE C, PG 70-22, 160 GYRATIONS (CARBONATE STONE) 6" GABC
	2" SUPERPAVE TYPE C, PG 70-22, 160 GYRATIONS (CARBONATE STONE) ON 3" SUPERPAVE TYPE B, PG 70-22, 160 GYRATIONS ON 3½" BCBC, PG 64-22, 160 GYRATIONS ON 8" GABC

UTILITY COMPANY FACILITIES

VER-C	VERIZON

EROSION & SEDIMENT CONTROL

DWBAG	DEWATERING BAG
DWB	DEWATERING BASIN
ED	EARTH DIKE
	INLET SEDIMENT CONTROL
	PERIMETER DIKE/SWALE
PST	PORTABLE SEDIMENT TANK
SBD	SANDBAG DIKE
SB	SANDBAG DIVERSION
	STONE CHECK DAM
SCE	STABILIZED CONSTRUCTION ENTRANCE
SF	SILT FENCE / LENGTH
SF	SILT FENCE
RSF	SILT FENCE - REINFORCED
SP-1	SUMP PIT, TYPE 1
SP-2	SUMP PIT, TYPE 2
ST	SEDIMENT TRAP
ST	SEDIMENT TRAP
ST	SEDIMENT TRAP WITH INLET AS OUTLET
ST	SEDIMENT TRAP PIPE OUTLET
SW	STILLING WELL
	TEMPORARY SWALE
TSD	TEMPORARY SLOPE DRAIN
T XXX	TURBIDITY CURTAIN / LENGTH
T	TURBIDITY CURTAIN

Unofficial Website Copy

LAST REVISED: 01/08/2013
Y:\KENT\388\BRIDGE\T201407201\PLANS\LG01.DGN

DELAWARE DEPARTMENT OF TRANSPORTATION

ADDENDUMS / REVISIONS

NOT TO SCALE

BR 2-388C ON SR 15
CANTERBURY ROAD
OVER WARD BRANCH

CONTRACT T201407201	BRIDGE NO. 2-388C	LEGEND	SHEET NO. 2
COUNTY KENT	DESIGNED BY: GML		TOTAL SHTS. 20
	CHECKED BY: CAS		

GENERAL NOTES

1. THIS PROJECT IS TO BE CONSTRUCTED IN ACCORDANCE WITH THE DELAWARE DEPARTMENT OF TRANSPORTATION "STANDARD SPECIFICATIONS", DATED AUGUST 2001 AND THE DELAWARE DEPARTMENT OF TRANSPORTATION "STANDARD CONSTRUCTION DETAILS", DATED 2001, INCLUDING ALL REVISIONS UP TO THE DATE OF ADVERTISEMENT.

2. SITE REVIEWER - AN EROSION CONTROL SITE REVIEWER SHALL BE A PERSON FROM THE CONTRACTOR'S STAFF ASSIGNED TO EROSION AND SEDIMENT CONTROL IMPLEMENTATION AND MAINTENANCE AND SHALL BE REQUIRED ON SPECIFIC PROJECTS. THE NAME AND DNREC CERTIFICATION NUMBER OF EACH SITE REVIEWER SO REQUIRED SHALL BE SUBMITTED TO THE DEPARTMENT PRIOR TO THE EXECUTION OF THE CONTRACT. THE NAME OF THE DELAWARE REGISTERED PROFESSIONAL ENGINEER PROVIDING DIRECTION AND SUPERVISION OF THE SITE REVIEWER, AS REQUIRED IN SECTION 12.3 OF THE DELAWARE SEDIMENT AND STORMWATER REGULATIONS, SHALL ALSO BE SUBMITTED TO THE DEPARTMENT PRIOR TO THE EXECUTION OF THE CONTRACT. THE SITE REVIEWER REQUIREMENTS IN EFFECT ON THIS PROJECT SHALL BE MARKED WITH AN "X" BELOW:

3.

EROSION POTENTIAL FOR THIS PROJECT	CONTRACTOR ESC SUPERVISOR REQUIREMENT
( ) INSIGNIFICANT	NONE
( ) MINOR	CONTRACTOR TRAINING PROGRAM, AS DEFINED IN SECTION 6.2 OF THE DELAWARE SEDIMENT AND STORMWATER REGULATIONS.
(X) MEDIUM	CONTRACTOR TRAINING PROGRAM, AS DEFINED IN SECTION 6.2 OF THE DELAWARE SEDIMENT AND STORMWATER REGULATIONS.
( ) MAJOR	CERTIFIED CONSTRUCTION REVIEWER (CCR), AS DEFINED IN SECTION 6.3 OF THE DELAWARE SEDIMENT AND STORMWATER REGULATIONS.

4. ELECTRONIC PROJECT FILES THAT WILL BE MADE AVAILABLE TO THE AWARDED CONTRACTOR, INCLUDE:

( )	NONE
( )	ASCII DATA FILES WITH COORDINATES AND ELEVATIONS FOR PROPOSED POINTS AS SELECTED BY THE ENGINEER.
(X)	ALL PLAN SHEETS, IN PDF FORMAT.
( )	EXISTING DIGITAL TERRAIN MODEL, IN .DTM FILE FORMAT, COMPATIBLE WITH SOFTWARE CURRENTLY USED BY DELDOT.
( )	PROPOSED DIGITAL TERRAIN MODEL, IN .DTM FILE FORMAT, COMPATIBLE WITH SOFTWARE CURRENTLY USED BY DELDOT.
( )	DESIGN FILE, IN .DGN FILE FORMAT, CONTAINING ONLY THE PROPOSED 3D TRIANGLES OF THE PROPOSED DIGITAL TERRAIN MODEL (DTM).

NOTE: THE DOCUMENT ENTITLED "RELEASE FOR DELIVERY OF DOCUMENTS IN ELECTRONIC FORM TO A CONTRACTOR" MUST BE SIGNED BY ALL PARTIES PRIOR TO THE DELIVERY OF ANY ELECTRONIC PROJECT FILES.

5. PROJECT FILES THAT WILL BE MADE AVAILABLE TO THE CONTRACTOR, INCLUDE:

(X)	CROSS SECTIONS (WILL BE MADE AVAILABLE TO THE AWARDED CONTRACTOR)
(X)	RIGHT-OF-WAY PLANS (INCLUDED IN PLAN SET)

6. AMERICAN TRAFFIC SAFETY SERVICES ASSOCIATION (ATSSA) CERTIFIED TRAFFIC CONTROL SUPERVISOR REQUIREMENT FOR THIS PROJECT.

(X)	THE CONTRACTOR SHALL NOT BE REQUIRED TO HAVE AN ATSSA SUPERVISOR ASSIGNED TO THIS PROJECT.
( )	THE CONTRACTOR SHALL HAVE AN ATSSA SUPERVISOR ASSIGNED TO THIS PROJECT. THE CONTRACTOR'S GENERAL SUPERINTENDENT FOR THIS PROJECT OR ANOTHER ATSSA CERTIFIED MEMBER OF THE CONTRACTOR'S PROJECT STAFF MAY BE THE ATSSA SUPERVISOR. PAYMENT FOR ATSSA SUPERVISOR IS INCIDENTAL TO ITEM 743000.
( )	THE CONTRACTOR SHALL HAVE AN ATSSA SUPERVISOR ASSIGNED TO THIS PROJECT. THE ATSSA SUPERVISOR'S SOLE JOB SHALL BE SUPERVISION OF THE INSTALLATION, OPERATION AND MAINTENANCE OF TRAFFIC CONTROL DEVICES FOR THIS PROJECT. THE CONTRACTOR'S GENERAL SUPERINTENDENT FOR THIS PROJECT SHALL NOT BE THE ATSSA SUPERVISOR. PAYMENT FOR ATSSA SUPERVISOR SHALL BE PAID FOR UNDER ITEM 743031.

7. THE DISTURBED AREA FOR THIS PROJECT IS 0.928 ACRES.

8. THE ADDITIONAL IMPERVIOUS AREA FOR THIS PROJECT IS 7462.00 SQUARE FEET.

9. THE SEDIMENT AND STORMWATER MANAGEMENT PLANS HAVE BEEN APPROVED BY DELDOT'S STORMWATER ENGINEER UNDER DELDOT'S DELEGATED AUTHORITY. THE SEDIMENT AND STORMWATER MANAGEMENT PLANS ARE VALID FOR A THREE YEAR PERIOD, BEGINNING ON THE DATE THE STORMWATER ENGINEER SIGNED THE CONSTRUCTION TITLE SHEET. IF THE FINAL ACCEPTANCE OF THE PROJECT IS ANTICIPATED TO EXTEND BEYOND THE THREE YEARS, THE CONTRACTOR WILL INFORM THE ENGINEER THREE MONTHS PRIOR TO THE EXPIRATION OF THE APPROVED SEDIMENT AND STORMWATER MANAGEMENT PLANS. THE STORMWATER ENGINEER WILL REVIEW THE CURRENT SEDIMENT AND STORMWATER MANAGEMENT PLAN AND ISSUE AN EXTENSION WITH ANY APPROPRIATE MODIFICATIONS.

10. THE CONTRACTOR SHALL GIVE TWO (2) WEEKS NOTICE TO THE PROPERTY OWNER WHEN ANY FIXTURE, SHRUB OR OTHER OBJECT MUST BE REMOVED FROM THE RIGHT OF WAY OR EASEMENT AREA. IF THE OWNER HAS NOT ATTEMPTED TO SALVAGE THIS PROPERTY, THE CONTRACTOR SHALL REMOVE IT WITHOUT OBLIGATION. COMPENSATION SHALL BE INCIDENTAL TO THE CONTRACT.

PROJECT NOTES

SECTION 100

1. ANY DAMAGE TO ITEMS NOTED TO BE RELOCATED OR RESET BY THE CONTRACTOR, AT THE DISCRETION OF THE ENGINEER, SHALL BE REPAIRED AND/OR REPLACED IN KIND AT THE CONTRACTOR'S EXPENSE.

SECTION 200

2. ITEMS TO BE REMOVED UNDER ITEM 211000 - REMOVAL OF STRUCTURES AND OBSTRUCTIONS SHALL INCLUDE, BUT NOT BE LIMITED TO THE FOLLOWING:
   - REMOVAL OF THE EXISTING 6 FT. CMP IN IT'S ENTIRETY
   - REMOVAL OF EXISTING 12 IN. RCP

3. THE CONTRACTOR SHALL REMOVE AND RESET ALL MAILBOXES TO MAINTAIN MAIL SERVICE AS DIRECTED BY THE ENGINEER. THE CONTRACTOR SHALL RELOCATE MAILBOXES AS REQUIRED BY THE PROPOSED GEOMETRICS AND AS DIRECTED BY THE ENGINEER. WHEN RELOCATING MAILBOXES IN CURBED SECTIONS, THE FACE OF THE MAILBOX SHALL BE FLUSH WITH THE BACK EDGE OF CURB. WHEN RELOCATING MAILBOXES IN OPEN SECTIONS, THE FACE OF THE MAILBOX SHALL SET BACK 8 INCHES FROM THE EDGE OF THE PAVED SHOULDER. THE BOTTOM OF THE MAILBOX SHALL BE SET 46 INCHES ABOVE THE ROADWAY SURFACE. MAILBOXES LOCATED AT DRIVEWAY ENTRANCES SHALL BE PLACED ON THE FAR SIDE OF THE DRIVEWAY IN THE DIRECTION OF TRAVEL. POSTS BEING RESET IN CONCRETE SIDEWALK SHALL BE PLACED IN AN APPROPRIATE SIZE PVC SLEEVE. COST FOR ALL WORK AND MATERIALS SHALL BE INCIDENTAL TO ITEM 201000 - CLEARING AND GRUBBING.

4. THE SOIL BORINGS REVEALED POTENTIAL UNSUITABLE MATERIAL AT THE APPROXIMATE ELEVATION OF THE PROPOSED COARSE AGGREGATE. THE LAYER MAY BE UNACCEPTABLE FOR THE BEARING OF THE STRUCTURE AND SHALL BE EXCAVATED UNTIL SUITABLE MATERIAL IS REACHED AS DETERMINED BY THE FIELD ENGINEER. THE UNDERCUT EXCAVATION SHALL BE PAID UNDER ITEM 207000-EXCAVATION AND BACKFILL FOR STRUCTURES AND SHALL BE BACKFILLED WITH COARSE AGGREGATE FOR FOUNDATION STABILIZATION AND SUBFOUNDATION BACKFILL (ITEM 608000). UNDERCUT EXCAVATION SHALL NOT BE PERFORMED IN AREAS OF UTILITY RELOCATION.

SECTION 300

5. A. THE CONTRACTOR MAY ELECT TO USE ANY OF THE FOLLOWING MATERIALS TO MEET THE REQUIREMENTS OF ITEM 302007 - GRADED AGGREGATE BASE COURSE, TYPE 'B':
   a. CRUSHED STONE (PER STANDARD SPECIFICATION 821)
   b. CRUSHED CONCRETE (PER STANDARD SPECIFICATION 821)
   c. HOT-MIX MILLINGS (PER SPECIAL PROVISION 302514 MILLED HOT-MIX BASE COURSE)

   THE CONTRACTOR WILL NOT BE ALLOWED TO MIX DIFFERENT MATERIALS (OR SIMILAR MATERIALS FROM DIFFERENT SOURCES) TO MEET THE REQUIREMENTS OF ITEM 302007 - GRADED AGGREGATE BASE COURSE, TYPE 'B'.

   ALL OF THE ABOVE LISTED MATERIALS ARE PERMITTED FOR USE ON THE JOB, PROVIDED THEY ARE SEPARATED INTO APPROVED AREAS. EACH AREA OF BASE COURSE MUST BE CONSTRUCTED USING MATERIALS FROM A SINGULAR SOURCE, FULL DEPTH, IN ORDER THAT PROPER TESTING MAY BE ACCOMPLISHED. THE CONTRACTOR AND ENGINEER SHALL AGREE ON THE LIMITS OF EACH SOURCE OF MATERIAL PRIOR TO PLACEMENT.

   B. THE QUANTITY USED FOR BASE OF EACH OF THE ABOVE LISTED MATERIALS WILL BE THE CONTRACTOR'S CHOICE, WITH THE TOTAL BEING EQUAL TO THE ACTUAL QUANTITY USED UNDER ITEM 302007 - GRADED AGGREGATE BASE COURSE, TYPE 'B'.

   C. HOT-MIX MILLINGS MAY BE GENERATED FROM THE FOLLOWING SOURCES:
   a. MILLED MATERIAL FURNISHED ON THE JOB FROM THE CONTRACTOR'S YARD OR OTHER OUTSIDE SOURCE. ALL MILLED MATERIALS SHALL MEET THE MATERIAL REQUIREMENTS OF ITEM 302514 - MILLED HOT-MIX BASE COURSE.

   D. PAYMENT CLARIFICATION:
   a. SHOULD THE CONTRACTOR ELECT TO MILL PORTIONS OF HOT-MIX SHOWN ON THE PLANS TO BE REMOVED UNDER ITEM 202000 - EXCAVATION AND EMBANKMENT THE COST OF MILLING THIS HOT-MIX WILL BE PAID AS ITEM 202000 - EXCAVATION AND EMBANKMENT. THE MILLINGS GENERATED MAY BE RECYCLED INTO HOT-MIX, UTILIZED FOR BASE COURSE, OR DISPOSED OF TO AN APPROVED SITE. HAULING COSTS FOR DISPOSAL AND/OR RECYCLING ARE INCIDENTAL TO ITEM 202000 - EXCAVATION AND EMBANKMENT.

   b. SHOULD THE CONTRACTOR ELECT TO TEMPORARILY STOCKPILE MILLINGS ON THE JOB SITE FOR LATER USE, ALL COSTS FOR STOCKPILING AND SUBSEQUENT REHANDLING SHALL BE INCIDENTAL TO ITEM 202000 - EXCAVATION AND EMBANKMENT.

   c. MILLINGS USED FOR BASE COURSE SHALL BE PLACED IN ACCORDANCE WITH THE REQUIREMENTS OF SPECIAL PROVISION 302514 - MILLED HOT-MIX BASE COURSE. NO SEPARATE PAYMENT WILL BE MADE TO FURNISH MILLINGS FROM AN OUTSIDE SOURCE OR TRANSPORT MILLINGS WITHIN THE PROJECT LIMITS. MILLINGS USED FOR BASE COURSE WILL BE PAID FOR AT THE UNIT BID PRICE FOR ITEM 302007 - GRADED AGGREGATE BASE COURSE, TYPE 'B'.

   d. ALL COSTS TO UTILIZE MILLINGS IN RECYCLED HOT-MIX WILL BE INCIDENTAL TO THE UNIT PRICE BID FOR THE HOT-MIX ITEM USING THE RECYCLED MATERIAL.

   e. SPECIAL PROVISION 302514 - MILLED HOT-MIX BASE COURSE IS PROVIDED TO SPECIFY THE MEANS OF LAY DOWN AND COMPACTION AS WELL AS THE MATERIAL REQUIREMENTS FOR MILLINGS USED AS BASE COURSE. ALL COSTS TO BRING THE MILLINGS INTO COMPLIANCE WITH THE REQUIREMENTS OF ITEM - 302514 MILLED HOT-MIX BASE COURSE ARE INCIDENTAL TO ITEM 302007 - GRADED AGGREGATE BASE COURSE, TYPE 'B'. NO PAYMENT WILL BE MADE FOR ITEM 302514 - MILLED HOT-MIX BASE COURSE. THE QUANTITY OF MILLINGS USED FOR BASE COURSE WILL BE PAID FOR UNDER ITEM 302007 - GRADED AGGREGATE BASE COURSE.

SECTION 600

6. PORTLAND CEMENT CONCRETE
   STRUCTURAL ELEMENTS OF PORTLAND CEMENT CONCRETE SHALL BE AS NOTED (F'c = 28 DAY COMMPRESSIVE STRENGTH)
   -PRECAST ELEMENTS (F'c = 5000 psi)
   -CLASS A (F'c = 4500 psi) - SHEETPILE CAP AND WALL ENCASEMENT
   -MIX REQUIREMENTS SHALL CONFORM TO SECTION 812 OF THE SPECIFICATIONS.
   -ALL EXPOSED EDGES SHALL BE CHAMFERED ¾" UNLESS OTHERWISE NOTED.
   -ALL KEYED CONSTRUCTION JOINTS SHALL BE 2" x 4" UNLESS OTHERWISE NOTED.

7. BAR REINFORCEMENT
   REINFORCING STEEL SHALL CONFORM TO AASHTO M31(ASTM A615), GRADE 60. ALL REINFORCING STEEL SHALL HAVE A CLEAR COVER OF 2", UNLESS OTHERWISE SPECIFIED ON THE PLANS. ALL REINFORCING STEEL SHALL BE PROTECTED WITH FUSION BONDED EPOXY. EPOXY COATED REINFORCING STEEL SHALL CONFORM TO AASHTO M284 (ASTM D3963) AND IS DENOTED WITH A SUFFIX 'E' IN THE BAR MARKS.

8. LIMITS OF COARSE AGGREGATE FOR FOUNDATION STABILIZATION SHALL EXTEND 18" OUTSIDE OF THE NEAT LINE PERIMETER OF THE VERTICAL FACES OF ANY FOOTER, ENCASEMENT, OR STRUCTURAL UNIT.

SECTION 700

9. ALL PAVED AREAS TO BE RECONSTRUCTED OR WIDENED SHALL BE SAWCUT AT THE POINT WHERE THE NEW PAVEMENT IS TO TIE INTO THE EXISTING PAVEMENT. ALL HOT-MIX SAWCUTTING SHALL BE FULL DEPTH, UNLESS OTHERWISE NOTED ON THE PLANS, OR AS DIRECTED BY THE ENGINEER.

10. ALL MOT ITEMS WITH THE EXCEPTION OF CHANGEABLE MESSAGE BOARDS AND FLAGGERS WILL BE INCLUDED IN ITEM 763643-MAINTENANCE OF TRAFFIC, ALL INCLUSIVE.

SECTION 900

11. THIS PROJECT IS COVERED UNDER AN NPDES GENERAL PERMIT FOR CONSTRUCTION. UNDER THE GENERAL PERMIT, COMPLIANCE WITH DELDOT'S APPROVED SEDIMENT AND STORMWATER MANAGEMENT PLANS WILL CONSTITUTE COMPLIANCE WITH THE NPDES INDUSTRIAL PERMITTING REQUIREMENTS FOR THIS CONSTRUCTION PROJECT. A COPY OF THE NPDES GENERAL PERMIT AND NOI IS KEPT ON FILE IN EACH OF THE CONSTRUCTION OFFICES AND THE DEPARTMENT'S STORMWATER SECTION. A COPY OF THE GENERAL PERMIT OR THE NOI CAN BE OBTAINED UPON REQUEST FROM EITHER THE DEPARTMENT'S STORMWATER ENGINEER OR THE APPROPRIATE CONSTRUCTION ENGINEER.

MISCELLANEOUS

12. DESIGN CRITERIA
    2014 AASHTO LRFD BRIDGE DESIGN SPECIFICATIONS, 6TH EDITION, CUSTOMARY U.S. UNITS.
    USING AASHTO HL93 FOR LIVE LOAD, 25 psf FOR FUTURE WEARING SURFACE.

13. HYDRAULIC DATA
    PROPOSED OPENING: 34.11 SF
    DRAINAGE AREA: 1.93 sq miles DESIGN FREQUENCY: 50 YEARS
    DESIGN DISCHARGE: 282.0 cfs 50-YEAR FLOOD ELEVATION: 13.38 ft
    PLEASE REFER TO THE HYDROLOGY & HYDRAULIC REPORT FOR MORE INFORMATION ON HOW THE 50-YEAR STORM ELEVATION WAS OBTAINED.

14. SCOUR ANALYSIS
    THE PROPOSED STRUCTURE HAS BEEN ANALYZED FOR THE EFFECTS OF SCOUR IN ACCORDANCE WITH HEC-14 - 'HYDRAULIC DESIGN OF ENERGY DISSIPATORS FOR CULVERTS AND CHANNELS', HEC-18 - 'EVALUATING SCOUR AT BRIDGES' AND HEC-23 - 'BRIDGE SCOUR AND STREAM INSTABILITY COUNTERMEASURES'. SCOUR COUNTERMEASURES HAVE BEEN DESIGNED FOR THE OVERTOPPING FLOOD EVENT.
    DESIGN EVENT: Overtopping Flood DESIGN VELOCITY: 15.54 fps
    DESIGN DISCHARGE: 510.0 cfs TAILWATER DEPTH OF FLOW: 4.52 ft

15. THE CONTRACTOR SHALL CONTACT MICHAEL ELLER, THE CHIEF OF SCHEDULING FOR DART FIRST STATE, 14 DAYS PRIOR TO THE START OF CONSTRUCTION AT 302-576-6061.

16. ENVIRONMENTAL COMPLIANCE:
    REFER TO THE ENVIRONMENTAL COMPLIANCE PLAN FOR ANY RESTRICTIONS AND ADDITIONAL GUIDANCE THAT MAY BE ASSOCIATED TO THIS PROJECT.

17. PERMITTING FOR UTILITIES:
    AS OUTLINED IN CHAPTER 3 OF THE DELDOT UTILITIES MANUAL, THE INDIVIDUAL UTILITY COMPANIES ARE RESPONSIBLE FOR OBTAINING ALL REQUIRED PERMITS FROM MUNICIPAL, STATE, AND FEDERAL GOVERNMENT AGENCIES AND RAILROADS. THIS INCLUDES BUT IS NOT LIMITED TO WATER QUALITY PERMIT/DNREC WATER QUALITY CERTIFICATION, DNREC SUBAQUEOUS LANDS/WETLANDS PERMITS, DNREC COASTAL ZONE CONSISTENCY CERTIFICATION, U.S. COAST GUARD PERMITS, U.S. ARMY CORPS 404 PERMITS, SEDIMENT AND EROSION PERMITS, AND RAILROAD CROSSING PERMITS. THE ENVIRONMENTAL PERMITS CITED ON THE EC SHEETS(S) DO NOT AUTHORIZE ANY PART OF THE UTILITY WORK ASSOCIATED WITH THIS PROJECT.

18. UTILITIES:
    REFER TO THE 'UTILITY RELOCATION PLAN' FOR ADDITIONAL INFORMATION ON TYPES AND LOCATIONS OF ALL UTILITIES. ANY UTILITIES WHICH WILL CONFLICT WITH THE PROPOSED WORK SHOWN IN THESE PLANS, SHALL BE RELOCATED PRIOR TO THE COMMENCEMENT OF ANY PROPOSED BRIDGE OR ROAD WORK. FOR ADDITIONAL GUIDANCE, REFER TO THE 'UTILITY STATEMENT.

19. THE LOCAL DETOUR SHOWN IN THESE PLANS IS SUITABLE FOR CAR, TRUCK, AND SMALL FARM VEHICLE TRAFFIC. PRIOR TO AND AT THE COMPLETION OF THE BRIDGE REPLACEMENT, ALL OF THE ROADS THAT COMPRISE THE LOCAL DETOUR ROUTES SHALL BE EVALUATED FOR THEIR CONDITION BY THE ENGINEER. ANY NOTED WEAR WHICH MAY BE CAUSED BY THE DETOUR TRAFFIC, SHALL BE REPAIRED AT THE ENGINEER'S DISCRETION. PATCHING ITEMS FOR TYPE 'B' AND 'C' SUPERPAVE (ITEMS 401822 AND 401821, RESPECTIVELY), AND WARM-MIX PATCHING (ITEM 406001) HAVE BEEN INCLUDED IN THIS CONTRACT FOR THAT PURPOSE.

20. LOAD RATINGS FOR BR. 2-388C HAVE BEEN PERFORMED BY DELDOT'S BRIDGE MANAGEMENT SECTION IN ACCORDANCE WITH THE 2014 AASHTO LRFD BRIDGE DESIGN SPECIFICATIONS AND THE MANUAL FOR BRIDGE EVALUATION. ALL CURRENT AASHTO, DELAWARE LEGAL AND PERMIT LOADS HAVE BEEN CONFIRMED TO HAVE A MINIMUM LOAD RATING FACTOR OF 1.0 IN ACCORDANCE WITH DELDOT'S BRIDGE DESIGN MANUAL.

LOAD RATING SUMMARY

DESIGN VEHICLE	RATING FACTOR	RATING WEIGHT (TON)	CONTROLLING MEMBER	CONTROLLING POINT	LOAD AFFECT
HL-93 TRUCK (INVENTORY)	2.32	N/A	SIDE WALL	700.875	FLEXURE
HL-93 TANDEM (INVENTORY)	2.30	N/A	SIDE WALL	700.875	FLEXURE
HL-93 TRUCK TRAIN (INVENTORY)	N/A	N/A	N/A	N/A	FLEXURE
HS-20 (INVENTORY)	2.32	83.65	SIDE WALL	700.875	FLEXURE
HL-93 TRUCK (OPERATING)	3.02	N/A	TOP SLAB	108.540	FLEXURE
HL-93 TANDEM (OPERATING)	2.99	N/A	SIDE WALL	700.875	FLEXURE
HL-93 TRUCK TRAIN (OPERATING)	N/A	N/A	N/A	N/A	FLEXURE
HS-20 (OPERATING)	3.02	108.54	SIDE WALL	108.540	FLEXURE
DE S220 & LEGAL-LANE (LEGAL)	3.49	41.40	SIDE WALL	700.875	FLEXURE
DE S335 & LEGAL-LANE (LEGAL)	2.24	45.85	SIDE WALL	700.875	FLEXURE
DE S437 & LEGAL-LANE (LEGAL)	2.73	46.25	SIDE WALL	700.875	FLEXURE
DE T330 & LEGAL-LANE (LEGAL)	3.49	48.30	SIDE WALL	700.875	FLEXURE
DE T435 & LEGAL-LANE (LEGAL)	3.02	49.70	SIDE WALL	700.875	FLEXURE
DE T540 & LEGAL-LANE (LEGAL)	3.07	51.60	SIDE WALL	700.875	FLEXURE

NOTE: LOAD RATING INCLUDES FUTURE WEARING SURFACE AS NOTED IN THE PLANS.

Unofficial Website Copy

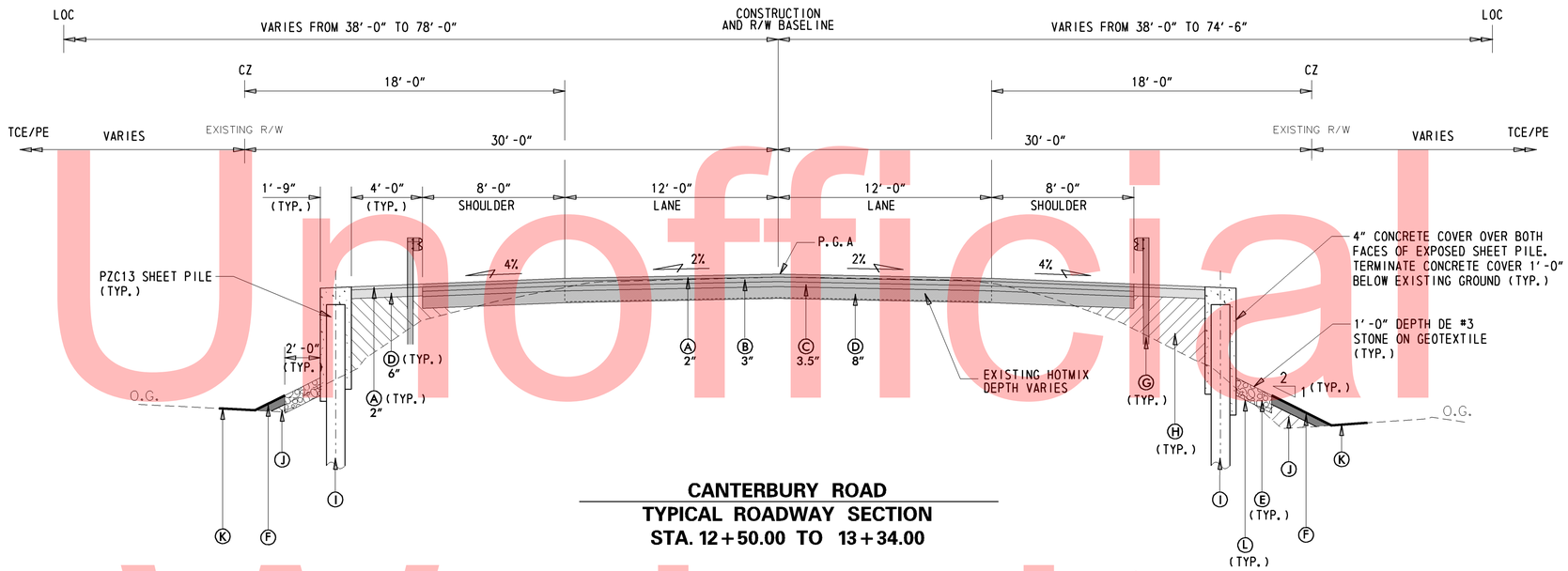

CANTERBURY ROAD
TYPICAL ROADWAY SECTION
STA. 12+50.00 TO 13+34.00

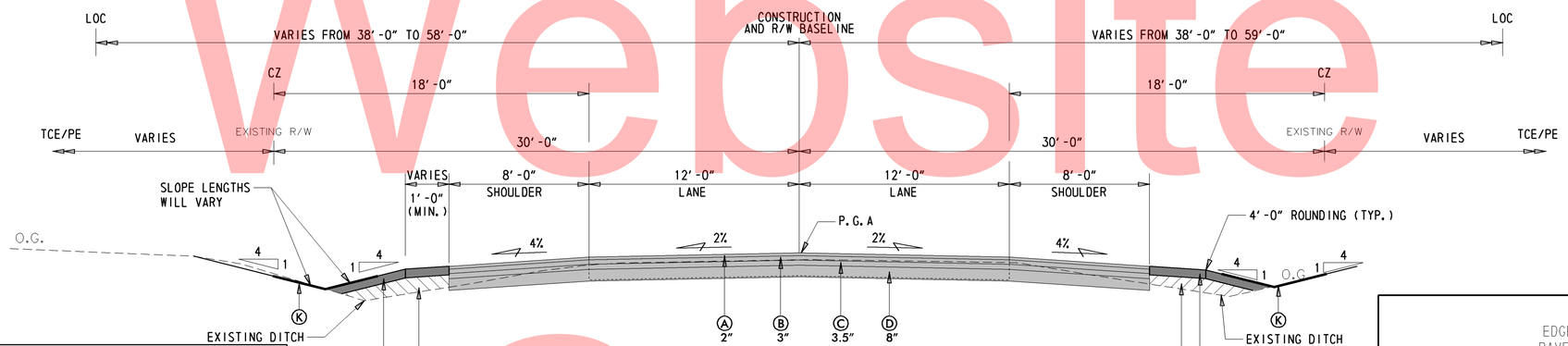

CANTERBURY ROAD
TYPICAL ROADWAY SECTION
STA. 11+00.00 TO 12+50.00
STA. 13+34.00 TO 15+80.00

LEGEND

- (A) ITEM 401804 - BITUMINOUS CONCRETE, SUPERPAVE TYPE C, PG 70-22, 160 GYRATIONS (CARBONATE STONE) (TON)
- (B) ITEM 401813 - BITUMINOUS CONCRETE, SUPERPAVE TYPE B, PG 70-22, 160 GYRATIONS (TON)
- (C) ITEM 401819 - BITUMINOUS CONCRETE, BCBC, PG 64-22, 160 GYRATIONS (TON)
- (D) ITEM 302007 - GABC, TYPE B (C.Y.)
- (E) ITEM 302011 - DELAWARE NO. 3 STONE (TON)
- (F) ITEM 908004 - TOPSOIL, 6" DEPTH (S.Y.)
  ITEM 908019 - STREAMBANK SEED MIX, SEEDING (S.Y.)
- (G) ITEM 720050 - GALVANIZED STEEL BEAM GUARDRAIL, TYPE 1-31 (L.F.)
- (H) ITEM 209003 - BORROW, TYPE C (C.Y.)
- (I) ITEM 622015 - STEEL SHEET PILES, PZC13 (S.F.)
- (J) ITEM 209006 - BORROW, TYPE F (C.Y.)
- (K) ITEM 908020 - EROSION CONTROL BLANKET MULCH (S.Y.)
- (L) ITEM 713003 - GEOTEXTILES, RIPRAP (S.Y.)

MATERIAL	LIFT THICKNESS	
	MINIMUM	MAXIMUM
BITUMINOUS CONCRETE, TYPE 'C'	1.25"	2"
BITUMINOUS CONCRETE, TYPE 'B'	2.25"	4"
BITUMINOUS CONCRETE BASE COURSE	3"	6"
GRADED AGGREGATE BASE COURSE	-	8"

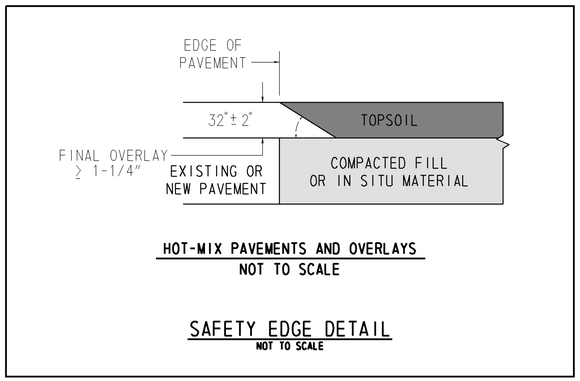

HOT-MIX PAVEMENTS AND OVERLAYS
NOT TO SCALE

SAFETY EDGE DETAIL
NOT TO SCALE

Unofficial Website Copy

W:\MSV8\CELLS\PROJDEV\SB.CEL

DELAWARE DEPARTMENT OF TRANSPORTATION

ADDENDUMS / REVISIONS

SCALE 0 4 8 12 FEET

BR 2-388C ON SR 15 CANTERBURY ROAD OVER WARD BRANCH

CONTRACT	BRIDGE NO.	2-388C
T201107201	DESIGNED BY: GML	
COUNTY		
KENT	CHECKED BY: CAS	

TYPICAL SECTION

SHEET NO. 4
TOTAL SHTS. 20

DATUM REFERENCE:
HORIZONTAL - THIS PROJECT IS REFERENCED TO THE DELAWARE STATE PLANE COORDINATE SYSTEM (NAD 83/91).

VERTICAL - THIS PROJECT IS REFERENCED TO NAVD 88 AND BASED ON THE FOLLOWING STATE OF DELAWARE BENCHMARKS ESTABLISHED BY THE DELAWARE DEPARTMENT OF TRANSPORTATION:

HORIZONTAL / VERTICAL CONTROL DATA					
POINT	STATION	OFFSET	NORTHING	EASTING	ELEVATION
TP #4	13+46.18	17.68	351327.8892	636468.5699	16.27
TP #5	13+03.26	234.64	351145.2375	636343.8465	9.56
TP #6	12+91.79	16.45	351350.3847	636419.0411	16.59
TP #7	10+00.78	15.46	351465.6471	636151.8260	23.41
TP #9	10+68.18	-27.11	351478.3107	636230.5353	22.57
TP #10	12+73.29	-21.43	351392.4901	636416.9154	15.25
TP #11	12+76.08	-216.55	351570.8170	636496.1556	11.64
TP #12	13+71.70	-16.19	351348.9968	636505.3488	16.98

CONSTRUCTION ALIGNMENT CONTROL				
POINT	STATION	OFFSET	NORTHING	EASTING
3000	10+00.00	0.00	351480.1707	636157.1860
3001	15+79.66	0.00	351252.3952	636690.2230

Unofficial Website Copy

Y:\KENT\388\BRIDGE\T201407201\PLANS\CP01.DGN

DELAWARE DEPARTMENT OF TRANSPORTATION

ADDENDUMS / REVISIONS

SCALE 0 30 60 90 FEET

BR 2-388C ON SR 15
CANTERBURY ROAD OVER
WARD BRANCH

CONTRACT T201407201
COUNTY KENT
BRIDGE NO. 2-388C
DESIGNED BY: GML
CHECKED BY: CAS

HORIZONTAL AND VERTICAL CONTROL

SHEET NO. 5
TOTAL SHTS. 20

GUARDRAIL SCHEDULE

NO.	ITEM DESCRIPTION / TYPE	BEGIN STA.	OFFSET	LENGTH
1	END TREATMENT ATTENUATOR, TYPE 1	11+91.56	-22.67	50.00
2	STEEL BEAM GUARDRAIL TYPE 1-31	12+41.56	-20.00	125.00
3	END TREATMENT ATTENUATOR, TYPE 1	13+66.56	-20.00	50.00
4	END TREATMENT ATTENUATOR, TYPE 1	11+74.04	22.67	50.00
5	STEEL BEAM GUARDRAIL, TYPE 1-31	12+24.04	20.00	112.50
6	END TREATMENT ATTENUATOR, TYPE 1	13+36.54	20.00	50.00

RIGHT-OF-WAY MONUMENT SCHEDULE

NO.	TYPE	STATION	OFFSET	NORTHING	EASTING
M-1	CAPPED REBAR	12+72.00	-30.00	351400.878	636419.093
M-2	CAPPED REBAR	13+12.00	-30.00	351385.160	636455.880
M-3	CAPPED REBAR	11+43.00	30.00	351396.390	636276.890
M-4	CAPPED REBAR	14+90.00	30.00	351260.040	636595.980

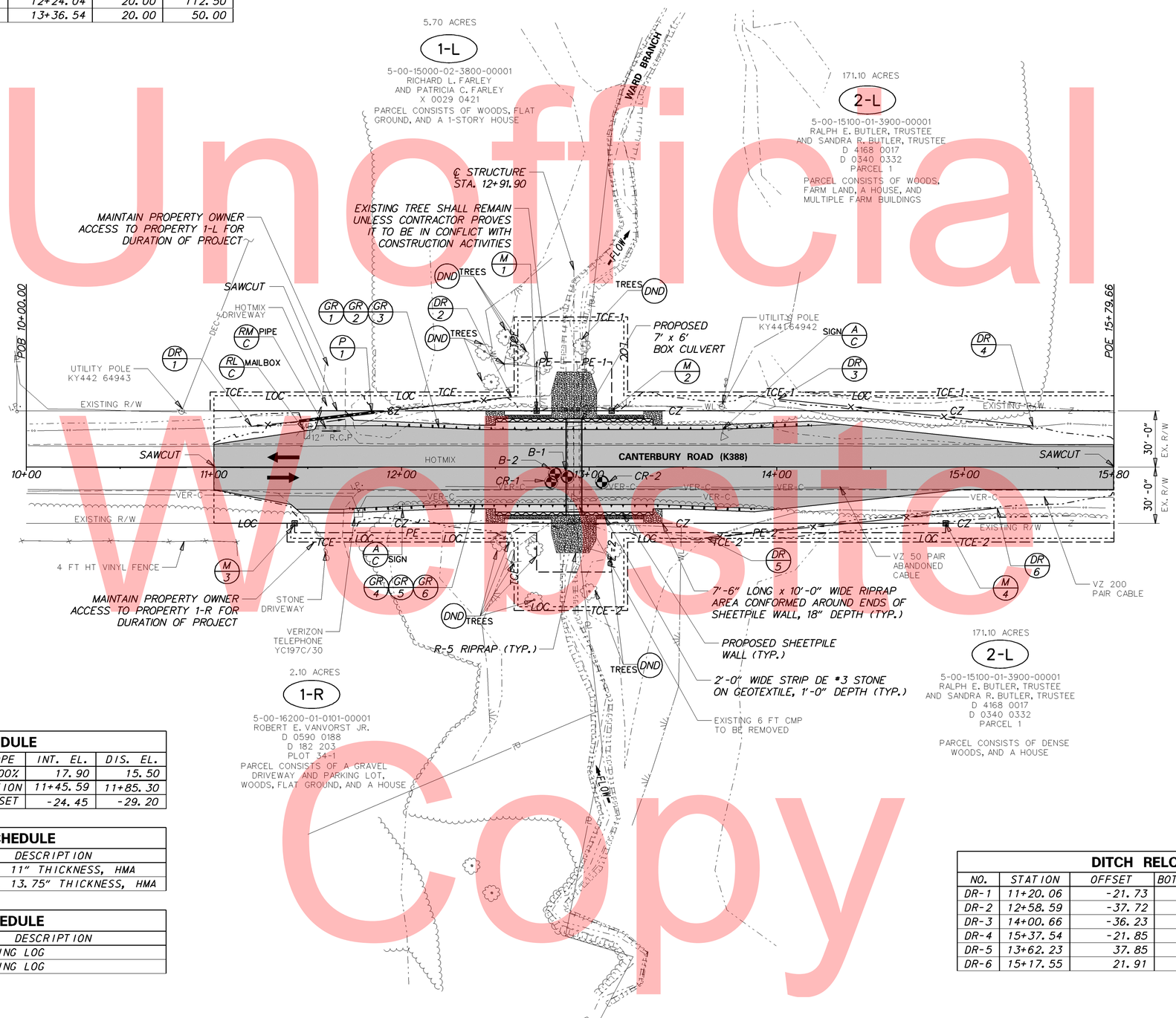

DRAINAGE PIPE SCHEDULE

NO.	SIZE / TYPE	CLASS	LENGTH	SLOPE	INT. EL.	DIS. EL.
P-1	15" R.C.P.	III	40.00	6.00%	17.90	15.50
				STATION	11+45.59	11+85.30
				OFFSET	-24.45	-29.20

ROADWAY CORE SCHEDULE

NO.	STATION	OFFSET	DESCRIPTION
CR-1	12+79.76	8.00	SB LANE, 11" THICKNESS, HMA
CR-2	13+06.76	8.00	SB LANE, 13.75" THICKNESS, HMA

SOIL BORING SCHEDULE

NO.	STATION	OFFSET	DESCRIPTION
B-1	12+88.45	5.20	SEE BORING LOG
B-2	12+81.78	3.64	SEE BORING LOG

DITCH RELOCATION SCHEDULE

NO.	STATION	OFFSET	BOT. ELEV.	WIDTH	FORE SLOPE	BACK SLOPE
DR-1	11+20.06	-21.73	18.58	V-DITCH	3:1	3:1
DR-2	12+58.59	-37.72	10.73	V-DITCH	3:1 TO 2:1	6:1 TO 10:1
DR-3	14+00.66	-36.23	13.70	V-DITCH	3:1	-
DR-4	15+37.54	-21.85	17.58	V-DITCH	3:1 TO 4:1	6:1 TO 3:1
DR-5	13+62.23	37.85	11.84	V-DITCH	2:1	-
DR-6	15+17.55	21.91	17.25	V-DITCH	3:1 TO 4:1	4:1

Unofficial Website Copy

DELAWARE DEPARTMENT OF TRANSPORTATION

ADDENDUMS / REVISIONS

SCALE 0 30 60 90 FEET

BR 2-388C ON SR 15 CANTERBURY ROAD OVER WARD BRANCH

CONTRACT	BRIDGE NO.	2-388C
T201407201	DESIGNED BY: GML	
COUNTY: KENT	CHECKED BY: CAS	

CONSTRUCTION PLAN

SHEET NO. 6 / TOTAL SHTS. 20

Y:\KENT\388\BRIDGE\T201407201\PLANS\CP01.DGN

Type of Curve = Symmetric Parabola
Direction = Sag
Length = 415.77'
L1 = 207.88'
L2 = 207.88'
G1 = -2.02%
G2 = 1.60%
SSD = 510.13'
K = 115.00

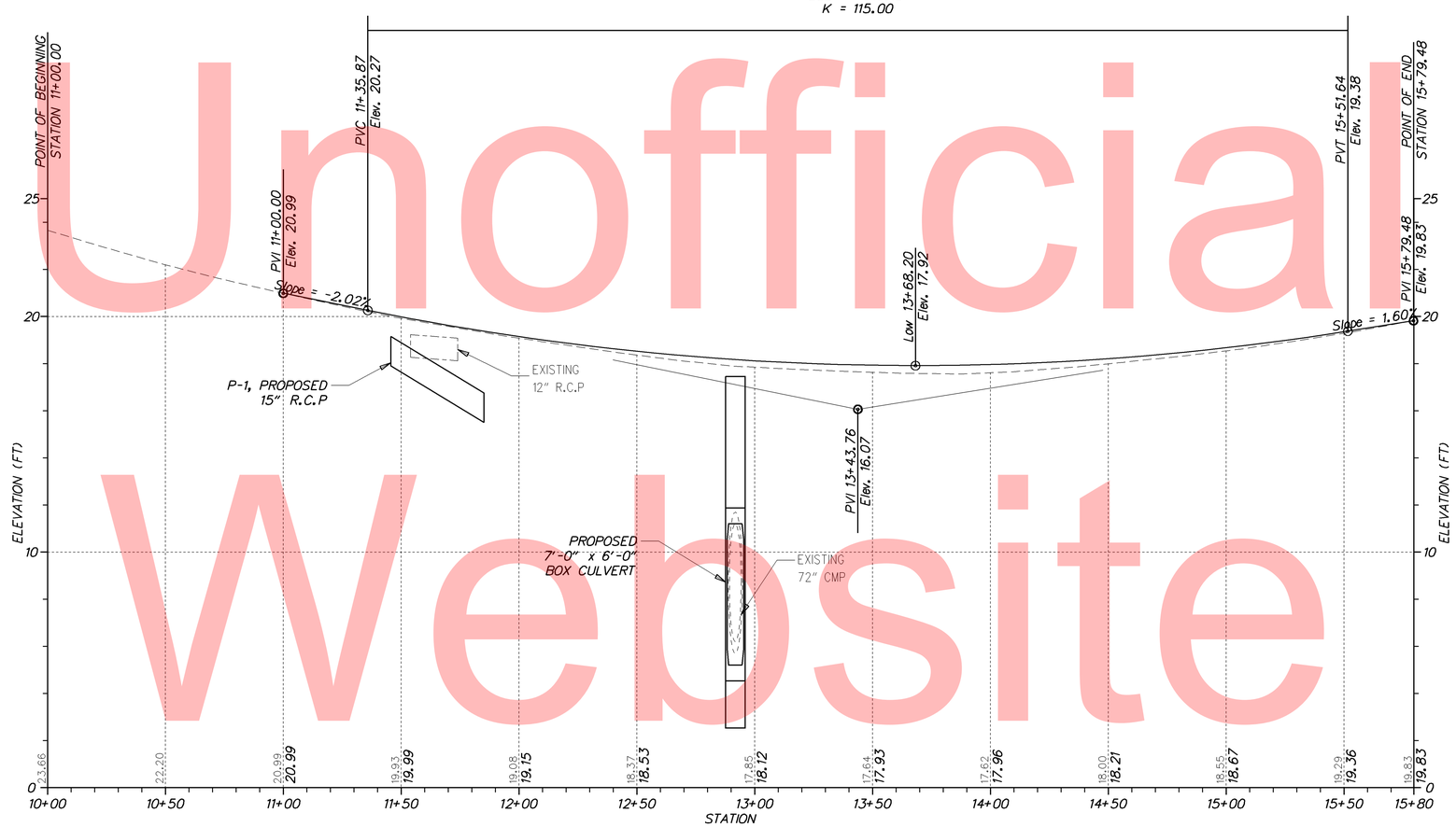

CANTERBURY ROAD, SR 15
M.R.#: K388

Unofficial Website Copy

VERTICAL SCALE FEET 9 6 3 0

W:\MSV8\CELLS\PROJDEV\SB.CEL

DELAWARE DEPARTMENT OF TRANSPORTATION

ADDENDUMS / REVISIONS

SCALE 0 30 60 90 FEET

BR 2-388C ON SR 15 CANTERBURY ROAD OVER WARD BRANCH

CONTRACT	BRIDGE NO.	2-388C
T201407201	DESIGNED BY: GML	
COUNTY		
KENT	CHECKED BY: CAS	

PROFILE

SHEET NO. 7
TOTAL SHTS. 20

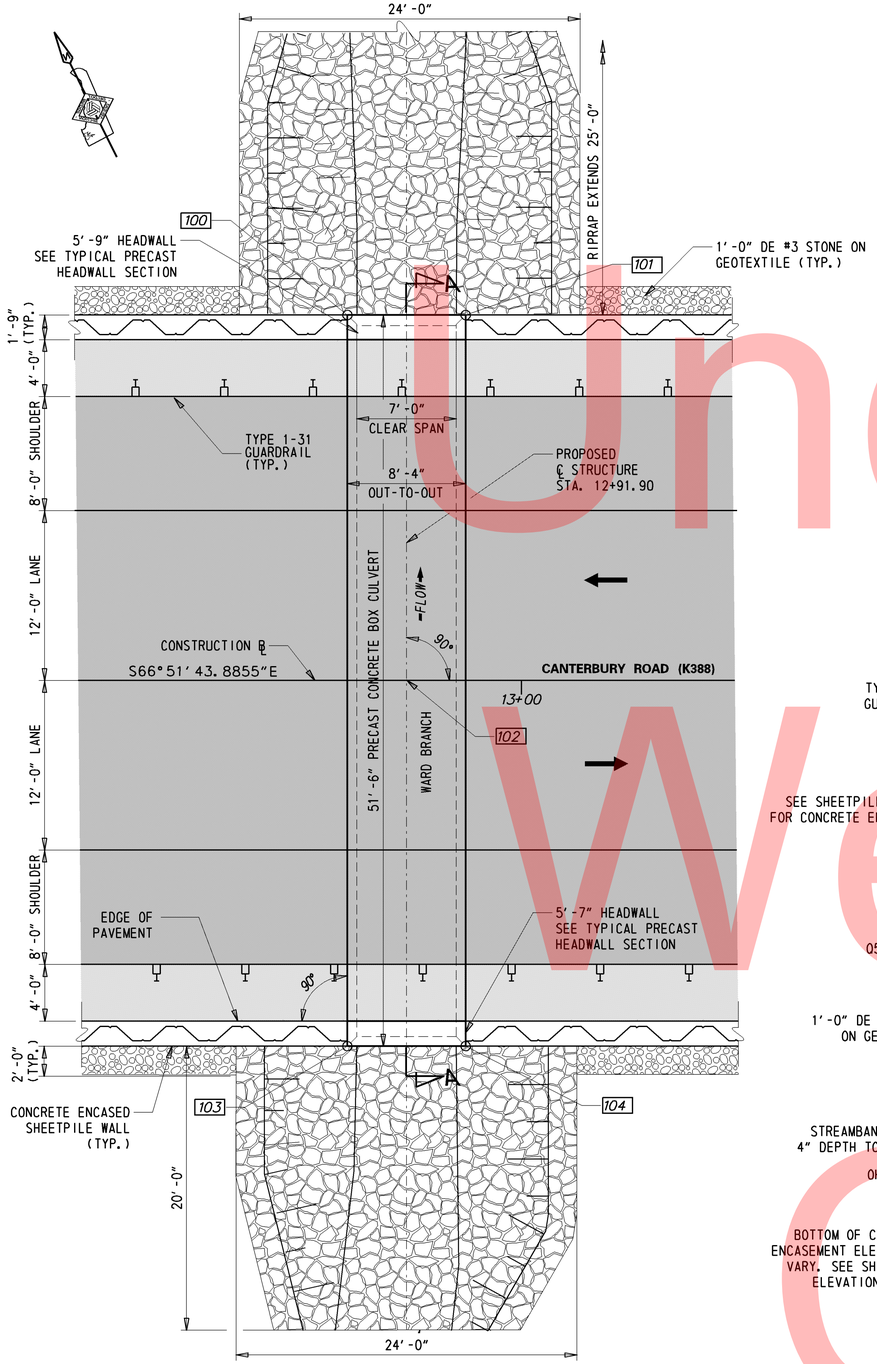

PLAN

1/16" = 1'-0"

WORKING POINTS				
PT.	STATION	OFFSET	NORTHING	EASTING
100	12+87.74	-25.75	351390.78	636431.90
101	12+96.07	-25.75	351387.51	636439.56
102	12+91.90	0.00	351368.82	636427.04
103	12+87.74	25.75	351343.42	636411.66
104	12+96.07	25.75	351340.15	636419.32

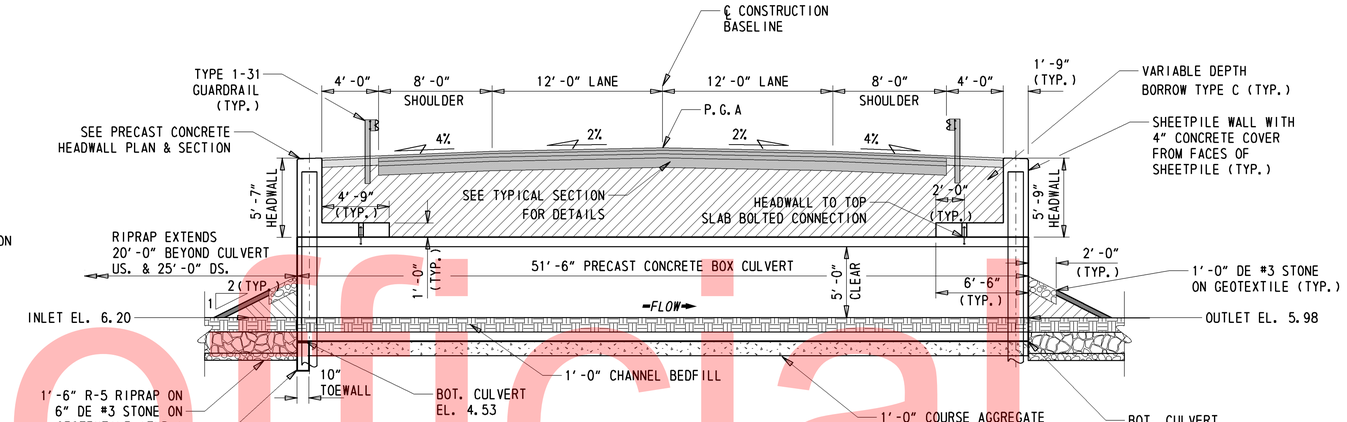

SECTION (A-A)

3/16" = 1'-0"

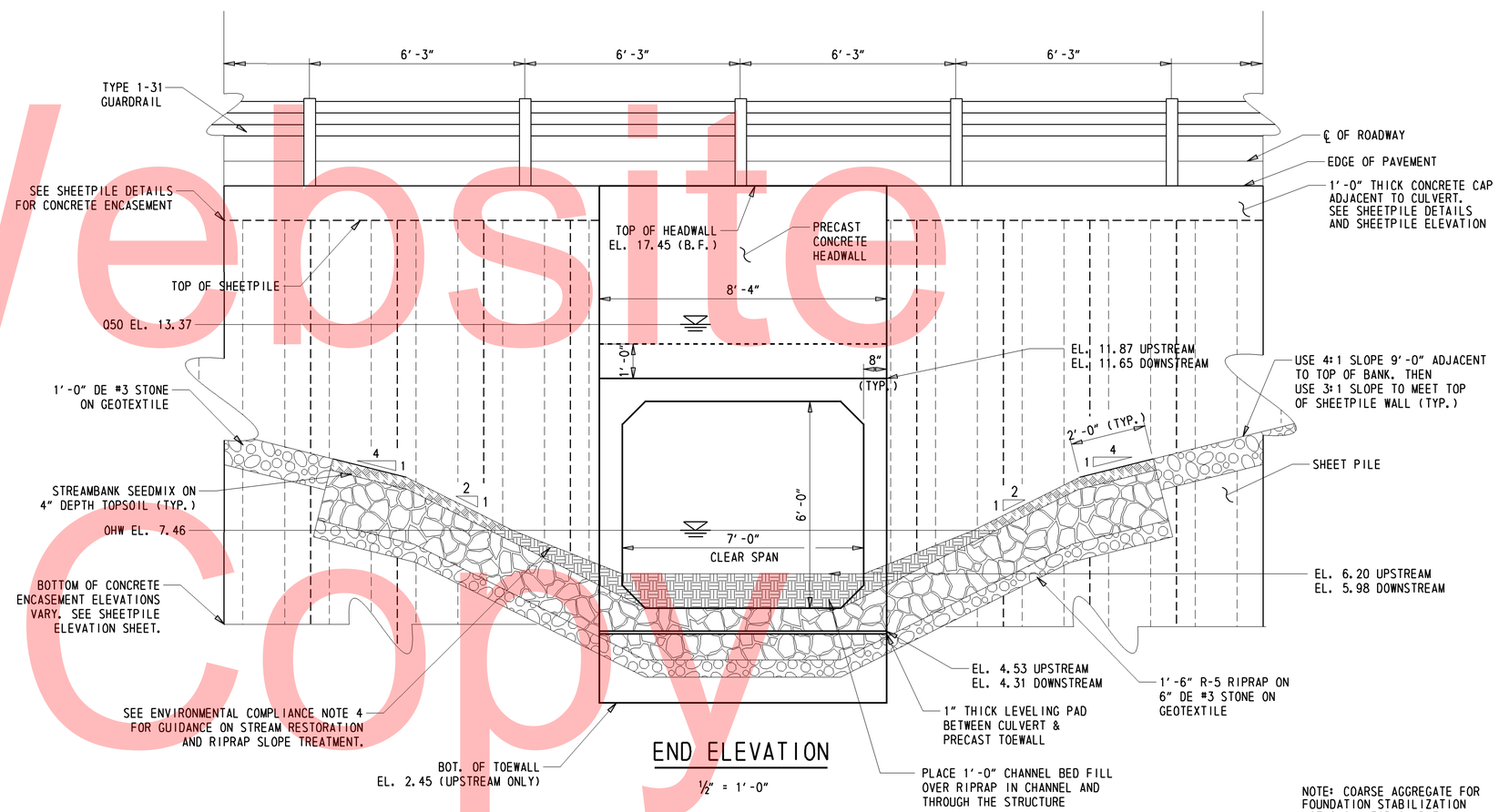

END ELEVATION

1/2" = 1'-0"

NOTE: COARSE AGGREGATE FOR FOUNDATION STABILIZATION NOT SHOWN FOR CLARITY

Unofficial Website Copy

Y:\KENT2\Bridge\T201407201\Plans\pe01.dgn

DELAWARE DEPARTMENT OF TRANSPORTATION	ADDENDUMS / REVISIONS	SCALE: AS NOTED	BR 2-388C ON SR 15 CANTERBURY ROAD OVER WARD BRANCH	CONTRACT T201407201	BRIDGE NO. 2-388C	BRIDGE PLAN, SECTION, & ELEVATION	SHEET NO. 8
				COUNTY KENT	DESIGNED BY: GML		TOTAL SHTS. 20
					CHECKED BY: CAS		

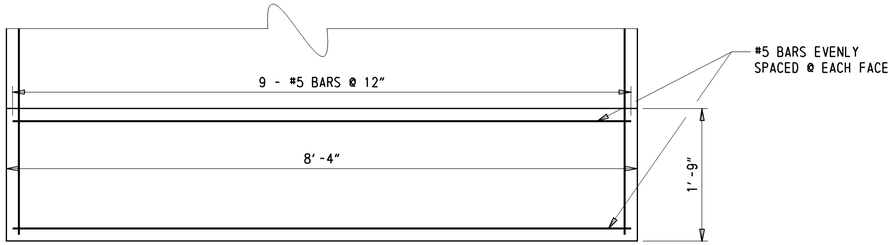

TYPICAL PRECAST HEADWALL PLAN

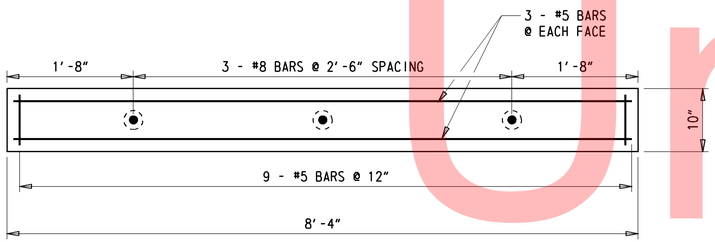

TYPICAL PRECAST TOEWALL PLAN

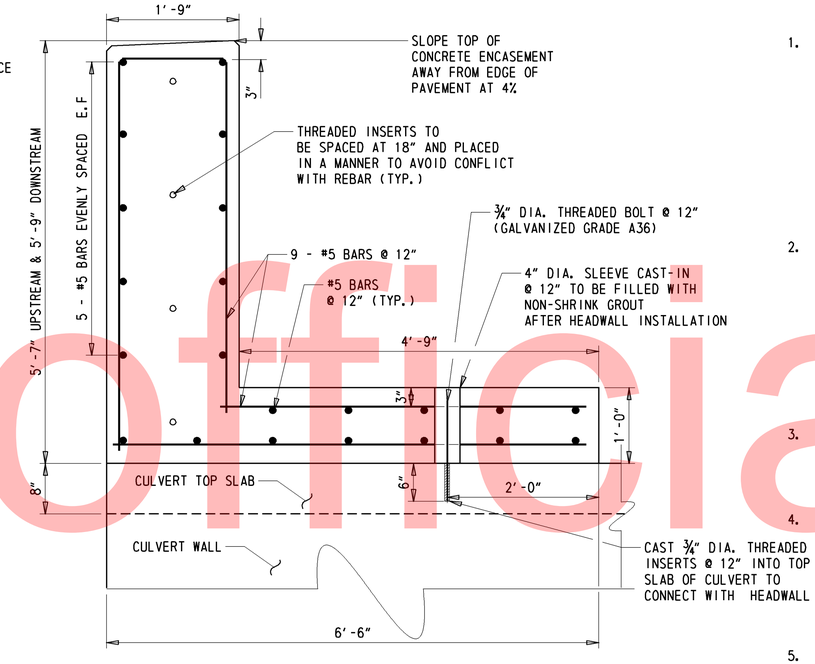

TYPICAL PRECAST HEADWALL SECTION

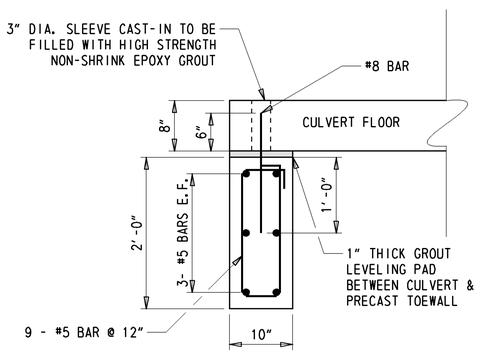

TYPICAL PRECAST TOEWALL SECTION

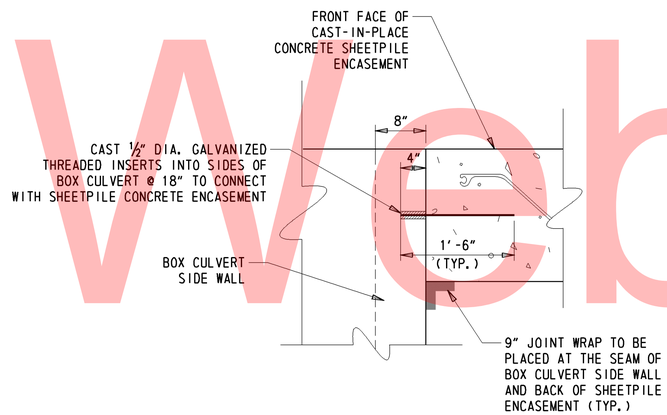

CULVERT WALL CONNECTION

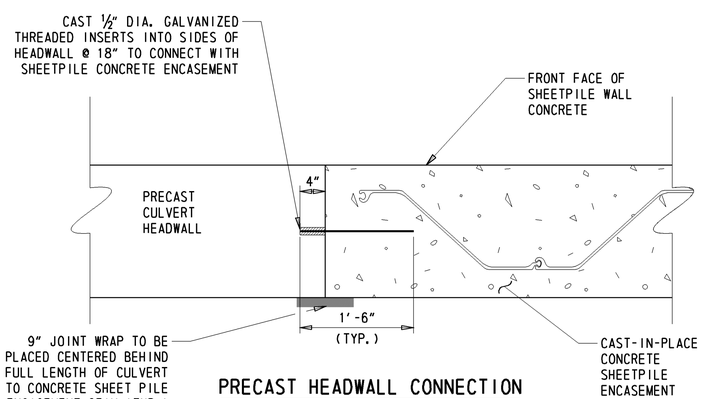

PRECAST HEADWALL CONNECTION

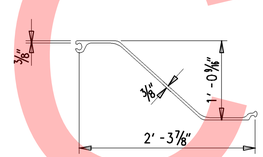

SHEETPILE DETAIL

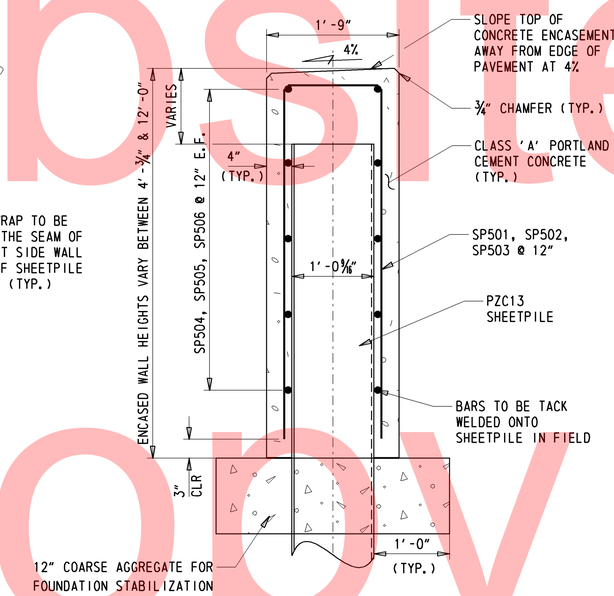

SHEETPILE DETAIL

NOTE: REFER TO THE REINFORCING BAR LIST ON THE SHEETPILE PLAN FOR BAR SPECIFICATIONS.

PRECAST ELEMENT NOTES:

1. DESIGN PLANS / WORKING DRAWINGS
   INFORMATION PERTAINING TO THE PRECAST REINFORCED CONCRETE BOX CULVERT SECTIONS IS INTENDED TO SERVE AS AN INDICATION OF THE TYPE OF CONSTRUCTION ACCEPTABLE FOR USE. THE CONTRACTOR WILL BE REQUIRED TO PREPARE AND SUBMIT FOR APPROVAL A COMPLETE SET OF DETAILED SHOP DRAWINGS FOR THE PRECAST CONCRETE UNITS THEY PROPOSE TO FURNISH. THE SHOP DRAWINGS SHALL INCLUDE:
   A. AN OVERALL PLAN SHOWING ALL UNITS TOGETHER AND DETAILS OF EACH TYPE OF UNIT.
   B. A PLAN VIEW OF REINFORCEMENT FOR ANY IRREGULAR SHAPED SECTIONS (SKEWED, CURVED, ETC.)
   C. REINFORCING BAR LIST
   D. BILL OF MATERIALS INCLUDING ALL ACCESSORIES
   E. METHOD AND SEQUENCE OF POST-TENSIONING

2. PRECAST ELEMENTS, ACCESSORIES AND INSTALLATION
   ALL PRECAST BOX SECTIONS SHALL CONFORM TO ASTM C1577 FOR DESIGN REINFORCEMENT WHICH IS NOT SHOWN ON THIS SHEET. PAYMENT FOR ITEM 602736 - PRECAST CONCRETE CULVERT SHALL INCLUDE:
   A. ALL PRECAST ELEMENTS FOR THE RESPECTIVE ITEM (BOX CULVERT, TOEWALLS, AND HEADWALLS UNDER ITEM 602736).
   B. ALL ASSOCIATED REINFORCEMENT.
   C. ALL ACCESSORIES (INCLUDING, BUT NOT LIMITED TO, CONCRETE FINISH, POST-TENSIONING TENDONS, CONNECTION PLATES, GROUT, JOINT WRAP, THREADED INSERTS) MENTIONED IN THE FOLLOWING NOTES UNLESS NOTED OTHERWISE.
   D. DELIVERY AND INSTALLATION OF ALL PRECAST ELEMENTS AND ALL ACCESSORIES.

3. MISCELLANEOUS CONCRETE NOTES
   A. ALL EXPOSED SURFACES SHALL BE PROTECTED WITH A WATER MISCIBLE, PENETRATING SILANE SEALER.
   B. ALL EXPOSED EDGES SHALL BE CHAMFERED ¾" UNLESS OTHERWISE NOTED.

4. BOX CULVERT POST-TENSIONING
   THE PRECAST BOX CULVERT SECTIONS SHALL BE POST-TENSIONED TOGETHER WITH A MINIMUM OF FOUR POST-TENSIONING TENDONS. THE BOX CULVERT SHALL BE POST-TENSIONED SUCH THAT THE NEOPRENE GASKETS ARE COMPRESSED ALL AROUND AND THERE IS A ½" MAXIMUM GAP BETWEEN SECTIONS. MAXIMUM POST-TENSIONING FORCE SHALL BE 28,900 LBS. POST- TENSIONING DETAILS (PLACEMENT, SEQUENCE OF TENSIONING, ETC.) SHALL BE SHOWN IN THE SUBMITTED SHOP DRAWINGS. ALL POCKETS AND DUCTS FOR POST-TENSIONING SHALL BE FILLED WITH NON-SHRINK GROUT.

5. SHEETPILE WALL CONNECTIONS
   A. THE SHEETPILE WALL SHALL BE POSITIVELY CONNECTED TO THE BOX CULVERT USING THE CONNECTIONS AS SHOWN ON THE PLANS. THE HEADWALL AND CULVERT SHALL BE CONNECTED TO THE SHEET PILE WALL USING ½" THREADED INSERTS PRECAST INTO THE SIDES OF THE HEADWALL AND CULVERT SIDE WALL. THE CONNECTION BETWEEN THE PRECAST HEADWALL AND TOP CULVERT SLAB SHALL BE CONNECTED USING ¾" THREADED INSERTS PRECAST INTO THE CULVERT TOP SLAB AS SHOWN ON THE PLANS. ALL BARS IN SHEETPILE ARE INCIDENTAL TO ITEM 622015 - PERMANENT STEEL SHEET PILES, PZC 13. ALTERNATIVE CONNECTION DETAILS SHALL BE SHOWN IN THE SUBMITTED SHOP DRAWINGS.

6. JOINTS BETWEEN PRECAST SECTIONS
   A. NEOPRENE GASKETS SHALL BE PROVIDED AT THE JOINTS BETWEEN ALL PRECAST UNITS IN ORDER TO MAKE THE JOINTS WATERTIGHT. AFTER INSTALLATION, THE GASKETS SHALL BE COMPRESSED SUCH THAT GAPS ARE NOT VISIBLE.
   B. ALL JOINTS BETWEEN PRECAST BOX CULVERT SECTIONS SHALL BE TONGUE AND GROOVE.
   C. THE LOCATIONS OF THE JOINTS IN THE BOX CULVERT SHALL BE DETERMINED BY THE PRECASTER AND SUBMITTED IN THE SHOP DRAWINGS FOR APPROVAL.
   D. THE REINFORCEMENT SHALL HAVE 2" COVER AT THE END OF EACH SECTION AND MEET OR EXCEED THE MINIMUM AREA OF STEEL PER FOOT DENOTED IN THE PLANS.
   E. ALL JOINT EXTERIORS SHALL BE COVERED WITH A MINIMUM 9" WIDE WRAP CENTERED ON THE JOINT AS PER THE SPECIAL PROVISION FOR ITS RESPECTIVE ITEM.

7. TOEWALLS
   A. TOEWALLS SHALL BE PLACED BENEATH THE BOTTOM SLAB OF THE CULVERT AT THE INLET AND CONNECTED BY DOWELS GROUTED INTO THE BOTTOM SLAB AS SHOWN.
   B. THE 1" GROUT LEVELING PAD SHALL BE PLACED IMMEDIATELY PRIOR TO PLACEMENT OF THE CULVERT SECTION.
   C. COARSE AGGREGATE PLACED BENEATH THE CULVERT SHALL BE CONTAINED IN PLACE (BY FORMWORK OR OTHER ACCEPTABLE MEANS) WHILE ADJACENT EXCAVATIONS ARE COMPLETED. ANY VOIDS BETWEEN THE BOTTOM SLAB OF THE CULVERT AND THE COARSE AGGREGATE SHALL BE FILLED WITH FLOWABLE FILL PRIOR TO ANY BACKFILLING. PAYMENT FOR FLOWABLE FILL IS INCIDENTAL TO ITEM 602736 - PRECAST CONCRETE CULVERT.

SHEET PILE NOTES:

1. PZC SHAPES ARE DEPICTED IN THESE DETAILS. SCZ SHAPES ARE ALSO ACCEPTABLE FOR USE. IF SCZ SHAPES ARE PROPOSED IN LIEU OF PZC SHAPES, THE CONTRACTOR SHALL SUBMIT SHOP DRAWINGS SHOWING THE ALTERNATE LAYOUT, CORNER PIECES, ETC FOR APPROVAL. THE SECTION MODULUS FOR THE ALTERNATE SHAPES SHALL BE HIGHER THAN SECTION MODULUS OF PZC13.
2. SHEET PILES SHALL BE DRIVEN TO ELEVATIONS SHOWN ON THE SHEET PILE ELEVATION SHEET.
3. ALL STEEL SHEET PILES AND FABRICATED PIECES SHALL CONFORM TO ASTM A572 GRADE 50.
4. ALL CONNECTION UNITS SHALL BE COMPATIBLE WITH THE UNITS THEY CONNECT, PERTAINING TO THE ASTM DESIGNATIONS. FOR PAYMENT PURPOSES, THE CONNECTIONS UNITS SHALL BE TREATED AS THE ADJACENT UNITS OF SHEET PILING.
5. SHEET PILES SHALL BE ORDERED IMMEDIATELY UPON AWARD OF THE PROJECT.

Unofficial Website Copy

NORTH SHEET PILE WORKING POINTS				
PT.	STATION	OFFSET	NORTHING	EASTING
301	12+50.00	-24.00	351404.00	636396.51
302	12+50.00	-25.75	351405.64	636397.18
303	12+87.74	-25.75	351390.78	636431.90
304	12+87.74	-24.00	351389.18	636431.21
305	12+96.07	-25.75	351387.51	636439.56
306	12+96.07	-24.00	351385.90	636438.87
307	13+34.00	-25.75	351372.60	636474.44
308	13+34.00	-24.00	351370.99	636473.75

SOUTH SHEET PILE WORKING POINTS				
PT.	STATION	OFFSET	NORTHING	EASTING
201	12+50.00	24.00	351359.87	636377.65
202	12+50.00	25.75	351358.25	636376.96
203	12+87.74	25.75	351343.44	636411.64
204	12+87.74	24.00	351345.04	636412.35
205	12+96.07	25.75	351340.15	636419.32
206	12+96.07	24.00	351341.76	636420.01
207	13+34.00	25.75	351325.25	636454.20
208	13+34.00	24.00	351326.86	636454.89

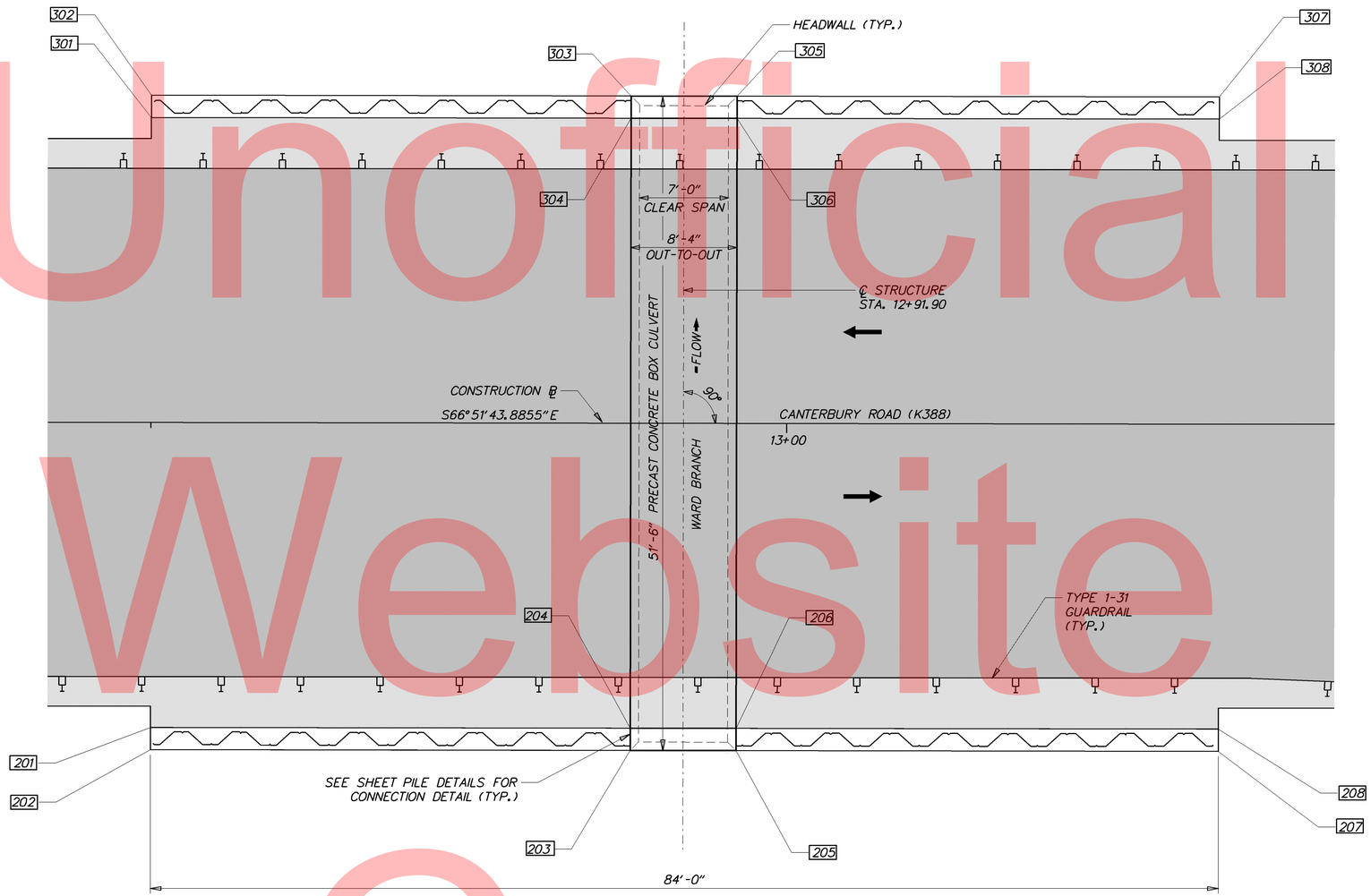

PLAN
3/16"=1'-0"

REINFORCING BAR LIST											
SPECIFICATIONS					BENDING DIMENSIONS (FT-IN / QTR. IN)						
QTY.	SIZE	LENGTH	MARK	TYPE	A	B	C	D	E	G	
64	5	9-72	SP501	17		4-20	1-32	4-20			
44	5	16-52	SP502	17		7-100	1-32	7-100			
36	5	23-112	SP503	17		11-40	1-32	11-40			
32	5	16-20	SP504	STR			16-20				
64	5	11-70	SP505	STR			11-70				
96	5	9-00	SP506	STR			9-00				

Unofficial Website Copy

DELAWARE
DEPARTMENT OF TRANSPORTATION

ADDENDUMS / REVISIONS

SCALE: AS NOTED

BR 2-388C ON SR 15
CANTERBURY ROAD
OVER WARD BRANCH

CONTRACT	BRIDGE NO.	2-388C
T201407201	DESIGNED BY: GML	
COUNTY		
KENT	CHECKED BY: CAS	

SHEET PILE PLAN

SHEET NO. 10
TOTAL SHTS. 20

Y:\KENT?\BRIDGE\T201407201\PLANS\DT01.DGN

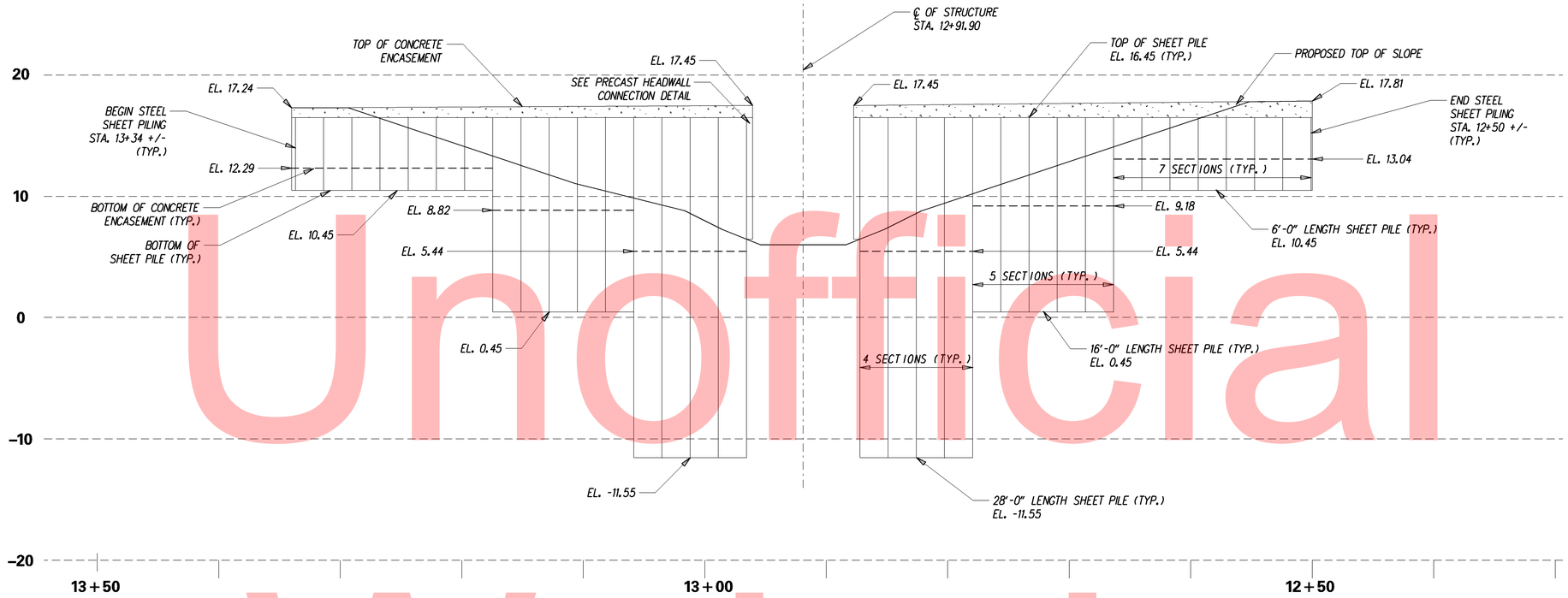

NORTH ELEVATION

1/8" = 1' -0"

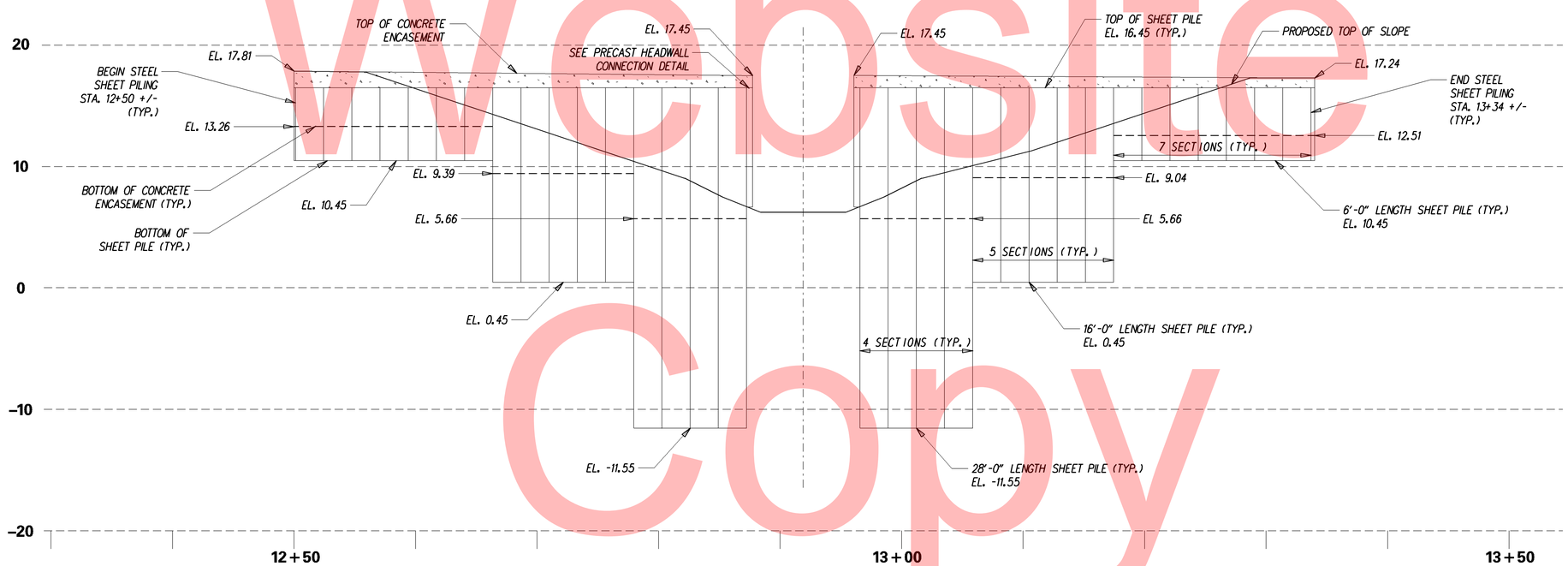

SOUTH ELEVATION

1/8" = 1' -0"

Unofficial Website Copy

DELAWARE DEPARTMENT OF TRANSPORTATION	ADDENDUMS / REVISIONS	SCALE: AS NOTED	BR 2-388C ON SR 15 CANTERBURY ROAD OVER WARD BRANCH	CONTRACT T201407201	BRIDGE NO. 2-388C	SHEET PILE ELEVATION	SHEET NO. 11
				COUNTY KENT	DESIGNED BY: GML		TOTAL SHTS. 20
					CHECKED BY: CAS		

Y:\KENT\388\BRIDGE\T201407201\PLANS\DT02.DGN

BORING: B-1 | **DATE DRILLED:** 12/11/13
STATION: 12+88.45 | **OFFSET:** 5.20 | **ELEVATION:** | **NORTHING:** | **EASTING:**
COMMENTS: N/A

SAMPLE INFORMATION

NO.	DEPTH	BLOWS /6"	DESCRIPTION	CLASS /G.I.	REMARKS
1	0.0	4	MOIST MEDIUM DENSE DARK GRAY COARSE SAND AND FINE GRAVEL W/SOME FINE SAND AND SILT.	A-1-B	
	1.0	9			
2	1.0	3	MOIST LOOSE ORANGISH BROWN FINE TO COARSE SAND W/SOME SILT, TRACE OF FINE GRAVEL.	A-2-4(0)	
		4			
		4			
	2.0	4			
3	2.0	3	MOIST VERY LOOSE BROWN FINE TO COARSE SAND W/SOME SILT, TRACE OF FINE GRAVEL.	A-2-4(0)	
		2			
		2			
	4.0	3			
4	4.0	1	MOIST VERY LOOSE GRAY FINE TO COARSE SAND W/SOME SILT AND FINE GRAVEL.	A-1-B	
		1			
		1			
	6.0	1			
5	6.0	1	WET VERY LOOSE ORANGE FINE TO COARSE SAND W/SOME SILT, TRACE OF FINE GRAVEL.	A-2-4(0)	
		0			
		1			
	8.0	1			
~~6~~	8.0	1	WET VERY LOOSE ORANGE FINE TO COARSE SAND W/TRACE SILT AND FINE GRAVEL.	A-3	
		1			
		1			
	10.0	2			
7	10.0	0	WET MEDIUM DENSE ORANGE FINE TO COARSE SAND W/SOME FINE GRAVEL, TRACE OF SILT.	A-1-B	
		1			
		12			
	12.0	7			
8	12.0	4	WET FIRM ORANGE FINE SANDY SILT W/TRACE COARSE SAND.	A-4(0)	
		4			
		3			
	14.0	3			BOTTOM OF CULVERT
9	14.0	1	WET VERY LOOSE GRAY SILTY FINE SAND W/TRACE COARSE SAND AND FINE GRAVEL.	A-2-4(0)	
		1			
		2			
	16.0	1			
10	16.0	1	WET VERY LOOSE GRAY FINE SAND W/SOME COARSE SAND, TRACE OF SILT AND FINE GRAVEL.	A-3	
		1			
		2			
	18.0	3			BOTTOM OF COARSE AGGREGATE FOR FOUNDATION STABILIZATION (LIMITS OF UNDERCUTTING)
11	18.0	1	WET VERY LOOSE DARK GRAY FINE SAND W/SOME SILT, TRACE OF COARSE SAND.	A-2-4(0)	
		1			
		2			
	23.0	4			
12	23.0	3	WET LOOSE GRAY SILTY FINE SAND W/TRACE COARSE SAND.	A-2-4(0)	
		4			
		5			
	28.0	7			
13	28.0	3	WET MEDIUM DENSE GRAY FINE SAND W/TRACE COARSE SAND AND SILT.	A-3	
		9			
		16			
	33.0	28			
	33.0		END BORING		
	35.0				

BORING: B-2 | **DATE DRILLED:** 12/11/13
STATION: 12+81.78 | **OFFSET:** 3.64 | **ELEVATION:** | **NORTHING:** | **EASTING:**
COMMENTS: N/A

SAMPLE INFORMATION

NO.	DEPTH	BLOWS /6"	DESCRIPTION	CLASS /G.I.	REMARKS
1	0.0	3	NO SIEVE ANALYSIS - INDICATION OF MOIST MEDIUM DENSE ORANGE FINE TO COARSE SAND W/ SOME SILT.	A-2-4(0)	
		16			
	0.5	10			
2	0.5	5	MOIST LOOSE ORANGE COARSE TO FINE SAND W/SOME SILT, TRACE OF FINE GRAVEL.	A-1-B	
		4			
		4			
	2.0	3			
3	2.0	2	MOIST VERY LOOSE ORANGE COARSE TO FINE SAND W/SOME SILT, TRACE OF FINE GRAVEL.	A-1-B	
		2			
		2			
	4.0	2			
4	4.0	1	WET VERY LOOSE ORANGE COARSE TO FINE SAND W/SOME SILT, TRACE OF FINE GRAVEL.	A-2-4(0)	
		1			
		1			
	6.0	1			
~~5~~	6.0	1	WET VERY LOOSE ORANGE COARSE TO FINE SAND W/SOME SILT, TRACE OF FINE GRAVEL.	A-1-B	
		0			
		1			
	8.0	1			
6	8.0	WH	SATURATED VERY LOOSE GRAY FINE TO COARSE SAND W/SOME SILT, TRACE OF FINE GRAVEL.	A-2-4(0)	
		1			
	10.0	3			
7	10.0	4	SATURATED LOOSE ORANGE FINE TO COARSE SAND W/SOME SILT AND FINE GRAVEL.	A-2-4(0)	
		5			
		3			
	12.0	3			
8	12.0	2	SATURATED LOOSE ORANGE FINE SAND W/SOME SILT AND COARSE SAND, TRACE OF FINE GRAVEL.	A-2-4(0)	
		2			
		3			
	14.0	4			BOTTOM OF CULVERT
9	14.0	2	SATURATED SOFT GRAY FINE SANDY SILT W/SOME CLAY, TRACE OF COARSE SAND AND FINE GRAVEL.	A-4(0)	
		2			
		1			
	16.0	2			
10	16.0	1	SATURATED VERY LOOSE GRAY FINE SAND W/SOME SILT, TRACE OF COARSE SAND.	A-2-4(0)	
		1			
		1			
	18.0	1			BOTTOM OF COARSE AGGREGATE FOR FOUNDATION STABILIZATION (LIMITS OF UNDERCUTTING)
11	18.0	1	SATURATED VERY LOOSE BROWN FINE SAND W/SOME SILT, TRACE OF COARSE SAND AND FINE GRAVEL.	A-2-4(0)	
		1			
		1			
	23.0	2			
12	23.0	2	SATURATED LOOSE GRAY FINE SAND W/SOME SILT, TRACE OF COARSE SAND.	A-2-4(0)	
		2			
		3			
	28.0	15			
13	28.0	5	SATURATED VERY DENSE GRAY FINE SAND W/SOME SILT AND COARSE SAND.	A-3	
		13			
		32			
	33.0	47			
	33.0		END BORING		
	35.0				

Unofficial Website Copy

ENVIRONMENTAL COMPLIANCE NOTES

1. GENERAL NOTES:

A. THE PURPOSE OF THIS SHEET IS TO IDENTIFY THOSE ITEMS ASSOCIATED WITH ENVIRONMENTAL COMPLIANCE. IMPACT CALCULATIONS ARE FOR THE AGENCY PERMIT REPORTING PURPOSES ONLY AND ARE NOT TO BE USED FOR BIDDING PURPOSES.

B. IF A DEPARTURE FROM THE APPROVED PLANS (WHICH WOULD AFFECT ANY NATURAL AND/OR CULTURAL RESOURCES) IS NECESSARY, THE ENVIRONMENTAL STUDIES SECTION SHALL BE CONTACTED AT (302)760-2264 TO ALLOW FOR COORDINATION WITH THE APPROPRIATE RESOURCE AGENCIES AND APPROVAL.

C. USE OF THIS SHEET DOES NOT ALLEVIATE THE CONTRACTOR'S RESPONSIBILITY TO COMPLY WITH ALL CONDITIONS SET FORTH IN THE ENVIRONMENTAL STATEMENT AND PERMITS.

2. NATURAL RESOURCE ISSUES:

A. PERMIT REQUIREMENTS/APPROVALS*:
U.S. ARMY CORPS OF ENGINEERS (COE): NWP 3(a) AND (c) (NO PCN)
DNREC - WETLANDS & SUBAQUEOUS LANDS (WLSL): PROJECT CONSISTENT WITH DEL. CODE CH. 72, SECTION 7217, SPECIAL EXEMPTION (b).
DNREC - WATER QUALITY (WQC) & COASTAL ZONE CONSISTENCY (CZM): ISSUED (PROJECT IS NOT LOCATED IN CRW)

* THE PERMITS/APPROVALS LISTED ARE THOSE REQUIRED FOR THIS PROJECT. THE ENVIRONMENTAL STUDIES SECTION IS RESPONSIBLE FOR COORDINATING AND/OR OBTAINING THIS APPROVAL.

B. CONSTRUCTION RESTRICTIONS:
FISHERIES - NONE
ENDANGERED SPECIES - NONE
MIGRATORY BIRDS - NONE

3. CULTURAL RESOURCE ISSUES:
A. NONE (PROJECT IS CONSISTENT WITH STIPULATION II. B. 2 OF PROGRAMMATIC AGREEMENT)

LEGEND

- PERMANENT IMPACT AREA
- TEMPORARY IMPACT AREA
- CREATION AREA
- POHW — PROPOSED ORDINARY HIGH WATER
- WL — WETLAND BOUNDARY
- OHW/WL — ORD. HIGH WATER / WETLAND

XX / XX — IMPACT AREA TYPE ID. (SEE BELOW) / IMPACT AREA ID. AND/OR NUMBER

O = OPEN WATER IMPACT
W = WETLAND IMPACT
T = TEMPORARY IMPACT
C = CREATION AREA

4. STREAM RESTORATION AND SLOPE RIPRAP TREATMENT

A. THE CONTRACTOR SHALL FOLLOW THE SPECIAL PROVISIONS OF ITEM *712531 - CHANNEL BED FILL IN REGARDS TO THE SALVAGING OF ON-SITE NATURAL STREAM BOTTOM MATERIAL OR THE FURNISHING OF OFF-SITE MATERIAL. ALL RIPRAP IN THE CHANNEL BOTTOM (I.E. BELOW THE WATER LINE) SHALL BE RECESSED ONE FOOT BELOW STREAM BED ELEVATION AND CHOKED WITH BORROW TYPE 'B' SO THAT ALL OF THE VOIDS IN THE RIPRAP ARE FILLED WITH MATERIAL. PAYMENT UNDER ITEM *209002 - BORROW TYPE 'B'. THE RIPRAP SHALL THEN BE COVERED WITH 12" CHANNEL BED FILL TO MATCH EXISTING ELEVATIONS. PAYMENT UNDER ITEM *712531 - CHANNEL BED FILL.

B. OTHER AREAS OF THE CHANNEL BOTTOM AFFECTED BY CONSTRUCTION (INCLUDING, BUT NOT LIMITED TO, THE LOCATION OF SUMP PITS, STABILIZED OUTFALLS, TEMPORARY PIPES AND/OR SANDBAG DIKES AND DIVERSIONS) SHALL BE RESTORED TO EXISTING CONDITIONS. ANY CAVITIES OR SCOUR HOLES RESULTING FROM CONSTRUCTION ACTIVITIES SHALL BE FILLED WITH CHANNEL BED FILL. PAYMENT UNDER ITEM *712531 - CHANNEL BED FILL.

C. WHEN ALL EROSION AND SEDIMENT CONTROL MEASURES ARE REMOVED AND THE STREAM RETURNS TO ITS NATURAL FLOW CONDITIONS, THE FLOW MUST REMAIN ABOVE GROUND AND ABOVE THE RIPRAP (I.E. THE FLOW CANNOT BE "LOST" IN THE RIPRAP OR BENEATH THE STRUCTURE). IF THIS IS NOT ACHIEVED, THE CONTRACTOR WILL BE REQUIRED TO TAKE CORRECTIVE ACTION AT THE CONTRACTOR'S EXPENSE.

D. ALL RIPRAP ON THE STREAM BANK, OUTSIDE THE CHANNEL BED, SHALL BE CHOKED WITH DELAWARE *57 STONE, FILLED WITH TOPSOIL, AND SEEDED. PLACE JUST ENOUGH CHOKE MATERIAL TO PREVENT THE LOSS OF TOPSOIL THROUGH THE RIPRAP, AND THEN FINISH FILLING THE VOIDS WITH TOPSOIL SO THAT THE RIPRAP PEAKS ARE BARELY VISIBLE. AN ADDITIONAL 4-INCH TOPSOIL LAYER SHALL BE PLACED ON TOP OF THE RIPRAP. SLOPE SEEDING SHALL BE WITH ITEM *908019 - STREAMBANK SEED MIX. FOLLOWING THE SEEDING OPERATION, ITEM * 908020 - EROSION CONTROL BLANKET, OR OTHER BLANKET AS SHOWN ON THE PLANS SHALL BE INSTALLED. ALL WORK, STARTING WITH THE INITIAL CHOKING WITH TOPSOIL THROUGH THE SEEDING SHALL BE COMPLETED PRIOR TO ANY RAIN EVENT. DELAWARE *57 STONE SHALL BE INCIDENTAL TO THE RIPRAP ITEM.

E. THE TOPSOIL/SEED/MULCH CAN BE PLACED BEFORE OR AFTER THE REMOVAL OF THE STREAM DIVERSION. IF IT OCCURS AFTER STREAM DIVERSION REMOVAL, A TURBIDITY CURTAIN SHALL BE USED TO MINIMIZE IN-STREAM SEDIMENTATION. PAYMENT SHALL BE INCIDENTAL TO ITEM *909005 - STREAM DIVERSION.

PERMANENT OPEN WATER IMPACT AREA SCHEDULE

ID	IMPACT DESCRIPTION	AREA (SF)	AREA (AC)	VOLUME (CY)	JURISDICTION
O-1	RIPRAP UPSTREAM	201.25	0.005	11.18	COE/DNREC
O-2	RIPRAP DOWNSTREAM	247.15	0.006	13.73	COE/DNREC
TOTAL PERMANENT OPEN WATER IMPACTS		448.4	0.011	24.91	COE/DNREC

WETLANDS DELINEATED BY KEN DUNNE AND CHRISTIE BONNIWELL, DELDOT, ON 10-25-13 IN ACCORDANCE WITH THE US ARMY CORPS OF ENGINEERS "CORPS OF ENGINEERS WETLAND DELINEATION MANUAL (1987) AND THE ATLANTIC AND GULF COAST REGIONAL SUPPLEMENT (2010)."

SHEET PREPARED BY GREGORY LAVENBURG, DELAWARE D.O.T. BRIDGE DESIGN SECTION.
LAST UPDATED ON 02/4/2015.

TEMPORARY OPEN WATER IMPACT AREA SCHEDULE

ID	IMPACT DESCRIPTION	AREA (SF)	AREA (AC)	VOLUME (CY)	JURISDICTION
OT-1	PIPE TO BOX CULVERT	310.21	0.0071	54.08	COE/DNREC
OT-2	SANDBAG DIKE (UPS.)	63.51	0.0015	1.96	COE/DNREC
OT-3	SANDBAG DIKE (DS.)	89.60	0.0021	2.77	COE/DNREC
OT-4	SUMP PIT, TYPE 2	50.26	0.0012	8.84	COE/DNREC
OT-5	STILLING WELL	54.00	0.0012	2.50	COE/DNREC
OT-6	5'x5' RIP RAP AREA	25.00	0.0006	0.77	COE/DNREC
TOTAL TEMPORARY OPEN WATER IMPACTS		592.58	0.0137	70.92	COE/DNREC

OPEN WATER CREATION AREA SCHEDULE

ID	IMPACT DESCRIPTION	AREA (SF)	AREA (AC)	VOLUME (CY)	JURISDICTION
OC-1	AREA BETWEEN PIPES	51.66	0.0012	26.27	COE/DNREC
OC-2	EX. PIPE TO OPEN WATER	22.39	0.0005	0.69	COE/DNREC
OC-3	EX. PIPE TO OPEN WATER	29.29	0.0007	0.90	COE/DNREC
TOTAL OPEN WATER CREATION AREAS		103.34	0.0024	27.86	COE/DNREC

TEMPORARY WETLAND IMPACT AREA SCHEDULE

ID	IMPACT DESCRIPTION	AREA (SF)	AREA (AC)	VOLUME (CY)	JURISDICTION
WT-1	SANDBAG DIKE (UPS.)	146.49	0.0034	N/A	COE
WT-2	SANDBAG DIKE (DS.)	120.10	0.0028	N/A	COE
WT-3	PORTABLE SEDIMENT TANK	69.35	0.0016	N/A	COE
TOTAL TEMPORARY WETLAND IMPACT AREAS		335.94	0.0078	N/A	COE

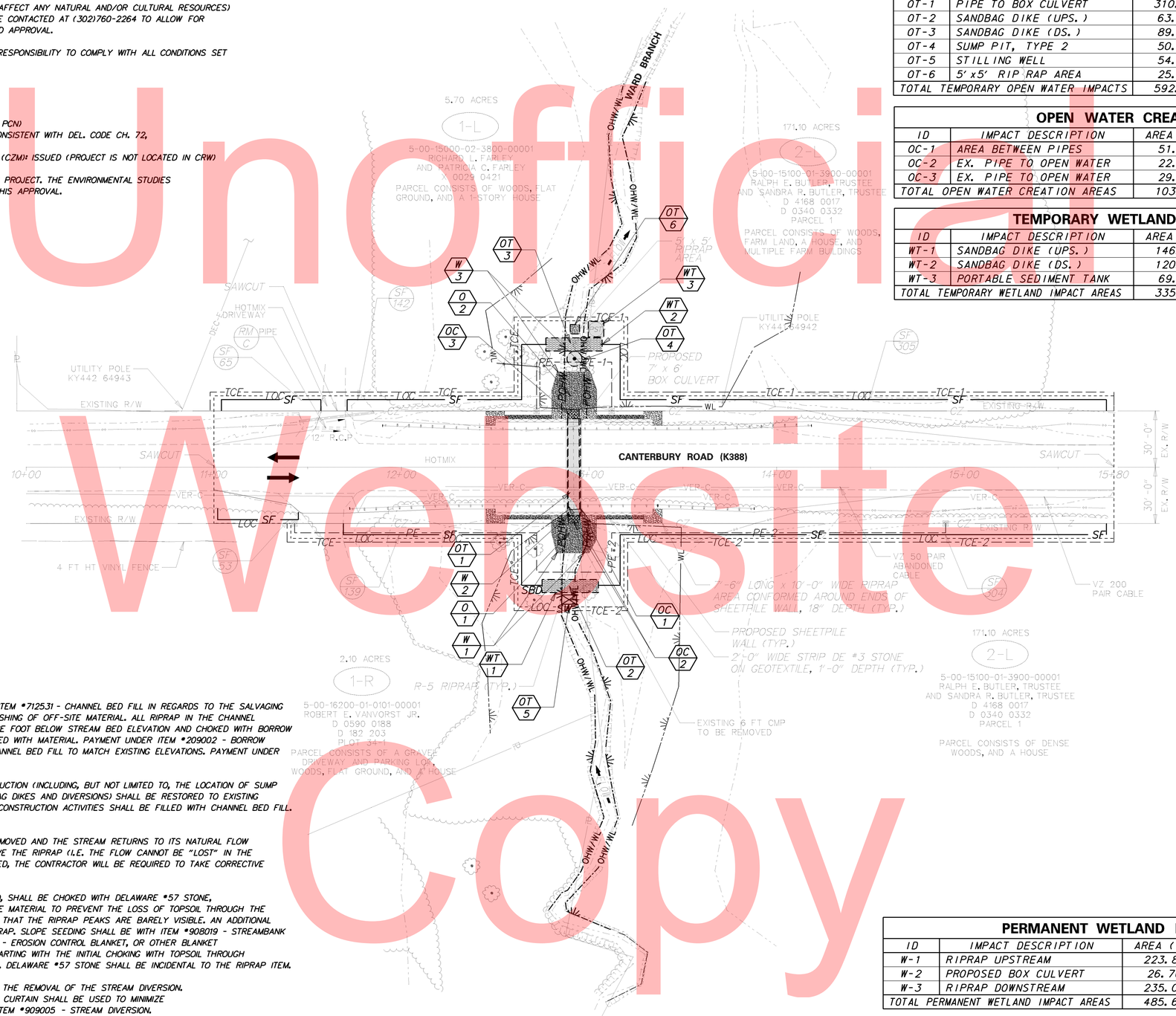

5. PROTECTION OF RESOURCES:

A. CLEARING IN WETLAND AREAS SHALL BE KEPT TO A MINIMUM ABSOLUTELY NECESSARY FOR CONSTRUCTION ACCESS. ALL EQUIPMENT TRAVERSING WETLANDS AND SUBAQUEOUS LAND SHALL BE SUPPORTED ON MATS. PAYMENT FOR MATS SHALL BE MADE UNDER 601520 - TIMBER MAT. IN WETLAND AREAS THAT ARE CLEARED, THERE SHALL BE NO GRUBBING EXCEPT WHERE NECESSARY TO CONSTRUCT PROJECT COMPONENTS SUCH AS FOUNDATIONS AND RIPRAP PROTECTION. VEGETATION SHALL BE CUT FLUSH WITH THE GROUND (I.E. NO DISTURBANCE OF THE ROOT MAT. TEMPORARILY DISTURBED WETLAND AREAS SHALL BE RESTORED TO GRADE AND SEEDED WITH TEMPORARY GRASS SEEDING - DRY GROUND, (PAYMENT UNDER ITEM 908017).

B. SILT FENCE OR CONSTRUCTION SAFETY FENCE SHALL BE USED ALONG THE LIMITS OF CONSTRUCTION IN ALL AREAS WHERE WATER/WETLANDS ARE BEING IMPACTED(AS SHOWN ON EC SHEETS), AND ALSO IN ANY AREA WHERE WATER/WETLANDS EXIST WITHIN 20 FEET OF THE LOC (AS SHOWN ON CONSTRUCTION PLANS). CONTRACTOR ACCESS BEYOND THE LOC IS STRICTLY PROHIBITED.

C. SILT FENCE INSTALLATION ADJACENT TO WOODED UPLANDS/ WETLANDS: SANDBAGS SHALL BE USED TO SECURE SILT FENCE IN LIEU OF TRENCHING UNLESS PROPER EROSION & SEDIMENT CONTROL CANNOT BE MAINTAINED. SANDBAGS USED TO SECURE SILT FENCE SHALL BE INCIDENTAL TO ITEM NUMBER 905001 - SILT FENCE. THE ENVIRONMENTAL STUDIES SECTION (CAROL SULLIVAN, 302-760-2129) CAN PROVIDE FURTHER GUIDANCE REGARDING THIS METHOD OF INSTALLATION.

D. IF IT IS NECESSARY TO REMOVE ANY OF THE TREES MARKED DO NOT DISTURB (DND), THE CONTRACTOR MUST COORDINATE AND OBTAIN APPROVAL WITH THE ENVIRONMENTAL STUDIES SECTION PRIOR TO REMOVAL.

6. PLANTING GUIDANCE

(INFORMATION ONLY, WORK TO BE DONE BY OTHERS. THERE SHALL BE NO PAYMENT FOR PLANTING ON THIS CONTRACT): UPON FINAL ACCEPTANCE OF THE CONTRACT, APROPRIATE TREES AND/OR SHRUBS SHALL BE PLANTED IN A NATURALIZED PATTERN (MINIMUM 8', MAXIMUM 12' CENTERS) IN TEMPORARILY DISTURBED WOODED WETLAND AREAS WITHIN THE LOC. FINAL PLANT COUNTS WILL BE BASED ON FIELD CONDITIONS AND DETERMINED BY THE ROADSIDE ENVIRONMENTAL ADMINISTRATOR OR HIS DESIGNEE. SPECIFIC PLANT SELECTION IS ALSO AT HIS DISCRECTION BUT SHALL BE A NATIVE SPECIES APPROVED BY THE DELAWARE DEPARTMENT OF NATURAL RESOURCES.

PERMANENT WETLAND IMPACT AREA SCHEDULE

ID	IMPACT DESCRIPTION	AREA (SF)	AREA (AC)	VOLUME (CY)	JURISDICTION
W-1	RIPRAP UPSTREAM	223.80	0.0051	N/A	COE
W-2	PROPOSED BOX CULVERT	26.76	0.0006	N/A	COE
W-3	RIPRAP DOWNSTREAM	235.05	0.0054	N/A	COE
TOTAL PERMANENT WETLAND IMPACT AREAS		485.61	0.011	N/A	COE

Unofficial Website Copy

Y:\KENT\388\BRIDGE\T201407201\PLANS\CP01.DGN

DELAWARE DEPARTMENT OF TRANSPORTATION

ADDENDUMS / REVISIONS

SCALE 0 30 60 90 FEET

BR 2-388C ON SR 15 CANTERBURY ROAD OVER WARD BRANCH

CONTRACT	BRIDGE NO.	2-388C
T201407201	DESIGNED BY: GML	
COUNTY		
KENT	CHECKED BY: CAS	

ENVIRONMENTAL COMPLIANCE PLAN

SHEET NO. 13
TOTAL SHTS. 20

SEQUENCE OF CONSTRUCTION:

1. INSTALL MOT DEVICES IN ACCORDANCE WITH THE DETOUR PLAN AND CLOSE CANTERBURY ROAD (K388).

2. INSTALL SILT FENCE (ITEM 905001) AS SHOWN ON THE PLAN, EXCEPT AT CONNECTION TO SANDBAG DIKES (ITEM 909005). INSTALL STILLING WELL (ITEM 905005) JUST UPSTREAM OF THE PROPOSED UPSTREAM SANDBAG DIKE. PLACE R-5 RIPRAP (ITEM 909005) 5 FEET IN DIRECTION OF FLOW BY 5 FEET WIDE AT THE PROPSED DISCHARGE AREA. CONSTRUCT THE SANDBAG DIKES, AT THE LOCATIONS SHOWN, WITH TOP EL. OF 10.00 ON THE UPSTREAM SIDE. THE ELEVATION OF THE DOWNSTREAM SANDBAG DIKE SHALL NOT BE HIGHER THAN THE LOWEST ELEVATION ON THE UPSTREAM SANDBAG DIKE. WEIR OPENINGS SHOULD BE 2' WIDE x 1' DEEP BOTH UPSTREAM AND DOWNSTREAM. CONNECT SILT FENCE TO THE SANDBAG DIKES TO COMPLETELY ENCLOSE THE WORK AREA. USE PUMP (ITEM 909005) TO DIVERT THE STREAM BASE FLOW AROUND THE ENCLOSED WORK AREA. WHEN THE FLOW IS HIGHER THAN PUMP CAPACITY DURING RAINFALL EVENTS, THE STREAM FLOW IS ALLOWED TO FLOW OVER THE SANDBAG DIKE. THEREFORE, THE ENCLOSED WORK AREA SHALL BE KEPT CLEAR OF DEBRIS AND OBSTRUCTIONS AT THE END OF EACH WORKDAY. THE BASE FLOW THROUGH THE PUMP SHALL BE 11.72 CFS.

3. INSTALL SUMP PIT (ITEM 906003) AND PORTABLE SEDIMENT TANK (ITEM 906001) AS A SEDIMENT TRAPPING DEVICE. DEWATER THE WORK AREA IN ACCORDANCE WITH SECTION 902 OF THE STANDARD SPECIFICATIONS. DISCHARGE CLEAN EFFLUENT FROM THE APPROVED SEDIMENT TRAPPING DEVICE AT THE STABILIZED OUTLET OF THE PUMPING OPERATION OR ON OTHER STABLE OUTLET AS APPROVED BY THE ENGINEER.

4. EXCAVATE HOTMIX AND REMOVE THE EXISTING 72" DIAMETER CMP.

5. DRIVE SHEETPILE IN ACCORDANCE WITH THE PLANS AND TO THE DEPTH AS INDICATED ON THE PLANS.

6. PLACE FOUNDATION STABILIZATION MATERIAL AND PROPOSED STRUCTURE IN ACCORDANCE WITH THE PLANS. CONNECT SHEETPILE TO THE PROPOSED STRUCTURE AS INDICATED ON THE PLANS AND CONSTRUCT CONCRETE SHEETPILE ENCASEMENT.

7. BACKFILL, PLACE DE #3 STONE, R-5 RIPRAP, AND CHANNEL BED FILL, AND BUILD SIDE SLOPES WITH 2 FT. WIDE STRIP OF DE #3 STONE DIRECTLY IN FRONT OF SHEET PILE WALL AND R-5 RIPRAP APRON ON CORNERS OF SHEET PILE WALL. RELOCATE SIGNS AND MAILBOX AS INDICATED ON THE PLANS. INSTALL PROPOSED DRAINAGE PIPE, PAVEMENT, GUARDRAIL, STRIPING, AND ANY OTHER REMAINING WORK, AS PER THE PLANS.

8. REMOVE TEMPORARY EROSION AND SEDIMENT CONTROL DEVICES AFTER VEGETATION HAS STABILIZED ALL DISTURBED AREAS IN ACCORDANCE WITH THESE PLANS AND AS DIRECTED BY THE ENGINEER. REMOVE ALL MOT DEVICES AND REOPEN THE ROADWAY. REMOVAL OF MOT DEVICES MAY OCCUR PRIOR TO REMOVAL OF TEMPORARY EROSION AND SEDIMENT CONTROL DEVICES.

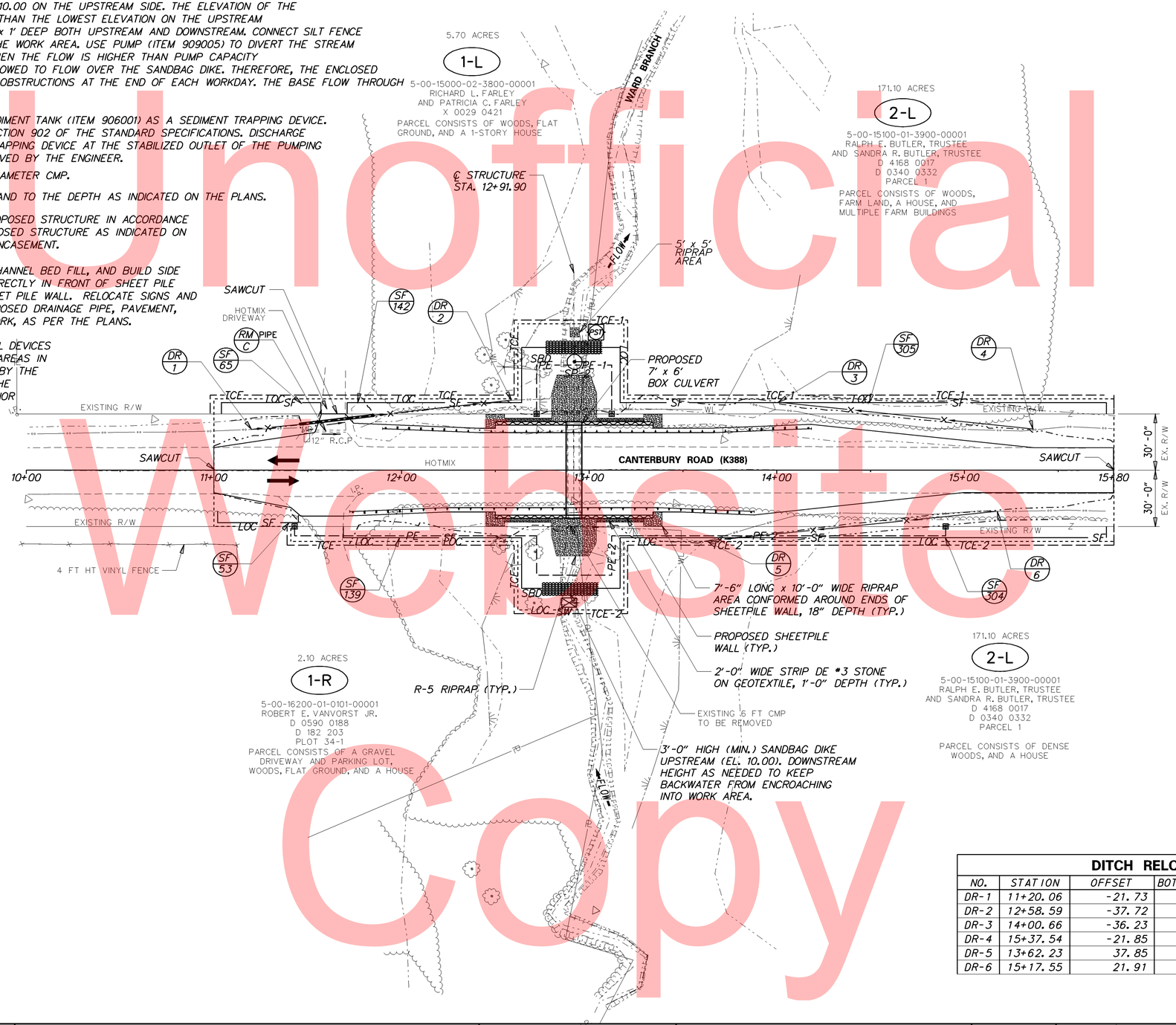

DITCH RELOCATION SCHEDULE

NO.	STATION	OFFSET	BOT. ELEV.	WIDTH	FORE SLOPE	BACK SLOPE
DR-1	11+20.06	-21.73	18.58	V-DITCH	3:1	3:1
DR-2	12+58.59	-37.72	10.73	V-DITCH	3:1 TO 2:1	6:1 TO 10:1
DR-3	14+00.66	-36.23	13.70	V-DITCH	3:1	-
DR-4	15+37.54	-21.85	17.58	V-DITCH	3:1 TO 4:1	6:1 TO 3:1
DR-5	13+62.23	37.85	11.84	V-DITCH	2:1	-
DR-6	15+17.55	21.91	17.25	V-DITCH	3:1 TO 4:1	4:1

Unofficial Website Copy

PORTABLE CHANGEABLE MESSAGE SIGNS

PRIOR TO DETOUR
(10 DAYS PRIOR TO BEGINNING OF DETOUR)

PCMS-1

CANTER-
BURY RD
CLOSING

STARTING
XX/XX/XX

SPECIAL SIGNS

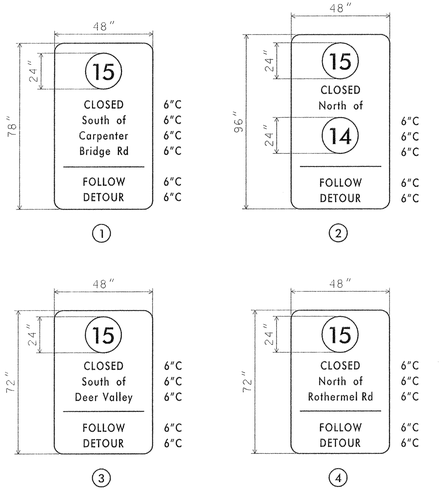

ALL SIGNS D/G RETROREFLECTIVE FLUORESCENT ORANGE; BLACK LEGEND
ALL ROUTE 15 SHIELDS WHITE BACKGROUND; BLACK LEGEND

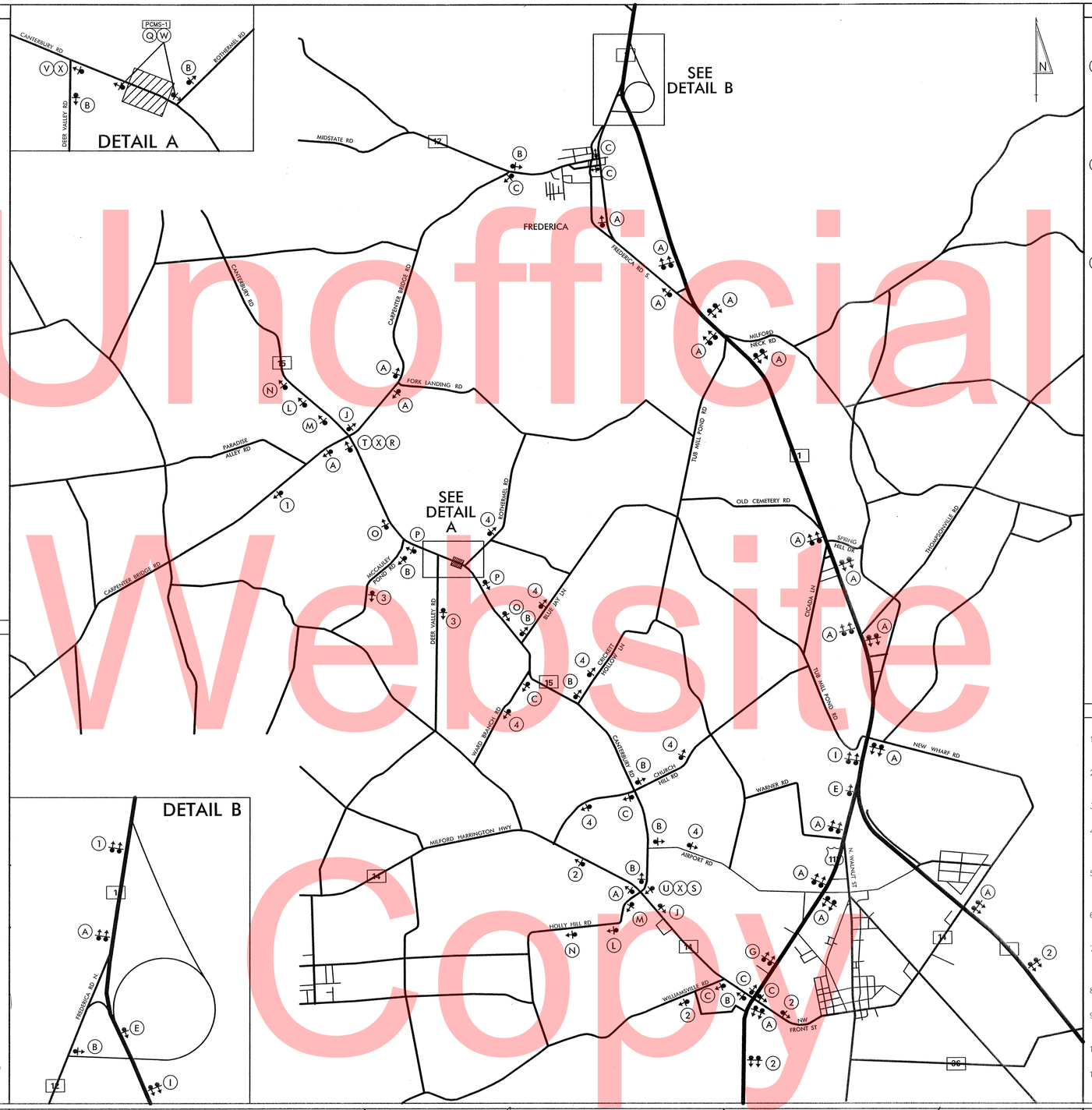

LEGEND

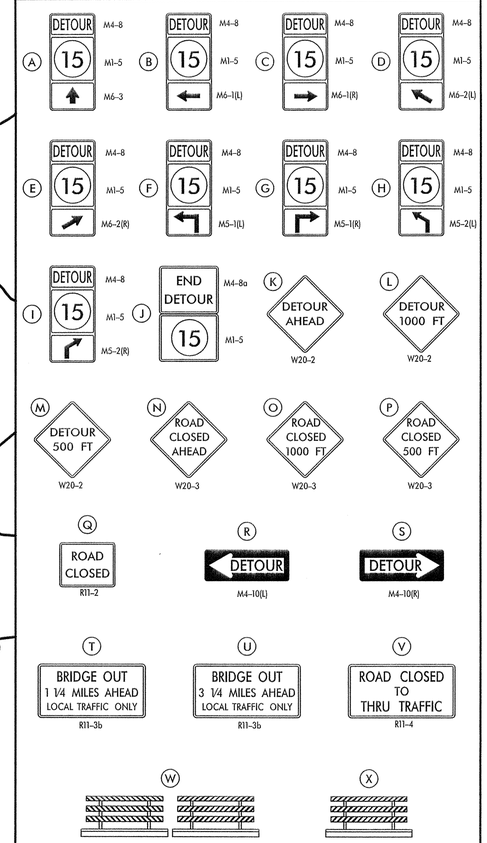

GENERAL NOTES

1. ALL DETOUR SIGNING, INCLUDING TRAILBLAZERS, ARE TO BE SUPPLIED AND MAINTAINED BY THE GENERAL CONTRACTOR IN COMPLIANCE WITH "THE DELAWARE MANUAL OF UNIFORM TRAFFIC CONTROL DEVICES" (DE MUTCD.)
2. THE CONTRACTOR SHALL COMPLY WITH GUIDELINES IN "THE DELAWARE MANUAL ON UNIFORM TRAFFIC CONTROL DEVICES" (DE MUTCD PART 6) FOR BARRICADES AND SIGNS (AS PER LATEST REVISION.)
3. DESIGN OF ALL SIGNS SHALL BE IN ACCORDANCE WITH THE FHWA STANDARD HIGHWAY SIGNS BOOK.
4. SIZES OF ALL SIGNS SHALL BE IN ACCORDANCE WITH THE DELAWARE MANUAL ON UNIFORM TRAFFIC CONTROL DEVICES" (DE MUTCD.) SIZE OF SIGN SHALL BE BASED ON TYPE OF ROADWAY ON WHICH THE SIGN IS INSTALLED.
5. THE COLORS, DIMENSIONS, AND CHARACTERISTICS OF ALL INTERSTATE, U.S ROUTE, AND STATE ROUTE SHIELD SIGNS SHALL BE IN ACCORDANCE WITH SECTION 2D.11 OF "THE DELAWARE MANUAL ON UNIFORM TRAFFIC CONTROL DEVICES" (DE MUTCD.)
6. SIGNS NO LONGER IN USE SHALL BE COMPLETELY COVERED WITH NO RETROREFLECTIVE MATERIAL SHOWING, OR SHALL BE REMOVED, AS DIRECTED BY THE ENGINEER.
7. FIELD CONDITIONS MAY DICTATE CHANGES AT SOME TIME DURING THE LIFE OF THE CONTRACT. IN THE EVENT OF OMISSIONS OR CORRECTIONS, THE SIGNING PROVISIONS OF "THE DELAWARE MANUAL ON UNIFORM TRAFFIC CONTROL DEVICES" (DE MUTCD) WILL PREVAIL.
8. SIGNS "N" THROUGH "Q" AND "T" AND "V", THE WORD "ROAD" SHOULD BE CHANGED TO "RAMP", "RR XING", OR "BRIDGE" WHERE APPLICABLE.
9. WARNING SIGNS AND DETOUR TRAILBLAZERS SHALL BE MOUNTED ON BREAKAWAY POSTS AND HAVE RETROREFLECTIVE FLUORESCENT ORANGE SHEETING.
10. "W" BARRICADES SHALL COMPLETELY RUN THE FULL WIDTH OF THE ROADWAY.
11. BARRICADES SHALL BE A MINIMUM OF 6 FEET WIDE UNLESS DIRECTED BY THE ENGINEER.

RECOMMENDED _____ DATE: _____

RECOMMENDED _____ DATE: _____

RECOMMENDED [signature] DATE: 7/1/14

APPROVED CHIEF SAFETY OFFICER [signature] DATE: 7-7-14

APPROVED TRAFFIC ENGINEER [signature] DATE: 7/8/14

DELAWARE DEPARTMENT OF TRANSPORTATION

ADDENDUM / REVISIONS

NOT TO SCALE

BR 2-388C ON CANTERBURY ROAD OVER WARD BRANCH

CONTRACT	ROAD NO.	K388
T201407201	DESIGNED BY: MBW/SWN	
COUNTY		
KENT	CHECKED BY: ASW	

DETOUR PLAN

SHEET NO. 15
TOTAL SHTS. 20

W:\MSV8\CELLS\PROJDEV\SB.CEL

Unofficial Website Copy

Unofficial Website Copy

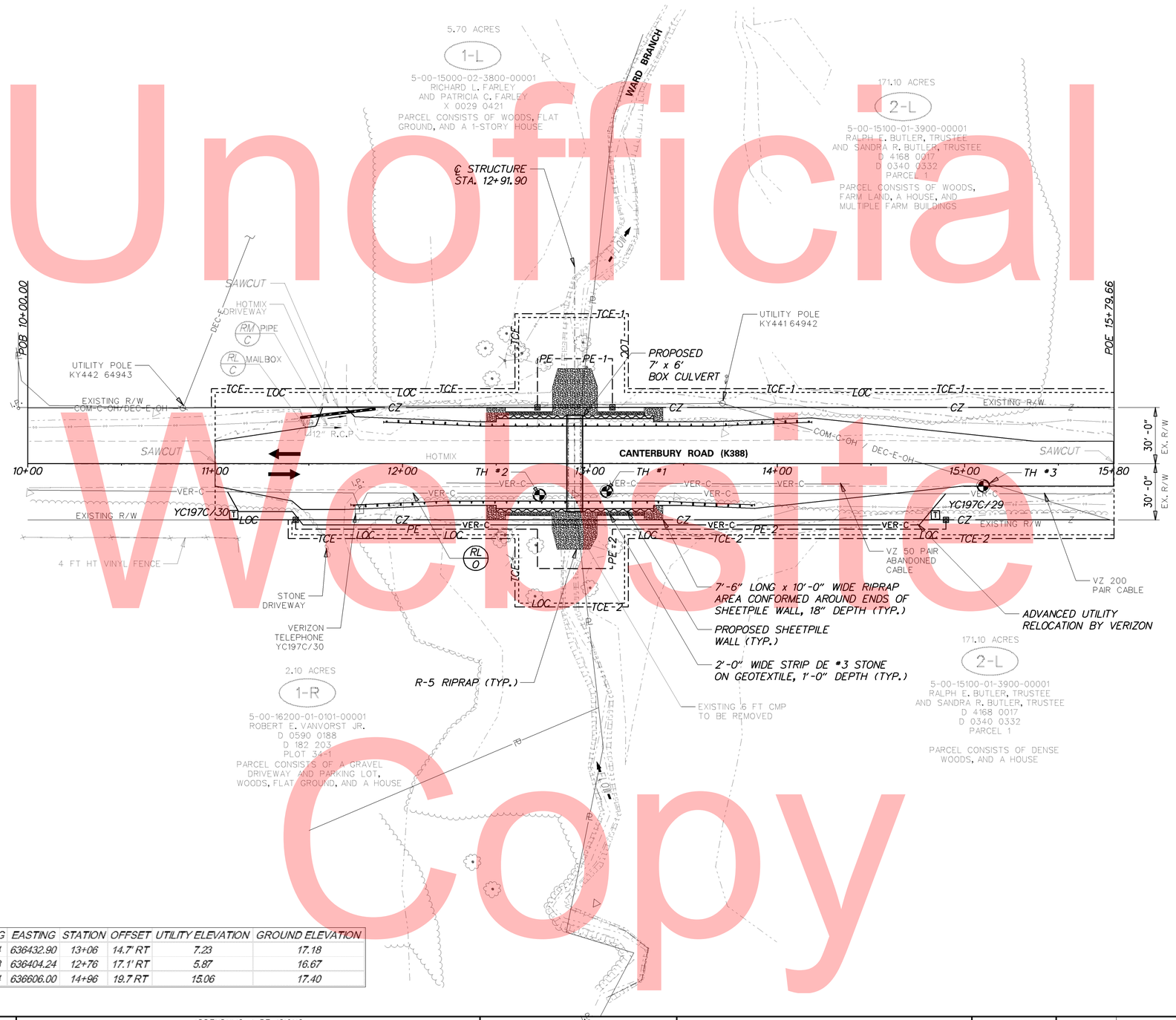

TEST HOLE #	UTILITY	SIZE	MATERIAL	NORTHING	EASTING	STATION	OFFSET	UTILITY ELEVATION	GROUND ELEVATION
TH 1	TELEPHONE	UNKNOWN	UNKNOWN	351346.34	636432.90	13+06	14.7' RT	7.23	17.18
TH 2	TELEPHONE	UNKNOWN	UNKNOWN	351356.18	636404.24	12+76	17.1' RT	5.87	16.67
TH 3	TELEPHONE	1.25 in.	PLASTIC	351266.94	636606.00	14+96	19.7 RT	15.06	17.40

Y:\KENT\388\BRIDGE\T201407201\PLANS\CP01.DGN

DELAWARE DEPARTMENT OF TRANSPORTATION

ADDENDUMS / REVISIONS

SCALE 0 30 60 90 FEET

BR 2-388C ON SR 15 CANTERBURY ROAD OVER WARD BRANCH

CONTRACT	BRIDGE NO.	2-388C
T201407201	DESIGNED BY: GML	
COUNTY		
KENT	CHECKED BY: CAS	

UTILITY RELOCATION PLAN

SHEET NO. 16
TOTAL SHTS. 20

#	SHEET NO.	PLAN INDICATOR	CODE	QTY.	DESCRIPTION	ASSEMBLY NO.	SIGN WIDTH (IN)	SIGN HEIGHT (IN)	SIGN AREA (SF)	ITEM 749687 SINGLE POST			POST INSTALLATION TYPE	Code X11 12' Post (W/
										SIGN DISPOSTION	REMOVE	INSTALL		
783	17	1	W1-10_R(36)	1	COMBINATION HORIZONTAL ALIGNMENT/INTERSECTION (Right) - 36x36	1	36"	36"	9	REPOSITION	1	1	SOIL	1
1367	17	2	W16-8P	1	ADVANCE STREET NAME (1 - line plaque)	1	36"	8"	2	REPOSITION	0	0	SOIL	0
828	17	3	W2-2_L(36)	1	SIDE ROAD (Perpendicular - Left) - 36x36	2	36"	36"	9	REPOSITION	1	1	SOIL	1
1368	17	4	W16-8aP	1	ADVANCE STREET NAME (2 - line plaque)	2	24"	15"	2.5	REPOSITION	0	0	SOIL	0

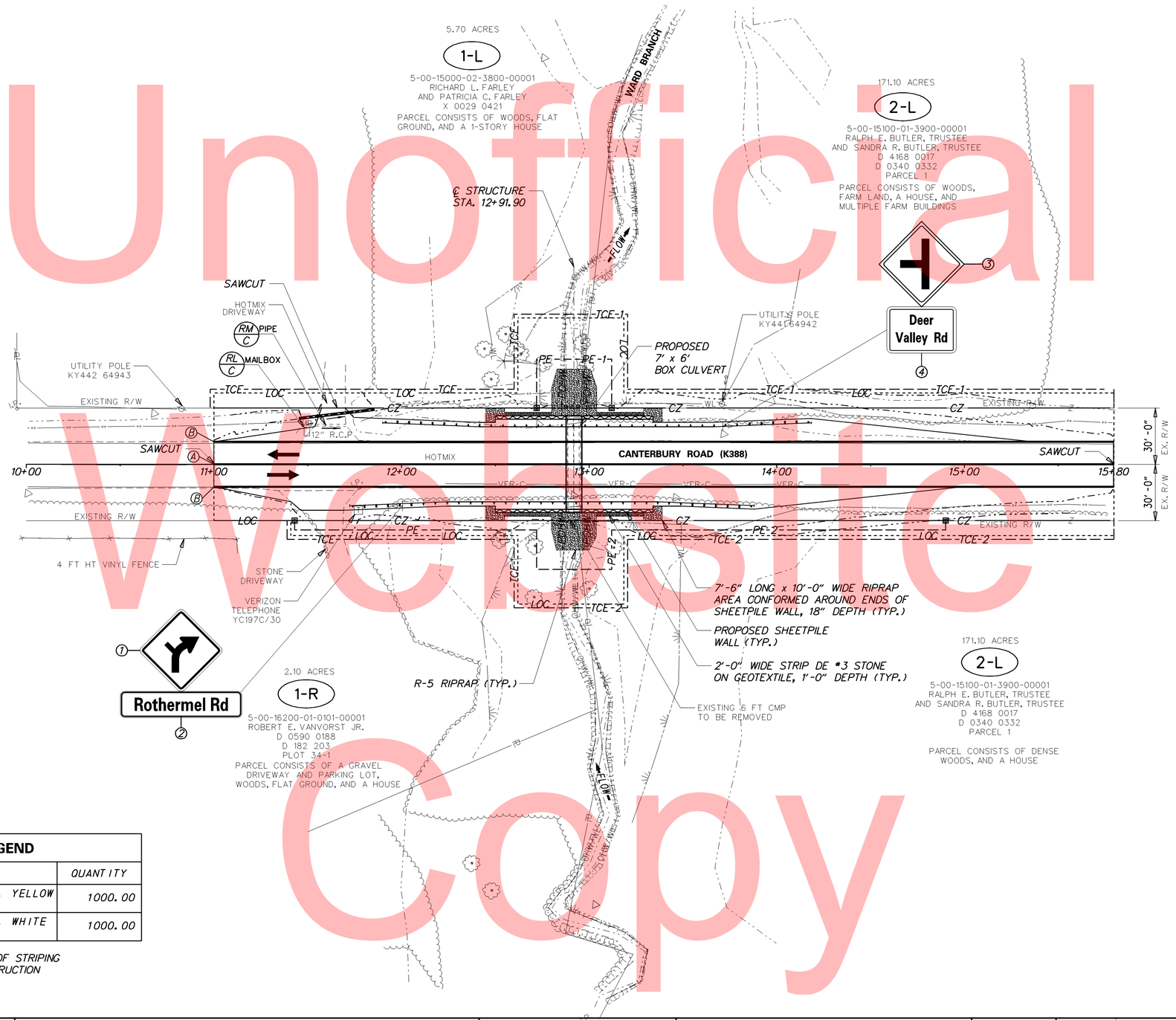

PAVEMENT MARKINGS LEGEND

SYMBOL	ITEM	QUANTITY
(A)	EPOXY RESIN PAINT PAVEMENT STRIPING, YELLOW 5" SOLID DOUBLE LINE (ITEM 748548)	1000.00
(B)	EPOXY RESIN PAINT PAVEMENT STRIPING, WHITE 5" SOLID (ITEM 748548)	1000.00

NOTE: EACH STRIPING QUANTITY ACCOUNTS FOR 10 LF OF STRIPING BEYOND SAWCUT FOR ROADWAY DAMAGE DURING CONSTRUCTION (TOTAL OF 40 LF EACH SIDE).

Unofficial Website Copy

Y:\KENT\388\BRIDGE\T201407201\PLANS\CP01.DGN

DELAWARE DEPARTMENT OF TRANSPORTATION

ADDENDUMS / REVISIONS

SCALE 0 30 60 90 FEET

BR 2-388C ON SR 15 CANTERBURY ROAD OVER WARD BRANCH

CONTRACT	BRIDGE NO. 2-388C
T201407201	DESIGNED BY: GML
COUNTY	CHECKED BY: CAS
KENT	

SIGNING, STRIPING AND CONDUIT PLAN

SHEET NO. 17 / TOTAL SHTS. 20

RECOMMENDED AS TO ENGINEERING NEED	
MANAGER, TEAM SUPPORT	9.30.14 DATE
PROGRAM MANAGER, TEAM SUPPORT	9/30/14 DATE
TECHNICAL REVIEWER, TEAM SUPPORT	9.30.14 DATE

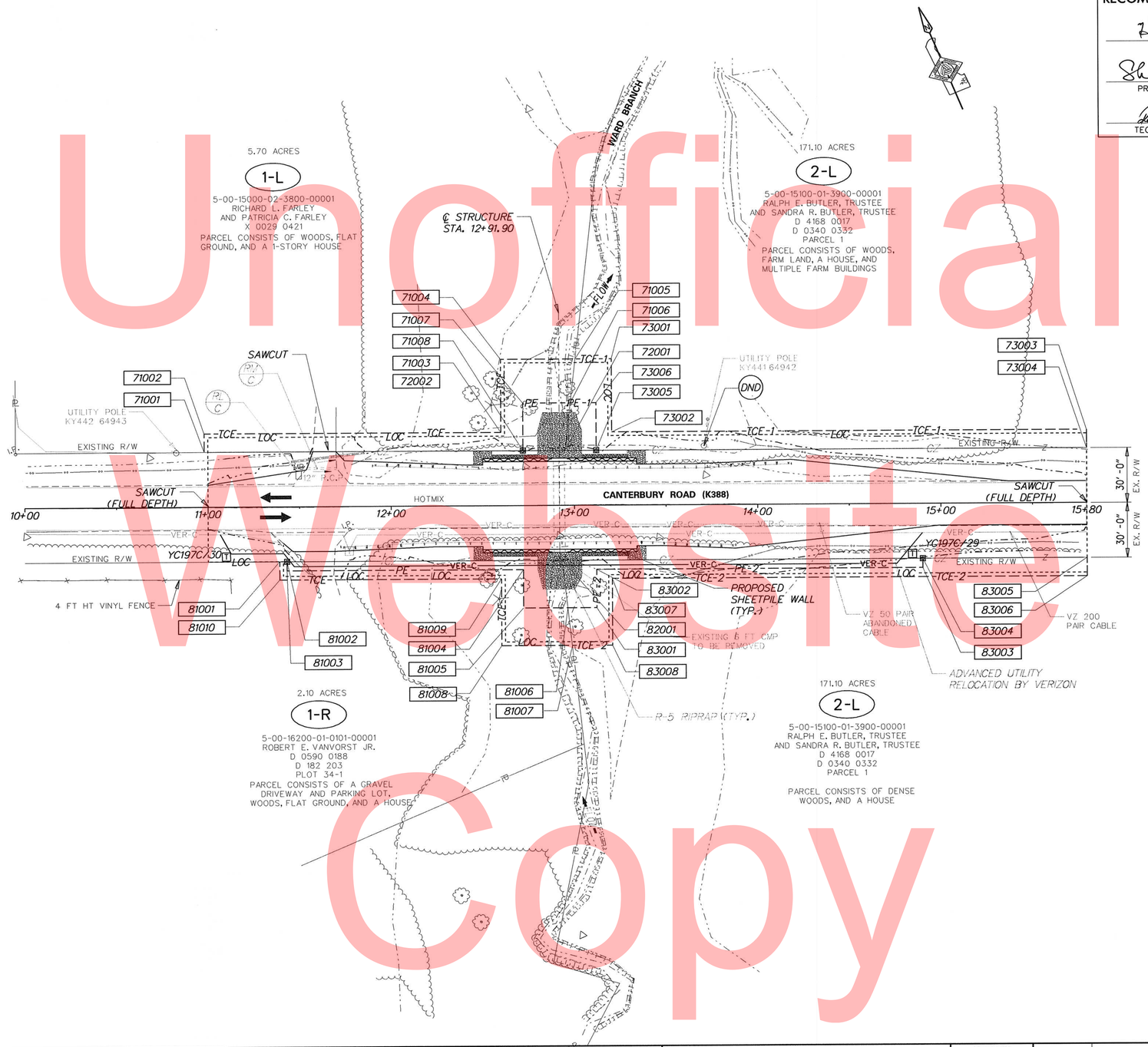

Unofficial Website Copy

DELAWARE DEPARTMENT OF TRANSPORTATION	ADDENDUMS / REVISIONS	SCALE 0 30 60 90 FEET	BR 2-388C ON SR 15 CANTERBURY ROAD OVER WARD BRANCH	CONTRACT T201407201	BRIDGE NO. 2-388C	RIGHT-OF-WAY PLAN SHEET 1 OF 3	SHEET NO. 18
				COUNTY KENT	DESIGNED BY: GML		TOTAL SHTS. 20
					CHECKED BY: CAS		

Y:\KENT\388\BRIDGE\T201407201\PLANS\CP01.DGN

ASSESSMENT NUMBER	OWNERSHIP OF RECORD	TYPE OF ACQUISITION	TITLE SOURCE	PARCEL AREA (ACRES)
5-00-15100-01-3900-00001	(2-L) RALPH E. BUTLER, TRUSTEE & SANDRA R. BUTLER, TRUSTEE	P/E-1	D 4168 0017	171.000

ALIGNMENT NUMBER & DESCRIPTION:

PT. NO.	ALIGN. NO.	STATION	OFFSET *	NORTH	EAST	BEARING	DISTANCE	CHORD BEARING	CHORD LENGTH	ARC LENGTH	RADIUS **
71006	5000-HA	12+97.97	-56.00	351414.5824	636453.1886	S 66°51′43.89″ E	14.03				
73006	5000-HA	13+12.00	-56.00	351409.0684	636466.0926	S 23°08′16.11″ W	26.00				
73005	5000-HA	13+12.00	-30.00	351385.1597	636455.8760	N 66°52′03.17″ W	17.00				
72001	5000-HA	12+95.00	-30.00	351391.8367	636440.2466	N 29°38′21.07″ E	26.17				
71006	5000-HA	12+97.97	-56.00	351414.5824	636453.1886						

FIGURE 74000 AREA = 403.3840 SQ. FT. (0.0093 ACRES)

ASSESSMENT NUMBER	OWNERSHIP OF RECORD	TYPE OF ACQUISITION	TITLE SOURCE	PARCEL AREA (ACRES)
5-00-15100-01-3900-00001	(2-L) RALPH E. BUTLER, TRUSTEE & SANDRA R. BUTLER, TRUSTEE	P/E-2	D 4168 0017	171.000

ALIGNMENT NUMBER & DESCRIPTION:

PT. NO.	ALIGN. NO.	STATION	OFFSET *	NORTH	EAST	BEARING	DISTANCE	CHORD BEARING	CHORD LENGTH	ARC LENGTH	RADIUS **
81006	5000-HA	12+96.18	56.00	351312.2914	636407.5409	N 16°34′01.11″ E	26.17				
82001	5000-HA	12+93.19	30.00	351337.3768	636415.0035	S 66°51′43.89″ E	196.81				
83004	5000-HA	14+90.00	30.00	351260.0412	636595.9832	S 23°08′16.11″ W	5.00				
83003	5000-HA	14+90.00	35.00	351255.4429	636594.0183	N 66°51′43.27″ W	178.00				
83002	5000-HA	13+12.00	35.00	351325.3875	636430.3363	S 23°08′16.11″ W	21.00				
83001	5000-HA	13+12.00	56.00	351306.0767	636422.0845	N 66°51′43.89″ W	15.82				
81006	5000-HA	12+96.18	56.00	351312.2914	636407.5409						

FIGURE 84000 AREA = 1340.1907 SQ. FT. (0.0308 ACRES)

ASSESSMENT NUMBER	OWNERSHIP OF RECORD	TYPE OF ACQUISITION	TITLE SOURCE	PARCEL AREA (ACRES)
5-00-15100-01-3900-00001	(2-L) RALPH E. BUTLER, TRUSTEE & SANDRA R. BUTLER, TRUSTEE	TCE-1	D 4168 0017	171.000

ALIGNMENT NUMBER & DESCRIPTION: -

PT. NO.	ALIGN. NO.	STATION	OFFSET *	NORTH	EAST	BEARING	DISTANCE	CHORD BEARING	CHORD LENGTH	ARC LENGTH	RADIUS **
71005	5000-HA	13+00.70	-80.00	351435.5772	636465.1342	S 66°51′43.89″ E	19.80				
73001	5000-HA	13+20.50	-80.00	351427.7971	636483.3412	S 23°08′16.11″ W	40.00				
73002	5000-HA	13+20.50	-40.00	351391.0146	636467.6235	S 66°51′43.89″ E	259.17				
73003				351289.1764	636705.9437	S 23°08′16.11″ W	10.00				
73004				351279.9808	636702.0143	N 66°51′43.89″ W	267.67				
73005	5000-HA	13+12.00	-30.00	351385.1597	636455.8760	N 23°08′16.11″ E	26.00				
73006	5000-HA	13+12.00	-56.00	351409.0684	636466.0926	N 66°51′43.89″ W	14.03				
71006	5000-HA	12+97.97	-56.00	351414.5824	636453.1886	N 29°38′21.07″ E	24.16				
71005	5000-HA	13+00.70	-80.00	351435.5772	636465.1342						

FIGURE 73000 AREA = 3320.7309 SQ. FT. (0.0762 ACRES)

ASSESSMENT NUMBER	OWNERSHIP OF RECORD	TYPE OF ACQUISITION	TITLE SOURCE	PARCEL AREA (ACRES)
5-00-15100-01-3900-00001	(2-L) RALPH E. BUTLER, TRUSTEE & SANDRA R. BUTLER, TRUSTEE	TCE-2	D 4168 0017	171.000

ALIGNMENT NUMBER & DESCRIPTION:

PT. NO.	ALIGN. NO.	STATION	OFFSET *	NORTH	EAST	BEARING	DISTANCE	CHORD BEARING	CHORD LENGTH	ARC LENGTH	RADIUS **
81007	5000-HA	12+98.55	76.50	351292.5120	636401.6568	N 16°34′01.11″ E	20.64				
81006	5000-HA	12+96.18	56.00	351312.2914	636407.5409	S 66°51′43.89″ E	15.82				
83001	5000-HA	13+12.00	56.00	351306.0767	636422.0845	N 23°08′16.11″ E	21.00				
83002	5000-HA	13+12.00	35.00	351325.3875	636430.3363	S 66°51′43.27″ E	178.00				
83003	5000-HA	14+90.00	35.00	351255.4429	636594.0183	N 23°08′16.11″ E	5.00				
83004	5000-HA	14+90.00	30.00	351260.0412	636595.9832	S 66°51′43.89″ E	89.66				
83005	5000-HA	15+79.66	30.00	351224.8084	636678.4347	S 23°08′16.11″ W	10.00				
83006	5000-HA	15+79.66	40.00	351215.6137	636674.5056	N 66°51′43.89″ W	259.16				
83007	5000-HA	13+20.50	40.00	351317.4501	636436.1895	S 23°08′16.11″ W	36.50				
83008	5000-HA	13+20.50	76.50	351283.8846	636421.8465	N 66°51′43.89″ W	21.96				
81007	5000-HA	12+98.55	76.50	351292.5120	636401.6568						

FIGURE 83000 AREA = 2396.6441 SQ. FT. (0.0550 ACRES)

ASSESSMENT NUMBER	OWNERSHIP OF RECORD	TYPE OF ACQUISITION	TITLE SOURCE	PARCEL AREA (ACRES)
5-00-15000-02-3800-00001	(1-L) RICHARD L. FARLEY & PATRICIA C. FARLEY	P/E	X 0029 0421	5.700

ALIGNMENT NUMBER & DESCRIPTION:

PT. NO.	ALIGN. NO.	STATION	OFFSET *	NORTH	EAST	BEARING	DISTANCE	CHORD BEARING	CHORD LENGTH	ARC LENGTH	RADIUS **
71008	5000-HA	12+72.00	-30.00	351400.8775	636419.0935	N 23°08′16.11″ E	26.00				
71007	5000-HA	12+72.00	-56.00	351424.7861	636429.3101	S 66°51′43.89″ E	25.97				
71006	5000-HA	12+97.97	-56.00	351414.5824	636453.1886	S 29°38′21.07″ W	26.17				
72001	5000-HA	12+95.00	-30.00	351391.8367	636440.2466	N 66°51′29.64″ W	23.00				
71008	5000-HA	12+72.00	-30.00	351400.8775	636419.0935						

FIGURE 72000 AREA = 636.6478 SQ. FT. (0.0146 ACRES)

ASSESSMENT NUMBER	OWNERSHIP OF RECORD	TYPE OF ACQUISITION	TITLE SOURCE	PARCEL AREA (ACRES)
5-00-15000-02-3800-00001	(1-L) RICHARD L. FARLEY & PATRICIA C. FARLEY	TCE	X 0029 0421	5.700

ALIGNMENT NUMBER & DESCRIPTION:

PT. NO.	ALIGN. NO.	STATION	OFFSET *	NORTH	EAST	BEARING	DISTANCE	CHORD BEARING	CHORD LENGTH	ARC LENGTH	RADIUS **
71001	5000-HA	10+98.00	-30.00	351469.2490	636259.0914	N 23°08′16.11″ E	10.00				
71002	5000-HA	10+98.00	-40.00	351478.4446	636263.0208	S 66°51′43.89″ E	162.00				
71003	5000-HA	12+60.00	-40.00	351414.7877	636411.9899	N 23°08′16.11″ E	40.00				
71004	5000-HA	12+60.00	-80.00	351451.5702	636427.7077	S 66°51′43.89″ E	40.70				
71005	5000-HA	13+00.70	-80.00	351435.5772	636465.1342	S 29°38′21.07″ W	24.16				
71006	5000-HA	12+97.97	-56.00	351414.5824	636453.1886	N 66°51′43.89″ W	25.97				
71007	5000-HA	12+72.00	-56.00	351424.7861	636429.3101	S 23°08′16.11″ W	26.00				
71008	5000-HA	12+72.00	-30.00	351400.8775	636419.0935	N 66°51′43.89″ W	174.00				
71001	5000-HA	10+98.00	-30.00	351469.2490	636259.0914						

FIGURE 71000 AREA = 2875.9395 SQ. FT. (0.0660 ACRES)

ASSESSMENT NUMBER	OWNERSHIP OF RECORD	TYPE OF ACQUISITION	TITLE SOURCE	PARCEL AREA (ACRES)
5-00-16200-01-0101-00001	(1-R) ROBERT E. VANVORST JR.	P/E	D 0590 0188	2.100

ALIGNMENT NUMBER & DESCRIPTION:

PT. NO.	ALIGN. NO.	STATION	OFFSET *	NORTH	EAST	BEARING	DISTANCE	CHORD BEARING	CHORD LENGTH	ARC LENGTH	RADIUS **
81002	5000-HA	11+43.00	30.00	351396.3935	636276.8933	S 66°51′43.89″ E	150.19				
82001	5000-HA	12+93.19	30.00	351337.3768	636415.0035	S 16°34′01.11″ W	26.17				
81006	5000-HA	12+96.18	56.00	351312.2914	636407.5409	N 66°51′43.89″ W	24.19				
81005	5000-HA	12+72.00	56.00	351321.7951	636385.3003	N 23°08′16.11″ E	21.00				
81004	5000-HA	12+72.00	35.00	351341.1059	636393.5522	N 66°51′43.89″ W	129.00				
81003	5000-HA	11+43.00	35.00	351391.7957	636274.9286	N 23°08′16.11″ E	5.00				
81002	5000-HA	11+43.00	30.00	351396.3935	636276.8933						

FIGURE 82000 AREA = 1234.9039 SQ. FT. (0.0283 ACRES)

ASSESSMENT NUMBER	OWNERSHIP OF RECORD	TYPE OF ACQUISITION	TITLE SOURCE	PARCEL AREA (ACRES)
5-00-16200-01-0101-00001	(1-R) ROBERT E. VANVORST JR.	TCE	D 0590 0188	2.100

ALIGNMENT NUMBER & DESCRIPTION:

PT. NO.	ALIGN. NO.	STATION	OFFSET *	NORTH	EAST	BEARING	DISTANCE	CHORD BEARING	CHORD LENGTH	ARC LENGTH	RADIUS **
81001	5000-HA	11+39.00	30.00	351397.9646	636273.2168	S 66°51′43.89″ E	4.00				
81002	5000-HA	11+43.00	30.00	351396.3935	636276.8933	S 23°08′16.11″ W	5.00				
81003	5000-HA	11+43.00	35.00	351391.7957	636274.9286	S 66°51′43.89″ E	129.00				
81004	5000-HA	12+72.00	35.00	351341.1059	636393.5522	S 23°08′16.11″ W	21.00				
81005	5000-HA	12+72.00	56.00	351321.7951	636385.3003	S 66°51′43.89″ E	24.19				
81006	5000-HA	12+96.18	56.00	351312.2914	636407.5409	S 16°34′01.11″ W	20.64				
81007	5000-HA	12+98.55	76.50	351292.5120	636401.6568	N 66°51′43.89″ W	38.59				
81008	5000-HA	12+59.95	76.50	351307.6770	636366.1679	N 23°12′41.07″ E	36.49				
81009	5000-HA	12+60.00	40.01	351341.2144	636380.5500	N 66°51′04.39″ W	121.00				
81010	5000-HA	11+39.00	39.99	351388.7816	636269.2928	N 23°08′16.11″ E	9.99				
81001	5000-HA	11+39.00	30.00	351397.9646	636273.2168						

FIGURE 81000 AREA = 1643.5617 SQ. FT. (0.0377 ACRES)

Unofficial Website Copy

LEGEND

FEE AREA OF ACQUISITION
R/W AREA OCCUPIED BY EXISTING R/W
P/E PERMANENT EASEMENT
TCE TEMPORARY CONSTRUCTION EASEMENT

* "-" OFFSET IS LEFT OF BASELINE
** "-" CURVE TURNS TO THE LEFT

DELAWARE DEPARTMENT OF TRANSPORTATION

ADDENDUMS / REVISIONS

NOT TO SCALE

BR 2-388C ON SR 15
CANTERBURY ROAD
OVER WARD BRANCH

CONTRACT T201407201 | COUNTY KENT

BRIDGE NO. 2-388C | DESIGNED BY: GML | CHECKED BY: CAS

RIGHT-OF-WAY DATA SHEET 2 OF 3

COUNTY ASSESSMENT PARCEL NUMBER	PLAN SHEET NUMBER	OWNERSHIP OF RECORD	TITLE SOURCE	PROPERTY AREA BEFORE ACQUISITION (ACRE) D=DEED C=CALCULATED A=ASSESMENT	ACQUISITION CODE FEE, R/W, P/E, TCE	AREA TO BE ACQUIRED				PROPERTY AREA REMAINING (SQ. FEET /ACRES)	DEED RECORD OF ACQUISTITION	REMARKS
						ACQUISITION (SQ. FEET /ACRES)	AREA OCCUPIED BY EXISTING RIGHT OF WAY (SQ. FEET /ACRES)	EASEMENT PERMANENT (SQ. FEET /ACRES)	EASEMENT TEMPORARY (SQ. FEET /ACRES)			
5-00-15100-01-3900-00001	-	(2-L) RALPH E. BUTLER, TRUSTEE & SANDRA R. BUTLER, TRUSTEE	D 4168 0017	D - 171.00	P/E-1			403.384 / 0.01				
					P/E-2			1340.1907 / 0.03				
					TCE-1				3320.7309 / 0.08			
					TCE-2				2396.6441 / 0.06	7448760.00 / 171.00		
5-00-15000-02-3800-00001	-	(1-L) RICHARD L. FARLEY & PATRICIA C. FARLEY	X 0029 0421	D - 5.70	P/E			636.6478 / 0.01				
					TCE				2875.9395 / 0.07	248292.00 / 5.70		
5-00-16200-01-0101-00001	-	(1-R) ROBERT E. VANVORST JR.	D 0590 0188	D - 2.10	P/E			1234.9039 / 0.03				
					TCE				1643.5617 / 0.04	91476.00 / 2.10		

Unofficial Website Copy

ACQUISITION CODES

FEE - ACQUISITION
R/W - AREA OCCUPIED BY EXISTING R/W
P/E - PERMANENT EASEMENT
TCE - TEMPORARY EASEMENT

DELAWARE DEPARTMENT OF TRANSPORTATION

ADDENDUMS / REVISIONS

NOT TO SCALE

BR 2-388C ON SR 15
CANTERBURY ROAD
OVER WARD BRANCH

CONTRACT: T201407201
COUNTY: KENT
BRIDGE NO.: 2-388C
DESIGNED BY: GML
CHECKED BY: CAS

RIGHT-OF-WAY TABULATION SHEET 3 OF 3

SHEET NO. 20
TOTAL SHTS. 20

Y:\KENT\388\BRIDGE\T201407201\PLANS\RT01.DGN