PROJECT NOTES:

1. NO UTILITY RELOCATION INVOLVEMENT IS ANTICIPATED. SHOULD ANY CONFLICTS BE ENCOUNTERED DURING CONSTRUCTION REQUIRING ADJUSTMENT AND/OR RELOCATION OF THE AGENCIES' EXISTING FACILITIES, THE NECESSARY RELOCATION WORK SHALL BE ACCOMPLISHED BY THE RESPECTIVE AGENCIES' FORCES, AS DIRECTED BY THE DISTRICT ENGINEER. ANY ADJUSTMENT AND/OR RELOCATIONS OF MUNICIPALLY OWNED FACILITIES SHALL BE DONE BY THE STATES CONTRACTOR IN ACCORDANCE WITH THE RESPECTIVE AGENCIES STANDARD SPECIFICATIONS AS DIRECTED BY THE DISTRICT ENGINEER.

2. NO ENVIRONMENTAL PERMITS ARE REQUIRED FOR THIS WORK PROVIDED NO JURISDICTIONAL WETLANDS OR WATERS ARE IMPACTED. IF THERE IS ANY QUESTION AS TO WHETHER OR NOT A WATER OR WETLAND IS JURISDICTIONAL, CONTACT THE DEL DOT ENVIRONMENTAL SECTION AT 302-760-2264.

3. IT IS ANTICIPATED THAT ALL WORK WILL OCCUR WITHIN DELDOT'S EXISTING RIGHT OF WAY OR EASEMENTS AREAS. SHOULD THE NEED OCCUR TO TRESPASS ONTO PRIVATE PROPERTY; IT WILL BE THE RESPONSIBILITY OF THE PROJECT MANAGER TO SECURE SUCH TRESPASS NEEDS.

4. IT IS ANTICIPATED THAT ALL WILL OCCUR WITHIN DELDOT'S RIGHT OF WAY. SHOULD THE NEED OCCUR TO TRESPASS ONTO RAILROAD PROPERTY, INCLUDING THE HIGHWAY-RAIL CROSSING: IT WILL BE THE RESPONSIBILITY OF THE THE PROJECT MANAGER TO CONTACT THE RAILROAD CHIEF ENGINEER AND OBTAIN WRITTEN AUTHORIZATION BEFORE ENTERING.

5. THE PROJECT MANAGER SHALL RESPONSIBLE FOR COORDINATION WITH THE TRAFFIC SECTION RELATING TO ANY IMPACTS TO TRAFFIC SECTION FACILITIES (INCLUDING BUT NOT LIMITED TO TRAFFIC LOOPS, JUNCTION WELLS ETC.) AT LEAST 4 WEEKS IN ADVANCE OF THE THE START OF THE ACTIVITY. PRIOR TO INITIATING ANY WORK ON THIS CONTRACT (OR SITES). THE PROJECT MANAGER SHALL BE RESPONSIBLE FOR PREPARING AND SUBMITTING FOR APPROVAL OF THE SAFETY SECTION, A MAINTENANCE OF TRAFFIC PLAN. SUFFICIENT TIME SHALL BE PROVIDED FOR THE REVIEW AND APPROVAL OF THE PLAN. THE MAINTENANCE OF TRAFFIC PLAN SHALL INCLUDE PROPOSED TIME RESTRICTIONS ON THE CLOSURE OF TRAVEL LANES SUBJECT TO THE APPROVAL OF THE SAFETY SECTION.

6. THE PROJECT MANAGER IS RESPONSIBLE FOR ENSURING ANY REQUIRED DOCUMENTS AND ANALYSIS AS PART OF THE ADOPTED WORK ZONE SAFETY AND MOBILITY PROCEDURES AND GUIDELINES HAS BEEN COMPLETED PRIOR TO ANY WORK STARTING ON THIS CONTRACT.

THE STATE OF DELAWARE
DEPARTMENT OF TRANSPORTATION

U.S. CUSTOMARY UNITS

PROTOTYPICAL DESIGN PLANS FOR:

STATEWIDE FABRIC SALT BARNS
OPEN - END FY15-17

SALT BARN: 70-FEET BY 100-FEET
AND/OR
SALT BARN: 80-FEET BY 120-FEET

CONTRACT NUMBER: T201480107

FEDERAL AID PROJECT NUMBER: _____

COUNTY: _____ M.R. #: _____

UNOFFICIAL WEBSITE COPY

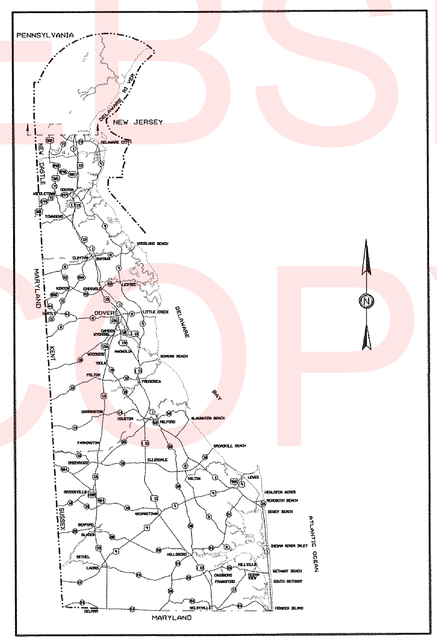

LOCATION MAP

SCALE: N. T. S.

DESIGN DESIGNATION

FUNCTIONAL CLASS: N/A	D.H.V. PROJECTED: N/A	YEAR: N/A
TYPE OF CONSTRUCTION: N/A	DESIGN SPEED: N/A	
A.A.D.T. CURRENT: N/A YEAR: N/A	TRUCKS: N/A	
A.A.D.T. PROJECTED: N/A YEAR: N/A	DIRECTION OF DISTRIBUTION: N/A	

INDEX OF SHEETS

DWG. No.	SHT. No.	TABLE OF CONTENTS	DWG. No.	SHT. No.	TABLE OF CONTENTS
T-1	1	TITLE			
S-01	2	STRUCTURAL GENERAL NOTES, AND LEGEND			
S-02	3	SALT BARN 70'x100' WALL & FOUNDATION PLAN			
S-03	4	SALT BARN 70'x100' SECTION & ASSUMED PRELIMINARY REACTIONS			
S-04	5	SALT BARN 80'x120' WALL & FOUNDATION PLAN			
S-05	6	SALT BARN 80'x120' SECTION & ASSUMED PRELIMINARY REACTIONS			
S-06	7	SALT BARN SECTIONS & DETAILS			
S-07	8	SALT BARN DETAILS			
E-01	9	ELECTRICAL LEGEND, NOTES AND ABBREVIATIONS			
E-02	10	SALT BARN 70'x 100' LIGHTING LAYOUT PLAN			
E-03	11	SALT BARN 80'x 120' LIGHTING LAYOUT PLAN			
E-04	12	ELECTRICAL SPECIFICATIONS			

TOTAL SHEETS: 5

APPROVED DESIGN EXCEPTIONS

DESIGN PARAMETER	REQUIRED	PROVIDED	DATE

ADDENDA & REVISIONS

DESCRIPTION	NAME & DATE

ASSOCIATED CONTRACTS

CONTRACT NO.	CONTRACT NAME
T2014800107	STATE WIDE FABRIC SALT BARNS OPEN-END FY15-17

T-1

PREPARED BY
THE CONSULTING FIRM OF

JOHNSON, MIRMIRAN & THOMPSON
Engineering A Brighter Future

72 Loveton Circle Baltimore, Maryland 21152-0949
410-329-3100

RECOMMENDED _____ DATE 09/08/15

SEAL: DAVID M. CHANDLER, 0201018501, DELAWARE PROFESSIONAL ENGINEER

RECOMMENDED

STATEWIDE SUPPORT SERVICES ENGINEER _____ DATE 9/10/15

ASSISTANT DIRECTOR STATEWIDE SUPPORT SERVICES _____ DATE 9/10/15

DIRECTOR, MAINTENANCE & OPERATIONS _____ DATE 9/10/15

RECOMMENDED	RECOMMENDED AS TO PROCESS	RECOMMENDED	RECOMMENDED	RECOMMENDED	APPROVED
STORMWATER ENGINEER	Robert B. McCleary, CHIEF ENGINEER	BRIDGE DESIGN ENGINEER	GROUP ENGINEER, PROJECT DEVELOPMENT	ASSISTANT DIRECTOR, TRANSPORTATION SOLUTIONS	CHIEF ENGINEER
DATE	DATE 9/10/2015	DATE	DATE	DATE	DATE
SEAL	SEAL	SEAL	SEAL	SEAL	SEAL

SUBMISSION STATUS: PS&E
DATE PLOTTED: @DATE@
JMT FILE LOCATION@FILE@: \\SMD\101552_011_Standard_Foundation_\CADD\Structural\SALT BARNS 70x100 & 80x120\01 - T-1 COVER SHEET.dwg

GENERAL NOTES

GENERAL:

1. THE STRUCTURE IS DESIGNED TO BE SELF–SUPPORTING AND STABLE AFTER THE WORK IS FULLY COMPLETED. IT IS SOLELY THE CONTRACTOR'S RESPONSIBILITY TO DETERMINE ERECTION PROCEDURES AND SEQUENCE, AND TO ENSURE THE STABILITY OF THE BUILDING AND ITS COMPONENT PARTS, AND THE ADEQUACY OF TEMPORARY OR INCOMPLETE CONNECTIONS, DURING ERECTION. THIS INCLUDES THE ADDITION OF ANY SHORING, TEMPORARY GUYS, BRACING OR TIEDDOWNS THAT MIGHT BE NECESSARY. SUCH MATERIAL IS NOT SHOWN ON THE DRAWINGS. IF APPLIED, THEY SHALL BE REMOVED AS CONDITIONS PERMIT AND SHALL REMAIN THE CONTRACTOR'S PROPERTY.

2. THE ENGINEER HAS NO EXPERTISE IN, AND TAKES NO RESPONSIBILITY FOR, CONSTRUCTION MEANS AND METHODS OR JOB SITE SAFETY DURING CONSTRUCTION. PROCESSING AND/OR APPROVING SUBMITTALS MADE BY THE CONTRACTOR WHICH MAY CONTAIN INFORMATION RELATED TO CONSTRUCTION METHODS OR SAFETY ISSUES, OR PARTICIPATION IN MEETINGS WHERE SUCH ISSUES MIGHT BE DISCUSSED, SHALL NOT BE CONSTRUED AS VOLUNTARY ASSUMPTION BY THE ENGINEER OR ANY RESPONSIBILITY FOR SAFETY PROCEDURES. IT IS SOLELY THE RESPONSIBILITY OF EACH CONTRACTOR TO FOLLOW ALL APPLICABLE SAFETY CODES AND REGULATIONS DURING ALL PHASE'S OF CONSTRUCTION. THE ENGINEER IS NOT ENGAGED IN, AND DOESN'T SUPERVISE CONSTRUCTION.

UTILITIES:

1. CONTRACTOR IS TO VERIFY LOCATIONS OF ALL UNDERGROUND UTILITIES PRIOR TO PERFORMING ANY SUBSURFACE OR EXCAVATION WORK.

2. PROTECTION: PROTECT EXISTING UTILITIES TO REMAIN DURING EXCAVATION, AND CUTTING AND PATCHING, TO PREVENT DAMAGE.

3. TAKE ALL PRECAUTIONS NECESSARY TO AVOID CUTTING EXISTING PIPE, CONDUIT OR DUCTWORK SERVING THE SITE, UNTIL PROVISIONS HAVE BEEN MADE TO BYPASS THEM. PROVIDE TEMPORARY SERVICES DURING INTERRUPTIONS TO EXISTING UTILITIES, AS ACCEPTABLE TO OWNER.

4. DAMAGES: PROMPTLY REPAIR DAMAGES CAUSED TO ADJACENT FACILITIES BY DEMOLITION WORK AT NO COST TO THE OWNER.

5. DISPOSAL OF DEMOLISHED MATERIALS: REMOVE DEBRIS, RUBBISH AND OTHER MATERIALS RESULTING FROM EXCAVATION/DEMOLITION OPERATIONS FROM THE BUILDING SITE. TRANSPORT AND LEGALLY DISPOSE OF MATERIALS OFF SITE.

6. IF UNANTICIPATED MECHANICAL, ELECTRICAL OR STRUCTURAL ELEMENTS WHICH CONFLICT WITH THE INTENDED FUNCTION OR DESIGN ARE ENCOUNTERED, INVESTIGATE AND MEASURE BOTH NATURE AND EXTENT OF THE CONFLICT. SUBMIT REPORT TO OWNER'S REPRESENTATIVE IN WRITTEN, ACCURATE DETAIL. PENDING RECEIPT OF DIRECTIVE FROM OWNERS' REPRESENTATIVE, REARRANGE SCHEDULE AS NECESSARY TO CONTINUE OVERALL JOB PROGRESS WITHOUT DELAY.

CONTROLLED FILL AND BACKFILL:

1. SAMPLES OF ALL MATERIALS THAT THE CONTRACTOR PROPOSES TO USE FOR COMPACTED FILL SHALL BE APPROVED BY THE ENGINEER OF RECORD. COMPACTED FILL SHALL CONSIST OF LOCAL MATERIAL FREE OF DELETERIOUS MATTER AND CLASSIFIED CL, SC, GC, GM, OR SM PER ASTM D–2487. THE CONTROL OF THE MOISTURE FOR PLACING THE FILL WILL BE BASED ON THE RESULTS OF COMPACTION TESTS PER ASTM D–1557. ALL COMPACTED FILL SHALL HAVE A DENSITY OF AT LEAST 95% OF THE MODIFIED PROCTOR MAXIMUM DRY DENSITY AS DETERMINED BY ASTM D–1557.

2. PRIOR TO PLACEMENT OF ANY FILLS, THE SITE SHALL BE STRIPPED OF ALL TOPSOIL, VEGETATION, ROCKS, AND ORGANIC MATERIALS AND THE EXPOSED SUB–GRADE SHALL BE COMPACTED IN PLACE TO A CONFIRMED DENSITY OF 95% OF THE MODIFIED PROCTOR MAXIMUM DRY DENSITY. FILL MATERIAL SHALL BE PLACED IN LOOSE LIFTS NOT EXCEEDING 8" IN THICKNESS AND SHALL BE MIXED, SPREAD AND PLACED IN SUCH A WAY AS TO PRODUCE A UNIFORM THICKNESS OF MATERIAL AFTER PLACING.

3. EACH LAYER OF FILL SHALL BE COMPACTED WITH A MINIMUM OF 6 COMPLETE PASSES ON ALL PORTIONS OF THE SURFACE OF EACH LIFT OF FILL BY RUBBER–TIRED ROLLERS, SHEEPS–FOOT ROLLERS OR OTHER MECHANICAL EQUIPMENT APPROVED BY THE ENGINEER OF RECORD. COMPACTED FILL PLACED WITHIN 4 FEET OF STRUCTURES AND PIPES SHOULD BE PLACED IN HORIZONTAL LIFTS NOT TO EXCEED 4 INCHES THICKNESS AND COMPACTED WITH HAND TAMPERS OR LIGHT COMPACTION EQUIPMENT TO THE SAME STANDARD. HEAVY COMPACTION EQUIPMENT IS NOT ALLOWED WITHIN 4 FEET OF STRUCTURES UNLESS A MINIMUM 2 FEET DEPTH OF FILL COVERS THE STRUCTURES. WHENEVER IN PLACE DENSITIES ARE FOUND BELOW ACCEPTABLE LIMITS, ADDITIONAL ROLLING TO PRODUCE THE SPECIFIED DENSITIES SHALL BE REQUIRED.

4. THE CONTRACTOR SHALL TAKE ALL MEASURES REQUIRED TO PROVIDE FOR FREE DRAINAGE OF THE SITE AND TO PREVENT PONDING OF WATER. SEDIMENT CONTROL MEASURES SHALL BE MAINTAINED AT ALL TIMES. PLACING OF FILL CONTAINING ORGANIC MATTER; PLACING OF FILL WITH MOISTURE CONTENT TOO HIGH OR TOO LOW FOR PROPER COMPACTION; PLACING OF FILL WHEN FREE WATER IS STANDING ON THE EXISTING FILL SURFACE; PLACING OF FILL IN A FROZEN CONDITION OR ON TOP OF FROZEN MATTER WILL NOT BE PERMITTED.

5. DELDOT WILL PERFORM THE FILL AND BACKFILL TESTING AND SHALL SUPERVISE THE PLACING OF THE COMPACTED FILL AND ALL THE MATERIAL AND EQUIPMENT USED FOR ON THIS PROJECT AND SHALL MAKE SUCH SOILS TESTS FOR THE COMPLETION OF THE WORK PERFORMING AT LEAST 6 IN PLACE DENSITY TESTS DURING EACH EIGHT HOUR SHIFT.

6. CLASSIFICATION TESTING FOR NATURAL MOISTURE CONTENT GRADATION ANALYSIS AND PROCTOR TESTING SHOULD BE PERFORMED IN THE FIELD DURING CONSTRUCTION TO EVALUATE THE SUITABILITY OF EXCAVATED SOILS FOR REUSE AS FILL AND BACKFILL AS COMPACTED BACKFILL AS APPLICABLE.

SOIL BEARING:

1. DESIGN ALLOWABLE BEARING CAPACITY OF 2,000 PSF WAS USED IN THE DESIGN OF THE FOUNDATION SYSTEM. THIS ALLOWABLE BEARING CAPACITY OF 2,000 PSF MUST BE FIELD VERIFY BY A REGISTERED PROFESSIONAL GEOTECHNICAL ENGINEER PRIOR TO PLACEMENT OF THE FOUNDATION SYSTEM.

2. IF SOIL OF THIS BEARING CAPACITY IS NOT ENCOUNTERED AT THE ELEVATIONS INDICATED ON THE CONTRACT DRAWINGS, FOOTINGS SHALL BE LOWERED OR INCREASED IN SIZE AS DIRECTED BY THE ENGINEER OF RECORD.

SUBGRADE PREPARATION:

FOLLOWING THE CLEARING AND STRIPPING OPERATION. THE EXPOSED SUBGRADE SOILS SHALL BE DENSIFIED WITH SUITABLE COMPACTION EQUIPMENT SELECTED AND UNDER THE SUPERVISION OF THE CONTRACTORS GEOTECHNICAL ENGINEER AFTER THE SUBGRADE SOILS HAVE BEEN DENSIFIED, THEY SHALL BE EVALUATED BY THE GEOTECHNICAL ENGINEER FOR STABILITY. ACCORDINGLY, THE SUBGRADE SOILS SHALL BE PROOFROLLED WITH SUITABLE EQUIPMENT TO CHECK FOR AREAS OF SOFT, PUMPING AND/OR YIELDING MATERIAL SHOWING STABILITY FAILURE.

SEVERAL PASSES SHOULD BE MADE WITH SUITABLE EQUIPMENT OVER THE BUILDING PAVING AND FOUNDATION AREA. THE NUMBER OF PASSES SHOULD BE DETERMINED BY THE CONTRACTORS GEOTECHNICAL ENGINEER DEPENDING ON SOIL CONDITIONS.

ANY PUMPING, AND/OR YIELDING AND/OR UNSTABLE SOILS SHOWING FAILURE DURING PROOFROLLING BEYOND THE INITIAL CLEARING OUT SHALL BE UNDERCUT AND/OR STABILIZED AS DIRECTED BY THE GEOTECHNICAL ENGINEER.

FOUNDATIONS–SPREAD FOOTINGS:

1. ALL FOUNDATIONS SHALL BEAR ON UNDISTURBED SOIL WITH THE ALLOWABLE BEARING CAPACITY SPECIFIED.

2. BOTTOM OF ALL FOOTINGS SHALL BE A MINIMUM OF 3'–0" BELOW ORIGINAL GRADE OR PLACED IN APPROVED COMPACTED FILL.

3. ELEVATIONS SHOWN ON PLAN ARE TO THE BOTTOM OF FOOTINGS.

4. CONCRETE SHALL NOT BE POURED ON FROZEN GROUND/OR IN WET CONDITIONS.

5. PROVIDE SHORING AS REQUIRED TO SUPPORT LATERAL LOADS DURING EXCAVATION.

6. FILL ALL VOIDS AND REPLACE DISTURBED SOIL WITH LEAN CONCRETE

FOUNDATIONS AND SLAB–ON–GRADE:

BOTTOM OF ALL FOOTINGS SHALL BE A MINIMUM OF 3'–0" BELOW ORIGINAL GRADE OR PLACED IN APPROVED COMPACTED FILL. BOTTOM OF ALL EXTERIOR FOOTINGS SHALL BE A MINIMUM OF 3'–0" BELOW FINISHED GRADE. A SOIL BEARING CAPACITY AND MODULUS OF SUBGRADE REACTION AS INDICATED BELOW WAS USED IN THE FOUNDATION AND PAVEMENT DESIGN, AND MUST BE FIELD VERIFIED BY A REGISTERED GEOTECHNICAL ENGINEER PRIOR TO PLACEMENT OF THE FOUNDATIONS AND PAVEMENT. IF SOIL OF THIS BEARING CAPACITY OR MODULUS OF SUBGRADE REACTION IS NOT ENCOUNTERED AT THE ELEVATIONS INDICATED ON THE CONTRACT DRAWINGS, FOOTINGS SHALL BE LOWERED OR INCREASED IN SIZE OR THE SUBGRADE PREPARED AS DIRECTED BY THE ENGINEER OF RECORD. ELEVATIONS SHOWN ON PLAN ARE TO THE BOTTOM OF THE FOOTINGS.

CALCULATIONS FOR TOTAL BUILDING SETTLEMENTS OR DIFFERENTIAL BUILDING SETTLEMENTS HAVE NOT BEEN PERFORMED.

BEARING CAPACITY AND MODULUS OF SUBGRADE REACTION:

BUILDING: 2,000 PSF — MODULUS OF SUBGRADE REACTION (K) FOR PAVEMENT STRUCTURE: 150 POUNDS PER CUBIC INCH

THE ELEVATION FOR THE BOTTOM OF THE FOUNDATIONS HAS BEEN UNIFORMLY SET AT 3'–0" BELOW FINISHED GRADE. IF THE FINISHED GRADE VARIES MORE THAN 6–INCHES ACROSS THE WIDTH OR LENGTH OF THE BUILDING, THEN THE FOUNDATIONS SHALL BE STEPPED AS DIRECTED BY THE ENGINEER, (REFERENCE 5/S–06, TYPICAL STEPPED FOOTING).

THE FOUNDATIONS, WALLS, AND PIERS HAVE BEEN DESIGNED FOR THE ASSUMED "PRELIMINARY REACTIONS" INDICATED. THESE REACTIONS SHALL BE VERIFIED BY THE ENGINEER AGAINST THE ACTUAL SALT BARN REACTIONS DATA SUPPLIED BY THE SALT BARN MANUFACTURER. SHOULD THE ACTUAL REACTION DATA EXCEED THE ASSUMED PRELIMINARY REACTIONS, MODIFICATIONS TO THE FOUNDATIONS, WALLS, AND PIERS MAY BE REQUIRED AS DETERMINED BY THE ENGINEER.

THE CONTRACTOR SHALL PROVIDE ACTUAL SALT BARN REACTION DATA PRIOR TO SUBMITTAL OF THE REINFORCING STEEL SHOP DRAWINGS SO AS TO ALLOW FOR MODIFICATIONS IF REQUIRED SO AS NOT TO DELAY THE PROJECT.

CONCRETE:

1. ALL CONCRETE WORK SHALL CONFORM TO ALL THE PROVISIONS OF THE "SPECIFICATIONS FOR STRUCTURAL CONCRETE FOR BUILDINGS" (ACI 301) AND TO THE "BUILDING CODE REQUIREMENTS FOR REINFORCED CONCRETE" (ACI 318).

2. ALL STRUCTURAL CONCRETE SHALL HAVE A MINIMUM 28 DAY COMPRESSIVE STRENGTH f'c = 4,000 psi AND NOT EXCEED A WATER CEMENT RATIO W/C OF 0.45, UNLESS NOTED OTHERWISE.

3. ALL CONCRETE SHALL CONFORM TO ALL THE PROVISIONS OF "RECOMMENDED PRACTICE FOR HOT WEATHER CONCRETING" (ACI 305R–10) AND "RECOMMENDED PRACTICE FOR COLD WEATHER CONCRETING" (ACI 306R–10).

4. ALL FORMWORK SHALL BE IN ACCORDANCE WITH THE AMERICAN CONCRETE INSTITUTE "FORMWORK FOR CONCRETE" SPECIAL PUBLICATION NO. 4 AND ACI'S "STANDARD RECOMMENDED PRACTICE FOR CONCRETE FORMWORK" (ACI–347–LATEST EDITION).

5. ALL CONCRETE SHALL HAVE AN AIR ENTRAINMENT OF 5% ±1%. NO ADMIXTURES CONTAINING CALCIUM CHLORIDE SHALL BE PERMITTED.

6. THE MAXIMUM SLUMP OF ALL CONCRETE SHALL BE 4".

7. PROVIDE ¾" CHAMFER AT EXPOSED CORNERS, INCLUDING TOP OF RETAINING WALLS.

8. SLABS SHALL BE FINISHED TO A MINIMUM FLATNESS F– NUMBER Ff = 20 AND A MINIMUM LEVELNESS F–NUMBER Fl = 17 IN ANY DIRECTION.

9. ALL CONCRETE SHALL BE CURED WITH LIQUID SEALING COMPOUND CONFORMING TO ASTM C–309, TYPE I AND FEDERAL SPECIFICATION TT–C–00800 OR OTHER APPROVED METHOD WHICH IS COMPATIBLE WITH FLOORING ADHESIVES AND OTHER SURFACE TREATMENTS. ALL CONCRETE LEFT EXPOSED AT THE COMPLETION OF THE PROJECT SHALL BE TREATED WITH A CLEAR, PENETRATING ACRYLIC BASE POLYMER CAPABLE OF PREVENTING INFILTRATION OF WATER BORNE CHLORIDES.

10. LOADS GREATER THAN THE DESIGN LOADS SHALL NOT BE PLACED ON THE STRUCTURE. CONCRETE MAY NOT SUPPORT ITS DESIGN LOAD FOR 28 DAYS. ONE SET OF COMPRESSIVE TEST CYLINDERS FOR EACH 100 CUBIC YARDS POURED, BUT NOT LESS THAN ONE SET FOR EACH DAY'S POUR AND EACH CLASS OF CONCRETE, ALONG WITH SLUMP TESTS SHALL BE PERFORMED BY A QUALIFIED TESTING LABORATORY APPROVED BY THE ENGINEER OF RECORD.

REINFORCING STEEL:

1. REINFORCING STEEL SHALL BE NEW DEFORMED BARS IN ACCORDANCE WITH ASTM A–615, GRADE 60. BENDS ARE TO BE FABRICATED AS PER CRSI MANUAL OF STANDARD PRACTICE.

2. WELDED WIRE FABRIC SHALL CONFORM TO ASTM A–185, GRADE 60.

3. PLACE MAIN REINFORCING STEEL SO AS TO PROVIDE 3" MINIMUM COVER FOR FOUNDATIONS POURED ON EARTH, 2" MINIMUM COVER FOR INTERIOR AND EXTERIOR FACE OF WALLS AND SLABS, (EXCEPT AS OTHERWISE DETAILED).

4. ALL WALL AND SLAB STEEL SHALL HAVE A MINIMUM EXTENSION INTO THE SUPPORTS IN ACCORDANCE WITH THE LATEST ADDITION OF THE ACI CODE, PROVIDE ACCESSORIES AND BAR SUPPORTS IN ACCORDANCE WITH THE MANUAL OF STANDARD PRACTICE FOR DETAILING REINFORCED CONCRETE STRUCTURES (ACI 315).

5. UNLESS OTHERWISE NOTED, WELDED WIRE FABRIC (WWF) REINFORCING SHALL BE PLACED AT MID–DEPTH OF SLABS ON GRADE AND DRAPED OVER SUPPORTS IN CONCRETE SLABS ON CENTERING. END LAPS OF ALL WWF REINFORCING SHALL BE LAPPED 8" MINIMUM.

SHOP DRAWINGS:

COMPREHENSIVE AND COMPLETE SHOP DRAWINGS FOR ALL STRUCTURAL ELEMENTS AND THE SALT BARN SHOWN ON THE CONTRACT DOCUMENTS MUST BE SUBMITTED THE BY GENERAL CONTRACTOR AND REVIEWED BY THE ENGINEER OF RECORD. ALL CONTRACTOR MODIFICATIONS (INCLUDING PRODUCTS SUBMISSION) MUST BE IDENTIFIED IN WRITING AS A PROPOSED "AS EQUAL" CHANGES AT TIME OF SUBMISSION. IF A CONTRACTOR OR OWNER FAILS TO SUBMIT THE SHOP DRAWINGS OR FAILS TO FOLLOW THE ABOVE "AS EQUAL" PROCEDURE, JMT WILL NOT BE RESPONSIBLE FOR THE STRUCTURAL CERTIFICATION AND DESIGN OF THE PROJECT. SHOP DRAWINGS ARE REVIEWED BY THE ENGINEER AS A CONVENIENCE TO THE CONTRACTOR AND ARE NOT A CONTRACT DOCUMENT.

INSPECTION:

ALL WORK SPECIFIED HEREIN SHALL BE INSPECTED IN ACCORDANCE WITH THE BUILDING CODE AND ALL LOCAL ORDINANCES. DELDOT WILL HIRE AN EXPERIENCED QUALIFIED INSPECTOR TO PERFORM ALL REQUIRED INSPECTION WORK. INSPECTION SHALL CONSIST OF, BUT NOT BE LIMITED TO, VISUAL OBSERVATIONS OF MATERIALS, EQUIPMENT OR CONSTRUCTION WORK FOR THE PURPOSE OF ASCERTAINING THAT THE WORK IS IN SUBSTANTIAL CONFORMANCE WITH THE CONTRACT DOCUMENTS AND WITH THE DESIGN INTENT. THE ENGINEER WILL NOT PERFORM THE REQUIRED INSPECTION. THE ENGINEER MAY VISIT THE SITE TO ASCERTAIN GENERAL CONFORMANCE TO THE CONTRACT DOCUMENTS. HOWEVER, SUCH VISITS SHALL NOT BE RELIED UPON BY OTHERS AS ACCEPTANCE OF THE WORK, NOR SHOULD IT BE CONSTRUED TO RELIEVE THE CONTRACTOR IN ANY WAY FROM HIS OBLIGATIONS AND RESPONSIBILITIES UNDER THE CONSTRUCTION CONTRACT.

DESIGN CODES AND SPECIFICATIONS:

1. AMERICAN SOCIETY OF CIVIL ENGINEERS, STRUCTURAL ENGINEERING INSTITUTE, MINIMUM DESIGN LOADS FOR BUILDINGS AND OTHER STRUCTURES, (ASCE/SEI 7–10)
2. 2012 INTERNATIONAL BUILDING CODE (IBC)
3. ASCE STANDARD 17–96, AIR SUPPORTED STRUCTURES
4. ASCE STANDARD 19–10, STRUCTURAL APPLICATIONS OF STEEL CABLES FOR BUILDINGS
5. ASCE STANDARD 55–10, TENSILE MEMBRANE STRUCTURES
6. ASCE 2013, TENSILE FABRIC STRUCTURES, DESIGN, ANALYSIS, AND CONSTRUCTION
7. AMERICAN CONCRETE INSTITUTE (ACI)
8. AMERICAN INSTITUTE OF STEEL CONSTRUCTION 14TH EDITION (AISC)
9. AMERICAN IRON AND STEEL INSTITUTE (AISI)

DESIGN DATA:

f'c = 4,000 psi (FOOTINGS, SLABS AND WALLS)
fy = 60,000 psi (CONCRETE REINFORCING)
Fy = 36,000 psi/50,000 psi

RISK CATEGORY:

I

CRITERIA & LOADING		REGIONS		
Minimum Design Loads:		1. Coastal Regions to Lewes–Millsboro	2. North of Lewes–Millsboro to Milford	3. Kent and New Castle Counties
A.	Building Classification Category	I	I	I
B.	Ground Snow, Pg	20 PSF	25 PSF	25 PSF
	Flat Roof Snow Load, P_f	12.1 PSF	15.1 PSF	15.1 PSF
	Snow Exposure Factor, Ce	0.9	0.9	0.9
	Snow Thermal Factor, C_t	1.2	1.2	1.2
	Snow Importance Factor, Is	0.80	0.80	0.80
C.	Wind Speed	116 MPH	110 MPH	105 MPH
	Exposure	C	C	C
	Importance Factor, I_W	1.00	1.00	1.00
	Internal Pressure Coefficient, GC_{pi} Enclosed Building	±0.18	±0.18	±0.18
D.	Temperature Range	–20° F – 110° F	–20° F – 110° F	–20° F – 110° F
E.	Maximum Collateral Load Delegated to Salt Barn Manufacturer	1.0 PSF	1.0 PSF	1.0 PSF
F.	Roof Live Load	ASCE 7–10	ASCE 7–10	ASCE 7–10
G.	Seismic Design	ASCE 7–10	ASCE 7–10	ASCE 7–10
	Seismic Importance Factor, I_e	1.00	1.00	1.00
	Ss Mapped Spectral Response Acceleration	0.100g	0.111g	0.187g
	S1 Mapped Spectral Response Acceleration	0.045g	0.047g	0.058g
	Site Soil Class (To be Confirmed by Geotechnical Report)	D	D	D
	Spectral Coefficient, S_{DS}	0.107g	0.118g	0.200g
	Spectral Coefficient, S_{D1}	0.072g	0.075g	0.093g
	Seismic Design Category	B	B	B
	Basic Structural System	Moment–resisting frame system	Moment–resisting frame system	Moment–resisting frame system
	Seismic Force Resisting System	Steel System Not Specifically detailed for Seismic Resistance (Table 12.2–1H, ASCE 7–10)	Steel System Not Specifically detailed for Seismic Resistance (Table 12.2–1H, ASCE 7–10)	Steel System Not Specifically detailed for Seismic Resistance (Table 12.2–1H, ASCE 7–10)
H.	Assumed Minimum Soil Bearing Pressure (To be confirmed by Geotechnical Report)	2000 PSF	2000 PSF	2000 PSF
I.	Ice	Chapter 10 ASCE 7–10	Chapter 10 ASCE 7–10	Chapter 10 ASCE 7–10
	Ice Importance Factor, Ii	0.80	0.80	0.80
J.	The maximum allowable deflection of any structural member shall be L/240 and the maximum story drift shall be 0.020 x the height.			

COATING:

1. REFERENCE PLANS, SECTIONS AND DETAILS FOR LOCATIONS WHERE COATING IS APPLIED.
2. COATING TO BE LOW, TWO PART, VOC COAL TAR EPOXY, HIGH BUILD, POLYAMIDE, CHEMICAL RESISTANT SYSTEM MEETING STRUCTURAL STEEL PAINTING COUNCIL (SSPC) PAINT 16 SPECIFICATIONS AND AS FOLLOWS:

FINISH:	SEMI–GLOSS
COLOR:	BLACK
WEIGHT SOLIDS:	82%± 2%, MIXED
VOC (EPA METHOD 24):	24% < 100 G/L; 0.083 LB/GAL, MIX
MIX RATIO:	2 COMPONENT, PREMEASURED 4:1 5 GALLONS MIXED
DRY MILLS:	8.0 MILLS MINIMUM 16.0 MILLS MAXIMUM
SURFACE PREPARATION & APPLICATION:	PREPARE SURFACE AND APPLY IN ACCORDANCE WITH MANUFACTURERS WRITTEN INSTRUCTIONS.

3. BASIS OF DESIGN PRODUCT: TARGUARD LOW VOC COAL TAR EPOXY BY SHERWIN WILLIAMS.

LEGEND

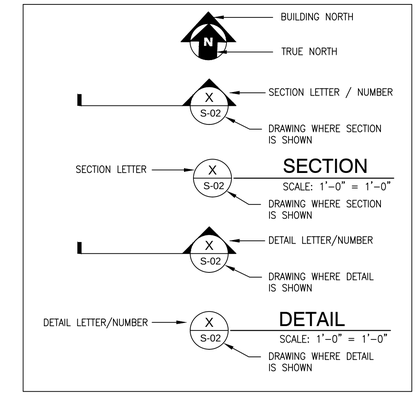

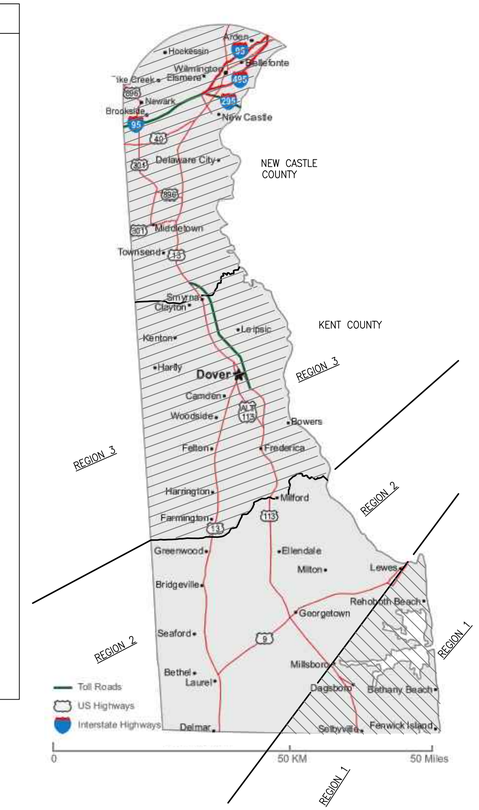

UNOFFICIAL WEBSITE COPY

Q:\SMD\101552_011_Standard_Foundation_\CADD\Structural\SALT BARNS 70x100 & 80x120\S-01.dwg

S-01

DELAWARE DEPARTMENT OF TRANSPORTATION

ADDENDUMS / REVISIONS

STATEWIDE FABRIC SALT BARNS OPEN END FY 15–17

CONTRACT	DATE	08-31-2015
T201480107	DESIGNED BY:	NLL / JZ / DL
COUNTY	CHECKED BY:	JHB
STATEWIDE		

STRUCTURAL GENERAL NOTES, AND LEGEND

SHEET NO. 2
TOTAL SHTS. 12

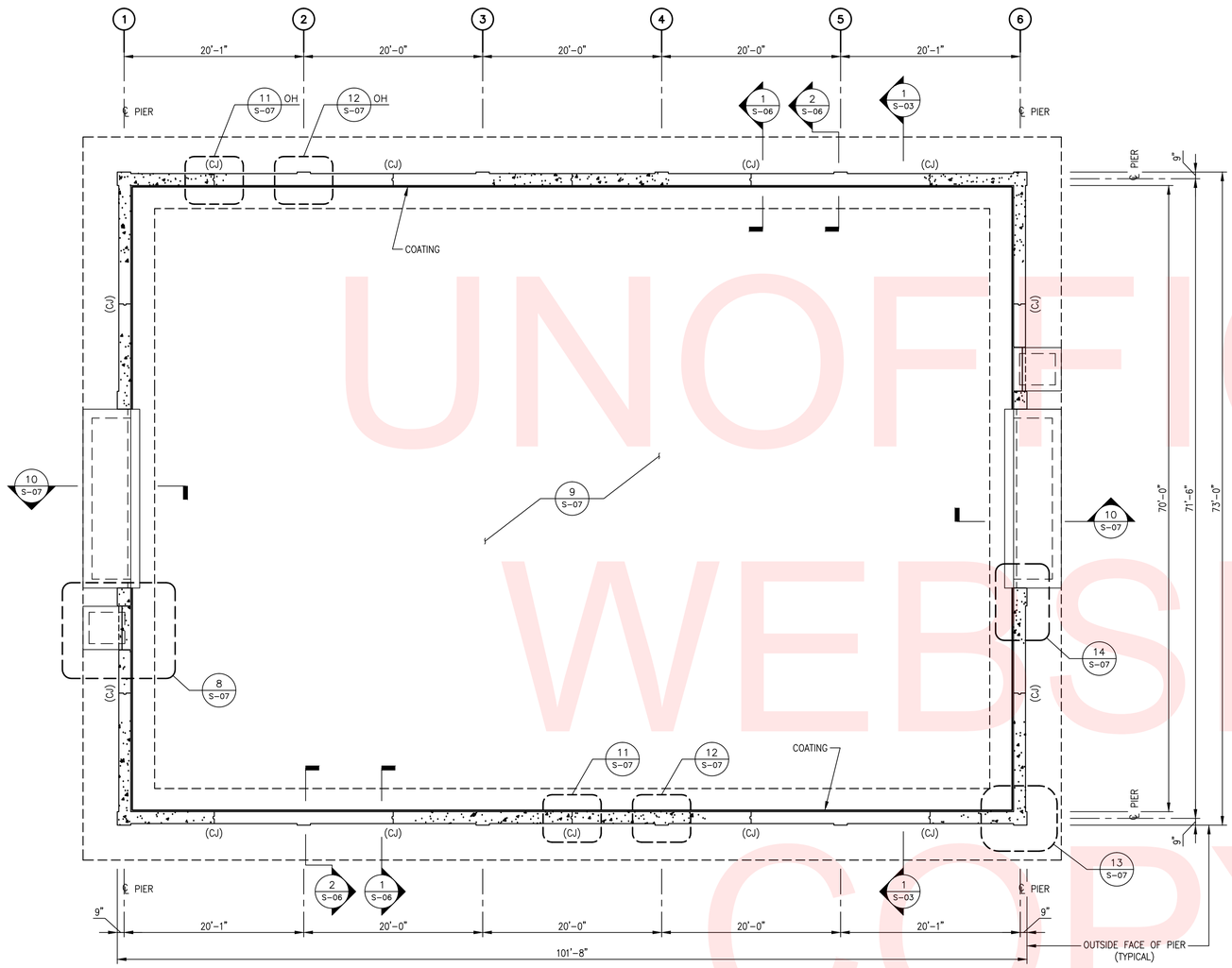

1 / S-02 SALT BARN - WALL & FOUNDATION PLAN

SCALE: 1/8" = 1'-0"

NOTES:

SALT STORAGE 70'x 100'

1. ASSUMED UNIT WEIGHT OF SALT MATERIAL: 100 POUNDS PER CUBIC FOOT.
2. ASSUMED ANGLE OF REPOSE: 34 DEGREES FROM HORIZONTAL.
3. APPROXIMATE ALLOWABLE VOLUME OF SALT MATERIAL EVENLY DISTRIBUTED: 3,780 CUBIC YARDS.
4. APPROXIMATE ALLOWABLE WEIGHT OF SALT MATERIAL EVENLY DISTRIBUTED: 5,100 TONS.
5. APPROXIMATE SOIL PRESSURE DUE TO SALT MATERIALS: 1,457 PSF.

UNOFFICIAL WEBSITE COPY

Q:\SMD\101552_011_Standard_Foundation_\CADD\Structural\SALT BARNS 70x100 & 80x120\S-02.dwg

4' 0 4' 8'
SCALE: 1/8"= 1'-0"

S-02

DELAWARE DEPARTMENT OF TRANSPORTATION

ADDENDUMS / REVISIONS	

STATEWIDE FABRIC SALT BARNS
OPEN END
FY 15-17

CONTRACT	DATE	08-31-2015
T201480107	DESIGNED BY:	NLL / JZ / DL
COUNTY		
STATEWIDE	CHECKED BY:	JHB

SALT BARN 70' x 100'
WALL & FOUNDATION PLAN

SHEET NO.
3
TOTAL SHTS.
12

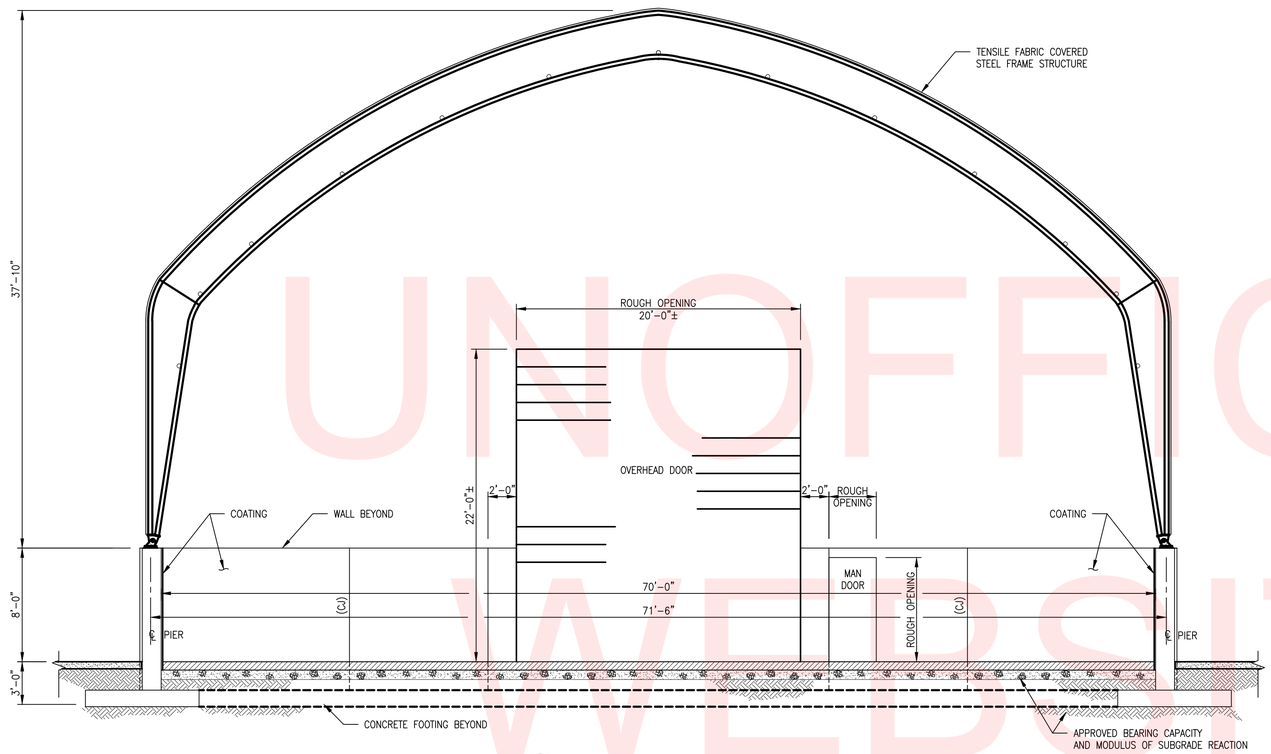

1 / S-03 **SALT BARN - SECTION**

SCALE: 3/16" = 1'-0"

NOTE: GENERAL CONTRACTOR COORDINATE ROUGH OPENING SIZE WITH OVERHEAD DOOR AND MAN DOOR MANUFACTURER

WL: WIND LOAD
SL: SNOW LOAD
DL: DEAD LOAD

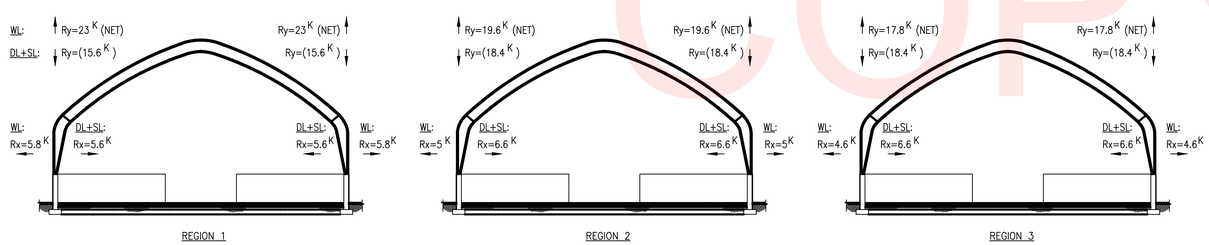

ASSUMED PRELIMINARY REACTIONS – 70'x 100'

2' 0 2' 4'
SCALE: 3/16"= 1'-0"

S-03

DELAWARE DEPARTMENT OF TRANSPORTATION	ADDENDUMS / REVISIONS	STATEWIDE FABRIC SALT BARNS OPEN END FY 15–17	CONTRACT T201480107	DATE 08-31-2015	SALT BARN 70' x 100' SECTION & ASSUMED PRELIMINARY REACTIONS	SHEET NO. 4
			COUNTY STATEWIDE	DESIGNED BY: NLL / JZ / DL		TOTAL SHTS. 12
				CHECKED BY: JHB		

UNOFFICIAL WEBSITE COPY

Q:\SMD\101552_011_Standard_Foundation_\CADD\Structural\SALT BARNS 70x100 & 80x120\S-03.dwg

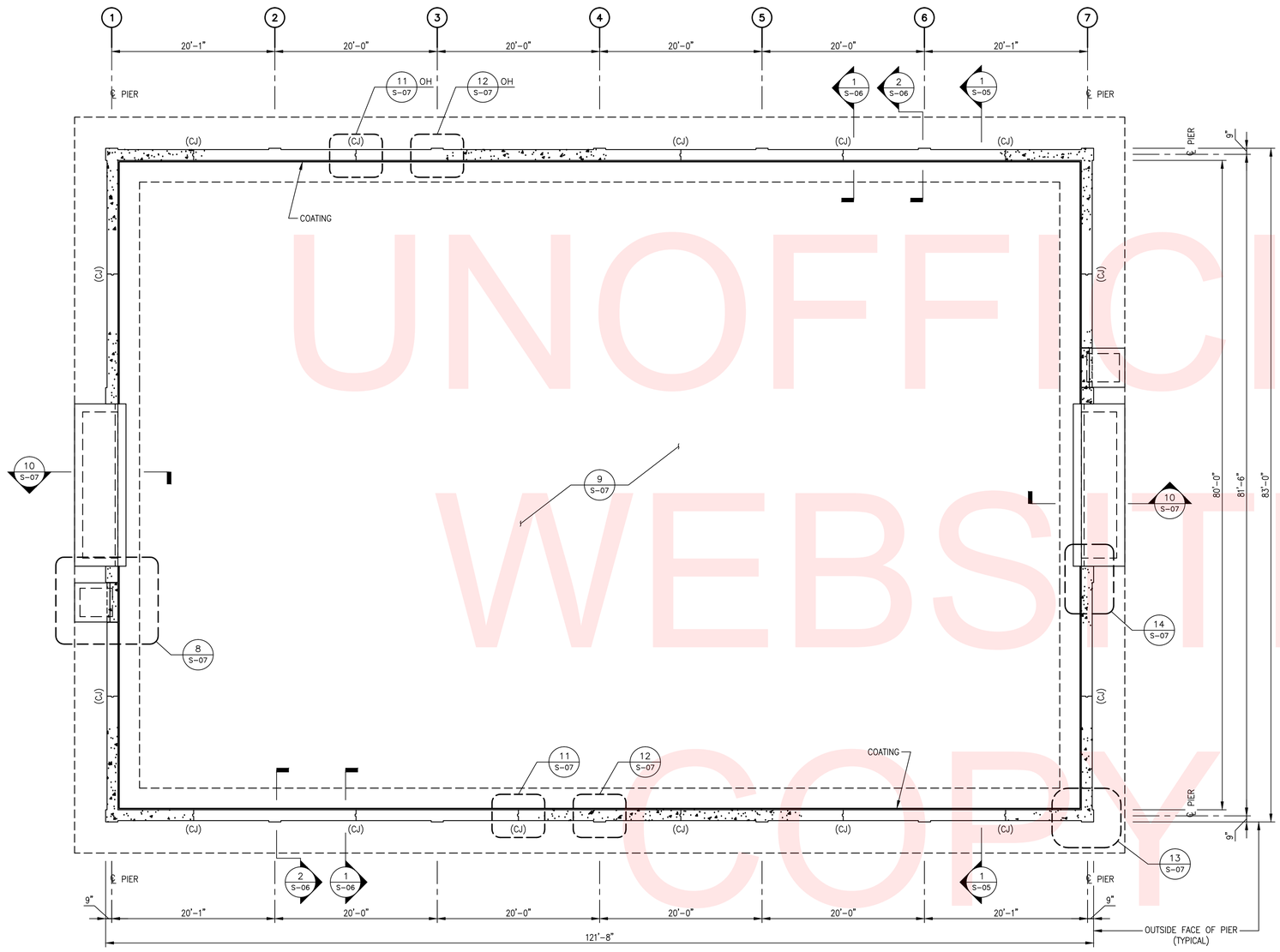

UNOFFICIAL WEBSITE COPY

1 S-02 SALT BARN - WALL & FOUNDATION PLAN

SCALE: 1/8" = 1'-0"

NOTES:

SALT STORAGE 80'x 120'

1. ASSUMED UNIT WEIGHT OF SALT MATERIAL: 100 POUNDS PER CUBIC FOOT.
2. ASSUMED ANGLE OF REPOSE: 34 DEGREES FROM HORIZONTAL.
3. APPROXIMATE ALLOWABLE VOLUME OF SALT MATERIAL EVENLY DISTRIBUTED: 5,184 CUBIC YARDS.
4. APPROXIMATE ALLOWABLE WEIGHT OF SALT MATERIAL EVENLY DISTRIBUTED: 7,000 TONS.
5. APPROXIMATE SOIL PRESSURE DUE TO SALT MATERIALS: 1,458 PSF.

4' 0 4' 8'
SCALE: 1/8"= 1'-0"

S-04

Q:\SMD\101552_011_Standard_Foundation_\CADD\Structural\SALT BARNS 70x100 & 80x120\S-04.dwg

DELAWARE DEPARTMENT OF TRANSPORTATION	ADDENDUMS / REVISIONS	STATEWIDE FABRIC SALT BARNS OPEN END FY 15-17	CONTRACT T201480107	DATE	08-31-2015	SALT BARN 80' x 120' WALL & FOUNDATION PLAN	SHEET NO. 5
			COUNTY STATEWIDE	DESIGNED BY:	NLL / JZ / DL		TOTAL SHTS. 12
				CHECKED BY:	JHB		

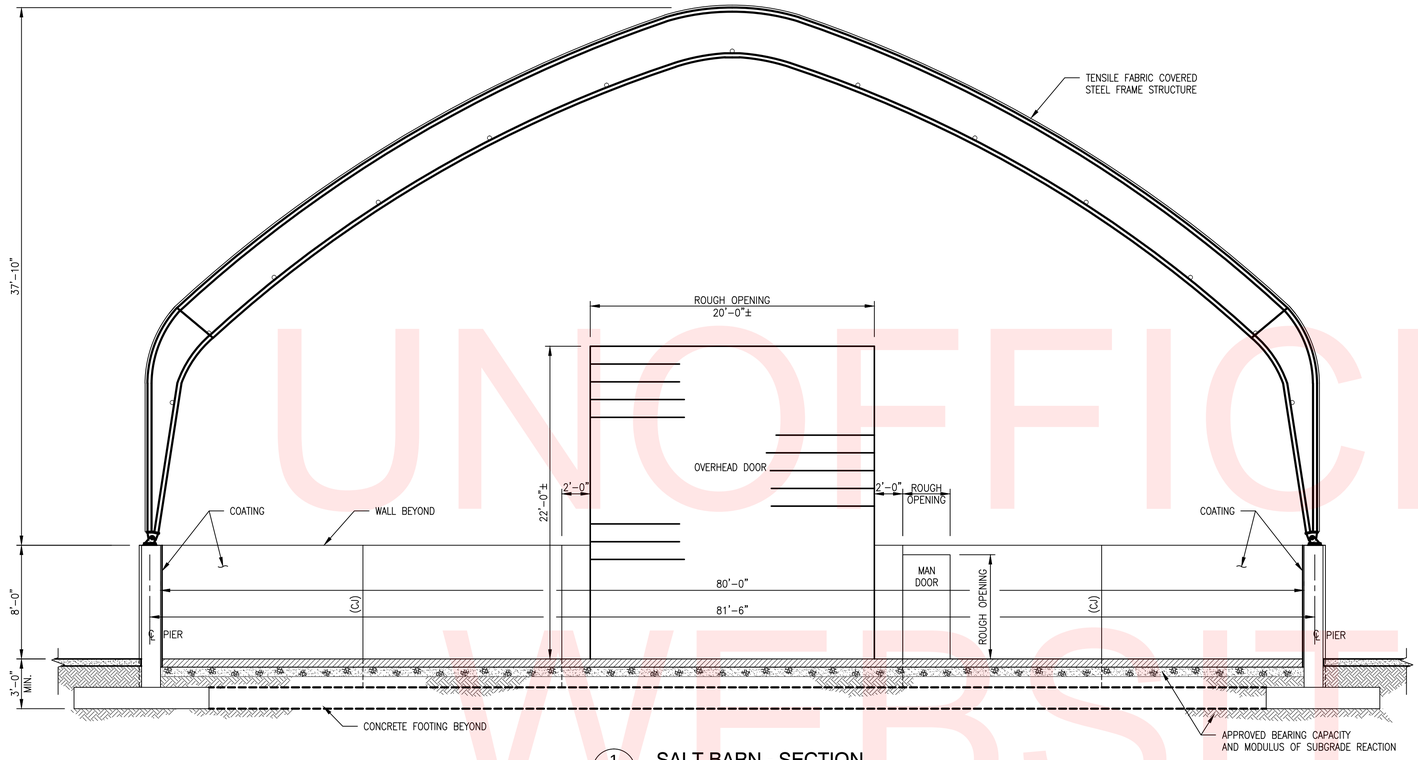

1 S-05 **SALT BARN - SECTION**

SCALE: 3/16" = 1'-0"

NOTE: GENERAL CONTRACTOR COORDINATE ROUGH OPENING SIZE WITH OVERHEAD DOOR AND MAN DOOR MANUFACTURER

WL: WIND LOAD
SL: SNOW LOAD
DL: DEAD LOAD

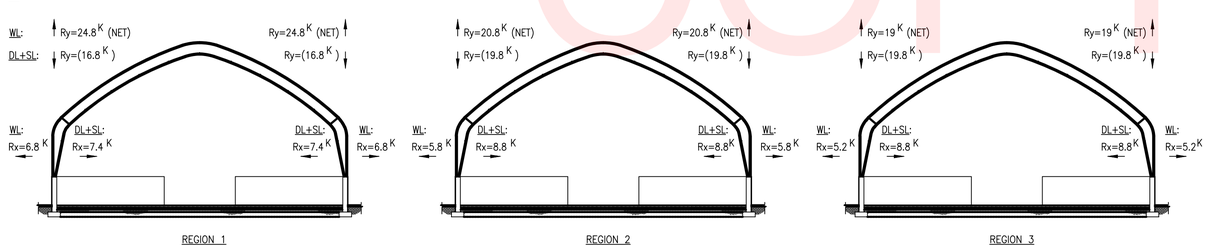

ASSUMED PRELIMINARY REACTIONS – 80x120

2' 0 2' 4' 6'
SCALE: 3/16"= 1'-0"

S-05

UNOFFICIAL WEBSITE COPY

Q:\SMD\101552_011_Standard_Foundation_\CADD\Structural\SALT BARNS 70x100 & 80x120\S-05.dwg

DELAWARE DEPARTMENT OF TRANSPORTATION	ADDENDUMS / REVISIONS	STATEWIDE FABRIC SALT BARNS OPEN END FY 15-17	CONTRACT T201480107	DATE	08-31-2015	SALT BARN 80' x 120' SECTION & ASSUMED PRELIMINARY REACTIONS	SHEET NO. 6
			COUNTY STATEWIDE	DESIGNED BY:	NLL / JZ / DL		TOTAL SHTS. 12
				CHECKED BY:	JHB		

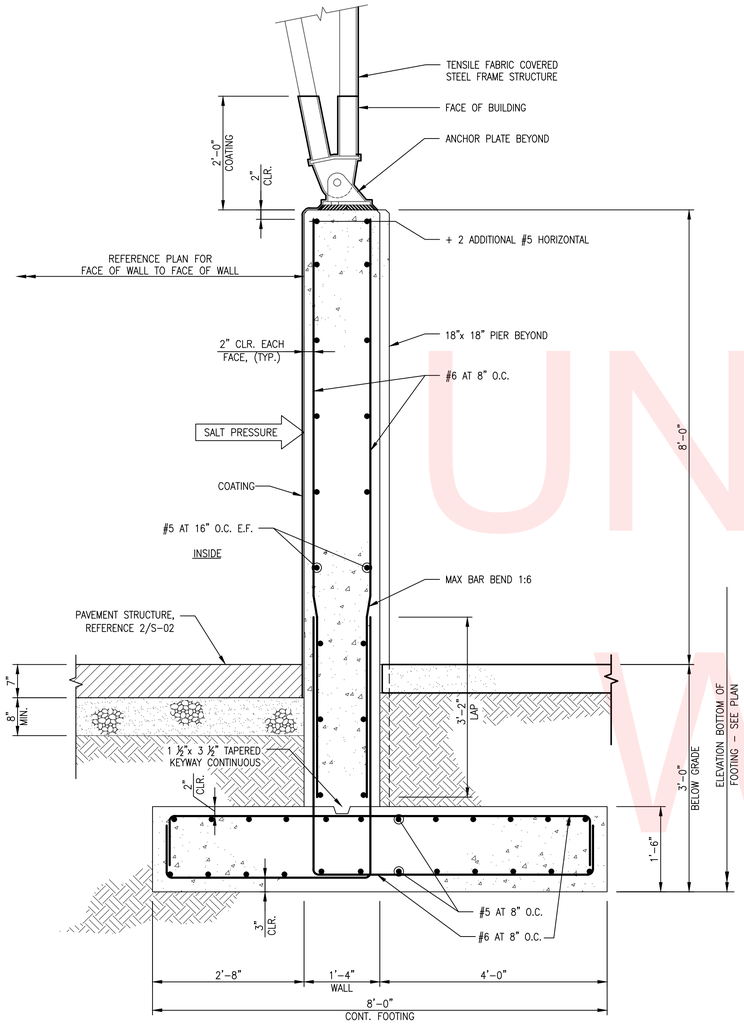

1 S-06 CONCRETE WALL
SCALE: 3/4" = 1'-0"

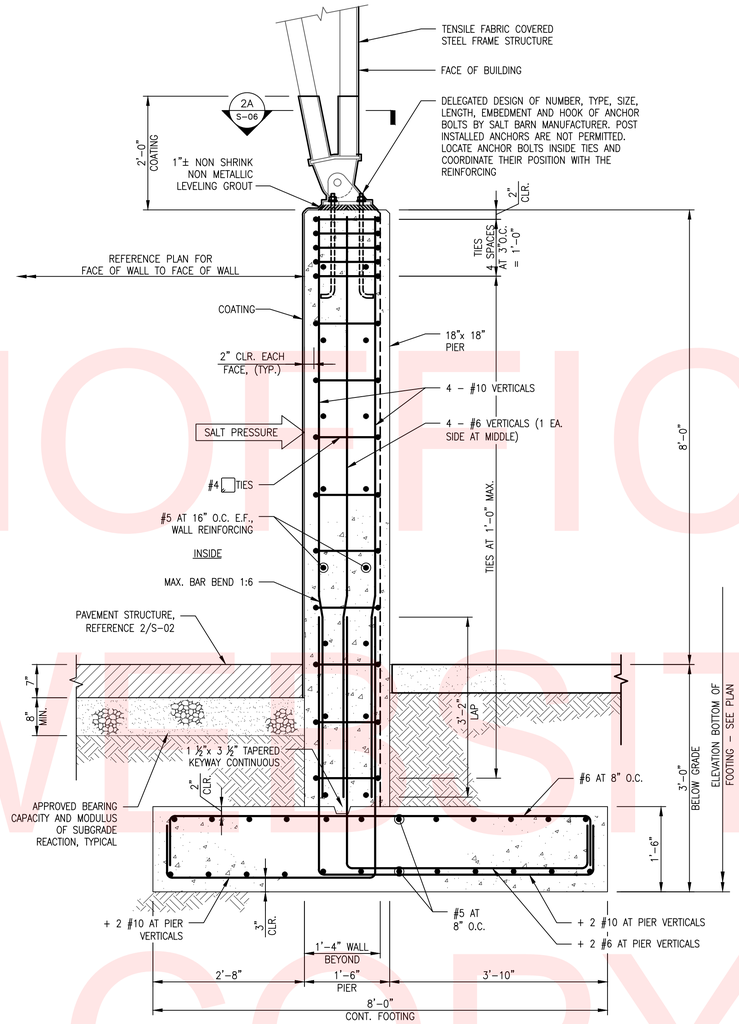

2 S-06 CONCRETE PIER AT INTERIOR
SCALE: 3/4" = 1'-0"

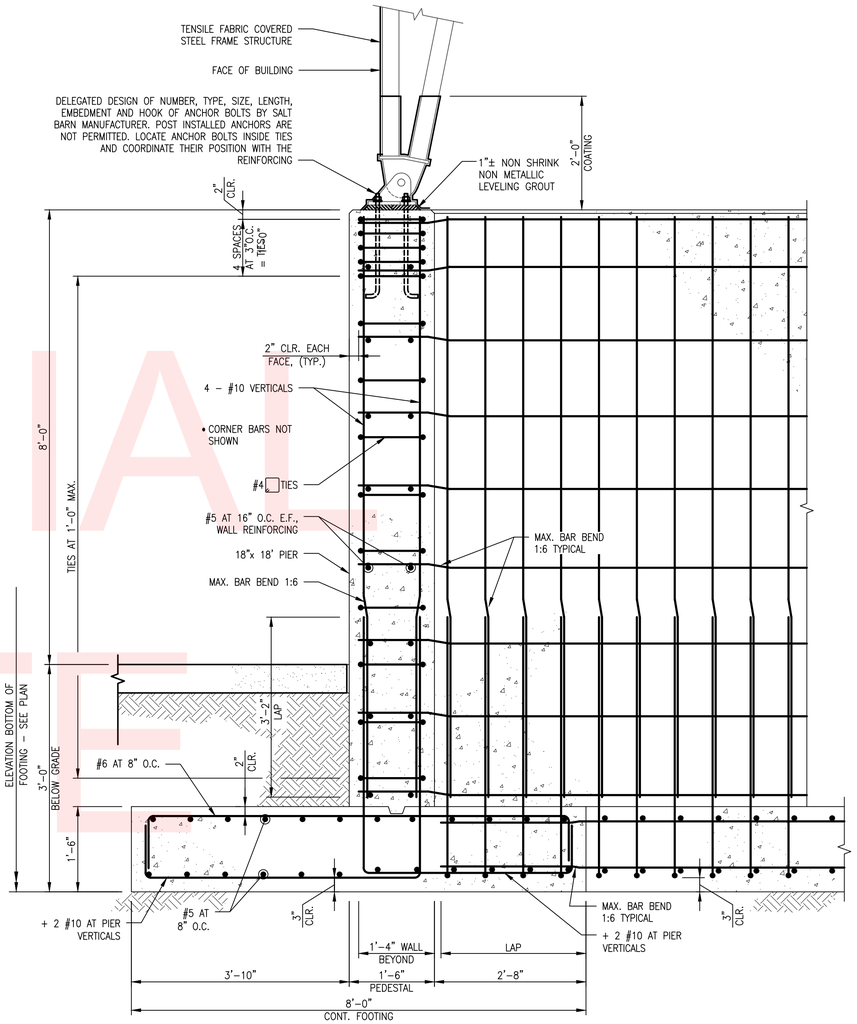

3 S-06 CONCRETE PIER AT CORNER
SCALE: 3/4" = 1'-0"

LAP SPLICE SCHEDULE (f'c = 4,000 PSI)

BAR SIZE	SLAB AND WALL		STANDARD 90° HOOK		STANDARD 180° HOOK	
	OTHER BARS	TOP BARS	1dh	12db	1dh	4db
#3	15"	22"	8"	5"	8"	2"
#4	19"	29"	10"	6"	10"	2"
#5	24"	38"	12"	8"	12"	3"
#6	29"	43"	15"	9"	15"	3"
#7	42"	63"	17"	11"	17"	4"
#8	48"	72"	19"	12"	19"	4"
#9	54"	81"	22"	14"	22"	5"
#10	60"	89"	24"	16"	24"	5"

NOTES:

SLAB AND WALL: MINIMUM REBAR SPACING AS INDICATED
MINIMUM CONCRETE COVER = 2.0" CLEAR (UNLESS NOTED OTHERWISE)

TOP BAR: TOP BAR FOR SLAB SHALL BE DEFINED AS REINFORCED SO PLACED THAT MORE THAN 12" OF CONCRETE IS CAST BELOW THE SPLICE.

STANDARD HOOKS: SIDE COVER MORE THAN 2.5"
END COVER (90° HOOK) MORE THAN 2"
MINIMUM COVER TO TAIL = 2"

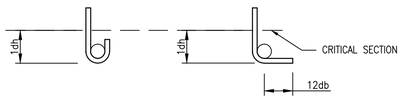

STANDARD 180° AND 90° END HOOKS
STANDARD HOOK LENGTH DIAGRAM

TYPICAL LAP SPLICE SCHEDULE & STANDARD HOOK LENGTH DIAGRAM

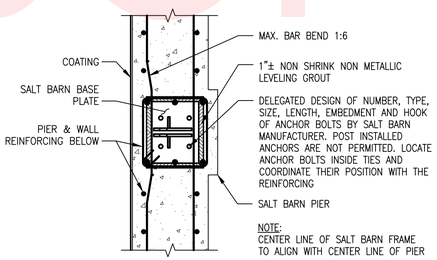

2A S-06 SALT BARN BASE PLATE
SCALE: 3/4" = 1'-0"

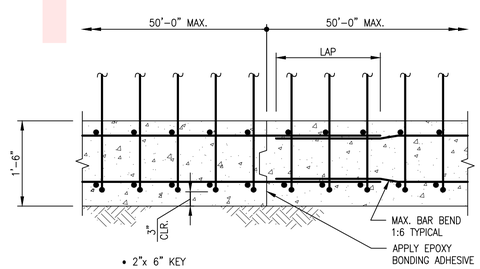

• JOINT LOCATION BY CONTRACTOR MAINTAIN AT LEAST 10'-0" AWAY FROM ANY PIER IN EITHER DIRECTION. LOCATION TO BE SHOWN ON SHOP DRAWINGS AND APPROVED BY ENGINEER

4 S-06 TYP. WALL FOOTING JOINT
SCALE: 3/4" = 1'-0"

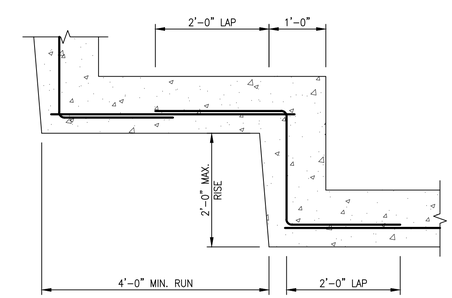

5 S-06 TYP. STEPPED FOOTING
SCALE: N.T.S.

6" 0 6" 12" 18"
SCALE: ¾"= 1'-0"

S-06

UNOFFICIAL WEBSITE COPY

Q:\SMD\101552_011_Standard_Foundation_\CADD\Structural\SALT BARNS 70x100 & 80x120\S-06.dwg

DELAWARE DEPARTMENT OF TRANSPORTATION

ADDENDUMS / REVISIONS

STATEWIDE FABRIC SALT BARNS
OPEN END
FY 15-17

CONTRACT	DATE	08-31-2015
T201480107	DESIGNED BY:	NLL / JZ / DL
COUNTY		
STATEWIDE	CHECKED BY:	JHB

SALT BARN SECTIONS & DETAILS

SHEET NO. 7
TOTAL SHTS. 12

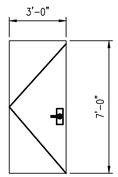

1 DOOR
S-07 SCALE: 1/4" = 1'-0"

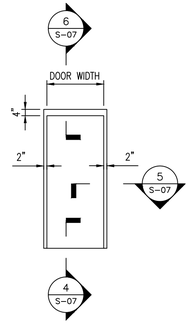

2 FRAME
S-07 SCALE: 1/4" = 1'-0"

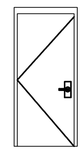

3 DOOR AND FRAME
S-07 SCALE: 1/4" = 1'-0"

NOTES:

1. PAINT HOLLOW METAL DOOR AND FRAME. COLOR TO BE SELECTED BY OWNER. PROVIDE ZINC-RICH EPOXY PRIMER, EPOXY INTERMEDIATE COAT AND EPOXY TOP COAT FOR ALL MAN DOORS AND FRAMES.
2. 1-3/4" THICK HOLLOW METAL DOOR.
3. STAINLESS STEEL HARDWARE SELECTED BY OWNER.

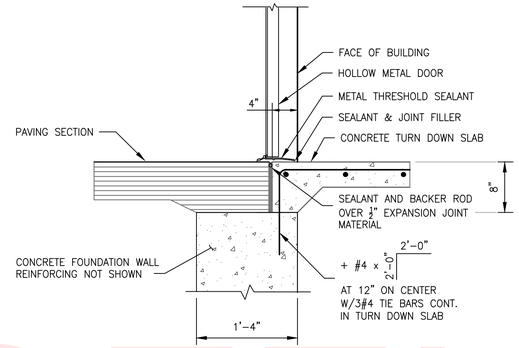

4 EXTERIOR DOOR SILL
S-07 SCALE: 1" = 1'-0"

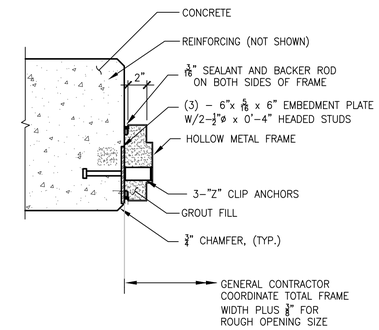

NOTE:

1. GENERAL CONTRACTOR COORDINATE LOCATION OF PLATE W/"Z" CLIP ANCHORS.

5 JAMB DETAIL
S-07 SCALE: 1-1/2" = 1'-0"

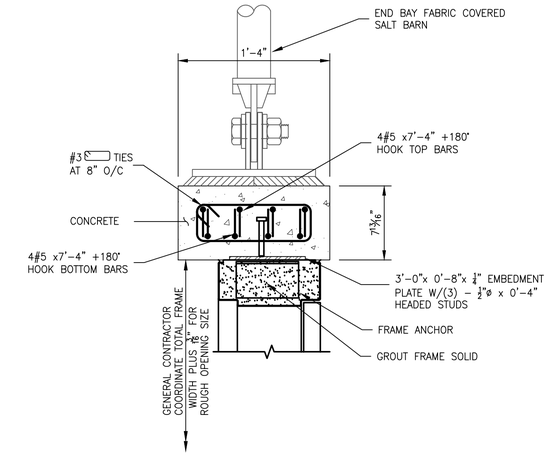

6 DOOR HEAD DETAIL
S-07 SCALE: 1-1/2" = 1'-0"

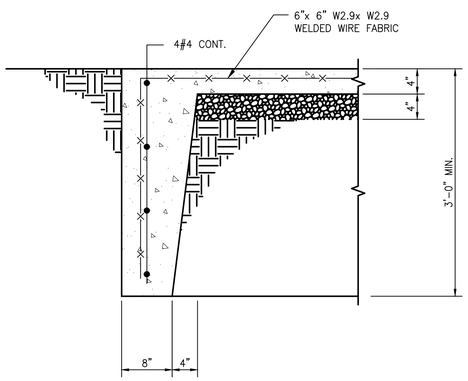

7 EXTERIOR TURN DOWN SLAB
S-07 SCALE: 1" = 1'-0"

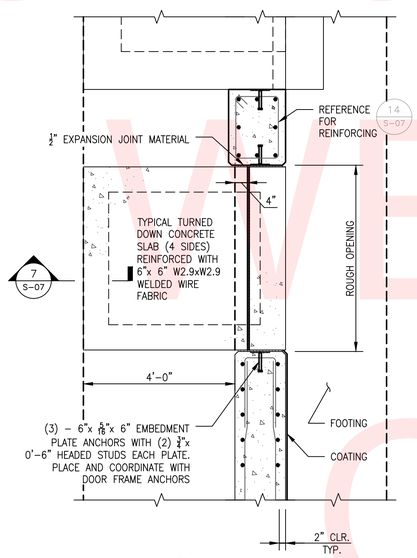

8 DOOR PAD
S-07 SCALE: 1/2" = 1'-0"

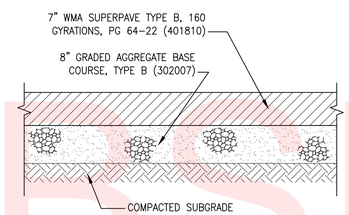

9 PAVING SECTION
S-07 SCALE: N.T.S.

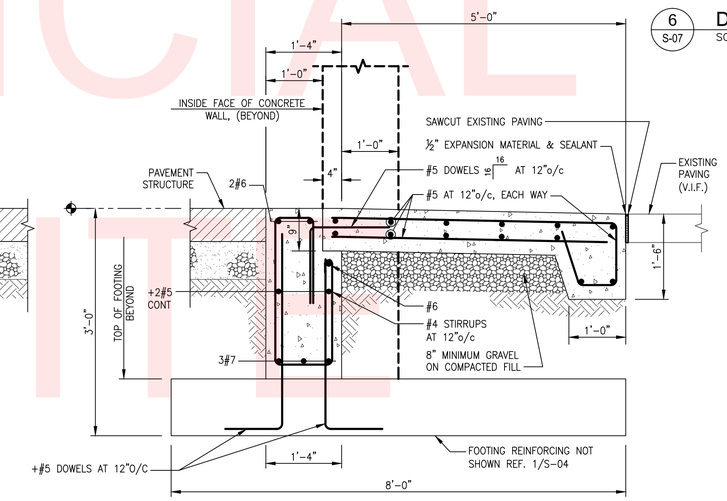

10 ENTRANCE DETAIL
S-07 SCALE: 3/4" = 1'-0"

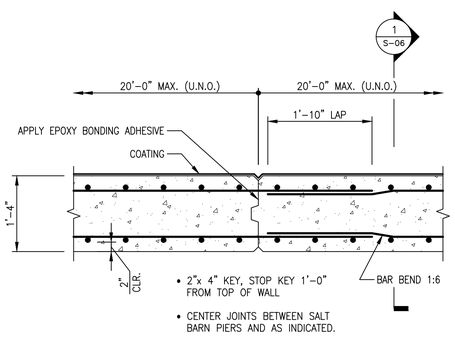

11 TYP. WALL CONSTRUCTION JOINT
S-07 SCALE: 3/4" = 1'-0"

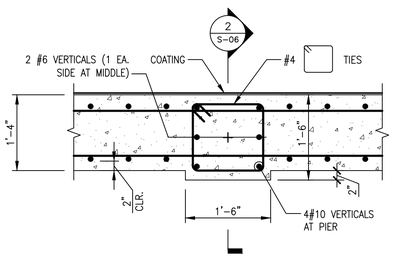

12 TYP. INTERIOR PIER
S-07 SCALE: 3/4" = 1'-0"

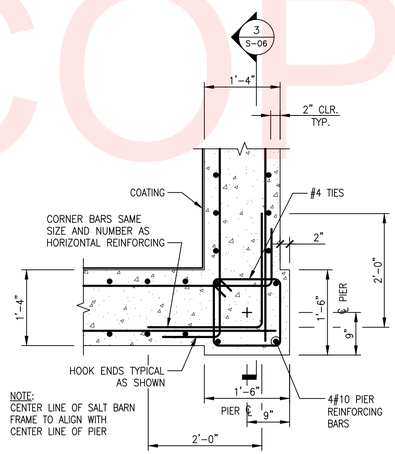

NOTE:
CENTER LINE OF SALT BARN FRAME TO ALIGN WITH CENTER LINE OF PIER

13 TYP. CORNER PIER
S-07 SCALE: 3/4" = 1'-0"

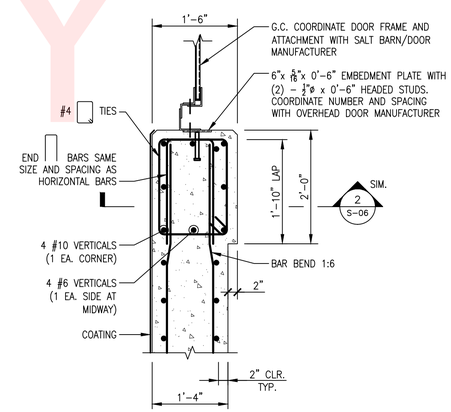

14 TYP. WALL END
S-07 SCALE: 3/4" = 1'-0"

24" 0 2' 4'
SCALE: 1/4" = 1'-0"

6" 0 6" 12" 18"
SCALE: 3/4" = 1'-0"

6" 0 6" 1'
SCALE: 1" = 1'-0"

3" 0 3" 6" 9"
SCALE: 1 1/2" = 1'-0"

2" 0 2" 4"
SCALE: 3" = 1'-0"

S-07

UNOFFICIAL WEBSITE COPY

Q:\SMO\101552_011_Standard_Foundation_\CADD\Structural\SALT BARNS 70x100 & 80x120\S-07.dwg

DELAWARE DEPARTMENT OF TRANSPORTATION	ADDENDUMS / REVISIONS	STATEWIDE FABRIC SALT BARNS OPEN END FY 15-17	CONTRACT T201480107	DATE 08-31-2015	SALT BARN DETAILS
			COUNTY STATEWIDE	DESIGNED BY: NLL / JZ / DL	SHEET NO. 8
				CHECKED BY: JHB	TOTAL SHTS. 12

SYMBOL LEGEND

SYMBOL	DESCRIPTION	MOUNTING HEIGHT
J	JUNCTION BOX, WALL/CEILING MOUNTED	= =
S T X	SWITCH, TOGGLE T = DENOTES TIMER SWITCH X = SWITCH CONTROL GROUP	= =
	WALL MOUNTED LIGHT FIXTURE	= =
	PENDANT MOUNTED LIGHT FIXTURE	= =

ELECTRICAL CONVENTIONS

WIRING

LP2A-1,3,5 — HOMERUN TO PANEL "LP2A", CIRCUIT #1,3,5. PROVIDE INSULATED GROUND CONDUCTOR IN ACCORDANCE WITH SPECIFICATIONS. ARROW HEAD INDICATES A HOMERUN TO A PANEL.

HASH MARKS INDICATE QUANTITY OF #12 AWG COPPER CONDUCTORS IN CONDUIT. WHEN NO HASH MARKS ARE INDICATED, CONDUIT SHALL CONTAIN (2) #12 WIRES AND #12 GROUND WIRE. ASSUME 3/4" DIAMETER CONDUIT UNLESS NOTED OTHERWISE. EXAMPLE SHOWN AT LEFT INDICATES 2 HOT, 2 NEUTRAL (LONG LINES), AND 1 GROUND WIRES.

EXPOSED CONDUIT AND/OR WIRING.

—UG— UNDERGROUND CONDUIT AND/OR WIRING.

REFERENCE

DETAIL REFERENCE
"#" DENOTES DETAIL NUMBER
"SHT" DENOTES SHEET NUMBER

ELEVATION OR SECTION IDENTIFIER
"X" DENOTES ELEVATION OR SECTION NUMBER
"#" DENOTES SHEET NUMBER

SHEET KEYNOTE NUMBER

REVISION NUMBER

PRESENTATION

ELECTRICAL EQUIPMENT DESIGNATED BY SOLID HEAVY LINE WEIGHT INDICATES NEW WORK TO BE PROVIDED, UNLESS OTHERWISE INDICATED.

ELECTRICAL EQUIPMENT DESIGNATED BY SOLID LIGHT LINE WEIGHT INDICATES EXISTING EQUIPMENT TO REMAIN, UNLESS OTHERWISE INDICATED.

ELECTRICAL EQUIPMENT DESIGNATED BY DASHED HEAVY LINE WEIGHT INDICATES EXISTING EQUIPMENT TO BE REMOVED AND DISPOSED, UNLESS INDICATED TO BE REMOUNTED, RELOCATED, OR TURNED OVER TO OWNER.

ABBREVIATIONS

A	AMPERES
AFF	ABOVE FINISH FLOOR
AFG	ABOVE FINISH GRADE
AHJ	AUTHORITY HAVING JURISDICTION
AHU	AIR HANDLING UNIT
AIC	AMPERE INTERRUPTING CAPACITY
ANSI	AMERICAN NATIONAL STANDARDS INSTITUTE
ATS	AUTOMATIC TRANSFER SWITCH
ATC	AUTOMATIC TEMPERATURE CONTROL
AWG	AMERICAN WIRE GAUGE
BFG	BELOW FINISH GRADE
BG&E	BALTIMORE GAS AND ELECTRIC COMPANY
BLDG	BUILDING
C	CONDUIT
CAT	CATALOG
CB	CIRCUIT BREAKER
CCSI	COMMERCIAL CABLING AND SOUND, INC.
CI	CAST IRON
CKT	CIRCUIT
CPT	CONTROL POWER TRANSFORMER
CT	CURRENT TRANSFORMER
CU	COPPER
DI	DUCTILE IRON
DWG	DRAWING
ECB	ENCLOSED CIRCUIT BREAKER
EF	EXHAUST FAN
EM	EMERGENCY
EMT	ELECTRICAL METALLIC TUBING
EPO	EMERGENCY POWER OFF
EX	EXISTING
EXP	EXPLOSION PROOF
ETR	EXISTING TO REMAIN
F	FUSE
FLA	FULL LOAD AMPERES
FMC	FLEXIBLE METAL CONDUIT
FT	FEET
FVNR	FULL VOLTAGE NON-REVERSING
GND,G	GROUND OR GROUNDING
GRMC	GALVANIZED RIGID METALLIC CONDUIT
H2S	HYDROGEN SULFIDE
HOA	HAND, OFF, AUTOMATIC SWITCH
HP	HORSEPOWER
IEEE	INSTITUTE OF ELECTRICAL AND
EE	ELECTRONIC ENGINEERS
KCMIL	THOUSAND CIRCULAR MILS
KVA	KILOVOLT AMPERES
KW	KILOWATTS
LFMC	LIQUID TIGHT FLEXIBLE METAL CONDUIT
MAU	MAKE-UP AIR UNIT
MCB	MAIN CIRCUIT BREAKER
MCC	MOTOR CONTROL CENTER
MCP	MOTOR CIRCUIT PROTECTOR
MDP	MAIN DISTRIBUTION PANEL
MISC	MISCELLANEOUS
MLO	MAIN LUGS ONLY
MSIC	MANUFACTURER SPECIFIED INSTRUMENT CABLE
NC	NORMALLY CLOSED
NEC	NATIONAL ELECTRIC CODE
NEMA	NATIONAL ELECTRICAL MANUFACTURES ASSOCIATION
NFPA	NATIONAL FIRE PROTECTION ASSOCIATION
NO	NORMALLY OPEN OR NUMBER
NTS	NOT TO SCALE
O2	OXYGEN
OL	OVERLOAD
P	POLE
PB	PUSHBUTTON
PLC	PROGRAMMABLE LOGIC CONTROLLER
PNL	PANEL
PVC	POLYVINYL CHLORIDE
PWR	POWER
PT	POTENTIAL TRANSFORMER
QTY	QUANTITY
REL	RELOCATE
REX	REMOVE EXISTING
RMC	RIGID METAL CONDUIT
RMS	ROOT MEAN SQUARED
RGS	RIGID GALVANIZED STEEL
RTU	ROOF TOP UNIT
SP	SPARE
SS	STAINLESS STEEL
S/S	SELECTOR SWITCH
SSS	SOLID STATE STARTER
SW	SWITCH
SYM	SYMMETRICAL
TEL	TELEPHONE
TMCB	THERMAL MAGNETIC CIRCUIT BREAKER
TPS	TWISTED PAIR SHIELDED
UG	UNDERGROUND OR UNDERGRADE
UL	UNDERWRITERS LABORATORIES
UPS	UNINTERRUPTED POWER SOURCE
V	VOLT
VAC	VOLTS AC
VT	VOLTAGE TRANSFORMER
W	WIRE
WH	WATER HEATER
WP	WEATHER PROOF
XFMR	TRANSFORMER
△	DELTA
Y	WYE
Φ	PHASE

GENERAL NOTES

1. ALL WORK SHALL BE IN ACCORDANCE WITH THE LATEST EDITION OF THE NATIONAL ELECTRICAL CODE.
2. THESE DRAWINGS ARE SCHEMATIC IN NATURE AND REPRESENT A COMPLETED PROJECT, MINOR MODIFICATIONS OF WORK SHALL BE PROVIDED BY THE CONTRACTOR TO COMPLY WITH PROJECT REQUIREMENTS. LOCATIONS OF DEVICES AND EQUIPMENT SHOW A GENERAL ARRANGEMENT AND INTENDED FUNCTION. BEFORE INSTALLATION OF WORK, CHECK FOR SWINGS AND ALL REQUIRED CLEARANCES, TO AVOID INTERFERENCE WITH OTHER TRADES. COORDINATE WITH ALL CONTRACT DOCUMENTS, SHOP DRAWINGS AND EQUIPMENT DRAWINGS. THE CONTRACTOR IS RESPONSIBLE FOR OBTAINING ALL REQUIRED CONTRACT DRAWINGS.
3. INSTALL EQUIPMENT IN ACCORDANCE WITH THE MANUFACTURER'S RECOMMENDATIONS AND CONDITIONS FOR WARRANTY AND GUARANTEE. PROVIDE ALL ACCESSORIES REQUIRED FOR A COMPLETE AND SATISFACTORY INSTALLATION READY FOR CONTINUOUS USE.
4. COMPLY WITH LOCAL AND APPLICABLE CODES. IN THE EVENT OF A CONFLICT, THE MOST STRINGENT SHALL GOVERN. SHOULD A CONFLICT ARISE BETWEEN CONSTRUCTION DOCUMENTS AND APPLICABLE CODES, WORK SHALL COMPLY WITH THE REQUIREMENTS OF ENFORCING CODE AUTHORITIES.
5. COORDINATE ELECTRICAL CHARACTERISTICS AND CIRCUIT PROTECTION REQUIREMENTS OF EQUIPMENT SUPPLIED, REGARDLESS OF TRADE. CONTRACTOR SHALL PROVIDE NECESSARY REVISIONS TO FEEDERS AND OR CIRCUIT PROTECTION AS REQUIRED TO MEET ACTUAL MANUFACTURER NAMEPLATE DATA.
6. CUT AND PATCH BUILDING STRUCTURE AS REQUIRED. WATERPROOF OUTDOOR PENETRATIONS. THIS WORK SHALL BE SUBJECT TO INSPECTION AND APPROVAL.
7. ALL EQUIPMENT SHALL BE INSTALLED IN A NEAT AND WORKMANLIKE MANNER, RECTILINEAR TO BUILDING STRUCTURE.
8. CONTRACTOR SHALL REVIEW ALL TRADES' CONTRACT DOCUMENTS TO DETERMINE SPECIFIC MOUNTING LOCATIONS FOR ELECTRICAL EQUIPMENT. COORDINATE EXACT MOUNTING LOCATIONS WITH THE ENGINEER.
9. GROUNDING: PROVIDE GROUNDING IN ACCORDANCE WITH NEC ARTICLE 250. CONDUCTORS SHALL BE COPPER. FEEDERS, BRANCH CIRCUITS, AND OTHER WIRING SYSTEMS SHALL HAVE A SEPARATE GREEN INSULATED GROUND WIRE.

GENERAL SPECIFICATIONS

1. PROVIDE ITEMS REFERRED TO IN SINGULAR NUMBER IN CONTRACT DOCUMENTS IN QUANTITIES NECESSARY TO COMPLETE WORK.
2. VISIT SITE AND EXAMINE CONDITIONS UNDER WHICH WORK MUST BE PERFORMED. REPORT ADVERSE CONDITIONS IN WRITING TO ENGINEER. COMMENCEMENT OF WORK SHALL BE CONSTRUED AS COMPLETE ACCEPTANCE OF EXISTING CONDITIONS INCLUDING PREPARATORY WORK DONE BY OTHERS.
3. PERFORM WORK AND PROVIDE MATERIALS AND EQUIPMENT AS SHOWN ON DRAWINGS. COORDINATE ELECTRICAL WORK WITH WORK OF OTHER SECTIONS.
4. GIVE NOTICES, FILE PLANS, OBTAIN PERMITS AND LICENSES, PAY FEES AND BACK CHARGES, AND OBTAIN NECESSARY APPROVALS FROM AUTHORITIES THAT HAVE JURISDICTION.
5. PERFORM WORK AS REQUIRED BY CODES, REGULATIONS AND LAWS OF LOCAL, STATE AND FEDERAL GOVERNMENTS AND OTHER AUTHORITIES WITH LAWFUL JURISDICTION.
6. MATERIAL AND EQUIPMENT SHALL BE UL, NEMA, ANSI, IEEE, ADA, AND CBM APPROVED FOR INTENDED SERVICE. MATERIAL AND INSTALLATION SHALL MEET REQUIREMENTS OF NATIONAL AND STATE ELECTRICAL CODE. REFER TO THE SHA STANDARD SPECIFICATIONS FOR CONSTRUCTION AND MATERIALS.
7. MAINTAIN RECORD DRAWINGS ON SITE. RECORD SET MUST BE COMPLETE AND CURRENT AND AVAILABLE FOR INSPECTION WHEN REQUISITIONS FOR PAYMENT ARE SUBMITTED.
8. GUARANTEE WORK IN WRITING FOR ONE YEAR FROM DATE OF FINAL ACCEPTANCE. REPAIR OR REPLACE DEFECTIVE MATERIALS OR INSTALLATION AT NO COST TO OWNER. CORRECT DAMAGE CAUSED IN MAKING NECESSARY REPAIRS AND REPLACEMENTS UNDER GUARANTEE AT NO COST TO OWNER.
9. STATEMENT OF GUARANTEE REQUIREMENTS SHALL NOT BE INTERPRETED TO LIMIT OWNER'S RIGHTS UNDER LAW AND THIS CONTRACT.
10. DEVIATION FROM CONTRACT DOCUMENTS, OR PROPOSED SUBSTITUTION OF MATERIALS OR EQUIPMENT FOR THOSE SPECIFIED, SHALL BE REQUESTED IN SEPARATE LETTER, WHETHER DEVIATIONS ARE DUE TO FIELD CONDITIONS, STANDARD SHOP PRACTICE, OR OTHER CAUSE.
11. ALL NEW WIRING SHALL BE TYPE THWN RATED 75^C., 600 VOLT. WET OR DRY LOCATIONS. MINIMUM BRANCH CIRCUIT WIRING SHALL BE NO. 12 AWG SOLID COPPER. BRANCH CIRCUITS LONGER THAN 75 FEET FOR 120 VOLT SHALL BE AT LEAST #10 FROM PANEL TO LAST OUTLET/LIGHT FIXTURE.
12. PROVIDE MATERIALS THAT ARE NEW, OF THE BEST OF THEIR RESPECTIVE KINDS, WITHOUT IMPERFECTIONS OR BLEMISHES, AND PROTECTED FROM THE ELEMENTS PRIOR TO CONSTRUCTION.
13. TEST AND DEMONSTRATE THE WORKABILITY OF ALL ELECTRICAL SYSTEMS BY GENERATOR IF NO POWER IS PRESENT.

UNOFFICIAL WEBSITE COPY

E-01

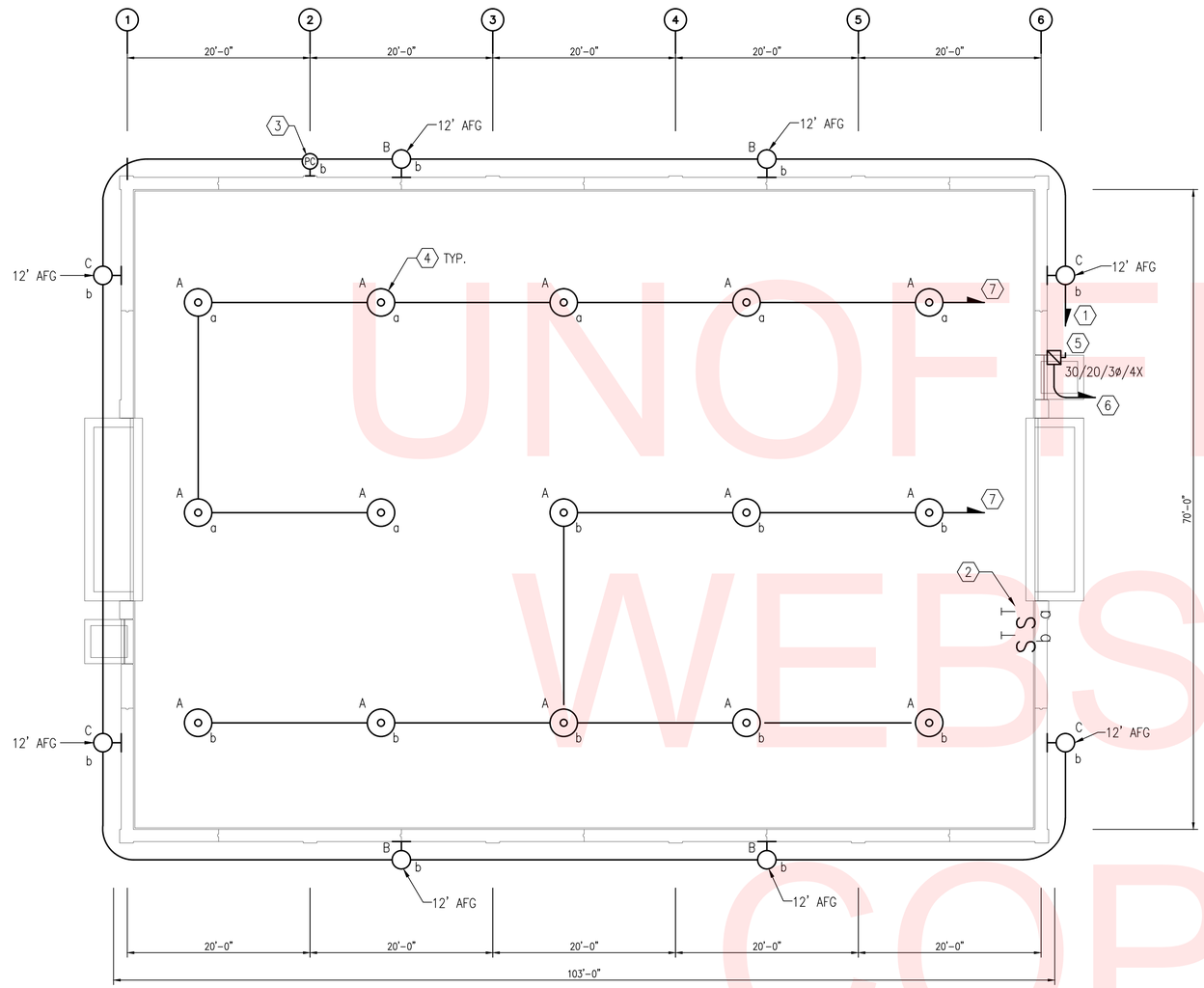

1 E-02 SALT BARN - LIGHTING PLAN
SCALE: 1/8" = 1'-0"

GENERAL NOTES:

1. INFORMATION SHOWN ON THIS DRAWING PERTAINING TO EXISTING CONDITIONS HAS BEEN OBTAINED FROM AVAILABLE BUILDING DRAWINGS OR GENERAL FIELD OBSERVATIONS AND MAY NOT INDICATE ACTUAL EXISTING CONDITIONS IN DETAIL OR DIMENSION. THE CONTRACTOR IS RESPONSIBLE FOR DETERMINING THE ACTUAL EXISTING CONDITIONS PRIOR TO FABRICATION OR PERFORMANCE OF ANY WORK. SHOULD CONDITIONS BE DISCOVERED THAT PREVENT EXECUTION OF THE WORK AS INDICTED, THE CONTRACTOR SHALL IMMEDIATELY NOTIFY THE ARCHITECT IN WRITING AND AWAIT DIRECTION BEFORE PROCEEDING WITH THE WORK.
2. UNLESS OTHERWISE NOTED ELECTRICAL ITEMS SHOWN HEAVY SOLID (——) SHALL BE NEW.
3. ABOVE GRADE CONDUIT SHALL BE PVC COATED RIGID GALVANIZED STEEL CONDUIT.
4. BELOW GRADE CONDUIT SHALL BE SCHEDULE 80 PVC CONDUIT. CONDUIT SHALL TRANSITION FROM PVC COATED RGS TO SCHEDULE 80 PVC AT 6" AFG. UNDERGROUND CONDUIT SHALL BE BURIED AT 24" BELOW GRADE.

SHEET KEYNOTES:

1. PROVIDE (2)#12 AWG AND (1)#12 GND IN 3/4" PVC COATED, SURFACE MOUNTED, RGS CONDUIT ROUTE CIRCUIT THROUGH SERVICE ENTRANCE DISCONNECT SWITCH.
2. PROVIDE 20A SINGLE POLE TIMER SWITCHES. SWITCHES SHALL BE CAPABLE OF TURNING DEVICE ON FOR A MAXIMUM OF 12 CONTINUOUS HOURS. THIS SWITCH SHALL CONTROL ALL INTERIOR LIGHTING FIXTURES.
3. PROVIDE 20A PHOTOCELL. PHOTOCELL SHALL BE LOCATED ON THE NORTH SIDE OF THE BUILDING. THIS SWITCH SHALL CONTROL ALL EXTERIOR LIGHTING FIXTURES. COORDINATE COIL VOLTAGE WITH SERVICE VOLTAGE.
4. COORDINATE MOUNTING HEIGHT TO BOTTOM OF STRUCTURAL TRUSSES.
5. PROVIDE 3 POLE, 30A, HEAVY DUTY 480V SERVICE ENTRANCE RATED DISCONNECT SWITCH, FUSED AT 20A IN NEMA 4X ENCLOSURE.
6. PROVIDE 3-1 POLE, 20A CIRCUITS FROM NEAREST SOURCE OF POWER. PROVIDE 3#8, 1#8 NEUTRAL, AND 1#8 GND IN 2"C FROM 3 POLE 20A CIRCUIT BREAKER. ROUTE 2"C UNDERGROUND FROM SALT BARN TO POWER SOURCE. IF DISTANCE FROM SALT BARN TO POWER SOURCE EXCEEDS 100', INCREASE CONDUCTOR SIZE SUCH THAT VOLTAGE DROP DOES NOT EXCEED 3%.
7. PROVIDE (2) #12 AWG AND (1) #12 GND IN ¾" PVC COATED, SURFACE MOUNTED, RGS CONDUIT ROUTE CIRCUIT THROUGH TIMER SWITCH TO SERVICE ENTRANCE DISCONNECT SWITCH.

UNOFFICIAL WEBSITE COPY

4' 0 4' 8'
SCALE: ⅛"= 1'-0"

E-02

Q:\SMD\101552_011_Standard_Foundation_\CADD\Electrical\E-02.dwg

DELAWARE DEPARTMENT OF TRANSPORTATION	ADDENDUMS / REVISIONS	STATEWIDE FABRIC SALT BARNS OPEN END FY 15-17	CONTRACT T201480107	DATE 08-31-2015	SALT BARN 70' x 100' LIGHTING LAYOUT PLAN	SHEET NO. 10
			COUNTY STATEWIDE	DESIGNED BY: EAF		TOTAL SHTS. 12
				CHECKED BY: JWL		

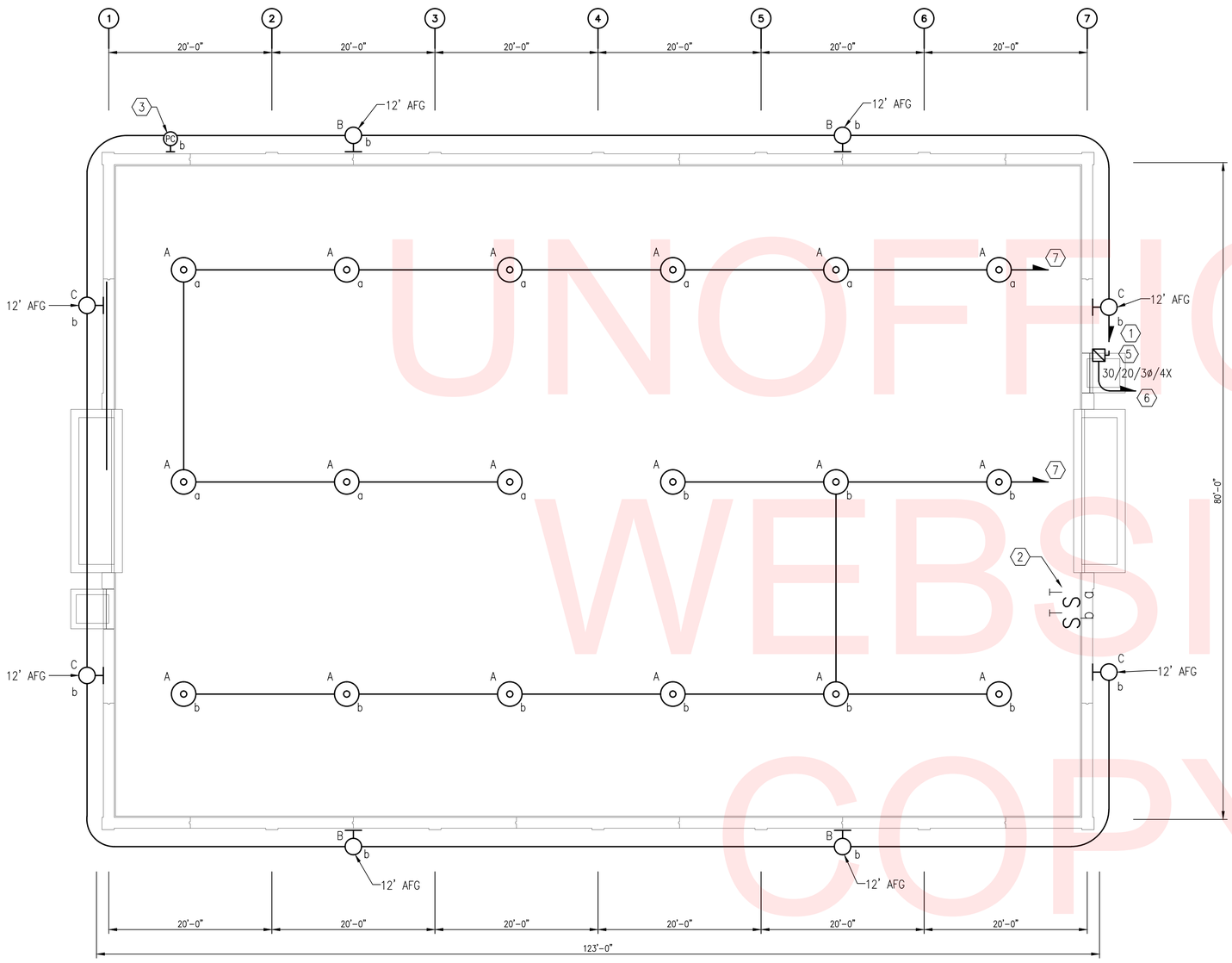

1 / E-02 SALT BARN - LIGHTING PLAN
SCALE: 1/8" = 1'-0"

GENERAL NOTES:

1. INFORMATION SHOWN ON THIS DRAWING PERTAINING TO EXISTING CONDITIONS HAS BEEN OBTAINED FROM AVAILABLE BUILDING DRAWINGS OR GENERAL FIELD OBSERVATIONS AND MAY NOT INDICATE ACTUAL EXISTING CONDITIONS IN DETAIL OR DIMENSION. THE CONTRACTOR IS RESPONSIBLE FOR DETERMINING THE ACTUAL EXISTING CONDITIONS PRIOR TO FABRICATION OR PERFORMANCE OF ANY WORK. SHOULD CONDITIONS BE DISCOVERED THAT PREVENT EXECUTION OF THE WORK AS INDICTED, THE CONTRACTOR SHALL IMMEDIATELY NOTIFY THE ARCHITECT IN WRITING AND AWAIT DIRECTION BEFORE PROCEEDING WITH THE WORK.
2. UNLESS OTHERWISE NOTED ELECTRICAL ITEMS SHOWN HEAVY SOLID (——) SHALL BE NEW.
3. ABOVE GRADE CONDUIT SHALL BE PVC COATED RIGID GALVANIZED STEEL CONDUIT.
4. BELOW GRADE CONDUIT SHALL BE SCHEDULE 80 PVC CONDUIT. CONDUIT SHALL TRANSITION FROM PVC COATED RGS TO SCHEDULE 80 PVC AT 6" AFG. UNDERGROUND CONDUIT SHALL BE BURIED AT 24" BELOW GRADE.

SHEET KEYNOTES:

1. PROVIDE (2)#12 AWG AND (1)#12 GND IN 3/4" PVC COATED, SURFACE MOUNTED, RGS CONDUIT ROUTE CIRCUIT THROUGH SERVICE ENTRANCE DISCONNECT SWITCH.
2. PROVIDE 20A SINGLE POLE TIMER SWITCHES. SWITCHES SHALL BE CAPABLE OF TURNING DEVICE ON FOR A MAXIMUM OF 12 CONTINUOUS HOURS. THIS SWITCH SHALL CONTROL ALL INTERIOR LIGHTING FIXTURES.
3. PROVIDE 20A PHOTOCELL. PHOTOCELL SHALL BE LOCATED ON THE NORTH SIDE OF THE BUILDING. THIS SWITCH SHALL CONTROL ALL EXTERIOR LIGHTING FIXTURES. COORDINATE COIL VOLTAGE WITH SERVICE VOLTAGE.
4. COORDINATE MOUNTING HEIGHT TO BOTTOM OF STRUCTURAL TRUSSES.
5. PROVIDE 3 POLE, 30A HEAVY DUTY, 480V SERVICE ENTRANCE RATED DISCONNECT SWITCH, FUSED AT 20A IN NEMA ENCLOSURE.
6. PROVIDE 3-1 POLE, 20A CIRCUITS FROM NEAREST SOURCE OF POWER. PROVIDE 3#8, 1#8 NEUTRAL, AND 1#8 GND IN 2"C FROM 3 POLE 20A CIRCUIT BREAKER. ROUTE 2"C UNDERGROUND FROM SALT BARN TO POWER SOURCE. IF DISTANCE FROM SALT BARN TO POWER SOURCE EXCEEDS 100', INCREASE CONDUCTOR SIZE SUCH THAT VOLTAGE DROP DOES NOT EXCEED 3%.
7. PROVIDE (2) #12 AWG AND (1) #12 GND IN ¾" PVC COATED, SURFACE MOUNTED, RGS CONDUIT ROUTE CIRCUIT THROUGH TIMER SWITCH TO SERVICE ENTRANCE DISCONNECT SWITCH.

4' 0 4' 8'
SCALE: ⅛"= 1'-0"

UNOFFICIAL WEBSITE COPY

Q:\SMD\101552_011_Standard_Foundation_\CADD\Electrical\E-03.dwg

E-03

DELAWARE DEPARTMENT OF TRANSPORTATION	ADDENDUMS / REVISIONS		STATEWIDE FABRIC SALT BARNS OPEN END FY 15-17	CONTRACT T201480107	DATE 08-31-2015	SALT BARN 80' x 120' LIGHTING LAYOUT PLAN	SHEET NO. 11
				COUNTY STATEWIDE	DESIGNED BY: EAF		TOTAL SHTS. 12
					CHECKED BY: JWL		

PART 1 - GENERAL

1.1 REFERENCES

A. CONDITIONS OF THE CONTRACT AND DIVISION 1, GENERAL REQUIREMENTS, APPLY TO WORK OF THIS SECTION. WHERE PARAGRAPHS OF THIS SECTION CONFLICT WITH SIMILAR PARAGRAPHS OF DIVISION 1, REQUIREMENTS OF THIS SECTION SHALL PREVAIL.

B. EXAMINE DRAWINGS AND OTHER SECTIONS OF SPECIFICATIONS FOR REQUIREMENTS THAT AFFECT WORK OF THIS SECTION.

C. AS USED IN THIS SECTION, "PROVIDE" MEANS "FURNISH AND INSTALL," AND "POS" MEANS PROVIDED UNDER OTHER SECTIONS." "FURNISH" MEANS "TO PURCHASE AND DELIVER TO THE PROJECT SITE COMPLETE WITH EVERY NECESSARY APPURTENANCE AND SUPPORT," AND "INSTALL" MEANS "TO UNLOAD" AT THE DELIVERY POINT AT THE SITE AND PERFORM EVERY OPERATION NECESSARY TO ESTABLISH SECURE MOUNTING AND CORRECT OPERATION AT THE PROPER LOCATION IN THE PROJECT."

D. PERFORM WORK AND PROVIDE MATERIAL AND EQUIPMENT AS SHOWN ON DRAWINGS AND AS SPECIFIED OR INDICATED IN THIS SECTION OF THE SPECIFICATIONS. COMPLETELY COORDINATE WORK OF THIS SECTION WITH WORK OF OTHER TRADES AND PROVIDE A COMPLETE AND FULLY FUNCTIONAL INSTALLATION. DRAWINGS AND SPECIFICATIONS FORM COMPLIMENTARY REQUIREMENTS; PROVIDE WORK SPECIFIED & NOT SHOWN, AND WORK SHOWN AND NOT SPECIFIED AS THOUGH EXPLICITLY REQUIRED BY BOTH. ALTHOUGH WORK IS NOT SPECIFICALLY SHOWN OR SPECIFIED, PROVIDE SUPPLEMENTARY OR MISCELLANEOUS ITEMS, APPURTENANCES, DEVICES AND MATERIALS OBVIOUSLY NECESSARY FOR A SOUND, SECURE AND COMPLETE INSTALLATION. REMOVE ALL DEBRIS CAUSED BY CONTRACTORS WORK.

E. DRAWINGS ARE DIAGRAMMATIC AND INDICATE GENERAL ARRANGEMENT OF SYSTEMS AND WORK INCLUDED IN CONTRACT. IT IS NOT INTENDED TO SPECIFY OR TO SHOW EVERY OFFSET, FITTING OR COMPONENT; HOWEVER, CONTRACT DOCUMENTS REQUIRE COMPONENTS AND MATERIALS WHETHER OR NOT INDICATED OR SPECIFIED AS NECESSARY TO MAKE INSTALLATION COMPLETE AND OPERATIONAL.

F. PERFORM WORK STRICTLY AS REQUIRED BY RULES, REGULATIONS, STANDARDS, CODES, ORDINANCES, AND LAWS OF LOCAL, STATE, AND FEDERAL GOVERNMENTS, AND OTHER AUTHORITIES THAT HAVE LAWFUL JURISDICTION.

G. GIVE NOTICES, FILE PLANS, OBTAIN PERMITS AND LICENSES (IF REQUIRED), PAY FEES AND BACK CHARGES AND OBTAIN NECESSARY APPROVALS FROM AUTHORITIES THAT HAVE JURISDICTION.

H. AS WORK PROGRESSES AND FOR DURATION OF CONTRACT, MAINTAIN COMPLETE AND SEPARATE SET OF PRINTS OF CONTRACT DRAWINGS AT JOB SITE AT ALL TIMES. RECORD WORK COMPLETED AND ALL CHANGES FROM ORIGINAL CONTRACT DRAWINGS CLEARLY AND ACCURATELY INCLUDING WORK INSTALLED AS A MODIFICATION OR ADDITION TO THE ORIGINAL DESIGN.

I. WORK SHALL INCLUDE, BUT SHALL NOT BE LIMITED TO THE FOLLOWING:

1. LIGHTING FIXTURES INCLUDING LAMPS AND BALLASTS.
2. CONDUIT AND RACEWAYS.
3. WIRE AND CABLE.
4. BRANCH CIRCUIT WIRING.

1.2 CONTRACT DOCUMENTS

A. WORK TO BE PERFORMED UNDER THIS SECTION IS SHOWN PRIMARILY ON THE FOLLOWING ELECTRICAL DRAWINGS: E-02.

B. LISTING OF DRAWINGS DOES NOT LIMIT RESPONSIBILITY OF DETERMINING FULL EXTENT OF WORK REQUIRED BY CONTRACT DOCUMENTS. REFER TO ARCHITECTURAL, ELECTRICAL, AND OTHER DRAWINGS AND OTHER SECTIONS THAT INDICATE TYPES OF CONSTRUCTION IN WHICH WORK SHALL BE INSTALLED AND WORK OF OTHER TRADES WITH WHICH WORK OF THIS SECTION MUST BE COORDINATED.

C. EXCEPT WHERE MODIFIED BY A SPECIFIC NOTATION TO THE CONTRARY, IT SHALL BE UNDERSTOOD THAT THE INDICATION AND/OR DESCRIPTION OF ANY ITEM, IN THE DRAWINGS OR SPECIFICATIONS OR BOTH, CARRIES WITH IT THE INSTRUCTION TO FURNISH AND INSTALL THE ITEM, REGARDLESS OF WHETHER OR NOT THIS INSTRUCTION IS EXPLICITLY STATED AS PART OF THE INDICATION OR DESCRIPTION.

D. ITEMS REFERRED TO IN SINGULAR NUMBER IN CONTRACT DOCUMENTS SHALL BE PROVIDED IN QUANTITIES NECESSARY TO COMPLETE WORK.

E. DRAWINGS ARE DIAGRAMMATIC. THEY ARE NOT INTENDED TO BE ABSOLUTELY PRECISE; THEY ARE NOT INTENDED TO SPECIFY OR TO SHOW EVERY OFFSET, FITTING, AND COMPONENT. THE PURPOSE OF THE DRAWINGS IS TO INDICATE A SYSTEMS CONCEPT, THE MAIN COMPONENTS OF THE SYSTEMS, & THE APPROXIMATE GEOMETRICAL RELATIONSHIPS. BASED ON THE SYSTEMS CONCEPT, THE MAIN COMPONENTS, AND THE APPROXIMATE GEOMETRICAL RELATIONSHIPS, THE CONTRACTOR SHALL PROVIDE ALL OTHER COMPONENTS AND MATERIALS NECESSARY TO MAKE THE SYSTEMS FULLY COMPLETE AND OPERATIONAL.

1.3 DISCREPANCIES IN DOCUMENTS

A. ADDRESS QUESTIONS REGARDING DRAWINGS TO ARCHITECT IN WRITING BEFORE AWARD OF CONTRACT. OTHERWISE, ARCHITECT'S INTERPRETATION OF MEANING AND INTENT OF DRAWINGS SHALL BE FINAL.

1.4 CODES, STANDARDS, AUTHORITIES AND PERMITS

A. PERFORM WORK IN STRICT ACCORDANCE WITH THE RULES, REGULATIONS, STANDARDS, CODES, ORDINANCES, AND LAWS OF LOCAL, STATE, AND FEDERAL GOVERNMENTS, AND OTHER AUTHORITIES HAVING LEGAL JURISDICTION OVER THE SITE.

B. MATERIAL AND EQUIPMENT SHALL BE LISTED BY UNDERWRITERS' LABORATORIES (UL).

1.5 GUARANTEE AND 24 HOUR SERVICE

A. GUARANTEE WORK IN WRITING FOR ONE YEAR FROM DATE OF FINAL ACCEPTANCE. REPAIR OR REPLACE DEFECTIVE MATERIALS OR INSTALLATION AT NO COST TO OWNER. CORRECT DAMAGE CAUSED IN MAKING NECESSARY REPAIRS AND REPLACEMENTS UNDER GUARANTEE AT NO COST TO OWNER.

B. SUBMIT GUARANTEE TO ARCHITECT BEFORE FINAL PAYMENT.

C. STATEMENT OF GUARANTEE REQUIREMENTS SHALL NOT BE INTERPRETED TO LIMIT OWNER'S RIGHTS UNDER LAW AND THIS CONTRACT.

1.6 RECORD DRAWINGS

A. MAINTAIN RECORD DRAWINGS ON SITE. RECORD SET MUST BE COMPLETE AND CURRENT AND AVAILABLE FOR INSPECTION WHEN REQUISITIONS FOR PAYMENT ARE SUBMITTED.

1.7 SUBMITTALS

A. WITHIN TWO WEEKS (EXCEPT AS NOTED OTHERWISE) AFTER AWARD OF CONTRACT AND BEFORE ORDERING MATERIALS OR EQUIPMENT. SUBMIT LIST OF PROPOSED MATERIALS AND EQUIPMENT AND INDICATE MANUFACTURER'S NAMES, ADDRESSES AND IDENTIFYING DATA. NO CONSIDERATION WILL BE GIVEN TO PARTIAL LISTS SUBMITTED OUT OF SEQUENCE.

B. SCHEDULE AT LEAST TEN WORKING DAYS, EXCLUSIVE OF TRANSMITTAL TIME FOR SUBMITTAL REVIEW.

C. MATERIAL AND EQUIPMENT REQUIRING SHOP DRAWING AND PRODUCT DATA SUBMITTAL SHALL INCLUDE, BUT SHALL NOT BE LIMITED TO:

1. LIGHTING FIXTURES, LAMPS AND BALLAST.
2. WIRING DEVICES AND PLATES.

PART 2 - PRODUCTS

2.1 RACEWAYS

A. RIGID GALVANIZED STEEL (RGS) SHALL BE PVC COATED AND MANUFACTURED IN ACCORDANCE WITH NEMA TL2.

B. CONDUIT EXPANSION FITTINGS SHALL BE THREADED HOT-DIPPED GALVANIZED MALLEABLE IRON WITH INTERNAL BONDING ASSEMBLY.

C. PROVIDE THREADED MALLEABLE IRON OR STEEL CONNECTORS AND COUPLINGS WITH INSULATED THROATS; MANUFACTURED ELBOWS; LOCKNUTS; AND PLASTIC OR BAKELITE BUSHINGS AT TERMINATION'S, AS NECESSARY. COUPLINGS AND CONNECTORS SHALL BE GLAND AND RING COMPRESSION OR STAINLESS STEEL MULTIPLE POINT LOCKING OR STEEL CONCRETE-TIGHT SET SCREW. COMPRESSION COUPLINGS & CONNECTORS SHALL FORM POSITIVE GROUND. SET-SCREW CONNECTORS AND COUPLINGS SHALL HAVE WALL THICKNESS EQUAL TO CONDUIT, CASEHARDENED, HEX-HEAD SCREWS AND SEPARATE GROUND WIRE. BUSHINGS FOR RIGID STEEL AND CONNECTORS FOR EMT SHALL HAVE INSULATING INSERTS THAT MEET REQUIREMENTS OF UL 514 FLAME TEST.

2.2 OUTLET BOXES

D. SWITCH BOXES, RECEPTACLE BOXES AND OTHER OUTLET BOXES SHALL BE STANDARD 4" SQUARE WITH WEATHERPROOF COVER AS REQUIRED.

E. PROVIDE ONLY ENOUGH CONDUIT OPENINGS TO ACCOMMODATE CONDUITS AT INDIVIDUAL LOCATION. EACH BOX SHALL BE LARGE ENOUGH TO ACCOMMODATE NUMBER AND SIZES OF CONDUITS, WIRES AND SPLICES TO MEET NEC REQUIREMENTS, BUT SHALL BE AT LEAST SIZE SHOWN OR SPECIFIED. NECESSARY VOLUME SHALL BE OBTAINED BY USING BOXES OF PROPER DIMENSIONS.

2.3 JUNCTION BOXES AND PULL BOXES

A. PROVIDE CODE GAUGE GALVANIZED STEEL JUNCTION AND PULL BOXES FOR CONDUIT 1-1/4" TRADE SIZE AND LARGER, WHERE INDICATED AND AS NECESSARY TO FACILITATE INSTALLATION, OF REQUIRED DIMENSIONS, WITH ACCESSIBLE, REMOVABLE SCREW-ON COVERS. PROVIDE JUNCTION AND PULL BOXES IN SPECIAL SIZES AND SHAPES DETERMINED IN FIELD WHERE NECESSARY. ALL JUNCTION AND PULL BOXES SHALL BE NEMA 4X. 316 STAINLESS STEEL.

B. JUNCTION BOX COVERS SHALL BE ACCESSIBLE.

2.4 WIRE AND CABLE (600 V INSULATION)

A. PROVIDE SINGLE CONDUCTOR, ANNEALED COPPER WIRE AND CABLE WITH INSULATION RATED 600 V, OF SIZES SPECIFIED AND SCHEDULED ON DRAWINGS, FOR SECONDARY SERVICE, FEEDERS, BRANCH AND SYSTEM WIRING. WIRE SIZES SHOWN AND SPECIFIED ARE AMERICAN WIRE GAUGE FOR COPPER.

B. WIRE #8 AND LARGER SHALL BE STRANDED; #10 AND SMALLER SHALL BE SOLID. WIRE AND CABLE SHALL HAVE THWN-THHN INSULATION RATED 75°C.

C. WIRING WITHIN LIGHT FIXTURES AND OTHER HIGH-TEMPERATURE EQUIPMENT SHALL HAVE 150°C INSULATION AS REQUIRED BY NEC.

D. SPLICES AND TERMINATIONS

1. MAKE SPLICES IN BRANCH CIRCUIT WIRING WITH UL LISTED, SOLDERLESS CONNECTORS RATED 600V, OF SIZES AND TYPES REQUIRED BY MANUFACTURER'S RECOMMENDATIONS WITH TEMPERATURE RATINGS EQUAL TO THOSE OF WIRES. SPLICE CONNECTORS SHALL BE SCREW ON. INSULATE SPLICES WITH INTEGRAL COVERS OR WITH PLASTIC OR RUBBER FRICTION TAPE TO PRESERVE CHARACTERISTICS OF WIRE AND CABLE INSULATION.

2. PROVIDE STANDARD BOLT ON LUGS WITH HEX SCREWS TO ATTACH COPPER WIRE AND CABLE TO PANELBOARDS AND ELECTRICAL EQUIPMENT.

3. AMPACITY OF SPLICES AND CONNECTORS SHALL BE EQUAL TO THOSE OF ASSOCIATED WIRES AND CABLES.

2.5 COLOR CODING

A. COLOR CODE SECONDARY SERVICE, FEEDERS AND BRANCH CIRCUIT CONDUCTORS SHALL MATCH EXISTING BUILDING COLOR CODE.

B. BRANCH CIRCUIT CONDUCTORS #12 AND #10 SHALL HAVE SOLID COLOR COMPOUND, SOLID COLOR COATING. NEUTRALS AND EQUIPMENT GROUNDS SHALL HAVE SOLID COMPOUND OR SOLID COLOR COATING (WHITE, GRAY AND GREEN), EXCEPT THAT NEUTRALS WITH COLORED STRIPE SHALL BE USED WHERE REQUIRED BY NEC. CONDUCTORS #8 AND LARGER WITH STRIPES, BANDS OR HASH MARKS SHALL MATCH EXISTING BUILDING COLOR CODE.

2.6 WIRE PULLING EQUIPMENT

A. PROVIDE POLYETHYLENE ROPES FOR PULLING WIRE.

B. PROVIDE FISH WIRES FOR DATA AND OTHER EMPTY CONDUIT SYSTEMS REQUIRED, WITHOUT SPLICES AND WITH AMPLE EXPOSED LENGTHS AT EACH END.

2.7 WIRING DEVICES

A. PROVIDE WIRING DEVICES BY SINGLE MANUFACTURER. CATALOG DESIGNATIONS OF MANUFACTURER ARE SPECIFIED TO ESTABLISH STANDARDS OF QUALITY FOR MATERIALS AND PERFORMANCE. PROVIDE DEVICES AS LISTED BELOW, OR APPROVED EQUAL. DEVICE COLORS SHALL BE AS COORDINATED WITH THE ARCHITECT.

1. TIMER SWITCHES: TURN DIAL SWITCH IN NEMA 4X ENCLOSURE. SWITCH SHALL HAVE CAPABILITY TO AUTOMATICALLY SHUT OFF AFTER A MAXIMUM DURATION OF 12 HOURS.

2. PHOTOCELL: SOLID STATE, WITH SPST DRY CONTACTS RATED FOR 1800-VA TUNGSTEN OR 1000-VA INDUCTIVE, TO OPERATE CONNECTED RELAY, CONTACTOR COILS, OR MICROPROCESSOR INPUT; COMPLYING WITH UL 773A.

a. LISTED AND LABELED AS DEFINED IN NFPA 70, BY A QUALIFIED TESTING AGENCY, AND MARKED FOR INTENDED LOCATION AND APPLICATION.

b. LIGHT-LEVEL MONITORING RANGE: 1.5 TO 10 FC (16.14 TO 108 LUX), WITH AN ADJUSTMENT FOR TURN-ON AND TURN-OFF LEVELS WITHIN THAT RANGE.

c. TIME DELAY: FIFTEEN SECOND MINIMUM, TO PREVENT FALSE OPERATION.

d. SURGE PROTECTION: METAL-OXIDE VARISTOR.

e. MOUNTING: TWIST LOCK COMPLIES WITH NEMA C136.10, WITH BASE-AND-STEM MOUNTING OR STEM-AND-SWIVEL MOUNTING ACCESSORIES AS REQUIRED TO DIRECT SENSOR TO THE NORTH SKY EXPOSURE.

2.8 LIGHTING FIXTURES

A. INSTALL LIGHTING FIXTURES, EQUIPMENT AND COMPONENTS WHERE SHOWN ON DRAWINGS, AS LISTED IN FIXTURE SCHEDULES AND AS SPECIFIED, WIRED AND ASSEMBLED. PROVIDE APPROVED ALIGNER CANOPIES, HANGERS AND OTHER APPURTENANCES AS REQUIRED.

1. LED FIXTURES SHALL HAVE LOW LOSS AND HIGH EFFICIENCY.

PART 3 - EXECUTION

3.1 MATERIALS AND WORKMANSHIP

A. WORK SHALL BE EXECUTED IN WORKMANLIKE MANNER AND SHALL PRESENT NEAT, RECTILINEAR AND MECHANICAL APPEARANCE WHEN COMPLETED. MAINTAIN MAXIMUM HEADROOM AT ALL TIMES. DO NOT RUN PIPES AND DUCTS EXPOSED UNLESS SHOWN EXPOSED ON DRAWINGS. MATERIAL AND EQUIPMENT SHALL BE NEW AND INSTALLED ACCORDING TO MANUFACTURER'S RECOMMENDED BEST PRACTICE SO THAT COMPLETED INSTALLATION SHALL OPERATE SAFELY AND EFFICIENTLY.

3.2 CONTINUITY OF SERVICES

A. DO NOT INTERRUPT EXISTING SERVICES WITHOUT OWNER'S APPROVAL.

3.3 TESTING, INSPECTION AND CLEANING

A. TEST WIRING AND CONNECTIONS FOR CONTINUITY AND GROUNDS BEFORE FIXTURES ARE CONNECTED.

B. TEST LIGHTING FIXTURES WITH SPECIFIED LAMPS IN PLACE FOR 10 HOURS; CHECK FIXTURES IN SECTIONS. DO NOT OPERATE LAMPS OTHER THAN FOR TESTING BEFORE FINAL INSPECTION BY ENGINEER AND ARCHITECT.

C. FAILURE OR DEFECTS IN WORKMANSHIP OR MATERIALS REVEALED BY TESTS OR INSPECTION SHALL BE CORRECTED PROMPTLY AND RETESTED. REPLACE DEFECTIVE MATERIAL.

D. EQUIPMENT

1. AFTER COMPLETION OF PROJECT, CLEAN THE EXTERIOR SURFACE OF EQUIPMENT INCLUDED IN THIS SECTION, INCLUDING CONCRETE RESIDUE.

3.4 WIRING METHODS

A. ALL ABOVE GROUND CONDUIT SHALL BE PVC COATED RGS CONDUIT. ALL UNDERGROUND CONDUIT SHALL BE SCHEDULE 80 PVC AND BURIED A MINIMUM OF 36" BELOW FINISHED GRADE.

B. INSTALL WIRE AND CABLE IN APPROVED RACEWAYS AS SPECIFIED AND AS APPROVED BY AUTHORITY HAVING JURISDICTION. SURFACE METAL RACEWAYS SHALL NOT BE USED. DO NOT USE SURFACE RACEWAYS ON FLOOR. DO NOT USE ARMORED CABLE EXCEPT AS APPROVED BY LOCAL CODE FOR LIGHTING AND RECEPTACLE CIRCUITS IN SUSPENDED CEILINGS AND STUD-WALL PARTITIONS.

C. WIRE FROM POINT OF SERVICE CONNECTION TO RECEPTACLES, LIGHTING FIXTURES, DEVICES, EQUIPMENT, OUTLETS FOR FUTURE EXTENSION, AND OTHER ELECTRICAL APPARATUS AS SHOWN ON DRAWINGS. PROVIDE SLACK WIRE FOR CONNECTIONS. TAPE ENDS OF WIRES AND PROVIDE BLANK COVERS FOR OUTLET BOXES DESIGNATED FOR FUTURE USE.

D. FOLLOW HOMERUN CIRCUIT NUMBERS SHOWN ON DRAWINGS TO CONNECT CIRCUITS TO PANELBOARDS. WHERE HOMERUN CIRCUIT NUMBERS ARE NOT SHOWN ON DRAWINGS, DIVIDE SIMILAR TYPES OF CONNECTED LOADS AMONG PHASE BUSES SO THAT CURRENTS ARE APPROXIMATELY EQUAL. PROVIDE A NEUTRAL CONDUCTOR WITH EACH PHASE WIRE. COMMON NEUTRALS ARE NOT ALLOWED. PANELBOARD CABINETS ARE RECESSED. PROVIDE CONDUITS WITH SUFFICIENT CAPACITY FOR FUTURE CONDUCTORS FOR SPARE BRANCH CIRCUIT CIRCUIT PROTECTIVE DEVICES AND SPACES IN PANELBOARD; STUB UP CONCEALED TO JUNCTION BOX. PROVIDE EXTENSIONS ABOVE CEILING.

E. INSTALL CONNECTORS AND COUPLINGS AS RECOMMENDED BY MANUFACTURERS.

F. RUN CONCEALED CONDUIT IN AS DIRECT LINES AS POSSIBLE WITH MINIMUM NUMBER OF BENDS OF LONGEST POSSIBLE RADIUS. RUN EXPOSED CONDUIT AND EMT PARALLEL TO OR AT RIGHT ANGLES TO BUILDING LINES. ENDS SHALL BE FREE FROM DENTS OR FLATTENING.

G. CONDUIT AND EMT RUNS SHALL BE MECHANICALLY AND ELECTRICALLY CONTINUOUS FROM SOURCE PANEL TO OUTLETS. CONDUIT SHALL ENTER AND BE SECURED TO CABINET, JUNCTION BOX, PULL BOX OR OUTLET BOX WITH LOCKNUT OUTSIDE AND BUSHING INSIDE, OR WITH LIQUID-TIGHT, THREADED, SELF-LOCKING, COLD-WELD WEDGE ADAPTER. PROVIDE ADDITIONAL WRENCH-TIGHTEN LOCKNUT FOR EMT OR FLEXIBLE CONDUIT WHERE CIRCUIT VOLTAGE EXCEEDS 250 V. LOCKNUTS AND BUSHINGS OR SELF-LOCKING ADAPTERS WILL NOT BE REQUIRED WHERE CONDUITS ARE SCREWED INTO TAPPED CONNECTIONS. VERTICAL CONDUIT RUNS THAT TERMINATE IN BOTTOMS OF WALL BOXES OR CABINETS SHALL BE PROTECTED FROM ENTRANCE OF FOREIGN MATERIAL BEFORE INSTALLATION OF CONDUCTORS.

H. SIZE CONDUIT AS REQUIRED BY NEC EXCEPT AS SPECIFIED OR SHOWN ON DRAWINGS OTHERWISE.

I. CHECK RACEWAY SIZES TO DETERMINE THAT GREEN EQUIPMENT GROUND CONDUCTOR FITS IN SAME RACEWAY WITH PHASE AND NEUTRAL CONDUCTORS TO MEET NEC PERCENTAGE OF FILL REQUIREMENTS. INCREASE DUCT, CONDUIT, TUBING AND RACEWAY SIZES SHOWN OR SPECIFIED AS REQUIRED TO ACCOMMODATE CONDUCTORS.

J. UNLESS SPECIFIED OR SHOWN ON DRAWINGS OTHERWISE, INSTALL CONDUIT CONCEALED. UNLESS SPECIFIED OR SHOWN OTHERWISE, CONDUIT MAY BE RUN EXPOSED ON UNFINISHED WALLS AND UNFURRED BASEMENT CEILINGS AND IN UNFINISHED PENTHOUSES, ATTICS AND ROOF SPACES. PROVIDE STAND-OFF CLIPS FOR CONDUITS ON EXTERIOR MASONRY WALLS.

K. INSTALL CONDUIT SYSTEMS COMPLETE BEFORE DRAWING IN CONDUCTORS. BLOW THROUGH AND SWAB AFTER PLASTER IS FINISHED AND DRY, AND BEFORE CONDUCTORS ARE INSTALLED.

L. ATTACH PULL ROPES TO CONDUCTORS WITH BASKET-WEAVE GRIPS ON PULLING EYES. PULL CABLES THAT SHARE CONDUIT AT SAME TIME.

M. PROVIDE INSERTS, HANGERS, ANCHORS AND STEEL SUPPORTS AS NECESSARY.

N. ALL BRANCH CIRCUITS SHALL HAVE DEDICATED NEUTRAL.

3.5 INSTALLATION OF LIGHT FIXTURES

A. VERIFY CEILING CONSTRUCTIONS, AND PROVIDE FIXTURES, BALLASTS, FRAMES, RINGS AND OTHER ACCESSORIES SUITABLE FOR CONSTRUCTION ENCOUNTERED.

B. COORDINATE INSTALLATION OF FIXTURES WITH INSTALLATION OF CEILING MATERIALS AND SUSPENSION SYSTEMS.

C. COORDINATE THE INSTALLATION OF THE LIGHT FIXTURES WITH OTHER TRADES TO AVOID DAMAGE TO FIXTURES.

D. INVESTIGATE LIGHTING FIXTURE LOCATIONS AND SUPPORTS TO ENSURE THAT NO INTERFERENCE EXISTS WITH HANGERS, DUCTS, SPRINKLERS, PIPES AND OTHER EQUIPMENT.

E. PROVIDE PLASTER FRAMES FOR FIXTURES RECESSED IN GYPSUM BOARD OR PLASTER CEILING.

F. DO NOT SUSPEND OR SUPPORT LIGHTING FIXTURES OR SAFETY CHAINS FROM HUNG CEILING, CONDUIT OR DUCT. SUPPORT FIXTURES FROM STRUCTURAL MEMBERS ONLY.

G. CEILING MOUNTED FIXTURES SHALL BE SUPPORTED INDEPENDENT OF HUNG CEILING WITH BOW CHAIN.

H. PROVIDE UNISTRUT BELOW DUCTS WHERE FIXTURE LOCATIONS COINCIDE WITH DUCT RUNS. PROVIDE THREADED RODS TO SUPPORT UNISTRUT.

I. PATCH SPRAY-ON FIREPROOFING DAMAGED DURING INSTALLATION.

J. SUPPORT SURFACE-MOUNTED LUMINARIES WITH AT LEAST TWO CONCEALED POINTS TO PREVENT ROTATION.

K. MOUNTING HEIGHT OF SUSPENDED OR WALL-MOUNTED LUMINARIES SHALL BE SHOWN ON DRAWINGS.

L. LOCATE CEILING-MOUNTED FIXTURES AS SHOWN ON REFLECTED CEILING PLANS. LOCATE WALL AND FLOOR-MOUNTED FIXTURES AS SHOWN ON ELECTRICAL DRAWINGS.

3.6 GROUNDING

A. PER CODE: PROVIDE JUMPERS OR BONDING CONDUCTORS WHERE RACEWAY IS ELECTRICALLY DISCONTINUOUS. PROVIDE COPPER GROUND CONDUCTOR MINIMUM #12 IN ALL 120 VOLT BRANCH CIRCUITS. EACH BRANCH CIRCUIT OR MULTI-WIRE CIRCUIT, TO HAVE A SEPARATE, DEDICATED CONDUCTOR.

B. PROVIDE GROUND BUS INDICATED ON DRAWINGS.

3.7 VOLTAGE CHECK

A. AT COMPLETION OF JOB AND AFTER FULL BUILDING OCCUPANCY. CHECK VOLTAGE AT SEVERAL POINTS OF UTILIZATION ON THE SYSTEM WHICH HAS BEEN INSTALLED UNDER THIS CONTRACT. DURING THE TEST, ENERGIZE ALL LOADS INSTALLED.

3.8 PANELBOARDS

A. REVISE ALL EXISTING PANELBOARD DIRECTORIES WITH NEW TYPE WRITTEN INDEX SHOWING CIRCUIT CHANGES UNDER THIS CONTRACT, INCLUDING UPDATING OF EXISTING CIRCUITS NOT BEING CHANGED. PLACE DIRECTORY IN CLEAR PLASTIC SLEEVE AND POSITIVELY ATTACH TO THE INSIDE OF THE PANELBOARD DOOR. DO NOT GLUE DIRECTORY IN PLACE.

B. PROVIDE TERMINAL STRIPS IN EXISTING PANELS TO ACCOMMODATE THE INCREASE IN NEUTRAL AND GROUND WIRES.

C. PROVIDE NEW CIRCUIT BREAKERS OF TYPE AND SHORT CIRCUIT RATING TO MATCH EXISTING WHERE REQUIRED TO SUPPLEMENT EXISTING QUANTITY.

LIGHTING FIXTURE SCHEDULE

FIXTURE TYPE	DESCRIPTION	MANUFACTURER & CATALOG NUMBER	LAMPS TYPE	VOLTAGE	LOAD
A	CEILING MOUNTED, HAZARDOUS CLIMATE RATED LED LIGHTING FIXTURE, AND POWDER POLYESTER PAINT FINISH.	HUBBELL HBLH-60L-U-X-2-5K-W-070-ND-TN-ENCA OR APPROVED EQUAL	LED	UNIVERSAL	139W
B	WALL MOUNTED, OUTDOOR RATED LED LIGHTING FIXTURE, WITH DIE-CAST ALUMINUM HOUSING AND IMPACT RESISTANT LENS.	HUBBELL LIGHTING PVL-30L-U-4K-BZ OR APPROVED EQUAL	LED	UNIVERSAL	68W
C	WALL MOUNTED, OUTDOOR RATED LED LIGHTING FIXTURE, WITH DIE-CAST ALUMINUM HOUSING AND ACRYLIC DIFFUSER	HUBBELL LIGHTING LNC-7LU-4K-2-1 OR APPROVED EQUAL	LED	UNIVERSAL	16.6W

UNOFFICIAL WEBSITE COPY

Q:\SMD\101552_011_Standard_Foundation_\CADD\Electrical\E-04.dwg