STATE OF DELAWARE
DEPARTMENT OF TRANSPORTATION
800 BAY ROAD
P.O. BOX 778
DOVER, DELAWARE 19903

JENNIFER COHAN
SECRETARY

VIA WEBSITE POSTING

December 11, 2019

Contract No. T201504401.01
Federal Aid Project No. ESTP-N011(31)
Elkton Road, MD Line to Casho Mill Road
New Castle County

Ladies and Gentlemen:

Enclosed is Addendum No. 2 for the referenced contract consisting of the following:

1. The Bid Proposal Cover, revised, to be substituted for the same page of the Proposal.
2. The following plan sheets have been revised: 3, 7, 8, 9, 10, 11, 12, 13, 14, 15, 16, 17, 18, and 141.

Please note the revisions listed above and submit your bid based upon this information.

Sincerely,
~signature on file~
Connie Ivins
Competitively Bid Contracts Coordinator
Delaware Department of Transportation

Addendum No. 2
December 11, 2019

STATE OF DELAWARE

DEPARTMENT OF TRANSPORTATION

BID PROPOSAL

for

CONTRACT T201504401.01

FEDERAL AID PROJECT NO. ESTP-N011(31)

CFDA NO. 20.205

ELKTON ROAD, MD LINE TO CASHO MILL ROAD

NEW CASTLE COUNTY

ADVERTISEMENT DATE: October 28, 2019

COMPLETION TIME: 760 Calendar Days

SPECIFICATIONS FOR ROAD AND BRIDGE CONSTRUCTION
DELAWARE DEPARTMENT OF TRANSPORTATION
AUGUST 2016

Bids will be received in the Bidder's Room at the Delaware Department of Transportation's Administration Building, 800 Bay Road, Dover, Delaware prior to 2:00 P.M. local time **~~November 26~~ December 17, 2019**

ADDENDUM PREPARED BY
JOHNSON, MIRMIRAN AND THOMPSON

11/15/2019
DATE

THIS SEAL APPLIES TO THE FOLLOWING SHEETS CHANGED UNDER ADDENDUM #1: REPLACED PAGES 1 THRU 432

BRADLEY P. HERD REGISTERED No. 13305 DELAWARE PROFESSIONAL ENGINEER
SEAL

ADDENDUM PREPARED BY
JOHNSON, MIRMIRAN AND THOMPSON

12/09/2019
DATE

THIS SEAL APPLIES TO THE FOLLOWING SHEETS CHANGED UNDER ADDENDUM #2: PAGES 7 THRU 18 AND 141

BRADLEY P. HERD REGISTERED No. 13305 DELAWARE PROFESSIONAL ENGINEER
SEAL

PLOTTED BY: LBERZINA DATE: 12/9/2019
FILE LOCATION: Q:\NDE\140659_007_ELKTON_RD_CASHO_MILL\CADD\AD.DGN [SHEET: AD01]

ADDENDA / REVISIONS

1	REPLACED PAGES 1 THRU 432	11-15-2019 (LB)
2	REVISED PAGES 7 THRU 18 AND 141	12-09-2019 (LB)

NOT TO SCALE

ELKTON ROAD
MD LINE TO
CASHO MILL ROAD

CONTRACT	BRIDGE NO.	1-322 1-322P 1-323 1-323P	ADDENDA AND REVISIONS	SECTION
T201504401	DESIGNED BY: LB			JMT
COUNTY				SHEET NO.
NEW CASTLE	CHECKED BY: BPH			3

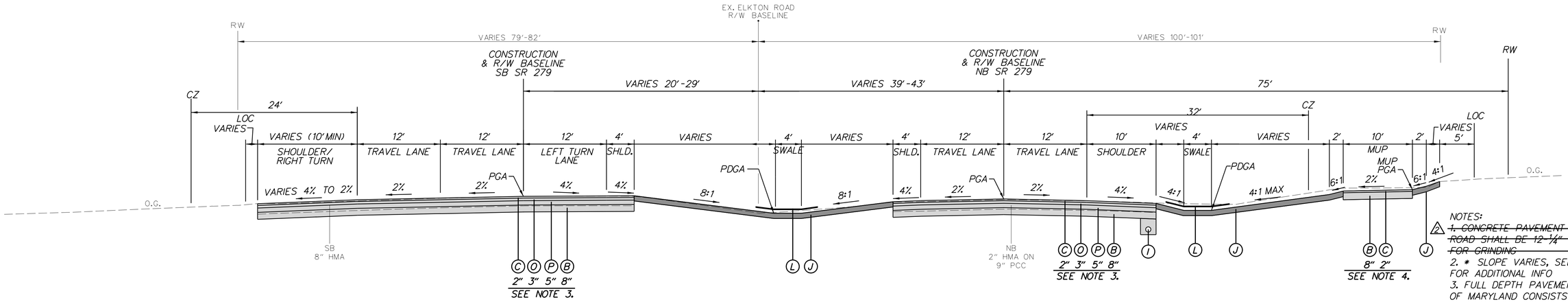

NOTES:
~~1. CONCRETE PAVEMENT ON ELKTON ROAD SHALL BE 12-1/4" TO ACCOUNT FOR GRINDING~~
2. * SLOPE VARIES, SEE GG SHEETS FOR ADDITIONAL INFO
3. FULL DEPTH PAVEMENT IN STATE OF MARYLAND CONSISTS OF 2"-12.5MM PG 64S-22, LEVEL 2, 8"-19.0MM PG 64-S-22, LEVEL 2 (2 - 4" LIFTS) AND 6" GRADED AGGREGATE BASE
4. MULTI-USE PATH PAVEMENT IN STATE OF MARYLAND CONSISTS OF 2"-12.5MM PG 64S-22, LEVEL 2 AND 6" GRADED AGGREGATE BASE

MATERIAL	LIFT THICKNESS	
	MINIMUM	MAXIMUM
BITUMINOUS CONCRETE, TYPE 'C'	1.25"	2"
BITUMINOUS CONCRETE, TYPE 'B'	2.25"	4"
BITUMINOUS CONCRETE BASE COURSE	3"	6"
GRADED AGGREGATE BASE COURSE	-	8"

SR 279 ELKTON ROAD

SB SR 279 STATION 6009+86 TO STATION 6010+87
NB SR 279 STATION 7009+07 TO STATION 7009+86

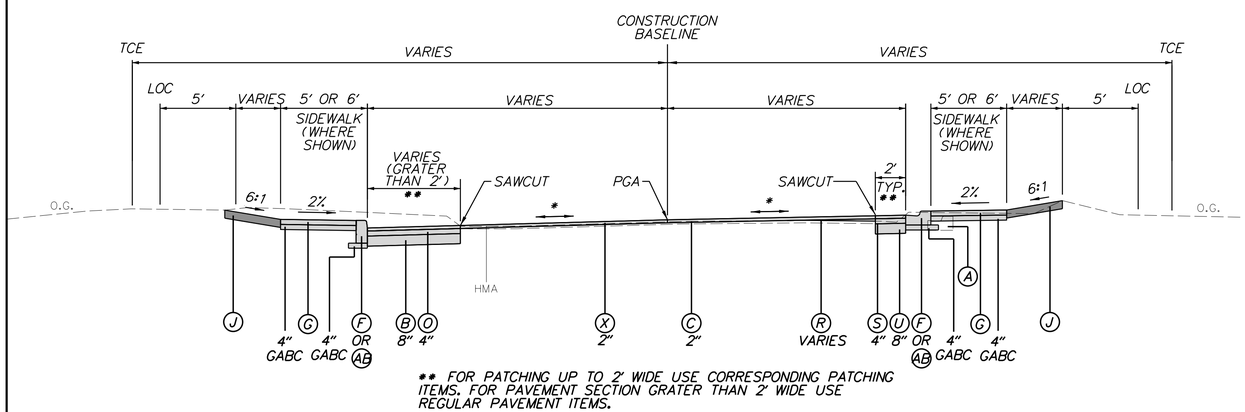

** FOR PATCHING UP TO 2' WIDE USE CORRESPONDING PATCHING ITEMS. FOR PAVEMENT SECTION GRATER THAN 2' WIDE USE REGULAR PAVEMENT ITEMS.

ENTRANCE DETAIL

STA. 7037+00 RT, STA. 7043+25 RT, STA. 7056+75 RT, STA. 7058+50 RT
STA. 6047+00 LT, STA. 6073+00 LT, STA. 6075+50 LT, STA. 6079+50 LT

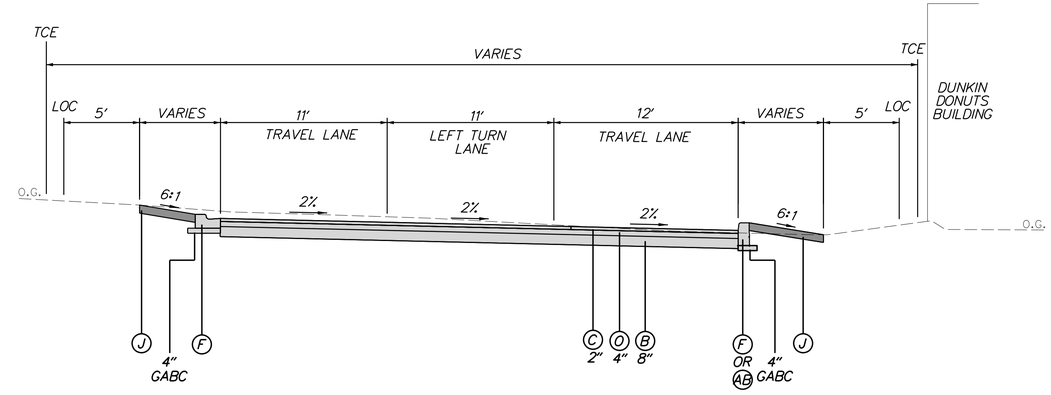

DUNKIN DONUTS ENTRANCE

STA. 6016+00 LT

LEGEND

- (A) ITEM 209006 - BORROW, TYPE F
- (B) ITEM 301001 - GRADED AGGREGATE BASE COURSE, TYPE B
- (C) ITEM 401005 - SUPERPAVE, TYPE C, PG 64-22 (CARBONATE STONE)
- (D) ITEM 501006 - PORTLAND CEMENT CONCRETE PAVEMENT, 12" OR ITEM 501503 - PRECAST CONCRETE PAVEMENT (AS SHOWN IN CP SHEETS)
- (E) ITEM 701014 - PORTLAND CEMENT CONCRETE CURB, TYPE 2
- (F) ITEM 701021 - INTEGRAL P.C.C. CURB & GUTTER, TYPE 3-4
- (G) ITEM 705001 - P.C.C. SIDEWALK, 4"
- (H) ITEM 705005 - P.C.C. SIDEWALK, 8"
- (I) ITEM 709001 - PERFORATED PIPE UNDERDRAINS, 6"
- (J) ITEM 908004 - TOPSOIL, 6" DEPTH ITEM 908014 - PERMANENT GRASS SEEDING, DRY GROUND
- (K) ITEM 708002 - GEOTEXTILES, SEPARATION
- (L) ITEM 908020 - EROSION CONTROL BLANKET MULCH
- (M) ITEM 720021 - GALVANIZED STEEL BEAM GUARDRAIL, TYPE 1-31
- (N) ITEM 209002 - BORROW, TYPE B
- (O) ITEM 401014 - SUPERPAVE, TYPE B, PG 64-22
- (P) ITEM 401021 - SUPERPAVE, TYPE BCBC, PG 64-22
- (Q) ITEM 209001 - BORROW, TYPE A
- (R) ITEM 401037 - SUPERPAVE, TYPE B, PG 64-22, WEDGE
- (S) ITEM 401030 - SUPERPAVE, TYPE B, PG 64-22, PATCHING
- (T) ITEM 401031 - SUPERPAVE, BCBC, PG 64-22, PATCHING
- (U) ITEM 301002 - GRADED AGGREGATE BASE COURSE, TYPE B, PATCHING
- (V) ITEM 760011 - PAVEMENT MILLING, BITUMINOUS CONCRETE PAVEMENT, TAPER CUT
- (W) ITEM 908005 - TOPSOIL, 12" DEPTH ITEM 908014 - PERMANENT GRASS SEEDING, DRY GROUND
- (X) ITEM 760010 - PAVEMENT MILLING, BITUMINOUS CONCRETE PAVEMENT
- (Y) ITEM 626010 - ALUMINUM PEDESTRIAN RAILING (SEE CONST. DETAILS)
- (Z) ITEM 727000 - CHAIN LINK FENCE
- (AB) ITEM 701012 - P.C.C. CURB, TYPE 1-6
- (AC) ITEM 302005 - DELAWARE NO.57 STONE

ADDENDA / REVISIONS

1	REPLACED PAGES 1 THRU 432	11-15-2019 (LB)
2	REMOVED NOTE #1	12-09-2019 (LB)

NOT TO SCALE

ELKTON ROAD
MD LINE TO
CASHO MILL ROAD

CONTRACT	BRIDGE NO.	1-322 1-322P 1-323 1-323P
T201504401	DESIGNED BY: LB	
COUNTY		
NEW CASTLE	CHECKED BY: BPH	

TYPICAL SECTIONS

TS-01

SECTION: JMT

SHEET NO. 7

PLOTTED BY: LBERZINA DATE: 12/9/2019
FILE LOCATION: Q:\NDE\140659_007_ELKTON_RD_CASHO_MILL\CADD\TS.DGN [SHEET: TS01]

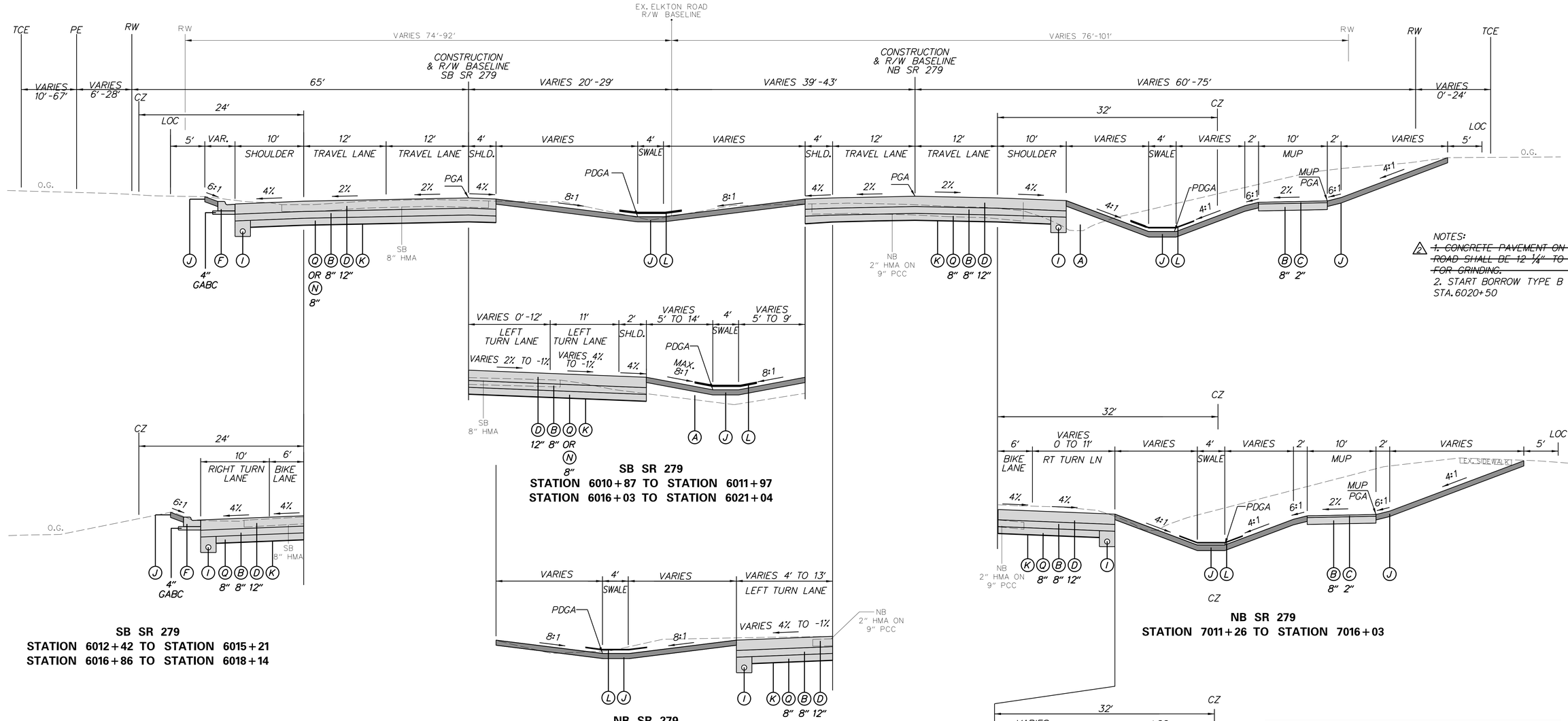

NOTES:

1. ~~CONCRETE PAVEMENT ON ELKTON ROAD SHALL BE 12 1/4" TO ACCOUNT FOR GRINDING.~~
2. START BORROW TYPE B AT STA. 6020+50

SB SR 279
STATION 6010+87 TO STATION 6011+97
STATION 6016+03 TO STATION 6021+04

SB SR 279
STATION 6012+42 TO STATION 6015+21
STATION 6016+86 TO STATION 6018+14

NB SR 279
STATION 7011+67 TO STATION 7016+03

NB SR 279
STATION 7011+26 TO STATION 7016+03

NB SR 279
STATION 7016+03 TO STATION 7019+39

MATERIAL	LIFT THICKNESS	
	MINIMUM	MAXIMUM
BITUMINOUS CONCRETE, TYPE 'C'	1.25"	2"
BITUMINOUS CONCRETE, TYPE 'B'	2.25"	4"
BITUMINOUS CONCRETE BASE COURSE	3"	6"
GRADED AGGREGATE BASE COURSE	-	8"

SR 279 ELKTON ROAD

SB SR 279 STATION 6010+87 TO STATION 6021+04
NB SR 279 STATION 7009+86 TO STATION 7019+39

LEGEND

- (A) ITEM 209006 - BORROW, TYPE F
- (B) ITEM 301001 - GRADED AGGREGATE BASE COURSE, TYPE B
- (C) ITEM 401005 - SUPERPAVE, TYPE C, PG 64-22 (CARBONATE STONE)
- (D) ITEM 501006 - PORTLAND CEMENT CONCRETE PAVEMENT, 12" OR ITEM 501503 - PRECAST CONCRETE PAVEMENT (AS SHOWN IN CP SHEETS)
- (E) ITEM 701014 - PORTLAND CEMENT CONCRETE CURB, TYPE 2
- (F) ITEM 701021 - INTEGRAL P.C.C. CURB & GUTTER, TYPE 3-4
- (G) ITEM 705001 - P.C.C. SIDEWALK, 4"
- (H) ITEM 705005 - P.C.C. SIDEWALK, 8"
- (I) ITEM 709001 - PERFORATED PIPE UNDERDRAINS, 6"
- (J) ITEM 908004 - TOPSOIL, 6" DEPTH ITEM 908014 - PERMANENT GRASS SEEDING, DRY GROUND
- (K) ITEM 708002 - GEOTEXTILES, SEPARATION
- (L) ITEM 908020 - EROSION CONTROL BLANKET MULCH
- (M) ITEM 720021 - GALVANIZED STEEL BEAM GUARDRAIL, TYPE 1-31
- (N) ITEM 209002 - BORROW, TYPE B
- (O) ITEM 401014 - SUPERPAVE, TYPE B, PG 64-22
- (P) ITEM 401021 - SUPERPAVE, TYPE BCBC, PG 64-22
- (Q) ITEM 209001 - BORROW, TYPE A
- (R) ITEM 401037 - SUPERPAVE, TYPE B, PG 64-22, WEDGE
- (S) ITEM 401030 - SUPERPAVE, TYPE B, PG 64-22, PATCHING
- (T) ITEM 401031 - SUPERPAVE, BCBC, PG 64-22, PATCHING
- (U) ITEM 301002 - GRADED AGGREGATE BASE COURSE, TYPE B, PATCHING
- (V) ITEM 760011 - PAVEMENT MILLING, BITUMINOUS CONCRETE PAVEMENT, TAPER CUT
- (W) ITEM 908005 - TOPSOIL, 12" DEPTH ITEM 908014 - PERMANENT GRASS SEEDING, DRY GROUND
- (X) ITEM 760010 - PAVEMENT MILLING, BITUMINOUS CONCRETE PAVEMENT
- (Y) ITEM 626010 - ALUMINUM PEDESTRIAN RAILING (SEE CONST. DETAILS)
- (Z) ITEM 727000 - CHAIN LINK FENCE
- (AB) ITEM 701012 - P.C.C. CURB, TYPE 1-6
- (AC) ITEM 302005 - DELAWARE NO.57 STONE

ADDENDA / REVISIONS

1	REPLACED PAGES 1 THRU 432	11-15-2019 (LB)
2	REMOVED NOTE #1	12-09-2019 (LB)

NOT TO SCALE

ELKTON ROAD
MD LINE TO
CASHO MILL ROAD

CONTRACT	BRIDGE NO.	1-322 1-322P 1-323 1-323P
T201504401	DESIGNED BY: LB	
COUNTY		
NEW CASTLE	CHECKED BY: BPH	

TYPICAL SECTIONS

TS-02

SECTION: JMT

SHEET NO. 8

PLOTTED BY: LBERZINA DATE: 12/9/2019
FILE LOCATION: Q:\MDE\140659_007_ELKTON_RD_CASHO_MILL\CADD\TS.DGN [SHEET: TS02]

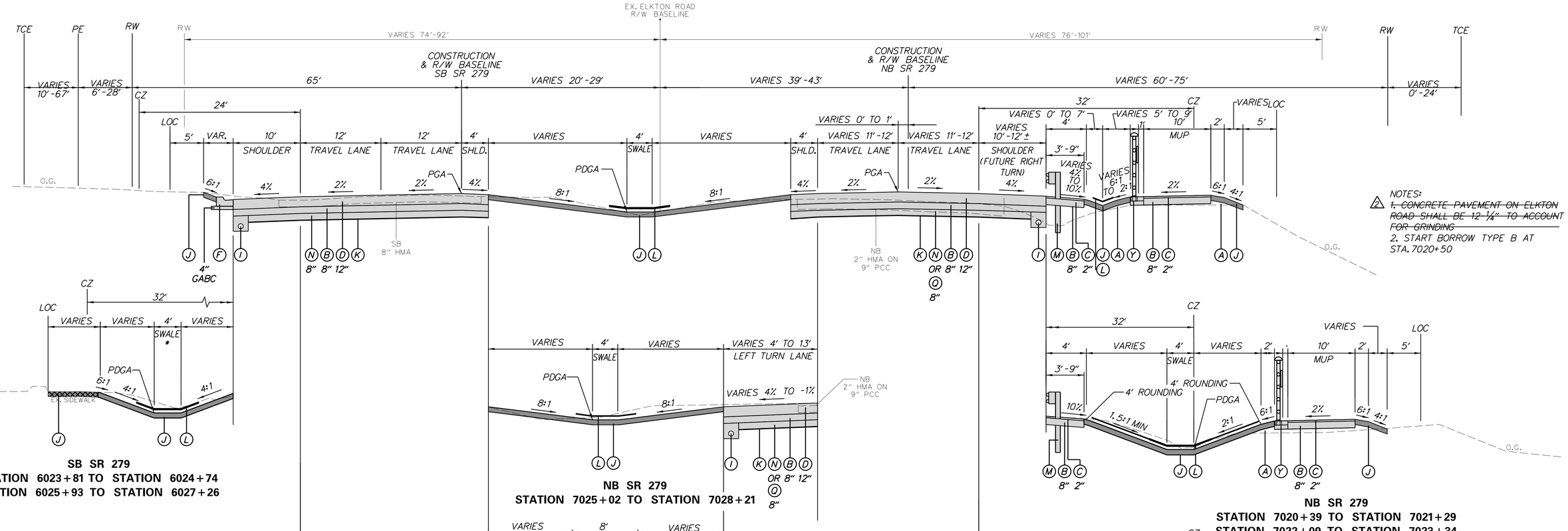

MATERIAL	LIFT THICKNESS	
	MINIMUM	MAXIMUM
BITUMINOUS CONCRETE, TYPE 'C'	1.25"	2"
BITUMINOUS CONCRETE, TYPE 'B'	2.25"	4"
BITUMINOUS CONCRETE BASE COURSE	3"	6"
GRADED AGGREGATE BASE COURSE	-	8"

SR 279 ELKTON ROAD

SB SR 279 STATION 6021+04 TO STATION 6028+31
NB SR 279 STATION 7019+39 TO STATION 7028+21

LEGEND

- (A) ITEM 209006 - BORROW, TYPE F
- (B) ITEM 301001 - GRADED AGGREGATE BASE COURSE, TYPE B
- (C) ITEM 401005 - SUPERPAVE, TYPE C, PG 64-22 (CARBONATE STONE)
- (D) ITEM 501006 - PORTLAND CEMENT CONCRETE PAVEMENT, 12" OR ITEM 501503 - PRECAST CONCRETE PAVEMENT (AS SHOWN IN CP SHEETS)
- (E) ITEM 701014 - PORTLAND CEMENT CONCRETE CURB, TYPE 2
- (F) ITEM 701021 - INTEGRAL P.C.C. CURB & GUTTER, TYPE 3-4
- (G) ITEM 705001 - P.C.C. SIDEWALK, 4"
- (H) ITEM 705005 - P.C.C. SIDEWALK, 8"
- (I) ITEM 709001 - PERFORATED PIPE UNDERDRAINS, 6"
- (J) ITEM 908004 - TOPSOIL, 6" DEPTH ITEM 908014 - PERMANENT GRASS SEEDING, DRY GROUND
- (K) ITEM 708002 - GEOTEXTILES, SEPARATION
- (L) ITEM 908020 - EROSION CONTROL BLANKET MULCH
- (M) ITEM 720021 - GALVANIZED STEEL BEAM GUARDRAIL, TYPE 1-31
- (N) ITEM 209002 - BORROW, TYPE B
- (O) ITEM 401014 - SUPERPAVE, TYPE B, PG 64-22
- (P) ITEM 401021 - SUPERPAVE, TYPE BCBC, PG 64-22
- (Q) ITEM 209001 - BORROW, TYPE A
- (R) ITEM 401037 - SUPERPAVE, TYPE B, PG 64-22, WEDGE
- (S) ITEM 401030 - SUPERPAVE, TYPE B, PG 64-22, PATCHING
- (T) ITEM 401031 - SUPERPAVE, BCBC, PG 64-22, PATCHING
- (U) ITEM 301002 - GRADED AGGREGATE BASE COURSE, TYPE B, PATCHING
- (V) ITEM 760011 - PAVEMENT MILLING, BITUMINOUS CONCRETE PAVEMENT, TAPER CUT
- (W) ITEM 908005 - TOPSOIL, 12" DEPTH ITEM 908014 - PERMANENT GRASS SEEDING, DRY GROUND
- (X) ITEM 760010 - PAVEMENT MILLING, BITUMINOUS CONCRETE PAVEMENT
- (Y) ITEM 626010 - ALUMINUM PEDESTRIAN RAILING (SEE CONST. DETAILS)
- (Z) ITEM 727000 - CHAIN LINK FENCE
- (AB) ITEM 701012 - P.C.C. CURB, TYPE 1-6
- (AC) ITEM 302005 - DELAWARE NO.57 STONE

TS-03

ADDENDA / REVISIONS

1	REPLACED PAGES 1 THRU 432	11-15-2019 (LB)
2	REMOVED NOTE #1	12-09-2019 (LB)

NOT TO SCALE

ELKTON ROAD MD LINE TO CASHO MILL ROAD

CONTRACT	BRIDGE NO.	1-322 1-322P 1-323 1-323P
T201504401	DESIGNED BY: LB	
COUNTY		
NEW CASTLE	CHECKED BY: BPH	

TYPICAL SECTIONS

SECTION	SHEET NO.
JMT	9

PLOTTED BY: LBERZINA DATE: 12/9/2019
FILE LOCATION: Q:\NDE\140659_007_ELKTON_RD_CASHO_MILL\CADD\TS.DGN [SHEET: TS03]

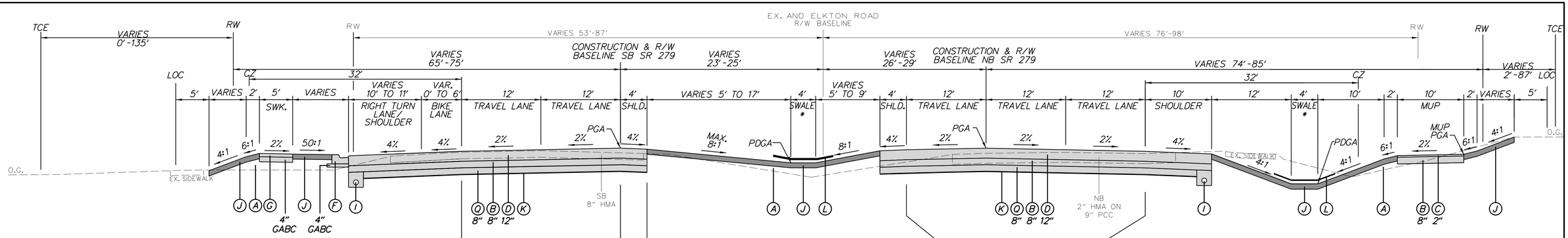

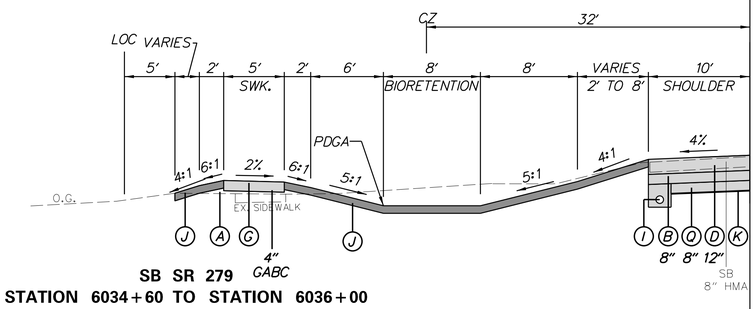

SB SR 279
STATION 6034+60 TO STATION 6036+00

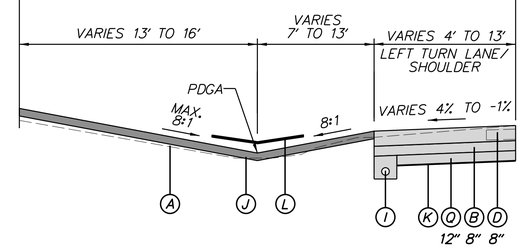

NB SR 279 STATION 7037+60 TO STATION 7043+33

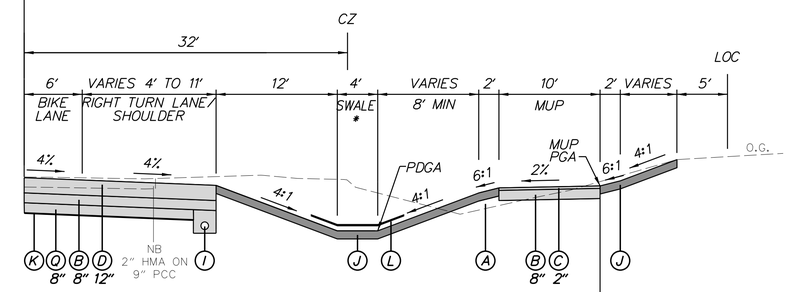

NB SR 279
STATION 7033+56 TO STATION 7037+00

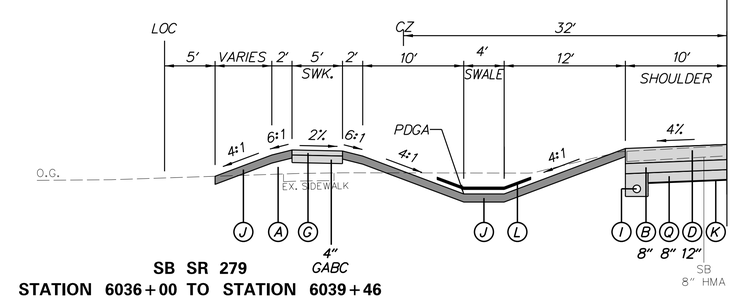

SB SR 279
STATION 6036+00 TO STATION 6039+46

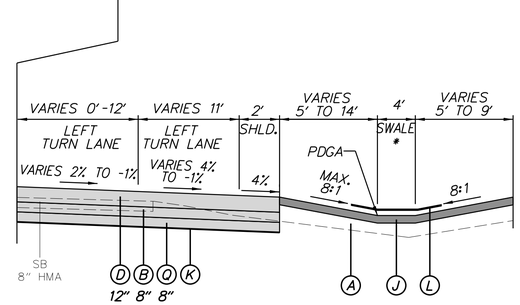

SB SR 279
STATION 6028+31 TO STATION 6035+87

*BIOFILTRATION SWALES ARE LOCATED IN THE FOLLOWING LOCATIONS:
NB STATION 7030+02 TO STATION 7037+60 (MEDIAN)
NB STATION 7040+30 TO STATION 7042+05

NOTES:
1. ~~CONCRETE PAVEMENT ON ELKTON ROAD NB SHALL BE 12-1/4" BEFORE FINAL GRINDING~~
2. USE EROSION CONTROL BLANKET MULCH FOR ENTIRE 2:1 SLOPES OR STEEPER.

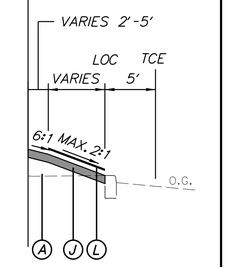

NB SR 279
STATION 7038+48 TO STATION 7043+33

SR 279 ELKTON ROAD

SB SR 279 STATION 6028+31 TO STATION 6043+33
NB SR 279 STATION 7028+31 TO STATION 7043+33

MATERIAL	LIFT THICKNESS	
	MINIMUM	MAXIMUM
BITUMINOUS CONCRETE, TYPE 'C'	1.25"	2"
BITUMINOUS CONCRETE, TYPE 'B'	2.25"	4"
BITUMINOUS CONCRETE BASE COURSE	3"	6"
GRADED AGGREGATE BASE COURSE	-	8"

LEGEND

- (A) ITEM 209006 - BORROW, TYPE F
- (B) ITEM 301001 - GRADED AGGREGATE BASE COURSE, TYPE B
- (C) ITEM 401005 - SUPERPAVE, TYPE C, PG 64-22 (CARBONATE STONE)
- (D) ITEM 501006 - PORTLAND CEMENT CONCRETE PAVEMENT, 12" OR ITEM 501503 - PRECAST CONCRETE PAVEMENT (AS SHOWN IN CP SHEETS)
- (E) ITEM 701014 - PORTLAND CEMENT CONCRETE CURB, TYPE 2
- (F) ITEM 701021 - INTEGRAL P.C.C. CURB & GUTTER, TYPE 3-4
- (G) ITEM 705001 - P.C.C. SIDEWALK, 4"
- (H) ITEM 705005 - P.C.C. SIDEWALK, 8"
- (I) ITEM 709001 - PERFORATED PIPE UNDERDRAINS, 6"
- (J) ITEM 908004 - TOPSOIL, 6" DEPTH ITEM 908014 - PERMANENT GRASS SEEDING, DRY GROUND
- (K) ITEM 708002 - GEOTEXTILES, SEPARATION
- (L) ITEM 908020 - EROSION CONTROL BLANKET MULCH
- (M) ITEM 720021 - GALVANIZED STEEL BEAM GUARDRAIL, TYPE 1-31
- (N) ITEM 209002 - BORROW, TYPE B
- (O) ITEM 401014 - SUPERPAVE, TYPE B, PG 64-22
- (P) ITEM 401021 - SUPERPAVE, TYPE BCBC, PG 64-22
- (Q) ITEM 209001 - BORROW, TYPE A
- (R) ITEM 401037 - SUPERPAVE, TYPE B, PG 64-22, WEDGE
- (S) ITEM 401030 - SUPERPAVE, TYPE B, PG 64-22, PATCHING
- (T) ITEM 401031 - SUPERPAVE, BCBC, PG 64-22, PATCHING
- (U) ITEM 301002 - GRADED AGGREGATE BASE COURSE, TYPE B, PATCHING
- (V) ITEM 760011 - PAVEMENT MILLING, BITUMINOUS CONCRETE PAVEMENT, TAPER CUT
- (W) ITEM 908005 - TOPSOIL, 12" DEPTH ITEM 908014 - PERMANENT GRASS SEEDING, DRY GROUND
- (X) ITEM 760010 - PAVEMENT MILLING, BITUMINOUS CONCRETE PAVEMENT
- (Y) ITEM 626010 - ALUMINUM PEDESTRIAN RAILING (SEE CONST. DETAILS)
- (Z) ITEM 727000 - CHAIN LINK FENCE
- (AB) ITEM 701012 - P.C.C. CURB, TYPE 1-6
- (AC) ITEM 302005 - DELAWARE NO.57 STONE

ADDENDA / REVISIONS		
1	REPLACED PAGES 1 THRU 432	11-15-2019 (LB)
2	REMOVED NOTE *1	12-09-2019 (LB)

NOT TO SCALE

ELKTON ROAD
MD LINE TO
CASHO MILL ROAD

CONTRACT	BRIDGE NO.	
T201504401		1-322 1-322P 1-323 1-323P
COUNTY	DESIGNED BY: LB	
NEW CASTLE	CHECKED BY: BPH	

TYPICAL SECTIONS

SECTION	SHEET NO.
JMT	10

TS-04

PLOTTED BY: LBERZINA DATE: 12/9/2019
FILE LOCATION: Q:\NDE\140659_007_ELKTON_RD_CASHO_MILL\CADD\TS.DGN [SHEET: TS04]

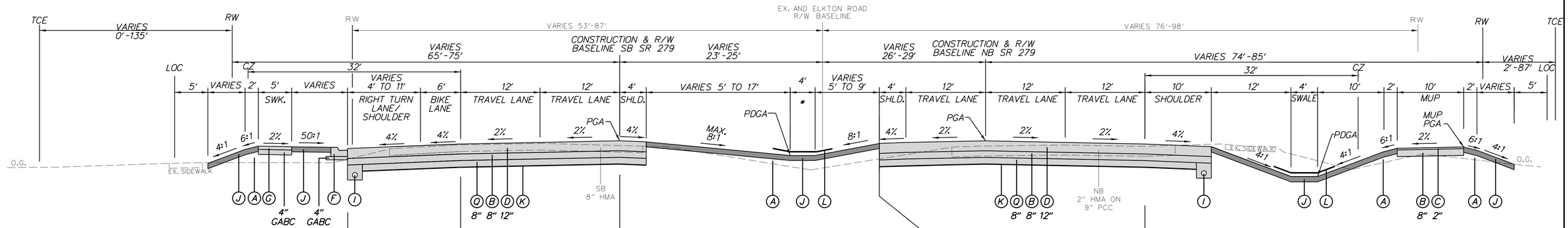

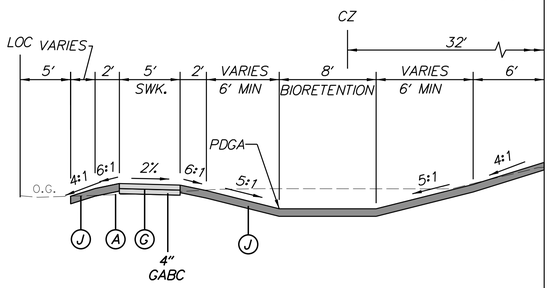

SB SR 279
STATION 6049+11 TO STATION 6051+00

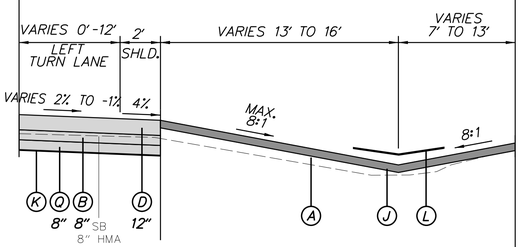

NB SR 279 STATION 6043+33 TO STATION 6050+15
SB SR 279 STATION 7043+33 TO STATION 7050+15

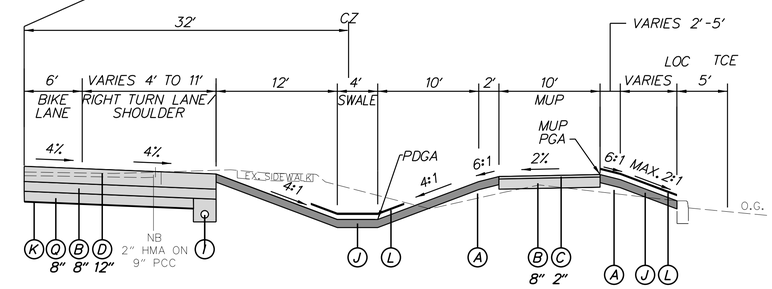

NB SR 279
STATION 7052+59 TO STATION 7059+12

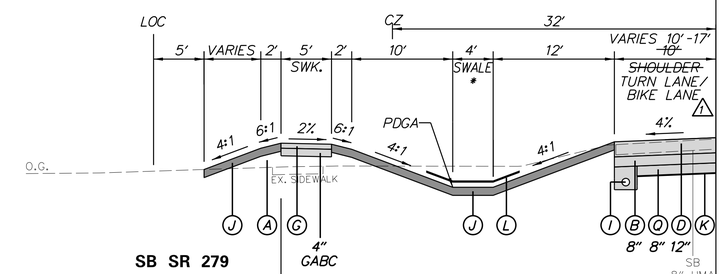

SB SR 279
STATION 6044+59 TO STATION 6046+82
STATION 6051+99 TO STATION 6053+24

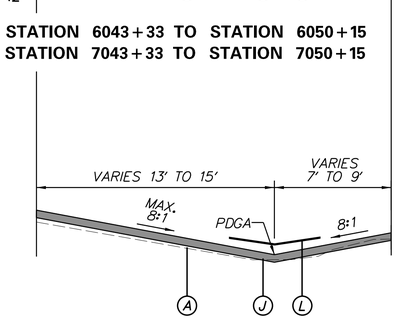

SB SR 279 STATION 6050+15 TO STATION 6053+26
NB SR 279 STATION 7050+15 TO STATION 7053+26

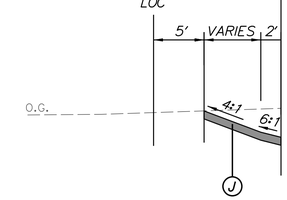

SB SR 279
STATION 6056+46 TO STATION 6060+24

*BIOFILTRATION SWALES ARE IN THE FOLLOWING LOCATIONS:
SB STATION 6051+99 TO STATION 6053+24
SB STATION 6059+03 TO STATION 6060+24
NB STATION 7053+26 TO STATION 6054+90 (MEDIAN)
NB STATION 7053+73 TO STATION 7055+26

NOTES:

~~1. CONCRETE PAVEMENT ON ELKTON ROAD SHALL BE 12 1/4" BEFORE FINAL GRINDING~~
2. USE EROSION CONTROL BLANKET MULCH FOR ENTIRE 2:1 SLOPES OR STEEPER.

MATERIAL	LIFT THICKNESS	
	MINIMUM	MAXIMUM
BITUMINOUS CONCRETE, TYPE 'C'	1.25"	2"
BITUMINOUS CONCRETE, TYPE 'B'	2.25"	4"
BITUMINOUS CONCRETE BASE COURSE	3"	6"
GRADED AGGREGATE BASE COURSE	-	8"

SR 279 ELKTON ROAD

SB SR 279 STATION 6043+33 TO STATION 6060+24
NB SR 279 STATION 7043+33 TO STATION 7059+12

LEGEND

- (A) ITEM 209006 - BORROW, TYPE F
- (B) ITEM 301001 - GRADED AGGREGATE BASE COURSE, TYPE B
- (C) ITEM 401005 - SUPERPAVE, TYPE C, PG 64-22 (CARBONATE STONE)
- (D) ITEM 501006 - PORTLAND CEMENT CONCRETE PAVEMENT, 12" OR ITEM 501503 - PRECAST CONCRETE PAVEMENT (AS SHOWN IN CP SHEETS)
- (E) ITEM 701014 - PORTLAND CEMENT CONCRETE CURB, TYPE 2
- (F) ITEM 701021 - INTEGRAL P.C.C. CURB & GUTTER, TYPE 3-4
- (G) ITEM 705001 - P.C.C. SIDEWALK, 4"
- (H) ITEM 705005 - P.C.C. SIDEWALK, 8"
- (I) ITEM 709001 - PERFORATED PIPE UNDERDRAINS, 6"
- (J) ITEM 908004 - TOPSOIL, 6" DEPTH ITEM 908014 - PERMANENT GRASS SEEDING, DRY GROUND
- (K) ITEM 708002 - GEOTEXTILES, SEPARATION
- (L) ITEM 908020 - EROSION CONTROL BLANKET MULCH
- (M) ITEM 720021 - GALVANIZED STEEL BEAM GUARDRAIL, TYPE 1-31
- (N) ITEM 209002 - BORROW, TYPE B
- (O) ITEM 401014 - SUPERPAVE, TYPE B, PG 64-22
- (P) ITEM 401021 - SUPERPAVE, TYPE BCBC, PG 64-22
- (Q) ITEM 209001 - BORROW, TYPE A
- (R) ITEM 401037 - SUPERPAVE, TYPE B, PG 64-22, WEDGE
- (S) ITEM 401030 - SUPERPAVE, TYPE B, PG 64-22, PATCHING
- (T) ITEM 401031 - SUPERPAVE, BCBC, PG 64-22, PATCHING
- (U) ITEM 301002 - GRADED AGGREGATE BASE COURSE, TYPE B, PATCHING
- (V) ITEM 760011 - PAVEMENT MILLING, BITUMINOUS CONCRETE PAVEMENT, TAPER CUT
- (W) ITEM 908005 - TOPSOIL, 12" DEPTH ITEM 908014 - PERMANENT GRASS SEEDING, DRY GROUND
- (X) ITEM 760010 - PAVEMENT MILLING, BITUMINOUS CONCRETE PAVEMENT
- (Y) ITEM 626010 - ALUMINUM PEDESTRIAN RAILING (SEE CONST. DETAILS)
- (Z) ITEM 727000 - CHAIN LINK FENCE
- (AB) ITEM 701012 - P.C.C. CURB, TYPE 1-6
- (AC) ITEM 302005 - DELAWARE NO.57 STONE

TS-05

ADDENDA / REVISIONS

1	REPLACED PAGES 1 THRU 432	11-15-2019 (LB)
2	REMOVED NOTE #1	12-09-2019 (LB)

NOT TO SCALE

ELKTON ROAD
MD LINE TO
CASHO MILL ROAD

CONTRACT	BRIDGE NO.	1-322 1-322P 1-323 1-323P
T201504401	DESIGNED BY: LB	
COUNTY	CHECKED BY: BPH	
NEW CASTLE		

TYPICAL SECTIONS

SECTION	SHEET NO.
JMT	11

PLOTTED BY: LBERZINA DATE: 12/9/2019
FILE LOCATION: Q:\NDE\140659_007_ELKTON_RD_CASHO_MILL\CADD\TS.DGN [SHEET: TS05]

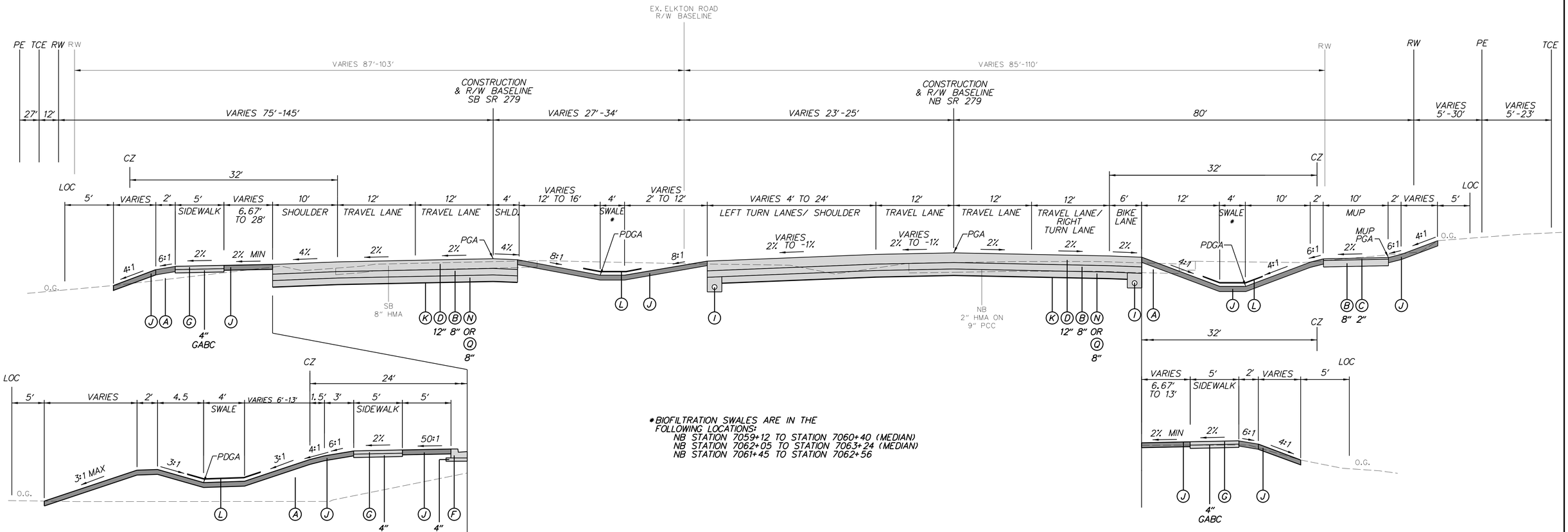

*BIOFILTRATION SWALES ARE IN THE FOLLOWING LOCATIONS:
NB STATION 7059+12 TO STATION 7060+40 (MEDIAN)
NB STATION 7062+05 TO STATION 7063+24 (MEDIAN)
NB STATION 7061+45 TO STATION 7062+56

NOTES:

1. ~~CONCRETE PAVEMENT ON ELKTON ROAD SHALL BE 12 ¼" TO ACCOUNT FOR GRINDING~~
2. START BORROW TYPE B AT STA. 6060+50 AND STA. 7060+50

MATERIAL	LIFT THICKNESS	
	MINIMUM	MAXIMUM
BITUMINOUS CONCRETE, TYPE 'C'	1.25"	2"
BITUMINOUS CONCRETE, TYPE 'B'	2.25"	4"
BITUMINOUS CONCRETE BASE COURSE	3"	6"
GRADED AGGREGATE BASE COURSE	-	8"

SR 279 ELKTON ROAD

SB SR 279 STATION 6060+24 TO STATION 6065+15
NB SR 279 STATION 7059+12 TO STATION 7064+92

LEGEND

- (A) ITEM 209006 - BORROW, TYPE F
- (B) ITEM 301001 - GRADED AGGREGATE BASE COURSE, TYPE B
- (C) ITEM 401005 - SUPERPAVE, TYPE C, PG 64-22 (CARBONATE STONE)
- (D) ITEM 501006 - PORTLAND CEMENT CONCRETE PAVEMENT, 12" OR ITEM 501503 - PRECAST CONCRETE PAVEMENT (AS SHOWN IN CP SHEETS)
- (E) ITEM 701014 - PORTLAND CEMENT CONCRETE CURB, TYPE 2
- (F) ITEM 701021 - INTEGRAL P.C.C. CURB & GUTTER, TYPE 3-4
- (G) ITEM 705001 - P.C.C. SIDEWALK, 4"
- (H) ITEM 705005 - P.C.C. SIDEWALK, 8"
- (I) ITEM 709001 - PERFORATED PIPE UNDERDRAINS, 6"
- (J) ITEM 908004 - TOPSOIL, 6" DEPTH ITEM 908014 - PERMANENT GRASS SEEDING, DRY GROUND
- (K) ITEM 708002 - GEOTEXTILES, SEPARATION
- (L) ITEM 908020 - EROSION CONTROL BLANKET MULCH
- (M) ITEM 720021 - GALVANIZED STEEL BEAM GUARDRAIL, TYPE 1-31
- (N) ITEM 209002 - BORROW, TYPE B
- (O) ITEM 401014 - SUPERPAVE, TYPE B, PG 64-22
- (P) ITEM 401021 - SUPERPAVE, TYPE BCBC, PG 64-22
- (Q) ITEM 209001 - BORROW, TYPE A
- (R) ITEM 401037 - SUPERPAVE, TYPE B, PG 64-22, WEDGE
- (S) ITEM 401030 - SUPERPAVE, TYPE B, PG 64-22, PATCHING
- (T) ITEM 401031 - SUPERPAVE, BCBC, PG 64-22, PATCHING
- (U) ITEM 301002 - GRADED AGGREGATE BASE COURSE, TYPE B, PATCHING
- (V) ITEM 760011 - PAVEMENT MILLING, BITUMINOUS CONCRETE PAVEMENT, TAPER CUT
- (W) ITEM 908005 - TOPSOIL, 12" DEPTH ITEM 908014 - PERMANENT GRASS SEEDING, DRY GROUND
- (X) ITEM 760010 - PAVEMENT MILLING, BITUMINOUS CONCRETE PAVEMENT
- (Y) ITEM 626010 - ALUMINUM PEDESTRIAN RAILING (SEE CONST. DETAILS)
- (Z) ITEM 727000 - CHAIN LINK FENCE
- (AB) ITEM 701012 - P.C.C. CURB, TYPE 1-6
- (AC) ITEM 302005 - DELAWARE NO.57 STONE

TS-06

ADDENDA / REVISIONS

1	REPLACED PAGES 1 THRU 432	11-15-2019 (LB)
2	REMOVED NOTE #1	12-09-2019 (LB)

NOT TO SCALE

ELKTON ROAD
MD LINE TO
CASHO MILL ROAD

CONTRACT	BRIDGE NO.	1-322 1-322P 1-323 1-323P
T201504401	DESIGNED BY: LB	
COUNTY		
NEW CASTLE	CHECKED BY: BPH	

TYPICAL SECTIONS

SECTION	SHEET NO.
JMT	12

PLOTTED BY: LBERZINA DATE: 12/9/2019
FILE LOCATION: Q:\NDE\140659_007_ELKTON_RD_CASHO_MILL\CADD\TS.DGN [SHEET: TS06]

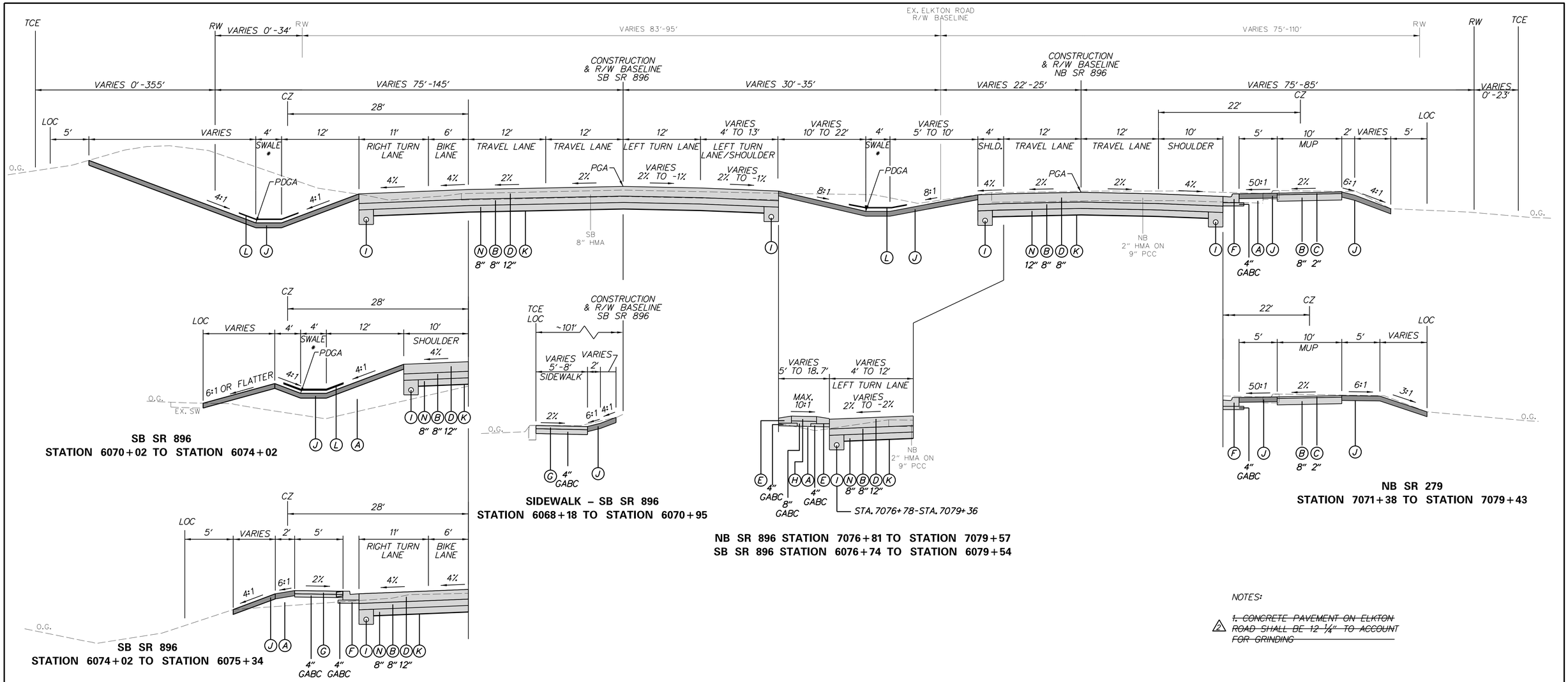

SB SR 896
STATION 6070+02 TO STATION 6074+02

SIDEWALK – SB SR 896
STATION 6068+18 TO STATION 6070+95

NB SR 896 STATION 7076+81 TO STATION 7079+57
SB SR 896 STATION 6076+74 TO STATION 6079+54

NB SR 279
STATION 7071+38 TO STATION 7079+43

SB SR 896
STATION 6074+02 TO STATION 6075+34

NOTES:

~~1. CONCRETE PAVEMENT ON ELKTON ROAD SHALL BE 12 1/4" TO ACCOUNT FOR GRINDING~~

*BIOFILTRATION SWALES ARE IN THE FOLLOWING LOCATIONS:
SB STATION 6066+85 TO STATION 6068+15
SB STATION 6071+41 TO STATION 6072+61
NB STATION 7067+04 TO STATION 7068+10 (MEDIAN)
NB STATION 7071+43 TO STATION 7072+43 (MEDIAN)
NB STATION 7074+92 TO STATION 7076+42 (MEDIAN)

SR 896 ELKTON ROAD

SB SR 896 STATION 6065+15 TO STATION 6075+34
NB SR 896 STATION 7064+92 TO STATION 7079+56

MATERIAL	LIFT THICKNESS	
	MINIMUM	MAXIMUM
BITUMINOUS CONCRETE, TYPE 'C'	1.25"	2"
BITUMINOUS CONCRETE, TYPE 'B'	2.25"	4"
BITUMINOUS CONCRETE BASE COURSE	3"	6"
GRADED AGGREGATE BASE COURSE	-	8"

LEGEND

- (A) ITEM 209006 - BORROW, TYPE F
- (B) ITEM 301001 - GRADED AGGREGATE BASE COURSE, TYPE B
- (C) ITEM 401005 - SUPERPAVE, TYPE C, PG 64-22 (CARBONATE STONE)
- (D) ITEM 501006 - PORTLAND CEMENT CONCRETE PAVEMENT, 12" OR ITEM 501503 - PRECAST CONCRETE PAVEMENT (AS SHOWN IN CP SHEETS)
- (E) ITEM 701014 - PORTLAND CEMENT CONCRETE CURB, TYPE 2
- (F) ITEM 701021 - INTEGRAL P.C.C. CURB & GUTTER, TYPE 3-4
- (G) ITEM 705001 - P.C.C. SIDEWALK, 4"
- (H) ITEM 705005 - P.C.C. SIDEWALK, 8"
- (I) ITEM 709001 - PERFORATED PIPE UNDERDRAINS, 6"
- (J) ITEM 908004 - TOPSOIL, 6" DEPTH ITEM 908014 - PERMANENT GRASS SEEDING, DRY GROUND
- (K) ITEM 708002 - GEOTEXTILES, SEPARATION
- (L) ITEM 908020 - EROSION CONTROL BLANKET MULCH
- (M) ITEM 720021 - GALVANIZED STEEL BEAM GUARDRAIL, TYPE 1-31
- (N) ITEM 209002 - BORROW, TYPE B
- (O) ITEM 401014 - SUPERPAVE, TYPE B, PG 64-22
- (P) ITEM 401021 - SUPERPAVE, TYPE BCBC, PG 64-22
- (Q) ITEM 209001 - BORROW, TYPE A
- (R) ITEM 401037 - SUPERPAVE, TYPE B, PG 64-22, WEDGE
- (S) ITEM 401030 - SUPERPAVE, TYPE B, PG 64-22, PATCHING
- (T) ITEM 401031 - SUPERPAVE, BCBC, PG 64-22, PATCHING
- (U) ITEM 301002 - GRADED AGGREGATE BASE COURSE, TYPE B, PATCHING
- (V) ITEM 760011 - PAVEMENT MILLING, BITUMINOUS CONCRETE PAVEMENT, TAPER CUT
- (W) ITEM 908005 - TOPSOIL, 12" DEPTH ITEM 908014 - PERMANENT GRASS SEEDING, DRY GROUND
- (X) ITEM 760010 - PAVEMENT MILLING, BITUMINOUS CONCRETE PAVEMENT
- (Y) ITEM 626010 - ALUMINUM PEDESTRIAN RAILING (SEE CONST. DETAILS)
- (Z) ITEM 727000 - CHAIN LINK FENCE
- (AB) ITEM 701012 - P.C.C. CURB, TYPE 1-6
- (AC) ITEM 302005 - DELAWARE NO.57 STONE

TS-07

ADDENDA / REVISIONS

1	REPLACED PAGES 1 THRU 432	11-15-2019 (LB)
2	REMOVED NOTE #1	12-09-2019 (LB)

NOT TO SCALE

ELKTON ROAD MD LINE TO CASHO MILL ROAD

CONTRACT	BRIDGE NO.	1-322 1-322P 1-323 1-323P
T201504401	DESIGNED BY: LB	
COUNTY		
NEW CASTLE	CHECKED BY: BPH	

TYPICAL SECTIONS

SECTION: JMT
SHEET NO. 13

PLOTTED BY: LBERZINA DATE: 12/9/2019
FILE LOCATION: Q:\NDE\140659_007_ELKTON_RD_CASHO_MILL\CADD\TS.DGN [SHEET: TS07]

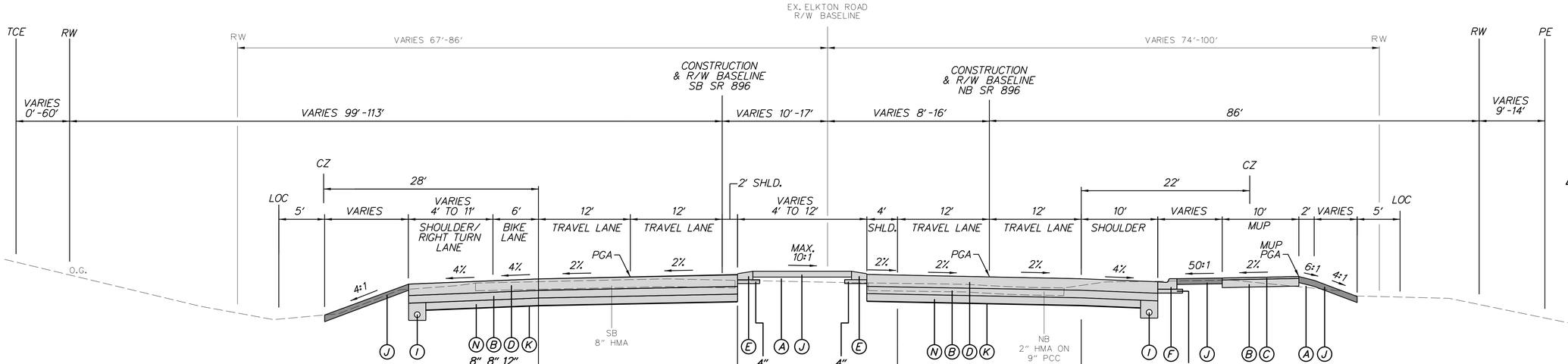

NOTES:

1. ~~CONCRETE PAVEMENT ON ELKTON ROAD SHALL BE 12 1/4" TO ACCOUNT FOR GRINDING~~
2. USE EROSION CONTROL BLANKET MULCH FOR ENTIRE 2:1 SLOPES OR STEEPER.

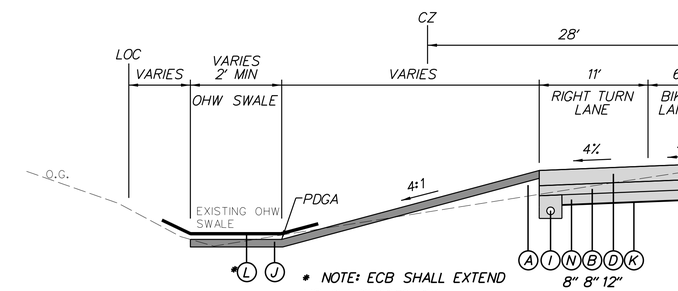

* NOTE: ECB SHALL EXTEND UP ON SLOPES BY A MINIMUM OF 2'

SB SR 896
STATION 6076+10 TO STATION 6077+53

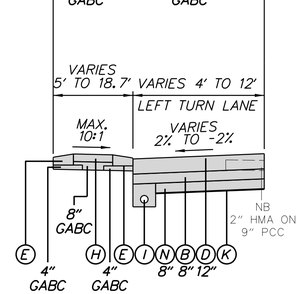

NB SR 896 STATION 7083+00 TO STATION 7083+47
SB SR 896 STATION 6082+98 TO STATION 6083+47

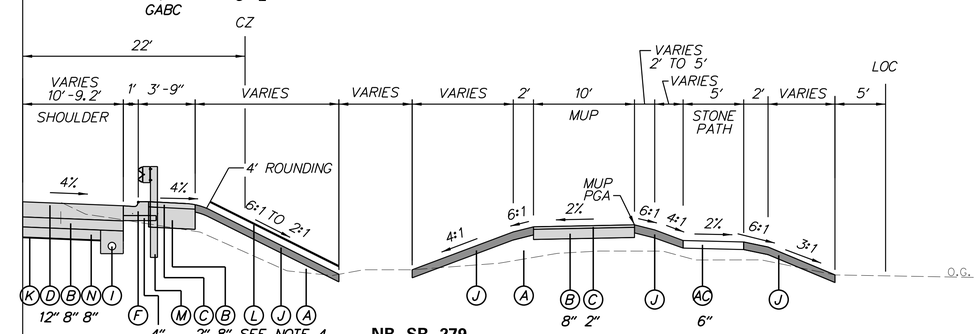

NB SR 279
STATION 7081+70 TO STATION 7082+58

LANDSCAPED MEDIAN

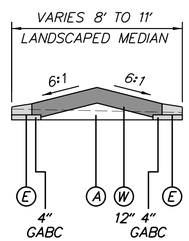

NB SR 896 STATION 7079+54 TO STATION 7083+00
SB SR 896 STATION 6079+54 TO STATION 6083+00

MATERIAL	LIFT THICKNESS	
	MINIMUM	MAXIMUM
BITUMINOUS CONCRETE, TYPE 'C'	1.25"	2"
BITUMINOUS CONCRETE, TYPE 'B'	2.25"	4"
BITUMINOUS CONCRETE BASE COURSE	3"	6"
GRADED AGGREGATE BASE COURSE	-	8"

SR 896 ELKTON ROAD

SB SR 896 STATION 6075+34 TO STATION 6083+47
NB SR 896 STATION 7079+50 TO STATION 7083+00

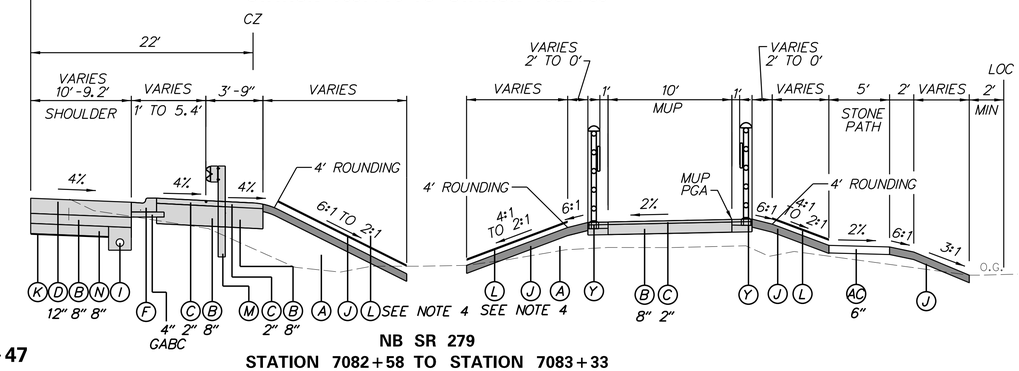

NB SR 279
STATION 7082+58 TO STATION 7083+33

LEGEND

- (A) ITEM 209006 - BORROW, TYPE F
- (B) ITEM 301001 - GRADED AGGREGATE BASE COURSE, TYPE B
- (C) ITEM 401005 - SUPERPAVE, TYPE C, PG 64-22 (CARBONATE STONE)
- (D) ITEM 501006 - PORTLAND CEMENT CONCRETE PAVEMENT, 12" OR ITEM 501503 - PRECAST CONCRETE PAVEMENT (AS SHOWN IN CP SHEETS)
- (E) ITEM 701014 - PORTLAND CEMENT CONCRETE CURB, TYPE 2
- (F) ITEM 701021 - INTEGRAL P.C.C. CURB & GUTTER, TYPE 3-4
- (G) ITEM 705001 - P.C.C. SIDEWALK, 4"
- (H) ITEM 705005 - P.C.C. SIDEWALK, 8"
- (I) ITEM 709001 - PERFORATED PIPE UNDERDRAINS, 6"
- (J) ITEM 908004 - TOPSOIL, 6" DEPTH ITEM 908014 - PERMANENT GRASS SEEDING, DRY GROUND
- (K) ITEM 708002 - GEOTEXTILES, SEPARATION
- (L) ITEM 908020 - EROSION CONTROL BLANKET MULCH
- (M) ITEM 720021 - GALVANIZED STEEL BEAM GUARDRAIL, TYPE 1-31
- (N) ITEM 209002 - BORROW, TYPE B
- (O) ITEM 401014 - SUPERPAVE, TYPE B, PG 64-22
- (P) ITEM 401021 - SUPERPAVE, TYPE BCBC, PG 64-22
- (Q) ITEM 209001 - BORROW, TYPE A
- (R) ITEM 401037 - SUPERPAVE, TYPE B, PG 64-22, WEDGE
- (S) ITEM 401030 - SUPERPAVE, TYPE B, PG 64-22, PATCHING
- (T) ITEM 401031 - SUPERPAVE, BCBC, PG 64-22, PATCHING
- (U) ITEM 301002 - GRADED AGGREGATE BASE COURSE, TYPE B, PATCHING
- (V) ITEM 760011 - PAVEMENT MILLING, BITUMINOUS CONCRETE PAVEMENT, TAPER CUT
- (W) ITEM 908005 - TOPSOIL, 12" DEPTH ITEM 908014 - PERMANENT GRASS SEEDING, DRY GROUND
- (X) ITEM 760010 - PAVEMENT MILLING, BITUMINOUS CONCRETE PAVEMENT
- (Y) ITEM 626010 - ALUMINUM PEDESTRIAN RAILING (SEE CONST. DETAILS)
- (Z) ITEM 727000 - CHAIN LINK FENCE
- (AB) ITEM 701012 - P.C.C. CURB, TYPE 1-6
- (AC) ITEM 302005 - DELAWARE NO.57 STONE

TS-08

ADDENDA / REVISIONS

1	REPLACED PAGES 1 THRU 432	11-15-2019 (LB)
2	REMOVED NOTE #1	12-09-2019 (LB)

NOT TO SCALE

ELKTON ROAD
MD LINE TO
CASHO MILL ROAD

CONTRACT	BRIDGE NO.	1-322 1-322P 1-323 1-323P
T201504401	DESIGNED BY: LB	
COUNTY		
NEW CASTLE	CHECKED BY: BPH	

TYPICAL SECTIONS

SECTION: JMT
SHEET NO. 14

PLOTTED BY: LBERZINA DATE: 12/9/2019
FILE LOCATION: Q:\NDE\140659_007_ELKTON_RD_CASHO_MILL\CADD\TS.DGN [SHEET: TS08]

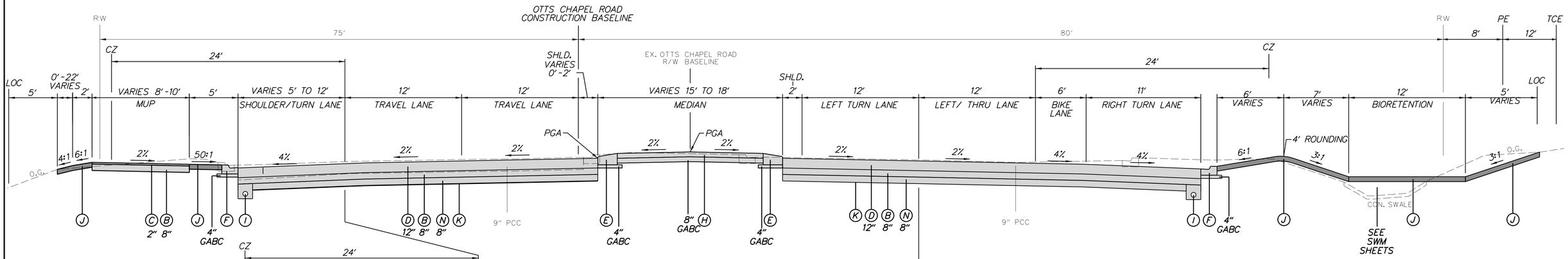

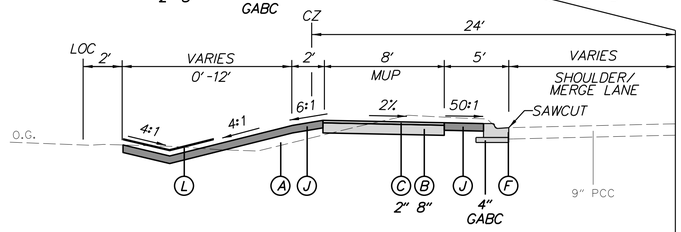

STATION 105+91 TO STATION 106+64

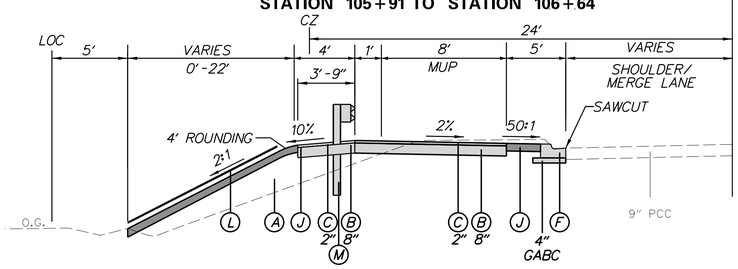

STATION 103+50 TO STATION 105+00

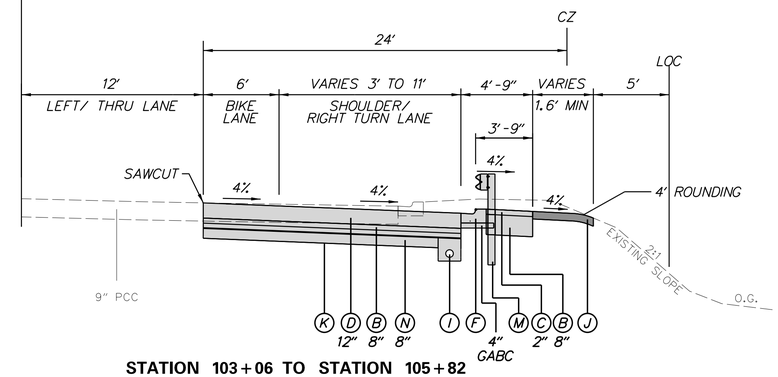

STATION 103+06 TO STATION 105+82

OTTS CHAPEL ROAD

STA 103+06 TO STA 108+50

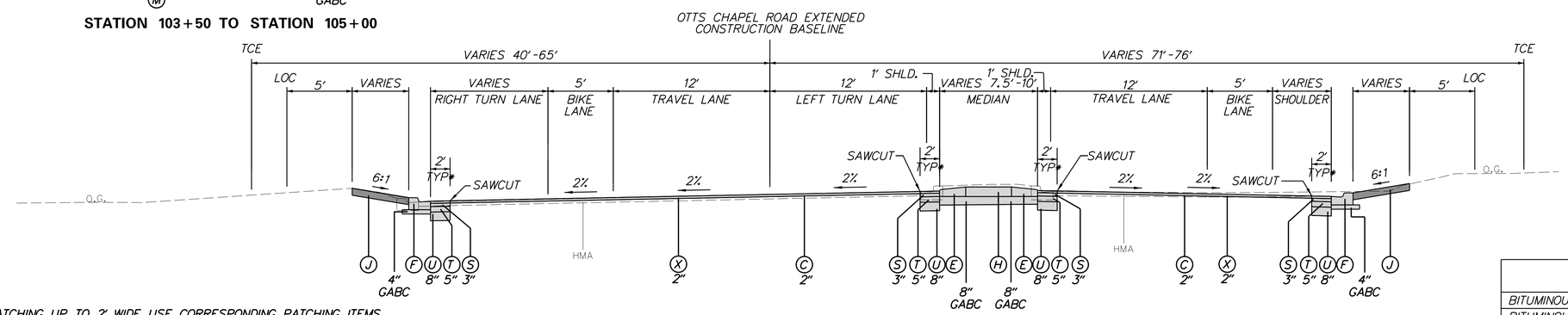

*FOR PATCHING UP TO 2' WIDE USE CORRESPONDING PATCHING ITEMS.
FOR PAVEMENT SECTION GRATER THAN 2' WIDE USE REGULAR PAVEMENT ITEMS.

CROSSVIEW BUSINESS PARK ACCESS

STA 400+50 TO STA 401+10

NOTES:

1. ~~CONCRETE PAVEMENT ON ELKTON ROAD SHALL BE 12 1/4" TO ACCOUNT FOR GRINDING~~
2. USE EROSION CONTROL BLANKET MULCH FOR ENTIRE 2:1 SLOPES OR STEEPER.

MATERIAL	LIFT THICKNESS	
	MINIMUM	MAXIMUM
BITUMINOUS CONCRETE, TYPE 'C'	1.25"	2"
BITUMINOUS CONCRETE, TYPE 'B'	2.25"	4"
BITUMINOUS CONCRETE BASE COURSE	3"	6"
GRADED AGGREGATE BASE COURSE	-	8"

LEGEND

- (A) ITEM 209006 - BORROW, TYPE F
- (B) ITEM 301001 - GRADED AGGREGATE BASE COURSE, TYPE B
- (C) ITEM 401005 - SUPERPAVE, TYPE C, PG 64-22 (CARBONATE STONE)
- (D) ITEM 501006 - PORTLAND CEMENT CONCRETE PAVEMENT, 12" OR ITEM 501503 - PRECAST CONCRETE PAVEMENT (AS SHOWN IN CP SHEETS)
- (E) ITEM 701014 - PORTLAND CEMENT CONCRETE CURB, TYPE 2
- (F) ITEM 701021 - INTEGRAL P.C.C. CURB & GUTTER, TYPE 3-4
- (G) ITEM 705001 - P.C.C. SIDEWALK, 4"
- (H) ITEM 705005 - P.C.C. SIDEWALK, 8"
- (I) ITEM 709001 - PERFORATED PIPE UNDERDRAINS, 6"
- (J) ITEM 908004 - TOPSOIL, 6" DEPTH ITEM 908014 - PERMANENT GRASS SEEDING, DRY GROUND
- (K) ITEM 708002 - GEOTEXTILES, SEPARATION
- (L) ITEM 908020 - EROSION CONTROL BLANKET MULCH
- (M) ITEM 720021 - GALVANIZED STEEL BEAM GUARDRAIL, TYPE 1-31
- (N) ITEM 209002 - BORROW, TYPE B
- (O) ITEM 401014 - SUPERPAVE, TYPE B, PG 64-22
- (P) ITEM 401021 - SUPERPAVE, TYPE BCBC, PG 64-22
- (Q) ITEM 209001 - BORROW, TYPE A
- (R) ITEM 401037 - SUPERPAVE, TYPE B, PG 64-22, WEDGE
- (S) ITEM 401030 - SUPERPAVE, TYPE B, PG 64-22, PATCHING
- (T) ITEM 401031 - SUPERPAVE, BCBC, PG 64-22, PATCHING
- (U) ITEM 301002 - GRADED AGGREGATE BASE COURSE, TYPE B, PATCHING
- (V) ITEM 760011 - PAVEMENT MILLING, BITUMINOUS CONCRETE PAVEMENT, TAPER CUT
- (W) ITEM 908005 - TOPSOIL, 12" DEPTH ITEM 908014 - PERMANENT GRASS SEEDING, DRY GROUND
- (X) ITEM 760010 - PAVEMENT MILLING, BITUMINOUS CONCRETE PAVEMENT
- (Y) ITEM 626010 - ALUMINUM PEDESTRIAN RAILING (SEE CONST. DETAILS)
- (Z) ITEM 727000 - CHAIN LINK FENCE
- (AB) ITEM 701012 - P.C.C. CURB, TYPE 1-6
- (AC) ITEM 302005 - DELAWARE NO.57 STONE

TS-09

ADDENDA / REVISIONS		
1	REPLACED PAGES 1 THRU 432	11-15-2019 (LB)
2	REMOVED NOTE #1	12-09-2019 (LB)

NOT TO SCALE

ELKTON ROAD MD LINE TO CASHO MILL ROAD

CONTRACT	BRIDGE NO.	1-322 1-322P 1-323 1-323P
T201504401	DESIGNED BY: LB	
COUNTY		
NEW CASTLE	CHECKED BY: BPH	

TYPICAL SECTIONS

SECTION: JMT

SHEET NO. 15

PLOTTED BY: LBERZINA DATE: 12/9/2019
FILE LOCATION: Q:\NDE\140659_007_ELKTON_RD_CASHO_MILL\CADD\TS.DGN [SHEET: TS09]

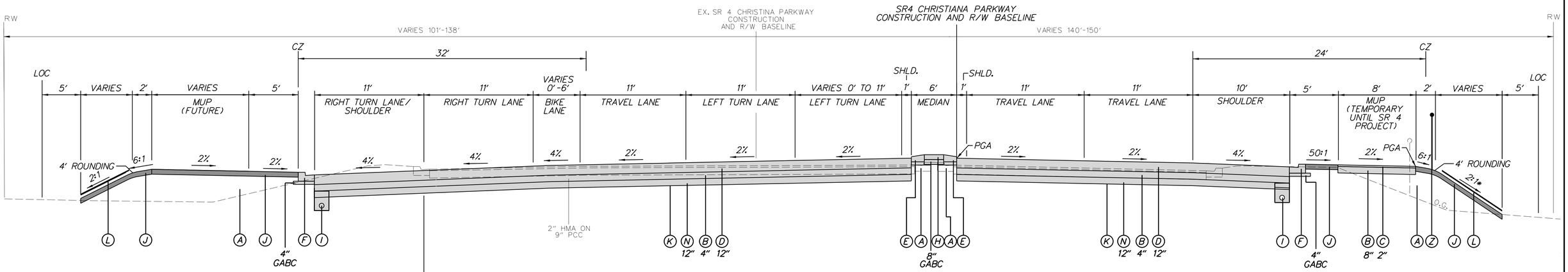

SR4 CHRISTINA PARKWAY

STA 1000+50 TO STA 1004+00

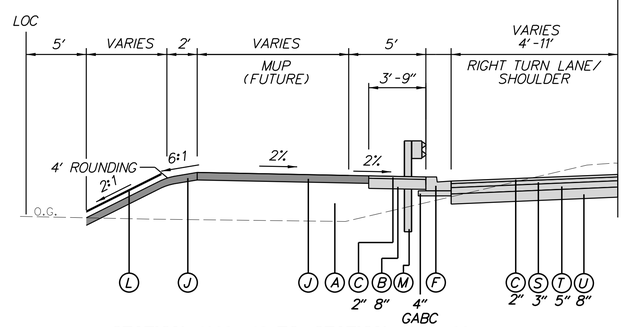

STATION 1002+48 TO STATION 1004+00

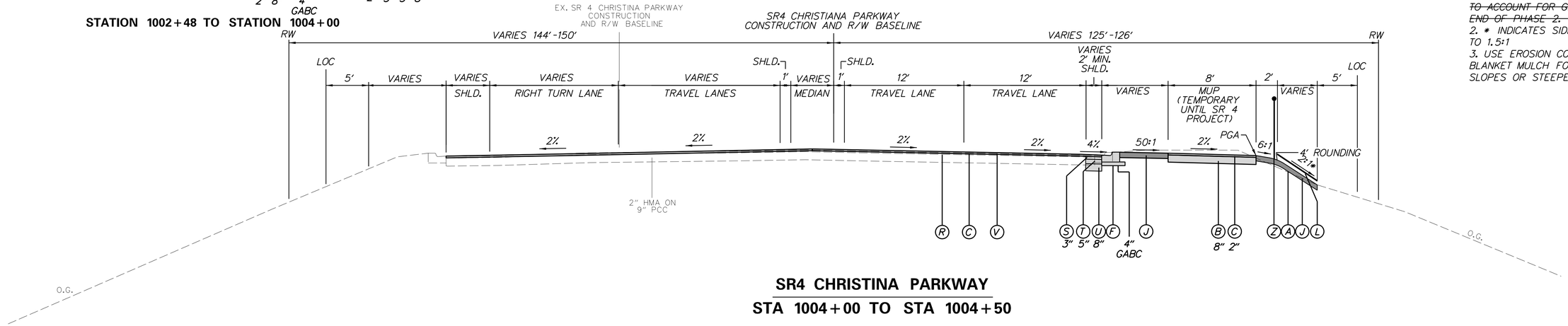

SR4 CHRISTINA PARKWAY

STA 1004+00 TO STA 1004+50

MATERIAL	LIFT THICKNESS	
	MINIMUM	MAXIMUM
BITUMINOUS CONCRETE, TYPE 'C'	1.25"	2"
BITUMINOUS CONCRETE, TYPE 'B'	2.25"	4"
BITUMINOUS CONCRETE BASE COURSE	3"	6"
GRADED AGGREGATE BASE COURSE	-	8"

NOTES:

2. ~~1. CONCRETE PAVEMENT ON ELKTON ROAD ND SHALL BE 12 1/4" TO ACCOUNT FOR GRINDING AT THE END OF PHASE 2.~~
2. * INDICATES SIDE SLOPE VARIES TO 1.5:1
3. USE EROSION CONTROL BLANKET MULCH FOR ENTIRE 2:1 SLOPES OR STEEPER.

LEGEND

- (A) ITEM 209006 - BORROW, TYPE F
- (B) ITEM 301001 - GRADED AGGREGATE BASE COURSE, TYPE B
- (C) ITEM 401005 - SUPERPAVE, TYPE C, PG 64-22 (CARBONATE STONE)
- (D) ITEM 501006 - PORTLAND CEMENT CONCRETE PAVEMENT, 12" OR ITEM 501503 - PRECAST CONCRETE PAVEMENT (AS SHOWN IN CP SHEETS)
- (E) ITEM 701014 - PORTLAND CEMENT CONCRETE CURB, TYPE 2
- (F) ITEM 701021 - INTEGRAL P.C.C. CURB & GUTTER, TYPE 3-4
- (G) ITEM 705001 - P.C.C. SIDEWALK, 4"
- (H) ITEM 705005 - P.C.C. SIDEWALK, 8"
- (I) ITEM 709001 - PERFORATED PIPE UNDERDRAINS, 6"
- (J) ITEM 908004 - TOPSOIL, 6" DEPTH ITEM 908014 - PERMANENT GRASS SEEDING, DRY GROUND
- (K) ITEM 708002 - GEOTEXTILES, SEPARATION
- (L) ITEM 908020 - EROSION CONTROL BLANKET MULCH
- (M) ITEM 720021 - GALVANIZED STEEL BEAM GUARDRAIL, TYPE 1-31
- (N) ITEM 209002 - BORROW, TYPE B
- (O) ITEM 401014 - SUPERPAVE, TYPE B, PG 64-22
- (P) ITEM 401021 - SUPERPAVE, TYPE BCBC, PG 64-22
- (Q) ITEM 209001 - BORROW, TYPE A
- (R) ITEM 401037 - SUPERPAVE, TYPE B, PG 64-22, WEDGE
- (S) ITEM 401030 - SUPERPAVE, TYPE B, PG 64-22, PATCHING
- (T) ITEM 401031 - SUPERPAVE, BCBC, PG 64-22, PATCHING
- (U) ITEM 301002 - GRADED AGGREGATE BASE COURSE, TYPE B, PATCHING
- (V) ITEM 760011 - PAVEMENT MILLING, BITUMINOUS CONCRETE PAVEMENT, TAPER CUT
- (W) ITEM 908005 - TOPSOIL, 12" DEPTH ITEM 908014 - PERMANENT GRASS SEEDING, DRY GROUND
- (X) ITEM 760010 - PAVEMENT MILLING, BITUMINOUS CONCRETE PAVEMENT
- (Y) ITEM 626010 - ALUMINUM PEDESTRIAN RAILING (SEE CONST. DETAILS)
- (Z) ITEM 727000 - CHAIN LINK FENCE
- (AB) ITEM 701012 - P.C.C. CURB, TYPE 1-6
- (AC) ITEM 302005 - DELAWARE NO.57 STONE

TS-10

ADDENDA / REVISIONS

1	REPLACED PAGES 1 THRU 432	11-15-2019 (LB)
2	REMOVED NOTE #1	12-09-2019 (LB)

NOT TO SCALE

ELKTON ROAD
MD LINE TO
CASHO MILL ROAD

CONTRACT	BRIDGE NO.	
T201504401		1-322 1-322P 1-323 1-323P
COUNTY	DESIGNED BY: LB	
NEW CASTLE	CHECKED BY: BPH	

TYPICAL SECTIONS

SECTION: JMT

SHEET NO. 16

PLOTTED BY: LBERZINA DATE: 12/9/2019
FILE LOCATION: Q:\NDE\140659_007_ELKTON_RD_CASHO_MILL\CADD\TS.DGN [SHEET: TS10]

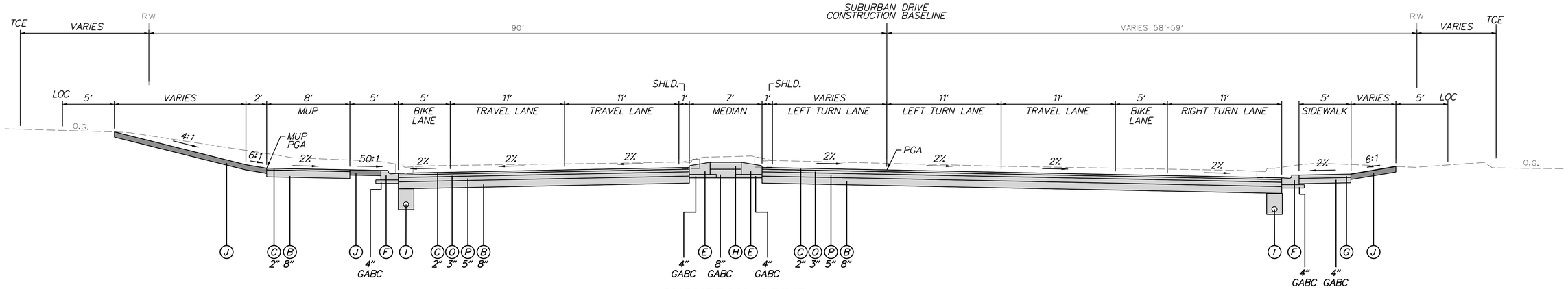

NOTES:

2. ~~CONCRETE PAVEMENT ON ELKTON ROAD NB SHALL BE 12 ¼" TO ACCOUNT FOR GRINDING AT THE END OF PHASE 2.~~

SUBURBAN DRIVE

STA 382+50 RT TO STA 384+21 RT
STA 382+70 LT TO STA 384+69 LT

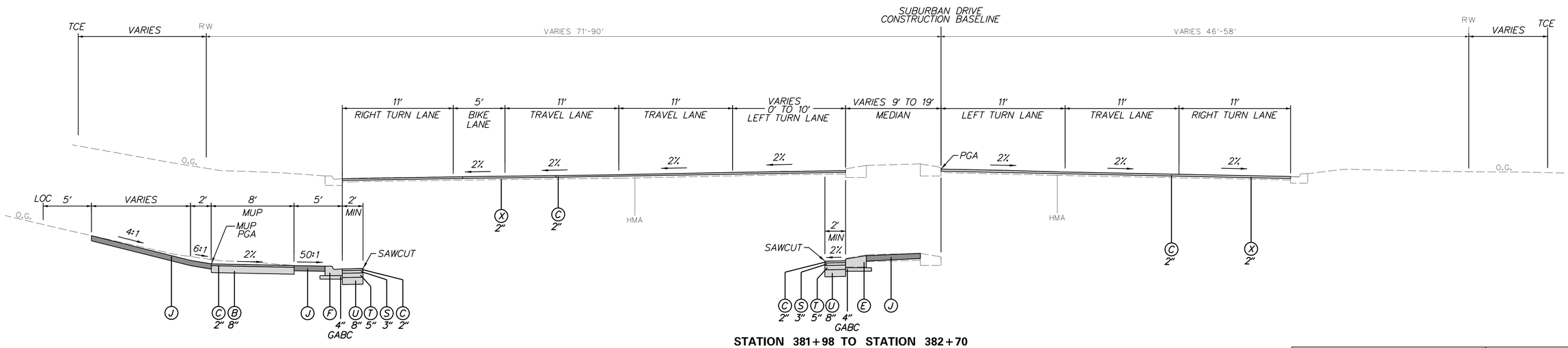

STATION 382+17 TO STATION 382+70

STATION 381+98 TO STATION 382+70

SUBURBAN DRIVE

STA 380+25 RT TO 385+50 RT
STA 380+25 LT TO 382+70 LT

MATERIAL	LIFT THICKNESS	
	MINIMUM	MAXIMUM
BITUMINOUS CONCRETE, TYPE 'C'	1.25"	2"
BITUMINOUS CONCRETE, TYPE 'B'	2.25"	4"
BITUMINOUS CONCRETE BASE COURSE	3"	6"
GRADED AGGREGATE BASE COURSE	-	8"

LEGEND

- (A) ITEM 209006 - BORROW, TYPE F
- (B) ITEM 301001 - GRADED AGGREGATE BASE COURSE, TYPE B
- (C) ITEM 401005 - SUPERPAVE, TYPE C, PG 64-22 (CARBONATE STONE)
- (D) ITEM 501006 - PORTLAND CEMENT CONCRETE PAVEMENT, 12" OR
  ITEM 501503 - PRECAST CONCRETE PAVEMENT (AS SHOWN IN CP SHEETS)
- (E) ITEM 701014 - PORTLAND CEMENT CONCRETE CURB, TYPE 2
- (F) ITEM 701021 - INTEGRAL P.C.C. CURB & GUTTER, TYPE 3-4
- (G) ITEM 705001 - P.C.C. SIDEWALK, 4"
- (H) ITEM 705005 - P.C.C. SIDEWALK, 8"
- (I) ITEM 709001 - PERFORATED PIPE UNDERDRAINS, 6"
- (J) ITEM 908004 - TOPSOIL, 6" DEPTH
  ITEM 908014 - PERMANENT GRASS SEEDING, DRY GROUND
- (K) ITEM 708002 - GEOTEXTILES, SEPARATION
- (L) ITEM 908020 - EROSION CONTROL BLANKET MULCH
- (M) ITEM 720021 - GALVANIZED STEEL BEAM GUARDRAIL, TYPE 1-31
- (N) ITEM 209002 - BORROW, TYPE B
- (O) ITEM 401014 - SUPERPAVE, TYPE B, PG 64-22
- (P) ITEM 401021 - SUPERPAVE, TYPE BCBC, PG 64-22
- (Q) ITEM 209001 - BORROW, TYPE A
- (R) ITEM 401037 - SUPERPAVE, TYPE B, PG 64-22, WEDGE
- (S) ITEM 401030 - SUPERPAVE, TYPE B, PG 64-22, PATCHING
- (T) ITEM 401031 - SUPERPAVE, BCBC, PG 64-22, PATCHING
- (U) ITEM 301002 - GRADED AGGREGATE BASE COURSE, TYPE B, PATCHING
- (V) ITEM 760011 - PAVEMENT MILLING, BITUMINOUS CONCRETE PAVEMENT, TAPER CUT
- (W) ITEM 908005 - TOPSOIL, 12" DEPTH
  ITEM 908014 - PERMANENT GRASS SEEDING, DRY GROUND
- (X) ITEM 760010 - PAVEMENT MILLING, BITUMINOUS CONCRETE PAVEMENT
- (Y) ITEM 626010 - ALUMINUM PEDESTRIAN RAILING (SEE CONST. DETAILS)
- (Z) ITEM 727000 - CHAIN LINK FENCE
- (AB) ITEM 701012 - P.C.C. CURB, TYPE 1-6
- (AC) ITEM 302005 - DELAWARE NO.57 STONE

TS-11

ADDENDA / REVISIONS

1	REPLACED PAGES 1 THRU 432	11-15-2019 (LB)
2	REMOVED NOTE #1	12-09-2019 (LB)

NOT TO SCALE

ELKTON ROAD
MD LINE TO
CASHO MILL ROAD

CONTRACT	BRIDGE NO.	1-322 1-322P 1-323 1-323P
T201504401	DESIGNED BY: LB	
COUNTY		
NEW CASTLE	CHECKED BY: BPH	

TYPICAL SECTIONS

SECTION: JMT
SHEET NO. 17

PLOTTED BY: LBERZINA DATE: 12/9/2019
FILE LOCATION: Q:\NDE\140659_007_ELKTON_RD_CASHO_MILL\CADD\TS.DGN [SHEET: TS11]

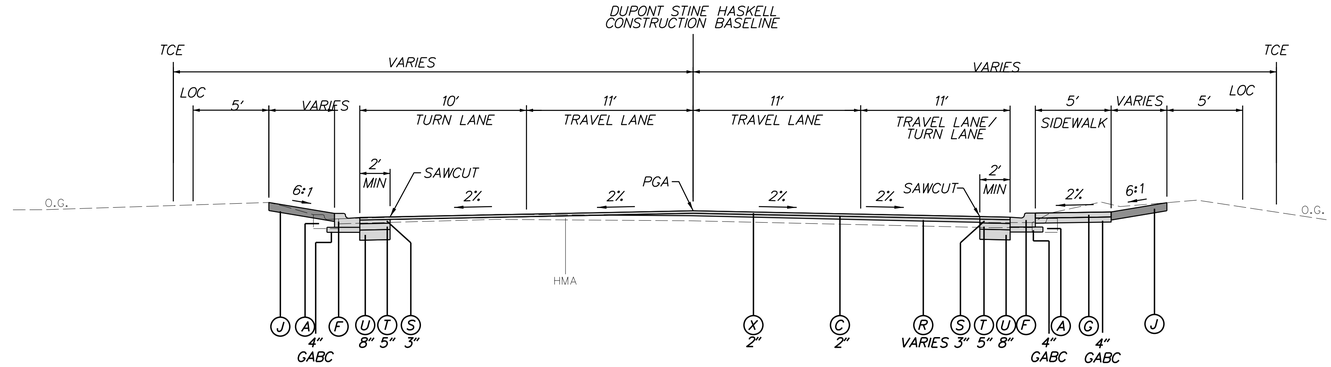

DUPONT STINE HASKELL

STA 600+60 TO STA 601+75

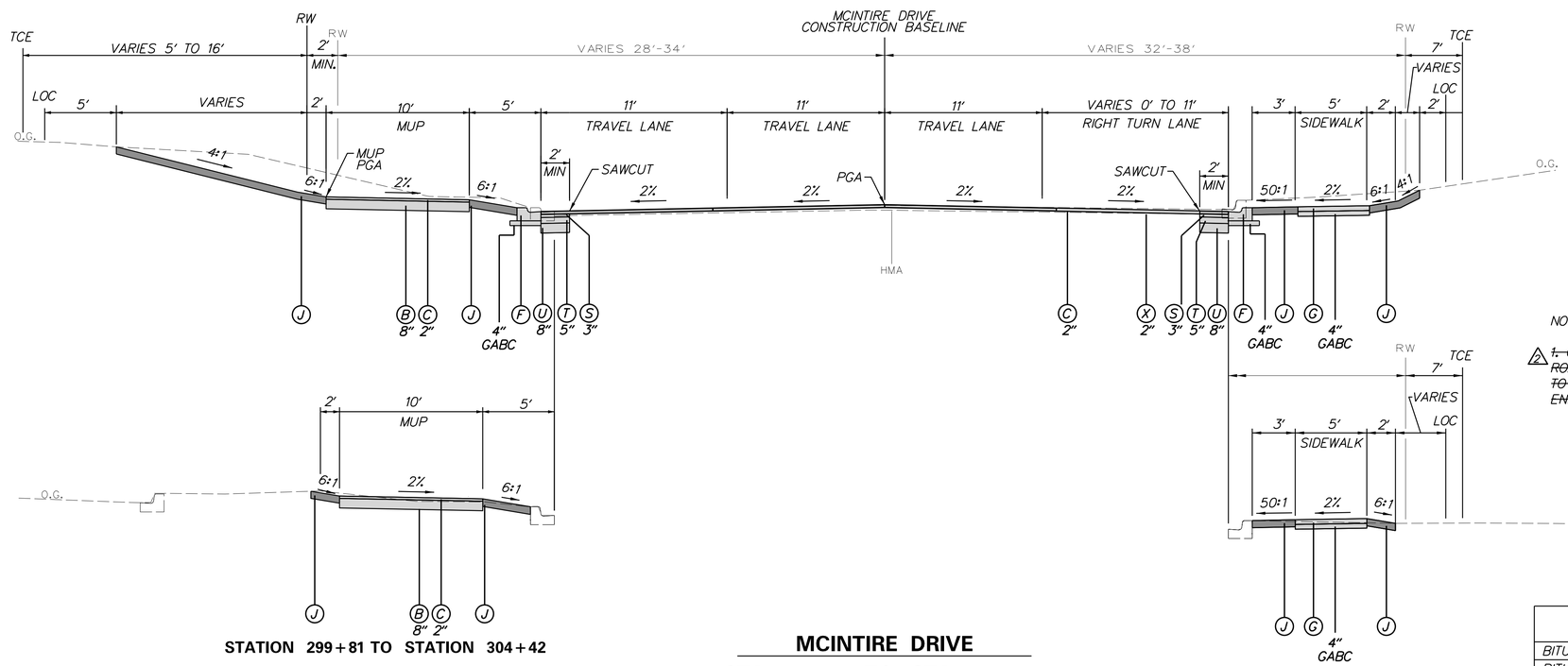

NOTES:

1. ~~CONCRETE PAVEMENT ON ELKTON ROAD NB SHALL BE 12 1/4″ TO ACCOUNT FOR GRINDING AT THE END OF PHASE 2.~~

STATION 299+81 TO STATION 304+42

MCINTIRE DRIVE

STA 299+81 TO STA 306+36

STATION 301+81 TO STATION 304+90

MATERIAL	LIFT THICKNESS	
	MINIMUM	MAXIMUM
BITUMINOUS CONCRETE, TYPE 'C'	1.25″	2″
BITUMINOUS CONCRETE, TYPE 'B'	2.25″	4″
BITUMINOUS CONCRETE BASE COURSE	3″	6″
GRADED AGGREGATE BASE COURSE	-	8″

LEGEND

- (A) ITEM 209006 - BORROW, TYPE F
- (B) ITEM 301001 - GRADED AGGREGATE BASE COURSE, TYPE B
- (C) ITEM 401005 - SUPERPAVE, TYPE C, PG 64-22 (CARBONATE STONE)
- (D) ITEM 501006 - PORTLAND CEMENT CONCRETE PAVEMENT, 12″ OR ITEM 501503 - PRECAST CONCRETE PAVEMENT (AS SHOWN IN CP SHEETS)
- (E) ITEM 701014 - PORTLAND CEMENT CONCRETE CURB, TYPE 2
- (F) ITEM 701021 - INTEGRAL P.C.C. CURB & GUTTER, TYPE 3-4
- (G) ITEM 705001 - P.C.C. SIDEWALK, 4″
- (H) ITEM 705005 - P.C.C. SIDEWALK, 8″
- (I) ITEM 709001 - PERFORATED PIPE UNDERDRAINS, 6″
- (J) ITEM 908004 - TOPSOIL, 6″ DEPTH ITEM 908014 - PERMANENT GRASS SEEDING, DRY GROUND
- (K) ITEM 708002 - GEOTEXTILES, SEPARATION
- (L) ITEM 908020 - EROSION CONTROL BLANKET MULCH
- (M) ITEM 720021 - GALVANIZED STEEL BEAM GUARDRAIL, TYPE 1-31
- (N) ITEM 209002 - BORROW, TYPE B
- (O) ITEM 401014 - SUPERPAVE, TYPE B, PG 64-22
- (P) ITEM 401021 - SUPERPAVE, TYPE BCBC, PG 64-22
- (Q) ITEM 209001 - BORROW, TYPE A
- (R) ITEM 401037 - SUPERPAVE, TYPE B, PG 64-22, WEDGE
- (S) ITEM 401030 - SUPERPAVE, TYPE B, PG 64-22, PATCHING
- (T) ITEM 401031 - SUPERPAVE, BCBC, PG 64-22, PATCHING
- (U) ITEM 301002 - GRADED AGGREGATE BASE COURSE, TYPE B, PATCHING
- (V) ITEM 760011 - PAVEMENT MILLING, BITUMINOUS CONCRETE PAVEMENT, TAPER CUT
- (W) ITEM 908005 - TOPSOIL, 12″ DEPTH ITEM 908014 - PERMANENT GRASS SEEDING, DRY GROUND
- (X) ITEM 760010 - PAVEMENT MILLING, BITUMINOUS CONCRETE PAVEMENT
- (Y) ITEM 626010 - ALUMINUM PEDESTRIAN RAILING (SEE CONST. DETAILS)
- (Z) ITEM 727000 - CHAIN LINK FENCE
- (AB) ITEM 701012 - P.C.C. CURB, TYPE 1-6
- (AC) ITEM 302005 - DELAWARE NO.57 STONE

TS-12

ADDENDA / REVISIONS		
1	REPLACED PAGES 1 THRU 432	11-15-2019 (LB)
2	REMOVED NOTE #1	12-09-2019 (LB)

NOT TO SCALE

ELKTON ROAD
MD LINE TO
CASHO MILL ROAD

CONTRACT	BRIDGE NO.	1-322 1-322P 1-323 1-323P
T201504401	DESIGNED BY: LB	
COUNTY		
NEW CASTLE	CHECKED BY: BPH	

TYPICAL SECTIONS

SECTION: JMT

SHEET NO. 18

PLOTTED BY: LBERZINA DATE: 12/9/2019
FILE LOCATION: Q:\NDE\140659_007_ELKTON_RD_CASHO_MILL\CADD\TS.DGN [SHEET: TS12]

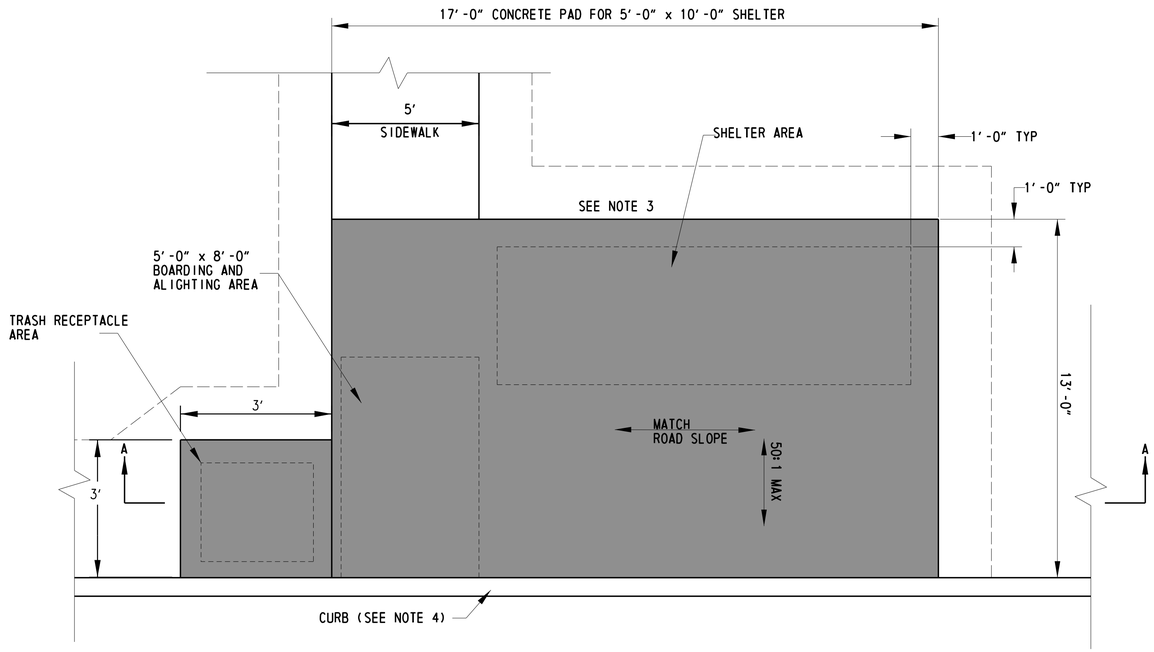

SECTION A-A

NOTES:

1). REFERENCE THE DELAWARE MANUAL ON UNIFORM TRAFFIC CONTROL DEVICES FOR GENERAL INFORMATION ON PLACEMENT OF SIGNS.
2). SEE CONSTRUCTION PLANS SIGNING AND STRIPING SHEETS FOR SPECIFIC SIGN AND SIGN LOCATION DETAILS
3). A 6:1 MAX SLOPE IS REQUIRED FOR 2'-0" ON ALL SIDES OF THE BUS STOP PAD AND APPROACHING SIDEWALKS. WHERE THIS CANNOT BE ACHIEVED, AN APPROVED HANDRAIL OR HEADWALL IS REQUIRED.
4). CURB TYPE VARIES. SEE PLANS FOR CORRECT CURB TYPE.
5). TRASH RECEPTACLE PAD CAN BE PLACED ON EITHER SIDE OF THE SHELTER PAD, AT THE DIRECTION OF THE ENGINEER IN THE FIELD.

BUS STOP WITH SHELTER PAD, TYPE 1, MODIFIED

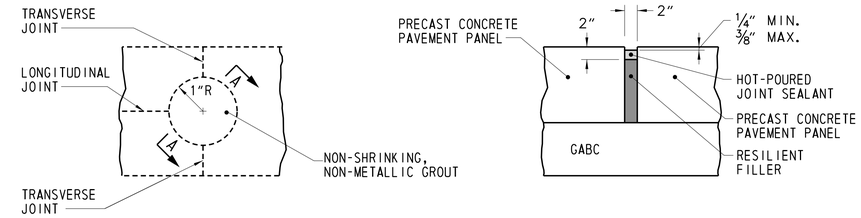

PLAN

SECTION A-A

PCC CORE HOLE FOR SYMPATHY CRACKING

NOT TO SCALE

NOTES

1. DRILL FULL DEPTH 2" DIAMETER CORE HOLE AT THE INTERSECTION OF JOINTS AS INDICATED ON THE PAVEMENT JOINT LAYOUT PLANS.
2. FILL HOLE WITH RESILIENT FILLER (STYROFOAM OR CLEAN SAND) TO WITHIN 2" OF THE TOP OF SLAB.
3. FILL THE REMAINDER OF THE HOLE WITH HOT-POURED JOINT SEALANT TO BETWEEN 1/4" AND 3/8" FROM THE TOP OF SLAB.
4. CONCRETE SURFACES MUST BE WET BEFORE THE APPLICATION OF GROUT.
5. THE COST ASSOCIATED WITH CREATING CORE HOLE AND BACKFILLING WITH FILLER AND SEALANT ARE INCIDENTAL TO ITEM 501006-PORTLAND CEMENT CONCRETE PAVEMENT, 12".
6. FOR LOCATIONS UTILIZING PRECAST CONCRETE PAVEMENT PANEL, THE CORE HOLES ARE TO BE INSTALLED ACCORDING TO MANUFACTURER'S RECOMMENDATIONS OR AS PRESCRIBED BY THE ENGINEER. COSTS ASSOCIATED WITH CREATING CORE HOLES AND BACKFILLING WITH FILLER AND SEALANT AT THE RECOMMENDATION OF THE MANUFACTURER OR ENGINEER ARE INCIDENTAL TO ITEM 501503-PRECAST CONCRETE PANELS.

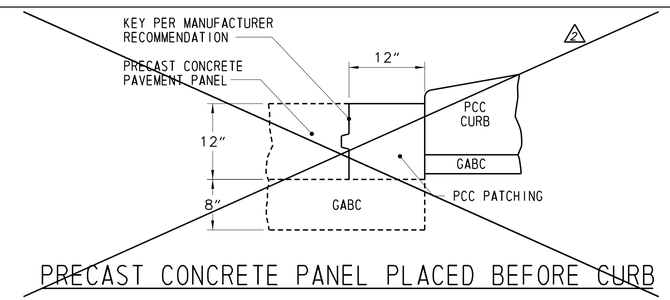

~~PRECAST CONCRETE PANEL PLACED BEFORE CURB~~

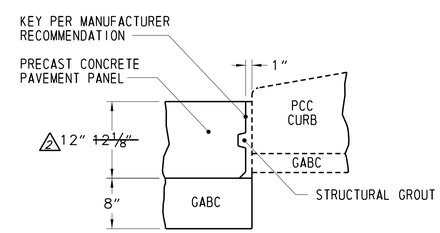

2 ~~PRECAST CONCRETE PANEL PLACED AFTER CURB~~

CONCRETE JOINT BETWEEN P.C.C. CURB AND PRECAST CONCRETE PAVEMENT PANELS

NOT TO SCALE

ADDENDA / REVISIONS		
1 REPLACED PAGES 1 THRU 432	11-15-2019 (LB)	
2 REVISED JOINT DETAIL	12-09-2019 (LB)	

AS NOTED

ELKTON ROAD
MD LINE TO
CASHO MILL ROAD

CONTRACT	BRIDGE NO.	1-322 1-322P 1-323 1-323P
T201504401	DESIGNED BY: LB	
COUNTY		
NEW CASTLE	CHECKED BY: BPH	

CONSTRUCTION DETAILS

DT-17

SECTION: JMT

SHEET NO. 141

PLOTTED BY: LBERZINA DATE: 12/9/2019
FILE LOCATION: Q:\NDE\140659_007_ELKTON_RD_CASHO_MILL\CADD\DT.DGN [SHEET: DT17]