THE STATE OF DELAWARE
DEPARTMENT OF TRANSPORTATION

U.S. CUSTOMARY UNITS

CONSTRUCTION PLANS FOR:

BR 1-714 ON CHAPMAN ROAD OVER I-95

CONTRACT NUMBER: T201507402
FEDERAL AID PROJECT NUMBER: BHN-N347(03)

COUNTY: NEW CASTLE **M.R. #:** 347

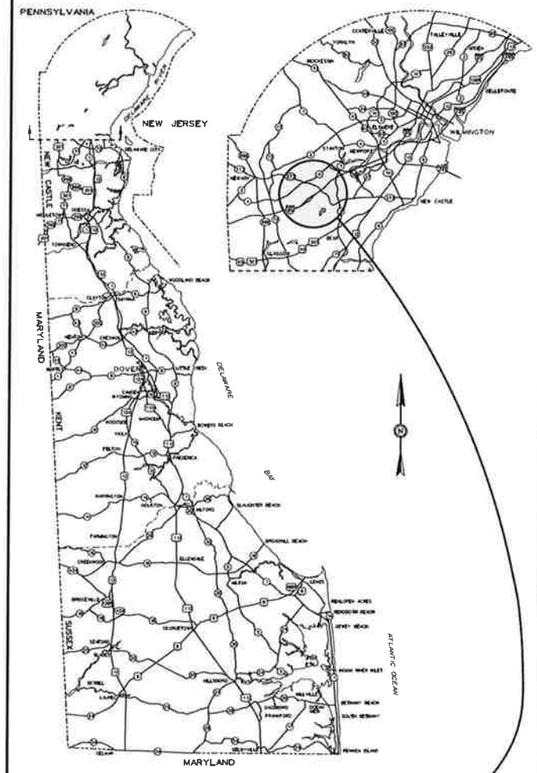

GENERAL LOCATION OF CONTRACT

DESIGN DESIGNATION

MRD #: 347	ROAD NAME: CHAPMAN ROAD	
FUNCTIONAL CLASS: MINOR ARTERIAL	D.H.V. PROJECTED: 924	YEAR: 2050
TYPE OF CONSTRUCTION: BRIDGE REPLACEMENT	DESIGN SPEED: 40 M.P.H.	
A.A.D.T. CURRENT: 10,800 YEAR: 2015	TRUCKS: 11 %	
A.A.D.T. PROJECTED: 14,000 YEAR: 2050	DIRECTION OF DISTRIBUTION: 60 %	

APPROVED DESIGN EXCEPTIONS

DESIGN PARAMETER	REQUIRED	PROVIDED	DATE

ADDENDA / REVISIONS

ASSOCIATED CONTRACTS

CONTRACT NO.	CONTRACT NAME
7802115	CHAPMAN ROAD PHASE 2, I-95 TO SR 273
7802116	CHAPMAN ROAD PHASE 1, SALEM CHURCH ROAD TO I-95
9407407	BR 1-714 ON CHAPMAN RD. OVER I-95
i-1(21)	PROPERTY ACQUISITION PLANS DELAWARE TURNPIKE MAY 20, 1976
7058	DELAWARE TURNPIKE - STATE LINE TO BASIN ROAD WIDENING

APPROVED FOR ADVERTISEMENT

DIRECTOR OF TRANSPORTATION SOLUTIONS — DATE: 08/29/2019

PREPARED BY
AECOM TECHNICAL SERVICES, INC.

08/20/2019
DATE

THIS SEAL APPLIES TO ALL SHEETS BEARING THE "AEC" SECTION DESIGNATION.

ANGELA D. MELVIN — LICENSE No. 16435 — DELAWARE PROFESSIONAL ENGINEER
SEAL

BEGIN CONTRACT STATION 22+50.00

END CONTRACT STATION 44+00.00

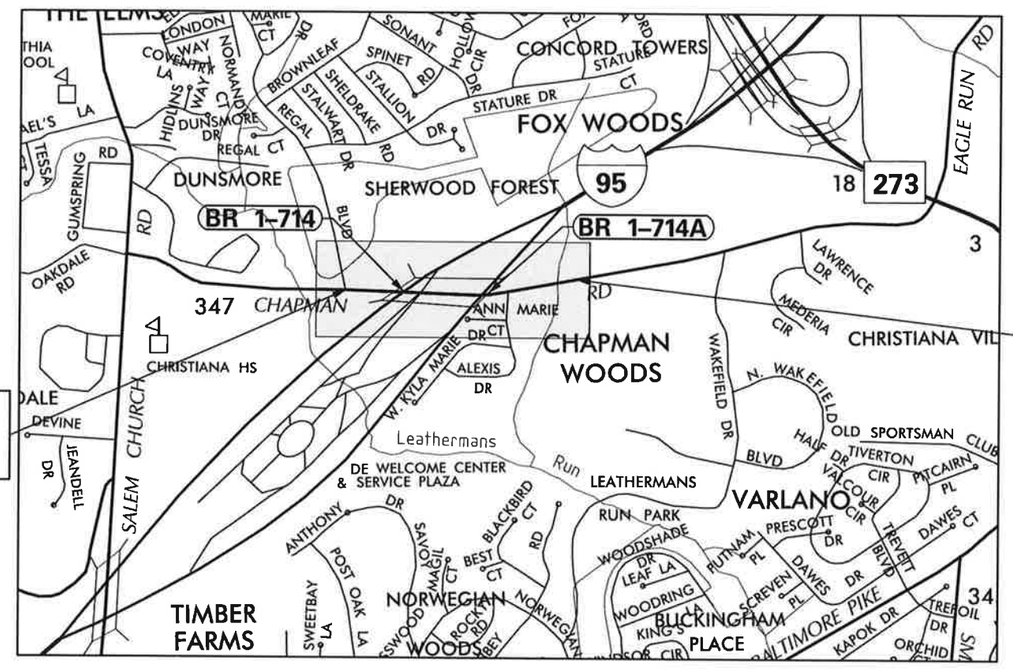

LOCATION MAP
NOT TO SCALE

8/14/2019
3:27:59 PM
P:\60532305\4 DelDOT AGR 1672 BDS\T06 - Rehab Br. 1-714\900 WORK\910 CAD\20-SHEETS\100_Construction Plans\TC00.dgn

INDEX OF SHEETS

SECTION	SHEET DESCRIPTION	SHEET NO(S)
AEC	TITLE	1
AEC	INDEX OF SHEETS	2
AEC	ADDENDA AND REVISIONS	3
AEC	LEGEND	4
AEC	NOTES	5
AEC	TYPICAL SECTIONS	6-9
AEC	HORIZONTAL AND VERTICAL CONTROL	10-11
AEC	CONSTRUCTION PLANS	12-15
AEC	PROFILES	16-18
AEC	GRADES AND GEOMETRICS	19-21
AEC	CONSTRUCTION DETAILS	22-24
AEC	BRIDGE PLANS - SEE BRIDGE PLANS FOR TABLE OF CONTENTS	25-99
AEC	STORMWATER MANAGEMENT PLANS	100-102
AEC	CONSTRUCTION PHASING, M.O.T. AND EROSION CONTROL PLANS	103-125
AEC	DETOUR PLANS	126-130
AEC	LIGHTING PLANS	131
AEC	SIGNING, STRIPING AND CONDUIT PLANS	132-136
AEC	SIGN STRUCTURES	137-141
APPENDIX	UTILITY RELOCATION PLANS - DESIGN BY: American U-Tel, INC 9760 Smith Road Willouhgby, OH 44094	7-9-10 to 7-9-16

8/7/2019
2:06:37 PM
PW_60323054 DelDOT AGR 1672 BDS\T06 - Rehab Br. 1-714\900 WORK\910 CAD\20-SHEETS\100_Construction Plans\AD01.dgn

ADDENDA / REVISIONS	

NOT TO SCALE

BR 1-714 ON
CHAPMAN ROAD OVER I-95

CONTRACT	BRIDGE NO.	1-714 /1-714A
T201507402	DESIGNED BY: T. SINGLE	
COUNTY		
NEW CASTLE	CHECKED BY: D. SEMPLE	

ADDENDA AND REVISIONS

SECTION
AEC
SHEET NO.
3

EXISTING SYMBOLS

DRAINAGE

	DITCH OR STREAM CENTERLINE
	DIRECTIONAL STREAM FLOW ARROW
C.B. / D.I.	DRAINAGE INLET
J.B.	DRAINAGE JUNCTION BOX
D	DRAINAGE MANHOLE
SIZE/TYPE LABEL	DRAINAGE PIPE AND FLOW ARROW
	DRAINAGE PIPE HEADWALL
	RIPRAP - AREA FEATURE
	RIPRAP - LINEAR FEATURE

MANMADE ROADSIDE FEATURES

	BOLLARD - STEEL POLE
	BOLLARD - WOOD POST
(TYPE LABEL)	CURB
(TYPE LABEL)	CURB AND GUTTER
	FENCE - CHAINLINK OR STRANDED
	FENCE - STOCKADE OR SPLIT RAIL
F.P.	FLAG POLE
	GUARDRAIL - STEEL BEAM
	GUARDRAIL - WIRE ROPE
LAMP	LAMP AND POST - RESIDENTIAL
MB	MAILBOX
P.M.	PARKING METER AND POST
	PAVEMENT - FLEXIBLE
	PAVEMENT - RIGID
	PILE - BRIDGE
	PILLAR OR MISCELLANEOUS POST
	TRAFFIC SIGN AND POST
	WALL - BRICK OR BLOCK
	WALL - STONE

NATURAL ROADSIDE FEATURES

	GRASS LAWN
	HEDGEROW OR THICKET
	MARSH BOUNDARY LINE
	TREE - CONIFEROUS
	TREE - DECIDUOUS
	TREE STUMP
	SHRUBBERY
WL	DELINEATED WETLAND BOUNDARY LINE
	WOODS LINE BOUNDARY

RIGHT-OF-WAY SYMBOLS

C.M.	PROPERTY MARKER - CONCRETE MON.
I.P.	PROPERTY MARKER - IRON PIPE
100+00	HISTORIC RIGHT-OF-WAY BASELINE
	EXISTING RIGHT-OF-WAY
	EXISTING PROPERTY LINE
EASEMENT TYPE	EXISTING EASEMENT
DA	EXISTING DENIAL OF ACCESS
R/W-DA	EXISTING R/W & DENIAL OF ACCESS

SURVEY CONTROL & MONUMENTATION

B.M.	SURVEY BENCHMARK LOCATION
T.P.	SURVEY TIE POINT LOCATION
	SURVEY TRAVERSE POINT
	POINT OF CURVATURE OR TANGENCY
	POINT OF INTERSECTING TANGENTS

UTILITY

	SOIL BORING LOCATION
	UTILITY TEST HOLE LOCATION
TV	CABLE TV DISTRIBUTION BOX
E	ELECTRIC MANHOLE
EM	ELECTRIC METER
E	ELECTRIC TRANSFORMER
	POLE MOUNTED LUMINAIRE
G	GAS MANHOLE
G.M.	GAS METER
G.V.	GAS VALVE
G.P.	GAS PUMP - SERVICE STATION
	RAILROAD TRACKS
S	SANITARY SEWER MANHOLE
S.V.	SANITARY SEWER VALVE
S.C.O.	SANITARY SEWER CLEANOUT OR VENT
S.D.F.	SEPTIC DRAIN FIELD
B	TELEPHONE BOOTH
T	TELEPHONE MANHOLE
T	TELEPHONE TEST POINT
J.W.	TRAFFIC - CONDUIT JUNCTION WELL
	TRAFFIC - LIGHT POLE AND BASE
	TRAFFIC - PEDESTRIAN POLE & BASE
	TRAFFIC - SIGNAL CABINET & BASE
	TRAFFIC - SIGNAL POLE AND BASE
U	UTILITY BOX
	UTILITY POLE GUY WIRE ANCHOR
	UTILITY POLE
F.H.	WATER - FIRE HYDRANT
W.M.	WATER METER
WV	WATER VALVE
WELL	WELL HEAD
?	MANHOLE - UNDETERMINED OWNER

UTILITY COMPANY FACILITIES

DOT-FO (X)	DELDOT - FIBER
DP-E (X)	DELMARVA POWER - ELECTRIC
DP-E-OH (X)	DELMARVA POWER - O.H. ELECTRIC
DP-G (X)	DELMARVA POWER - GAS
NCC-S (X)	NEW CASTLE COUNTY - SEWER
SZ-W (X)	SUEZ WATER
VER-C (X)	VERIZON - CABLE
VER-FO (X)	VERIZON - FIBER OPTIC
WND-C (X)	WINDSTREAM - CABLE
COM-C (X)	COMCAST - CABLE

(X) REPRESENTS ASCE DEFINED SUE QUALITY LEVEL

PROPOSED SYMBOLS

CONSTRUCTION

	CONCRETE SAFETY BARRIER - PERMANENT
BFS	BIOFILTRATION SWALE
	BRICK PATTERNED SURFACE
	BUTT JOINT
CZ	CLEAR ZONE
100+00	CONSTRUCTION BASELINE
CSF	CONSTRUCTION SAFETY FENCE
	CURB, TYPE 1 & TYPE 3
	CURB, TYPE 2
	CURB & GUTTER, TYPE 1
	CURB & GUTTER, TYPE 2
	CURB & GUTTER, TYPE 3
	CURB & GUTTER, TYPE 4
	CURB OPENING - SUMP / ON GRADE
	CURB OPENING WITH SIDEWALK
	DRAINAGE INLET
	DITCH
	FENCE - METAL / FENCE - WOOD
	FLARED END / SAFETY END SECTION
	GUARDRAIL, TYPE 1
	GUARDRAIL, TYPE 2
	GUARDRAIL, TYPE 3
	GUARDRAIL END ANCHORAGE
	GUARDRAIL END TREATMENT, TYPE 1
	GUARDRAIL END TREATMENT, TYPE 2
	GUARDRAIL END TREATMENT, TYPE 3
	IMPACT ATTENUATOR
	JUNCTION BOX - DRAINAGE
LO	LATERAL OFFSET
LOC	LIMIT OF CONSTRUCTION
MB	MAILBOX
	MANHOLE
	PAVEMENT PATCH
	PAVEMENT REMOVAL - TOPSOIL, SEED AND MULCH
	PIPE & DIRECTIONAL FLOW ARROW
	RIPRAP
	P.C.C. SIDEWALK - 4"
	P.C.C. SIDEWALK - 6" (USE 8" DEPTH FOR CHANNELIZATION ISLANDS.)
	UNDERDRAIN
	UNDERDRAIN OUTLET

RIGHT-OF-WAY SYMBOLS

	PROPOSED RIGHT-OF-WAY MONUMENT
DA	PROPOSED DENIAL OF ACCESS
PE	PROPOSED PERMANENT EASEMENT
R/W	PROPOSED RIGHT-OF-WAY
R/W-DA	PROPOSED R/W & DENIAL OF ACCESS
RTE	RIGHT-TO-ENTER
TCE	TEMPORARY CONSTRUCTION EASEMENT
100+00	PROPOSED RIGHT-OF-WAY BASELINE

IDENTIFIERS

A / C	ADJUST BY CONTRACTOR
A / C	ADJUST BY OTHERS
B / XXX	CONCRETE SAFETY BARRIER
C / XXX	CURB OR CURB & GUTTER
CJB / XXX	CONVERT TO JUNCTION BOX
CMH / XXX	CONVERT TO DRAINAGE MANHOLE
C / O	CURB OPENING - SUMP / ON GRADE
CO / SW	CURB OPENING WITH SIDEWALK
PC / XX	PEDESTRIAN CONNECTION / TYPE
PC-N / XXX	PEDESTRIAN CONNECTION / TYPE WITHOUT SIDEWALK SURFACE DETECTABLE WARNING SYSTEM
CSF / XXX	CONSTRUCTION SAFETY FENCE
DI / XXX	DRAINAGE INLET
DND	DO NOT DISTURB
ED / XXX	ENERGY DISSIPATOR
F / XXX	FENCE
FES / XXX	FLARED END SECTION
FF / C	FILL WITH FLOWABLE FILL
FS	FILTRATION STRUCTURE
GR / XXX	GUARDRAIL
JB / XXX	JUNCTION BOX
MH / XXX	MANHOLE
M / XXX	MONUMENT - RIGHT-OF-WAY
P / XXX	PIPE
RL / C	RELOCATE BY CONTRACTOR
RL / O	RELOCATE BY OTHERS
RL / PO	RELOCATE BY PROPERTY OWNER
RM / C	REMOVE BY CONTRACTOR
RM / RMTC	REMOVE BY TRAFFIC CONTRACTOR
RM / O	REMOVE BY OTHERS
SES / XXX	SAFETY END SECTION
UD / XXX	UNDERDRAIN / LENGTH
UDO / XXX	UNDERDRAIN OUTLET PIPE

LANDSCAPING

LS / XXX	LANDSCAPE PLANTINGS
	SHRUBBERY
	CONIFEROUS TREE
	DECIDUOUS TREE

TRAFFIC

ITMS-CON	ITMS CONDUIT
SIG-CON	SIGNAL CONDUIT
	CONDUIT JUNCTION WELL
	LUMINAIRE
	PAVEMENT MARKINGS
	PAVEMENT STRIPING
	TRAFFIC SIGN

PAVEMENT SECTION(S)

	OVERLAY PAVEMENT - SEE TYPICAL SECTIONS FOR MATERIALS AND DEPTHS
	RECONSTRUCTED PAVEMENT - SEE TYPICAL SECTIONS FOR MATERIALS AND DEPTHS
	DRIVEWAY AND GUARDRAIL MAINTENANCE PAVEMENT - SEE NOTES FOR MATERIALS AND DEPTHS

UTILITY COMPANY FACILITIES

DP-E	DELMARVA POWER - ELECTRIC

ADDENDA / REVISIONS

NOT TO SCALE

BR 1-714 ON
CHAPMAN ROAD OVER I-95

CONTRACT	BRIDGE NO.	1-714 /1-714A
T201507402	DESIGNED BY: T. SINGLE	
COUNTY		
NEW CASTLE	CHECKED BY: D. SEMPLE	

LEGEND

SECTION: AEC
SHEET NO. 4

8/7/2019
2:06:53 PM
P:\80323054 DelDOT AGR 1672 BDS\T06 - Rehab Br. 1-714\900 WORK\910 CAD\20-SHEETS\100_Construction Plans\LG01.dgn

GENERAL NOTES

1. THIS PROJECT IS TO BE CONSTRUCTED IN ACCORDANCE WITH THE DELAWARE DEPARTMENT OF TRANSPORTATION "STANDARD SPECIFICATIONS", DATED AUGUST 2016 AND THE DELAWARE DEPARTMENT OF TRANSPORTATION "STANDARD CONSTRUCTION DETAILS", DATED 2018, INCLUDING ALL REVISIONS UP TO THE DATE OF ADVERTISEMENT.

2. ELECTRONIC PROJECT FILES THAT WILL BE MADE AVAILABLE TO THE AWARDED CONTRACTOR, INCLUDE:

( )	NONE
( )	ASCII DATA FILES WITH COORDINATES AND ELEVATIONS FOR PROPOSED POINTS AS SELECTED BY THE ENGINEER.
(X)	ALL PLAN SHEETS, IN PDF FORMAT.
( )	EXISTING DIGITAL TERRAIN MODEL, IN .DTM FILE FORMAT, COMPATIBLE WITH SOFTWARE CURRENTLY USED BY DELDOT.
( )	PROPOSED DIGITAL TERRAIN MODEL, IN .DTM FILE FORMAT, COMPATIBLE WITH SOFTWARE CURRENTLY USED BY DELDOT.
( )	DESIGN FILE, IN .DGN FILE FORMAT, CONTAINING ONLY THE PROPOSED 3D TRIANGLES OF THE PROPOSED DIGITAL TERRAIN MODEL (DTM).

NOTE: THE DOCUMENT ENTITLED "RELEASE FOR DELIVERY OF DOCUMENTS IN ELECTRONIC FORM TO A CONTRACTOR" MUST BE SIGNED BY ALL PARTIES PRIOR TO THE DELIVERY OF ANY ELECTRONIC PROJECT FILES.

3. PROJECT FILES THAT WILL BE MADE AVAILABLE TO THE CONTRACTOR, INCLUDE:

(X)	CROSS SECTIONS (WILL BE MADE AVAILABLE TO THE AWARDED CONTRACTOR)
( )	RIGHT-OF-WAY PLANS

PROJECT NOTES

SECTION 100

1. ANY DAMAGE TO ITEMS NOTED TO BE RELOCATED OR RESET BY THE CONTRACTOR, AT THE DISCRETION OF THE ENGINEER, SHALL BE REPAIRED AND/OR REPLACED IN KIND AT THE CONTRACTOR'S EXPENSE.

2. THE CONTRACTOR WILL CONTACT THE DELAWARE TMC AT 302-659-4600 PRIOR TO ANY UNMANNED AIRCRAFT VEHICLE (UAV) FLIGHTS. THE CONTRACTOR WILL BE REQUIRED TO PROVIDE THE FOLLOWING INFORMATION: THE REGISTRATION NUMBER OF THE UAV, THE FLIGHT TIME, LOCATION OF THE FLIGHT, THE PILOT'S NAME AND THE PILOT'S CONTACT NUMBER DURING THE FLIGHT.

SECTION 200

3. THE CONTRACTOR SHALL REMOVE AND RESET ALL MAILBOXES TO MAINTAIN MAIL SERVICE AS DIRECTED BY THE ENGINEER. THE CONTRACTOR SHALL RELOCATE MAILBOXES AS REQUIRED BY THE PROPOSED GEOMETRICS AND AS DIRECTED BY THE ENGINEER COMPLYING WITH THE AASHTO ROADSIDE DESIGN GUIDE AND THE AMERICANS WITH DISABILITIES ACT. WHEN RELOCATING MAILBOXES IN CURBED SECTIONS, THE FACE OF THE MAILBOX SHALL BE FLUSH WITH THE BACK EDGE OF CURB. WHEN RELOCATING MAILBOXES IN OPEN SECTIONS, THE FACE OF THE MAILBOX SHALL SET BACK 8 INCHES FROM THE EDGE OF THE PAVED SHOULDER. THE BOTTOM OF THE MAILBOX SHALL BE SET 42 TO 48 INCHES ABOVE THE ROADWAY SURFACE. MAILBOXES LOCATED AT DRIVEWAY ENTRANCES SHALL BE PLACED ON THE FAR SIDE OF THE DRIVEWAY IN THE DIRECTION OF TRAVEL. POSTS BEING RESET IN CONCRETE SIDEWALK SHALL BE PLACED IN AN APPROPRIATE SIZE PVC SLEEVE. ACCEPTABLE POST SHALL BE 4 INCH X 4 INCH WOOD POST OR 4 INCH DIAMETER WOOD POST. FOR RELOCATING MULTIPLE MAILBOXES TOGETHER ALL POSTS SHALL BE SEPARATED BY A DISTANCE OF NO LESS THAN ¾ OF THEIR FULL HEIGHT ABOVE THE GROUND. MULTIPLE MAILBOXES ATTACHED TO A SINGLE POST HORIZONTAL BOARD SHALL NOT BE LOCATED INSIDE THE CLEAR ZONE. EACH MAILBOX SHALL BE PLACED ON AN INDIVIDUAL POST MEETING THE CRITERIA ABOVE. ALL MAILBOXES SHALL BE SET NOT TO IMPEDE THE MINIMUM PAR (PEDESTRIAN ACCESS ROUTE) WIDTH AS DETERMINED BY THE CURRENT EDITION OF THE PEDESTRIAN ACCESSIBILITY STANDARDS FOR FACILITIES IN THE PUBLIC RIGHT OF WAY. IF MAILBOXES ARE NOT SET IN ACCORDANCE WITH THE ABOVE DIRECTIONS, RESETTING OF THE MAILBOXES WILL BE AT THE COST OF THE CONTRACTOR. COST FOR ALL WORK AND MATERIALS SHALL BE PAID UNDER ITEM 201000 - CLEARING AND GRUBBING.

4. ITEMS TO BE REMOVED UNDER ITEM 211000 - REMOVAL OF STRUCTURES AND OBSTRUCTIONS SHALL INCLUDE, BUT NOT BE LIMITED TO THE FOLLOWING:
   - EXISTING FENCE
   - EXISTING GUARDRAIL
   - EXISTING HEADWALLS
   - EXISTING PIPES
   - EXISTING DRAINAGE INLETS/CATCH BASINS
   - EXISTING SIGN STRUCTURES
   - EXISTING BARRIER
   - EXISTING ELECTRIC MANHOLE
   - EXISTING MAINTENANCE GATE

5. EXCAVATION FOR THE FOLLOWING SECTION(S) WILL NOT BE INCIDENTAL TO THEIR INDIVIDUAL CONSTRUCTION ITEMS AND WILL BE QUANTIFIED AND PAID UNDER ITEM 202000 - EXCAVATION AND EMBANKMENT:
   a. PCC SIDEWALK
   b. PCC CURB/CURB & GUTTER
   c. UNDERDRAIN

SECTION 400

6. THE PAVEMENT SECTION FOR FLEXIBLE PAVEMENT RESIDENTIAL DRIVEWAYS SHALL BE 2" BITUMINOUS CONCRETE, TYPE 'C' OVER 8" GRADED AGGREGATE BASE COURSE, TYPE 'B', UNLESS OTHERWISE NOTED ON THE PLANS.

SECTION 600

7. DRAINAGE INLET GRATES ADJACENT TO THE ROAD, WITHIN THE PROJECT LIMITS, WHICH ARE NOT TYPE 1 OR TYPE 4, SHALL BE REPLACED. THE ACTUAL LOCATIONS, THE NEED FOR ANY GRATE MODIFICATIONS OR FOR NEW FRAMES SHALL BE DETERMINED BY THE ENGINEER. ALL REPLACED GRATES/FRAMES SHALL BE DELIVERED TO THE NEAREST DISTRICT MAINTENANCE YARD WITH THE COST OF DELIVERY INCIDENTAL TO ITEM 602100 - REPLACING DRAINAGE INLET GRATE(S). FINAL PAYMENT FOR REPLACED GRATES/FRAMES SHALL NOT BE MADE UNTIL RECEIPT OF DELIVERED MATERIALS IS PRODUCED, SIGNED BY A DELDOT MAINTENANCE YARD SUPERVISOR.

8. STATION AND ELEVATION DATA GIVEN FOR DRAINAGE STRUCTURES ARE TO BE APPLIED TO THE CENTER OF THE GRATE FOR INLETS, AND TO THE CENTER OF THE STRUCTURE FOR JUNCTION BOXES AND MANHOLES.

SECTION 700

9. IN AREAS WHERE PROPOSED CURB MEETS EXISTING CURB AND THE TWO CURB TYPES ARE NOT SIMILAR, THE PROPOSED CURB SHALL BE TRANSITIONED IN 10 LINEAR FEET, UNLESS OTHERWISE DIRECTED BY THE ENGINEER. PAYMENT FOR THIS WORK, INCLUDING SAW CUTTING EXISTING CURB SHALL BE INCIDENTAL TO THE PROPOSED CURB ITEM.

10. WHERE PROPOSED CONCRETE SIDEWALK IS CONSTRUCTED TO MEET EXISTING SIDEWALK, THE EXISTING SIDEWALK SHALL BE SAWCUT AT THE TIE-IN POINT OR MEET THE NEAREST EXISTING SIDEWALK JOINT. ALL SAW CUTTING SHALL BE FULL DEPTH, UNLESS OTHERWISE NOTED ON THE PLANS OR DIRECTED BY THE ENGINEER AND SHALL BE PAID FOR UNDER ITEM 762001 - SAWCUTTING, CONCRETE, FULL DEPTH.

11. PORTLAND CEMENT CONCRETE CHANNELIZING ISLANDS THAT ARE LESS THAN 75 SQ FT MAY BE POURED MONOLITHICALLY, OR AS DIRECTED BY THE ENGINEER.

12. ALL PAVED AREAS TO BE RECONSTRUCTED OR WIDENED SHALL BE SAWCUT AT THE POINT WHERE THE NEW PAVEMENT IS TO TIE INTO THE EXISTING PAVEMENT.

SECTION 900

13. THIS PROJECT IS COVERED UNDER AN NPDES GENERAL PERMIT FOR CONSTRUCTION. UNDER THE GENERAL PERMIT, COMPLIANCE WITH DELDOT'S APPROVED SEDIMENT AND STORMWATER MANAGEMENT PLANS WILL CONSTITUTE COMPLIANCE WITH THE NPDES INDUSTRIAL PERMITTING REQUIREMENTS FOR THIS CONSTRUCTION PROJECT. A COPY OF THE NPDES GENERAL PERMIT AND NOI IS KEPT ON FILE IN EACH OF THE CONSTRUCTION OFFICES AND THE DEPARTMENT'S STORMWATER SECTION. A COPY OF THE GENERAL PERMIT OR THE NOI CAN BE OBTAINED UPON REQUEST FROM EITHER THE DEPARTMENT'S STORMWATER ENGINEER OR THE APPROPRIATE CONSTRUCTION ENGINEER.

MISCELLANEOUS

14. THE CONTRACTOR SHALL CONTACT THE CHIEF OF SCHEDULING FOR DART FIRST STATE, 14 DAYS PRIOR TO THE START OF CONSTRUCTION AT 302-576-6191 OR BY EMAIL NOTIFICATION TO DOT_Detours@state.de.us.

15. REFER TO THE CONSTRUCTION PLAN SHEETS FOR THE LOCATION OF THE CLEAR ZONE AREA LIMITS.

16. THERE ARE NO WETLANDS/WATERS LOCATED WITHIN THE CURRENT PROJECT LIMITS. AS SUCH, AN ENVIORMENTAL COMPLIANCE SHEET WAS NOT PREPARED.

17. AS A RESULT OF THE CURRENT PROJECT COORDINATION, THIS PROJECT IS CONSISTENT WITH STIPULATION III.B.1 OF DELDOT'S PROGRAMMATIC AGREEMENT WITH THE DE STATE HISTORIC PRESERVATION OFFICE (DE SHPO), FEDERAL HIGHWAY ADMINISTRATION (FHWA) AND ADVISORY COUNCIL ON HISTORIC PRESERVATION (ACHP). THERE IS NO CULTURAL RESOURCE CONCERNS AS LONG AS THE PROJECT SCOPE IS NOT MODIFIED AND ALL STAGING AND STOCKPILING REMAIN WITHIN THE EXISTING LOC. SHOULD IT BE NECESSARY TO ADD ADDITIONAL ACCESS LOCATIONS, ADD OTHER STOCKPILING/STAGING AREAS, OR OTHERWISE ALTER THE SCOPE OF THE PROJECT, DELDOT ENVIRONMENTAL STUDIES STAFF WILL NEED TO REVIEW THESE CHANGES FOR POTENTIAL CULTURAL RESOURCE CONCERNS.

18. THE CONTRACTOR SHALL SALVAGE THE STEEL HANDRAILS ON THE EXISTING CHAPMAN ROAD BRIDGE AND DELIVER TO AREA 23 BEAR YARD. CONTACT KEVIN CANNING AT 302-326-4471. THIS WORK SHALL BE INCIDENTAL TO ITEM 211000.

EARTHWORK SUMMARY

	SHT: 1	SHT: 2	SHT: 4	
	STA. 22+50 TO STA. 27+00	STA. 27+00 TO STA. 36+00	STA. 36+00 TO STA. 44+00	PROJECT TOTALS
EXCAVATION - ITEM 202000 (CY) [NEED = '-' / EXCESS = '+']				
EX01 : FROM CROSS SECTIONS / MODELS (+)	953.17	2568.29	4715.54	8237.00
EX02 : BITUMINOUS PAVEMENT REMOVED IN FILL SECTIONS (+)	118.34	162.34	352.83	633.52
EX03 : TOPSOIL REMOVED UNDER FILL SECTIONS (+)	316.00	1009.00	109.00	1434.00
EX04 : TOPSOIL PLACED IN CUT SECTIONS (+)	4.00	0.00	95.00	99.00
EX05 : ROOT MAT REMOVED IN CUT SECTIONS (-)	145.00	1038.00	287.00	1470.00
EX06 : CURB AND/OR CURB AND GUTTER EXCAVATION (-)	0.00	0.00	0.00	0.00
EX07 : UNDERDRAIN EXCAVATION (-)	0.00	0.00	0.00	0.00
EX08 : ROCK EXCAVATION (-)	0.00	0.00	0.00	0.00
EX09 : REMOVAL OF PCC PAVEMENT, CURBS, SIDEWALK, ETC. (-)	0.00	0.00	0.00	0.00
EXTOTAL : TOTAL EXCAVATION	1246.51	2701.63	4985.38	8933.52
STORMWATER MANAGEMENT POND EXCAVATION - ITEM 271000 (CY) [NEED = '-' / EXCESS = '+']				
SWEX01 : FROM CROSS SECTIONS / MODELS (+)	0.00	0.00	155.00	155.00
SWEX02 : TOPSOIL REMOVED UNDER FILL SECTIONS (+)	0.00	0.00	0.00	0.00
SWEX03 : TOPSOIL PLACED IN CUT SECTIONS (+)	0.00	0.00	0.00	0.00
SWEX04 : ROOT MAT REMOVED (-)	0.00	0.00	0.00	0.00
SWEX05 : ROCK EXCAVATION (-)	0.00	0.00	0.00	0.00
SWEXTOTAL : TOTAL STORMWATER MANAGEMENT POND EXCAVATION	0.00	0.00	155.00	155.00
EXCAVATION AVAILABLE FOR EMBANKMENT (CY) [NEED = '-' / EXCESS = '+']				
EXTOTAL : TOTAL EXCAVATION (+) [ITEM 202000]	1246.51	2701.63	4985.38	8933.52
SWEXTOTAL : TOTAL STORMWATER MANAGEMENT POND EXCAVATION (+) [ITEM 910008]	0.00	0.00	155.00	155.00
AVEX01 : EXCAVATION AND BACKFILLING FOR STRUCTURES (+) [ITEM 207000]	0.00	1678.00	0.00	1678.00
AVEX02 : EXCAVATION FOR PIPE TRENCHES (+) [Item 207000]	39.14	1030.14	373.86	1443.14
AVEX03 : CHANNEL EXCAVATION (+) [ITEM 203000]	0.00	0.00	0.00	0.00
AVEX04 : POLE BASES EXCAVATION (+) [ITEM 83400X]	0.00	0.00	0.00	0.00
AVEX05 : EXCAVATION FROM CURBS AND/OR CURB AND GUTTER (+)	0.00	0.00	0.00	0.00
AVEX06 : EXCAVATION FROM UNDERDRAINS (+) [ITEM 70900X]	0.00	0.00	0.00	0.00
AVEX07 : MISCELLANEOUS EXCAVATIONS (+)	0.00	336.59	0.00	336.59
AVEX08 : TOPSOIL REMOVED IN CUT AND/OR FILL SECTIONS (-)	316.00	1009.00	109.00	1434.00
AVEX09 : TOPSOIL REMOVED IN CUT AND/OR FILL SECTIONS FOR STORMWATER MANAGEMENT PONDS (-)	0.00	0.00	0.00	0.00
AVEX10: UNSUITABLE MATERIALS (-)	443.00	589.00	2435.00	3467.00
AVEXTOTAL : TOTAL EXCAVATION AVAILABLE FOR EMBANKMENT	526.65	4148.37	2970.23	7645.26
EMBANKMENT AND BORROW, TYPE 'F' REQUIRED (CY) [NEED = '-' / EXCESS = '+']				
EMRF01 : FROM CROSS SECTIONS / MODEL (+) [EMBANKMENT REQUIRED BELOW SUBGRADE OR CAPPING]	1967.57	17399.05	1666.05	21032.67
EMRF02 : TOPSOIL REMOVED UNDER FILL (+)	316.00	1009.00	109.00	1434.00
EMRF03 : ROOT MAT REMOVED UNDER FILL (+)	145.00	1038.00	287.00	1470.00
EMRF04 : UNSUITABLE MATERIAL REMOVED UNDER FILL (+)	0.00	0.00	0.00	0.00
EMRF05 : PCC REMOVED UNDER FILL (+)	0.00	0.00	0.00	0.00
EMRF06 : BITUMINOUS PAVEMENT REMOVED UNDER FILL (+)	118.34	162.34	352.83	633.52
EMRF07 : TOPSOIL TO BE PLACED IN FILL (+)	0.00	0.00	0.00	0.00
EMRF08 : SUBTOTAL OF EMBANKMENT AND BORROW, TYPE 'F' REQUIRED	2546.91	19608.39	2414.88	24570.19
EMRF09 : COMPACTION FACTOR APPLIED TO THE SUBTOTAL (%)	1.20	1.20	1.20	
EMRFTOTAL : TOTAL EMBANKMENT AND BORROW, TYPE 'F' REQUIRED	3056.30	23530.07	2897.86	29484.22
TOPSOIL SUMMARY (CY) [NEED = '-' / EXCESS = '+']				
TOP01 ; TOPSOIL SALVAGED FROM CUT SECTIONS (+)	0.00	0.00	0.00	0.00
TOP02 : TOPSOIL SALVAGED FROM FILL SECTIONS (+)	0.00	0.00	0.00	0.00
TOP03 : TOPSOIL SALVAGED FROM STORMWATER MANAGEMENT PONDS (+)	0.00	0.00	0.00	0.00
TOP04 : TOPSOIL REQUIRED (-)	199.84	917.18	400.89	1517.91
TOPTOTAL : TOTAL TOPSOIL	-199.84	-917.18	-400.89	-1517.91
MATERIAL BALANCE (CY) [NEED = '-' / EXCESS = '+']				
BORROW, TYPE 'A'	-125.42	-667.91	-340.93	-1134.25
BORROW, TYPE 'B'	0.00	0.00	0.00	0.00
BORROW, TYPE 'C'	-5.30	-11771.06	-42.64	-11819.00
BORROW, TYPE 'F'	-2647.99	-19544.04	-280.46	-22472.49
TOPSOIL	-199.84	-917.18	-400.89	-1517.91
UNSUITABLE MATERIAL	443.00	589.00	2435.00	3467.00

MATERIAL	LIFT THICKNESS	
	MINIMUM	MAXIMUM
BITUMINOUS CONCRETE, TYPE 'C'	1.25"	2"
BITUMINOUS CONCRETE, TYPE 'B'	2.25"	4"
BITUMINOUS CONCRETE BASE COURSE	3"	6"
GRADED AGGREGATE BASE COURSE	-	8"

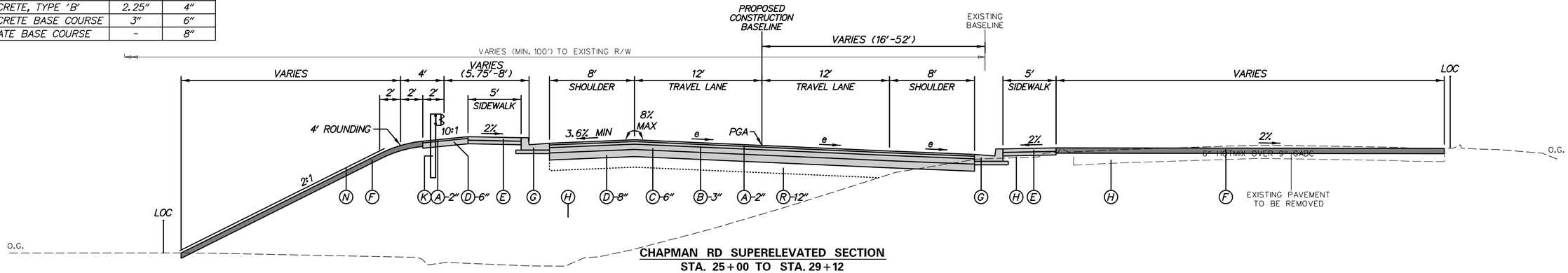

CHAPMAN RD SUPERELEVATED SECTION
STA. 25+00 TO STA. 29+12
e_{MAX}=4.4%

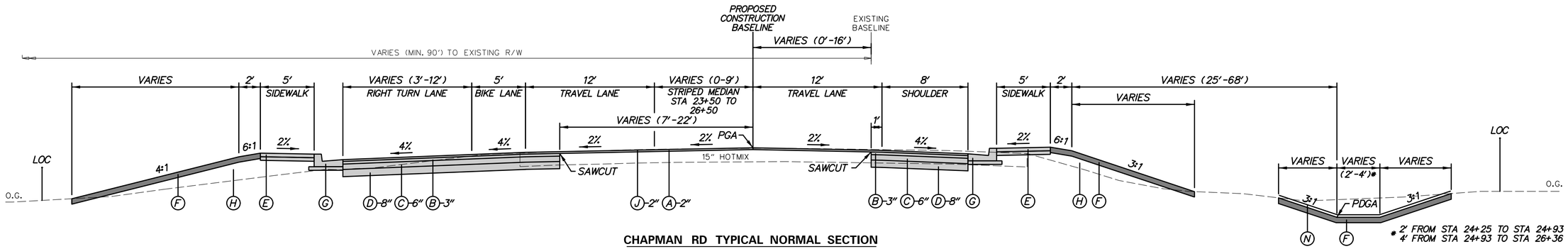

CHAPMAN RD TYPICAL NORMAL SECTION
STA. 24+27 TO STA. 25+00

TYPICAL DITCH SECTION
STA. 24+25 TO STA. 26+36

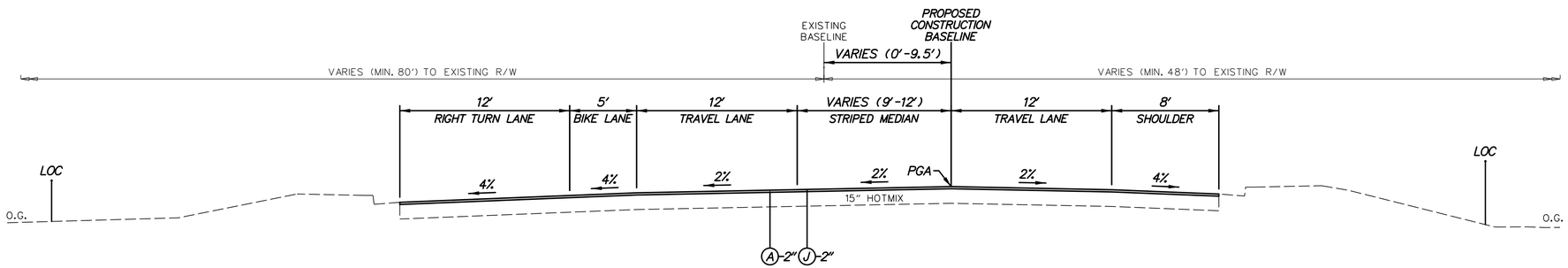

CHAPMAN RD TYPICAL NORMAL SECTION
STA. 23+30 TO STA. 24+27

LEGEND

- (A) ITEM 401045 - SUPERPAVE TYPE C, PG 70-22 (NON-CARBONATE STONE)
- (B) ITEM 401015 - SUPERPAVE TYPE B, PG 70-22
- (C) ITEM 401021 - SUPERPAVE TYPE BCBC, PG 64-22
- (D) ITEM 301001 - GRADED AGGREGATE BASE COURSE, TYPE B
- (E) ITEM 705001 - P.C.C. SIDEWALK, 4" OVER 4" GABC, TYPE B
- (F) ITEM 908004 - TOPSOIL, 6" DEPTH
  ITEM 908014 - PERMANENT GRASS SEEDING, DRY GROUND
- (G) ITEM 701018 - I.P.C.C. CURB AND GUTTER, TYPE 1-8 OVER 4" GABC, TYPE B
- (H) ITEM 209006 - BORROW, TYPE F
- (I) ITEM 701013 - P.C.C. CURB, TYPE 1-8 OVER 4" GABC, TYPE B
- (J) ITEM 760012 - PAVEMENT MILLING, BITUMINOUS CONCRETE PAVEMENT, VARIABLE DEPTH
- (K) ITEM 720021 - GALVANIZED STEEL BEAM GUARDRAIL, TYPE 1-31
- (L) ITEM 701014 - P.C.C. CURB, TYPE 2 OVER 4" GABC, TYPE B
- (M) ITEM 701019 - I.P.C.C. CURB AND GUTTER, TYPE 2 OVER 4" GABC, TYPE B
- (N) ITEM 908020 - EROSION CONTROL BLANKET MULCH
- (O) ITEM 401030 - SUPERPAVE TYPE B, PG 64-22, PATCHING
- (P) ITEM 401031 - SUPERPAVE TYPE BCBC, PG 64-22, PATCHING
- (Q) ITEM 301002 - GRADED AGG. BASE COURSE, TYPE B, PATCHING
- (R) ITEM 209001 - BORROW, TYPE A
- (S) ITEM 908004 - TOPSOIL, 6" DEPTH
  ITEM 908015 - PERMANENT GRASS SEEDING, STORMWATER

NOTES:

1. THE ALGEBRAIC DIFFERENCE BETWEEN THE TRAVEL LANE SLOPE AND SHOULDER SLOPE SHALL NOT EXCEED 8%.
2. SHOULDER CROSS SLOPE ON THE LOW SIDE SHALL BE THE SAME AS THE TRAVEL LANE CROSS SLOPE WHEN SUPERELEVATION IS 4% OR GREATER.
3. A MINIMUM LATERAL OFFSET OF 3' SHOULD BE PROVIDED BEYOND THE FACE OF CURB TO OBSTRUCTIONS AT INTERSECTIONS AND DRIVEWAY OPENINGS. A MINIMUM LATERAL OFFSET OF 1.5' SHOULD BE USED ELSEWHERE.

PGA - PROFILE GRADE APPLICATION
PDGA - PROFILE DITCH GRADE APPLICATION

ADDENDA / REVISIONS	

NOT TO SCALE

BR 1-714 ON CHAPMAN ROAD OVER I-95

CONTRACT	BRIDGE NO.	1-714 /1-714A
T201507402	DESIGNED BY: T. SINGLE	
COUNTY		
NEW CASTLE	CHECKED BY: D. SEMPLE	

TYPICAL SECTIONS

SECTION
AEC
SHEET NO.
6

8/7/2019
P:\60322054 DelDOT AGR 1672 BDS\T06 - Rehab Br. 1-714\900 WORK\910 CAD\20-SHEETS\100_Construction Plans\TS01.dgn

MATERIAL	LIFT THICKNESS	
	MINIMUM	MAXIMUM
BITUMINOUS CONCRETE, TYPE 'C'	1.25"	2"
BITUMINOUS CONCRETE, TYPE 'B'	2.25"	4"
BITUMINOUS CONCRETE BASE COURSE	3"	6"
GRADED AGGREGATE BASE COURSE	-	8"

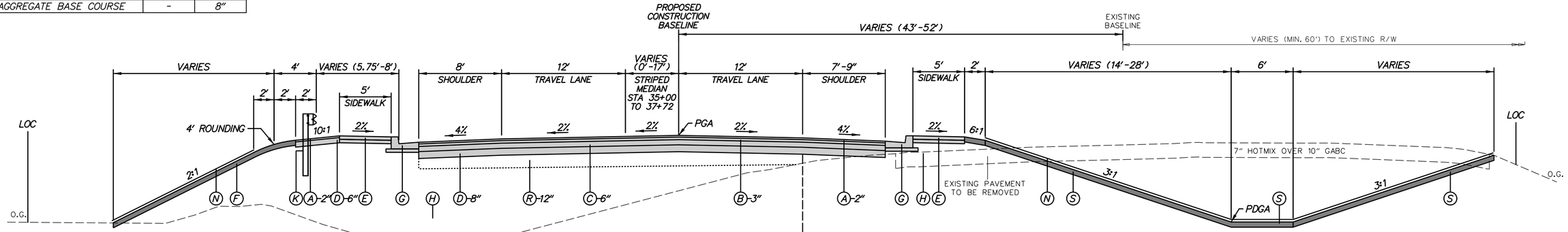

GUARDRAIL
STA. 34+36 TO STA. 36+60

CHAPMAN RD TYPICAL NORMAL SECTION
STA. 34+36 TO STA. 37+72

TYPICAL DITCH SECTION
STA. 35+00 TO 37+17
STA. 37+65 TO 37+90

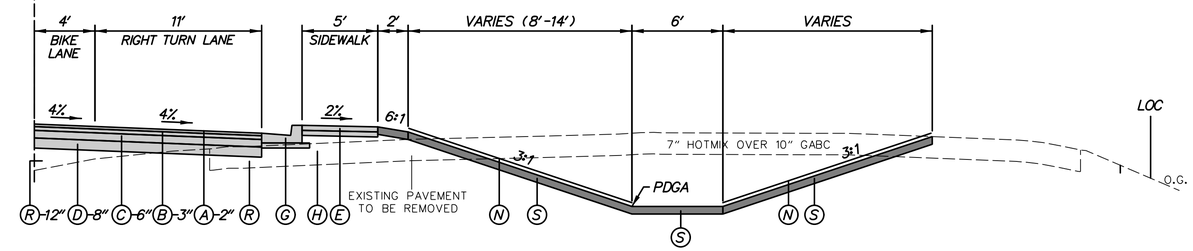

BMP 1014
STA. 37+17 TO STA. 37+65

*SEE SWM PLANS FOR BMP 1014 DETAILS

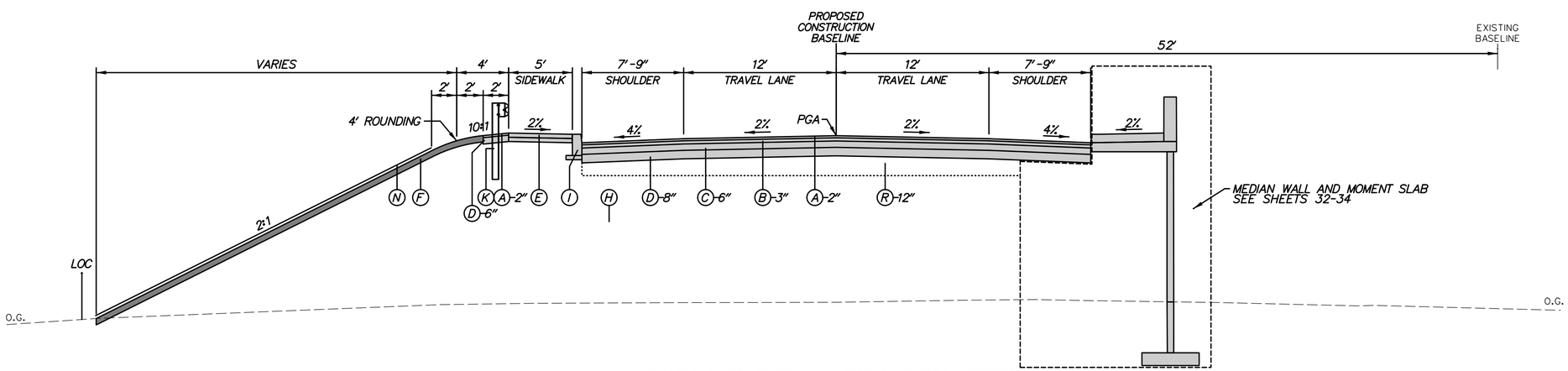

CHAPMAN RD OVER I-95 MEDIAN TYPICAL SECTION
STA. 31+37 TO STA. 32+60

LEGEND

- (A) ITEM 401045 - SUPERPAVE TYPE C, PG 70-22 (NON-CARBONATE STONE)
- (B) ITEM 401015 - SUPERPAVE TYPE B, PG 70-22
- (C) ITEM 401021 - SUPERPAVE TYPE BCBC, PG 64-22
- (D) ITEM 301001 - GRADED AGGREGATE BASE COURSE, TYPE B
- (E) ITEM 705001 - P.C.C. SIDEWALK, 4" OVER 4" GABC, TYPE B
- (F) ITEM 908004 - TOPSOIL, 6" DEPTH
  ITEM 908014 - PERMANENT GRASS SEEDING, DRY GROUND
- (G) ITEM 701018 - I.P.C.C. CURB AND GUTTER, TYPE 1-8 OVER 4" GABC, TYPE B
- (H) ITEM 209006 - BORROW, TYPE F
- (I) ITEM 701013 - P.C.C. CURB, TYPE 1-8 OVER 4" GABC, TYPE B
- (J) ITEM 760012 - PAVEMENT MILLING, BITUMINOUS CONCRETE PAVEMENT, VARIABLE DEPTH
- (K) ITEM 720021 - GALVANIZED STEEL BEAM GUARDRAIL, TYPE 1-31
- (L) ITEM 701014 - P.C.C. CURB, TYPE 2 OVER 4" GABC, TYPE B
- (M) ITEM 701019 - I.P.C.C. CURB AND GUTTER, TYPE 2 OVER 4" GABC, TYPE B
- (N) ITEM 908020 - EROSION CONTROL BLANKET MULCH
- (O) ITEM 401030 - SUPERPAVE TYPE B, PG 64-22, PATCHING
- (P) ITEM 401031 - SUPERPAVE TYPE BCBC, PG 64-22, PATCHING
- (Q) ITEM 301002 - GRADED AGG. BASE COURSE, TYPE B, PATCHING
- (R) ITEM 209001 - BORROW, TYPE A
- (S) ITEM 908004 - TOPSOIL, 6" DEPTH
  ITEM 908015 - PERMANENT GRASS SEEDING, STORMWATER

PGA - PROFILE GRADE APPLICATION
PDGA - PROFILE DITCH GRADE APPLICATION

NOTES:

1. THE ALGEBRAIC DIFFERENCE BETWEEN THE TRAVEL LANE SLOPE AND SHOULDER SLOPE SHALL NOT EXCEED 8%.
2. SHOULDER CROSS SLOPE ON THE LOW SIDE SHALL BE THE SAME AS THE TRAVEL LANE CROSS SLOPE WHEN SUPERELEVATION IS 4% OR GREATER.
3. A MINIMUM LATERAL OFFSET OF 3' SHOULD BE PROVIDED BEYOND THE FACE OF CURB TO OBSTRUCTIONS AT INTERSECTIONS AND DRIVEWAY OPENINGS. A MINIMUM LATERAL OFFSET OF 1.5' SHOULD BE USED ELSEWHERE.

ADDENDA / REVISIONS	

NOT TO SCALE

BR 1-714 ON
CHAPMAN ROAD OVER I-95

CONTRACT	BRIDGE NO.	1-714 /1-714A	TYPICAL SECTIONS	SECTION
T201507402	DESIGNED BY: T. SINGLE			AEC
COUNTY				SHEET NO.
NEW CASTLE	CHECKED BY: D. SEMPLE			7

8/7/2019
4:05:15 PM
P:\60320054 DelDOT AGR 1672 BDS\T06 - Rehab Br. 1-714\900 WORK\910 CAD\20-SHEETS\100_Construction Plans\TS02.dgn

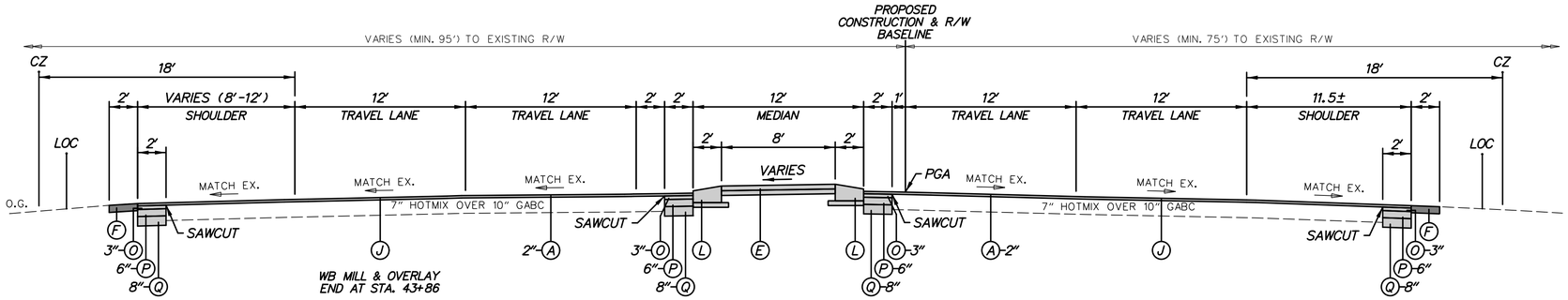

CHAPMAN RD TYPICAL NORMAL SECTION
STA. 42+52 TO STA. 44+00

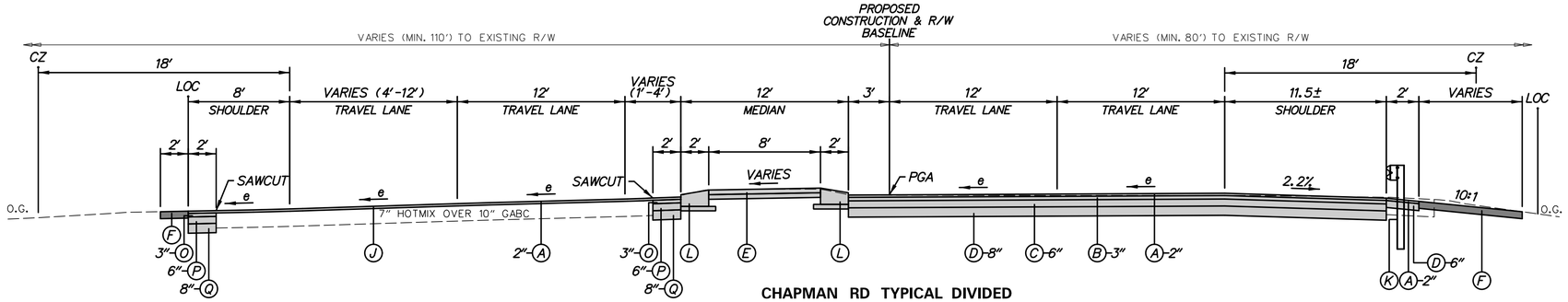

CHAPMAN RD TYPICAL DIVIDED SUPERELEVATED SECTION
STA. 41+25 TO STA. 42+52
e_{MAX}=5.8%

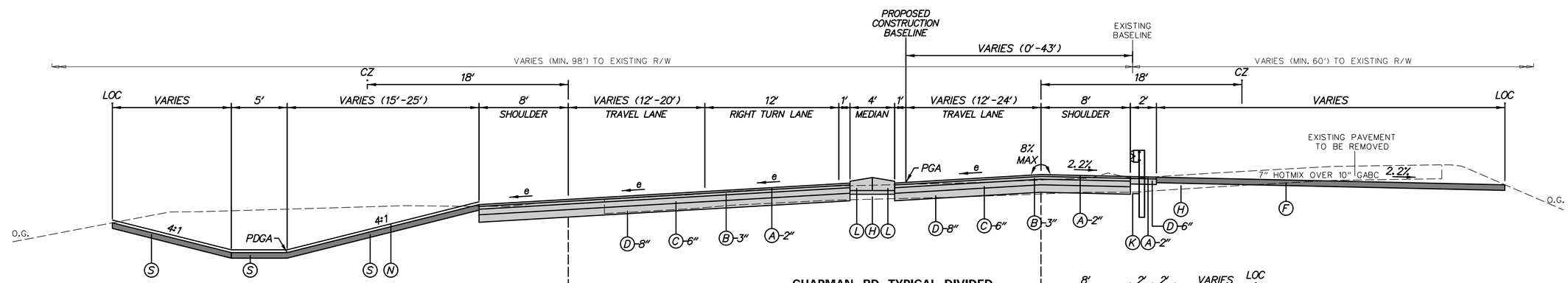

TYPICAL DITCH SECTION
STA. 39+00 TO STA. 40+32

* BMP 1015 FROM STA. 40+32 TO STA. 41+03
SEE SWM PLANS FOR DETAILS

CHAPMAN RD TYPICAL DIVIDED SUPERELEVATED SECTION
STA. 37+72 TO STA. 41+25
e_{MAX}=5.8%

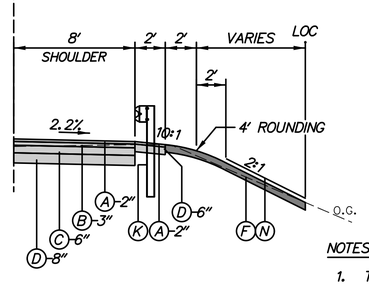

2:1 GRADING
STA. 40+50 TO STA. 41+48

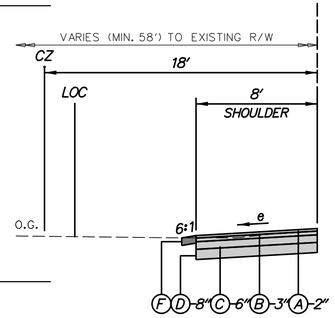

6:1 GRADING
STA. 37+30 TO STA. 39+00
STA. 41+03 TO STA. 41+25

LEGEND

- (A) ITEM 401045 - SUPERPAVE TYPE C, PG 70-22 (NON-CARBONATE STONE)
- (B) ITEM 401015 - SUPERPAVE TYPE B, PG 70-22
- (C) ITEM 401021 - SUPERPAVE TYPE BCBC, PG 64-22
- (D) ITEM 301001 - GRADED AGGREGATE BASE COURSE, TYPE B
- (E) ITEM 705001 - P.C.C. SIDEWALK, 4" OVER 4" GABC, TYPE B
- (F) ITEM 908004 - TOPSOIL, 6" DEPTH
  ITEM 908014 - PERMANENT GRASS SEEDING, DRY GROUND
- (G) ITEM 701018 - I.P.C.C. CURB AND GUTTER, TYPE 1-8 OVER 4" GABC, TYPE B
- (H) ITEM 209006 - BORROW, TYPE F
- (I) ITEM 701013 - P.C.C. CURB, TYPE 1-8 OVER 4" GABC, TYPE B
- (J) ITEM 760012 - PAVEMENT MILLING, BITUMINOUS CONCRETE PAVEMENT, VARIABLE DEPTH
- (K) ITEM 720021 - GALVANIZED STEEL BEAM GUARDRAIL, TYPE 1-31
- (L) ITEM 701014 - P.C.C. CURB, TYPE 2 OVER 4" GABC, TYPE B
- (M) ITEM 701019 - I.P.C.C. CURB AND GUTTER, TYPE 2 OVER 4" GABC, TYPE B
- (N) ITEM 908020 - EROSION CONTROL BLANKET MULCH
- (O) ITEM 401030 - SUPERPAVE TYPE B, PG 64-22, PATCHING
- (P) ITEM 401031 - SUPERPAVE TYPE BCBC, PG 64-22, PATCHING
- (Q) ITEM 301002 - GRADED AGG. BASE COURSE, TYPE B, PATCHING
- (R) ITEM 209001 - BORROW, TYPE A
- (S) ITEM 908004 - TOPSOIL, 6" DEPTH
  ITEM 908015 - PERMANENT GRASS SEEDING, STORMWATER

PGA - PROFILE GRADE APPLICATION
PDGA - PROFILE DITCH GRADE APPLICATION

MATERIAL	LIFT THICKNESS	
	MINIMUM	MAXIMUM
BITUMINOUS CONCRETE, TYPE 'C'	1.25"	2"
BITUMINOUS CONCRETE, TYPE 'B'	2.25"	4"
BITUMINOUS CONCRETE BASE COURSE	3"	6"
GRADED AGGREGATE BASE COURSE	-	8"

NOTES:

1. THE ALGEBRAIC DIFFERENCE BETWEEN THE TRAVEL LANE SLOPE AND SHOULDER SLOPE SHALL NOT EXCEED 8%.
2. SHOULDER CROSS SLOPE ON THE LOW SIDE SHALL BE THE SAME AS THE TRAVEL LANE CROSS SLOPE WHEN SUPERELEVATION IS 4% OR GREATER.
3. A MINIMUM LATERAL OFFSET OF 3' SHOULD BE PROVIDED BEYOND THE FACE OF CURB TO OBSTRUCTIONS AT INTERSECTIONS AND DRIVEWAY OPENINGS. A MINIMUM LATERAL OFFSET OF 1.5' SHOULD BE USED ELSEWHERE.

ADDENDA / REVISIONS	NOT TO SCALE	BR 1-714 ON CHAPMAN ROAD OVER I-95	CONTRACT T201507402	BRIDGE NO. 1-714 /1-714A	TYPICAL SECTIONS	SECTION AEC
			COUNTY NEW CASTLE	DESIGNED BY: T. SINGLE		SHEET NO. 8
				CHECKED BY: D. SEMPLE		

8/7/2019
2:10:06 PM
P:\60052\0054 DelDOT AGR 1672 BDS\T06 - Rehab Br. 1-714\900 WORK\910 CAD\20-SHEETS\100_Construction Plans\TS03.dgn

MATERIAL	LIFT THICKNESS	
	MINIMUM	MAXIMUM
BITUMINOUS CONCRETE, TYPE 'C'	1.25"	2"
BITUMINOUS CONCRETE, TYPE 'B'	2.25"	4"
BITUMINOUS CONCRETE BASE COURSE	3"	6"
GRADED AGGREGATE BASE COURSE	-	8"

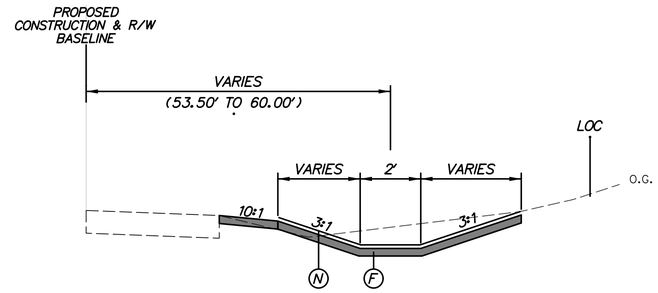

I-95 SOUTHBOUND
TYPICAL DITCH RELOCATION SECTION
STA. 328+15 TO STA. 328+50

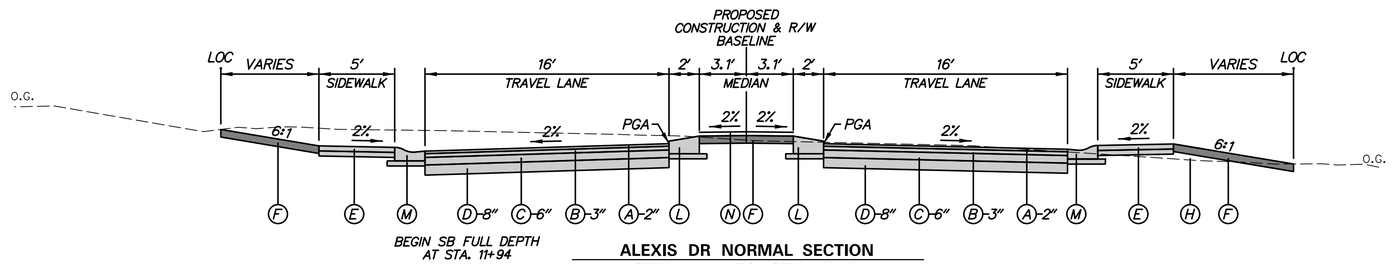

ALEXIS DR NORMAL SECTION
STA. 11+72 TO STA. 12+48

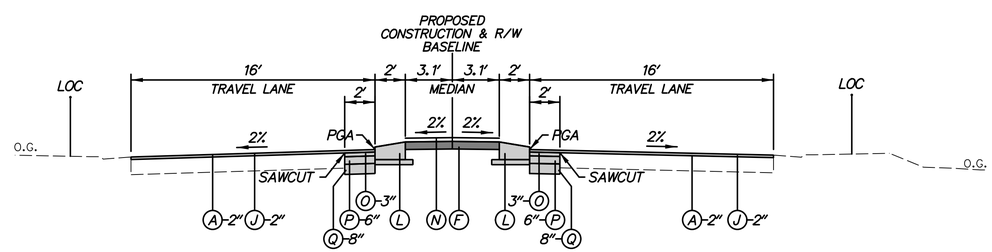

ALEXIS DR MILL AND OVERLAY
STA. 10+80 TO STA. 11+72

LEGEND

- (A) ITEM 401045 - SUPERPAVE TYPE C, PG 70-22 (NON-CARBONATE STONE)
- (B) ITEM 401015 - SUPERPAVE TYPE B, PG 70-22
- (C) ITEM 401021 - SUPERPAVE TYPE BCBC, PG 64-22
- (D) ITEM 301001 - GRADED AGGREGATE BASE COURSE, TYPE B
- (E) ITEM 705001 - P.C.C. SIDEWALK, 4" OVER 4" GABC, TYPE B
- (F) ITEM 908004 - TOPSOIL, 6" DEPTH
  ITEM 908014 - PERMANENT GRASS SEEDING, DRY GROUND
- (G) ITEM 701018 - I.P.C.C. CURB AND GUTTER, TYPE 1-8 OVER 4" GABC, TYPE B
- (H) ITEM 209006 - BORROW, TYPE F
- (I) ITEM 701013 - P.C.C. CURB, TYPE 1-8 OVER 4" GABC, TYPE B
- (J) ITEM 760012 - PAVEMENT MILLING, BITUMINOUS CONCRETE PAVEMENT, VARIABLE DEPTH
- (K) ITEM 720021 - GALVANIZED STEEL BEAM GUARDRAIL, TYPE 1-31
- (L) ITEM 701014 - P.C.C. CURB, TYPE 2 OVER 4" GABC, TYPE B
- (M) ITEM 701019 - I.P.C.C. CURB AND GUTTER, TYPE 2 OVER 4" GABC, TYPE B
- (N) ITEM 908020 - EROSION CONTROL BLANKET MULCH
- (O) ITEM 401030 - SUPERPAVE TYPE B, PG 64-22, PATCHING
- (P) ITEM 401031 - SUPERPAVE TYPE BCBC, PG 64-22, PATCHING
- (Q) ITEM 301002 - GRADED AGG. BASE COURSE, TYPE B, PATCHING
- (R) ITEM 209001 - BORROW, TYPE A
- (S) ITEM 908004 - TOPSOIL, 6" DEPTH
  ITEM 908015 - PERMANENT GRASS SEEDING, STORMWATER

PGA - PROFILE GRADE APPLICATION
PDGA - PROFILE DITCH GRADE APPLICATION

NOTES:

1. THE ALGEBRAIC DIFFERENCE BETWEEN THE TRAVEL LANE SLOPE AND SHOULDER SLOPE SHALL NOT EXCEED 8%.
2. SHOULDER CROSS SLOPE ON THE LOW SIDE SHALL BE THE SAME AS THE TRAVEL LANE CROSS SLOPE WHEN SUPERELEVATION IS 4% OR GREATER.
3. A MINIMUM LATERAL OFFSET OF 3' SHOULD BE PROVIDED BEYOND THE FACE OF CURB TO OBSTRUCTIONS AT INTERSECTIONS AND DRIVEWAY OPENINGS. A MINIMUM LATERAL OFFSET OF 1.5' SHOULD BE USED ELSEWHERE.

ADDENDA / REVISIONS	

NOT TO SCALE

BR 1-714 ON
CHAPMAN ROAD OVER I-95

CONTRACT	BRIDGE NO.	1-714 /1-714A
T201507402	DESIGNED BY: T. SINGLE	
COUNTY		
NEW CASTLE	CHECKED BY: D. SEMPLE	

TYPICAL SECTIONS

SECTION
AEC
SHEET NO.
9

8/7/2019
2:20:07 PM
P:\60323054 DelDOT AGR 1672 BDS\T06 - Rehab Br. 1-714\900 WORK\910 CAD\20-SHEETS\100_Construction Plans\TS04.dgn

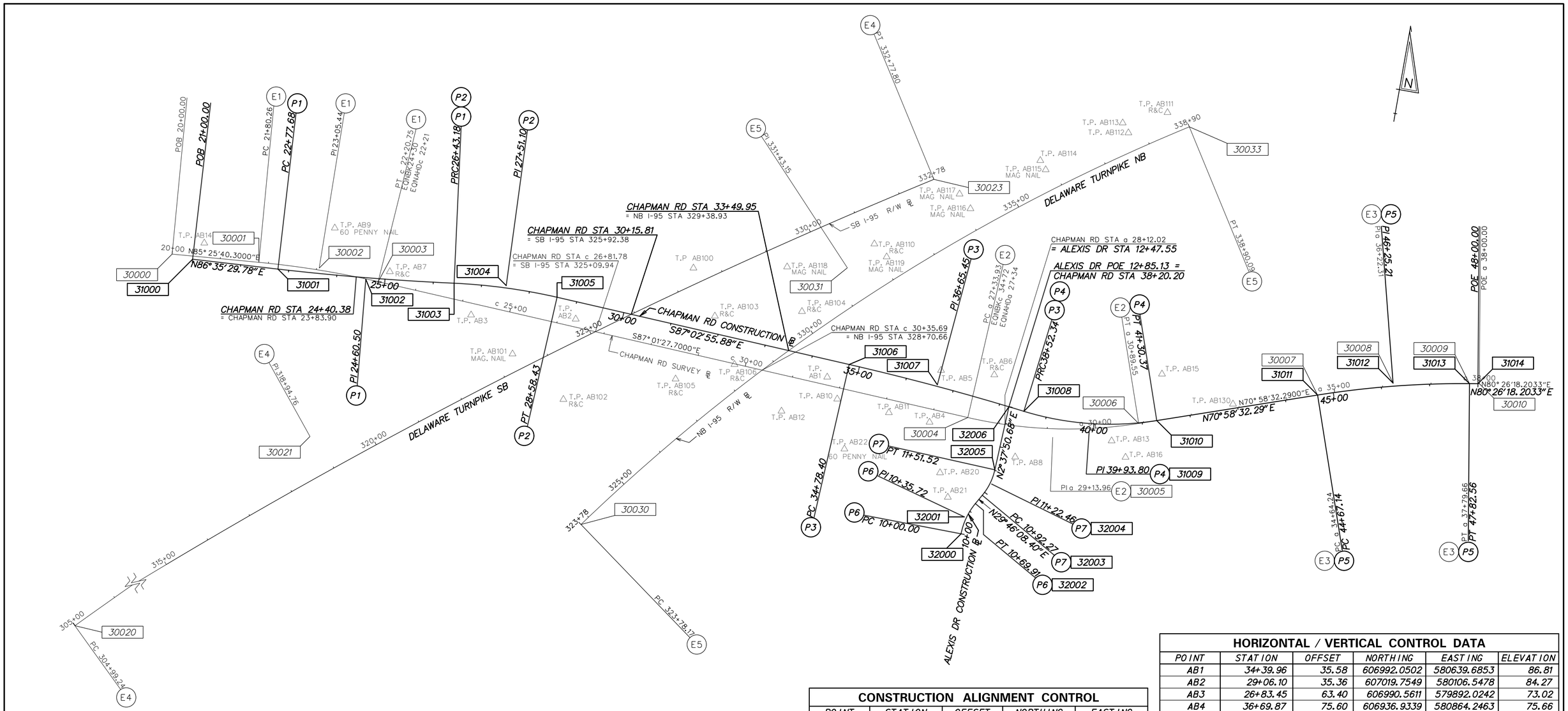

CONSTRUCTION ALIGNMENT CONTROL

POINT	STATION	OFFSET	NORTHING	EASTING
30000	20+00.00	0.00	607007.2015	579261.2356
30010	38+00.00	0.00	607212.7147	581970.2194
30014	28+75.00	0.00	606991.0883	580344.0849
31000	21+00.00	0.00	607004.1316	579304.8000
31014	48+00.00	0.00	607212.2329	581967.3586
31020	31+75.00	0.00	607041.2201	580376.9072
32006	12+85.13	0.00	606996.8640	581020.4373

HORIZONTAL / VERTICAL CONTROL DATA

POINT	STATION	OFFSET	NORTHING	EASTING	ELEVATION
AB110	34+73.21	-254.54	607280.0704	580687.8262	68.67
AB111	42+52.19	-625.57	607652.8839	581237.7226	74.50
AB112	41+65.79	-596.85	607597.5672	581165.4048	75.15
AB113	41+57.30	-618.96	607615.7082	581150.1769	73.48
AB114	37+43.48	-507.05	607509.6545	580995.9028	71.23
AB115	37+57.93	-491.77	607492.8175	581010.0667	73.84
AB116	36+39.14	-372.89	607386.4842	580870.9084	72.09
AB117	36+11.79	-396.50	607412.3620	580843.5261	69.41
AB118	33+08.02	-167.82	607201.9737	580518.3916	64.32
AB119	35+02.95	-234.26	607258.1709	580717.5745	69.58
AB130	42+91.40	-9.06	607082.8326	581475.7593	60.31

HORIZONTAL / VERTICAL CONTROL DATA

POINT	STATION	OFFSET	NORTHING	EASTING	ELEVATION
AB1	34+39.96	35.58	606992.0502	580639.6853	86.81
AB2	29+06.10	35.36	607019.7549	580106.5478	84.27
AB3	26+83.45	63.40	606990.5611	579892.0242	73.02
AB4	36+69.87	75.60	606936.9339	580864.2463	75.66
AB5	36+65.00	-34.11	607046.6535	580869.0185	72.44
AB6	37+72.70	-54.69	607056.5586	580979.121	66.86
AB7	25+08.95	-16.14	607049.5949	579710.9771	64.03
AB8	38+61.56	95.61	606896.9049	581051.2035	67.51
AB9	23+86.72	-96.80	607118.8041	579583.1736	53.90
AB10	34+70.28	75.15	606950.9659	580667.9285	84.23
AB11	35+82.18	77.66	606941.7617	580777.948	78.98
AB12	33+63.45	125.34	606906.3444	580558.6588	75.53
AB13	40+36.48	34.27	606964.3738	581241.796	63.09
AB14	21+20.18	-36.04	607041.305	579322.8019	48.52
AB15	41+56.10	-93.48	607118.5382	581320.3309	53.80
AB16	40+62.15	68.90	606935.9504	581275.9388	47.85
AB20	37+19.56	170.72	606837.7311	580903.7354	67.22
AB21	37+49.91	214.94	606790.7946	580928.3777	63.74
AB22	35+08.94	172.47	606851.7494	580700.5185	74.53
AB100	31+19.77	-122.21	607166.1067	580328.0392	63.12
AB101	27+86.92	132.87	606926.1925	579990.4183	57.40
AB102	29+18.49	202.82	606851.8737	580110.2929	59.95
AB103	31+85.16	-35.33	607075.9847	580388.8767	63.52
AB104	33+58.65	-84.84	607116.4941	580564.6854	66.75
AB105	31+35.13	109.74	606933.674	580331.4389	64.86
AB106	32+47.07	53.00	606984.5764	580446.1571	64.66

DATUM REFERENCE:

HORIZONTAL - THIS PROJECT IS REFERENCED TO THE DELAWARE STATE PLANE COORDINATE SYSTEM (NAD 83/91).

VERTICAL - THIS PROJECT IS REFERENCED TO NAVD 88.

ADDENDA / REVISIONS

SCALE 0 100 200 300 FEET

BR 1-714 ON CHAPMAN ROAD OVER I-95

CONTRACT	BRIDGE NO.	1-714 /1-714A
T201507402	DESIGNED BY: T. SINGLE	
COUNTY		
NEW CASTLE	CHECKED BY: D. SEMPLE	

HORIZONTAL AND VERTICAL CONTROL

SECTION: AEC

SHEET NO. 10

8/7/2019
2:10:08 PM
P:\60322054 DelDOT AGR 1672 BDS\T06 - Rehab Br. 1-714\900 WORK\910 CAD\20-SHEETS\100_Construction Plans\HV01.dgn

CHAPMAN RD CIRCULAR CURVE NO. E1

Element: Circular

		STATION	NORTHING	EASTING
PC	(30001)	21+80.26	607021.5710	579440.9246
PI	(30002)	23+05.44	607031.5496	579565.7060
CC	(30011)		605129.8601	579592.2022
PT	(30003)	c22+20.75	607025.0513	579690.7170

Radius:	1897.75
Delta:	7° 32′52.0000″ Right
Degree of Curvature (Arc):	3° 01′08.9136″
Length:	250.00
Tangent:	125.18
Chord:	249.82
Middle Ordinate:	4.12
External:	4.12
Tangent Direction:	N 85° 25′40.3000″ E
Radial Direction:	S 04° 34′19.7000″ E
Chord Direction:	N 89° 12′06.3000″ E
Radial Direction:	S 02° 58′32.3000″ W
Tangent Direction:	S 87° 01′27.7000″ E

CHAPMAN RD CIRCULAR CURVE NO. E2

Element: Circular

		STATION	NORTHING	EASTING
PC	(30004)	a27+33.93	606960.0781	580940.6484
PI	(30005)	a29+13.96	606950.7325	581120.4349
CC	(30012)		607884.9993	580988.7272
PT	(30006)	a30+89.55	607009.4167	581290.6310

Radius:	926.17
Delta:	22° 00′00.0100″ Left
Degree of Curvature (Arc):	6° 11′10.7286″
Length:	355.62
Tangent:	180.03
Chord:	353.44
Middle Ordinate:	17.02
External:	17.33
Tangent Direction:	S 87° 01′27.7000″ E
Radial Direction:	S 02° 58′32.3000″ W
Chord Direction:	N 81° 58′32.2950″ E
Radial Direction:	S 19° 01′27.7100″ E
Tangent Direction:	N 70° 58′32.2900″ E

CHAPMAN RD CIRCULAR CURVE NO. E3

Element: Circular

		STATION	NORTHING	EASTING
PC	(30007)	a34+64.24	607131.5535	581644.8527
PI	(30008)	a36+22.31	607183.0795	581794.2885
CC	(30013)		605326.0383	582267.4003
PT	(30009)	a37+79.66	607209.3361	581950.1621

Radius:	1909.83
Delta:	9° 27′45.9132″ Right
Degree of Curvature (Arc):	3° 00′00.1657″
Length:	315.42
Tangent:	158.07
Chord:	315.06
Middle Ordinate:	6.51
External:	6.53
Tangent Direction:	N 70° 58′32.2900″ E
Radial Direction:	S 19° 01′27.7100″ E
Chord Direction:	N 75° 42′25.2467″ E
Radial Direction:	S 09° 33′41.7967″ E
Tangent Direction:	N 80° 26′18.2033″ E

SB I-95 CIRCULAR CURVE NO. E4

Element: Circular

		STATION	NORTHING	EASTING
PC	(30020)	304+99.24	605687.0958	578632.2992
PI	(30021)	318+94.76	606685.2674	579607.5604
CC	(30022)		597300.9054	587215.4941
PT	(30023)	332+77.80	607432.9936	580785.8586

Radius:	11999.98
Delta:	13° 16′00.0658″ Right
Degree of Curvature (Arc):	0° 28′38.8768″
Length:	2778.56
Tangent:	1395.52
Chord:	2772.36
Middle Ordinate:	80.33
External:	80.87
Tangent Direction:	N 44° 20′05.4951″ E
Radial Direction:	S 45° 39′54.5049″ E
Chord Direction:	N 50° 58′05.5279″ E
Radial Direction:	S 32° 23′54.4391″ E
Tangent Direction:	N 57° 36′05.5609″ E

NB I-95 CIRCULAR CURVE NO. E5

Element: Circular

		STATION	NORTHING	EASTING
PC	(30030)	323+78.17	606603.4081	580190.9648
PI	(30031)	331+43.15	607221.7091	580641.4081
CC	(30032)		604233.9619	583443.3848
PT	(30033)	338+90.09	607631.5888	581287.3137

Radius:	4023.99
Delta:	21° 31′39.1314″ Right
Degree of Curvature (Arc):	1° 25′25.8751″
Length:	1511.92
Tangent:	764.98
Chord:	1503.04
Middle Ordinate:	70.80
External:	72.07
Tangent Direction:	N 36° 04′26.4294″ E
Radial Direction:	S 53° 55′33.5705″ E
Chord Direction:	N 46° 50′15.9951″ E
Radial Direction:	S 32° 23′54.4391″ E
Tangent Direction:	N 57° 36′05.5609″ E

CHAPMAN RD CIRCULAR CURVE NO. P1

Element: Circular

		STATION	NORTHING	EASTING
PC	(31001)	22+77.68	607014.6950	579482.1639
PI	(31002)	24+60.50	607025.5646	579664.6673
CC	(31015)		612235.4438	579171.2267
PRC	(31003)	26+43.18	607049.1516	579845.9661

Radius:	5230.00
Delta:	4° 00′ 15.0563″ Left
Degree of Curvature (Arc):	1° 05′ 43.8778″
Length:	365.50
Tangent:	182.83
Chord:	365.43
Middle Ordinate:	3.19
External:	3.19
Tangent Direction:	N 86° 35′ 29.7826″ E
Radial Direction:	S 03° 24′ 30.2174″ E
Chord Direction:	N 84° 35′ 22.2544″ E
Radial Direction:	S 07° 24′ 45.2737″ E
Tangent Direction:	N 82° 35′ 14.7263″ E

CHAPMAN RD CIRCULAR CURVE NO. P2

Element: Circular

		STATION	NORTHING	EASTING
PRC	(31003)	26+43.18	607049.1516	579845.9661
PI	(31004)	27+51.10	607063.0746	579952.9828
CC	(31016)		605869.0966	579999.4919
PT	(31005)	28+58.43	607057.5184	580060.7583

Radius:	1190.00
Delta:	10° 21′ 49.3960″ Right
Degree of Curvature (Arc):	4° 48′ 53.1765″
Length:	215.25
Tangent:	107.92
Chord:	214.96
Middle Ordinate:	4.86
External:	4.88
Tangent Direction:	N 82° 35′ 14.7263″ E
Radial Direction:	S 07° 24′ 45.2737″ E
Chord Direction:	N 87° 46′ 09.4243″ E
Radial Direction:	S 02° 57′ 04.1223″ W
Tangent Direction:	S 87° 02′ 55.8777″ E

CHAPMAN RD CIRCULAR CURVE NO. P3

Element: Circular

		STATION	NORTHING	EASTING
PC	(31006)	34+78.40	607025.6000	580679.9002
PI	(31007)	36+65.45	607015.9698	580866.7022
CC	(31017)		601802.5360	580410.6366
PRC	(31008)	38+52.34	606993.0194	581052.3390

Radius:	5230.00
Delta:	4° 05′ 47.7700″ Right
Degree of Curvature (Arc):	1° 05′ 43.8778″
Length:	373.94
Tangent:	187.05
Chord:	373.86
Middle Ordinate:	3.34
External:	3.34
Tangent Direction:	S 87° 02′ 55.8777″ E
Radial Direction:	S 02° 57′ 04.1223″ W
Chord Direction:	S 85° 00′ 01.9927″ E
Radial Direction:	S 07° 02′ 51.8923″ W
Tangent Direction:	S 82° 57′ 08.1077″ E

CHAPMAN RD CIRCULAR CURVE NO. P4

Element: Circular

		STATION	NORTHING	EASTING
PRC	(31008)	38+52.34	606993.0194	581052.3391
PI	(31009)	39+93.80	606975.6621	581192.7357
CC	(31018)		607599.4028	581127.3066
PT	(31010)	41+30.37	607021.7756	581326.4744

Radius:	611.00
Delta:	26° 04′ 19.6036″ Left
Degree of Curvature (Arc):	9° 22′ 38.5626″
Length:	278.03
Tangent:	141.47
Chord:	275.64
Middle Ordinate:	15.75
External:	16.16
Tangent Direction:	S 82° 57′ 08.1077″ E
Radial Direction:	S 07° 02′ 51.8924″ W
Chord Direction:	N 84° 00′ 42.0905″ E
Radial Direction:	S 19° 01′ 27.7112″ E
Tangent Direction:	N 70° 58′ 32.2888″ E

CHAPMAN RD CIRCULAR CURVE NO. P5

Element: Circular

		STATION	NORTHING	EASTING
PC	(31011)	44+67.14	607131.5535	581644.8526
PI	(31012)	46+25.21	607183.0795	581794.2885
CC	(31019)		605326.0383	582267.4003
PT	(31013)	47+82.56	607209.3361	581950.1621

Radius:	1909.83
Delta:	9° 27′ 45.9145″ Right
Degree of Curvature (Arc):	3° 00′ 00.1657″
Length:	315.42
Tangent:	158.07
Chord:	315.06
Middle Ordinate:	6.51
External:	6.53
Tangent Direction:	N 70° 58′ 32.2888″ E
Radial Direction:	S 19° 01′ 27.7112″ E
Chord Direction:	N 75° 42′ 25.2460″ E
Radial Direction:	S 9° 33′ 41.7967″ E
Tangent Direction:	N 80° 26′ 18.2033″ E

ALEXIS DR CIRCULAR CURVE NO. P6

Element: Circular

		STATION	NORTHING	EASTING
PC	(32000)	10+00.00	606720.8997	580968.5528
PI	(32001)	10+35.72	606756.6111	580969.0937
CC	(32007)		606718.8006	581107.1315
PT	(32002)	10+69.91	606787.6134	580986.8267

Radius:	138.59
Delta:	28° 54′ 04.2639″ Right
Degree of Curvature (Arc):	41° 20′ 25.9591″
Length:	69.91
Tangent:	35.72
Chord:	69.17
Middle Ordinate:	4.38
External:	4.53
Tangent Direction:	N 0° 52′ 04.1398″ E
Radial Direction:	S 89° 07′ 55.8604″ E
Chord Direction:	N 15° 19′ 06.2717″ E
Radial Direction:	S 60° 13′ 51.5963″ E
Tangent Direction:	N 29° 46′ 08.4037″ E

ALEXIS DR CIRCULAR CURVE NO. P7

Element: Circular

		STATION	NORTHING	EASTING
PC	(32003)	10+92.27	606807.0200	580997.9270
PI	(32004)	11+22.46	606833.2300	581012.9187
CC	(32008)		606869.1350	580889.3319
PT	(32005)	11+51.52	606863.3928	581014.3046

Radius:	125.10
Delta:	27° 08′ 17.7238″ Left
Degree of Curvature (Arc):	45° 47′ 53.9112″
Length:	59.26
Tangent:	30.19
Chord:	58.70
Middle Ordinate:	3.49
External:	3.59
Tangent Direction:	N 29° 46′ 08.4037″ E
Radial Direction:	S 60° 13′ 51.5963″ E
Chord Direction:	N 16° 11′ 59.5417″ E
Radial Direction:	S 87° 22′ 09.3200″ E
Tangent Direction:	N 02° 37′ 50.6799″ E

ADDENDA / REVISIONS

NOT TO SCALE

BR 1-714 ON
CHAPMAN ROAD OVER I-95

CONTRACT	T201507402	BRIDGE NO.	1-714 /1-714A
COUNTY	NEW CASTLE	DESIGNED BY: T. SINGLE	CHECKED BY: D. SEMPLE

HORIZONTAL AND VERTICAL CONTROL

SECTION	SHEET NO.
AEC	11

8/7/2019 2:10:09 PM P:\60323054 DelDOT AGR 1672 BDS\T06 - Rehab Br. 1-714\900 WORK\910 CAD\20-SHEETS\100_Construction Plans\HV02.dgn

DRAINAGE PIPE SCHEDULE

NO.	SIZE / TYPE	CLASS	LENGTH	SLOPE	INT. EL.	DIS. EL.
100	18" RCP	IV	52.00	0.0165	67.96	67.10

DRAINAGE INLET SCHEDULE

NO.	STATION	OFFSET	BOX SIZE	GRATE	T.G. EL.	INV. EL.
100	26+75.05	*	48" x 30"	1	**	67.96

*MATCH PROPOSED CURBLINE
**MATCH FLOWLINE OF PROPOSED CURB & GUTTER

FLARED END SECTION SCHEDULE

NO.	SIZE / TYPE	SLOPE	SAFETY GRATE
101	18" RCP	0.0165	NO

UTILITY TEST HOLE SCHEDULE

NO.	UTILITY	STATION	OFFSET	GRND EL.	COVER	O.D. & MATERIAL
1	DOT-FO	24+95.80	61.07'	58.20	2.70	UNKNOWN
2	DP-G	25+19.94	61.71'	58.23	5.40	UNKNOWN

NOTE: ALL UTILITIES SHOWN ON PLANS ARE QL-B UNLESS OTHERWISE NOTED.

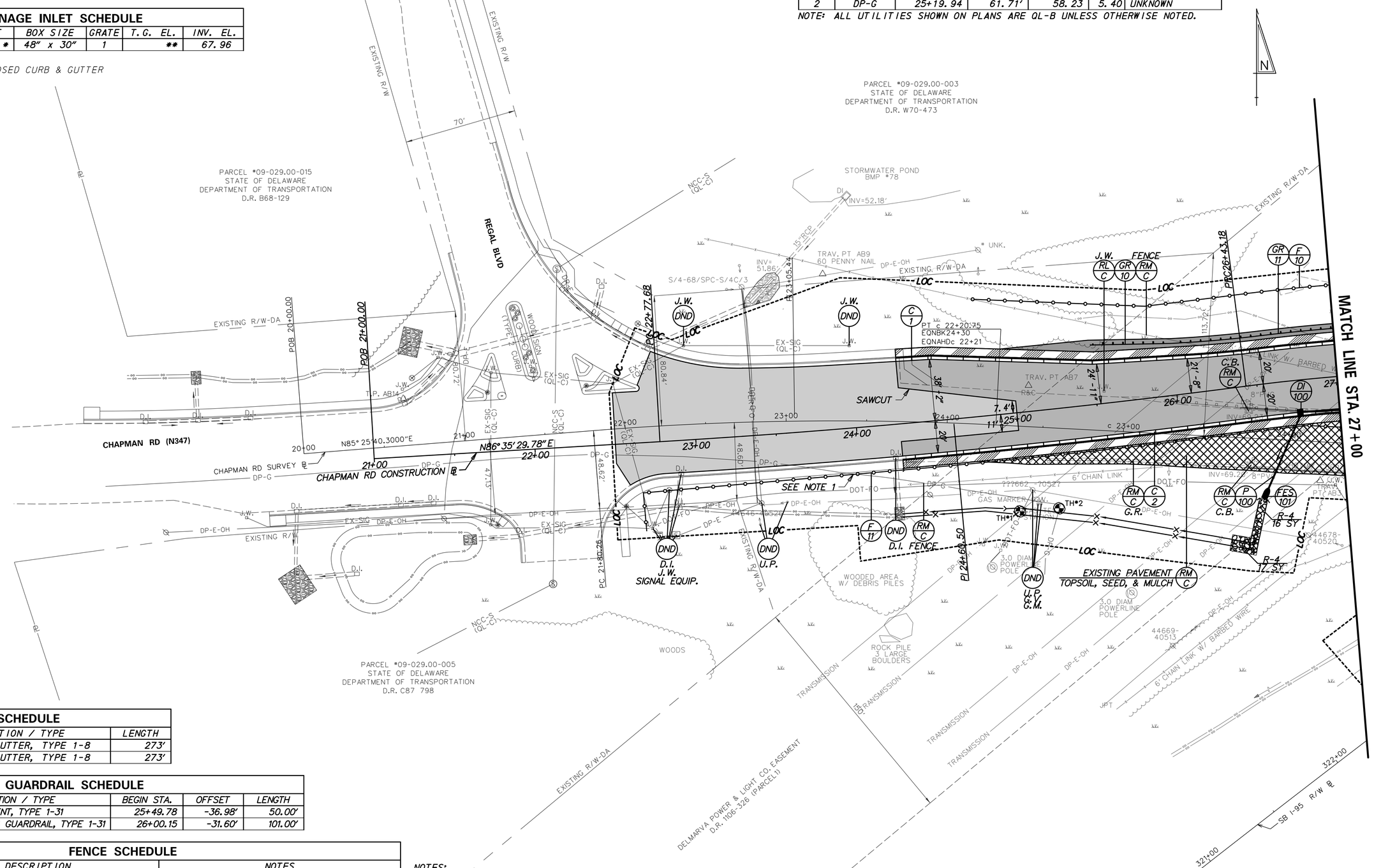

CURB SCHEDULE

NO.	ITEM DESCRIPTION / TYPE	LENGTH
1	I.P.C.C. CURB AND GUTTER, TYPE 1-8	273'
2	I.P.C.C. CURB AND GUTTER, TYPE 1-8	273'

GUARDRAIL SCHEDULE

NO.	ITEM DESCRIPTION / TYPE	BEGIN STA.	OFFSET	LENGTH
10	GUARDRAIL END TREATMENT, TYPE 1-31	25+49.78	-36.98'	50.00'
11	GALVANIZED STEEL BEAM GUARDRAIL, TYPE 1-31	26+00.15	-31.60'	101.00'

FENCE SCHEDULE

NO.	QTY.	DESCRIPTION	NOTES
10	223 LF	CHAIN LINK FENCE, 6 FT. HIGH (ITEM 727000)	STA. 24+78, 73' LT. TO STA. 27+00, 57' LT. (+/-)
11	459 LF	CHAIN LINK FENCE, 6 FT. HIGH (ITEM 727000)	STA. 22+66, 55' RT. TO STA. 27+00, 30' RT. (+/-)
12	44 LF	CHAIN LINK FENCE, 6 FT. HIGH (ITEM 727000)	STA. 26+54, 118' RT. TO STA. 27+00, 105' RT. (+/-)

NOTES:

1. CONTRACTOR TO PERFORM A TEST PIT TO LOCATE EXISTING GAS MAIN IN THE FIELD PRIOR TO INSTALLING FENCE. THIS WORK WILL BE INCIDENTAL TO 727000 - CHAIN LINK FENCE. HAND DIG ADJACENT FENCE POSTS TO SPAN THE UTILITY.

ADDENDA / REVISIONS

SCALE 0 30 60 90 FEET

BR 1-714 ON CHAPMAN ROAD OVER I-95

CONTRACT	BRIDGE NO.	1-714 /1-714A
T201507402	DESIGNED BY: T. SINGLE	
COUNTY		
NEW CASTLE	CHECKED BY: D. SEMPLE	

CONSTRUCTION PLAN

CP-01
SECTION AEC
SHEET NO. 12

9/19/2019
4:45:16 PM
P:\60323054 DelDOT AGR 1672 BDS\T06 - Rehab Br. 1-714\900 WORK\910 CAD\20-SHEETS\100_Construction Plans\CP01.dgn

NOTES:

1. CONTRACTOR SHALL FIELD LOCATE GUARDRAIL POSTS SO AS TO NOT IMPACT PROPOSED DRAINAGE PIPES. ANY ADJUSTMENTS TO THE GUARDRAIL POST SPACING REQUIRED TO SPAN THE PROPOSED DRAINAGE PIPES SHALL BE PAID FOR UNDER ITEM 720024.
2. THE STATE'S CONTRACTOR TO BRING THE CONDUIT TO PROPOSED POLE. THE CONDUITS SHALL BE BROUGHT UP TO GRADE WITH A 90 DEGREE BEND TO 1 FOOT ABOVE FINISHED GRADE. CAP OR PLUG CONDUIT. DUCT TAPE WILL NOT BE ACCEPTABLE.

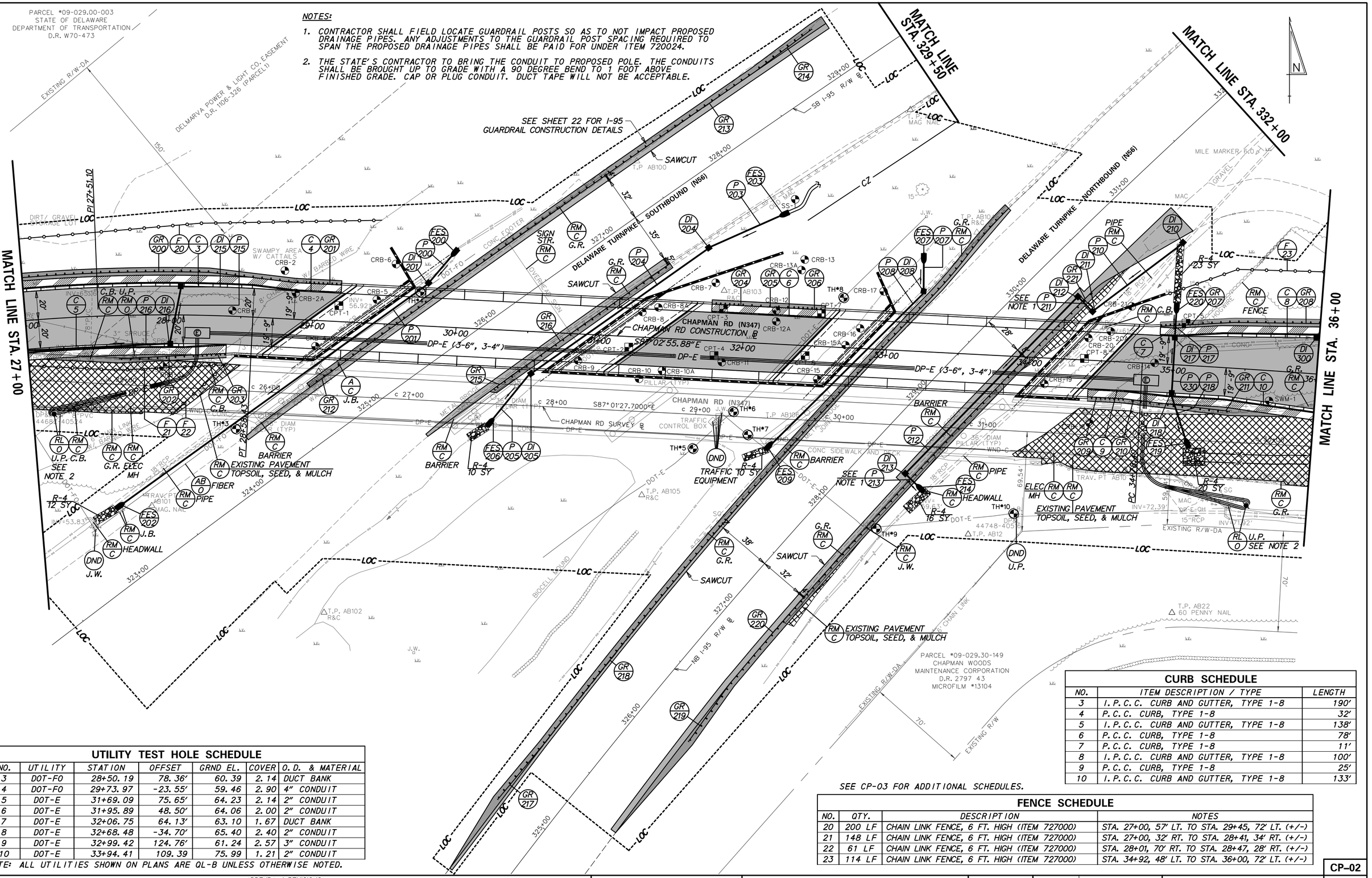

UTILITY TEST HOLE SCHEDULE

NO.	UTILITY	STATION	OFFSET	GRND EL.	COVER	O.D. & MATERIAL
3	DOT-FO	28+50.19	78.36'	60.39	2.14	DUCT BANK
4	DOT-FO	29+73.97	-23.55'	59.46	2.90	4" CONDUIT
5	DOT-E	31+69.09	75.65'	64.23	2.14	2" CONDUIT
6	DOT-E	31+95.89	48.50'	64.06	2.00	2" CONDUIT
7	DOT-E	32+06.75	64.13'	63.10	1.67	DUCT BANK
8	DOT-E	32+68.48	-34.70'	65.40	2.40	2" CONDUIT
9	DOT-E	32+99.42	124.76'	61.24	2.57	3" CONDUIT
10	DOT-E	33+94.41	109.39	75.99	1.21	2" CONDUIT

NOTE: ALL UTILITIES SHOWN ON PLANS ARE QL-B UNLESS OTHERWISE NOTED.

CURB SCHEDULE

NO.	ITEM DESCRIPTION / TYPE	LENGTH
3	I.P.C.C. CURB AND GUTTER, TYPE 1-8	190'
4	P.C.C. CURB, TYPE 1-8	32'
5	I.P.C.C. CURB AND GUTTER, TYPE 1-8	138'
6	P.C.C. CURB, TYPE 1-8	78'
7	P.C.C. CURB, TYPE 1-8	11'
8	I.P.C.C. CURB AND GUTTER, TYPE 1-8	100'
9	P.C.C. CURB, TYPE 1-8	25'
10	I.P.C.C. CURB AND GUTTER, TYPE 1-8	133'

SEE CP-03 FOR ADDITIONAL SCHEDULES.

FENCE SCHEDULE

NO.	QTY.	DESCRIPTION	NOTES
20	200 LF	CHAIN LINK FENCE, 6 FT. HIGH (ITEM 727000)	STA. 27+00, 57' LT. TO STA. 29+45, 72' LT. (+/-)
21	148 LF	CHAIN LINK FENCE, 6 FT. HIGH (ITEM 727000)	STA. 27+00, 32' RT. TO STA. 28+41, 34' RT. (+/-)
22	61 LF	CHAIN LINK FENCE, 6 FT. HIGH (ITEM 727000)	STA. 28+01, 70' RT. TO STA. 28+47, 28' RT. (+/-)
23	114 LF	CHAIN LINK FENCE, 6 FT. HIGH (ITEM 727000)	STA. 34+92, 48' LT. TO STA. 36+00, 72' LT. (+/-)

ADDENDA / REVISIONS

SCALE 0 30 60 90 FEET

BR 1-714 ON CHAPMAN ROAD OVER I-95

CONTRACT	BRIDGE NO.	1-714 /1-714A
T201507402	DESIGNED BY: T. SINGLE	
COUNTY		
NEW CASTLE	CHECKED BY: D. SEMPLE	

CONSTRUCTION PLAN

CP-02

SECTION: AEC

SHEET NO. 13

8/16/2019
2:48:52 PM
P:\60323054 DelDOT AGR 1672 BDS\T06 - Rehab Br. 1-714\900 WORK\910 CAD\20-SHEETS\100_Construction Plans\CP02.dgn

DRAINAGE PIPE SCHEDULE

NO.	SIZE / TYPE	CLASS	LENGTH	SLOPE	INT. EL.	DIS. EL.
200	24" RCP	V	25.00	0.0246	58.72	58.11
201	24" RCP	V	262.00	0.0035	58.11	57.19
203	24" RCP	V	55.00	0.0553	61.67	58.63
204	24" RCP	V	149.00	0.0032	58.63	58.15
205	24" RCP	V	41.00	0.0033	58.15	58.02
207	18" RCP	V	20.00	0.0041	63.98	63.89
208	18" RCP	V	149.00	0.0037	63.89	63.34
210	18" RCP	V	77.00	0.0101	62.38	61.61
211	18" RCP	V	11.00	0.0098	61.60	61.50
212	14"X23" RCP	V	168.00	0.0098	61.50	59.85
213	14"X23" RCP	V	11.00	0.0130	59.85	59.71
215	18" RCP	IV	38.00	0.0450	75.47	73.76
216	18" RCP	IV	120.00	0.0450	73.56	68.16
217	18" RCP	IV	18.00	0.0140	79.00	78.74
218	18" RCP	IV	33.00	0.0145	76.57	76.09
230	18" RCP	IV	37.00	0.0050	80.69	80.52

FLARED END SECTION SCHEDULE

NO.	SIZE / TYPE	SLOPE	SAFETY GRATE
200	24" RCP	0.0246	NO
202	24" RCP	0.0035	NO
203	24" RCP	0.0553	NO
206	24" RCP	0.0033	NO
207	18" RCP	0.0041	NO
209	18" RCP	0.0037	NO
214	14" X 23" RCP	0.0130	NO
219	18" RCP	0.0145	NO
220	18" RCP	0.0140	NO

GUARDRAIL SCHEDULE

NO.	ITEM DESCRIPTION / TYPE	BEGIN STA.	OFFSET	LENGTH
301	GUARDRAIL END TREATMENT, TYPE 1-31	331+00.00 SB	48.00'	50.00'
302	END ANCHORAGE 31	333+50.00 SB	48.00'	12.50'

DRAINAGE INLET SCHEDULE

NO.	STATION	OFFSET	BOX SIZE	GRATE	T.G. EL.	INV. EL.
201	325+83.04 SB	-46.32	48" x 30"	2	61.80	58.11
204	327+55.73 SB	46.59	48" x 30"	2	62.30	58.63
205	326+03.86 SB	46.73	48" x 30"	2	61.85	58.15
208	329+52.95 NB	-47.35	48" x 30"	2	67.05	63.89
210	331+05.69 NB	55.40	48" x 30"	2	65.55	62.38
211	330+26.05 NB	46.08	48" x 30"	2	64.85	61.61
212	330+25.62 NB	31.98	48" x 48"	1	65.00	61.50
213	328+52.52 NB	31.19	48" x 48"	1	62.78	59.85
215	28+08.00	*	34" x 24"	1	**	75.47
216	28+01.00	*	48" x 30"	1	**	73.56
217	35+00.00	*	34" x 24"	1	**	79.00
218	35+00.00	*	34" x 24"	1	**	76.57
300	35+98.00	*	34" x 24"	1	79.02	73.12

*MATCH PROPOSED CURBLINE
** MATCH FLOWLINE OF PROPOSED CURB & GUTTER
*** TRASH RACK SEE SWM DETAILS

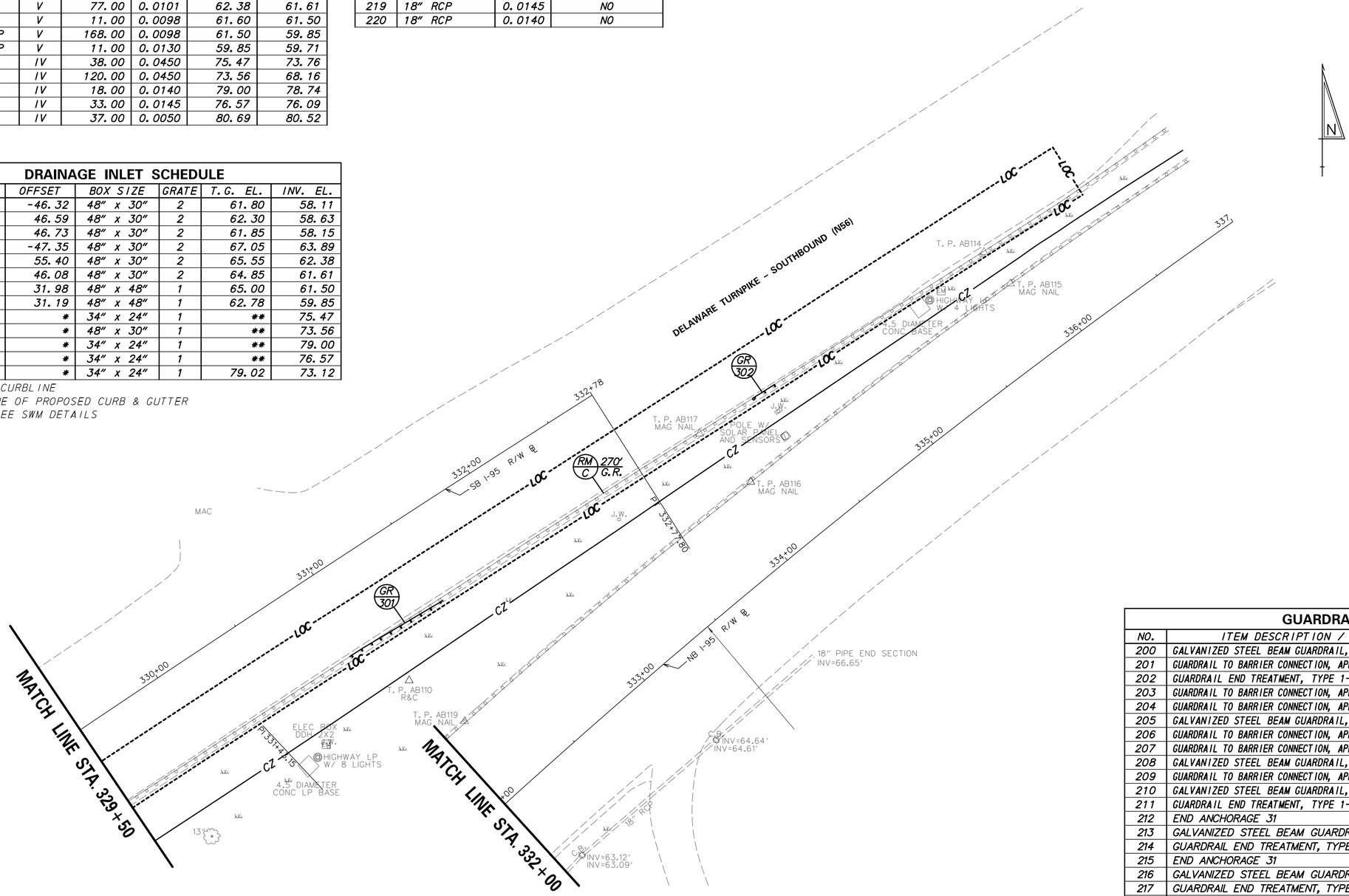

GUARDRAIL SCHEDULE (CP-02)

NO.	ITEM DESCRIPTION / TYPE	BEGIN STA.	OFFSET	LENGTH
200	GALVANIZED STEEL BEAM GUARDRAIL, TYPE 1-31	27+00.00	-30.00'	199.00'
201	GUARDRAIL TO BARRIER CONNECTION, APPROACH TYPE 2-31	28+94.54	-25.50'	25.00'
202	GUARDRAIL END TREATMENT, TYPE 1-31	27+64.42	29.44'	50.00'
203	GUARDRAIL TO BARRIER CONNECTION, APPROACH TYPE 2-31	28+15.64	27.84	25.00'
204	GUARDRAIL TO BARRIER CONNECTION, APPROACH TYPE 2-31	31+77.49	-25.50'	25.00'
205	GALVANIZED STEEL BEAM GUARDRAIL, TYPE 1-31	32+01.65	-25.50'	30.00'
206	GUARDRAIL TO BARRIER CONNECTION, APPROACH TYPE 2-31	32+31.48	-25.50'	25.00'
207	GUARDRAIL TO BARRIER CONNECTION, APPROACH TYPE 2-31	34+89.71	-26.14'	25.00'
208	GALVANIZED STEEL BEAM GUARDRAIL, TYPE 1-31	35+13.88	-28.80'	87.00'
209	GUARDRAIL TO BARRIER CONNECTION, APPROACH TYPE 2-31	34+41.54	25.50'	25.00'
210	GALVANIZED STEEL BEAM GUARDRAIL, TYPE 1-31	34+66.01	25.50'	25.00'
211	GUARDRAIL END TREATMENT, TYPE 1-31	34+90.99	27.15'	50.00'
212	END ANCHORAGE 31	324+80.00 SB	-36.00'	12.50'
213	GALVANIZED STEEL BEAM GUARDRAIL, TYPE 1-31	324+92.46 SB	-36.00'	350.00'
214	GUARDRAIL END TREATMENT, TYPE 1-31	328+51.51 SB	-36.00'	50.00'
215	END ANCHORAGE 31	325+77.21 SB	40.00'	12.50'
216	GALVANIZED STEEL BEAM GUARDRAIL, TYPE 1-31	325+89.75 SB	40.00'	137.50'
217	GUARDRAIL END TREATMENT, TYPE 1-31	324+96.17 NB	-38.90'	50.00'
218	GALVANIZED STEEL BEAM GUARDRAIL, TYPE 1-31	325+45.94 NB	-37.43'	494.00'
219	GUARDRAIL END TREATMENT, TYPE 1-31	326+10.51 NB	39.82'	50.00'
220	GALVANIZED STEEL BEAM GUARDRAIL, TYPE 1-31	326+61.15 NB	36.00'	355.00'
221	END ANCHORAGE 31	330+20.44 NB	36.00'	12.50'

CP-03

ADDENDA / REVISIONS

SCALE 0 30 60 90 FEET

BR 1-714 ON CHAPMAN ROAD OVER I-95

CONTRACT	BRIDGE NO. 1-714 /1-714A
T201507402	DESIGNED BY: T. SINGLE
COUNTY	
NEW CASTLE	CHECKED BY: D. SEMPLE

CONSTRUCTION PLAN

SECTION: AEC
SHEET NO. 14

8/7/2019
2:06:26 PM
P:\60323054 DelDOT AGR 1672 BDS\T06 - Rehab Br. I-714\900 WORK\910 CAD\20-SHEETS\100_Construction Plans\CP03.dgn

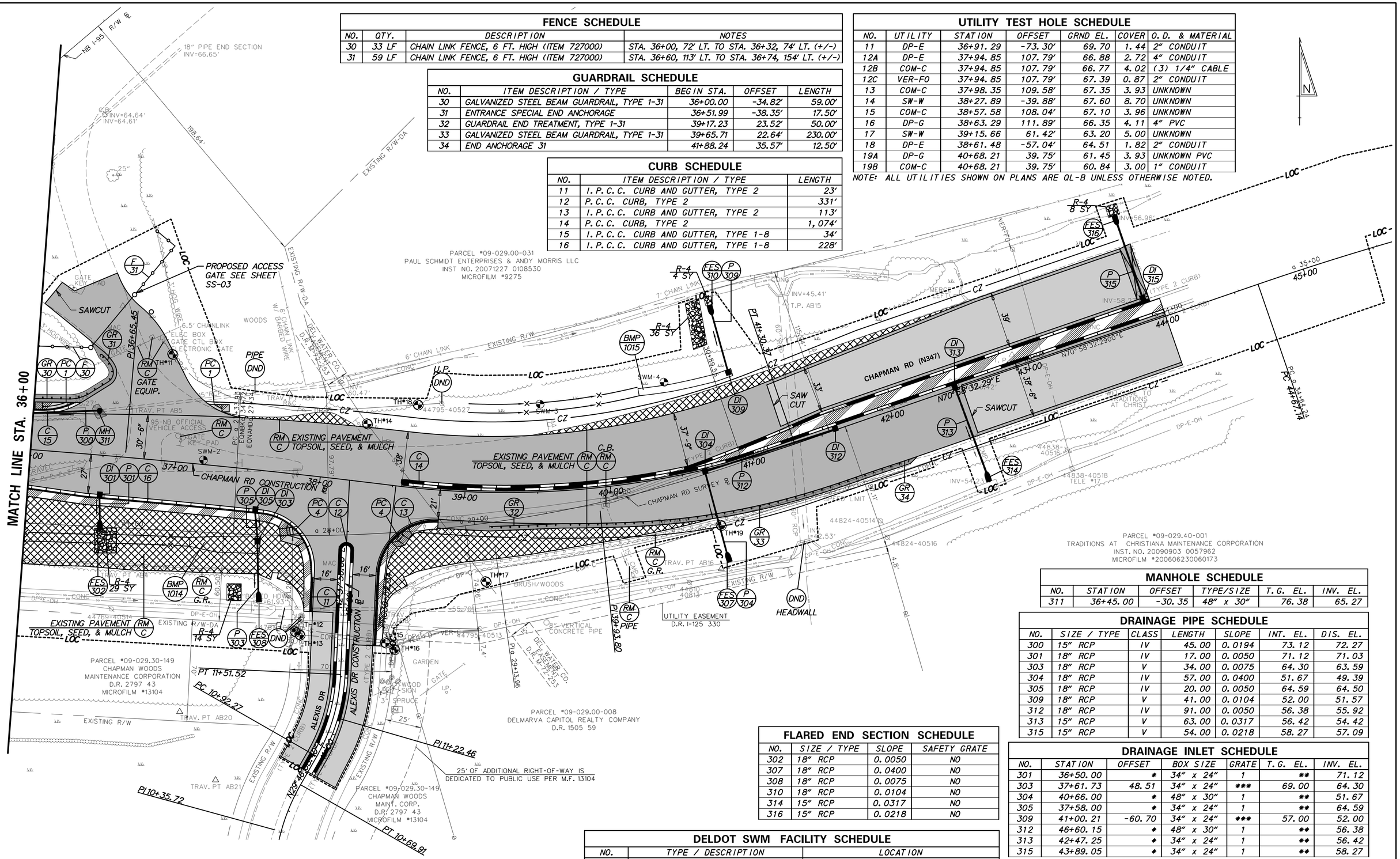

FENCE SCHEDULE

NO.	QTY.	DESCRIPTION	NOTES
30	33 LF	CHAIN LINK FENCE, 6 FT. HIGH (ITEM 727000)	STA. 36+00, 72' LT. TO STA. 36+32, 74' LT. (+/-)
31	59 LF	CHAIN LINK FENCE, 6 FT. HIGH (ITEM 727000)	STA. 36+60, 113' LT. TO STA. 36+74, 154' LT. (+/-)

GUARDRAIL SCHEDULE

NO.	ITEM DESCRIPTION / TYPE	BEGIN STA.	OFFSET	LENGTH
30	GALVANIZED STEEL BEAM GUARDRAIL, TYPE 1-31	36+00.00	-34.82'	59.00'
31	ENTRANCE SPECIAL END ANCHORAGE	36+51.99	-38.35'	17.50'
32	GUARDRAIL END TREATMENT, TYPE 1-31	39+17.23	23.52'	50.00'
33	GALVANIZED STEEL BEAM GUARDRAIL, TYPE 1-31	39+65.71	22.64'	230.00'
34	END ANCHORAGE 31	41+88.24	35.57'	12.50'

CURB SCHEDULE

NO.	ITEM DESCRIPTION / TYPE	LENGTH
11	I.P.C.C. CURB AND GUTTER, TYPE 2	23'
12	P.C.C. CURB, TYPE 2	331'
13	I.P.C.C. CURB AND GUTTER, TYPE 2	113'
14	P.C.C. CURB, TYPE 2	1,074'
15	I.P.C.C. CURB AND GUTTER, TYPE 1-8	34'
16	I.P.C.C. CURB AND GUTTER, TYPE 1-8	228'

UTILITY TEST HOLE SCHEDULE

NO.	UTILITY	STATION	OFFSET	GRND EL.	COVER	O.D. & MATERIAL
11	DP-E	36+91.29	-73.30'	69.70	1.44	2" CONDUIT
12A	DP-E	37+94.85	107.79'	66.88	2.72	4" CONDUIT
12B	COM-C	37+94.85	107.79'	66.77	4.02	(3) 1/4" CABLE
12C	VER-FO	37+94.85	107.79'	67.39	0.87	2" CONDUIT
13	COM-C	37+98.35	109.58'	67.35	3.93	UNKNOWN
14	SW-W	38+27.89	-39.88'	67.60	8.70	UNKNOWN
15	COM-C	38+57.58	108.04'	67.10	3.96	UNKNOWN
16	DP-G	38+63.29	111.89'	66.35	4.11	4" PVC
17	SW-W	39+15.66	61.42'	63.20	5.00	UNKNOWN
18	DP-E	38+61.48	-57.04'	64.51	1.82	2" CONDUIT
19A	DP-G	40+68.21	39.75'	61.45	3.93	UNKNOWN PVC
19B	COM-C	40+68.21	39.75'	60.84	3.00	1" CONDUIT

NOTE: ALL UTILITIES SHOWN ON PLANS ARE QL-B UNLESS OTHERWISE NOTED.

MANHOLE SCHEDULE

NO.	STATION	OFFSET	TYPE/SIZE	T.G. EL.	INV. EL.
311	36+45.00	-30.35	48" x 30"	76.38	65.27

DRAINAGE PIPE SCHEDULE

NO.	SIZE / TYPE	CLASS	LENGTH	SLOPE	INT. EL.	DIS. EL.
300	15" RCP	IV	45.00	0.0194	73.12	72.27
301	18" RCP	IV	17.00	0.0050	71.12	71.03
303	18" RCP	V	34.00	0.0075	64.30	63.59
304	18" RCP	IV	57.00	0.0400	51.67	49.39
305	18" RCP	IV	20.00	0.0050	64.59	64.50
309	18" RCP	V	41.00	0.0104	52.00	51.57
312	18" RCP	IV	91.00	0.0050	56.38	55.92
313	15" RCP	V	63.00	0.0317	56.42	54.42
315	15" RCP	V	54.00	0.0218	58.27	57.09

FLARED END SECTION SCHEDULE

NO.	SIZE / TYPE	SLOPE	SAFETY GRATE
302	18" RCP	0.0050	NO
307	18" RCP	0.0400	NO
308	18" RCP	0.0075	NO
310	18" RCP	0.0104	NO
314	15" RCP	0.0317	NO
316	15" RCP	0.0218	NO

DRAINAGE INLET SCHEDULE

NO.	STATION	OFFSET	BOX SIZE	GRATE	T.G. EL.	INV. EL.
301	36+50.00	*	34" x 24"	1	**	71.12
303	37+61.73	48.51	34" x 24"	***	69.00	64.30
304	40+66.00	*	48" x 30"	1	**	51.67
305	37+58.00	*	34" x 24"	1	**	64.59
309	41+00.21	-60.70	34" x 24"	***	57.00	52.00
312	46+60.15	*	48" x 30"	1	**	56.38
313	42+47.25	*	34" x 24"	1	**	56.42
315	43+89.05	*	34" x 24"	1	**	58.27

*MATCH PROPOSED CURBLINE
**MATCH FLOWLINE OF PROPOSED CURB & GUTTER
***TRASH RACK SEE SWM DETAILS

DELDOT SWM FACILITY SCHEDULE

NO.	TYPE / DESCRIPTION	LOCATION
1014	BIORETENTION AREA	STA. 37+17, 53' TO STA. 37+65, 51'
1015	BIORETENTION AREA	STA. 40+32, -61' TO STA. 41+03, -61'

ADDENDA / REVISIONS

SCALE 0 30 60 90 FEET

BR 1-714 ON CHAPMAN ROAD OVER I-95

CONTRACT	BRIDGE NO.	1-714 /1-714A
T201507402	DESIGNED BY: T. SINGLE	
COUNTY		
NEW CASTLE	CHECKED BY: D. SEMPLE	

CONSTRUCTION PLAN

CP-04

SECTION AEC

SHEET NO. 15

8/13/2019
10:09:09 AM
P:\160323054 DelDOT AGR 1672 BDS\T06 - Rehab Br. 1-714\900 WORK\910 CAD\20-SHEETS\100_Construction Plans\CP04.dgn

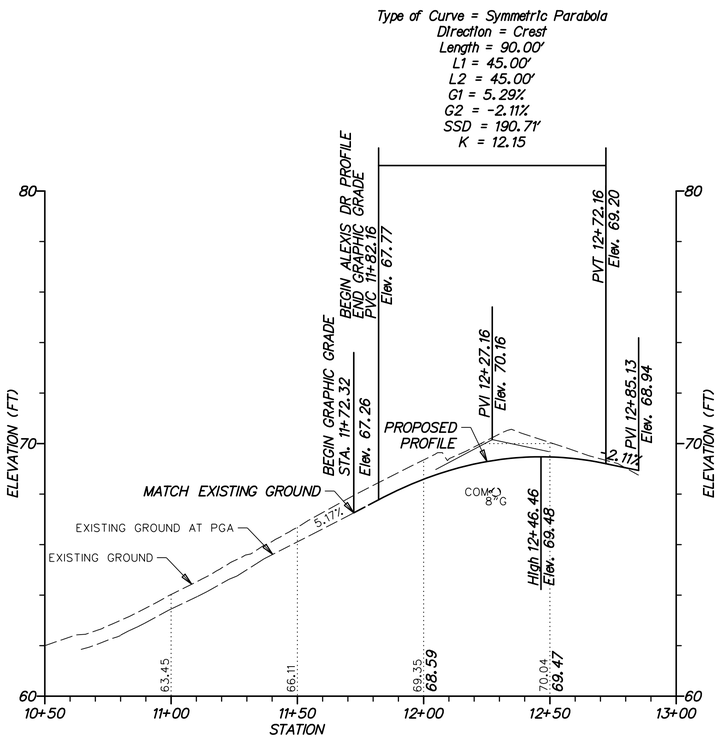

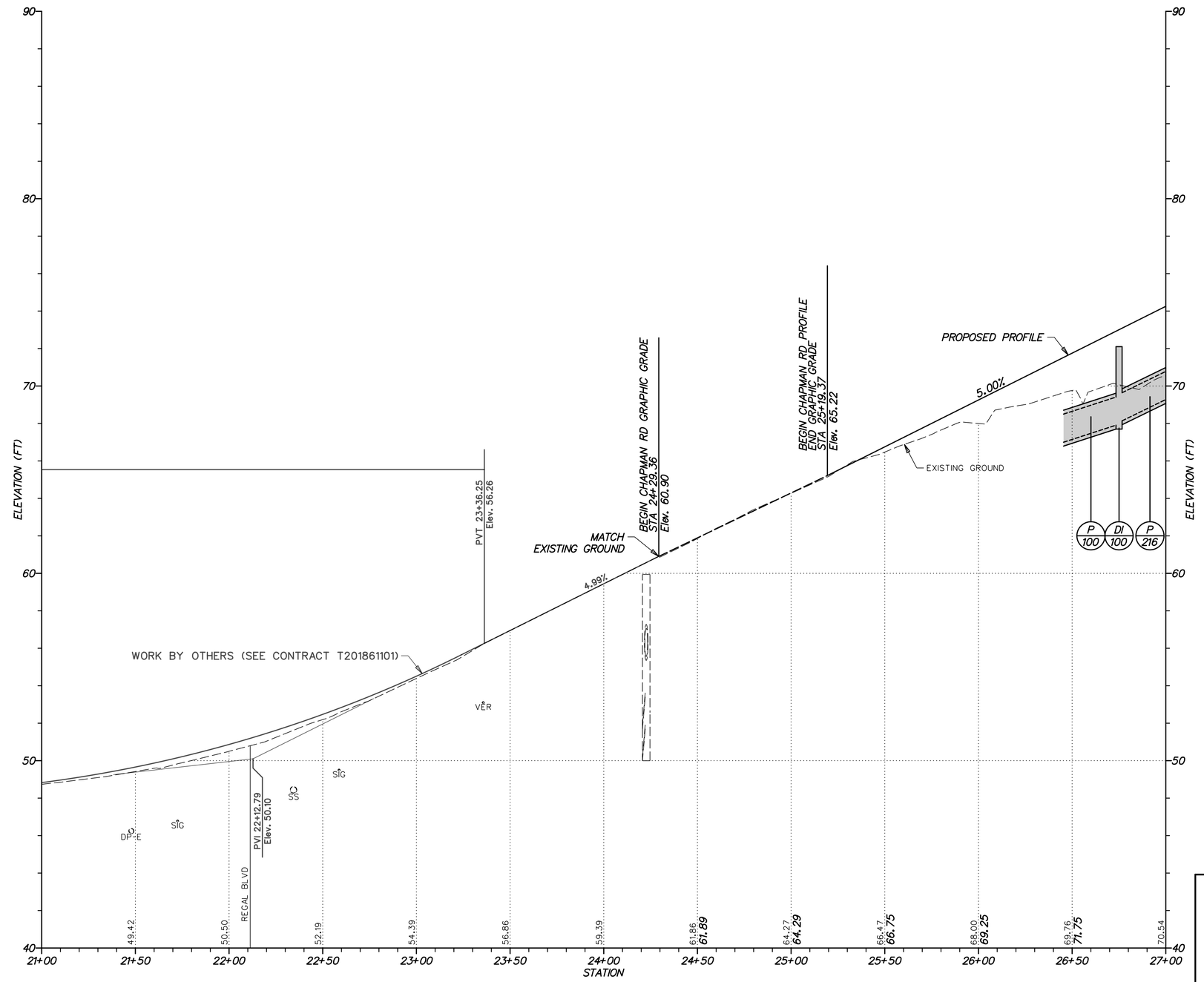

VERTICAL SCALE FEET 0 3 6 9

ADDENDA / REVISIONS	

SCALE 0 30 60 90 FEET

BR 1-714 ON CHAPMAN ROAD OVER I-95

CONTRACT	BRIDGE NO.	1-714 /1-714A
T201507402	DESIGNED BY: T. SINGLE	
COUNTY		
NEW CASTLE	CHECKED BY: D. SEMPLE	

PROFILES

SECTION AEC

SHEET NO. 16

8/7/2019
2:09 PM
P:\60323054 DelDOT AGR 1672 BDS\T06 - Rehab Br. 1-714\900 WORK\910 CAD\20-SHEETS\100_Construction Plans\PF01.dgn

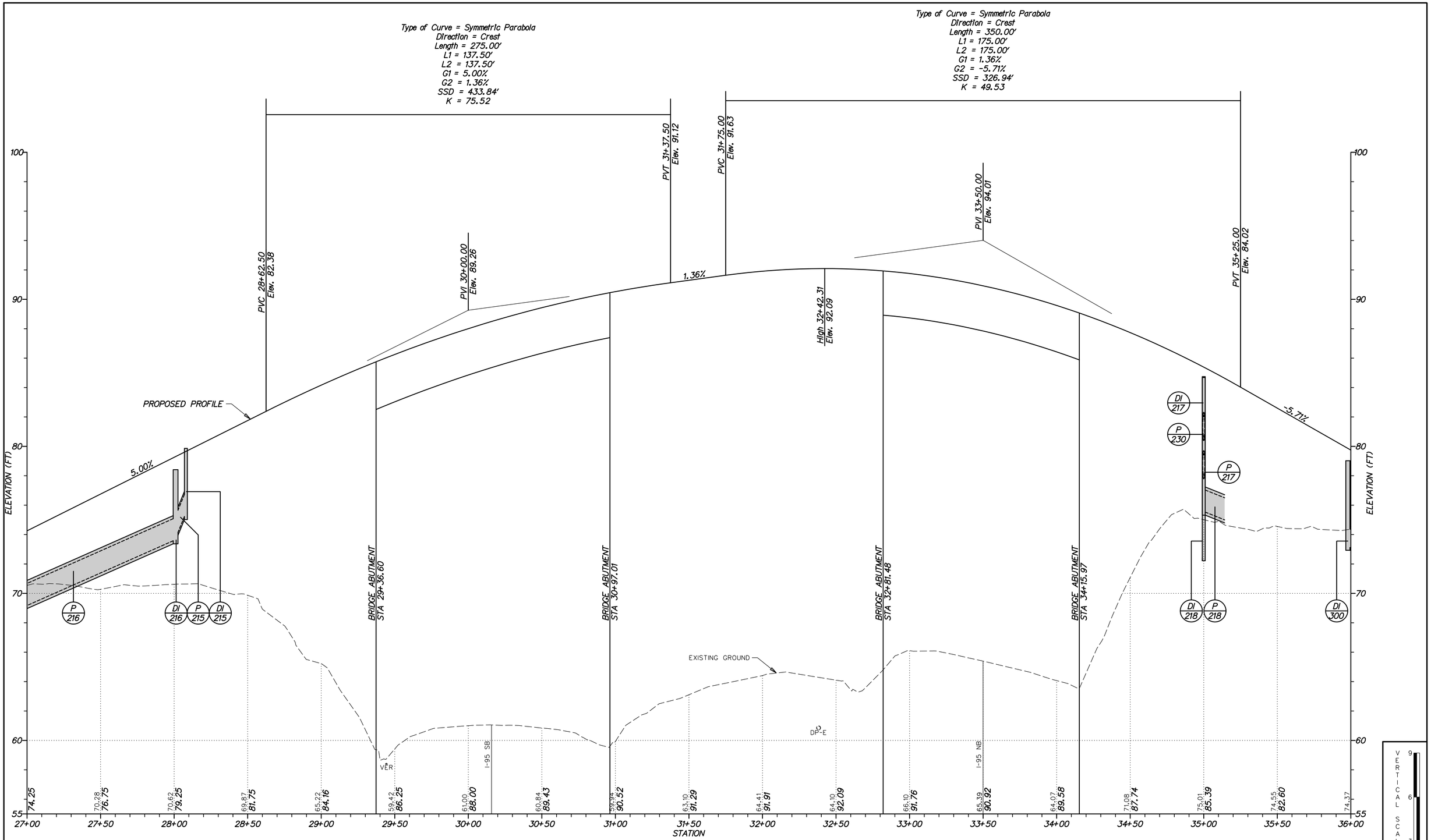

CHAPMAN ROAD

ADDENDA / REVISIONS	

SCALE
0 30 60 90
FEET

BR 1-714 ON
CHAPMAN ROAD OVER I-95

CONTRACT	BRIDGE NO.	1-714 /1-714A
T201507402	DESIGNED BY: T. SINGLE	
COUNTY	CHECKED BY: D. SEMPLE	
NEW CASTLE		

PROFILES

SECTION
AEC
SHEET NO.
17

8/7/2019
2:57:01 PM
PW:\60322054 DelDOT AGR 1672 BDS\T06 - Rehab Br. 1-714\900 WORK\910 CAD\20-SHEETS\100_Construction Plans\PF02.dgn

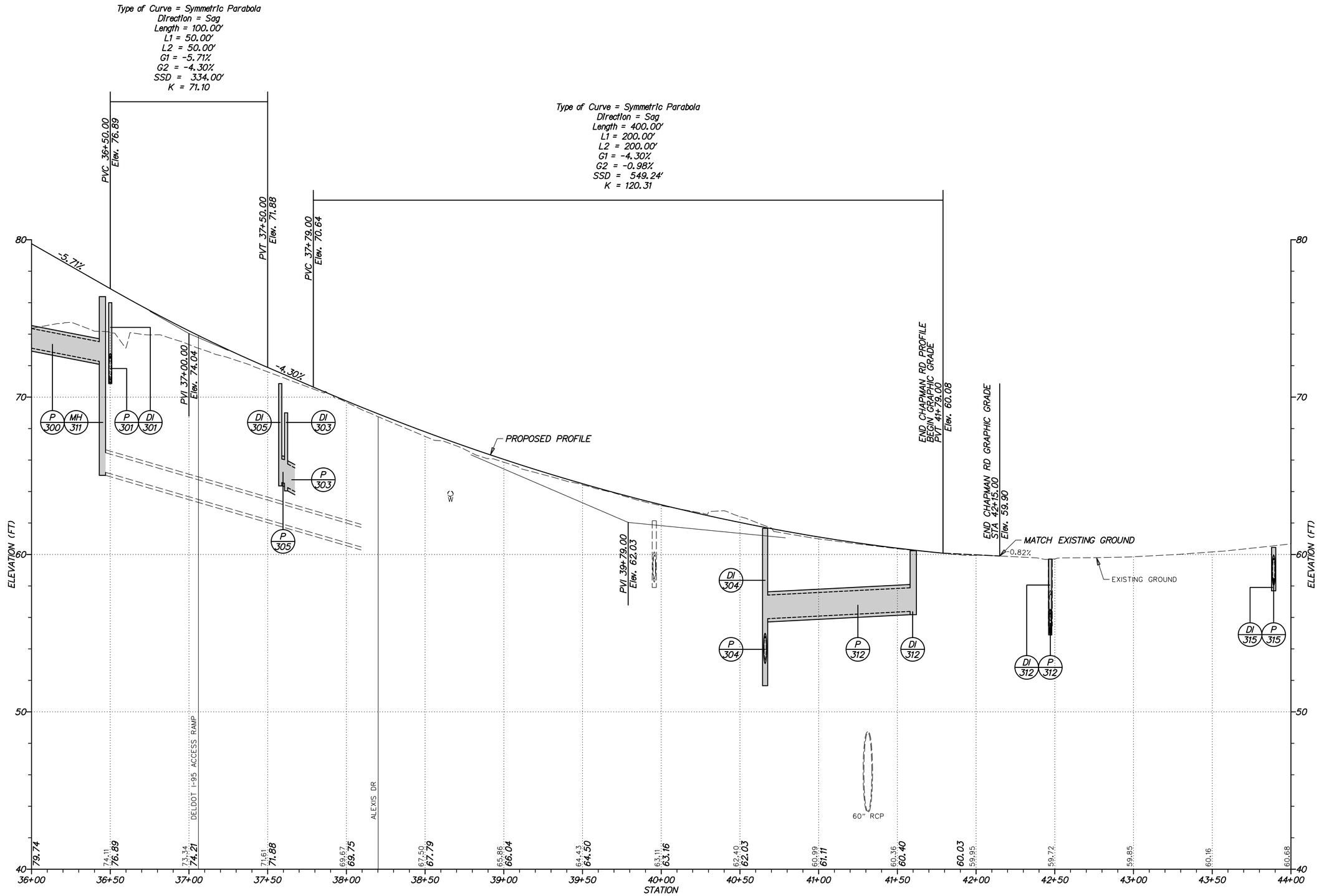

CHAPMAN ROAD

ADDENDA / REVISIONS	

SCALE
0 30 60 90
FEET

BR 1-714 ON CHAPMAN ROAD OVER I-95

CONTRACT	BRIDGE NO.	1-714 /1-714A
T201507402	DESIGNED BY: T. SINGLE	
COUNTY	CHECKED BY: D. SEMPLE	
NEW CASTLE		

PROFILES

SECTION
AEC
SHEET NO.
18

8/7/2019
2:10:00 PM
P:\60352.5054 DelDOT AGR 1672 BDS\T06 - Rehab Br. 1-714\900 WORK\910 CAD\20-SHEETS\100_Construction Plans\PF03.dgn

COORDINATE LIST

POINT NO.	STATION	OFFSET	NORTHING	EASTING
80100	22+75.06	-56.29	607070.7292	579476.2077
80101	22+65.58	-35.83	607049.7458	579467.9524
80102	22+50.00	-32.00	607044.9929	579452.6322
80103	22+50.00	12.00	607001.0707	579455.2481
80104	22+57.85	25.85	606987.7137	579463.9043
80105	24+28.00	-38.86	607064.4919	579628.6469
80106	24+50.00	-38.18	607065.7909	579650.4566
80107	24+93.20	-40.44	607072.1704	579692.9166
80108	25+48.80	-40.09	607077.6567	579747.8092
80109	25+50.00	-24.95	607062.7442	579750.6827
80110	26+00.39	-35.11	607078.6607	579799.2662
80111	26+07.90	-21.62	607066.1768	579808.3177
80112	26+53.35	-20.00	607070.2743	579853.6422
80113	24+27.00	20.00	607005.7766	579632.8330
80114	26+43.18	20.00	607029.3188	579848.5464

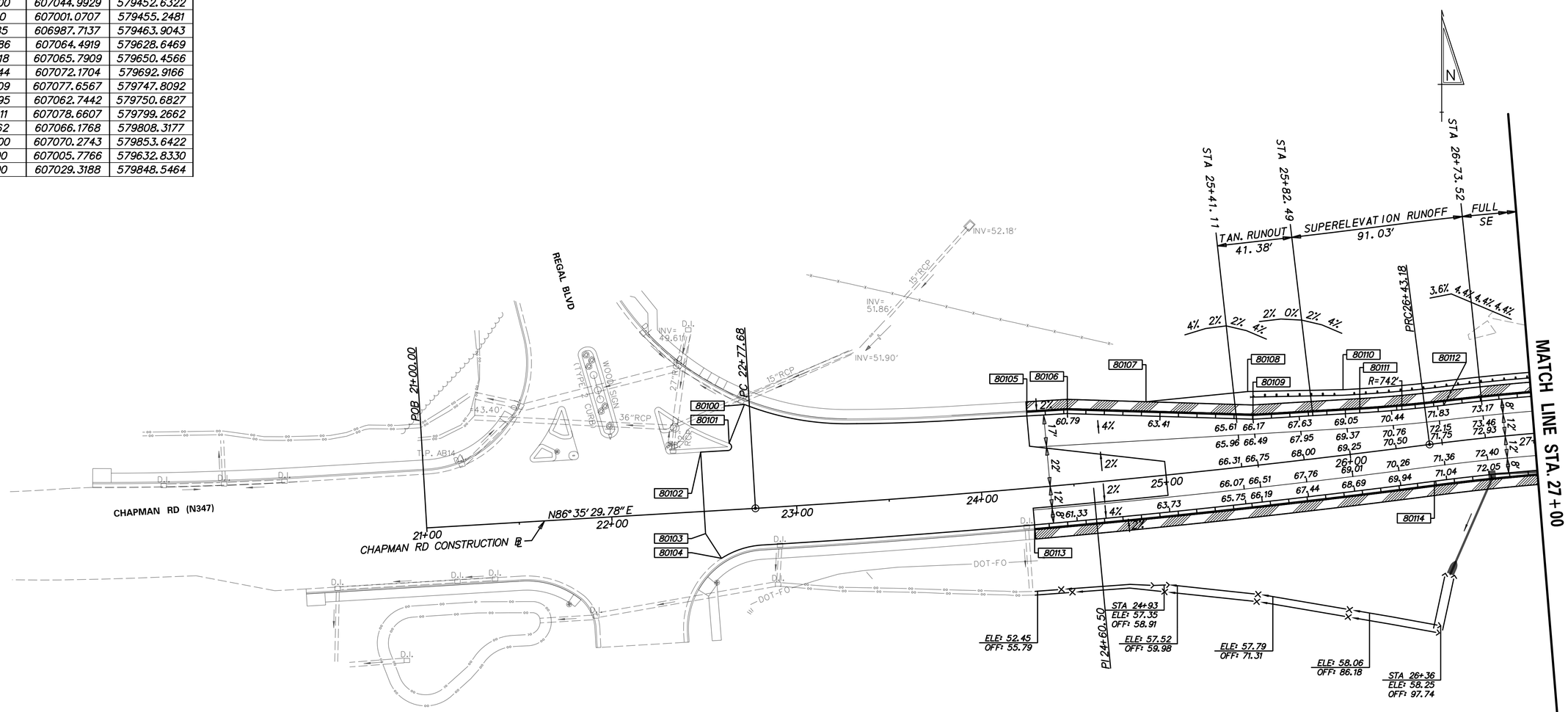

ADDENDA / REVISIONS	

SCALE
0 30 60 90
FEET

BR 1-714 ON CHAPMAN ROAD OVER I-95

CONTRACT	BRIDGE NO.	1-714 /1-714A
T201507402	DESIGNED BY: T. SINGLE	
COUNTY		
NEW CASTLE	CHECKED BY: D. SEMPLE	

GRADES AND GEOMETRICS

GG-01
SECTION
AEC
SHEET NO.
19

8/7/2019
2:09:03 PM
P:\60325054 DelDOT AGR 1672 BDS\T06 - Rehab Br. 1-714\900 WORK\910 CAD\20-SHEETS\100_Construction Plans\GG01.dgn

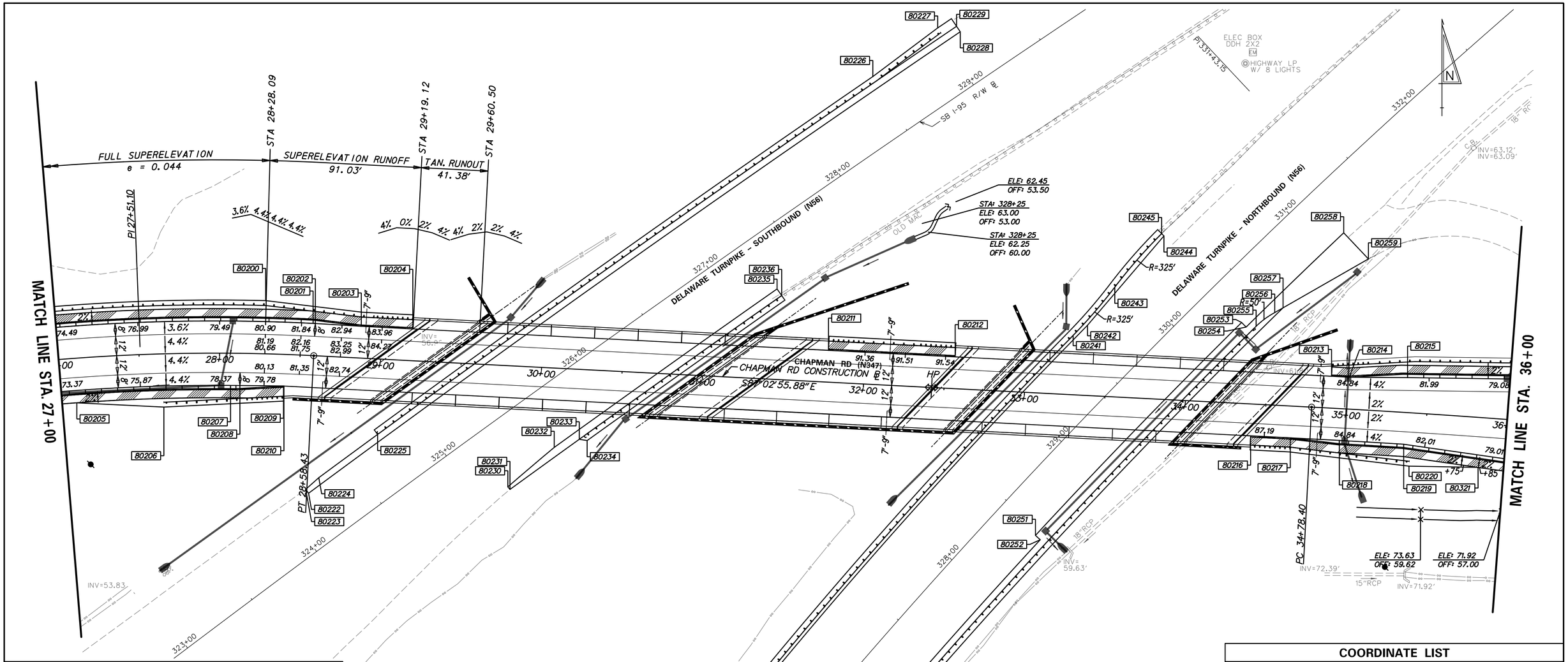

COORDINATE LIST

POINT NO.	STATION	OFFSET	NORTHING	EASTING
80200	28+27.76	-33.00	607091.6917	580030.9601
80201	28+57.02	-20.00	607077.5650	580060.3536
80202	28+58.43	-20.00	607077.4919	580061.7880
80203	28+87.00	-19.75	607075.7716	580090.3017
80204	29+18.98	-19.75	607074.1250	580122.2425
80205	27+09.33	27.67	607028.2669	579913.8002
80206	27+64.51	33.06	607025.6018	579967.7714
80207	28+06.95	20.00	607039.0569	580009.1380
80208	28+12.87	20.00	607038.9943	580014.9631
80209	28+40.37	19.62	607038.7091	580042.0060
80210	28+40.67	19.62	607038.6940	580042.2979
80211	31+77.22	-19.75	607060.8298	580380.1365
80212	32+55.92	-19.75	607056.7779	580458.7335
80213	34+89.72	-19.76	607044.7383	580692.2740
80214	35+00.74	-19.80	607044.1689	580703.3187
80215	35+36.69	-21.68	607043.9123	580739.4579
80216	34+41.54	19.75	607007.7735	580642.0795
80217	34+66.17	19.75	607006.5054	580666.6765
80218	34+96.72	19.75	607004.9043	580697.1144
80219	35+36.87	19.75	607002.5517	580737.0440
80220	35+41.01	33.11	606988.9587	580740.3136
80221	34+84.11	31.00	606988.1695	580783.1877
80222	324+17.48 SB	-32.00	606972.1161	580057.5524
80223	324+17.48 SB	-35.00	606974.5275	580055.7677

COORDINATE LIST

POINT NO.	STATION	OFFSET	NORTHING	EASTING
80224	324+28.29 SB	-36.00	606981.7818	580063.8964
80225	324+73.47 SB	-36.00	607008.6356	580100.3910
80226	328+51.44 SB	-39.50	607230.7787	580407.6643
80227	329+01.53 SB	-41.75	607260.9765	580447.9051
80228	329+11.77 SB	-31.92	607258.6056	580461.9242
80229	329+11.76 SB	-36.00	607261.9765	580459.6241
80230	325+19.52 SB	37.95	606976.0615	580181.1860
80231	325+19.71 SB	40.00	606974.5084	580182.5410
80232	325+57.32 SB	35.00	607000.5615	580209.9733
80233	325+72.95 SB	40.00	607005.6170	580225.5300
80234	325+76.46 SB	43.50	607004.8062	580230.4146
80235	327+27.51 SB	35.00	607098.9385	580348.2386

COORDINATE LIST

POINT NO.	STATION	OFFSET	NORTHING	EASTING
80236	327+27.51 SB	40.00	607094.8440	580351.1083
80237	324+38.53 NB	-34.36	606672.5740	580199.4014
80238	324+38.54 NB	-36.36	606673.7921	580197.8152
80239	324+96.06 NB	-42.41	606723.6256	580228.2369
80240	325+45.96 NB	-40.93	606762.3867	580260.5176
80241	329+52.38 NB	-40.52	607070.1331	580531.9589
80242	329+62.97 NB	-38.53	607076.3957	580540.8581
80243	329+91.40 NB	-43.10	607100.0474	580557.7705
80244	330+35.02 NB	-44.11	607131.8821	580588.2935
80245	330+35.00 NB	-46.11	607133.2955	580586.8785
80246	325+28.50 NB	36.03	606700.9424	580310.0418
80247	325+28.62 NB	40.03	606698.5622	580313.2566
80248	326+10.58 NB	43.36	606759.6892	580366.6724
80249	326+60.69 NB	32.08	606805.0662	580389.7373
80250	326+61.20 NB	39.58	606800.6224	580395.8028
80251	328+46.36 NB	28.00	606945.9528	580508.5837
80252	328+46.36 NB	32.00	606943.2381	580511.5214
80253	330+31.60 NB	28.00	607078.1294	580636.4892
80254	330+31.60 NB	32.00	607075.2824	580639.2989
80255	330+36.41 NB	36.00	607075.7825	580645.5042
80256	330+50.71 NB	38.00	607084.2770	580657.0187
80257	330+56.57 NB	39.50	607087.2561	580662.2180
80258	331+16.46 NB	32.00	607133.7805	580699.8375
80259	331+16.46 NB	54.29	607117.5888	580715.1566

ADDENDA / REVISIONS

SCALE
0 30 60 90
FEET

BR 1-714 ON CHAPMAN ROAD OVER I-95

CONTRACT	BRIDGE NO.	1-714 /1-714A
T201507402	DESIGNED BY: T. SINGLE	
COUNTY		
NEW CASTLE	CHECKED BY: D. SEMPLE	

GRADES AND GEOMETRICS

GG-02

SECTION: AEC

SHEET NO. 20

8/15/2019
2:09:19 PM
P:\6032.3054 DelDOT AGR 1672 BDS\T06 - Rehab Br. 1-714\900 WORK\910 CAD\20-SHEETS\100_Construction Plans\GG02.dgn

COORDINATE LIST

POINT NO.	STATION	OFFSET	NORTHING	EASTING
80300	36+06.15	-25.54	607042.9323	580809.3335
80301	36+03.10	-75.45	607092.9273	580810.0347
80302	36+32.06	-34.90	607050.2250	580836.0446
80303	36+19.78	-28.37	607044.6928	580823.2039
80304	36+50.55	-48.79	607062.4638	580855.7538
80305	36+44.64	-56.75	607070.9590	580850.4785
80306	36+53.06	-61.98	607075.4569	580859.4090
80307	36+27.79	-46.33	607061.9623	580832.6154
80308	36+44.75	-70.90	607085.0526	580851.7684
80309	36+02.34	-100.98	607118.3615	580811.1738
80310	36+12.84	-116.29	607132.8995	580823.0310
80311	36+21.50	-111.01	607126.9395	580831.4416
80312	36+49.30	-125.69	607139.2589	580860.9751

COORDINATE LIST

POINT NO.	STATION	OFFSET	NORTHING	EASTING
80313	36+51.12	-122.11	607135.5319	580862.5298
80314	36+95.60	-146.09	607155.3742	580910.0984
80315	36+67.19	-103.76	607115.8398	580877.3056
80316	36+86.60	-83.05	607093.4497	580895.1338
80317	37+02.07	-58.00	607067.0568	580908.4266
80318	37+43.74	-84.77	607089.5478	580953.0825
80319	37+46.18	-34.83	607039.6180	580950.4349
80320	37+23.10	-39.34	607046.4385	580927.7530
80321	38+56.60	-38.00	607030.2550	581060.9758
80322	41+18.94	-46.26	607062.1570	581301.3744
80323	42+79.40	-54.00	607121.4045	581449.7592
80324	43+93.13	-54.91	607159.3380	581556.9852
80325	36+40.00	27.00	606987.8795	580838.9139

COORDINATE LIST

POINT NO.	STATION	OFFSET	NORTHING	EASTING
80326	37+62.90	27.00	606976.3850	580960.6325
80327	37+62.90	67.00	606936.6091	580956.4042
80328	38+03.32	64.45	606934.7732	580996.3620
80329	37+90.34	37.65	606962.8477	580986.5958
80330	11+93.78	-21.20	606906.5817	580995.0667
80331	10+80.00	-21.03	606806.8141	580973.5802
80332	10+80.00	-5.10	606798.9041	580987.4094
80333	38+23.63	47.76	606949.0302	581018.2395
80334	10+80.00	5.10	606793.8397	580996.2634
80335	10+80.00	21.70	606785.5988	581010.6708
80336	11+72.32	21.20	606883.1979	581036.4363
80337	38+46.19	62.22	606932.0059	581038.6796
80338	38+83.14	60.00	606930.1700	581078.6375

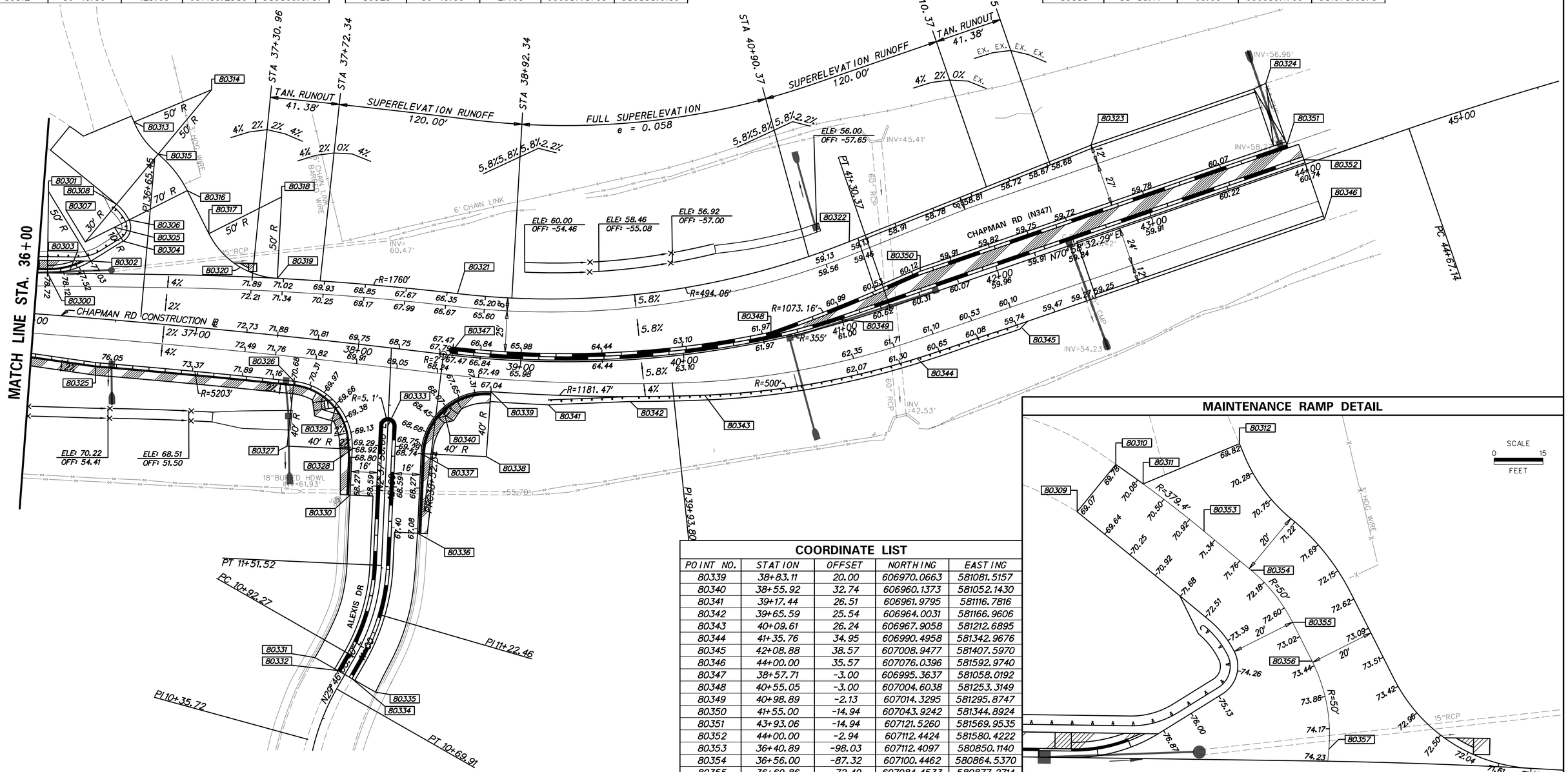

COORDINATE LIST

POINT NO.	STATION	OFFSET	NORTHING	EASTING
80339	38+83.11	20.00	606970.0663	581081.5157
80340	38+55.92	32.74	606960.1373	581052.1430
80341	39+17.44	26.51	606961.9795	581116.7816
80342	39+65.59	25.54	606964.0031	581166.9606
80343	40+09.61	26.24	606967.9058	581212.6895
80344	41+35.76	34.95	606990.4958	581342.9676
80345	42+08.88	38.57	607008.9477	581407.5970
80346	44+00.00	35.57	607076.0396	581592.9740
80347	38+57.71	-3.00	606995.3637	581058.0192
80348	40+55.05	-3.00	607004.6038	581253.3149
80349	40+98.89	-2.13	607014.3295	581295.8747
80350	41+55.00	-14.94	607043.9242	581344.8924
80351	43+93.06	-14.94	607121.5260	581569.9535
80352	44+00.00	-2.94	607112.4424	581580.4222
80353	36+40.89	-98.03	607112.4097	580850.1140
80354	36+56.00	-87.32	607100.4462	580864.5370
80355	36+69.86	-72.49	607084.4533	580877.2714
80356	36+76.81	-61.15	607072.5365	580883.2733
80357	36+84.29	-34.70	607045.5079	580888.4110

MAINTENANCE RAMP DETAIL

ADDENDA / REVISIONS

SCALE 0 30 60 90 FEET

BR 1-714 ON CHAPMAN ROAD OVER I-95

CONTRACT	BRIDGE NO.	1-714 /1-714A
T201507402	DESIGNED BY: T. SINGLE	
COUNTY		
NEW CASTLE	CHECKED BY: D. SEMPLE	

GRADES AND GEOMETRICS

GG-03

SECTION	SHEET NO.
AEC	21

8/15/2019
11:45:04
P:\60323054 DelDOT AGR 1672 BDSVT06 - Rehab Br. 1-714\900 WORK\910 CAD\20-SHEETS\100_Construction Plans\GG03.dgn

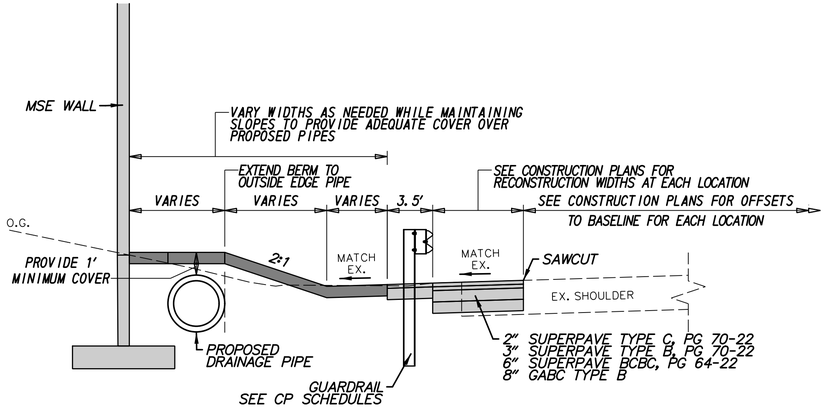

I-95 ROADSIDE GRADING

NOT TO SCALE

I-95 SOUTHBOUND STA 323+16 TO STA 329+12, LT
I-95 SOUTHBOUND STA 325+19 TO STA 328+17, RT
I-95 NORTHBOUND STA 324+52 TO STA 330+35, LT
I-95 NORTHBOUND STA 325+48 TO STA 331+16, RT

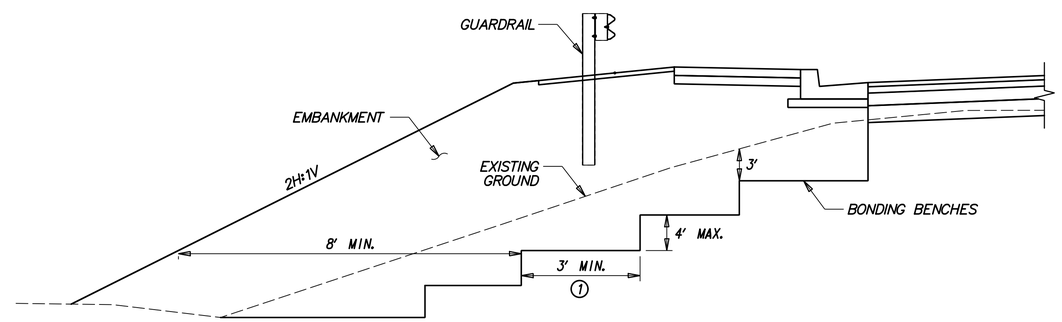

NOTES

1. IF DISTANCE BETWEEN NEW AND EXISTING EMBANKMENT SLOPE EXCEEDS 8 FEET THEN BONDING BENCHES SHOULD BE 3 FEET MAX IN WIDTH.

BONDING BENCHES TYPICAL DETAIL

NOT TO SCALE

STA 25+50 TO STA 28+00, LT
STA 34+50 TO STA 36+00, LT

ADDENDA / REVISIONS		NOT TO SCALE	BR 1-714 ON CHAPMAN ROAD OVER I-95	CONTRACT T201507402	BRIDGE NO. 1-714 /1-714A	CONSTRUCTION DETAILS	SECTION AEC
				COUNTY NEW CASTLE	DESIGNED BY: T. SINGLE		SHEET NO. 22
					CHECKED BY: D. SEMPLE		

8/7/2019 2:02:29 PM P:\06532\054 DelDOT AGR 1672 BDS\T06 - Rehab Br. 1-714\900 WORK\910 CAD\20-SHEETS\100_Construction Plans\DT01.dgn

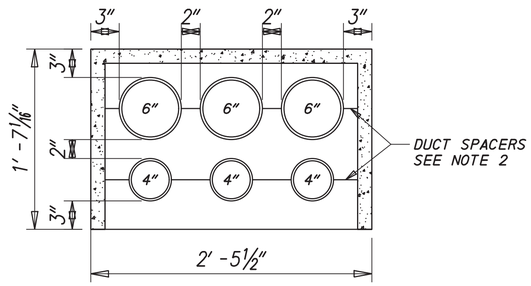

NOTES:

1. CONDUIT SHALL BE SCHEDULE 40 PVC.
2. DUCT SPACERS THAT MAINTAIN A 2" SEPARATION BETWEEN DUCTS ARE REQUIRED EVERY 6.5'-7' LONGITUDINALLY.

TYPICAL ELECTRIC DUCT BANK SECTION

NOT TO SCALE

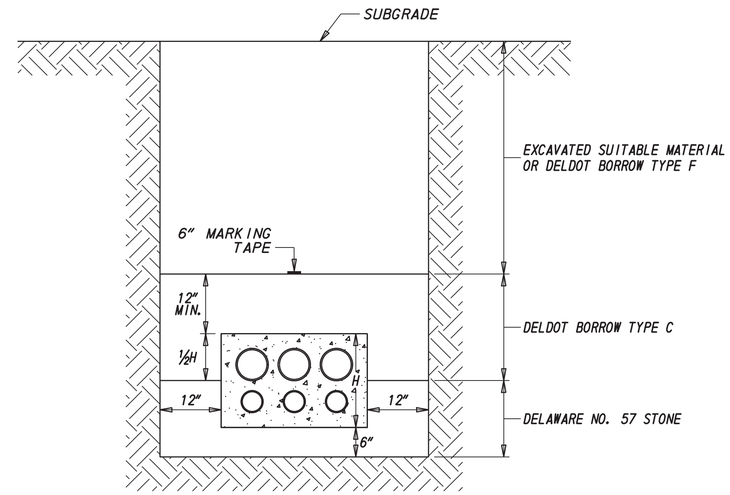

NOTES:

1. EXCAVATION AND BACKFILL SHALL BE IN ACCORDANCE WITH SECTION 208 OF THE DELDOT STANDARD SPECIFICATIONS.
2. THE ENGINEER SHALL DETERMINE WHAT PORTION, IF ANY, OF THE EXCAVATED MATERIAL IS SUITABLE FOR BORROW TYPE F.
3. COMPACTION WITHIN THE PROPOSED PAVEMENT AND SHOULDER AREAS SHALL MEET OR EXCEED 95%. ALL OTHER AREAS SHALL BE 90% OR MORE.
4. ALL DIMENSIONS ARE SHOWN IN INCHES AND ARE TO THE OUTSIDE WALL OF THE CONCRETE DUCT BANK.

CONCRETE ENCASED CONDUIT TRENCH DETAIL

NOT TO SCALE

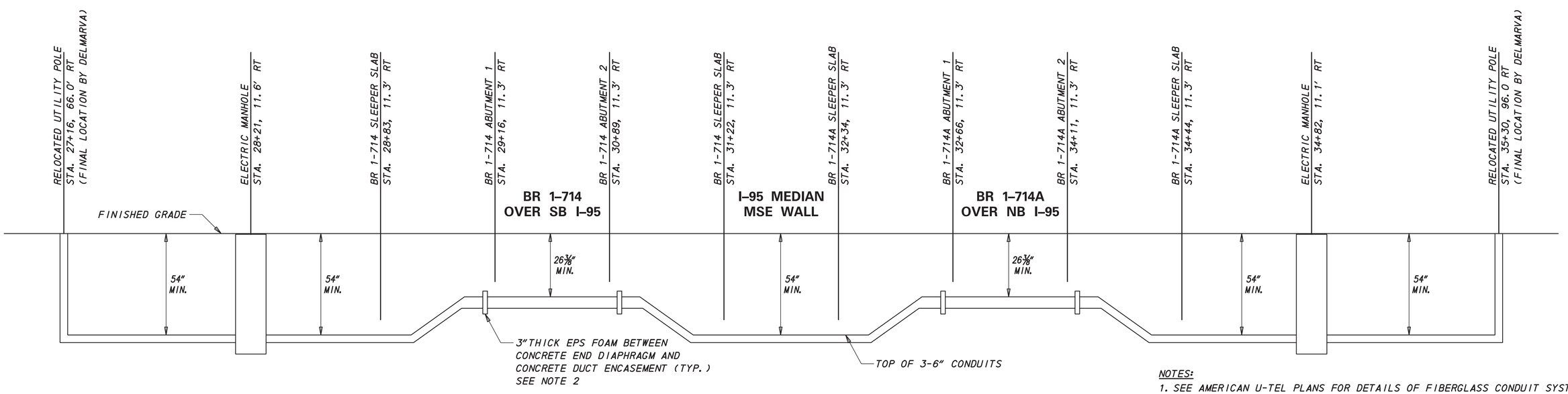

ELECTRIC DUCT BANK ELEVATION DETAIL

NOT TO SCALE

NOTES:

1. SEE AMERICAN U-TEL PLANS FOR DETAILS OF FIBERGLASS CONDUIT SYSTEM ACROSS BRIDGES.
2. COST TO FURNISH AND INSTALL 3" EPS FOAM BETWEEN CONCRETE END DIAPHRAGM AND CONCRETE DUCT ENCASEMENT IS INCIDENTAL TO ITEM 602509.

ADDENDA / REVISIONS	NOT TO SCALE	BR 1-714 ON CHAPMAN ROAD OVER I-95	CONTRACT T201507402	BRIDGE NO. 1-714 /1-714A	CONSTRUCTION DETAILS ELECTRIC UTILITY RELOCATION	SECTION AEC
			COUNTY NEW CASTLE	DESIGNED BY: T. SINGLE		SHEET NO. 23
				CHECKED BY: D. SEMPLE		

8/7/2019
11:24:31 AM
P:\60323054 DelDOT AGR 1672 BDS\T06 - Rehab Br. 1-714\900 WORK\910 CAD\20-SHEETS\100_Construction Plans\DT02.dgn

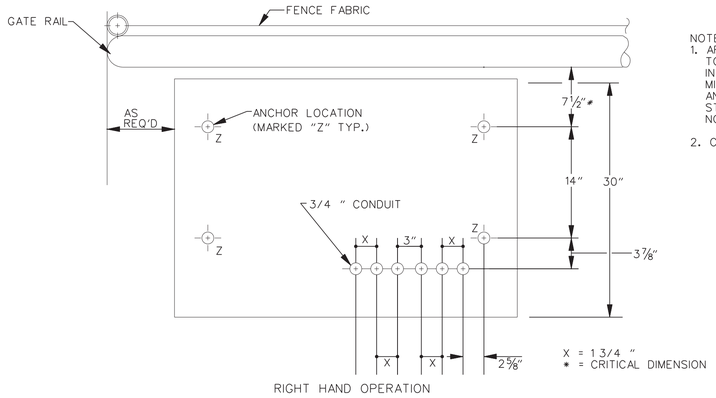

RIGHT HAND OPERATION

LAYOUT CONCRETE PLAN
N.T.S.

NOTE:
1. AFTER OPERATOR HAS BEEN CORRECTLY POSITIONED TO THE GATE RAIL. ANCHOR BOLTS SHALL BE 1/2 INCH IN DIAMETER BY 4 1/2 INCH MINIMUM LENGTH WITH MINIMUM 1 1/4 INCH THREADED LENGTH EXPOSED. ANCHOR BOLTS SHALL BE EQUIVALENT TO HILTI STANDARD KWIK BOLT II, OR RAWL-STUD CATALOG NO. 7423, OR AN APPROVED EQUAL.
2. CONCRETE SHALL BE CLASS B.

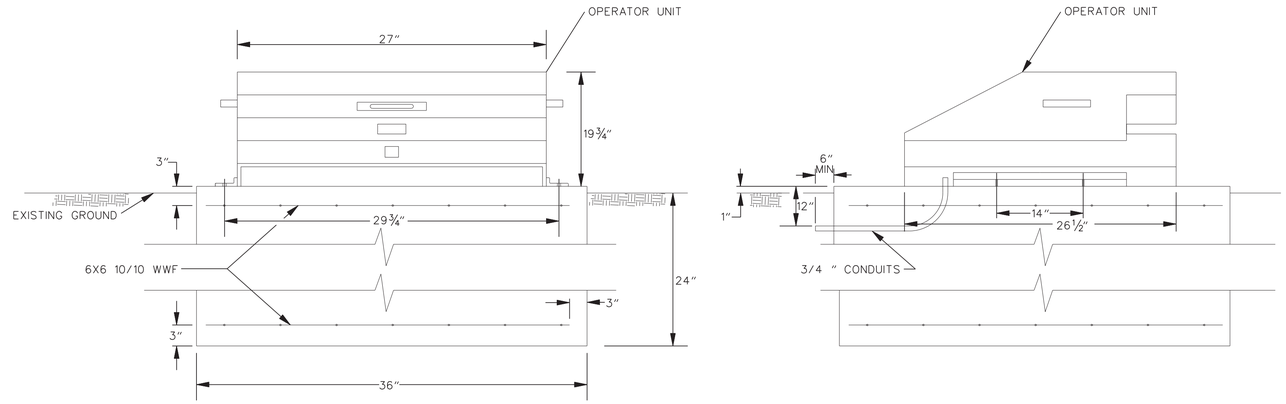

SLIDE GATE OPERATOR
N.T.S.

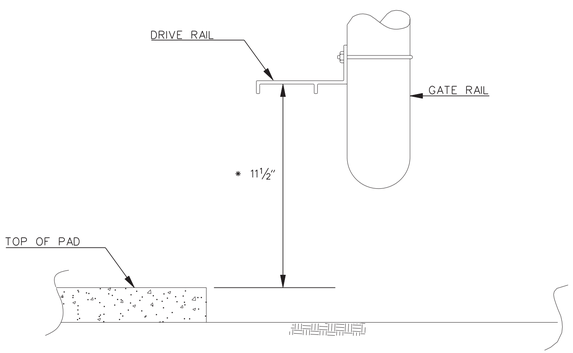

SECTION AT CONCRETE PAD AND GATE RAIL
N.T.S.

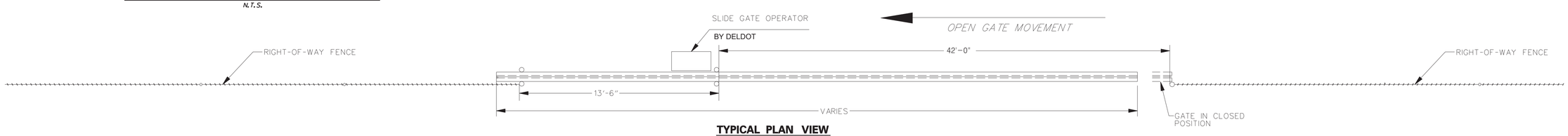

TYPICAL PLAN VIEW
N.T.S.

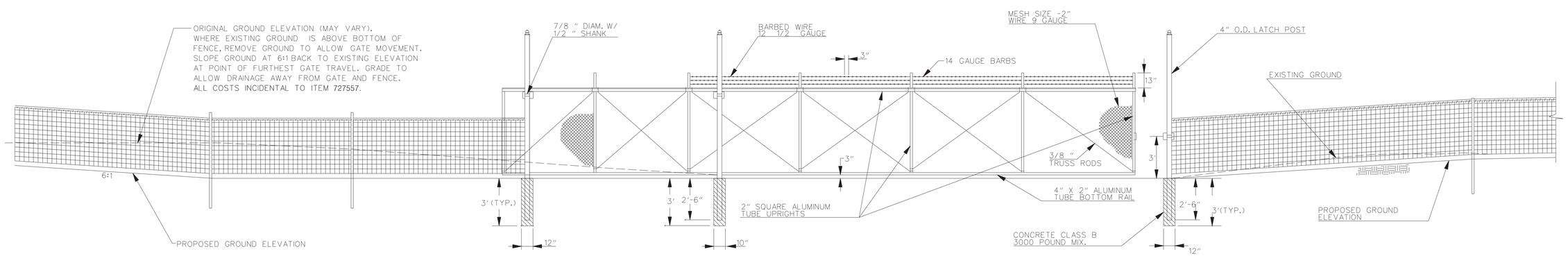

TYPICAL ELEVATION SINGLE CANTILVER SLIDE GATE
N.T.S.

NOTE: ALL ITEMS SHOWN ARE INCIDENTAL TO ITEM 727557.

DELAWARE DEPARTMENT OF TRANSPORTATION	ADDENDUMS / REVISIONS	**BR 1-714 ON CHAPMAN ROAD OVER I-95**	CONTRACT T201507402	BRIDGE NO. **1-714 /1-714A**	**CONSTRUCTION DETAILS**	SECTION AEC
			COUNTY NEW CASTLE	DESIGNED BY: D. SEMPLE		SHEET NO. 24
				CHECKED BY: J. EGGER		

SECTION 200

1. REMOVAL OF STRUCTURES AND OBSTRUCTIONS:
ITEMS TO BE REMOVED UNDER ITEM 211550 - REMOVAL OF EXISTING BRIDGE ASSOCIATED WITH BRIDGE (BRI-714) SHALL INCLUDE, BUT NOT BE LIMITED TO,THE FOLLOWING:
SUPERSTRUCTURE AND SUBSTRUCTURE TO LIMITS SHOWN ON DRAWINGS.

2. HAZARDOUS MATERIAL:
THE CONTRACTOR IS ADVISED THAT THE EXISTING STRUCTURE OVER (I-95 NB & SB) DOES CONTAIN LEAD BASED PAINT. AS A RESULT, THE CONTRACTOR'S PROPOSED DEMOLITION PLAN MUST ADDRESS, AS A MINIMUM, METHODS OF CUTTING THE BEAMS AND/OR DIAPHRAGMS, IF REQUIRED , AND HOW THOSE PERSONS PERFORMING SUCH WORK WILL BE PROTECTED IN ACCORDANCE WITH APPLICABLE OSHA REGULATIONS. ADDITIONALLY,THE CONTRACTOR MUST ADDRESS WHEN AND HOW THE LEAD BASED PAINT WILL BE REMOVED FROM THE STRUCTURAL STEEL AND ALL RELATED BRIDGE COMPONENTS. IF THE WORK IS PERFORMED ON SITE,THEN PROPER PROTECTION, CONTAINMENT, AND FINAL LEAD PAINT DISPOSAL MUST BE ADDRESSED IN THE PROPOSED PLAN. IF THE BEAMS WILL BE TRANSPORTED WITH THE PAINT STILL INTACT,THEN THE PLAN SHALL DETAIL HOW THE STRUCTURAL COMPONENTS WILL BE PROTECTED DURING TRANSPORT, WHERE AND HOW THE PAINT WILL BE REMOVED, AND THE LOCATION OF FINAL PAINT DISPOSAL, AGAIN IN ACCORDANCE WITH OSHA REGULATIONS. WRITTEN DOCUMENTATION MUST BE PROVIDED TO THE ENGINEER, PRIOR TO FINAL CONTRACT ACCEPTANCE, NOTING WHEN AND WHERE THE LEAD BASED PAINT WAS REMOVED, AND THE LOCATION OF FINAL PAINT DISPOSAL. ALL COSTS INVOLVED WITH THE ABOVE LISTED WORK SHALL BE INCIDENTAL TO ITEM 211550 - REMOVAL OF EXISTING BRIDGE. IF EXISTING UTILITY CONDUIT IS FOUND TO CONTAIN ASBESTOS, REMEDIATION SHALL BE PAID UNDER 202560 - CONTAMINATED MATERIAL.

SECTION 600

3. PORTLAND CEMENT CONCRETE:
USE PORTLAND CEMENT CONCRETE FOR CAST-IN-PLACE ELEMENTS AS FOLLOWS: (f'c = 28-DAY COMPRESSIVE STRENGTH)
CLASS A - (PILE CAP, SIDEWALK AND BARRIERS),(f'c = 4.5 ksi)
CLASS D - (DECK, DIAPHRAGMS,APPROACH SLAB AND SLEEPER SLAB),(f'c = 4.5ksi)
A HIGHER CLASS CONCRETE MAY BE SUBSTITUTED FOR A LOWER CLASS CONCRETE AT NO ADDITIONAL COST TO DELDOT WITH APPROVAL OF THE BRIDGE DESIGN ENGINEER.

4. DECK SLAB:
THE DECK SLAB THICKNESS INCLUDES ½" INTEGRAL WEARING SURFACE.

5. BAR REINFORCEMENT:
- REINFORCING STEEL SHALL CONFORM TO AASHTO M31 (ASTM A615),GRADE 60.
- REINFORCING STEEL SHALL HAVE A 3" CLEAR COVER IF CAST AGAINST EARTH OR A 2" CLEAR COVER ELSEWHERE, UNLESS OTHERWISE SPECIFIED ON THE PLANS.
- ALL REINFORCING STEEL SHALL BE PROTECTED WITH FUSION BONDED EPOXY. EPOXY COATED REINFORCING STEEL SHALL CONFORM TO AASHTO M284 (D3963).
- ANY FIELD CUTTING OR FIELD BENDING MUST BE APPROVED BY THE ENGINEER. PAYMENT SHALL BE INCIDENTAL TO THE BAR REINFORCEMENT ITEM.
- GALVANIZED REINFORCING STEEL MAY BE SUBSTITUTED FOR EPOXY-COATED REINFORCING STEEL AT NO ADDITIONAL COST TO DELDOT WITH APPROVAL OF THE BRIDGE DESIGN ENGINEER.
- WELDING OF REINFORCEMENT DURING FABRICATION OR CONSTRUCTION IS NOT PERMITTED UNLESS SPECIFIED.

6. CONCRETE SEALER:
REFER TO DIAGRAMS CONTAINING CONCRETE SEALER LIMITS ON SHEET BR 1-714 BD-02, PAYMENT SHALL BE INCIDENTAL TO (613001 AND 613003).

7. STRUCTURAL STEEL:
PROVIDE STRUCTURAL STEEL CONFORMING TO AASHTO M270, GRADE 50W (ASTM A709 , GRADE 50W) DESIGNATION, EXCEPT WHEN NOTED OTHERWISE. THE ADDITIONAL REQUIREMENTS FOR CHARPY V-NOTCH TESTING (DENOTED AS 'CVN' ON PLANS) OF AASHTO M270 FOR PRIMARY LOAD CARRYING MEMBERS SHALL BE INCLUDED.

SUPPLEMENTAL NOTCH TOUGHNESS REQUIREMENTS ARE MANDATORY FOR:
- TOP AND BOTTOM GIRDER FLANGES AS SHOWN ON PLANS
- GIRDER WEB PLATES AS SHOWN ON PLANS
- GIRDER FIELD SPLICE PLATES
- ALL DIAPHRAGM MEMBERS AND DIAPHRAGM CONNECTION PLATES

ALL FASTENERS ARE ⅞" DIAMETER ASTM A325 HIGH STRENGTH BOLTS, TYPE 3, UNLESS OTHERWISE NOTED. REAM SUBDRILLED or SUBPUNCHED HOLES FOR FIELD SPLICES IN THE FABRICATION SHOP. ALL BOLTED CONNECTIONS SHALL BE DESIGNED AS SLIP-CRITICAL CONNECTIONS WITH CLASS B FAYING SURFACE.

IF GIRDERS CAN BE FABRICATED IN LENGTHS LONGER THAN THE SECTIONS SHOWN ON THE PLANS BY ELIMINATING FIELD SPLICES, FIELD SPLICES MAY BE OMITTED AT THE REQUEST OF THE CONTRACTOR. THE CONTRACTOR ASSUMES FULL RESPONSIBILITY FOR SECURING A HAULING PERMIT, APPROVAL FOR ELIMINATION OF A FIELD SPLICE AT THE SHOP DRAWING STAGE DOES NOT OBLIGATE THE DEPARTMENT TO ISSUE A HAULING PERMIT.

PROVIDE MATERIALS AND PERFORM WORK IN ACCORDANCE WITH AASHTO/AWS D1.5M/D.15 **BRIDGE WELDING CODE, AND CONTRACT DOCUMENTS. MAKE TACK WELDS WITH THE SAME TYPE OF ELECTRODE AND INCORPORATE IN THE FINAL WELD. NO OTHER TACK WELDING WILL BE PERMITTED.

DO NOT MAKE WELDS BY MANUAL SHIELDED METAL ARC PROCESS FOR PRIMARY GIRDER WELDS SUCH AS FLANGE TO WEB WELDS OR FOR SHOP SPLICES OF WEB AND FLANGES.

DO NOT USE FORM SUPPORT SYSTEMS THAT WILL CAUSE UNACCEPTABLE OVERSTRESS OR DEFORMATION TO PERMANENT BRIDGE MEMBERS.

SHOP ASSEMBLE THE ENTIRE STEEL SUPERSTRUCTURE FOLLOWING THE SAME ERECTION PROCEDURES AND SUPPORT CONDITIONS TO ENSURE THE PROPER FIT FOR ALL STRUCTURAL STEEL COMPONENTS PRIOR TO REAMING OF BOLT HOLES FOR SPLICES AND DIAPHRAGM CONNECTION PLATES.

DO NOT WELD PERMANENT METAL DECK FORMS OR OTHER ATTACHMENTS TO GIRDER TOP FLANGES IN TENSION ZONES. TENSION ZONES OF TOP FLANGE ARE DESIGNATED ON THE PLANS. THREADED STUDS FOR THE SUPPORT OF THE DECK OVERHANG FORMING BRACKET ARE PERMITTED PROVIDED THE THREADED STUD IS ATTACHED WITH THE SAME WELDING PROCESS AS THE SHEAR STUDS.

VERTICALLY ADJUST STAY-IN-PLACE FORMS TO ATTAIN FINISHED LINES AND GRADES REQUIRED ON THE PLANS.

SECTION 600 (CONTINUED)

USE OVERSIZED HOLES ON DIAPHRAGM CONNECTORS. ALL BOLTS ON DIAPHRAGMS MUST BE FINGER TIGHT AT ERECTION. BOLTS ARE TO BE TORQUED BEFORE CONCRETE DECK IS POURED.

SET ANCHOR BOLTS TO TEMPLATE OR IN PRE-FORMED HOLES. DO NOT DRILL UNLESS SPECIFICALLY INDICATED ON PLANS. FILL THE PRE-FORMED HOLES WITH NON-SHRINK GROUT. IN MASONRY PLATES, FILL THE CLEARANCE BETWEEN ANCHOR BOLTS AND HOLES WITH APPROVED NON-HARDENING CAULKING COMPOUND.

STABILITY OF PARTIAL GIRDERS AND COMPLETED GIRDERS IS TO BE MAINTAINED BY THE CONTRACTOR DURING ERECTION UNTIL ALL GIRDERS AND DIAPHRAGMS (INCLUDING CONCRETE END DIAPHRAGM) ARE IN-PLACE AND ALL BOLTS ARE PROPERLY INSTALLED. ERECTION LOADS INCLUDING SELF-WEIGHT OF THE STEEL MEMBERS, WIND LOADING AND CONSTRUCTION LIVE LOAD EFFECTS ARE TO BE EVALUATED BY THE CONTRACTOR FOR STABILITY, STRESSES AND DEFLECTIONS ON THE STEEL MEMBERS DURING ANY STAGE OF ERECTION.

THE DESIGN WIND SPEED FOR CONSTRUCTION PRIOR TO COMPLETED CONSTRUCTION OF THE COMPOSITE DECK WAS TAKEN AS 60 MPH. DESIGN OF ALTERNATE SUPPORT FOR WIND SPEEDS ABOVE 60 MPH SHALL BE THE RESPONSIBILITY OF THE CONTRACTOR.

AN ALTERNATE SLAB PLACEMENT SEQUENCE MAY BE PERMITTED AT THE REQUEST OF THE CONTRACTOR . SUBMIT FOR REVIEW AND APPROVAL TO THE DEPARTMENT A REVISED SLAB PLACEMENT SEQUENCE WITH SUPPORT CALCULATIONS AND COMPUTER STRESS ANALYSIS. SATISFY THE REQUIREMENTS OF THE ORIGINAL SLAB PLACEMENT SEQUENCE. OBTAIN WRITTEN APPROVAL PRIOR TO THE USE OF THE REVISED SLAB PLACEMENT SEQUENCE AND/OR CAMBER VALUES. NO COMPENSATION WILL BE ALLOWED FOR THE DEVELOPMENT AND APPROVAL OF THE REVISED SLAB PLACEMENT SEQUENCE AND CAMBER VALUES. THE DEPARTMENT WILL BE THE SOLE JUDGE OF THE ACCEPTABILITY OF THE REVISED SLAB PLACEMENT SEQUENCE AND CAMBER VALUES.

BLAST CLEAN THE FLAYING SURFACES OF SPLICES AND CONNECTIONS THAT REMAIN UNASSEMBLED FOR A PERIOD OF 12 MONTHS OR MORE FOLLOWING THE INITIAL CLEANING.

8. BEARINGS:
ALL ELASTOMERIC BEARINGS SHALL BE STEEL LAMINATED ELASTOMERIC DESIGNED AS PER AASHTO 14.7.5, METHOD B, AND SHALL CONFORM TO SECTION 623 OF THE STANDARD SPECIFICATIONS. PAYMENT SHALL BE INCIDENTAL TO 623000.

9. PERFORATED PIPE UNDERDRAINS:
MINIMUM INSTALLATION SLOPE SHALL BE 0.02 FT./FT. CAP FREE ENDS.

SECTION 800

10. MAINTENANCE OF TRAFFIC:
MAINTENANCE OF TRAFFIC SHALL BE AS PER THE TRAFFIC CONTROL PLANS AND DETOUR PLANS. THE DETOUR SHALL REMAIN IN EFFECT AS REQUIRED FOR GIDER ERECTION AND DEMOLITION AS REQUIRED.
ITEM 801000 - MAINTENANCE OF TRAFFIC,ALL INCLUSIVE.

MISCELLANEOUS

11. DESIGN SPECIFICATIONS:
(A) DELDOT BRIDGE DESIGN MANUAL, 2017 EDITION
(B) AASHTO LRFD BRIDGE SPECIFICATIONS, 2014,7TH EDITION, CUSTOMARY U.S. UNITS INCLUDING 2015 AND 2016 INTERIMS.
(C) PROVIDE MATERIALS AND PERFORM WORK IN ACCORDANCE WITH THE DELDOT STANDARD SPECIFICATIONS, AUGUST 2016.
(D) SPLICE PLATES DESIGNED IN ACCORDANCE WITH AASHTO LRFD BRIDGE SPECIFICATIONS,2017,8TH EDITION,CUSTOMARY U.S. UNITS.

12. LOADING:
-DEAD LOADS INCLUDE 25 PSF FOR FUTURE WEARING SURFACE ON DECK SLAB AND 15 PSF FOR STAY-IN-PLACE FORMS (INCLUDES CONCRETE IN FORM CORRUGATIONS).BARRIER AND FENCE LOADS ARE DISTRIBUTED 75% TO EXTERIOR GIRDER AND 25% TO FIRST INTERIOR. SIDEWALK LOAD IS DISTRIBUTED 100% TO EXTERIOR GIRDER.
-DESIGN LIVE LOADS INCLUDE HL-93 LOADING.
-FATIGUE DESIGN IS BASED ON THE FOLLOWING ONE DIRECTIONAL TRAFFIC VOLUMES: ADTT = (989, MEASURED IN 2017).
-LIVE LOAD DISTRIBUTION TO THE GIRDERS IS BASED ON THE GRILLAGE METHOD.
- THERMAL LOADS AND MOVEMENTS ARE BASED ON THE MODERATE TEMPERATURE RANGE AS STIPULATED IN THE AASHTO LRFD DESIGN SPECIFICATIONS AS 0-80°GIRDERS TO BE ERECTED BETWEEN 40°-80°FOR STEEL. THE NORMAL TEMPERATURE SHALL BE CONSIDERED TO BE 68F.
-LIVE LOAD DEFLECTION SHALL BE LIMITED TO L/1000.
-FOR SEISMIC LOADS, CONSIDER SEISMIC PERFORMANCE ZONE 1, WITH A SITE CLASS = (A) AND OPERATIONAL CATEGORY = ESSENTIAL.
-FOR REINFORCEMENT DISTRIBUTION REQUIREMENTS,CONSIDER CLASS 2 EXPOSURE CRITERIA FOR DECKS.
-BARRIERS HAVE BEEN DESIGNED FOR (MASH OR NCHRP 350) TEST LEVEL 3 (TL-3).

13. EXISTING CONDITIONS:
-ALL EXISTING DIMENSIONS AND ELEVATIONS SHOWN ARE BASED ON THE BEST AVAILABLE INFORMATION AND ARE APPROXIMATE ONLY. THE CONTRACTOR SHALL FIELD VERIFY ALL EXISTING DIMENSIONS, GEOMETRY, AND ELEVATIONS AS NECESSARY PRIOR TO ORDERING ANY MATERIALS AND COMMENCING CONSTRUCTION TO ENSURE PROPER FIT OF THE PROPOSED CONSTRUCTION.
-THE CONTRACTOR SHALL NOT CONSIDER ANY OF THE DATA ON THE EXISTING STRUCTURE SUPPLIED IN THE ORIGINAL DESIGN DRAWINGS OR MADE AVAILABLE BY THE DEPARTMENT OR ITS AUTHORIZED AGENTS AS POSITIVE REPRESENTATIONS OF ANY OF THE CONDITIONS THAT WILL BE ENCOUNTERED IN THE FIELD.

14. ROADWAY CLEARANCES:
A MINIMUM OF 16'-6" SHALL BE MAINTAINED ABOVE ALL ROADWAYS.

15. UTILITIES:
SEE UTILITY STATEMENT AND CONSTRUCTION PLAN SHEETS FOR FURTHER INFORMATION ON UTILITY COORDINATION.

INDEX OF STRUCTURES DRAWINGS

BR 1-714 BD-01 BRIDGE NOTES
BR 1-714 BD-02 QUANTITIES AND LOAD RATINGS
BR 1-714 BD-03 GENERAL PLAN AND ELEVATION
BR 1-714 BD-04 CONSTRUCTION SEQUENCE AND DEMOLITION PLAN
BR 1-714 BD-05 GEOMETRIC LAYOUT
BR 1-714 BD-06 GEOTECHNICAL INSTRUMENTATION PLAN
BR 1-714 BD-07 GEOTECHNICAL INSTRUMENTATION TYPICAL DETAILS
BR 1-714 BD-08 PILE PLAN
BR 1-714 BD-09 PILE DETAILS
BR 1-714 BD-10 ABUTMENT 1 PLAN AND ELEVATION
BR 1-714 BD-11 ABUTMENT 2 PLAN AND ELEVATION
BR 1-714 BD-12 ABUTMENT SECTIONS
BR 1-714 BD-13 PILE CAP SECTIONS AND DETAILS
BR 1-714 BD-14 ABUTMENT REINFORCEMENT SCHEDULE
BR 1-714 BD-15 MSE WINGWALLS ELEVATIONS
BR 1-714 BD-16 MSE MEDIAN ELEVATION
BR 1-714 BD-17 MEDIAN MOMENT SLAB - PLAN AND SECTION
BR 1-714 BD-18 FRAMING PLAN
BR 1-714 BD-19 EXTERIOR GIRDER ELEVATION AND DETAILS
BR 1-714 BD-20 INTERIOR GIRDER ELEVATION AND DETAILS
BR 1-714 BD-21 INTERMEDIATE DIAPHRAGM DETAILS
BR 1-714 BD-22 CAMBER DIAGRAM
BR 1-714 BD-23 BEARINGS DETAILS - 1
BR 1-714 BD-24 BEARINGS DETAILS - 2
BR 1-714 BD-25 BEARINGS DETAILS - 3
BR 1-714 BD-26 ABUTMENT 1 CONCRETE DIAPHRAGM
BR 1-714 BD-27 ABUTMENT 2 CONCRETE DIAPHRAGM
BR 1-714 BD-28 BRIDGE DECK REINFORCEMENT PLAN - 1
BR 1-714 BD-29 BRIDGE DECK REINFORCEMENT PLAN - 2
BR 1-714 BD-30 BRIDGE DECK SECTION AND DETAILS
BR 1-714 BD-31 BRIDGE BARRIER & SIDEWALK REINFORCEMENT - SECTION AND ELEVATION
BR 1-714 BD-32 FINISHED BRIDGE DECK ELEVATIONS
BR 1-714 BD-33 ABUTMENT 1 APPROACH SLAB REINFORCEMENT - PLAN
BR 1-714 BD-34 ABUTMENT 2 APPROACH SLAB REINFORCEMENT - PLAN
BR 1-714 BD-35 BRIDGE APPROACH SLAB REINFORCEMENT - SECTION AND DETAILS
BR 1-714 BD-36 DECK AND CONCRETE DIAPHRAGM REINFORCEMENT SCHEDULE
BR 1-714 BD-37 APPROACH SLAB REINFORCEMENT SCHEDULE
BR 1-714 BD-38 RAILING DETAILS
BR 1-714 BD-39 EXPANSION JOINT DETAILS
BR 1-714 BD-40 ITS CONDUIT DETAILS

MISCELLANEOUS (CONTINUED)

16. WORKING OVER ROADWAYS:

DO NOT PICK OR LIFT OVER LANES AND OR SHOULDERS OPEN TO TRAFFIC.

DO NOT PERFORM ANY WORK DIRECTLY OVER OPEN LANES OF TRAFFIC WITHOUT ADEQUATE SHIELDING OR WORK PLATFORMS, LANE CLOSURES OR DETOURS IN ACCORDANCE WITH THE CONTRACT PLANS AND SPECIFICATIONS.

INSTALL SIP FORMS, ADDITIONAL PROTECTIVE SHIELD SYSTEM, WORK PLATFORMS AND/OR OVERHANG FALSEWORK BEFORE BEGINNING ANY CONSTRUCTION OPERATIONS OVER TRAFFIC.

IF THE CONTRACTOR DETERMINES THAT ADDITIONAL PROTECTIVE SHIELDING OR WORK PLATFORMS ARE NEEDED TO PROTECT TRAFFIC, SUBMIT PLANS AND CALCULATIONS FOR REVIEW AND APPROVAL FOR PROTECTING TRAFFIC WHILE WORKING OVER TRAVELWAYS. HAVE THE DRAWINGS AND DESIGN CALCULATIONS PREPARED, SIGNED, AND SEALED BY A DELAWARE REGISTERED PROFESSIONAL ENGINEER. THE APPROVAL OF THE ENGINEER WILL NOT RELIEVE THE CONTRACTOR OF THE RESPONSIBILITY FOR THE SAFETY OF THE METHOD OR EQUIPMENT. BASED ON CONTRACTOR MEANS AND METHODS DETERMINE AND CLEARLY DEFINE ALL DEAD AND LIVE LOADS FOR THIS SYSTEM, WHICH, AT A MINIMUM, SHALL BE INSTALLED BETWEEN BEAMS OR GIRDERS OVER ANY TRAVEL WAY OR SHOULDER AREA WHERE TRAFFIC IS MAINTAINED. NO SEPARATE PAYMENT WILL BE MADE FOR ADDITIONAL PROTECTIVE SHIELDING OR WORK PLATFORMS.

ALL FORMWORK INCLUDING STAY-IN-PLACE FORMS SHALL BE MORTAR TIGHT.

WHILE PLACING DECK, DECK OVERHANG AND PARAPET CONCRETE OVER LANES OPEN TO TRAFFIC, NO CLOSURE OR DETOURS WILL BE ALLOWED DURING THESE OPERATIONS.

THE MAINTENANCE OF TRAFFIC REQUIRED FOR THE INSTALLATION OF THESE ITEMS WILL BE PAID UNDER THE MAINTENANCE OF TRAFFIC UNIT BID ITEMS. CONTRACTOR SHALL ADHERE TO THE TRAFFIC CONTROL PLAN, DELAWARE MUTCD, AND TRAFFIC LANE CLOSURE AND WORK RESTRICTIONS PROVIDED IN THE CONTRACT DOCUMENTS.

ESTIMATED BRIDGE QUANTITIES

ITEM NO.	DESCRIPTION	UNIT	TOTAL
202560	CONTAMINATED MATERIAL *	NONE	—
211550	DEMOLITION OF EXISTING BRIDGE *	LS	1
604000	JACKING BRIDGE	LS	1
604XXX	TEMPORARY PROTECTIVE SHIELD *	LS	1
604003	SHORING	LS	1
605201	DYNAMIC PILE TESTING BY CONTRACTOR	EA	4
605505	FURNISH STEEL PIPE PILES, 20" *	LF	3,120
605506	INSTALL STEEL PIPE PILES, 20" *	LF	3,120
605507	FURNISH STEEL INDICATOR OR TEST PILES, 20" *	LF	400
605508	INSTALL STEEL PIPE INDICATOR OR TEST PILES, 20" *	LF	400
607001	MECHANICALLY STABILIZED EARTH WALLS	LS	1
610002	PORTLAND CEMENT CONCRETE MASONRY, ABUTMENT ABOVE FOOTING, CLASS A	CY	100
610008	PORTLAND CEMENT CONCRETE MASONRY, PARAPET, CLASS A	CY	240
610017	PORTLAND CEMENT CONCRETE MASONRY, SUPERSTRUCTURE, CLASS D	CY	370
610018	PORTLAND CEMENT CONCRETE MASONRY, APPROACH SLAB, CLASS D	CY	310
611001	BAR REINFORCEMENT, EPOXY COATED	LB	211,650
613001	SILICONE-BASED ACRYLIC CONCRETE SEALER	SF	6,230
613003	HIGH MOLECULAR WEIGHT METHACRYLATE CONCRETE SEALER	SF	12,970
615001	STEEL STRUCTURES	LS	1
623000	ELASTOMERIC BEARINGS	EACH	14
624000	PREFABRICATED EXPANSION JOINT SYSTEM, 3"	LF	180
626011	ALUMINUM RAILING, TYPE 1	LF	630
727008	BRIDGE SAFETY FENCE, TYPE 2	LF	480

* SPECIAL PROVISION INCLUDED IN CONTRACT FOR THIS ITEM

BRIDGE LOAD RATING TABLE

VEHICLE TYPE	RATING FACTOR	RATING WEIGHT (TONS)	CONTROLLING MEMBER	CONTROLLING POINT	LOAD EFFECT
HL-93 TRUCK (INVENTORY)	1.47	N/A	EXTERIOR BEAM	105	STRENGTH I
HL-93 TANDEM (INVENTORY)	1.74	N/A	EXTERIOR BEAM	105	STRENGTH I
HS20 (INVENTORY)	2.41	86.76	EXTERIOR BEAM	105	STRENGTH I
HL-93 TRUCK (OPERATING)	1.91	N/A	EXTERIOR BEAM	105	STRENGTH I
HL-93 TANDEM (OPERATING)	2.26	N/A	EXTERIOR BEAM	105	STRENGTH I
HS20 (OPERATING)	3.12	112.32	EXTERIOR BEAM	105	STRENGTH I
DE S220	3.17	63.40	EXTERIOR BEAM	105	SERVICE II
DE S335	2.02	70.70	EXTERIOR BEAM	105	SERVICE II
DE S437	1.94	71.78	EXTERIOR BEAM	105	SERVICE II
DE T330	2.44	73.20	EXTERIOR BEAM	105	SERVICE II
DE T435	2.17	75.95	EXTERIOR BEAM	105	SERVICE II
DE T540	1.95	78.00	EXTERIOR BEAM	105	SERVICE II
EV2	2.4	69.00	EXTERIOR BEAM	105	SERVICE II
EV3	1.72	73.96	EXTERIOR BEAM	105	SERVICE II
SU4	2.49	67.23	EXTERIOR BEAM	105	SERVICE II
SU5	2.25	69.75	EXTERIOR BEAM	105	SERVICE II
SU6	2.06	71.59	EXTERIOR BEAM	105	SERVICE II
SU7	1.89	73.24	EXTERIOR BEAM	105	SERVICE II

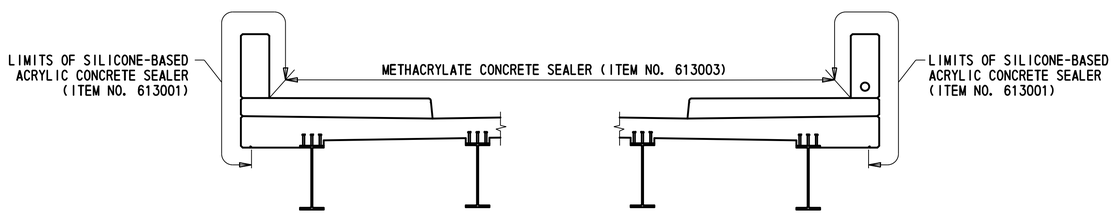

COATING LIMITS

PLAN LIMITS TO INCLUDE BRIDGE, APPROACH SLABS,SLEEPER SLABS & MOMENT SLABS
NOT TO SCALE

ABBREVIATIONS

T = TOP
B = BOTTOM
C/L = CENTER LINE
B/L = BASE LINE
BRG = BEARING
TYP. = TYPICAL
CLR. = CLEAR
CVN = CHARPY V-NOTCH
MSE = MECHANICALLY STABILIZED EARTH
EF = EACH FACE
FF = FRONT FACE
RF = REAR FACE
ELEV. = ELEVATION
TLP = TOP OF LEVELING PAD
RDWY = ROADWAY
R/W = RIGHT OF WAY
EXP. = EXPANSION
RCP = REINFORCED CONCRETE PIPE
WP = WORK POINT

BR 1-714
BD-02

ADDENDA / REVISIONS	NOT TO SCALE	BR 1-714 ON CHAPMAN ROAD OVER I-95 SB	CONTRACT T201507402	BRIDGE NO. 1-714	QUANTITIES AND LOAD RATINGS	SECTION AEC
			COUNTY NEW CASTLE	DESIGNED BY: R.GANOVSKA		SHEET NO. 26
				CHECKED BY: R.DOMINICK/S.MUKHERJEE		

8/19/2019
4:52:28 PM
P:\60323054 DelDOT AGR 1672 BDS\T06 - Rehab Br. 1-714\900 WORK\910 CAD\20-SHEETS\Structures\Final Design\SB\BR1-714-SB-QT01.dgn

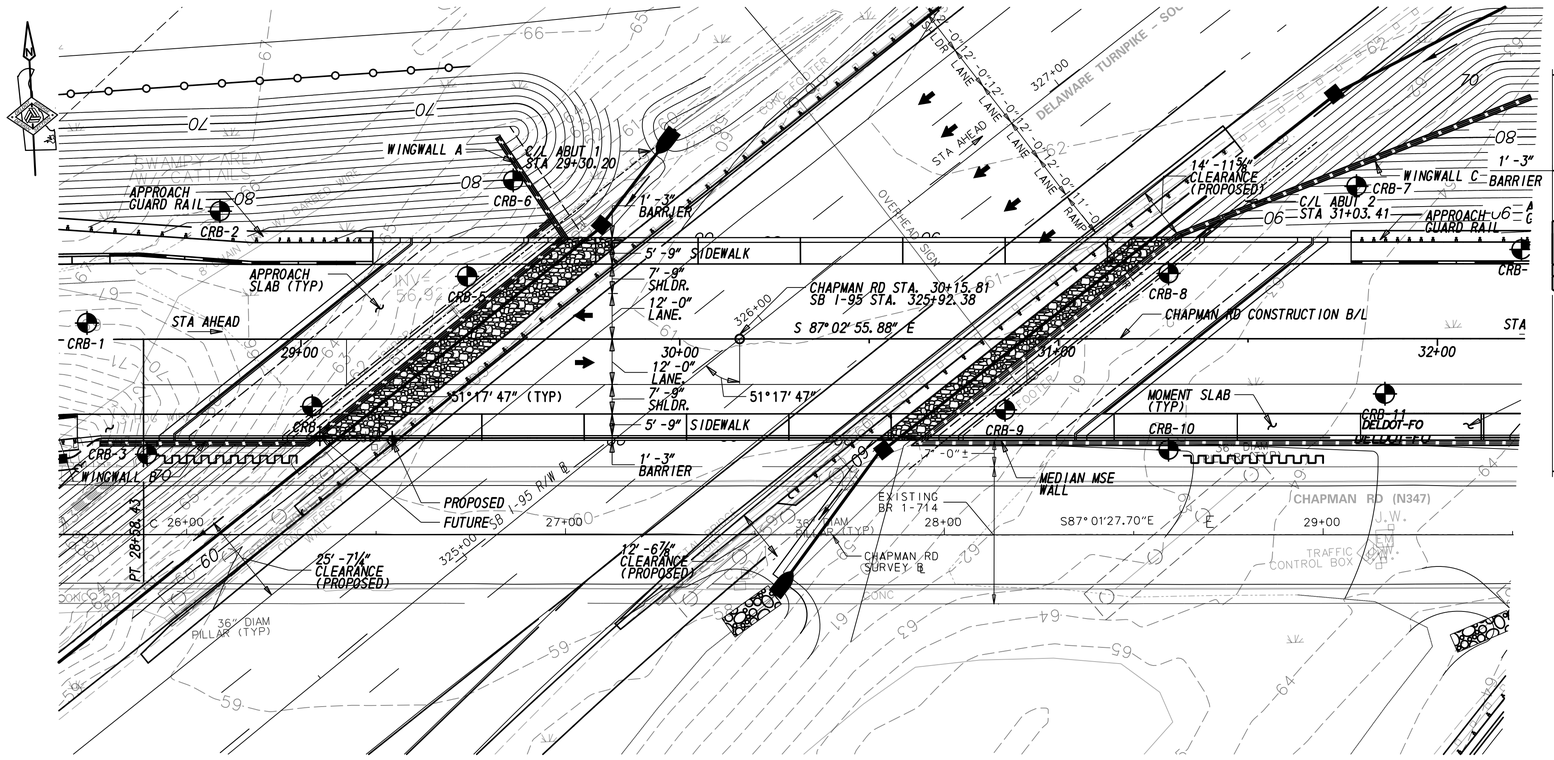

PLAN - PROPOSED

SCALE: 1" = 20'

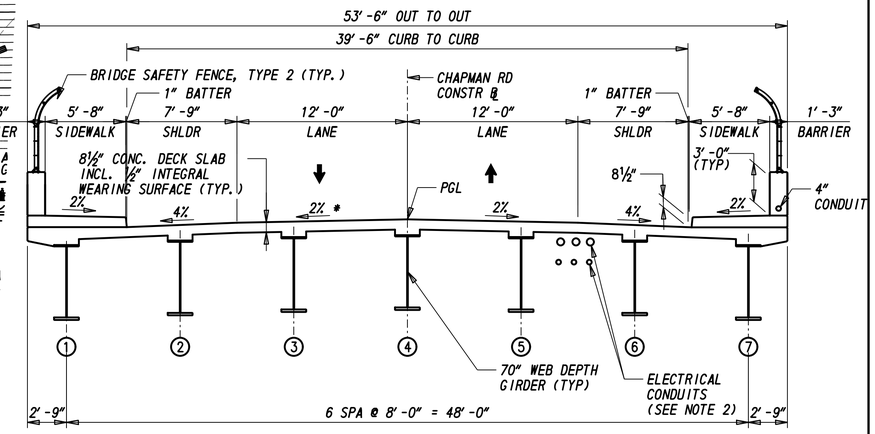

* VARIES FROM STA 28+77.74 TO STA 29+60.50, SEE SHEET BR 1-714 BD-32.

SECTION - PROPOSED

SCALE: 3/16" = 1'-0"

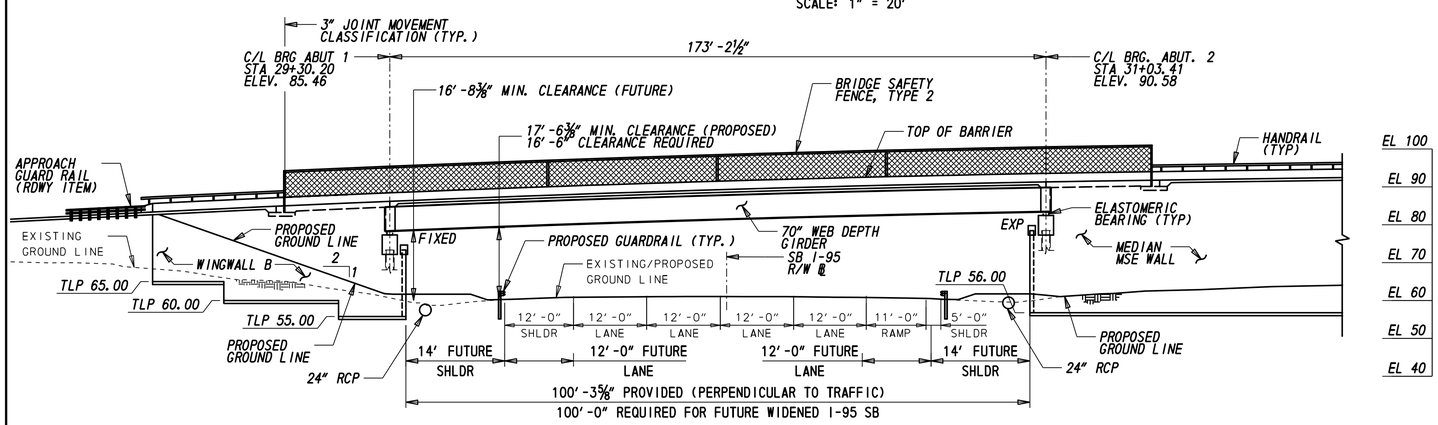

ELEVATION - PROPOSED

SCALE: 1" = 20'

CHAPMAN ROAD VERTICAL CURVE DATA

+5.00% +1.36%

PVI 30+00.00
ELEV. 89.26
LENGTH = 275.00'
SSD = 433.84'
K = 75.52

CHAPMAN ROAD HORIZONTAL CURVE DATA

TANGENT
S87°02' 55.88"E

LEGEND

- BORINGS
- POINT OF MINIMUM VERTICAL CLEARANCE
- SHORING
- LIMITS OF NO. 3 STONE UNDER BRIDGE
- EXISTING CONTOURS
- PROPOSED CONTOURS

NOTES:

1. FOR GENERAL NOTES, SEE SHEET BR 1-714 BD-01.
2. REFER TO SHEET BR 1-714 BD-40 FOR CONDUIT DETAILS.

BR 1-714
BD-03

ADDENDA / REVISIONS	SCALE AS NOTED	BR 1-714 ON CHAPMAN ROAD OVER I-95 SB	CONTRACT T201507402	BRIDGE NO. 1-714	GENERAL PLAN AND ELEVATION	SECTION AEC
			COUNTY NEW CASTLE	DESIGNED BY: R. GANOVSKA		SHEET NO. 27
				CHECKED BY: R.DOMINICK		

8/19/2019 4:52:30 PM P:\60323054 DelDOT AGR 1672 BDS\T06 - Rehab Br. 1-714\900 WORK\910 CAD\20-SHEETS\Structures\Final Design\SB\BR1-714-SB-PE01.dgn

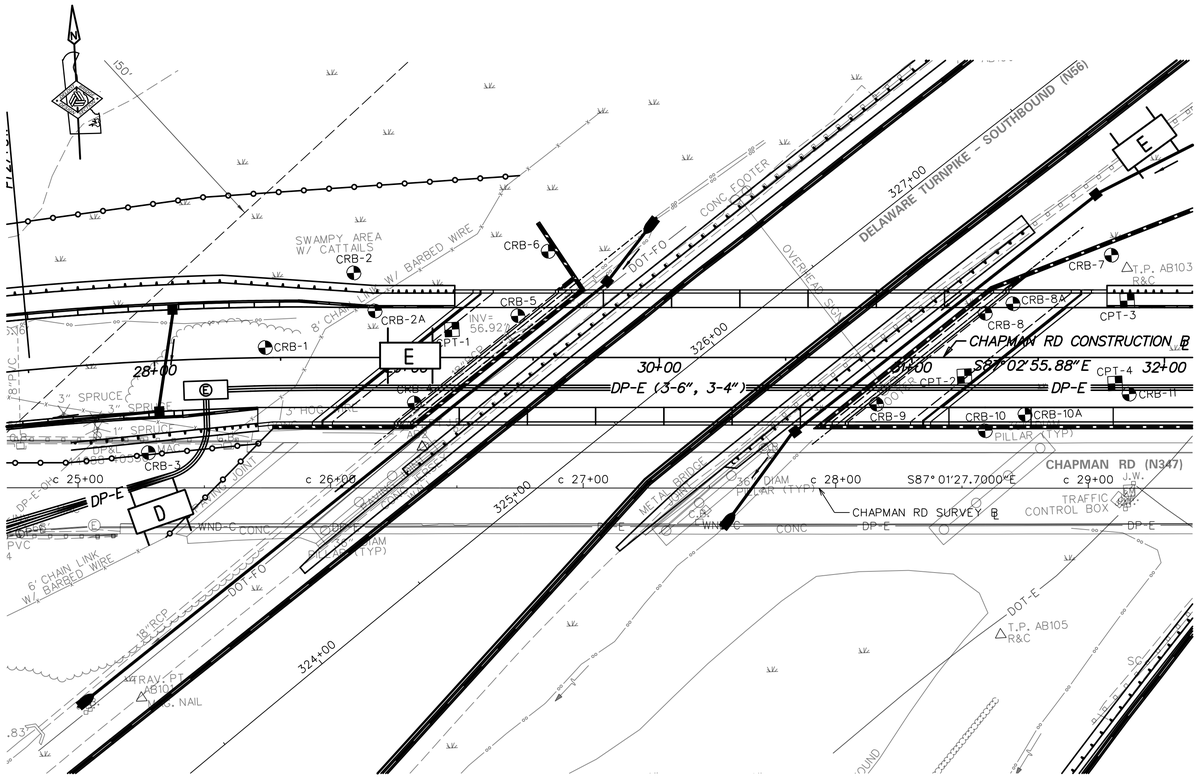

D - DENOTES CRANE FOR REMOVAL OF BEAMS OVER I-95 SB
E - DENOTES CRANE FOR ERECTION OF GIRDERS OVER I-95 SB

OPTIONAL CRANE LOCATIONS

SCALE: 1" = 30'

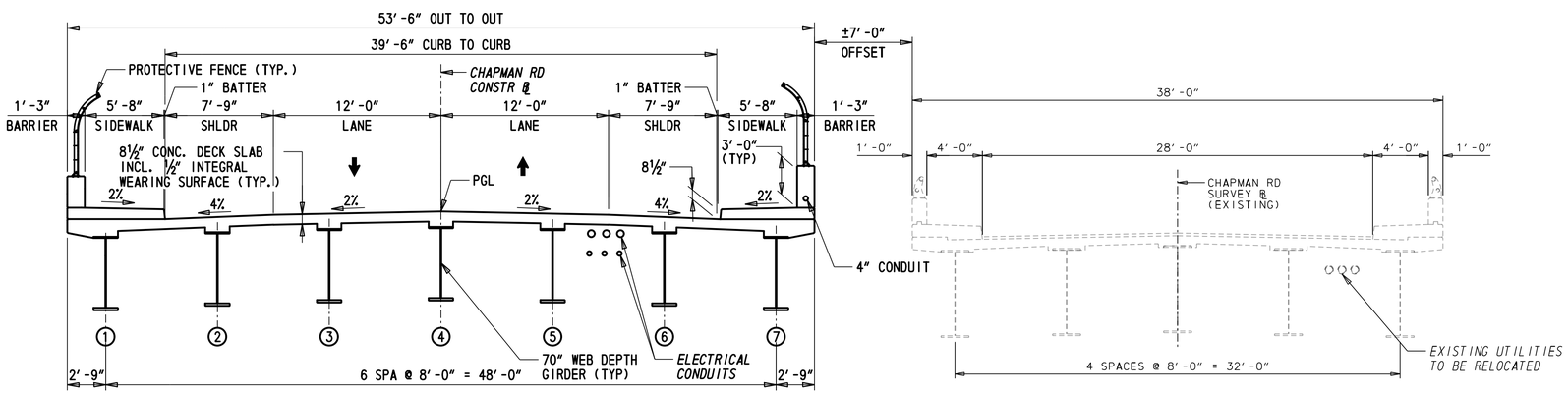

SECTION

SCALE: 3/16" = 1'-0"

I95 SB - CONSTRUCTION SEQUENCE: (COINCIDENT WITH I-95 NB CONSTRUCTION SEQUENCE ON SHEET BD 1-714A BD-04)

1. INSTALL BARRIERS AND REMOVE GUARDRAIL ALONG I-95 NB AND SB IN ACCORDANCE WITH PHASE 1 MOT PLANS.
2. INSTALL TEMPORARY SUPPORT OF EXCAVATION AS SHOWN ON THE PLANS AT THE WESTERN AND EASTERN APPROACHES IMMEDIATELY ADJACENT TO THE EXISTING CHAPMAN ROAD BRIDGE.
3. INSTALL INSTRUMENTATION MONITORING DEVICES (TILTMETERS ON EXISTING CHAPMAN ROAD PIERS, SURFACE MONUMENTS IN ADJACENT I-95 NB AND NB SHOULDERS, PIEZOMETERS ADJACENT TO NEW BRIDGE ABUTMENTS, ETC.)
4. EXCAVATE TO ESTABLISH A WORKING PLATFORM FOR THE CONSTRUCTION OF THE MSE WALL ABUTMENTS.
5. DRIVE THE PILES TO CAPACITY FOR EACH ABUTMENT. INSTALL SLEEVES AROUND EACH PILE.
6. CONSTRUCT THE MSE WALL EMBANKMENTS AT EACH ABUTMENT AND IN THE MEDIAN; INSTALL SETTLEMENT PLATFORMS AND MONITOR SETTLEMENT DURING CONSTRUCTION OF MSE AND EMBANKMENTS.
7. INSTALL DRAINAGE AND REQUIRED COVER AT FRONT FACE OF PROPOSED CHAPMAN ROAD BRIDGE ABUTMENTS AS THE MSE WALLS ARE BEING CONSTRUCTED. SEE PHASE 1 MOT FOR DRAINAGE DETAILS.
8. CONSTRUCT THE PILE CAP AT EACH ABUTMENT
9. INSTALL BEARINGS.
10. PLACE CRANE ALONG I-95NB (SEE OPTIONAL CRANE PLACEMENT OR PROVIDE ALTERNATE)
11. SEE DETOUR PLANS FOR CHAPMAN ROAD AND I-95 PRIOR TO GIRDER ERECTION
12. GIRDER ERECTION SEQUENCE (CHAPMAN ROAD UNDER DETOUR):
    A. PLACE CRANE AT WEST APPROACH TO CHAPMAN ROAD BRIDGE (SEE OPTIONAL CRANE PLACEMENT OR PROVIDE ALTERNATE)
    B. DELIVER GIRDERS TO ADJACENT EXISTING CHAPMAN ROAD
    C. ERECT GIRDER 1 AND ADEQUATELY SECURE AT BEARING (CONTRACTOR RESPONSIBLE FOR BRACING TOP FLANGES OF ALL GIRDERS UNTIL END DIAPHRAGM IS CURED. COST TO PROVIDE ADEQUATE BRACING IS INCIDENTAL TO ITEM 615001)
    D. ERECT GIRDER 2 AND INSTALL DIAPHRAGMS
    E. ERECT GIRDERS 3-7 AND INSTALL DIAPHRAGMS TO PROVIDE ADEQUATE STABILITY
13. REMOVE I-95 AND CHAPMAN ROAD DETOUR UPON COMPLETION OF INSTALLATION OF GIRDERS
14. INSTALL UNDERDECK SHIELDING
15. INSTALL CONDUIT AND UTILITY HANGERS
16. INSTALL STAY-IN-PLACE FORMS, WELD SHEAR STUDS TO TOP OF GIRDERS AND INSTALL DECK REINFORCEMENT
17. PLACE REINFORCEMENT FOR CONCRETE DIAPHRAGMS AND POUR CONCRETE DIAPHRAGMS
18. POUR DECK CONCRETE
19. AFTER THE CONCRETE DECK HAS CURED, JACK AND RESET THE BRIDGE TO REMOVE SHEAR DEFORMATIONS FROM ELASTOMERIC BEARINGS. THE RESETTING OF THE BEAMS MUST BE COMPLETED BETWEEN 40 DEGREES AND 80 DEGREES. TIGHTEN ANCHOR BOLTS.
20. PLACE REINFORCEMENT FOR BARRIERS AND SIDEWALK AND POUR CONCRETE SIDEWALK AND BARRIER
21. INSTALL WATERPROOFING ON REAR FACE OF CONCRETE DIAPHRAGM AND BACKFILL.
22. PLACE SLEEPER SLAB REINFORCEMENT AND EXPANSION JOINT HARDWARE. POUR SLEEPER SLAB CONCRETE.
23. INSTALL PROLYPROPOLENE SHEET, PLACE APPROACH SLAB REINFORCEMENT, EXPANSION JOINT HARDWARE AND POUR APPROACH SLAB.
24. INSTALL EXPANSION JOINT
25. PLACE REINFORCEMENT FOR MOMENT SLABS AND POUR MOMENT SLAB CONCRETE
26. INSTALL SAFETY FENCE AND HANDRAIL ALONG BRIDGE, APPROACH SLAB AND MOMENT SLAB AFTER THE CONCRETE HAS CURED.
27. PERFORM REMAINING CHAPMAN ROAD CONSTRUCTION AND RELOCATE UTILITIES AS DETAILED IN PHASE 1 MOT PLANS.
28. INSTALL MOT IN ACCORDANCE WITH PHASE 4 MOT PLANS
29. INSTALL UNDER DECK PROTECTIVE SHIELDING AS NECESSARY UNDER EXISTING CHAPMAN ROAD BRIDGE
30. SAWCUT DECK OF EXISTING CHAPMAN ROAD FOR REMOVAL
31. PLACE CRANE (AS SHOWN ON OPTIONAL PLAN OR PROVIDE ALTERNATE LOCATION)
32. SEE DETOUR PLANS FOR CHAPMAN ROAD AND I-95 PRIOR TO EXISTING CHAPMAN ROAD BRIDGE BEAM REMOVAL.
33. REMOVE BEAMS OVER I-95 SB WHILE CHAPMAN ROAD AND I-95 SB ARE UNDER DETOUR
34. REMOVE REMAINDER OF BEAMS FROM THE MEDIAN OF I-95 OR APPROACHES
35. DEMOLISH PIERS AND ABUTMENTS TO APPROXIMATELY 3 (THREE) FEET BELOW TOP OF PROPOSED GRADE.
36. FINALIZE GRADING AND PERFORM REMAINING PHASE 4 MOT WORK

BR 1-714
BD-04

ADDENDA / REVISIONS	SCALE AS NOTED	BR 1-714 ON CHAPMAN ROAD OVER I-95 SB	CONTRACT T201507402	BRIDGE NO. 1-714	CONSTRUCTION SEQUENCE AND DEMOLITION PLAN	SECTION AEC
			COUNTY NEW CASTLE	DESIGNED BY: R. GANOVSKA		SHEET NO. 28
				CHECKED BY: R.DOMINICK		

8/16/2019 8:15:15 PM P:\60323054 DelDOT AGR 1672 BDS\T06 - Rehab Br. 1-714\900 WORK\910 CAD\20-SHEETS\Structures\Final Design\SB\BR1-714-SB-TS01.dgn

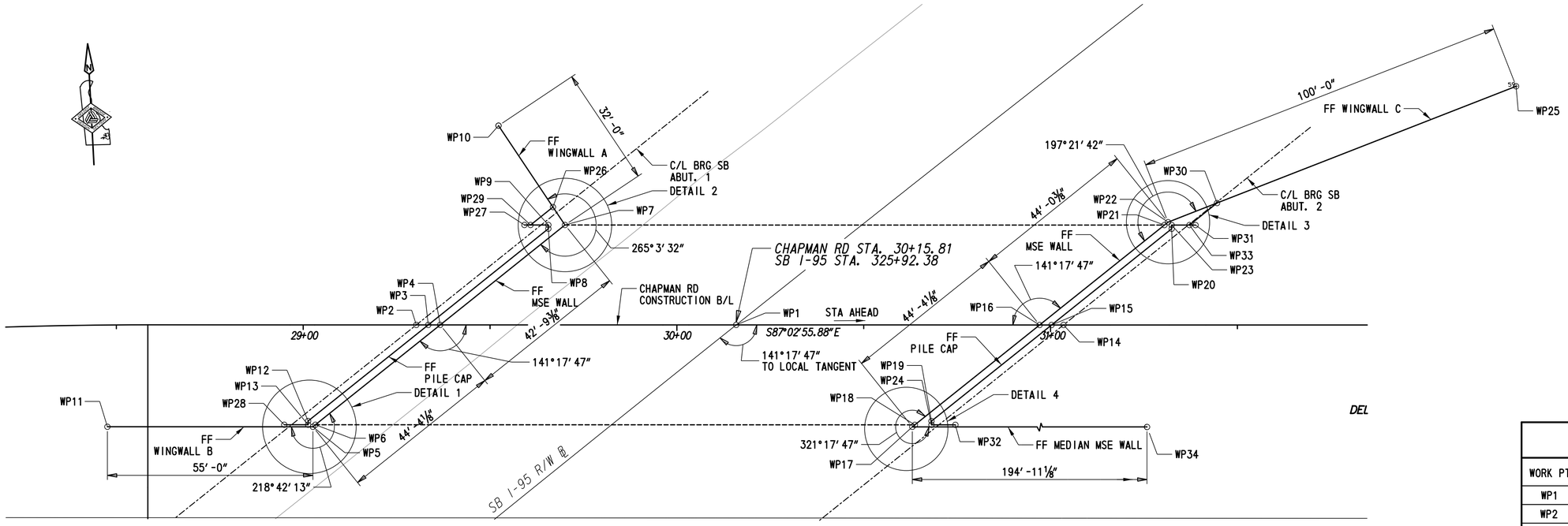

NOTE:

1. FOUR DECIMAL PLACE COORDINATES ARE FOR COMPUTATIONAL PURPOSES ONLY AND DO NOT IMPLY A PRECISION BEYOND TWO DECIMAL PLACES.

STAKE-OUT PLAN

SCALE: 1" = 10"

WORKING POINTS

WORK PT	STATION	OFFSET	COORDINATES	
			NORTHING	EASTING
WP1	30+15.81	0.00	607049.4160	580217.9256
WP2	29+30.20	0.00	607053.8233	580132.4349
WP3	29+33.40	0.00	607053.6586	580135.6292
WP4	29+36.60	0.00	607053.4939	580138.8234
WP5	29+01.99	27.73 RT	607027.5832	580102.8345
WP6	29+03.21	26.75 RT	607028.4982	580104.1054
WP7	29+69.98	26.75 LT	607078.4897	580173.5415
WP8	29+65.54	25.75 LT	607077.7199	580169.0494
WP9	29+65.54	26.75 LT	607078.7186	580169.1009
WP10	29+52.20	53.35 LT	607105.9731	580157.1507
WP11	28+46.72	27.67 RT	607030.4149	580047.9074
WP12	29+01.26	25.75 RT	607029.5973	580102.2090
WP13	29+01.26	26.75 RT	607028.5986	580102.1575
WP14	31+03.41	0.00	607044.9058	580305.4135
WP15	31+00.21	0.00	607045.0705	580302.2192
WP16	30+97.01	0.00	607045.2351	580299.0250
WP17	30+62.40	27.73 RT	607019.3244	580263.0360
WP18	30+63.63	26.75 RT	607020.2394	580264.3069
WP19	30+68.07	25.75 RT	607021.0092	580268.7990
WP20	31+32.35	25.75 LT	607069.1317	580335.6394
WP21	31+30.40	26.75 LT	607070.2308	580333.7431
WP22	31+31.38	27.53 LT	607070.9642	580334.7617
WP23	31+32.35	26.75 LT	607070.1304	580335.6909
WP24	30+68.07	26.75 RT	607020.0105	580268.7476
WP25	32+24.52	63.93 LT	607102.5140	580429.6543
WP26	29+66.77	31.56 LT	607083.4554	580170.5800
WP27	29+59.14	26.75 LT	607079.0479	580162.7136
WP28	28+94.87	26.75 RT	607028.9279	580095.7702
WP29	29+60.77	26.75 LT	607078.9639	580164.3416
WP30	31+44.49	32.66 LT	607075.4043	580348.1163
WP31	31+38.74	26.75 LT	607069.8011	580342.0782
WP32	30+74.47	26.75 RT	607019.6812	580275.1349
WP33	31+37.11	26.75 LT	607069.8851	580340.4502
WP34	32+57.33	27.73 RT	607009.2890	580457.6990

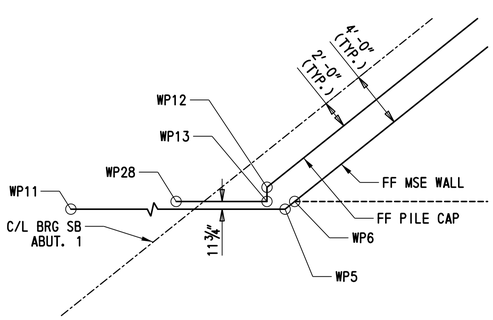

DETAIL 1

SCALE: 1/8" = 1'-0"

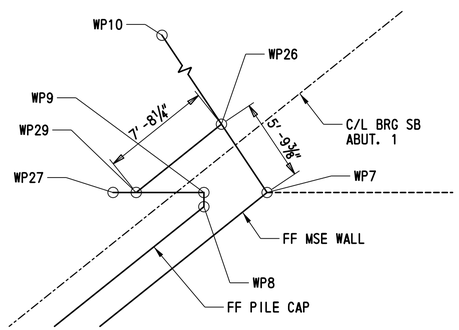

DETAIL 2

SCALE: 1/8" = 1'-0"

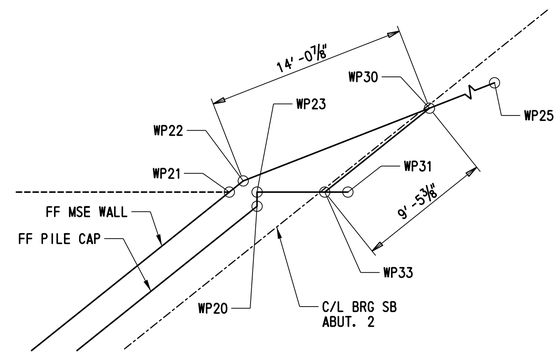

DETAIL 3

SCALE: 1/8" = 1'-0"

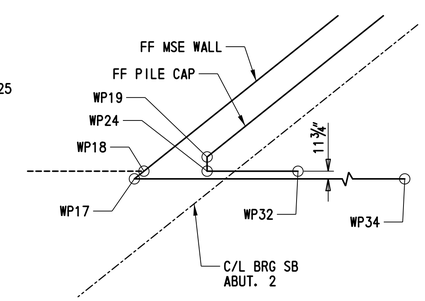

DETAIL 4

SCALE: 1/8" = 1'-0"

BR 1-714
BD-05

ADDENDA / REVISIONS	SCALE AS NOTED	BR 1-714 ON CHAPMAN ROAD OVER I-95 SB	CONTRACT T201507402	BRIDGE NO. 1-714	GEOMETRIC LAYOUT	SECTION AEC
			COUNTY NEW CASTLE	DESIGNED BY: R.GANOVSKA		SHEET NO. 29
				CHECKED BY: E. LUCZKA/S. MUKHERJEE		

8/16/2019 8:15:59 PM P:\60323054 DelDOT AGR 1672 BDS\T06 - Rehab Br. 1-714\900 WORK\910 CAD\20-SHEETS\Structures\Final Design\SB\BR1-714-SB-ST01.dgn

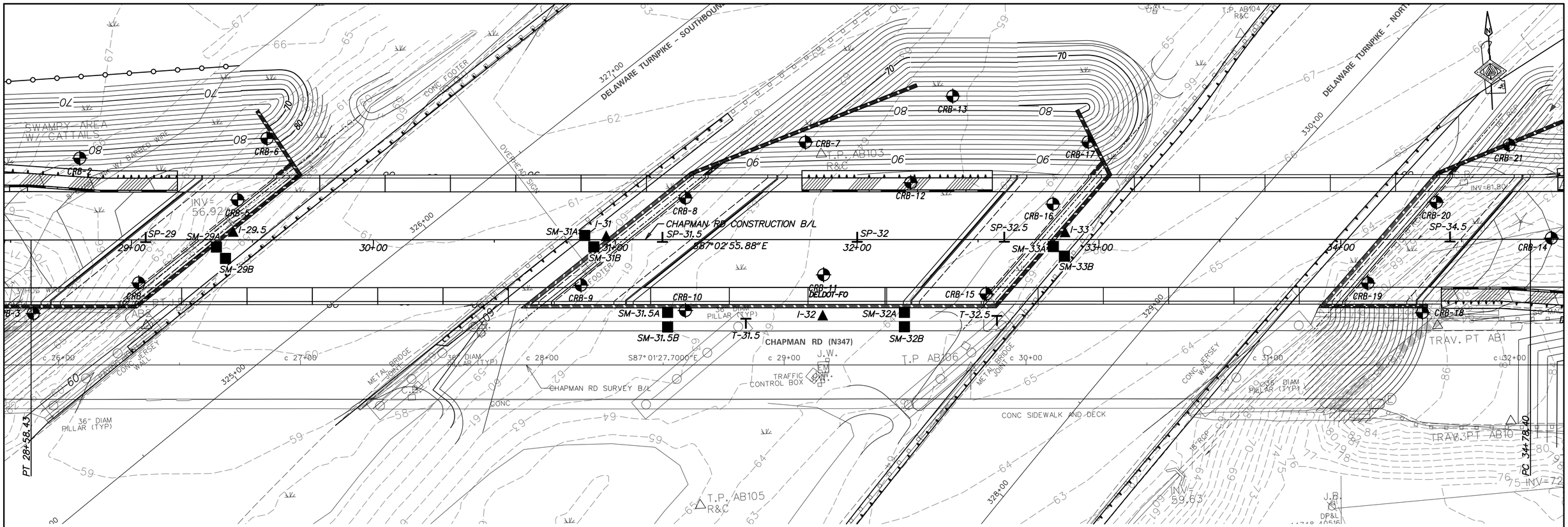

PLAN - PROPOSED

SCALE: 1" = 20'

LEGEND

- SP — SETTLEMENT PLATE
- I — INCLINOMETER
- SM — SURFACE MONUMENT
- T — TILTMETER

SURFACE MONUMENTS		
NUMBER	STATION	OFFSET
SM-29A	29+35	3' RT
SM-29B	29+39	8' RT
SM-31A	30+87	2' LT
SM-31B	30+91	3' RT
SM-31.5A	31+22	30' RT
SM-31.5B	31+22	36' RT
SM-32A	32+20	30' RT
SM-32B	32+20	36' RT
SM-33A	32+81	3' RT
SM-33B	32+86	7' RT

INCLINOMETERS			
NUMBER	STATION	OFFSET	TIP EL.
I-29.5	29+42	3' LT	-40'
I-31	30+96	1' LT	-40'
I-32	31+85	32' RT	-40'
I-33	32+86	2' LT	-40'

SETTLEMENT PLATFORMS		
NUMBER	STATION	OFFSET
SP-29	29+05	0
SP-31.5	31+20	0
SP-32	32+00	0
SP-32.5	32+60	0
SP-34.5	34+45	0

TILTMETERS		
NUMBER	STATION	OFFSET
T-31.5	31+54	33' RT
T-32.5	32+58	33' RT

BR 1-714
BD-06

ADDENDA / REVISIONS	SCALE AS NOTED	BR 1-714 ON CHAPMAN ROAD OVER I-95 NB/SB	CONTRACT T201507402	BRIDGE NO. 1-714 /1-714A	GEOTECHNICAL INSTRUMENTATION PLAN	SECTION AEC
			COUNTY NEW CASTLE	DESIGNED BY: P.MOFFIT		SHEET NO. 30
				CHECKED BY: J.VOLK		

8/16/2019 8:17:57 PM P:\60323054 DelDOT AGR 1672 BDS\T06 - Rehab Br. 1-714\900 WORK\910 CAD\20-SHEETS\Structures\Final Design\GEOTECH\BR1-714-NB_SB-GT01.dgn

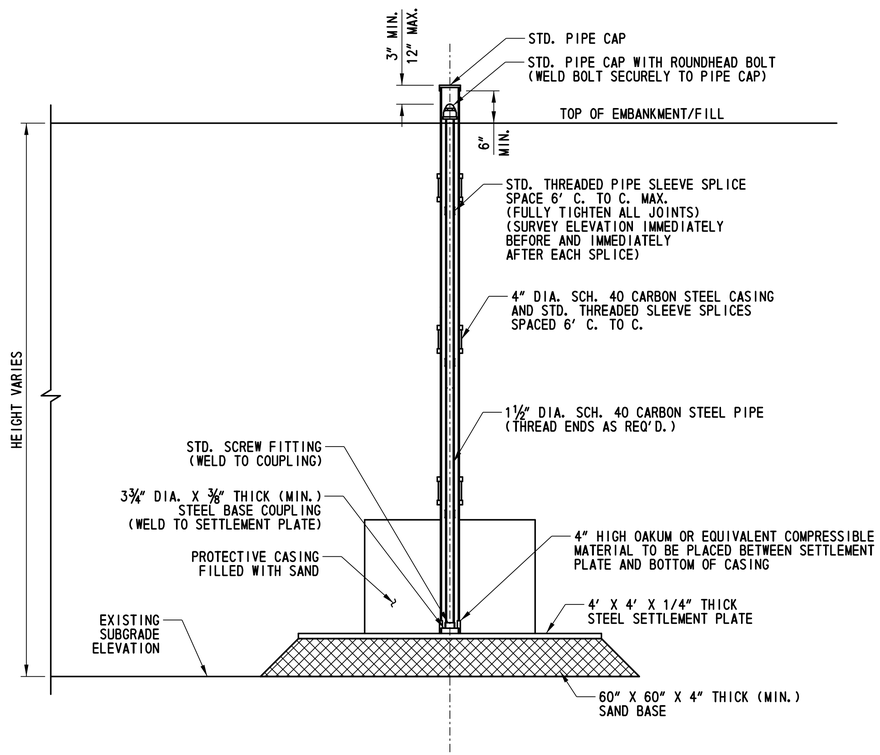

SETTLEMENT PLATFORM

NTS

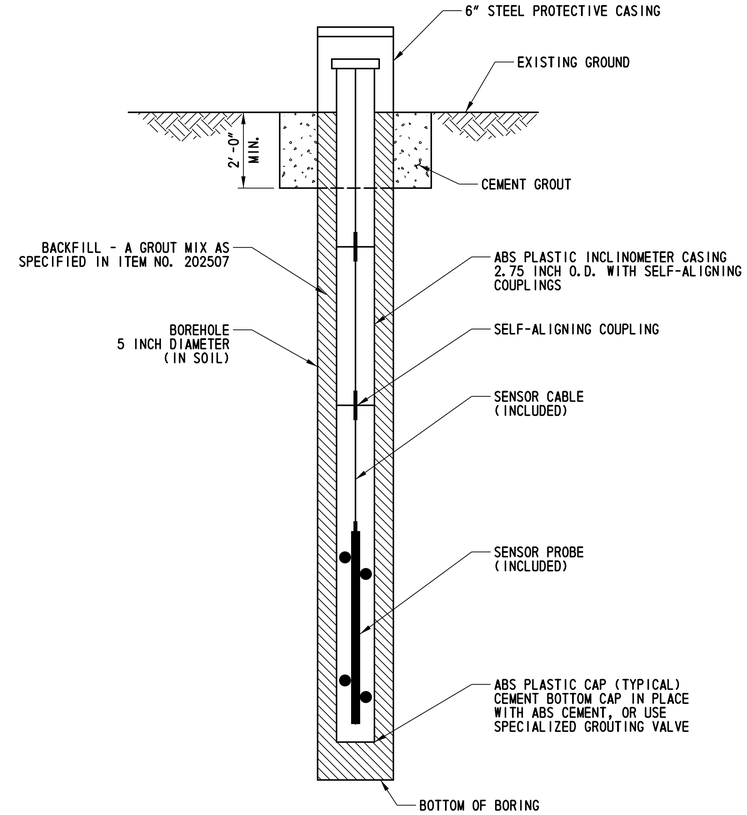

INCLINOMETER INSTALLATION

NTS

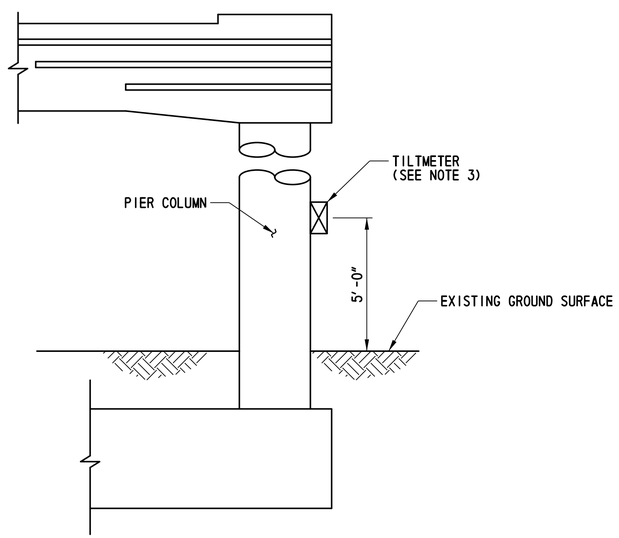

TILTMETER TYPICAL DETAIL

NTS

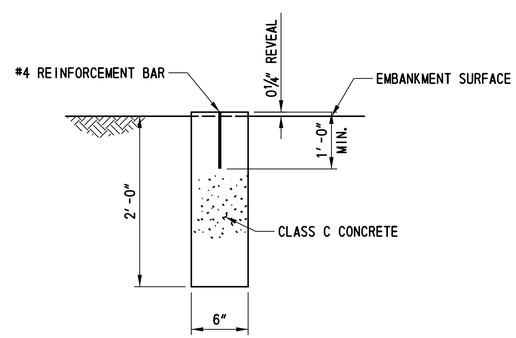

SETTLEMENT MONUMENT DETAIL

SCALE: 3/4"=1'-0"

CROSS REFERENCE NOTE:

1. FOR LOCATION OF SETTLEMENT PLATFORMS, SURFACE MONUMENTS, INCLINOMETERS AND TILTMETERS, SEE SHEET BR 1-714 BD-06.

NOTE:

1. THE BASE OF THE SETTLEMENT PLATFORM SHALL BE PLACED ON THE TOP OF THE EXISTING SUBGRADE.
2. READINGS ON THE SETTLEMENT PLATFORMS AND SURFACE MONUMENTS AND TILTMETERS SHALL BE MADE BY THE CONTRACTOR AFTER INITIAL INSTALLATION AND PRIOR TO FILL PLACEMENT. DURING FILL PLACEMENT, READINGS ON ALL SETTLEMENT PLATFORMS SHALL BE TAKEN NOT LESS FREQUENTLY THAN 3 CALENDAR DAY INTERVALS. AFTER FILL PLACEMENT IS COMPLETE, READINGS ON ALL SETTLEMENT PLATFORMS SHALL BE TAKEN NOT LESS FREQUENTLY THAN 5 CALENDAR DAY INTERVALS.
3. PROVIDE DGSI MEMS BIAXIAL TILTMETER WITH 10 M CABLE AND DATA RECORDER. INSTALL ON NORTHERN-MOST CONCRETE PIER COLUMNS ON EXISTING PIERS 3 AND 4, FACING NORTH AS INDICATED ON PLANS.

BR 1-714
BD-07

ADDENDA / REVISIONS	SCALE AS NOTED	BR 1-714 ON CHAPMAN ROAD OVER I-95 NB/SB	CONTRACT T201507402	BRIDGE NO. 1-714 /1-714A	GEOTECHNICAL INSTRUMENTATION TYPICAL DETAILS	SECTION AEC
			COUNTY NEW CASTLE	DESIGNED BY: P.MOFFIT		SHEET NO. 31
				CHECKED BY: J.VOLK		

8/16/2019 8:18:11 PM P:\60323054 DelDOT AGR 1672 BDS\T06 - Rehab Br. 1-714\900 WORK\910 CAD\20-SHEETS\Structures\Final Design\GEOTECH\BR1-714-NB_SB-GT02.dgn

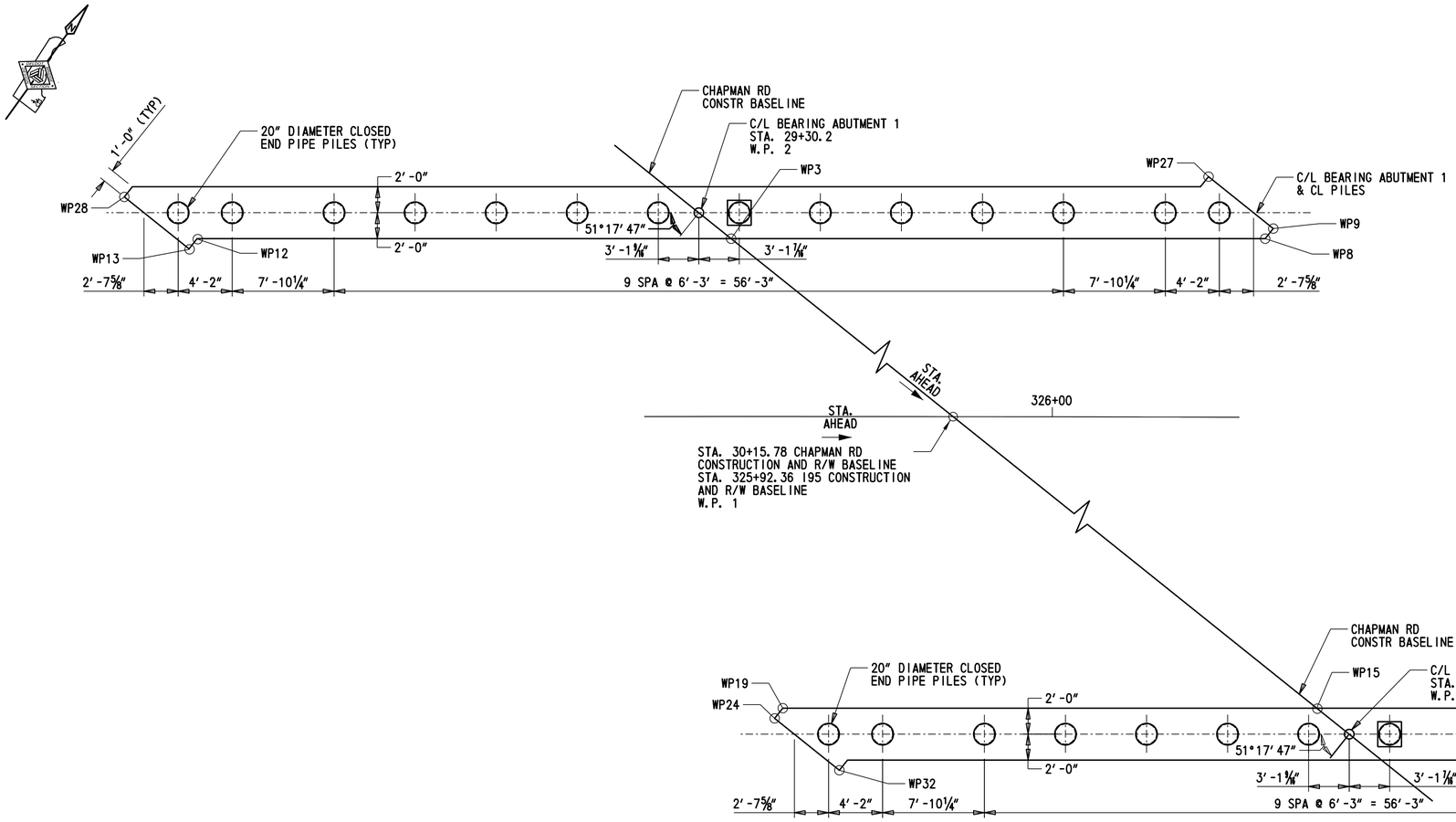

PILE PLAN

SCALE: 3/16" = 10'

LEGEND:

○ DENOTES 20" DIAMETER CLOSED END PILES

⊡ DENOTES TEST PILE

CROSS REFERENCE NOTES:

1. FOR BRIDGE PLAN AND ELEVATION, SEE SHEET BR 1-714 BD-03.
2. FOR ABUTMENT PLAN AND ELEVATION, SEE SHEETS BR 1-714 BD-10 AND BR 1-714 BD-11.
3. FOR PILE DETAILS, SEE SHEET BR 1-714 BD-09.
4. FOR GEOMETRIC LAYOUT, SEE SHEET BR 1-714 BD-05.

BR 1-714
BD-08

ADDENDA / REVISIONS	SCALE AS NOTED	BR 1-714 ON CHAPMAN ROAD OVER I-95 SB	CONTRACT T201507402	BRIDGE NO. 1-714	PILE PLAN	SECTION AEC
			COUNTY NEW CASTLE	DESIGNED BY: W.O'RANGERS		SHEET NO. 32
				CHECKED BY: J.EBERLE		

8/16/2019 8:18:22 PM P:\60323054 DelDOT AGR 1672 BDS\T06 - Rehab Br. 1-714\900 WORK\910 CAD\20-SHEETS\Structures\Final Design\SB\BR1-714-SB-AB04.dgn

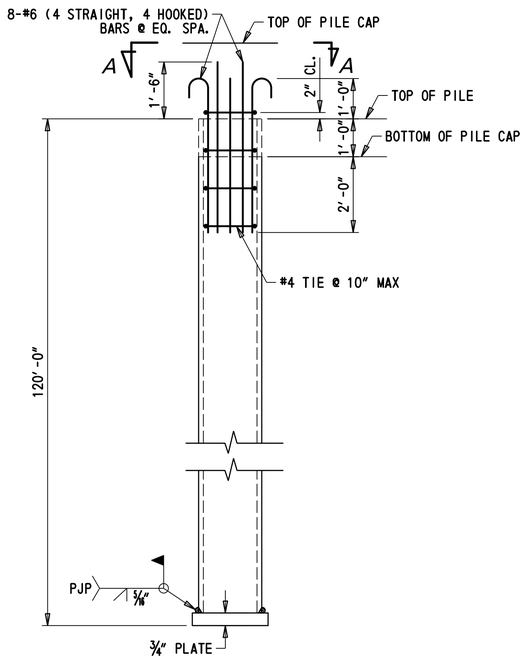

PILE ELEVATION

SCALE : 1/2" = 1'-0"

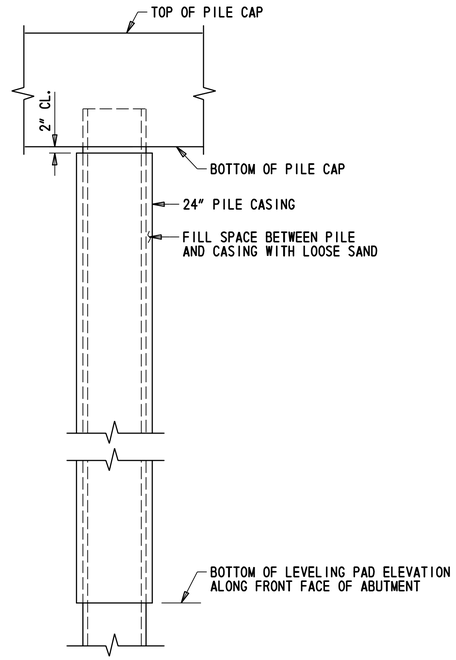

PILE CASING

SCALE : 1/2" = 1'-0"

GENERAL PILE NOTES

1. FOR MORE INFORMATION REGARDING PILE DRIVING, INSTALLATION, MATERIALS, AND FABRICATION, REFER TO SECTION 605 - DRIVEN PILES OF THE STANDARD SPECIFICATIONS.

2. EACH TEST PILE SHALL BE DYNAMICALLY TESTED BY THE CONTRACTOR IN ACCORDANCE WITH ITEM #605201 - DYNAMIC PILE TESTING BY CONTRACTOR. THE QUANTITIY FOR DYNAMIC PILE TESTING SHALL INCLUDE ONE FOR THE INITIAL DRIVE AND ONE FOR THE RE-STRIKE OF EACH TEST PILE. THE NEED TO RESTRIKE EITHER A TEST PILE OR A PRODUCTION PILE SHALL BE THE SOLE DECISION OF THE ENGINEER.

3. WAVE EQUATION ANALYSIS SHALL BE SUBMITTED BY THE CONTRACTOR FOR REVIEW BY THE ENGINEER (ELECTRONIC PREFERRED, OTHERWISE 8 COPIES MINIMUM).

4. ALL PILES SHALL BE ORDERED THE SAME LENGTH (I.e. WITHOUT A LONGER TEST PILE). TEST PILES, AS NOTED, SHALL BE DRIVEN FIRST TO ESTABLISH DRIVING CRITERIA FOR THE OTHER PILES IN EACH SUBSTRUCTURE ELEMENT. AN ADDITIONAL 10' HAS BEEN ADDED TO THE DESIGN LENGTH OF EACH PILE AS A CONTINGENCY.

CAST-IN-PLACE PILE NOTES

1. COST OF REINFORCING BARS INSIDE THE STEEL SHELL IS INCLUDED IN THE BID PRICE FOR THE APPROPRIATE CAST-IN-PLACE CONCRETE PILE ITEMS. REINFORCEMENT SHALL BE EPOXY COATED.

2. PILES SHALL BE COAL TAR EPOXY COATED.

3. THE INTERIOR OF THE REINFORCEMENT CAGE SHALL BE OPEN TO ALLOW FOR FREE FLOW OF CONCRETE INTO THE PILE SHELL. NO BRACING, SPACERS, ETC. WILL BE PERMITTED.

PROJECT SPECIFIC PILE NOTES

1. PILE TYPE:

   THIS PROJECT SHALL UTILIZE 20' DIA. BY 1/2" WALL CAST-IN-PLACE CONCRETE FILLED STEEL PIPE PILES. REINFORCEMENT SHALL EXTEND INTO THE PILE AS SHOWN IN THE TYPICAL PILE ELEVATION. ESTIMATED PRODUCTION PILE LENGTH IS 120' AT ABUTMENT 1 AND 120' AT ABUTMENT 2.

2. PILES SHALL BE DRIVEN TO A BEARING RESISTANCE OF 590 KIPS USING A RESISTANCE FACTOR OF 0.65.

3. MINIMUM TIP ELEVATION SHALL NOT BE REQUIRED FOR THIS PROJECT.

4. COST TO FURNISH AND INSTALL PILE CASING AND SAND BETWEEN PILE AND CASING ARE INCIDENTAL TO ITEMS 605505 AND 605506 RESPECTIVELY.

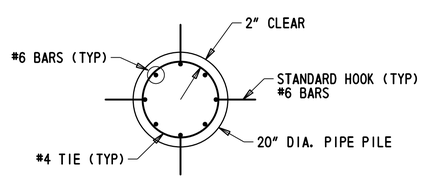

TYPICAL PIPE PILE SECTION (VIEW A-A)

SCALE : 1/2" = 1'-0"

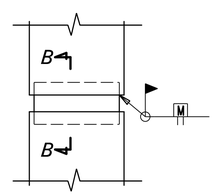

SPLICE JOINT DETAIL

SCALE : N.T.S.

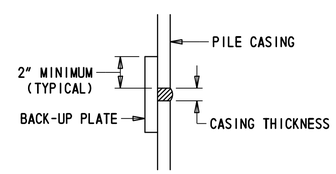

NOTE:
BACK-UP PLATE TO BE CUT FROM SAME PILE SIZE AS IS BEING SPLICED. CUT AND BEND TO FIT INSIDE DIAMETER OF PILE.

SECTION B-B

SCALE : N.T.S.

BR 1-714
BD-09

ADDENDA / REVISIONS		SCALE AS NOTED	BR 1-714 ON CHAPMAN ROAD OVER I-95 SB	CONTRACT T201507402	BRIDGE NO. 1-714	PILE DETAILS	SECTION AEC
				COUNTY NEW CASTLE	DESIGNED BY: W.O'RANGERS		SHEET NO. 33
					CHECKED BY: J.EBERLE		

8/16/2019
8:18:56 PM
P:\60323054 DelDOT AGR 1672 BDS\T06 - Rehab Br. 1-714\900 WORK\910 CAD\20-SHEETS\Structures\Final Design\SB\BR1-714-SB-PD01.dgn

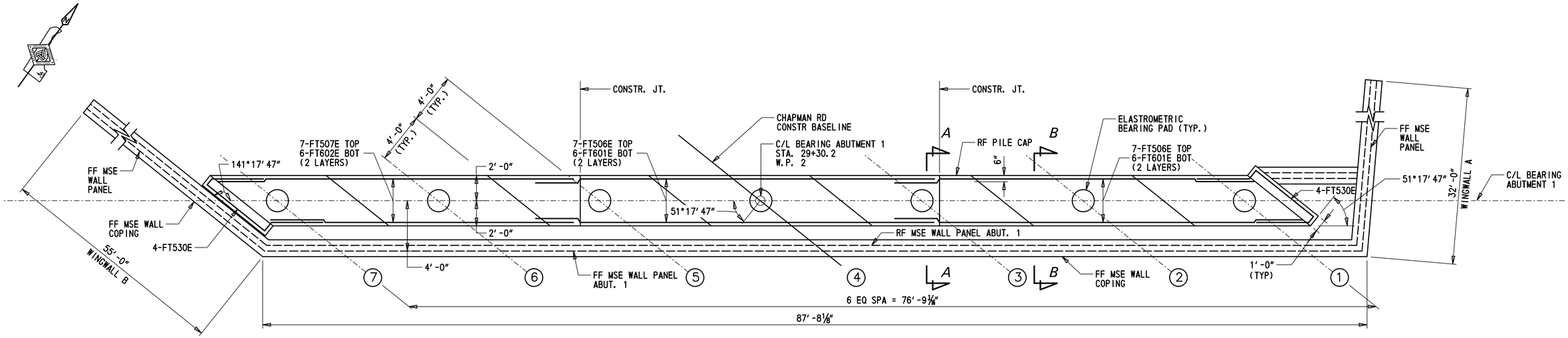

ABUTMENT 1 - PLAN

SCALE: 1/4" = 1'

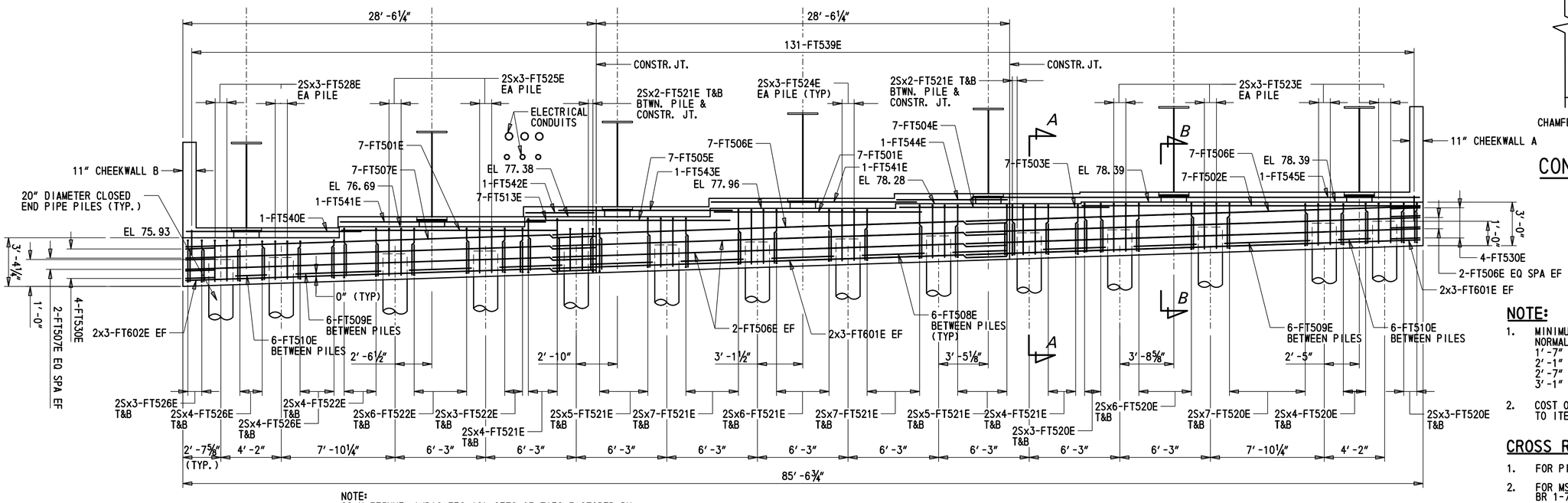

NOTE:
2SxX-FT5XXE -INDICATES (S) SETS OF TIES FACTORED BY TOTAL QUANTITY X BARS

ABUTMENT 1 - ELEVATION

SCALE: 1/4" = 1'

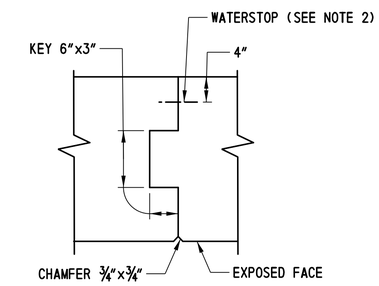

CONSTRUCTION JOINTS

SCALE: 1 1/2" = 1'

NOTE:

1. MINIMUM LAP SPLICE LENGTHS, NORMAL WEIGHT CONCRETE.
   1'-7" (#3 BARS)
   2'-1" (#4 BARS)
   2'-7" (#5 BARS)
   3'-1" (#6 BARS)
2. COST OF WATERSTOP SHALL BE INCIDENTAL TO ITEM 610002.

CROSS REFERENCE NOTES:

1. FOR PILE DETAILS, SEE SHEET BR 1-714 BD-09.
2. FOR MSE WALL ELEVATIONS, SEE SHEETS BR 1-714 BD-15 AND BR 1-714 BD-16.
3. FOR BEARING AND SOLE PLATE DETAILS, SEE SHEETS BR 1-714 BD-23 - BR 1-714 BD-25.
4. FOR REINFORCEMENT BAR SCHEDULE, SEE SHEET BR 1-714 BD-14.
5. FOR SECTIONS AND DETAILS, SEE SHEETS BR 1-714 BD-12 AND BR 1-714 BD-13.
6. WORK THIS SHEET WITH SHEETS BR 1-714 BD-12 AND BR 1-714 BD-13.
7. FOR REINFORCEMENT IN CHEEKWALL, REFER TO SHEET BR 1-714 BD-13.

BR 1-714
BD-10

ADDENDA / REVISIONS	SCALE AS NOTED	BR 1-714 ON CHAPMAN ROAD OVER I-95 SB	CONTRACT T201507402	BRIDGE NO. 1-714	ABUTMENT 1 PLAN AND ELEVATION	SECTION AEC
			COUNTY NEW CASTLE	DESIGNED BY: W.O'RANGERS		SHEET NO. 34
				CHECKED BY: S.MUKHERJEE		

8/16/2019
8:18:48 PM
P:\60323054 DelDOT AGR 1672 BDS\T06 - Rehab Br. 1-714\900 WORK\910 CAD\20-SHEETS\Structures\Final Design\SB\BR1-714-SB-AB01.dgn

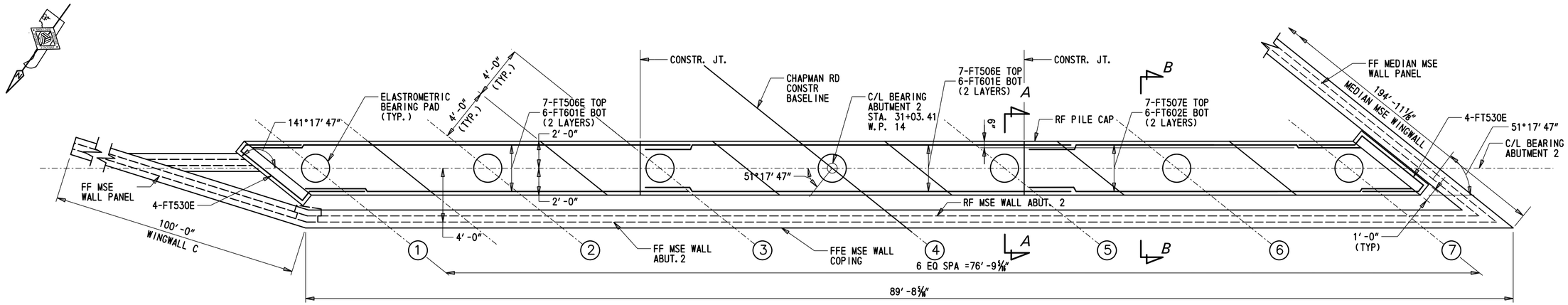

ABUTMENT 2 - PLAN

SCALE: ¼" = 1'

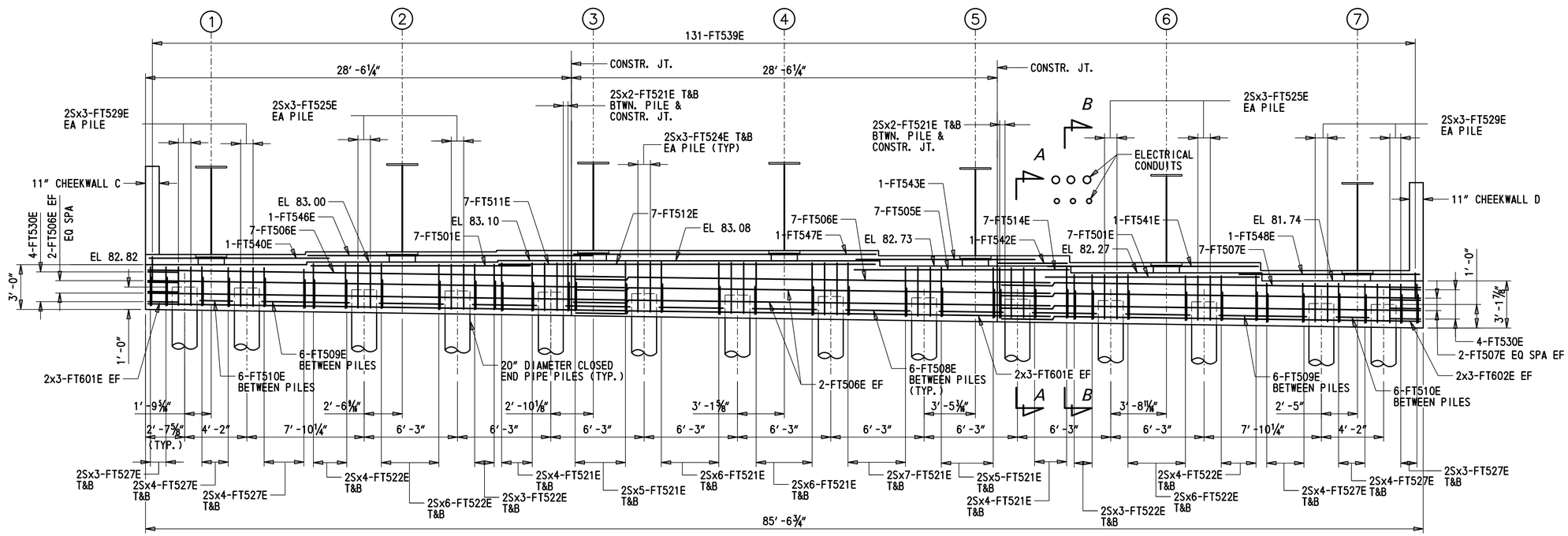

NOTE:
2SxX-FT5XXE - INDICATES (S) SETS OF TIES FACTORED BY TOTAL QUANTITY X BARS

ABUTMENT 2 - ELEVATION

SCALE: ¼" = 1'

NOTE:

1. MINIMUM LAP SPLICE LENGTHS, NORMAL WEIGHT CONCRETE.
   1'-7" (#3 BARS)
   2'-1" (#4 BARS)
   2'-7" (#5 BARS)
   3'-1" (#6 BARS)

CROSS REFERENCE NOTES:

1. FOR PILE DETAILS, SEE SHEET BR 1-714 BD-09.
2. FOR MSE WALL ELEVATIONS, SEE SHEETS BR 1-714 BD-15 AND BR 1-714 BD-16.
3. FOR BEARING AND SOLE PLATE DETAILS, SEE SHEETS BR 1-714 BD-23 - BR 1-714 BD-25.
4. FOR REINFORCEMENT BAR SCHEDULE, SEE SHEET BR 1-714 BD-14.
5. FOR SECTIONS AND DETAILS, SEE SHEETS BR 1-714 BD-12 AND BR 1-714 BD-13.
6. WORK THIS SHEET WITH SHEETS BR 1-714 BD-12 AND BR 1-714 BD-13.
7. FOR CONSTRUCTION JOINT DETAIL, SEE SHEET BR 1-714 BD-10.
8. FOR REINFORCEMENT IN CHEEKWALL, REFER TO SHEET BR 1-714 BD-13.

BR 1-714
BD-11

ADDENDA / REVISIONS	SCALE AS NOTED	BR 1-714 ON CHAPMAN ROAD OVER I-95 SB	CONTRACT T201507402	BRIDGE NO. 1-714	ABUTMENT 2 PLAN AND ELEVATION	SECTION AEC
			COUNTY NEW CASTLE	DESIGNED BY: W.O'RANGERS		SHEET NO. 35
				CHECKED BY: S.MUKHERJEE		

8/16/2019 8:19:01 PM P:\60323054 DelDOT AGR 1672 BDS\T06 - Rehab Br. 1-714\900 WORK\910 CAD\20-SHEETS\Structures\Final Design\SB\BR1-714-SB-AB02.dgn

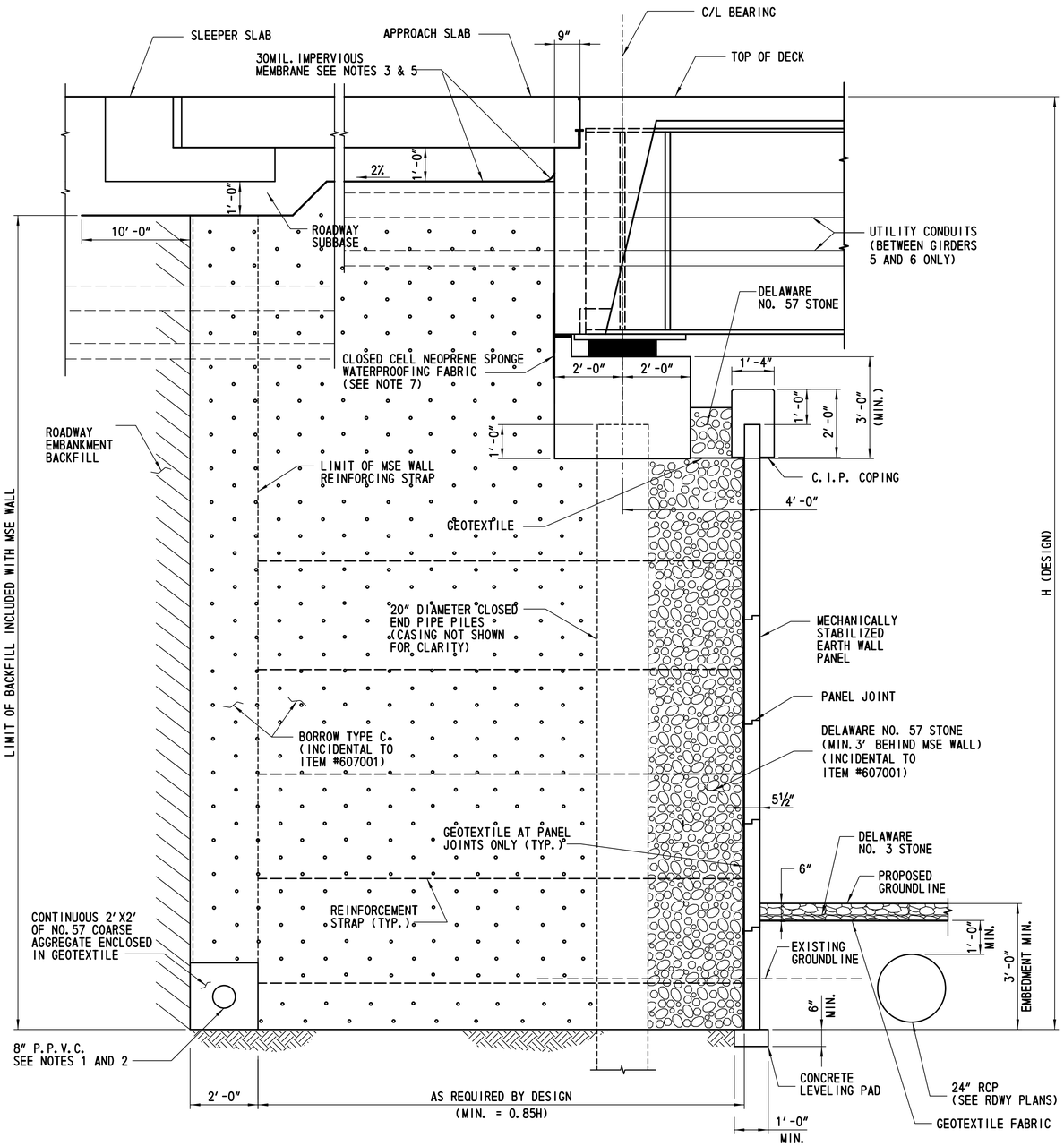

TYPICAL SECTION AT ABUTMENT

SCALE: 1/2" = 1'-0"

CROSS REFERENCE NOTES:

1. FOR DECK SECTIONS, SEE SHEET BR 1-714 BD-30.
2. FOR MEDIAN AND WINGWALL MSE ELEVATION, SEE SHEETS BR 1-714 BD-15 AND BR 1-714 BD-16.
3. FOR MSE WALL LAYOUTS, SEE SHEETS BR 1-714 BD-10 AND BR 1-714 BD-11.
4. FOR GEOMETRIC LAYOUT, SEE SHEET BR 1-714 BD-05.
5. FOR LOCATIONS OF SECTIONS C-C AND D-D, SEE SHEET BR 1-714 BD-13.
6. FOR APPROACH SLAB AND SLEEPER SLAB SECTIONS SEE SHEET BR 1-714 BD-35.
7. FOR LIMITS OF WATERPROOFING MEMBRANE, SEE SHEET BR 1-714 BD-27.

NOTES:

1. DRAIN PERFORATED POLYVINYL CHLORIDE PIPE (P.P.V.C.) TO DAYLIGHT.
2. SURROUND P.P.V.C. WITH A CONTINUOUS 2'-0"x2'-0" OF DELAWARE NO. 57 STONE ENCLOSED IN GEOTEXTILE.
3. SLOPE MEMBRANE A MINIMUM OF 2% AWAY FROM DIAPHRAGM.
4. COST OF EXPANSION MATERIAL AND RUBBERIZED JOINT SEALING MATERIAL SHALL BE INCIDENTAL TO ITEM 607001.
5. COST OF IMPERVIOUS MEMBRANE UNDER SUBBASE SHALL BE INCIDENTAL TO ITEM 607001.
6. REINFORCEMENT FOR CAST IN PLACE COPING INCLUDING CONNECTION TO MSE WALL PANELS SHALL BE DEVELOPED BY MSE WALL SUPPLIER. COST OF COPING AND REINFORCEMENT SHALL BE INCIDENTAL TO MSE WALL ITEM.
7. BOLTS AT BEARING PLATE NOT SHOWN FOR CLARITIY.
8. COST OF CLOSED CELL NEOPRENE SPONGE, NEOPRENE BEARING PAD AND PREFORMED CELLULAR POLYSTYRENE SHALL BE INCIDENTAL TO ITEM 610002.

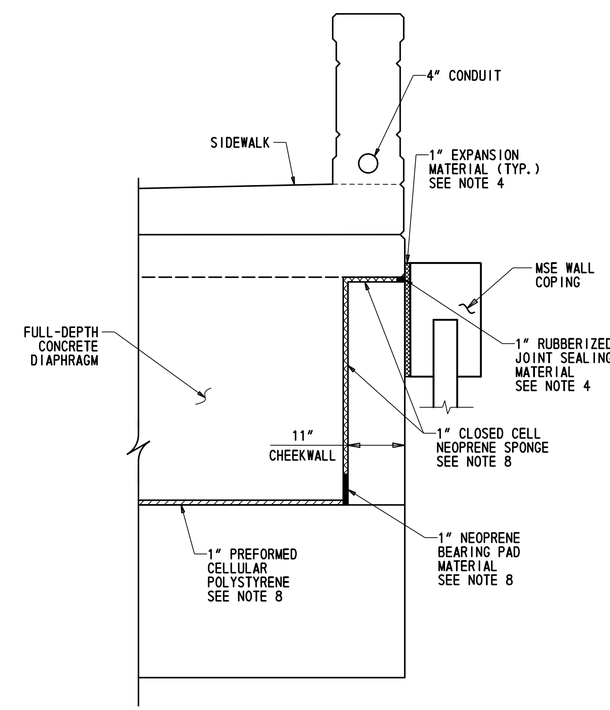

SECTION C-C

SCALE: 3/4" = 1'-0"

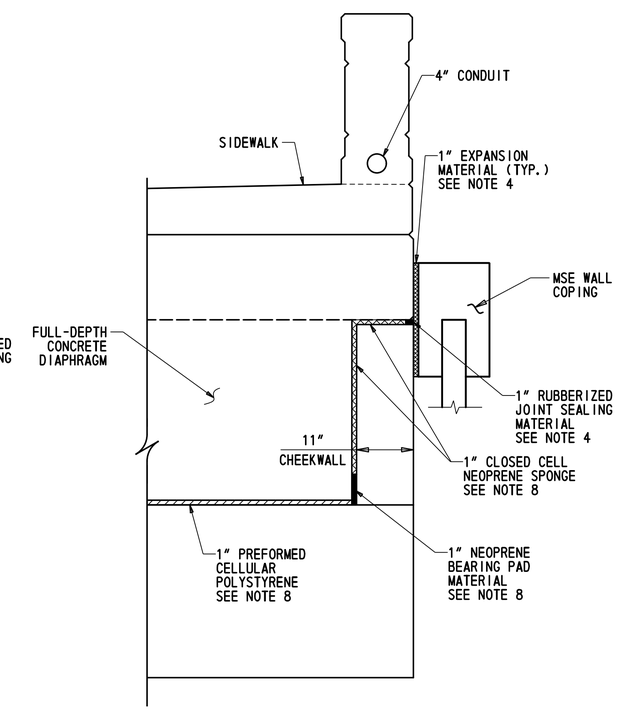

SECTION D-D

SCALE: 3/4" = 1'-0"

BR 1-714
BD-12

ADDENDA / REVISIONS	SCALE AS NOTED	BR 1-714 ON CHAPMAN ROAD OVER I-95 SB	CONTRACT T201507402	BRIDGE NO. 1-714	ABUTMENT SECTIONS	SECTION AEC
			COUNTY NEW CASTLE	DESIGNED BY: W.O'RANGERS		SHEET NO. 36
				CHECKED BY: S.MUKHERJEE		

9/19/2019 6:05:39 PM P:\60323054 DelDOT AGR 1672 BDS\T06 - Rehab Br. 1-714\900 WORK\910 CAD\20-SHEETS\Structures\Final Design\SB\BR1-714-SB-AB03.dgn

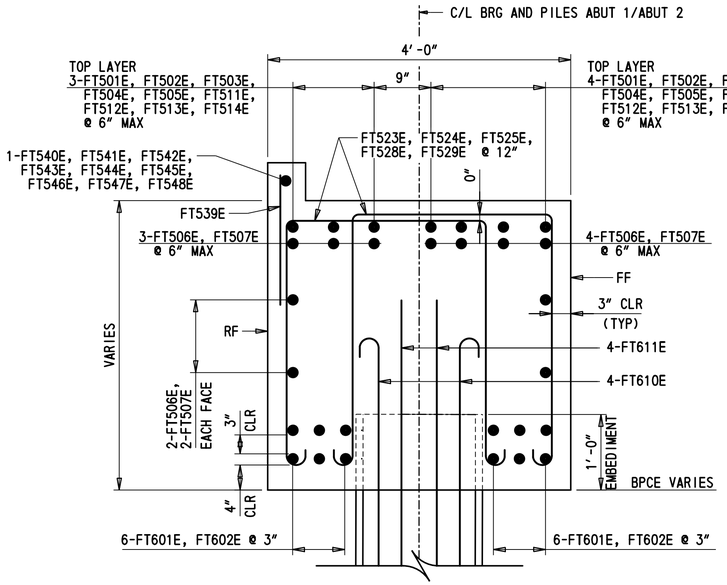

TYPICAL SECTION A-A

SCALE: ¾" = 1'-0"

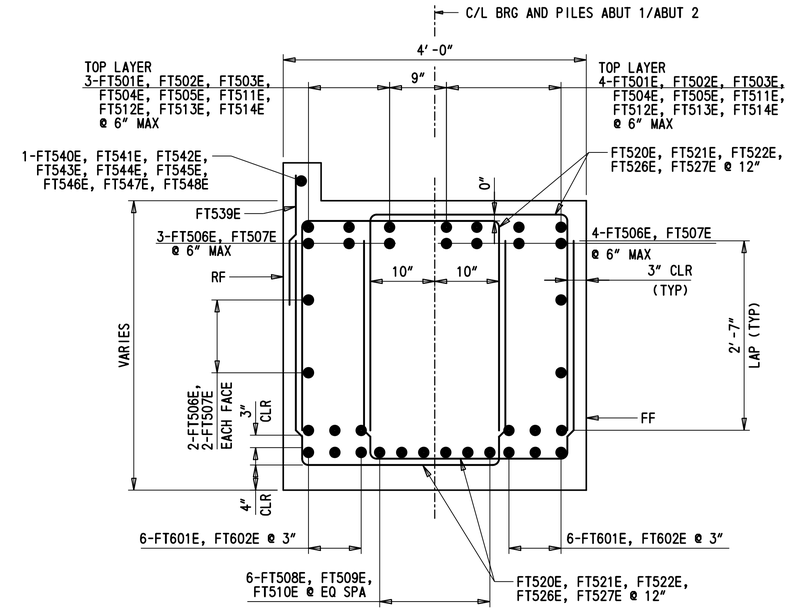

TYPICAL SECTION B-B

SCALE: ¾" = 1'-0"

CROSS REFERENCE NOTES:

1. FOR PILE DETAILS, SEE SHEET BR 1-714 BD-09.
2. FOR MSE WALL ELEVATION, SEE SHEET BR 1-714 BD-15.
3. FOR BEARING AND SOLE PLATE DETAILS, SEE SHEETS BR 1-714 BD-23 - BR 1-714 BD-25.
4. FOR REINFORCEMENT BAR SCHEDULE, SEE SHEET BR 1-714 BD-14.
5. FOR ABUTMENT 1 AND 2 PLAN AND ELEVATION, SEE SHEETS BR 1-714 BD-10 AND BR 1-714 BD-11.
6. WORK THIS SHEET WITH SHEETS BR 1-714 BD-10 AND BR 1-714 BD-11.

NOTES:

1. MINIMUM LAP SPLICE LENGTHS, NORMAL WEIGHT CONCRETE.
   1'-7" (#3 BARS)
   2'-1" (#4 BARS)
   2'-7" (#5 BARS)
   3'-1" (#6 BARS)
2. DIAPHRAGM REINFORCEMENT NOT SHOWN FOR CLARITY. FOR ADDITIONAL DETAIL SEE SHEETS BR 1-714 BD-26 AND BR 1-714 BD-27.
3. APPROACH SLAB AND DECK REINFORCEMENT NOT SHOWN FOR CLARITY, SEE SHEETS BR 1-714 BD-33 - BR 1-714 BD-35 AND BR 1-714 BD-28 - BR 1-714 BD-30.
4. STIRRUP BARS ALONG SKEW.

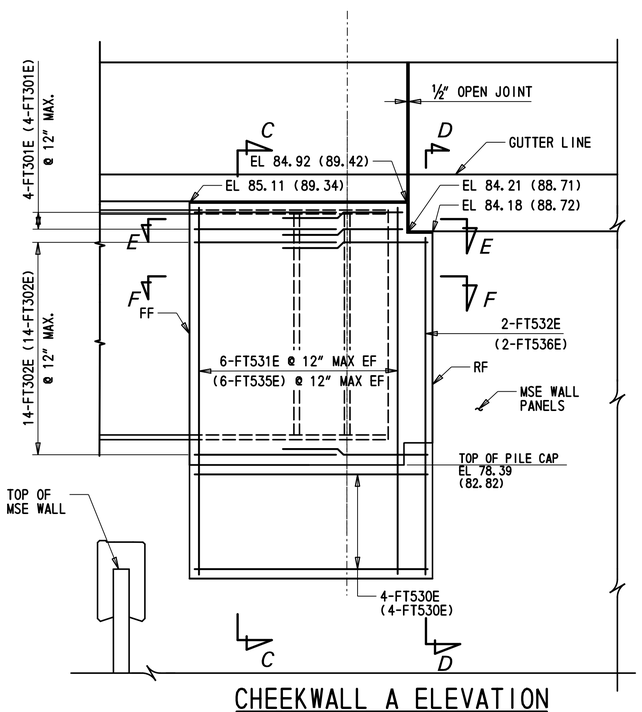

CHEEKWALL A ELEVATION

(BAR CALL-OUTS AND CHEEKWALL ELEVATIONS FOR CHEEKWALL C ARE SHOWN IN PARENTHESIS)
SCALE: ½"=1'-0"

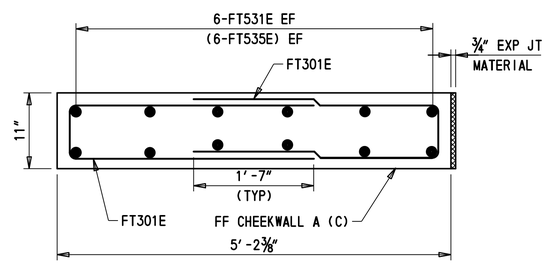

SECTION E-E

(BAR CALL-OUTS FOR CHEEKWALL C ARE SHOWN IN PARENTHESIS)
SCALE: ¾"=1'-0"

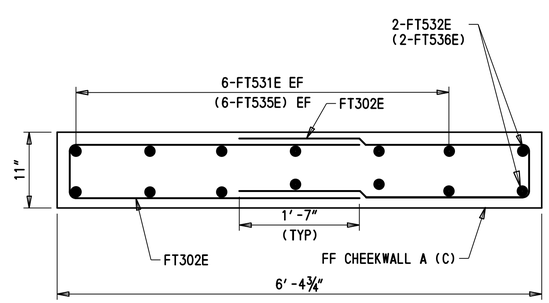

SECTION F-F

(BAR CALL-OUTS FOR CHEEKWALL C ARE SHOWN IN PARENTHESIS)
SCALE: ¾"=1'-0"

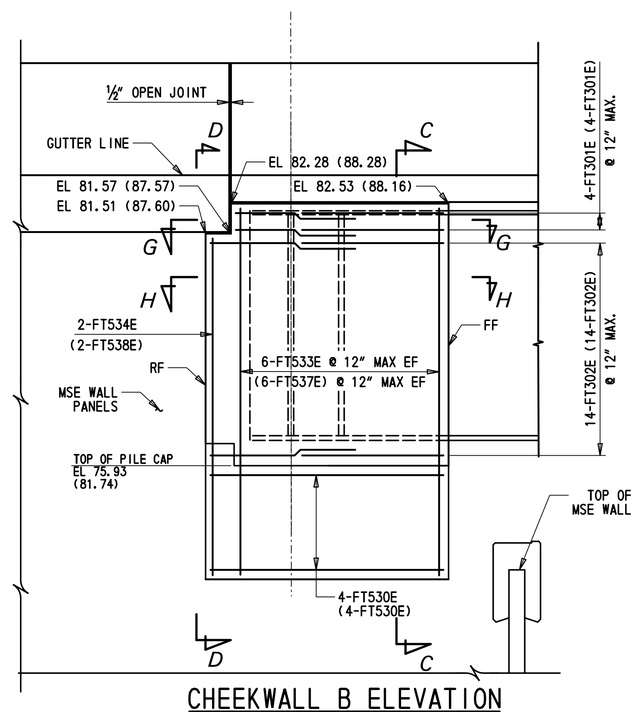

CHEEKWALL B ELEVATION

(BAR CALL-OUTS AND CHEEKWALL ELEVATIONS FOR CHEEKWALL D ARE SHOWN IN PARENTHESIS)
SCALE: ½"=1'-0"

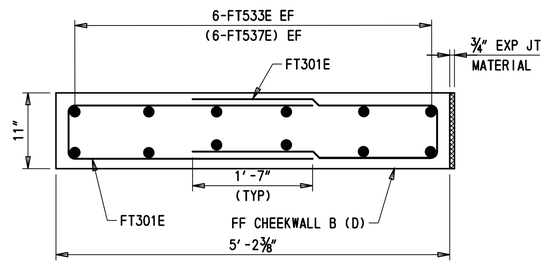

SECTION G-G

(BAR CALL-OUTS FOR CHEEKWALL D ARE SHOWN IN PARENTHESIS)
SCALE: ¾"=1'-0"

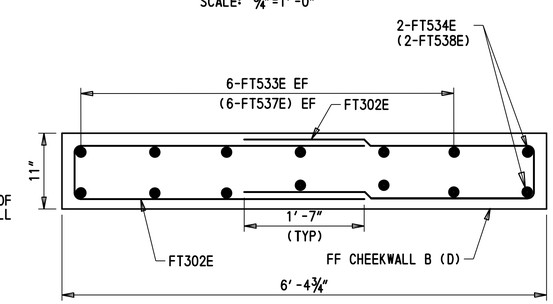

SECTION H-H

(BAR CALL-OUTS FOR CHEEKWALL D ARE SHOWN IN PARENTHESIS)
SCALE: ¾"=1'-0"

BR 1-714
BD-13

ADDENDA / REVISIONS	SCALE AS NOTED	BR 1-714 ON CHAPMAN ROAD OVER I-95 SB	CONTRACT T201507402	BRIDGE NO. 1-714	PILE CAP SECTIONS AND DETAILS	SECTION AEC
			COUNTY NEW CASTLE	DESIGNED BY: R.GANOVSKA		SHEET NO. 37
				CHECKED BY: E.LUCZKA/S.MUKHERJEE		

8/16/2019
8:19:44 PM
P:\60323054 DelDOT AGR 1672 BDS\T06 - Rehab Br. 1-714\900 WORK\910 CAD\20-SHEETS\Structures\Final Design\SB\BR1-714-SB-PCD01.dgn

REINFORCEMENT BAR SCHEDULE

SB PILE CAP

MARK	BAR SIZE	LENGTH	NUMBER	TYPE	A	B	C	D	E	F	G	H	J	K	O	REMARKS
FT301E	3	6′-8 1/2″	16	17		3′-1 3/4″	0′-5″	3′-1 3/4″								
FT302E	3	7′-11″	56	17		3′-9″	0′-5″	3′-9″								
							4′-2½″									
FT401E	4	6′-3 1/2″	196	T3							2′-1″				1′-4″	
FT501E	5	15′-4 3/4″	28	STR												
FT502E	5	23′-3 1/4″	7	STR												
FT503E	5	10′-5 1/4″	7	STR												
FT504E	5	7′-6 1/2″	7	STR												
FT505E	5	13′-4 1/2″	14	STR												
FT506E	5	31′-1 1/2″	44	STR												
FT507E	5	28′-2 1/2″	22	STR												
FT508E	5	4′-3 1/4″	108	STR												
FT509E	5	5′-10 1/2″	24	STR												
FT510E	5	2′-2 1/4″	24	STR												
FT511E	5	7′-6 1/4″	7	STR												
FT512E	5	20′-4″	7	STR												
FT513E	5	4′-7 1/4″	14	STR												
FT520E	5	VARIES 9′-1¾″ TO 9′-11¼″	92	17		VARIES 2′-6″ TO 2′-10¾″	4′-1 3/4″	VARIES 2′-6″ TO 2′-10¾″								MIN. LAP 2′-6″
FT521E	5	10′-4 1/4″	332	17		3′-1 1/4″	4′-1 3/4″	3′-1 1/4″								MIN. LAP 2′-6″
FT522E	5	9′-11 1/4″	156	17		2′-10 3/4″	4′-1 3/4″	2′-10 3/4″								MIN. LAP 2′-6″
FT523E	5	VARIES 10′-10½″ TO 11′-8″	24	S8	0′-7″	VARIES 2′-6″ TO 2′-10¾″	4′-8 1/2″	VARIES 2′-6″ TO 2′-10¾″			0′-7″		0′-5″			MIN. LAP 2′-6″
FT524E	5	12′-1″	72	S8	0′-7″	3′-1 1/4″	4′-8 1/2″	3′-1 1/4″			0′-7″		0′-5″			MIN. LAP 2′-6″
FT525E	5	11′-8″	36	S8	0′-7″	2′-10 3/4″	4′-8 1/2″	2′-10 3/4″			0′-7″		0′-5″			MIN. LAP 2′-6″
FT526E	5	VARIES 9′-1¾″ TO 9′-6¼″	44	17		VARIES 2′-6″ TO 2′-8¼″	4′-1 3/4″	VARIES 2′-6″ TO 2′-8¼″								MIN. LAP 2′-6″
FT527E	5	VARIES 9′-1¾″ TO 9′-3¾″	88	17		VARIES 2′-6″ TO 2′-7″	4′-1 3/4″	VARIES 2′-6″ TO 2′-7″								MIN. LAP 2′-6″
FT528E	5	VARIES 10′-10½″ TO 11′-3″	12	S8	0′-7″	VARIES 2′-6″ TO 2′-8¼″	4′-8 1/2″	VARIES 2′-6″ TO 2′-8¼″			0′-7″		0′-5″			MIN. LAP 2′-6″
FT529E	5	VARIES 10′-10½″ TO 11′-½″	24	S8	0′-7″	VARIES 2′-6″ TO 2′-7″	4′-8 1/2″	VARIES 2′-6″ TO 2′-7″			0′-7″		0′-5″			MIN. LAP 2′-6″
FT530E	5	12′-8 3/4″	16	17A		0′-8″	5′-10¾″	0′-8″	2′-9″			1′-8¾″		2′-1¾″		
FT531E	5	9′-2 3/4″	12	STR												
FT532E	5	8′-4″	2	STR												
FT533E	5	9′-5 1/2″	12	STR												
FT534E	5	8′-6″	2	STR												
FT535E	5	9′-1 1/4″	12	STR												
FT536E	5	8′-5″	2	STR												
FT537E	5	9′-2 1/2″	12	STR												
FT538E	5	8′-6 1/4″	2	STR												
FT539E	5	1′-8 1/2″	262	STR												
FT540E	5	12′-0 1/2″	2	STR												
FT541E	5	14′-1 3/4″	3	STR												
FT542E	5	4′-7 1/4″	2	STR												
FT543E	5	11′-11 1/2″	2	STR												
FT544E	5	7′-6 1/2″	1	STR												
FT545E	5	30′-11 1/4″	1	STR												
FT546E	5	19′-0 3/4″	1	STR												
FT547E	5	20′-4″	1	STR												
FT548E	5	12′-0 3/4″	1	STR												
FT601E	6	31′-7 1/2″	48	STR												
FT602E	6	28′-2 1/2″	24	STR												
FT610E	6	4′-8″	112	1	0′-8″	4′-0″					0′-0″		0′-6″			
FT611E	6	4′-8″	112	STR												

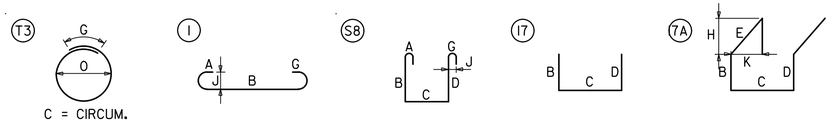

BR 1-714
BD-14

ADDENDA / REVISIONS		NOT TO SCALE	BR 1-714 ON CHAPMAN ROAD OVER I-95 SB	CONTRACT T201507402	BRIDGE NO. 1-714	ABUTMENT REINFORCEMENT SCHEDULE	SECTION AEC
				COUNTY NEW CASTLE	DESIGNED BY: N.KIRN		SHEET NO. 38
					CHECKED BY: E.LUCKZA/S.MUKHERJEE		

8/16/2019 8:19:52 PM
P:\60323054 DelDOT AGR 1672 BDS\T06 - Rehab Br. 1-714\900 WORK\910 CAD\20-SHEETS\Structures\Final Design\SB\BR1-714-SB-RE02.dgn

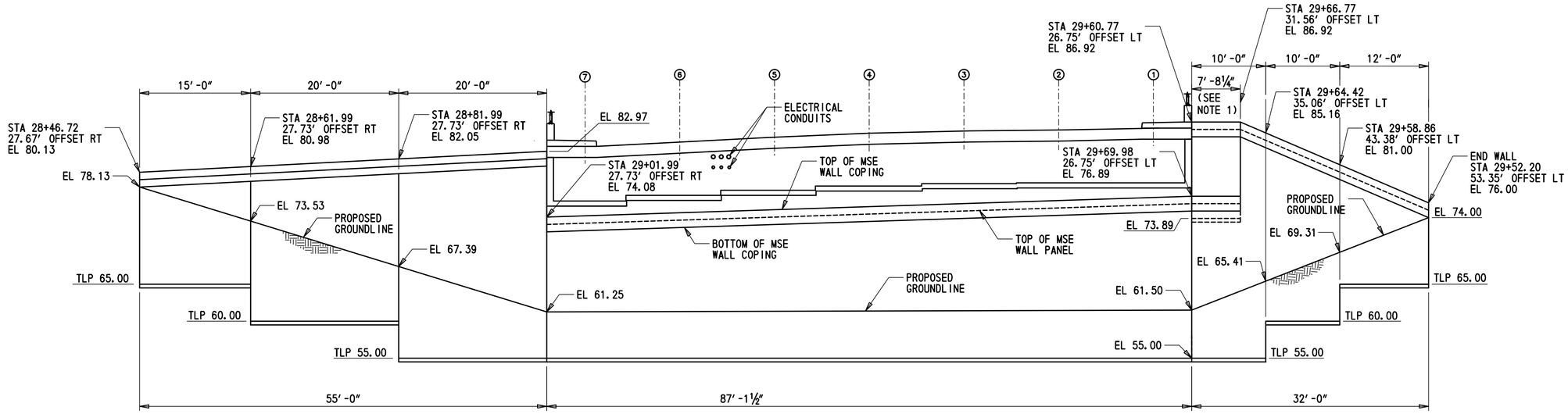

SB ABUTMENT 1 MSE WALL ELEVATION (DEVELOPED)

SCALE: 1/8″ = 1′

CROSS REFERENCE NOTES:

1. FOR BRIDGE PLAN AND ELEVATION, SEE SHEET BR 1-714 BD-03.
2. FOR ABUTMENT 1 AND 2 PLAN AND ELEVATION, SEE SHEETS BR 1-714 BD-10 AND BR 1-714 BD-11.
3. FOR MSE SECTION AND DETAILS, SEE SHEET BR 1-714 BD-10.
4. SEE SHEETS BY AMERICAN UTEL FOR CONDUIT DETAILS.

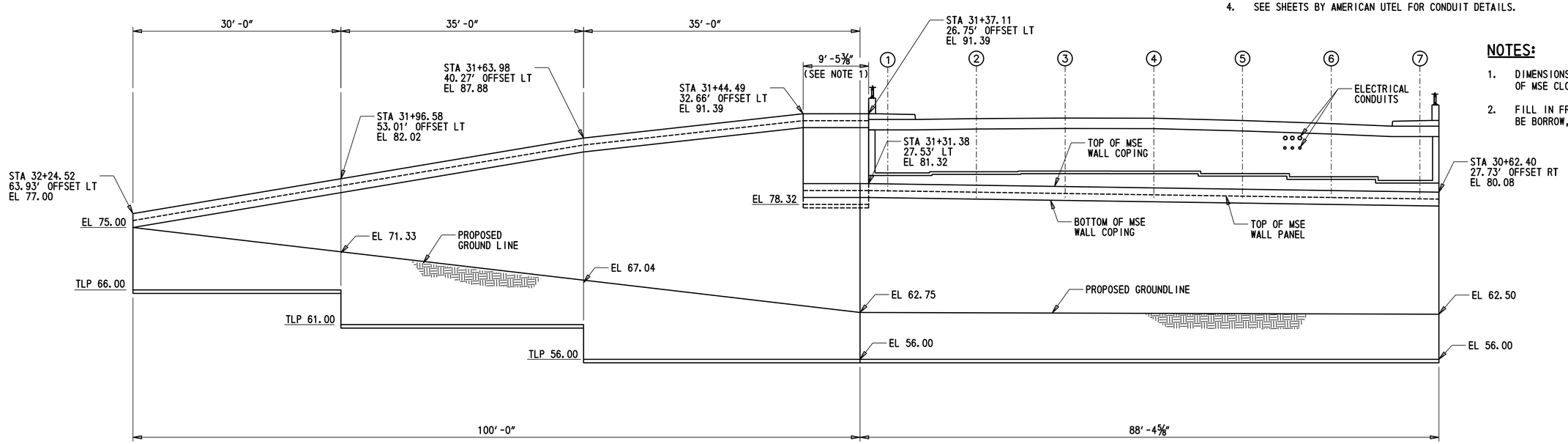

NOTES:

1. DIMENSIONS ARE ALONG FRONT FACE OF MSE CLOSURE WALL.
2. FILL IN FRONT OF MSE WALL SHALL BE BORROW, TYPE F.

SB ABUTMENT 2 MSE WALL ELEVATION (DEVELOPED)

SCALE: 1/8″ = 1′

BR 1-714
BD-15

ADDENDA / REVISIONS	SCALE AS NOTED	BR 1-714 ON CHAPMAN ROAD OVER I-95 SB	CONTRACT T201507402	BRIDGE NO. 1-714	MSE WINGWALLS ELEVATIONS	SECTION AEC
			COUNTY NEW CASTLE	DESIGNED BY: H.BORDNER		SHEET NO. 39
				CHECKED BY: S.MUKHERJEE		

8/19/2019
4:52:34 PM
P:\60323054 DelDOT AGR 1672 BDS\T06 - Rehab Br. 1-714\900 WORK\910 CAD\20-SHEETS\Structures\Final Design\SB\BR1-714-SB-MSE01.dgn

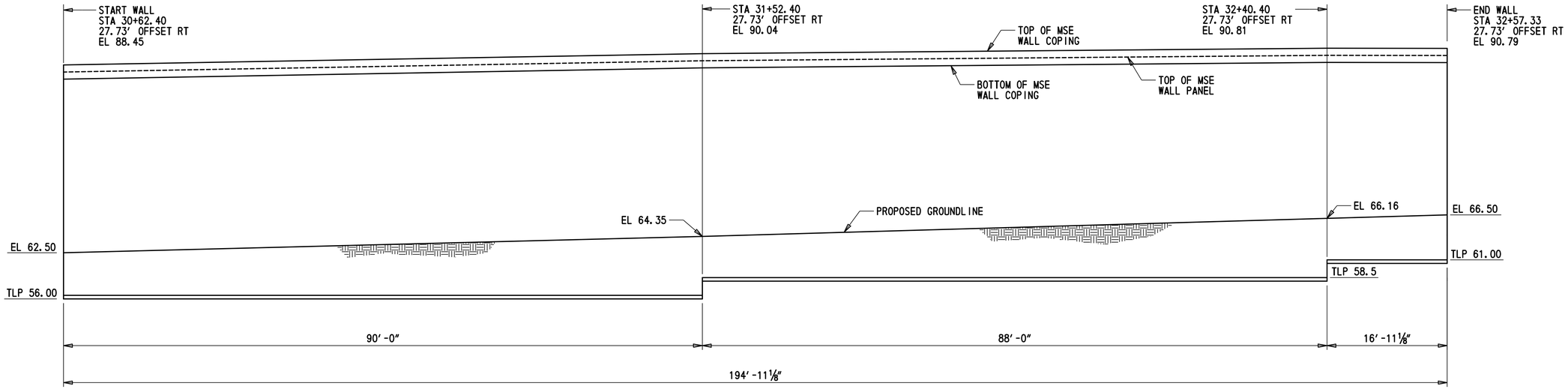

MEDIAN MSE WALL ELEVATION

SCALE: 1/8" = 1'

CROSS REFERENCE NOTES:

1. FOR BRIDGE PLAN AND ELEVATION, SEE SHEET BR 1-714 BD-03.
2. FOR ABUTMENT 1 AND 2 PLAN AND ELEVATION, SEE SHEETS BR 1-714 BD-10 AND BR 1-714 BD-11.
3. FOR MSE SECTION AND DETAILS, SEE SHEET BR 1-714 BD-12.
4. FOR MOMENT SLAB DETAILS, SEE SHEET BR 1-714 BD-17.

NOTE:

1. FILL IN FRONT OF MSE WALL SHALL BE BORROW, TYPE F.

BR 1-714
BD-16

ADDENDA / REVISIONS		SCALE AS NOTED	BR 1-714 ON CHAPMAN ROAD OVER I-95 SB	CONTRACT T201507402	BRIDGE NO. 1-714	MSE MEDIAN ELEVATION	SECTION AEC
				COUNTY NEW CASTLE	DESIGNED BY: H.BORDNER		SHEET NO. 40
					CHECKED BY: S.MUKHERJEE		

8/19/2019
4:52:34 PM
P:\60323054 DelDOT AGR 1672 BDS\T06 - Rehab Br. 1-714\900 WORK\910 CAD\20-SHEETS\Structures\Final Design\SB\BR1-714-SB-MSE02.dgn

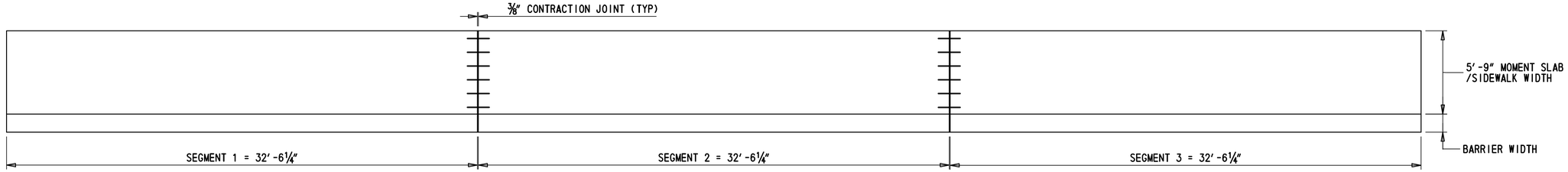

MOMENT SLAB SEGMENTS LAYOUT

SCALE: ¼"=1'-0"

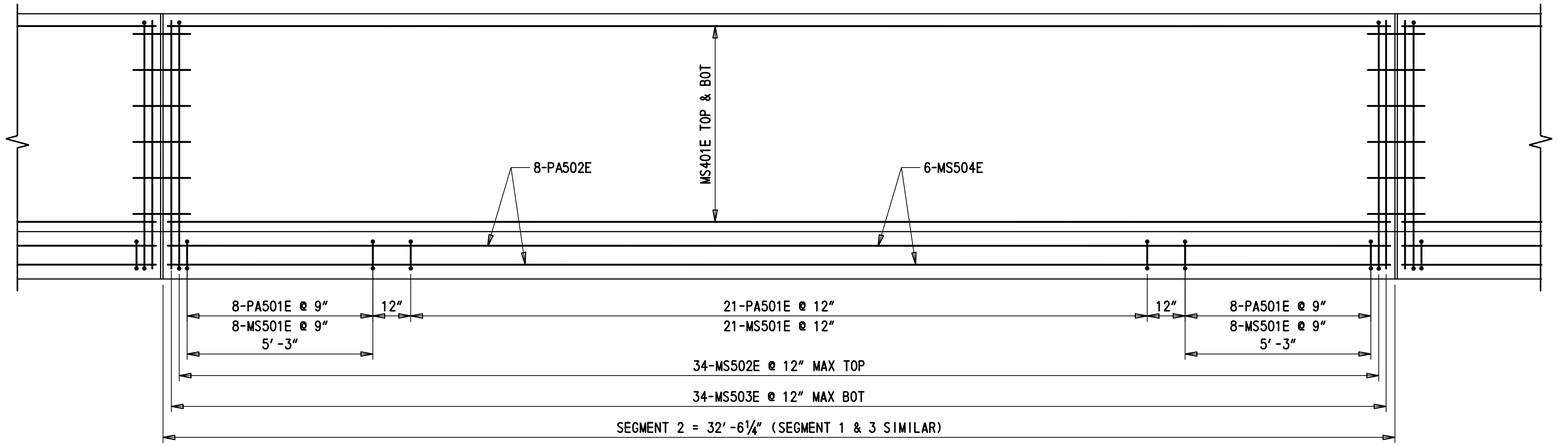

MOMENT SLAB PLAN

SCALE: ½"=1'-0"

NOTES:

1. DRAIN PERFORATED POLYVINYL CHLORIDE PIPE (P.P.V.C) TO DAYLIGHT.
2. COST OF IMPERVIOUS MEMBRANE, 4" P.P.V.C. AND 8" P.P.V.C. INCIDENTAL TO ITEM 607001.

CROSS REFERENCE NOTES:

1. FOR MSE WALL LAYOUT AND DETAILS, SEE SHEETS BR 1-714 BD-10 AND BR 1-714 BD-11.
2. FOR MSE WALL ELEVATIONS, SEE SHEETS BR 1-714 BD-16 AND BR 1-714 BD-17.
3. FOR REINFORCEMENT BAR SCHEDULE, SEE SHEET BR 1-714 BD-37.

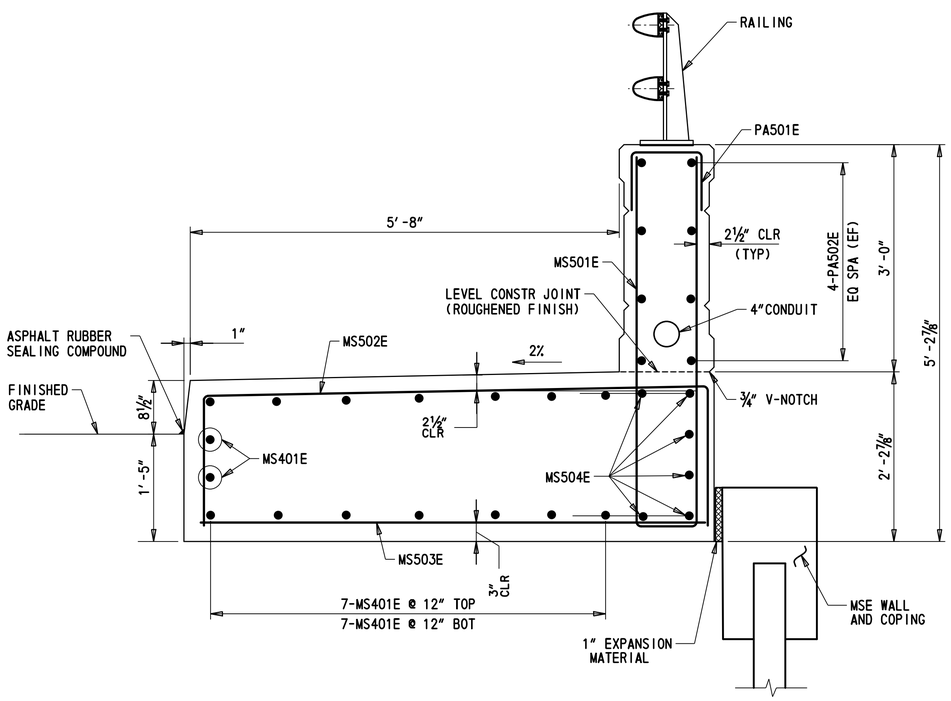

MOMENT SLAB SECTION-1

SCALE: 1" = 1'-0"

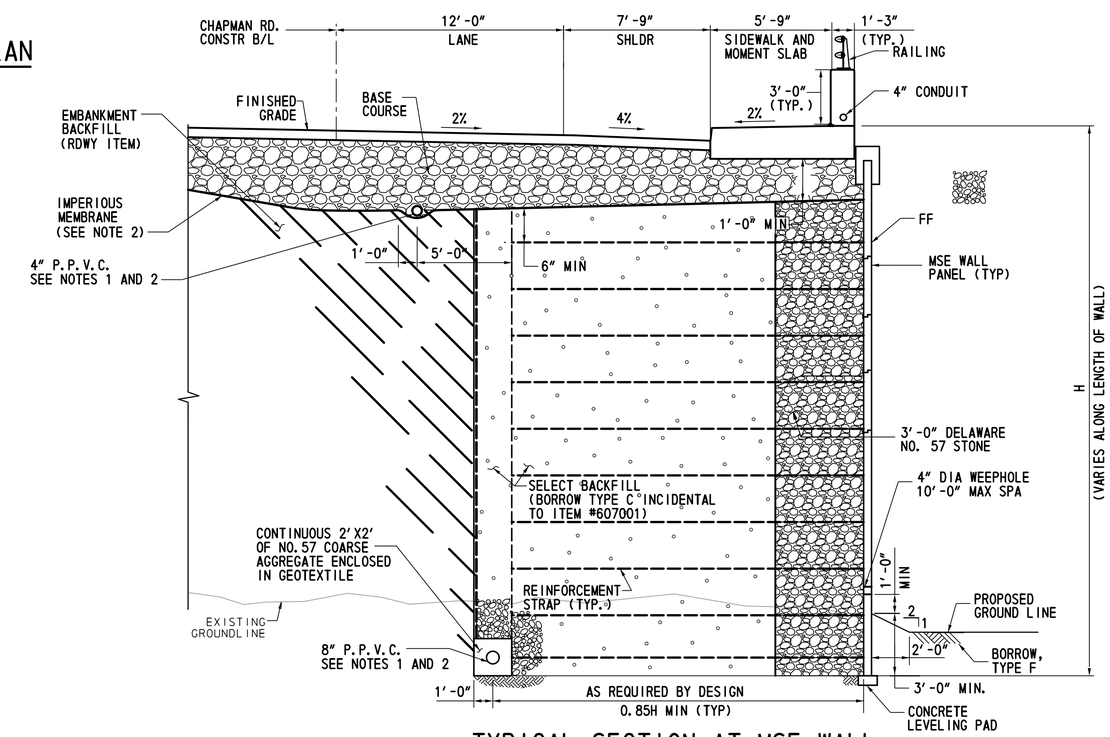

TYPICAL SECTION AT MSE WALL

SCALE: ¼" = 1'-0"

BR 1-714
BD-17

ADDENDA / REVISIONS	SCALE AS NOTED	BR 1-714 ON CHAPMAN ROAD OVER I-95 SB	CONTRACT T201507402	BRIDGE NO. 1-714	MEDIAN MOMENT SLAB – PLAN AND SECTION	SECTION AEC
			COUNTY NEW CASTLE	DESIGNED BY: H.BORDNER		SHEET NO. 41
				CHECKED BY: E.LUCZKA		

9/19/2019
6:05:59 PM
P:\60323054 DelDOT AGR 1672 BDS\T06 - Rehab Br. 1-714\900 WORK\910 CAD\20-SHEETS\Structures\Final Design\SB\BR1-714-SB-MSS01.dgn

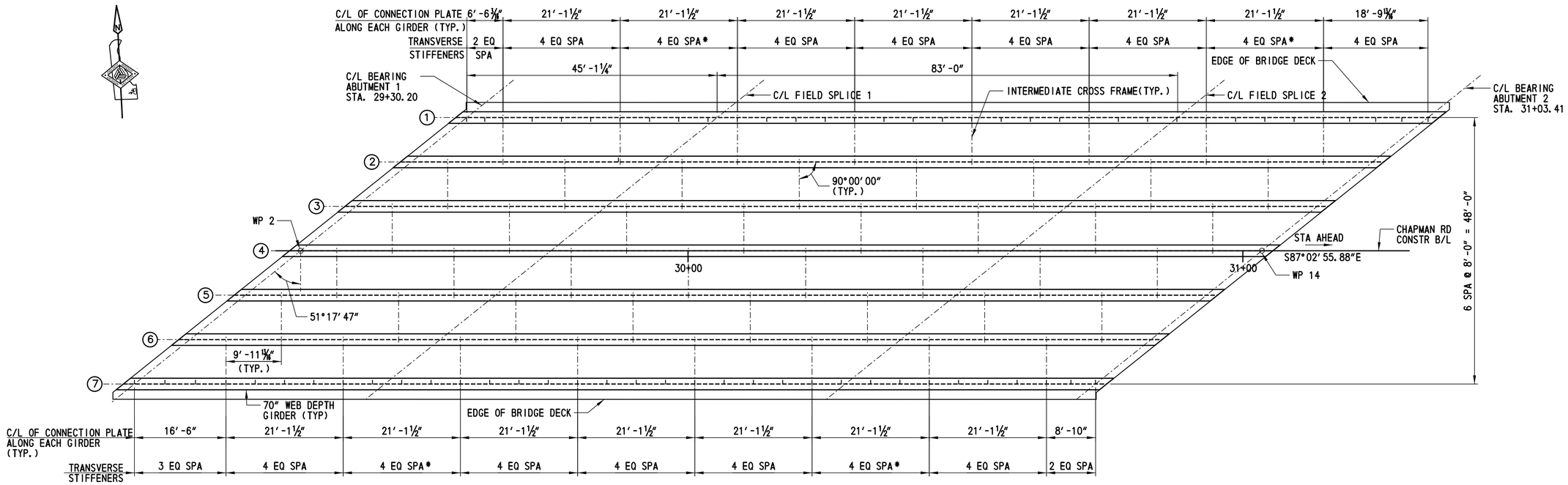

FRAMING PLAN

SCALE: 1″ = 10′

* ADJUST STIFFENER SPACING AT OPTIONAL FIELD SPICES (IF FIELD SPLICES ARE USED) TO AVOID CONFLICT WITH FLANGE SPLICE PLATES.

CROSS REFERENCE NOTES:

1. FOR PROJECT NOTES, SEE SHEET BR 1-714 BD-01.
2. FOR GIRDER ELEVATION AND DETAILS, SEE SHEETS BR 1-714 BD-19 AND BR 1-714 BD-20.
3. FOR INTERMEDIATE DIAPHRAGM DETAILS, SEE SHEET BR 1-714 BD-21.
4. FOR BEARING DETAILS, SEE SHEETS BR 1-714 BD-23, BR 1-714 BD-24 AND BR 1-714 BD-25.

BR 1-714
BD-18

ADDENDA / REVISIONS	

SCALE 0 10 20 30 FEET

BR 1-714 ON CHAPMAN ROAD OVER I-95 SB

CONTRACT T201507402	BRIDGE NO. 1-714	**FRAMING PLAN**	SECTION AEC
COUNTY NEW CASTLE	DESIGNED BY: R.GANOVSKA		SHEET NO. 42
	CHECKED BY: S.MUKHERJEE		

8/16/2019 8:21:04 PM P:\60323054 DelDOT AGR 1672 BDS\T06 - Rehab Br. 1-714\900 WORK\910 CAD\20-SHEETS\Structures\Final Design\SB\BR1-714-SB-FP01.dgn

* ADJUST STIFFENER SPACING AT OPTIONAL FIELD SPLICES (IF FIELD SPLICES ARE USED) TO AVOID CONFLICT WITH FLANGE SPLICE PLATES.

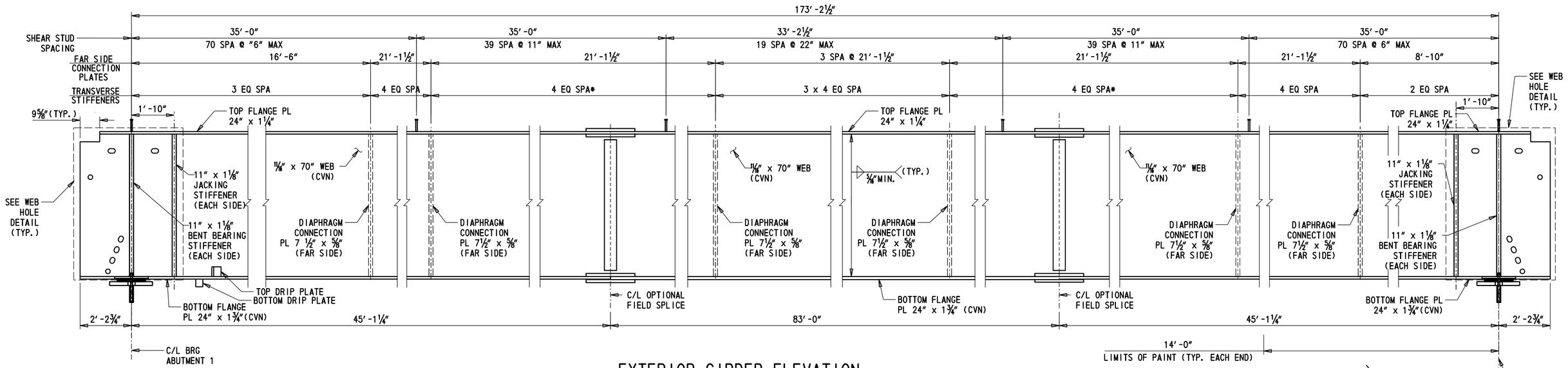

EXTERIOR GIRDER ELEVATION

SCALE: 1/2" = 1'-0"

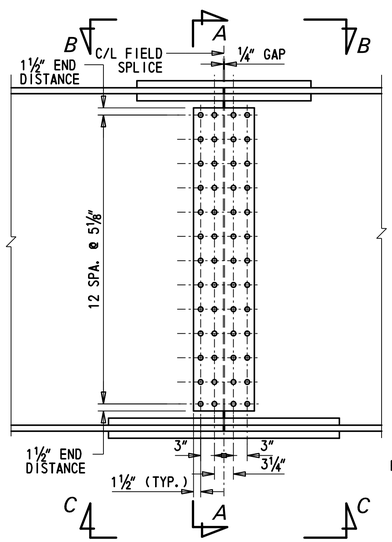

WEB SPLICE ELEVATION

SCALE: ¾" = 1'-0"

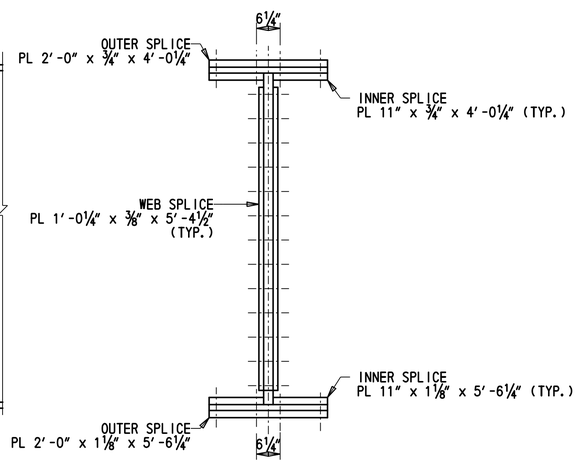

SECTION A-A

SCALE: ¾" = 1'-0"

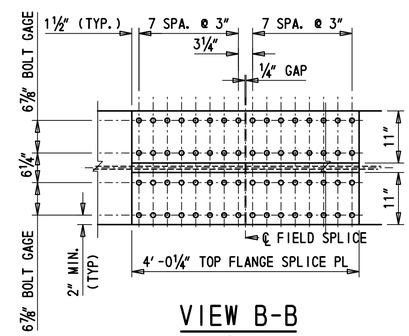

VIEW B-B

SCALE: ¾" = 1'-0"

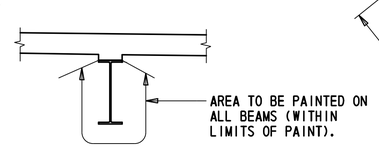

PAINTING DETAIL

NOT TO SCALE

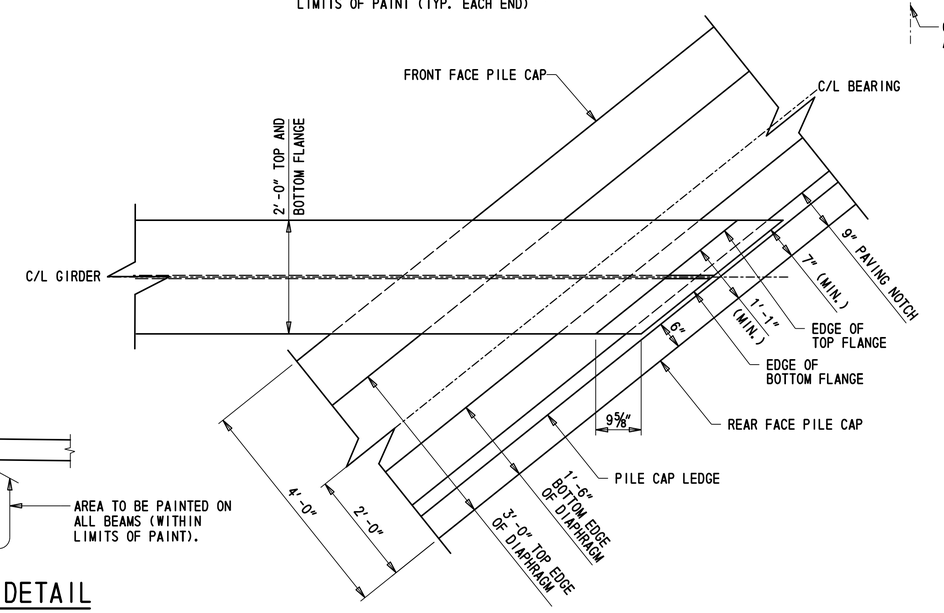

GIRDER CLIP DETAIL

SCALE: ¾" = 1'-0"

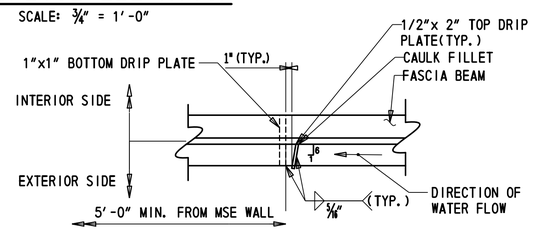

DRIP PLATE DETAIL

NOT TO SCALE

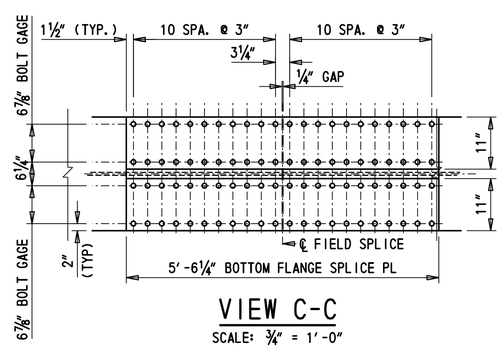

VIEW C-C

SCALE: ¾" = 1'-0"

NOTES:

1. ALL SPLICE PLATES TO CONFORM TO CVN REQUIREMENTS.
2. CONNECTION PLATES AND TRANSVERSE STIFFENERS SPACINGS SHOWN FOR GIRDER 7. GIRDER 1 NOT SHOWN FOR CLARITY, SEE SHEET BR 1-714 BD-18.

CROSS REFERENCE NOTES:

1. FOR FRAMING PLAN, SEE SHEET BR 1-714 BD-18.
2. FOR BEARING DETAILS, SEE SHEETS BR 1-714 BD-23, BR 1-714 BD-24 AND BR 1-714 BD-25.
3. FOR CONNECTION PLATE DETAILS, SEE SHEET BR 1-714 BD-21.
4. FOR BEARING AND JACKING STIFFENER DETAILS, SEE SHEET BR 1-714 BD-20.
5. FOR SHEAR STUD DETAILS, SEE SHEET BR 1-714 BD-20.

BR 1-714
BD-19

ADDENDA / REVISIONS	SCALE AS NOTED	BR 1-714 ON CHAPMAN ROAD OVER I-95 SB	CONTRACT T201507402	BRIDGE NO. 1-714	EXTERIOR GIRDER ELEVATION AND DETAILS	SECTION AEC
			COUNTY NEW CASTLE	DESIGNED BY: R.GANOVSKA		SHEET NO. 43
				CHECKED BY: S.MUKHERJEE		

9/6/2019 10:31:22 AM P:\60323054 DelDOT AGR 1672 BDS\T06 - Rehab Br. 1-714\900 WORK\910 CAD\20-SHEETS\Structures\Final Design\SB\BR1-714-SB-GE01.dgn

* ADJUST STIFFENER SPACING AT OPTINAL FIELD SPLICES (IF FIELD SPLICES ARE USED) TO AVOID CONFLICT WITH FLANGE SPLICE PLATES.

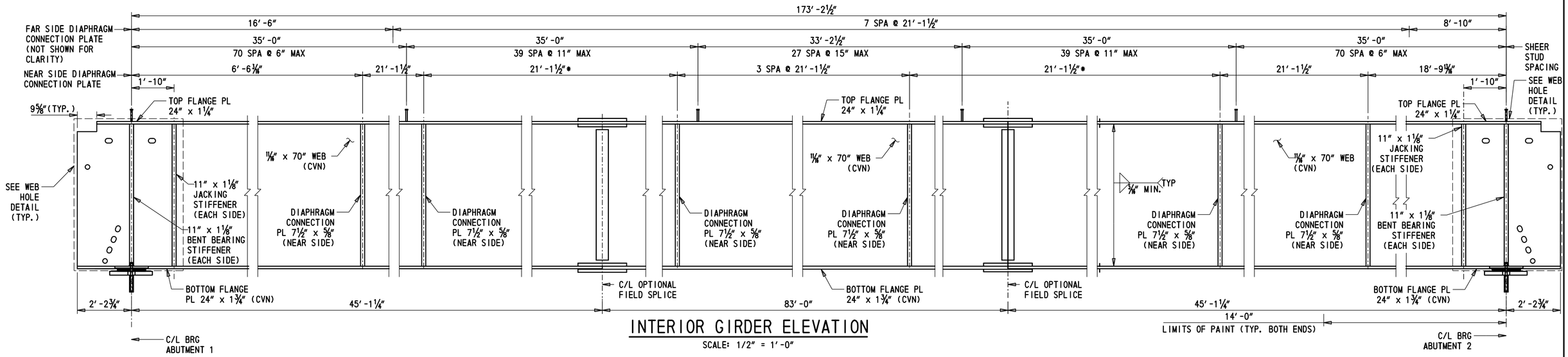

INTERIOR GIRDER ELEVATION

SCALE: 1/2" = 1'-0"

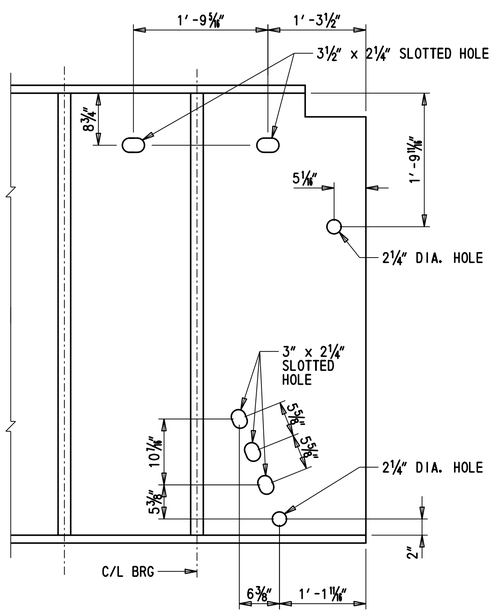

WEB HOLE DETAIL

SCALE: 1" = 1'-0"

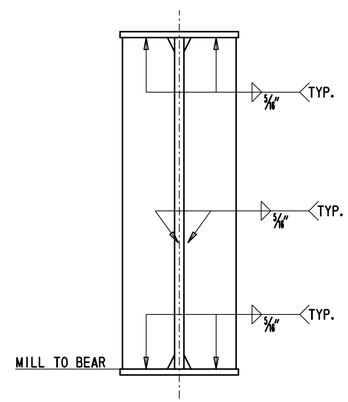

BEARING AND JACKING STIFFENER DETAIL

SCALE: ¾" = 1'-0"

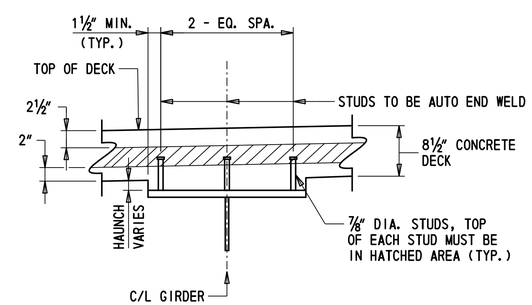

SHEAR STUD DETAIL

SCALE: 1" = 1'-0"

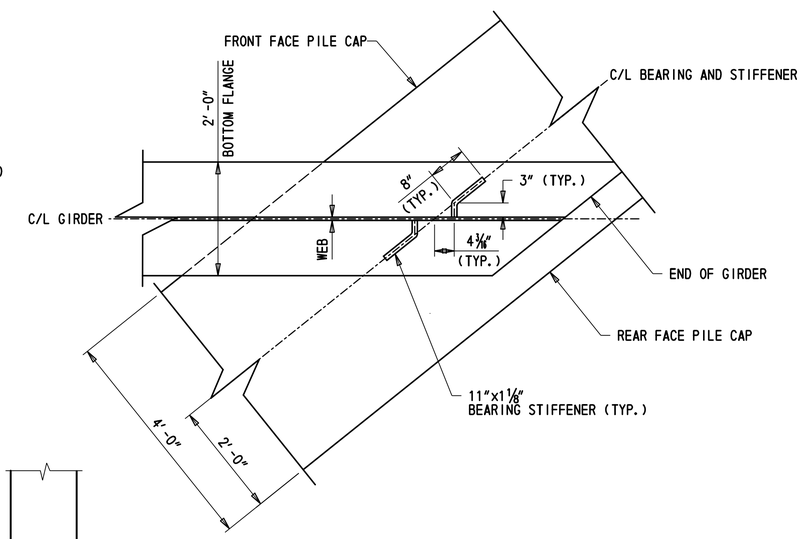

BEARING STIFFENER DETAIL

SCALE: ¾" = 1'-0"

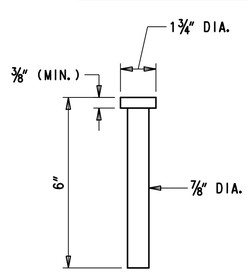

STUD DETAIL

NOT TO SCALE

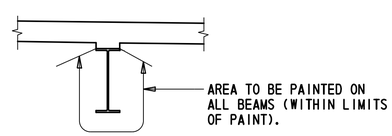

PAINTING DETAIL

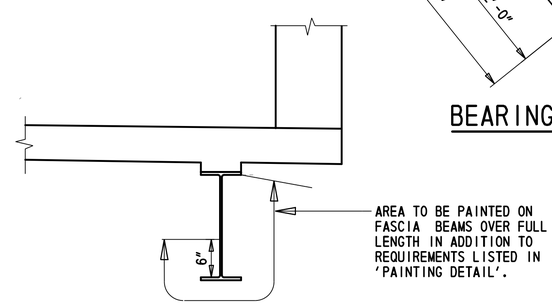

FASICIA BEAM PAINTING DETAIL

NOT TO SCALE

CROSS REFERENCE NOTES:

1. FOR FRAMING PLAN, SEE SHEET BR 1-714 BD-18.
2. FOR WEB & FLANGES SPLICES, SEE SHEET BR 1-714 BD-19.
3. FOR BEARING DETAILS, SEE SHEETS BR 1-714 BD-23, BR 1-714 BD-24, BR 1-714 BD-25.

BR 1-714
BD-20

ADDENDA / REVISIONS		SCALE AS NOTED	BR 1-714 ON CHAPMAN ROAD OVER I-95 SB	CONTRACT T201507402	BRIDGE NO. 1-714	INTERIOR GIRDER ELEVATION AND DETAILS	SECTION AEC
				COUNTY NEW CASTLE	DESIGNED BY: R. GANOVSKA		SHEET NO. 44
					CHECKED BY: S.MUKHERJEE		

9/6/2019 10:31:48 AM P:\60323054 DelDOT AGR 1672 BDS\T06 - Rehab Br. 1-714\900 WORK\910 CAD\20-SHEETS\Structures\Final Design\SB\BR1-714-SB-GE02.dgn

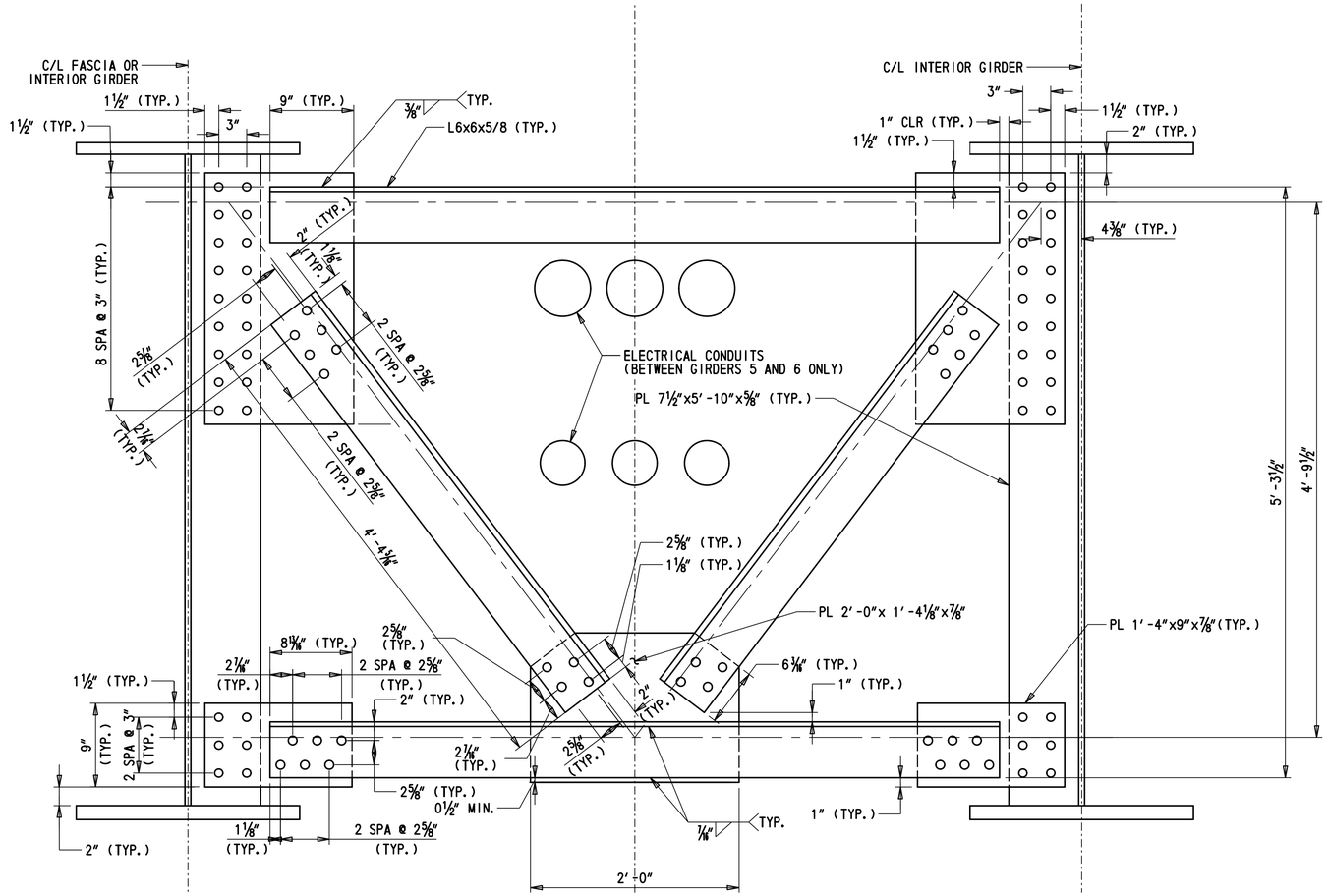

INTERMEDIATE CROSS-FRAME DETAIL

SCALE: 1 1/2" = 1'-0"

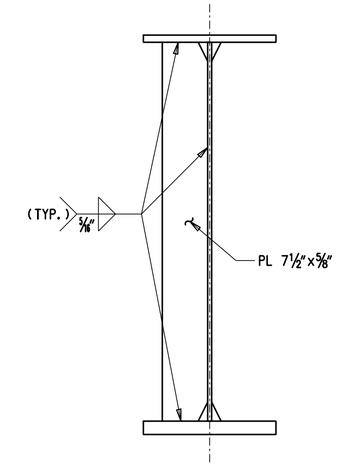

CONNECTION PLATE DETAIL

SCALE: 1" = 1'-0"

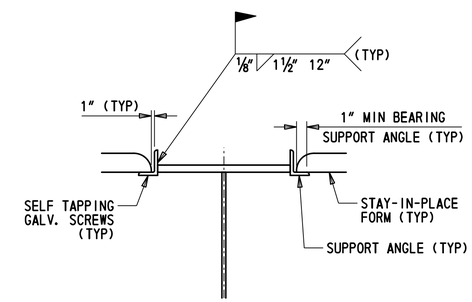

COMPRESSION FLANGE STAY-IN-PLACE FORM CONNECTION DETAIL

SCALE: 1" = 1'-0"

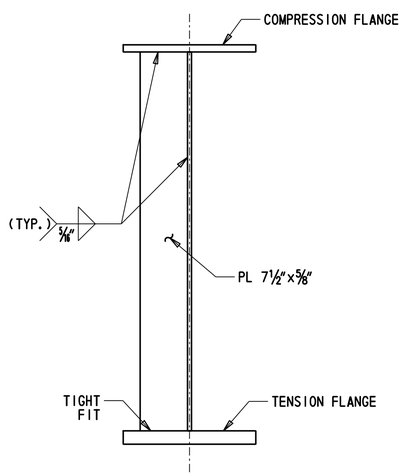

TRANSVERSE STIFFENER DETAIL

SCALE: 1" = 1'-0"

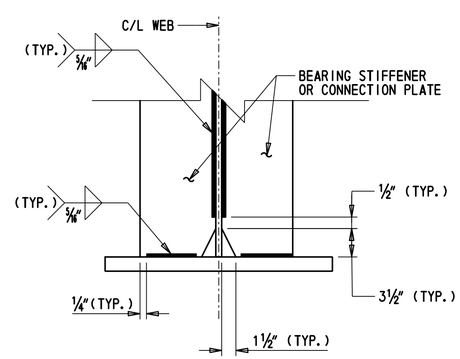

WELD TERMINATION AND CORNER CHAMFER DETAIL

SCALE: 1 1/2" = 1'-0"

NOTES:

1. CROSS FRAMES SHAL BE DETAILED FOR TOTAL DEAD LOAD FIT-UP.

CROSS REFERENCE NOTES:

1. FOR FRAMING PLAN, SEE SHEET BR 1-714 BD-18.
2. FOR EXTERIOR AND INTERIOR GIRDER ELEVATIONS, SEE SHEETS BR 1-714 BD-19 AND BR 1-714 BD-20.

BR 1-714
BD-21

ADDENDA / REVISIONS	SCALE AS NOTED	BR 1-714 ON CHAPMAN ROAD OVER I-95 SB	CONTRACT T201507402	BRIDGE NO. 1-714	INTERMEDIATE DIAPHRAGM DETAILS	SECTION AEC
			COUNTY NEW CASTLE	DESIGNED BY: R.GANOVSKA		SHEET NO. 45
				CHECKED BY: S.MUKHERJEE		

8/16/2019 8:22:16 PM P:\60323054 DelDOT AGR 1672 BDS\T06 - Rehab Br. 1-714\900 WORK\910 CAD\20-SHEETS\Structures\Final Design\SB\BR1-714-SB-ID01.dgn

DEFLECTION AND TOTAL CAMBER (INCHES)

PROPOSED GIRDERS		C/L BRG. ABUT. 1	0.1L	0.2L	0.3L	0.4L	0.5L	0.6L	0.7L	0.8L	0.9L	C/L BRG. ABUT. 2
GIRDER 1	DLS	0	0.854	1.611	2.209	2.588	2.717	2.590	2.210	1.617	0.854	0
	DLC	0	1.755	3.313	4.541	5.322	5.587	5.325	4.544	3.325	1.757	0
	SDL	0	1.125	2.116	2.879	3.346	3.487	3.301	2.800	2.040	1.074	0
	TD & C	0	3.734	7.040	9.629	11.256	11.791	11.216	9.554	6.982	3.685	0
	VCO	0	2.145	3.814	5.006	5.721	5.959	5.721	5.007	3.814	2.146	0
	TD & C + VCO	0	5.879	10.854	14.635	16.977	17.750	16.937	14.561	10.796	5.831	0
GIRDER 2	DLS	0	0.853	1.614	2.210	2.589	2.719	2.589	2.211	1.615	0.854	0
	DLC	0	2.015	3.811	5.219	6.113	6.419	6.114	5.220	3.814	2.016	0
	SDL	0	0.737	1.393	1.916	2.256	2.382	2.282	1.961	1.444	0.771	0
	TD & C	0	3.605	6.818	9.345	10.958	11.520	10.985	9.392	6.873	3.641	0
	VCO	0	1.508	3.247	4.510	5.296	5.605	5.437	4.793	3.672	2.074	0
	TD & C + VCO	0	5.113	10.065	13.855	16.254	17.125	16.422	14.185	10.545	5.715	0
GIRDER 3	DLS	0	0.853	1.614	2.210	2.589	2.719	2.589	2.211	1.616	0.854	0
	DLC	0	2.016	3.812	5.221	6.116	6.423	6.117	5.223	3.817	2.018	0
	SDL	0	0.535	1.007	1.380	1.623	1.712	1.639	1.409	1.038	0.556	0
	TD & C	0	3.404	6.433	8.811	10.328	10.854	10.345	8.843	6.471	3.428	0
	VCO	0	1.408	3.052	4.340	5.151	5.484	5.341	4.720	3.623	2.050	0
	TD & C + VCO	0	4.812	9.485	13.151	15.479	16.338	15.686	13.563	10.094	5.478	0
GIRDER 4	DLS	0	0.853	1.614	2.210	2.589	2.719	2.589	2.211	1.615	0.854	0
	DLC	0	2.017	3.815	5.224	6.119	6.426	6.120	5.225	3.818	2.018	0
	SDL	0	0.465	0.875	1.195	1.400	1.472	1.404	1.201	0.882	0.471	0
	TD & C	0	3.335	6.304	8.629	10.108	10.617	10.113	8.637	6.315	3.343	0
	VCO	0	2.146	3.815	5.006	5.722	5.960	5.722	5.006	3.815	2.146	0
	TD & C + VCO	0	5.481	10.119	13.635	15.830	16.577	15.835	13.643	10.130	5.489	0
GIRDER 5	DLS	0	0.853	1.614	2.210	2.589	2.719	2.589	2.211	1.616	0.854	0
	DLC	0	2.132	4.0325	5.523	6.47	6.794	6.4705	5.525	4.0375	2.134	0
	SDL	0	0.512	0.969	1.329	1.556	1.631	1.548	1.317	0.959	0.506	0
	TD & C	0	3.497	6.616	9.062	10.615	11.144	10.608	9.053	6.613	3.494	0
	VCO	0	2.145	3.813	5.006	5.720	5.959	5.720	5.006	3.813	2.145	0
	TD & C + VCO	0	5.642	10.429	14.068	16.335	17.102	16.328	14.059	10.426	5.639	0
GIRDER 6	DLS	0	0.853	1.614	2.210	2.589	2.719	2.589	2.211	1.615	0.854	0
	DLC	0	2.131	4.031	5.5205	6.466	6.790	6.467	5.5215	4.0345	2.132	0
	SDL	0	0.688	1.314	1.810	2.121	2.223	2.107	1.788	1.297	0.681	0
	TD & C	0	3.672	6.959	9.541	11.176	11.732	11.163	9.521	6.947	3.667	0
	VCO	0	2.145	3.813	5.006	5.720	5.959	5.720	5.006	3.813	2.145	0
	TD & C + VCO	0	5.817	10.772	14.546	16.896	17.690	16.883	14.526	10.760	5.812	0
GIRDER 7	DLS	0	0.853	1.610	2.205	2.589	2.719	2.591	2.212	1.620	0.862	0
	DLC	0	1.754	3.311	4.534	5.325	5.592	5.328	4.549	3.331	1.773	0
	SDL	0	0.958	1.848	2.572	3.062	3.249	3.124	2.687	1.977	1.054	0
	TD & C	0	3.565	6.769	9.311	10.976	11.560	11.043	9.448	6.928	3.689	0
	VCO	0	2.145	3.813	5.006	5.720	5.960	5.720	5.006	3.813	2.145	0
	TD & C + VCO	0	5.710	10.582	14.317	16.696	17.520	16.763	14.454	10.741	5.834	0

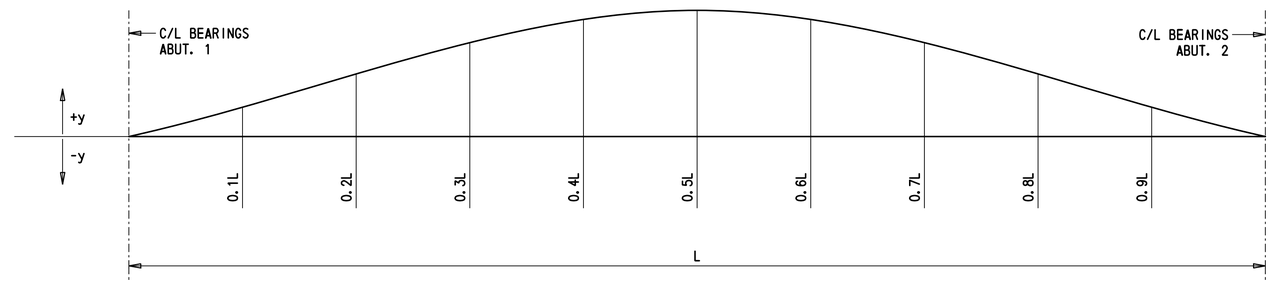

CAMBER DIAGRAM

NOT TO SCALE

LEGEND:

DLS = DENOTES DEFLECTION DUE TO STRUCTURAL STEEL

DLC = DENOTES DEFLECTION DUE TO CONCRETE DECK SLAB, HAUNCH, S.I.P. FORMS & UTILITIES

SDL = DENOTES DEFLECTION DUE TO BARRIER, SAFETY FENCE & FUTURE WEARING SURFACE

TD & C = DENOTES TOTAL DEAD LOAD DEFLECTION & CAMBER

VCO = DENOTES CAMBER FOR VERTICAL CURVE ORDINATE DUE TO ROADWAY PROFILE

NOTES:

1. CROSS FRAMES SHALL BE DETAILED FOR TOTAL DEAD LOAD FIT-UP.

STEEL BEAM CAMBER NOTES:

1. ALL GIRDERS SHALL BE CAMBERED FOR DEAD LOAD ORDINATES TO THE DIMENSION SHOWN ON THESE PLANS. THE CAMBER TOLERANCE IS ZERO UNDER TO ¾ INCH OVER.
2. AFTER THE ERECTION OF STEEL AND THE CONNECTIONS OF THE STEEL CROSS FRAMES ARE COMPLETE, THE CONTRACTOR SHALL OBTAIN ELEVATIONS AT TENTH POINTS ON THE TOP FLANGES OF ALL GIRDERS TO DETERMINE THE REQUIRED HAUNCH THICKNESS. ALL OF THE DATA SHALL BE SUBMITTED WITH DETAILS OF STAY-IN-PLACE FORMS FOR REVIEW AND APPROVAL BY THE ENGINEER IN THE FIELD.
3. AFTER THE ERECTION OF STEEL AND THE CONNECTIONS OF THE STEEL CROSS FRAMES ARE COMPLETE, THE CONTRACTOR SHALL VERIFY THAT ALL UNDERCLEARANCES ARE SUFFICIENT AFTER SUBTRACTING THE CALCULATED TOTAL DEAD LOAD DEFLECTION.
4. VARY THICKNESS OF HAUNCH TO ACCOUNT FOR ANY INACCURACIES IN CAMBER.

BR 1-714
BD-22

ADDENDA / REVISIONS		NOT TO SCALE	BR 1-714 ON CHAPMAN ROAD OVER I-95 SB	CONTRACT T201507402	BRIDGE NO. 1-714	CAMBER DIAGRAM	SECTION AEC
				COUNTY NEW CASTLE	DESIGNED BY: R.GANOVSKA		SHEET NO. 46
					CHECKED BY: S.MUKHERJEE		

8/16/2019
8:22:28 PM
P:\60323054 DelDOT AGR 1672 BDS\T06 - Rehab Br. 1-714\900 WORK\910 CAD\20-SHEETS\Structures\Final Design\SB\BR1-714-SB-CD01.dgn

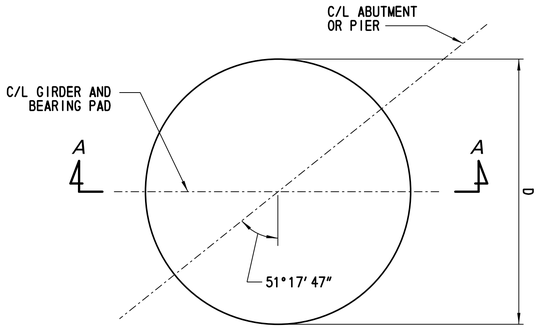

PLAN

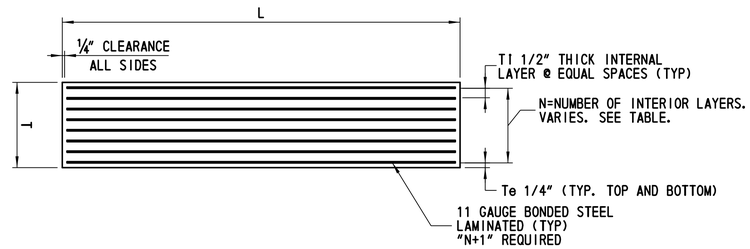

SECTION A-A

STEEL REINFORCED ELASTOMERIC BEARING PAD

NTS

STEEL REINFORCED ELASTOMERIC BEARING SCHEDULE

LOCATION	BEARING DESIGNATION						LAMINATED ELASTOMERIC BEARING				
	MARK	TYPE	NEOPRENE HARDNESS (SHORE A)	TOTAL NO. REQD.	CAPACITY PER PAD		DIMENSION				
					REACTION *	MOVEMENT **	"L" (IN)	LAYER THICKNESS 'TI'	LAYER THICKNESS 'Te'	INTERIOR LAYERS	TOTAL PAD THICKNESS"T"
ABUT A (FIXED)	FX 1	FIX.	60± 5 DURO	7	377 KIP	N/A	23 IN	0.5 IN	0.25 IN	7	4.96 IN
ABUT B (EXPANSION)	EX 1	EXP.	60± 5 DURO	7	377 KIP	1.3 IN	23 IN	0.5 IN	0.25 IN	7	4.96 IN

* MAX, UNFACTORED SERVICE 1 REACTION (W/O DYNAMIC LOAD ALLOWANCE)
** TEMPERATURE MOVEMENT

BEARING NOTES (INCLUDES NOTES FOR ELASTOMERIC BEARINGS, SOLE PLATES AND ANCHOR BOLTS)

1. BRIDGE SHALL BE JACKED ONCE THE DECK HAD BEEN CURED. JACKING SHALL BE DONE AT TEMPERATURE RANGE OF 40°TO 80°.COST OF JACKING SHALL BE PAID UNDER ITEM 604000.
2. PROVIDE ALL STEEL REINFORCED ELASTOMERIC BEARINGS IN ACCORDANCE WITH SECTION 623 - 'BEARING DEVICES' OF THE STANDARD SPECIFICATIONS.
3. PROVIDE INTERNAL SHIMS AS PER ASTM A1011 GRADE 36.
4. SMOOTH CUT AND DEBURR METAL SHIMS.
5. GRIT BLAST AND DEGREASE METAL SHIMS.
6. ELASTOMERIC BEARINGS SHALL BE 60 DUROMETER HARDNESS SHORE TYPE A.
7. MINIMUM LOW TEMPERATURE ELASTOMER SHALL BE GRADE 3.
8. ALL BEARINGS ARE TO BE MOLDED TO DESIGN DIMENSIONS. CUTTING TO SIZE AFTER FABRICATION IS PROHIBITED.
9. HOLES ARE NOT PERMITTED IN THE ELASTOMERIC BEARINGS.
10. AVOID DAMAGING ELASTOMERIC PAD DURING WELDING.
11. FOR BEVELED SOLE PLATE, MARK THICKER END OF BEVELED SOLE PLATES TO IDENTIFY THICKER END IN FIELD.
12. USE APPLICABLE INFORMATION SHOWN ON THESE DRAWINGS TO DEVELOP SHOP DRAWINGS.
13. ENSURE ALL BEARING SURFACES INCLUDING THE BEARING SEAT ARE LEVEL PRIOR TO INSTALLATION OF BEARINGS.
14. ANCHOR BOLTS SHALL BE UNPAINTED AASHTO M314 GRADE 36 GALVANIZED STEEL WASHERS SHALL BE ASTM F436 GALVANIZED STEEL. ALL NUTS SHALL BE UNPAINTED ASTM A563 GALVANIZED STEEL. SET NUTS 1/4″ CLEAR OF SOLE PLATES AND BURR THREADS ABOVE AND BELOW NUTS.
15. USE SWEDGED ANCHOR BOLTS. BOLTS MAY BE CAST-IN-PLACE OR GROUTED IN PREFORMED (SLEEVED OR DRILLED) HOLES. SLEEVED HOLES SHALL BE CORRUGATED TO PREVENT SLIPPAGE. THE PREFORMED HOLES SHALL HAVE A DIAMETER OF 3 1/2″ WHEN DRILLING HOLES, DO NOT COME INTO CONTACT WITH THE REINFORCING BARS.
16. SOLE PLATE SHALL BE BEVELED AS PRESCRIBED IN THESE PLANS. STEEL SURFACES OF SOLE PLATES TO BE MACHINE FINISHED AS SHOWN IN THE DETAILS, MEASURED IN ACCORDANCE WITH ANSI B46.1.
17. SOLE PLATES SHALL MEET A FLATNESS REQUIREMENT OF 0.5 PERCENT IN THE DIRECTION BEING MEASURED (WIDTH, LENGTH, AND DIAGONALS) MAXIMUM, BUT NOT TO EXCEED 1/8 INCH.
18. USE WASHERS WITH 1/16″ LARGER DIAMETER THAN BOLT DIAMETER.
19. STEEL REINFORCED ELASTOMERIC BEARINGS SHALL BE ATTACHED TO THE TOP OF CONCRETE PEDESTAL WITH AN APPROVED EPOXY ADHESIVE IN ACCORDANCE WITH SECTION 623.03(C) OF THE STANDARD SPECIFICATIONS IN SUCH A WAY THAT VISIBLE CONCRETE SURFACES WILL NOT BE STAINED. ENSURE THE EPOXY ADHESIVE HAS SET PRIOR TO PLACEMENT OF BEAMS. COST OF EPOXY ADHESIVE IS INCIDENTAL TO ITEM 623000.
20. PAYMENT FOR FABRICATION AND INSTALLATION OF STEEL REINFORCED ELASTOMERIC BEARINGS, SHALL BE INCIDENTAL TO 623000.
21. PAYMENT FOR ANCHOR BOLTS, NUTS AND WASHERS SHALL BE INCIDENTAL TO ITEM 623000.
22. SOLE PLATE SHALL BE PAID UNDER ITEM 615001.
23. FILL SLOTS AND HOLES AROUND ANCHOR BOLTS WITH AN APPROVED NON-HARDENING CAULKING COMPOUND OR ELASTIC JOINT SEALER. THIS WORK IS INCIDENTAL TO ITEM 623000.

CROSS REFERENCE NOTES:

1. FOR BEVELED SOLE PLATE DIMENSIONS, SEE SHEET BR 1-714 BD-25.
2. FOR ADDITIONAL BEARING DETAILS, SEE SHEETS BR 1-714 BD-24 - BR 1-714 BD-25.

ADDENDA / REVISIONS

NOT TO SCALE

BR 1-714 ON
CHAPMAN ROAD OVER I-95 SB

CONTRACT	BRIDGE NO.	1-714	BEARING DETAILS - 1	SECTION
T201507402	DESIGNED BY: R. GANOVSKA			AEC
COUNTY				SHEET NO.
NEW CASTLE	CHECKED BY: E. LUCZKA			47

8/16/2019
8:22:59 PM
P:\60323054 DelDOT AGR 1672 BDS\T06 - Rehab Br. 1-714\900 WORK\910 CAD\20-SHEETS\Structures\Final Design\SB\BR1-714-SB-BD01.dgn

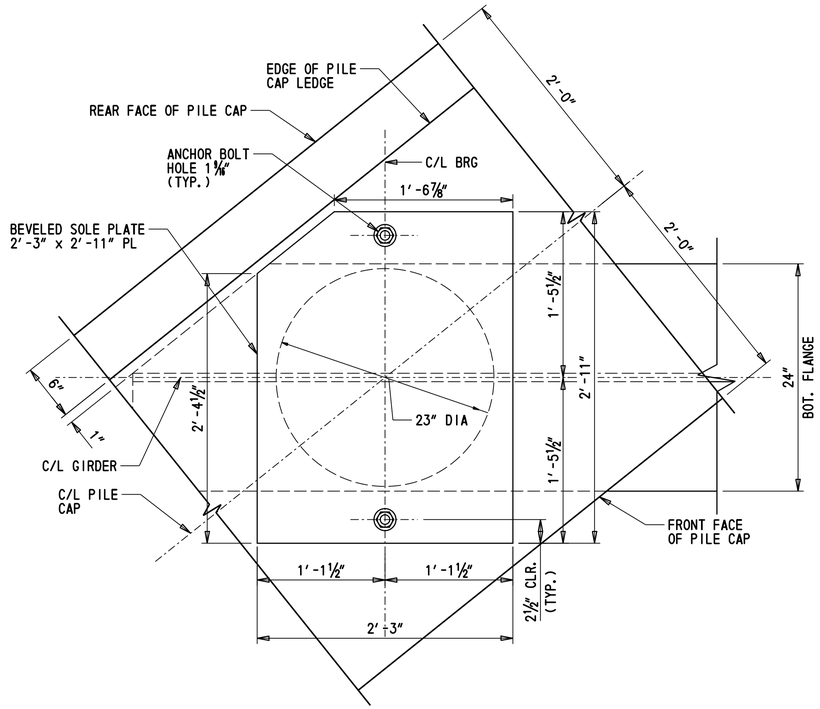

PLAN - ABUTMENT 1 - FIXED BEARING

SCALE: 3" = 1'-0"

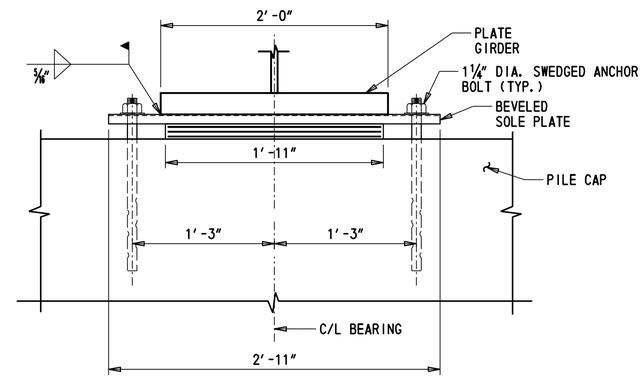

END ELEVATION - ABUTMENT 1 - FIXED BEARING

SCALE: 3" = 1'-0"

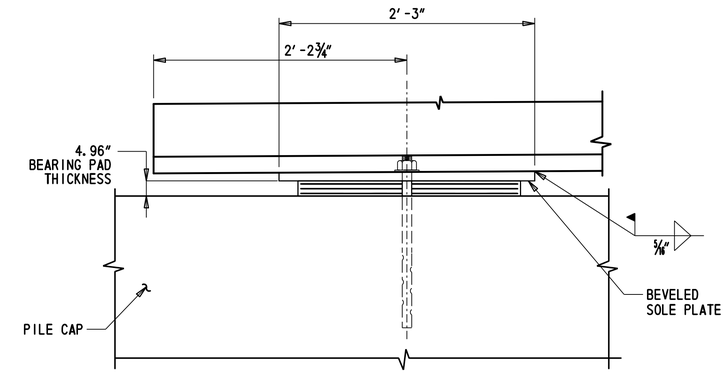

ELEVATION - ABUTMENT 1 - FIXED BEARING

SCALE: 3" = 1'-0"

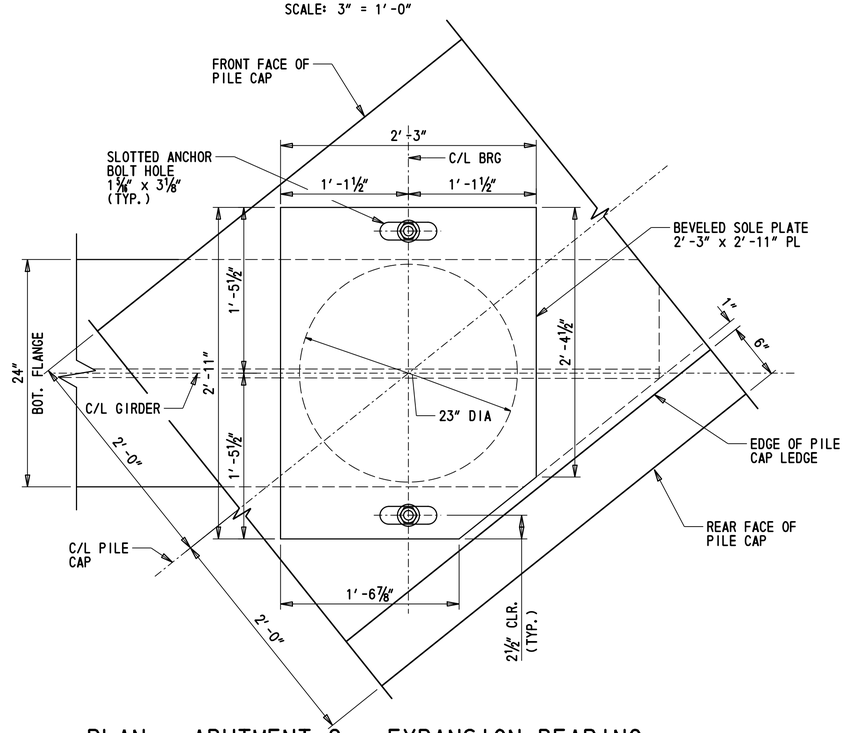

PLAN - ABUTMENT 2 - EXPANSION BEARING

SCALE: 3" = 1'-0"

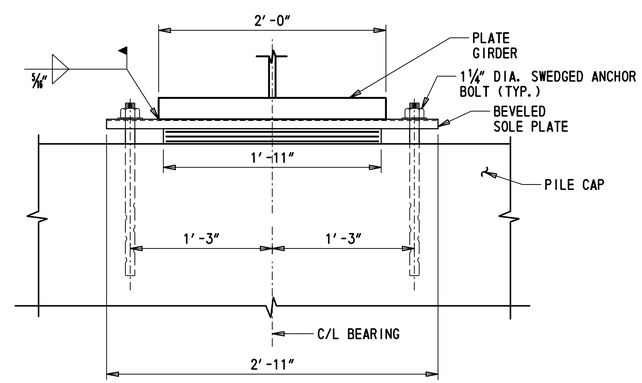

END ELEVATION - ABUTMENT 2 - EXPANSION BEARING

SCALE: 3" = 1'-0"

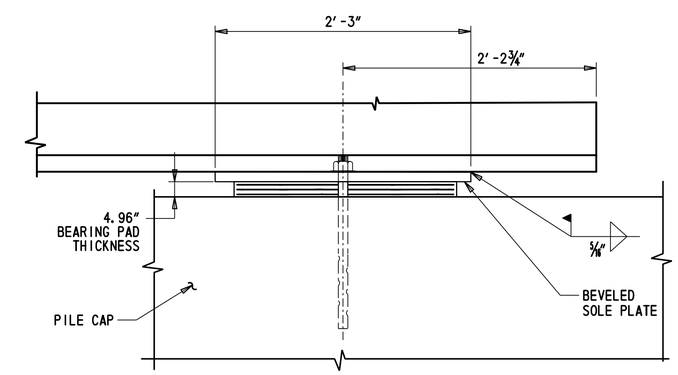

ELEVATION - ABUTMENT 2 - EXPANSION BEARING

SCALE: 3" = 1'-0"

CROSS REFERENCE NOTES:

1. FOR ELASTOMERIC BEARING DETAILS AND BEARING NOTES, SEE SHEET BR 1-714 BD-23.
2. FOR BEVELED SOLE PLATE DETAILS, SEE SHEET BR 1-714 BD-25.
3. FOR PILE CAP DETAILS AND ELEVATIONS, SEE SHEETS BR 1-714 BD-11, BR 1-714 BD-12, BR 1-714 BD-13.

BR 1-714
BD-24

ADDENDA / REVISIONS	SCALE AS NOTED	BR 1-714 ON CHAPMAN ROAD OVER I-95 SB	CONTRACT T201507402	BRIDGE NO. 1-714	BEARING DETAILS - 2	SECTION AEC
			COUNTY NEW CASTLE	DESIGNED BY: R. GANOVSKA		SHEET NO. 48
				CHECKED BY: E. LUCZKA		

8/16/2019
8:23:02 PM
P:\60323054 DelDOT AGR 1672 BDS\T06 - Rehab Br. 1-714\900 WORK\910 CAD\20-SHEETS\Structures\Final Design\SB\BR1-714-SB-BD02.dgn

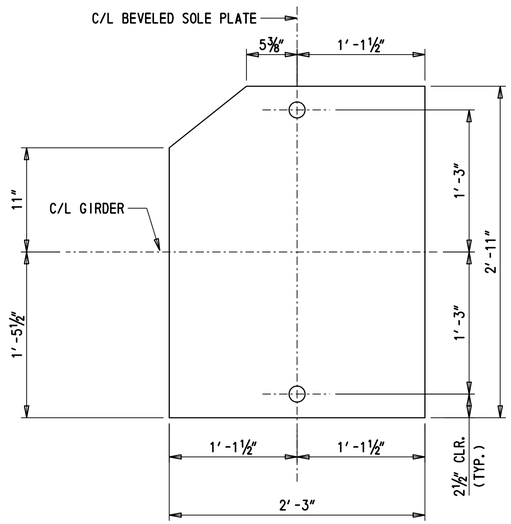

PLAN - BEVELED SOLE PLATE-ABUTMENT 1

SCALE: 1 1/2" = 1'-0"

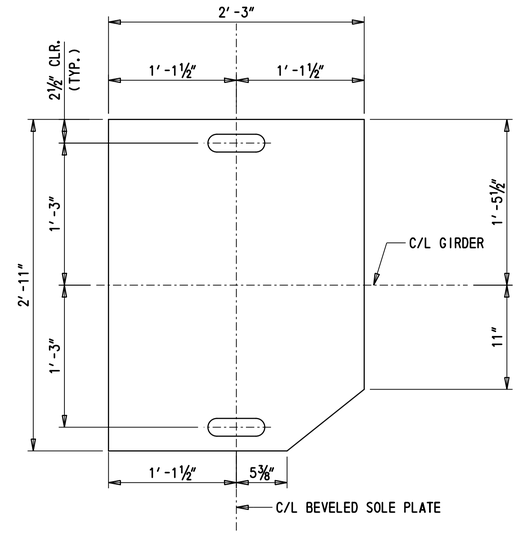

PLAN - BEVELED SOLE PLATE-ABUTMENT 2

SCALE: 1 1/2" = 1'-0"

BEVELED SOLE PLATE TABLE							
GIRDER	SUPPORT	TMIN, (IN)	TCL, (IN)*	TMAX (IN)	A (IN)	B (IN)	G (IN)
G1	ABUT. 1	1.000	1.1563	1.3125	13.50	13.50	1.16%
	ABUT. 2	1.000	1.1563	1.3125	13.50	13.50	1.16%
G2	ABUT. 1	1.000	1.1250	1.2500	13.50	13.50	0.93%
	ABUT. 2	1.000	1.1563	1.3125	13.50	13.50	1.16%
G3	ABUT. 1	1.000	1.1250	1.2500	13.50	13.50	0.93%
	ABUT. 2	1.000	1.1563	1.3125	13.50	13.50	1.16%
G4	ABUT. 1	1.000	1.1563	1.3125	13.50	13.50	1.16%
	ABUT. 2	1.000	1.1563	1.3125	13.50	13.50	1.16%
G5	ABUT. 1	1.000	1.1563	1.3125	13.50	13.50	1.16%
	ABUT. 2	1.000	1.1563	1.3125	13.50	13.50	1.16%
G6	ABUT. 1	1.000	1.1563	1.3125	13.50	13.50	1.16%
	ABUT. 2	1.000	1.1563	1.3125	13.50	13.50	1.16%
G7	ABUT. 1	1.000	1.1563	1.3125	13.50	13.50	1.16%
	ABUT. 2	1.000	1.1563	1.3125	13.50	13.50	1.16%

* TCL THICKNESS AT CENTERLINE OF SOLE PLATE, WHICH MAY OR MAY NOT BE LOCATED AT THE CENTERLINE OF BEARING. SEE BEVELED SOLE PLATE DETAIL.

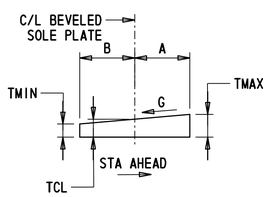

BEVELED SOLE PLATE DETAIL

NTS

NOTES:

1. SOLE PLATE SHALL BE PAID FOR UNDER ITEM 615001.

CROSS REFERENCE NOTES:

1. FOR ELASTOMERIC BEARINGS DETAILS AND BEARING NOTES, SEE SHEETS BR 1-714 BD-23 - BR 1-714 BD-24.

BR 1-714
BD-25

ADDENDA / REVISIONS	SCALE AS NOTED	BR 1-714 ON CHAPMAN ROAD OVER I-95 SB	CONTRACT T201507402	BRIDGE NO. 1-714	BEARING DETAILS - 3	SECTION AEC
			COUNTY NEW CASTLE	DESIGNED BY: R.GANOVSKA		SHEET NO. 49
				CHECKED BY: E.LUCZKA		

8/16/2019
8:23:18 PM
P:\60323054 DelDOT AGR 1672 BDS\T06 - Rehab Br. 1-714\900 WORK\910 CAD\20-SHEETS\Structures\Final Design\SB\BR1-714-SB-BD04.dgn

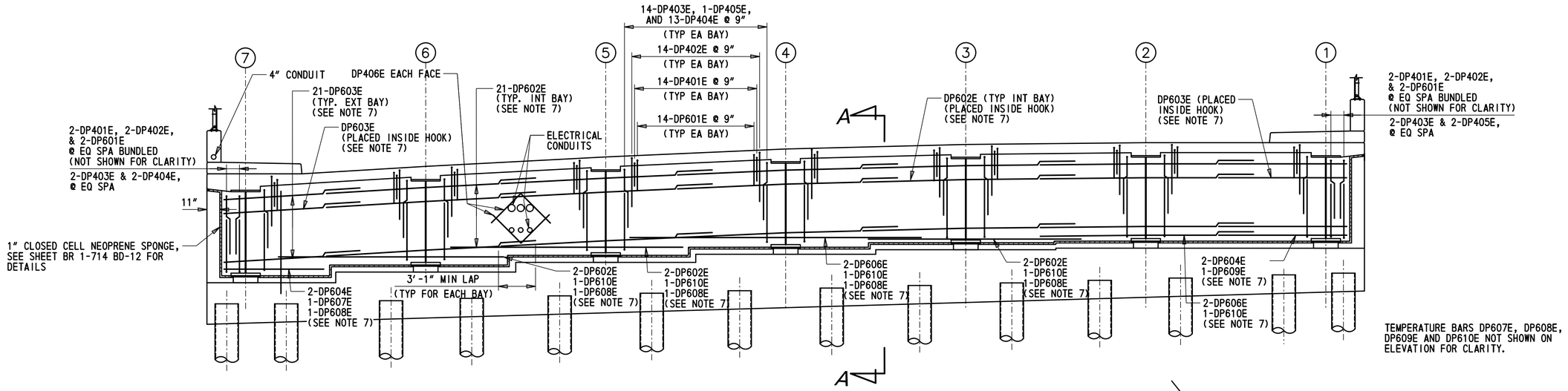

TEMPERATURE BARS DP607E, DP608E, DP609E AND DP610E NOT SHOWN ON ELEVATION FOR CLARITY.

ABUTMENT 1 - ELEVATION

SCALE: 1/4" = 1'

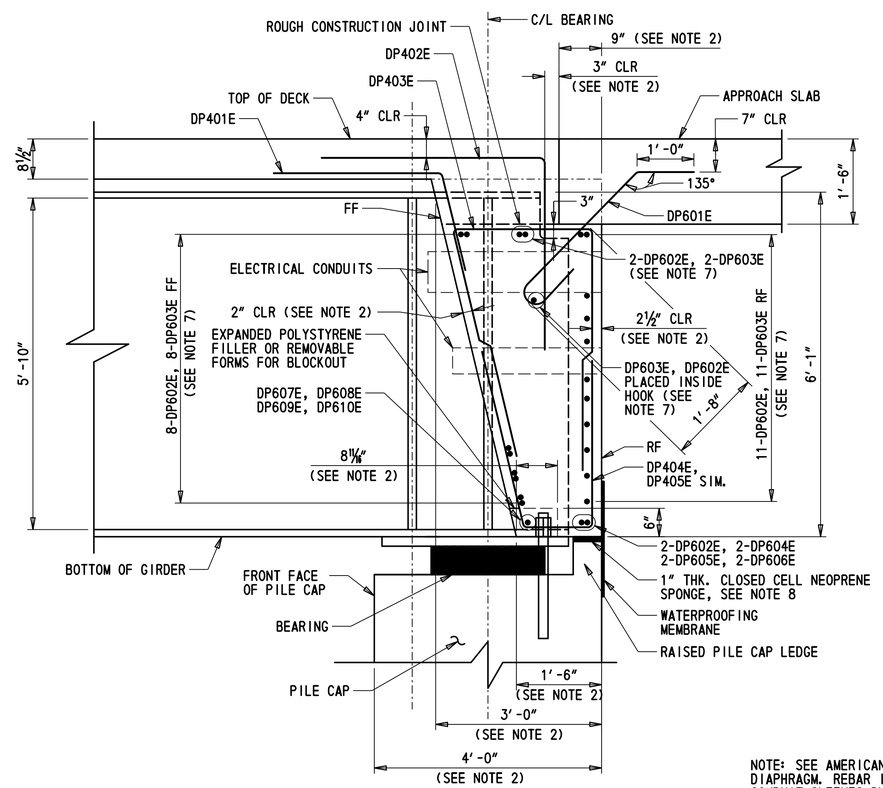

SECTION A-A

SCALE: 3/4" = 1'

NOTE: SEE AMERICAN UTEL PLANS FOR DETAILS OF PIPES THROUGH END DIAPHRAGM. REBAR IN END DIAPHRAGM SHOULD BE POSITIONED TO AVOID CONDUIT SLEEVES BUT MAINTAIN AVERAGE SPACING.

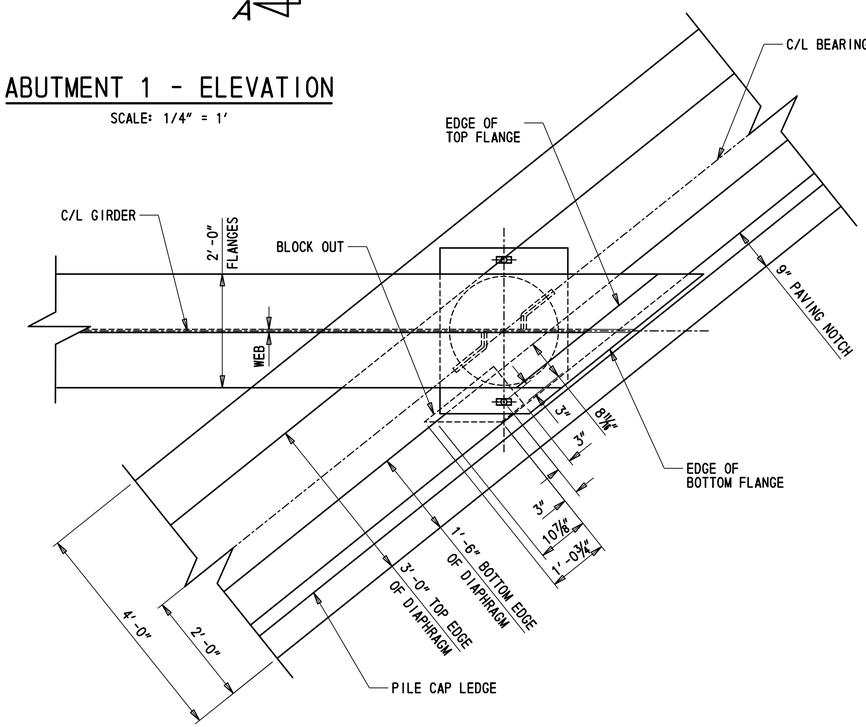

DIAPHRAGM PLAN

SCALE: 3/4" = 1'

NOTES:

1. SECTION A-A REINFORCING SHOWN NORMAL TO C/L GIRDER.
2. DIAPHRAGM WIDTHS, DIMENSIONS AND CLEARANCES SHOWN NORMAL TO C/L BEARING.
3. CONCRETE IN CONCRETE DIAPHRAGM TO BE PAID FOR UNDER ITEM 610017 AND REINFORCEMENT SHALL BE PAID FOR UNDER ITEM 611001.
4. MINIMUM LAP SPLICE LENGTHS, NORMAL WEIGHT CONCRETE. 2'-1" (#4 BARS) 3'-1" (#6 BARS)
5. BARS DP401E, DP402E, DP403E, DP404E & DP601E TO BE PLACED PARALLEL TO GIRDER.
6. FOR OTHER DETAILS REFER TO SHEET 49.
7. SPACE BARS TO AVOID INTERFERENCE WITH BEARING STIFFENERS AND UTILITY SERVICES. REFER TO SHEETS BR 1-714 BD-19 AND BR 1-714 BD-20 FOR LOCATION OF HOLES IN GIRDER WEB.
8. CLOSED CELL NEOPRENE SPONGE SHALL BE PAID UNDER ITEM 610002.

CROSS REFERENCE NOTES:

1. FOR REINFORCEMENT BAR SCHEDULE, SEE SHEET BR 1-714 BD-36.
2. FOR FRAMING PLAN, SEE SHEET BR 1-714 BD-18.
3. FOR PILE CAP, CHEEKWALL DETAILS AND REINFORCEMENT, SEE SHEETS BR 1-714 BD-10 - BR 1-714 BD-13.

BR 1-714
BD-26

ADDENDA / REVISIONS	SCALE AS NOTED	BR 1-714 ON CHAPMAN ROAD OVER I-95 SB	CONTRACT T201507402	BRIDGE NO. 1-714	ABUTMENT 1 CONCRETE DIAPHRAGM	SECTION AEC
			COUNTY NEW CASTLE	DESIGNED BY: R. GANOVSKA		SHEET NO. 50
				CHECKED BY: E.LUCZKA		

9/6/2019 10:32:12 AM P:\60323054 DelDOT AGR 1672 BDS\T06 - Rehab Br. 1-714\900 WORK\910 CAD\20-SHEETS\Structures\Final Design\SB\BR1-714-SB-DIAPH-01.dgn

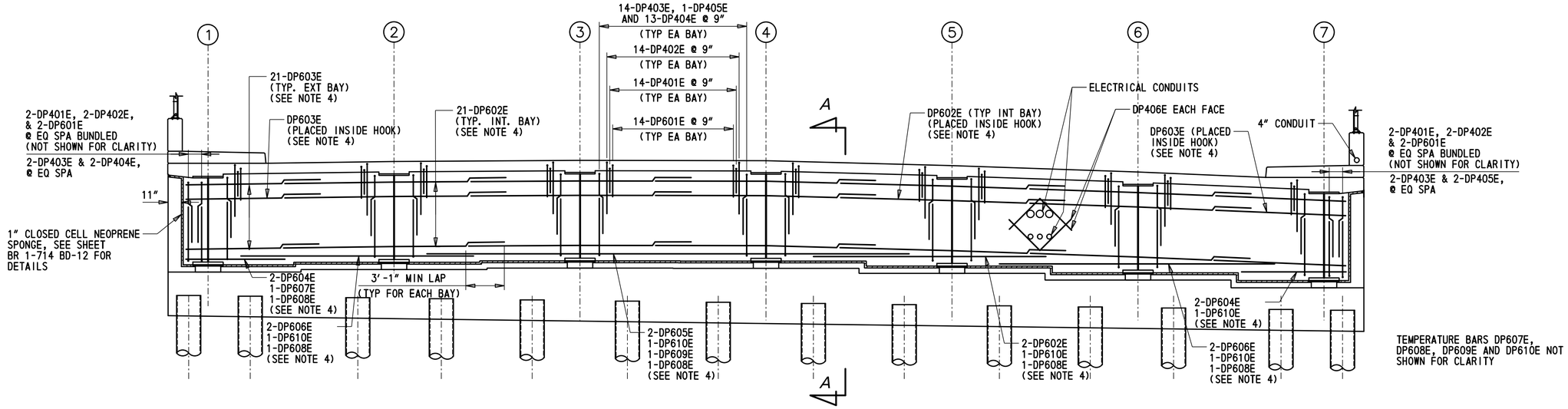

ABUTMENT 2 - ELEVATION

SCALE: 1/4" = 1'

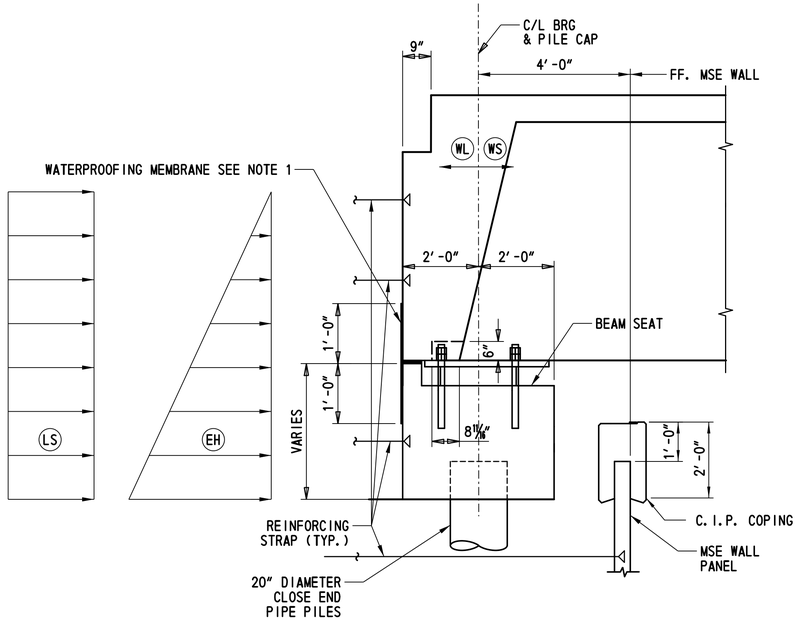

TYPICAL ABUTMENT SECTION

SCALE: 1/2" = 1'-0"

NOTE: ELECTRICAL CONDUITS NOT SHOWN FOR CLARITY

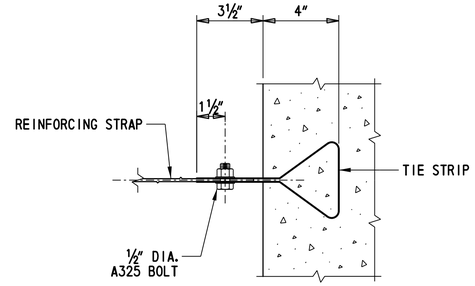

ABUTMENT STRAP ANCHOR DETAIL

NOT TO SCALE

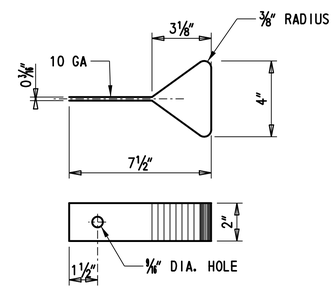

TIE STRIP DETAIL

NOT TO SCALE

ABUTMENT 1 (FIX) LATERAL LOADS	
TYPE	SERVICE LOAD (KIPS/FT)
EH	9.95
WL	0.10
WS	0.52
LS	2.90
EQ	1.58

ABUTMENT 2 (EXP) LATERAL LOADS	
TYPE	SERVICE LOAD (KIPS/FT)
EH	9.95
WL	0.10
WS	0.52
LS	2.90

NOTES:

1. CONCRETE IN CONCRETE DIAPHRAGM SHALL BE PAID FOR UNDER ITEM 610017. REINFORCEMENT IN DIAPHRAGM SHALL BE PAID FOR UNDER 611001.
2. MINIMUM LAP SPLICE LENGTHS, NORMAL WEIGHT CONCRETE:
   2'-1" (#4 BARS)
   3'-1" (#6 BARS)
3. BARS DP401E, DP402E, DP403E, DP404E & DP601E TO BE PLACED PARALLEL TO GIRDER.
4. SPACE BARS TO AVOID INTERFERENCE WITH BEARING STIFFENERS AND UTILITY SERVICES. REFER TO SHEETS BR 1-714 BD-19 AND BR 1-714 BD-20 FOR LOCATION OF HOLES IN GIRDER WEB.

CROSS REFERENCE NOTES:

1. FOR REINFORCEMENT BAR SCHEDULE, SEE SHEET BR 1-714 BD-36.
2. FOR FRAMING PLAN, SEE SHEET BR 1-714 BD-18.
3. FOR PILE CAP, CHEEKWALL DETAILS AND REINFORCEMENT, SEE SHEETS SHEET BR 1-714 BD-10 - BR 1-714 BD-13.
4. FOR SECTION A-A, SEE SHEET SHEET BR 1-714 BD-26.

ABUTMENT LATERAL LOADS:

1. CONTRACTOR SHALL DESIGN THE REINFORCING STRAPS IN THE ABUTMENT STEM AND BACKWALL TO RESIST LATERAL LOADS "EH", "WL", "LS" AND "WS".
2. LOAD "EH" IS THE HORIZONTAL EARTH PRESSURE EXERTED ON THE ABUTMENT.
3. LOAD "WL" IS THE HORIZONTAL LOAD DUE TO THE WIND ON LIVE LOAD ON THE SUPERSTRUCTURE.
4. LOAD "WS" IS THE HORIZONTAL LOAD DUE TO THE WIND ON STRUCTURE.
5. LOAD "LS" IS THE ADDITIONAL HORIZONTAL SOIL PRESSURE DUE TO 3FT OF SOIL SURCHARGE IN ACCORDANCE WITH AASHTO 3.11.6.4. CONTRACTOR IS RESPONSIBLE FOR PROVIDING MSE WALL DESIGNER WITH OTHER CONSTRUCTION LOADS WHICH WILL BE IN EXCESS OF 3FT OF SOIL SURCHARGE.
6. LOAD "EQ" IS THE SEISMIC LOAD ON THE ABUTMENT.

NOTES:

1. THE WATERPROOFING MEMBRANE SHALL BE INCIDENTAL TO ITEM 610012.
2. FOR ADDITIONAL REQUIREMENTS FOR STRAP ANCHORS AND TIE STRIPS, SEE SPECIAL PROVISION 607001 - MECHANICALLY STABILIZED EARTH WALLS.

BR 1-714
BD-27

ADDENDA / REVISIONS	SCALE AS NOTED	BR 1-714 ON CHAPMAN ROAD OVER I-95 SB	CONTRACT T201507402	BRIDGE NO. 1-714	ABUTMENT 2 CONCRETE DIAPHRAGM	SECTION AEC
			COUNTY NEW CASTLE	DESIGNED BY: R. GANOVSKA		SHEET NO. 51
				CHECKED BY: E. LUCZKA		

9/6/2019 10:32:28 AM P:\60323054 DelDOT AGR 1672 BDS\T06 - Rehab Br. 1-714\900 WORK\910 CADD\20-SHEETS\Structures\Final Design\SB\BR1-714-SB-DIAPH-02.dgn

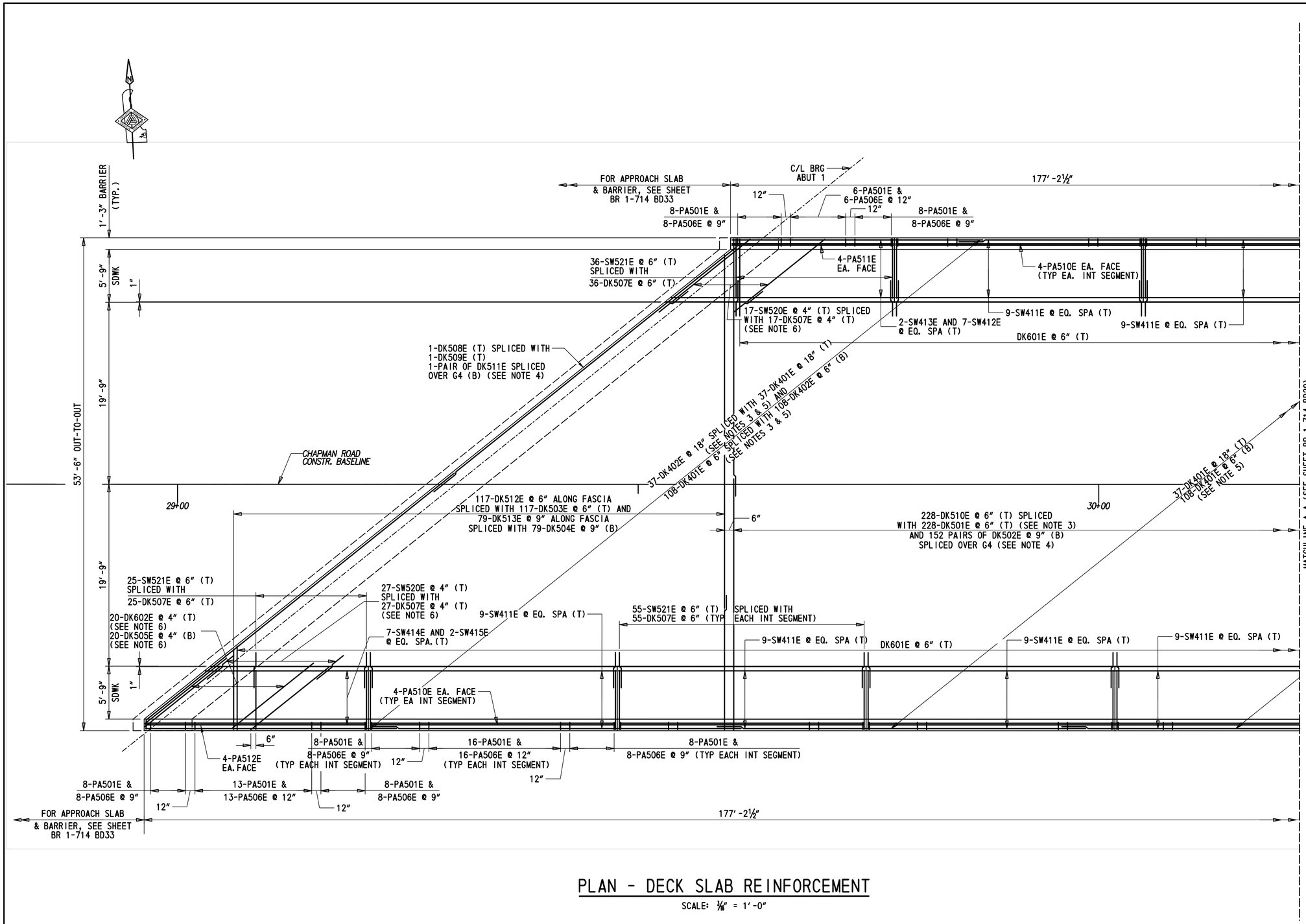

PLAN - DECK SLAB REINFORCEMENT

SCALE: 3/16" = 1'-0"

NOTES:

1. CONCRETE IN DECK SLAB TO BE PAID FOR UNDER ITEM 610017 AND REINFORCEMENT SHALL BE PAID FOR UNDER ITEM 611001. SIDEWALK AND PARAPET TO BE PAID FOR UNDER ITEM 610008.
2. MINIMUM LAP SPLICE LENGTHS, NORMAL WEIGHT CONCRETE.
   2'-1" (#4 BARS)
   2'-7" (#5 BARS)
   3'-1" (#6 BARS)
3. ALTERNATE PLACEMENT TO AVOID ADJACENT SPLICES.
4. TOP SPLICE NOT SHOWN FOR CLARITY.
5. SPACING MEASURED PERPENDICULAR TO BASELINE.
6. SPACING MEASURED PERPENDICULAR TO SKEW.

CROSS REFERENCE NOTES:

1. FOR DECK SECTIONS, SEE SHEET BR 1-714 BD-30.
2. FOR APPROACH SLAB PLAN AND SECTIONS, SEE SHEETS BR 1-714 BD-33 - BR 1-714 BD-35.
3. FOR REINFORCEMENT BAR SCHEDULE, SEE SHEETS BR 1-714 BD-36 AND BR 1-714 BD-37.
4. FOR FINISHED BRIDGE DECK ELEVATIONS, SEE SHEET BR 1-714 BD-32.
5. FOR SIDEWALK AND BARRIER ELEVATION, SEE SHEET BR 1-714 BD-31.
6. FOR PROTECTIVE FENCE AND RAILING, SEE SHEETS BR 1-714 BD-38.

BR 1-714
BD-28

ADDENDA / REVISIONS	SCALE AS NOTED	BR 1-714 ON CHAPMAN ROAD OVER I-95 SB	CONTRACT T201507402	BRIDGE NO. 1-714	BRIDGE DECK REINFORCEMENT PLAN - 1	SECTION AEC
			COUNTY NEW CASTLE	DESIGNED BY: H.BORDNER		SHEET NO. 52
				CHECKED BY: S.MUKHERJEE/E. LUCZKA		

8/16/2019 8:24:11 PM P:\60323054 DelDOT AGR 1672 BDS\T06 - Rehab Br. 1-714\900 WORK\910 CAD\20-SHEETS\Structures\Final Design\SB\BR1-714-SB-DP01.dgn

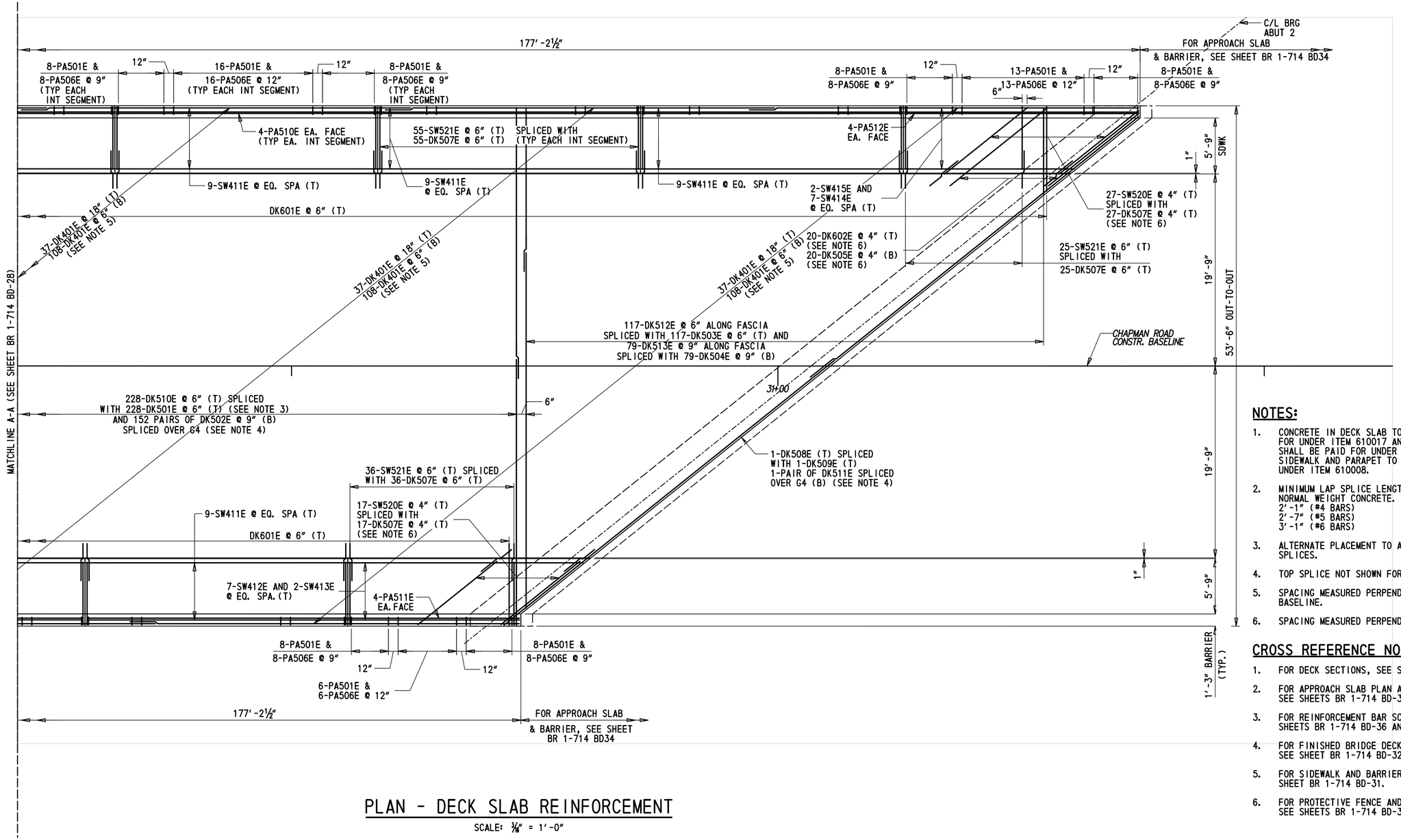

PLAN - DECK SLAB REINFORCEMENT

SCALE: 3/16" = 1'-0"

NOTES:

1. CONCRETE IN DECK SLAB TO BE PAID FOR UNDER ITEM 610017 AND REINFORCEMENT SHALL BE PAID FOR UNDER ITEM 611001. SIDEWALK AND PARAPET TO BE PAID FOR UNDER ITEM 610008.
2. MINIMUM LAP SPLICE LENGTHS, NORMAL WEIGHT CONCRETE.
   2'-1" (#4 BARS)
   2'-7" (#5 BARS)
   3'-1" (#6 BARS)
3. ALTERNATE PLACEMENT TO AVOID ADJACENT SPLICES.
4. TOP SPLICE NOT SHOWN FOR CLARITY.
5. SPACING MEASURED PERPENDICULAR TO BASELINE.
6. SPACING MEASURED PERPENDICULAR TO SKEW.

CROSS REFERENCE NOTES:

1. FOR DECK SECTIONS, SEE SHEET BR 1-714 BD-30.
2. FOR APPROACH SLAB PLAN ANS SECTIONS, SEE SHEETS BR 1-714 BD-33 - BR 1-714 BD-35.
3. FOR REINFORCEMENT BAR SCHEDULE, SEE SHEETS BR 1-714 BD-36 AND BR 1-714 BD-37.
4. FOR FINISHED BRIDGE DECK ELEVATIONS, SEE SHEET BR 1-714 BD-32.
5. FOR SIDEWALK AND BARRIER ELEVATION, SEE SHEET BR 1-714 BD-31.
6. FOR PROTECTIVE FENCE AND RAILING, SEE SHEETS BR 1-714 BD-38.

BR 1-714
BD-29

ADDENDA / REVISIONS	SCALE AS NOTED	BR 1-714 ON CHAPMAN ROAD OVER I-95 SB	CONTRACT T201507402	BRIDGE NO. 1-714	BRIDGE DECK REINFORCEMENT PLAN - 2	SECTION AEC
			COUNTY NEW CASTLE	DESIGNED BY: H.BORDNER		SHEET NO. 53
				CHECKED BY: S.MUKHERJEE/E. LUCZKA		

8/16/2019
8:24:28 PM
P:\60323054 DelDOT AGR 1672 BDS\T06 - Rehab Br. 1-714\900 WORK\910 CAD\20-SHEETS\Structures\Final Design\SB\BR1-714-SB-DP02.dgn

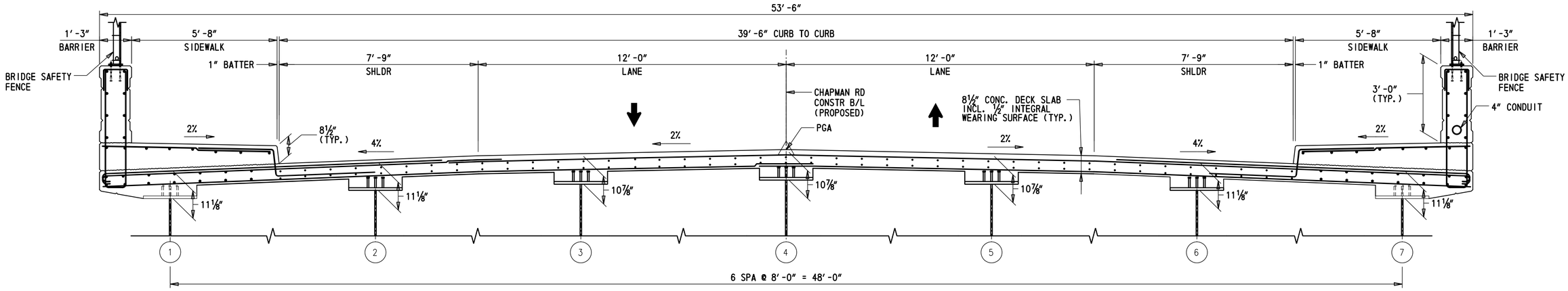

TYPICAL DECK SECTION

SCALE: 1/2" = 1'-0"

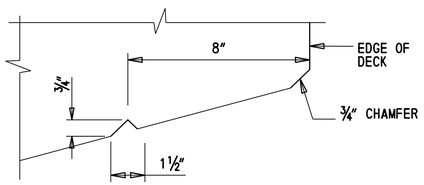

DETAIL 1

NOT TO SCALE

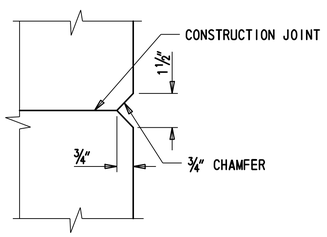

DETAIL 2

NOT TO SCALE

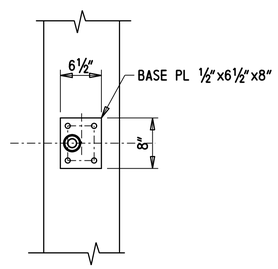

SECTION A-A

SCALE: 1" = 1'-0"

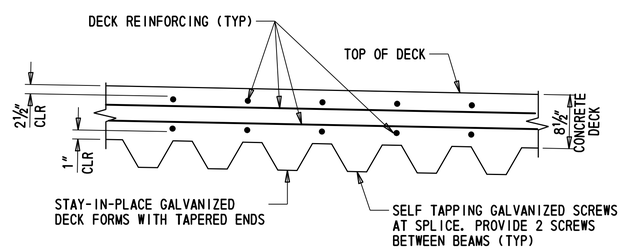

STAY-IN-PLACE FORM DETAIL

SCALE: 1" = 1'-0"

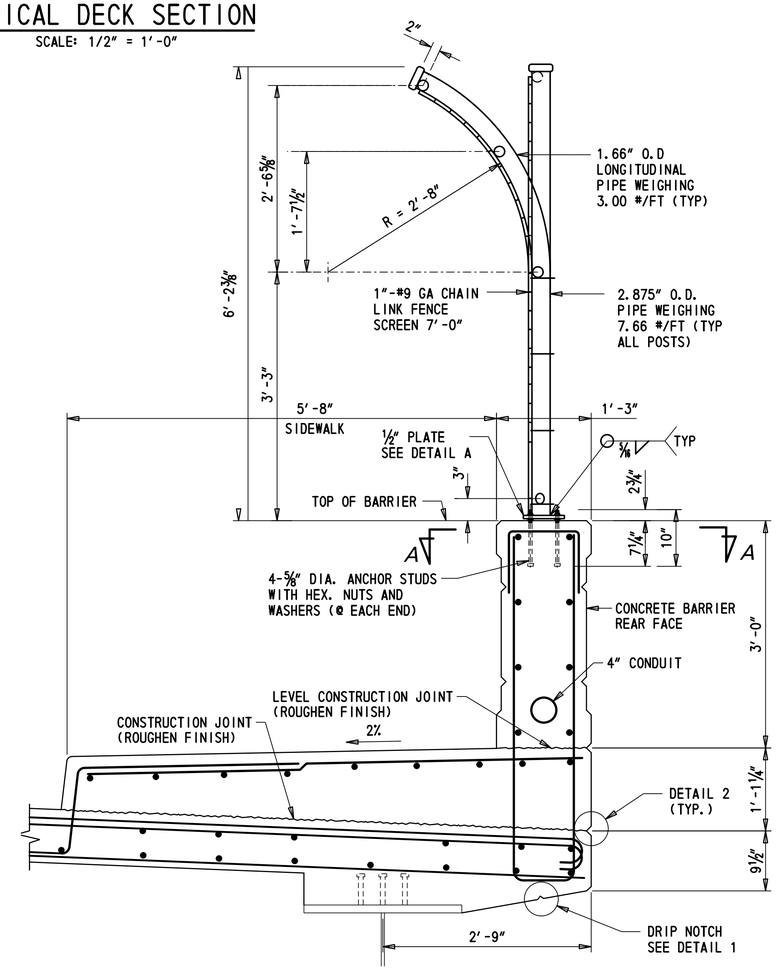

TYPICAL SECTION - PROPOSED AT SAFETY FENCE POST (PVC COATED)

SCALE: 1" = 1'-0"
SEE GENERAL NOTE 1

GENERAL NOTES

1. BRIDGE SAFETY FENCE, TYPE 2 TO BE PAID FOR UNDER ITEM 727008.

STAY-IN-PLACE FORM NOTES

1. THESE FORMS SHALL BE VERTICALLY ADJUSTED TO ATTAIN LINE AND GRADE REQUIRED ON THE PLANS.
2. THE CONTRACTOR SHALL SUBMIT SHOP DRAWINGS FOR APPROVAL. METAL FORMS MUST BE GALVANIZED AND MORTAR TIGHT. SELF TAPPING SCREWS MUST BE NON-CORROSIVE. SELF TAPPING SCREWS SHALL BE INSTALLED AT THE SIDE LAP OF THE SHEETS AT MID-SPAN SUPPORTS. ALL ANGLES, WELDS, AND INSERTS MUST BE DESIGNED BY THE CONTRACTOR.
3. ALL MATERIALS AND LABOR NEEDED FOR FORMS SHALL BE INCIDENTAL TO ITEM 610017 - P.C.C. MASONRY, SUPERSTRUCTURE, CLASS D.
4. WELDING TO STEEL BEAM FLANGES IN TENSION ZONE IS STRICTLY PROHIBITED.
5. CONCRETE IN CORRUGATIONS WILL NOT BE MEASURED AND WILL NOT WILL BE INCIDENTAL TO ITEM 610017.

CROSS REFERENCE NOTES:

1. FOR DECK REINFORCEMENT PLANS, SEE SHEETS BR 1-714 BD-28 AND BR 1-714 BD-29.
2. FOR BRIDGE BARRIER & SIDEWALK ELEVATION, SEE SHEET BR 1-714 BD-31.
3. FOR REINFORCEMENT BAR SCHEDULE, SEE SHEET BR 1-714 BD-36.
4. FOR SAFETY FENCE DETAILS AND NOTES, SEE SHEET BR 1-714 BD-38.

BR 1-714
BD-30

ADDENDA / REVISIONS	SCALE AS NOTED	BR 1-714 ON CHAPMAN ROAD OVER I-95 SB	CONTRACT T201507402	BRIDGE NO. 1-714	BRIDGE DECK SECTION & DETAILS	SECTION AEC
			COUNTY NEW CASTLE	DESIGNED BY: H.BORDNER		SHEET NO. 54
				CHECKED BY: S.MUKHERJEE		

8/16/2019
8:24:51 PM
P:\60323054 DelDOT AGR 1672 BDS\T06 - Rehab Br. 1-714\900 WORK\910 CAD\20-SHEETS\Structures\Final Design\SB\BR1-714-SB-DD01.dgn

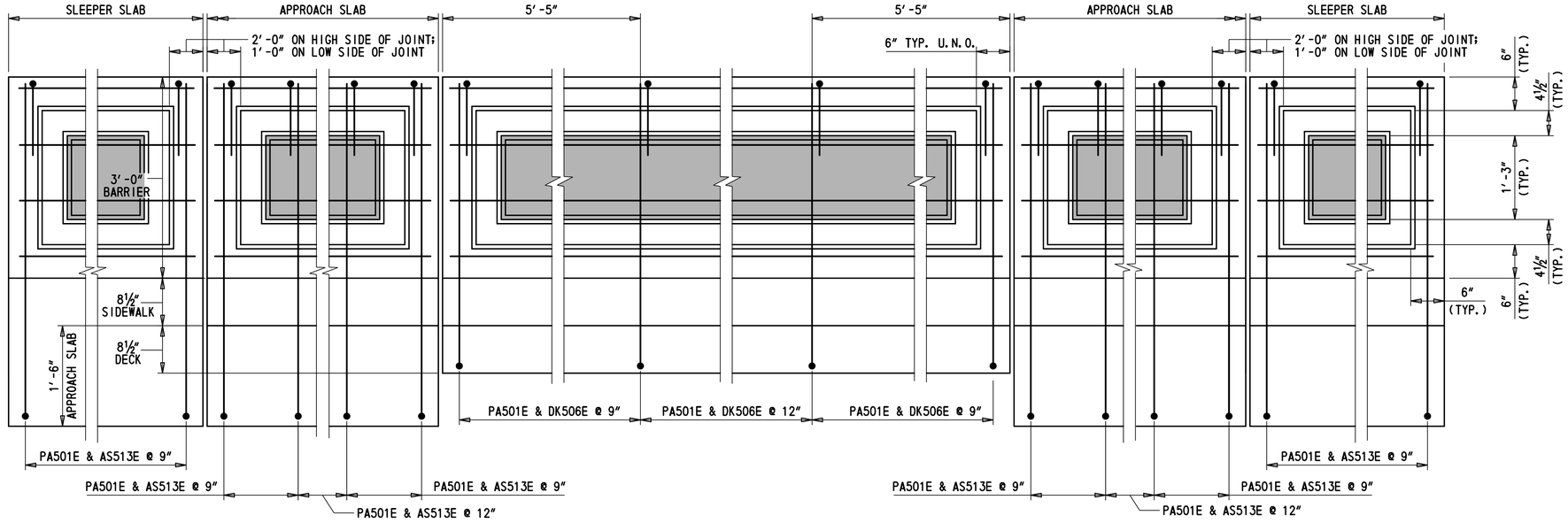

BARRIER ELEVATION

SCALE: 1″ = 1′-0″

PAINT RECESSED AREAS (BOTH SIDES OF BARRIER) TO MATCH BARRIER ON NEARBY BR 1-675. A SAMPLE OF THE PAINT COLOR SHALL BE SUBMITTED TO THE ENGINEER FOR APPROVAL. PAINTING SHALL BE PAID UNDER ITEM 613001.

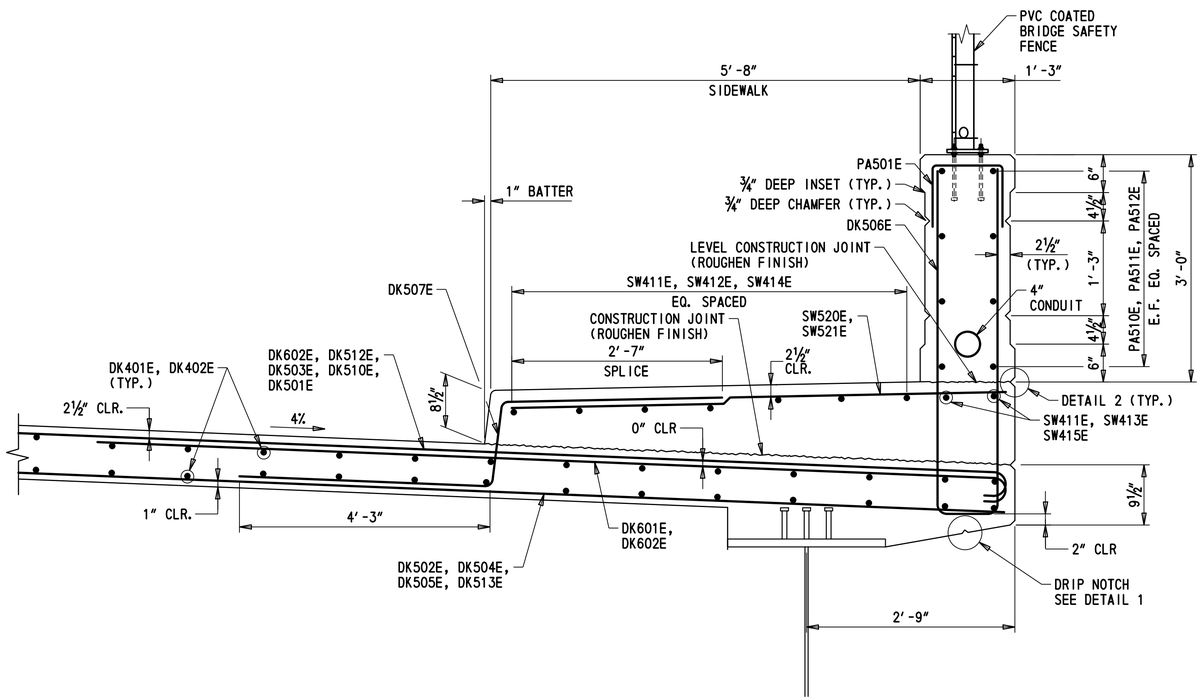

TYPICAL SECTION - PROPOSED

SCALE: 1″ = 1′-0″

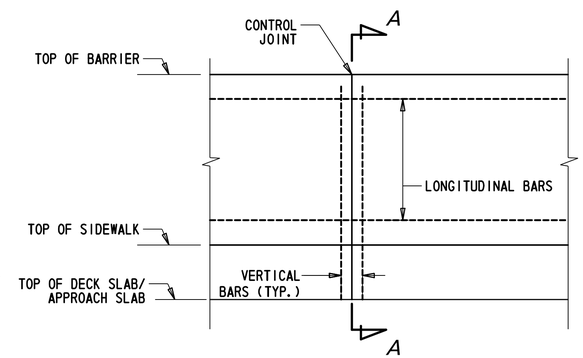

BARRIER CONTROL JOINT DETAIL (ELEVATION)

NOT TO SCALE

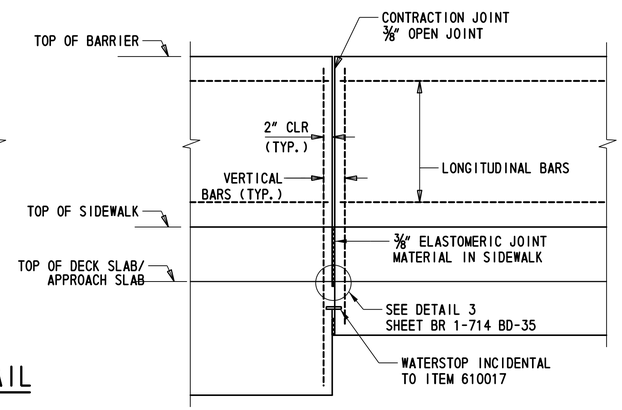

BARRIER CONTRACTION JOINT DETAIL (ELEVATION)

NOT TO SCALE

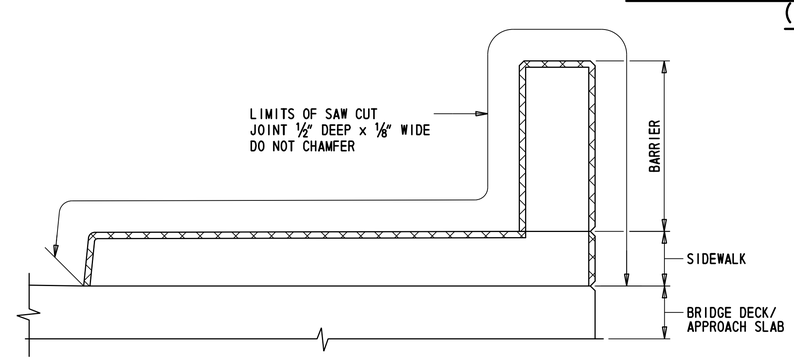

SECTION A-A

REINFORCEMENT NOT SHOWN FOR CLARITY
NOT TO SCALE

CROSS REFERENCE NOTES:

1. WORK THIS SHEET WITH SHEETS BR 1-714 BD-28 AND BR 1-714 BD-29.
2. FOR DECK DETAILS AND REINFORCEMENT, SEE SHEET BR 1-714 BD-30.
3. FOR APPROACH SLAB AND SLEEPER SLAB BARRIER AND SIDEWALK DETAILS AND REINFORCEMENT, SEE SHEETS BR 1-714 BD-33 - BR 1-714 BD-35.
4. FOR PROTECTIVE FENCE DETAILS, SEE SHEET BR 1-714 BD-38.

NOTES:

1. MINIMUM LAP SPLICE LENGTHS, NORMAL WEIGHT CONCRETE.
   2′-1″ (#4 BARS)
   2′-7″ (#5 BARS)
   3′-1″ (#6 BARS)
2. BARRIER & SIDEWALK REINFORCEMENT ANCHORED INTO DECK AND APPROACH SLAB IS NOT SHOWN ON THIS SHEET. SEE DECK AND APPROACH SLAB PLANS.
3. ALL CONTROL JOINTS SHALL BE SPACED AT A MINIMUM OF 8′-0″ AND A MAXIMUM OF 10′-0″. THE CONTRACTOR SHALL SUBMIT THE PROPOSED LAYOUT OF THE CONTROL JOINTS.
4. FORMLINER ON BARRIER INCIDENTAL TO ITEM 610008.

BR 1-714
BD-31

ADDENDA / REVISIONS	SCALE AS NOTED	BR 1-714 ON CHAPMAN ROAD OVER I-95 SB	CONTRACT T201507402	BRIDGE NO. 1-714	BRIDGE BARRIER & SIDEWALK REINFORCEMENT - SECTION AND ELEVATION	SECTION AEC
			COUNTY NEW CASTLE	DESIGNED BY: H.BORDEN		SHEET NO. 55
				CHECKED BY: S.MUKHERJEE/E. LUCZKA		

9/19/2019 6:06:16 PM P:\60323054 DelDOT AGR 1672 BDS\T06 - Rehab Br. 1-714\900 WORK\910 CAD\20-SHEETS\Structures\Final Design\SB\BR1-714-SB-BB01.dgn

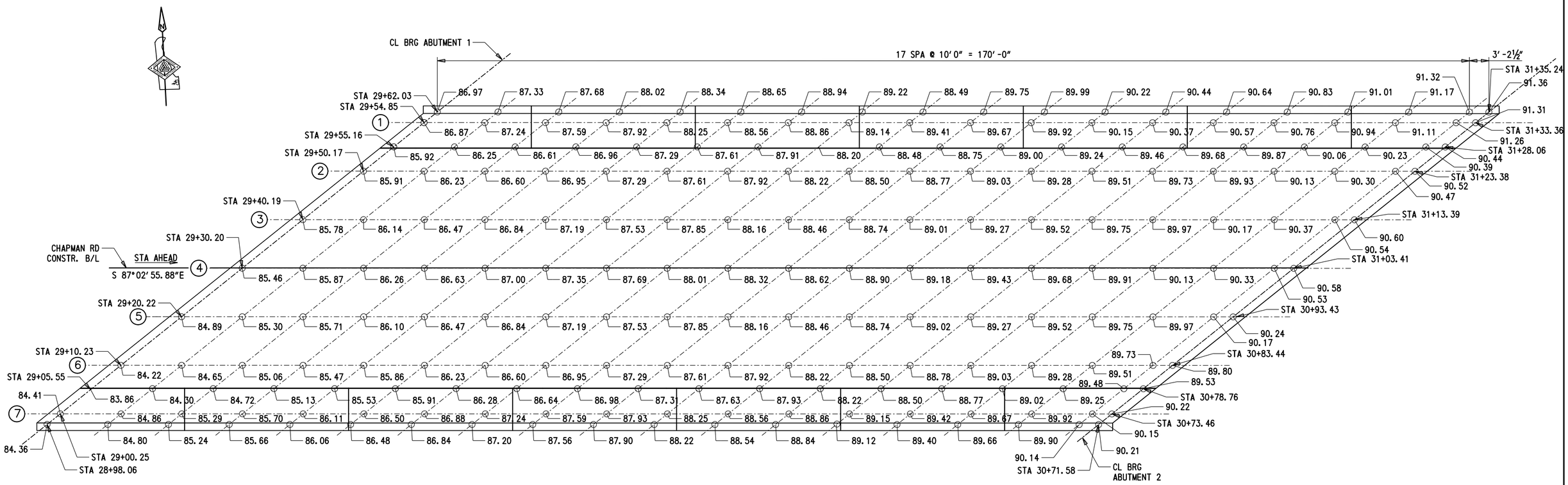

FINISHED BRIDGE DECK ELEVATION

SCALE: 3/16" = 1'-0"

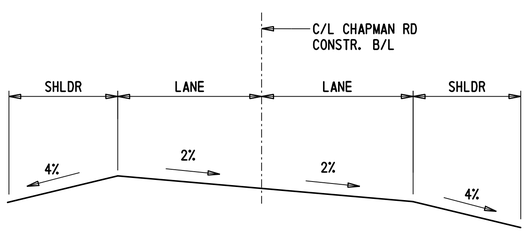

STA. 28+77.74

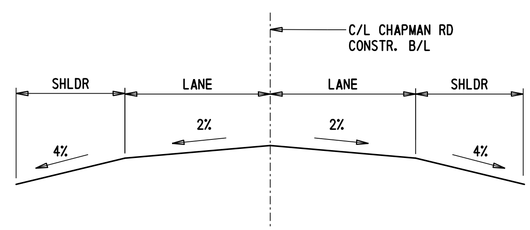

STA. 29+60.50

SUPERELEVATION TRANSITION

(LOOKING STATION AHEAD)
NOT TO SCALE

NOTES:

1. ELEVATIONS OVER GIRDER LINES 1 AND 7 AND AT BARRIER GUTTERLINES ARE AT TOP OF FINISHED SIDEWALK.

CROSS REFERENCE NOTES:

1. FOR DECK SECTION, SEE SHEET BR 1-714 BD-30.
2. FOR VERTICAL CURVE DATA, SEE SHEET BR 1-714 BD-03.
3. FOR DECK PLANS, SEE SHEETS BR 1-714 BD-28, BR 1-714 BD-29.

BR 1-714
BD-32

ADDENDA / REVISIONS	SCALE AS NOTED	BR 1-714 ON CHAPMAN ROAD OVER I-95 SB	CONTRACT T201507402	BRIDGE NO. 1-714	FINISHED BRIDGE DECK ELEVATIONS	SECTION AEC
			COUNTY NEW CASTLE	DESIGNED BY: R.GANOVSKA		SHEET NO. 56
				CHECKED BY: E.LUCZKA		

8/16/2019
8:25:23 PM
P:\60323054 DelDOT AGR 1672 BDS\T06 - Rehab Br. 1-714\900 WORK\910 CAD\20-SHEETS\Structures\Final Design\SB\BR1-714-SB-DE01.dgn

DETAIL A

SCALE: ½" = 1'-0"

DETAIL B

SCALE: ½" = 1'-0"

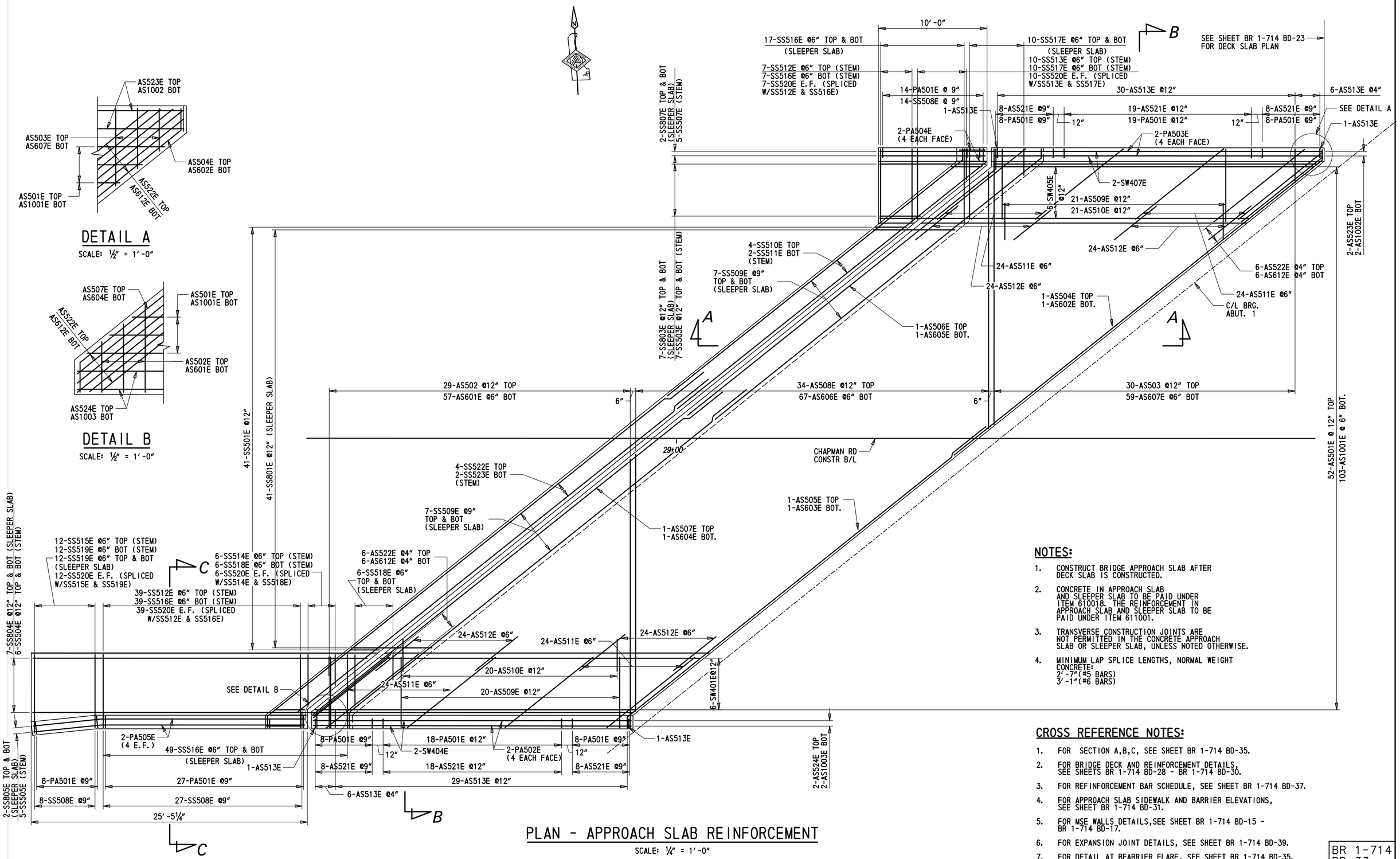

PLAN - APPROACH SLAB REINFORCEMENT

SCALE: ¼" = 1'-0"

NOTES:

1. CONSTRUCT BRIDGE APPROACH SLAB AFTER DECK SLAB IS CONSTRUCTED.
2. CONCRETE IN APPROACH SLAB AND SLEEPER SLAB TO BE PAID UNDER ITEM 610018. THE REINFORCEMENT IN APPROACH SLAB AND SLEEPER SLAB TO BE PAID UNDER ITEM 611001.
3. TRANSVERSE CONSTRUCTION JOINTS ARE NOT PERMITTED IN THE CONCRETE APPROACH SLAB OR SLEEPER SLAB, UNLESS NOTED OTHERWISE.
4. MINIMUM LAP SPLICE LENGTHS, NORMAL WEIGHT CONCRETE:
   2'-7"(#5 BARS)
   3'-1"(#6 BARS)

CROSS REFERENCE NOTES:

1. FOR SECTION A,B,C, SEE SHEET BR 1-714 BD-35.
2. FOR BRIDGE DECK AND REINFORCEMENT DETAILS, SEE SHEETS BR 1-714 BD-28 - BR 1-714 BD-30.
3. FOR REFINFORCEMENT BAR SCHEDULE, SEE SHEET BR 1-714 BD-37.
4. FOR APPROACH SLAB SIDEWALK AND BARRIER ELEVATIONS, SEE SHEET BR 1-714 BD-31.
5. FOR MSE WALLS DETAILS,SEE SHEET BR 1-714 BD-15 - BR 1-714 BD-17.
6. FOR EXPANSION JOINT DETAILS, SEE SHEET BR 1-714 BD-39.
7. FOR DETAIL AT BEARRIER FLARE, SEE SHEET BR 1-714 BD-35.

BR 1-714
BD-33

ADDENDA / REVISIONS	SCALE AS NOTED	BR 1-714 ON CHAPMAN ROAD OVER I-95 SB	CONTRACT T201507402	BRIDGE NO. 1-714	ABUTMENT 1 APPROACH SLAB REINFORCEMENT - PLAN	SECTION AEC
			COUNTY NEW CASTLE	DESIGNED BY: R.GANOVSKA		SHEET NO. 57
				CHECKED BY: E.LUCZKA		

8/16/2019
8:25:36 PM
P:\60323054 DelDOT AGR 1672 BDS\T06 - Rehab Br. 1-714\900 WORK\910 CAD\20-SHEETS\Structures\Final Design\SB\BR1-714-SB-AP01.dgn

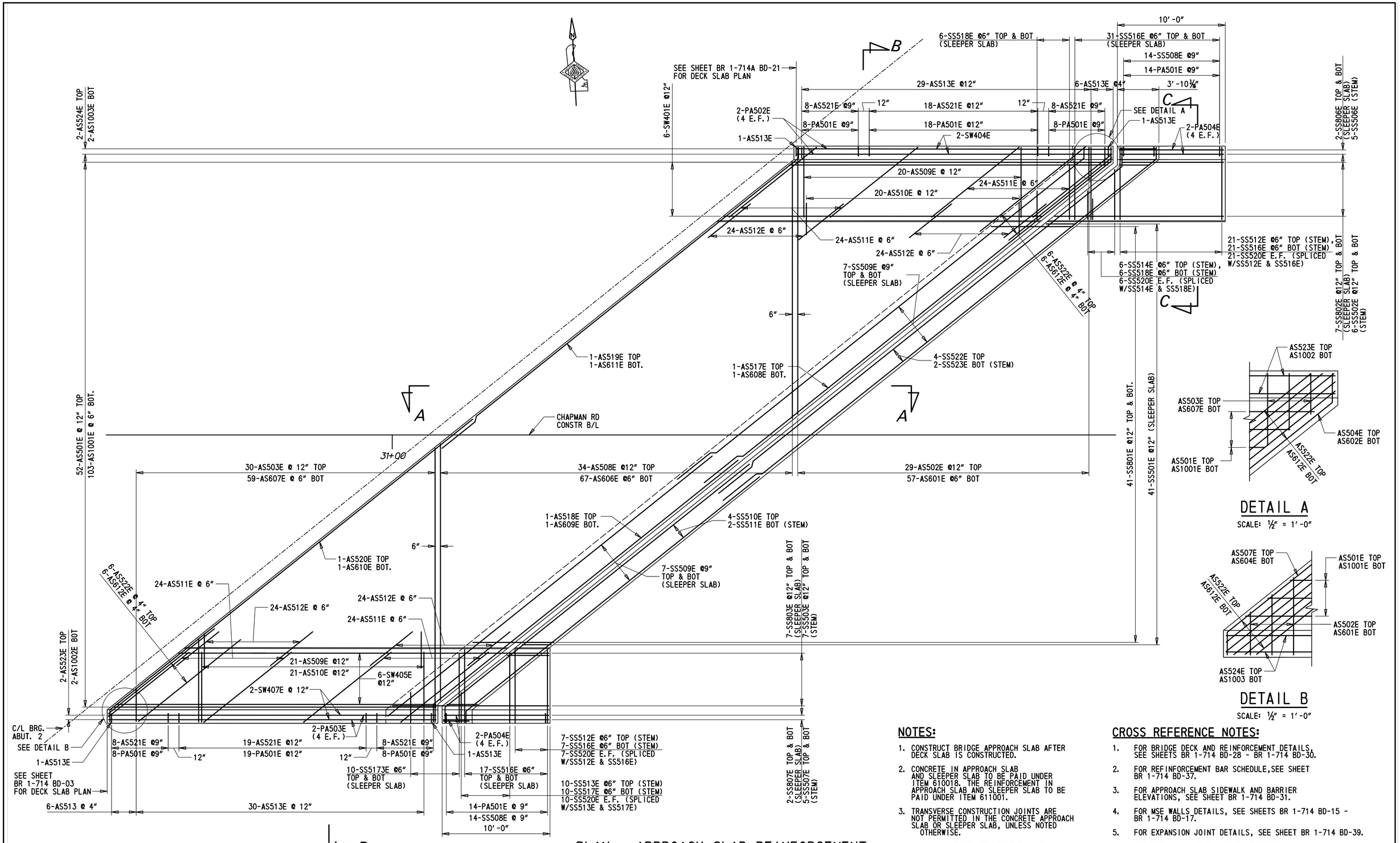

PLAN - APPROACH SLAB REINFORCEMENT

SCALE: ¼" = 1'-0"

NOTES:

1. CONSTRUCT BRIDGE APPROACH SLAB AFTER DECK SLAB IS CONSTRUCTED.
2. CONCRETE IN APPROACH SLAB AND SLEEPER SLAB TO BE PAID UNDER ITEM 610018. THE REINFORCEMENT IN APPROACH SLAB AND SLEEPER SLAB TO BE PAID UNDER ITEM 611001.
3. TRANSVERSE CONSTRUCTION JOINTS ARE NOT PERMITTED IN THE CONCRETE APPROACH SLAB OR SLEEPER SLAB, UNLESS NOTED OTHERWISE.
4. MINIMUM LAP SPLICE LENGTHS, NORMAL WEIGHT CONCRETE:
   2'-7"(#5 BARS)
   3'-1"(#6 BARS)

CROSS REFERENCE NOTES:

1. FOR BRIDGE DECK AND REINFORCEMENT DETAILS, SEE SHEETS BR 1-714 BD-28 - BR 1-714 BD-30.
2. FOR REINFORCEMENT BAR SCHEDULE, SEE SHEET BR 1-714 BD-37.
3. FOR APPROACH SLAB SIDEWALK AND BARRIER ELEVATIONS, SEE SHEET BR 1-714 BD-31.
4. FOR MSE WALLS DETAILS, SEE SHEETS BR 1-714 BD-15 - BR 1-714 BD-17.
5. FOR EXPANSION JOINT DETAILS, SEE SHEET BR 1-714 BD-39.
6. FOR DETAIL A AND B, SEE THIS SHEET.

BR 1-714
BD-34

ADDENDA / REVISIONS	SCALE AS NOTED	BR 1-714 ON CHAPMAN ROAD OVER I-95 SB	CONTRACT T201507402	BRIDGE NO. 1-714	ABUTMENT 2 APPROACH SLAB REINFORCEMENT - PLAN	SECTION AEC
			COUNTY NEW CASTLE	DESIGNED BY: R. GANOVSKA		SHEET NO. 58
				CHECKED BY: E. LUCZKA		

8/16/2019 8:25:45 PM P:\60323054 DelDOT AGR 1672 BDS\T06 - Rehab Br. 1-714\900 WORK\910 CAD\20-SHEETS\Structures\Final Design\SB\BR1-714-SB-AP02.dgn

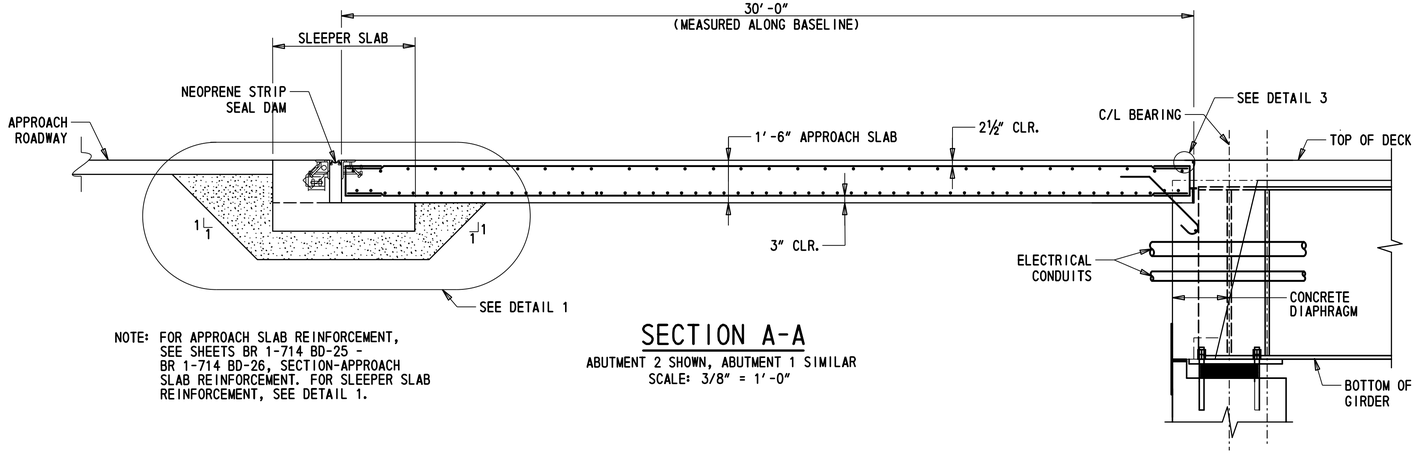

NOTE: FOR APPROACH SLAB REINFORCEMENT, SEE SHEETS BR 1-714 BD-25 - BR 1-714 BD-26, SECTION-APPROACH SLAB REINFORCEMENT. FOR SLEEPER SLAB REINFORCEMENT, SEE DETAIL 1.

SECTION A-A

ABUTMENT 2 SHOWN, ABUTMENT 1 SIMILAR
SCALE: 3/8" = 1'-0"

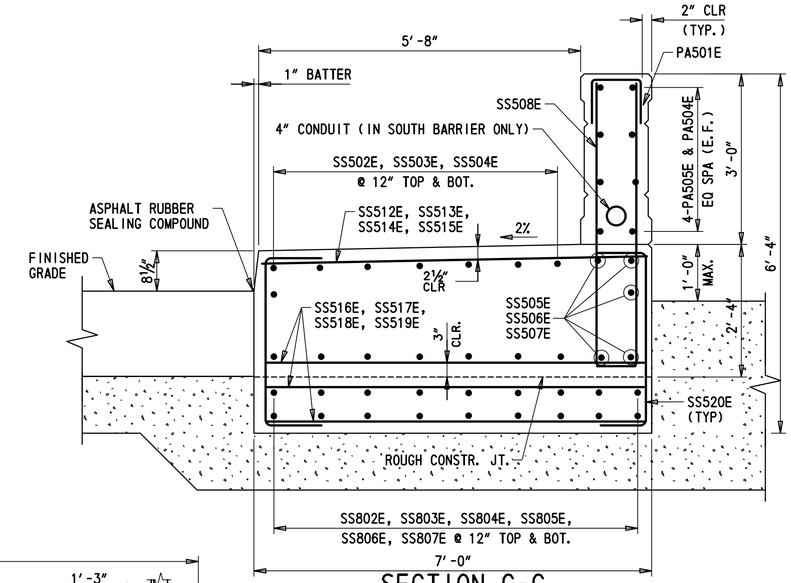

SECTION C-C

SCALE: 3/4" = 1'-0"

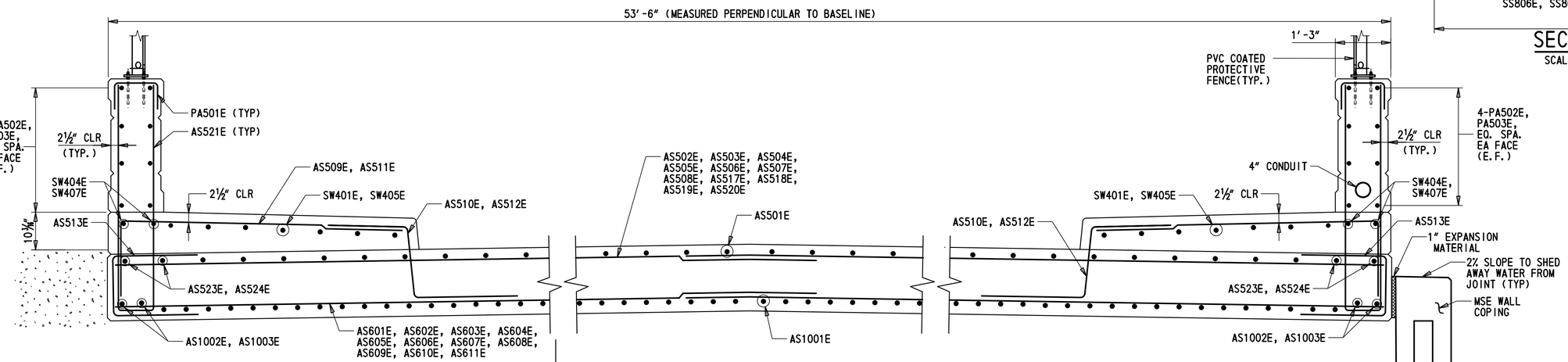

SECTION B-B

SCALE: 3/4" = 1'-0"

CROSS REFERENCE NOTES:

1. FOR APPROACH SLAB PLAN AND DETAILS, SEE SHEET BR 1-714 BD-33 AND BR 1-714 BD-34.
2. FOR APPROACH SLAB BARRIER AND SIDEWALK ELEVATION, SEE SHEET BR 1-714 BD-31.
3. FOR ABUTMENT CONCRETE DIAPHRAGM DETAILS, SEE SHEETS BR 1-714 BD-26 AND BR 1-714 BD-27.
4. FOR EXPANSION JOINT DETAIL, SEE SHEET BR 1-714 BD-39.
5. FOR MSE WINGWALL DETAILS, SEE SHEET BR 1-714 BD-12.

NOTES:

1. CONSTRUCT BRIDGE APPROACH SLAB AFTER THE DECK SLAB IS CONSTRUCTED.
2. TRANSVERSE CONSTRUCTION JOINTS ARE NOT PERMITTED IN THE CONCRETE APPROACH SLAB OR SLEEPER SLAB, UNLESS NOTED OTHERWISE.
3. CONCRETE IN APPROACH SLAB TO BE PAID FOR UNDER ITEM 610018 AND REINFORCEMENT IN APPROACH SLAB SHALL BE PAID FOR UNDER ITEM 611001.

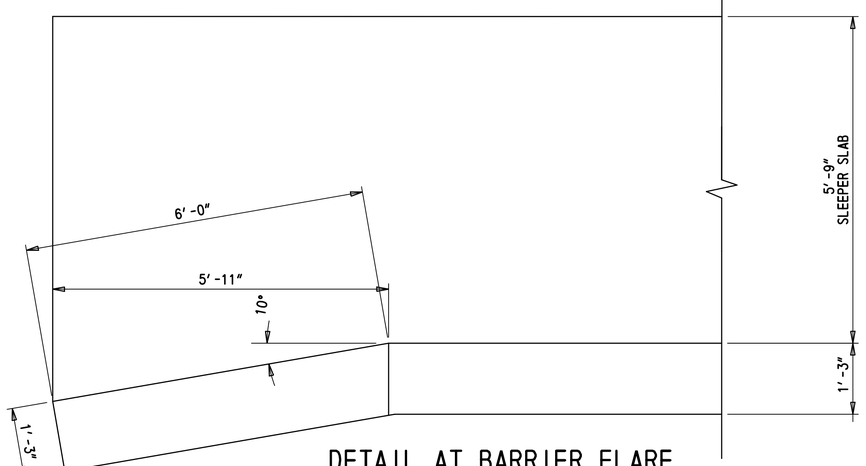

DETAIL AT BARRIER FLARE

SCALE: ¾" = 1'-0"

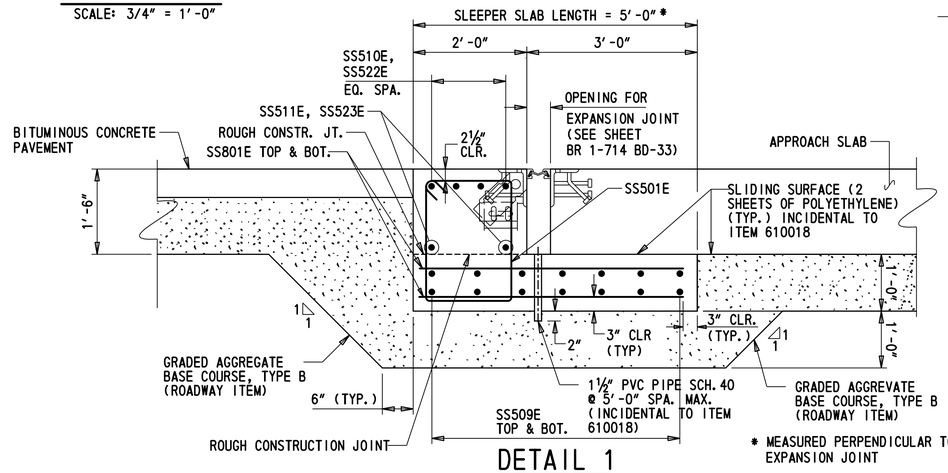

DETAIL 1

SCALE: 3/4" = 1'-0"

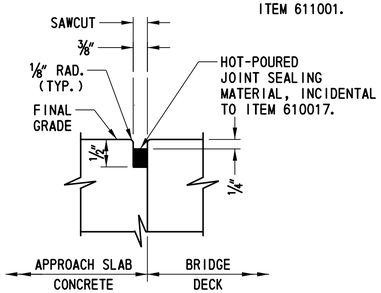

DETAIL 3

SCALE: 6" = 1'-0"

BR 1-714
BD-35

ADDENDA / REVISIONS	SCALE AS NOTED	BR 1-714 ON CHAPMAN ROAD OVER I-95 SB	CONTRACT T201507402	BRIDGE NO. 1-714	BRIDGE APPROACH SLAB REINFORCEMENT - SECTION AND DETAILS	SECTION AEC
			COUNTY NEW CASTLE	DESIGNED BY: R.GANOVSKA		SHEET NO. 59
				CHECKED BY: E.LUCZKA		

8/16/2019 8:26:21 PM P:\60323054 DelDOT AGR 1672 BDS\T06 - Rehab Br. 1-714\900 WORK\910 CAD\20-SHEETS\Structures\Final Design\SB\BR1-714-SB-AP03.dgn

REINFORCEMENT BAR SCHEDULE

SOUTHBOUND DECK SLAB

MARK	SIZE	LENGTH	NUMBER	TYPE	A	B	C	D	E	F	G	H	J	K	O	REMARKS
DK401E	4	40′-0″	580	STR												
DK402E	4	25′-6″	145	STR												
DK501E	5	16′-5½″	228	24	0′-7″	15′-10½″					0′-0″		0′-5″			
DK502E	5	27′-10½″	304	STR												
DK503E	5	VARIES 8′-2″ TO 49′-3″	234	24	0′-7″	VARIES 7′-7″ TO 48′-8″					0′-0″		0′-5″			VARY B EVERY TWO BARS BY 4¼″
DK504E	5	VARIES 8′-¼″ TO 48′-8″	158	STR												VARY EVERY TWO BARS BY 6¼″
DK505E	5	10′-6½″	40	STR												
DK506E	5	9′-2½″	422	17		4′-3″	8½″	4′-3″								
DK507E	5	7′-11″	760	17		2′-7″	1′-1″	4′-3″								
DK508E	5	50′-3¼″	2	12	0′-0″	0′-0″	49′-2¼″	1′-1″				0′-10¼″	0′-0″	0′-8¼″	49′-10½″	
DK509E	5	40′-¾″	2	12	0′-0″	0′-0″	38′-11¾″	1′-1″				0′-10¼″	0′-0″	0′-8¼″	39′-8″	
DK510E	5	40′-5½″	228	24	0′-7″	39′-10½″					0′-0″		0′-5″			
DK511E	5	43′-2″	4	12	0′-0″	0′-0″	42′-1″	1′-1″				0′-10¼″	0′-0″	0′-8¼″	42′-9¼″	
DK512E	5	7′-5″	234	24	0′-7″	6′-10″					0′-0″		0′-5″			
DK513E	5	6′-10″	158	STR												
DK601E	6	6′-3″	696	24	0′-8″	5′-7″					0′-0″		0′-6″			
DK602E	6	11′-2½″	40	24	0′-8″	10′-6½″					0′-0″		0′-6″			
SW411E	4	26′-8″	90	STR												
SW412E	4	VARIES 17′-6¾″ TO 24′-2¼″	14	STR												VARY EVERY TWO BARS BY 13¼″
SW413E	4	17′-5½″	4	STR												
SW414E	4	VARIES 17′-¼″ TO 23′-7¾″	14	STR												VARY EVERY TWO BARS BY 13¼″
SW415E	4	24′-0″	4	STR												
SW520E	5	10′-6¼″	88	STR												
SW521E	5	6′-7″	670	STR												
PA501E	5	5′-10½″	422	17		2′-7″	8½″	2′-7″								
PA510E	5	26′-8¼″	80	STR												
PA511E	5	17′-5½″	16	STR												
PA512E	5	24′-0″	16	STR												

SOUTHBOUND DIAPHRAGMS

MARK	SIZE	LENGTH	NUMBER	TYPE	A	B	C	D	E	F	G	H	J	K	O	REMARKS
DP401E	4	5′-4½″	176	16	0′-0″	0′-0″	2′-1″	3′-3½″				3′-2¼″		0′-9¾″	2′-10¾″	
DP402E	4	4′-11″	176	17		2′-9″	2′-2″	0′-0″								
DP403E	4	10′-1¾″	176	16	0′-0″	3′-1″	3′-11¼″	3′-1½″				3′-0½″		-0′-9¼″	3′-2″	K VALUE IS NEGATIVE BECAUSE BAR BEND OPPOSITE OF WHAT IS SHOWN IN THE DIAGRAM
DP404E	4	10′-3¾″	160	16	0′-0″	4′-2¼″	1′-9½″	4′-4″				4′-2¼″		1′-0½″	2′-10″	
DP405E	4	10′-7¾″	16	43	4′-2¼″	4¾″	6″	10¾″	4′-8″	4′-6¼″	1′-1½″					
DP406E	4	9′-6″	8	17		4′-9″	4′-9″	0′-0″								
DP601E	6	4′-8″	176	30		1′-0″	3′-0″				0′-8″	0′-8½″	0′-6″	-0′-8½″		K VALUE IS NEGATIVE BECAUSE BAR BEND OPPOSITE OF WHAT IS SHOWN IN THE DIAGRAM
DP602E	6	15′-10¾″	238	STR												
DP603E	6	10′-5¾″	89	STR												
DP604E	6	8′-9″	8	STR												
DP605E	6	28′-8¼″	2	STR												
DP606E	6	17′-5″	8	STR												
DP607E	6	3′-8¾″	2	STR												
DP608E	6	3′-6″	10	STR												
DP609E	6	11′-3″	2	STR												
DP610E	6	7′-5″	10	STR												

REINFORCEMENT BAR SCHEDULE

MOMENT SLABS

MARK	SIZE	LENGTH	NUMBER	TYPE	A	B	C	D	E	F	G	H	J	K	O	REMARKS
PA501E	5	5′-10½″	111	17		2′-7″	8½″	2′-7″								
PA502E	5	32′-2¼″	24	STR												
MS401E	4	32′-2¼″	48	STR												
MS501E	5	10′-4″	111	17		4′-9¾″	8½″	4′-9¾″								
MS502E	5	10′-0″	102	17		1′-8″	6′-6½″	1′-9½″				0′-1½″			6′-6½″	
MS503E	5	6′-6½″	102	STR												
MS504E	5	32′-2¼″	18	STR												

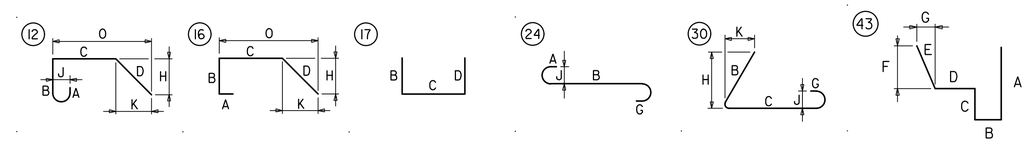

BR 1-714
BD-36

ADDENDA / REVISIONS	NOT TO SCALE	BR 1-714 ON CHAPMAN ROAD OVER I-95 SB	CONTRACT T201507402	BRIDGE NO. 1-714	DECK AND CONCRETE DIAPHRAGM REINFORCEMENT SCHEDULE	SECTION AEC
			COUNTY NEW CASTLE	DESIGNED BY: A.WASSEF		SHEET NO. 60
				CHECKED BY: J.BRASK/E.LUCZKA		

8/16/2019 8:26:53 PM P:\60323054 DelDOT AGR 1672 BDS\T06 - Rehab Br. 1-714\900 WORK\910 CAD\20-SHEETS\Structures\Final Design\SB\BR1-714-SB-RE01.dgn

SOUTHBOUND APPROACH SLAB REINFORCEMENT SCHEDULE

MARK	SIZE	NUMBER	LENGTH	TYPE	A	B	C	D	E	F	G	H	K	O	REMARKS
AS501E	5	104	29′-5½″	STR											
AS502E	5	58	VARIES 2′-7″ TO 24′-9″	STR											VARY EVERY 2 BARS BY 9½″
AS503E	5	60	VARIES 2′-7″ TO 25′-3¼″	STR											VARY EVERY 2 BARS BY 9½″
AS504E	5	1	43′-2½″	16	0′-0″	0′-0″	42′-2½″	1′-0″				9¼″	7½″	42′-10″	
AS505E	5	1	43′-¾″	16	0′-0″	0′-0″	41′-11¼″	1′-1½″				10½″	8½″	42′-7¾″	
AS506E	5	1	42′-9½″	16	0′-0″	0′-0″	41′-4¼″	1′-8¼″				1′-3¾″	1′-¾″	42′-2″	
AS507E	5	1	43′-0″	16	0′-0″	0′-0″	41′-8″	1′-4″				1′-½″	10″	42′-6″	
AS508E	5	68	20′-7¼″	STR											
AS509E	5	82	8′-4¾″	16	0′-0″	1′-10¾″	6′-6″	0′-0″				0′-0″	0′-0″	6′-6″	
AS510E	5	82	7′-5″	4	0′-0″	2′-7″	1′-9″	3′-1″	0′-0″	0′-0″	0′-0″	0′-0″	0′-0″	5′-8″	
AS511E	5	192	12′-4¼″	16	0′-0″	1′-10¾″	10′-5½″	0′-0″				0′-0″	0′-0″	10′-5½″	
AS512E	5	192	9′-8¾″	4	0′-0″	2′-7″	1′-9″	5′-4¾″	0′-0″	0′-0″	0′-0″	0′-0″	0′-0″	7′-11¾″	
AS513E	5	150	7′-½″	17		3′-1″	10½″	3′-1″							
AS517E	5	1	43′-0″	16	0′-0″	0′-0″	41′-8″	1′-4″				10½″	10″	42′-6″	
AS518E	5	1	42′-9½″	16	0′-0″	0′-0″	41′-1¼″	1′-8¼″				1′-3¾″	1′-¾″	42′-2″	
AS519E	5	1	42′-11¼″	16	0′-0″	0′-0″	41′-9¼″	1′-2″				11″	8¾″	42′-6″	
AS520E	5	1	43′-4½″	16	0′-0″	0′-0″	42′-4½″	1′-0″				9½″	7½″	43′-0″	
AS521E	5	138	10′-6¾″	17		4′-11⅛″	8½″	4′-11⅛″							
AS522E	5	24	10′-7″	STR											
AS523E	5	4	30′-3¼″	STR											
AS524E	5	4	29′-3″	STR											
AS601E	6	114	VARIES 2′-7″ TO 24′-9″	STR											VARY EVERY 2 BARS BY 4¾″
AS602E	6	1	43′-5½″	16	0′-0″	0′-0″	42′-5½″	1′-0″				9¼″	7½″	43′-1″	
AS603E	6	1	43′-3¾″	16	0′-0″	0′-0″	42′-2¼″	1′-1½″				10½″	8½″	42′-10¾″	
AS604E	6	1	43′-3″	16	0′-0″	0′-0″	41′-11″	1′-4″				1′-½″	10″	42′-9″	
AS605E	6	1	43′-½″	16	0′-0″	0′-0″	41′-4¼″	1′-8¼″				1′-3¾″	1′-¾″	42′-5″	
AS606E	6	134	20′-7¼″	STR											
AS607E	6	118	VARIES 2′-7″ TO 25′-3¼″	STR											VARY EVERY 2 BARS BY 4¾″
AS608E	6	1	43′-3″	16	0′-0″	0′-0″	41′-11″	1′-4″				10½″	10″	42′-9″	
AS609E	6	1	43′-½″	16	0′-0″	0′-0″	41′-4¼″	1′-8¼″				1′-3¾″	1′-¾″	42′-5″	
AS610E	6	1	43′-7½″	16	0′-0″	0′-0″	42′-7½″	1′-0″				9½″	7½″	43′-3″	
AS611E	6	1	43′-2¼″	16	0′-0″	0′-0″	42′-¼″	1′-2″				11″	8¾″	42′-9″	
AS612E	6	24	10′-7″	STR											
AS1001E	10	206	29′-5½″	STR											
AS1002E	10	4	30′-3¼″	STR											
AS1003E	10	4	29′-3″	STR											

SOUTHBOUND APPROACH AND SLEEPER SLAB PARAPET REINFORCEMENT SCHEDULE

MARK	SIZE	NUMBER	LENGTH	TYPE	A	B	C	D	E	F	G	H	K	O	REMARKS
PA501E	5	215	6′-2½″	17		2′-9″	8½″	2′-9″							
PA502E	5	16	29′-3″	STR											
PA503E	5	16	30′-3¾″	STR											
PA504E	5	24	9′-8″	STR											
PA505E	5	8	25′-¼″	16	0′-0″	0′-0″	19′-3″	5′-9¼″				7″	5′-9″	21′-1¾″	

SOUTHBOUND APPROACH AND SLEEPER SLAB SIDEWALK REINFORCEMENT SCHEDULE

MARK	SIZE	NUMBER	LENGTH	TYPE	A	B	C	D	E	F	G	H	K	O	REMARKS
SW401E	4	12	29′-5½″	STR											
SW404E	4	4	29′-3″	STR											
SW405E	4	12	29′-5½″	STR											
SW407E	4	4	30′-3¾″	STR											

SOUTHBOUND SLEEPER SLAB REINFORCEMENT SCHEDULE

MARK	SIZE	NUMBER	LENGTH	TYPE	A	B	C	D	E	F	G	H	K	O	REMARKS
SS501E	5	82	10′-3½″	T1	7″	2′-6¼″	2′-½″	2′-6¼″	2′-½″		7″				
SS502E	5	12	VARIES 9′-6″ TO 15′-6″	STR											VARY EVERY 2 BARS BY 1′-2½″
SS503E	5	28	VARIES 2′-11½″ TO 9′-6½″	STR											VARY EVERY 4 BARS BY 1′-1¼″
SS504E	5	12	VARIES 24′-11¼″ TO 30′-11¼″	STR											VARY EVERY 2 BARS BY 1′-2½″
SS505E	5	5	24′-10¼″	4	0′-0″	19′-2″	5′-8¼″	0″	0″	0″	0″	7″	5′-8″	24′-10″	
SS506E	5	5	9′-6″	STR											
SS507E	5	10	9′-6½″	STR											
SS508E	5	77	10′-6¾″	17		4′-11⅛″	8½″	4′-11⅛″							
SS509E	5	56	VARIES 43′-3½″ TO 43′-6½″	31		VARIES 11½″ TO 1′-2½″	42′-4″	0′-0″				33′-½″	26′-5¾″	VARIES 27′-5¼″ TO 27′-8¼″	VARY "B" EVERY 8 BARS BY ½″ VARY "O" EVERY 8 BARS BY ½″ VARY EVERY 8 BARS BY ½″
SS510E	5	8	VARIES 43′-1½″ TO 43′-2½″	31		VARIES 1′-2½″ TO 1′-3½″	41′-11″	0′-0″				32′-8½″	26′-2½″	VARIES 27′-5″ TO 27′-6″	VARY "B" EVERY 2 BARS BY ¼″ VARY "O" EVERY 2 BARS BY ¼″ VARY EVERY 2 BARS BY ¼″
SS511E	5	4	VARIES 43′-1½″ TO 43′-2½″	31		VARIES 1′-2½″ TO 1′-3½″	41′-11″	0′-0″				32′-8½″	26′-2½″	VARIES 27′-5″ TO 27′-6″	VARY "B" EVERY 2 BARS BY 1″ VARY "O" EVERY 2 BARS BY 1″ VARY EVERY 2 BARS BY 1″
SS512E	5	74	6′-6″	STR											
SS513E	5	20	VARIES 2′-7″ TO 6′-2¼″	STR											VARY EVERY 2 BARS BY 4¾″
SS514E	5	12	VARIES 2′-7″ TO 4′-7″	STR											VARY EVERY 2 BARS BY 4¾″
SS515E	5	12	VARIES 6′-6¾″ TO 7′-1½″	STR											VARY EACH BAR BY ½″
SS516E	5	302	6′-7″	STR											
SS517E	5	60	VARIES 2′-8″ TO 6′-3¼″	STR											VARY EVERY 6 BARS BY 4¾″
SS518E	5	36	VARIES 2′-8″ TO 4′-8″	STR											VARY EVERY 6 BARS BY 4¾″
SS519E	5	36	VARIES 6′-7¾″ TO 7′-2½″	STR											VARY EVERY 3 BARS BY ½″
SS520E	5	236	7′-11″	17		2′-7″	2′-9″	2′-7″							
SS522E	5	8	VARIES 43′-3½″ TO 44′-¾″	31		VARIES 11½″ TO 1′-8¾″	42′-4″	0′-0″				33′-½″	26′-5¾″	VARIES 27′-5¼″ TO 28′-2½″	VARY "B" EVERY 2 BARS BY 3″ VARY "O" EVERY 2 BARS BY 3″ VARY EVERY 2 BARS BY 3″
SS523E	5	4	VARIES 43′-3½″ TO 44′-¾″	31		VARIES 11½″ TO 1′-8¾″	42′-4″	0′-0″				33′-½″	26′-5¾″	VARIES 27′-5¼″ TO 28′-2½″	VARY "B" EVERY 2 BARS BY 9¼″ VARY "O" EVERY 2 BARS BY 9¼″ VARY EVERY 2 BARS BY 9¼″
SS801E	8	164	7′-3½″	STR											
SS802E	8	14	VARIES 13′-7¾″ TO 20′-3¾″	STR											VARY EVERY 2 BARS BY 1′-1¼″
SS803E	8	28	VARIES 7′-9″ TO 14′-5½″	STR											VARY EVERY 4 BARS BY 1′-1½″
SS804E	8	14	VARIES 29′-1″ TO 29′-8¾″	STR											VARY EVERY 2 BARS BY 1′-1¼″
SS805E	8	4	29′-0″	4	0′-0″	23′-3¾″	5′-8¼″	0′-0″	0′-0″	0′-0″	0′-0″	7″	5′-8″	28′-11¾″	
SS806E	8	4	13′-7¾″	STR											
SS807E	8	8	14′-5½″	STR											

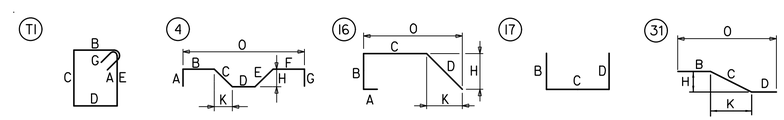

BR 1-714
BD-37

ADDENDA / REVISIONS	NOT TO SCALE	BR 1-714 ON CHAPMAN ROAD OVER I-95 SB	CONTRACT T201507402	BRIDGE NO. 1-714	APPROACH SLAB REINFORCEMENT SCHEDULE	SECTION AEC
			COUNTY NEW CASTLE	DESIGNED BY: A.WASSEF		SHEET NO. 61
				CHECKED BY: J.BRASK/E.LUCZKA		

8/16/2019 8:26:40 PM P:\60323054 DelDOT AGR 1672 BDS\T06 - Rehab Br. 1-714\900 WORK\910 CAD\20-SHEETS\Structures\Final Design\SB\BR1-714-SB-RE03.dgn

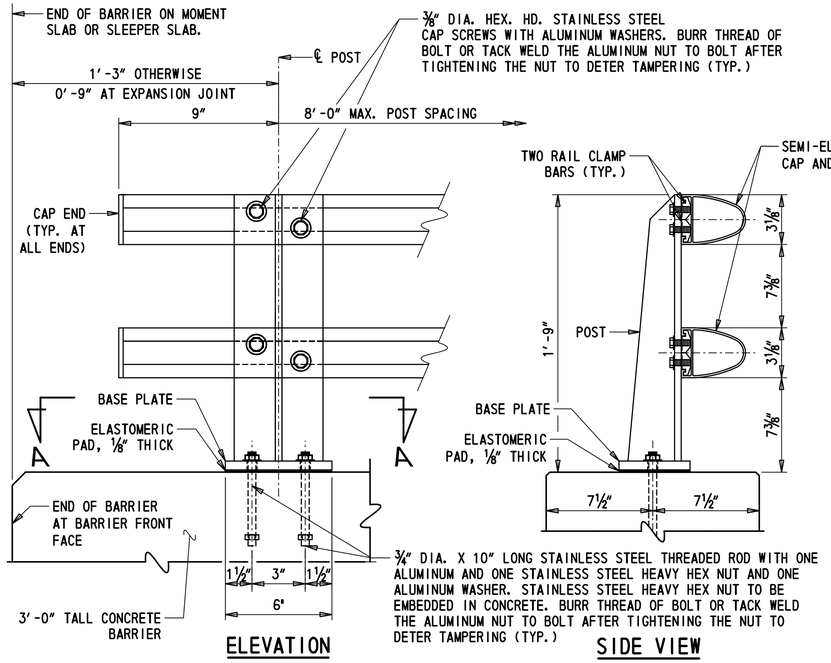

METAL BRIDGE RAILING

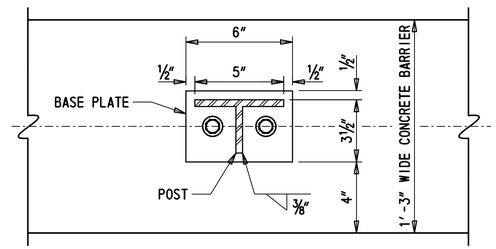

SECTION A-A

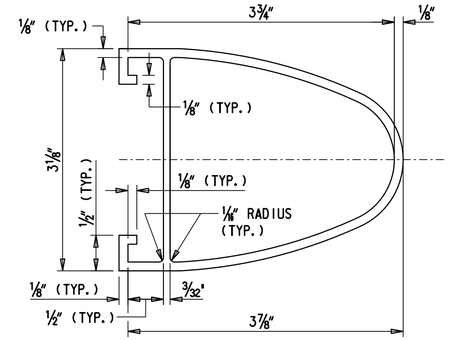

SEMI-ELLIPTICAL RAIL

GENERAL METAL RAILING AND SAFETY FENCE NOTES

1. THE SAFETY FENCE (ITEM 727008) SHALL BE CONSTRUCTED ON BOTH BARRIERS (EA SIDE OF BRIDGE) WITHIN THE FULL LENGTH BRIDGE AND APPROACH SLAB. THE SAFETY FENCE SHALL BE CONSTRUCTED PER DELDOT STANDARD DRAWING NO. M-10(2014)-BRIDGE SAFETY FENCE, TYPE 2. EXCEPT THAT IT SHALL BE 6′-2⅜″ TALL (INSTEAD OF 5′-0½″) AS MEASURED FROM THE BOTTOM OF THE FENCE POST BASE PLATE TO THE TOP OF THE FENCE POST.
2. BRIDE RAILING SHALL BE CONSTRUCTED ON BARRIER WITHIN SLEEPER SLAB AND MOMENT SLAB.
3. THE CONTRACTOR SHALL SUBMIT THE PROPOSED LAYOUT FOR BRIDGE RAIL POSTS & SAFETY FENCE POSTS FOR APPROVAL.
4. POSTS SHALL BE SET PERPENDICULAR TO GRADE.
5. CL HANDRAIL AND SAFETY FENCE POST MUST BE LOCATED A MINIMUM OF 6″ FROM CONTROL JOINTS AND A MINIMUM OF 12″ FROM EXPANSION OR CONTRACTION JOINTS.
6. RAILS SHALL BE CONTINUOUS WITH SPLICES WHERE RAIL SECTIONS CROSS EXPANSION JOINTS.
7. THE CENTERLINE OF ANY SPLICE SHALL BE LOCATED AT LEAST 2′-0″ AWAY FROM CENTERLINE OF A POST.
8. SET NUTS ¼″ CLEAR MINIMUM OF PLATES AND BURR THREADS ABOVE NUTS.
9. THE METAL RAILING DETAILS SHALL BE PLACED ALONG ENTIRE LENGTH OF 3′-0″ TALL CONCRETE BARRIER.
10. FABRICATION AND INSTALLATION OF THE ALUMINUM RAILING SYSTEM WILL BE INCIDENTAL TO ITEM 626011 - ALUMINUM RAILING, TYPE 1.

METAL RAILING MATERIAL NOTES

1. POSTS, RAILS, SPLICE SLEEVES, CLAMP BARS, AND ALUMINUM HEX NUTS MUST MEET REQUIREMENTS OF ASTM B-221 ALLOY 6061-T6.
2. BASE PLATES MUST MEET REQUIREMENTS OF ASTM B209 ALLOY 6061-T6.
3. END CAPS MUST MEET REQUIREMENTS OF ASTM B26 ALLOY 356-F.
4. ELASTOMERIC PADS MUST MEET REQUIREMENTS OF 60 +/- SHORE A DUROMETER.
5. STAINLESS STEEL HEX NUTS MUST MEET REQUIREMENTS OF ASTM A-307, GRADE A.
6. ANCHOR BOLTS MUST MEET REQUIREMENTS OF ASTM A-276 TYPE 430 (THREADS TO BE ROLLED NOT CUT).
7. STAINLESS STEEL HEX HEAD CAP SCREWS (CLAMPS) MUST MEET REQUIREMENTS OF ASTM A-193, GRADE B-8.
8. ALUMINUM WASHERS MUST MEET REQUIREMENTS OF ASTM B-209 ALLOY ALCLAD 2024-T4.

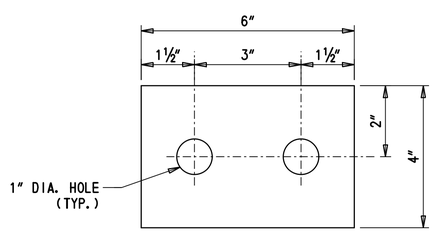

BASE PLATE

NOTE: BASE PLATE ½″ THICK. THE ⅛″ THICK ELASTOMERIC PAD WILL HAVE IDENTICAL DIMENSIONS AS BASE PLATE WITH 1″ DIA x 1½″ SLOTS.

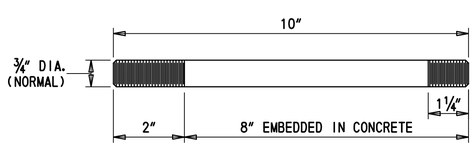

ANCHOR BOLT

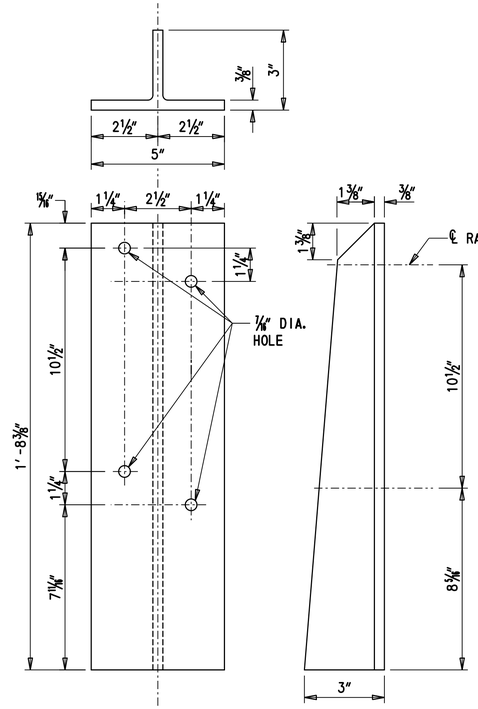

POST

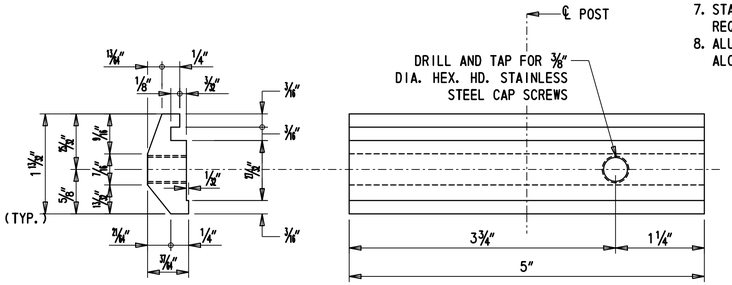

RAIL CLAMP BAR

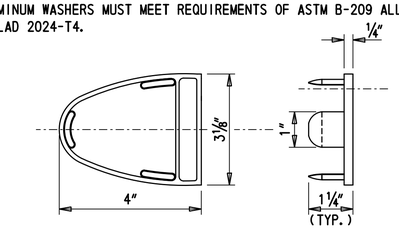

END CAP

NOTE: CAPS SHALL BE SPOT WELDED TO RAILS WITH WELDS GROUND SMOOTH (3 WELDS REQUIRED FOR EACH CAP)

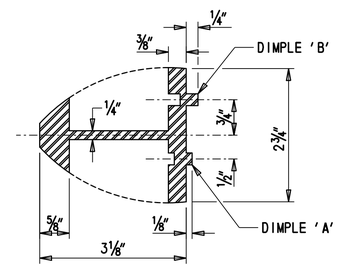

SECTION B-B

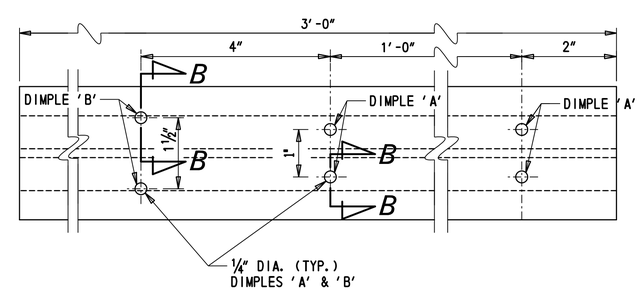

SLEEVE

BR 1-714
BD-38

ADDENDA / REVISIONS	NOT TO SCALE	BR 1-714 ON CHAPMAN ROAD OVER I-95 SB	CONTRACT T201507402	BRIDGE NO. 1-714	RAILING DETAILS	SECTION AEC
			COUNTY NEW CASTLE	DESIGNED BY: R. GANOVSKA		SHEET NO. 62
				CHECKED BY: J.EBERLE		

8/19/2019 4:52:36 PM P:\60323054 DelDOT AGR 1672 BDS\T06 - Rehab Br. 1-714\900 WORK\910 CAD\20-SHEETS\Structures\Final Design\SB\BR1-714-SB-HR01.dgn

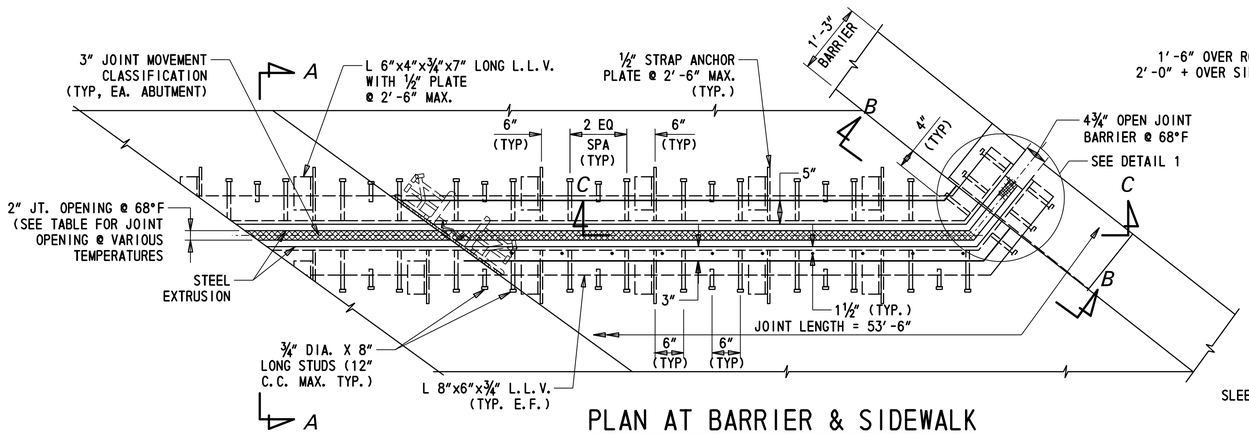

PLAN AT BARRIER & SIDEWALK

SCALE: ¾" = 1'-0"

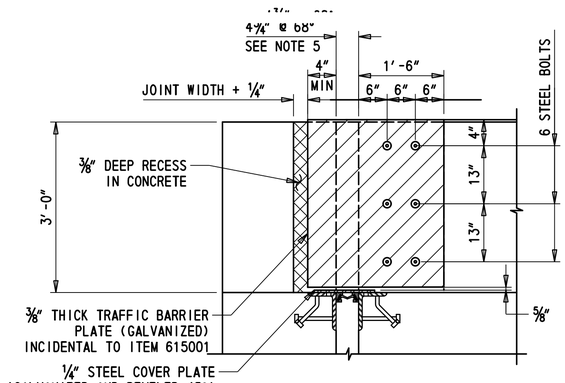

SECTION B-B

SCALE: ¾" = 1'-0"

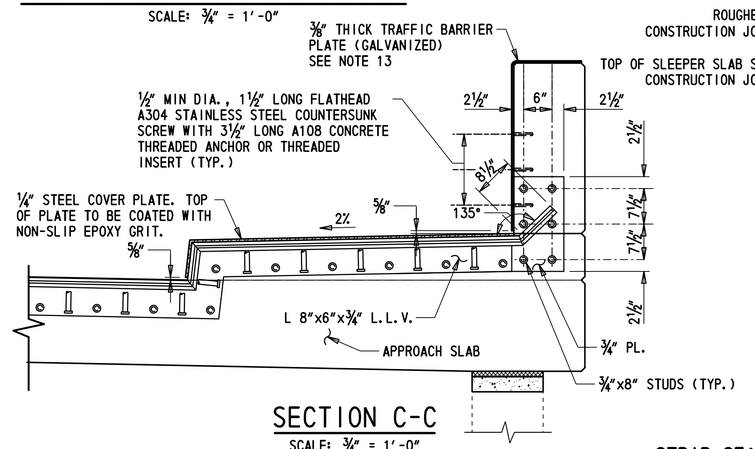

SECTION C-C

SCALE: ¾" = 1'-0"

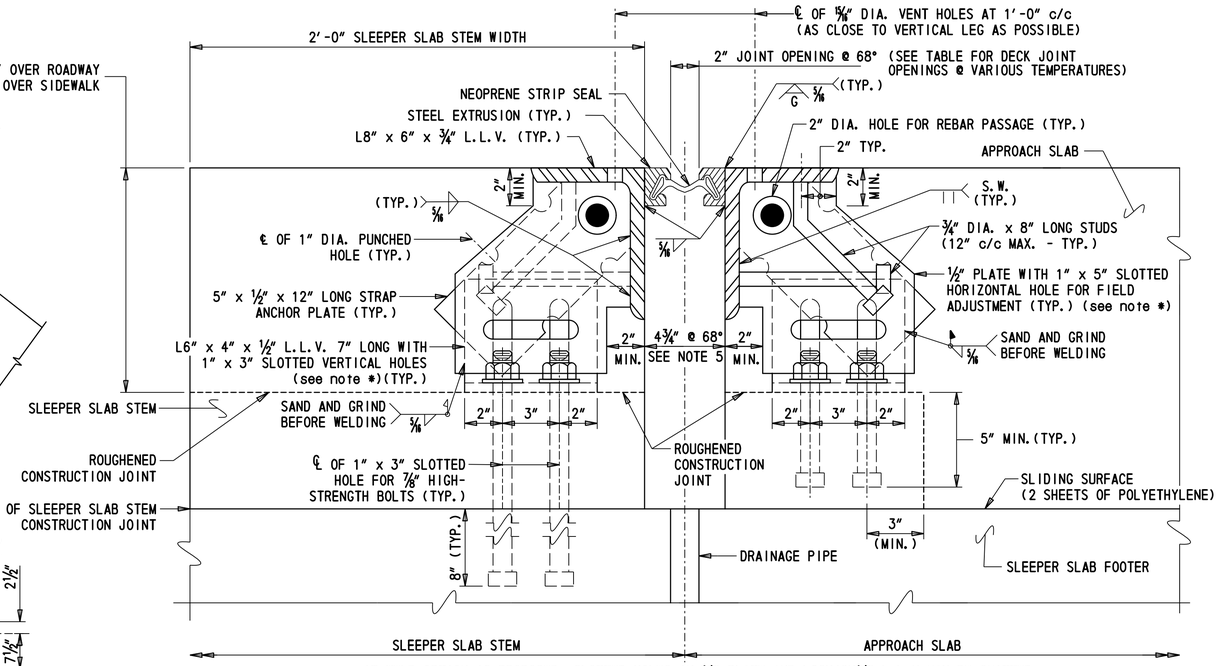

* IF WELD OPTION IS PROPOSED, SLOTTED HOLES IN ½" PLATE AND L6"X4"X½" L.L.V MAY BE OMITTED

SECTION A-A (APPROACH SLAB TO SLEEPER SLAB)

SCALE: 3" = 1'-0"

NOTE: SLEEPER SLAB AND APPROACH SLAB REINFORCEMENT NOT SHOWN FOR CLARITY.

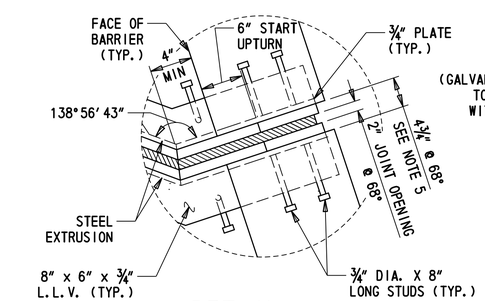

DETAIL 1

SCALE: 1½" = 1'-0"
(SLIDING PLATE NOT SHOWN FOR CLARITY)

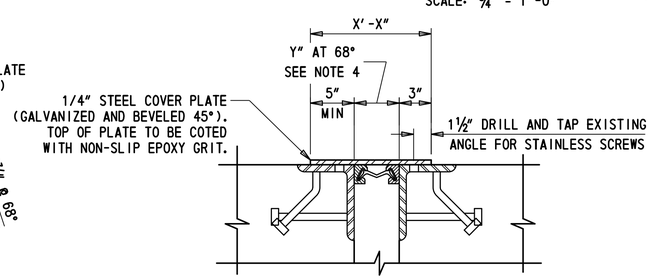

JOINT SECTION AT SIDEWALK

NOT TO SCALE

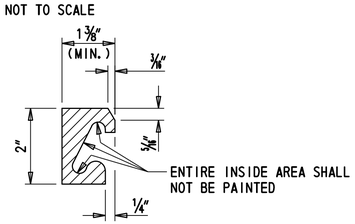

STEEL EXTRUSION DETAIL

NOT TO SCALE

JOINT OPENING (INCH)

LOCATION	TEMPERATURE (°F)							MOVEMENT CLASSIFICATION
	0	10	30	50	70	90	120	
ABUTMENT B STRIP SEAL	2.67	2.57	2.38	2.18	1.98	1.78	1.48	3

NOTE: JOINT OPENING IS MEASURED PERPENDICULAR TO THE STRIP SEAL & DECK JOINT

STRIP SEAL EXPANSION JOINT NOTES:

1. STEEL FOR DECK JOINTS AND STEEL EXTRUSIONS SHALL BE AASHTO M270, GR. 36 (ASTM A36) AT MINIMUM. STEEL EXTRUSIONS SHALL BE GALVANIZED IN ITS ENTIRETY AND PAINTED AS DETAILED IN "STEEL EXTRUSION DETAIL".
2. L.L.V. DENOTES LONG LEG VERTICAL.
3. NEOPRENE EXTRUSION TO MEET D-2628-81 MODIFIED, (RECOVERY TESTS EXCLUDED).
4. THE EXPANSION JOINT SHALL BE CAPABLE OF SEALING THE DECK TO PREVENT MOISTURE AND OTHER CONTAMINANTS FROM DESCENDING THROUGH THE JOINT.
5. THE CONTRACTOR SHALL ADJUST THE OPEN JOINT AS REQUIRED BY THE WIDTH OF THE STEEL EXTRUSION USED SO AS TO PROVIDE A 2" JOINT OPENING AT 68°F.
6. THE STRIP SEAL SHALL BE INSTALLED IN ONE PIECE ACROSS THE BRIDGE WIDTH. SPLICING OF THE STRIP SEAL IS NOT PERMITTED.
7. THE EXPANSION JOINT SYSTEM IS PAID FOR UNDER ITEM NO. 624000.
8. ENTIRE EXPANSION DAM SHALL BE PAINTED AFTER FABRICATION USING URETHANE SYSTEM, EXCEPT AS NOTED IN ACCORDANCE WITH ITEM NO. 624000.
9. LUBRICANT-ADHESIVE FOR USE IN INSTALLING AND BONDING NEOPRENE SEAL ELEMENTS TO STEEL JOINT COMPONENTS SHALL BE A ONE QUART MOISTURE-CURING POLYURETHANE AND HYDROCARBON SOLVENT MIXTURE HAVING THE FOLLOWING PHYSICAL PROPERTIES:

AVERAGE WEIGHT, POUNDS PER GALLON	8 +/- 10%
SOLIDS CONTENT	65%
ADHESIVE SHALL REMAIN LIQUID FROM	5°F TO 120°F
FILM STRENGTH, AS PER ASTM D-412	2,000 PSI
ELONGATION	250%

10. HOLES SHALL BE PLACED IN THE RIB PLATES AND STRAP ANCHOR PLATES FOR BAR REINFORCEMENT. IF THIS IS DONE IN THE FIELD AN APPROVED EPOXY-BONDED PAINT SHALL BE USED TO TOUCH-UP THE HOLES. PAYMENT INCIDENTAL TO ITEM NO. 624000.
11. ANCHOR PLATE AND STEEL EXTRUSION SHALL BE WELDED TO BE WATERTIGHT AT CONSTRUCTION JOINTS. PAYMENT INCIDENTAL TO ITEM NO. 624000.
12. WHERE TRAFFIC BARRIER PLATES ARE USED:
-BOLTS SHALL BE A304 STAINLESS STEEL COUNTERSUNK SCREW WITH A108 CONCRETE THREADED ANCHORS OR THREADED INSERTS.
-HEAD OF BOLTS SHALL BE FLUSH WITH FACE OF STEEL PLATE.
-THE CONTRACTOR SHALL SUBMIT WORKING DRAWINGS OF TRAFFIC BARRIER PLATES FOR APPROVAL.
13. STEEL FOR TRAFFIC BARRIER PLATES AND SIDEWALK COVER PLATES MUST BE ASTM A709, GRADE 36 OR 50 AND HOT-DIPPED GALVANIZED IN ACCORDANCE WITH ASTM A123.
14. APPLY EPOXY COATING ON BOTH SIDES OF THE STEEL SIDEWALK COVER PLATE. THE TOP OF PLATE (WALKING SURFACE) MUST RECEIVE NON-SLIP EPOXY GRIT COATING IN ACCORDANCE WITH ADA A4.5.
15. AT AREAS WHERE STEEL MEMBERS ARE TO BE SPLICED, USE OF COMPLETE JOINT PENETRATION (CJP) AND PARTIAL JOINT PENETRATION (PJP) WELD ARE BOTH PERMITTED. THE THICKNESS OF PJP WELD MUST BE MINIMUM HALF OF THE STEEL MEMBER THICKNESS.
16. THE CONTRACTOR SHALL SUBMIT A WORKING PLAN FOR PLACEMENT OF STRIP SEAL DUE TO PHASING.
17. STEEL EXTRUSIONS FOR STRIP SEAL JOINTS MUST BE GALVANIZED IN ITS ENTIRELY AND PAINTED AS DETAILED IN" STEEL EXTRUSION DETAIL".

CROSS REFERENCE NOTES:

1. FOR LOCATION OF EXPANSION JOINTS, SEE SHEET BR 1-714 BD-35.
2. FOR APPROACH SLAB & SLEEPER SLAB REINFORCEMENT, SEE SHEETS BR 1-714 BD-33 - BR 1-714 BD-35.

BR 1-714
BD-39

ADDENDA / REVISIONS	SCALE AS NOTED	BR 1-714 ON CHAPMAN ROAD OVER I-95 SB	CONTRACT T201507402	BRIDGE NO. 1-714	EXPANSION JOINT DETAILS	SECTION AEC
			COUNTY NEW CASTLE	DESIGNED BY: R. GANOVSKA		SHEET NO. 63
				CHECKED BY: J.EBERLE		

8/16/2019 8:27:13 PM P:\60323054 DelDOT AGR 1672 BDS\T06 - Rehab Br. 1-714\900 WORK\910 CAD\20-SHEETS\Structures\Final Design\SB\BR1-714-SB-EX01.dgn

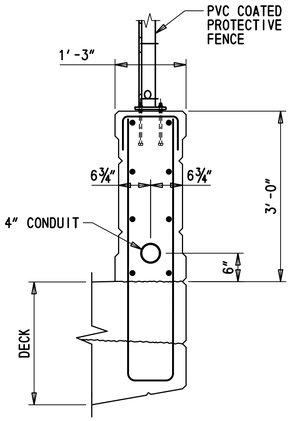

TYPICAL SECTION

(AT DECK)
SCALE: 3/4" = 1'-0"

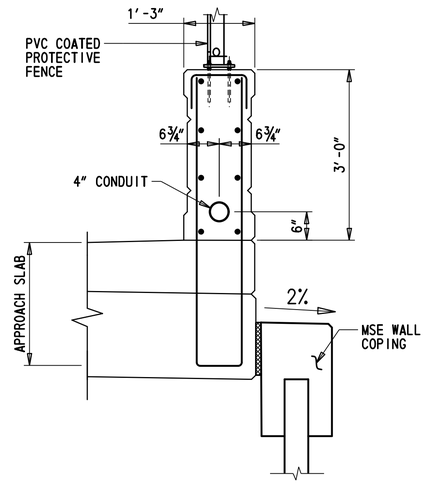

TYPICAL SECTION

(AT APPROACH SLAB)
SCALE: 3/4" = 1'-0"

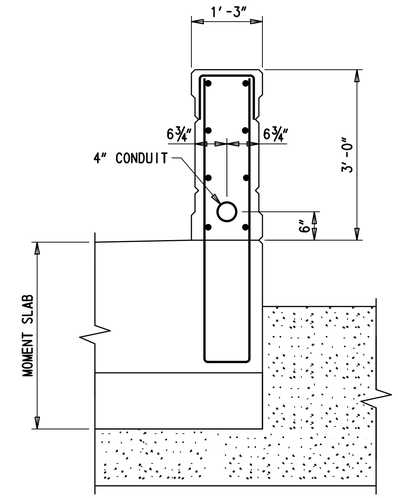

TYPICAL SECTION

(AT MOMENT SLAB)
(HANDRAIL NOT SHOWN FOR CLARITY)
SCALE: 3/4" = 1'-0"

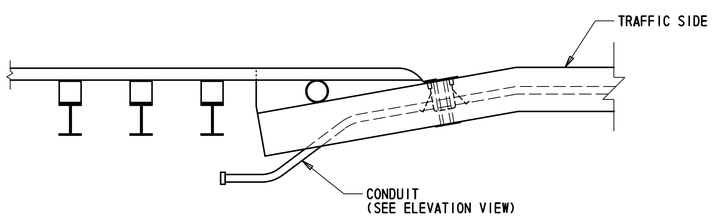

PLAN VIEW

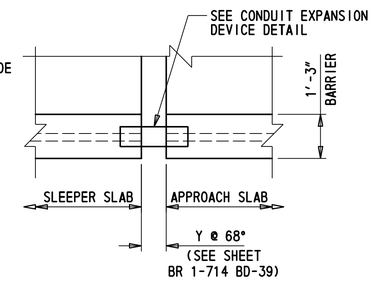

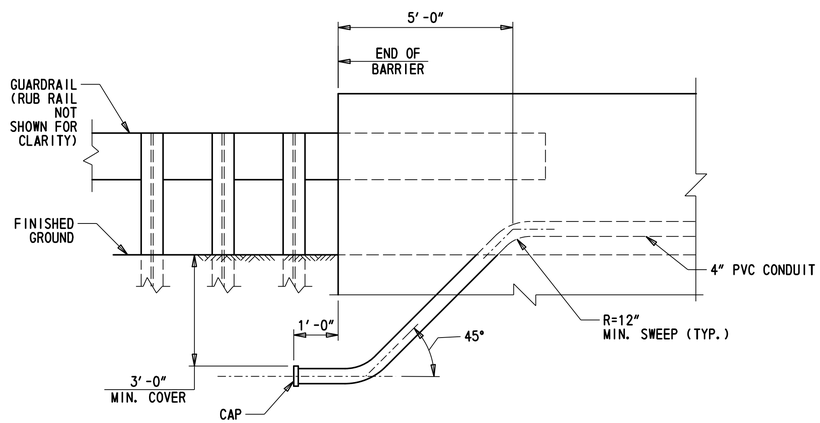

ELEVATION

CONDUIT DETAILS AT ENDS OF BRIDGE

NOT TO SCALE

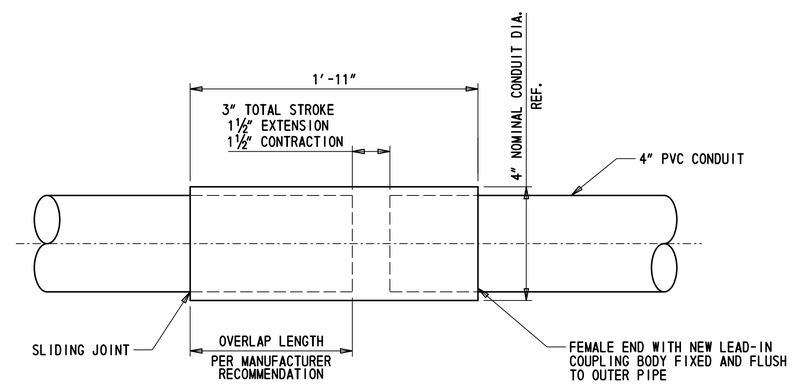

CONDUIT EXPANSION DEVICE DETAIL

NOT TO SCALE

NOTES:

1. CONDUIT TO EXIT BARRIER ON OUTSIDE OF GUARDRAIL POST LINE TO AVOID DAMAGE TO THE CONDUIT.

BR 1-714
BD-40

ADDENDA / REVISIONS		SCALE AS NOTED	BR 1-714 ON CHAPMAN ROAD OVER I-95 SB	CONTRACT T201507402	BRIDGE NO. 1-714	ITS CONDUIT DETAILS	SECTION AEC
				COUNTY NEW CASTLE	DESIGNED BY: -		SHEET NO. 64
					CHECKED BY: -		

8/16/2019
8:27:35 PM
\\usphilfp002\data\Projects\60323054 DelDOT AGR 1672 BDS\T06 - Rehab Br. 1-714\900 WORK\910 CAD\20-SHEETS\Structures\Final Design\SB\BR1-714-SB-IT01.dgn

SECTION 200

1. REMOVAL OF STRUCTURES AND OBSTRUCTIONS:
ITEMS TO BE REMOVED UNDER ITEM 211550 - REMOVAL OF EXISTING BRIDGE ASSOCIATED WITH BRIDGE (BRI-714) SHALL INCLUDE, BUT NOT BE LIMITED TO, THE FOLLOWING:
SUPERSTRUCTURE AND SUBSTRUCTURE TO LIMITS SHOWN ON BRI-714 DRAWINGS.

2. HAZARDOUS MATERIAL:
THE CONTRACTOR IS ADVISED THAT THE EXISTING STRUCTURE OVER (I-95 NB & SB) DOES CONTAIN LEAD BASED PAINT. AS A RESULT, THE CONTRACTOR'S PROPOSED DEMOLITION PLAN MUST ADDRESS, AS A MINIMUM, METHODS OF CUTTING THE BEAMS AND/OR DIAPHRAGMS, IF REQUIRED , AND HOW THOSE PERSONS PERFORMING SUCH WORK WILL BE PROTECTED IN ACCORDANCE WITH APPLICABLE OSHA REGULATIONS. ADDITIONALLY,THE CONTRACTOR MUST ADDRESS WHEN AND HOW THE LEAD BASED PAINT WILL BE REMOVED FROM THE STRUCTURAL STEEL AND ALL RELATED BRIDGE COMPONENTS. IF THE WORK IS PERFORMED ON SITE,THEN PROPER PROTECTION, CONTAINMENT, AND FINAL LEAD PAINT DISPOSAL MUST BE ADDRESSED IN THE PROPOSED PLAN. IF THE BEAMS WILL BE TRANSPORTED WITH THE PAINT STILL INTACT,THEN THE PLAN SHALL DETAIL HOW THE STRUCTURAL COMPONENTS WILL BE PROTECTED DURING TRANSPORT, WHERE AND HOW THE PAINT WILL BE REMOVED, AND THE LOCATION OF FINAL PAINT DISPOSAL, AGAIN IN ACCORDANCE WITH OSHA REGULATIONS. WRITTEN DOCUMENTATION MUST BE PROVIDED TO THE ENGINEER, PRIOR TO FINAL CONTRACT. ACCEPTANCE,NOTING WHEN AND WHERE THE LEAD BASED PAINT WAS REMOVED, AND THE LOCATION OF FINAL PAINT DISPOSAL. ALL COSTS INVOLVED WITH THE ABOVE LISTED WORK SHALL BE INCIDENTAL TO ITEM #211550 - REMOVAL OF EXISTING BRIDGE. IF EXISTING UTILITY CONDUIT IS FOUND TO CONTAIN ASBESTOS, REMEDIATION SHALL BE PAID UNDER 202560 - CONTAMINATED MATERIAL.

SECTION 600

3. PORTLAND CEMENT CONCRETE:
USE PORTLAND CEMENT CONCRETE FOR CAST-IN-PLACE ELEMENTS AS FOLLOWS: (f'c = 28-DAY COMPRESSIVE STRENGTH)
CLASS A - (PILE CAP, SIDEWALK AND BARRIERS),(f'c = 4.5 ksi)
CLASS D - (DECK, DIAPHRAGMS, APPROACH SLAB AND SLEEPER SLAB),(f'c = 4.5ksi)
A HIGHER CLASS CONCRETE MAY BE SUBSTITUTED FOR A LOWER CLASS CONCRETE AT NO ADDITIONAL COST TO DELDOT WITH APPROVAL OF THE BRIDGE DESIGN ENGINEER.

4. DECK SLAB:
THE DECK SLAB THICKNESS INCLUDES ½" INTEGRAL WEARING SURFACE.

5. BAR REINFORCEMENT:
- REINFORCING STEEL SHALL CONFORM TO AASHTO M31 (ASTM A615),GRADE 60.
- REINFORCING STEEL SHALL HAVE A 3" CLEAR COVER IF CAST AGAINST EARTH OR A 2" CLEAR COVER ELSEWHERE,UNLESS OTHERWISE SPECIFIED ON THE PLANS.
- ALL REINFORCING STEEL SHALL BE PROTECTED WITH FUSION BONDED EPOXY. EPOXY COATED REINFORCING STEEL SHALL CONFORM TO AASHTO M284 (D3963).
- ANY FIELD CUTTING OR FIELD BENDING MUST BE APPROVED BY THE ENGINEER. PAYMENT SHALL BE INCIDENTAL TO THE BAR REINFORCEMENT ITEM.
- GALVANIZED REINFORCING STEEL MAY BE SUBSTITUTED FOR EPOXY-COATED REINFORCING STEEL AT NO ADDITIONAL COST TO DELDOT WITH APPROVAL OF THE BRIDGE DESIGN ENGINEER.
- WELDING OF REINFORCEMENT DURING FABRICATION OR CONSTRUCTION IS NOT PERMITTED UNLESS SPECIFIED.

6. CONCRETE SEALER:
REFER TO DIAGRAMS CONTAINING CONCRETE SEALER LIMITS ON SHEET BR 1-714A BD-02, PAYMENT SHALL BE INCIDENTAL TO (613001 AND 613003).

7. STRUCTURAL STEEL:
PROVIDE STRUCTURAL STEEL CONFORMING TO AASHTO M270, GRADE 50W (ASTM A709 , GRADE 50W) DESIGNATION, EXCEPT WHEN NOTED OTHERWISE. THE ADDITIONAL REQUIREMENTS FOR CHARPY V-NOTCH TESTING (DENOTED AS 'CVN' ON PLANS) OF AASHTO M270 FOR PRIMARY LOAD CARRYING MEMBERS SHALL BE INCLUDED.

SUPPLEMENTAL NOTCH TOUGHNESS REQUIREMENTS ARE MANDATORY FOR:
- TOP AND BOTTOM GIRDER FLANGES AS SHOWN ON PLANS
- GIRDER WEB PLATES AS SHOWN ON PLANS
- GIRDER FIELD SPLICE PLATES
- ALL DIAPHRAGM MEMBERS AND DIAPHRAGM CONNECTION PLATES

ALL FASTENERS ARE ⅞" DIAMETER ASTM A325 HIGH STRENGTH BOLTS, TYPE 3,UNLESS OTHERWISE NOTED. REAM SUBDRILLED or SUBPUNCHED HOLES FOR FIELD SPLICES IN THE FABRICATION SHOP. ALL BOLTED CONNECTIONS SHALL BE DESIGNED AS SLIP-CRITICAL CONNECTIONS WITH CLASS B FAYING SURFACE.

IF GIRDERS CAN BE FABRICATED IN LENGTHS LONGER THAN THE SECTIONS SHOWN ON THE PLANS BY ELIMINATING FIELD SPLICES,FIELD SPLICES MAY BE OMITTED AT THE REQUEST OF THE CONTRACTOR. THE CONTRACTOR ASSUMES FULL RESPONSIBILITY FOR SECURING A HAULING PERMIT,APPROVAL FOR ELIMINATION OF A FIELD SPLICE AT THE SHOP DRAWING STAGE DOES NOT OBLIGATE THE DEPARTMENT TO ISSUE A HAULING PERMIT.

PROVIDE MATERIALS AND PERFORM WORK IN ACCORDANCE WITH AASHTO/AWS D1.5M/D.15 **BRIDGE WELDING CODE, AND CONTRACT DOCUMENTS. MAKE TACK WELDS WITH THE SAME TYPE OF ELECTRODE AND INCORPORATE IN THE FINAL WELD. NO OTHER TACK WELDING WILL BE PERMITTED.

DO NOT MAKE WELDS BY MANUAL SHIELDED METAL ARC PROCESS FOR PRIMARY GIRDER WELDS SUCH AS FLANGE TO WEB WELDS OR FOR SHOP SPLICES OF WEB AND FLANGES.

DO NOT USE FORM SUPPORT SYSTEMS THAT WILL CAUSE UNACCEPTABLE OVERSTRESS OR DEFORMATION TO PERMANENT BRIDGE MEMBERS.

SHOP ASSEMBLE THE ENTIRE STEEL SUPERSTRUCTURE FOLLOWING THE SAME ERECTION PROCEDURES AND SUPPORT CONDITIONS TO ENSURE THE PROPER FIT FOR ALL STRUCTURAL STEEL COMPONENTS PRIOR TO REAMING OF BOLT HOLES FOR SPLICES AND DIAPHRAGM CONNECTION PLATES.

DO NOT WELD PERMANENT METAL DECK FORMS OR OTHER ATTACHMENTS TO GIRDER TOP FLANGES IN TENSION ZONES. TENSION ZONES OF TOP FLANGE ARE DESIGNATED ON THE PLANS. THREADED STUDS FOR THE SUPPORT OF THE DECK OVERHANG FORMING BRACKET ARE PERMITTED PROVIDED THE THREADED STUD IS ATTACHED WITH THE SAME WELDING PROCESS AS THE SHEAR STUDS.

VERTICALLY ADJUST STAY-IN-PLACE FORMS TO ATTAIN FINISHED LINES AND GRADES REQUIRED ON THE PLANS.

SECTION 600 (CONTINUED)

USE OVERSIZED HOLES ON DIAPHRAGM CONNECTORS. ALL BOLTS ON DIAPHRAGMS MUST BE FINGER TIGHT AT ERECTION. BOLTS ARE TO BE TORQUED BEFORE CONCRETE DECK IS POURED.

SET ANCHOR BOLTS TO TEMPLATE OR IN PRE-FORMED HOLES. DO NOT DRILL UNLESS SPECIFICALLY INDICATED ON PLANS. FILL THE PRE-FORMED HOLES WITH NON-SHRINK GROUT. IN MASONRY PLATES,FILL THE CLEARANCE BETWEEN ANCHOR BOLTS AND HOLES WITH APPROVED NON-HARDENING CAULKING COMPOUND.

STABILITY OF PARTIAL GIRDERS AND COMPLETED GIRDERS IS TO BE MAINTAINED BY THE CONTRACTOR DURING ERECTION UNTIL ALL GIRDERS AND DIAPHRAGMS (INCLUDING CONCRETE END DIAPHRAGM) ARE IN-PLACE AND ALL BOLTS ARE PROPERLY INSTALLED. ERECTION LOADS INCLUDING SELF-WEIGHT OF THE STEEL MEMBERS, WIND LOADING AND CONSTRUCTION LIVE LOAD EFFECTS ARE TO BE EVALUATED BY THE CONTRACTOR FOR STABILITY, STRESSES AND DEFLECTIONS ON THE STEEL MEMBERS DURING ANY STAGE OF ERECTION.

THE DESIGN WIND SPEED FOR CONSTRUCTION PRIOR TO COMPLETED CONSTRUCTION OF THE COMPOSITE DECK WAS TAKEN AS 60 MPH. DESIGN OF ALTERNATE SUPPORT FOR WIND SPEEDS ABOVE 60 MPH SHALL BE THE RESPONSIBILITY OF THE CONTRACTOR.

AN ALTERNATE SLAB PLACEMENT SEQUENCE MAY BE PERMITTED AT THE REQUEST OF THE CONTRACTOR . SUBMIT FOR REVIEW AND APPROVAL TO THE DEPARTMENT A REVISED SLAB PLACEMENT SEQUENCE WITH SUPPORT CALCULATIONS AND COMPUTER STRESS ANALYSIS. SATISFY THE REQUIREMENTS OF THE ORIGINAL SLAB PLACEMENT SEQUENCE. OBTAIN WRITTEN APPROVAL PRIOR TO THE USE OF THE REVISED SLAB PLACEMENT SEQUENCE AND/OR CAMBER VALUES. NO COMPENSATION WILL BE ALLOWED FOR THE DEVELOPMENT AND APPROVAL OF THE REVISED SLAB PLACEMENT SEQUENCE AND CAMBER VALUES. THE DEPARTMENT WILL BE THE SOLE JUDGE OF THE ACCEPTABILITY OF THE REVISED SLAB PLACEMENT SEQUENCE AND CAMBER VALUES.

BLAST CLEAN THE FLAYING SURFACES OF SPLICES AND CONNECTIONS THAT REMAIN UNASSEMBLED FOR A PERIOD OF 12 MONTHS OR MORE FOLLOWING THE INITIAL CLEANING.

8. BEARINGS:
ALL ELASTOMERIC BEARINGS SHALL BE STEEL LAMINATED ELASTOMERIC DESIGNED AS PER AASHTO 14.7.5,METHOD B,AND SHALL CONFORM TO SECTION 623 OF THE STANDARD SPECIFICATIONS. PAYMENT SHALL BE INCIDENTAL TO (623000)

9. PERFORATED PIPE UNDERDRAINS:
MINIMUM INSTALLATION SLOPE SHALL BE 0.02 FT./F T. CAP FREE ENDS.

SECTION 800

10. MAINTENANCE OF TRAFFIC:
MAINTENANCE OF TRAFFIC SHALL BE AS PER THE TRAFFIC CONTROL PLANS AND DETOUR PLANS. THE DETOUR SHALL REMAIN IN EFFECT AS REQUIRED FOR GIDER ERECTION AND DEMOLITION AS REQUIRED.
ITEM 801000 - MAINTENANCE OF TRAFFIC,ALL INCLUSIVE.

MISCELLANEOUS

11. DESIGN SPECIFICATIONS:
(A) DELDOT BRIDGE DESIGN MANUAL, 2017 EDITION
(B) AASHTO LRFD BRIDGE SPECIFICATIONS, 2014,7TH EDITION, CUSTOMARY U.S. UNITS INCLUDING 2015 AND 2016 INTERIMS.
(C) PROVIDE MATERIALS AND PERFORM WORK IN ACCORDANCE WITH THE DELDOT STANDARD SPECIFICATIONS,AUGUST 2016.
(D) SPLICE PLATES DESIGNED IN ACCORDANCE WITH AASHTO LRFD BRIDGE SPECIFICATIONS,2017,8TH EDITION,CUSTOMARY U.S. UNITS.

12. LOADING:
-DEAD LOADS INCLUDE 25 PSF FOR FUTURE WEARING SURFACE ON DECK SLAB AND 15 PSF FOR STAY-IN-PLACE FORMS (INCLUDES CONCRETE IN FORM CORRUGATIONS). BARRIER AND FENCE LOADS ARE DISTRIBUTED 75% TO EXTERIOR GIRDER AND 25% TO FIRST INTERIOR. SIDEWALK LOAD IS DISTRIBUTED 100% TO EXTERIOR GIRDER.
-DESIGN LIVE LOADS INCLUDE HL-93 LOADING.
-FATIGUE DESIGN IS BASED ON THE FOLLOWING ONE DIRECTIONAL TRAFFIC VOLUMES: ADTT = (989, MEASURED IN 2017).
-LIVE LOAD DISTRIBUTION TO THE GIRDERS IS BASED ON THE GRILLAGE METHOD.
-THERMAL LOADS AND MOVEMENTS ARE BASED ON THE MODERATE TEMPERATURE RANGE AS STIPULATED IN THE AASHTO LRFD DESIGN SPEC IFICATIONS AS 0-80°GIRDERS TO BE ERECTED BETWEEN 40°-80°FOR STEEL. THE NORMAL TEMPERATURE SHALL BE CONSIDERED TO BE 68F.
-LIVE LOAD DEFLECTION SHALL BE LIMITED TO (L/1000).
-FOR SEISMIC LOADS, CONSIDER SEISMIC PERFORMANCE ZONE 1, WITH A SITE CLASS = (A) AND OPERATIONAL CATEGORY = ESSENTIAL.
-FOR REINFORCEMENT DISTRIBUTION REQUIREMENTS,CONSIDER CLASS 2 EXPOSURE CRITERIA FOR DECKS.
-BARRIERS HAVE BEEN DESIGNED FOR (MASH OR NCHRP 350) TEST LEVEL 3 (TL-3).

13. EXISTING CONDITIONS:
-ALL EXISTING DIMENSIONS AND ELEVATIONS SHOWN ARE BASED ON THE BEST AVAILABLE INFORMATION AND ARE APPROXIMATE ONLY. THE CONTRACTOR SHALL FIELD VERIFY ALL EXISTING DIMENSIONS, GEOMETRY, AND ELEVATIONS AS NECESSARY PRIOR TO ORDERING ANY MATERIALS AND COMMENCING CONSTRUCTION TO ENSURE PROPER FIT OF THE PROPOSED CONSTRUCTION.
-THE CONTRACTOR SHALL NOT CONSIDER ANY OF THE DATA ON THE EXISTING STRUCTURE SUPPLIED IN THE ORIGINAL DESIGN DRAWINGS OR MADE AVAILABLE BY THE DEPARTMENT OR ITS AUTHORIZED AGENTS AS POSITIVE REPRESENTATIONS OF ANY OF THE CONDITIONS THAT WILL BE ENCOUNTERED IN THE FIELD.

14. ROADWAY CLEARANCES:
A MINIMUM OF 16'-6" SHALL BE MAINTAINED ABOVE ALL ROADWAYS.

15. UTILITIES:
SEE UTILITY STATEMENT AND CONSTRUCTION PLAN SHEETS FOR FURTHER INFORMATION ON UTILITY COORDINATION.

INDEX OF STRUCTURES DRAWINGS

BR 1-714A BD-01. BRIDGE NOTES
BR 1-714A BD-02. QUANTITIES AND LOAD RATINGS
BR 1-714A BD-03. GENERAL PLAN AND ELEVATION
BR 1-714A BD-04. CONSTRUCTION SEQUENCE AND DEMOLITION PLAN
BR 1-714A BD-05. GEOMETRIC LAYOUT
BR 1-714A BD-06. PILE PLAN
BR 1-714A BD-07. PILE DETAILS
BR 1-714A BD-08. ABUTMENT 1 PLAN AND ELEVATION
BR 1-714A BD-09. ABUTMENT 2 PLAN AND ELEVATION
BR 1-714A BD-10. ABUTMENT SECTIONS
BR 1-714A BD-11. PILE CAP SECTIONS AND DETAILS
BR 1-714A BD-12. ABUTMENT REINFORCEMENT SHCEDULE
BR 1-714A BD-13. MSE WINGWALL ELEVATIONS
BR 1-714A BD-14. FRAMING PLAN
BR 1-714A BD-15. EXTERIOR GIRDER ELEVATION AND DETAILS
BR 1-714A BD-16. INTERIOR GIRDER ELEVATION AND DETAILS
BR 1-714A BD-17. INTERMEDIATE DIAPHRAGM DETAILS
BR 1-714A BD-18. CAMBER DIAGRAM
BR 1-714A BD-19. BEARINGS DETAILS - 1
BR 1-714A BD-20. BEARINGS DETAILS - 2
BR 1-714A BD-21. BEARINGS DETAILS - 3
BR 1-714A BD-22. ABUTMENT 1 CONCRETE DIAPHRAGM
BR 1-714A BD-23. ABUTMENT 2 CONCRETE DIAPHRAGM
BR 1-714A BD-24. BRIDGE DECK REINFORCEMENT PLAN - 1
BR 1-714A BD-25. BRIDGE DECK REINFORCEMENT PLAN - 2
BR 1-714A BD-26. BRIDGE DECK SECTION AND DETAILS
BR 1-714A BD-27. BRIDGE BARRIER AND SIDEWALK REINFORCEMENT - SECTION AND ELEVATION
BR 1-714A BD-28. FINISHED BRIDGE DECK ELEVATIONS
BR 1-714A BD-29. ABUTMENT 1 APPROACH SLAB REINFORCEMENT - PLAN
BR 1-714A BD-30. ABUTMENT 2 APPROACH SLAB REINFORCEMENT - PLAN
BR 1-714A BD-31. BRIDGE APPROACH SLAB REINFORCEMENT - SECTION AND DETAILS
BR 1-714A BD-32. DECK AND CONCRETE DIAPHRAGM REINFORCEMENT SCHEDULE
BR 1-714A BD-33. APPROACH SLAB REINFORCEMENT SCHEDULE
BR 1-714A BD-34. RAILING DETAILS
BR 1-714A BD-35. EXPANSION JOINT DETAILS
BR 1-714A BD-36. ITS CONDUIT DETAILS

MISCELLANEOUS (CONTINUED)

16. WORKING OVER ROADWAYS:

DO NOT PICK OR LIFT OVER LANES AND OR SHOULDERS OPEN TO TRAFFIC.

DO NOT PERFORM ANY WORK DIRECTLY OVER OPEN LANES OF TRAFFIC WITHOUT ADEQUATE SHIELDING OR WORK PLATFORMS, LANE CLOSURES OR DETOURS IN ACCORDANCE WITH THE CONTRACT PLANS AND SPECIFICATIONS.

INSTALL SIP FORMS, ADDITIONAL PROTECTIVE SHIELD SYSTEM, WORK PLATFORMS AND/OR OVERHANG FALSEWORK BEFORE BEGINNING ANY CONSTRUCTION OPERATIONS OVER TRAFFIC.

IF THE CONTRACTOR DETERMINES THAT ADDITIONAL PROTECTIVE SHIELDING OR WORK PLATFORMS ARE NEEDED TO PROTECT TRAFFIC, SUBMIT PLANS AND CALCULATIONS FOR REVIEW AND APPROVAL FOR PROTECTING TRAFFIC WHILE WORKING OVER TRAVELWAYS. HAVE THE DRAWINGS AND DESIGN CALCULATIONS PREPARED, SIGNED, AND SEALED BY A DELAWARE REGISTERED PROFESSIONAL ENGINEER. THE APPROVAL OF THE ENGINEER WILL NOT RELIEVE THE CONTRACTOR OF THE RESPONSIBILITY FOR THE SAFETY OF THE METHOD OR EQUIPMENT. BASED ON CONTRACTOR MEANS AND METHODS DETERMINE AND CLEARLY DEFINE ALL DEAD AND LIVE LOADS FOR THIS SYSTEM, WHICH, AT A MINIMUM, SHALL BE INSTALLED BETWEEN BEAMS OR GIRDERS OVER ANY TRAVEL WAY OR SHOULDER AREA WHERE TRAFFIC IS MAINTAINED. NO SEPARATE PAYMENT WILL BE MADE FOR ADDITIONAL PROTECTIVE SHIELDING OR WORK PLATFORMS.

ALL FORMWORK INCLUDING STAY-IN-PLACE FORMS SHALL BE MORTAR TIGHT.

WHILE PLACING DECK, DECK OVERHANG AND PARAPET CONCRETE OVER LANES OPEN TO TRAFFIC, NO CLOSURE OR DETOURS WILL BE ALLOWED DURING THESE OPERATIONS.

THE MAINTENANCE OF TRAFFIC REQUIRED FOR THE INSTALLATION OF THESE ITEMS WILL BE PAID UNDER THE MAINTENANCE OF TRAFFIC UNIT BID ITEMS. CONTRACTOR SHALL ADHERE TO THE TRAFFIC CONTROL PLAN, DELAWARE MUTCD, AND TRAFFIC LANE CLOSURE AND WORK RESTRICTIONS PROVIDED IN THE CONTRACT DOCUMENTS.

BR 1-714A
BD-01

ADDENDA / REVISIONS		NOT TO SCALE	BR 1-714A ON CHAPMAN ROAD OVER I-95 NB	CONTRACT T201507402	BRIDGE NO. 1-714A	BRIDGE NOTES	SECTION AEC
				COUNTY NEW CASTLE	DESIGNED BY: R. GANOVSKA		SHEET NO. 65
					CHECKED BY: R. DOMINICK		

8/16/2019
7:23:09 PM
P:\60323054 DelDOT AGR 1672 BDS\T06 - Rehab Br. 1-714\900 WORK\910 CAD\20-SHEETS\Structures\Final Design\NB\BR1-714-NB-GN01.dgn

BRIDGE LOAD RATING TABLE

VEHICLE TYPE	RATING FACTOR	RATING WEIGHT (TONS)	CONTROLLING MEMBER	CONTROLLING POINT	LOAD EFFECT
HL-93 TRUCK (INVENTORY)	1.32	N/A	EXTERIOR BEAM	105	SERVICE II
HL-93 TANDEM (INVENTORY)	1.56	N/A	EXTERIOR BEAM	105	SERVICE II
HS20 (INVENTORY)	2.04	73.44	EXTERIOR BEAM	105	SERVICE II
HL-93 TRUCK (OPERATING)	1.71	N/A	EXTERIOR BEAM	105	SERVICE II
HL-93 TANDEM (OPERATING)	2.03	N/A	EXTERIOR BEAM	105	SERVICE II
HS20 (OPERATING)	2.65	95.40	EXTERIOR BEAM	105	SERVICE II
DE S220	2.75	55.00	EXTERIOR BEAM	105	SERVICE II
DE S335	1.72	60.20	EXTERIOR BEAM	105	SERVICE II
DE S437	1.65	61.05	EXTERIOR BEAM	105	SERVICE II
DE T330	2.12	63.60	EXTERIOR BEAM	105	SERVICE II
DE T435	1.88	65.80	EXTERIOR BEAM	105	SERVICE II
DE T540	1.69	67.60	EXTERIOR BEAM	105	SERVICE II
EV 2	2.06	59.23	EXTERIOR BEAM	105	SERVICE II
EV 3	1.46	62.78	EXTERIOR BEAM	105	SERVICE II
SU 4	2.14	57.78	EXTERIOR BEAM	105	SERVICE II
SU 5	1.93	59.83	EXTERIOR BEAM	105	SERVICE II
SU 6	1.76	61.16	EXTERIOR BEAM	105	SERVICE II
SU 7	1.61	62.39	EXTERIOR BEAM	105	SERVICE II

ESTIMATED BRIDGE QUANTITIES

ITEM NO.	DESCRIPTION	UNIT	TOTAL
604000	JACKING BRIDGE	LS	1
604XXX	TEMPORARY PROTECTIVE SHIELD *	LS	1
604003	SHORING	LS	1
605201	DYNAMIC PILE TESTING BY CONTRACTOR	EA	4
605505	FURNISH STEEL PIPE PILES, 20" *	LF	2,160
605506	INSTALL STEEL PIPE PILES, 20" *	LF	2,160
605507	FURNISH STEEL INDICATOR OR TEST PILES, 20" *	LF	400
605508	INSTALL STEEL PIPE INDICATOR OR TEST PILES, 20" *	LF	400
607001	MECHANICALLY STABILIZED EARTH WALLS	LS	1
610002	PORTLAND CEMENT CONCRETE MASONRY, ABUTMENT ABOVE FOOTING, CLASS A	CY	80
610008	PORTLAND CEMENT CONCRETE MASONRY, PARAPET, CLASS A	CY	180
610017	PORTLAND CEMENT CONCRETE MASONRY, SUPERSTRUCTURE, CLASS D	CY	310
610018	PORTLAND CEMENT CONCRETE MASONRY, APPROACH SLAB, CLASS D	CY	240
611001	BAR REINFORCEMENT, EPOXY COATED	LB	191,320
613001	SILICONE-BASED ACRYLIC CONCRETE SEALER	SF	4,570
613003	HIGH MOLECULAR WEIGHT METHACRYLATE CONCRETE SEALER	SF	10,890
615001	STEEL STRUCTURES	LS	1
623000	ELASTOMERIC BEARINGS	EACH	14
624000	PREFABRICATED EXPANSION JOINT SYSTEM, 3"	LF	150
626011	ALUMINUM RAILING, TYPE 1	LF	470
727008	BRIDGE SAFETY FENCE,TYPE 2	LF	420

* SPECIAL PROVISION INCLUDED IN CONTRACT FOR THIS ITEM

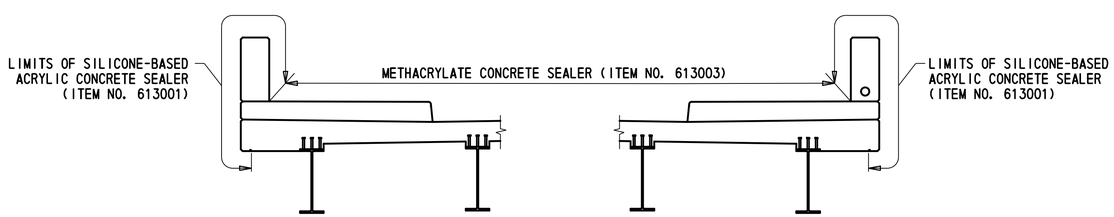

COATING LIMITS

PLAN LIMITS TO INCLUDE BRIDGE, APPROACH SLABS, SLEEPER SLABS & MOMENT SLABS
NOT TO SCALE

ABBREVIATIONS

T = TOP
B = BOTTOM
C/L = CENTER LINE
B/L = BASE LINE
BRG = BEARING
TYP. = TYPICAL
CLR. = CLEAR
CVN = CHARPY V-NOTCH
MSE = MECHANICALLY STABILIZED EARTH
EF = EACH FACE
FF = FRONT FACE
RF = REAR FACE
ELEV. = ELEVATION
TLP = TOP OF LEVELING PAD
RDWY = ROADWAY
R/W = RIGHT OF WAY
EXP. = EXPANSION
RCP = REINFORCED CONCRETE PIPE
WP = WORK POINT

BR 1-714A
BD-02

ADDENDA / REVISIONS		NOT TO SCALE	BR 1-714A ON CHAPMAN ROAD OVER I-95 NB	CONTRACT T201507402	BRIDGE NO. 1-714A	QUANTITIES AND LOAD RATINGS	SECTION AEC
				COUNTY NEW CASTLE	DESIGNED BY: R. GANOVSKA		SHEET NO. 66
					CHECKED BY: S.MUKHERJEE/R.DOMINICK		

8/19/2019
4:48:42 PM
P:\60323054 DelDOT AGR 1672 BDS\T06 - Rehab Br. 1-714\900 WORK\910 CAD\20-SHEETS\Structures\Final Design\NB\BR1-714-NB-GN02.dgn

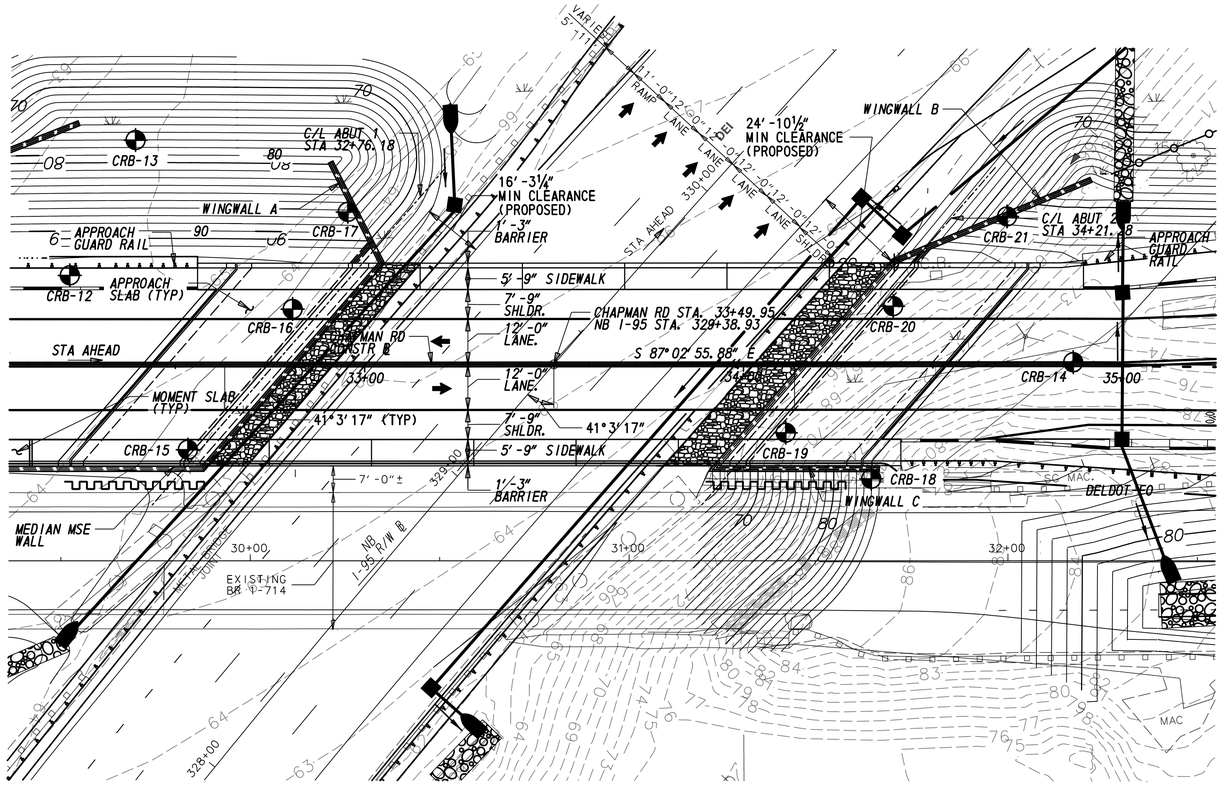

PLAN - PROPOSED

SCALE: 1" = 20'

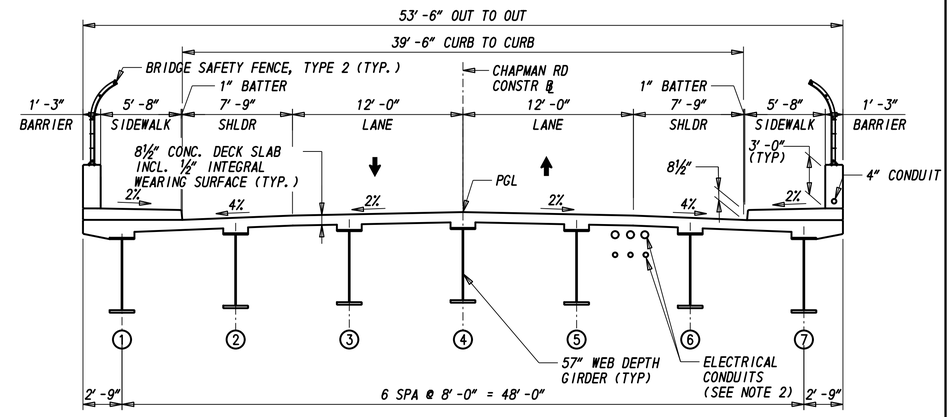

SECTION - PROPOSED

SCALE: 3/16" = 1'-0"

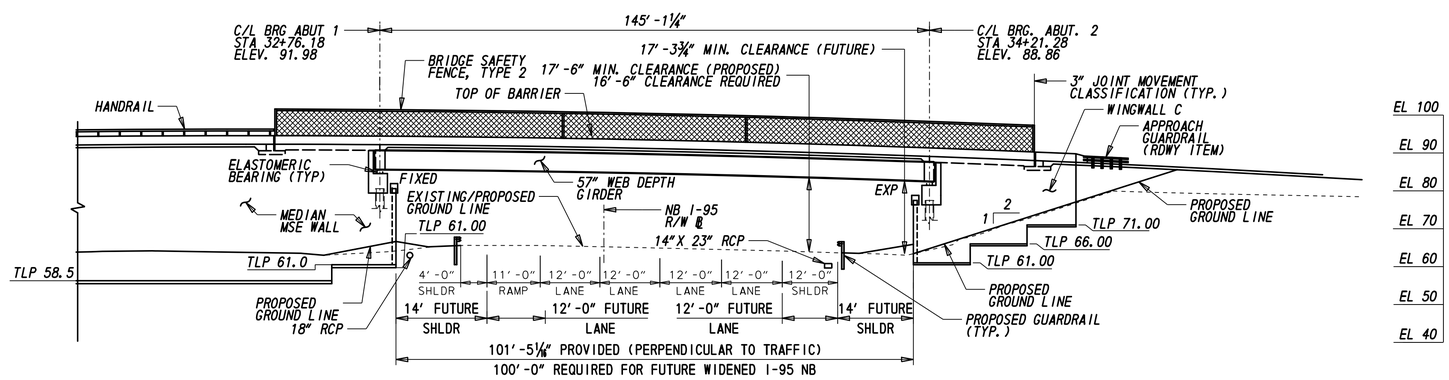

ELEVATION - PROPOSED

SCALE: 1" = 20'

CHAPMAN ROAD VERTICAL CURVE DATA

+1.36% -5.71%

PVI 33+50.00
ELEV. 94.01
LENGTH = 350.00'
SSD = 326.94'
K = 49.53

CHAPMAN ROAD HORIZONTAL CURVE DATA

TANGENT
S87°02'55.88"E

LEGEND

- BORINGS
- POINT OF MINIMUM VERTICAL CLEARANCE
- SHORING
- LIMITS OF NO. 3 STONE UNDER BRIDGE
- EXISTING CONTOURS
- PROPOSED CONTOURS

NOTE

1. FOR GENERAL NOTES, SEE SHEET BR 1-714A BD-01.
2. REFER TO SHEET BR 1-714 BD-40 FOR CONDUIT DETAILS.

BR 1-714A
BD-03

ADDENDA / REVISIONS	SCALE 0 30 60 90 FEET	BR 1-714A ON CHAPMAN ROAD OVER I-95 NB	CONTRACT T201507402	BRIDGE NO. 1-714A	GENERAL PLAN AND ELEVATION	SECTION AEC
			COUNTY NEW CASTLE	DESIGNED BY: H.BORDNER		SHEET NO. 67
				CHECKED BY: S.MUKHERJEE		

8/19/2019 4:48:45 PM
P:\60323054 DelDOT AGR 1672 BDS\T06 - Rehab Br. 1-714\900 WORK\910 CAD\20-SHEETS\Structures\Final Design\NB\BR1-714-NB-PE01.dgn

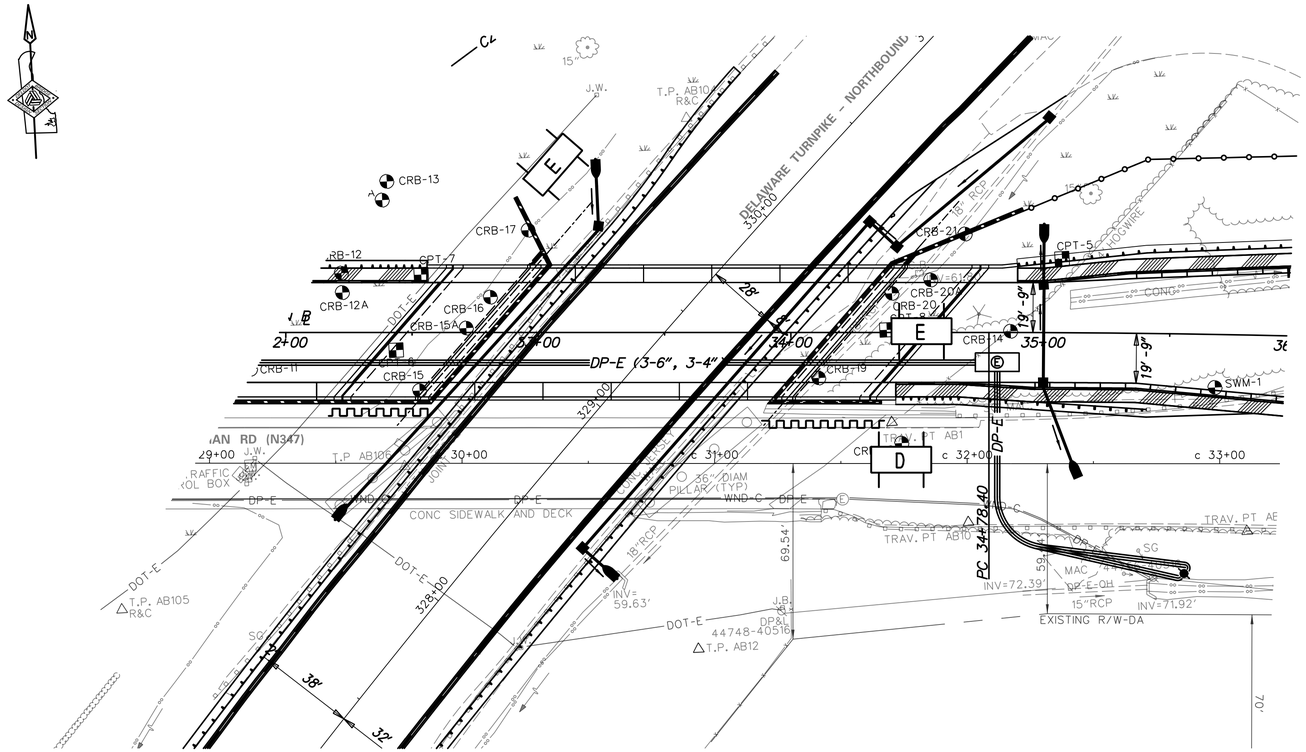

OPTIONAL CRANE LOCATIONS

SCALE: 1" = 30'

D - DENOTES CRANE FOR REMOVAL OF BEAMS OVER I-95 SB
E - DENOTES CRANE FOR ERECTION OF GIRDERS OVER I-95 SB

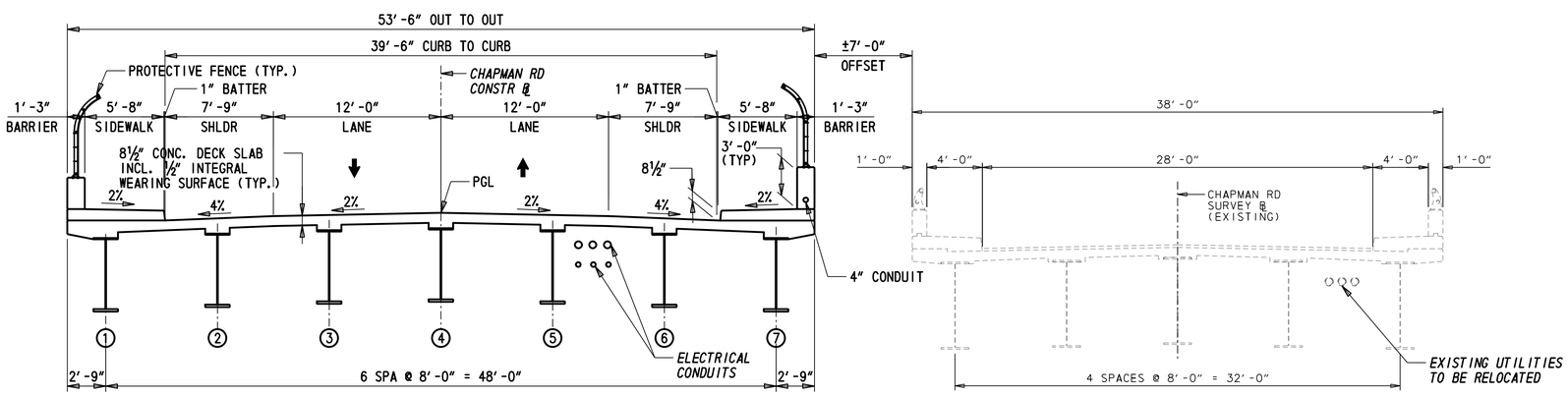

SECTION

SCALE: 3/16" = 1'-0"

I95 NB - CONSTRUCTION SEQUENCE: (COINCIDENT WITH I-95 SB CONSTRUCTION SEQUENCE ON SHEET BR 1-714 BD-04)

1. INSTALL BARRIERS AND REMOVE GUARDRAIL ALONG I-95 NB AND SB IN ACCORDANCE WITH PHASE 1 MOT PLANS.
2. INSTALL TEMPORARY SUPPORT OF EXCAVATION AS SHOWN ON THE PLANS AT THE WESTERN AND EASTERN APPROACHES IMMEDIATELY ADJACENT TO THE EXISTING CHAPMAN ROAD BRIDGE.
3. INSTALL INSTRUMENTATION MONITORING DEVICES (TILTMETERS ON EXISTING CHAPMAN ROAD PIERS, SURFACE MONUMENTS IN ADJACENT I-95 NB AND NB SHOULDERS, PIEZOMETERS ADJACENT TO NEW BRIDGE ABUTMENTS, ETC.)
4. EXCAVATE TO ESTABLISH A WORKING PLATFORM FOR THE CONSTRUCTION OF THE MSE WALL ABUTMENTS.
5. DRIVE THE PILES TO CAPACITY FOR EACH ABUTMENT. INSTALL SLEEVES AROUND EACH PILE.
6. CONSTRUCT THE MSE WALL EMBANKMENTS AT EACH ABUTMENT AND IN THE MEDIAN; INSTALL SETTLEMENT PLATFORMS AND MONITOR SETTLEMENT DURING CONSTRUCTION OF MSE AND EMBANKMENTS.
7. INSTALL DRAINAGE AND REQUIRED COVER AT FRONT FACE OF PROPOSED CHAPMAN ROAD BRIDGE ABUTMENTS AS THE MSE WALLS ARE BEING CONSTRUCTED. SEE PHASE 1 MOT FOR DRAINAGE DETAILS.
8. CONSTRUCT THE PILE CAP AT EACH ABUTMENT
9. INSTALL BEARINGS.
10. PLACE CRANE ALONG I-95NB (SEE OPTIONAL CRANE PLACEMENT OR PROVIDE ALTERNATE)
11. SEE DETOUR PLANS FOR CHAPMAN ROAD AND I-95 PRIOR TO GIRDER ERECTION
12. GIRDER ERECTION SEQUENCE (CHAPMAN ROAD UNDER DETOUR):
    A. PLACE CRANE AT EAST APPROACH TO CHAPMAN ROAD BRIDGE (SEE OPTIONAL CRANE PLACEMENT OR PROVIDE ALTERNATE)
    B. DELIVER GIRDERS TO ADJACENT EXISTING CHAPMAN ROAD
    C. ERECT GIRDER 1 AND ADEQUATELY SECURE AT BEARING (CONTRACTOR RESPONSIBLE FOR BRACING TOP FLANGES OF ALL GIRDERS UNTIL END DIAPHRAGM IS CURED. COST TO PROVIDE ADEQUATE BRACING IS INCIDENTAL TO ITEM 615001)
    D. ERECT GIRDER 2 AND INSTALL DIAPHRAGMS
    E. ERECT GIRDERS 3-7 AND INSTALL DIAPHRAGMS TO PROVIDE ADEQUATE STABILITY
13. REMOVE I-95 AND CHAPMAN ROAD DETOUR UPON COMPLETION OF INSTALLATION OF GIRDERS
14. INSTALL UNDERDECK SHIELDING
15. INSTALL CONDUIT AND HANGER SYSTEMS
16. INSTALL STAY-IN-PLACE FORMS, WELD SHEAR STUDS TO TOP OF GIRDERS AND INSTALL DECK REINFORCEMENT
17. PLACE REINFORCEMENT FOR CONCRETE DIAPHRAGMS AND POUR CONCRETE DIAPHRAGMS
18. POUR DECK CONCRETE
19. AFTER THE CONCRETE DECK HAS CURED, JACK AND RESET THE BRIDGE TO REMOVE SHEAR DEFORMATIONS FROM ELASTOMERIC BEARINGS. THE RESETTING OF THE BEAMS MUST BE COMPLETED BETWEEN 40 DEGREES AND 80 DEGREES. TIGHTEN ANCHOR BOLTS.
20. PLACE REINFORCEMENT FOR BARRIERS AND SIDEWALK AND POUR CONCRETE SIDEWALK AND BARRIER
21. INSTALL WATERPROOFING ON REAR FACE OF CONCRETE DIAPHRAGM AND BACKFILL.
22. PLACE SLEEPER SLAB REINFORCEMENT AND EXPANSION JOINT HARDWARE. POUR SLEEPER SLAB CONCRETE.
23. INSTALL PROLYPROPOLENE SHEET, PLACE APPROACH SLAB REINFORCEMENT, EXPANSION JOINT HARDWARE AND POUR APPROACH SLAB.
24. INSTALL EXPANSION JOINT
25. PLACE REINFORCEMENT FOR MOMENT SLABS AND POUR MOMENT SLAB CONCRETE
26. INSTALL SAFETY FENCE AND HANDRAIL ALONG BRIDGE, APPROACH SLAB AND MOMENT SLAB AFTER THE CONCRETE HAS CURED.
27. PERFORM REMAINING CHAPMAN ROAD CONSTRUCTION AND RELOCATE UTILITIES AS DETAILED IN PHASE 1 MOT PLANS.
28. INSTALL MOT IN ACCORDANCE WITH PHASE 4 MOT PLANS
29. INSTALL UNDER DECK PROTECTIVE SHIELDING AS NECESSARY UNDER EXISTING CHAPMAN ROAD BRIDGE
30. SAWCUT DECK OF EXISTING CHAPMAN ROAD FOR REMOVAL
31. PLACE CRANE (AS SHOWN ON OPTIONAL PLAN OR PROVIDE ALTERNATE LOCATION)
32. SEE DETOUR PLANS FOR CHAPMAN ROAD AND I-95 PRIOR TO EXISTING CHAPMAN ROAD BRIDGE BEAM REMOVAL.
33. REMOVE BEAMS OVER I-95 NB WHILE CHAPMAN ROAD AND I-95 NB ARE UNDER DETOUR
34. REMOVE REMAINDER OF BEAMS FROM THE MEDIAN OF I-95 OR APPROACHES
35. DEMOLISH PIERS AND ABUTMENTS TO APPROXIMATELY 3 (THREE) FEET BELOW TOP OF PROPOSED GRADE.
36. FINALIZE GRADING AND PERFORM REMAINING PHASE 4 MOT WORK

BR 1-714A
BD-04

ADDENDA / REVISIONS	SCALE AS NOTED	BR 1-714A ON CHAPMAN ROAD OVER I-95 NB	CONTRACT T201507402	BRIDGE NO. 1-714A	CONSTRUCTION SEQUENCE AND DEMOLITION PLAN	SECTION AEC
			COUNTY NEW CASTLE	DESIGNED BY: H. BORDNER		SHEET NO. 68
				CHECKED BY: R.DOMINICK		

8/16/2019 7:27:59 PM P:\60323054 DelDOT AGR 1672 BDS\T06 - Rehab Br. 1-714\900 WORK\910 CAD\20-SHEETS\Structures\Final Design\NB\BR1-714-NB-TS01.dgn

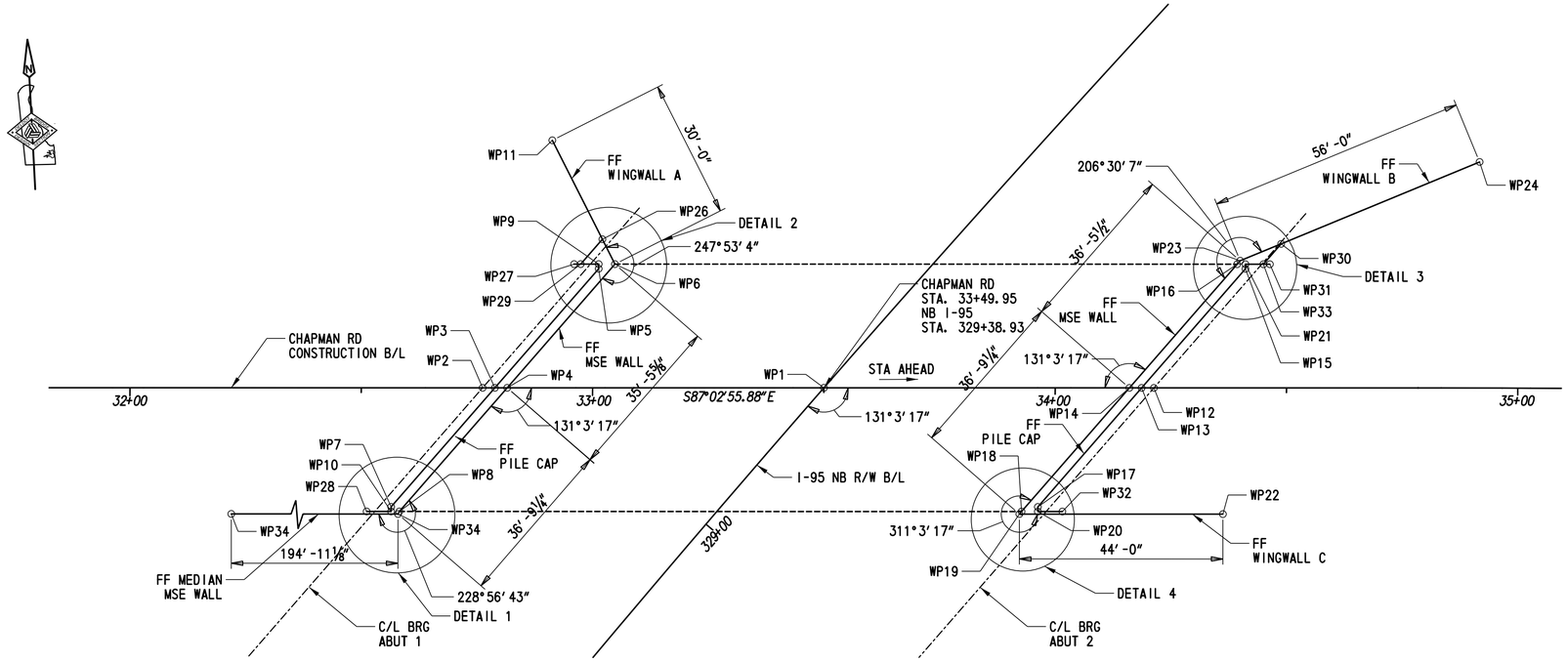

STAKE-OUT PLAN

SCALE: 1" = 10"

NOTE:

1. FOUR DECIMAL PLACE COORDINATES ARE FOR COMPUTATIONAL PURPOSES ONLY AND DO NOT IMPLY A PRECISION BEYOND TWO DECIMAL PLACES.

WORKING POINTS

WORK PT	STATION	OFFSET	COORDINATES NORTHING	COORDINATES EASTING
WP1	33+49.94	0.00	607032.2132	580551.6205
WP2	32+76.18	0.00	607036.0112	580477.9484
WP3	32+78.83	0.00	607035.8746	580480.5971
WP4	32+81.48	0.00	607035.7381	580483.2458
WP5	33+01.25	25.75 LT	607060.4358	580504.3204
WP6	33+04.78	26.75 LT	607061.2531	580507.8904
WP7	32+56.40	25.75 RT	607011.3134	580456.8738
WP8	32+58.18	26.75 RT	607010.2230	580458.6012
WP9	33+01.25	26.75 LT	607061.4345	580504.3719
WP10	32+56.40	26.75 RT	607010.3147	580456.8223
WP11	32+91.24	53.52 LT	607088.6852	580495.7464
WP12	34+21.28	0.00	607028.5406	580622.8604
WP13	34+18.63	0.00	607028.6771	580620.2117
WP14	34+15.97	0.00	607028.8136	580617.5630
WP15	34+41.05	25.75 LT	607053.2383	580643.9349
WP16	34+39.27	26.75 LT	607054.3287	580642.2075
WP17	33+96.20	25.75 RT	607004.1159	580596.4885
WP18	33+92.68	26.75 RT	607003.2986	580592.9185
WP19	33+91.82	27.73 RT	607002.3646	580592.0164
WP20	33+96.20	26.75 RT	607003.1172	580596.4370
WP21	34+41.05	26.75 LT	607054.2370	580643.9864
WP22	34+35.82	27.73 RT	607000.0993	580635.9580
WP23	34+39.92	27.50 LT	607055.0405	580642.8950
WP24	34+91.56	48.89 LT	607073.7266	580695.6854
WP26	33+02.05	32.14 LT	607066.7711	580505.4476
WP27	32+95.95	26.75 LT	607061.7074	580499.0787
WP28	32+51.10	26.75 RT	607010.5877	580451.5272
WP29	32+97.36	26.75 LT	607061.6348	580500.4864
WP30	34+48.78	31.16 LT	607058.2388	580651.9306
WP31	34+46.36	26.75 LT	607053.9640	580649.2815
WP32	34+01.50	26.75 RT	607002.8443	580601.7321
WP33	34+44.94	26.75 LT	607054.0367	580647.8718
WP34	32+57.33	27.73 RT	607009.2890	580457.6990

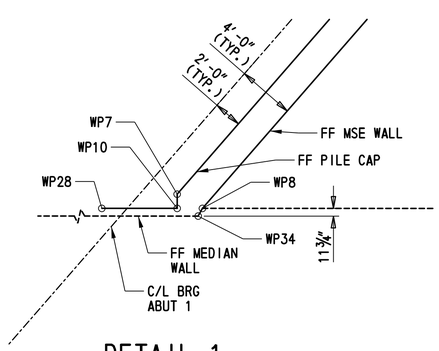

DETAIL 1

SCALE: 1/8" = 1'-0"

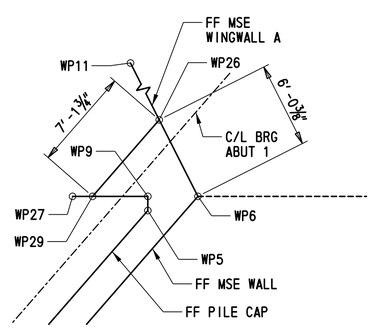

DETAIL 2

SCALE: 1/8" = 1'-0"

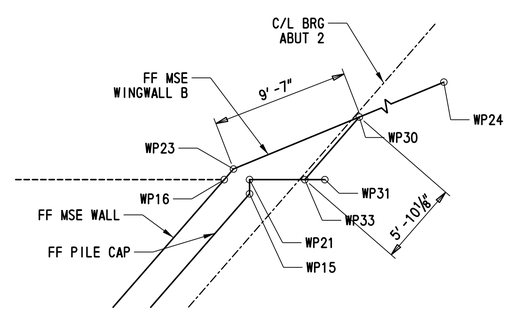

DETAIL 3

SCALE: 1/8" = 1'-0"

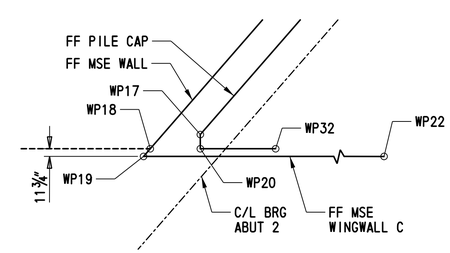

DETAIL 4

SCALE: 1/8" = 1'-0"

NOTE:

MEDIAN MSE WALL SHOWN AS DASHED AND IS PART OF BR 1-714.

BR 1-714A
BD-05

ADDENDA / REVISIONS		SCALE AS NOTED	BR 1-714A ON CHAPMAN ROAD OVER I-95 NB	CONTRACT T201507402	BRIDGE NO. 1-714A	GEOMETRIC LAYOUT	SECTION AEC
				COUNTY NEW CASTLE	DESIGNED BY: R. GANOVSKA		SHEET NO. 69
					CHECKED BY: E.LUCZKA/S. MURKHERJEE		

8/16/2019
7:28:07 PM
P:\60323054 DelDOT AGR 1672 BDS\T06 - Rehab Br. 1-714\900 WORK\910 CAD\20-SHEETS\Structures\Final Design\NB\BR1-714-NB-S001.dgn

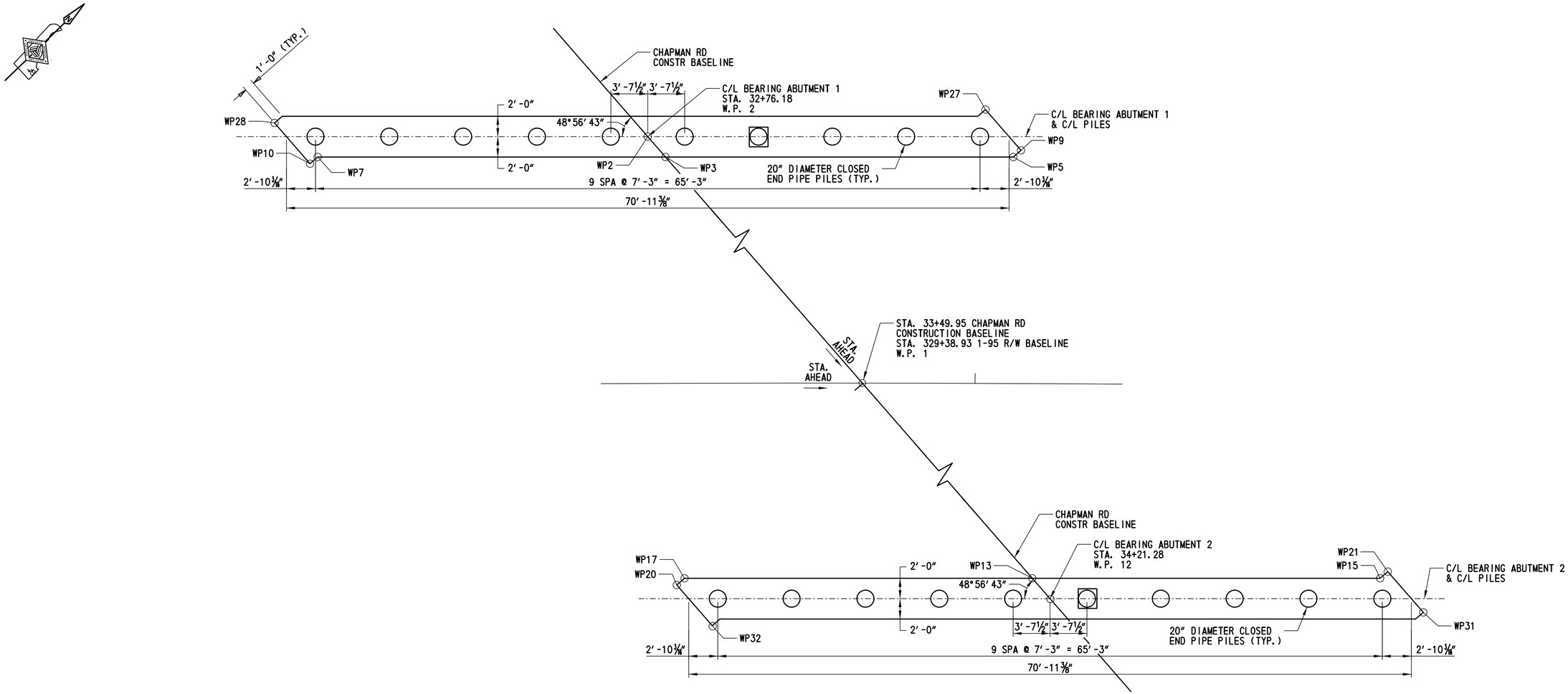

PILE PLAN

SCALE: 3/16" = 1'-0"

CROSS REFERENCE NOTES:

1. FOR BRIDGE PLAN AND ELEVATION, SEE SHEET BR 1-714A BD-03.
2. FOR ABUTMENT PLAN AND ELEVATION, SEE SHEET BR 1-714A BD-08 AND BR 1-714A BD-09.
3. FOR PILE DETAILS, SEE SHEET BR 1-714A BD-07.
4. FOR GEOMETRIC LAYOUT, SEE SHEET BR 1-714A BD-05.

LEGEND:

○ DENOTES 20" DIAMETER CLOSED END PIPE PILES

◎ DENOTES TEST PILE

BR 1-714A
BD-06

ADDENDA / REVISIONS		SCALE IN FEET 2 0 2 4 6	BR 1-714A ON CHAPMAN ROAD OVER I-95 NB	CONTRACT T201507402	BRIDGE NO. 1-714A	PILE PLAN	SECTION AEC
				COUNTY NEW CASTLE	DESIGNED BY: W.O'RANGERS		SHEET NO. 70
					CHECKED BY: S.MURKHERJEE		

8/16/2019
7:28:48 PM
P:\60323054 DelDOT AGR 1672 BDS\T06 - Rehab Br. 1-714\900 WORK\910 CAD\20-SHEETS\Structures\Final Design\NB\BR1-714-NB-AB04.dgn

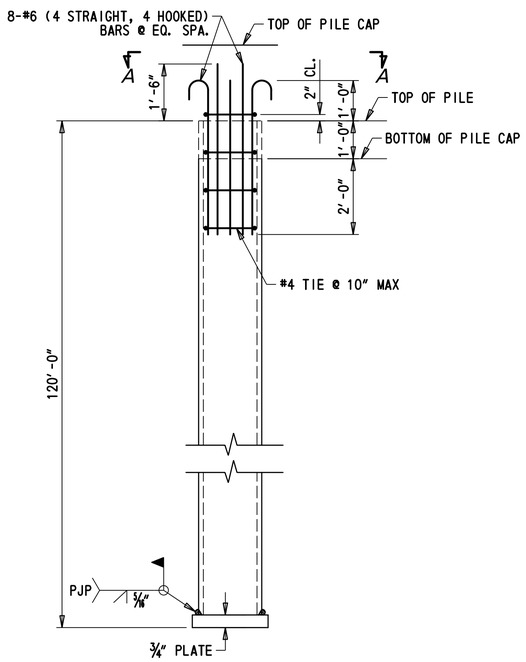

PILE ELEVATION

SCALE : 1/2" = 1'-0"

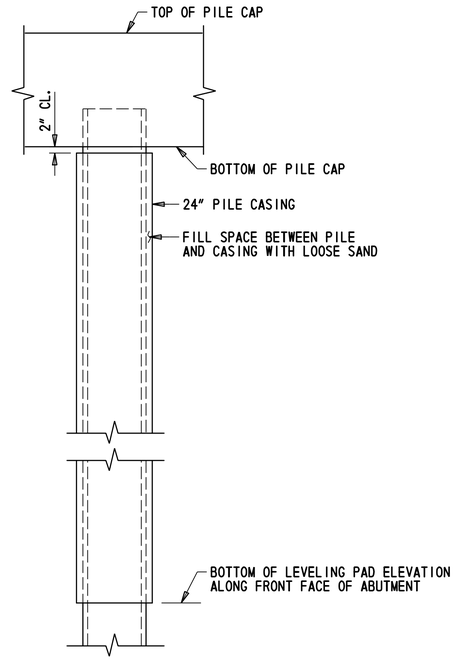

PILE CASING

SCALE : 1/2" = 1'-0"

GENERAL PILE NOTES

1. FOR MORE INFORMATION REGARDING PILE DRIVING, INSTALLATION, MATERIALS, AND FABRICATION, REFER TO SECTION 605 - DRIVEN PILES OF THE STANDARD SPECIFICATIONS.

2. EACH TEST PILE SHALL BE DYNAMICALLY TESTED BY THE CONTRACTOR IN ACCORDANCE WITH ITEM 605201 - DYNAMIC PILE TESTING BY CONTRACTOR. THE QUANTITY FOR DYNAMIC PILE TESTING SHALL INCLUDE ONE FOR THE INITIAL DRIVE AND ONE FOR THE RE-STRIKE OF EACH TEST PILE. THE NEED TO RESTRIKE EITHER A TEST PILE OR A PRODUCTION PILE SHALL BE THE SOLE DECISION OF THE ENGINEER.

3. WAVE EQUATION ANALYSIS SHALL BE SUBMITTED BY THE CONTRACTOR FOR REVIEW BY THE ENGINEER (ELECTRONIC PREFERRED, OTHERWISE 8 COPIES MINIMUM).

4. ALL PILES SHALL BE ORDERED THE SAME LENGTH (I.e. WITHOUT A LONGER TEST PILE). TEST PILES, AS NOTED, SHALL BE DRIVEN FIRST TO ESTABLISH DRIVING CRITERIA FOR THE OTHER PILES IN EACH SUBSTRUCTURE ELEMENT. AN ADDITIONAL 10' HAS BEEN ADDED TO THE DESIGN LENGTH OF EACH PILE AS A CONTINGENCY.

CAST-IN-PLACE PILE NOTES

1. COST OF REINFORCING BARS INSIDE THE STEEL SHELL IS INCLUDED IN THE BID PRICE FOR THE APPROPRIATE CAST-IN-PLACE CONCRETE PILE ITEMS. REINFORCEMENT SHALL BE EPOXY COATED.

2. PILES SHALL BE COAL TAR EPOXY COATED.

3. THE INTERIOR OF THE REINFORCEMENT CAGE SHALL BE OPEN TO ALLOW FOR FREE FLOW OF CONCRETE INTO THE PILE SHELL. NO BRACING, SPACERS, ETC. WILL BE PERMITTED.

PROJECT SPECIFIC PILE NOTES

1. PILE TYPE:

   THIS PROJECT SHALL UTILIZE 20" DIA. BY 1/2" WALL CAST-IN-PLACE CONCRETE FILLED STEEL PIPE PILES. REINFORCEMENT SHALL EXTEND INTO THE PILE AS SHOWN IN THE TYPICAL PILE ELEVATION. ESTIMATED PRODUCTION PILE LENGTH IS 120' AT ABUTMENT 1 AND 120' AT ABUTMENT 2.

2. PILES SHALL BE DRIVEN TO A BEARING RESISTANCE OF 660 KIPS USING A RESISTANCE FACTOR OF 0.65.

3. MINIMUM TIP ELEVATION SHALL NOT BE REQUIRED FOR THIS PROJECT.

4. COST TO FURNISH AND INSTALL PILE CASING AND SAND BETWEEN PILE AND CASING ARE INCIDENTAL TO ITEMS 605505 AND 605506 RESPECTIVELY.

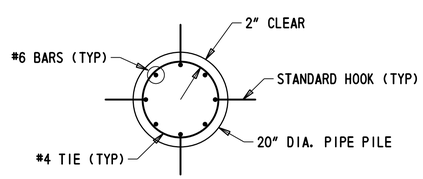

TYPICAL PIPE PILE SECTION (VIEW A-A)

SCALE : 1/2" = 1'-0"

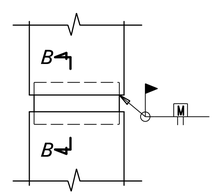

SPLICE JOINT DETAIL

SCALE : N.T.S.

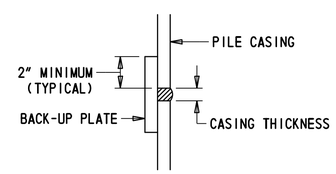

NOTE:
BACK-UP PLATE TO BE CUT FROM SAME PILE SIZE AS IS BEING SPLICED. CUT AND BEND TO FIT INSIDE DIAMETER OF PILE.

SECTION B-B

SCALE : N.T.S.

BR 1-714A
BD-07

ADDENDA / REVISIONS		SCALE AS NOTED	BR 1-714A ON CHAPMAN ROAD OVER I-95 NB	CONTRACT T201507402	BRIDGE NO. 1-714A	PILE DETAILS	SECTION AEC
				COUNTY NEW CASTLE	DESIGNED BY: W.O'RANGERS		SHEET NO. 71
					CHECKED BY: J.EBERLE		

8/16/2019 7:29:04 PM P:\60323054 DelDOT AGR 1672 BDS\T06 - Rehab Br. 1-714\900 WORK\910 CAD\20-SHEETS\Structures\Final Design\NB\BR1-714-NB-PD01.dgn

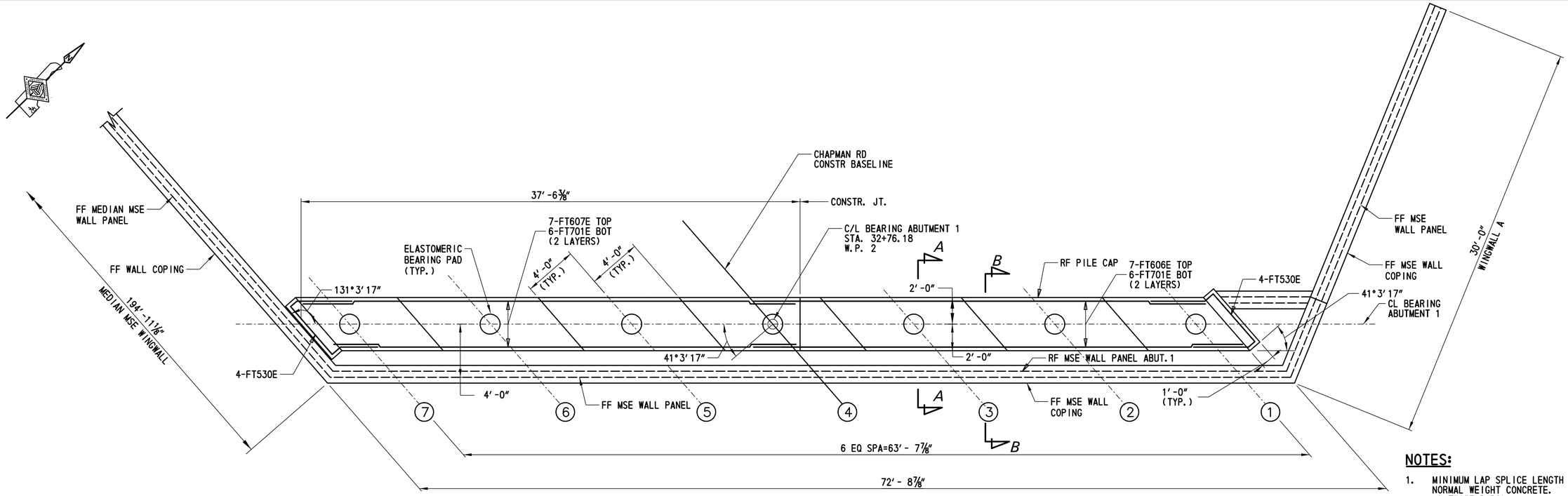

ABUTMENT 1 - PLAN

SCALE: 1/4" = 1'-0"

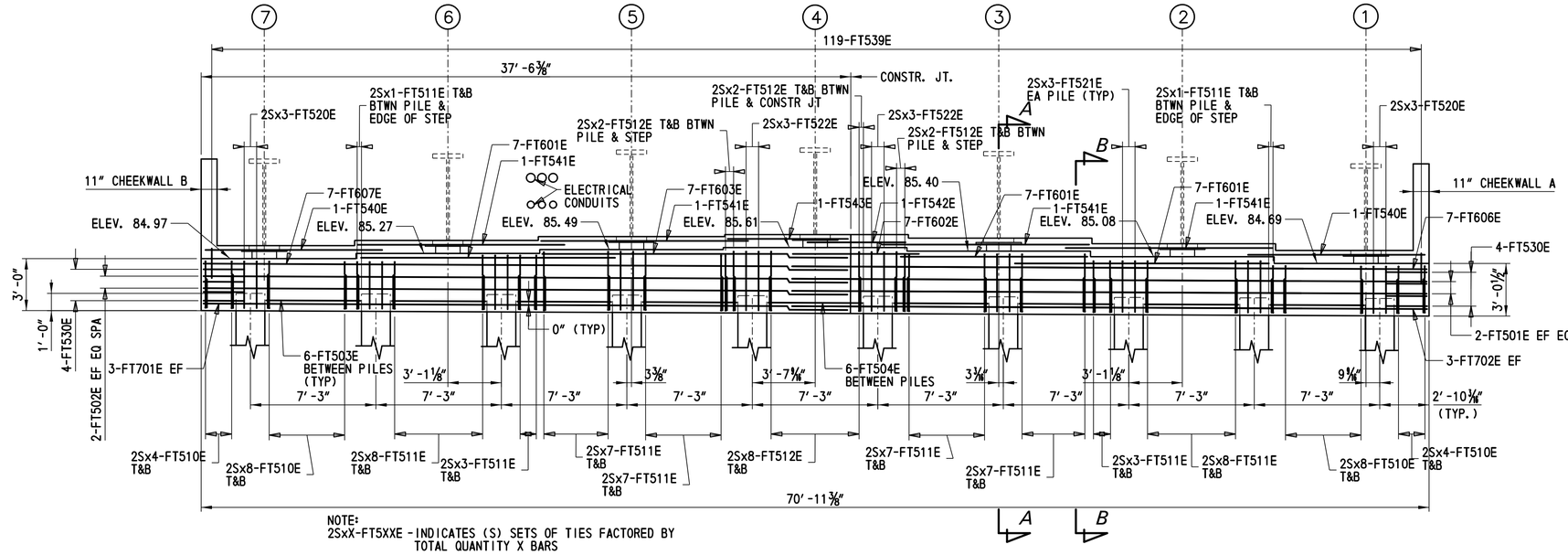

NOTE:
2SxX-FT5XXE - INDICATES (S) SETS OF TIES FACTORED BY TOTAL QUANTITY X BARS

ABUTMENT 1 - ELEVATION

SCALE: 1/4" = 1'-0"

NOTES:

1. MINIMUM LAP SPLICE LENGTH NORMAL WEIGHT CONCRETE.
   1'-7" (#3 BARS)
   2'-1" (#4 BARS)
   2'-7" (#5 BARS)
   3'-1" (#6 BARS)
   3'-8" (#7 BARS)
2. COST OF WATERSTOP SHALL BE INCIDENTAL TO ITEM 610002.

CROSS REFERENCE NOTES:

1. FOR PILE DETAILS, SEE SHEET BR 1-714A BD-07.
2. FOR MSE WALL ELEVATION, SEE SHEET BR 1-714A BD-13.
3. FOR BEARING AND SOLE PLATE DETAILS, SEE SHEETS BR 1-714A BD-19 - BR 1-714A BD-21.
4. FOR REINFORCEMENT BAR SCHEDULE, SEE SHEET BR 1-714A BD-012.
5. FOR SECTIONS AND DETAILS, SEE SHEETS BR 1-714A BD-10 AND BR 1-714A BD-11.
6. WORK THIS SHEET WITH SHEETS BR 1-714A BD-10 AND BR 1-714A BD-11.
7. FOR REINFORCEMENT IN CHEEKWALL, REFER TO SHEET BR 1-714A BD-11.

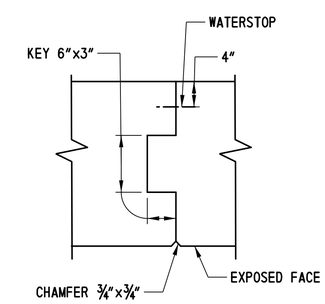

CONSTRUCTION JOINTS

SCALE: 1 1/2" = 1'

BR 1-714A
BD-08

ADDENDA / REVISIONS	SCALE IN FEET 1 0 1 2 3 4 5	BR 1-714A ON CHAPMAN ROAD OVER I-95 NB	CONTRACT T201507402	BRIDGE NO. 1-714A	ABUTMENT 1 PLAN AND ELEVATION	SECTION AEC
			COUNTY NEW CASTLE	DESIGNED BY: W.O'RANGERS		SHEET NO. 72
				CHECKED BY: J.EBERLE		

8/16/2019
7:29:24 PM
P:\60323054 DelDOT AGR 1672 BDS\T06 - Rehab Br. 1-714\900 WORK\910 CAD\20-SHEETS\Structures\Final Design\NB\BR1-714-NB-AB01.dgn

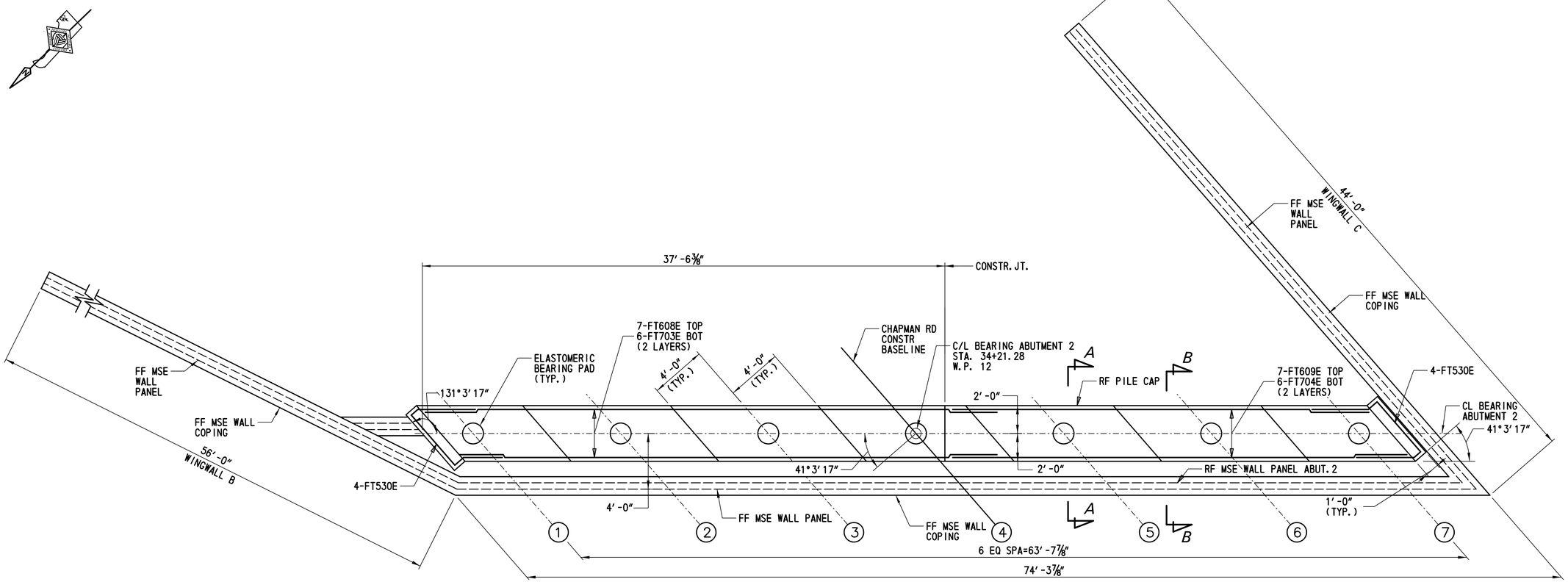

ABUTMENT 2 - PLAN

SCALE: 1/4" = 1'-0"

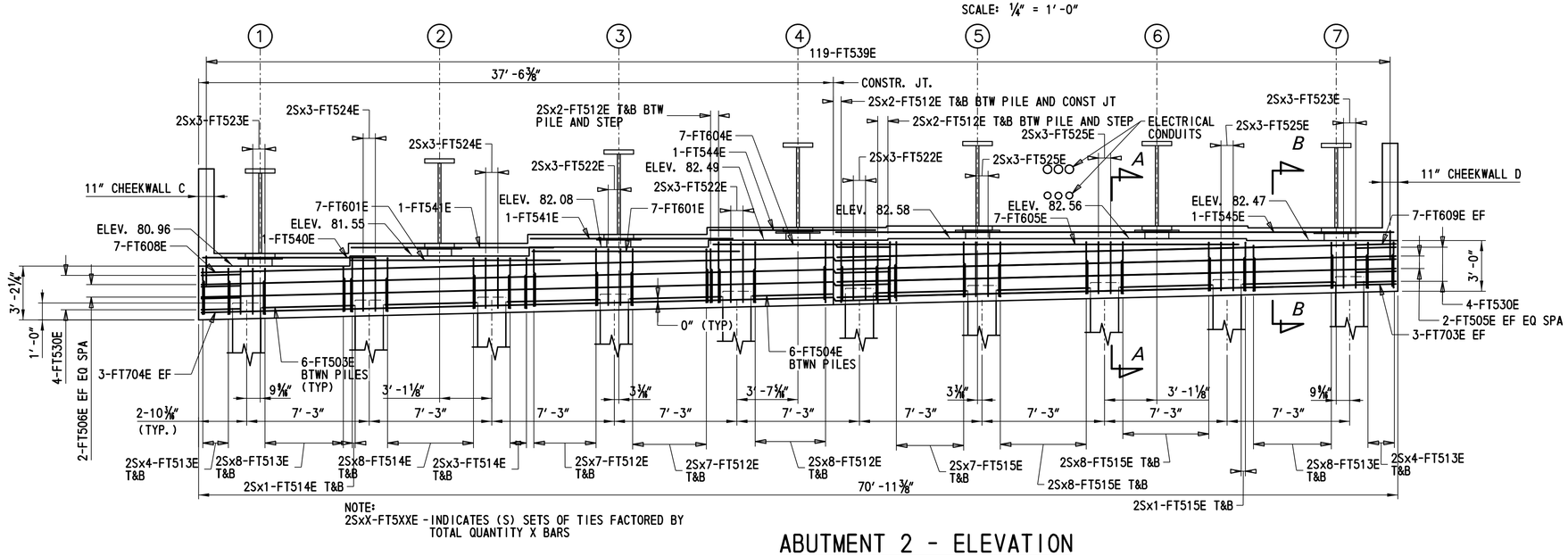

NOTE:
2SxX-FT5XXE - INDICATES (S) SETS OF TIES FACTORED BY TOTAL QUANTITY X BARS

ABUTMENT 2 - ELEVATION

SCALE: 1/4" = 1'-0"

NOTES:

1. MINIMUM LAP SPLICE LENGTH NORMAL WEIGHT CONCRETE.
   1'-7"(#3 BARS)
   2'-1"(#4 BARS)
   2'-7"(#5 BARS)
   3'-1"(#6 BARS)
   3'-8"(#7 BARS)

CROSS REFERENCE NOTES:

1. FOR PILE DETAILS, SEE SHEET BR 1-714A BD-07.
2. FOR MSE WALL ELEVATION, SEE SHEET BR 1-714A BD-13.
3. FOR BEARING AND SOLE PLATE DETAILS, SEE SHEETS BR 1-714A BD-19 - BR 1-714A BD-21.
4. FOR REINFORCEMENT BAR SCHEDULE, SEE SHEET BR 1-714A BD-12.
5. FOR SECTIONS AND DETAILS, SEE SHEETS BR 1-714A BD-10 AND BR 1-714A BD-11.
6. WORK THIS SHEET WITH SHEETS BR 1-714A BD-10 AND BR 1-714A BD-11.
7. FOR CONSTRUCTION JOINT DETAILS, SEE SHEET BR 1-714A BD-08.
8. FOR REINFORCEMENT IN CHEEKWALL, REFER TO SHEET BR 1-714 BD-11.

BR 1-714A
BD-09

ADDENDA / REVISIONS		SCALE IN FEET 1 0 1 2 3 4 5	BR 1-714A ON CHAPMAN ROAD OVER I-95 NB	CONTRACT T201507402	BRIDGE NO. 1-714A	ABUTMENT 2 PLAN AND ELEVATION	SECTION AEC
				COUNTY NEW CASTLE	DESIGNED BY: W.O'RANGERS		SHEET NO. 73
					CHECKED BY: J.EBERLE		

8/16/2019
7:29:41 PM
P:\60323054 DelDOT AGR 1672 BDS\T06 - Rehab Br. 1-714\900 WORK\910 CAD\20-SHEETS\Structures\Final Design\NB\BR1-714-NB-AB02.dgn

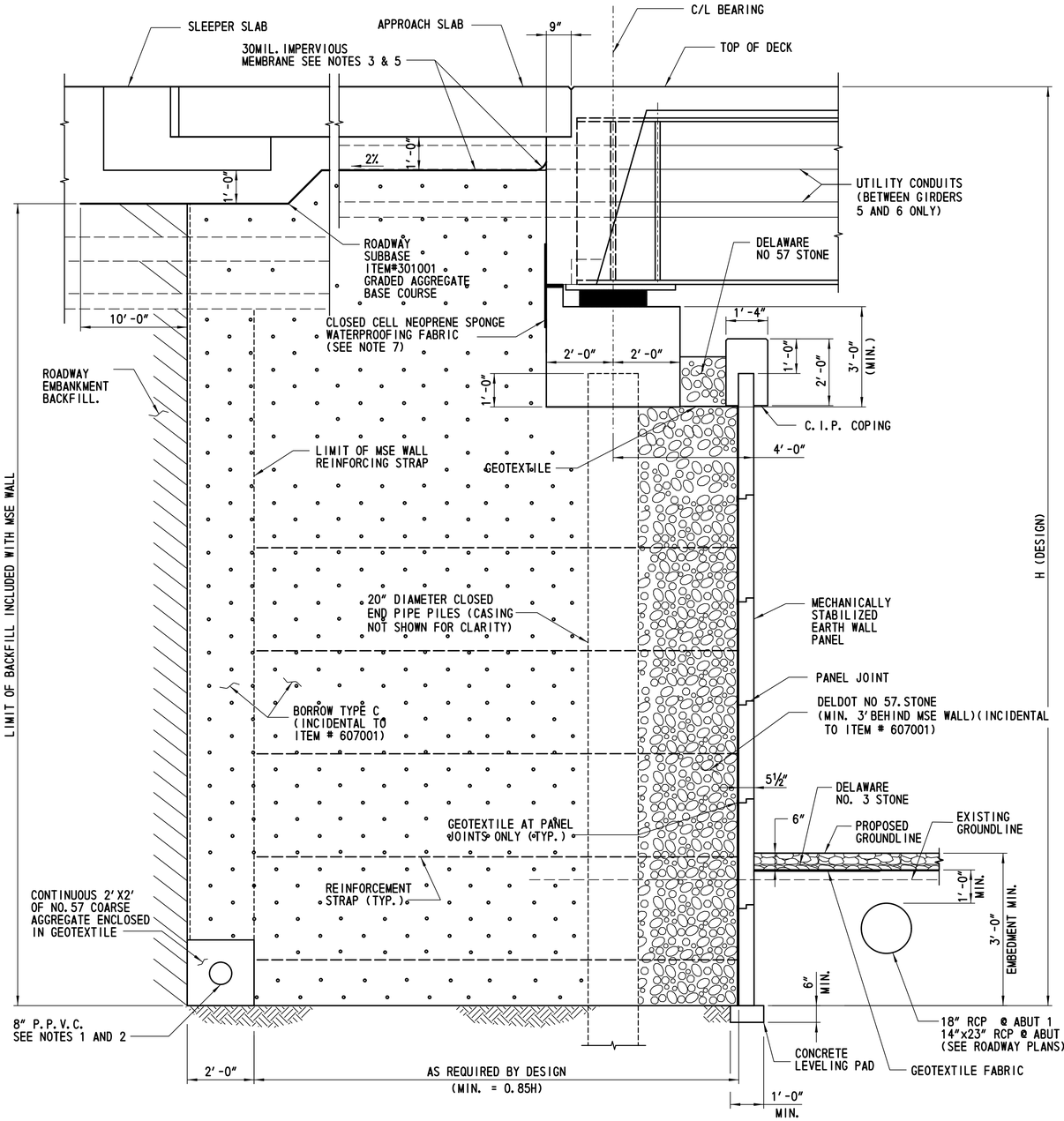

TYPICAL SECTION @ ABUTMENT

SCALE: 1/2" = 1'-0"

CROSS REFERENCE NOTES:

1. FOR DECK SECTIONS, SEE SHEET BR 1-714A BD-26.
2. FOR WINGWALL MSE ELEVATION, SEE SHEET BR 1-714A BD-13.
3. FOR MSE WALL LAYOUTS, SEE SHEETS BR 1-714A BD-08 AND BR 1-714A BD-09.
4. FOR GEOMETRIC LAYOUT, SEE SHEET BR 1-714A BD-05.
5. FOR LOCATION OF SECTION C-C AND D-D, SEE SHEET BR 1-714A BD-11.
6. FOR APPROACH SLAB AND SLEEPER SLAB SECTIONS,SEE SHEET BR 1-714A BD-31.
7. FOR LIMITS OF WATERPROOFING MEMBRANE, SEE SHEET BR 1-714A BD-23.

NOTES:

1. DRAIN PERFORATED POLYVINYL CHLORIDE PIPE (P.P.V.C.) TO DAYLIGHT.
2. SURROUND P.P.V.C. WITH A CONTINUOUS 2'-0"x2'-0" OF DELAWARE NO. 57 STONE ENCLOSED IN GEOTEXTILE.
3. SLOPE MEMBRANE A MINIMUM OF 2% AWAY FROM DIAPHRAGM.
4. COST OF EXPANSION MATERIAL AND RUBBERIZED JOINT SEALING MATERIAL SHALL BE INCIDENTAL TO ITEM 607001.
5. COST OF IMPERVIOUS MEMBRANE UNDER SUBBASE SHALL BE INCIDENTAL TO ITEM 607001.
6. REINFORCEMENT FOR CAST IN PLACE COPING INCLUDING CONNECTION TO MSE WALL PANELS SHALL BE DEVELOPED BY MSE WALL SUPPLIER. COST OF COPING AND REINFORCEMENT SHALL BE INCIDENTAL TO MSE WALL ITEM.
7. BOLTS AT BEARING PLATE NOT SHOWN FOR CLARITIY.
8. COST OF CLOSED CELL NEOPRENE SPONGE, NEOPRENE BEARING PAD AND PREFORMED CELLULAR POLYSTYRENE SHALL BE INCIDENTAL TO ITEM 610002.

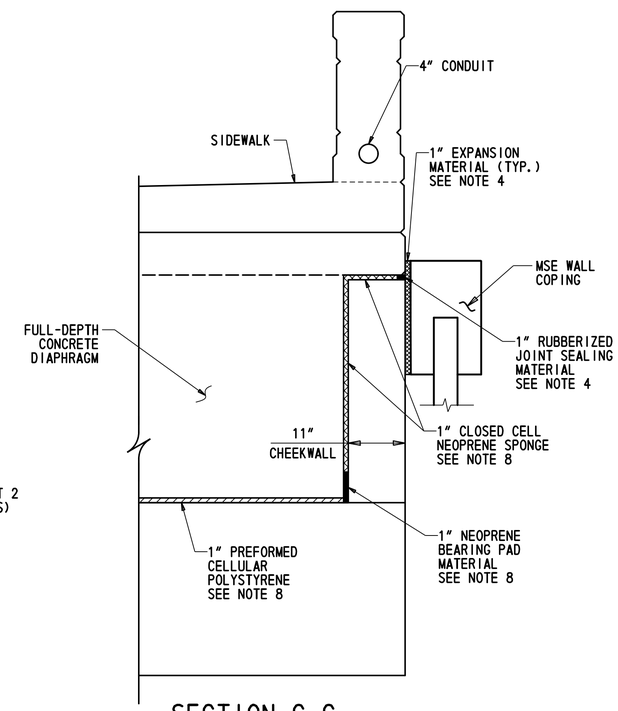

SECTION C-C

SCALE: 3/4" = 1'-0"

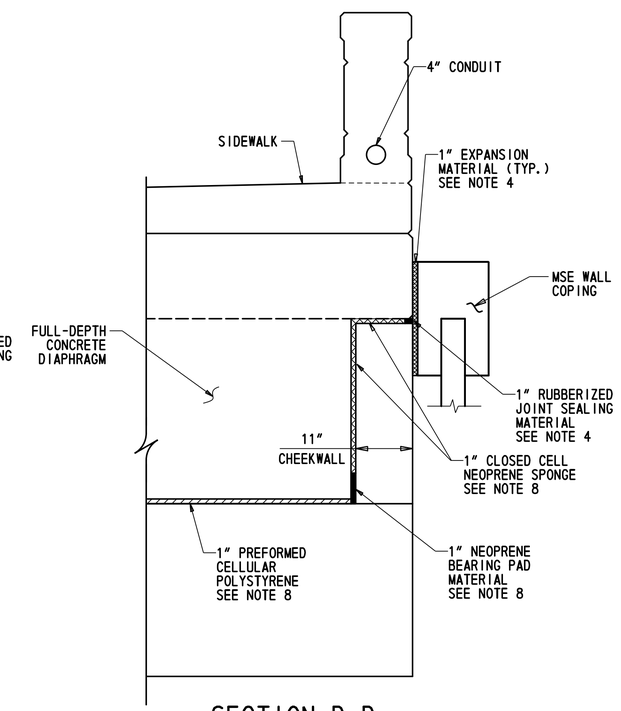

SECTION D-D

SCALE: 3/4" = 1'-0"

BR 1-714A
BD-10

ADDENDA / REVISIONS	SCALE AS NOTED	BR 1-714A ON CHAPMAN ROAD OVER I-95 NB	CONTRACT T201507402	BRIDGE NO. 1-714A	ABUTMENT SECTIONS	SECTION AEC
			COUNTY NEW CASTLE	DESIGNED BY: W.O'RANGERS		SHEET NO. 74
				CHECKED BY: J.EBERLE		

9/19/2019 5:53:38 PM P:\60323054 DelDOT AGR 1672 BDS\T06 - Rehab Br. 1-714\900 WORK\910 CAD\20-SHEETS\Structures\Final Design\NB\BR1-714-NB-AB03.dgn

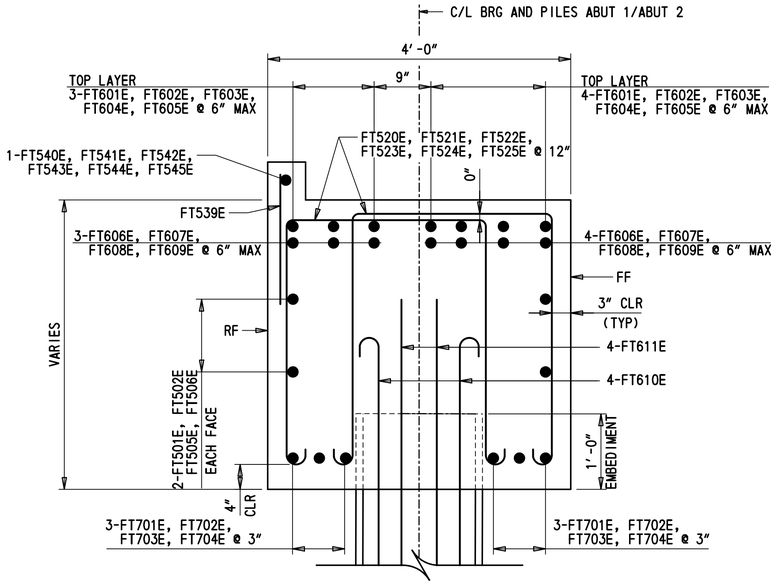

TYPICAL SECTION A-A

SCALE: ¾" = 1'-0"

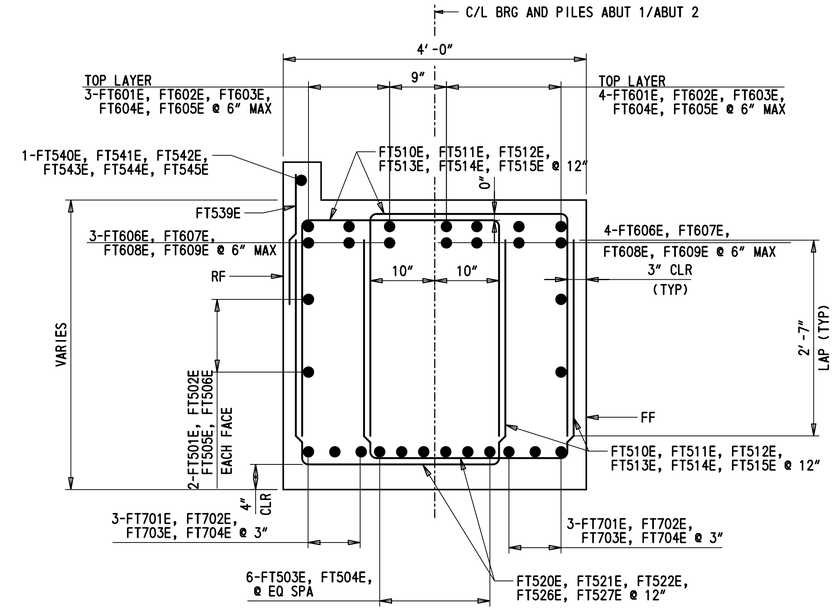

TYPICAL SECTION B-B

SCALE: ¾" = 1'-0"

CROSS REFERENCE NOTES:

1. FOR PILE DETAILS, SEE SHEET BR 1-714A BD-07.
2. FOR MSE WALL ELEVATION, SEE SHEET BR 1-714A BD-13.
3. FOR BEARING AND SOLE PLATE DETAILS, SEE SHEETS BR 1-714A BD-20 - BR 1-714A BD-22.
4. FOR REINFORCEMENT BAR SCHEDULE, SEE SHEET BR 1-714A BD-12.
5. FOR ABUTMENT 1 AND 2 PLAN AND ELEVATION SEE SHEETS BR 1-714A BD-08 AND BR 1-714A BD-09.
6. WORK THIS SHEET WITH SHEETS BR 1-714A BD-08 AND BR 1-714A BD-09.

NOTES:

1. MINIMUM LAP SPLICE LENGTHS, NORMAL WEIGHT CONCRETE.
   1'-7" (#3 BARS)
   2'-1" (#4 BARS)
   2'-7" (#5 BARS)
   3'-1" (#6 BARS)
   3'-8" (#7 BARS)
2. DIAPHRAGM REINFORCEMENT NOT SHOWN FOR CLARITY. FOR ADDITIONAL DETAIL SEE SHEETS BR 1-714A BD-22 AND BR 1-714A BD-23.
3. APPROACH SLAB AND DECK REINFORCEMENT NOT SHOWN FOR CLARITY, SEE SHEETS BR 1-714A BD-24 - BR 1-714A BD-26 AND BR 1-714A BD-29 - BR 1-714A BD-31.
4. STIRRUP BARS ALONG SKEW.

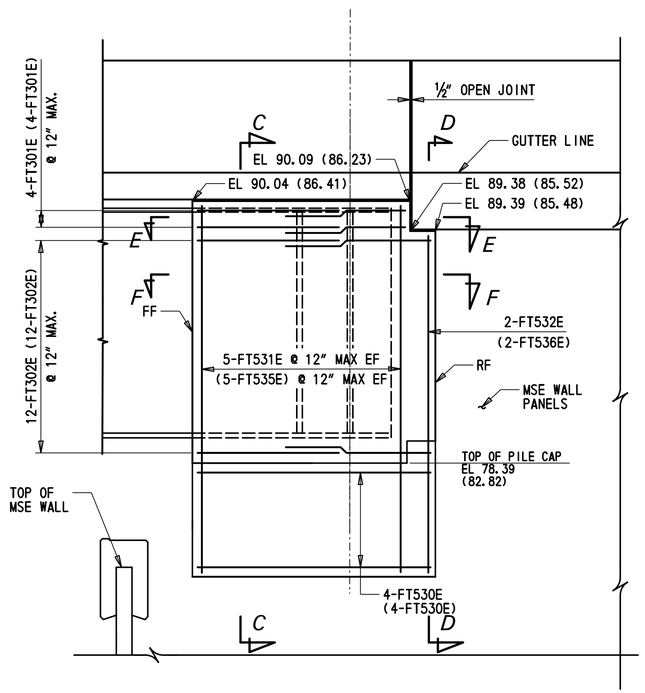

CHEEKWALL A ELEVATION

(BAR CALL-OUTS AND CHEEKWALL ELEVATIONS FOR CHEEKWALL C ARE SHOWN IN PARENTHESIS)
SCALE: ½"=1'-0"

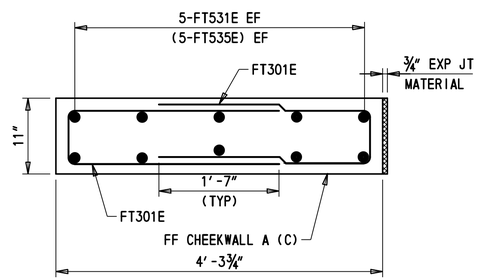

SECTION E-E

(BAR CALL-OUTS FOR CHEEKWALL C ARE SHOWN IN PARENTHESIS)
SCALE: ¾"=1'-0"

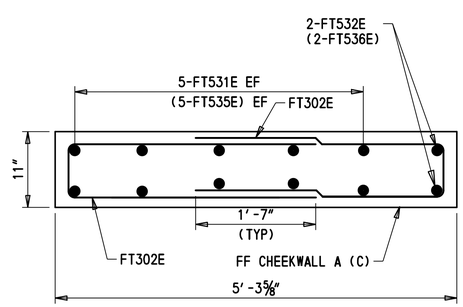

SECTION F-F

(BAR CALL-OUTS FOR CHEEKWALL C ARE SHOWN IN PARENTHESIS)
SCALE: ¾"=1'-0"

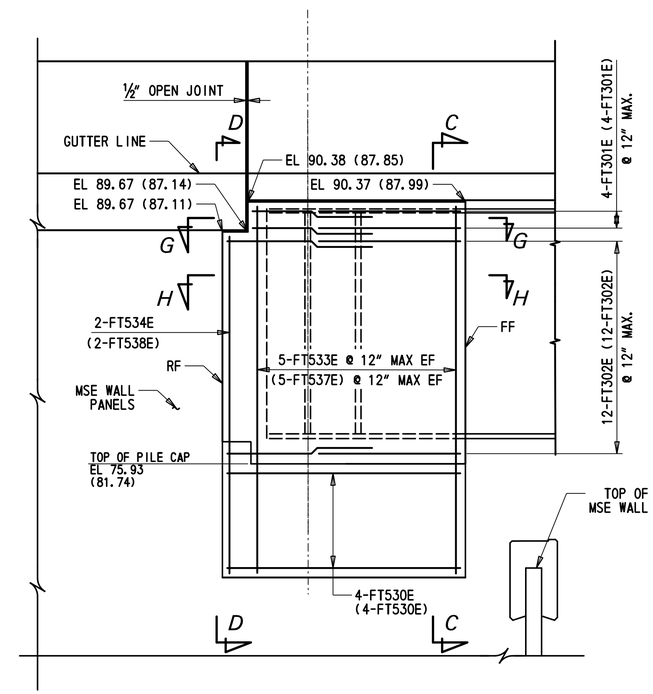

CHEEKWALL B ELEVATION

(BAR CALL-OUTS AND CHEEKWALL ELEVATIONS FOR CHEEKWALL D ARE SHOWN IN PARENTHESIS)
SCALE: ½"=1'-0"

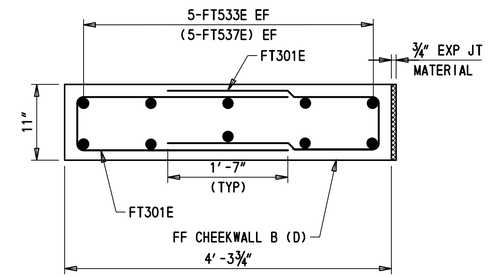

SECTION G-G

(BAR CALL-OUTS FOR CHEEKWALL D ARE SHOWN IN PARENTHESIS)
SCALE: ¾"=1'-0"

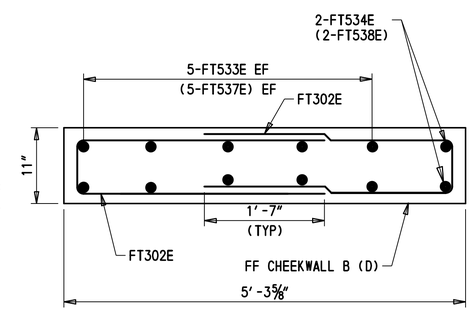

SECTION H-H

(BAR CALL-OUTS FOR CHEEKWALL D ARE SHOWN IN PARENTHESIS)
SCALE: ¾"=1'-0"

BR 1-714A
BD-11

ADDENDA / REVISIONS	SCALE AS NOTED	BR 1-714A ON CHAPMAN ROAD OVER I-95 NB	CONTRACT T201507402	BRIDGE NO. 1-714A	PILE CAP SECTIONS AND DETAILS	SECTION AEC
			COUNTY NEW CASTLE	DESIGNED BY: R.GANOVSKA		SHEET NO. 75
				CHECKED BY: S.MUKHERJEE		

8/16/2019
7:30:29 PM
P:\60323054 DelDOT AGR 1672 BDS\T06 - Rehab Br. 1-714\900 WORK\910 CAD\20-SHEETS\Structures\Final Design\NB\BR1-714-NB-PCD01.dgn

REINFORCEMENT BAR SCHEDULE

NB PILE CAP

MARK	BAR SIZE	LENGTH	NUMBER	TYPE	A	B	C	D	E	F	G	H	J	K	O	REMARKS
FT301E	3	5′-10″	16	17		2′-8 1/2″	0′-5″	2′-8 1/2″								
FT302E	3	6′-10″	48	17		3′-2 1/2″	0′-5″	3′-2 1/2″								
FT401E	4	6′-3 1/2″	140	T3			4′-2 1/2″				2′-1″				1′-4″	
FT501E	5	36′-6 1/4″	4	STR												
FT502E	5	37′-2 1/2″	4	STR												
FT503E	5	5′-3 1/4″	96	STR												
FT504E	5	4′-6 1/2″	12	STR												
FT505E	5	40′-7 3/4″	4	STR												
FT506E	5	33′-1 1/4″	4	STR												
FT510E	5	8′-5 3/4″	96	17		2′-6 1/4″	3′-5¼″	2′-6 1/4″								MIN. LAP SPLICE 2′-6″
FT511E	5	9′-1 1/4″	208	17		2′-10″	3′-5¼″	2′-10″								MIN. LAP SPLICE 2′-6″
FT512E	5	9′-5 1/4″	168	17		3′-0″	3′-5¼″	3′-0″								MIN. LAP SPLICE 2′-6″
FT513E	5	VARIES 8′-5¼″ TO 8′-8¼″	96	17		VARIES 2′-6″ TO 2′-7½″	3′-5¼″	VARIES 2′-6″ TO 2′-7½″								MIN. LAP SPLICE 2′-6″
FT514E	5	9′-1/4″	48	17		2′-9 1/2″	3′-5¼″	2′-9 1/2″								MIN. LAP SPLICE 2′-6″
FT515E	5	VARIES 9′-1¼″ TO 9′-3¼″	96	17		VARIES 2′-10″ TO 2′-11″	3′-5¼″	VARIES 2′-10″ TO 2′-11″								MIN. LAP SPLICE 2′-6″
FT520E	5	10′-1 1/4″	12	S8	0′-7″	2′-6 1/4″	3′-10¾″	2′-6 1/4″			0′-7″		0′-5″			MIN. LAP SPLICE 2′-6″
FT521E	5	10′-8 3/4″	36	S8	0′-7″	2′-10″	3′-10¾″	2′-10″			0′-7″		0′-5″			MIN. LAP SPLICE 2′-6″
FT522E	5	11′-3/4″	30	S8	0′-7″	3′-0″	3′-10¾″	3′-0″			0′-7″		0′-5″			MIN. LAP SPLICE 2′-6″
FT523E	5	VARIES 10′-¾″ TO 10′-3¾″	12	S8	0′-7″	VARIES 2′-6″ TO 2′-7½″	3′-10¾″	VARIES 2′-6″ TO 2′-7½″			0′-7″		0′-5″			MIN. LAP SPLICE 2′-6″
FT524E	5	10′-7 1/4″	12	S8	0′-7″	2′-9 1/2″	3′-10¾″	2′-9 1/2″			0′-7″		0′-5″			MIN. LAP SPLICE 2′-6″
FT525E	5	VARIES 10′-8¾″ TO 10′-10¾″	18	S8	0′-7″	VARIES 2′-10″ TO 2′-11″	3′-10¾″	VARIES 2′-10″ TO 2′-11″			0′-7″		0′-5″			MIN. LAP SPLICE 2′-6″
FT530E	5	11′-7 3/4″	16	17A		0′-8″	4′-9 3/4″	0′-8″	2′-9″			2′-1¾″		1′-9¾″		
FT531E	5	7′-11 1/2″	10	STR												
FT532E	5	7′-3″	2	STR												
FT533E	5	7′-11″	10	STR												
FT534E	5	7′-2 1/2″	2	STR												
FT535E	5	8′-1 3/4″	10	STR												
FT536E	5	7′-3 1/4″	2	STR												
FT537E	5	8′-1/4″	10	STR												
FT538E	5	7′-2 1/4″	2	STR												
FT539E	5	1′-8 1/2″	238	STR												
FT540E	5	10′-2 1/2″	3	STR												
FT541E	5	11′-11 1/2″	6	STR												
FT542E	5	5′-8″	1	STR												
FT543E	5	7′-0 1/2″	1	STR												
FT544E	5	9′-9 1/2″	1	STR												
FT545E	5	33′-0″	1	STR												
FT601E	6	13′-8 1/2″	35	STR												
FT602E	6	6′-4″	7	STR												
FT603E	6	17′-7 3/4″	7	STR												
FT604E	6	10′-5 1/2″	7	STR												
FT605E	6	24′-1 3/4″	7	STR												
FT606E	6	36′-6 1/4″	7	STR												
FT607E	6	37′-2 1/2″	7	STR												
FT608E	6	40′-7 3/4″	7	STR												
FT609E	6	33′-1 1/4″	7	STR												
FT610E	6	4′-8″	80	1	0′-8″	4′-0″					0′-0″		0′-6″			
FT611E	6	4′-8″	80	STR												
FT701E	7	37′-2 1/2″	6	STR												
FT702E	7	37′-1 1/4″	6	STR												
FT703E	7	41′-2 3/4″	6	STR												
FT704E	7	33′-1 1/4″	6	STR												

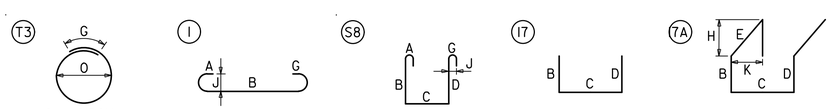

BR 1-714A
BD-12

ADDENDA / REVISIONS		NOT TO SCALE	BR 1-714A ON CHAPMAN ROAD OVER I-95 NB	CONTRACT T201507402	BRIDGE NO. 1-714A	ABUTMENT REINFORCEMENT SCHEDULE	SECTION AEC
				COUNTY NEW CASTLE	DESIGNED BY: N.KIRN		SHEET NO. 76
					CHECKED BY: S.MUKHERJEE		

8/16/2019
7:30:40 PM
P:\60323054 DelDOT AGR 1672 BDS\T06 - Rehab Br. 1-714\900 WORK\910 CAD\20-SHEETS\Structures\Final Design\NB\BR1-714-NB-RE01.dgn

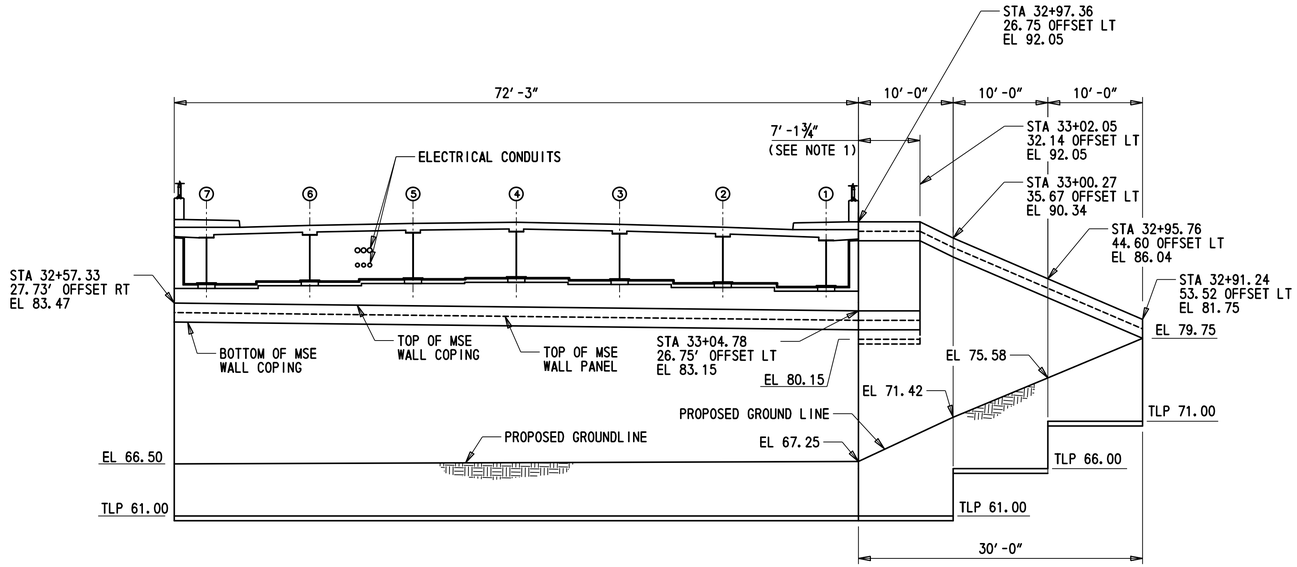

NB ABUTMENT 1 MSE WALL ELEVATION

SCALE: 1/8″ = 1′

CROSS REFERENCE NOTES:

1. FOR BRIDGE PLAN AND ELEVATION, SEE SHEET BR 1-714A BD-03.
2. FOR ABUTMENT 1 AND 2 PLAN, AND ELEVATION, SEE SHEETS BR 1-714A BD-08 AND BR 1-714A BD-09.
3. FOR MSE SECTION AND DETAILS, SEE SHEET BR 1-714A BD-10.
4. SEE SHEETS BY AMERICAN UTEL FOR CONDUIT DETAILS.

NOTES:

1. DIMENSIONS ARE ALONG FRONT FACE OF MSE CLOSURE WALL.
2. FILL IN FRONT OF MSE WALL SHALL BE BORROW, TYPE F.

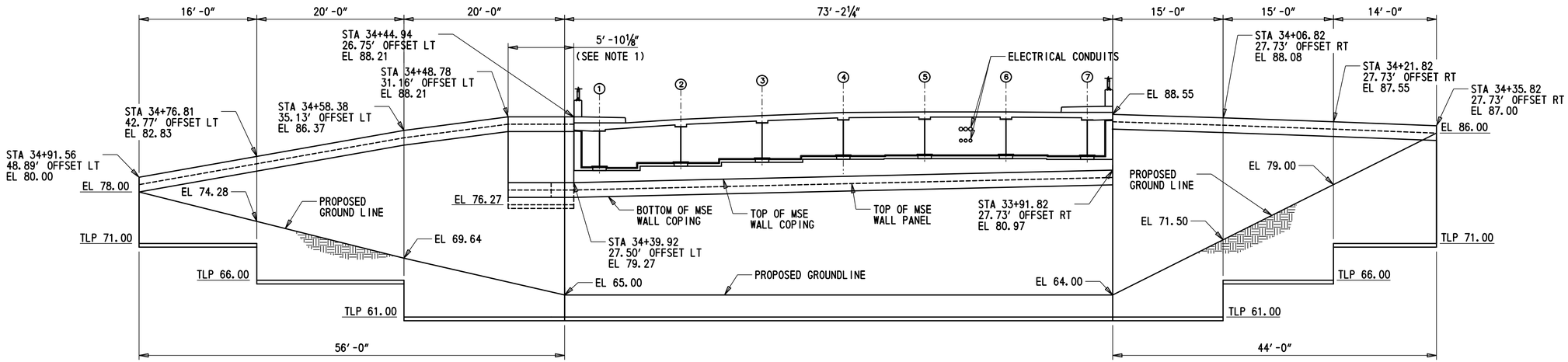

NB ABUTMENT 2 MSE WALL ELEVATION

SCALE: 1/8″ = 1′

BR 1-714A
BD-13

ADDENDA / REVISIONS	SCALE IN FEET 2 0 2 4 6 8 10	BR 1-714A ON CHAPMAN ROAD OVER I-95 NB	CONTRACT T201507402	BRIDGE NO. 1-714A	MSE WINGWALL ELEVATIONS	SECTION AEC
			COUNTY NEW CASTLE	DESIGNED BY: H.BORDNER		SHEET NO. 77
				CHECKED BY: S.MUKHERJEE		

8/19/2019
4:48:47 PM
P:\60323054 DelDOT AGR 1672 BDS\T06 - Rehab Br. 1-714\900 WORK\910 CAD\20-SHEETS\Structures\Final Design\NB\BR1-714-NB-MSE01.dgn

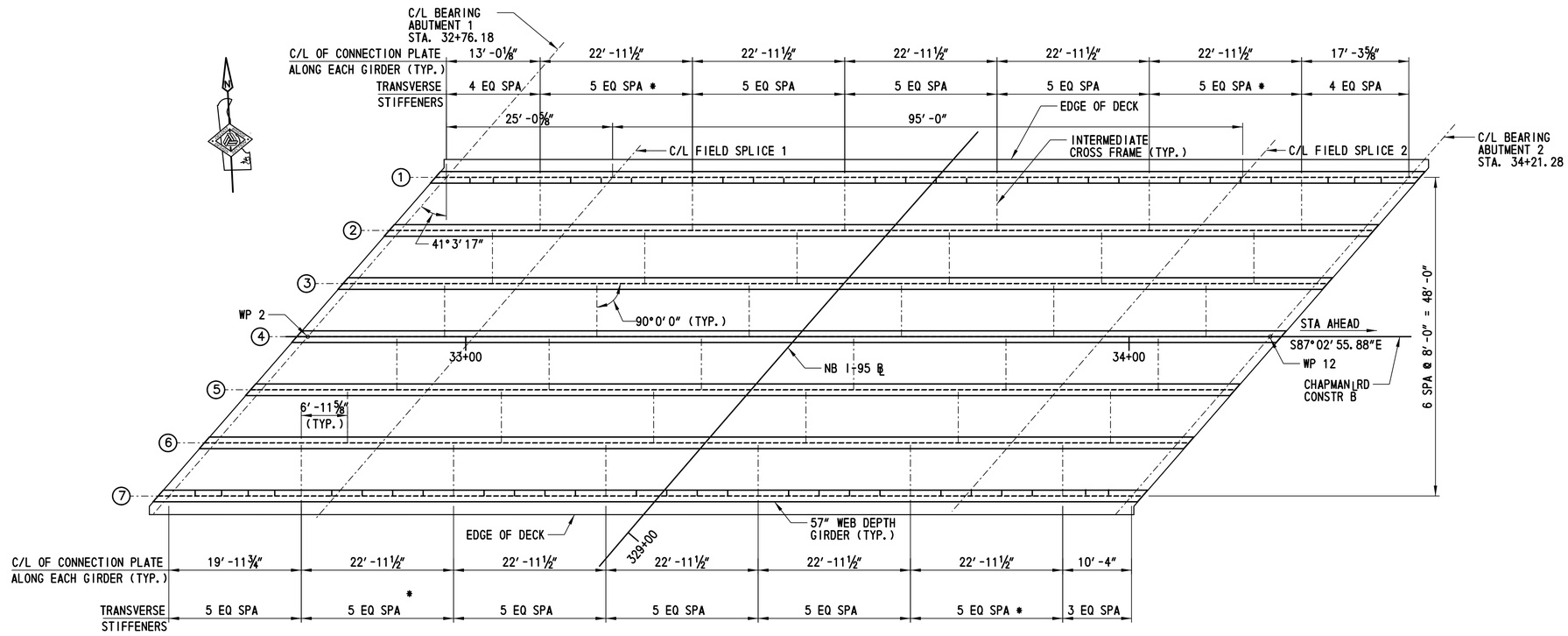

FRAMING PLAN

SCALE: 1" = 10'

CROSS REFERENCE NOTES:

1. FOR PROJECT NOTES, SEE SHEET BR 1-714A BD-01.
2. FOR GIRDER ELEVATION AND DETAILS, SEE SHEETS BR 1-714A BD-15 AND BR 1-714A BD-16.
3. FOR INTERMEDIATE DIAPHRAGM DETAILS, SEE SHEET BR 1-714A BD-17.
4. FOR BEARING DETAILS, SEE SHEETS BR 1-714A BD-19 - BR 1-714A BD-21.

* ADJUST TRANSVERSE SPACING AT OPTION FIELD SPLICES (IF FIELD SPLICES ARE USED) TO AVOID CONFLICT WITH FLANGE SPLICE PLATES.

BR 1-714A
BD-14

ADDENDA / REVISIONS	

SCALE
0 10 20 30
FEET

BR 1-714A ON CHAPMAN ROAD OVER I-95 NB

CONTRACT	BRIDGE NO.	1-714A	
T201507402	DESIGNED BY: H.BORDNER		
COUNTY			
NEW CASTLE	CHECKED BY: S.MUKHERJEE		

FRAMING PLAN

SECTION
AEC
SHEET NO.
78

8/16/2019
7:31:16 PM
P:\60323054 DelDOT AGR 1672 BDS\T06 - Rehab Br. 1-714\900 WORK\910 CAD\20-SHEETS\Structures\Final Design\NB\BR1-714-NB-FP01.dgn

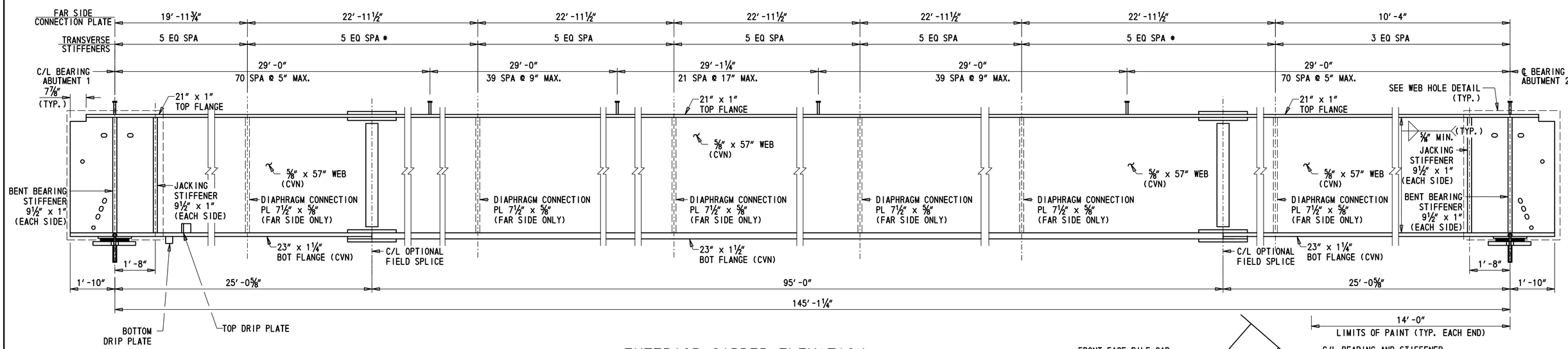

EXTERIOR GIRDER ELEVATION

SCALE: ½" = 1'-0"

* ADJUST STIFFENER SPACING AT OPTIONAL FIELD SPLICES (IF FIELD SPLICES ARE USED) TO AVOID CONFLICT WITH FLANGE SPLICE PLATES.

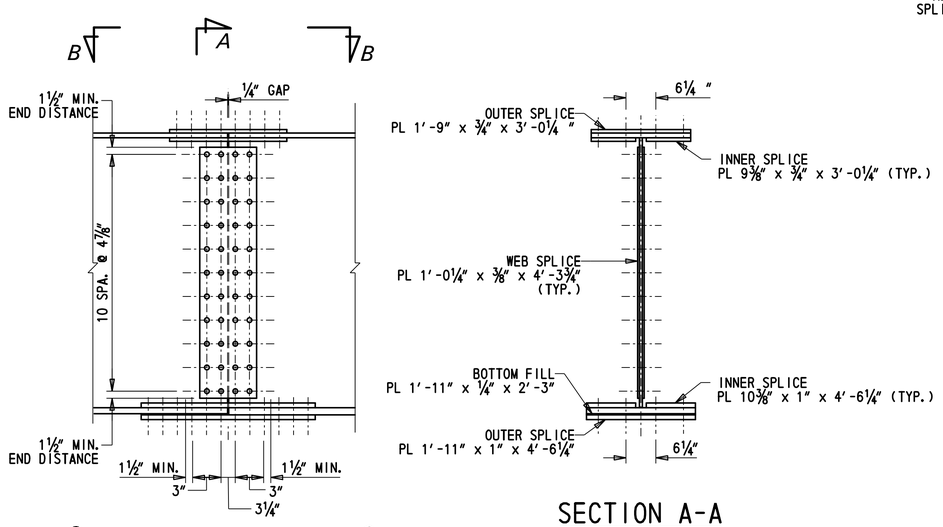

WEB SPLICE DETAIL

SCALE: ¾" = 1'-0"

SECTION A-A

SCALE: ¾" = 1'-0"

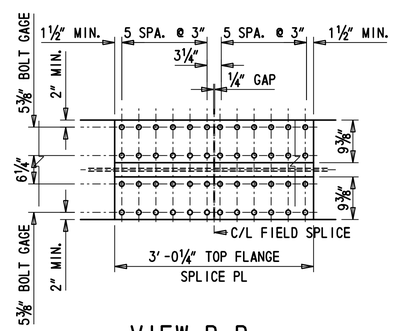

VIEW B-B

SCALE: ¾" = 1'-0"

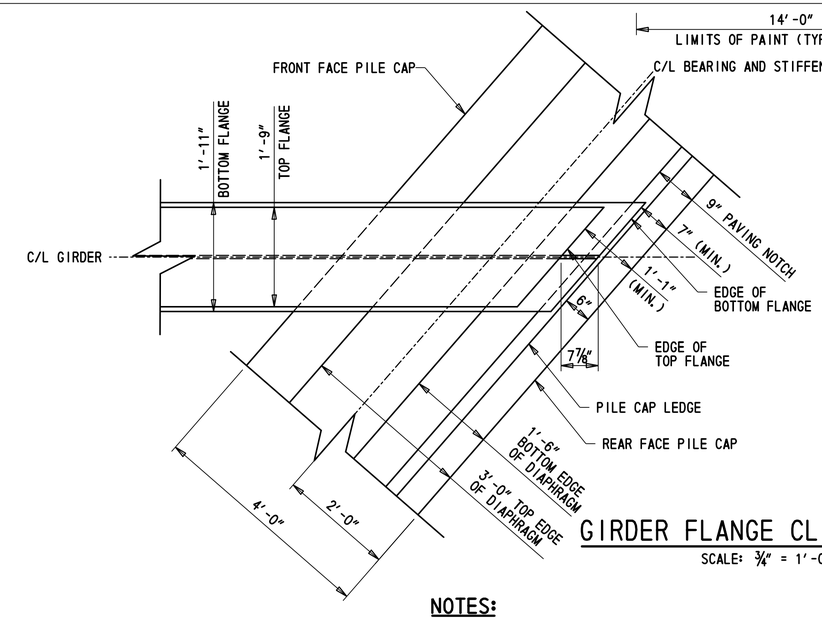

GIRDER FLANGE CLIP DETAIL

SCALE: ¾" = 1'-0"

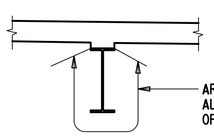

PAINTING DETAILS

NOT TO SCALE

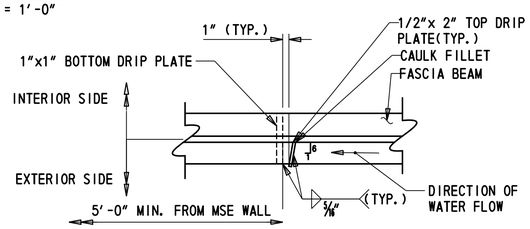

DRIP PLATE DETAIL

NOT TO SCALE

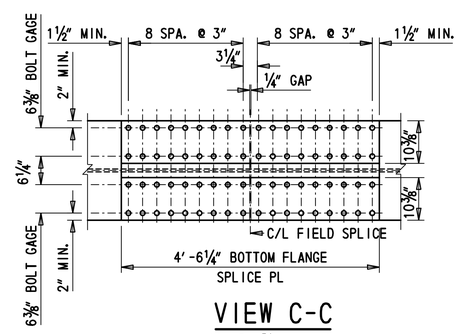

VIEW C-C

SCALE: ¾" = 1'-0"

NOTES:

1. ALL SPLICE PLATES TO CONFIRM TO CVN REQUIREMENTS
2. CONNECTION PLATES AND TRANSVERSE STIFFENERS SPACING SHOWN FOR GIRDER 7. GIRDER 1 SPACING NOT SHOWN FOR CLARITY, SEE SHEET BR 1-714A BD-14.

CROSS REFERENCE NOTES:

1. FOR FRAMING PLAN, SEE SHEET BR 1-714A BD-14.
2. FOR BEARING DETAILS, SEE SHEETS BR 1-714A BD-19 - BR 1-714A BD-21.
3. FOR BEARING AND JACKING STIFFENER DETAILS, SEE SHEET BR 1-714A BD-17.
4. FOR SHEAR STUD DETAILS, SEE SHEET BR 1-714A BD-16.

BR 1-714A BD-15

ADDENDA / REVISIONS	SCALE AS NOTED	BR 1-714A ON CHAPMAN ROAD OVER I-95 NB	CONTRACT T201507402	BRIDGE NO. 1-714A	EXTERIOR GIRDER ELEVATION AND DETAILS	SECTION AEC
			COUNTY NEW CASTLE	DESIGNED BY: R.GANOVSKA		SHEET NO. 79
				CHECKED BY: S.MUKHERJEE		

9/6/2019 10:34:14 AM P:\60323054 DelDOT AGR 1672 BDS\T06 - Rehab Br. 1-714\900 WORK\910 CAD\20-SHEETS\Structures\Final Design\NB\BR1-714-NB-GE01.dgn

* ADJUST STIFFENER SPACING AT OPTIONAL FIELD SPLICES (IF FIELD SPLICES ARE USED) TO AVOID CONFLICT WITH FLANGE SPLICE PLATES.

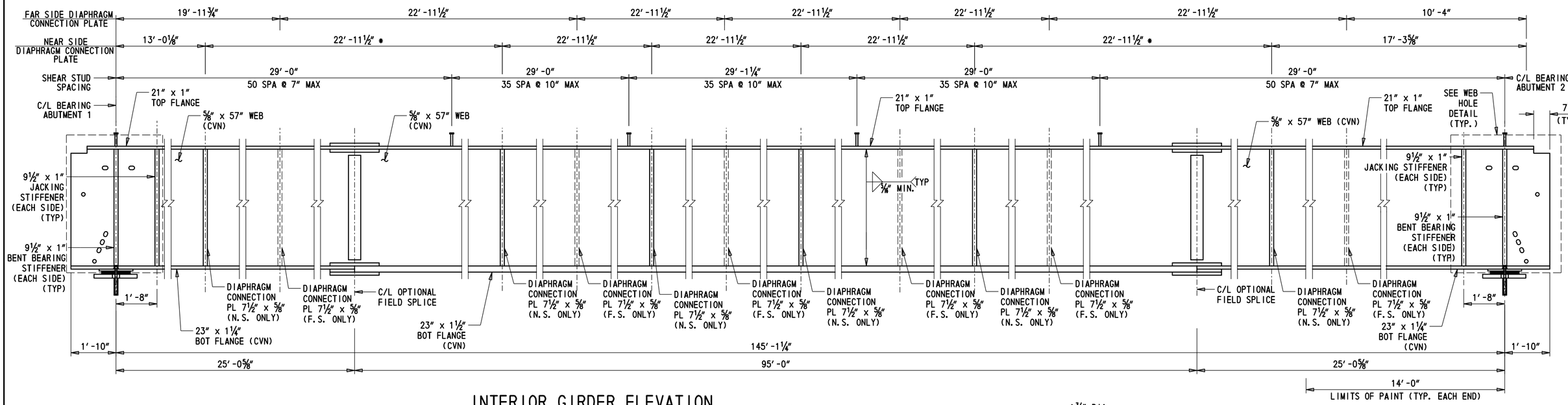

INTERIOR GIRDER ELEVATION

SCALE: ½" = 1'-0"

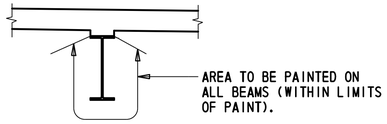

PAINTING DETAIL

NOT TO SCALE

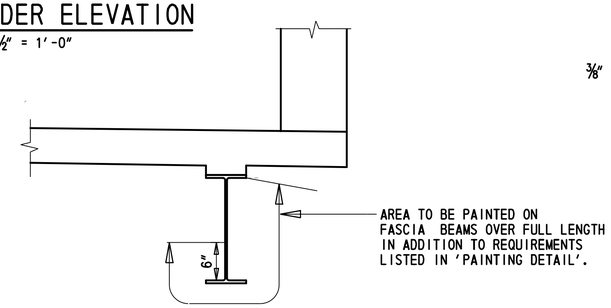

FASCIA BEAM PAINTING DETAIL

NOT TO SCALE

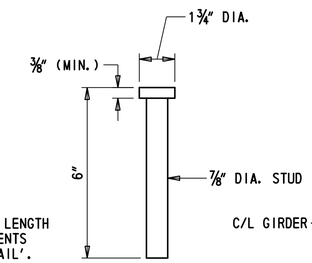

STUD DETAIL

NOT TO SCALE

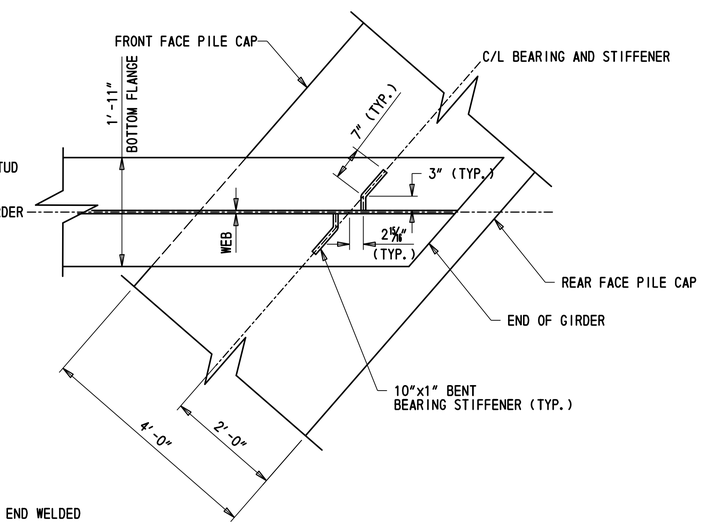

BEARING STIFFENER DETAIL

SCALE: ¾" = 1'-0"

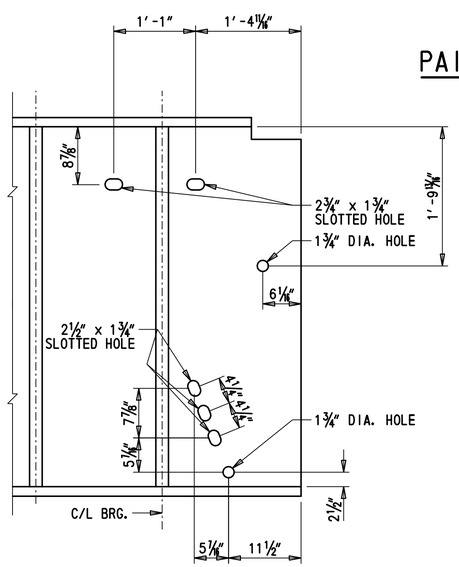

WEB HOLE DETAIL

SCALE : 1" = 1'-0"

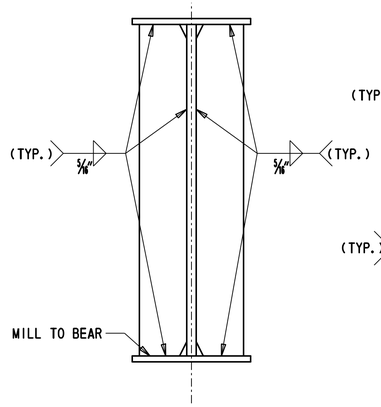

BEARING AND JACKING STIFFENER DETAIL

SCALE: ¾" = 1'-0"

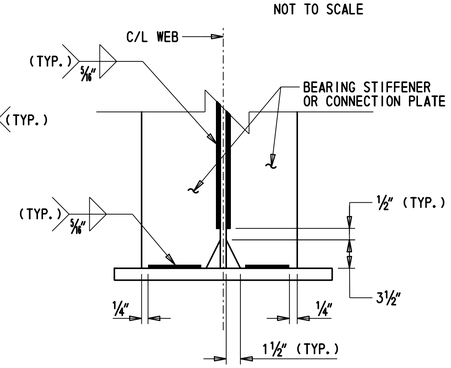

WELD TERMINATION AND CORNER CHAMFER DETAIL

SCALE: 1 1/2" = 1'-0"

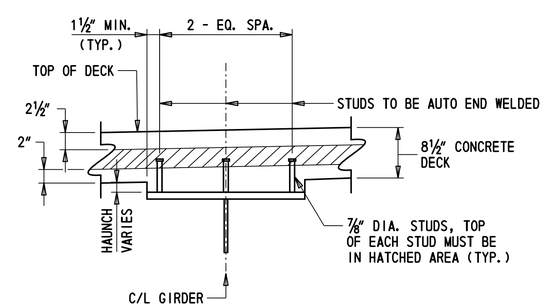

SHEAR STUD DETAIL

SCALE : 1" = 1'-0"

CROSS REFERENCE NOTES:

1. FOR FRAMING PLAN, SEE SHEET BR 1-714A BD-14.
2. FOR BEARING DETAILS, SEE SHEETS BR 1-714A BD-19 - BR 1-714A BD-21.
3. FOR WEB AND FLANGES SPLICES, SEE SHEET BR 1-714A BD-15.
4. FOR GIRDER FLANGE CLIP DETAIL, SEE SHEET BR 1-714A BD-15.

BR 1-714A BD-16

ADDENDA / REVISIONS	SCALE AS NOTED	BR 1-714A ON CHAPMAN ROAD OVER I-95 NB	CONTRACT T201507402	BRIDGE NO. 1-714A	INTERIOR GIRDER ELEVATION AND DETAILS	SECTION AEC
			COUNTY NEW CASTLE	DESIGNED BY: R.GANOVSKA		SHEET NO. 80
				CHECKED BY: S.MUKHERJEE		

9/6/2019 10:34:40 AM P:\60323054 DelDOT AGR 1672 BDS\T06 - Rehab Br. 1-714\900 WORK\910 CAD\20-SHEETS\Structures\Final Design\NB\BR1-714-NB-GE02.dgn

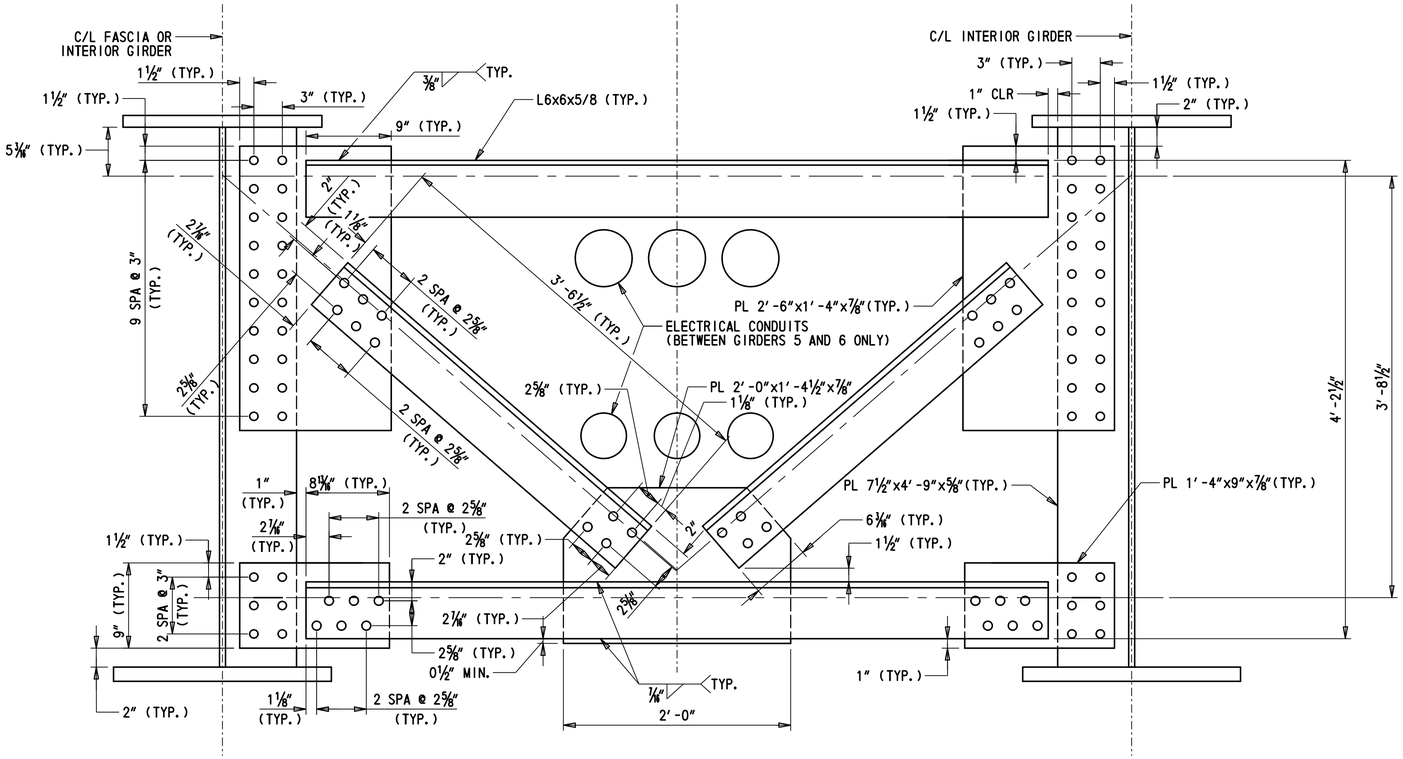

INTERMEDIATE CROSS-FRAME DETAIL

SCALE: 1 1/2" = 1'-0"

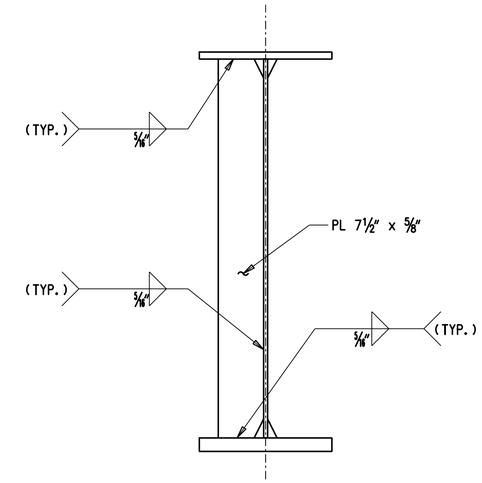

CONNECTION PLATE DETAIL

SCALE: 1" = 1'-0"

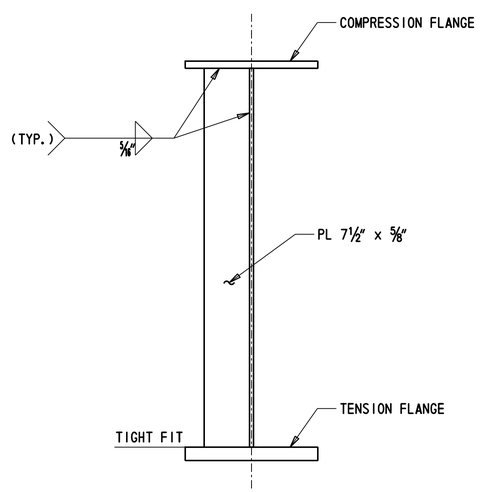

TRANSVERSE STIFFENER DETAIL

SCALE: 1" = 1'-0"

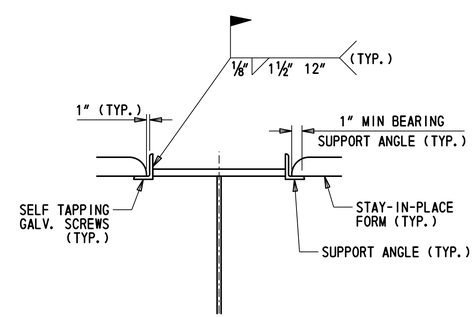

COMPRESSION FLANGE STAY-IN-PLACE FORM CONNECTION DETAIL

SCALE: 1" = 1'-0"

CROSS REFERENCE NOTES:

1. FOR FRAMING PLAN, SEE SHEET BR 1-714A BD-14.
2. FOR EXTERIOR AND INTERIOR GIRDER ELEVATIONS, SEE SHEETS BR 1-714A BD-15 AND BR 1-714A BD-16.

NOTES:

1. CROSS FRAMES SHALL BE DETAILED FOR TOTAL DEAD LOAD FIT-UP.

BR 1-714A
BD-17

ADDENDA / REVISIONS	SCALE AS NOTED	BR 1-714A ON CHAPMAN ROAD OVER I-95 NB	CONTRACT T201507402	BRIDGE NO. 1-714A	INTERMEDIATE DIAPHRAGM DETAILS	SECTION AEC
			COUNTY NEW CASTLE	DESIGNED BY: R.GANOVSKA		SHEET NO. 81
				CHECKED BY: S.MUKHERJEE		

8/16/2019 7:32:30 PM P:\60323054 DelDOT AGR 1672 BDS\T06 - Rehab Br. 1-714\900 WORK\910 CAD\20-SHEETS\Structures\Final Design\NB\BR1-714-NB-ID01.dgn

DEFLECTION AND TOTAL CAMBER (INCHES)

PROPOSED GIRDERS		C/L BRG. ABUT. 1	0.1L	0.2L	0.3L	0.4L	0.5L	0.6L	0.7L	0.8L	0.9L	C/L BRG. ABUT. 2
GIRDER 1	DLS	0	0.638	1.198	1.651	1.930	2.026	1.930	1.648	1.202	0.638	0
	DLC	0	1.732	3.251	4.478	5.235	5.494	5.233	4.470	3.261	1.732	0
	SDL	0	1.065	1.998	2.736	3.180	3.318	3.149	2.684	1.956	1.035	0
	TD & C	0	3.435	6.447	8.865	10.345	10.838	10.312	8.802	6.419	3.405	0
	VCO	0	2.296	4.081	5.357	6.122	6.376	6.121	5.356	4.080	2.295	0
	TD & C + VCO	0	5.731	10.528	14.222	16.467	17.214	16.433	14.158	10.499	5.700	0
GIRDER 2	DLS	0	0.637	1.200	1.645	1.926	2.022	1.926	1.646	1.203	0.637	0
	DLC	0	1.988	3.746	5.133	6.008	6.309	6.009	5.135	3.755	1.988	0
	SDL	0	0.677	1.273	1.745	2.053	2.168	2.078	1.790	1.322	0.707	0
	TD & C	0	3.302	6.219	8.523	9.987	10.499	10.013	8.571	6.280	3.332	0
	VCO	0	2.296	4.082	5.357	6.122	6.378	6.123	5.357	4.082	2.297	0
	TD & C + VCO	0	5.598	10.301	13.880	16.109	16.877	16.136	13.928	10.362	5.629	0
GIRDER 3	DLS	0	0.637	1.200	1.645	1.926	2.023	1.926	1.646	1.204	0.637	0
	DLC	0	1.989	3.748	5.137	6.012	6.313	6.013	5.138	3.759	1.991	0
	SDL	0	0.467	0.870	1.184	1.386	1.458	1.396	1.201	0.889	0.478	0
	TD & C	0	3.093	5.818	7.966	9.324	9.794	9.335	7.985	5.852	3.106	0
	VCO	0	2.296	4.081	5.357	6.122	6.377	6.122	5.356	4.082	2.297	0
	TD & C + VCO	0	5.389	9.899	13.323	15.446	16.171	15.457	13.341	9.934	5.403	0
GIRDER 4	DLS	0	0.637	1.200	1.645	1.926	2.023	1.926	1.646	1.203	0.637	0
	DLC	0	1.990	3.750	5.139	6.015	6.316	6.015	5.140	3.758	1.990	0
	SDL	0	0.395	0.733	0.994	1.158	1.214	1.157	0.993	0.731	0.393	0
	TD & C	0	3.022	5.683	7.778	9.099	9.553	9.098	7.779	5.692	3.020	0
	VCO	0	2.297	4.082	5.358	6.122	6.377	6.123	5.357	4.081	2.296	0
	TD & C + VCO	0	5.319	9.765	13.136	15.221	15.930	15.221	13.136	9.773	5.316	0
GIRDER 5	DLS	0	0.637	1.200	1.645	1.926	2.022	1.926	1.645	1.203	0.637	0
	DLC	0	2.123	3.999	5.4815	6.4165	6.738	6.4175	5.4835	4.01	2.123	0
	SDL	0	0.448	0.840	1.144	1.333	1.394	1.324	1.129	0.826	0.438	0
	TD & C	0	3.208	6.039	8.271	9.676	10.154	9.668	8.258	6.039	3.198	0
	VCO	0	2.295	4.081	5.357	6.122	6.377	6.122	5.356	4.082	2.296	0
	TD & C + VCO	0	5.503	10.120	13.628	15.797	16.531	15.790	13.614	10.121	5.494	0
GIRDER 6	DLS	0	0.637	1.200	1.645	1.926	2.022	1.926	1.646	1.203	0.637	0
	DLC	0	2.1215	3.998	5.479	6.4125	6.734	6.4135	5.4805	4.0075	2.122	0
	SDL	0	0.644	1.217	1.667	1.948	2.037	1.931	1.642	1.196	0.630	0
	TD & C	0	3.403	6.415	8.791	10.287	10.793	10.271	8.769	6.407	3.389	0
	VCO	0	2.296	4.081	5.357	6.122	6.377	6.122	5.357	4.081	2.296	0
	TD & C + VCO	0	5.699	10.496	14.148	16.408	17.169	16.393	14.126	10.487	5.685	0
GIRDER 7	DLS	0	0.641	1.204	1.647	1.929	2.026	1.930	1.649	1.210	0.645	0
	DLC	0	1.741	3.266	4.468	5.233	5.495	5.237	4.476	3.284	1.751	0
	SDL	0	0.952	1.808	2.500	2.949	3.117	2.989	2.569	1.898	1.010	0
	TD & C	0	3.334	6.278	8.615	10.111	10.638	10.156	8.694	6.392	3.406	0
	VCO	0	2.295	4.081	5.356	6.121	6.376	6.121	5.356	4.081	2.295	0
	TD & C + VCO	0	5.629	10.359	13.971	16.232	17.014	16.277	14.050	10.473	5.701	0

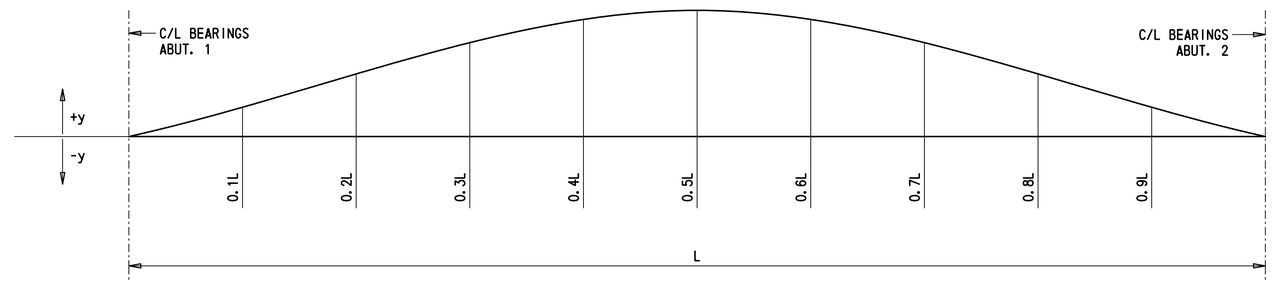

CAMBER DIAGRAM

NOT TO SCALE

LEGEND:

DLS = DENOTES DEFLECTION DUE TO STRUCTURAL STEEL

DLC = DENOTES DEFLECTION DUE TO CONCRETE DECK SLAB, HAUNCH, S.I.P. FORMS & UTILITIES

SDL = DENOTES DEFELECTION DUE TO BARRIER, SAFETY FENCE & FUTURE WEARING SURFACE

TD & C = DENOTES TOTAL DEAD LOAD DEFLECTION & CAMBER

VCO = DENOTES CAMBER FOR VERTICAL CURVE ORDINATE DUE TO ROADWAY PROFILE

STEEL BEAM CAMBER NOTES:

1. ALL GIRDERS SHALL BE CAMBERED FOR DEAD LOAD ORDINATES TO THE DIMENSION SHOWN ON THESE PLANS. THE CAMBER TOLERANCE IS ZERO UNDER TO ¾ INCH OVER.
2. AFTER THE ERECTION OF STEEL AND THE CONECTIONS OF THE STEEL CROSS FRAMES ARE COMPLETE, THE CONTRACTOR SHALL OBTAIN ELEVATIONS AT TENTH POINTS ON THE TOP FLANGES OF ALL GIRDERS TO DETERMINE THE REQUIRED HAUNCH THICKNESS. ALL OF THE DATA SHALL BE SUBMITTED WITH DETAILS OF STAY-IN-PLACE FORMS FOR REVIEW AND APPROVAL BY THE ENGINEER IN THE FIELD.
3. AFTER THE ERECTION OF STEEL AND THE CONNECTIONS OF THE STEEL CROSS FRAMES ARE COMPLETE, THE CONTRACTOR SHALL VERIFY THAT ALL UNDERCLEARANCES ARE SUFFICIENT AFTER SUBTRACTING THE CALCULATED TOTAL DEAD LOAD DEFELECTION.
4. VARY THICKNESS OF HAUNCH TO ACCOUNT FOR ANY INACCURACIES IN CAMBER.

BR 1-714A
BD-18

ADDENDA / REVISIONS	

NOT TO SCALE

BR 1-714A ON
CHAPMAN ROAD OVER I-95 NB

CONTRACT	BRIDGE NO.	1-714A
T201507402	DESIGNED BY:	R.GANOVSKA
COUNTY		
NEW CASTLE	CHECKED BY:	S.MUKHERJEE

CAMBER DIAGRAM

SECTION
AEC
SHEET NO.
82

8/16/2019
7:32:41 PM
P:\60323054 DelDOT AGR 1672 BDS\T06 - Rehab Br. 1-714\900 WORK\910 CAD\20-SHEETS\Structures\Final Design\NB\BR1-714-NB-CD01.dgn

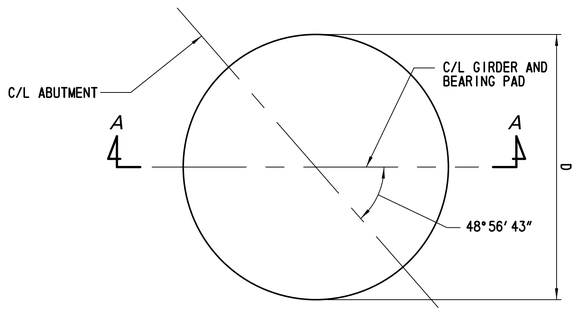

PLAN

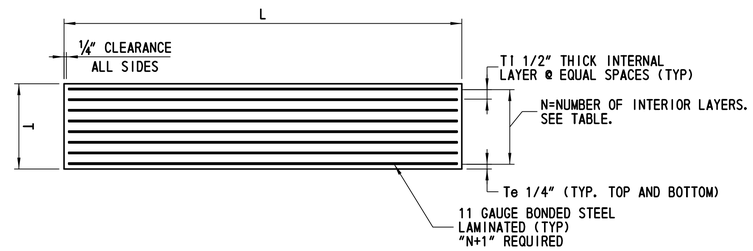

SECTION A-A

STEEL REINFORCED ELASTOMERIC BEARING PAD

NTS

STEEL REINFORCED ELASTOMERIC BEARING SCHEDULE

LOCATION	BEARING DESIGNATION						LAMINATED ELASTOMERIC BEARING				
					CAPACITY PER PAD		DIMENSION				
	MARK	TYPE	NEOPRENE HARDNESS (SHORE A)	TOTAL NO. REQD.	REACTION *	MOVEMENT * *	"L" (IN)	LAYER THICKNESS 'Tl'	LAYER THICKNESS 'Te'	INTERIOR LAYERS	TOTAL PAD THICKNESS"T"
ABUT A (FIXED)	FX 1	FIX	60± 5 DURO	7	283 KIP	N/A	23 IN	0.5 IN	0.25 IN	7	4.96 IN
ABUT B (EXPANSION)	EX 1	EXP.	60± 5 DURO	7	283 KIP	1.1 IN	23 IN	0.5 IN	0.25 IN	7	4.96 IN

* MAX UNFACTORED SERVICE 1 REACTION (W/O DYNAMIC LOAD ALLOWANCE)
** TEMPERATURE MOVEMENT

BEARING NOTES (INCLUDES NOTES FOR ELASTOMERIC BEARINGS, SOLE PLATES AND ANCHOR BOLTS)

1. BRIDGE SHALL BE JACKED ONCE THE DECK HAD BEEN CURED. JACKING SHALL BE DONE AT TEMPERATURE RANGE OF 40°TO 80°.COST OF JACKING SMALL BE PAID UNDER ITEM 604000.
2. PROVIDE ALL STEEL REINFORCED ELASTOMERIC BEARINGS IN ACCORDANCE WITH SECTION 623 - 'BEARING DEVICES' OF THE STANDARD SPECIFICATIONS.
3. PROVIDE INTERNAL SHIMS AS PER ASTM A1011 GRADE 36.
4. SMOOTH CUT AND DEBURR METAL SHIMS.
5. GRIT BLAST AND DEGREASE METAL SHIMS.
6. ELASTOMERIC BEARINGS SHALL BE 60 DUROMETER HARDNESS SHORE TYPE A.
7. MINIMUM LOW TEMPERATURE ELASTOMER SHALL BE GRADE 3.
8. ALL BEARINGS ARE TO BE MOLDED TO DESIGN DIMENSIONS. CUTTING TO SIZE AFTER FABRICATION IS PROHIBITED.
9. HOLES ARE NOT PERMITTED IN THE ELASTOMERIC BEARINGS.
10. AVOID DAMAGING ELASTOMERIC PAD DURING WELDING.
11. FOR BEVELED SOLE PLATE, MARK THICKER END OF BEVELED SOLE PLATES TO IDENTIFY THICKER END IN FIELD.
12. USE APPLICABLE INFORMATION SHOWN ON THESE DRAWINGS TO DEVELOP SHOP DRAWINGS.
13. ENSURE ALL BEARING SURFACES INCLUDING THE BEARING SEAT ARE LEVEL PRIOR TO INSTALLATION OF BEARINGS.
14. ANCHOR BOLTS SHALL BE UNPAINTED AASHTO M319 GRADE 36 GALVANIZED STEEL. WASHERS SHALL BE ASTM F436 GALVANIZED STEEL. ALL NUTS SHALL BE UNPAINTED ASTM A563 GALVANIZED STEEL. SET NUTS 1/4" CLEAR OF SOLE PLATES AND BURR THREADS ABOVE AND BELOW NUTS.
15. USE SWEDGED ANCHOR BOLTS. BOLTS MAY BE CAST-IN-PLACE OR GROUTED IN PREFORMED (SLEEVED OR DRILLED) HOLES. SLEEVED HOLES SHALL BE CORRUGATED TO PREVENT SLIPPAGE. THE PREFORMED HOLES SHALL HAVE A DIAMETER OF 3 1/2" WHEN DRILLING HOLES, DO NOT COME INTO CONTACT WITH THE REINFORCING BARS.
16. SOLE PLATE SHALL BE BEVELED AS PRESCRIBED IN THESE PLANS. STEEL SURFACES OF SOLE PLATES TO BE MACHINE FINISHED AS SHOWN IN THE DETAILS, MEASURED IN ACCORDANCE WITH ANSI B46.1.
17. SOLE PLATES SHALL MEET A FLATNESS REQUIREMENT OF 0.5 PERCENT IN THE DIRECTION BEING MEASURED (WIDTH, LENGTH, AND DIAGONALS) MAXIMUM, BUT NOT TO EXCEED 1/8 INCH.
18. USE WASHERS WITH 1/16" LARGER DIAMETER THAN BOLT DIAMETER.
19. STEEL REINFORCED ELASTOMERIC BEARINGS SHALL BE ATTACHED TO THE TOP OF CONCRETE PEDESTAL WITH AN APPROVED EPOXY ADHESIVE IN ACCORDANCE WITH SECTION 623.03(C) OF THE STANDARD SPECIFICATIONS IN SUCH A WAY THAT VISIBLE CONCRETE SURFACES WILL NOT BE STAINED. ENSURE THE EPOXY ADHESIVE HAS SET PRIOR TO PLACEMENT OF BEAMS. COST OF EPOXY ADHEHESIVE IS INCIDENTAL TO ITEM 623000.
20. PAYMENT FOR FABRICATION AND INSTALLATION OF STEEL REINFORCED ELASTOMERIC BEARINGS, SHALL BE INCIDENTAL TO 623000.
21. PAYMENT FOR ANCHOR BOLTS, NUTS AND WASHERS SHALL BE INCIDENTAL TO ITEM 623000.
22. SOLE PLATE SHALL BE PAID UNDER ITEM 615001.
23. FILL SLOTS AND HOLES AROUND ANCHOR BOLTS WITH AN APPROVED NON-HARDENING CAULKING COMPOUND OR ELASTIC JOINT SEALER. THIS WORK IS INCIDENTAL TO ITEM 623000.

CROSS REFERENCE NOTES:

1. FOR BEVELED SOLE PLATE DIMENSIONS, SEE SHEET BR 1-714A BD-21.
2. FOR ADDITIONAL BEARING DETAILS, SEE SHEETS BR 1-714A BD-19 AND BR 1-714A BD-20.

8/16/2019
7:32:51 PM
P:\60323054 DelDOT AGR 1672 BDS\T06 - Rehab Br. 1-714\900 WORK\910 CAD\20-SHEETS\Structures\Final Design\NB\BR1-714-NB-BD01.dgn

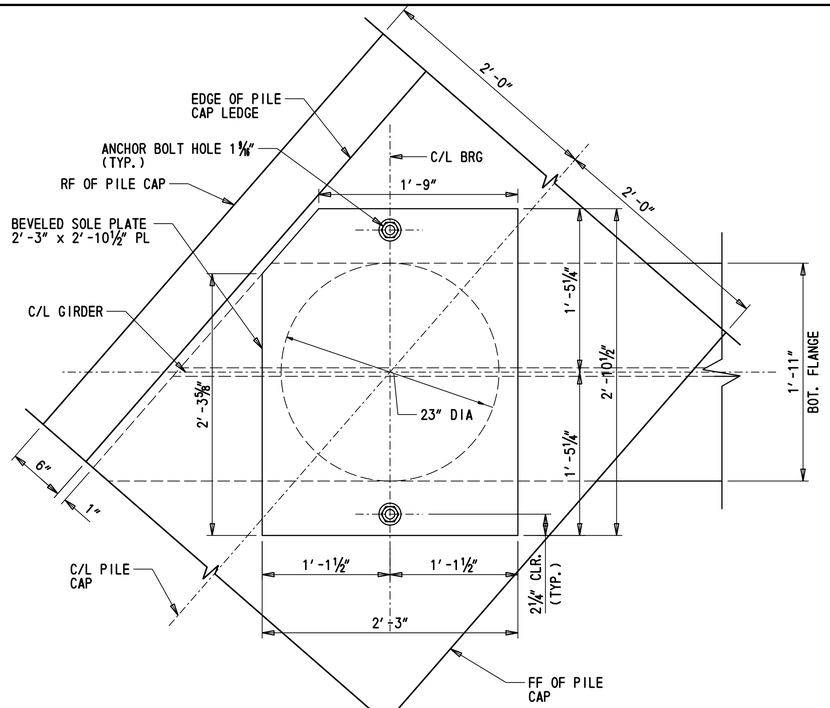

PLAN - ABUTMENT 1 - FIXED BEARING

SCALE: 3" = 1'-0"

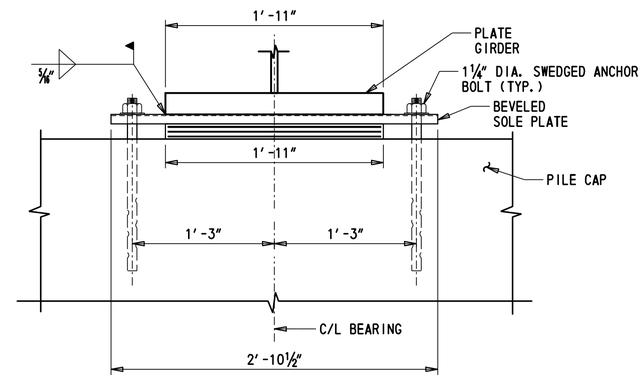

END ELEVATION - ABUTMENT 1 - FIXED BEARING

SCALE: 3" = 1'-0"

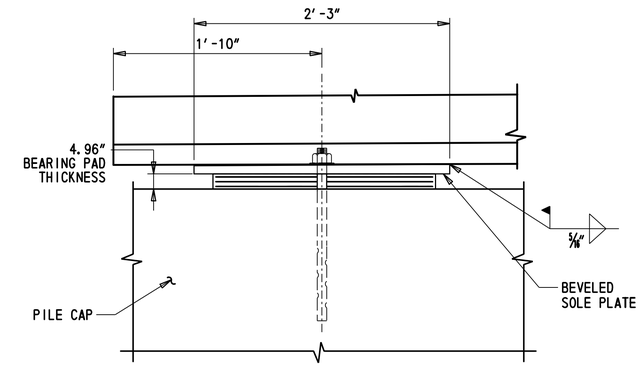

ELEVATION - ABUTMENT 1 - FIXED BEARING

SCALE: 3" = 1'-0"

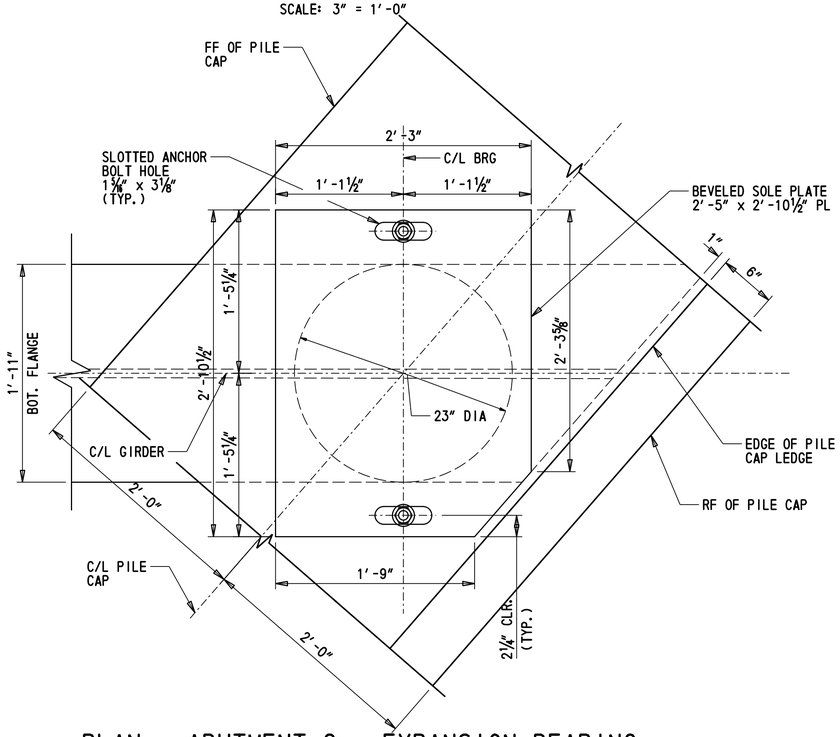

PLAN - ABUTMENT 2 - EXPANSION BEARING

SCALE: 3" = 1'-0"

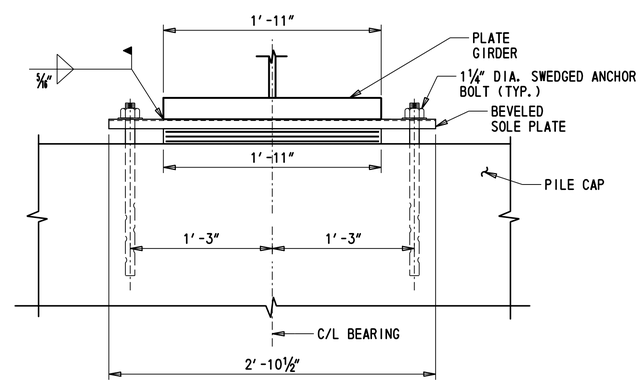

END ELEVATION - ABUTMENT 2 - EXPANSION BEARING

SCALE: 3" = 1'-0"

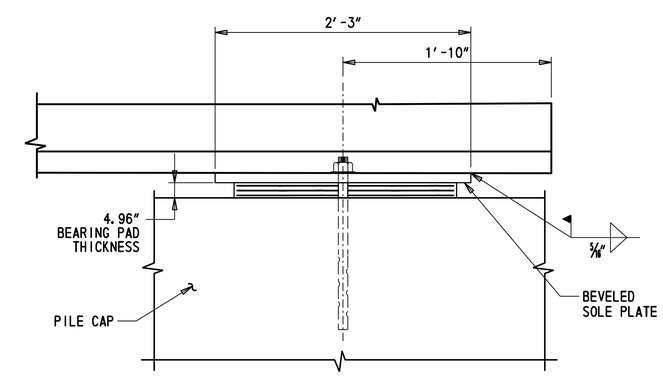

ELEVATION - ABUTMENT 2 - EXPANSION BEARING

SCALE: 3" = 1'-0"

CROSS REFERENCE NOTES:

1. FOR ELASTOMERIC BEARING DETAILS AND BEARING NOTES, SEE SHEET BR 1-714A BD-19.
2. FOR BEVELED SOLE PLATE DETAILS, SEE SHEET BR 1-714A BD-21.
3. FOR PILE CAP DETAILS AND ELEVATIONS, SEE SHEETS BR 1-714A BD-08 - BR 1-714A BD-10.

BR 1-714A
BD-20

ADDENDA / REVISIONS	SCALE AS NOTED	BR 1-714A ON CHAPMAN ROAD OVER I-95 NB	CONTRACT T201507402	BRIDGE NO. 1-714A	BEARING DETAILS - 2	SECTION AEC
			COUNTY NEW CASTLE	DESIGNED BY: R.GANOVSKA		SHEET NO. 84
				CHECKED BY: E.LUCZKA		

8/16/2019
7:43:19 PM
P:\60323054 DelDOT AGR 1672 BDS\T06 - Rehab Br. 1-714\900 WORK\910 CAD\20-SHEETS\Structures\Final Design\NB\BR1-714-NB-BD02.dgn

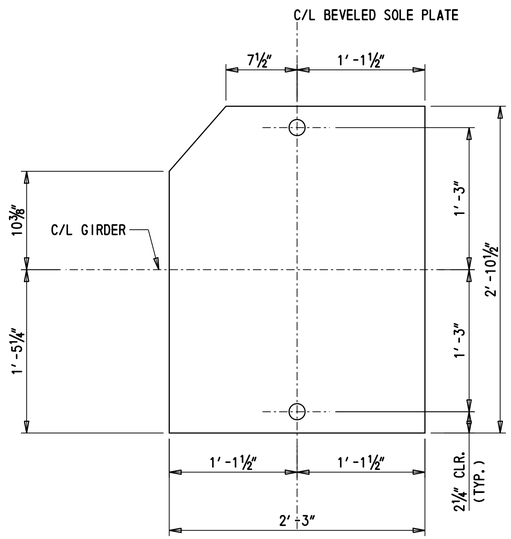

PLAN - BEVELED SOLE PLATE-ABUTMENT 1

SCALE: 1 1/2" = 1'-0"

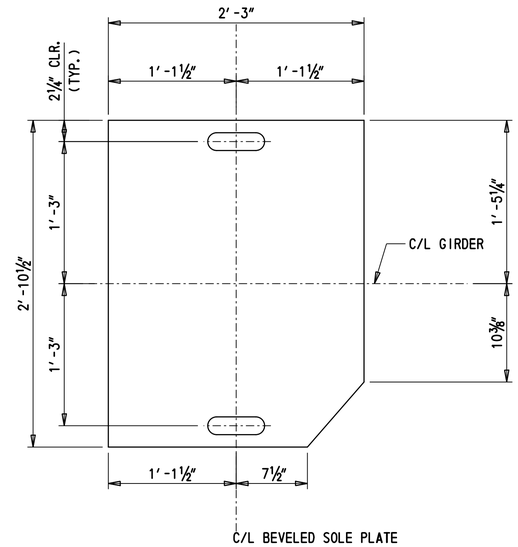

PLAN - BEVELED SOLE PLATE-ABUTMENT 2

SCALE: 1 1/2" = 1'-0"

BEVELED SOLE PLATE TABLE							
GIRDER	SUPPORT	TMIN, (IN)	TCL, (IN)*	TMAX (IN)	A (IN)	B (IN)	G (IN)
G1	ABUT. 1	1.000	1.2188	1.4375	13.50	13.50	1.62%
	ABUT. 2	1.000	1.2188	1.4375	13.50	13.50	1.62%
G2	ABUT. 1	1.000	1.2188	1.4375	13.50	13.50	1.62%
	ABUT. 2	1.000	1.2188	1.4375	13.50	13.50	1.62%
G3	ABUT. 1	1.000	1.2188	1.4375	13.50	13.50	1.62%
	ABUT. 2	1.000	1.2188	1.4375	13.50	13.50	1.62%
G4	ABUT. 1	1.000	1.2188	1.4375	13.50	13.50	1.62%
	ABUT. 2	1.000	1.2188	1.4375	13.50	13.50	1.62%
G5	ABUT. 1	1.000	1.2188	1.4375	13.50	13.50	1.62%
	ABUT. 2	1.000	1.2188	1.4375	13.50	13.50	1.62%
G6	ABUT. 1	1.000	1.2188	1.4375	13.50	13.50	1.62%
	ABUT. 2	1.000	1.2188	1.4375	13.50	13.50	1.62%
G7	ABUT. 1	1.000	1.2188	1.4375	13.50	13.50	1.62%
	ABUT. 2	1.000	1.2188	1.4375	13.50	13.50	1.62%

* TCL THICKNESS AT CENTERLINE OF SOLE PLATE, WHICH MAY OR MAY NOT BE LOCATED AT THE CENTERLINE OF BEARING. SEE BEVELED SOLE PLATE DETAIL.

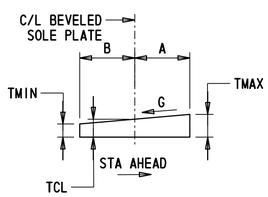

BEVELED SOLE PLATE DETAIL

NTS

NOTES:

1. SOLE PLATE SHALL BE PAID FOR UNDER ITEM 615001.

CROSS REFERENCE NOTES:

1. FOR ELASTOMERIC BEARINGS DETAILS AND BEARING NOTES, SEE SHEETS BR 1-714A BD-19 AND BR 1-714A BD-20.

BR 1-714A
BD-21

ADDENDA / REVISIONS	SCALE AS NOTED	BR 1-714A ON CHAPMAN ROAD OVER I-95 NB	CONTRACT T201507402	BRIDGE NO. 1-714A	BEARING DETAILS - 3	SECTION AEC
			COUNTY NEW CASTLE	DESIGNED BY: R.GANOVSKA		SHEET NO. 85
				CHECKED BY: E.LUCZKA		

8/16/2019 7:33:57 PM P:\60323054 DelDOT AGR 1672 BDS\T06 - Rehab Br. 1-714\900 WORK\910 CAD\20-SHEETS\Structures\Final Design\NB\BR1-714-NB-BD03.dgn

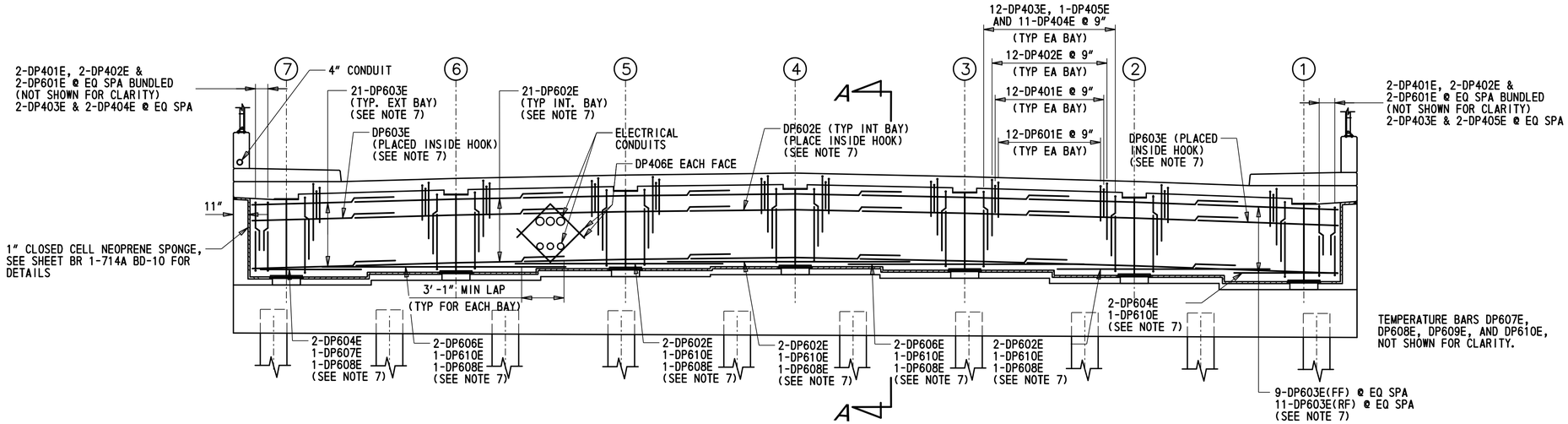

ABUTMENT 1 - ELEVATION

SCALE: 1/4" = 1'

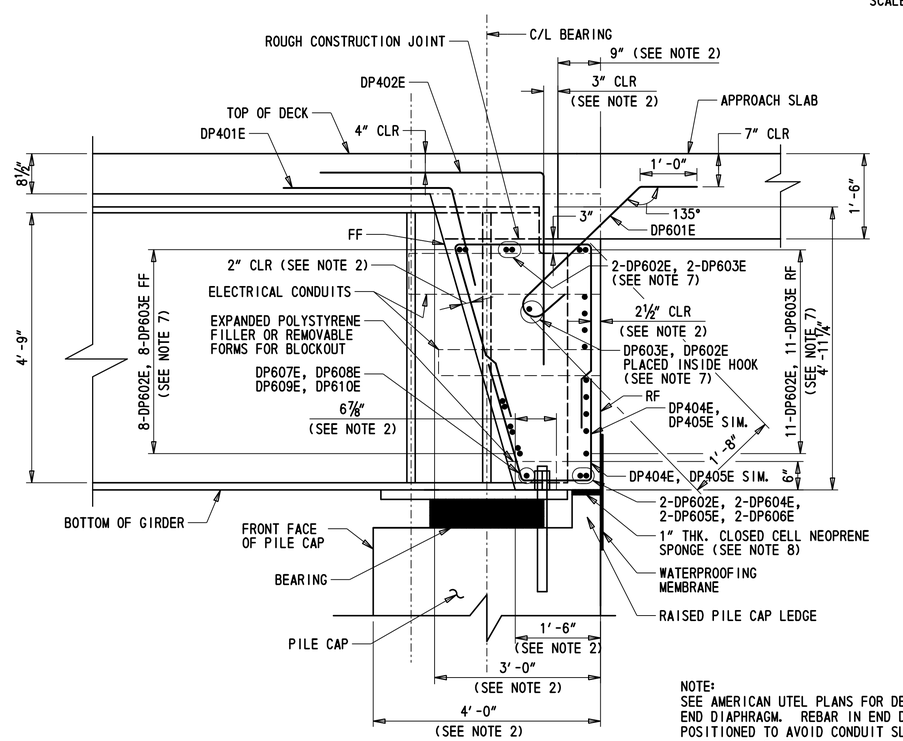

SECTION A-A

SCALE: 3/4" = 1'

NOTE:
SEE AMERICAN UTEL PLANS FOR DETAILS OF PIPES THROUGH END DIAPHRAGM. REBAR IN END DIAPHRAGM SHOULD BE POSITIONED TO AVOID CONDUIT SLEEVES BUT MAINTAIN AVERAGE SPACING.

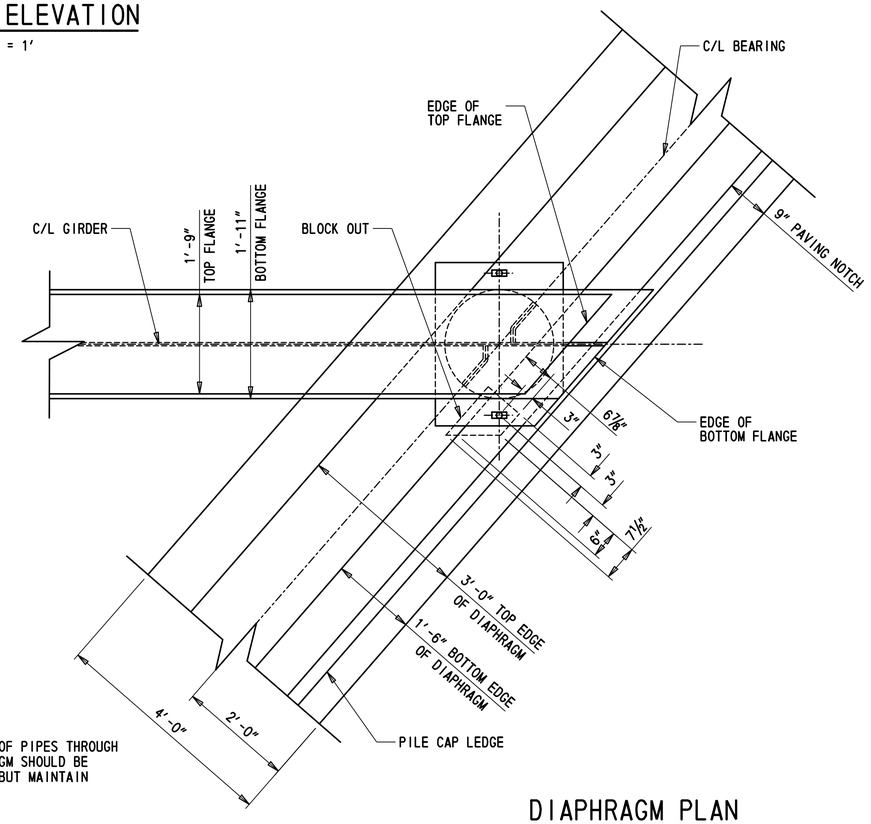

DIAPHRAGM PLAN

SCALE: 3/4" = 1'

NOTES:

1. SECTIONS A-A REINFORCING SHOWN NORMAL TO C/L GIRDER.
2. DIAPHRAGM WIDTHS, DIMENSIONS AND CLEARANCES SHOWN NORMAL TO C/L BEARING.
3. CONCRETE IN CONCRETE DIAPHRAGM TO BE PAID FOR UNDER ITEM 610017 AND REINFORCEMENT SHALL BE PAID FOR UNDER ITEM 611001.
4. MINIMUM LAP SPLICE LENGTHS, NORMAL WEIGHT CONCRETE.
   2'-1" (#4 BARS)
   3'-1" (#6 BARS)
5. BARS DP401E, DP402E, DP403E, DP404E & DP601E TO BE PLACED PARALLEL TO THE GIRDERS.
6. FOR OTHER DETAILS REFER TO SHEET BR 1-714A BD-20.
7. SPACE BARS TO AVOID INTERFERENCE WITH BEARING STIFFENERS AND UTILITY SERVICES. REFER TO SHEETS BR 1-714A BD-15 AND BR 1-714A BD-16 FOR LOCATION OF HOLES IN GIRDER WEB.
8. CLOSED CELL NEOPRENE SPONGE SHALL BE PAID UNDER ITEM 610002.

CROSS REFERENCE NOTES:

BR 1-714A
BD-22

ADDENDA / REVISIONS	SCALE AS NOTED	BR 1-714A ON CHAPMAN ROAD OVER I-95 NB	CONTRACT T201507402	BRIDGE NO. 1-714A	ABUTMENT 1 CONCRETE DIAPHRAGM	SECTION AEC
			COUNTY NEW CASTLE	DESIGNED BY: R.GANOVSKA		SHEET NO. 86
				CHECKED BY: S.MUKHERJEE/E.LUCZKA		

9/6/2019 10:35:04 AM
P:\60323054 DelDOT AGR 1672 BDS\T06 - Rehab Br. 1-714\900 WORK\910 CAD\20-SHEETS\Structures\Final Design\NB\BR1-714-NB-ED01.dgn

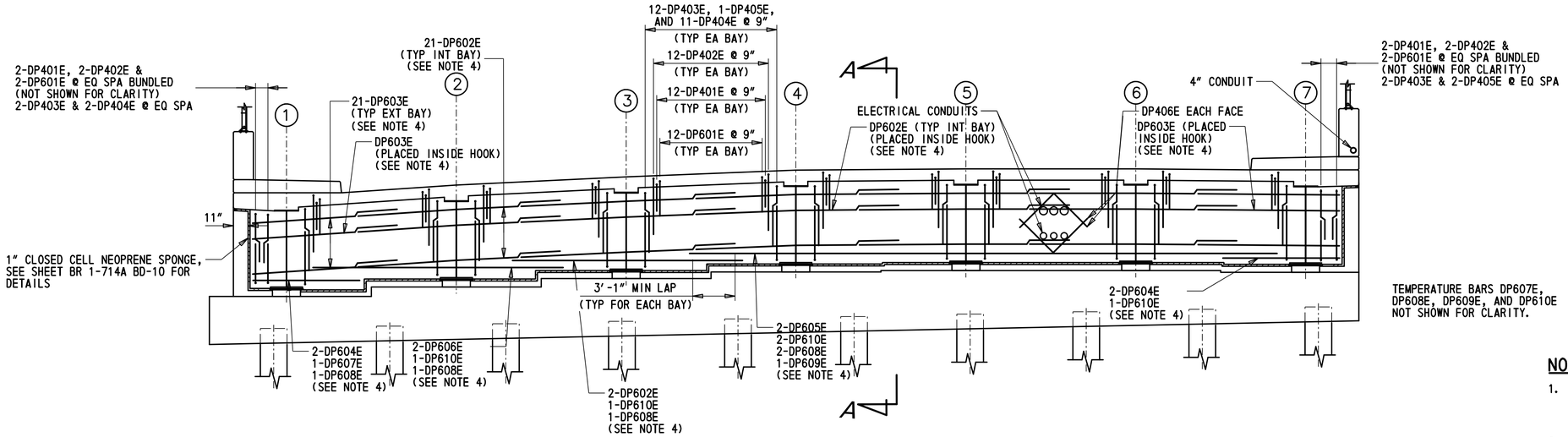

ABUTMENT 2 - ELEVATION

SCALE: 1/4" = 1'

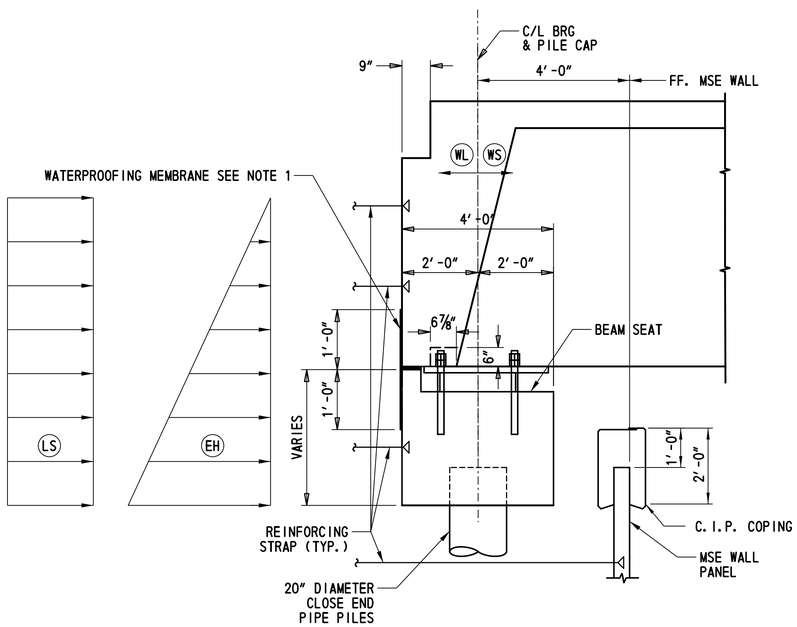

TYPICAL ABUTMENT SECTION

SCALE: 1/2" = 1'

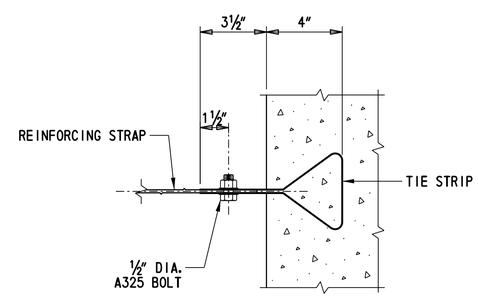

ABUTMENT STRAP ANCHOR DETAIL

NOT TO SCALE

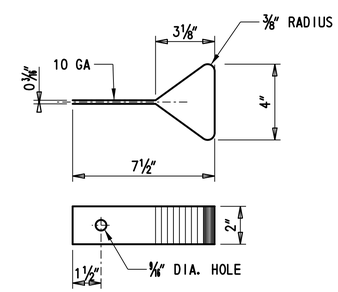

TIE STRIP DETAIL

NOT TO SCALE

ABUTMENT 1 (FIX) LATERAL LOADS	
TYPE	SERVICE LOAD (KIPS/FT)
EH	9.95
WL	0.15
WS	0.63
LS	2.90
EQ	1.60

ABUTMENT 2 (EXP) LATERAL LOADS	
TYPE	SERVICE LOAD (KIPS/FT)
EH	9.95
WL	0.15
WS	0.63
LS	2.90

NOTES:

1. CONCRETE IN CONCRETE DIAPHRAGM SHALL BE PAID FOR UNDER ITEM 610017. REINFORCEMENT IN DIAPHRAGM SHALL BE PAID FOR UNDER 611001.
2. MINIMUM LAP SPLICE LENGTHS, NORMAL WEIGHT CONCRETE:
   2'-1" (#4 BARS)
   3'-1" (#6 BARS)
3. BARS DP401E, DP402E, DP403E, DP404E & DP601E TO BE PLACED PARALLEL TO GIRDER.
4. SPACE BARS TO AVOID INTERFERENCE WITH BEARING STIFFENERS AND UTILITY SERVICES. REFER TO SHEETS BR 1-714A BD-15 AND BR 1-714A BD-16 FOR LOCATION OF HOLES IN GIRDER WEB.

CROSS REFERENCE NOTES:

1. FOR REINFORCEMENT BAR SCHEDULE, SEE SHEET BR 1-714A BD-32.
2. FOR FRAMING PLAN, SEE SHEET BR 1-714A BD-14.
3. FOR PILE CAP, CHEEKWALL DETAILS AND REINFORCEMENT, SEE SHEETS BR 1-714A BD-08 - BR 1-714A BD-11.
4. FOR SECTION A-A, SEE SHEET BR 1-714A BD-22.

ABUTMENT LATERAL LOADS:

1. CONTRACTOR SHALL DESIGN THE REINFORCING STRAPS IN THE ABUTMENT STEM AND BACKWALL TO RESIST LATERAL LOADS "EH", "WL", "LS" AND "WS".
2. LOAD "EH" IS THE HORIZONTAL EARTH PRESSURE EXERTED ON THE ABUTMENT.
3. LOAD "WL" IS THE HORIZONTAL LOAD DUE TO THE WIND ON LIVE LOAD ON THE SUPERSTRUCTURE.
4. LOAD "WS" IS THE HORIZONTAL LOAD DUE TO THE WIND ON STRUCTURE.
5. LOAD "LS" IS THE ADDITIONAL HORIZONTAL SOIL PRESSURE DUE TO 3FT OF SOIL SURCHARGE IN ACCORDANCE WITH AASHTO 3.11.6.4. CONTRACTOR IS RESPONSIBLE FOR PROVIDING MSE WALL DESIGNER WITH OTHER CONSTRUCTION LOADS WHICH WILL BE IN EXCESS OF 3FT OF SOIL SURCHARGE.
6. LOAD "EQ" IS THE SEISMIC LOAD ON THE ABUTMENT.

NOTES:

1. THE WATERPROOFING MEMBRANE SHALL BE INCIDENTAL TO ITEM 610012.
2. FOR ADDITIONAL REQUIREMENTS FOR STRAP ANCHORS AND TIE STRIPS, SEE SPECIAL PROVISION 607001 - MECHANICALLY STABALIZED EARTH WALLS.
3. ELECTRICAL CONDUITS NOT SHOWN FOR CLARITY.

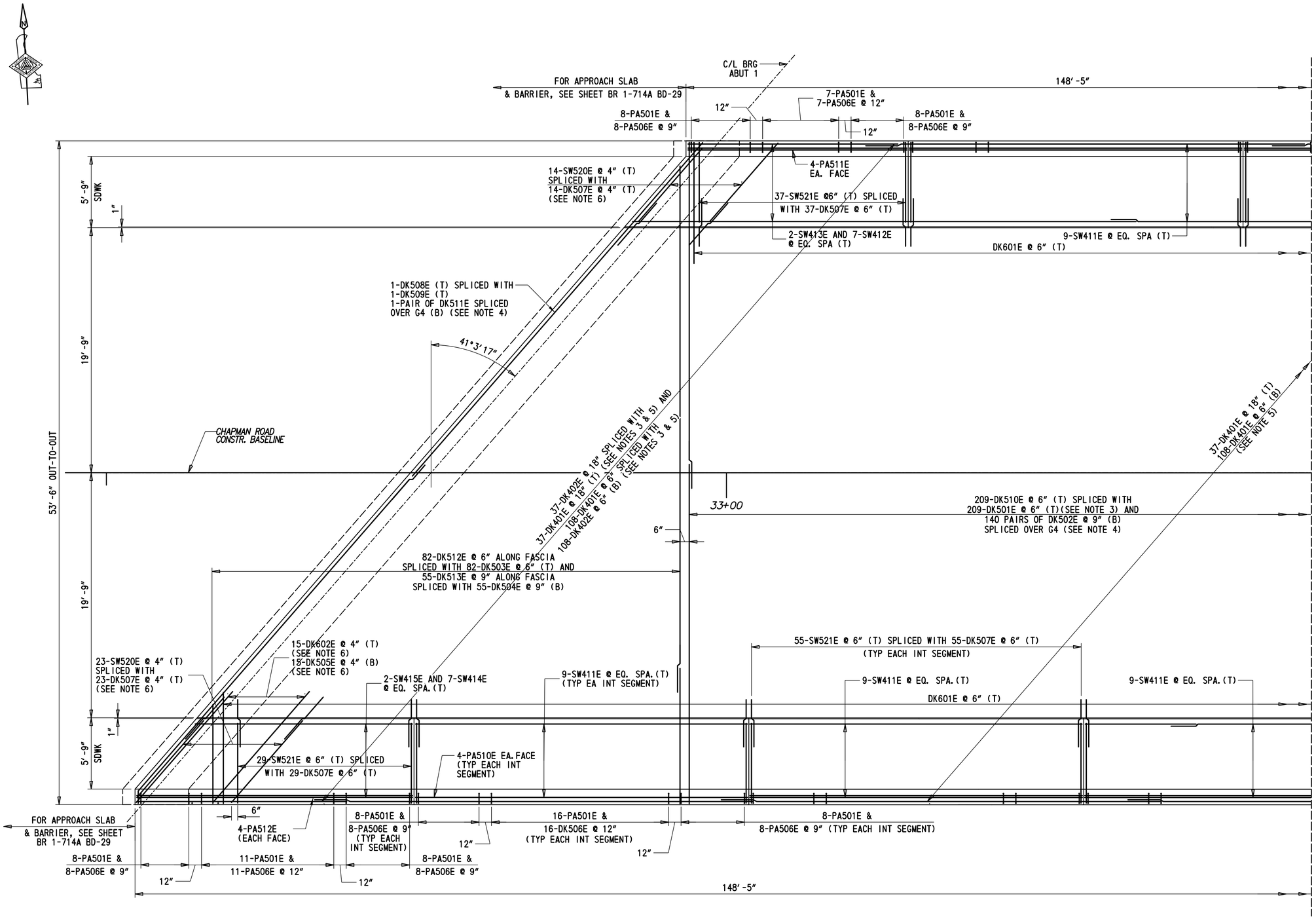

NOTES:

1. CONCRETE IN DECK SLAB TO BE PAID FOR UNDER ITEM 610017 AND REINFORCEMENT SHALL BE PAID FOR UNDER ITEM 611001. SIDEWALK AND PARAPET TO BE PAID FOR UNDER ITEM 610008.
2. MINIMUM LAP SPLICE LENGTHS, NORMAL WEIGHT CONCRETE.
   2'-1" (#4 BARS)
   2'-7" (#5 BARS)
   3'-1" (#6 BARS)
3. ALTERNATE PLACEMENT TO AVOID ADJACENT SPLICES.
4. TOP SPLICE NOT SHOWN FOR CLARITY.
5. SPACING MEASURED PERPENDICULAR TO BASELINE.
6. SPACING MEASURED PERPENDICULAR TO SKEW.

CROSS REFERENCE NOTES:

1. FOR DECK SECTIONS, SEE SHEET BR 1-714A BD-26.
2. FOR APPROACH SLAB SECTION AND DETAILS, SEE SHEETS BR 1-714A BD-29 - BR 1-714A BD-31.
3. FOR REINFORCEMENT BAR SCHEDULE, SEE SHEET BR 1-714A BD-32.
4. FOR FINISHED BRIDGE DECK ELEVATIONS, SEE SHEET BR 1-714A BD-28.
5. FOR SIDEWALK AND BARRIER ELEVATION, SEE SHEET BR 1-714A BD-27.

PLAN - DECK SLAB REINFORCEMENT

SCALE: 1/4" = 1'-0"

BR 1-714A
BD-24

ADDENDA / REVISIONS	SCALE IN FEET 1 0 1 2 3 4 5	BR 1-714A ON CHAPMAN ROAD OVER I-95 NB	CONTRACT T201507402	BRIDGE NO. 1-714A	BRIDGE DECK REINFORCEMENT PLAN - 1	SECTION AEC
			COUNTY NEW CASTLE	DESIGNED BY: H.BORDNER		SHEET NO. 88
				CHECKED BY: S.MUKHERJEE/E.LUCZKA		

8/16/2019
7:34:51 PM
P:\60323054 DelDOT AGR 1672 BDS\T06 - Rehab Br. 1-714\900 WORK\910 CAD\20-SHEETS\Structures\Final Design\NB\BR1-714-NB-DP01.dgn

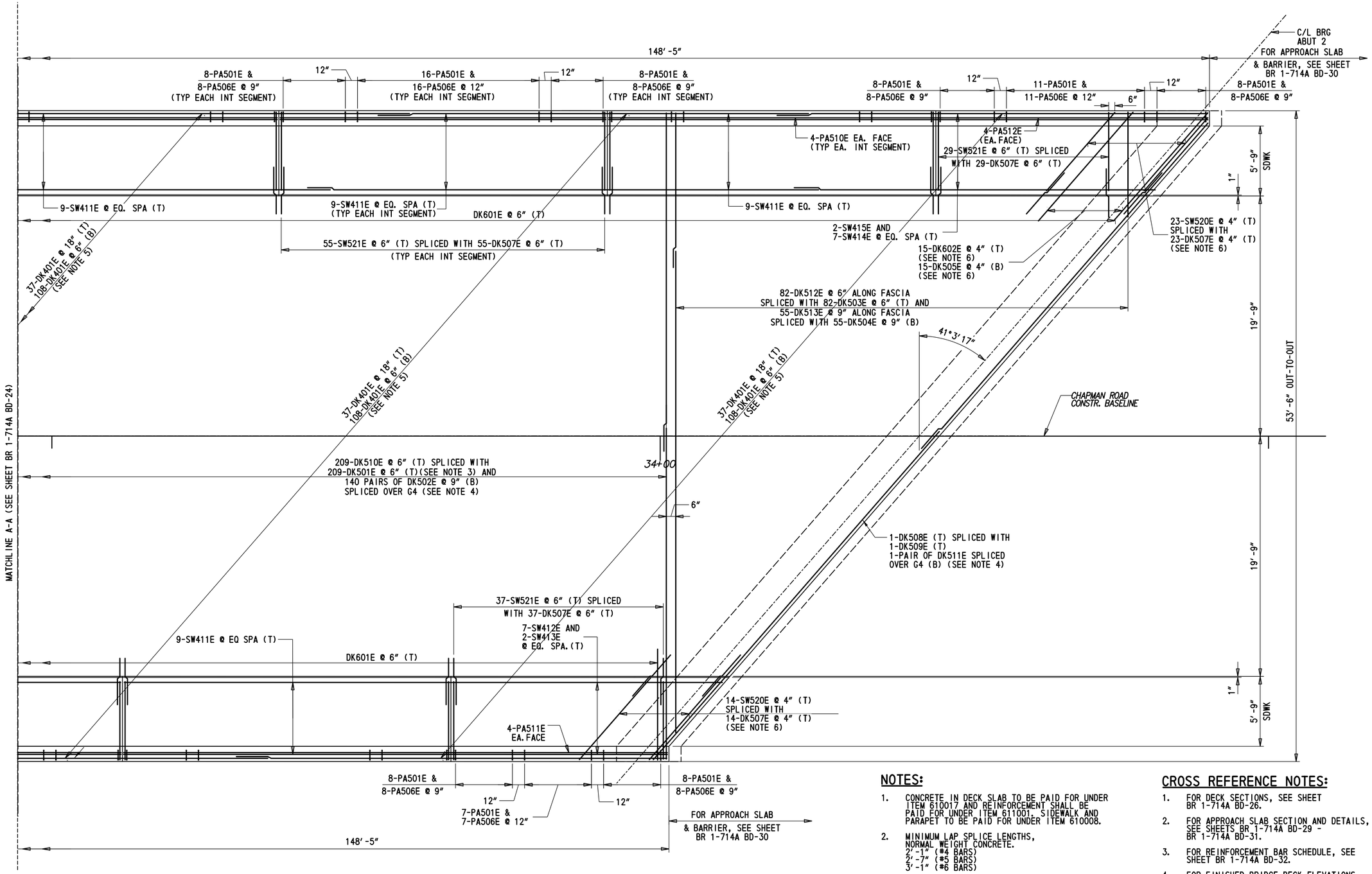

PLAN - DECK SLAB REINFORCEMENT

SCALE: ¼" = 1'-0"

NOTES:

1. CONCRETE IN DECK SLAB TO BE PAID FOR UNDER ITEM 610017 AND REINFORCEMENT SHALL BE PAID FOR UNDER ITEM 611001. SIDEWALK AND PARAPET TO BE PAID FOR UNDER ITEM 610008.
2. MINIMUM LAP SPLICE LENGTHS, NORMAL WEIGHT CONCRETE.
   2'-1" (#4 BARS)
   2'-7" (#5 BARS)
   3'-1" (#6 BARS)
3. ALTERNATE PLACEMENT TO AVOID ADJACENT SPLICES.
4. TOP SPLICE NOT SHOWN FOR CLARITY.
5. SPACING MEASURED PERPENDICULAR TO BASELINE.
6. SPACING MEASURED PERPENDICULAR TO SKEW.

CROSS REFERENCE NOTES:

1. FOR DECK SECTIONS, SEE SHEET BR 1-714A BD-26.
2. FOR APPROACH SLAB SECTION AND DETAILS, SEE SHEETS BR 1-714A BD-29 - BR 1-714A BD-31.
3. FOR REINFORCEMENT BAR SCHEDULE, SEE SHEET BR 1-714A BD-32.
4. FOR FINISHED BRIDGE DECK ELEVATIONS, SEE SHEET BR 1-714A BD-28.
5. FOR SIDEWALK AND BARRIER ELEVATIONS, SEE SHEET BR 1-714A BD-27.

BR 1-714A
BD-25

ADDENDA / REVISIONS	SCALE IN FEET 1 0 1 2 3 4 5	BR 1-714A ON CHAPMAN ROAD OVER I-95 NB	CONTRACT T201507402	BRIDGE NO. 1-714A	BRIDGE DECK REINFORCEMENT PLAN - 2	SECTION AEC
			COUNTY NEW CASTLE	DESIGNED BY: H.BORDNER		SHEET NO. 89
				CHECKED BY: S.MUKHERJEE/E.LUCZKA		

8/16/2019
7:35:10 PM
P:\60323054 DelDOT AGR 1672 BDS\T06 - Rehab Br. 1-714\900 WORK\910 CAD\20-SHEETS\Structures\Final Design\NB\BR1-714-NB-DP02.dgn

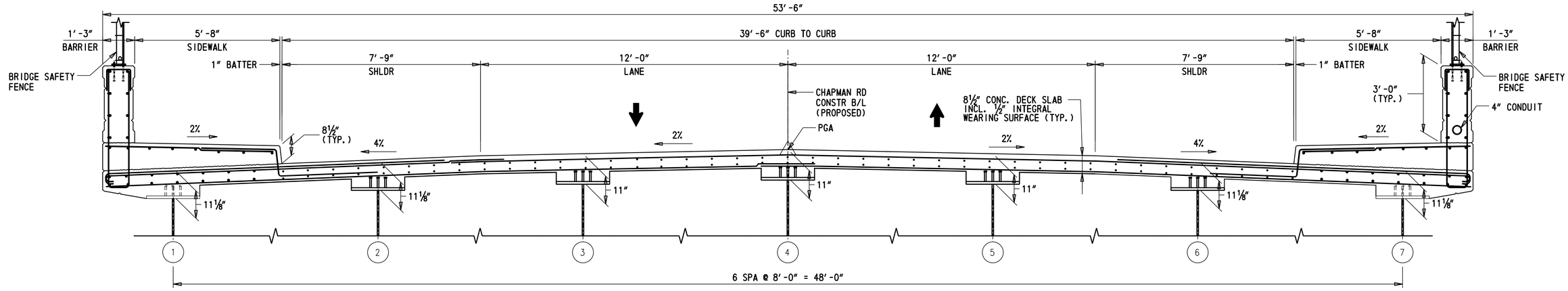

TYPICAL DECK SECTION

SCALE: 1/2" = 1'-0"

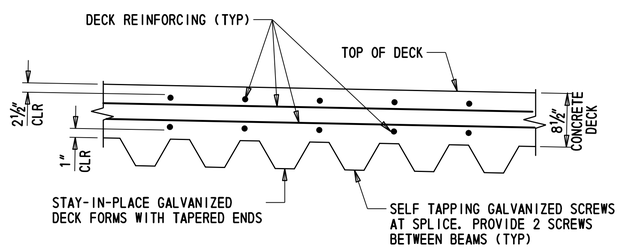

STAY-IN-PLACE FORM DETAIL

SCALE: 1" = 1'-0"

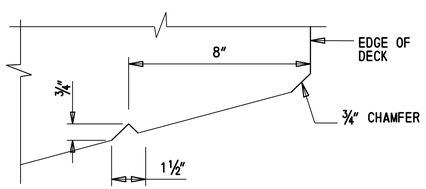

DETAIL 1

NOT TO SCALE

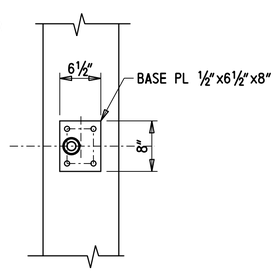

SECTION A-A

SCALE: 1" = 1'-0"

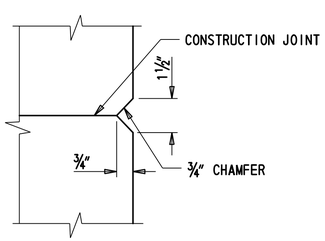

DETAIL 2

NOT TO SCALE

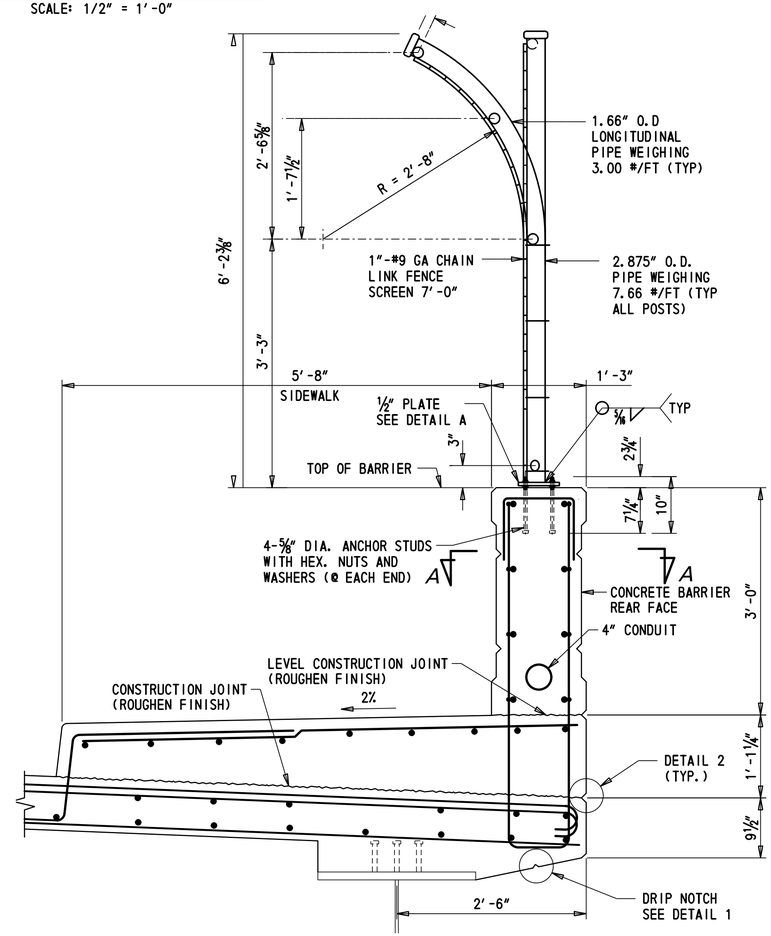

TYPICAL SECTION - PROPOSED AT SAFETY FENCE POST (PVC COATED)

SCALE: 1" = 1'-0"
SEE GENERAL NOTE 1

GENERAL NOTES

1. BRIDGE SAFETY FENCE, TYPE 2 TO BE PAID FOR UNDER ITEM 727008.

STAY-IN-PLACE FORM NOTES

1. THESE FORMS SHALL BE VERTICALLY ADJUSTED TO ATTAIN LINE AND GRADE REQUIRED ON THE PLANS.
2. THE CONTRACTOR SHALL SUBMIT SHOP DRAWINGS FOR APPROVAL. METAL FORMS MUST BE GALVANIZED AND MORTAR TIGHT. SELF TAPPING SCREWS MUST BE NON-CORROSIVE. SELF TAPPING SCREWS SHALL BE INSTALLED AT THE SIDE LAP OF THE SHEETS AT MID-SPAN SUPPORTS. ALL ANGLES, WELDS, AND INSERTS MUST BE DESIGNED BY THE CONTRACTOR.
3. ALL MATERIALS AND LABOR NEEDED FOR FORMS SHALL BE INCIDENTAL TO ITEM 610017 - P.C.C. MASONRY, SUPERSTRUCTURE, CLASS D.
4. WELDING TO STEEL BEAM FLANGES IN TENSION ZONE IS STRICTLY PROHIBITED.
5. CONCRETE IN CORRUGATIONS WILL NOT BE MEASURED AND WILL BE INCIDENTAL TO ITEM 610017.

CROSS REFERENCE NOTES:

1. FOR DECK REINFORCEMENT PLANS, SEE SHEETS BR 1-714A BD-24 AND BR 1-714A BD-25.
2. FOR BRIDGE BARRIER & SIDEWALK ELEVATION, SEE SHEET BR 1-714A BD-27.
3. FOR REINFORCEMENT BAR SCHEDULE, SEE SHEET BR 1-714A BD-32.
4. FOR SAFETY FENCE NOTES, SEE SHEET BR 1-714A BD-34.

BR 1-714A
BD-26

ADDENDA / REVISIONS	SCALE AS NOTED	BR 1-714A ON CHAPMAN ROAD OVER I-95 NB	CONTRACT T201507402	BRIDGE NO. 1-714A	BRIDGE DECK SECTION AND DETAILS	SECTION AEC
			COUNTY NEW CASTLE	DESIGNED BY: H.BORDNER		SHEET NO. 90
				CHECKED BY: S.MUKHERJEE/E.LUCZKA		

8/16/2019 7:35:57 PM P:\60323054 DelDOT AGR 1672 BDS\T06 - Rehab Br. 1-714\900 WORK\910 CAD\20-SHEETS\Structures\Final Design\NB\BR1-714-NB-DD01.dgn

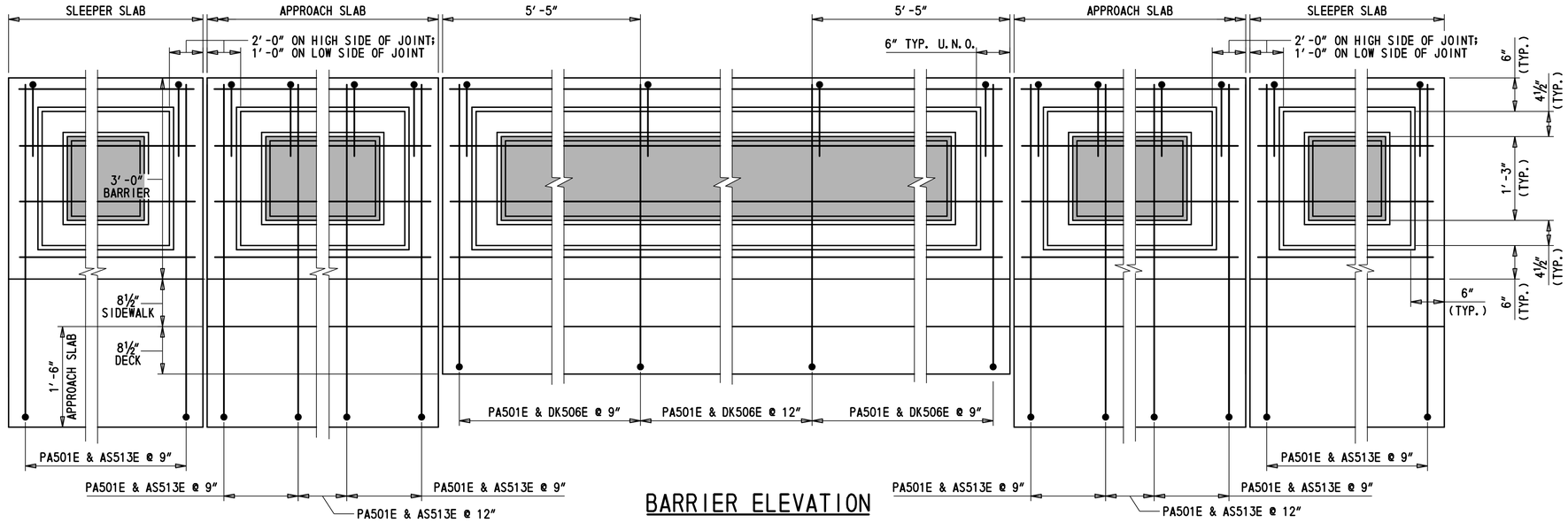

BARRIER ELEVATION

(BARRIER REINFORCEMENT CONTINUOUS BETWEEN UPHC JOINTS)
SCALE: 1" = 1'-0"

PAINT RECESSED AREAS (BOTH SIDES OF BARRIER) TO MATCH BARRIER ON NEARBY BR 1-675. A SAMPLE OF THE PAINT COLOR SHALL BE SUBMITTED TO THE ENGINEER FOR APPROVAL. PAINTING SHALL BE PAID UNDER ITEM 613001.

CROSS REFERENCE NOTES:

1. WORK THIS SHEET WITH SHEETS BR 1-714A BD-24 AND BR 1-714A BD-25.
2. FOR DECK DETAILS AND REINFORCEMENT, SEE SHEET BR 1-714A BD-26.
3. FOR APPROACH SLAB AND SLEEPER SLAB BARRIER AND SIDEWALK DETAILS AND REINFORCEMENT, SEE SHEETS BR 1-714A BD-29 - BR 1-714A BD-31.
4. FOR DETAIL A AND B, SEE SHEET BR 1-714A BD-26.

NOTES:

1. MINIMUM LAP SPLICE LENGTHS, NORMAL WEIGHT CONCRETE.
   2'-1" (#4 BARS)
   2'-7" (#5 BARS)
   3'-1" (#6 BARS)
2. BARRIER & SIDEWALK REINFORCEMENT ANCHORED INTO DECK AND APPROACH SLAB IS NOT SHOWN ON THIS SHEET. SEE DECK AND APPROACH SLAB PLANS.
3. ALL CONTROL JOINTS SHALL BE SPACED AT A MINIMUM OF 8'-0" AND A MAXIMUM OF 10'-0". THE CONTRACTOR SHALL SUBMIT THE PROPOSED LAYOUT OF THE CONTROL JOINTS.
4. FORMLINER ON BARRIER INCIDENTAL TO ITEM 610008.

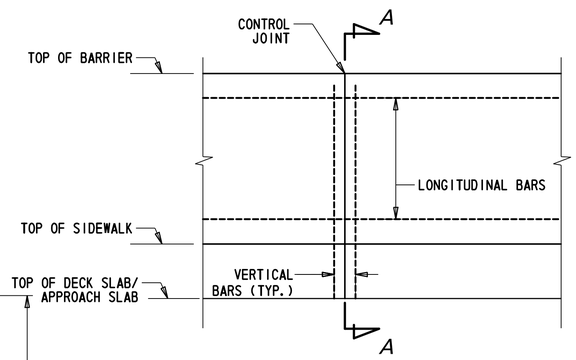

BARRIER CONTROL JOINT DETAIL (ELEVATION)

NOT TO SCALE

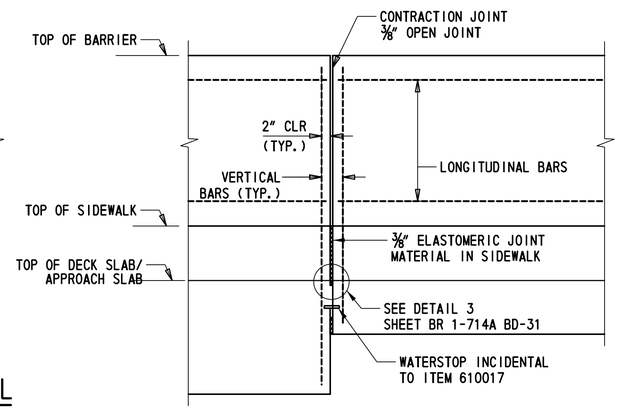

BARRIER CONTRACTION JOINT DETAIL (ELEVATION)

NOT TO SCALE

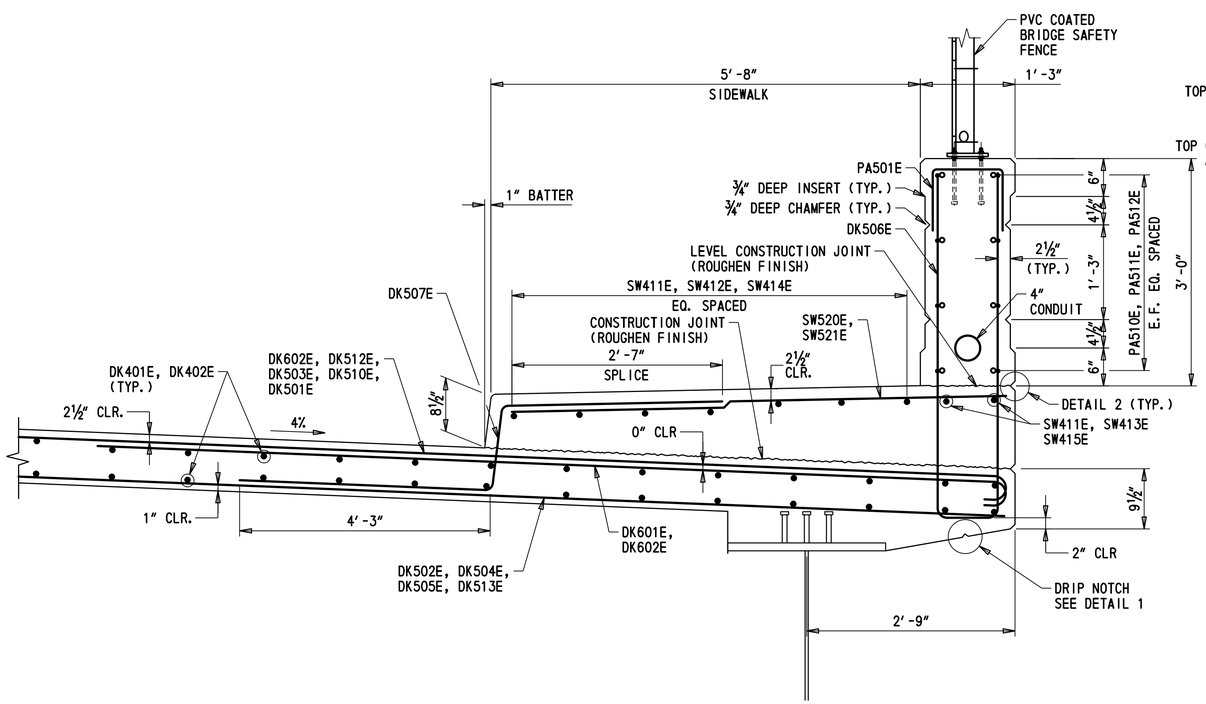

TYPICAL SECTION - PROPOSED

SCALE: 1" = 1'-0"

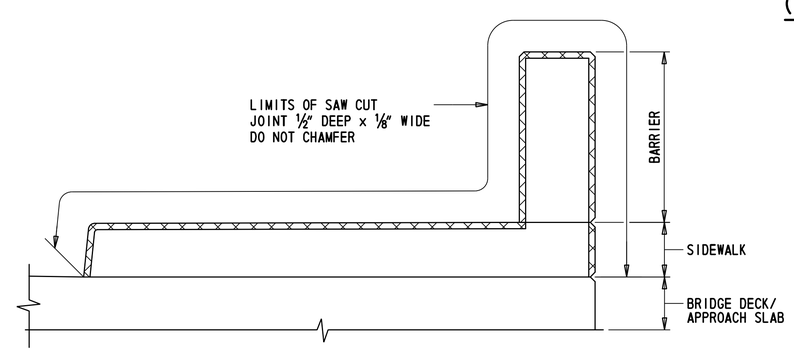

SECTION A-A

REINFORCEMENT NOT SHOWN FOR CLARITY
NOT TO SCALE

BR 1-714A
BD-27

ADDENDA / REVISIONS	SCALE AS NOTED	BR 1-714A ON CHAPMAN ROAD OVER I-95 NB	CONTRACT T201507402	BRIDGE NO. 1-714A	BRIDGE BARRIER AND SIDEWALK REINFORCEMENT-SECTION AND ELEVATION	SECTION AEC
			COUNTY NEW CASTLE	DESIGNED BY: H.BORDNER		SHEET NO. 91
				CHECKED BY: S.MUKHERJEE		

9/19/2019 5:45:53 PM P:\60323054 DelDOT AGR 1672 BDS\T06 - Rehab Br. 1-714\900 WORK\910 CAD\20-SHEETS\Structures\Final Design\NB\BR1-714-NB-BB01.dgn

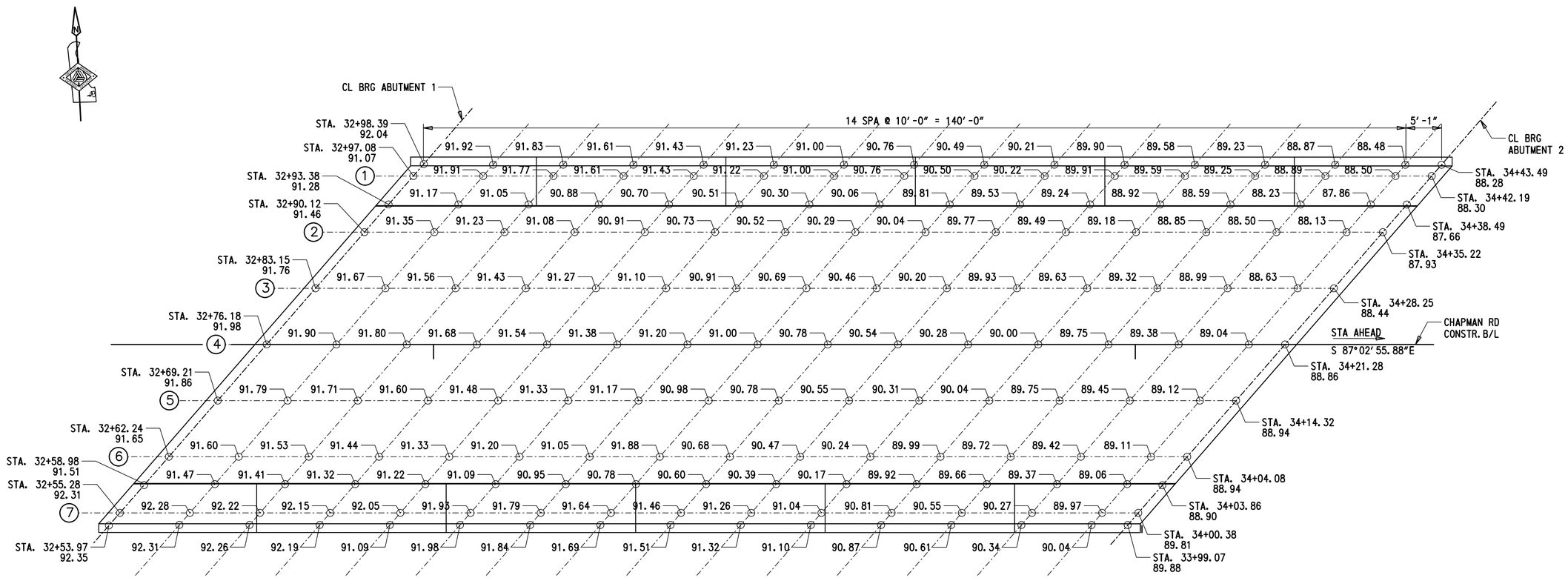

FINISHED BRIDGE DECK ELEVATIONS

SCALE: 1/8" = 1'-0"

NOTES:

1. ELEVATIONS OVER GIRDER LINES 1 AND 7 AND AT BARRIER GUTTERLINES ARE AT TOP OF FINISHED SIDEWALK.

CROSS REFERENCE NOTES:

1. FOR DECK SECTION, SEE SHEET BR 1-714A BD-26.
2. FOR VERTICAL CURVE DATA, SEE SHEET BR 1-714A BD-03.
3. FOR DECK PLANS, SEE SHEETS BR 1-714A BD-24 AND BR 1-714A BD-25.

ADDENDA / REVISIONS		SCALE IN FEET 2 0 2 4 6 8 10	BR 1-714A ON CHAPMAN ROAD OVER I-95 NB	CONTRACT T201507402	BRIDGE NO. 1-714A	FINISHED BRIDGE DECK ELEVATIONS	SECTION AEC
				COUNTY NEW CASTLE	DESIGNED BY: R.GANOVSKA		SHEET NO. 92
					CHECKED BY: E.LUCZKA		

8/16/2019
7:36:14 PM
P:\60323054 DelDOT AGR 1672 BDS\T06 - Rehab Br. 1-714\900 WORK\910 CAD\20-SHEETS\Structures\Final Design\NB\BR1-714-NB-DE01.dgn

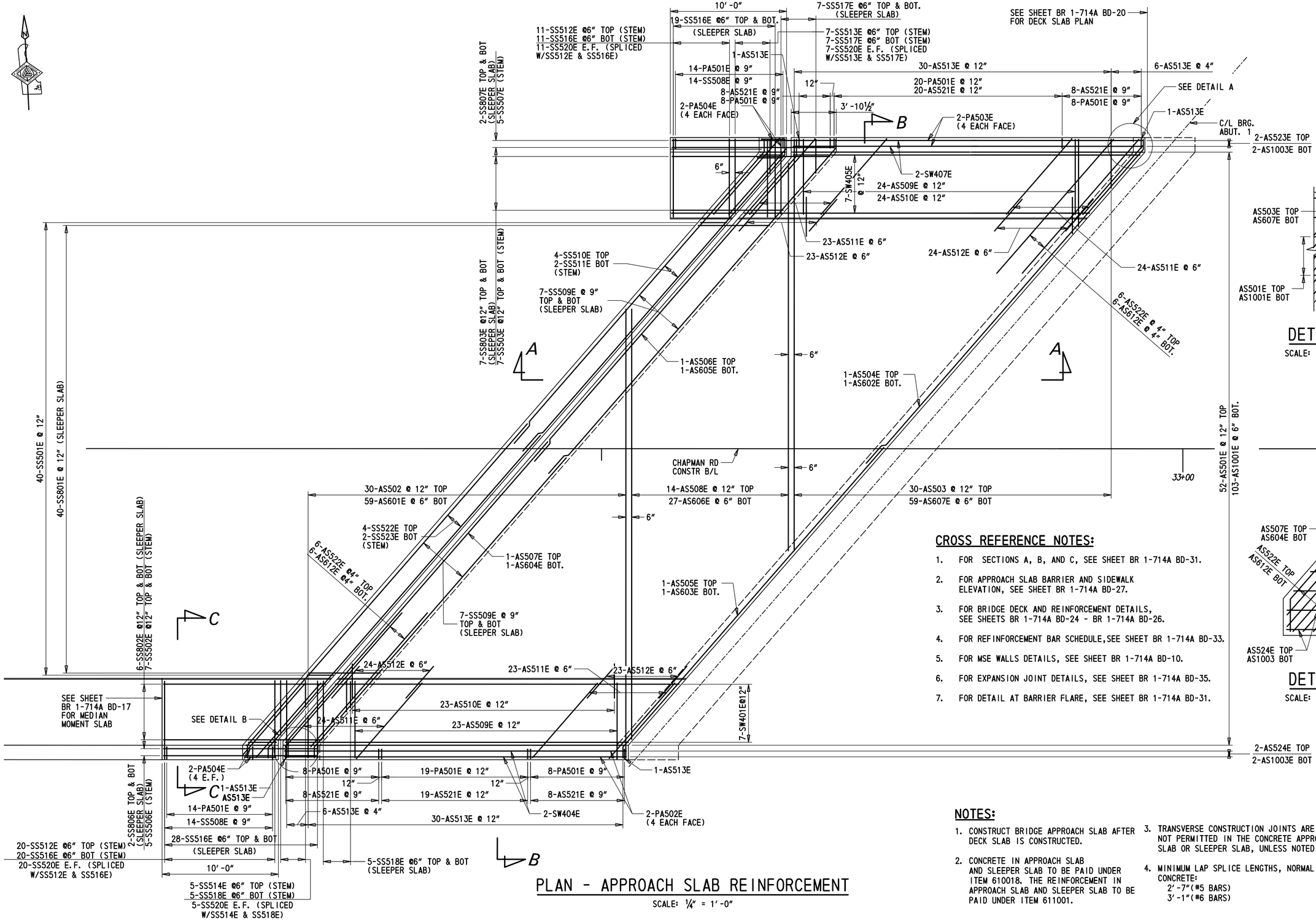

CROSS REFERENCE NOTES:

1. FOR SECTIONS A, B, AND C, SEE SHEET BR 1-714A BD-31.
2. FOR APPROACH SLAB BARRIER AND SIDEWALK ELEVATION, SEE SHEET BR 1-714A BD-27.
3. FOR BRIDGE DECK AND REINFORCEMENT DETAILS, SEE SHEETS BR 1-714A BD-24 - BR 1-714A BD-26.
4. FOR REINFORCEMENT BAR SCHEDULE, SEE SHEET BR 1-714A BD-33.
5. FOR MSE WALLS DETAILS, SEE SHEET BR 1-714A BD-10.
6. FOR EXPANSION JOINT DETAILS, SEE SHEET BR 1-714A BD-35.
7. FOR DETAIL AT BARRIER FLARE, SEE SHEET BR 1-714A BD-31.

NOTES:

1. CONSTRUCT BRIDGE APPROACH SLAB AFTER DECK SLAB IS CONSTRUCTED.
2. CONCRETE IN APPROACH SLAB AND SLEEPER SLAB TO BE PAID UNDER ITEM 610018. THE REINFORCEMENT IN APPROACH SLAB AND SLEEPER SLAB TO BE PAID UNDER ITEM 611001.
3. TRANSVERSE CONSTRUCTION JOINTS ARE NOT PERMITTED IN THE CONCRETE APPROACH SLAB OR SLEEPER SLAB, UNLESS NOTED OTHERWISE.
4. MINIMUM LAP SPLICE LENGTHS, NORMAL WEIGHT CONCRETE:
   2'-7"(#5 BARS)
   3'-1"(#6 BARS)

PLAN - APPROACH SLAB REINFORCEMENT

SCALE: ¼" = 1'-0"

BR 1-714A
BD-29

ADDENDA / REVISIONS	SCALE IN FEET 1 0 1 2 3 4 5	BR 1-714A ON CHAPMAN ROAD OVER I-95 NB	CONTRACT T201507402	BRIDGE NO. 1-714A	ABUTMENT 1 APPROACH SLAB REINFORCEMENT - PLAN	SECTION AEC
			COUNTY NEW CASTLE	DESIGNED BY: R.GANOVSKA		SHEET NO. 93
				CHECKED BY: E.LUCZKA		

8/16/2019
7:36:50 PM
P:\60323054 DelDOT AGR 1672 BDS\T06 - Rehab Br. 1-714\900 WORK\910 CAD\20-SHEETS\Structures\Final Design\NB\BR1-714-NB-AP01.dgn

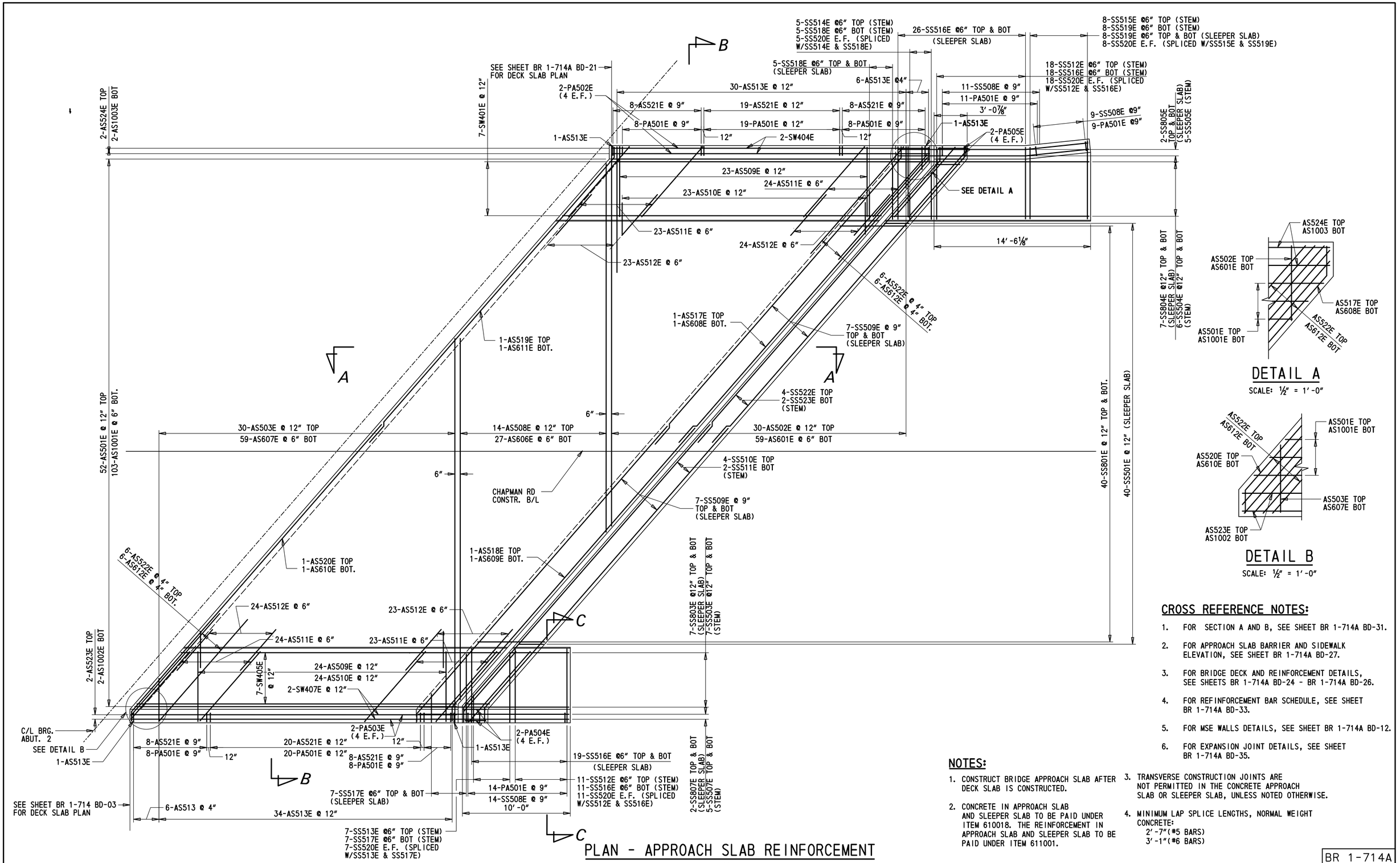

CROSS REFERENCE NOTES:

1. FOR SECTION A AND B, SEE SHEET BR 1-714A BD-31.
2. FOR APPROACH SLAB BARRIER AND SIDEWALK ELEVATION, SEE SHEET BR 1-714A BD-27.
3. FOR BRIDGE DECK AND REINFORCEMENT DETAILS, SEE SHEETS BR 1-714A BD-24 - BR 1-714A BD-26.
4. FOR REFINFORCEMENT BAR SCHEDULE, SEE SHEET BR 1-714A BD-33.
5. FOR MSE WALLS DETAILS, SEE SHEET BR 1-714A BD-12.
6. FOR EXPANSION JOINT DETAILS, SEE SHEET BR 1-714A BD-35.

NOTES:

1. CONSTRUCT BRIDGE APPROACH SLAB AFTER DECK SLAB IS CONSTRUCTED.
2. CONCRETE IN APPROACH SLAB AND SLEEPER SLAB TO BE PAID UNDER ITEM 610018. THE REINFORCEMENT IN APPROACH SLAB AND SLEEPER SLAB TO BE PAID UNDER ITEM 611001.
3. TRANSVERSE CONSTRUCTION JOINTS ARE NOT PERMITTED IN THE CONCRETE APPROACH SLAB OR SLEEPER SLAB, UNLESS NOTED OTHERWISE.
4. MINIMUM LAP SPLICE LENGTHS, NORMAL WEIGHT CONCRETE:
   2'-7"(#5 BARS)
   3'-1"(#6 BARS)

BR 1-714A
BD-30

ADDENDA / REVISIONS	SCALE AS NOTED	BR 1-714A ON CHAPMAN ROAD OVER I-95 NB	CONTRACT T201507402	BRIDGE NO. 1-714A	ABUTMENT 2 APPROACH SLAB REINFORCEMENT – PLAN	SECTION AEC
			COUNTY NEW CASTLE	DESIGNED BY: R.GANOVSKA		SHEET NO. 94
				CHECKED BY: E.LUCZKA		

8/16/2019 7:36:43 PM P:\60323054 DelDOT AGR 1672 BDS\T06 - Rehab Br. 1-714\900 WORK\910 CAD\20-SHEETS\Structures\Final Design\NB\BR1-714-NB-AP02.dgn

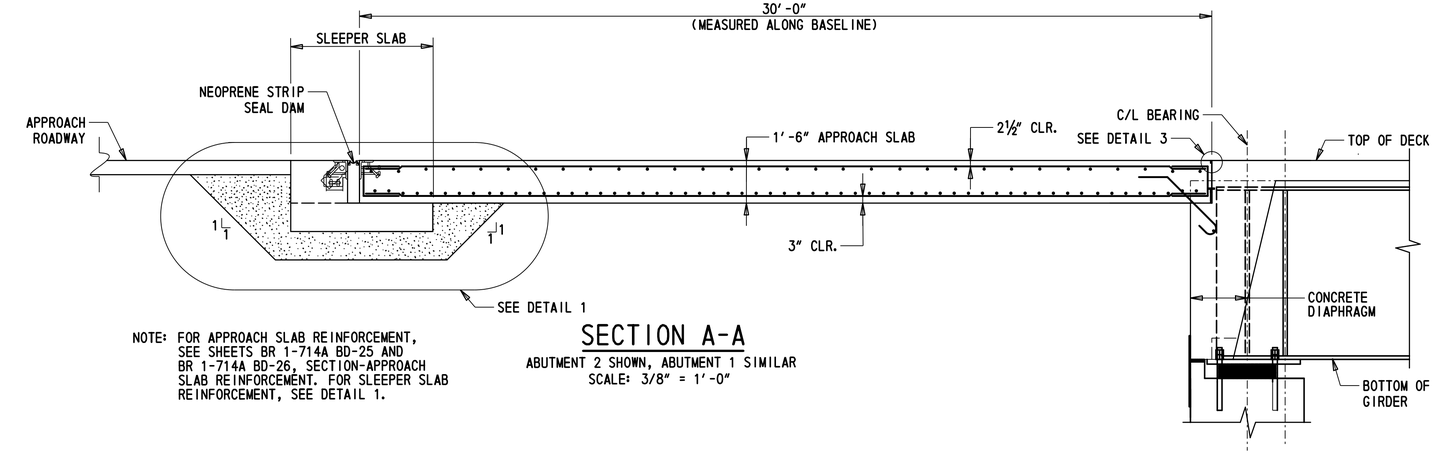

NOTE: FOR APPROACH SLAB REINFORCEMENT, SEE SHEETS BR 1-714A BD-25 AND BR 1-714A BD-26, SECTION-APPROACH SLAB REINFORCEMENT. FOR SLEEPER SLAB REINFORCEMENT, SEE DETAIL 1.

SECTION A-A

ABUTMENT 2 SHOWN, ABUTMENT 1 SIMILAR
SCALE: 3/8" = 1'-0"

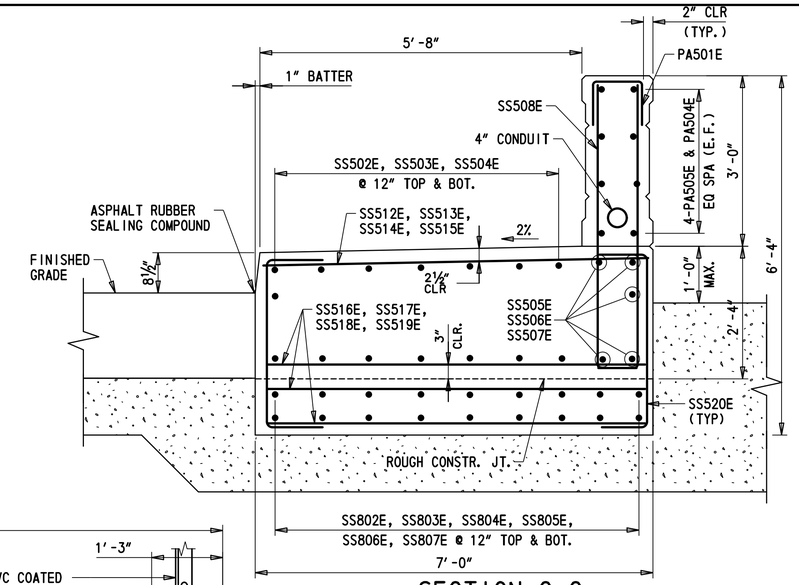

SECTION C-C

SCALE: 3/4" = 1'-0"

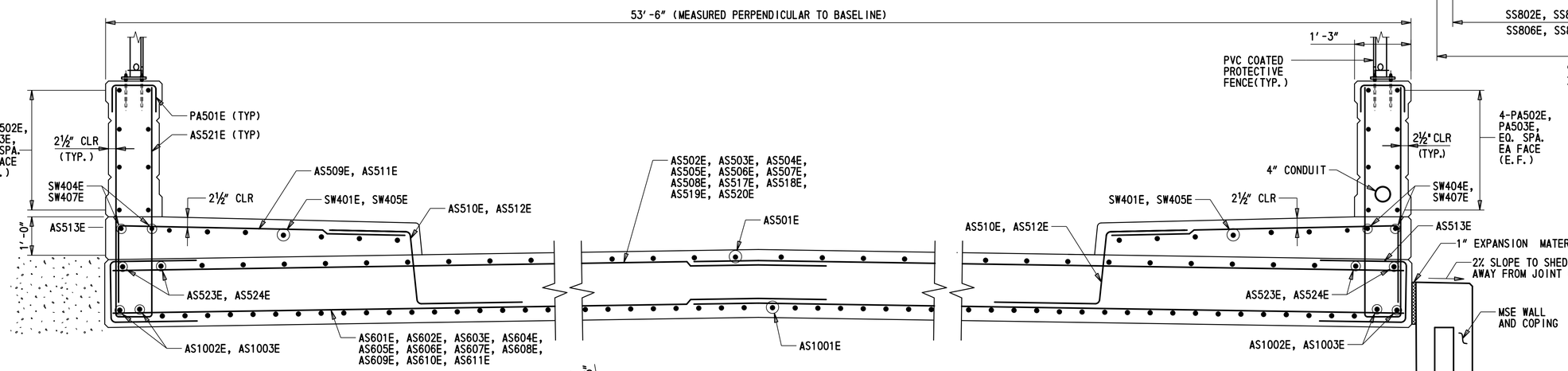

SECTION B-B

SCALE: 3/4" = 1'-0"

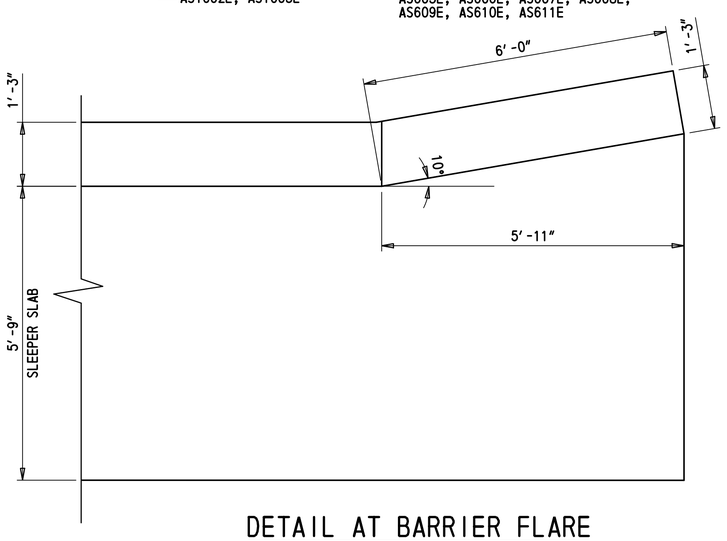

DETAIL AT BARRIER FLARE

SCALE: ¾" = 1'-0"

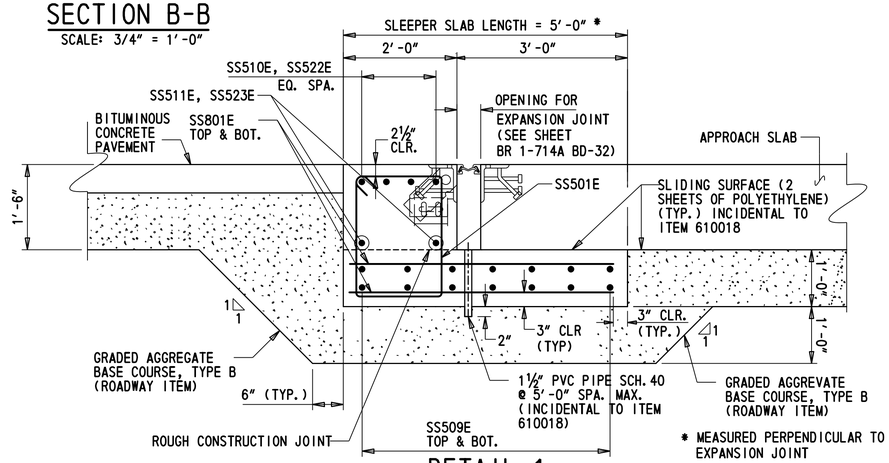

* MEASURED PERPENDICULAR TO EXPANSION JOINT

DETAIL 1

SCALE: 3/4" = 1'-0"

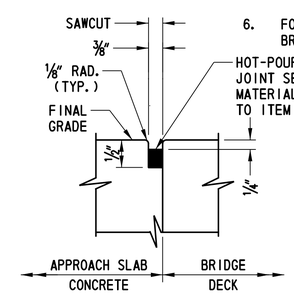

DETAIL 3

SCALE: 6" = 1'-0"

NOTES:

1. CONSTRUCT BRIDGE APPROACH SLAB AFTER THE DECK SLAB IS CONSTRUCTED.
2. TRANSVERSE CONSTRUCTION JOINTS ARE NOT PERMITTED IN THE CONCRETE APPROACH SLAB OR SLEEPER SLAB, UNLESS NOTED OTHERWISE.
3. CONCRETE IN APPROACH SLAB TO BE PAID FOR UNDER ITEM 610018 AND REINFORCEMENT IN APPROACH SLAB SHALL BE PAID FOR UNDER ITEM 611001.

CROSS REFERENCE NOTES:

1. FOR APPROACH SLAB PLAN AND DETAILS, SEE SHEET BR 1-714A BD-29 AND BR 1-714A BD-30.
2. FOR APPROACH SLAB BARRIER AND SIDEWALK ELEVATION, SEE SHEET BR 1-714A BD-27.
3. FOR ABUTMENT CONCRETE DIAPHRAGM DETAILS, SEE SHEETS BR 1-714A BD-22 AND BR 1-714A BD-23.
4. FOR EXPANSION JOINT DETAIL, SEE SHEET BR 1-714A BD-35.
5. FOR MSE WINGWALL DETAILS, SEE SHEET BR 1-714A BD-10.
6. FOR REINFORCEMENT BAR SCHEDULE, SEE SHEET BR 1-714A BD-33.

BR 1-714A
BD-31

ADDENDA / REVISIONS	SCALE AS NOTED	BR 1-714A ON CHAPMAN ROAD OVER I-95 NB	CONTRACT T201507402	BRIDGE NO. 1-714A	BRIDGE APPROACH SLAB REINFORCEMENT – SECTION AND DETAILS	SECTION AEC
			COUNTY NEW CASTLE	DESIGNED BY: R.GANOVSKA		SHEET NO. 95
				CHECKED BY: E.LUCZKA		

8/16/2019 7:37:23 PM P:\60323054 DelDOT AGR 1672 BDS\T06 - Rehab Br. 1-714\900 WORK\910 CAD\20-SHEETS\Structures\Final Design\NB\BR1-714-NB-AP03.dgn

REINFORCEMENT BAR SCHEDULE

NORTHBOUND DIAPHRAGMS

MARK	SIZE	LENGTH	NUMBER	TYPE	A	B	C	D	E	F	G	H	J	K	O	REMARKS
DP401E	4	5′-4 3/4″	152	16	0′-0″	0′-0″	2′-1″	3′-3¾″				3′-2″		0′-11¾″	3′-0¾″	
DP402E	4	4′-11″	152	17		2′-9″	2′-2″	0′-0″								
DP403E	4	9′-6 1/4″	124	16	0′-0″	3′-1″	3′-2½″	3′-2¾″				3′-1″		-0′-11½″	2′-3″	K VALUE IS NEGATIVE BECAUSE BAR BEND OPPOSITE OF WHAT IS SHOWN IN THE DIAGRAM
DP404E	4	7′-9″	108	16	0′-0″	3′-0½″	1′-5¾″	3′-2¾″				3′-0½″		0′-11½″	2′-5¼″	
DP405E	4	7′-4 1/2″	16	43	3′-0½″	0′-6½″	0′-6″	0′-9½″	2′-6″	2′-4½″	0′-8¾″					
DP406E	4	9′-6″	8	17		4′-9″	4′-9″	0′-0″								
DP601E	6	4′-8″	152	30		1′-0″	3′-0″				0′-8″	0′-8½″	0′-6″	-0′-8½″		K VALUE IS NEGATIVE BECAUSE BAR BEND OPPOSITE OF WHAT IS SHOWN IN THE DIAGRAM
DP602E	6	13′-8 1/2″	233	STR												
DP603E	6	8′-11 1/2″	92	STR												
DP604E	6	7′-2 3/4″	8	STR												
DP605E	6	36′-5 1/2″	2	STR												
DP606E	6	15′-3″	6	STR												
DP607E	6	3′-2 1/2″	2	STR												
DP608E	6	2′-8 1/2″	11	STR												
DP609E	6	9′-3 1/4″	1	STR												
DP610E	6	6′-2 3/4″	10	STR												

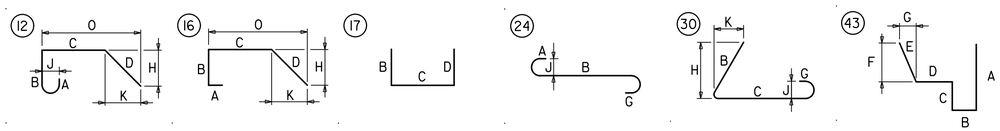

REINFORCEMENT BAR SCHEDULE

NORTHBOUND DECK SLAB

MARK	SIZE	LENGTH	NUMBER	TYPE	A	B	C	D	E	F	G	H	J	K	O	REMARKS
DK401E	4	35′-4¼″	580	STR												
DK402E	4	15′-0″	145	STR												
DK501E	5	16′-5½″	209	24	0′-7″	15′-10½″					0′-0″		0′-5″			
DK502E	5	27′-10½″	280	STR												
DK503E	5	VARIES 8′-7½″ TO 49′-1½″	164	24	0′-7″	VARIES 8′-1½″ TO 48′-6½″					0′-0″		0′-5″			VARY B EVERY TWO BARS BY 6″
DK504E	5	VARIES 6′-11″ TO 48′-6½″	110	STR												VARY EVERY TWO BARS BY 9¼″
DK505E	5	8′-9″	32	STR												
DK506E	5	9′-2½″	356	17		4′-3″	8½″	4′-3″								
DK507E	5	7′-11″	646	17		2′-7″	1′-1″	4′-3″								
DK508E	5	52′-5¾″	2	12	0′-0″	0′-0″	51′-4¾″	1′-1″				0′-8½″	0′-0″	9¾″	52′-2½″	
DK509E	5	23′-2¾″	2	12	0′-0″	0′-0″	22′-1¾″	1′-1″				0′-8½″	0′-0″	9¾″	22′-11½″	
DK510E	5	40′-5½″	209	24	0′-7″	39′-10½″					0′-0″		0′-5″			
DK511E	5	36′-2½″	4	12	0′-0″	0′-0″	35′-1½″	1′-1″				0′-8½″	0′-0″	9¾″	35′-11¼″	
DK512E	5	7′-5″	164	24	0′-7″	6′-10″					0′-0″		0′-5″			
DK513E	5	6′-10″	110	STR												
DK601E	6	5′-9″	588	24	0′-8″	5′-1″					0′-0″		0′-6″			
DK602E	6	9′-5″	32	24	0′-8″	8′-9″					0′-0″		0′-6″			
SW411E	4	26′-8″	72	STR												
SW412E	4	VARIES 17′-8″ TO 22′-3½″	14	STR												VARY EVERY TWO BARS BY 9¼″
SW413E	4	17′-7″	4	STR												
SW414E	4	VARIES 17′-2¾″ TO 21′-10½″	14	STR												VARY EVERY TWO BARS BY 9¼″
SW415E	4	22′-2″	4	STR												
SW520E	5	8′-8¾″	74	STR												
SW521E	5	6′-7″	570	STR												
PA501E	5	5′-10½″	356	17		2′-7″	8½″	2′-7″								
PA510E	5	26′-8″	64	STR												
PA511E	5	17′-7″	16	STR												
PA512E	5	22′-2″	16	STR												

BR 1-714A
BD-32

ADDENDA / REVISIONS	NOT TO SCALE	BR 1-714A ON CHAPMAN ROAD OVER I-95 NB	CONTRACT T201507402	BRIDGE NO. 1-714A	DECK AND CONCRETE DIAPHRAGM REINFORCEMENT SCHEDULE	SECTION AEC
			COUNTY NEW CASTLE	DESIGNED BY: A.WASSEF		SHEET NO. 96
				CHECKED BY: E.LUCZKA		

8/16/2019
7:37:39 PM
P:\60323054 DelDOT AGR 1672 BDS\T06 - Rehab Br. 1-714\900 WORK\910 CAD\20-SHEETS\Structures\Final Design\NB\BR1-714-NB-RE02.dgn

NORTHBOUND APPROACH SLAB REINFORCEMENT SCHEDULE

MARK	SIZE	NUMBER	LENGTH	TYPE	A	B	C	D	E	F	G	H	K	O	REMARKS
AS501E	5	104	29′-6¾″	STR											
AS502E	5	60	VARIES 2′-7″ TO 35′-1″	STR											VARY EVERY 2 BARS BY 1′-1½″
AS503E	5	60	VARIES 2′-7″ TO 35′-6¼″	STR											VARY EVERY 2 BARS BY 1′-1⅝″
AS504E	5	1	36′-1½″	16	0′-0″	0′-0″	35′-1¼″	1′-0¼″				8⅛″	9¼″	35′-10½″	
AS505E	5	1	36′-3″	16	0′-0″	0′-0″	35′-1¼″	1′-1¾″				9″	10⅜″	35′-11⅝″	
AS506E	5	1	36′-2¼″	16	0′-0″	0′-0″	34′-6¾″	1′-7½″				1′-⅞″	1′-2¾″	35′-9½″	
AS507E	5	1	35′-11″	16	0′-0″	0′-0″	34′-6¾″	1′-4¼″				10⅝″	1′-0¼″	35′-7″	
AS508E	5	28	33′-11¼″	STR											
AS509E	5	94	8′-4⅝″	16	0′-0″	1′-10⅝″	6′-6″	0′-0″				0′-0″	0′-0″	6′-6″	
AS510E	5	94	7′-5″	4	0′-0″	2′-7″	1′-9″	3′-1″	0′-0″	0′-0″	0′-0″	0′-0″	0′-0″	5′-8″	
AS511E	5	188	12′-4⅛″	16	0′-0″	1′-10⅝″	10′-5½″	0′-0″				0′-0″	0′-0″	10′-5½″	
AS512E	5	188	9′-8¾″	4	0′-0″	2′-7″	1′-9″	5′-4¾″	0′-0″	0′-0″	0′-0″	0′-0″	0′-0″	7′-11¾″	
AS513E	5	152	7′-⅜″	17		3′-1″	10⅜″	3′-1″							
AS517E	5	1	35′-11″	16	0′-0″	0′-0″	34′-6¾″	1′-4¼″				10⅝″	1′-¼″	35′-7″	
AS518E	5	1	36′-2¼″	16	0′-0″	0′-0″	34′-6¾″	1′-7½″				1′-⅞″	1′-2¾″	35′-9½″	
AS519E	5	1	36′-3″	16	0′-0″	0′-0″	35′-1¼″	1′-1¾″				9″	10⅜″	35′-11⅝″	
AS520E	5	1	36′-1½″	16	0′-0″	0′-0″	35′-1¼″	1′-¼″				8″	9¼″	35′-10½″	
AS521E	5	142	10′-6¾″	17		4′-11⅛″	8½″	4′-11⅛″							
AS522E	5	24	8′-8⅛″	STR											
AS523E	5	4	30′-1″	STR											
AS524E	5	4	29′-4½″	STR											
AS601E	6	118	VARIES 2′-7″ TO 35′-1″	STR											VARY EVERY 2 BARS BY 6¾″
AS602E	6	1	36′-4½″	16	0′-0″	0′-0″	35′-4¼″	1′-¼″				8⅛″	9¼″	36′-1½″	
AS603E	6	1	36′-6″	16	0′-0″	0′-0″	35′-4¼″	1′-1¾″				9″	10⅜″	36′-2⅝″	
AS604E	6	1	36′-2⅛″	16	0′-0″	0′-0″	34′-9¾″	1′-4¼″				10⅝″	1′-¼″	35′-10⅛″	
AS605E	6	1	36′-5⅜″	16	0′-0″	0′-0″	34′-9⅞″	1′-7½″				1′-⅞″	1′-2¾″	36′-⅝″	
AS606E	6	54	33′-11¼″	STR											
AS607E	6	118	VARIES 2′-7″ TO 35′-6¼″	STR											VARY EVERY 2 BARS BY 6⅞″
AS608E	6	1	36′-2⅛″	16	0′-0″	0′-0″	34′-9⅞″	1′-4¼″				10⅝″	1′-¼″	35′-10⅛″	
AS609E	6	1	36′-5¼″	16	0′-0″	0′-0″	34′-9¾″	1′-7½″	1′-⅞″			1′-⅞″	1′-2¾″	36′-½″	
AS610E	6	1	36′-4½″	16	0′-0″	0′-0″	35′-4¼″	1′-¼″				8″	9¼″	36′-1½″	
AS611E	6	1	36′-6″	16	0′-0″	0′-0″	35′-4¼″	1′-1¾″				9″	10⅜″	36′-2⅝″	
AS612E	6	24	8′-8⅛″	STR											
AS1001E	10	206	29′-6¾″	STR											
AS1002E	10	4	30′-1″	STR											
AS1003E	10	4	29′-4½″	STR											

NORTHBOUND APPROACH AND SLEEPER SLAB PARAPET REINFORCEMENT SCHEDULE

MARK	SIZE	NUMBER	LENGTH	TYPE	A	B	C	D	E	F	G	H	K	O	REMARKS
PA501E	5	204	6′-2½″	17		2′-9″	8½″	2′-9″							
PA502E	5	16	29′-4½″	STR											
PA503E	5	16	30′-1″	STR											
PA504E	5	24	9′-8″	STR											
PA505E	5	8	14′-1⅜″	16	0′-0″	0′-0″	8′-4″	5′-9⅜″				7¼″	5′-9″	14′-1″	

NORTHBOUND APPROACH AND SLEEPER SLAB SIDEWALK REINFORCEMENT SCHEDULE

MARK	SIZE	NUMBER	LENGTH	TYPE	A	B	C	D	E	F	G	H	K	O	REMARKS
SW401E	4	14	29′-6¾″	STR											
SW404E	4	4	29′-4½″	STR											
SW405E	4	14	29′-6¾″	STR											
SW407E	4	4	30′-1″	STR											

NORTHBOUND SLEEPER SLAB REINFORCEMENT SCHEDULE

MARK	SIZE	NUMBER	LENGTH	TYPE	A	B	C	D	E	F	G	H	K	O	REMARKS
SS501E	5	80	9′-5½″	T1	7″	2′-1¼″	2′-½″	2′-1¼″	2′-½″		7″				
SS502E	5	12	VARIES 9′-7½″ TO 13′-10¾″	STR											VARY EVERY 2 BARS BY 10¼″
SS503E	5	28	VARIES 5′-⅝″ TO 9′-7″	STR											VARY EVERY 4 BARS BY 9½″
SS504E	5	12	VARIES 14′-1⅛″ TO 18′-4⅜″	STR											VARY EVERY 2 BARS BY 10¼″
SS505E	5	5	14′-1⅜″	16	0′-0″	0′-0″	8′-4″	5′-9⅜″				7¼″	5′-9″	14′-1″	
SS506E	5	5	9′-7½″	STR											
SS507E	5	10	9′-7″	STR											
SS508E	5	62	10′-6¾″	17		4′-11⅛″	8½″	4′-11⅛″							
SS509E	5	56	VARIES 36′-1⅛″ TO 36′-3⅞″	31		VARIES 11⅞″ TO 1′-2⅛″	35′-1¼″	0′-0″				23′-¾″	26′-5¾″	VARIES 27′-5⅝″ TO 27′-7⅞″	VARY "B" EVERY 8 BARS BY ⅜″ VARY "O" EVERY 8 BARS BY ⅜″ VARY EVERY 8 BARS BY ⅞″
SS510E	5	8	VARIES 37′-6⅜″ TO 37′-8⅛″	31		VARIES 1′-2⅛″ TO 1′-3⅞″	36′-4¼″	0′-0″				23′-10½″	27′-5″	VARIES 28′-7⅛″ TO 28′-8⅞″	VARY "B" EVERY 2 BARS BY ⅝″ VARY "O" EVERY 2 BARS BY ⅜″ VARY EVERY 2 BARS BY ⅞″
SS511E	5	4	VARIES 37′-6⅜″ TO 37′-8⅛″	31		VARIES 1′-2⅛″ TO 1′-3⅞″	36′-4¼″	0′-0″				23′-10½″	27′-5″	VARIES 28′-7⅛″ TO 28′-8⅞″	VARY "B" EVERY 2 BARS BY 1¾″ VARY "O" EVERY 2 BARS BY 1¾″ VARY EVERY 2 BARS BY 1¾″
SS512E	5	60	6′-6″	STR											
SS513E	5	14	VARIES 2′-7″ TO 5′-11⅝″	STR											VARY EVERY 2 BARS BY 6¾″
SS514E	5	10	VARIES 2′-7″ TO 4′-10⅛″	STR											VARY EVERY 2 BARS BY 6¾″
SS515E	5	8	VARIES 6′-6⅝″ TO 7′-1¼″	STR											VARY EACH BAR BY 1″
SS516E	5	244	6′-7″	STR											
SS517E	5	42	VARIES 2′-8″ TO 6′-⅝″	STR											VARY EVERY 6 BARS BY 6¾″
SS518E	5	30	VARIES 2′-8″ TO 4′-11⅛″	STR											VARY EVERY 6 BARS BY 6¾″
SS519E	5	24	VARIES 6′-7⅝″ TO 7′-2¼″	STR											VARY EVERY 3 BARS BY 1″
SS520E	5	184	7′-11″	17		2′-7″	2′-9″	2′-7″							
SS522E	5	8	VARIES 35′-11½″ TO 36′-7½″	31		VARIES 11⅞″ TO 1′-7⅞″	34′-11⅝″	0′-0″				22′-11⅝″	26′-4½″	VARIES 27′-4⅜″ TO 28′-⅜″	VARY "B" EVERY 2 BARS BY 2⅝″ VARY "O" EVERY 2 BARS BY 2⅝″ VARY EVERY 2 BARS BY 2⅝″
SS523E	5	4	VARIES 35′-11½″ TO 36′-7½″	31		VARIES 11⅞″ TO 1′-7⅞″	34′-11⅝″	0′-0″				22′-11⅝″	26′-4½″	VARIES 27′-4⅜″ TO 28′-⅜″	VARY "B" EVERY 2 BARS BY 8″ VARY "O" EVERY 2 BARS BY 8″ VARY EVERY 2 BARS BY 8″
SS801E	8	160	5′-11⅝″	STR											
SS802E	8	14	VARIES 13′-1¼″ TO 17′-9¼″	STR											VARY EVERY 2 BARS BY 9⅜″
SS803E	8	28	VARIES 8′-11¼″ TO 13′-9¼″	STR											VARY EVERY 4 BARS BY 9⅝″
SS804E	8	14	VARIES 17′-6⅞″ TO 22′-3″	STR											VARY EVERY 2 BARS BY 9⅜″
SS805E	8	4	17′-7″	4	0′-0″	11′-10⅛″	5′-8⅞″	0′-0″	0′-0″	0′-0″	0′-0″	7¼″	5′-8½″	17′-6⅝″	
SS806E	8	4	13′-1¼″	STR											
SS807E	8	8	13′-9¼″	STR											

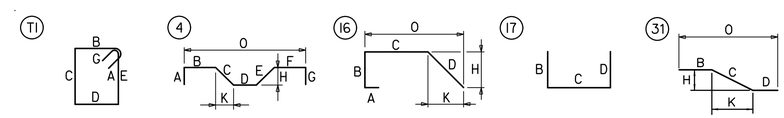

BR 1-714A
BD-33

ADDENDA / REVISIONS		NOT TO SCALE	BR 1-714A ON CHAPMAN ROAD OVER I-95 NB	CONTRACT T201507402	BRIDGE NO. 1-714A	APPROACH SLAB REINFORCEMENT SCHEDULE	SECTION AEC
				COUNTY NEW CASTLE	DESIGNED BY: A.WASSEF		SHEET NO. 97
					CHECKED BY: J.BRASK		

8/16/2019
7:37:47 PM
P:\60323054 DelDOT AGR 1672 BDS\T06 - Rehab Br. 1-714\900 WORK\910 CAD\20-SHEETS\Structures\Final Design\NB\BR1-714-NB-RE03.dgn

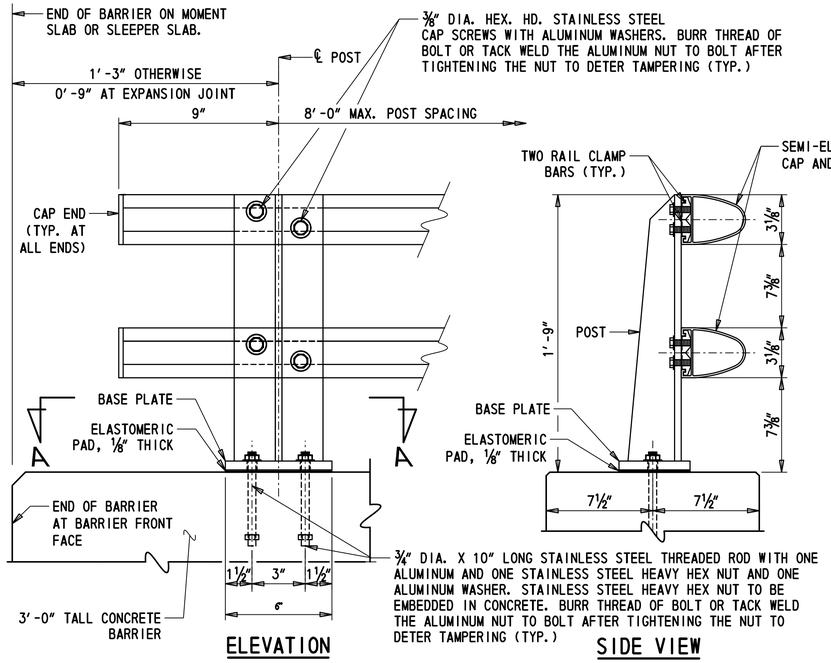

METAL BRIDGE RAILING

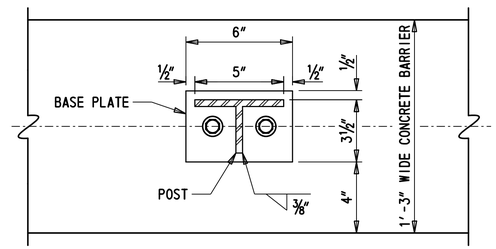

SECTION A-A

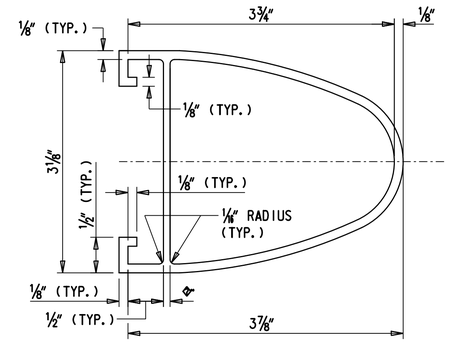

SEMI-ELLIPTICAL RAIL

GENERAL METAL RAILING AND SAFETY FENCE NOTES

1. THE SAFETY FENCE (ITEM 727008) SHALL BE CONSTRUCTED ON BOTH BARRIERS (EA SIDE OF BRIDGE) WITHIN THE FULL LENGTH BRIDGE AND APPROACH SLAB.. THE SAFETY FENCE SHALL BE CONSTRUCTED PER DELDOT STANDARD DRAWING NO. M-10(2014)-BRIDGE SAFETY FENCE, TYPE 2. EXCEPT THAT IT SHALL BE 6′-2⅜″ TALL (INSTEAD OF 5′-0½″) AS MEASURED FROM THE BOTTOM OF THE FENCE POST BASE PLATE TO THE TOP OF THE FENCE POST.
2. BRIDE RAILING SHALL BE CONSTRUCTED ON BARRIER WITHIN SLEEPER SLAB AND MOMENT SLAB.
3. THE CONTRACTOR SHALL SUBMIT THE PROPOSED LAYOUT FOR BRIDGE RAIL POSTS & SAFETY FENCE POSTS FOR APPROVAL.
4. POSTS SHALL BE SET PERPENDICULAR TO GRADE.
5. ℄ HANDRAIL AND SAFETY FENCE POST MUST BE LOCATED A MINIMUM OF 6″ FROM CONTROL JOINTS AND A MINIMUM OF 12″ FROM EXPANSION OR CONTRACTION JOINTS.
6. RAILS SHALL BE CONTINUOUS WITH SPLICES WHERE RAIL SECTIONS CROSS EXPANSION JOINTS.
7. THE CENTERLINE OF ANY SPLICE SHALL BE LOCATED AT LEAST 2′-0″ AWAY FROM CENTERLINE OF A POST.
8. SET NUTS 1#4″ CLEAR MINIMUM OF PLATES AND BURR THREADS ABOVE NUTS.
9. THE METAL RAILING DETAILS SHALL BE PLACED ALONG ENTIRE LENGTH OF 3′-0″ TALL CONCRETE BARRIER.
10. FABRICATION AND INSTALLATION OF THE ALUMINUM RAILING SYSTEM WILL BE INCIDENTAL TO ITEM 626011 - ALUMINUM RAILING, TYPE 1.

METAL RAILING MATERIAL NOTES

1. POSTS, RAILS, SPLICE SLEEVES, CLAMP BARS, AND ALUMINUM HEX NUTS MUST MEET REQUIREMENTS OF ASTM B-221 ALLOY 6061-T6.
2. BASE PLATES MUST MEET REQUIREMENTS OF ASTM B209 ALLOY 6061-T6.
3. END CAPS MUST MEET REQUIREMENTS OF ASTM B26 ALLOY 356-F.
4. ELASTOMERIC PADS MUST MEET REQUIREMENTS OF 60 +/- SHORE A DUROMETER.
5. STAINLESS STEEL HEX NUTS MUST MEET REQUIREMENTS OF ASTM A-307, GRADE A.
6. ANCHOR BOLTS MUST MEET REQUIREMENTS OF ASTM A-276 TYPE 430 (THREADS TO BE ROLLED NOT CUT).
7. STAINLESS STEEL HEX HEAD CAP SCREWS (CLAMPS) MUST MEET REQUIREMENTS OF ASTM A-193, GRADE B-8.
8. ALUMINUM WASHERS MUST MEET REQUIREMENTS OF ASTM B-209 ALLOY ALCLAD 2024-T4.

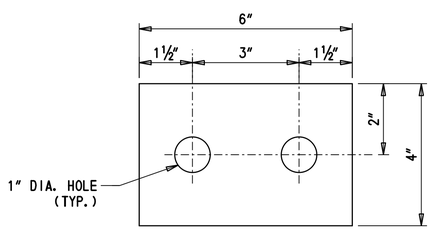

BASE PLATE

NOTE: BASE PLATE ½″ THICK. THE ⅛″ THICK ELASTOMERIC PAD WILL HAVE IDENTICAL DIMENSIONS AS BASE PLATE WITH 1″ DIA x 1½″ SLOTS.

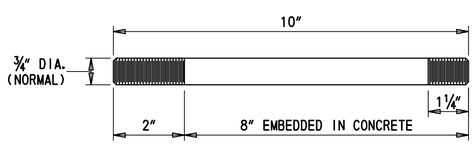

ANCHOR BOLT

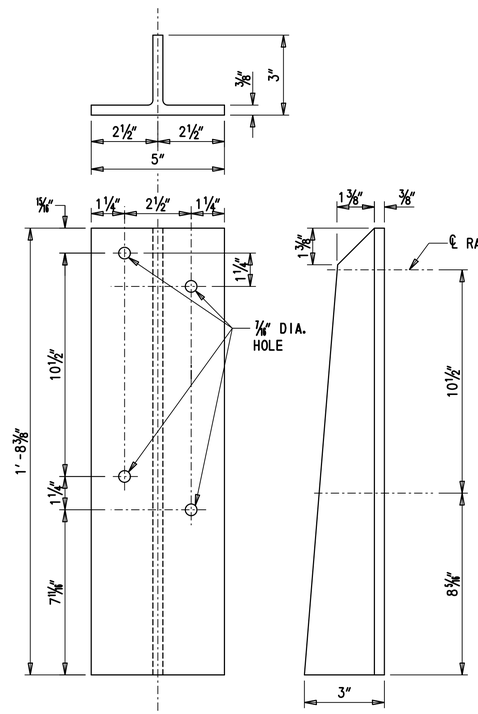

POST

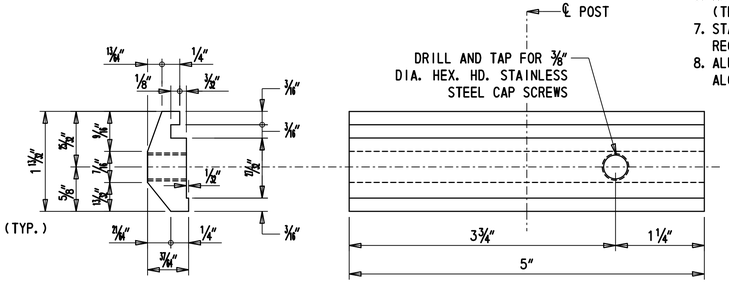

RAIL CLAMP BAR

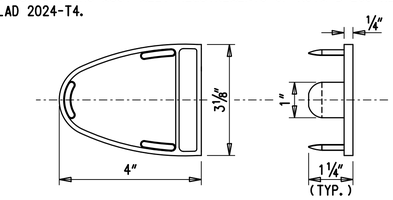

END CAP

NOTE: CAPS SHALL BE SPOT WELDED TO RAILS WITH WELDS GROUND SMOOTH (3 WELDS REQUIRED FOR EACH CAP)

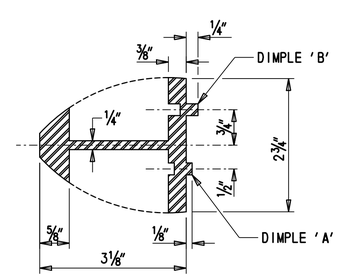

SECTION B-B

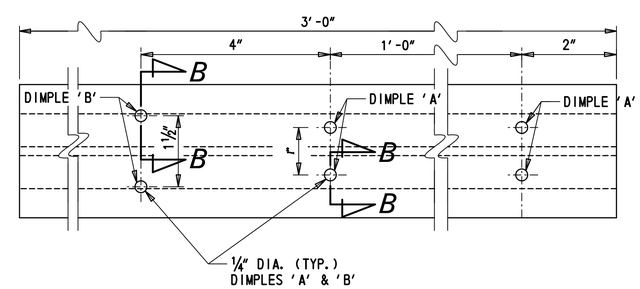

SLEEVE

ADDENDA / REVISIONS	NOT TO SCALE	BR 1-714A ON CHAPMAN ROAD OVER I-95 NB	CONTRACT T201507402	BRIDGE NO. 1-714A	RAILING DETAILS	SECTION AEC
			COUNTY NEW CASTLE	DESIGNED BY: R.GANOVSKA		SHEET NO. 98
				CHECKED BY: S.MUKHERJEE		

BR 1-714A
BD-34

8/16/2019 7:38:04 PM P:\60323054 DelDOT AGR 1672 BDS\T06 - Rehab Br. 1-714\900 WORK\910 CAD\20-SHEETS\Structures\Final Design\NB\BR1-714-NB-HR01.dgn

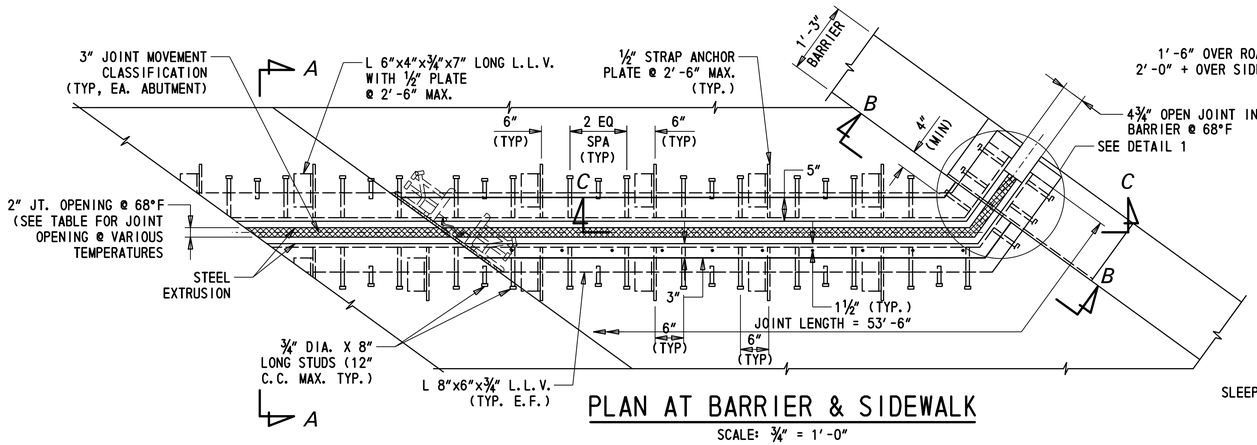

PLAN AT BARRIER & SIDEWALK

SCALE: ¾" = 1'-0"

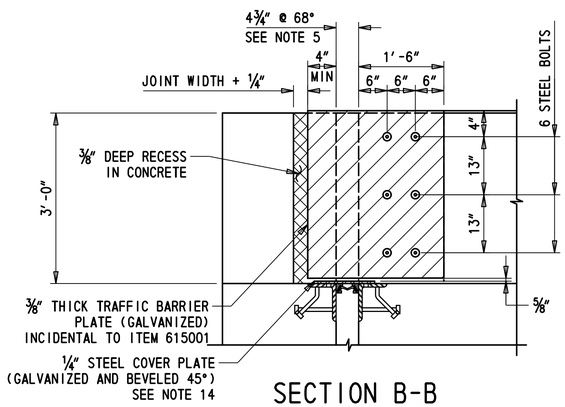

SECTION B-B

SCALE: ¾" = 1'-0"

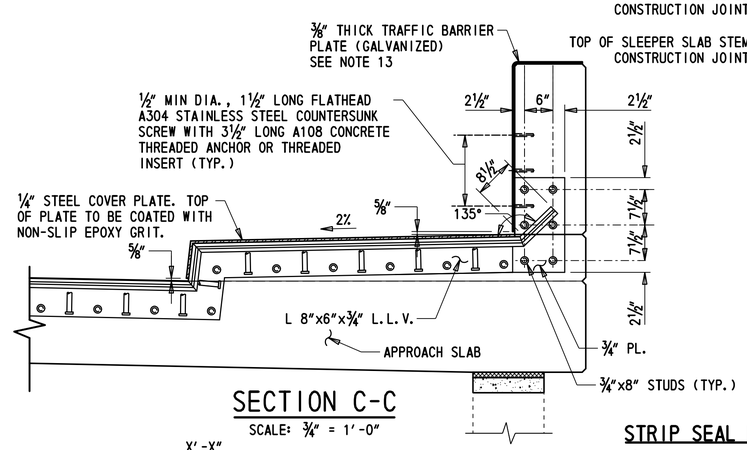

SECTION C-C

SCALE: ¾" = 1'-0"

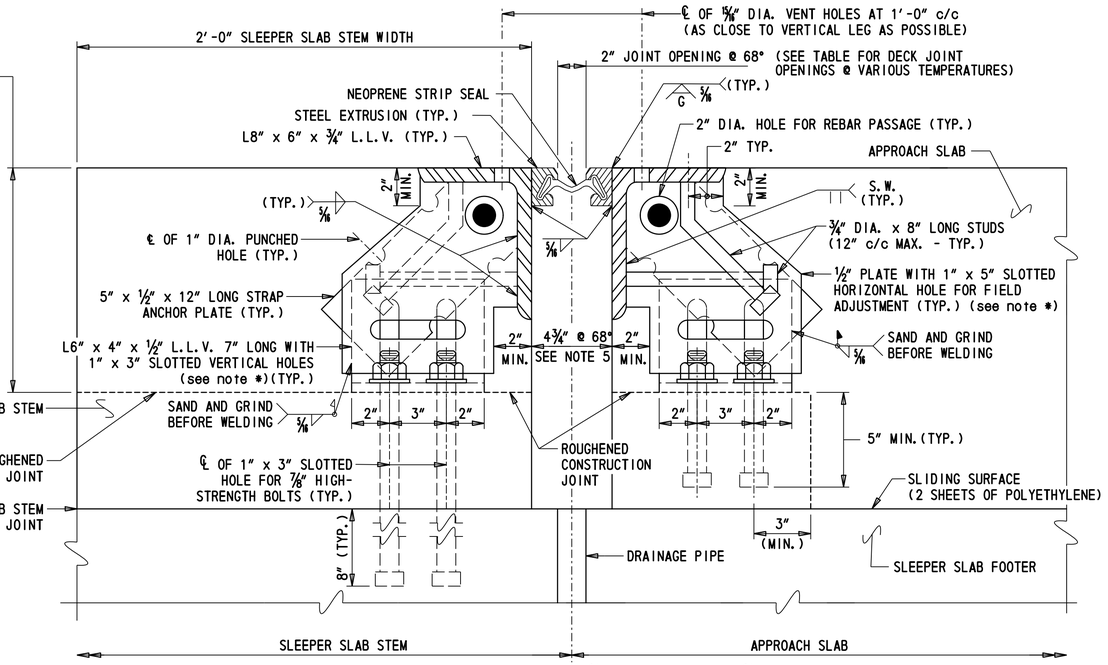

* IF WELD OPTION IS PROPOSED, SLOTTED HOLES IN ½" PLATE AND L6"X4"X½" L.L.V MAY BE OMITTED

SECTION A-A (APPROACH SLAB TO SLEEPER SLAB)

SCALE: 3" = 1'-0"

NOTE: SLEEPER SLAB AND APPROACH SLAB REINFORCEMENT NOT SHOWN FOR CLARITY.

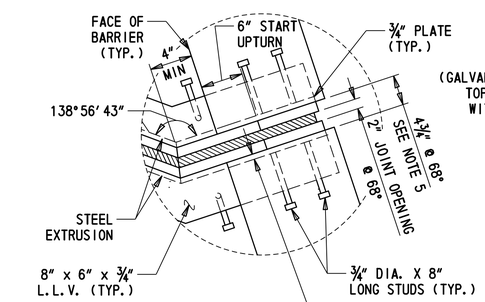

DETAIL 1

SCALE: 1½" = 1'-0"
(SLIDING PLATE NOT SHOWN FOR CLARITY)

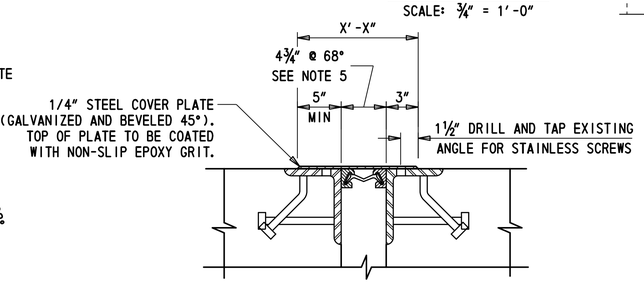

JOINT SECTION AT SIDEWALK

NOT TO SCALE

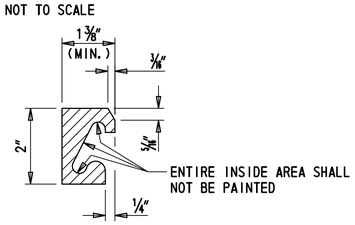

STEEL EXTRUSION DETAIL

NOT TO SCALE

JOINT OPENING (INCH)

LOCATION	TEMPERATURE (°F)							MOVEMENT CLASSIFICATION
	0	10	30	50	70	90	120	
ABUTMENT B STRIP SEAL	2.70	2.60	2.39	2.19	1.98	1.77	1.46	3

NOTE: JOINT OPENING IS MEASURED PERPENDICULAR TO THE STRIP SEAL & DECK JOINT

STRIP SEAL EXPANSION JOINT NOTES:

1. STEEL FOR DECK JOINTS AND STEEL EXTRUSIONS SHALL BE AASHTO M270, GR. 36 (ASTM A36) AT MINIMUM. STEEL EXTRUSIONS SHALL BE GALVANIZED IN ITS ENTIRETY AND PAINTED AS DETAILED IN "STEEL EXTRUSION DETAIL".
2. L.L.V. DENOTES LONG LEG VERTICAL.
3. NEOPRENE EXTRUSION TO MEET D-2628-81 MODIFIED, (RECOVERY TESTS EXCLUDED).
4. THE EXPANSION JOINT SHALL BE CAPABLE OF SEALING THE DECK TO PREVENT MOISTURE AND OTHER CONTAMINANTS FROM DESCENDING THROUGH THE JOINT.
5. THE CONTRACTOR SHALL ADJUST THE OPEN JOINT AS REQUIRED BY THE WIDTH OF THE STEEL EXTRUSION USED SO AS TO PROVIDE A 2" JOINT OPENING AT 68°F.
6. THE STRIP SEAL SHALL BE INSTALLED IN ONE PIECE ACROSS THE BRIDGE WIDTH. SPLICING OF THE STRIP SEAL IS NOT PERMITTED.
7. THE EXPANSION JOINT SYSTEM IS PAID FOR UNDER ITEM NO. 624000.
8. ENTIRE EXPANSION DAM SHALL BE PAINTED AFTER FABRICATION USING URETHANE SYSTEM, EXCEPT AS NOTED IN ACCORDANCE WITH ITEM NO. 624000.
9. LUBRICANT-ADHESIVE FOR USE IN INSTALLING AND BONDING NEOPRENE SEAL ELEMENTS TO STEEL JOINT COMPONENTS SHALL BE A ONE QUART MOISTURE-CURING POLYURETHANE AND HYDROCARBON SOLVENT MIXTURE HAVING THE FOLLOWING PHYSICAL PROPERTIES:

AVERAGE WEIGHT, POUNDS PER GALLON	8 +/- 10%
SOLIDS CONTENT	65%
ADHESIVE SHALL REMAIN LIQUID FROM	5°F TO 120°F
FILM STRENGTH, AS PER ASTM D-412	2,000 PSI
ELONGATION	250%

10. HOLES SHALL BE PLACED IN THE RIB PLATES AND STRAP ANCHOR PLATES FOR BAR REINFORCEMENT. IF THIS IS DONE IN THE FIELD AN APPROVED EPOXY-BONDED PAINT SHALL BE USED TO TOUCH-UP THE HOLES. PAYMENT INCIDENTAL TO ITEM NO. 624000.
11. ANCHOR PLATE AND STEEL EXTRUSION SHALL BE WELDED TO BE WATERTIGHT AT CONSTRUCTION JOINTS. PAYMENT INCIDENTAL TO ITEM NO. 624000.
12. WHERE TRAFFIC BARRIER PLATES ARE USED:
-BOLTS SHALL BE A304 STAINLESS STEEL COUNTERSUNK SCREW WITH A108 CONCRETE THREADED ANCHORS OR THREADED INSERTS.
-HEAD OF BOLTS SHALL BE FLUSH WITH FACE OF STEEL PLATE.
-THE CONTRACTOR SHALL SUBMIT WORKING DRAWINGS OF TRAFFIC BARRIER PLATES FOR APPROVAL.
13. STEEL FOR TRAFFIC BARRIER PLATES AND SIDEWALK COVER PLATES MUST BE ASTM A709, GRADE 36 OR 50 AND HOT-DIPPED GALVANIZED IN ACCORDANCE WITH ASTM A123.
14. APPLY EPOXY COATING ON BOTH SIDES OF THE STEEL SIDEWALK COVER PLATE. THE TOP OF PLATE (WALKING SURFACE) MUST RECEIVE NON-SLIP EPOXY GRIT COATING IN ACCORDANCE WITH ADA A4.5.
15. AT AREAS WHERE STEEL MEMBERS ARE TO BE SPLICED, USE OF COMPLETE JOINT PENETRATION (CJP) AND PARTIAL JOINT PENETRATION (PJP) WELD ARE BOTH PERMITTED. THE THICKNESS OF PJP WELD MUST BE MINIMUM HALF OF THE STEEL MEMBER THICKNESS.
16. THE CONTRACTOR SHALL SUBMIT A WORKING PLAN FOR PLACEMENT OF STRIP SEAL DUE TO PHASING.
17. STEEL EXTRUSIONS FOR STRIP SEAL JOINTS MUST BE GALVANIZED IN ITS ENTIRELY AND PAINTED AS DETAILED IN" STEEL EXTRUSION DETAIL".

CROSS REFERENCE NOTES:

1. FOR LOCATION OF EXPANSION JOINTS, SEE SHEETS BR 1-714 BD-38 AND BR 1-714 BD-25 - BR 714 BD-27.
2. FOR APPROACH SLAB & SLEEPER SLAB REINFORCEMENT, SEE SHEETS BR 1-714 BD-25- BR 1-714 BD-27.

BR 1-714A
BD-35

ADDENDA / REVISIONS	NOT TO SCALE	BR 1-714A ON CHAPMAN ROAD OVER I-95 NB	CONTRACT T201507402	BRIDGE NO. 1-714A	EXPANSION JOINT DETAILS	SECTION AEC
			COUNTY NEW CASTLE	DESIGNED BY: R.GANOVSKA		SHEET NO. 99
				CHECKED BY: S.MUKHERJEE		

8/16/2019 7:38:49 PM P:\60323054 DelDOT AGR 1672 BDS\T06 - Rehab Br. 1-714\900 WORK\910 CAD\20-SHEETS\Structures\Final Design\NB\BR1-714-NB-EX01.dgn

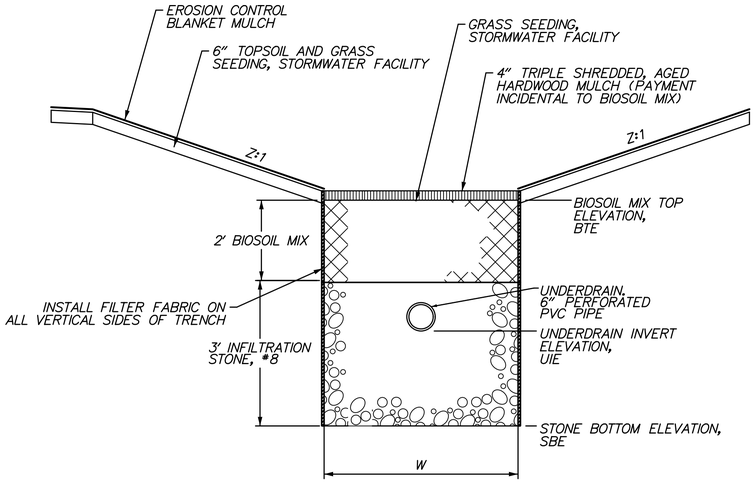

BIORETENTION WITH UNDERDRAIN
TYPICAL SECTION A-A
BMP 1014 AND 1015
NOT TO SCALE

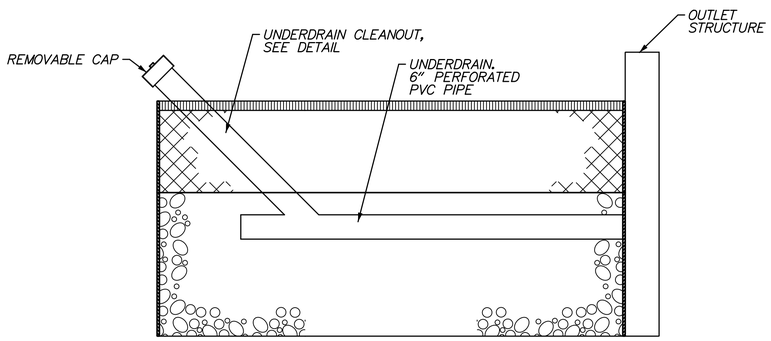

BIORETENTION WITH UNDERDRAIN
TYPICAL SECTION B-B
BMP 1014 AND 1015
NOT TO SCALE

BMP DATA		
SWM FACILITY NUMBER	DRAINAGE AREA AC.	CN
BMP 1014	0.59	85
BMP 1015	0.42	88

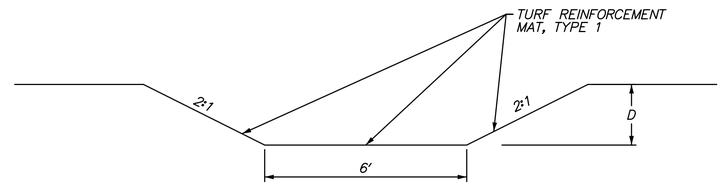

BMP EMERGENCY SPILLWAY
BMP 1014 AND 1015
NOT TO SCALE

BMP EMERGENCY SPILLWAY SCHEDULE			
SWM FACILITY NUMBER	DEPTH (D) FT	SPILLWAY BOTTOM ELEVATION	DOWNSTREAM DISCHARGE LOCATION
BMP 1014	1	70.00	EXISTING CONCRETE CHANNEL
BMP 1015	1	58.00	EXISTING CONCRETE CHANNEL

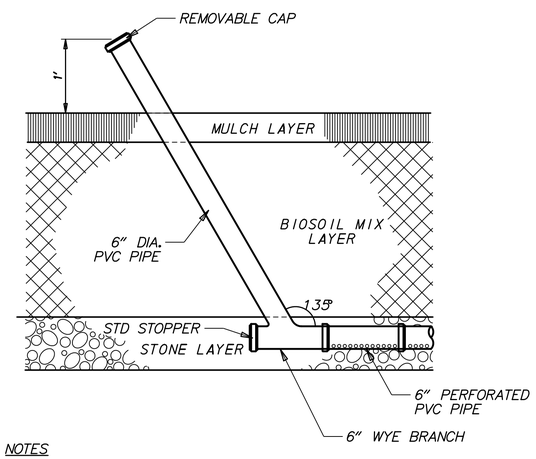

NOTES
1. ALL MATERIAL AND WORK REQUIRED TO INSTALL CLEANOUT SHALL BE INCIDENTAL TO PAY ITEM 910010.
2. 6-INCH DIAMETER PVC CLEANOUT PIPE IN ACCORDANCE WITH SECTION 1031.01.D.

CLEANOUT DETAIL
NOT TO SCALE

BIORETENTION AREA CONSTRUCTION SEQUENCE

BEFORE ANY CONSTRUCTION BEGINS ON THE BIORETENTION AREA, CONTACT THE DESIGNATED CCR A MINIMUM OF 2 WORKING DAYS IN ADVANCE SO THAT THE REQUIRED FACILITY CONSTRUCTION CHECKLIST CAN BE COMPLETED.

INITIAL CONSTRUCTION OF BMP 1014 IS INDICATED TO ALLOW FOR POSITIVE DRAINAGE PRIOR TO SITE STABILIZATION. BMP 1014 DOES NOT FUNCTION AS A SEDIMENT TRAP.

INITIAL CONSTRUCTION OF BMP 1015 IS INDICATED TO ALLOW FOR COMPLETION OF SOME EARTHWORK OPERATIONS WHILE THE ADJACENT ROADWAY WORKZONE IS ACTIVE. BMP 1015 DOES NOT FUNCTION AS A SEDIMENT TRAP.

A. INITIAL CONSTRUCTION:

1. CONSTRUCT INFLOW SWALE AND EXCAVATE BIORETENTION AREA TO THE BIOSOIL TOP ELEVATION (SEE BMP FACILITY SCHEDULE). DO NOT EXCAVATE BELOW THE BIOSOIL TOP ELEVATION.
2. CONSTRUCT OUTLET AND OUTFALL AS SHOWN ON THE PLANS. DEWATER FOUNDATION AS NEEDED IN ACCORDANCE WITH DEWATERING PRACTICES AS SHOWN IN SECTION 900 OF THE STANDARD SPECIFICATIONS. CONSTRUCT EMERGENCY SPILLWAY AS SHOWN ON THE PLANS.
3. ALL DISTURBED AREAS MEETING FINAL ELEVATIONS AND GRADES ABOVE THE BIOSOIL TOP ELEVATION SHALL BE TOPSOILED, SEEDED, AND MULCHED AS SHOWN ON THE PLANS. DISTURBED AREAS NOT MEETING FINAL ELEVATIONS AND GRADES SHALL BE TEMPORARILY STABILIZED AS SHOWN ON THE PLANS.

B. MAINTENANCE OF BIORETENTION AREA:

1. THE CONTRACTOR SHALL INSPECT THE BIORETENTION AREA THE NEXT WORK DAY FOLLOWING A RAIN EVENT AND MAKE ANY REPAIRS AS NEEDED.
2. ANY EXCESS SEDIMENT AROUND THE OUTFALL AREA WILL BE REMOVED WITHIN TWO WORKING DAYS AND DISPOSED AT A LOCATION APPROVED BY THE ENGINEER.

C. CONVERSION TO PERMANENT BIORETENTION AREA:

1. ALL AREAS DRAINING TO THE BIORETENTION AREA MUST BE AT FINAL GRADE AND STABILIZED. STABILIZATION SHALL BE APPROVED BY THE STORMWATER ENGINEER PRIOR TO FACILITY CONVERSION. SHOULD COMPLETION OF BIORETENTION AREA CONSTRUCTION BE NECESSARY PRIOR TO FINAL STABILIZATION, AN ONSITE MEETING WILL BE CONDUCTED WITH THE STORMWATER ENGINEER (OR DESIGNEE) TO DETERMINE THE E&S REQUIREMENTS PRIOR TO CONVERSION.
2. ABSOLUTELY NO WHEELED OR TRACKED EQUIPMENT SHALL BE ALLOWED WITHIN 2 FT OF THE STONE BOTTOM ELEVATION. REMOVE ANY EXCESS SEDIMENT, EXCAVATE THE BIORETENTION AREA TO THE DIMENSIONS SHOWN ON THE PLANS, AND SCARIFY THE BOTTOM A MINIMUM OF 6 INCHES.
3. PLACE THE FILTER FABRIC ON THE VERTICAL FACES OF THE TRENCH, AS INDICATED.
4. PLACE #8 INFILTRATION STONE UP TO THE BOTTOM INVERT OF THE UNDERDRAIN ORIFICE ON THE OUTLET STRUCTURE. NO COMPACTION OF THE STONE IS NECESSARY.
5. PLACE THE UNDERDRAIN AS SHOWN ON THE PLANS. PLACE THE ADDITIONAL #8 INFILTRATION STONE SO THAT THERE WILL BE 6 INCHES OF STONE OVER TOP OF THE UNDERDRAIN PIPING. ATTACH THE REMAINING CLEAN OUT PORTIONS OF THE UNDERDRAIN SYSTEM.
6. FILL THE REST OF THE AREA WITH BIOSOIL MIX TO THE ELEVATION SHOWN ON THE PLANS.
   - OPTION 1: ALLOW ONE STORM EVENT TO TAKE PLACE OR WAIT 3 CALENDAR DAYS TO CHECK FOR SETTLEMENT AND ADD ADDITIONAL BIOSOIL MIX, AS NEEDED, TO ACHIEVE THE DESIGN ELEVATION.
   - OPTION 2: PLACE BIOSOIL MIX IN MAXIMUM 12" LIFTS, WATERING EACH LIFT UNTIL SATURATED.
7. AFTER FINAL BIOSOIL ELEVATION ACHIEVED, APPLY THE SEEDING AS DESIGNATED ON THE PLANS.
8. IMMEDIATELY AFTER INSTALLING VEGETATION, PLACE 4 INCHES OF TRIPLE SHREDDED, AGED HARDWOOD MULCH OVER ALL OF THE BIOSOIL MIX.
9. THE SAME DAY THAT THE BIOSOIL IS COMPLETED, PERMANENTLY STABILIZE THE DISTURBED AREA AROUND THE BIORETENTION AREA AS SHOWN ON THE PLANS. COMPLETE STABILIZATION OF ALL BARE AREAS WITH GRASS SEEDING - STORMWATER FACILITY AND EROSION CONTROL BLANKET MULCH
10. AFTER ALL SURROUNDING AREAS DRAINING TO THE BIORETENTION AREA HAVE SUFFICIENT VEGETATION, WITH CONCURRENCE FROM THE STORMWATER ENGINEER, REMOVE REMAINING E&S CONTROLS.

* AS-BUILT DRAWINGS WILL BE COMPLETED BY THE CONTRACTOR AND CERTIFIED BY A DELAWARE PLS BY THE DELDOT SEMI-FINAL INSPECTION DATE. THESE DRAWINGS SHALL BE SENT TO THE STORMWATER ENGINEER FOR VERIFICATION. AS-BUILT DRAWINGS WILL INCLUDE, BUT NOT BE LIMITED TO:
- GENERAL TOPOGRAPHY OF THE WHOLE FACILITY
- INVERTS OF ALL PIPES AND SWALES THAT INFLOW TO THE POND
- OUTLINE OF ALL RIPRAP AND OBTAIN SPOT ELEVATIONS ON TOP OF THE RIPRAP
- OUTLET STRUCTURE (OR WEIR WALL) INVERTS OF ANY AND ALL ORIFICES/WEIRS, TOP OF STRUCTURE, OUTLET PIPE, ETC.

GENERAL NOTES:

1. ALL #8 STONE USED IN THE BIORETENTION AREA SHALL CONFORM TO THE INFILTRATION STONE SPECIFICATION OF SECTION 910 OF THE STANDARD SPECIFICATIONS.
2. FILTER FABRIC SHALL BE MIRAFI 140N, LINO GTF 130D, AMOCO 4545 OR APPROVED EQUAL IN ACCORDANCE WITH SECTION 1060 OF THE STANDARD SPECIFICATIONS SHALL BE INCIDENTAL TO BIORETENTION AREA.
3. 6-INCH DIAMETER PVC PERFORATED UNDERDRAIN PIPE WITH 3/8-INCH DIAMETER HOLES IN ACCORDANCE WITH SECTION 1031.01.D. WRAP IN WIRE MESH WITH A SQUARE OPENING SIZE OF 1/8-INCH, AND SECURE MESH TO THE PIPE PRIOR TO PIPE PLACEMENT. MESH AND FASTENERS SHALL BE INCIDENTAL TO BIORETENTION AREA.
4. BIOSOIL MIX MUST COME FROM A 'DNREC APPROVED BIOSOIL-14 SUPPLIER' ONLY

BMP FACILITY SCHEDULE								
SWM FACILITY NUMBER	START STA/OFF	END STA/OFF	LENGTH FT	WIDTH (W) FT	SIDE SLOPE (Z)	BIOSOIL TOP ELEVATION (BTE)	STONE BOTTOM ELEVATION (SBE)	UNDERDRAIN INVERT ELEVATION (UIE)
BMP 1014	37+17, +53'	37+65, +51'	48	VARIES 6-12	3	68.00	63.00	65.00
BMP 1015	40+32, -61'	41+03, -61'	71	5.00	4	56.00	51.00	53.00

ADDENDA / REVISIONS	

NOT TO SCALE

BR 1-714 ON CHAPMAN ROAD OVER I-95

CONTRACT	BRIDGE NO.	1-714 /1-714A
T201507402	DESIGNED BY: G. MAYER	
COUNTY		
NEW CASTLE	CHECKED BY: J. ZARRELLA	

STORMWATER MANAGEMENT PLAN DETAIL & NOTES

SECTION
AEC
SHEET NO.
100

8/7/2018 2:03:01 PM P:\60325054 DelDOT AGR 1672 BDS\T06 - Rehab Br. 1-714\900 WORK\910 CAD\20-SHEETS\SW01.dgn

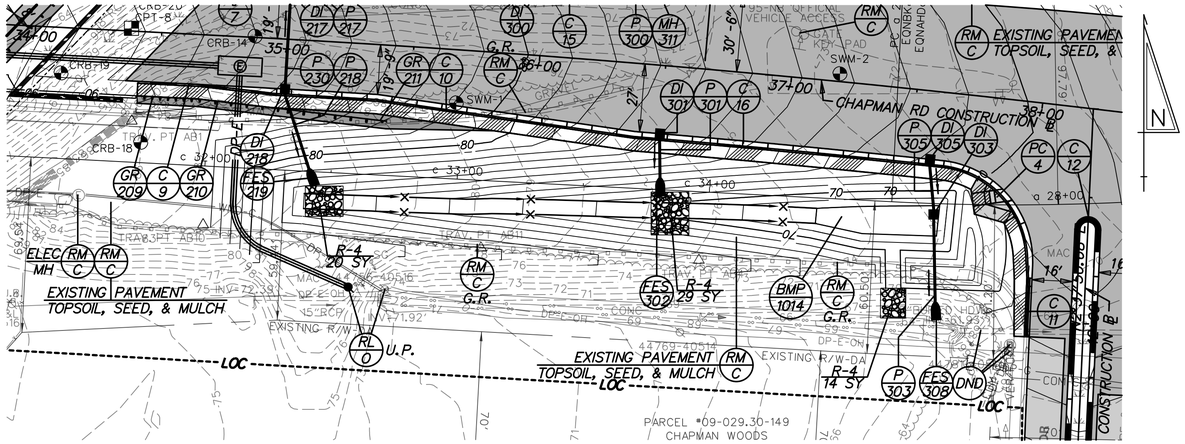

PLAN - BIORETENTION WITH UNDERDRAIN - SWM BMP 1014

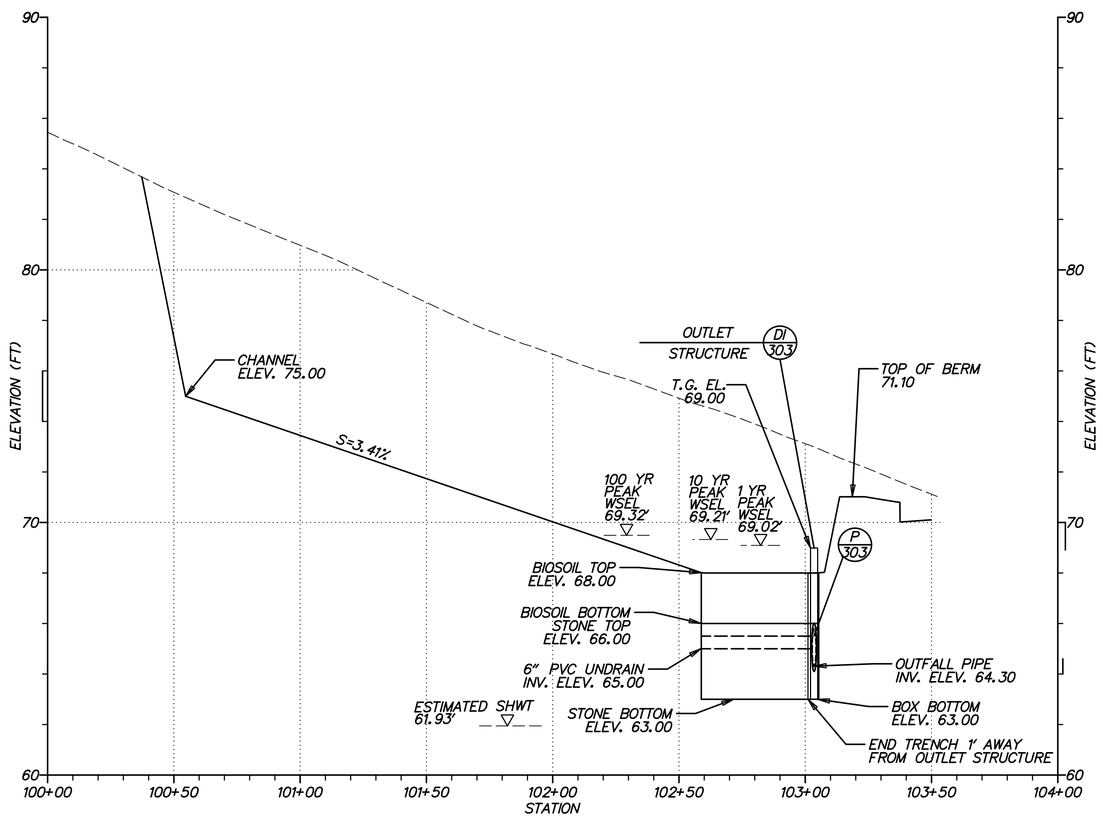

PROFILE - BIORETENTION WITH UNDERDRAIN - SWM BMP 1014

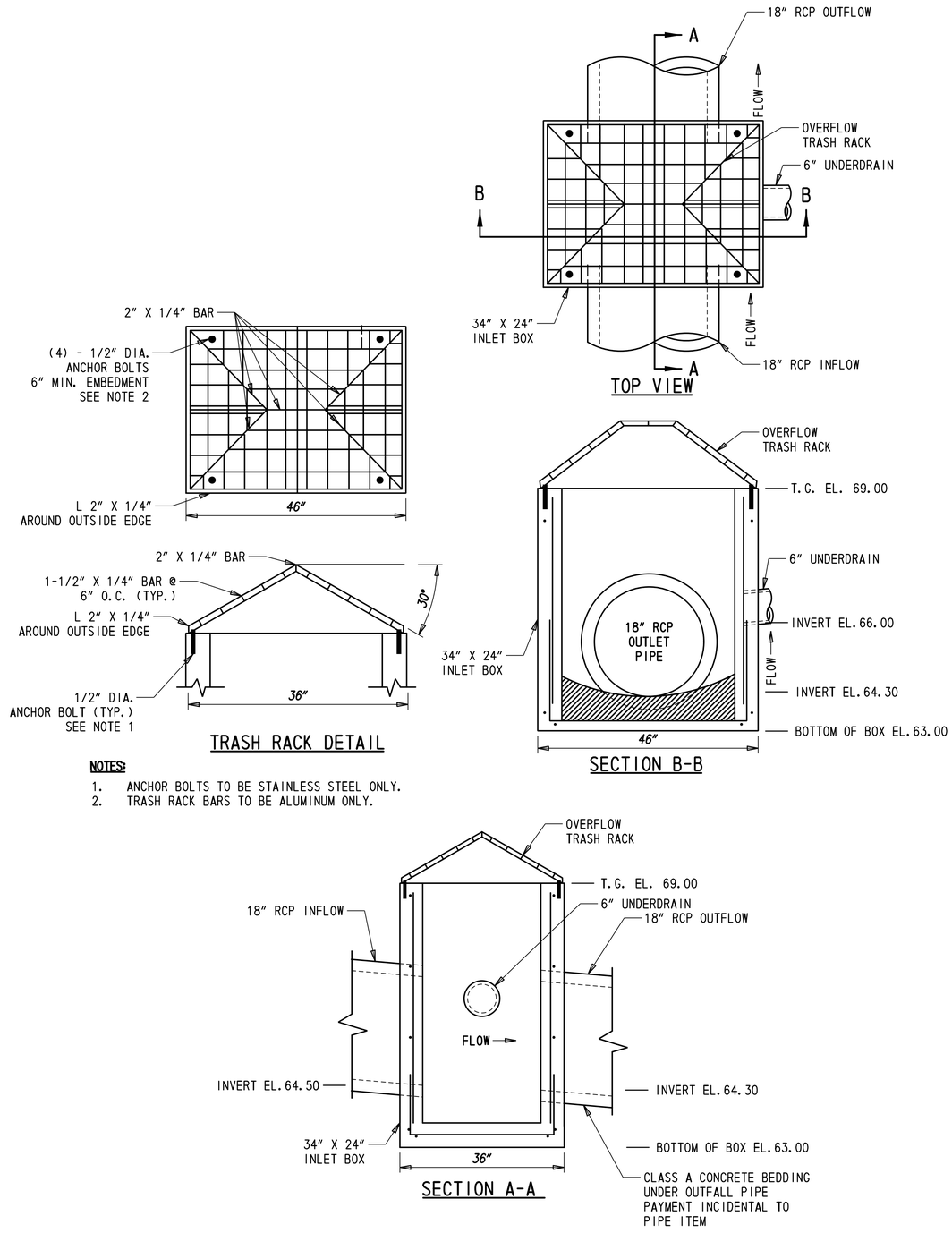

NOTES:

1. ANCHOR BOLTS TO BE STAINLESS STEEL ONLY.
2. TRASH RACK BARS TO BE ALUMINUM ONLY.

BMP OUTLET STRUCTURE DETAIL
(INLET DI 303)

ADDENDA / REVISIONS	NOT TO SCALE	BR 1-714 ON CHAPMAN ROAD OVER I-95	CONTRACT T201507402	BRIDGE NO. 1-714 /1-714A	STORMWATER MANAGEMENT PLAN DELDOT SWM FACILITIES BMP 1014	SECTION AEC
			COUNTY NEW CASTLE	DESIGNED BY: G. MAYER		SHEET NO. 101
				CHECKED BY: J. ZARRELLA		

8/7/2019
2:03:13 PM
E:\60323054 DelDOT AGR 1672 BDS\T06 - Rehab Br. 1-714\900 WORK\910 CAD\20-SHEETS\SW02.dgn

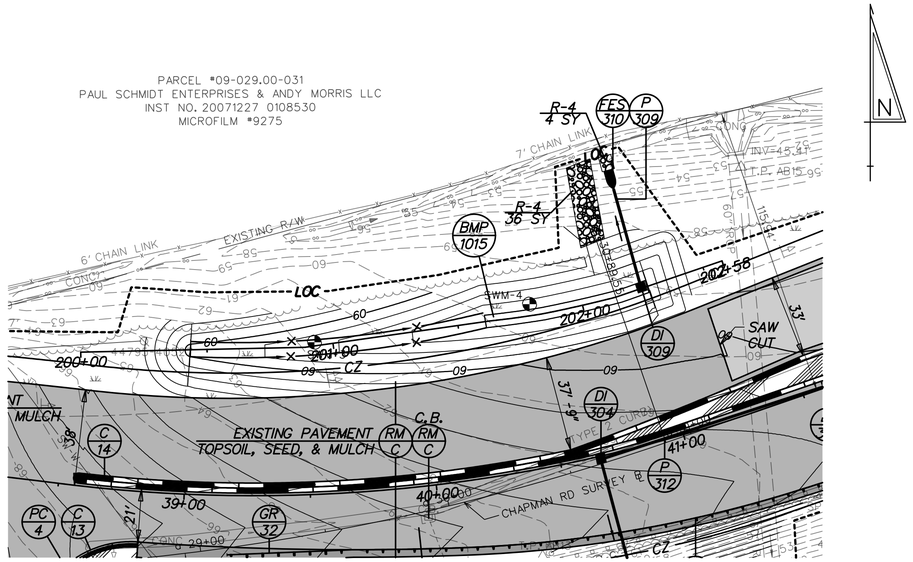

PLAN - BIORETENTION WITH UNDERDRAIN - SWM BMP 1015

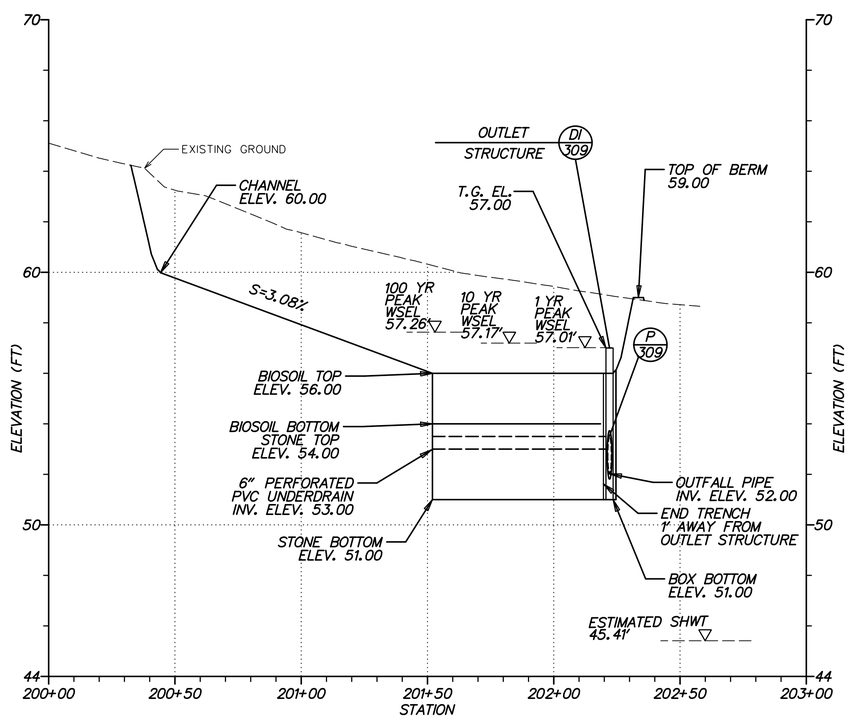

PROFILE - BIORETENTION WITH UNDERDRAIN - SWM BMP 1015

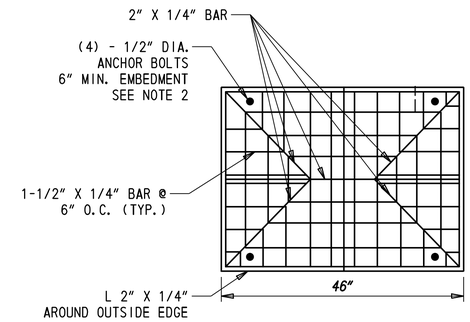

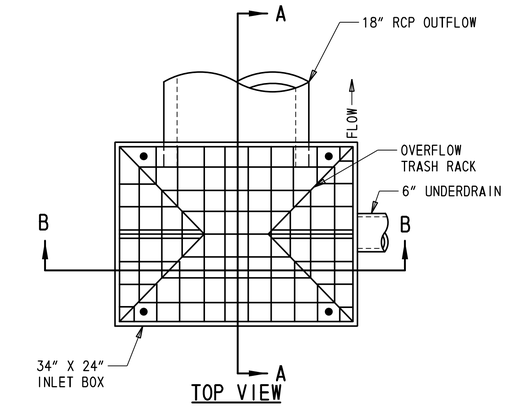

TOP VIEW

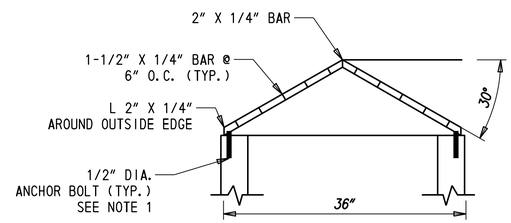

TRASH RACK DETAIL

NOTES:

1. ANCHOR BOLTS TO BE STAINLESS STEEL ONLY.
2. TRASH RACK BARS TO BE ALUMINUM ONLY.

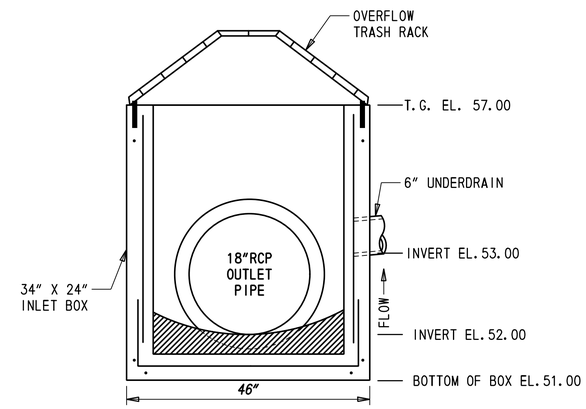

SECTION B-B

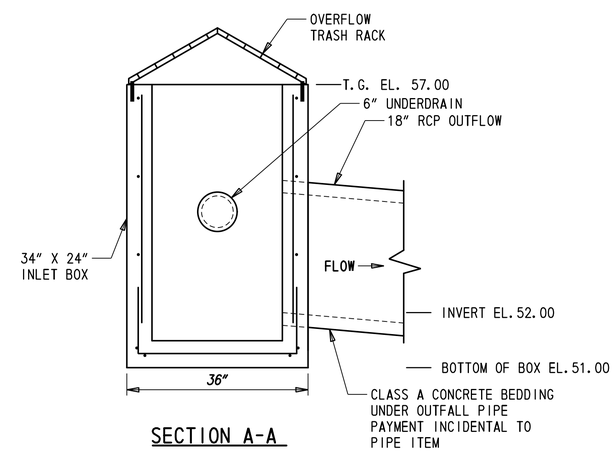

SECTION A-A

BMP OUTLET STRUCTURE DETAIL
(INLET DI 309)

ADDENDA / REVISIONS	NOT TO SCALE	BR 1-714 ON CHAPMAN ROAD OVER I-95	CONTRACT T201507402	BRIDGE NO. 1-714 /1-714A	STORMWATER MANAGEMENT PLAN DELDOT SWM FACILITY BMP 1015	SECTION AEC
			COUNTY NEW CASTLE	DESIGNED BY: G. MAYER		SHEET NO. 102
				CHECKED BY: J. ZARRELLA		

8/7/2019
2:04:15 PM
P:\60325054 DelDOT AGR 1672 BDSVT06 - Rehab Br. 1-714\900 WORK\910 CAD\20-SHEETS\SW03.dgn

MOT GENERAL NOTES

1. MAINTENANCE OF TRAFFIC DURING LANE CLOSURES AND LANE SHIFTS SHALL CONFORM TO TA-5, TA-7, TA-11B, TA-17A, TA-23, TA-33, TA-35H, AND TA-39 OF THE DELAWARE MUTCD.

2. AMERICAN TRAFFIC SAFETY SERVICES ASSOCIATION (ATSSA) CERTIFIED TRAFFIC CONTROL SUPERVISOR REQUIREMENT FOR THIS PROJECT.

( )	THE CONTRACTOR SHALL NOT BE REQUIRED TO HAVE AN ATSSA SUPERVISOR ASSIGNED TO THIS PROJECT.
(X)	THE CONTRACTOR SHALL HAVE AN ATSSA SUPERVISOR ASSIGNED TO THIS PROJECT. THE CONTRACTOR'S GENERAL SUPERINTENDENT FOR THIS PROJECT OR ANOTHER ATSSA CERTIFIED MEMBER OF THE CONTRACTOR'S PROJECT STAFF MAY BE THE ATSSA SUPERVISOR. PAYMENT FOR ATSSA SUPERVISOR IS INCIDENTAL TO ITEM 801000.

3. THIS PROJECT IS CONSIDERED A SIGNIFICANT PROJECT AS DEFINED BY DELDOT'S WORK ZONE MOBILITY PROCEDURES AND GUIDELINES. A TYPE B TRANSPORTATION MANAGEMENT PLAN (TMP) HAS BEEN PREPARED AND IS AVAILABLE FOR VIEWING BY CONTACTING THE DEPARTMENT'S SAFETY PROGRAMS MANAGER AT (302)659-4060. ALL MONITORING REQUIREMENTS OF THE TMP SHALL BE CONDUCTED BY DELDOT FORCES UNLESS OTHERWISE DIRECTED BY THE ENGINEER. MODIFICATIONS TO THE TMP SHALL BE COMPLETED BY THE CONTRACTOR IF CHANGES TO THE TIME RESTRICTIONS OR THE TRAFFIC CONTROL PLAN ARE DESIRED. THE MODIFIED TMP SHALL BE PREPARED BY A PROFESSIONAL ENGINEER, REGISTERED IN THE STATE OF DELAWARE.

4. THE USE OF MILLINGS AND GRADED AGGREGATE BASE COURSE (GABC) IN THE TRAVEL WAY, TEMPORARY TRAVEL WAY, HIGH VOLUME ENTRANCES AND ACCESS RAMP FOR THE PURPOSE OFPROVIDING A TEMPORARY ROADWAY SURFACE, POTHOLE REPAIR, TAPERED EDGE FOR UTILITIES, BUTT JOINTS, AND LONGITUDINAL DROP-OFFS (MILLING AND PAVING OPERATIONS) IS PROHIBITED UNLESS IT IS OTHERWISE DESIGNATED TO BE USED IN THE CONTRACT PLANS. USE COLD PATCH, BITUMINOUS CONCRETE, BITUMINOUS CONCRETE WEDGE, OR TAPER MILL, AS NOTED IN THE CONTRACT DOCUMENTS OR APPROVED BY THE ENGINEER. PAYMENT FOR COLD PATCH, BITUMINOUS CONCRETE OR BITUMINOUS CONCRETE WEDGE SHALL BE PAID AS NOTED IN THE CONTRACT DOCUMENTS. TAPER MILL BITUMINOUS CONCRETE SHALL BE PAID UNDER THE BITUMINOUS CONCRETE MILLING ITEM. MILLINGS OR GABC SHALL BE USED AT THE FOLLOWING LOCATIONS WHERE ACCESS TO A BUSINESS, RESIDENCE, OR EDGE DROP OFF NEEDS TO BE MAINTAINED UNLESS OTHERWISE NOTED IN THE PLANS OR DIRECTED BY THE ENGINEER TO USE BITUMINOUS CONCRETE OR COLD PATCH. ALL MILLINGS AND GABC WILL BE ROLLED AND COMPACTED TO HELP PREVENT THE MATERIAL FROM UNRAVELLING:

   a. DRIVEWAYS
   b. ENTRANCES
   c. LOW VOLUME ACCESS RAMPS (IDENTIFIED IN THE CONTRACT DOCUMENTS)
   d. EDGE DROP-OFFS ADJACENT TO LIVE ROADWAY(LANES AND SHOULDER) AND THE PROPOSED ROAD CONSTRUCTION
   e. EDGE OF ROADWAY DROP-OFF

   GRADING AND MAINTAINING BASE COURSE THAT IS BEING USED FOR ROADWAY WEDGE/FILLET BETWEEN TRAVEL LANES AND PAVEMENT BOX, EDGE OF TRAVELWAY, DRIVEWAY OR ENTRANCE ACCESS SHALL BE INCIDENTAL TO ITEM NO. 801000 - MAINTENANCE OF TRAFFIC. THE BASE COURSE MATERIAL SHALL BE PLACED AT NO GREATER THAN THE SLOPE SPECIFIED IN TABLE 6G-1 AND SHALL BE COMPACTED. EXCESS BASE COURSE MATERIAL SHALL BE PUSHED AHEAD AND USED IN THE NEXT SEGMENT AND SHALL BE INCIDENTAL TO THE PARTICULAR BASE COURSE PAY ITEM. NO SEPARATE PAYMENT SHALL BE MADE FOR MILLINGS OR GABC TEMPORARY ROADWAY MATERIAL (TRM) USED TO PROTECT EDGE DROP-OFFS, UNLESS THE MATERIAL IS EVENTUALLY UTILIZED AS PART OF A PERMANENT ROADWAY AT WHICH TIME THE MATERIAL WOULD BE PAID FOR UNDER THE RESPECTIVE CONTRACT MATERIAL ITEM. VERTICAL DIFFERENCES SHALL BE CORRECTED IN ACCORDANCE WITH TABLE 6G-1 OF THE DELAWARE MUTCD.

5. ACCEPTABLE MATERIALS FOR TEMPORARY PEDESTRIAN PATHS SHALL INCLUDE CONCRETE, HOT-MIX, COMPACTED MILLINGS OR PLYWOOD WALKWAY STRUCTURE. PLYWOOD WALKWAY STRUCTURES SHALL ALSO INCLUDE DETECTABLE EDGING AND RAILINGS IN ACCORDANCE WITH ADA GUIDELINES AND THE DELAWARE MUTCD. TEMPORARY PEDESTRIAN PATHS SHALL BE INCIDENTAL TO ITEM 743000 UNLESS OTHERWISE SPECIFIED IN THE PLANS. STONE OR GRADED AGGREGATE BASE COURSE SHALL NOT BE USED FOR TEMPORARY PEDESTRIAN PATHS.

6. THE CONTRACTOR'S VEHICLE(S) AND EQUIPMENT SHALL NOT USE THE DELDOT EMERGENCY GATE EAST OF THE BRIDGE OR MEDIAN CROSSOVERS ON I-95 WHICH ARE RESTRICTED FOR AUTHORIZED AND EMERGENCY VEHICLES ONLY.

7. THE CONTRACTOR SHALL MAINTAIN ACCESS TO THE KEY CODE BOX FOR THE DELDOT EMERGENCY GATE AT ALL TIMES. THE CONTRACTOR IS PROHIBITED FROM STORING EQUIPMENT AND MATERIAL WITHIN THE LIMITS OF THE EMERGENCY GATE. ALL EXISTING REGULATORY SIGNS ARE TO BE MAINTAINED THROUGHOUT THE DURATION OF CONSTRUCTION.

8. THE CONTRACTOR SHALL PROVIDE ONE TRAFFIC OFFICER FOR ANY OPERATION WHERE AN EXISTING SIGNALIZED INTERSECTION IS PLACED IN FLASH MODE. THE TRAFFIC OFFICER IS THE ONLY INDIVIDUAL THAT CAN PLACE A TRAFFIC SIGNAL IN FLASH MODE, AND THE TRAFFIC OFFICER SHALL STAY ON LOCATION UNTIL THE SIGNAL IS PLACED BACK IN STOP-AND-GO OPERATION IN ACCORDANCE WITH DELDOT'S TEMPORARY TRAFFIC CONTROL WITHIN INTERSECTIONS MEMORANDUM (WWW.MUTCD.DELDOT.GOV).

9. SEE TA-35H FOR TRAFFIC OFFICER REQUIREMENTS.

10. FOR NIGHT-TIME CLOSURES OF ANY ROAD OR RAMP, PROVIDE A TRAFFIC OFFICER AT EACH CLOSURE POINT SHOWN IN THE APPLICABLE DETOUR PLANS. THE TRAFFIC OFFICER SHALL BE PLACED BEHIND THE CLOSURE BARRICADE WITH THE FRONT OF THE VEHICLE FACING APPROACHING TRAFFIC AND ALL EMERGENCY LIGHTS SHALL BE ACTIVATED. THE TRAFFIC OFFICER SHALL PROVIDE A REPORT TO THE ENGINEER AT THE END OF THE DAY'S ACTIVITY IDENTIFYING THE NUMBER OF VEHICLES THAT ATTEMPTED TO DISREGARD THE DETOUR. TWO OFFICERS SHALL BE PLACED AT THE MAINLINE I-95 CLOSURE POINTS AND ONE TRAFFIC OFFICER SHALL BE PLACED AT EACH RAMP CLOSURE POINT. SEE DETOUR PLANS FOR TRAFFIC OFFICER LOCATIONS.

11. ADDITIONAL USAGE OF TRAFFIC OFFICERS OUTSIDE OF THE ABOVE REQUIREMENTS SHALL BE APPROVED BY THE ENGINEER IN CONSULTATION WITH THE TRAFFIC SAFETY SECTION.

12. ALL NECESSARY SIGNS, PAVEMENT MARKINGS AND ROADSIDE APPURTENANCES SHALL BE INSTALLED PRIOR TO THE OPENING/REOPENING OF A ROADWAY OR RAMP. A WALKTHROUGH WITH THE ENGINEER, TRAFFIC SAFETY, TRAFFIC CONSTRUCTION, AND OTHER PERSONNEL SHALL OCCUR NO LESS THAN 48 HOURS PRIOR TO THE OPENING/REOPENING OF ANY ROAD OR RAMP.

E&S GENERAL NOTES

1.

EROSION POTENTIAL FOR THIS PROJECT	CONTRACTOR ESC SUPERVISOR REQUIREMENT
( ) INSIGNIFICANT	NONE
( ) MINOR	CONTRACTOR TRAINING PROGRAM, AS DEFINED IN SECTION 6.2 OF THE DELAWARE SEDIMENT AND STORMWATER REGULATIONS.
(X) MAJOR	CERTIFIED CONSTRUCTION REVIEWER (CCR), AS DEFINED IN SECTION 6.3 OF THE DELAWARE SEDIMENT AND STORMWATER REGULATIONS.

2. THE DISTURBED AREA FOR THIS PROJECT IS 7.54 ACRES. THE DRAINAGE AREA DRAINING TO ADJACENT CONTRACT T201861101 IS 2.40 ACRES. THE DITURBED AREA MANAGED UNDER THIS CONTRACT IS 7.14 ACRES.

3. THE SEDIMENT AND STORMWATER MANAGEMENT PLANS HAVE BEEN APPROVED BY DELDOT'S STORMWATER ENGINEER UNDER DELDOT'S DELEGATED AUTHORITY. THE SEDIMENT AND STORMWATER MANAGEMENT PLANS ARE VALID FOR A FIVE YEAR PERIOD, BEGINNING ON THE DATE THE STORMWATER ENGINEER SIGNED THE CONSTRUCTION TITLE SHEET. IF THE FINAL ACCEPTANCE OF THE PROJECT IS ANTICIPATED TO EXTEND BEYOND THE FIVE YEARS, THE CONTRACTOR WILL INFORM THE ENGINEER THREE MONTHS PRIOR TO THE EXPIRATION OF THE APPROVED SEDIMENT AND STORMWATER MANAGEMENT PLANS. THE STORMWATER ENGINEER WILL REVIEW THE CURRENT SEDIMENT AND STORMWATER MANAGEMENT PLAN AND ISSUE AN EXTENSION WITH ANY APPROPRIATE MODIFICATIONS.

4. ANY E&S DEVICE REMOVAL WILL BE AS DIRECTED BY THE ENGINEER WITH CONCURRENCE FROM THE E&S LIASON.

CONSTRUCTION PHASING & M.O.T

SYMBOL	DESCRIPTION
	BARRICADE, TYPE 3
	CONCRETE SAFETY BARRIER - PORTABLE
CSF XXX	CONSTRUCTION SAFETY FENCE / LENGTH
—CSF—	CONSTRUCTION SAFETY FENCE
	CONSTRUCTION WARNING SIGN LOCATION
END ROAD WORK	CONSTRUCTION WARNING SIGN
	CRASH CUSHION ARRAY
	DRUM - TRAFFIC CONTROL
	FLAGGER LOCATION
	PHASING TRAFFIC FLOW ARROW
	PEDESTRIAN CHANNELIZING BARRICADE
	TEMPORARY CONSTRUCTION
	TEMPORARY PAVEMENT MARKING ARROW
	TRUCK WITH MOUNTED ATTENUATOR
	WORK AREA - ACTIVE PHASE
	BARRIER RUNOUT AREA

EROSION & SEDIMENT CONTROL

SYMBOL	DESCRIPTION
—CFL—	COMPOST FILTER LOG
CFL	COMPOST FILTER LOG / LENGTH
DWBAG	DEWATERING BAG
DWB	DEWATERING BASIN
ED	EARTH DIKE
	INLET SEDIMENT CONTROL
	PERIMETER DIKE/SWALE
PST	PORTABLE SEDIMENT TANK
SBD	SANDBAG DIKE
SB	SANDBAG DIVERSION
	STONE CHECK DAM
SCE	STABILIZED CONSTRUCTION ENTRANCE
SF	SILT FENCE / LENGTH
—SF—	SILT FENCE
RSF	REINFORCED SILT FENCE / LENGTH
—RSF—	REINFORCED SILT FENCE
SSF	SUPER SILT FENCE / LENGTH
—SSF—	SUPER SILT FENCE
SP	SUMP PIT
ST	SEDIMENT TRAP / NUMBER
ST	SEDIMENT TRAP
ST	SEDIMENT TRAP WITH INLET AS OUTLET
ST	SEDIMENT TRAP PIPE OUTLET
SW	STILLING WELL
	TEMPORARY SWALE
TSD	TEMPORARY SLOPE DRAIN
T XXX	TURBIDITY CURTAIN / LENGTH
—T—	TURBIDITY CURTAIN

I95 NB - ALLOWABLE TEMPORARY TRAVEL LANE CLOSURES TIMES

	12:00 AM	1:00 AM	2:00 AM	3:00 AM	4:00 AM	5:00 AM	6:00 AM	7:00 AM	8:00 AM	9:00 AM	10:00 AM	11:00 AM	12:00 PM	1:00 PM	2:00 PM	3:00 PM	4:00 PM	5:00 PM	6:00 PM	7:00 PM	8:00 PM	9:00 PM	10:00 PM	11:00 PM
SUNDAY	3	3	3	3	3	3	2	2	2	1	1							1	1	1	1	3	3	3
MONDAY	3	3	3	3	3	3	1			1	1	1	1	1	1	1	1	1	1	2	2	3	3	3
TUESDAY	3	3	3	3	3	3	1			1	1	1	1	1	1	1	1	1	1	2	2	3	3	3
WEDNESDAY	3	3	3	3	3	3	1			1	1	1	1	1	1	1	1	1	1	2	2	3	3	3
THURSDAY	3	3	3	3	3	3	1			1	1	1	1	1	1	1	1	1	1	2	2	3	3	3
FRIDAY	3	3	3	3	3	3	1			1	1	1	1	1	1	1	1	1	1	2	2	3	3	3
SATURDAY	3	3	3	3	3	3	2	2	1	1								1	1	1	1	3	3	3

I95 SB - ALLOWABLE TEMPORARY TRAVEL LANE CLOSURES TIMES

	12:00 AM	1:00 AM	2:00 AM	3:00 AM	4:00 AM	5:00 AM	6:00 AM	7:00 AM	8:00 AM	9:00 AM	10:00 AM	11:00 AM	12:00 PM	1:00 PM	2:00 PM	3:00 PM	4:00 PM	5:00 PM	6:00 PM	7:00 PM	8:00 PM	9:00 PM	10:00 PM	11:00 PM
SUNDAY	3	3	3	3	3	3	2	2	2	1	1	1							1	1	1	2	3	3
MONDAY	3	3	3	3	3	3	2	1	1	1	1	1	1	1	1	1			1	2	2	2	3	3
TUESDAY	3	3	3	3	3	3	2	1	1	1	1	1	1	1	1	1			1	2	2	2	3	3
WEDNESDAY	3	3	3	3	3	3	2	1	1	1	1	1	1	1	1	1			1	2	2	2	3	3
THURSDAY	3	3	3	3	3	3	2	1	1	1	1	1	1	1	1	1			1	2	2	2	3	3
FRIDAY	3	3	3	3	3	3	2	1	1	1	1	1	1	1	1	1			1	2	2	2	3	3
SATURDAY	3	3	3	3	3	3	2	2	2	1	1	1	1	1	1	1	1	1	1	1	2	2	3	3

1 ONE THROUGH LANE AND/OR TURN LANE PERMITTED TO BE CLOSED

2 TWO THROUGH LANES PERMITTED TO BE CLOSED

3 THREE THROUGH LANES PERMITTED TO BE CLOSED

NO TRAVEL OR TURN LANE CLOSURES PERMITTED

CHAPMAN RD - ALLOWABLE TEMPORARY TRAVEL LANE CLOSURES TIMES

	12:00 AM	1:00 AM	2:00 AM	3:00 AM	4:00 AM	5:00 AM	6:00 AM	7:00 AM	8:00 AM	9:00 AM	10:00 AM	11:00 AM	12:00 PM	1:00 PM	2:00 PM	3:00 PM	4:00 PM	5:00 PM	6:00 PM	7:00 PM	8:00 PM	9:00 PM	10:00 PM	11:00 PM
SUNDAY	(shaded)	(shaded)	(shaded)	(shaded)	(shaded)	(shaded)															(shaded)	(shaded)	(shaded)	(shaded)
MONDAY	(shaded)	(shaded)	(shaded)	(shaded)	(shaded)	(shaded)															(shaded)	(shaded)	(shaded)	(shaded)
TUESDAY	(shaded)	(shaded)	(shaded)	(shaded)	(shaded)	(shaded)															(shaded)	(shaded)	(shaded)	(shaded)
WEDNESDAY	(shaded)	(shaded)	(shaded)	(shaded)	(shaded)	(shaded)															(shaded)	(shaded)	(shaded)	(shaded)
THURSDAY	(shaded)	(shaded)	(shaded)	(shaded)	(shaded)	(shaded)															(shaded)	(shaded)	(shaded)	(shaded)
FRIDAY	(shaded)	(shaded)	(shaded)	(shaded)	(shaded)	(shaded)															(shaded)	(shaded)	(shaded)	(shaded)
SATURDAY	(shaded)	(shaded)	(shaded)	(shaded)	(shaded)	(shaded)															(shaded)	(shaded)	(shaded)	(shaded)

1. THE CONTRACTOR SHALL NOT CLOSE LANES ON THE LEFT AND RIGHT SIDE OF I-95 NORTHBOUND OR SOUTHBOUND SIMULTANEOUSLY.

2. CLOSURES OF I-95 FOR STEEL BEAM ERECTION ARE PERMITTED THREE NIGHTS PER DIRECTION. CLOSURE OF BOTH NORTHBOUND AND SOUTHBOUND I-95 SIMULTANEOUSLY IS PROHIBITED.

3. CLOSURES OF I-95 FOR BEAM REMOVAL ARE PERMITTED THREE NIGHTS PER DIRECTION. CLOSURE OF BOTH NORTHBOUND AND SOUTHBOUND I-95 SIMULTANEOUSLY IS PROHIBITED.

4. LANE CLOSURES AND ROAD CLOSURES ARE PROHIBITED FROM OCCURRING DURING THE FIREFLY MUSIC FESTIVAL EVENT IN DOVER, DE FROM 12:00 AM WEDNESDAY PRIOR TO THE EVENT THROUGH 12:00 AM TUESDAY FOLLOWING THE EVENT. THE ENGINEER WILL PROVIDE THE DATES OF THE EVENT TWO WEEKS PRIOR TO THE RESTRICTION BEING IMPLEMENTED.

Vincent W. Davis 08/28/2019

DELDOT STORMWATER ENGINEER DATE

"I CERTIFY TO THE BEST OF MY KNOWLEDGE AND BELIEF THAT THESE PLANS MEET THE REQUIREMENTS OF THE DELAWARE SEDIMENT AND STORMWATER REGULATIONS AND THAT ALL CLEARING, GRADING, AND CONSTRUCTION WILL BE ACCOMPLISHED PURSUANT TO THE PLAN."

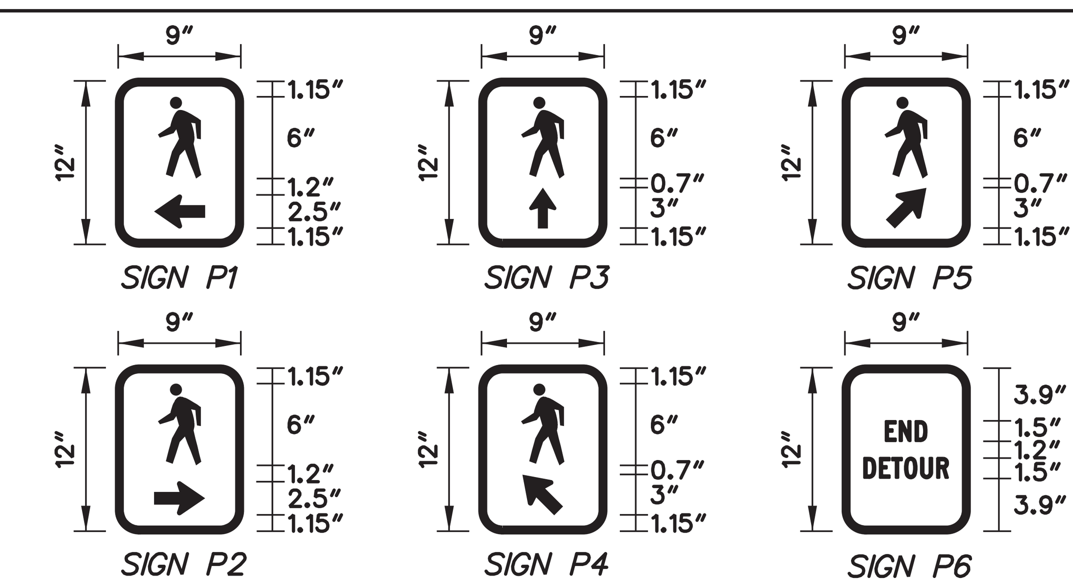

NOTES
1. SIGN P1-P6: BLACK LEGEND ON FLUORESCENT ORANGE PRISMATIC RETROREFLECTIVE BACKGROUND.
2. BORDER R=1.38" TH=0.25" IN=0.17"

PEDESTRIAN DETOUR SIGNS

NOT TO SCALE

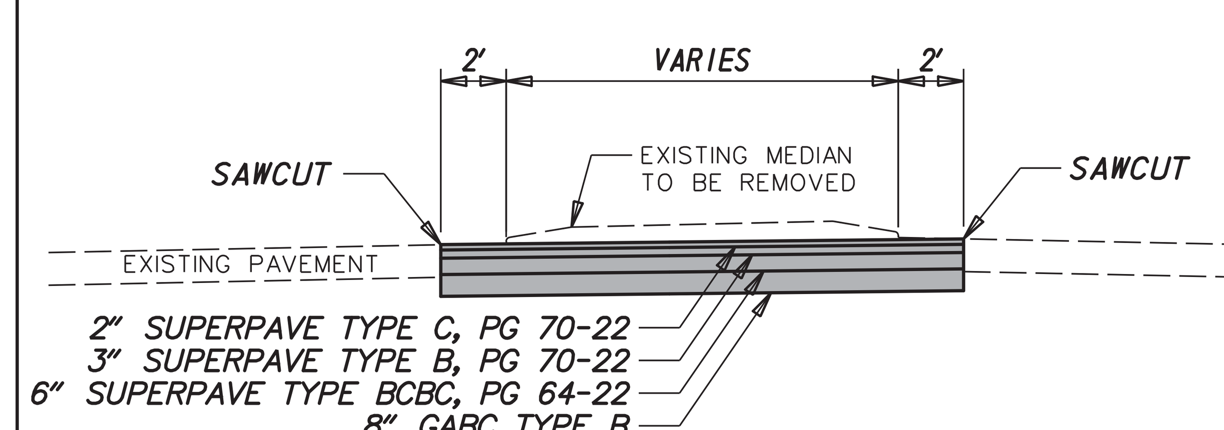

NOTES
1. DETAIL IS TO BE USED FOR TEMPORARY MEDIAN CROSSOVERS ALONG CHAPMAN RD AND ALEXIS DR.

MEDIAN CROSSOVER PAVEMENT DETAIL

NOT TO SCALE

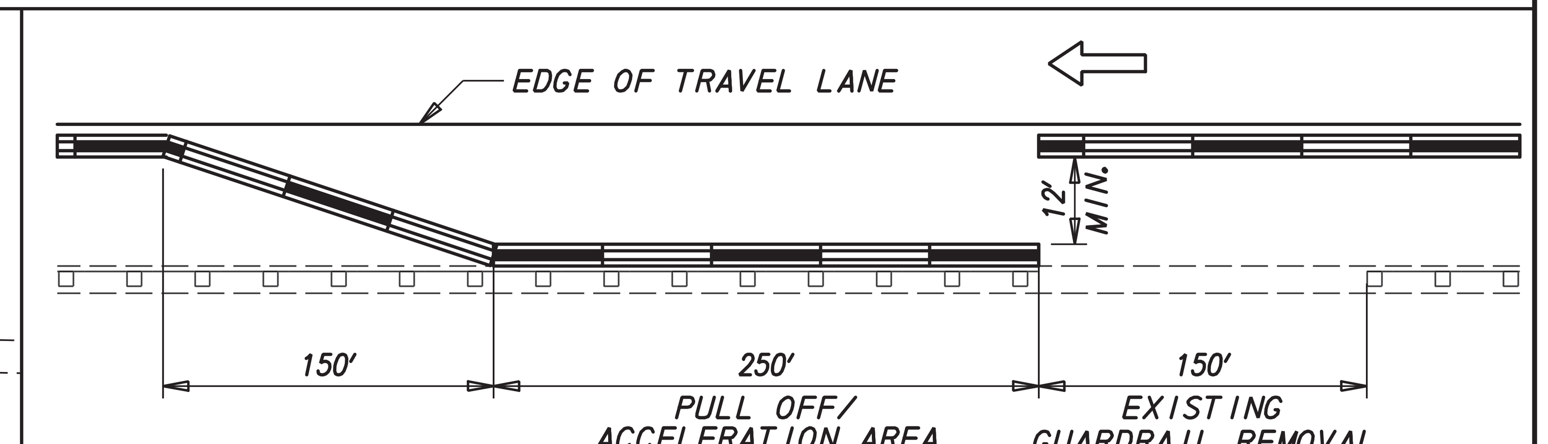

NOTES
1. DETAIL IS TO BE USED FOR ACCESS TO I-95 MEDIAN NORTH OF CHAPMAN RD. ACCESS TO THE MEDIAN SOUTH OF CHAPMAN RD WILL BE FROM THE WELCOME CENTER.
2. DIMENSIONS AND DISTANCES MAY BE ADJUSTED SLIGHTLY TO FIT FIELD CONDITIONS.

I-95 MEDIAN CONSTRUCTION EGRESS

NOT TO SCALE

ADVANCE WARNING SIGN LAYOUT

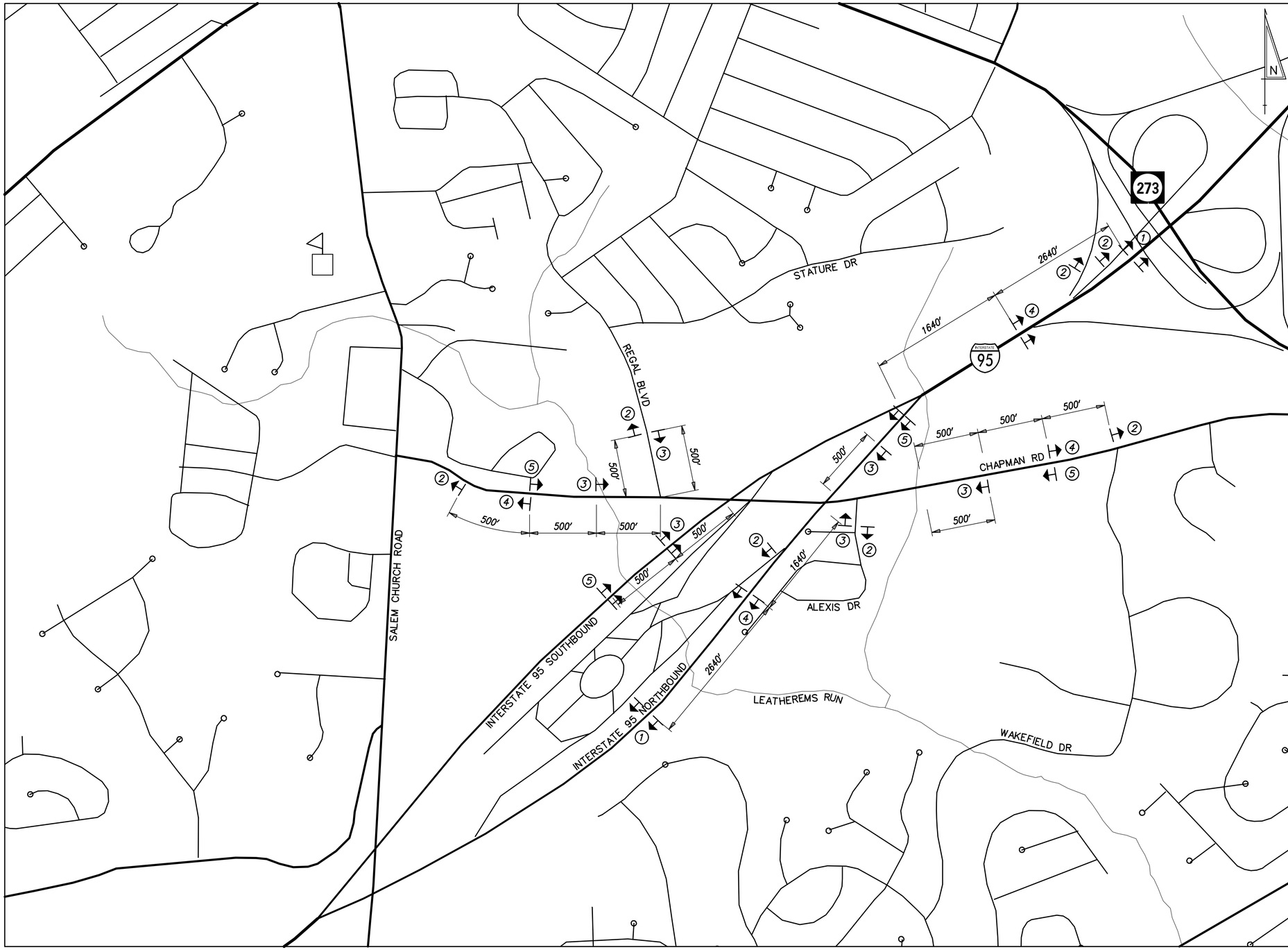

WARNING SIGN LEGEND

ROAD WORK 1 MILE
W20-1
48" X 48"
1

ROAD WORK AHEAD
W20-1
48" X 48"
2

END ROAD WORK
G20-02
48" X 24"
3

BEGIN HIGHER FINES ZONE
R2-10
36" X 48"
4

END HIGHER FINES ZONE
R2-10
36" X 48"
5

NOTES:

1. THE CONTRACTOR SHALL LAYOUT SIGN LOCATIONS FOR APPROVAL BY THE ENGINEER PRIOR TO INSTALLATION. ALL PERMANENT WARNING SIGNS SHALL BE PAID UNDER ITEM *810001. THE COVERING OF ANY CONFLICTING SIGNS SHALL BE INCIDENTAL TO ITEM *810001.
2. MINIMUM 8" FONT SIZE FOR INTERSTATE APPLICATIONS.

CS-02

ADDENDA / REVISIONS	NOT TO SCALE	BR 1-714 ON CHAPMAN ROAD OVER I-95	CONTRACT T201507402	BRIDGE NO. 1-714 /1-714A	CONSTRUCTION PHASING, M.O.T., AND EROSION CONTROL PLAN	SECTION AEC
			COUNTY NEW CASTLE	DESIGNED BY: T. SINGLE		SHEET NO. 104
				CHECKED BY: D. SEMPLE		

8/7/2019
2:09:01 PM
P:\16032\054 DelDOT AGR 1672 BDS\T06 - Rehab Br. 1-714\900 WORK\910 CAD\20-SHEETS\102_Traffic Control Plans\CS02-Permanent Warning Sign.dgn

SEQUENCE OF CONSTRUCTION PHASE 1

1. PLACE ALL PERMANENT WARNING SIGNS AS SHOWN ON THE PERMANENT WARNING SIGN PLAN SHEET AND TEMPORARY WARNING SIGNS AS SHOWN ON THE PHASE 1 MOT SHEETS.
2. INSTALL ALL EROSION AND SEDIMENT CONTROL MEASURES AS SHOWN ON PHASE 1 TRAFFIC CONTROL PLANS CLEARING AND GRUBBING AS NECESSARY FOR INSTALLATION. PERFORM REMAINING CLEARING AND GRUBBING WHEN E&S IS IN PLACE.
3. REMOVE EXISTING STRIPING AS NECESSARY AND PLACE TEMPORARY PAVEMENT STRIPING AS SHOWN ON PHASE 1 TRAFFIC CONTROL PLANS USING TA-17A ON CHAPMAN ROAD AND TA-35G ON I-95. SHIFT CHAPMAN RD TRAFFIC TO NEW LANES DESIGNATED FOR PHASE 1.
4. PLACE TEMPORARY BARRIER ALONG BRIDGE APPROACHES AND I-95 AS SHOWN IN PHASE 1 TRAFFIC CONTROL PLANS CONFORMING TO TA-5 OF THE DELAWARE MUTCD.
5. CONSTRUCT AND STABLIZE RELOCATED SWALE AROUND NEW SIGN STRUCTURE LOCATION. CONSTRUCT NEW SIGN STRUCTURE ON SB I-95 AS SHOWN AND INSTALL NEW OVERHEAD SIGN. ONCE NEW SIGN IS INSTALLED REMOVE EXISTING OVERHEAD SIGN AND STRUCTURE USING TA-35H.
6. INSTALL PROPOSED DRAINAGE ALONG I-95 WITH THE CONSTRUCTION OF THE ABUTMENT FOUNDATIONS. INSTALL THE DIVERSION SWALE AND THE SOUTHBOUND MEDIAN DRAINAGE SYSTEM PRIOR TO THE NORTHBOUND MEDIAN DRAINAGE SYSTEM, PREVENTING RUNOFF FROM REACHING THE NORTHBOUND SYSTEM. UTILIZE TA-5 AND TA-5A. SEE STRUCTURES PLANS FOR BRIDGE CONSTRUCTION SEQUENCE.
7. CONSTRUCT NEW BRIDGE STRUCTURE OVER NORTHBOUND AND SOUTHBOUND I-95 USING TA-5. STEEL GIRDERS SHALL BE INSTALLED DURING NIGHTIME CLOSURES OF I-95 AND CHAPMAN RD. SEE SHEET 103 FOR CLOSURE RESTRICTIONS AND SHEETS 126-130 FOR DETOUR PLAN. SEE STRUCTURES PLANS FOR BRIDGE CONSTRUCTION SEQUENCE.
8. PLACE AND COMPACT EMBANKMENT MATERIAL FOR NEW CHAPMAN RD. INSTALL RELOCATED ELECTRIC UTILITY MANHOLES AND CONCRETE ENCASED DUCT BANK.
9. CONSTRUCT CHAPMAN RD DRAINAGE SYSTEM AS SHOWN, BEGINNING FROM MOST DOWNSTREAM SECTION OF WORK AREA. INSTALL INLET PROTECTION AND PERMANENTLY STABILIZE DITCH AS SHOWN. ADJUST TEMPORARY BARRIER AS NEEDED FOR INLET INSTALLATION AND UPSTREAM PIPE AT STA. 26+75 RT. INSTALL INLET BOX ONLY, BACKFILL AND COVER WITH STEEL PLATE TO REPLACE TEMPORARY BARRIER.
10. CONSTRUCT CURB AND GUTTER, SIDEWALK, GUARDRAIL AS SHOWN.
11. GRADE AND BOX OUT FOR PROPOSED FULL DEPTH PAVEMENT TO THE LIMITS SHOWN.
12. PRIOR TO PAVING, REMOVE INLET PROTECTION AND COMPLETE INLET TOP UNIT INSTALLATION. PLACE PROPOSED PAVEMENT SECTION UP TO THE TOP OF THE TYPE-B LAYER TO LIMITS SHOWN.
13. PERFORM REMAINING CONSTRUCTION OF CHAPMAN ROAD DETAILED IN PHASE 1.
14. STABILIZE ALL DISTURBED AREAS AS INDICATED.

PERMANENT PAVEMENT MARKINGS LEGEND

SYMBOL	ITEM	QUANTITY
A	5" SOLID WHITE PERMANENT PAINT PAVEMENT STRIPING (ITEM 817013)	1,011 LF
C	5" SOLID DOUBLE YELLOW PERMANENT PAINT PAVEMENT STRIPING (ITEM 817013)	904 LF
D	5" DASHED WHITE PERMANENT PAINT PAVEMENT STRIPING, 2' LINE & 6' GAP (ITEM 748019)	58 LF
E	WHITE PERMANENT PAINT PAVEMENT SYMBOL (ITEM 817002)	47 SF
F	16" SOLID WHITE ALKYD THERMOPLASTIC PAVEMENT STRIPING (ITEM 817002)	30 SF

NOTES:

1. CONTRACTOR SHALL REPLACE EXISTING 45 MPH SPEED LIMIT SIGNS FROM REGAL BLVD TO WAKEFIELD DR WITH R2-1 35 MPH SIGNS

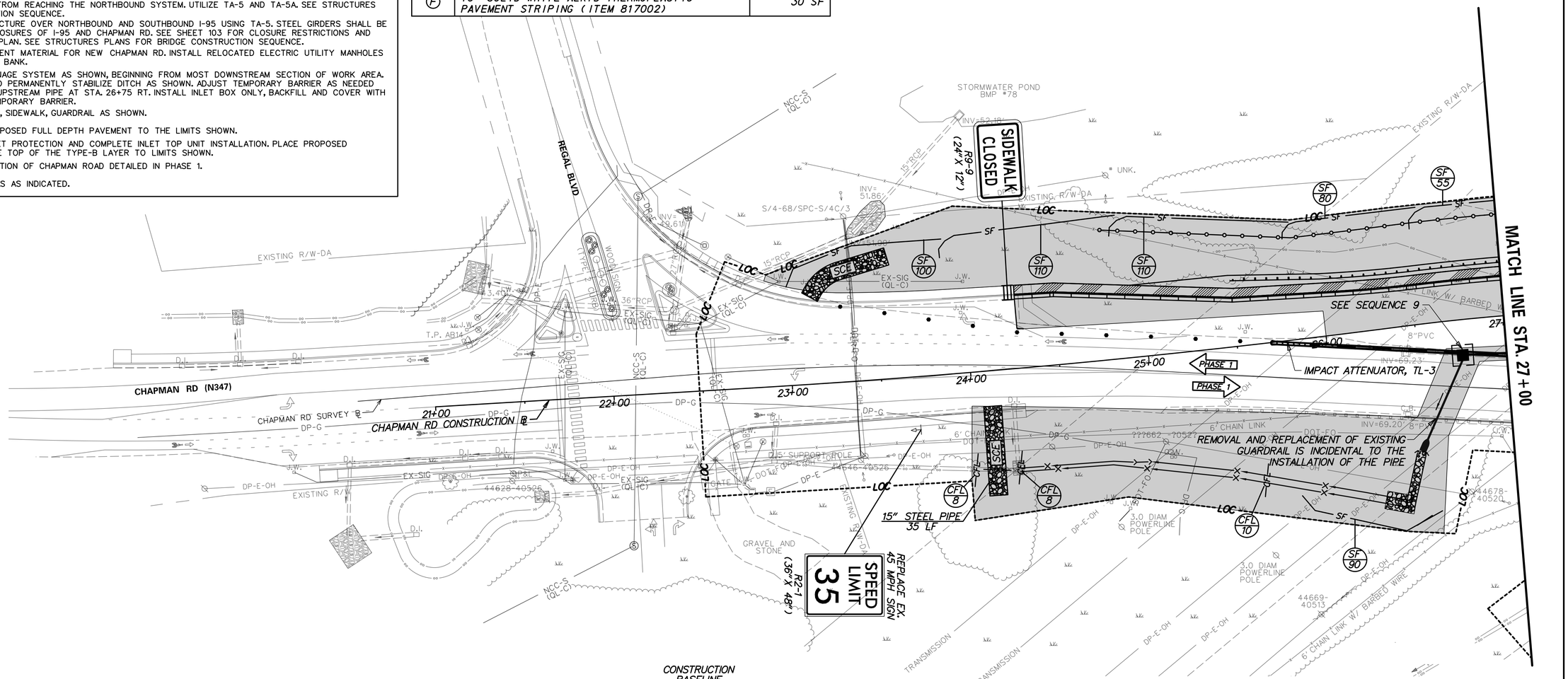

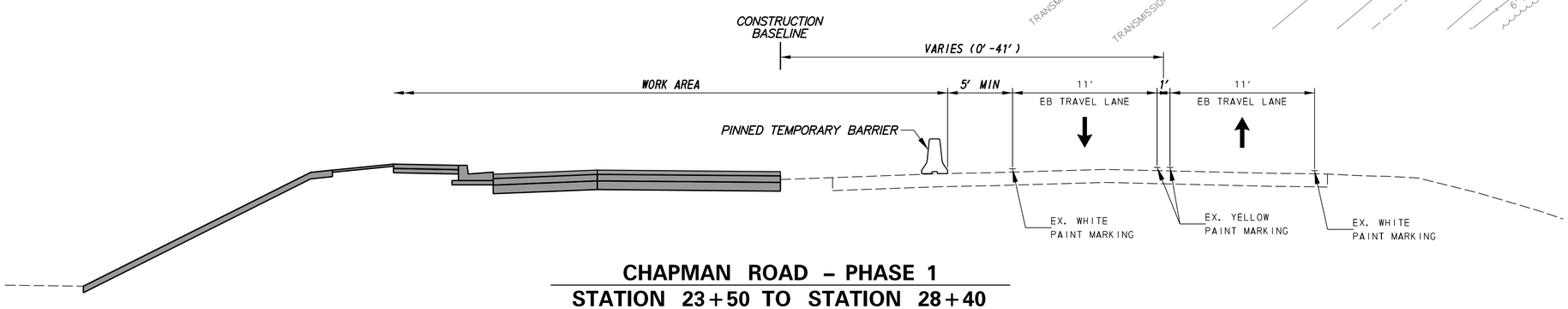

CHAPMAN ROAD – PHASE 1
STATION 23+50 TO STATION 28+40

ADDENDA / REVISIONS	

SCALE 0 30 60 90 FEET

BR 1-714 ON CHAPMAN ROAD OVER I-95

CONTRACT	BRIDGE NO.	1-714 /1-714A
T201507402	DESIGNED BY: T. SINGLE	
COUNTY		
NEW CASTLE	CHECKED BY: D. SEMPLE	

CONSTRUCTION PHASING, M.O.T., AND EROSION CONTROL PLAN – PHASE 1

CS-03

SECTION: AEC

SHEET NO. 105

9/19/2019
9:17:22 AM
P:\60323054 DelDOT AGR 1672 BDS\T06 - Rehab Br. 1-714\900 WORK\910 CAD\20-SHEETS\102_Traffic Control Plans\CS03-1.dgn

SEQUENCE OF CONSTRUCTION PHASE 1

1. PLACE ALL PERMANENT WARNING SIGNS AS SHOWN ON THE PERMANENT WARNING SIGN PLAN SHEET AND TEMPORARY WARNING SIGNS AS SHOWN ON THE PHASE 1 MOT SHEETS.
2. INSTALL ALL EROSION AND SEDIMENT CONTROL MEASURES AS SHOWN ON PHASE 1 TRAFFIC CONTROL PLANS CLEARING AND GRUBBING AS NECESSARY FOR INSTALLATION. PERFORM REMAINING CLEARING AND GRUBBING WHEN E&S IS IN PLACE.
3. REMOVE EXISTING STRIPING AS NECESSARY AND PLACE TEMPORARY PAVEMENT STRIPING AS SHOWN ON PHASE 1 TRAFFIC CONTROL PLANS USING TA-17A ON CHAPMAN ROAD AND TA-35G ON I-95. SHIFT CHAPMAN RD TRAFFIC TO NEW LANES DESIGNATED FOR PHASE 1.
4. PLACE TEMPORARY BARRIER ALONG BRIDGE APPROACHES AND I-95 AS SHOWN IN PHASE 1 TRAFFIC CONTROL PLANS CONFORMING TO TA-5 OF THE DELAWARE MUTCD.
5. CONSTRUCT AND STABILIZE RELOCATED SWALE AROUND NEW SIGN STRUCTURE LOCATION. CONSTRUCT NEW SIGN STRUCTURE ON SB I-95 AS SHOWN AND INSTALL NEW OVERHEAD SIGN. ONCE NEW SIGN IS INSTALLED REMOVE EXISTING OVERHEAD SIGN AND STRUCTURE USING TA-35H.
6. INSTALL PROPOSED DRAINAGE ALONG I-95 WITH THE CONSTRUCTION OF THE ABUTMENT FOUNDATIONS. INSTALL THE DIVERSION SWALE AND THE SOUTHBOUND MEDIAN DRAINAGE SYSTEM PRIOR TO THE NORTHBOUND MEDIAN DRAINAGE SYSTEM, PREVENTING RUNOFF FROM REACHING THE NORTHBOUND SYSTEM. UTILIZE TA-5 AND TA-5A. SEE STRUCTURES PLANS FOR BRIDGE CONSTRUCTION SEQUENCE.
7. CONSTRUCT NEW BRIDGE STRUCTURE OVER NORTHBOUND AND SOUTHBOUND I-95 USING TA-5. STEEL GIRDERS SHALL BE INSTALLED DURING NIGHTTIME CLOSURES OF I-95 AND CHAPMAN RD. SEE SHEET 103 FOR CLOSURE RESTRICTIONS AND SHEETS 126-130 FOR DETOUR PLAN. SEE STRUCTURES PLANS FOR BRIDGE CONSTRUCTION SEQUENCE.
8. PLACE AND COMPACT EMBANKMENT MATERIAL FOR NEW CHAPMAN RD. INSTALL RELOCATED ELECTRIC UTILITY MANHOLES AND CONCRETE ENCASED DUCT BANK.
9. CONSTRUCT CHAPMAN RD DRAINAGE SYSTEM AS SHOWN, BEGINNING FROM MOST DOWNSTREAM SECTION OF WORK AREA. INSTALL INLET PROTECTION AND PERMANENTLY STABILIZE DITCH AS SHOWN. ADJUST TEMPORARY BARRIER AS NEEDED FOR INLET INSTALLATION AND UPSTREAM PIPE AT STA. 26+75 RT. INSTALL INLET BOX ONLY, BACKFILL AND COVER WITH STEEL PLATE TO REPLACE TEMPORARY BARRIER.
10. CONSTRUCT CURB AND GUTTER, SIDEWALK, GUARDRAIL AS SHOWN.
11. GRADE AND BOX OUT FOR PROPOSED FULL DEPTH PAVEMENT TO THE LIMITS SHOWN.
12. PRIOR TO PAVING, REMOVE INLET PROTECTION AND COMPLETE INLET TOP UNIT INSTALLATION. PLACE PROPOSED PAVEMENT SECTION UP TO THE TOP OF THE TYPE-B LAYER TO LIMITS SHOWN.
13. PERFORM REMAINING CONSTRUCTION OF CHAPMAN ROAD DETAILED IN PHASE 1.
14. STABILIZE ALL DISTURBED AREAS AS INDICATED.

PERMANENT PAVEMENT MARKINGS LEGEND

SYMBOL	ITEM	QUANTITY
A	5" SOLID WHITE PERMANENT PAINT PAVEMENT STRIPING (ITEM 817013)	504 LF
B	5" SOLID YELLOW PERMANENT PAINT PAVEMENT STRIPING (ITEM 817013)	783 LF
C	5" SOLID DOUBLE YELLOW PERMANENT PAINT PAVEMENT STRIPING (ITEM 817013)	226 LF

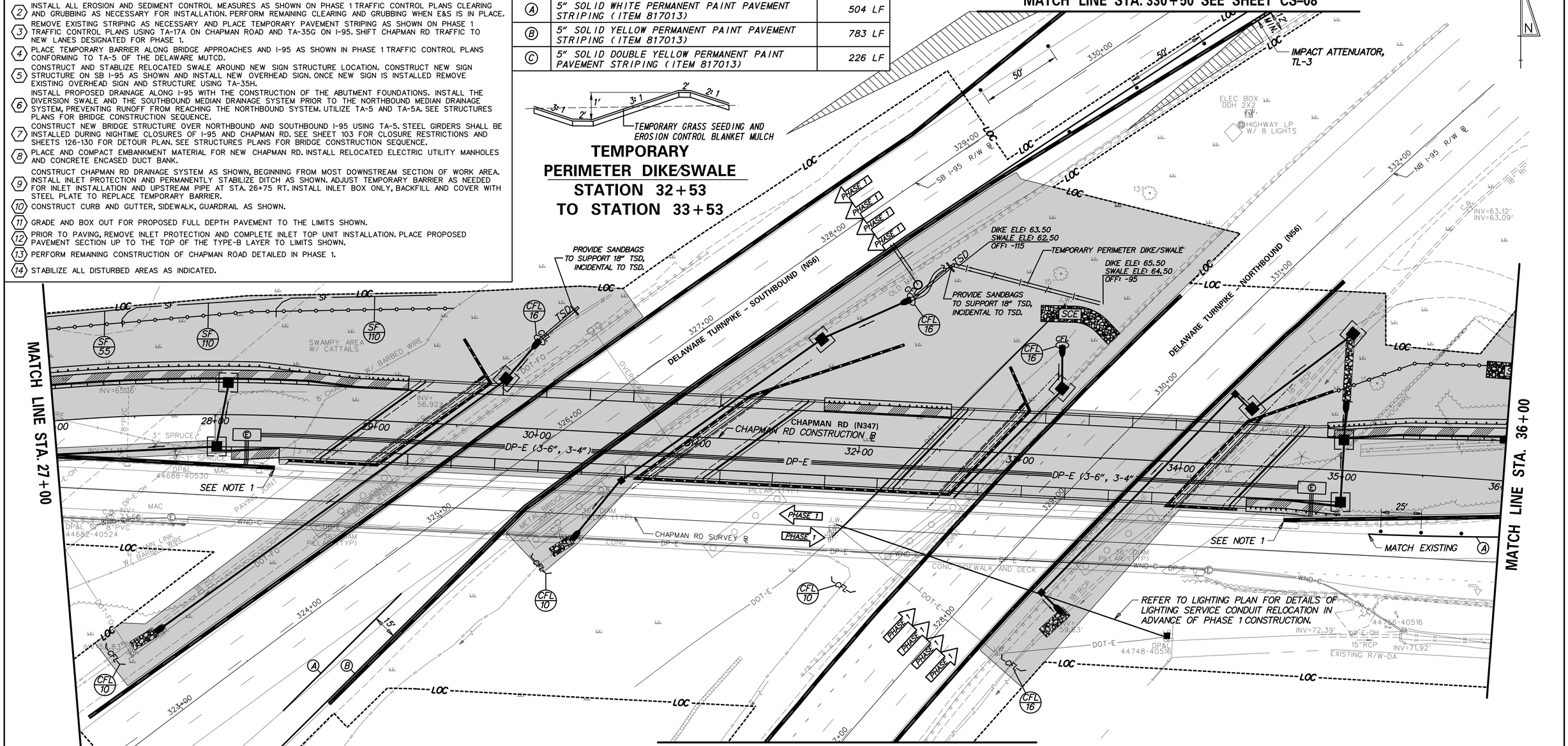

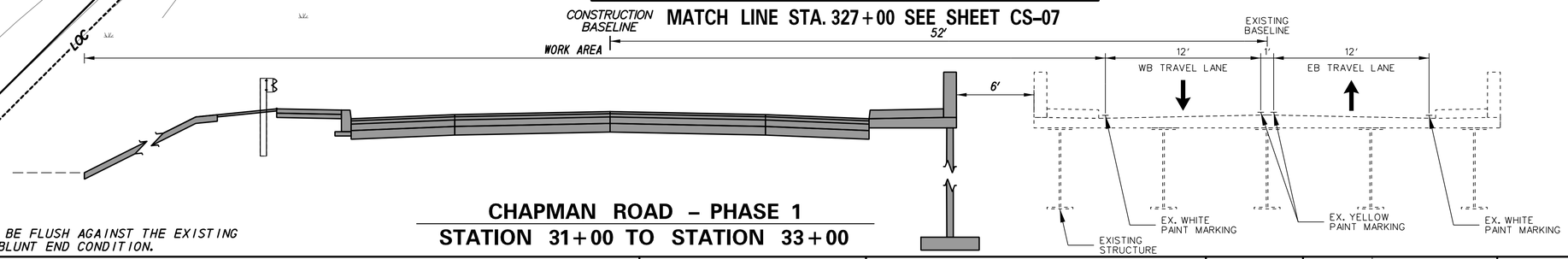

NOTES:
1. PINNED TEMPORARY BARRIER SHALL BE FLUSH AGAINST THE EXISTING BRIDGE PARAPET TO ELIMINATE A BLUNT END CONDITION.

CHAPMAN ROAD – PHASE 1
STATION 31+00 TO STATION 33+00

ADDENDA / REVISIONS	

SCALE 0 30 60 90 FEET

BR 1-714 ON CHAPMAN ROAD OVER I-95

CONTRACT	BRIDGE NO.	1-714 /1-714A
T201507402	DESIGNED BY: T. SINGLE	
COUNTY		
NEW CASTLE	CHECKED BY: D. SEMPLE	

CONSTRUCTION PHASING, M.O.T., AND EROSION CONTROL PLAN – PHASE 1

CS-04

SECTION	SHEET NO.
AEC	106

9/19/2019 4:17:22 PM P:\60522054 DelDOT AGR 1672 BDS\T06 - Rehab Br. 1-714\900 WORK\910 CAD\20-SHEETS\102_Traffic ControlPlans\CS04-1.dgn

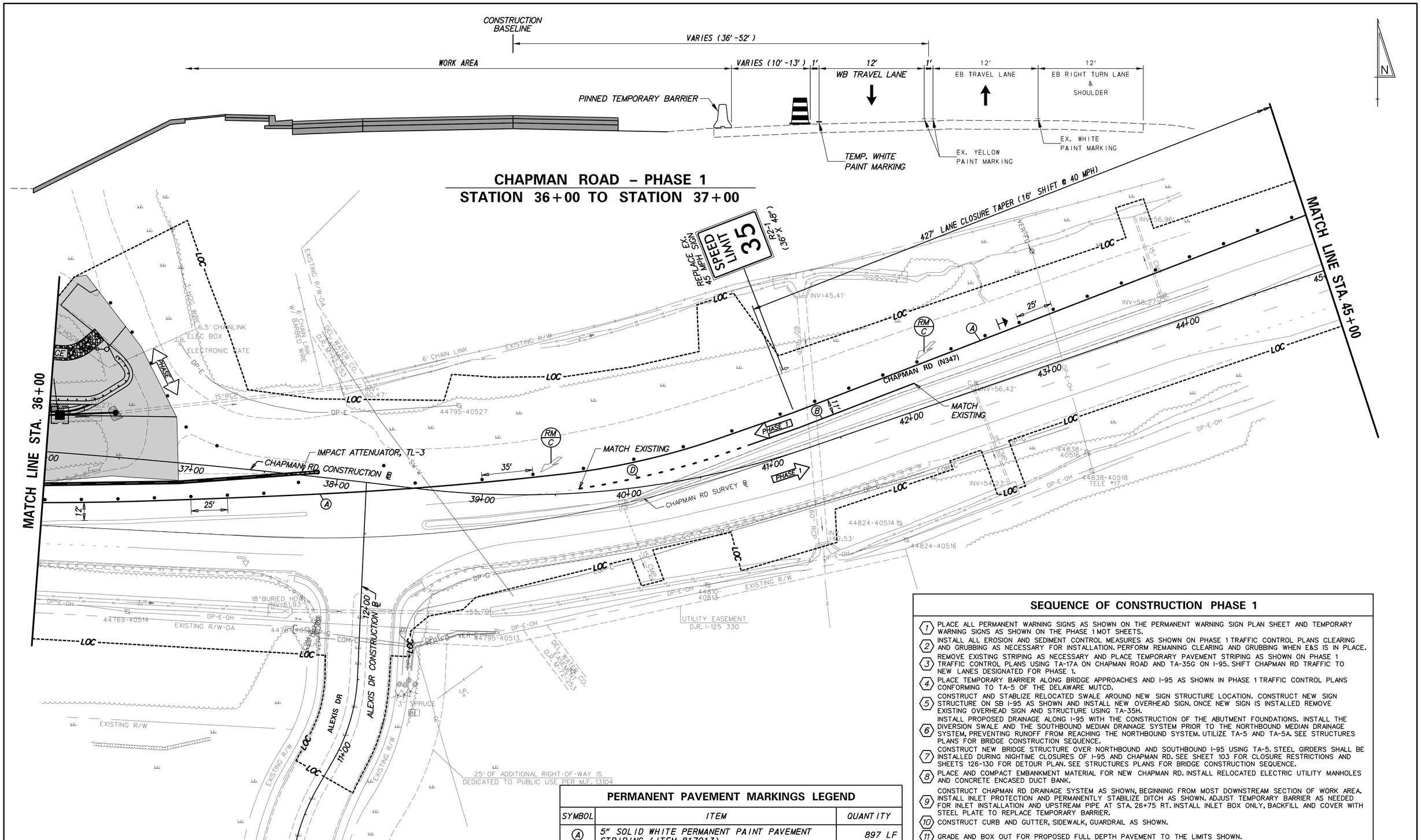

SEQUENCE OF CONSTRUCTION PHASE 1

1. PLACE ALL PERMANENT WARNING SIGNS AS SHOWN ON THE PERMANENT WARNING SIGN PLAN SHEET AND TEMPORARY WARNING SIGNS AS SHOWN ON THE PHASE 1 MOT SHEETS.
2. INSTALL ALL EROSION AND SEDIMENT CONTROL MEASURES AS SHOWN ON PHASE 1 TRAFFIC CONTROL PLANS CLEARING AND GRUBBING AS NECESSARY FOR INSTALLATION. PERFORM REMAINING CLEARING AND GRUBBING WHEN E&S IS IN PLACE.
3. REMOVE EXISTING STRIPING AS NECESSARY AND PLACE TEMPORARY PAVEMENT STRIPING AS SHOWN ON PHASE 1 TRAFFIC CONTROL PLANS USING TA-17A ON CHAPMAN ROAD AND TA-35G ON I-95. SHIFT CHAPMAN RD TRAFFIC TO NEW LANES DESIGNATED FOR PHASE 1.
4. PLACE TEMPORARY BARRIER ALONG BRIDGE APPROACHES AND I-95 AS SHOWN IN PHASE 1 TRAFFIC CONTROL PLANS CONFORMING TO TA-5 OF THE DELAWARE MUTCD.
5. CONSTRUCT AND STABLIZE RELOCATED SWALE AROUND NEW SIGN STRUCTURE LOCATION. CONSTRUCT NEW SIGN STRUCTURE ON SB I-95 AS SHOWN AND INSTALL NEW OVERHEAD SIGN. ONCE NEW SIGN IS INSTALLED REMOVE EXISTING OVERHEAD SIGN AND STRUCTURE USING TA-35H.
6. INSTALL PROPOSED DRAINAGE ALONG I-95 WITH THE CONSTRUCTION OF THE ABUTMENT FOUNDATIONS. INSTALL THE DIVERSION SWALE AND THE SOUTHBOUND MEDIAN DRAINAGE SYSTEM PRIOR TO THE NORTHBOUND MEDIAN DRAINAGE SYSTEM, PREVENTING RUNOFF FROM REACHING THE NORTHBOUND SYSTEM. UTILIZE TA-5 AND TA-5A. SEE STRUCTURES PLANS FOR BRIDGE CONSTRUCTION SEQUENCE.
7. CONSTRUCT NEW BRIDGE STRUCTURE OVER NORTHBOUND AND SOUTHBOUND I-95 USING TA-5. STEEL GIRDERS SHALL BE INSTALLED DURING NIGHTIME CLOSURES OF I-95 AND CHAPMAN RD. SEE SHEET 103 FOR CLOSURE RESTRICTIONS AND SHEETS 126-130 FOR DETOUR PLAN. SEE STRUCTURES PLANS FOR BRIDGE CONSTRUCTION SEQUENCE.
8. PLACE AND COMPACT EMBANKMENT MATERIAL FOR NEW CHAPMAN RD. INSTALL RELOCATED ELECTRIC UTILITY MANHOLES AND CONCRETE ENCASED DUCT BANK.
9. CONSTRUCT CHAPMAN RD DRAINAGE SYSTEM AS SHOWN, BEGINNING FROM MOST DOWNSTREAM SECTION OF WORK AREA. INSTALL INLET PROTECTION AND PERMANENTLY STABILIZE DITCH AS SHOWN. ADJUST TEMPORARY BARRIER AS NEEDED FOR INLET INSTALLATION AND UPSTREAM PIPE AT STA. 26+75 RT. INSTALL INLET BOX ONLY, BACKFILL AND COVER WITH STEEL PLATE TO REPLACE TEMPORARY BARRIER.
10. CONSTRUCT CURB AND GUTTER, SIDEWALK, GUARDRAIL AS SHOWN.
11. GRADE AND BOX OUT FOR PROPOSED FULL DEPTH PAVEMENT TO THE LIMITS SHOWN.
12. PRIOR TO PAVING, REMOVE INLET PROTECTION AND COMPLETE INLET TOP UNIT INSTALLATION. PLACE PROPOSED PAVEMENT SECTION UP TO THE TOP OF THE TYPE-B LAYER TO LIMITS SHOWN.
13. PERFORM REMAINING CONSTRUCTION OF CHAPMAN ROAD DETAILED IN PHASE 1.
14. STABILIZE ALL DISTURBED AREAS AS INDICATED.

PERMANENT PAVEMENT MARKINGS LEGEND

SYMBOL	ITEM	QUANTITY
A	5" SOLID WHITE PERMANENT PAINT PAVEMENT STRIPING (ITEM 817013)	897 LF
B	5" SOLID YELLOW PERMANENT PAINT PAVEMENT STRIPING (ITEM 817013)	122 LF
D	5" DASHED WHITE PERMANENT PAINT PAVEMENT STRIPING, 2' LINE & 6' GAP (ITEM 748019)	32 LF

ADDENDA / REVISIONS

SCALE 0 30 60 90 FEET

BR 1-714 ON CHAPMAN ROAD OVER I-95

CONTRACT	BRIDGE NO.	1-714 /1-714A
T201507402	DESIGNED BY: T. SINGLE	
COUNTY		
NEW CASTLE	CHECKED BY: D. SEMPLE	

CONSTRUCTION PHASING, M.O.T., AND EROSION CONTROL PLAN – PHASE 1

SECTION: AEC

SHEET NO.: 107

CS-05

9/19/2019
4:17:42 PM
P:\60325054 DelDOT AGR 1672 BDSVT06 - Rehab Br. 1-714\900 WORK\910 CAD\20-SHEETS\102_Traffic ControlPlans\CS05-1.dgn

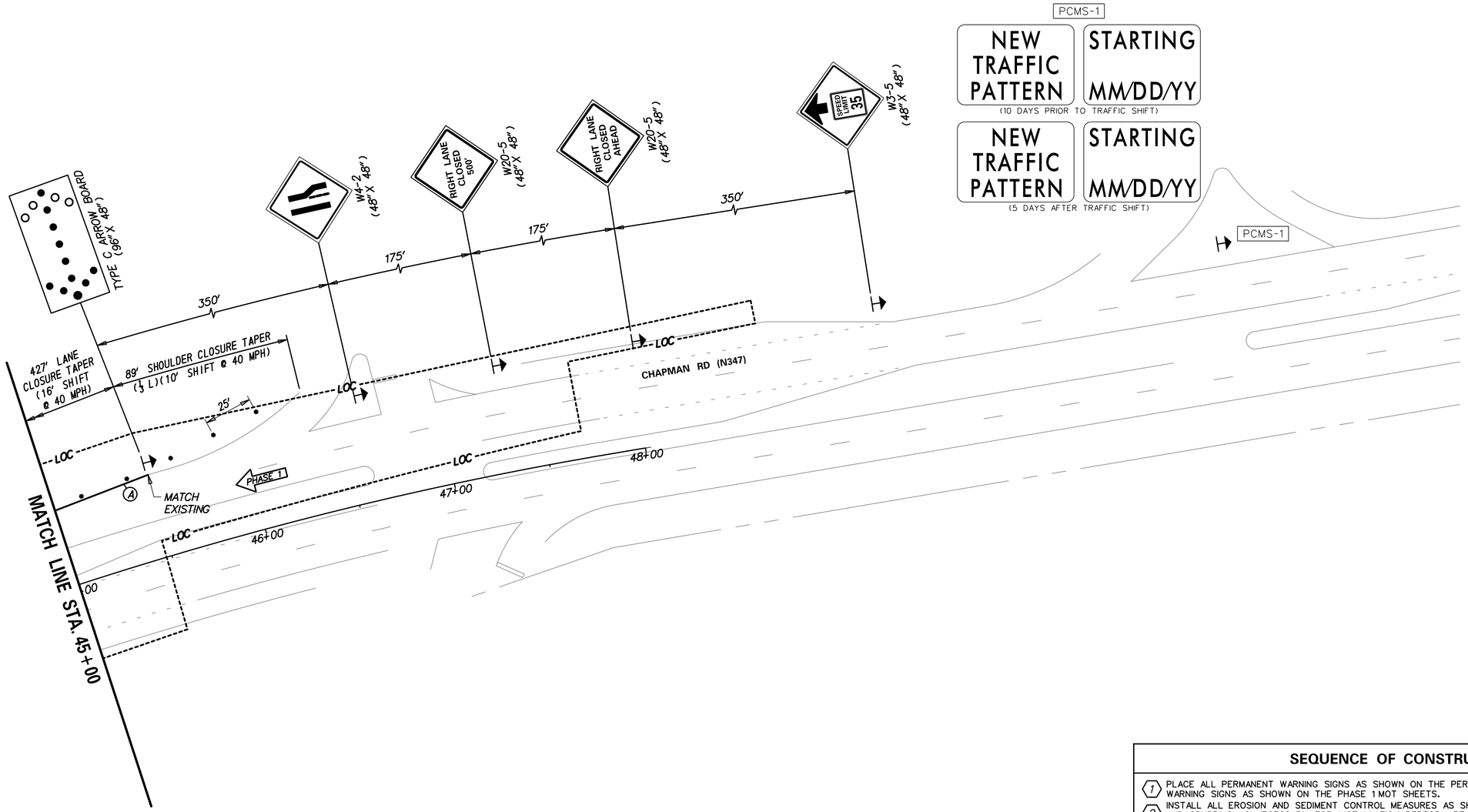

SEQUENCE OF CONSTRUCTION PHASE 1

1. PLACE ALL PERMANENT WARNING SIGNS AS SHOWN ON THE PERMANENT WARNING SIGN PLAN SHEET AND TEMPORARY WARNING SIGNS AS SHOWN ON THE PHASE 1 MOT SHEETS.
2. INSTALL ALL EROSION AND SEDIMENT CONTROL MEASURES AS SHOWN ON PHASE 1 TRAFFIC CONTROL PLANS CLEARING AND GRUBBING AS NECESSARY FOR INSTALLATION. PERFORM REMAINING CLEARING AND GRUBBING WHEN E&S IS IN PLACE.
3. REMOVE EXISTING STRIPING AS NECESSARY AND PLACE TEMPORARY PAVEMENT STRIPING AS SHOWN ON PHASE 1 TRAFFIC CONTROL PLANS USING TA-17A ON CHAPMAN ROAD AND TA-35G ON I-95. SHIFT CHAPMAN RD TRAFFIC TO NEW LANES DESIGNATED FOR PHASE 1.
4. PLACE TEMPORARY BARRIER ALONG BRIDGE APPROACHES AND I-95 AS SHOWN IN PHASE 1 TRAFFIC CONTROL PLANS CONFORMING TO TA-5 OF THE DELAWARE MUTCD.
5. CONSTRUCT AND STABLIZE RELOCATED SWALE AROUND NEW SIGN STRUCTURE LOCATION. CONSTRUCT NEW SIGN STRUCTURE ON SB I-95 AS SHOWN AND INSTALL NEW OVERHEAD SIGN. ONCE NEW SIGN IS INSTALLED REMOVE EXISTING OVERHEAD SIGN AND STRUCTURE USING TA-35H.
6. INSTALL PROPOSED DRAINAGE ALONG I-95 WITH THE CONSTRUCTION OF THE ABUTMENT FOUNDATIONS. INSTALL THE DIVERSION SWALE AND THE SOUTHBOUND MEDIAN DRAINAGE SYSTEM PRIOR TO THE NORTHBOUND MEDIAN DRAINAGE SYSTEM, PREVENTING RUNOFF FROM REACHING THE NORTHBOUND SYSTEM. UTILIZE TA-5 AND TA-5A. SEE STRUCTURES PLANS FOR BRIDGE CONSTRUCTION SEQUENCE.
7. CONSTRUCT NEW BRIDGE STRUCTURE OVER NORTHBOUND AND SOUTHBOUND I-95 USING TA-5. STEEL GIRDERS SHALL BE INSTALLED DURING NIGHTIME CLOSURES OF I-95 AND CHAPMAN RD. SEE SHEET 103 FOR CLOSURE RESTRICTIONS AND SHEETS 126-130 FOR DETOUR PLAN. SEE STRUCTURES PLANS FOR BRIDGE CONSTRUCTION SEQUENCE.
8. PLACE AND COMPACT EMBANKMENT MATERIAL FOR NEW CHAPMAN RD. INSTALL RELOCATED ELECTRIC UTILITY MANHOLES AND CONCRETE ENCASED DUCT BANK.
9. CONSTRUCT CHAPMAN RD DRAINAGE SYSTEM AS SHOWN, BEGINNING FROM MOST DOWNSTREAM SECTION OF WORK AREA. INSTALL INLET PROTECTION AND PERMANENTLY STABILIZE DITCH AS SHOWN. ADJUST TEMPORARY BARRIER AS NEEDED FOR INLET INSTALLATION AND UPSTREAM PIPE AT STA. 26+75 RT. INSTALL INLET BOX ONLY, BACKFILL AND COVER WITH STEEL PLATE TO REPLACE TEMPORARY BARRIER.
10. CONSTRUCT CURB AND GUTTER, SIDEWALK, GUARDRAIL AS SHOWN.
11. GRADE AND BOX OUT FOR PROPOSED FULL DEPTH PAVEMENT TO THE LIMITS SHOWN.
12. PRIOR TO PAVING, REMOVE INLET PROTECTION AND COMPLETE INLET TOP UNIT INSTALLATION. PLACE PROPOSED PAVEMENT SECTION UP TO THE TOP OF THE TYPE-B LAYER TO LIMITS SHOWN.
13. PERFORM REMAINING CONSTRUCTION OF CHAPMAN ROAD DETAILED IN PHASE 1.
14. STABILIZE ALL DISTURBED AREAS AS INDICATED.

PERMANENT PAVEMENT MARKINGS LEGEND

SYMBOL	ITEM	QUANTITY
A	5" SOLID WHITE PERMANENT PAINT PAVEMENT STRIPING (ITEM 817013)	50 LF

ADDENDA / REVISIONS

SCALE 0 30 60 90 FEET

BR 1-714 ON CHAPMAN ROAD OVER I-95

CONTRACT	BRIDGE NO.	1-714 /1-714A
T201507402	DESIGNED BY: T. SINGLE	
COUNTY		
NEW CASTLE	CHECKED BY: D. SEMPLE	

CONSTRUCTION PHASING, M.O.T., AND EROSION CONTROL PLAN - PHASE 1

SECTION: AEC

SHEET NO. 108

CS-06

9/19/2019
4:17:44 PM
P:\60323054 DelDOT AGR 1672 BDS\T06 - Rehab Br. 1-714\900 WORK\910 CAD\20-SHEETS\102_Traffic Control Plans\CS06-1.dgn

SEQUENCE OF CONSTRUCTION PHASE 1

1. PLACE ALL PERMANENT WARNING SIGNS AS SHOWN ON THE PERMANENT WARNING SIGN PLAN SHEET AND TEMPORARY WARNING SIGNS AS SHOWN ON THE PHASE 1 MOT SHEETS.
2. INSTALL ALL EROSION AND SEDIMENT CONTROL MEASURES AS SHOWN ON PHASE 1 TRAFFIC CONTROL PLANS CLEARING AND GRUBBING AS NECESSARY FOR INSTALLATION. PERFORM REMAINING CLEARING AND GRUBBING WHEN E&S IS IN PLACE.
3. REMOVE EXISTING STRIPING AS NECESSARY AND PLACE TEMPORARY PAVEMENT STRIPING AS SHOWN ON PHASE 1 TRAFFIC CONTROL PLANS USING TA-17A ON CHAPMAN ROAD AND TA-35G ON I-95. SHIFT CHAPMAN RD TRAFFIC TO NEW LANES DESIGNATED FOR PHASE 1.
4. PLACE TEMPORARY BARRIER ALONG BRIDGE APPROACHES AND I-95 AS SHOWN IN PHASE 1 TRAFFIC CONTROL PLANS CONFORMING TO TA-5 OF THE DELAWARE MUTCD.
5. CONSTRUCT AND STABLIZE RELOCATED SWALE AROUND NEW SIGN STRUCTURE LOCATION. CONSTRUCT NEW SIGN STRUCTURE ON SB I-95 AS SHOWN AND INSTALL NEW OVERHEAD SIGN. ONCE NEW SIGN IS INSTALLED REMOVE EXISTING OVERHEAD SIGN AND STRUCTURE USING TA-35H.
6. INSTALL PROPOSED DRAINAGE ALONG I-95 WITH THE CONSTRUCTION OF THE ABUTMENT FOUNDATIONS. INSTALL THE DIVERSION SWALE AND THE SOUTHBOUND MEDIAN DRAINAGE SYSTEM PRIOR TO THE NORTHBOUND MEDIAN DRAINAGE SYSTEM, PREVENTING RUNOFF FROM REACHING THE NORTHBOUND SYSTEM. UTILIZE TA-5 AND TA-5A. SEE STRUCTURES PLANS FOR BRIDGE CONSTRUCTION SEQUENCE.
7. CONSTRUCT NEW BRIDGE STRUCTURE OVER NORTHBOUND AND SOUTHBOUND I-95 USING TA-5. STEEL GIRDERS SHALL BE INSTALLED DURING NIGHTIME CLOSURES OF I-95 AND CHAPMAN RD. SEE SHEET 103 FOR CLOSURE RESTRICTIONS AND SHEETS 126-130 FOR DETOUR PLAN. SEE STRUCTURES PLANS FOR BRIDGE CONSTRUCTION SEQUENCE.
8. PLACE AND COMPACT EMBANKMENT MATERIAL FOR NEW CHAPMAN RD. INSTALL RELOCATED ELECTRIC UTILITY MANHOLES AND CONCRETE ENCASED DUCT BANK.
9. CONSTRUCT CHAPMAN RD DRAINAGE SYSTEM AS SHOWN, BEGINNING FROM MOST DOWNSTREAM SECTION OF WORK AREA. INSTALL INLET PROTECTION AND PERMANENTLY STABILIZE DITCH AS SHOWN. ADJUST TEMPORARY BARRIER AS NEEDED FOR INLET INSTALLATION AND UPSTREAM PIPE AT STA. 26+75 RT. INSTALL INLET BOX ONLY, BACKFILL AND COVER WITH STEEL PLATE TO REPLACE TEMPORARY BARRIER.
10. CONSTRUCT CURB AND GUTTER, SIDEWALK, GUARDRAIL AS SHOWN.
11. GRADE AND BOX OUT FOR PROPOSED FULL DEPTH PAVEMENT TO THE LIMITS SHOWN.
12. PRIOR TO PAVING, REMOVE INLET PROTECTION AND COMPLETE INLET TOP UNIT INSTALLATION. PLACE PROPOSED PAVEMENT SECTION UP TO THE TOP OF THE TYPE-B LAYER TO LIMITS SHOWN.
13. PERFORM REMAINING CONSTRUCTION OF CHAPMAN ROAD DETAILED IN PHASE 1.
14. STABILIZE ALL DISTURBED AREAS AS INDICATED.

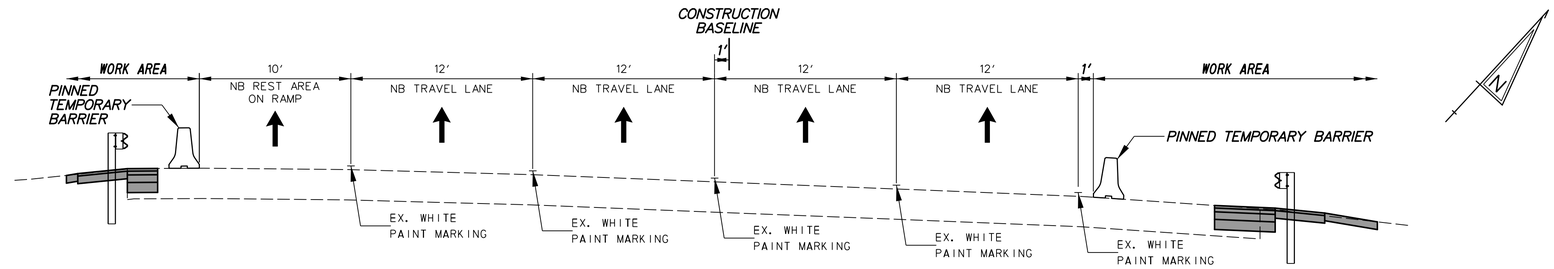

I95 NB TRAFFIC CONTROL
STATION 324+00 TO STATION 331+00

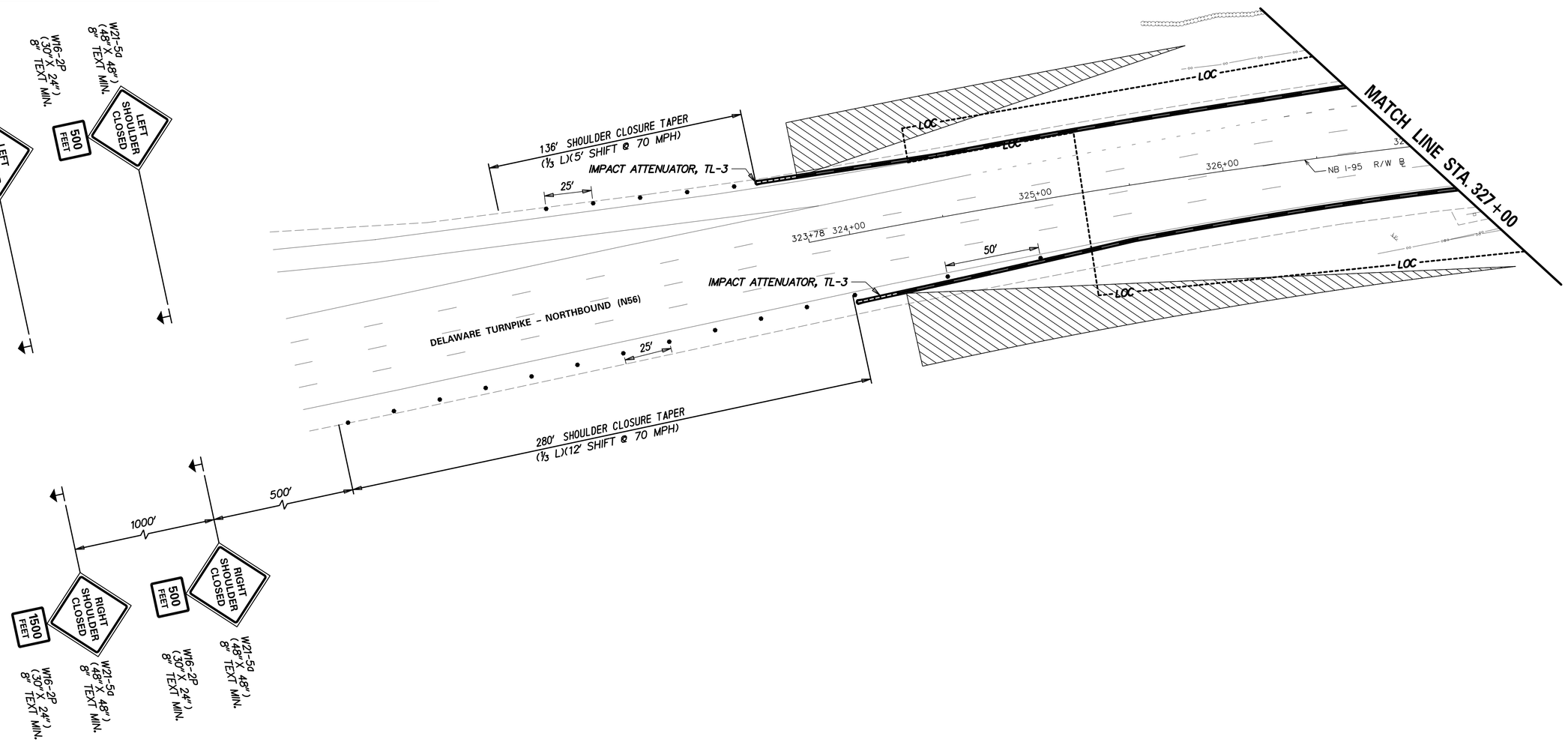

ADDENDA / REVISIONS	

SCALE 0 30 60 90 FEET

BR 1-714 ON CHAPMAN ROAD OVER I-95

CONTRACT	BRIDGE NO.	1-714 /1-714A
T201507402	DESIGNED BY: T. SINGLE	
COUNTY		
NEW CASTLE	CHECKED BY: D. SEMPLE	

CONSTRUCTION PHASING, M.O.T., AND EROSION CONTROL PLAN - PHASE 1

CS-07

SECTION AEC

SHEET NO. 109

9/19/2019 4:45:51 PM
P:\60325054 DelDOT AGR 1672 BDS\T06 - Rehab Br. 1-714\900 WORK\910 CAD\20-SHEETS\102_Traffic Control Plans\CS07-1.dgn

SEQUENCE OF CONSTRUCTION PHASE 1

1. PLACE ALL PERMANENT WARNING SIGNS AS SHOWN ON THE PERMANENT WARNING SIGN PLAN SHEET AND TEMPORARY WARNING SIGNS AS SHOWN ON THE PHASE 1 MOT SHEETS.
2. INSTALL ALL EROSION AND SEDIMENT CONTROL MEASURES AS SHOWN ON PHASE 1 TRAFFIC CONTROL PLANS CLEARING AND GRUBBING AS NECESSARY FOR INSTALLATION. PERFORM REMAINING CLEARING AND GRUBBING WHEN E&S IS IN PLACE.
3. REMOVE EXISTING STRIPING AS NECESSARY AND PLACE TEMPORARY PAVEMENT STRIPING AS SHOWN ON PHASE 1 TRAFFIC CONTROL PLANS USING TA-17A ON CHAPMAN ROAD AND TA-35G ON I-95. SHIFT CHAPMAN RD TRAFFIC TO NEW LANES DESIGNATED FOR PHASE 1.
4. PLACE TEMPORARY BARRIER ALONG BRIDGE APPROACHES AND I-95 AS SHOWN IN PHASE 1 TRAFFIC CONTROL PLANS CONFORMING TO TA-5 OF THE DELAWARE MUTCD.
5. CONSTRUCT AND STABLIZE RELOCATED SWALE AROUND NEW SIGN STRUCTURE LOCATION. CONSTRUCT NEW SIGN STRUCTURE ON SB I-95 AS SHOWN AND INSTALL NEW OVERHEAD SIGN. ONCE NEW SIGN IS INSTALLED REMOVE EXISTING OVERHEAD SIGN AND STRUCTURE USING TA-35H.
6. INSTALL PROPOSED DRAINAGE ALONG I-95 WITH THE CONSTRUCTION OF THE ABUTMENT FOUNDATIONS. INSTALL THE DIVERSION SWALE AND THE SOUTHBOUND MEDIAN DRAINAGE SYSTEM PRIOR TO THE NORTHBOUND MEDIAN DRAINAGE SYSTEM, PREVENTING RUNOFF FROM REACHING THE NORTHBOUND SYSTEM. UTILIZE TA-5 AND TA-5A. SEE STRUCTURES PLANS FOR BRIDGE CONSTRUCTION SEQUENCE.
7. CONSTRUCT NEW BRIDGE STRUCTURE OVER NORTHBOUND AND SOUTHBOUND I-95 USING TA-5. STEEL GIRDERS SHALL BE INSTALLED DURING NIGHTIME CLOSURES OF I-95 AND CHAPMAN RD. SEE SHEET 103 FOR CLOSURE RESTRICTIONS AND SHEETS 126-130 FOR DETOUR PLAN. SEE STRUCTURES PLANS FOR BRIDGE CONSTRUCTION SEQUENCE.
8. PLACE AND COMPACT EMBANKMENT MATERIAL FOR NEW CHAPMAN RD. INSTALL RELOCATED ELECTRIC UTILITY MANHOLES AND CONCRETE ENCASED DUCT BANK.
9. CONSTRUCT CHAPMAN RD DRAINAGE SYSTEM AS SHOWN, BEGINNING FROM MOST DOWNSTREAM SECTION OF WORK AREA. INSTALL INLET PROTECTION AND PERMANENTLY STABILIZE DITCH AS SHOWN. ADJUST TEMPORARY BARRIER AS NEEDED FOR INLET INSTALLATION AND UPSTREAM PIPE AT STA. 26+75 RT. INSTALL INLET BOX ONLY, BACKFILL AND COVER WITH STEEL PLATE TO REPLACE TEMPORARY BARRIER.
10. CONSTRUCT CURB AND GUTTER, SIDEWALK, GUARDRAIL AS SHOWN.
11. GRADE AND BOX OUT FOR PROPOSED FULL DEPTH PAVEMENT TO THE LIMITS SHOWN.
12. PRIOR TO PAVING, REMOVE INLET PROTECTION AND COMPLETE INLET TOP UNIT INSTALLATION. PLACE PROPOSED PAVEMENT SECTION UP TO THE TOP OF THE TYPE-B LAYER TO LIMITS SHOWN.
13. PERFORM REMAINING CONSTRUCTION OF CHAPMAN ROAD DETAILED IN PHASE 1.
14. STABILIZE ALL DISTURBED AREAS AS INDICATED.

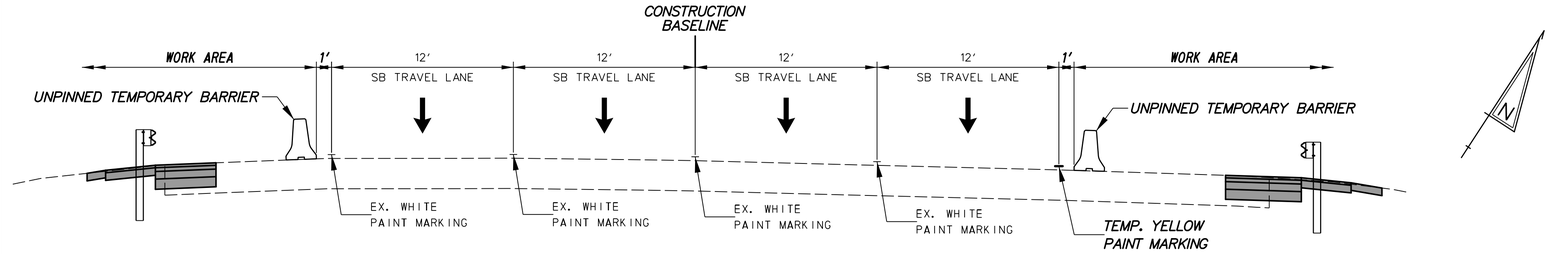

I95 SB TRAFFIC CONTROL
STATION 322+50 TO STATION 335+00

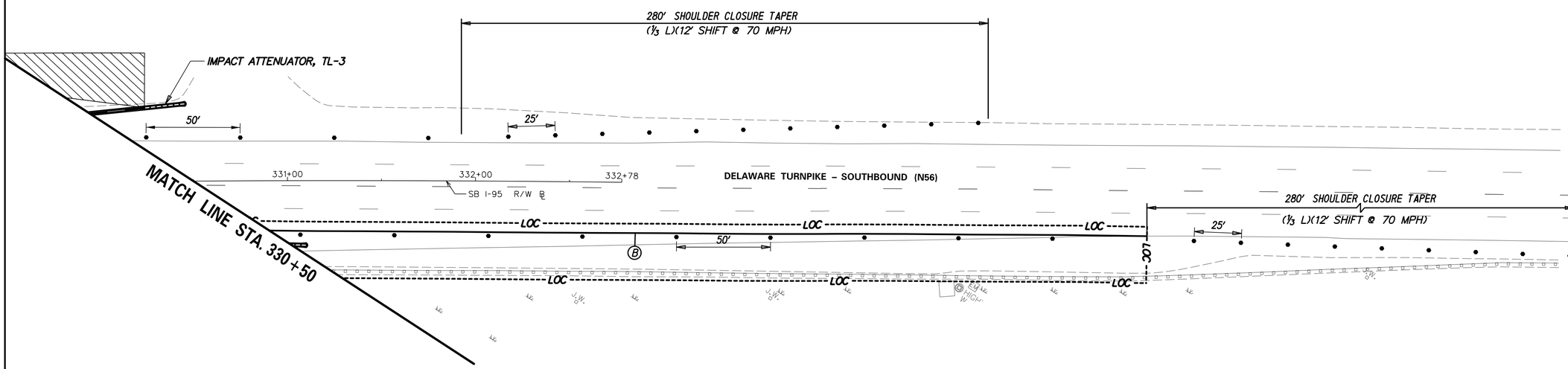

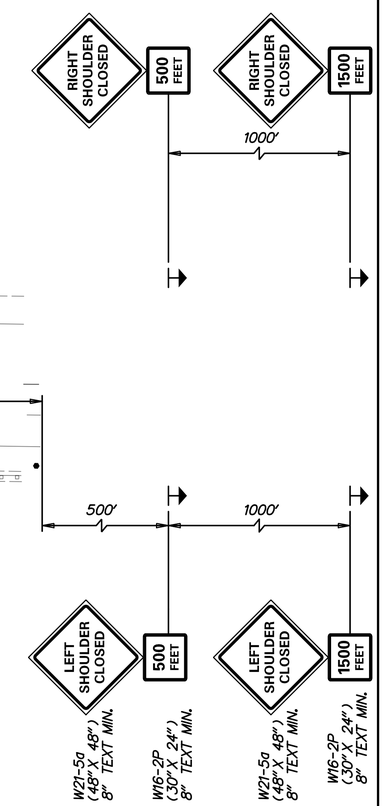

PERMANENT PAVEMENT MARKINGS LEGEND

SYMBOL	ITEM	QUANTITY
B	5" SOLID YELLOW PERMANENT PAINT PAVEMENT STRIPING (ITEM 817013)	508 LF

ADDENDA / REVISIONS	

SCALE 0 30 60 90 FEET

BR 1-714 ON CHAPMAN ROAD OVER I-95

CONTRACT	BRIDGE NO.	1-714 /1-714A
T201507402	DESIGNED BY: T. SINGLE	
COUNTY		
NEW CASTLE	CHECKED BY: D. SEMPLE	

CONSTRUCTION PHASING, M.O.T., AND EROSION CONTROL PLAN – PHASE 1

CS-08

SECTION: AEC

SHEET NO. 110

9/19/2019 4:17:46 PM P:\60323054 DelDOT AGR 1672 BDS\T06 - Rehab Br. 1-714\900 WORK\910 CAD\20-SHEETS\102_Traffic Control Plans\CS08-1.dgn

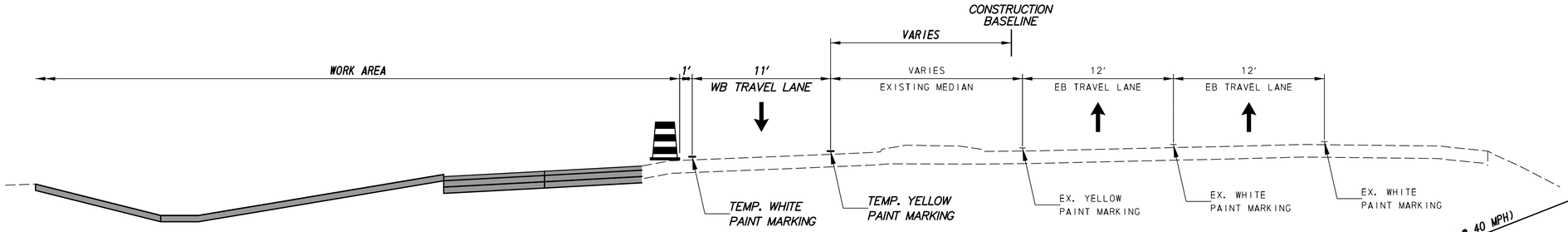

CHAPMAN ROAD – PHASE 2
STATION 36+00 TO STATION 44+00

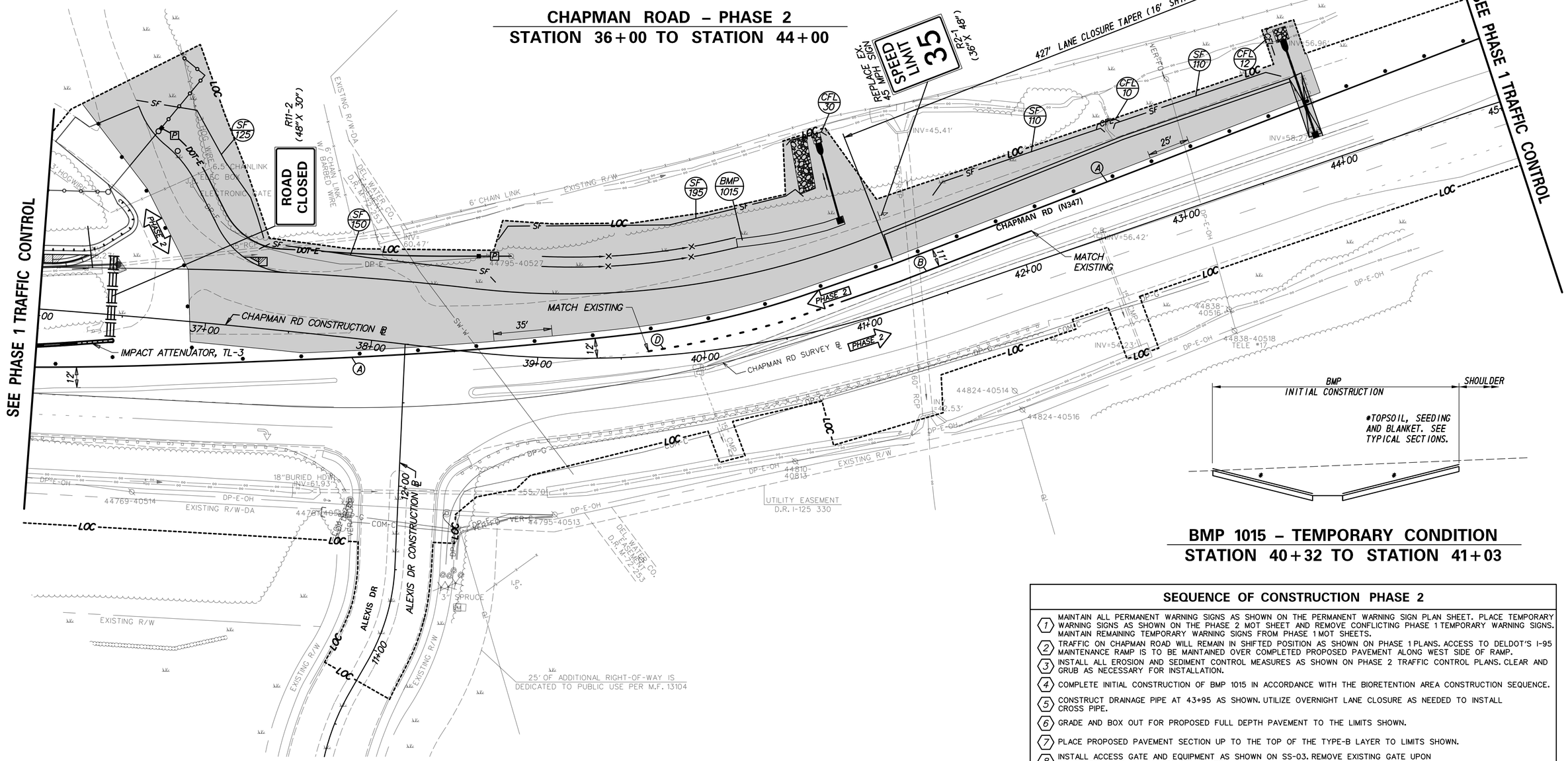

BMP 1015 – TEMPORARY CONDITION
STATION 40+32 TO STATION 41+03

SEQUENCE OF CONSTRUCTION PHASE 2

1. MAINTAIN ALL PERMANENT WARNING SIGNS AS SHOWN ON THE PERMANENT WARNING SIGN PLAN SHEET. PLACE TEMPORARY WARNING SIGNS AS SHOWN ON THE PHASE 2 MOT SHEET AND REMOVE CONFLICTING PHASE 1 TEMPORARY WARNING SIGNS. MAINTAIN REMAINING TEMPORARY WARNING SIGNS FROM PHASE 1 MOT SHEETS.
2. TRAFFIC ON CHAPMAN ROAD WILL REMAIN IN SHIFTED POSITION AS SHOWN ON PHASE 1 PLANS. ACCESS TO DELDOT'S I-95 MAINTENANCE RAMP IS TO BE MAINTAINED OVER COMPLETED PROPOSED PAVEMENT ALONG WEST SIDE OF RAMP.
3. INSTALL ALL EROSION AND SEDIMENT CONTROL MEASURES AS SHOWN ON PHASE 2 TRAFFIC CONTROL PLANS. CLEAR AND GRUB AS NECESSARY FOR INSTALLATION.
4. COMPLETE INITIAL CONSTRUCTION OF BMP 1015 IN ACCORDANCE WITH THE BIORETENTION AREA CONSTRUCTION SEQUENCE.
5. CONSTRUCT DRAINAGE PIPE AT 43+95 AS SHOWN. UTILIZE OVERNIGHT LANE CLOSURE AS NEEDED TO INSTALL CROSS PIPE.
6. GRADE AND BOX OUT FOR PROPOSED FULL DEPTH PAVEMENT TO THE LIMITS SHOWN.
7. PLACE PROPOSED PAVEMENT SECTION UP TO THE TOP OF THE TYPE-B LAYER TO LIMITS SHOWN.
8. INSTALL ACCESS GATE AND EQUIPMENT AS SHOWN ON SS-03. REMOVE EXISTING GATE UPON COMPLETED INSTALLATION OF NEW GATE.
9. PERFORM REMAINING CONSTRUCTION OF CHAPMAN ROAD DETAILED IN PHASE 2.
10. STABILIZE ALL DISTURBED AREAS AS INDICATED. SWITCH TO PHASE 3 TRAFFIC CONTROL.

CS–09

ADDENDA / REVISIONS	

SCALE 0 30 60 90 FEET

BR 1–714 ON CHAPMAN ROAD OVER I–95

CONTRACT	BRIDGE NO.	1–714 /1–714A
T201507402	DESIGNED BY: T. SINGLE	
COUNTY		
NEW CASTLE	CHECKED BY: D. SEMPLE	

CONSTRUCTION PHASING, M.O.T., AND EROSION CONTROL PLAN – PHASE 2

SECTION AEC

SHEET NO. 111

9/19/2019
5:24:20 PM
P:\60323054 DelDOT AGR 1672 BDS\T06 - Rehab Br. 1-714\900 WORK\910 CAD\20-SHEETS\102_Traffic Control Plans\CS09-2.dgn

SEQUENCE OF CONSTRUCTION PHASE 3

1. MAINTAIN ALL PERMANENT WARNING SIGNS AS SHOWN ON THE PERMANENT WARNING SIGN PLAN SHEET. PLACE TEMPORARY WARNING SIGNS AS SHOWN ON THE PHASE 3 MOT SHEETS.
2. INSTALL ALL EROSION AND SEDIMENT CONTROL MEASURES AS SHOWN ON PHASE 3 TRAFFIC CONTROL PLANS. CLEAR AND GRUB AS NECESSARY.
3. REMOVE EXISTING STRIPING AS NECESSARY AND PLACE TEMPORARY PAVEMENT STRIPING AS SHOWN ON PHASE 3 TRAFFIC CONTROL PLANS USING TA-17A. SHIFT TRAFFIC TO NEW LANES DESIGNATED FOR PHASE 3.
4. CONSTRUCT CHAPMAN ROAD CONCRETE MEDIAN CURB AS SHOWN.
5. CONSTRUCT TOP UNIT OF DRAINAGE INLET LOCATED AT STA. 26+75 RT.
6. GRADE AND BOX OUT FOR PROPOSED FULL DEPTH PAVEMENT TO THE LIMITS SHOWN. CONSTRUCT TEMPORARY PAVEMENT FOR PHASE 4 MEDIAN CROSSOVER ON CHAPMAN ROAD AND ALEXIS DRIVE.
7. PLACE PROPOSED PAVEMENT SECTION UP TO THE TOP OF THE TYPE-B LAYER TO LIMITS SHOWN.
8. PERFORM REMAINING CONSTRUCTION OF CHAPMAN ROAD DETAILED IN PHASE 3.
9. STABILIZE ALL DISTURBED AREAS AS INDICATED. SWITCH TO PHASE 4 TRAFFIC CONTROL.

PERMANENT PAVEMENT MARKINGS LEGEND

SYMBOL	ITEM	QUANTITY
A	5" SOLID WHITE PERMANENT PAINT PAVEMENT STRIPING (ITEM 817013)	1,011 LF
C	5" SOLID DOUBLE YELLOW PERMANENT PAINT PAVEMENT STRIPING (ITEM 817013)	904 LF
D	5" DASHED WHITE PERMANENT PAINT PAVEMENT STRIPING, 2' LINE & 6' GAP (ITEM 748019)	58 LF
E	WHITE PERMANENT PAINT PAVEMENT SYMBOL (ITEM 817002)	47 SF
F	16" SOLID WHITE ALKYD THERMOPLASTIC PAVEMENT STRIPING (ITEM 817002)	30 SF

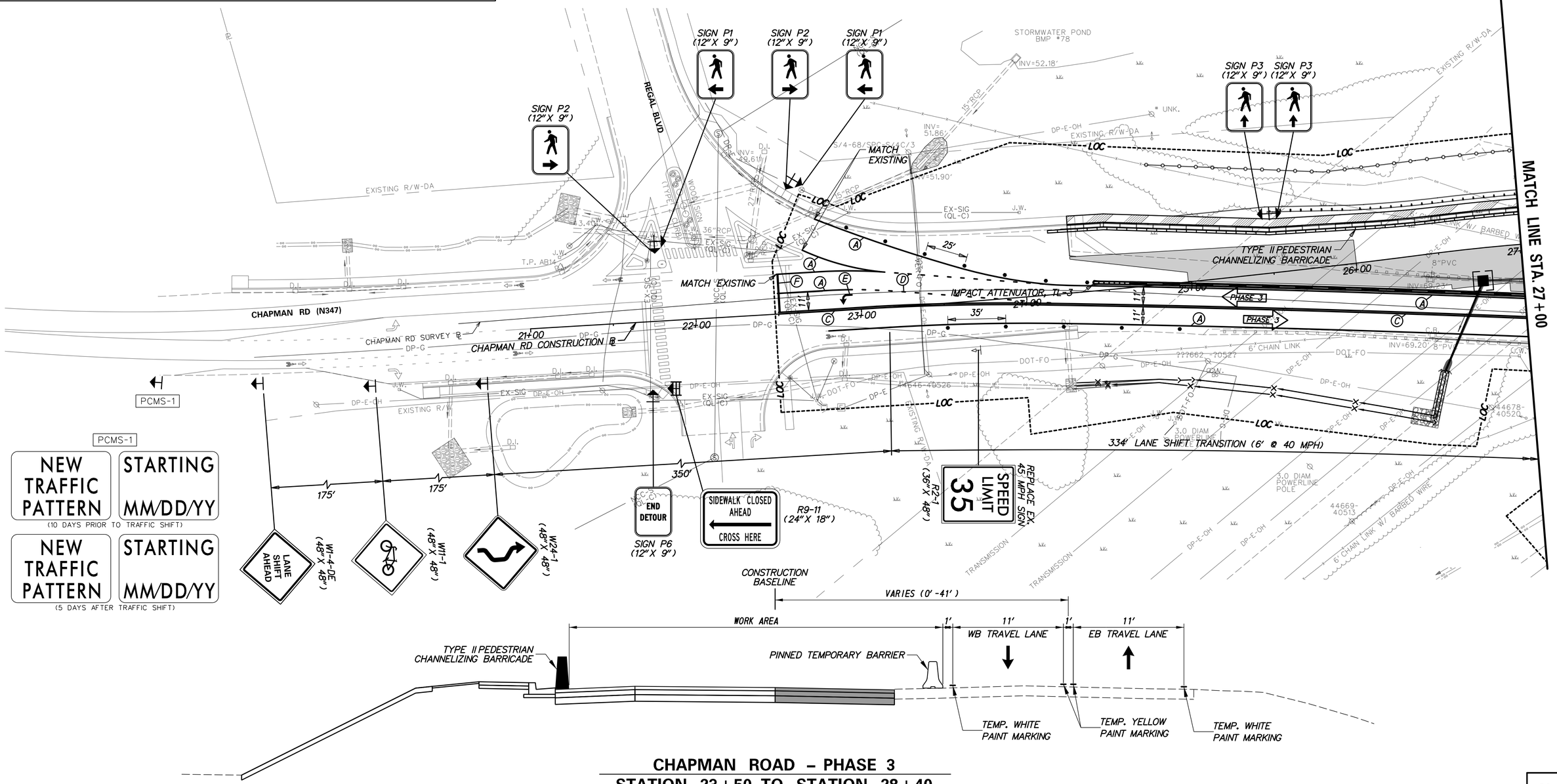

CHAPMAN ROAD – PHASE 3
STATION 23+50 TO STATION 28+40

CS-10

ADDENDA / REVISIONS	SCALE 0 30 60 90 FEET	BR 1-714 ON CHAPMAN ROAD OVER I-95	CONTRACT T201507402	BRIDGE NO. 1-714 /1-714A	CONSTRUCTION PHASING, M.O.T., AND EROSION CONTROL PLAN – PHASE 3	SECTION AEC
			COUNTY NEW CASTLE	DESIGNED BY: T. SINGLE		SHEET NO. 112
				CHECKED BY: D. SEMPLE		

8/7/2019
2:10:01 PM
P:\60323054 DelDOT AGR 1672 BDS\T06 - Rehab Br. 1-714\900 WORK\910 CAD\20-SHEETS\102_Traffic Control Plans\CS10-3.dgn

SEQUENCE OF CONSTRUCTION PHASE 3

1. MAINTAIN ALL PERMANENT WARNING SIGNS AS SHOWN ON THE PERMANENT WARNING SIGN PLAN SHEET. PLACE TEMPORARY WARNING SIGNS AS SHOWN ON THE PHASE 3 MOT SHEETS.
2. INSTALL ALL EROSION AND SEDIMENT CONTROL MEASURES AS SHOWN ON PHASE 3 TRAFFIC CONTROL PLANS. CLEAR AND GRUB AS NECESSARY.
3. REMOVE EXISTING STRIPING AS NECESSARY AND PLACE TEMPORARY PAVEMENT STRIPING AS SHOWN ON PHASE 3 TRAFFIC CONTROL PLANS USING TA-17A. SHIFT TRAFFIC TO NEW LANES DESIGNATED FOR PHASE 3.
4. CONSTRUCT CHAPMAN ROAD CONCRETE MEDIAN CURB AS SHOWN.
5. CONSTRUCT TOP UNIT OF DRAINAGE INLET LOCATED AT STA. 26+75 RT.
6. GRADE AND BOX OUT FOR PROPOSED FULL DEPTH PAVEMENT TO THE LIMITS SHOWN. CONSTRUCT TEMPORARY PAVEMENT FOR PHASE 4 MEDIAN CROSSOVER ON CHAPMAN ROAD AND ALEXIS DRIVE.
7. PLACE PROPOSED PAVEMENT SECTION UP TO THE TOP OF THE TYPE-B LAYER TO LIMITS SHOWN.
8. PERFORM REMAINING CONSTRUCTION OF CHAPMAN ROAD DETAILED IN PHASE 3.
9. STABILIZE ALL DISTURBED AREAS AS INDICATED. SWITCH TO PHASE 4 TRAFFIC CONTROL.

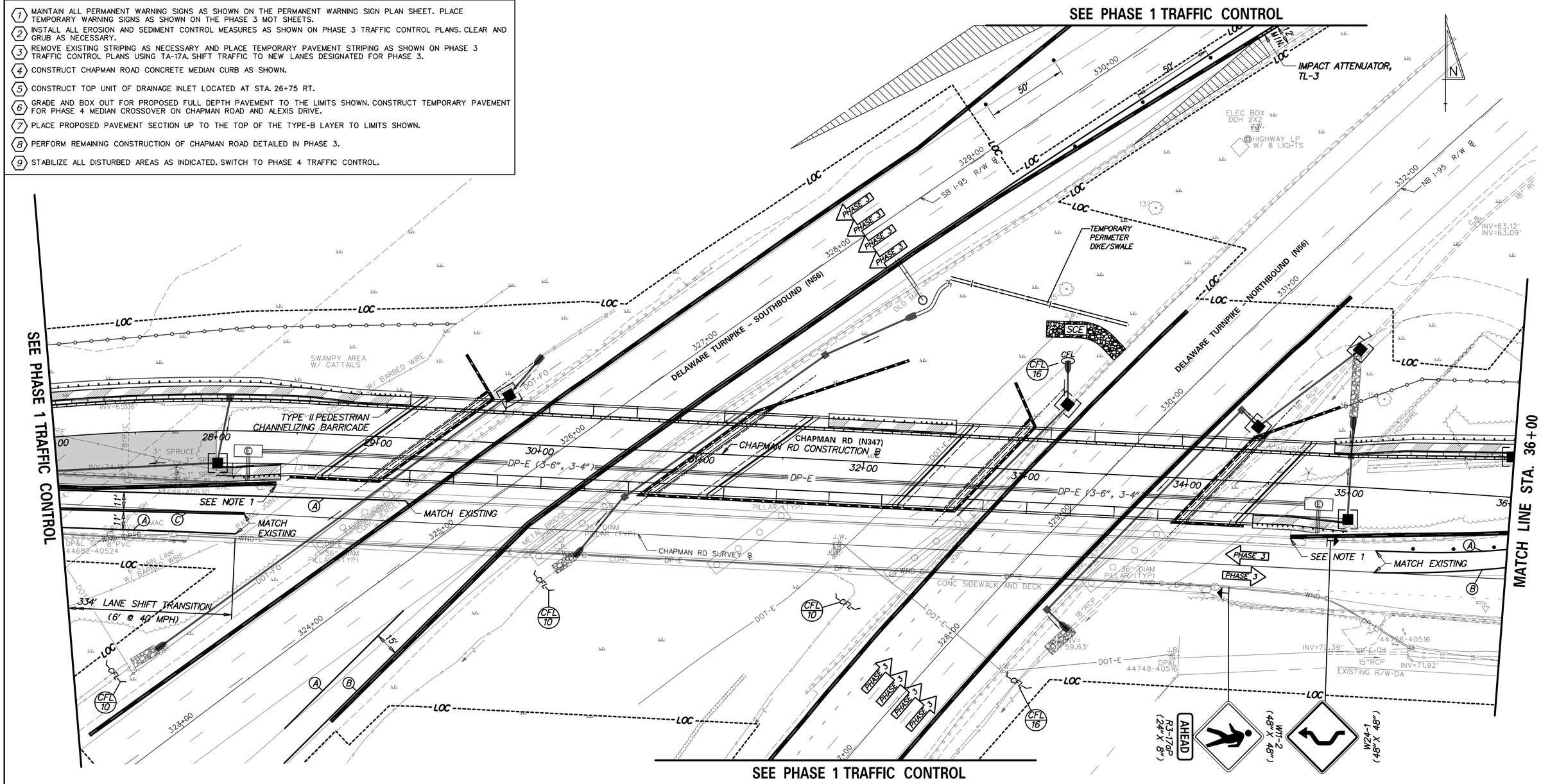

PERMANENT PAVEMENT MARKINGS LEGEND

SYMBOL	ITEM	QUANTITY
(A)	5" SOLID WHITE PERMANENT PAINT PAVEMENT STRIPING (ITEM 817013)	81 LF
(B)	5" SOLID YELLOW PERMANENT PAINT PAVEMENT STRIPING (ITEM 817013)	81 LF

NOTES:

1. PINNED TEMPORARY BARRIER SHALL BE FLUSH AGAINST THE EXISTING BRIDGE PARAPET TO ELIMINATE A BLUNT END CONDITION.

ADDENDA / REVISIONS	

SCALE: 0 30 60 90 FEET

BR 1-714 ON CHAPMAN ROAD OVER I-95

CONTRACT	BRIDGE NO.	1-714 /1-714A
T201507402	DESIGNED BY: T. SINGLE	
COUNTY		
NEW CASTLE	CHECKED BY: D. SEMPLE	

CONSTRUCTION PHASING, M.O.T., AND EROSION CONTROL PLAN - PHASE 3

CS-11

SECTION	SHEET NO.
AEC	113

8/13/2019
8:20:04 AM
P:\60320054 DelDOT AGR 1672 BDS\T06 - Rehab Br. 1-714\900 WORK\910 CAD\20-SHEETS\102_Traffic ControlPlans\CS10A-3.dgn

SEQUENCE OF CONSTRUCTION PHASE 3

1. MAINTAIN ALL PERMANENT WARNING SIGNS AS SHOWN ON THE PERMANENT WARNING SIGN PLAN SHEET. PLACE TEMPORARY WARNING SIGNS AS SHOWN ON THE PHASE 3 MOT SHEETS.
2. INSTALL ALL EROSION AND SEDIMENT CONTROL MEASURES AS SHOWN ON PHASE 3 TRAFFIC CONTROL PLANS. CLEAR AND GRUB AS NECESSARY.
3. REMOVE EXISTING STRIPING AS NECESSARY AND PLACE TEMPORARY PAVEMENT STRIPING AS SHOWN ON PHASE 3 TRAFFIC CONTROL PLANS USING TA-17A. SHIFT TRAFFIC TO NEW LANES DESIGNATED FOR PHASE 3.
4. CONSTRUCT CHAPMAN ROAD CONCRETE MEDIAN CURB AS SHOWN.
5. CONSTRUCT TOP UNIT OF DRAINAGE INLET LOCATED AT STA. 26+75 RT.
6. GRADE AND BOX OUT FOR PROPOSED FULL DEPTH PAVEMENT TO THE LIMITS SHOWN. CONSTRUCT TEMPORARY PAVEMENT FOR PHASE 4 MEDIAN CROSSOVER ON CHAPMAN ROAD AND ALEXIS DRIVE.
7. PLACE PROPOSED PAVEMENT SECTION UP TO THE TOP OF THE TYPE-B LAYER TO LIMITS SHOWN.
8. PERFORM REMAINING CONSTRUCTION OF CHAPMAN ROAD DETAILED IN PHASE 3.
9. STABILIZE ALL DISTURBED AREAS AS INDICATED. SWITCH TO PHASE 4 TRAFFIC CONTROL.

PERMANENT PAVEMENT MARKINGS LEGEND

SYMBOL	ITEM	QUANTITY
A	5" SOLID WHITE PERMANENT PAINT PAVEMENT STRIPING (ITEM 817013)	893 LF
B	5" SOLID YELLOW PERMANENT PAINT PAVEMENT STRIPING (ITEM 817013)	1,327 LF

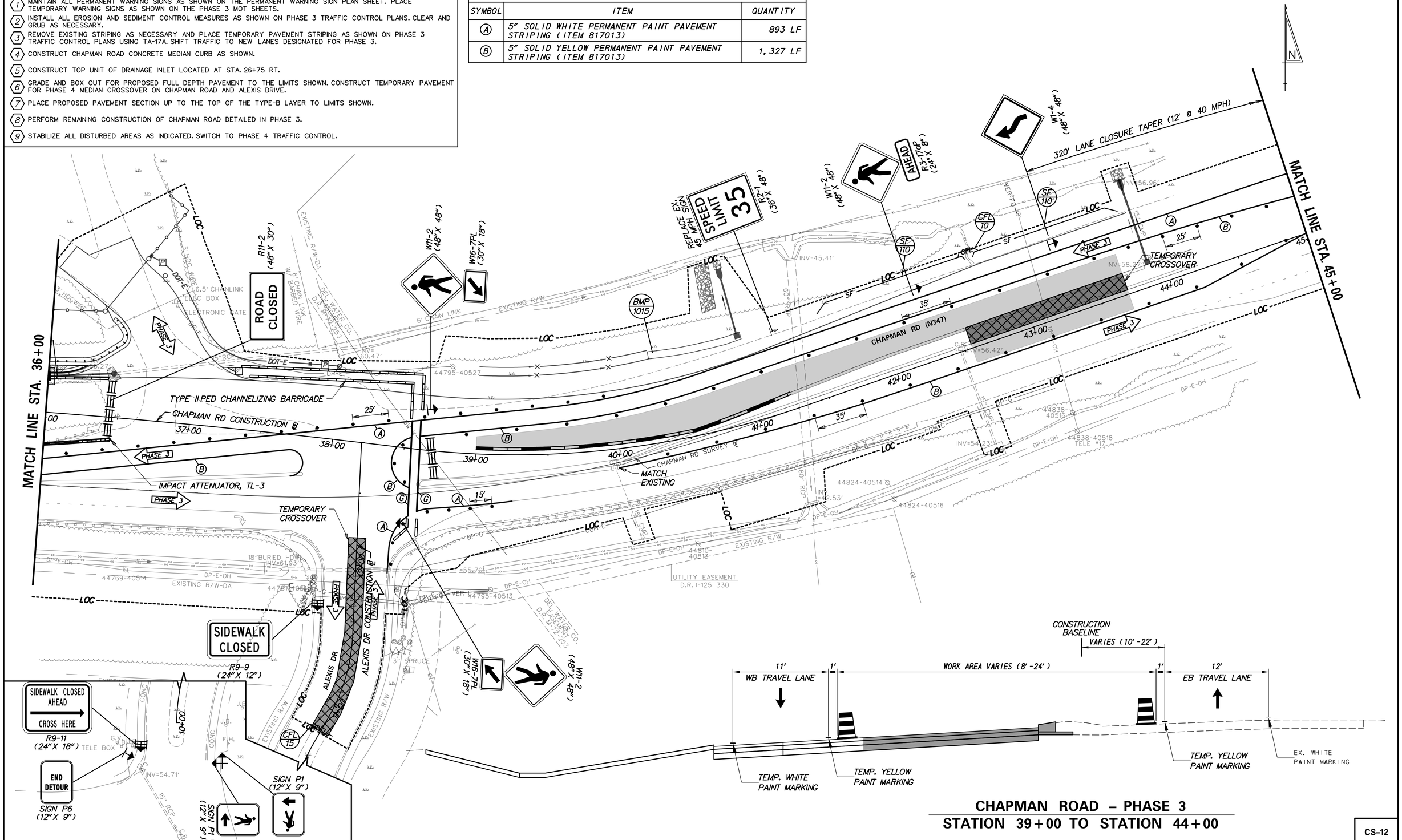

CHAPMAN ROAD – PHASE 3
STATION 39+00 TO STATION 44+00

ADDENDA / REVISIONS

SCALE 0 30 60 90 FEET

BR 1-714 ON CHAPMAN ROAD OVER I-95

CONTRACT	BRIDGE NO.	1-714 /1-714A
T201507402	DESIGNED BY: T. SINGLE	
COUNTY		
NEW CASTLE	CHECKED BY: D. SEMPLE	

CONSTRUCTION PHASING, M.O.T., AND EROSION CONTROL PLAN – PHASE 3

CS-12

SECTION: AEC

SHEET NO. 114

8/7/2019
2:10:07 PM
P:\60323054 DelDOT AGR 1672 BDS\T06 - Rehab Br. 1-714\900 WORK\910 CAD\20-SHEETS\102_Traffic Control Plans\CS11-3.dgn

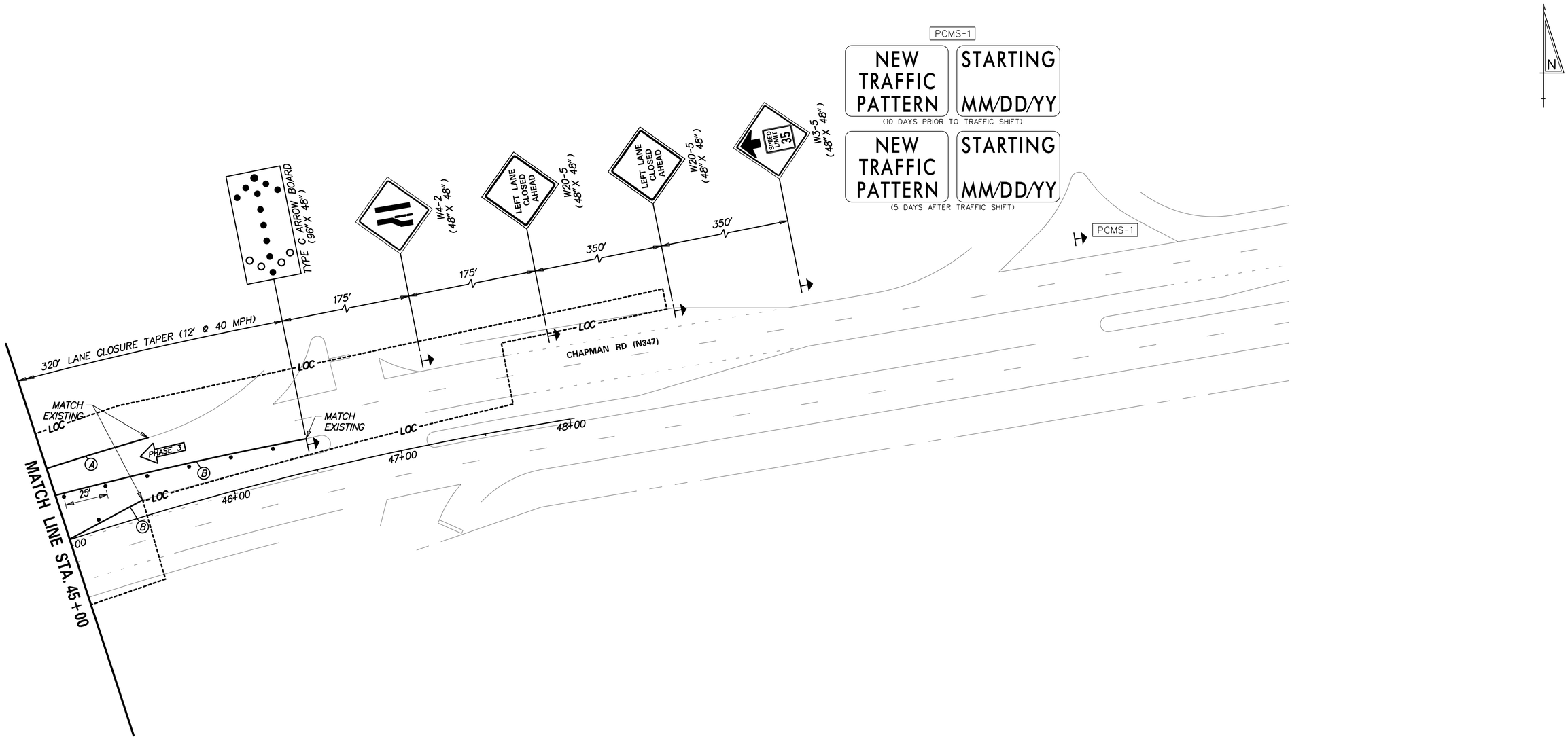

SEQUENCE OF CONSTRUCTION PHASE 3

1. MAINTAIN ALL PERMANENT WARNING SIGNS AS SHOWN ON THE PERMANENT WARNING SIGN PLAN SHEET. PLACE TEMPORARY WARNING SIGNS AS SHOWN ON THE PHASE 3 MOT SHEETS.
2. INSTALL ALL EROSION AND SEDIMENT CONTROL MEASURES AS SHOWN ON PHASE 3 TRAFFIC CONTROL PLANS. CLEAR AND GRUB AS NECESSARY.
3. REMOVE EXISTING STRIPING AS NECESSARY AND PLACE TEMPORARY PAVEMENT STRIPING AS SHOWN ON PHASE 3 TRAFFIC CONTROL PLANS USING TA-17A. SHIFT TRAFFIC TO NEW LANES DESIGNATED FOR PHASE 3.
4. CONSTRUCT CHAPMAN ROAD CONCRETE MEDIAN CURB AS SHOWN.
5. CONSTRUCT TOP UNIT OF DRAINAGE INLET LOCATED AT STA. 26+75 RT.
6. GRADE AND BOX OUT FOR PROPOSED FULL DEPTH PAVEMENT TO THE LIMITS SHOWN. CONSTRUCT TEMPORARY PAVEMENT FOR PHASE 4 MEDIAN CROSSOVER ON CHAPMAN ROAD AND ALEXIS DRIVE.
7. PLACE PROPOSED PAVEMENT SECTION UP TO THE TOP OF THE TYPE-B LAYER TO LIMITS SHOWN.
8. PERFORM REMAINING CONSTRUCTION OF CHAPMAN ROAD DETAILED IN PHASE 3.
9. STABILIZE ALL DISTURBED AREAS AS INDICATED. SWITCH TO PHASE 4 TRAFFIC CONTROL.

PERMANENT PAVEMENT MARKINGS LEGEND

SYMBOL	ITEM	QUANTITY
A	5" SOLID WHITE PERMANENT PAINT PAVEMENT STRIPING (ITEM 817013)	61 LF
B	5" SOLID YELLOW PERMANENT PAINT PAVEMENT STRIPING (ITEM 817013)	195 LF

ADDENDA / REVISIONS

SCALE 0 30 60 90 FEET

BR 1-714 ON CHAPMAN ROAD OVER I-95

CONTRACT	BRIDGE NO.	1-714 /1-714A
T201507402	DESIGNED BY: T. SINGLE	
COUNTY		
NEW CASTLE	CHECKED BY: D. SEMPLE	

CONSTRUCTION PHASING, M.O.T., AND EROSION CONTROL PLAN - PHASE 3

CS-13

SECTION AEC

SHEET NO. 115

8/7/2019
2:10:01 PM
P:\60323054 DelDOT AGR 1672 BDS\T06 - Rehab Br. 1-714\900 WORK\910 CAD\20-SHEETS\102_Traffic Control Plans\CS12-3.dgn

SEQUENCE OF CONSTRUCTION PHASE 4

1. MAINTAIN ALL PERMANENT WARNING SIGNS AS SHOWN ON THE PERMANENT WARNING SIGN PLAN SHEET. PLACE TEMPORARY WARNING SIGNS AS SHOWN ON THE PHASE 4 MOT SHEETS.
2. INSTALL ALL EROSION AND SEDIMENT CONTROL MEASURES AS SHOWN ON PHASE 4 TRAFFIC CONTROL PLANS CLEARING AND GRUBBING AS NECESSARY FOR INSTALLATION. PERFORM REMAINING CLEARING AND GRUBBING WHEN E&S IS IN PLACE.
3. MAINTAIN I-95 TRAFFIC CONTROL AS IMPLEMENTED IN PHASE 1.
4. REMOVE CHAPMAN RD EXISTING STRIPING AS NECESSARY AND PLACE TEMPORARY PAVEMENT STRIPING AS SHOWN ON PHASE 4 TRAFFIC CONTROL PLANS USING TA-17A. SHIFT TRAFFIC TO NEW LANES DESIGNATED FOR PHASE 4.
5. COMPLETE INSTALLATION OF RELOCATED ELECTRIC UTILITY DUCT BANK PRIOR TO DEMOLISHING THE EXISTING BRIDGE.
6. DEMOLISH BRIDGE STRUCTURE OVER NORTHBOUND AND SOUTHBOUND I-95 USING TA-5. GIRDERS SHALL BE REMOVED DURING NIGHTTIME CLOSURES OF I-95 AND CHAPMAN RD. SEE SHEET 103 FOR CLOSURE RESTRICTIONS AND SHEETS 126-130 FOR DETOUR PLANS.
7. COMPLETE CONSTRUCTION OF I-95 DRAINAGE AS SHOWN, REMOVE TEMPORARY DIVERSION BERM, AND STABILIZE DISTURBED AREA.
8. INSTALL GUARDRAIL AND PLACE PROPOSED PAVEMENT SECTION ON I-95. I-95 TRAFFIC CONTROL MAY BE REMOVED ONCE ALL NECESSARY CONSTRUCTION IMPACTING I-95 IS COMPLETE.
9. COMPLETE INITIAL CONSTRUCTION OF BMP 1014 IN ACCORDANCE WITH THE BIORETENTION AREA SEQUENCE.
10. CONSTRUCT CHAPMAN RD DRAINAGE SYSTEM AS SHOWN, BEGINNING FROM MOST DOWNSTREAM SECTION OF WORK AREA. INSTALL INLET PROTECTION ON CONSTRUCTED INLETS AS SHOWN.
11. CONSTRUCT CURB AND GUTTER, SIDEWALK, GUARDRAIL AS SHOWN.
12. GRADE AND BOX OUT FOR PROPOSED FULL DEPTH PAVEMENT TO THE LIMITS SHOWN.
13. PLACE PROPOSED PAVEMENT SECTION UP TO THE TOP OF THE TYPE-B LAYER TO LIMITS SHOWN.
14. PERFORM REMAINING CONSTRUCTION OF CHAPMAN ROAD DETAILED IN PHASE 4.
15. STABILIZE ALL DISTURBED AREAS AS INDICATED. UPON STABILIZATION OF AREAS CONTRIBUTING TO BMPS 1014 & 1015, COMPLETE BMP CONSTRUCTION IN ACCORDANCE WITH THE BIORETENTION AREA CONSTRUCTION SEQUENCE. MAINTAIN CHAPMAN RD PHASE 4 TRAFFIC CONTROL AND SWITCH TO PHASE 5 TRAFFIC CONTROL AT ALEXIS DRIVE.

PERMANENT PAVEMENT MARKINGS LEGEND

SYMBOL	ITEM	QUANTITY
A	5" SOLID WHITE PERMANENT PAINT PAVEMENT STRIPING (ITEM 817013)	1,089 LF
C	5" SOLID DOUBLE YELLOW PERMANENT PAINT PAVEMENT STRIPING (ITEM 817013)	900 LF
D	5" DASHED WHITE PERMANENT PAINT PAVEMENT STRIPING, 2' LINE & 6' GAP (ITEM 748019)	90 LF
E	WHITE PERMANENT PAINT PAVEMENT SYMBOL (ITEM 817002)	31 SF
F	16" SOLID WHITE ALKYD THERMOPLASTIC PAVEMENT STRIPING (ITEM 817002)	30 SF

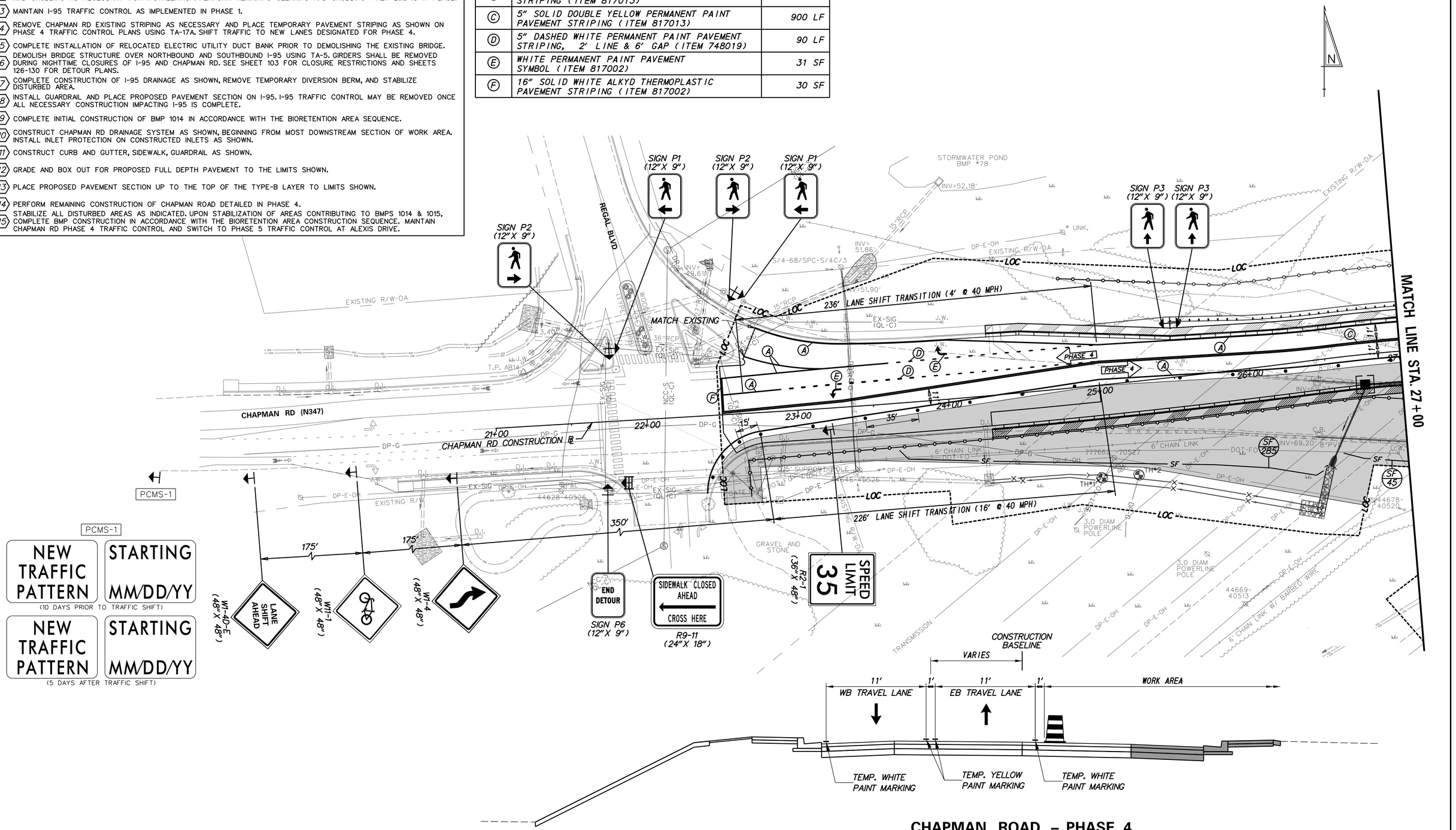

CHAPMAN ROAD – PHASE 4
STATION 22+50 TO STATION 29+00

CS-14

ADDENDA / REVISIONS	

SCALE 0 30 60 90 FEET

BR 1-714 ON CHAPMAN ROAD OVER I-95

CONTRACT	BRIDGE NO. 1-714 /1-714A
T201507402	DESIGNED BY: T. SINGLE
COUNTY	CHECKED BY: D. SEMPLE
NEW CASTLE	

CONSTRUCTION PHASING, M.O.T., AND EROSION CONTROL PLAN – PHASE 4

SECTION: AEC
SHEET NO. 116

8/13/2019
8:20:02 AM
PI:\60323054 DelDOT AGR 1672 BDS\T06 - Rehab Br. 1-714\900 WORK\910 CAD\20-SHEETS\102_Traffic Control Plans\CS13-4.dgn

SEQUENCE OF CONSTRUCTION PHASE 4

1. MAINTAIN ALL PERMANENT WARNING SIGNS AS SHOWN ON THE PERMANENT WARNING SIGN PLAN SHEET. PLACE TEMPORARY WARNING SIGNS AS SHOWN ON THE PHASE 4 MOT SHEETS.
2. INSTALL ALL EROSION AND SEDIMENT CONTROL MEASURES AS SHOWN ON PHASE 4 TRAFFIC CONTROL PLANS CLEARING AND GRUBBING AS NECESSARY FOR INSTALLATION. PERFORM REMAINING CLEARING AND GRUBBING WHEN E&S IS IN PLACE.
3. MAINTAIN I-95 TRAFFIC CONTROL AS IMPLEMENTED IN PHASE 1.
4. REMOVE CHAPMAN RD EXISTING STRIPING AS NECESSARY AND PLACE TEMPORARY PAVEMENT STRIPING AS SHOWN ON PHASE 4 TRAFFIC CONTROL PLANS USING TA-17A. SHIFT TRAFFIC TO NEW LANES DESIGNATED FOR PHASE 4.
5. COMPLETE INSTALLATION OF RELOCATED ELECTRIC UTILITY DUCT BANK PRIOR TO DEMOLISHING THE EXISTING BRIDGE.
6. DEMOLISH BRIDGE STRUCTURE OVER NORTHBOUND AND SOUTHBOUND I-95 USING TA-5. GIRDERS SHALL BE REMOVED DURING NIGHTTIME CLOSURES OF I-95 AND CHAPMAN RD. SEE SHEET 103 FOR CLOSURE RESTRICTIONS AND SHEETS 126-130 FOR DETOUR PLANS.
7. COMPLETE CONSTRUCTION OF I-95 DRAINAGE AS SHOWN, REMOVE TEMPORARY DIVERSION BERM, AND STABILIZE DISTURBED AREA.
8. INSTALL GUARDRAIL AND PLACE PROPOSED PAVEMENT SECTION ON I-95. I-95 TRAFFIC CONTROL MAY BE REMOVED ONCE ALL NECESSARY CONSTRUCTION IMPACTING I-95 IS COMPLETE.
9. COMPLETE INITIAL CONSTRUCTION OF BMP 1014 IN ACCORDANCE WITH THE BIORETENTION AREA SEQUENCE.
10. CONSTRUCT CHAPMAN RD DRAINAGE SYSTEM AS SHOWN, BEGINNING FROM MOST DOWNSTREAM SECTION OF WORK AREA. INSTALL INLET PROTECTION ON CONSTRUCTED INLETS AS SHOWN.
11. CONSTRUCT CURB AND GUTTER, SIDEWALK, GUARDRAIL AS SHOWN.
12. GRADE AND BOX OUT FOR PROPOSED FULL DEPTH PAVEMENT TO THE LIMITS SHOWN.
13. PLACE PROPOSED PAVEMENT SECTION UP TO THE TOP OF THE TYPE-B LAYER TO LIMITS SHOWN.
14. PERFORM REMAINING CONSTRUCTION OF CHAPMAN ROAD DETAILED IN PHASE 4.
15. STABILIZE ALL DISTURBED AREAS AS INDICATED. UPON STABILIZATION OF AREAS CONTRIBUTING TO BMPS 1014 & 1015, COMPLETE BMP CONSTRUCTION IN ACCORDANCE WITH THE BIORETENTION AREA CONSTRUCTION SEQUENCE. MAINTAIN CHAPMAN RD PHASE 4 TRAFFIC CONTROL AND SWITCH TO PHASE 5 TRAFFIC CONTROL AT ALEXIS DRIVE.

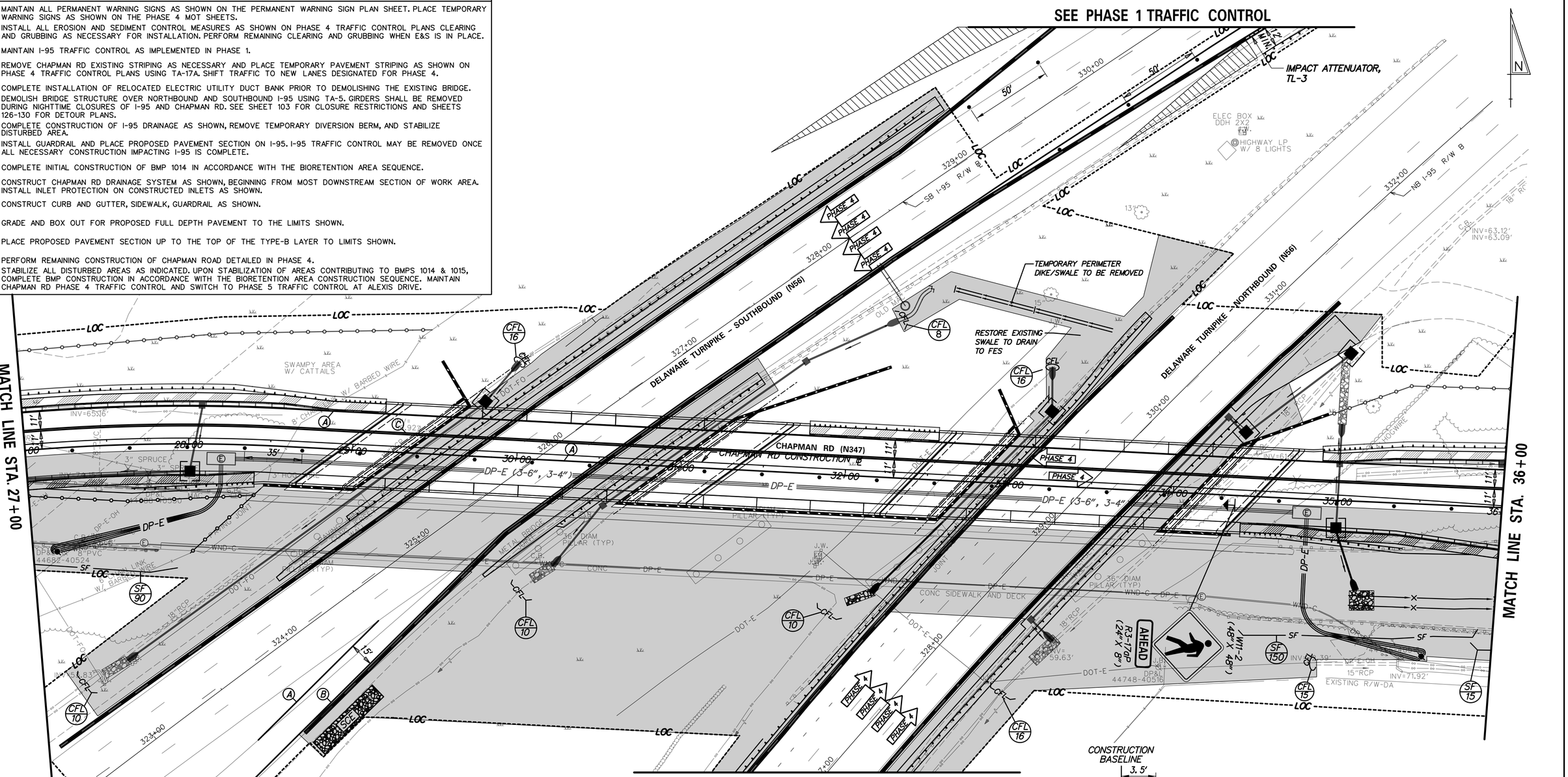

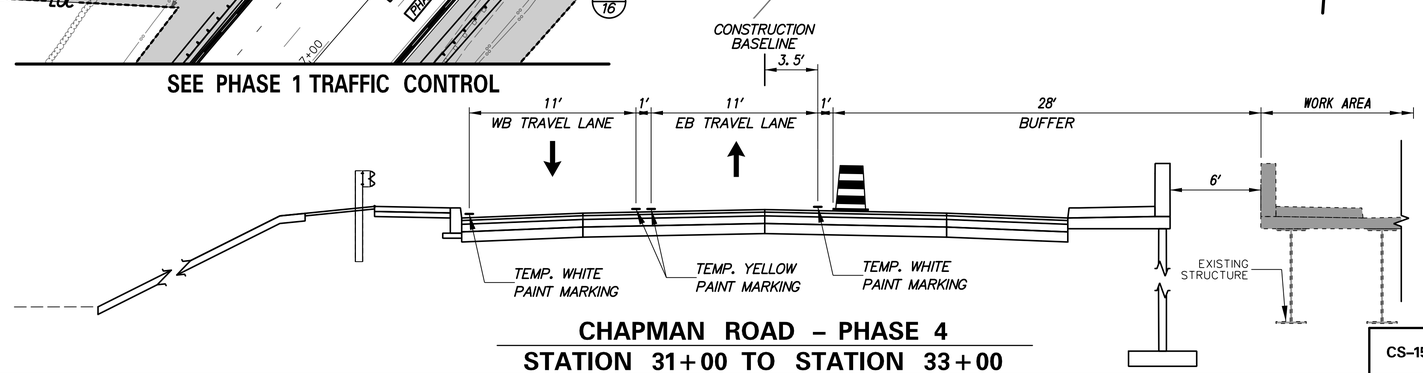

PERMANENT PAVEMENT MARKINGS LEGEND

SYMBOL	ITEM	QUANTITY
A	5" SOLID WHITE PERMANENT PAINT PAVEMENT STRIPING (ITEM 817013)	1,800 LF
C	5" SOLID DOUBLE YELLOW PERMANENT PAINT PAVEMENT STRIPING (ITEM 817013)	1,800 LF

CHAPMAN ROAD – PHASE 4
STATION 31+00 TO STATION 33+00

ADDENDA / REVISIONS

SCALE 0 30 60 90 FEET

BR 1-714 ON CHAPMAN ROAD OVER I-95

CONTRACT	BRIDGE NO.	1-714 /1-714A
T201507402	DESIGNED BY: T. SINGLE	
COUNTY		
NEW CASTLE	CHECKED BY: D. SEMPLE	

CONSTRUCTION PHASING, M.O.T., AND EROSION CONTROL PLAN – PHASE 4

CS-15

SECTION AEC

SHEET NO. 117

8/16/2019 8:24:41 AM
P:\60322054 DelDOT AGR 1672 BDS\T06 - Rehab Br. 1-714\900 WORK\910 CAD\20-SHEETS\102_Traffic Control Plans\CS14-4.dgn

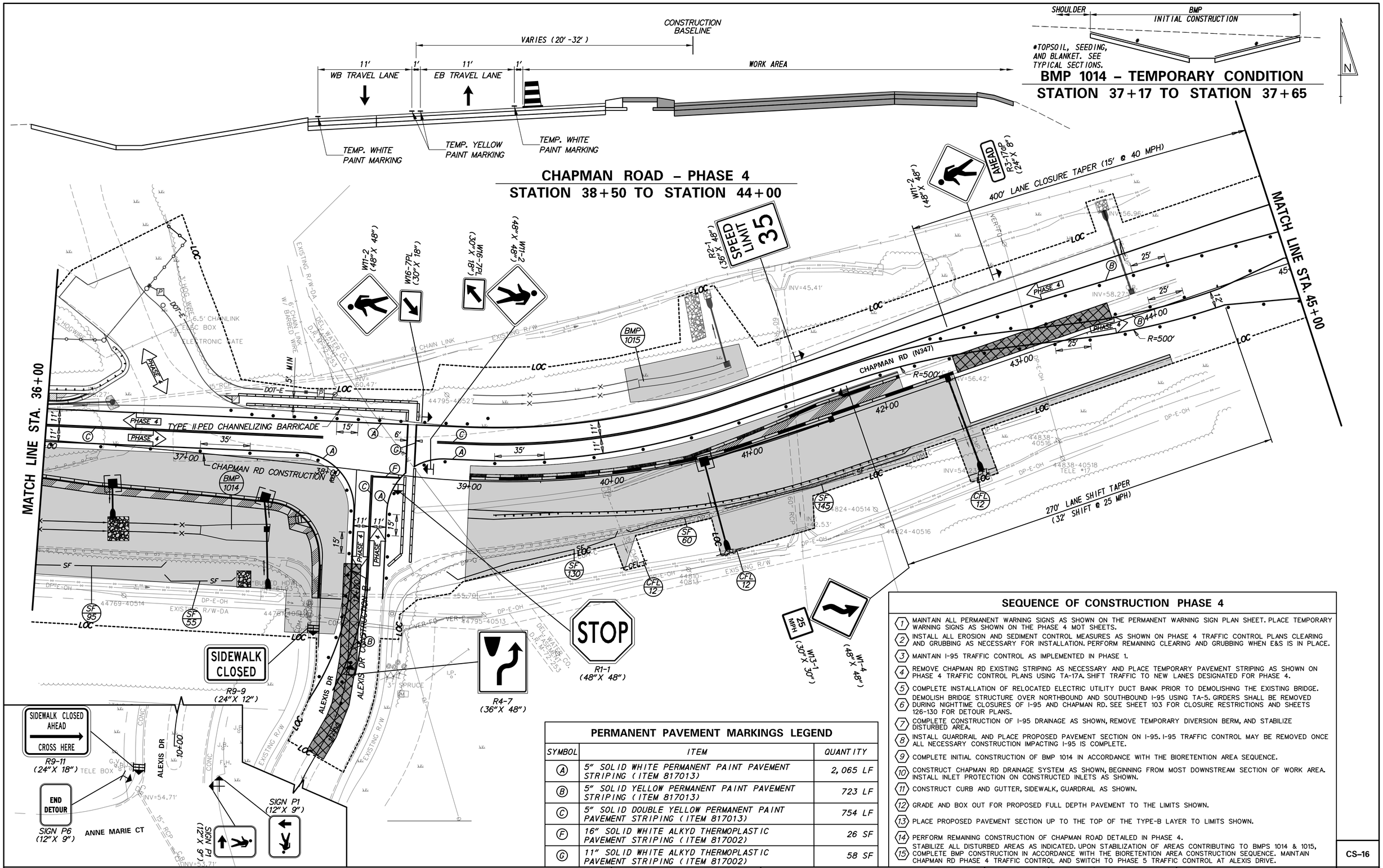

SEQUENCE OF CONSTRUCTION PHASE 4

1. MAINTAIN ALL PERMANENT WARNING SIGNS AS SHOWN ON THE PERMANENT WARNING SIGN PLAN SHEET. PLACE TEMPORARY WARNING SIGNS AS SHOWN ON THE PHASE 4 MOT SHEETS.
2. INSTALL ALL EROSION AND SEDIMENT CONTROL MEASURES AS SHOWN ON PHASE 4 TRAFFIC CONTROL PLANS CLEARING AND GRUBBING AS NECESSARY FOR INSTALLATION. PERFORM REMAINING CLEARING AND GRUBBING WHEN E&S IS IN PLACE.
3. MAINTAIN I-95 TRAFFIC CONTROL AS IMPLEMENTED IN PHASE 1.
4. REMOVE CHAPMAN RD EXISTING STRIPING AS NECESSARY AND PLACE TEMPORARY PAVEMENT STRIPING AS SHOWN ON PHASE 4 TRAFFIC CONTROL PLANS USING TA-17A. SHIFT TRAFFIC TO NEW LANES DESIGNATED FOR PHASE 4.
5. COMPLETE INSTALLATION OF RELOCATED ELECTRIC UTILITY DUCT BANK PRIOR TO DEMOLISHING THE EXISTING BRIDGE.
6. DEMOLISH BRIDGE STRUCTURE OVER NORTHBOUND AND SOUTHBOUND I-95 USING TA-5. GIRDERS SHALL BE REMOVED DURING NIGHTTIME CLOSURES OF I-95 AND CHAPMAN RD. SEE SHEET 103 FOR CLOSURE RESTRICTIONS AND SHEETS 126-130 FOR DETOUR PLANS.
7. COMPLETE CONSTRUCTION OF I-95 DRAINAGE AS SHOWN, REMOVE TEMPORARY DIVERSION BERM, AND STABILIZE DISTURBED AREA.
8. INSTALL GUARDRAIL AND PLACE PROPOSED PAVEMENT SECTION ON I-95. I-95 TRAFFIC CONTROL MAY BE REMOVED ONCE ALL NECESSARY CONSTRUCTION IMPACTING I-95 IS COMPLETE.
9. COMPLETE INITIAL CONSTRUCTION OF BMP 1014 IN ACCORDANCE WITH THE BIORETENTION AREA SEQUENCE.
10. CONSTRUCT CHAPMAN RD DRAINAGE SYSTEM AS SHOWN, BEGINNING FROM MOST DOWNSTREAM SECTION OF WORK AREA. INSTALL INLET PROTECTION ON CONSTRUCTED INLETS AS SHOWN.
11. CONSTRUCT CURB AND GUTTER, SIDEWALK, GUARDRAIL AS SHOWN.
12. GRADE AND BOX OUT FOR PROPOSED FULL DEPTH PAVEMENT TO THE LIMITS SHOWN.
13. PLACE PROPOSED PAVEMENT SECTION UP TO THE TOP OF THE TYPE-B LAYER TO LIMITS SHOWN.
14. PERFORM REMAINING CONSTRUCTION OF CHAPMAN ROAD DETAILED IN PHASE 4.
15. STABILIZE ALL DISTURBED AREAS AS INDICATED. UPON STABILIZATION OF AREAS CONTRIBUTING TO BMPS 1014 & 1015, COMPLETE BMP CONSTRUCTION IN ACCORDANCE WITH THE BIORETENTION AREA CONSTRUCTION SEQUENCE. MAINTAIN CHAPMAN RD PHASE 4 TRAFFIC CONTROL AND SWITCH TO PHASE 5 TRAFFIC CONTROL AT ALEXIS DRIVE.

PERMANENT PAVEMENT MARKINGS LEGEND

SYMBOL	ITEM	QUANTITY
(A)	5" SOLID WHITE PERMANENT PAINT PAVEMENT STRIPING (ITEM 817013)	2,065 LF
(B)	5" SOLID YELLOW PERMANENT PAINT PAVEMENT STRIPING (ITEM 817013)	723 LF
(C)	5" SOLID DOUBLE YELLOW PERMANENT PAINT PAVEMENT STRIPING (ITEM 817013)	754 LF
(F)	16" SOLID WHITE ALKYD THERMOPLASTIC PAVEMENT STRIPING (ITEM 817002)	26 SF
(G)	11" SOLID WHITE ALKYD THERMOPLASTIC PAVEMENT STRIPING (ITEM 817002)	58 SF

CS-16

ADDENDA / REVISIONS

SCALE 0 30 60 90 FEET

BR 1-714 ON CHAPMAN ROAD OVER I-95

CONTRACT	BRIDGE NO.	1-714 /1-714A
T201507402	DESIGNED BY: T. SINGLE	
COUNTY		
NEW CASTLE	CHECKED BY: D. SEMPLE	

CONSTRUCTION PHASING, M.O.T., AND EROSION CONTROL PLAN – PHASE 4

SECTION AEC

SHEET NO. 118

8/7/2019
2:19:24 PM
P:\16032\3054 DelDOT AGR 1672 BDS\T06 - Rehab Br. 1-714\900 WORK\910 CAD\20-SHEETS\102_Traffic Control Plans\CS15-4.dgn

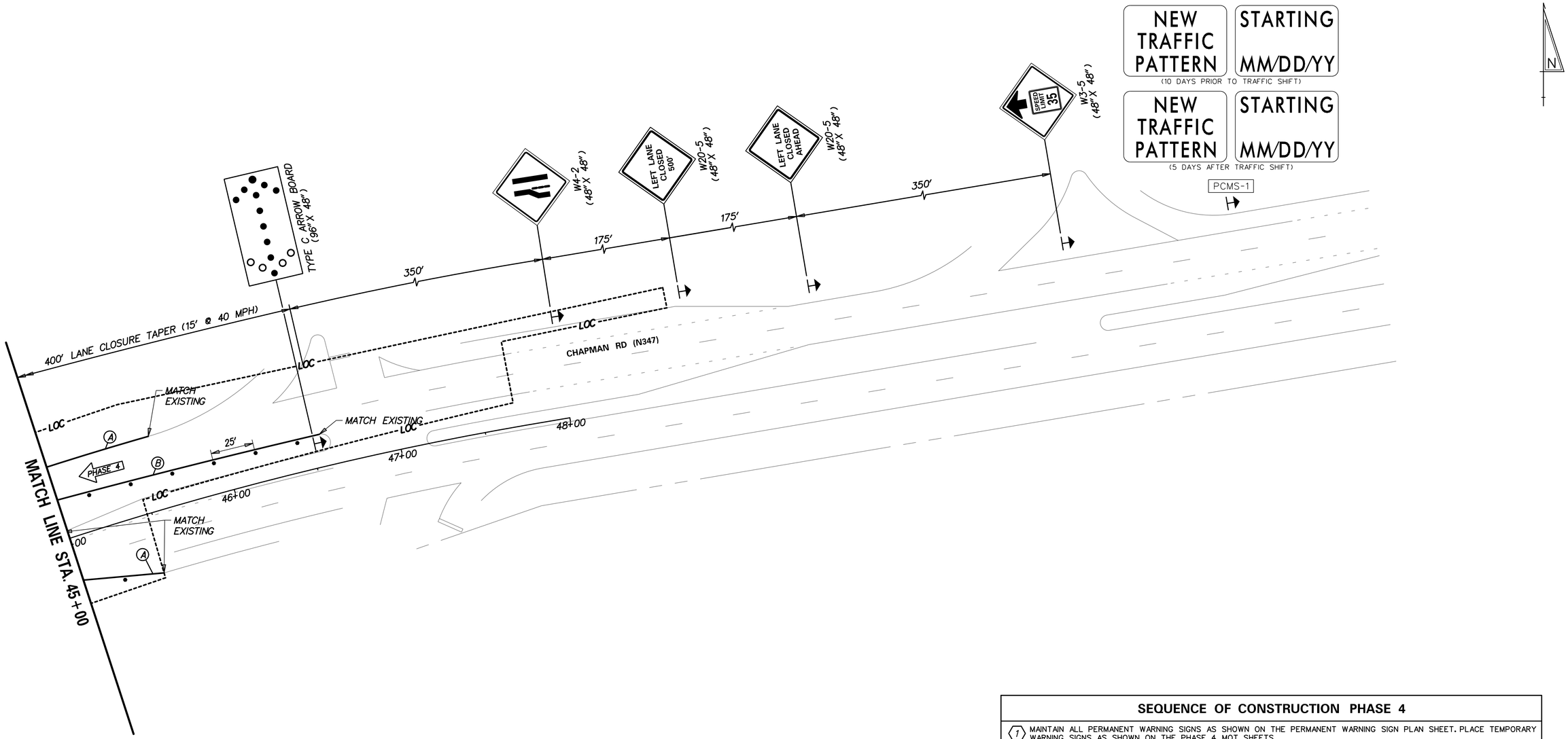

SEQUENCE OF CONSTRUCTION PHASE 4

1. MAINTAIN ALL PERMANENT WARNING SIGNS AS SHOWN ON THE PERMANENT WARNING SIGN PLAN SHEET. PLACE TEMPORARY WARNING SIGNS AS SHOWN ON THE PHASE 4 MOT SHEETS.
2. INSTALL ALL EROSION AND SEDIMENT CONTROL MEASURES AS SHOWN ON PHASE 4 TRAFFIC CONTROL PLANS CLEARING AND GRUBBING AS NECESSARY FOR INSTALLATION. PERFORM REMAINING CLEARING AND GRUBBING WHEN E&S IS IN PLACE.
3. MAINTAIN I-95 TRAFFIC CONTROL AS IMPLEMENTED IN PHASE 1.
4. REMOVE CHAPMAN RD EXISTING STRIPING AS NECESSARY AND PLACE TEMPORARY PAVEMENT STRIPING AS SHOWN ON PHASE 4 TRAFFIC CONTROL PLANS USING TA-17A. SHIFT TRAFFIC TO NEW LANES DESIGNATED FOR PHASE 4.
5. COMPLETE INSTALLATION OF RELOCATED ELECTRIC UTILITY DUCT BANK PRIOR TO DEMOLISHING THE EXISTING BRIDGE.
6. DEMOLISH BRIDGE STRUCTURE OVER NORTHBOUND AND SOUTHBOUND I-95 USING TA-5. GIRDERS SHALL BE REMOVED DURING NIGHTTIME CLOSURES OF I-95 AND CHAPMAN RD. SEE SHEET 103 FOR CLOSURE RESTRICTIONS AND SHEETS 126-130 FOR DETOUR PLANS.
7. COMPLETE CONSTRUCTION OF I-95 DRAINAGE AS SHOWN, REMOVE TEMPORARY DIVERSION BERM, AND STABILIZE DISTURBED AREA.
8. INSTALL GUARDRAIL AND PLACE PROPOSED PAVEMENT SECTION ON I-95. I-95 TRAFFIC CONTROL MAY BE REMOVED ONCE ALL NECESSARY CONSTRUCTION IMPACTING I-95 IS COMPLETE.
9. COMPLETE INITIAL CONSTRUCTION OF BMP 1014 IN ACCORDANCE WITH THE BIORETENTION AREA SEQUENCE.
10. CONSTRUCT CHAPMAN RD DRAINAGE SYSTEM AS SHOWN, BEGINNING FROM MOST DOWNSTREAM SECTION OF WORK AREA. INSTALL INLET PROTECTION ON CONSTRUCTED INLETS AS SHOWN.
11. CONSTRUCT CURB AND GUTTER, SIDEWALK, GUARDRAIL AS SHOWN.
12. GRADE AND BOX OUT FOR PROPOSED FULL DEPTH PAVEMENT TO THE LIMITS SHOWN.
13. PLACE PROPOSED PAVEMENT SECTION UP TO THE TOP OF THE TYPE-B LAYER TO LIMITS SHOWN.
14. PERFORM REMAINING CONSTRUCTION OF CHAPMAN ROAD DETAILED IN PHASE 4.
15. STABILIZE ALL DISTURBED AREAS AS INDICATED. UPON STABILIZATION OF AREAS CONTRIBUTING TO BMPS 1014 & 1015, COMPLETE BMP CONSTRUCTION IN ACCORDANCE WITH THE BIORETENTION AREA CONSTRUCTION SEQUENCE. MAINTAIN CHAPMAN RD PHASE 4 TRAFFIC CONTROL AND SWITCH TO PHASE 5 TRAFFIC CONTROL AT ALEXIS DRIVE.

PERMANENT PAVEMENT MARKINGS LEGEND

SYMBOL	ITEM	QUANTITY
A	5" SOLID WHITE PERMANENT PAINT PAVEMENT STRIPING (ITEM 817013)	108 LF
B	5" SOLID YELLOW PERMANENT PAINT PAVEMENT STRIPING (ITEM 817013)	156 LF

ADDENDA / REVISIONS

SCALE 0 30 60 90 FEET

BR 1-714 ON CHAPMAN ROAD OVER I-95

CONTRACT	BRIDGE NO.	1-714 /1-714A
T201507402	DESIGNED BY: T. SINGLE	
COUNTY		
NEW CASTLE	CHECKED BY: D. SEMPLE	

CONSTRUCTION PHASING, M.O.T., AND EROSION CONTROL PLAN – PHASE 4

CS-17

SECTION AEC

SHEET NO. 119

8/7/2019 2:11:20 PM P:\60323054 DelDOT AGR 1672 BDS\T06 - Rehab Br. 1-714\900 WORK\910 CAD\20-SHEETS\102_Traffic Control Plans\CS16-4.dgn

ALEXIS DRIVE PHASE 5

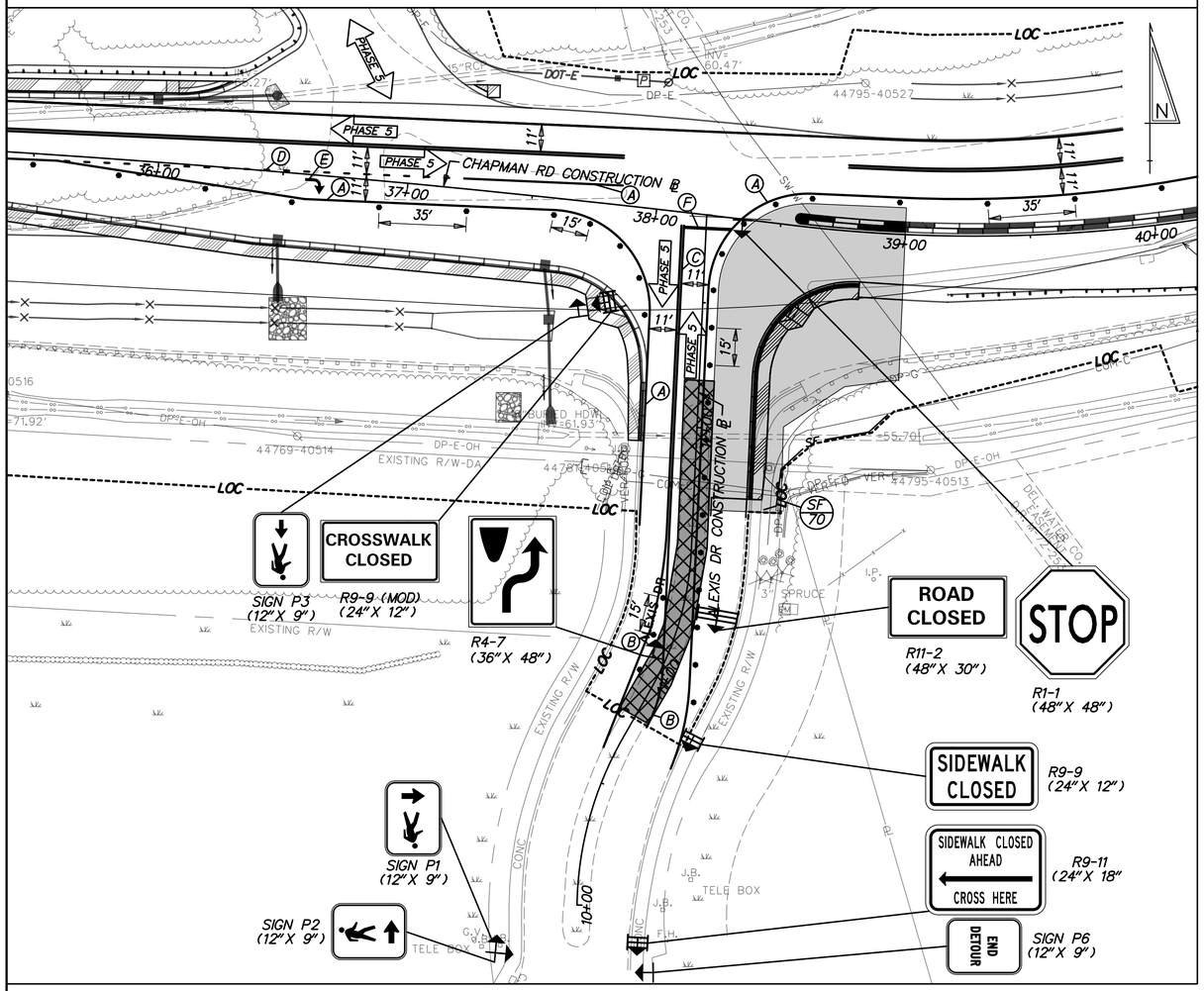

ALEXIS DRIVE PHASE 6

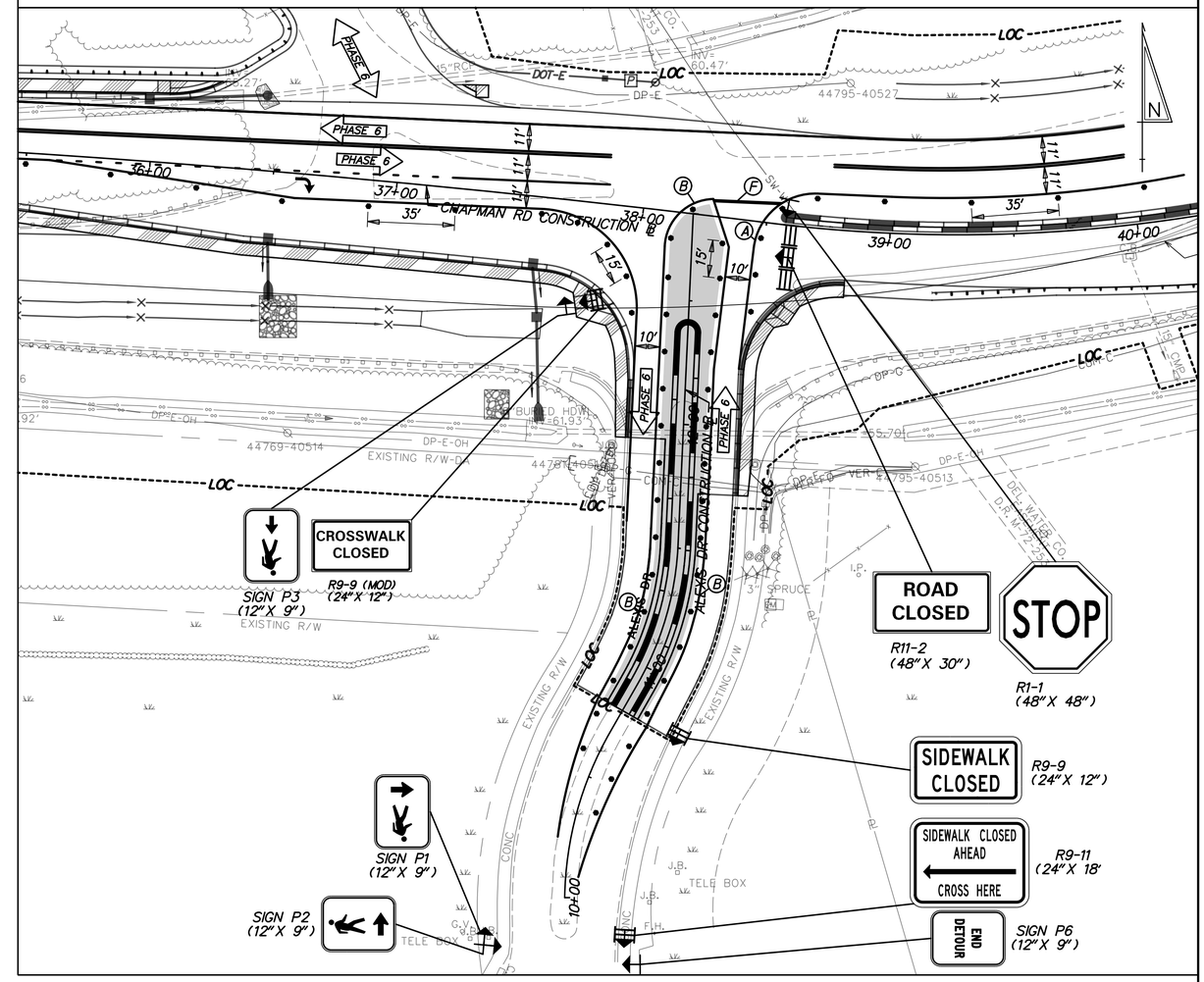

PERMANENT PAVEMENT MARKINGS LEGEND

SYMBOL	ITEM	QUANTITY	SYMBOL	ITEM	QUANTITY
A	5" SOLID WHITE PERMANENT PAINT PAVEMENT STRIPING (ITEM 817013)	785 LF	D	5" DASHED WHITE PERMANENT PAINT PAVEMENT STRIPING, 2' LINE & 6' GAP (ITEM 748019)	42 LF
B	5" SOLID YELLOW PERMANENT PAINT PAVEMENT STRIPING (ITEM 817013)	714 LF	E	WHITE PERMANENT PAINT PAVEMENT SYMBOL (ITEM 817002)	16 SF
C	5" SOLID DOUBLE YELLOW PERMANENT PAINT PAVEMENT STRIPING (ITEM 817013)	240 LF	F	16" SOLID WHITE ALKYD THERMOPLASTIC PAVEMENT STRIPING (ITEM 817002)	61 SF

SEQUENCE OF CONSTRUCTION PHASE 7

1. MAINTAIN ALL PERMANENT WARNING SIGNS AS SHOWN ON THE PERMANENT WARNING SIGN PLAN SHEET.
2. SHIFT CHAPMAN ROAD TRAFFIC TO FINAL CONFIGURATION. PLACE PAVEMENT MARKINGS IN PERMANENT CONFIGURATION USING TEMPORARY MARKING ITEMS.
3. REMOVE TEMPORARY CROSSOVER ON CHAPMAN ROAD USING TA-15 DURING ALLOWABLE LANE CLOSURE TIMES. CONSTRUCT CURB AND MEDIAN ON CHAPMAN ROAD AT LIMITS SHOWN.
4. STABILIZE ALL DISTURBED AREAS AS INDICATED. SWITCH TO PHASE 8 TRAFFIC CONTROL.

SEQUENCE OF CONSTRUCTION PHASE 5

1. MAINTAIN ALL PERMANENT WARNING SIGNS AS SHOWN ON THE PERMANENT WARNING SIGN PLAN SHEET. PLACE TEMPORARY WARNING SIGNS AS SHOWN ON THE PHASE 5 MOT SHEETS.
2. INSTALL ALL EROSION AND SEDIMENT CONTROL MEASURES AS SHOWN ON PHASE 5 TRAFFIC CONTROL PLANS. CLEAR AND GRUB AS NECESSARY FOR INSTALLATION.
3. TRAFFIC ON CHAPMAN ROAD WILL REMAIN IN SHIFTED POSITION AS SHOWN ON PHASE 4 PLANS. SHIFT TRAFFIC AT ALEXIS DRIVE TO PHASE 4 COMPLETED PAVEMENT AS SHOWN.
4. CONSTRUCT CURB AND GUTTER, SIDEWALK AS SHOWN.
5. GRADE AND BOX OUT FOR PROPOSED FULL DEPTH PAVEMENT TO THE LIMITS SHOWN.
6. PLACE PROPOSED PAVEMENT SECTION UP TO THE TOP OF THE TYPE-B LAYER TO LIMITS SHOWN.
7. PERFORM REMAINING CONSTRUCTION OF CHAPMAN ROAD DETAILED IN PHASE 5.
8. STABILIZE ALL DISTURBED AREAS AS INDICATED. MAINTAIN CHAPMAN RD PHASE 4 TRAFFIC CONTROL AND SWITCH TO PHASE 6 TRAFFIC CONTROL AT ALEXIS DR.

SEQUENCE OF CONSTRUCTION PHASE 6

1. MAINTAIN ALL PERMANENT WARNING SIGNS AS SHOWN ON THE PERMANENT WARNING SIGN PLAN SHEET. PLACE TEMPORARY WARNING SIGNS AS SHOWN ON THE PHASE 6 MOT SHEETS.
2. INSTALL ALL EROSION AND SEDIMENT CONTROL MEASURES AS SHOWN ON PHASE 6 TRAFFIC CONTROL PLANS. CLEAR AND GRUB AS NECESSARY.
3. TRAFFIC ON CHAPMAN ROAD WILL REMAIN IN SHIFTED POSITION AS SHOWN ON PHASE 4 AND PHASE 5 PLANS. SHIFT NORTHBOUND TRAFFIC ON ALEXIS DRIVE TO PHASE 5 COMPLETED PAVEMENT AS SHOWN.
4. REMOVE TEMPORARY CROSSOVER PAVEMENT ON ALEXIS DRIVE.
5. CONSTRUCT CURB AND MEDIAN ON ALEXIS DRIVE AT LIMITS SHOWN. USE TA-10 TO CONTROL TRAFFIC DURING WORK PERIODS.
6. PERFORM REMAINING CONSTRUCTION OF CHAPMAN ROAD DETAILED IN PHASE 6.
7. STABILIZE ALL DISTURBED AREAS AS INDICATED. SWITCH TO PHASE 7 TRAFFIC CONTROL.

SEQUENCE OF CONSTRUCTION PHASE 8

1. MAINTAIN ALL PERMANENT WARNING SIGNS AS SHOWN ON THE PERMANENT WARNING SIGN PLAN SHEET.
2. COMPLETE CONVERSION OF BMP 1015 TO PERMANENT CONDITIONS IN ACCORDANCE WITH THE BMP SEQUENCE SHOWN ON THE STORMWATER MANAGEMENT PLANS.
3. USE TA-10, TA-11B, TA-23, AND TA-33 TO MILL ALL REMAINING EXISTING CHAPMAN ROAD PAVEMENT.
4. PLACE PROPOSED 2" TYPE C HOT-MIX SURFACE COURSE ALONG ENTIRE PROJECT USING TA-10, TA-11B, TA-23 AND TA-33. INSTALL TEMPORARY STRIPING IN THE FINAL CONFIGURATION.
5. INSTALL BICYCLE-FRIENDLY RUMBLE STRIPS IN SHOULDER USING TA-10, TA-11B, AND TA-17.
6. STABILIZE ALL REMAINING DISTURBED AREAS AS INDICATED.
7. PLACE FINAL PROPOSED PAVEMENT MARKINGS AND RPMS USING TA-17 AND TA-35C, AND INSTALL ALL PROPOSED SIGNS AS SHOWN IN SIGNING AND STRIPING PLANS.

ADDENDA / REVISIONS

SCALE 0 30 60 90 FEET

BR 1-714 ON CHAPMAN ROAD OVER I-95

CONTRACT	BRIDGE NO.	1-714 /1-714A
T201507402	DESIGNED BY: T. SINGLE	
COUNTY		
NEW CASTLE	CHECKED BY: D. SEMPLE	

CONSTRUCTION PHASING, M.O.T., AND EROSION CONTROL PLAN – PHASE 5, 6, 7 & 8

CS-18

SECTION AEC

SHEET NO. 120

8/17/2019 2:53:24 PM P:\60323054 DelDOT AGR 1672 BDSVT06 - Rehab Br. 1-714\900 WORK\910 CAD\20-SHEETS\102_Traffic ControlPlans\CS17-56.dgn

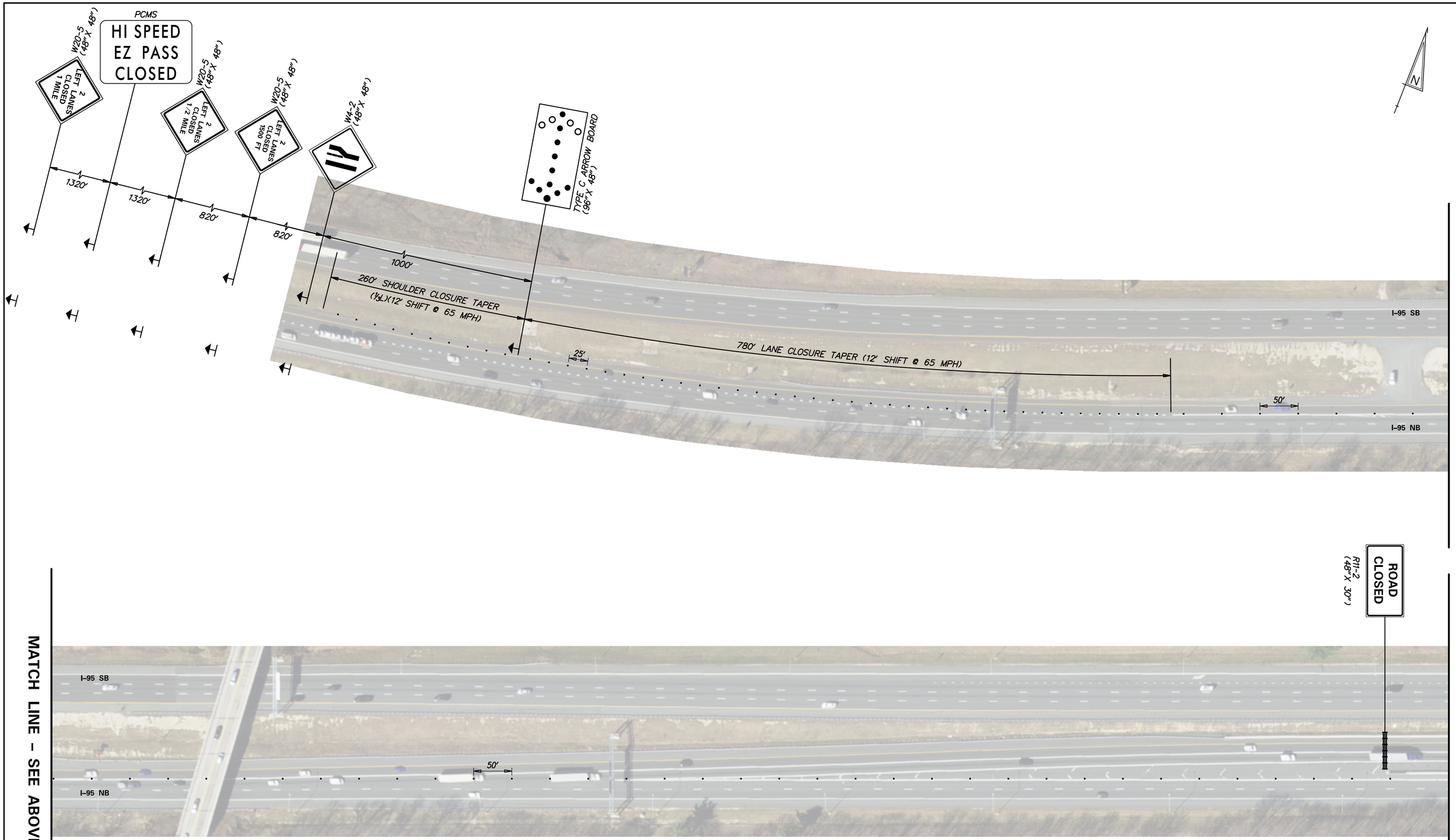

ADDENDA / REVISIONS	

SCALE
0 60 120 180
FEET

BR 1-714 ON CHAPMAN ROAD OVER I-95

CONTRACT	BRIDGE NO.	1-714 /1-714A
T201507402	DESIGNED BY: T. SINGLE	
COUNTY		
NEW CASTLE	CHECKED BY: D. SEMPLE	

CONSTRUCTION PHASING, M.O.T., AND EROSION CONTROL PLAN - I95 NB CLOSURE

CS-19

SECTION
AEC
SHEET NO.
121

8/7/2019
2:11:19 PM
P:\60323054 DelDOT AGR 1672 BDS\T06 - Rehab Br. 1-714\900 WORK\910 CAD\20-SHEETS\102_Traffic Control Plans\CS18- I95NB.dgn

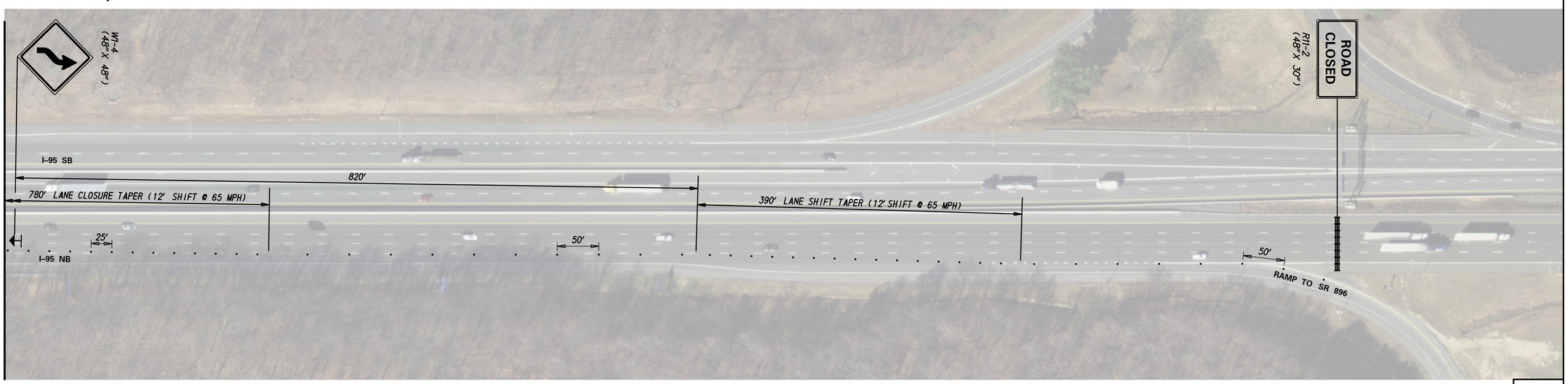

ADDENDA / REVISIONS	

SCALE
0 60 120 180
FEET

BR 1-714 ON CHAPMAN ROAD OVER I-95

CONTRACT	BRIDGE NO.	1-714 /1-714A
T201507402	DESIGNED BY: T. SINGLE	
COUNTY		
NEW CASTLE	CHECKED BY: D. SEMPLE	

CONSTRUCTION PHASING, M.O.T., AND EROSION CONTROL PLAN - I95 NB CLOSURE

CS-20

SECTION
AEC
SHEET NO.
122

8/7/2019
2:15:18 PM
P:\16032\0054 DelDOT AGR 1672 BDS\T06 - Rehab Br. 1-714\900 WORK\910 CAD\20-SHEETS\102_Traffic Control Plans\CS19- I95NB.dgn

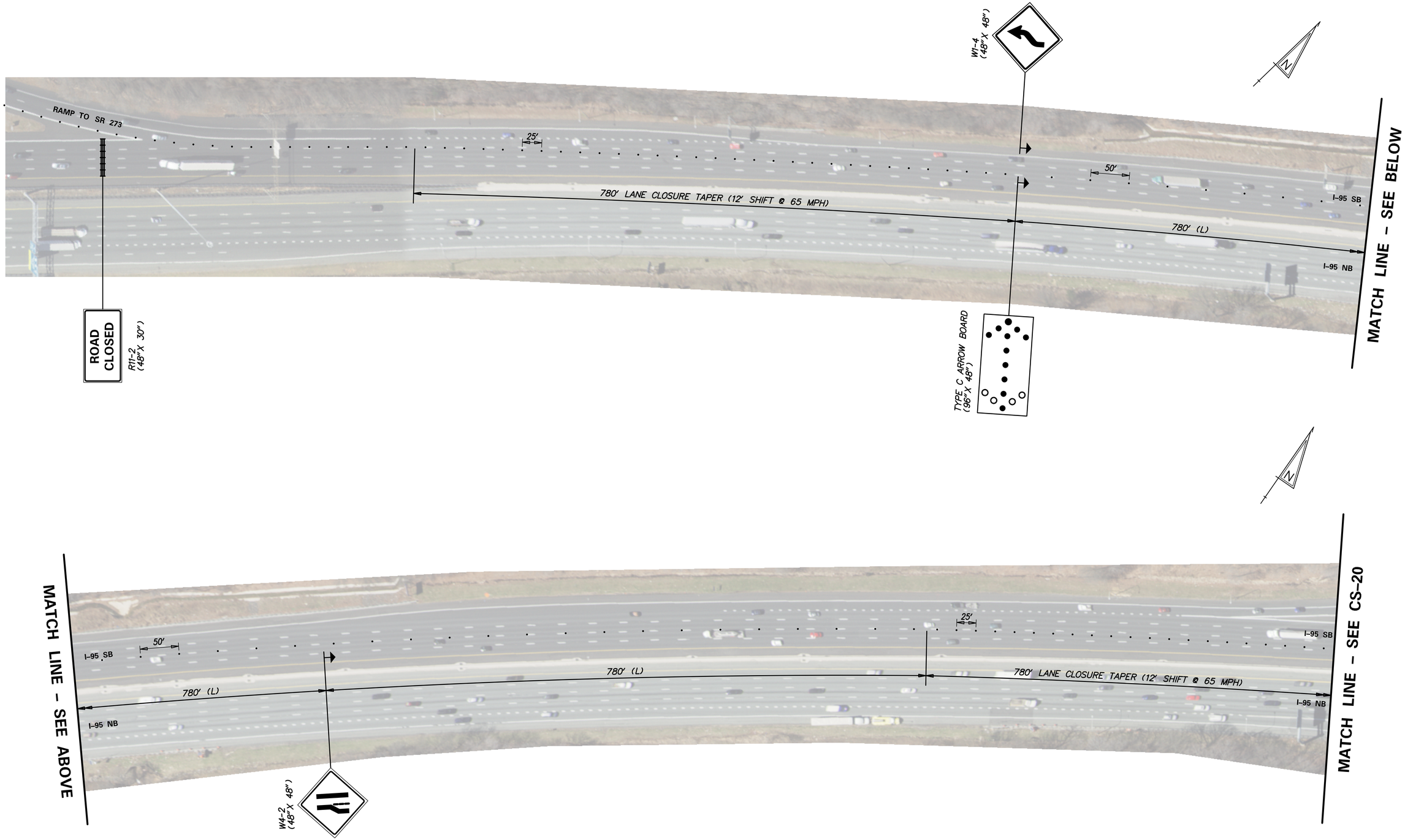

ADDENDA / REVISIONS	

SCALE
0 60 120 180
FEET

BR 1-714 ON CHAPMAN ROAD OVER I-95

CONTRACT	BRIDGE NO.	1-714 /1-714A
T201507402	DESIGNED BY: T. SINGLE	
COUNTY	CHECKED BY: D. SEMPLE	
NEW CASTLE		

CONSTRUCTION PHASING, M.O.T., AND EROSION CONTROL PLAN - I95 SB CLOSURE

CS-21
SECTION
AEC
SHEET NO.
123

8/7/2018
2:04:42 PM
P:\50325054 DelDOT AGR 1672 BDS\T06 - Rehab Br. 1-714\900 WORK\910 CAD\20-SHEETS\102_Traffic Control Plans\CS20-I95SB.dgn

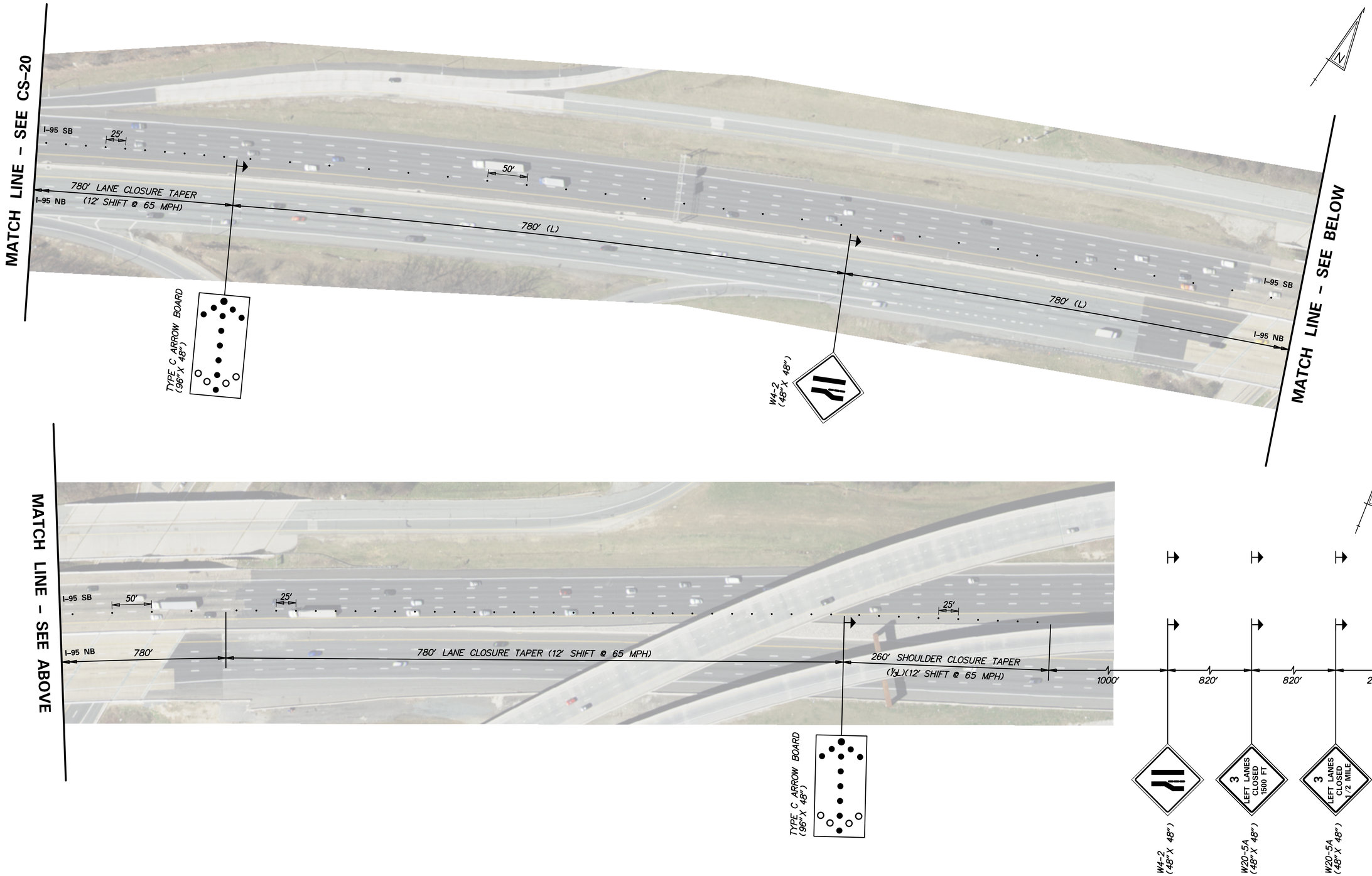

8/7/2019
2:24:10 PM
P:\60325054 DelDOT AGR 1672 BDSVT06 - Rehab Br. 1-714\900 WORK\910 CAD\20-SHEETS\102_Traffic ControlPlans\CS21-I95SB.dgn

ADDENDA / REVISIONS	

SCALE
0 60 120 180
FEET

BR 1–714 ON CHAPMAN ROAD OVER I–95

CONTRACT	BRIDGE NO.	1–714 /1–714A
T201507402	DESIGNED BY: T. SINGLE	
COUNTY	CHECKED BY: D. SEMPLE	
NEW CASTLE		

CONSTRUCTION PHASING, M.O.T., AND EROSION CONTROL PLAN – I95 SB CLOSURE

CS–22
SECTION
AEC
SHEET NO.
124

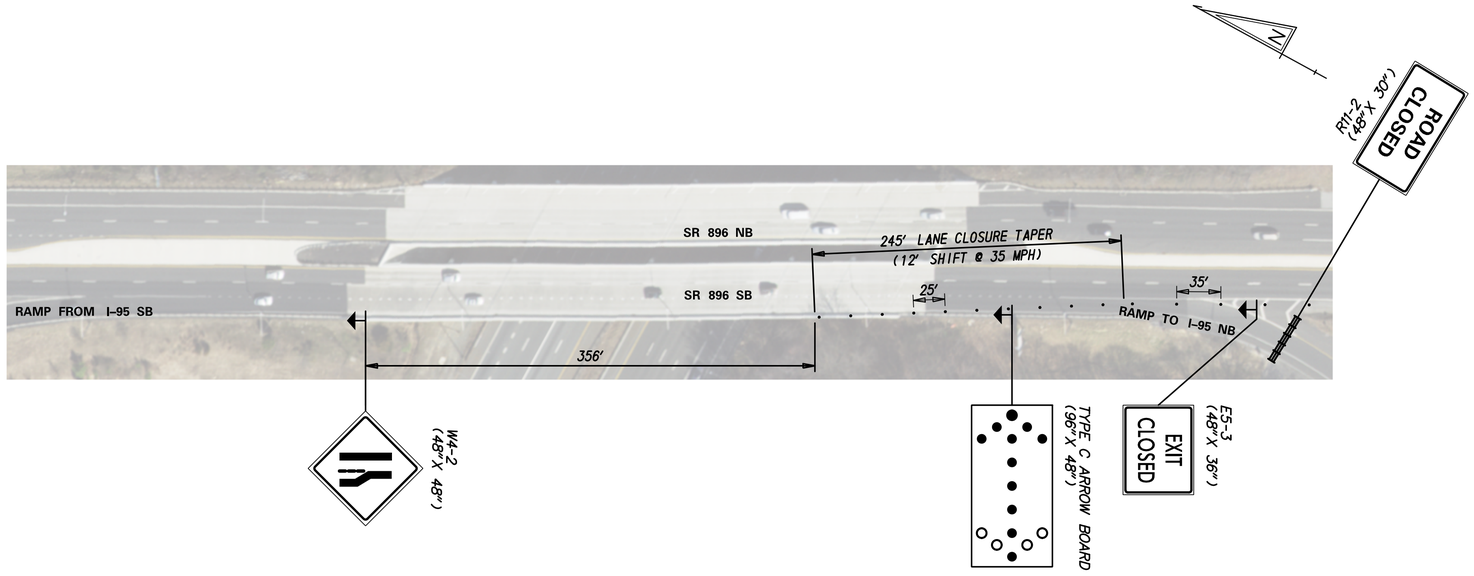

SB SR 896 TO I-95 NB RAMP CLOSURE

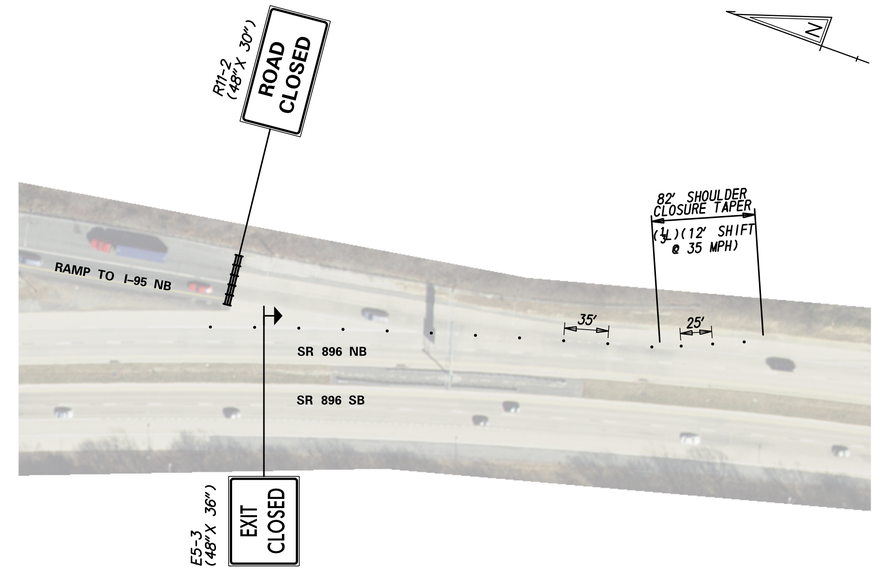

NB SR 896 TO I-95 NB RAMP CLOSURE

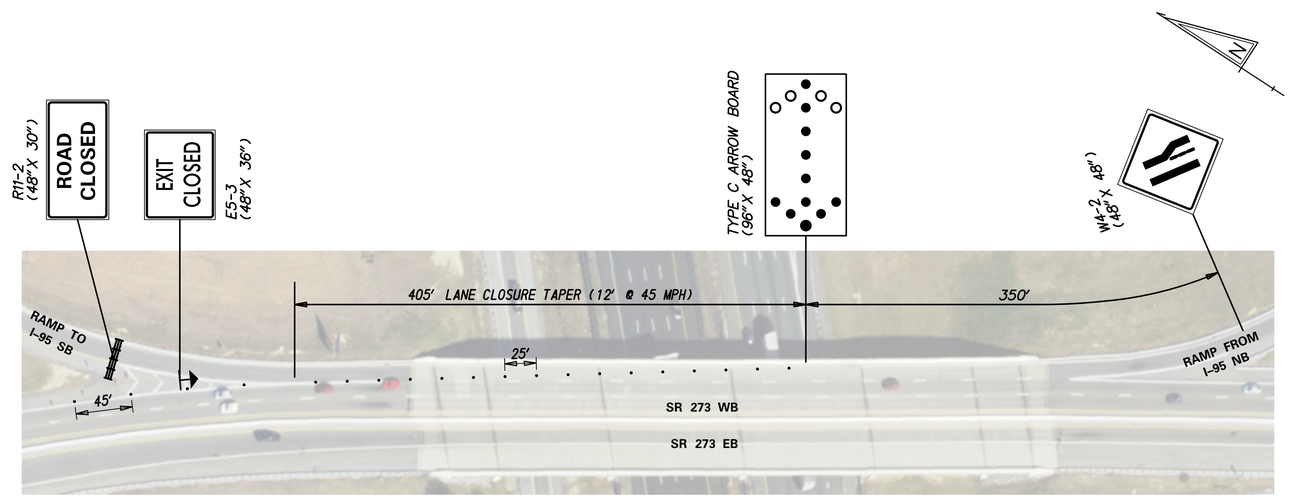

WB SR 273 TO I-95 SB RAMP CLOSURE

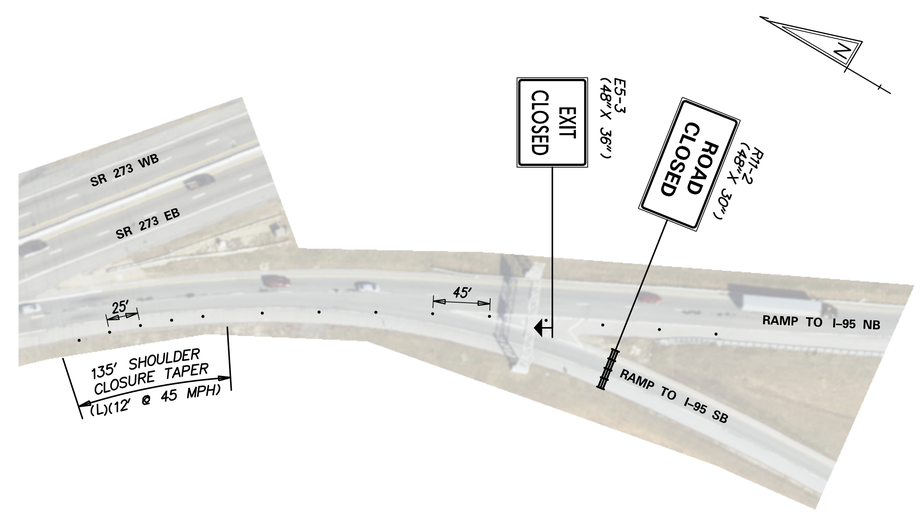

EB SR 273 TO I-95 SB RAMP CLOSURE

ADDENDA / REVISIONS	

SCALE
0 60 120 180
FEET

BR 1-714 ON CHAPMAN ROAD OVER I-95

CONTRACT	BRIDGE NO.	1-714 /1-714A
T201507402	DESIGNED BY: T. SINGLE	
COUNTY		
NEW CASTLE	CHECKED BY: D. SEMPLE	

CONSTRUCTION PHASING, M.O.T., AND EROSION CONTROL PLAN – I-95 RAMP CLOSURES

CS-23
SECTION
AEC
SHEET NO.
125

8/7/2019
2:28:01 PM
P:\60323054 DelDOT AGR 1672 BDS\T06 - Rehab Br. 1-714\900 WORK\910 CAD\20-SHEETS\102_Traffic Control Plans\CS22- Ramps.dgn

PORTABLE CHANGEABLE MESSAGE SIGNS

PRIOR TO DETOUR
(10 DAYS PRIOR TO BEGINNING OF DETOUR)

PCMS-1

NB 95 TO CLOSE AT EX 1	STARTING XX/XX/XX XXPM-XAM

PRIOR TO DETOUR
(10 DAYS PRIOR TO BEGINNING OF DETOUR)

PCMS-2

NB 95 TO CLOSE	STARTING XX/XX/XX XXPM-XAM

DURING DETOUR
(DISPLAY FOR DURATION OF DETOUR)

PCMS-3

NB 95 TO CLOSE AT DE896	FOLLOW DETOUR

DURING DETOUR
(DISPLAY FOR DURATION OF DETOUR)

PCMS-4

NB 95 DETOUR	TO DE273 LEFT AT SIGNAL	TO NB 95 USE DE 1 N

SPECIAL SIGNS

1. NIGHTTIME CLOSURES ARE PERMITTED BETWEEN THE HOURS OF 10 PM TO 5 AM EACH NIGHT, MONDAY NIGHT TO FRIDAY MORNING.
2. CONTRACTOR SHALL CONTACT AND COORDINATE TIME RESTRICTIONS WITH THE DELAWARE TURNPIKE TRAVEL PLAZA PRIOR TO IMPLEMENTING ANY DETOURS OF I-95.

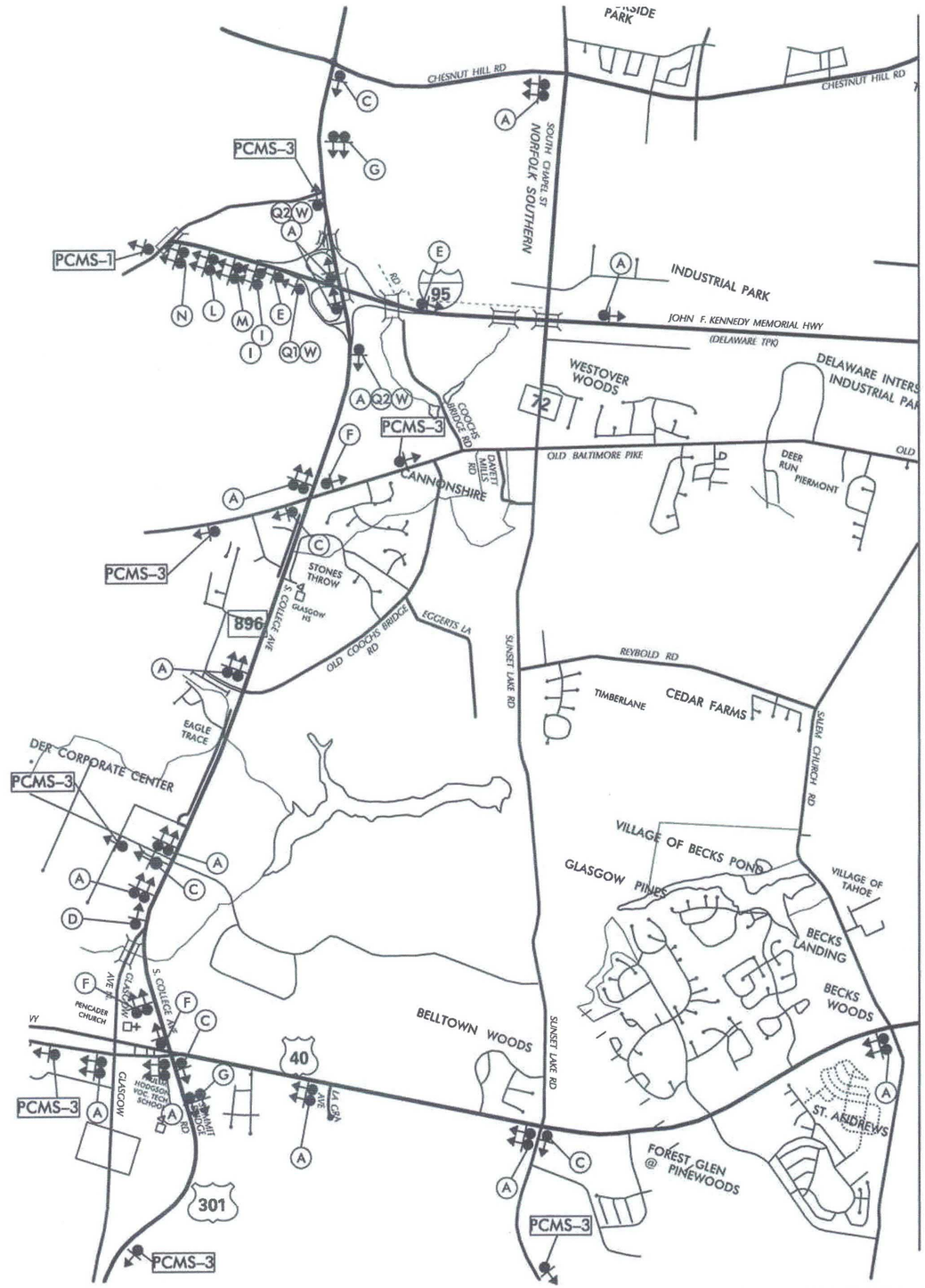

MATCH SHEET 127

LEGEND

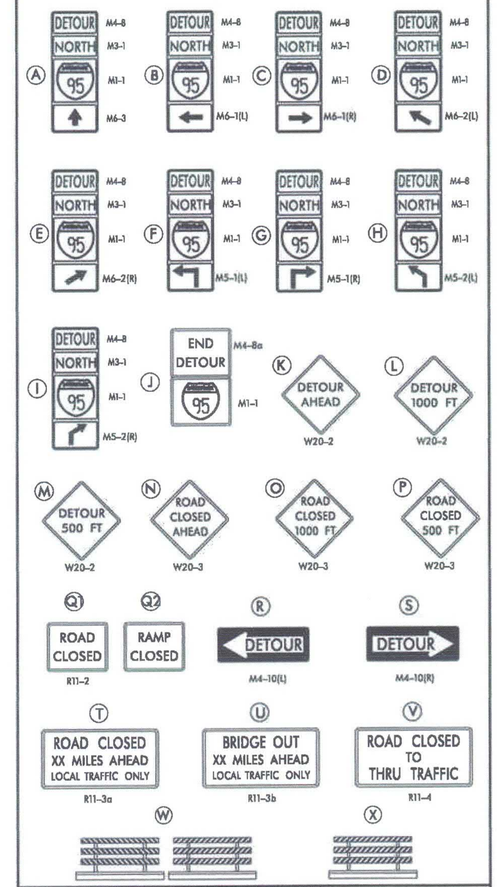

GENERAL NOTES

1. ALL TEMPORARY TRAFFIC CONTROL DEVICES ARE TO BE SUPPLIED AND MAINTAINED BY THE GENERAL CONTRACTOR AND SHALL BE IN COMPLIANCE WITH THIS PLAN AND THE DELAWARE MANUAL ON UNIFORM TRAFFIC CONTROL DEVICES (DE MUTCD) LATEST EDITION.
2. SIGNS "N" THROUGH "Q" AND "T" AND "V", THE WORD "ROAD" SHALL BE CHANGED TO "RAMP", "RR XING" OR "BRIDGE" WHERE APPLICABLE.
3. "W" TYPE 3 BARRICADES AT A ROAD CLOSURE SHALL BE PLACED COMPLETELY ACROSS THE ROADWAY, FROM CURB TO CURB, OR FROM EDGE OF ROAD TO EDGE OF ROAD, WITH THE STRIPES POSITIONED DOWNWARD TOWARD THE CENTER OF THE ROADWAY.
4. BARRICADES SHALL BE A MINIMUM OF 6 FEET WIDE UNLESS DIRECTED BY THE ENGINEER.

PREPARED BY
AECOM TECHNICAL SERVICES, INC.

08/29/2019
DATE

THIS SEAL APPLIES TO ALL SHEETS BEARING THE "AEC" SECTION DESIGNATION.

NEIL A. SHEMO LICENSE No. 16934 DELAWARE PROFESSIONAL ENGINEER
SEAL

CONCURRENCE FOR IMPLEMENTATION

8-29-19
TRAFFIC SAFETY DATE

ADDENDA / REVISIONS

NOT TO SCALE

BR 1-714 ON
CHAPMAN ROAD OVER I-95

CONTRACT	T201507402
COUNTY	NEW CASTLE
BRIDGE NO.	1-714 /1-714A
DESIGNED BY:	S. PATEL
CHECKED BY:	J. MACIOS

TRAFFIC DETOUR PLAN
I-95 NB

SECTION	AEC
SHEET NO.	126

8/28/2019 2:40:50 PM
P:\60323054 DelDOT AGR 1672 BDS\T06 - Rehab Br. 1-714\900 WORK\910 CAD\20-SHEETS\103_Detour Plans\Final\DP01_Sheet 1_Final.dgn

PORTABLE CHANGEABLE MESSAGE SIGNS

PRIOR TO DETOUR
(10 DAYS PRIOR TO BEGINNING OF DETOUR)

PCMS-1

NB 95 TO CLOSE AT EX 1	STARTING XX/XX/XX XXPM-XAM

PRIOR TO DETOUR
(10 DAYS PRIOR TO BEGINNING OF DETOUR)

PCMS-2

NB 95 TO CLOSE AT DE896	FOLLOW DETOUR

DURING DETOUR
(DISPLAY FOR DURATION OF DETOUR)

PCMS-3

NB 95 TO CLOSE	STARTING XX/XX/XX XXPM-XAM

DURING DETOUR
(DISPLAY FOR DURATION OF DETOUR)

PCMS-4

NB 95 DETOUR	TO DE273 LEFT AT SIGNAL	TO NB 95 USE DE 1 N

SPECIAL SIGNS

1. CONTRACTOR SHALL CONTACT AND COORDINATE TIME RESTRICTIONS WITH THE DELAWARE TURNPIKE TRAVEL PLAZA PRIOR TO IMPLEMENTING ANY DETOURS OF I-95.

MATCH SHEET 126

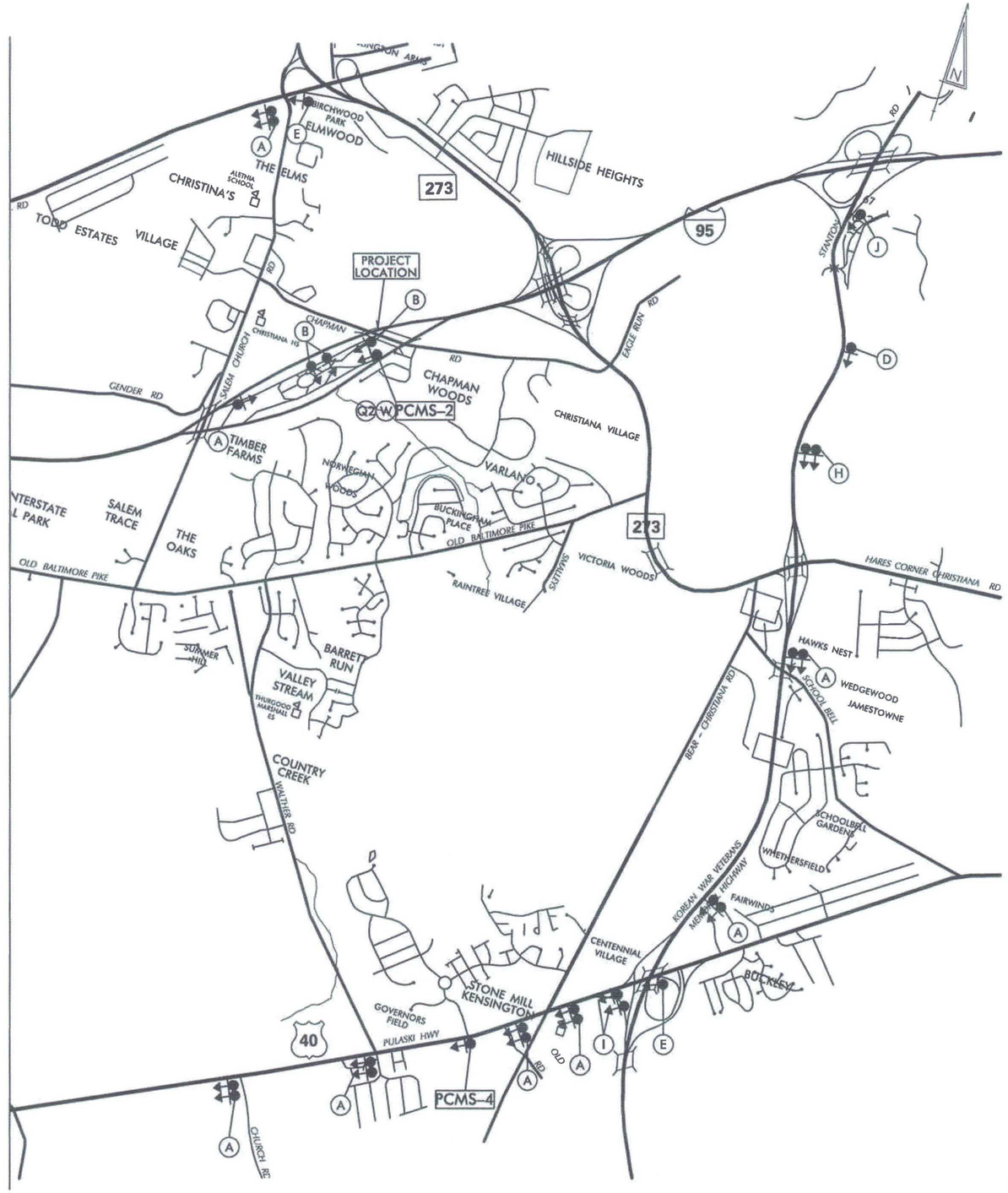

LEGEND

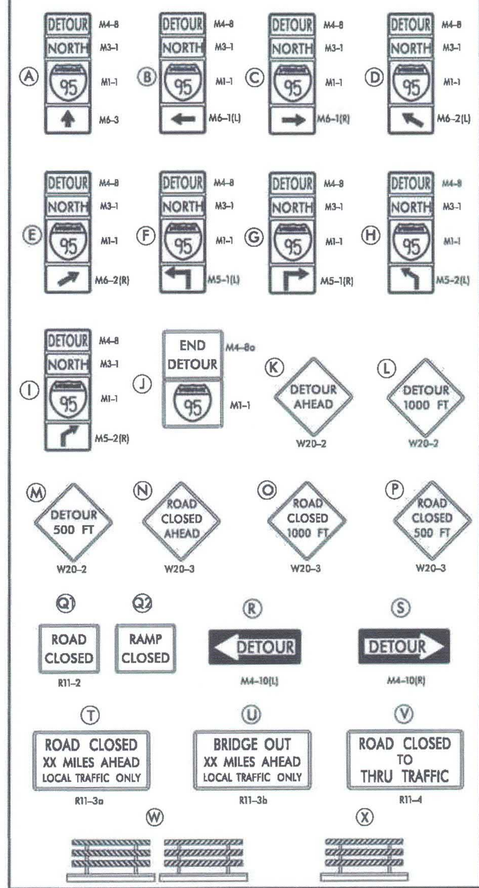

GENERAL NOTES

1. ALL TEMPORARY TRAFFIC CONTROL DEVICES ARE TO BE SUPPLIED AND MAINTAINED BY THE GENERAL CONTRACTOR AND SHALL BE IN COMPLIANCE WITH THIS PLAN AND THE DELAWARE MANUAL ON UNIFORM TRAFFIC CONTROL DEVICES (DE MUTCD) LATEST EDITION.
2. SIGNS "N" THROUGH "Q" AND "T" AND "V", THE WORD "ROAD" SHALL BE CHANGED TO "RAMP", "RR XING" OR "BRIDGE" WHERE APPLICABLE.
3. "W" TYPE 3 BARRICADES AT A ROAD CLOSURE SHALL BE PLACED COMPLETELY ACROSS THE ROADWAY, FROM CURB TO CURB, OR FROM EDGE OF ROAD TO EDGE OF ROAD, WITH THE STRIPES POSITIONED DOWNWARD TOWARD THE CENTER OF THE ROADWAY.
4. BARRICADES SHALL BE A MINIMUM OF 6 FEET WIDE UNLESS DIRECTED BY THE ENGINEER.

PREPARED BY
AECOM TECHNICAL SERVICES, INC.

08/29/2019
DATE

THIS SEAL APPLIES TO ALL SHEETS BEARING THE "AEC" SECTION DESIGNATION.

NEIL A. SHEMO LICENSE No. 16934 DELAWARE PROFESSIONAL ENGINEER
SEAL

CONCURRENCE FOR IMPLEMENTATION

TRAFFIC SAFETY — DATE 8-29-19

ADDENDA / REVISIONS

NOT TO SCALE

BR 1-714 ON
CHAPMAN ROAD OVER I-95

CONTRACT	BRIDGE NO.	1-714 /1-714A
T201507402	DESIGNED BY: S. PATEL	
COUNTY	CHECKED BY: J. MACIOS	
NEW CASTLE		

TRAFFIC DETOUR PLAN
I-95 NB

SECTION: AEC
SHEET NO.: 127

8/28/2019
2:40:51 PM
P:\60323054 DelDOT AGR 1672 BDS\T06 - Rehab Br. 1-714\900 WORK\910 CAD\20-SHEETS\103_Detour Plans\Final\DP01_Sheet 2_Final.dgn

PORTABLE CHANGEABLE MESSAGE SIGNS

PRIOR TO DETOUR
(10 DAYS PRIOR TO BEGINNING OF DETOUR)

PCMS-1

SB 95 TO CLOSE AT EX 3	STARTING XX/XX/XX XXPM-XAM

DURING DETOUR
(DISPLAY FOR DURATION OF DETOUR)

PCMS-1

SB 95 CLOSED AT EX 3	FOLLOW DETOUR

PRIOR TO DETOUR
(10 DAYS PRIOR TO BEGINNING OF DETOUR)

PCMS-2

SB 95 TO CLOSE	STARTING XX/XX/XX XXPM-XAM

DURING DETOUR
(DISPLAY FOR DURATION OF DETOUR)

PCMS-3

SB 95 CLOSED AT DE273	FOLLOW DETOUR

SPECIAL SIGNS

1. NIGHTTIME CLOSURES ARE PERMITTED BETWEEN THE HOURS OF 10 PM TO 5 AM EACH NIGHT, MONDAY NIGHT TO FRIDAY MORNING.
2. COORDINATE WITH TOLL PLAZA TO SET UP EZPASS LANES ON THE LEFT OF TOLL BOOTHS FOR THE NIGHT DETOUR.
3. CONTRACTOR SHALL CONTACT AND COORDINATE TIME RESTRICTIONS WITH THE DELAWARE TURNPIKE TRAVEL PLAZA PRIOR TO IMPLEMENTING ANY DETOURS OF I-95.

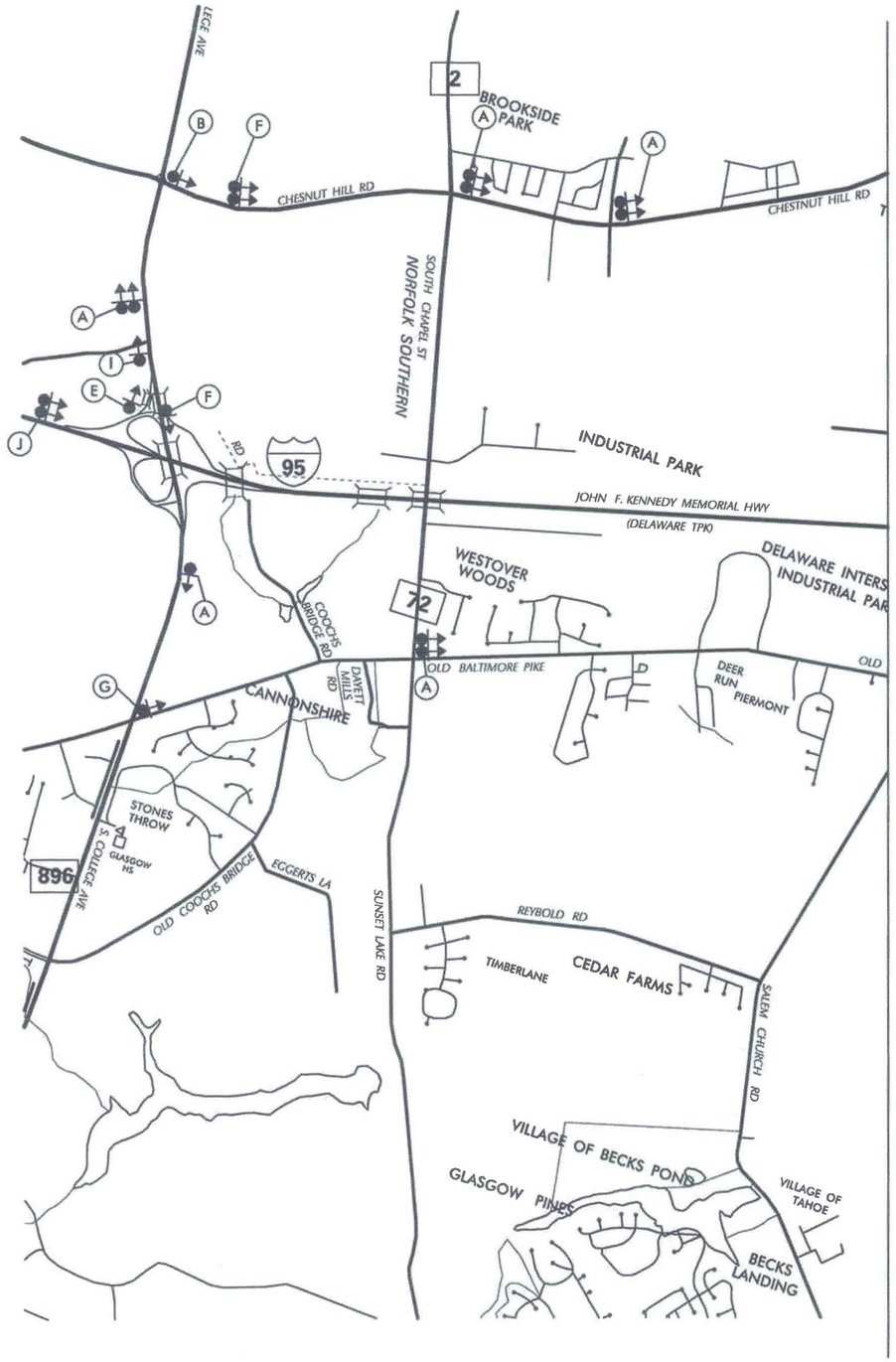

MATCH SHEET 129

LEGEND

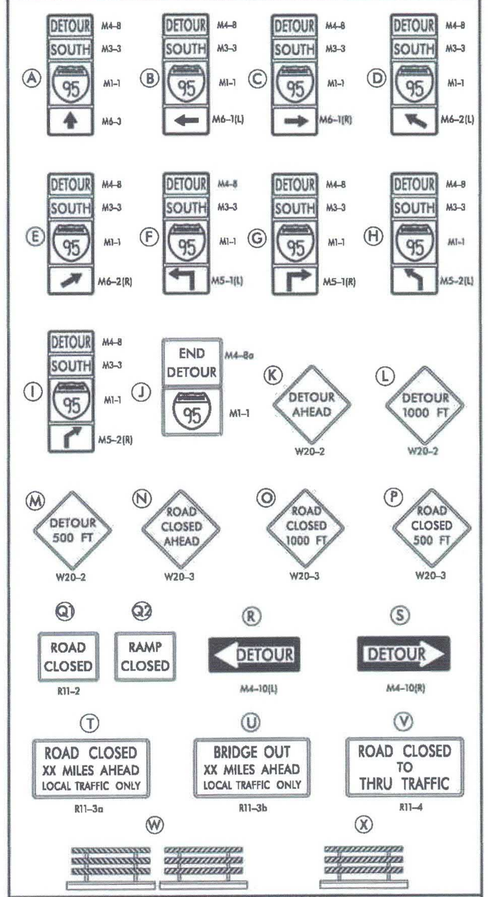

GENERAL NOTES

1. ALL TEMPORARY TRAFFIC CONTROL DEVICES ARE TO BE SUPPLIED AND MAINTAINED BY THE GENERAL CONTRACTOR AND SHALL BE IN COMPLIANCE WITH THIS PLAN AND THE DELAWARE MANUAL ON UNIFORM TRAFFIC CONTROL DEVICES (DE MUTCD) LATEST EDITION.
2. SIGNS "N" THROUGH "Q" AND "T" AND "V", THE WORD "ROAD" SHALL BE CHANGED TO "RAMP", "RR XING" OR "BRIDGE" WHERE APPLICABLE.
3. "W" TYPE 3 BARRICADES AT A ROAD CLOSURE SHALL BE PLACED COMPLETELY ACROSS THE ROADWAY, FROM CURB TO CURB, OR FROM EDGE OF ROAD TO EDGE OF ROAD, WITH THE STRIPES POSITIONED DOWNWARD TOWARD THE CENTER OF THE ROADWAY.
4. BARRICADES SHALL BE A MINIMUM OF 8 FEET WIDE UNLESS DIRECTED BY THE ENGINEER.

PREPARED BY
AECOM TECHNICAL SERVICES, INC.

08/29/2019
DATE

THIS SEAL APPLIES TO ALL SHEETS BEARING THE "AEC" SECTION DESIGNATION.

NEIL A. SHEMO LICENSE No. 16934 DELAWARE PROFESSIONAL ENGINEER
SEAL

CONCURRENCE FOR IMPLEMENTATION

TRAFFIC SAFETY — DATE 8-29-19

ADDENDA / REVISIONS

NOT TO SCALE

BR 1-714 ON
CHAPMAN ROAD OVER I-95

CONTRACT	T201507402
COUNTY	NEW CASTLE
BRIDGE NO.	1-714 /1-714A
DESIGNED BY: S. PATEL	
CHECKED BY: J. MACIOS	

TRAFFIC DETOUR PLAN
I-95 SB

SECTION	AEC
SHEET NO.	128

8/28/2019 2:40:52 PM P:\60323054 DelDOT AGR 1672 BDS\T06 - Rehab Br. 1-714\900 WORK\910 CAD\20-SHEETS\103_Detour Plans\Final\DP02_Sheet 3_Final.dgn

PORTABLE CHANGEABLE MESSAGE SIGNS

PRIOR TO DETOUR
(10 DAYS PRIOR TO BEGINNING OF DETOUR)

PCMS-1

SB 95 TO CLOSE AT EX 3	STARTING XX/XX/XX XXPM-XAM

DURING DETOUR
(DISPLAY FOR DURATION OF DETOUR)

PCMS-1

SB 95 CLOSED AT EX 3	FOLLOW DETOUR

PRIOR TO DETOUR
(10 DAYS PRIOR TO BEGINNING OF DETOUR)

PCMS-2

SB 95 TO CLOSE	STARTING XX/XX/XX XXPM-XAM

DURING DETOUR
(DISPLAY FOR DURATION OF DETOUR)

PCMS-3

SB 95 CLOSED AT DE273	FOLLOW DETOUR

SPECIAL SIGNS

1. CONTRACTOR SHALL CONTACT AND COORDINATE TIME RESTRICTIONS WITH THE DELAWARE TURNPIKE TRAVEL PLAZA PRIOR TO IMPLEMENTING ANY DETOURS OF I-95.

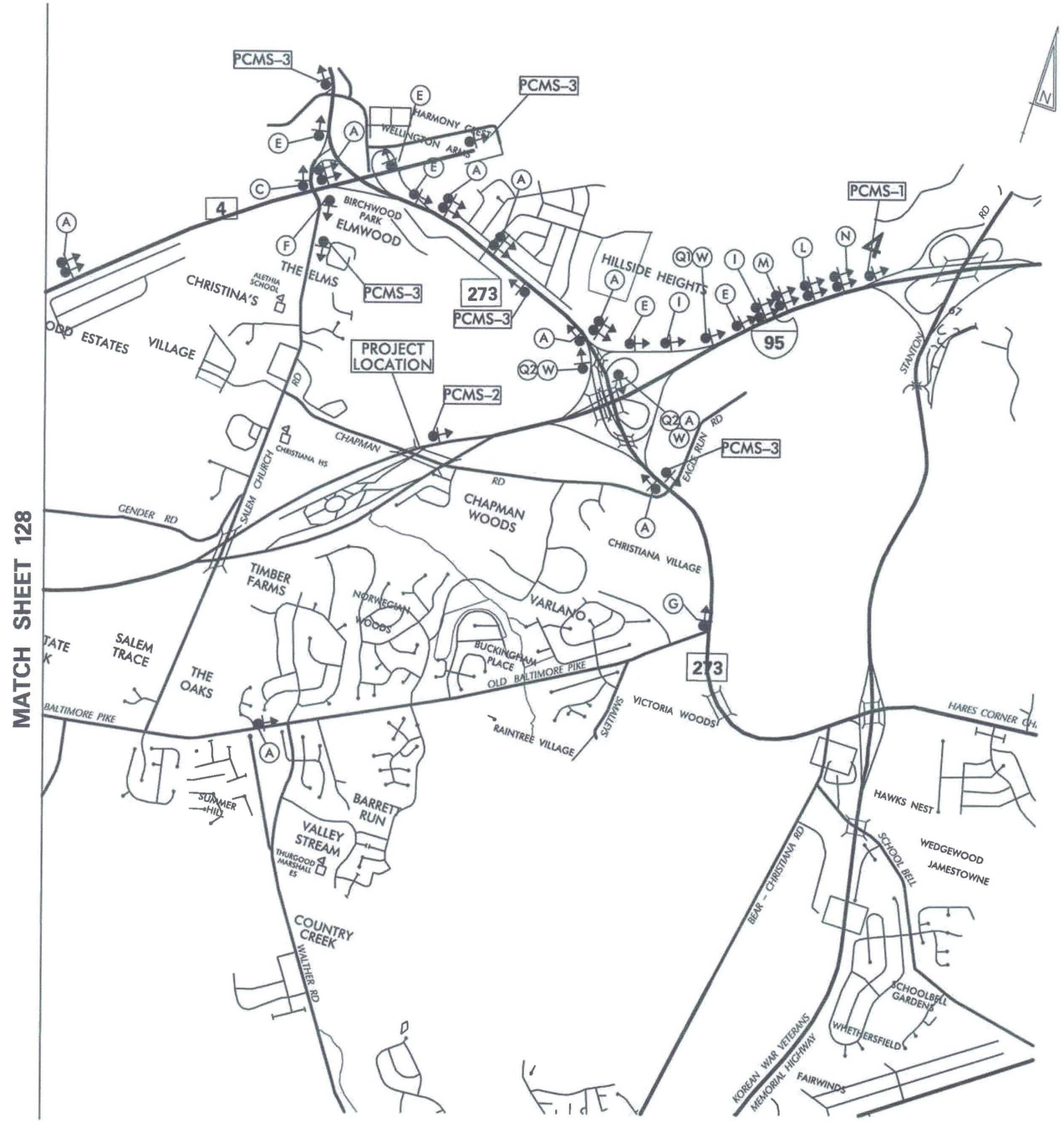

LEGEND

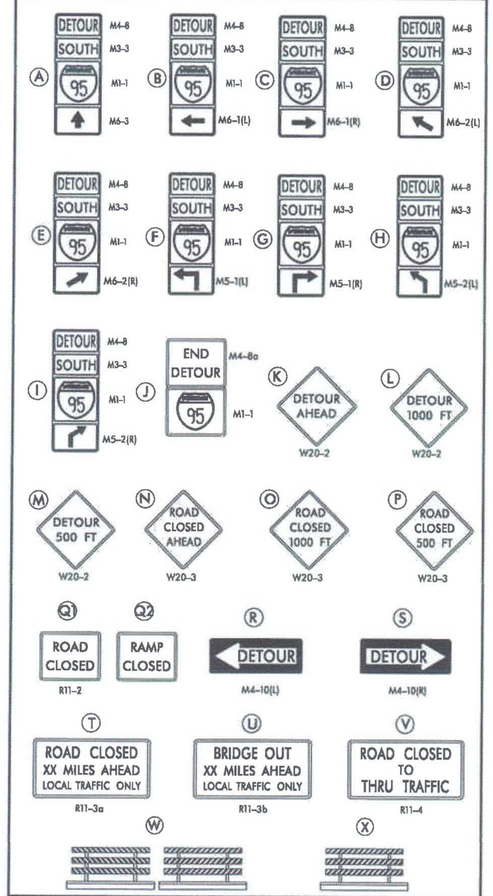

GENERAL NOTES

1. ALL TEMPORARY TRAFFIC CONTROL DEVICES ARE TO BE SUPPLIED AND MAINTAINED BY THE GENERAL CONTRACTOR AND SHALL BE IN COMPLIANCE WITH THIS PLAN AND THE DELAWARE MANUAL ON UNIFORM TRAFFIC CONTROL DEVICES (DE MUTCD) LATEST EDITION.
2. SIGNS "N" THROUGH "Q" AND "T" AND "V", THE WORD "ROAD" SHALL BE CHANGED TO "RAMP", "RR XING" OR "BRIDGE" WHERE APPLICABLE.
3. "W" TYPE 3 BARRICADES AT A ROAD CLOSURE SHALL BE PLACED COMPLETELY ACROSS THE ROADWAY, FROM CURB TO CURB, OR FROM EDGE OF ROAD TO EDGE OF ROAD, WITH THE STRIPES POSITIONED DOWNWARD TOWARD THE CENTER OF THE ROADWAY.
4. BARRICADES SHALL BE A MINIMUM OF 8 FEET WIDE UNLESS DIRECTED BY THE ENGINEER.

CONCURRENCE FOR IMPLEMENTATION

TRAFFIC SAFETY — DATE: 8-29-19

PREPARED BY
AECOM TECHNICAL SERVICES, INC.

08/29/2019
DATE

THIS SEAL APPLIES TO ALL SHEETS BEARING THE "AEC" SECTION DESIGNATION.

NEIL A. SHEMO LICENSE No. 16934 DELAWARE PROFESSIONAL ENGINEER
SEAL

ADDENDA / REVISIONS

NOT TO SCALE

BR 1-714 ON CHAPMAN ROAD OVER I-95

CONTRACT	T201507402
COUNTY	NEW CASTLE
BRIDGE NO.	1-714 /1-714A
DESIGNED BY: S. PATEL	
CHECKED BY: J. MACIOS	

TRAFFIC DETOUR PLAN
I-95 SB

SECTION	AEC
SHEET NO.	129

8/28/2019 2:40:53 PM
P:\60323054 DelDOT AGR 1672 BDS\T06 - Rehab Br. I-714\900 WORK\910 CAD\20-SHEETS\103_Detour Plans\Final\DP02_Sheet 4_Final.dgn

PORTABLE CHANGEABLE MESSAGE SIGNS

PRIOR TO DETOUR
(10 DAYS PRIOR TO BEGINNING OF DETOUR)

PCMS-1

CHAPMAN ROAD TO CLOSE	STARTING XXXXXXXX XXPM-XXAM

SPECIAL SIGNS

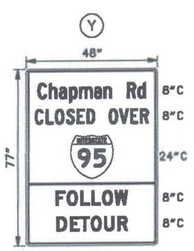

SIGN Y NOTES:

BLACK LEGEND ON FLUORESCENT ORANGE PRISMATIC RETROREFLECTIVE BACKGROUND
INTERSTATE 95 ROUTE SHIELD

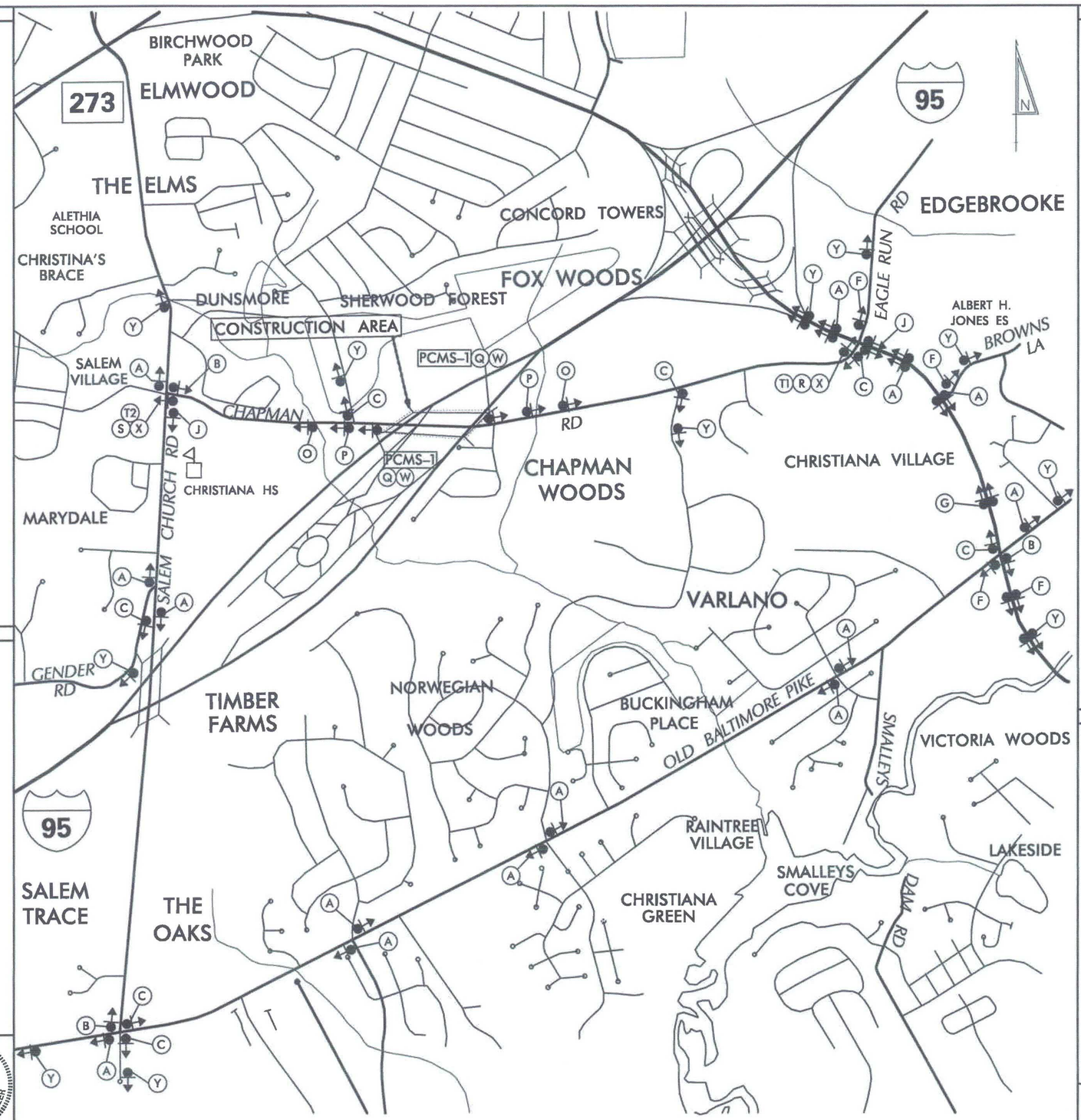

LEGEND

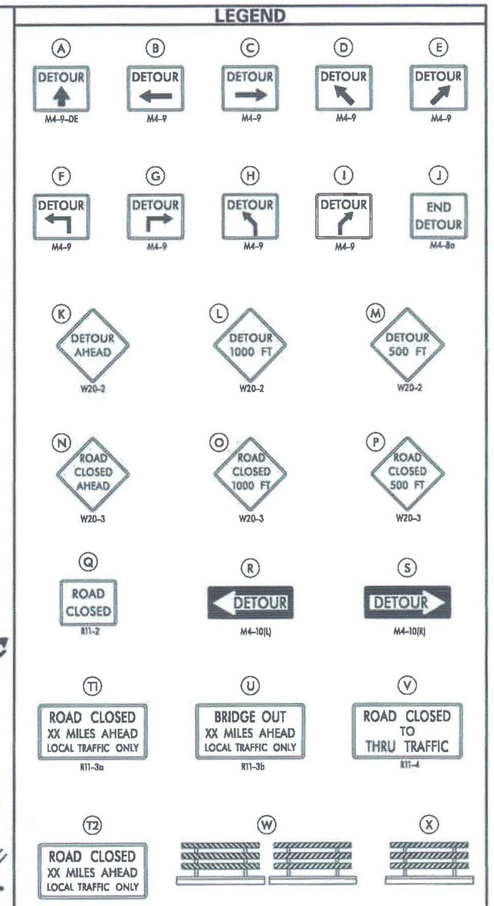

GENERAL NOTES

1. ALL TEMPORARY TRAFFIC CONTROL DEVICES ARE TO BE SUPPLIED AND MAINTAINED BY THE GENERAL CONTRACTOR AND SHALL BE IN COMPLIANCE WITH THIS PLAN AND THE DELAWARE MANUAL ON UNIFORM TRAFFIC CONTROL DEVICES (DE MUTCD) LATEST EDITION.
2. SIGNS "N" THROUGH "Q" AND "T" AND "V", THE WORD "ROAD" SHALL BE CHANGED TO "RAMP", "RR XING" OR "BRIDGE" WHERE APPLICABLE.
3. "W" TYPE 3 BARRICADES AT A ROAD CLOSURE SHALL BE PLACED COMPLETELY ACROSS THE ROADWAY, FROM CURB TO CURB, OR FROM EDGE OF ROAD TO EDGE OF ROAD, WITH THE STRIPES POSITIONED DOWNWARD TOWARD THE CENTER OF THE ROADWAY.
4. BARRICADES SHALL BE A MINIMUM OF 8 FEET WIDE UNLESS DIRECTED BY THE ENGINEER.

CONCURRENCE FOR IMPLEMENTATION

TRAFFIC SAFETY — DATE 8-29-19

PREPARED BY
AECOM TECHNICAL SERVICES, INC.

08/29/2019
DATE

THIS SEAL APPLIES TO ALL SHEETS BEARING THE "AEC" SECTION DESIGNATION.

NEIL A. SHEMO — LICENSE No. 16934 — DELAWARE PROFESSIONAL ENGINEER
SEAL

ADDENDA / REVISIONS

NOT TO SCALE

BR 1-714 ON CHAPMAN ROAD OVER I-95

CONTRACT	BRIDGE NO.	1-714 /1-714A
T201507402	DESIGNED BY: S. PATEL	
COUNTY		
NEW CASTLE	CHECKED BY: J. MACIOS	

TRAFFIC DETOUR PLAN
CHAPMAN RD

SECTION: AEC
SHEET NO.: 130

8/28/2019 2:40:53 PM
P:\60323054 DelDOT AGR 1672 BIDS\T06 - Rehab Br. 1-714\900 WORK\910 CAD\20-SHEETS\103_Detour Plans\Final\DP03_Sheet 5_Final.dgn

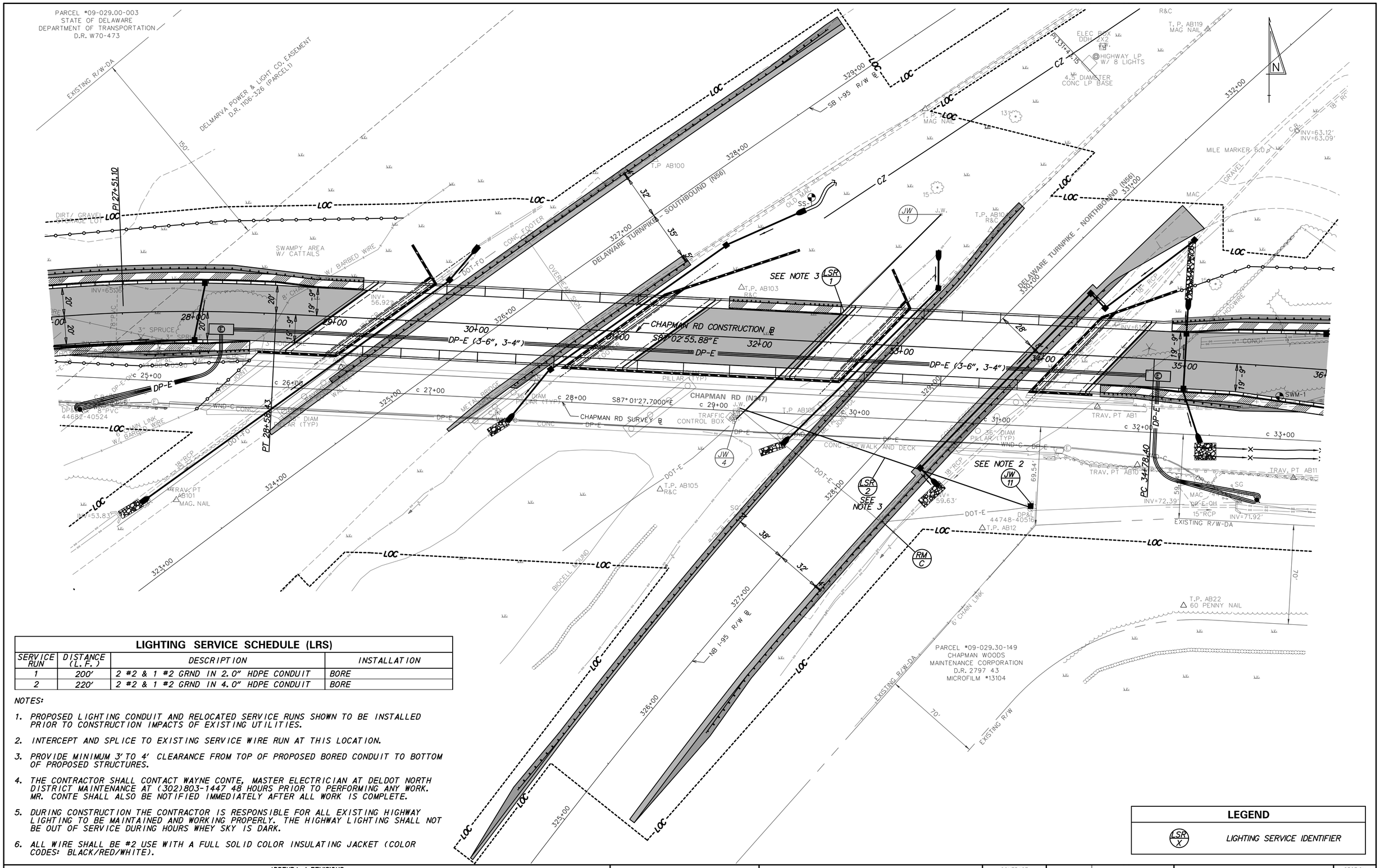

LIGHTING SERVICE SCHEDULE (LRS)			
SERVICE RUN	DISTANCE (L.F.)	DESCRIPTION	INSTALLATION
1	200'	2 #2 & 1 #2 GRND IN 2.0" HDPE CONDUIT	BORE
2	220'	2 #2 & 1 #2 GRND IN 4.0" HDPE CONDUIT	BORE

NOTES:

1. PROPOSED LIGHTING CONDUIT AND RELOCATED SERVICE RUNS SHOWN TO BE INSTALLED PRIOR TO CONSTRUCTION IMPACTS OF EXISTING UTILITIES.
2. INTERCEPT AND SPLICE TO EXISTING SERVICE WIRE RUN AT THIS LOCATION.
3. PROVIDE MINIMUM 3' TO 4' CLEARANCE FROM TOP OF PROPOSED BORED CONDUIT TO BOTTOM OF PROPOSED STRUCTURES.
4. THE CONTRACTOR SHALL CONTACT WAYNE CONTE, MASTER ELECTRICIAN AT DELDOT NORTH DISTRICT MAINTENANCE AT (302)803-1447 48 HOURS PRIOR TO PERFORMING ANY WORK. MR. CONTE SHALL ALSO BE NOTIFIED IMMEDIATELY AFTER ALL WORK IS COMPLETE.
5. DURING CONSTRUCTION THE CONTRACTOR IS RESPONSIBLE FOR ALL EXISTING HIGHWAY LIGHTING TO BE MAINTAINED AND WORKING PROPERLY. THE HIGHWAY LIGHTING SHALL NOT BE OUT OF SERVICE DURING HOURS WHEY SKY IS DARK.
6. ALL WIRE SHALL BE #2 USE WITH A FULL SOLID COLOR INSULATING JACKET (COLOR CODES: BLACK/RED/WHITE).

LEGEND	
LSR X	LIGHTING SERVICE IDENTIFIER

ADDENDA / REVISIONS

SCALE 0 30 60 90 FEET

BR 1-714 ON
CHAPMAN ROAD OVER I-95

CONTRACT	BRIDGE NO.	1-714 /1-714A	LIGHTING PLAN	SECTION
T201507402	DESIGNED BY: R. PICCIOLO			AEC
COUNTY				SHEET NO.
NEW CASTLE	CHECKED BY: J. EGGER			131

8/16/2019
2:44:51 PM
P:\6032.3054 DelDOT AGR 1672 BDS\T06 - Rehab Br. 1-714\900 WORK\910 CAD\20-SHEETS\106_Lighting\LI02.dgn

NOTES:

1. CONTRACTOR SHALL REPLACE EXISTING 45 MPH SPEED LIMIT SIGNS FROM REGAL BLVD TO WAKEFIELD DR WITH R2-1 35 MPH SIGNS

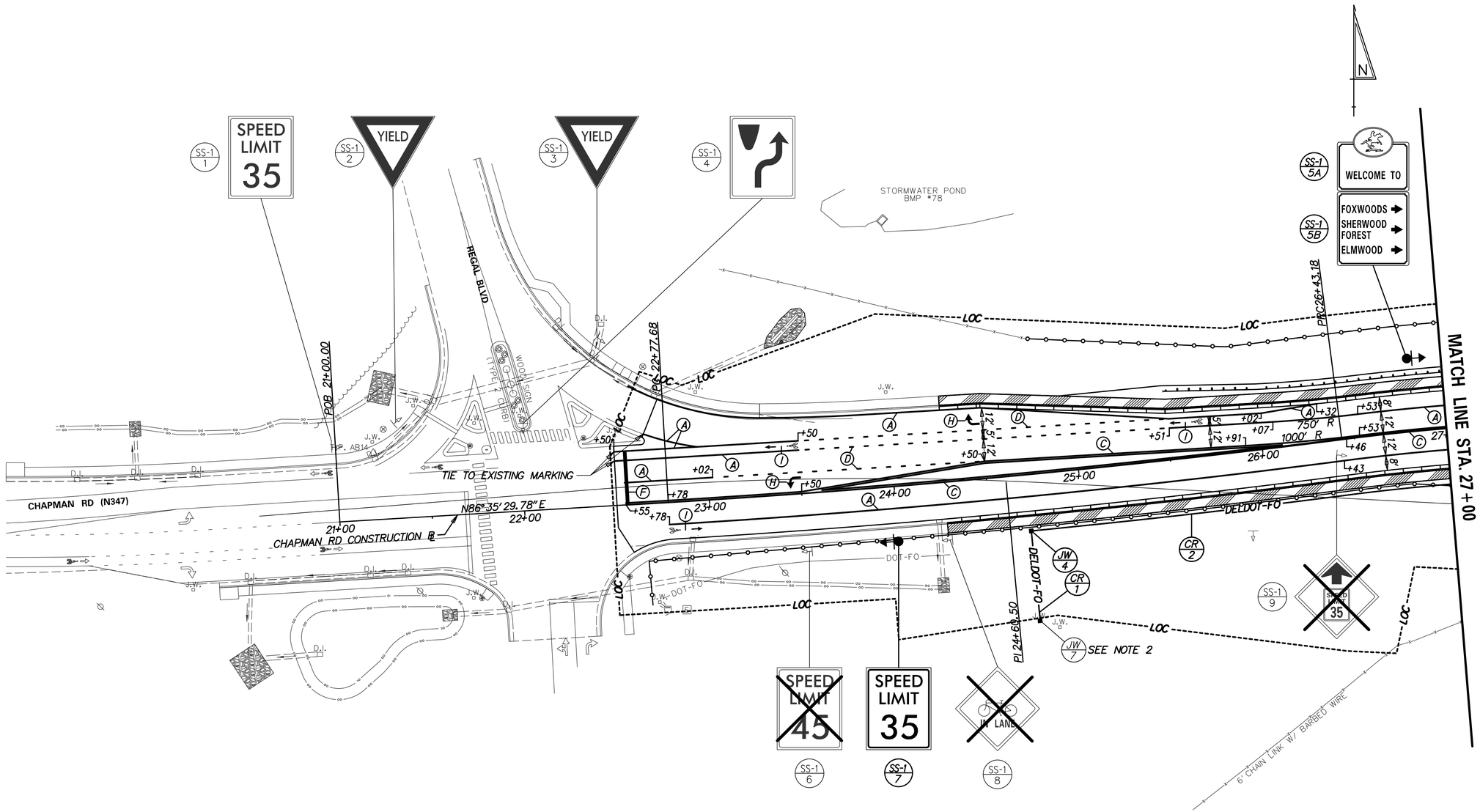

PAVEMENT MARKINGS LEGEND

SYMBOL	ITEM	QUANTITY
(A)	5" SOLID WHITE EPOXY RESIN PAVEMENT STRIPING (ITEM 817013)	1,236 LF
(C)	5" SOLID DOUBLE YELLOW EPOXY RESIN PAVEMENT STRIPING (ITEM 817013)	1,482 LF
(D)	5" DASHED WHITE EPOXY RESIN PAVEMENT STRIPING, 2' LINE & 6' GAP (ITEM 817013)	142 LF
(F)	16" SOLID WHITE ALKYD THERMOPLASTIC PAVEMENT STRIPING (ITEM 817002)	58 SF
(H)	WHITE ALKYD THERMOPLASTIC PAVEMENT SYMBOL (ITEM 817002)	31 SF
(I)	PREFORMED RETROFLECTIVE THERMOPLASTIC MARKINGS, WHITE, BIKE SYMBOL (ITEM 817015)	3 EACH

NOTE:

1. ALL CONDUIT SHALL BE SCHEDULE 80, RIGID POLYVINYL CHLORIDE UNLESS OTHERWISE NOTED.
2. COORDINATE FIBER OPTIC CONDUIT INSTALLATION TO EXISTING JUNCTION WELL LOCATION INSTALLED BY ADJACENT PROJECT CONTRACT.

CONDUIT RUN SCHEDULE

CR NO.	NO. OF CONDUITS	SIZE	LENGTH	B/T/O	AMOUNT AND TYPE OF CABLE / WIRE
1	1	4"	45'	T	DELDOT FIBER OPTIC
2	1	4"	360'	T	DELDOT FIBER OPTIC

ADDENDA / REVISIONS

SCALE 0 30 60 90 FEET

BR 1-714 ON CHAPMAN ROAD OVER I-95

CONTRACT	BRIDGE NO.	1-714 /1-714A
T201507402	DESIGNED BY: T. SINGLE	
COUNTY		
NEW CASTLE	CHECKED BY: D. SEMPLE	

SIGNING & STRIPING PLANS

SS-01

SECTION AEC

SHEET NO. 132

8/22/2019
13:09:24
P:\60323054 DelDOT AGR 1672 BDS\T06 - Rehab Br. 1-714\900 WORK\910 CAD\20-SHEETS\104_Signing & Striping Plans\SS01.dgn

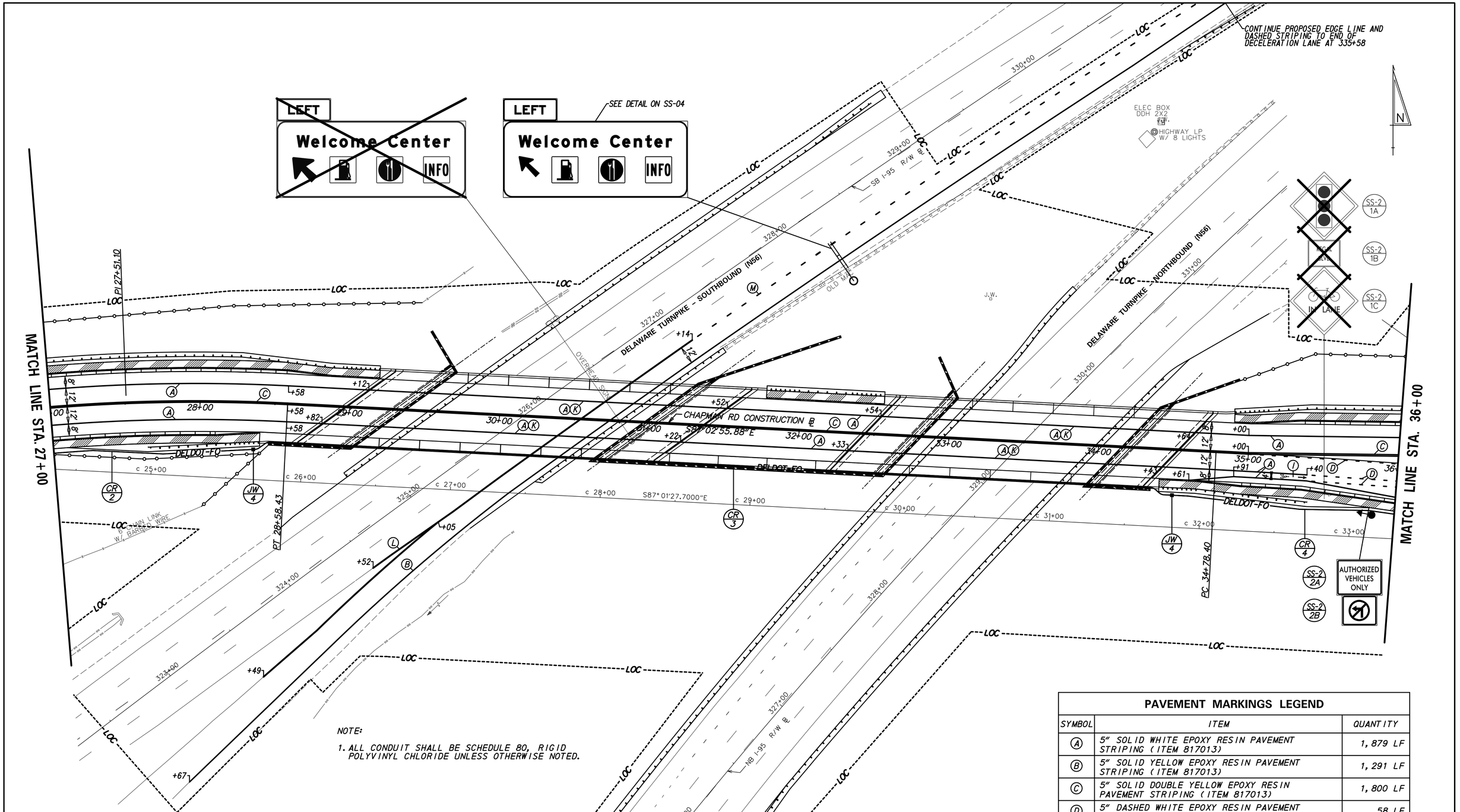

NOTE:

1. ALL CONDUIT SHALL BE SCHEDULE 80, RIGID POLYVINYL CHLORIDE UNLESS OTHERWISE NOTED.

CONDUIT RUN SCHEDULE

CR NO.	NO. OF CONDUITS	SIZE	LENGTH	B/T/O	AMOUNT AND TYPE OF CABLE / WIRE
2*	*	*	*	*	*
3	1	4"	615'	**	DELDOT FIBER OPTIC
4	1	4"	360'	T	DELDOT FIBER OPTIC

* INDICATES SEE PREVIOUS SHEET FOR CONDUIT RUN DETAILS
** INDICATES CONDUIT RUN WITHIN BRIDGE BARRIER

PAVEMENT MARKINGS LEGEND

SYMBOL	ITEM	QUANTITY
(A)	5" SOLID WHITE EPOXY RESIN PAVEMENT STRIPING (ITEM 817013)	1,879 LF
(B)	5" SOLID YELLOW EPOXY RESIN PAVEMENT STRIPING (ITEM 817013)	1,291 LF
(C)	5" SOLID DOUBLE YELLOW EPOXY RESIN PAVEMENT STRIPING (ITEM 817013)	1,800 LF
(D)	5" DASHED WHITE EPOXY RESIN PAVEMENT STRIPING, 2' LINE & 6' GAP (ITEM 817013)	58 LF
(I)	PREFORMED RETROFLECTIVE THERMOPLASTIC MARKINGS, WHITE, BIKE SYMBOL (ITEM 817015)	1 EACH
(K)	3" SOLID BLACK EPOXY RESIN PAVEMENT STRIPING (ITEM 817018)	900 LF
(L)	10" SOLID WHITE EPOXY RESIN PAVEMENT STRIPING (ITEM 817014)	420 LF
(M)	10" DASHED WHITE EPOXY RESIN PAVEMENT STRIPING, 3' LINE & 9' GAP (ITEM 817014)	210 LF

SS-02

ADDENDA / REVISIONS

SCALE 0 30 60 90 FEET

BR 1-714 ON CHAPMAN ROAD OVER I-95

CONTRACT	BRIDGE NO.	1-714 /1-714A
T201507402	DESIGNED BY: T. SINGLE	
COUNTY	CHECKED BY: D. SEMPLE	
NEW CASTLE		

SIGNING & STRIPING PLANS

SECTION AEC
SHEET NO. 133

8/13/2019
8:20:20 AM
PI\60322054 DelDOT AGR 1672 BDS\T06 - Rehab Br. 1-714\900 WORK\910 CAD\20-SHEETS\104_Signing & Striping Plans\SS02.dgn

CONDUIT RUN SCHEDULE

CR NO.	NO. OF CONDUITS	SIZE	LENGTH	B/T/O	AMOUNT AND TYPE OF CABLE / WIRE
4	*	*	*	*	*
5	1	4"	60'	T	DELDOT FIBER OPTIC
6	1	2"	10'	T	(1) 2/#8 U.F.W./GROUND
7	1	2"	5'	T	(1) 2/#8 U.F.W./GROUND
8	1	2"	225'	T	(1) 2/#8 U.F.W./GROUND
9	1	2"	10'	T	(1) 2/#8 U.F.W./GROUND

* INDICATES SEE PREVIOUS SHEET FOR CONDUIT RUN DETAILS

NOTES:

1. THE CONTRACTOR SHALL COORDINATE THE INSTALLATION OF RIGHT OF WAY FENCING WITH THE INSTALLATION OF THE EMERGENCY ACCESS GATE.
2. ALL CONDUITS SHALL BE SCHEDULE 80, RIGID POLYVINYL CHLORIDE UNLESS OTHERWISE NOTED.

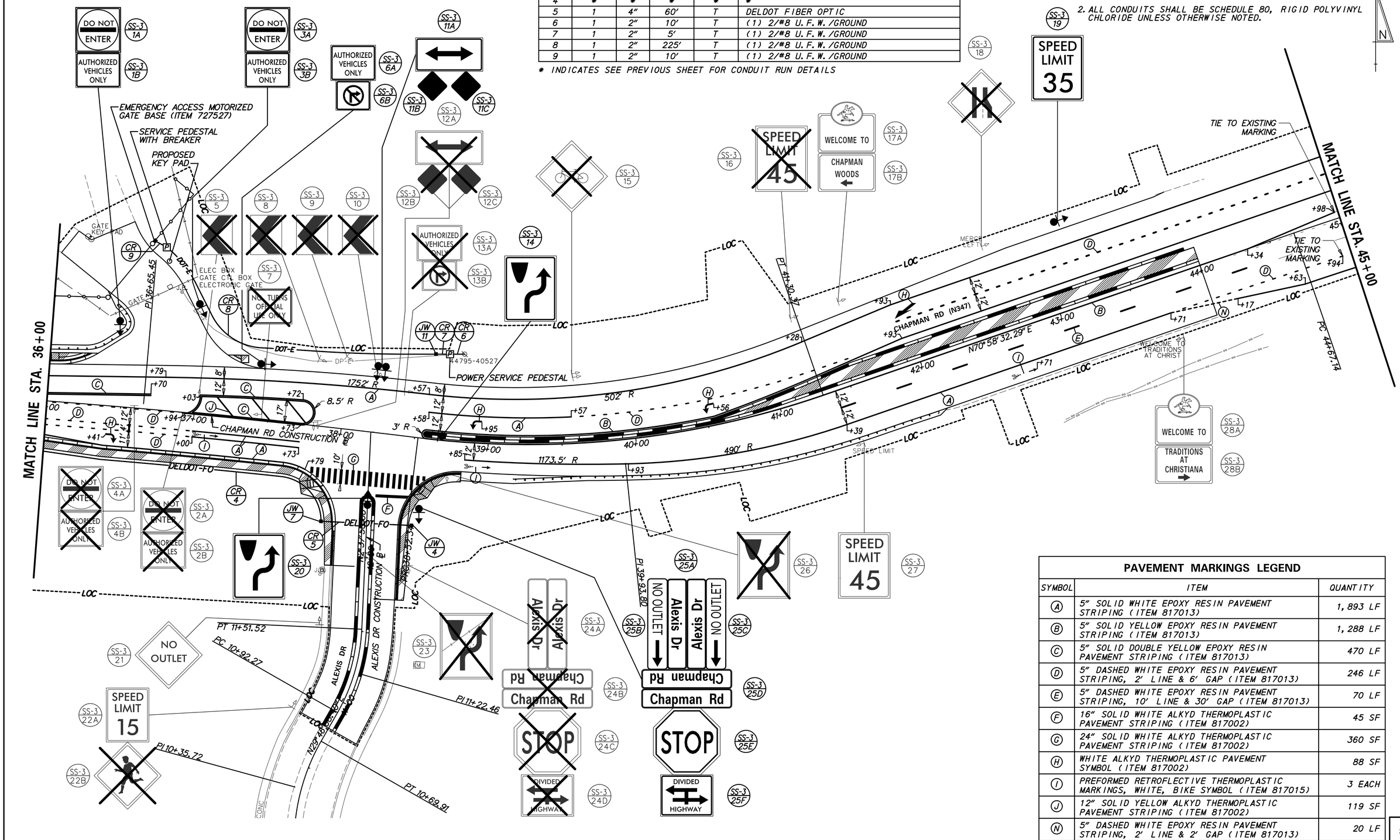

PAVEMENT MARKINGS LEGEND

SYMBOL	ITEM	QUANTITY
A	5" SOLID WHITE EPOXY RESIN PAVEMENT STRIPING (ITEM 817013)	1,893 LF
B	5" SOLID YELLOW EPOXY RESIN PAVEMENT STRIPING (ITEM 817013)	1,288 LF
C	5" SOLID DOUBLE YELLOW EPOXY RESIN PAVEMENT STRIPING (ITEM 817013)	470 LF
D	5" DASHED WHITE EPOXY RESIN PAVEMENT STRIPING, 2' LINE & 6' GAP (ITEM 817013)	246 LF
E	5" DASHED WHITE EPOXY RESIN PAVEMENT STRIPING, 10' LINE & 30' GAP (ITEM 817013)	70 LF
F	16" SOLID WHITE ALKYD THERMOPLASTIC PAVEMENT STRIPING (ITEM 817002)	45 SF
G	24" SOLID WHITE ALKYD THERMOPLASTIC PAVEMENT STRIPING (ITEM 817002)	360 SF
H	WHITE ALKYD THERMOPLASTIC PAVEMENT SYMBOL (ITEM 817002)	88 SF
I	PREFORMED RETROFLECTIVE THERMOPLASTIC MARKINGS, WHITE, BIKE SYMBOL (ITEM 817015)	3 EACH
J	12" SOLID YELLOW ALKYD THERMOPLASTIC PAVEMENT STRIPING (ITEM 817002)	119 SF
N	5" DASHED WHITE EPOXY RESIN PAVEMENT STRIPING, 2' LINE & 2' GAP (ITEM 817013)	20 LF

SS-03

ADDENDA / REVISIONS

SCALE 0 30 60 90 FEET

BR 1-714 ON CHAPMAN ROAD OVER I-95

CONTRACT	BRIDGE NO.	1-714 /1-714A
T201507402	DESIGNED BY: T. SINGLE	
COUNTY		
NEW CASTLE	CHECKED BY: D. SEMPLE	

SIGNING & STRIPING PLANS

SECTION AEC

SHEET NO. 134

8/13/2019
10:04:44 AM
PW:\6032\054 DelDOT AGR 1672 BDS\T06 - Rehab Br. 1-714\900 WORK\910 CAD\20-SHEETS\104_Signing & Striping Plans\SS03.dgn

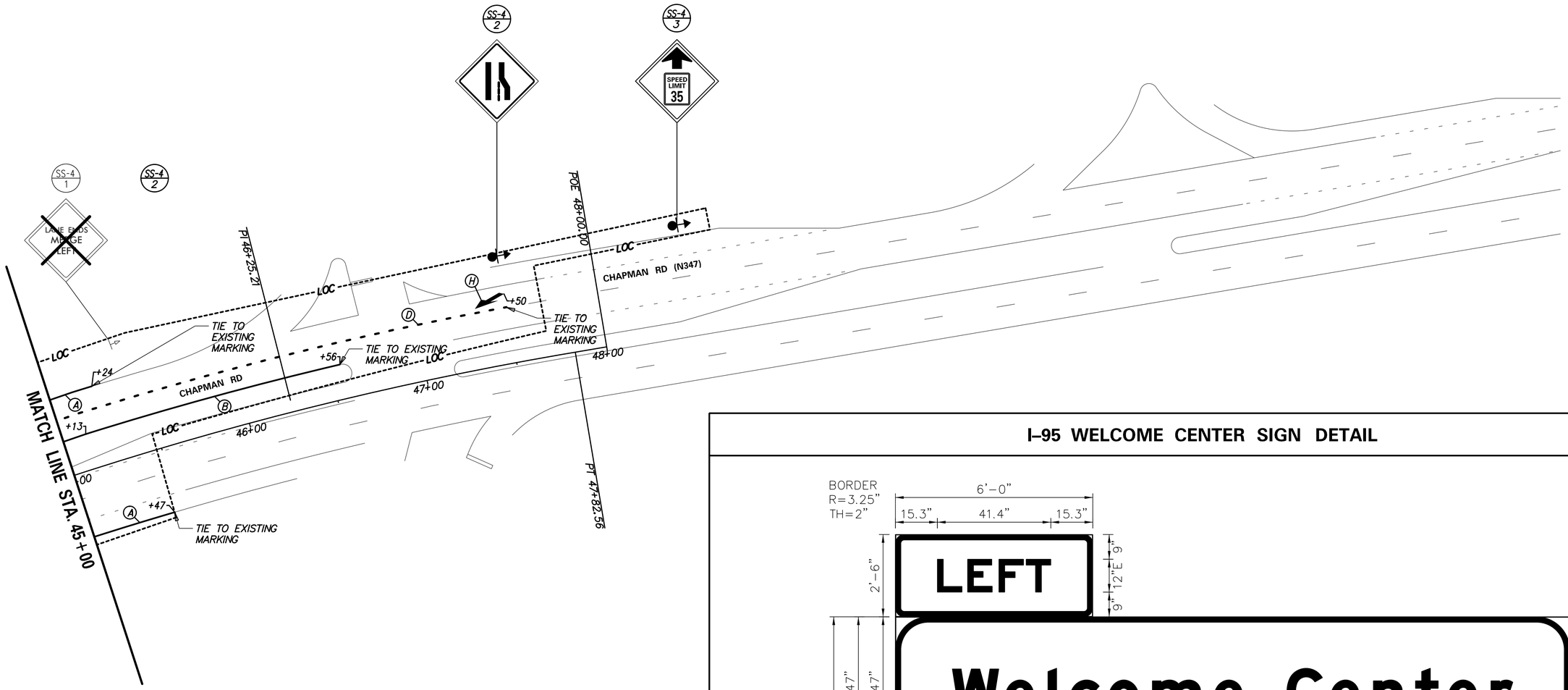

I–95 WELCOME CENTER SIGN DETAIL

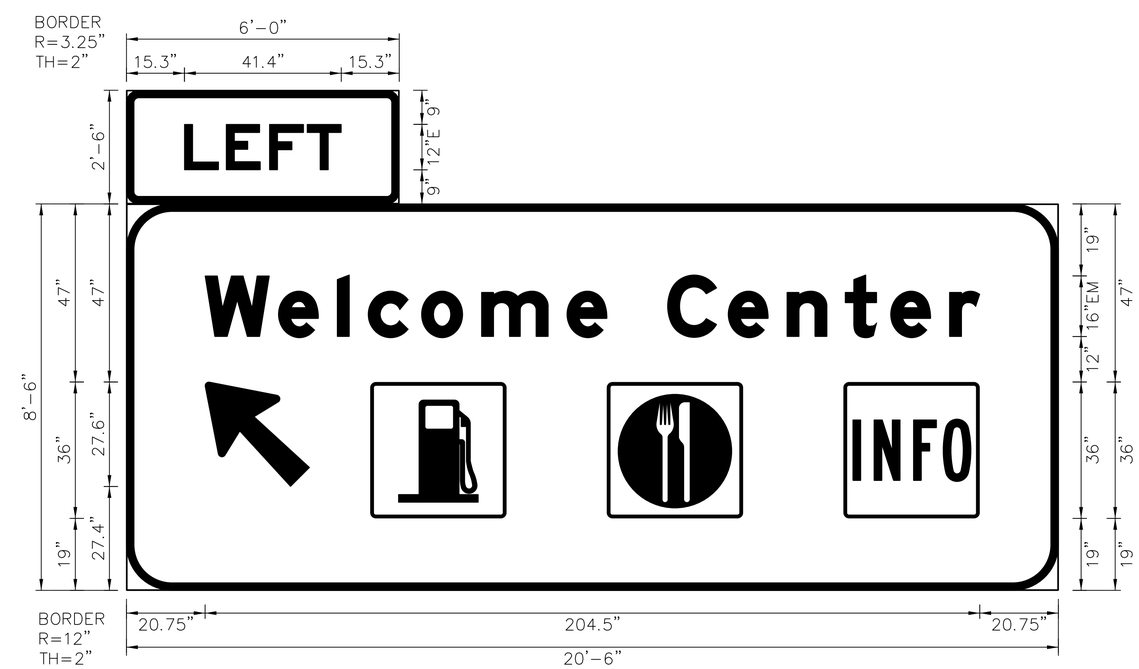

PAVEMENT MARKINGS LEGEND

SYMBOL	ITEM	QUANTITY
A	5" SOLID WHITE EPOXY RESIN PAVEMENT STRIPING (ITEM 817013)	71 LF
B	5" SOLID YELLOW EPOXY RESIN PAVEMENT STRIPING (ITEM 817013)	156 LF
D	5" DASHED WHITE EPOXY RESIN PAVEMENT STRIPING, 2' LINE & 6' GAP (ITEM 817013)	64 LF
H	WHITE ALKYD THERMOPLASTIC PAVEMENT SYMBOL (ITEM 817002)	41 SF

ADDENDA / REVISIONS

SCALE
0 30 60 90
FEET

BR 1–714 ON CHAPMAN ROAD OVER I–95

CONTRACT	BRIDGE NO.	1–714 /1–714A
T201507402	DESIGNED BY: T. SINGLE	
COUNTY		
NEW CASTLE	CHECKED BY: D. SEMPLE	

SIGNING & STRIPING PLANS

SS–04

SECTION
AEC
SHEET NO.
135

8/7/2019
2:26:17 PM
P:\60325054 DelDOT AGR 1672 BDS\T06 - Rehab Br. 1-714\900 WORK\910 CAD\20-SHEETS\104_Signing & Striping Plans\SS04.dgn

PERMANENT SIGN SCHEDULE

SHEET NO.	PLAN IDENTIFIER	SIGN DESIGNATION	QTY.	DESCRIPTION	SIGN WIDTH (IN)	SIGN HEIGHT (IN)	SIGN AREA (SF)	ITEM 819018 SINGLE POST (EACH)			ITEM 819019 INSTALLATION OR REMOVAL OF TRAFFIC SIGN(S) ON MULTIPLE SIGN POSTS (SF)			POST INSTALLATION TYPE	Code X11 12' Post (W/ Basepost)	ITEM 819016 4" HOLE, 0-6" (EACH)	ITEM 819017 4" HOLE, >6" (EACH)	REMARKS
								SIGN DISPOSITION	REMOVE	INSTALL	SIGN DISPOSITION	REMOVE	INSTALL					
SS-1	1	R2-1-35(24)	1	SPEED LIMIT (35 MPH - 24x30)	24"	30"		REMAIN										
SS-1	2	R1-2(36)	1	YIELD	36"	36"		REMAIN										
SS-1	3	R1-2(36)	1	YIELD	36"	36"		REMAIN										
SS-1	4	R4-7(24)	1	KEEP RIGHT (Symbol) - 24x30	24"	30"		REMAIN										
SS-1	5A	D3-2-DE1	1	WELCOME TO	36"	32"		REPOSITION	1	1				SOIL	1			
SS-1	5B	D3-2-DE2	1	DEVELOPMENT NAME	36"	48"		REPOSITION	1	1								Foxwoods, Sherwood Forest, Elmwood
SS-1	6	R2-1-45(24)	1	SPEED LIMIT (45 MPH - 24x30)	24"	30"		REMOVE	1									
SS-1	7	R2-1-35(24)	1	SPEED LIMIT (35 MPH - 24x30)	24"	30"	5	NEW		1				SOIL	1			
SS-1	8	W11-1-DE	1	BICYCLE IN LANE	36"	36"		REMOVE	1									
SS-1	9	W3-5(30)	1	SPEED REDUCTION (Symbol) - 30x30	30"	30"		REMOVE	1									35 MPH
SS-2	1A	W3-3(30)	1	SIGNAL AHEAD (Symbol) - 30x30	30"	30"		REMOVE	1									
SS-2	1B	W16-8P	1	ADVANCE STREET NAME (1 - line plaque)	0	9"		REMOVE	1									Regal Blvd
SS-2	1C	W11-1(36)	1	BICYCLE (Symbol) - 36x36	36"	36"		REMOVE	1									
SS-2	2A	R5-11	1	AUTHORIZED VEHICLES ONLY	30"	24"	5	NEW		1				SOIL	1			
SS-2	2B	R3-2(24)	1	LEFT TURN PROHIBITION (Symbol) - 24x24	24"	24"	4	ADD TO ASSEMBLY		1								
SS-3	1A	R5-1(30)	1	DO NOT ENTER - 30x30	30"	30"	6.25	NEW		1				SOIL	1			
SS-3	1B	R5-11	1	AUTHORIZED VEHICLES ONLY	30"	24"	5	ADD TO ASSEMBLY		1								
SS-3	2A	R5-1(30)	1	DO NOT ENTER - 30x30	30"	30"		REMOVE	1									
SS-3	2B	R5-11	1	AUTHORIZED VEHICLES ONLY	30"	24"		REMOVE	1									
SS-3	3A	R5-1(30)	1	DO NOT ENTER - 30x30	30"	30"	6.25	NEW		1				SOIL	1			
SS-3	3B	R5-11	1	AUTHORIZED VEHICLES ONLY	30"	24"	5	ADD TO ASSEMBLY		1								
SS-3	4A	R5-1(30)	1	DO NOT ENTER - 30x30	30"	30"		REMOVE	1									
SS-3	4B	R5-11	1	AUTHORIZED VEHICLES ONLY	30"	24"		REMOVE	1									
SS-3	5	W1-8(30)	1	CHEVRON ALIGNMENT - 30x36	30"	36"		REMOVE	1									
SS-3	6A	R5-11	1	AUTHORIZED VEHICLES ONLY	30"	24"	5	NEW		1				SOIL	1			
SS-3	6B	R3-1(24)	1	RIGHT TURN PROHIBITION (Symbol) - 24x24	24"	24"	4	ADD TO ASSEMBLY		1								
SS-3	7	R3-3-DE(24)	1	NO TURNS OFFICIAL USE ONLY - 24"x24"	24"	24"		REMOVE	1									
SS-3	8	W1-8(30)	1	CHEVRON ALIGNMENT - 30x36	30"	36"		REMOVE	1									
SS-3	9	W1-8(30)	1	CHEVRON ALIGNMENT - 30x36	30"	36"		REMOVE	1									
SS-3	10	W1-8(30)	1	CHEVRON ALIGNMENT - 30x36	30"	36"		REMOVE	1									
SS-3	11A	W1-7(36)	1	TWO DIRECTIONAL LARGE ARROW - 36x18	36"	18"					NEW		4.5	SOIL	2			
SS-3	11B	OM4-3	1	END OF ROAD OBJECT MARKER	18"	18"					ADD TO ASSEMBLY		2.25					
SS-3	11C	OM4-3	1	END OF ROAD OBJECT MARKER	18"	18"					ADD TO ASSEMBLY		2.25					
SS-3	12A	W1-7(36)	1	TWO DIRECTIONAL LARGE ARROW - 36x18	36"	18"					REMOVE	4.5						
SS-3	12B	OM4-3	1	END OF ROAD OBJECT MARKER	18"	18"					REMOVE	2.25						
SS-3	12C	OM4-3	1	END OF ROAD OBJECT MARKER	18"	18"					REMOVE	2.25						
SS-3	13A	R5-11	1	AUTHORIZED VEHICLES ONLY	30"	24"		REMOVE	1									
SS-3	13B	R3-1(24)	1	RIGHT TURN PROHIBITION (Symbol) - 24x24	24"	24"		REMOVE	1									
SS-3	14	R4-7c	1	NARROW KEEP RIGHT	18"	30"	3.75	NEW		1				CONCRETE	1	1		
SS-3	15	W11-1(30)	1	BICYCLE (Symbol) - 30x30	30"	30"		REMOVE	1									
SS-3	16	R2-1-45(24)	1	SPEED LIMIT (45 MPH - 24x30)	24"	30"		REMOVE	1									
SS-3	17A	D3-2-DE1	1	WELCOME TO	36"	32"		REMAIN										
SS-3	17B	D3-2-DE2	1	DEVELOPMENT NAME	36"	32"		REMAIN										CHAPMAN WOODS
SS-3	18	W4-2_R(30)	1	LANE ENDS (Right) - 30x30	30"	30"		REMOVE	1									
SS-3	19	R2-1-35(24)	1	SPEED LIMIT (35 MPH - 24x30)	24"	30"	5	NEW		1				SOIL	1			
SS-3	20	R4-7(24)	1	KEEP RIGHT (Symbol) - 24x30	24"	30"	5	NEW		1				CONCRETE	1	1		
SS-3	21	W14-2(30)	1	NO OUTLET - 30x30	30"	30"		REMAIN										
SS-3	22A	R2-1(24)	1	SPEED LIMIT (Blank - 24x30)	24"	30"		REMAIN										15 MPH
SS-3	22B	W21-11-DE	1	WATCH CHILDREN (Symbol)	30"	30"		REMOVE	1									
SS-3	23	R4-7(24)	1	KEEP RIGHT (Symbol) - 24x30	24"	30"		REMOVE	1									
SS-3	24A	D3-1(8)	2	STREET NAME (1 Line)	30"	8"		REMOVE	2									Alexis Dr
SS-3	24B	D3-1(8)	2	STREET NAME (1 Line)	30"	8"		REMOVE	2									Chapman Rd
SS-3	24C	R1-1(36)	1	STOP	36"	36"		REMOVE	1									
SS-3	24D	R6-3a(30)	1	DIVIDED HIGHWAY CROSSING (T - Intersection) - 30x24	30"	24"		REMOVE	1									
SS-3	25A	D3-1(8)	2	STREET NAME (1 Line)	30"	8"	3.33	NEW		2				SOIL	1			Alexis Dr
SS-3	25B	W14-2a_R	1	NO OUTLET (Arrow right)	30"	8"	1.67	ADD TO ASSEMBLY		1								
SS-3	25C	W14-2a_L	1	NO OUTLET (Arrow left)	30"	8"	1.67	ADD TO ASSEMBLY		1								
SS-3	25D	D3-1(8)	2	STREET NAME (1 Line)	30"	8"	3.33	ADD TO ASSEMBLY		2								Chapman Rd
SS-3	25E	R1-1(36)	1	STOP	36"	36"	9	ADD TO ASSEMBLY		1								
SS-3	25F	R6-3a(30)	1	DIVIDED HIGHWAY CROSSING (T - Intersection) - 30x24	30"	24"	5	ADD TO ASSEMBLY		1								
SS-3	26	R4-7(24)	1	KEEP RIGHT (Symbol) - 24x30	24"	30"		REMOVE	1									
SS-3	27	R2-1-45(24)	1	SPEED LIMIT (45 MPH - 24x30)	24"	30"		REMAIN										
SS-3	28A	D3-2-DE1	1	WELCOME TO	36"	32"		REMAIN										
SS-3	28B	D3-2-DE2	1	DEVELOPMENT NAME	36"	0		REMAIN										TRADITIONS AT CHRISTIANA
SS-4	1	W9-1_L(36)	1	LEFT LANE ENDS - 36x36	36"	36"		REMOVE	1									
SS-4	2	W4-2_R(30)	1	LANE ENDS (Right) - 30x30	30"	30"	6.25	NEW		1				SOIL	1			
SS-4	3	W3-5(36)	1	SPEED REDUCTION (Symbol) - 36x36	36"	36"	9	NEW		1				SOIL	1			35 MPH
				JOB TOTALS			**98.5**		**32.0**	**24.0**		**9.0**	**9.0**		**14.0**	**2.0**	**0.0**	

SS–05

ADDENDA / REVISIONS	

NOT TO SCALE

BR 1–714 ON CHAPMAN ROAD OVER I–95

CONTRACT	BRIDGE NO.	1–714 /1–714A
T201507402	DESIGNED BY: T. SINGLE	
COUNTY		
NEW CASTLE	CHECKED BY: D. SEMPLE	

SIGNING & STRIPING PLANS

SECTION: AEC

SHEET NO. 136

8/6/2019 10:02:24 AM
P:\60323054 DelDOT AGR 1672 BDS\T06 - Rehab Br. 1-714\900 WORK\910 CAD\20-SHEETS\104_Signing & Striping Plans\SS05.dgn

SECTION 200

1. REMOVAL OF STRUCTURES AND OBSTRUCTIONS:
ITEMS TO BE REMOVED UNDER ITEM #211000 - REMOVAL OF STRUCTURES AND OBSTRUCTIONS ASSOCIATING WITH BRIDGE SIGN STRUCTURE SHALL INCLUDE , BUT NOT BE LIMITED TO, THE FOLLOWING: SIGN STRUCTURE FOOTING 3' BELOW FINAL GRADE.

2. PORTLAND CEMENT CONCRETE:
USE PORTLAND CEMENT CONCRETE FOR CAST-IN-PLACE ELEMENTS AS FOLLOWS: (f'c = 28-DAY COMPRESSIVE STRENGTH)
CLASS B - DRILLED SHAFT (f'c = 3.0 ksi)
A HIGHER CLASS CONCRETE MAY BE SUBSTITUTED FOR A LOWER CLASS CONCRETE AT NO ADDITIONAL COST TO DELDOT WITH APPROVAL OF THE BRIDGE DESIGN ENGINEER.

SECTION 600

4. BAR REINFORCEMENT:
- REINFORCING STEEL SHALL CONFORM TO AASHTO M31 (ASTM A615), GRADE 60.
- REINFORCING STEEL SHALL HAVE A 3" CLEAR COVER IF CAST AGAINST EARTH OR A 2" CLEAR COVER ELSEWHERE, UNLESS OTHERWISE SPECIFIED ON THE PLANS.
- ALL REINFORCING STEEL SHALL BE PROTECTED WITH FUSION BONDED EPOXY. EPOXY COATED REINFORCING STEEL SHALL CONFORM TO AASHTO M284 (D3963).
- ANY FIELD CUTTING OR FIELD BENDING MUST BE APPROVED BY THE ENGINEER. PAYMENT SHALL BE INCIDENTAL TO THE BAR REINFORCEMENT ITEM.
- GALVANIZED REINFORCING STEEL MAY BE SUBSTITUTED FOR EPOXY-COATED REINFORCING STEEL AT NO ADDITIONAL COST TO DELDOT WITH APPROVAL OF THE BRIDGE DESIGN ENGINEER .
- WELDING OF REINFORCEMENT DURING FABRICATION OR CONSTRUCTION IS NOT PERMITTED UNLESS SPECIFIED.

5. STRUCTURAL STEEL:
PROVIDE STRUCTURAL STEEL CONFORMING TO AASHTO M270, GRADE (ASTM A709 , GRADE) DESIGNATION, EXCEPT WHEN NOTED OTHERWISE. THE ADDITIONAL REQUIREMENTS FOR CHARPY V-NOTCH TESTING (DENOTED AS 'CVN' ON PLANS) OF AASHTO M270 FOR PRIMARY LOAD CARRYING MEMBERS SHALL BE INCLUDED.

ALL FASTENERS ARE ⅞" DIAMETER ASTM A325 HIGH STRENGTH BOLTS, TYPE 3, UNLESS OTHERWISE NOTED. REAM SUBDRILLED or SUBPUNCHED HOLES FOR FIELD SPLICES IN THE FABRICATION SHOP.

PROVIDE MATERIALS AND PERFORM WORK IN ACCORDANCE WITH AASHTO/AWS D1.5M/D.15 **BRIDGE WELDING CODE, AND CONTRACT DOCUMENTS. MAKE TACK WELDS WITH THE SAME TYPE OF ELECTRODE AND INCORPORATE IN THE FINAL WELD. NO OTHER TACK WELDING WILL BE PERMITTED.

PROVIDE WELDED OR SEAMLESS STEEL PIPE CONFORMING TO STANDARD SPECIFICATIONS FOR ROAD AND BRIDGE CONSTRUCTION, SECTION 1039.08 (E).

PROVIDE HIGH-STRENGTH STEEL BOLTS CONFORMING TO AASHTO M164 (ASTM A325). MECHANICALLY GALVANIZE ALL BOLTS (EXCEPT ANCHOR BOLTS), NUTS AND WASHERS. EITHER MECHANICALLY GALVANIZE ALL ANCHOR BOLTS OR HOT-DIP GALVANIZE ALL ANCHOR BOLTS IN ACCORDANCE WITH FABRICATION NOTE 6 ON THIS SHEET. PROVIDE U-BOLTS CONFORMING TO ASTM A449. PROVIDE ANCHOR BOLTS CONFORMING TO AASHTO M314, GRADE 55.

SECTION 600 (CONTINUED)

6 FABRICATION:
CONSTRUCT SIGN STRUCTURES TRUE TO DIMENSION, FREE FROM KINKS, TWISTS OR BENDS, AND UNIFORM IN APPEARANCE. ASSEMBLE COMPLETED SECTIONS IN THE SHOP AND CHECK FOR STRAIGHTNESS, ALIGNMENT, DIMENSION, AND THE FIRM SEATING OF THE SPLICE PLATES. CORRECT ANY VARIATIONS TO THE SATISFACTION OF THE ENGINEER.

FORM MASTS FOR SIGN STRUCTURES TO THE RADII SHOWN ON THE PLANS IN ACCORDANCE WITH THE TUBE AND PIPE ASSOCIATION INTERNATIONAL RECOMMENDED STANDARDS FOR INDUCTION BENDING OF PIPE AND TUBE (TPA-IBS-98).

AFFIX CLIPS, EYES, OR REMOVABLE BRACKETS TO ALL MASTS AND MAST ARMS, AS NECESSARY, TO SECURE THE SIGN STRUCTURE DURING SHIPPING AND FOR LIFTING AND MOVING DURING ERECTION. THIS IS TO PREVENT DAMAGE TO THE FINISHED GALVANIZED OR PAINTED SURFACES. REMOVE BRACKETS ON SIGN STRUCTURES AFTER ERECTION. INCLUDE DETAILS OF SUCH DEVICES ON THE SHOP DRAWINGS.

FABRICATE ALL SIGN STRUCTURES INTO THE LARGEST PRACTICAL SECTIONS PRIOR TO GALVANIZING. SUBMIT SPLICE LOCATIONS TO THE ENGINEER FOR APPROVAL. DO NOT COMMENCE FABRICATION UNTIL SUCH SPLICE LOCATIONS ARE APPROVED.

GRIND ALL AREAS TO BE WELDED TO BRIGHT METAL. BUTT WELD SPLICES ARE NOT PERMITTED, UNLESS SHOWN ON THE PLANS. COMPLETE ALL WELDING AND REQUIRED TESTING BEFORE ANY MATERIAL IS GALVANIZED. NON-DESTRUCTIVELY TEST ALL CIRCUMFERENTIAL AND STIFFENER WELDS USING THE METHODS AND PROCEDURES IN ACCORDANCE WITH SECTION 1039. THE ACCEPTABLE CRITERIA ARE STATED IN TABLE 6.1 OF ANSI/AWS D1.1/D1.1M. PROVIDE FULL PENETRATION GROOVE WELDS FOR ALL LONGITUDINAL WELDS WITHIN 6" OF A FULL PENETRATION CIRCUMFERENTIAL GROOVE WELD AND INSPECT AS SPECIFIED ABOVE. PROVIDE MAXIMUM WELD UNDERCUT OF 0.01".

HOT-DIP GALVANIZE ALL COMPONENTS (EXCEPT REINFORCEMENT BARS, ALUMINUM, AND NON-FERROUS INCIDENTALS) AFTER FABRICATION PER ASTM A123 OR ASTM A153, AS APPROPRIATE.

SECTION 800

7. MAINTENANCE OF TRAFFIC:
MAINTENANCE OF TRAFFIC SHALL BE AS PER PHASE 1 MOT PLANS.

MISCELLANEOUS

8. DESIGN SPECIFICATIONS:
(A) DELDOT BRIDGE DESIGN MANUAL, 2017 EDITION
(B) AASHTO LRFD SPECIFICATIONS FOR STRUCTURAL SUPPORTS FOR HIGHWAY SIGNS, LUMINARIES AND TRAFFIC SIGNALS, 1ST EDITION, (2015).
(C) PROVIDE MATERIALS AND PERFORM WORK IN ACCORDANCE WITH THE DELDOT STANDARD SPECIFICATIONS, AUGUST 2016.
(D) DRILLED SHAFT FOUNDATIONS ARE BASED ON A MAXIMUM ½" LATERAL DEFLECTION AT TOP OF DRILLED SHAFT.

9. LOADING:
EXTREME WIND LOADS ARE BASED ON 120 MPH (3 SECOND GUST BASIC WIND SPEED)
SERVICE WIND LOADS ARE BASED ON 76 mph (3 SECOND GUST BASIC WIND SPEED).

10. CONSTRUCTION:
USE TEMPLATES TO ACCURATELY SET BASE PLATE ANCHOR BOLTS TO CORRECT ELEVATION AND ALIGNMENT. SECURELY BRACE ANCHOR BOLTS AGAINST DISPLACEMENT BEFORE CAISSON CONCRETE IS PLACED AND DURING CONCRETE CURING.

ERECT SIGN STRUCTURE ONLY AFTER CAISSON CONCRETE MEETS 7 DAY STRENGTH REQUIREMENTS.

TEMPORARILY SUPPORT MAST ARMS TO RELIEVE LOAD FROM THE SPLICES WHILE HIGH-STRENGTH BOLTS ARE BEING TIGHTENED IN ORDER TO FIRMLY SEAT THE CONNECTION PLATES.

PRIOR TO ERECTION, DEMONSTRATE TO THE ENGINEER BY PREASSEMBLY OR OTHER APPROVED METHOD THAT FRAME STRUCTURE LENGTH IN A NO-LOAD CONDITION MATCHES FIELD MEASURED CAISSON SPACING WITHIN 1/2".

ADEQUATELY SUSPEND FRAME STRUCTURES TO AVOID DISTORTIONS OR CHANGES IN SPAN LENGTH IF ERECTED ONTO FOUNDATIONS AS ONE UNIT.

INDEX OF SIGN STRUCTURE DRAWINGS

137. PROJECT NOTES
138. PLAN AND ELEVATION
139. SECTIONS AND DETAILS-1
140. SECTIONS AND DETAILS-2
141. FOUNDATION

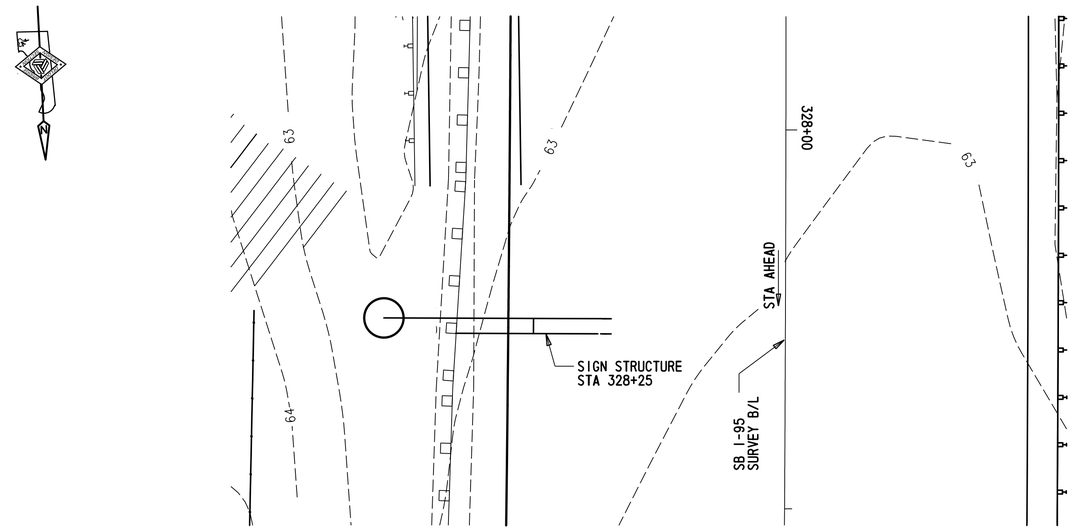

LOCATION PLAN

SCALE: 1" = 10'

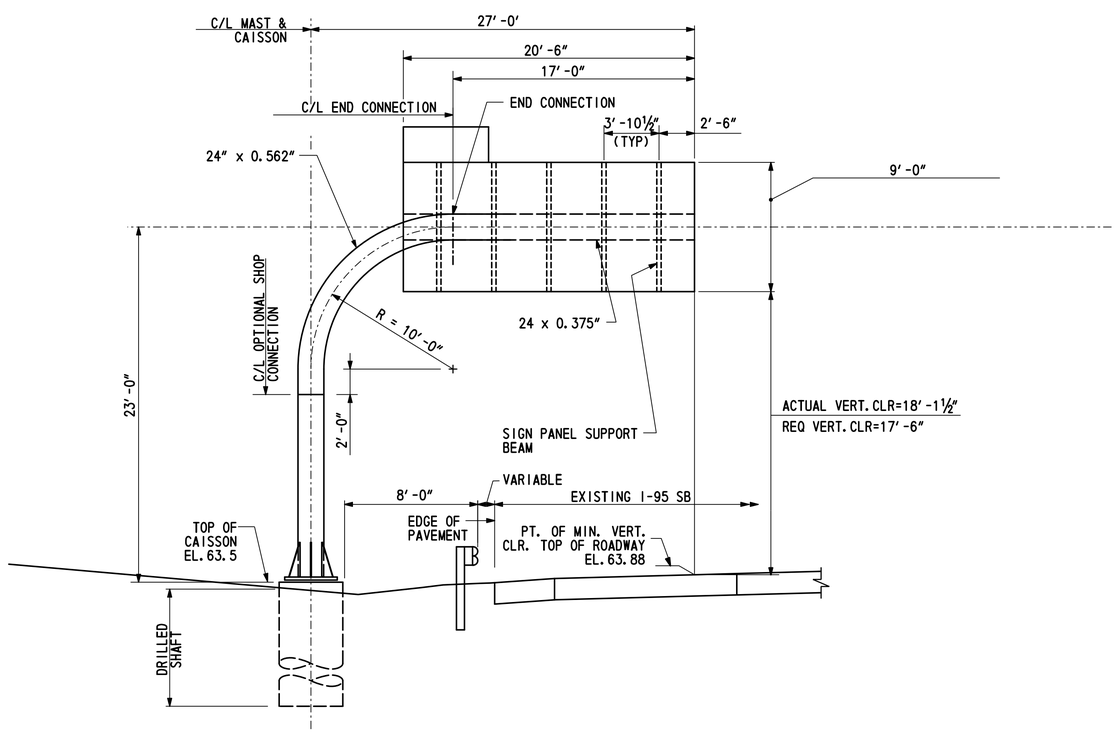

ELEVATION

SCALE: 3/16" = 1'-0"

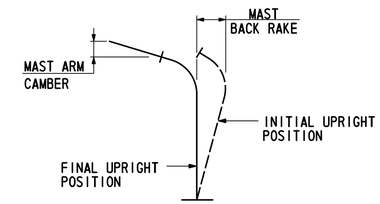

CAMBER DIAGRAM

NOT TO SCALE

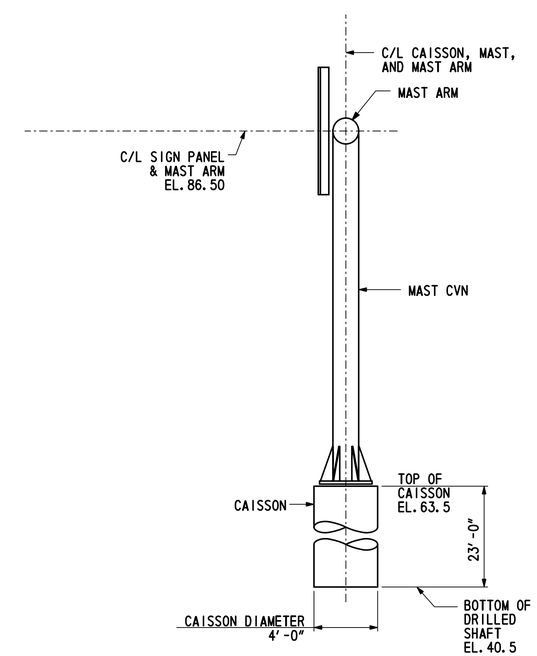

SIDE ELEVATION

SCALE: 3/16" = 1'-0"

NOTES:

1. SEE SIGNING AND STRIPING PLANS FOR SIGN DETAIL.
2. SIGN STRUCTURE PAID UNDER ITEM 617000.
3. CAISSON IS PAID FOR UNDER ITEM 606003.

ADDENDA / REVISIONS	SCALE AS NOTED	BR 1-714 ON CHAPMAN ROAD OVER I-95 SB	CONTRACT T201507402	BRIDGE NO. 1-714	SIGN STRUCTURE STA 328+25 PLAN AND ELEVATION	SECTION AEC
			COUNTY NEW CASTLE	DESIGNED BY: J.WHEALAN		SHEET NO. 138
				CHECKED BY: R.DOMINICK		

9/19/2019
4:33:42 PM
P:\60323054 DelDOT AGR 1672 BDS\T06 - Rehab Br. 1-714\900 WORK\910 CAD\20-SHEETS\Structures\Final Design\SB\BR1-714-SB-SS01.dgn

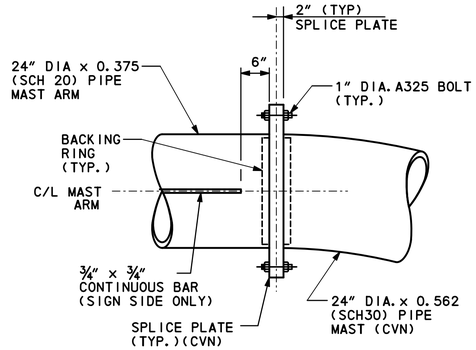

ELEVATION

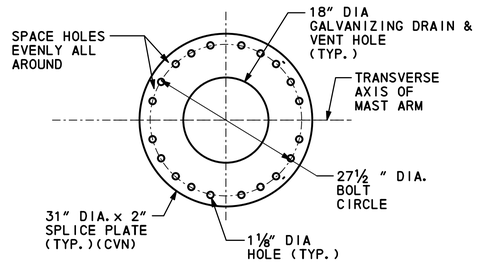

SECTION

END CONNECTION DETAILS

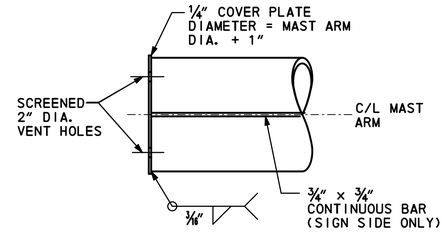

MAST ARM END DETAIL

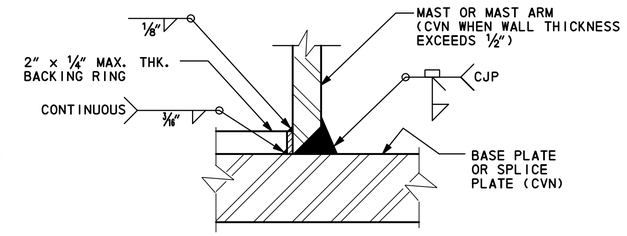

WELD DETAIL

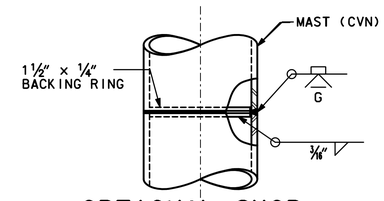

OPTIONAL SHOP CONNECTION DETAIL

WELD DETAIL NOTE:

BACKING RING MUST BE FITTED/SIZED TO THE PIPE COLUMN AND CONTINUOUSLY FILLET WELDED TO THE BASE PLATE BEFORE THE FULL PENETRATION GROOVE WELD IS MADE. BACKING RING MUST BE FABRICATED AS A CONTINUOUS RING. TOP WELD OF BACKING RING MUST BE MADE AFTER THE ULTRASONIC INSPECTION OF THE GROOVE WELD.

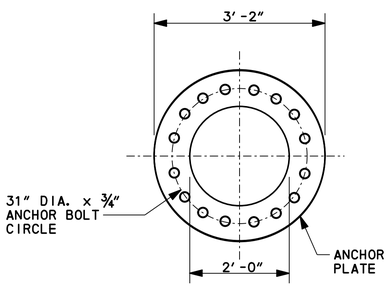

PLAN

ANCHOR PLATE DETAIL

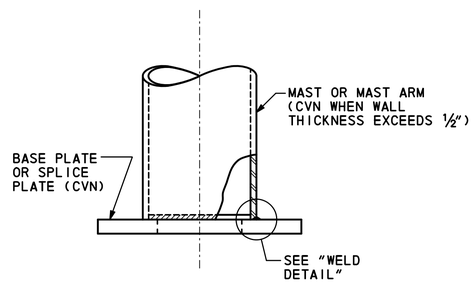

PIPE TO PLATE CONNECTION DETAIL

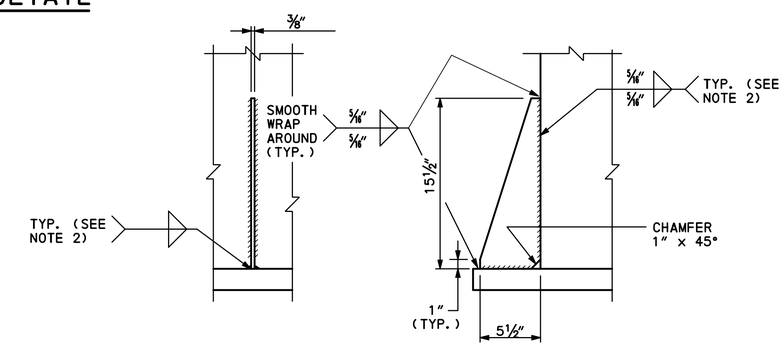

SECTION ELEVATION

STIFFENER DETAILS (8 LOCATIONS)

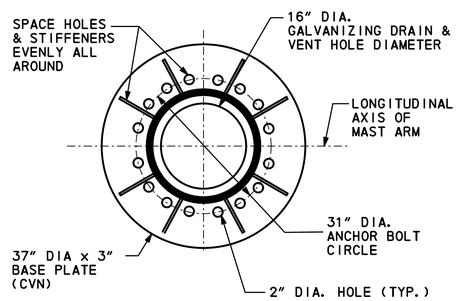

PLAN

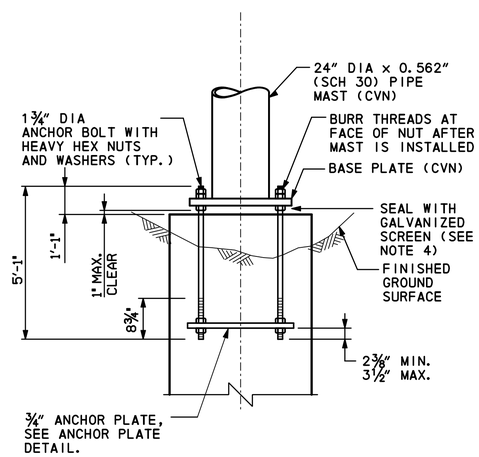

ELEVATION

NOTE: STIFFENERS NOT SHOWN FOR CLARITY

BASE CONNECTION DETAILS

NOTES:

1. FOR GENERAL NOTES, SEE SHEET 137.
2. TERMINATE WELDS ¼" SHORT OF STIFFENER CHAMFER.
3. FOR DRILLED SHAFT INFORMATION, SEE SHEET 141.
4. SEAL BASE PLATE TO FOUNDATION GAP WITH GALVANIZED STEEL SCREEN, ½" BY ½" MESH AND 0.063" DIAMETER WIRES. SCREEN IS TO PREVENT ENTRY OF RODENTS WHILE PERMITTING DRAINAGE. SCREEN IS TO BE REMOVABLE AND ATTACHED TO BASEPLATE WITH STAINLESS STEEL HARDWARE.

ADDENDA / REVISIONS		SCALE AS NOTED	BR 1-714 ON CHAPMAN ROAD OVER I-95 SB	CONTRACT T201507402	BRIDGE NO. 1-714	SIGN STRUCTURE STA 328+25 SECTIONS AND DETAILS - 1	SECTION AEC
				COUNTY NEW CASTLE	DESIGNED BY: J.WHEALAN		SHEET NO. 139
					CHECKED BY: R.DOMINICK		

8/19/2019
4:39:56 PM
P:\60323054 DelDOT AGR 1672 BDS\T06 - Rehab Br. 1-714\900 WORK\910 CAD\20-SHEETS\Structures\Final Design\SB\BR1-714-SB-SS03.dgn

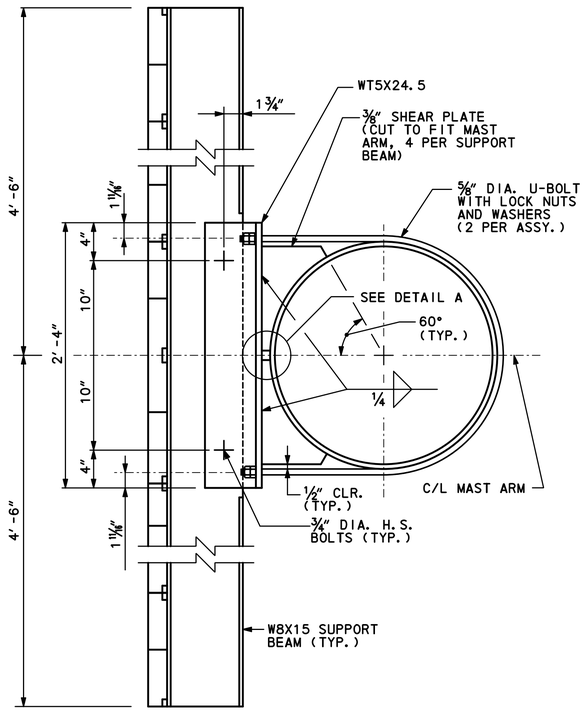

SIGN PANEL SECTION

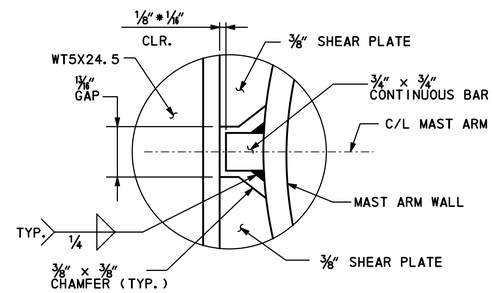

DETAIL A

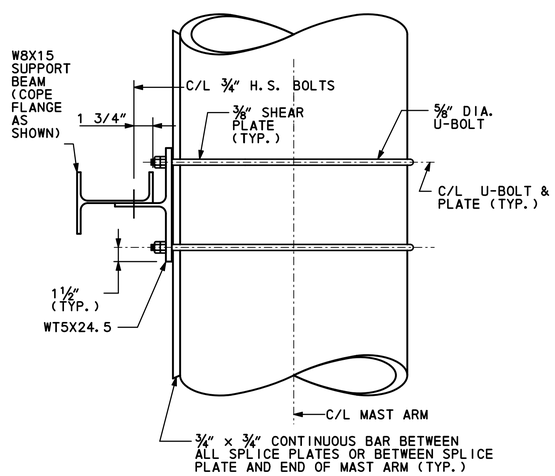

SIGN PANEL PLAN

SUPPORT BEAM TO MAST ARM CONNECTION DETAILS

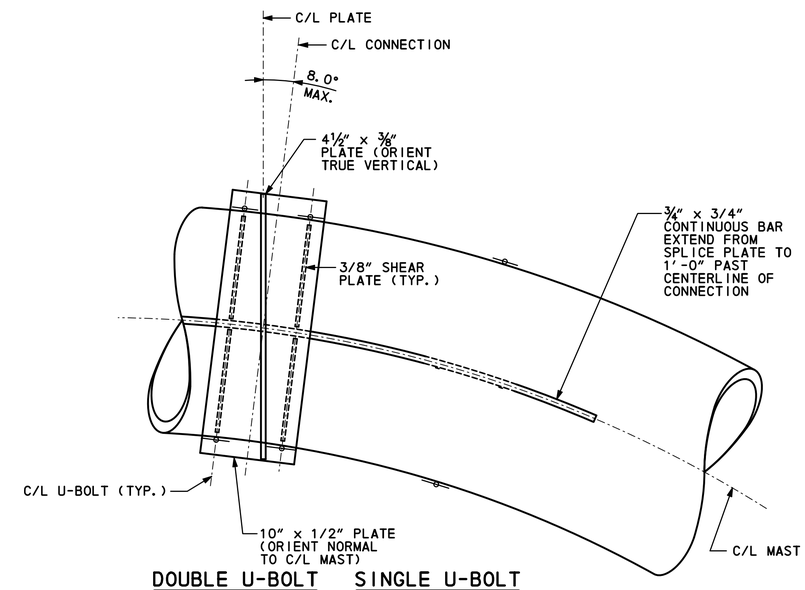

DOUBLE U-BOLT SINGLE U-BOLT

SUPPORT BEAM TO MAST CONNECTION DETAILS

(FOR DETAILS NOT SHOWN OR NOTED, SEE SUPPORT BEAM TO MAST ARM CONNECTION DETAILS)
(SUPPORT BEAM NOT SHOWN IN PLAN AND ELEVATION VIEWS FOR CLARITY)

NOTES:

1. FOR PROJECT NOTES, SEE SHEET 137.
2. FOR DETAILS NOT SHOWN OR NOTED, SEE SINGLE SIGN PANEL DETAILS, THIS SHEET.
3. FOR SIGN PANEL DETAILS, SEE SHEET 139.
4. LOCATE SUPPORT BEAMS TO AVOID END CONNECTIONS. MAXIMUM SPACING = 5'-0". MAXIMUM DISTANCE TO PANEL EDGE = 2'-6".

ADDENDA / REVISIONS	SCALE AS NOTED	BR 1-714 ON CHAPMAN ROAD OVER I-95 SB	CONTRACT T201507402	BRIDGE NO. 1-714	SIGN STRUCTURE STA 328+25 SECTIONS AND DETAILS - 2	SECTION AEC
			COUNTY NEW CASTLE	DESIGNED BY: J.WHEALAN		SHEET NO. 140
				CHECKED BY: R.DOMINICK		

9/20/2019 6:32:17 AM P:\60323054 DelDOT AGR 1672 BDS\T06 - Rehab Br. 1-714\900 WORK\910 CAD\20-SHEETS\Structures\Final Design\SB\BR1-714-SB-SS04.dgn

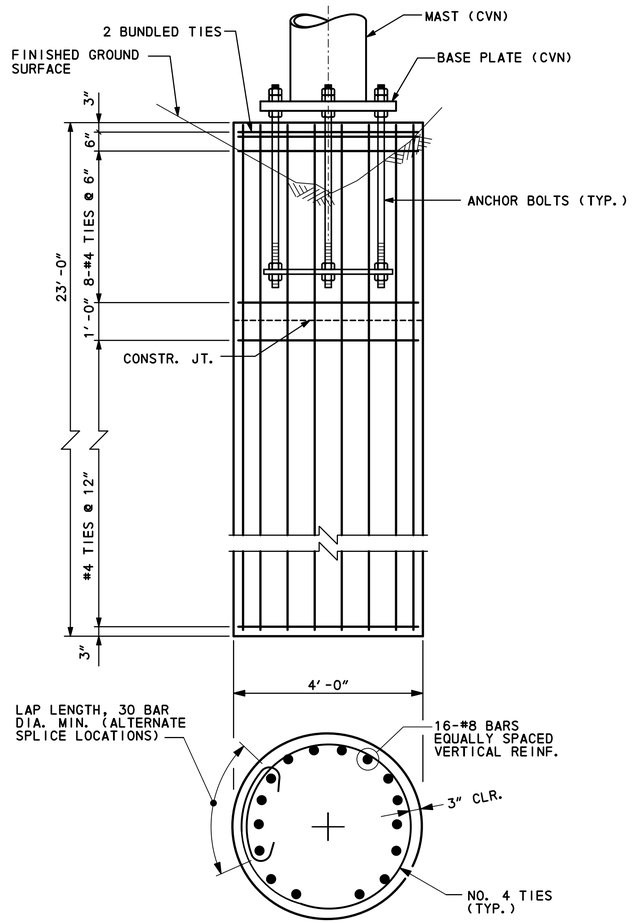

DRILLED SHAFT FOUNDATION DETAILS

NOTES:

1. FOR PROJECT NOTES, SEE SHEET 137.
2. FOR ANCHOR BOLT INFORMATION, SEE SHEET 138.
3. DRILLED SHAFT IS PAID FOR UNDER ITEM 606003.

ADDENDA / REVISIONS		SCALE AS NOTED	BR 1-714 ON CHAPMAN ROAD OVER I-95 SB	CONTRACT T201507402	BRIDGE NO. 1-714	SIGN STRUCTURE STA 328+25 FOUNDATIONS	SECTION AEC
				COUNTY NEW CASTLE	DESIGNED BY: J.WHELAN		SHEET NO. 141
					CHECKED BY: R.DOMINICK		

8/19/2019 4:39:57 PM P:\60323054 DelDOT AGR 1672 BDS\T06 - Rehab Br. 1-714\900 WORK\910 CAD\20-SHEETS\Structures\Final Design\SB\BR1-714-SB-SS05.dgn

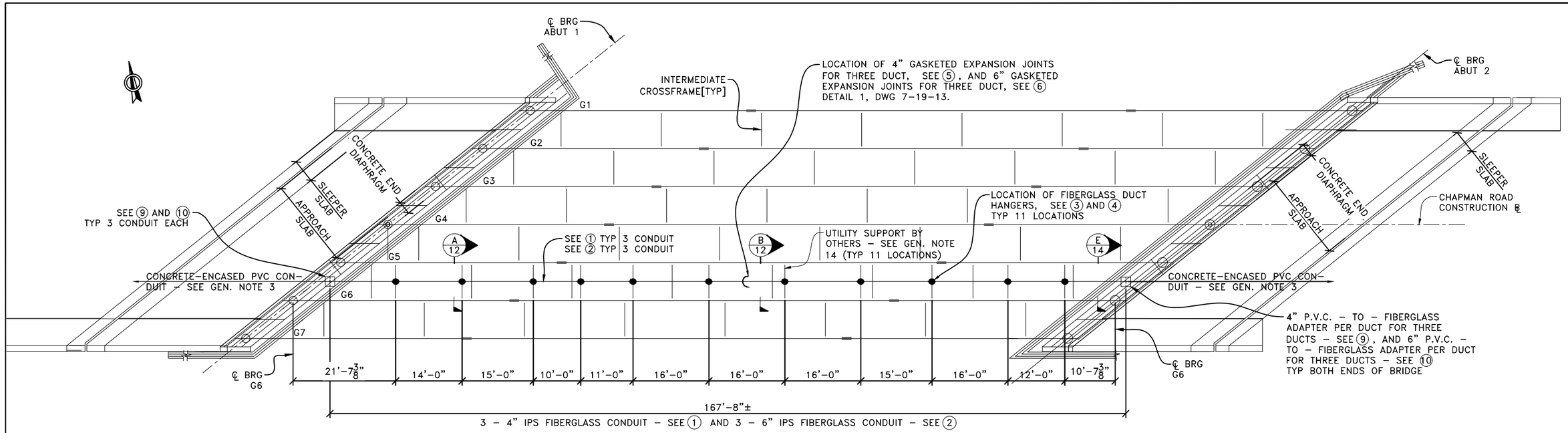

LOCATION PLAN

BRIDGE 1-714 OVER I-95S

$\frac{3}{32}$"=1'-0"

LEGEND

1 - DENOTES MATERIAL ITEM NUMBER

-(- DENOTES GASKETED TYPE EXPANSION JOINT

-●- DENOTES HANGER AND CONDUIT SUPPORT LOCATION

GENERAL NOTES

1) ALL ITEMS SHOWN IN THE "MATERIAL LIST" ON DWG. 7-19-11 WITH PART NUMBERS ARE AMERICAN U-TEL, INC. STANDARD ITEMS SUPPLIED THROUGH DELMARVA POWER CO. BY:

AMERICAN U-TEL, INC.
9760 SMITH ROAD
WILLOUGHBY, OHIO 44094

UNLESS OTHERWISE NOTED. THIS MATERIAL WILL BE SUPPLIED BY DELMARVA POWER CO., 401 EAGLE RUN ROAD, NEWARK, DE 19702.

2) THESE DRAWINGS ARE BASED ON AVAILABLE BRIDGE DESIGN DRAWINGS. CONTRACTOR SHALL VERIFY ALL DIMENSIONS BEFORE FABRICATION AND INSTALLATION OF CONDUITS AND SUPPORTS.

3) SUBGRADE CONDUITS ARE TO BE CONCRETE-ENCASED - DESIGN AND DETAILS ARE TO BE BY OTHERS. SEE CONTRACT T201507402 DRAWINGS, SHEET NO. 23, FOR ALL SUBGRADE CONDUIT DETAILS AND NOTES.

4) FIBERGLASS DUCT SUPPORTS ARE TO BE DESIGNED FOR A MAXIMUM CABLE LOAD OF 8.0 LBS PER FT PER 4" DUCT; AND 15 LBS PER FT FOR 6" DUCT. THE TOTAL POWER CABLE AND DUCT LOAD AT A SUPPORT IS 1400 LBS MAXIMUM.

5) 4" AND 6" STRAIGHT COUPLINGS SHALL BE INSTALLED AS REQUIRED.

6) THE CONTRACTOR IS REQUIRED TO COMPLY WITH ALL NATIONALLY ACCEPTED SAFETY PRACTICES, OSHA AND ANY OTHER SAFETY REQUIREMENTS IMPOSED BY THE OWNER, AGENCY OR ANY OTHER PARTIES WHICH MAY HAVE JURISDICTION OVER SAFETY.

7) DESIGN OF 4" DUCT BASED ON AMERICAN U-TEL PART NO. [12370] FIBERGLASS CONDUIT WITH THE FOLLOWING CHARACTERISTICS LISTED IN A THRU D:

A)4" FIBERGLASS DUCTS ARE TO HAVE THREADED JOINTS WITH 3000 LBS PULL OUT STRENGTH UNBONDED.
B)4" DIA. FIBERGLASS DUCTS ARE TO HAVE ULTIMATE TENSILE STRENGTH OF 10,500 PSI PER ASTM D-2105.
C)4" IPS:4.5" O.D. x 4.36" I.D. x 32 FT LENGTH
D)CAPABLE OF MAIN/INTERIOR HANGER SUPPORT SPANS OF UP TO 21.2 FT. FOR 3 LBS. PER FT. CABLE, 17.2 FT. FOR 8 LBS. PER FT. CABLE, AND 25.5 FT. FOR 1 LBS. PER FT. CABLE BASED ON NOT EXCEEDING 5/8" MIDSPAN DEFLECTION.

8) FOR THE 6" IPS CONDUIT, THE CONDUIT TO BE ABLE TO SPAN 17FT WITH A MAXIMUM LOAD OF 15 LBS PER FOOT.

9) DURING INSTALLATION, THE DUCT EXPANSION JOINTS MUST BE SET TO THE PROPER LENGTH ACCORDING TO THE AMBIENT TEMPERATURE. REFER TO THE EXPANSION JOINT MANUFACTURER'S INSTRUCTIONS.

10) ALL CONNECTION BETWEEN DUCT SECTIONS, EXPANSION JOINTS, ADAPTERS, AND COUPLINGS ARE TO BE CEMENTED. REFER TO MANUFACTURER'S INSTRUCTIONS FOR CEMENTING PROCEDURES.

11) CAP THE ENDS OF THE DUCTS IF THE UNDERGROUND PORTION OF THE WORK IS NOT DONE AT THE SAME TIME AS THE BRIDGE PORTION.

12) ALL ATTACHMENT RODS, SPACER RODS, NUTS, LOCK AND FLAT WASHERS IN ITEMS 3 AND 4 TO BE HOT-DIP GALVANIZED.

13) DESIGN AND INSTALLATION OF UTILITY SUPPORT AS SHOWN ON THESE DRAWINGS.

14) ALL UTILITY SUPPORT STEEL IS TO BE SUPPLIED AND ERECTED ACCORDING TO THE CONTRACT DRAWINGS AND SPECIFICATIONS FOR STRUCTURAL STEEL.

15) DELETED.

16) DELETED.

17) CONDUIT SUPPORT SPACING CAN BE ADJUSTED TO MISS EXISTING OBSTRUCTIONS (SPLICES, PLATES, ETC.) AS REQUIRED AS LONG AS THE SUPPORT SPACING DOES NOT EXCEED 16 FEET.

18) THIS DESIGN IS FOR THE EXPRESS PURPOSE FOR USE ON THE CHAPMAN ROAD BRIDGES [1-714 AND 1-714A] OVER I-95 IN NEWARK, DELAWARE AND IS NOT TO BE USED ELSEWHERE.

19) THE CONTRACTOR SHALL PULL A MANDREL [$\frac{1}{2}$" SMALLER IN DIAMETER THAN THE CONDUIT AND 6" LONG] THROUGH EACH DUCT PRIOR TO DPL CABLE INSTALLATION, FOLLOWED BY A PULLING LINE [1800 LB MULE LINE OR APPROVED EQUAL]. WHICH SHALL REMAIN IN EACH DUCT.

REV	COMMENTS	BY	DATE
2	REVISED PER DEL DOT COMMENTS	DG	8/14/19
1	REVISED PER DEL DOT COMMENTS	AE	8/05/19
0	FOR APPROVAL	AE	7/29/19

CHAPMAN ROAD OVER I-95
BRIDGES 1-714 AND 1-714A
IN NEWARK, DELAWARE

ELECTRIC POWER DUCT SUPPORTS
BRIDGE 1-714 FRAMING PLAN

DAVID GUERRIERO, P.E.

OWNER: DELMARVA POWER

FURNISHED BY: AMERICAN U-TEL
9760 SMITH ROAD
WILLOUHGBY, OHIO 44094
(440)946-6027

CHECKED BY: DG DATE: 7-29-19
DRAWN BY: AE DATE: 7-20-19
DRAWING NO: 7-19-10 SH. 1 OF 1

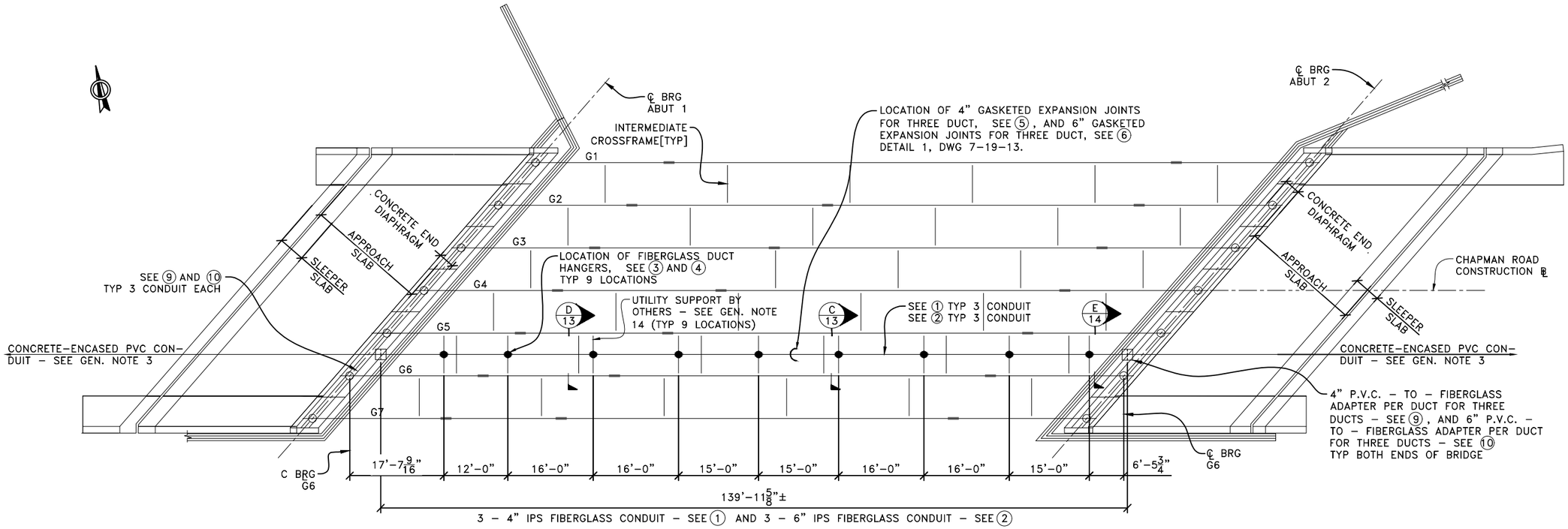

LOCATION PLAN

BRIDGE 1-714A OVER I-95N

3/32"=1'-0"

LEGEND

① - DENOTES MATERIAL ITEM NUMBER

℄ - DENOTES GASKETED TYPE EXPANSION JOINT

● - DENOTES HANGER AND CONDUIT SUPPORT LOCATION

MATERIAL LIST

ITEM NO.	DESCRIPTION AND AMERICAN U-TEL[PART NO.]	QUANTITY
①	4" IPS - 4 1/2" O.D. FIBERGLASS DUCT WITH THREADED ENDS [12370-04]. SEE G.N. NO'S 7 & 10.	960 FT
②	6" IPS - 6 1/2" O.D. FIBERGLASS DUCT WITH THREADED ENDS [12370-06]. SEE G.N. NO'S 8 & 10.	960 FT
③	FIBERGLASS 3Wx1H STANDARD 4" DUCT HANGER. SEE G.N. NO. 12.	20
④	FIBERGLASS 3Wx1H STANDARD 6" DUCT HANGER. SEE G.N. NO. 12.	20
⑤	4" GASKETED EXPANSION JOINT [12352-04]. SEE G.N. NO'S 9 & 10.	6
⑥	6" GASKETED EXPANSION JOINT [12352-06]. SEE G.N. NO'S 9 & 10.	6
⑦	4" STRAIGHT COUPLING [12348-04]. SEE G.N. NO'S 5 & 10	12
⑧	6" STRAIGHT COUPLING [12348-06]. SEE G.N. NO'S 5 & 10	12
⑨	4" PVC ADAPTER TO FIBERGLASS [12357-04].	12
⑩	6" PVC ADAPTER TO FIBERGLASS [12357-06].	12
⑪	DELETED.	---

MATERIAL LIST(CONT'D)

ITEM NO.	DESCRIPTION AND AMERICAN U-TEL[PART NO.]	QUANTITY
⑫	ADHESIVE KIT [12358].	20
⑬	DELETED.	---
⑭	DELETED.	---
⑮	5" DIA. SCH. 40 PVC PIPE, 4'-9" LONG	12
⑯	8" DIA. SCH. 80 PVC PIPE, 5'-8" LONG	12
⑰	6" SPLIT-FIBERGLASS SLEEVE x 5'-10" LONG [12354-SP].	12

THE ABOVE MATERIAL WILL BE SUPPLIED BY DELMARVA POWER CO., 401 EAGLE RUN ROAD, NEWARK, DE 19702.

REV	COMMENTS	BY	DATE
2	REVISED PER DEL DOT COMMENTS	DG	8/14/19
1	REVISED PER DEL DOT COMMENTS	AE	8/05/19
0	FOR APPROVAL	AE	7/29/19

CHAPMAN ROAD OVER I-95
BRIDGES 1-714 AND 1-714A
IN NEWARK, DELAWARE

ELECTRIC POWER DUCT SUPPORTS
BRIDGE 1-714A FRAMING PLAN

DAVID GUERRIERO, P.E.

OWNER: DELMARVA POWER

FURNISHED BY: AMERICAN U-TEL
9760 SMITH ROAD
WILLOUHGBY, OHIO 44094
(440)946-6027

CHECKED BY: DG DATE: 7-29-19
DRAWN BY: AE DATE: 7-20-19
DRAWING NO: 7-19-11 SH. 1 OF 1

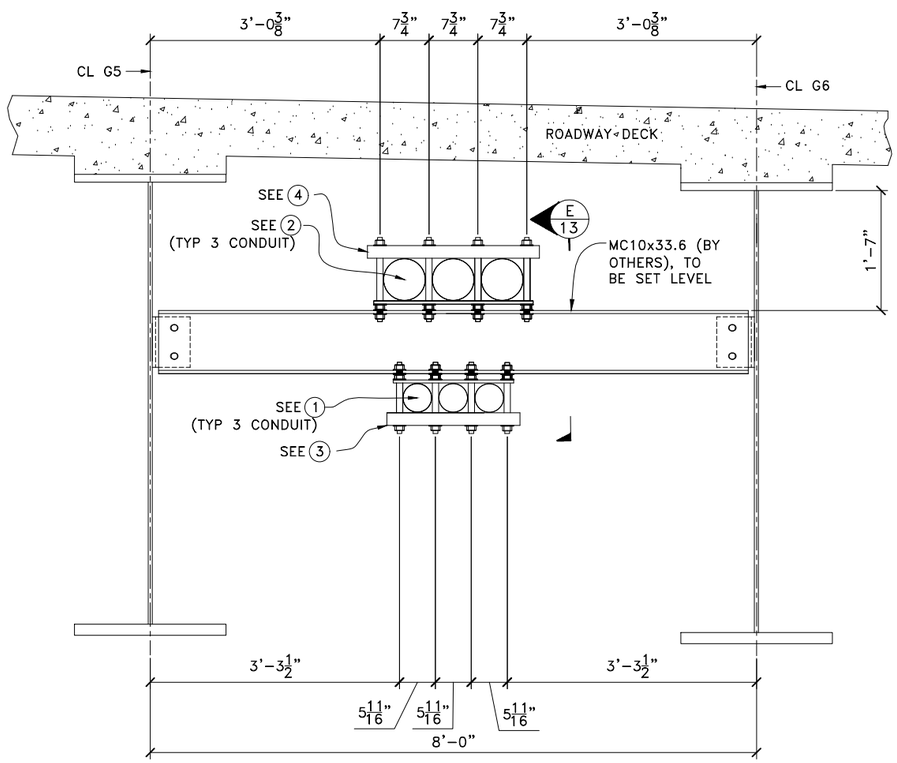

SECTION A/10 HANGER SUPPORT AT UTILITY SUPPORT SHOWN
1"=1'-0 TYP OF 11 TOTAL SUPPORTS, SPAN OVER I-95 S.B..

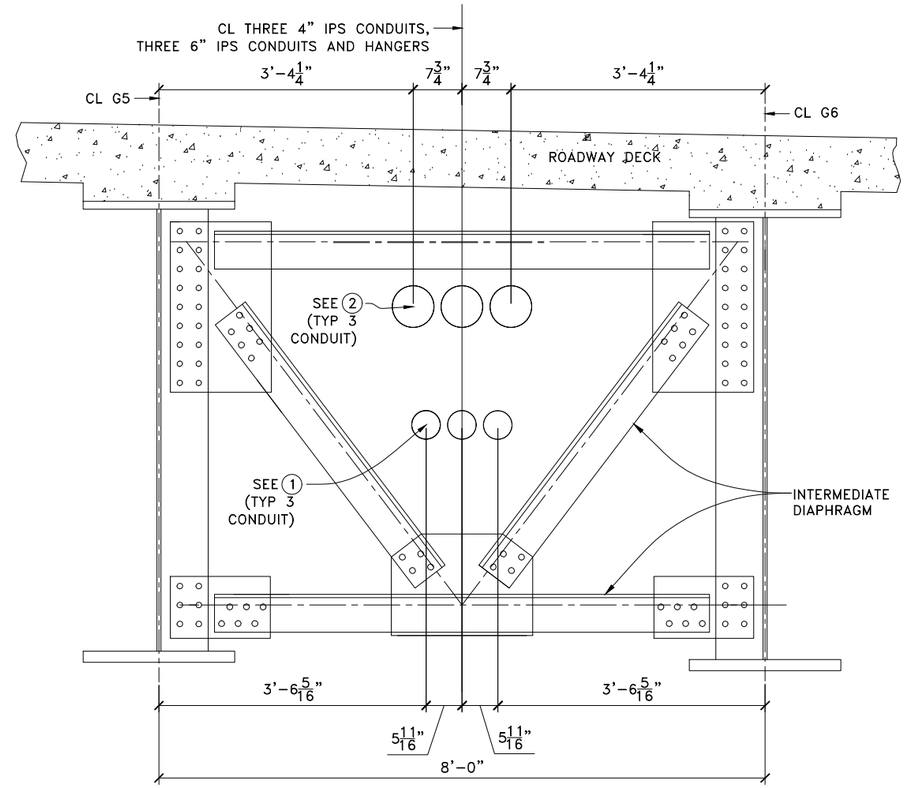

SECTION B/10 CONDUIT THROUGH INTERMEDIATE DIAPHRAGM
1"=1'-0

REV	COMMENTS	BY	DATE
2	REVISED PER DEL DOT COMMENTS	DG	8/14/19
1	REVISED PER DEL DOT COMMENTS	AE	8/05/19
0	FOR APPROVAL	AE	7/29/19

CHAPMAN ROAD OVER I-95
BRIDGES 1-714 AND 1-714A
IN NEWARK, DELAWARE

ELECTRIC POWER DUCT SUPPORTS
BRIDGE 1-714 SECTIONS

DAVID GUERRIERO, P.E.

OWNER: DELMARVA POWER

FURNISHED BY: AMERICAN U-TEL
9760 SMITH ROAD
WILLOUHGBY, OHIO 44094
(440)946-6027

CHECKED BY: AE DATE: 7-29-19
DRAWN BY: WS DATE: 7-20-19
DRAWING NO: 7-19-12 SH. 1 OF 1

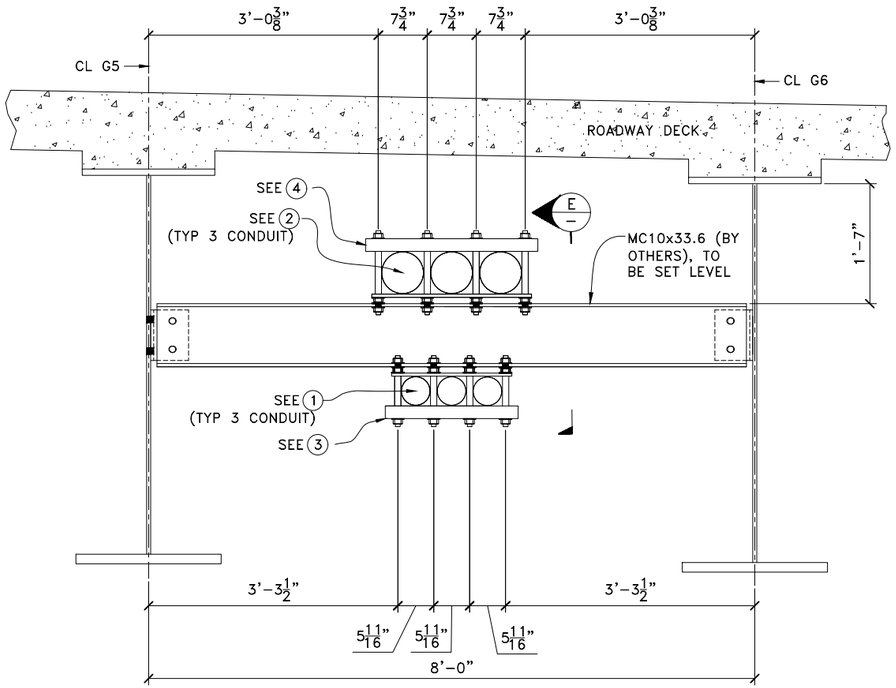

SECTION C/11 HANGER SUPPORT AT UTILITY SUPPORT SHOWN
1"=1'-0 TYP OF 9 TOTAL SUPPORTS, SPAN OVER I-95 N.B..

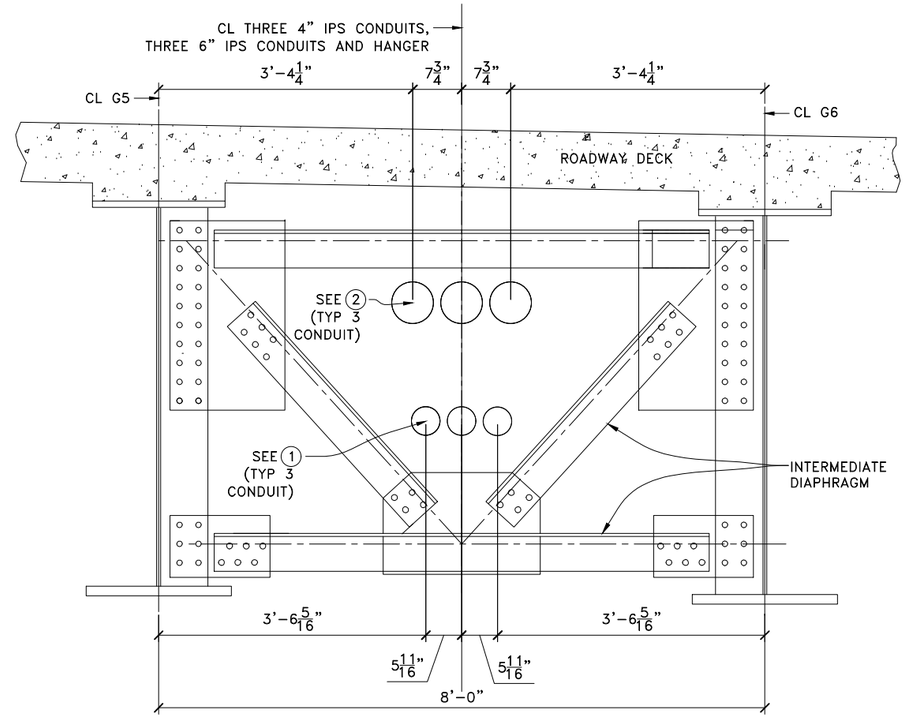

SECTION D/11 CONDUIT THROUGH INTERMEDIATE DIAPHRAGM
1"=1'-0

*INDICATES PARTS OF MODIFIED AMERICAN U-TEL HANGER PACKAGE FOR MATERIAL ITEM NO. 4

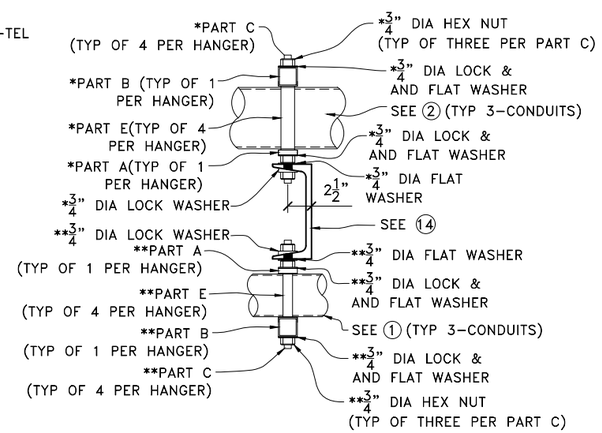

**INDICATES PARTS OF MODIFIED AMERICAN U-TEL HANGER PACKAGE FOR MATERIAL ITEM NO. 3

SECTION E/E 12
1 1/2"=1'-0

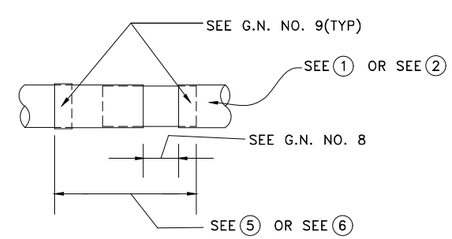

DETAIL 1/— ITEM 5 AND 6
1 1/2"=1'-0

REV	COMMENTS	BY	DATE
2	REVISED PER DEL DOT COMMENTS	DG	8/14/19
1	REVISED PER DEL DOT COMMENTS	AE	8/05/19
0	FOR APPROVAL	AE	7/29/19

CHAPMAN ROAD OVER I-95
BRIDGES 1-714 AND 1-714A
IN NEWARK, DELAWARE

ELECTRIC POWER DUCT SUPPORTS
BRIDGE 1-714A SECTIONS

DAVID GUERRIERO, P.E.

OWNER: DELMARVA POWER

FURNISHED BY: AMERICAN U-TEL
9760 SMITH ROAD
WILLOUHGBY, OHIO 44094
(440)946-6027

CHECKED BY: AE DATE: 7-29-19
DRAWN BY: WS DATE: 7-20-19
DRAWING NO: 7-19-13 SH. 1 OF 1

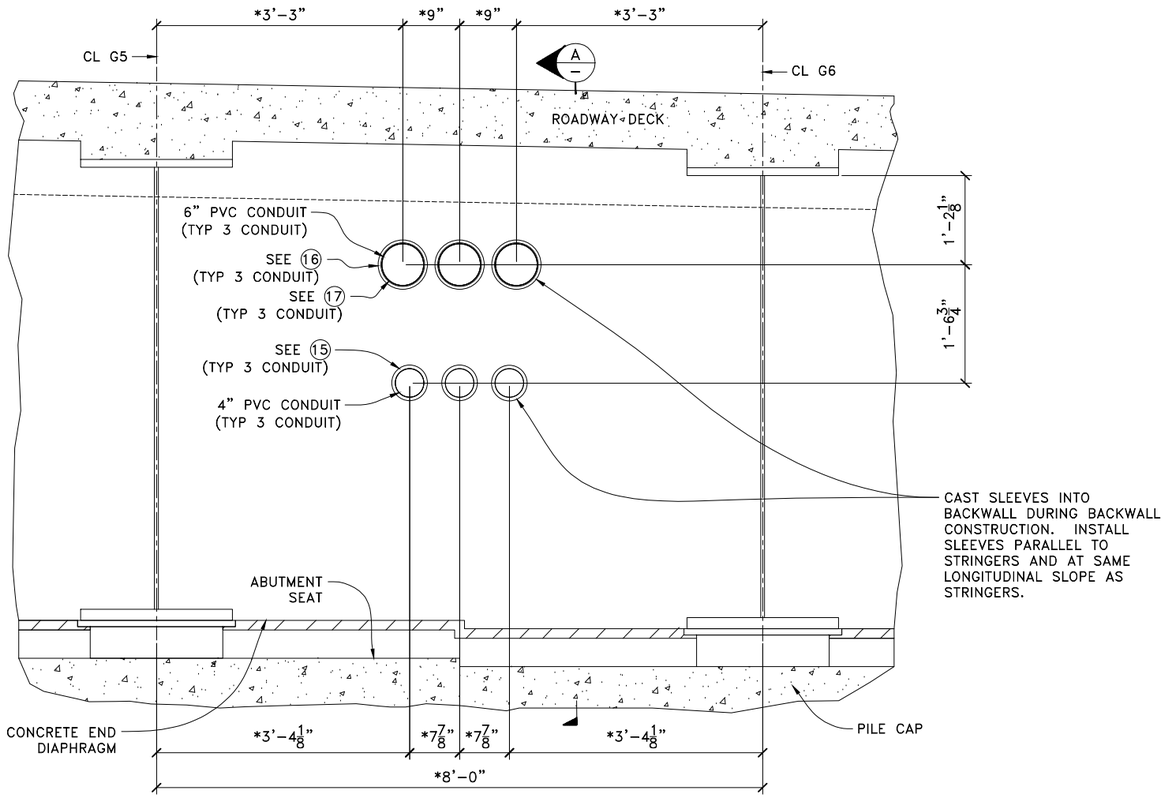

*DIMENSIONS TO CENTERLINE OF CONDUITS ARE MEASURED PERPENDICULAR TO THE CENTERLINE OF THE BEAMS, TYP BOTH ENDS OF BRIDGE

SECTION E/10 E/11
1"=1'-0

ABUTMENT NO. 2 SHOWN FOR BRIDGE 1-714 OVER I-95 S.B, ABUTMENT NO. 1 FOR BRIDGE 1-714 OVER I-95 S.B. SIMILAR. BOTH ABUTMENTS FOR BRIDGE 1-714A OVER I-95 N.B. ALSO SIMILAR.

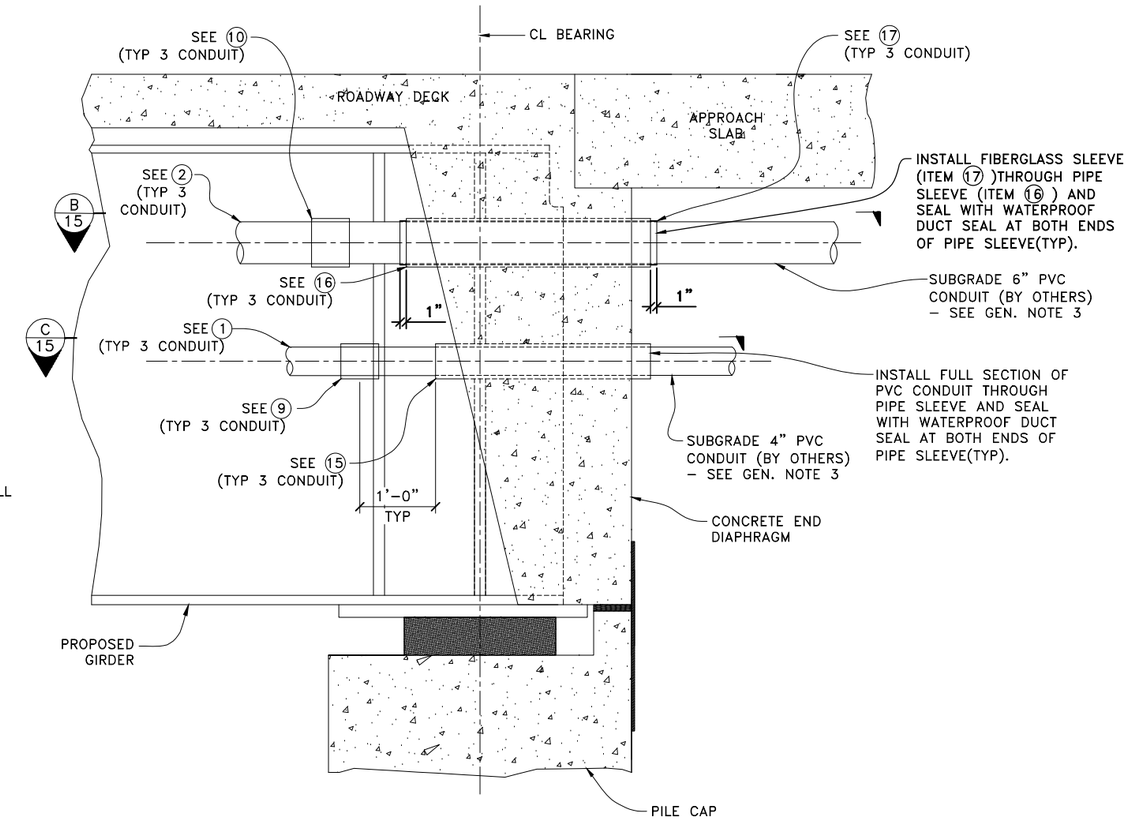

SECTION A/–
1"=1'-0

ABUTMENT NO. 1 SHOWN, ABUTMENT NO. 2 SIMILAR FOR BOTH BRIDGES

REV	COMMENTS	BY	DATE
2	REVISED PER DEL. DOT COMM.; 7" SLEEVE DET.	DG	8/14/19
1	REVISED PER DEL DOT COMMENTS	AE	8/05/19
0	APPROVAL	AE	7/29/19

CHAPMAN ROAD OVER I-95
BRIDGES 1-714 AND 1-714A
IN NEWARK, DELAWARE

ELECTRIC POWER DUCT SUPPORTS
ABUTMENT DETAILS - 1

DAVID GUERRIERO, P.E.

OWNER: DELMARVA POWER

FURNISHED BY: AMERICAN U-TEL
9760 SMITH ROAD
WILLOUHGBY, OHIO 44094
(440)946-6027

CHECKED BY: AE	DATE: 7-29-19
DRAWN BY: WS	DATE: 7-20-19
DRAWING NO: 7-19-14	SH. 1 OF 1

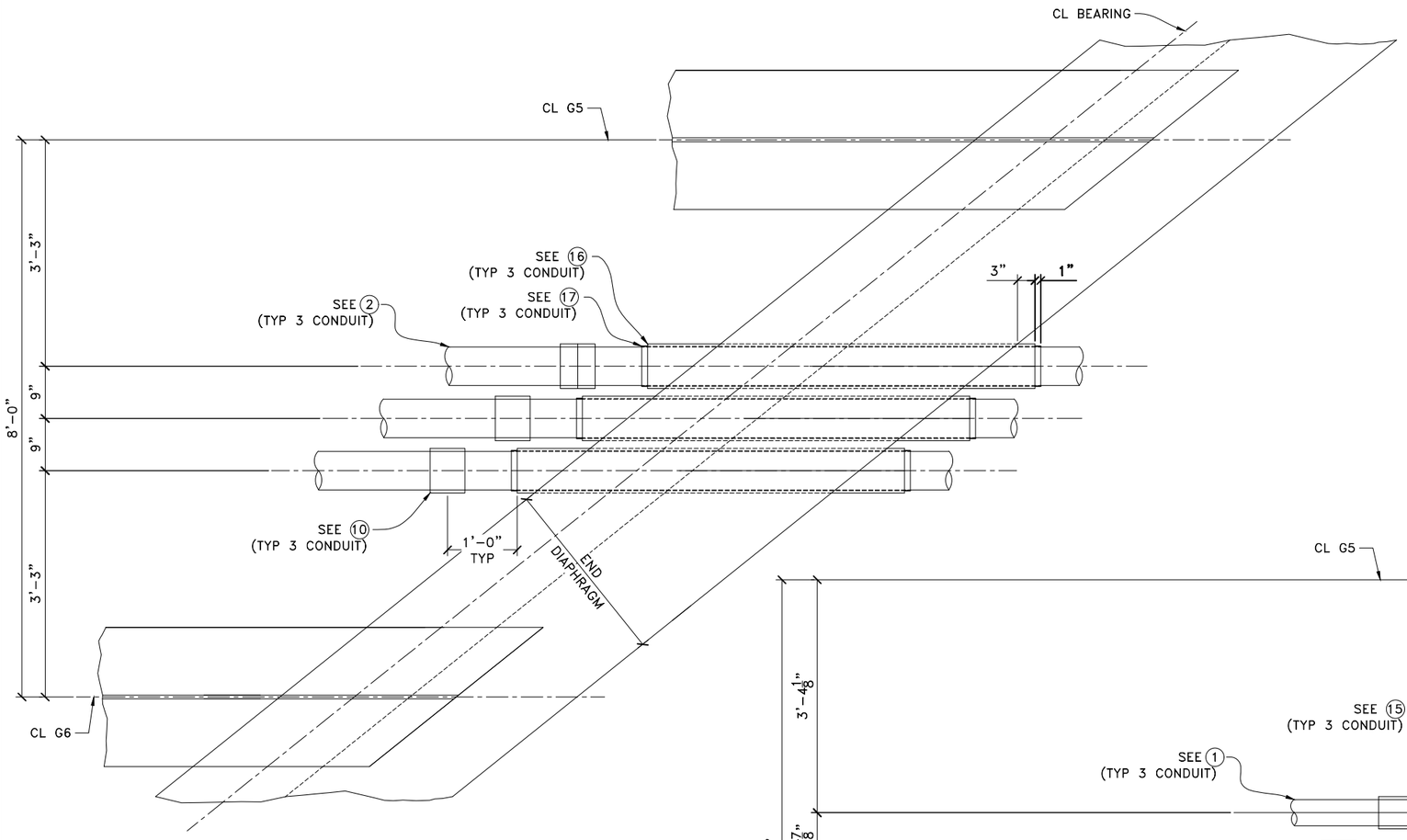

SECTION B/14
1"=1'-0

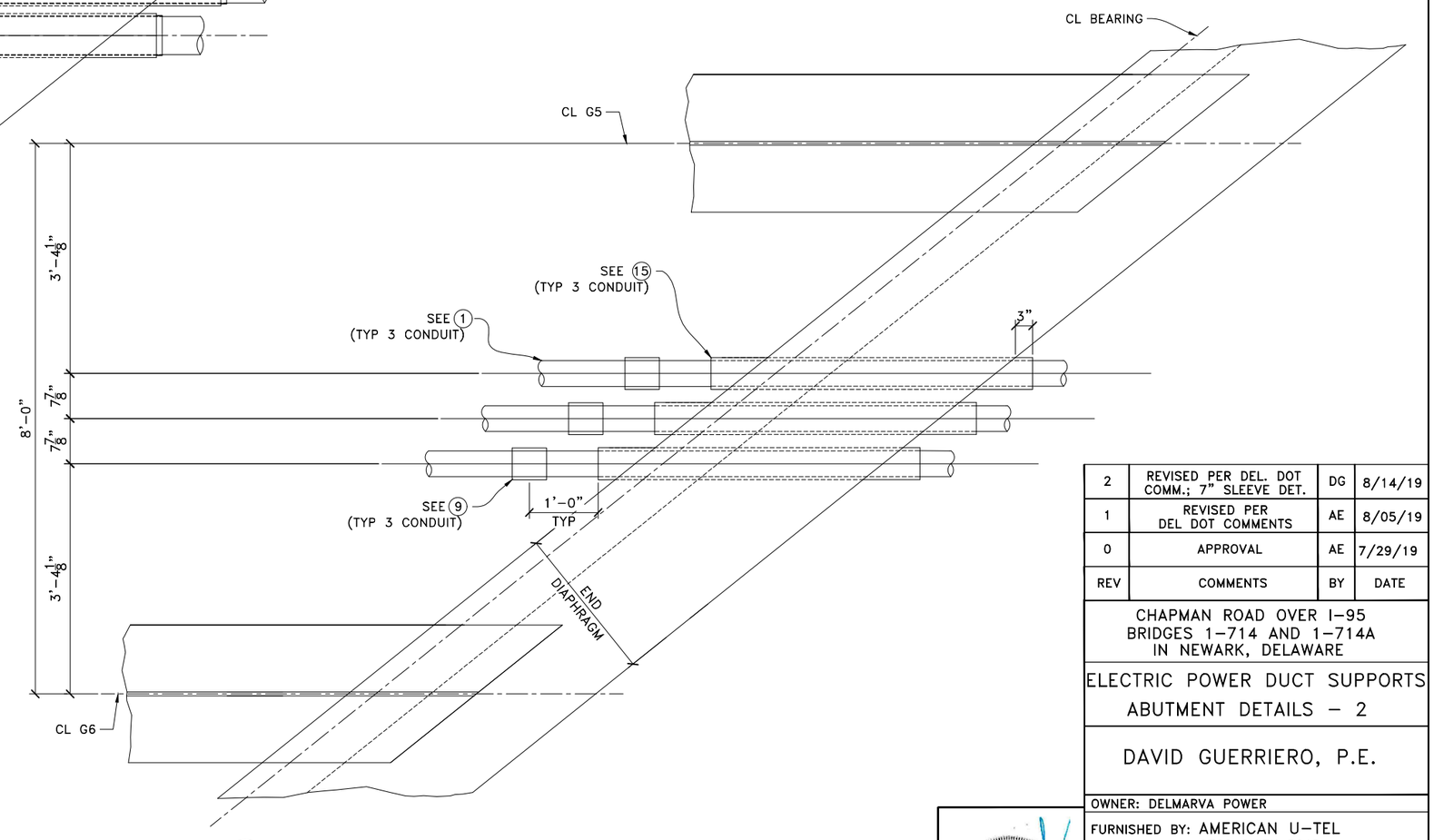

SECTION C/14
1"=1'-0

ABUTMENT NO. 1 SHOWN, ABUTMENT NO. 2 SIMILAR, TYP BOTH BRIDGES

REV	COMMENTS	BY	DATE
2	REVISED PER DEL. DOT COMM.; 7" SLEEVE DET.	DG	8/14/19
1	REVISED PER DEL DOT COMMENTS	AE	8/05/19
0	APPROVAL	AE	7/29/19

CHAPMAN ROAD OVER I-95
BRIDGES 1-714 AND 1-714A
IN NEWARK, DELAWARE

ELECTRIC POWER DUCT SUPPORTS
ABUTMENT DETAILS - 2

DAVID GUERRIERO, P.E.

OWNER: DELMARVA POWER

FURNISHED BY: AMERICAN U-TEL
9760 SMITH ROAD
WILLOUHGBY, OHIO 44094
(440)946-6027

CHECKED BY: AE DATE: 7-29-19
DRAWN BY: WS DATE: 7-20-19
DRAWING NO: 7-19-15 SH. 1 OF 1