THE STATE OF DELAWARE
DEPARTMENT OF TRANSPORTATION

U.S. CUSTOMARY UNITS

CONSTRUCTION & RIGHT-OF-WAY PLANS FOR:

RECORDS POND DAM IMPROVEMENTS

CONTRACT NUMBER: T201507605

FEDERAL AID PROJECT NUMBER: N/A

COUNTY: SUSSEX **M.R. #:** N/A

UNOFFICIAL WEBSITE COPY

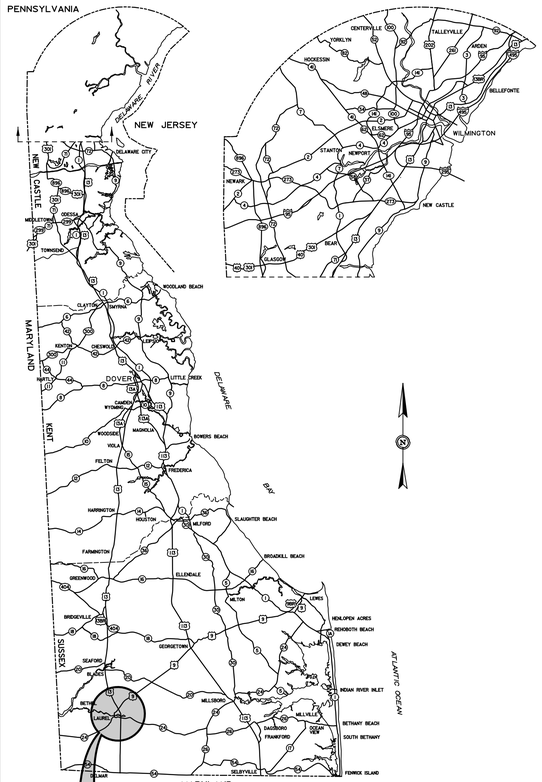

GENERAL LOCATION OF CONTRACT

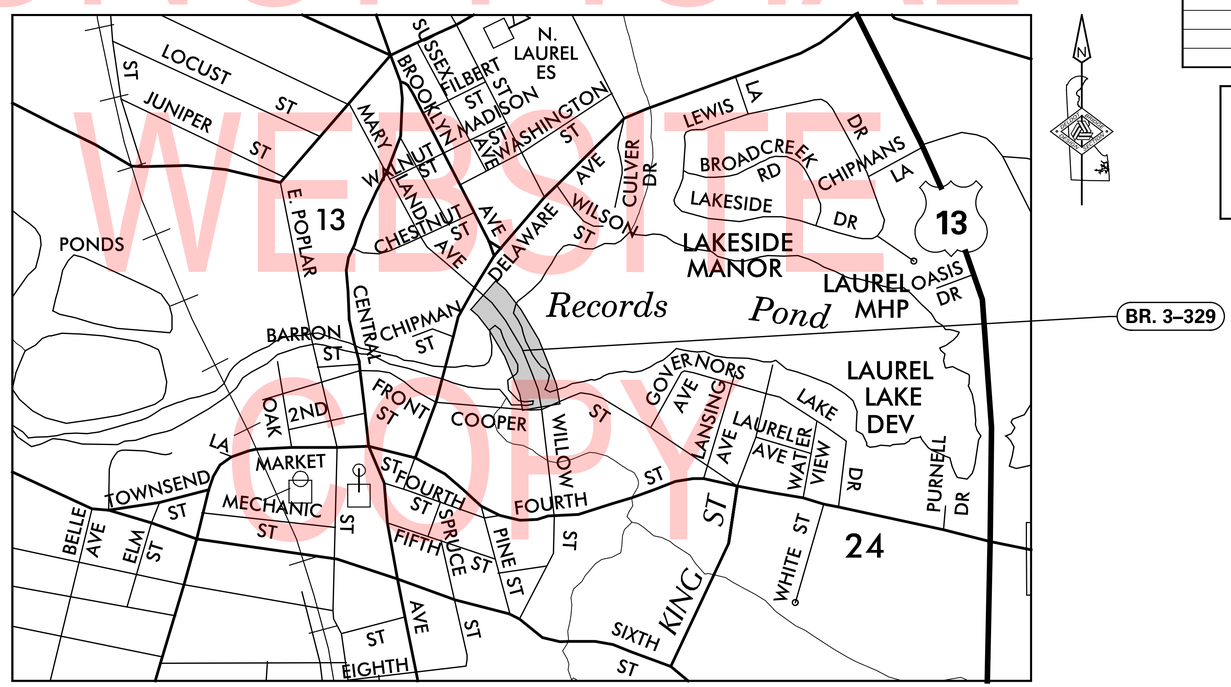

LOCATION MAP
SCALE: N.T.S.

DESIGN DESIGNATION

MRD #: N/A	ROAD NAME: WILLOW STREET	
FUNCTIONAL CLASS: URBAN LOCAL	D.H.V. PROJECTED: N/A	YEAR: N/A
TYPE OF CONSTRUCTION: DAM IMPROVEMENTS	DESIGN SPEED: 30 M.P.H.	
A.A.D.T. CURRENT: N/A YEAR: N/A	TRUCKS: N/A	
A.A.D.T. PROJECTED: N/A YEAR: N/A	DIRECTION OF DISTRIBUTION: N/A	

APPROVED DESIGN EXCEPTIONS

DESIGN PARAMETER	REQUIRED	PROVIDED	DATE
GUARDRAIL OVER CULVERT	25'-0"	37'-6"	2/1/2018

ADDENDA & REVISIONS

DESCRIPTION	NAME & DATE

ASSOCIATED CONTRACTS

CONTRACT NO.	CONTRACT NAME
6401015	BRIDGE 162 ON DELAWARE AVENUE LAUREL OVER BROAD CREEK
SSR2329	THE VILLAS ON BROAD CREEK

APPROVED FOR ADVERTISEMENT

DIRECTOR OF TRANSPORTATION SOLUTIONS — DATE: 10/15/2019

PREPARED BY
SCHNABEL ENGINEERING

THIS SEAL APPLIES TO ALL SHEETS BEARING THE "SE" SECTION DESIGNATION. — DATE: 9/13/2019

JEREMY R. YOUNG — REGISTERED — No. 15040 — DELAWARE — PROFESSIONAL ENGINEER — SEAL

PREPARED BY
PENNONI ASSOCIATES INC.

THIS SEAL APPLIES TO ALL SHEETS BEARING THE "PAI" SECTION DESIGNATION. — DATE: 9/13/2019

NATHAN W. BUTTORFF — LICENSE — No. 15428 — DELAWARE — PROFESSIONAL ENGINEER — SEAL

INDEX OF SHEETS

SECTION	SHEET DESCRIPTION	SHEET NO(S)
PAI	TITLE	1
PAI	INDEX OF SHEETS	2
PAI	ADDENDA AND REVISIONS	3
PAI	LEGEND	4
PAI	NOTES	5
PAI	TYPICAL SECTIONS	6-7
PAI	HORIZONTAL & VERTICAL CONTROL	8
PAI	EXISTING CONDITIONS	9
PAI	CONSTRUCTION PLAN	10
PAI	PROFILES	11
SE / PAI	GRADES & GEOMETRICS	12
PAI	CONSTRUCTION DETAILS	13-14
SE	SHEET PILE PLAN	15
SE	SHEET PILE PROFILE	16
SE	SHEET PILE WALL TYPICAL SECTIONS	17
SE	SHEET PILE WALL CAP DETAILS	18
SE	SHEET PILE WALL DETAILS AND NOTES	19
SE	SHEET PILE WALL SECTION AND DETAILS	20
SE	RIPRAP SECTIONS	21
SE	CULVERT REPAIR PLAN AND DETAILS	22
SE	STRUCTURAL DETAILS	23-24
SE	OUTLET WORKS GENERAL PLAN	25
SE	OUTLET WORKS PLAN, PROFILE AND SECTION	26
SE	OUTLET WORKS WALL PROFILE	27
SE	MISCELLANEOUS STRUCTURAL DETAILS AND NOTES	28
SE	OUTLET WORKS CONNECTION DETAILS	29
SE	OUTLET WORKS DETAIL SECTIONS	30
SE	OUTLET GATE PLAN AND SECTIONS	31
SE	TRASHRACK AND STOPLOG DETAILS	32
SE	ALUMINUM RAILING DETAILS	33-34
SE	ALUMINUM RAILING PLAN AND PROFILE	35
SE	ALUMINUM RAILING FOOTING REBAR PLAN	36-37
SE	REINFORCEMENT BAR SCHEDULE	38-39
SE / PAI	SOIL BORING LOGS	40-41
PAI	ENVIRONMENTAL COMPLIANCE PLANS	42-43
SE / PAI	CONSTRUCTION PHASING, M.O.T. AND EROSION CONTROL PLANS	44-45
PAI	VEHICULAR DETOUR PLAN	46
SE	CONTROL OF WATER OUTLET STRUCTURE	47
SE	CONTROL OF WATER CULVERT REPAIR	48
PAI	SIGNING, STRIPING AND CONDUIT PLANS	49
PAI	PERMANENT SIGN SCHEDULE	50
PAI	RIGHT-OF-WAY PLAN	51
PAI	RIGHT-OF-WAY DATA AND TABULATION SHEET	52

UNOFFICIAL WEBSITE COPY

UNOFFICIAL
WEBSITE
COPY

ADDENDA / REVISIONS	

RECORDS POND
DAM IMPROVEMENTS

CONTRACT	BRIDGE NO.	3-329
T201507605	DESIGNED BY: DAH	
COUNTY		
SUSSEX	CHECKED BY: NWB	

ADDENDA AND REVISIONS

SECTION
PAI
SHEET NO.
3

EXISTING SYMBOLS

DRAINAGE

—∞—	DITCH OR STREAM CENTERLINE
—→	DIRECTIONAL STREAM FLOW ARROW
C.B. / D.I.	DRAINAGE INLET
J.B.	DRAINAGE JUNCTION BOX
Ⓓ	DRAINAGE MANHOLE
SIZE/TYPE LABEL	DRAINAGE PIPE AND FLOW ARROW
	DRAINAGE PIPE HEADWALL
	RIPRAP - AREA FEATURE
	RIPRAP - LINEAR FEATURE

MANMADE ROADSIDE FEATURES

	BOLLARD - STEEL POLE
	BOLLARD - WOOD POST
(TYPE LABEL)	CURB
(TYPE LABEL)	CURB AND GUTTER
—x—	FENCE - CHAINLINK OR STRANDED
—o—	FENCE - STOCKADE OR SPLIT RAIL
FP	FLAG POLE
	GUARDRAIL - STEEL BEAM
	GUARDRAIL - WIRE ROPE
LAMP	LAMP AND POST - RESIDENTIAL
MB	MAILBOX
PM	PARKING METER AND POST
	PAVEMENT - FLEXIBLE
	PAVEMENT - RIGID
	PILE - BRIDGE
	PILLAR OR MISCELLANEOUS POST
	TRAFFIC SIGN AND POST
	WALL - BRICK OR BLOCK
	WALL - STONE

NATURAL ROADSIDE FEATURES

	GRASS LAWN
	HEDGEROW OR THICKET
	MARSH BOUNDARY LINE
	TREE - CONIFEROUS
	TREE - DECIDUOUS
	TREE STUMP
	SHRUBBERY
—WL—	DELINEATED WETLAND BOUNDARY LINE
	WOODS LINE BOUNDARY

RIGHT-OF-WAY SYMBOLS

C.M.	PROPERTY MARKER - CONCRETE MON.
I.P.	PROPERTY MARKER - IRON PIPE
100+00	HISTORIC RIGHT-OF-WAY BASELINE
	EXISTING RIGHT-OF-WAY
	EXISTING PROPERTY LINE
—EASEMENT TYPE—	EXISTING EASEMENT
—DA—	EXISTING DENIAL OF ACCESS
—R/W-DA—	EXISTING R/W & DENIAL OF ACCESS

SURVEY CONTROL & MONUMENTATION

B.M.	SURVEY BENCHMARK LOCATION
T.P.	SURVEY TIE POINT LOCATION
△	SURVEY TRAVERSE POINT
	POINT OF CURVATURE OR TANGENCY
	POINT OF INTERSECTING TANGENTS

UTILITY

	SOIL BORING LOCATION
	UTILITY TEST HOLE LOCATION
TV	CABLE TV DISTRIBUTION BOX
Ⓔ	ELECTRIC MANHOLE
EM	ELECTRIC METER
E	ELECTRIC TRANSFORMER
	POLE MOUNTED LUMINAIRE
Ⓖ	GAS MANHOLE
G.M.	GAS METER
G.V.	GAS VALVE
G.P.	GAS PUMP - SERVICE STATION
	RAILROAD TRACKS
Ⓢ	SANITARY SEWER MANHOLE
S.V.	SANITARY SEWER VALVE
S.C.O.	SANITARY SEWER CLEANOUT OR VENT
S.D.F.	SEPTIC DRAIN FIELD
B	TELEPHONE BOOTH
Ⓣ	TELEPHONE MANHOLE
T	TELEPHONE TEST POINT
J.W.	TRAFFIC - CONDUIT JUNCTION WELL
	TRAFFIC - LIGHT POLE AND BASE
	TRAFFIC - PEDESTRIAN POLE & BASE
	TRAFFIC - SIGNAL CABINET & BASE
⊗	TRAFFIC - SIGNAL POLE AND BASE
U	UTILITY BOX
	UTILITY POLE GUY WIRE ANCHOR
	UTILITY POLE
F.H.	WATER - FIRE HYDRANT
W.M.	WATER METER
W.V.	WATER VALVE
WELL	WELL HEAD
ⓘ	MANHOLE - UNDETERMINED OWNER

EXISTING UTILITIES

—DP-E-OH—	DELMARVA POWER ELECTRIC

PROPOSED SYMBOLS

CONSTRUCTION

	CONCRETE SAFETY BARRIER - PERMANENT
—BFS→	BIOFILTRATION SWALE
	BRICK PATTERNED SURFACE
	BUTT JOINT
—CZ—	CLEAR ZONE
100+00	CONSTRUCTION BASELINE
—CSF—	CONSTRUCTION SAFETY FENCE
	CURB, TYPE 1 & TYPE 3
	CURB, TYPE 2
	CURB & GUTTER, TYPE 1
	CURB & GUTTER, TYPE 2
	CURB & GUTTER, TYPE 3
	CURB & GUTTER, TYPE 4
	CURB OPENING
	DRAINAGE INLET
	DITCH
	FENCE - METAL
	FENCE - WOOD
	FLARED END SECTION
	GUARDRAIL, TYPE 1
	GUARDRAIL, TYPE 2
	GUARDRAIL, TYPE 3
	GUARDRAIL END ANCHORAGE
	GUARDRAIL END TREATMENT, TYPE 1
	GUARDRAIL END TREATMENT, TYPE 2
	GUARDRAIL END TREATMENT, TYPE 3
	IMPACT ATTENUATOR
	JUNCTION BOX - DRAINAGE
—LO—	LATERAL OFFSET
-----LOC-----	LIMIT OF CONSTRUCTION
MB	MAILBOX
	MANHOLE
	PAVEMENT PATCH
	PAVEMENT REMOVAL - TOPSOIL, SEED AND MULCH
	PIPE & DIRECTIONAL FLOW ARROW
	RIPRAP
	P.C.C. SIDEWALK - 4"
	P.C.C. SIDEWALK - 6" (USE 8" DEPTH FOR CHANNELIZATION ISLANDS.)
	UNDERDRAIN
	UNDERDRAIN OUTLET

RIGHT-OF-WAY SYMBOLS

	PROPOSED RIGHT-OF-WAY MONUMENT
—DA—	PROPOSED DENIAL OF ACCESS
—PE—	PROPOSED PERMANENT EASEMENT
—R/W—	PROPOSED RIGHT-OF-WAY
—R/W-DA—	PROPOSED R/W & DENIAL OF ACCESS
—TCE—	TEMPORARY CONSTRUCTION EASEMENT
100+00	PROPOSED RIGHT-OF-WAY BASELINE

IDENTIFIERS

A/C	ADJUST BY CONTRACTOR
A/O	ADJUST BY OTHERS
B	CONCRETE SAFETY BARRIER
C	CURB OR CURB & GUTTER
C/JB	CONVERT TO JUNCTION BOX
C/MH	CONVERT TO DRAINAGE MANHOLE
C/O	CURB OPENING
PC	PEDESTRIAN CONNECTION / TYPE
PC-N	PEDESTRIAN CONNECTION / TYPE WITHOUT SIDEWALK SURFACE DETECTABLE WARNING SYSTEM
CSF	CONSTRUCTION SAFETY FENCE
DI	DRAINAGE INLET
DND	DO NOT DISTURB
ED	ENERGY DISSIPATOR
F	FENCE
FES	FLARED END SECTION
FF/C	FILL WITH FLOWABLE FILL
FS	FILTRATION STRUCTURE
GR	GUARDRAIL
JB	JUNCTION BOX
MH	MANHOLE
M	MONUMENT - RIGHT-OF-WAY
P	PIPE
RL/C	RELOCATE BY CONTRACTOR
RL/O	RELOCATE BY OTHERS
RL/PO	RELOCATE BY PROPERTY OWNER
RM/C	REMOVE BY CONTRACTOR
RM/TC	REMOVE BY TRAFFIC CONTRACTOR
RM/O	REMOVE BY OTHERS
UD	UNDERDRAIN / LENGTH
UDO	UNDERDRAIN OUTLET PIPE

LANDSCAPING

LS	LANDSCAPE PLANTINGS
	SHRUBBERY
	CONIFEROUS TREE
	DECIDUOUS TREE

TRAFFIC

—ITMS-CON—	ITMS CONDUIT
—SIG-CON—	SIGNAL CONDUIT
	CONDUIT JUNCTION WELL
	LUMINAIRE
	PAVEMENT MARKINGS
	PAVEMENT STRIPING
	TRAFFIC SIGN

UTILITY COMPANY FACILITIES

—DP-E-OH—	DELMARVA POWER ELECTRIC

PAVEMENT SECTION(S)

	OVERLAY PAVEMENT - SEE TYPICAL SECTIONS FOR MATERIALS AND DEPTHS
	RECONSTRUCTED PAVEMENT - SEE TYPICAL SECTIONS FOR MATERIALS AND DEPTHS

MISCELLANEOUS

	ALUMINUM RAILING
R	RAIL IDENTIFIER
PGA	PROFILE GRADE APPLIED
	SHEET PILE WALL
	CONCRETE CAP SHEET PILE WALL
	PLANTINGS BY OTHERS

UNOFFICIAL WEBSITE COPY

ADDENDA / REVISIONS

NOT TO SCALE

RECORDS POND DAM IMPROVEMENTS

CONTRACT	T201507605
COUNTY	SUSSEX
BRIDGE NO.	3-329
DESIGNED BY: DAH	
CHECKED BY: NWB	

LEGEND

LG-01

SECTION: PAI

SHEET NO. 4

GENERAL NOTES

1. THIS PROJECT IS TO BE CONSTRUCTED IN ACCORDANCE WITH THE DELAWARE DEPARTMENT OF TRANSPORTATION "STANDARD SPECIFICATIONS", DATED AUGUST 2016 AND THE DELAWARE DEPARTMENT OF TRANSPORTATION "STANDARD CONSTRUCTION DETAILS", DATED 2017, INCLUDING ALL REVISIONS UP TO THE DATE OF ADVERTISEMENT.

2. ELECTRONIC PROJECT FILES THAT WILL BE MADE AVAILABLE TO THE AWARDED CONTRACTOR, INCLUDE:

( )	NONE
( )	ASCII DATA FILES WITH COORDINATES AND ELEVATIONS FOR PROPOSED POINTS AS SELECTED BY THE ENGINEER.
(X)	ALL PLAN SHEETS, IN PDF FORMAT.
( )	EXISTING DIGITAL TERRAIN MODEL, IN .DTM FILE FORMAT, COMPATIBLE WITH SOFTWARE CURRENTLY USED BY DELDOT.
( )	PROPOSED DIGITAL TERRAIN MODEL, IN .DTM FILE FORMAT, COMPATIBLE WITH SOFTWARE CURRENTLY USED BY DELDOT.
( )	DESIGN FILE, IN .DGN FILE FORMAT, CONTAINING ONLY THE PROPOSED 3D TRIANGLES OF THE PROPOSED DIGITAL TERRAIN MODEL (DTM).

NOTE: THE DOCUMENT ENTITLED "RELEASE FOR DELIVERY OF DOCUMENTS IN ELECTRONIC FORM TO A CONTRACTOR" MUST BE SIGNED BY ALL PARTIES PRIOR TO THE DELIVERY OF ANY ELECTRONIC PROJECT FILES.

3. PROJECT FILES THAT WILL BE MADE AVAILABLE TO THE CONTRACTOR, INCLUDE:

(X)	CROSS SECTIONS (TO BE MADE AVAILABLE TO THE AWARDED CONTRACTOR)
(X)	RIGHT-OF-WAY PLANS (INCLUDED IN PLAN SET)

4. EXISTING IMPERVIOUS PAVEMENT AREA: 36,195 SF
PERMANENT IMPERVIOUS PAVEMENT AREA: 36,870 SF
NET CHANGE IN IMPERVOUS PAVEMENT AREA: +675 SF

PROJECT NOTES

SECTION 100

1. ANY DAMAGE TO ITEMS NOTED TO BE RELOCATED OR RESET BY THE CONTRACTOR, AT THE DISCRETION OF THE ENGINEER, SHALL BE REPAIRED AND/OR REPLACED IN KIND AT THE CONTRACTOR'S EXPENSE.

2. THE CONTRACTOR WILL CONTACT THE DELAWARE TMC AT 302-659-4600 PRIOR TO ANY UNMANNED AIRCRAFT VEHICLE (UAV) FLIGHTS. THE CONTRACTOR WILL BE REQUIRED TO PROVIDE THE FOLLOWING INFORMATION: THE REGISTRATION NUMBER OF THE UAV, THE FLIGHT TIME, LOCATION OF THE FLIGHT, THE PILOT'S NAME AND THE PILOT'S CONTACT NUMBER DURING THE FLIGHT.

SECTION 200

3. ITEMS TO BE REMOVED UNDER ITEM 211000 - REMOVAL OF STRUCTURES AND OBSTRUCTIONS SHALL INCLUDE, BUT NOT BE LIMITED TO THE FOLLOWING:
   - WOODEN BOLLARDS
   - STEEL BOLLARDS
   - CHAIN LINK FENCE
   - FLOOD GATES INCLUDING 36" CORRUGATED METAL PIPES
   - TRAINING WALL
   - EXISTING CONCRETE PADS AT POND OVERLOOK

SECTION 600

4. PORTLAND CEMENT CONCRETE:
   USE PORTLAND CEMENT CONCRETE FOR CAST-IN-PLACE ELEMENTS AS FOLLOWS:
   - (f'c = 28-DAY COMPRESSIVE STRENGTH)
   - CLASS A - (SLAB, PILE CAPS, BRIDGE CONNECTIONS INCLUDING GATE STRUCTURE, SPILLWAY REPAIR, RAILING FOOTER AND CONCRETE CAP BEAM), (f'c = 4.5 ksi)

   A HIGHER CLASS CONCRETE MAY BE SUBSTITUTED FOR A LOWER CLASS CONCRETE AT NO ADDITIONAL COST TO DELDOT WITH APPROVAL OF THE BRIDGE DESIGN ENGINEER.
   - CHAMFER ALL EXPOSED EDGES ¾" X ¾" UNLESS OTHERWISE NOTED.
   - ALL CONCRETE INCLUDING PILE CAPS TO BE PAID UNDER ITEM 610000.

5. BAR REINFORCEMENT:
   - REINFORCING STEEL SHALL CONFORM TO AASHTO M31 (ASTM A615), GRADE 60.
   - REINFORCING STEEL SHALL HAVE A 3" CLEAR COVER IF CAST AGAINST EARTH, 2.5" CLEAR COVER IF CONTINOUSLY EXPOSED TO WATER, OR A 2" CLEAR COVER ELSEWHERE, UNLESS OTHERWISE SPECIFIED ON THE PLANS.
   - ALL REINFORCING STEEL SHALL BE PROTECTED WITH FUSION BONDED EPOXY. EPOXY COATED REINFORCING STEEL SHALL CONFORM TO ASTM A775.
   - ANY FIELD CUTTING OR FIELD BENDING MUST BE APPROVED BY THE ENGINEER, PAYMENT SHALL BE INCIDENTAL TO THE BAR REINFORCEMENT ITEM.
   - GALVANIZED REINFORCING STEEL MAY BE SUBSTITUTED FOR EPOXY-COATED REINFORCING STEEL AT NO ADDITIONAL COST TO DELDOT WITH APPROVAL OF THE BRIDGE DESIGN ENGINEER.
   - WELDING OF REINFORCEMENT DURING FABRICATION OR CONSTRUCTION IS NOT PERMITTED UNLESS SPECIFIED.

6. STEEL STRUCTURES:
   - TO BE PROVIDED IN ACCORDANCE WITH SECTION 615 OF THE STANDARD SPECIFICATIONS.
   - STRUCTURES INCLUDE: TRASH RACK, C-CHANNEL SLOTS FOR TRASH RACK SUPPORT, ANGLES FOR BAR GRATE SUPPORT, BAR GRATE, SHEAR STUDS

7. STEEL SHEET PILES:
   - SHEET PILES SHALL CONSIST OF PZ27 (Sx=30.2 IN3, Ix=184.2 IN4, Fy 50 KSI), OR OTHER SHEET PILES WITH EQUAL OR GREATER SECTION MODULUS, MOMENT OF INERTIA, AND Fy. NO ADDITIONAL PAYMENT WILL BE MADE FOR APPROVED ALTERNATE SHEETPILES.
   - SHEET PILES SHALL BE HOT ROLLED. NO COLD ROLLED STEEL SHEET PILES SHALL BE PERMITTED.
   - ALL SHEET PILES SHALL BE CORROSION-PROTECTED WITH COAL TAR EPOXY PAINT. TWO COATS OF COAL TAR POLYAMIDE EPOXY SHALL BE APPLIED ON ALL SHEET PILES PRIOR TO INSTALLATION.

8. COAL TAR EPOXY:
   - REFER TO MATERIAL NOTES ON DT-03. PAYMENT SHALL BE INCLUDED IN ITEM 608001 - STEEL SHEET PILES, PZ 27.

PROJECT NOTES (CONT.)

SECTION 600 (CONT.)

9. BITUMINOUS PAINT:
   - PAYMENT FOR BITUMINOUS PAINT TO BE MADE UNDER ITEM 610000 - PORTLAND CEMENT CONCRETE MASONRY, CLASS A.

10. COFFERDAMS:
   - TO BE PROVIDED AND PAID FOR IN ACCORDANCE WITH ITEM 604002.
   - TYPE OF COFFERDAM TO BE CONSTRUCTED SHALL BE SELECTED BY THE CONTRACTOR, HOWEVER, THE DESIGN AND CONSTRUCTION SHALL BE IN ACCORDANCE WITH THE APPLICABLE REQUIREMENTS OF SECTION 604 OF THE STANDARD SPECIFICATIONS.
   - THE CONTRACTOR MAY SUBMIT FOR APPROVAL, PROPRIETARY DIVERSION DEVICES SUCH AS PORTADAM, AQUA-BARRIER OR APPROVED EQUAL.

SECTION 700

11. IN AREAS WHERE PROPOSED CURB MEETS EXISTING CURB AND THE TWO CURB TYPES ARE NOT SIMILAR, THE PROPOSED CURB SHALL BE TRANSITIONED IN 10 LINEAR FEET, UNLESS OTHERWISE DIRECTED BY THE ENGINEER. PAYMENT FOR THIS WORK, INCLUDING SAW CUTTING EXISTING CURB SHALL BE INCIDENTAL TO THE PROPOSED CURB ITEM.

12. WHERE PROPOSED CONCRETE SIDEWALK IS CONSTRUCTED TO MEET EXISTING SIDEWALK, THE EXISTING SIDEWALK SHALL BE SAWCUT AT THE TIE-IN POINT OR MEET THE NEAREST EXISTING SIDEWALK JOINT. ALL SAW CUTTING SHALL BE FULL DEPTH, UNLESS OTHERWISE NOTED ON THE PLANS OR DIRECTED BY THE ENGINEER AND SHALL BE PAID FOR UNDER ITEM 762001 - SAWCUTTING, CONCRETE, FULL DEPTH.

13. ALL PAVED AREAS TO BE RECONSTRUCTED OR WIDENED SHALL BE SAWCUT AT THE POINT WHERE THE NEW PAVEMENT IS TO TIE INTO THE EXISTING PAVEMENT.

SECTION 800

14. MAINTENANCE OF TRAFFIC:
   MAINTENANCE OF TRAFFIC SHALL BE AS PER DETOUR PLAN. THE DETOUR SHALL REMAIN IN EFFECT UNTIL THE FINAL HOT MIX OR P.C.C. PAVEMENT IS PLACED. ALL M.O.T. ITEMS WITH THE EXCEPTION OF PORTABLE CHANGEABLE MESSAGE SIGNS AND FLAGGERS WILL BE INCLUDED IN ITEM 801500 - MAINTENANCE OF TRAFFIC, ALL INCLUSIVE.

SECTION 900

15. THIS PROJECT IS COVERED UNDER AN NPDES GENERAL PERMIT FOR CONSTRUCTION. UNDER THE GENERAL PERMIT, COMPLIANCE WITH DELDOT'S APPROVED SEDIMENT AND STORMWATER MANAGEMENT PLANS WILL CONSTITUTE COMPLIANCE WITH THE NPDES INDUSTRIAL PERMITTING REQUIREMENTS FOR THIS CONSTRUCTION PROJECT. A COPY OF THE NPDES GENERAL PERMIT AND NOI IS KEPT ON FILE IN EACH OF THE CONSTRUCTION OFFICES AND THE DEPARTMENT'S STORMWATER SECTION. A COPY OF THE GENERAL PERMIT OR THE NOI CAN BE OBTAINED UPON REQUEST FROM EITHER THE DEPARTMENT'S STORMWATER ENGINEER OR THE APPROPRIATE CONSTRUCTION ENGINEER.

MISCELLANEOUS

16. THE CONTRACTOR SHALL CONTACT THE CHIEF OF SCHEDULING FOR DART FIRST STATE, 14 DAYS PRIOR TO THE START OF CONSTRUCTION AT 302-576-6191 OR BY EMAIL NOTIFICATION TO DOT_DETOUR@STATE.DE.US.

17. REFER TO THE CONSTRUCTION PLAN SHEETS FOR THE LOCATION OF THE CLEAR ZONE AREA LIMITS.

18. THE CONTRACTOR SHALL GIVE TWO (2) WEEKS NOTICE TO THE PROPERTY OWNER WHEN ANY FIXTURE, SHRUB OR OTHER OBJECT MUST BE REMOVED FROM THE RIGHT OF WAY OR EASEMENT AREA. IF THE OWNER HAS NOT ATTEMPTED TO SALVAGE THIS PROPERTY, THE CONTRACTOR SHALL REMOVE IT WITHOUT OBLIGATION, COMPENSATION SHALL BE INCIDENTAL TO THE CONTRACT.

19. WILLOW STREET IS A CITY STREET, A PORTION OF WHICH IS LOCATED ON THE RECORDS POND DAM ON DNREC RIGHT-OF-WAY. LONG TERM MAINTENANCE RESPONSIBILITY FOR WILLOW STREET IS UNDER DISCUSSION BETWEEN DNREC AND THE TOWN OF LAUREL.

20. THE CONTRACTOR SHALL CONTACT STATE HISTORIC PRESERVATION OFFICE (SHPO) AT (302) 736-7400 AT LEAST TWO (2) WEEKS PRIOR TO START OF CONSTRUCTION.

21. ENVIRONMENTAL COMPLIANCE - SEE ENVIRONMENTAL COMPLIANCE PLAN FOR FURTHER RESTRICTIONS/GUIDANCE ASSOCIATED WITH THIS PROJECT.

22. EXISTING CONDITIONS
   - ALL EXISTING DIMENSIONS AND ELEVATIONS SHOWN ARE BASED ON THE BEST AVAILABLE INFORMATION AND ARE APPROXIMATE ONLY. THE CONTRACTOR SHALL FIELD VERIFY ALL EXISTING DIMENSIONS, GEOMETRY, AND ELEVATIONS AS NECESSARY PRIOR TO ORDERING ANY MATERIALS AND COMMENCING CONSTRUCTION TO ENSURE PROPER FIT OF THE PROPOSED CONSTRUCTION. PAYMENT SHALL BE INCIDENTAL TO ITEM #763501 - CONSTRUCTION ENGINEERING.
   - THE CONTRACTOR SHALL NOT CONSIDER ANY OF THE DATA ON THE EXISTING STRUCTURE SUPPLIED IN THE ORIGINAL DESIGN DRAWINGS OR MADE AVAILABLE BY THE DEPARTMENT OR ITS AUTHORIZED AGENTS AS POSITIVE REPRESENTATIONS OF ANY OF THE CONDITIONS THAT WILL BE ENCOUNTERED IN THE FIELD.

23. HYDRAULIC DATA:

DRAINAGE AREA:	58.4 sq. miles	DESIGN FREQ.:	0.5 PMF
DESIGN DISCHARGE:	13,490 cfs	100-YEAR DISCHARGE:	3,860 cfs
EXISTING (0.5 PMF) WSE:	EL 12.9 ft.	PROPOSED (0.5 PMF) WSE:	EL 13.3 ft.
EXISTING (0.5 PMF) DISCHARGE:	13,490 cfs	PROPOSED (0.5 PMF) DISCHARGE:	13,490 cfs
EXISTING 100-YEAR WSE:	EL 10.6 ft.	PROPOSED 100-YEAR WSE:	EL 10.6 ft.
EXISITING 100-YEAR DISCHARGE:	3,860 cfs	PROPOSED 100-YEAR DISCHARGE:	3,860 cfs
EXISTING WATERWAY OPENING:	227.8 sq. ft.	PROPOSED WATERWAY OPENING:	183.6 sq. ft.

UNOFFICIAL WEBSITE

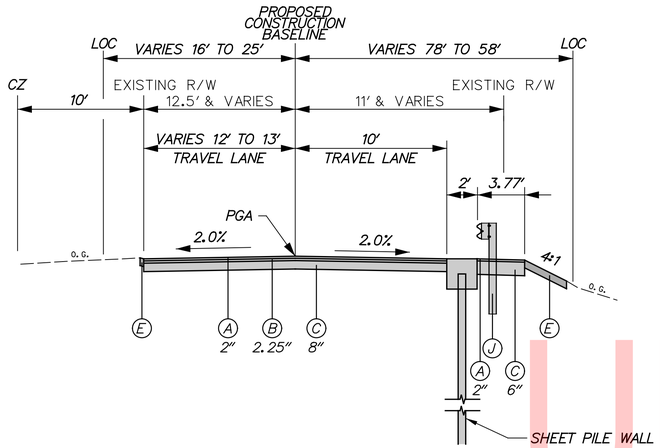

WILLOW STREET
STATION 13+34 TO STATION 13+69

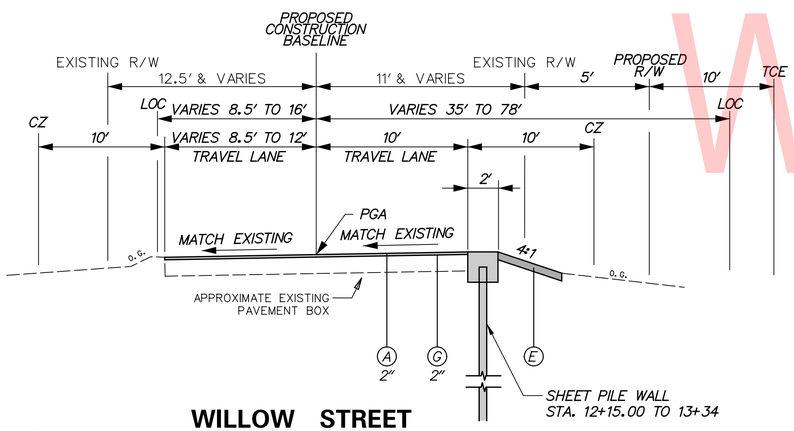

WILLOW STREET
STATION 12+08 TO STATION 13+34

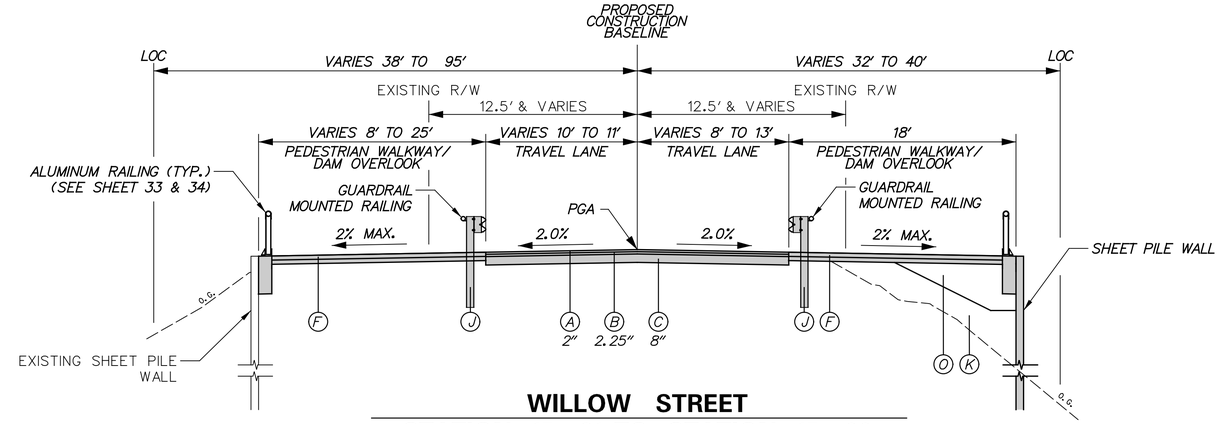

WILLOW STREET
STATION 15+31 TO STATION 15+90
STATION 16+25 TO STATION 17+25

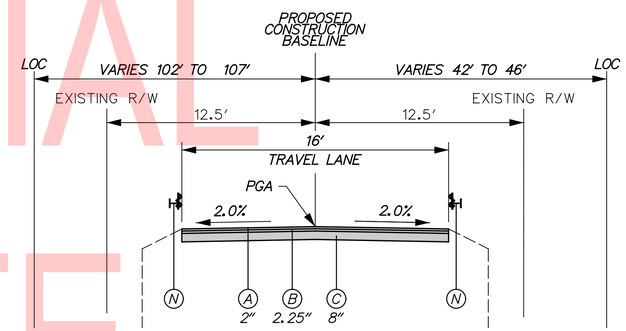

WILLOW STREET
STATION 15+90 TO STATION 16+25

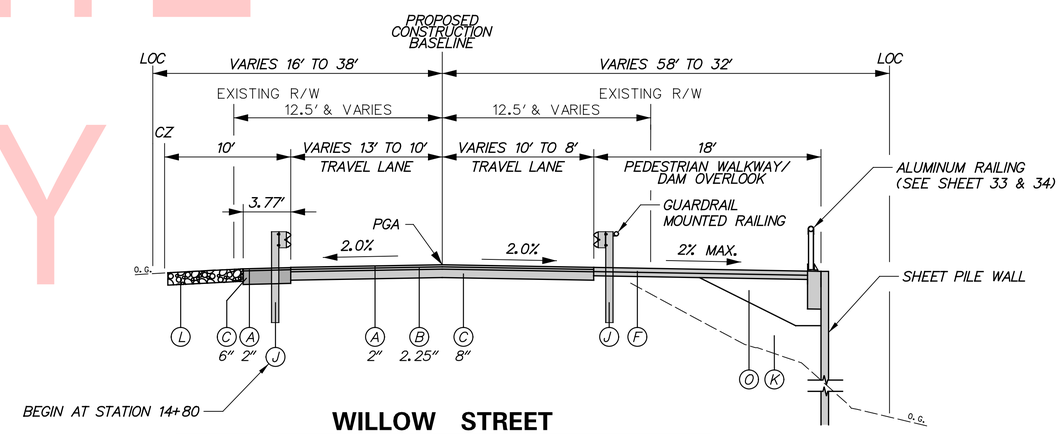

WILLOW STREET
STATION 13+69 TO STATION 15+31

LEGEND

- (A) ITEM 401005 - SUPERPAVE TYPE C, PG 64-22 (CARBONATE STONE)
- (B) ITEM 401014 - SUPERPAVE TYPE B, PG 64-22
- (C) ITEM 301001 - GRADED AGGREGATE BASE COURSE, TYPE B
- (D) ITEM 301002 - GRADED AGGREGATE BASE COURSE, TYPE B, PATCHING
- (E) ITEM 908004 - TOPSOIL, 6" DEPTH
  ITEM 908019 - STREAM BANK SEED MIX, SEEDING
  ITEM 908020 - EROSION CONTROL BLANKET MULCH
- (F) ITEM 705001 - PCC SIDEWALK, 4"
  4" GRADED AGGREGATE BASE COURSE, TYPE B
- (G) ITEM 760010 - PAVEMENT MILLING, BITUMINOUS CONCRETE PAVEMENT
- (H) ITEM 701012 - P.C.C. CURB, TYPE 1-6
- (I) ITEM 701013 - P.C.C. CURB, TYPE 1-8
- (J) ITEM 720021 - GALVANIZED STEEL BEAM GUARDRAIL, TYPE 1-31
- (K) ITEM 209004 - BORROW, TYPE C
- (L) ITEM 707017 - RIPRAP, R-6
  ITEM 707500 - CHANNEL BED FILL
- (M) ITEM 908004 - TOPSOIL, 6" DEPTH
  ITEM 908014 - PERMANENT GRASS SEEDING, DRY GROUND
- (N) ITEM 720502 - LONG-SPAN GUARDRAIL
- (O) ITEM 302501 - BLENDED AGGREGATE
- (P) ITEM 401027 - BITUMINOUS CONCRETE, SUPERPAVE TYPE B, 160 GYRATIONS PG 64-22 PATCHING

NOTES:

1. REFER TO DETAIL B-13, SHEET 10 OF 10 OF STANDARD CONSTRUCTION DETAILS FOR MORE INFORMATION ON GUARDRAIL MOUNTED RAILING. PAYMENT UNDER ITEM 720031.

MATERIAL	LIFT THICKNESS	
	MINIMUM	MAXIMUM
BITUMINOUS CONCRETE, TYPE 'C'	1.25"	2"
BITUMINOUS CONCRETE, TYPE 'B'	2.25"	4"
GRADED AGGREGATE BASE COURSE	4"	8"

TS-01

ADDENDA / REVISIONS	NOT TO SCALE	RECORDS POND DAM IMPROVEMENTS	CONTRACT T201507605	BRIDGE NO. 3-329	TYPICAL SECTIONS	SECTION PAI
			COUNTY SUSSEX	DESIGNED BY: DAH		SHEET NO. 6
				CHECKED BY: NWB		

UNOFFICIAL WEBSITE COPY

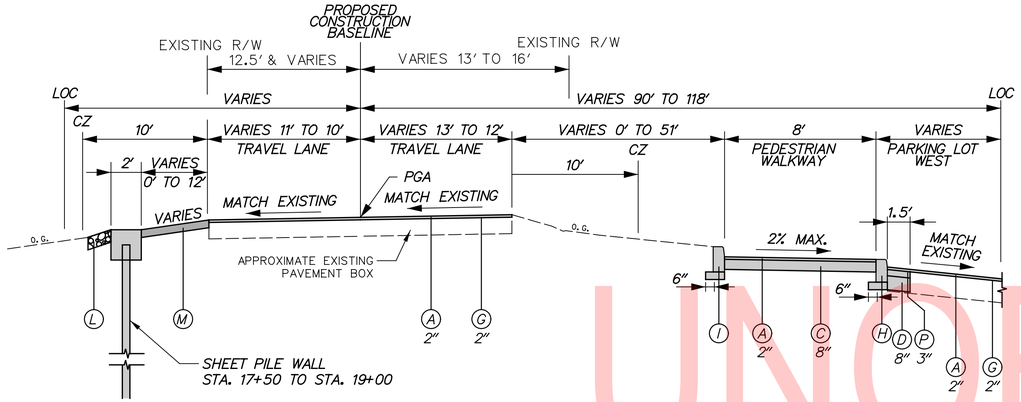

WILLOW STREET
STATION 17+54 TO STATION 19+52

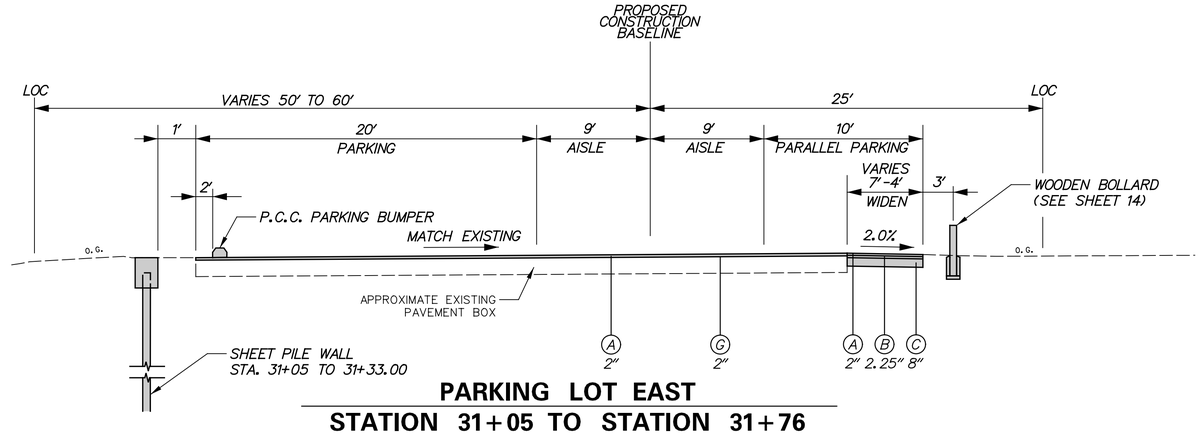

PARKING LOT EAST
STATION 31+05 TO STATION 31+76

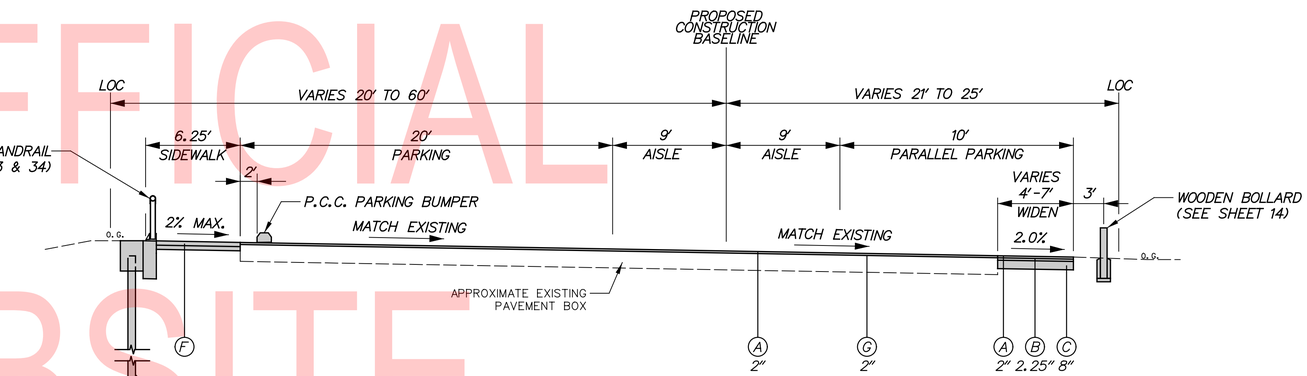

PARKING LOT EAST
STATION 30+40 TO STATION 31+05

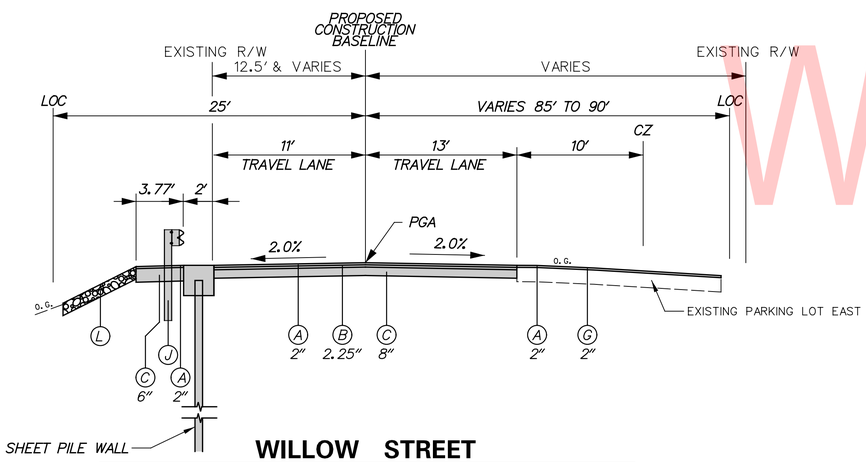

WILLOW STREET
STATION 17+25 TO STATION 17+54

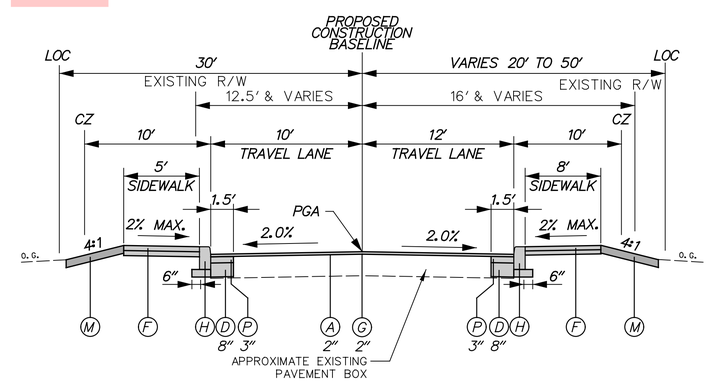

WILLOW STREET
STATION 19+52 TO STATION 19+98

LEGEND

- (A) ITEM 401005 - SUPERPAVE TYPE C, PG 64-22 (CARBONATE STONE)
- (B) ITEM 401014 - SUPERPAVE TYPE B, PG 64-22
- (C) ITEM 301001 - GRADED AGGREGATE BASE COURSE, TYPE B
- (D) ITEM 301002 - GRADED AGGREGATE BASE COURSE, TYPE B, PATCHING
- (E) ITEM 908004 - TOPSOIL, 6" DEPTH; ITEM 908019 - STREAM BANK SEED MIX, SEEDING; ITEM 908020 - EROSION CONTROL BLANKET MULCH
- (F) ITEM 705001 - PCC SIDEWALK, 4"; 4" GRADED AGGREGATE BASE COURSE, TYPE B
- (G) ITEM 760010 - PAVEMENT MILLING, BITUMINOUS CONCRETE PAVEMENT
- (H) ITEM 701012 - P.C.C. CURB, TYPE 1-6
- (I) ITEM 701013 - P.C.C. CURB, TYPE 1-8
- (J) ITEM 720021 - GALVANIZED STEEL BEAM GUARDRAIL, TYPE 1-31
- (K) ITEM 209004 - BORROW, TYPE C
- (L) ITEM 707017 - RIPRAP, R-6; ITEM 707500 - CHANNEL BED FILL
- (M) ITEM 908004 - TOPSOIL, 6" DEPTH; ITEM 908014 - PERMANENT GRASS SEEDING, DRY GROUND
- (N) ITEM 720502 - LONG-SPAN GUARDRAIL
- (O) ITEM 302501 - BLENDED AGGREGATE
- (P) ITEM 401027 - BITUMINOUS CONCRETE, SUPERPAVE TYPE B, 160 GYRATIONS PG 64-22 PATCHING

MATERIAL	LIFT THICKNESS	
	MINIMUM	MAXIMUM
BITUMINOUS CONCRETE, TYPE 'C'	1.25"	2"
BITUMINOUS CONCRETE, TYPE 'B'	2.25"	4"
GRADED AGGREGATE BASE COURSE	4"	8"

UNOFFICIAL WEBSITE COPY

ADDENDA / REVISIONS	

NOT TO SCALE

RECORDS POND DAM IMPROVEMENTS

CONTRACT	BRIDGE NO.	3-329
T201507605	DESIGNED BY: DAH	
COUNTY		
SUSSEX	CHECKED BY: NWB	

TYPICAL SECTIONS

TS-02

SECTION: PAI

SHEET NO. 7

CIRCULAR CURVE NO. 1

Element: Circular

	STATION	NORTHING	EASTING
PC (50002)	11+62.75	203856.4669	612779.8023
PI (50003)	12+29.49	203809.4306	612827.8377
CC		203534.9425	612464.9657
PT (50004)	12+96.22	203750.4088	612860.0281

Radius:	450.00
Delta:	16°59'38.9862" Right
Degree of Curvature (Arc):	12°43'56.6236"
Length:	133.47
Tangent:	67.23
Chord:	132.98
Middle Ordinate:	4.94
External:	4.99
Tangent Direction:	S 45°36'07.6494" E
Radial Direction:	S 44°23'52.3506" W
Chord Direction:	S 37°06'18.1563" E
Radial Direction:	S 61°23'31.3368" W
Tangent Direction:	S 28°36'28.6632" E

CIRCULAR CURVE NO. 2

Element: Circular

	STATION	NORTHING	EASTING
PC (50007)	18+62.82	203249.0086	613123.5040
PI (50008)	19+20.72	203196.7124	613151.2751
CC		203143.4823	612924.7852
PT (50009)	19+78.62	203137.5206	613149.7062

Radius:	225.00
Delta:	29°29'17.1704" Right
Degree of Curvature (Arc):	25°27'53.2472"
Length:	115.80
Tangent:	59.21
Chord:	114.53
Middle Ordinate:	7.41
External:	7.66
Tangent Direction:	S 27°58'11.2479" E
Radial Direction:	S 62°01'48.7521" W
Chord Direction:	S 13°13'32.6628" E
Radial Direction:	N 88°28'54.0776" W
Tangent Direction:	S 01°31'05.9224" W

CIRCULAR CURVE NO. 3

Element: Circular

	STATION	NORTHING	EASTING
PC (50012)	30+61.45	203217.6082	613199.7645
PI (50013)	30+85.62	203228.5426	613221.3230
CC		203105.2359	613256.7598
PRC (50014)	31+09.21	203230.7225	613245.3974

Radius:	126.00
Delta:	21°43'13.0407" Right
Degree of Curvature (Arc):	45°28'22.2272"
Length:	47.77
Tangent:	24.17
Chord:	47.48
Middle Ordinate:	2.26
External:	2.30
Tangent Direction:	N 63°06'21.0531" E
Radial Direction:	S 26°53'38.9469" E
Chord Direction:	N 73°57'57.5734" E
Radial Direction:	S 05°10'25.9062" E
Tangent Direction:	N 84°49'34.0938" E

HORIZONTAL / VERTICAL CONTROL DATA

POINT	STATION	OFFSET	NORTHING	EASTING	ELEVATION
REC1	N/A	N/A	204830.1112	612060.7171	26.12
RECA	N/A	N/A	204461.1886	611946.4901	20.11

CONSTRUCTION ALIGNMENT CONTROL

POINT	STATION	OFFSET	NORTHING	EASTING
50001	10+00.00	0.0000	203970.3324	612663.5180
50005	16+23.83	0.0000	203462.7973	613016.8908
50006	17+32.48	0.0000	203364.1201	613062.3760
50010	20+23.34	0.0000	203092.8196	613148.5213
50011	19+25.99	0.0000	203189.8130	613144.9634
50020	19+45.06	0.0000	203199.1904	613376.7530

CIRCULAR CURVE NO. 4

Element: Circular

	STATION	NORTHING	EASTING
PRC (50014)	31+09.21	203230.7225	613245.3974
PI (50015)	31+21.33	203231.8156	613257.4692
CC		203353.0001	613234.3255
PT (50016)	31+33.38	203235.2481	613269.0942

Radius:	122.78
Delta:	11°16'35.3522" Left
Degree of Curvature (Arc):	46°39'58.4402"
Length:	24.16
Tangent:	12.12
Chord:	24.13
Middle Ordinate:	0.59
External:	0.60
Tangent Direction:	N 84°49'34.0938" E
Radial Direction:	S 05°10'25.9062" E
Chord Direction:	N 79°11'16.4177" E
Radial Direction:	S 16°27'01.2584" E
Tangent Direction:	N 73°32'58.7416" E

CIRCULAR CURVE NO. 5

Element: Circular

	STATION	NORTHING	EASTING
PC (50017)	31+76.45	203247.4446	613310.4002
PI (50018)	32+13.25	203257.8680	613345.7012
CC		203204.2866	613323.1435
PT (50019)	32+38.15	203225.3348	613362.9175

Radius:	45.00
Delta:	78°33'46.2418" Right
Degree of Curvature (Arc):	127°19'26.2361"
Length:	61.70
Tangent:	36.81
Chord:	56.98
Middle Ordinate:	10.17
External:	13.14
Tangent Direction:	N 73°32'58.7416" E
Radial Direction:	S 16°27'07.2584" E
Chord Direction:	S 67°10'08.1375" E
Radial Direction:	S 62°06'44.9834" W
Tangent Direction:	S 27°53'15.0166" E

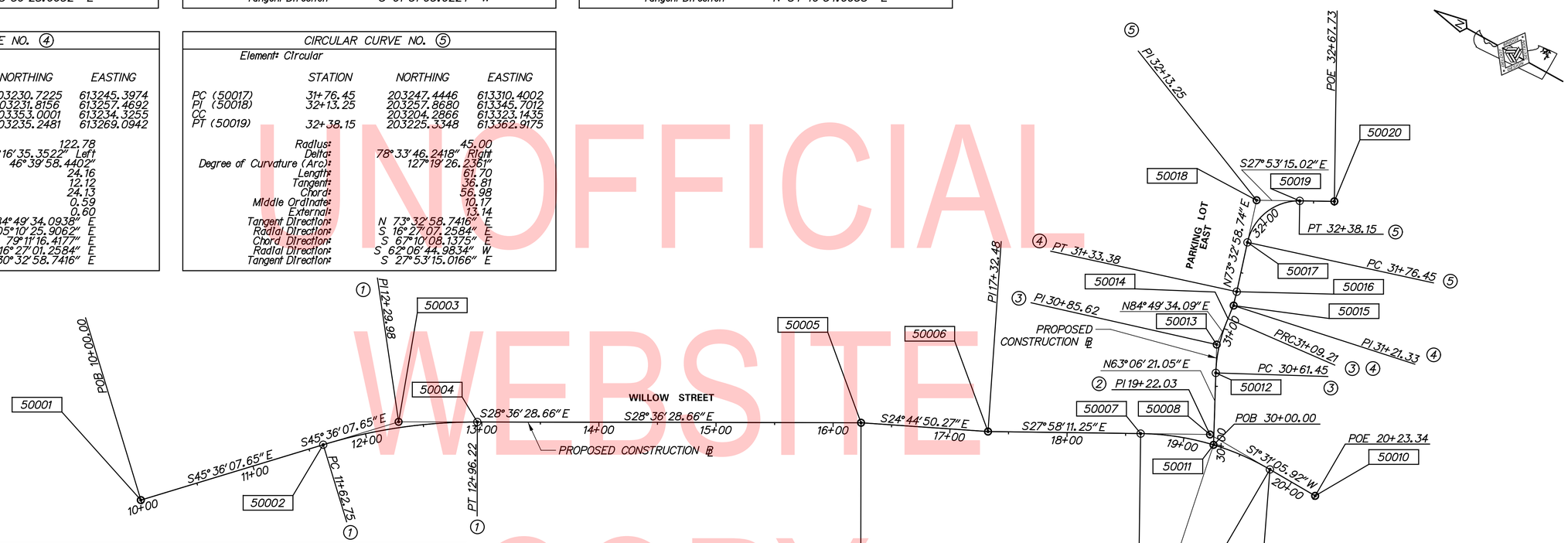

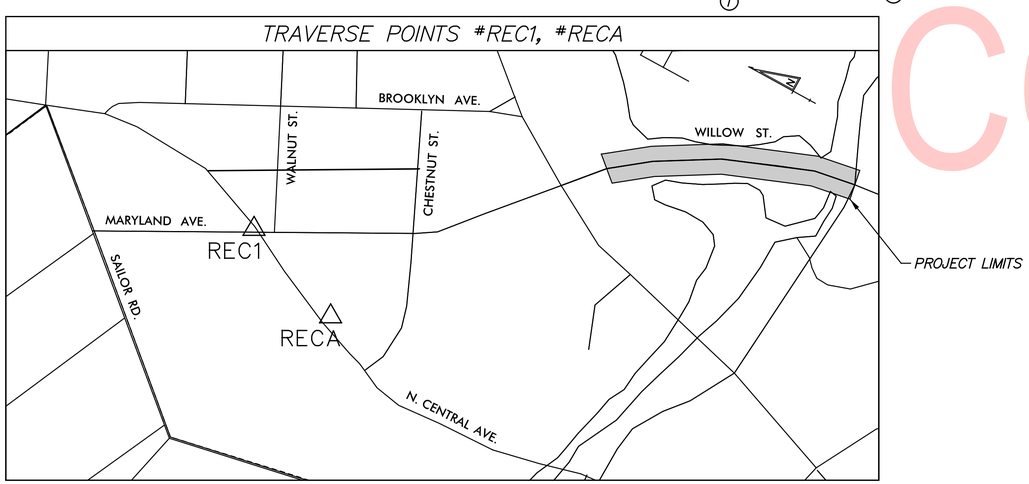

DATUM REFERENCE:
HORIZONTAL - THIS PROJECT IS REFERENCED TO THE DELAWARE STATE PLANE COORDINATE SYSTEM (NAD 83/91).
VERTICAL - THIS PROJECT IS REFERENCED TO NAVD 88.
BASED ON THE FOLLOWING STATE OF DELAWARE BENCHMARKS: REC1, RECA

UNOFFICIAL WEBSITE COPY

ADDENDA / REVISIONS	

SCALE 0 50 100 150 FEET

RECORDS POND DAM IMPROVEMENTS

CONTRACT	BRIDGE NO.	3-329
T201507605	DESIGNED BY: DAH	
COUNTY		
SUSSEX	CHECKED BY: NWB	

HORIZONTAL & VERTICAL CONTROL

HV-01

SECTION	PAI
SHEET NO.	8

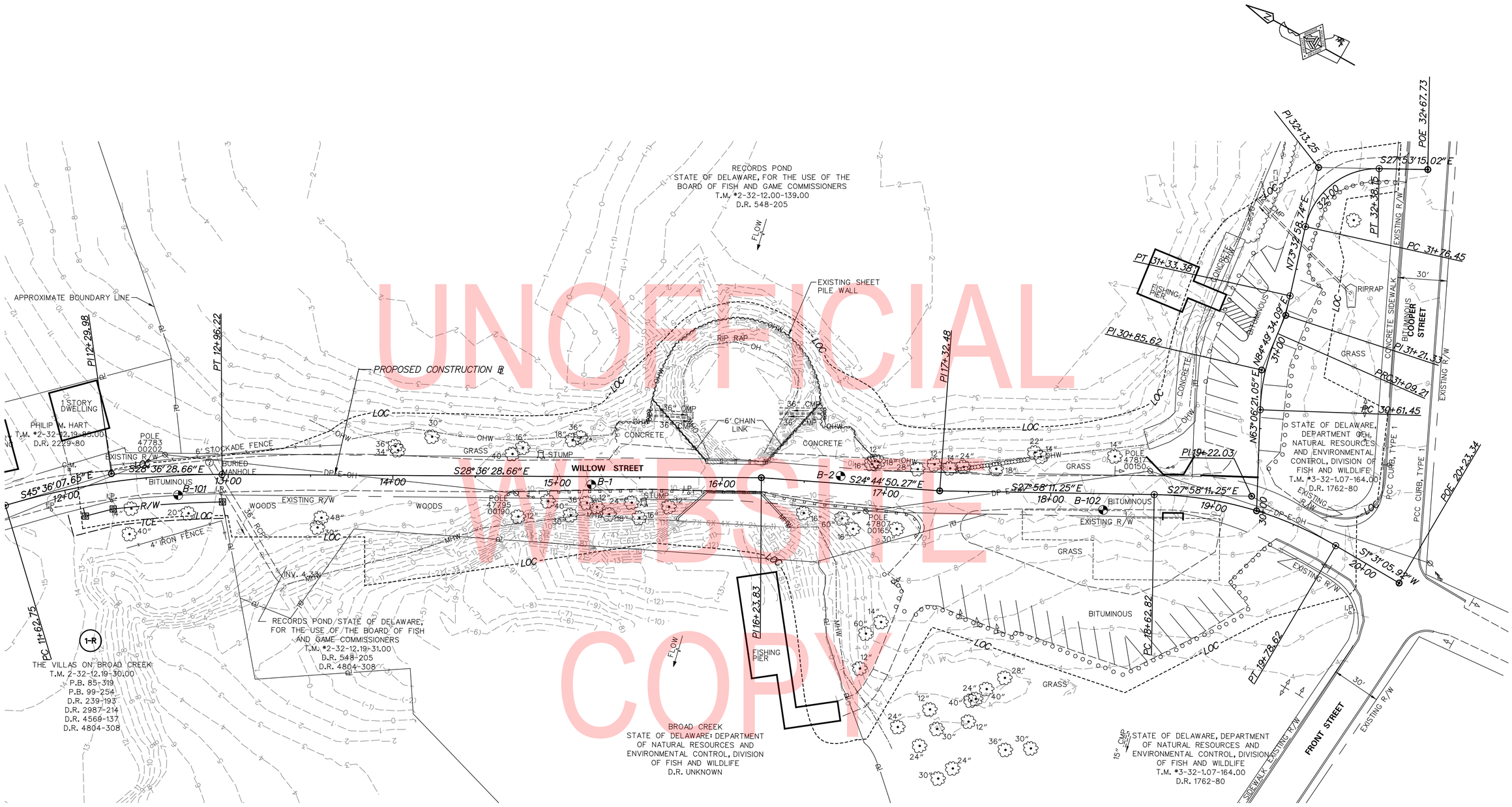

UNOFFICIAL WEBSITE COPY

NOTES:

1. *BORING LOCATIONS SHOWN ARE APPROXIMATE AND SHALL BE FIELD VERIFIED BY THE CONTRACTOR.*
2. *SEE SHEETS 40 AND 41 FOR SOIL BORING LOGS.*

ADDENDA / REVISIONS		SCALE 0 30 60 90 FEET	RECORDS POND DAM IMPROVEMENTS	CONTRACT T201507605	BRIDGE NO. 3-329	EXISTING CONDITIONS	SECTION PAI
				COUNTY SUSSEX	DESIGNED BY: DAH		SHEET NO. 9
					CHECKED BY: NWB		

GUARDRAIL SCHEDULE

NO.	ITEM DESCRIPTION / TYPE	BEGIN STA.	OFFSET	LENGTH
1	GUARDRAIL END TREATMENT, TYPE 1-31	13+15.00	13.50′	50.00′
2	GALVANIZED STEEL BEAM GUARDRAIL, TYPE 1-31 *	13+63.50	11.25′	212.50′
3	LONGSPAN GUARDRAIL	15+75.00	8.00′	62.50′
4	GALVANIZED STEEL BEAM GUARDRAIL, TYPE 1-31 *	16+38.90	10.00′	25.00′
5	GUARDRAIL END TREATMENT, TYPE 1-31 *	16+64.00	13.50′	50.00′
6	GUARDRAIL END TREATMENT, TYPE 1-31	14+80.00	13.50′	50.00′
7	GALVANIZED STEEL BEAM GUARDRAIL, TYPE 1-31 *	15+26.00	12.00′	50.00′
8	LONGSPAN GUARDRAIL	15+78.50	8.00′	62.50′
9	GALVANIZED STEEL BEAM GUARDRAIL, TYPE 1-31 *	16+38.00	8.00′	50.00′
10	GUARDRAIL END TREATMENT, TYPE 1-31	16+98.50	10.50′	50.00′

* INSTALL GUARDRAIL MOUNTED RAILING (INCIDENTAL TO ITEM 720031)
REFER TO DETAIL B-13, SHEET 10 IN STANDARD CONSTRUCTION DETAILS.

CURB SCHEDULE

NO.	ITEM DESCRIPTION / TYPE	LENGTH
1	PCC CURB, TYPE 1-8	180.00
2	PCC CURB, TYPE 1-6	222.00
3	PCC CURB, TYPE 1-6	99.00
4	PCC CURB, TYPE 1-6	44.00

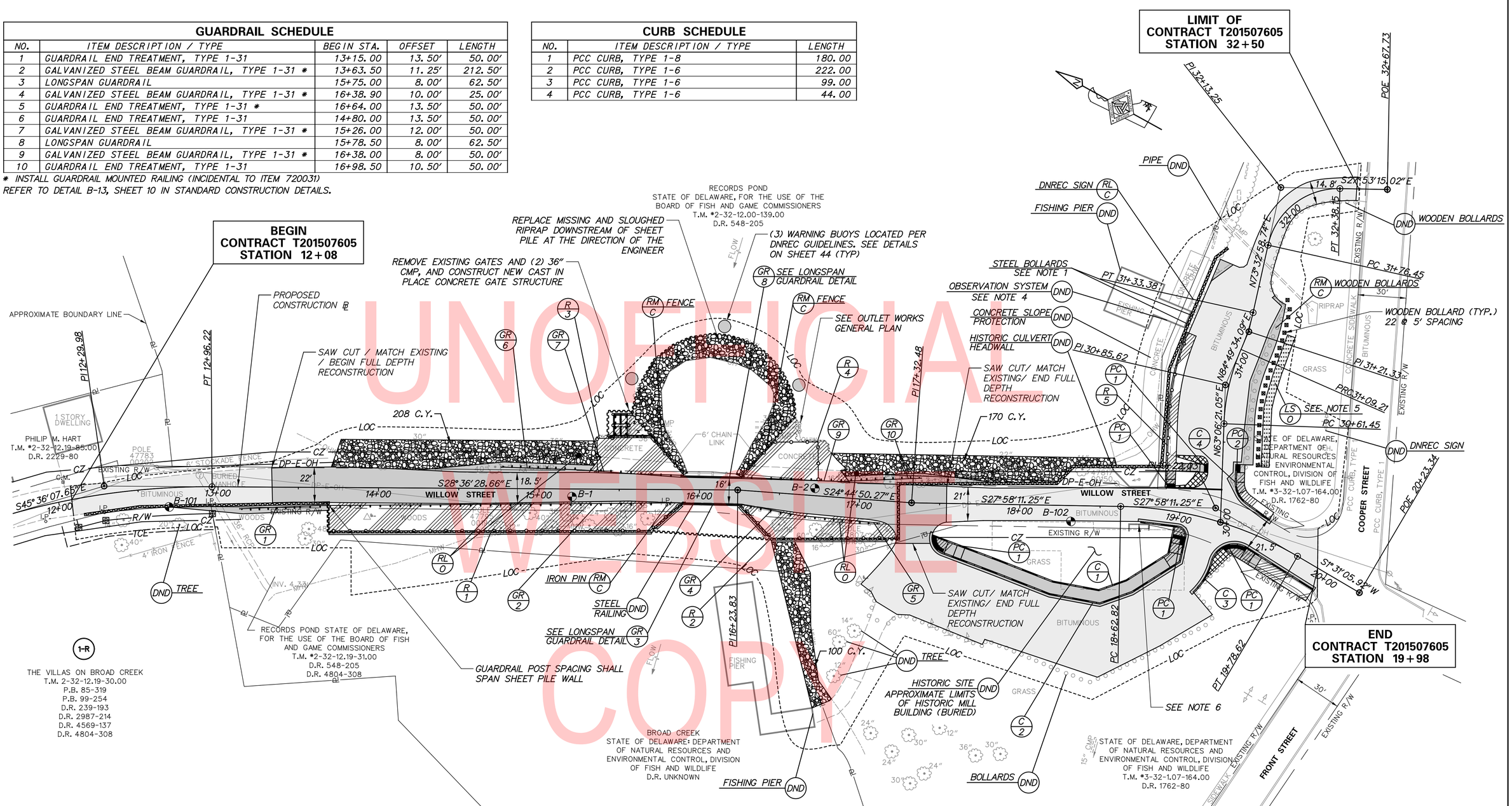

PEDESTRIAN RAILING SCHEDULE

NO.	QTY.	DESCRIPTION	NOTES
1	223 LF	ALUMINUM PEDESTRIAN RAILING (ITEM 626010)	STA. 13+71, 27′ RT. TO STA. 15+87, 9.8′ RT. (+/-)
2	104 LF	ALUMINUM PEDESTRIAN RAILING (ITEM 626010)	STA. 16+29, 12.2′ RT. TO STA. 17+23, 22.6′ RT. (+/-)
3	89 LF	ALUMINUM PEDESTRIAN RAILING (ITEM 626010)	STA. 15+35, 12′ LT. TO STA. 15+89, 8.5′ LT. (+/-)
4	81 LF	ALUMINUM PEDESTRIAN RAILING (ITEM 626010)	STA. 16+27, 8′ LT. TO STA. 16+74, 10′ LT. (+/-)
5	100 LF	ALUMINUM PEDESTRIAN RAILING (ITEM 626010)	STA. 30+20, 35′ LT. TO STA. 31+06, 35′ LT. (+/-)

SOIL BORING SCHEDULE

NO.	STATION	OFFSET	DESCRIPTION
B-1	15+20.61	4.79′ RT	SEE BORING LOG
B-2	16+71.78	4.57′ LT	SEE BORING LOG
B-101	12+68.86	11.93′ RT	SEE BORING LOG
B-102	18+31.95	9.89′ RT	SEE BORING LOG

NOTES:

1. STEEL BOLLARDS SHALL BE REMOVED PRIOR TO INSTALLATION OF SHEET 5. PILE AND RESET IN SAME LOCATION AFTER COMPLETION OF INSTALLATION OF SHEET PILE. COST INCIDENTAL TO ITEM 211000.
2. ALL VEGETATION WITHIN SPILLWAY SHALL BE REMOVED BY CONTRACTOR, PAYMENT UNDER ITEM 201000.
3. ALL TREES WITHIN THE LOC SHALL BE REMOVED BY CONTRACTOR UNLESS NOTED BY DND OR DIRECTED BY THE ENGINEER.
4. EXISTING DELAWARE OBSERVATION SYSTEM (DEOS) WATER LEVEL GAUGE. CONTACT JANICE SHUTE WITH DNREC DAM SAFETY AT (302) 739-9146 FOR REMOVAL IF REQUIRED FOR CONSTRUCTION.
5. PLANTING GUIDANCE: (INFORMATION ONLY, WORK TO BE DONE BY OTHERS. THERE WILL BE NO PAYMENT FOR PLANTING ON THIS CONTRACT.) UPON FINAL ACCEPTANCE OF THE CONTRACT, NOTIFY THE ENVIRONMENTAL STUDIES SECTION (ALEX TARANTINO) AND ROADSIDE ENVIRONMENTAL (DARIN CALLAWAY).
6. FILL EXISTING CULVERT WITH FLOWABLE FILL IN ACCORDANCE WITH SECTION 208 OF THE STANDARD SPECIFICATIONS.

UNOFFICIAL WEBSITE COPY

ADDENDA / REVISIONS

SCALE 0 30 60 90 FEET

RECORDS POND DAM IMPROVEMENTS

CONTRACT	BRIDGE NO.	3-329
T201507605	DESIGNED BY: DAH	
COUNTY		
SUSSEX	CHECKED BY: NWB	

CONSTRUCTION PLAN

CP-01
SECTION
PAI
SHEET NO.
10

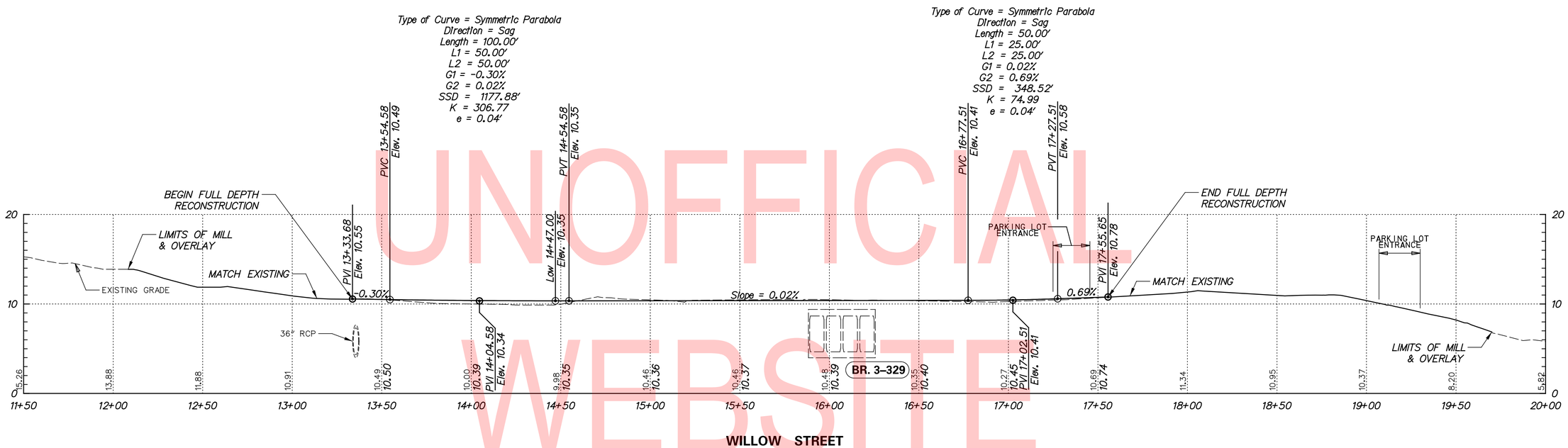

UNOFFICIAL WEBSITE COPY

VERTICAL SCALE FEET 18 12 6 0

PF-01

ADDENDA / REVISIONS		SCALE 0 30 60 90 FEET	RECORDS POND DAM IMPROVEMENTS	CONTRACT T201507605	BRIDGE NO. 3-329	PROFILES	SECTION PAI
				COUNTY SUSSEX	DESIGNED BY: DAH		SHEET NO. 11
					CHECKED BY: NWB		

COORDINATE LIST				
POINT NO.	STATION	OFFSET	NORTHING	EASTING
60001	17+52.21	31.36′	203331.9929	613043.9327
60002	18+19.30	55.79′	203261.2810	613053.8162
60003	18+50.87	61.05′	203230.9251	613063.9788
60004	30+61.45	29.00′	203243.4708	613186.6449
60005	31+06.15	29.00′	203259.2189	613239.0335
60006	30+61.39	19.00′	203200.6371	613208.3077
60007	31+09.19	19.02′	203211.7789	613247.0945
60008	31+42.69	18.69′	203219.9571	613283.3205
60009	13+33.33	11.89′	203723.5270	612888.2366
60010	13+33.97	9.66′	203712.6460	612869.6189
60011	17+24.20	26.01′	203360.7559	613035.2917
60012	17+54.26	10.64′	203349.8760	613081.9926
60013	31+61.40	27.07′	203269.1464	613288.3083
60014	19+21.57	46.38′	203183.6905	613098.8185
60015	19+97.31	13.35′	203119.1907	613135.8628
60016	19+53.42	12.36′	203163.7523	613161.2823
60017	30+36.36	19.00′	203189.3175	613185.9898
60018	30+40.78	29.00′	203234.1226	613168.2139
60019	18+75.92	8.85′	203233.5781	613121.2671

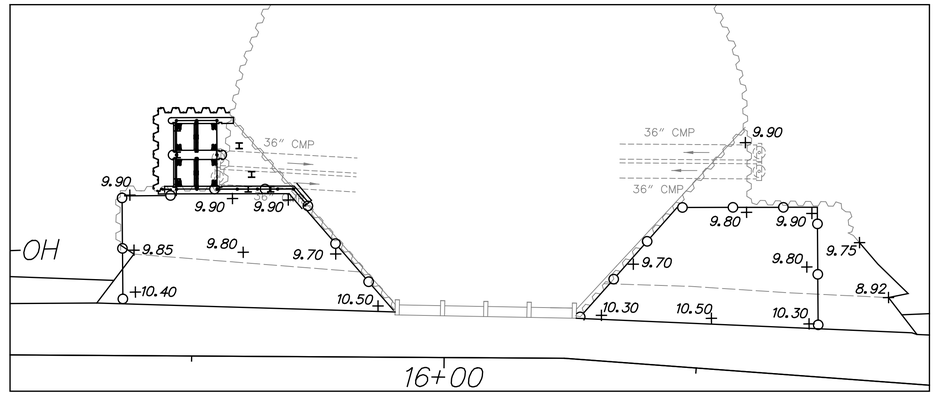

CONCRETE OVERLOOKS DETAIL

SCALE: 1"= 15′-0"

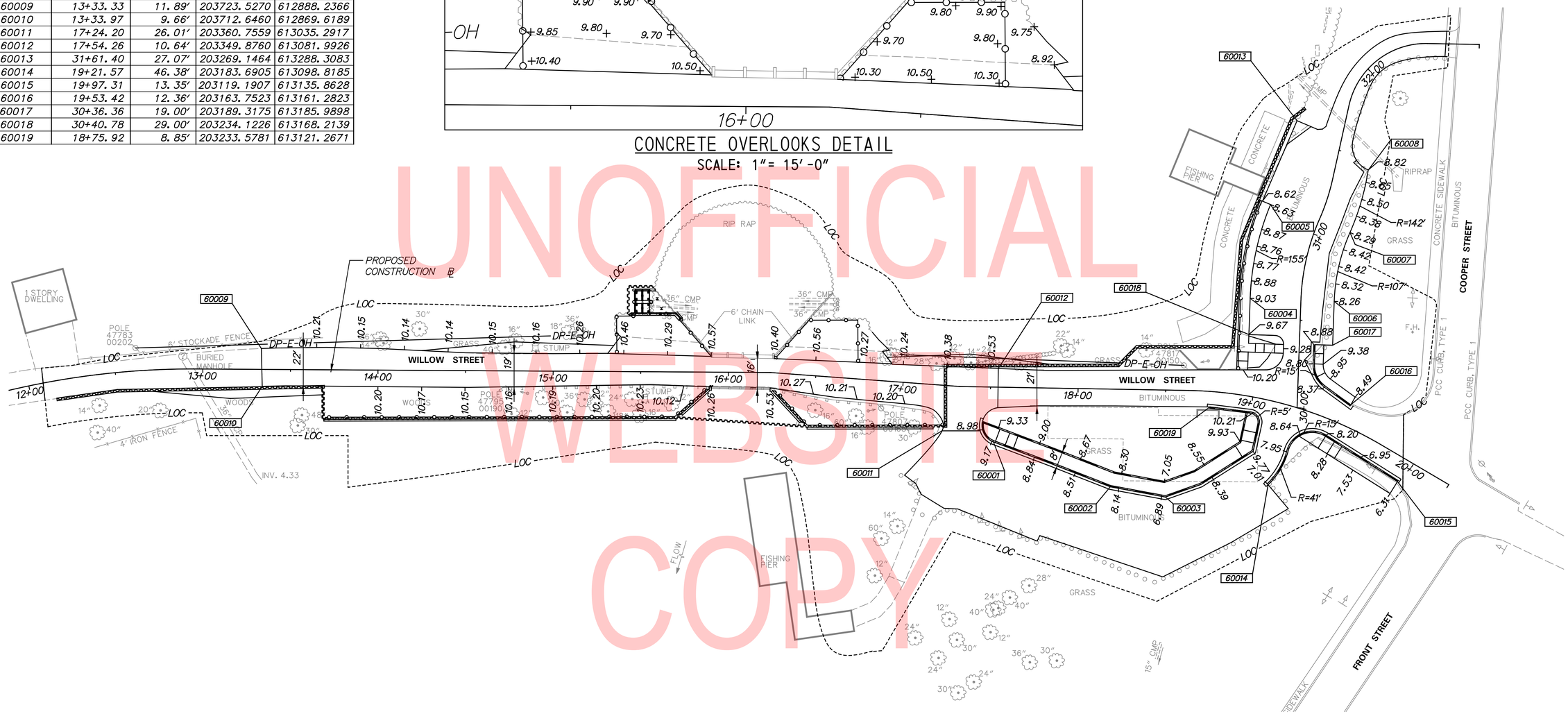

UNOFFICIAL WEBSITE COPY

NOTES:

1. IN CURB AREAS, SPOT ELEVATIONS ARE FOR FRONT BOTTOM EDGE OF CURB
2. SEE CROSS SECTIONS FOR PAVEMENT OFFSETS.

GG-01

ADDENDA / REVISIONS	

SCALE 0 30 60 90 FEET

RECORDS POND DAM IMPROVEMENTS

CONTRACT	BRIDGE NO.	3-329
T201507605	DESIGNED BY: DAH	
COUNTY	CHECKED BY: NWB	
SUSSEX		

GRADES & GEOMETRICS

SECTION: SE/PAI

SHEET NO. 12

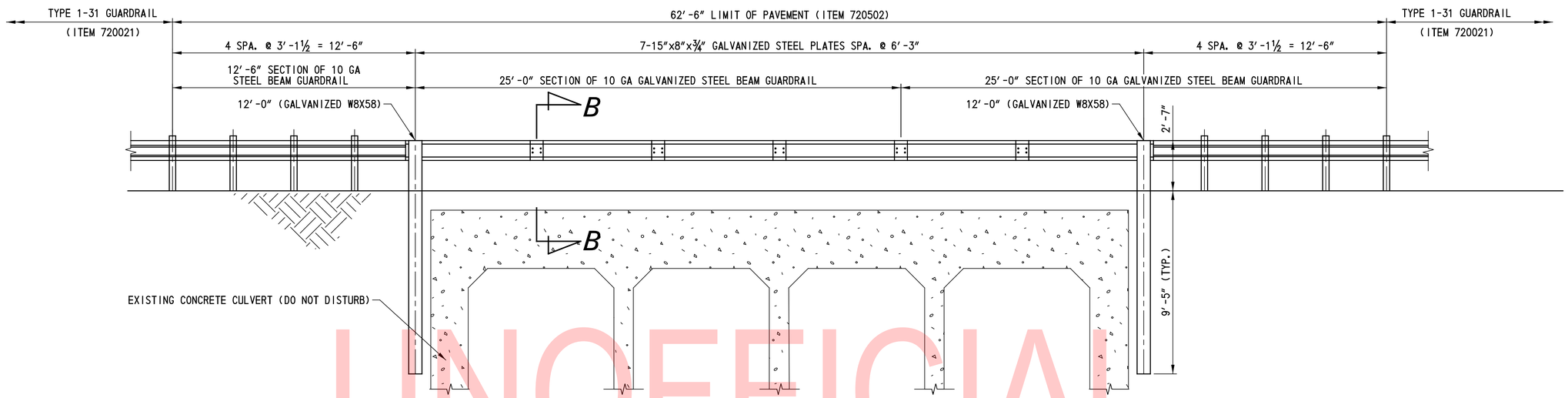

GUARDRAIL OVER CULVERT - ELEVATION
SCALE: 1"= 3'-0"

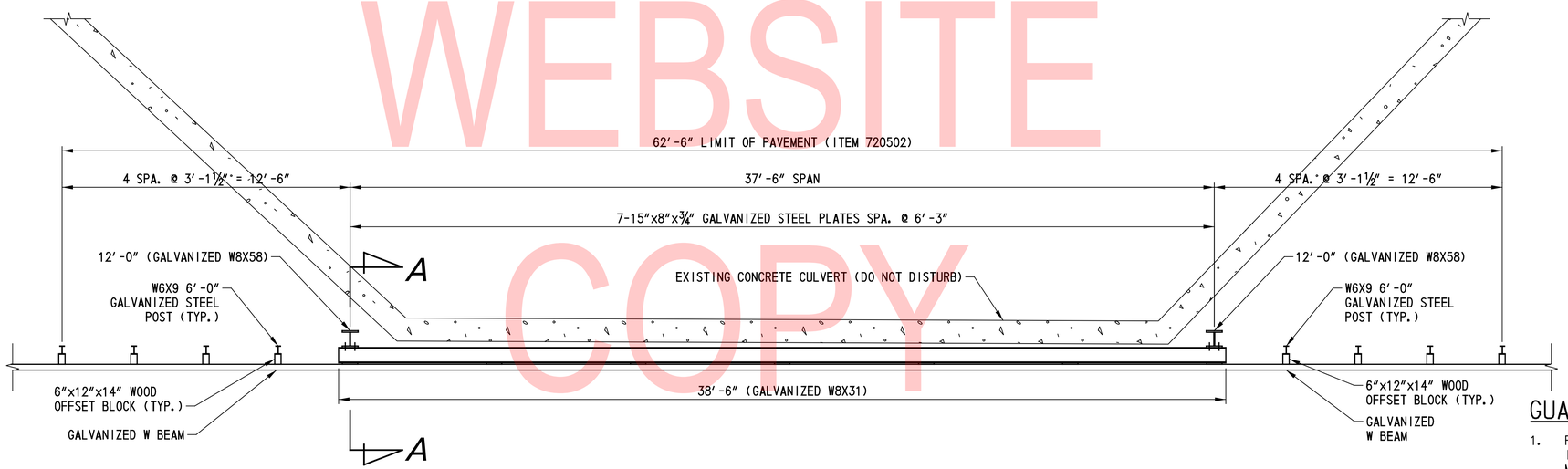

GUARDRAIL OVER CULVERT - PLAN
SCALE: 1"= 3'-0"

GUARDRAIL NOTES:

1. PLACE GUARDRAIL DELINEATORS AT THE INTERVALS SPECIFIED IN THE DELAWARE MANUAL ON UNIFORM TRAFFIC CONTROL DEVICES, 2011. PAYMENT UNDER RESPECTIVE GUARDRAIL ITEM.
2. BRIDGE GUARDRAIL SHALL BE PAID UNDER ITEM 720502 - LONG SPAN GUARDRAIL TO LIMITS AS SHOWN.
3. SEE SHEET 14 FOR SECTIONS A-A AND B-B.
4. THE CONTRACTOR SHALL ENSURE GUARDRAIL POST INSTALLATION DOES NOT CONFLICT WITH SHEET PILE TIE ROD SPACING.

UNOFFICIAL WEBSITE COPY

ADDENDA / REVISIONS	SCALE: AS NOTED	RECORDS POND DAM IMPROVEMENTS	CONTRACT T201507605	BRIDGE NO. 3-329	CONSTRUCTION DETAILS-1	SECTION PAI
			COUNTY SUSSEX	DESIGNED BY: DAH		SHEET NO. 13
				CHECKED BY: MJS		

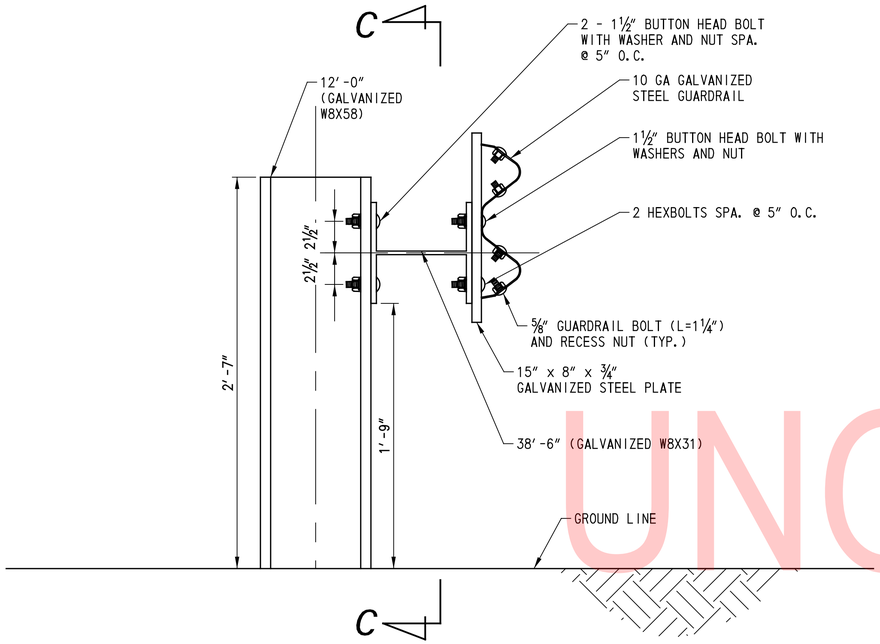

SECTION A-A
SCALE: 2" = 1'-0"

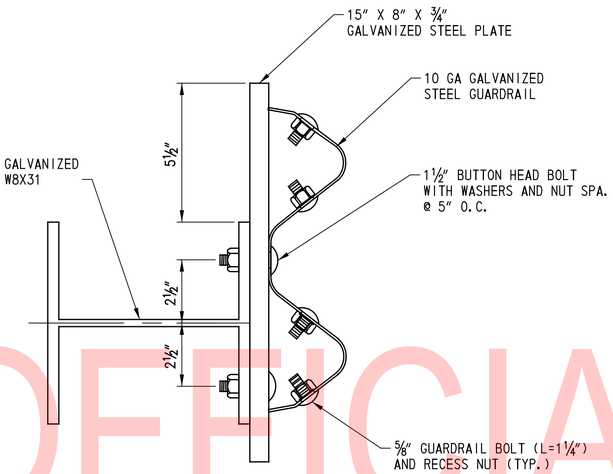

SECTION B-B
SCALE: 4" = 1'-0"

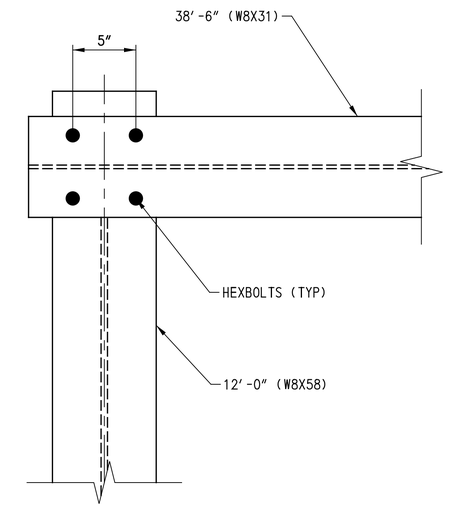

SECTION C-C
SCALE: 2" = 1'-0"

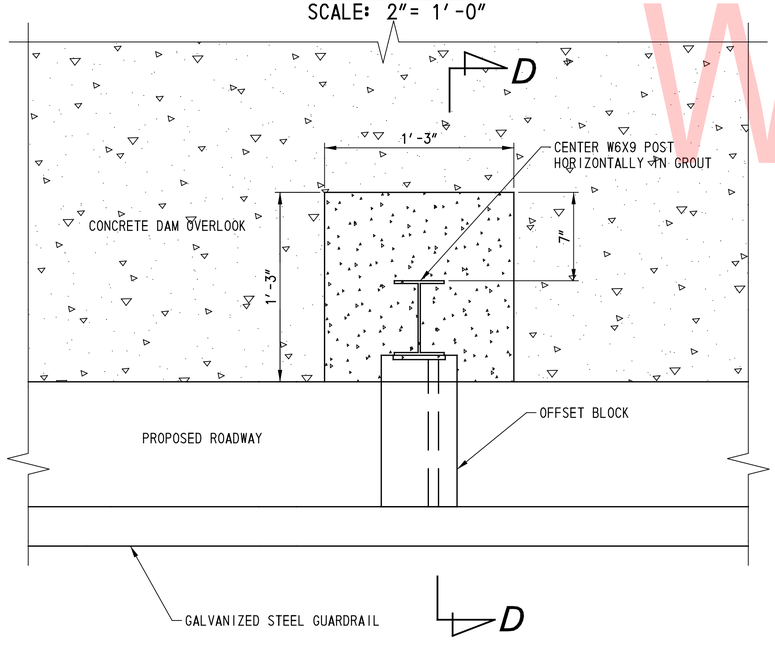

GROUT BASE - PLAN
SCALE: 2" = 1'-0"

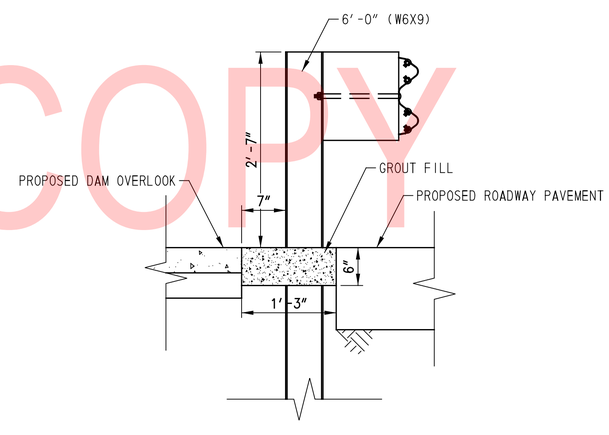

SECTION D-D
SCALE: 1" = 1'-0"

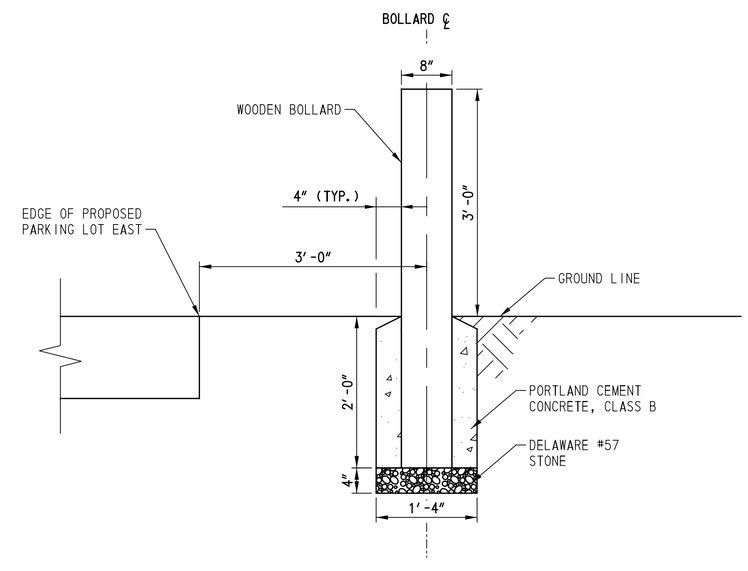

WOODEN BOLLARD - SECTION
SCALE: 1" = 1'-0"

UNOFFICIAL WEBSITE COPY

ADDENDA / REVISIONS	SCALE: AS NOTED	RECORDS POND DAM IMPROVEMENTS	CONTRACT T201507605	BRIDGE NO. 3-329	CONSTRUCTION DETAILS-2	SECTION PAI
			COUNTY SUSSEX	DESIGNED BY: DAH		SHEET NO. 14
				CHECKED BY: MJS		

SHEET PILE REFERENCE POINTS				
POINT NO.	STATION	OFFSET	NORTHING	EASTING
SP-1	12+14.49	10.64'	203811.5234	612806.3393
SP-2	12+50.13	10.41'	203783.7747	612827.3435
SP-3	13+69.45	9.70'	203681.4802	612886.5735
SP-4	13+69.27	28.83'	203672.4761	612869.6938
SP-5	15+70.26	27.26'	203496.7721	612967.3110
SP-6	16+47.20	30.17'	203428.9380	612999.2782
SP-7	17+26.03	23.86'	203359.9925	613038.0054
SP-8	17+23.40	11.24'	203377.0771	613068.7773
SP-9	18+22.81	13.61'	203290.7325	613116.7601
SP-10	18+33.12	24.32'	203286.6481	613131.0559
SP-11	18+85.26	26.61'	203238.7752	613157.6531
SP-12	30+86.90	38.55'	203263.9369	613213.2834
SP-13	31+61.99	30.14'	203272.2608	613288.0006
SP-14	31+69.19	24.08'	203268.4869	613296.6211

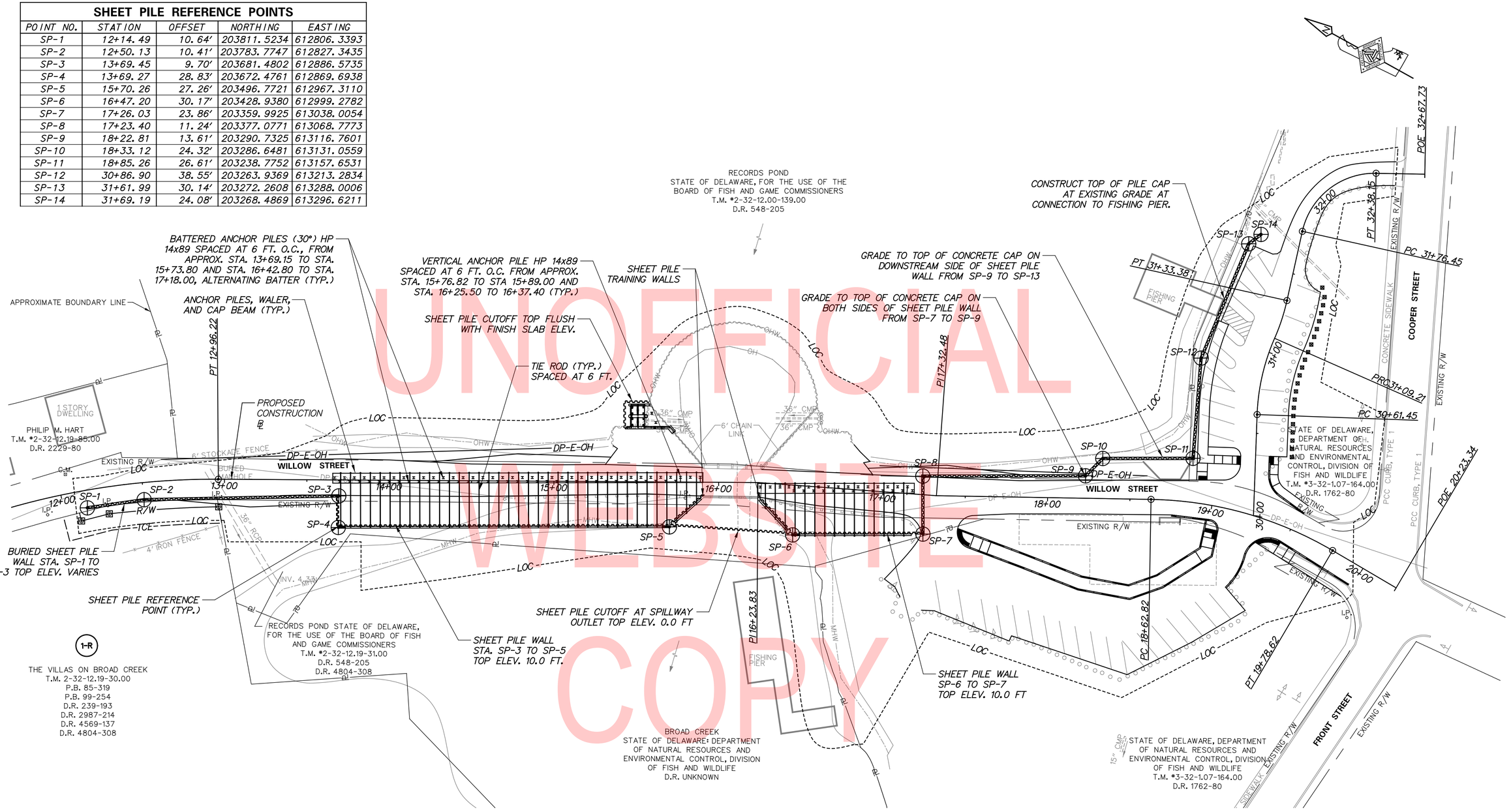

UNOFFICIAL WEBSITE COPY

ADDENDA / REVISIONS	

SCALE
0 30 60 90
FEET

RECORDS POND DAM IMPROVEMENTS

CONTRACT	BRIDGE NO.	3-329
T201507605	DESIGNED BY:	JS
COUNTY		
SUSSEX	CHECKED BY:	JRY

SHEET PILE PLAN

SECTION
SE
SHEET NO.
15

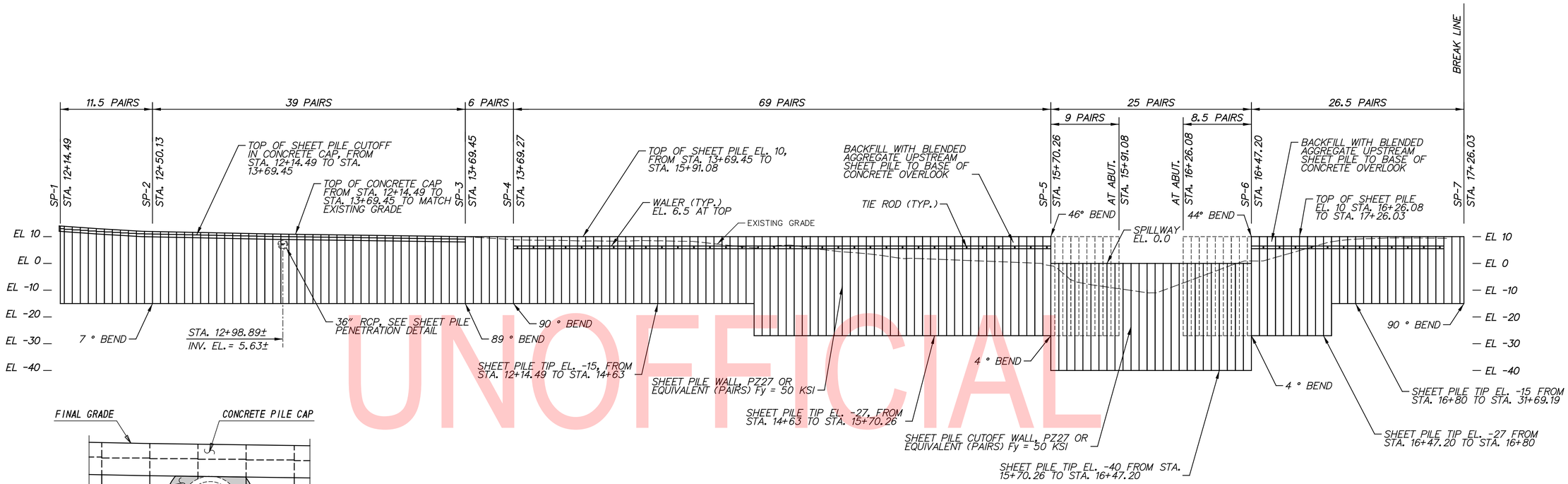

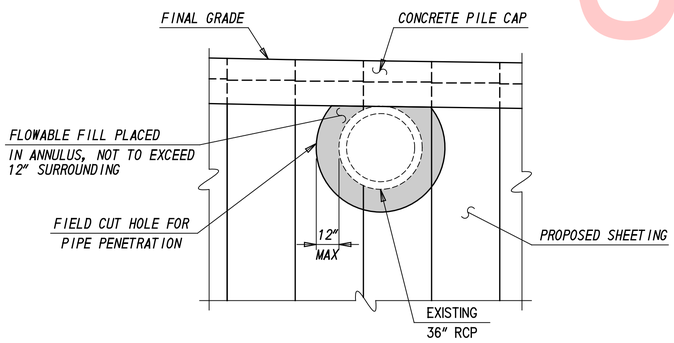

SHEET PILE PENETRATION DETAIL

NOT TO SCALE

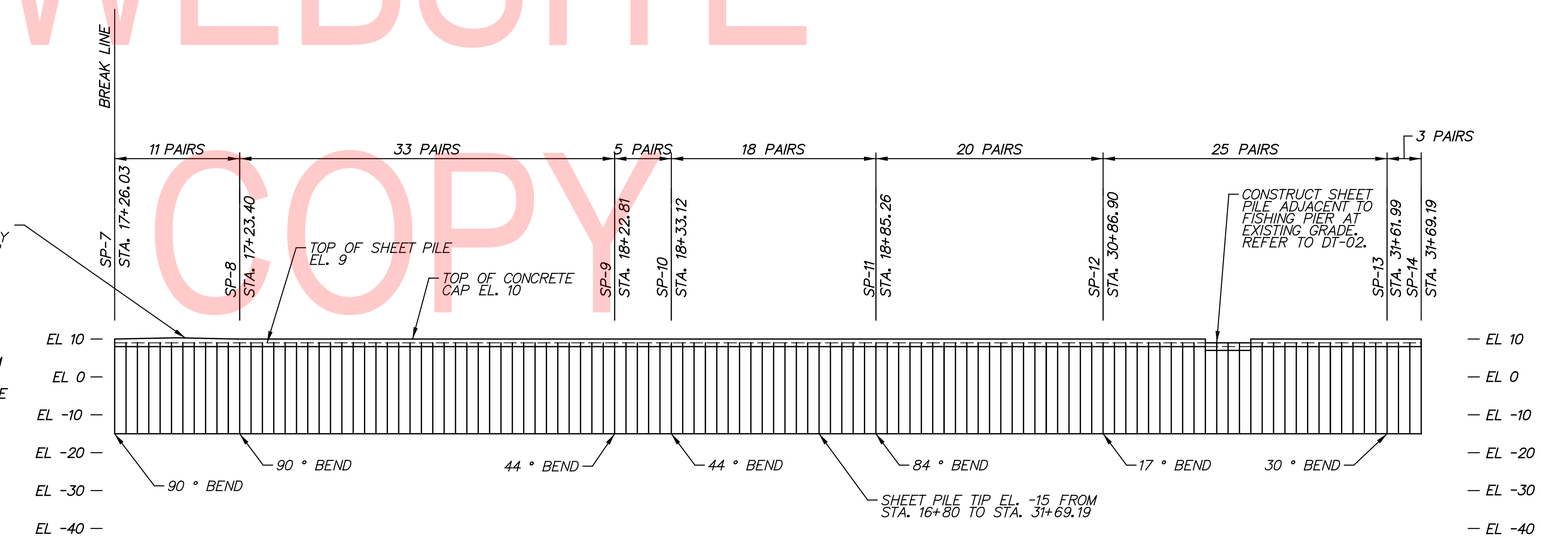

SHEET PILE PENETRATION CONSTRUCTION SEQUENCE:

1. COORDINATE TEMPORARY REMOVAL OF PIPE (BETWEEN MANHOLE AND APPROX. 10' DOWNSTREAM OF PROPOSED SHEET PILE) AND INSTALLATION OF SHEETING DURING A 7-DAY PERIOD WITH NO PREDICTED PRECIPITATION. EXCAVATION TO BE PAID FOR UNDER ITEM 202000. TEMPORARY PIPE REMOVAL TO BE PAID FOR UNDER ITEM 211000.
2. DRIVE SHEETING RUN.
3. CUT HOLE IN SHEETING TO ALLOW REINSTALLATION OF PIPE - CUT HOLE DIAMETER AS SMALL AS FEASIBLE FOR INSTALLATION OF THE PIPE THROUGH THE HOLE.
4. PLACE THE PIPE AT THE SAME SLOPE AND ALIGNMENT AS EXISTED PRIOR TO CONSTRUCTION. PIPE REINSTALLATION CONSIDERED INCIDENTAL TO ITEM 202000.
5. PLACE FLOWABLE FILL IN PIPE ANNULUS, LIMITING FLOWABLE FILL THICKNESS TO 1-FOOT IN ALL DIRECTIONS AROUND THE PIPE (STAY IN PLACE FORMS SHALL BE PERMITTED TO LIMIT FLOWABLE FILL OVERPOUR). FLOWABLE FILL PAID FOR UNDER ITEM 208000.
6. BACKFILL ABOVE AND AROUND THE PIPE; PAID FOR UNDER ITEM 202000.

UNOFFICIAL WEBSITE COPY

ADDENDA / REVISIONS	NOT TO SCALE	RECORDS POND DAM IMPROVEMENTS	CONTRACT T201507605	BRIDGE NO. 3-329	SHEET PILE PROFILE	SECTION SE
			COUNTY SUSSEX	DESIGNED BY: JS		SHEET NO. 16
				CHECKED BY: JRY		

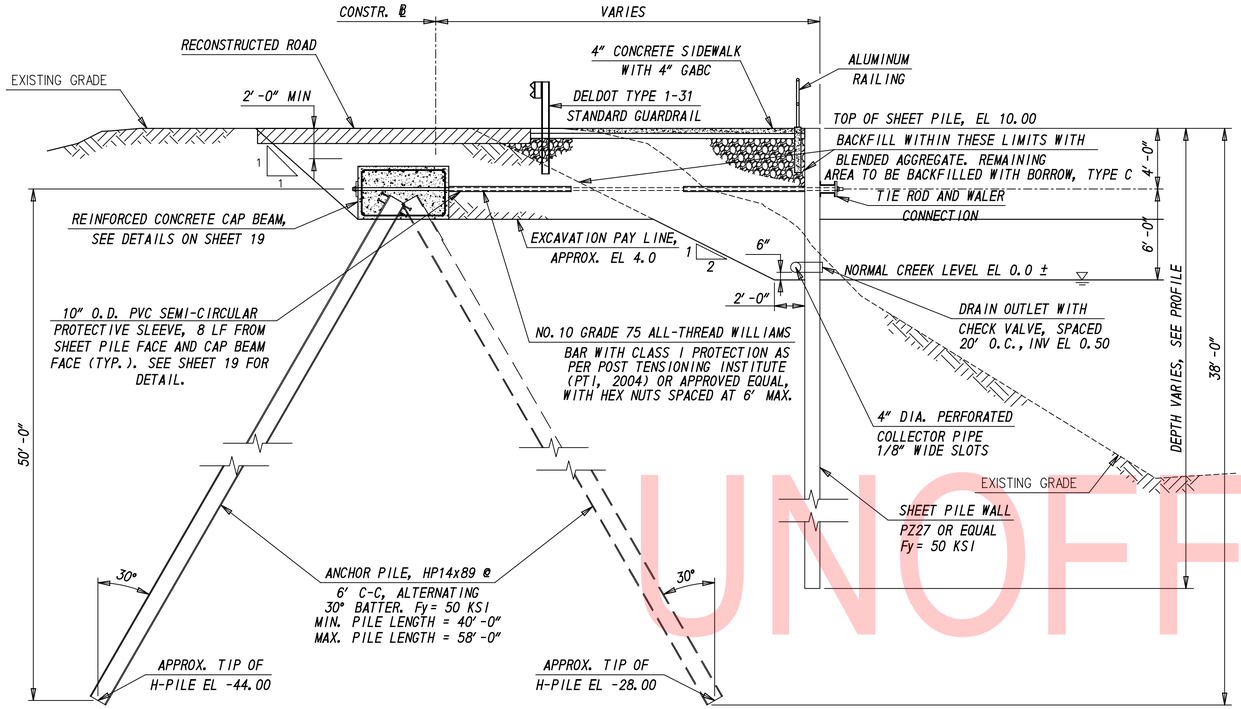

SHEET PILE WALL SECTION SP-4 TO SP-5 SP-6 TO SP-7

SCALE: 1" = 5'-0"

NOTE:

1. CONTRACTOR TO ENSURE GUARDRAIL POST INSTALLATION DOES NOT CONFLICT WITH TIE ROD SPACING.
2. CONTRACTOR TO ESTABLISH TEST PILES (40 LF EACH) AND TEST SCHEDULE. (1) TEST PILE TO BE LOCATED BETWEEN 16+42.80 AND 17+18.00 AND (2) TEST PILES TO BE LOCATED BETWEEN 13+69.15 AND 15+73.80 SPACED AT MINIMUM 100' APART.
3. NOMINAL AXIAL LOAD:
   COMPRESSION PILE = 70.6 KIP
   TENSION PILE = 53.9 KIP
   NOMINAL LATERAL LOAD = 53.9 KIP

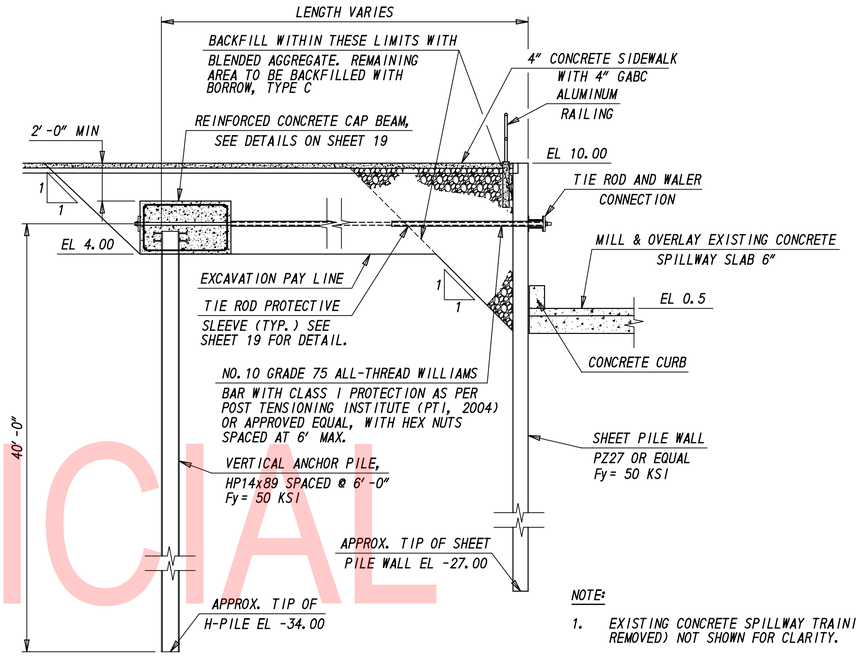

NOTE:

1. EXISTING CONCRETE SPILLWAY TRAINING WALL AND FOOTING (TO BE REMOVED) NOT SHOWN FOR CLARITY.

SECTION AT SPILLWAY WINGWALLS SP-5 TO STA 15+91 RT STA 16+24 RT TO SP-6

SCALE: 1" = 5'-0"

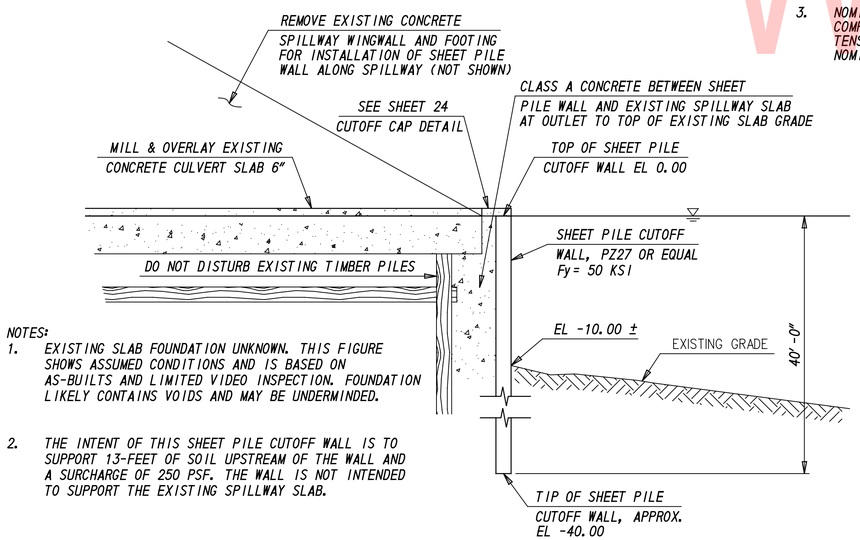

NOTES:

1. EXISTING SLAB FOUNDATION UNKNOWN. THIS FIGURE SHOWS ASSUMED CONDITIONS AND IS BASED ON AS-BUILTS AND LIMITED VIDEO INSPECTION. FOUNDATION LIKELY CONTAINS VOIDS AND MAY BE UNDERMINDED.
2. THE INTENT OF THIS SHEET PILE CUTOFF WALL IS TO SUPPORT 13-FEET OF SOIL UPSTREAM OF THE WALL AND A SURCHARGE OF 250 PSF. THE WALL IS NOT INTENDED TO SUPPORT THE EXISTING SPILLWAY SLAB.

SPILLWAY OUTLET SHEET PILE CUTOFF WALL SECTION, SP-5 TO SP-6

SCALE: 1" = 5'-0"

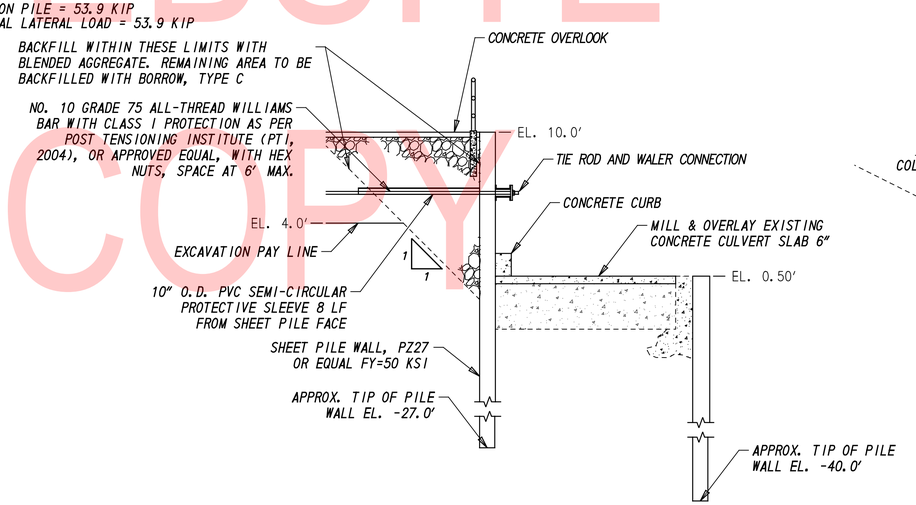

SECTION THROUGH SPILLWAY & WINGWALLS SP-5 TO STA 15+91

SCALE: 1" = 5'-0"

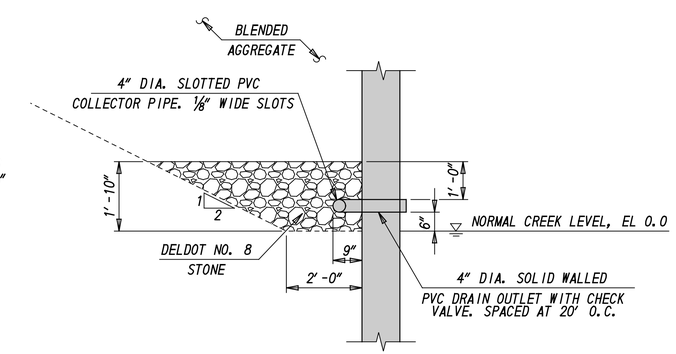

DRAIN DETAIL

SCALE: 1/2" = 1'-0"

NOTES:

1. EXCAVATION SHOWN ON THIS SHEET TO BE PAID FOR UNDER ITEM 202000.

UNOFFICIAL WEBSITE COPY

ADDENDA / REVISIONS	SCALE: AS NOTED	RECORDS POND DAM IMPROVEMENTS	CONTRACT T201507605	BRIDGE NO. 3-329	SHEET PILE WALL TYPICAL SECTIONS	DT-01
			COUNTY SUSSEX	DESIGNED BY: JS		SECTION SE
				CHECKED BY: JRY		SHEET NO. 17

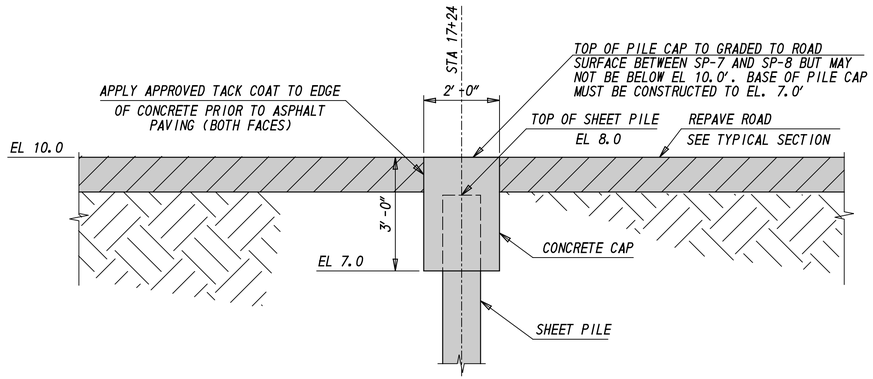

SHEET PILE WALL WITH CAP THROUGH ROADWAY SECTION (SP-7 TO SP-8)

SCALE: 1/2" = 1'-0"

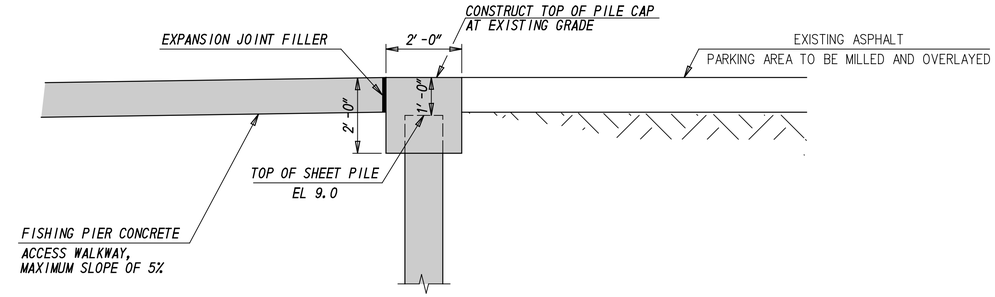

SHEET PILE WALL WITH CAP AT FISHING PIER (STA 31+09 TO 31+21)

SCALE: 1/2" = 1'-0"

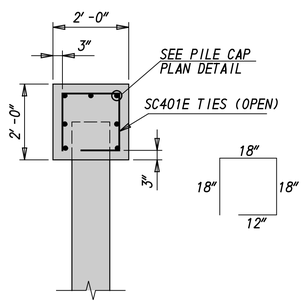

SECTION
SP-1 TO SP-3
SP-8 TO SP-14

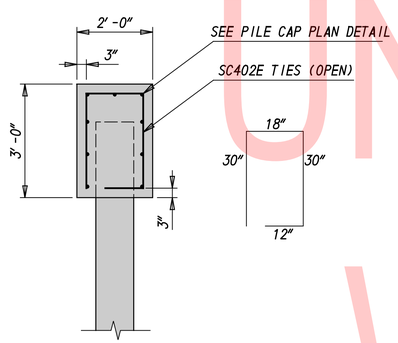

SECTION
SP-7 TO SP-8

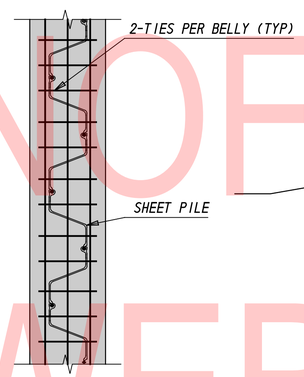

TIE DETAILS - PLAN

CONCRETE CAP STRUCTURAL DETAILS

SCALE: 1/2" = 1'-0"

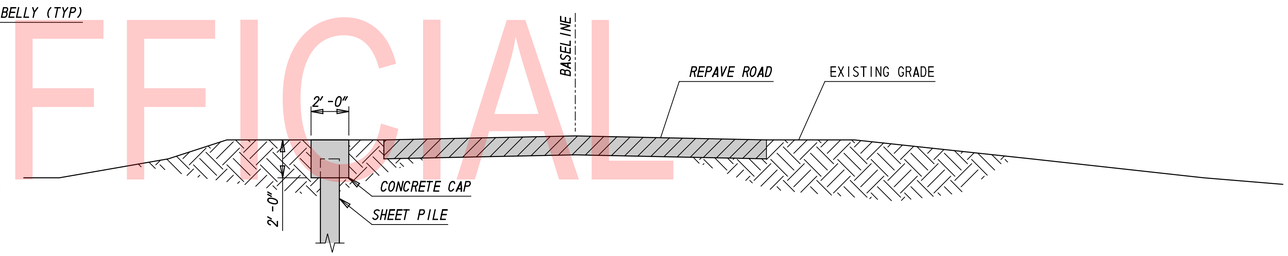

NOTE: GRADING AND LOCATION OF ROADWAY MAY VARY.

SHEET PILE WALL WITH CAP - SECTION AT SP-1 TO SP-3 AND SP-8 TO SP-14

SCALE: 1/4" = 1'-0"

NOTE: CONTROL JOINTS SHALL BE SPACED AT 20-FEET ALONG LENGTH OF CAP.

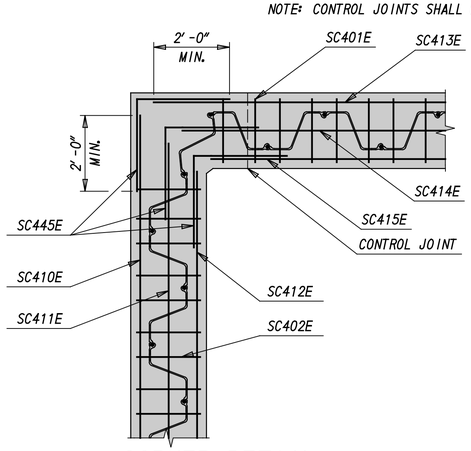

CORNER DETAIL SP-8

SCALE: 1/2" = 1'-0"

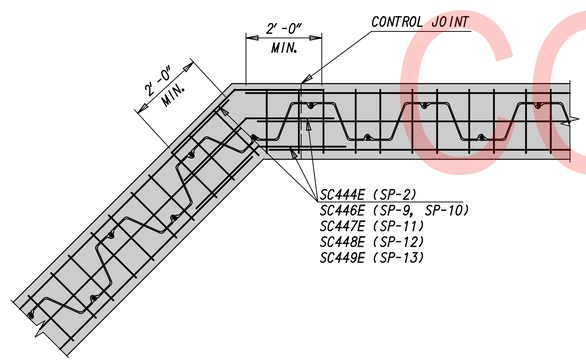

TYPICAL PILE CAP CORNER DETAIL

SCALE: 1/2" = 1'-0"

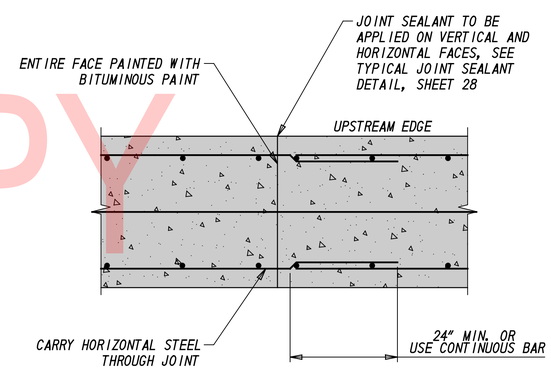

TYPICAL PILE CAP CONTROL JOINT DETAIL

SCALE: 1" = 1'-0"

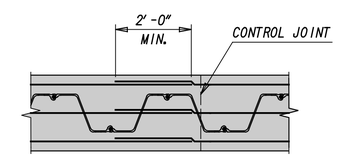

PILE CAP SPLICE DETAIL

SCALE: 1/2" = 1'-0"

NOTES:

1. JOINT FILLER SHALL BE PREMOLDED SPONGE, FULLY COMPRESSIBLE WITH A MINIMUM RECOVERY RATE OF 95 PERCENT MEETING THE REQUIREMENTS OF ASTM D1752.
2. PAYMENT FOR TACK COAT, JOINT FILLER, AND JOINT SEALANT IS INCIDENTAL TO 610000.

LEGEND	
	PROPOSED WORK

UNOFFICIAL WEBSITE COPY

DT-02

ADDENDA / REVISIONS		SCALE: AS NOTED	RECORDS POND DAM IMPROVEMENTS	CONTRACT T201507605	BRIDGE NO. 3-329	SHEET PILE WALL CAP DETAILS	SECTION SE
				COUNTY SUSSEX	DESIGNED BY: JS		SHEET NO. 18
					CHECKED BY: JRY		

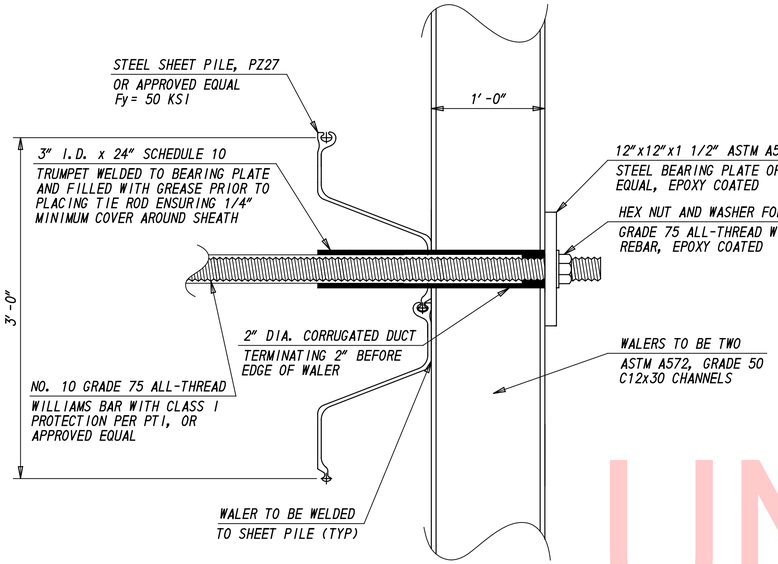

TIE ROD CONNECTION
SCALE: 1 1/2"= 1'-0"

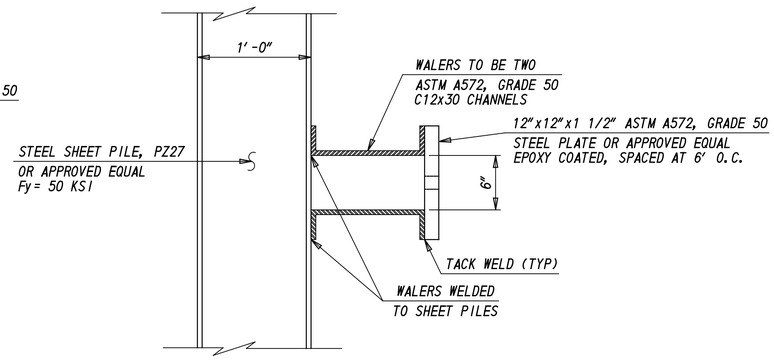

WALER WELDING DETAILS
SCALE: 1 1/2"= 1'-0"

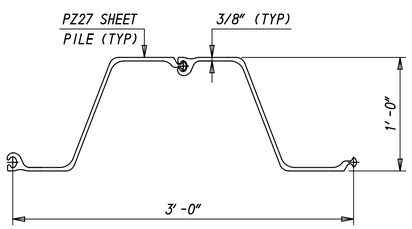

TYPICAL SHEET PILE
SCALE: 1 1/2"= 1'-0"

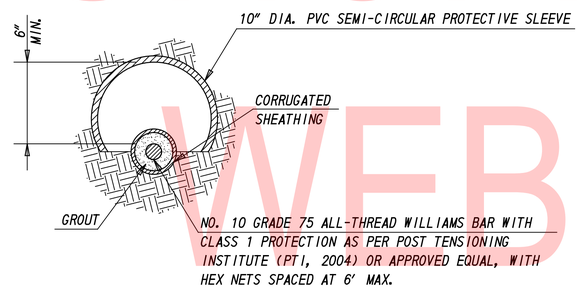

TIE ROD PROTECTIVE SLEEVE DETAIL
SCALE: 2"= 1'-0"

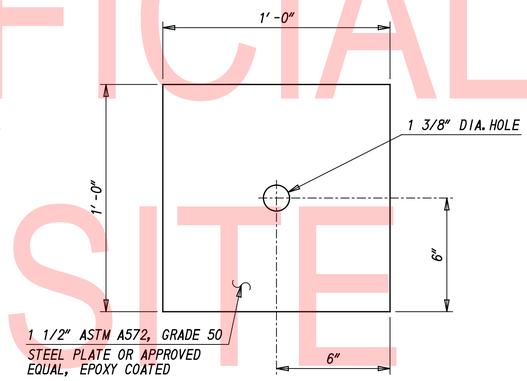

BEARING PLATE DETAILS
SCALE: 3"= 1'-0"

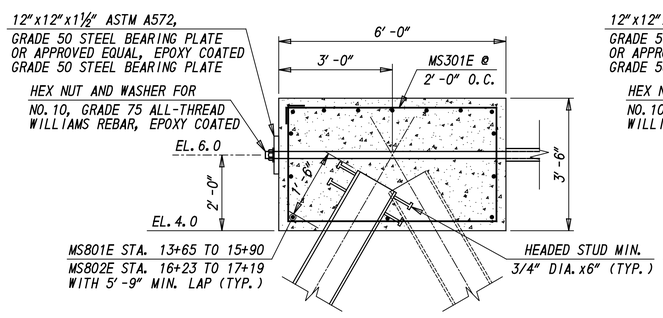

PILE CAP BEAM SECTION WITH BATTERED PILES
SCALE: 1/2"= 1'-0"

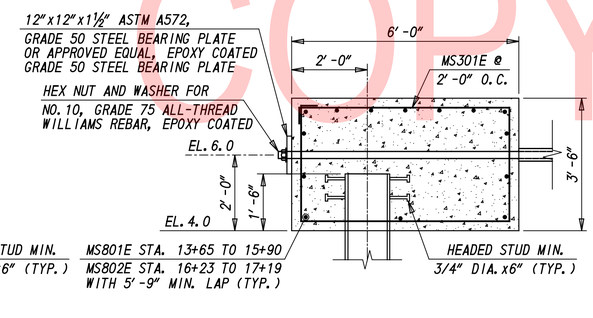

PILE CAP BEAM SECTION WITH VERTICAL PILES
SCALE: 1/2"= 1'-0"

GENERAL NOTES:

1. THE ALIGNMENT OF THE WALL MAY BE ADJUSTED AS NECESSARY TO AVOID OBSTRUCTIONS. ANY ADJUSTMENT OF THE ALIGNMENT REQUIRED SHALL BE APPROVED BY THE ENGINEER.
2. THE PROPOSED DESIGN CONSIDERS THE SUBGRADE ELEVATION AS SHOWN IN THE DRAWINGS. IF THE EXPOSED FACE OF SHEET PILE WALL IS TALLER THAN THAT SHOWN ON THESE PLANS IT SHOULD BE BROUGHT TO THE ATTENTION OF THE ENGINEER.
3. SHEET PILE AND ANCHOR PILE LENGTHS AND TOP OF SOIL STRATA ELEVATIONS SHOWN IN THE DRAWINGS ARE ESTIMATED BASED ON THE GEOTECHNICAL INFORMATION AVAILABLE. ACTUAL SHEET PILE AND ANCHOR PILE LENGTHS MAY VARY THROUGHOUT THE SITE DEPENDING UPON SOIL AND ROCK CONDITIONS.

MATERIAL NOTES

1. SHEET PILES (ITEM 608001): SHEET PILES SHALL CONSIST OF PZ27 (Sx=30.2 IN3, Ix=184.2 IN4, Fy=50 KSI), OR OTHER SHEET PILES WITH EQUAL OR GREATER SECTION MODULUS, MOMENT OF INERTIA, AND Fy.
2. WALERS (ITEM 608030): WALERS SHALL CONSIST OF TWO C12X30 (Sx=27.0 IN3, Ix=162 IN4, Fy=50 KSI), OR OTHER CHANNEL SECTIONS WITH EQUAL OR GREATER SECTION MODULUS, MOMENT OF INERTIA, AND Fy.
3. TIERODS (ITEM 608030): TIEBACKS SHALL CONSIST OF NO. 10 GRADE 75 (Fy=75 KSI) WILLIAMS ALLTHREAD BARS WITH CLASS 1 PROTECTION PER POST TENSIONING INSTITUTE (PTI).
4. COUPLERS, NUTS, STUDS, AND PLATES (ITEM 608030): COUPLERS, AND NUTS SHALL BE FURNISHED BY THE MANUFACTURER OF THE ANCHOR. THE NUTS SHALL BE FITTED, WHERE NECESSARY, WITH A SPECIAL WASHER OR SPHERICAL SEAT SUCH THAT THE NUT WILL BEAR UNIFORMLY ON THE PLATE. NUTS SHALL CONFORM TO ASTM A563-00, GRADE B, HEXAGONAL, OR EQUIVALENT. PLATES SHALL CONFORM TO ASTM A572, GRADE 50.
5. ALL STEEL ELEMENTS THAT ARE A PART OF THE SHEET PILE WALL INCLUDING, BUT NOT LIMITED TO SHEET PILES, WALERS, TIE RODS, NUTS AND WASHERS SHALL BE CORROSION-PROTECTED. TWO COATS OF COAL TAR POLYAMIDE EPOXY SHALL BE APPLIED TO SHEET PILES. COAL TAR EPOXY SHALL BE BITUMASTIC 300 M AS MANUFACTURED BY CARBOLINE, OR APPROVED EQUAL. SURFACE PREPARATION AND APPLICATION OF COAL TAR EPOXY SHALL CONFORM TO THE MANUFACTURER'S SPECIFICATIONS. DRY FILM THICKNESS SHALL BE A MINIMUM OF 8.0 MILS PER COAT. COAL TAR EPOXY SHALL BE APPLIED TO THE SHEET PILES BEFORE THEIR INSTALLATION. SHEET PILES WHERE COAL TAR EPOXY HAS BEEN REMOVED AS A RESULT OF DAMAGE DURING INSTALLATION OR FOR CONNECTION PURPOSES SHALL BE PATCHED IN THE FIELD.

DYNAMIC TEST ANCHOR PILES:

1. THE CONTRACTOR SHALL PERFORM RESTRIKE TESTS ON THE TEST ANCHOR PILES AT LEAST 24 HOURS AFTER INITIAL INSTALLATION.
2. THE CONTRACTOR SHALL DEMONSTRATE THE CAPACITY TO DRIVE THE ANCHOR PILES TO TWICE THE SPECIFIED DESIGN LOADS WITHOUT EXCEEDING A BLOWCOUNT OF 6 BLOWS PER INCH.
3. THE CONTRACTOR SHALL MEET REQUIREMENTS SET IN DELDOT STANDARD SPECIFICATIONS 2016, SECTION 605 - DRIVEN PILES.

DESIGN LOADS (NOMINAL):

1. 66.9 KIPS (COMPRESSION)
2. 50.3 KIPS (TENSION)

UNOFFICIAL WEBSITE COPY

ADDENDA / REVISIONS	SCALE: AS NOTED	RECORDS POND DAM IMPROVEMENTS	CONTRACT T201507605	BRIDGE NO. 3-329	SHEET PILE WALL DETAILS AND NOTES	DT-03
			COUNTY SUSSEX	DESIGNED BY: JS		SECTION SE
				CHECKED BY: JRY		SHEET NO. 19

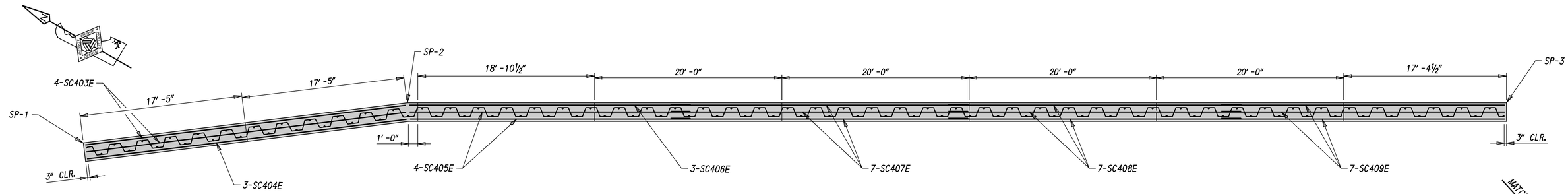

PILE CAP PLAN DETAIL
SP-1 TO SP-3
SCALE: 3/16″= 1′-0″

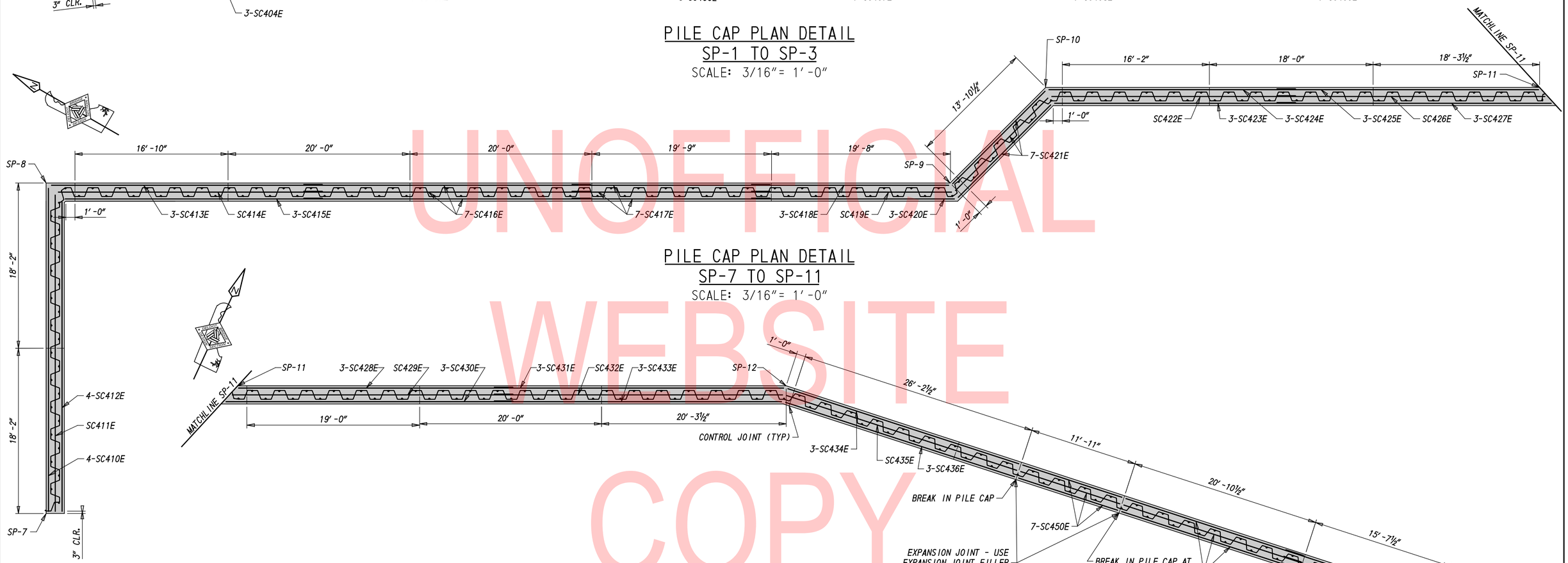

PILE CAP PLAN DETAIL
SP-7 TO SP-11
SCALE: 3/16″= 1′-0″

NOTE: REBAR AT CORNERS NOT SHOWN FOR CLARITY. SEE PILE CAP CORNER DETAILS ON SHEET 18.

PILE CAP PLAN DETAIL
SP-11 TO SP-14
SCALE: 3/16″= 1′-0″

UNOFFICIAL WEBSITE COPY

LEGEND	
	PROPOSED WORK

DT-04

ADDENDA / REVISIONS	SCALE: AS NOTED	RECORDS POND DAM IMPROVEMENTS	CONTRACT T201507605	BRIDGE NO. 3-329	SHEET PILE WALL SECTION AND DETAILS	SECTION SE
			COUNTY SUSSEX	DESIGNED BY: JS		SHEET NO. 20
				CHECKED BY: JRY		

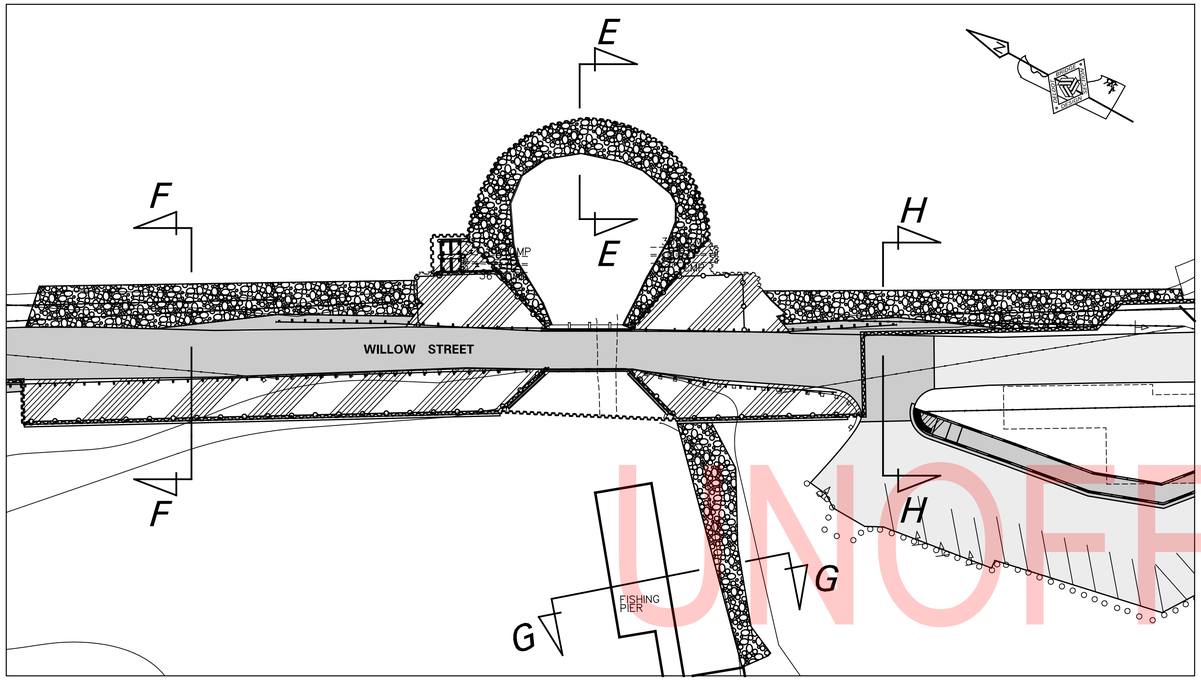

RIPRAP PLAN
SCALE: 1/32" = 1'-0"

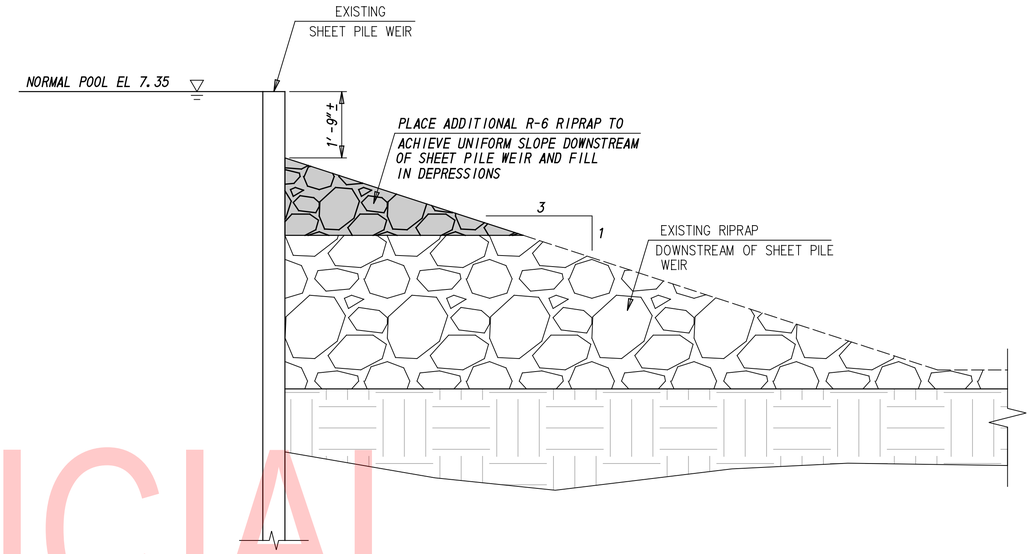

SECTION E-E: TYPICAL SPILLWAY RIPRAP DETAIL
SCALE: 1/2" = 1'-0"

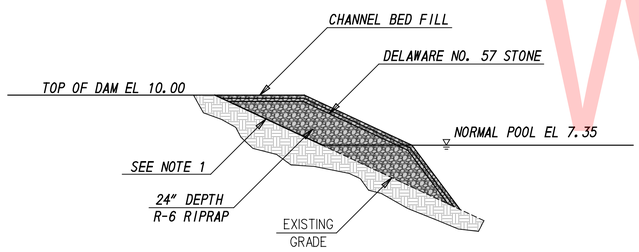

SECTION F-F: TYPICAL UPSTREAM RIPRAP DETAIL
SCALE: 1/4" = 1'-0"

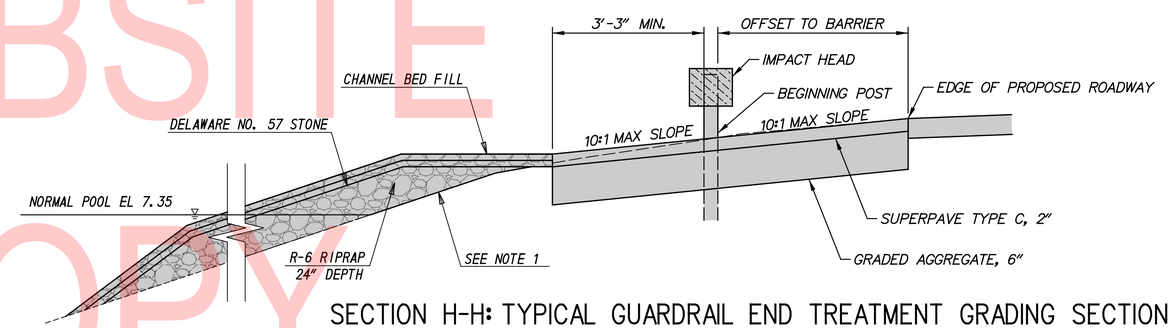

SECTION H-H: TYPICAL GUARDRAIL END TREATMENT GRADING SECTION
SCALE: 1" = 1'-0"

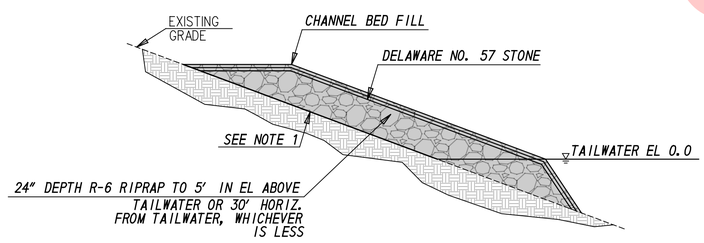

SECTION G-G: TYPICAL DOWNSTREAM/LEFT BANK RIPRAP DETAIL
SCALE: 1/4" = 1'-0"

NOTES:

1. GEOTEXTILE FABRIC IS TO BE USED WHERE RIPRAP IS PLACED ABOVE NORMAL POOL ELEVATION IN ACCORDANCE WITH SECTION 707 AND 708 OF THE STANDARD SPECIFICATIONS.
2. SEE ENVIRONMENTAL COMPLIANCE NOTES, NOTE 4 FOR GUIDANCE ON STREAM RESTORATION AND RIPRAP SLOPE TREATMENT.

LEGEND	
	PROPOSED WORK

UNOFFICIAL WEBSITE COPY

DT-05

ADDENDA / REVISIONS	SCALE: AS NOTED	RECORDS POND DAM IMPROVEMENTS	CONTRACT T201507605	BRIDGE NO. 3-329	RIPRAP SECTIONS	SECTION SE
			COUNTY SUSSEX	DESIGNED BY: JS		SHEET NO. 21
				CHECKED BY: JRY		

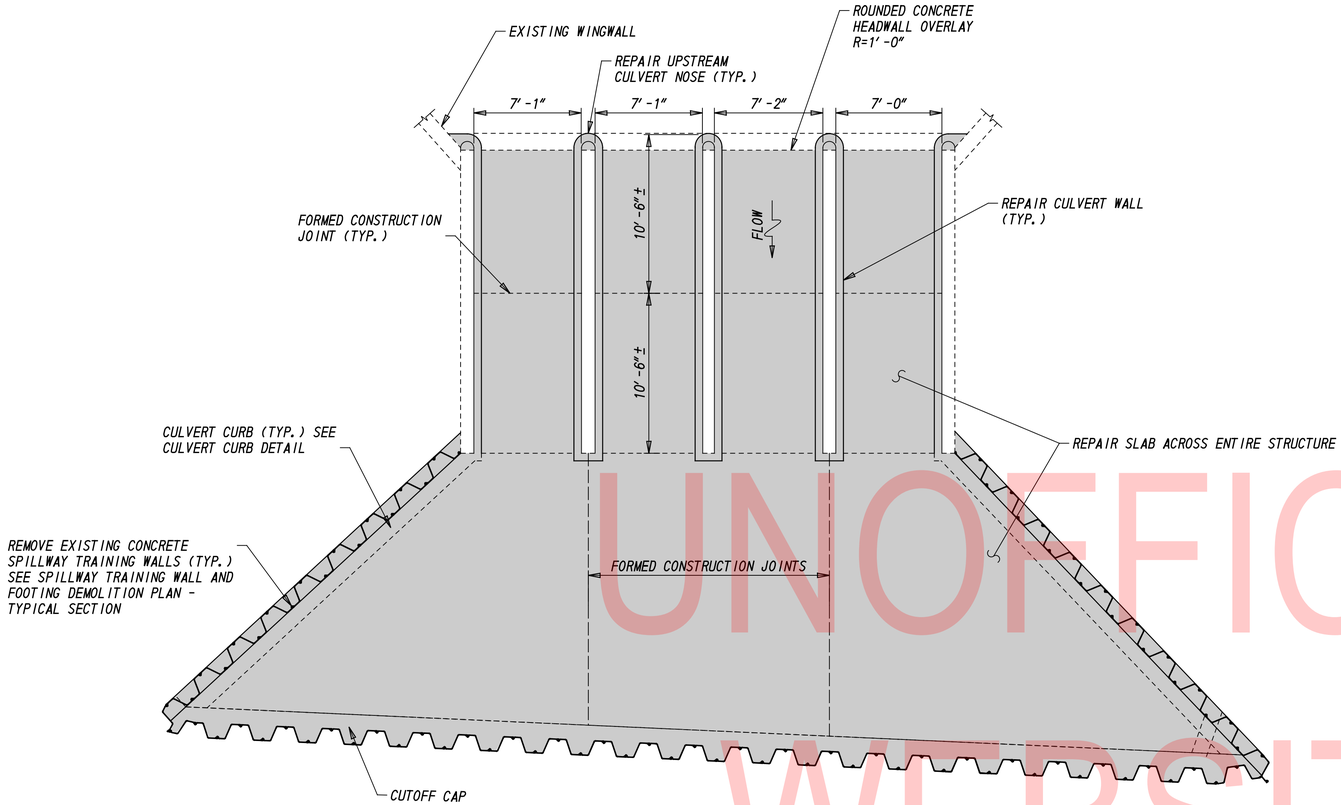

CULVERT REPAIR PLAN
SCALE: 1" = 5'-0"

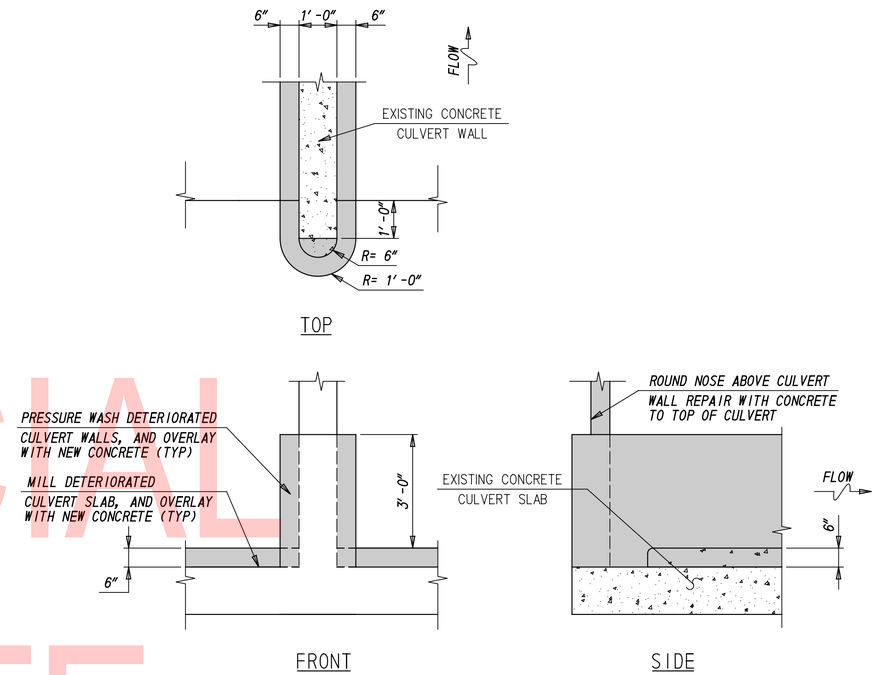

UPSTREAM CULVERT ENTRANCE REPAIR DETAIL-LOWER
SCALE: 1/2" = 1'-0"

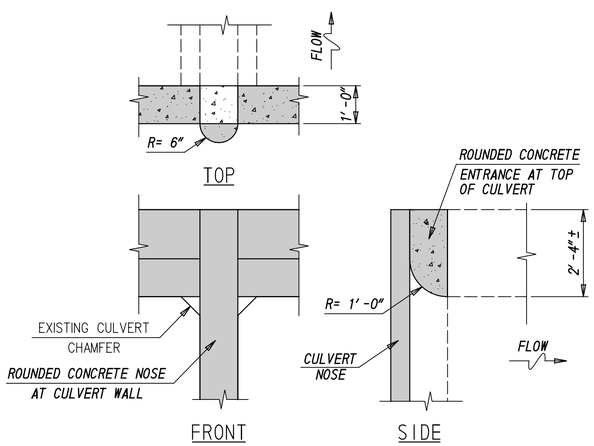

UPSTREAM CULVERT ENTRANCE REPAIR DETAIL-UPPER
SCALE: 1/2" = 1'-0"

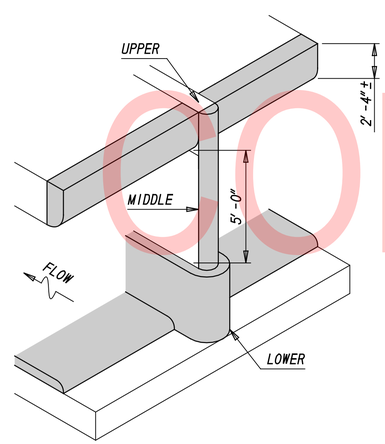

UPSTREAM CULVERT ENTRANCE REPAIR DETAIL - ISOMETRIC
NOT TO SCALE

NOTE: TOP BEAM NOT SHOWN FOR CLARITY

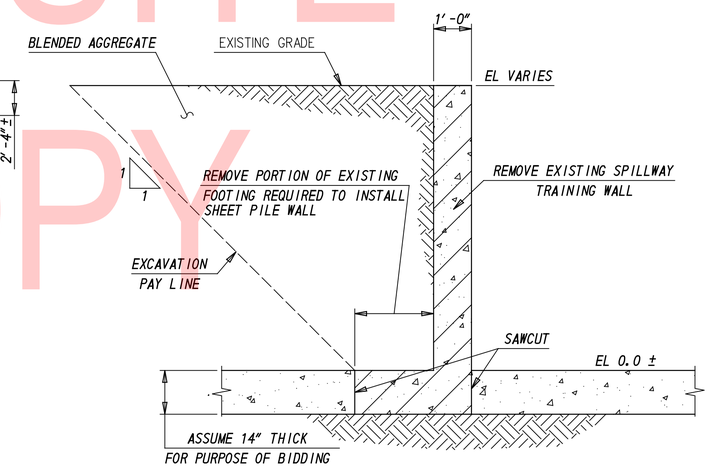

SPILLWAY TRAINING WALL AND FOOTING DEMOLITION - TYPICAL SECTION
SCALE: 1/2" = 1'-0"

NOTE: SUBGRADE SHALL BE OBSERVED BY ENGINEER FOLLOWING DEMOLITION.

CONCRETE NOTES:

1. PROVIDE CONSTRUCTION, CONTRACTION, AND CONTROL JOINTS AS INDICATED ON THE DRAWINGS, OR AS DIRECTED BY THE ENGINEER. PROVIDE WATER STOP WHERE INDICATED.

LEGEND	
	PROPOSED WORK

UNOFFICIAL WEBSITE COPY

DT-06

ADDENDA / REVISIONS	SCALE: AS NOTED	RECORDS POND DAM IMPROVEMENTS	CONTRACT T201507605	BRIDGE NO. 3-329	CULVERT REPAIR PLAN AND DETAILS	SECTION SE
			COUNTY SUSSEX	DESIGNED BY: JS		SHEET NO. 22
				CHECKED BY: JRY		

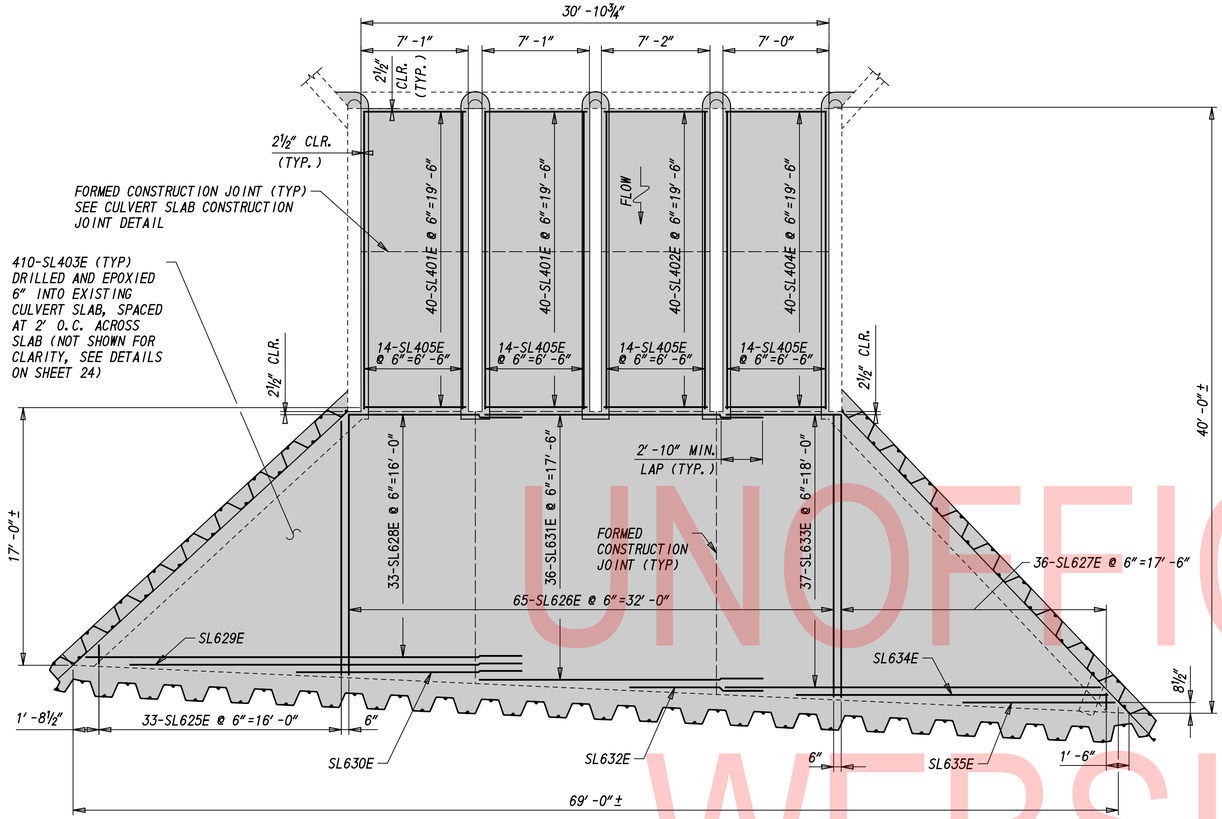

CULVERT SLAB DETAIL
SCALE: 1"= 5'-0"

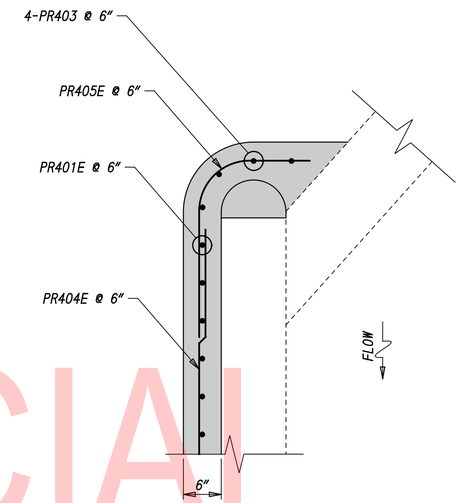

CULVERT SIDEWALL DETAIL
SCALE: 1"= 1'-0"

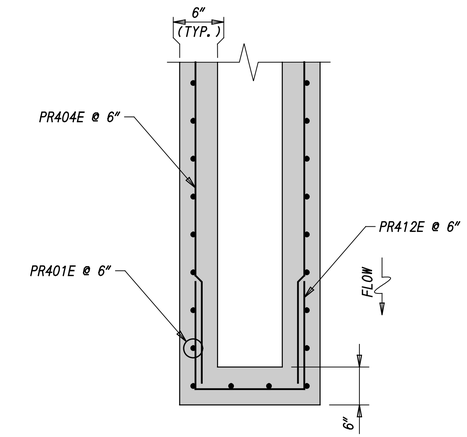

DOWNSTREAM END DETAIL
SCALE: 1"= 1'-0"

CONCRETE NOTES:

1. REINFORCING STEEL SPLICES NOT SHOWN ON THESE DRAWINGS SHALL BE SHOWN ON THE SHOP DRAWINGS AND APPROVED BY THE ENGINEER IN ACCORDANCE WITH THE SPECIFICATIONS. LOCATE SPLICES AT POINT OF MINIMUM STRESS.

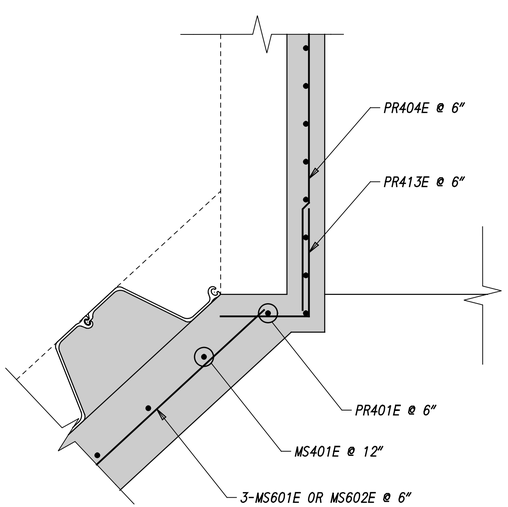

SIDEWALL DOWNSTREAM END DETAIL
SCALE: 1"= 1'-0"

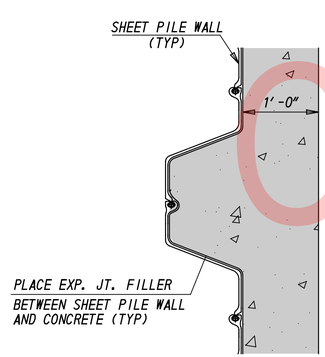

CULVERT CURB / SHEET PILE DETAIL
SCALE: 1"= 1'-0"

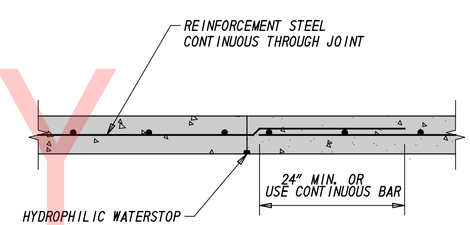

CULVERT SLAB CONSTRUCTION JOINT
SCALE: 1"= 1'-0"

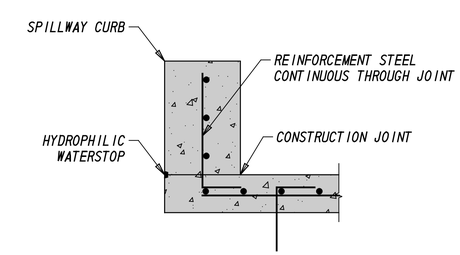

CULVERT CURB CONSTRUCTION JOINT
SCALE: 1"= 1'-0"

LEGEND	
	PROPOSED WORK

UNOFFICIAL WEBSITE COPY

DT-07

ADDENDA / REVISIONS	SCALE: AS NOTED	RECORDS POND DAM IMPROVEMENTS	CONTRACT T201507605	BRIDGE NO. 3-329	STRUCTURAL DETAILS – 1	SECTION SE
			COUNTY SUSSEX	DESIGNED BY: JS		SHEET NO. 23
				CHECKED BY: JRY		

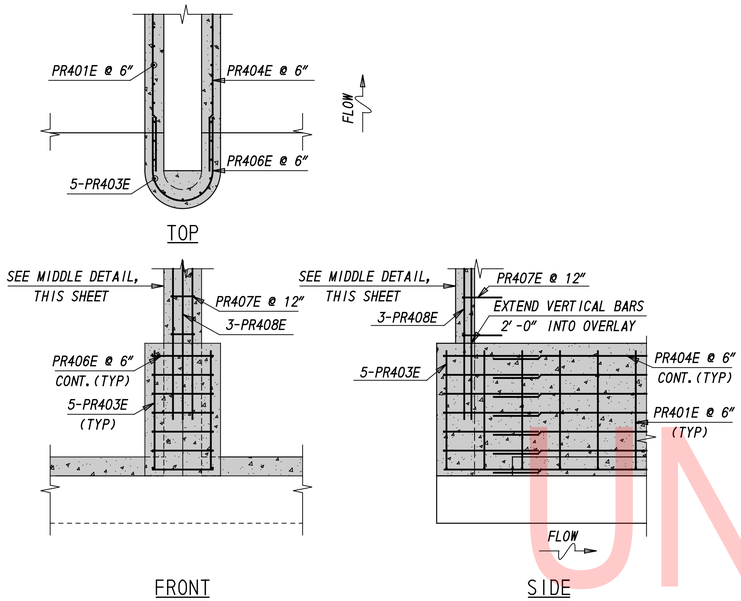

UPSTREAM CULVERT NOSE REPAIR DETAIL - LOWER

SCALE: 1/2" = 1'-0"

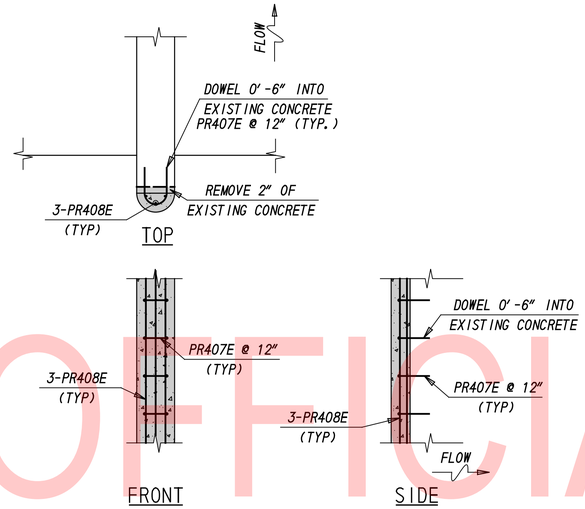

UPSTREAM CULVERT NOSE REPAIR DETAIL - MIDDLE

SCALE: 1/2" = 1'-0"

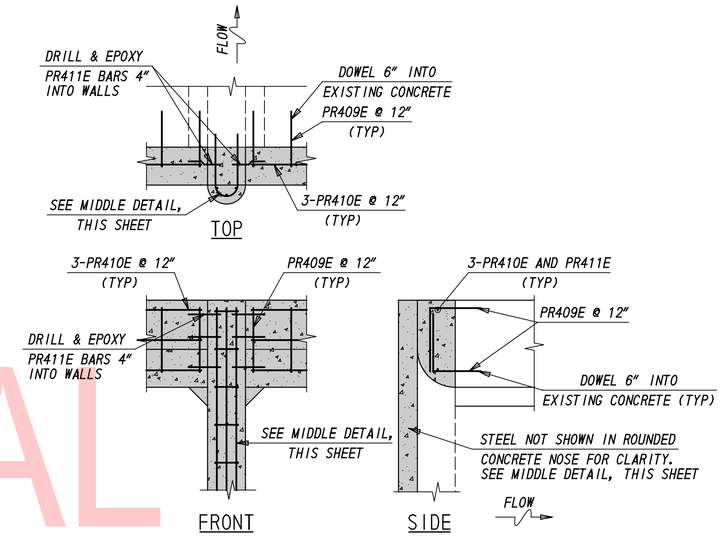

UPSTREAM CULVERT NOSE REPAIR DETAIL - UPPER

SCALE: 1/2" = 1'-0"

UNOFFICIAL WEBSITE COPY

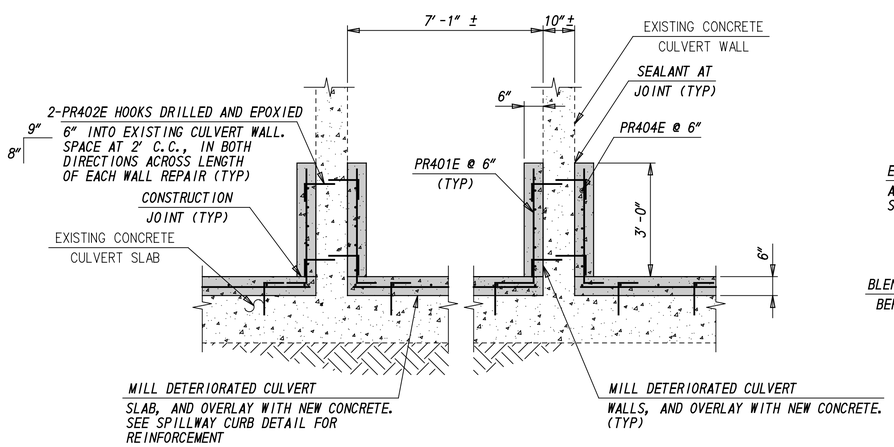

NOTE: SLAB STEEL CALLED OUT IN CULVERT SLAB DETAIL

CULVERT WALL REPAIR DETAIL

SCALE: 1/2" = 1'-0"

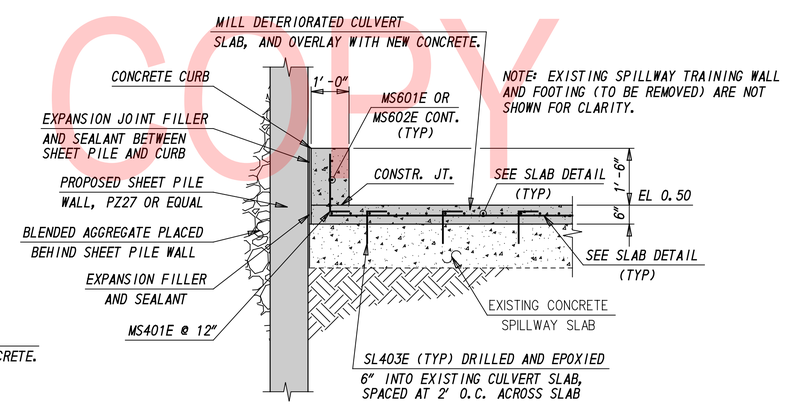

NOTE: EXISTING SPILLWAY TRAINING WALL AND FOOTING (TO BE REMOVED) ARE NOT SHOWN FOR CLARITY.

CULVERT CURB DETAIL

SCALE: 1/2" = 1'-0"

NOTE: FOR CONSTRUCTION JOINT DETAILS SEE CULVERT CURB CONSTRUCTION JOINT DETAIL ON SHEET 23.

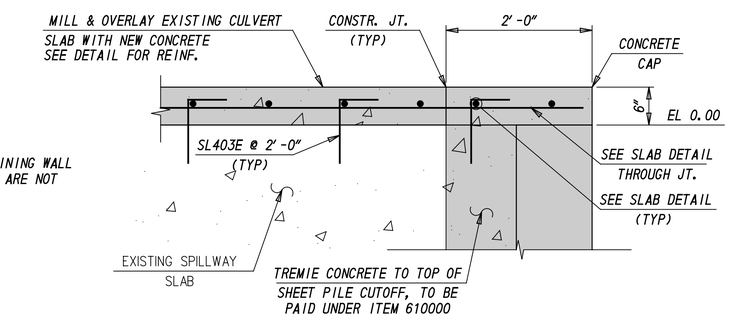

CUTOFF CAP DETAIL

SCALE: 1" = 1'-0"

LEGEND	
	PROPOSED WORK

DT-08

ADDENDA / REVISIONS	SCALE: AS NOTED	RECORDS POND DAM IMPROVEMENTS	CONTRACT T201507605	BRIDGE NO. 3-329	STRUCTURAL DETAILS – 2	SECTION SE
			COUNTY SUSSEX	DESIGNED BY: JS		SHEET NO. 24
				CHECKED BY: JRY		

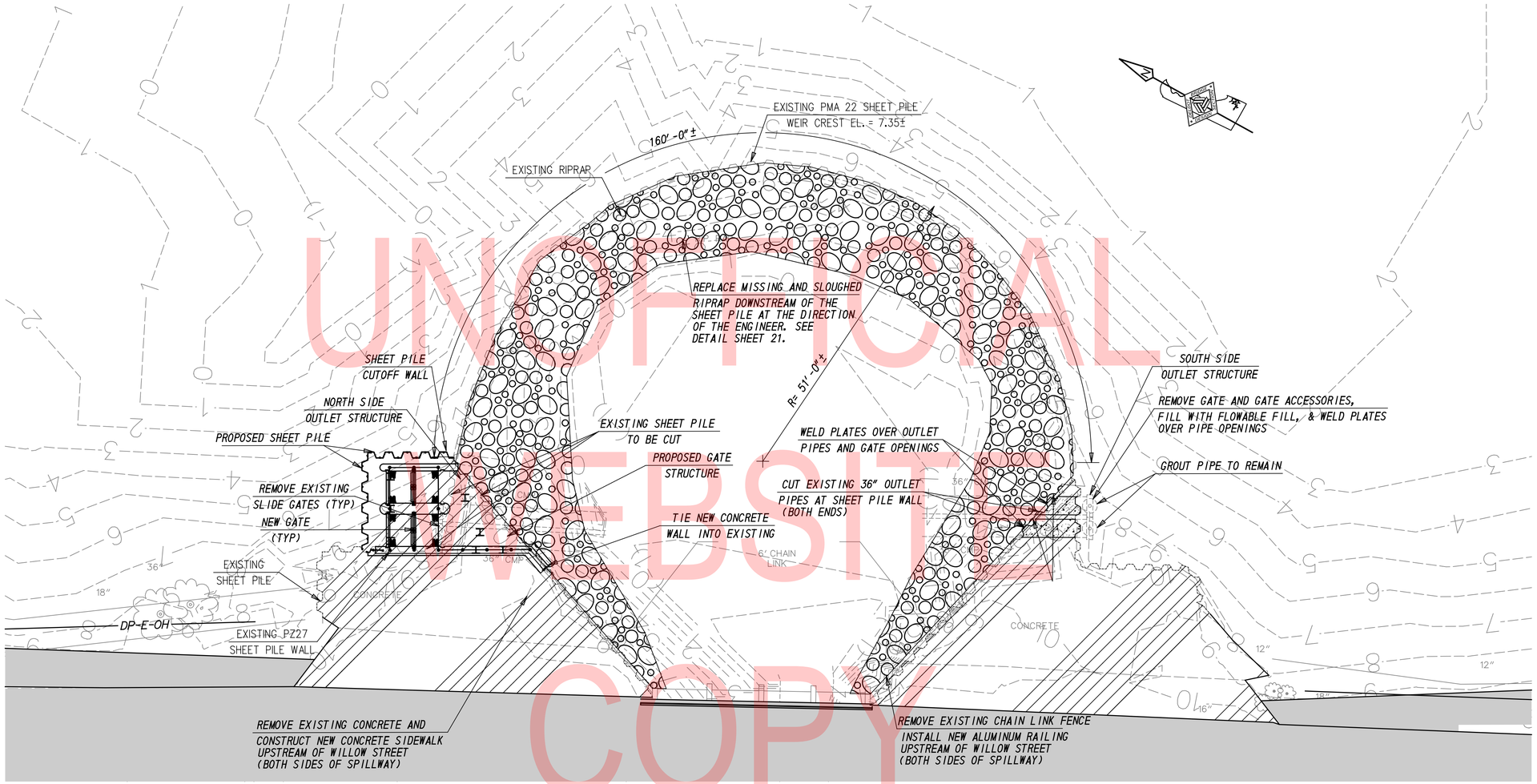

UNOFFICIAL WEBSITE COPY

EXISTING LOW LEVEL OUTLETS & WORKS PLAN

SCALE: 1"= 10'-0"

DT-09

ADDENDA / REVISIONS	SCALE: AS NOTED	RECORDS POND DAM IMPROVEMENTS	CONTRACT T201507605	BRIDGE NO. 3-329	OUTLET WORKS GENERAL PLAN	SECTION SE
			COUNTY SUSSEX	DESIGNED BY: JS		SHEET NO. 25
				CHECKED BY: JRY		

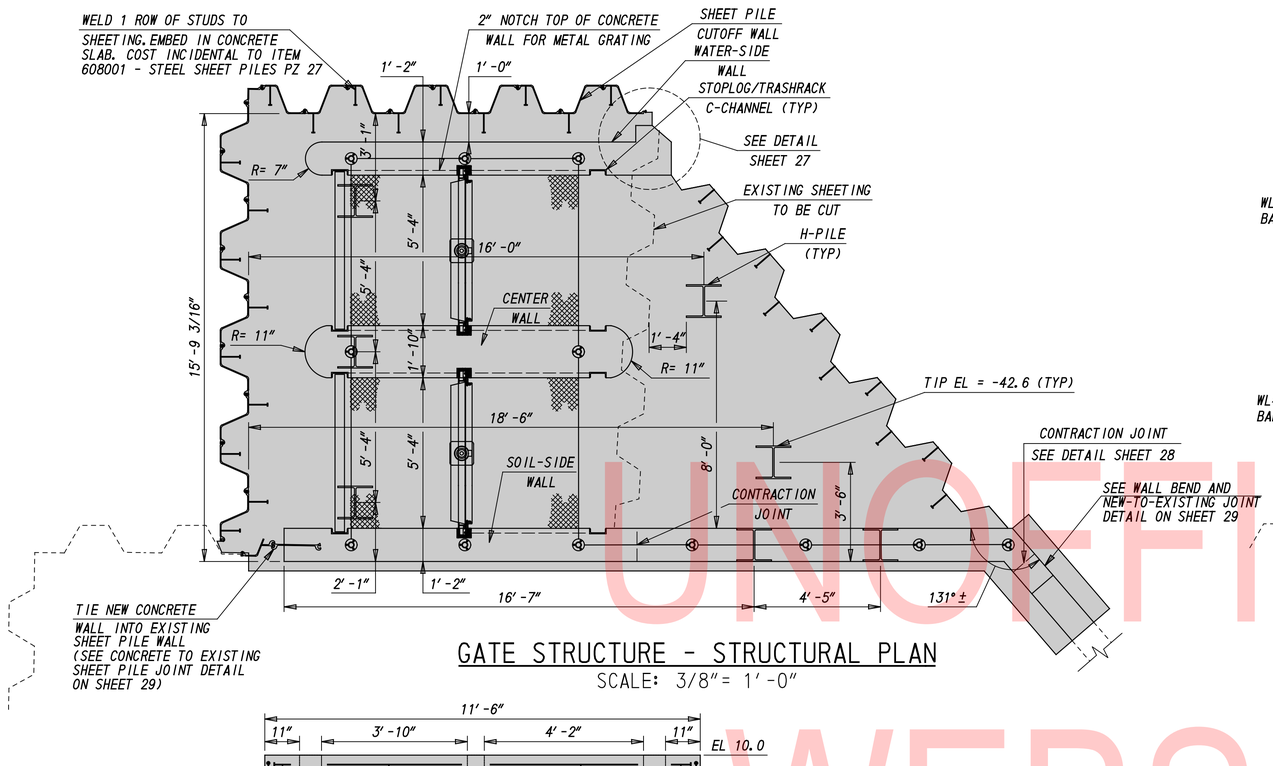

GATE STRUCTURE - STRUCTURAL PLAN

SCALE: 3/8" = 1'-0"

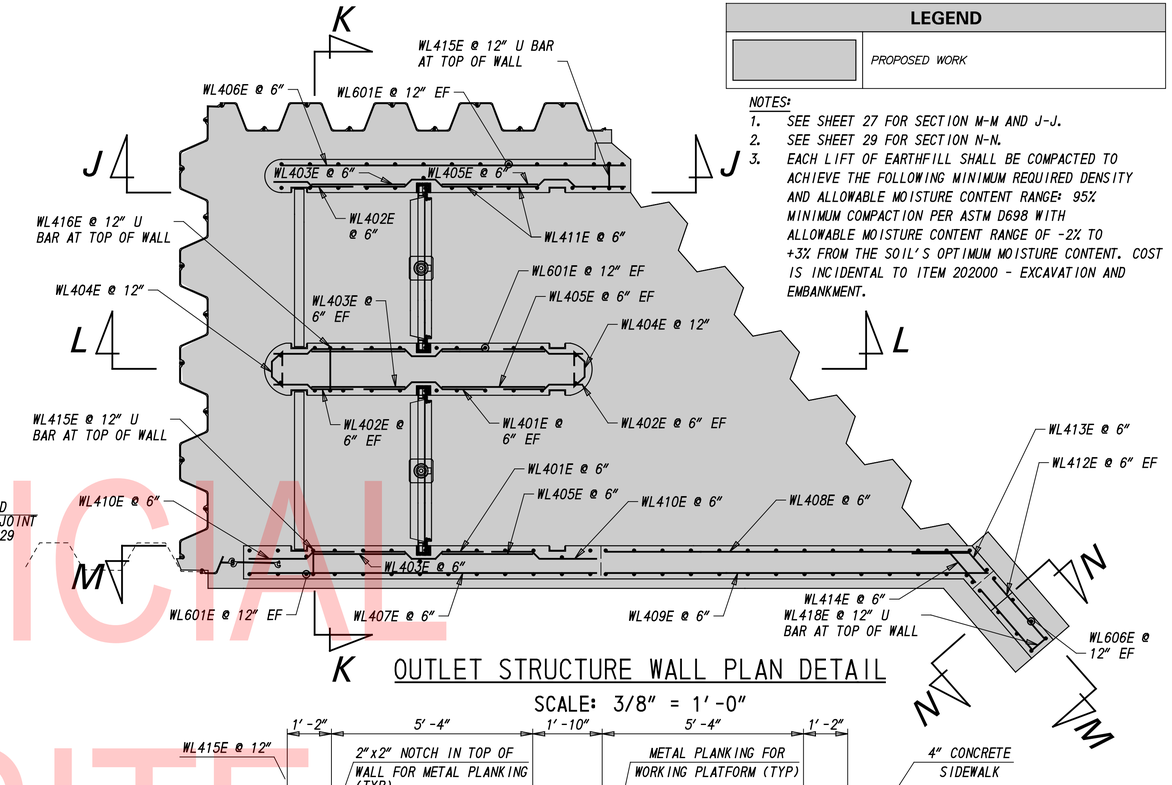

OUTLET STRUCTURE WALL PLAN DETAIL

SCALE: 3/8" = 1'-0"

LEGEND

	PROPOSED WORK

NOTES:

1. SEE SHEET 27 FOR SECTION M-M AND J-J.
2. SEE SHEET 29 FOR SECTION N-N.
3. EACH LIFT OF EARTHFILL SHALL BE COMPACTED TO ACHIEVE THE FOLLOWING MINIMUM REQUIRED DENSITY AND ALLOWABLE MOISTURE CONTENT RANGE: 95% MINIMUM COMPACTION PER ASTM D698 WITH ALLOWABLE MOISTURE CONTENT RANGE OF -2% TO +3% FROM THE SOIL'S OPTIMUM MOISTURE CONTENT. COST IS INCIDENTAL TO ITEM 202000 - EXCAVATION AND EMBANKMENT.

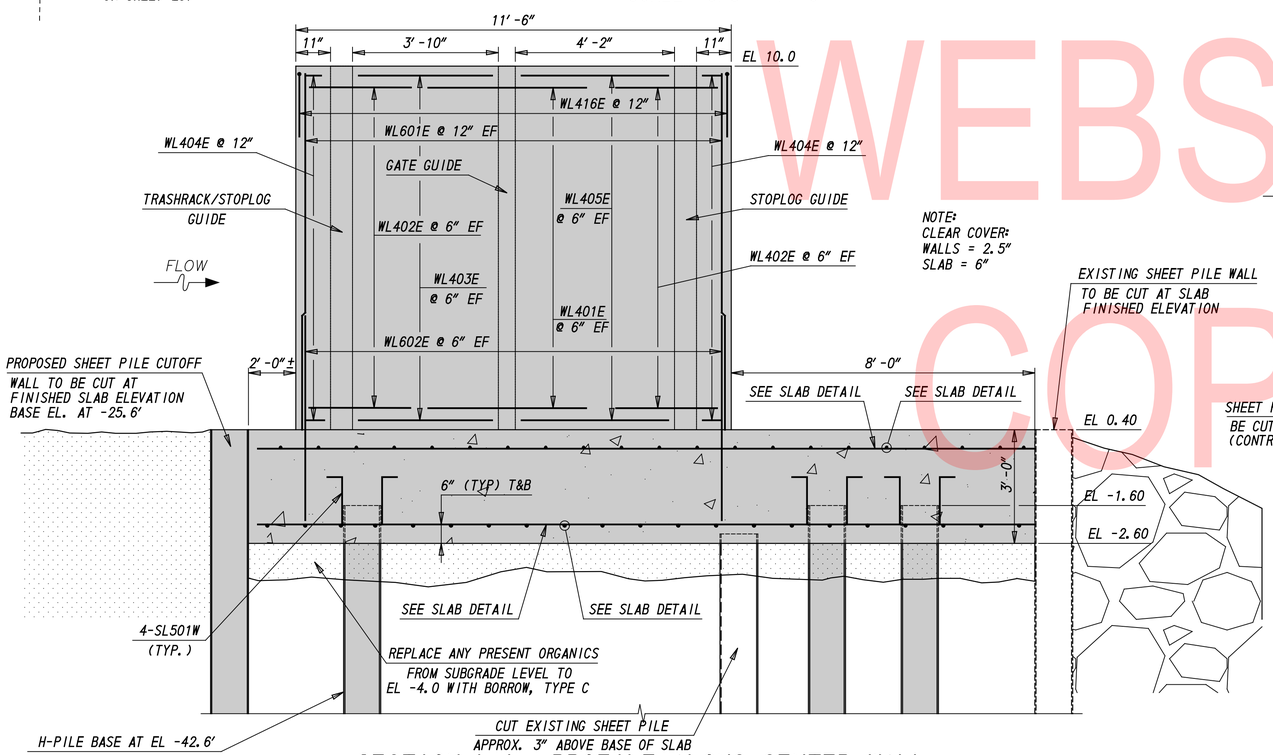

SECTION L-L: PROFILE ALONG CENTER WALL

SCALE: 1/2" = 1'-0"

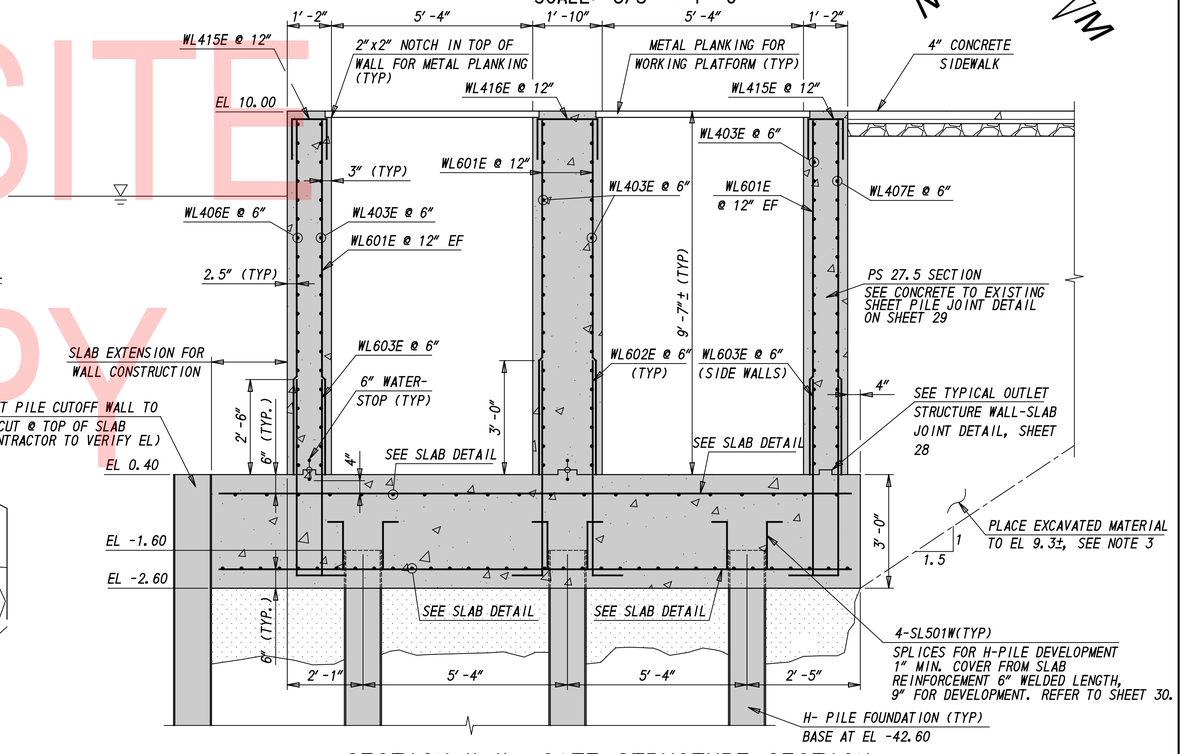

SECTION K-K: GATE STRUCTURE SECTION

SCALE: 1/2" = 1'-0"

UNOFFICIAL WEBSITE COPY

ADDENDA / REVISIONS		SCALE: AS NOTED	RECORDS POND DAM IMPROVEMENTS	CONTRACT T201507605	BRIDGE NO. 3-329	OUTLET WORKS PLAN, PROFILE AND SECTION	DT-10
				COUNTY SUSSEX	DESIGNED BY: JS		SECTION SE
					CHECKED BY: JRY		SHEET NO. 26

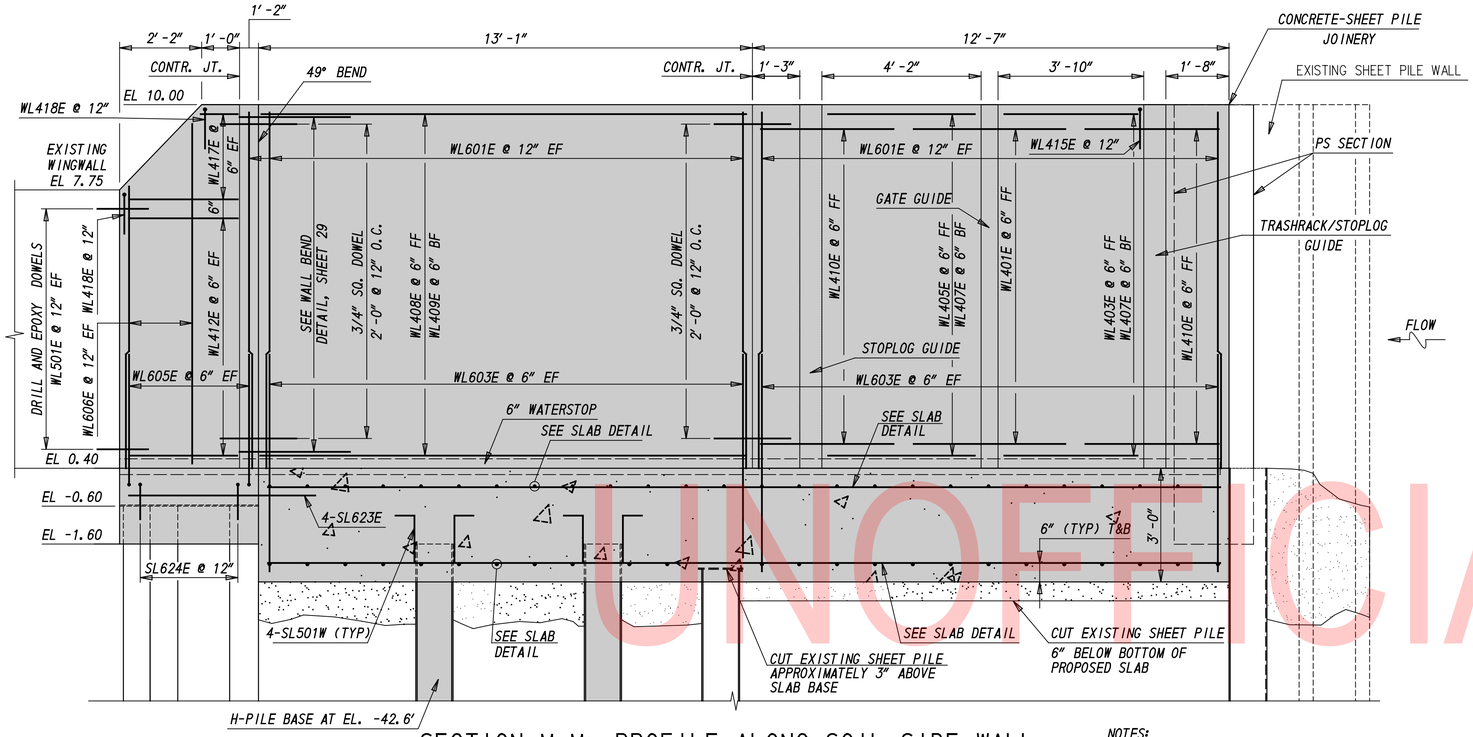

SECTION M-M: PROFILE ALONG SOIL-SIDE WALL

SCALE: 1/2" = 1'-0"

NOTES:

1. DIMENSIONS TAKEN ALONG THE FRONT FACE OF WALL.

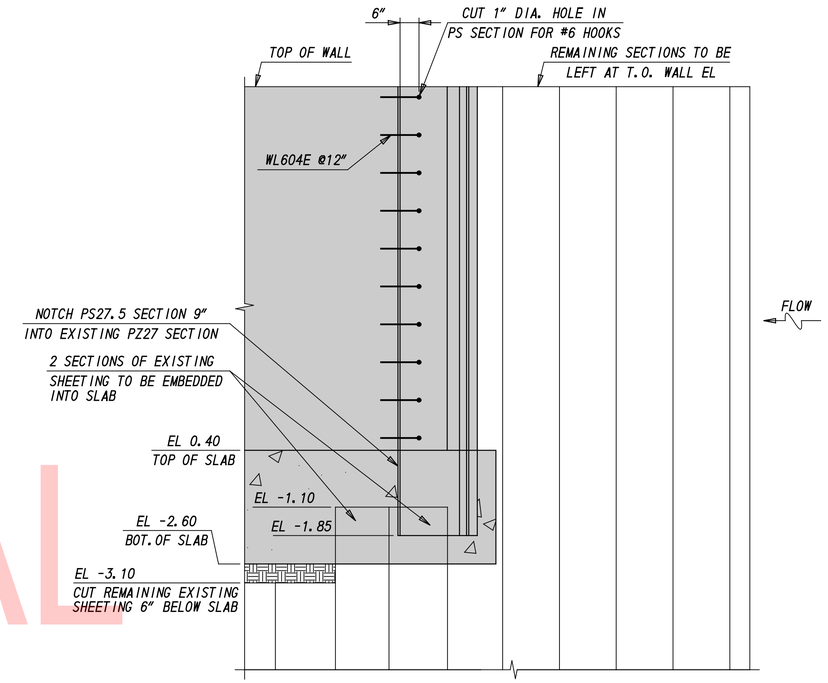

CONNECTION TO EXISTING SHEET PILE WALL PROFILE

SCALE: 1/2" = 1'-0"

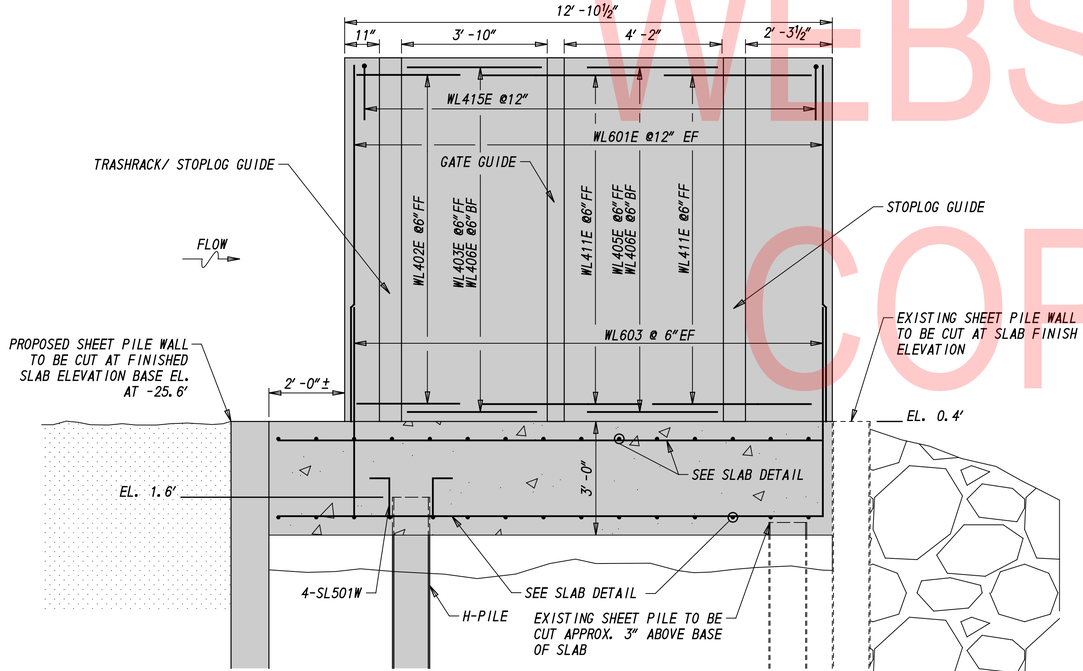

SECTION J-J: PROFILE ALONG WATER-SIDE WALL

SCALE: 1/2" = 1'-0"

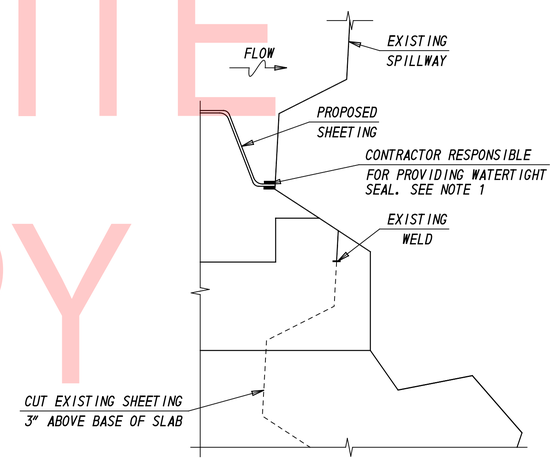

OUTLET STRUCTURE WALL/EXISTING SHEETING CONNECTION DETAIL

SCALE: 1" = 1'-0"

NOTES:

1. CONTRACTOR IS RESPONSIBLE FOR DEVELOPING THE MEANS AND METHODS FOR PROVIDING WATERTIGHT SEAL AT THE INTERFACE BETWEEN THE EXISTING AND PROPOSED SHEETING, AND SHALL SUBMIT THE PROPOSED APPROACH TO THE DEPARTMENT FOR REVIEW. A POSSIBLE APPROACH THAT THE CONTRACTOR MAY CONSIDER INCLUDES DRIVING BENTONITE SOAKED OAKUM ON EITHER SIDE OF THE PROPOSED SHEETING. THIS WORK IS INCIDENTAL TO ITEM 608011 - STEEL SHEET PILES PZ 27.

LEGEND	
	PROPOSED WORK

UNOFFICIAL WEBSITE COPY

DT-11

ADDENDA / REVISIONS	SCALE: AS NOTED	RECORDS POND DAM IMPROVEMENTS	CONTRACT T201507605	BRIDGE NO. 3-329	OUTLET WORKS WALL PROFILE	SECTION SE
			COUNTY SUSSEX	DESIGNED BY: JS		SHEET NO. 27
				CHECKED BY: JRY		

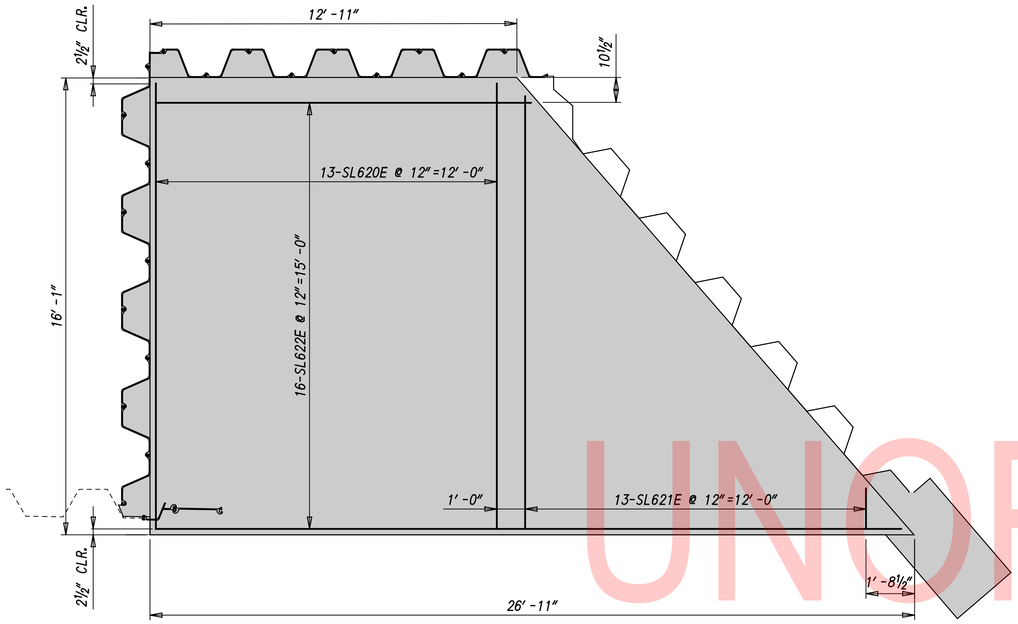

OUTLET STRUCTURE SLAB - TOP OF SLAB

SCALE: 3/8" = 1'-0"

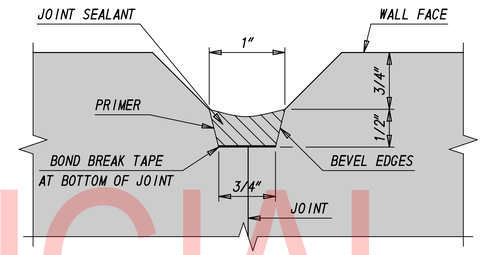

TYPICAL JOINT SEALANT DETAIL

SCALE: 1" = 1"

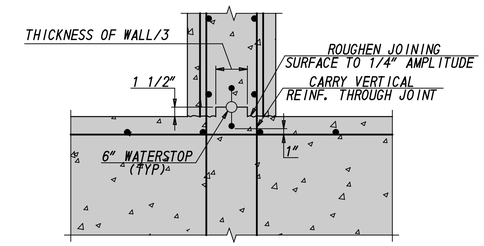

TYPICAL OUTLET STRUCTURE WALL-SLAB JOINT

SCALE: 1 1/2"=1'-0"

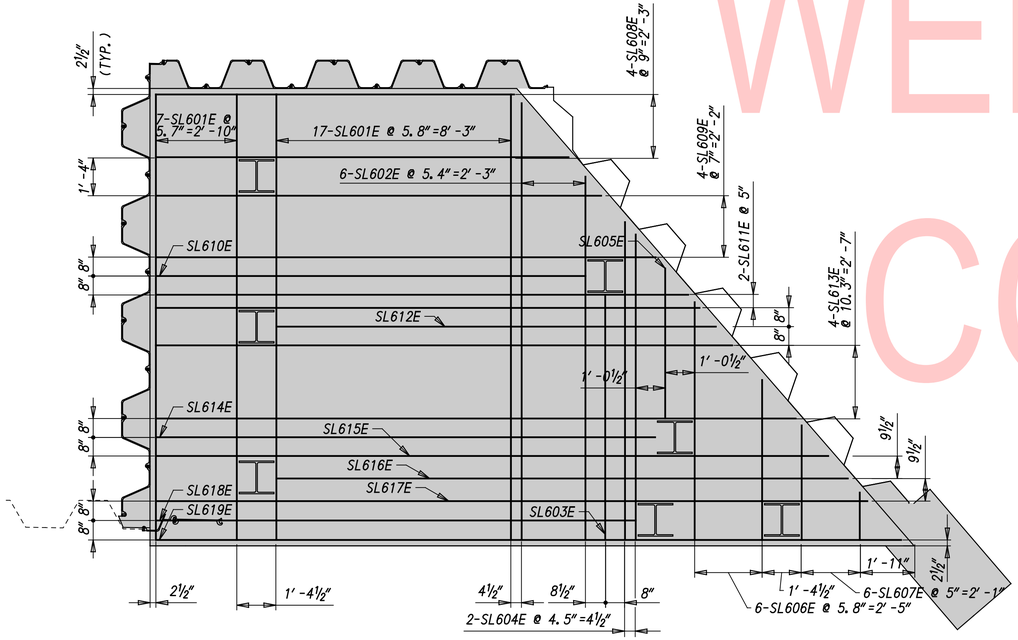

OUTLET STRUCTURE SLAB - BOTTOM OF SLAB

SCALE: 3/8" = 1'-0"

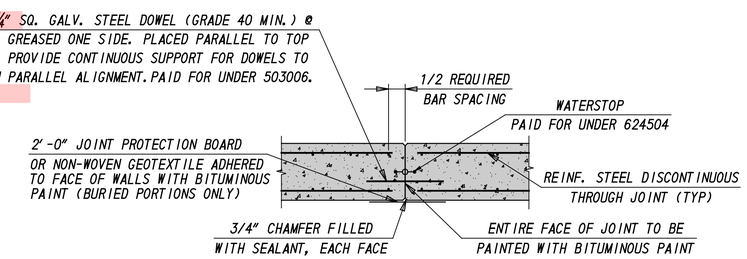

NOTE: JOINT PROTECTION BOARD, CHAMFER SEALANT AND BITUMINOUS PAINT PAID FOR UNDER 610000.

TYPICAL OUTLET STRUCTURE WALL CONTRACTION JOINT DETAIL

SCALE: 1/2"= 1'-0"

LEGEND	
	PROPOSED WORK

UNOFFICIAL WEBSITE COPY

DT-12

ADDENDA / REVISIONS	SCALE: AS NOTED	RECORDS POND DAM IMPROVEMENTS	CONTRACT T201507605	BRIDGE NO. 3-329	MISCELLANEOUS STRUCTURAL DETAILS AND NOTES	SECTION SE
			COUNTY SUSSEX	DESIGNED BY: JS		SHEET NO. 28
				CHECKED BY: JRY		

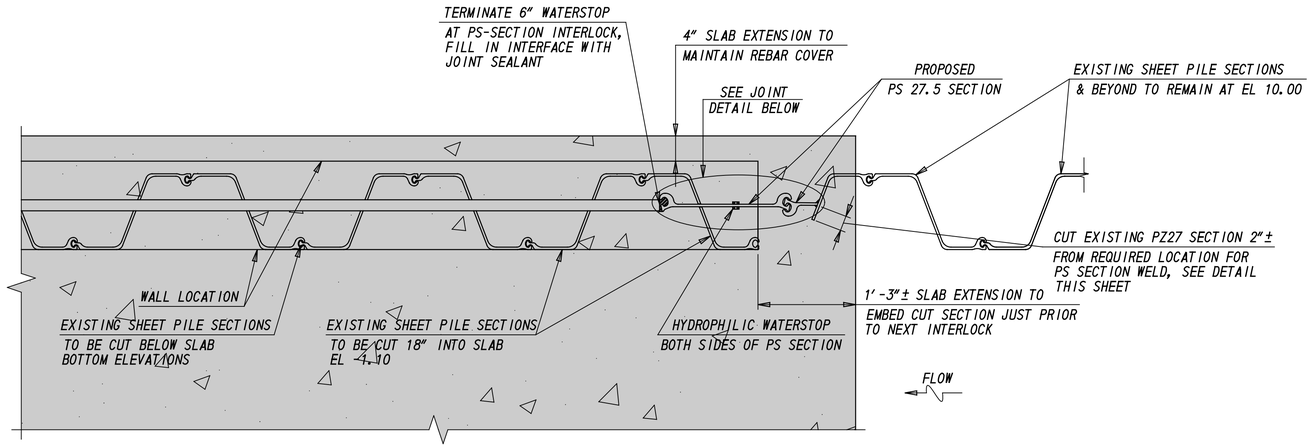

NOTES:
1. SECTION SHOWN AT EL. -1.1'
2. LOCATION REFERENCED ON SHEET 26

CONCRETE TO EXISTING SHEET PILE JOINT - PLAN VIEW
SCALE = 1"=1'-0"

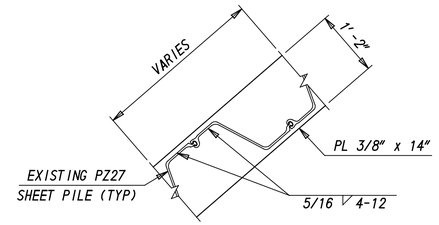

TYPICAL WELD DETAIL - PLATE TO SHEET PILE
SCALE: 3/4" = 1'-0"

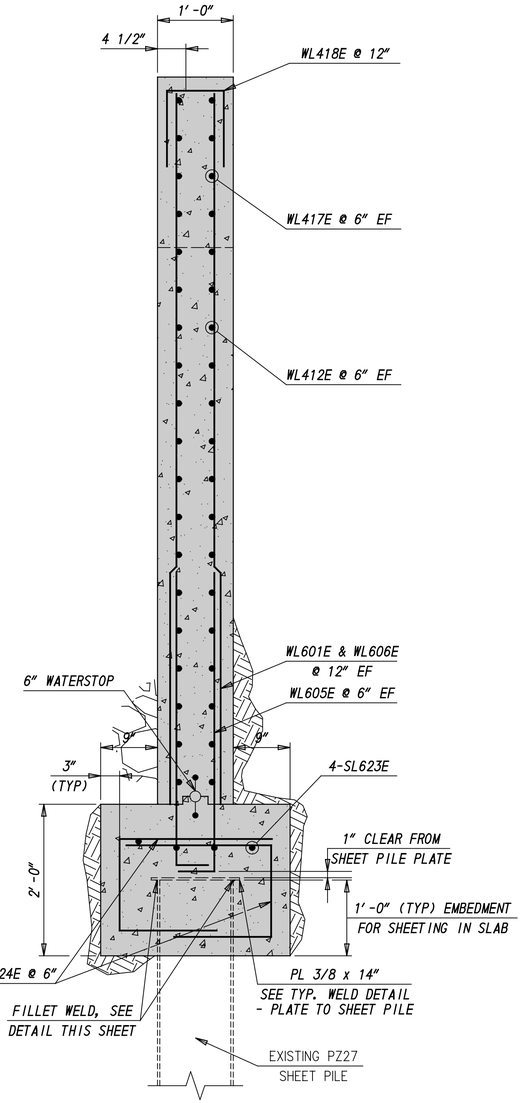

SECTION N-N: WEST WALL FOUNDATION DETAIL
SCALE = 1"=1'-0"

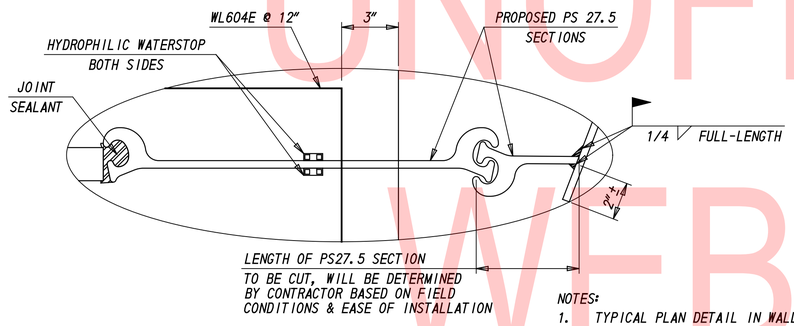

NOTES:
1. TYPICAL PLAN DETAIL IN WALL.
2. PS27.5, WELD, SEALANT AND WATERSTOP ARE INCIDENTAL TO ITEM 610000.

JOINT DETAIL
SCALE: 3" =1'-0"

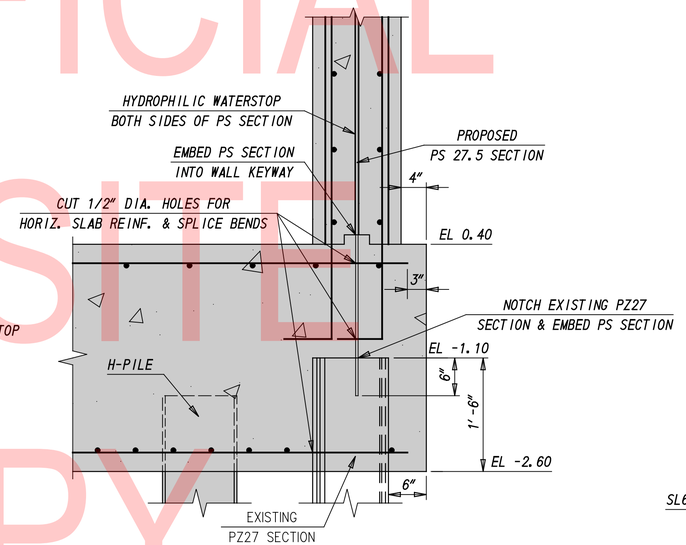

CONCRETE TO EXISTING SHEET PILE JOINT - ELEVATION VIEW (BASE OF WALL)
SCALE = 1"=1'-0"

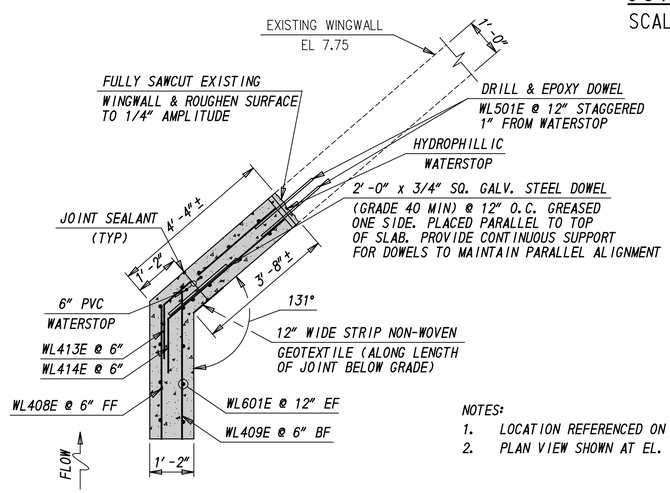

NOTES:
1. LOCATION REFERENCED ON SHEET 26.
2. PLAN VIEW SHOWN AT EL. 7.75'.

WALL BEND AND NEW-TO-EXISTING JOINT DETAIL
SCALE: 1/2"= 1'-0"

LEGEND	
	PROPOSED WORK

UNOFFICIAL WEBSITE COPY

DT-13

ADDENDA / REVISIONS	SCALE: AS NOTED	RECORDS POND DAM IMPROVEMENTS	CONTRACT T201507605	BRIDGE NO. 3-329	OUTLET WORKS CONNECTION DETAILS	SECTION SE
			COUNTY SUSSEX	DESIGNED BY: JS		SHEET NO. 29
				CHECKED BY: JRY		

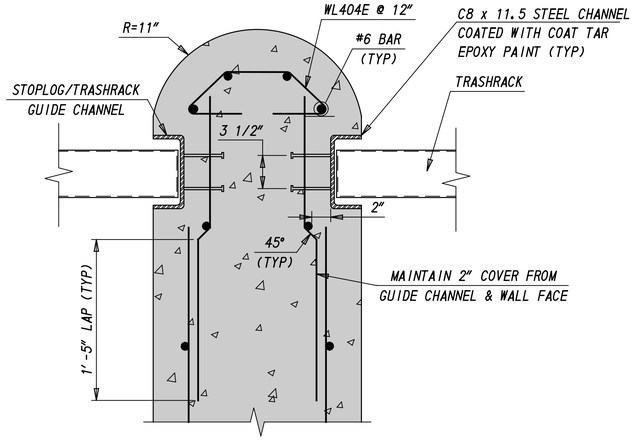

CENTER WALL - TRASHRACK/STOPLOG GUIDE EMBEDMENT DETAIL
SCALE: 1 1/2" =1'-0"

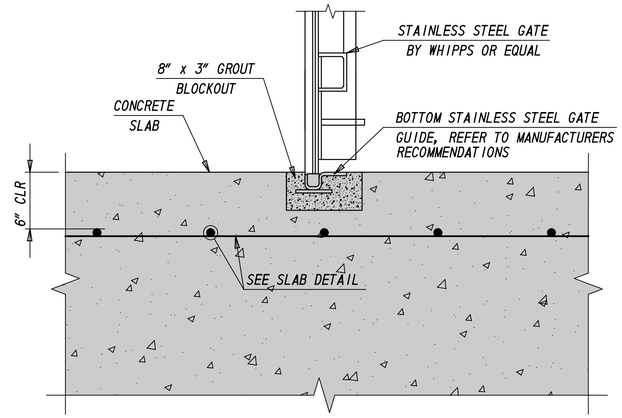

SLAB - GATE EMBEDMENT DETAIL
SCALE: 1 1/2" =1'-0"

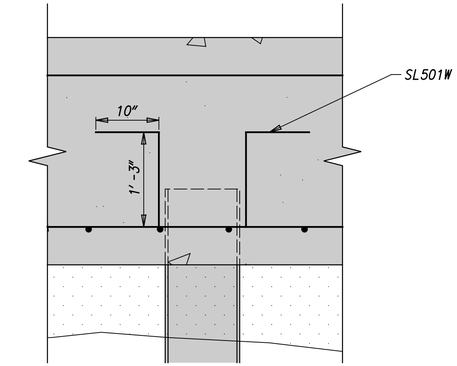

H-PILE DEVELOPMENT PROFILE
SCALE: 1" = 1'-0"

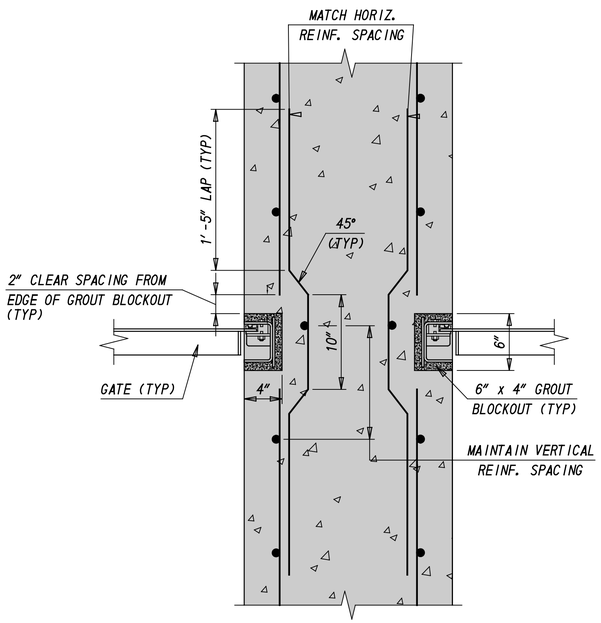

CENTER WALL - GATE EMBEDMENT DETAIL
SCALE: 1 1/2" =1'-0"

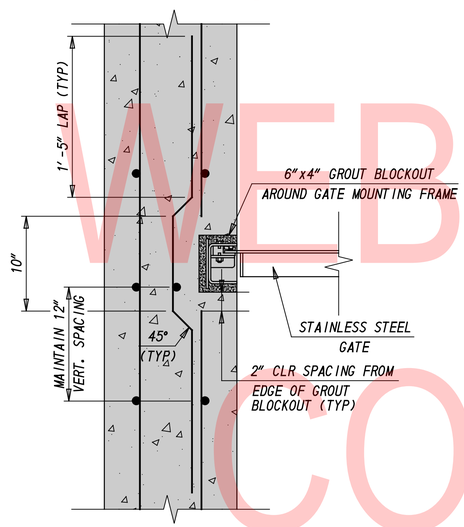

SIDE WALLS - GATE EMBEDMENT DETAIL
SCALE: 1 1/2" =1'-0"

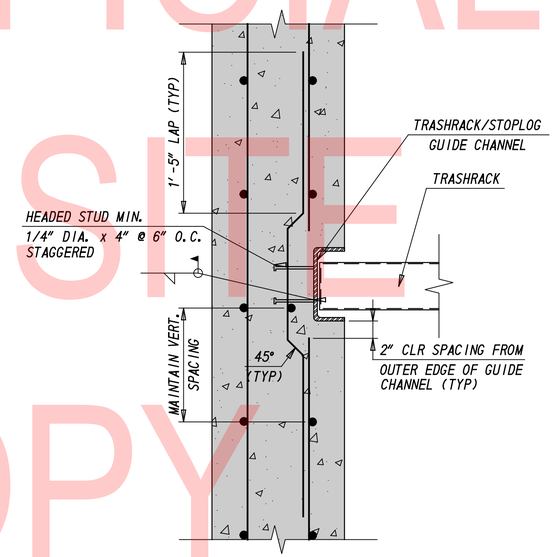

SIDE WALLS - TRASHLOG/STOPLOG GUIDE EMBEDMENT DETAIL
SCALE: 1 1/2" =1'-0"

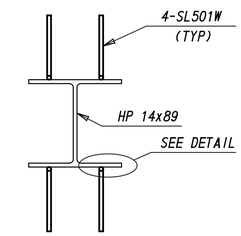

TYPICAL H-PILE REBAR PLAN
SCALE: 1"= 1'-0"

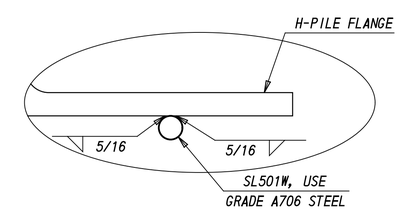

H-PILE WELD DETAIL
SCALE: 6"=1'-0"

LEGEND	
	PROPOSED WORK

UNOFFICIAL WEBSITE COPY

DT-14

ADDENDA / REVISIONS	SCALE: AS NOTED	RECORDS POND DAM IMPROVEMENTS	CONTRACT T201507605	BRIDGE NO. 3-329	OUTLET WORKS DETAIL SECTIONS	SECTION SE
			COUNTY SUSSEX	DESIGNED BY: JS		SHEET NO. 30
				CHECKED BY: JRY		

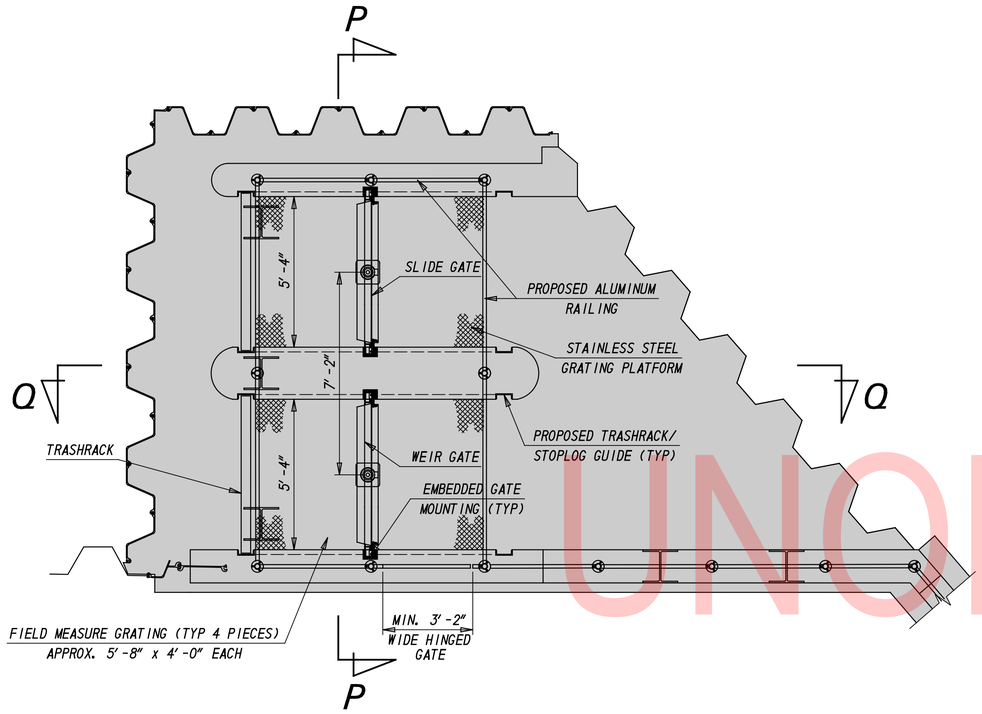

GENERAL GATE PLAN
SCALE: 3/8"= 1'-0"

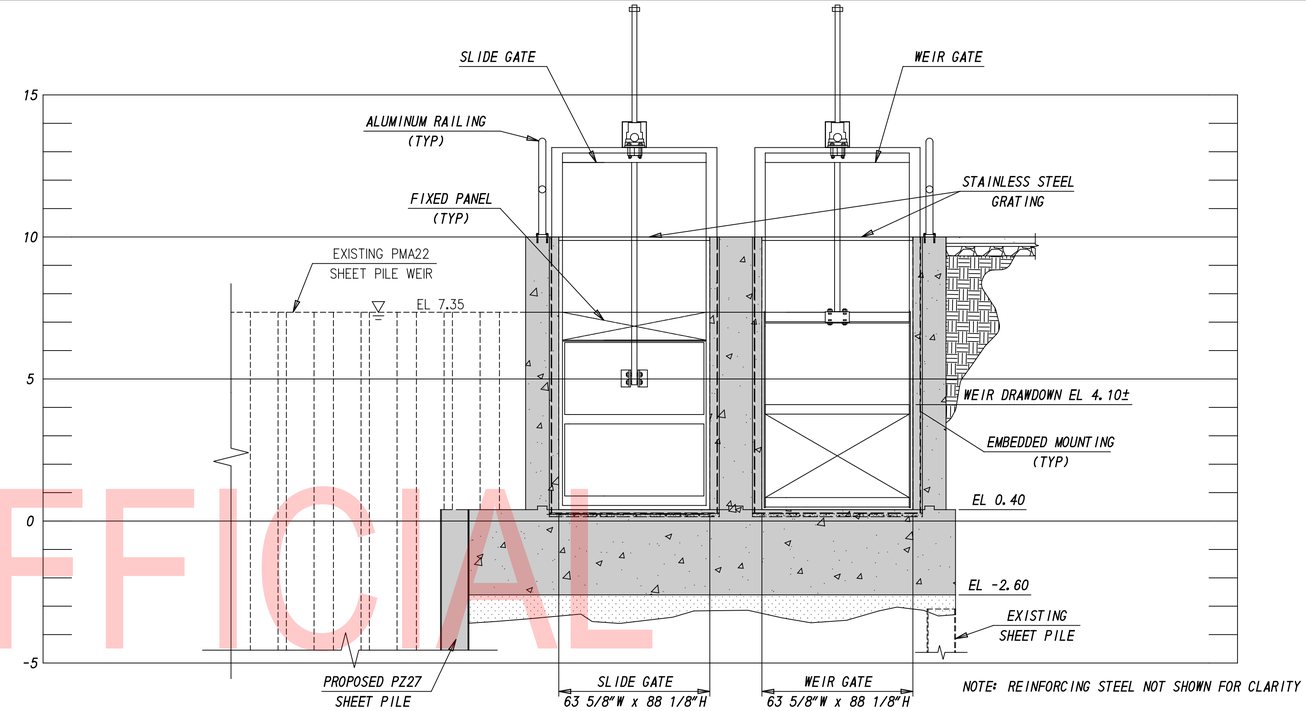

SECTION P-P: PROPOSED GATES SECTION
SCALE: 3/8"= 1'-0"

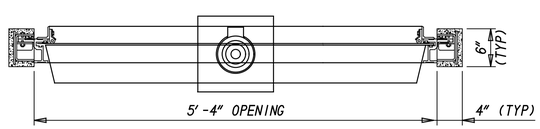

GATE OPENING
SCALE: 1"=1'-0"

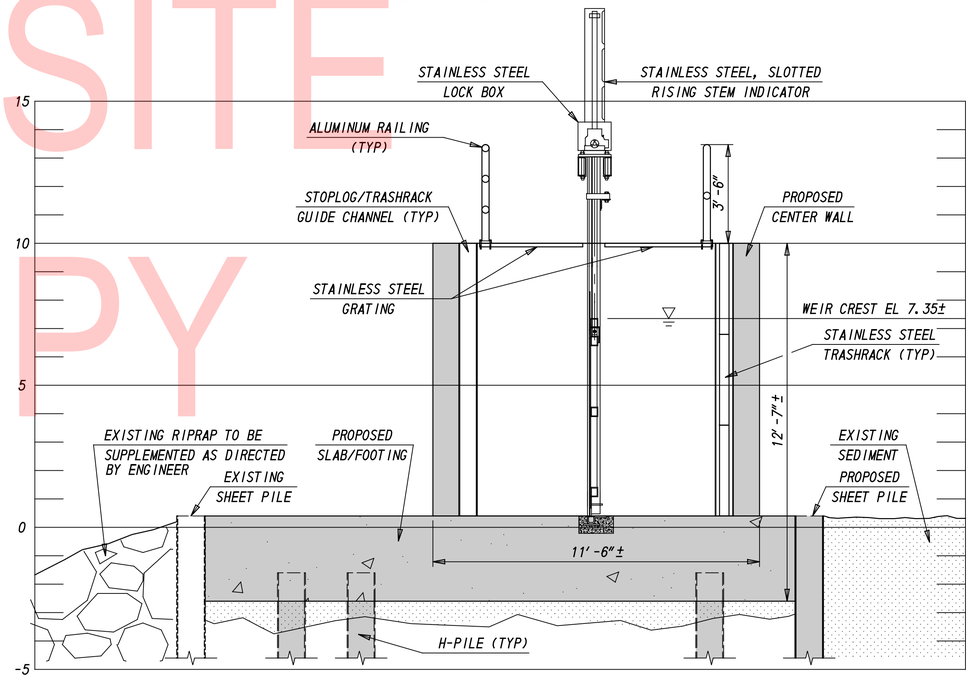

SECTION Q-Q: PROPOSED GATES PROFILE
SCALE: 3/8"= 1'-0"

LEGEND	
	PROPOSED WORK

UNOFFICIAL WEBSITE COPY

ADDENDA / REVISIONS		SCALE: AS NOTED	RECORDS POND DAM IMPROVEMENTS	CONTRACT T201507605	BRIDGE NO. 3-329	OUTLET GATE PLAN AND SECTIONS	DT-15
				COUNTY SUSSEX	DESIGNED BY: JS		SECTION SE
					CHECKED BY: JRY		SHEET NO. 31

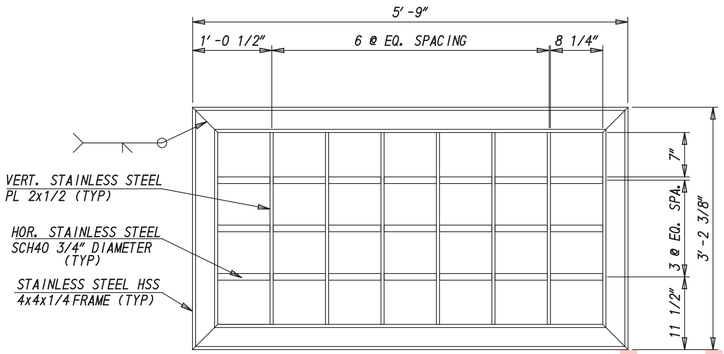

STAINLESS STEEL TRASHRACK
SCALE: 1"=1'-0"

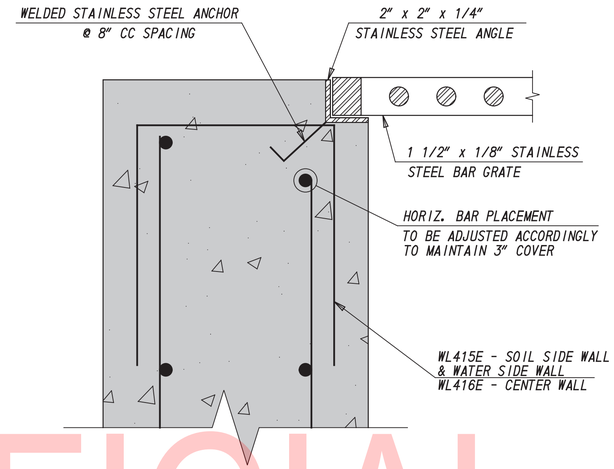

TYPICAL WALL SUPPORT FOR METAL PLANKING
SCALE: 3" = 1'-0"

UNOFFICIAL WEBSITE COPY

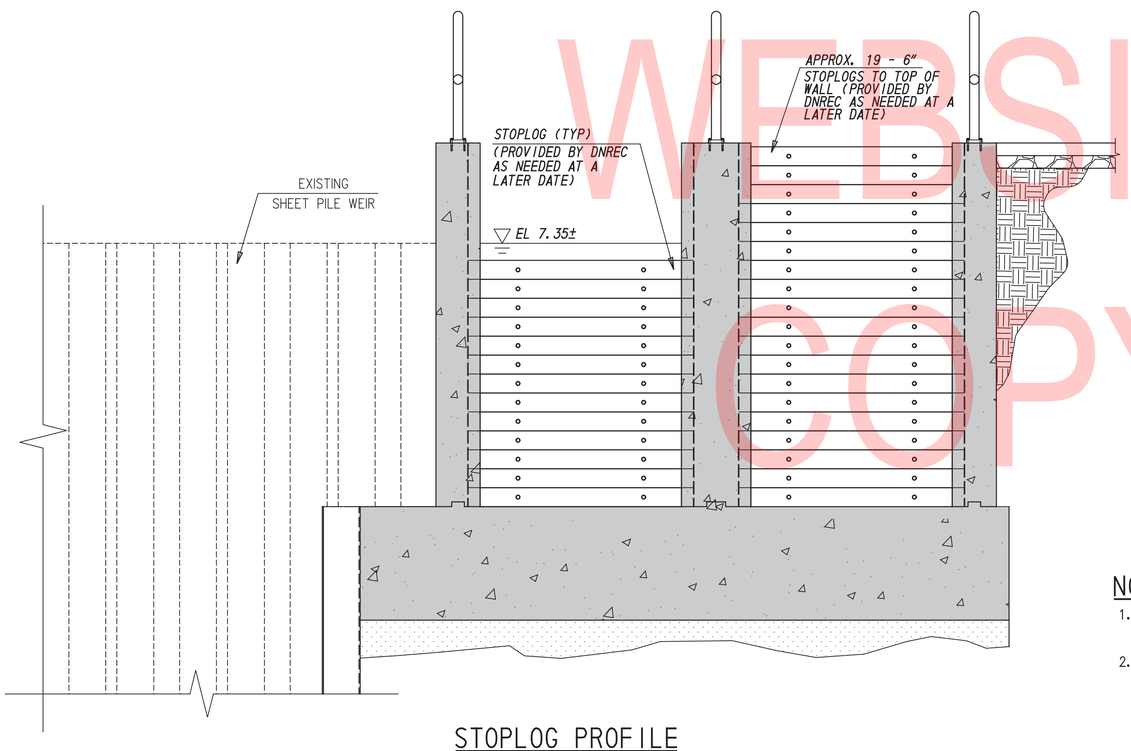

STOPLOG PROFILE
SCALE: 1/2" = 1'-0"

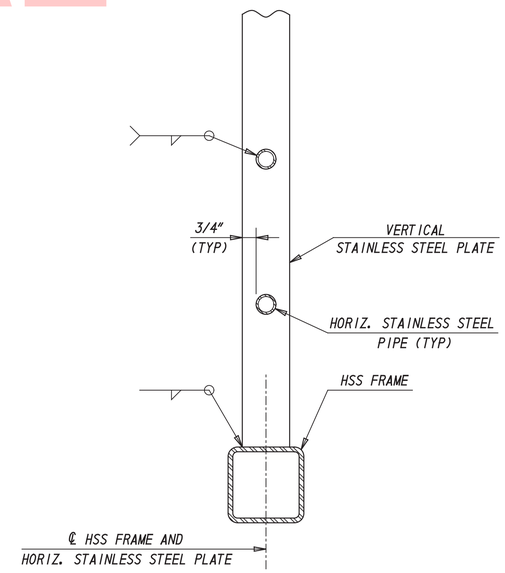

TRASHRACK SECTION
SCALE: 3" = 1'-0"

NOTES:

1. TRASH RACK AND STAINLESS STEEL GRATING SHALL BE PAID FOR UNDER ITEM 615000 - STEEL STRUCTURES.
2. PROVIDE STAINLESS STEEL BAR GRATING, TYPE 304L, MILL FINISH, WELDED, RECTANGULAR BAR, 19-W-4 SPACING, 1 1/2" HEIGHT x 1/8" THICK RECTANGULAR BEARING BARS, SPACED 1 3/16" ON CENTER WITH 1 1/16" CLEAR SPACE BETWEEN BEARING BARS, SMOOTH SURFACE, BEARING BARS RUN PARALLEL TO LENGTH OF PANEL, CROSS BARS SPACED 4" ON CENTER, 83% OPEN AREA.

LEGEND	
	PROPOSED WORK

DT-16

ADDENDA / REVISIONS	SCALE: AS NOTED	RECORDS POND DAM IMPROVEMENTS	CONTRACT T201507605	BRIDGE NO. 3-329	TRASHRACK AND STOPLOG DETAILS	SECTION SE
			COUNTY SUSSEX	DESIGNED BY: JS		SHEET NO. 32
				CHECKED BY: JRY		

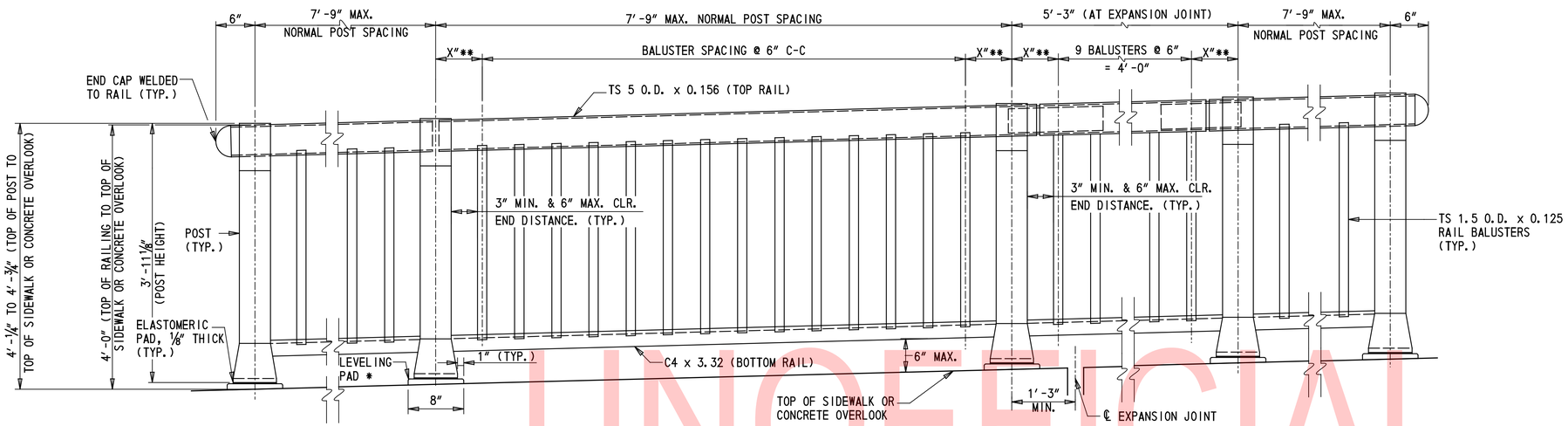

NOTE: MAINTAIN UNIFORM NORMAL POST SPACING WHEN POSSIBLE.

* CAST LEVELING PADS INTEGRALLY WITH SIDEWALK AND CONCRETE OVERLOOK. TOOL EDGES OF PADS.

** VARYING DIMENSION TO ENSURE PROPER PLACMENT IN THE FIELD.

ELEVATION - PEDESTRIAN RAIL

N.T.S.

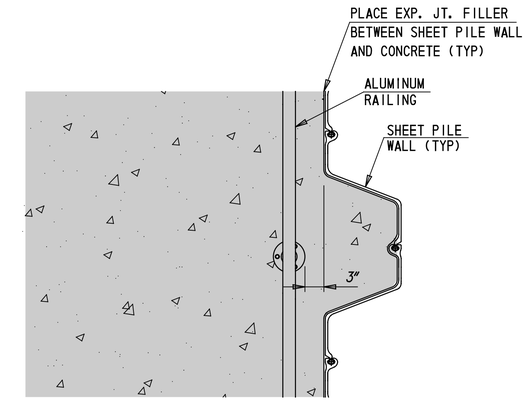

SIDEWALK SHEET PILE DETAIL

SCALE: 1" = 1'-0"

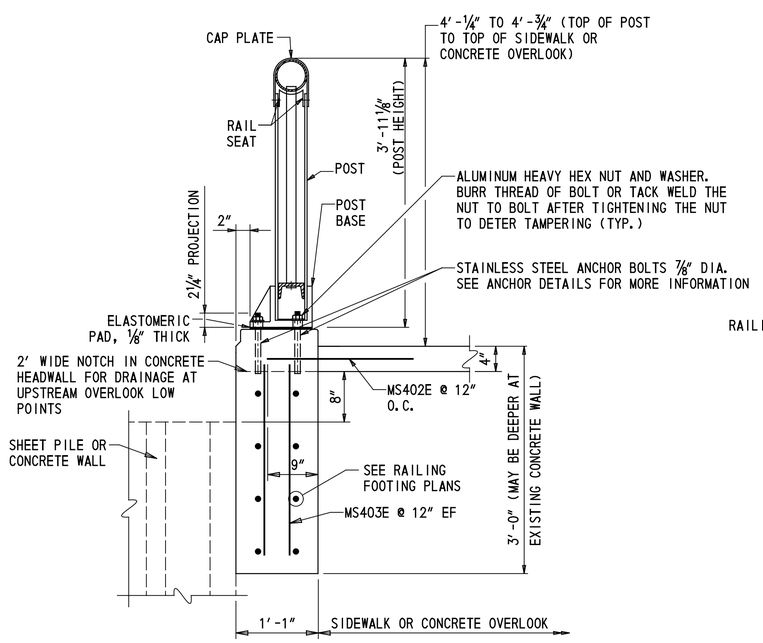

TYPICAL RAILING SECTION

N.T.S.

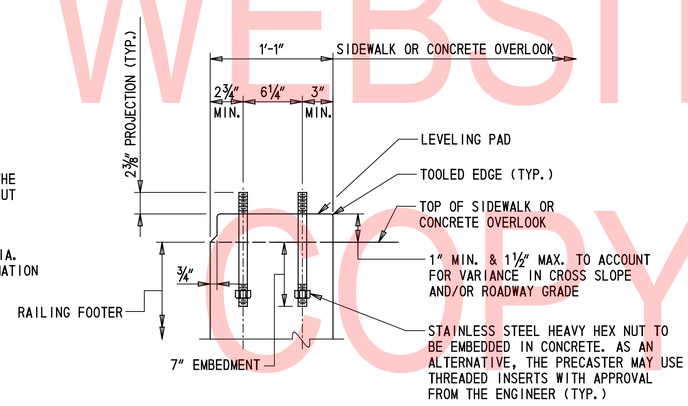

NOTE: FOR ANCHOR DETAIL, THE CONTRACTOR HAS THE OPTION TO PROPOSE FIELD DRILLING AND INSTALLING MANUFACTURED ANCHORS OR MECHANICAL FASTENERS CAPABLE OF DEVELOPING THE FULL STRENGTH OF THE BOLT WITH APPROVAL OF THE ENGINEER.

ANCHOR DETAIL FOR RAILING MOUNTED ONTO CONCRETE RAILING FOOTER

N.T.S.

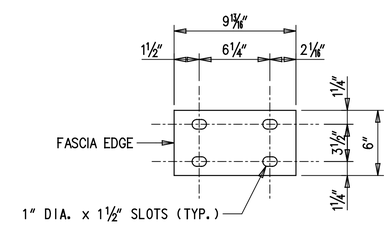

ELASTOMERIC PAD DETAIL ⅛" THICK

N.T.S.

UNOFFICIAL WEBSITE COPY

DT-17

ADDENDA / REVISIONS	SCALE: AS NOTED	RECORDS POND DAM IMPROVEMENTS	CONTRACT T201507605	BRIDGE NO. 3-329	ALUMINUM RAILING DETAIL – 1	SECTION SE
			COUNTY SUSSEX	DESIGNED BY: JS		SHEET NO. 33
				CHECKED BY: JRY		

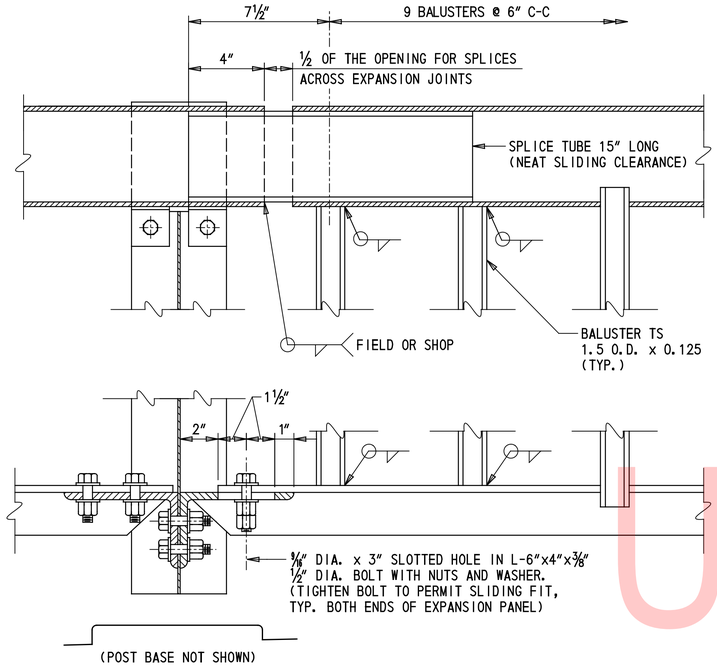

TYPICAL EXPANSION PANEL DETAIL
N. T. S.

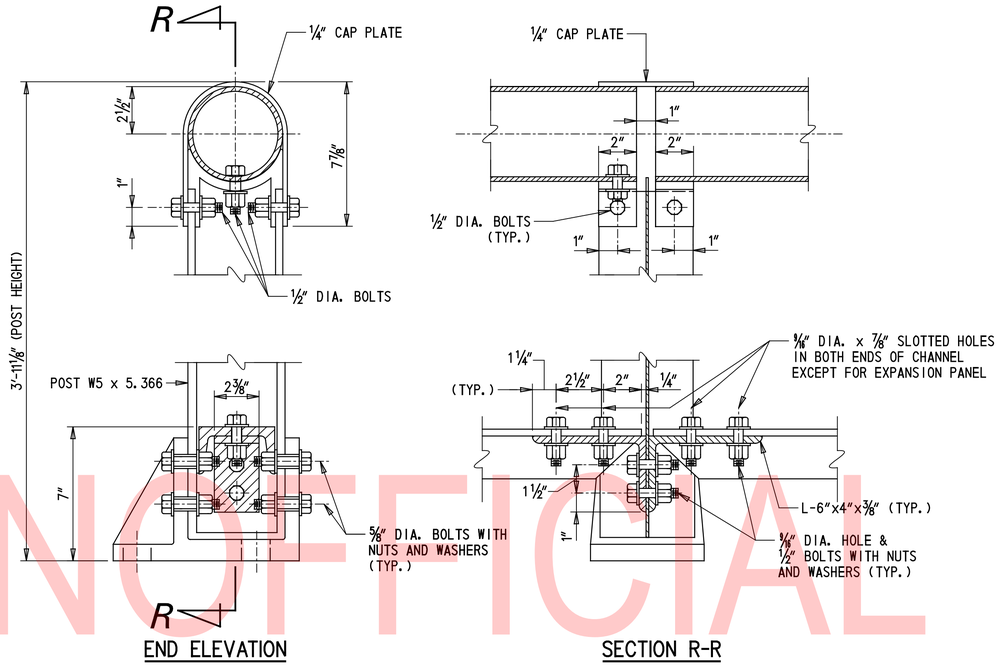

TYPICAL DETAIL AT POST
N. T. S.

GENERAL PEDESTRIAN RAILING NOTES

1. PLACE POSTS, BALUSTERS, AND ANCHOR BOLTS TRULY VERTICAL. PLACE RAILS PARALLEL TO GRADE.
2. PLACE END CAPS FLUSH WITH RAILS.
3. DO NOT PAINT ANY MATERIALS.
4. PROVIDE UNIFORM SPACING OF BALUSTERS IN EACH PANEL. IF POST SPACING SHOWN ON SHEET 33 DOES NOT RESULT IN 6″ SPACING FOR THE BALUSTERS, ADJUST THE DIFFERENCE BY INCREASING OR DECREASING BALUSTER SPACING BY NOT MORE THAN ¼″. WHEN REQUIRED, ADJUST END CLEAR SPACING BETWEEN POST TO ADJACENT BALUSTER FROM 3″ MIN. TO 6″ MAX.
5. SIMILAR ALUMINUM RAILING SYSTEM MAY BE SUBSTITUTED FOR THE SPECIFIED RAILING SYSTEM WITH APPROVAL OF THE ENGINEER.
6. FABRICATION AND INSTALLATION OF THE ALUMINUM RAILING SYSTEM WILL BE INCIDENTAL TO ITEM 626010 - ALUMINUM PEDESTRIAN RAILING.

MATERIAL NOTES

1. MATERIALS FOR ALUMINUM RAILING SYSTEM AND NUTS MUST MEET REQUIREMENTS OF ASTM B-221 ALLOY 6061-T6.
2. ELASTOMERIC PADS MUST MEET REQUIREMENTS OF 60 +/- SHORE A DUROMETER.
3. STAINLESS STEEL HEX NUTS MUST MEET REQUIREMENTS OF ASTM A-307, GRADE A.
4. BOLTS MUST MEET REQUIREMENTS OF ASTM B-211, ALUMINUM ALLOY 2024-T4.
5. ANCHOR BOLTS MUST MEET REQUIREMENTS OF ASTM A-276, TYPE 304 OR TYPE 430 (THREADS TO BE ROLLED NOT CUT).
6. ALUMINUM WASHERS MUST MEET REQUIREMENTS OF ASTM B-209 ALLOY ALCLAD 2024-T4.

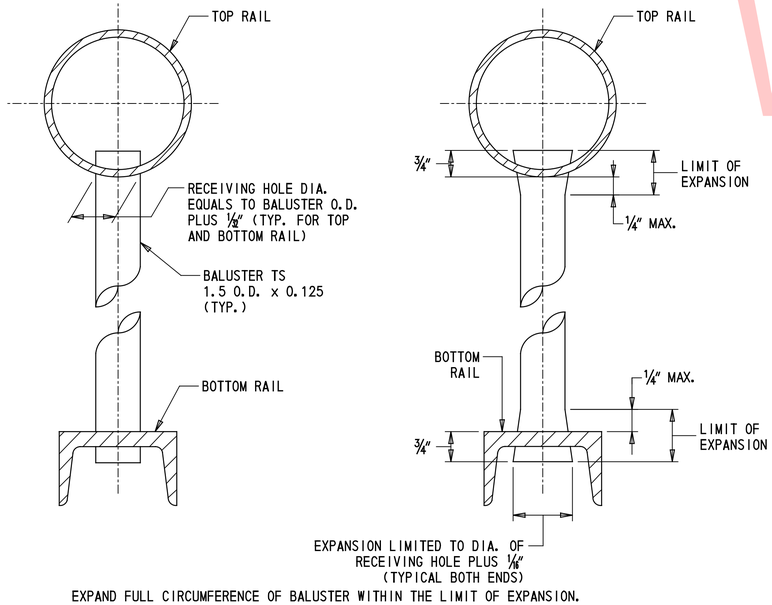

PRIOR TO EXPANDING EXPANDED

BALUSTER DETAILS
N. T. S.

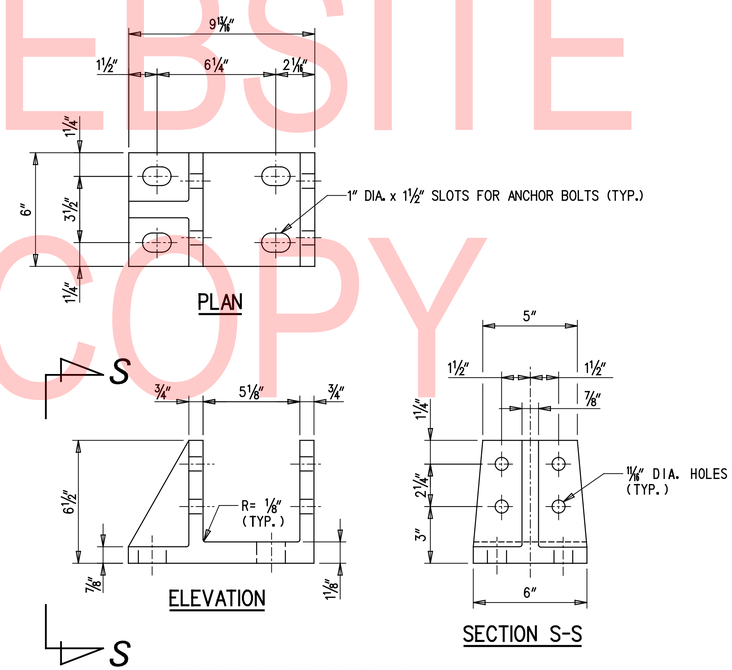

POLE BASE DETAIL
N. T. S.

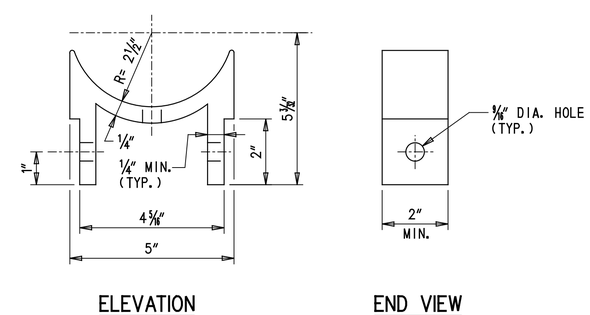

RAIL SEAT DETAIL
N. T. S.

UNOFFICIAL WEBSITE COPY

ADDENDA / REVISIONS	SCALE: AS NOTED	RECORDS POND DAM IMPROVEMENTS	CONTRACT T201507605	BRIDGE NO. 3-329	ALUMINUM RAILING DETAIL – 2	DT-18
			COUNTY SUSSEX	DESIGNED BY: JS		SECTION SE
				CHECKED BY: JRY		SHEET NO. 34

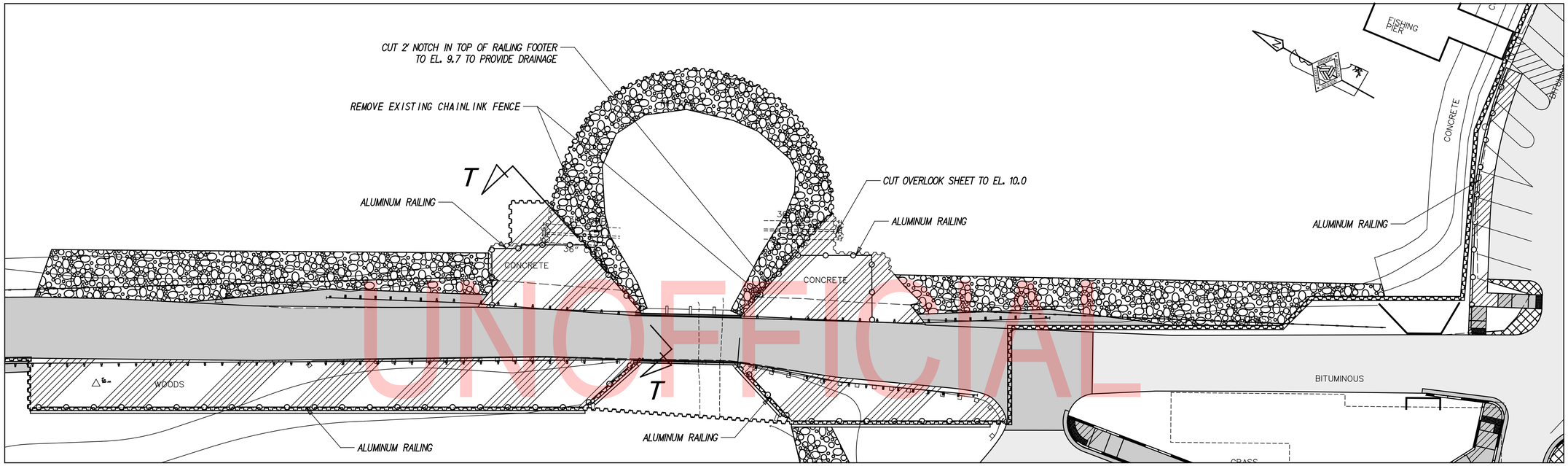

PEDESTRIAN RAILING PLAN
SCALE: 1"= 20'-0"

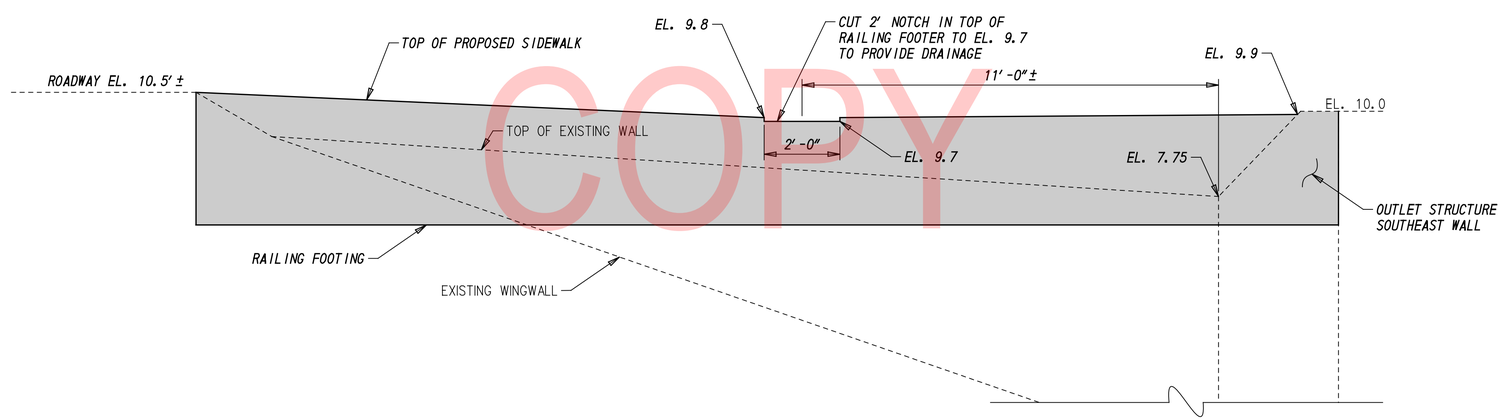

SECTION T-T: OVERLOOK PROFILE
SCALE: 1/2"= 1'-0"

UNOFFICIAL WEBSITE COPY

DT-19

ADDENDA / REVISIONS	SCALE: AS NOTED	RECORDS POND DAM IMPROVEMENTS	CONTRACT T201507605	BRIDGE NO. 3-329	ALUMINUM RAILING PLAN AND PROFILE	SECTION SE
			COUNTY SUSSEX	DESIGNED BY: JS		SHEET NO. 35
				CHECKED BY: JRY		

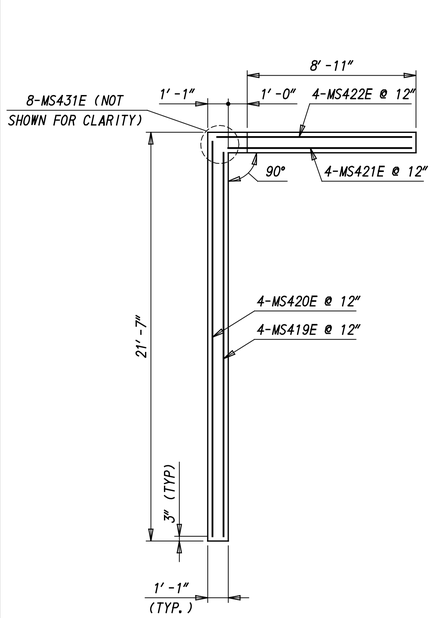

NORTH UPSTREAM RAILING FOOTING
SCALE: 1/4"=1'-0"

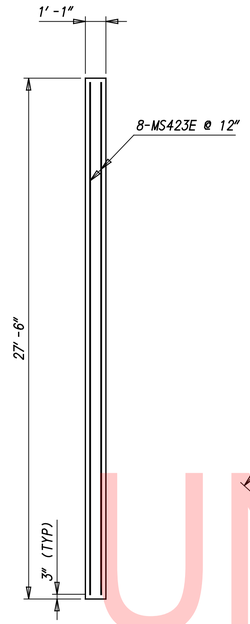

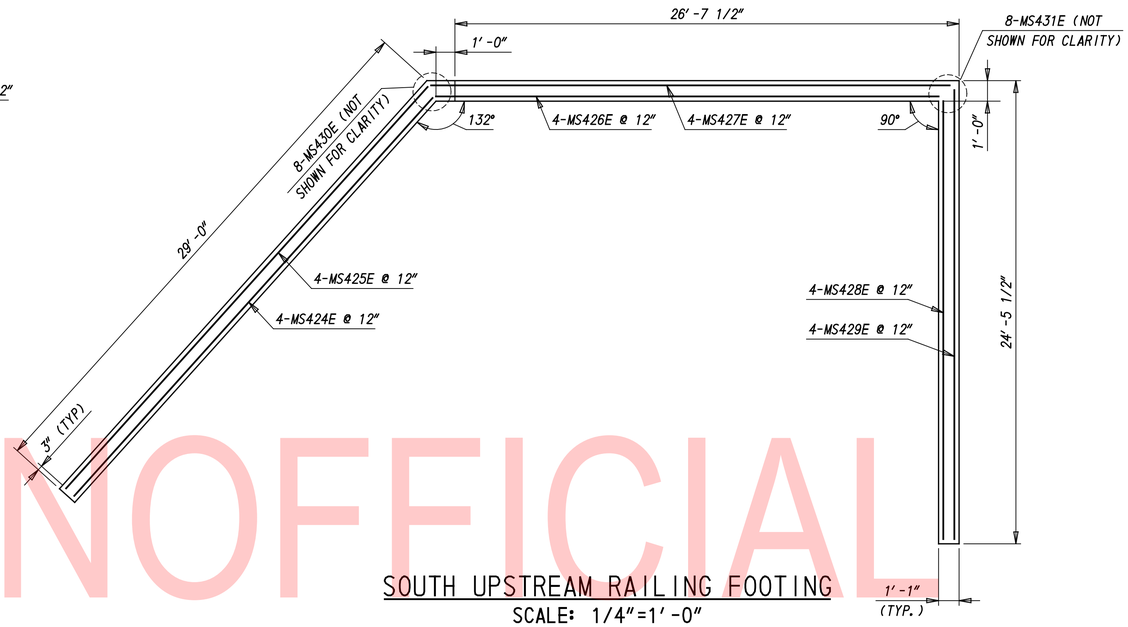

SOUTH UPSTREAM RAILING FOOTING
SCALE: 1/4"=1'-0"

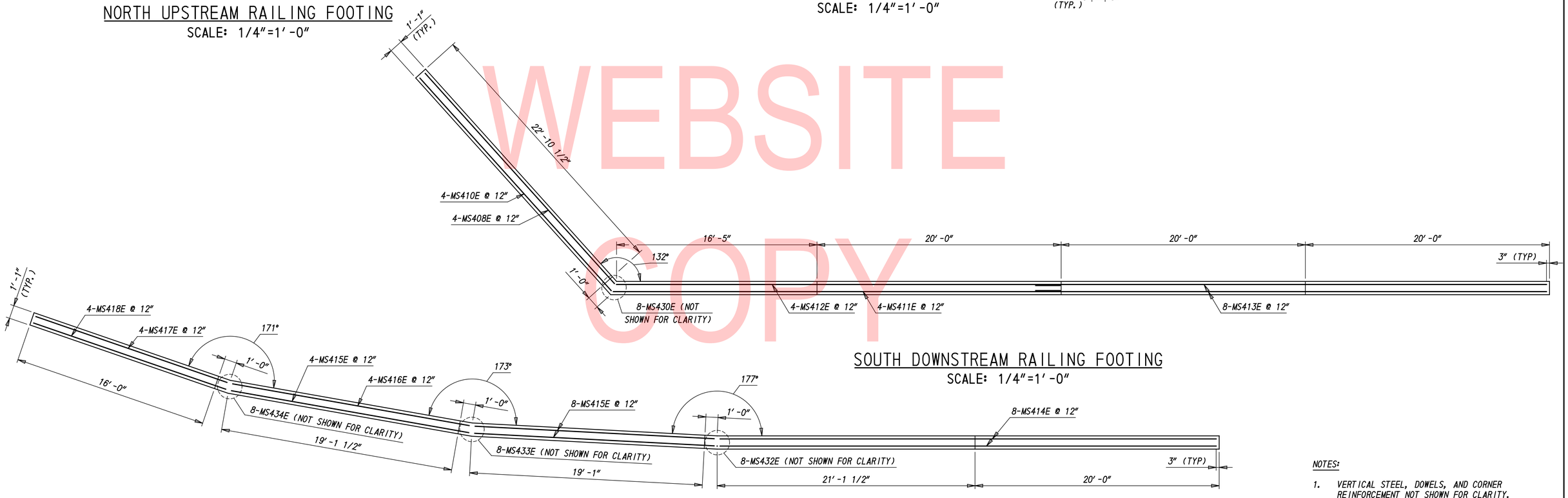

SOUTH DOWNSTREAM RAILING FOOTING
SCALE: 1/4"=1'-0"

RAILING FOOTING BETWEEN SP-11 AND FISHING PIER
SCALE: 1/4"=1'-0"

NOTES:

1. VERTICAL STEEL, DOWELS, AND CORNER REINFORCEMENT NOT SHOWN FOR CLARITY.

UNOFFICIAL WEBSITE COPY

ADDENDA / REVISIONS	SCALE: AS NOTED	RECORDS POND DAM IMPROVEMENTS	CONTRACT T201507605	BRIDGE NO. 3-329	ALUMINUM RAILING FOOTING REBAR PLAN - 1	DT-20
			COUNTY SUSSEX	DESIGNED BY: JS		SECTION SE
				CHECKED BY: JRY		SHEET NO. 36

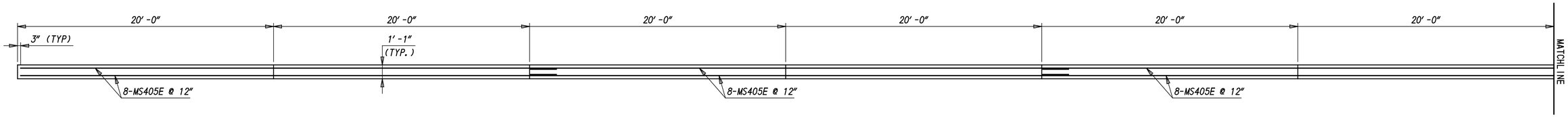

NORTH DOWNSTREAM RAILING FOOTING - 1

SCALE: 1/4"=1'-0"

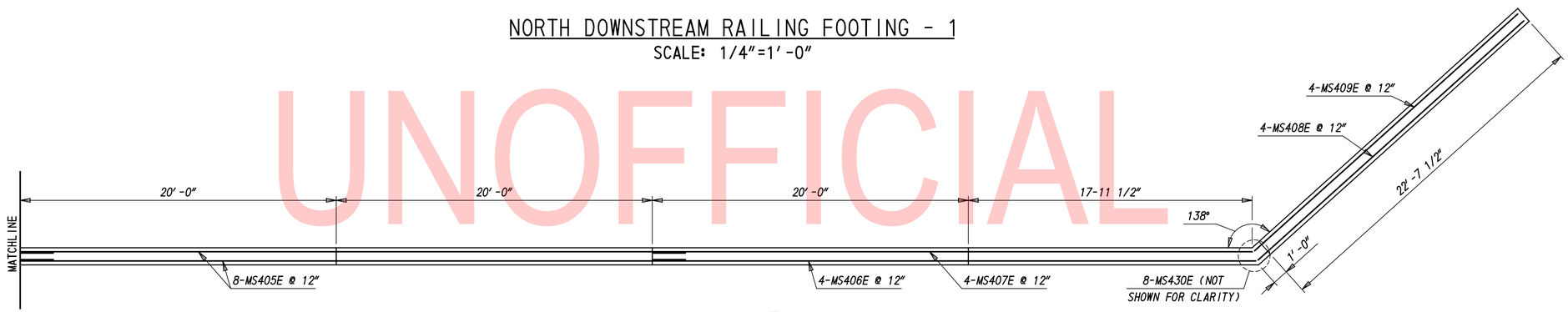

NORTH DOWNSTREAM RAILING FOOTING - 2

SCALE: 1/4"=1'-0"

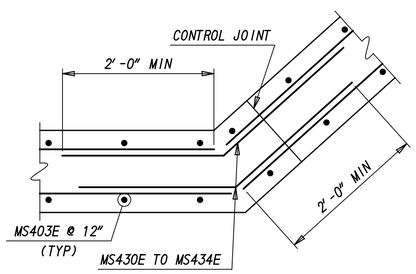

TYPICAL RAILING FOOTING CORNER DETAIL

SCALE: 1"=1'-0"

UNOFFICIAL WEBSITE COPY

NOTES:

1. VERTICAL STEEL, DOWELS, AND CORNER REINFORCEMENT NOT SHOWN FOR CLARITY.

DT-21

ADDENDA / REVISIONS	SCALE: AS NOTED	RECORDS POND DAM IMPROVEMENTS	CONTRACT T201507605	BRIDGE NO. 3-329	ALUMINUM RAILING FOOTING REBAR PLAN - 2	SECTION SE
			COUNTY SUSSEX	DESIGNED BY: JS		SHEET NO. 37
				CHECKED BY: JRY		

① ANY MARK NUMBER WITH SUFFIX 'E' DENOTES EPOXY COATED REINFORCING STEEL.

② ANY MARK NUMBER WITH SUFFIX 'W' DENOTES WELDABLE REINFORCING STEEL.

③ ALL MARK 'LOCATION PREFIXES' SHALL CONSIST OF TWO LETTERS AND ARE AS FOLLOWS: AB = ABUTMENT, AS = APPROACH SLAB, BC = BOX CULVERT, BW = BACKWALL, CL = COLUMN, DK = DECK, DL = DOWEL, FT = FOOTING, HW = HEADWALL, MS = MISC. BARS, PA = PARAPET, PR = PIER, SC = SHEET PILE CAP, SL = SLAB, TW = TOEWALL, WL = WALL (UNIQUE LOCATION), WW = WINGWALL

SPECIFICATIONS					BENDING DIMENSIONS (FEET-INCHES /QUARTER INCH)											
QTY.	SIZE	LENGTH	MARK	TYPE	A	B	C	D	E	F/R	G	H	J	K	O
GATE STRUCTURE SLAB															
28	5	2-10	SL501W	20		0-100	1-30								
24	6	15-80	SL601E	STR		15-80									
1 x 6	6	12-90	SL602E	STR		12-90									
		T0				T0									
		15-40				15-40									
1	6	8-70	SL603E	STR		8-70									
1 x 2	6	10-90	SL604E	STR		10-90									
		T0				T0									
		11-20				11-20									
1	6	5-30	SL605E	STR		5-30									
1 x 6	6	5-70	SL606E	STR		5-70									
		T0				T0									
		8-40				8-40									
1 x 6	6	1-80	SL607E	STR		1-80									
		T0				T0									
		4-00				4-00									
1 x 4	6	12-70	SL608E	STR		12-70									
		T0				T0									
		14-60				14-60									
1 x 4	6	15-80	SL609E	STR		15-80									
		T0				T0									
		17-70				17-70									
1	6	15-20	SL610E	STR		15-20									
1 x 2	6	18-80	SL611E	STR		18-80									
		T0				T0									
		19-10				19-10									
1	6	15-60	SL612E	STR		15-60									
1 x 4	6	20-30	SL613E	STR		20-30									
		T0				T0									
		22-60				22-60									
1	6	17-70	SL614E	STR		17-70									
1	6	23-80	SL615E	STR		23-80									
1	6	20-10	SL616E	STR		20-10									
1	6	25-00	SL617E	STR		25-00									
1	6	16-110	SL618E	STR		16-110									
1	6	26-20	SL619E	STR		26-20									
13	6	15-80	SL620E	STR		15-80									

SPECIFICATIONS					BENDING DIMENSIONS (FEET-INCHES /QUARTER INCH)											
QTY.	SIZE	LENGTH	MARK	TYPE	A	B	C	D	E	F/R	G	H	J	K	O
GATE STRUCTURE SLAB (CONTINUED)															
1 x 13	6	1-50	SL621E	STR		1-50									
		T0				T0									
		15-30				15-30									
1 x 16	6	13-20	SL622E	STR		13-20									
		T0				T0									
		26-30				26-30									
4	6	5-60	SL623E	29		2-40	4-20	0-00		0-00		1-90	0-00	1-60	5-110
8	6	4-60	SL624E	17		2-00	1-30	1-30							
STRUCTURE WALLS															
60	4	4-42	WL401E	4		1-50	0-41	0-100	0-41	1-50		0-30		0-30	4-20
100	4	2-93	WL402E	6		1-20	0-23	1-50				0-20		0-20	2-90
80	4	3-30	WL403E	STR		3-30									
20	4	2-80	WL404E	DE30		0-70	0-60	0-70	0-60	0-60		0-50	0-00	0-60	1-40
80	4	3-30	WL405E	STR		3-30									
20	4	12-10	WL406E	STR		12-10									
20	4	12-20	WL407E	STR		12-20									
20	4	12-90	WL408E	STR		12-90									
20	4	13-50	WL409E	STR		13-50									
40	4	3-91	WL410E	6		2-00	0-41	1-50				0-30		0-30	3-80
40	4	4-82	WL411E	4		1-50	0-41	0-100	0-41	1-90		0-30		0-30	4-60
30	4	2-90	WL412E	STR		2-90									
20	4	2-40	WL413E	29		1-50	0-110			0-00		1-00	0-00	0-102	1-92
20	4	2-90	WL414E	29		1-50	1-40			0-00		1-00	0-00	0-102	2-22
40	4	3-70	WL415E	17		1-50	0-90	1-50							
11	4	4-30	WL416E	17		1-50	1-50	1-50							
1 x 10	4	1-00	WL417E	STR		1-00									
		T0				T0									
		2-90				2-90									
3	4	3-50	WL418E	17		1-50	0-70	1-50							
16	5	2-00	WL501E	STR		2-00									
114	6	9-50	WL601E	STR		9-50									
50	6	6-60	WL602E	20		5-60	1-00								
158	6	6-00	WL603E	20		5-00	1-00								
10	6	3-20	WL604E	17		1-30	0-80	1-30							
20	6	4-30	WL605E	20		3-30	1-00								
6	6	7-30	WL606E	STR		7-30									
		T0				T0									
		9-10				9-10									

SPECIFICATIONS					BENDING DIMENSIONS (FEET-INCHES /QUARTER INCH)											
QTY.	SIZE	LENGTH	MARK	TYPE	A	B	C	D	E	F/R	G	H	J	K	O
SPILLWAY SLAB															
80	4	6-80	SL401E	STR		6-80									
40	4	6-90	SL402E	STR		6-90									
410	4	1-52	SL403E	20		0-80	0-92								
40	4	6-70	SL404E	STR		6-70									
56	4	19-70	SL405E	STR		19-70									
1 x 33	6	1-20	SL625E	STR		1-20									
		T0				T0									
		16-80				16-80									
1 x 65	6	17-20	SL626E	STR		17-20									
		T0				T0									
		18-70				18-70									
1 x 36	6	1-0	SL627E	STR		1-0									
		T0				T0									
		18-70				18-70									
1 x 33	6	11-40	SL628E	STR		11-40									
		T0				T0									
		28-80				28-80									
1	6	25-90	SL629E	STR		25-90									
1	6	14-90	SL630E	STR		14-90									
36	6	18-50	SL631E	STR		18-50									
1	6	8-80	SL632E	STR		8-80									
1 x 37	6	7-110	SL633E	STR		7-110									
		T0				T0									
		25-10				25-10									
1	6	20-60	SL634E	STR		20-60									
1	6	10-00	SL635E	STR		10-00									

UNOFFICIAL WEBSITE COPY

ASTM STANDARD ENGLISH REINFORCING BARS

	NOMINAL DIMENSIONS			RECOMMENDED END HOOKS, APPLICABLE TO ALL GRADES				STIRRUP AND TIE HOOKS, APPLICABLE TO ALL GRADES			
				180° HOOKS			90° HOOKS	90° HOOK		135° HOOK	
BAR SIZE	DIAMETER (INCHES)	AREA (INCHES²)	WEIGHT (LBS./FT.)	D	A OR G	J	A OR G	D	A OR G	A OR G	A OR G
3	0.375	0.110	0.376	2¼″	5″	3″	6″	1½″	4″	4″	2½″
4	0.500	0.200	0.668	3″	6″	4″	8″	2″	4½″	4½″	3″
5	0.625	0.310	1.043	3¾″	7″	5″	10″	2½″	6″	5½″	3¾″
6	0.750	0.440	1.502	4½″	8″	6″	1-0″	4½″	1-0″	8″	4½″
7	0.875	0.600	2.044	5¼″	10″	7″	1-2″	5¼″	1-2″	9″	5¼″
8	1.000	0.790	2.670	6″	11″	8″	1-4″	6″	1-4″	10½″	6″
9	1.128	1.000	3.400	9½″	1-3″	11¾″	1-7″				
10	1.270	1.270	4.303	10¾″	1-5″	1-1¼″	1-10″				
11	1.410	1.560	5.313	1-0″	1-7″	1-2¾″	2-0″				
14	1.693	2.250	7.650	1-6¼″	2-3″	1-9¾″	2-7″				
18	2.257	4.000	13.600	2-0″	3-0″	2-4½″	3-5″				

NOTES:

1. FIGURES SHOWN IN CIRCLES REPRESENT BAR BEND TYPES.
2. STANDARD BAR BENDS INCLUDE ONLY THOSE TYPES BELOW, INDICATED AS SUCH.
3. ALL DIMENSIONS OUT-TO-OUT, EXCEPT "A" AND "G" ON STD. 180° AND 135° HOOKS.
4. "J" DIMENSIONS ON 180° HOOKS TO BE SHOWN ONLY WHERE NECESSARY TO RESTRICT HOOK SIZE, OTHERWISE STANDARD 'ACI' HOOKS ARE TO BE USED.
5. WHERE "J" IS NOT SHOWN, "J" WILL BE KEPT EQUAL TO OR LESS THAN "H" ON TYPES 3, 5 AND 22. WHERE "J" CAN EXCEED "H", IT SHALL BE SHOWN.
6. "H" DIMENSIONS OF STIRRUPS TO BE SHOWN AS NEEDED TO FIT WITHIN THE CONCRETE.
7. UNLESS OTHERWISE NOTED, DIAMETER "D" IS THE SAME FOR ALL BENDS AND HOOKS ON A BAR (EXCEPT FOR BEND TYPES 11 AND 13).
8. WHERE SLOPE DIFFERS FROM 45° OFFSET, "H" AND "K" MUST BE SHOWN.
9. WHERE BARS ARE TO BE BENT MORE ACCURATELY THAN STANDARD BENDING TOLERANCES, BENDING DIMENSIONS REQUIRING CLOSER FABRICATION SHOULD HAVE LIMITS INDICATED.
10. FOR RECOMMENDED DIAMETER "D", OF BENDS, HOOKS, ETC., REFER TO TABLE ABOVE, 'CRSI' OR 'ACI' TABLES WHERE APPLICABLE AND REQUIRED.
11. TYPE S1-S6, S11, T1-T3 AND T6-T9 APPLICABLE TO BAR SIZES #3 THROUGH #8.

STANDARD BAR BENDS

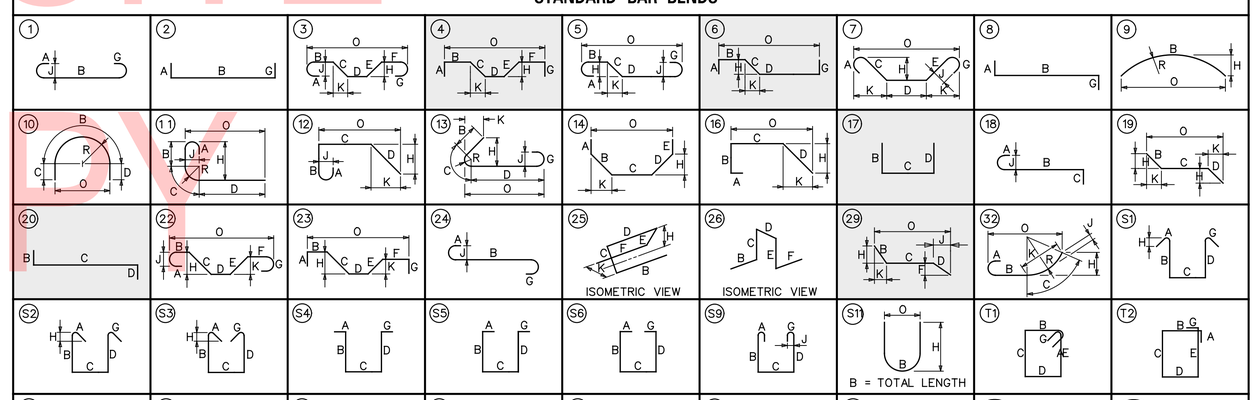

STIRRUP AND TIE HOOKS

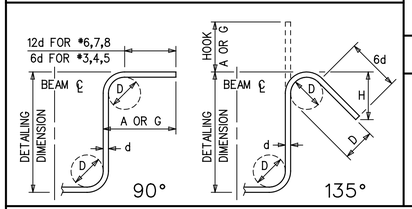

180° AND 90° END HOOKS

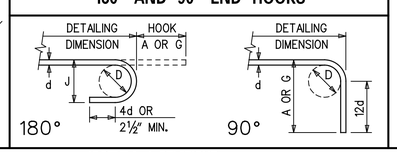

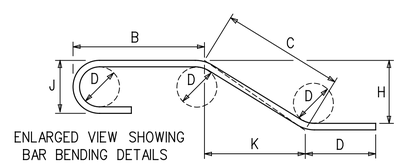

ENLARGED VIEW SHOWING BAR BENDING DETAILS

SPECIAL BAR BENDS

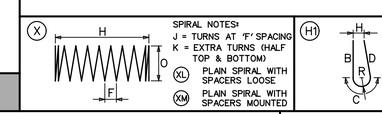

ADDENDA / REVISIONS

RECORDS POND DAM IMPROVEMENTS	CONTRACT T201507605	BRIDGE NO. 3-329	REINFORCEMENT BAR SCHEDULE - 1	SECTION SE
	COUNTY SUSSEX	DESIGNED BY: JS		SHEET NO. 38
		CHECKED BY: JRY		

① ANY MARK NUMBER WITH SUFFIX 'E' DENOTES EPOXY COATED REINFORCING STEEL.

② ALL MARK 'LOCATION PREFIXES' SHALL CONSIST OF TWO LETTERS AND ARE AS FOLLOWS: AB = ABUTMENT, AS = APPROACH SLAB, BC = BOX CULVERT, BW = BACKWALL, CL = COLUMN, DK = DECK, DL = DOWEL, FT = FOOTING, HW = HEADWALL, MS = MISC. BARS, PA = PARAPET, PR = PIER, SC = SHEET PILE CAP, SL = SLAB, TW = TOEWALL, WL = WALL (UNIQUE LOCATION), WW = WINGWALL

SPECIFICATIONS					BENDING DIMENSIONS (FEET-INCHES /QUARTER INCH)											
QTY.	SIZE	LENGTH	MARK	TYPE	A	B	C	D	E	F/R	G	H	J	K	O
CULVERT/SPILLWAY CURB/NOSE															
53	4	2-20	MS401E	20		1-60	0-80								
3	6	23-110	MS601E	STR		23-110									
3	6	26-80	MS602E	STR		26-80									
334	4	3-70	PR401E	20		3-10	0-60								
176	4	1-50	PR402E	20		0-80	0-90								
23	4	3-10	PR403E	STR		3-10									
56	4	19-90	PR404E	STR		19-90									
16	4	4-11	PR405E	11		0-90	1-11								
21	4	6-23	PR406E	10		2-23	2-00	2-00		0-82					1-70
40	4	2-12	PR407E	10		0-92	0-80	0-80		0-30					0-60
15	4	8-80	PR408E	STR		8-80									
64	4	3-00	PR409E	20		1-100	1-20								
12	4	6-90	PR410E	STR		6-90									
24	4	1-100	PR411E	STR		1-100									
21	4	5-50	PR412E	17		2-00	1-50	2-00							
14	4	3-20	PR413E	20		1-20	2-00								
SHEET PILE WALL CAP															
630	4	5-60	SC401E	DE15		1-60	1-60	1-60	1-00	0-00					
44	4	7-60	SC402E	DE15		2-60	1-60	2-60	1-00	0-00					
4	4	34-40	SC403E	STR		34-40									
3	4	34-30	SC404E	STR		34-30									
4	4	29-100	SC405E	STR		29-100									
3	4	29-110	SC406E	STR		29-110									
7	4	31-80	SC407E	STR		31-80									
7	4	31-20	SC408E	STR		31-20									
7	4	30-20	SC409E	STR		30-20									
4	4	35-60	SC410E	STR		35-60									
1	4	34-90	SC411E	STR		34-90									
4	4	34-00	SC412E	STR		34-00									
3	4	29-90	SC413E	STR		29-90									
1	4	29-00	SC414E	STR		29-00									
3	4	28-30	SC415E	STR		28-30									
7	4	31-60	SC416E	STR		31-60									
7	4	21-90	SC417E	STR		21-90									
3	4	21-80	SC418E	STR		21-80									
1	4	22-00	SC419E	STR		22-00									
3	4	22-40	SC420E	STR		22-40									
7	4	14-40	SC421E	STR		14-40									
1	4	26-90	SC422E	STR		26-90									

SPECIFICATIONS					BENDING DIMENSIONS (FEET-INCHES /QUARTER INCH)											
QTY.	SIZE	LENGTH	MARK	TYPE	A	B	C	D	E	F/R	G	H	J	K	O
SHEET PILE WALL CAP (CONTINUED)															
3	4	26-50	SC423E	STR		26-50									
3	4	27-10	SC424E	STR		27-10									
3	4	28-90	SC425E	STR		28-90									
1	4	29-50	SC426E	STR		29-50									
3	4	30-20	SC427E	STR		30-20									
3	4	30-10	SC428E	STR		30-10									
1	4	30-100	SC429E	STR		30-100									
3	4	31-60	SC430E	STR		31-60									
3	4	31-100	SC431E	STR		31-100									
1	4	31-80	SC432E	STR		31-80									
3	4	31-70	SC433E	STR		31-70									
3	4	26-80	SC434E	STR		26-80									
1	4	19-40	SC435E	STR		19-40									
3	4	19-22	SC436E	STR		19-22									
7	4	20-52	SC437E	STR		20-52									
3	4	17-60	SC438E	STR		17-60									
1	4	17-30	SC439E	STR		17-30									
3	4	17-10	SC440E	STR		17-10									
3	4	9-10	SC441E	STR		9-10									
1	4	8-103	SC442E	STR		8-103									
3	4	8-81	SC443E	STR		8-81									
7	4	4-80	SC444E	29		2-40	2-40					0-32		2-33	4-73
7	4	4-100	SC445E	20		2-50	2-50	0-00							
14	4	4-80	SC446E	29		2-40	2-40					1-73		1-73	3-113
7	4	4-100	SC447E	29		2-50	2-50					2-50		0-22	2-72
7	4	4-80	SC448E	29		2-40	2-40					0-83		2-23	4-63
7	4	4-80	SC449E	29		2-40	2-40					1-20		2-01	4-41
7	4	11-50	SC450E	STR		11-50									
RAILING FOOTING															
593	4	2-00	MS402E	STR		2-00									
1128	4	2-60	MS403E	STR		2-60									
32	4	42-00	MS405E	STR		42-00									
4	4	37-70	MS406E	STR		37-70									
4	4	37-50	MS407E	STR		37-50									
8	4	23-00	MS408E	STR		23-00									
4	4	22-90	MS409E	STR		22-90									
4	4	23-30	MS410E	STR		23-30									
4	4	36-50	MS411E	STR		36-50									
4	4	36-20	MS412E	STR		36-20									

SPECIFICATIONS					BENDING DIMENSIONS (FEET-INCHES /QUARTER INCH)											
QTY.	SIZE	LENGTH	MARK	TYPE	A	B	C	D	E	F/R	G	H	J	K	O
RAILING FOOTING (CONTINUED)															
8	4	41-100	MS413E	STR		41-100									
8	4	40-70	MS414E	STR		40-70									
12	4	19-70	MS415E	STR		19-70									
4	4	19-60	MS416E	STR		19-60									
4	4	16-60	MS417E	STR		16-60									
4	4	16-70	MS418E	STR		16-70									
4	4	20-20	MS419E	STR		20-20									
4	4	20-90	MS420E	STR		20-90									
4	4	9-70	MS421E	STR		9-70									
4	4	10-20	MS422E	STR		10-20									
8	4	27-00	MS423E	STR		27-00									
4	4	28-10	MS424E	STR		28-10									
4	4	28-40	MS425E	STR		28-40									
4	4	26-40	MS426E	STR		26-40									
4	4	27-20	MS427E	STR		27-20									
4	4	23-00	MS428E	STR		23-00									
4	4	23-70	MS429E	STR		23-70	2-40					1-90		1-70	3-110
24	4	4-80	MS430E	29		2-40	2-50	0-00							
16	4	4-100	MS431E	20		2-50	2-40					2-40		0-10	2-50
8	4	4-80	MS432E	29		2-40	2-40					0-30		2-40	4-80
8	4	4-80	MS433E	29		2-40	2-40					0-40		2-40	4-80
8	4	4-80	MS434E	29		2-40									
CAP BEAM															
161	3	17-80	MS301E	T2	0-40	3-00	5-60	3-00	5-60		0-40				
98	8	36-112	MS801E	STR		36-112									
42	8	35-50	MS802E	STR		35-50									

UNOFFICIAL WEBSITE COPY

ASTM STANDARD ENGLISH REINFORCING BARS				RECOMMENDED END HOOKS, APPLICABLE TO ALL GRADES				STIRRUP AND TIE HOOKS, APPLICABLE TO ALL GRADES			
	NOMINAL DIMENSIONS				180° HOOKS		90° HOOKS		90° HOOK	135° HOOK	
BAR SIZE	DIAMETER (INCHES)	AREA (INCHES²)	WEIGHT (LBS./FT.)	D	A OR G	J	A OR G	D	A OR G	A OR G	A OR G
3	0.375	0.110	0.376	2¼″	5″	3″	6″	1½″	4″	4″	2½″
4	0.500	0.200	0.668	3″	6″	4″	8″	2″	4½″	4½″	3″
5	0.625	0.310	1.043	3¾″	7″	5″	10″	2½″	6″	5½″	3¾″
6	0.750	0.440	1.502	4½″	8″	6″	1-0″	4½″	1-0″	8″	4½″
7	0.875	0.600	2.044	5¼″	10″	7″	1-2″	5¼″	1-2″	9″	5¼″
8	1.000	0.790	2.670	6″	11″	8″	1-4″	6″	1-4″	10½″	6″
9	1.128	1.000	3.400	9½″	1-3″	11¾″	1-7″				
10	1.270	1.270	4.303	10¾″	1-5″	1-1¼″	1-10″				
11	1.410	1.560	5.313	1-0″	1-7″	1-2¾″	2-0″				
14	1.693	2.250	7.650	1-6¼″	2-3″	1-9¾″	2-7″				
18	2.257	4.000	13.600	2-0″	3-0″	2-4½″	3-5″				

NOTES:

1. FIGURES SHOWN IN CIRCLES REPRESENT BAR BEND TYPES.
2. STANDARD BAR BENDS INCLUDE ONLY THOSE TYPES BELOW, INDICATED AS SUCH.
3. ALL DIMENSIONS OUT-TO-OUT, EXCEPT "A" AND "G" ON STD. 180° AND 135° HOOKS.
4. "J" DIMENSIONS ON 180° HOOKS TO BE SHOWN ONLY WHERE NECESSARY TO RESTRICT HOOK SIZE, OTHERWISE STANDARD 'ACI' HOOKS ARE TO BE USED.
5. WHERE "J" IS NOT SHOWN, "J" WILL BE KEPT EQUAL TO OR LESS THAN "H" ON TYPES 3, 5 AND 22. WHERE "J" CAN EXCEED "H", IT SHALL BE SHOWN.
6. "H" DIMENSIONS OF STIRRUPS TO BE SHOWN AS NEEDED TO FIT WITHIN THE CONCRETE.
7. UNLESS OTHERWISE NOTED, DIAMETER "D" IS THE SAME FOR ALL BENDS AND HOOKS ON A BAR (EXCEPT FOR BEND TYPES 11 AND 13).
8. WHERE SLOPE DIFFERS FROM 45° OFFSET, "H" AND "K" MUST BE SHOWN.
9. WHERE BARS ARE TO BE BENT MORE ACCURATELY THAN STANDARD BENDING TOLERANCES, BENDING DIMENSIONS REQUIRING CLOSER FABRICATION SHOULD HAVE LIMITS INDICATED.
10. FOR RECOMMENDED DIAMETER "D", OF BENDS, HOOKS, ETC., REFER TO TABLE ABOVE, 'CRSI' OR 'ACI' TABLES WHERE APPLICABLE AND REQUIRED.
11. TYPE S1-S6, S11, T1-T3 AND T6-T9 APPLICABLE TO BAR SIZES #3 THROUGH #8.

STANDARD BAR BENDS

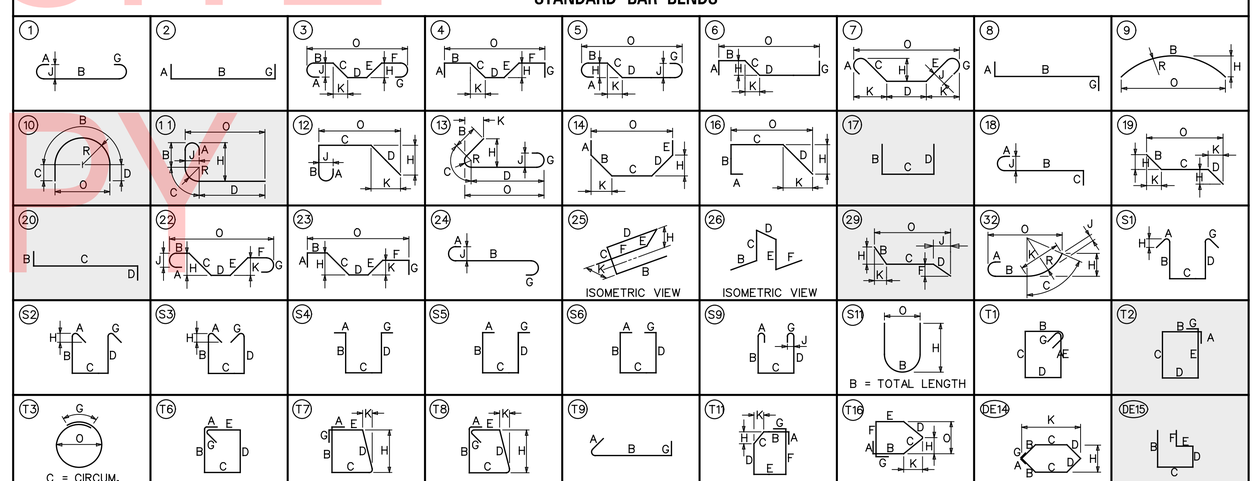

SPECIAL BAR BENDS

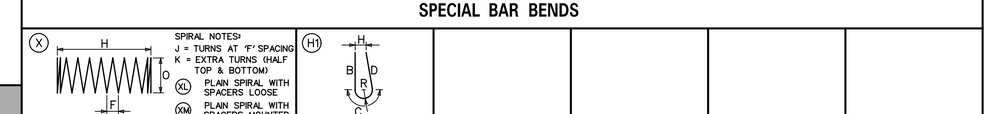

STIRRUP AND TIE HOOKS

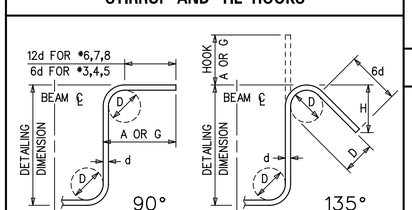

180° AND 90° END HOOKS

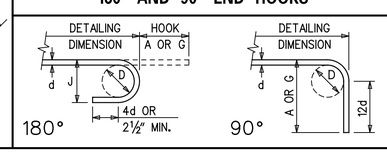

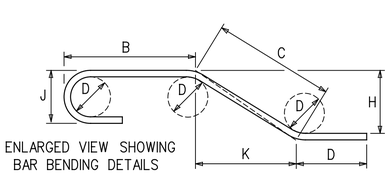

ADDENDA / REVISIONS

RECORDS POND DAM IMPROVEMENTS

CONTRACT	BRIDGE NO.	3-329
T201507605	DESIGNED BY: JS	
COUNTY		
SUSSEX	CHECKED BY: JRY	

REINFORCEMENT BAR SCHEDULE - 2

SECTION
SE
SHEET NO.
39

BORING: B-1 | **DATE DRILLED:** 11/27/06
STATION: 15+20.61 | **OFFSET:** 4.79' RT | **ELEVATION:** 9.7 | **NORTHING:** 203551.1220 | **EASTING:** 612963.2674
COMMENTS: N/A

SAMPLE INFORMATION

NO.	DEPTH	BLOWS /6"	DESCRIPTION	CLASS /G.I.	REMARKS
1	0.0 2.0	5 5 4 6	FINE TO COARSE POORLY GRADED SAND FILL, TRACE SILT, MOIST - TAN	A-3	
2	2.0 4.0	4 4 4 4	FINE TO COARSE POORLY GRADED SAND FILL, TRACE SILT, MOIST - TAN	A-3	
3	4.0 6.0	3 3 3 2	FINE TO COARSE POORLY GRADED SAND FILL, TRACE SILT, MOIST - TAN	A-3	
4	6.0 8.0	2 2 1 2	FINE TO COARSE POORLY GRADED SAND FILL, TRACE SILT, WET - TAN	A-3	
5	8.0 10.0	1 1 1 1	FINE TO COARSE POORLY GRADED SAND FILL, TRACE SILT, WET - TAN	A-3	
6	10.0 12.0	4 4 2 2	FINE TO COARSE SILTY SAND, CONTAINS ORGANIC MATTER, WET - GRAY	A-2-4(0)	NANTICOKE DEPOSITS
7	12.0 14.0	2 1 3 6	FINE TO COARSE SILTY SAND, CONTAINS ORGANIC MATTER, WET - GRAY	A-2-4(0)	NANTICOKE DEPOSITS
8	14.0 16.0	2 2 2 3	FINE TO COARSE SILTY SAND, CONTAINS ORGANIC MATTER, WET - GRAY	A-2-4(0)	NANTICOKE DEPOSITS
9	16.0 18.0	5 5 9 14	FINE TO COARSE SILTY SAND, CONTAINS ORGANIC MATTER, CONTAINS GRAVEL, WET - GRAY	A-2-4(0)	NANTICOKE DEPOSITS
10	18.0 20.0	10 8 9 9	FINE TO COARSE WELL GRADED SAND, TRACE SILT, CONTAINS GRAVEL, WET - BROWN	A-1-B	NANTICOKE DEPOSITS
11	20.0 22.0	5 4 4 4	FINE TO COARSE WELL GRADED SAND, TRACE SILT, CONTAINS GRAVEL, WET - BROWN	A-1-B	NANTICOKE DEPOSITS
12	22.0 24.0	3 3 3 5	FINE TO COARSE POORLY GRADED SAND WITH CLAY, CONTAINS GRAVEL, WET - BROWN	A-2-4(0)	NANTICOKE DEPOSITS
13	24.0 26.0	3 8 3 5	FINE TO COARSE POORLY GRADED SAND WITH CLAY, CONTAINS GRAVEL, WET - BROWN	A-2-4(0)	NANTICOKE DEPOSITS
14	26.0 28.0	3 4 5 4	FINE TO COARSE POORLY GRADED SAND WITH CLAY, CONTAINS GRAVEL, WET - BROWN	A-2-4(0)	NANTICOKE DEPOSITS
15	28.0 30.0	2 2 4 4	FINE TO COARSE POORLY GRADED SAND WITH CLAY, CONTAINS GRAVEL, WET - BROWN	A-2-4(0)	NANTICOKE DEPOSITS
16	30.0 32.0	4 3 5 7	FINE TO COARSE POORLY GRADED SAND WITH CLAY, TRACE GRAVEL, WET - ORANGE-BROWN	A-2-4(0)	NANTICOKE DEPOSITS
17	32.0 34.0	6 5 4 6	FINE TO COARSE POORLY GRADED SAND WITH CLAY, TRACE GRAVEL, WET - ORANGE-BROWN	A-2-4(0)	NANTICOKE DEPOSITS
18	34.0 36.0	2 3 5 4	FINE TO COARSE POORLY GRADED SAND WITH CLAY, TRACE GRAVEL, WET - ORANGE-BROWN	A-2-4(0)	NANTICOKE DEPOSITS
19	36.0 38.0	4 4 10 10	FINE TO COARSE POORLY GRADED SAND WITH CLAY, TRACE GRAVEL, WET - ORANGE-BROWN	A-2-4(0)	NANTICOKE DEPOSITS APPROXIMATE SHEET PILE TIP ELEV = -27.0
20	38.0 40.0	5 8 11 10	FINE TO COARSE POORLY GRADED SAND WITH CLAY, TRACE GRAVEL, WET - ORANGE-BROWN	A-2-4(0)	NANTICOKE DEPOSITS
21	40.0 42.0	6 5 9 9	FINE TO COARSE POORLY GRADED SAND WITH CLAY, TRACE GRAVEL, WET - ORANGE-BROWN	A-2-4(0)	NANTICOKE DEPOSITS
22	42.0 44.0	8 8 12 20	FINE TO COARSE POORLY GRADED SAND WITH CLAY, TRACE GRAVEL, WET - ORANGE-BROWN	A-2-4(0)	NANTICOKE DEPOSITS
23	44.0 45.5	6 16 27	FINE TO COARSE POORLY GRADED SAND WITH CLAY, TRACE GRAVEL, WET - ORANGE-BROWN	A-2-4(0)	NANTICOKE DEPOSITS
	45.5		END BORING		

BORING: B-2 | **DATE DRILLED:** 11/27/06
STATION: 16+71.78 | **OFFSET:** 4.57' LT | **ELEVATION:** 9.7 | **NORTHING:** 203421.1624 | **EASTING:** 613041.1106
COMMENTS: N/A

SAMPLE INFORMATION

NO.	DEPTH	BLOWS /6"	DESCRIPTION	CLASS /G.I.	REMARKS
1	0.0 2.0	5 9 5 5	FINE TO COARSE POORLY GRADED SAND FILL, TRACE SILT, MOIST - TAN	A-3	
2	2.0 4.0	7 4 3 4	FINE TO COARSE POORLY GRADED SAND FILL, TRACE SILT, MOIST - TAN	A-3	
3	4.0 6.0	3 1 2 1	FINE TO COARSE POORLY GRADED SAND FILL, TRACE SILT, MOIST - TAN	A-3	
4	6.0 8.0	3 4 3 2	FINE TO COARSE POORLY GRADED SAND FILL, TRACE SILT, MOIST - TAN	A-3	
5	8.0 10.0	6 2 3 3	FINE TO COARSE POORLY GRADED SAND FILL, TRACE SILT, WET - TAN	A-3	
6	10.0 12.0	2 1 1 2	FINE TO COARSE POORLY GRADED SAND FILL, TRACE SILT, WET - TAN	A-3	
7	12.0 14.0	3 3 3 3	FINE TO COARSE POORLY GRADED SAND FILL, TRACE SILT, WET-TAN -> SANDY FAT CLAY FILL, WET - GRAY -> FINE TO COARSE POORLY GRADED SAND WITH SILT, WET - GRAY	A-2-4(0)	NANTICOKE DEPOSITS
8	14.0 16.0	2 1 1 1	FINE TO COARSE POORLY GRADED SAND WITH SILT, WET - GRAY	A-2-4(0)	NANTICOKE DEPOSITS
9	16.0 18.0	4 10 13 7	FINE TO COARSE POORLY GRADED SAND WITH SILT, TRACE GRAVEL, WET - GRAY	A-2-4(0)	NANTICOKE DEPOSITS
10	18.0 20.0	8 13 15 12	FINE TO COARSE POORLY GRADED SAND WITH SILT, TRACE GRAVEL, WET - GRAY	A-2-4(0)	NANTICOKE DEPOSITS
11	20.0 22.0	5 5 4 2	FINE TO COARSE POORLY GRADED SAND, TRACE SILT, CONTAINS GRAVEL, WET - GRAY	A-1-B	NANTICOKE DEPOSITS
12	22.0 24.0	2 1 2 4	FINE TO COARSE POORLY GRADED SAND, TRACE SILT, CONTAINS GRAVEL, WET - GRAY	A-1-B	NANTICOKE DEPOSITS
13	24.0 26.0	1 1 1 1	FINE TO COARSE POORLY GRADED SAND, TRACE SILT, CONTAINS GRAVEL, WET - GRAY	A-1-B	NANTICOKE DEPOSITS
14	26.0 28.0	2 1 2 3	FINE TO COARSE POORLY GRADED SAND, TRACE SILT, CONTAINS GRAVEL, WET - GRAY	A-1-B	NANTICOKE DEPOSITS
15	28.0 30.0	2 1 2 4	FINE TO COARSE POORLY GRADED SAND, TRACE SILT, CONTAINS GRAVEL, WET - GRAY	A-1-B	NANTICOKE DEPOSITS
16	30.0 32.0	2 2 2 4	FINE TO COARSE POORLY GRADED SAND WITH SILT, CONTAINS GRAVEL, WET - ORANGE-BROWN	A-1-B	NANTICOKE DEPOSITS
17	32.0 34.0	4 2 4 5	FINE TO COARSE POORLY GRADED SAND WITH SILT, CONTAINS GRAVEL, WET - ORANGE-BROWN	A-1-B	NANTICOKE DEPOSITS
18	34.0 36.0	2 3 4 4	FINE TO COARSE POORLY GRADED SAND WITH SILT, CONTAINS GRAVEL, WET - ORANGE-BROWN	A-1-B	NANTICOKE DEPOSITS
19	36.0 38.0	4 4 4 7	FINE TO COARSE POORLY GRADED SAND WITH SILT, CONTAINS GRAVEL, WET - ORANGE-BROWN	A-1-B	NANTICOKE DEPOSITS APPROXIMATE SHEET PILE TIP ELEV = -27.0
20	38.0 40.0	4 4 8 8	FINE TO COARSE POORLY GRADED SAND WITH SILT, CONTAINS GRAVEL, WET - ORANGE-BROWN	A-1-B	NANTICOKE DEPOSITS
21	40.0 42.0	5 9 8 7	FINE TO COARSE POORLY GRADED SAND WITH SILT, CONTAINS GRAVEL, WET - ORANGE-BROWN	A-1-B	NANTICOKE DEPOSITS
22	42.0 44.0	9 14 18 13	FINE TO COARSE POORLY GRADED SAND WITH SILT, CONTAINS GRAVEL, WET - ORANGE-BROWN	A-1-B	NANTICOKE DEPOSITS
23	44.0 46.0	13 13 12 14	FINE TO COARSE POORLY GRADED SAND WITH SILT, CONTAINS GRAVEL, WET - ORANGE-BROWN	A-1-B	NANTICOKE DEPOSITS
	46.0		END BORING		

UNOFFICIAL WEBSITE COPY

BO-01

ADDENDA / REVISIONS

CONTRACT T201507605	BRIDGE NO. 3-329
COUNTY SUSSEX	DESIGNED BY: DAH
	CHECKED BY: NWB

RECORDS POND DAM IMPROVEMENTS

SOIL BORINGS LOGS – 1

SECTION PAI

SHEET NO. 40

BORING: B-101 | **DATE DRILLED:** 8/3/10
STATION: 12+68.86 | **OFFSET:** 11.93' RT | **ELEVATION:** 9.7 | **NORTHING:** 203767.6830 | **EASTING:** 612836.0994
COMMENTS: N/A

SAMPLE INFORMATION

NO.	DEPTH	BLOWS /6"	DESCRIPTION	CLASS /G.I.	REMARKS
1	0.0 2.0	0 8 6 4	FINE TO MEDIUM GRAINED POORLY GRADED SAND, MOIST - BLACK	A-1-B	NANTICOKE DEPOSITS
2	2.0 4.0	1 2 5 6	FINE TO MEDIUM GRAINED POORLY GRADED SAND, MOIST - BLACK	A-1-B	NANTICOKE DEPOSITS
3	4.0 6.0	2 3 3 3	FINE TO MEDIUM GRAINED POORLY GRADED SAND, MOIST - BROWN	A-1-B	NANTICOKE DEPOSITS
4	6.0 8.0	2 2 1 1	FINE TO MEDIUM GRAINED POORLY GRADED SAND WITH SILT, WET - LIGHT BROWN	A-1-B	NANTICOKE DEPOSITS
5	8.0 10.0	1/12" 0 2 5	FINE TO MEDIUM GRAINED POORLY GRADED SAND WITH SILT, ESTIMATED <5% WOOD, WET-LIGHT BROWN	A-1-B	NANTICOKE DEPOSITS
6	10.0 12.0	5 9 7 6	FINE TO MEDIUM GRAINED POORLY GRADED SAND WITH SILT, ESTIMATED <5% WOOD, WET-LIGHT BROWN	A-1-B	NANTICOKE DEPOSITS
7	12.0 14.0	1 2 5 9	FINE TO MEDIUM GRAINED POORLY GRADED SAND WITH SILT, ESTIMATED 0-5% WOOD, WET-LIGHT BROWN	A-1-B	NANTICOKE DEPOSITS
8	14.0 16.0	1 2 18 19	FINE TO MEDIUM GRAINED POORLY GRADED SAND WITH SILT, WET-LIGHT BROWN -> FINE TO COARSE GRAINED POORLY GRADED SAND WITH 15-25% FINE TO COARSE GRAVEL, WET - LIGHT BROWN	A-1-B	NANTICOKE DEPOSITS
9	16.0 18.0	7 8 13 11	FINE TO COARSE GRAINED POORLY GRADED SAND WITH 15-25% FINE TO COARSE GRAVEL, WET - LIGHT BROWN	A-1-B	NANTICOKE DEPOSITS
10	18.0 20.0	8 7 6 7	FINE TO COARSE GRAINED POORLY GRADED SAND, WET-LIGHT BROWN	A-1-B	NANTICOKE DEPOSITS
11	20.0 22.0	3 4 6 5	FINE TO COARSE GRAINED POORLY GRADED SAND, WET-LIGHT BROWN	A-1-B	NANTICOKE DEPOSITS
12	22.0 24.0	3 1 1 1	FINE TO COARSE POORLY GRADED SAND, WET-LIGHT BROWN -> FINE TO MEDIUM GRAINED SILTY SAND, WET - LIGHT BROWN	A-2-4(0)	NANTICOKE DEPOSITS
13	24.0 26.0	1 WH 1 WH	FINE TO MEDIUM GRAINED GRAINED SILTY SAND, WET - LIGHT BROWN	A-2-4(0)	NANTICOKE DEPOSITS APPROXIMATE SHEET PILE TIP ELEV = -15.0
14	26.0 28.0	WH 1/12" - 1 1	FINE TO MEDIUM GRAINED SILTY SAND, ESTIMATED 15-25% MICA, WET-LIGHT BROWN WITH BANDS OF YELLOWISH BLACK	A-2-4(0)	NANTICOKE DEPOSITS
15	28.0 30.0	WH 1/12" - 1 3	FINE TO MEDIUM GRAINED SILTY SAND, ESTIMATED 15-25% MICA, WET-LIGHT BROWN WITH BANDS OF YELLOWISH BLACK	A-2-4(0)	NANTICOKE DEPOSITS
16	30.0 32.0	3 2 3 3	FINE TO MEDIUM GRAINED SILTY SAND, ESTIMATED 15-25% MICA, WET-LIGHT BROWN WITH BANDS OF YELLOWISH BLACK	A-2-4(0)	NANTICOKE DEPOSITS
17	32.0 34.0	1 WH 3 3	FINE TO MEDIUM GRAINED SILTY SAND, ESTIMATED 15-25% MICA, WET-LIGHT BROWN WITH BANDS OF YELLOWISH BROWN	A-2-4(0)	NANTICOKE DEPOSITS
18	34.0 36.0	4 1 3 4	FINE TO MEDIUM GRAINED SILTY SAND, ESTIMATED 15-25% MICA, WET-BROWN WITH BANDS OF YELLOWISH BROWN	A-2-4(0)	NANTICOKE DEPOSITS
19	36.0 38.0	2 2 5 6	FINE TO MEDIUM GRAINED SILTY SAND, ESTIMATED 15-25% MICA, WET-BROWN WITH BANDS OF YELLOWISH BROWN	A-2-4(0)	NANTICOKE DEPOSITS
20	38.0 40.0	7 5 6 6	FINE TO MEDIUM GRAINED SILTY SAND, ESTIMATED 15-25% MICA, WET-BROWNISH ORANGE WITH BANDS OF YELLOWISH BROWN	A-2-4(0)	NANTICOKE DEPOSITS
21	40.0 42.0	3 5 8 17	FINE TO COARSE GRAINED POORLY GRADED SAND WITH SILT AND GRAVEL, WET - LIGHT BROWN WITH BANDS OF YELLOWISH BROWN	A-2-4(0)	NANTICOKE DEPOSITS
22	42.0 44.0	2 21 33 25	FINE TO COARSE GRAINED POORLY GRADED SAND WITH SILT AND GRAVEL, WET - LIGHT BROWN WITH BANDS OF YELLOWISH BROWN	A-2-4(0)	NANTICOKE DEPOSITS
23	44.0 45.5	10 16 17	FINE TO MEDIUM GRAINED SILTY SAND, WET - LIGHT BROWN WITH BANDS OF YELLOWISH BROWN	A-2-4(0)	NANTICOKE DEPOSITS
	45.5		END BORING		

BORING: B-102 | **DATE DRILLED:** 8/4/10
STATION: 18+31.95 | **OFFSET:** 9.89' RT | **ELEVATION:** 9.5 | **NORTHING:** 203271.6366 | **EASTING:** 613100.2929
COMMENTS: N/A

SAMPLE INFORMATION

NO.	DEPTH	BLOWS /6"	DESCRIPTION	CLASS /G.I.	REMARKS
1	0.0 2.0	0 6 13 10	FINE TO COARSE GRAINED POORLY GRADED SAND WITH SILT, MOIST - YELLOWISH BROWN	A-1-B	
2	2.0 4.0	4 6 6 8	FINE TO COARSE GRAINED POORLY GRADED SAND WITH SILT, MOIST - YELLOWISH BROWN	A-1-B	
3	4.0 6.0	2 3 3 3	FINE TO COARSE GRAINED POORLY GRADED SAND WITH SILT, MOIST - YELLOWISH BROWN	A-1-B	
4	6.0 8.0	1 2 1 2	FINE TO COARSE GRAINED POORLY GRADED SAND WITH SILT, MOIST - LIGHT BROWN	A-1-B	NANTICOKE DEPOSITS
5	8.0 10.0	1 WH 1/12" 0 WH	FINE TO COARSE GRAINED POORLY GRADED SAND WITH SILT, MOIST - LIGHT BROWN	A-1-B	NANTICOKE DEPOSITS
6	10.0 12.0	1 WH 1 WH	FINE TO COARSE GRAINED POORLY GRADED SAND WITH SILT, MOIST - LIGHT BROWN	A-1-B	NANTICOKE DEPOSITS
7	12.0 14.0	1 2 2 1	FINE TO COARSE GRAINED POORLY GRADED SAND WITH SILT, MOIST - LIGHT BROWN -> LEAN CLAY, TRACE ORGANICS, WET - GRAYISH BROWN -> FINE TO MEDIUM GRAINED POORLY GRADED SAND WITH SILT, WET - LIGHT BROWN	A-1-B	NANTICOKE DEPOSITS
8	14.0 16.0	WH 2 6 6	FINE TO MEDIUM GRAINED POORLY GRADED SAND WITH SILT ESTIMATED <5% WOOD, WET - LIGHT BROWN	A-1-B	NANTICOKE DEPOSITS
9	16.0 18.0	4 5 6 10	FINE TO MEDIUM GRAINED POORLY GRADED SAND WITH SILT AND GRAVEL, WET - LIGHT BROWN	A-1-B	NANTICOKE DEPOSITS
10	18.0 20.0	7 9 13 13	FINE TO MEDIUM GRAINED POORLY GRADED SAND WITH SILT AND GRAVEL, WET - LIGHT BROWN	A-1-B	NANTICOKE DEPOSITS
11	20.0 22.0	4 3 3 4	FINE TO MEDIUM GRAINED POORLY GRADED SAND WITH SILT AND GRAVEL, WET - LIGHT BROWN -> FINE TO MEDIUM GRAINED SILTY SAND, WET-GREENISH GRAY	A-1-B	NANTICOKE DEPOSITS
12	22.0 24.0	3 1 2 1	FINE TO MEDIUM GRAINED SILTY SAND, WET - GREENISH GRAY	A-2-4(0)	NANTICOKE DEPOSITS
13	24.0 26.0	1 2 1 4	FINE TO MEDIUM GRAINED SILTY SAND, WET - GREENISH GRAY	A-2-4(0)	NANTICOKE DEPOSITS APPROXIMATE SHEET PILE TIP ELEV = -15.0
14	26.0 28.0	2 4 6 7	FINE TO MEDIUM GRAINED SILTY SAND, WET - GREENISH GRAY	A-2-4(0)	NANTICOKE DEPOSITS
15	28.0 30.0	4 3 2 4	FINE TO MEDIUM GRAINED SILTY SAND, WET - YELLOWISH BROWN	A-2-4(0)	NANTICOKE DEPOSITS
16	30.0 32.0	3 6 3 7	FINE TO MEDIUM GRAINED SILTY SAND, WET - YELLOWISH BROWN	A-2-4(0)	NANTICOKE DEPOSITS
17	32.0 34.0	3 4 8 10	FINE TO MEDIUM GRAINED POORLY GRADED SAND, WET - YELLOWISH BROWN WITH BANDS OF BROWN	A-1-B	NANTICOKE DEPOSITS
18	34.0 36.0	4 5 7 8	FINE TO MEDIUM GRAINED POORLY GRADED SAND WITH GRAVEL, WET - YELLOWISH BROWN WITH BANDS OF BROWN	A-1-B	NANTICOKE DEPOSITS
19	36.0 38.0	6 6 8 10	FINE TO MEDIUM GRAINED POORLY GRADED SAND WITH GRAVEL, WET - YELLOWISH BROWN WITH BANDS OF BROWN	A-1-B	NANTICOKE DEPOSITS
20	38.0 40.0	7 5 6 20	FINE TO MEDIUM GRAINED SILTY SAND WITH GRAVEL, WET - YELLOWISH BROWN	A-2-4(0)	NANTICOKE DEPOSITS
21	40.0 42.0	10 11 16 17	FINE TO MEDIUM GRAINED SILTY SAND WITH GRAVEL, WET - YELLOWISH BROWN	A-2-4(0)	NANTICOKE DEPOSITS
22	42.0 43.5	8 20 18	FINE TO COARSE GRAINED POORLY GRADED SAND WITH GRAVEL, WET - YELLOWISH BROWN	A-1-B	NANTICOKE DEPOSITS
23	43.5 45.0	3 10 18	FINE TO COARSE GRAINED POORLY GRADED SAND WITH GRAVEL, WET - YELLOWISH BROWN	A-1-B	NANTICOKE DEPOSITS
	45.0		END BORING		

UNOFFICIAL WEBSITE COPY

BO-02

ADDENDA / REVISIONS

RECORDS POND
DAM IMPROVEMENTS

CONTRACT	BRIDGE NO. 3-329	SOIL BORINGS LOGS - 2	SECTION
T201507605	DESIGNED BY: DAH		PAI
COUNTY			SHEET NO.
SUSSEX	CHECKED BY: NWB		41

ENVIRONMENTAL COMPLIANCE NOTES

1. GENERAL NOTES:

A. THE PURPOSE OF THESE SHEETS IS TO IDENTIFY THOSE ITEMS ASSOCIATED WITH ENVIRONMENTAL COMPLIANCE. IMPACT CALCULATIONS ARE FOR THE AGENCY PERMIT REPORTING PURPOSES ONLY AND ARE NOT TO BE USED FOR BIDDING PURPOSES.

B. IF A DEPARTURE FROM THE APPROVED PLANS (WHICH WOULD AFFECT ANY NATURAL AND/OR CULTURAL RESOURCES) IS NECESSARY, THE ENVIRONMENTAL STUDIES SECTION SHALL BE CONTACTED AT (302)760-2264 TO ALLOW FOR COORDINATION WITH THE APPROPRIATE RESOURCE AGENCIES AND APPROVAL.

C. USE OF THESE SHEETS DOES NOT ALLEVIATE THE CONTRACTOR'S RESPONSIBILITY TO COMPLY WITH ALL CONDITIONS SET FORTH IN THE ENVIRONMENTAL STATEMENT AND PERMITS.

2. NATURAL RESOURCE ISSUES:

A. PERMIT REQUIREMENTS/APPROVALS*:
U.S. ARMY CORPS OF ENGINEERS (COE) - NWP #3 (a) AND (c) (WITH PCN) **
DNREC - WETLANDS & SUBAQUEOUS LANDS (WLSL) - SUBAQUEOUS LANDS PERMIT **
DNREC - WATER QUALITY (WQC) & COASTAL ZONE CONSISTENCY (CZM) - ISSUED (PROJECT IS NOT LOCATED IN CRW)

* THE PERMITS/APPROVALS LISTED (COE, WLSL) ARE THOSE REQUIRED FOR THIS PROJECT. THE ENVIRONMENTAL STUDIES SECTION IS RESPONSIBLE FOR COORDINATING AND/OR OBTAINING THIS APPROVAL.
** THE CONTRACTOR MUST ENSURE THAT THESE PERMITS/APPROVALS (COE, WLSL) ARE IN THEIR POSSESSION PRIOR TO BEGINNING CONSTRUCTION IN THE PERMITTED AREA(S) AND ENSURE IT IS DISPLAYED ON-SITE DURING THE ENTIRE CONSTRUCTION PERIOD.

THE ABSENCE OF ASTERISKS AFTER PERMIT (WQC, CZM) INDICATES THAT COORDINATION HAS BEEN DONE WITH THAT AGENCY BUT NO WRITTEN AUTHORIZATION WAS REQUIRED. AS SUCH, NO PAPERWORK FROM THAT AGENCY SHOLD BE ANTICIPATED.

B. CONSTRUCTION RESTRICTIONS:

NO IN WATER WORK CAN OCCUR IN RECORDS POND FROM APRIL 1 TO JULY 15. NO IN WATER WORK CAN OCCUR INSIDE THE SPILLWAY AND DOWNSTREAM OF THE DAM FROM MARCH 1 TO JULY 15 AND FROM AUGUST 15 TO NOVEMBER 1, SEE BELOW FOR DETAILS.

FISHERIES - ATLANTIC STURGEON, A FEDERALLY PROTECTED SPECIES (ALSO STATE LISTED AS ENDANGERED), OCCURS IN THE NANTICOKE RIVER SYSTEM. DIVISION RESEARCH HAS REVEALED TWO ACOUSTICALLY TAGGED STURGEON 1.7 RIVER MILES BELOW THE RECORDS POND DAM. THEREFORE, ATLANTIC STURGEON COULD BE IN THE PROJECT AREA FROM MID-AUGUST TO OCTOBER. TO PROTECT THESE SPECIES, NO IN-WATER WORK SHALL BE PERFORMED FROM MARCH 15 TO JULY 1 AND FROM AUGUST 15 TO NOVEMBER 1.

FISHERIES - THE COVE ADJACENT TO THE SPILLWAY IS A SPAWNING AREA FOR LARGEMOUTH BASS, THE MOST POPULAR FRESHWATER SPECIES IN DELAWARE THAT SUPPORTS HEAVY RECREATIONAL ANGLING PRESSURE. THE LACK OF SUITABLE SPAWNING HABITAT IN THE NANTICOKE RIVER SYSTEM IS ONE FACTOR THAT LIMITS THE ABUNDANCE OF THE POPULATION, THUS PROTECTION OF KNOWN SPAWNING AREAS IS IMPORTANT. IN-WATER WORK CAN SUSPEND SEDIMENTS WHICH CAN SMOTHER NESTS AND EGGS, THUS A TURBIDITY CURTAIN COULD POTENTIALLY MITIGATE FOR THIS IMPACT. HOWEVER, IF THE WORK EXTENDS DOWNSTREAM OF THE SPILLWAY DIRECT IMPACTS TO SPAWNING COULD OCCUR. IN ADDITION, IF THE POND IS DRAWN DOWN 1-2 FEET, THIS COULD IMPACT THE SUITABILITY AND AVAILABILITY OF SPAWNING HABITAT FOR CENTRARCHIDS (WHICH INCLUDES BASS, BLUEGILL, BLACK CRAPPIE ETC.) IN THE POND. SO, IF THE POND IS DRAWN DOWN OR THE WORK EXTENDS DOWNSTREAM, A TIME OF YEAR RESTRICTION IS REQUESTED WHICH IS IN LINE WITH OUR POND POLICY: MARCH 15-JUNE 1.

FISHERIES - AMERICAN SHAD (ALOSA SAPIDISSIMA), BLUEBACK HERRING (ALOSA AESTIVALIS), AND ALEWIFE (ALOSA PSEUDOHARENGUS) COLLECTIVELY KNOWN AS ALOSINES, MIGRATE UPSTREAM WITHIN BROAD CREEK DURING THE SPRING IN SEARCH OF SUITABLE SPAWNING HABITAT. THESE SPECIES HAVE BEEN OBSERVED IN RATHER LARGE NUMBERS WITHIN THE SPILLWAY AS THE DAM CREATES AN IMPEDIMENT TO FURTHER UPSTREAM MIGRATION. GIVEN THE CONCENTRATION OF THESE SPECIES IN THE SPRING WITHIN THE PROJECT AREA, WE REQUEST A TIME OF YEAR RESTRICTION OF MARCH 15-JUNE 1. THIS TIME OF YEAR RESTRICTION SHOULD MINIMIZE IMPACTS TO SPAWNING ACTIVITIES AS WELL AS DIRECT IMPACTS TO THESE SPECIES WHICH ARE ESPECIALLY SENSITIVE TO DISTURBANCE IN THE WATER COLUMN. IT IS IMPORTANT TO PROTECT THESE STOCKS BECAUSE AMERICAN SHAD POPULATIONS HAVE DECLINED ALONG THE EAST COAST PROMPTING RESTORATION EFFORTS ON THE NANTICOKE RIVER. ALEWIFE (ALOSA PSEUDOHARENGUS) AND BLUEBACK HERRING (ALOSA AESTIVALIS) ARE LISTED BY THE NATIONAL MARINE FISHERIES SERVICE AS A SPECIES OF CONCERN. THESE SPECIES ARE IMPORTANT TO BOTH COMMERCIAL AND RECREATIONAL FISHERIES AND FORM AN IMPORTANT FORAGE BASE FOR OTHER FISH AND ANIMAL SPECIES

FISHERIES - USACE NATIONWIDE PERMIT REGIONAL GENERAL CONDITION G-6(B), IN ORDER TO PROTECT DIADROMOUS FISH MIGRATIONS, SPAWNING ACTIVITIES, AND EFH, IN-WATER WORK SHALL BE AVOIDED FROM MARCH 1 TO JUNE 30 IN ALL WATERS. WORK WITHIN COFFERDAMS THAT FULLY ENCLOSE AND DEWATER THE PROJECT AREA CAN PROCEED ANY TIME DURING THE YEAR PROVIDED THE COFFERDAMS ARE INSTALLED OR REMOVED OUTSIDE OF THE SEASONAL WORK RESTRICTION AND DO NOT PRECLUDE THE FREE MOVEMENT OF MIGRATING OR SPAWNING AQUATIC SPECIES TO ENSURE COMPLIANCE WITH NWP GENERAL CONDITION 2 AND 3.

ENDANGERED SPECIES: NORTHERN LANCE (ELLIPTIO FISHERIANA), IS A FRESHWATER MUSSEL THAT HAS BEEN DOCUMENTED IN BROAD CREEK DOWNSTREAM OF THE PROJECT. ENSURE THAT BEST MANAGEMENT PRATICES ARE IN PLACE TO MINIMIZE DOWNSTREAM SEDIMENTATION DURING CONSTRUCTION ACTIVITIES.

BLACKBANDED SUNFISH (ENNEACANTHUS CHAETODON) AND IRON COLOR SHINER (NOTROPIS CHALBAEUS) - TWO STATE RARE FISH SPECIES HAVE BEEN DOCUMENTED IN RECORDS POND. A TIME OF YEAR RESTRICTION (APRIL 1 TO JUNE 30) IS REQUESTED FOR ANY IN-WATER WORK THAT OCCURS WITHIN RECORDS POND, INCLUDING A DRAWDOWN OF THE POND.

MIGRATORY BIRDS: NONE

3. CULTURAL RESOURCE ISSUES:

A. BRIDGE 3-329 IS INDIVIDUALLY ELIGIBLE FOR LISTING ON THE NATIONAL REGISTER OF HISTORIC PLACES (NRHP) AND WORK ON THE SOUTH SIDE OF THE DAM IS LOCATED WITHIN THE LAUREL HISTORIC DISTRICT WHICH IS LISTED ON THE NRHP. DELDOT HAS CONCURRENCE WITH THE DE SHPO THAT THE WORK AS DESCRIBED IN THESE PLANS CONSTITUTES A CONDITIONAL NO ADVERSE EFFECT FINDING UNDER SECTION 106 OF THE NATIONAL HISTORIC PRESERVATION ACT. IF THE SCOPE OF WORK SHOULD CHANGE, DELDOT ENVIRONMENTAL STUDIES SECTION MUST BE NOTIFIED IMMEDIATELY TO APPROVE ANY CHANGES OR RE-EVALUATE THE SECTION 106 FINDING

B. IF UNFORESEEN DAMAGE OCCURS TO BRIDGE 3-329 (AS A DIRECT RESULT OF THE UNDERTAKING), DELDOT'S ENVIRONMENTAL STUDIES SECTION MUST BE CONTACTED TO ENSURE THAT THE SHPO, FHWA, OR OTHERS ARE CONSULTED ON WAYS TO REPAIR THE DAMAGE CONSISTENT WITH THE SECRETARY OF THE INTERIOR'S STANDARDS

4. STREAM RESTORATION:

A. RESTORE OTHER AREAS OF THE CHANNEL BOTTOM AFFECTED BY CONSTRUCTION (INCLUDING, BUT NOT LIMITED TO, THE LOCATION OF SUMP PITS, STABILIZED OUTFALLS, TEMPORARY PIPES AND/OR SANDBAG DIKES AND DIVERSIONS) TO EXISTING CONDITIONS. FILL ANY CAVITIES OR SCOUR HOLES RESULTING FROM CONSTRUCTION ACTIVITIES WITH CHANNEL BED FILL. PAYMENT UNDER ITEM 707500 - CHANNEL BED FILL.

B. CHOKE ALL RIPRAP ON THE STREAM BANK WITH DELAWARE #57 STONE. PLACE JUST ENOUGH CHOKE MATERIAL TO PREVENT THE LOSS OF CHANNEL BED FILL THROUGH THE RIPRAP. AFTER PLACING DELAWARE #57 STONE, PERFORM A FINAL CHOKE OF CHANNEL BED FILL SO THAT THE RIPRAP PEAKS ARE BARELY VISIBLE. PAYMENT UNDER ITEM 707500 - CHANNEL BED FILL. DELAWARE #57 STONE IS INCIDENTAL TO THE RIPRAP ITEM.

5. PROTECTION OF RESOURCES:

A. SILT FENCE OR CONSTRUCTION SAFETY FENCE SHALL BE USED ALONG THE LIMITS OF CONSTRUCTION IN ALL AREAS WHERE WATER/WETLAND ARE BEING IMPACTED (AS SHOWN ON EC SHEETS), AND ALSO IN ANY AREA WHERE WATER/WETLANDS EXIST WITHIN 20 FEET OF THE LOC (AS SHOWN ON CONSTRUCTION PLANS). CONTRACTOR ACCESS BEYOND THE LOC IS STRICTLY PROHIBITED.

B. ALL TREES TO BE REMOVED SHALL BE CLEARLY MARKED WITH PAINT PRIOR TO THE E&S SEDIMENT CONTROL MEETING.

PROJECT AREA DELINEATED BY MCCORMICK TAYLOR, INC. IN JUNE 2016 IN ACCORDANCE WITH THE CORPS OF ENGINEERS WETLAND DELINEATION MANUAL (1987) AND THE ATLANTIC AND GULF COAST REGIONAL SUPPLEMENT (VERSION 2.0)

SHEETS PREPARED BY: PENNONI ASSOCIATES
DATE: OCTOBER, 2016

SHEETS LAST UPDATED: JUNE, 2019

UNOFFICIAL WEBSITE COPY

TEMPORARY OPEN WATER IMPACT AREA SCHEDULE					
ID	IMPACT DESCRIPTION	AREA (SF)	AREA (AC)	VOLUME (CY)	JURISDICTION
OT1	RIPRAP	6486.09	0.1489	240.23	USACE/DNREC
OT2	TEMPORARY COFFERDAM	662.89	0.0152	245.51	USACE/DNREC
OT3	CONCRETE OVERLAY	1528.20	0.0351	28.30	USACE/DNREC
TOTAL FOR THIS SHEET		8677.18	0.1992	514.04	USACE/DNREC

PERMANENT OPEN WATER IMPACT AREA SCHEDULE					
ID	IMPACT DESCRIPTION	AREA (SF)	AREA (AC)	VOLUME (CY)	JURISDICTION
01	RIPRAP	868.89	0.0199	64.36	USACE/DNREC
02	SHEET PILE WALL	202.72	0.0047	37.54	USACE/DNREC
03	RIPRAP	1467.32	0.0337	108.69	USACE/DNREC
04	RIPRAP	1353.19	0.0311	100.24	USACE/DNREC
05	SHEET PILE WALL	68.00	0.0016	25.19	USACE/DNREC
06	CONCRETE OVERLOOK	260.55	0.0060	38.60	USACE/DNREC
TOTAL FOR THIS SHEET		4220.67	0.0969	374.61	USACE/DNREC

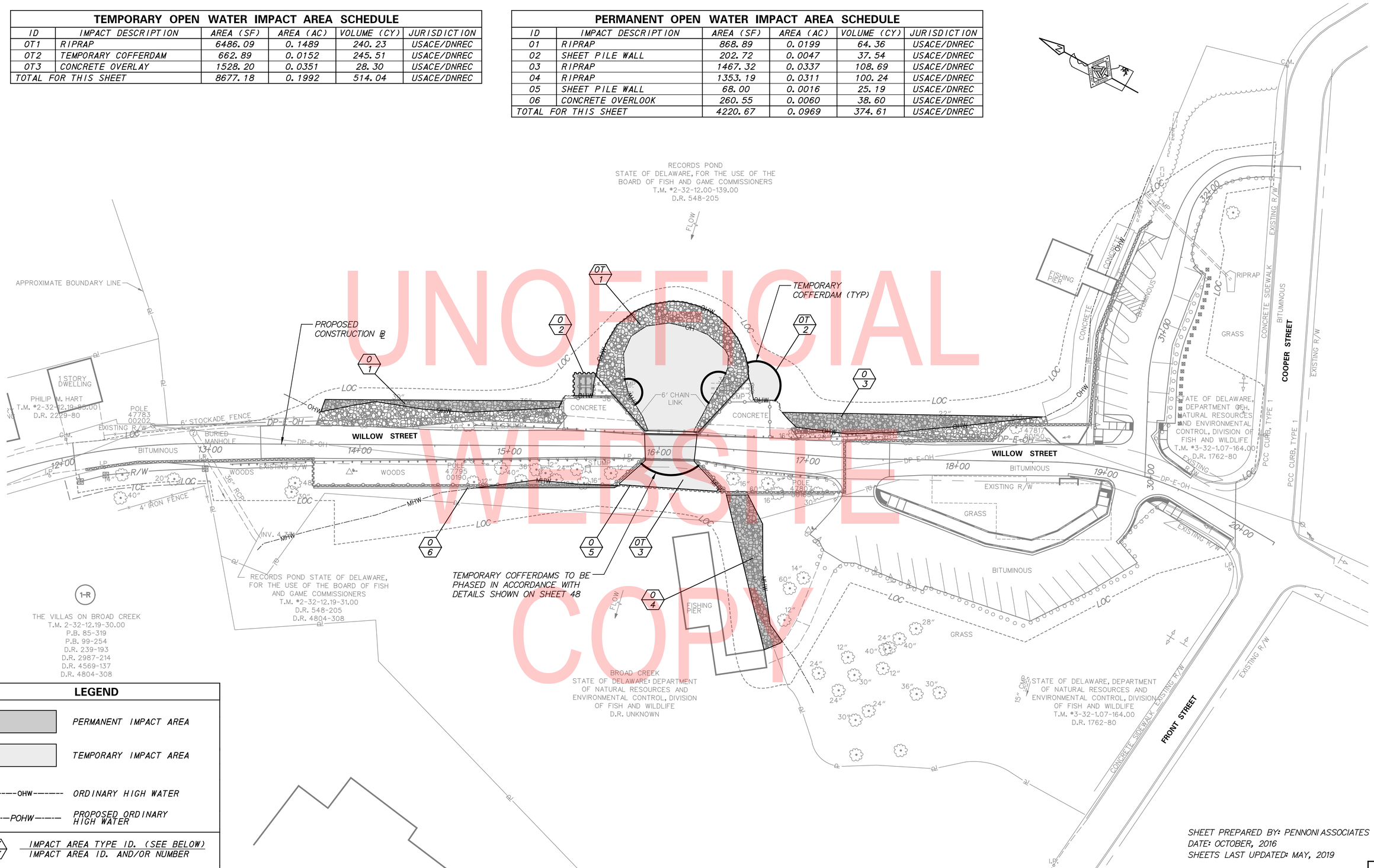

UNOFFICIAL WEBSITE COPY

LEGEND

- PERMANENT IMPACT AREA
- TEMPORARY IMPACT AREA
- OHW — ORDINARY HIGH WATER
- POHW — PROPOSED ORDINARY HIGH WATER
- XX / ?X — IMPACT AREA TYPE ID. (SEE BELOW) / IMPACT AREA ID. AND/OR NUMBER

O = OPEN WATER IMPACT T = TEMPORARY IMPACT

SHEET PREPARED BY: PENNONI ASSOCIATES
DATE: OCTOBER, 2016
SHEETS LAST UPDATED: MAY, 2019

ADDENDA / REVISIONS	

SCALE 0 30 60 90 FEET

RECORDS POND DAM IMPROVEMENTS

CONTRACT	BRIDGE NO.	3-329
T201507605	DESIGNED BY: DAH	
COUNTY	CHECKED BY: NWB	
SUSSEX		

ENVIRONMENTAL COMPLIANCE PLAN

EC-02

SECTION	PAI
SHEET NO.	43

GENERAL MOT NOTES:

1. ACCESS TO ALL BUSINESSES AND RESIDENCES WITHIN THE PROJECT LIMITS SHALL BE MAINTAINED THROUGHOUT THE DURATION OF THIS CONTRACT. ANY TEMPORARY CLOSURE OF A DRIVEWAY FOR TIE-IN PURPOSES SHALL BE COORDINATED WTH THE ENGINEER AND/OR PROPERTY OWNER IN ADVANCE OF THE CLOSURE.

2. SEE VEHICULAR DETOUR PLAN FOR ADDITIONAL TEMPORARY CONSTRUCTION SIGNAGE.

3. AMERICAN TRAFFIC SAFETY SERVICES ASSOCIATION (ATSSA) CERTIFIED TRAFFIC CONTROL SUPERVISOR REQUIREMENT FOR THIS PROJECT.

(X)	THE CONTRACTOR SHALL NOT BE REQUIRED TO HAVE AN ATSSA SUPERVISOR ASSIGNED TO THIS PROJECT.
( )	THE CONTRACTOR SHALL HAVE AN ATSSA SUPERVISOR ASSIGNED TO THIS PROJECT. THE CONTRACTOR'S GENERAL SUPERINTENDENT FOR THIS PROJECT OR ANOTHER ATSSA CERTIFIED MEMBER OF THE CONTRACTOR'S PROJECT STAFF MAY BE THE ATSSA SUPERVISOR. PAYMENT FOR ATSSA SUPERVISOR IS INCIDENTAL TO ITEM 801000.

4. THE CONTRACTOR SHALL COORDINATE WITH THE ADJACENT BRIDGE 3-162 / DELAWARE AVENUE PROJECT TO ENSURE THAT THE WILLOW STREET CLOSURE AND DETOUR IS NOT IMPLEMENTED CONCURRENT WITH THE DELAWARE AVENUE CLOSURE AND DETOUR.

GENERAL EROSION AND SEDIMENT CONTROL NOTES:

1. EROSION AND SEDIMENT CONTROL DEVICES WILL BE MAINTAINED IN PLACE AND WILL ONLY BE REMOVED WHEN IT IS NO LONGER NECESSARY TO PROVIDE FOR THEIR DESIGNATED FUNCTIONS AS APPROVED BY THE ENGINEER.

2. THE CONTRACTOR SHALL ENSURE THAT SUMP PIT LOCATIONS DO NOT CONFLICT WITH TIE RODS AND ASSOCIATED SHEET PILE WALL ACTIVITIES.

3.

EROSION POTENTIAL FOR THIS PROJECT	CONTRACTOR ESC SUPERVISOR REQUIREMENT
( ) INSIGNIFICANT	NONE
( ) MINOR	CONTRACTOR TRAINING PROGRAM, AS DEFINED IN SECTION 6.2 OF THE DELAWARE SEDIMENT AND STORMWATER REGULATIONS.
(X) MAJOR	CERTIFIED CONSTRUCTION REVIEWER (CCR), AS DEFINED IN SECTION 6.3 OF THE DELAWARE SEDIMENT AND STORMWATER REGULATIONS.

4. THE DISTURBED AREA FOR THIS PROJECT IS 0.89 ACRES.

5. THE SEDIMENT AND STORMWATER MANAGEMENT PLANS HAVE BEEN APPROVED BY DELDOT'S STORMWATER ENGINEER UNDER DELDOT'S DELEGATED AUTHORITY. THE SEDIMENT AND STORMWATER MANAGEMENT PLANS ARE VALID FOR A FIVE YEAR PERIOD, BEGINNING ON THE DATE THE STORMWATER ENGINEER SIGNED THIS SHEET. IF THE FINAL ACCEPTANCE OF THE PROJECT IS ANTICIPATED TO EXTEND BEYOND THE FIVE YEARS, THE CONTRACTOR WILL INFORM THE ENGINEER THREE MONTHS PRIOR TO THE EXPIRATION OF THE APPROVED SEDIMENT AND STORMWATER MANAGEMENT PLANS. THE STORMWATER ENGINEER WILL REVIEW THE CURRENT SEDIMENT AND STORMWATER MANAGEMENT PLAN AND ISSUE AN EXTENSION WITH ANY APPROPRIATE MODIFICATIONS.

SEQUENCE OF CONSTRUCTION:

1. INSTALL REQUIRED EROSION AND SEDIMENT CONTROLS AS SHOWN ON PLANS.
2. OVERHEAD UTILITIES WILL BE RELOCATED BY OTHERS.
3. CONSTRUCT SHEETPILE WALL BETWEEN STA. 31+69 AND APPROXIMATELY STA. 16+47.
4. CONSTRUCT OUTLET STRUCTURE PHASE 1, AS SHOWN ON THE CONTROL OF WATER PLAN.
5. CONSTRUCT SHEETPILE WALL BETWEEN STA. 15+70 AND APPROXIMATELY STA. 12+14.
6. REPAIR CULVERT IN THREE PHASES AS SHOWN ON THE CONTROL OF WATER PLAN.
7. CONSTRUCT OUTLET STRUCTURE PHASE 2, AS SHOWN ON THE CONTROL OF WATER PLAN.
8. INSTALL RIPRAP AS DIRECTED BY THE ENGINEER.
9. INSTALL NEW CONCRETE PAVING, PEDESTRIAN RAILINGS AND GUARDRAILS.
10. RECONSTRUCT ROADWAY, CONSTRUCT PEDESTRIAN WALKWAY AND INSTALL GUARDRAIL OVER CULVERT.
11. RESTORE THE STAGING AREA TO PRE-CONSTRUCTION CONDITIONS (REMOVE STOCKPILED MATERIALS AND EQUIPMENT, GRADE AS NECESSARY, ETC.).
12. CONSTRUCT BASE WIDENING WITHIN PARKING LOT EAST.
13. STABILIZE ALL DISTURBED AREAS WITH TOPSOIL, SEED, AND MULCH. SEED IN ACCORDANCE WITH 908014 EXCEPT WHERE 908019 IS SPECIFICALLY SHOWN ON THE DRAWINGS. STABILIZATION BLANKETS (ITEM 908020 - EROSION CONTROL BLANKET MULCH) SHALL BE USED ON SLOPES ADJACENT TO THE POND AND CREEK.
14. REMOVE EROSION AND SEDIMENT CONTROLS AFTER FINAL VEGETATIVE STABILIZATION OF ALL DISTURBED AREAS AND WITH CONCURRENCE FROM DELDOT'S STORMWATER ENGINEER.

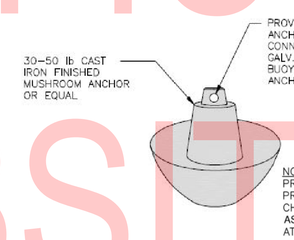

BUOY ANCHOR DETAIL
NOT TO SCALE

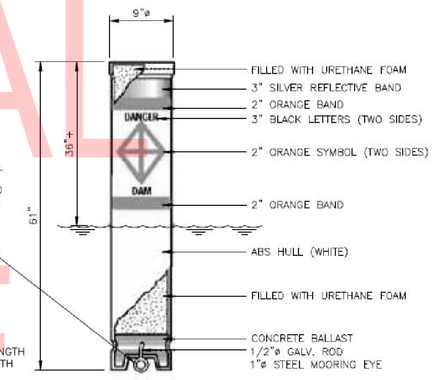

WARNING BUOY DETAIL
NOT TO SCALE

UNOFFICIAL WEBSITE COPY

Vincent W. Davis 10/17/2019
DELDOT STORMWATER ENGINEER DATE
"I CERTIFY TO THE BEST OF MY KNOWLEDGE AND BELIEF THAT THESE PLANS MEET THE REQUIREMENTS OF THE DELAWARE SEDIMENT AND STORMWATER REGULATIONS AND THAT ALL CLEARING, GRADING, AND CONSTRUCTION WILL BE ACCOMPLISHED PURSUANT TO THE PLAN."

ADDENDA / REVISIONS	

RECORDS POND DAM IMPROVEMENTS

CONTRACT	BRIDGE NO.	3-329
T201507605	DESIGNED BY:	JS
COUNTY		
SUSSEX	CHECKED BY:	JRY

CONSTRUCTION PHASING, M.O.T., AND EROSION CONTROL PLAN

CS-01
SECTION SE/PAI
SHEET NO. 44

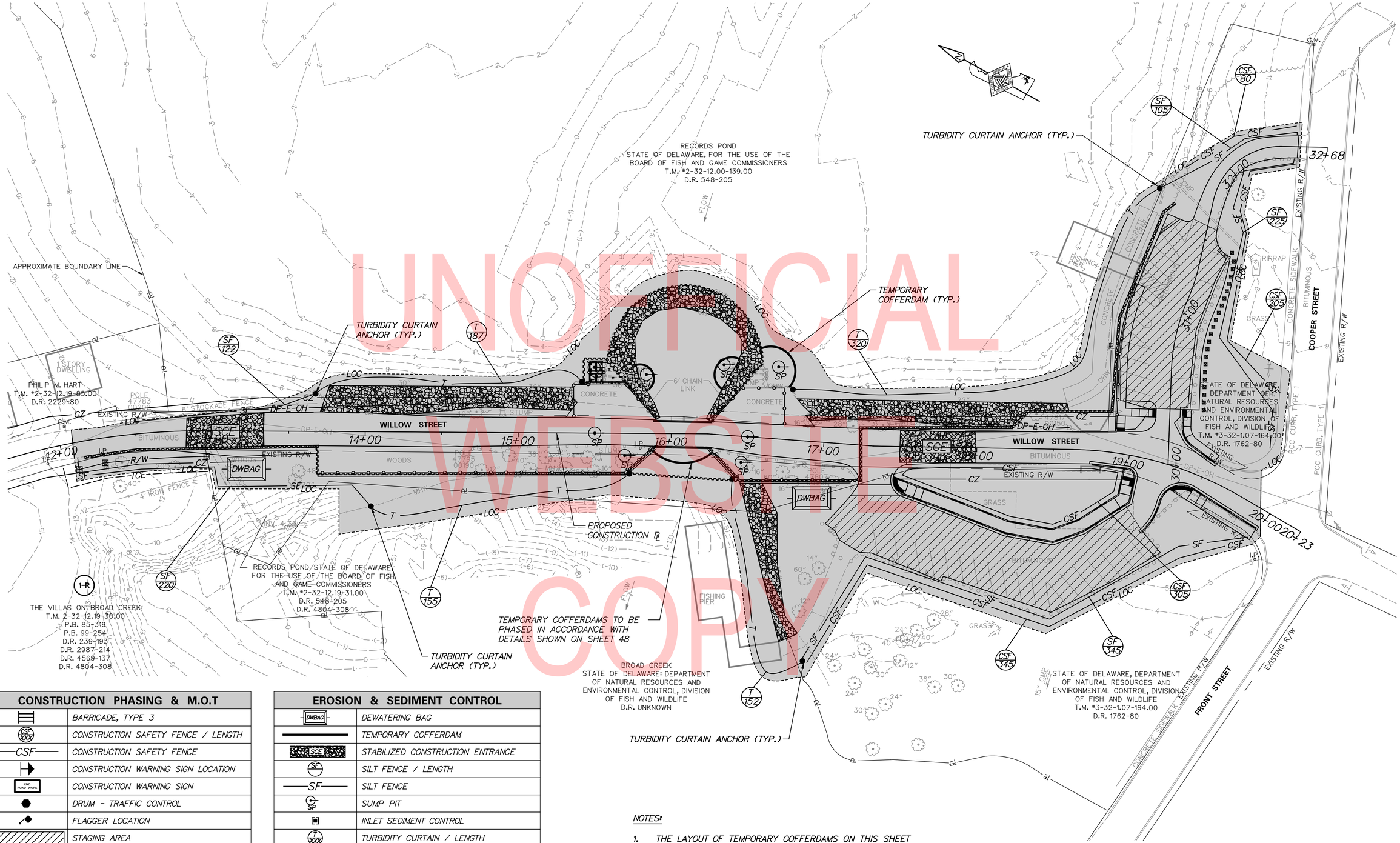

UNOFFICIAL WEBSITE COPY

CONSTRUCTION PHASING & M.O.T	
	BARRICADE, TYPE 3
CSF XXX	CONSTRUCTION SAFETY FENCE / LENGTH
—CSF—	CONSTRUCTION SAFETY FENCE
	CONSTRUCTION WARNING SIGN LOCATION
END ROAD WORK	CONSTRUCTION WARNING SIGN
	DRUM - TRAFFIC CONTROL
	FLAGGER LOCATION
	STAGING AREA
	WORK AREA - ACTIVE PHASE

EROSION & SEDIMENT CONTROL	
DWBAG	DEWATERING BAG
	TEMPORARY COFFERDAM
SCE	STABILIZED CONSTRUCTION ENTRANCE
SF	SILT FENCE / LENGTH
—SF—	SILT FENCE
SP	SUMP PIT
	INLET SEDIMENT CONTROL
T XXX	TURBIDITY CURTAIN / LENGTH
—T—	TURBIDITY CURTAIN

NOTES:

1. THE LAYOUT OF TEMPORARY COFFERDAMS ON THIS SHEET IS CONCEPTUAL ONLY. REFER TO SHEETS CS-03 AND CS-04 FOR PLACEMENT OF TEMPORARY COFFERDAMS.

ADDENDA / REVISIONS

SCALE 0 30 60 90 FEET

RECORDS POND DAM IMPROVEMENTS

CONTRACT	BRIDGE NO.	3-329
T201507605	DESIGNED BY: JS	
COUNTY		
SUSSEX	CHECKED BY: JRY	

CONSTRUCTION PHASING, M.O.T., AND EROSION CONTROL PLAN

CS-02

SECTION SE/PAI

SHEET NO. 45

PORTABLE CHANGEABLE MESSAGE SIGNS

PRIOR TO DETOUR
(10 DAYS PRIOR TO BEGINNING OF DETOUR)

PCMS-1

WILLOW ST TO CLOSE	STARTING XX/XX/XX

SPECIAL SIGNS

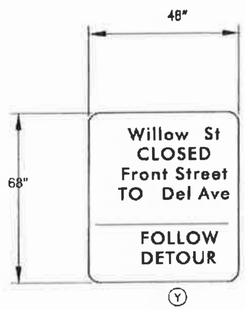

1. ALL SIGNS SHALL HAVE A BLACK LEGEND ON A FLUORESCENT RETROREFLECTIVE PRISMATIC ORANGE BACKGROUND.

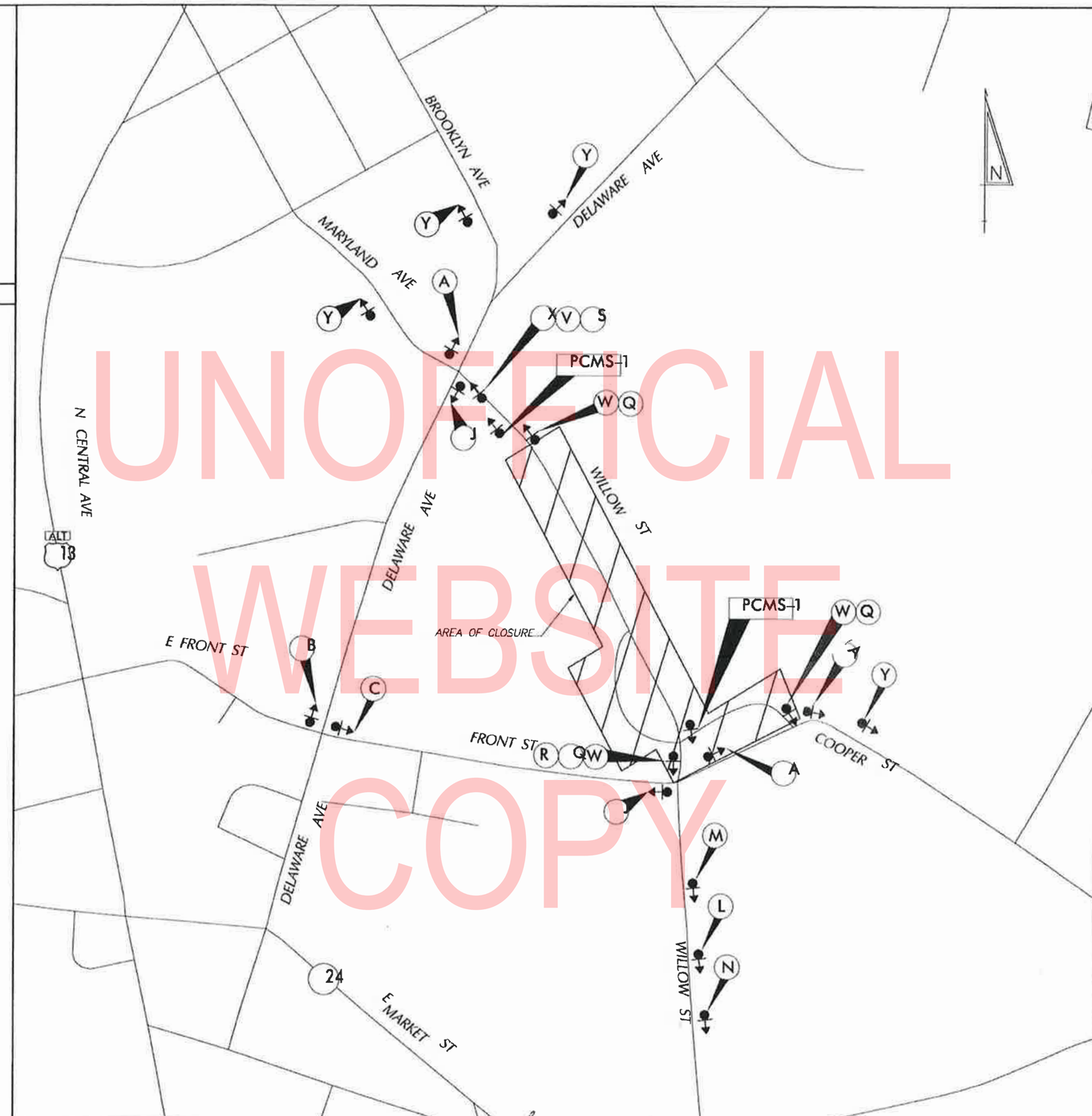

UNOFFICIAL WEBSITE COPY

LEGEND

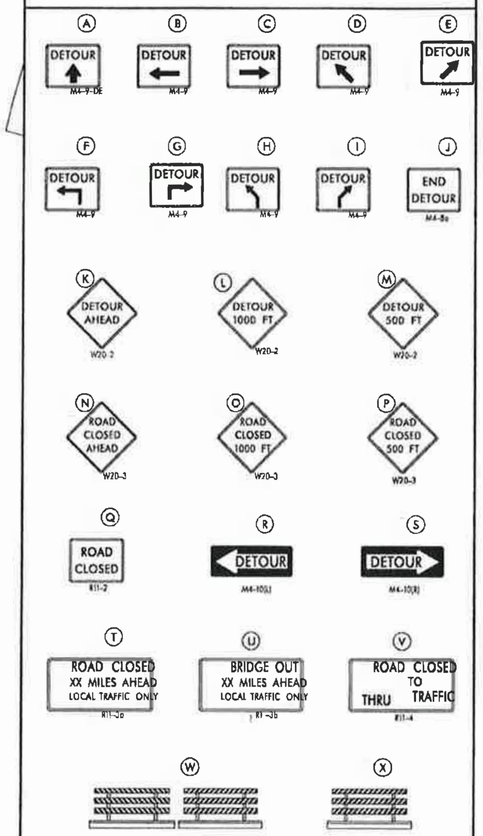

GENERAL NOTES

1. ALL DETOUR SIGNING, INCLUDING TRAILBLAZERS, ARE TO BE SUPPLIED AND MAINTAINED BY THE CONTRACTOR IN COMPLIANCE WITH "THE DELAWARE GENERAL MANUAL ON UNIFORM TRAFFIC CONTROL DEVICES" (DE MUTCD.)
2. THE CONTRACTOR SHALL COMPLY WITH GUIDELINES IN "THE DELAWARE MANUAL ON UNIFORM TRAFFIC CONTROL DEVICES" (DE MUTCD PART 6) FOR BARRICADES AND SIGNS (AS PER LATEST REVISION.)
3. DESIGN OF ALL SIGNS SHALL BE IN ACCORDANCE WITH THE FHWA STANDARD HIGHWAY SIGNS BOOK.
4. SIZES OF ALL SIGNS SHALL BE IN ACCORDANCE WITH THE DELAWARE MANUAL ON UNIFORM TRAFFIC CONTROL DEVICES" (DE MUTCD.) SIZE OF SIGN SHALL BE BASED ON TYPE OF ROADWAY ON WHICH THE SIGN IS INSTALLED.
5. SIGNS NO LONGER IN USE SHALL BE COMPLETELY COVERED WITH NO RETROREFLECTIVE MATERIAL SHOWING, OR SHALL BE REMOVED AS DIRECTED BY THE ENGINEER.
6. FIELD CONDITIONS MAY DICTATE CHANGES AT SOME TIME DURING THE LIFE OF THE CONTRACT. IN THE EVENT OF OMISSIONS OR CORRECTIONS, THE SIGNING PROVISIONS OF THE DELAWARE MANUAL ON UNIFORM TRAFFIC CONTROL DEVICES" (DE MUTCD) WILL PREVAIL.
7. SIGNS "N" AND "O" AND "T" AND "V", THE WORD "ROAD" SHOULD BE CHANGED TO "BRIDGE", "RR XING", OR "BRIDGE" WHERE APPLICABLE.
8. WARNING SIGNS AND DETOUR TRAILBLAZERS SHALL BE MOUNTED ON BREAKAWAY POSTS AND HAVE RETROREFLECTIVE FLUORESCENT ORANGE SHEETING.
9. "W" BARRICADES SHALL COMPLETELY RUN THE FULL WIDTH OF THE ROADWAY.
10. BARRICADES SHALL BE A MINIMUM OF 6 FEET WIDE UNLESS DIRECTED BY THE ENGINEER.

RECOMMENDED _____ DATE: _____

RECOMMENDED _____ DATE: _____

RECOMMENDED [signature] DATE: 6/11/18

APPROVED CHIEF SAFETY OFFICER [signature] DATE: 6-11-18

APPROVED TRAFFIC ENGINEER [signature] DATE: 6/11/18

DELAWARE DEPARTMENT OF TRANSPORTATION

ADDENDUMS / REVISIONS

NOT TO SCALE

RECORDS POND DAM IMPROVEMENTS

CONTRACT	BRIDGE NO	3-329
T201507605	DESIGNED BY:	DAH
COUNTY: SUSSEX	CHECKED BY:	MJS

VEHICULAR DETOUR PLAN
WILLOW STREET

SHEET NO: 46
TOTAL SHTS: 520

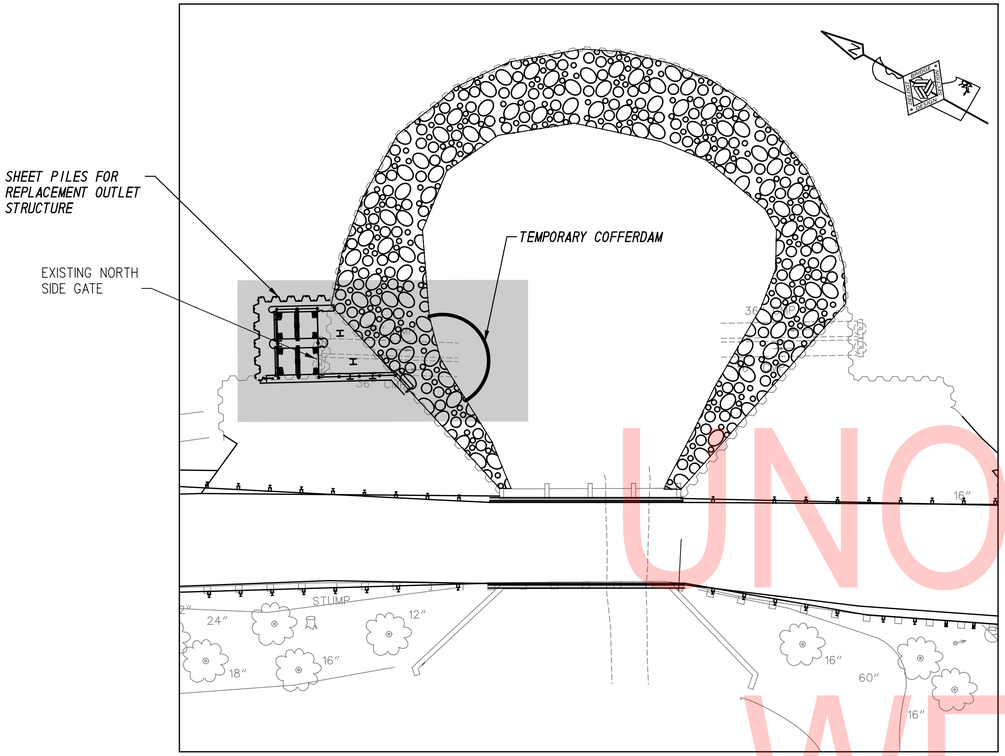

OUTLET STRUCTURE CONSTRUCTION - PHASE 1

SCALE: 1"= 15'-0"

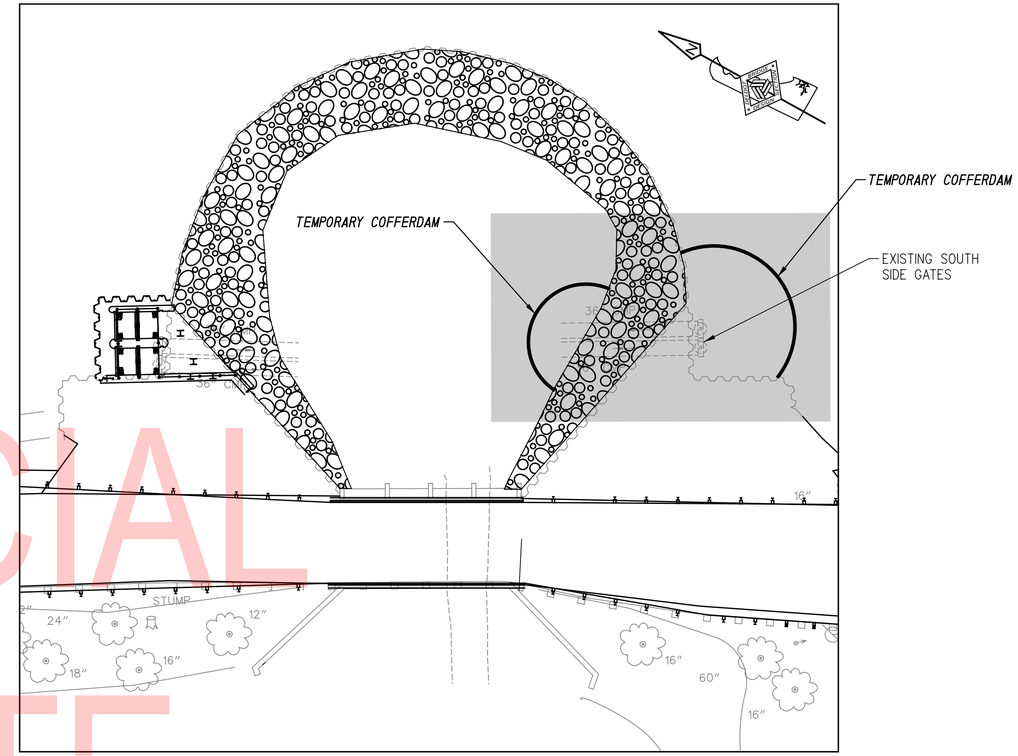

OUTLET STRUCTURE CONSTRUCTION - PHASE 2

SCALE: 1"= 15'-0"

PHASE 1 CONTROL OF WATER NOTES:

1. ASSUME NO RESERVOIR DRAWDOWN DURING PHASE 1.
2. INSTALL SHEET PILE CUTOFF FOR NORTH SIDE REPLACEMENT OUTLET STRUCTURE. TOP OF SHEET PILE SHALL BE AT LEAST TO TOP OF DAM (ELEV. 10.0').
3. INSTALL TEMPORARY COFFERDAM (MINIMUM TOP ELEV. 10.0') DOWNSTREAM SIDE OF NORTH OUTLET PIPES.
4. REMOVE WATER (UNWATER) AREAS WITHIN TEMPORARY COFFERDAM (PAID FOR UNDER ITEM 906003).
5. INSTALL EXCAVATION DEWATERING MEASURES AS NEEDED AND EXCAVATE OUTLET STRUCTURE FOUNDATION IN ACCORDANCE WITH SECTION 900 OF THE STANDARD SPECIFICATIONS.
6. CONSTRUCT REPLACEMENT OUTLET STRUCTURE.
7. TRIM SHEET PILE CUTOFF TO FINAL ELEV. AS SHOWN ON PLANS AND REMOVE TEMPORARY COFFERDAM.

PHASE 2 CONTROL OF WATER NOTES:

1. DIVERT FLOW THROUGH REPLACEMENT OUTLET STRUCTURE AND MAINTAIN 1-FOOT RESERVOIR DRAWDOWN DURING PHASE 2.
2. INSTALL TEMPORARY COFFERDAM (MINIMUM TOP ELEV. 10.0') AT DOWNSTREAM AND UPSTREAM SIDES OF SOUTH OUTLET PIPES. REMOVE WATER (UNWATER) AREAS WITHIN TEMPORARY COFFERDAMS (PAID FOR UNDER ITEM 906003). CUT SOUTH SIDE PIPES FLUSH WITH SHEETING AND WELD STEEL PLATES OVER DOWNSTREAM END OF EXISTING OUTLET PIPES (PAID FOR UNDER ITEM 615000).
3. REMOVE EXISTING SOUTH SIDE SLIDE GATE.
4. GROUT EXISTING OUTLET PIPE CLOSED WITH FLOWABLE FILL (ITEM 208000) AND WELD STEEL PLATES OVER UPSTREAM OPENING.
5. REMOVE TEMPORARY COFFERDAMS.
6. CONTRACTOR TO FIELD VERIFY DIMENSIONS AND SELECT PLATE SIZES TO ADEQUATELY BULKHEAD THE END OF THE OUTLET PIPES.

GENERAL NOTES:

1. TEMPORARY COFFERDAMS SHALL CONFORM WITH SPECIAL PROVISION 604500.

UNOFFICIAL WEBSITE COPY

CS-03

ADDENDA / REVISIONS	SCALE: AS NOTED	RECORDS POND DAM IMPROVEMENTS	CONTRACT T201507605	BRIDGE NO. 3-329	CONTROL OF WATER OUTLET STRUCTURE	SECTION SE
			COUNTY SUSSEX	DESIGNED BY: JS		SHEET NO. 47
				CHECKED BY: JRY		

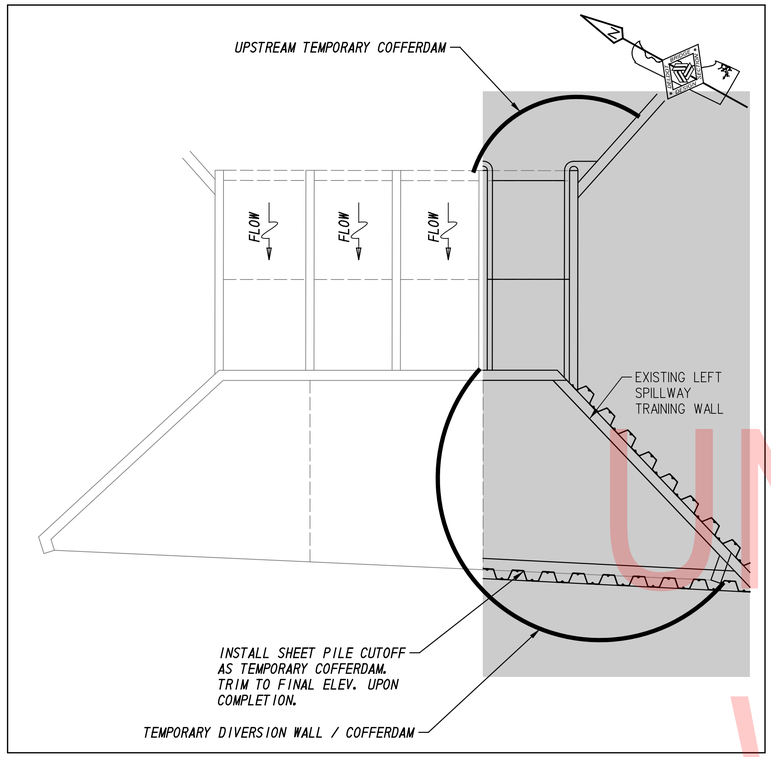

SHEET PILE WALL INSTALLATION/ CULVERT REPAIR - PHASE 1

SCALE: 1"= 15'-0"

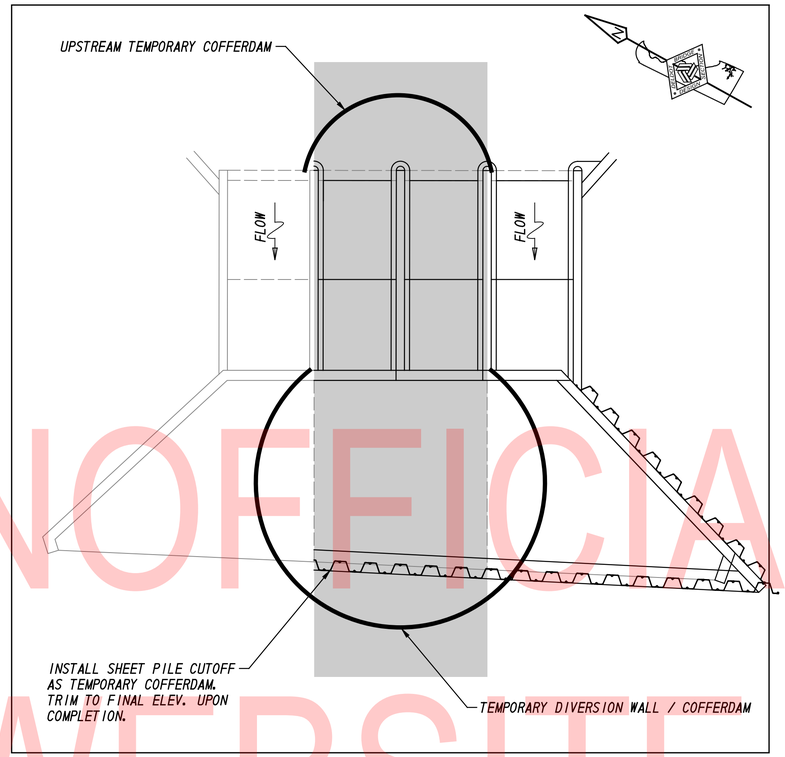

SHEET PILE WALL INSTALLATION/ CULVERT REPAIR - PHASE 2

SCALE: 1"= 15'-0"

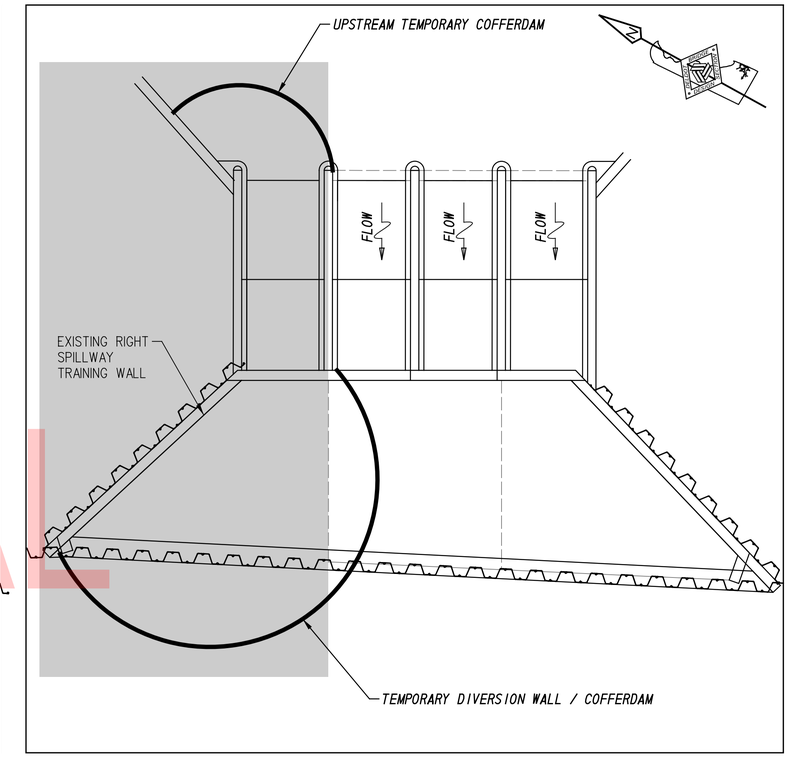

SHEET PILE WALL INSTALLATION/ CULVERT REPAIR - PHASE 3

SCALE: 1"= 15'-0"

PHASE 1 CONTROL OF WATER NOTES:

1. INSTALL UPSTREAM TEMPORARY COFFERDAM.
2. INSTALL SHEET PILE CUTOFF AS TEMPORARY COFFERDAM BETWEEN STA. 16+18 TO 16+47.
3. INSTALL TEMPORARY DIVERSION WALL / COFFERDAM TO DIVERT FLOW FROM THE LEFT BOX CULVERT SECTION.
4. DIVERT SPILLWAY FLOW THROUGH THREE RIGHT BOX CULVERT SECTIONS.
5. REMOVE EXISTING LEFT SPILLWAY TRAINING WALL AND FOOTING TO THE LIMITS SHOWN ON PLANS. INSTALL EXCAVATION AND DEWATERING MEASURES AS NEEDED.
6. INSTALL LEFT SIDE SHEET PILE TRAINING WALL.
7. INSTALL ANCHOR PILES, TIE RODS, AND CONSTRUCT PILE CAP BETWEEN STA. 16+47 TO 31+69.
8. BACKFILL BEHIND SHEET PILING.
9. RESURFACE LEFT CONCRETE CULVERT SECTION THAT IS NOT BEING USED AS A STREAM DIVERSION.
10. TRIM SHEET PILE CUTOFF TO FINAL ELEV. AND REMOVE TEMPORARY COFFERDAM / DIVERSION WORKS.

PHASE 2 CONTROL OF WATER NOTES:

1. INSTALL UPSTREAM TEMPORARY COFFERDAM.
2. INSTALL SHEET PILE CUTOFF AS TEMPORARY COFFERDAM BETWEEN STA. 16+00 TO 16+18.
3. INSTALL TEMPORARY DIVERSION WALL / COFFERDAM TO DIVERT FLOW FROM THE CENTER BOX CULVERT SECTIONS.
4. DIVERT SPILLWAY FLOW THROUGH OUTSIDE BOX CULVERT SECTIONS.
5. RESURFACE MIDDLE CONCRETE CULVERT SECTIONS THAT ARE NOT BEING USED AS STREAM DIVERSION.
6. TRIM SHEET PILE CUTOFF TO FINAL ELEV. AND REMOVE TEMPORARY COFFERDAM / DIVERSION WORKS.

GENERAL NOTES:

1. DIVERT FLOW THROUGH REPLACMENT OUTLET STRUCTURE AND MAINTAIN 1-FOOT RESERVOIR DRAWDOWN DURING PHASES 1, 2, AND 3.
2. TEMPORARY COFFERDAMS SHALL CONFORM WITH SPECIAL PROVISION 604500.

PHASE 3 CONTROL OF WATER NOTES:

1. INSTALL UPSTREAM TEMPORARY COFFERDAM.
2. INSTALL SHEET PILE CUTTOFF AS TEMPORARY COFFERDAM BETWEEN STA. 15+70 TO 16+00.
3. INSTALL TEMPORARY DIVERSION WALL/ COFFERDAM TO DIVERT FLOW FROM THE RIGHT BOX CULVERT SECTION.
4. DIVERT SPILLWAY FLOW THROUGH LEFT BOX CULVERT SECTIONS.
5. REMOVE EXISTING RIGHT SPILLWAY TRAINING WALL AND FOOTING TO THE LIMITS SHOWN ON PLANS. INSTALL EXCAVATION AND DEWATERING MEASURES AS NEEDED.
6. INSTALL RIGHT SIDE SHEET PILE TRAINING WALL.
7. INSTALL ANCHOR PILES, TIE RODS, AND CONSTRUCT PILE CAP BETWEEN STA. 12+14 AND 15+70.
8. BACKFILL BEHIND SHEET PILE.
9. RESURFACE RIGHT CONCRETE CULVERT SECTION THAT IS NOT BEING USED AS STREAM DIVERSION.
10. TRIM SHEET PILE CUTOFF TO FINAL ELEV. AND REMOVE TEMPORARY COFFERDAM / DIVERSION WORKS.

UNOFFICIAL WEBSITE COPY

DETAIL A

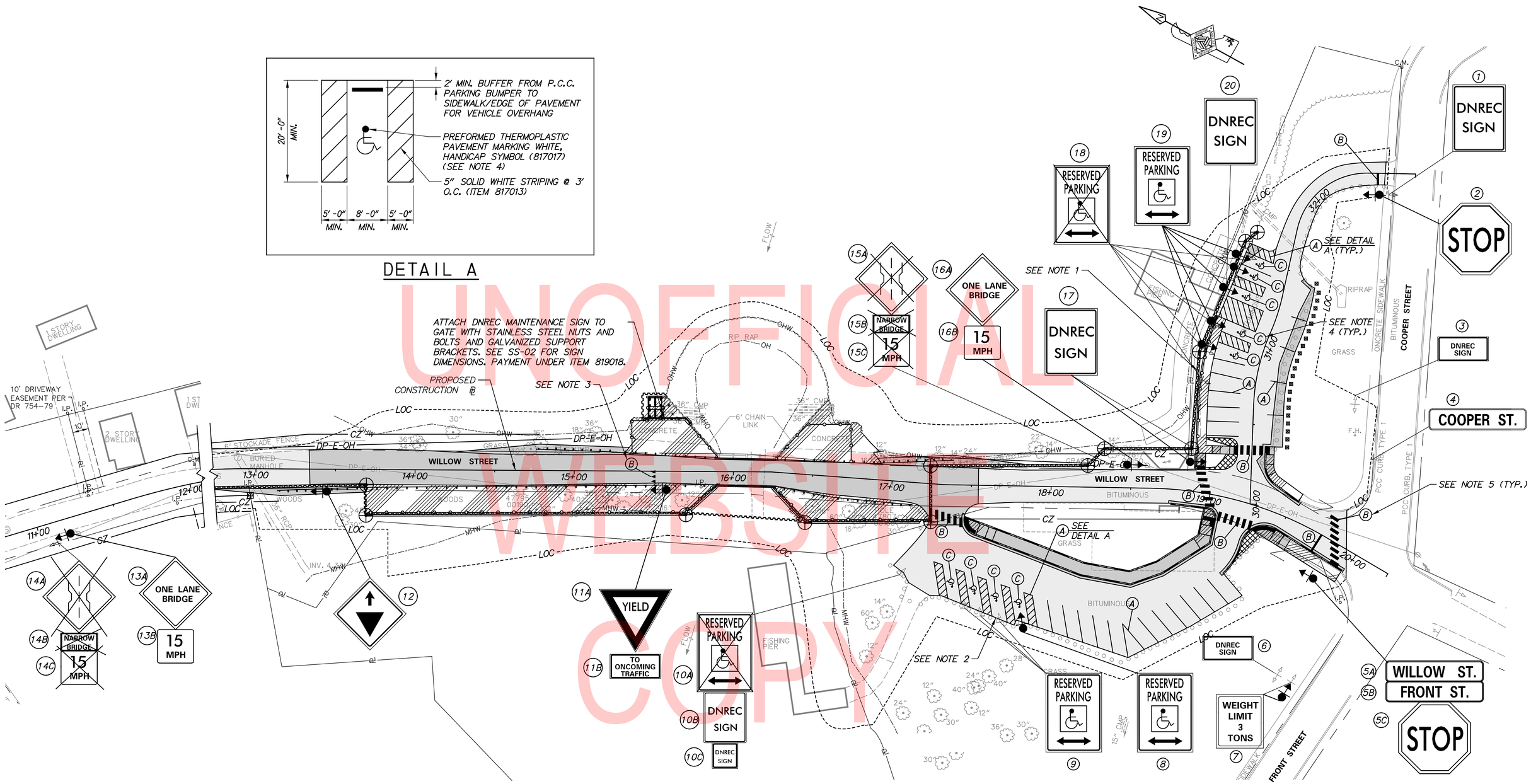

UNOFFICIAL WEBSITE COPY

PAVEMENT MARKINGS LEGEND

SYMBOL	ITEM	QUANTITY
A	PERMANENT PAVEMENT STRIPING, EPOXY RESIN PAINT, 5" WHITE (ITEM 817013)	1,030 LF
B	PERMANENT PAVEMENT STRIPING, SYMBOL/LEGEND, ALKYD-THERMOPLASTIC (ITEM 817002)	350 SF
C	PREFORMED RETROFLECTIVE THERMOPLASTIC MARKINGS, HANDICAP SYMBOL (ITEM 817017)	9 EACH

NOTES:

1. EAST PARKING LOT: EXISTING PARKING SPOTS: 5 HANDICAP, 8 REGULAR (13 TOTAL) PROPOSED PARKING SPOTS: 5 HANDICAP, 10 REGULAR (15 TOTAL)
2. WEST PARKING LOT: EXISTING PARKING SPOTS: 4 HANDICAP, 13 REGULAR (17 TOTAL) PROPOSED PARKING SPOTS: 4 HANDICAP, 13 REGULAR (17 TOTAL)
3. SEE DELAWARE MUTCD FIGURE 3B-16 FOR YIELD LINE LAYOUT
4. SEE DELAWARE MUTCD FIGURE 3B-22 FOR INTERNATIONAL SYMBOL OF ACCESSIBILITY PARKING SPACE MARKING DETAIL. SEE CHAPTER 5 OF 2010 ADA STANDARDS FOR ACCESSIBLE DESIGN FOR DESIGN AND LAYOUT OF ACCESSIBLE PARKING SPACES.
5. CROSSWALK MARKINGS SHALL BE 6' LONG BY 2' WIDE WITH 2' GAPS BETWEEN MARKINGS.

SS-01

ADDENDA / REVISIONS	

SCALE 0 30 60 90 FEET

RECORDS POND DAM IMPROVEMENTS

CONTRACT	BRIDGE NO.	3-329
T201507605	DESIGNED BY: DAH	
COUNTY		
SUSSEX	CHECKED BY: NWB	

SIGNING, STRIPING AND CONDUIT PLAN

SECTION: PAI

SHEET NO. 49

SIGN SCHEDULE

SHEET NO.	PLAN INDICATOR	CODE	QTY.	DESCRIPTION	ASSEMBLY NO.	SIGN WIDTH (IN)	SIGN HEIGHT (IN)	SIGN AREA (SF)	ITEM 819018 SINGLE POST (EACH)			ITEM 819019 MULTI POST (POST NEEDED)			POST INSTALLATION TYPE	Code X11 12' Post (W/ Basepost) (EACH)	ITEM 819016 4" HOLE, 0-6" (EACH)	ITEM 819017 4" HOLE, >6" (EACH)	REMARKS
									SIGN DISPOSITION	REMOVE	INSTALL	SIGN DISPOSITION	REMOVE	INSTALL					
	1	N/A	1	DNREC SIGN					REMAIN							0	0	0	NO FEEDING DUCKS OR GEESE
	2	R1-1(36)	1	STOP		36"	36"	9	NEW		1				SOIL	1	0	0	
	3	N/A	1	DNREC SIGN					REMAIN							0	0	0	RECORDS POND HANDICAP FISHING AREA
	4	D3-1-DE1	1	PRIVATE STREET NAME					REMAIN							0	0	0	Cooper St.
	5A	D3-1-DE1	1	PRIVATE STREET NAME					REPOSITION	1	1				SOIL	1	0	0	Willow St.
	5B	D3-1-DE1	1	PRIVATE STREET NAME					REPOSITION	1	1					0	0	0	Front St.
	5C	R1-1(36)	1	STOP		36"	36"	9	RENEW	1	1					0	0	0	
	6	N/A	1	DNREC SIGN					REMAIN							0	0	0	RECORDS POND HANDICAP FISHING AREA
	7	R12-1(24)	1	WEIGHT LIMITS XX TONS - 24x30		24"	30"	5	RENEW	1	1				SOIL	1	0	0	
	8	R7-8	1	RESERVED PARKING (Disabilities - symbols)		12"	18"	1.5	NEW		1				SOIL	1	0	0	
	9	R7-8	3	RESERVED PARKING (Disabilities - symbols)					REMAIN							0	0	0	
	10A	R7-8	1	RESERVED PARKING (Disabilities - symbols)					REMOVE	1						0	0	0	REMOVING HANDICAP PARKING SIGN
	10B	N/A	1	DNREC SIGN					REMAIN							0	0	0	ATTENTION ANGLERS
	10C	N/A	1	DNREC SIGN					REMAIN							0	0	0	NORTHERN SNAKEHEAD
	11A	R1-2(36)	1	YIELD		36"	36"	4.5	NEW		1				CONCRETE	1	1	0	
	11B	R1-2aP(24)	1	TO ONCOMING TRAFFIC (plaque)		24"	18"	3	NEW		1					0	0	0	
	12	W3-2(30)	1	YIELD AHEAD (Symbol) - 30x30		30"	30"	6.25	NEW		1				SOIL	1	0	0	
	13A	W5-3(30)	1	ONE LANE BRIDGE - 30x30		30"	30"	6.25	NEW		1				SOIL	1	0	0	
	13B	W13-1P-15(18	1	ADVISORY SPEED (15 MPH) 18x18		18"	18"	2.25	NEW		1					0	0	0	
	14A	N/A	1	ROAD NARROWS SYMBOL					REMOVE	1						0	0	0	
	14B	N/A	1	NARROW BRIDGE					REMOVE	1						0	0	0	
	14C	W13-1P-15(18	1	ADVISORY SPEED (15 MPH) 18x18					REMOVE	1						0	0	0	
	15A	N/A	1	ROAD NARROWS SYMBOL					REMOVE	1						0	0	0	
	15B	N/A	1	NARROW BRIDGE					REMOVE	1						0	0	0	
	15C	W13-1P-15(18	1	ADVISORY SPEED (15 MPH) 18x18					REMOVE	1						0	0	0	
	16A	W5-3(30)	1	ONE LANE BRIDGE - 30x30		30"	30"	6.25	NEW		1				SOIL	1	0	0	
	16B	W13-1P-15(18	1	ADVISORY SPEED (15 MPH) 18x18		18"	18"	2.25	NEW		1					0	0	0	
	17	N/A	1	DNREC SIGN					REPOSITION	1	1				SOIL	0	0	0	NO FEEDING DUCKS OR GEESE
	18	R7-8	5	RESERVED PARKING (Disabilities - symbols)					REMOVE	5						0	0	0	
	19	R7-8	5	RESERVED PARKING (Disabilities - symbols)					NEW		5				SOIL	5	0	0	2 SIGNS ON POSTS, 3 SIGNS ON BOLLARDS
	20	N/A	1	DNREC SIGN		48"	30"					REPOSITION	10	10	SOIL	0	0	0	FISHING REGULATIONS; REUSE EXISTING WOOD SIGN POST
	N/A	N/A	1	DNREC MAINTENANCE SIGN		12"	12"	2	NEW		1					1	0	0	SEE SIGN FABRICATION DETAIL
				JOB TOTALS				57.25		17	20		10	10		14	1	0	

GUIDE SIGN DIMENSIONS AND DETAILS

PANEL DESIGNATION	SHEET NO.	QUANTITY	LEGEND	SIZE			COLOR		BORDER		ARROW	REMARKS
				AREA (SF)	WIDTH	HEIGHT	LEGEND	BCKGRND	THICKNESS	RADIUS		
N/A	SS-01	1	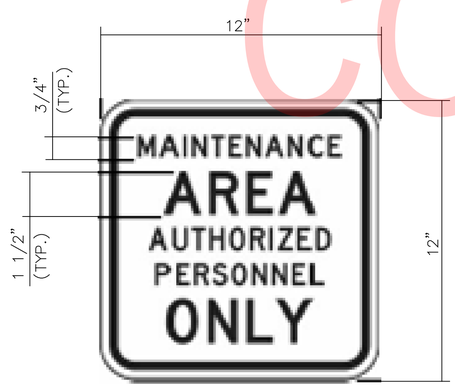	2	1'-0"	1'-0"	B	W	0.75"	2.25"	N/A	SHEET ALUMINUM ATTACH TO GATE

UNOFFICIAL WEBSITE COPY

SS-02

ADDENDA / REVISIONS	NOT TO SCALE	RECORDS POND DAM IMPROVEMENTS	CONTRACT T201507605	BRIDGE NO. 3-329	PERMANENT SIGN SCHEDULE	SECTION PAI
			COUNTY SUSSEX	DESIGNED BY: DAH		SHEET NO. 50
				CHECKED BY: NWB		

RIGHT-OF-WAY MONUMENT SCHEDULE					
NO.	TYPE	STATION	OFFSET	NORTHING	EASTING
1	CONCRETE	12+09.43	17.84'	203810.7561	612797.6676
2	CONCRETE	12+27.48	16.36'	203798.0838	612809.6372
3	CONCRETE	12+96.58	16.73'	203742.0824	612845.5179

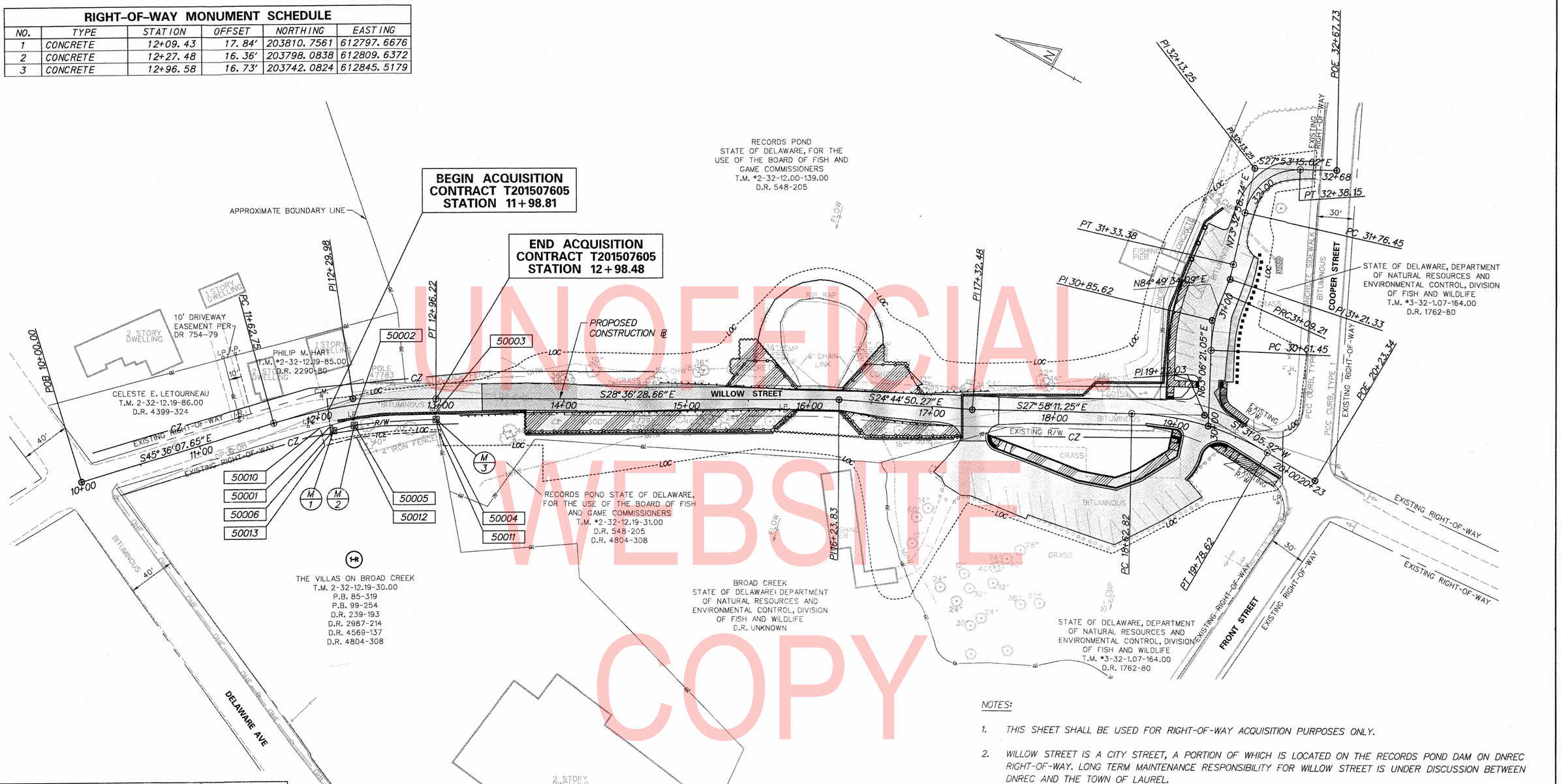

UNOFFICIAL WEBSITE COPY

NOTES:

1. THIS SHEET SHALL BE USED FOR RIGHT-OF-WAY ACQUISITION PURPOSES ONLY.
2. WILLOW STREET IS A CITY STREET, A PORTION OF WHICH IS LOCATED ON THE RECORDS POND DAM ON DNREC RIGHT-OF-WAY. LONG TERM MAINTENANCE RESPONSIBILITY FOR WILLOW STREET IS UNDER DISCUSSION BETWEEN DNREC AND THE TOWN OF LAUREL.

PREPARED BY
THE CONSULTING FIRM OF
Pennoni

PENNONI ASSOCIATES INC.
121 CONTINENTAL DRIVE
SUITE 207
NEWARK, DE 19713

NATHAN W. BUTTORFF, LICENSE No. 15428, DELAWARE PROFESSIONAL ENGINEER
SEAL

RECOMMENDED — DATE 6/27/18

APPROVED

SIGNATURE — DATE 7/11/18

David E. Saveikis, Director
NAME & TITLE

DEPARTMENT OF NATURAL RESOURCES AND ENVIRONMENTAL CONTROL
DIVISION OF FISH AND WILDLIFE

RECOMMENDED AS TO ENGINEERING NEED

MANAGER, ROW ENGINEERING — DATE 7/24/18

PROGRAM MANAGER, TEAM SUPPORT — DATE 7/24/18

TECHNICAL REVIEWER, ~~TEAM SUPPORT~~ CENTURY ENGINEERING, INC. — DATE 7/23/18

DELAWARE DEPARTMENT OF TRANSPORTATION

ADDENDUMS / REVISIONS

SCALE 0 40 80 120 FEET

RECORDS POND DAM IMPROVEMENTS

CONTRACT	BRIDGE NO.	3-329
T201507605	DESIGNED BY:	DAH
COUNTY	CHECKED BY:	MJS
SUSSEX		

RIGHT-OF-WAY PLAN

SHEET NO. 51
TOTAL SHTS. 52

COUNTY ASSESSMENT PARCEL NUMBER	OWNERSHIP OF RECORD	TITLE SOURCE	PROPERTY AREA BEFORE ACQUISITION (ACRE) D=DEED C=CALCULATED A=ASSESMENT	ACQUISITION CODE FEE, R/W, P/E, TCE	AREA TO BE ACQUIRED				PROPERTY AREA REMAINING (SQ. FEET /ACRES)	DEED RECORD OF ACQUISTITION	REMARKS
					ACQUISITION (SQ. FEET /ACRES)	AREA OCCUPIED BY EXISTING RIGHT OF WAY (SQ. FEET /ACRES)	EASEMENT				
							PERMANENT (SQ. FEET /ACRES)	TEMPORARY (SQ. FEET /ACRES)			
2-32-12.19-30.00	(1-R) THE VILLAS ON BROAD CREEK	D.R. 239-193, D.R. 4569-137, D.R. 4804-308, D.R. 2987-214	C - 2.8347	FEE	420.6811 / 0.0097						
				TCE				986.2239 / 0.0226	123060.4149 / 2.8250		

ASSESSMENT NUMBER	OWNERSHIP OF RECORD	TYPE OF ACQUISITION	TITLE SOURCE	PARCEL AREA (ACRES)
2-32-12.19-30.00	(1-R) THE VILLAS ON BROAD CREEK	FEE	D.R. 239-193, D.R. 4569-137, D.R. 4804-308, D.R. 2987-214	2.8347

ALIGNMENT NUMBER & DESCRIPTION: 1000 - PROPOSED WILLOW STREET CONSTRUCTION & R/W BASELINE

PT. NO.	ALIGN. NO.	STATION	OFFSET	NORTH	EAST	BEARING	DISTANCE	CHORD BEARING	CHORD LENGTH	ARC LENGTH	RADIUS
50001	1000	12+09.09	12.85′	203814.1894	612801.3024	S 43°22′00.40″ E	17.78′				
50002	1000	12+27.31	11.35′	203801.2605	612813.5145			S 32°41′39.40″ E	66.50′	66.52′	730.48′
50003	1000	12+95.62	11.75′	203745.2964	612849.4349	S 50°37′46.60″ W	5.07′				
50004	1000	12+96.58	16.73′	203742.0824	612845.5179			N 32°38′53.17″ W	66.51′	66.53′	725.48′
50005	1000	12+27.48	16.36′	203798.0838	612809.6372	N 43°22′00.40″ W	17.43′				
50006	1000	12+09.43	17.84′	203810.7561	612797.6676	N 46°37′59.60″ E	5.00′				
50001	1000	12+09.09	12.85′	203814.1894	612801.3024						

FIGURE 1-R FEE AREA = 420.6811 SQ. FT (0.0097 ACRES)

ASSESSMENT NUMBER	OWNERSHIP OF RECORD	TYPE OF ACQUISITION	TITLE SOURCE	PARCEL AREA (ACRES)
2-32-12.19-30.00	(1-R) THE VILLAS ON BROAD CREEK	TCE	D.R. 239-193, D.R. 4569-137, D.R. 4804-308, D.R. 2987-214	2.8347

ALIGNMENT NUMBER & DESCRIPTION: 1000 - PROPOSED WILLOW STREET CONSTRUCTION & R/W BASELINE

PT. NO.	ALIGN. NO.	STATION	OFFSET	NORTH	EAST	BEARING	DISTANCE	CHORD BEARING	CHORD LENGTH	ARC LENGTH	RADIUS
50010	1000	11+98.81	13.37′	203821.4591	612794.4358	S 43°22′00.40″ E	10.00′				
50001	1000	12+09.09	12.85′	203814.1894	612801.3024	S 46°37′59.60″ W	5.00′				
50006	1000	12+09.43	17.84′	203810.7561	612797.6676	S 43°22′00.40″ E	17.43′				
50005	1000	12+27.48	16.36′	203798.0838	612809.6372			S 32°38′53.17″ E	66.51′	66.53′	725.48′
50004	1000	12+96.58	16.73′	203742.0824	612845.5179	S 50°37′46.60″ W	10.14′				
50011	1000	12+98.48	26.68′	203735.6524	612837.6817			N 32°33′14.20″ W	66.53′	66.56′	715.48′
50012	1000	12+27.84	26.38′	203791.7331	612801.8801	N 43°22′00.40″ W	26.72′				
50013	1000	11+99.46	28.36′	203811.1591	612783.5312	N 46°37′59.60″ E	15.00′				
50010	1000	11+98.81	13.37′	203821.4591	612794.4358						

FIGURE 1-R TCE AREA = 986.2239 SQ. FT (0.0226 ACRES)

UNOFFICIAL WEBSITE COPY

LEGEND

FEE AREA OF ACQUISITION
R/W AREA OCCUPIED BY EXISTING R/W
P/E PERMANENT EASEMENT
TCE TEMPORARY CONSTRUCTION EASEMENT

* " - " OFFSET IS LEFT OF BASELINE
** " - " CURVE TURNS TO THE LEFT

ACQUISITION CODES

FEE - ACQUISITION P/E - PERMANENT EASEMENT
R/W - AREA OCCUPIED BY EXISTING R/W TCE - TEMPORARY EASEMENT

ADDENDA / REVISIONS

RECORDS POND DAM IMPROVEMENTS

CONTRACT	BRIDGE NO.	3-329
T201507605	DESIGNED BY: DAH	
COUNTY		
SUSSEX	CHECKED BY: NWB	

RIGHT-OF-WAY DATA AND TABULATION SHEET

SECTION: PAI
SHEET NO. 52