THE STATE OF DELAWARE
DEPARTMENT OF TRANSPORTATION

U.S. CUSTOMARY UNITS

CONSTRUCTION PLANS FOR:

SR 1 NORTHBOUND AUXILIARY LANE
US 40 TO SR 273

CONTRACT NUMBER: T201511001
FEDERAL AID PROJECT NUMBER: NH-N067(27)

COUNTY: NEW CASTLE **M.R. #:** 067

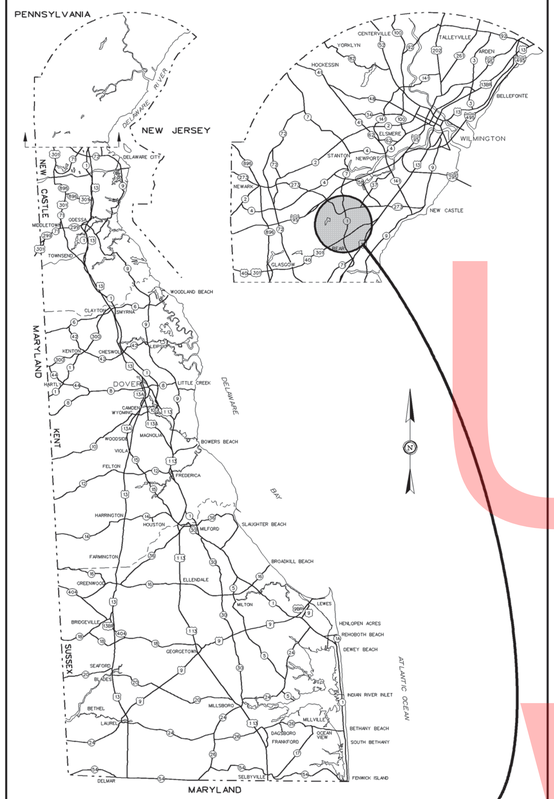

GENERAL LOCATION OF CONTRACT

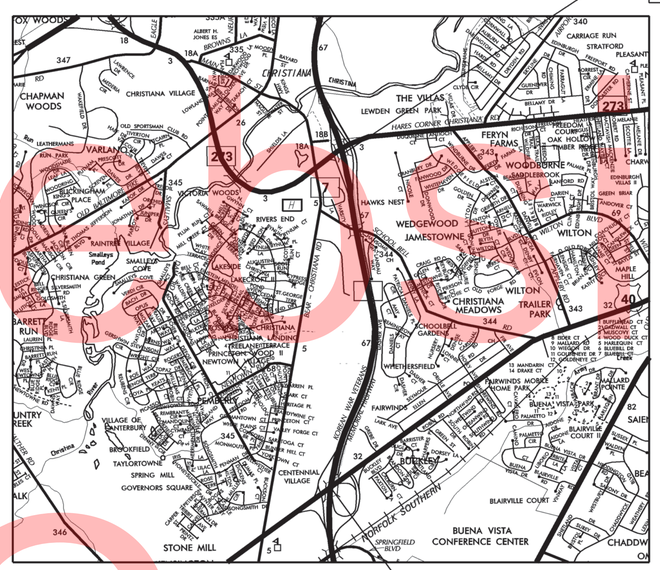

END CONTRACT STATION a 337+83

BEGIN CONTRACT STATION 246+00

DESIGN DESIGNATION

FUNCTIONAL CLASS: FREEWAY/EXPRESSWAY	D.H.V. PROJECTED: 5,685	YEAR: 2025
TYPE OF CONSTRUCTION: WIDENING	DESIGN SPEED: 60 MPH	
A.A.D.T. CURRENT: 44,550 YEAR: 2014	TRUCKS: 10%	
A.A.D.T. PROJECTED: 56,250 YEAR: 2025	DIRECTION OF DISTRIBUTION: 100%	

INDEX OF SHEETS

SHEET Nº	TABLE OF CONTENTS
1	TITLE
2	PLAN SHEET INDEX
3	LEGEND
4	NOTES
5-10	TYPICAL SECTIONS
11-14	HORIZONTAL AND VERTICAL CONTROL
15-27	CONSTRUCTION PLANS
28-29	CONSTRUCTION DETAILS
30-33	STORMWATER MANAGEMENT PLANS
34-38	ENVIRONMENTAL COMPLIANCE PLANS
39-57	CONSTRUCTION PHASING, M.O.T. AND EROSION CONTROL PLANS
58-61	DETOUR PLANS
62-76	SIGNING, STRIPING AND CONDUIT PLANS
77	SIGN STRUCTURE FOUNDATION DETAIL
	FOR INFORMATION ONLY (CONTRACT NO. T20161101)
2	SIGN STRUCTURES - GENERAL NOTES
3	CANTILEVER SIGN STRUCTURES - ELEVATION AND END VIEW
4-5	CANTILEVER SIGN STRUCTURE DETAILS - 1&2

TOTAL SHEETS: 77

APPROVED DESIGN EXCEPTIONS

DESIGN PARAMETER	REQUIRED	PROVIDED	DATE
BRIDGE 1-319N CLEAR WIDTH	45'	42'	6/12/15

ADDENDA & REVISIONS

DESCRIPTION	NAME & DATE

ASSOCIATED CONTRACTS

CONTRACT NO.	CONTRACT NAME
83-101-02	DELAWARE ROUTE 7 PHASE I
83-101-03	DELAWARE ROUTE 7 PHASE II
93-101-01	SR 1, US 13 TO I-95 LIGHTING
T201611001	CANTILEVER SIGN STRUCTURE MATERIALS, SR 1 NORTHBOUND AUXILIARY LANE

PREPARED BY
THE CONSULTING FIRM OF

RUMMEL, KLEPPER & KAHL, LLP

NANCY RUTH BERGERON LICENSE No. 16737 DELAWARE PROFESSIONAL ENGINEER
SEAL

Nancy R. Bergeron — 6/10/15
RECOMMENDED — DATE

RECOMMENDED

Barry C. Beckett — 06/18/2015
SQUAD MANAGER, CONSTRUCTION — DATE

06/18/2015
GROUP ENGINEER, CONSTRUCTION — DATE

06/18/2015
ASSISTANT DIRECTOR, TRANSPORTATION SOLUTIONS (CONSTRUCTION) — DATE

RECOMMENDED
Vincent W. Davis
STORMWATER ENGINEER
DATE 06/16/2015
VINCENT W. DAVIS REGISTERED No. 12898 DELAWARE PROFESSIONAL ENGINEER
SEAL

RECOMMENDED
Jenna Lynne Frye
SQUAD MANAGER, PROJECT DEVELOPMENT
DATE 06/11/2015
JENNA LYNNE FRYE LICENSE No. 18184 DELAWARE PROFESSIONAL ENGINEER
SEAL

RECOMMENDED
BRIDGE DESIGN ENGINEER
DATE 06/16/2015
JASON N. HASTINGS REGISTERED No. 13545 DELAWARE PROFESSIONAL ENGINEER
SEAL

RECOMMENDED
Darren M. O'Neill
GROUP ENGINEER, PROJECT DEVELOPMENT
DATE 06/16/2015
DARREN M. O'NEILL REGISTERED No. 10857 DELAWARE PROFESSIONAL ENGINEER
SEAL

RECOMMENDED
Mark C. Luther
ASSISTANT DIRECTOR, PROJECT DEVELOPMENT
DATE 06/18/2015
MARK CHRISTOPHER TUTOR REGISTERED No. 10803 DELAWARE PROFESSIONAL ENGINEER
SEAL

APPROVED
Robert Brian McCleary
CHIEF ENGINEER
DATE 06/19/2015
ROBERT BRIAN McCLEARY REGISTERED No. 8567 DELAWARE PROFESSIONAL ENGINEER
SEAL

6/10/2015 11:17:57 AM
\\BALSRV02\V2011\2011\1009_TYBOUTS\SR1WIDE_ NBAUXLANE\CADD\CONTRACT\PLANS\TC01_NBAUXLN_SIGNED&SEALED.DGN

Unofficial Website Copy

PLAN SHEET INDEX CROSS REFERENCE													
CONSTRUCTION PLAN	15	16	17	18	19	20	21	22	23	24	25	26	27
STORMWATER MANAGEMENT PLAN	N/A	30	31	N/A	N/A	N/A	N/A	32	33	N/A	N/A	N/A	N/A
ENVIRONMENTAL COMPLIANCE PLAN	N/A	35	N/A	N/A	N/A	N/A	N/A	N/A	N/A	36	37	N/A	38
SIGNING, STRIPING AND CONDUIT PLAN	62	63	64	65	66	67	68	69	70	71	72	73	74

Unofficial Website Copy

DELAWARE DEPARTMENT OF TRANSPORTATION

ADDENDUMS / REVISIONS

SCALE 0 400 800 1200 FEET

SR 1 NORTHBOUND AUXILIARY LANE US 40 TO SR 273

CONTRACT	BRIDGE NO. 1-319N
T201511001	DESIGNED BY: SJS
COUNTY	
NEW CASTLE	CHECKED BY: ZJS

PLAN SHEET INDEX

SHEET NO. 2

TOTAL SHTS. 77

5/27/2015 10:27:26 PM
\\BALSRV02\V201\2011\11009_TYBOUTS\SRWIDE_ NBAUXLANE\CADD\CONTRACT\PLANS\IS01_NBAUXLN.DGN

EXISTING SYMBOLS

DRAINAGE

	DITCH OR STREAM CENTERLINE
	DIRECTIONAL STREAM FLOW ARROW
C.B. / D.I.	DRAINAGE INLET
J.B.	DRAINAGE JUNCTION BOX
D	DRAINAGE MANHOLE
SIZE/TYPE LABEL	DRAINAGE PIPE AND FLOW ARROW
	DRAINAGE PIPE HEADWALL
	RIPRAP - AREA FEATURE
	RIPRAP - LINEAR FEATURE

MANMADE ROADSIDE FEATURES

	BOLLARD - STEEL POLE
	BOLLARD - WOOD POST
(TYPE LABEL)	CURB
(TYPE LABEL)	CURB AND GUTTER
	FENCE - CHAINLINK OR STRANDED
	FENCE - STOCKADE OR SPLIT RAIL
FP	FLAG POLE
	GUARDRAIL - STEEL BEAM
	GUARDRAIL - WIRE ROPE
LAMP	LAMP AND POST - RESIDENTIAL
MB	MAILBOX
PM	PARKING METER AND POST
	PAVEMENT - FLEXIBLE
	PAVEMENT - RIGID
	PILE - BRIDGE
	PILLAR OR MISCELLANEOUS POST
	TRAFFIC SIGN AND POST
	WALL - BRICK OR BLOCK
	WALL - STONE

NATURAL ROADSIDE FEATURES

	GRASS LAWN
	HEDGEROW OR THICKET
	MARSH BOUNDARY LINE
	TREE - CONIFEROUS
	TREE - DECIDUOUS
	TREE STUMP
	SHRUBBERY
WL	DELINEATED WETLAND BOUNDARY LINE
	WOODS LINE BOUNDARY

RIGHT-OF-WAY SYMBOLS

C.M.	PROPERTY MARKER - CONCRETE MON.
I.P.	PROPERTY MARKER - IRON PIPE
100+00	HISTORIC RIGHT-OF-WAY BASELINE
	EXISTING RIGHT-OF-WAY
PB	EXISTING PROPERTY LINE
EASEMENT TYPE	EXISTING EASEMENT
DA	EXISTING DENIAL OF ACCESS
R/W-DA	EXISTING R/W & DENIAL OF ACCESS

SURVEY CONTROL & MONUMENTATION

B.M.	SURVEY BENCHMARK LOCATION
T.P.	SURVEY TIE POINT LOCATION
	SURVEY TRAVERSE POINT
	POINT OF CURVATURE OR TANGENCY
	POINT OF INTERSECTING TANGENTS

UTILITY

	SOIL BORING LOCATION
	UTILITY TEST HOLE LOCATION
TV	CABLE TV DISTRIBUTION BOX
E	ELECTRIC MANHOLE
EM	ELECTRIC METER
E	ELECTRIC TRANSFORMER
	POLE MOUNTED LUMINAIRE
G	GAS MANHOLE
G.M.	GAS METER
G.V.	GAS VALVE
G.P.	GAS PUMP - SERVICE STATION
	RAILROAD TRACKS
S	SANITARY SEWER MANHOLE
S.V.	SANITARY SEWER VALVE
VENT	SANITARY SEWER VENT OR CLEANOUT
S.D.F.	SEPTIC DRAIN FIELD
B	TELEPHONE BOOTH
T	TELEPHONE MANHOLE
T	TELEPHONE TEST POINT
J.W.	TRAFFIC - CONDUIT JUNCTION WELL
	TRAFFIC - LIGHT POLE AND BASE
	TRAFFIC - PEDESTRIAN POLE & BASE
	TRAFFIC - SIGNAL CABINET & BASE
	TRAFFIC - SIGNAL POLE AND BASE
U	UTILITY BOX
	UTILITY POLE GUY WIRE ANCHOR
	UTILITY POLE
F.H.	WATER - FIRE HYDRANT
W.M.	WATER METER
W.V.	WATER VALVE
WELL	WELL HEAD
?	MANHOLE - UNDETERMINED OWNER

UTILITY COMPANY FACILITIES

EX-CON	DELDOT MULTIDUCT CONDUIT
NCC-S	NEW CASTLE COUNTY SEWER
DP-E	DELMARVA POWER-ELECTRIC
AW-W	ARTESIAN WATER COMPANY

PROPOSED SYMBOLS

CONSTRUCTION

	CONCRETE SAFETY BARRIER - PERMANENT
BFS	BIOFILTRATION SWALE
	BRICK PATTERNED SURFACE
	BUTT JOINT
100+00	CONSTRUCTION BASELINE
CSF	CONSTRUCTION SAFETY FENCE
	CURB, TYPE 1 & TYPE 3
	CURB, TYPE 2
	CURB & GUTTER, TYPE 1
	CURB & GUTTER, TYPE 2
	CURB & GUTTER, TYPE 3
	CURB & GUTTER, TYPE 4
CZ	CLEAR ZONE
	DRAINAGE INLET
	DITCH
	FENCE - METAL
	FENCE - WOOD
	FLARED END SECTION
	GUARDRAIL, TYPE 1
	GUARDRAIL, TYPE 2
	GUARDRAIL, TYPE 3
	GUARDRAIL END ANCHORAGE
	GUARDRAIL END TREATMENT, TYPE 1
	GUARDRAIL END TREATMENT, TYPE 2
	GUARDRAIL END TREATMENT, TYPE 3
	IMPACT ATTENUATOR
	JUNCTION BOX - DRAINAGE
LO	LATERAL OFFSET
LOC	LIMIT OF CONSTRUCTION
MB	MAILBOX
	MANHOLE
	PAVEMENT PATCH
	PAVEMENT REMOVAL - TOPSOIL, SEED AND MULCH
	PIPE & DIRECTIONAL FLOW ARROW
	RIPRAP
	P.C.C. SIDEWALK - 4"
	P.C.C. SIDEWALK - 6" (USE 8" DEPTH FOR CHANNELIZATION ISLANDS.)
	UNDERDRAIN
	UNDERDRAIN OUTLET

RIGHT-OF-WAY SYMBOLS

	PROPOSED RIGHT-OF-WAY MONUMENT
DA	PROPOSED DENIAL OF ACCESS
PE	PROPOSED PERMANENT EASEMENT
R/W	PROPOSED RIGHT-OF-WAY
R/W-DA	PROPOSED R/W & DENIAL OF ACCESS
TCE	TEMPORARY CONSTRUCTION EASEMENT
100+00	PROPOSED RIGHT-OF-WAY BASELINE

IDENTIFIERS

A C	ADJUST BY CONTRACTOR
A O	ADJUST BY OTHERS
B	CONCRETE SAFETY BARRIER
C	CURB OR CURB & GUTTER
C.J.B.	CONVERT TO JUNCTION BOX
C.M.H.	CONVERT TO DRAINAGE MANHOLE
C O	CURB OPENING
CR	CURB RAMP / TYPE
CR-N	CURB RAMP / TYPE - WITHOUT SIDEWALK SURFACE DETECTABLE WARNING SYSTEM
CSF	CONSTRUCTION SAFETY FENCE
DI	DRAINAGE INLET
DND	DO NOT DISTURB
ED	ENERGY DISSIPATOR
F	FENCE
FES	FLARED END SECTION
FF C	FILL WITH FLOWABLE FILL
FS	FILTRATION STRUCTURE
GR	GUARDRAIL
JB	JUNCTION BOX
MH	MANHOLE
M	MONUMENT - RIGHT-OF-WAY
P	PIPE
RL C	RELOCATE BY CONTRACTOR
RL O	RELOCATE BY OTHERS
RM C	REMOVE BY CONTRACTOR
RM O	REMOVE BY OTHERS
UD	UNDERDRAIN / LENGTH
UOP	UNDERDRAIN OUTLET PIPE

LANDSCAPING

LS	LANDSCAPE PLANTINGS
	SHRUBBERY
	CONIFEROUS TREE
	DECIDUOUS TREE

TRAFFIC

ITMS-CON	ITMS CONDUIT
SIG-CON	SIGNAL CONDUIT
	CONDUIT JUNCTION WELL
	LUMINAIRE
	PAVEMENT MARKINGS
	PAVEMENT STRIPING
	TRAFFIC SIGN

MISCELLANEOUS

LSR O	LIGHTING SERVICE RUN BY OTHERS

PAVEMENT SECTION(S)

	OVERLAY PAVEMENT - SEE TYPICAL SECTIONS FOR MATERIALS AND DEPTHS
	RECONSTRUCTED PAVEMENT - SEE TYPICAL SECTIONS FOR MATERIALS AND DEPTHS
	DRIVEWAY AND ENTRANCE PAVEMENT - SEE TYPICAL SECTIONS FOR MATERIALS AND DEPTHS

Unofficial Website Copy

GENERAL NOTES

1. THIS PROJECT IS TO BE CONSTRUCTED IN ACCORDANCE WITH THE DELAWARE DEPARTMENT OF TRANSPORTATION "STANDARD SPECIFICATIONS", DATED AUGUST 2001 AND THE DELAWARE DEPARTMENT OF TRANSPORTATION "STANDARD CONSTRUCTION DETAILS", DATED 2001, INCLUDING ALL REVISIONS UP TO THE DATE OF ADVERTISEMENT.

2.

EROSION POTENTIAL FOR THIS PROJECT	CONTRACTOR ESC SUPERVISOR REQUIREMENT
( ) INSIGNIFICANT	NONE
( ) MINOR	CONTRACTOR TRAINING PROGRAM, AS DEFINED IN SECTION 6.2 OF THE DELAWARE SEDIMENT AND STORMWATER REGULATIONS.
( ) MEDIUM	CONTRACTOR TRAINING PROGRAM, AS DEFINED IN SECTION 6.2 OF THE DELAWARE SEDIMENT AND STORMWATER REGULATIONS.
(X) MAJOR	CERTIFIED CONSTRUCTION REVIEWER (CCR), AS DEFINED IN SECTION 6.3 OF THE DELAWARE SEDIMENT AND STORMWATER REGULATIONS.

3. ELECTRONIC PROJECT FILES THAT WILL BE MADE AVAILABLE TO THE AWARDED CONTRACTOR, INCLUDE:

( )	NONE
( )	ASCII DATA FILES WITH COORDINATES AND ELEVATIONS FOR PROPOSED POINTS AS SELECTED BY THE ENGINEER.
(X)	ALL PLAN SHEETS, IN PDF FORMAT.
(X)	EXISTING DIGITAL TERRAIN MODEL, IN .DTM FILE FORMAT, COMPATIBLE WITH SOFTWARE CURRENTLY USED BY DELDOT.
(X)	PROPOSED DIGITAL TERRAIN MODEL, IN .DTM FILE FORMAT, COMPATIBLE WITH SOFTWARE CURRENTLY USED BY DELDOT.
( )	DESIGN FILE, IN .DGN FILE FORMAT, CONTAINING ONLY THE PROPOSED 3D TRIANGLES OF THE PROPOSED DIGITAL TERRAIN MODEL (DTM).

NOTE: THE DOCUMENT ENTITLED "RELEASE FOR DELIVERY OF DOCUMENTS IN ELECTRONIC FORM TO A CONTRACTOR" MUST BE SIGNED BY ALL PARTIES PRIOR TO THE DELIVERY OF ANY ELECTRONIC PROJECT FILES.

4. PROJECT FILES THAT WILL BE MADE AVAILABLE TO THE CONTRACTOR, INCLUDE:

(X)	CROSS SECTIONS
( )	RIGHT-OF-WAY PLANS (WILL BE MADE AVAILABLE TO THE AWARDED CONTRACTOR)

5. AMERICAN TRAFFIC SAFETY SERVICES ASSOCIATION (ATSSA) CERTIFIED TRAFFIC CONTROL SUPERVISOR REQUIREMENT FOR THIS PROJECT.

( )	THE CONTRACTOR SHALL NOT BE REQUIRED TO HAVE AN ATSSA SUPERVISOR ASSIGNED TO THIS PROJECT.
( )	THE CONTRACTOR SHALL HAVE AN ATSSA SUPERVISOR ASSIGNED TO THIS PROJECT. THE CONTRACTOR'S GENERAL SUPERINTENDENT FOR THIS PROJECT OR ANOTHER ATSSA CERTIFIED MEMBER OF THE CONTRACTOR'S PROJECT STAFF MAY BE THE ATSSA SUPERVISOR. PAYMENT FOR ATSSA SUPERVISOR IS INCIDENTAL TO ITEM 743000.
(X)	THE CONTRACTOR SHALL HAVE AN ATSSA SUPERVISOR ASSIGNED TO THIS PROJECT. THE ATSSA SUPERVISOR'S SOLE JOB SHALL BE SUPERVISION OF THE INSTALLATION, OPERATION AND MAINTENANCE OF TRAFFIC CONTROL DEVICES FOR THIS PROJECT. THE CONTRACTOR'S GENERAL SUPERINTENDENT FOR THIS PROJECT SHALL NOT BE THE ATSSA SUPERVISOR. PAYMENT FOR ATSSA SUPERVISOR SHALL BE PAID FOR UNDER ITEM 743031.

6. THE DISTURBED AREA FOR THIS PROJECT IS 16.58 ACRES.

7. THE SEDIMENT AND STORMWATER MANAGEMENT PLANS HAVE BEEN APPROVED BY DELDOT'S STORMWATER ENGINEER UNDER DELDOT'S DELEGATED AUTHORITY. THE SEDIMENT AND STORMWATER MANAGEMENT PLANS ARE VALID FOR A THREE YEAR PERIOD, BEGINNING ON THE DATE THE STORMWATER ENGINEER SIGNED THE CONSTRUCTION TITLE SHEET. IF THE FINAL ACCEPTANCE OF THE PROJECT IS ANTICIPATED TO EXTEND BEYOND THE THREE YEARS, THE CONTRACTOR WILL INFORM THE ENGINEER THREE MONTHS PRIOR TO THE EXPIRATION OF THE APPROVED SEDIMENT AND STORMWATER MANAGEMENT PLANS. THE STORMWATER ENGINEER WILL REVIEW THE CURRENT SEDIMENT AND STORMWATER MANAGEMENT PLAN AND ISSUE AN EXTENSION WITH ANY APPROPRIATE MODIFICATIONS.

PROJECT NOTES

SECTION 100

1. ANY DAMAGE TO ITEMS NOTED TO BE RELOCATED OR RESET BY THE CONTRACTOR, AT THE DISCRETION OF THE ENGINEER, SHALL BE REPAIRED AND/OR REPLACED IN KIND AT THE CONTRACTOR'S EXPENSE.

SECTION 200

2. THE ENGINEER MAY REQUIRE THE CONTRACTOR TO EXCAVATE TEST PITS ALONG PROPOSED DRAINAGE RUNS, AT POINTS OF POSSIBLE UTILITY CONFLICTS, TO DETERMINE IF A CONFLICT EXISTS. ANY CONFLICTS SHALL BE COORDINATED BY THE CONTRACTOR, WITH THE ENGINEER AND THE UTILITY COMPANY INVOLVED. THE ENGINEER SHALL ULTIMATELY DETERMINE THE SOLUTION TO THE UTILITY CONFLICT. TEST HOLES SHALL BE MEASURED AND PAID FOR IN ACCORDANCE WITH ITEM 202000 - EXCAVATION AND EMBANKMENT, BUT ONLY TO THE ACTUAL DEPTH EXCAVATED.

3. ITEMS TO BE REMOVED UNDER ITEM 211000 - REMOVAL OF STRUCTURES AND OBSTRUCTIONS SHALL INCLUDE, BUT NOT BE LIMITED TO THE FOLLOWING:
   - CANTILEVER SIGN STRUCTURES
   - CANTILEVER SIGN FOUNDATIONS (REMOVE 1.5' MINIMUM BELOW EXISTING GROUND SURFACE)
   - FLARED END SECTIONS

4. POOR SUBGRADE SOILS THAT ARE ENCOUNTERED AND DETERMINED BY THE ENGINEER TO REQUIRE UNDERCUT EXCAVATION SHALL BE EXCAVATED TO THE DEPTH DETERMINED BY THE ENGINEER AND SHALL BE PAID UNDER ITEM 212000, UNDERCUT EXCAVATION. BORROW TYPE B (209002) SHALL BE USED FOR UNDERCUT BACKFILL IN WET AREAS, ALL OTHER UNDERCUT BACKFILL AREAS SHALL BE BACKFILLED WITH BORROW TYPE A (209001) UNLESS OTHERWISE DIRECTED BY THE ENGINEER.

SECTION 300

5. A. THE CONTRACTOR MAY ELECT TO USE ANY OF THE FOLLOWING MATERIALS TO MEET THE REQUIREMENTS OF ITEM 302007 - GRADED AGGREGATE BASE COURSE, TYPE 'B':
   a. CRUSHED STONE (PER STANDARD SPECIFICATION 821)
   b. CRUSHED CONCRETE (PER STANDARD SPECIFICATION 821)
   c. HOT-MIX MILLINGS (PER SPECIAL PROVISION 302514 MILLED HOT-MIX BASE COURSE)

   THE CONTRACTOR WILL NOT BE ALLOWED TO MIX DIFFERENT MATERIALS (OR SIMILAR MATERIALS FROM DIFFERENT SOURCES) TO MEET THE REQUIREMENTS OF ITEM 302007 - GRADED AGGREGATE BASE COURSE, TYPE 'B'.

   ALL OF THE ABOVE LISTED MATERIALS ARE PERMITTED FOR USE ON THE JOB, PROVIDED THEY ARE SEPARATED INTO APPROVED AREAS. EACH AREA OF BASE COURSE MUST BE CONSTRUCTED USING MATERIALS FROM A SINGULAR SOURCE, FULL DEPTH, IN ORDER THAT PROPER TESTING MAY BE ACCOMPLISHED. THE CONTRACTOR AND ENGINEER SHALL AGREE ON THE LIMITS OF EACH SOURCE OF MATERIAL PRIOR TO PLACEMENT.

   B. THE QUANTITY USED FOR BASE OF EACH OF THE ABOVE LISTED MATERIALS WILL BE THE CONTRACTOR'S CHOICE, WITH THE TOTAL BEING EQUAL TO THE ACTUAL QUANTITY USED UNDER ITEM 302007 - GRADED AGGREGATE BASE COURSE, TYPE 'B'.

   C. THE CONTRACTOR MAY ALSO ELECT TO RECYCLE MILLINGS FOR USE IN HOT-MIX AS PERMITTED BY THE STANDARD SPECIFICATIONS. THE CHOICE OF THE QUANTITY OF MILLINGS USED FOR THIS PURPOSE, OR FOR BASE COURSE, LIES WITH THE CONTRACTOR. ALL EXCESS MILLING MATERIAL SHALL BECOME PROPERTY OF THE CONTRACTOR.

   D. HOT-MIX MILLINGS MAY BE GENERATED FROM THE FOLLOWING SOURCES:
   a. MATERIAL MADE AVAILABLE WHEN MILLED ON THIS CONTRACT UNDER ITEM 761001.
   b. MATERIAL MILLED ON THIS CONTRACT AT THE CONTRACTOR'S CHOICE UNDER ITEM 202000.
   c. MILLED MATERIAL FURNISHED ON THE JOB FROM THE CONTRACTOR'S YARD OR OTHER OUTSIDE SOURCE.
   ALL MILLED MATERIALS SHALL MEET THE MATERIAL REQUIREMENTS OF ITEM 302514 - MILLED HOT-MIX BASE COURSE.

   E. PAYMENT CLARIFICATION:
   a. SHOULD THE CONTRACTOR ELECT TO MILL PORTIONS OF HOT-MIX SHOWN ON THE PLANS TO BE REMOVED UNDER ITEM 202000 - EXCAVATION AND EMBANKMENT THE COST OF MILLING THIS HOT-MIX WILL BE PAID AS ITEM 202000 - EXCAVATION AND EMBANKMENT. THE MILLINGS GENERATED MAY BE RECYCLED INTO HOT-MIX, UTILIZED FOR BASE COURSE, OR DISPOSED OF TO AN APPROVED SITE. HAULING COSTS FOR DISPOSAL AND/OR RECYCLING ARE INCIDENTAL TO ITEM 202000 - EXCAVATION AND EMBANKMENT.

   b. MILLINGS GENERATED UNDER ITEM 760502 - PAVEMENT MILLINGS, TAPERCUT MAY BE RECYCLED INTO HOT-MIX, UTILIZED FOR BASE COURSE OR DISPOSED OF BY THE CONTRACTOR TO AN APPROVED SITE. NO SEPARATE PAYMENT WILL BE MADE FOR TRANSPORTING MILLINGS ON SITE OR TO AN APPROVED DISPOSAL SITE.

   c. SHOULD THE CONTRACTOR ELECT TO TEMPORARILY STOCKPILE MILLINGS ON THE JOB SITE FOR LATER USE, ALL COSTS FOR STOCKPILING AND SUBSEQUENT REHANDLING SHALL BE INCIDENTAL TO ITEM 202000 - EXCAVATION AND EMBANKMENT.

   d. MILLINGS USED FOR BASE COURSE SHALL BE PLACED IN ACCORDANCE WITH THE REQUIREMENTS OF SPECIAL PROVISION 302514 - MILLED HOT-MIX BASE COURSE. NO SEPARATE PAYMENT WILL BE MADE TO FURNISH MILLINGS FROM AN OUTSIDE SOURCE OR TRANSPORT MILLINGS WITHIN THE PROJECT LIMITS. MILLINGS USED FOR BASE COURSE WILL BE PAID FOR AT THE UNIT BID PRICE FOR ITEM 302007 - GRADED AGGREGATE BASE COURSE, TYPE 'B'.

   e. ALL COSTS TO UTILIZE MILLINGS IN RECYCLED HOT-MIX WILL BE INCIDENTAL TO THE UNIT PRICE BID FOR THE HOT-MIX ITEM USING THE RECYCLED MATERIAL.

   f. SPECIAL PROVISION 302514 - MILLED HOT-MIX BASE COURSE IS PROVIDED TO SPECIFY THE MEANS OF LAY DOWN AND COMPACTION AS WELL AS THE MATERIAL REQUIREMENTS FOR MILLINGS USED AS BASE COURSE. ALL COSTS TO BRING THE MILLINGS INTO COMPLIANCE WITH THE REQUIREMENTS OF ITEM - 302514 MILLED HOT-MIX BASE COURSE ARE INCIDENTAL TO ITEM 302007 - GRADED AGGREGATE BASE COURSE, TYPE 'B'. NO PAYMENT WILL BE MADE FOR ITEM 302514 - MILLED HOT-MIX BASE COURSE. THE QUANTITY OF MILLINGS USED FOR BASE COURSE WILL BE PAID FOR UNDER ITEM 302007 - GRADED AGGREGATE BASE COURSE.

SECTION 600

6. THE DEPARTMENT AND THE CONTRACTOR SHALL INSPECT ALL EXISTING PIPES AND DRAINAGE STRUCTURES TO BE USED IN THE FINAL DRAINAGE SYSTEM AND AGREE ON THE CONDITION PRIOR TO THE START OF CONSTRUCTION. EXISTING PIPES AND DRAINAGE STRUCTURES DAMAGED DUE TO CONTRACTOR OPERATIONS SHALL BE REPAIRED OR REPLACED IN-KIND AT THE CONTRACTOR'S EXPENSE. THE DEPARTMENT WILL VIDEO INSPECT NEW PIPE RUNS TO CONFIRM CONDITION PRIOR TO ACCEPTANCE. PIPE CLEANING PRIOR TO VIDEO INSPECTION AND MAINTENANCE OF TRAFFIC DURING THE VIDEO INSPECTION ARE THE RESPONSIBILITY OF THE CONTRACTOR AND INCIDENTAL TO THE PIPE ITEM THAT IS BEING VIDEO INSPECTED.

SECTION 700

7. IN AREAS WHERE PROPOSED CURB MEETS EXISTING CURB AND THE TWO CURB TYPES ARE NOT SIMILAR, THE PROPOSED CURB SHALL BE TRANSITIONED IN 10 LINEAR FEET, UNLESS OTHERWISE DIRECTED BY THE ENGINEER. PAYMENT FOR THIS WORK, INCLUDING SAW CUTTING EXISTING CURB SHALL BE INCIDENTAL TO THE PROPOSED CURB ITEM.

SECTION 700

8. STATION AND ELEVATION DATA GIVEN FOR DRAINAGE STRUCTURES ARE TO BE APPLIED TO THE CENTER OF THE GRATE FOR INLETS, AND TO THE CENTER OF THE STRUCTURE FOR JUNCTION BOXES AND MANHOLES.

9. DRAINAGE INLET GRATES ADJACENT TO THE ROAD, WITHIN THE PROJECT LIMITS, WHICH ARE NOT TYPE 1 SHALL BE REPLACED. THE ACTUAL LOCATIONS, THE NEED FOR ANY GRATE MODIFICATIONS OR FOR NEW FRAMES SHALL BE DETERMINED BY THE ENGINEER. ALL REPLACED GRATES/FRAMES SHALL BE DELIVERED TO THE NEAREST DISTRICT MAINTENANCE YARD WITH THE COST OF DELIVERY INCIDENTAL TO ITEM 708060 - REPLACING DRAINAGE INLET GRATE(S). FINAL PAYMENT FOR REPLACED GRATES/FRAMES SHALL NOT BE MADE UNTIL RECEIPT OF DELIVERED MATERIALS IS PRODUCED, SIGNED BY A DELDOT MAINTENANCE YARD SUPERVISOR.

SECTION 900

10. THIS PROJECT IS COVERED UNDER AN NPDES GENERAL PERMIT FOR CONSTRUCTION. UNDER THE GENERAL PERMIT, COMPLIANCE WITH DELDOT'S APPROVED SEDIMENT AND STORMWATER MANAGEMENT PLANS WILL CONSTITUTE COMPLIANCE WITH THE NPDES INDUSTRIAL PERMITTING REQUIREMENTS FOR THIS CONSTRUCTION PROJECT. A COPY OF THE NPDES GENERAL PERMIT AND NOI IS KEPT ON FILE IN EACH OF THE CONSTRUCTION OFFICES AND THE DEPARTMENT'S STORMWATER SECTION. A COPY OF THE GENERAL PERMIT OR THE NOI CAN BE OBTAINED UPON REQUEST FROM EITHER THE DEPARTMENT'S STORMWATER ENGINEER OR THE APPROPRIATE CONSTRUCTION ENGINEER.

MISCELLANEOUS

11. THE CONTRACTOR SHALL CONTACT MICHAEL ELLER, THE CHIEF OF SCHEDULING FOR DART FIRST STATE, 14 DAYS PRIOR TO THE START OF CONSTRUCTION AT 302-576-6061.

12. REFER TO THE CONSTRUCTION PLAN SHEETS FOR THE LOCATION OF THE CLEAR ZONE AREA LIMITS.

13. THE BASE TOPOGRAPHY IS FROM AERIAL MAPPING, FLOWN BY AERO-METRIC IN DECEMBER 2011, AND SUPPLEMENTED WITH GROUND SURVEY IN CRITICAL LOCATIONS.

14. ONLY THOSE EXISTING RIGHT-OF-WAY MONUMENTS RECOVERED AND UTILIZED TO RE-ESTABLISH THE EXISTING RIGHT-OF-WAY ARE SHOWN ON THE PLANS.

15. CANTILEVER SIGN SUPPORTS AND SIGN PANELS
    THE SUPPLIER OF THE CANTILEVER SIGN SUPPORTS IS RESPONSIBLE FOR FABRICATION AND DELIVERY OF THE CANTILEVER SIGN SUPPORTS AND ANCHOR BOLTS UNDER CONTRACT T201611001. THE SUPPLIER OF THE SIGN PANELS IS RESPONSIBLE FOR FABRICATION AND DELIVERY OF THE SIGN PANELS UNDER DELDOT'S ON CALL TRAFFIC CONTRACT. CANTILEVER SIGN SUPPORT AND SIGN PANEL DETAILS FROM THOSE CONTRACTS ARE INCLUDED FOR INFORMATIONAL PURPOSES ONLY. UNDER THIS CONTRACT (T201511001), THE CONTRACTOR IS RESPONSIBLE FOR CONSTRUCTING THE CANTILEVER SIGN FOUNDATIONS AND INSTALLING THE CANTILEVER SIGN SUPPORTS AND SIGN PANELS, INCLUDING UNLOADING THE SIGN SUPPORTS AND PANELS DELIVERED TO THE SITE BY THE SUPPLIERS. PAYMENT FOR ITEM 605500, CANTILEVER SIGN SUPPORTS AND FOUNDATION, WILL CONSTITUTE FULL COMPENSATION FOR CONSTRUCTION OF THE SIGN STRUCTURE FOUNDATIONS, INSTALLATION OF THE CANTILEVER SIGN SUPPORTS AND PANELS, UNLOADING MATERIALS DELIVERED TO THE SITE AND ALL INCIDENTALS REQUIRED TO COMPLETE THE WORK. THE CONTACT INFORMATION OF THE SUPPLIERS/FABRICATORS OF THE SIGN SUPPORTS AND PANELS SHALL BE PROVIDED TO THE CONTRACTOR PRIOR TO THE TIME OF BID.

16. LIGHTING AND CONDUIT
    RELOCATION OF EXISTING LIGHTS AND NEW CONDUIT RUNS ARE ANTICIPATED TO BE DONE BY DELDOT PRIOR TO THE START OF THIS CONTRACT. EXISTING LIGHT FOUNDATIONS WILL BE REMOVED TO A DEPTH OF 1.5' TO 2' BELOW THE EXISTING SURFACE GRADE.

EARTHWORK SUMMARY

EXCAVATION	
EXCAVATION FROM CROSS SECTIONS	3,542 C.Y.
EXCAVATION FOR ROOTMAT REMOVAL	0 C.Y.
EXCAVATION FOR PAVEMENT REMOVAL	125 C.Y.
EXCAVATION FOR STRUCTURES	0 C.Y.
MISC. EXCAVATION (DRAINAGE, POLE BASES, ETC.)	75 C.Y.
TOPSOIL STRIPPING	2,549 C.Y.
TOTAL EXCAVATION	6,291 C.Y.
EXCAVATION AVAILABLE FOR EMBANKMENT	
EXCAVATION MEETING BORROW TYPE 'A'	0 C.Y.
EXCAVATION MEETING BORROW TYPE 'F'	3,108 C.Y.
EXCAVATION MEETING TOPSOIL	1,912 C.Y.
EMBANKMENT REQUIREMENTS	
BORROW TYPE 'A' REQUIRED (INCLUDING UNDERCUT)	50 C.Y.
BORROW TYPE 'F' REQUIRED	6,987 C.Y.
TOPSOIL REQUIRED	4,492 C.Y.
MATERIAL BALANCE ("+"= EXCESS, "-"= NEED)	
BORROW TYPE 'A'	-50 C.Y.
BORROW TYPE 'F'	-3,879 C.Y.
TOPSOIL	-2,580 C.Y.
UNSUITABLE MATERIAL	1,272 C.Y.

NOTES:
1) THE VALUES LISTED IN THE EARTHWORK SUMMARY ARE APPROXIMATE AND ARE NOT TO BE USED AS A BASIS OF PAYMENT. THE EARTHWORK SUMMARY IS CONSIDERED FOR INFORMATIONAL PURPOSES ONLY.
2) OTHER SOURCES OF EXCAVATION MAY INCLUDE PIPE TRENCH EXCAVATION, STRUCTURE EXCAVATION, UNDERCUT EXCAVATION, ENVIRONMENTAL SITE EXCAVATION, ETC.
3) UNSUITABLE MATERIALS INCLUDE UNDERCUT SOILS, BITUMINOUS PAVEMENT, ETC.

Unofficial Website Copy

LEGEND

- (A) ITEM 401830 - WMA, SUPERPAVE, TYPE C, 160 GYRATIONS, PG 70-22, (NON-CARBONATE STONE)
- (B) ITEM 401810 - WMA, SUPERPAVE, TYPE B, 160 GYRATIONS, PG 64-22
- (C) ITEM 401819 - WMA, SUPERPAVE, BITUMINOUS CONCRETE BASE COURSE, 160 GYRATIONS, PG 64-22
- (D) ITEM 302007 - GRADED AGGREGATE BASE COURSE, TYPE B
- (E) ITEM 908010 - TOPSOILING, 6" DEPTH
- (F) ITEM 908007 - TOPSOILING
- (G) ITEM 908004 - TOPSOIL, 6" DEPTH
- (H) ITEM 908002 - TOPSOIL
- (I) ITEM 908014 - PERMANENT GRASS SEEDING, DRY GROUND
- (J) ITEM 401752 - SAFETY EDGE FOR ROADWAY PAVEMENT
- (K) ITEM 760016 - RUMBLE STRIPS, HOT-MIX
- (L) ITEM 209006 - BORROW, TYPE F OR APPROVED PROJECT EXCAVATION
- (M) ITEM 401824 - WMA, SUPERPAVE, TYPE C, 160 GYRATIONS, PG 64-22, WEDGE
- (N) ITEM 401825 - WMA, SUPERPAVE, TYPE B, 160 GYRATIONS, PG 64-22, WEDGE
- (O) ITEM 760507 - PROFILE MILLING, HOT-MIX
- (P) ITEM 760003 - PAVEMENT MILLING, HOT-MIX, VARIABLE DEPTH
- (Q) ITEM 701012 - PORTLAND CEMENT CONCRETE CURB, TYPE 1-4
- (R) ITEM 720050 - GALVANIZED STEEL BEAM GUARDRAIL, TYPE 1-31
- (T) ITEM 404501 - BITUMINOUS ASPHALT TACK COAT
- (U) ITEM 908020 - EROSION CONTROL BLANKET MULCH

MATERIAL	LIFT THICKNESS	
	MINIMUM	MAXIMUM
BITUMINOUS CONCRETE, TYPE 'C'	1.25"	2"
BITUMINOUS CONCRETE, TYPE 'B'	2.25"	4"
BITUMINOUS CONCRETE BASE COURSE	3"	6"
GRADED AGGREGATE BASE COURSE	3"	8"

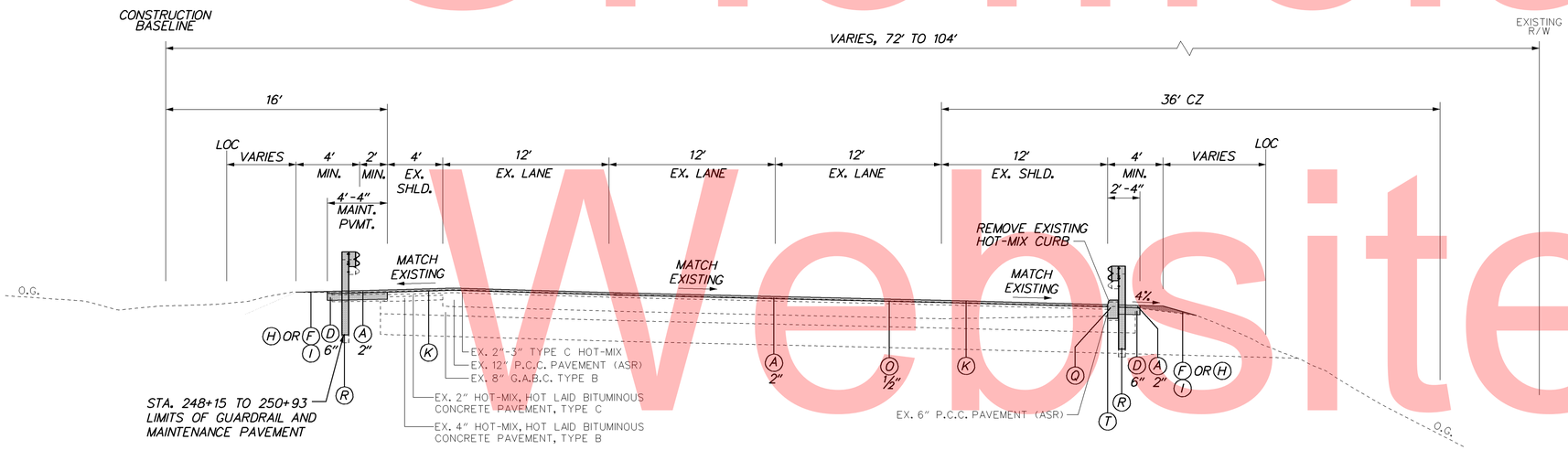

NORTHBOUND SR 1
STA. 248+37 to STA. 251+70

Unofficial Website Copy

6/29/2015 7:32:56 PM
\\BALSRV02\V2011\2011\11009_TYBOUTS\SR1WIDE_ NBAUXLANE\CADD\CONTRACT\PLANS\TS01_NBAUXLN.DGN

DELAWARE DEPARTMENT OF TRANSPORTATION	ADDENDUMS / REVISIONS	NOT TO SCALE	SR 1 NORTHBOUND AUXILIARY LANE US 40 TO SR 273	CONTRACT T201511001	BRIDGE NO. 1-319N	TYPICAL SECTIONS	SHEET NO. 5
				COUNTY NEW CASTLE	DESIGNED BY: ZJS		TOTAL SHTS. 77
					CHECKED BY: CDW		

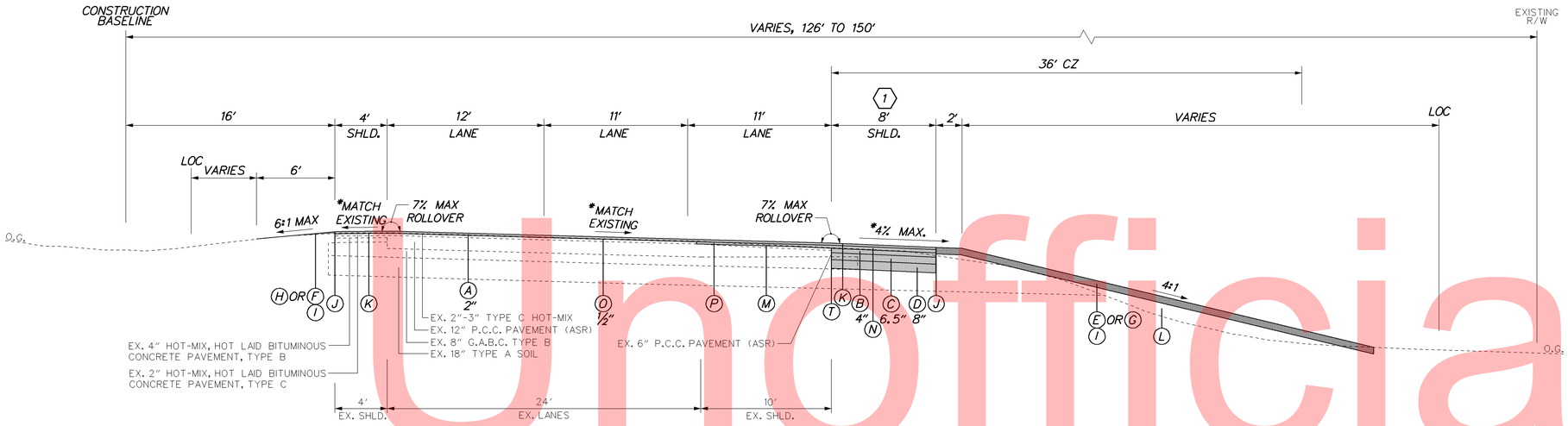

NORTHBOUND SR 1

STA. 251+70 to STA. 269+90

(1) STA. 251+70 TO STA. 253+27 SHOULDER TAPERS FROM 12' TO 8'

LEGEND

- (A) ITEM 401830 - WMA, SUPERPAVE, TYPE C, 160 GYRATIONS, PG 70-22, (NON-CARBONATE STONE)
- (B) ITEM 401810 - WMA, SUPERPAVE, TYPE B, 160 GYRATIONS, PG 64-22
- (C) ITEM 401819 - WMA, SUPERPAVE, BITUMINOUS CONCRETE BASE COURSE, 160 GYRATIONS, PG 64-22
- (D) ITEM 302007 - GRADED AGGREGATE BASE COURSE, TYPE B
- (E) ITEM 908010 - TOPSOILING, 6" DEPTH
- (F) ITEM 908007 - TOPSOILING
- (G) ITEM 908004 - TOPSOIL, 6" DEPTH
- (H) ITEM 908002 - TOPSOIL
- (I) ITEM 908014 - PERMANENT GRASS SEEDING, DRY GROUND
- (J) ITEM 401752 - SAFETY EDGE FOR ROADWAY PAVEMENT
- (K) ITEM 760016 - RUMBLE STRIPS, HOT-MIX
- (L) ITEM 209006 - BORROW, TYPE F OR APPROVED PROJECT EXCAVATION
- (M) ITEM 401824 - WMA, SUPERPAVE, TYPE C, 160 GYRATIONS, PG 64-22, WEDGE
- (N) ITEM 401825 - WMA, SUPERPAVE, TYPE B, 160 GYRATIONS, PG 64-22, WEDGE
- (O) ITEM 760507 - PROFILE MILLING, HOT-MIX
- (P) ITEM 760003 - PAVEMENT MILLING, HOT-MIX, VARIABLE DEPTH
- (Q) ITEM 701012 - PORTLAND CEMENT CONCRETE CURB, TYPE 1-4
- (R) ITEM 720050 - GALVANIZED STEEL BEAM GUARDRAIL, TYPE 1-31
- (T) ITEM 404501 - BITUMINOUS ASPHALT TACK COAT
- (U) ITEM 908020 - EROSION CONTROL BLANKET MULCH

MATERIAL	LIFT THICKNESS	
	MINIMUM	MAXIMUM
BITUMINOUS CONCRETE, TYPE 'C'	1.25"	2"
BITUMINOUS CONCRETE, TYPE 'B'	2.25"	4"
BITUMINOUS CONCRETE BASE COURSE	3"	6"
GRADED AGGREGATE BASE COURSE	3"	8"

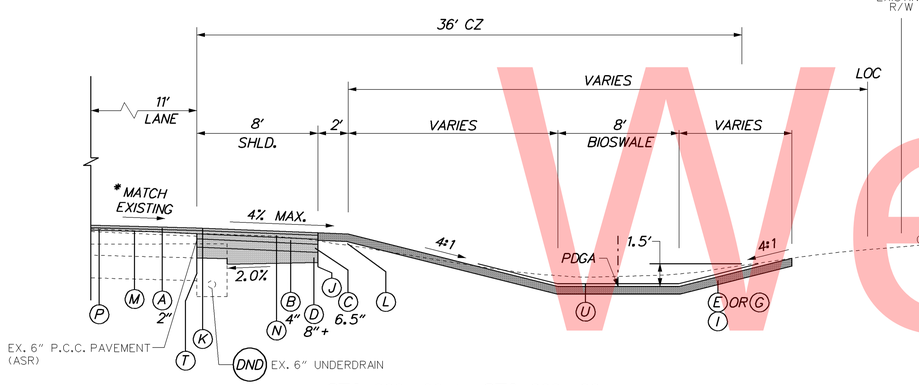

STA. 260+00 to STA. 262+66
STA. 264+20 to STA. 266+50

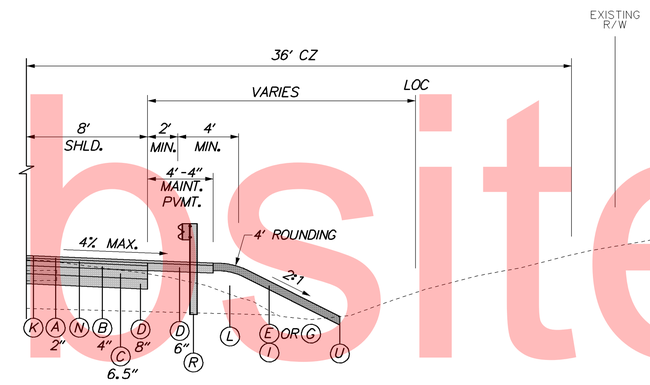

STA. 268+00 to STA. 269+23

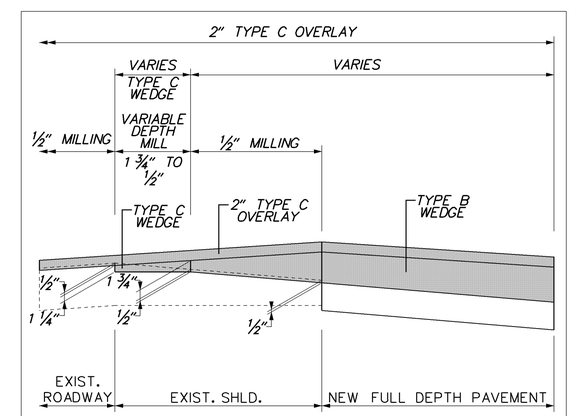

TYPICAL PAVING DETAIL

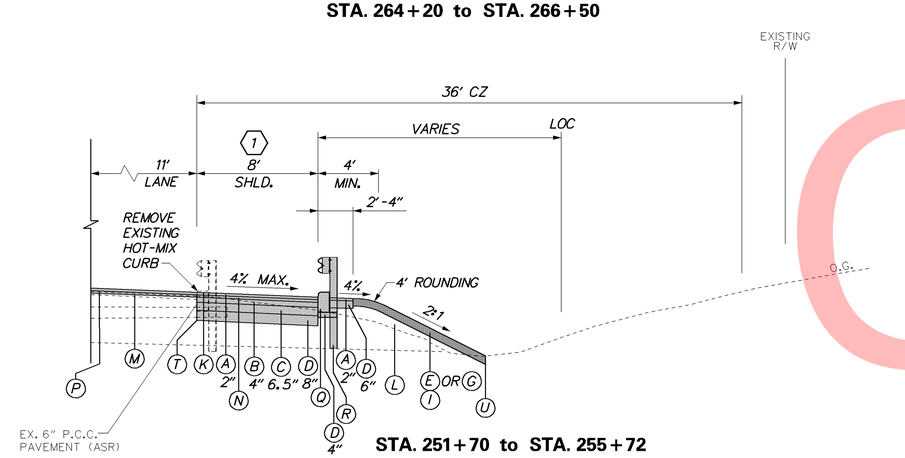

STA. 251+70 to STA. 255+72

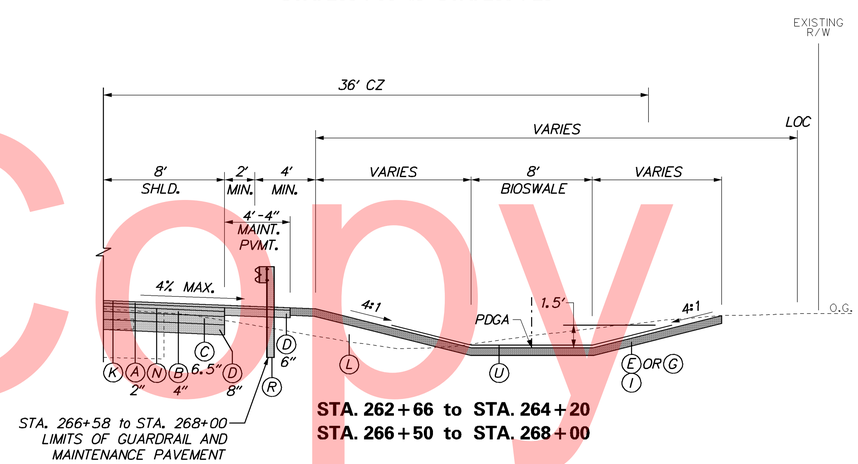

STA. 262+66 to STA. 264+20
STA. 266+50 to STA. 268+00

*SR 1 CROSS-SLOPES			
STA.	LT SHLD.	LANES	RT SHLD.
251+70	-2.00%	-2.70%	-4.00%
264+70	-2.00%	-2.70%	-4.00%
266+50	-2.00%	-2.00%	-4.00%
268+10	-2.00%	0.00%	-4.00%
269+22.25	-2.00%	2.00%	-4.00%
269+78.75	-3.00%	3.00%	-4.00%
269+90	-3.20%	3.20%	-3.80%

Unofficial Website Copy

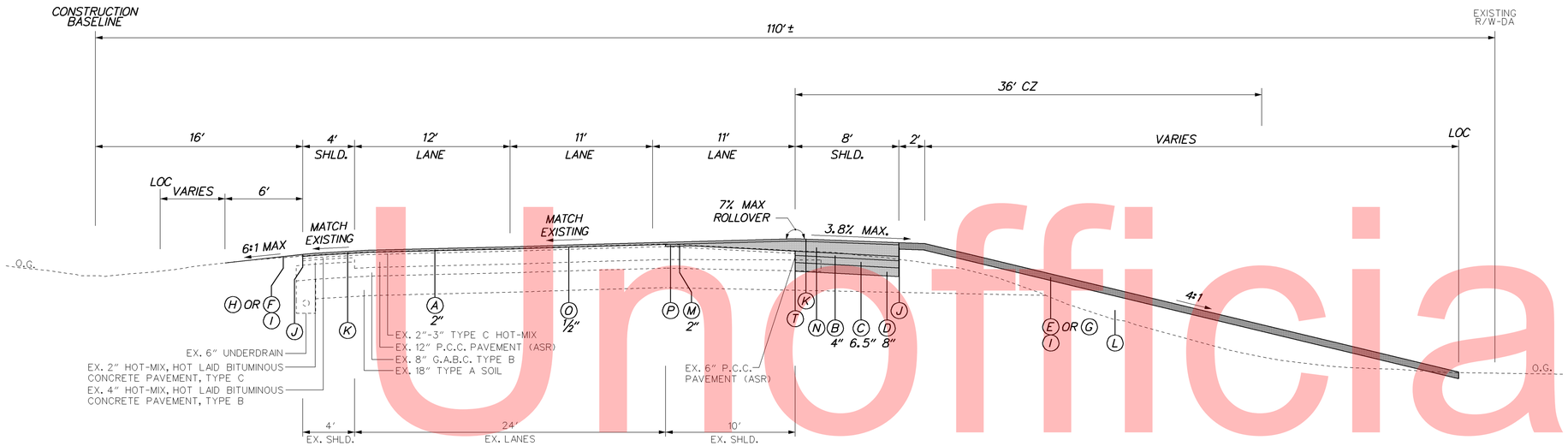

NORTHBOUND SR 1
STA. 269+90 to STA. 297+05

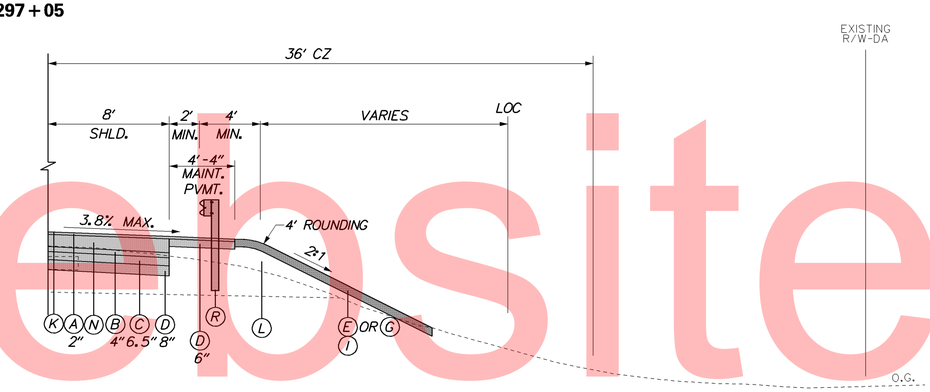

STA. 293+11 to STA. 295+73

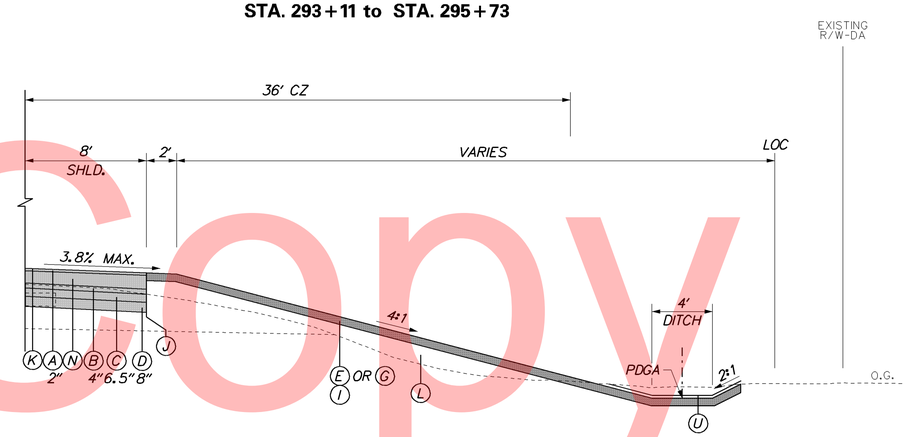

STA. 271+08 to STA. 273+00

LEGEND

- (A) ITEM 401830 - WMA, SUPERPAVE, TYPE C, 160 GYRATIONS, PG 70-22, (NON-CARBONATE STONE)
- (B) ITEM 401810 - WMA, SUPERPAVE, TYPE B, 160 GYRATIONS, PG 64-22
- (C) ITEM 401819 - WMA, SUPERPAVE, BITUMINOUS CONCRETE BASE COURSE, 160 GYRATIONS, PG 64-22
- (D) ITEM 302007 - GRADED AGGREGATE BASE COURSE, TYPE B
- (E) ITEM 908010 - TOPSOILING, 6" DEPTH
- (F) ITEM 908007 - TOPSOILING
- (G) ITEM 908004 - TOPSOIL, 6" DEPTH
- (H) ITEM 908002 - TOPSOIL
- (I) ITEM 908014 - PERMANENT GRASS SEEDING, DRY GROUND
- (J) ITEM 401752 - SAFETY EDGE FOR ROADWAY PAVEMENT
- (K) ITEM 760016 - RUMBLE STRIPS, HOT-MIX
- (L) ITEM 209006 - BORROW, TYPE F OR APPROVED PROJECT EXCAVATION
- (M) ITEM 401824 - WMA, SUPERPAVE, TYPE C, 160 GYRATIONS, PG 64-22, WEDGE
- (N) ITEM 401825 - WMA, SUPERPAVE, TYPE B, 160 GYRATIONS, PG 64-22, WEDGE
- (O) ITEM 760507 - PROFILE MILLING, HOT-MIX
- (P) ITEM 760003 - PAVEMENT MILLING, HOT-MIX, VARIABLE DEPTH
- (Q) ITEM 701012 - PORTLAND CEMENT CONCRETE CURB, TYPE 1-4
- (R) ITEM 720050 - GALVANIZED STEEL BEAM GUARDRAIL, TYPE 1-31
- (T) ITEM 404501 - BITUMINOUS ASPHALT TACK COAT
- (U) ITEM 908020 - EROSION CONTROL BLANKET MULCH

MATERIAL	LIFT THICKNESS	
	MINIMUM	MAXIMUM
BITUMINOUS CONCRETE, TYPE 'C'	1.25"	2"
BITUMINOUS CONCRETE, TYPE 'B'	2.25"	4"
BITUMINOUS CONCRETE BASE COURSE	3"	6"
GRADED AGGREGATE BASE COURSE	3"	8"

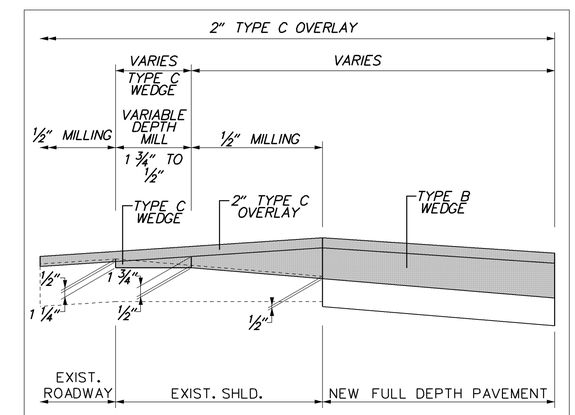

TYPICAL PAVING DETAIL

Unofficial Website Copy

6/29/2015 7:23:16 PM
\\BALSRV02\V2011\2011\1009_TYBOUTS\SR1WIDE_ NBAUXLANE\CADD\CONTRACT\PLANS\TS03_NBAUXLN.DGN

DELAWARE DEPARTMENT OF TRANSPORTATION	ADDENDUMS / REVISIONS	NOT TO SCALE	SR 1 NORTHBOUND AUXILIARY LANE US 40 TO SR 273	CONTRACT T201511001 / COUNTY NEW CASTLE	BRIDGE NO. 1-319N / DESIGNED BY: ZJS / CHECKED BY: CDW	TYPICAL SECTIONS	SHEET NO. 7 / TOTAL SHTS. 77

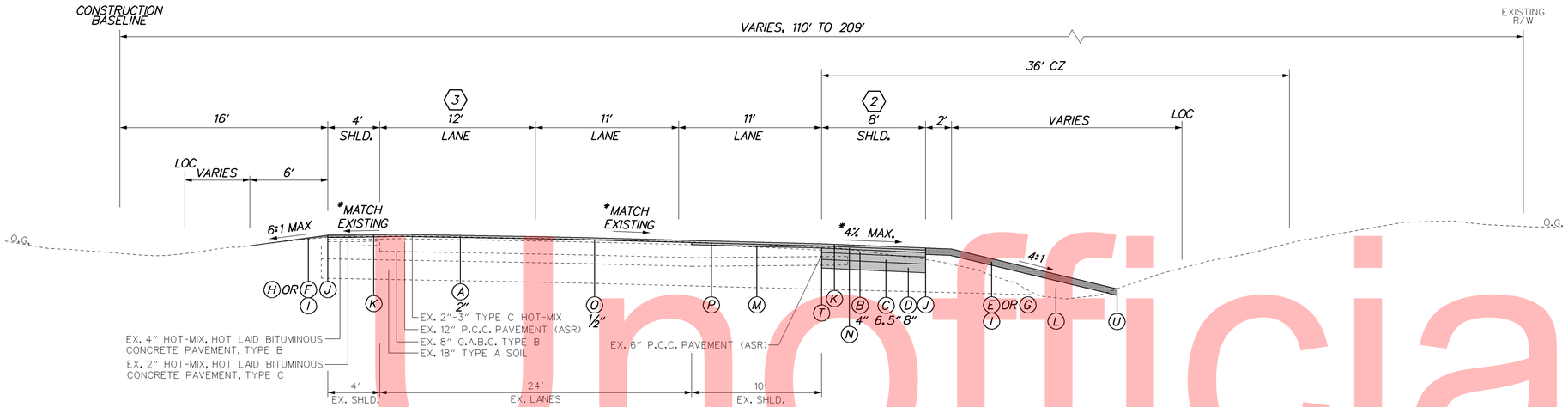

NORTHBOUND SR 1
STA. 297+05 to STA. 315+30

(2) STA. 313+18 TO STA. 315+24
SHOULDER TAPERS FROM 8' TO 3'

(3) STA. 314+24 TO STA. 315+84
LANE TAPERS FROM 12' TO 11'

LEGEND

- (A) ITEM 401830 - WMA, SUPERPAVE, TYPE C, 160 GYRATIONS, PG 70-22, (NON-CARBONATE STONE)
- (B) ITEM 401810 - WMA, SUPERPAVE, TYPE B, 160 GYRATIONS, PG 64-22
- (C) ITEM 401819 - WMA, SUPERPAVE, BITUMINOUS CONCRETE BASE COURSE, 160 GYRATIONS, PG 64-22
- (D) ITEM 302007 - GRADED AGGREGATE BASE COURSE, TYPE B
- (E) ITEM 908010 - TOPSOILING, 6" DEPTH
- (F) ITEM 908007 - TOPSOILING
- (G) ITEM 908004 - TOPSOIL, 6" DEPTH
- (H) ITEM 908002 - TOPSOIL
- (I) ITEM 908014 - PERMANENT GRASS SEEDING, DRY GROUND
- (J) ITEM 401752 - SAFETY EDGE FOR ROADWAY PAVEMENT
- (K) ITEM 760016 - RUMBLE STRIPS, HOT-MIX
- (L) ITEM 209006 - BORROW, TYPE F OR APPROVED PROJECT EXCAVATION
- (M) ITEM 401824 - WMA, SUPERPAVE, TYPE C, 160 GYRATIONS, PG 64-22, WEDGE
- (N) ITEM 401825 - WMA, SUPERPAVE, TYPE B, 160 GYRATIONS, PG 64-22, WEDGE
- (O) ITEM 760507 - PROFILE MILLING, HOT-MIX
- (P) ITEM 760003 - PAVEMENT MILLING, HOT-MIX, VARIABLE DEPTH
- (Q) ITEM 701012 - PORTLAND CEMENT CONCRETE CURB, TYPE 1-4
- (R) ITEM 720050 - GALVANIZED STEEL BEAM GUARDRAIL, TYPE 1-31
- (T) ITEM 404501 - BITUMINOUS ASPHALT TACK COAT
- (U) ITEM 908020 - EROSION CONTROL BLANKET MULCH

MATERIAL	LIFT THICKNESS	
	MINIMUM	MAXIMUM
BITUMINOUS CONCRETE, TYPE 'C'	1.25"	2"
BITUMINOUS CONCRETE, TYPE 'B'	2.25"	4"
BITUMINOUS CONCRETE BASE COURSE	3"	6"
GRADED AGGREGATE BASE COURSE	3"	8"

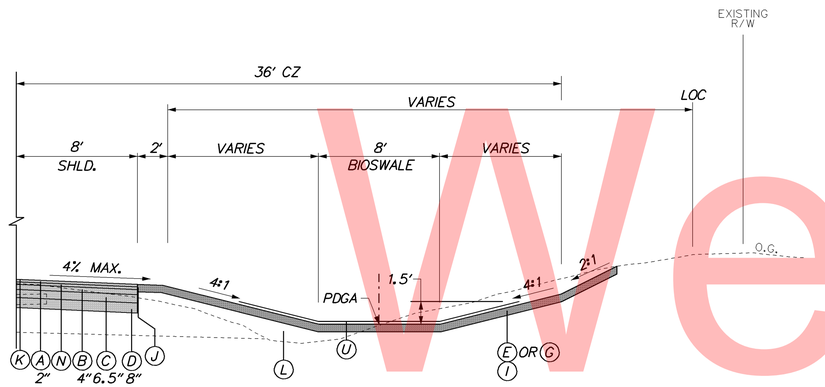

STA. 299+00 to STA. 306+50

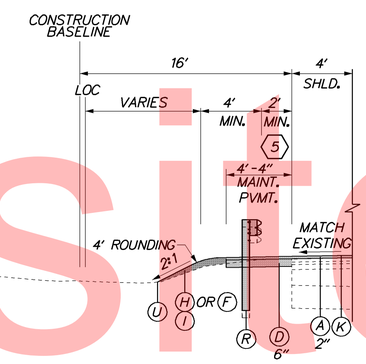

STA. 312+30 to STA. 315+43

(5) STA. 312+30 TO STA. 314+93
MAINTENANCE PAVEMENT TAPERS FROM 8.9' TO 2'

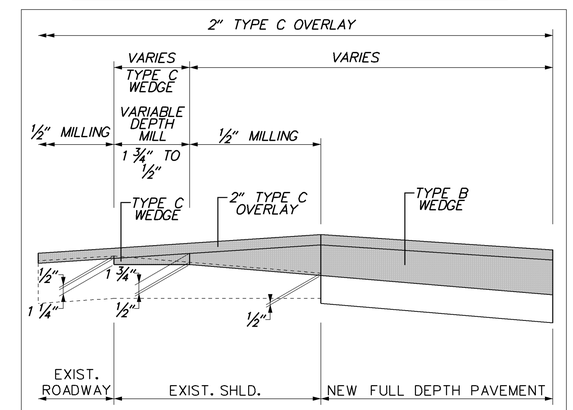

TYPICAL PAVING DETAIL

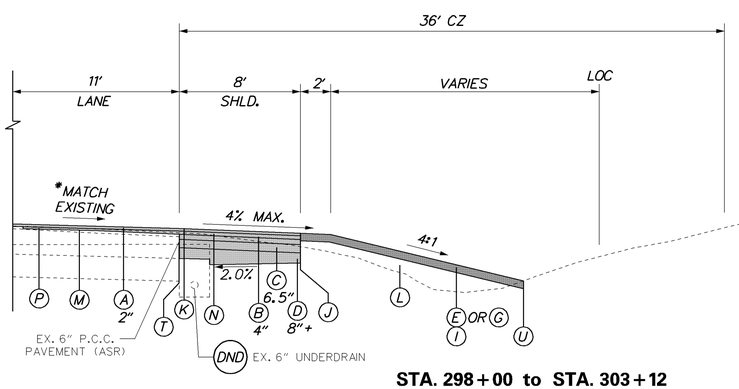

STA. 298+00 to STA. 303+12
STA. 308+00 to STA. 311+70

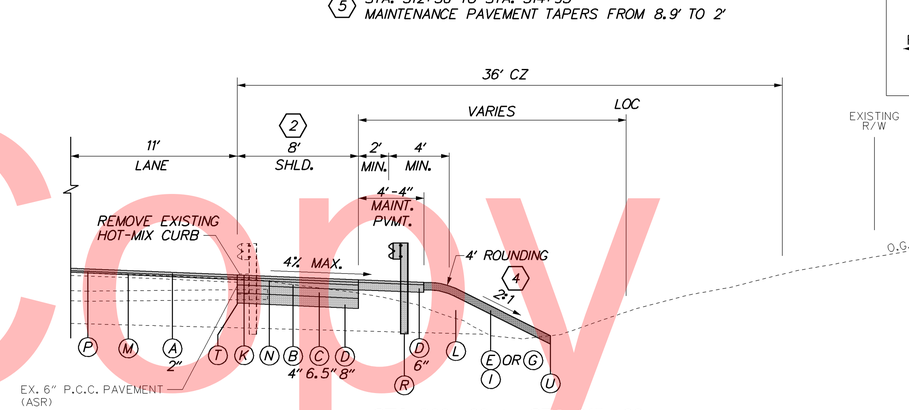

STA. 309+03 to STA. 315+30

(4) STA. 309+03 TO STA. 312+55
TIE-IN GRADING IS 4:1

*SR 1 CROSS-SLOPES			
STA.	LT SHLD.	LANES	RT SHLD.
297+05	-3.20%	3.20%	-3.80%
297+16.25	-3.00%	3.00%	-4.00%
297+72.50	-2.00%	2.00%	-4.00%
298+85	-2.00%	0.00%	-4.00%
299+85	-2.00%	-2.00%	-4.00%

Unofficial Website Copy

6/29/2015 7:26:28 PM
\\BALSRV02\V201\2011\11009_TYBOUTS\SRWIDE_ NBAUXLANE\CADD\CONTRACT\PLANS\TS04_NBAUXLN.DGN

DELAWARE DEPARTMENT OF TRANSPORTATION

ADDENDUMS / REVISIONS

NOT TO SCALE

SR 1 NORTHBOUND AUXILIARY LANE US 40 TO SR 273

CONTRACT	BRIDGE NO. 1-319N
T201511001	DESIGNED BY: ZJS
COUNTY	
NEW CASTLE	CHECKED BY: CDW

TYPICAL SECTIONS

SHEET NO. 8
TOTAL SHTS. 77

LEGEND

- (A) ITEM 401830 - WMA, SUPERPAVE, TYPE C, 160 GYRATIONS, PG 70-22, (NON-CARBONATE STONE)
- (B) ITEM 401810 - WMA, SUPERPAVE, TYPE B, 160 GYRATIONS, PG 64-22
- (C) ITEM 401819 - WMA, SUPERPAVE, BITUMINOUS CONCRETE BASE COURSE, 160 GYRATIONS, PG 64-22
- (D) ITEM 302007 - GRADED AGGREGATE BASE COURSE, TYPE B
- (E) ITEM 908010 - TOPSOILING, 6" DEPTH
- (F) ITEM 908007 - TOPSOILING
- (G) ITEM 908004 - TOPSOIL, 6" DEPTH
- (H) ITEM 908002 - TOPSOIL
- (I) ITEM 908014 - PERMANENT GRASS SEEDING, DRY GROUND
- (J) ITEM 401752 - SAFETY EDGE FOR ROADWAY PAVEMENT
- (K) ITEM 760016 - RUMBLE STRIPS, HOT-MIX
- (L) ITEM 209006 - BORROW, TYPE F OR APPROVED PROJECT EXCAVATION
- (M) ITEM 401824 - WMA, SUPERPAVE, TYPE C, 160 GYRATIONS, PG 64-22, WEDGE
- (N) ITEM 401825 - WMA, SUPERPAVE, TYPE B, 160 GYRATIONS, PG 64-22, WEDGE
- (O) ITEM 760507 - PROFILE MILLING, HOT-MIX
- (P) ITEM 760003 - PAVEMENT MILLING, HOT-MIX, VARIABLE DEPTH
- (Q) ITEM 701012 - PORTLAND CEMENT CONCRETE CURB, TYPE 1-4
- (R) ITEM 720050 - GALVANIZED STEEL BEAM GUARDRAIL, TYPE 1-31
- (T) ITEM 404501 - BITUMINOUS ASPHALT TACK COAT
- (U) ITEM 908020 - EROSION CONTROL BLANKET MULCH

MATERIAL	LIFT THICKNESS	
	MINIMUM	MAXIMUM
BITUMINOUS CONCRETE, TYPE 'C'	1.25"	2"
BITUMINOUS CONCRETE, TYPE 'B'	2.25"	4"
BITUMINOUS CONCRETE BASE COURSE	3"	6"
GRADED AGGREGATE BASE COURSE	3"	8"

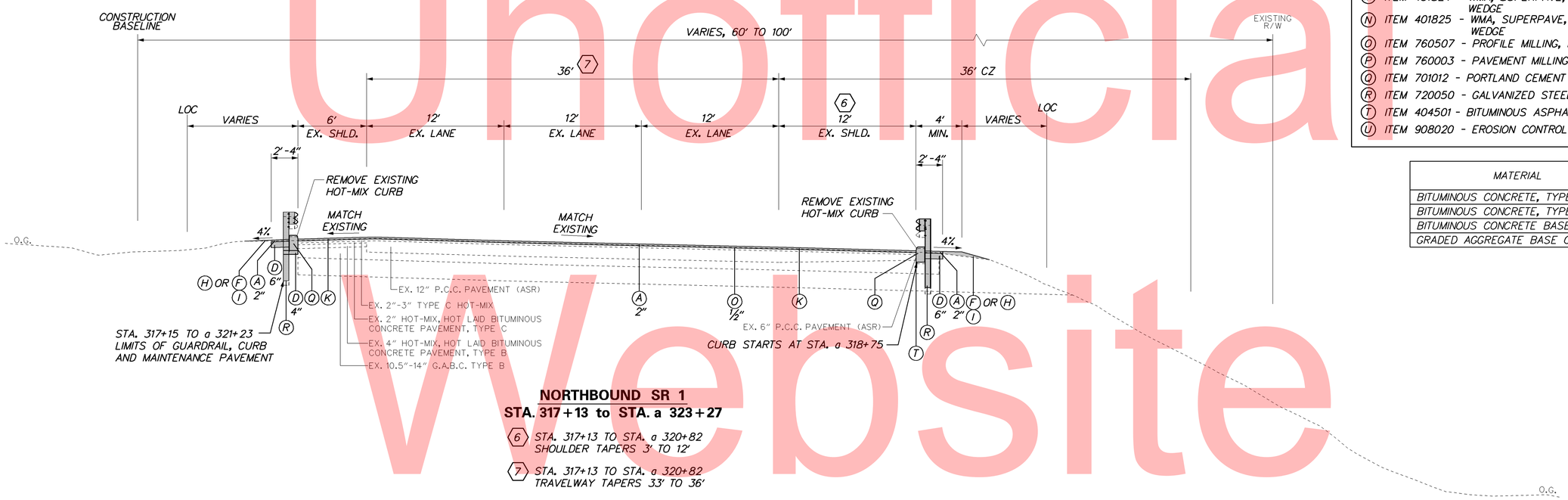

NORTHBOUND SR 1
STA. 317+13 to STA. ℄ 323+27

(6) STA. 317+13 TO STA. ℄ 320+82 SHOULDER TAPERS 3' TO 12'

(7) STA. 317+13 TO STA. ℄ 320+82 TRAVELWAY TAPERS 33' TO 36'

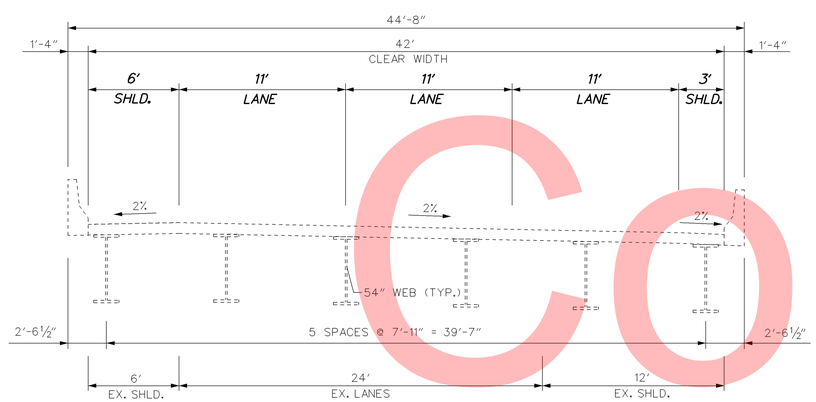

NORTHBOUND SR 1
STA. 315+30 to STA. 317+13

Unofficial Website Copy

DELAWARE DEPARTMENT OF TRANSPORTATION	ADDENDUMS / REVISIONS	NOT TO SCALE	SR 1 NORTHBOUND AUXILIARY LANE US 40 TO SR 273	CONTRACT T201511001	BRIDGE NO. 1-319N	TYPICAL SECTIONS	SHEET NO. 9
				COUNTY NEW CASTLE	DESIGNED BY: ZJS		TOTAL SHTS. 77
					CHECKED BY: CDW		

6/29/2015 7:30:48 PM
\\BALSRV02\V2011\2011\11009_TYBOUTS\SR1WIDE_ NBAUXLANE\CADD\CONTRACT\PLANS\TS05_NBAUXLN.DGN

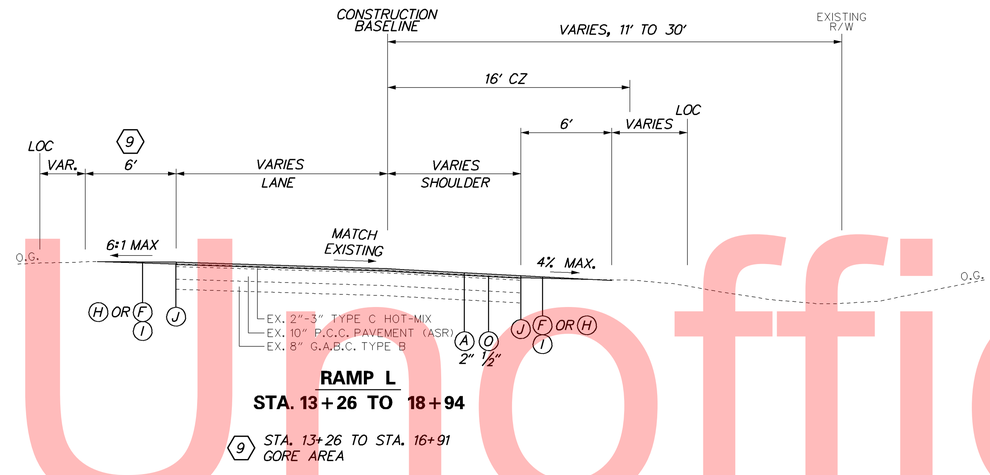

RAMP L

STA. 13+26 TO 18+94

9 STA. 13+26 TO STA. 16+91
GORE AREA

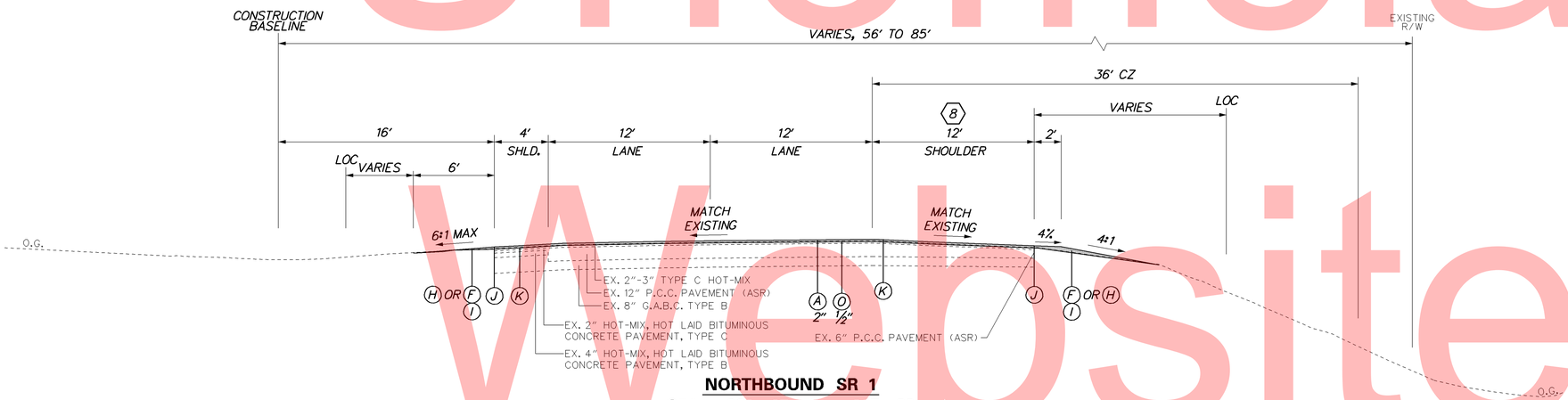

NORTHBOUND SR 1

STA. a 323+27 TO a 337+83

8 STA. a 323+27 TO STA. a 326+92
GORE AREA
STA. a 326+92 TO STA. a 328+50
SHOULDER TAPERS 19.3' TO 10'
STA. a 330+00 TO STA. a 331+17
SHOULDER TAPERS 10' TO 12'

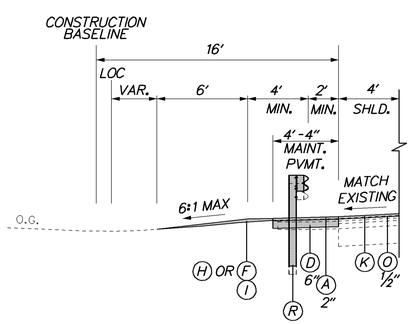

STA. a 335+59 TO STA. a 337+83

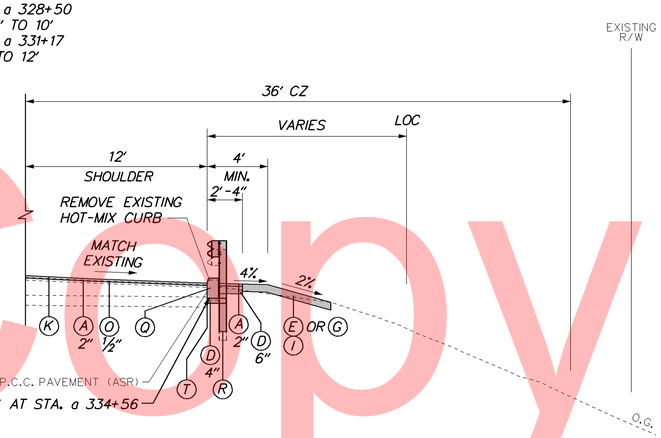

STA. a 331+20 to STA. a 337+67

LEGEND

- (A) ITEM 401830 - WMA, SUPERPAVE, TYPE C, 160 GYRATIONS, PG 70-22, (NON-CARBONATE STONE)
- (B) ITEM 401810 - WMA, SUPERPAVE, TYPE B, 160 GYRATIONS, PG 64-22
- (C) ITEM 401819 - WMA, SUPERPAVE, BITUMINOUS CONCRETE BASE COURSE, 160 GYRATIONS, PG 64-22
- (D) ITEM 302007 - GRADED AGGREGATE BASE COURSE, TYPE B
- (E) ITEM 908010 - TOPSOILING, 6" DEPTH
- (F) ITEM 908007 - TOPSOILING
- (G) ITEM 908004 - TOPSOIL, 6" DEPTH
- (H) ITEM 908002 - TOPSOIL
- (I) ITEM 908014 - PERMANENT GRASS SEEDING, DRY GROUND
- (J) ITEM 401752 - SAFETY EDGE FOR ROADWAY PAVEMENT
- (K) ITEM 760016 - RUMBLE STRIPS, HOT-MIX
- (L) ITEM 209006 - BORROW, TYPE F OR APPROVED PROJECT EXCAVATION
- (M) ITEM 401824 - WMA, SUPERPAVE, TYPE C, 160 GYRATIONS, PG 64-22, WEDGE
- (N) ITEM 401825 - WMA, SUPERPAVE, TYPE B, 160 GYRATIONS, PG 64-22, WEDGE
- (O) ITEM 760507 - PROFILE MILLING, HOT-MIX
- (P) ITEM 760003 - PAVEMENT MILLING, HOT-MIX, VARIABLE DEPTH
- (Q) ITEM 701012 - PORTLAND CEMENT CONCRETE CURB, TYPE 1-4
- (R) ITEM 720050 - GALVANIZED STEEL BEAM GUARDRAIL, TYPE 1-31
- (T) ITEM 404501 - BITUMINOUS ASPHALT TACK COAT
- (U) ITEM 908020 - EROSION CONTROL BLANKET MULCH

MATERIAL	LIFT THICKNESS	
	MINIMUM	MAXIMUM
BITUMINOUS CONCRETE, TYPE 'C'	1.25"	2"
BITUMINOUS CONCRETE, TYPE 'B'	2.25"	4"
BITUMINOUS CONCRETE BASE COURSE	3"	6"
GRADED AGGREGATE BASE COURSE	3"	8"

Unofficial Website Copy

HORIZONTAL / VERTICAL CONTROL DATA

POINT	STATION	OFFSET	NORTHING	EASTING	ELEVATION
A06	273+39.38	53.46	598755.2770	590386.1543	88.54
GPS-NC-2	239+21.96	-4.24	595496.8944	589492.8735	93.53
GPS-NC-2A	249+81.39	7.97	596551.2968	589575.6190	99.24
RKK 1	13+73.10	-141.96	596466.0568	589951.7977	73.62
RKK 2	14+92.60	-544.37	596748.3930	590333.5372	74.67
RKK 31	258+25.53	57.76	597355.7259	589817.5104	87.45
RKK 32	267+05.76	57.67	598165.8654	590141.3347	83.98
RKK 33	278+17.06	57.78	599217.4225	590527.5059	90.83
RKK 34	286+79.14	56.76	600080.3869	590649.6365	92.57
RKK 68A	270+31.77	47.19	598468.0867	590266.8510	87.18
T012	282+61.47	-52.92	599674.7070	590501.6347	91.24
T013	254+46.68	-103.67	597033.1617	589559.4265	90.92
T014	232+26.70	-71.19	594794.3340	589486.5811	100.35

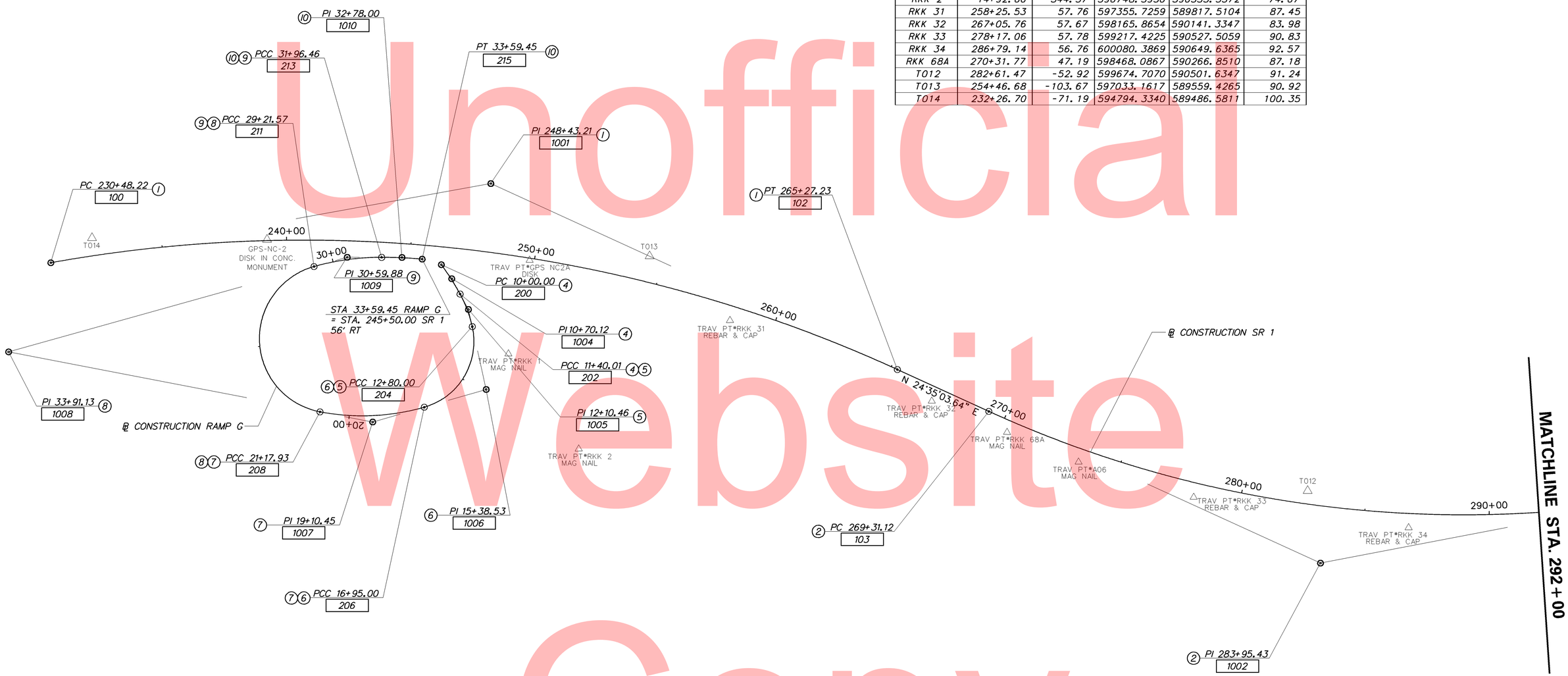

Unofficial Website Copy

DATUM REFERENCE:
HORIZONTAL - THIS PROJECT IS REFERENCED TO THE DELAWARE STATE PLANE COORDINATE SYSTEM (NAD 83/07).

VERTICAL - THIS PROJECT IS REFERENCED TO NAVD 88.

5/20/2015 9:43:03 AM
\\BALSRV02\V2011\2011\11009_TYBOUTS\SR1WIDE_ NBAUXLANE\CADD\CONTRACT\PLANS\HV01_NBAUXLN.DGN

DELAWARE DEPARTMENT OF TRANSPORTATION	ADDENDUMS / REVISIONS	SCALE 0 200 400 600 FEET	SR 1 NORTHBOUND AUXILIARY LANE US 40 TO SR 273	CONTRACT T201511001	BRIDGE NO. 1-319N	HORIZONTAL AND VERTICAL CONTROL PLAN	SHEET NO. 11
				COUNTY NEW CASTLE	DESIGNED BY: MCK		TOTAL SHTS. 77
					CHECKED BY: ZJS		

Unofficial Website Copy

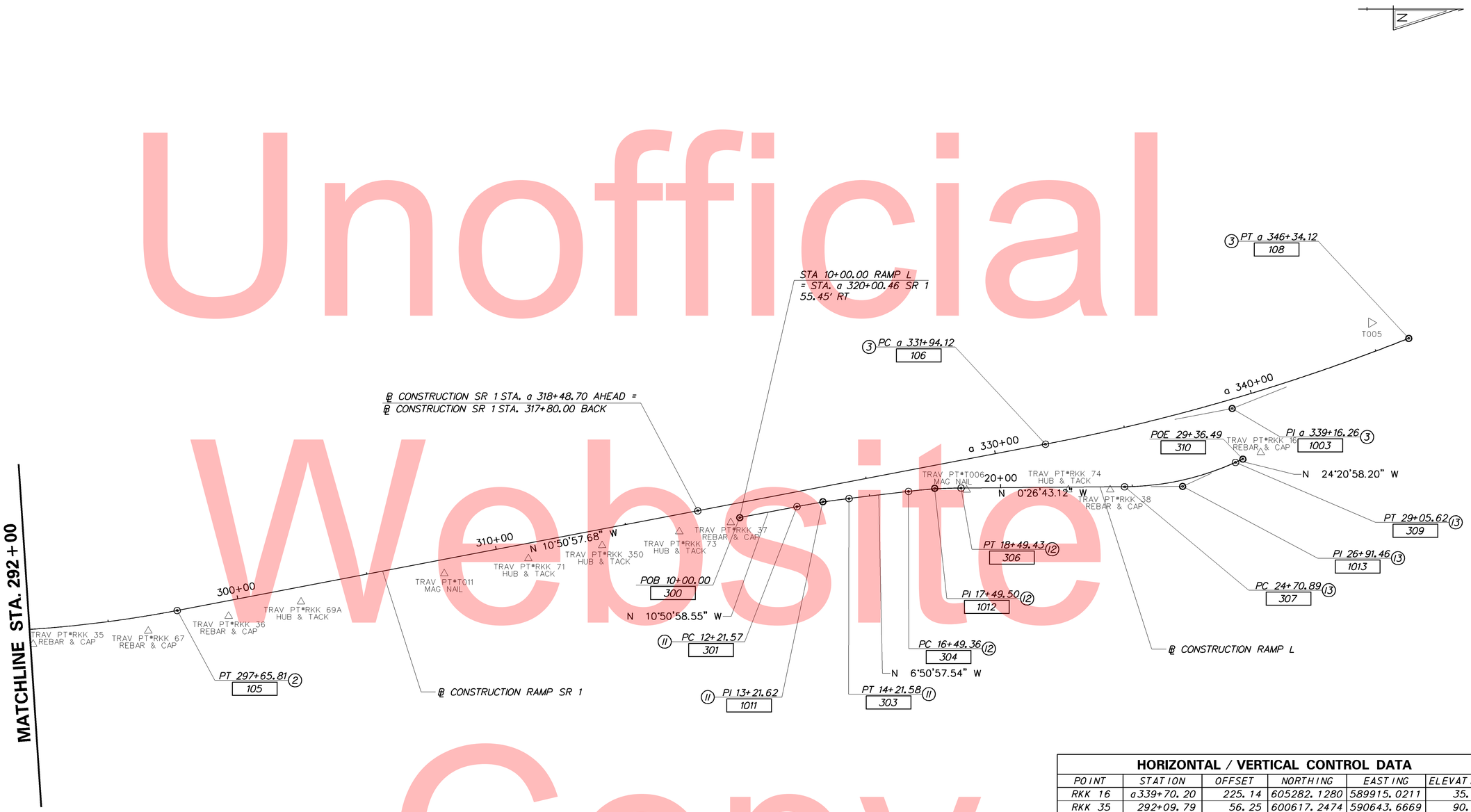

HORIZONTAL / VERTICAL CONTROL DATA

POINT	STATION	OFFSET	NORTHING	EASTING	ELEVATION
RKK 16	a339+70.20	225.14	605282.1280	589915.0211	35.54
RKK 35	292+09.79	56.25	600617.2474	590643.6669	90.02
RKK 36	299+53.72	57.78	601359.9349	590537.6093	84.96
RKK 37	a319+63.59	67.52	603268.2392	590181.7918	74.45
RKK 38	24+16.55	10.68	604710.2820	590056.9031	46.14
RKK 67	296+44.84	57.54	601054.7520	590594.1998	87.68
RKK 69A	302+34.35	56.21	601635.2539	590483.2377	83.34
RKK 71	311+13.74	57.33	602499.1346	590318.8112	78.83
RKK 73	316+96.21	64.93	603072.6281	590216.6408	74.31
RKK 74	22+57.53	9.68	604551.2583	590057.1451	52.44
RKK 350	313+98.55	61.05	602779.5489	590268.8556	76.53
T005	a345+22.27	-106.88	605702.2634	589422.1088	44.58
T006	18+71.04	7.32	604164.7556	590057.7902	65.57
T011	307+89.15	53.09	602179.5703	590375.7430	80.64

DATUM REFERENCE:

HORIZONTAL - THIS PROJECT IS REFERENCED TO THE DELAWARE STATE PLANE COORDINATE SYSTEM (NAD 83/07).

VERTICAL - THIS PROJECT IS REFERENCED TO NAVD 88.

DELAWARE DEPARTMENT OF TRANSPORTATION

ADDENDUMS / REVISIONS

SCALE 0 200 400 600 FEET

SR 1 NORTHBOUND AUXILIARY LANE US 40 TO SR 273

CONTRACT	BRIDGE NO. 1-319N
T201511001	DESIGNED BY: MCK
COUNTY	CHECKED BY: ZJS
NEW CASTLE	

HORIZONTAL AND VERTICAL CONTROL PLAN

SHEET NO. 12

TOTAL SHTS. 77

5/20/2015 9:57:13 AM
\\BALSRV02\V2011\2011\11009_TYBOUTS\SR1WIDE_ NBAUXLANE\CADD\CONTRACT\PLANS\HV02_NBAUXLN.DGN

CONSTRUCTION SR 1

CIRCULAR CURVE NO. 1

ELEMENT: CIRCULAR	STATION	NORTHING	EASTING
PC (100)	230+48.22	594628.6332	589585.8848
PI (1001)	248+43.21	596395.2299	589267.8405
CC (101)		595643.8208	595224.8083
PT (102)	265+27.23	598027.5105	590014.6176
RADIUS:	5729.5780		
DELTA:	34°47'24.3722" RIGHT		
DEGREE OF CURVATURE(ARC):	1°00'00.0000"		
LENGTH:	3479.0104		
TANGENT:	1794.9975		
CHORD:	3425.8107		
MIDDLE ORDINATE:	262.0357		
EXTERNAL:	274.5939		
TANGENT DIRECTION:	N 10°12'20.7308" W		
RADIAL DIRECTION:	N 79°47'39.2692" E		
CHORD DIRECTION:	N 7°11'21.4553" E		
RADIAL DIRECTION:	S 65°24'56.3586" E		
TANGENT DIRECTION:	N 24°35'03.6414" E		

CIRCULAR CURVE NO. 2

ELEMENT: CIRCULAR	STATION	NORTHING	EASTING
PC (103)	269+31.12	598394.7861	590182.6481
PI (1002)	283+95.43	599726.3640	590791.8520
CC (104)		600301.7379	586014.4955
PT (105)	297+65.81	601164.5087	590516.2271
RADIUS:	4583.6624		
DELTA:	35°26'01.3197" LEFT		
DEGREE OF CURVATURE(ARC):	1°15'00.0000"		
LENGTH:	2834.6960		
TANGENT:	1464.3187		
CHORD:	2789.7381		
MIDDLE ORDINATE:	217.3938		
EXTERNAL:	228.2177		
TANGENT DIRECTION:	N 24°35'03.6414" E		
RADIAL DIRECTION:	S 65°24'56.3586" E		
CHORD DIRECTION:	N 6°52'02.9816" E		
RADIAL DIRECTION:	N 79°09'02.3217" E		
TANGENT DIRECTION:	N 10°50'57.6783" W		

CIRCULAR CURVE NO. 3

ELEMENT: CIRCULAR	STATION	NORTHING	EASTING
PC (106)	a 331+94.12	604464.0700	589883.8559
PI (1003)	a 339+16.26	605173.3009	589747.9296
CC (107)		603026.1181	582380.9673
PT (108)	a 346+34.12	605844.4995	589481.5145
RADIUS:	7639.4400		
DELTA:	10°47'59.9553" LEFT		
DEGREE OF CURVATURE(ARC):	0°44'59.9990"		
LENGTH:	1439.9989		
TANGENT:	722.1389		
CHORD:	1437.8680		
MIDDLE ORDINATE:	33.9040		
EXTERNAL:	34.0552		
TANGENT DIRECTION:	N 10°50'57.6783" W		
RADIAL DIRECTION:	N 79°09'02.3217" E		
CHORD DIRECTION:	N 16°14'57.6559" W		
RADIAL DIRECTION:	N 68°21'02.3665" E		
TANGENT DIRECTION:	N 21°38'57.6335" W		

RAMP G

CIRCULAR CURVE NO. 4

ELEMENT: CIRCULAR	STATION	NORTHING	EASTING
PC (200)	10+00.00	596196.5374	589593.5152
PI (1004)	10+70.12	596238.2875	589649.8476
CC (201)		595393.1331	590188.9491
PCC (202)	11+40.01	596271.7681	589711.4550
RADIUS:	1000.0000		
DELTA:	8°01'18.1388" RIGHT		
DEGREE OF CURVATURE(ARC):	5°43'46.4806"		
LENGTH:	140.0052		
TANGENT:	70.1172		
CHORD:	139.8908		
MIDDLE ORDINATE:	2.4492		
EXTERNAL:	2.4552		
TANGENT DIRECTION:	N 53°27'23.1397" E		
RADIAL DIRECTION:	S 36°32'36.8603" E		
CHORD DIRECTION:	N 57°28'02.2091" E		
RADIAL DIRECTION:	S 28°31'18.7215" E		
TANGENT DIRECTION:	N 61°28'41.2785" E		

CIRCULAR CURVE NO. 5

ELEMENT: CIRCULAR	STATION	NORTHING	EASTING
PCC (202)	11+40.01	596271.7681	589711.4550
PI (1005)	12+10.46	596305.4109	589773.3614
CC (203)		595832.4500	589950.2009
PCC (204)	12+80.00	596320.6363	589842.1540
RADIUS:	500.0000		
DELTA:	16°02'31.2262" RIGHT		
DEGREE OF CURVATURE(ARC):	11°27'32.9612"		
LENGTH:	139.9929		
TANGENT:	70.4573		
CHORD:	139.5361		
MIDDLE ORDINATE:	4.8915		
EXTERNAL:	4.9398		
TANGENT DIRECTION:	N 61°28'41.8135" E		
RADIAL DIRECTION:	S 28°31'18.1865" E		
CHORD DIRECTION:	N 69°29'57.4266" E		
RADIAL DIRECTION:	S 12°28'46.9603" E		
TANGENT DIRECTION:	N 77°31'13.0397" E		

CIRCULAR CURVE NO. 6

ELEMENT: CIRCULAR	STATION	NORTHING	EASTING
PCC (204)	12+80.00	596320.6363	589842.1540
PI (1006)	15+38.53	596376.5046	590094.5810
CC (205)		596052.1339	589901.5801
PCC (206)	16+95.00	596128.0026	590165.9074
RADIUS:	275.0000		
DELTA:	86°27'53.8056" RIGHT		
DEGREE OF CURVATURE(ARC):	20°50'05.3841"		
LENGTH:	415.0019		
TANGENT:	258.5356		
CHORD:	376.7281		
MIDDLE ORDINATE:	74.6404		
EXTERNAL:	102.4463		
TANGENT DIRECTION:	N 77°31'12.7873" E		
RADIAL DIRECTION:	S 12°28'47.2127" E		
CHORD DIRECTION:	S 59°14'50.3099" E		
RADIAL DIRECTION:	S 73°59'06.5929" W		
TANGENT DIRECTION:	S 16°00'53.4071" E		

RAMP G

CIRCULAR CURVE NO. 7

ELEMENT: CIRCULAR	STATION	NORTHING	EASTING
PCC (206)	16+95.00	596128.0026	590165.9074
PI (1007)	19+10.45	595920.9178	590225.3461
CC (207)		595879.7050	589300.8362
PCC (208)	21+17.93	595709.3656	590184.5695
RADIUS:	900.0000		
DELTA:	26°55'29.2303" RIGHT		
DEGREE OF CURVATURE(ARC):	6°21'58.3118"		
LENGTH:	422.9336		
TANGENT:	215.4462		
CHORD:	419.0528		
MIDDLE ORDINATE:	24.7294		
EXTERNAL:	25.4280		
TANGENT DIRECTION:	S 16°00'53.4071" E		
RADIAL DIRECTION:	S 73°59'06.5929" W		
CHORD DIRECTION:	S 2°33'08.7920" E		
RADIAL DIRECTION:	N 79°05'24.1769" W		
TANGENT DIRECTION:	S 10°54'35.8231" W		

CIRCULAR CURVE NO. 8

ELEMENT: CIRCULAR	STATION	NORTHING	EASTING
PCC (209)	21+17.93	595709.3646	590184.5693
PI (1008)	33+91.13	594459.1774	589943.5945
CC (210)		595766.1448	589889.9913
PCC (211)	29+21.57	595685.4326	589601.0524
RADIUS:	300.0002		
DELTA:	153°28'58.1289" RIGHT		
DEGREE OF CURVATURE(ARC):	19°05'54.8824"		
LENGTH:	803.6348		
TANGENT:	1273.1995		
CHORD:	584.0074		
MIDDLE ORDINATE:	231.1963		
EXTERNAL:	1008.0659		
TANGENT DIRECTION:	S 10°54'36.0566" W		
RADIAL DIRECTION:	N 79°05'23.9434" W		
CHORD DIRECTION:	S 87°39'05.1210" W		
RADIAL DIRECTION:	N 74°23'34.1855" E		
TANGENT DIRECTION:	N 15°36'25.8145" W		

CIRCULAR CURVE NO. 9

ELEMENT: CIRCULAR	STATION	NORTHING	EASTING
PCC (211)	29+21.57	595685.4326	589601.0524
PI (1009)	30+59.88	595818.6487	589563.8399
CC (212)		595954.4730	590564.1814
PCC (213)	31+96.46	595956.9642	589564.1845
RADIUS:	1000.0000		
DELTA:	15°44'59.6697" RIGHT		
DEGREE OF CURVATURE(ARC):	5°43'46.4806"		
LENGTH:	274.8878		
TANGENT:	138.3159		
CHORD:	274.0231		
MIDDLE ORDINATE:	9.4305		
EXTERNAL:	9.5203		
TANGENT DIRECTION:	N 15°36'25.8145" W		
RADIAL DIRECTION:	N 74°23'34.1855" E		
CHORD DIRECTION:	N 7°43'55.9797" W		
RADIAL DIRECTION:	S 89°51'26.1448" E		
TANGENT DIRECTION:	N 0°08'33.8552" E		

CIRCULAR CURVE NO. 10

ELEMENT: CIRCULAR	STATION	NORTHING	EASTING
PCC (213)	31+96.46	595956.9642	589564.1845
PI (1010)	32+78.00	596038.5080	589564.3876
CC (214)		595951.9817	591564.1782
PT (215)	33+59.45	596119.7646	589571.2284
RADIUS:	2000.0000		
DELTA:	4°40'10.3574" RIGHT		
DEGREE OF CURVATURE(ARC):	2°51'53.2403"		
LENGTH:	162.9978		
TANGENT:	81.5441		
CHORD:	162.9527		
MIDDLE ORDINATE:	1.6603		
EXTERNAL:	1.6617		
TANGENT DIRECTION:	N 0°08'33.8552" E		
RADIAL DIRECTION:	S 89°51'26.1448" E		
CHORD DIRECTION:	N 2°28'39.0339" E		
RADIAL DIRECTION:	S 85°11'15.7874" E		
TANGENT DIRECTION:	N 4°48'44.2126" E		

DATUM REFERENCE:

HORIZONTAL - THIS PROJECT IS REFERENCED TO THE DELAWARE STATE PLANE COORDINATE SYSTEM (NAD 83/07).

VERTICAL - THIS PROJECT IS REFERENCED TO NAVD 88.

Unofficial Website Copy

RAMP L

CIRCULAR CURVE NO. 11

	STATION	NORTHING	EASTING
ELEMENT: CIRCULAR			
PC (301)	12+21.57	603519.7874	590121.2840
PI (1011)	13+21.62	603618.0467	590102.4518
CC (302)		604059.0312	592934.8649
PT (303)	14+21.58	603717.3804	590090.5203
RADIUS:	2864.7900		
DELTA:	4°00'01.0097" RIGHT		
DEGREE OF CURVATURE(ARC):	1°59'59.9974"		
LENGTH:	200.0141		
TANGENT:	100.0477		
CHORD:	199.9735		
MIDDLE ORDINATE:	1.7454		
EXTERNAL:	1.7465		
TANGENT DIRECTION:	N 10°50'58.5491" W		
RADIAL DIRECTION:	N 79°09'01.4509" E		
CHORD DIRECTION:	N 8°50'58.0442" W		
RADIAL DIRECTION:	N 83°09'02.4606" E		
TANGENT DIRECTION:	N 6°50'57.5394" W		

CIRCULAR CURVE NO. 12

	STATION	NORTHING	EASTING
ELEMENT: CIRCULAR			
PC (304)	16+49.36	603943.5331	590063.3558
PI (1012)	17+49.50	604042.9577	590051.4133
CC (305)		604157.0060	591840.5809
PT (306)	18+49.43	604143.0940	590050.6350
RADIUS:	1790.0000		
DELTA:	6°24'14.4154" RIGHT		
DEGREE OF CURVATURE(ARC):	3°12'03.1735"		
LENGTH:	200.0700		
TANGENT:	100.1393		
CHORD:	199.9659		
MIDDLE ORDINATE:	2.7945		
EXTERNAL:	2.7989		
TANGENT DIRECTION:	N 6°50'57.5394" W		
RADIAL DIRECTION:	N 83°09'02.4606" E		
CHORD DIRECTION:	N 3°38'50.3317" W		
RADIAL DIRECTION:	N 89°33'16.8760" E		
TANGENT DIRECTION:	N 0°26'43.1240" W		

CIRCULAR CURVE NO. 13

	STATION	NORTHING	EASTING
ELEMENT: CIRCULAR			
PC (307)	24+70.89	604764.5339	590045.8050
PI (1013)	26+91.46	604985.1005	590044.0908
CC (308)		604756.4354	589003.8364
PT (309)	29+05.62	605186.0537	589953.1478
RADIUS:	1042.0000		
DELTA:	23°54'15.1816" LEFT		
DEGREE OF CURVATURE(ARC):	5°29'55.0870"		
LENGTH:	434.7300		
TANGENT:	220.5738		
CHORD:	431.5839		
MIDDLE ORDINATE:	22.5895		
EXTERNAL:	23.0900		
TANGENT DIRECTION:	N 0°26'43.0196" W		
RADIAL DIRECTION:	N 89°33'16.9804" E		
CHORD DIRECTION:	N 12°23'50.6104" W		
RADIAL DIRECTION:	N 65°39'01.7988" E		
TANGENT DIRECTION:	N 24°20'58.2012" W		

CONSTRUCTION SR 1

CONSTRUCTION ALIGNMENT CONTROL

POINT	STATION	OFFSET	NORTHING	EASTING
100	230+48.22	0	594628.6332	589585.8848
POT	301+00.00	0	601492.7237	590453.3237
POT	306+00.00	0	601983.7865	590359.2100
POT	311+00.00	0	602474.8492	590265.0963
POT	316+00.00	0	602965.9119	590170.9826
POT	a320+00.00	0	603291.2901	590108.6228
POT	a325+00.00	0	603782.3528	590014.5091
POT	a330+00.00	0	604273.4156	589920.3955
108	a346+34.12	0	605844.4995	589481.5143

RAMP L

CONSTRUCTION ALIGNMENT CONTROL

POINT	STATION	OFFSET	NORTHING	EASTING
300	10+00.00	0	603302.1780	590162.9904
POT	20+00.00	0	604293.6570	590049.4648
310	29+36.49	0	605214.1777	589940.4201

DATUM REFERENCE:

HORIZONTAL - THIS PROJECT IS REFERENCED TO THE DELAWARE STATE PLANE COORDINATE SYSTEM (NAD 83/07).

VERTICAL - THIS PROJECT IS REFERENCED TO NAVD 88.

Unofficial Website Copy

3/4/2015 1:54:19 PM
\\BALSRV02\V2011\2011\11009_TYBOUTS\SR1WIDE_ NBAUXLANE\CADD\CONTRACT\PLANS\HV04_NBAUXLN.DGN

CURB SCHEDULE

NO.	ITEM DESCRIPTION / TYPE	LENGTH
1	P.C.C. CURB, TYPE 1-4	654.50′

GUARDRAIL SCHEDULE

NO.	ITEM DESCRIPTION / TYPE	BEGIN STA.	OFFSET	LENGTH
1	GUARDRAIL TO BARRIER CONNECTION (EXIT TYPE 27) (725005)	B	14′	1 EA.
2	TYPE 1-27 TO TYPE 1-31 TRANSITION SECTION (720050)	248+27.00	14′	25′
3	GALVANIZED STEEL BEAM GUARDRAIL, TYPE 1-31 (720050)	248+52.00	14′	237.50′
4	END ANCHORAGE, TYPE 31 (726001)	250+89.50	14′	1 EA.
5	GUARDRAIL TO BARRIER CONNECTION (EXIT TYPE 27) (725005)	B	68.00′	1 EA.
6	TYPE 1-27 TO TYPE 1-31 TRANSITION SECTION (720050)	248+74.00	68.00′	25′
7	GALVANIZED STEEL BEAM GUARDRAIL, TYPE 1-31 (720050)	248+99.00	VARIES	650.00′

NOTES: ALL BEGINNING STATIONS ARE APPROXIMATE. EXACT LOCATIONS ARE TO BE DETERMINED BY THE ENGINEER IN THE FIELD.
A = OFFSET ATTENUATORS AS PER STANDARD DETAILS.
B = ATTACH TO P.C.C. BARRIER

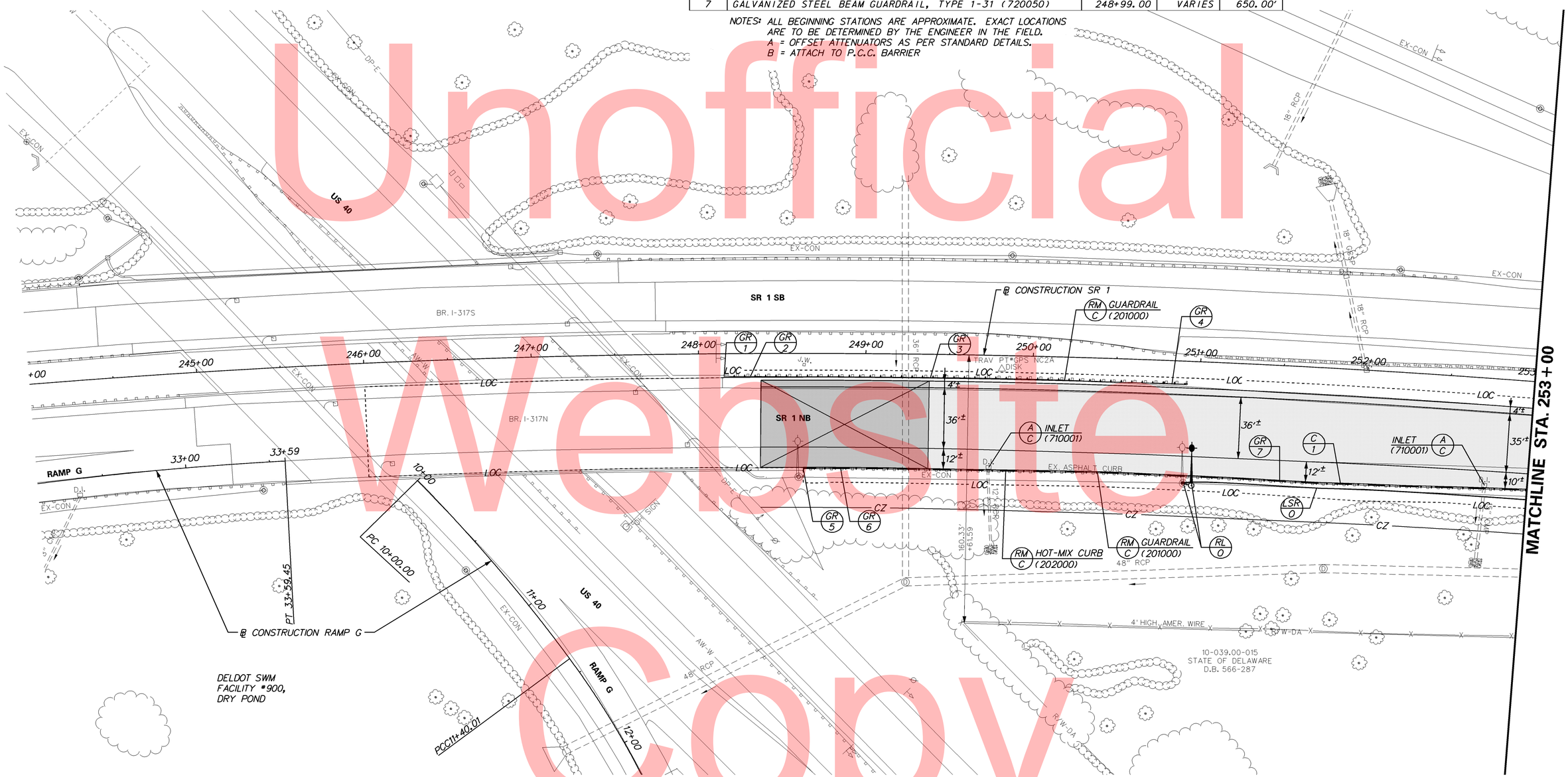

Unofficial Website Copy

6/26/2015 11:37:28 AM
\\BALSRV02\V201\2011\11009_TYBOUTS\SRWIDE_ NBAUXLANE\CADD\CONTRACT\PLANS\CP01_NBAUXLN.DGN

DELAWARE DEPARTMENT OF TRANSPORTATION

ADDENDUMS / REVISIONS

SCALE 0 30 60 90 FEET

SR 1 NORTHBOUND AUXILIARY LANE US 40 TO SR 273

CONTRACT	BRIDGE NO. 1-319N
T201511001	DESIGNED BY: ZJS
COUNTY	CHECKED BY: RLS
NEW CASTLE	

CONSTRUCTION PLAN

SHEET NO. 15
TOTAL SHTS. 77

GUARDRAIL SCHEDULE				
NO.	ITEM DESCRIPTION / TYPE	BEGIN STA.	OFFSET	LENGTH
8	END ANCHORAGE, TYPE 31 (726001)	255+58.00	62.00'	1 EA.

NOTES: ALL BEGINNING STATIONS ARE APPROXIMATE. EXACT LOCATIONS ARE TO BE DETERMINED BY THE ENGINEER IN THE FIELD.
A = OFFSET ATTENUATORS AS PER STANDARD DETAILS.
B = ATTACH TO P.C.C. BARRIER

DRAINAGE INLET SCHEDULE						
NO.	STATION	OFFSET	BOX SIZE/TOP UNIT	GRATE	T.G. EL.	INV. EL.
1	255+24.73	+	72" x 24", TYPE C	TYPE 2	++	*

+ MATCH PROPOSED CURB LINE
++ MATCH FLOWLINE OF PROPOSED CURB
* TO BE VERIFIED IN FIELD BY ENGINEER

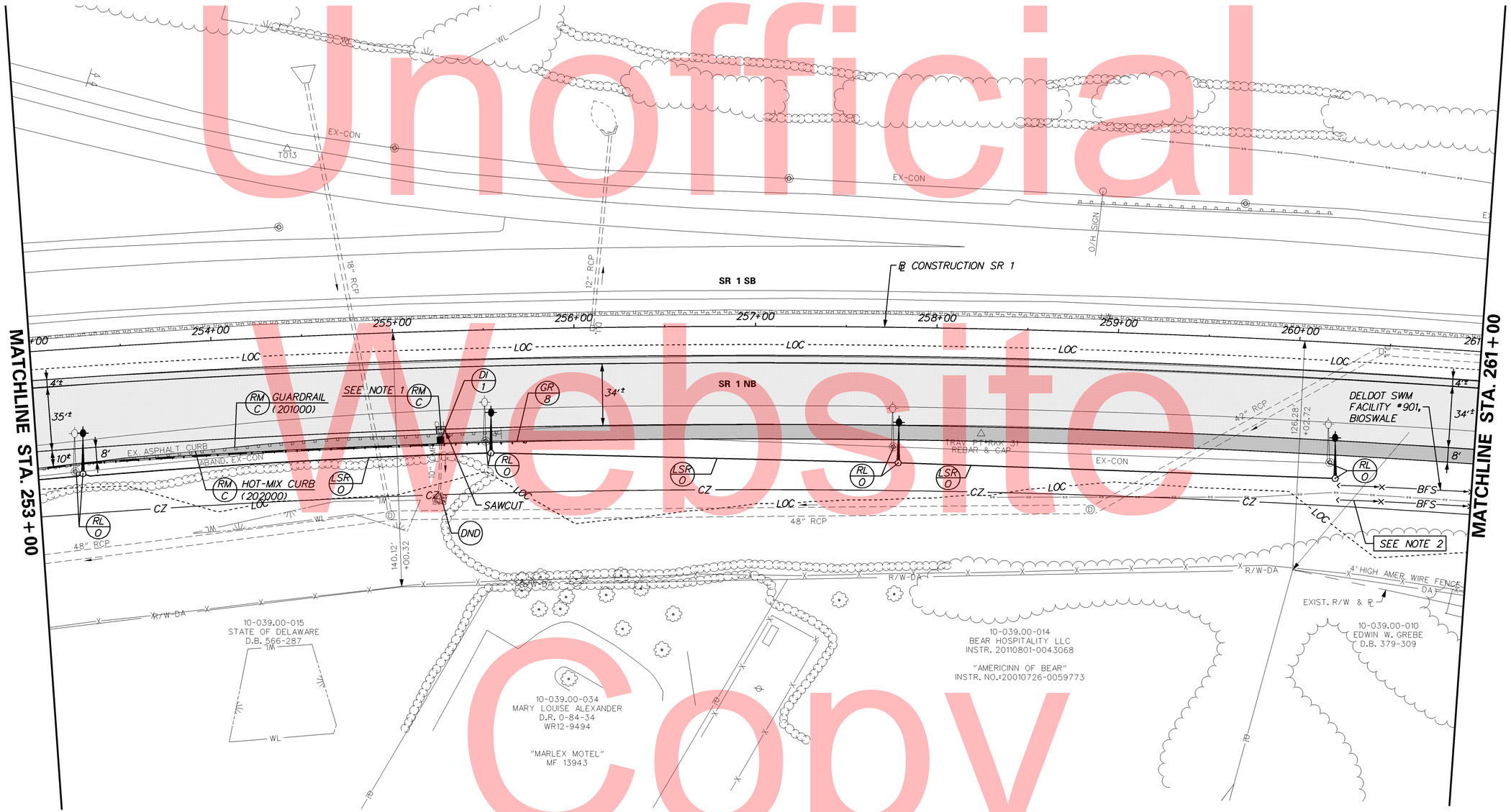

NOTE:

1. REMOVE EXISTING CATCH BASIN (708537). SAWCUT AND REMOVE EXISTING PIPE BETWEEN EXISTING INLET AND DI-1, AND WITHIN DI-1 LIMITS (211000).
2. FOR BIOSWALE GRADING PLEASE SEE STORMWATER MANAGEMENT SHEET 30.

Unofficial Website Copy

DELAWARE DEPARTMENT OF TRANSPORTATION

ADDENDUMS / REVISIONS

SCALE 0 30 60 90 FEET

SR 1 NORTHBOUND AUXILIARY LANE US 40 TO SR 273

CONTRACT	BRIDGE NO. 1-319N
T201511001	DESIGNED BY: ZJS
COUNTY	CHECKED BY: RLS
NEW CASTLE	

CONSTRUCTION PLAN

SHEET NO. 16
TOTAL SHTS. 77

6/23/2015 4:10:27 PM
\\BALSRV02\V2011\2011\11009_TYBOUTS\SR1WIDE_ NBAUXLANE\CADD\CONTRACT\PLANS\CP02_NBAUXLN.DGN

GUARDRAIL SCHEDULE

NO.	ITEM DESCRIPTION / TYPE	BEGIN STA.	OFFSET	LENGTH
9	GUARDRAIL END TREATMENT ATTENUATOR, TYPE 1-31 (720585)	266+58.00	A	1 EA.
10	GALVANIZED STEEL BEAM GUARDRAIL, TYPE 1-31 (720050)	267+10.00	64.00	200'

NOTES: ALL BEGINNING STATIONS ARE APPROXIMATE. EXACT LOCATIONS ARE TO BE DETERMINED BY THE ENGINEER IN THE FIELD.
A = OFFSET ATTENUATORS AS PER STANDARD DETAILS.
B = ATTACH TO P.C.C. BARRIER

DRAINAGE PIPE SCHEDULE

NO.	SIZE / TYPE	CLASS	LENGTH	SLOPE	INT. EL.	DIS. EL.
1	18" RCP	III	16	0.83%	*	+

+ MEET EXISTING PIPE INVERT
* TO BE VERIFIED IN FIELD BY ENGINEER

FLARED END SECTION SCHEDULE

NO.	SIZE / TYPE	SLOPE	SAFETY GRATE
1	18" RCP	0.83%	YES

UNDERDRAIN OUTLETS

NO.	LENGTH	DIS. EL.
1	10'	*
2	10'	*

* TO BE VERIFIED IN FIELD BY ENGINEER

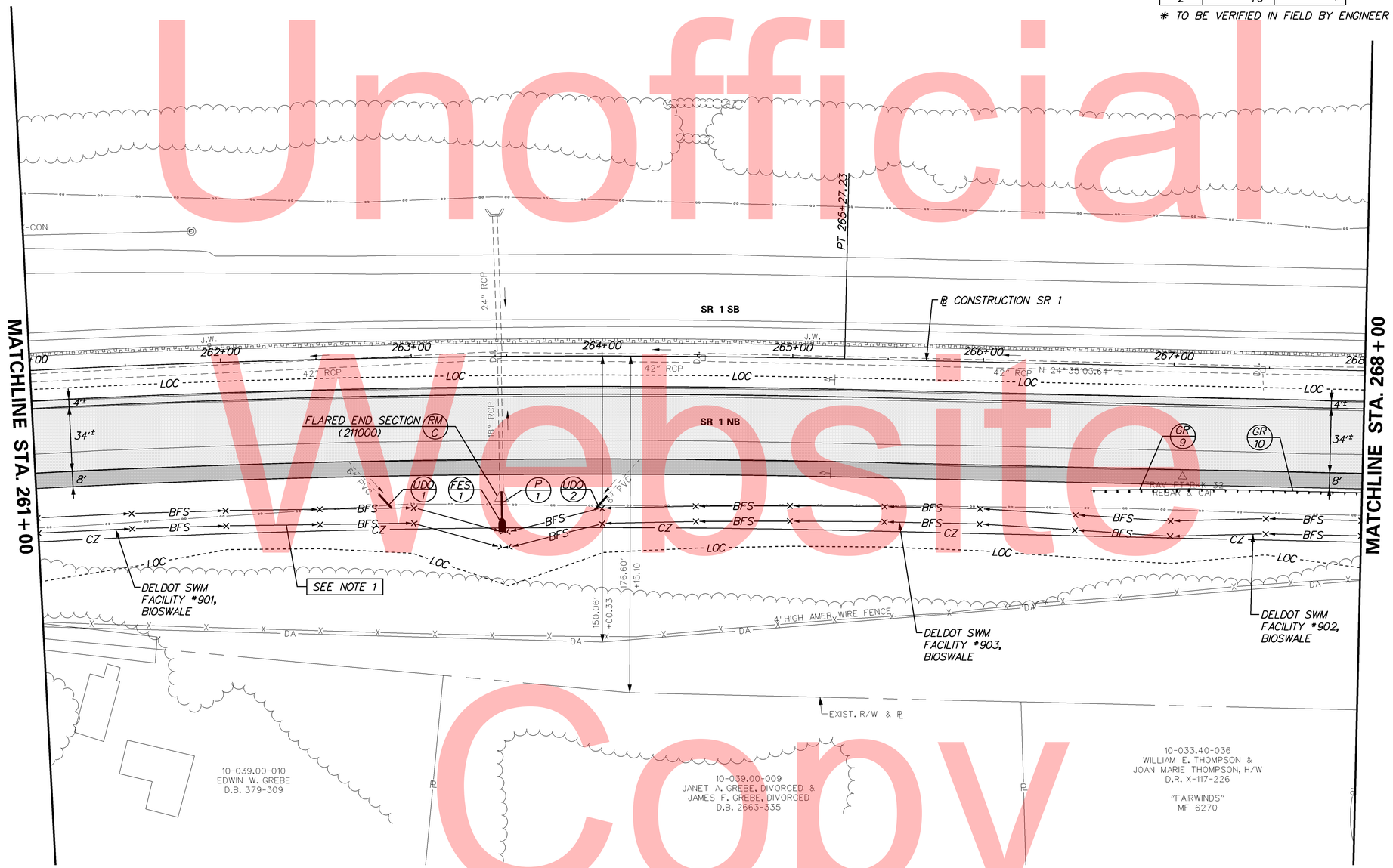

NOTE:
1. FOR BIOSWALE GRADING PLEASE SEE STORMWATER MANAGEMENT SHEET 31.

Unofficial Website Copy

DELAWARE DEPARTMENT OF TRANSPORTATION

ADDENDUMS / REVISIONS

SCALE 0 30 60 90 FEET

SR 1 NORTHBOUND AUXILIARY LANE US 40 TO SR 273

CONTRACT	BRIDGE NO. 1-319N
T201511001	DESIGNED BY: ZJS
COUNTY	CHECKED BY: RLS
NEW CASTLE	

CONSTRUCTION PLAN

SHEET NO. 17
TOTAL SHTS. 77

6/26/2015 9:41:04 AM
\\BALSRV02\V2011\2011\11009_TYBOUTS\SR1WIDE_ NBAUXLANE\CADD\CONTRACT\PLANS\CP03_NBAUXLN.DGN

GUARDRAIL SCHEDULE				
NO.	ITEM DESCRIPTION / TYPE	BEGIN STA.	OFFSET	LENGTH
11	END ANCHORAGE, TYPE 31 (726001)	269+10.00	64.00'	1 EA.

NOTES: ALL BEGINNING STATIONS ARE APPROXIMATE. EXACT LOCATIONS ARE TO BE DETERMINED BY THE ENGINEER IN THE FIELD.
A = OFFSET ATTENUATORS AS PER STANDARD DETAILS.
B = ATTACH TO P.C.C. BARRIER

FLARED END SECTION SCHEDULE			
NO.	SIZE / TYPE	SLOPE	SAFETY GRATE
2	18" RCP	0.61%	YES

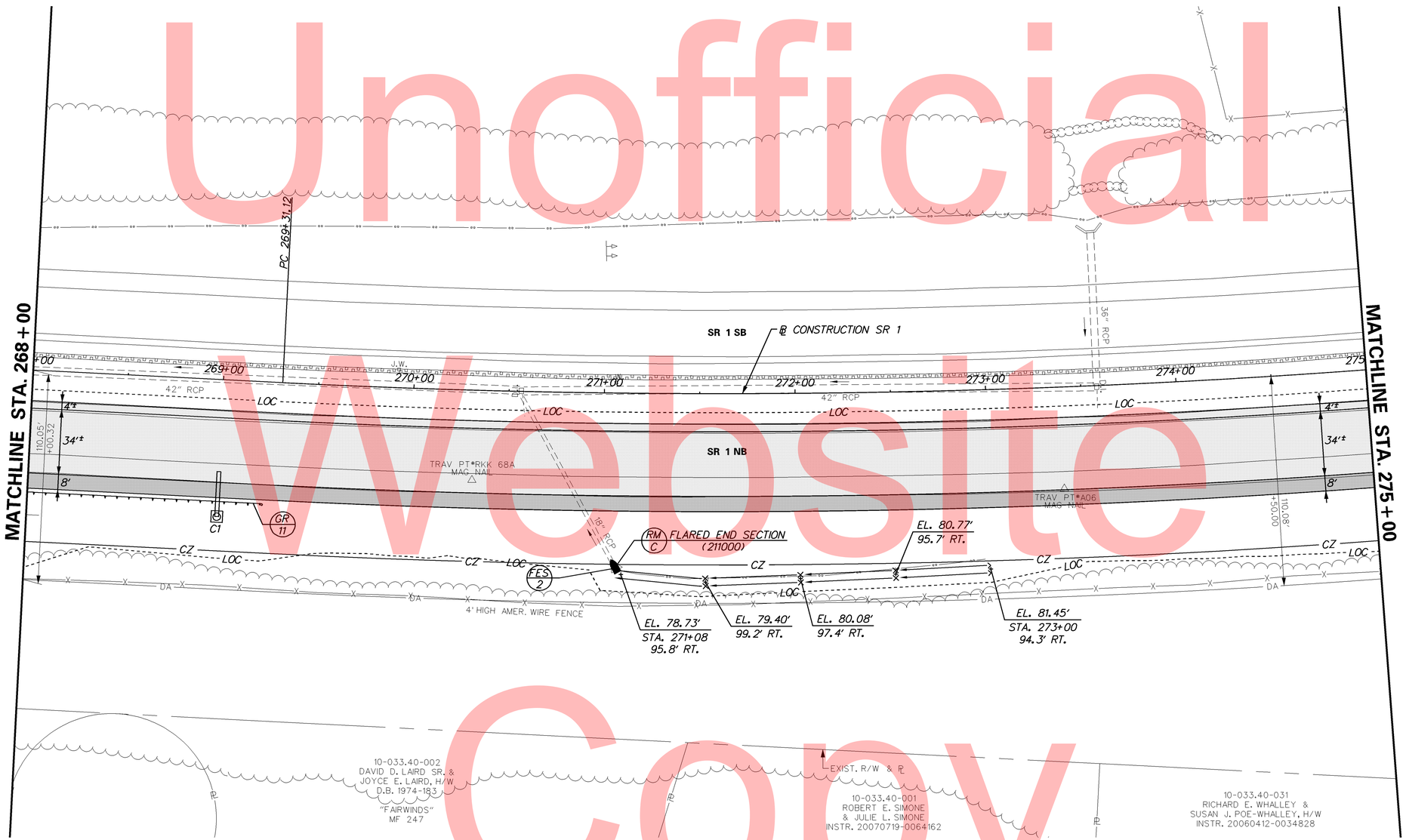

Unofficial Website Copy

DELAWARE DEPARTMENT OF TRANSPORTATION

ADDENDUMS / REVISIONS

SCALE 0 30 60 90 FEET

SR 1 NORTHBOUND AUXILIARY LANE US 40 TO SR 273

CONTRACT	BRIDGE NO. 1-319N	CONSTRUCTION PLAN	SHEET NO.
T201511001	DESIGNED BY: ZJS		18
COUNTY			TOTAL SHTS.
NEW CASTLE	CHECKED BY: RLS		77

6/23/2015 4:14:02 PM
\\BALSRV02\V2011\2011\11009_TYBOUTS\SR1WIDE_ NBAUXLANE\CADD\CONTRACT\PLANS\CP04_NBAUXLN.DGN

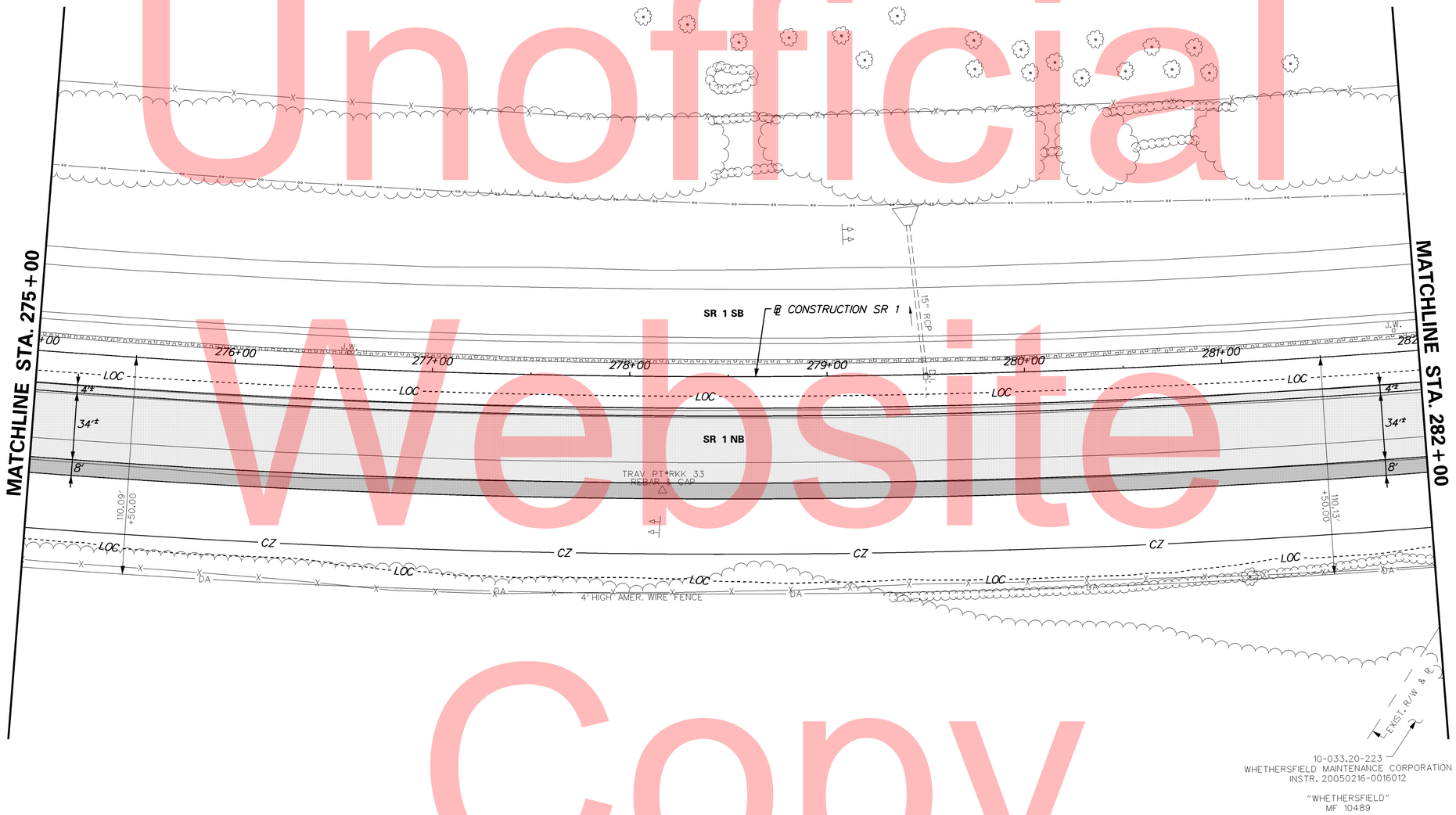

Unofficial Website Copy

5/27/2015 9:49:23 AM
\\BALSRV02\V2011\2011\11009_TYBOUTS\SR1WIDE_ NBAUXLANE\CADD\CONTRACT\PLANS\CP05_NBAUXLN.DGN

DELAWARE DEPARTMENT OF TRANSPORTATION	ADDENDUMS / REVISIONS	SCALE 0 30 60 90 FEET	SR 1 NORTHBOUND AUXILIARY LANE US 40 TO SR 273	CONTRACT T201511001	BRIDGE NO. 1-319N	CONSTRUCTION PLAN	SHEET NO. 19
				COUNTY NEW CASTLE	DESIGNED BY: ZJS		TOTAL SHTS. 77
					CHECKED BY: RLS		

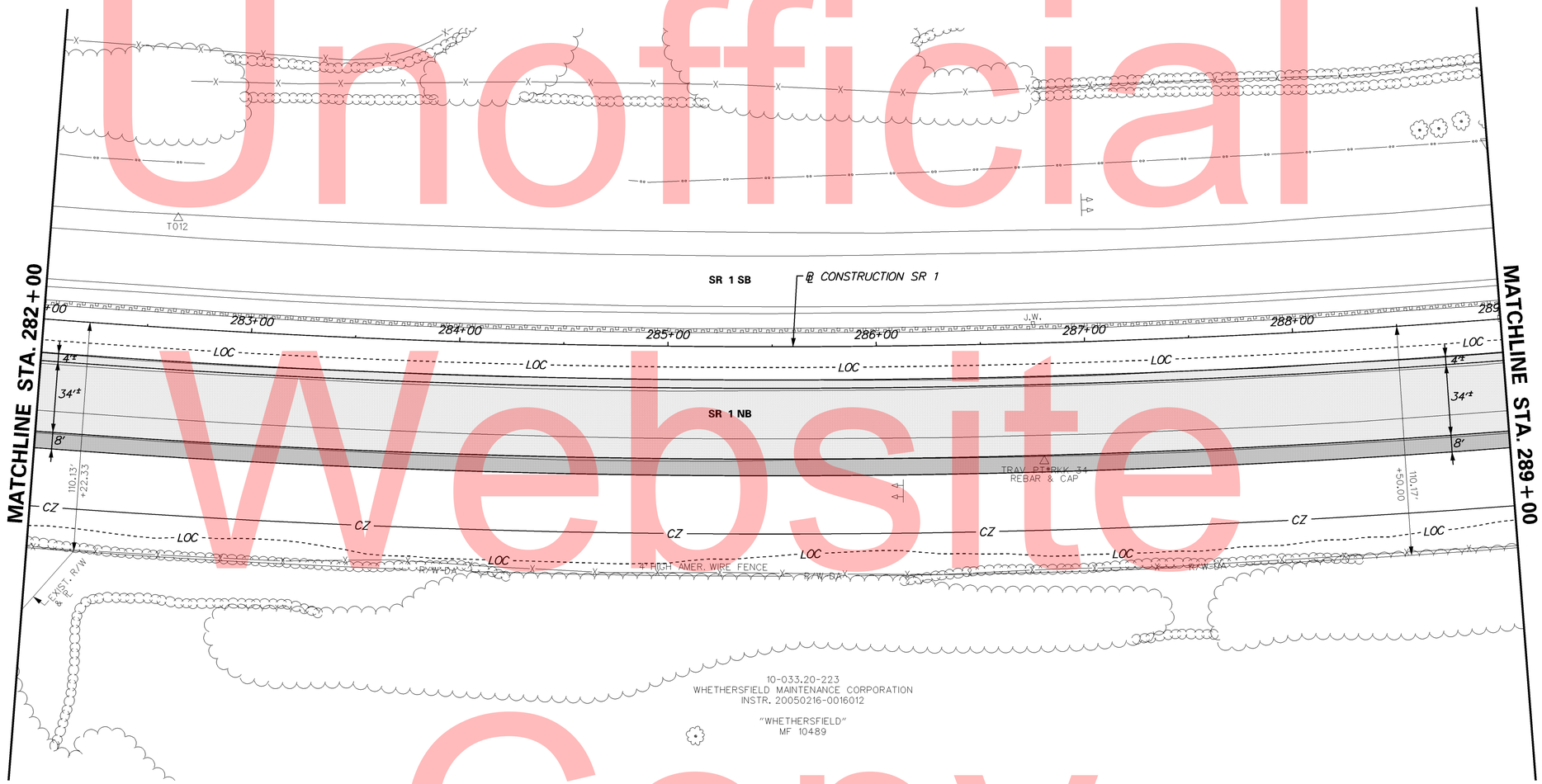

Unofficial Website Copy

5/27/2015 9:50:11 AM
\\BALSRV02\V2011\2011\11009_TYBOUTS\SR1WIDE_ NBAUXLANE\CADD\CONTRACT\PLANS\CP06_NBAUXLN.DGN

DELAWARE DEPARTMENT OF TRANSPORTATION

ADDENDUMS / REVISIONS

SCALE 0 30 60 90 FEET

SR 1 NORTHBOUND AUXILIARY LANE US 40 TO SR 273

CONTRACT	BRIDGE NO. 1-319N	CONSTRUCTION PLAN	SHEET NO.
T201511001	DESIGNED BY: ZJS		20
COUNTY			TOTAL SHTS.
NEW CASTLE	CHECKED BY: RLS		77

GUARDRAIL SCHEDULE

NO.	ITEM DESCRIPTION / TYPE	BEGIN STA.	OFFSET	LENGTH
12	GUARDRAIL END TREATMENT ATTENUATOR, TYPE 1-31 (720585)	293+11.00	A	1 EA.
13	GALVANIZED STEEL BEAM GUARDRAIL, TYPE 1-31 (720050)	293+62.00	64.00'	200.00'
14	END ANCHORAGE, TYPE 31 (726001)	295+60.00	64.00'	1 EA.

NOTES: ALL BEGINNING STATIONS ARE APPROXIMATE. EXACT LOCATIONS ARE TO BE DETERMINED BY THE ENGINEER IN THE FIELD.
A = OFFSET ATTENUATORS AS PER STANDARD DETAILS.
B = ATTACH TO P.C.C. BARRIER

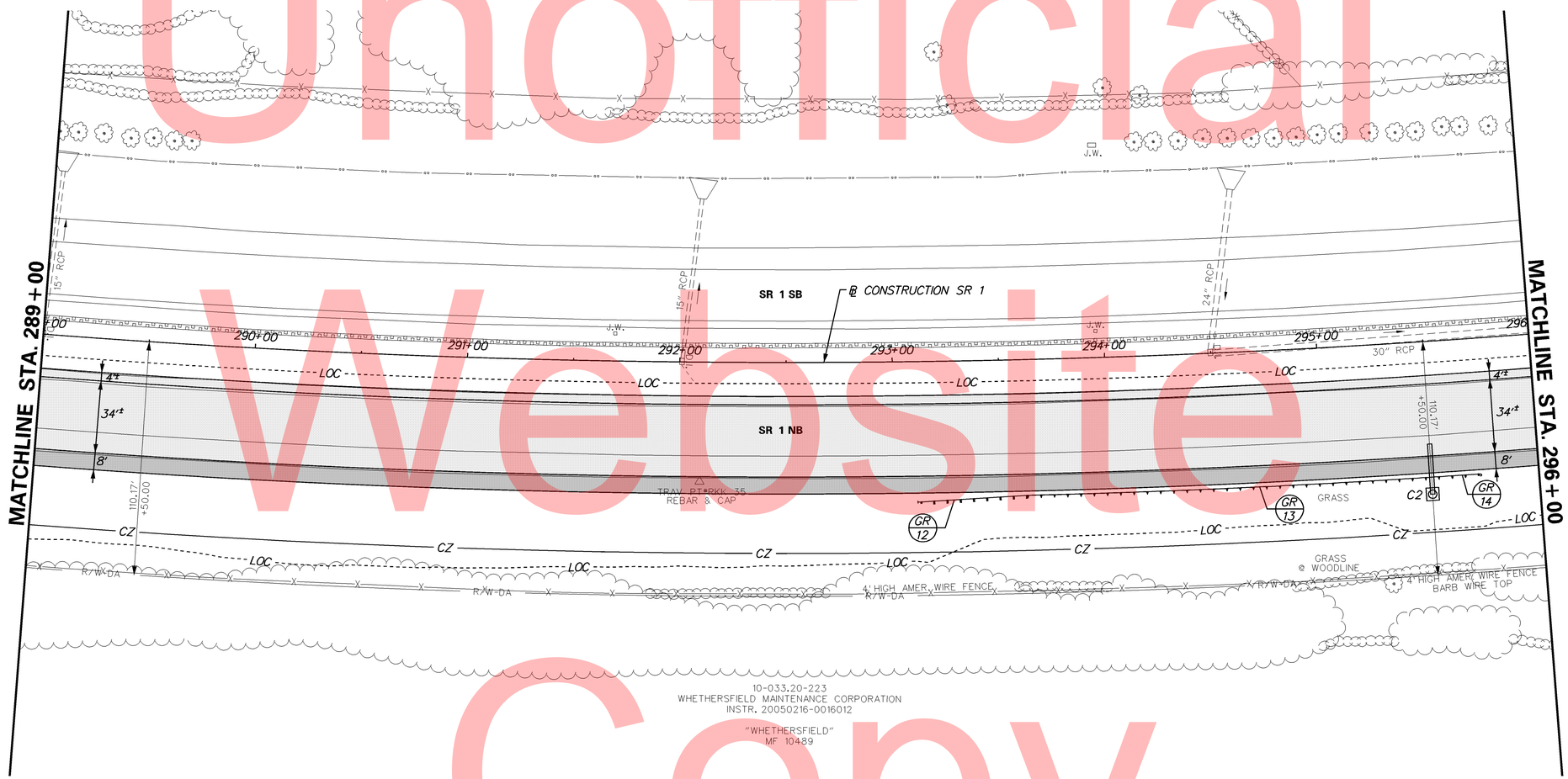

Unofficial Website Copy

5/27/2015 9:51:00 AM
\\BALSRV02\V2011\2011\11009_TYBOUTS\SR1WIDE_ NBAUXLANE\CADD\CONTRACT\PLANS\CP07_NBAUXLN.DGN

DELAWARE DEPARTMENT OF TRANSPORTATION	ADDENDUMS / REVISIONS	SCALE 0 30 60 90 FEET	SR 1 NORTHBOUND AUXILIARY LANE US 40 TO SR 273	CONTRACT T201511001	BRIDGE NO. 1-319N	CONSTRUCTION PLAN	SHEET NO. 21
				COUNTY NEW CASTLE	DESIGNED BY: ZJS		TOTAL SHTS. 77
					CHECKED BY: RLS		

UNDERDRAIN OUTLETS		
NO.	LENGTH	DIS. EL.
3	10'	*

* TO BE VERIFIED IN FIELD BY ENGINEER

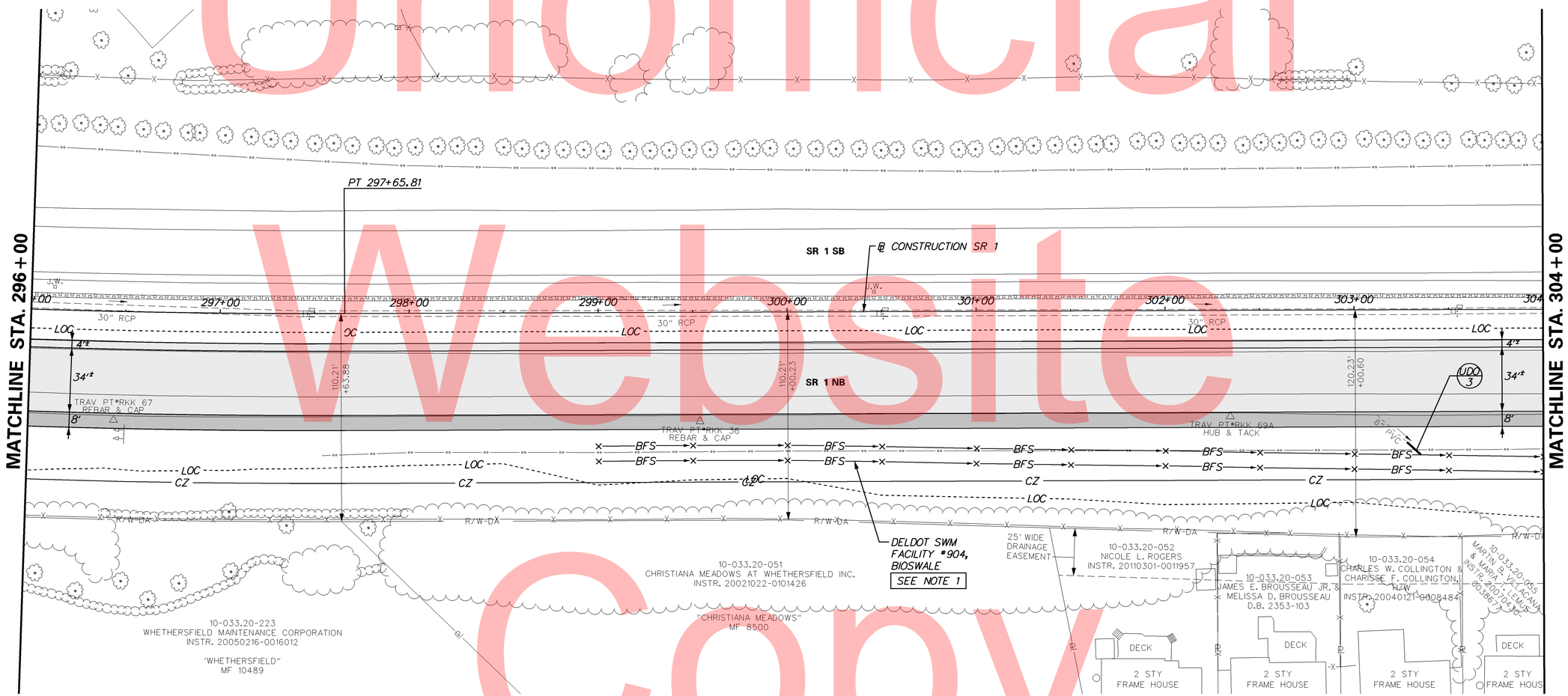

NOTE:
1. FOR BIOSWALE GRADING PLEASE SEE STORMWATER MANAGEMENT SHEET 32.

Unofficial Website Copy

6/22/2015 5:44:38 PM
\\BALSRV02\V201\2011\11009_TYBOUTS\SRWIDE_ NBAUXLANE\CADD\CONTRACT\PLANS\CP08_NBAUXLN.DGN

DELAWARE
DEPARTMENT OF TRANSPORTATION

ADDENDUMS / REVISIONS

SCALE
0 30 60 90
FEET

SR 1 NORTHBOUND
AUXILIARY LANE
US 40 TO SR 273

CONTRACT	BRIDGE NO. 1-319N
T201511001	DESIGNED BY: ZJS
COUNTY	
NEW CASTLE	CHECKED BY: RLS

CONSTRUCTION PLAN

SHEET NO.
22
TOTAL SHTS.
77

DRAINAGE PIPE SCHEDULE						
NO.	SIZE / TYPE	CLASS	LENGTH	SLOPE	INT. EL.	DIS. EL.
2	18" RCP	III	9.0'	3.0%	*	+

+ MEET EXISTING PIPE INVERT
* TO BE VERIFIED IN FIELD BY ENGINEER

FLARED END SECTION SCHEDULE			
NO.	SIZE / TYPE	SLOPE	SAFETY GRATE
3	18" RCP	3.0%	YES

UNDERDRAIN OUTLETS		
NO.	LENGTH	DIS. EL.
4	10'	*

* TO BE VERIFIED IN FIELD BY ENGINEER

GUARDRAIL SCHEDULE				
NO.	ITEM DESCRIPTION / TYPE	BEGIN STA.	OFFSET	LENGTH
15	GUARDRAIL END TREATMENT ATTENUATOR, TYPE 1-31 (720585)	309+03.00	A	1 EA.
16	GALVANIZED STEEL BEAM GUARDRAIL, TYPE 1-31 (720050)	309+53.00	VARIES	537.5'

NOTES: ALL BEGINNING STATIONS ARE APPROXIMATE. EXACT LOCATIONS ARE TO BE DETERMINED BY THE ENGINEER IN THE FIELD.
A = OFFSET ATTENUATORS AS PER STANDARD DETAILS.
B = ATTACH TO P.C.C. BARRIER

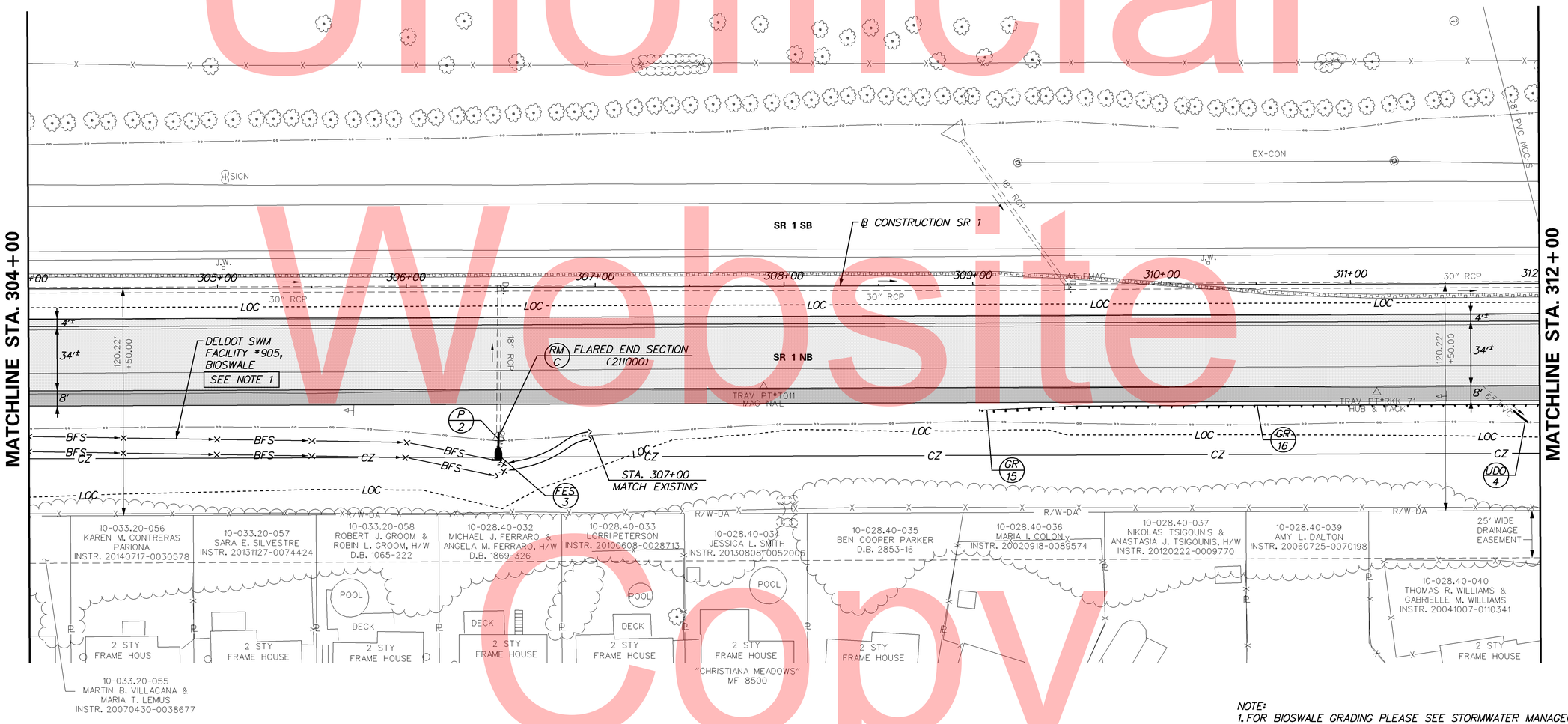

NOTE:
1. FOR BIOSWALE GRADING PLEASE SEE STORMWATER MANAGEMENT SHEET 33.

Unofficial Website Copy

6/26/2015 9:43:03 AM
\\BALSRV02\V2011\2011\11009_TYBOUTS\SRWIDE_ NBAUXLANE\CADD\CONTRACT\PLANS\CP09_NBAUXLN.DGN

DELAWARE DEPARTMENT OF TRANSPORTATION

ADDENDUMS / REVISIONS

SCALE 0 30 60 90 FEET

SR 1 NORTHBOUND AUXILIARY LANE US 40 TO SR 273

CONTRACT	BRIDGE NO. 1-319N
T201511001	DESIGNED BY: ZJS
COUNTY	CHECKED BY: RLS
NEW CASTLE	

CONSTRUCTION PLAN

SHEET NO. 23
TOTAL SHTS. 77

GUARDRAIL SCHEDULE

NO.	ITEM DESCRIPTION / TYPE	BEGIN STA.	OFFSET	LENGTH
17	TYPE 1-31 TO TYPE 1-27 TRANSITION SECTION (720050)	314+92.00	VARIES	25'
18	GUARDRAIL TO BARRIER CONNECTION (APPROACH TYPE 1-27) (725006)	B	VARIES	1 EA.
19	TYPE 1-27 TO TYPE 1-31 TRANSITION SECTION (720050)	312+23.00	VARIES	25'
20	GALVANIZED STEEL BEAM GUARDRAIL, TYPE 1-31 (720050)	312+48.00	VARIES	250.00'
21	TYPE 1-31 TO TYPE 1-27 TRANSITION SECTION (720050)	314+98.00	14'	25'
22	GUARDRAIL TO BARRIER CONNECTION (APPROACH TYPE 1-27) (725006)	B	14'	1 EA.
23	GUARDRAIL TO BARRIER CONNECTION (EXIT TYPE 27) (725005)	B	14'	1 EA.
24	TYPE 1-27 TO TYPE 1-31 TRANSITION SECTION (720050)	317+27.00	14'	25'
25	GALVANIZED STEEL BEAM GUARDRAIL, TYPE 1-31 (720050)	317+52.00	14'	287.50'
26	GUARDRAIL TO BARRIER CONNECTION (EXIT TYPE 27) (725005)	B	VARIES	1 EA.
27	TYPE 1-27 TO TYPE 1-31 TRANSITION SECTION (720050)	316+92.00	VARIES	25'
28	GALVANIZED STEEL BEAM GUARDRAIL, TYPE 1-31 (720050)	317+17.00	VARIES	537.50'

NOTES: ALL BEGINNING STATIONS ARE APPROXIMATE. EXACT LOCATIONS ARE TO BE DETERMINED BY THE ENGINEER IN THE FIELD.
A = OFFSET ATTENUATORS AS PER STANDARD DETAILS.
B = ATTACH TO P.C.C. BARRIER

CURB SCHEDULE

NO.	ITEM DESCRIPTION / TYPE	LENGTH
2	P.C.C. CURB, TYPE 1-4	325.00'
3	P.C.C. CURB, TYPE 1-4	326.50'

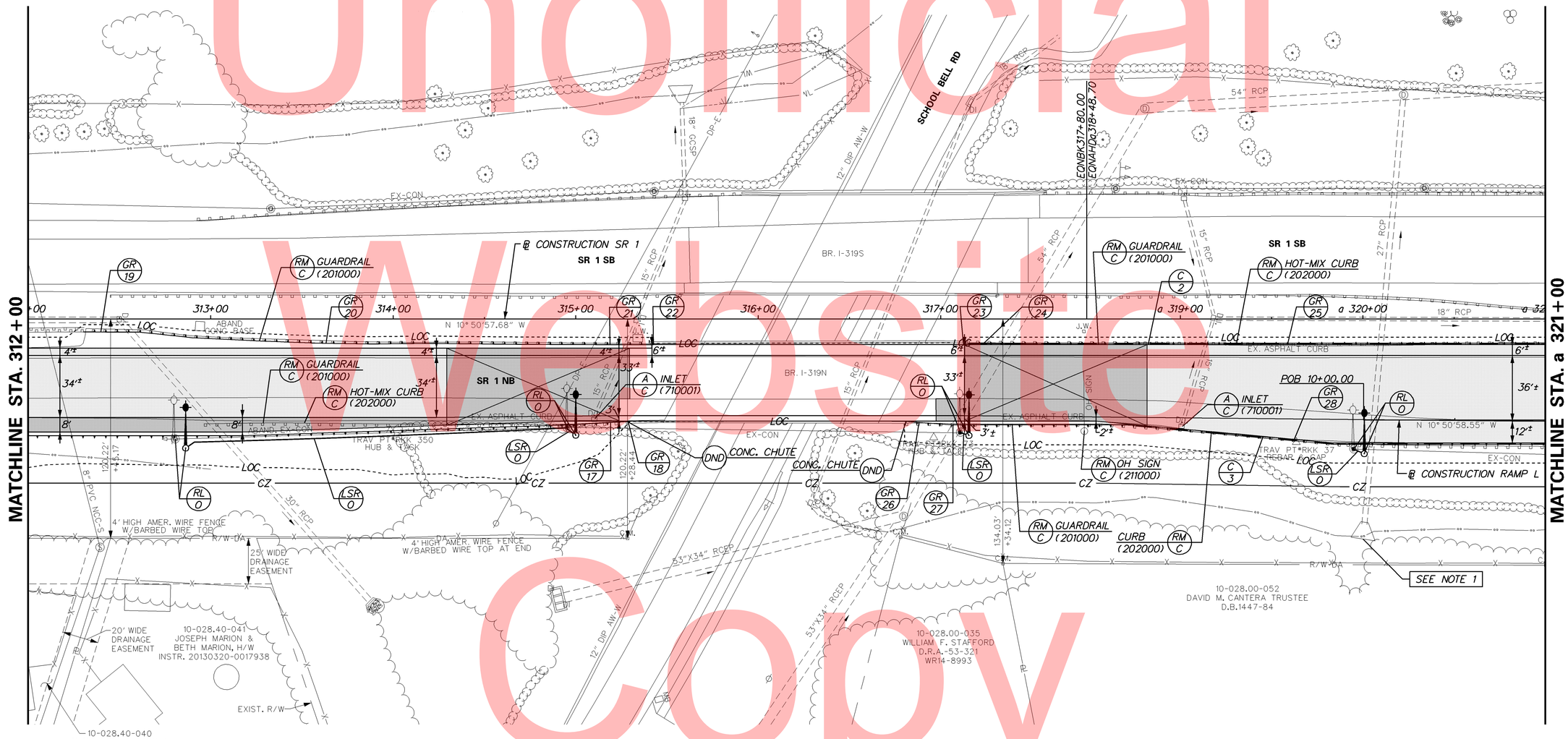

NOTE:
1. PERSONAL SAFETY GRATE TO BE ADDED TO EXISTING FLARED END SECTION.

Unofficial Website Copy

6/26/2015 11:38:32 AM
\\BALSRV02\V2011\2011\11009_TYBOUTS\SR1WIDE_ NBAUXLANE\CADD\CONTRACT\PLANS\CP10_NBAUXLN.DGN

DELAWARE DEPARTMENT OF TRANSPORTATION

ADDENDUMS / REVISIONS

SCALE 0 30 60 90 FEET

SR 1 NORTHBOUND AUXILIARY LANE US 40 TO SR 273

CONTRACT	BRIDGE NO. 1-319N	CONSTRUCTION PLAN	SHEET NO.
T201511001	DESIGNED BY: ZJS		24
COUNTY			TOTAL SHTS.
NEW CASTLE	CHECKED BY: RLS		77

GUARDRAIL SCHEDULE

NO.	ITEM DESCRIPTION / TYPE	BEGIN STA.	OFFSET	LENGTH
29	END ANCHORAGE, TYPE 31 (726001)	a321+22.00	14'	1 EA.
30	END ANCHORAGE, TYPE 31 (726001)	a323+24.00	VARIES	1 EA.

NOTES: ALL BEGINNING STATIONS ARE APPROXIMATE. EXACT LOCATIONS ARE TO BE DETERMINED BY THE ENGINEER IN THE FIELD.
A = OFFSET ATTENUATORS AS PER STANDARD DETAILS.
B = ATTACH TO P.C.C. BARRIER

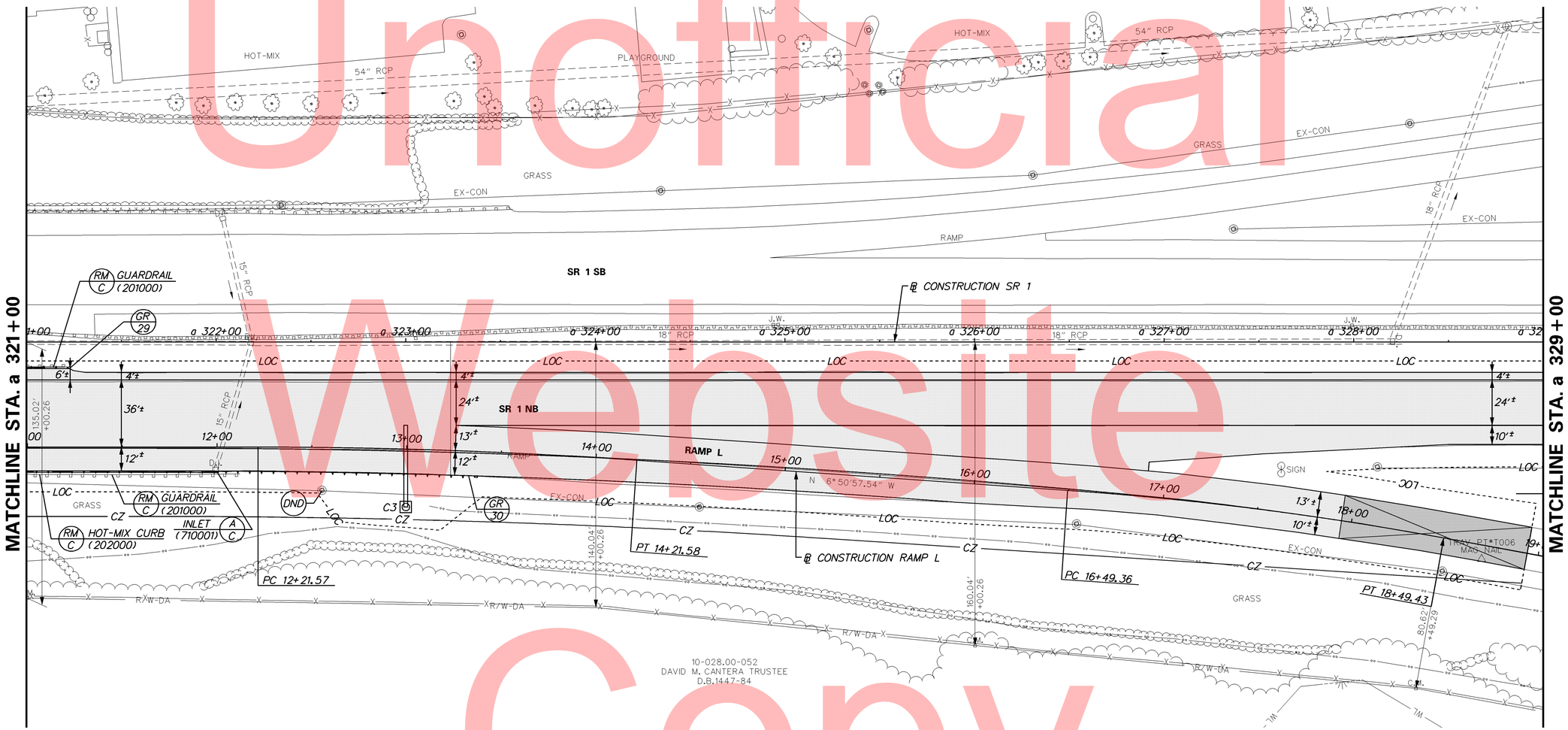

Unofficial Website Copy

DELAWARE DEPARTMENT OF TRANSPORTATION

ADDENDUMS / REVISIONS

SCALE 0 30 60 90 FEET

SR 1 NORTHBOUND AUXILIARY LANE US 40 TO SR 273

CONTRACT	BRIDGE NO. 1-319N
T201511001	DESIGNED BY: ZJS
COUNTY	
NEW CASTLE	CHECKED BY: RLS

CONSTRUCTION PLAN

SHEET NO. 25
TOTAL SHTS. 77

6/26/2015 11:41:35 AM
\\BALSRV02\V2011\2011\11009_TYBOUTS\SRWIDE_ NBAUXLANE\CADD\CONTRACT\PLANS\CP11_NBAUXLN.DGN

GUARDRAIL SCHEDULE				
NO.	ITEM DESCRIPTION / TYPE	BEGIN STA.	OFFSET	LENGTH
31	GUARDRAIL END TREATMENT ATTENUATOR, TYPE 1-31 (720585)	a331+22.00	A	1 EA.
32	GALVANIZED STEEL BEAM GUARDRAIL, TYPE 1-31 (720050)	a331+72.00	VARIES	550.00'
33	TYPE 1-31 TO TYPE 1-27 TRANSITION SECTION (720050)	a335+52.50	VARIES	25'

NOTES: ALL BEGINNING STATIONS ARE APPROXIMATE. EXACT LOCATIONS ARE TO BE DETERMINED BY THE ENGINEER IN THE FIELD.
A = OFFSET ATTENUATORS AS PER STANDARD DETAILS.
B = ATTACH TO P.C.C. BARRIER

CURB SCHEDULE		
NO.	ITEM DESCRIPTION / TYPE	LENGTH
4	P.C.C. CURB, TYPE 1-4	313.00'

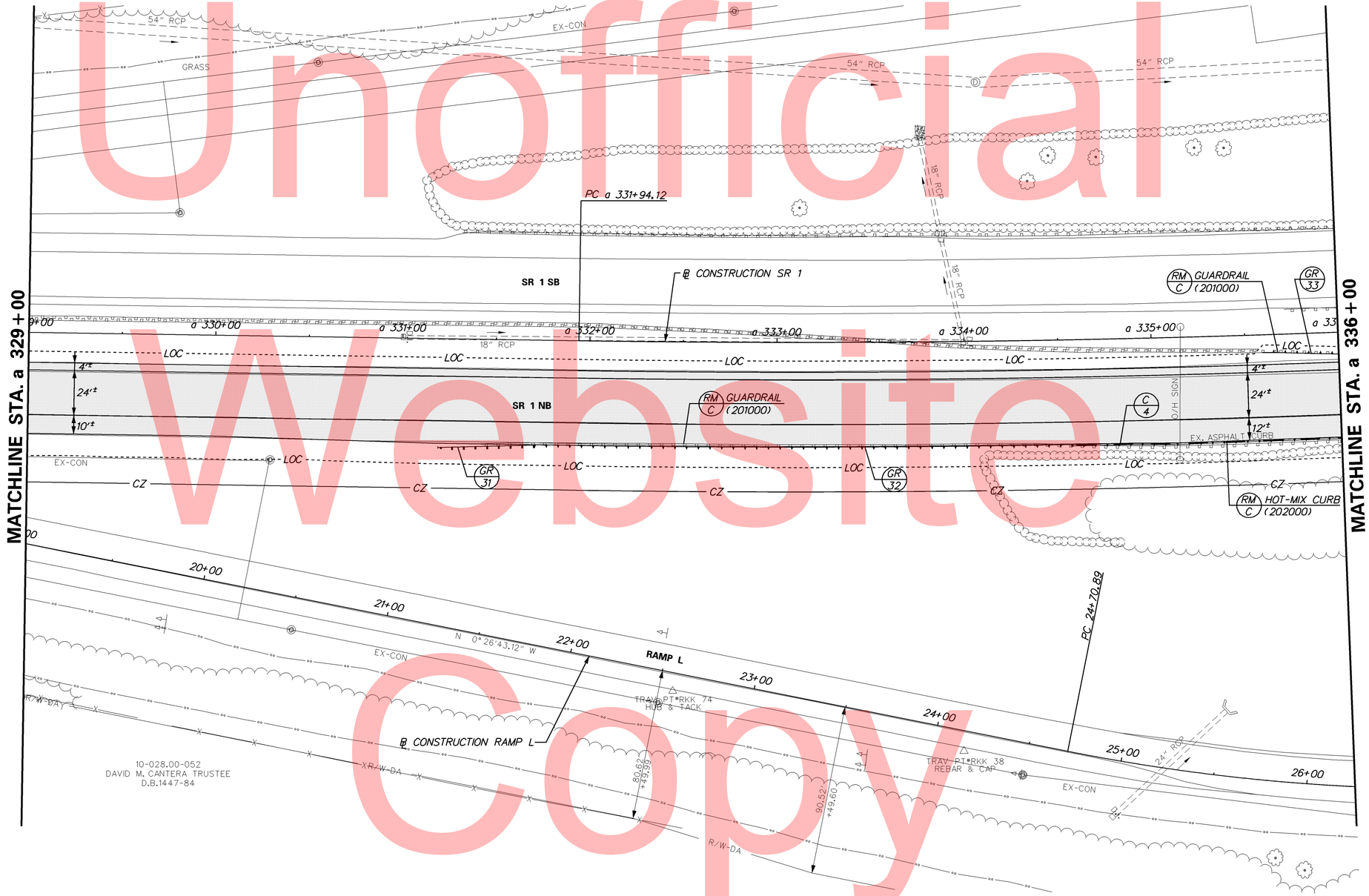

Unofficial Website Copy

DELAWARE DEPARTMENT OF TRANSPORTATION

ADDENDUMS / REVISIONS

SCALE 0 30 60 90 FEET

SR 1 NORTHBOUND AUXILIARY LANE US 40 TO SR 273

CONTRACT	BRIDGE NO. 1-319N
T201511001	DESIGNED BY: ZJS
COUNTY	
NEW CASTLE	CHECKED BY: RLS

CONSTRUCTION PLAN

SHEET NO. 26
TOTAL SHTS. 77

6/26/2015 11:42:28 AM
\\BALSRV02\V2011\2011\11009_TYBOUTS\SRWIDE_ NBAUXLANE\CADD\CONTRACT\PLANS\CP12_NBAUXLN.DGN

GUARDRAIL SCHEDULE

NO.	ITEM DESCRIPTION / TYPE	BEGIN STA.	OFFSET	LENGTH
34	GALVANIZED STEEL BEAM GUARDRAIL, TYPE 1-31 (720050)	a355+77.50	VARIES	162.5'
35	TYPE 1-31 TO TYPE 1-27 TRANSITION SECTION (720050)	a337+40.00	VARIES	25'
36	GUARDRAIL TO BARRIER CONNECTION (APPROACH TYPE 1-27) (725006)	B	VARIES	1 EA.
37	TYPE 1-31 TO TYPE 1-27 TRANSITION SECTION (720050)	a337+22.00	VARIES	25'
38	GUARDRAIL TO BARRIER CONNECTION (APPROACH TYPE 1-27) (725006)	B	VARIES	1 EA.

NOTES: ALL BEGINNING STATIONS ARE APPROXIMATE. EXACT LOCATIONS ARE TO BE DETERMINED BY THE ENGINEER IN THE FIELD.
A = OFFSET ATTENUATORS AS PER STANDARD DETAILS.
B = ATTACH TO P.C.C. BARRIER

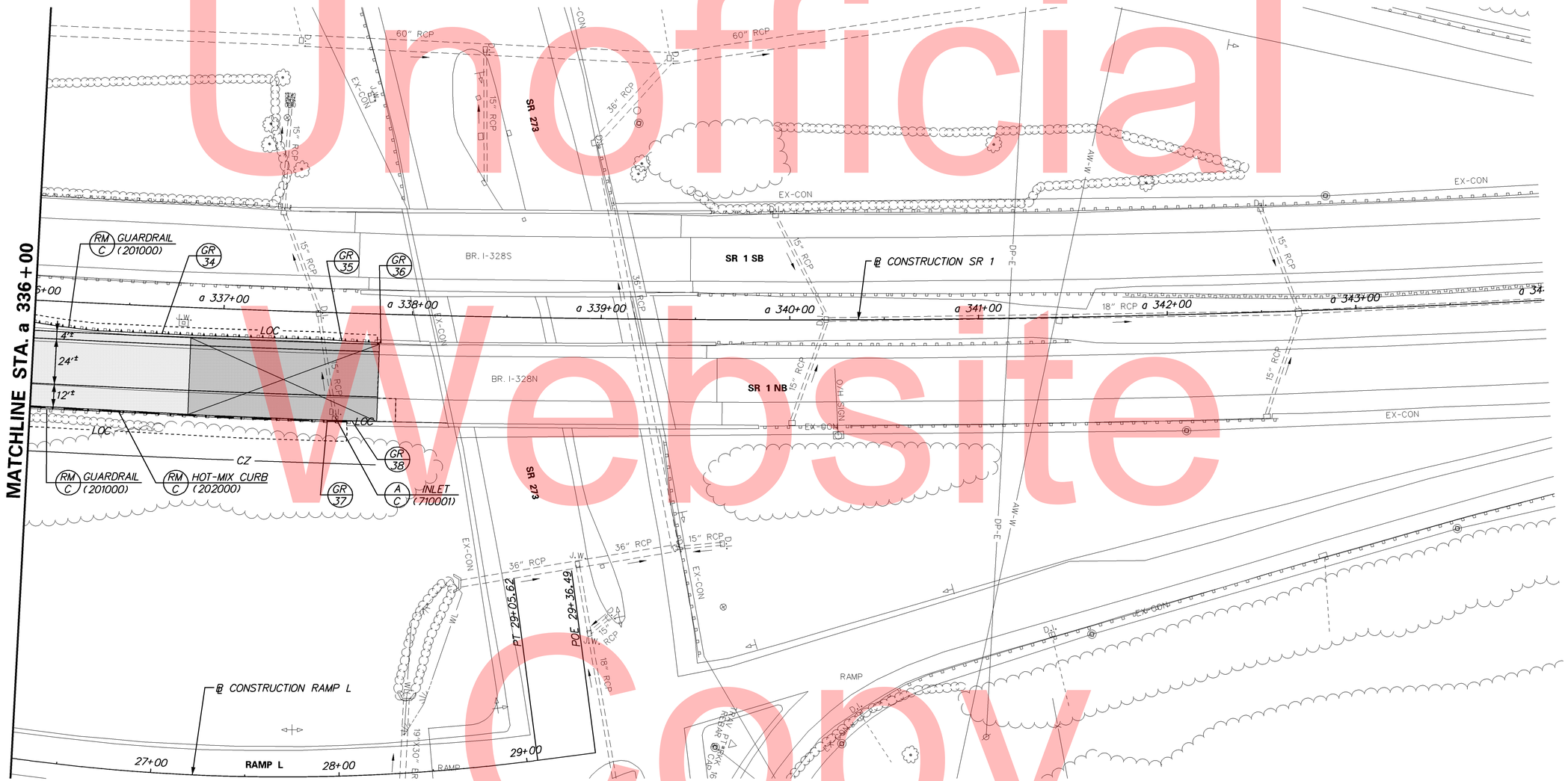

Unofficial Website Copy

DELAWARE DEPARTMENT OF TRANSPORTATION

ADDENDUMS / REVISIONS

SCALE 0 30 60 90 FEET

SR 1 NORTHBOUND AUXILIARY LANE US 40 TO SR 273

CONTRACT	BRIDGE NO. 1-319N
T201511001	DESIGNED BY: ZJS
COUNTY	
NEW CASTLE	CHECKED BY: RLS

CONSTRUCTION PLAN

SHEET NO. 27
TOTAL SHTS. 77

6/26/2015 11:43:52 AM
\\BALSRV02\V201\201\11009_TYBOUTS\SR1WIDE_ NBAUXLANE\CADD\CONTRACT\PLANS\CP13_NBAUXLN.DGN

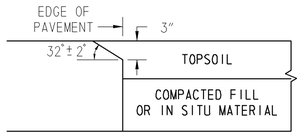

CONCRETE PAVEMENTS
NOT TO SCALE

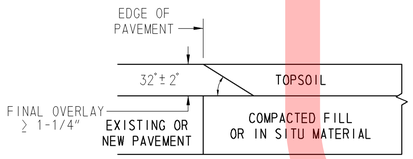

HOT-MIX PAVEMENTS AND OVERLAYS
NOT TO SCALE

SAFETY EDGE DETAIL
NOT TO SCALE

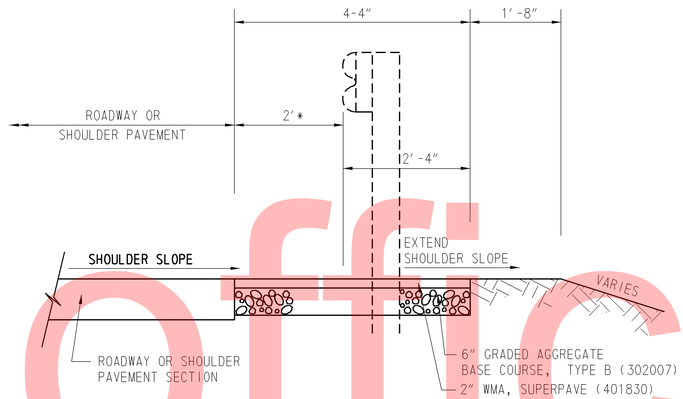

* DIMENSION TO SHOULDER SHALL BE 2' OR MATCH ADJACENT OFFSET.

NOTE:
GUARDRAIL CONSTRUCTION LOCATIONS ARE SHOWN ON THE PLAN SHEETS. MAINTENANCE PAVEMENT SHALL BE CONSTRUCTED WITH GUARDRAIL LOCATIONS WHERE NOTED ON THE PLANS.

MAINTENANCE PAVEMENT SECTION
FOR SINGLE FACED GUARDRAIL
NOT TO SCALE

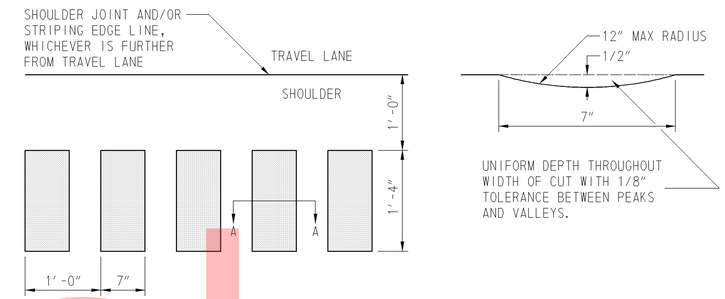

PLAN

SECTION A-A

EDGELINE RUMBLE STRIPS DETAIL
NOT TO SCALE

NOTES:
- ALL WORK REQUIRED TO COMPLETE THE INSTALLATION OF EDGELINE RUMBLE STRIPS SHALL BE INCIDENTAL TO ITEM 760016 - RUMBLE STRIPS, HOT MIX.

- RUMBLE STRIPS SHALL NOT BE INSTALLED ON APPROACH SLABS OR BRIDGE DECKS.

- EDGELINE RUMBLE STRIPS SHALL BE INSTALLED ALONG ALL INSIDE AND OUTSIDE SHOULDERS, AS PER THIS DETAIL, THROUGHOUT THE PROJECT UNLESS OTHERWISE NOTED BELOW:
-STATION 317+13 TO STATION ɑ 326+75 (OUTSIDE SHOULDER)

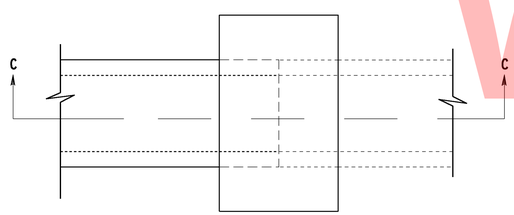

PLAN

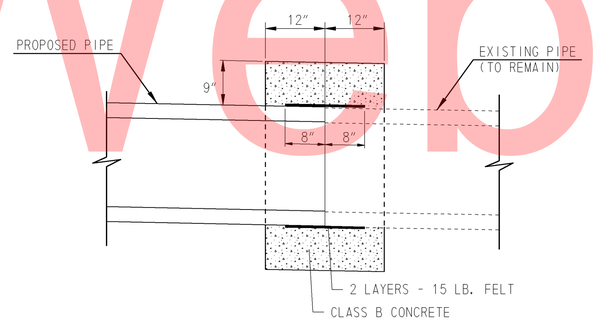

SECTION C-C

NOTES:

1. PIPE CONNECTION SHALL BE CONSTRUCTED OF PLAIN CONCRETE (CLASS B)SIZE, TYPE & DIRECTION OF CONNECTION WILL VARY TO SUIT CONDITIONS.

2. PIPE CONNECTION SHALL BE WRAPPED WITH DOUBLE LAYER OF 15 LB. FELT PRIOR TO PLACEMENT OF CONCRETE COLLAR.

3. NEW PIPE STUB SHALL MATCH THE SIZE, TYPE, DIRECTION AND SLOPE OF THE EXISTING PIPE AT THE PIPE CONNECTION.

4. PAYMENT SHALL BE INCIDENTAL TO PIPE ITEM BEING INSTALLED.

PIPE CONNECTION DETAIL

Unofficial Website Copy

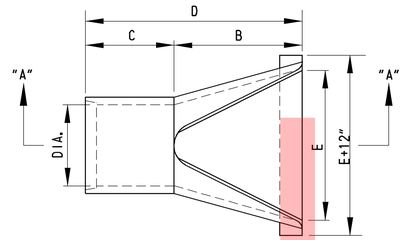

PLAN

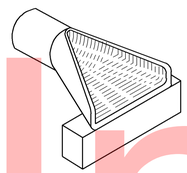

ISOMETRIC VIEW

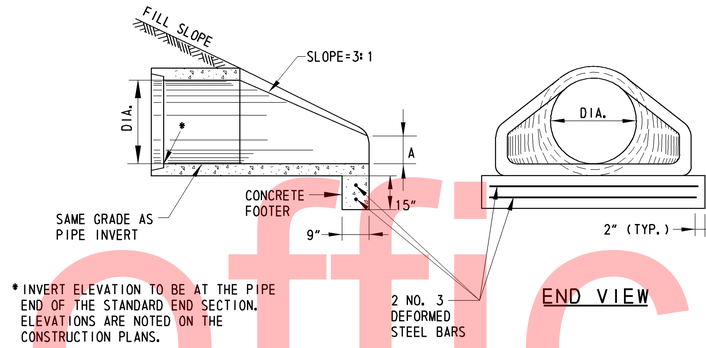

* INVERT ELEVATION TO BE AT THE PIPE END OF THE STANDARD END SECTION. ELEVATIONS ARE NOTED ON THE CONSTRUCTION PLANS.

SECTION A-A

END VIEW

DIAMETER	A	B	C	D	E
12"	4"	2'-0"	4'-0⅞"	6'-0⅞"	2'-0"
15"	6"	2'-3"	3'-10"	6'-1"	2'-6"
18"	9"	2'-3"	3'-10"	6'-1"	3'-0"
24"	9½"	3'-7½"	2'-6"	6'-1½"	4'-0"
30"	1'-0"	4'-6"	1'-7¾"	6'-1¾"	5'-0"
36"	1'-3"	5'-3"	2'-10¾"	8'-1¾"	6'-0"
42"	1'-9"	5'-3"	2'-11"	8'-2"	6'-6"
48"	2'-0"	6'-0"	2'-2"	8'-2"	7'-0"

CONCRETE FLARED END SECTION
(617003)

Unofficial Website Copy

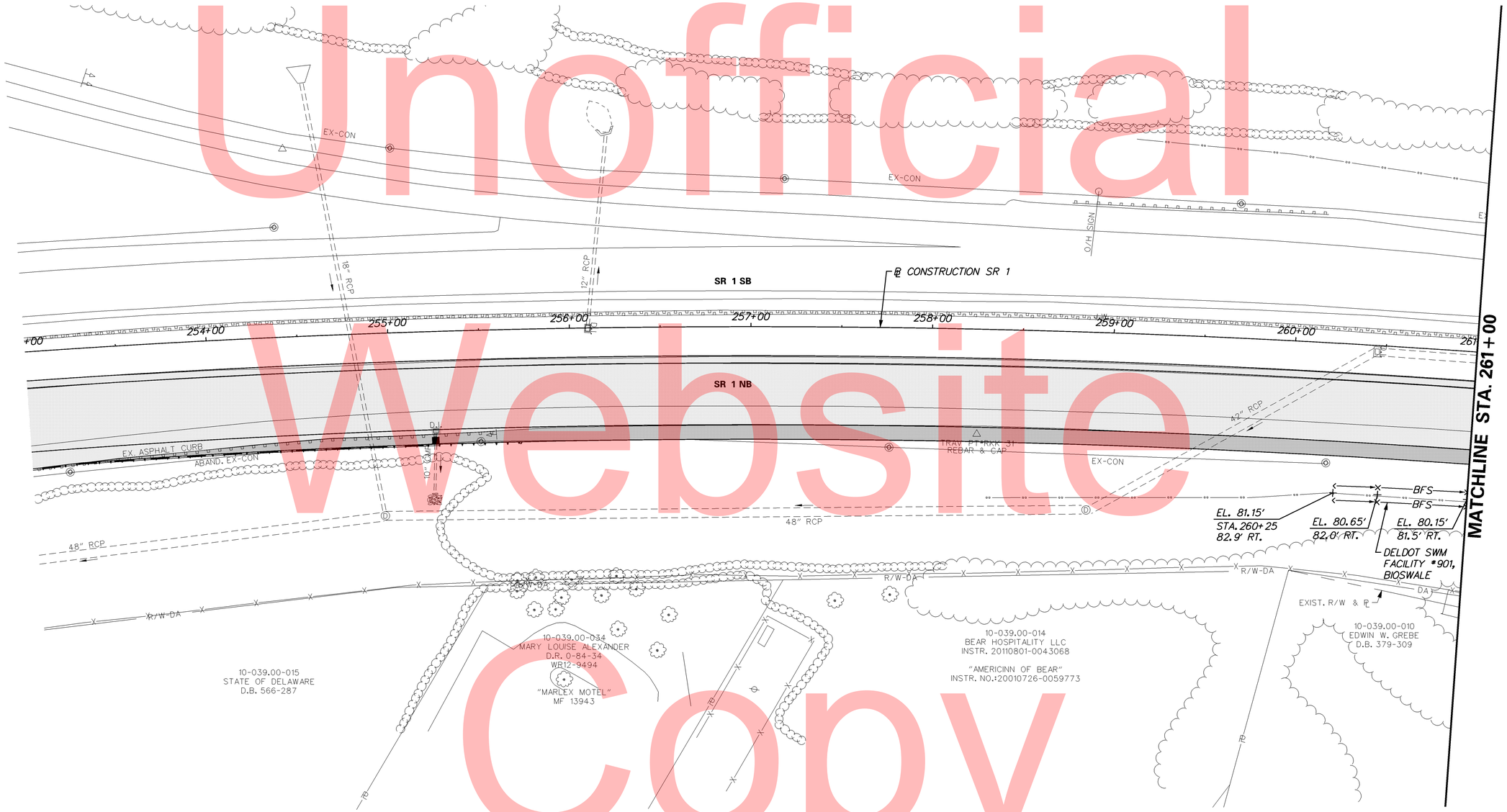

Unofficial Website Copy

6/23/2015 2:17:15 PM
\\BALSRV02\V2011\2011\11009_TYBOUTS\SR1WIDE_ NBAUXLANE\CADD\CONTRACT\PLANS\SW01_NBAUXLN.DGN

DELAWARE DEPARTMENT OF TRANSPORTATION

ADDENDUMS / REVISIONS

SCALE 0 30 60 90 FEET

SR 1 NORTHBOUND AUXILIARY LANE US 40 TO SR 273

CONTRACT	BRIDGE NO. 1-319N	STORMWATER MANAGEMENT PLAN	SHEET NO.
T201511001	DESIGNED BY: TMC		30
COUNTY			TOTAL SHTS.
NEW CASTLE	CHECKED BY: RLS		77