THE STATE OF DELAWARE

DEPARTMENT OF TRANSPORTATION
OFFICE OF TRANSPORTATION SOLUTIONS
PLANS AND SPECIFICATIONS FOR

CONTRACT NUMBER- T201603102 CANAL

FEDERAL AID NUMBER- NONE

CONTRACT TITLE- COMMUNITY TRANSPORTATION FUND, NORTH II, 2016 OPEN END

Unofficial Website Copy

PLANS PREPARED BY:

DESIGN TECHNICIAN

MATTHEW S. LICHTENSTEIN
LICENSE
No. 15556
DELAWARE
PROFESSIONAL ENGINEER

DATE RECOMMENDED: 2/2/16

PUBLIC WORKS ENGINEER:

RICHARD G. FAIN
REGISTERED
No. 9223
DELAWARE
PROFESSIONAL ENGINEER

DATE RECOMMENDED: 2/2/16

MAINTENANCE ENGINEER:

JOHN M. GARCIA JR.
REGISTERED
No. 10807
DELAWARE
PROFESSIONAL ENGINEER

DATE RECOMMENDED: 2/3/16

CONTRACTS ENGINEER:

KEVIN T. CANNING
REGISTERED
NO 9666
DELAWARE
PROFESSIONAL ENGINEER

DATE APPROVED:

2/3/16

DISTRICT ENGINEER:

VARIOUS LOCATIONS

LOCATION MAP

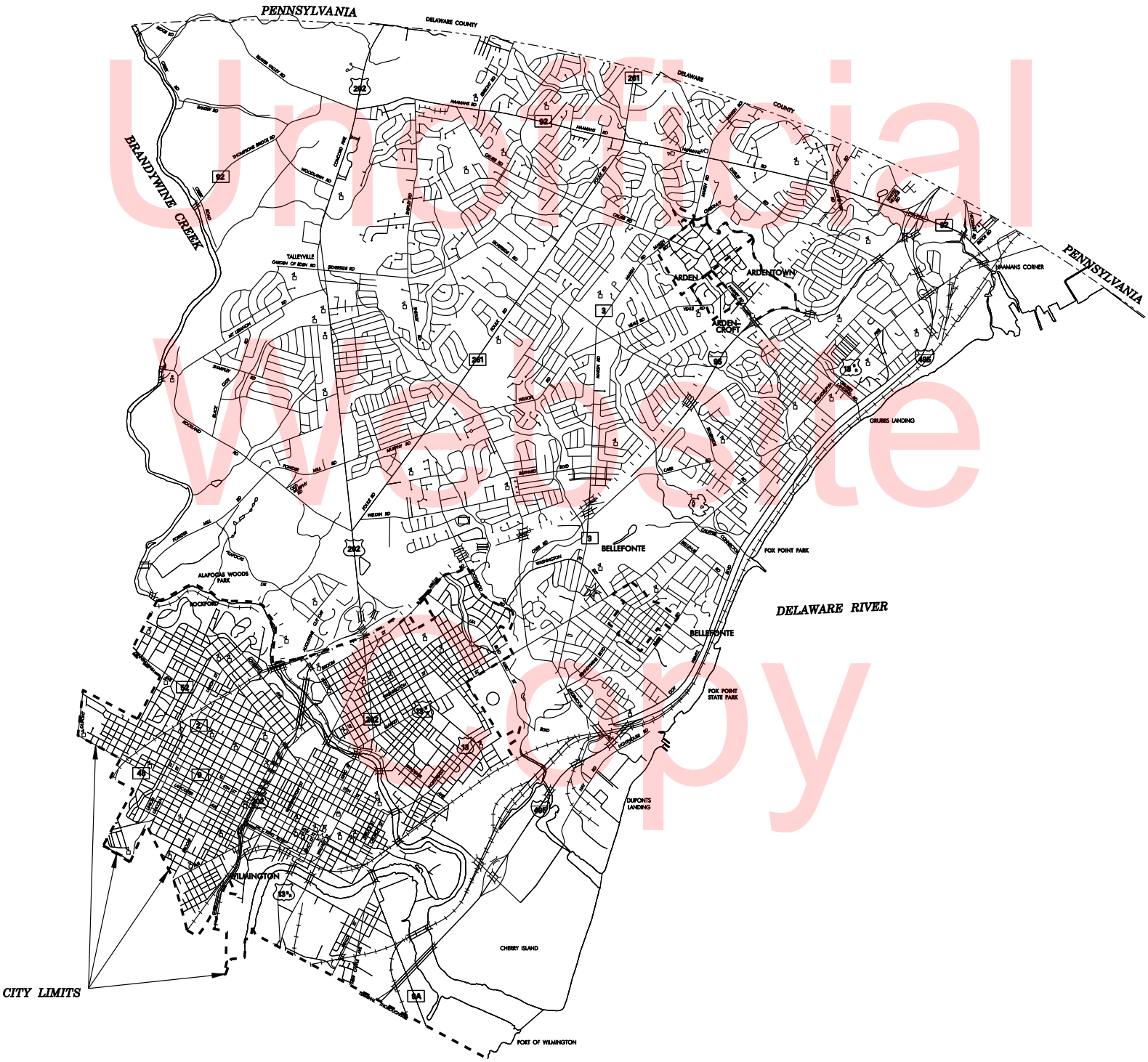

Unofficial Website Copy

MOBILIZATION ZONE–1

VARIOUS LOCATIONS

LOCATION MAP

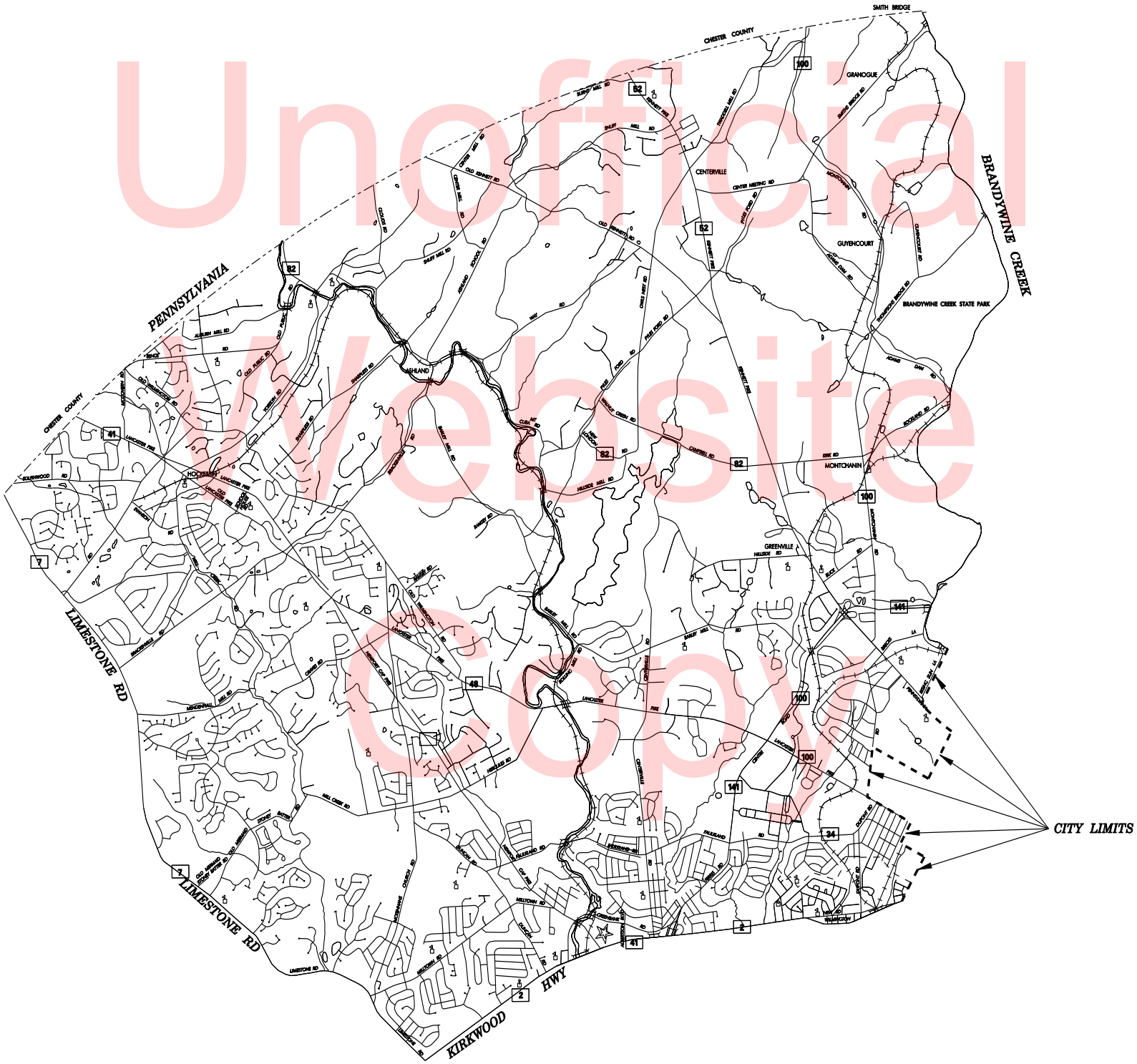

MOBILIZATION ZONE–2

Unofficial Website Copy

VARIOUS LOCATIONS

LOCATION MAP

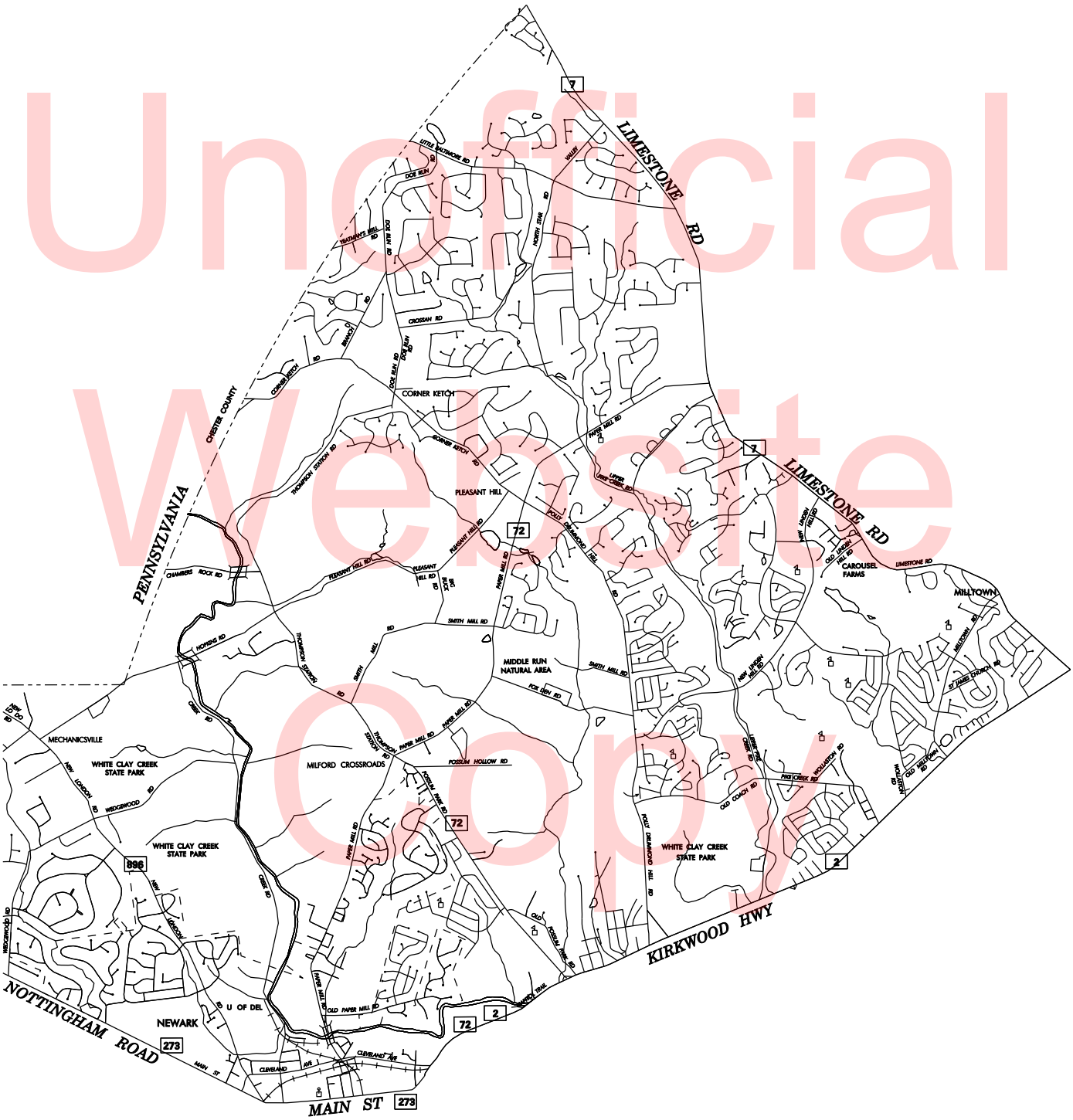

Unofficial Website Copy

MOBILIZATION ZONE_3

VARIOUS LOCATIONS

LOCATION MAP

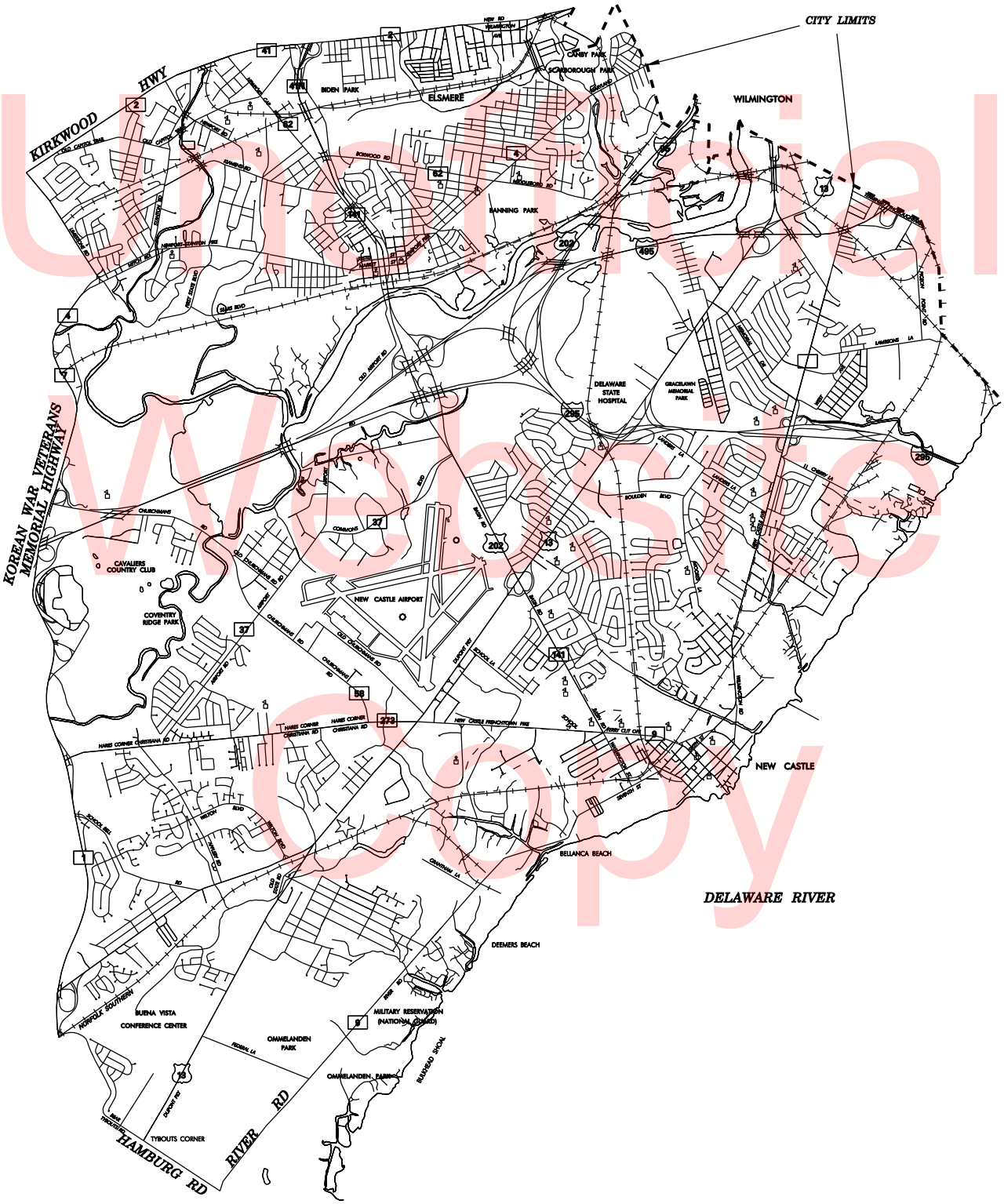

Unofficial Website Copy

MOBILIZATION ZONE–5

VARIOUS LOCATIONS

LOCATION MAP

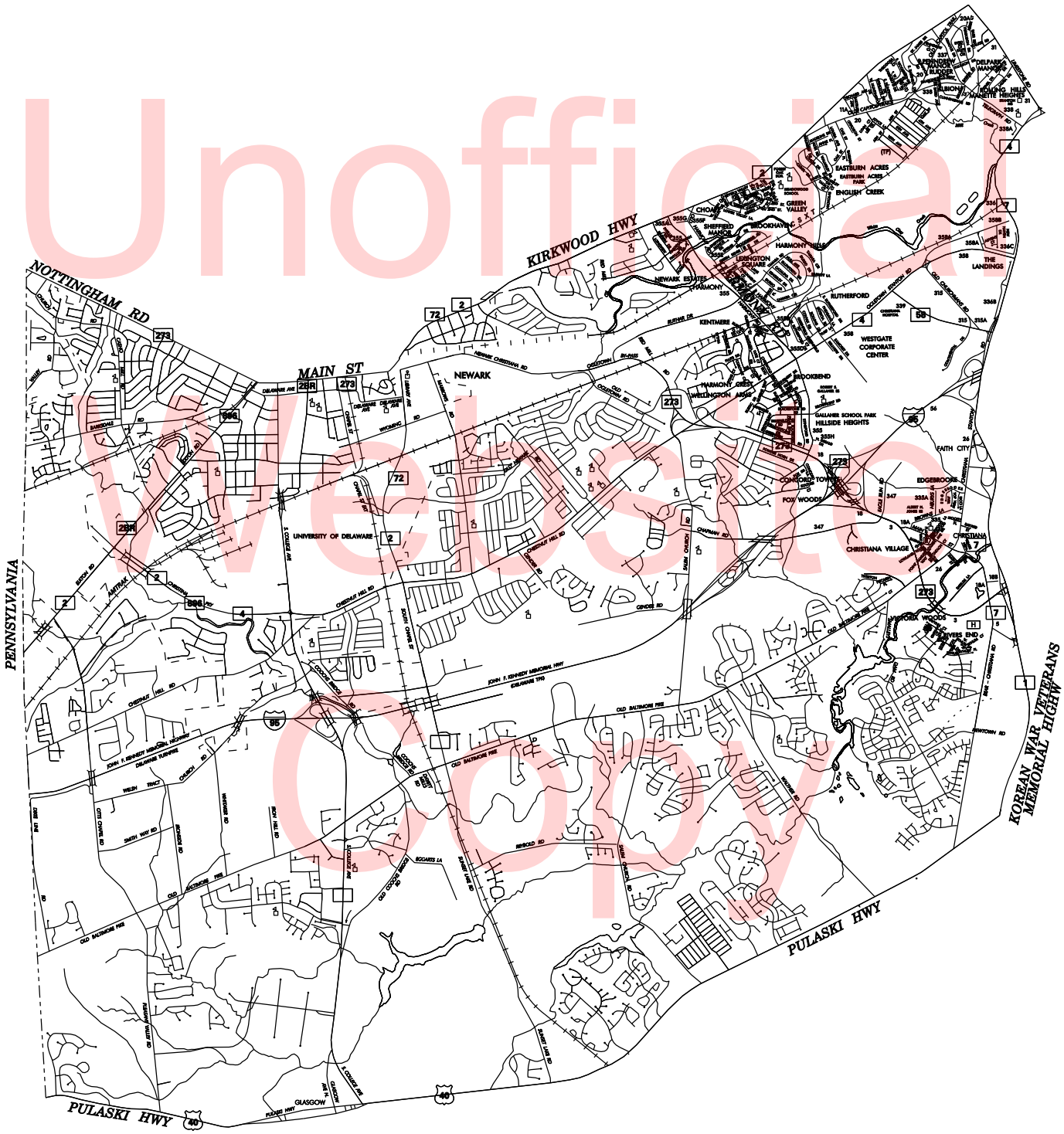

Unofficial Website Copy

VARIOUS LOCATIONS

LOCATION MAP

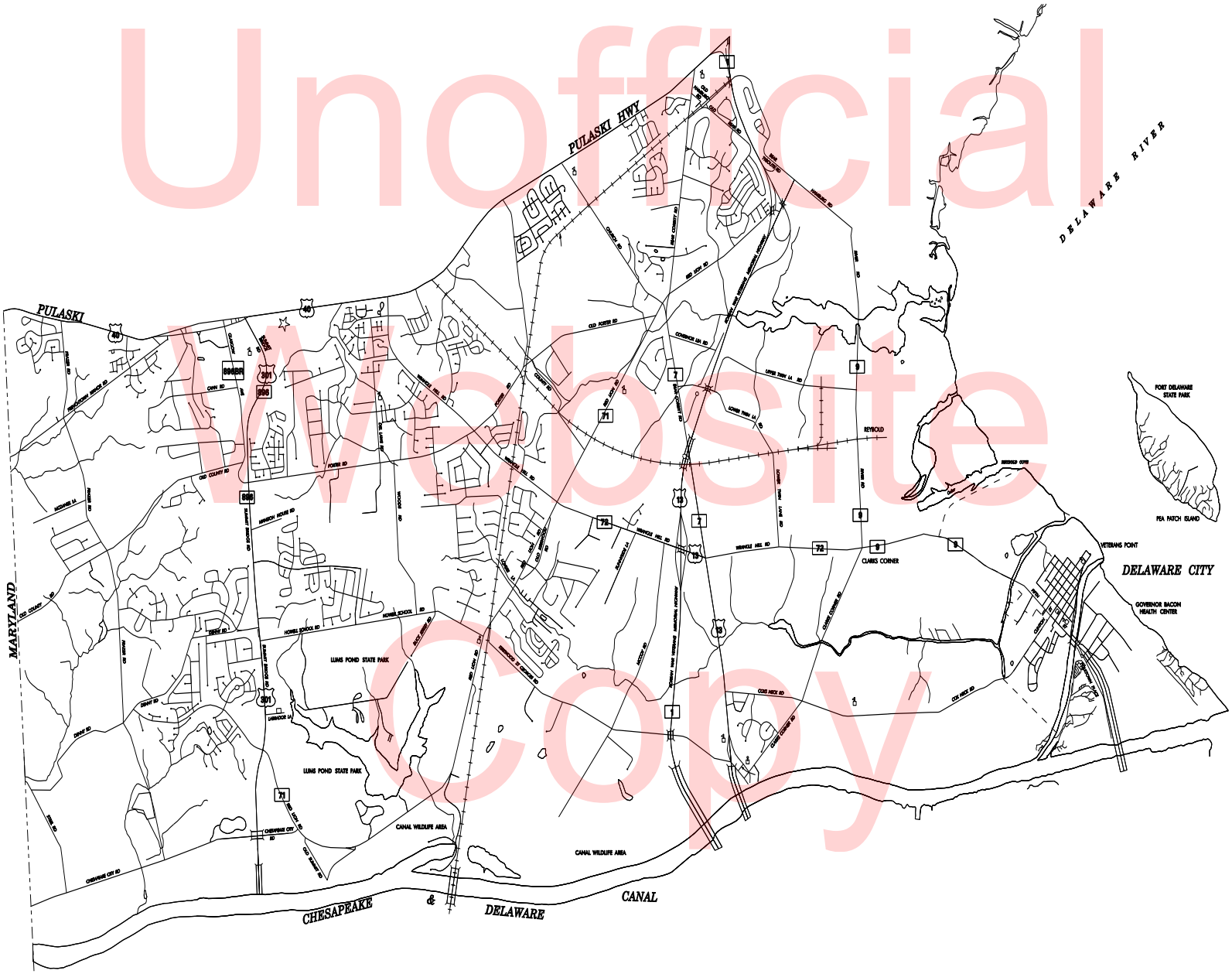

Unofficial Website Copy

MOBILIZATION ZONE-7

VARIOUS LOCATIONS

LOCATION MAP

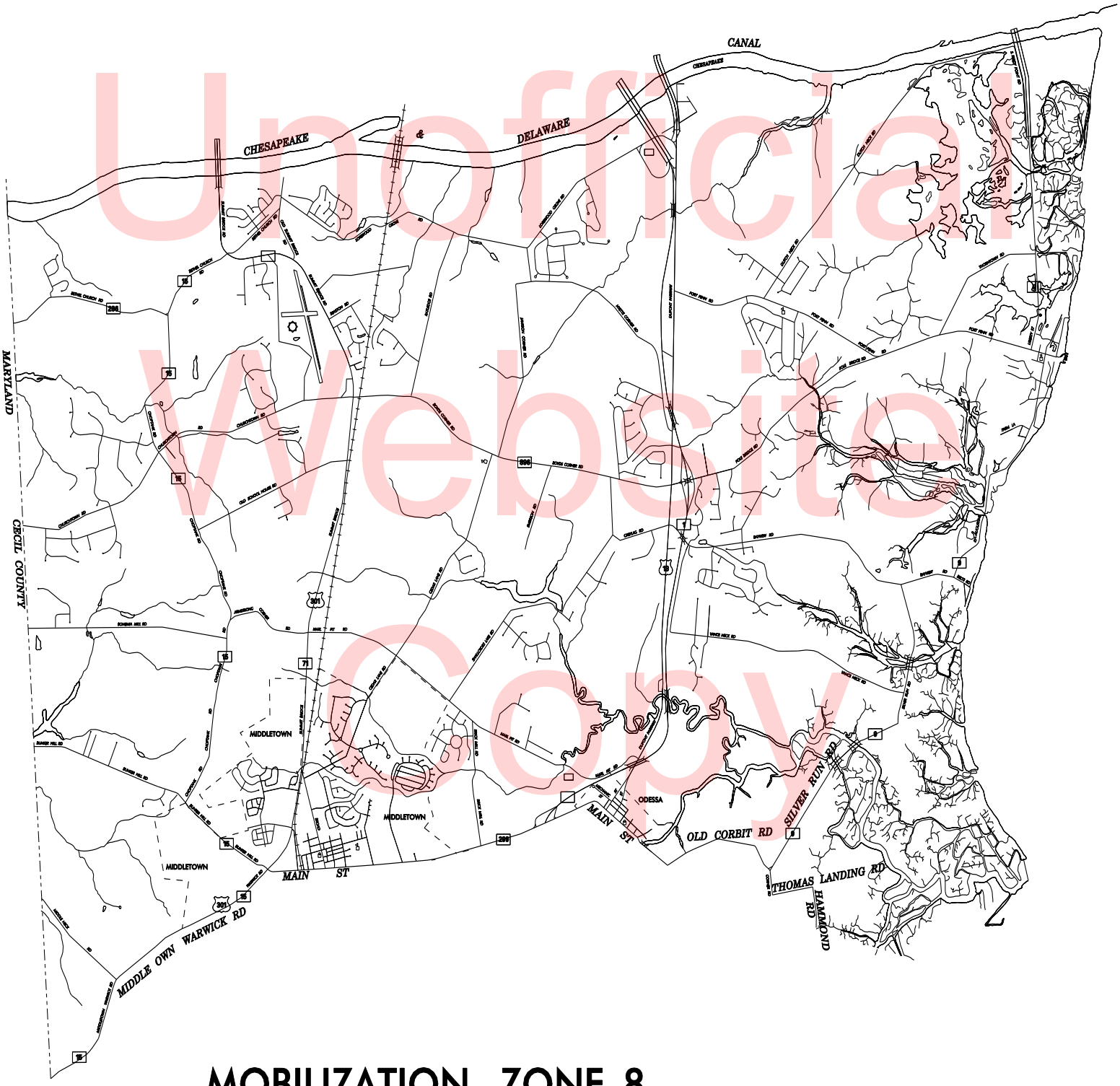

Unofficial Website Copy

MOBILIZATION ZONE–8

VARIOUS LOCATIONS

LOCATION MAP

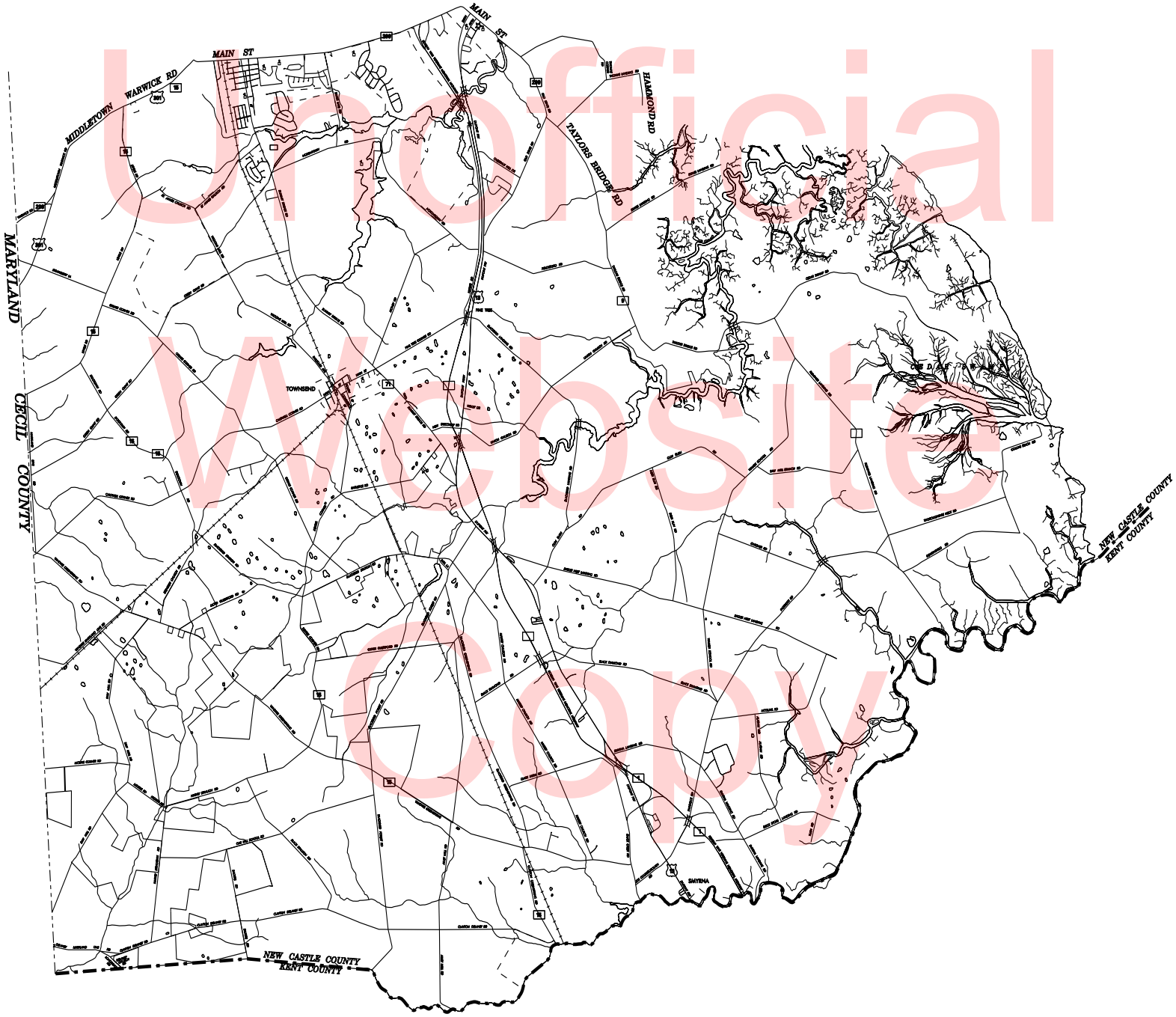

Unofficial Website Copy

MOBILIZATION ZONE–9

GENERAL CONTRACT PLAN NOTES

SECTION 100

1. THIS PROJECT IS TO BE CONSTRUCTED IN ACCORDANCE WITH THE DELAWARE DEPARTMENT OF TRANSPORTATION STANDARD SPECIFICATIONS FOR ROAD AND BRIDGE CONSTRUCTION DATED AUGUST 2001 AND THE DELAWARE DEPARTMENT OF TRANSPORTATION STANDARD CONSTRUCTION DETAILS, DATED 2001 INCLUDING ALL REVISIONS UP TO THE DATE OF ADVERTISEMENT.

2. THE PURPOSE OF THIS CONTRACT IS TO MAKE GENERAL IMPROVEMENTS TO ROADS AND/OR STREETS WITHIN THE DISTRICT HEREIN SPECIFIED. DEPENDING ON FUND AVAILABILITY, THE DEPARTMENT RESERVES THE RIGHT TO ADD OR DELETE LOCATIONS AND/OR QUANTITIES FOR THIS CONTRACT. SUCH ADDITIONS OR DELETIONS SHALL NOT BE CAUSE FOR AN INCREASE OR DECREASE IN ANY CONTRACT UNIT BID PRICES. NO ITEM PRICES ARE TO BE RENEGOTIATED DUE TO EITHER AN INCREASE OR DECREASE IN QUANTITY USAGE RESULTING FROM SAID ADDITIONS OR DELETIONS.

3. LOCATION LISTINGS INDICATE GENERAL LIMITS OF CONSTRUCTION, MAJOR TYPES OF IMPROVEMENTS, AND ESTIMATED QUANTITIES. DURING THE BIDDING PERIOD, ANY QUESTIONS PERTAINING TO LOCATIONS SHALL BE DIRECTED TO THE CONTRACT ADMINISTRATOR. AFTER THE AWARD, SUCH QUESTIONS SHALL BE REFERRED TO THE APPROPRIATE DISTRICT ENGINEER OR HIS REPRESENTATIVE.

PROSECUTION AND PROGRESS OF WORK:

4. WORK TO BE PERFORMED UNDER THIS CONTRACT SHALL BE GENERATED THROUGH JOB ORDERS ISSUED TO THE CONTRACTOR BY THE DEPARTMENT'S PROJECT MANAGER. JOB ORDERS WILL BE ASSEMBLED TO ALLOW THE MOST EFFICIENT ALLOCATION OF THE CONTRACTOR'S WORK FORCE AS THE SITUATION ALLOWS.

EACH JOB ORDER ISSUED WILL HAVE CLEAR "START BY" DATE AND TIME ALLOCATED TO COMPLETE SAID JOB ORDER. FAILURE TO COMPLETE A JOB ORDER IN THE SPECIFIED TIME SHALL CONSTITUTE "FAILURE TO PURSE THE WORK" AND SUBJECTS THE CONTRACTOR TO LIQUIDATED DAMAGES AS OUTLINED IN SUBSECTION 108.08 OF THE STANDARD SPECIFICATIONS.

EACH JOB ORDER IS TO BE COMPLETED WITHIN THE SPECIFIED TIME. ADDITIONAL ITEMS AND/OR WORKING DAYS MAY BE ADDED TO ANY JOB ORDER AS NEEDED AT THE DISCRETION OF THE ENGINEER. IF THE WORK ON A SPECIFIED JOB ORDER IS NOT COMPLETED WITHIN THE ALLOCATED TIME, LIQUIDATED DAMAGES WILL BE ASSESSED IN ACCORDANCE WITH SUBSECTION 108.09 OF THE STANDARD SPECIFICATIONS BASED ON THE TOTAL VALUE OF THAT PARTICULAR JOB ORDER.

UPSET LIMIT:

5. DEPENDING ON FUND AVAILABILITY, THE DEPARTMENT RESERVES THE RIGHT TO INCREASE OR DECREASE THE QUANTITIES OF THE ITEMS SPECIFIED IN THIS CONTRACT. SUCH ADDITIONS OR DELETIONS SHALL NOT BE CAUSE FOR AN INCREASE OR DECREASE IN ANY CONTRACT UNIT BID PRICES. THE TOTAL CONTRACT VALUE, WITH ALL ADDITIONAL WORK IF ADDED, SHALL NOT EXCEED 150 PERCENT OF THE ORIGNAL CONTRACT VALUE.

6. UPON RECEIPT OF EACH JOB ORDER, THE CONTRACTOR SHALL SUBMIT THE REQUIRED COPIES OF A

Unofficial Website Copy

GENERAL CONTRACT PLAN NOTES

DETAILED PROGRESS SCHEDULE (PSC) AS OUTLINED IN STANDARD SPECIFICATION 108.04. DETAILS SHALL INCLUDE A DESCRIPTION OF EACH WORK ACTIVITY, THE PLANNED DAYS OF WORK, MULITPLE CREWS OR SHIFTS, AND SCHEDULED WORKING HOURS. DURING THE CONTRACT, THE CONTRACTOR SHALL SUBMIT TWO-WEEK (OR AS REQUIRED) “LOOK AHEAD” SCHEDULES TO THE AREA ENGINEER/MANAGER NO LATER THAN NOON OF EACH THURSDAY. FAILURE TO COMPLY WILL RESULT IN A SUSPENSION OF ALL CONTRACT WORK WITH TIME CHARGES CONTINUING TO BE ASSESSED.

Unofficial Website Copy

SECTION 400

7. THE COST OF CLIPPING BACK THE EDGES OF THE ROADWAY, SHOULDERS, AND THE FIRST 3' OF UNPAVED DRIVEWAY ENTRANCES, PICKING UP AND DISPOSING OF WASTE AND EXCESS MATERIAL, AND CLEANING THE EXISTING PAVEMENT PRIOR TO AN OVERLAY SHALL BE INCIDENTAL TO SECTION 401( ). PREPARING UNPAVED DRIVEWAY ENTRANCES BEYOND THE FIRST 3' SHALL BE PAID UNDER THE APPROPRIATE CONTRACT ITEMS: 202000 AND/OR 30200X. UNLESS SPECIFIED, OVERLAY WIDTHS SHALL MATCH EXISTING WIDTHS.

SECTION 700

8. BUTT JOINTS SHALL BE CONSTRUCTED AT ALL INTERSECTING BITUMINOUS CONCRETE ROADS AND ANY OTHER LOCATIONS AS DIRECTED BY THE ENGINEER. BUTT JOINTS AT RAILROAD CROSSINGS AND AT BRIDGE OR DRAINAGE STRUCTURES NOT TO BE RESURFACED SHALL BE AS PER THE INCLUDED PLAN DETAIL. BUTT JOINTS CUT PRIOR TO THE DAY OF PAVEMENT OVERLAY SHALL BE RAMPED WITH BITUMINOUS CONCRETE TRM INCIDENTAL TO THE ITEM 761001 BUTT JOINT. ONLY BITUMINOUS CONCRETE WILL BE ALLOWED FOR THIS PURPOSE. BUTT JOINTS IN FULL MILL AREAS SHALL BE INCIDENTAL TO THE PAVEMENT MILLING ITEM. SAWCUTS FOR BUTT JOINTS SHALL BE INCIDENTAL TO THE BUTT JOINT ITEM. ALL BITUMINOUS CONCRETE TRM SHALL BE REMOVED PRIOR TO THE PAVING OPERATION.

9. MILLED MATERIAL, SHALL BECOME THE PROPERTY OF THE CONTRACTOR.

10. AFTER PAVEMENT MILLING, ALL RAISED EDGES OF MANHOLES, DRAINAGE INLETS, WATER VALVE BOXES, ETC. SHALL BE RAMPED WITH BITUMINOUS CONCRETE TRM AT A 20:1 OR FLATTER SLOPE INCIDENTAL TO PAVEMENT MILLING. PAVEMENT MILLINGS OR COLD PATCH MATERIAL WILL NOT BE ALLOWED FOR THIS PURPOSE. ALL ADJUSTMENTS SHALL BE MADE NOT MORE THAN SEVEN (7) CALENDAR DAYS PRIOR TO THE PLACEMENT OF THE FINAL COURSE OF BITUMINOUS CONCRETE, UNLESS DIRECTED BY THE ENGINEER. FAILURE TO COMPLY WILL RESULT IN A SUSPENSION OF ALL OTHER CONTRACT WORK WITH TIME CHARGES CONTINUING TO BE ASSESSED. ALL BITUMINOUS CONCRETE TRM SHALL BE REMOVED PRIOR TO THE PAVING OPERATIONS. IF THE CONTRACTOR ELECTS TO ADJUST MANHOLES, DRAINAGE INLETS AND WATER VALVES AFTER THE FINAL COURSE OF PAVING, THIS WORK MUST BE COMPLETED WITHIN SEVEN (7) CALENDAR DAYS OF THE FINAL COURSE OF BITUMINOUS CONCRETE. FAILURE TO COMPLY WILL RESULT IN A SUSPENSION OF ALL OTHER CONTRACT WORK WITH TIME CHARGES CONTINUING TO BE ASSESSED

11. PAVING IS TO BE COMPLETED CURB TO CURB INCLUDING TURN LANES AND INTERSECTIONS WITHIN SEVEN (7) CALENDER DAYS OF PAVEMENT MILLING FOR A PARTICULAR DAYS PAVEMENT MILLING LOCATION. THIS RESTRICTION APPLIES TO EACH DAYS PAVEMENT MILLING OPERATION, NOT AN ENTIRE PROJECT LOCATION.

GENERAL CONTRACT PLAN NOTES

FAILURE TO COMPLY WILL RESULT IN A SUSPENSION OF ALL OTHER CONTRACT WORK WITH TIME CHARGES CONTINUING TO BE ASSESSED.

12. THE CONTRACTOR SHALL TAKE CARE IN REMOVING PAVEMENT AROUND UTILITIES, BUTT JOINTS, CURB EDGES, ETC., WHEN CLEANING AFTER A PAVEMENT MILLING OPERATION. CARE SHOULD BE TAKEN SO AS NOT TO GOUGE OR DIG DEEPER THAN THE REQUIRED DEPTH. FAILURE TO DO SO WILL RESULT IN THE CONTRACTOR PLACING LEVELING COURSES AT HIS OWN EXPENSE.

13. THE BASIS OF MEASURMENT AND PAYMENT FOR ITEM 760006 - PAVEMENT MILLING, 2" (50 mm) DEPTH, SHALL INCLUDE AN AVERAGE OF THE MILLED DEPTH PER LOCATION FROM 1" (25 mm) TO 2.25" (56 mm) (INCLUSIVE) FOR MEASUREMENT AND PAYMENT PURPOSES. PAYMENT FOR PAVEMENT MILLING DEPTHS WHOSE AVERAGE IS GREATER THAN 2.25" (56 mm) SHALL BE NEGOTIATED BY THE ENGINEER.

14. DRAINAGE INLET GRATES ADJACENT TO THE ROAD, WITHIN THE PROJECT LIMITS, WHICH ARE NOT TYPE 1 SHALL BE REPLACED. THE ACTUAL LOCATIONS, THE NEED FOR ANY GRATE MODIFICATIONS OR FOR NEW FRAMES SHALL BE DETERMINED BY THE ENGINEER. ALL REPLACED GRATES/ FRAMES SHALL BE DELIVERED TO THE NEAREST DISTRICT MAINTENANCE YARD WITH THE COST OF DELIVERY INCIDENTAL TO 708060/708061 REPLACING CATCH BASIN GRATES/FRAMES. FINAL PAYMENT FOR REPLACED GREATES/ FRAMES SHALL NOT BE MADE UNTIL RECEIPT OF DELIVERED MATERIALS IS PRODUCED, SIGNED BY A DELDOT MAINTENANCE YARD SUPERVISOR.

15. EXCAVATION FOR THE REPLACEMENT OF P.C.C. CURBS, SIDEWALK OR VALLEY GUTTER SHALL BE INCIDENTAL TO THE PRICE BID FOR THESE RESPECTIVE ITEMS. EXCAVATED MATERIAL, NOT NEEDED ON THE PROJECT, SHALL BECOME THE PROPERTY OF THE CONTRACTOR AND REMOVED FROM THE PROJECT. IN THE CASE OF NEW SIDEWALK EXCAVATION WILL BE PAID TO THE WIDTH OF THE NEW SIDEWALK UNDER ITEM 202000. ITEM 732004, TOPSOIL, SHALL BE USED AS BACKFILL MATERIAL FOR CURB AND SIDEWALK WHEN SO DIRECTED BY THE ENGINEER. WHEN REPLACEMENT OF CURB AND GUTTER HAS BEEN COMPLETED AND THE FORMS REMOVED AT EACH LOCATION OF THIS CONTRACT, BACKFILLING SHALL BE DONE IMMEDIATELY. COMPLETE RESTORATION, TOPSOIL, SEEDING, AND REMOVAL OF ALL MATERIALS FOR CURB & GUTTER OR SIDEWALK; SEALING OF VALLEY GUTTERS AND PARGING OF DRAINAGE INLETS, SHALL BE COMPLETED WITHIN SEVEN (7) CALENDER DAYS. FAILURE TO COMPLY WILL RESULT IN A SUSPENSION OF ALL OTHER CONTRACT WORK WITH TIME CHARGES CONTINUING TO BE ASSESSED. TOPSOIL SHALL BE SCREENED/SIFTED SO AS NO MATERIAL GREATER THAN .5" SHOULD BE PRESENT IN MATERIAL USED FOR BACKFILL.

16. AS DIRECTED BY THE ENGINEER, THE CONTRACTOR SHALL PARTIALLY SAW AND FILL WITH AN APPROVED SEALER EXISTING CRACKED CURB AND/OR SIDEWALK. THIS WORK WILL BE INCIDENTAL TO ITEM #762002 SAWCUT - CONCRETE FULL DEPTH.

17. PERTAINING TO PCC CURB REMOVAL & PATCHING, SAWCUTTING IS TO BE PERFORMED PRIOR TO THE REMOVAL OF BITUMINOUS CONCRETE UNLESS APPROVAL IS GIVEN BY THE ENGINEERS REPRESENTATIVE.

18. AT EACH LOCATION, THE CONTRACTOR SHALL NOTE ALL EXISTING PAVEMENT MARKINGS AND SUBMIT A DRAWING WHICH DEPICTS THE STRIPING PATTERN TO THE DEPARTMENT PRIOR TO THE START OF ANY WORK AT THE LOCATION.
THE CONTRACTOR WILL BE RESPONSIBLE TO CORRECT ANY ERRONEOUS MARKINGS IMMEDIATELY. FAILURE TO COMPLY WILL RESULT IN SUSPENSION OF ALL OTHER CONTRACT WORK WITH TIME CHARGES CONTINUING TO BE ASSESSED. FINAL PAVEMENT MARKINGS SHALL CONFORM TO ALL EXISTING PATTERNS AND SHALL BE PLACED WITHIN FIVE (5) CALENDER DAYS (MAXIMUM) AFTER PLACEMENT OF THE FINAL COURSE OF

Unofficial Website Copy

GENERAL CONTRACT PLAN NOTES

BITUMINOUS CONCRETE. IF THE CONTRACTOR FAILS TO DOCUMENT THE EXISTING PAVEMENT MARKINGS IN AN ACCEPTABLE MANNER, HE SHALL BE REQUIRED TO PROVIDE AT HIS OWN EXPENSE, A NEW PAVEMENT MARKING PLAN SIGNED AND SEALED BY A PROFESSIONAL ENGINEER REGISTERED IN THE STATE OF DELAWARE.

AT THE END OF EACH DAYS OPERATION AND BEFORE TRAFFIC IS RETURNED TO UNRESTRICTED ROADWAY USE, TEMPORARY MARKINGS SHALL BE UTILIZED AT LOCATIONS THAT REQUIRE PERMANENT MARKING, WHEN:

A. EXISTING PAVEMENT IS MILLED AND BITUMINOUS CONCRETE WILL NOT BE PLACED THE SAME DAY;
B. MORE THAN A SINGLE COURSE OF BITUMINOUS CONCRETE IS TO BE PLACED
C. PERMANENT ROADWAY STRIPING CANNOT BE PLACED ON THE SAME DAY AS THE PLACEMENT OF THE FINAL COURSE OF BITUMINOUS CONCRETE.

TEMPORARY PAVEMENT STRIPING MUST MATCH PERMANENT PAVEMENT STRIPING IN ALL REGARDS. TEMPORARY PAVEMENT MARKINGS SHALL BE PAID AT THE APPLICABLE CONTRACT UNIT PRICE. THE CONTRACTOR IS RESPONSIBLE FOR MAINTAINING THE TEMPORARY MARKINGS IN GOOD CONDITION SUCH THAT THE PAVEMENT IS PROPERLY DELINEATED AT ALL TIMES. ANY REFRESHING OF THE TEMPORARY MARKINGS WILL BE AT THE CONTRACTOR'S EXPENSE.

PLACEMENT OF TEMPORARY MARKINGS SHALL RECEIVE PRIOR APPROVAL FROM THE ENGINEER. PAYMENT FOR TEMPORARY PAVEMENT MARKING SHALL BE MADE AT THE UNIT PRICE BID FOR ITEM 748019 - TEMPORARY MARKINGS, FOR CONDITIONS A ,B & C LISTED ABOVE.

19. THE CONTRACTOR, WITH THE ENGINEER, SHALL INVENTORY ALL SIGNS ON ALL ROADS SUBJECT TO IMPROVEMENTS. NECESSARY SIGNS SHALL BE MAINTAINED IN OPERATION DURING CONSTRUCTION AND ANY OTHER SIGNS SHALL BE PROPERLY STORED WITH THE CONTRACTOR, WHO SHALL BE RESPONSIBLE FOR LOSS OR DAMAGE. IMMEDIATELY PRIOR TO FINAL INSPECTION, THE CONTRACTOR AND ENGINEER SHALL AGAIN INVENTORY THE TRAFFIC SIGNS AND ACCOUNT FOR ANY LOST OR DAMAGED SIGNS. LOST OR DAMAGED SIGNS, AT THE DISCRETION OF THE ENGINEER SHALL BE REPLACED IN KIND AT THE CONTRACTORS EXPENSE.

20. THE CONTRACTOR SHALL PROVIDE RESIDENTS WITH 24 HR. PRIOR WRITTEN NOTICE FOR ALL PHASES OF CONTRACT WORK INCLUDING BUT NOT LIMITED TO: SAWCUTTING FOR P.C.C. OPERATIONS, P.C.C. REMOVAL AND REPLACEMENT, PAVEMENT MILLING, AND PAVING. THIS NOTICE SHALL BE GIVEN TO ALL RESIDENTS WHOSE PROPERTY IS ADJACENT TO THE STREET ON WHICH WORK IS TO BE PERFORMED. FAIILURE TO GIVE PROPER NOTICE WILL RESULT IN A SUSPENSION OF WORK REQUIRING NOTICE, UNTIL PROPER NOTICE IS PROVIDED.

21. BEFORE THE START OF A DAYS PAVEMENT MILLING OR PAVING OPERATIONS AND WHERE THERE IS EXISTING STRIPING, THE CONTRACTOR SHALL BE REQUIRED TO PROVIDE PROOF THAT ENOUGH MATERIAL OF AN APPROVED ALTERNATIVE STRIPING METHOD IS ON HAND AT THE SITE TO ENSURE STRIPING IS COMPLETE BEFORE TRAFFIC IS RETURNED TO THE ROADWAY.

22. LANE CLOSURES ON NUMBERED MAINTENANCE ROADS ARE PERMITTED ONLY BETWEEN THE HOURS OF 9:00 AM AND 3:00 PM.

Unofficial Website Copy

GENERAL CONTRACT PLAN NOTES

23. BEFORE WORK IS DONE AT ANY LOCATION, THE APPROPRIATE DISTRICT SAFETY OFFICER MUST APPROVE THE MOT FOR THAT LOCATION. ANY ANTICIPATED IMPACT TO TRAFFIC SIGNALS MUST BE REVIEWED BY THE DELDOT TRAFFIC SECTION PRIOR TO CONSTRUCTION. THEY CAN BE CONTACTED AT 302-659-4060.

24. ANY ERRONEOUS MARKING WILL NOT BE PAID FOR AND SHALL BE CORRECTED IMMEDIATELY AT THE CONTRACTORS EXPENSE. ERRONEOUS MARKINGS OR SHADOWS THAT EXCEED ONE (1) INCH IN WIDTH SHALL BE REMOVED BY EITHER SAND OR WATER BLASTING. NO OTHER REMOVAL METHODS WILL BE ALLOWED.

25. THE CONTRACTOR SHALL SUBMIT A TRAFFIC CONTROL PLAN, INCLUDING THE NECESSARY NCHRP 350 CERTIFICATIONS OR THE MANUAL FOR ASSESSING SAFETY HARDWARE (MASH) FOR ALL DEVICES THAT WILL BE UTILIZED, FOR EACH LOCATION BEFORE THE START OF THE PRE-CONSTRUCTION MEETING. WRITTEN APPROVAL MUST BE RECEIVED BEFORE THE START OF WORK AT EACH AND EVERY LOCATION.

26. ALL TRAFFIC CONTROL DEVICES SHALL BE IN NEW OR REFURBISHED CONDITION AND SHALL BE IN COMPLIANCE WITH THE NCHRP 350 OR THE MANUAL FOR ASSESSING SAFETY HARDWARE(MASH) . THE DEVICES SHALL BE APROVED BY THE SAFETY SECTION PRIOR TO USE AND SHALL BE MAINTAINED IN GOOD CONDITION FOR THE DURATION OF THE CONTRACT.

SECTION 900

27. EROSION CONTROL MULCH BLANKET SHALL BE USED IN ALL DISTURBED AREAS UNLESS DIRECTED OTHERWISE BY THE ENGINEER.

OPEN END SPECIFIC PROJECT NOTES

28. NO UTILITY RELOCATION INVOLVEMENT IS ANTICIPATED. SHOULD ANY CONFLICTS BE ENCOUNTERED DURING CONSTRUCTION REQUIRING ADJUSTMENT AND/OR RELOCATION OF THE AGENCIES' EXISTING FACILITIES, THE NECESSARY RELOCATION WORK SHALL BE ACCOMPLISHED BY THE RESPECTIVE AGENCIES' FORCES, AS DIRECTED BY THE DISTRICT ENGINEER. ANY ADJUSTMENTS AND/OR RELOCATIONS OF MUNICIPALLY OWNED FACILITIES SHALL BE DONE BY THE STATE'S CONTRACTOR IN ACCORDANCE WITH THE RESPECTIVE AGENCIES' STANDARD SPECIFICATIONS AS DIRECTED BY THE DISTRICT ENGINEER.

29. NO ENVIRONMENTAL PERMITS ARE REQUIRED FOR THIS WORK PROVIDED NO JURISDICTIONAL WETLANDS OR WATERS ARE IMPACTED. IF THERE IS ANY QUESTION AS TO WHETHER OR NOT A WATER OR WETLAND IS JURISDICTIONAL, CONTACT THE DEL DOT ENVIRONMENTAL SECTION AT 302-760-2264.

30. IT IS ANTICIPATED THAT ALL WORK WILL OCCUR WITHIN DELDOT'S EXISTING RIGHT OF WAY OR EASEMENT AREAS. SHOULD THE NEED OCCUR TO TRESPASS ONTO PRIVATE PROPERTY; IT WILL BE THE RESPONSIBILITY OF THE PROJECT MANAGER TO SECURE SUCH TRESPASS NEEDS.

31. NO WORK NEAR OR WITHIN RAILROAD RIGHT-OF-WAY IS ANTICIPATED. IF ANY RAILROAD PROPERTY OR FACILITIES ARE NEAR OR WITHIN THE PROPOSED LIMITS OF WORK OR IF THE PROPOSED WORK ENCROACHES UPON THE RAILROAD'S RIGHT-OF-WAY, THE CONTRACTOR SHALL BE RESPONSIBLE FOR OBTAINING THE

Unofficial Website Copy

GENERAL CONTRACT PLAN NOTES

REQUIRED CLEARANCES AND INSURANCES FOR EACH INVOLVED RAILROAD IN ACCORDANCE WITH THE APPROPRIATE DELDOT MAINTENANCE OF RAILROAD TRAFFIC ITEM. DELDOT' S RAILROAD SECTION MANAGER MUST BE CONTACTED AT (302) 760-2183 TO COORDINATE THE EXECUTION OF THE APPROPRIATE AGREEMENTS AND AUTHORIZATIONS REQUIRED FROM ANY RAILROAD COMPANY INVOLVED, INCLUDING COORDINATION FOR RAILROAD FLAGGING, IF NECESSARY.

32. THE PROJECT MANAGER SHALL BE RESPONSIBLE FOR COORDINATING WITH THE TRAFFIC SECTION RELATING TO ANY IMPACTS TO TRAFFIC SECTION FACILITIES (INCLUDING BUT NOT LIMITED TO TRAFFIC LOOPS, JUNCTION WELLS ETC.) AT LEAST 4 WEEKS IN ADVANCE OF THE START OF THE ACTIVITY. PRIOR TO INITIATING ANY WORK ON THIS CONTRACT (OR SITES), THE PROJECT MANAGER SHALL BE RESPONSIBLE FOR PREPARING AND SUBMITTING FOR APPROVAL OF THE SAFETY SECTION, A MAINTENANCE OF TRAFFIC PLAN. SUFFICIENT TIME SHALL BE PROVIDED FOR THE REVIEW AND APPROVAL OF THE PLAN. THE MAINTENANCE OF TRAFFIC PLAN SHALL INCLUDE PROPOSED TIME RESTRICTIONS ON THE CLOSURE OF TRAVEL LANES SUBJECT TO THE APPROVAL OF THE SAFETY SECTION.

33. THE PROJECT MANAGER IS RESPONSIBLE FOR ENSURING ANY REQUIRED DOCUMENTS AND ANALYSIS AS PART OF THE ADOPTED WORK ZONE SAFETY AND MOBILITY PROCEDURES AND GUIDELINES HAS BEEN COMPLETED PRIOR TO ANY WORK STARTING ON THIS CONTRACT.

34. THE DEPARTMENT RESERVES THE RIGHT TO REQUEST AN EXTENSION OF THIS CONTRACT, WITH THE AGREEMENT OF THE CONTRACTOR, AT THE CURRENT CONTRACT PRICES.

35. THE WORK WILL BE SCHEDULED VIA JOB ORDERS FROM THE DISTRICT. WORK SITES WILL VARY IN SIZE. THE JOB ORDERS WILL INDICATE THE WORK TO BE PERFORMED AT EACH LOCATION.
12/28/2015

36. THIS CONTRACT IS NOT SUBJECT TO DEPARTMENT OF LABOR'S PREVAILING WAGE RATES PER THE DELAWARE CODE, 29 Del. C. § 6960(m).

Unofficial Website Copy

DETAILS SHEET

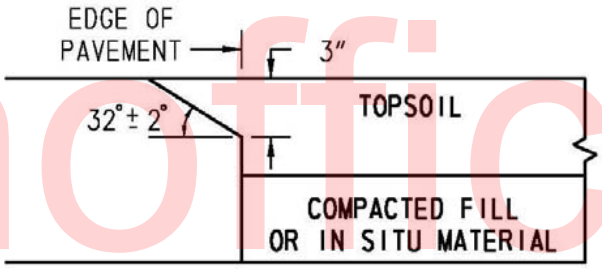

CONCRETE PAVEMENTS
N. T. S.

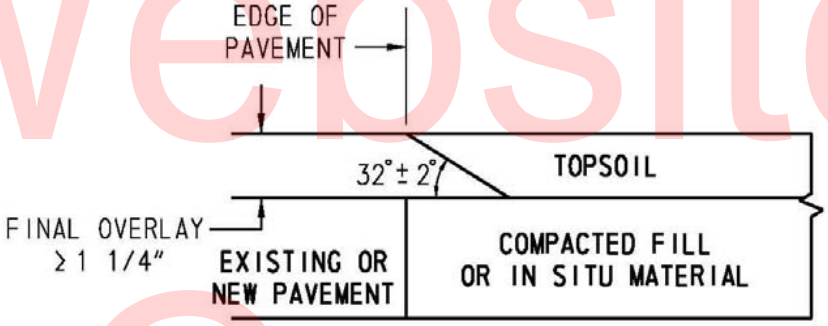

BITUMINOUS CONCRETE PAVEMENTS AND OVERLAYS
N. T. S.

Unofficial Website Copy

SAFETY EDGE DETAIL

DETAILS SHEET

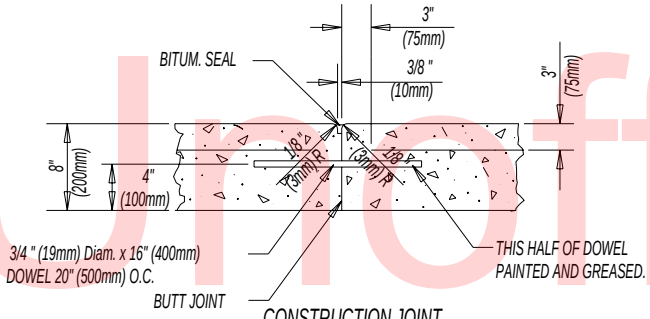

CONSTRUCTION JOINT

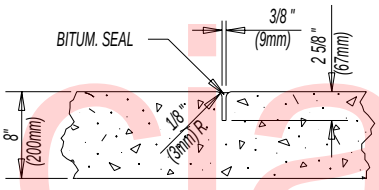

DUMMY JOINT

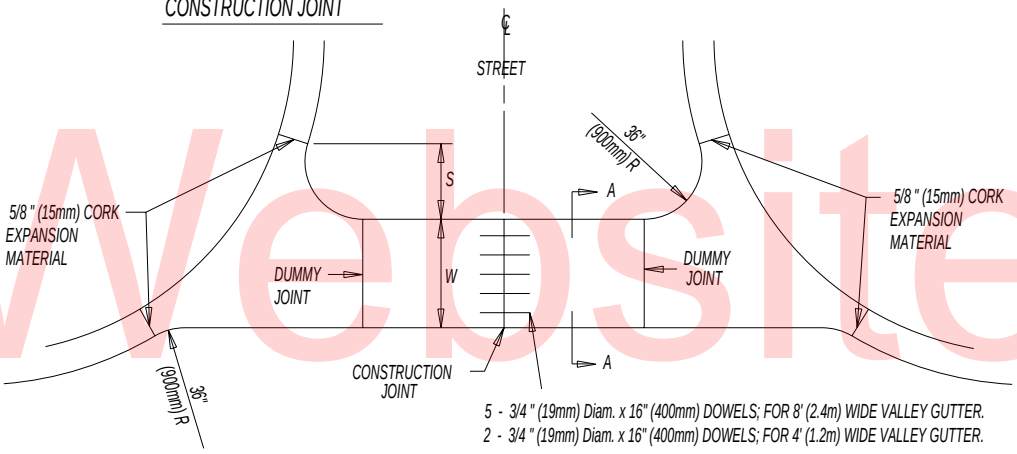

5 - 3/4 " (19mm) Diam. x 16" (400mm) DOWELS; FOR 8' (2.4m) WIDE VALLEY GUTTER.
2 - 3/4 " (19mm) Diam. x 16" (400mm) DOWELS; FOR 4' (1.2m) WIDE VALLEY GUTTER.

PLAN

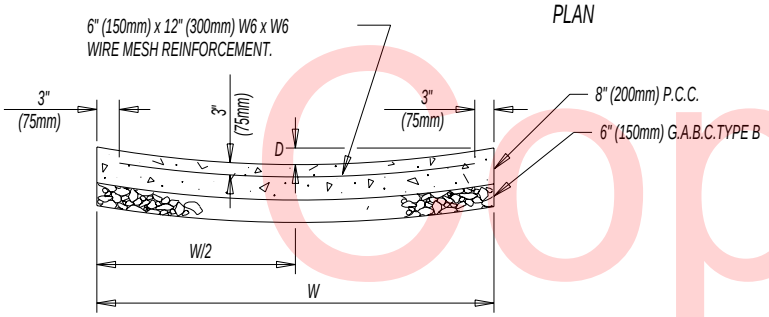

WIDTH W	DEPTH D	OFFSET S
8' (2.4m)	3" (75mm)	16" (405mm)
4' (1.2m)	1 1/2 " (38mm)	23 1/2 " (585mm)

SECTION A-A

P.C.C. VALLEY GUTTER
N.T.S.

NOTE: EXCAVATION FOR AREA IN FRONT OF CURB WILL BE INCIDENTAL TO ITEM 701004.

Unofficial Website Copy

DETAILS SHEET

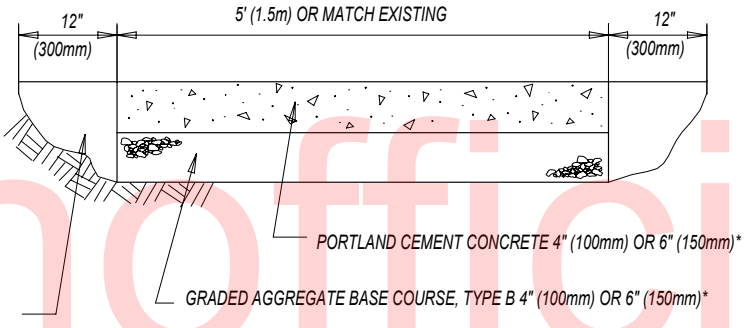

P.C.C. SIDEWALK

N.T.S.

* NOTE: 6" (150mm) CONCRETE OVER 6" (150mm) GRADED AGGREGATE TO BE USED FOR DRIVEWAY PLACEMENT

NOTE: ALL EDGES TO BE SAWCUT. CUTTING BY USE OF AIR HAMMERS MAY BE SUBSTITUTED FOR SAWCUTTING IF THE AREA IS TO BE OVERLAID UNDER THE SAME CONTRACT.
THIS DETAIL SHALL BE USED FOR ALL BITUMINOUS CONCRETE PATCHES UNLESS OTHERWISE SHOWN ON THE PLANS.

IN AREAS WHERE NO BITUMINOUS CONCRETE OVERLAY IS PROPOSED, PLACE 2" (50mm) BITUMINOUS CONCRETE TYPE C PATCHING OVER 6" (150mm) BCBC BITUMINOUS CONCRETE PATCHING.

FOR BITUMINOUS CONCRETE PATCHING, PARTIAL DEPTH, REMOVE EXISTING BITUMINOUS CONCRETE TO DEPTH OF EXISTING AGGREGATE BASE. REPLACE WITH BITUMINOUS CONCRETE TYPE C PATCHING.

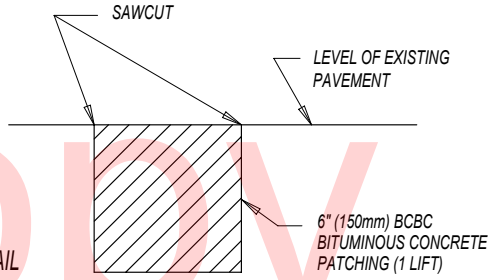

BITUMINOUS CONCRETEPATCH DETAIL

N.T.S.

Unofficial Website Copy

DETAILS SHEET

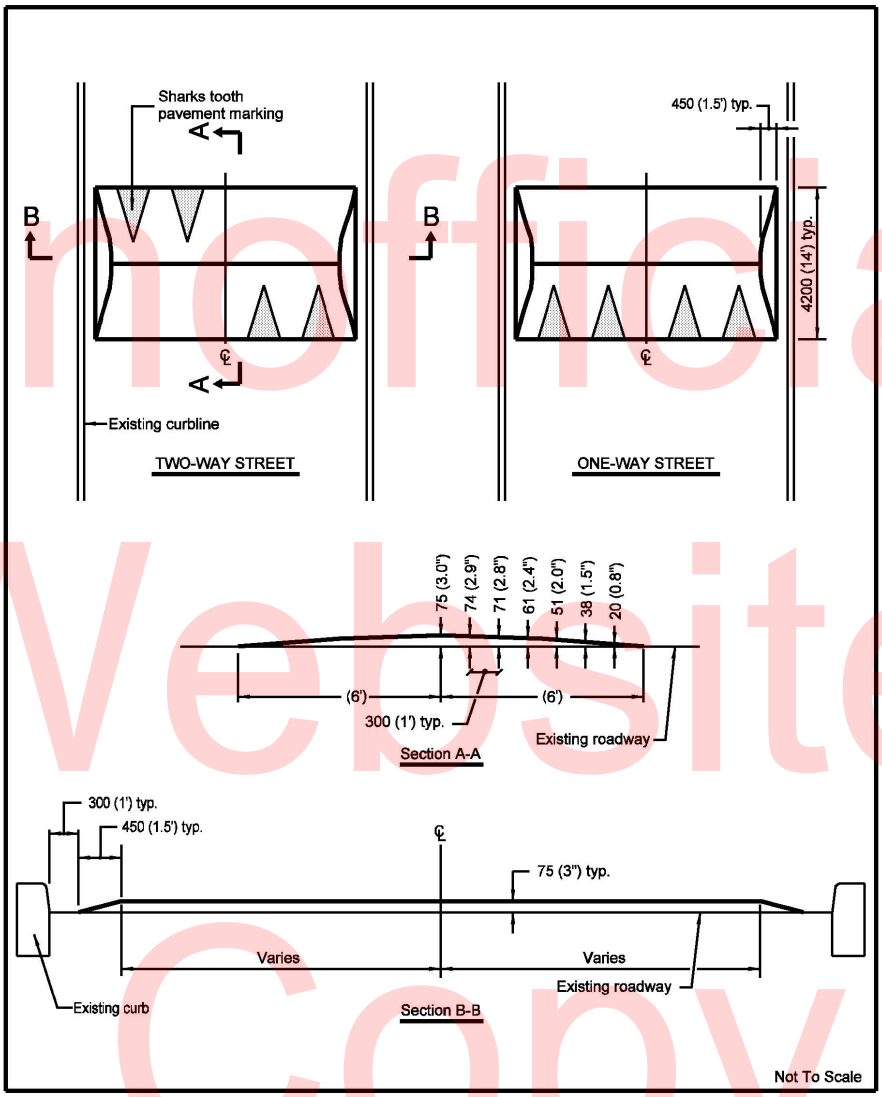

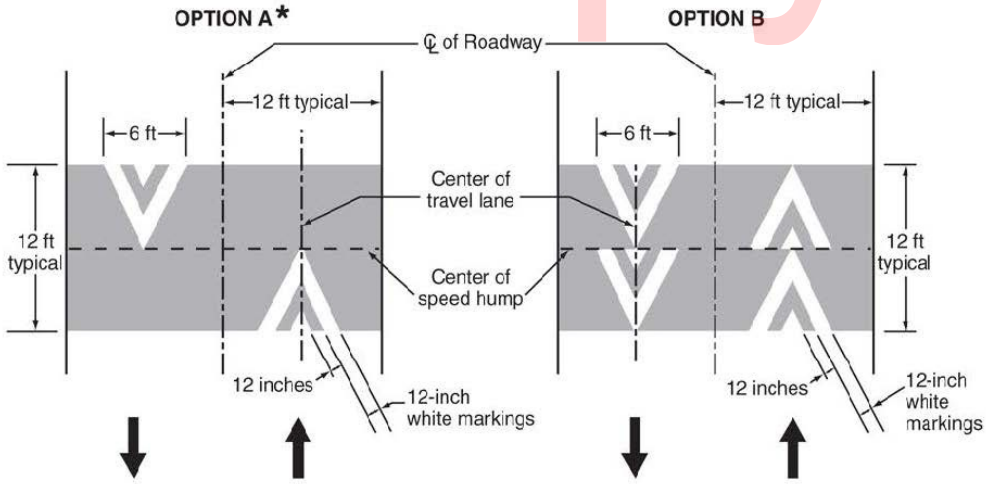

Unofficial Website Copy

DETAILS SHEET

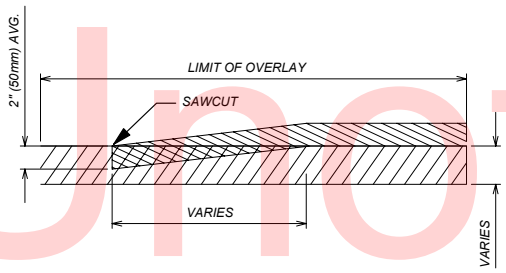

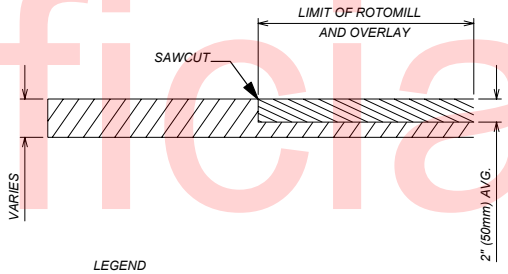

LEGEND

- PROPOSED OVERLAY
- EXISTING PAVEMENT
- EXISTING PAVEMENT TO BE REMOVED

BUTT JOINT

FOR OVERLAY SECTION*

PAYMENT UNDER ITEM 761001

LEGEND

- PROPOSED FULL WIDTH ROTOMILL AND OVERLAY
- EXISTING PAVEMENT (TO REMAIN)

BITUMINOUS CONCRETE JOINT

FOR FULL WIDTH MILL SECTION*

PAYMENT INCIDENTAL TO ITEM 760XXX, MILLING

BITUMENOUS CONCRETE JOINT DETAIL

NOTE: THE FOLLOWING LENGTHS ARE BASED ON THE POSTED SPEED OF THE ROADWAY: LESS THAN 50MPH = 20 FT PER 1" OF OVERLAY DEPTH
EQUAL TO OR GREATER THAN 50 MPH = 30 FT PER 1" OF OVERLAY DEPTH
AT STOP SIGNS = 15 FT PER 1" OF OVERLAY DEPTH

Unofficial Website Copy

DETAILS SHEET

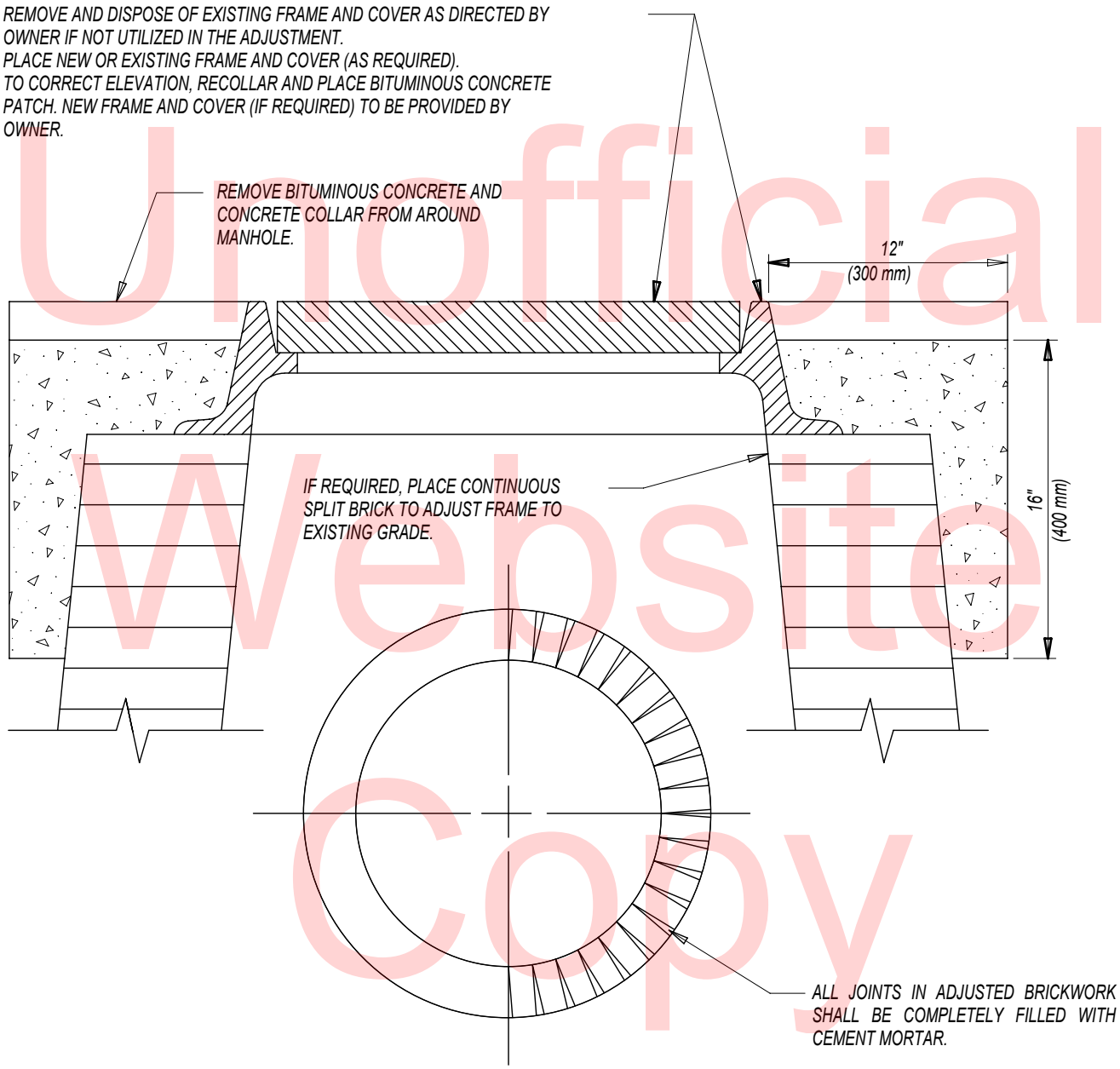

ADJUSTING AND REPAIRING MANHOLE

N.T.S.

NOTE: MANHOLES IN CONCRETE ROADWAYS SHALL BE SAWCUT FULL DEPTH TO THE SPECIFIED DIMENSION PRIOR TO ANY ADJUSTMENT BEING MADE. THE SAWCUTTING SHALL BE INCIDENTAL TO ITEM 710002.

Unofficial Website Copy

CANAL COMMUNITY TRANSPORTATION FUND, NORTH II, 2016 OPEN END

LOCATION 1 **OPEN END ESTIMATE - OPEN END VARIOUS LOCATIONS FROM VARIOUS TO VARIOUS**

LENGTH
GENERAL IMPROVEMENTS
DEPENDENT ON LOCATION

COMMENTS:

Unofficial Website Copy

MATERIAL ESTIMATE FOR LOCATION 1

202000	EXCAVATION AND EMBANKMENT	100.00	C.Y.
302007	GRADED AGGREGATE BASE COURSE, TYPE B	445.00	C.Y.
302008	GRADED AGGREGATE BASE COURSE, TYPE B, PATCHING	200.00	C.Y.
401511	REMOVE AND CONSTRUCT SPEED HUMP	220.00	L.F.
401520	PAVING SURCHARGE, ZONE 1	1,280.00	TON
401521	PAVING SURCHARGE, ZONE 2	1,280.00	TON
401522	PAVING SURCHARGE, ZONE 3	1,280.00	TON
401524	PAVING SURCHARGE, ZONE 5	1,280.00	TON
401525	PAVING SURCHARGE, ZONE 6	1,280.00	TON
401526	PAVING SURCHARGE, ZONE 7	1,280.00	TON
401527	PAVING SURCHARGE, ZONE 8	1,280.00	TON
401528	PAVING SURCHARGE, ZONE 9	1,280.00	TON
401800	BITUMINOUS CONCRETE, SUPERPAVE, TYPE C, 115 GYRATIONS, PG 64-22 (CARBONATE STONE)	9,000.00	TON
401809	BITUMINOUS CONCRETE, SUPERPAVE, TYPE B, 115 GYRATIONS, PG 64-22	500.00	TON
401819	BITUMINOUS CONCRETE, SUPERPAVE, BITUMINOUS CONCRETE BASE COURSE, 160 GYRATIONS, PG 64-22	250.00	TON
401821	BITUMINOUS CONCRETE, SUPERPAVE, TYPE C, 160 GYRATIONS, PG 64-22, PATCHING	490.00	TON
406001	BITUMINOUS CONCRETE PATCHING	2,500.00	SY-IN
612020	REINFORCED CONCRETE PIPE, 12", CLASS IV	40.00	L.F.
612021	REINFORCED CONCRETE PIPE, 15", CLASS IV	40.00	L.F.
612022	REINFORCED CONCRETE PIPE, 18", CLASS IV	40.00	L.F.
612519	CORRUGATED POLYETHYLENE PIPE, TYPE C, 15"	100.00	L.F.
617002	REINFORCED CONCRETE FLARED END SECTION, 15"	1.00	EACH
701004	PORTLAND CEMENT CONCRETE VALLEY GUTTER, 8"	100.00	S.Y.
701010	PORTLAND CEMENT CONCRETE CURB, TYPE 1-8	250.00	L.F.

CANAL COMMUNITY TRANSPORTATION FUND, NORTH II, 2016 OPEN END

LOCATION 1 **OPEN END ESTIMATE - OPEN END VARIOUS LOCATIONS FROM VARIOUS TO VARIOUS**

LENGTH
GENERAL IMPROVEMENTS
DEPENDENT ON LOCATION

COMMENTS:

Unofficial Website Copy

MATERIAL ESTIMATE FOR LOCATION 1

701011	PORTLAND CEMENT CONCRETE CURB, TYPE 2	30.00	L.F.
701020	INTEGRAL PORTLAND CEMENT CONCRETE CURB & GUTTER, TYPE 1-8	300.00	L.F.
701021	INTEGRAL PORTLAND CEMENT CONCRETE CURB & GUTTER, TYPE 2	6,600.00	L.F.
701022	INTEGRAL PORTLAND CEMENT CONCRETE CURB & GUTTER, TYPE 3-8	200.00	L.F.
705001	P.C.C. SIDEWALK, 4"	1,300.00	S.F.
705002	P.C.C. SIDEWALK, 6"	2,100.00	S.F.
705007	SIDEWALK SURFACE DETECTABLE WARNING SYSTEM	500.00	S.F.
705008	CURB RAMP, TYPE 1	390.00	S.F.
705009	CURB RAMP, TYPE 2, 3, AND/OR 4	10,000.00	S.F.
708050	DRAINAGE INLET, 34" X 18"	5.00	EACH
708051	DRAINAGE INLET, 34" X 24"	3.00	EACH
708060	REPLACE DRAINAGE INLET GRATE(S)	20.00	EACH
708061	REPLACE DRAINAGE INLET FRAME(S)	10.00	EACH
708585	JUNCTION BOX, 48" X 30"	1.00	EACH
710001	ADJUSTING AND REPAIRING EXISTING DRAINAGE INLET	30.00	EACH
710002	ADJUSTING AND REPAIRING EXISTING MANHOLE	75.00	EACH
712005	RIPRAP, R-4	10.00	S.Y.
713003	GEOTEXTILES, RIPRAP	10.00	S.Y.
714003	DITCHING	200.00	L.F.
715001	PERFORATED PIPE UNDERDRAINS, 6"	300.00	L.F.
718000	ROOF DRAINS	70.00	L.F.
727502	ADJUSTING EXISTING MONUMENT BOX	3.00	EACH
743003	ARROWPANELS, TYPE C	5.00	EA-DY
743009	FURNISH AND MAINTAIN TRUCK MOUNTED ATTENUATOR, TYPE I	5.00	EA-DY
743050	FLAGGER, NEW CASTLE COUNTY, STATE	3,000.00	HOUR

LOCATION 1 **OPEN END ESTIMATE - OPEN END VARIOUS LOCATIONS FROM VARIOUS TO VARIOUS**

LENGTH
GENERAL IMPROVEMENTS
DEPENDENT ON LOCATION

COMMENTS:

Unofficial Website Copy

MATERIAL ESTIMATE FOR LOCATION 1

743062	FLAGGER, NEW CASTLE COUNTY, STATE, OVERTIME	300.00	HOUR
746774	SUPPLY AND INSTALLATION OF LOOP DETECTOR WIRE	200.00	L.F.
748015	PERMANENT PAVEMENT STRIPING, SYMBOL/LEGEND ALKYD-THERMOPLAST IC	225.00	S.F.
748019	TEMPORARY MARKINGS, PAINT, 4"	1,400.00	L.F.
748548	PERMANENT PAVEMENT STRIPING, EPOXY RESIN PAINT, WHITE/YELLOW, 5"	1,400.00	L.F.
750000	ADJUST WATER VALVE BOXES	5.00	EACH
758000	REMOVAL OF EXISTING PORTLAND CEMENTCONCRETE PAVEMENT, CURB, SIDEWALK, ETC.	2,500.00	S.Y.
760000	PAVEMENT - MILLING, HOT-MIX	15,000.00	SY-IN
760006	PAVEMENT - MILLING, HOT-MIX, 2" DEPTH	80,000.00	S.Y.
760502	PAVEMENT MILLING, TAPER CUT	600.00	SY-IN
761001	BUTT JOINTS, HOT MIX	500.00	S.Y.
762001	SAW CUTTING, BITUMINOUS CONCRETE	9,000.00	L.F.
762002	SAW CUTTING, CONCRETE, FULL DEPTH	1,250.00	L.F.
763544	ROAD LOCATION MOBILIZATION, ZONE 1	5.00	EACH
763545	ROAD LOCATION MOBILIZATION, ZONE 2	5.00	EACH
763546	ROAD LOCATION MOBILIZATION, ZONE 3	5.00	EACH
763548	ROAD LOCATION MOBILIZATION, ZONE 5	5.00	EACH
763549	ROAD LOCATION MOBILIZATION, ZONE 6	5.00	EACH
763550	ROAD LOCATION MOBILIZATION, ZONE 7	5.00	EACH
763551	ROAD LOCATION MOBILIZATION, ZONE 8	5.00	EACH
763552	ROAD LOCATION MOBILIZATION, ZONE 9	5.00	EACH
908001	TOPSOIL (TON)	300.00	TON
908016	PERMANENT GRASS SEEDING, SUBDIVISION	1,000.00	S.Y.
908020	EROSION CONTROL BLANKET MULCH	300.00	S.Y.

CONTRACT QUANTITIES SUMMARY SHEET

202000	EXCAVATION AND EMBANKMENT	100.00	C.Y.
302007	GRADED AGGREGATE BASE COURSE, TYPE B	445.00	C.Y.
302008	GRADED AGGREGATE BASE COURSE, TYPE B, PATCHING	200.00	C.Y.
401511	REMOVE AND CONSTRUCT SPEED HUMP	220.00	L.F.
401520	PAVING SURCHARGE, ZONE 1	1,280.00	TON
401521	PAVING SURCHARGE, ZONE 2	1,280.00	TON
401522	PAVING SURCHARGE, ZONE 3	1,280.00	TON
401524	PAVING SURCHARGE, ZONE 5	1,280.00	TON
401525	PAVING SURCHARGE, ZONE 6	1,280.00	TON
401526	PAVING SURCHARGE, ZONE 7	1,280.00	TON
401527	PAVING SURCHARGE, ZONE 8	1,280.00	TON
401528	PAVING SURCHARGE, ZONE 9	1,280.00	TON
401800	BITUMINOUS CONCRETE, SUPERPAVE, TYPE C, 115 GYRATIONS, PG 64-22 (CARBONATE STONE)	9,000.00	TON
401809	BITUMINOUS CONCRETE, SUPERPAVE, TYPE B, 115 GYRATIONS, PG 64-22	500.00	TON
401819	BITUMINOUS CONCRETE, SUPERPAVE, BITUMINOUS CONCRETE BASE COURSE, 160 GYRATIONS, PG 64-22	250.00	TON
401821	BITUMINOUS CONCRETE, SUPERPAVE, TYPE C, 160 GYRATIONS, PG 64-22, PATCHING	490.00	TON
406001	BITUMINOUS CONCRETE PATCHING	2,500.00	SY-IN
612020	REINFORCED CONCRETE PIPE, 12", CLASS IV	40.00	L.F.
612021	REINFORCED CONCRETE PIPE, 15", CLASS IV	40.00	L.F.
612022	REINFORCED CONCRETE PIPE, 18", CLASS IV	40.00	L.F.
612519	CORRUGATED POLYETHYLENE PIPE, TYPE C, 15"	100.00	L.F.
617002	REINFORCED CONCRETE FLARED END SECTION, 15"	1.00	EACH
701004	PORTLAND CEMENT CONCRETE VALLEY GUTTER, 8"	100.00	S.Y.
701010	PORTLAND CEMENT CONCRETE CURB, TYPE 1-8	250.00	L.F.
701011	PORTLAND CEMENT CONCRETE CURB, TYPE 2	30.00	L.F.
701020	INTEGRAL PORTLAND CEMENT CONCRETE CURB & GUTTER, TYPE 1-8	300.00	L.F.
701021	INTEGRAL PORTLAND CEMENT CONCRETE CURB & GUTTER, TYPE 2	6,600.00	L.F.

Unofficial Website Copy

CONTRACT QUANTITIES SUMMARY SHEET

701022	INTEGRAL PORTLAND CEMENT CONCRETE CURB & GUTTER, TYPE 3-8	200.00	L.F.
705001	P.C.C. SIDEWALK, 4"	1,300.00	S.F.
705002	P.C.C. SIDEWALK, 6"	2,100.00	S.F.
705007	SIDEWALK SURFACE DETECTABLE WARNING SYSTEM	500.00	S.F.
705008	CURB RAMP, TYPE 1	390.00	S.F.
705009	CURB RAMP, TYPE 2, 3, AND/OR 4	10,000.00	S.F.
708050	DRAINAGE INLET, 34" X 18"	5.00	EACH
708051	DRAINAGE INLET, 34" X 24"	3.00	EACH
708060	REPLACE DRAINAGE INLET GRATE(S)	20.00	EACH
708061	REPLACE DRAINAGE INLET FRAME(S)	10.00	EACH
708585	JUNCTION BOX, 48" X 30"	1.00	EACH
710001	ADJUSTING AND REPAIRING EXISTING DRAINAGE INLET	30.00	EACH
710002	ADJUSTING AND REPAIRING EXISTING MANHOLE	75.00	EACH
712005	RIPRAP, R-4	10.00	S.Y.
713003	GEOTEXTILES, RIPRAP	10.00	S.Y.
714003	DITCHING	200.00	L.F.
715001	PERFORATED PIPE UNDERDRAINS, 6"	300.00	L.F.
718000	ROOF DRAINS	70.00	L.F.
727502	ADJUSTING EXISTING MONUMENT BOX	3.00	EACH
743003	ARROWPANELS, TYPE C	5.00	EA-DY
743009	FURNISH AND MAINTAIN TRUCK MOUNTED ATTENUATOR, TYPE I	5.00	EA-DY
743050	FLAGGER, NEW CASTLE COUNTY, STATE	3,000.00	HOUR
743062	FLAGGER, NEW CASTLE COUNTY, STATE, OVERTIME	300.00	HOUR
746774	SUPPLY AND INSTALLATION OF LOOP DETECTOR WIRE	200.00	L.F.
748015	PERMANENT PAVEMENT STRIPING, SYMBOL/LEGEND ALKYD-THERMOPLAST IC	225.00	S.F.
748019	TEMPORARY MARKINGS, PAINT, 4"	1,400.00	L.F.
748548	PERMANENT PAVEMENT STRIPING, EPOXY RESIN PAINT, WHITE/YELLOW, 5"	1,400.00	L.F.
750000	ADJUST WATER VALVE BOXES	5.00	EACH

Unofficial Website Copy

CONTRACT QUANTITIES SUMMARY SHEET

758000	REMOVAL OF EXISTING PORTLAND CEMENTCONCRETE PAVEMENT, CURB, SIDEWALK, ETC.	2,500.00	S.Y.
760000	PAVEMENT - MILLING, HOT-MIX	15,000.00	SY-IN
760006	PAVEMENT - MILLING, HOT-MIX, 2" DEPTH	80,000.00	S.Y.
760502	PAVEMENT MILLING, TAPER CUT	600.00	SY-IN
761001	BUTT JOINTS, HOT MIX	500.00	S.Y.
762001	SAW CUTTING, BITUMINOUS CONCRETE	9,000.00	L.F.
762002	SAW CUTTING, CONCRETE, FULL DEPTH	1,250.00	L.F.
763000	INITIAL EXPENSE	LUMP	SUM
763544	ROAD LOCATION MOBILIZATION, ZONE 1	5.00	EACH
763545	ROAD LOCATION MOBILIZATION, ZONE 2	5.00	EACH
763546	ROAD LOCATION MOBILIZATION, ZONE 3	5.00	EACH
763548	ROAD LOCATION MOBILIZATION, ZONE 5	5.00	EACH
763549	ROAD LOCATION MOBILIZATION, ZONE 6	5.00	EACH
763550	ROAD LOCATION MOBILIZATION, ZONE 7	5.00	EACH
763551	ROAD LOCATION MOBILIZATION, ZONE 8	5.00	EACH
763552	ROAD LOCATION MOBILIZATION, ZONE 9	5.00	EACH
763643	MAINTENANCE OF TRAFFIC, ALL INCLUSIVE	LUMP	SUM
908001	TOPSOIL (TON)	300.00	TON
908016	PERMANENT GRASS SEEDING, SUBDIVISION	1,000.00	S.Y.
908020	EROSION CONTROL BLANKET MULCH	300.00	S.Y.

Unofficial Website Copy