THE STATE OF DELAWARE

DEPARTMENT OF TRANSPORTATION

OFFICE OF TRANSPORTATION SOLUTIONS

PLANS AND SPECIFICATIONS FOR

CONTRACT NUMBER - T201606103

FEDERAL AID NUMBER - ESTP-2016(02)

NORTH MAINTENANCE

CONTRACT TITLE- PAVEMENT & REHABILITATION, NORTH III, 2016

PLANS PREPARED BY George LeCates

DESIGN TECHNICIAN

DATE RECOMMENDED: 12/1/15

Christopher Costello

GROUP ENGINEER, CONSTRUCTION – GROUP 1

DATE RECOMMENDED: 11-30-15

David A. Nicol

ASSIST. DIRECTOR, ENGINEERING SUPPORT

DAVID A. NICOL LICENSE No. 18839 DELAWARE PROFESSIONAL ENGINEER

DATE RECOMMENDED: 12/01/15

Robert Brian McCleary

CHIEF ENGINEER

ROBERT BRIAN McCLEARY REGISTERED No. 8567 DELAWARE PROFESSIONAL ENGINEER

Unofficial Website Copy

NAAMANS ROAD EB & WB FROM CONCORD PIKE TO 500' EAST OF FOULK ROAD @ BRIDGE DECK

LOCATION MAP

Location #1 - Naamans Road EB & WB from Concord Pike to 500' East of Foulk Ro...

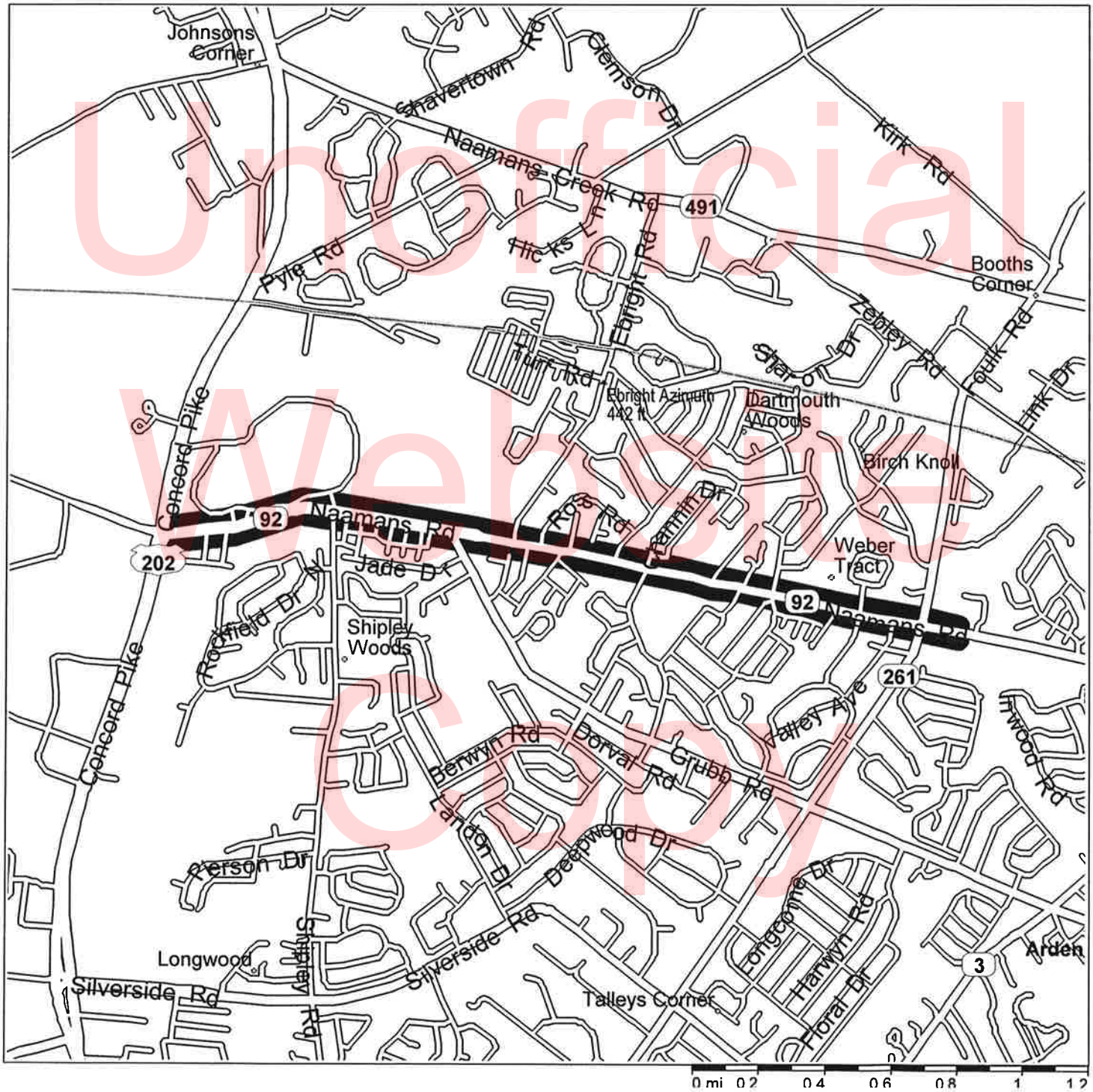

Unofficial Website Copy

NAAMANS ROAD EB & WB FROM CONCORD PIKE TO 500' EAST OF FOULK ROAD @ BRIDGE DECK

NAAMANS ROAD – BRIDGE 1-052A

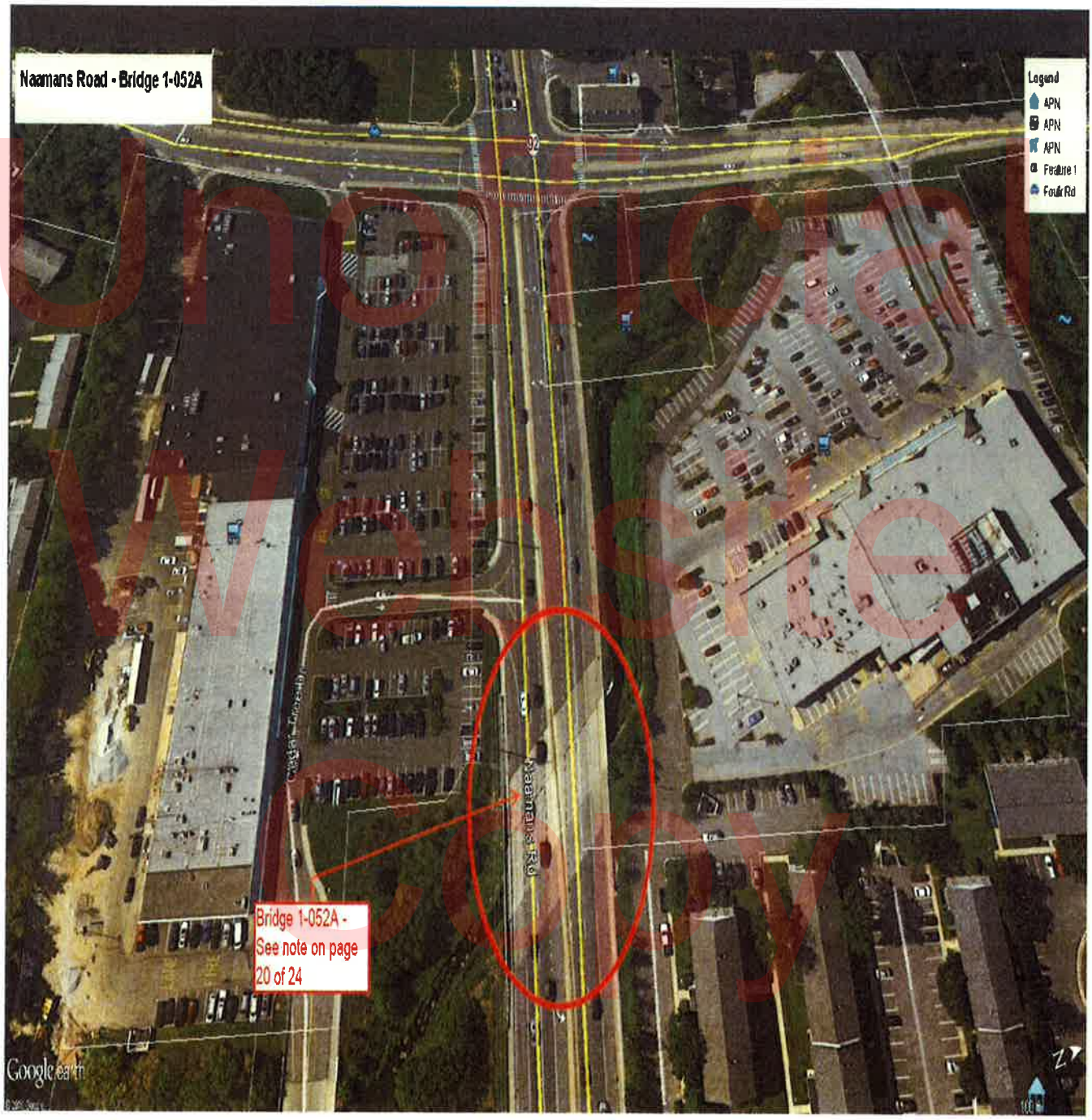

Unofficial Website Copy

GENERAL CONTRACT PLAN NOTES

REVISED 9/2015

GENERAL

1. CONSTRUCTION OF THIS CONTRACT SHALL CONFORM TO DELAWARE DEPARTMENT OF TRANSPORTATION STANDARD SPECIFICATIONS DATED AUGUST 2001 AS AMENDED BY THE SUPPLEMENTAL SPECIFICATIONS, THE SPECIAL PROVISIONS, THE MOST RECENT STANDARD CONSTRUCTION DETAILS, DELAWARE MANUAL ON UNIFORM TRAFFIC CONTROL DEVICES AND THESE PLANS.

2. THE PURPOSE OF THIS CONTRACT IS TO MAKE GENERAL IMPROVEMENTS TO ROADS AND/OR STREETS WITHIN THE DISTRICT HEREIN SPECIFIED. DEPENDING ON FUND AVAILABILITY, THE DEPARTMENT RESERVES THE RIGHT TO ADD OR DELETE LOCATIONS AND/OR QUANTITIES FOR THIS CONTRACT. SUCH LOCATION OR QUANTITY ADDITIONS OR DELETIONS SHALL NOT BE CAUSE FOR AN INCREASE OR DECREASE IN ANY CONTRACT UNIT BID PRICES. NO ITEM PRICES ARE TO BE RENEGOTIATED DUE TO EITHER AN INCREASE OR DECREASE IN QUANTITY USAGE RESULTING FROM SAID ADDITIONS OR DELETIONS.

3. THE CONTRACTOR SHALL PROVIDE ALL RESIDENTS AND BUSINESSES WHO LIVE ADJACENT TO THE WORK ZONE A MINIMUM 48 HR. PRIOR WRITTEN NOTICE FOR THE START OF CONSTRUCTION WORK. THIS NOTIFICATION SHALL INCLUDE THE SCOPE OF WORK, WORKING HOURS, ANTICIPATED START AND COMPLETION DATES, CONTRACTOR NAME & ADDRESS, AND DELDOT CONTACT NUMBERS. FAILURE TO GIVE PROPER NOTICE WILL RESULT IN A SUSPENSION OF WORK REQUIRING NOTICE, UNTIL PROPER NOTICE IS PROVIDED. ACCESS TO ALL BUSINESSES AND RESIDENCES WITHIN THE PROJECT LIMITS SHALL BE MAINTAINED THROUGHOUT THE DURATION OF THIS CONTRACT. ANY TEMPORARY CLOSURE OF A DRIVEWAY FOR TIE-IN PURPOSES SHALL BE COORDINATED WITH THE ENGINEER AND/OR PROPERTY OWNER IN ADVANCE OF THE CLOSURE.

4. THE CONTRACTOR SHALL SUBMIT THE REQUIRED COPIES OF A DETAILED PROGRESS SCHEDULE (PSC) AS OUTLINED IN STANDARD SPECIFICATION 108.04 PRIOR TO OR AT THE PRECONSTRUCTION MEETING. DETAILS SHALL INCLUDE A DESCRIPTION OF EACH WORK ACTIVITY, THE PLANNED DAYS OF WORK, MULTIPLE CREWS OR SHIFTS, AND SCHEDULED WORKING HOURS. DURING THE CONTRACT, THE CONTRACT SHALL SUBMIT TWO-WEEK (OR AS REQUIRED) "LOOK AHEAD" SCHEDULES TO THE AREA ENGINEER/ MANAGER NO LATER THAN NOON OF EACH THURSDAY.

Unofficial Website Copy

GENERAL CONTRACT PLAN NOTES

FAILURE TO COMPLY WILL RESULT IN A SUSPENSION OF ALL CONTRACT WORK WITH TIME CHARGES CONTINUING TO BE ASSESSED.

MAINTENANCE OF TRAFFIC

5. THE CONTRACTOR SHALL BE REQUIRED TO SHOW PROOF THAT HE HAS SUFFICIENT APPROVED STRIPING MATERIALS ON HAND TO ENSURE STRIPING IS COMPLETED PRIOR TO FULL OPENING ROADWAY TO TRAFFIC.

6. WITHIN THE MAINLINE WORK AREA, PERMANENT ADVANCE WARNING SIGNS WITH THE LEGENDS "ROAD WORK 1500 FT", "ROAD WORK 1000 FT", AND "ROAD WORK 500 FT" SHALL BE INSTALLED IN ADVANCE OF THE WORK AREA IN BOTH DIRECTIONS. AN "END ROAD WORK" SIGN SHALL BE LOCATED 500 FEET DOWNSTREAM FROM THE WORK AREA. ON INTERSECTING ROADWAYS WITHIN THE PROJECT LIMITS, A "ROAD WORK AHEAD" SIGN SHALL BE PLACED AT A DISTANCE NOT LESS THAN 500 FEET DOWNSTREAM OF THE WORK AREA. ALL PERMANENT ADVANCE WARNING SIGNS SHALL BE GROUND-MOUNTED ON TWO NCHRP-350 OR MASH APPROVED BREAKAWAY POSTS AND SHALL BE MOUNTED IN COMPLIANCE WITH THE DE-MUTCD. PERMANENT ADVANCE WARNING SIGNS SHALL BE MOUNTED AT A HEIGHT OF 7 FEET, MEASURED FROM THE ROADWAY TO THE BOTTOM OF THE SIGN. THE USE OF SKID-MOUNTED SIGN SUPPORTS IS NOT ALLOWED UNLESS THE CONTRACTOR CAN DEMONSTRATE THAT A UTILITY CONFLICT EXISTS, WHICH SHALL BE VERIFIED BY THE ENGINEER; OR CONCRETE MEDIANS PREVENT THE INSTALLATION OF THE PERMANENT SIGNS IN THE APPROPRIATE LOCATION.

7. AT THE END OF EACH DAY'S OPERATION AND BEFORE TRAFFIC IS RETURNED TO UNRESTRICTED ROADWAY USE, TEMPORARY STRIPING SHALL BE UTILIZED AT LOCATIONS THAT REQUIRE PERMANENT STRIPING. TEMPORARY PAVEMENT STRIPING MUST MATCH PERMANENT PAVEMENT STRIPING IN ALL REGARDS. TEMPORARY PAVEMENT MARKINGS SHALL BE PAID AT THE APPLICABLE CONTRACT UNIT PRICE. THE CONTRACTOR IS RESPONSIBLE FOR MAINTAINING THE TEMPORARY MARKINGS IN GOOD CONDITION SUCH THAT THE PAVEMENT IS PROPERLY DELINEATED AT ALL TIMES. ANY REFRESHING OF THE TEMPORARY MARKINGS WILL BE AT THE CONTRACTOR'S EXPENSE.

Unofficial Website Copy

GENERAL CONTRACT PLAN NOTES

8. ALL WORK SHALL BE PERFORMED IN A MANNER THAT WILL REASONABLY PROVIDE THE LEAST PRACTICABLE OBSTRUCTION TO ALL ROAD USERS, INCLUDING VEHICULAR, PEDESTRIAN AND BICYCLE TRAFFIC, AND SHALL CONFORM TO THE REQUIREMENTS OF THE 2011 DELAWARE MANUAL ON UNIFORM TRAFFIC CONTROL DEVICES, PART 6, INCLUDING ALL REVISIONS UP TO THE DATE OF ADVERTISEMENT FOR BIDS.

9. CURB RAMP AND/OR SIDEWALK CONSTRUCTION (NOT INCLUDING MEDIAN ISLANDS) SHALL BE COMPLETED DURING A SINGLE OPERATION. THE RAMP/SIDEWALK SHALL BE REMOVED AND PLACED BACK THE SAME NIGHT/DAY AND OPEN TO PEDESTRIAN TRAFFIC THE FOLLOWING DAY. THE USE OF A MONOLITHIC POUR SHALL BE PERMITTED WITH A BOND BREAKER TO BE PLACED AT THE BACK OF THE CURB AND EDGE OF SIDEWALK. IF THE CURB RAMP/SIDEWALK CANNOT BE COMPLETED IN A SINGLE OPERATION THE EXCAVATED AREA MUST BE BACKFILLED TO GRADE WITH COMPACTED MILLING MATERIAL ONLY. THIS MATERIAL WILL BE INCIDENTAL TO THE CURB RAMP ITEM. THE DRESSING UP OF THE AREA BEING PAID AS A CURB RAMP WITH TOPSOIL AND SEED WILL BE INCIDENTAL TO THE CURB RAMP ITEMS.THE CONTRACTOR SHALL MAINTAIN ACCESS TO AND ALONG PEDESTRIAN FACILITIES AT ALL TIMES DURING CONSTRUCTION. EARTH, STONE AND GRAVEL SURFACES ARE NOT ACCEPTABLE FOR PROVIDING PEDESTRIAN ACCESS. IF CURB RAMP CANNOT BE COMPLETED IN A SINGLE OPERATION AND PEDESTRIAN ROUTES ARE CLOSED OR BLOCKED, ALTERNATE PEDESTRIAN ACCESS SHALL BE PROVIDED USING TA-28 AND/OR TA-29 OF THE 2011 DELAWARE MANUAL ON UNIFORM TRAFFIC CONTROL DEVICES OR TO THE SATISFACTION OF THE ENGINEER. PEDESTRIAN DETOUR ROUTES OR ALTERNATE PEDESTRIAN FACILITIES SHALL CONSIST OF ADA COMPLIANT FACILITIES TO THE LEVEL OF WHICH EXISTS ON THE PEDESTRIAN ROUTE. THE COST FOR ANY PROVISIONS SHALL BE INCIDENTAL TO ITEM 763XXX - MAINTENANCE OF TRAFFIC.

PEDESTRIAN MAINTENANCE OF TRAFFIC: THIS WORK SHALL CONSIST OF PROVIDING AND MAINTAINING AN ACCESSIBLE PEDESTRIAN ROUTE THROUGHOUT THE PROJECT'S LIMITS IN ACCORDANCE WITH THE AMERICANS WITH DISABILITIES ACT OF 1990 (ADA) TITLE II, PARAGRAPH 35.130.

THE CONTRACTOR SHALL BE REQUIRED TO REVIEW EACH CURB RAMP LOCATION AND SUBMIT THE APPROPRIATE MAINTENANCE OF TRAFFIC DETAIL AND DEVICES TO THE ENGINEER FOR EACH LOCATION AT LEAST 2 WEEKS BEFORE CONSTRUCTION FOR REVIEW, COMMENT, AND APPROVAL BY THE DISTRICT TRAFFIC SAFETY OFFICER

Unofficial Website Copy

GENERAL CONTRACT PLAN NOTES

THE FOLLOWING CONSIDERATIONS SHALL BE TAKEN INTO ACCOUNT WHEN ADDRESSING ACCESSIBLE PEDESTRIAN MAINTENANCE OF TRAFFIC:

ALL PEDESTRIANS, INCLUDING PERSONS WITH DISABILITIES, SHALL BE PROVIDED WITH A REASONABLY SAFE, CONVENIENT AND ACCESSIBLE PATH THAT REPLICATES AS MUCH AS PRACTICABLE THE EXISTING PEDESTRIAN FACILITIES.

MAINTAIN ACCESS TO ALL BUSINESSES AND RESIDENCES AT ALL TIMES.

PROVIDE PEDESTRIAN ACCESS THROUGH OR AROUND THE WORK ZONE. IF A DETOUR IS CHOSEN THE CONTRACTOR MUST SUBMIT THE DETOUR ROUTE TO THE ENGINEER FOR REVIEW AND APPROVAL. THE DETOUR ROUTE MUST MEET OR EXCEED THE CURRENT CONDITIONS.

WORK SHOULD BE PHASED SO THAT ALL AREAS OF AN INTERSECTION/SIDEWALK PATH ARE NOT UNDER CONSTRUCTION AT THE SAME TIME UNLESS A CLEAR PATH IS PROVIDED AND IDENTIFIED.

TRAFFIC CONTROL DEVICES AND OTHER CONSTRUCTION MATERIALS AND FEATURES SHALL NOT INTRUDE INTO THE USABLE WIDTH OF THE SIDEWALK, TEMPORARY PATHWAY OR OTHER PEDESTRIAN FACILITY.

SIGNS AND OTHER DEVICES MOUNTED LOWER THAN 7 FT ABOVE THE TEMPORARY PEDESTRIAN PATHWAY SHALL NOT PROJECT MORE THAN 4 IN. INTO ACCESSIBLE PEDESTRIAN ROUTE.

A SMOOTH, CONTINUOUS HARD SURFACE SHALL BE PROVIDED THROUGHOUT THE ENTIRE LENGTH AND WIDTH OF THE PEDESTRIAN ROUTE THROUGHOUT CONSTRUCTION. THERE SHALL BE NO CURBS OR VERTICAL ELEVATION CHANGES GREATER THAN ¼ IN. IN GRADE OR TERRAIN THAT COULD CAUSE TRIPPING OR BE A BARRIER TO WHEELCHAIR USE.

Unofficial Website Copy

GENERAL CONTRACT PLAN NOTES

10. AN AMERICAN TRAFFIC SAFETY SERVICES ASSOCIATION (ATSSA) CERTIFIED TRAFFIC CONTROL SUPERVISOR SHALL BE REQUIRED FOR ALL LOCATIONS SPECIFIED IN THE CONTRACT PLANS. THE CONTRACTOR'S GENERAL SUPERINTENDENT FOR THIS PROJECT OR ANOTHER ATSSA CERTIFIED MEMBER OF THE CONTRACTOR'S PROJECT STAFF MAY BE THE ATTSA SUPERVISOR. A COPY OF THE CERTIFICATION CARD FOR THE ATSSA TRAFFIC CONTROL SUPERVISOR SHALL BE SUBMITTED AT THE PRECONSTRUCTION MEETING. THE PAPER CERTIFICATE IS NOT ACCEPTABLE.

11. MESSAGE BOARDS SHALL BE PLACED 10 DAYS IN ADVANCE OF THE WORK AND SHALL REMAIN IN PLACE FOR 5 DAYS AFTER THE START OF WORK. LOCATIONS OF MESSAGE BOARDS AND MESSAGES DISPLAYED SHALL BE REVIEWED AND APPROVED BY THE DISTRICT SAFETY OFFICER.

PAVEMENT MARKINGS

12. SIGNING AND STRIPING PLANS WILL BE PROVIDED AT THE PRECONSTRUCTION MEETING. THE CONTRACTOR WILL NOT BE REQUIRED TO SUBMIT DETAILED DRAWINGS OF THE EXISTING PAVEMENT MARKINGS.

UNLESS OTHERWISE DIRECTED BY THE ENGINEER, WHITE EDGE LINES SHALL WRAP AROUND THE RADIUS OF ALL SIDE STREETS AND MAJOR COMMERCIAL ENTRANCES TO A TANGENT POINT. YELLOW CENTERLINES SHALL BE CONTINUOUS AROUND MEDIAN ISLANDS. ALL DOUBLE YELLOW CENTERLINES SHALL BE PLACED IN A 5-6-5 CONFIGURATION (2 EACH, 5" YELLOW STRIPES WITH A 6" GAP BETWEEN).

13. ANY ERRONEOUS MARKING WILL NOT BE PAID FOR AND SHALL BE CORRECTED IMMEDIATELY AT THE CONTRACTORS EXPENSE. ERRONEOUS MARKINGS OR SHADOWS THAT EXCEED ONE (1) INCH IN WIDTH SHALL BE REMOVED BY EITHER SAND OR WATER BLASTING AS DIRECTED BY THE ENGINEER. NO OTHER REMOVAL METHODS WILL BE ALLOWED. A FLAT BLACK PAINT OR DRIVEWAY SEALER SHALL BE APPLIED IN THE AREA OF THE REMOVED MARKING TO MASK THE REPAIR. ANY DAMAGE TO THE PAVEMENT CAUSED BY REMOVAL OF ERRONEOUS MARKINGS SHALL BE REPAIRED / REPLACED TO THE SATISFACTION OF THE ENGINEER AT THE CONTRACTORS EXPENSE.

Unofficial Website Copy

GENERAL CONTRACT PLAN NOTES

14. STOP LINES "BARS" SHALL BE INSTALLED IN ACCORDANCE WITH SECTION 3B.16 OF THE 2011 DELAWARE MUTCD.

15. ALL CROSSWALKS SHALL BE INSTALLED IN ACCORDANCE WITH SECTION 3B.18 OF THE 2011 DELAWARE MUTCD.

Unofficial Website Copy

TRAFFIC SIGNAL NOTES

16. TRAFFIC DETECTION LOOPS SHALL BE PLACED IN THE FINAL WEARING SURFACE UNLESS OTHERWISE DIRECTED BY THE ENGINEER.

17. TRAFFIC DETECTION LOOPS THAT ARE CURRENTLY 5'x7' SHALL BE REPLACED WITH LOOPS THAT ARE 6'x6' AT THE SAME LOCATION. STOP BAR DETECTION LOOPS SHALL BE THE SAME SIZE AS CURRENTLY EXISTING, AND SHOULD BE PLACED STARTING ONE FOOT BEHIND THE STOP BAR, BUT PLACEMENT MAY BE ADJUSTED TO ADDRESS FIELD REQUIREMENTS. IF SEPARATE SIGNAL PLANS HAVE BEEN DEVELOPED, THE PLANS SUPERSEDE THIS NOTE.

PROJECT

18. UNLESS SPECIFIED, OVERLAY WIDTHS SHALL MATCH EXISTING WIDTHS.

19. THE COST OF CLIPPING BACK THE EDGES OF THE ROADWAY, SHOULDERS, AND THE FIRST 3' OF UNPAVED DRIVEWAY ENTRANCES, PICKING UP AND DISPOSING OF WASTE AND EXCESS MATERIAL, AND CLEANING THE EXISTING PAVEMENT PRIOR TO OVERLAY SHALL BE INCIDENTAL TO SECTION 401( ). PREPARING UNPAVED DRIVEWAY ENTRANCES BEYOND THE FIRST 3' SHALL BE PAID UNDER THE APPROPRIATE CONTRACT ITEMS: 202000 AND/OR 30200X.

GENERAL CONTRACT PLAN NOTES

20. BUTT JOINTS SHALL BE PLACED AT ALL INTERSECTING HOT MIX ROADS AND ANY OTHER LOCATIONS AS DIRECTED BY THE ENGINEER. BUTT JOINTS AT DRAINAGE STRUCTURES NOT TO BE RESURFACED SHALL BE AS PER THE INCLUDED PLAN DETAIL OR LOCATION NOTES. BUTT JOINTS CUT PRIOR TO THE DAY OF THE PAVEMENT OVERLAY SHALL BE RAMPED WITH HOT MIX TRM. IN MILLING AREAS, THERE WILL BE NO SEPARATE PAYMENT FOR BUTT JOINTS. AFTER PAVEMENT MILLING, ALL TRANSVERSE VERTICAL DIFFERENCES, RAISED EDGES OF MANHOLES, CATCH BASINS, WATER VALVE BOXES, ETC...SHALL BE RAMPED WITH HOT-MIX TRM AT A 20:1 OR FLATTER SLOPE PRIOR TO OPENING THE ROADWAY TO TRAFFIC. PAVEMENT MILLINGS WILL NOT BE ALLOWED FOR USE AS RAMPING MATERIAL.

21. TAPER MILLING IS INTENDED FOR MILLING IN THE AREA OF FIXED STRUCTURES (I.E. CURBS GUARDRAIL, ETC.) THE MILLED DEPTH AT THE STRUCTURE SHALL BE THE DEPTH OF THE PROPOSED OVERLAY AND 0" AT A DISTANCE OF +/- 6½' FROM THE STRUCTURE. THE COMPUTED DEPTH FOR PAYMENT PURPOSES IS THE AVERAGE OF THE TWO DEPTHS.

22. ALL MILLED MATERIAL SHALL REMAIN THE PROPERTY OF THE CONTRACTOR UNLESS OTHERWISE STATED.

23. EXCAVATION UP TO 1' IN FRONT OF CURB WILL BE INCIDENTAL TO ITEM 701XXX. HOT MIX PLACED IN FRONT OF CURB WILL BE PAID UNDER ITEM 401XXX. USE OF CONCRETE AS FILL IN FRONT OF CURB WILL NO LONGER BE ACCEPTED UNLESS DIRECTED BY THE ENGINEER. AT EACH LOCATION, BACKFILLING SHALL BE PERFORMED IMMEDIATELY UPON REMOVAL OF FORMS FOR CURB OR SIDEWALK. TOPSOIL, SEEDING, SEALING OF VALLEY GUTTERS, REMOVING OF FORMS, AND PARGING OF CATCH BASINS, SHALL BE COMPLETED WITHIN SEVEN (7) CALENDAR DAYS OF COMPLETION OF THE ITEM OF WORK. ITEM 732XXX, TOPSOIL, SHALL BE USED AS BACKFILL MATERIAL BEHIND CURB AND AROUND SIDEWALK OR/AS DIRECTED BY THE ENGINEER. TOPSOIL SHALL BE SCREENED/SIFTED SO AS NO MATERIAL GREATER THAN .5" IS PRESENT IN MATERIAL USED FOR BACKFILL. EXCAVATED MATERIAL, NOT NEEDED ON THE PROJECT, SHALL BE REMOVED FROM THE CONTRACT AT THE CONTRACTORS EXPENSE. FAILURE TO COMPLY WILL RESULT IN A SUSPENSION OF ALL OTHER CONTRACT WORK WITH TIME CHARGES CONTINUING TO BE ASSESSED.

24. ALL ADJUSTMENTS SHALL BE MADE NO MORE THAN SEVEN (7) CALENDAR DAYS PRIOR TO THE PLACEMENT OF THE FINAL COURSE OF HOT MIX UNLESS OTHERWISE APPROVED BY THE ENGINEER.

Unofficial Website Copy

GENERAL CONTRACT PLAN NOTES

FAILURE TO COMPLY WILL RESULT IN A SUSPENSION OF ALL OTHER CONTRACT WORK WITH TIME CHARGES CONTINUING TO BE ASSESSED.

25. ALL PAVING, INCLUDING TURN LANES, SHOULDERS AND INTERSECTIONS, IS TO BE COMPLETED WITHIN SEVEN (7) CALENDAR DAYS FROM THE TIME THE AREA WAS MILLED. FAILURE TO COMPLY WILL RESULT IN A SUSPENSION OF ALL OTHER CONTRACT WORK WITH TIME CHARGES CONTINUING TO BE ASSESSED.

26. THE CONTRACTOR SHALL TAKE CARE IN REMOVING PAVEMENT AROUND UTILITIES, BUTT JOINTS, CURBS, ETC. SO THAT EXISTING PAVEMENT BEYOND THE SPECIFIED DEPTHS IS NOT DAMAGED. ANY DAMAGE CAUSED BY THE CONTRACTOR'S OPERATIONS MAY RESULT IN PLACING LEVELING COURSES AT THE CONTRACTOR'S EXPENSE. THE REMOVAL AND CLEAN UP OF THE HOT MIX RESIDUE WEDGE REMAINING AFTER MILLING OPERATIONS SHALL BE INCIDENTAL TO THE MILLING ITEM. THE REMOVAL OF EXISTING RAISED PAVEMENT MARKERS (RPM'S) SHALL BE INCIDENTAL TO THE APPLICABLE MILLING AND/OR RECLAMATION ITEMS.

27. ALL PORTLAND CEMENT CONCRETE MUST BE RECEIVED FROM AN APPROVED PRODUCTION PLANT UNLESS OTHERWISE APPROVED BY THE ENGINEER. ONLY CALIBRATED VOLUMETRIC CONCRETE TRUCKS WILL BE PERMITTED TO PROVIDE ON-SITE MIXTURES. THIS PERTAINS TO BOTH WORK OCCURRING DURING NORMAL WORKING HOURS AND NIGHTTIME RESTRICTED WORK.

28. DRAINAGE INLETS, WHICH ARE 4' GREATER IN DEPTH AND ARE SLATED FOR REPAIR WILL HAVE STEPS INSTALLED IN ACCORDANCE WITH SECTION 708.07 OF THE STANDARD SPECIFICATIONS. PAYMENT SHALL BE INCIDENTAL TO THE UNIT PRICE BID FOR ITEM 710001.

29. THE PORTLAND CEMENT CONCRETE USED FOR ITEM 710001 - ADJUSTING AND REPAIRING EXISTING DRAINAGE INLET, ITEM 710002 - ADJUST AND REPAIR EXISTING MAN HOLES AND ITEM 750000 - ADJUST WATER VALVE BOX SHALL CONFORM TO THE REQUIREMENTS OF CLASS A CONCRETE (6 HOUR ROADWAY MIX) AS STATED WITHIN SECTION 503.02 OF THE DEPARTMENT'S STANDARD SPECIFICATIONS. ALSO, THE PERIMETER OF THE UTILITY ADJUSTMENT WILL BE SEALED AND WILL BE CONSIDERED INCIDENTAL TO THE APPLICABLE ADJUSTMENT ITEM.

Unofficial Website Copy

GENERAL CONTRACT PLAN NOTES

30. WHEN JACKHAMMERING OR THE USE OF A BREAKER IS NECESSARY ON CONTRACTS THAT OCCUR DURING THE NIGHTTIME HOURS THE JACKHAMMERING AND BREAKING MUST CEASE AT 12:00AM REGARDLESS OF ANY NOISE WAIVER THAT MAY EXIST.

31. ANY MILLING MATERIAL REQUIRED TO MAKE AREAS ADA COMPLIANT IF NOT COMPLETED IN THE SAME SHIFT AT CURB, SIDEWALK, CURB RAMPS, ISLANDS, ETC. WILL BE INCIDENTAL TO THE PAY ITEM ASSOCIATED WITH THE WORK. MILLING MATERIAL IS THE ONLY APPROVED MATERIAL FOR THIS PRACTICE.

32. WHEN CONTRACT INCLUDES ITEMS 503001 AND 503002 PATCHES WILL BE PRESUMED TO BE STANDARD PATCH SIZES AND LOCATIONS WILL BE DETERMINED AT THE CONSTRUCTION PRE-WALK. THE USE OF STEEL PLATES WILL BE PROHIBITED. ROADWAY MUST BE RETURNED TO UNRESTRICTED USE AT THE END OF EACH WORK DAY. ALL PCC PAVEMENT WILL BE PRESUMED TO BE 9".

33. ITEM 763621 CONSTRUCTION ENGINEERING, REHABILITATION WILL COMPENSATE THE CONTRACTOR FOR THE FOLLOWING SURVEY ACTIVITIES. ANY LAYOUT ASSOCIATED WITH ADA IMPROVEMENTS, PROVIDING GRADES FOR UTILITY ADJUSTMENTS IF NECESSARY, THE LAYOUT OF LANE LINES FOR PAVING, GRADES FOR THE INSTALLATION OF DRAINAGE STRUCTURES OR OTHER ITEMS OF WORK AS DETERMINED BY THE ENGINEER OR PROGRAM MANAGER. THIS ITEM WILL NOT COMPENSATE THE CONTRACTOR FOR THE LAYOUT OF STRIPING AS THIS IS THE RESPONSIBILITY OF THE STRIPING SUBCONTRACTOR. THE HOURLY PAYMENT WILL BE BASED UPON ACTUAL HOURS OF SURVEYING PERFORMED IN THE FIELD. IT WILL NOT INCLUDE TIME SPENT IN VEHICLE OR OFFICE. THE SURVEY CREW WILL BE RESPONSIBLE UPON ARRIVAL AND DEPARTURE ON THE JOBSITE TO CONTACT A MEMBER OF THE INSPECTION STAFF SO THAT HOURS CAN BE TRACKED FOR PAYMENT. THE CONSEQUENCE FOR NOT DOING THIS WILL BE NON-PAYMENT FOR THE SURVEYING SERVICES.

34. UPON RECEIPT OF THE MONTHLY PAY ESTIMATE ANY ISSUES OR DESCREPENCIES SHOULD BE BROUGHT TO THE ATTENTION OF THE ENGINEER/PROGRAM MANAGER IF POSSIBLE BEFORE THE ISSUANCE OF THE NEXT PAY ESTIMATE. TO ALLOW FOR INVOICES FROM SUBCONTRACTORS ETC., A 60 DAY TIME PERIOD TO REPORT DESCREPENCIES WILL BE PERMITTED. ANY DESCREPENCIES BEYOND THE 60 DAY TIME PERIOD WILL NOT BE ENTERTAINED.

35. FOR ITEM 743007 TRAFFIC OFFICERS, REQUIRED INVOICES WILL BE REVIEWED FOR ACCURACY. ANY MAJOR INACCURACIES WILL BE ADJUSTED ACCORDINGLY. FOR EXAMPLE, IF INVOICE SHOWS

Unofficial Website Copy

GENERAL CONTRACT PLAN NOTES

CHARGED HOURS ON A CERTAIN DATE AND WE HAVE DOCUMENTATION THAT NO WORK OCCURED THAT DATE OR NO OFFICERS WERE PRESENT THE INVOICE WLL BE ADJUSTED ACCORDINGLY.

Unofficial Website Copy

DETAILS SHEET

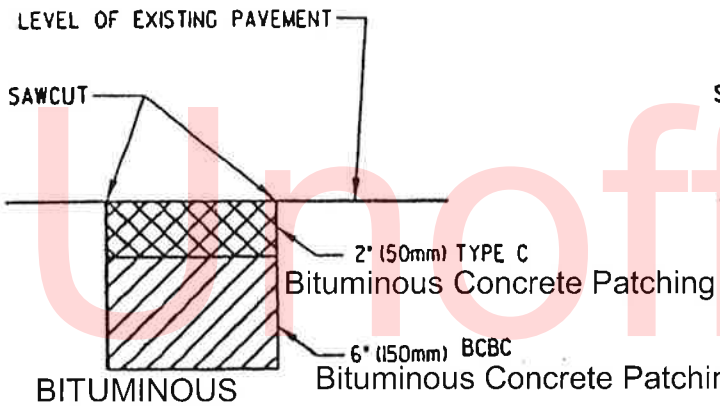

BITUMINOUS CONCRETE - NO OVERLAY

N.T.S.

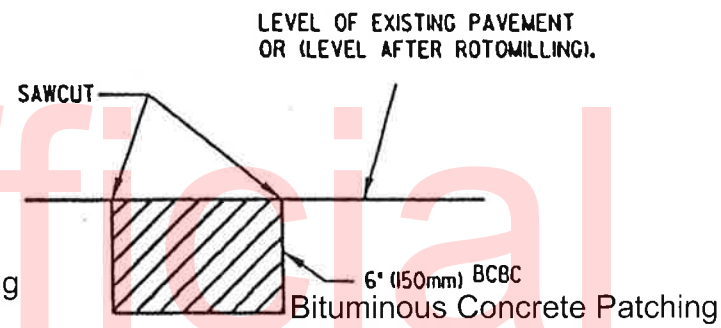

BITUMINOUS CONCRETE PATCH - OVERLAY SECTION

N.T.S.

•UNDERCUT EXCAVATION PATCHING TO BE UTILIZED BELOW 8" (200mm) WHEN DIRECTED BY THE ENGINEER.

•UNDERCUT EXCAVATION PATCHING TO BE UTILIZED BELOW 6" (150mm) WHEN DIRECTED BY THE ENGINEER.

NOTE: PREFERRED EXCAVATION METHOD TO BE BY ROTOMILLING. SAWCUTTING EDGES SHALL BE AS DIRECTED BY ENGINEER AND DEPENDENT ON THE CONDITION LEFT BY THE ROTOMILLING OPERATION.
BACKFILL FOR UNDERCUT EXCAVATION SHALL BE SUPERPAVE BCBC PATCH (SEPERATE LIFT).
MINIMUM WIDTH OF PATCHING 6' (1.8M).
THIS DETAIL SHALL BE USED FOR ALL HOT MIX PATCHES UNLESS OTHERWISE SHOWN ON THE PLANS.
ALL HOT MIX TO BE PLACED USING A PAVER.

WHEN PCC PATCHING IS REQUIRED ON A COMPOSITE PAVEMENT(HOT-MIX OVER CONCRETE), THE CONTRACTOR MAY ELECT TO ELIMINATE ANY GRADE DIFFERENCE BETWEEN THE TOP OF THE CONCRETE PATCH AND THE TOP OF THE EXISTING HOT-MIX PAVEMENT BY EITHER PLACING HOT-MIX TRM MATERIAL(PAYMENT UNDER ITEM 402000) OR PLACING CONCRETE FLUSH WITH EXISTING HOT-MIX PAVEMENT(ADDITIONAL CONCRETE PAID AS ITEM 503503). IF CONCRETE IS PLACED FLUSH WITH EXISTING HOT-MIX, THE ROTOMILLING OF THE CONCRETE WILL BE PAID FOR AS ROTOMILLING HOT-MIX.

P.C.C. PATCHING NOTES

Unofficial Website Copy

DETAILS SHEET

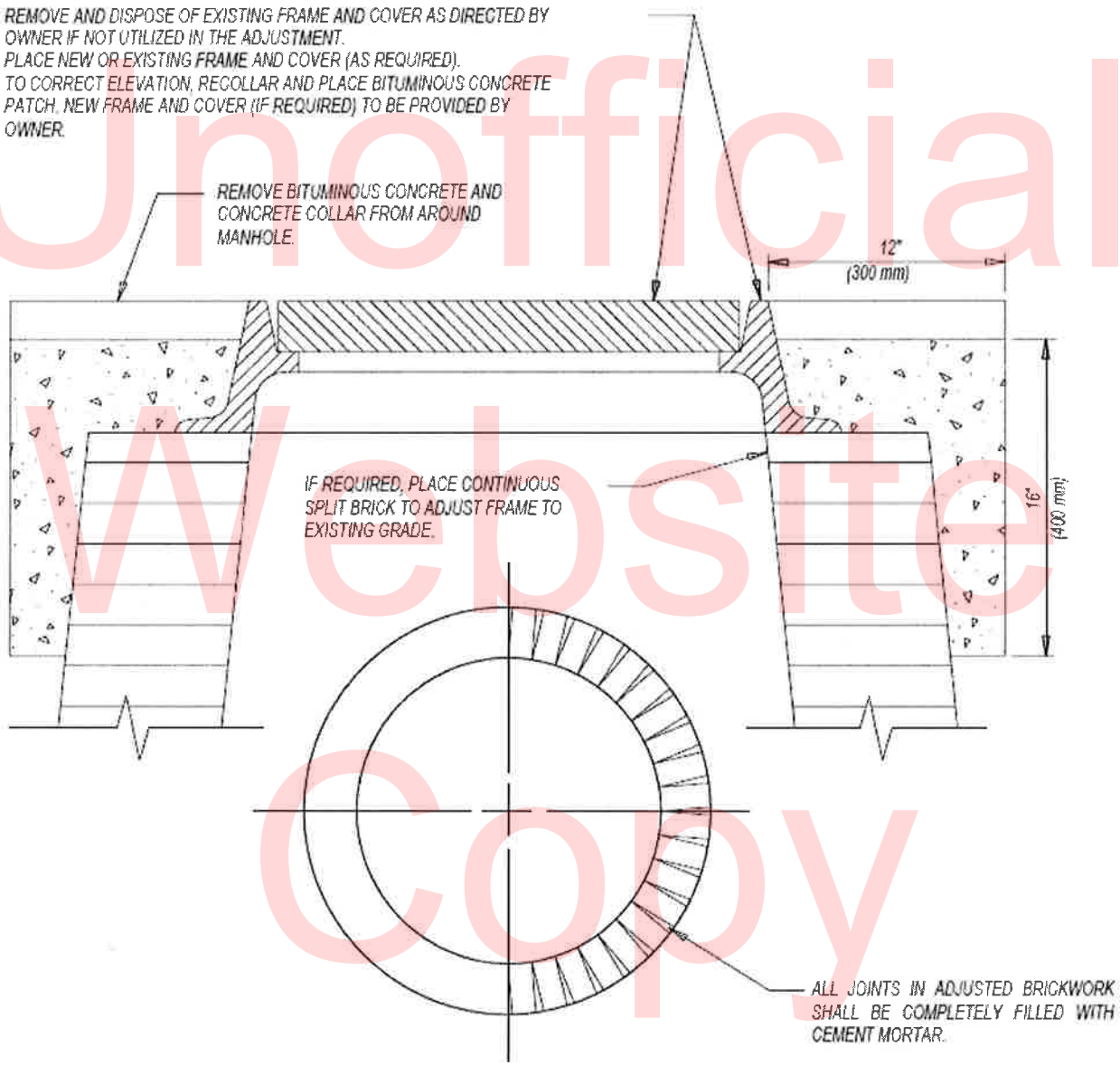

ADJUSTING AND REPAIRING MANHOLE

N.T.S.

NOTE: MANHOLES IN CONCRETE ROADWAYS SHALL BE SAWCUT FULL DEPTH TO THE SPECIFIED DIMENSION PRIOR TO ANY ADJUSTMENT BEING MADE. THE SAWCUTTING SHALL BE INCIDENTAL TO ITEM 710002.

Unofficial Website Copy

DETAILS SHEET

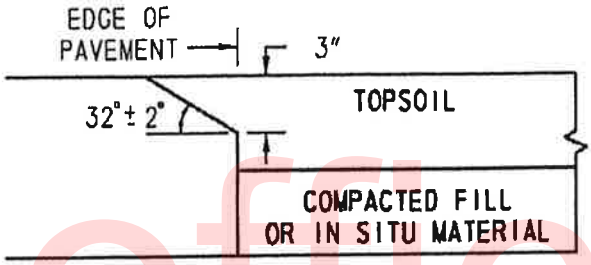

CONCRETE PAVEMENTS
N. T. S.

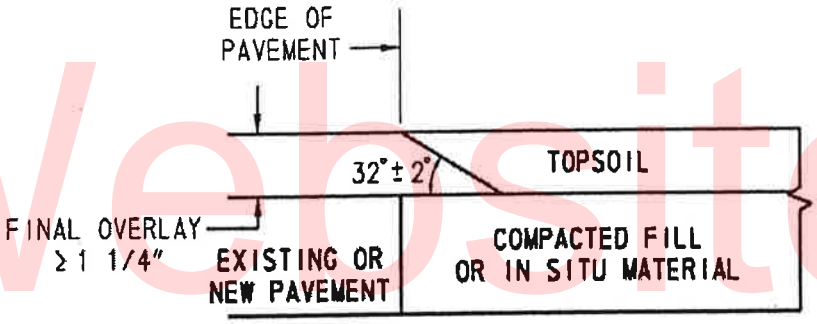

BITUMINOUS CONCRETE PAVEMENTS AND OVERLAYS
N. T. S.

Prior to placing concrete or bituminous concrete pavement, prepare the shoulder material where the Safety Edge will be placed to provide a foundation that will support its placement.

The Safety Edge is installed during a bituminous concrete resurfacing project using a special, removable wedge shape compaction device attached to and extending below the screed strike-off plate of the paver. This device is used to construct a pre-compacted, long lasting, low angle wedge fillet on the outside edge of the paved mat. The device has a self-adjusting internal spring that allows it to follow the surface independent of other paver components. The device has an angled surface that compacts the asphalt as it enters the device while another fixed-angle surface forms the tapered edge. As the asphalt continues under the wedge-forming surface, the asphalt is smoothed to create a finished surface on the tapered edge. Two wedge shape compaction devices that are commercially available are TransTech's Shoulder Wedge Maker and Advant-Edge Paving Equipment's Advant-Edger. The use of a single plate strike off is not allowed. Compaction of the edge should not be done with the first pass of the roller in order to give the Safety Edge a chance to harden some.

For concrete pavement or overlay, modify the paver screed to create the shoulder wedge as per the Safety Edge cross section.

Unofficial Website Copy

LOCATION 1 **17(NAAMANS ROAD) FROM CONCORD PIKE TO 500' EAST OF FOULK ROAD @ BRIDGE DECK**

LENGTH 3880.1040 m 12730.0000 L.F. AADT 22717

GENERAL IMPROVEMENTS

2" PROFILE MILL, BITUMINOUS CONCRETE PATCHING, 2" BITUMINOUS CONCRETE TYPE C PG 76-22, ADA IMPROVEMENTS, CURB, SIDEWALK, INLET REPAIRS, PAVEMENT MARKINGS

COMMENTS:

Please see attached sheets for comments

Unofficial Website Copy

MATERIAL ESTIMATE FOR LOCATION 1

302005	GRADED AGGREGATE BASE COURSE, TYPE B	207.00	TON
401696	ENTRANCE, DRIVEWAY AND INTERSECTINGSTREET PAVING SURCHARGE	1,475.00	TON
401823	BITUMINOUS CONCRETE, SUPERPAVE, BITUMINOUS CONCRETE BASE COURSE, 160 GYRATIONS, PG 64-22, PATCHING	500.00	TON
401833	BITUMINOUS CONCRETE, SUPERPAVE, TYPE C, 160 GYRATIONS, PG 76-22, (NON-CARBONATE STONE)	15,500.00	TON
402000	BITUMINOUS CONCRETE AND/OR COLD-LAID BITUMINOUS CONCRETE (TRM)	210.00	TON
406001	BITUMINOUS CONCRETE PATCHING	8,600.00	SY-IN
701016	INTEGRAL PORTLAND CEMENT CONCRETE CURB & GUTTER, TYPE 1-4	33.00	L.F.
701017	INTEGRAL PORTLAND CEMENT CONCRETE CURB & GUTTER, TYPE 1-6	450.00	L.F.
701019	INTEGRAL PORTLAND CEMENT CONCRETE CURB & GUTTER, TYPE 3-4	53.00	L.F.
701020	INTEGRAL PORTLAND CEMENT CONCRETE CURB & GUTTER, TYPE 1-8	1,136.00	L.F.
701022	INTEGRAL PORTLAND CEMENT CONCRETE CURB & GUTTER, TYPE 3-8	259.00	L.F.
701023	INTEGRAL PORTLAND CEMENT CONCRETE CURB & GUTTER, TYPE 3-6	617.00	L.F.
701025	PORTLAND CEMENT CONCRETE CURB, TYPE 2 MODIFIED	947.00	L.F.
705001	P.C.C. SIDEWALK, 4"	1,801.00	S.F.
705002	P.C.C. SIDEWALK, 6"	4,243.00	S.F.
705007	SIDEWALK SURFACE DETECTABLE WARNING SYSTEM	995.00	S.F.
705008	CURB RAMP, TYPE 1	1,303.00	S.F.
705009	CURB RAMP, TYPE 2, 3, AND/OR 4	5,831.00	S.F.
705010	CURB RAMP, TYPE 5	888.00	S.F.
708060	REPLACE DRAINAGE INLET GRATE(S)	4.00	EACH
708061	REPLACE DRAINAGE INLET FRAME(S)	4.00	EACH
710001	ADJUSTING AND REPAIRING EXISTING DRAINAGE INLET	41.00	EACH
710002	ADJUSTING AND REPAIRING EXISTING MANHOLE	20.00	EACH

LOCATION 1 **17(NAAMANS ROAD) FROM CONCORD PIKE TO 500' EAST OF FOULK ROAD @ BRIDGE DECK**

LENGTH 3880.1040 m 12730.0000 L.F. AADT 22717

GENERAL IMPROVEMENTS

2" PROFILE MILL, BITUMINOUS CONCRETE PATCHING, 2" BITUMINOUS CONCRETE TYPE C PG 76-22, ADA IMPROVEMENTS, CURB, SIDEWALK, INLET REPAIRS, PAVEMENT MARKINGS

COMMENTS:

Please see attached sheets for comments

Unofficial Website Copy

MATERIAL ESTIMATE FOR LOCATION 1

720611	FLEXIBLE DELINEATOR, PERMANENT	2.00	EACH
743003	ARROWPANELS, TYPE C	200.00	EA-DY
743004	FURNISH AND MAINTAIN PORTABLE CHANGEABLE MESSAGE SIGN	75.00	EA-DY
743007	** TRAFFIC OFFICERS	1,500.00	HOUR
743010	FURNISH AND MAINTAIN TRUCK MOUNTED ATTENUATOR, TYPE II	150.00	EA-DY
743056	FLAGGER, NEW CASTLE COUNTY, FEDERAL	3,500.00	HOUR
743065	FLAGGER, NEW CASTLE COUNTY, FEDERAL, OVERTIME	350.00	HOUR
744506	CONDUIT JUNCTION WELL, TYPE 7, PRECAST POLYMER CONCRETE	1.00	EACH
744530	CONDUIT JUNCTION WELL, TYPE 11, PRECAST CONCRETE/ POLYMER LID-FRAME	5.00	EACH
744531	CONDUIT JUNCTION WELL, TYPE 14, PRECAST CONCRETE/ POLYMER LID-FRAME	1.00	EACH
744532	CONDUIT JUNCTION WELL, TYPE 15, PRECAST CONCRETE/ POLYMET LID-FRAME	2.00	EACH
744541	FURNISH & INSTALL FRAME AND LID FOR JUNCTION WELL, TYPE 11	6.00	EACH
744542	FURNISH & INSTALL FRAME AND LID FOR JUNCTION WELL, TYPE 14	1.00	EACH
744544	ADJUST OR REPAIR EXISTING CONDUIT JUNCTION WELL	34.00	EACH
745602	FURNISH & INSTALL UP TO 4" SCHEDULE 80 HDPE CONDUIT (BORE)	1,235.00	L.F.
745603	FURNISH & INSTALL UP TO 4" SCHEDULE 80 PVC CONDUIT (OPEN CUT)	130.00	L.F.
745604	FURNISH & INSTALL UP TO 4" SCHEDULE 80 PVC CONDUIT (TRENCH)	255.00	L.F.
745606	FURNISH & INSTALL UP TO 4" GALVANIZED STEEL CONDUIT (TRENCH)	200.00	L.F.
745607	FURNISH & INSTALL UP TO 4" GALVANIZED STEEL CONDUIT (BORE)	100.00	L.F.
746614	POLE BASE EXTENSION	56.00	C.F.
746847	POLE BASE, TYPE 3	1.00	EACH
746848	POLE BASE, TYPE 3A	3.00	EACH
746849	POLE BASE, TYPE 3B	3.00	EACH
746850	POLE BASE, TYPE 4A	7.00	EACH

LOCATION 1 **17(NAAMANS ROAD) FROM CONCORD PIKE TO 500' EAST OF FOULK ROAD @ BRIDGE DECK**

LENGTH 3880.1040 m 12730.0000 L.F. AADT 22717

GENERAL IMPROVEMENTS

2" PROFILE MILL, BITUMINOUS CONCRETE PATCHING, 2" BITUMINOUS CONCRETE TYPE C PG 76-22, ADA IMPROVEMENTS, CURB, SIDEWALK, INLET REPAIRS, PAVEMENT MARKINGS

COMMENTS:

Please see attached sheets for comments

Unofficial Website Copy

MATERIAL ESTIMATE FOR LOCATION 1

746924	FURNISH & INSTALL LOOP WIRE 1-CONDUCTOR #14 AWG ENCASED IN 1/4" FLEXIBLE TUBING IN A LOOP SAWCUT	5,870.00	L.F.
747516	CABINET BASE, TYPE P	2.00	EACH
748015	PERMANENT PAVEMENT STRIPING, SYMBOL/LEGEND ALKYD-THERMOPLAST IC	14,081.00	S.F.
748019	TEMPORARY MARKINGS, PAINT, 4"	153,840.00	L.F.
748026	TEMPORARY MARKINGS, PAINT SYMBOL/LEGEND	28,162.00	S.F.
748027	PERMANENT PAVEMENT STRIPING, ALKYD-THERMOPLASTIC, 12"	58.00	L.F.
748033	PERMANENT PAVEMENT STRIPING, ALKYD-THERMOPLASTIC, 5"	275.00	L.F.
748502	RAISED/RECESSED PAVEMENT MARKER	550.00	EACH
748548	PERMANENT PAVEMENT STRIPING, EPOXY RESIN PAINT, WHITE/YELLOW, 5"	76,920.00	L.F.
749687	INSTALLATION OR REMOVAL OF TRAFFIC SIGN(S) ON SINGLE SIGN POST	284.00	EACH
749688	INSTALLATION OF 4" DIAMETER HOLE, LESS THAN OR EQUAL TO 6" DEPTH	33.00	EACH
749690	INSTALLATION OR REMOVAL OF TRAFFIC SIGNS ON MULTIPLE SIGN POSTS	16.00	S.F.
758000	REMOVAL OF EXISTING PORTLAND CEMENTCONCRETE PAVEMENT, CURB, SIDEWALK, ETC.	234.00	S.Y.
760507	PROFILE MILLING, BITUMINOUS CONCRETE	267,220.00	SY-IN
762001	SAW CUTTING, BITUMINOUS CONCRETE	4,040.00	L.F.
762002	SAW CUTTING, CONCRETE, FULL DEPTH	1,050.00	L.F.
763621	CONSTRUCTION ENGINEERING, REHABILITATION	50.00	HOUR
905004	INLET SEDIMENT CONTROL, DRAINAGE INLET	240.00	EACH
908001	TOPSOIL (TON)	145.00	TON
908014	PERMANENT GRASS SEEDING, DRY GROUND	360.00	S.Y.

** DENOTES FIXED PRICE ITEM

LOCATION 1 17(NAAMANS ROAD) FROM CONCORD PIKE TO 500' EAST OF FOULK ROAD @ BRIDGE DECK

COMMENTS:

Recommended Traffic Control: TA33, TA3, TA11B, TA3A, TA21, TA23, TA10

Restricted Work Hours: 8:00 am to 4:00 pm

NOTE: BRIDGE 1-052A EXISTS WITHIN THE LIMITS OF THE CONTRACT. NO PAVING IS TO OCCUR ON THIS BRIDGE AND NO VIBRATORY ROLLERS WILL BE PERMITTED ON OR NEAR (WITHIN 25') THIS BRIDGE.

FINAL PAVEMENT SHALL MEET THE SURFACE REQUIREMENTS, AS SPECIFIED IN ITEM 401580 - RIDE QUALITY OF HOT-MIX PAVEMENT

Curb Ramp/Triangular Channelizing Island Locations:

ACME Shopping Plaza Main Driveway
Foulk Road (Signalized)
@ The Station of F&N
Valley Road
Clearview Avenue
Overlook Drive
Northgate Road/Mousley Place (Signalized)
Pennington Way/Magnolia Drive
Veterans Drive
Soccer Field/Church of the Holy Child
Channin Drive
Dartmouth Woods Road
Cinder Road
Smiths Lane
Ross Road - Brandywine Liquors
Ebright Road (Signalized)
Grubb Road (Signalized)
E. Trotter Drive
Shipley Road (Signalized)
Shoppes at Naamans Shopping Center Exit Driveway
Shoppes at Naamans Shopping Center Entrance Driveway
Talley Place
Perry Place
Tally Ho Shopping Center Driveway
Magic Car Wash Entrance Driveway
Magic Car Wash Exit Driveway
Raymour Flanigan Driveway
Exxon Driveway
US 202 (Signalized)

Entrance and Driveway Locations:

EB ENTRANCES

Tally Ho Shopping Center
Perry Lane

Unofficial Website Copy

LOCATION 1 17(NAAMANS ROAD) FROM CONCORD PIKE TO 500' EAST OF FOULK ROAD @ BRIDGE DECK

Tally Place
Stratford Apartments
Shoppes at Naamans Road Exit Driveway
Shoppes at Naamans Road Entrance Driveway
Shipley Road
Amethyst Drive
Grubb Road
Brandywine Liquors
Paper Lane
Smiths Lane
Brandywood Drive
Church of the Holy Child
Magnolia Drive
Mousley Place
Clearview Avenue
Valley Avenue
ACME Shopping Plaza Main Driveway
Locust Avenue

WB ENTRANCES

The Station @ F&N
Clearview Avenue
N. Gate Road
Pennington Way
Veterans Drive
Soccer Fields
Channin Drive
Dartmouth Woods Road
Ross Road
Ebright Road
E. Trotters Drive
Brandywine Parkway
Brandywine Town Center EB & WB Entrances
Brandywine Town Center EB & WB Exits
Magic Carwash Entrance
Magic Carwash Exit
Raymoor & Flanigan Parking Lot
Exxon Gas Station

Utility Adjustments:

DelDOT Manholes (8)
Water Valves (3) By Others
N.C.C. Sanitary Manholes (3)
Verizon Telephone Manholes (2)

Unofficial Website Copy

CONTRACT QUANTITIES SUMMARY SHEET

302005	GRADED AGGREGATE BASE COURSE, TYPE B	207.00	TON
401696	ENTRANCE, DRIVEWAY AND INTERSECTINGSTREET PAVING SURCHARGE	1,475.00	TON
401823	BITUMINOUS CONCRETE, SUPERPAVE, BITUMINOUS CONCRETE BASE COURSE, 160 GYRATIONS, PG 64-22, PATCHING	500.00	TON
401833	BITUMINOUS CONCRETE, SUPERPAVE, TYPE C, 160 GYRATIONS, PG 76-22, (NON-CARBONATE STONE)	15,500.00	TON
402000	BITUMINOUS CONCRETE AND/OR COLD-LAID BITUMINOUS CONCRETE (TRM)	210.00	TON
406001	BITUMINOUS CONCRETE PATCHING	8,600.00	SY-IN
701016	INTEGRAL PORTLAND CEMENT CONCRETE CURB & GUTTER, TYPE 1-4	33.00	L.F.
701017	INTEGRAL PORTLAND CEMENT CONCRETE CURB & GUTTER, TYPE 1-6	450.00	L.F.
701019	INTEGRAL PORTLAND CEMENT CONCRETE CURB & GUTTER, TYPE 3-4	53.00	L.F.
701020	INTEGRAL PORTLAND CEMENT CONCRETE CURB & GUTTER, TYPE 1-8	1,136.00	L.F.
701022	INTEGRAL PORTLAND CEMENT CONCRETE CURB & GUTTER, TYPE 3-8	259.00	L.F.
701023	INTEGRAL PORTLAND CEMENT CONCRETE CURB & GUTTER, TYPE 3-6	617.00	L.F.
701025	PORTLAND CEMENT CONCRETE CURB, TYPE 2 MODIFIED	947.00	L.F.
705001	P.C.C. SIDEWALK, 4"	1,801.00	S.F.
705002	P.C.C. SIDEWALK, 6"	4,243.00	S.F.
705007	SIDEWALK SURFACE DETECTABLE WARNING SYSTEM	995.00	S.F.
705008	CURB RAMP, TYPE 1	1,303.00	S.F.
705009	CURB RAMP, TYPE 2, 3, AND/OR 4	5,831.00	S.F.
705010	CURB RAMP, TYPE 5	888.00	S.F.
708060	REPLACE DRAINAGE INLET GRATE(S)	4.00	EACH
708061	REPLACE DRAINAGE INLET FRAME(S)	4.00	EACH
710001	ADJUSTING AND REPAIRING EXISTING DRAINAGE INLET	41.00	EACH
710002	ADJUSTING AND REPAIRING EXISTING MANHOLE	20.00	EACH
720611	FLEXIBLE DELINEATOR, PERMANENT	2.00	EACH
743003	ARROWPANELS, TYPE C	200.00	EA-DY
743004	FURNISH AND MAINTAIN PORTABLE CHANGEABLE MESSAGE SIGN	75.00	EA-DY

Unofficial Website Copy

CONTRACT QUANTITIES SUMMARY SHEET

743007	** TRAFFIC OFFICERS	1,500.00	HOUR
743010	FURNISH AND MAINTAIN TRUCK MOUNTED ATTENUATOR, TYPE II	150.00	EA-DY
743056	FLAGGER, NEW CASTLE COUNTY, FEDERAL	3,500.00	HOUR
743065	FLAGGER, NEW CASTLE COUNTY, FEDERAL, OVERTIME	350.00	HOUR
744506	CONDUIT JUNCTION WELL, TYPE 7, PRECAST POLYMER CONCRETE	1.00	EACH
744530	CONDUIT JUNCTION WELL, TYPE 11, PRECAST CONCRETE/ POLYMER LID-FRAME	5.00	EACH
744531	CONDUIT JUNCTION WELL, TYPE 14, PRECAST CONCRETE/ POLYMER LID-FRAME	1.00	EACH
744532	CONDUIT JUNCTION WELL, TYPE 15, PRECAST CONCRETE/ POLYMET LID-FRAME	2.00	EACH
744541	FURNISH & INSTALL FRAME AND LID FOR JUNCTION WELL, TYPE 11	6.00	EACH
744542	FURNISH & INSTALL FRAME AND LID FOR JUNCTION WELL, TYPE 14	1.00	EACH
744544	ADJUST OR REPAIR EXISTING CONDUIT JUNCTION WELL	34.00	EACH
745602	FURNISH & INSTALL UP TO 4" SCHEDULE 80 HDPE CONDUIT (BORE)	1,235.00	L.F.
745603	FURNISH & INSTALL UP TO 4" SCHEDULE 80 PVC CONDUIT (OPEN CUT)	130.00	L.F.
745604	FURNISH & INSTALL UP TO 4" SCHEDULE 80 PVC CONDUIT (TRENCH)	255.00	L.F.
745606	FURNISH & INSTALL UP TO 4" GALVANIZED STEEL CONDUIT (TRENCH)	200.00	L.F.
745607	FURNISH & INSTALL UP TO 4" GALVANIZED STEEL CONDUIT (BORE)	100.00	L.F.
746614	POLE BASE EXTENSION	56.00	C.F.
746847	POLE BASE, TYPE 3	1.00	EACH
746848	POLE BASE, TYPE 3A	3.00	EACH
746849	POLE BASE, TYPE 3B	3.00	EACH
746850	POLE BASE, TYPE 4A	7.00	EACH
746924	FURNISH & INSTALL LOOP WIRE 1-CONDUCTOR #14 AWG ENCASED IN 1/4" FLEXIBLE TUBING IN A LOOP SAWCUT	5,870.00	L.F.
747516	CABINET BASE, TYPE P	2.00	EACH
748015	PERMANENT PAVEMENT STRIPING, SYMBOL/LEGEND ALKYD-THERMOPLAST IC	14,081.00	S.F.
748019	TEMPORARY MARKINGS, PAINT, 4"	153,840.00	L.F.
748026	TEMPORARY MARKINGS, PAINT SYMBOL/LEGEND	28,162.00	S.F.
748027	PERMANENT PAVEMENT STRIPING, ALKYD-THERMOPLASTIC, 12"	58.00	L.F.

Unofficial Website Copy

CONTRACT QUANTITIES SUMMARY SHEET

748033	PERMANENT PAVEMENT STRIPING, ALKYD-THERMOPLASTIC, 5"	275.00	L.F.
748502	RAISED/RECESSED PAVEMENT MARKER	550.00	EACH
748548	PERMANENT PAVEMENT STRIPING, EPOXY RESIN PAINT, WHITE/YELLOW, 5"	76,920.00	L.F.
749687	INSTALLATION OR REMOVAL OF TRAFFIC SIGN(S) ON SINGLE SIGN POST	284.00	EACH
749688	INSTALLATION OF 4" DIAMETER HOLE, LESS THAN OR EQUAL TO 6" DEPTH	33.00	EACH
749690	INSTALLATION OR REMOVAL OF TRAFFIC SIGNS ON MULTIPLE SIGN POSTS	16.00	S.F.
758000	REMOVAL OF EXISTING PORTLAND CEMENTCONCRETE PAVEMENT, CURB, SIDEWALK, ETC.	234.00	S.Y.
760507	PROFILE MILLING, BITUMINOUS CONCRETE	267,220.00	SY-IN
762001	SAW CUTTING, BITUMINOUS CONCRETE	4,040.00	L.F.
762002	SAW CUTTING, CONCRETE, FULL DEPTH	1,050.00	L.F.
763000	INITIAL EXPENSE	LUMP	SUM
763621	CONSTRUCTION ENGINEERING, REHABILITATION	50.00	HOUR
763643	MAINTENANCE OF TRAFFIC, ALL INCLUSIVE	LUMP	SUM
905004	INLET SEDIMENT CONTROL, DRAINAGE INLET	240.00	EACH
908001	TOPSOIL (TON)	145.00	TON
908014	PERMANENT GRASS SEEDING, DRY GROUND	360.00	S.Y.

** DENOTES FIXED PRICE ITEM

Unofficial Website Copy