THE STATE OF DELAWARE

DEPARTMENT OF TRANSPORTATION

OFFICE OF TRANSPORTATION SOLUTIONS

CONSTRUCTION PLANS AND SPECIFICATIONS FOR

PAVEMENT & REHABILITATION – SUSSEX V (MILLSBORO HIGHWAY), 2016

CONTRACT NUMBER - T201606305.01 **PRIMAVERA ID – 16-06305**

FUNDING - 100% STATE **SOUTH DISTRICT MAINTENANCE**

PLANS PREPARED BY: Paul Farkas

DESIGN TECHNICIAN

DATE RECOMMENDED: 3/3/2016

Bradford L. Salmons

GROUP ENGINEER, CONSTRUCTION

DATE RECOMMENDED: 3/9/16

ASSIST. DIRECTOR, ENGINEERING SUPPORT

DAVID A. NICOL LICENSE No. 18839 DELAWARE PROFESSIONAL ENGINEER

DATE RECOMMENDED: 3/9/2016

Robert B. McCleary

CHIEF ENGINEER

ROBERT BRIAN McCLEARY REGISTERED No. 8567 DELAWARE PROFESSIONAL ENGINEER

Unofficial Website Copy

LOCATION MAP

Unofficial Website Copy

Location 1
Millsboro Highway from
Laurel Rd to hmj West of Kendall St.

Location 2
Millsboro Highway from
Laurel Rd to Nine Foot Rd, DE26.

Location 3
Millsboro Highway from
MD/DE State line to Nine Foot Rd, DE26.

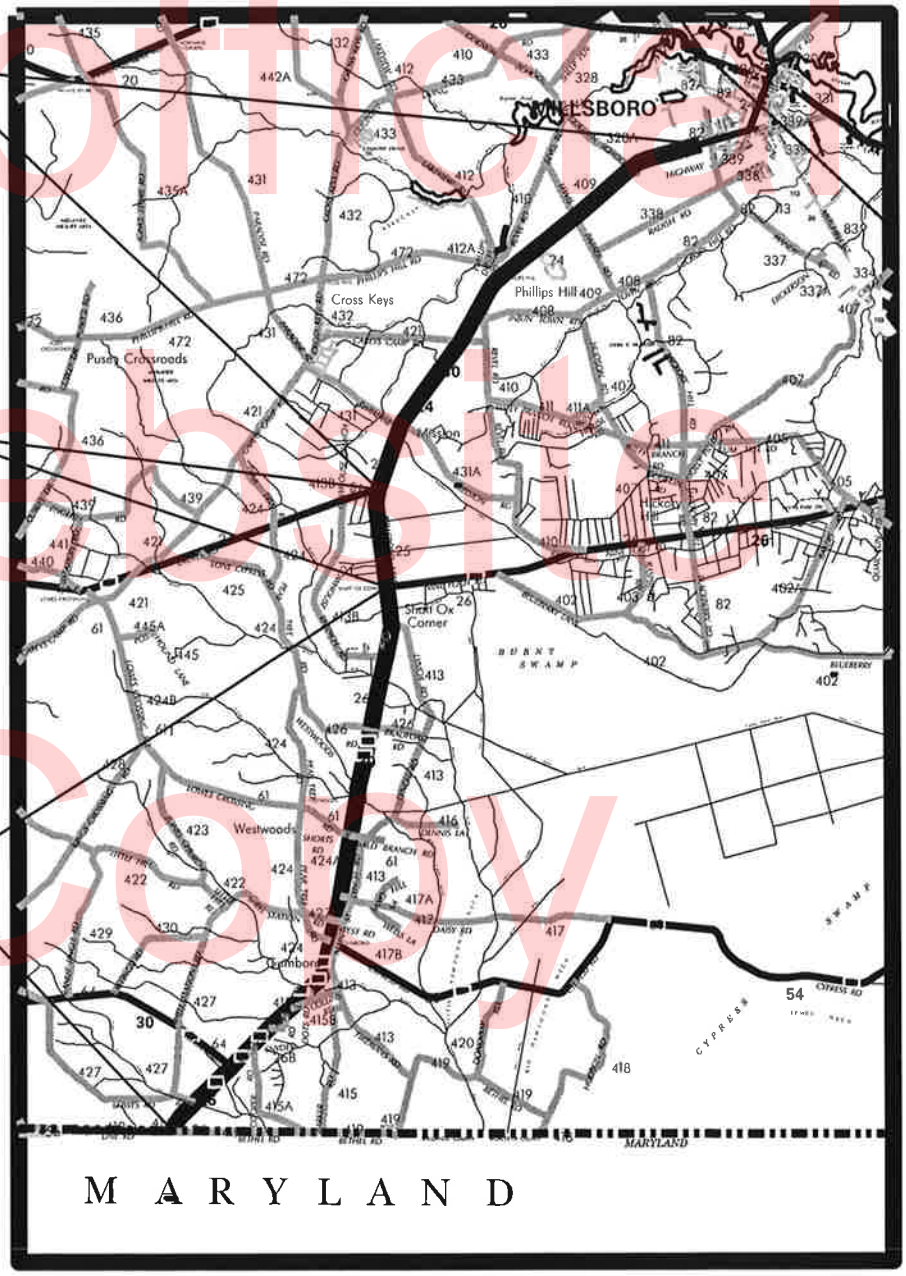

GENERAL CONTRACT PLAN NOTES

REVISED - MARCH 2016

GENERAL

1. CONSTRUCTION OF THIS CONTRACT SHALL CONFORM TO DELAWARE DEPARTMENT OF TRANSPORTATION STANDARD SPECIFICATIONS DATED AUGUST 2001 AS AMENDED BY THE SUPPLEMENTAL SPECIFICATIONS, THE SPECIAL PROVISIONS, THE MOST RECENT STANDARD CONSTRUCTION DETAILS, DELAWARE MANUAL ON UNIFORM TRAFFIC CONTROL DEVICES AND THESE PLANS.

2. THE PURPOSE OF THIS CONTRACT IS TO MAKE GENERAL IMPROVEMENTS TO ROADS AND/OR STREETS WITHIN THE DISTRICT HEREIN SPECIFIED. DEPENDING ON FUND AVAILABILITY, THE DEPARTMENT RESERVES THE RIGHT TO ADD OR DELETE LOCATIONS AND/OR QUANTITIES FOR THIS CONTRACT. SUCH LOCATION OR QUANTITY ADDITIONS OR DELETIONS SHALL NOT BE CAUSE FOR AN INCREASE OR DECREASE IN ANY CONTRACT UNIT BID PRICES. NO ITEM PRICES ARE TO BE RENEGOTIATED DUE TO EITHER AN INCREASE OR DECREASE IN QUANTITY USAGE RESULTING FROM SAID ADDITIONS OR DELETIONS.

3. THE CONTRACTOR SHALL PROVIDE ALL RESIDENTS AND BUSINESSES WHO LIVE ADJACENT TO THE WORK ZONE A MINIMUM 48 HR. PRIOR WRITTEN NOTICE FOR THE START OF CONSTRUCTION WORK. THIS NOTIFICATION SHALL INCLUDE THE SCOPE OF WORK, WORKING HOURS, ANTICIPATED START AND COMPLETION DATES, CONTRACTOR NAME & ADDRESS, AND DELDOT CONTACT NUMBERS. FAILURE TO GIVE PROPER NOTICE WILL RESULT IN A SUSPENSION OF WORK REQUIRING NOTICE, UNTIL PROPER NOTICE IS PROVIDED. ACCESS TO ALL BUSINESSES AND RESIDENCES WITHIN THE PROJECT LIMITS SHALL BE MAINTAINED THROUGHOUT THE DURATION OF THIS CONTRACT. ANY TEMPORARY CLOSURE OF A DRIVEWAY FOR TIE-IN PURPOSES SHALL BE COORDINATED WITH THE ENGINEER AND/OR PROPERTY OWNER IN ADVANCE OF THE CLOSURE.

4. THE CONTRACTOR SHALL SUBMIT THE REQUIRED COPIES OF A DETAILED PROGRESS SCHEDULE (PSC) AS OUTLINED IN STANDARD SPECIFICATION 108.04 PRIOR TO OR AT THE PRECONSTRUCTION MEETING. DETAILS SHALL INCLUDE A DESCRIPTION OF EACH WORK ACTIVITY, THE PLANNED DAYS OF WORK, MULTIPLE CREWS OR SHIFTS, AND SCHEDULED WORKING HOURS. DURING THE CONTRACT, THE CONTRACT SHALL SUBMIT TWO-WEEK (OR AS REQUIRED) "LOOK AHEAD" SCHEDULES TO THE AREA ENGINEER/ MANAGER NO LATER THAN NOON OF EACH THURSDAY. FAILURE TO COMPLY WILL RESULT IN A SUSPENSION OF ALL CONTRACT WORK WITH TIME CHARGES CONTINUING TO BE ASSESSED.

5. THE CONTRACTOR SHALL BE RESPONSIBLE FOR OBTAINING THE REQUIRED CLEARANCES AND INSURANCES FOR EACH RAILWAY COMPANY INVOLVED IF THE RAILROAD PROPERTY AND/OR FACILITES ARE LOCATED WITHIN OR NEAR THE PROPOSED LIMITS OF WORK AND/OR IF THE PROPOSED WORK ENCROACHES UPON THE RAILROAD'S RIGHT-OF-WAY, IN ACCORDANCE WITH DELDOT MAINTENANCE OF RAILROAD TRAFFIC ITEM NO. 763502. THE CONTRACTOR MUST CONTACT DELDOT'S RAILROAD SECTION MANAGER AT (302) 760-2183 PRIOR TO ANY WORK STARTED TO COORDINATE THE EXECUTION OF THE APPROPRIATE AGREEMENTS AND AUTHORIZATIONS REQUIRED FROM ANY RAILWAY COMPANY INVOLVED, INCLUDING COORDINATION FOR RAILROAD FLAGGING, IF NECESSARY.

MAINTENANCE OF TRAFFIC

6. PERMANENT ADVANCE WARNING SIGNS WITH THE LEGENDS "ROAD WORK 1500 FT", "ROAD WORK 1000 FT", "**ROAD WORK AHEAD" SIGNS SHALL BE PLACED AT A DISTANCE NOT LESS THAN 500 FEET BEFORE AND AFTER THE WORK AREA, RESPECTIVELY, INCLUDING ALL INTERESECTING ROADS WITHIN THE PROJECT LIMITS.** ALL PERMANENT ADVANCE WARNING SIGNS SHALL BE GROUND-MOUNTED ON TWO NCHRP-**350** OR MASH APPROVED BREAKAWAY POSTS AND SHALL BE MOUNTED IN

Unofficial Website Copy

GENERAL CONTRACT PLAN NOTES

MOUNTED ON TWO NCHRP-**350** OR MASH APPROVED BREAKAWAY POSTS AND SHALL BE MOUNTED IN COMPLIANCE WITH THE DE-MUTCD. PERMANENT ADVANCE WARNING SHALL BE MOUNTED AT A HEIGHT OF 7 FEET, MEASURED FROM THE PAVEMENT GRADE TO THE BOTTOM OF THE SIGN. THE USE OF SKID-MOUNTED SIGN SUPPORTS IS NOT ALLOWED UNLESS THE CONTRACTOR CAN DEMOSTRATE THAT A UTILITY CONFLICT EXISTS AND/ OR CONCRETE MEDIANS PREVENT THE INSTALLATION OF THE PERMANENT SIGNS IN THE APPROPRIATE LOCATION WHICH SHALL BE VERIFIED BY THE ENGINEER.

7. PORTABLE CHANGEABLE MESSAGE SIGNS (PCMS) SHALL BE PLACED IN BOTH DIRECTIONS 10 DAYS IN ADVANCE OF CONSTRUCTION THROUGH 5 DAYS AFTER THE START OF CONSTRUCTION, AS WELL AS PRIOR TO ANY MAJOR TRAFFIC PATTERN CHANGES. ALL PCMS MESSAGES SHALL BE APPROVED BY THE DISTRICT SAFETY OFFICER.

8. THE CONTRACTOR SHALL BE REQUIRED TO SHOW PROOF THAT HE HAS SUFFICIENT APPROVED STRIPING MATERIALS ON HAND TO ENSURE STRIPING IS COMPLETED PRIOR TO FULL OPENING ROADWAY TO TRAFFIC.

9. AT THE END OF EACH DAY'S OPERATION AND BEFORE TRAFFIC IS RETURNED TO UNRESTRICTED ROADWAY USE, TEMPORARY STRIPING SHALL BE UTILIZED AT LOCATIONS THAT REQUIRE PERMANENT STRIPING, SHALL BE INSTALLED IN ACCORDANCE WITH THE TEMPORARY STRIPING POLICY. TEMPORARY PAVEMENT STRIPING MUST MATCH PERMANENT PAVEMENT STRIPING IN ALL REGARDS. TEMPORARY PAVEMENT MARKINGS SHALL BE PAID AT THE APPLICABLE CONTRACT UNIT PRICE. THE CONTRACTOR IS RESPONSIBLE FOR MAINTAINING THE TEMPORARY MARKINGS IN GOOD CONDITION SUCH THAT THE PAVEMENT IS PROPERLY DELINEATED AT ALL TIMES. ANY REFRESHING OF THE TEMPORARY MARKINGS WILL BE AT THE CONTRACTOR'S EXPENSE.

10. ALL WORK SHALL BE PERFORMED IN A MANNER THAT WILL REASONABLY PROVIDE THE LEAST PRACTICABLE OBSTRUCTION TO ALL ROAD USERS, INCLUDING VEHICULAR, PEDESTRIAN AND BICYCLE TRAFFIC, AND SHALL CONFORM TO THE REQUIREMENTS OF THE 2011 DELAWARE MANUAL ON UNIFORM TRAFFIC CONTROL DEVICES, PART 6, INCLUDING ALL REVISIONS UP TO THE DATE OF ADVERTISEMENT FOR BIDS.

11. THE CONTRACTOR SHALL MAINTAIN ACCESS TO AND ALONG PEDESTRIAN FACILITIES AT ALL TIMES DURING CONSTRUCTION. EARTH, STONE AND GRAVEL SURFACES ARE NOT ACCEPTABLE FOR PROVIDING PEDESTRIAN ACCESS. WHERE PEDESTRIAN ROUTES ARE CLOSED OR BLOCKED, ALTERNATE PEDESTRIAN ACCESS SHALL BE PROVIDED USING TA-28 AND/OR TA-29 OF THE 2011 DELAWARE MANUAL ON UNIFORM TRAFFIC CONTROL DEVICES OR TO THE SATISFACTION OF THE ENGINEER. PEDESTRIAN DETOUR ROUTES OR ALTERNATE PEDESTRIAN FACILITIES SHALL CONSIST OF ADA COMPLIANT FACILITIES TO THE LEVEL OF WHICH EXISTS ON THE PEDESTRIAN ROUTE. THE COST FOR ANY PROVISIONS SHALL BE INCIDENTAL TO ITEM 763643 - MAINTENANCE OF TRAFFIC, ALL INCLUSIVE.

PEDESTRIAN MAINTENANCE OF TRAFFIC: THIS WORK SHALL CONSIST OF PROVIDING AND MAINTAINING AN ACCESSIBLE PEDESTRIAN ROUTE THROUGHOUT THE PROJECT'S LIMITS IN ACCORDANCE WITH THE AMERICANS WITH DISABILITIES ACT OF 1990 (ADA) TITLE II, PARAGRAPH 35.130.

THE CONTRACTOR SHALL BE REQUIRED TO REVIEW EACH CURB RAMP LOCATION AND SUBMIT THE APPROPRIATE MAINTENANCE OF TRAFFIC DETAIL AND DEVICES TO THE ENGINEER FOR EACH LOCATION AT LEAST 2 WEEKS BEFORE CONSTRUCTION FOR REVIEW, COMMENT, AND APPROVAL.
THE FOLLOWING CONSIDERATIONS SHALL BE TAKEN INTO ACCOUNT WHEN ADDRESSING ACCESSIBLE PEDESTRIAN MAINTENANCE OF TRAFFIC:

- ALL PEDESTRIANS, INCLUDING PERSONS WITH DISABILITIES, SHALL BE PROVIDED WITH A REASONABLY SAFE, CONVENIENT AND ACCESSIBLE PATH THAT REPLICATES AS

Unofficial Website Copy

GENERAL CONTRACT PLAN NOTES

MUCH AS PRACTICABLE THE EXISTING PEDESTRIAN FACILITIES.

- MAINTAIN ACCESS TO ALL BUSINESSES AND RESIDENCES AT ALL TIMES.
- PROVIDE PEDESTRIAN ACCESS THROUGH OR AROUND THE WORK ZONE. IF A DETOUR IS CHOSEN THE CONTRACTOR MUST SUBMIT THE DETOUR ROUTE TO THE ENGINEER FOR REVIEW AND APPROVAL. THE DETOUR ROUTE MUST MEET OR EXCEED THE CURRENT CONDITIONS.
- WORK SHOULD BE PHASED SO THAT ALL AREAS OF AN INTERSECTION/SIDEWALK PATH ARE NOT UNDER CONSTRUCTION AT THE SAME TIME UNLESS A CLEAR PATH IS PROVIDED AND IDENTIFIED.
- TRAFFIC CONTROL DEVICES AND OTHER CONSTRUCTION MATERIALS AND FEATURES SHALL NOT INTRUDE INTO THE USABLE WIDTH OF THE SIDEWALK, TEMPORARY PATHWAY OR OTHER PEDESTRIAN FACILITY.
- SIGNS AND OTHER DEVICES MOUNTED LOWER THAN 7FT ABOVE THE TEMPORARY PEDESTRIAN PATHWAY SHALL NOT PROJECT MORE THAN 4 IN. INTO ACCESSIBLE PEDESTRIAN ROUTE.

A SMOOTH, CONTINUOUS HARD SURFACE SHALL BE PROVIDED THROUGHOUT THE ENTIRE LENGTH AND WIDTH OF THE PEDESTRIAN ROUTE THROUGHOUT CONSTRUCTION. THERE SHALL BE NO CURBS OR VERTICAL ELEVATION CHANGES GREATER THAN ¼ IN. IN GRADE OR TERRAIN THAT COULD CAUSE TRIPPING OR BE A BARRIER TO WHEELCHAIR USE.

12. AN AMERICAN TRAFFIC SAFETY SERVICES ASSOCIATION (ATSSA) CERTIFIED TRAFFIC CONTROL SUPERVISOR SHALL BE REQUIRED FOR ALL LOCATIONS SPECIFIED IN THE CONTRACT PLANS. A COPY OF THE CERTIFICATION CARD FOR THE ATSSA TRAFFIC CONTROL SUPERVISOR SHALL BE SUBMITTED AT THE PRECONSTRUCTION MEETING. THE PAPER CERTIFICATE IS NOT ACCEPTABLE.

PAVEMENT MARKINGS

13. AT THE PRECONSTRUCTION MEETING, THE CONTRACTOR SHALL SUBMIT DETAILED DRAWINGS (INCLUDING BUT NOT LIMITED TO EXISTING STRIPING LENGTHS, LANE AND SHOULDER WIDTHS, TURN LANE LENGTHS, LOCATIONS OF STOP BARS, TURN ARROWS, CROSSWALKS AND RAILROAD CROSSINGS) THAT DEPICT THE EXISTING PAVEMENT MARKINGS FOR EACH PROJECT LOCATION. THESE DRAWINGS WILL BE REVIEWED BY THE DEPARTMENT'S TRAFFIC SECTION TO DETERMINE IF ANY CHANGES TO THE FINAL PAVEMENT MARKINGS ARE REQUIRED. FINAL PAVEMENT MARKINGS SHALL CONFORM TO ALL EXISTING PATTERNS UNLESS OTHERWISE DIRECTED BY THE ENGINEER.

THE DEPARTMENT WILL PROVIDE STRIPING LAYOUT AT LOCATIONS WHERE NO PAVEMENT MARKINGS PREVIOUSLY EXISTED. IF DEPARTMENT FORCES PROVIDE STRIPING LAYOUT ON LOCATIONS WHERE MARKINGS PREVIOUSLY EXISTED, THEN THE CONTRACTOR SHALL REIMBURSE THE DEPARTMENT FOR THE LAYOUT COSTS.

UNLESS OTHERWISE DIRECTED BY THE ENGINEER, WHITE EDGE LINES SHALL WRAP AROUND THE RADIUS OF ALL SIDE STREETS AND MAJOR COMMERCIAL ENTRANCES TO A TANGENT POINT. YELLOW CENTERLINES SHALL BE CONTINUOUS AROUND MEDIAN ISLANDS. ALL DOUBLE YELLOW CENTERLINES SHALL BE PLACED IN A 5-6-5 CONFIGURATION (2 EACH, 5" YELLOW STRIPES WITH A 6" GAP BETWEEN).

14. ANY ERRONEOUS MARKING WILL NOT BE PAID FOR AND SHALL BE CORRECTED IMMEDIATELY AT THE CONTRACTORS EXPENSE. ERRONEOUS MARKINGS OR SHADOWS THAT EXCEED ONE (1) INCH IN WIDTH SHALL BE REMOVED BY EITHER SAND OR WATER BLASTING AS DIRECTED BY THE ENGINEER. NO OTHER REMOVAL METHODS WILL BE ALLOWED. A FLAT BLACK PAINT OR DRIVEWAY SEALER SHALL BE APPLIED IN THE AREA OF THE REMOVED MARKING TO MASK THE REPAIR. ANY DAMAGE TO THE PAVEMENT

Unofficial Website Copy

GENERAL CONTRACT PLAN NOTES

CAUSED BY REMOVAL OF ERRONEOUS MARKINGS SHALL BE REPAIRED / REPLACED TO THE SATISFACTION OF THE ENGINEER AT THE CONTRACTORS EXPENSE.

15. STOP LINES "BARS" SHALL BE INSTALLED IN ACCORDANCE WITH SECTION 3B.16 OF THE 2011 DELAWARE MUTCD.

16. ALL CROSSWALKS SHALL BE INSTALLED IN ACCORDANCE WITH SECTION 3B.18 OF THE 2011 DELAWARE MUTCD.

TRAFFIC SIGNAL NOTES

17. TRAFFIC DETECTION LOOPS SHALL BE PLACED IN THE FINAL WEARING SURFACE UNLESS OTHERWISE DIRECTED BY THE ENGINEER.

18. TRAFFIC DETECTION LOOPS THAT ARE CURRENTLY 5'x7' SHALL BE REPLACED WITH LOOPS THAT ARE 6'x6' AT THE SAME LOCATION. STOP BAR DETECTION LOOPS SHALL BE THE SAME SIZE AS CURRENTLY EXISTING, AND SHOULD BE PLACED STARTING TWO FEET BEHIND THE STOP BAR, UNLESS OTHERWISE DIRECTED BY THE ENGINEER. IF SEPARATE SIGNAL PLANS HAVE BEEN DEVELOPED, THE PLANS SUPERSEDE THIS NOTE.

PROJECT

19. UNLESS SPECIFIED, OVERLAY WIDTHS SHALL MATCH EXISTING WIDTHS.

20. THE COST OF CLIPPING BACK THE EDGES OF THE ROADWAY, SHOULDERS, AND THE FIRST 3' OF UNPAVED DRIVEWAY ENTRANCES, PICKING UP AND DISPOSING OF WASTE AND EXCESS MATERIAL, AND CLEANING THE EXISTING PAVEMENT PRIOR TO OVERLAY SHALL BE INCIDENTAL TO SECTION 401( ). PREPARING UNPAVED DRIVEWAY ENTRANCES BEYOND THE FIRST 3' SHALL BE PAID UNDER THE APPROPRIATE CONTRACT ITEMS: 202000 AND/OR 30200X.

21. BUTT JOINTS SHALL BE PLACED AT ALL INTERSECTING HOT MIX ROADS AND ANY OTHER LOCATIONS AS DIRECTED BY THE ENGINEER. BUTT JOINTS AT DRAINAGE STRUCTURES NOT TO BE RESURFACED SHALL BE AS PER THE INCLUDED PLAN DETAIL OR LOCATION NOTES. BUTT JOINTS CUT PRIOR TO THE DAY OF THE PAVEMENT OVERLAY SHALL BE RAMPED WITH HOT MIX TRM. IN MILLING AREAS, THERE WILL BE NO SEPARATE PAYMENT FOR BUTT JOINTS. AFTER PAVEMENT MILLING, ALL TRANSVERSE VERTICAL DIFFERENCES, RAISED EDGES OF MANHOLES, CATCH BASINS, WATER VALVE BOXES, ETC...SHALL BE RAMPED WITH HOT-MIX TRM AT A 20:1 OR FLATTER SLOPE PRIOR TO OPENING THE ROADWAY TO TRAFFIC. PAVEMENT MILLINGS WILL NOT BE ALLOWED FOR USE AS RAMPING MATERIAL.

22. TAPER MILLING IS INTENDED FOR MILLING IN THE AREA OF FIXED STRUCTURES (I.E. CURBS GUARDRAIL, ETC.) THE MILLED DEPTH AT THE STRUCTURE SHALL BE THE DEPTH OF THE PROPOSED OVERLAY AND 0" AT A DISTANCE OF +/- 6½' FROM THE STRUCTURE. THE COMPUTED DEPTH FOR PAYMENT PURPOSES IS THE AVERAGE OF THE TWO DEPTHS.

23. ALL MILLED MATERIAL SHALL REMAIN THE PROPERTY OF THE CONTRACTOR UNLESS OTHERWISE STATED.

24. EXCAVATION FOR P.C.C. CURBS, SIDEWALK OR VALLEY GUTTER SHALL BE INCIDENTAL TO THE BID PRICE FOR THESE RESPECTIVE ITEMS. EXCAVATED MATERIAL, NOT NEEDED ON THE PROJECT, SHALL BE REMOVED FROM THE CONTRACT AT THE CONTRACTORS EXPENSE. ITEM 732XXX, TOPSOIL, SHALL BE USED AS BACKFILL MATERIAL FOR CURB AND SIDEWALK AS DIRECTED BY THE ENGINEER. TOPSOIL SHALL BE

Unofficial Website Copy

GENERAL CONTRACT PLAN NOTES

SCREENED/SIFTED SO AS NO MATERIAL GREATER THAN .5" IS PRESENT IN MATERIAL USED FOR BACKFILL. AT EACH LOCATION, BACKFILLING SHALL BE PERFORMED IMMEDIATELY UPON REMOVAL OF FORMS FOR CURB OR SIDEWALK WORK. COMPLETE RESTORATION, TOPSOIL, SEEDING, AND REMOVAL OF ALL MATERIALS FOR CURB & GUTTER OR SIDEWALK; SEALING OF VALLEY GUTTERS AND PARGING OF CATCH BASINS, SHALL BE COMPLETED WITHIN SEVEN (7) CALENDAR DAYS OF COMPLETION OF THE ITEM OF WORK. FAILURE TO COMPLY WILL RESULT IN A SUSPENSION OF ALL OTHER CONTRACT WORK WITH TIME CHARGES CONTINUING TO BE ASSESSED.

25. ALL ADJUSTMENTS SHALL BE MADE NO MORE THAN SEVEN (7) CALENDAR DAYS PRIOR TO THE PLACEMENT OF THE FINAL COURSE OF HOT MIX UNLESS OTHERWISE APPROVED BY THE ENGINEER. FAILURE TO COMPLY WILL RESULT IN A SUSPENSION OF ALL OTHER CONTRACT WORK WITH TIME CHARGES CONTINUING TO BE ASSESSED.

26. ALL PAVING, INCLUDING TURN LANES, SHOULDERS AND INTERSECTIONS, IS TO BE COMPLETED WITHIN SEVEN (7) CALENDAR DAYS FROM THE TIME THE AREA WAS MILLED. FAILURE TO COMPLY WILL RESULT IN A SUSPENSION OF ALL OTHER CONTRACT WORK WITH TIME CHARGES CONTINUING TO BE ASSESSED.

27. THE CONTRACTOR SHALL TAKE CARE IN REMOVING PAVEMENT AROUND UTILITIES, BUTT JOINTS, CURBING, ETC. SO THAT EXISTING PAVEMENT BEYOND THE SPECIFIED DEPTHS IS NOT DAMAGED. ANY DAMAGE CAUSED BY THE CONTRACTOR'S OPERATIONS MAY RESULT IN PLACING LEVELING COURSES AT THE CONTRACTOR'S EXPENSE. THE REMOVAL AND CLEAN UP OF THE HOT MIX RESIDUE WEDGE REMAINING AFTER MILLING OPERATIONS SHALL BE INCIDENTAL TO THE MILLING ITEM. THE REMOVAL OF EXISTING RAISED PAVEMENT MARKERS (RPM'S) SHALL BE INCIDENTAL TO THE APPLICABLE MILLING AND/OR RECLAMATION ITEMS.

28. ALL PORTLAND CEMENT CONCRETE MUST BE RECEIVED FROM AN APPROVED PRODUCTION PLANT UNLESS OTHERWISE APPROVED BY THE ENGINEER. ONLY CALIBRATED VOLUMETRIC CONCRETE TRUCKS WILL BE PERMITTED TO PROVIDE ON-SITE MIXTURES. THIS PERTAINS TO BOTH WORK OCCURRING DURING NORMAL WORKING HOURS AND NIGHTTIME RESTRICTED WORK.

29. DRAINAGE INLETS, WHICH ARE 4' GREATER IN DEPTH AND ARE SLATED FOR REPAIR WILL HAVE STEPS INSTALLED IN ACCORDANCE WITH SECTION 708.07 OF THE STANDARD SPECIFICATIONS. PAYMENT SHALL BE INCIDENTAL TO THE UNIT PRICE BID FOR ITEM 710001.

30. THE PORTLAND CEMENT CONCRETE USED WITHIN ITEM 701002 - ADJUST AND REPAIR EXISTING MAN HOLES AND ITEM 750000 - ADJUST WATER VALVE BOX SHALL CONFORM TO THE REQUIREMENTS OF CLASS A CONCRETE AS STATED WITHIN SECTION 503.02 OF THE DEPARTMENT'S STANDARD SPECIFICATIONS.

Unofficial Website Copy

DETAILS SHEET

Unofficial Website Copy

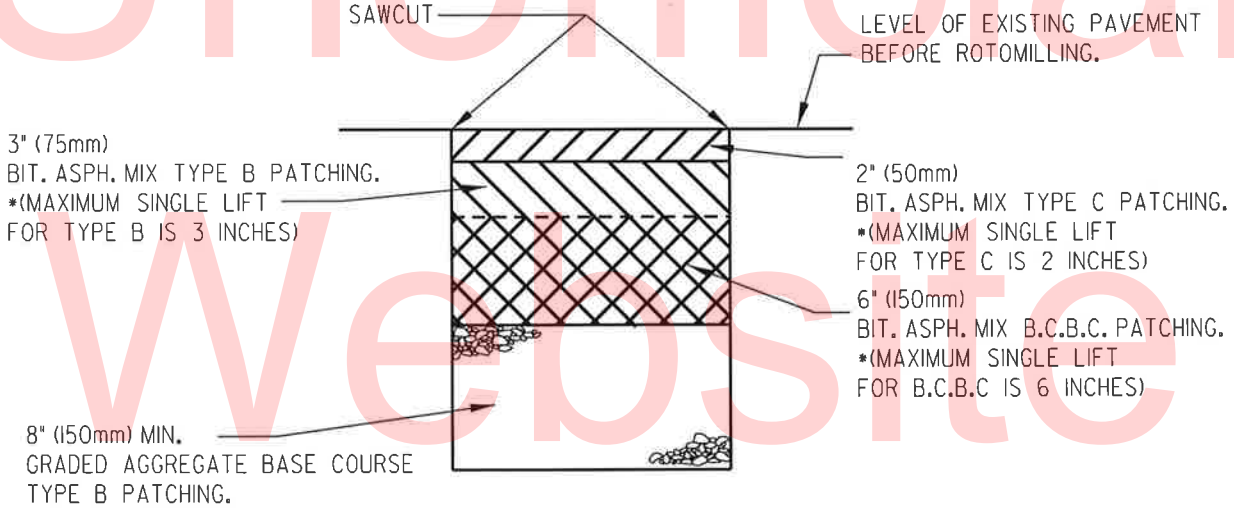

BIT. ASPHALT MIX PATCHING DETAIL
FOR P.C.C. ISLAND REMOVAL @ DE26
N.T.S.

NOTE: ALL EDGES TO BE SAWCUT. CUTTING BY USE OF AIR HAMMERS MAY BE SUBSTITUTED FOR SAWCUTTING IF THE AREA IS TO BE OVERLAID UNDER THE SAME CONTRACT. THIS DETAIL SHALL BE USED FOR ALL HOT-MIX PATCHES UNLESS OTHERWISE SHOWN ON THE PLANS.

DETAILS SHEET

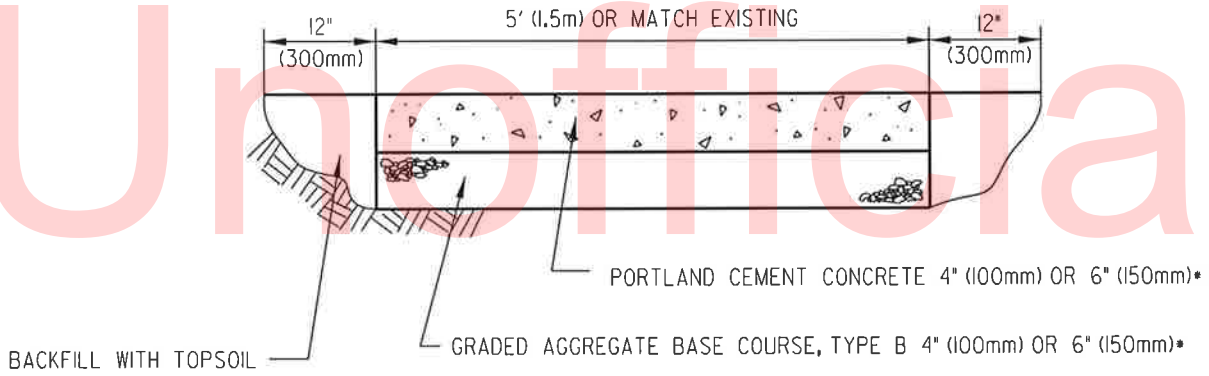

P.C.C. SIDEWALK

N.T.S.

• **NOTE:** 6" (150mm) CONCRETE OVER 6" (150mm) GRADED AGGREGATE TO BE USED FOR DRIVEWAY PLACEMENT

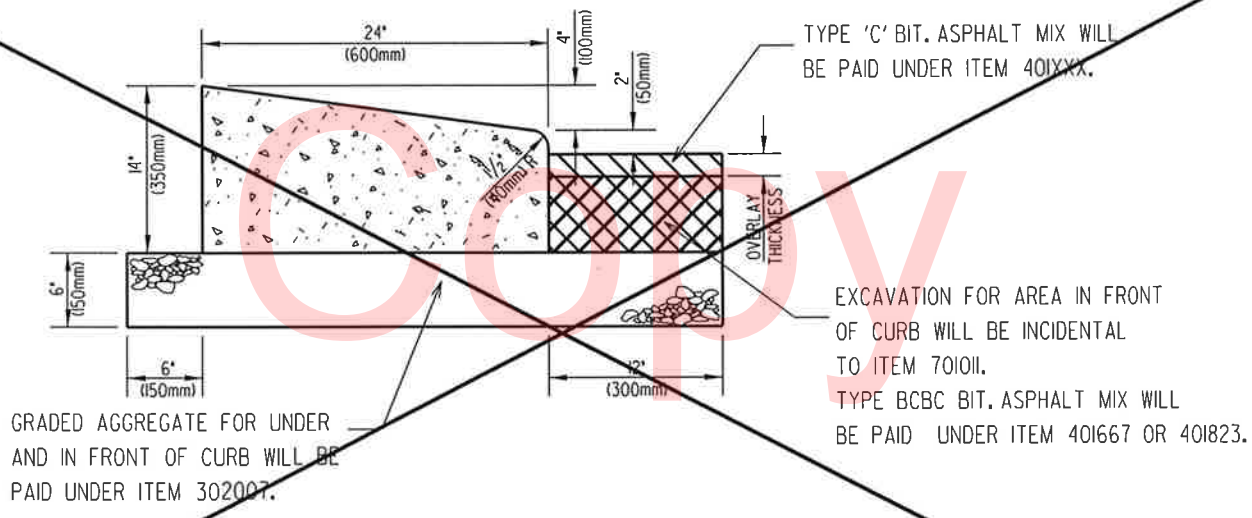

P.C.C. CURB TYPE 2

N.T.S.

Unofficial Website Copy

DETAILS SHEET

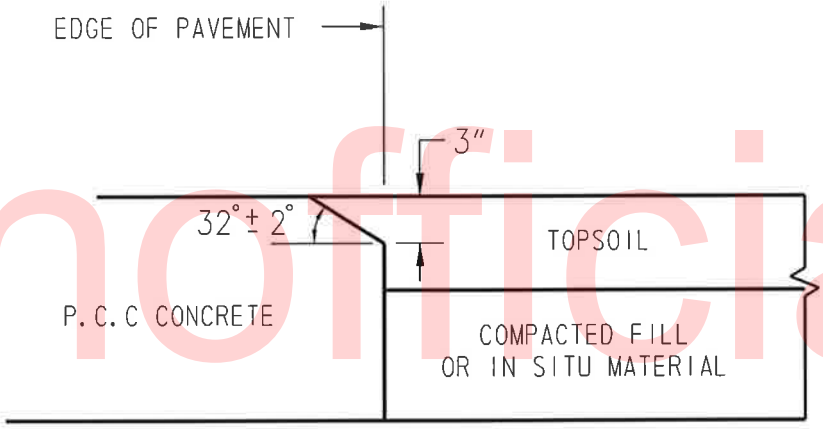

CONCRETE PAVEMENTS

NOT TO SCALE

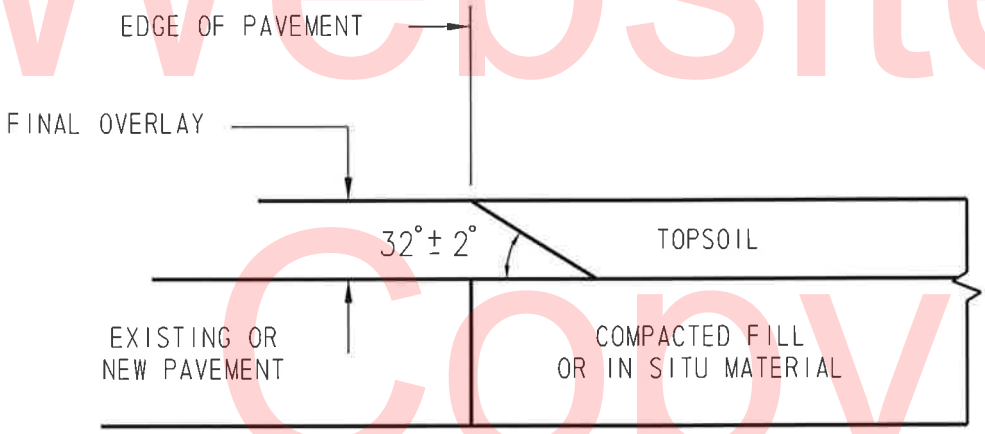

BIT. ASPHALT MIX PAVEMENTS AND OVERLAYS

NOT TO SCALE

SAFETY EDGE DETAIL

NOT TO SCALE

Unofficial Website Copy

DETAILS SHEET

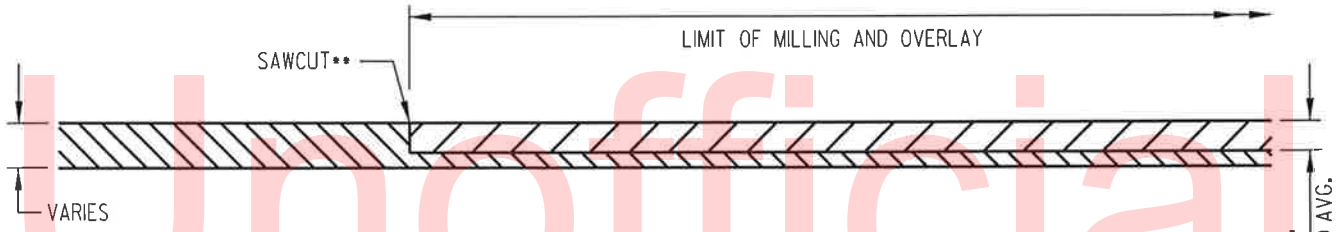

BIT. ASPHALT MIX JOINT FOR FULL WIDTH MILLING SECTION**

PAYMENT INCIDENTAL TO ITEM 760XXX, MILLING.
**SAWCUT SHALL BE PAID UNDER ITEM 762001.

LEGEND

- PROPOSED FULL WIDTH MILLING AND BIT. ASPHALT MIX OVERLAY
- EXISTING PAVEMENT (TO REMAIN)

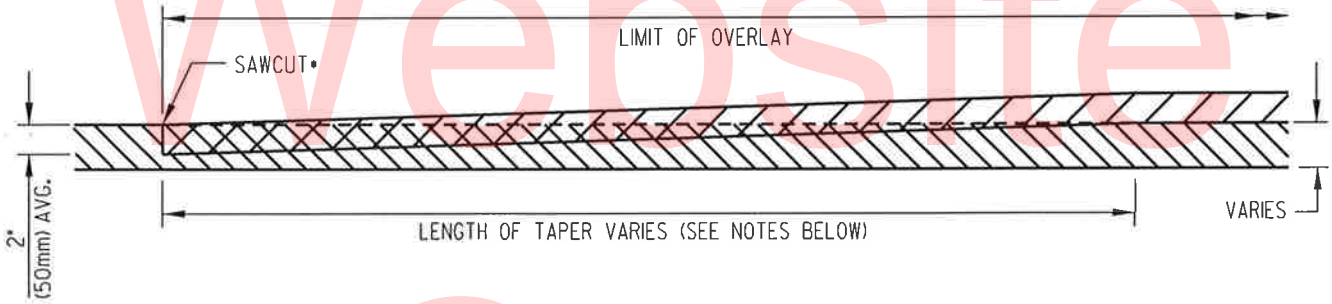

BIT. ASPHALT MIX JOINT FOR OVERLAY SECTION*

PAYMENT UNDER ITEM 761001.
*SAWCUT IS INCIDENTAL TO ITEM 761001.

LEGEND

- PROPOSED OVERLAY
- EXISTING PAVEMENT
- EXISTING PAVEMENT TO BE REMOVED

NOTES:

THE FOLLOWING LENGTHS ARE BASED ON THE POSTED SPEED OF THE ROADWAY:

1. EQUAL TO OR GREATER THAN 55 MPH = 40 FT (9.1m) PER 1" (25mm) OF OVERLAY DEPTH.
2. LESS THAN 55 MPH = 30 FT (6m) PER 1" (25mm) OF OVERLAY DEPTH.
3. AT STOP SIGNS = 15 FT (4.6m) PER 1" (25mm) OF OVERLAY DEPTH.

BITUMINOUS ASPHALT MIX JOINT DETAILS

Unofficial Website Copy

LOCATION 1 **MILLSBORO HIGHWAY, DE30 (S24) FROM LAUREL RD, DE24 (S24) TO HMJ WEST OF KENDALL ST.**

LENGTH 7327.392 m 24040 L.F. AADT 5388

GENERAL IMPROVEMENTS

2" MILLING AND 2" WARM MIX TYPE C (64-22, C) FULL WIDTH OVERLAY.

COMMENTS:

Please see attached sheets for comments

Unofficial Website Copy

MATERIAL ESTIMATE FOR LOCATION 1

302005	GRADED AGGREGATE BASE COURSE, TYPE B	65.00	TON
302007	GRADED AGGREGATE BASE COURSE, TYPE B	9.00	C.Y.
401696	ENTRANCE, DRIVEWAY AND INTERSECTINGSTREET PAVING SURCHARGE	435.00	TON
401801	BITUMINOUS CONCRETE, SUPERPAVE, TYPE C, 160 GYRATIONS PG 64-22 (CARBONATE STONE)	13,177.00	TON
402000	BITUMINOUS CONCRETE AND/OR COLD-LAID BITUMINOUS CONCRETE (TRM)	109.00	TON
705002	P.C.C. SIDEWALK, 6"	315.00	S.F.
705007	SIDEWALK SURFACE DETECTABLE WARNING SYSTEM	20.00	S.F.
705008	CURB RAMP, TYPE 1	250.00	S.F.
710001	ADJUSTING AND REPAIRING EXISTING DRAINAGE INLET	1.00	EACH
710002	ADJUSTING AND REPAIRING EXISTING MANHOLE	1.00	EACH
743004	FURNISH AND MAINTAIN PORTABLE CHANGEABLE MESSAGE SIGN	196.00	EA-DY
743010	FURNISH AND MAINTAIN TRUCK MOUNTED ATTENUATOR, TYPE II	30.00	EA-DY
743052	FLAGGER, SUSSEX COUNTY, STATE	900.00	HOUR
743064	FLAGGER, SUSSEX COUNTY, STATE, OVERTIME	135.00	HOUR
748015	PERMANENT PAVEMENT STRIPING, SYMBOL/LEGEND ALKYD-THERMOPLAST IC	1,160.00	S.F.
748019	TEMPORARY MARKINGS, PAINT, 4"	189,180.00	L.F.
748026	TEMPORARY MARKINGS, PAINT SYMBOL/LEGEND	2,320.00	S.F.
748027	PERMANENT PAVEMENT STRIPING, ALKYD-THERMOPLASTIC, 12"	154.00	L.F.
748502	RAISED/RECESSED PAVEMENT MARKER	300.00	EACH
748548	PERMANENT PAVEMENT STRIPING, EPOXY RESIN PAINT, WHITE/YELLOW, 5"	94,590.00	L.F.
748553	PREFORMED RETROREFLECTIVE THERMOPLASTIC PAVEMENT MARKINGS, BIKE SYMBOL	7.00	EACH
749687	INSTALLATION OR REMOVAL OF TRAFFIC SIGN(S) ON SINGLE SIGN POST	4.00	EACH
750000	ADJUST WATER VALVE BOXES	9.00	EACH
758000	REMOVAL OF EXISTING PORTLAND CEMENTCONCRETE PAVEMENT, CURB, SIDEWALK, ETC.	35.00	S.Y.
760012	RUMBLE STRIPS, BIKE-FRIENDLY, HOT-MIX	48,000.00	L.F.
760018	RUMBLE STRIPS, CENTER LINE, HOT-MIX	24,000.00	L.F.
760507	PROFILE MILLING, BITUMINOUS CONCRETE	218,389.00	SY-IN
762001	SAW CUTTING, BITUMINOUS CONCRETE	1,810.00	L.F.

LOCATION 1 **MILLSBORO HIGHWAY, DE30 (S24) FROM LAUREL RD, DE24 (S24) TO HMJ WEST OF KENDALL ST.**

LENGTH 7327.392 m 24040 L.F. AADT 5388

GENERAL IMPROVEMENTS

2" MILLING AND 2" WARM MIX TYPE C (64-22, C) FULL WIDTH OVERLAY.

COMMENTS:

Please see attached sheets for comments

Unofficial Website Copy

MATERIAL ESTIMATE FOR LOCATION 1

762002	SAW CUTTING, CONCRETE, FULL DEPTH	105.00 L.F.
763621	CONSTRUCTION ENGINEERING, REHABILITATION	4.00 HOUR
908001	TOPSOIL (TON)	751.00 TON
908014	PERMANENT GRASS SEEDING, DRY GROUND	8,018.00 S.Y.

LOCATION 1 MILLSBORO HIGHWAY, DE30 (S24) FROM LAUREL RD, DE24 (S24) TO HMJ WEST OF KENDALL ST.

COMMENTS:

1. RECOMMENDED M.O.T. TYPICAL APPLICATION, TA-10 (TRAVEL LANES).
. TYPICAL APPLICATION, TA-3 (SHOULDERS).

2. DAYTIME ALLOWABLE LANE CLOSURES: 8:00A - 6:00P.

3. ALL PAVEMENT VERTICAL DIFFERENCES MUST BE ADDRESSED IN ACCORDANCE WITH THE DE-MUTCD AT THE END OF EACH WORK DAY.

4. EXISTING R.O.W FOR THIS LOCATION IS 60' AS PER ARCHIVE PLANS;
. A. 1490

5. PLACE BIT. ASPHALT CONCRETE SAFETY EDGE AS PER ATTACHED DETAIL.

6. THE GABC ITEM 302005 AND QUANTITY IS FOR UNIMPROVED DRIVEWAYS.

7. THE P.C.C. REMOVAL AND 6" SIDEWALK ITEMS ARE FOR CONCRETE DRIVEWAYS.

8. THE REMOVAL OF EXISTING RAISED PAVEMENT MARKERS SHALL BE INCIDENTAL TO THE BIT. ASPHALT OVERLAY OPERATION.

9. INSTALL BIKE FRIENDLY AND CENTERLINE RUMBLESTRIPS AS PER THE MUTCD MANUAL.

10. ITEM 748027 12" THERMO-PLASTIC SHALL BE USED FOR THE GORE STRIPING.

11. ANY WATER VALVE ADJUSTED OR REPAIRED BY THE CONTRACTOR SHALL HAVE A 18" X 18" PIECE OF GEO-TECH MATERIAL PLACED IN-BETWEEN THE VALVE COVER LID AND RISER/EXTENSION AND TRIMMED FLUSH WITH THE TOP OF LID, INCIDENTAL TO ITEM 750000. (REF. UTILITY STATEMENT).

12. THE FOLLOWING LOCATIONS WILL REQUIRE TIE BACK (MILL AND OVERLAY) TO THE EXISTING HOT-MIX JOINTS AS DIRECTED BY THE FIELD ENGINEER;

. LEWIS & MUMFORD RD
. KENT DR
. REVEL RD AND CUT THRU SPUR, EAST & WEST SIDES.
. CAREYS CAMP RD, EAST & WEST SIDES.
. MISSION RD
. CONAWAY RD
. DE24, LAUREL RD

THIS LOCATION SHALL MEET THE TOLERANCES OF SUBSECTION 401580 - RIDE QUALITY OF HOT-MIX PAVEMENT REQUIREMENTS, AS SPECIFIED IN THE SPECIAL PROVISIONS.

Unofficial Website Copy

LOCATION 2 **MILLSBORO HIGHWAY, DE30 (S25) FROM LAUREL RD, DE24 (S24) TO NINE FOOT RD, DE26 (S26).**

LENGTH 1447.8 m 4750 L.F. AADT 1555

GENERAL IMPROVEMENTS

2" WARM MIX TYPE C (64-22, C) FULL WIDTH OVERLAY.

COMMENTS:

Please see attached sheets for comments

Unofficial Website Copy

MATERIAL ESTIMATE FOR LOCATION 2

302005	GRADED AGGREGATE BASE COURSE, TYPE B	19.00	TON
302007	GRADED AGGREGATE BASE COURSE, TYPE B	5.00	C.Y.
401696	ENTRANCE, DRIVEWAY AND INTERSECTINGSTREET PAVING SURCHARGE	50.00	TON
401801	BITUMINOUS CONCRETE, SUPERPAVE, TYPE C, 160 GYRATIONS PG 64-22 (CARBONATE STONE)	2,566.00	TON
705002	P.C.C. SIDEWALK, 6"	252.00	S.F.
743004	FURNISH AND MAINTAIN PORTABLE CHANGEABLE MESSAGE SIGN	56.00	EA-DY
743010	FURNISH AND MAINTAIN TRUCK MOUNTED ATTENUATOR, TYPE II	7.00	EA-DY
743052	FLAGGER, SUSSEX COUNTY, STATE	210.00	HOUR
743064	FLAGGER, SUSSEX COUNTY, STATE, OVERTIME	32.00	HOUR
748014	PERMANENT PAVEMENT STRIPING, ALKYD-THERMOPLASTIC, 4"	120.00	L.F.
748015	PERMANENT PAVEMENT STRIPING, SYMBOL/LEGEND ALKYD-THERMOPLAST IC	15.00	S.F.
748019	TEMPORARY MARKINGS, PAINT, 4"	39,600.00	L.F.
748026	TEMPORARY MARKINGS, PAINT SYMBOL/LEGEND	30.00	S.F.
748502	RAISED/RECESSED PAVEMENT MARKER	60.00	EACH
748548	PERMANENT PAVEMENT STRIPING, EPOXY RESIN PAINT, WHITE/YELLOW, 5"	19,800.00	L.F.
749687	INSTALLATION OR REMOVAL OF TRAFFIC SIGN(S) ON SINGLE SIGN POST	1.00	EACH
758000	REMOVAL OF EXISTING PORTLAND CEMENTCONCRETE PAVEMENT, CURB, SIDEWALK, ETC.	28.00	S.Y.
760012	RUMBLE STRIPS, BIKE-FRIENDLY, HOT-MIX	9,500.00	L.F.
760018	RUMBLE STRIPS, CENTER LINE, HOT-MIX	4,750.00	L.F.
762001	SAW CUTTING, BITUMINOUS CONCRETE	230.00	L.F.
762002	SAW CUTTING, CONCRETE, FULL DEPTH	80.00	L.F.
908001	TOPSOIL (TON)	151.00	TON
908014	PERMANENT GRASS SEEDING, DRY GROUND	1,600.00	S.Y.

LOCATION 2 MILLSBORO HIGHWAY, DE30 (S25) FROM LAUREL RD, DE24 (S24) TO NINE FOOT RD, DE26 (S26).

COMMENTS:

1. RECOMMENDED M.O.T. TYPICAL APPLICATION, TA-10 (TRAVEL LANES).
. TYPICAL APPLICATION, TA-3 (SHOULDERS).

2. DAYTIME ALLOWABLE LANE CLOSURES: 8:00A - 6:00P.

3. ALL PAVEMENT VERTICAL DIFFERENCES MUST BE ADDRESSED IN ACCORDANCE WITH THE DE-MUTCD AT THE END OF EACH WORK DAY.

4. EXISTING R.O.W FOR THIS LOCATION IS 60' AS PER ARCHIVE PLANS;
. A. 1446
. B. 86-063-10

5. PLACE BIT. ASPHALT CONCRETE SAFETY EDGE AS PER ATTACHED DETAIL.

6. THE GABC ITEM 302005 AND QUANTITY IS FOR UNIMPROVED DRIVEWAYS.

7. THE P.C.C. REMOVAL AND 6" SIDEWALK ITEMS ARE FOR CONCRETE DRIVEWAYS.

8. THE REMOVAL OF EXISTING RAISED PAVEMENT MARKERS SHALL BE INCIDENTAL TO THE BIT. ASPHALT OVERLAY OPERATION.

9. INSTALL BIKE FRIENDLY AND CENTERLINE RUMBLESTRIPS AS PER THE MUTCD MANUAL.

10. THE PROJECT LIMITS WILL TIE BACK (MILL AND OVERLAY) TO THE EXISTING HOT-MIX JOINT ON DE26 INTERSECTION AS DIRECTED BY THE FIELD ENGINEER. REPLACE THERMO TAPE RUMBLESTRIPS LOCATED AT THE DE26 STOP IN KIND. THE RUMBLESTRIPS STRIPING SHALL BE PAID UNDER ITEM 748014.

THIS LOCATION SHALL MEET THE TOLERANCES OF SUBSECTION 401580 - RIDE QUALITY OF HOT-MIX PAVEMENT REQUIREMENTS, AS SPECIFIED IN THE SPECIAL PROVISIONS.

Unofficial Website Copy

LOCATION 3 **MILLSBORO HIGHWAY, DE30 (S26) FROM MD/DE STATE LINE TO NINE FOOT RD, DE26 (S26).**

LENGTH 9122.664 m 29930 L.F. AADT 4888

GENERAL IMPROVEMENTS

1" MILLING (CRACK SEAL) AND 2" WARM MIX TYPE C (64-22, C) FULL WIDTH OVERLAY.

COMMENTS:

Please see attached sheets for comments

Unofficial Website Copy

MATERIAL ESTIMATE FOR LOCATION 3

211002	REMOVAL OF STRUCTURES AND OBSTRUCTIONS (GUARDRAIL)	600.00	L.F.
302005	GRADED AGGREGATE BASE COURSE, TYPE B	98.00	TON
302007	GRADED AGGREGATE BASE COURSE, TYPE B	2.00	C.Y.
302008	GRADED AGGREGATE BASE COURSE, TYPE B, PATCHING	4.00	C.Y.
401696	ENTRANCE, DRIVEWAY AND INTERSECTINGSTREET PAVING SURCHARGE	531.00	TON
401801	BITUMINOUS CONCRETE, SUPERPAVE, TYPE C, 160 GYRATIONS PG 64-22 (CARBONATE STONE)	16,217.00	TON
401821	BITUMINOUS CONCRETE, SUPERPAVE, TYPE C, 160 GYRATIONS, PG 64-22, PATCHING	2.00	TON
401822	BITUMINOUS CONCRETE, SUPERPAVE, TYPE B, 160 GYRATIONS, PG 64-22, PATCHING	3.00	TON
401823	BITUMINOUS CONCRETE, SUPERPAVE, BITUMINOUS CONCRETE BASE COURSE, 160 GYRATIONS, PG 64-22, PATCHING	6.00	TON
402000	BITUMINOUS CONCRETE AND/OR COLD-LAID BITUMINOUS CONCRETE (TRM)	67.00	TON
406001	BITUMINOUS CONCRETE PATCHING	324.00	SY-IN
705002	P.C.C. SIDEWALK, 6"	126.00	S.F.
708045	LAWN INLET	1.00	EACH
708060	REPLACE DRAINAGE INLET GRATE(S)	1.00	EACH
708061	REPLACE DRAINAGE INLET FRAME(S)	1.00	EACH
710001	ADJUSTING AND REPAIRING EXISTING DRAINAGE INLET	13.00	EACH
720585	GUARDRAIL END TREATMENT ATTENUATOR, TYPE 1-31	12.00	EACH
743004	FURNISH AND MAINTAIN PORTABLE CHANGEABLE MESSAGE SIGN	70.00	EA-DY
743010	FURNISH AND MAINTAIN TRUCK MOUNTED ATTENUATOR, TYPE II	31.00	EA-DY
743052	FLAGGER, SUSSEX COUNTY, STATE	932.00	HOUR
743064	FLAGGER, SUSSEX COUNTY, STATE, OVERTIME	140.00	HOUR
748015	PERMANENT PAVEMENT STRIPING, SYMBOL/LEGEND ALKYD-THERMOPLAST IC	405.00	S.F.
748019	TEMPORARY MARKINGS, PAINT, 4"	216,340.00	L.F.
748026	TEMPORARY MARKINGS, PAINT SYMBOL/LEGEND	810.00	S.F.
748502	RAISED/RECESSED PAVEMENT MARKER	374.00	EACH
748548	PERMANENT PAVEMENT STRIPING, EPOXY RESIN PAINT, WHITE/YELLOW, 5"	108,170.00	L.F.
749687	INSTALLATION OR REMOVAL OF TRAFFIC SIGN(S) ON SINGLE SIGN POST	7.00	EACH

LOCATION 3 **MILLSBORO HIGHWAY, DE30 (S26) FROM MD/DE STATE LINE TO NINE FOOT RD, DE26 (S26).**

LENGTH 9122.664 m 29930 L.F. AADT 4888

GENERAL IMPROVEMENTS

1" MILLING (CRACK SEAL) AND 2" WARM MIX TYPE C (64-22, C) FULL WIDTH OVERLAY.

COMMENTS:

Please see attached sheets for comments

Unofficial Website Copy

MATERIAL ESTIMATE FOR LOCATION 3

758000	REMOVAL OF EXISTING PORTLAND CEMENTCONCRETE PAVEMENT, CURB, SIDEWALK, ETC.	31.00	S.Y.
760012	RUMBLE STRIPS, BIKE-FRIENDLY, HOT-MIX	59,800.00	L.F.
760018	RUMBLE STRIPS, CENTER LINE, HOT-MIX	29,900.00	L.F.
760507	PROFILE MILLING, BITUMINOUS CONCRETE	143,380.00	SY-IN
762001	SAW CUTTING, BITUMINOUS CONCRETE	2,500.00	L.F.
762002	SAW CUTTING, CONCRETE, FULL DEPTH	40.00	L.F.
908001	TOPSOIL (TON)	935.00	TON
908014	PERMANENT GRASS SEEDING, DRY GROUND	9,977.00	S.Y.

LOCATION 3 MILLSBORO HIGHWAY, DE30 (S26) FROM MD/DE STATE LINE TO NINE FOOT RD, DE26 (S26).

COMMENTS:

1. RECOMMENDED M.O.T. TYPICAL APPLICATION, TA-10 (TRAVEL LANES).
. TYPICAL APPLICATION, TA-3 (SHOULDERS).

2. DAYTIME ALLOWABLE LANE CLOSURES: 8:00A - 6:00P.

3. ALL PAVEMENT VERTICAL DIFFERENCES MUST BE ADDRESSED IN ACCORDANCE WITH THE DE-MUTCD AT THE END OF EACH WORK DAY.

4. EXISTING R.O.W FOR THIS LOCATION IS 60' AS PER ARCHIVE PLANS;
. A. 655
. B. 1446
. C. 86-063-10

5. PLACE BIT. ASPHALT CONCRETE SAFETY EDGE AS PER ATTACHED DETAIL.

6. THE GABC ITEM 302005 AND QUANTITY IS FOR UNIMPROVED DRIVEWAYS.

7. THE P.C.C. REMOVAL AND 6" SIDEWALK ITEMS ARE FOR CONCRETE DRIVEWAYS.

8. THE REMOVAL OF EXISTING RAISED PAVEMENT MARKERS SHALL BE INCIDENTAL TO THE BIT. ASPHALT OVERLAY OPERATION.

9. INSTALL BIKE FRIENDLY AND CENTERLINE RUMBLESTRIPS AS PER THE MUTCD MANUAL.

10. 2" MILL FULL WIDTH IN EACH DIRECTION FROM CENTER LINE OF CULVERT/BRIDGE THRU GUARDRAIL AND PLACE BACK 2" HOT-MIX TYPE C OVERLAY OR AS DIRECTED BY THE FIELD ENGINEER.

11. REPLACE ALL EXISTING ET-PLUS END TREATMENT SYSTEMS AT CULVERTS.

12. DO NOT MILL OR OVERLAY P.C.C. DECKS OVER CULVERTS.

13. REMOVE EXISTING SOUTHERN MOST P.C.C. ISLAND AT DE26, NINE FOOT RD INTERSECTION AND BIT. ASPHALT PATCH. (REF. ATTACHED DETAIL).

14. REPLACE LAWN INLET IN KIND LOCATED AT BAYSHORE COMMUNITY CHURCH.

15. THE FOLLOWING LOCATIONS WILL REQUIRE TIE BACK (MILL AND OVERLAY) TO THE EXISTING HOT-MIX JOINTS AS DIRECTED BY THE FIELD ENGINEER;

. DE26, NINE FOOT RD.(APPROX. 210').
. LYNCH RD
. COW HOUSE BRANCH RD
. WESTWOOD & BRADFORD RD
. LOWES CROSSING RD, EAST AND WEST SIDES.
. DAISY RD
. CONAWAY RD
. CHARLES WEST & SHELL STATION RD
. PEAR TREE & CYPRESS RD
. COLLINS RD(1)
. COLLINS RD(2)
. SYNDER RD(1)
. SNYDER RD(2)
. COOPER RD

Unofficial Website Copy

LOCATION 3 MILLSBORO HIGHWAY, DE30 (S26) FROM MD/DE STATE LINE TO NINE FOOT RD, DE26 (S26).

. WHITESVILLE RD
. BETTS RD
. BETHEL RD
. MD 353 BEGINS.

THIS LOCATION SHALL MEET THE TOLERANCES OF SUBSECTION 401580 - RIDE QUALITY OF HOT-MIX PAVEMENT REQUIREMENTS, AS SPECIFIED IN THE SPECIAL PROVISIONS.

Unofficial Website Copy

CONTRACT QUANTITIES SUMMARY SHEET

211002	REMOVAL OF STRUCTURES AND OBSTRUCTIONS (GUARDRAIL)	600.00 L.F.
302005	GRADED AGGREGATE BASE COURSE, TYPE B	182.00 TON
302007	GRADED AGGREGATE BASE COURSE, TYPE B	16.00 C.Y.
302008	GRADED AGGREGATE BASE COURSE, TYPE B, PATCHING	4.00 C.Y.
401696	ENTRANCE, DRIVEWAY AND INTERSECTINGSTREET PAVING SURCHARGE	1,016.00 TON
401801	BITUMINOUS CONCRETE, SUPERPAVE, TYPE C, 160 GYRATIONS PG 64-22 (CARBONATE STONE)	31,960.00 TON
401821	BITUMINOUS CONCRETE, SUPERPAVE, TYPE C, 160 GYRATIONS, PG 64-22, PATCHING	2.00 TON
401822	BITUMINOUS CONCRETE, SUPERPAVE, TYPE B, 160 GYRATIONS, PG 64-22, PATCHING	3.00 TON
401823	BITUMINOUS CONCRETE, SUPERPAVE, BITUMINOUS CONCRETE BASE COURSE, 160 GYRATIONS, PG 64-22, PATCHING	6.00 TON
402000	BITUMINOUS CONCRETE AND/OR COLD-LAID BITUMINOUS CONCRETE (TRM)	176.00 TON
406001	BITUMINOUS CONCRETE PATCHING	324.00 SY-IN
705002	P.C.C. SIDEWALK, 6"	693.00 S.F.
705007	SIDEWALK SURFACE DETECTABLE WARNING SYSTEM	20.00 S.F.
705008	CURB RAMP, TYPE 1	250.00 S.F.
708045	LAWN INLET	1.00 EACH
708060	REPLACE DRAINAGE INLET GRATE(S)	1.00 EACH
708061	REPLACE DRAINAGE INLET FRAME(S)	1.00 EACH
710001	ADJUSTING AND REPAIRING EXISTING DRAINAGE INLET	14.00 EACH
710002	ADJUSTING AND REPAIRING EXISTING MANHOLE	1.00 EACH
720585	GUARDRAIL END TREATMENT ATTENUATOR, TYPE 1-31	12.00 EACH
743004	FURNISH AND MAINTAIN PORTABLE CHANGEABLE MESSAGE SIGN	322.00 EA-DY
743010	FURNISH AND MAINTAIN TRUCK MOUNTED ATTENUATOR, TYPE II	68.00 EA-DY
743052	FLAGGER, SUSSEX COUNTY, STATE	2,042.00 HOUR
743064	FLAGGER, SUSSEX COUNTY, STATE, OVERTIME	307.00 HOUR
748014	PERMANENT PAVEMENT STRIPING, ALKYD-THERMOPLASTIC, 4"	120.00 L.F.
748015	PERMANENT PAVEMENT STRIPING, SYMBOL/LEGEND ALKYD-THERMOPLAST IC	1,580.00 S.F.
748019	TEMPORARY MARKINGS, PAINT, 4"	445,120.00 L.F.
748026	TEMPORARY MARKINGS, PAINT SYMBOL/LEGEND	3,160.00 S.F.

Unofficial Website Copy

CONTRACT QUANTITIES SUMMARY SHEET

748027	PERMANENT PAVEMENT STRIPING, ALKYD-THERMOPLASTIC, 12"	154.00	L.F.
748502	RAISED/RECESSED PAVEMENT MARKER	734.00	EACH
748548	PERMANENT PAVEMENT STRIPING, EPOXY RESIN PAINT, WHITE/YELLOW, 5"	222,560.00	L.F.
748553	PREFORMED RETROREFLECTIVE THERMOPLASTIC PAVEMENT MARKINGS, BIKE SYMBOL	7.00	EACH
749687	INSTALLATION OR REMOVAL OF TRAFFIC SIGN(S) ON SINGLE SIGN POST	12.00	EACH
750000	ADJUST WATER VALVE BOXES	9.00	EACH
758000	REMOVAL OF EXISTING PORTLAND CEMENTCONCRETE PAVEMENT, CURB, SIDEWALK, ETC.	94.00	S.Y.
760012	RUMBLE STRIPS, BIKE-FRIENDLY, HOT-MIX	117,300.00	L.F.
760018	RUMBLE STRIPS, CENTER LINE, HOT-MIX	58,650.00	L.F.
760507	PROFILE MILLING, BITUMINOUS CONCRETE	361,769.00	SY-IN
762001	SAW CUTTING, BITUMINOUS CONCRETE	4,540.00	L.F.
762002	SAW CUTTING, CONCRETE, FULL DEPTH	225.00	L.F.
763000	INITIAL EXPENSE	LUMP	SUM
763621	CONSTRUCTION ENGINEERING, REHABILITATION	4.00	HOUR
763643	MAINTENANCE OF TRAFFIC, ALL INCLUSIVE	LUMP	SUM
908001	TOPSOIL (TON)	1,837.00	TON
908014	PERMANENT GRASS SEEDING, DRY GROUND	19,595.00	S.Y.

Unofficial Website Copy