STATE OF DELAWARE
DEPARTMENT OF TRANSPORTATION
800 BAY ROAD
P.O. BOX 778
DOVER, DELAWARE 19903

JENNIFER COHAN
SECRETARY

VIA WEBSITE POSTING AND OVERNIGHT DELIVERY

October 16, 2019

Contract No. T201701301.01
Federal Aid Project No. ESTP-2017(20)
Milton Rail to Trail, Phase II
Sussex County

Ladies and Gentlemen:

Enclosed is Addendum No. 1 for the referenced contract consisting of the following:

1. The Bid Proposal Cover, revised, to be substituted for the same page of the Proposal.
2. Three (3) pages, Bid Proposal Forms, pages 2, 4, and 6, revised, to be substituted for same pages in the Proposal.

   Items 301001, 720556 and 910001 have revised quantities.
3. Two (2) sheets, Construction Plans, sheets 3 and 28, revised, to be substituted for the same sheets in the Plans.
4. Amendment File No. 1.

Please note the revisions listed above and submit your bid based upon this information.

Sincerely,
~signature on file~
Connie Ivins
Competitively Bid Contracts Coordinator
Delaware Department of Transportation

Addendum No. 1
October 16, 2019

STATE OF DELAWARE

DEPARTMENT OF TRANSPORTATION

BID PROPOSAL

for

CONTRACT T201701301.01

FEDERAL AID PROJECT NO. ESTP-2017(20)

CFDA NO. 20.205

MILTON RAIL TO TRAIL, PHASE II

SUSSEX COUNTY

ADVERTISEMENT DATE: September 23, 2019

COMPLETION TIME: 123 Calendar Days

SPECIFICATIONS FOR ROAD AND BRIDGE CONSTRUCTION
DELAWARE DEPARTMENT OF TRANSPORTATION
AUGUST 2016

Bids will be received in the Bidder's Room at the Delaware Department of Transportation's Administration Building, 800 Bay Road, Dover, Delaware prior to 2:00 P.M. local time **October 22, 2019**

DELAWARE DEPARTMENT OF TRANSPORTATION PAGE: 2
SCHEDULE OF ITEMS DATE:

CONTRACT ID: T201701301.01 PROJECT(S): ESTP-2017(20)

All figures must be typewritten.

CONTRACTOR :_____

LINE NO	ITEM DESCRIPTION	APPROX. QUANTITY AND UNITS	UNIT PRICE DOLLARS	UNIT PRICE CTS	BID AMOUNT DOLLARS	BID AMOUNT CTS
0100	301001 GRADED AGGREGATE BASE COURSE, TYPE B	600.000 CY				
0110	301002 GRADED AGGREGATE BASE COURSE, TYPE B, PATCHING	19.000 CY				
0120	302002 DELAWARE NO. 3 STONE	15.000 TON				
0130	401005 SUPERPAVE TYPE C, PG 64-22 (CARBONATE STONE)	889.000 TON				
0140	401029 SUPERPAVE TYPE C, PG 64-22, PATCHING	10.000 TON				
0150	401030 SUPERPAVE TYPE B, PG 64-22, PATCHING	15.000 TON				
0160	401031 SUPERPAVE TYPE BCBC, PG 64-22, PATCHING	15.000 TON				
0170	601052 REINFORCED CONCRETE PIPE, 12", CLASS V	96.000 LF				
0180	601140 REINFORCED CONCRETE FLARED END SECTION, 12"	1.000 EACH				
0190	607501 GEOSYNTHETIC REINFORCED SOIL ABUTMENT AND WING WALLS	LUMP	LUMP			

CONTRACT ID: T201701301.01 PROJECT(S): ESTP-2017(20)

All figures must be typewritten.

CONTRACTOR :_____

LINE NO	ITEM DESCRIPTION	APPROX. QUANTITY AND UNITS	UNIT PRICE DOLLARS	UNIT PRICE CTS	BID AMOUNT DOLLARS	BID AMOUNT CTS
0300	708002 GEOTEXTILES, SEPARATION	300.000 SY				
0310	708003 GEOTEXTILES, RIPRAP	80.000 SY				
0320	720556 BOLLARD	3.000 EACH				
0330	727006 TEMPORARY CONSTRUCTION FENCE	1415.000 LF				
0340	727510 WOOD RAIL FENCE	610.000 LF				
0350	762000 SAW CUTTING, BITUMINOUS CONCRETE	155.000 LF				
0360	762001 SAW CUTTING, CONCRETE, FULL DEPTH	46.000 LF				
0370	763000 INITIAL EXPENSE/DE-MOBILIZATION	LUMP	LUMP			
0380	763621 CONSTRUCTION ENGINEERING, REHABILITATION	60.000 HOUR				
0390	801000 MAINTENANCE OF TRAFFIC	LUMP	LUMP			
0400	805001 PLASTIC DRUMS	180.000 EADY				

CONTRACT ID: T201701301.01 PROJECT(S): ESTP-2017(20)

All figures must be typewritten.

CONTRACTOR :_____

LINE NO	ITEM DESCRIPTION	APPROX. QUANTITY AND UNITS	UNIT PRICE DOLLARS	UNIT PRICE CTS	BID AMOUNT DOLLARS	BID AMOUNT CTS
0500	819018 INSTALLATION OR REMOVAL OF TRAFFIC SIGN(S) ON SINGLE SIGN POST	8.000 EACH				
0510	905001 SILT FENCE	425.000 LF				
0520	905500 SUPER SILT FENCE	175.000 LF				
0530	907017 COMPOST FILTER LOGS	240.000 LF				
0540	908004 TOPSOIL, 6" DEPTH	2400.000 SY				
0550	908014 PERMANENT GRASS SEEDING, DRY GROUND	2400.000 SY				
0560	908020 EROSION CONTROL BLANKET MULCH	3000.000 SY				
0570	908023 STABILIZED CONSTRUCTION ENTRANCE	97.000 SY				
0580	910001 INFILTRATION STONE, NO. 3	80.000 CY				
	SECTION 0001 TOTAL					
	TOTAL BID					

ADDENDUM PREPARED BY

CENTURY ENGINEERING

TODD S. WILSON

10/03/2019

DATE

TODD STEVEN WILSON
LICENSE
No. 19155
DELAWARE
PROFESSIONAL ENGINEER

SEAL

THIS SEAL APPLIES TO THE FOLLOWING SHEETS CHANGED UNDER ADDENDUM #1:
28

ADDENDA / REVISIONS	

NOT TO SCALE

MILTON RAIL TRAIL
PHASE II

CONTRACT	BRIDGE NO.	X
T201701301	DESIGNED BY: PM	
COUNTY	CHECKED BY: TF	
SUSSEX		

ADDENDA AND REVISIONS

SECTION
LSI
SHEET NO.
3

SDATES
STIMES
SFILES

ITEM 607501 - GEOSYNTHETIC REINFORCED SOIL ABUTMENT AND WING WALLS NOTES:

BEAM SEAT PLACEMENT: THICKNESS OF THE BEAM SEAT IS APPROXIMATELY 20 INCHES TO THE BOTTOM OF THE BEAMS AND CONSISTS OF A MINIMUM OF FOUR 4-INCH LIFTS OF WRAPPED-FACE GRS. PLACE PRECUT 3-INCH THICK FOAM BOARD ON TOP OF THE BEARING BED REINFORCEMENT BUT AGAINST THE FACE OF THE CMU BLOCK. SET HALF-HEIGHT SOLID CMU BLOCKS ON TOP OF THE FOAM BOARD IN THE BEAM BEARING AREA. WRAP 4-INCH LIFTS ACROSS THE BEAM SEAT. REPEAT THIS PROCESS FOR THE BEAM SEAT AREA DIRECTLY BELOW THE GLULAM DECK BEARING AREAS BETWEEN AND OUTSIDE THE BEAMS. BEFORE FOLDING FINAL WRAP, IT MAY BE NECESSARY TO GRADE THE SURFACE AGGREGATE OF THE BEAM SEAT SLIGHTLY HIGHER, TO ABOUT 0.5 INCHES, TO AID IN SEATING THE FOOTING AND TO MAXIMIZE CONTACT WITH THE BEARING AREA. THE BEAM SEAT AREA ALSO INCLUDES THE AREA UP TO THE GLULAM DECKING IN THE VOID BETWEEN THE BEAMS AND THE OVERHANG AREAS.

EQUIPMENT PLACEMENT:
EQUIPMENT CAN BE POSITIONED ON THE GRS ABUTMENT PROVIDED THE OUTRIGGER PADS ARE SIZED FOR LESS THAN 4000 PSF NEAR THE FACE OF THE ABUTMENT WALL.

THE FOLLOWING ITEMS SHALL BE INCIDENTAL TO THE RESPECTIVE ITEM:

RAILING POST:
THE CONTRACTOR SHALL INSTALL CONCRETE FOOTINGS AND STEEL HSS SLEEVES FOR THE TIMBER RAILING POSTS AT THE ABUTMENTS AS SHOWN IN DETAIL A ON THIS SHEET. FOOTINGS SHALL BE PRE-SET IN THE GEOTEXTILE LAYERS SO AS TO NOT CAUSE DAMAGE OR MISALIGNMENT TO THE WALL FACING ELEMENTS.
PAYMENT INCIDENTAL TO ITEM 621001 - WOOD STRUCTURES, TIMBER.

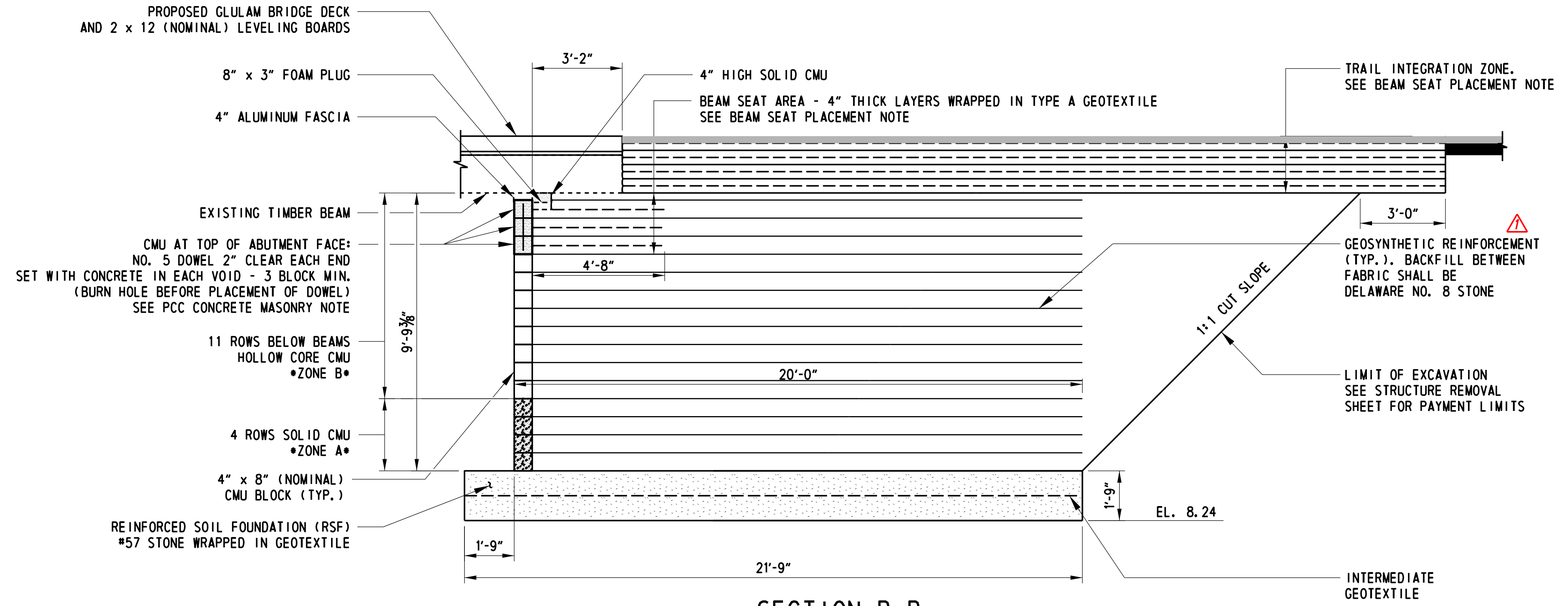

SECTION B-B

3/8" = 1'-0"

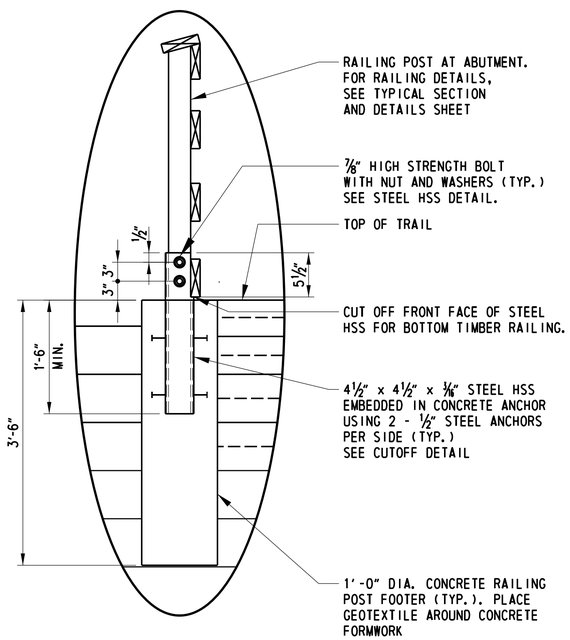

DETAIL A

1" = 1'-0"

NOTE:

FOR LOCATION
OF FOOTERS,
SEE PLAN SHEET

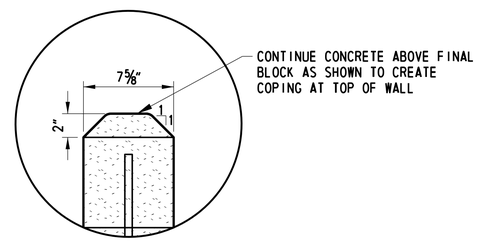

DETAIL B

NOT TO SCALE

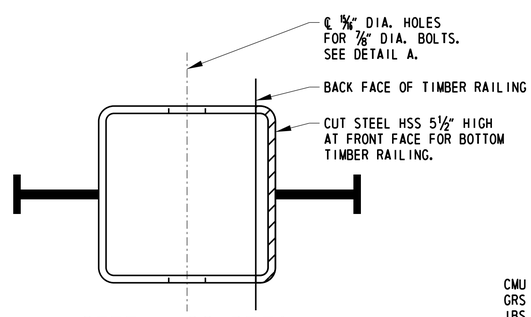

STEEL HSS DETAIL

NOT TO SCALE

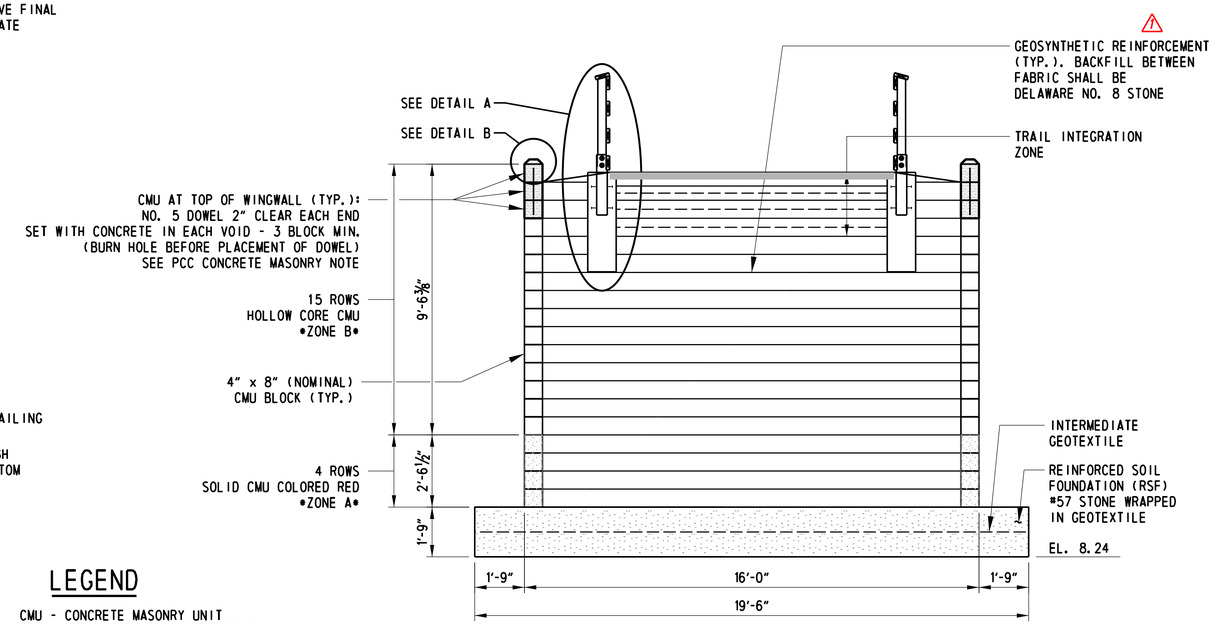

SECTION C-C

3/8" = 1'-0"

LEGEND

CMU - CONCRETE MASONRY UNIT
GRS - GEOSYNTHETIC REINFORCED SOIL
IBS - INTEGRATED BRIDGE SYSTEM

——— GEOTEXTILE (4800 LBS/FT) WIDE WIDTH TENSILE STRENGTH

– – – – INTERMEDIATE LAYER GEOTEXTILE (4800 LBS/FT) WIDE WIDTH TENSILE STRENGTH

ADDENDA / REVISIONS		
1 REVISED BACKFILL MATERIAL	JN 10/5/19	

SCALE AS SHOWN

MILTON RAIL TRAIL
PHASE II

CONTRACT	BRIDGE NO.	3-810P
T201701301	DESIGNED BY: BMC	
COUNTY	CHECKED BY: CAP	
SUSSEX		

SUBFOUNDATION DETAILS

SECTION
CEI
SHEET NO.
28

DATES
STYLES
SFILES