THE STATE OF DELAWARE
DEPARTMENT OF TRANSPORTATION

U.S. CUSTOMARY UNITS

FINAL PLANS

CONSTRUCTION PLANS FOR:

REHABILITATION OF BRIDGES 1-600, 1-601, AND 1-604, SR 2 AND SR 141 INTERCHANGE

CONTRACT NUMBER: T201707403

FEDERAL AID PROJECT NUMBER: BHN-N006(17)

COUNTY: NEW CASTLE **M.R. #: 6**

UNOFFICIAL WEBSITE COPY

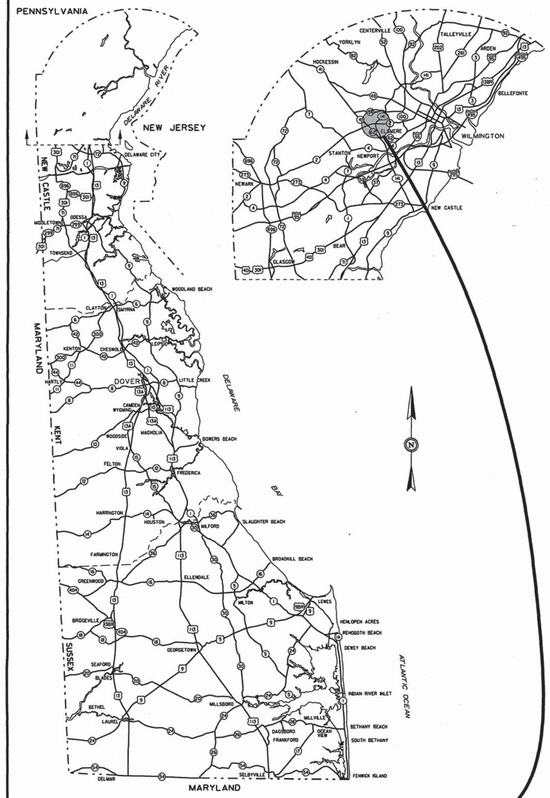

GENERAL LOCATION OF CONTRACT

DESIGN DESIGNATION

MRD #: 6	ROAD NAME: SR 141, BASIN ROAD		
FUNCTIONAL CLASS: OTHER PRINCIPAL ARTERIAL		D.H.V. PROJECTED: N/A	YEAR:
TYPE OF CONSTRUCTION: BRIDGE REHABILITATION		DESIGN SPEED: 60 M.P.H.	
A.A.D.T. CURRENT: 47,091	YEAR: 2016	TRUCKS: N/A %	
A.A.D.T. PROJECTED: N/A	YEAR: N/A	DIRECTION OF DISTRIBUTION: N/A %	

APPROVED DESIGN EXCEPTIONS

DESIGN PARAMETER	REQUIRED	PROVIDED	DATE

ADDENDA & REVISIONS

DESCRIPTION	NAME & DATE

ASSOCIATED CONTRACTS

CONTRACT NO.	CONTRACT NAME
69-020-01	RELOCATED DELAWARE ROUTE 141, PRICES CORNER INTERCHANGE
69-020-02	RELOCATED DELAWARE ROUTE 141, PRICES CORNER INTERCHANGE
70-020-08	DELAWARE ROUTE 141 PRICES CORNER INTERCHANGE (TEST BORINGS)
76-08-008	RELOCATED DELAWARE ROUTE 141, PRICES CORNER INTERCHANGE PHASE III
86-106-01	PRICE'S CORNER INTERCHANGE IMPROVEMENTS (PRICE'S CORNER INTERCHANGE RAMPS)
97-061-09	SR 141, N OF BURNSIDE BLVD TO SR 2
24-106-04	SR 141, KIRKWOOD HIGHWAY TO FAULKLAND ROAD

APPROVED FOR ADVERTISEMENT

DIRECTOR OF TRANSPORTATION SOLUTIONS — DATE: 08/29/2019

LIMIT OF CONTRACT STATION 2011+00

LIMIT OF CONTRACT STATION 1818+00

LIMIT OF CONTRACT STATION 1998+00

LIMIT OF CONTRACT STATION 1805+00

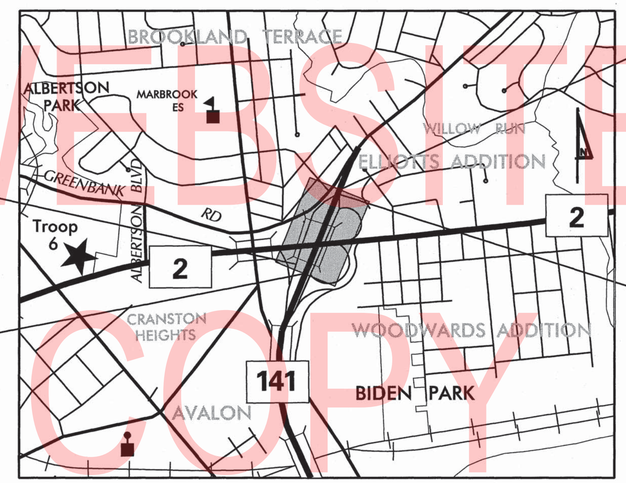

LOCATION MAP

NOT TO SCALE

PREPARED BY

Whitman, Requardt and Associates, LLP
Engineers • Architects • Environmental Planners Est. 1915

7/12/19 — DATE

THIS SEAL APPLIES TO ALL SHEETS BEARING THE "WRA" SECTION DESIGNATION.

WILLIAM A. BECHKEI — LICENSE No. 15578 — DELAWARE PROFESSIONAL ENGINEER — SEAL

N:\32122-002\CADD\TC01_141.dgn
7/11/2019 9:00:24 AM

SECTION	SHEET DESCRIPTION	SHEET NO(S)
WRA	TITLE	1
WRA	INDEX OF SHEETS	2
WRA	ADDENDA AND REVISIONS	3
WRA	LEGEND	4
WRA	PROJECT NOTES	5
WRA	TYPICAL SECTIONS	6
WRA	HORIZONTAL AND VERTICAL CONTROL	7-8
WRA	CONSTRUCTION PLANS	9-12
WRA	PROFILES	13-16
WRA	BRIDGE PLANS - SEE BRIDGE PLANS FOR TABLE OF CONTENTS	17-121
WRA	GENERAL TRAFFIC CONTROL NOTES	122-123
WRA	TRAFFIC CONTROL DETAILS	124-145
WRA	DETOUR PLANS	146-147
WRA	SIGNING, STRIPING AND CONDUIT PLANS	148-152

UNOFFICIAL WEBSITE COPY

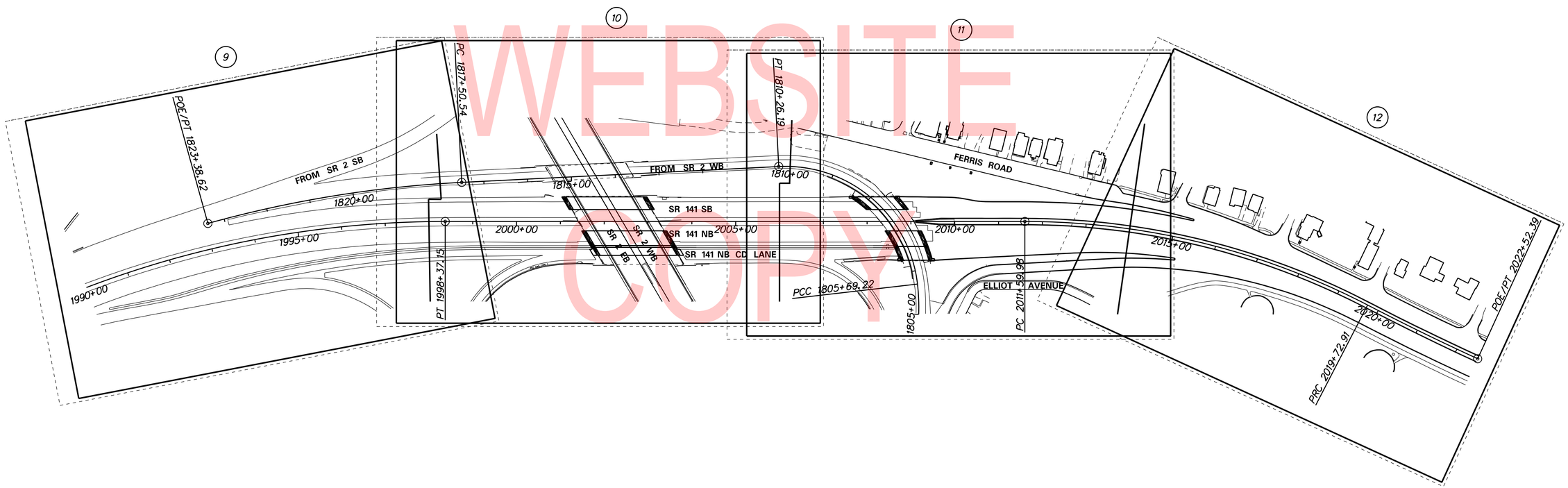

N:\32122-002\CADD\SG1_141.dgn
5/23/2019 4:00:34 PM

ADDENDA / REVISIONS	

SCALE
0 120 240 360
FEET

REHABILITATION OF BRIDGES 1-600, 1-601, AND 1-604, SR 2 AND SR 141 INTERCHANGE

CONTRACT	BRIDGE NO.	1-600, 1-601, 1-604
T201707403	DESIGNED BY: S.J.B.	
COUNTY	CHECKED BY: D.A.D.	
NEW CASTLE		

INDEX OF SHEETS

IS-01
SECTION
WRA
SHEET NO.
2

ADDENDUM PREPARED BY
DELDOT – TRANSPORTATION SOLUTIONS
XXXXXXXXXXXXXXXXXXXX

THIS SEAL APPLIES TO THE FOLLOWING SHEETS CHANGED UNDER ADDENDUM #X:
XX, XX-XX, XX

DATE

SEAL

REVISION PREPARED BY
DELDOT – TRANSPORTATION SOLUTIONS
XXXXXXXXXXXXXXXXXXXX

THIS SEAL APPLIES TO THE FOLLOWING SHEETS CHANGED UNDER REVISION #X:
XX, XX-XX, XX

DATE

SEAL

UNOFFICIAL WEBSITE COPY

N:\32122-002\C400\AR01_141.dgn
5/23/2019 4:00:36 PM

ADDENDA / REVISIONS	

SCALE: NONE

REHABILITATION OF BRIDGES 1–600, 1–601, AND 1–604, SR 2 AND SR 141 INTERCHANGE

CONTRACT	BRIDGE NO.	1–600, 1–601, 1–604
T201707403	DESIGNED BY: S.J.B.	
COUNTY		
NEW CASTLE	CHECKED BY: D.A.D.	

ADDENDA AND REVISIONS

AR–01	
SECTION	
WRA	
SHEET NO.	
3	

EXISTING SYMBOLS

DRAINAGE

	DITCH OR STREAM CENTERLINE
	DIRECTIONAL STREAM FLOW ARROW
C.B. / D.I.	DRAINAGE INLET
J.B.	DRAINAGE JUNCTION BOX
D	DRAINAGE MANHOLE
SIZE/TYPE LABEL	DRAINAGE PIPE AND FLOW ARROW
	DRAINAGE PIPE HEADWALL
	RIPRAP - AREA FEATURE
	RIPRAP - LINEAR FEATURE

MANMADE ROADSIDE FEATURES

	BOLLARD - STEEL POLE
	BOLLARD - WOOD POST
(TYPE LABEL)	CURB
(TYPE LABEL)	CURB AND GUTTER
	FENCE - CHAINLINK OR STRANDED
	FENCE - STOCKADE OR SPLIT RAIL
FP	FLAG POLE
	GUARDRAIL - STEEL BEAM
	GUARDRAIL - WIRE ROPE
LAMP	LAMP AND POST - RESIDENTIAL
MB	MAILBOX
PM	PARKING METER AND POST
	PAVEMENT - FLEXIBLE
	PAVEMENT - RIGID
	PILE - BRIDGE
	PILLAR OR MISCELLANEOUS POST
	TRAFFIC SIGN AND POST
	WALL - BRICK OR BLOCK
	WALL - STONE

NATURAL ROADSIDE FEATURES

	GRASS LAWN
	HEDGEROW OR THICKET
	MARSH BOUNDARY LINE
	TREE - CONIFEROUS
	TREE - DECIDUOUS
	TREE STUMP
	SHRUBBERY
WL	DELINEATED WETLAND BOUNDARY LINE
	WOODS LINE BOUNDARY

RIGHT-OF-WAY SYMBOLS

C.M.	PROPERTY MARKER - CONCRETE MON.
I.P.	PROPERTY MARKER - IRON PIPE
100+00	HISTORIC RIGHT-OF-WAY BASELINE
	EXISTING RIGHT-OF-WAY
PL	EXISTING PROPERTY LINE
EASEMENT TYPE	EXISTING EASEMENT
DA	EXISTING DENIAL OF ACCESS
R/W-DA	EXISTING R/W & DENIAL OF ACCESS

SURVEY CONTROL & MONUMENTATION

B.M.	SURVEY BENCHMARK LOCATION
T.P.	SURVEY TIE POINT LOCATION
	SURVEY TRAVERSE POINT
	POINT OF CURVATURE OR TANGENCY
	POINT OF INTERSECTING TANGENTS

UTILITY

	SOIL BORING LOCATION
	UTILITY TEST HOLE LOCATION
TV	CABLE TV DISTRIBUTION BOX
E	ELECTRIC MANHOLE
EM	ELECTRIC METER
E	ELECTRIC TRANSFORMER
	POLE MOUNTED LUMINAIRE
G	GAS MANHOLE
G.M.	GAS METER
G.V.	GAS VALVE
G.P.	GAS PUMP - SERVICE STATION
	RAILROAD TRACKS
S	SANITARY SEWER MANHOLE
S.V.	SANITARY SEWER VALVE
SCO	SANITARY SEWER CLEANOUT OR VENT
S.D.F.	SEPTIC DRAIN FIELD
B	TELEPHONE BOOTH
T	TELEPHONE MANHOLE
T	TELEPHONE TEST POINT
J.W.	TRAFFIC - CONDUIT JUNCTION WELL
	TRAFFIC - LIGHT POLE AND BASE
	TRAFFIC - PEDESTRIAN POLE & BASE
	TRAFFIC - SIGNAL CABINET & BASE
	TRAFFIC - SIGNAL POLE AND BASE
U	UTILITY BOX
	UTILITY POLE GUY WIRE ANCHOR
	UTILITY POLE
F.H.	WATER - FIRE HYDRANT
W.M.	WATER METER
W.V.	WATER VALVE
WELL	WELL HEAD
?	MANHOLE - UNDETERMINED OWNER

UTILITY COMPANY FACILITIES

NCC-S	NEW CASTLE COUNTY SEWER
DP-E	DELMARVA POWER (ELECTRIC)
DP-G	DELMARVA POWER (GAS)
AW-W	ARTESIAN WATER COMPANY
VER-C	VERIZON DELAWARE LLC (TELEPHONE)
COM-C	COMCAST CABLE TELEVISION
ATT-C	AT&T (FIBER OPTIC CABLE)

PROPOSED SYMBOLS

CONSTRUCTION

	CONCRETE SAFETY BARRIER - PERMANENT
BFS	BIOFILTRATION SWALE
	BRICK PATTERNED SURFACE
	BUTT JOINT
CZ	CLEAR ZONE
100+00	CONSTRUCTION BASELINE
CSF	CONSTRUCTION SAFETY FENCE
	CURB, TYPE 1 & TYPE 3
	CURB, TYPE 2
	CURB & GUTTER, TYPE 1
	CURB & GUTTER, TYPE 2
	CURB & GUTTER, TYPE 3
	CURB & GUTTER, TYPE 4
	CURB OPENING - SUMP / ON GRADE
	CURB OPENING WITH SIDEWALK
	DRAINAGE INLET
	DITCH
	FENCE - METAL
	FENCE - WOOD
	FLARED END SECTION
	GUARDRAIL, TYPE 1
	GUARDRAIL, TYPE 2
	GUARDRAIL, TYPE 3
	GUARDRAIL END ANCHORAGE
	GUARDRAIL END TREATMENT, TYPE 1
	GUARDRAIL END TREATMENT, TYPE 2
	GUARDRAIL END TREATMENT, TYPE 3
	IMPACT ATTENUATOR
	JUNCTION BOX - DRAINAGE
LO	LATERAL OFFSET
LOC	LIMIT OF CONSTRUCTION
MB	MAILBOX
	MANHOLE
	PAVEMENT PATCH
	PAVEMENT REMOVAL - TOPSOIL, SEED AND MULCH
	PIPE & DIRECTIONAL FLOW ARROW
	RIPRAP
	P.C.C. SIDEWALK - 4"
	P.C.C. SIDEWALK - 6" (USE 8" DEPTH FOR CHANNELIZATION ISLANDS.)
	UNDERDRAIN
	UNDERDRAIN OUTLET

RIGHT-OF-WAY SYMBOLS

	PROPOSED RIGHT-OF-WAY MONUMENT
DA	PROPOSED DENIAL OF ACCESS
PE	PROPOSED PERMANENT EASEMENT
R/W	PROPOSED RIGHT-OF-WAY
R/W-DA	PROPOSED R/W & DENIAL OF ACCESS
TCE	TEMPORARY CONSTRUCTION EASEMENT
100+00	PROPOSED RIGHT-OF-WAY BASELINE

IDENTIFIERS

A/C	ADJUST BY CONTRACTOR
A/O	ADJUST BY OTHERS
B	CONCRETE SAFETY BARRIER
C	CURB OR CURB & GUTTER
CJB	CONVERT TO JUNCTION BOX
CMH	CONVERT TO DRAINAGE MANHOLE
C/O	CURB OPENING - SUMP / ON GRADE
CO/SW	CURB OPENING WITH SIDEWALK
CR	CURB RAMP / TYPE
CR-N	CURB RAMP / TYPE - WITHOUT SIDEWALK SURFACE DETECTABLE WARNING SYSTEM
CSF	CONSTRUCTION SAFETY FENCE
DI	DRAINAGE INLET
DND	DO NOT DISTURB
ED	ENERGY DISSIPATOR
F	FENCE
FES	FLARED END SECTION
FF/C	FILL WITH FLOWABLE FILL
FS	FILTRATION STRUCTURE
GR	GUARDRAIL
JB	JUNCTION BOX
MH	MANHOLE
M	MONUMENT - RIGHT-OF-WAY
P	PIPE
RL/C	RELOCATE BY CONTRACTOR
RL/O	RELOCATE BY OTHERS
RL/PO	RELOCATE BY PROPERTY OWNER
RM/C	REMOVE BY CONTRACTOR
RM/TC	REMOVE BY TRAFFIC CONTRACTOR
RM/O	REMOVE BY OTHERS
UD	UNDERDRAIN / LENGTH
UDO	UNDERDRAIN OUTLET PIPE

LANDSCAPING

LS	LANDSCAPE PLANTINGS
	SHRUBBERY
	CONIFEROUS TREE
	DECIDUOUS TREE

TRAFFIC

ITMS-CON	ITMS CONDUIT
SIG-CON	SIGNAL CONDUIT
	CONDUIT JUNCTION WELL
	LUMINAIRE
	PAVEMENT MARKINGS
	PAVEMENT STRIPING
	TRAFFIC SIGN

PAVEMENT SECTION(S)

	OVERLAY PAVEMENT - SEE TYPICAL SECTIONS FOR MATERIALS AND DEPTHS
	RECONSTRUCTED PAVEMENT - SEE TYPICAL SECTIONS FOR MATERIALS AND DEPTHS
	DRIVEWAY AND ENTRANCE PAVEMENT - SEE NOTES FOR MATERIALS AND DEPTHS

EROSION & SEDIMENT CONTROL

SF	SILT FENCE / LENGTH
SF	SILT FENCE

UNOFFICIAL WEBSITE COPY

ADDENDA / REVISIONS

SCALE: NONE

REHABILITATION OF BRIDGES 1-600, 1-601, AND 1-604, SR 2 AND SR 141 INTERCHANGE

CONTRACT T201707403	BRIDGE NO.	1-600, 1-601, 1-604
COUNTY NEW CASTLE	DESIGNED BY: S.J.B.	
	CHECKED BY: D.A.D.	

LEGEND

LG-01

SECTION	WRA
SHEET NO.	4

N:\32122-002\CADD\LG01_141.dgn
5/23/2019 4:00:37 PM

GENERAL NOTES

1. THIS PROJECT IS TO BE CONSTRUCTED IN ACCORDANCE WITH THE DELAWARE DEPARTMENT OF TRANSPORTATION "STANDARD SPECIFICATIONS", DATED AUGUST 2016 AND THE DELAWARE DEPARTMENT OF TRANSPORTATION "STANDARD CONSTRUCTION DETAILS", DATED 2017, INCLUDING ALL REVISIONS UP TO THE DATE OF ADVERTISEMENT.

2. ELECTRONIC PROJECT FILES THAT WILL BE MADE AVAILABLE TO THE AWARDED CONTRACTOR, INCLUDE:

( )	NONE
( )	ASCII DATA FILES WITH COORDINATES AND ELEVATIONS FOR PROPOSED POINTS AS SELECTED BY THE ENGINEER.
(X)	ALL PLAN SHEETS, IN PDF FORMAT.
( )	EXISTING DIGITAL TERRAIN MODEL, IN .DTM FILE FORMAT, COMPATIBLE WITH SOFTWARE CURRENTLY USED BY DELDOT.
( )	PROPOSED DIGITAL TERRAIN MODEL, IN .DTM FILE FORMAT, COMPATIBLE WITH SOFTWARE CURRENTLY USED BY DELDOT.
( )	DESIGN FILE, IN .DGN FILE FORMAT, CONTAINING ONLY THE PROPOSED 3D TRIANGLES OF THE PROPOSED DIGITAL TERRAIN MODEL (DTM).

NOTE: THE DOCUMENT ENTITLED "RELEASE FOR DELIVERY OF DOCUMENTS IN ELECTRONIC FORM TO A CONTRACTOR" MUST BE SIGNED BY ALL PARTIES PRIOR TO THE DELIVERY OF ANY ELECTRONIC PROJECT FILES.

3. PROJECT FILES THAT WILL BE MADE AVAILABLE TO THE CONTRACTOR, INCLUDE:

( )	CROSS SECTIONS
( )	RIGHT-OF-WAY PLANS (WILL BE MADE AVAILABLE TO THE AWARDED CONTRACTOR)

PROJECT NOTES

SECTION 100

1. ANY DAMAGE TO ITEMS NOTED TO BE RELOCATED OR RESET BY THE CONTRACTOR, AT THE DISCRETION OF THE ENGINEER, SHALL BE REPAIRED AND/OR REPLACED IN KIND AT THE CONTRACTOR'S EXPENSE.

SECTION 200

2. ITEMS TO BE REMOVED UNDER ITEM 21100 - REMOVAL OF STRUCTURES AND OBSTRUCTIONS SHALL INCLUDE, BUT NOT BE LIMITED TO THE FOLLOWING:
   a. GUARDRAIL
   b. CURB
      STA. 2009+06 LT.
      STA. 2009+10 RT.

SECTION 700

3. ALL PAVED AREAS TO BE RECONSTRUCTED OR WIDENED SHALL BE SAWCUT AT THE POINT WHERE THE NEW PAVEMENT IS TO TIE INTO THE EXISTING PAVEMENT.

SECTION 900

4. THIS PROJECT IS COVERED UNDER AN NPDES GENERAL PERMIT FOR CONSTRUCTION. UNDER THE GENERAL PERMIT, COMPLIANCE WITH DELDOT'S APPROVED SEDIMENT AND STORMWATER MANAGEMENT PLANS WILL CONSTITUTE COMPLIANCE WITH THE NPDES INDUSTRIAL PERMITTING REQUIREMENTS FOR THIS CONSTRUCTION PROJECT. A COPY OF THE NPDES GENERAL PERMIT AND NOI IS KEPT ON FILE IN EACH OF THE CONSTRUCTION OFFICES AND THE DEPARTMENT'S STORMWATER SECTION. A COPY OF THE GENERAL PERMIT OR THE NOI CAN BE OBTAINED UPON REQUEST FROM EITHER THE DEPARTMENT'S STORMWATER ENGINEER OR THE APPROPRIATE CONSTRUCTION ENGINEER.

5. FOR FULL DEPTH PAVEMENT CONSTRUCTION AND/OR UTILITY RELOCATIONS, BARE SOILS SHALL BE COVERED WITHIN THREE (3) CALENDAR DAYS TO PREVENT EROSION. THIS CAN BE ACCOMPLISHED BY PLACING PROPOSED SUBBASE MATERIAL SUCH AS GRADED AGGREGATE BASE COURSE (GABC) OR GEOTEXTILE / PLASTIC SHEETING THAT IS SECURED SO AS TO NOT BLOW AWAY OR BE UNDERMINED BY RUNOFF.

MISCELLANEOUS

6. ALL WORK ASSOCIATED WITH THIS CONTRACT IS BEING PERFORMED WITHIN DELDOT RIGHT OF WAY.

7. THERE ARE NO ENVIRONMENTAL PERMITS (INCLUDING BUT NOT LIMITED TO COE, DNREC SUBAQUEOUS LANDS AND WETLANDS, COAST GUARD, NEW CASTLE COUNTY FLOODPLAIN), OR ENVIRONMENTAL CONSTRUCTION RESTRICTIONS ASSOCIATED WITH THIS PROJECT. AS SUCH, NO ENVIRONMENTAL COMPLIANCE SHEET WAS PREPARED.

UNOFFICIAL WEBSITE COPY

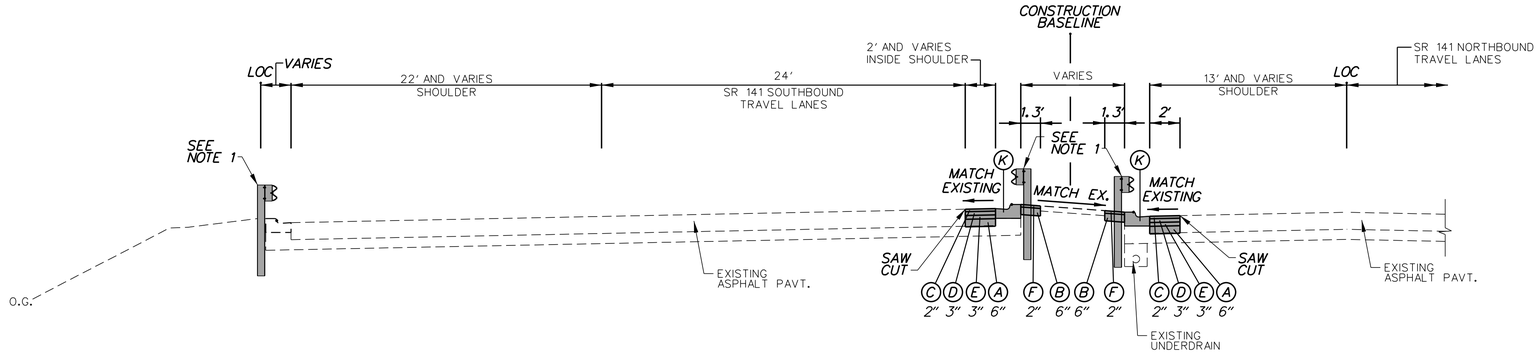

SR 141
STATION 2009+13 TO STATION 2009+32

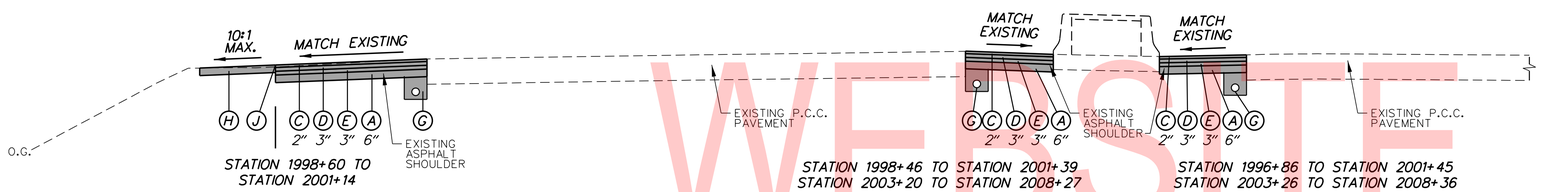

SR 141
STATION 1996+86 TO STATION 2008+36

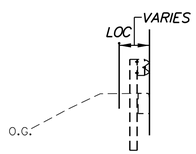

STATION 2003+14 TO STATION 2007+82

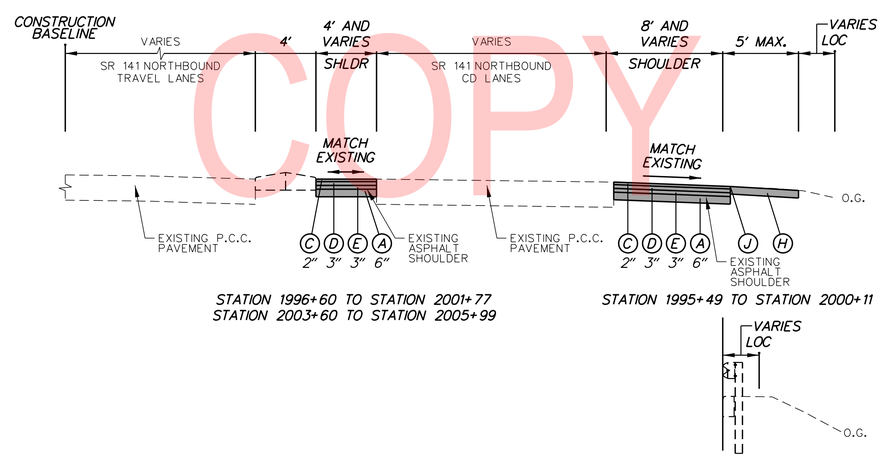

STATION 2000+89 TO STATION 2001+73

SR 141 NORTHBOUND CD LANE
STATION 1995+49 TO STATION 2007+10

LEGEND

- (A) ITEM 301001 - GRADED AGGREGATE BASE COURSE, TYPE B
- (B) ITEM 301002 - GRADED AGGREGATE BASE COURSE, TYPE B, PATCHING
- (C) ITEM 401005 - SUPERPAVE TYPE C, PG 64-22 (NON-CARBONATE STONE)
- (D) ITEM 401014 - SUPERPAVE TYPE B, PG 64-22
- (E) ITEM 401021 - SUPERPAVE TYPE BCBC, PG 64-22
- (F) ITEM 401026 - BITUMINOUS CONCRETE, SUPERPAVE TYPE C, 160 GYRATIONS PG 64-22 PATCHING
- (G) ITEM 709001 - PERFORATED PIPE UNDERDRAINS, 6"
- (H) ITEM 908004 - TOPSOIL, 6" DEPTH
  ITEM 908014 - PERMANENT GRASS SEEDING, DRY GROUND
- (J) SAFETY EDGE FOR ROADWAY PAVEMENT
- (K) ITEM 701021 - I.P.C.C. CURB AND GUTTER, TYPE 3-4

MATERIAL	LIFT THICKNESS	
	MINIMUM	MAXIMUM
BITUMINOUS CONCRETE, TYPE 'C'	1.25"	2"
BITUMINOUS CONCRETE, TYPE 'B'	2.25"	4"
BITUMINOUS CONCRETE BASE COURSE	3"	6"
GRADED AGGREGATE BASE COURSE	3"	8"

NOTES:
1. SEE CONSTRUCTION PLANS (CP-03) FOR LIMITS OF PROPOSED GUARDRAIL AND ASPHALT MAINTENANCE STRIP.
2. SEE CONSTRUCTION PLANS FOR LIMITS OF PROPOSED UNDERDRAIN.

UNOFFICIAL WEBSITE COPY

N:\33122-002\CADD\TS01_141.dgn
7/25/2019 3:43:17 PM

ADDENDA / REVISIONS	

SCALE 0 5 10 15 FEET

REHABILITATION OF BRIDGES 1-600, 1-601, AND 1-604, SR 2 AND SR 141 INTERCHANGE

CONTRACT	BRIDGE NO.	1-600, 1-601, 1-604
T201707403	DESIGNED BY: D.A.D.	
COUNTY		
NEW CASTLE	CHECKED BY: T.A.O.	

TYPICAL SECTIONS

TS-01
SECTION
WRA
SHEET NO.
6

HORIZONTAL / VERTICAL CONTROL DATA					
POINT	STATION	OFFSET	NORTHING	EASTING	ELEVATION
GPS1	2007+10.00	669.21'	633034.2372	599838.5210	122.98
GPS2	1805+26.63	43.89'	633480.7651	599523.5650	122.76
100	1997+88.86	-121.03'	632576.8749	598712.6265	143.00
101	2000+73.42	-272.88'	632901.8958	598709.2538	126.87
102	1808+34.68	62.92'	633493.8187	599177.9981	122.89
200	2001+95.35	-71.69'	632917.7067	598943.9716	124.83
201	2002+92.52	94.45'	632927.6474	599136.1869	123.52

CONSTRUCTION ALIGNMENT CONTROL SR 141				
POINT	STATION	OFFSET	NORTHING	EASTING
10008	2003+00.00	0.00'	632977.6981	599055.7458
10009	2008+00.00	0.00'	633421.7544	599285.5588

CONSTRUCTION ALIGNMENT CONTROL SR 141 RAMP				
POINT	STATION	OFFSET	NORTHING	EASTING
20000	1800+00.00	0.00'	633063.8770	599865.0690
20009	1815+00.00	0.00'	632869.1062	598884.9715

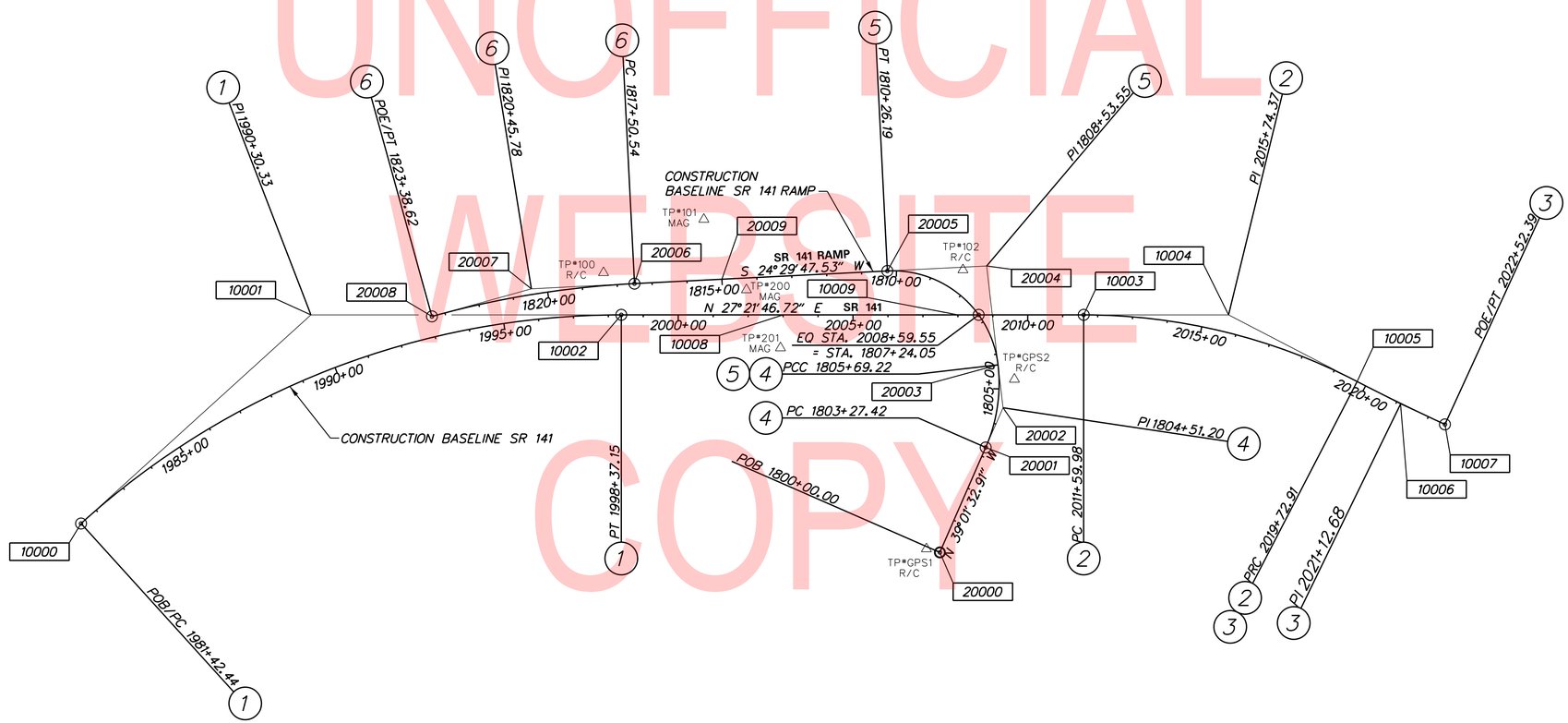

UNOFFICIAL WEBSITE COPY

DATUM REFERENCE:
HORIZONTAL - THIS PROJECT IS REFERENCED TO THE DELAWARE STATE PLANE COORDINATE SYSTEM (NAD 83/2011).
VERTICAL - THIS PROJECT IS REFERENCED TO NAVD 88.

N:\33122-003\CADD\HV01_141.dgn
5/23/2019 4:00:45 PM

ADDENDA / REVISIONS	

SCALE 0 200 400 600 FEET

REHABILITATION OF BRIDGES 1-600, 1-601, AND 1-604, SR 2 AND SR 141 INTERCHANGE

CONTRACT	BRIDGE NO.	1-600, 1-601, 1-604
T201707403	DESIGNED BY: A.A.T.	
COUNTY		
NEW CASTLE	CHECKED BY: B.R.T.	

HORIZONTAL AND VERTICAL CONTROL

HV-01
SECTION
WRA
SHEET NO.
7

CIRCULAR CURVE NO. 1

	STATION	NORTHING	EASTING
Element: Circular			
PC (10000)	1981+42.44	630919.8631	598662.5306
PI (10001)	1990+30.33	631778.0848	598434.9085
CC (CC10001)		631509.4951	600885.6667
PT (10002)	1998+37.15	632566.6349	598843.0078
Radius:	2300.00		
Delta:	42° 13′ 02.1626″ Right		
Degree of Curvature(Arc):	2° 29′ 28.0351″		
Length:	1694.71		
Tangent:	887.89		
Chord:	1656.63		
Middle Ordinate:	154.33		
External:	165.43		
Tangent Direction:	N 14° 51′ 15.45″ W		
Radial Direction:	N 75° 08′ 44.55″ E		
Chord Direction:	N 6° 15′ 15.63″ E		
Radial Direction:	S 62° 38′ 13.28″ E		
Tangent Direction:	N 27° 21′ 46.72″ E		

CIRCULAR CURVE NO. 2

	STATION	NORTHING	EASTING
Element: Circular			
PC (10003)	2011+59.98	633741.4580	599451.0155
PI (10004)	2015+74.37	634109.4847	599641.4807
CC (CC10004)		632960.0938	600960.8068
PRC (10005)	2019+72.91	634348.5811	599979.9383
Radius:	1700.00		
Delta:	27° 23′ 54.6253″ Right		
Degree of Curvature(Arc):	3° 22′ 13.2239″		
Length:	812.93		
Tangent:	414.39		
Chord:	805.21		
Middle Ordinate:	48.36		
External:	49.78		
Tangent Direction:	N 27° 21′ 46.72″ E		
Radial Direction:	S 62° 38′ 13.28″ E		
Chord Direction:	N 41° 03′ 44.03″ E		
Radial Direction:	S 35° 14′ 18.66″ E		
Tangent Direction:	N 54° 45′ 41.34″ E		

CIRCULAR CURVE NO. 3

	STATION	NORTHING	EASTING
Element: Circular			
PRC (10005)	2019+72.91	634348.5811	599979.9383
PI (10006)	2021+12.68	634429.2232	600094.0928
CC (CC10006)		639065.3540	596647.8702
PT (10007)	2022+52.39	634515.2932	600204.2125
Radius:	5775.00		
Delta:	2° 46′ 22.0169″ Left		
Degree of Curvature(Arc):	0° 59′ 31.6850″		
Length:	279.48		
Tangent:	139.77		
Chord:	279.45		
Middle Ordinate:	1.69		
External:	1.69		
Tangent Direction:	N 54° 45′ 41.34″ E		
Radial Direction:	S 35° 14′ 18.66″ E		
Chord Direction:	N 53° 22′ 30.33″ E		
Radial Direction:	S 38° 00′ 40.68″ E		
Tangent Direction:	N 51° 59′ 19.32″ E		

CIRCULAR CURVE NO. 4

	STATION	NORTHING	EASTING
Element: Circular			
PC (20001)	1803+27.42	633318.2349	599658.9043
PI (20002)	1804+51.20	633414.3989	599580.9604
CC (CC20002)		633029.5857	599302.7804
PCC (20003)	1805+69.22	633458.2587	599465.2059
Radius:	458.41		
Delta:	30° 13′ 20.3897″ Left		
Degree of Curvature(Arc):	12° 29′ 55.3996″		
Length:	241.80		
Tangent:	123.79		
Chord:	239.01		
Middle Ordinate:	15.85		
External:	16.42		
Tangent Direction:	N 39° 01′ 32.91″ W		
Radial Direction:	N 50° 58′ 27.09″ E		
Chord Direction:	N 54° 08′ 13.10″ W		
Radial Direction:	N 20° 45′ 06.70″ E		
Tangent Direction:	N 69° 14′ 53.30″ W		

CIRCULAR CURVE NO. 5

	STATION	NORTHING	EASTING
Element: Circular			
PCC (20003)	1805+69.22	633458.2587	599465.2059
PI (20004)	1808+53.55	633559.0020	599199.3247
CC (CC20004)		633174.4067	599357.6535
PT (20005)	1810+26.19	633300.2680	599081.4317
Radius:	303.54		
Delta:	86° 15′ 19.1767″ Left		
Degree of Curvature(Arc):	18° 52′ 31.9920″		
Length:	456.97		
Tangent:	284.33		
Chord:	415.02		
Middle Ordinate:	82.01		
External:	112.37		
Tangent Direction:	N 69° 14′ 53.30″ W		
Radial Direction:	N 20° 45′ 06.70″ E		
Chord Direction:	S 67° 37′ 27.12″ W		
Radial Direction:	N 65° 30′ 12.47″ W		
Tangent Direction:	S 24° 29′ 47.53″ W		

CIRCULAR CURVE NO. 6

	STATION	NORTHING	EASTING
Element: Circular			
PC (20006)	1817+50.54	632641.1152	598781.0866
PI (20007)	1820+45.78	632372.4539	598658.6702
CC (CC20007)		631535.4132	601207.7169
PT (20008)	1823+38.62	632083.5209	598597.9872
Radius:	2666.67		
Delta:	12° 38′ 07.4457″ Left		
Degree of Curvature(Arc):	2° 08′ 54.9301″		
Length:	588.08		
Tangent:	295.24		
Chord:	586.89		
Middle Ordinate:	16.19		
External:	16.29		
Tangent Direction:	S 24° 29′ 47.53″ W		
Radial Direction:	N 65° 30′ 12.47″ W		
Chord Direction:	S 18° 10′ 43.80″ W		
Radial Direction:	N 78° 08′ 19.92″ W		
Tangent Direction:	S 11° 51′ 40.08″ W		

UNOFFICIAL WEBSITE COPY

N:\33122-002\CADD\HV02_141.dgn
5/23/2019 4:00:46 PM

ADDENDA / REVISIONS		SCALE: NONE	REHABILITATION OF BRIDGES 1-600, 1-601, AND 1-604, SR 2 AND SR 141 INTERCHANGE	CONTRACT T201707403	BRIDGE NO. 1-600, 1-601, 1-604	HORIZONTAL AND VERTICAL CONTROL	HV-02
				COUNTY NEW CASTLE	DESIGNED BY: A.A.T.		SECTION WRA
					CHECKED BY: B.R.T.		SHEET NO. 8

COORDINATE LIST				
POINT NO.	STATION	OFFSET	NORTHING	EASTING
31000	1995+48.82	92.23'	632271.1267	598813.4271
31001	1996+60.00	73.32'	632377.7374	598835.2395
31002	1996+86.36	10.43'	632426.3651	598787.6938

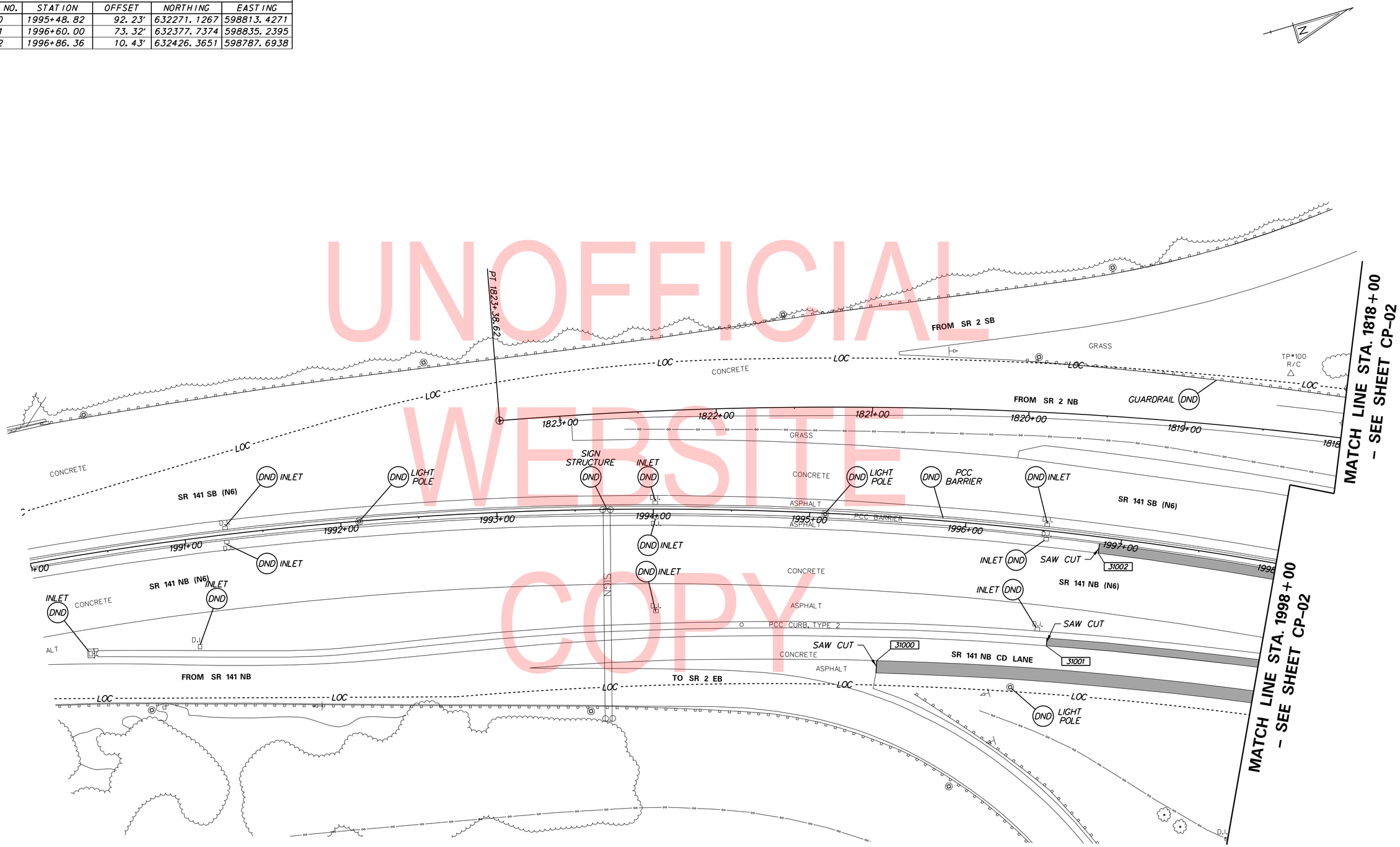

UNOFFICIAL WEBSITE COPY

N:\32122-002\CADD\CP01_141.dgn
5/23/2019 4:00:52 PM

ADDENDA / REVISIONS	

SCALE
0 30 60 90
FEET

REHABILITATION OF BRIDGES 1-600, 1-601, AND 1-604, SR 2 AND SR 141 INTERCHANGE

CONTRACT	BRIDGE NO.	1-600, 1-601, 1-604
T201707403	DESIGNED BY: D.A.D.	
COUNTY		
NEW CASTLE	CHECKED BY: T.A.O.	

CONSTRUCTION PLAN

CP-01
SECTION
WRA
SHEET NO.
9

COORDINATE LIST				
POINT NO.	STATION	OFFSET	NORTHING	EASTING
32000	1998+59.92	-44.32'	632607.2252	598814.1112
32001	1998+46.78	-8.81'	632579.2404	598839.6140
32002	2000+89.33	90.48'	632749.0133	599039.2776

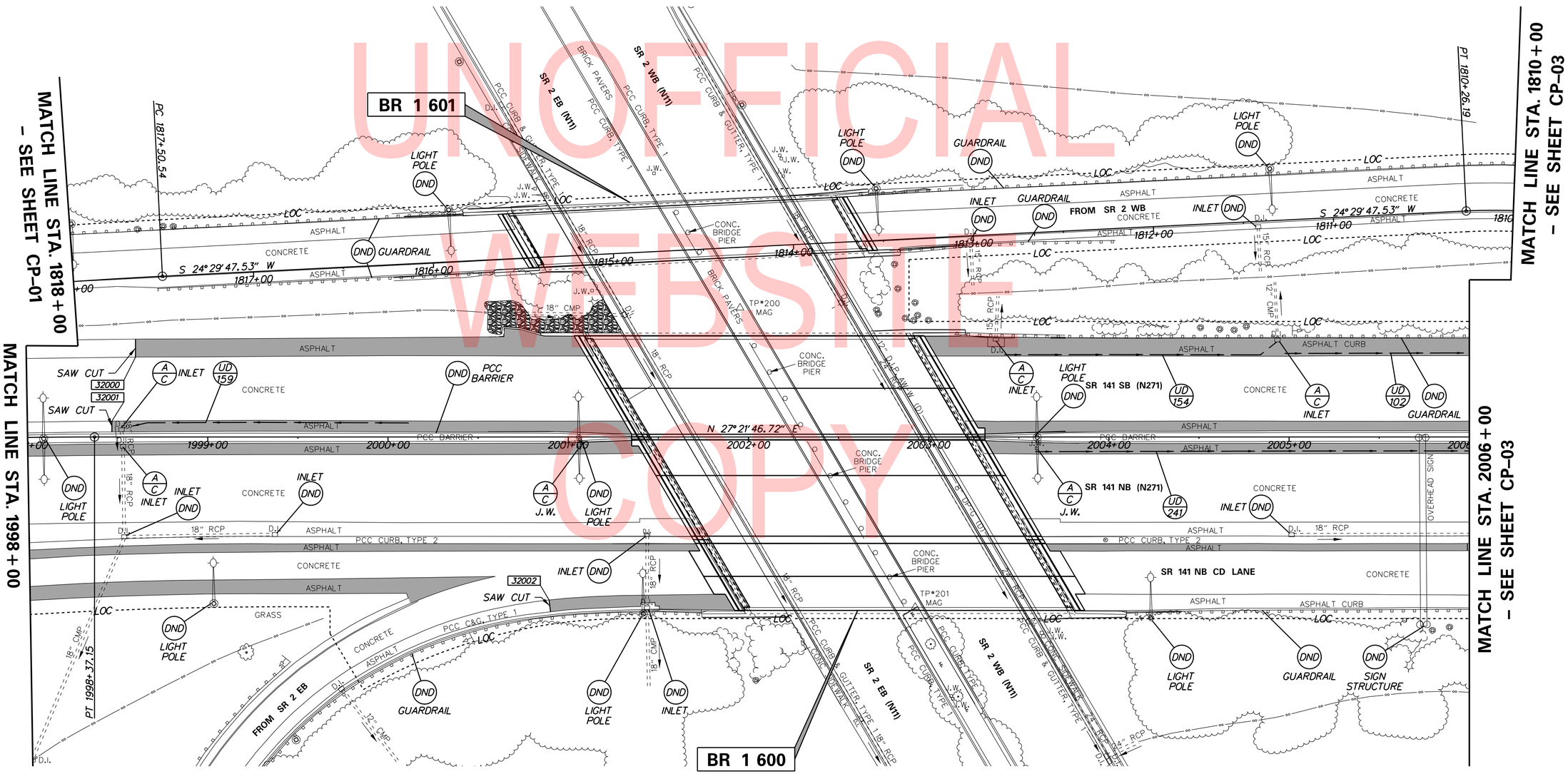

UNOFFICIAL WEBSITE COPY

ADDENDA / REVISIONS

SCALE 0 30 60 90 FEET

REHABILITATION OF BRIDGES 1-600, 1-601, AND 1-604, SR 2 AND SR 141 INTERCHANGE

CONTRACT	BRIDGE NO.	1-600, 1-601, 1-604
T201707403	DESIGNED BY: D.A.D.	
COUNTY		
NEW CASTLE	CHECKED BY: T.A.O.	

CONSTRUCTION PLAN

CP-02
SECTION
WRA
SHEET NO.
10

N:\32122-002\CADD\CP02_141.dgn
8/1/2019 2:31:40 PM

GUARDRAIL SCHEDULE

NO.	ITEM DESCRIPTION / TYPE	BEGIN STA.	OFFSET	LENGTH
1	GUARDRAIL TO BARRIER CONNECTION (EXIT TYPE 31)	2007+47.43	56.81' LT.	14.23'
2	GALVANIZED STEEL BEAM GUARDRAIL, TYPE 1-31 (TYPE 1-27 TO 1-31 TRANSITION SECTION)	2007+19.31	56.04' LT.	28.13'
3	GUARDRAIL TO BARRIER CONNECTION, APPROACH TYPE 1-31	2008+66.75	56.81' LT.	26.90'
4	GALVANIZED STEEL BEAM GUARDRAIL, TYPE 1-31 (TYPE 1-27 TO 1-31 TRANSITION SECTION)	2008+93.65	56.81' LT.	28.13'
5	GUARDRAIL TO BARRIER CONNECTION, APPROACH TYPE 1-31	2009+05.96	0.94' LT.	26.90'
6	GALVANIZED STEEL BEAM GUARDRAIL, TYPE 1-31 (TYPE 1-27 TO 1-31 TRANSITION SECTION)	2009+32.69	3.55' LT.	28.13'
7	GUARDRAIL TO BARRIER CONNECTION (EXIT TYPE 31)	2009+10.38	0.94' RT.	14.23'
8	GALVANIZED STEEL BEAM GUARDRAIL, TYPE 1-31 (TYPE 1-27 TO 1-31 TRANSITION SECTION)	2009+24.46	2.80' RT.	28.13'
9	GUARDRAIL TO BARRIER CONNECTION, APPROACH TYPE 1-31	2008+49.75	87.76' RT.	26.90'

GUARDRAIL SCHEDULE

NO.	ITEM DESCRIPTION / TYPE	BEGIN STA.	OFFSET	LENGTH
10	GALVANIZED STEEL BEAM GUARDRAIL, TYPE 1-31 (TYPE 1-27 TO 1-31 TRANSITION SECTION)	2008+21.66	89.23' RT.	28.13'
11	GUARDRAIL TO BARRIER CONNECTION (EXIT TYPE 31)	2009+51.26	88.81' RT.	14.23'
12	GALVANIZED STEEL BEAM GUARDRAIL, TYPE 1-31 (TYPE 1-27 TO 1-31 TRANSITION SECTION)	2009+65.47	88.25' RT.	28.13'

NOTES:

1. CONTRACTOR SHALL REMOVE EXISTING GUARDRAIL AS NEEDED TO INSTALL NEW GUARDRAIL TO BARRIER CONNECTION AND GUARDRAIL TRANSITION AS NOTED. ANY DAMAGE TO THE EXISTING PCC CURB AND GUTTER SHALL BE REPAIRED IN-KIND BY THE CONTRACTOR AND AT THE CONTRACTOR'S EXPENSE. NO PAYMENT SHALL BE MADE TO THE CONTRACTOR FOR CURB REPAIR OR REPLACEMENT.
2. CONTRACTOR SHALL PLACE UNDERDRAIN WITH A CONTINUOUS SLOPE SO THAT POSITIVE CONVEYANCE TO THE EXISTING CATCH BASIN IS ACHIEVED.

CURB SCHEDULE

NO.	ITEM DESCRIPTION / TYPE	LENGTH
1	I.P.C.C. CURB AND GUTTER, TYPE 3-4	20'
2	I.P.C.C. CURB AND GUTTER, TYPE 3-4	12'

COORDINATE LIST

POINT NO.	STATION	OFFSET	NORTHING	EASTING
33006	2009+32.55	-4.54'	633541.5626	599342.4533
33007	2009+24.23	4.17'	633530.1704	599346.3666

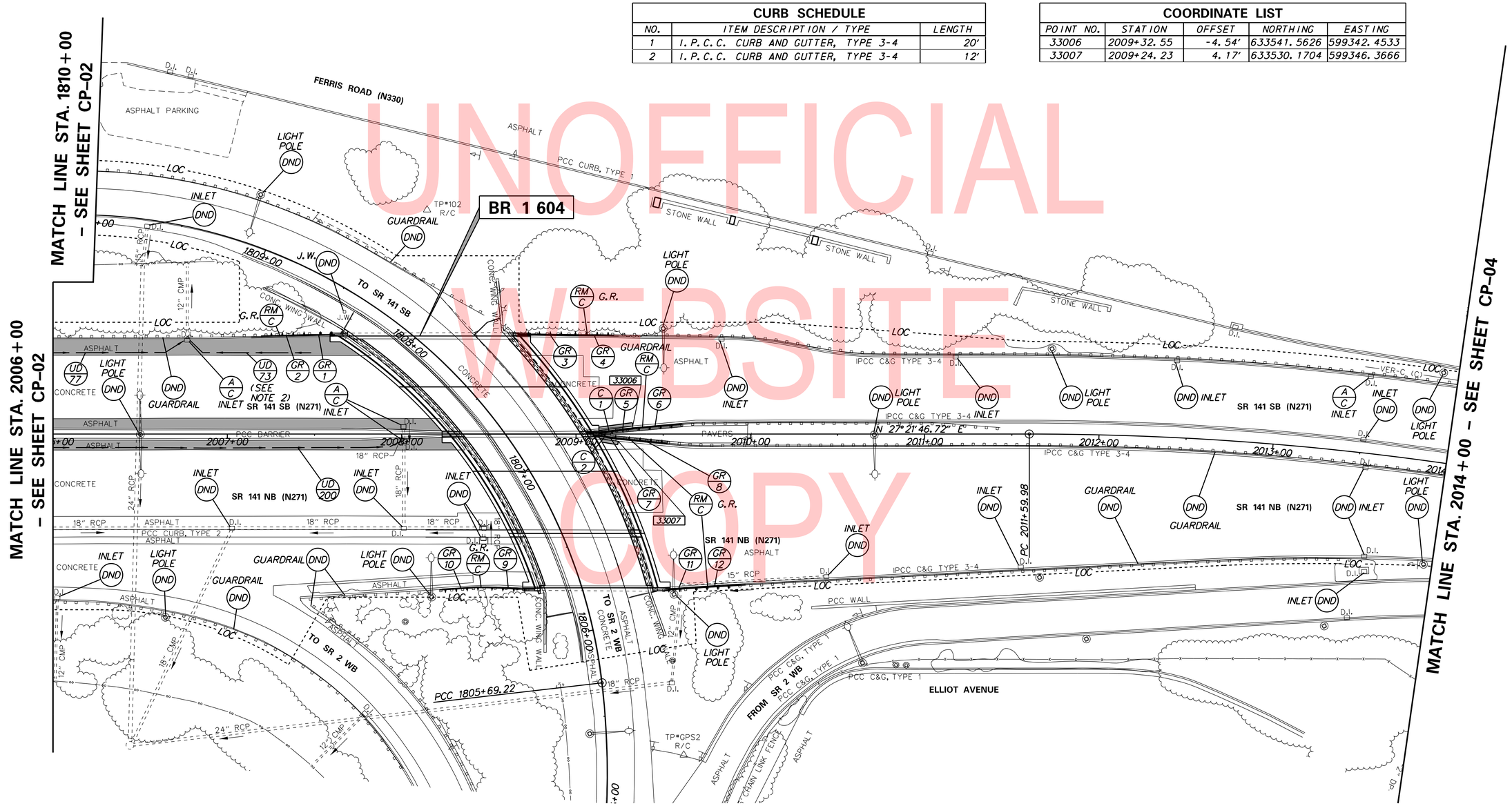

UNOFFICIAL WEBSITE COPY

N:\32122-002\CADD\CP03_141.dgn
8/17/2016 2:33:10 PM

ADDENDA / REVISIONS	

SCALE 0 30 60 90 FEET

REHABILITATION OF BRIDGES 1-600, 1-601, AND 1-604, SR 2 AND SR 141 INTERCHANGE

CONTRACT	BRIDGE NO.	1-600, 1-601, 1-604
T201707403	DESIGNED BY: D.A.D.	
COUNTY		
NEW CASTLE	CHECKED BY: T.A.O.	

CONSTRUCTION PLAN

CP-03
SECTION
WRA
SHEET NO.
11

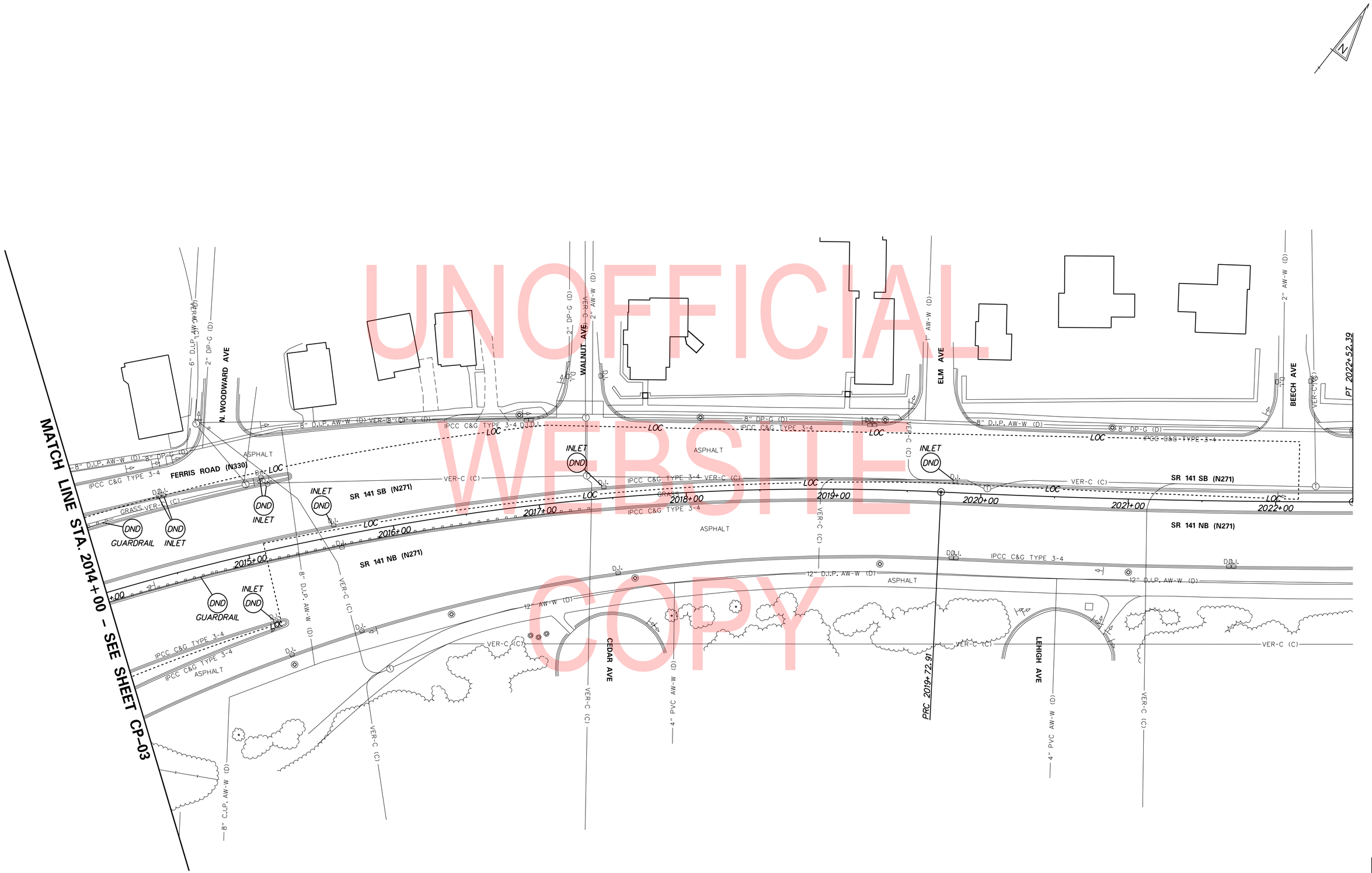

UNOFFICIAL WEBSITE COPY

N:\32122-002\CADD\CP04_141.dgn
5/23/2019 4:00:57 PM

ADDENDA / REVISIONS	

SCALE
0 30 60 90
FEET

REHABILITATION OF BRIDGES 1-600, 1-601, AND 1-604, SR 2 AND SR 141 INTERCHANGE

CONTRACT	BRIDGE NO.	1-600, 1-601, 1-604
T201707403	DESIGNED BY: D.A.D.	
COUNTY		
NEW CASTLE	CHECKED BY: T.A.O.	

CONSTRUCTION PLAN

CP-04
SECTION
WRA
SHEET NO.
12

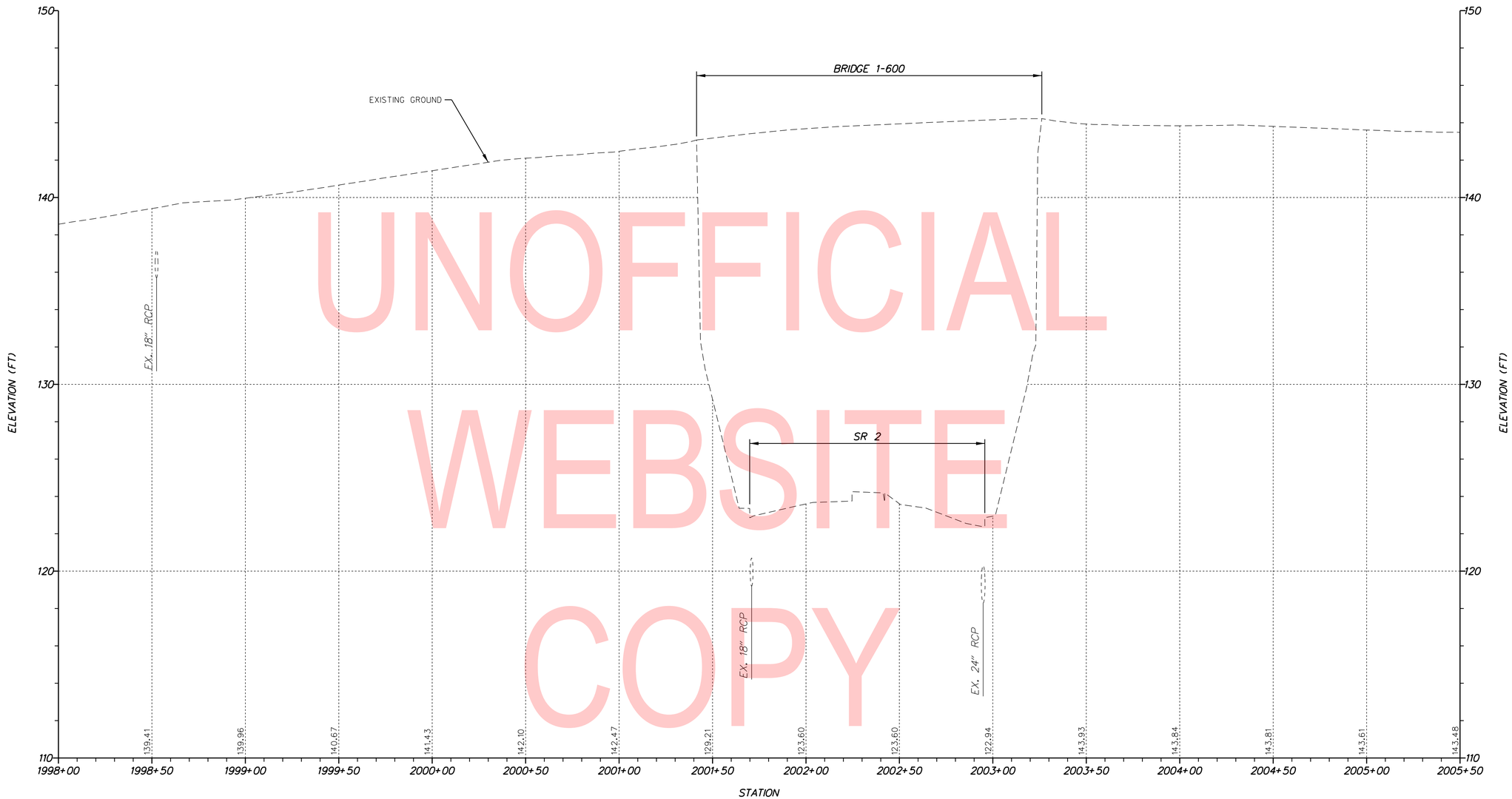

UNOFFICIAL WEBSITE COPY

SR 141 (N6 /N271)

VERTICAL SCALE FEET 9 6 3 0

PF-01

ADDENDA / REVISIONS	

SCALE 0 30 60 90 FEET

REHABILITATION OF BRIDGES 1-600, 1-601, AND 1-604, SR 2 AND SR 141 INTERCHANGE

CONTRACT	BRIDGE NO.	1-600, 1-601, 1-604
T201707403	DESIGNED BY: A.A.T.	
COUNTY		
NEW CASTLE	CHECKED BY: B.R.T.	

PROFILE

SECTION WRA

SHEET NO. 13

N:\32122-002\CADD\PF01_141.dgn
5/23/2019 4:00:59 PM

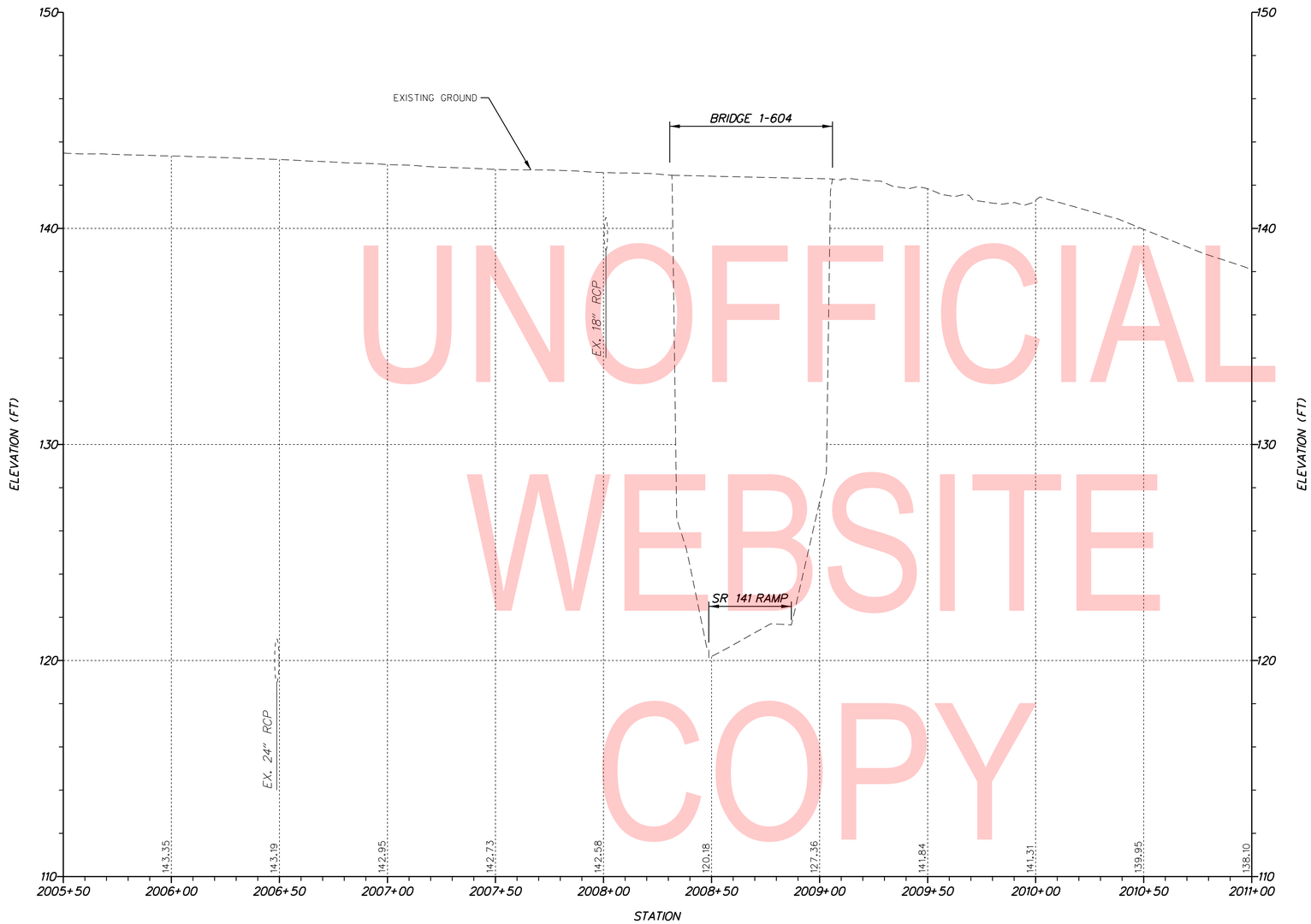

SR 141 (N6 /N271)

UNOFFICIAL WEBSITE COPY

VERTICAL SCALE FEET 9 6 3 0

PF-02

N:\32122-002\CADD\PF02_141.dgn
5/23/2019 4:01:01 PM

ADDENDA / REVISIONS	

SCALE 0 30 60 90 FEET

REHABILITATION OF BRIDGES 1-600, 1-601, AND 1-604, SR 2 AND SR 141 INTERCHANGE

CONTRACT	BRIDGE NO.	1-600, 1-601, 1-604
T201707403	DESIGNED BY: A.A.T.	
COUNTY		
NEW CASTLE	CHECKED BY: B.R.T.	

PROFILE

SECTION WRA

SHEET NO. 14

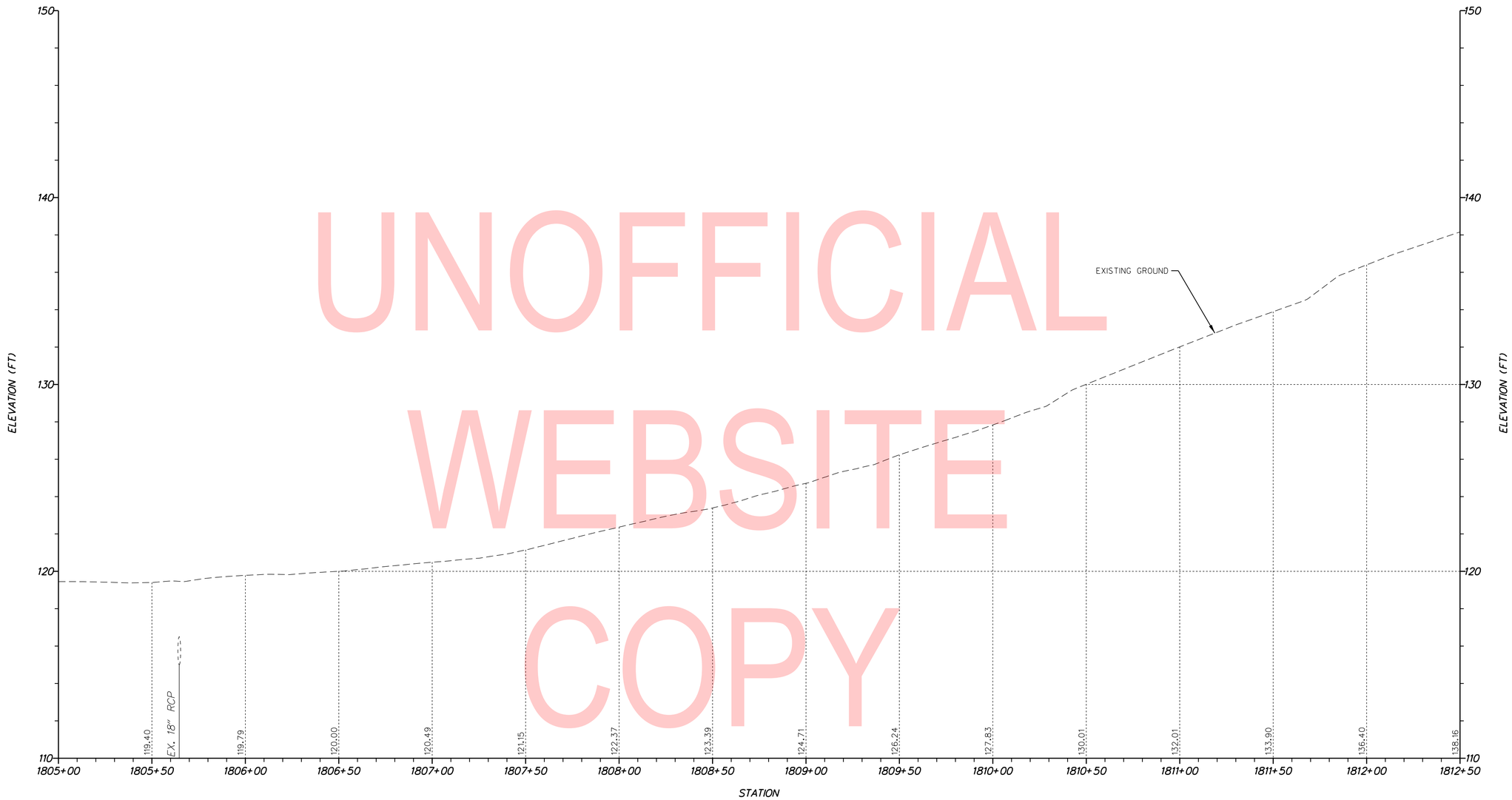

SR 141 RAMP (N6008)

UNOFFICIAL WEBSITE COPY

VERTICAL SCALE FEET 9 6 3 0

PF-03

ADDENDA / REVISIONS	

SCALE 0 30 60 90 FEET

REHABILITATION OF BRIDGES 1-600, 1-601, AND 1-604, SR 2 AND SR 141 INTERCHANGE

CONTRACT	BRIDGE NO.	1-600, 1-601, 1-604
T201707403	DESIGNED BY: A.A.T.	
COUNTY		
NEW CASTLE	CHECKED BY: B.R.T.	

PROFILE

SECTION
WRA
SHEET NO.
15

N:\32122-002\C400\PF03_141.dgn
8/1/2019 11:20:42 AM

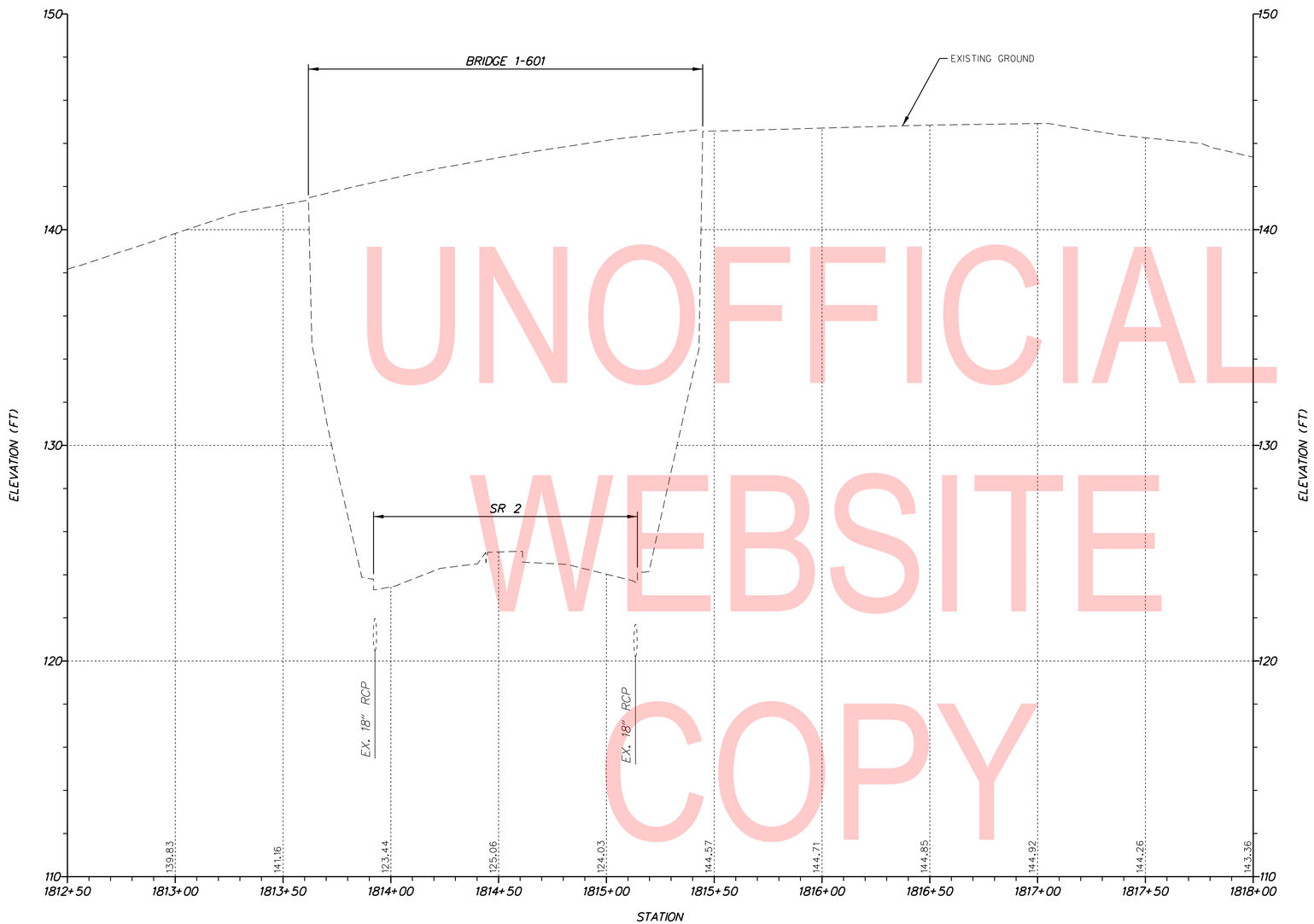

SR 141 RAMP (N6008)

UNOFFICIAL WEBSITE COPY

VERTICAL SCALE FEET 9 6 3 0

PF-04

ADDENDA / REVISIONS	

SCALE 0 30 60 90 FEET

REHABILITATION OF BRIDGES 1-600, 1-601, AND 1-604, SR 2 AND SR 141 INTERCHANGE

CONTRACT	BRIDGE NO.	1-600, 1-601, 1-604
T201707403	DESIGNED BY: A.A.T.	
COUNTY		
NEW CASTLE	CHECKED BY: B.R.T.	

PROFILE

SECTION: WRA

SHEET NO. 16

N:\3222-002\GRD\PF04_141.dgn
5/23/2019 4:01:03 PM

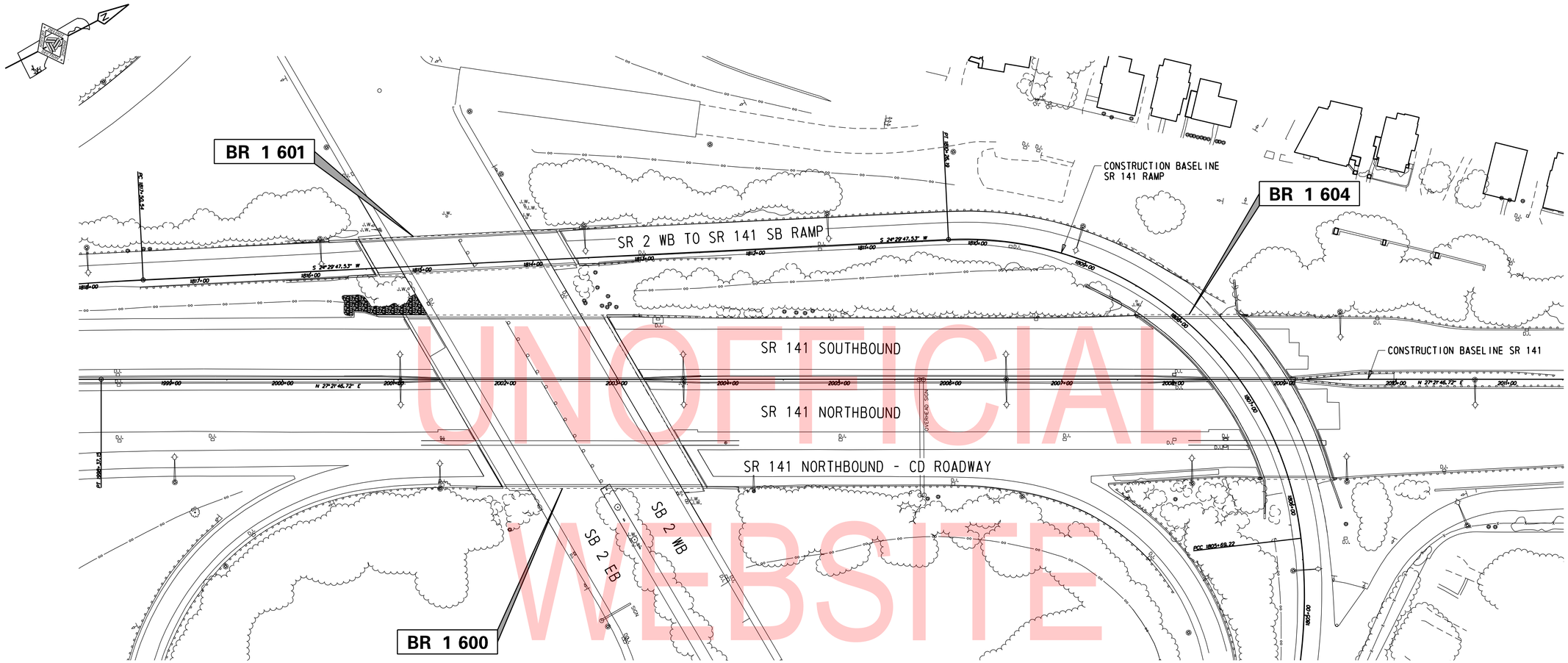

STRUCTURE LOCATION PLAN

1" = 50'

UNOFFICIAL WEBSITE COPY

N:\3212-002\CADD\Bridge\BR_1501.dgn
8/1/2019 2:04:38 PM

ADDENDA / REVISIONS		SCALE AS NOTED	REHABILITATION OF BRIDGES 1-600, 1-601, AND 1-604, SR 2 AND SR 141 INTERCHANGE	CONTRACT T201707403	BRIDGE NO.	STRUCTURE LOCATION PLAN	BR-01
				COUNTY NEW CASTLE	DESIGNED BY: ZMG		SECTION WRA
					CHECKED BY: WAG		SHEET NO. 17

SECTION 200

1. REMOVAL OF STRUCTURES AND OBSTRUCTIONS:
ITEMS TO BE REMOVED UNDER ITEM 211000 - REMOVAL OF STRUCTURES AND OBSTRUCTIONS SHALL INCLUDE, BUT NOT BE LIMITED TO, THE FOLLOWING:
- PORTIONS OF CONCRETE APPROACH SLABS
- CONCRETE END DIAPHRAGMS
- PORTIONS OF ABUTMENT ROADWAY JOINTS
- PORTIONS OF THE ABUTMENT BACKWALL
- PORTIONS OF EXISTING BRIDGE DECK
- PORTIONS OF MEDIAN PARAPET AND PARKWAY CURB

2. SIGNING:
TO AVOID DAMAGE, SIGNS WITHIN PROJECT LIMITS MAY BE REMOVED DURING CONSTRUCTION IF NEEDED, BUT MUST BE REPLACED TO MATCH EXISTING CONDITIONS BEFORE REOPENING THE ROADWAY. ALL WORK RELATED TO MOVING AND REINSTALLING THE SIGN WILL BE INCIDENTAL TO ITEM 211000 - REMOVAL OF STRUCTURES AND OBSTRUCTIONS. IF THE SIGN IS DAMAGED DURING CONSTRUCTION, THE SIGN MUST BE REPLACED AT THE CONTRACTOR'S EXPENSE.

SECTION 600

3. CAST-IN-PLACE PORTLAND CEMENT CONCRETE (f'c = 28-DAY COMPRESSIVE STRENGTH):
CLASS A - PARAPETS AND ABUTMENT STEM (f'c = 4.5 ksi)
CLASS D - END DIAPHRAGM DECK OVER CLOSURE POUR AND SLEEPER SLABS (f'c = 4.5 ksi)
A HIGHER CLASS CONCRETE MAY BE SUBSTITUTED FOR A LOWER CLASS CONCRETE AT NO ADDITIONAL COST TO DELDOT WITH APPROVAL OF THE BRIDGE DESIGN ENGINEER.
-CHAMFER ALL EXPOSED EDGES ¾" X ¾" UNLESS OTHERWISE NOTED.
-CONTRACTOR SHALL SUPPLY CONCRETE FOR THE END DIAPHRAGM DECK OVER CLOSURE, SLEEPER SLAB AND PARAPET POURS THAT INCLUDES A SHRINKAGE-REDUCING/COMPENSATING ADMIXTURE. PAYMENT FOR ADMIXTURE WILL BE INCIDENTAL EACH COMPONENTS RESPECTIVE ITEM (610017, 610016, 610008). THE ADMIXTURE MAY BE SUPPLIED BY ONE PRODUCT THAT PROVIDES BOTH EXPANSION AND PORE WATER SURFACE TENSION OR TWO SEPARATE PRODUCTS EACH ADDED AT DOSAGE RECOMMENDED BY MANUFACTURER'S TECHNICAL DATA SHEETS AND HAVING THE FOLLOWING CHARACTERISTICS:
(A) DESIGNED TO PROVIDE BOTH THE FOLLOWING CHARACTERISTICS:
I. EXPANDS AT A RATE THAT CLOSELY COMPENSATES FOR SHRINKAGE OF THE CONCRETE MIX.
II. REDUCES THE CAPILLARY SURFACE TENSION OF THE CONCRETE PORE WATER.
(B) PROVIDES AT LEAST 80% SHRINKAGE REDUCTION AS MEASURED AND DOCUMENTED BY FIELD PERFORMANCE.
(C) FORMULATED FOR USE IN FREEZING AND THAWING WEATHER.

4. BAR REINFORCEMENT:
-REINFORCING STEEL SHALL CONFORM TO AASHTO M31 (ASTM A615), GRADE 60.
-REINFORCING STEEL SHALL HAVE A 3" CLEAR COVER IF CAST AGAINST EARTH OR A 2" CLEAR COVER ELSEWHERE, UNLESS OTHERWISE SPECIFIED ON THE PLANS.
-ALL REINFORCING STEEL SHALL BE PROTECTED WITH FUSION BONDED EPOXY UNLESS OTHERWISE SPECIFIED ON THE PLANS. EPOXY COATED REINFORCING STEEL SHALL CONFORM TO ASTM A775.
-ANY FIELD CUTTING OR FIELD BENDING MUST BE APPROVED BY THE ENGINEER. PAYMENT SHALL BE INCIDENTAL TO THE BAR REINFORCEMENT ITEM.
-GALVANIZED REINFORCING STEEL MAY BE SUBSTITUTED FOR EPOXY-COATED REINFORCING STEEL AT NO ADDITIONAL COST TO THE DEPARTMENT WITH APPROVAL OF THE ENGINEER.
-WELDING OF REINFORCEMENT DURING FABRICATION OR CONSTRUCTION IS NOT PERMITTED UNLESS SPECIFIED.
-PAYMENT FOR BAR REINFORCEMENT SHALL BE UNDER ITEM 611001 UNLESS OTHERWISE NOTED.

5. CONCRETE SEALER:
REFER TO DIAGRAMS CONTAINING SILICONE-BASED ACRYLIC CONCRETE SEALER LIMITS ON DWG. TS-01. EPOXY CONCRETE SEALER SHALL BE APPLIED TO THE BEAM SEATS, BEARING PEDESTALS, AND VERTICAL SURFACES OF THE ABUTMENT BACKWALLS. SILICONE-BASED ACRYLIC CONCRETE SEALER SHALL BE APPLIED TO THE REMAINING EXPOSED CONCRETE SURFACES AT THE ABUTMENTS AND PIERS.

6. STRUCTURAL STEEL:
DO NOT USE DEMOLITION SHIELD SUPPORT SYSTEMS THAT WILL CAUSE UNACCEPTABLE OVERSTRESS OR DEFORMATION TO PERMANENT BRIDGE MEMBERS. DEMOLITION SHIELD SUPPORT SYSTEMS MAY NOT BE WELDED TO THE BRIDGE GIRDERS. ALL DEMOLITION SHIELD ATTACHMENT DEVICES SHALL BE REMOVED AFTER USE.

DEMOLITION SHIELDS SHALL BE INSTALLED AT THE PROPOSED DECK AND ABUTMENT BACKWALL REMOVAL AREAS. THE CONTRACTOR SHALL PREPARE AND SUBMIT WORKING DRAWINGS OF THE PROPOSED DEMOLITION SHIELDS FOR REVIEW BY THE ENGINEER IN ACCORDANCE WITH SECTION 604.03.1. PAYMENT FOR DEMOLITION SHIELDS WILL BE MADE UNDER ITEM 604001 - PROTECTIVE SHIELD.

7. STEEL COATING:
ALL EXPOSED SURFACES OF EXISTING STRUCTURAL STEEL LOCATED WITHIN A DISTANCE OF 5 FT. FROM THE ENDS OF THE GIRDERS AT EACH ABUTMENT, INCLUDING BEARINGS, SHALL BE CLEANED AND PAINTED IN ACCORDANCE WITH SECTION 616 OF THE STANDARD SPECIFICATIONS. PAINT COLOR TO MATCH EXISTING. THE CONTRACTOR SHALL SUBMIT A PAINT CHIP TO THE ENGINEER FOR APPROVAL PRIOR TO PAINTING ANY SURFACE. THIS WORK WILL BE PAID FOR UNDER ITEM 616000 - CLEANING AND PAINTING EXISTING STEEL.

SECTION 800

8. TEMPORARY PCC SAFETY BARRIERS:
TEMPORARY PCC SAFETY BARRIERS SHALL NOT BE PINNED TO THE BRIDGE DECK. TEMPORARY PCC SAFETY BARRIERS SHALL BE PLACED TO MEET THE CLEAR ZONE REQUIREMENTS TO THE WORK ZONE AS INDICATED ON THE PLANS.

9. SAWCUTTING:
ALL PAVED AREAS TO BE RECONSTRUCTED OR WIDENED SHALL BE SAWCUT AT THE POINT WHERE THE NEW PAVEMENT IS TO TIE INTO THE EXISTING PAVEMENT. ALL HOT-MIX OR P.C.C. SAWCUTTING SHALL BE FULL DEPTH, UNLESS OTHERWISE NOTED ON THE PLANS, OR AS DIRECTED BY THE ENGINEER.

MISCELLANEOUS

10. DESIGN SPECIFICATIONS:
(A) 2017 DELDOT BRIDGE DESIGN MANUAL.
(B) 2017 AASHTO LRFD BRIDGE DESIGN SPECIFICATIONS, 8TH EDITION, U.S. CUSTOMARY UNITS INCLUDING MAY 2018 ERRATA.
(C) PROVIDE MATERIALS AND PERFORM WORK IN ACCORDANCE WITH THE DELDOT STANDARD SPECIFICATIONS, AUGUST 2016.

11. CONSTRUCTION LOADING:
-THE UHPC OVERLAY MUST CURE FOR A MINIMUM OF 72-HOURS AND ACHIEVE MINIMUM COMPRESSIVE STRENGTH OF 14-KSI BEFORE THE BRIDGE IS OPENED TO TRAFFIC.

12. EXISTING CONDITIONS:
ALL EXISTING DIMENSIONS AND ELEVATIONS SHOWN ARE BASED ON THE BEST AVAILABLE INFORMATION AND ARE APPROXIMATE ONLY. THE CONTRACTOR SHALL FIELD VERIFY ALL EXISTING DIMENSIONS, GEOMETRY, AND ELEVATIONS AS NECESSARY PRIOR TO ORDERING ANY MATERIALS AND COMMENCING CONSTRUCTION TO ENSURE PROPER FIT OF THE PROPOSED CONSTRUCTION. PAYMENT WILL BE INCIDENTAL TO ITEM 763501 - CONSTRUCTION ENGINEERING.

13. ROADWAY SURFACE ELEVATIONS:
THE PROPOSED DECK AND APPROACH ROADWAY SURFACE ELEVATIONS SHALL MATCH THE EXISTING DECK AND APPROACH SURFACE ELEVATIONS. IT IS THE CONTRACTOR'S RESPONSIBILTY TO SURVEY THE EXISTING ROADWAY SURFACE BEFORE DEMOLITION. PAYMENT WILL BE INCIDENTAL TO ITEM 763501 - CONSTRUCTION ENGINEERING.

14. ROADWAY CLEARANCES:
NO REDUCTION TO THE VERTICAL CLEARANCE SHALL BE ALLOWED WITHOUT PRIOR APPROVAL BY THE DEPARTMENT.

15. CONTINGENT QUANTITIES:
THESE CONTRACT DRAWINGS HAVE BEEN PREPARED BASED ON ORIGINAL CONTRACT PLANS, SHOP DRAWINGS, AND FIELD INSPECTION NOTES TAKEN ON DECEMBER 6, 2017, JANUARY 9TH, 2018, JANUARY 10TH, 2018 AND JANUARY 18TH, 2018. ACTUAL CONDITIONS MAY REQUIRE MODIFICATION IN CONSTRUCTION DETAILS AND WORK QUANTITIES. ALL DIMENSIONS AND DETAILS SHOWN ON THE PLANS SHALL BE VERIFIED BY THE CONTRACTOR PRIOR TO ORDERING ANY MATERIALS. SEE DWG. PN-02 FOR PAY ITEM CONTINGENCY PERCENTAGES.

16. UTILITIES:
SEE UTILITY STATEMENT FOR FURTHER INFORMATION ON UTILITY COORDINATION.

17. ENVIRONMENTAL COMPLIANCE:
ENVIRONMENTAL COMPLIANCE PLANS ARE NOT REQUIRED FOR THIS PROJECT. NO ENVIRONMENTAL RESOURCES ARE IMPACTED BY THE PROPOSED WORK.

18. DIAMOND GRINDING:
LONGITUDINAL END-TO-END TEXTURING (BLANKET GRINDING) SHALL BE PERFORMED ON THE FULL EXTENTS OF ALL PROPOSED UHPC OVERLAY SURFACES IN ACCORDANCE WITH THE SPECIAL PROVISIONS. PAYMENT FOR THIS WORK WILL BE MADE UNDER ITEM 501502 - DIAMOND GRINDING P.C.C. PAVEMENT AND PRECAST PAVEMENT.

19. CONCRETING:
THE CONTRACTOR SHALL MEET STANDARD SPECIFICATION SECTION 610.03.D.3 - COLD WEATHER REQUIREMENTS FOR ALL CONCRETING. SEE SPECIAL PROVISIONS FOR ADDITIONAL REQUIREMENTS AND RESTRICTIONS FOR UHPC PLACEMENT.

MISCELLANEOUS (CONTINUED)

20. ABBREVIATIONS:

ABUT. = ABUTMENT	NB = NORTHBOUND
BOT. = BOTTOM	NO. = NUMBER
C/C = CENTER-TO-CENTER	N.T.S. = NOT TO SCALE
℄ = CENTERLINE	P.C.C. = PORTLAND CEMENT CONCRETE
CLR. = CLEAR	R = RADIUS
DIA. = DIAMETER	RT. = RIGHT
DWG. = DRAWING	SB = SOUTHBOUND
E.F. = EACH FACE	SCH. = SCHEDULE
EL. = ELEVATION	SHLD. = SHOULDER
EXP. = EXPANSION	STA. = STATION
FIX. = FIXED	TYP. = TYPICAL
LT. = LEFT	UG = UNDERGROUND
MAX. = MAXIMUM	UHPC = ULTRA HIGH PERFORMANCE CONCRETE
MIN. = MINIMUM	

UNOFFICIAL WEBSITE COPY

QUANTITIES

ITEM Nº	ITEM TITLE	UNIT	QUANTITY	CONTINGENT %	TOTAL QUANTITY
202000	EXCAVATION AND EMBANKMENT	CY	113	0	113
211000	REMOVAL OF STRUCTURES AND OBSTRUCTIONS	LS	1	0	1
211506	REMOVAL OF EX. PCC BARRIER & FOOTER	LF	14	0	14
301001	GRADED AGGREGATE BASE COURSE, TYPE B	CY	56	0	56
501502	DIAMOND GRINDING P.C.C. PAVEMENT AND PRECAST PAVEMENT	SF	27468	0	27468
604001	PROTECTIVE SHIELD	LS	1	0	1
610008	PORTLAND CEMENT CONCRETE MASONRY, PARAPET, CLASS A	CY	5	0	5
610016	PORTLAND CEMENT CONCRETE MASONRY, CLASS D	CY	134	0	134
610017	PORTLAND CEMENT CONCRETE MASONRY, SUPERSTRUCTURE, CLASS D	CY	99	0	99
611000	BAR REINFORCEMENT	LB	13512	0	13512
611001	BAR REINFORCEMENT, EPOXY COATED	LB	20455	0	20455
613000	EPOXY CONCRETE SEALER	SF	420	0	420
613001	SILICONE BASED ACRYLIC CONCRETE SEALER	SF	14942	0	14942
616000	CLEANING AND PAINTING EXISTING STEEL	LS	1	0	1
623004	CLEAN AND GREASE BRIDGE BEARINGS	EA	38	0	38
624000	PREFABRICATED EXPANSION JOINT SYSTEM, 3"	LF	312	0	312
625505	ULTRA HIGH PERFORMANCE CONCRETE OVERLAY	CF	6581	0	6581
625507	ADDITIONAL UHPC CONCRETE FOR PARTIAL DECK REPAIRS	CF	132	0	132
628001	REPAIR OF CONCRETE STRUCTURES BY EPOXY INJECTION	LF	2	100	4
628041	DEEP SPALL REPAIR	CF	9	100	18
628053	DECK REPAIR, FULL DEPTH	SF	5	25	7
628502	REMOVAL OF EXISTING DECK REPAIRS	SF	5	25	7
760013	PAVEMENT MILLING, PORTLAND CEMENT CONCRETE PAVEMENT	SY-IN	5679	0	5679
760500	TOTAL SURFACE HYDRODEMOLITION	SY	2840	0	2840
762002	SAWCUTTING, CONCRETE, VARIABLE DEPTH	LF	223	0	223

LOAD RATING SUMMARY

DESIGN VEHICLE	*RATING FACTOR*	*RATING WEIGHT (TON)*	*CONTROLLING MEMBER*	*CONTROLLING POINT*	*LOAD EFFECT*
HL-93 TRUCK (INVENTORY)	*0.62*	*N/A*	*SPAN 1: EXTERIOR BEAM*	*110*	*STRENGTH I*
HL-93 TANDEM (INVENTORY)	*0.54*	*N/A*	*SPAN 1: EXTERIOR BEAM*	*110*	*STRENGTH I*
HS-20 (INVENTORY)	*1.13*	*40.76*	*SPAN 1: EXTERIOR BEAM*	*110*	*STRENGTH I*
HL-93 TRUCK (OPERATING)	*0.81*	*N/A*	*SPAN 1: EXTERIOR BEAM*	*110*	*STRENGTH I*
HL-93 TANDEM (OPERATING)	*0.70*	*N/A*	*SPAN 1: EXTERIOR BEAM*	*110*	*STRENGTH I*
HS-20 (OPERATING)	*1.47*	*52.83*	*SPAN 1: EXTERIOR BEAM*	*110*	*STRENGTH I*
DE S220	*2.50*	*49.95*	*SPAN 1: EXTERIOR BEAM*	*110*	*STRENGTH I*
DE S335	*1.49*	*52.18*	*SPAN 1: EXTERIOR BEAM*	*110*	*STRENGTH I*
DE S437	*1.42*	*51.86*	*SPAN 1: EXTERIOR BEAM*	*110*	*STRENGTH I*
DE S330	*1.88*	*56.26*	*SPAN 1: EXTERIOR BEAM*	*110*	*STRENGTH I*
DE S435	*1.61*	*56.31*	*SPAN 1: EXTERIOR BEAM*	*110*	*STRENGTH I*
DE S540	*1.43*	*57.16*	*SPAN 1: EXTERIOR BEAM*	*110*	*STRENGTH I*

NOTE: ALL LOAD RATINGS PROVIDED BY DELDOT

INDEX OF BRIDGE 1-600 SHEETS

SHEET Nº	BR. DWG. Nº	TABLE OF CONTENTS
17	BR-01	STRUCTURE LOCATION PLAN
18	PN-01	BRIDGE PROJECT NOTES - 1
19	PN-02	BRIDGE PROJECT NOTES - 2
20	PN-03	CONCRETE REPAIR DETAILS - 1
21	PN-04	CONCRETE REPAIR DETAILS - 2
22	PE-01	GENERAL PLAN AND ELEVATION
23	TS-01	BRIDGE TYPICAL SECTIONS
24	SC-01	SEQUENCE OF CONSTRUCTION - 1
25	SC-02	SEQUENCE OF CONSTRUCTION - 2
26	SC-03	SEQUENCE OF CONSTRUCTION - 3
27	SC-04	SEQUENCE OF CONSTRUCTION - 4
28	SR-01	REMOVAL PLAN
29	SR-02	DEMOLITION DETAILS
30	AS-01	SLEEPER SLAB LAYOUT PLAN
31	AS-02	SLEEPER SLAB UNIT A PLAN AND REINFORCEMENT
32	AS-03	SLEEPER SLAB UNIT B PLAN AND REINFORCEMENT
33	AS-04	SLEEPER SLAB UNIT C PLAN AND REINFORCEMENT
34	AS-05	SLEEPER SLAB UNIT D PLAN AND REINFORCEMENT
35	AS-06	SLEEPER SLAB UNIT E PLAN AND REINFORCEMENT
36	AS-07	SLEEPER SLAB UNIT F PLAN AND REINFORCEMENT
37	AS-08	SLEEPER SLAB UNIT G PLAN AND REINFORCEMENT
38	AS-09	SLEEPER SLAB UNIT H PLAN AND REINFORCEMENT
39	AS-10	SLEEPER SLAB UNIT J PLAN AND REINFORCEMENT
40	AS-11	SLEEPER SLAB UNIT K PLAN AND REINFORCEMENT
41	AS-12	SLEEPER SLAB UNIT L PLAN AND REINFORCEMENT
42	AS-13	SLEEPER SLAB UNIT M PLAN AND REINFORCEMENT
43	EX-01	SLEEPER SLAB JOINT DETAILS
44	DK-01	DECK OVER LAYOUT PLAN
45	DK-02	DECK OVER DETAILS - 1
46	DK-03	DECK OVER DETAILS - 2
47	DK-04	DECK OVER DETAILS - 3
48	DK-05	DECK OVER DETAILS - 4
49	DK-06	DECK OVER DETAILS - 5
50	DK-07	DECK OVER DETAILS - 6
51	DK-08	DECK OVER DETAILS - 7
52	DK-09	DECK OVER DETAILS - 8
53	DK-10	DECK OVER DETAILS - 9
54	DK-11	PARAPET JOINT DETAILS - 1
55	DK-12	PARAPET JOINT DETAILS - 2
56	BR-01	REINFORCEMENT BAR LIST DECK OVER - 1
57	BR-02	REINFORCEMENT BAR LIST DECK OVER - 2
58	BR-03	REINFORCEMENT BAR LIST SLEEPER SLAB - 1
59	BR-04	REINFORCEMENT BAR LIST SLEEPER SLAB - 2

TOTAL BRIDGE SHEETS: 43

UNOFFICIAL WEBSITE COPY

N:\37122-003\CADD\Bridge\BR1-600_PN02.dgn
7/31/2019 4:18:17 PM

ADDENDA / REVISIONS	

NOT TO SCALE

REHABILITATION OF BRIDGES 1-600, 1-601, AND 1-604, SR 2 AND SR 141 INTERCHANGE

CONTRACT	BRIDGE NO.	1 600
T201707403	DESIGNED BY: ZMG	
COUNTY		
NEW CASTLE	CHECKED BY: WAG	

BRIDGE PROJECT NOTES – 2

PN-02
SECTION
WRA
SHEET NO.
19

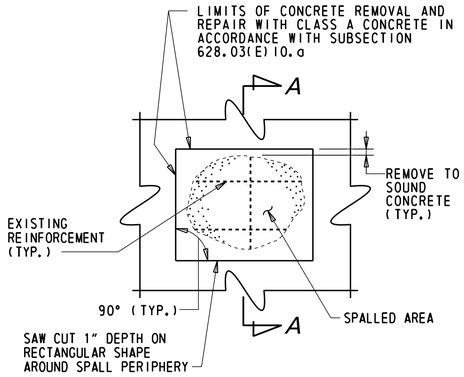

PLAN

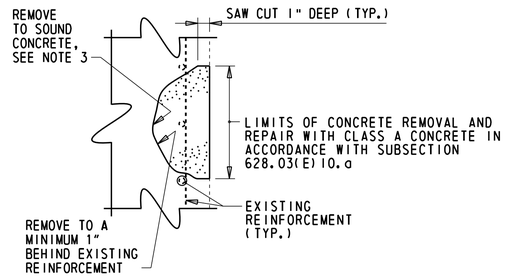

SECTION A-A

DEEP SPALL REPAIR

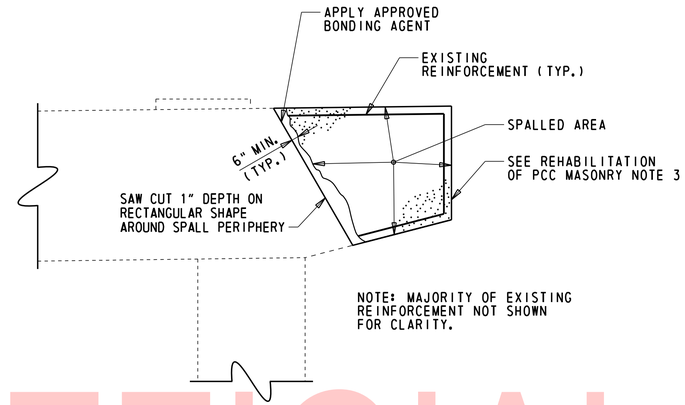

REHABILITATION OF PCC MASONRY

DEEP SPALL REPAIR NOTES

1. DEEP SPALL REPAIRS ARE DEFINED AS PATCHES THAT EXTEND BELOW THE TOP MAT OF REINFORCEMENT. DELAMINATED CONCRETE HAS BEEN ASSUMED AS DEEP SPALL REPAIRS.
2. ALL WORK INVOLVING METHODS OF CONCRETE REMOVAL; CLEANING OF CONCRETE SURFACE AND EXISTING REINFORCEMENT; REPAIRING OR REPLACING DAMAGED REINFORCEMENT AS RESULT OF CONSTRUCTION ACTIVITIES OR SECTION LOSS; PRESENCE OF CONTRACTION OR EXPANSION JOINTS; SURFACE PREPARATION; AND CONCRETE PLACEMENT SHALL BE PERFORMED IN ACCORDANCE WITH SUBSECTION 628.03(E) OF THE STANDARD SPECIFICATIONS. PAYMENT INCIDENTAL TO 628041 - DEEP SPALL REPAIR.
3. IF DEPTH OF REPAIR EXTENDS MORE THAN 6" BEYOND SURFACE OF CONCRETE, CONTRACTOR SHALL STOP WORK AND NOTIFY THE ENGINEER IMMEDIATELY.

REHABILITATION OF PCC MASONRY NOTES

1. REHABILITATION OF PCC MASONRY IS DEFINED AS DEEP SPALL PATCHES THAT EXCEED THE 0.5 C.Y. THRESHOLD IN A SINGLE AREA.
2. ALL WORK INVOLVING METHODS OF CONCRETE REMOVAL; CLEANING OF CONCRETE SURFACE AND EXISTING REINFORCEMENT; REPAIRING OR REPLACING DAMAGED REINFORCEMENT AS RESULT OF CONSTRUCTION ACTIVITIES OR SECTION LOSS; PRESENCE OF CONTRACTION OR EXPANSION JOINTS; SURFACE PREPARATION; AND CONCRETE PLACEMENT SHALL BE PERFORMED IN ACCORDANCE WITH SUBSECTION 628.03(E) OF THE STANDARD SPECIFICATIONS. PAYMENT INCIDENTAL TO 628042 - REHABILITATION OF PCC MASONRY.
3. DETAIL SHOWN FOR "REHABILITATION OF EXISTING PCC MASONRY" UTILIZES A GENERIC EXAMPLE USING PARTIAL RECONSTRUCTION OF AN EXISTING PIER CAP. SEE DWG. PN-04 FOR SIZE AND LOCATION OF REPAIRS AT EACH SUBSTRUCTURE UNIT.
4. IF DEPTH OF REPAIR EXTENDS MORE THAN 6" BEYOND SURFACE OF CONCRETE, CONTRACTOR SHALL STOP WORK AND NOTIFY THE ENGINEER IMMEDIATELY.

REMOVAL OF EXISTING DECK REPAIR NOTES

1. AFTER EXISTING OVERLAY IS REMOVED, PRIOR TO HYDRODEMOLITION, ANY EXISTING DECK REPAIRS THAT ARE LOOSE, PARTIALLY DELAMINATED, OR OTHERWISE UNSOUND, WILL BE MEASURED BY THE ENGINEER AND MARKED FOR REMOVAL.
2. THE CONTRACTOR SHALL REMOVE THE EXISTING DECK REPAIRS IN ACCORDANCE WITH SECTION 628.03(F).
3. THE REMOVAL SHALL NOT INCLUDE ANY SOUND ORIGINAL BRIDGE DECK CONCRETE.
4. REFER TO ITEM 628502 - REMOVAL OF EXISTING DECK REPAIR FOR PAYMENT AND ADDITIONAL INFORMATION.
5. IF REMOVAL OF EXISTING DECK REPAIR REACHES FULL DEPTH, AND WITH THE APPROVAL OF THE ENGINEER, REPAIR AREA SHALL BE REPAIRED IN ACCORDANCE WITH SUBSECTION 628.03(F) AND PAID FOR UNDER ITEM 628053 - DECK REPAIR, FULL DEPTH. REMOVAL OF EXISTING DECK REPAIRS THAT ARE CHANGED TO DECK REPAIR, FULL DEPTH WILL ONLY BE PAID FOR ONCE UNDER ITEM 628053.

DECK REPAIR NOTES

1. AFTER MILLING AND PRIOR TO HYDRODEMOLITION, EXISTING AREAS OF DECK REQUIRING FULL DEPTH REPAIR AS DIRECTED BY THE ENGINEER, SHALL BE REPAIRED USING DETAIL SHOWN ON THIS SHEET.
2. ALL WORK INVOLVING METHODS OF CONCRETE REMOVAL; CLEANING OF CONCRETE SURFACE AND EXISTING REINFORCEMENT; REPAIRING OR REPLACING DAMAGED REINFORCEMENT AS RESULT OF CONSTRUCTION ACTIVITIES OR SECTION LOSS; PRESENCE OF CONTRACTION OR EXPANSION JOINTS; SURFACE PREPARATION; AND CLASS D CONCRETE PLACEMENT, SHALL BE PERFORMED IN ACCORDANCE WITH SUBSECTION 628.03(F) OF THE STANDARD SPECIFICATIONS. PAYMENT FOR FULL DEPTH DECK REPAIRS WILL BE MADE UNDER ITEM 628053 - DECK REPAIR, FULL DEPTH. ADDITIONAL UHPC FOR FULL DEPTH DECK REPAIR SHALL BE PLACED DURING THE OVERLAY PLACEMENT AND SHALL PAYMENT WILL BE MADE UNDER ITEM 625507 - ADDITIONAL UHPC FOR PARTIAL DECK REPAIRS. FULL DEPTH DECK REPAIR HYDRODEMOLITION SHALL BE PERFORMED IN ACCORDANCE WITH ITEMS 760500 - TOTAL SURFACE HYDRODEMOLITION, HOWEVER, ALL PAYMENT WILL BE INCIDENTAL TO ITEM 628053 - DECK REPAIR, FULL DEPTH.
3. MILLING, HYDRODEMOLITION, AND UHPC OVERLAY WILL BE PAID FOR UNDER THEIR RESPECTIVE ITEMS.

LEGEND:

- SPALLED CONCRETE
- LIMITS OF REMOVAL, MECHANICAL MILLING (ITEM 760013)
- LIMITS OF TOTAL SURFACE HYDRODEMOLITION (ITEM 760500)
- LIMITS OF LOCALIZED DECK REMOVAL (ITEM 628053 OR 628502)
- CLASS D CONCRETE

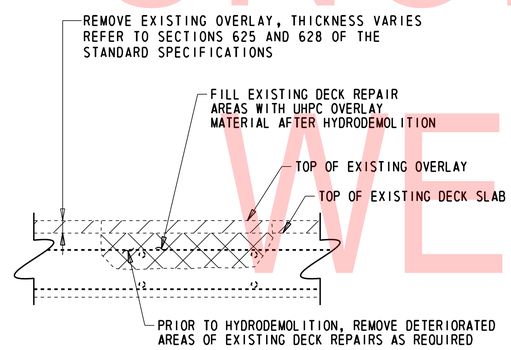

REMOVAL OF EXISTING DECK REPAIRS (ITEM 628502)

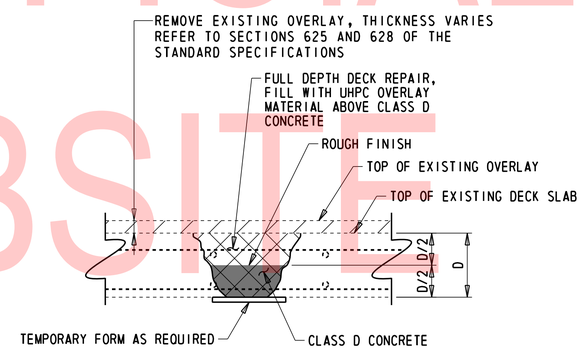

DECK REPAIR, FULL DEPTH (ITEM 628053)

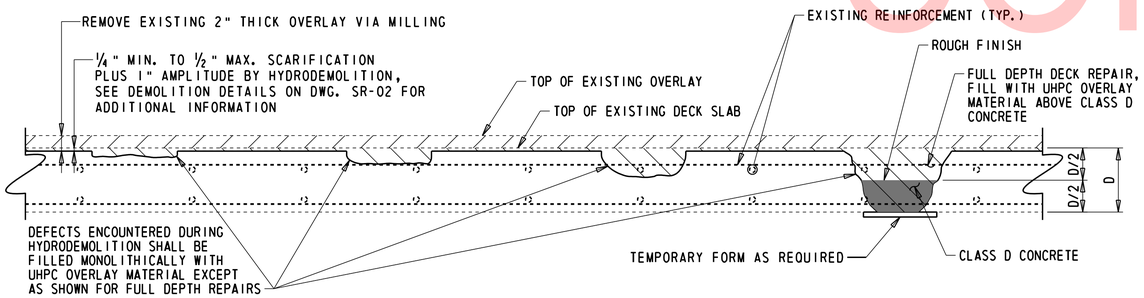

MILLING, HYDRODEMOLITION AND DECK REPAIR

UNOFFICIAL WEBSITE COPY

N:\37122-003\CADD\Bridge\BR1-600_PN03.dgn
7/31/2019 4:18:17 PM

ADDENDA / REVISIONS		SCALE AS NOTED	REHABILITATION OF BRIDGES 1-600, 1-601, AND 1-604, SR 2 AND SR 141 INTERCHANGE	CONTRACT T201707403	BRIDGE NO. 1 600	CONCRETE REPAIR DETAILS – 1	PN-03
				COUNTY NEW CASTLE	DESIGNED BY: ZMG		SECTION WRA
					CHECKED BY: WAG		SHEET NO. 20

CONCRETE REPAIR QUANTITIES
PIER COMPONENTS – CAP AND COLUMN

REPAIR №	ITEM №	REPAIR LOCATION	REPAIR DESCRIPTION	UNIT	QUANTITY
PIER 1	628001	PIER CAP EAST FACE AT PIER CAP END	2'-0" LONG X 1/16" WIDE HORIZONTAL CRACK AT MID-HEIGHT OF THE PIER CAP	LF	2.0
PIER 2	628041	PIER CAP NORTH FACE IN WEST OVERHANG	7" DIAMETER X 1-1/2" DEEP SPALL WITH EXPOSED CORRODED REINFORCEMENT BENEATH BEARING 1 APPROXIMATELY 1-FT FROM THE BOTTOM OF THE PIER CAP	CF	0.1
PIER 3	628041	COLUMN 6 WEST FACE AT THE BOTTOM	1'-4" WIDE X 1'-0" HIGH X 2" DEEP SPALL	CF	1.5
PIER 4	628041	COLUMN 9 WEST FACE AT THE BOTTOM	1'-0" WIDE X 6" HIGH DELAMINATION CONTAINING A 4" WIDE X 4" HIGH X 1/2" DEEP SPALL	CF	0.6
PIER 5	628041	COLUMN 10 SOUTHWEST FACE AT THE BOTTOM	1'-2" WIDE X 1'-2" HIGH DELAMINATION CONTAINING A 9" WIDE X 7" HIGH X 1" DEEP SPALL	CF	1.3

CONCRETE REPAIR QUANTITIES
SOUTH ABUTMENT

REPAIR №	ITEM №	REPAIR LOCATION	REPAIR DESCRIPTION	UNIT	QUANTITY
SAB-1	628041	EAST OVERHANG AT SOUTH ABUTMENT - CHEEKWALL	2'-3" HIGH X 2'-0" WIDE X 3" DEEP SPALL	CF	1.5

CONCRETE REPAIR QUANTITIES
DECK SOFFIT

REPAIR №	ITEM №	REPAIR LOCATION	REPAIR DESCRIPTION	UNIT	QUANTITY
SOF-1	628041	BAY 14 AT THE NORTH ABUTMENT ADJACENT TO GIRDER 14	3'-0" WIDE X 8" LONG X 2" DEEP SPALL WITH EXPOSED CORRODED REINFORCEMENT	CF	0.7
SOF-2	628041	EAST OVERHANG AT THE NORTH ABUTMENT	1'-6" LONG X 3" HIGH X 3" DEEP SPALL WITH ACTIVE WATER LEAKAGE	CF	1.0
SOF-3	628041	WEST OVERHANG AT THE SOUTH ABUTMENT	3'-0" WIDE X 7" LONG X 3" DEEP SPALL WITH EXPOSED CORRODED REINFORCEMENT	CF	0.6
SOF-4	628041	BAY 7 AT THE SOUTH ABUTMENT APPROXIMATELY 6" WEST OF THE LONGITUDINAL JOINT	2'-0" WIDE X 8" LONG X 2" DEEP SPALL	CF	0.5
SOF-5	628041	BAY 14 AT THE SOUTH ABUTMENT APPROXIMATELY 1'-3" EAST OF THE LONGITUDINAL JOINT	1'-3" WIDE X 6" LONG X 4" DEEP SPALL WITH EXPOSED CORRODED REINFORCEMENT	CF	0.3
SOF-6	628041	EAST OVERHANG AT SOUTH ABUTMENT	1'-3" WIDE X 4" LONG X 2" DEEP SPALL	CF	0.2
SOF-7	628041	BAY 14 IN SPAN 2 AT MIDSPAN ON THE EAST SIDE OF LONGITUDINAL JOINT	1'-4" DIAMETER X 4" DEEP SPALL WITH EXPOSED CORRODED REINFORCEMENT	CF	0.1

CONCRETE REPAIR QUANTITIES
REPAIR SUMMARY

ITEM №	ITEM TITLE	UNIT	QUANTITY
628001	REPAIR OF CONCRETE STRUCTURES BY EPOXY INJECTION	LF	2
628041	DEEP SPALL REPAIR	CF	9

NOTES:

1. THE LOCATION AND QUANTITIES OF THE REPAIRS SHOWN ON THIS DRAWING ARE BASED ON INSPECTION FIELD NOTES, SEE NOTE 15 ON DWG. PN-01. FOR REPAIR LOCATIONS, BRIDGE COMPONENTS ARE NUMBERED FROM THE WEST AND FROM THE SOUTH.
2. PRIOR TO STARTING EACH REPAIR, THE LIMITS SHALL BE VERIFIED BY THE CONTRACTOR IN THE PRESENCE OF THE ENGINEER.
3. FOR CONCRETE REPAIR DETAILS, SEE DWG. PN-03.
4. WHERE CRACKS AND SPALLS EXIST CONCURRENTLY, COMPLETE THE SPALL REPAIR COMPLETELY REMOVING THE ASSOCIATED CRACK. IF THE CRACK EXTENDS LESS THAN 1'-0" BEYOND THE LIMITS OF THE SPALL REPAIR, EXTEND THE LIMITS OF THE SPALL REPAIR TO ENCOMPASS THE CRACK. IF THE CRACK EXTENDS DEEPER THAN THE LIMITS OF CONCRETE REMOVAL, THE CONTRACTOR SHALL REMOVE ADDITIONAL CONCRETE UNTIL THE CRACK IS FULLY REMOVED. IF THE DEPTH OF REMOVAL REACHES MORE THAN 6" FROM THE ORIGINAL FACE OF CONCRETE, ALL WORK ON THE REPAIR SHALL STOP AND THE ENGINEER SHALL BE NOTIFIED IMMEDIATELY. IF THE CRACK EXTENDS MORE THAN 1'-0" BEYOND THE LIMITS OF THE SPALL REPAIR INTO SOUND CONCRETE THE CRACK SHALL BE REPAIRED BY EPOXY INJECTION AND PAID FOR UNDER ITEM 628001 BEYOND THE LIMITS OF THE SPALL REPAIR. CRACKS LOCATED WITHIN SPALL REPAIRS WILL NOT BE PAID FOR AND WILL BE CONSIDERED INCIDENTAL TO ITEM 628041.
5. SILICONE-BASED ACRYLIC CONCRETE SEALER AND EPOXY CONCRETE SEALER SHALL ONLY BE APPLIED AFTER ALL CONCRETE REPAIRS ARE COMPLETED AT ALL SUBSTRUCTURE UNITS. THE CONTRACTOR SHALL TAKE CARE TO PROTECT THE BEARINGS DURING APPLICATION OF THE CONCRETE SEALERS. ANY CLEAN-UP REQUIRED TO REMOVE THE SEALER FROM THE BEARINGS WILL BE AT NO ADDITIONAL COST TO THE DEPARTMENT AND TO THE SATISFACTION OF THE ENGINEER.
6. EPOXY CONCRETE SEALER SHALL BE APPLIED TO THE BEAM SEATS AND BEARING PEDESTALS. PAYMENT WILL BE MADE UNDER ITEM 613000. CONTRACTOR SHALL REMOVE DEBRIS FROM THE BEAM SEAT PRIOR TO APPLICATION OF EPOXY CONCRETE SEALER. PAYMENT FOR THIS WORK WILL BE INCIDENTAL TO ITEM 613000.
7. SILICONE-BASED ACRYLIC CONCRETE SEALER SHALL BE APPLIED TO ALL EXPOSED SUBSTRUCTURE SURFACES BESIDES BEAM SEATS AND BEARING PEDESTALS. PAYMENT WILL BE MADE UNDER ITEM 613001.

UNOFFICIAL WEBSITE COPY

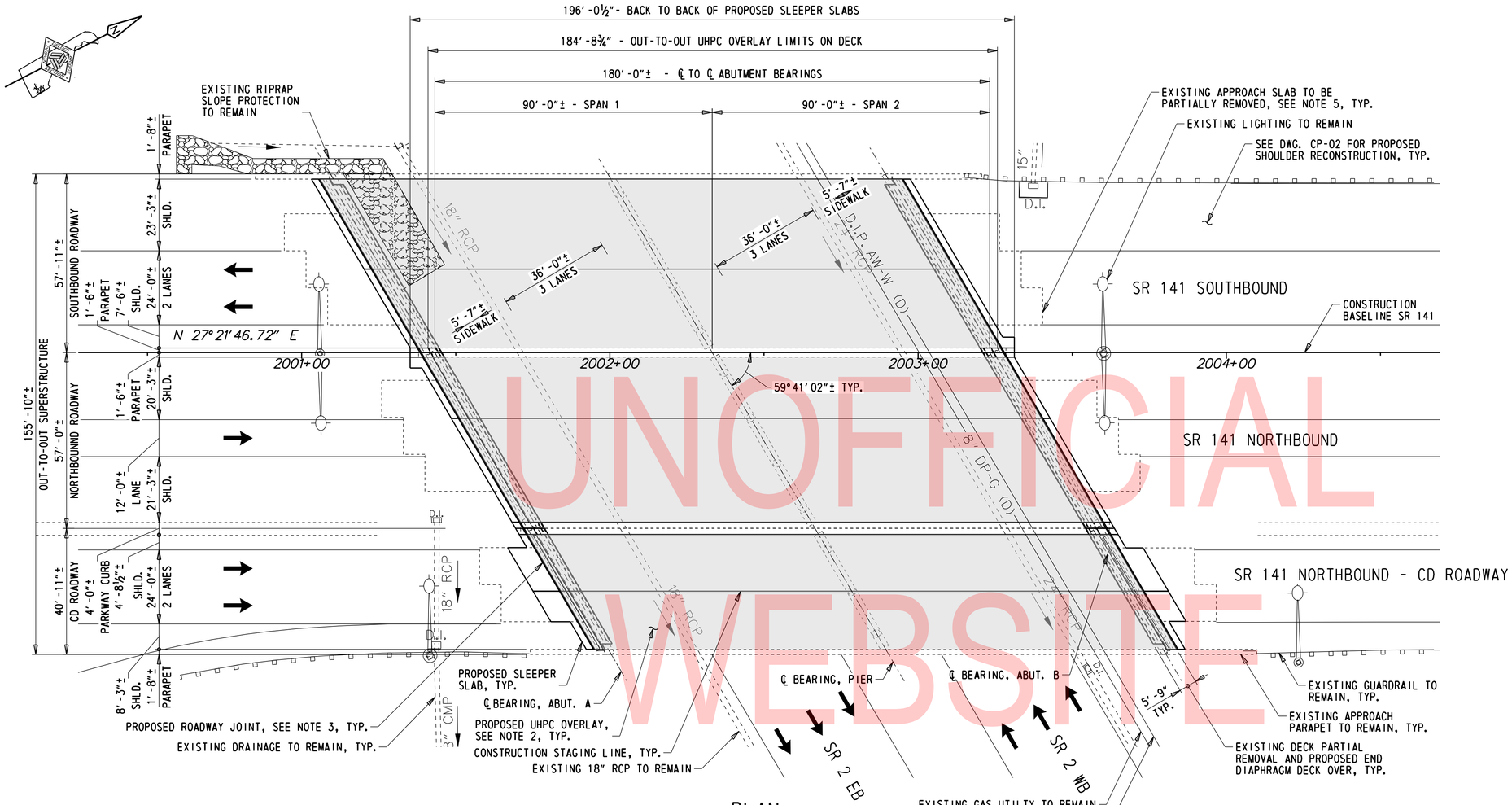

PLAN

1" = 20'-0"

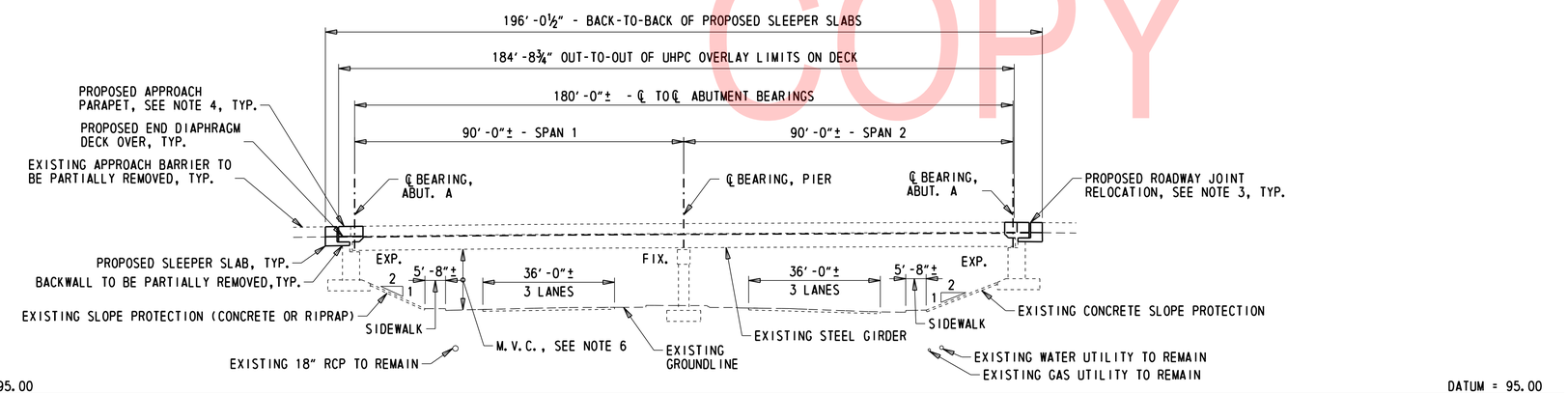

DEVELOPED ELEVATION ALONG BASELINE

1" = 20'-0"

NOTES:

1. ALL DIMENSIONS MEASURED FROM CONSTRUCTION BASELINE.
2. THE PROPOSED UHPC OVERLAY HAS NOMINAL THICKNESS OF 2⅞" ON THE EXISTING DECK AND ON THE PROPOSED DECK OVER END DIAPRHAGM. THE EXISTING LMC OVERLAY WILL BE REMOVED.
3. THE PROPOSED ROADWAY JOINT IS LOCATED BETWEEN THE PROPOSED END DIAPHRAGM DECK OVER AND SLEEPER SLAB BETWEEN THE FRONT FACE OF THE FASCIA PARAPETS. THE EXISTING JOINTS IN THE FASCIA PARAPETS REMAIN IN PLACE.
4. PROPOSED MEDIAN PARAPET AND PARKWAY CURB TO BE CONSTRUCTED ON PROPOSED END DIAPHRAGM DECK OVER AND SLEEPER SLAB COMPONENTS.
5. EXISTING APPROACH SLABS AND ROADWAY TO BE PARTIALLY REMOVED WITHIN PROPOSED STRUCTURE LIMITS.
6. THE LOCATION OF THE MINIMUM VERTICAL CLEARANCE (M.V.C.) IS ESTIMATED. A M.V.C. OF 14.8' WAS MEASURED AND INCLUDED IN THE 4/13/2016 INSPECTION REPORT PROVIDED BY DELDOT. THE CONTRACTOR SHALL CONFIRM THE M.V.C. LOCATION AND MEASUREMENT BEFORE STARTING WORK. THE M.V.C. SHALL NOT BE REDUCED AT ANY TIME DURING CONSTRUCTION.
7. THE DEPTH OF UTILITIES SHOWN IS APPROXIMATE.

LEGEND:

PROPOSED UHPC OVERLAY

UNOFFICIAL WEBSITE COPY

N:\32122-002\CADD\Bridge\BR1-600_PE01.dgn
7/31/2019 4:18:19 PM

ADDENDA / REVISIONS	SCALE AS NOTED	REHABILITATION OF BRIDGES 1-600, 1-601, AND 1-604, SR 2 AND SR 141 INTERCHANGE	CONTRACT T201707403	BRIDGE NO. 1 600	GENERAL PLAN AND ELEVATION	PE-01
			COUNTY NEW CASTLE	DESIGNED BY: ZMG		SECTION WRA
				CHECKED BY: WAG		SHEET NO. 22

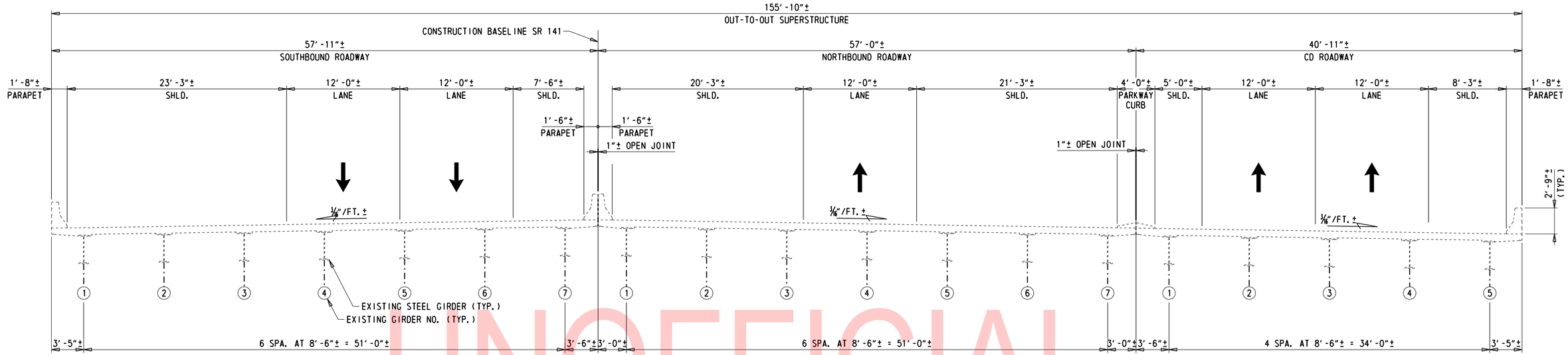

EXISTING TYPICAL SECTION

3/16" = 1'-0"

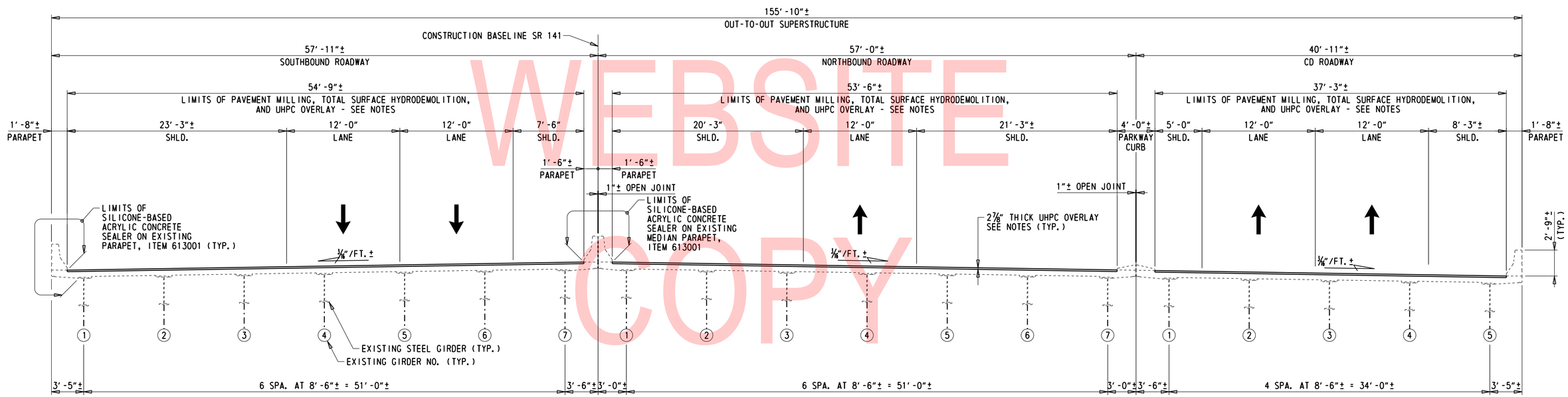

PROPOSED TYPICAL SECTION

3/16" = 1'-0"

NOTES:

1. THE PROPOSED OVERLAY THICKNESS NOTED IS THE AVERAGE THICKNESS OF UHPC PLACED FOLLOWING MILLING AND TOTAL SURFACE HYDRODEMOLITION OF THE EXISTING DECK.
2. THE PROPOSED OVERLAY SHALL MATCH THE EXISTING GRADE AND CROSS SLOPE OF THE BRIDGE DECK. THE CONTRACTOR SHALL SURVEY THE EXISTING BRIDGE DECK PRIOR TO DEMOLITION OPERATIONS TO ENSURE THE EXISTING GRADE AND CROSS SLOPE ARE MET IN THE FINAL CONDITION. COST OF THIS SURVEY WILL BE INCIDENTAL TO ITEM 763501 - CONSTRUCTION ENGINEERING.
3. REFERENCE DWGS. SR-01 AND SR-02 FOR LIMITS AND DETAILS OF THE MILLING AND TOTAL SURFACE HYDRODEMOLITION AND ASSOCIATED EXISTING DECK REPAIRS.
4. MILLING OF THE DECK WILL BE PAID FOR BY ITEM 760013 - PAVEMENT MILLING, PORTLAND CEMENT CONCRETE PAVEMENT. TOTAL SURFACE HYDRODEMOLITION WILL BE PAID FOR BY ITEM 760500 - TOTAL SURFACE HYDRODEMOLITION. THE UHPC OVERLAY WILL BE PAID FOR BY ITEM 625505 - UHPC OVERLAY. SEE SPECIAL PROVISIONS.
5. UPON COMPLETION OF THE UHPC OVERLAY, THE CONTRACTOR SHALL BLANKET GRIND THE PAVEMENT SURFACE IN ACCORDANCE WITH ITEM 501502 - DIAMOND GRINDING PCC PAVEMENT AND PRECAST PAVEMENT. SEE SPECIAL PROVISIONS.

UNOFFICIAL WEBSITE COPY

ADDENDA / REVISIONS	SCALE AS NOTED	REHABILITATION OF BRIDGES 1-600, 1-601, AND 1-604, SR 2 AND SR 141 INTERCHANGE	CONTRACT T201707403	BRIDGE NO. 1 600	BRIDGE TYPICAL SECTIONS	TS-01
			COUNTY NEW CASTLE	DESIGNED BY: ZMG		SECTION WRA
				CHECKED BY: WAG		SHEET NO. 23

N:\32122-002\C400\Bridge\BR1-600_TS01.dgn 7/31/2019 4:18:20 PM

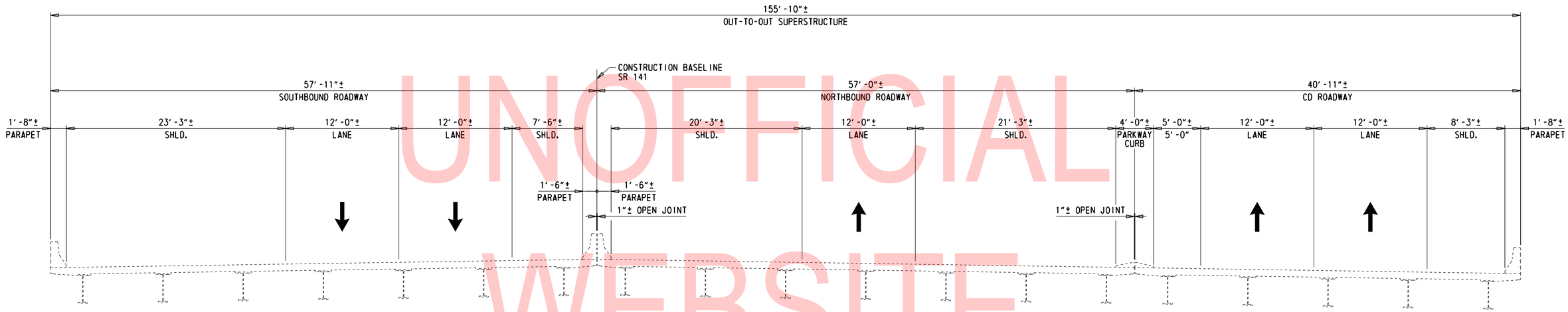

EXISTING TYPICAL SECTION

3/16" = 1'-0"

UNOFFICIAL WEBSITE COPY

N:\32122-002\C400\Bridge\BR1-600_SC01.dgn
7/31/2019 4:18:21 PM

ADDENDA / REVISIONS		SCALE AS NOTED	REHABILITATION OF BRIDGES 1-600, 1-601, AND 1-604, SR 2 AND SR 141 INTERCHANGE	CONTRACT T201707403	BRIDGE NO. 1 600	SEQUENCE OF CONSTRUCTION - 1	SC-01
				COUNTY NEW CASTLE	DESIGNED BY: ZMG		SECTION WRA
					CHECKED BY: WAG		SHEET NO. 24

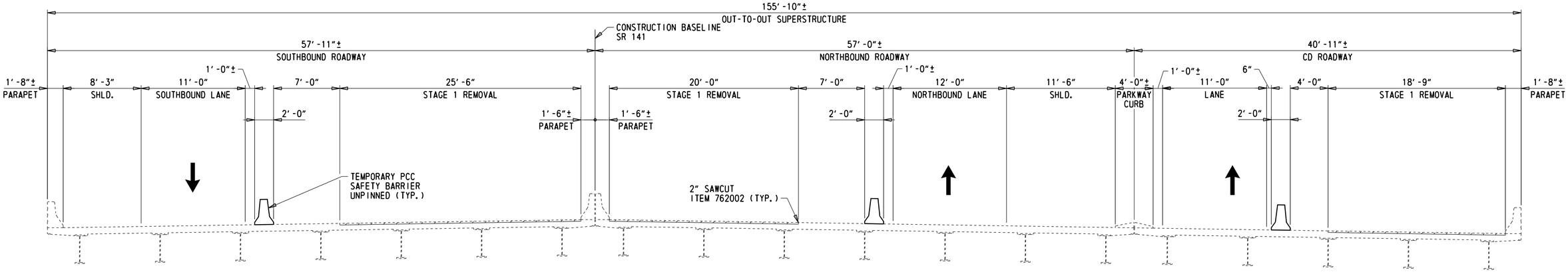

STAGE 1 REMOVAL

3/16" = 1'-0"

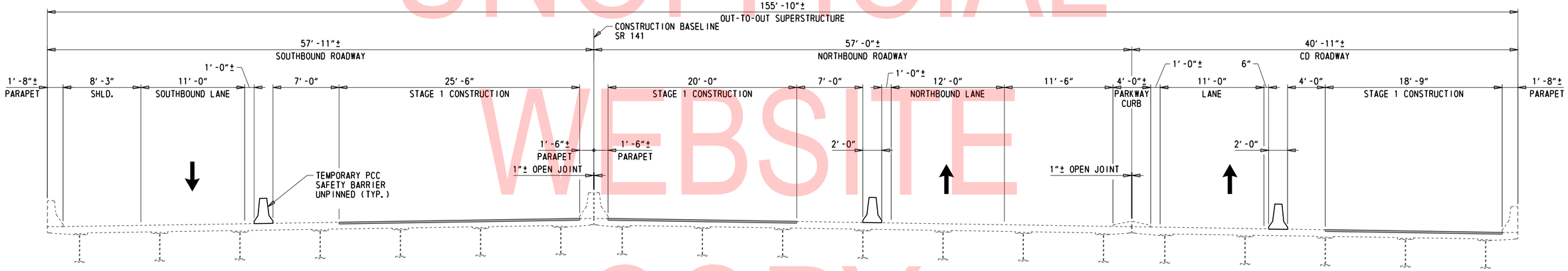

STAGE 1 CONSTRUCTION

3/16" = 1'-0"

UNOFFICIAL WEBSITE COPY

LEGEND

- LIMITS OF REMOVAL - SEE NOTE 1
  ITEM 760013 - PAVEMENT MILLING, P.C.C. PAVEMENT
  ITEM 760500 - TOTAL SURFACE HYDRODEMOLITION
- PROPOSED OVERLAY
  ITEM 625505 - UHPC OVERLAY
  ITEM 501502 - DIAMOND GRINDING P.C.C. PAVEMENT AND PRECAST PAVEMENT

NOTES:

1. FOR REMOVAL DETAILS, SEE DWGS. PN-03, SR-01, AND SR-02.

N:\32122-002\C400\Bridge\BR1-600_SC02.dgn
7/31/2019 4:18:22 PM

ADDENDA / REVISIONS		SCALE AS NOTED	REHABILITATION OF BRIDGES 1-600, 1-601, AND 1-604, SR 2 AND SR 141 INTERCHANGE	CONTRACT T201707403	BRIDGE NO. 1 600	SEQUENCE OF CONSTRUCTION - 2	SC-02 SECTION WRA
				COUNTY NEW CASTLE	DESIGNED BY: ZMG		SHEET NO. 25
					CHECKED BY: WAG		

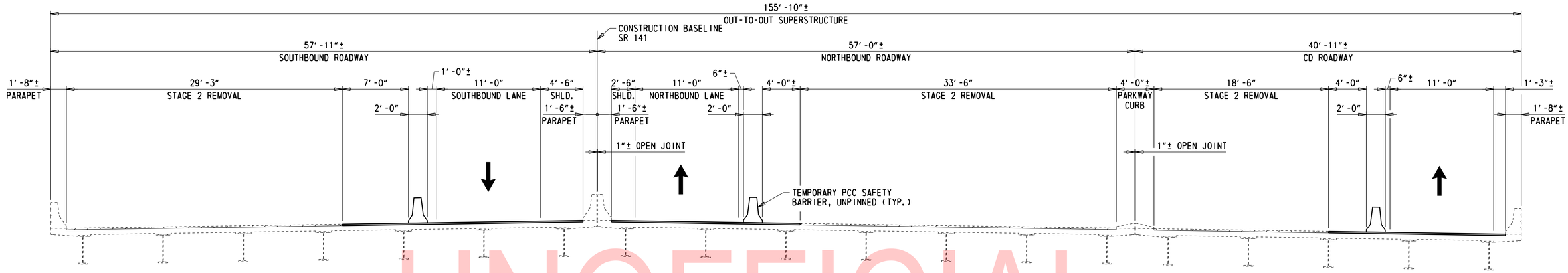

STAGE 2 REMOVAL

1/16" = 1'-0"

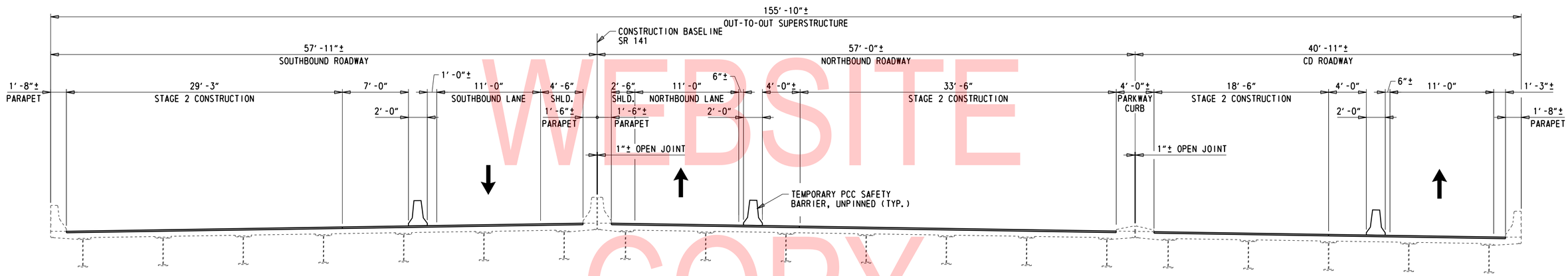

STAGE 2 CONSTRUCTION

1/16" = 1'-0"

UNOFFICIAL WEBSITE COPY

LEGEND

- LIMITS OF REMOVAL - SEE NOTE 1
  ITEM 760013 - PAVEMENT MILLING, P.C.C. PAVEMENT
  ITEM 760500 - TOTAL SURFACE HYDRODEMOLITION
- PROPOSED OVERLAY
  ITEM 625505 - UHPC OVERLAY
  ITEM 501502 - DIAMOND GRINDING P.C.C. PAVEMENT AND PRECAST PAVEMENT

NOTES:

1. FOR REMOVAL DETAILS, SEE DWGS. PN-03, SR-01 AND SR-02.

N:\37122-003\C40\Bridge\BR1-600_SC03.dgn
7/31/2019 4:18:22 PM

ADDENDA / REVISIONS		SCALE AS NOTED	REHABILITATION OF BRIDGES 1-600, 1-601, AND 1-604, SR 2 AND SR 141 INTERCHANGE	CONTRACT T201707403	BRIDGE NO. 1 600	SEQUENCE OF CONSTRUCTION – 3	SC–03
				COUNTY NEW CASTLE	DESIGNED BY: ZMG		SECTION WRA
					CHECKED BY: WAG		SHEET NO. 26

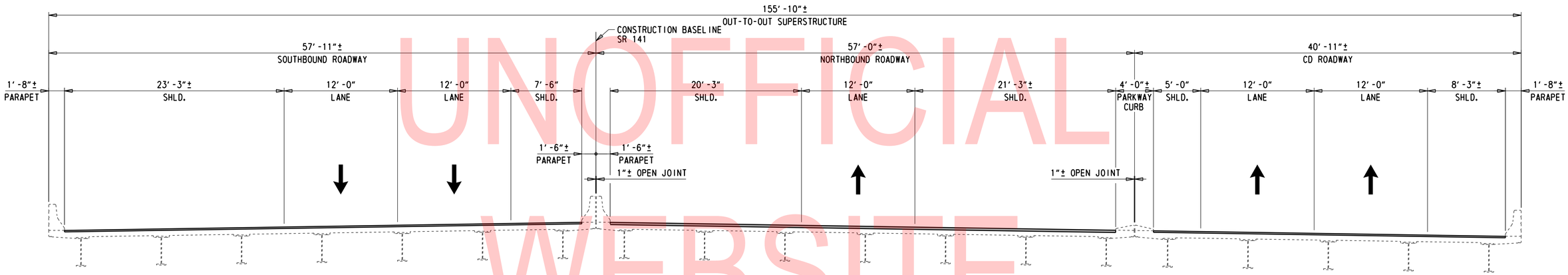

COMPLETED TYPICAL SECTION

3/16" = 1'-0"

UNOFFICIAL WEBSITE COPY

LEGEND

PROPOSED OVERLAY
ITEM 625505 - UHPC OVERLAY
ITEM 501502 - DIAMOND GRINDING P.C.C. PAVEMENT AND PRECAST PAVEMENT

N:\32122-002\C400\Bridge\BR1-600_SC04.dgn
7/31/2019 4:18:23 PM

ADDENDA / REVISIONS		SCALE AS NOTED	REHABILITATION OF BRIDGES 1-600, 1-601, AND 1-604, SR 2 AND SR 141 INTERCHANGE	CONTRACT T201707403	BRIDGE NO. 1 600	SEQUENCE OF CONSTRUCTION - 4	SC-04
				COUNTY NEW CASTLE	DESIGNED BY: ZMG		SECTION WRA
					CHECKED BY: WAG		SHEET NO. 27

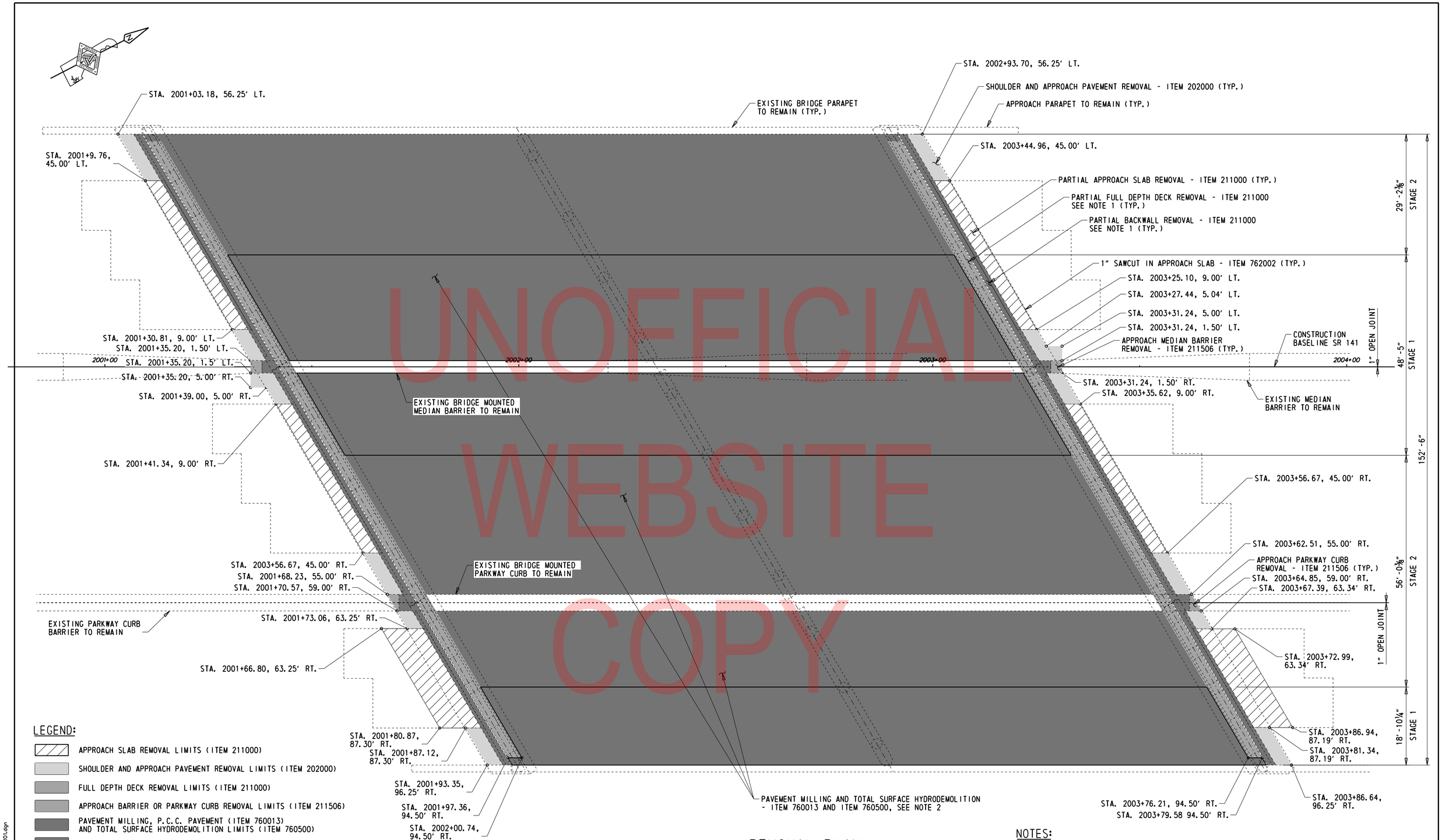

UNOFFICIAL WEBSITE COPY

REMOVAL PLAN

1/32" = 1'-0"

NOTES:

1. FOR DECK AND BACKWALL REMOVAL LIMITS AND DETAILS, SEE DWGS. DK-06, DK-07. FOR PARAPET REMOVAL LIMITS AND DETAILS SEE DWGS. DK-09 AND DK-10.
2. FOR PAVEMENT MILLING AND TOTAL SURFACE HYDRODEMOLITION REMOVAL LIMITS AND DETAILS, SEE DWGS. PN-03, SC-02, SC-03, AND SR-02.

ADDENDA / REVISIONS	SCALE AS NOTED	REHABILITATION OF BRIDGES 1-600, 1-601, AND 1-604, SR 2 AND SR 141 INTERCHANGE	CONTRACT T201707403	BRIDGE NO. 1 600	REMOVAL PLAN	SR-01 SECTION WRA
			COUNTY NEW CASTLE	DESIGNED BY: ZMG		SHEET NO. 28
				CHECKED BY: WAG		

N:\33122-002\CADD\Bridge\BR1-600_SR01.dgn
7/31/2019 4:18:24 PM

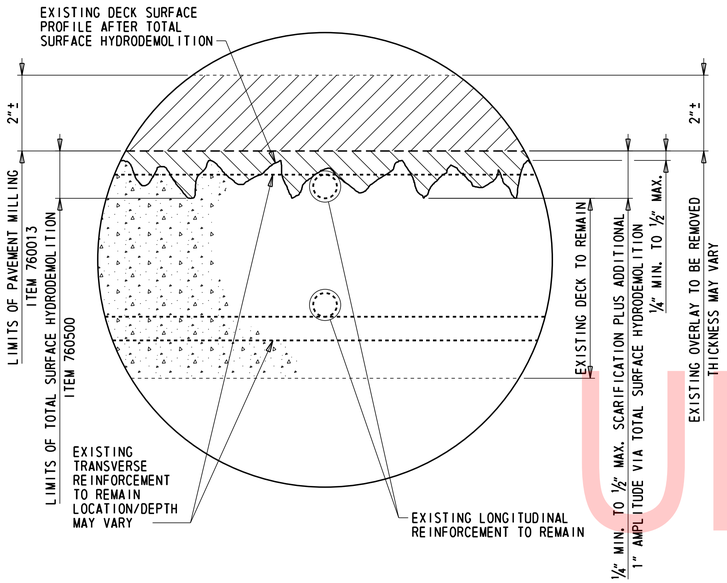

TOTAL SURFACE HYDRODEMOLITION DETAIL

6" = 1'-0"

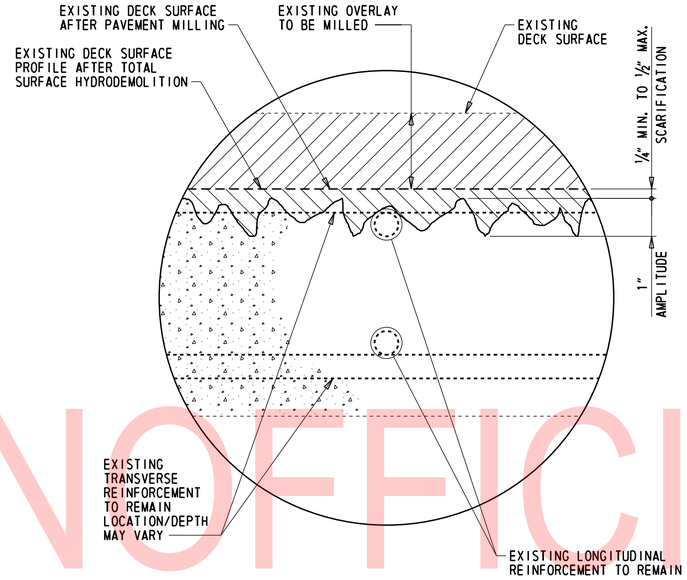

HYDRODEMOLITION AMPLITUDE DETAIL

6" = 1'-0"

UNOFFICIAL WEBSITE COPY

N:\32122-002\C400\Bridge\BR1-600_SR02.dgn
7/31/2019 4:18:25 PM

ADDENDA / REVISIONS	

SCALE AS NOTED

REHABILITATION OF BRIDGES
1-600, 1-601, AND 1-604,
SR 2 AND SR 141 INTERCHANGE

CONTRACT	BRIDGE NO.	1 600
T201707403	DESIGNED BY: ZMG	
COUNTY	CHECKED BY: WAG	
NEW CASTLE		

DEMOLITION DETAILS

SR-02
SECTION
WRA
SHEET NO.
29

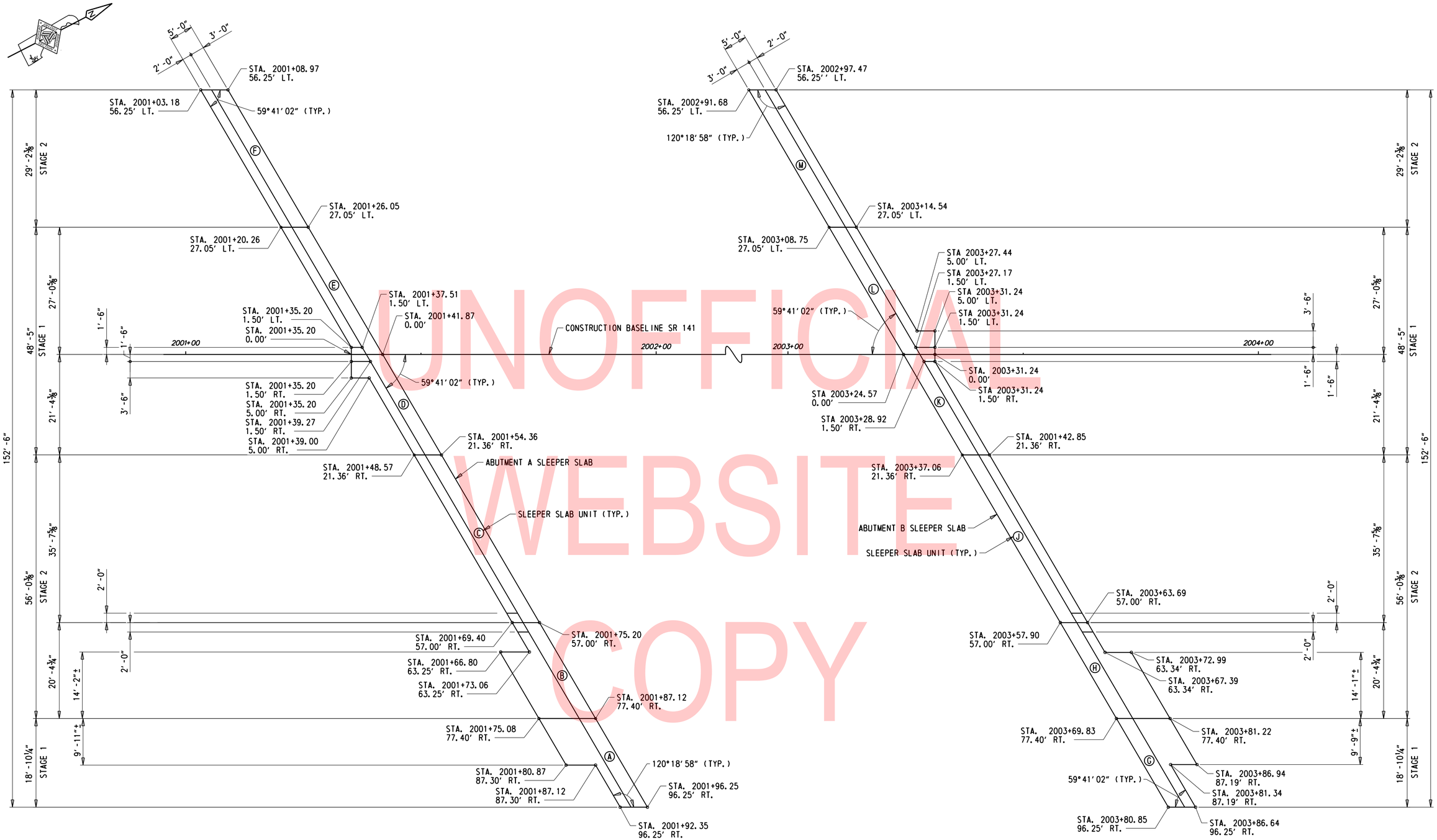

UNOFFICIAL WEBSITE COPY

SLEEPER SLAB LAYOUT PLAN

1" = 10'

NOTES:

1. FOR SLEEPER SLAB UNIT REINFORCEMENT DETAILS SEE DWGS. AS-02 THROUGH AS-13.

N:\32122-002\CADD\Bridge\BR1-600_AS01.dgn
8/12/2019 9:42:18 AM

ADDENDA / REVISIONS	SCALE AS NOTED	REHABILITATION OF BRIDGES 1-600, 1-601, AND 1-604, SR 2 AND SR 141 INTERCHANGE	CONTRACT T201707403	BRIDGE NO. 1 600	SLEEPER SLAB LAYOUT PLAN	AS-01
			COUNTY NEW CASTLE	DESIGNED BY: ZMG		SECTION WRA
				CHECKED BY: WAG		SHEET NO. 30

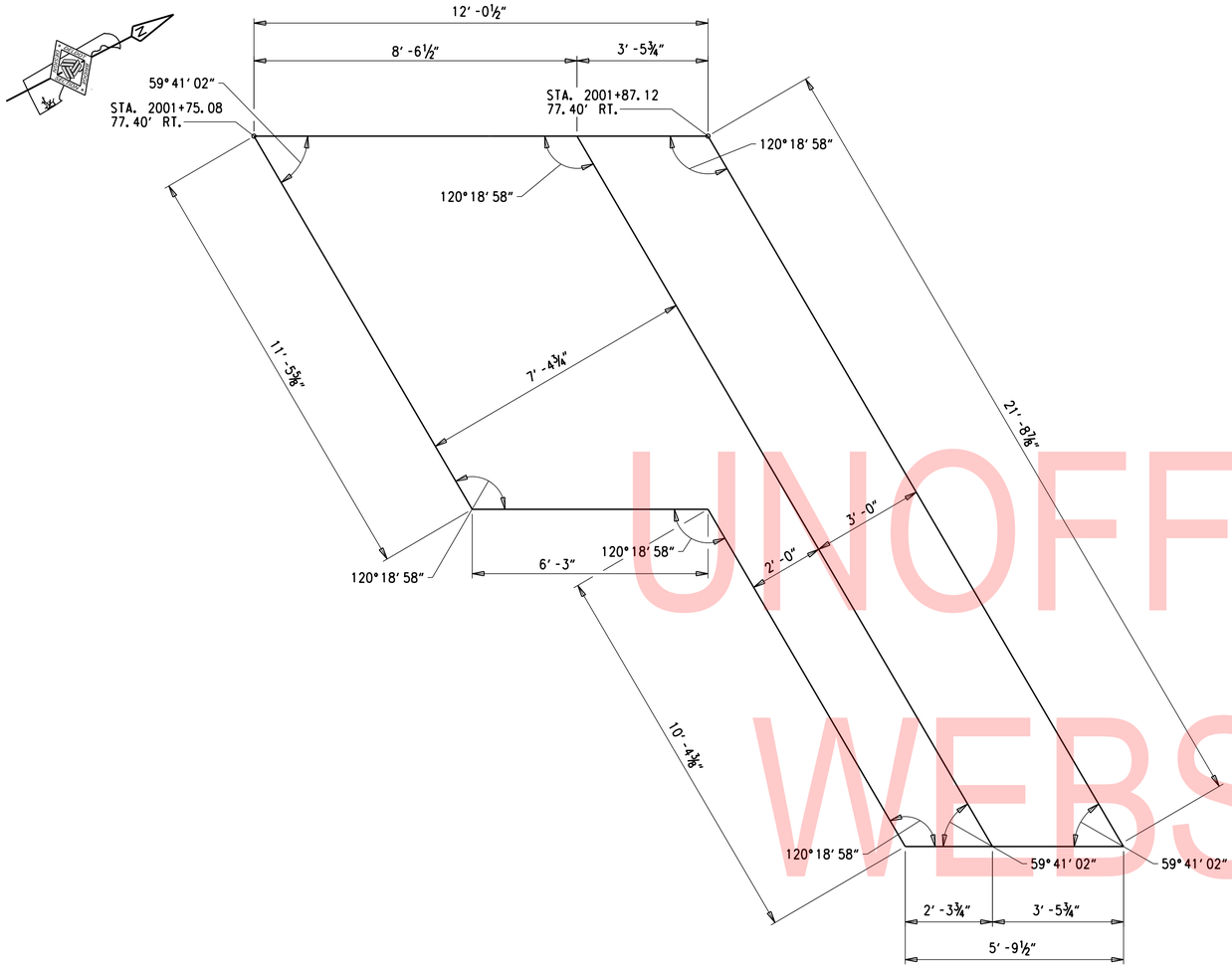

SLEEPER SLAB A - PLAN

½″ = 1′-0″

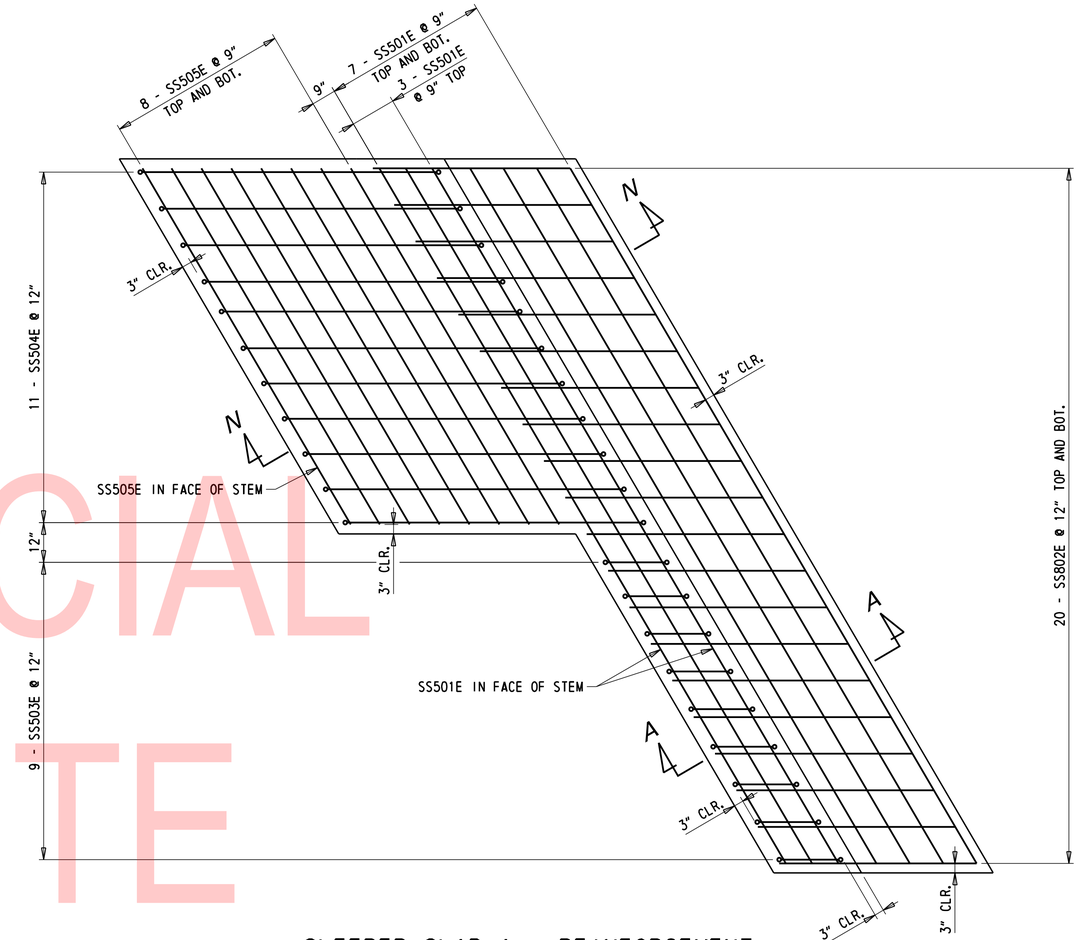

SLEEPER SLAB A - REINFORCEMENT

½″ = 1′-0″

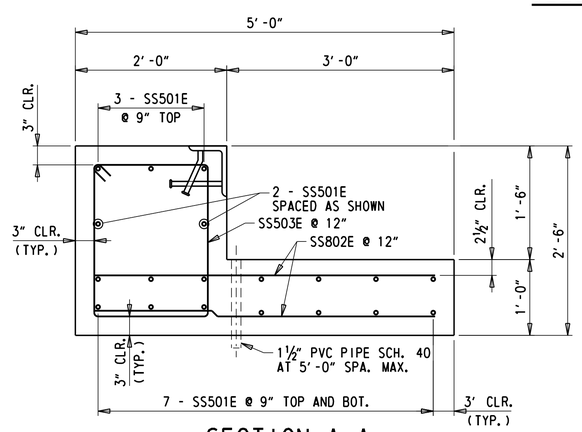

SECTION A-A

1″ = 1′-0″

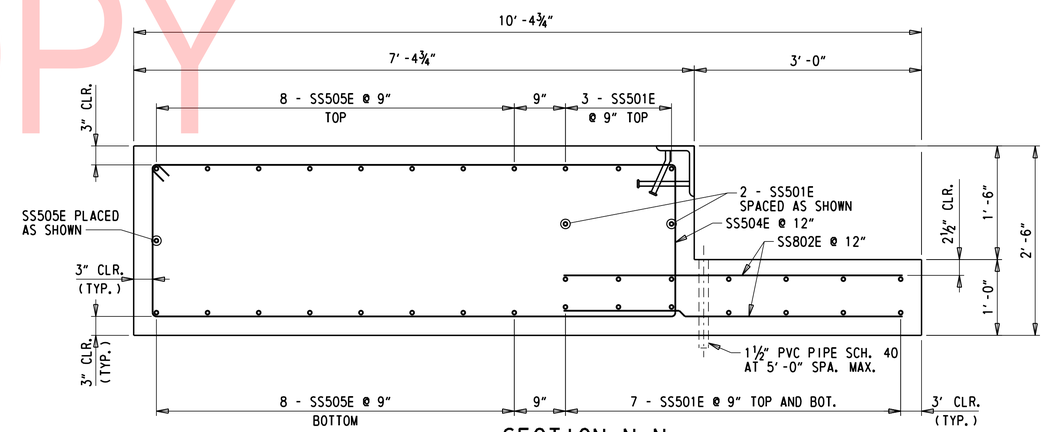

SECTION N-N

1″ = 1′-0″

UNOFFICIAL WEBSITE COPY

N:\32122-002\CADD\Bridge\BR1-600_AS02.dgn
7/31/2019 4:18:26 PM

ADDENDA / REVISIONS	SCALE AS NOTED	REHABILITATION OF BRIDGES 1-600, 1-601, AND 1-604, SR 2 AND SR 141 INTERCHANGE	CONTRACT T201707403	BRIDGE NO. 1 600	SLEEPER SLAB UNIT A PLAN AND REINFORCEMENT	AS-02
			COUNTY NEW CASTLE	DESIGNED BY: ZMG		SECTION WRA
				CHECKED BY: WAG		SHEET NO. 31

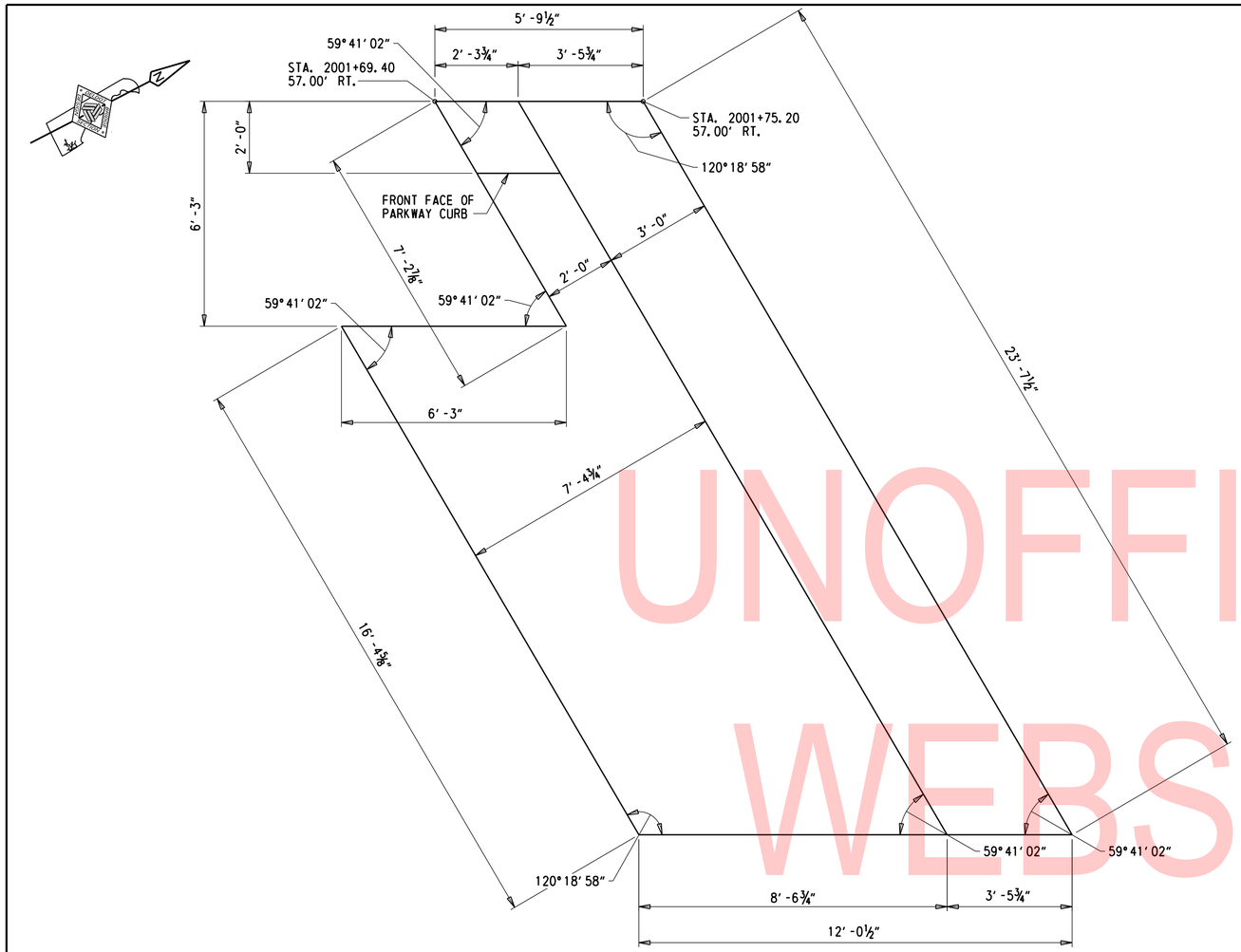

SLEEPER SLAB B - PLAN

½" = 1' -0"

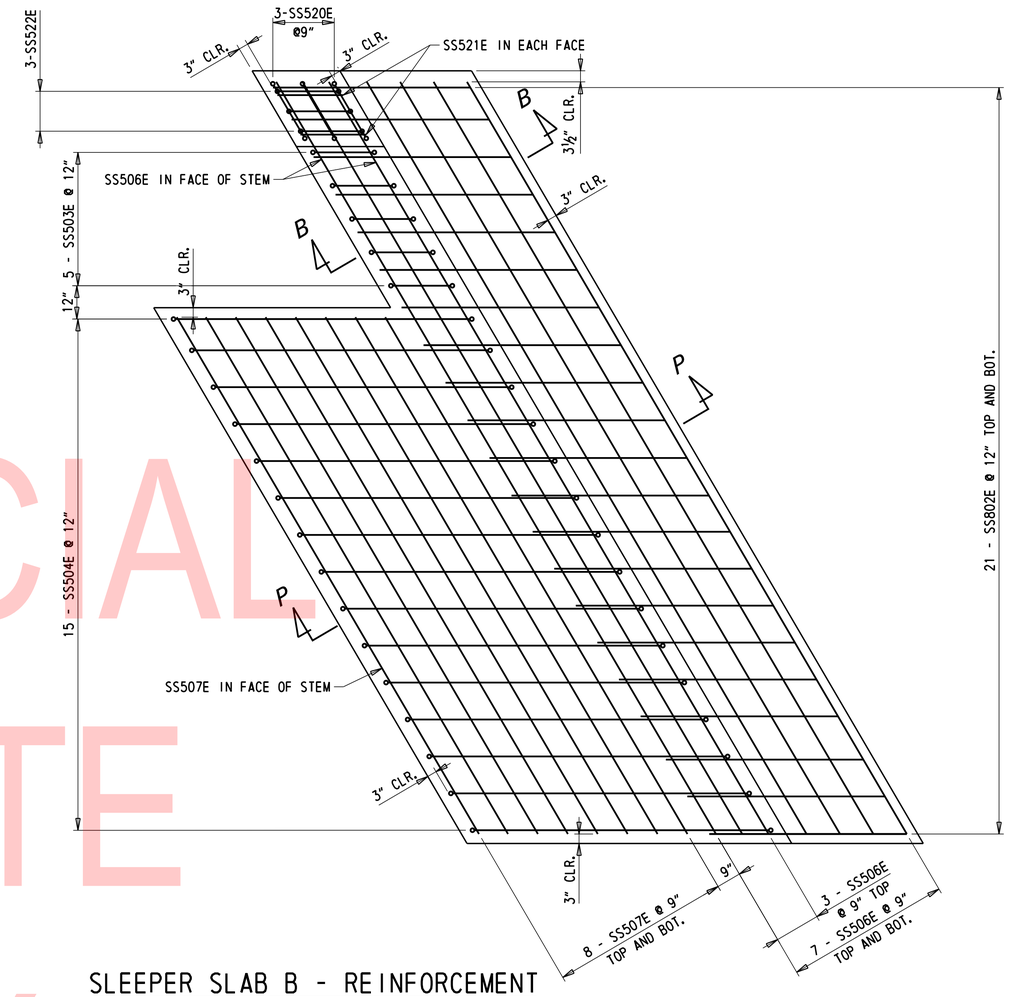

SLEEPER SLAB B - REINFORCEMENT

½" = 1' -0"

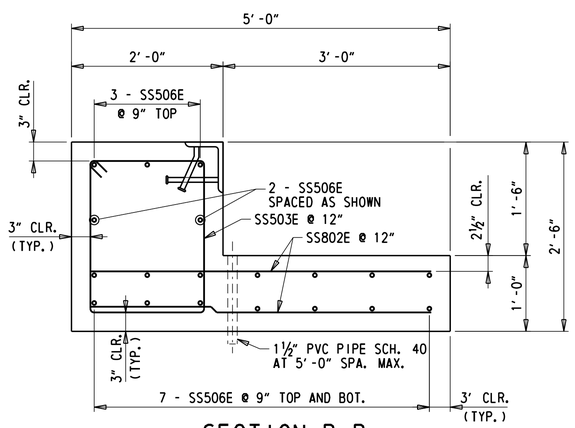

SECTION B-B

1" = 1' -0"

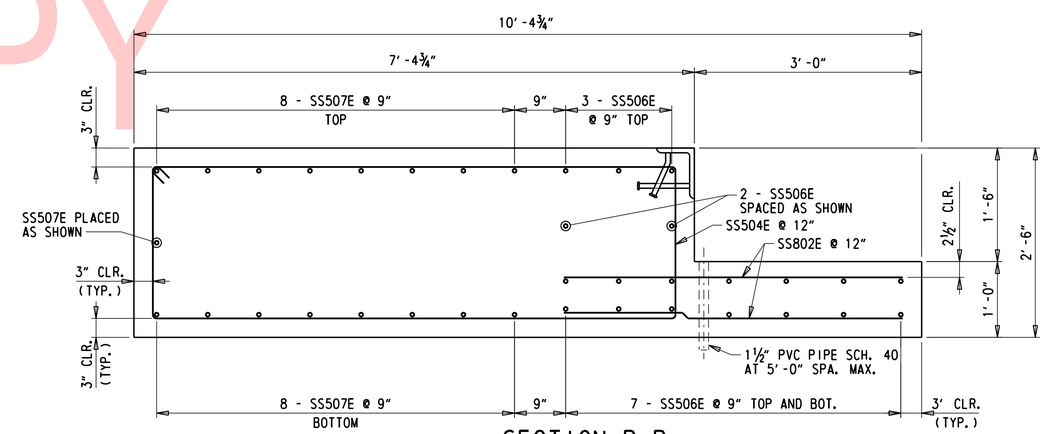

SECTION P-P

1" = 1' -0"

UNOFFICIAL WEBSITE COPY

N:\32122-002\CADD\Bridge\BR1-600_AS03.dgn
7/31/2019 4:18:27 PM

ADDENDA / REVISIONS	SCALE AS NOTED	REHABILITATION OF BRIDGES 1-600, 1-601, AND 1-604, SR 2 AND SR 141 INTERCHANGE	CONTRACT T201707403	BRIDGE NO. 1 600	SLEEPER SLAB UNIT B PLAN AND REINFORCEMENT	AS-03
			COUNTY NEW CASTLE	DESIGNED BY: ZMG		SECTION WRA
				CHECKED BY: WAG		SHEET NO. 32

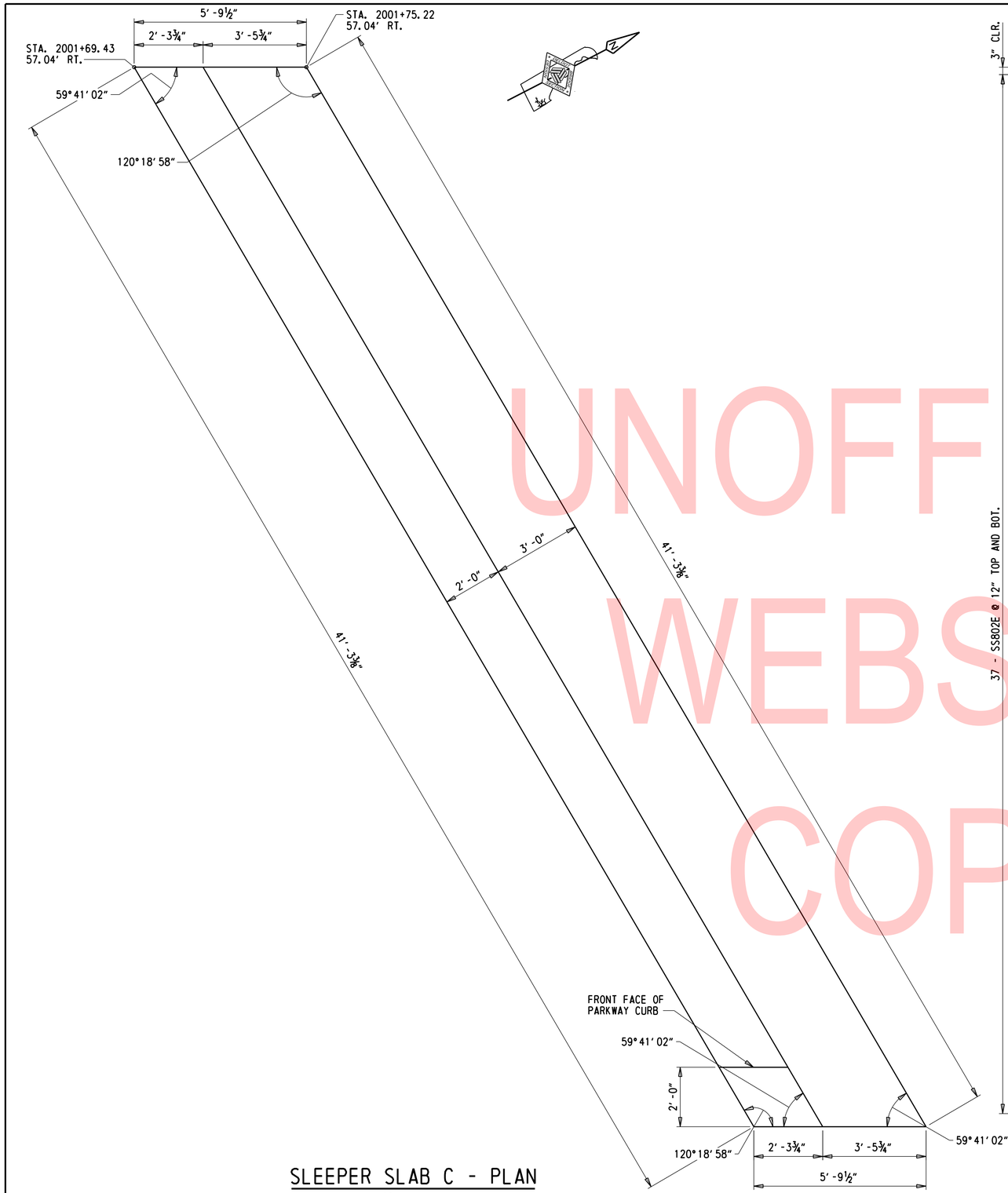

SLEEPER SLAB C - PLAN

½" = 1' -0"

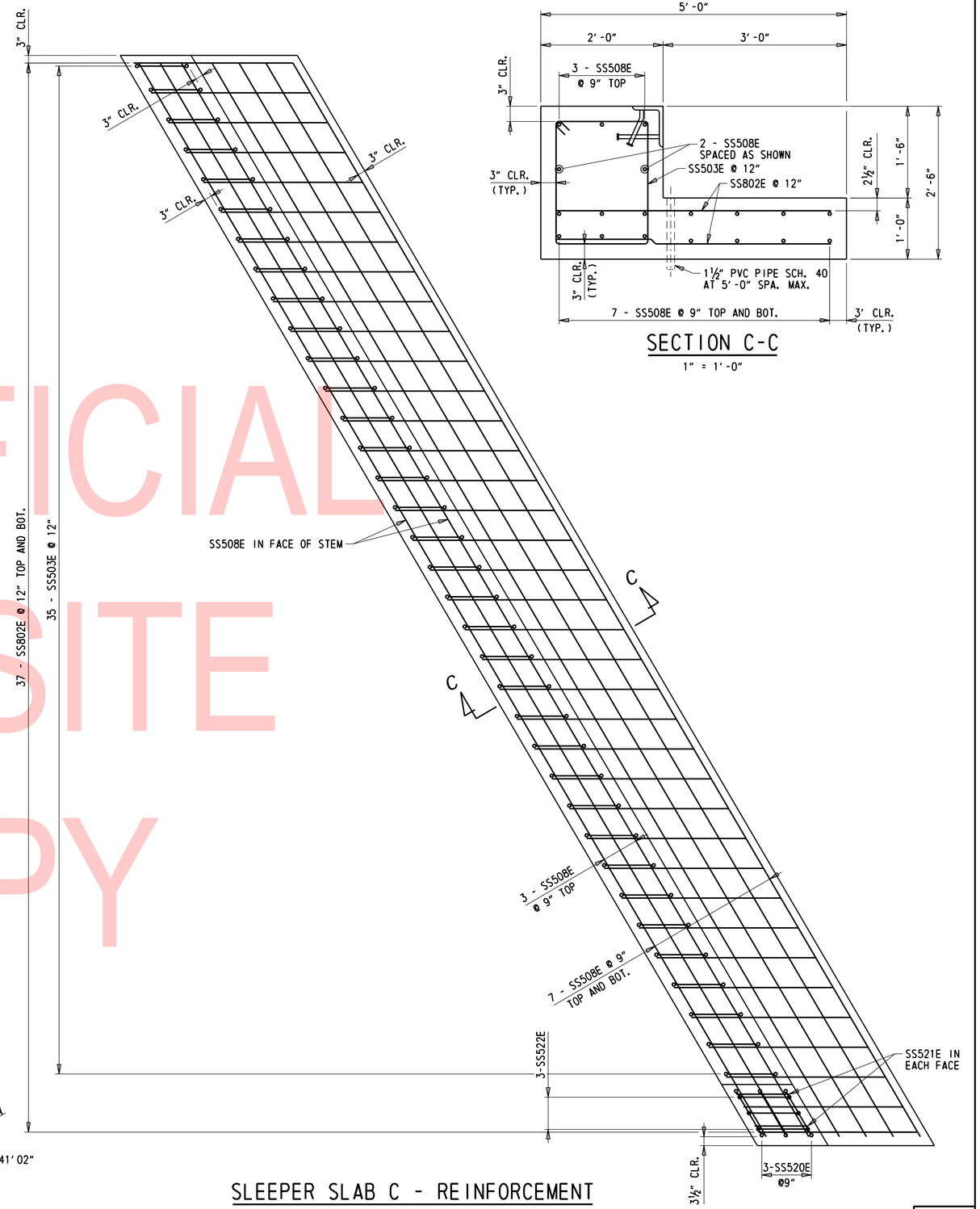

SLEEPER SLAB C - REINFORCEMENT

½" = 1' -0"

SECTION C-C

1" = 1' -0"

UNOFFICIAL WEBSITE COPY

N:\3222-002\CADD\Bridge\BR1-600_AS04.dgn
7/31/2019 4:18:29 PM

ADDENDA / REVISIONS	SCALE AS NOTED	REHABILITATION OF BRIDGES 1-600, 1-601, AND 1-604, SR 2 AND SR 141 INTERCHANGE	CONTRACT T201707403	BRIDGE NO. 1 600	SLEEPER SLAB UNIT C PLAN AND REINFORCEMENT	AS-04
			COUNTY NEW CASTLE	DESIGNED BY: ZMG		SECTION WRA
				CHECKED BY: WAG		SHEET NO. 33

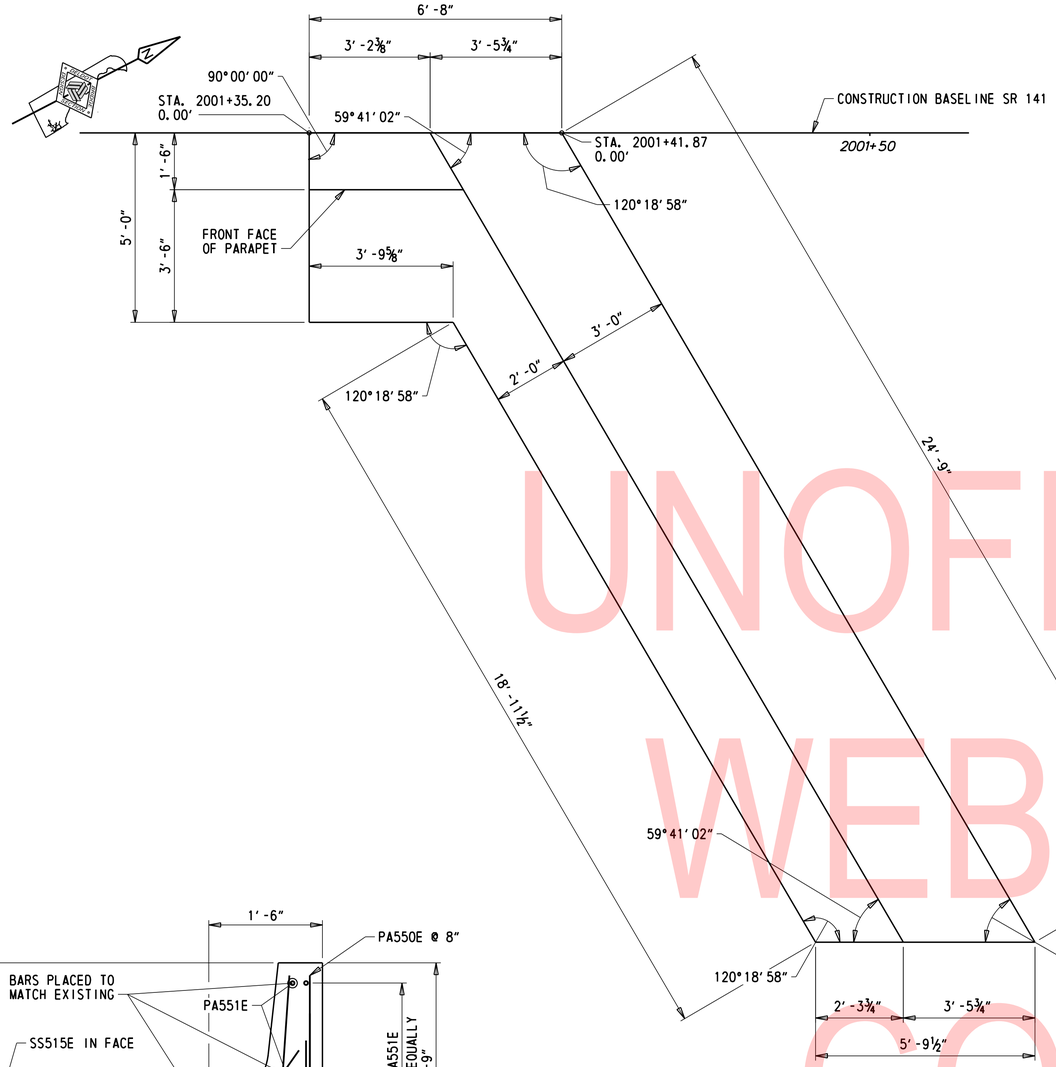

SLEEPER SLAB D - PLAN

½″ = 1′-0″

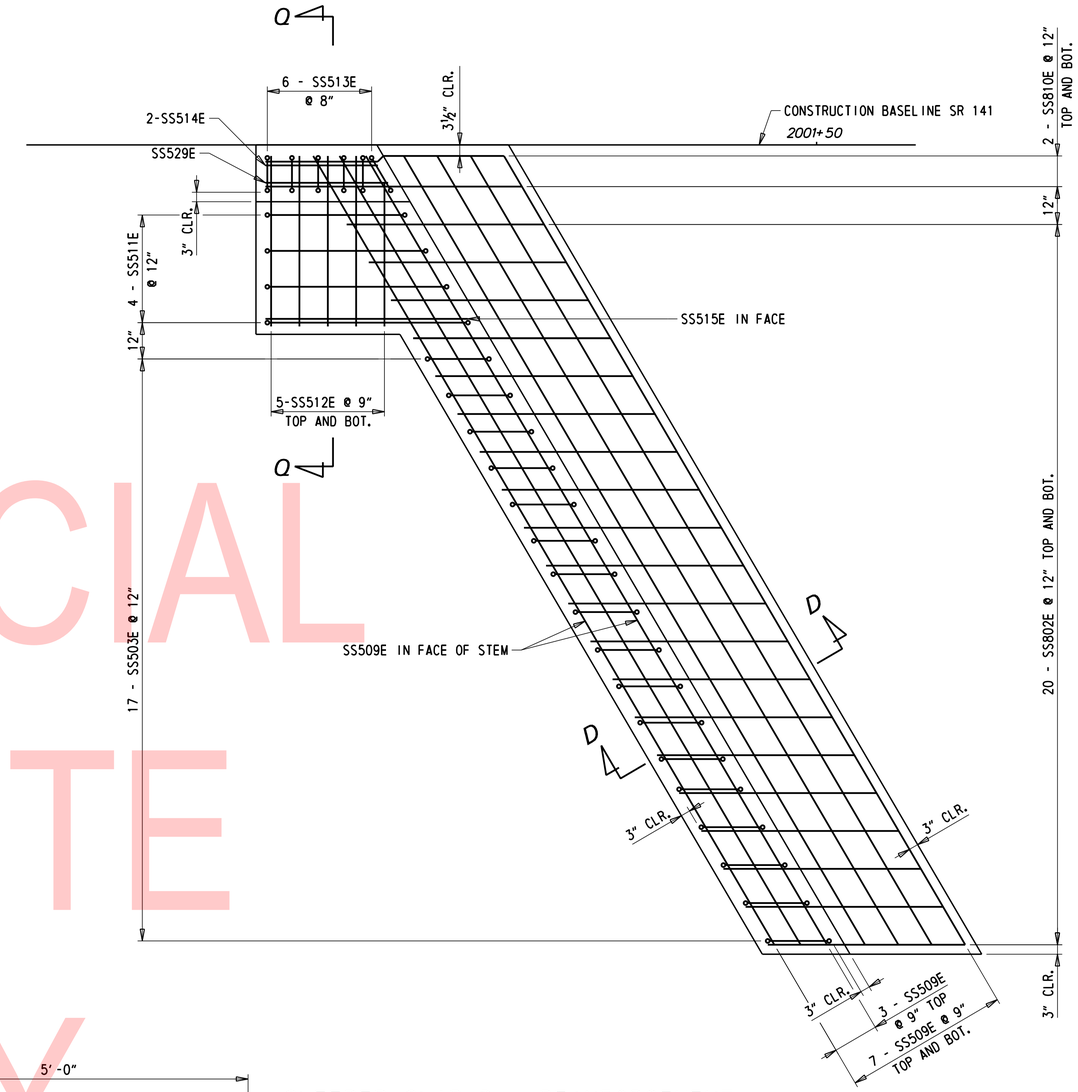

SLEEPER SLAB D - REINFORCEMENT

½″ = 1′-0″

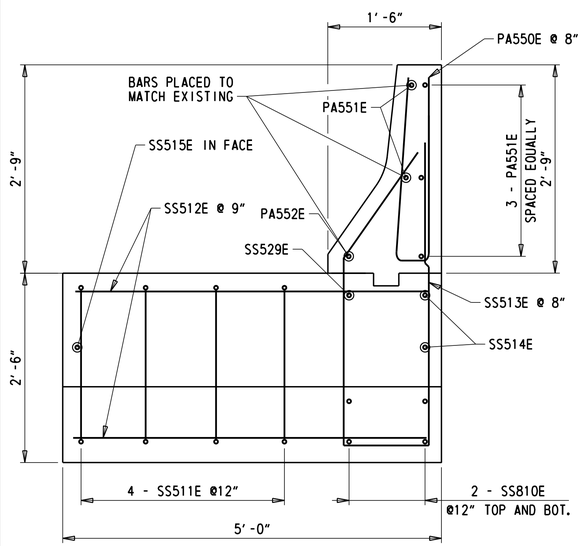

SECTION Q-Q

1″ = 1′-0″

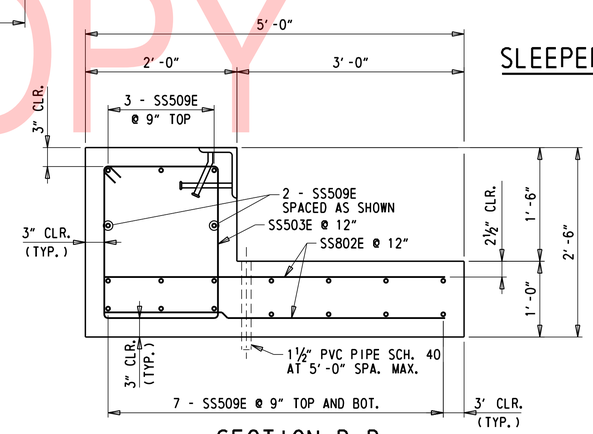

SECTION D-D

1″ = 1′-0″

UNOFFICIAL WEBSITE COPY

N:\32122-021\CADD\Bridge\BR1-600_AS05.dgn
7/31/2019 4:18:30 PM

ADDENDA / REVISIONS	SCALE AS NOTED	REHABILITATION OF BRIDGES 1-600, 1-601, AND 1-604, SR 2 AND SR 141 INTERCHANGE	CONTRACT T201707403	BRIDGE NO. 1 600	SLEEPER SLAB UNIT D PLAN AND REINFORCEMENT	AS-05 SECTION WRA
			COUNTY NEW CASTLE	DESIGNED BY: ZMG		SHEET NO. 34
				CHECKED BY: WAG		

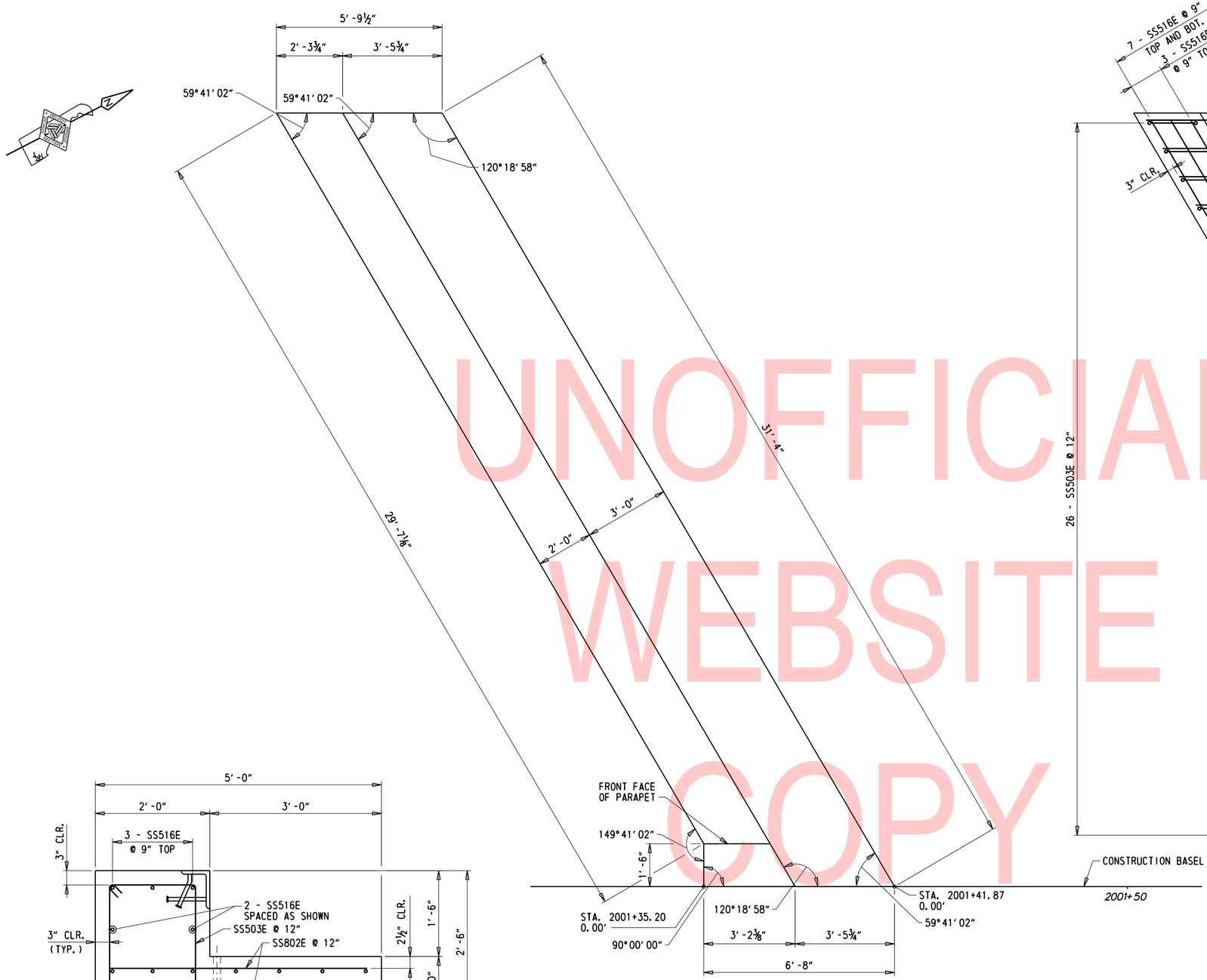

SLEEPER SLAB E - PLAN

½" = 1' -0"

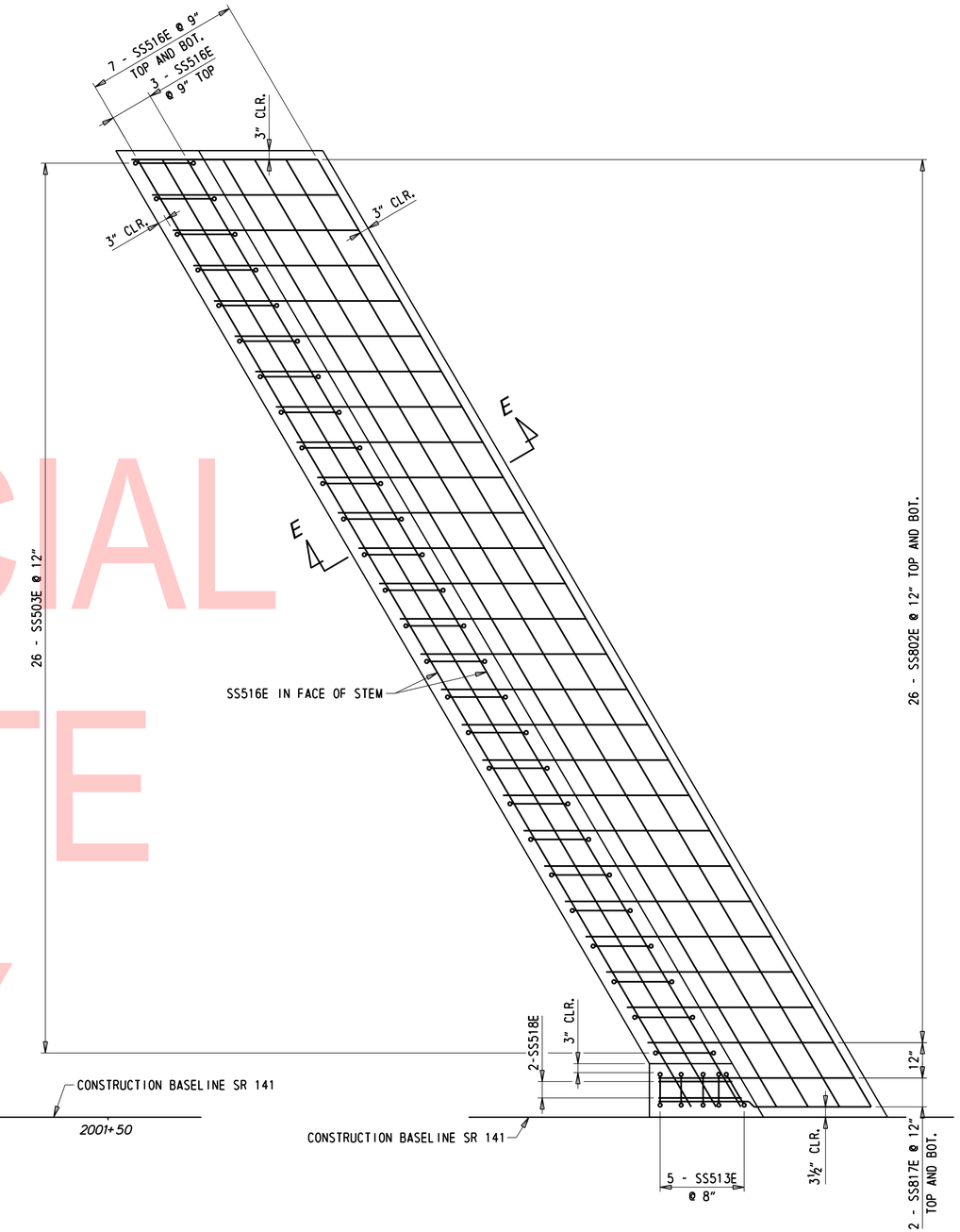

SLEEPER SLAB E - REINFORCEMENT

½" = 1' -0"

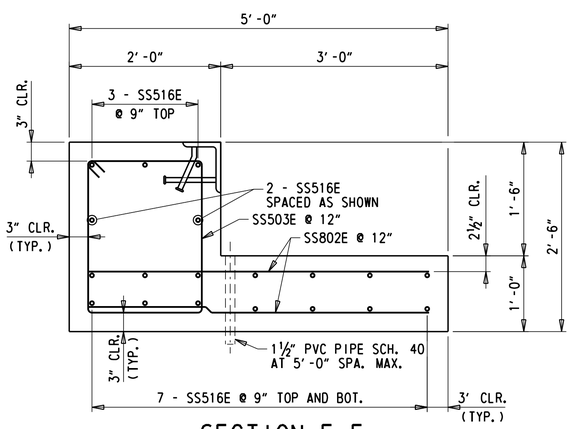

SECTION E-E

1" = 1' -0"

UNOFFICIAL WEBSITE COPY

N:\37122-003\C40D\Bridge\BR1-600_AS06.dgn
7/31/2019 4:18:50 PM

ADDENDA / REVISIONS	SCALE AS NOTED	REHABILITATION OF BRIDGES 1-600, 1-601, AND 1-604, SR 2 AND SR 141 INTERCHANGE	CONTRACT T201707403	BRIDGE NO. 1 600	SLEEPER SLAB UNIT E PLAN AND REINFORCEMENT	AS-06
			COUNTY NEW CASTLE	DESIGNED BY: ZMG		SECTION WRA
				CHECKED BY: WAG		SHEET NO. 35

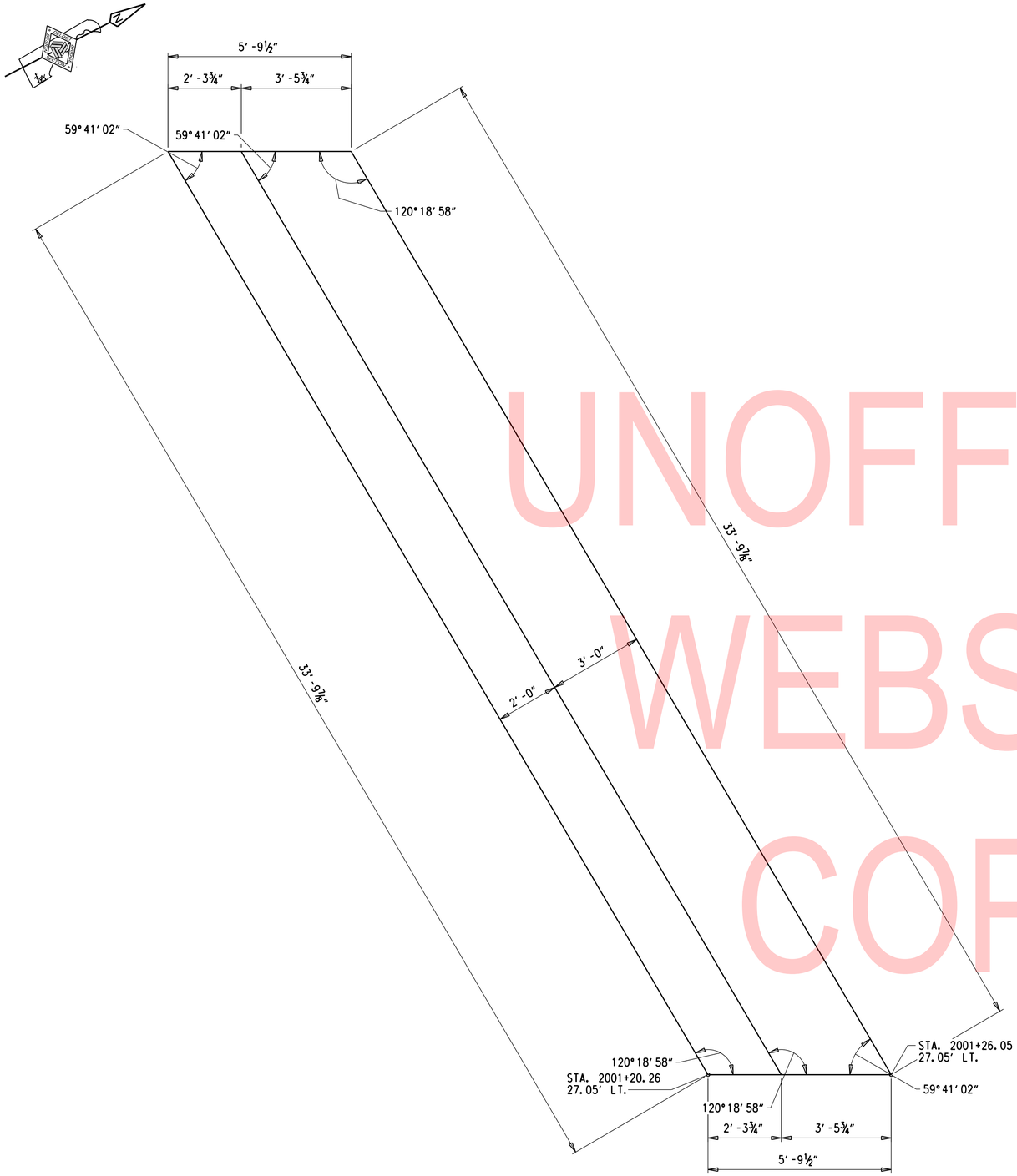

SLEEPER SLAB F - PLAN

½" = 1' -0"

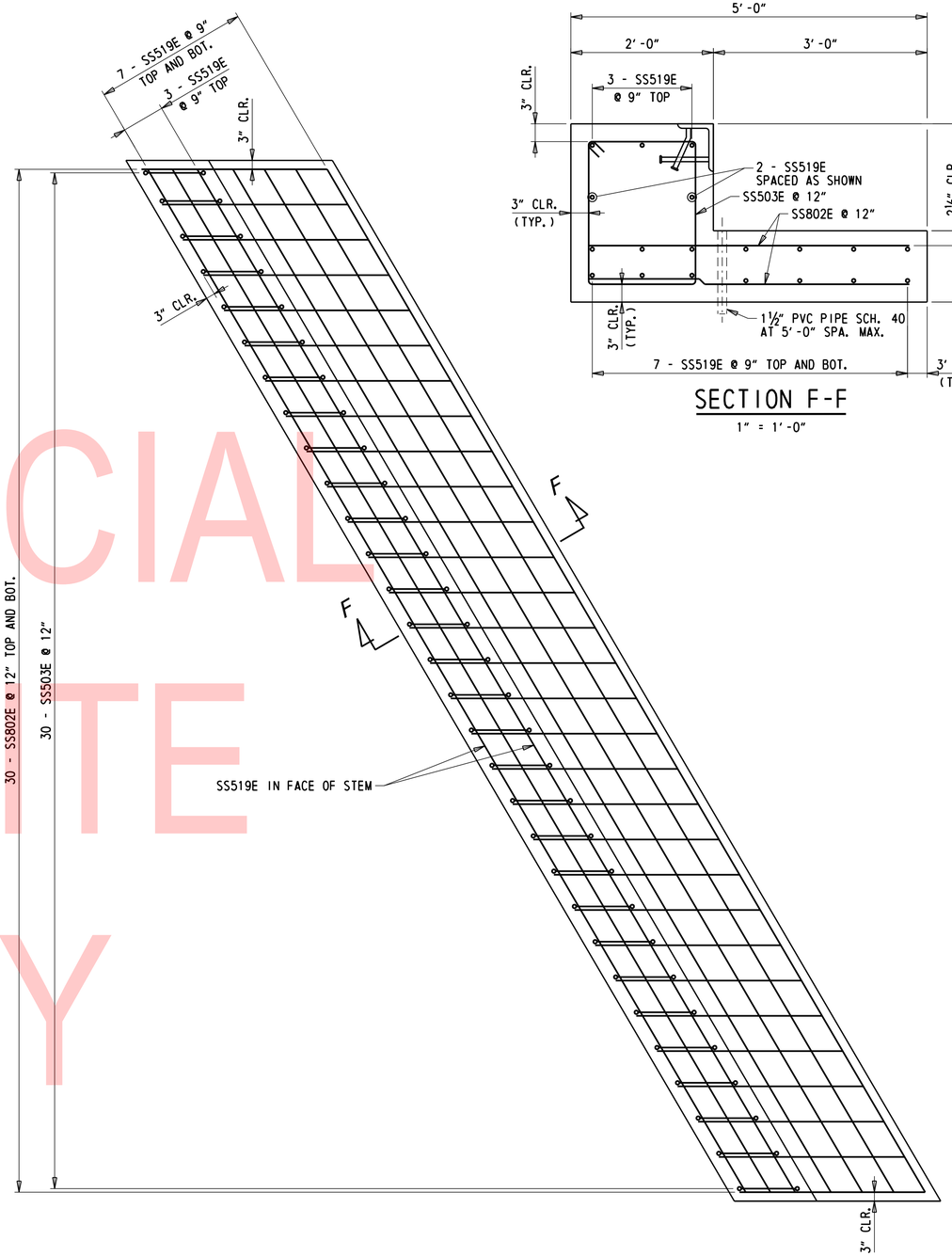

SLEEPER SLAB F - REINFORCEMENT

½" = 1' -0"

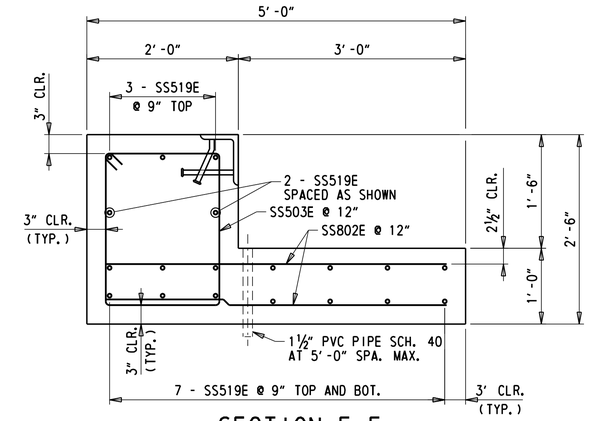

SECTION F-F

1" = 1' -0"

UNOFFICIAL WEBSITE COPY

N:\32122-002\CADD\Bridge\BR1-600_AS07.dgn
7/31/2019 4:18:31 PM

ADDENDA / REVISIONS	SCALE AS NOTED	REHABILITATION OF BRIDGES 1-600, 1-601, AND 1-604, SR 2 AND SR 141 INTERCHANGE	CONTRACT T201707403	BRIDGE NO. 1 600	SLEEPER SLAB UNIT F PLAN AND REINFORCEMENT	AS-07
			COUNTY NEW CASTLE	DESIGNED BY: ZMG		SECTION WRA
				CHECKED BY: WAG		SHEET NO. 36

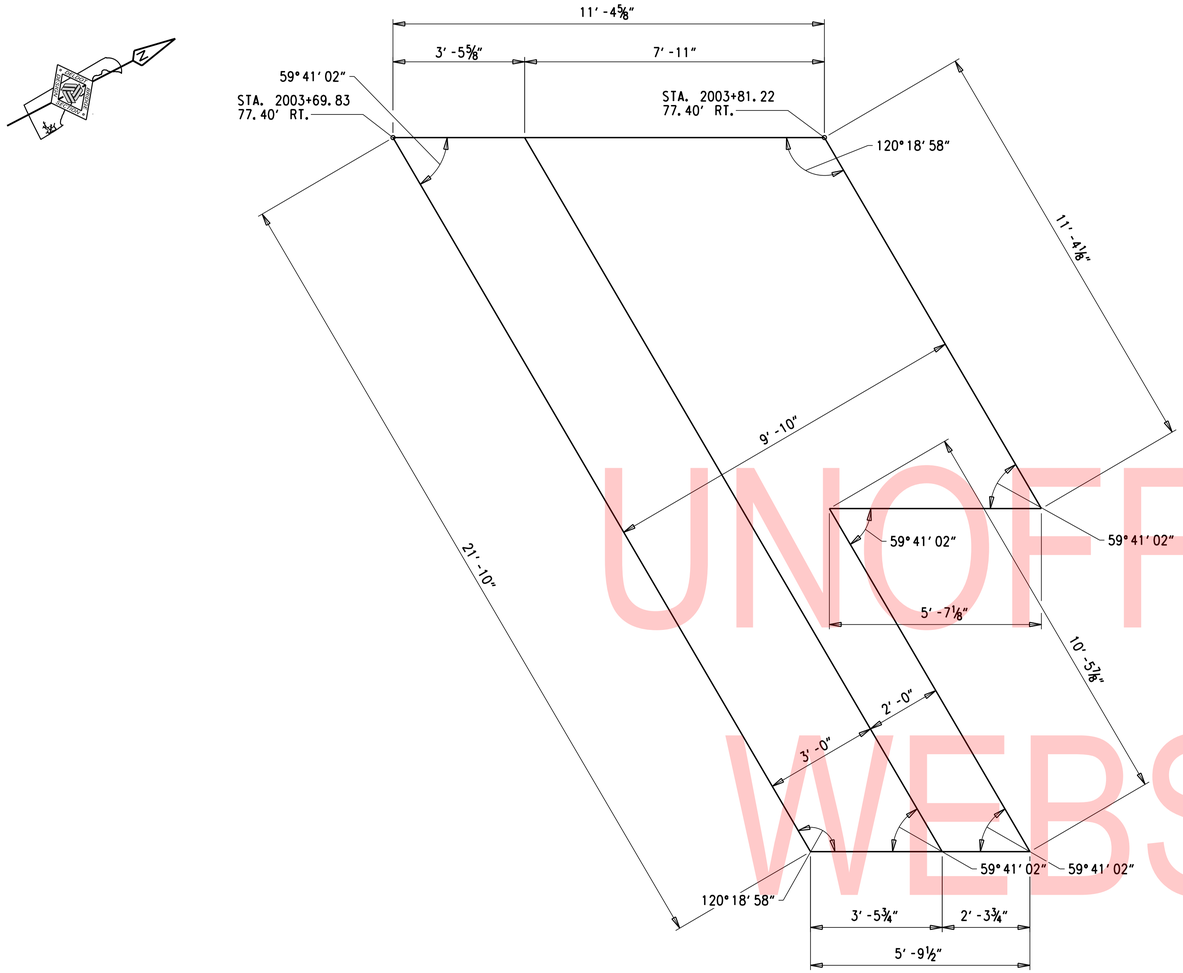

SLEEPER SLAB G - PLAN

½" = 1'-0"

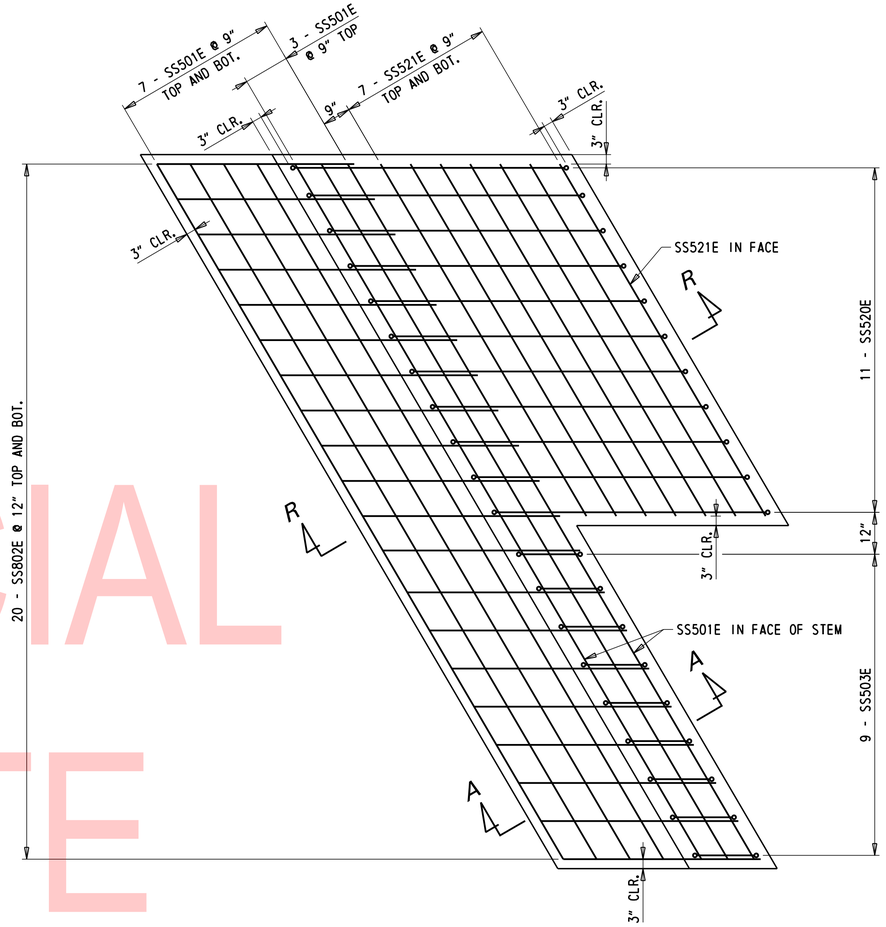

SLEEPER SLAB G - REINFORCEMENT

½" = 1'-0"

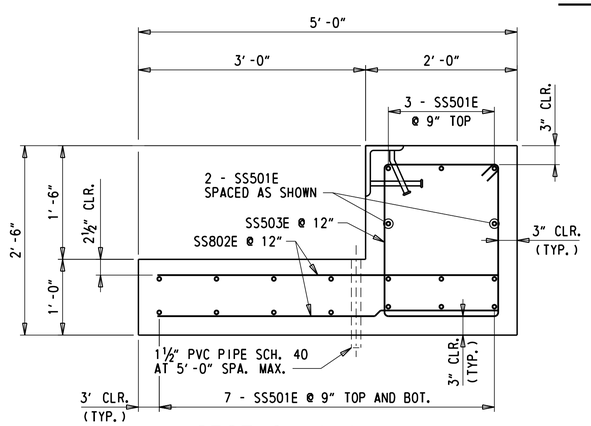

SECTION A-A

1" = 1'-0"

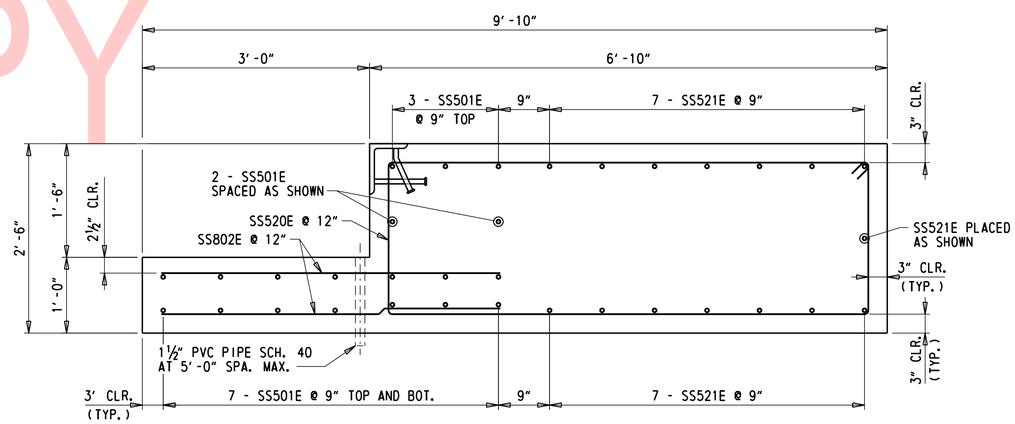

SECTION R-R

1" = 1'-0"

UNOFFICIAL WEBSITE COPY

N:\37122-002\C400\Bridge\BR1-600_AS08.dgn
7/31/2019 4:18:32 PM

ADDENDA / REVISIONS	SCALE AS NOTED	REHABILITATION OF BRIDGES 1-600, 1-601, AND 1-604, SR 2 AND SR 141 INTERCHANGE	CONTRACT T201707403	BRIDGE NO. 1 600	SLEEPER SLAB UNIT G PLAN AND REINFORCEMENT	AS-08
			COUNTY NEW CASTLE	DESIGNED BY: ZMG		SECTION WRA
				CHECKED BY: WAG		SHEET NO. 37

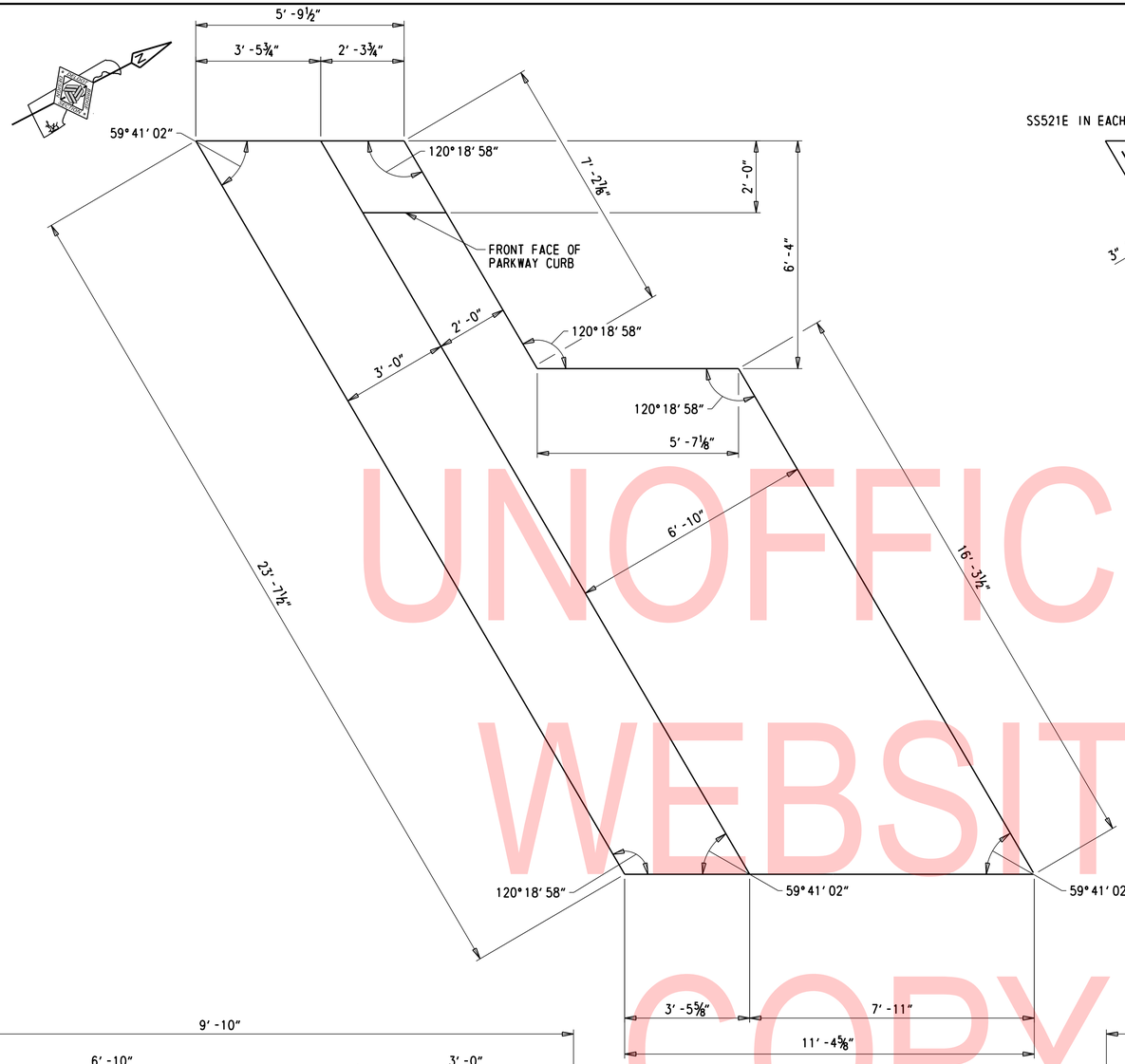

SLEEPER SLAB H - PLAN

½" = 1' -0"

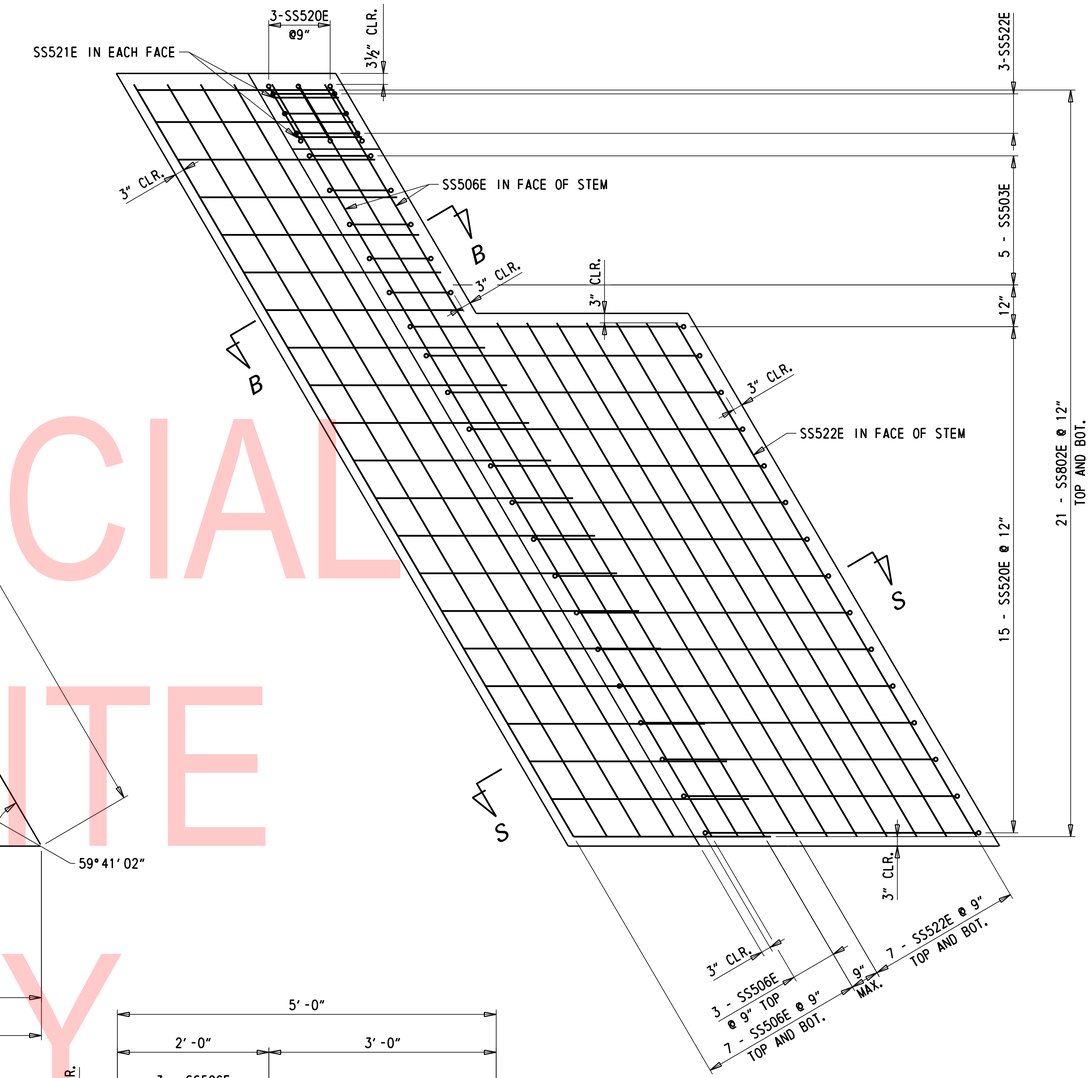

SLEEPER SLAB H - REINFORCEMENT

½" = 1' -0"

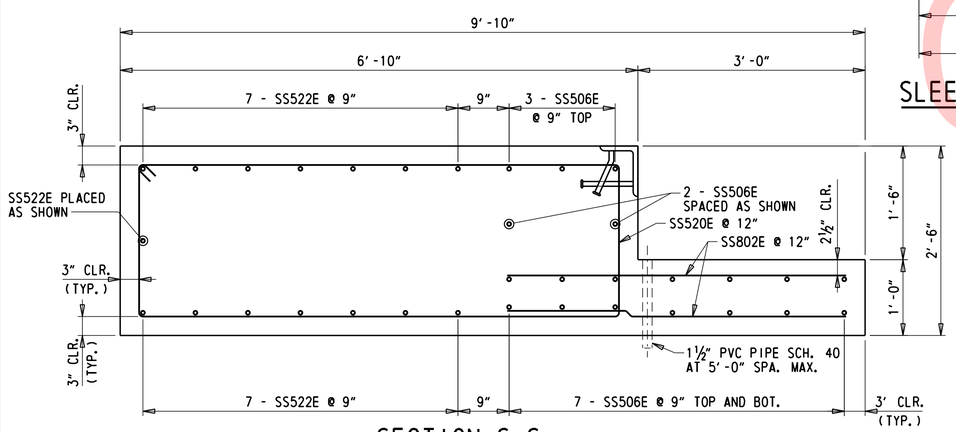

SECTION S-S

1" = 1' -0"

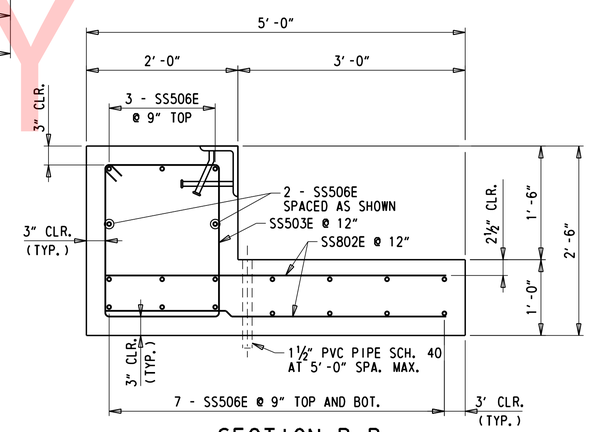

SECTION B-B

1" = 1' -0"

UNOFFICIAL WEBSITE COPY

N:\32122-003\CADD\Bridge\BR1-600_AS09.dgn
7/31/2019 4:18:33 PM

ADDENDA / REVISIONS	SCALE AS NOTED	REHABILITATION OF BRIDGES 1-600, 1-601, AND 1-604, SR 2 AND SR 141 INTERCHANGE	CONTRACT T201707403	BRIDGE NO. 1 600	SLEEPER SLAB UNIT H PLAN AND REINFORCEMENT	AS-09
			COUNTY NEW CASTLE	DESIGNED BY: ZMG		SECTION WRA
				CHECKED BY: WAG		SHEET NO. 38

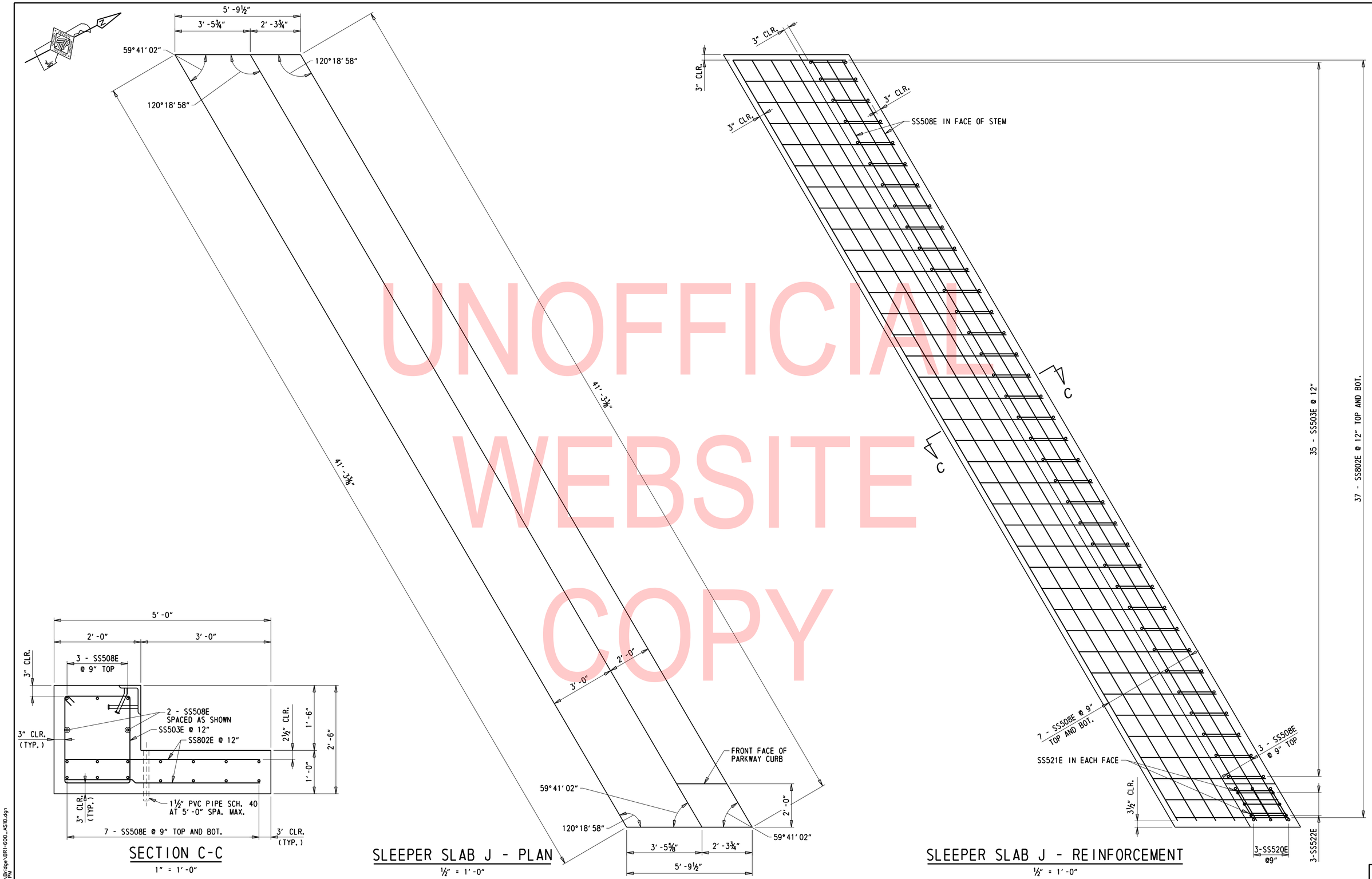

SECTION C-C

1" = 1' -0"

SLEEPER SLAB J - PLAN

½" = 1' -0"

SLEEPER SLAB J - REINFORCEMENT

½" = 1' -0"

UNOFFICIAL WEBSITE COPY

N:\32122-002\CADD\Bridge\BRI-600_AS10.dgn
7/31/2019 4:18:33 PM

ADDENDA / REVISIONS	SCALE AS NOTED	REHABILITATION OF BRIDGES 1-600, 1-601, AND 1-604, SR 2 AND SR 141 INTERCHANGE	CONTRACT T201707403	BRIDGE NO. 1 600	SLEEPER SLAB UNIT J PLAN AND REINFORCEMENT	AS-10
			COUNTY NEW CASTLE	DESIGNED BY: ZMG		SECTION WRA
				CHECKED BY: WAG		SHEET NO. 39

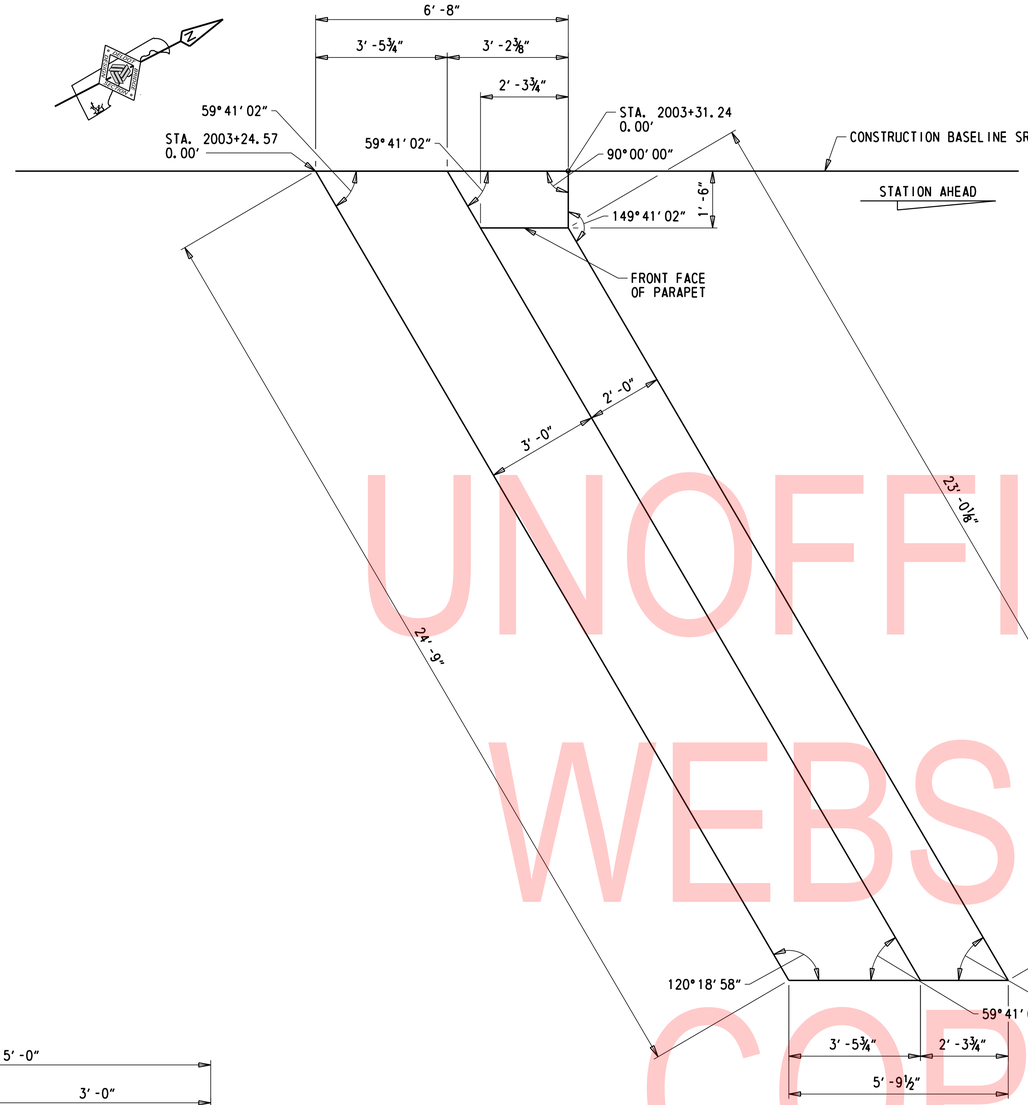

SLEEPER SLAB K - PLAN

½" = 1'-0"

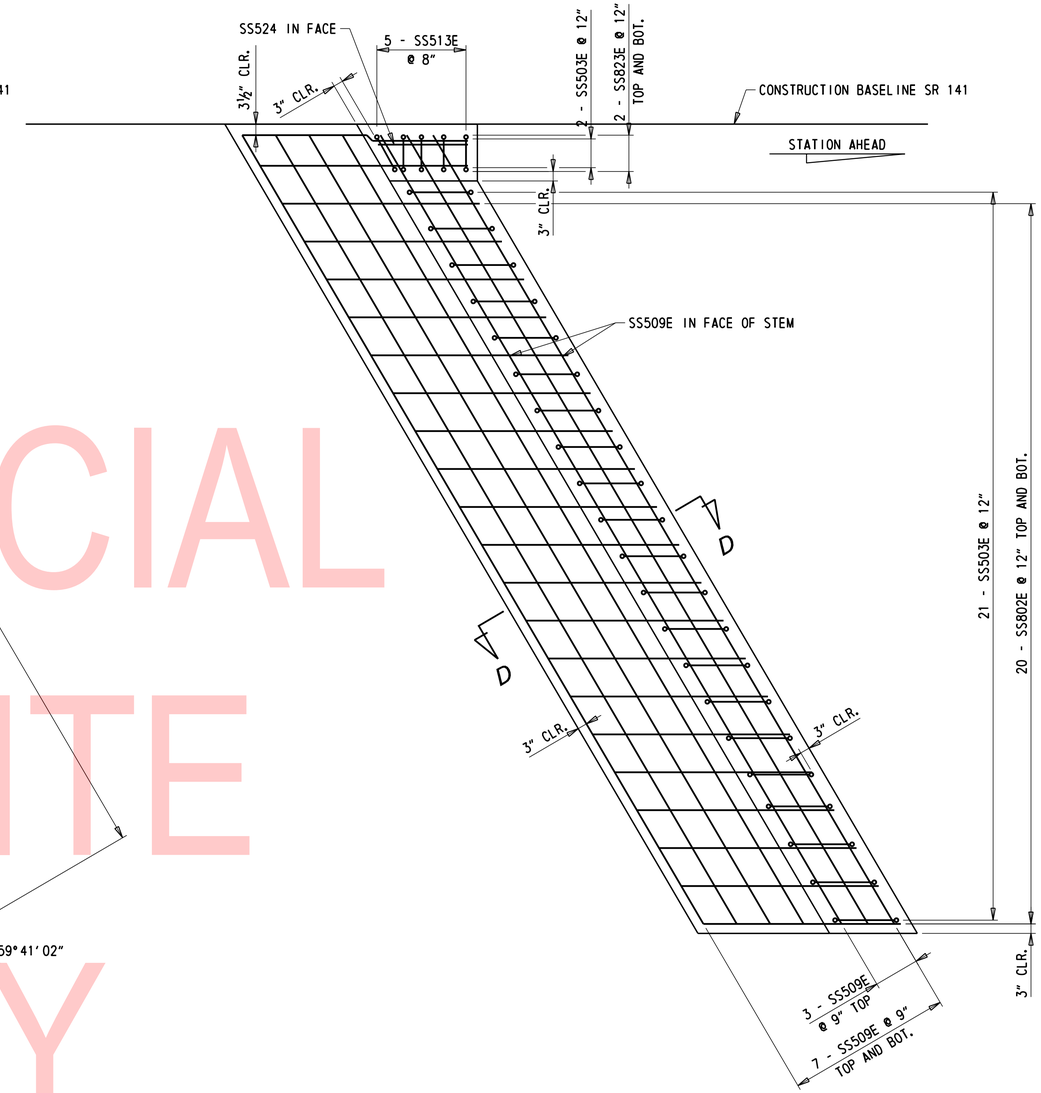

SLEEPER SLAB K - REINFORCEMENT

½" = 1'-0"

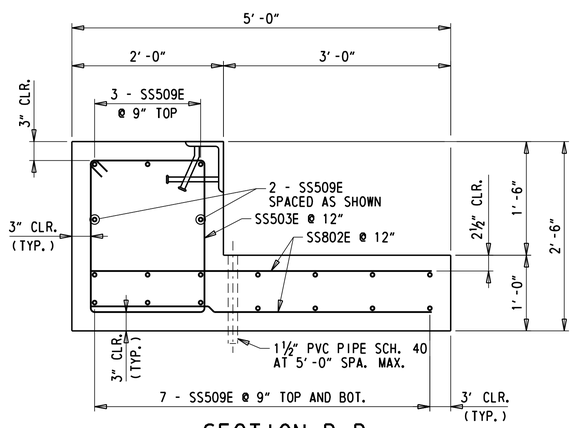

SECTION D-D

1" = 1'-0"

UNOFFICIAL WEBSITE COPY

N:\32122-002\C400\Bridge\BR1-600_AS11.dgn
7/31/2019 4:18:34 PM

ADDENDA / REVISIONS		SCALE AS NOTED	REHABILITATION OF BRIDGES 1-600, 1-601, AND 1-604, SR 2 AND SR 141 INTERCHANGE	CONTRACT T201707403	BRIDGE NO. 1 600	SLEEPER SLAB UNIT K PLAN AND REINFORCEMENT	AS-11
				COUNTY NEW CASTLE	DESIGNED BY: JPD		SECTION WRA
					CHECKED BY: WAG		SHEET NO. 40

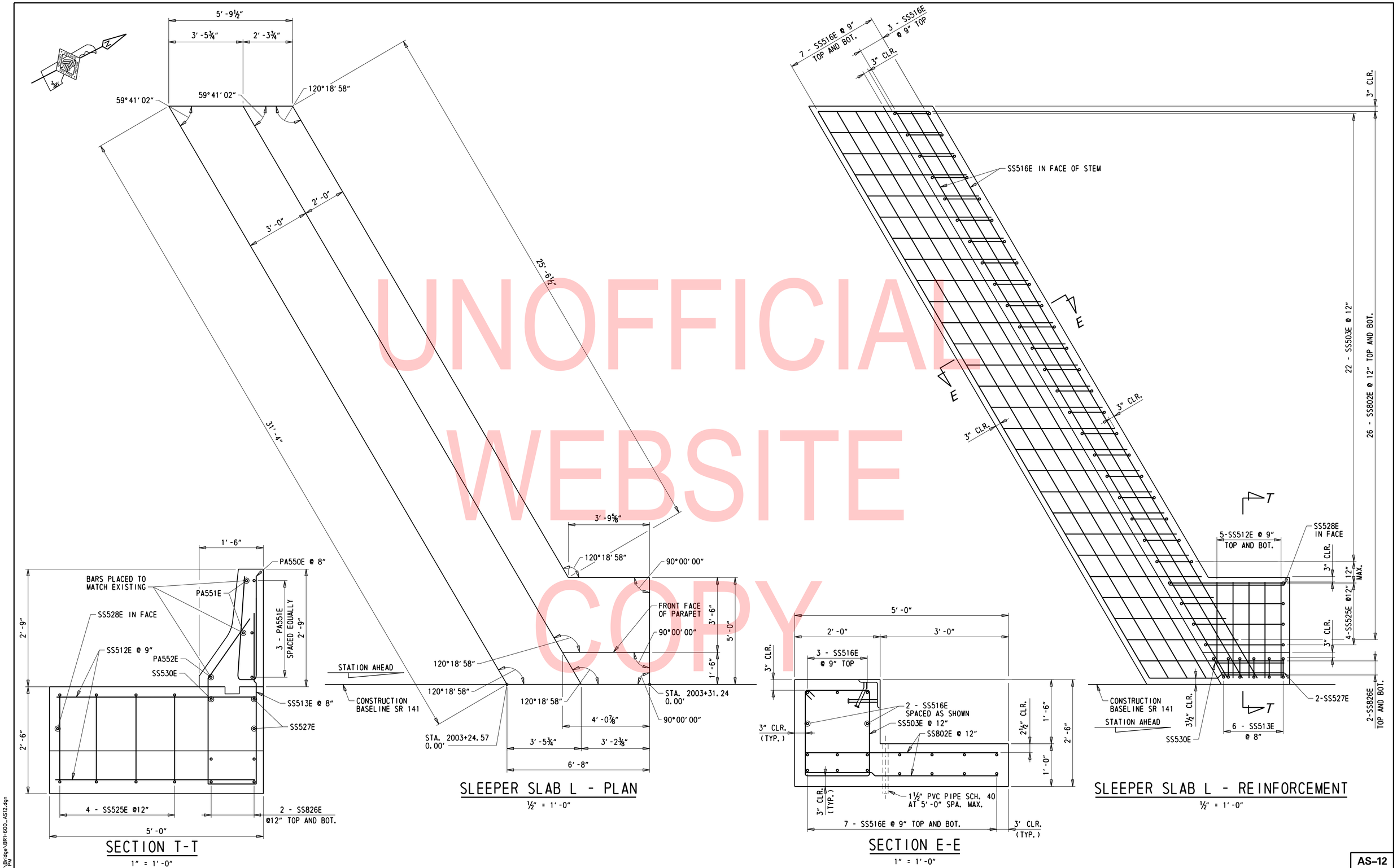

UNOFFICIAL WEBSITE COPY

N:\32122-002\C402\Bridge\BR1-600_AS12.dgn
7/31/2019 4:18:35 PM

ADDENDA / REVISIONS	SCALE AS NOTED	REHABILITATION OF BRIDGES 1-600, 1-601, AND 1-604, SR 2 AND SR 141 INTERCHANGE	CONTRACT T201707403	BRIDGE NO. 1 600	SLEEPER SLAB UNIT L PLAN AND REINFORCEMENT	AS-12
			COUNTY NEW CASTLE	DESIGNED BY: JPD		SECTION WRA
				CHECKED BY: WAG		SHEET NO. 41

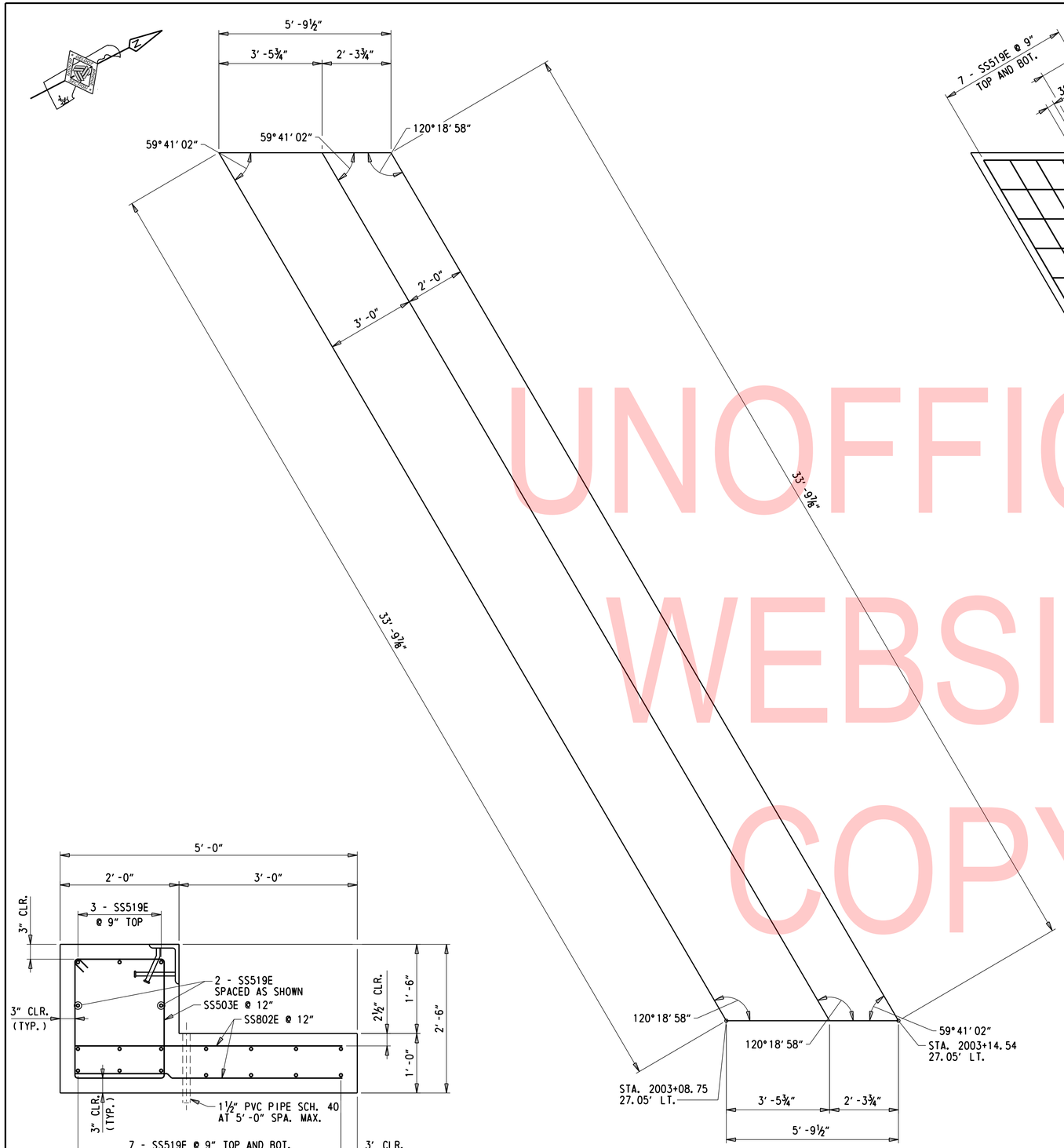

SLEEPER SLAB M - PLAN

½" = 1' -0"

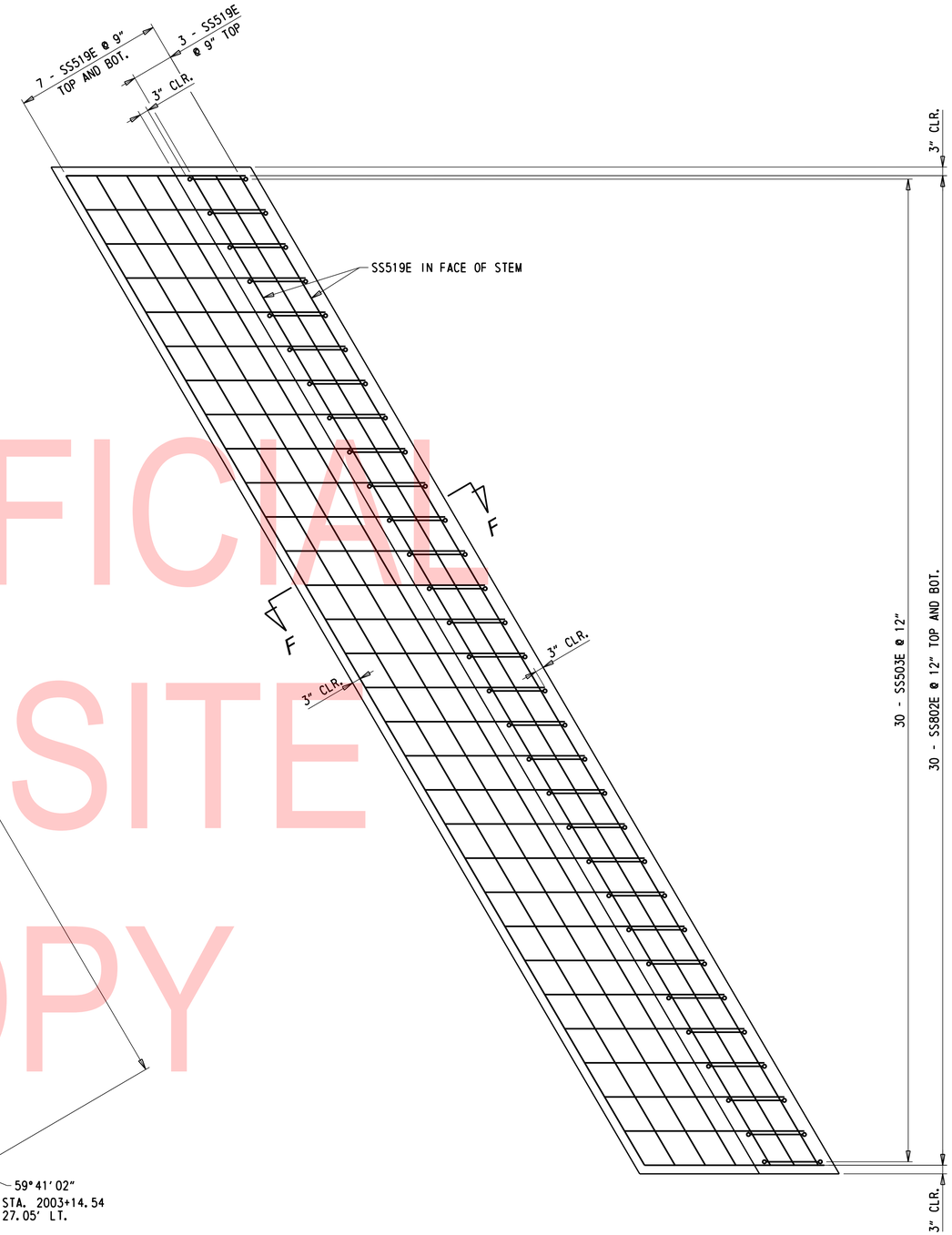

SLEEPER SLAB M - REINFORCEMENT

½" = 1' -0"

SECTION F-F

1" = 1' -0"

UNOFFICIAL WEBSITE COPY

N:\32122-021\C&D\Bridge\BR1-600_AS13.dgn
7/31/2019 4:18:36 PM

ADDENDA / REVISIONS	SCALE AS NOTED	REHABILITATION OF BRIDGES 1-600, 1-601, AND 1-604, SR 2 AND SR 141 INTERCHANGE	CONTRACT T201707403	BRIDGE NO. 1 600	SLEEPER SLAB UNIT M PLAN AND REINFORCEMENT	AS-13
			COUNTY NEW CASTLE	DESIGNED BY: JPD		SECTION WRA
				CHECKED BY: WAG		SHEET NO. 42

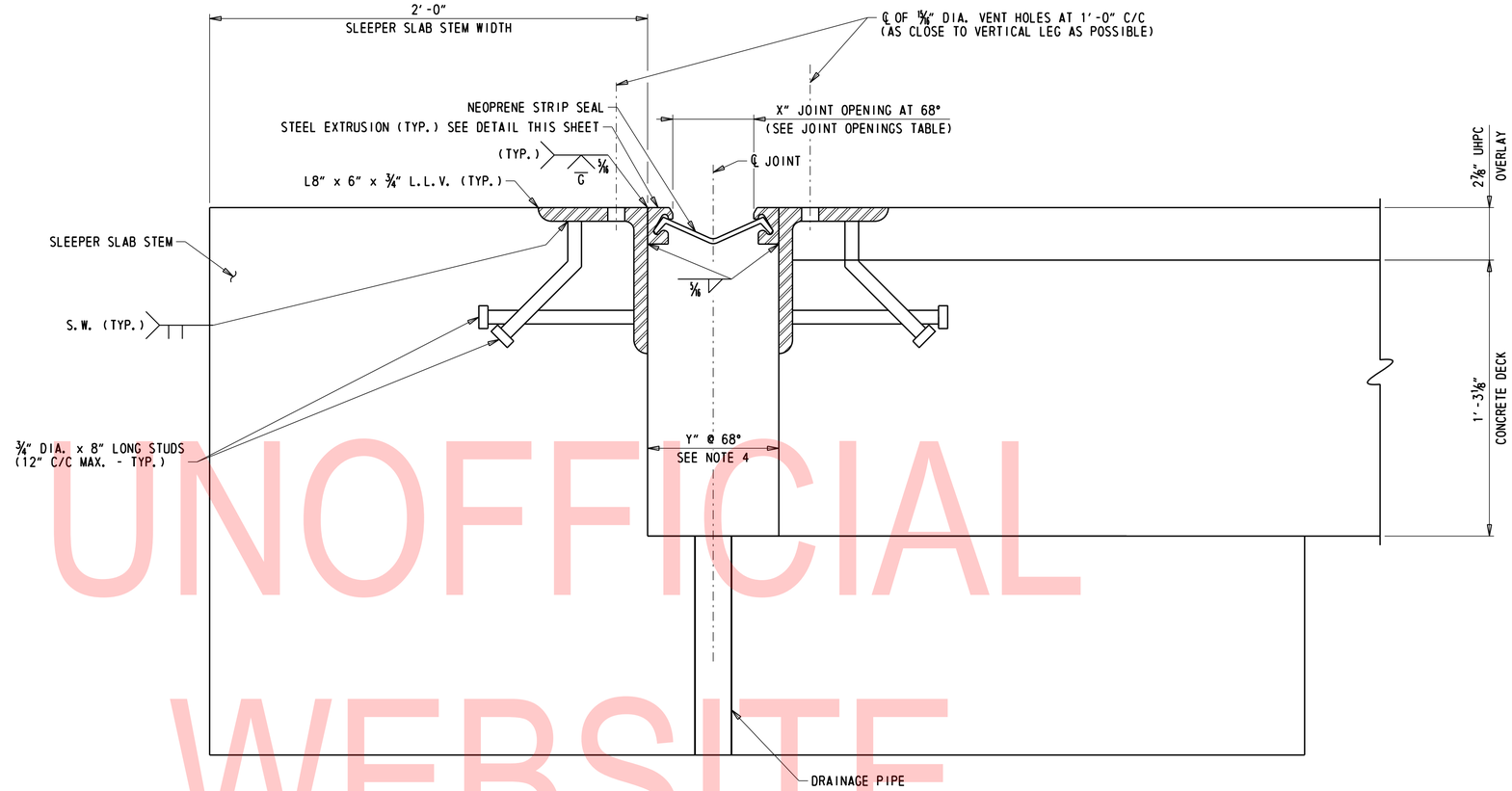

JOINT ASSEMBLY DETAIL

3" = 1'-0"

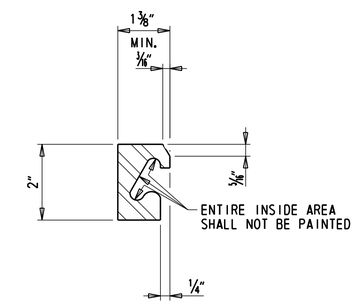

STEEL EXTRUSION DETAIL

6" = 1'-0"

STRIP SEAL EXPANSION JOINT NOTES:

1. STEEL FOR DECK JOINTS AND STEEL EXTRUSIONS SHALL BE AASHTO M270, GR. 36 (ASTM A36) AT MINIMUM.
2. NEOPRENE EXTRUSION TO MEET ASTM D-2628-81 MODIFIED, (RECOVERY TEST EXCLUDED).
3. THE EXPANSION JOINT SHALL BE CAPABLE OF SEALING THE APPROACH SLAB TO SLEEPER SLAB JOINT TO PREVENT MOISTURE AND OTHER CONTAMINANTS FROM DESCENDING THROUGH THE JOINT.
4. THE CONTRACTOR SHALL ADJUST THE OPEN JOINT (Y) AS REQUIRED BY THE WIDTH OF THE STEEL EXTRUSION USED SO AS TO PROVIDE A X" JOINT OPENING AT 68°F.
5. THE STRIP SEAL SHALL BE INSTALLED IN ONE PIECE ACROSS THE APPROACH SLAB WIDTH. SPLICING OF THE STRIP SEAL IS NOT PERMITTED.
6. THE EXPANSION JOINT SYSTEM IS PAID FOR UNDER ITEM 624000 - PREFABRICATED EXPANSION JOINT SYSTEM, 3".
7. STEEL EXTRUSIONS SHALL BE HOT-DIP GALVANIZED. ENTIRE EXPANSION DAM SHALL BE PAINTED AFTER FABRICATION USING URETHANE SYSTEM.
8. LUBRICANT-ADHESIVE FOR USE IN INSTALLING AND BONDING NEOPRENE SEAL ELEMENTS TO STEEL JOINT COMPONENTS SHALL BE A ONE QUART MOISTURE-CURING POLYURETHANE AND HYDROCARBON SOLVENT MIXTURE HAVING THE FOLLOWING PHYSICAL PROPERTIES:

AVERAGE WEIGHT, POUNDS PER GALLON	8±10%
SOLIDS CONTENT	65%
ADHESIVE SHALL REMAIN LIQUID FROM	5°F TO 120°F
FILM STRENGTH, AS PER ASTM D-412	2,000 PSI
ELONGATION	250%

9. STEEL EXTRUSIONS AND JOINT ANGLES SHALL BE CONTINUOUS ACROSS THE FULL WIDTH OF THE ROADWAY, NO SPLICING WILL BE PERMITTED.

JOINT OPENINGS, X										
TEMPERATURE °F	20°	30°	40°	50°	60°	68°	70°	80°	90°	100°
ABUTMENT A & B	2"	1 15/16"	1 7/8"	1 13/16"	1 3/4"	1 11/16" ±	1 11/16" ±	1 5/8"	1 9/16"	1 1/2"

NOTES:

1. FOR SLEEPER SLAB PLAN AND SECTIONS, SEE DWGS. AS-02 THROUGH A S-13.
2. REMAINING SLEEPER SLAB REINFORCEMENT NOT SHOWN FOR CLARITY. SEE DWGS. AS-02 THROUGH AS-13 FOR MORE INFORMATION.

UNOFFICIAL WEBSITE COPY

N:\32122-002\CADD\Bridge\BR1-600_EX01.dgn
7/31/2019 4:18:37 PM

ADDENDA / REVISIONS	SCALE AS NOTED	REHABILITATION OF BRIDGES 1-600, 1-601, AND 1-604, SR 2 AND SR 141 INTERCHANGE	CONTRACT T201707403	BRIDGE NO. 1 600	SLEEPER SLAB JOINT DETAILS	EX-01
			COUNTY NEW CASTLE	DESIGNED BY: ZMG		SECTION WRA
				CHECKED BY: WAG		SHEET NO. 43

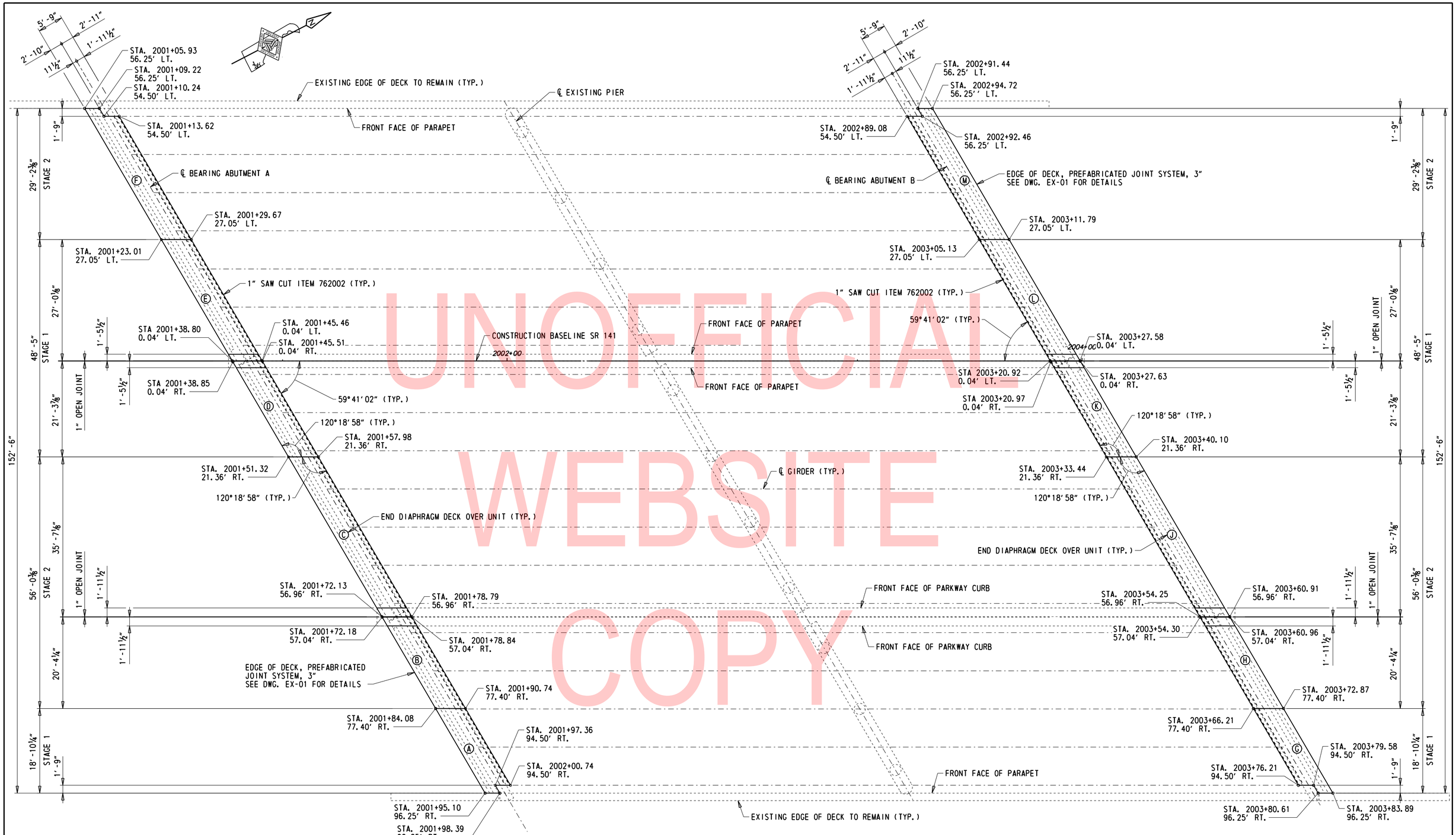

UNOFFICIAL WEBSITE COPY

END DIAPHRAGM DECK OVER LAYOUT PLAN

1" = 10'

NOTES:

1. FOR END DIAPHRAGM DECK OVER UNIT REINFORCEMENT DETAILS SEE DWGS. DK-02 THROUGH DK-07.
2. FOR ADDITIONAL MEDIAN AND PARKWAY CURB DETAILS SEE DWGS. DK-10 AND DK-11, RESPECTIVELY.

ADDENDA / REVISIONS		SCALE AS NOTED	REHABILITATION OF BRIDGES 1-600, 1-601, AND 1-604, SR 2 AND SR 141 INTERCHANGE	CONTRACT T201707403	BRIDGE NO. 1 600	END DIAPHRAGM DECK OVER LAYOUT PLAN	DK-01
				COUNTY NEW CASTLE	DESIGNED BY: ZMG		SECTION WRA
					CHECKED BY: WAG		SHEET NO. 44

N:\32122-002\C400\Bridge\BR1-600_DK01.dgn
7/31/2019 4:18:37 PM

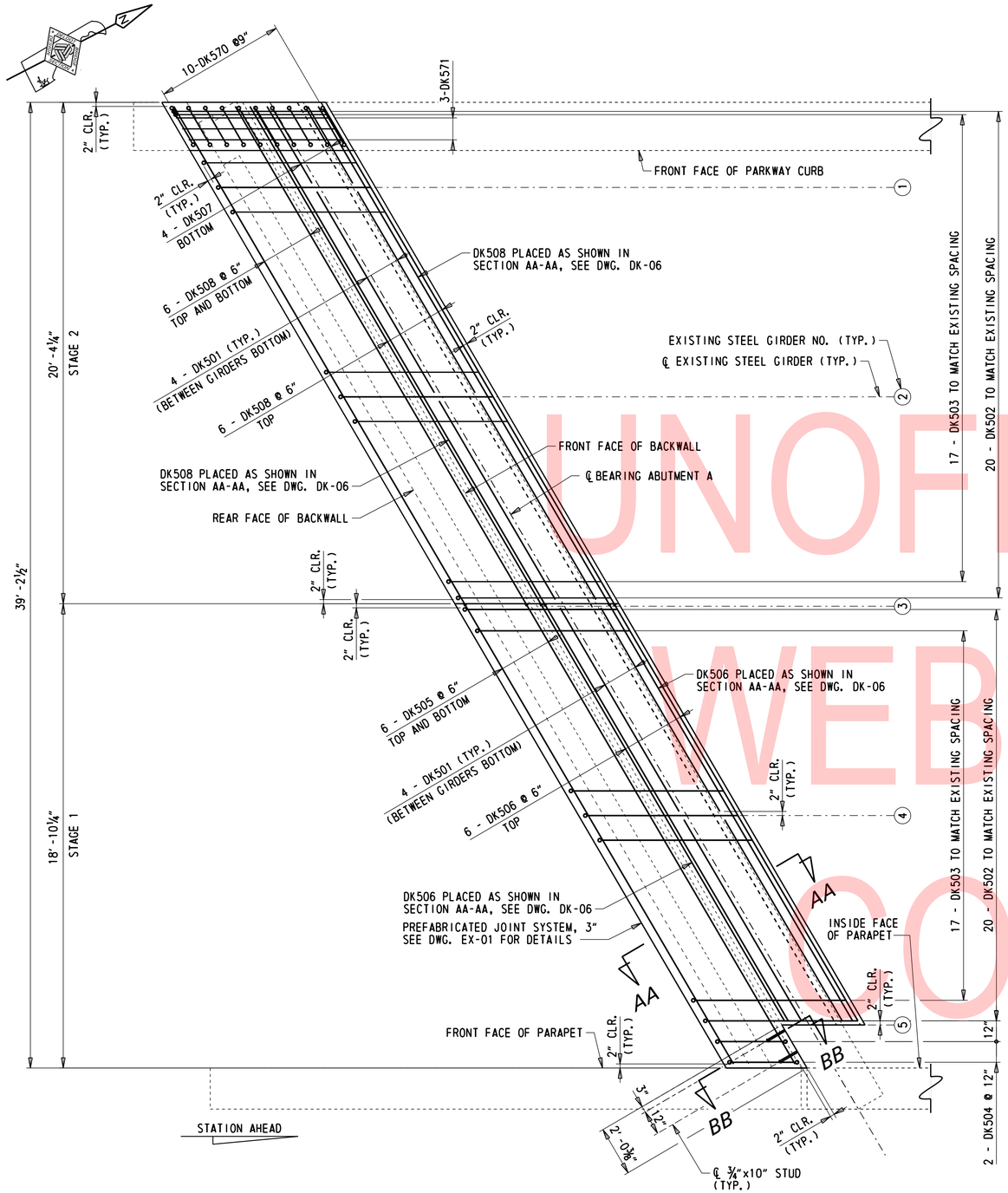

END DIAPHRAGM DECK OVER A AND B - REINFORCEMENT PLAN

⅜" = 1'-0"

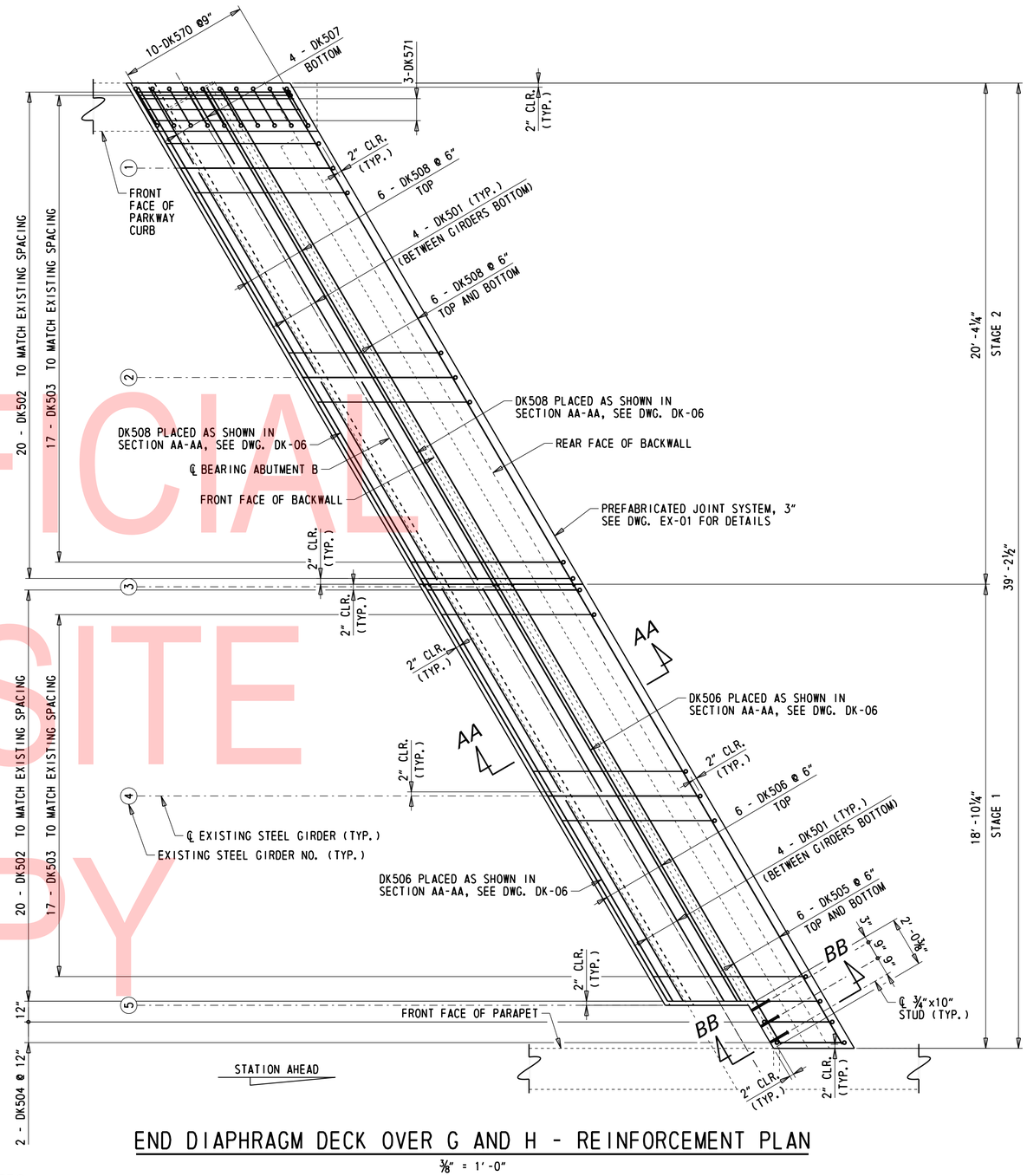

END DIAPHRAGM DECK OVER G AND H - REINFORCEMENT PLAN

⅜" = 1'-0"

NOTES:

1. DK502 & DK503 BARS BETWEEN BEAMS SPACED TO MATCH EXISTING DECK LONGITUDINAL BARS BETWEEN BEAMS. SEE DWG. DK-06 AND DK-07 FOR ADDITIONAL BAR DETAILS.
2. FOR DIAPHRAGM LONGITUDINAL BAR DETAILS, SEE DWG. DK-06 AND DK-07.
3. SPLICES IN REINFORCEMENT BETWEEN CONSTRUCTION STAGES SHALL USE THREADED COUPLERS. SEE DETAIL ON DWG. DK-08. PAYMENT FOR THREADED COUPLERS WILL BE INCIDENTAL TO ITEM 611001 BAR REINFORCEMENT, EPOXY COATED.

UNOFFICIAL WEBSITE COPY

N:\37122-002\CADD\Bridge\BR1-600_DK02.dgn
7/31/2019 4:18:58 PM

ADDENDA / REVISIONS	

SCALE AS NOTED

REHABILITATION OF BRIDGES 1-600, 1-601, AND 1-604, SR 2 AND SR 141 INTERCHANGE

CONTRACT	BRIDGE NO.	1 600
T201707403	DESIGNED BY: ZMG	
COUNTY		
NEW CASTLE	CHECKED BY: WAG	

END DIAPHRAGM DECK OVER DETAILS – 1

DK-02
SECTION
WRA
SHEET NO.
45

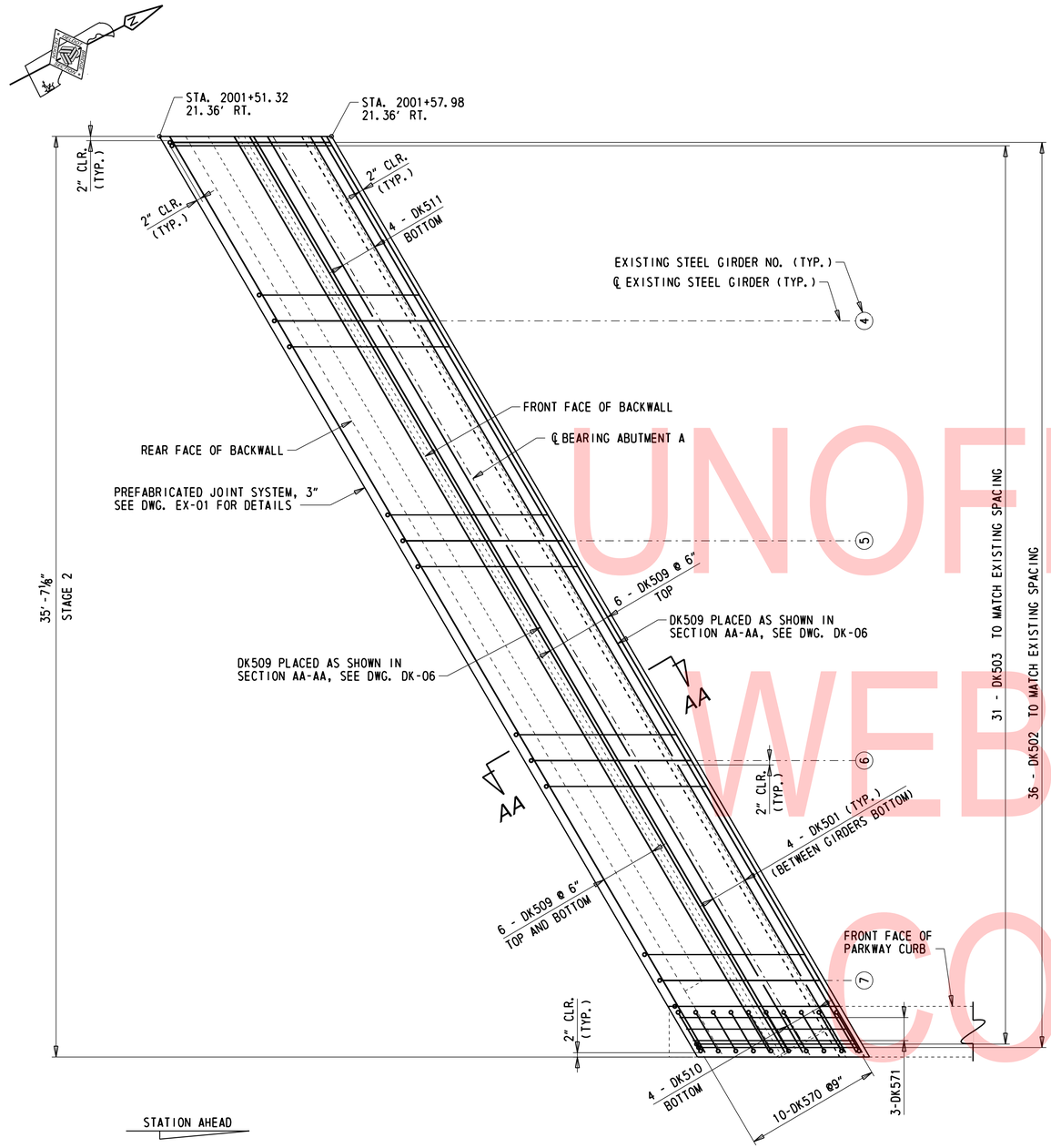

END DIAPHRAGM DECK OVER C - REINFORCEMENT PLAN

⅜" = 1'-0"

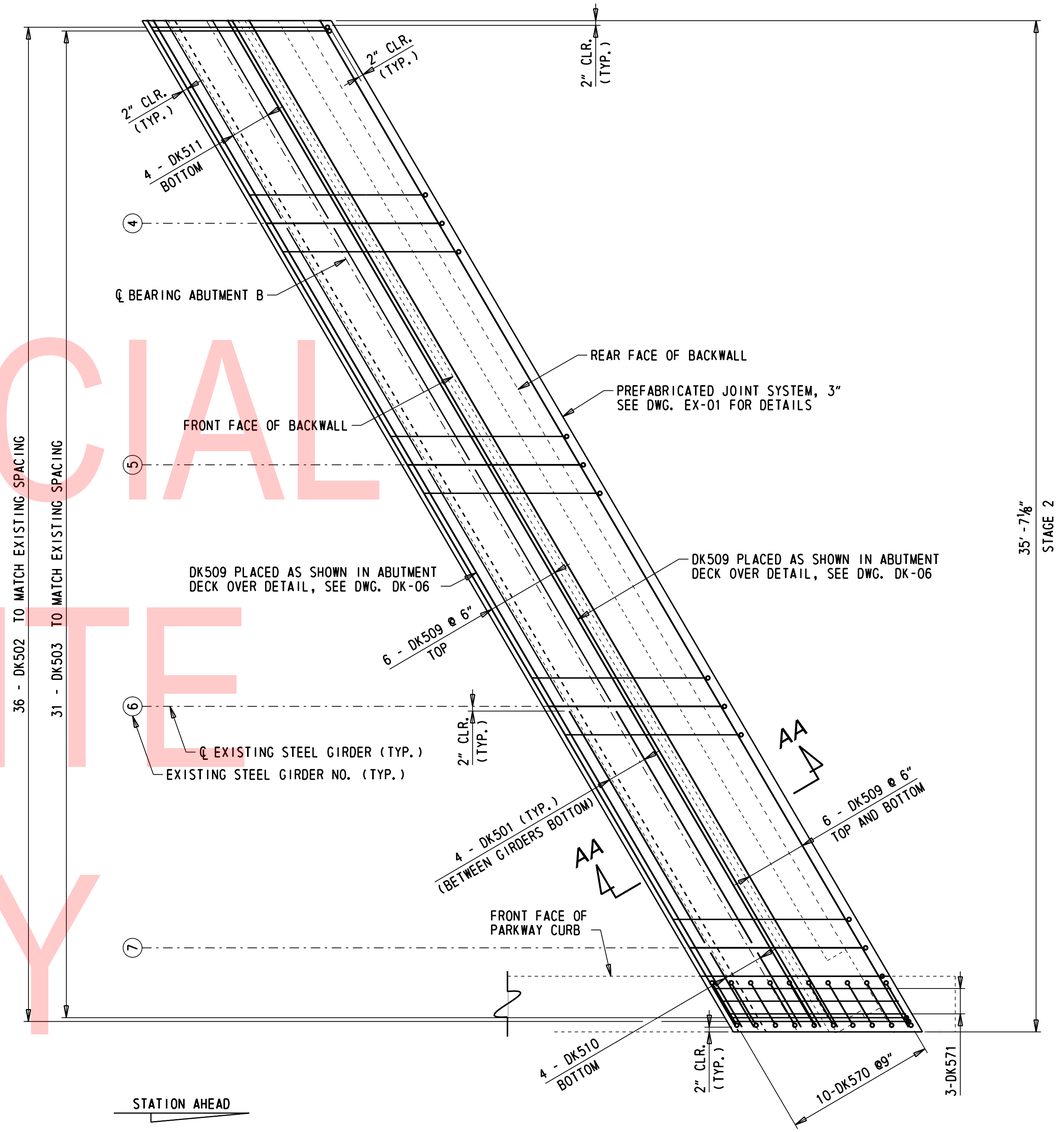

END DIAPHRAM DECK OVER J - REINFORCEMENT PLAN

⅜" = 1'-0"

NOTES:

1. DK502 & DK503 BARS BETWEEN BEAMS SPACED TO MATCH EXISTING DECK LONGITUDINAL BARS BETWEEN BEAMS. SEE DWG. DK-06 AND DK-07 FOR ADDITIONAL BAR DETAILS.
2. FOR DIAPHRAGM LONGITUDINAL BAR DETAILS, SEE DWG. DK-06 AND DK-07.
3. SPLICES IN REINFORCEMENT BETWEEN CONSTRUCTION STAGES SHALL USE THREADED COUPLERS. SEE DETAIL ON DWG. DK-08. PAYMENT FOR THREADED COUPLERS WILL BE INCIDENTAL TO ITEM 611001 BAR REINFORCEMENT, EPOXY COATED.

UNOFFICIAL WEBSITE COPY

N:\32122-002\CADD\Bridge\BR1-600_DK03.dgn
7/31/2019 4:18:39 PM

ADDENDA / REVISIONS	SCALE AS NOTED	REHABILITATION OF BRIDGES 1-600, 1-601, AND 1-604, SR 2 AND SR 141 INTERCHANGE	CONTRACT T201707403	BRIDGE NO. 1 600	END DIAPHRAGM DECK OVER DETAILS – 2	DK-03
			COUNTY NEW CASTLE	DESIGNED BY: ZMG		SECTION WRA
				CHECKED BY: WAG		SHEET NO. 46

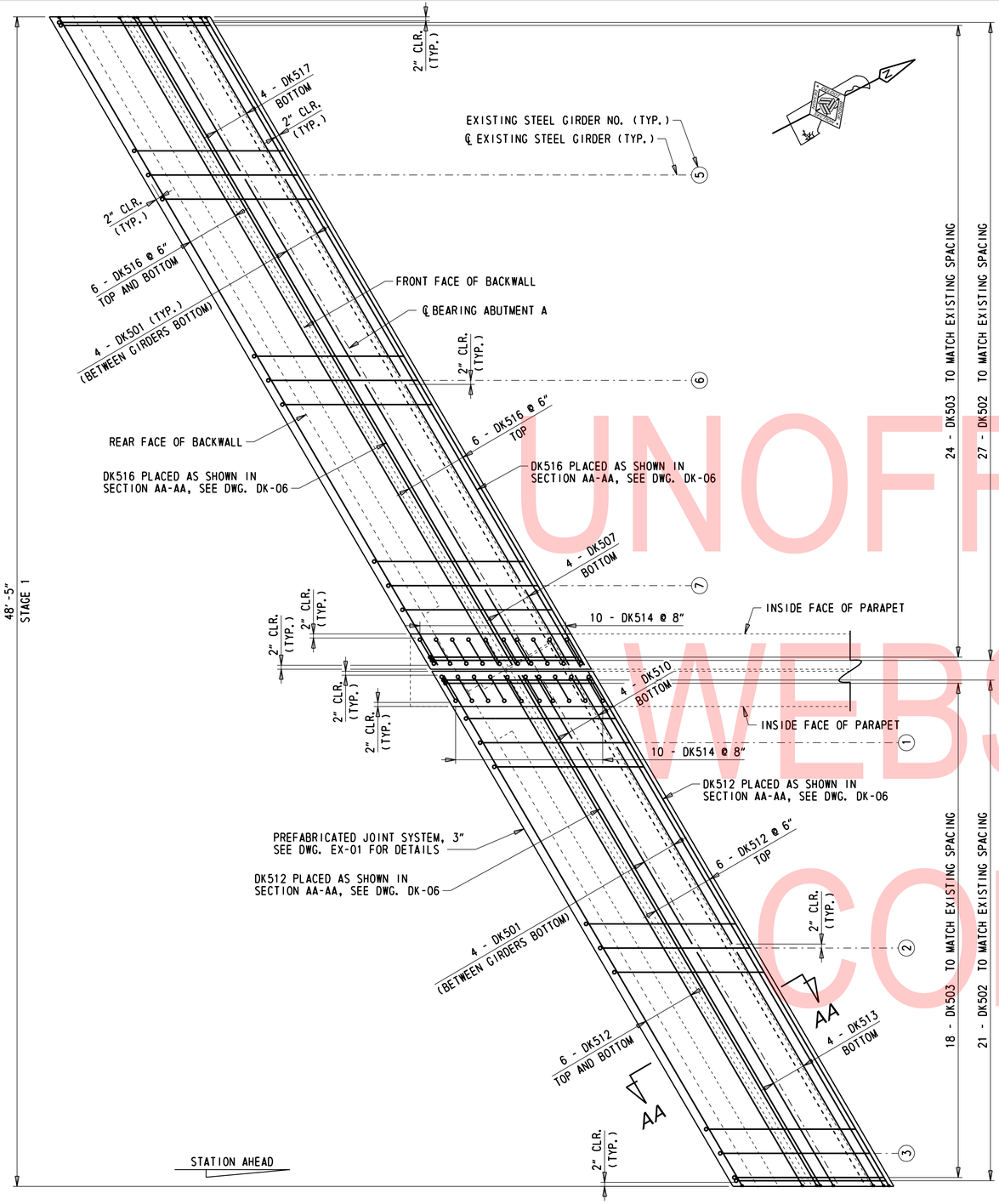

END DIAPHRAGM DECK OVER D AND E - REINFORCEMENT PLAN

3/8" = 1'-0"

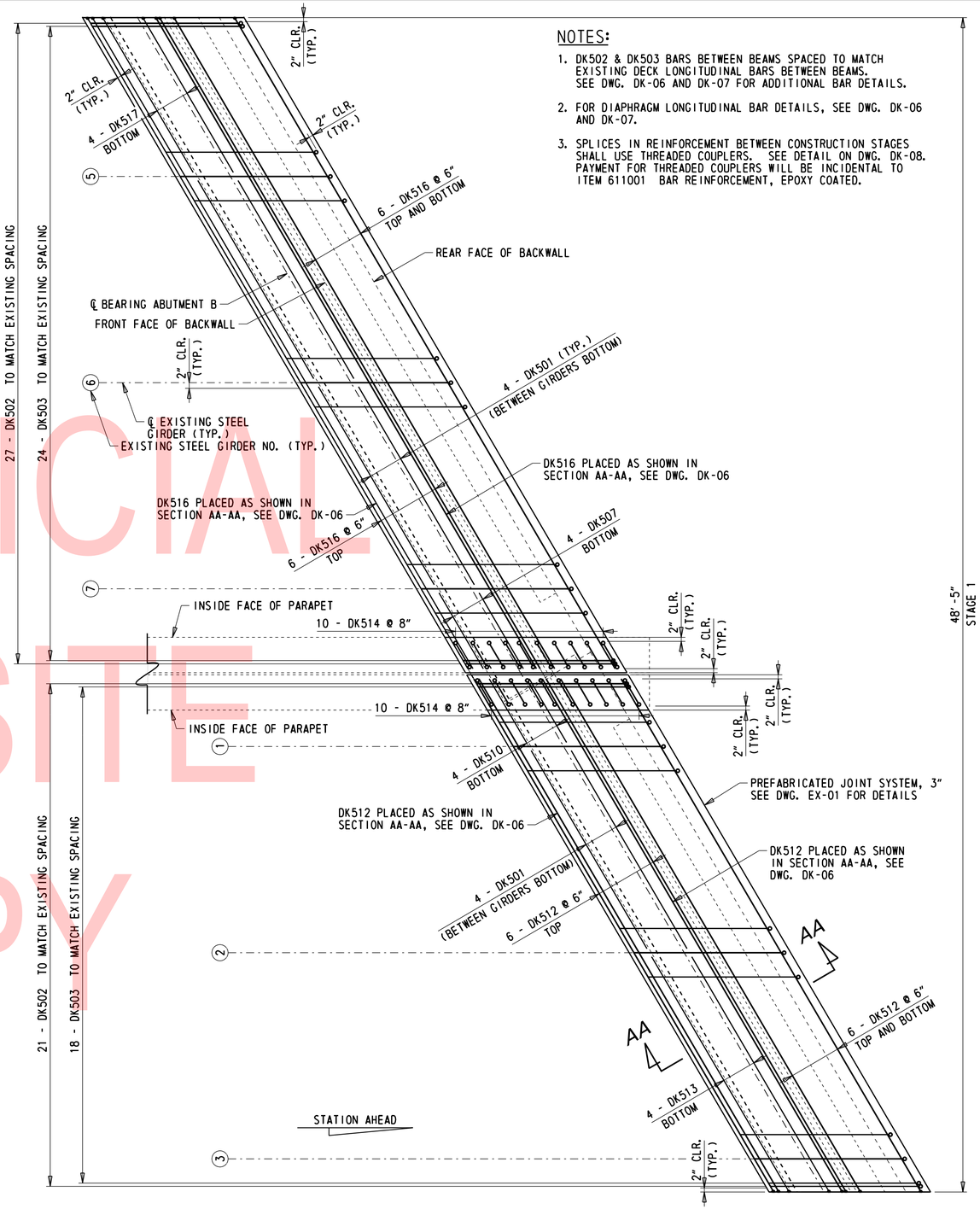

END DIAPHRAGM DECK OVER K AND L - REINFORCEMENT PLAN

3/8" = 1'-0"

NOTES:

1. DK502 & DK503 BARS BETWEEN BEAMS SPACED TO MATCH EXISTING DECK LONGITUDINAL BARS BETWEEN BEAMS. SEE DWG. DK-06 AND DK-07 FOR ADDITIONAL BAR DETAILS.
2. FOR DIAPHRAGM LONGITUDINAL BAR DETAILS, SEE DWG. DK-06 AND DK-07.
3. SPLICES IN REINFORCEMENT BETWEEN CONSTRUCTION STAGES SHALL USE THREADED COUPLERS. SEE DETAIL ON DWG. DK-08. PAYMENT FOR THREADED COUPLERS WILL BE INCIDENTAL TO ITEM 611001 BAR REINFORCEMENT, EPOXY COATED.

UNOFFICIAL WEBSITE COPY

N:\32122-002\CADD\Bridge\BR1-600_DK04.dgn
7/31/2019 4:18:40 PM

ADDENDA / REVISIONS	SCALE AS NOTED	REHABILITATION OF BRIDGES 1-600, 1-601, AND 1-604, SR 2 AND SR 141 INTERCHANGE	CONTRACT T201707403	BRIDGE NO. 1 600	END DIAPHRAGM DECK OVER DETAILS - 3	DK-04
			COUNTY NEW CASTLE	DESIGNED BY: ZMG		SECTION WRA
				CHECKED BY: WAG		SHEET NO. 47

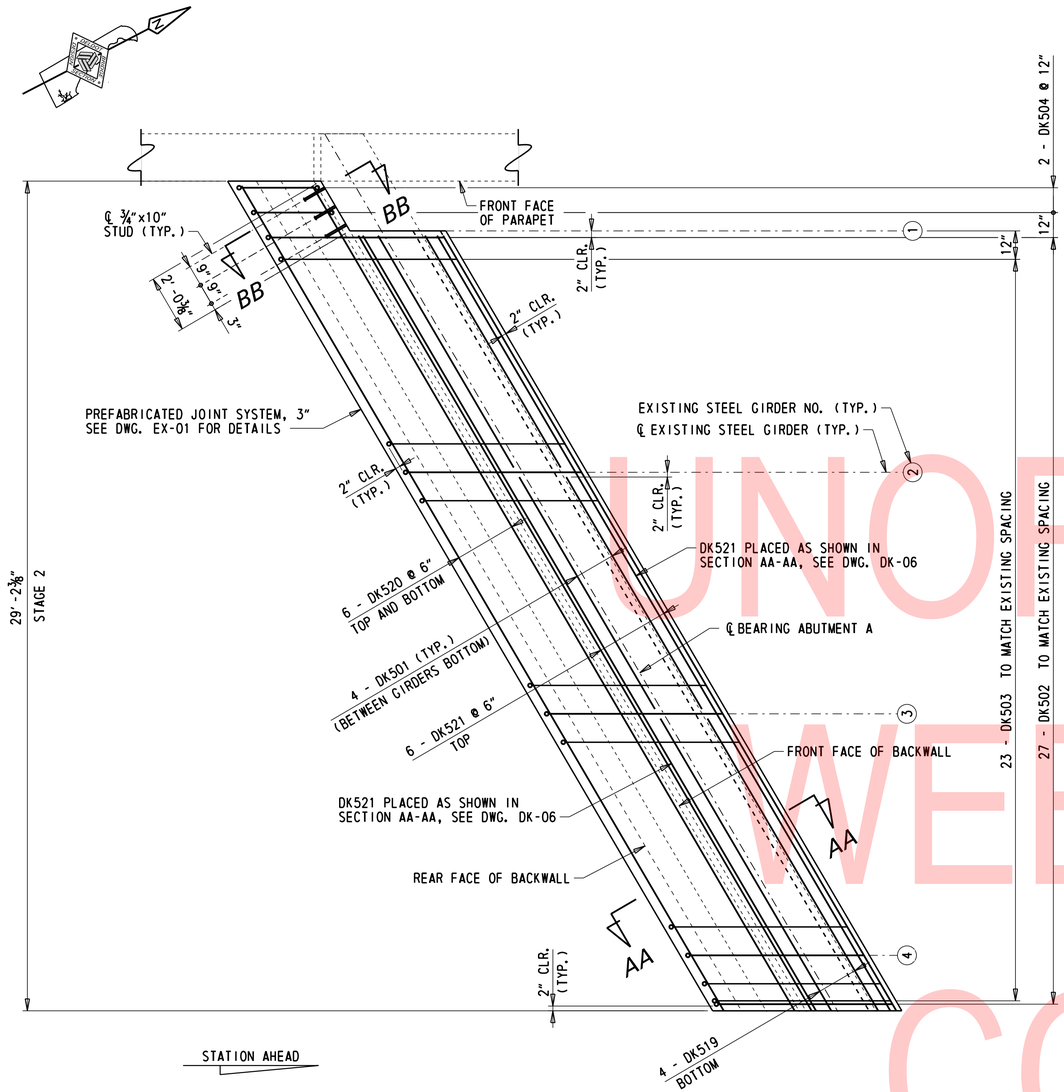

END DIAPHRAGM DECK OVER F - REINFORCEMENT PLAN

⅜" = 1'-0"

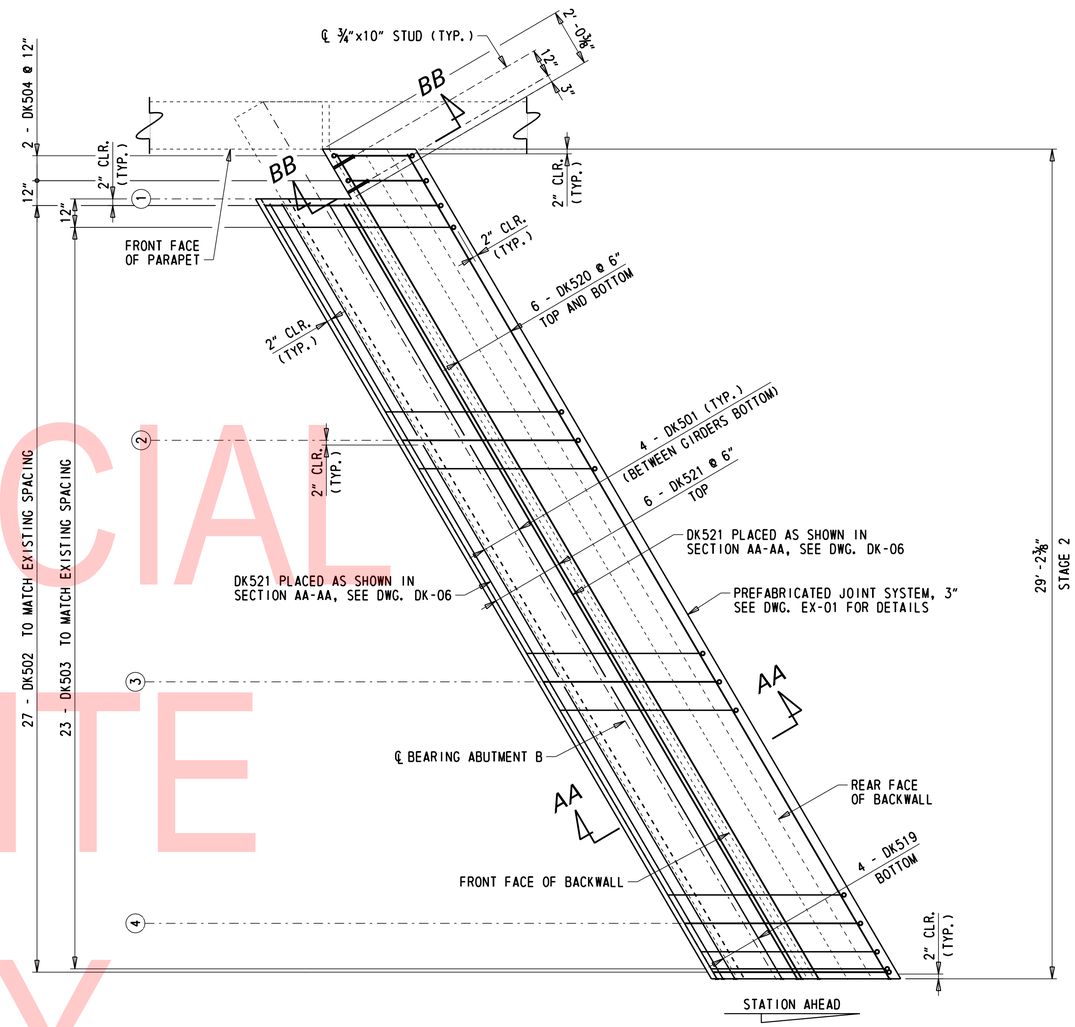

END DIAPHRAGM DECK OVER M - REINFORCEMENT PLAN

⅜" = 1'-0"

UNOFFICIAL WEBSITE COPY

NOTES:

1. DK502 & DK503 BARS BETWEEN BEAMS SPACED TO MATCH EXISTING DECK LONGITUDINAL BARS BETWEEN BEAMS. SEE DWG. DK-06 AND DK-07 FOR ADDITIONAL BAR DETAILS.
2. FOR DIAPHRAGM LONGITUDINAL BAR DETAILS, SEE DWG. DK-06 AND DK-07.
3. SPLICES IN REINFORCEMENT BETWEEN CONSTRUCTION STAGES SHALL USE THREADED COUPLERS. SEE DETAIL ON DWG. DK-08. PAYMENT FOR THREADED COUPLERS WILL BE INCIDENTAL TO ITEM 611001 BAR REINFORCEMENT, EPOXY COATED.

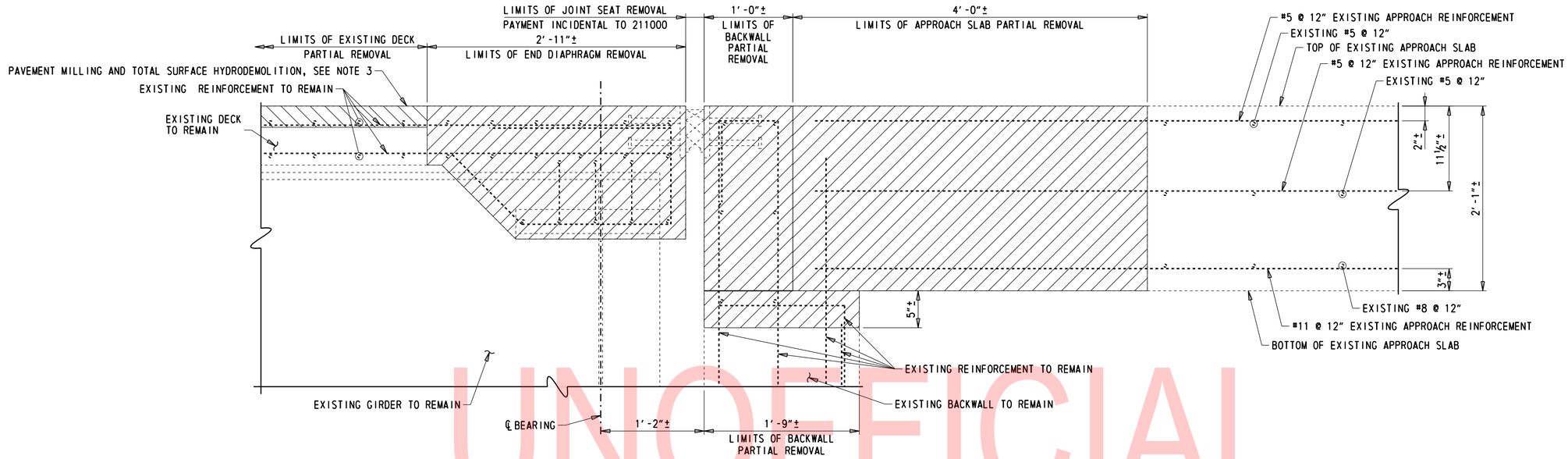

STRUCTURE REMOVAL DETAIL AT APPROACH SLAB

1½" = 1'-0"

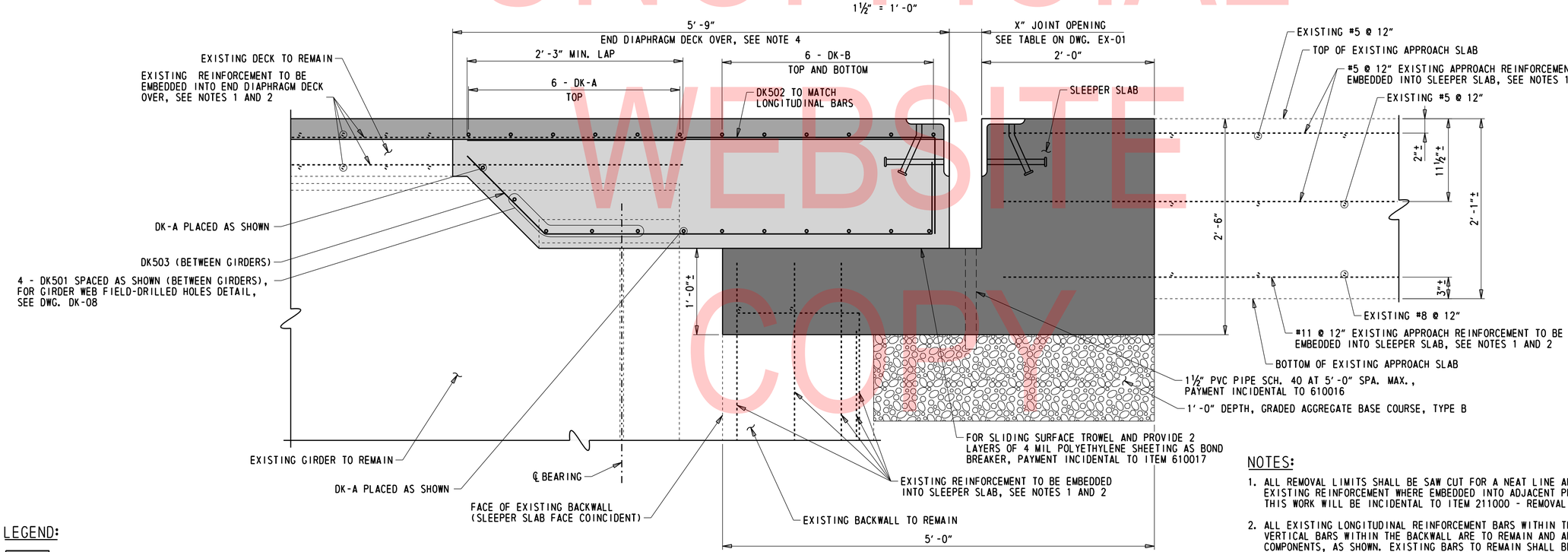

SECTION AA-AA

SEE 'DECK OVER BAR MARK' TABLE

1½" = 1'-0"

DECK OVER BAR MARK		
	DK-A	DK-B
DECK OVER A	DK506	DK505
DECK OVER B	DK508	
DECK OVER C	DK509	
DECK OVER D	DK512	
DECK OVER E	DK516	
DECK OVER F	DK521	DK520
DECK OVER G	DK506	DK505
DECK OVER H	DK508	
DECK OVER J	DK509	
DECK OVER K	DK512	
DECK OVER L	DK516	
DECK OVER M	DK521	DK520

NOTES:

1. ALL REMOVAL LIMITS SHALL BE SAW CUT FOR A NEAT LINE AND CARE SHOULD BE TAKEN TO NOT DAMAGE EXISTING REINFORCEMENT WHERE EMBEDDED INTO ADJACENT PROPOSED COMPONENTS, AS SHOWN. PAYMENT FOR THIS WORK WILL BE INCIDENTAL TO ITEM 211000 - REMOVAL OF STRUCTURES AND OBSTRUCTIONS.
2. ALL EXISTING LONGITUDINAL REINFORCEMENT BARS WITHIN THE EXISTING DECK AND APPROACH SLAB AND VERTICAL BARS WITHIN THE BACKWALL ARE TO REMAIN AND ARE TO BE EMBEDDED INTO ADJACENT PROPOSED COMPONENTS, AS SHOWN. EXISTING BARS TO REMAIN SHALL BE CLEANED IN ACCORDANCE WITH SUBSECTION 628.03(E)7. BARS WITH CORROSION, BROKEN, OR WITH INADEQUATE BOND SHALL BE REPAIRED IN ACCORDANCE WITH SUBSECTION 628.03(E)7. PAYMENT FOR THIS WORK WILL BE INCIDENTAL TO ITEM 211000 - REMOVAL OF STRUCTURES AND OBSTRUCTIONS.
3. NOMINAL OVERLAY THICKNESS NOTED. FOR DETAILS ON EXISTING DECK PARTIAL REMOVAL AND OVERLAY PLACEMENT, SEE DWG. SR-02.
4. THE END DIAPHRAGM TOP SURFACE INTERFACING WITH THE UHPC OVERLAY SHALL HAVE A UNIFORM ROUGHENED SURFACE WITH A MINIMUM ¼" AMPLITUDE. THE UHPC OVERLAY SHALL NOT BE PLACED UNTIL THE END DIAPHRAGM CONCRETE HAS REACHED 80% OF ITS 28-DAY STRENGTH.

LEGEND:

- UHPC OVERLAY (ITEM 625505)
- END DIAPHRAGM DECK OVER (ITEM 610017)
- SLEEPER SLAB (ITEM 610016)
- REMOVAL LIMITS (ITEM 211000)
- PAVEMENT MILLING, P.C.C. PAVEMENT (ITEM 760013) AND TOTAL SURFACE HYDRODEMOLITION LIMITS (ITEM 760500)

UNOFFICIAL WEBSITE COPY

ADDENDA / REVISIONS	

SCALE AS NOTED

REHABILITATION OF BRIDGES 1-600, 1-601, AND 1-604, SR 2 AND SR 141 INTERCHANGE

CONTRACT	BRIDGE NO.	1 600
T201707403	DESIGNED BY: ZMG	
COUNTY		
NEW CASTLE	CHECKED BY: WAG	

END DIAPHRAGM DECK OVER DETAILS - 5

DK-06
SECTION
WRA
SHEET NO.
49

N:\33122-002\CADD\Bridge\BR1-600_DK06.dgn
7/31/2019 4:18:42 PM

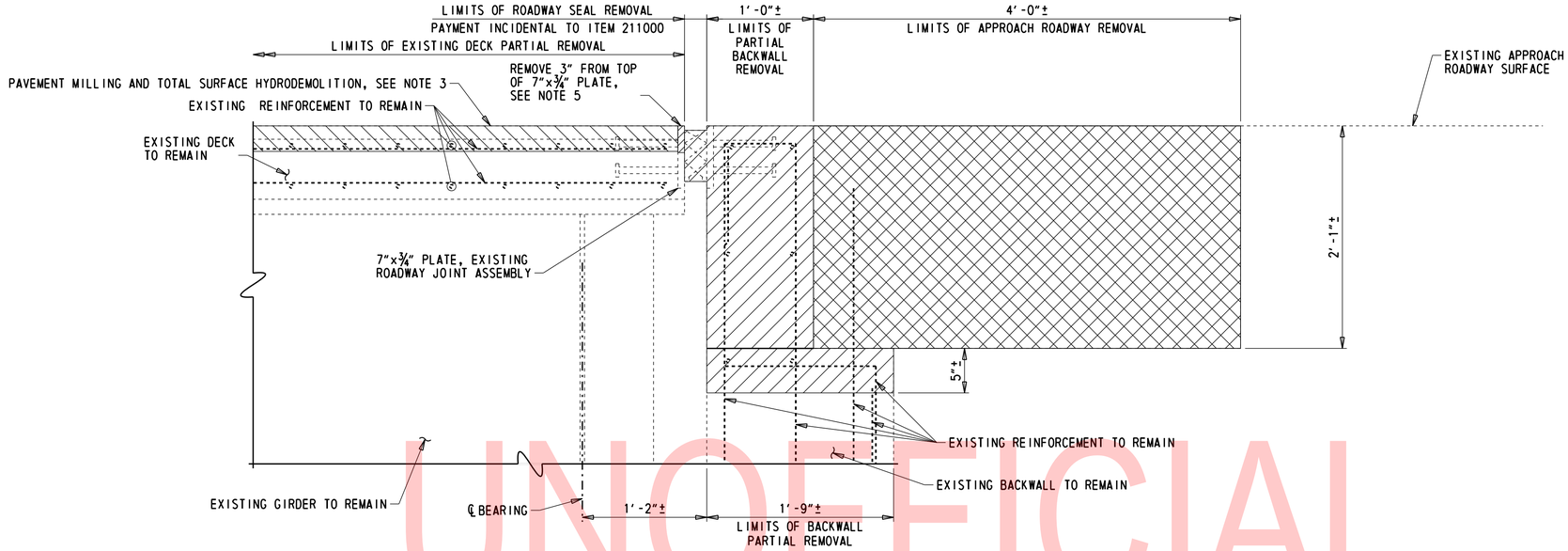

STRUCTURE REMOVAL DETAIL AT SHOULDER

1½" = 1'-0"

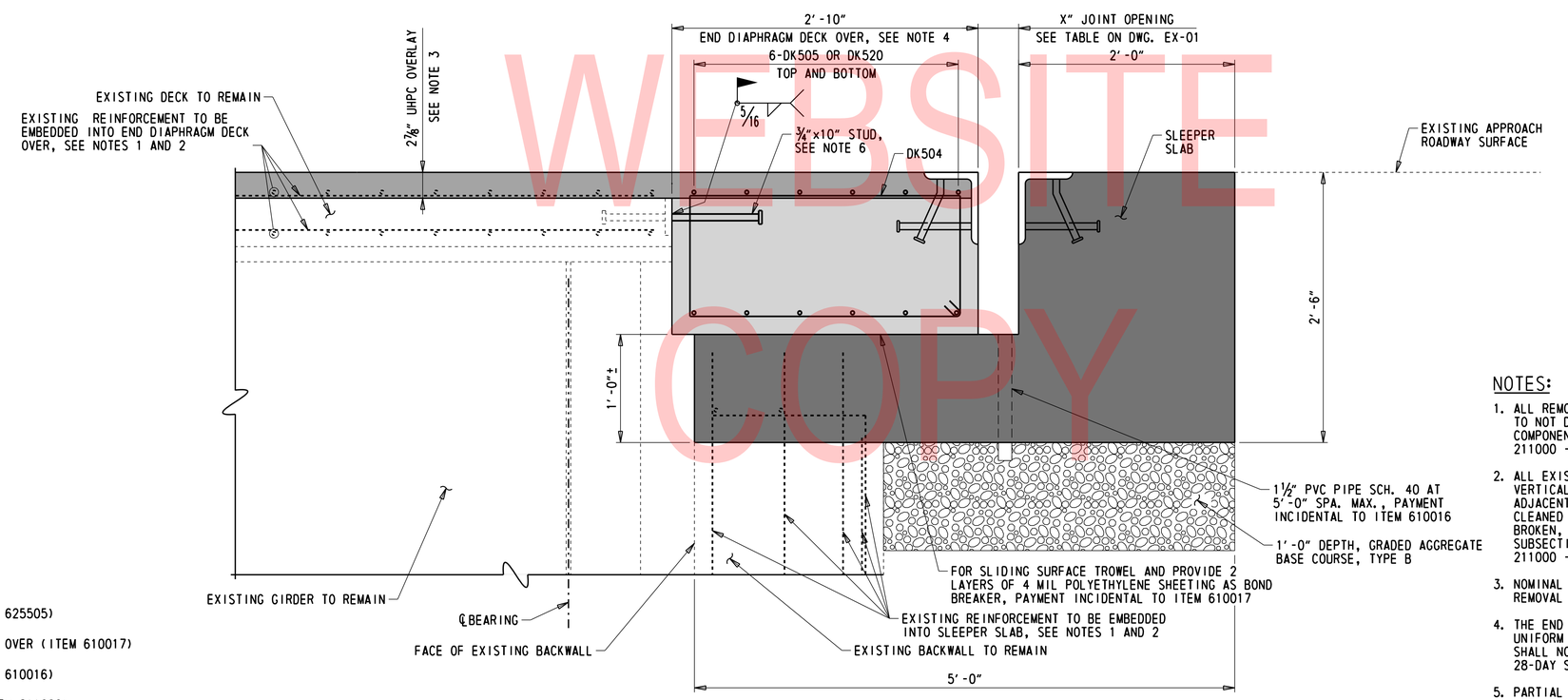

SECTION BB-BB

1½" = 1'-0"

LEGEND:

- UHPC OVERLAY (ITEM 625505)
- END DIAPHRAGM DECK OVER (ITEM 610017)
- SLEEPER SLAB (ITEM 610016)
- REMOVAL LIMITS (ITEM 211000)
- REMOVAL LIMITS (ITEM 202000)
- PAVEMENT MILLING, P.C.C. PAVEMENT (ITEM 760013) AND TOTAL SURFACE HYDRODEMOLITION LIMITS (ITEM 760500)

NOTES:

1. ALL REMOVAL LIMITS SHALL BE SAW CUT FOR A NEAT LINE AND CARE SHOULD BE TAKEN TO NOT DAMAGE EXISTING REINFORCEMENT WHERE EMBEDDED INTO ADJACENT PROPOSED COMPONENTS, AS SHOWN. PAYMENT FOR THIS WORK WILL BE INCIDENTAL TO ITEM 211000 - REMOVAL OF STRUCTURES AND OBSTRUCTIONS.
2. ALL EXISTING LONGITUDINAL REINFORCEMENT BARS WITHIN THE EXISTING DECK AND VERTICAL BARS WITHIN THE BACKWALL ARE TO REMAIN AND ARE TO BE EMBEDDED INTO ADJACENT PROPOSED COMPONENTS, AS SHOWN. EXISTING BARS TO REMAIN SHALL BE CLEANED IN ACCORDANCE WITH SUBSECTION 628.03(E)7. BARS WITH CORROSION, BROKEN, OR WITH INADEQUATE BOND SHALL BE REPAIRED IN ACCORDANCE WITH SUBSECTION 628.03(E)7. PAYMENT FOR THIS WORK WILL BE INCIDENTAL TO ITEM 211000 - REMOVAL OF STRUCTURES AND OBSTRUCTIONS.
3. NOMINAL OVERLAY THICKNESS DIMENSIONED. FOR DETAILS ON EXISTING DECK PARTIAL REMOVAL AND OVERLAY PLACEMENT, SEE DWG. SR-02.
4. THE END DIAPHRAGM TOP SURFACE INTERFACING WITH THE UHPC OVERLAY SHALL HAVE A UNIFORM ROUGHENED SURFACE WITH A MINIMUM ¼" AMPLITUDE. THE UHPC OVERLAY SHALL NOT BE PLACED UNTIL THE END DIAPHRAGM CONCRETE HAS REACHED 80% OF ITS 28-DAY STRENGTH.
5. PARTIAL REMOVAL OF ROADWAY JOINT ASSEMBLY PLATE PAYMENT WILL BE INCIDENTAL TO ITEM 211000.
6. FIELD WELD STUDS AT MID-DEPTH THE REMAINING SECTION OF THE EXISTING ROADWAY JOINT ASSEMBLY PLATE. STUDS AND FIELD WELD PAYMENT WILL BE INCIDENTAL TO ITEM 610017.

UNOFFICIAL WEBSITE COPY

ADDENDA / REVISIONS	SCALE AS NOTED	REHABILITATION OF BRIDGES 1-600, 1-601, AND 1-604, SR 2 AND SR 141 INTERCHANGE	CONTRACT T201707403	BRIDGE NO. 1 600	END DIAPHRAGM DECK OVER DETAILS – 6	DK-07
			COUNTY NEW CASTLE	DESIGNED BY: ZMG		SECTION WRA
				CHECKED BY: WAG		SHEET NO. 50

N:\32122-002\CADD\Bridge\BR1-600_DK07.dgn
7/31/2019 4:18:42 PM

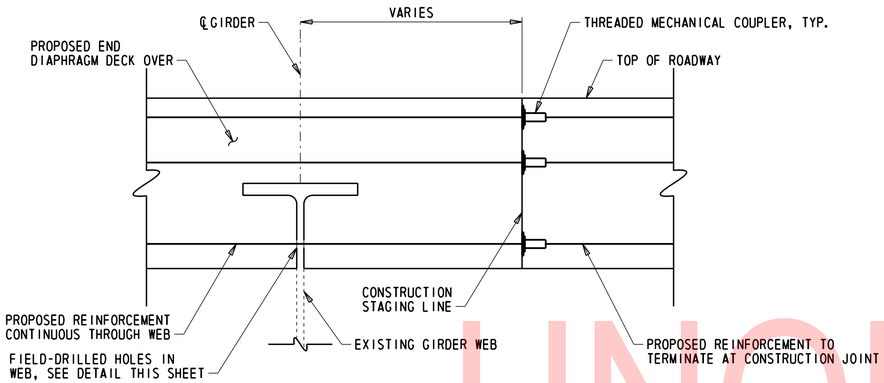

END DIAPHRAGM DECK OVER REINFORCEMENT DETAILS

1½" = 1'-0"

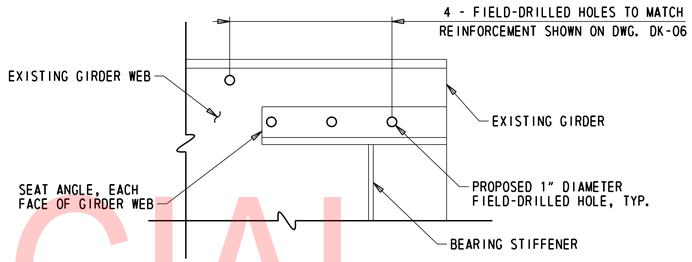

GIRDER WEB FIELD-DRILLED HOLES DETAIL

1½" = 1'-0"

UNOFFICIAL WEBSITE COPY

NOTES:

1. SPLICES IN REINFORCEMENT BETWEEN CONSTRUCTION STAGES SHALL USE THREADED COUPLERS. ALL THREADED COUPLER HARDWARE SHALL MEET OR EXCEED 125% OF BAR REINFORCEMENT YIELD STRENGTH. PAYMENT FOR THREADED COUPLERS WILL BE INCIDENTAL TO ITEM 611001 - BAR REINFORCEMENT, EPOXY COATED.
2. PAYMENT FOR GIRDER WEB FIELD-DRILLED HOLES WILL BE INCIDENTAL TO ITEM 611001 - BAR REINFORCEMENT, EPOXY COATED.

N:\32122-002\CADD\Bridge\BR1-600_DK08.dgn
7/31/2019 4:18:43 PM

ADDENDA / REVISIONS		SCALE AS NOTED	REHABILITATION OF BRIDGES 1-600, 1-601, AND 1-604, SR 2 AND SR 141 INTERCHANGE	CONTRACT T201707403	BRIDGE NO. 1 600	END DIAPHRAGM DECK OVER DETAILS - 7	DK-08
				COUNTY NEW CASTLE	DESIGNED BY: ZMG		SECTION WRA
					CHECKED BY: WAG		SHEET NO. 51

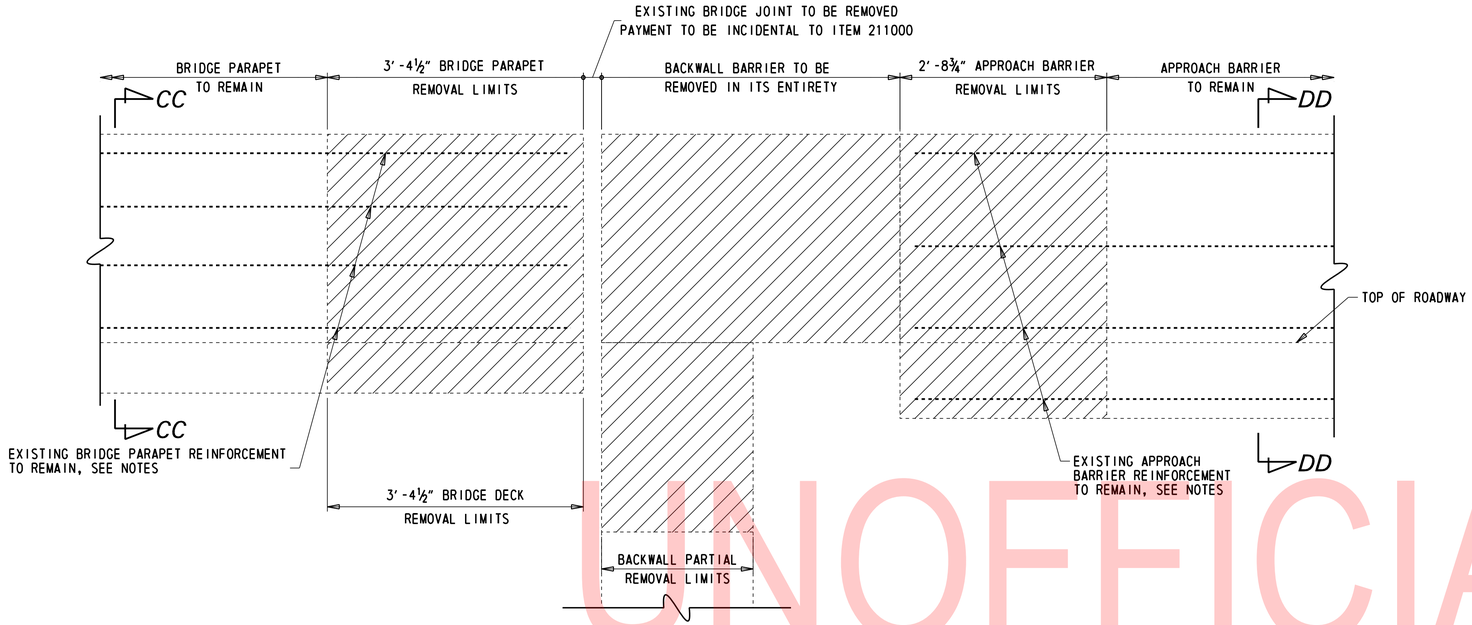

MEDIAN BARRIER DEMOLITION

NORTH ABUTMENT SHOWN; SOUTH ABUTMENT SIMILAR

1" = 1'-0"

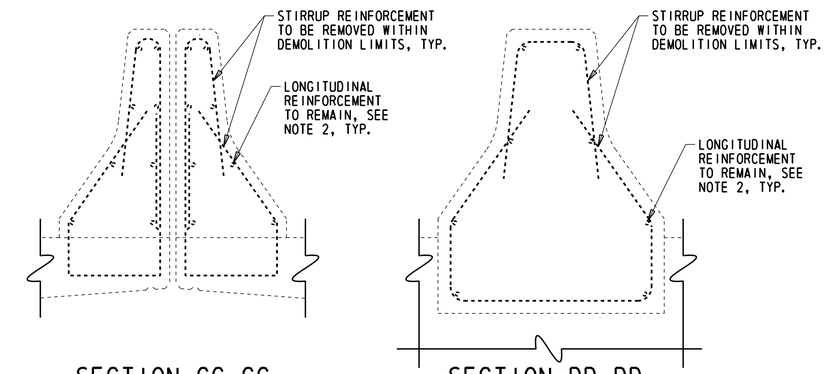

SECTION CC-CC

1" = 1'-0"

SECTION DD-DD

1" = 1'-0"

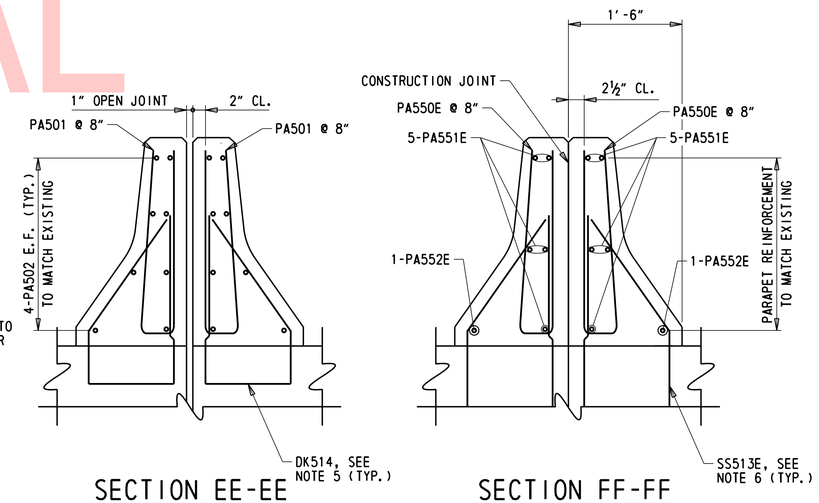

SECTION EE-EE

1" = 1'-0"

SECTION FF-FF

1" = 1'-0"

NOTE:

EXISTING REINFORCEMENT NOT SHOWN FOR CLARITY IN SECTIONS C-C AND D-D.

ALL BARS SHOWN IN SECTIONS C-C AND D-D TO MATCH EXISTING.

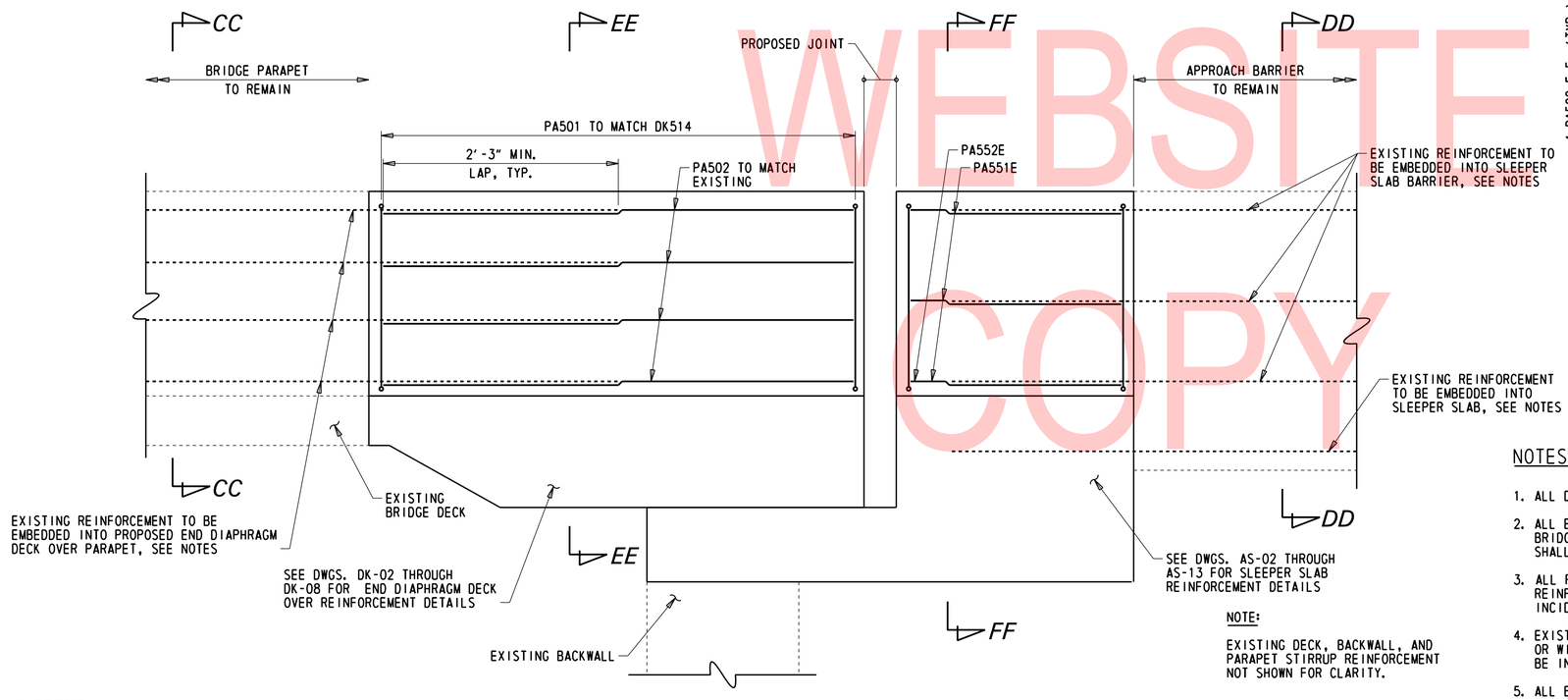

NOTE:

EXISTING DECK, BACKWALL, AND PARAPET STIRRUP REINFORCEMENT NOT SHOWN FOR CLARITY.

PROPOSED MEDIAN BARRIER

NORTH ABUTMENT SHOWN; SOUTH ABUTMENT SIMILAR

1" = 1'-0"

LEGEND:

LIMITS OF REMOVAL (ITEM 211000)

NOTES:

1. ALL DIMENSIONS MEASURED ALONG CONSTRUCTION BASELINE.
2. ALL EXISTING LONGITUDINAL REINFORCEMENT BARS WITHIN THE EXISTING APPROACH BARRIER DEMOLITION LIMITS AND EXISTING BRIDGE PARAPET DEMOLITION LIMITS TO REMAIN. STIRRUP REINFORCEMENT FULLY CONTAINED WITHIN DEMOLITION LIMITS SHALL BE REMOVED. PARTIALLY EMBEDDED STIRRUP REINFORCEMENT SHALL REMAIN IN ITS ENTIRETY.
3. ALL REMOVAL LIMITS SHALL BE SAW CUT FOR A NEAT LINE AND CARE SHOULD BE TAKEN TO NOT DAMAGE EXISTING REINFORCEMENT WHERE EMBEDDED INTO ADJACENT PROPOSED COMPONENTS, AS SHOWN. PAYMENT FOR THIS WORK WILL BE INCIDENTAL TO ITEM 211000 - REMOVAL OF STRUCTURES AND OBSTRUCTIONS.
4. EXISTING BARS TO REMAIN SHALL BE CLEANED IN ACCORDANCE WITH SUBSECTION 628.03(E)7. BARS WITH CORROSION, BROKEN, OR WITH INADEQUATE BOND SHALL BE REPAIRED IN ACCORDANCE WITH SUBSECTION 628.03(E)7. PAYMENT FOR THIS WORK WILL BE INCIDENTAL TO ITEM 211000 - REMOVAL OF STRUCTURES AND OBSTRUCTIONS.
5. ALL BARRIERS TO MATCH THE SHAPE AND FASCIA OF EXISTING BARRIERS.
6. FOR SECTION D-D, SEE SECTION O-O ON DWG. AS-05 AND SECTION T-T ON DWG. AS-12.
7. SEE DWGS. DK-02 THROUGH DK-08 FOR DECKOVER REINFORCEMENT DETAILS.
8. SEE DWGS. AS-02 THROUGH AS-13 FOR SLEEPER SLAB AND SLEEPER SLAB BARRIER STIRRUP REINFORCEMENT DETAILS.

UNOFFICIAL WEBSITE COPY

ADDENDA / REVISIONS	SCALE AS NOTED	REHABILITATION OF BRIDGES 1-600, 1-601, AND 1-604, SR 2 AND SR 141 INTERCHANGE	CONTRACT T201707403	BRIDGE NO. 1 600	END DIAPHRAGM DECK OVER DETAILS – 8	DK–09
			COUNTY NEW CASTLE	DESIGNED BY: ZMG		SECTION WRA
				CHECKED BY: WAG		SHEET NO. 52

N:\33122-003\CADD\Bridge\BR1-600_DK09.dgn 7/31/2019 4:18:44 PM

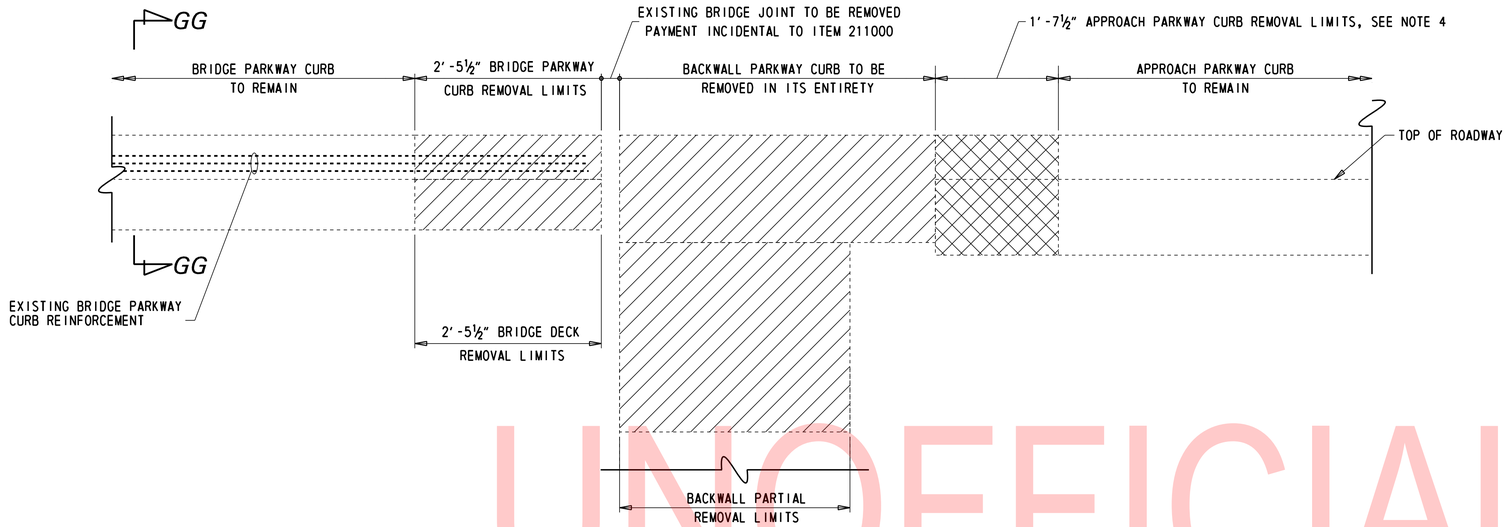

PARKWAY CURB DEMOLITION

NORTH ABUTMENT SHOWN; SOUTH ABUTMENT SIMILAR

1" = 1'-0"

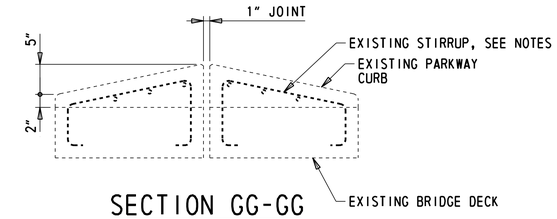

SECTION GG-GG

1" = 1'-0"

NOTE:

EXISTING BRIDGE DECK REINFORCEMENT NOT SHOWN FOR CLARITY

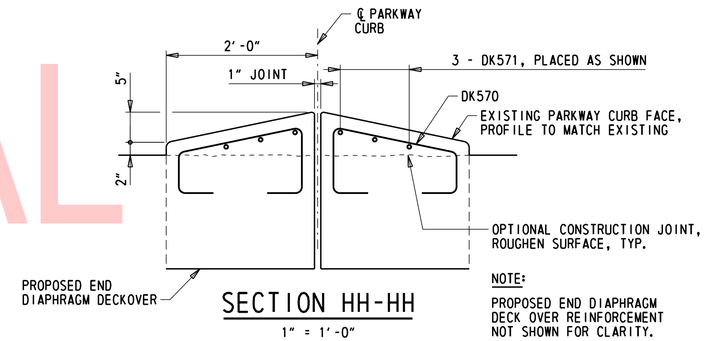

SECTION HH-HH

1" = 1'-0"

NOTE:

PROPOSED END DIAPHRAGM DECK OVER REINFORCEMENT NOT SHOWN FOR CLARITY.

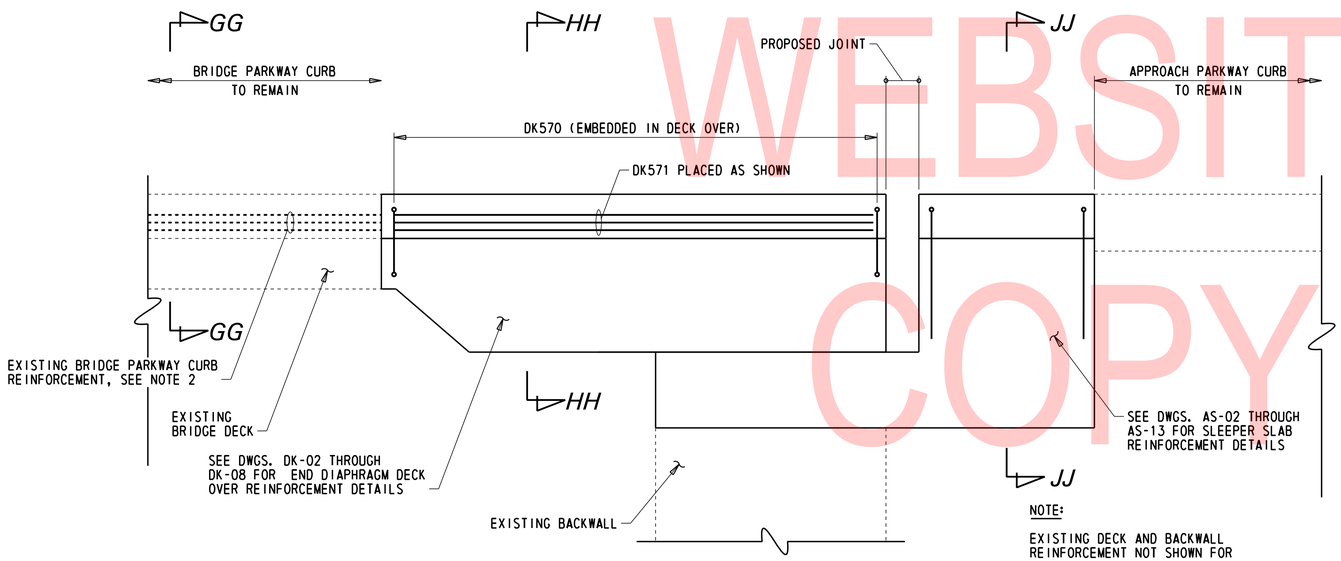

NOTE:

EXISTING DECK AND BACKWALL REINFORCEMENT NOT SHOWN FOR CLARITY.

PROPOSED PARKWAY CURB

NORTH ABUTMENT SHOWN; SOUTH ABUTMENT SIMILAR

1" = 1'-0"

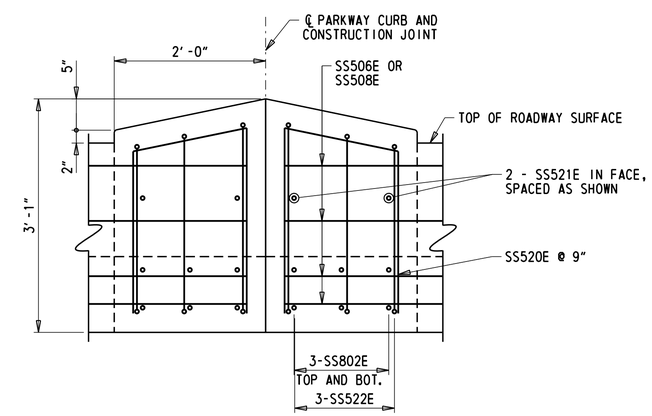

SECTION JJ-JJ

1" = 1'-0"

NOTES:

1. ALL DIMENSIONS MEASURED ALONG CONSTRUCTION BASELINE.
2. LONGITUDINAL REINFORCEMENT TO BE FIELD CUT AND TERMINATED AT DEMOLITION LIMITS. STIRRUP REINFORCEMENT FULLY CONTAINED WITHIN DEMOLITION LIMITS SHALL BE REMOVED. PARTIALLY EMBEDDED STIRRUP REINFORCEMENT SHALL REMAIN IN ITS ENTIRETY.
3. ALL REMOVAL LIMITS SHALL BE SAW CUT FOR A NEAT LINE AND CARE SHOULD BE TAKEN TO NOT DAMAGE EXISTING REINFORCEMENT WHERE EMBEDDED INTO ADJACENT PROPOSED COMPONENTS, AS SHOWN. PAYMENT FOR THIS WORK WILL BE INCIDENTAL TO ITEM 211000 - REMOVAL OF STRUCTURES AND OBSTRUCTIONS.
4. EXISTING BARS TO REMAIN SHALL BE CLEANED IN ACCORDANCE WITH SUBSECTION 628.03(E)7. BARS WITH CORROSION, BROKEN, OR WITH INADEQUATE BOND SHALL BE REPAIRED IN ACCORDANCE WITH SUBSECTION 628.03(E)7. PAYMENT FOR THIS WORK WILL BE INCIDENTAL TO ITEM 211000 - REMOVAL OF STRUCTURES AND OBSTRUCTIONS.
5. THE CONTRACTOR IS RESPONSIBLE FOR VERIFYING REINFORCEMENT AT WITHIN THE EXISTING APPROACH PARKWAY CURB. IF PRESENT, ALL REINFORCEMENT SHALL BE FIELD CUT AT THE DEMOLITION LIMITS.

LEGEND:

- REMOVAL LIMITS (ITEM 211000)
- REMOVAL LIMITS (ITEM 211506)

UNOFFICIAL WEBSITE COPY

N:\37122-002\CADD\Bridge\BR1-600_DK10.dgn
7/31/2019 4:18:45 PM

ADDENDA / REVISIONS		SCALE AS NOTED	REHABILITATION OF BRIDGES 1-600, 1-601, AND 1-604, SR 2 AND SR 141 INTERCHANGE	CONTRACT T201707403	BRIDGE NO. 1 600	END DIAPHRAGM DECK OVER DETAILS – 9	DK-10
				COUNTY NEW CASTLE	DESIGNED BY: ZMG		SECTION WRA
					CHECKED BY: WAG		SHEET NO. 53

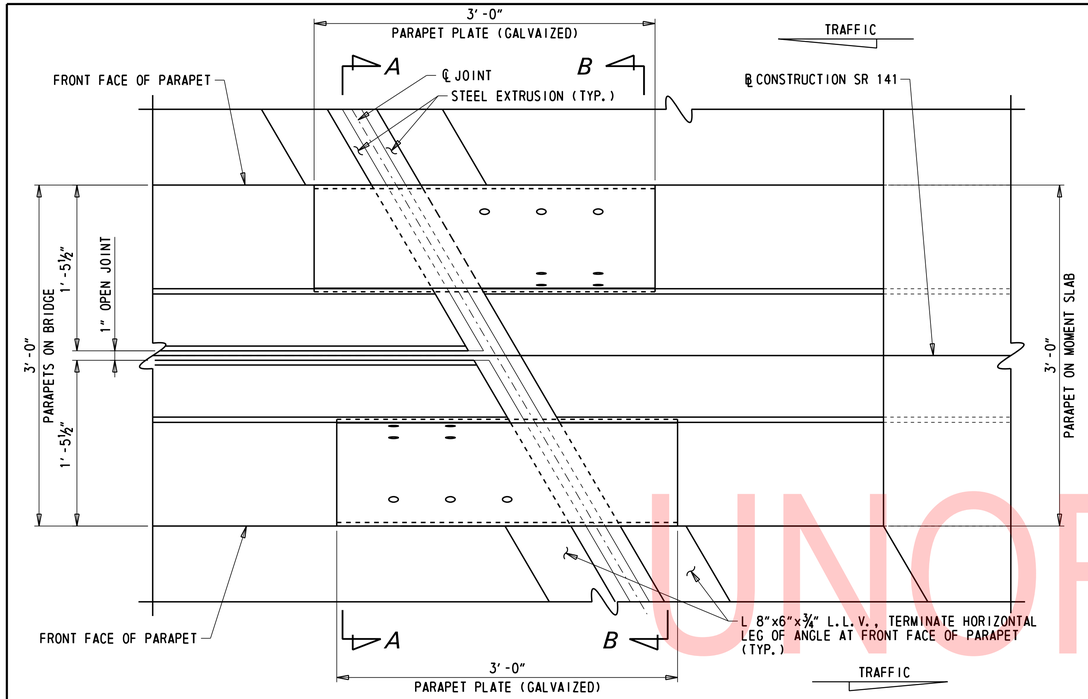

TYPICAL JOINT PLAN

1½" = 1'-0"

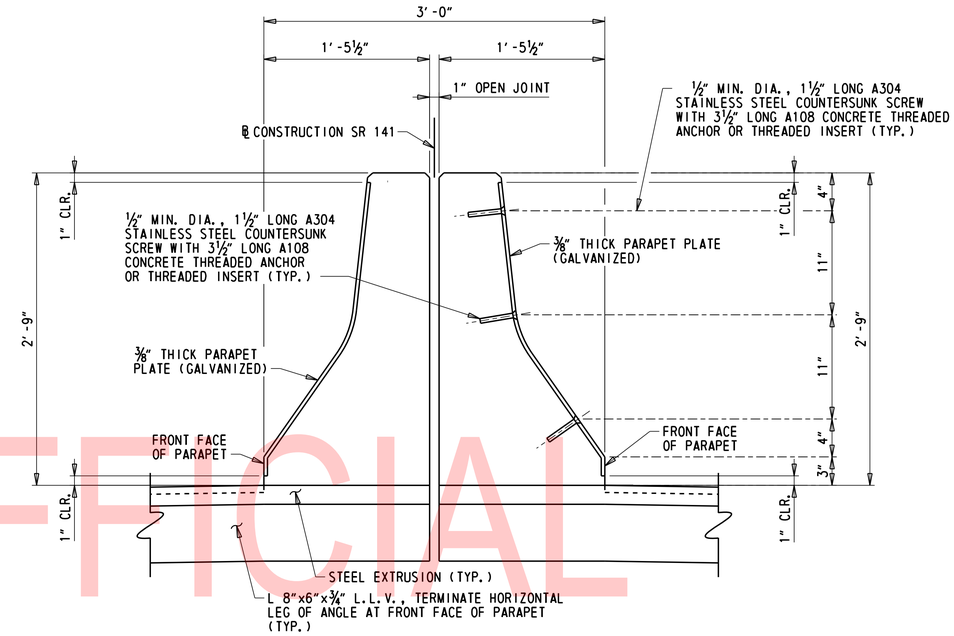

VIEW A-A

1½" = 1'-0"

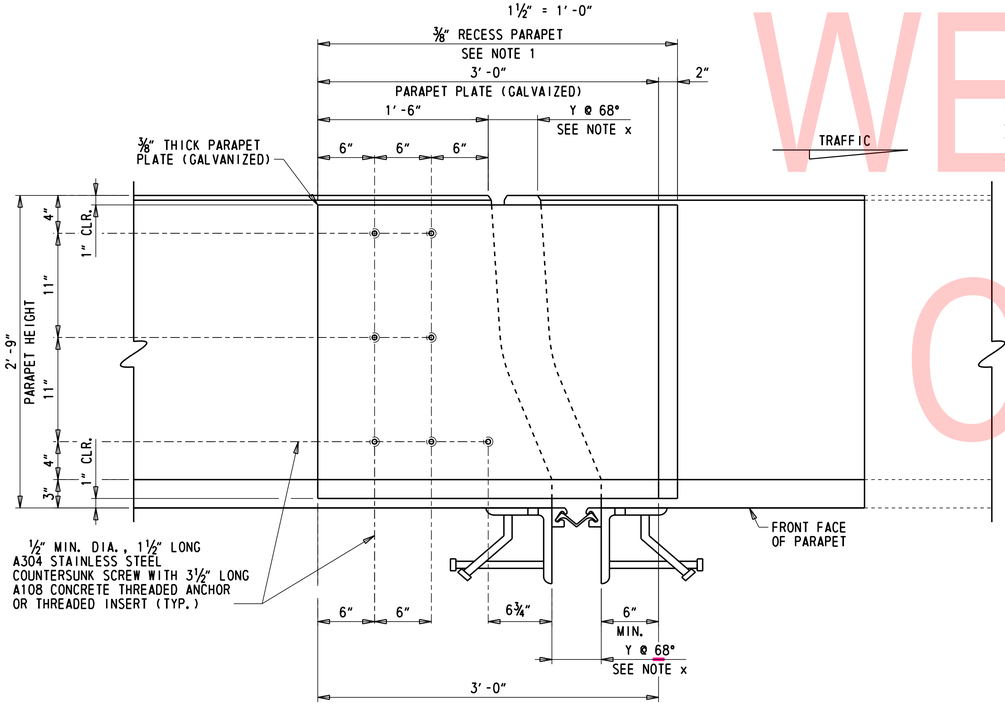

TYPICAL JOINT ELEVATION

1½" = 1'-0"

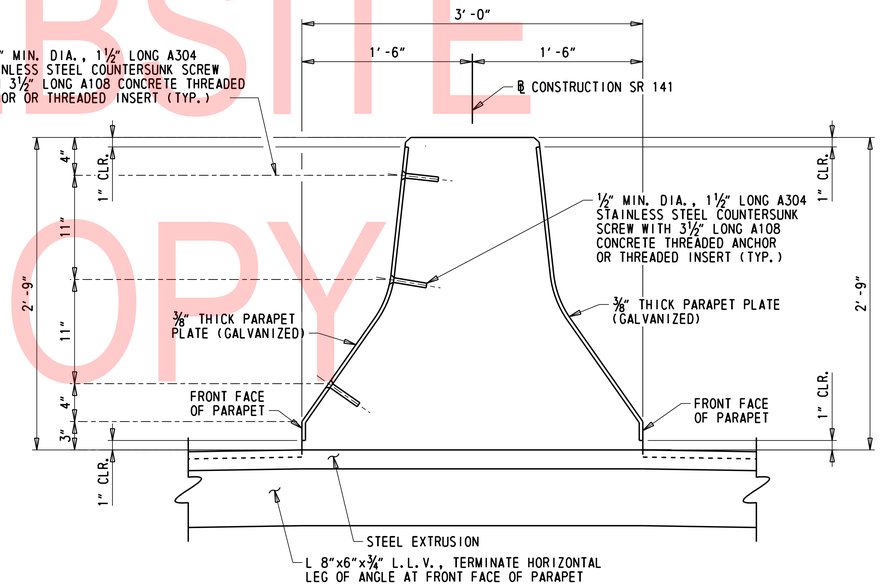

VIEW B-B

1½" = 1'-0"

PARAPET JOINT PLATE NOTES:

1. FORM CONCRETE RECESS AREA IN PARAPET AND GRIND TO PROVIDE SMOOTH SURFACE. APPLY ONE COAT OF ASPHALT CEMENT TO FREE SIDE OF JOINT IN ACCORDANCE WITH SECTION 1012 OF THE STANDARD SPECIFICATIONS TO ALLOW BENT SLIDING PLATE TO MOVE FREELY WITHOUT FRICTION. PAYMENT WILL BE INCIDENTAL TO ITEM 624000 - PREFABRICATED EXPANSION JOINT SYSTEM, 3".
2. PLACE PARAPET CONCRETE WITH STEEL BENT PLATES, INSERTS, AND BOLTS IN PLACE TO ENSURE PROPER ALIGNMENT OF INSERTS AND HOLES IN THE STEEL PLATE. REMOVE PLATES TO INSTALL SEAL. APPLY APPROVED BONDBREAKER TO SLIDING PLATES PRIOR TO PLACEMENT OF CONCRETE.
3. USE TYPE 316 STAINLESS STEEL COUNTERSUNK FLATHEAD SCREWS WITH ASTM A108 CONCRETE THREADED ANCHOR OR THREADED INSERT. HEAD OF SCREWS SHALL BE FLUSH WITH FACE OF STEEL PLATE.
4. THE CONTRACTOR SHALL SUBMIT WORKING DRAWINGS OF TRAFFIC BARRIER PLATES FOR APPROVAL.
5. ⅜" PARAPET PLATE SHALL BE UNPAINTED GALVANIZED STEEL. PAYMENT FOR PARAPET JOINT PLATES SHALL BE INCIDENTAL TO ITEM 624000 - PREFABRICATED EXPANSION JOINT SYSTEM, 3".
6. FOR JOINT ASSEMBLY DETAIL AND STRIP SEAL EXPANSION NOTES, SEE DWG. EX-01.
7. L.L.V. = LONG LEG VERTICAL

UNOFFICIAL WEBSITE COPY

N:\32122-002\CADD\Bridge\BR1-600_DK11.dgn
7/31/2019 4:18:46 PM

ADDENDA / REVISIONS	SCALE AS NOTED	REHABILITATION OF BRIDGES 1-600, 1-601, AND 1-604, SR 2 AND SR 141 INTERCHANGE	CONTRACT T201707403	BRIDGE NO. 1 600	PARAPET JOINT DETAILS – 1	DK-11
			COUNTY NEW CASTLE	DESIGNED BY: ZMG		SECTION WRA
				CHECKED BY: WAG		SHEET NO. 54

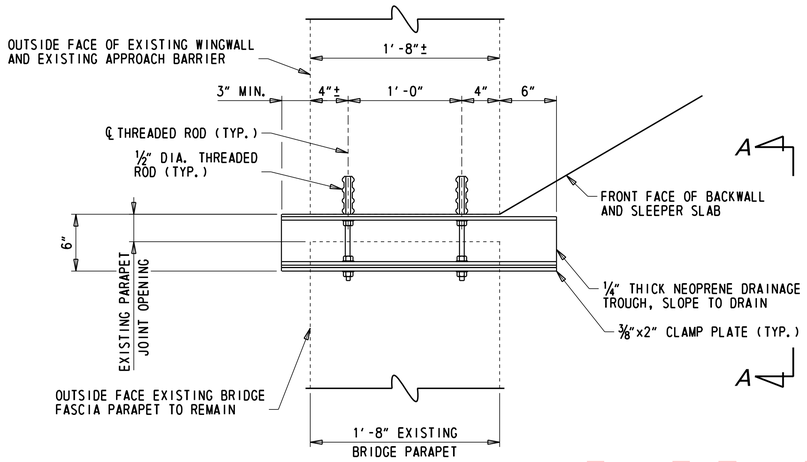

PARAPET JOINT TROUGH PLAN - DETAIL 1

NORTHWEST AND SOUTHEAST CORNERS

1½" = 1'-0"

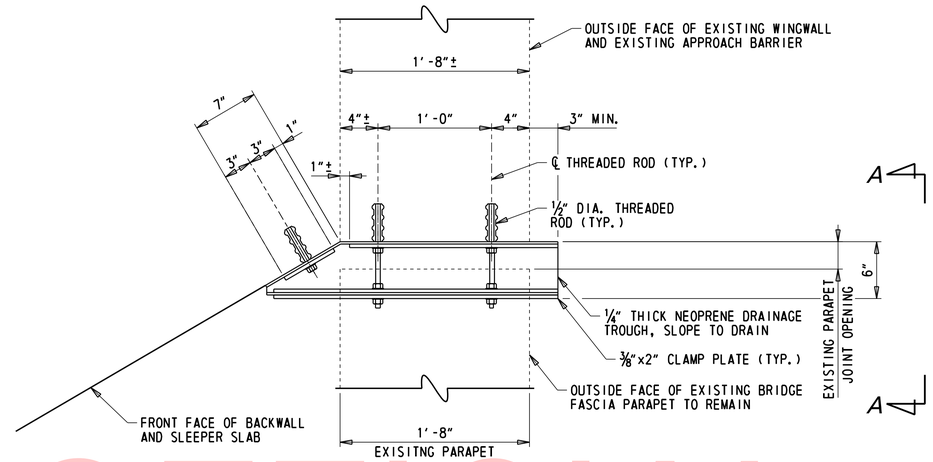

PARAPET JOINT TROUGH PLAN - DETAIL 2

NORTHEAST AND SOUTHWEST CORNERS

1½" = 1'-0"

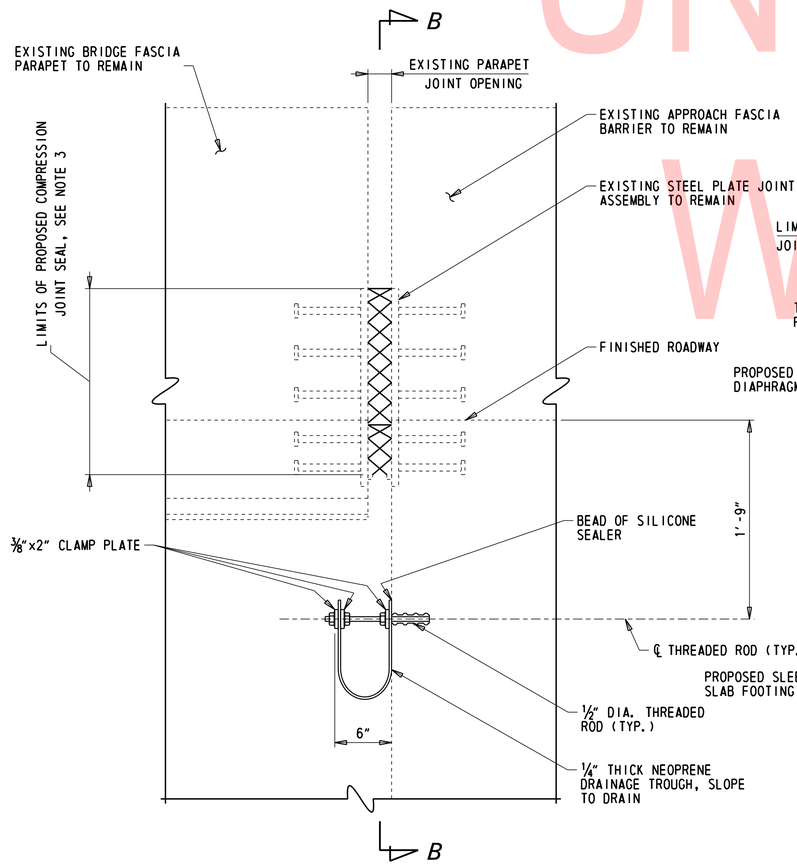

VIEW A-A

1½" = 1'-0"

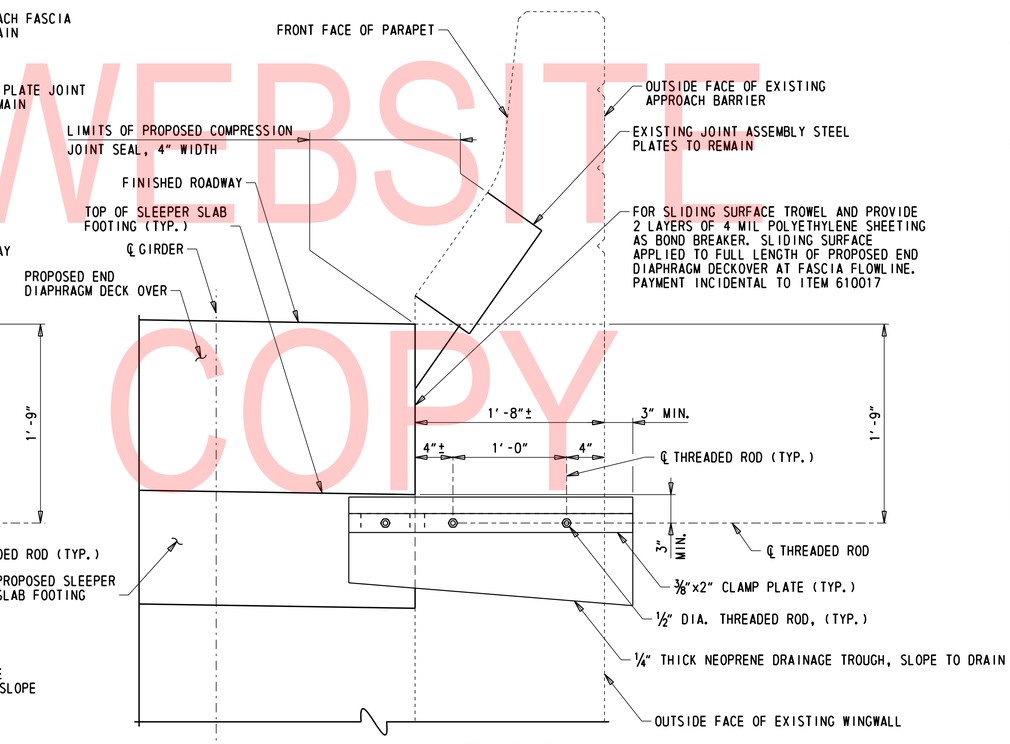

VIEW B-B

'PARAPET JOINT TROUGH PLAN - DETAIL 2' SHOWN

1½" = 1'-0"

UNOFFICIAL WEBSITE COPY

NOTES:

1. THE COMPRESSION JOINT SEAL AND PARAPET JOINT TROUGH SHALL BE INSTALLED AT THE EXISTING FASCIA PARAPET JOINT LOCATIONS AT ALL FOUR CORNERS OF THE BRIDGE AS INDICATED IN PARAPET JOINT TROUGH PLAN - DETAILS 1 AND 2.
2. PAYMENT FOR INSTALLATION OF THE COMPRESSION JOINT SEAL, THE PARAPET JOINT TROUGH, AND ALL ASSOCIATED RESPECTIVE COMPONENTS AND HARDWARE WILL BE INCIDENTAL TO ITEM 610016.
3. THE PROPOSED COMPRESSION JOINT SEAL SHALL MEET THE REQUIREMENTS OF STANDARD SPECIFICATION SECTION 624.
4. THE CONTRACTOR SHALL SUBMIT WORKING DRAWINGS OF THE PARAPET JOINT TROUGH ASSEMBLY FOR APPROVAL.
5. ALL STEEL SHALL BE GALVANIZED ASTM A 709 GRADE 36 OR GRADE 50. ALL HARDWARE SHALL BE STAINLESS STEEL TYPE 304.
6. THREADED ROD MINIMUM DIAMETER SHALL BE 1/2". THREADED ROD MINIMUM WORKING LOAD SHALL BE 2000 LB. THREADED ROD MINIMUM EMBEDMENT LENGTH SHALL BE 4".
7. DRILLED HOLES SHALL BE 1/2" LARGER THAN THREADED ROD DIAMETERS AND FILLED WITH GROUT DURING INSTALLATION. GROUT SHALL HAVE A MINIMUM COMPRESSION STRENGTH OF 5000 PSI IN 7 DAYS.
8. THE NEOPRENE TROUGH SHALL MEET THE REQUIREMENTS OF ASTM D 2826 AND THE 'NEOPRENE DRAINAGE TROUGH REQUIREMENTS' TABLE BELOW. THE TROUGH CROSS SLOPE SHALL BE A MINIMUM OF 1" PER FOOT.

NEOPRENE DRAINAGE TROUGH REQUIREMENTS

PHYSICAL PROPERTIES	METHOD	LIMITS
THICKNESS (IN), MINIMUM	--	1/4
TENSILE STRENGTH (PSI), MINIMUM	D 412	2000
ELONGATION AT BREAK (%), MINIMUM	D 412	250
HARDNESS, TYPE A DUROMETER	D 2240	60±5
COMPRESSION SET, 22-HR @ 212 F (%), MAX.	D 395	35
OVEN AGING, 70-HR @ 212 F		
TENSILE STRENGTH, % LOSS MAX	D 573	20
ELONGATION (%), LOSS MAX		20
HARDNESS, TYPE A DUROMETER (POINTS CHANGE)		0 TO + 10

ADDENDA / REVISIONS

SCALE AS NOTED

REHABILITATION OF BRIDGES 1-600, 1-601, AND 1-604, SR 2 AND SR 141 INTERCHANGE

CONTRACT	BRIDGE NO.	1 600
T201707403	DESIGNED BY: ZMG	
COUNTY		
NEW CASTLE	CHECKED BY: WAG	

PARAPET JOINT DETAILS - 2

DK-12
SECTION
WRA
SHEET NO.
55

N:\32122-002\CADD\Bridge\BR1-600_DK12.dgn
7/31/2019 4:18:47 PM

① ANY MARK NUMBER WITH SUFFIX 'E' DENOTES EPOXY COATED REINFORCING STEEL.

② ALL MARK 'LOCATION PREFIXES' SHALL CONSIST OF TWO LETTERS AND ARE AS FOLLOWS: AB = ABUTMENT, AS = APPROACH SLAB, BC = BOX CULVERT, BW = BACKWALL, CL = COLUMN, DK = DECK, DL = DOWEL, FT = FOOTING, HW = HEADWALL, MS = MISC. BARS, PA = PARAPET, PR = PIER, SC = SHEETPILE CAP, SL = SLAB, SS = SLEEPER SLAB, TW = TOEWALL, WL = WALL (UNIQUE LOCATION), WW = WINGWALL

SPECIFICATIONS					BENDING DIMENSIONS (FEET-INCHES /QUARTER INCH)										
QTY.	SIZE	LENGTH	MARK	TYPE	A	B	C	D	E	F/R	G	H	J	K	O
DECK OVER UNIT															
	UNIT A														
8	5	9-5'2	DK501	STR		9-5'2									
17	5	7-4'2	DK502	17			6-3'1	1-1'1							
14	5	7-2'2	DK503	16		0-10'0	5-1'1	1-3'1				0-10'0		0-11'2	6-0'3
2	5	9-13'0	DK504	T1	0-5'2	2-11'1	1-1'1	2-11'1	1-1'1		0-5'2				
12	5	21-5'1	DK505	STR		21-5'1									
8	5	19-5'0	DK506	STR		19-5'0									
2		3/4"x10" STUDS													
	UNIT B														
8	5	9-5'2	DK501	STR		9-5'2									
20	5	7-4'2	DK502	17			6-3'1	1-1'1							
17	5	7-2'2	DK503	16		0-10'0	5-1'1	1-3'1				0-10'0		0-11'2	6-0'3
4	5	3-7'1	DK507	STR		3-7'1									
20	5	23-2'1	DK508	STR		23-2'1									
10	5	4-2'1	DK570	DE05	0-5'2	0-11'1	1-10'0	0-6'0			0-5'2	0-11'0	0-6'0	0-2'2	1-11'2
3	5	6-3'1	DK571	STR		6-3'1									
	UNIT C														
12	5	9-5'2	DK501	STR		9-5'2									
36	5	7-4'2	DK502	17			6-3'1	1-1'1							
31	5	7-2'2	DK503	16		0-10'0	5-1'1	1-3'1				0-10'0		0-11'2	6-0'3
20	5	41-0'2	DK509	STR		41-0'2									
4	5	3-0'2	DK510	STR		3-0'2									
4	5	8-0'3	DK511	STR		8-0'3									
10	5	4-2'1	DK570	DE05	0-5'2	0-11'1	1-10'0	0-6'0			0-5'2	0-11'0	0-6'0	0-2'2	1-11'2
3	5	6-3'1	DK571	STR		6-3'1									

SPECIFICATIONS					BENDING DIMENSIONS (FEET-INCHES /QUARTER INCH)										
QTY.	SIZE	LENGTH	MARK	TYPE	A	B	C	D	E	F/R	G	H	J	K	O
DECK OVER UNIT															
	UNIT D														
4	5	9-5'2	DK501	STR		9-5'2									
21	5	7-4'2	DK502	17			6-3'1	1-1'1							
18	5	7-2'2	DK503	16		0-10'0	5-1'1	1-3'1				0-10'0		0-11'2	6-0'3
4	5	3-0'2	DK510	STR		3-0'2									
20	5	24-6'0	DK512	STR		24-6'0									
4	5	11-2'3	DK513	STR		11-2'3									
10	5	7-8'0	DK514	DE16		3-0'2	1-3'2	1-6'0	1-10'0			1-4'0		1-3'0	
10	5	5-6'0	PA501	T7		2-6'0	0-6'0	2-6'0				2-6'0		0-2'1	
8	5	6-3'1	PA502	STR		6-3'1									
24		MECHANICAL COUPLERS UNIT C TO D													
	UNIT E														
8	5	9-5'2	DK501	STR		9-5'2									
27	5	7-4'2	DK502	17			6-3'1	1-1'1							
24	5	7-2'2	DK503	16		0-10'0	5-1'1	1-3'1				0-10'0		0-11'2	6-0'3
4	5	3-7'1	DK507	STR		3-7'1									
10	5	7-8'0	DK514	DE16		3-0'2	1-3'2	1-6'0	1-10'0			1-4'0		1-3'0	
20	5	31-1'0	DK516	STR		31-1'0									
4	5	7-4'2	DK517	STR		7-4'2									
10	5	5-6'0	PA501	T7		2-6'0	0-6'0	2-6'0				2-6'0		0-2'1	
8	5	6-3'1	PA502	STR		6-3'1									
	UNIT F														
8	5	9-5'2	DK501	STR		9-5'2									
27	5	7-4'2	DK502	17			6-3'1	1-1'1							
23	5	7-2'2	DK503	16		0-10'0	5-1'1	1-3'1				0-10'0		0-11'2	6-0'3
2	5	9-13'0	DK504	T1	0-5'2	2-11'1	1-1'1	2-11'1	1-1'1		0-5'2				
4	5	12-0'0	DK519	STR		12-0'0									
6	5	33-7'2	DK520	STR		33-7'2									
8	5	31-7'1	DK521	STR		31-7'1									
24		MECHANICAL COUPLERS UNIT E TO F													
3		3/4"x10" STUDS													

SPECIFICATIONS					BENDING DIMENSIONS (FEET-INCHES /QUARTER INCH)										
QTY.	SIZE	LENGTH	MARK	TYPE	A	B	C	D	E	F/R	G	H	J	K	O
DECK OVER UNIT															
	UNIT G														
8	5	9-5'2	DK501	STR		9-5'2									
17	5	7-4'2	DK502	17			6-3'1	1-1'1							
14	5	7-2'2	DK503	16		0-10'0	5-1'1	1-3'1				0-10'0		0-11'2	6-0'3
2	5	9-13'0	DK504	T1	0-5'2	2-11'1	1-1'1	2-11'1	1-1'1		0-5'2				
12	5	21-5'1	DK505	STR		21-5'1									
8	5	19-5'0	DK506	STR		19-5'0									
3		3/4"x10" STUDS													
	UNIT H														
8	5	9-5'2	DK501	STR		9-5'2									
20	5	7-4'2	DK502	17			6-3'1	1-1'1							
17	5	7-2'2	DK503	16		0-10'0	5-1'1	1-3'1				0-10'0		0-11'2	6-0'3
4	5	3-7'1	DK507	STR		3-7'1									
20	5	23-2'1	DK508	STR		23-2'1									
10	5	4-2'1	DK570	DE05	0-5'2	0-11'1	1-10'0	0-6'0			0-5'2	0-11'0	0-6'0	0-2'2	1-11'2
3	5	6-3'1	DK571	STR		6-3'1									
	UNIT J														
12	5	9-5'2	DK501	STR		9-5'2									
36	5	7-4'2	DK502	17			6-3'1	1-1'1							
31	5	7-2'2	DK503	16		0-10'0	5-1'1	1-3'1				0-10'0		0-11'2	6-0'3
20	5	41-0'2	DK509	STR		41-0'2									
4	5	3-0'2	DK510	STR		3-0'2									
4	5	8-0'3	DK511	STR		8-0'3									
10	5	4-2'1	DK570	DE05	0-5'2	0-11'1	1-10'0	0-6'0			0-5'2	0-11'0	0-6'0	0-2'2	1-11'2
3	5	6-3'1	DK571	STR		6-3'1									

UNOFFICIAL WEBSITE COPY

ASTM STANDARD ENGLISH REINFORCING BARS				RECOMMENDED END HOOKS, APPLICABLE TO ALL GRADES				STIRRUP AND TIE HOOKS, APPLICABLE TO ALL GRADES			
NOMINAL DIMENSIONS				180° HOOKS			90° HOOKS	90° HOOK		135° HOOK	
BAR SIZE	DIAMETER (INCHES)	AREA (INCHES²)	WEIGHT (LBS./FT.)	D	A OR G	J	A OR G	D	A OR G	A OR G	A OR G
3	0.375	0.110	0.376	2¼"	5"	3"	6"	1½"	4"	4"	2½"
4	0.500	0.200	0.668	3"	6"	4"	8"	2"	4½"	4½"	3"
5	0.625	0.310	1.043	3¾"	7"	5"	10"	2½"	6"	5½"	3¾"
6	0.750	0.440	1.502	4½"	8"	6"	1-0"	4½"	1-0"	8"	4½"
7	0.875	0.600	2.044	5¼"	10"	7"	1-2"	5¼"	1-2"	9"	5¼"
8	1.000	0.790	2.670	6"	11"	8"	1-4"	6"	1-4"	10½"	6"
9	1.128	1.000	3.400	9½"	1-3"	11¾"	1-7"				
10	1.270	1.270	4.303	10¾"	1-5"	1-1¼"	1-10"				
11	1.410	1.560	5.313	1-0"	1-7"	1-2¾"	2-0"				
14	1.693	2.250	7.650	1-6¼"	2-3"	1-9¾"	2-7"				
18	2.257	4.000	13.600	2-0"	3-0"	2-4½"	3-5"				

NOTES:

1. FIGURES SHOWN IN CIRCLES REPRESENT BAR BEND TYPES.
2. STANDARD BAR BENDS INCLUDE ONLY THOSE TYPES BELOW, INDICATED AS SUCH.
3. ALL DIMENSIONS OUT-TO-OUT, EXCEPT "A" AND "G" ON STD. 180° AND 135° HOOKS.
4. "J" DIMENSIONS ON 180° HOOKS TO BE SHOWN ONLY WHERE NECESSARY TO RESTRICT HOOK SIZE, OTHERWISE STANDARD 'ACI' HOOKS ARE TO BE USED.
5. WHERE "J" IS NOT SHOWN, "J" WILL BE KEPT EQUAL TO OR LESS THAN "H" ON TYPES 3, 5 AND 22. WHERE "J" CAN EXCEED "H", IT SHALL BE SHOWN.
6. "H" DIMENSIONS OF STIRRUPS TO BE SHOWN AS NEEDED TO FIT WITHIN THE CONCRETE.
7. UNLESS OTHERWISE NOTED, DIAMETER "D" IS THE SAME FOR ALL BENDS AND HOOKS ON A BAR (EXCEPT FOR BEND TYPES 11 AND 13).
8. WHERE SLOPE DIFFERS FROM 45° OFFSET, "H" AND "K" MUST BE SHOWN.
9. WHERE BARS ARE TO BE BENT MORE ACCURATELY THAN STANDARD BENDING TOLERANCES, BENDING DIMENSIONS REQUIRING CLOSER FABRICATION SHOULD HAVE LIMITS INDICATED.
10. FOR RECOMMENDED DIAMETER "D", OF BENDS, HOOKS, ETC., REFER TO TABLE ABOVE, 'CRSI' OR 'ACI' TABLES WHERE APPLICABLE AND REQUIRED.
11. TYPE S1-S6, S11, T1-T3 AND T6-T9 APPLICABLE TO BAR SIZES #3 THROUGH #8.

STANDARD BAR BENDS

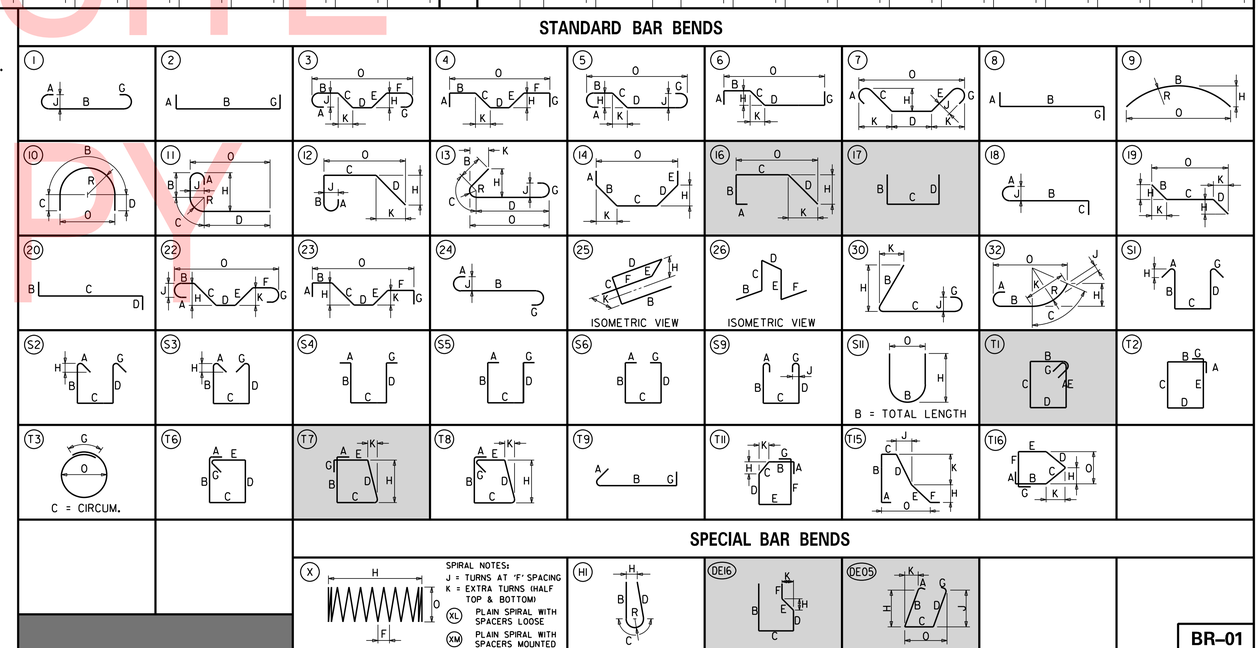

STIRRUP AND TIE HOOKS

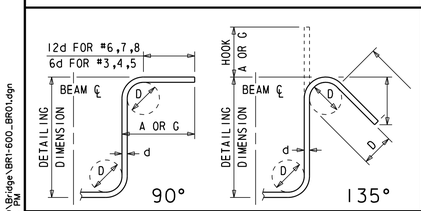

180° AND 90° END HOOKS

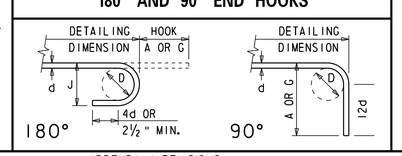

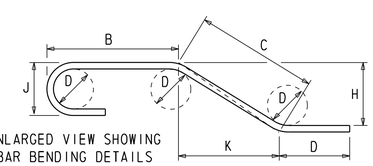

SPECIAL BAR BENDS

ADDENDA / REVISIONS	

SCALE AS NOTED

REHABILITATION OF BRIDGES 1-600, 1-601, AND 1-604, SR 2 AND SR 141 INTERCHANGE

CONTRACT	BRIDGE NO.	1 600
T201707403	DESIGNED BY: ZMG	
COUNTY		
NEW CASTLE	CHECKED BY: WAG	

REINFORCEMENT BAR LIST DECK OVER – 1

BR-01
SECTION
WRA
SHEET NO.
56

N:\32122-002\C60\Bridge\BR1-600_BR01.dgn
7/31/2019 4:18:48 PM

① ANY MARK NUMBER WITH SUFFIX 'E' DENOTES EPOXY COATED REINFORCING STEEL.

② ALL MARK 'LOCATION PREFIXES' SHALL CONSIST OF TWO LETTERS AND ARE AS FOLLOWS: AB = ABUTMENT, AS = APPROACH SLAB, BC = BOX CULVERT, BW = BACKWALL, CL = COLUMN, DK = DECK, DL = DOWEL, FT = FOOTING, HW = HEADWALL, MS = MISC. BARS, PA = PARAPET, PR = PIER, SC = SHEETPILE CAP, SL = SLAB, SS = SLEEPER SLAB, TW = TOEWALL, WL = WALL (UNIQUE LOCATION), WW = WINGWALL

SPECIFICATIONS					BENDING DIMENSIONS (FEET-INCHES /QUARTER INCH)										
QTY.	SIZE	LENGTH	MARK	TYPE	A	B	C	D	E	F/R	G	H	J	K	O
DECK OVER UNIT															
	UNIT K														
4	5	9-5/2	DK501	STR		9-5/2									
21	5	7-4/2	DK502	17			6-3/1	1-1/1							
18	5	7-2/2	DK503	16		0-10/0	5-1/1	1-3/1				0-10/0		0-11/2	6-0/3
4	5	3-0/2	DK510	STR		3-0/2									
20	5	24-6/0	DK512	STR		24-6/0									
4	5	11-2/3	DK513	STR		11-2/3									
10	5	7-8/0	DK514	DE16		3-0/2	1-3/2	1-6/0	1-10/0			1-4/0		1-3/0	
10	5	5-6/0	PA501	T7		2-6/0	0-6/0	2-6/0				2-6/0		0-2/1	
8	5	6-3/1	PA502	STR		6-3/1									
24			MECHANICAL COUPLERS UNIT J TO K												
	UNIT L														
8	5	9-5/2	DK501	STR		9-5/2									
27	5	7-4/2	DK502	17			6-3/1	1-1/1							
24	5	7-2/2	DK503	16		0-10/0	5-1/1	1-3/1				0-10/0		0-11/2	6-0/3
4	5	3-7/1	DK507	STR		3-7/1									
10	5	7-8/0	DK514	DE16		3-0/2	1-3/2	1-6/0	1-10/0			1-4/0		1-3/0	
20	5	31-1/0	DK516	STR		31-1/0									
4	5	7-4/2	DK517	STR		7-4/2									
10	5	5-6/0	PA501	T7		2-6/0	0-6/0	2-6/0				2-6/0		0-2/1	
8	5	6-3/1	PA502	STR		6-3/1									
	UNIT M														
8	5	9-5/2	DK501	STR		9-5/2									
27	5	7-4/2	DK502	17			6-3/1	1-1/1							
23	5	7-2/2	DK503	16		0-10/0	5-1/1	1-3/1				0-10/0		0-11/2	6-0/3
2	5	9-13/0	DK504	T1	0-5/2	2-11/1	1-1/1	2-11/1	1-1/1		0-5/2				
4	5	12-0/0	DK519	STR		12-0/0									
6	5	33-7/2	DK520	STR		33-7/2									
8	5	31-7/1	DK521	STR		31-7/1									
24			MECHANICAL COUPLERS UNIT L TO M												
2			3/4"x10" STUDS												

SPECIFICATIONS					BENDING DIMENSIONS (FEET-INCHES /QUARTER INCH)										
QTY.	SIZE	LENGTH	MARK	TYPE	A	B	C	D	E	F/R	G	H	J	K	O

SPECIFICATIONS					BENDING DIMENSIONS (FEET-INCHES /QUARTER INCH)										
QTY.	SIZE	LENGTH	MARK	TYPE	A	B	C	D	E	F/R	G	H	J	K	O

UNOFFICIAL WEBSITE COPY

ASTM STANDARD ENGLISH REINFORCING BARS

	NOMINAL DIMENSIONS			RECOMMENDED END HOOKS, APPLICABLE TO ALL GRADES				STIRRUP AND TIE HOOKS, APPLICABLE TO ALL GRADES			
					180° HOOKS		90° HOOKS		90° HOOK	135° HOOK	
BAR SIZE	DIAMETER (INCHES)	AREA (INCHES²)	WEIGHT (LBS./FT.)	D	A OR G	J	A OR G	D	A OR G	A OR G	A OR G
3	0.375	0.110	0.376	2¼"	5"	3"	6"	1½"	4"	4"	2½"
4	0.500	0.200	0.668	3"	6"	4"	8"	2"	4½"	4½"	3"
5	0.625	0.310	1.043	3¾"	7"	5"	10"	2½"	6"	5½"	3¾"
6	0.750	0.440	1.502	4½"	8"	6"	1-0"	4½"	1-0"	8"	4½"
7	0.875	0.600	2.044	5¼"	10"	7"	1-2"	5¼"	1-2"	9"	5¼"
8	1.000	0.790	2.670	6"	11"	8"	1-4"	6"	1-4"	10½"	6"
9	1.128	1.000	3.400	9½"	1-3"	11¾"	1-7"				
10	1.270	1.270	4.303	10¾"	1-5"	1-1¼"	1-10"				
11	1.410	1.560	5.313	1-0"	1-7"	1-2¾"	2-0"				
14	1.693	2.250	7.650	1-6¼"	2-3"	1-9¾"	2-7"				
18	2.257	4.000	13.600	2-0"	3-0"	2-4½"	3-5"				

NOTES:

1. FIGURES SHOWN IN CIRCLES REPRESENT BAR BEND TYPES.
2. STANDARD BAR BENDS INCLUDE ONLY THOSE TYPES BELOW, INDICATED AS SUCH.
3. ALL DIMENSIONS OUT-TO-OUT, EXCEPT "A" AND "G" ON STD. 180° AND 135° HOOKS.
4. "J" DIMENSIONS ON 180° HOOKS TO BE SHOWN ONLY WHERE NECESSARY TO RESTRICT HOOK SIZE, OTHERWISE STANDARD 'ACI' HOOKS ARE TO BE USED.
5. WHERE "J" IS NOT SHOWN, "J" WILL BE KEPT EQUAL TO OR LESS THAN "H" ON TYPES 3, 5 AND 22. WHERE "J" CAN EXCEED "H", IT SHALL BE SHOWN.
6. "H" DIMENSIONS OF STIRRUPS TO BE SHOWN AS NEEDED TO FIT WITHIN THE CONCRETE.
7. UNLESS OTHERWISE NOTED, DIAMETER "D" IS THE SAME FOR ALL BENDS AND HOOKS ON A BAR (EXCEPT FOR BEND TYPES 11 AND 13).
8. WHERE SLOPE DIFFERS FROM 45° OFFSET, "H" AND "K" MUST BE SHOWN.
9. WHERE BARS ARE TO BE BENT MORE ACCURATELY THAN STANDARD BENDING TOLERANCES, BENDING DIMENSIONS REQUIRING CLOSER FABRICATION SHOULD HAVE LIMITS INDICATED.
10. FOR RECOMMENDED DIAMETER "D", OF BENDS, HOOKS, ETC., REFER TO TABLE ABOVE, 'CRSI' OR 'ACI' TABLES WHERE APPLICABLE AND REQUIRED.
11. TYPE S1-S6, S11, T1-T3 AND T6-T9 APPLICABLE TO BAR SIZES #3 THROUGH #8.

STANDARD BAR BENDS

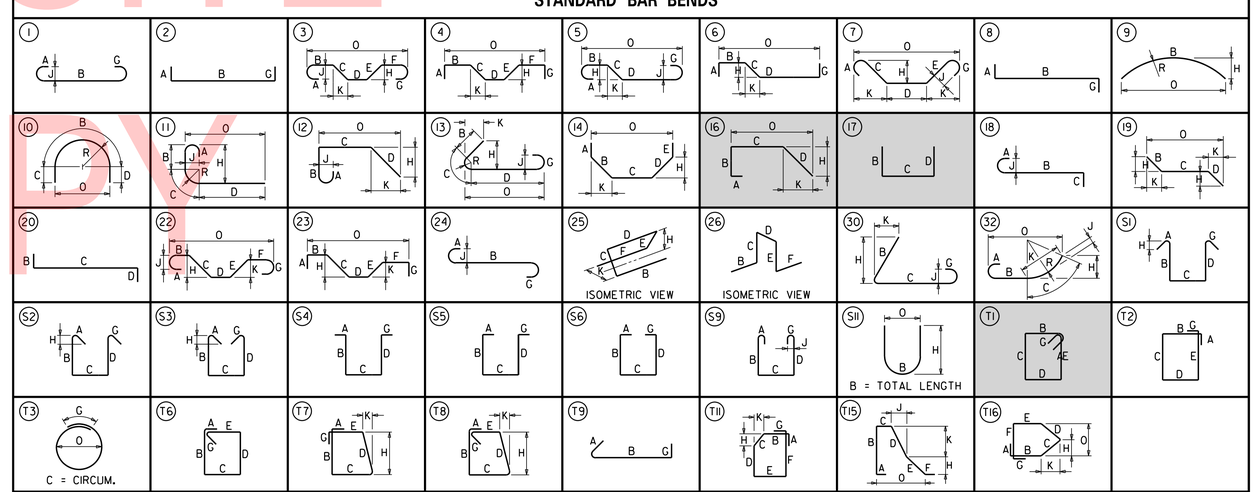

SPECIAL BAR BENDS

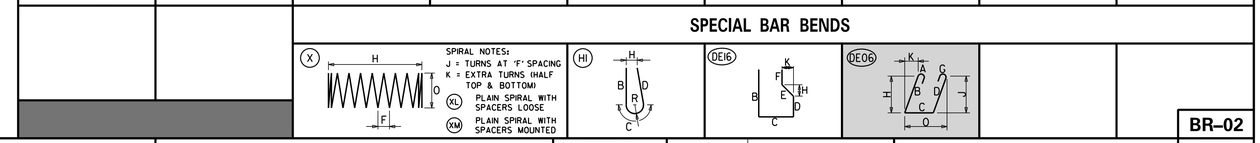

STIRRUP AND TIE HOOKS

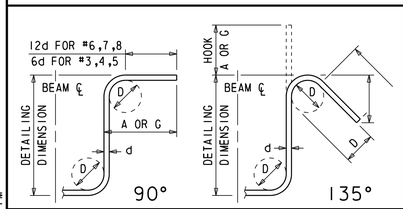

180° AND 90° END HOOKS

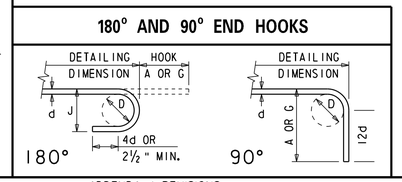

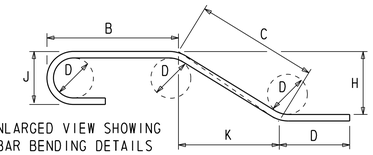

ENLARGED VIEW SHOWING BAR BENDING DETAILS

ADDENDA / REVISIONS

SCALE AS NOTED

REHABILITATION OF BRIDGES 1-600, 1-601, AND 1-604, SR 2 AND SR 141 INTERCHANGE

CONTRACT	BRIDGE NO.	1 600
T201707403	DESIGNED BY: ZMG	
COUNTY		
NEW CASTLE	CHECKED BY: WAG	

REINFORCEMENT BAR LIST

BR-02

SECTION: WRA

SHEET NO. 57

N:\32122-002\C&D\Bridge\BR1-600_BR03.dgn 7/31/2019 4:18:49 PM

① ANY MARK NUMBER WITH SUFFIX 'E' DENOTES EPOXY COATED REINFORCING STEEL.

② ALL MARK 'LOCATION PREFIXES' SHALL CONSIST OF TWO LETTERS AND ARE AS FOLLOWS: AB = ABUTMENT, AS = APPROACH SLAB, BC = BOX CULVERT, BW = BACKWALL, CL = COLUMN, DK = DECK, DL = DOWEL, FT = FOOTING, HW = HEADWALL, MS = MISC. BARS, PA = PARAPET, PR = PIER, SC = SHEETPILE CAP, SL = SLAB, SS = SLEEPER SLAB, TW = TOEWALL, WL = WALL (UNIQUE LOCATION), WW = WINGWALL

SPECIFICATIONS					BENDING DIMENSIONS (FEET-INCHES /QUARTER INCH)										
QTY.	SIZE	LENGTH	MARK	TYPE	A	B	C	D	E	F/R	G	H	J	K	O
SLEEPER SLAB UNIT															
	UNIT A														
19	5	21-3⁄0	SS501E	STR		21-3⁄0									
40	8	5-2⁄2	SS802E	STR		5-2⁄2									
9	5	8-4⁄0	SS503E	T1	0-5⁄2	1-8⁄2	2-0⁄0	1-8⁄2	2-0⁄0		0-5⁄2				
11	5	20-10⁄2	SS504E	T1	0-5⁄2	7-11⁄3	2-0⁄0	7-11⁄3	2-0⁄0		0-5⁄2				
17	5	10-10⁄2	SS505E	STR		10-10⁄2									
	UNIT B														
42	8	5-2⁄2	SS802E	STR		5-2⁄2									
5	5	8-4⁄0	SS503E	T1	0-5⁄2	1-8⁄2	2-0⁄0	1-8⁄2	2-0⁄0		0-5⁄2				
15	5	20-10⁄2	SS504E	T1	0-5⁄2	7-11⁄3	2-0⁄0	7-11⁄3	2-0⁄0		0-5⁄2				
19	5	23-0⁄0	SS506E	STR		23-0⁄0									
17	5	15-9⁄2	SS507E	STR		15-9⁄2									
3	5	6-4⁄0	SS520E	DE06		2-5⁄2	1-9⁄0	2-1⁄2				2-4⁄3	2-1⁄0	0-7⁄1	2-2⁄2
2	5	1-9⁄0	SS521E	STR		1-9⁄0									
3•	5	8-9⁄0	SS522E	T1	0-5⁄2	1-9⁄0	2-2⁄0	1-9⁄0	2-2⁄0		0-5⁄2				
		10⁄					10⁄		10⁄						
		9-7⁄0			0-5⁄2	1-9⁄0	2-7⁄0	1-9⁄0	2-7⁄0		0-5⁄2				
			••1 SET OF 3												
	UNIT C														
74	8	5-2⁄2	SS802E	STR		5-2⁄2									
35	5	8-4⁄0	SS503E	T1	0-5⁄2	1-8⁄2	2-0⁄0	1-8⁄2	2-0⁄0		0-5⁄2				
19	5	40-7⁄3	SS508E	STR		40-7⁄3									
3	5	6-4⁄0	SS520E	DE06		2-5⁄2	1-9⁄0	2-1⁄2				2-4⁄3	2-1⁄0	0-7⁄1	2-2⁄2
2	5	1-9⁄0	SS521E	STR		1-9⁄0									
3•	5	8-9⁄0	SS522E	T1	0-5⁄2	1-9⁄0	2-2⁄0	1-9⁄0	2-2⁄0		0-5⁄2				
		10⁄				10⁄									
		9-7⁄0			0-5⁄2	1-9⁄0	2-7⁄0	1-9⁄0	2-7⁄0		0-5⁄2				
			••1 SET OF 3												

SPECIFICATIONS					BENDING DIMENSIONS (FEET-INCHES /QUARTER INCH)										
QTY.	SIZE	LENGTH	MARK	TYPE	A	B	C	D	E	F/R	G	H	J	K	O
SLEEPER SLAB UNIT															
	UNIT D														
40	8	5-2⁄2	SS802E	STR		5-2⁄2									
17	5	8-4⁄0	SS503E	T1	0-5⁄2	1-8⁄2	2-0⁄0	1-8⁄2	2-0⁄0		0-5⁄2				
19	5	24-11⁄1	SS509E	STR		24-11⁄1									
4••	8	6-3⁄2	SS810E	STR		6-3⁄2									
		10⁄				10⁄									
		6-9⁄1				6-9⁄1									
			••2 SETS OF 2												
4••	5	12-4⁄2	SS511E	T1	0-5⁄2	3-8⁄3	2-0⁄0	3-8⁄3	2-0⁄0		0-5⁄2				
		10⁄				10⁄									
		15-8⁄2			0-5⁄2	5-4⁄3	2-0⁄0	5-4⁄3	2-0⁄0		0-5⁄2				
			••1 SET OF 4												
10	5	4-6⁄0	SS512E	STR		4-6⁄0									
6	5	9-2⁄0	SS513E	DE16		4-0⁄0	0-11⁄2	2-6⁄0	1-8⁄2			1-4⁄3		0-11⁄3	
2	5	2-10⁄1	SS514E	STR		2-10⁄1									
1	5	5-4⁄3	SS515E	STR		5-4⁄3									
1	5	3-3⁄2	SS529E	STR		3-3⁄2									
6	5	5-5⁄1	PA550E	T7		2-6⁄0	0-5⁄1	2-6⁄0				2-6⁄0		0-2⁄0	
5	5	3-1⁄0	PA551E	STR		3-1⁄0									
1	5	3-6⁄3	PA552E	STR		3-6⁄3									
	UNIT E														
52	8	5-2⁄2	SS802E	STR		5-2⁄2									
26	5	8-4⁄0	SS503E	T1	0-5⁄2	1-8⁄2	2-0⁄0	1-8⁄2	2-0⁄0		0-5⁄2				
5	5	9-2⁄0	SS513E	DE16		4-0⁄0	0-11⁄2	2-6⁄0	1-8⁄2			1-4⁄3		0-11⁄3	
19	5	30-8⁄1	SS516E	STR		30-8⁄1									
4••	8	5-4⁄3	SS817E	STR		5-4⁄3									
		10⁄				10⁄									
		5-11⁄2				5-11⁄2									
			••2 SETS OF 2												
2••	5	1-11⁄2	SS518E	STR		1-11⁄2									
		10⁄				10⁄									
		2-6⁄0				2-6⁄0									
			••1 SET OF 2												
5	5	5-5⁄1	PA550E	T7		2-6⁄0	0-5⁄1	2-6⁄0				2-6⁄0		0-2⁄0	
5	5	2-7⁄0	PA553E	STR		2-7⁄0									
1	5	2-1⁄1	PA554E	STR		2-1⁄1									

SPECIFICATIONS					BENDING DIMENSIONS (FEET-INCHES /QUARTER INCH)										
QTY.	SIZE	LENGTH	MARK	TYPE	A	B	C	D	E	F/R	G	H	J	K	O
SLEEPER SLAB UNIT															
	UNIT F														
60	8	5-2⁄2	SS802E	STR		5-2⁄2									
30	5	8-4⁄0	SS503E	T1	0-5⁄2	1-8⁄2	2-0⁄0	1-8⁄2	2-0⁄0		0-5⁄2				
19	5	33-3⁄0	SS519E	STR		33-3⁄0									
	UNIT G														
19	5	21-3⁄0	SS501E	STR		21-3⁄0									
40	8	5-2⁄2	SS802E	STR		5-2⁄2									
9	5	8-4⁄0	SS503E	T1	0-5⁄2	1-8⁄2	2-0⁄0	1-8⁄2	2-0⁄0		0-5⁄2				
11	5	19-6⁄2	SS520E	T1	0-5⁄2	7-3⁄3	2-0⁄0	7-3⁄3	2-0⁄0		0-5⁄2				
15	5	10-9⁄1	SS521E	STR		10-9⁄1									
	UNIT H														
42	8	5-2⁄2	SS802E	STR		5-2⁄2									
5	5	8-4⁄0	SS503E	T1	0-5⁄2	1-8⁄2	2-0⁄0	1-8⁄2	2-0⁄0		0-5⁄2				
19	5	23-0⁄0	SS506E	STR		23-0⁄0									
15	5	19-6⁄2	SS520E	T1	0-5⁄2	7-3⁄3	2-0⁄0	7-3⁄3	2-0⁄0		0-5⁄2				
15	5	15-8⁄2	SS522E	STR		15-8⁄2									
3	5	6-4⁄0	SS520E	DE06		2-5⁄2	1-9⁄0	2-1⁄2				2-4⁄3	2-1⁄0	0-7⁄1	2-2⁄2
2	5	1-9⁄0	SS521E	STR		1-9⁄0									
3•	5	8-9⁄0	SS522E	T1	0-5⁄2	1-9⁄0	2-2⁄0	1-9⁄0	2-2⁄0		0-5⁄2				
		10⁄					10⁄		10⁄						
		9-7⁄0			0-5⁄2	1-9⁄0	2-7⁄0	1-9⁄0	2-7⁄0		0-5⁄2				
			••1 SET OF 3												
	UNIT J														
74	8	5-2⁄2	SS802E	STR		5-2⁄2									
35	5	8-4⁄0	SS503E	T1	0-5⁄2	1-8⁄2	2-0⁄0	1-8⁄2	2-0⁄0		0-5⁄2				
19	5	40-7⁄3	SS508E	STR		40-7⁄3									
3	5	6-4⁄0	SS520E	DE06		2-5⁄2	1-9⁄0	2-1⁄2				2-4⁄3	2-1⁄0	0-7⁄1	2-2⁄2
2	5	1-9⁄0	SS521E	STR		1-9⁄0									
3•	5	8-9⁄0	SS522E	T1	0-5⁄2	1-9⁄0	2-2⁄0	1-9⁄0	2-2⁄0		0-5⁄2				
		10⁄					10⁄		10⁄						
		9-7⁄0			0-5⁄2	1-9⁄0	2-7⁄0	1-9⁄0	2-7⁄0		0-5⁄2				
			••1 SET OF 3												

UNOFFICIAL WEBSITE COPY

ASTM STANDARD ENGLISH REINFORCING BARS				RECOMMENDED END HOOKS, APPLICABLE TO ALL GRADES				STIRRUP AND TIE HOOKS, APPLICABLE TO ALL GRADES			
	NOMINAL DIMENSIONS				180° HOOKS		90° HOOKS		90° HOOK	135° HOOK	
BAR SIZE	DIAMETER (INCHES)	AREA (INCHES²)	WEIGHT (LBS./FT.)	D	A OR G	J	A OR G	D	A OR G	A OR G	A OR G
3	0.375	0.110	0.376	2¼"	5"	3"	6"	1½"	4"	4"	2½"
4	0.500	0.200	0.668	3"	6"	4"	8"	2"	4½"	4½"	3"
5	0.625	0.310	1.043	3¾"	7"	5"	10"	2½"	6"	5½"	3¾"
6	0.750	0.440	1.502	4½"	8"	6"	1-0"	4½"	1-0"	8"	4½"
7	0.875	0.600	2.044	5¼"	10"	7"	1-2"	5¼"	1-2"	9"	5¼"
8	1.000	0.790	2.670	6"	11"	8"	1-4"	6"	1-4"	10½"	6"
9	1.128	1.000	3.400	9½"	1-3"	11¾"	1-7"				
10	1.270	1.270	4.303	10¾"	1-5"	1-1¼"	1-10"				
11	1.410	1.560	5.313	1-0"	1-7"	1-2¾"	2-0"				
14	1.693	2.250	7.650	1-6¼"	2-3"	1-9¾"	2-7"				
18	2.257	4.000	13.600	2-0"	3-0"	2-4½"	3-5"				

NOTES:

1. FIGURES SHOWN IN CIRCLES REPRESENT BAR BEND TYPES.
2. STANDARD BAR BENDS INCLUDE ONLY THOSE TYPES BELOW, INDICATED AS SUCH.
3. ALL DIMENSIONS OUT-TO-OUT, EXCEPT "A" AND "G" ON STD. 180° AND 135° HOOKS.
4. "J" DIMENSIONS ON 180° HOOKS TO BE SHOWN ONLY WHERE NECESSARY TO RESTRICT HOOK SIZE, OTHERWISE STANDARD 'ACI' HOOKS ARE TO BE USED.
5. WHERE "J" IS NOT SHOWN, "J" WILL BE KEPT EQUAL TO OR LESS THAN "H" ON TYPES 3, 5 AND 22. WHERE "J" CAN EXCEED "H", IT SHALL BE SHOWN.
6. "H" DIMENSIONS OF STIRRUPS TO BE SHOWN AS NEEDED TO FIT WITHIN THE CONCRETE.
7. UNLESS OTHERWISE NOTED, DIAMETER "D" IS THE SAME FOR ALL BENDS AND HOOKS ON A BAR (EXCEPT FOR BEND TYPES 11 AND 13).
8. WHERE SLOPE DIFFERS FROM 45° OFFSET, "H" AND "K" MUST BE SHOWN.
9. WHERE BARS ARE TO BE BENT MORE ACCURATELY THAN STANDARD BENDING TOLERANCES, BENDING DIMENSIONS REQUIRING CLOSER FABRICATION SHOULD HAVE LIMITS INDICATED.
10. FOR RECOMMENDED DIAMETER "D", OF BENDS, HOOKS, ETC., REFER TO TABLE ABOVE, 'CRSI' OR 'ACI' TABLES WHERE APPLICABLE AND REQUIRED.
11. TYPE S1-S6, S11, T1-T3 AND T6-T9 APPLICABLE TO BAR SIZES #3 THROUGH #8.

STANDARD BAR BENDS

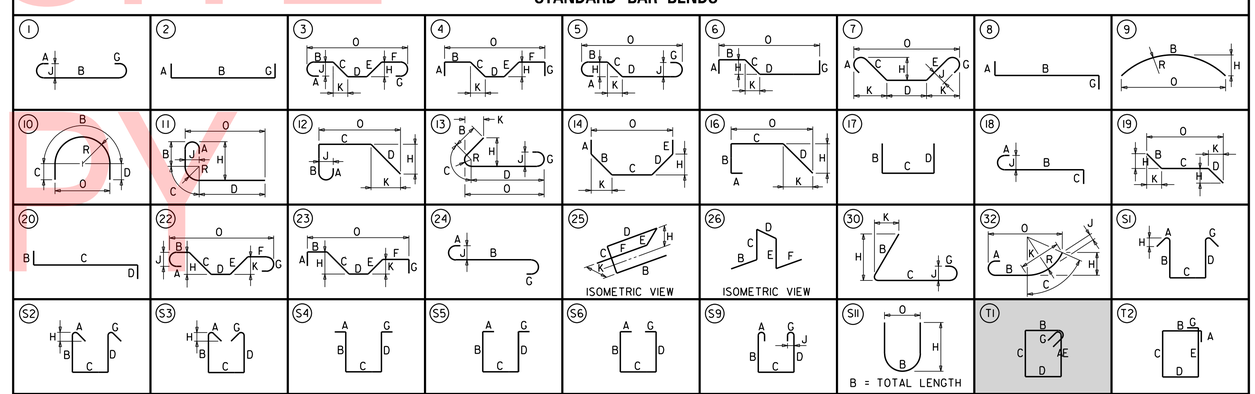

SPECIAL BAR BENDS

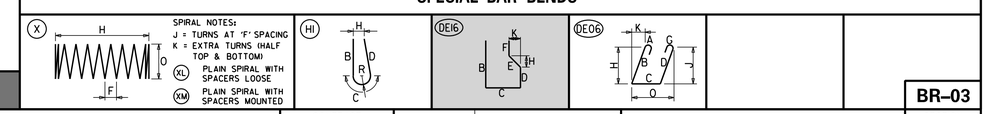

STIRRUP AND TIE HOOKS

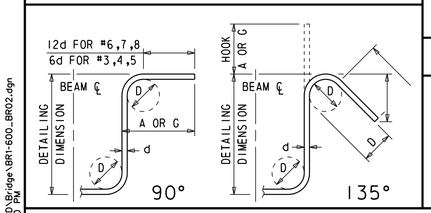

180° AND 90° END HOOKS

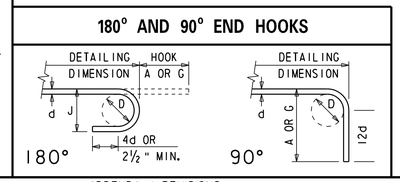

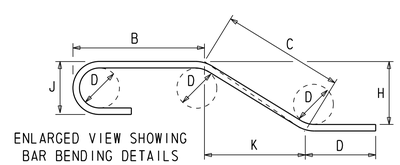

ENLARGED VIEW SHOWING BAR BENDING DETAILS

ADDENDA / REVISIONS

SCALE AS NOTED

REHABILITATION OF BRIDGES 1-600, 1-601, AND 1-604, SR 2 AND SR 141 INTERCHANGE

CONTRACT	BRIDGE NO.	1 600
T201707403	DESIGNED BY: ZMG	
COUNTY		
NEW CASTLE	CHECKED BY: WAG	

REINFORCEMENT BAR LIST SLEEPER SLAB

BR-03

SECTION: WRA

SHEET NO. 58

N:\32122-003\CADD\Bridge\BR1-600_BR02.dgn 7/31/2019 4:18:50 PM

(1) ANY MARK NUMBER WITH SUFFIX 'E' DENOTES EPOXY COATED REINFORCING STEEL.

(2) ALL MARK 'LOCATION PREFIXES' SHALL CONSIST OF TWO LETTERS AND ARE AS FOLLOWS: AB = ABUTMENT, AS = APPROACH SLAB, BC = BOX CULVERT, BW = BACKWALL, CL = COLUMN, DK = DECK, DL = DOWEL, FT = FOOTING, HW = HEADWALL, MS = MISC. BARS, PA = PARAPET, PR = PIER, SC = SHEETPILE CAP, SL = SLAB, SS = SLEEPER SLAB, TW = TOEWALL, WL = WALL (UNIQUE LOCATION), WW = WINGWALL

SPECIFICATIONS					BENDING DIMENSIONS (FEET-INCHES /QUARTER INCH)										
QTY.	SIZE	LENGTH	MARK	TYPE	A	B	C	D	E	F/R	G	H	J	K	O
SLEEPER SLAB UNIT															
	UNIT K														
40	8	5-2 2	SS802E	STR		5-2 2									
21	5	8-4 0	SS503E	T1	0-5 2	1-8 2	2-0 0	1-8 2	2-0 0		0-5 2				
19	5	24-1 1	SS509E	STR		24-1 1									
5	5	9-2 0	SS513E	DE16		4-0 0	0-1 1 2	2-6 0	1-8 2			1-4 3		0-1 1 3	
4••	8	5-5 3	SS823E	STR		5-5 3									
		T0				T0									
		5-1 1 2				5-1 1 2									
			••2 SETS OF 2												
1	5	2-5 3	SS524E	STR		2-5 3									
5	5	5-5 1	PA550E	T7		2-6 0	0-5 1	2-6 0				2-6 0		0-2 0	
5	5	2-7 0	PA553E	STR		2-7 0									
1	5	2-1 1	PA554E	STR		2-1 1									
	UNIT L														
52	8	5-2 2	SS802E	STR		5-2 2									
22	5	8-4 0	SS503E	T1	0-5 2	1-8 2	2-0 0	1-8 2	2-0 0		0-5 2				
5	5	4-6 0	SS512E	STR		4-6 0									
6	5	9-2 0	SS513E	DE16		4-0 0	0-1 1 2	2-6 0	1-8 2			1-4 3		0-1 1 3	
19	5	30-8 1	SS516E	STR		30-8 1									
4••	5	12-4 2	SS525E	T1	0-5 2	3-8 3	2-0 0	3-8 3	2-0 0		0-5 2				
		T0				T0		T0							
		15-9 0			0-5 2	5-5 0	2-0 0	5-5 0	2-0 0		0-5 2				
			••1 SET OF 4												
4••	8	6-3 2	SS826E	STR		6-3 2									
		T0				T0									
		6-9 1				6-9 1									
			••2 SETS OF 2												
2	5	2-10 3	SS527E	STR		2-10 3									
1	5	5-5 0	SS528E	STR		5-5 0									
1	5	3-3 0	SS530E	STR		3-3 0									
6	5	5-5 1	PA550E	T7		2-6 0	0-5 1	2-6 0				2-6 0		0-2 0	
5	5	3-1 0	PA551E	STR		3-1 0									
1	5	3-6 3	PA552E	STR		3-6 3									
	UNIT M														
60	8	5-2 2	SS802E	STR		5-2 2									
30	5	8-4 0	SS503E	T1	0-5 2	1-8 2	2-0 0	1-8 2	2-0 0		0-5 2				
19	5	33-3 0	SS519E	STR		33-3 0									

SPECIFICATIONS					BENDING DIMENSIONS (FEET-INCHES /QUARTER INCH)										
QTY.	SIZE	LENGTH	MARK	TYPE	A	B	C	D	E	F/R	G	H	J	K	O

SPECIFICATIONS					BENDING DIMENSIONS (FEET-INCHES /QUARTER INCH)										
QTY.	SIZE	LENGTH	MARK	TYPE	A	B	C	D	E	F/R	G	H	J	K	O

UNOFFICIAL WEBSITE COPY

ASTM STANDARD ENGLISH REINFORCING BARS

BAR SIZE	NOMINAL DIMENSIONS: DIAMETER (INCHES)	AREA (INCHES²)	WEIGHT (LBS./FT.)	RECOMMENDED END HOOKS, APPLICABLE TO ALL GRADES: 180° HOOKS D	180° HOOKS A OR G	180° HOOKS J	90° HOOKS A OR G	STIRRUP AND TIE HOOKS, APPLICABLE TO ALL GRADES: 90° HOOK D	90° HOOK A OR G	135° HOOK A OR G	135° HOOK A OR G
3	0.375	0.110	0.376	2¼"	5"	3"	6"	1½"	4"	4"	2½"
4	0.500	0.200	0.668	3"	6"	4"	8"	2"	4½"	4½"	3"
5	0.625	0.310	1.043	3¾"	7"	5"	10"	2½"	6"	5½"	3¾"
6	0.750	0.440	1.502	4½"	8"	6"	1-0"	4½"	1-0"	8"	4½"
7	0.875	0.600	2.044	5¼"	10"	7"	1-2"	5¼"	1-2"	9"	5¼"
8	1.000	0.790	2.670	6"	11"	8"	1-4"	6"	1-4"	10½"	6"
9	1.128	1.000	3.400	9½"	1-3"	11¾"	1-7"				
10	1.270	1.270	4.303	10¾"	1-5"	1-1¼"	1-10"				
11	1.410	1.560	5.313	1-0"	1-7"	1-2¾"	2-0"				
14	1.693	2.250	7.650	1-6¼"	2-3"	1-9¾"	2-7"				
18	2.257	4.000	13.600	2-0"	3-0"	2-4½"	3-5"				

NOTES:

1. FIGURES SHOWN IN CIRCLES REPRESENT BAR BEND TYPES.
2. STANDARD BAR BENDS INCLUDE ONLY THOSE TYPES BELOW, INDICATED AS SUCH.
3. ALL DIMENSIONS OUT-TO-OUT, EXCEPT "A" AND "G" ON STD. 180° AND 135° HOOKS.
4. "J" DIMENSIONS ON 180° HOOKS TO BE SHOWN ONLY WHERE NECESSARY TO RESTRICT HOOK SIZE, OTHERWISE STANDARD 'ACI' HOOKS ARE TO BE USED.
5. WHERE "J" IS NOT SHOWN, "J" WILL BE KEPT EQUAL TO OR LESS THAN "H" ON TYPES 3, 5 AND 22. WHERE "J" CAN EXCEED "H", IT SHALL BE SHOWN.
6. "H" DIMENSIONS OF STIRRUPS TO BE SHOWN AS NEEDED TO FIT WITHIN THE CONCRETE.
7. UNLESS OTHERWISE NOTED, DIAMETER "D" IS THE SAME FOR ALL BENDS AND HOOKS ON A BAR (EXCEPT FOR BEND TYPES 11 AND 13).
8. WHERE SLOPE DIFFERS FROM 45° OFFSET, "H" AND "K" MUST BE SHOWN.
9. WHERE BARS ARE TO BE BENT MORE ACCURATELY THAN STANDARD BENDING TOLERANCES, BENDING DIMENSIONS REQUIRING CLOSER FABRICATION SHOULD HAVE LIMITS INDICATED.
10. FOR RECOMMENDED DIAMETER "D", OF BENDS, HOOKS, ETC., REFER TO TABLE ABOVE, 'CRSI' OR 'ACI' TABLES WHERE APPLICABLE AND REQUIRED.
11. TYPE S1-S6, S11, T1-T3 AND T6-T9 APPLICABLE TO BAR SIZES #3 THROUGH #8.

STANDARD BAR BENDS

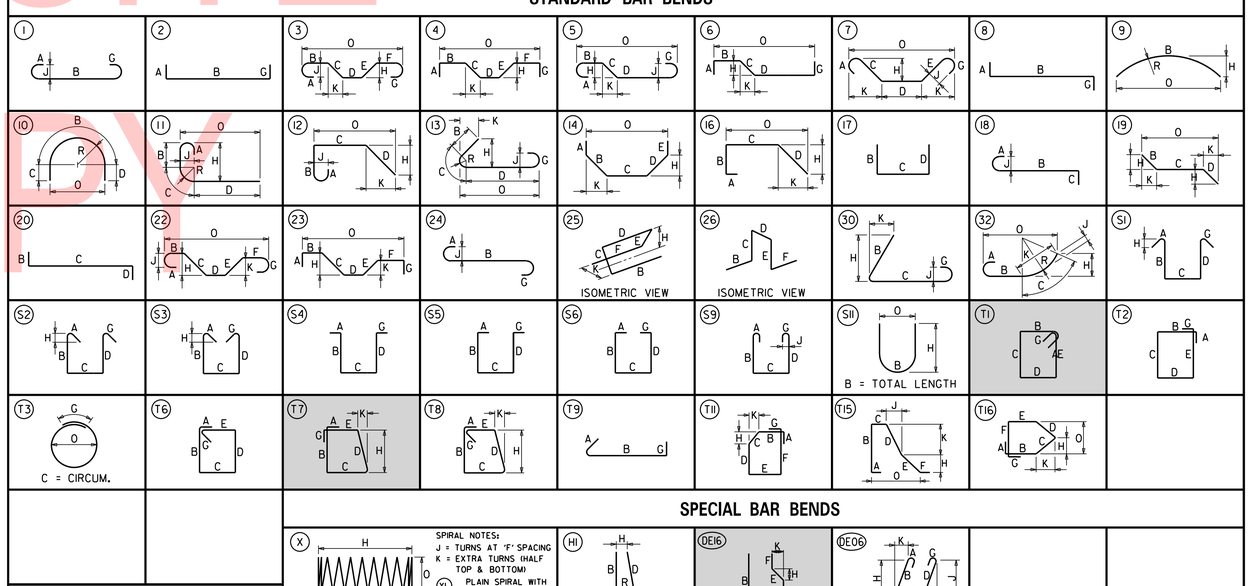

SPECIAL BAR BENDS

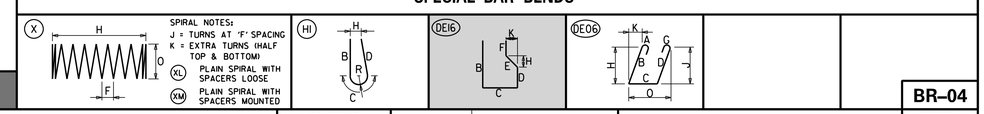

STIRRUP AND TIE HOOKS

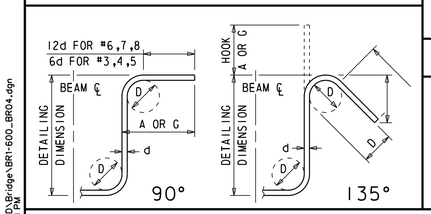

180° AND 90° END HOOKS

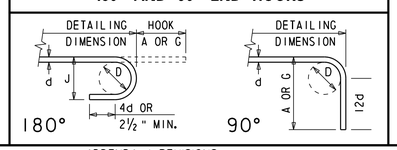

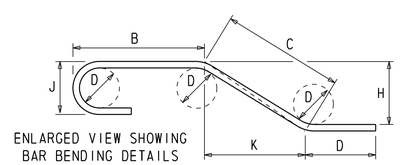

ENLARGED VIEW SHOWING BAR BENDING DETAILS

ADDENDA / REVISIONS

NOT TO SCALE

REHABILITATION OF BRIDGES 1-600, 1-601, AND 1-604, SR 2 AND SR 141 INTERCHANGE

CONTRACT	BRIDGE NO.	1 600
T201707403	DESIGNED BY: CZK	
COUNTY		
NEW CASTLE	CHECKED BY: WAG	

REINFORCEMENT BAR LIST SLEEPER SLAB – 2

BR-04

SECTION: WRA

SHEET NO. 59

N:\32122-002\CADD\Bridge\BR1-600_BR04.dgn
7/31/2019 4:18:51 PM

SECTION 200

1. REMOVAL OF STRUCTURES AND OBSTRUCTIONS:
ITEMS TO BE REMOVED UNDER ITEM #211000 - REMOVAL OF STRUCTURES AND OBSTRUCTIONS SHALL INCLUDE, BUT NOT BE LIMITED TO, THE FOLLOWING:
- PORTIONS OF CONCRETE APPROACH SLABS
- CONCRETE END DIAPHRAGMS
- PORTIONS OF THE ABUTMENT ROADWAY JOINT
- PORTIONS OF THE ABUTMENT BACKWALL
- PORTIONS OF EXISTING BRIDGE DECK

2. SIGNING:
TO AVOID DAMAGE, SIGNS WITHIN PROJECT LIMITS MAY BE REMOVED DURING CONSTRUCTION IF NEEDED, BUT MUST BE REPLACED TO MATCH EXISTING CONDITIONS BEFORE REOPENING THE ROADWAY. ALL WORK RELATED TO MOVING AND REINSTALLING THE SIGN WILL BE INCIDENTAL TO ITEM 211000 - REMOVAL OF STRUCTURES AND OBSTRUCTIONS. IF THE SIGN IS DAMAGED DURING CONSTRUCTION, THE SIGN MUST BE REPLACED AT THE CONTRACTOR'S EXPENSE.

SECTION 600

3. CAST-IN-PLACE PORTLAND CEMENT CONCRETE (f'c = 28-DAY COMPRESSIVE STRENGTH):
CLASS A - ABUTMENT STEM (f'c = 4.5 ksi)
CLASS D - END DIAPHRAGM DECK-OVER CLOSURE POUR AND SLEEPER SLABS (f'c = 4.5 ksi)
A HIGHER CLASS CONCRETE MAY BE SUBSTITUTED FOR A LOWER CLASS CONCRETE AT NO ADDITIONAL COST TO DELDOT WITH APPROVAL OF THE BRIDGE DESIGN ENGINEER.
-CHAMFER ALL EXPOSED EDGES ¾" X ¾" UNLESS OTHERWISE NOTED.
-CONTRACTOR SHALL SUPPLY CONCRETE FOR THE END DIAPHRAGM DECK OVER CLOSURE AND SLEEPER SLAB POURS THAT INCLUDES A SHRINKAGE-REDUCING/COMPENSATING ADMIXTURE. PAYMENT FOR ADMIXTURE WILL BE INCIDENTAL EACH COMPONENTS RESPECTIVE ITEM (610017, 610016). THE ADMIXTURE MAY BE SUPPLIED BY ONE PRODUCT THAT PROVIDES BOTH EXPANSION AND PORE WATER SURFACE TENSION OR TWO SEPARATE PRODUCTS EACH ADDED AT DOSAGE RECOMMENDED BY MANUFACTURER'S TECHNICAL DATA SHEETS AND HAVING THE FOLLOWING CHARACTERISTICS:
(A) DESIGNED TO PROVIDE BOTH THE FOLLOWING CHARACTERISTICS:
I. EXPANDS AT A RATE THAT CLOSELY COMPENSATES FOR SHRINKAGE OF THE CONCRETE MIX.
II. REDUCES THE CAPILLARY SURFACE TENSION OF THE CONCRETE PORE WATER.
(B) PROVIDES AT LEAST 80% SHRINKAGE REDUCTION AS MEASURED AND DOCUMENTED BY FIELD PERFORMANCE.
(C) FORMULATED FOR USE IN FREEZING AND THAWING WEATHER.

4. BAR REINFORCEMENT:
-REINFORCING STEEL SHALL CONFORM TO AASHTO M31 (ASTM A615), GRADE 60.
-REINFORCING STEEL SHALL HAVE A 3" CLEAR COVER IF CAST AGAINST EARTH OR A 2" CLEAR COVER ELSEWHERE, UNLESS OTHERWISE SPECIFIED ON THE PLANS.
-ALL REINFORCING STEEL SHALL BE PROTECTED WITH FUSION BONDED EPOXY UNLESS OTHERWISE SPECIFIED ON THE PLANS. EPOXY COATED REINFORCING STEEL SHALL CONFORM TO ASTM A775.
-ANY FIELD CUTTING OR FIELD BENDING MUST BE APPROVED BY THE ENGINEER. PAYMENT SHALL BE INCIDENTAL TO THE BAR REINFORCEMENT ITEM.
-GALVANIZED REINFORCING STEEL MAY BE SUBSTITUTED FOR EPOXY-COATED REINFORCING STEEL AT NO ADDITIONAL COST TO THE DEPARTMENT WITH APPROVAL OF THE ENGINEER.
-WELDING OF REINFORCEMENT DURING FABRICATION OR CONSTRUCTION IS NOT PERMITTED UNLESS SPECIFIED.
-PAYMENT FOR BAR REINFORCEMENT SHALL BE UNDER ITEM 611001 UNLESS OTHERWISE NOTED.

5. CONCRETE SEALER:
REFER TO DIAGRAMS CONTAINING SILICONE ACRYLIC CONCRETE SEALER LIMITS ON DWG. TS-01. EPOXY CONCRETE SEALER SHALL BE APPLIED TO THE BEAM SEATS, BEARING PEDESTALS, AND VERTICAL SURFACES OF THE ABUTMENT BACKWALLS. SILICONE ACRYLIC CONCRETE SEALER SHALL BE APPLIED TO THE REMAINING EXPOSED CONCRETE SURFACES AT THE ABUTMENTS AND PIERS.

6. STRUCTURAL STEEL:
PROVIDE STRUCTURAL STEEL CONFORMING TO AASHTO M270, GRADE 50 (ASTM A709, GRADE 50) DESIGNATION, EXCEPT WHEN NOTED OTHERWISE.

ALL FASTENERS ARE ⅞" DIAMETER ASTM A325 HIGH STRENGTH BOLTS, TYPE 1, UNLESS OTHERWISE NOTED
REAM SUBDRILLED OR SUBPUNCHED HOLES FOR FIELD SPLICES IN FABRICATION SHOP.

DO NOT USE DEMOLITION SHIELD SUPPORT SYSTEMS THAT WILL CAUSE UNACCEPTABLE OVERSTRESS OR DEFORMATION TO PERMANENT BRIDGE MEMBERS. DEMOLITION SHIELD SUPPORT SYSTEMS MAY NOT BE WELDED TO THE BRIDGE GIRDERS. ALL DEMOLITION SHIELD ATTACHMENT DEVICES SHALL BE REMOVED AFTER USE.

DEMOLITION SHIELDS SHALL BE INSTALLED AT THE PROPOSED DECK AND ABUTMENT BACKWALL REMOVAL AREAS. THE CONTRACTOR SHALL PREPARE AND SUBMIT WORKING DRAWINGS OF THE PROPOSED DEMOLITION SHIELDS FOR REVIEW BY THE ENGINEER IN ACCORDANCE WITH SECTION 604.03.1. PAYMENT FOR DEMOLITION SHIELDS WILL BE MADE UNDER ITEM 604001 - PROTECTIVE SHIELD.

7. STEEL COATING:
ALL EXPOSED SURFACES OF EXISTING STRUCTURAL STEEL LOCATED WITHIN A DISTANCE OF 5 FT. FROM THE ENDS OF THE GIRDERS AT EACH ABUTMENT, INCLUDING BEARINGS, SHALL BE CLEANED AND PAINTED IN ACCORDANCE WITH SECTION 616 OF THE STANDARD SPECIFICATIONS. PAINT COLOR TO MATCH EXISTING. THE CONTRACTOR SHALL SUBMIT A PAINT CHIP TO THE ENGINEER FOR APPROVAL PRIOR TO PAINTING ANY SURFACE. THIS WORK WILL BE PAID FOR UNDER ITEM 616000 - CLEANING AND PAINTING EXISTING STEEL.

SECTION 800

8. TEMPORARY PCC SAFETY BARRIERS:
TEMPORARY PCC SAFETY BARRIERS SHALL NOT BE PINNED TO THE BRIDGE DECK. TEMPORARY PCC SAFETY BARRIERS SHALL BE PLACED TO MEET THE CLEAR ZONE REQUIREMENTS TO THE WORK ZONE AS INDICATED ON THE PLANS.

9. SAWCUTTING:
ALL PAVED AREAS TO BE RECONSTRUCTED OR WIDENED SHALL BE SAWCUT AT THE POINT WHERE THE NEW PAVEMENT IS TO TIE INTO THE EXISTING PAVEMENT. ALL HOT-MIX OR P.C.C. SAWCUTTING SHALL BE FULL DEPTH, UNLESS OTHERWISE NOTED ON THE PLANS, OR AS DIRECTED BY THE ENGINEER.

MISCELLANEOUS

10. DESIGN SPECIFICATIONS:
(A) 2017 DELDOT BRIDGE DESIGN MANUAL.
(B) 2017 AASHTO LRFD BRIDGE DESIGN SPECIFICATIONS, 8TH EDITION, U.S. CUSTOMARY UNITS INCLUDING MAY 2018 ERRATA.
(C) PROVIDE MATERIALS AND PERFORM WORK IN ACCORDANCE WITH THE DELDOT STANDARD SPECIFICATIONS, AUGUST 2016.

11. CONSTRUCTION LOADING:
-THE UHPC OVERLAY MUST CURE FOR A MINIMUM OF 72-HOURS AND ACHIEVE MINIMUM COMPRESSIVE STRENGTH OF 14-KSI BEFORE THE BRIDGE IS OPENED TO TRAFFIC.

12. EXISTING CONDITIONS:
ALL EXISTING DIMENSIONS AND ELEVATIONS SHOWN ARE BASED ON THE BEST AVAILABLE INFORMATION AND ARE APPROXIMATE ONLY. THE CONTRACTOR SHALL FIELD VERIFY ALL EXISTING DIMENSIONS, GEOMETRY, AND ELEVATIONS AS NECESSARY PRIOR TO ORDERING ANY MATERIALS AND COMMENCING CONSTRUCTION TO ENSURE PROPER FIT OF THE PROPOSED CONSTRUCTION. PAYMENT WILL BE INCIDENTAL TO ITEM 763501 - CONSTRUCTION ENGINEERING.

13. ROADWAY SURFACE ELEVATIONS:
THE PROPOSED DECK AND APPROACH ROADWAY SURFACE ELEVATIONS SHALL MATCH THE EXISTING DECK AND APPROACH SURFACE ELEVATIONS. IT IS THE CONTRACTOR'S RESPONSIBILTY TO SURVEY THE EXISTING ROADWAY SURFACE BEFORE DEMOLITION. PAYMENT WILL BE INCIDENTAL TO ITEM 763501 - CONSTRUCTION ENGINEERING.

14. ROADWAY CLEARANCES:
NO REDUCTION TO THE VERTICAL CLEARANCE SHALL BE ALLOWED WITHOUT PRIOR APPROVAL BY THE DEPARTMENT.

15. CONTINGENT QUANTITIES:
THESE CONTRACT DRAWINGS HAVE BEEN PREPARED BASED ON ORIGINAL CONTRACT PLANS, SHOP DRAWINGS, AND FIELD INSPECTION NOTES TAKEN ON DECEMBER 6, 2017, JANUARY 9TH, 2018, JANUARY 10TH, 2018 AND JANUARY 18TH, 2018. ACTUAL CONDITIONS MAY REQUIRE MODIFICATION IN CONSTRUCTION DETAILS AND WORK QUANTITIES. ALL DIMENSIONS AND DETAILS SHOWN ON THE PLANS SHALL BE VERIFIED BY THE CONTRACTOR PRIOR TO ORDERING ANY MATERIALS. SEE DWG. PN-02 FOR PAY ITEM CONTINGENCY PERCENTAGES.

16. UTILITIES:
SEE UTILITY STATEMENT FOR FURTHER INFORMATION ON UTILITY COORDINATION.

17. ENVIRONMENTAL COMPLIANCE:
ENVIRONMENTAL COMPLIANCE PLANS ARE NOT REQUIRED FOR THIS PROJECT. NO ENVIRONMENTAL RESOURCES ARE IMPACTED BY THE PROPOSED WORK.

18. DIAMOND GRINDING:
LONGITUDINAL END-TO-END TEXTURING (BLANKET GRINDING) SHALL BE PERFORMED ON THE FULL EXTENTS OF ALL PROPOSED UHPC OVERLAY SURFACES IN ACCORDANCE WITH THE SPECIAL PROVISIONS. PAYMENT FOR THIS WORK WILL BE MADE UNDER ITEM 501502 - DIAMOND GRINDING P.C.C. PAVEMENT AND PRECAST PAVEMENT.

19. CONCRETING:
THE CONTRACTOR SHALL MEET STANDARD SPECIFICATION SECTION 610.03.D.3 - COLD WEATHER REQUIREMENTS FOR ALL CONCRETING. SEE SPECIAL PROVISIONS FOR ADDITIONAL REQUIREMENTS AND RESTRICTIONS FOR UHPC PLACEMENT.

MISCELLANEOUS (CONTINUED)

20. ABBREVIATIONS:

ABUT. = ABUTMENT	NB = NORTHBOUND
BOT. = BOTTOM	NO. = NUMBER
C/C = CENTER-TO-CENTER	N.T.S. = NOT TO SCALE
℄ = CENTERLINE	P.C.C. = PORTLAND CEMENT CONCRETE
CLR. = CLEAR	R = RADIUS
DIA. = DIAMETER	RT. = RIGHT
DWG. = DRAWING	SB = SOUTHBOUND
E.F. = EACH FACE	SCH. = SCHEDULE
EL. = ELEVATION	SHLD. = SHOULDER
EXP. = EXPANSION	STA. = STATION
FIX. = FIXED	TYP. = TYPICAL
LT. = LEFT	UG = UNDERGROUND
MAX. = MAXIMUM	UHPC = ULTRA HIGH PERFORMANCE CONCRETE
MIN. = MINIMUM	

UNOFFICIAL WEBSITE COPY

QUANTITIES

ITEM Nº	ITEM TITLE	UNIT	QUANTITY	CONTINGENT %	TOTAL QUANTITY
202000	EXCAVATION AND EMBANKMENT	CY	85	0	85
211000	REMOVAL OF STRUCTURES AND OBSTRUCTIONS	LS	1	0	1
301001	GRADED AGGREGATE BASE COURSE, TYPE B	CY	9	0	9
501502	DIAMOND GRINDING P.C.C. PAVEMENT AND PRECAST PAVEMENT	SF	5750	0	5750
604001	PROTECTIVE SHIELD	LS	1	0	1
610016	PORTLAND CEMENT CONCRETE MASONRY, CLASS D	CY	21	0	21
610017	PORTLAND CEMENT CONCRETE MASONRY, SUPERSTRUCTURE, CLASS D	CY	19	0	19
611000	BAR REINFORCEMENT	LB	2486	0	2486
611001	BAR REINFORCEMENT, EPOXY COATED	LB	1775	0	1775
613000	EPOXY CONCRETE SEALER	SF	178	0	178
613001	SILICONE BASED ACRYLIC CONCRETE SEALER	SF	6008	0	6008
615006	STEEL STRUCTURE REPAIR	LS	1	0	1
616000	CLEANING AND PAINTING EXISTING STEEL	LS	1	0	1
623004	CLEAN AND GREASE BRIDGE BEARINGS	EA	10	0	10
624000	PREFABRICATED EXPANSION JOINT SYSTEM, 3"	LF	68	0	68
625505	ULTRA HIGH PERFORMANCE CONCRETE OVERLAY	CF	659	0	659
625507	ADDITIONAL UHPC CONCRETE FOR PARTIAL DECK REPAIRS	CF	14	0	14
628001	REPAIR OF CONCRETE STRUCTURES BY EPOXY INJECTION	LF	13	100	26
628041	DEEP SPALL REPAIR	CF	36	100	72
628042	REHABILITATION OF P.C.C. MASONRY	CY	1	10	2
628053	DECK REPAIR, FULL DEPTH	SF	1	25	2
628502	REMOVAL OF EXISTING DECK REPAIRS	SF	1	25	2
760013	PAVEMENT MILLING, PORTLAND CEMENT CONCRETE PAVEMENT	SY-IN	293	0	293
760500	TOTAL SURFACE HYDRODEMOLITION	SY	586	0	586
762001	SAW CUTTING, CONCRETE, FULL DEPTH	LF	36	0	36

INDEX OF BRIDGE 1-601 SHEETS

SHEET Nº	BR. DWG. Nº	TABLE OF CONTENTS
60	PN-01	BRIDGE PROJECT NOTES - 1
61	PN-02	BRIDGE PROJECT NOTES - 2
62	PN-03	CONCRETE REPAIR DETAILS - 1
63	PN-04	CONCRETE REPAIR DETAILS - 2
64	PE-01	GENERAL PLAN AND ELEVATION
65	TS-01	BRIDGE TYPICAL SECTIONS
66	SC-01	SEQUENCE OF CONSTRUCTION
67	SR-01	REMOVAL PLAN
68	SR-02	DEMOLITION DETAILS
69	AS-01	SLEEPER SLAB A DETAILS
70	AS-02	SLEEPER SLAB B DETAILS
71	EX-01	JOINT DETAILS
72	DK-01	DECK OVER DETAILS - 1
73	DK-02	DECK OVER DETAILS - 2
74	DK-03	DECK OVER DETAILS - 3
75	DK-04	PARAPET JOINT DETAILS
76	RH-01	STRUCTURAL REPAIRS
77	BR-01	REINFORCEMENT SCHEDULE

TOTAL BRIDGE SHEETS: 18

LOAD RATING SUMMARY

DESIGN VEHICLE	*RATING FACTOR*	*RATING WEIGHT (TON)*	*CONTROLLING MEMBER*	*CONTROLLING POINT*	*LOAD EFFECT*
HL-93 TRUCK (INVENTORY)	*0.92*	*N/A*	*SPAN 2: EXTERIOR BEAM*	*201*	*STRENGTH I*
HL-93 TANDEM (INVENTORY)	*1.12*	*N/A*	*SPAN 1: EXTERIOR BEAM*	*109*	*STRENGTH I*
HS-20 (INVENTORY)	*1.42*	*51.12*	*SPAN 2: EXTERIOR BEAM*	*201*	*STRENGTH I*
HL-93 TRUCK (OPERATING)	*1.19*	*N/A*	*SPAN 2: EXTERIOR BEAM*	*201*	*STRENGTH I-O*
HL-93 TANDEM (OPERATING)	*1.47*	*N/A*	*SPAN 1: EXTERIOR BEAM*	*109*	*STRENGTH I-O*
HS-20 (OPERATING)	*1.84*	*66.24*	*SPAN 2: EXTERIOR BEAM*	*201*	*STRENGTH I-O*
DE S220	*3.43*	*68.60*	*SPAN 2: EXTERIOR BEAM*	*201*	*STRENGTH I*
DE S335	*1.93*	*67.55*	*SPAN 1: EXTERIOR BEAM*	*109*	*STRENGTH I*
DE S437	*1.83*	*67.71*	*SPAN 1: EXTERIOR BEAM*	*109*	*STRENGTH I*
DE S330	*2.43*	*72.90*	*SPAN 1: EXTERIOR BEAM*	*109*	*STRENGTH I*
DE S435	*2.08*	*72.80*	*SPAN 1: EXTERIOR BEAM*	*109*	*STRENGTH I*
DE S540	*1.85*	*74.00*	*SPAN 1: EXTERIOR BEAM*	*109*	*STRENGTH I*

NOTE: ALL LOAD RATINGS PROVIDED BY DELDOT

UNOFFICIAL WEBSITE COPY

N:\37122-003\C4D\Bridge\BR1-601_PN02.dgn
7/31/2019 4:18:52 PM

ADDENDA / REVISIONS

NOT TO SCALE

REHABILITATION OF BRIDGES 1-600, 1-601, AND 1-604, SR 2 AND SR 141 INTERCHANGE

CONTRACT	BRIDGE NO.	1 601
T201707403	DESIGNED BY: ZMG	
COUNTY		
NEW CASTLE	CHECKED BY: WAG	

BRIDGE PROJECT NOTES - 2

PN-02
SECTION
WRA
SHEET NO.
61

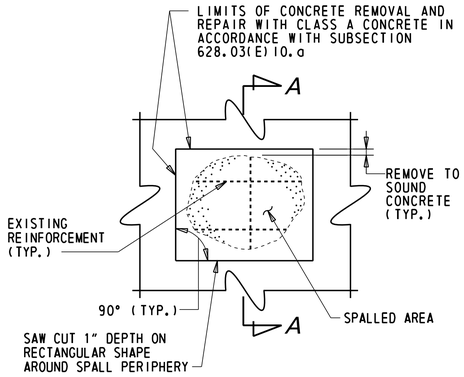

PLAN

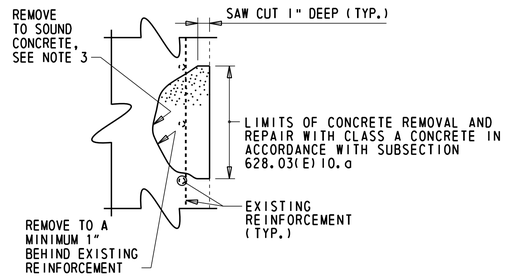

SECTION A-A

DEEP SPALL REPAIR

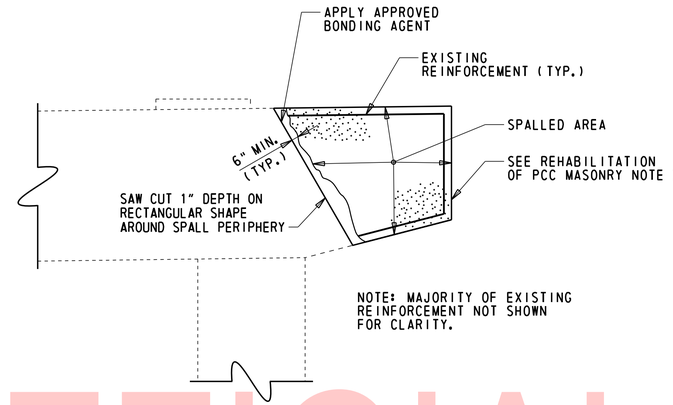

REHABILITATION OF PCC MASONRY

DEEP SPALL REPAIR NOTES

1. DEEP SPALL REPAIRS ARE DEFINED AS PATCHES THAT EXTEND BELOW THE TOP MAT OF REINFORCEMENT. DELAMINATED CONCRETE HAS BEEN ASSUMED AS DEEP SPALL REPAIRS.
2. ALL WORK INVOLVING METHODS OF CONCRETE REMOVAL; CLEANING OF CONCRETE SURFACE AND EXISTING REINFORCEMENT; REPAIRING OR REPLACING DAMAGED REINFORCEMENT AS RESULT OF CONSTRUCTION ACTIVITIES OR SECTION LOSS; PRESENCE OF CONTRACTION OR EXPANSION JOINTS; SURFACE PREPARATION; AND CONCRETE PLACEMENT SHALL BE PERFORMED IN ACCORDANCE WITH SUBSECTION 628.03(E) OF THE STANDARD SPECIFICATIONS. PAYMENT INCIDENTAL TO ITEM 628041 - DEEP SPALL REPAIR.
3. IF DEPTH OF REPAIR EXTENDS MORE THAN 6" BEYOND SURFACE OF CONCRETE, CONTRACTOR SHALL STOP WORK AND NOTIFY THE ENGINEER IMMEDIATELY.

REHABILITATION OF PCC MASONRY NOTES

1. REHABILITATION OF PCC MASONRY IS DEFINED AS DEEP SPALL PATCHES THAT EXCEED THE 0.5 C.Y. THRESHOLD IN A SINGLE AREA.
2. ALL WORK INVOLVING METHODS OF CONCRETE REMOVAL; CLEANING OF CONCRETE SURFACE AND EXISTING REINFORCEMENT; REPAIRING OR REPLACING DAMAGED REINFORCEMENT AS RESULT OF CONSTRUCTION ACTIVITIES OR SECTION LOSS; PRESENCE OF CONTRACTION OR EXPANSION JOINTS; SURFACE PREPARATION; AND CONCRETE PLACEMENT SHALL BE PERFORMED IN ACCORDANCE WITH SUBSECTION 628.03(E) OF THE STANDARD SPECIFICATIONS. PAYMENT INCIDENTAL TO ITEM 628042 - REHABILITATION OF PCC MASONRY.
3. DETAIL SHOWN FOR "REHABILITATION OF EXISTING PCC MASONRY" UTILIZES A GENERIC EXAMPLE USING PARTIAL RECONSTRUCTION OF AN EXISTING PIER CAP. SEE DWG. PN-04 FOR SIZE AND LOCATION OF REPAIRS AT EACH SUBSTRUCTURE UNIT.
4. IF DEPTH OF REPAIR EXTENDS MORE THAN 6" BEYOND SURFACE OF CONCRETE, CONTRACTOR SHALL STOP WORK AND NOTIFY THE ENGINEER IMMEDIATELY.

REMOVAL OF EXISTING DECK REPAIR NOTES

1. PRIOR TO HYDRODEMOLITION, ANY EXISTING DECK REPAIRS THAT ARE LOOSE, PARTIALLY DELAMINATED, OR OTHERWISE UNSOUND, WILL BE MEASURED BY THE ENGINEER AND MARKED FOR REMOVAL.
2. THE CONTRACTOR SHALL REMOVE THE EXISTING DECK REPAIRS IN ACCORDANCE WITH SECTION 628.03(F).
3. THE REMOVAL SHALL NOT INCLUDE ANY SOUND ORIGINAL BRIDGE DECK CONCRETE.
4. REFER TO ITEM 628502 - REMOVAL OF EXISTING DECK REPAIR FOR PAYMENT AND ADDITIONAL INFORMATION.
5. IF REMOVAL OF EXISTING DECK REPAIR REACHES FULL DEPTH, AND WITH THE APPROVAL OF THE ENGINEER, REPAIR AREA SHALL BE REPAIRED IN ACCORDANCE WITH SUBSECTION 628.03(F) AND PAID FOR UNDER ITEM 628053 - DECK REPAIR, FULL DEPTH. REMOVAL OF EXISTING DECK REPAIRS THAT ARE CHANGED TO DECK REPAIR, FULL DEPTH WILL ONLY BE PAID FOR ONCE UNDER ITEM 628053.

DECK REPAIR NOTES

1. AFTER MILLING AND PRIOR TO HYDRODEMOLITION, EXISTING AREAS OF DECK REQUIRING FULL DEPTH REPAIR AS DIRECTED BY THE ENGINEER, SHALL BE REPAIRED USING DETAIL SHOWN ON THIS SHEET.
2. ALL WORK INVOLVING METHODS OF CONCRETE REMOVAL; CLEANING OF CONCRETE SURFACE AND EXISTING REINFORCEMENT; REPAIRING OR REPLACING DAMAGED REINFORCEMENT AS RESULT OF CONSTRUCTION ACTIVITIES OR SECTION LOSS; PRESENCE OF CONTRACTION OR EXPANSION JOINTS; SURFACE PREPARATION; AND CLASS D CONCRETE PLACEMENT, SHALL BE PERFORMED IN ACCORDANCE WITH SUBSECTION 628.03(F) OF THE STANDARD SPECIFICATIONS. PAYMENT FOR FULL DEPTH DECK REPAIRS WILL BE MADE UNDER ITEM 628053 - DECK REPAIR, FULL DEPTH. ADDITIONAL UHPC FOR FULL DEPTH DECK REPAIR SHALL BE PLACED DURING THE OVERLAY PLACEMENT AND SHALL PAYMENT WILL BE MADE UNDER ITEM 625507 - ADDITIONAL UHPC FOR PARTIAL DECK REPAIRS. FULL DEPTH DECK REPAIR HYDRODEMOLITION SHALL BE PERFORMED IN ACCORDANCE WITH ITEMS 760500 - TOTAL SURFACE HYDRODEMOLITION, HOWEVER, ALL PAYMENT WILL BE INCIDENTAL TO ITEM 628053 - DECK REPAIR, FULL DEPTH.
3. MILLING, HYDRODEMOLITION AND UHPC OVERLAY WILL BE PAID FOR UNDER THEIR RESPECTIVE ITEMS.

LEGEND:

- SPALLED CONCRETE
- LIMITS OF REMOVAL, MECHANICAL MILLING (ITEM 760013)
- LIMITS OF TOTAL SURFACE HYDRODEMOLITION (ITEM 760500)
- LIMITS OF LOCALIZED DECK REMOVAL (ITEM 628053 OR 628502)
- CLASS D CONCRETE

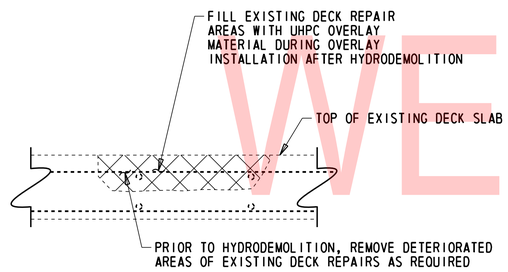

REMOVAL OF EXISTING DECK REPAIRS (ITEM 628502)

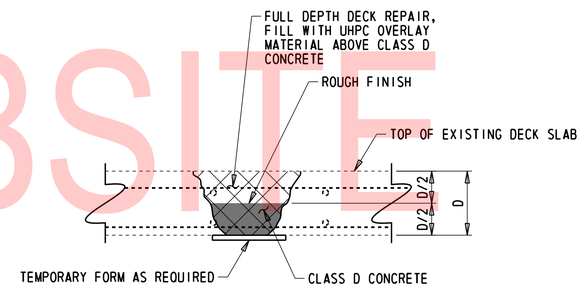

DECK REPAIR, FULL DEPTH (ITEM 628053)

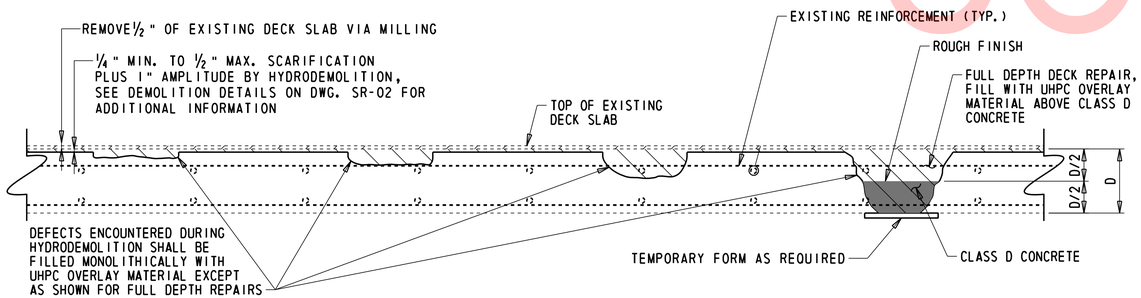

MILLING, HYDRODEMOLITION AND DECK REPAIR

UNOFFICIAL WEBSITE COPY

ADDENDA / REVISIONS	

SCALE AS NOTED

REHABILITATION OF BRIDGES 1-600, 1-601, AND 1-604, SR 2 AND SR 141 INTERCHANGE

CONTRACT	BRIDGE NO.	1 601
T201707403	DESIGNED BY: ZMG	
COUNTY		
NEW CASTLE	CHECKED BY: WAG	

CONCRETE REPAIR DETAILS - 1

PN-03
SECTION
WRA
SHEET NO.
62

N:\37122-003\CADD\Bridge\BR1-601_PN03.dgn
7/31/2019 4:18:53 PM

CONCRETE REPAIR QUANTITIES
PIER COMPONENTS – CAP AND COLUMN

REPAIR №	ITEM №	REPAIR LOCATION	REPAIR DESCRIPTION	UNIT	QUANTITY
PIER-1	628001	PIER CAP WEST FACE TOWARDS SOUTH	1/16" WIDE X 2'-8" LONG HORIZONTAL CRACK WITHIN AN AREA OF HAIRLINE MAPCRACKING AT THE SOUTHWEST CORNER OF THE PIER CAP	LF	3.0
PIER-2	628041	PIER CAP SOUTH FACE BENEATH BEARING 5, 8" FROM THE TOP OF THE PIER CAP	1'-0" WIDE X 1'-0" HIGH X 1" DEEP SPALL WITH EXPOSED CORRODED REINFORCEMENT	CF	0.4
PIER-3	628041	PEIR CAP NORTH FACE BENEATH GIRDER 5, 1-FT FROM TOP OF PIER CAP	1'-0" HIGH X 6" WIDE X 1" DEEP SPALL WITH EXPOSED CORRODED REINFORCEMENT UNDER GIRDER 5, 1-FT FROM THE TOP OF THE CAP	CF	0.2
PIER-4	628041	PIER CAP NORTH FACE BENEATH GIRDER 1	THREE (3) POP-OUT SPALLS 1/2" DEEP WITH EXPOSED CORRODED REINFORCEMENT: 2'-0" HIGH X 2" WIDE, 10" HIGH X 6" WIDE, AND 8" HIGH X 3" WIDE	CF	2.2

CONCRETE REPAIR QUANTITIES
NORTH ABUTMENT

REPAIR №	ITEM №	REPAIR LOCATION	REPAIR DESCRIPTION	UNIT	QUANTITY
NAB-1	628001	WEST FACE OF ABUTMENT STEM	1/16" WIDE X 3'-10" LONG HORIZONTAL CRACK 1-FT FROM THE TOP OF THE ABUTMENT STEM (BENEATH THE CHEEKWALL)	LF	4.0
NAB-2	628041	BAY 2 EAST OF GIRDER 2 AT THE TOP OF THE ABUTMENT STEM	1'-4" WIDE X 1'-10" HIGH DELAMINATION	CF	0.5
NAB-3	628041	BAY 2 WEST OF GIRDER 3 AT THE TOP OF THE ABUTMENT STEM	3'-8" WIDE X 3'-3" HIGH DELAMINATION CONTAINING 1/16" WIDE X 3'-6" LONG HORIZONTAL CRACK, 4" FROM THE TOP OF THE ABUTMENT STEM	CF	4.0
NAB-4	628041	GIRDER 3 8" FROM THE TOP OF THE ABUTMENT STEM	1'-8" WIDE X 1'-1" HIGH DELAMINATION	CF	0.7
NAB-5	628041	BAY 3 NEAR GIRDER 3 (FULL-HEIGHT) AT THE TOP OF THE ABUTMENT STEM	4'-6" WIDE X FULL-HEIGHT (3'-8") DELAMINATION CONTAINING: A 7" WIDE X 8" HIGH X 1/2" DEEP SPALL AND THE MAJORITY A 1/16" WIDE X 5'-8" LONG HORIZONTAL CRACK, 5" FROM THE TOP OF THE WALL. A 2'-0" LENGTH OF THE CRACK, TOWARD GIRDER 3, IS NOT WITHIN THE DELAMINATED AREA.	CF	5.5
NAB-6	628041	BAY 4 AT EAST EDGE OF GIRDER 4 PEDESTAL AT THE BOTTOM OF THE ABUTMENT STEM	4'-4" WIDE X 2'-7" HIGH DELAMINATION	CF	3.8
NAB-7	628001	BAY 4 AT EAST EDGE OF GIRDER 4 PEDESTAL, 4" FROM THE TOP OF THE ABUTMENT STEM	3/16" WIDE X 4'-10" LONG HORIZONTAL CRACK	LF	5.0
NAB-8	628041	BAY 4 AT WEST EDGE OF GIRDER 5 PEDESTAL, 5" FROM THE TOP OF THE ABUTMENT STEM	10" WIDE X 1'-4" HIGH DELAMINATION	CF	0.4
NAB-9	628042	EAST OVERHANG AT NORTHEAST CORNER OF ABUTMENT AT TOP OF ABUTMENT STEM	FULL-LENGTH (2'-0") ON EAST FACE X 1'-0" WIDE ON NORTH FACE X UP TO 2'-2" HIGH X UP TO 4" DEEP SPALL WITH EXPOSED CORRODED REINFORCEMENT	CY	0.9

CONCRETE REPAIR QUANTITIES
SOUTH ABUTMENT

REPAIR №	ITEM №	REPAIR LOCATION	REPAIR DESCRIPTION	UNIT	QUANTITY
SAB-1	628001	WEST FACE OF THE ABUTMENT STEM	1/16" WIDE X 1'-0" LONG VERTICAL CRACK AND A 1/16" WIDE X 10" LONG HORIZONTAL CRACK	LF	1.0
SAB-2	628041	BAY 2 4" FROM THE WEST FACE OF THE GIRDER 3 PEDESTAL IN THE ABUTMENT STEM	2'-2" WIDE X 3'-6" HIGH AREA OF DELAMINATION, 6" FROM THE TOP OF THE ABUTMENT STEM	CF	2.6
SAB-3	628041	BAY 3 AT FROM WEST EDGE OF GIRDER 4 PEDESTAL TO EAST EDGE OF GIRDER 3 AT THE TOP OF THE ABUTMENT STEM	5'-5" WIDE X 3'-11" HIGH AREA OF DELAMINATION CONTAINING A 1/16" WIDE X 1'-6" LONG HORIZONTAL CRACK, 1-FT FROM THE TOP OF THE ABUTMENT STEM	CF	7.1
SAB-4	628041	BAY 4 FROM BENEATH GIRDER 4 TO WEST EDGE OF GIRDER 5 PEDESTAL AT THE TOP OF THE ABUTMENT STEM	7'-0" WIDE X UP TO 3'-4" HIGH AREA OF DELAMINATION. THIS AREA CONTAINS A 1/16" WIDE X 1'-6" LONG HORIZONTAL CRACK 10" BENEATH THE TOP OF THE CAP, STARTING 2-FT FROM GIRDER 4 AND A 7" WIDE X 1'-4" HIGH X 1-1/2" DEEP SPALL BENEATH GIRDER 4, 1-FT BELOW THE TOP OF THE ABUTMENT STEM	CF	7.8

NOTES:

1. THE LOCATION AND QUANTITIES OF THE REPAIRS SHOWN ON THIS DRAWING ARE BASED ON INSPECTION FIELD NOTES, SEE NOTE 15 ON DWG. PN-01. FOR REPAIR LOCATIONS, BRIDGE COMPONENTS ARE NUMBERED FROM THE WEST AND FROM THE SOUTH.
2. PRIOR TO STARTING EACH REPAIR, THE LIMITS SHALL BE VERIFIED BY THE CONTRACTOR IN THE PRESENCE OF THE ENGINEER.
3. FOR CONCRETE REPAIR DETAILS, SEE DWG. PN-03.
4. WHERE CRACKS AND SPALLS EXIST CONCURRENTLY, COMPLETE THE SPALL REPAIR COMPLETELY REMOVING THE ASSOCIATED CRACK. IF THE CRACK EXTENDS LESS THAN 1'-0" BEYOND THE LIMITS OF THE SPALL REPAIR, EXTEND THE LIMITS OF THE SPALL REPAIR TO ENCOMPASS THE CRACK. IF THE CRACK EXTENDS DEEPER THAN THE LIMITS OF CONCRETE REMOVAL, THE CONTRACTOR SHALL REMOVE ADDITIONAL CONCRETE UNTIL THE CRACK IS FULLY REMOVED. IF THE DEPTH OF REMOVAL REACHES MORE THAN 6" FROM THE ORIGINAL FACE OF CONCRETE, ALL WORK ON THE REPAIR SHALL STOP AND THE ENGINEER SHALL BE NOTIFIED IMMEDIATELY. IF THE CRACK EXTENDS MORE THAN 1'-0" BEYOND THE LIMITS OF THE SPALL REPAIR INTO SOUND CONCRETE THE CRACK SHALL BE REPAIRED BY EPOXY INJECTION AND PAID FOR UNDER ITEM 628001 BEYOND THE LIMITS OF THE SPALL REPAIR. CRACKS LOCATED WITHIN SPALL REPAIRS WILL NOT BE PAID FOR AND WILL BE CONSIDERED INCIDENTAL TO ITEM 628041.
5. SILICONE-BASED ACRYLIC CONCRETE SEALER AND EPOXY CONCRETE SEALER SHALL ONLY BE APPLIED AFTER ALL CONCRETE REPAIRS ARE COMPLETED AT ALL SUBSTRUCTURE UNITS. THE CONTRACTOR SHALL TAKE CARE TO PROTECT THE BEARINGS DURING APPLICATION OF THE CONCRETE SEALERS. ANY CLEAN-UP REQUIRED TO REMOVE THE SEALER FROM THE BEARINGS WILL BE AT NO ADDITIONAL COST TO THE DEPARTMENT AND TO THE SATISFACTION OF THE ENGINEER.
6. EPOXY CONCRETE SEALER SHALL BE APPLIED TO THE BEAM SEATS AND BEARING PEDESTALS. PAYMENT WILL BE MADE UNDER ITEM 613000. CONTRACTOR SHALL REMOVE DEBRIS FROM THE BEAM SEAT PRIOR TO APPLICATION OF EPOXY CONCRETE SEALER. PAYMENT FOR THIS WORK WILL BE INCIDENTAL TO ITEM 613000.
7. SILICONE-BASED ACRYLIC CONCRETE SEALER SHALL BE APPLIED TO ALL EXPOSED SUBSTRUCTURE SURFACES BESIDES BEAM SEATS AND BEARING PEDESTALS. PAYMENT WILL BE MADE UNDER ITEM 613001.

CONCRETE REPAIR QUANTITIES
REPAIR SUMMARY

ITEM №	ITEM TITLE	UNIT	QUANTITY
628001	REPAIR OF CONCRETE STRUCTURES BY EPOXY INJECTION	LF	13
628041	DEEP SPALL REPAIR	CF	36
628042	REHABILITATION OF PCC MASONRY	CY	1

UNOFFICIAL WEBSITE COPY

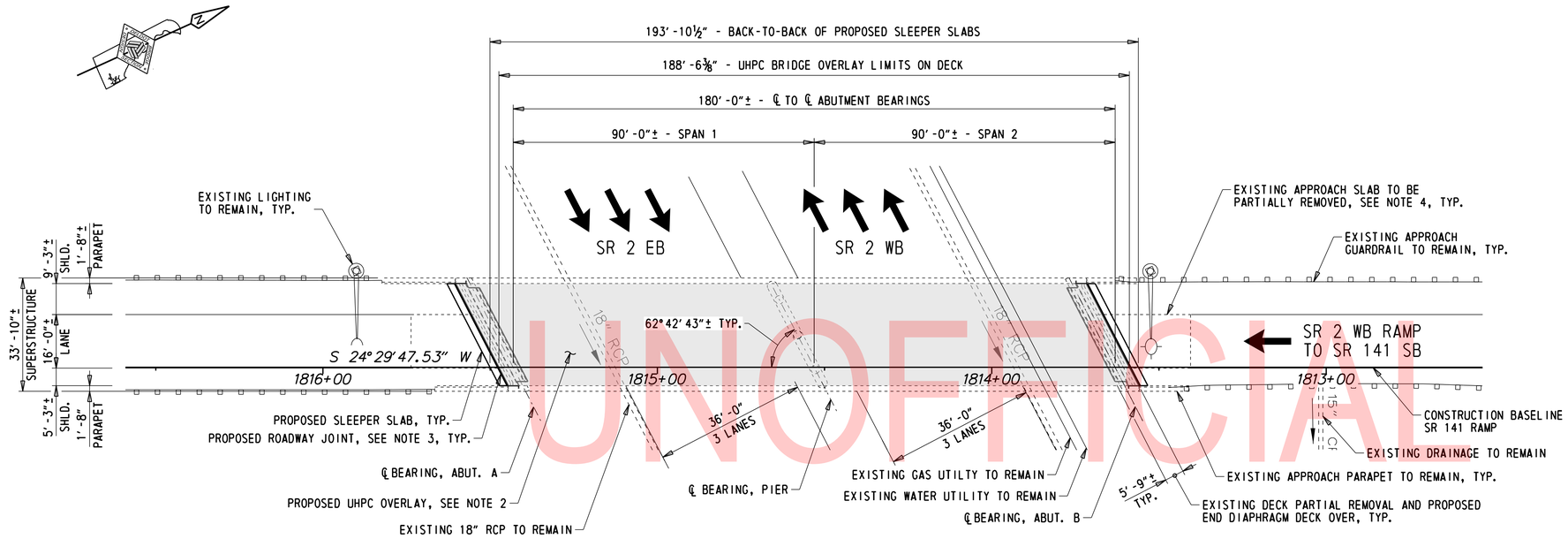

PLAN

1" = 20'-0"

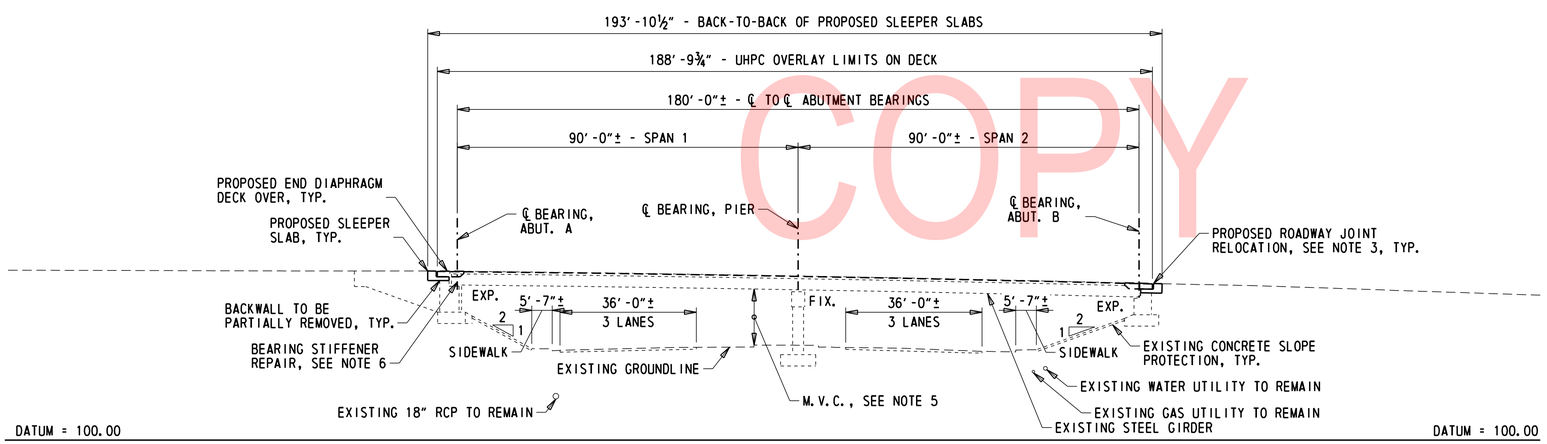

DEVELOPED ELEVATION ALONG BASELINE

1" = 20'-0"

LEGEND:

PROPOSED UHPC OVERLAY

NOTES:

1. ALL DIMENSIONS MEASURED FROM CONSTRUCTION BASELINE.
2. THE PROPOSED UHPC OVERLAY HAS NOMINAL THICKNESS OF 1⅜" ON THE EXISTING DECK AND THE PROPOSED DECK OVER END DIAPRHAGM.
3. THE PROPOSED ROADWAY JOINT IS LOCATED BETWEEN THE PROPOSED END DIAPHRAGM DECK OVER AND SLEEPER SLAB BETWEEN THE FRONT FACE OF FASCIA PARAPETS. THE EXISTING JOINTS IN THE FASCIA PARAPETS REMAIN IN PLACE.
4. EXISTING APPROACH SLABS AND ROADWAY TO BE PARTIALLY REMOVED WITHIN PROPOSED STRUCTURE LIMITS.
5. THE LOCATION OF THE MINIMUM VERTICAL CLEARANCE (M.V.C.) IS ESTIMATED. A M.V.C. OF 14.8' WAS MEASURED AND INCLUDED IN THE 4/13/2016 INSPECTION REPORT PROVIDED BY DELDOT. THE CONTRACTOR SHALL CONFIRM THE M.V.C. LOCATION AND MEASUREMENT BEFORE STARTING WORK. THE M.V.C. SHALL NOT BE REDUCED AT ANY TIME DURING CONSTRUCTION.
6. FOR STEEL BEARING STIFFENER REPAIR DETAILS, SEE DWG. RH-01.
7. THE DEPTH OF UTILITIES SHOWN IS APPROXIMATE.

UNOFFICIAL WEBSITE COPY

N:\3122-002\CADD\Bridge\BR1-601_PE01.dgn
7/31/2019 4:18:55 PM

ADDENDA / REVISIONS	SCALE AS NOTED	REHABILITATION OF BRIDGES 1-600, 1-601, AND 1-604, SR 2 AND SR 141 INTERCHANGE	CONTRACT T201707403	BRIDGE NO. 1 601	GENERAL PLAN AND ELEVATION	PE-01
			COUNTY NEW CASTLE	DESIGNED BY: ZMG		SECTION WRA
				CHECKED BY: WAG		SHEET NO. 64

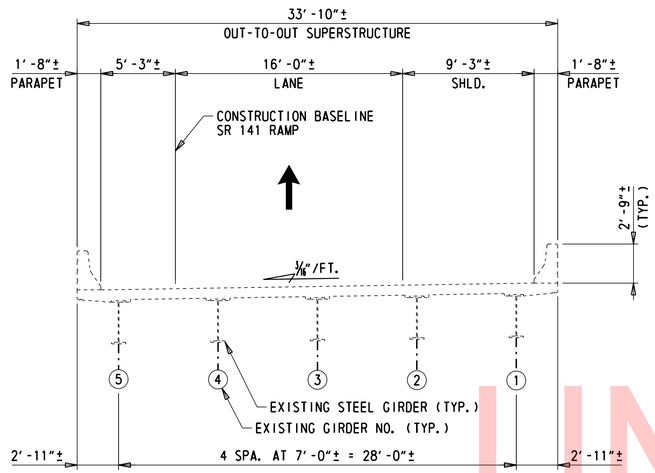

EXISTING TYPICAL SECTION

3/16" = 1'-0"

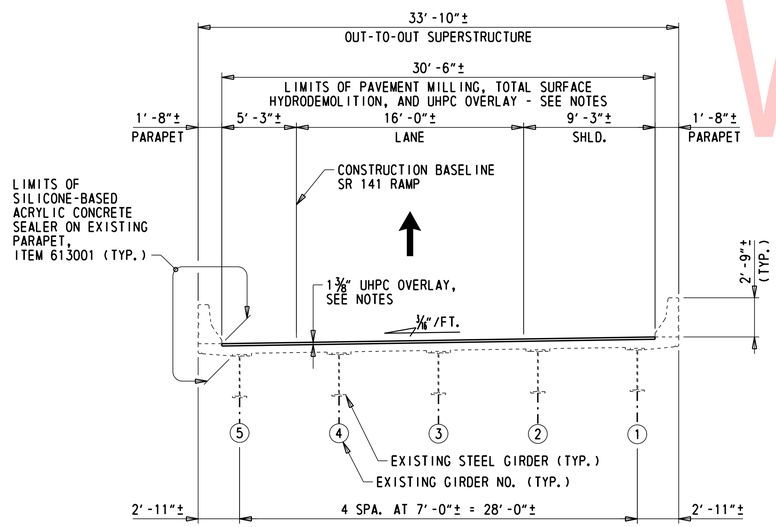

PROPOSED TYPICAL SECTION

3/16" = 1'-0"

UNOFFICIAL WEBSITE COPY

NOTES:

1. THE PROPOSED OVERLAY THICKNESS NOTED IS THE AVERAGE THICKNESS OF UHPC PLACED FOLLOWING MILLING AND TOTAL SURFACE HYDRODEMOLITION OF THE EXISTING DECK, SEE DWG. SR-02 FOR UHPC PLACEMENT DETAILS.
2. THE PROPOSED OVERLAY SHALL MATCH THE EXISTING GRADE AND CROSS SLOPE OF THE BRIDGE DECK. THE CONTRACTOR SHALL SURVEY THE EXISTING BRIDGE DECK PRIOR TO DEMOLITION OPERATIONS TO ENSURE THE EXISTING GRADE AND CROSS SLOPE ARE MET IN THE FINAL CONDITION. COST OF THIS SURVEY WILL BE INCIDENTAL TO ITEM 763501 - CONSTRUCTION ENGINEERING.
3. REFERENCE DWGS. SR-01 AND SR-02 FOR LIMITS AND DETAILS OF THE MILLING AND TOTAL SURFACE HYDRODEMOLITION AND ASSOCIATED EXISTING DECK REPAIRS.
4. MILLING OF THE DECK WILL BE PAID FOR BY ITEM 760013 - PAVEMENT MILLING, PORTLAND CEMENT CONCRETE PAVEMENT. TOTAL SURFACE HYDRODEMOLITION WILL BE PAID FOR BY ITEM 760500 - TOTAL SURFACE HYDRODEMOLITION. THE UHPC OVERLAY WILL BE PAID FOR BY ITEM 625505 - UHPC OVERLAY. SEE SPECIAL PROVISIONS.
5. UPON COMPLETION OF THE UHPC OVERLAY, THE CONTRACTOR SHALL BLANKET GRIND THE PAVEMENT SURFACE IN ACCORDANCE WITH ITEM 501502 - DIAMOND GRINDING PCC PAVEMENT AND PRECAST PAVEMENT. SEE SPECIAL PROVISIONS.

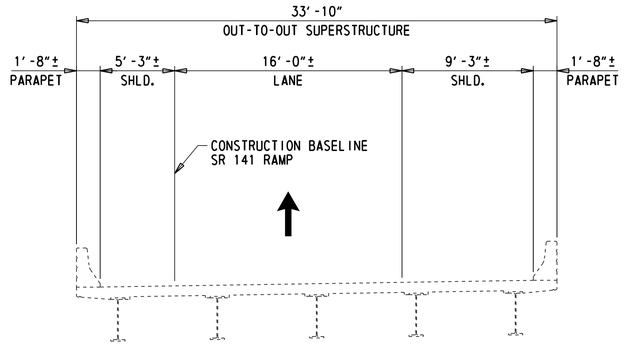

EXISTING TYPICAL SECTION

3/16" = 1'-0"

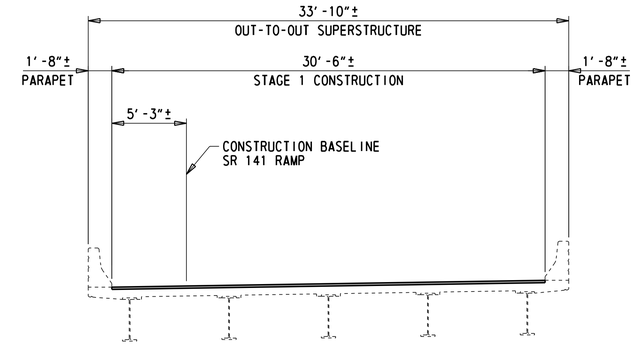

STAGE 1 CONSTRUCTION

3/16" = 1'-0"

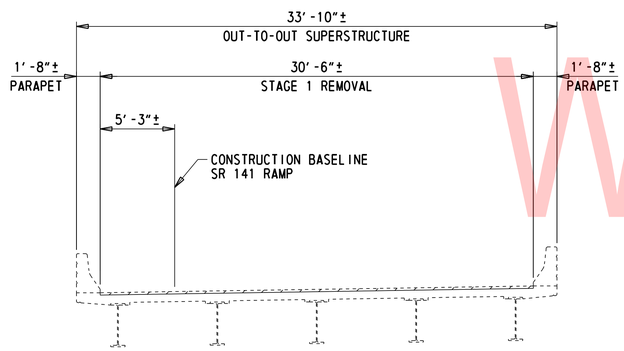

STAGE 1 REMOVAL

3/16" = 1'-0"

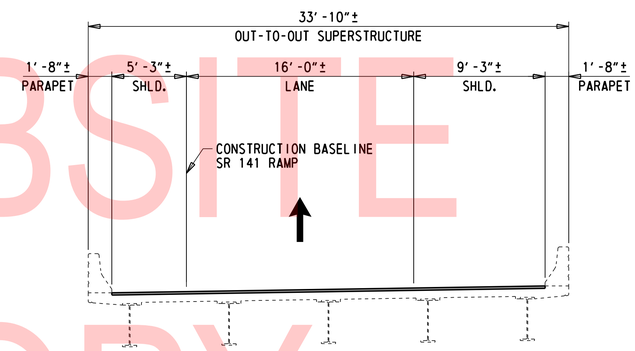

COMPLETED TYPICAL SECTION

3/16" = 1'-0"

UNOFFICIAL WEBSITE COPY

LEGEND

- LIMITS OF REMOVAL
  ITEM 760013 - PAVEMENT MILLING, P.C.C. PAVEMENT
  ITEM 760500 - TOTAL SURFACE HYDRODEMOLITION
- PROPOSED OVERLAY
  ITEM 625505 - UHPC OVERLAY
  ITEM 501502 - DIAMOND GRINDING P.C.C. PAVEMENT AND PRECAST PAVEMENT

NOTES:

1. SR 2 NB TO 141 SB RAMP SHALL BE CLOSED TO TRAFFIC DURING STAGE 1 WORK.
2. FOR REMOVAL DETAILS, SEE DWGS. PN-03, SR-01, AND SR-02.

N:\3122-002\CADD\Bridge\BR1-601_SC01.dgn
7/31/2019 4:18:56 PM

ADDENDA / REVISIONS	SCALE AS NOTED	REHABILITATION OF BRIDGES 1-600, 1-601, AND 1-604, SR 2 AND SR 141 INTERCHANGE	CONTRACT T201707403	BRIDGE NO. 1 601	SEQUENCE OF CONSTRUCTION	SC-01
			COUNTY NEW CASTLE	DESIGNED BY: ZMG		SECTION WRA
				CHECKED BY: WAG		SHEET NO. 66

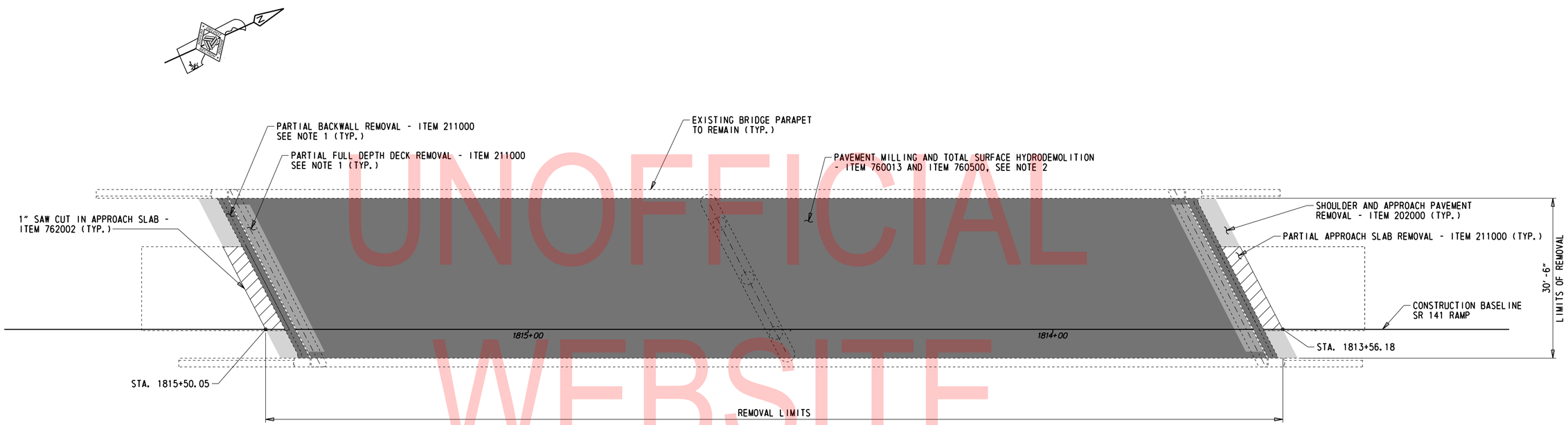

REMOVAL PLAN

1" = 10'-0"

UNOFFICIAL WEBSITE COPY

LEGEND:

- APPROACH SLAB REMOVAL LIMITS (ITEM 211000)
- SHOULDER AND APPROACH PAVEMENT REMOVAL LIMITS (ITEM 202000)
- FULL DEPTH DECK REMOVAL LIMITS (ITEM 211000)
- PAVEMENT MILLING, P.C.C. PAVEMENT (ITEM 760013) AND TOTAL SURFACE HYDRODEMOLITION LIMITS (ITEM 760500)
- BACKWALL REMOVAL LIMITS (ITEM 211000)

NOTES:

1. FOR DECK AND BACKWALL REMOVAL LIMITS AND DETAILS, SEE DWGS. DK-02 AND DK-03.
2. FOR PAVEMENT MILLING AND TOTAL SURFACE HYDRODEMOLITION REMOVAL LIMITS AND DETAILS, SEE DWGS. PN-03, SC-02, SC-03, AND SR-02.

N:\32122-002\CADD\Bridge\BR1-601_SR01.dgn
7/31/2019 4:18:57 PM

ADDENDA / REVISIONS	SCALE AS NOTED	REHABILITATION OF BRIDGES 1-600, 1-601, AND 1-604, SR 2 AND SR 141 INTERCHANGE	CONTRACT T201707403	BRIDGE NO. 1 601	REMOVAL PLAN	SR-01
			COUNTY NEW CASTLE	DESIGNED BY: ZMG		SECTION WRA
				CHECKED BY: WAG		SHEET NO. 67

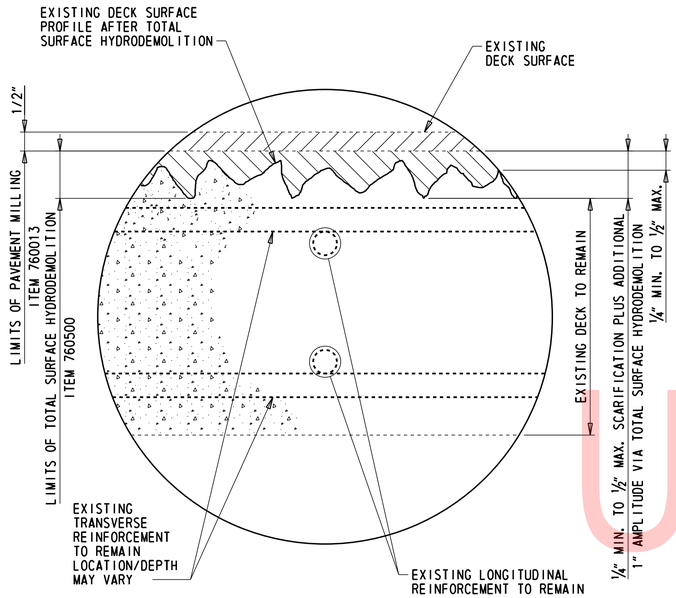

TOTAL SURFACE HYDRODEMOLITION DETAIL

6" = 1'-0"

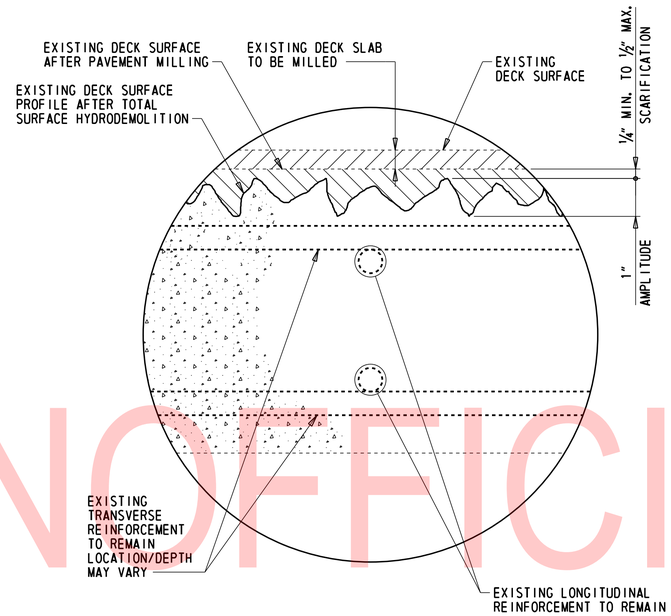

HYDRODEMOLITION AMPLITUDE DETAIL

6" = 1'-0"

UNOFFICIAL WEBSITE COPY

N:\32122-002\C400\Bridge\BR1-601_SR02.dgn
7/31/2019 4:18:58 PM

ADDENDA / REVISIONS		SCALE AS NOTED	REHABILITATION OF BRIDGES 1-600, 1-601, AND 1-604, SR 2 AND SR 141 INTERCHANGE	CONTRACT T201707403	BRIDGE NO. 1 601	DEMOLITION DETAILS	SR-02
				COUNTY NEW CASTLE	DESIGNED BY: ZMG		SECTION WRA
					CHECKED BY: WAG		SHEET NO. 68

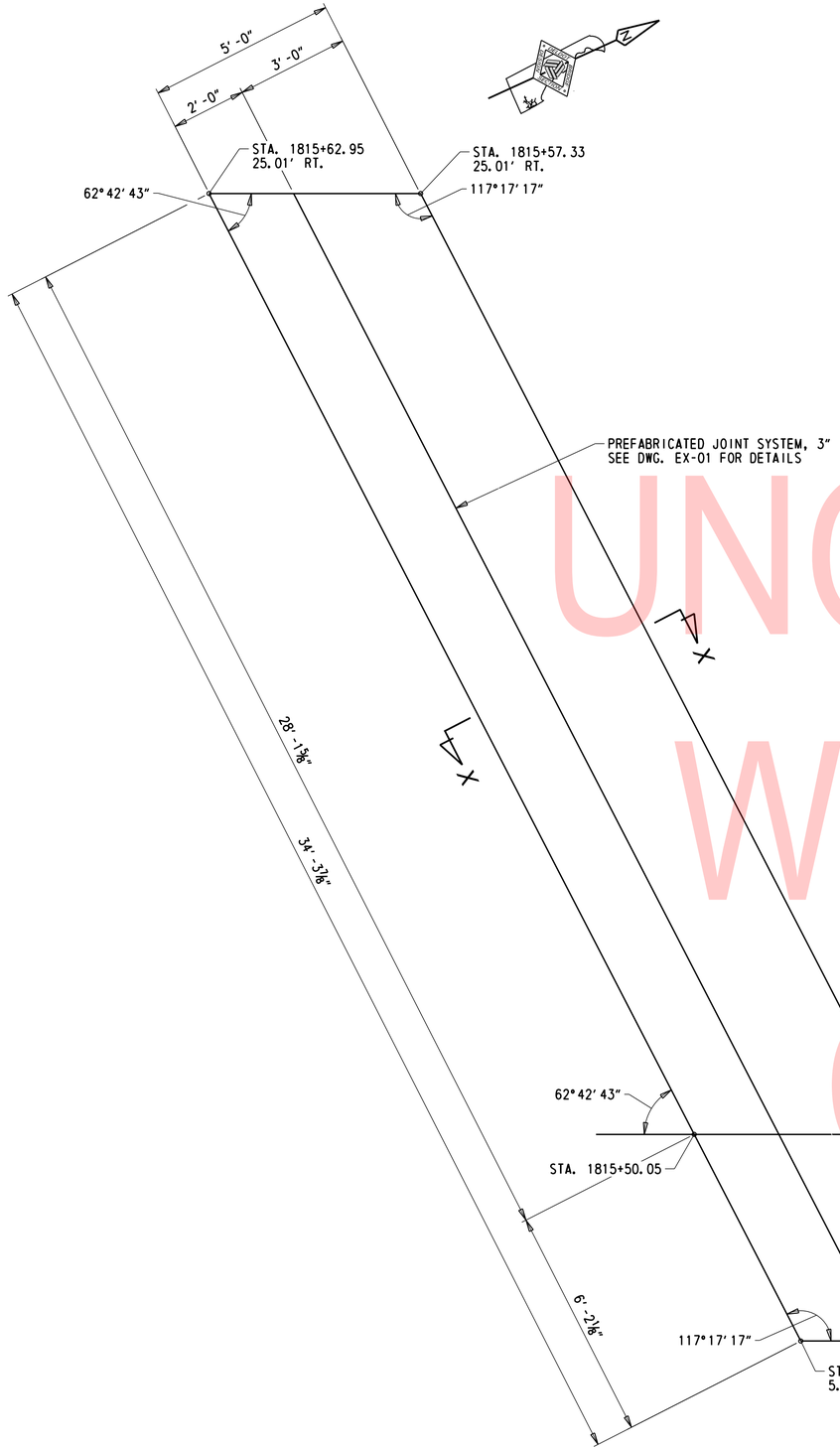

SLEEPER SLAB A - PLAN

½" = 1'-0"

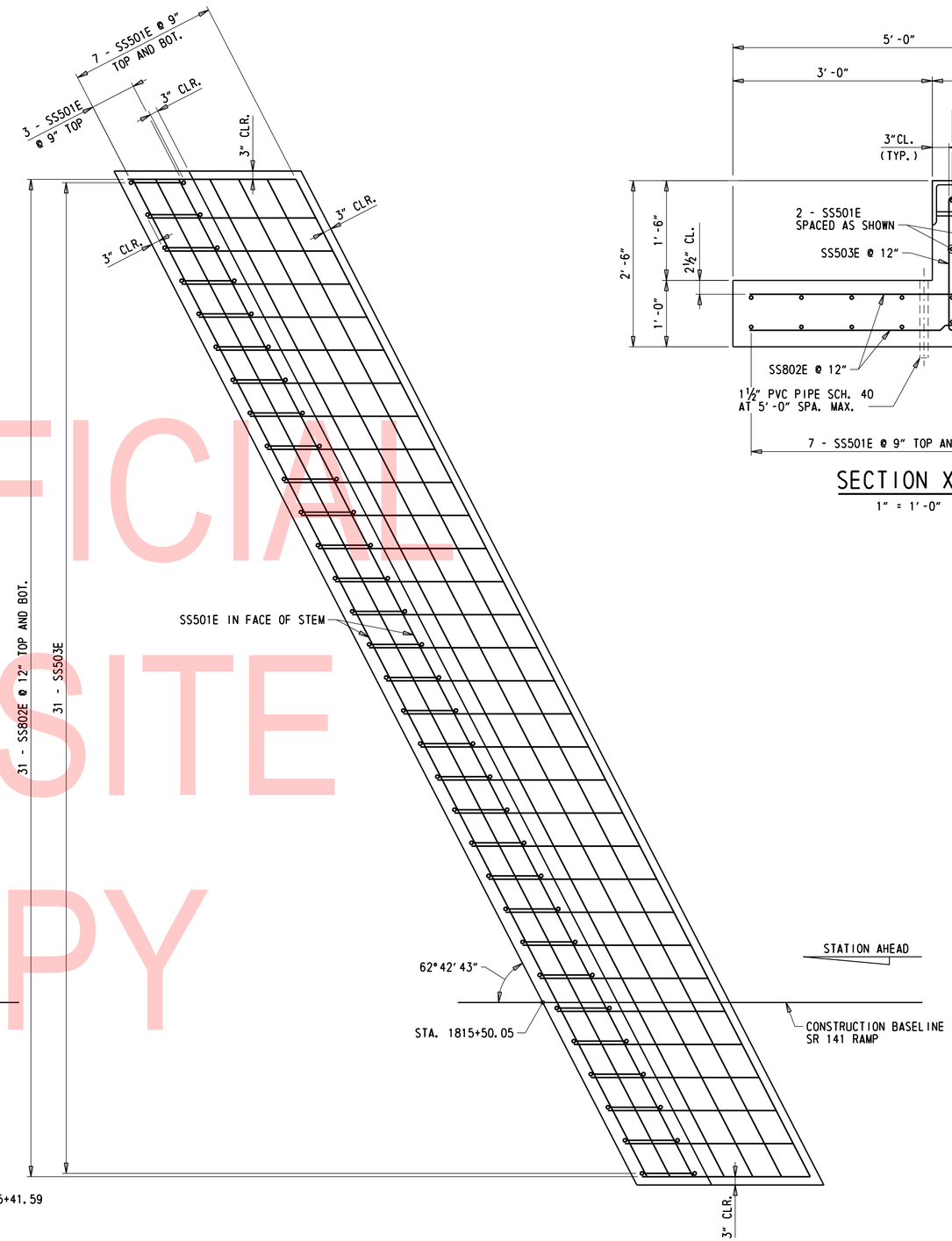

SLEEPER SLAB A - REINFORCEMENT

½" = 1'-0"

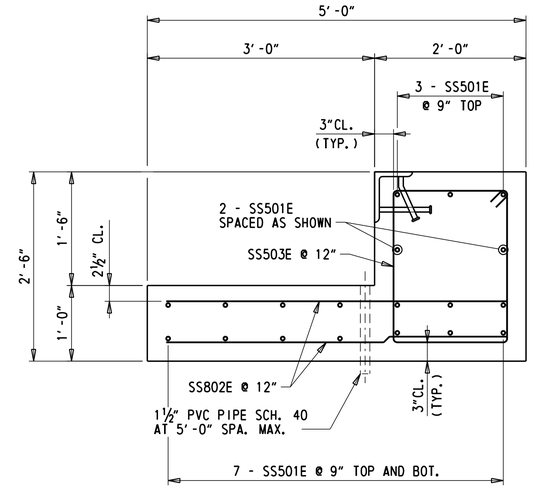

SECTION X-X

1" = 1'-0"

UNOFFICIAL WEBSITE COPY

N:\3122-002\CADD\Bridge\BR1-601_AS01.dgn
7/31/2019 4:18:59 PM

ADDENDA / REVISIONS	SCALE AS NOTED	REHABILITATION OF BRIDGES 1-600, 1-601, AND 1-604, SR 2 AND SR 141 INTERCHANGE	CONTRACT T201707403	BRIDGE NO. 1 601	SLEEPER SLAB A DETAILS	AS-01
			COUNTY NEW CASTLE	DESIGNED BY: ZMG		SECTION WRA
				CHECKED BY: WAG		SHEET NO. 69

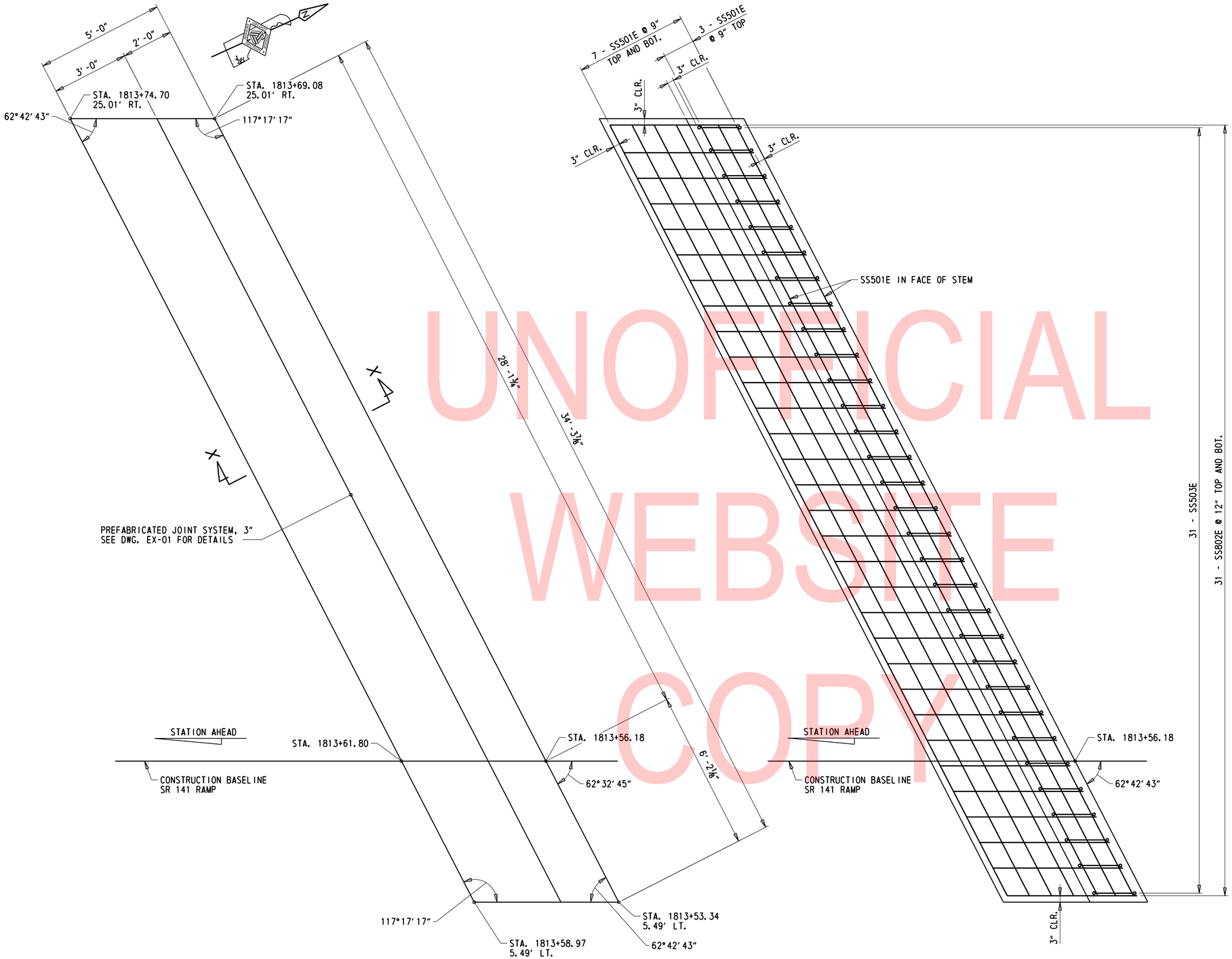

UNOFFICIAL WEBSITE COPY

SLEEPER SLAB B - PLAN

½" = 1'-0"

SLEEPER SLAB B - REINFORCEMENT

½" = 1'-0"

ADDENDA / REVISIONS	

SCALE AS NOTED

REHABILITATION OF BRIDGES 1-600, 1-601, AND 1-604, SR 2 AND SR 141 INTERCHANGE

CONTRACT	BRIDGE NO.	1 601
T201707403	DESIGNED BY: ZMG	
COUNTY		
NEW CASTLE	CHECKED BY: WAG	

SLEEPER SLAB B DETAILS

AS-02
SECTION
WRA
SHEET NO.
70

N:\32122-002\C400\Bridge\BR1-601_AS02.dgn
7/31/2019 4:19:05 PM

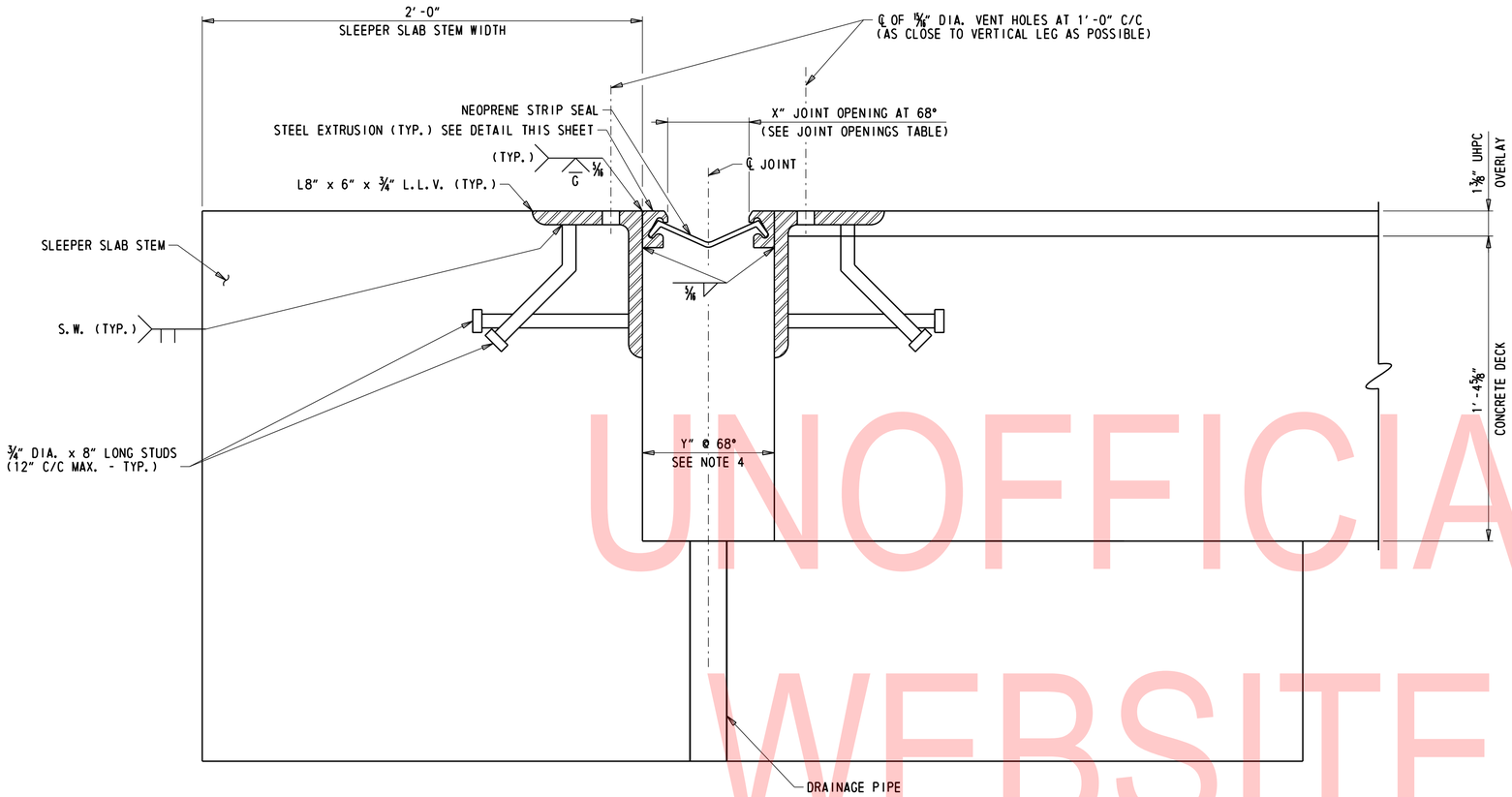

JOINT ASSEMBLY DETAIL

3" = 1'-0"

JOINT OPENINGS, X										
TEMPERATURE °F	20°	30°	40°	50°	60°	68°	70°	80°	90°	100°
ABUTMENT A & B	2"	1 15/16"	1 7/8"	1 13/16"	1 3/4"	1 11/16" ±	1 11/16" ±	1 5/8"	1 9/16"	1 1/2"

STRIP SEAL EXPANSION JOINT NOTES:

1. STEEL FOR DECK JOINTS AND STEEL EXTRUSIONS SHALL BE AASHTO M270, GR. 36 (ASTM A36) AT MINIMUM.
2. NEOPRENE EXTRUSION TO MEET ASTM D-2628-81 MODIFIED, (RECOVERY TEST EXCLUDED).
3. THE EXPANSION JOINT SHALL BE CAPABLE OF SEALING THE APPROACH SLAB TO SLEEPER SLAB JOINT TO PREVENT MOISTURE AND OTHER CONTAMINANTS FROM DESCENDING THROUGH THE JOINT.
4. THE CONTRACTOR SHALL ADJUST THE OPEN JOINT (Y) AS REQUIRED BY THE WIDTH OF THE STEEL EXTRUSION USED SO AS TO PROVIDE A X" JOINT OPENING AT 68°F.
5. THE STRIP SEAL SHALL BE INSTALLED IN ONE PIECE ACROSS THE APPROACH SLAB WIDTH. SPLICING OF THE STRIP SEAL IS NOT PERMITTED.
6. THE EXPANSION JOINT SYSTEM IS PAID FOR UNDER ITEM 624000 - PREFABRICATED EXPANSION JOINT SYSTEM, 3".
7. STEEL EXTRUSIONS SHALL BE HOT-DIP GALVANIZED. ENTIRE EXPANSION DAM SHALL BE PAINTED AFTER FABRICATION USING URETHANE SYSTEM.
8. LUBRICANT-ADHESIVE FOR USE IN INSTALLING AND BONDING NEOPRENE SEAL ELEMENTS TO STEEL JOINT COMPONENTS SHALL BE A ONE QUART MOISTURE-CURING POLYURETHANE AND HYDROCARBON SOLVENT MIXTURE HAVING THE FOLLOWING PHYSICAL PROPERTIES:

AVERAGE WEIGHT, POUNDS PER GALLON	8±10%
SOLIDS CONTENT	65%
ADHESIVE SHALL REMAIN LIQUID FROM	5°F TO 120°F
FILM STRENGTH, AS PER ASTM D-412	2,000 PSI
ELONGATION	250%

9. STEEL EXTRUSIONS AND JOINT ANGLES SHALL BE CONTINUOUS ACROSS THE FULL WIDTH OF THE ROADWAY, NO SPLICING WILL BE PERMITTED.

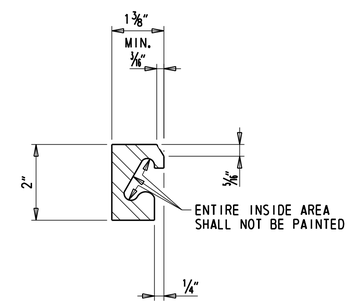

STEEL EXTRUSION DETAIL

6" = 1'-0"

NOTES:

1. FOR SLEEPER SLAB PLAN AND SECTIONS, SEE DWGS. AS-01 AND AS-02.
2. REMAINING SLEEPER SLAB REINFORCEMENT NOT SHOWN FOR CLARITY. SEE DWGS. AS-01 AND AS-02 FOR MORE INFORMATION.

UNOFFICIAL WEBSITE COPY

N:\32122-002\CADD\Bridge\BR1-601_EX01.dgn
7/31/2019 4:19:06 PM

ADDENDA / REVISIONS	SCALE AS NOTED	REHABILITATION OF BRIDGES 1-600, 1-601, AND 1-604, SR 2 AND SR 141 INTERCHANGE	CONTRACT T201707403	BRIDGE NO. 1 601	JOINT DETAILS	EX-01
			COUNTY NEW CASTLE	DESIGNED BY: ZMG		SECTION WRA
				CHECKED BY: WAG		SHEET NO. 71

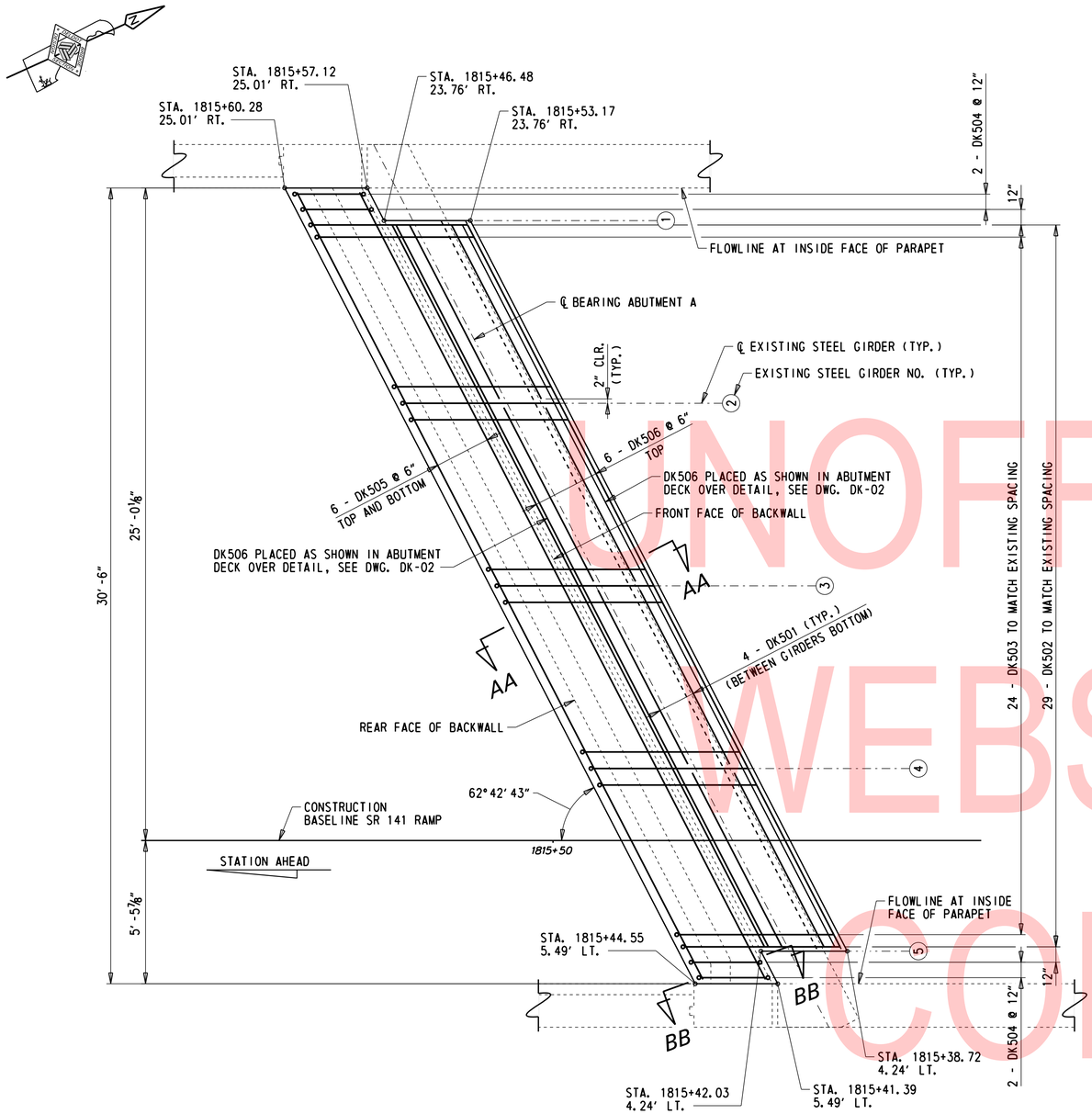

DECK OVER - ABUTMENT A REINFORCEMENT PLAN

⅜" = 1'-0"

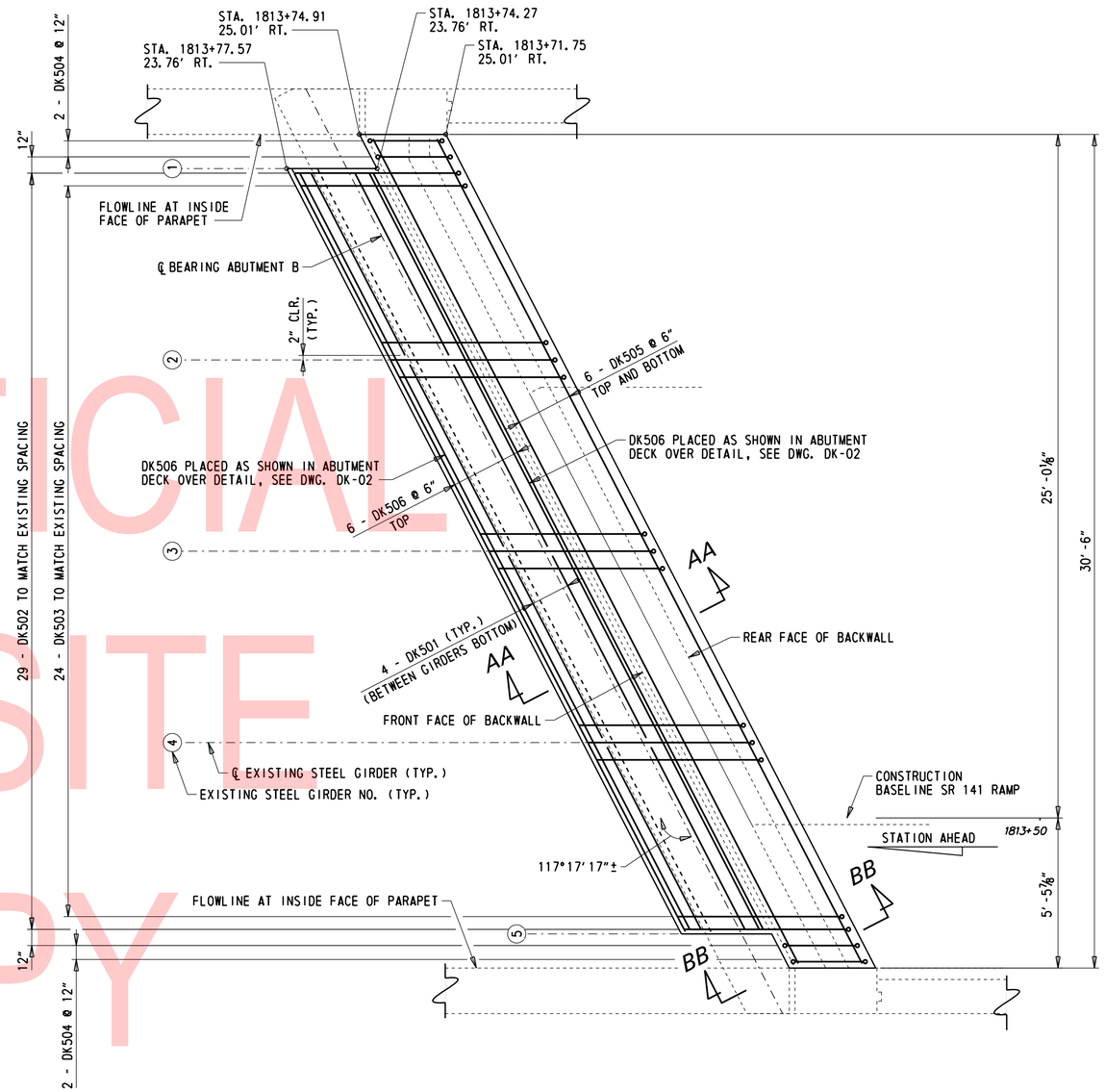

DECK OVER - ABUTMENT B REINFORCEMENT PLAN

⅜" = 1'-0"

NOTES:

1. BARS SPACED TO MATCH LONGITUDINAL BARS BETWEEN BEAMS. SEE DWGS. DK-02 AND DK-03 FOR ADDITIONAL BAR DETAILS.

UNOFFICIAL WEBSITE COPY

N:\32122-003\CADD\Bridge\BR1-601_DK01.dgn
7/31/2019 4:19:06 PM

ADDENDA / REVISIONS	SCALE AS NOTED	REHABILITATION OF BRIDGES 1-600, 1-601, AND 1-604, SR 2 AND SR 141 INTERCHANGE	CONTRACT T201707403	BRIDGE NO. 1 601	END DIAPHRAGM DECK OVER DETAILS – 1	DK-01
			COUNTY NEW CASTLE	DESIGNED BY: ZMG		SECTION WRA
				CHECKED BY: WAG		SHEET NO. 72

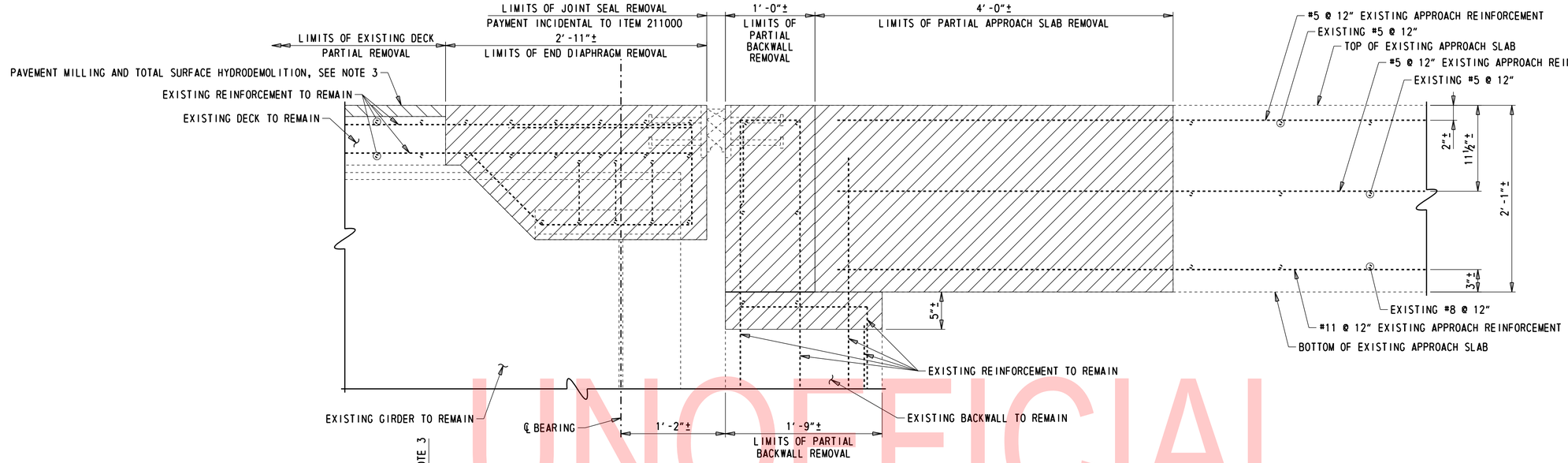

STRUCTURE REMOVAL DETAIL AT APPROACH SLAB

1½" = 1'-0"

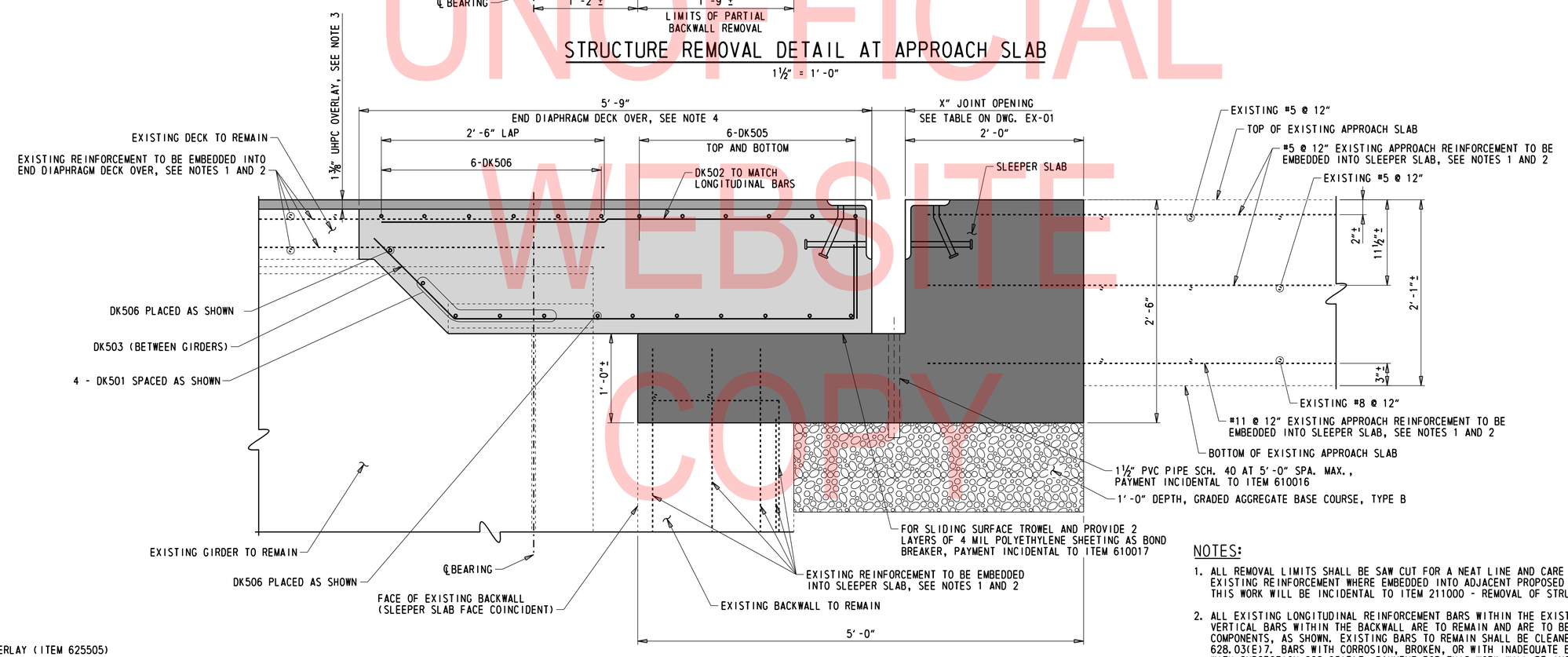

SECTION AA-AA

1½" = 1'-0"

NOTES:

1. ALL REMOVAL LIMITS SHALL BE SAW CUT FOR A NEAT LINE AND CARE SHOULD BE TAKEN TO NOT DAMAGE EXISTING REINFORCEMENT WHERE EMBEDDED INTO ADJACENT PROPOSED COMPONENTS, AS SHOWN. PAYMENT FOR THIS WORK WILL BE INCIDENTAL TO ITEM 211000 - REMOVAL OF STRUCTURES AND OBSTRUCTIONS.
2. ALL EXISTING LONGITUDINAL REINFORCEMENT BARS WITHIN THE EXISTING DECK AND APPROACH SLAB AND VERTICAL BARS WITHIN THE BACKWALL ARE TO REMAIN AND ARE TO BE EMBEDDED INTO ADJACENT PROPOSED COMPONENTS, AS SHOWN. EXISTING BARS TO REMAIN SHALL BE CLEANED IN ACCORDANCE WITH SUBSECTION 628.03(E)7. BARS WITH CORROSION, BROKEN, OR WITH INADEQUATE BOND SHALL BE REPAIRED IN ACCORDANCE WITH SUBSECTION 628.03(E)7. PAYMENT FOR THIS WORK WILL BE INCIDENTAL TO ITEM 211000 - REMOVAL OF STRUCTURES AND OBSTRUCTIONS.
3. NOMINAL OVERLAY THICKNESS DIMENSIONED, FOR DETAILS ON EXISTING DECK PARTIAL REMOVAL AND OVERLAY PLACEMENT, SEE DWG. SR-02.
4. THE END DIAPHRAGM TOP SURFACE INTERFACING WITH THE UHPC OVERLAY SHALL HAVE A UNIFORM ROUGHENED SURFACE WITH A MINIMUM ¼" AMPLITUDE. THE UHPC OVERLAY SHALL NOT BE PLACED UNTIL THE END DIAPHRAGM CONCRETE HAS REACHED 80% OF ITS 28-DAY STRENGTH.

LEGEND:

- UHPC OVERLAY (ITEM 625505)
- END DIAPHRAGM DECK OVER (ITEM 610017)
- SLEEPER SLAB (ITEM 610016)
- REMOVAL LIMITS (ITEM 211000)
- PAVEMENT MILLING, P.C.C. PAVEMENT (ITEM 760013) AND TOTAL SURFACE HYDRODEMOLITION LIMITS (ITEM 760500)

UNOFFICIAL WEBSITE COPY

ADDENDA / REVISIONS		SCALE AS NOTED	REHABILITATION OF BRIDGES 1-600, 1-601, AND 1-604, SR 2 AND SR 141 INTERCHANGE	CONTRACT T201707403	BRIDGE NO. 1 601	END DIAPHRAGM DECK OVER DETAILS - 2	DK-02
				COUNTY NEW CASTLE	DESIGNED BY: ZMG		SECTION WRA
					CHECKED BY: WAG		SHEET NO. 73

N:\32122-002\C400\Bridge\BR1-601_DK02.dgn 7/31/2019 4:19:07 PM

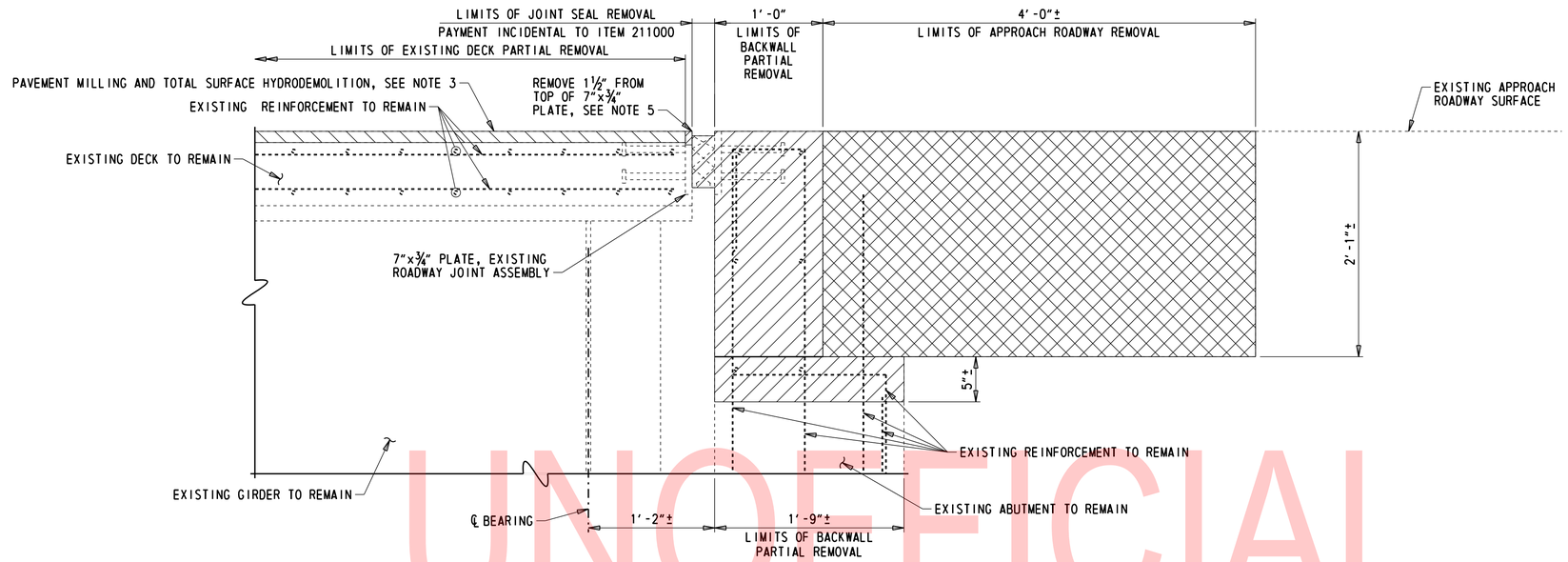

STRUCTURE REMOVAL DETAIL AT SHOULDER

1½" = 1'-0"

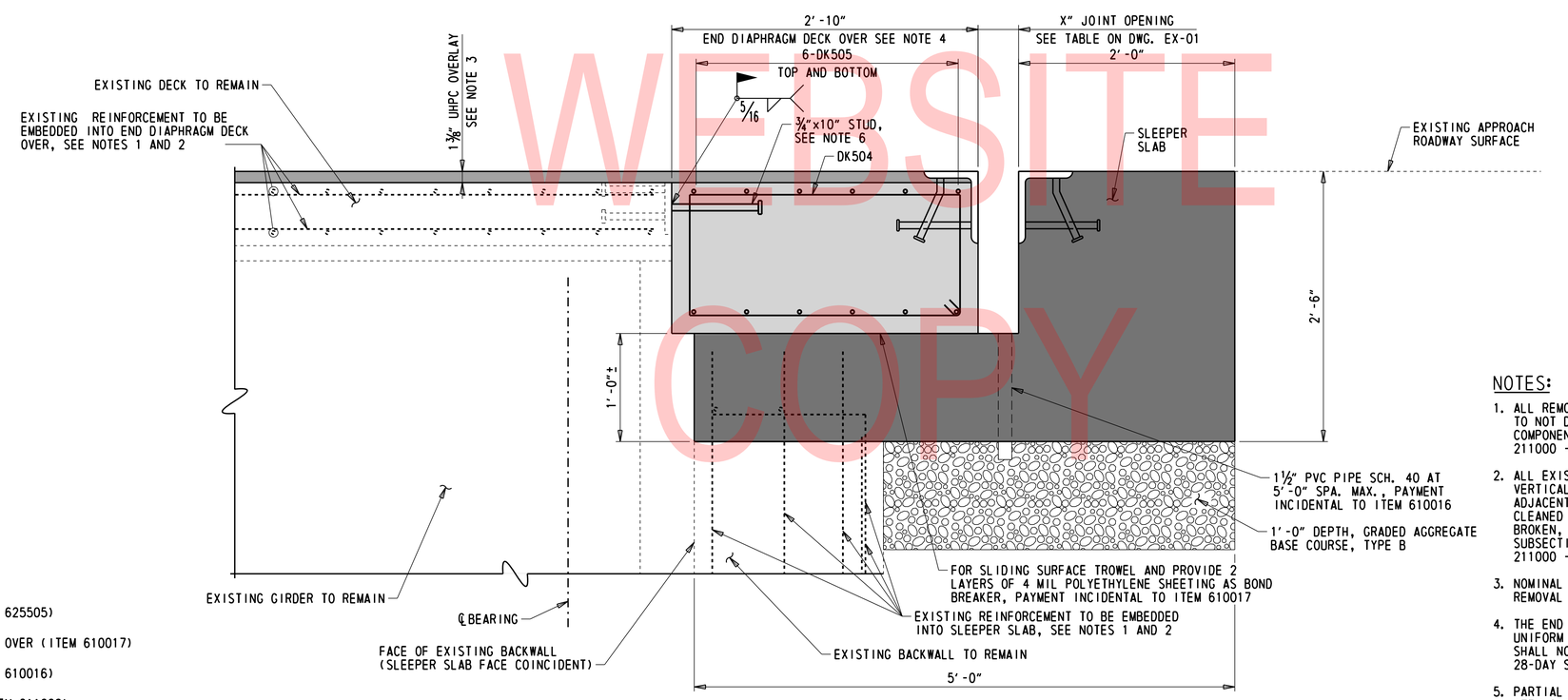

SECTION BB-BB

1½" = 1'-0"

LEGEND:

- UHPC OVERLAY (ITEM 625505)
- END DIAPHRAGM DECK OVER (ITEM 610017)
- SLEEPER SLAB (ITEM 610016)
- REMOVAL LIMITS (ITEM 211000)
- REMOVAL LIMITS (ITEM 202000)
- PAVEMENT MILLING, P.C.C. PAVEMENT (ITEM 760013) AND TOTAL SURFACE HYDRODEMOLITION LIMITS (ITEM 760500)

NOTES:

1. ALL REMOVAL LIMITS SHALL BE SAW CUT FOR A NEAT LINE AND CARE SHOULD BE TAKEN TO NOT DAMAGE EXISTING REINFORCEMENT WHERE EMBEDDED INTO ADJACENT PROPOSED COMPONENTS, AS SHOWN. PAYMENT FOR THIS WORK WILL BE INCIDENTAL TO ITEM 211000 - REMOVAL OF STRUCTURES AND OBSTRUCTIONS.
2. ALL EXISTING LONGITUDINAL REINFORCEMENT BARS WITHIN THE EXISTING DECK AND VERTICAL BARS WITHIN THE BACKWALL ARE TO REMAIN AND ARE TO BE EMBEDDED INTO ADJACENT PROPOSED COMPONENTS, AS SHOWN. EXISTING BARS TO REMAIN SHALL BE CLEANED IN ACCORDANCE WITH SUBSECTION 628.03(E)7. BARS WITH CORROSION, BROKEN, OR WITH INADEQUATE BOND SHALL BE REPAIRED IN ACCORDANCE WITH SUBSECTION 628.03(E)7. PAYMENT FOR THIS WORK WILL BE INCIDENTAL TO ITEM 211000 - REMOVAL OF STRUCTURES AND OBSTRUCTIONS.
3. NOMINAL OVERLAY THICKNESS DIMENSIONED. FOR DETAILS ON EXISTING DECK PARTIAL REMOVAL AND OVERLAY PLACEMENT, SEE DWG. SR-02.
4. THE END DIAPHRAGM TOP SURFACE INTERFACING WITH THE UHPC OVERLAY SHALL HAVE A UNIFORM ROUGHENED SURFACE WITH A MINIMUM ¼" AMPLITUDE. THE UHPC OVERLAY SHALL NOT BE PLACED UNTIL THE END DIAPHRAGM CONCRETE HAS REACHED 80% OF ITS 28-DAY STRENGTH.
5. PARTIAL REMOVAL OF ROADWAY JOINT ASSEMBLY PLATE PAYMENT WILL BE INCIDENTAL TO ITEM 211000.
6. FIELD WELD STUDS AT MID-DEPTH THE REMAINING SECTION OF THE EXISTING ROADWAY JOINT ASSEMBLY PLATE. STUDS AND FIELD WELD PAYMENT WILL BE INCIDENTAL TO ITEM 610017.

UNOFFICIAL WEBSITE COPY

ADDENDA / REVISIONS		SCALE AS NOTED	REHABILITATION OF BRIDGES 1-600, 1-601, AND 1-604, SR 2 AND SR 141 INTERCHANGE	CONTRACT T201707403	BRIDGE NO. 1 601	END DIAPHRAGM DECK OVER DETAILS - 3	DK-03
				COUNTY NEW CASTLE	DESIGNED BY: ZMG		SECTION WRA
					CHECKED BY: WAG		SHEET NO. 74

N:\32122-002\CADD\Bridge\BR1-601_DK03.dgn
7/31/2019 4:19:08 PM

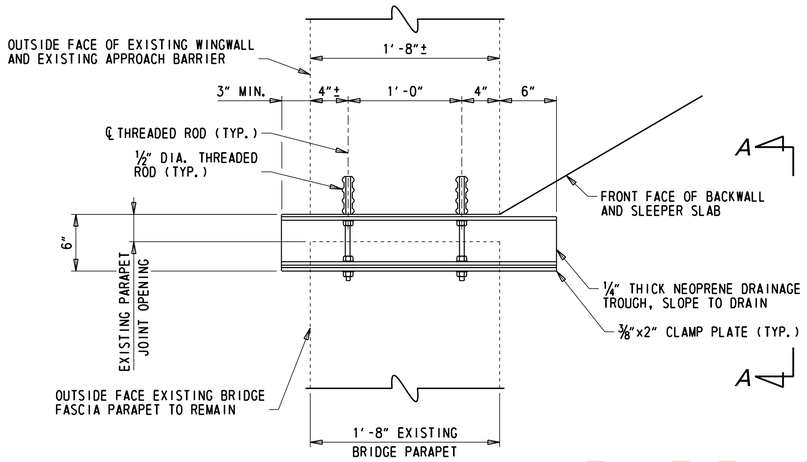

PARAPET JOINT TROUGH PLAN - DETAIL 1

NORTHWEST AND SOUTHEAST CORNERS

1½" = 1'-0"

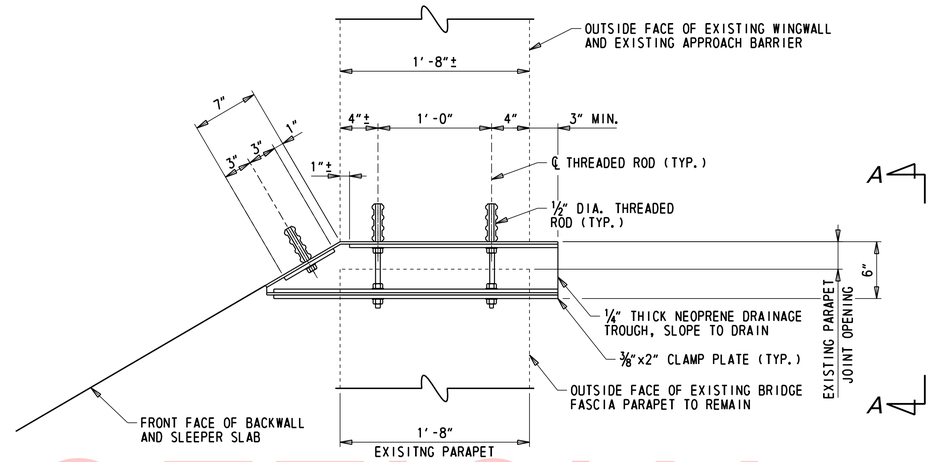

PARAPET JOINT TROUGH PLAN - DETAIL 2

NORTHEAST AND SOUTHWEST CORNERS

1½" = 1'-0"

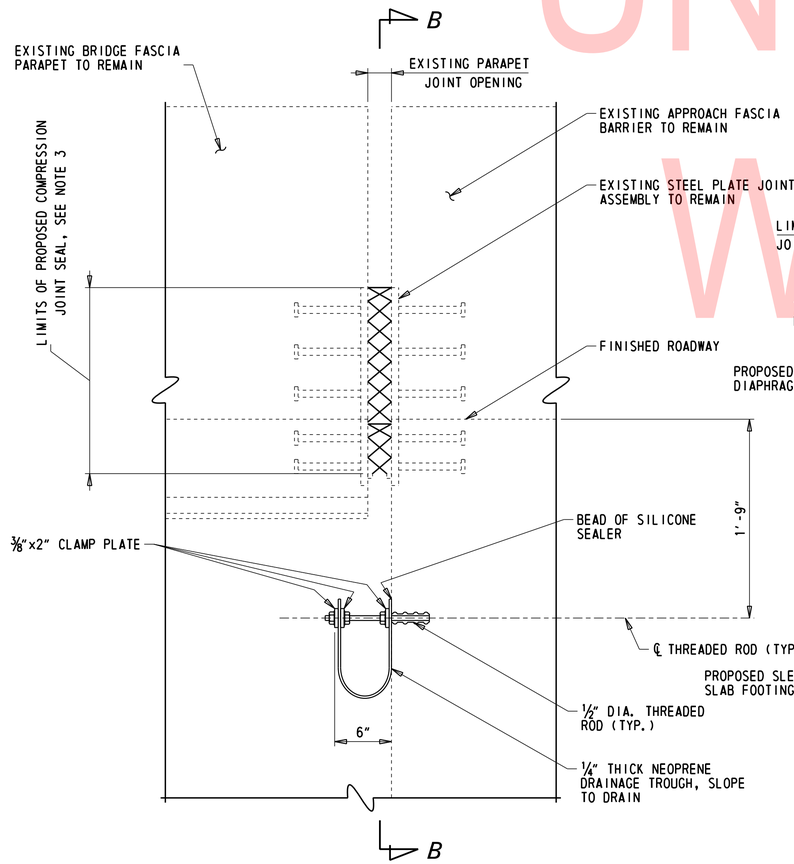

VIEW A-A

1½" = 1'-0"

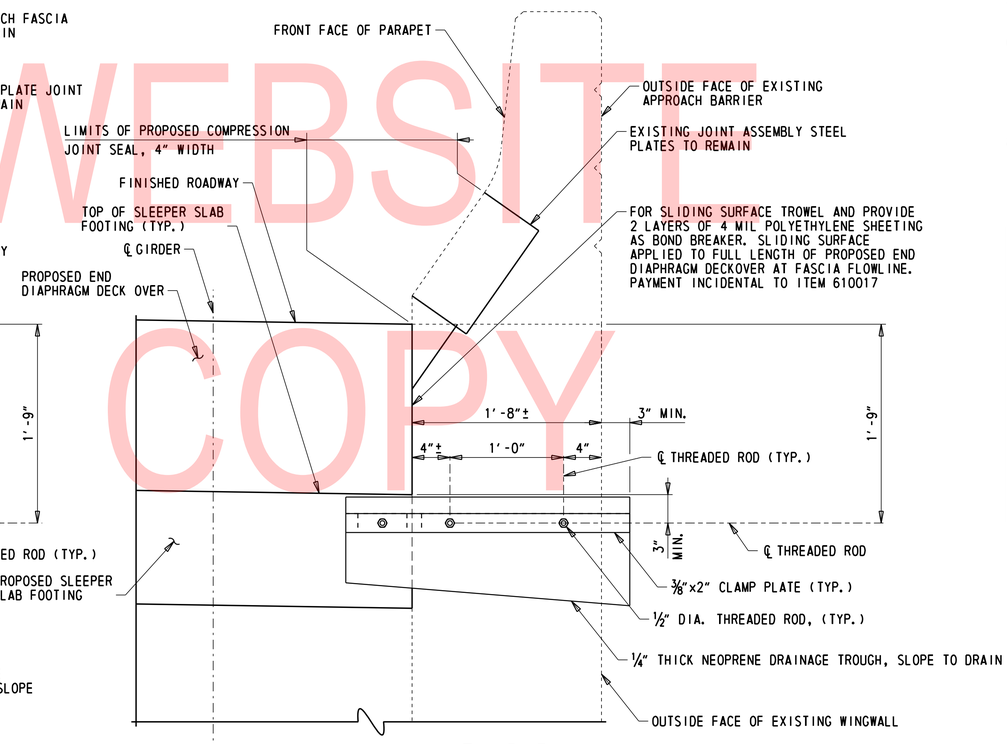

VIEW B-B

'PARAPET JOINT TROUGH PLAN - DETAIL 2' SHOWN

1½" = 1'-0"

UNOFFICIAL WEBSITE COPY

NOTES:

1. THE COMPRESSION JOINT SEAL AND PARAPET JOINT TROUGH SHALL BE INSTALLED AT THE EXISTING FASCIA PARAPET JOINT LOCATIONS AT ALL FOUR CORNERS OF THE BRIDGE AS INDICATED IN PARAPET JOINT TROUGH PLAN - DETAILS 1 AND 2.
2. PAYMENT FOR INSTALLATION OF THE COMPRESSION JOINT SEAL, THE PARAPET JOINT TROUGH, AND ALL ASSOCIATED RESPECTIVE COMPONENTS AND HARDWARE WILL BE INCIDENTAL TO ITEM 610016.
3. THE PROPOSED COMPRESSION JOINT SEAL SHALL MEET THE REQUIREMENTS OF STANDARD SPECIFICATION SECTION 624.
4. THE CONTRACTOR SHALL SUBMIT WORKING DRAWINGS OF THE PARAPET JOINT TROUGH ASSEMBLY FOR APPROVAL.
5. ALL STEEL SHALL BE GALVANIZED ASTM A 709 GRADE 36 OR GRADE 50. ALL HARDWARE SHALL BE STAINLESS STEEL TYPE 304.
6. THREADED ROD MINIMUM DIAMETER SHALL BE 1/2". THREADED ROD MINIMUM WORKING LOAD SHALL BE 2000 LB. THREADED ROD MINIMUM EMBEDMENT LENGTH SHALL BE 4".
7. DRILLED HOLES SHALL BE 1/2" LARGER THAN THREADED ROD DIAMETERS AND FILLED WITH GROUT DURING INSTALLATION. GROUT SHALL HAVE A MINIMUM COMPRESSION STRENGTH OF 5000 PSI IN 7 DAYS.
8. THE NEOPRENE TROUGH SHALL MEET THE REQUIREMENTS OF ASTM D 2826 AND THE 'NEOPRENE DRAINAGE TROUGH REQUIREMENTS' TABLE BELOW. THE TROUGH CROSS SLOPE SHALL BE A MINIMUM OF 1" PER FOOT.

NEOPRENE DRAINAGE TROUGH REQUIREMENTS

PHYSICAL PROPERTIES	METHOD	LIMITS
THICKNESS (IN), MINIMUM	--	1/4
TENSILE STRENGTH (PSI), MINIMUM	D 412	2000
ELONGATION AT BREAK (%), MINIMUM	D 412	250
HARDNESS, TYPE A DUROMETER	D 2240	60±5
COMPRESSION SET, 22-HR @ 212 F (%), MAX.	D 395	35
OVEN AGING, 70-HR @ 212 F		
TENSILE STRENGTH, % LOSS MAX	D 573	20
ELONGATION (%), LOSS MAX		20
HARDNESS, TYPE A DUROMETER (POINTS CHANGE)		0 TO + 10

ADDENDA / REVISIONS

NOT TO SCALE

REHABILITATION OF BRIDGES 1-600, 1-601, AND 1-604, SR 2 AND SR 141 INTERCHANGE

CONTRACT	BRIDGE NO.	1 601
T201707403	DESIGNED BY: ZMG	
COUNTY		
NEW CASTLE	CHECKED BY: WAG	

PARAPET JOINT DETAILS

DK-04

SECTION: WRA

SHEET NO. 75

N:\32122-002\CADD\Bridge\BR1-601_DK04.dgn
7/31/2019 4:19:09 PM

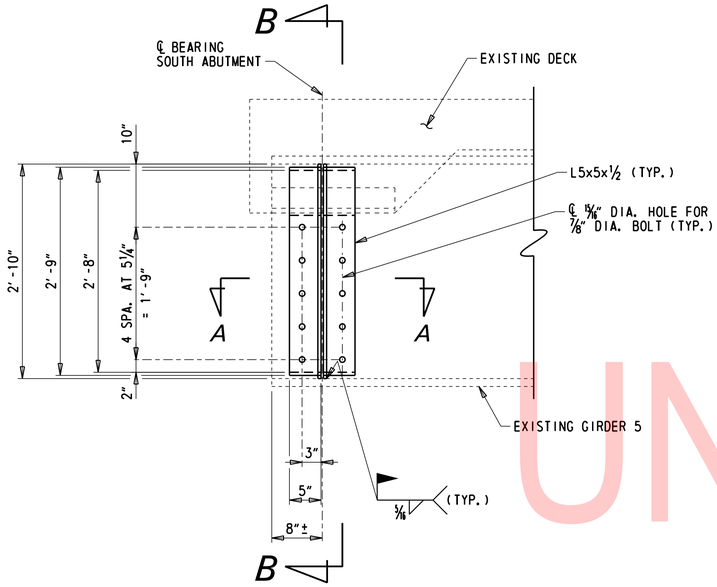

ELEVATION - BEARING STIFFENER REPAIR, EXTERIOR

1" = 1'-0"

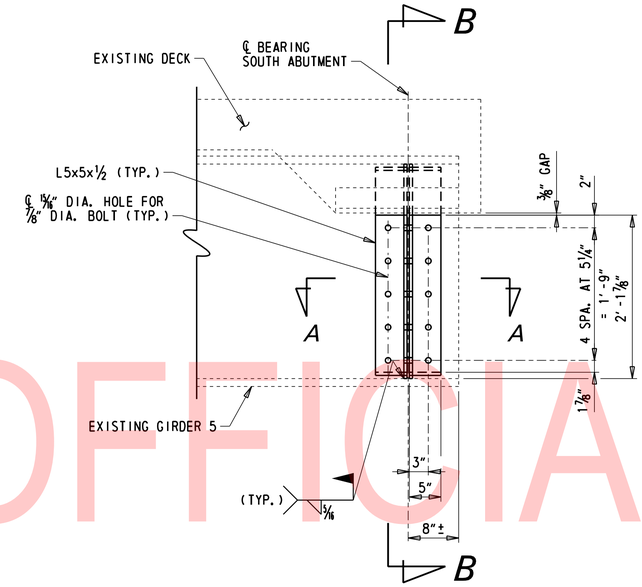

ELEVATION - BEARING STIFFENER REPAIR, INTERIOR

1" = 1'-0"

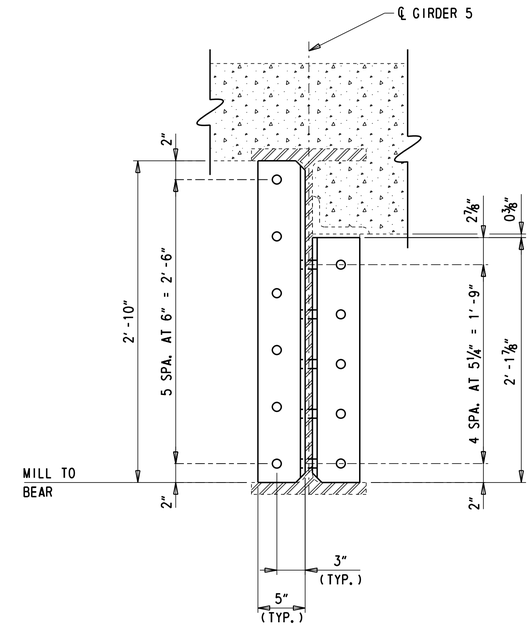

SECTION B-B

1½" = 1'-0"

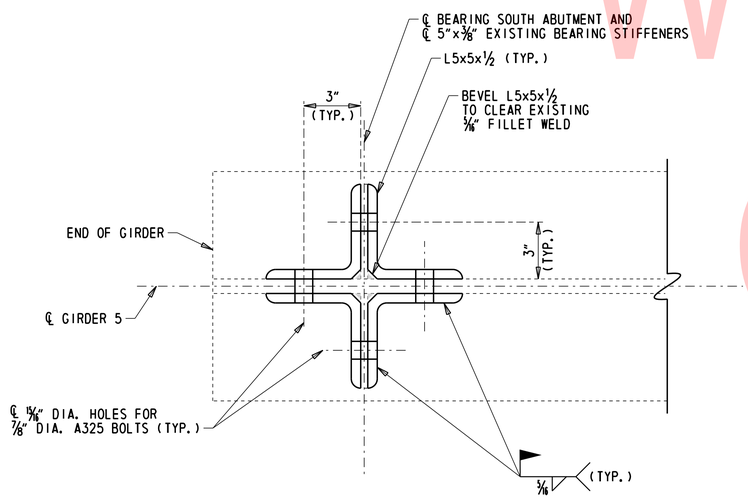

SECTION A-A

3" = 1'-0"

UNOFFICIAL WEBSITE COPY

NOTES:

1. THE CONTRACTOR SHALL VERIFY ALL DIMENSIONS, INCLUDING BUT NOT LIMITED TO THE HEIGHT BETWEEN THE BEAM FLANGE AND THE CONCRETE END DIAPHRAGM, THE ANGLE BETWEEN THE BEAM AND STIFFENER, THE PLUMBNESS OF THE STIFFENER, THE SLOPE OF THE TOP OF THE BOTTOM FLANGE, LIMITS OF SECTION LOSS, AND THE CHAMFER FOR THE EXISTING BEAM FILLET, ETC., BEFORE ANY MATERIAL IS ORDERED OR FABRICATED.
2. THE CONTRACTOR SHALL COMPLETE THE INSTALLATION OF THIS PLATING LOCATION PRIOR TO THE END OF THE WORK DAY. THIS LOCATION IS NOT TO BE LEFT WITH BOLT HOLES DRILLED AND PLATING NOT FULLY BOLTED.
3. TO ELIMINATE ANY KNIFE EDGE, GRIND THE STIFFENER EDGE UNTIL A 1/8" MIN. THICKNESS IS ATTAINED. POLISH SURFACE TO RMS 128. SEE NOTE 8.
4. ALL BOLTS SHALL BE ASTM F3125 GR. A325, TYPE 1, 7/8" DIAMETER GALVANIZED. ALL BOLTS SHALL BE OFF-VENTED A MINIMUM OF 24 DAYS BEFORE INSTALLATION.
5. THE MINIMUM ACCEPTABLE EDGE DISTANCE FOR ANY BOLT SHALL BE 1½". THE MAXIMUM ACCEPTABLE EDGE DISTANCE FOR ANY BOLT SHALL BE 3".
6. THE MIMIMUM ACCEPTABLE CENTER-TO-CENTER BOLT SPACING SHALL BE 3".
7. ALL BOLT HOLES SHALL BE 15/16" DIAMETER.
8. THE AREAS OF SECTION LOSS AND PITTING SHALL BE FILLED WITH AN APPROVED METAL REINFORCED EPOXY FILLER JUST PRIOR TO INSTALLING NEW STEEL SECTIONS.
9. SEAL THE EDGES OF ADJOINING PLATES WITH CAULK PRIOR TO APPLYING THE FINISH COAT OF PAINT.
10. ALL NEW STEEL AND AREAS TO BE PLATED SHALL BE CLEANED AND PAINTED IN ACCORDANCE WITH SECTION 616. THE COLOR SHALL MATCH THE EXISTING GIRDERS.
11. ALL STRUCTURAL STEEL SHALL BE ½" THICK AND CONFORM TO ASTM A709, GRADE 50.
12. BOLT HEADS SHALL BE ON THE EXTERIOR FACE OF GIRDER 5.
13. PLATING REPAIRS FOR THE EXISTING STIFFENER WILL BE PAID FOR UNDER ITEM 615006 AND INCLUDES ALL WORK ASSOCIATED WITH THE REPAIR INCLUDING GRINDING, METAL REINFORCED EPOXY FILLER, CAULKING, PAINTING, AND ALL INCIDENTALS NECESSARY TO COMPLETE THE WORK AS SHOWN.

(1) ANY MARK NUMBER WITH SUFFIX 'E' DENOTES EPOXY COATED REINFORCING STEEL.

(2) ALL MARK 'LOCATION PREFIXES' SHALL CONSIST OF TWO LETTERS AND ARE AS FOLLOWS: AB = ABUTMENT, AS = APPROACH SLAB, BC = BOX CULVERT, BW = BACKWALL, CL = COLUMN, DK = DECK, DL = DOWEL, FT = FOOTING, HW = HEADWALL, MS = MISC. BARS, PA = PARAPET, PR = PIER, SC = SHEETPILE CAP, SL = SLAB, SS = SLEEPER SLAB, TW = TOEWALL, WL = WALL (UNIQUE LOCATION), WW = WINGWALL

SPECIFICATIONS					BENDING DIMENSIONS (FEET-INCHES /QUARTER INCH)										
QTY.	SIZE	LENGTH	MARK	TYPE	A	B	C	D	E	F/R	G	H	J	K	O
SLEEPER SLAB															
19	5	33-9 0	SS501E	STR		33-9 0									
62	8	5-0 3	SS802E	STR		5-0 3									
31	5	8-3 2	SS503E	T1	0-5 2	1-8 1	2-0 0	1-8 1	2-0 0		0-5 2				
DECK OVER															
32	5	7-6 0	DK501	STR		7-6 0									
58	5	7-2 1	DK502	17			6-1 0	1-1 1							
48	5	7-2 0	DK503	16		0-10 0	5-1 0	1-3 0				0-10 0		0-11 1	6-0 1
8	5	8-8 2	DK504	T1	0-5 2	2-9 2	1-1 1	2-9 2	1-1 1		0-5 2				
24	5	33-11 1	DK505	STR		33-11 1									
16	5	31-1 2	DK506	STR		31-1 2									

SPECIFICATIONS					BENDING DIMENSIONS (FEET-INCHES /QUARTER INCH)										
QTY.	SIZE	LENGTH	MARK	TYPE	A	B	C	D	E	F/R	G	H	J	K	O

SPECIFICATIONS					BENDING DIMENSIONS (FEET-INCHES /QUARTER INCH)										
QTY.	SIZE	LENGTH	MARK	TYPE	A	B	C	D	E	F/R	G	H	J	K	O

UNOFFICIAL WEBSITE COPY

ASTM STANDARD ENGLISH REINFORCING BARS

BAR SIZE	NOMINAL DIMENSIONS: DIAMETER (INCHES)	AREA (INCHES²)	WEIGHT (LBS./FT.)	RECOMMENDED END HOOKS, APPLICABLE TO ALL GRADES: 180° HOOKS D	180° HOOKS A OR G	180° HOOKS J	90° HOOKS A OR G	STIRRUP AND TIE HOOKS, APPLICABLE TO ALL GRADES: 90° HOOK D	90° HOOK A OR G	135° HOOK A OR G	135° HOOK A OR G
3	0.375	0.110	0.376	2¼"	5"	3"	6"	1½"	4"	4"	2½"
4	0.500	0.200	0.668	3"	6"	4"	8"	2"	4½"	4½"	3"
5	0.625	0.310	1.043	3¾"	7"	5"	10"	2½"	6"	5½"	3¾"
6	0.750	0.440	1.502	4½"	8"	6"	1-0"	4½"	1-0"	8"	4½"
7	0.875	0.600	2.044	5¼"	10"	7"	1-2"	5¼"	1-2"	9"	5¼"
8	1.000	0.790	2.670	6"	11"	8"	1-4"	6"	1-4"	10½"	6"
9	1.128	1.000	3.400	9½"	1-3"	11¾"	1-7"				
10	1.270	1.270	4.303	10¾"	1-5"	1-1¼"	1-10"				
11	1.410	1.560	5.313	1-0"	1-7"	1-2¾"	2-0"				
14	1.693	2.250	7.650	1-6¼"	2-3"	1-9¾"	2-7"				
18	2.257	4.000	13.600	2-0"	3-0"	2-4½"	3-5"				

NOTES:

1. FIGURES SHOWN IN CIRCLES REPRESENT BAR BEND TYPES.
2. STANDARD BAR BENDS INCLUDE ONLY THOSE TYPES BELOW, INDICATED AS SUCH.
3. ALL DIMENSIONS OUT-TO-OUT, EXCEPT "A" AND "G" ON STD. 180° AND 135° HOOKS.
4. "J" DIMENSIONS ON 180° HOOKS TO BE SHOWN ONLY WHERE NECESSARY TO RESTRICT HOOK SIZE, OTHERWISE STANDARD 'ACI' HOOKS ARE TO BE USED.
5. WHERE "J" IS NOT SHOWN, "J" WILL BE KEPT EQUAL TO OR LESS THAN "H" ON TYPES 3, 5 AND 22. WHERE "J" CAN EXCEED "H", IT SHALL BE SHOWN.
6. "H" DIMENSIONS OF STIRRUPS TO BE SHOWN AS NEEDED TO FIT WITHIN THE CONCRETE.
7. UNLESS OTHERWISE NOTED, DIAMETER "D" IS THE SAME FOR ALL BENDS AND HOOKS ON A BAR (EXCEPT FOR BEND TYPES 11 AND 13).
8. WHERE SLOPE DIFFERS FROM 45° OFFSET, "H" AND "K" MUST BE SHOWN.
9. WHERE BARS ARE TO BE BENT MORE ACCURATELY THAN STANDARD BENDING TOLERANCES, BENDING DIMENSIONS REQUIRING CLOSER FABRICATION SHOULD HAVE LIMITS INDICATED.
10. FOR RECOMMENDED DIAMETER "D", OF BENDS, HOOKS, ETC., REFER TO TABLE ABOVE, 'CRSI' OR 'ACI' TABLES WHERE APPLICABLE AND REQUIRED.
11. TYPE S1-S6, S11, T1-T3 AND T6-T9 APPLICABLE TO BAR SIZES #3 THROUGH #8.

STANDARD BAR BENDS

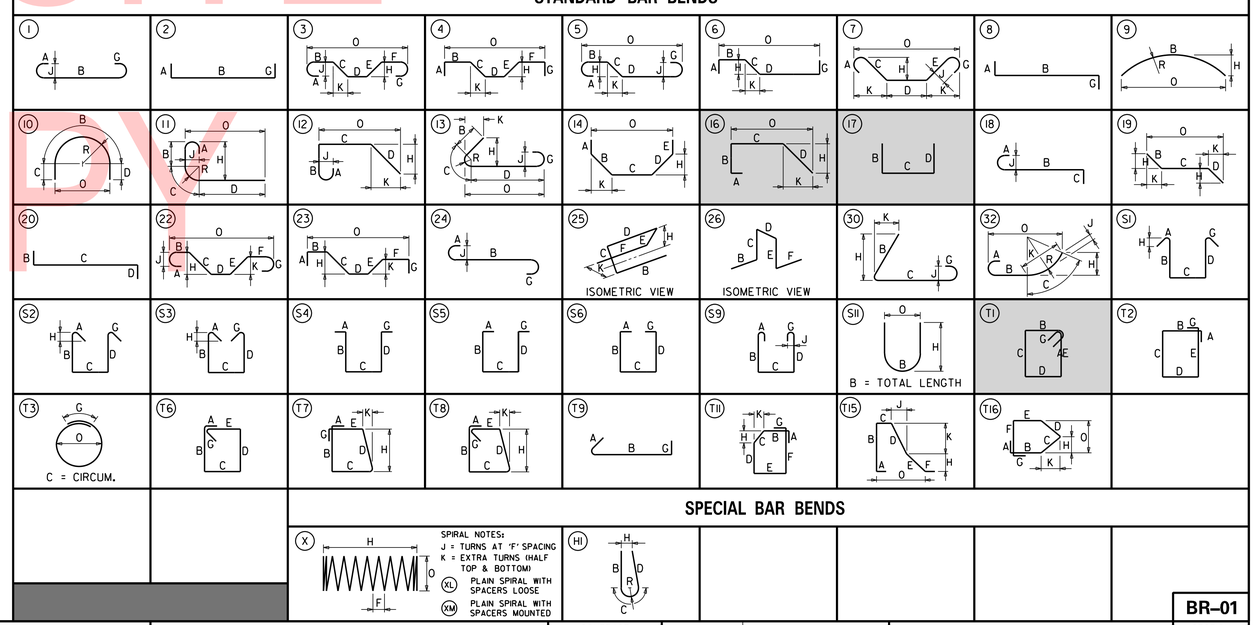

STIRRUP AND TIE HOOKS

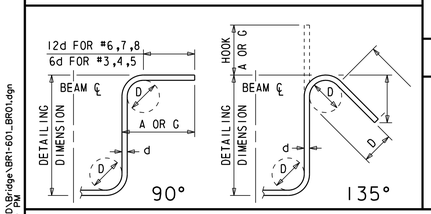

180° AND 90° END HOOKS

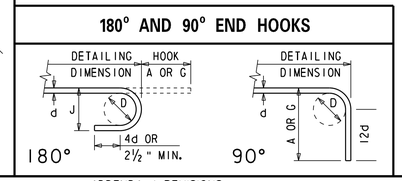

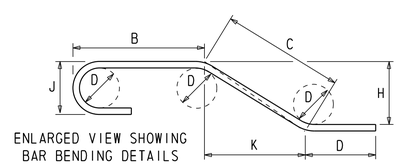

SPECIAL BAR BENDS

ADDENDA / REVISIONS

SCALE AS NOTED

REHABILITATION OF BRIDGES 1-600, 1-601, AND 1-604, SR 2 AND SR 141 INTERCHANGE

CONTRACT	BRIDGE NO. 1 601
T201707403	DESIGNED BY: ZMG
COUNTY	
NEW CASTLE	CHECKED BY: WAG

REINFORCEMENT SCHEDULE

BR-01

SECTION: WRA

SHEET NO. 77

N:\32122-003\CADD\Bridge\BR1-601_BR01.dgn 7/31/2019 4:19:10 PM

SECTION 200

1. REMOVAL OF STRUCTURES AND OBSTRUCTIONS:
   ITEMS TO BE REMOVED UNDER ITEM 211000 - REMOVAL OF STRUCTURES AND OBSTRUCTIONS SHALL INCLUDE, BUT NOT BE LIMITED TO, THE FOLLOWING:
   - PORTIONS OF CONCRETE APPROACH SLABS
   - CONCRETE END DIAPHRAGMS
   - PORTIONS OF ABUTMENT ROADWAY JOINTS
   - PORTIONS OF THE ABUTMENT BACKWALL
   - PORTIONS OF EXISTING BRIDGE DECK
   - PORTIONS OF MEDIAN PARAPET AND PARKWAY CURB

2. SIGNING:
   TO AVOID DAMAGE, SIGNS WITHIN PROJECT LIMITS MAY BE REMOVED DURING CONSTRUCTION IF NEEDED, BUT MUST BE REPLACED TO MATCH EXISTING CONDITIONS BEFORE REOPENING THE ROADWAY. ALL WORK RELATED TO MOVING AND REINSTALLING THE SIGN WILL BE INCIDENTAL TO ITEM 211000 - REMOVAL OF STRUCTURES AND OBSTRUCTIONS. IF THE SIGN IS DAMAGED DURING CONSTRUCTION, THE SIGN MUST BE REPLACED AT THE CONTRACTOR'S EXPENSE.

SECTION 600

3. CAST-IN-PLACE PORTLAND CEMENT CONCRETE (f'c = 28-DAY COMPRESSIVE STRENGTH):
   CLASS A - PARAPETS AND ABUTMENT STEM (f'c = 4.5 ksi)
   CLASS D - END DIAPHRAGM DECK OVER CLOSURE POUR AND SLEEPER SLABS (f'c = 4.5 ksi)
   A HIGHER CLASS CONCRETE MAY BE SUBSTITUTED FOR A LOWER CLASS CONCRETE AT NO ADDITIONAL COST TO DELDOT WITH APPROVAL OF THE BRIDGE DESIGN ENGINEER.
   -CHAMFER ALL EXPOSED EDGES ¾" X ¾" UNLESS OTHERWISE NOTED.
   -CONTRACTOR SHALL SUPPLY CONCRETE FOR THE END DIAPHRAGM DECK OVER CLOSURE, SLEEPER SLAB AND PARAPET POURS THAT INCLUDES A SHRINKAGE-REDUCING/COMPENSATING ADMIXTURE. PAYMENT FOR ADMIXTURE WILL BE INCIDENTAL EACH COMPONENTS RESPECTIVE ITEM (610017, 610016, 610008). THE ADMIXTURE MAY BE SUPPLIED BY ONE PRODUCT THAT PROVIDES BOTH EXPANSION AND PORE WATER SURFACE TENSION OR TWO SEPARATE PRODUCTS EACH ADDED AT DOSAGE RECOMMENDED BY MANUFACTURER'S TECHNICAL DATA SHEETS AND HAVING THE FOLLOWING CHARACTERISTICS:
   (A) DESIGNED TO PROVIDE BOTH THE FOLLOWING CHARACTERISTICS:
      I. EXPANDS AT A RATE THAT CLOSELY COMPENSATES FOR SHRINKAGE OF THE CONCRETE MIX.
      II. REDUCES THE CAPILLARY SURFACE TENSION OF THE CONCRETE PORE WATER.
   (B) PROVIDES AT LEAST 80% SHRINKAGE REDUCTION AS MEASURED AND DOCUMENTED BY FIELD PERFORMANCE.
   (C) FORMULATED FOR USE IN FREEZING AND THAWING WEATHER.

4. BAR REINFORCEMENT:
   -REINFORCING STEEL SHALL CONFORM TO AASHTO M31 (ASTM A615), GRADE 60.
   -REINFORCING STEEL SHALL HAVE A 3" CLEAR COVER IF CAST AGAINST EARTH OR A 2" CLEAR COVER ELSEWHERE, UNLESS OTHERWISE SPECIFIED ON THE PLANS.
   -ALL REINFORCING STEEL SHALL BE PROTECTED WITH FUSION BONDED EPOXY UNLESS OTHERWISE SPECIFIED ON THE PLANS. EPOXY COATED REINFORCING STEEL SHALL CONFORM TO ASTM A775.
   -ANY FIELD CUTTING OR FIELD BENDING MUST BE APPROVED BY THE ENGINEER. PAYMENT SHALL BE INCIDENTAL TO THE BAR REINFORCEMENT ITEM.
   -GALVANIZED REINFORCING STEEL MAY BE SUBSTITUTED FOR EPOXY-COATED REINFORCING STEEL AT NO ADDITIONAL COST TO THE DEPARTMENT WITH APPROVAL OF THE ENGINEER.
   -WELDING OF REINFORCEMENT DURING FABRICATION OR CONSTRUCTION IS NOT PERMITTED UNLESS SPECIFIED.
   -PAYMENT FOR BAR REINFORCEMENT SHALL BE UNDER ITEM 611001 UNLESS OTHERWISE NOTED.

5. CONCRETE SEALER:
   REFER TO DIAGRAMS CONTAINING SILICONE-BASED ACRYLIC CONCRETE SEALER LIMITS ON DWG. TS-01. EPOXY CONCRETE SEALER SHALL BE APPLIED TO THE BEAM SEATS, BEARING PEDESTALS, AND VERTICAL SURFACES OF THE ABUTMENT BACKWALLS. SILICONE-BASED ACRYLIC CONCRETE SEALER SHALL BE APPLIED TO THE REMAINING EXPOSED CONCRETE SURFACES AT THE ABUTMENTS AND PIERS.

6. STRUCTURAL STEEL:
   DO NOT USE DEMOLITION SHIELD SUPPORT SYSTEMS THAT WILL CAUSE UNACCEPTABLE OVERSTRESS OR DEFORMATION TO PERMANENT BRIDGE MEMBERS. DEMOLITION SHIELD SUPPORT SYSTEMS MAY NOT BE WELDED TO THE BRIDGE GIRDERS. ALL DEMOLITION SHIELD ATTACHMENT DEVICES SHALL BE REMOVED AFTER USE.

   DEMOLITION SHIELDS SHALL BE INSTALLED AT THE PROPOSED DECK AND ABUTMENT BACKWALL REMOVAL AREAS. THE CONTRACTOR SHALL PREPARE AND SUBMIT WORKING DRAWINGS OF THE PROPOSED DEMOLITION SHIELDS FOR REVIEW BY THE ENGINEER IN ACCORDANCE WITH SECTION 604.03.1. PAYMENT FOR DEMOLITION SHIELDS WILL BE MADE UNDER ITEM 604001 - PROTECTIVE SHIELD.

7. STEEL COATING:
   ALL EXPOSED SURFACES OF EXISTING STRUCTURAL STEEL LOCATED WITHIN A DISTANCE OF 5 FT. FROM THE ENDS OF THE GIRDERS AT EACH ABUTMENT, INCLUDING BEARINGS, SHALL BE CLEANED AND PAINTED IN ACCORDANCE WITH SECTION 616 OF THE STANDARD SPECIFICATIONS. PAINT COLOR TO MATCH EXISTING. THE CONTRACTOR SHALL SUBMIT A PAINT CHIP TO THE ENGINEER FOR APPROVAL PRIOR TO PAINTING ANY SURFACE. THIS WORK WILL BE PAID FOR UNDER ITEM 616000 - CLEANING AND PAINTING EXISTING STEEL.

SECTION 800

8. TEMPORARY PCC SAFETY BARRIERS:
   TEMPORARY PCC SAFETY BARRIERS SHALL NOT BE PINNED TO THE BRIDGE DECK. TEMPORARY PCC SAFETY BARRIERS SHALL BE PLACED TO MEET THE CLEAR ZONE REQUIREMENTS TO THE WORK ZONE AS INDICATED ON THE PLANS.

9. SAWCUTTING:
   ALL PAVED AREAS TO BE RECONSTRUCTED OR WIDENED SHALL BE SAWCUT AT THE POINT WHERE THE NEW PAVEMENT IS TO TIE INTO THE EXISTING PAVEMENT. ALL HOT-MIX OR P.C.C. SAWCUTTING SHALL BE FULL DEPTH, UNLESS OTHERWISE NOTED ON THE PLANS, OR AS DIRECTED BY THE ENGINEER.

MISCELLANEOUS

10. DESIGN SPECIFICATIONS:
    (A) 2017 DELDOT BRIDGE DESIGN MANUAL.
    (B) 2017 AASHTO LRFD BRIDGE DESIGN SPECIFICATIONS, 8TH EDITION, U.S. CUSTOMARY UNITS INCLUDING MAY 2018 ERRATA.
    (C) PROVIDE MATERIALS AND PERFORM WORK IN ACCORDANCE WITH THE DELDOT STANDARD SPECIFICATIONS, AUGUST 2016.

11. CONSTRUCTION LOADING:
    -THE UHPC OVERLAY MUST CURE FOR A MINIMUM OF 72-HOURS AND ACHIEVE MINIMUM COMPRESSIVE STRENGTH OF 14-KSI BEFORE THE BRIDGE IS OPENED TO TRAFFIC.

12. EXISTING CONDITIONS:
    ALL EXISTING DIMENSIONS AND ELEVATIONS SHOWN ARE BASED ON THE BEST AVAILABLE INFORMATION AND ARE APPROXIMATE ONLY. THE CONTRACTOR SHALL FIELD VERIFY ALL EXISTING DIMENSIONS, GEOMETRY, AND ELEVATIONS AS NECESSARY PRIOR TO ORDERING ANY MATERIALS AND COMMENCING CONSTRUCTION TO ENSURE PROPER FIT OF THE PROPOSED CONSTRUCTION. PAYMENT WILL BE INCIDENTAL TO ITEM 763501 - CONSTRUCTION ENGINEERING.

13. ROADWAY SURFACE ELEVATIONS:
    THE PROPOSED DECK AND APPROACH ROADWAY SURFACE ELEVATIONS SHALL MATCH THE EXISTING DECK AND APPROACH SURFACE ELEVATIONS. IT IS THE CONTRACTOR'S RESPONSIBILTY TO SURVEY THE EXISTING ROADWAY SURFACE BEFORE DEMOLITION. PAYMENT WILL BE INCIDENTAL TO ITEM 763501 - CONSTRUCTION ENGINEERING.

14. ROADWAY CLEARANCES:
    NO REDUCTION TO THE VERTICAL CLEARANCE SHALL BE ALLOWED WITHOUT PRIOR APPROVAL BY THE DEPARTMENT.

15. CONTINGENT QUANTITIES:
    THESE CONTRACT DRAWINGS HAVE BEEN PREPARED BASED ON ORIGINAL CONTRACT PLANS, SHOP DRAWINGS, AND FIELD INSPECTION NOTES TAKEN ON DECEMBER 6, 2017, JANUARY 9TH, 2018, JANUARY 10TH, 2018 AND JANUARY 18TH, 2018. ACTUAL CONDITIONS MAY REQUIRE MODIFICATION IN CONSTRUCTION DETAILS AND WORK QUANTITIES. ALL DIMENSIONS AND DETAILS SHOWN ON THE PLANS SHALL BE VERIFIED BY THE CONTRACTOR PRIOR TO ORDERING ANY MATERIALS. SEE DWG. PN-02 FOR PAY ITEM CONTINGENCY PERCENTAGES.

16. UTILITIES:
    SEE UTILITY STATEMENT FOR FURTHER INFORMATION ON UTILITY COORDINATION.

17. ENVIRONMENTAL COMPLIANCE:
    ENVIRONMENTAL COMPLIANCE PLANS ARE NOT REQUIRED FOR THIS PROJECT. NO ENVIRONMENTAL RESOURCES ARE IMPACTED BY THE PROPOSED WORK.

18. DIAMOND GRINDING:
    LONGITUDINAL END-TO-END TEXTURING (BLANKET GRINDING) SHALL BE PERFORMED ON THE FULL EXTENTS OF ALL PROPOSED UHPC OVERLAY SURFACES IN ACCORDANCE WITH THE SPECIAL PROVISIONS. PAYMENT FOR THIS WORK WILL BE MADE UNDER ITEM 501502 - DIAMOND GRINDING P.C.C. PAVEMENT AND PRECAST PAVEMENT.

19. CONCRETING:
    THE CONTRACTOR SHALL MEET STANDARD SPECIFICATION SECTION 610.03.D.3 - COLD WEATHER REQUIREMENTS FOR ALL CONCRETING. SEE SPECIAL PROVISIONS FOR ADDITIONAL REQUIREMENTS AND RESTRICTIONS FOR UHPC PLACEMENT.

MISCELLANEOUS (CONTINUED)

20. ABBREVIATIONS:

ABUT. = ABUTMENT	NB = NORTHBOUND
BOT. = BOTTOM	NO. = NUMBER
C/C = CENTER-TO-CENTER	N.T.S. = NOT TO SCALE
℄ = CENTERLINE	P.C.C. = PORTLAND CEMENT CONCRETE
CLR. = CLEAR	R = RADIUS
DIA. = DIAMETER	RT. = RIGHT
DWG. = DRAWING	SB = SOUTHBOUND
E.F. = EACH FACE	SCH. = SCHEDULE
EL. = ELEVATION	SHLD. = SHOULDER
EXP. = EXPANSION	STA. = STATION
FIX. = FIXED	TYP. = TYPICAL
LT. = LEFT	UG = UNDERGROUND
MAX. = MAXIMUM	UHPC = ULTRA HIGH PERFORMANCE CONCRETE
MIN. = MINIMUM	

UNOFFICIAL WEBSITE COPY

QUANTITIES

ITEM Nº	ITEM TITLE	UNIT	QUANTITY	CONTINGENT %	TOTAL QUANTITY
202000	EXCAVATION AND EMBANKMENT	CY	26	0	26
211000	REMOVAL OF STRUCTURES AND OBSTRUCTIONS	LS	1	0	1
211506	REMOVAL OF EX. PCC BARRIER & FOOTER	LF	15	0	15
301001	GRADED AGGREGATE BASE COURSE, TYPE B	CY	46	0	46
501502	DIAMOND GRINDING P.C.C. PAVEMENT AND PRECAST PAVEMENT	SF	11176	0	11176
604001	PROTECTIVE SHIELD	LS	1	0	1
610008	PORTLAND CEMENT CONCRETE MASONRY, PARAPET, CLASS A	CY	10	0	10
610016	PORTLAND CEMENT CONCRETE MASONRY, CLASS D	CY	119	0	119
610017	PORTLAND CEMENT CONCRETE MASONRY, SUPERSTRUCTURE, CLASS D	CY	99	0	99
611000	BAR REINFORCEMENT	LB	12605	0	12605
611001	BAR REINFORCEMENT, EPOXY COATED	LB	21819	0	21819
613000	EPOXY CONCRETE SEALER	SF	840	0	840
613001	SILICONE BASED ACRYLIC CONCRETE SEALER	SF	9349	0	9349
616000	CLEANING AND PAINTING EXISTING STEEL	LS	1	0	1
623004	CLEAN AND GREASE BRIDGE BEARINGS	EA	38	0	38
624000	PREFABRICATED EXPANSION JOINT SYSTEM, 3"	LF	296	0	296
625505	ULTRA HIGH PERFORMANCE CONCRETE OVERLAY	CF	1281	0	1281
625507	ADDITIONAL UHPC CONCRETE FOR PARTIAL DECK REPAIRS	CF	26	0	26
628001	REPAIR OF CONCRETE STRUCTURES BY EPOXY INJECTION	LF	33	100	66
628041	DEEP SPALL REPAIR	CF	60	100	120
628042	REHABILITATION OF P.C.C. MASONRY	CY	10	10	11
628053	DECK REPAIR, FULL DEPTH	SF	5	25	7
628502	REMOVAL OF EXISTING DECK REPAIRS	SF	5	25	7
760013	PAVEMENT MILLING, PORTLAND CEMENT CONCRETE PAVEMENT	SY-IN	515	0	515
760500	TOTAL SURFACE HYDRODEMOLITION	SY	1030	0	1030
762001	SAW CUTTING, CONCRETE, FULL DEPTH	LF	229	0	229

LOAD RATING SUMMARY

DESIGN VEHICLE	*RATING FACTOR*	*RATING WEIGHT (TON)*	*CONTROLLING MEMBER*	*CONTROLLING POINT*	*LOAD EFFECT*
HL-93 TRUCK (INVENTORY)	*1.51*	*N/A*	*SECTION 2: GIRDER 8*	*108*	*SERVICE II*
HL-93 TANDEM (INVENTORY)	*1.78*	*N/A*	*SECTION 2: GIRDER 8*	*108*	*SERVICE II*
HS-20 (INVENTORY)	*1.94*	*69.84*	*SECTION 2: GIRDER 8*	*108*	*SERVICE II*
HL-93 TRUCK (OPERATING)	*1.96*	*N/A*	*SECTION 2: GIRDER 8*	*108*	*SERVICE II-O*
HL-93 TANDEM (OPERATING)	*2.31*	*N/A*	*SECTION 2: GIRDER 8*	*108*	*SERVICE II-O*
HS-20 (OPERATING)	*2.53*	*91.08*	*SECTION 2: GIRDER 8*	*108*	*SERVICE II-O*
DE S220	*3.63*	*72.60*	*SECTION 2: GIRDER 8*	*108*	*SERVICE II*
DE S335	*2.06*	*72.10*	*SECTION 2: GIRDER 8*	*108*	*SERVICE II*
DE S437	*2.00*	*74.00*	*SECTION 2: GIRDER 8*	*108*	*SERVICE II*
DE S330	*3.02*	*90.60*	*SECTION 2: GIRDER 8*	*108*	*SERVICE II*
DE S435	*2.42*	*84.70*	*SECTION 2: GIRDER 8*	*108*	*SERVICE II*
DE S540	*2.27*	*90.80*	*SECTION 2: GIRDER 8*	*108*	*SERVICE II*

NOTE: ALL LOAD RATINGS PROVIDED BY DELDOT

INDEX OF BRIDGE 1-604 SHEETS

SHEET Nº	BR. DWG. Nº	TABLE OF CONTENTS
78	PN-01	BRIDGE PROJECT NOTES - 1
79	PN-02	BRIDGE PROJECT NOTES - 2
80	PN-03	CONCRETE REPAIR DETAILS - 1
81	PN-04	CONCRETE REPAIR DETAILS - 2
82	PE-01	GENERAL PLAN AND ELEVATION
83	TS-01	BRIDGE TYPICAL SECTIONS
84	SC-01	SEQUENCE OF CONSTRUCTION - 1
85	SC-02	SEQUENCE OF CONSTRUCTION - 2
86	SC-03	SEQUENCE OF CONSTRUCTION - 3
87	SC-04	SEQUENCE OF CONSTRUCTION - 4
88	SR-01	REMOVAL PLAN
89	SR-02	BRIDGE DECK DEMOLITION DETAILS
90	SR-03	BACKWALL DEMOLITION DETAILS
91	AS-01	SLEEPER SLAB LAYOUT PLAN
92	AS-02	SLEEPER SLAB UNIT A PLAN AND REINFORCEMENT
93	AS-03	SLEEPER SLAB UNIT B PLAN AND REINFORCEMENT
94	AS-04	SLEEPER SLAB UNIT C PLAN AND REINFORCEMENT
95	AS-05	SLEEPER SLAB UNIT D PLAN AND REINFORCEMENT
96	AS-06	SLEEPER SLAB UNIT E PLAN AND REINFORCEMENT
97	AS-07	SLEEPER SLAB UNIT F PLAN AND REINFORCEMENT
98	AS-08	SLEEPER SLAB UNIT G PLAN AND REINFORCEMENT
99	AS-09	SLEEPER SLAB UNIT H PLAN AND REINFORCEMENT
100	AS-10	SLEEPER SLAB UNIT J PLAN AND REINFORCEMENT
101	AS-11	SLEEPER SLAB UNIT K PLAN AND REINFORCEMENT
102	AS-12	SLEEPER SLAB SECTIONS REINFORCEMENT
103	EX-01	SLEEPER SLAB JOINT DETAILS - 1
104	DK-01	END DIAPHRAGM DECK OVER LAYOUT PLAN
105	DK-02	END DIAPHRAGM DECK OVER DETAILS - 1
106	DK-03	END DIAPHRAGM DECK OVER DETAILS - 2
107	DK-04	END DIAPHRAGM DECK OVER DETAILS - 3
108	DK-05	END DIAPHRAGM DECK OVER DETAILS - 4
109	DK-06	END DIAPHRAGM DECK OVER DETAILS - 5
110	DK-07	END DIAPHRAGM DECK OVER DETAILS - 6
111	DK-08	END DIAPHRAGM DECK OVER DETAILS - 7
112	DK-09	END DIAPHRAGM DECK OVER DETAILS - 8
113	DK-10	END DIAPHRAGM DECK OVER DETAILS - 9
114	DK-11	END DIAPHRAGM DECK OVER DETAILS - 10
115	DK-12	PARAPET JOINT DETAILS - 1
116	DK-13	PARAPET JOINT DETAILS - 2
117	BR-01	REINFORCEMENT BAR LIST SLEEPER SLAB - 1
118	BR-02	REINFORCEMENT BAR LIST SLEEPER SLAB - 2
119	BR-03	REINFORCEMENT BAR LIST DECK OVER - 1
120	BR-04	REINFORCEMENT BAR LIST DECK OVER - 2
121	AB-01	ABUTMENT A CONCRETE REPAIR DETAILS
TOTAL BRIDGE SHEETS: 44		

UNOFFICIAL WEBSITE COPY

N:\37122-003\C40\Bridge\BR1-604_PN02.dgn
7/31/2019 4:19:12 PM

ADDENDA / REVISIONS

NOT TO SCALE

REHABILITATION OF BRIDGES
1-600, 1-601, AND 1-604,
SR 2 AND SR 141 INTERCHANGE

CONTRACT	BRIDGE NO.	1 604
T201707403	DESIGNED BY: ZMG	
COUNTY		
NEW CASTLE	CHECKED BY: WAG	

BRIDGE PROJECT
NOTES – 2

PN-02

SECTION
WRA
SHEET NO.
79

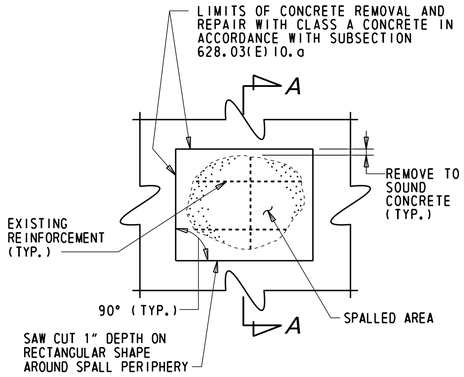

PLAN

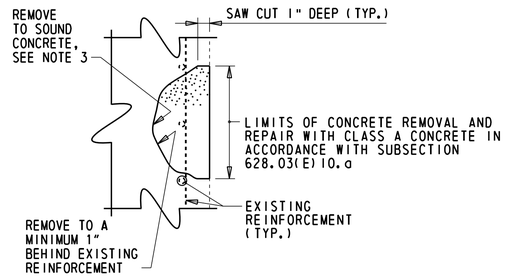

SECTION A-A

DEEP SPALL REPAIR

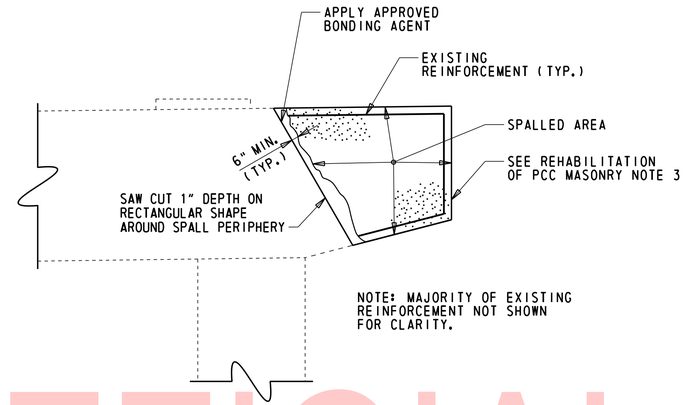

REHABILITATION OF PCC MASONRY

DEEP SPALL REPAIR NOTES

1. DEEP SPALL REPAIRS ARE DEFINED AS PATCHES THAT EXTEND BELOW THE TOP MAT OF REINFORCEMENT. DELAMINATED CONCRETE HAS BEEN ASSUMED AS DEEP SPALL REPAIRS.
2. ALL WORK INVOLVING METHODS OF CONCRETE REMOVAL; CLEANING OF CONCRETE SURFACE AND EXISTING REINFORCEMENT; REPAIRING OR REPLACING DAMAGED REINFORCEMENT AS RESULT OF CONSTRUCTION ACTIVITIES OR SECTION LOSS; PRESENCE OF CONTRACTION OR EXPANSION JOINTS; SURFACE PREPARATION; AND CONCRETE PLACEMENT SHALL BE PERFORMED IN ACCORDANCE WITH SUBSECTION 628.03(E) OF THE STANDARD SPECIFICATIONS. PAYMENT INCIDENTAL TO ITEM 628041 - DEEP SPALL REPAIR.
3. IF DEPTH OF REPAIR EXTENDS MORE THAN 6" BEYOND SURFACE OF CONCRETE, CONTRACTOR SHALL STOP WORK AND NOTIFY THE ENGINEER IMMEDIATELY.

REHABILITATION OF PCC MASONRY NOTES

1. REHABILITATION OF PCC MASONRY IS DEFINED AS DEEP SPALL PATCHES THAT EXCEED THE 0.5 C.Y. THRESHOLD IN A SINGLE AREA.
2. ALL WORK INVOLVING METHODS OF CONCRETE REMOVAL; CLEANING OF CONCRETE SURFACE AND EXISTING REINFORCEMENT; REPAIRING OR REPLACING DAMAGED REINFORCEMENT AS RESULT OF CONSTRUCTION ACTIVITIES OR SECTION LOSS; PRESENCE OF CONTRACTION OR EXPANSION JOINTS; SURFACE PREPARATION; AND CONCRETE PLACEMENT SHALL BE PERFORMED IN ACCORDANCE WITH SUBSECTION 628.03(E) OF THE STANDARD SPECIFICATIONS. PAYMENT INCIDENTAL TO ITEM 628042 - REHABILITATION OF PCC MASONRY.
3. DETAIL SHOWN FOR "REHABILITATION OF EXISTING PCC MASONRY" UTILIZES A GENERIC EXAMPLE USING PARTIAL RECONSTRUCTION OF AN EXISTING PIER CAP. SEE DWG. PN-04 FOR SIZE AND LOCATION OF REPAIRS AT EACH SUBSTRUCTURE UNIT.
4. IF DEPTH OF REPAIR EXTENDS MORE THAN 6" BEYOND SURFACE OF CONCRETE, CONTRACTOR SHALL STOP WORK AND NOTIFY THE ENGINEER IMMEDIATELY.

REMOVAL OF EXISTING DECK REPAIR NOTES

1. PRIOR TO HYDRODEMOLITION, ANY EXISTING DECK REPAIRS THAT ARE LOOSE, PARTIALLY DELAMINATED, OR OTHERWISE UNSOUND, WILL BE MEASURED BY THE ENGINEER AND MARKED FOR REMOVAL.
2. THE CONTRACTOR SHALL REMOVE THE EXISTING DECK REPAIRS IN ACCORDANCE WITH SECTION 628.03(F).
3. THE REMOVAL SHALL NOT INCLUDE ANY SOUND ORIGINAL BRIDGE DECK CONCRETE.
4. REFER TO ITEM 628502 - REMOVAL OF EXISTING DECK REPAIR FOR PAYMENT AND ADDITIONAL INFORMATION.
5. IF REMOVAL OF EXISTING DECK REPAIR REACHES FULL DEPTH, AND WITH THE APPROVAL OF THE ENGINEER, REPAIR AREA SHALL BE REPAIRED IN ACCORDANCE WITH SUBSECTION 628.03(F) AND PAID FOR UNDER ITEM 628053 - DECK REPAIR, FULL DEPTH. REMOVAL OF EXISTING DECK REPAIRS THAT ARE CHANGED TO DECK REPAIR, FULL DEPTH WILL ONLY BE PAID FOR ONCE UNDER ITEM 628053.

DECK REPAIR NOTES

1. AFTER MILLING AND PRIOR TO HYDRODEMOLITION, EXISTING AREAS OF DECK REQUIRING FULL DEPTH REPAIR AS DIRECTED BY THE ENGINEER, SHALL BE REPAIRED USING DETAIL SHOWN ON THIS SHEET.
2. ALL WORK INVOLVING METHODS OF CONCRETE REMOVAL; CLEANING OF CONCRETE SURFACE AND EXISTING REINFORCEMENT; REPAIRING OR REPLACING DAMAGED REINFORCEMENT AS RESULT OF CONSTRUCTION ACTIVITIES OR SECTION LOSS; PRESENCE OF CONTRACTION OR EXPANSION JOINTS; SURFACE PREPARATION; AND CLASS D CONCRETE PLACEMENT, SHALL BE PERFORMED IN ACCORDANCE WITH SUBSECTION 628.03(F) OF THE STANDARD SPECIFICATIONS. PAYMENT FOR FULL DEPTH DECK REPAIRS WILL BE MADE UNDER ITEM 628053 - DECK REPAIR, FULL DEPTH. ADDITIONAL UHPC FOR FULL DEPTH DECK REPAIR SHALL BE PLACED DURING THE OVERLAY PLACEMENT AND SHALL PAYMENT WILL BE MADE UNDER ITEM 625507 - ADDITIONAL UHPC FOR PARTIAL DECK REPAIRS. FULL DEPTH DECK REPAIR HYDRODEMOLITION SHALL BE PERFORMED IN ACCORDANCE WITH ITEMS 760500 - TOTAL SURFACE HYDRODEMOLITION, HOWEVER, ALL PAYMENT WILL BE INCIDENTAL TO ITEM 628053 - DECK REPAIR, FULL DEPTH.
3. MILLING, HYDRODEMOLITION AND UHPC OVERLAY WILL BE PAID FOR UNDER THEIR RESPECTIVE ITEMS.

LEGEND:

- SPALLED CONCRETE
- LIMITS OF REMOVAL, MECHANICAL MILLING (ITEM 760013)
- LIMITS OF TOTAL SURFACE HYDRODEMOLITION (ITEM 760500)
- LIMITS OF LOCALIZED DECK REMOVAL (ITEM 628053 OR 628502)
- CLASS D CONCRETE

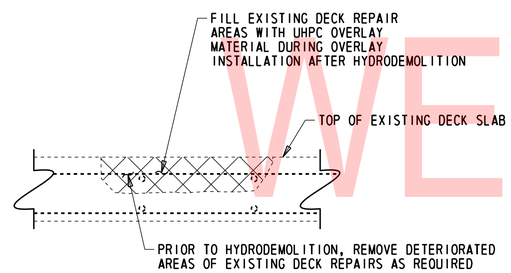

REMOVAL OF EXISTING DECK REPAIRS (ITEM 628502)

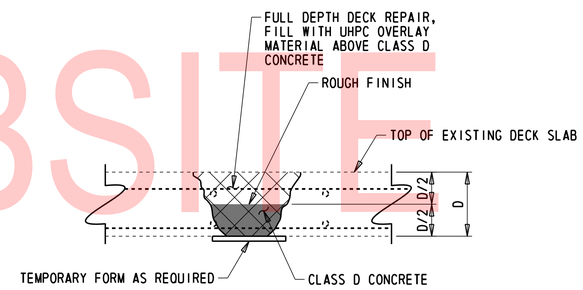

DECK REPAIR, FULL DEPTH (ITEM 628053)

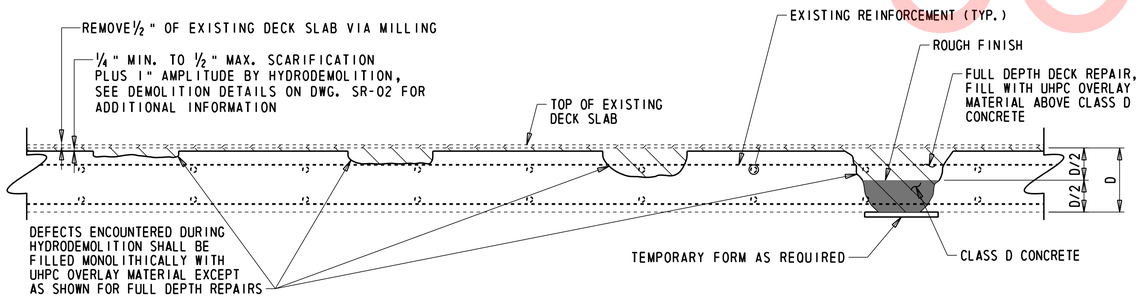

MILLING, HYDRODEMOLITION AND DECK REPAIR

UNOFFICIAL WEBSITE COPY

N:\37122-003\CADD\Bridge\BR1-604_PN03.dgn
7/31/2019 4:19:13 PM

ADDENDA / REVISIONS	

NOT TO SCALE

REHABILITATION OF BRIDGES 1-600, 1-601, AND 1-604, SR 2 AND SR 141 INTERCHANGE

CONTRACT	BRIDGE NO.	1 604
T201707403	DESIGNED BY: ZMG	
COUNTY		
NEW CASTLE	CHECKED BY: WAG	

CONCRETE REPAIR DETAILS - 1

PN-03
SECTION
WRA
SHEET NO.
80

CONCRETE REPAIR QUANTITIES
NORTH ABUTMENT

REPAIR №	ITEM №	REPAIR LOCATION	REPAIR DESCRIPTION	UNIT	QUANTITY
NAB-1	628041	BAY 1 (FULL-WIDTH)	ONE (1) 1/16" WIDE HORIZONTAL CRACK AND ONE (1) 1/16" WIDE DIAGONAL CRACK WIDE X FULL-WIDTH OF THE BAY WITH ASSOCIATED 2'-0" HIGH DELAMINATION	CF	13.4
NAB-2	628001	BAY 2 - 7" BELOW THE TOP OF THE ABUTMENT STEM	6'-0" LONG X 1/16" WIDE HORIZONTAL CRACK WITH ASSOCIATED 6" HIGH DELAMINATION	LF	0
NAB-3	628041	BAY 2 - EAST SIDE OF PEDESTAL 2	FULL-HEIGHT OF ABUTMENT STEM X 1'-10" WIDE DELAMINATION	CF	6.2
NAB-4	628041	BAY 2 - 2'-6" FROM THE TOP OF THE ABUTMENT STEM AND 3'-6" FROM GIRDER 3	3'-0" HIGH X 2'-0" WIDE DELAMINATION	CF	2
NAB-5	628041	BAY 3 - AT THE TOP OF THE THE ABUTMENT STEM NEAR GIRDER 4	3'-0" WIDE X 1'-9" HIGH DELAMINATION	CF	1.8
NAB-6	628041	BAY 3 - 1'-0" FROM TOP OF THE ABUTMENT STEM AT THE EAST SIDE OF PEDESTAL 3	2'-0" WIDE X 1'-4" HIGH DELAMINATION	CF	0.9
NAB-7	628001	BAY 3 AND BAY 4 - 5" FROM TOP OF THE ABUTMENT STEM, 1'-0" EAST OF PEDESTAL 3	FULL-WIDTH OF BAYS 3 & 4 X 1/16" WIDE HORIZONTAL CRACK	LF	9
NAB-8	628041	BAY 4 - AT THE TOP OF THE ABUTMENT STEM	UP TO 7'-0" WIDE X UP TO 3'-0" HIGH DELAMINATION CONTAINING A 1'-0" HIGH X 4" WIDE X 1" DEEP SPALL	CF	7
NAB-9	628041	GIRDER 4 - AT THE TOP OF THE ABUTMENT STEM	2'-8" WIDE X 1'-9" HIGH DELAMINATION	CF	1.6
NAB-10	628041	BAY 5 - AT THE TOP OF THE ABUTMENT STEM, 3'-3" FROM GIRDER 6	1'-9" WIDE X 8'-0" HIGH DELAMINATION CONTAINING A 1'-9" LONG X 1/16" WIDE HORIZONTAL CRACK	CF	4.7
NAB-11	628041	BAY 5 - AT EAST SIDE OF PEDESTAL 5, 5" FROM TOP OF THE ABUTMENT STEM	2'-6" LONG X 1/16" WIDE HORIZONTAL CRACK WITH ASSOCIATED 3'-0" HIGH DELAMINATION	CF	2.5
NAB-12	628041	GIRDER 6 - 6" BELOW THE TOP OF THE ABUTMENT STEM	3'-6" LONG X 1/16" WIDE HORIZONTAL CRACK WITH ASSOCIATED 6" HIGH DELAMINATION	CF	0.6
NAB-13	628042	BAY 6 - 5" BELOW TOP OF THE ABUTMENT STEM	FULL-WIDTH OF BAY X 1/4" WIDE HORIZONTAL CRACK WITH ASSOCIATED DELAMINATION. THE AREA OF DELAMINATED CONCRETE 6'-0" WIDE X FULL-HEIGHT OF ABUTMENT STEM STARTING AT GIRDER 6 AND 2'-0" HIGH FOR THE REMAINDER OF THE BAY, TO THE WEST FACE OF PEDESTAL 7.	CY	0.9
NAB-14	628041	BAY 9 - WEST FACE OF PEDESTAL 7 THE AT TOP OF THE ABUTMENT STEM	2'-3" WIDE X 2'-2" HIGH DELAMINATION	CF	1.7
NAB-15	628041	BAY 10 - AT THE TOP OF THE ABUTMENT STEM FROM BENEATH GIRDER 11	3'-4" WIDE X 7'-0" HIGH DELAMINATION	CF	8.1
NAB-16	628041	BAY 13 - 10" EAST OF PEDESTAL 13, 1'-0" BELOW THE TOP OF THE ABUTMENT STEM	2'-0" WIDE X 1'-6" HIGH DELAMINATION	CF	1
NAB-17	628042	GIRDER 14 - AT THE TOP OF THE ABUTMENT STEM	6'-0" WIDE X FULL-HEIGHT OF ABUTMENT STEM DELAMINATION	CY	0.8
NAB-18	628041	BAY 14 - EAST SIDE OF LONGITUDINAL JOINT	FULL-HEIGHT X 1'-8" WIDE DELAMINATION	CF	5.6
NAB-19	628041	BAY 15 - 4" FROM TOP OF THE ABUTMENT STEM, STARTING ON EAST SIDE OF PEDESTAL 15	3'-3" LONG X 1/16" WIDE HORIZONTAL CRACK WITH ASSOCIATED DELAMINATED CONCRETE 7" HIGH ALONG LENGTH OF CRACK	CF	0.7
NAB-20	628041	EAST OVERHANG - AT THE TOP OF THE ABUTMENT STEM	1'-5" WIDE X 2'-8" HIGH DELAMINATION	CF	1.3

CONCRETE REPAIR QUANTITIES
SOUTH ABUTMENT

REPAIR №	ITEM №	REPAIR LOCATION	REPAIR DESCRIPTION	UNIT	QUANTITY
SAB-1	628042	TOP 2'-3" OF THE ABUTMENT STEM (FULL-LENGTH) AT ABANDONED CONDUIT LINE.	SEE DWG. AB-01 FOR DETAIL OF THIS REPAIR	CY	8
SAB-2	628001	WEST CHEEKWALL - EAST FACE OF CHEEKWALL, 3'-4" FROM THE TOP OF THE CHEEKWALL	1'-0" LONG X 1/16" WIDE HORIZONTAL CRACK THAT CONTINUES 1'-0" INTO THE VERTICAL FACE OF THE ABUTMENT STEM	LF	2
SAB-3	628001	WEST CHEEKWALL - EAST FACE OF CHEEKWALL, 9" FROM THE TOP OF THE CHEEKWALL	6" LONG X 3/16" WIDE HORIZONTAL CRACK THAT CONTINUES 6" INTO THE VERTICAL FACE OF THE ABUTMENT STEM	LF	1
SAB-4	628001	WEST CHEEKWALL - NORTH FACE OF CHEEKWALL AT THE TOP OF THE CHEEKWALL	TWO (2) 1/4" WIDE VERTICAL CRACKS, 1'-0" LONG AND 3'-0" LONG	LF	4
SAB-5	628001	WEST OVERHANG - BENEATH SOUTHWEST CHEEKWALL	2'-0" LONG X 1/8" WIDE HORIZONTAL CRACK WITH AN ASSOCIATED 1'-3" WIDE X 6" HIGH X 1/2" DEEP SPALL	LF	2
SAB-6	628001	BAY 11 - TOP FACE OF THE ABUTMENT STEM AT MID BAY	1'-0" LONG X 1/16" WIDE LONGITUDINAL CRACK IN THE TOP FACE OF THE ABUTMENT STEM THAT CONTINUES 4" INTO THE VERTICAL FACE	LF	2
SAB-7	628001	BAY 12 - TOP FACE AND VERTICAL FACE OF ABUTMENT STEM AT MID BAY	2'-6" LONG X 1/16" WIDE VERTICAL CRACK AT THE TOP OF THE VERTICAL FACE OF THE ABUTMENT STEM THAT EXTENDS 1'-0" INTO THE TOP FACE	LF	4

CONCRETE REPAIR QUANTITIES
DECK SOFFIT

REPAIR №	ITEM №	REPAIR LOCATION	REPAIR DESCRIPTION	UNIT	QUANTITY
SOF-1	628041	WEST OVERHANG AT THE NORTH ABUTMENT BACKWALL - NEXT TO THE NORTHWEST WING WALL	10" WIDE X 6" LONG X 2" DEEP SPALL WITH EXPOSED CORRODED REINFORCEMENT	CF	0.1
SOF-2	628041	BAY 14 AT THE NORTH ABUTMENT BACKWALL - EAST SIDE OF THE LONGITUDINAL JOINT	1'-0" WIDE X 6" LONG X 2" DEEP SPALL WITH EXPOSED CORRODED REINFORCEMENT	CF	0.2
SOF-3	628041	BAY 14 AT THE NORTH ABUTMENT BACKWALL - WEST SIDE OF THE LONGITUDINAL JOINT	2'-6" WIDE X 6" LONG X 2" DEEP SPALL WITH EXPOSED CORRODED REINFORCEMENT	CF	0.2
SOF-4	628041	BAY 14 AT THE SOUTH ABUTMENT BACKWALL - EAST SIDE OF LONGITUDINAL JOINT, 6" FROM GIRDER 15	4" DIAMETER X 1/2" DEEP POP-OUT SPALL WITH EXPOSED CORRODED REINFORCEMENT	CF	0.1
SOF-5	628041	EAST OVERHANG AT THE SOUTH ABUTMENT BACKWALL - 1'-0" FROM GIRDER 19	1'-0" WIDE X 2" LONG X 1/2" DEEP SPALL WITH EXPOSED CORRODED REINFORCEMENT	CF	0.2
SOF-6	628041	WEST OVERHANG NEAR SPAN 2 MIDSPAN - ABOVE THE NORTH SHOULDER LANE STRIPE	6" WIDE X 2" LONG X 1" DEEP POPOUT SPALL WITH EXPOSED CORRODED REINFORCEMENT	CF	0.1

CONCRETE REPAIR QUANTITIES
REPAIR SUMMARY

ITEM №	ITEM TITLE	UNIT	QUANTITY
628001	REPAIR OF CONCRETE STRUCTURES BY EPOXY INJECTION	LF	33
628041	DEEP SPALL REPAIR	CF	60
628042	REHABILITATION OF PCC MASONRY	CY	10

NOTES:

1. THE LOCATION AND QUANTITIES OF THE REPAIRS SHOWN ON THIS DRAWING ARE BASED ON INSPECTION FIELD NOTES, SEE NOTE 15 ON DWG. PN-01. FOR REPAIR LOCATIONS, BRIDGE COMPONENTS ARE NUMBERED FROM THE WEST AND FROM THE SOUTH.
2. PRIOR TO STARTING EACH REPAIR, THE LIMITS SHALL BE VERIFIED BY THE CONTRACTOR IN THE PRESENCE OF THE ENGINEER.
3. FOR CONCRETE REPAIR DETAILS, SEE DWG. PN-03.
4. WHERE CRACKS AND SPALLS EXIST CONCURRENTLY, COMPLETE THE SPALL REPAIR COMPLETELY REMOVING THE ASSOCIATED CRACK. IF THE CRACK EXTENDS LESS THAN 1'-0" BEYOND THE LIMITS OF THE SPALL REPAIR, EXTEND THE LIMITS OF THE SPALL REPAIR TO ENCOMPASS THE CRACK. IF THE CRACK EXTENDS DEEPER THAN THE LIMITS OF CONCRETE REMOVAL, THE CONTRACTOR SHALL REMOVE ADDITIONAL CONCRETE UNTIL THE CRACK IS FULLY REMOVED. IF THE DEPTH OF REMOVAL REACHES MORE THAN 6" FROM THE ORIGINAL FACE OF CONCRETE, ALL WORK ON THE REPAIR SHALL STOP AND THE ENGINEER SHALL BE NOTIFIED IMMEDIATELY. IF THE CRACK EXTENDS MORE THAN 1'-0" BEYOND THE LIMITS OF THE SPALL REPAIR INTO SOUND CONCRETE THE CRACK SHALL BE REPAIRED BY EPOXY INJECTION AND PAID FOR UNDER ITEM 628001 BEYOND THE LIMITS OF THE SPALL REPAIR. CRACKS LOCATED WITHIN SPALL REPAIRS WILL NOT BE PAID FOR AND WILL BE CONSIDERED INCIDENTAL TO ITEM 628041.
5. SILICONE-BASED ACRYLIC CONCRETE SEALER AND EPOXY CONCRETE SEALER SHALL ONLY BE APPLIED AFTER ALL CONCRETE REPAIRS ARE COMPLETED AT ALL SUBSTRUCTURE UNITS. THE CONTRACTOR SHALL TAKE CARE TO PROTECT THE BEARINGS DURING APPLICATION OF THE CONCRETE SEALERS. ANY CLEAN-UP REQUIRED TO REMOVE THE SEALER FROM THE BEARINGS WILL BE AT NO ADDITIONAL COST TO THE DEPARTMENT AND TO THE SATISFACTION OF THE ENGINEER.
6. EPOXY CONCRETE SEALER SHALL BE APPLIED TO THE BEAM SEATS AND BEARING PEDESTALS. PAYMENT WILL BE MADE UNDER ITEM 613000. CONTRACTOR SHALL REMOVE DEBRIS FROM THE BEAM SEAT PRIOR TO APPLICATION OF EPOXY CONCRETE SEALER. PAYMENT FOR THIS WORK WILL BE INCIDENTAL TO ITEM 613000.
7. SILICONE-BASED ACRYLIC CONCRETE SEALER SHALL BE APPLIED TO ALL EXPOSED SUBSTRUCTURE SURFACES BESIDES BEAM SEATS AND BEARING PEDESTALS. PAYMENT WILL BE MADE UNDER ITEM 613001.

NOFICIAL WEBSITE COPY

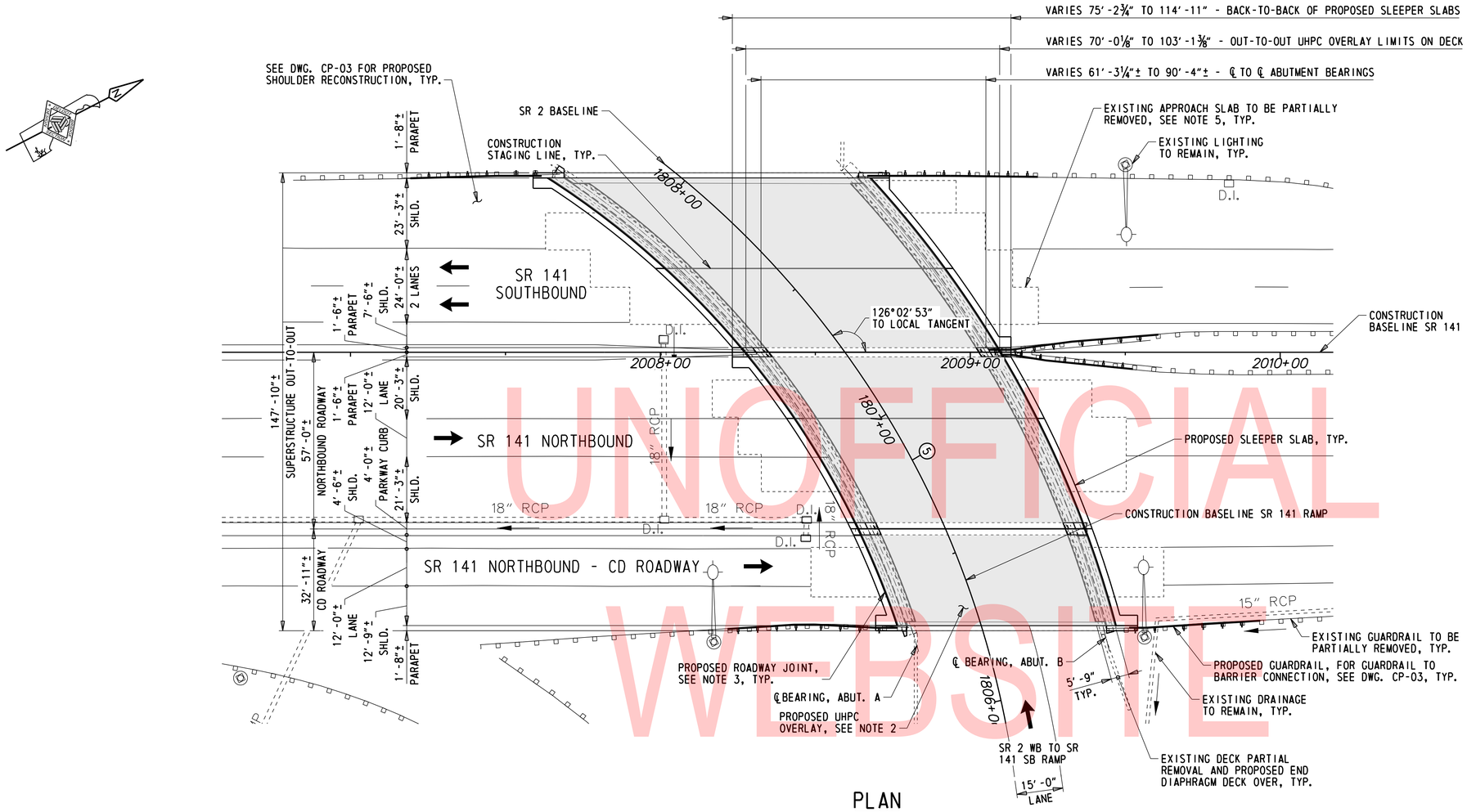

PLAN

1" = 20'-0"

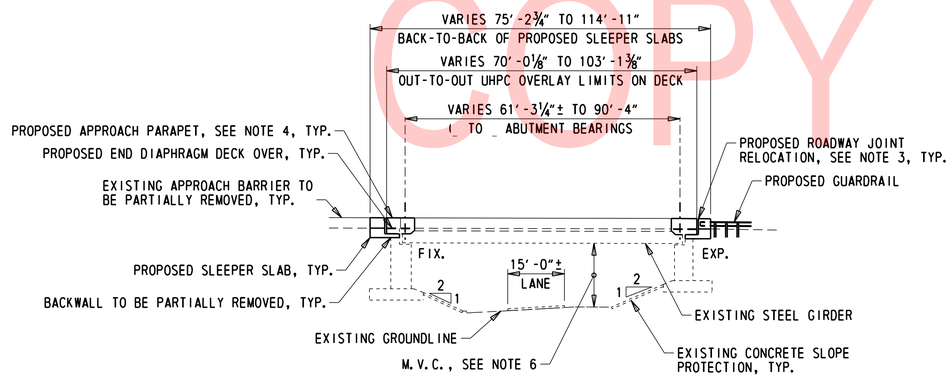

DEVELOPED ELEVATION ALONG BASELINE

1" = 20'-0"

HORIZONTAL CURVE DATA

CURVE ⑤

P.I. STA. 1808+53.55
DELTA = 86°-15'-19.1767"
Dc = 18°-52'-31.9920"
R = 303.54'
T = 284.33'
L = 456.97'
E = 112.37'
P.C. STA. = 1805+69.22
P.T. STA. = 1810+26.19

LEGEND:

PROPOSED UHPC OVERLAY

⑤ CURVE DATA

NOTES:

1. ALL DIMENSIONS MEASURED FROM CONSTRUCTION BASELINE.
2. THE PROPOSED UHPC OVERLAY HAS A NOMINAL THICKNESS OF 1⅜" ON THE EXISTING DECK AND THE PROPOSED DECK OVER END DIAPRHAGM.
3. THE PROPOSED ROADWAY JOINT IS LOCATED BETWEEN THE PROPOSED END DIAPHRAGM DECK OVER AND SLEEPER SLAB BETWEEN THE FRONT FACES OF THE FASCIA PARAPETS. THE EXISTING JOINTS IN THE FASCIA PARAPETS TO BE REPLACED IN THE SAME LOCATION.
4. PROPOSED MEDIAN PARAPET AND PARKWAY CURB TO BE CONSTRUCTED ON PROPOSED END DIAPHRAGM DECK OVER AND SLEEPER SLAB COMPONENTS.
5. EXISTING APPROACH SLABS AND ROADWAY TO BE PARTIALLY REMOVED WITHIN PROPOSED STRUCTURE LIMITS.
6. THE LOCATION OF THE MINIMUM VERTICAL CLEARANCE (M.V.C.) IS ESTIMATED. A M.V.C. OF 14.8' WAS MEASURED AND INCLUDED IN THE 4/13/2016 INSPECTION REPORT PROVIDED BY DELDOT. THE CONTRACTOR SHALL CONFIRM THE M.V.C. LOCATION AND MEASUREMENT BEFORE STARTING WORK. THE M.V.C. SHALL NOT BE REDUCED AT ANY TIME DURING CONSTRUCTION.

UNOFFICIAL WEBSITE COPY

N:\32122-002\CADD\Bridge\BR1-604_PE01.dgn
7/31/2019 4:19:15 PM

ADDENDA / REVISIONS	SCALE AS NOTED	REHABILITATION OF BRIDGES 1-600, 1-601, AND 1-604, SR 2 AND SR 141 INTERCHANGE	CONTRACT T201707403	BRIDGE NO. 1 604	GENERAL PLAN AND ELEVATION	PE-01
			COUNTY NEW CASTLE	DESIGNED BY: ZMG		SECTION WRA
				CHECKED BY: WAG		SHEET NO. 82

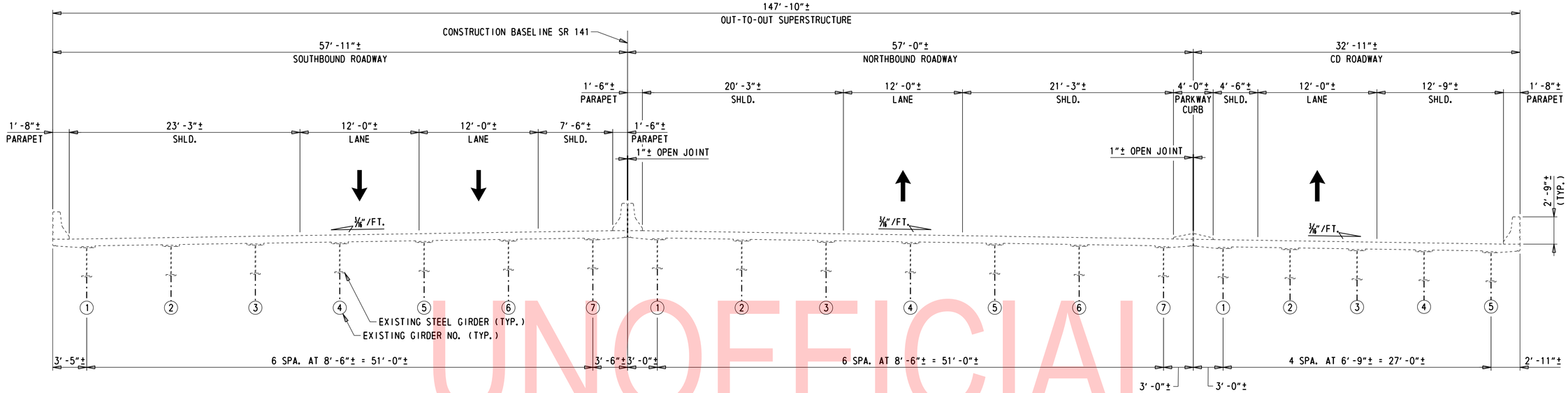

EXISTING TYPICAL SECTION

1/16" = 1'-0"

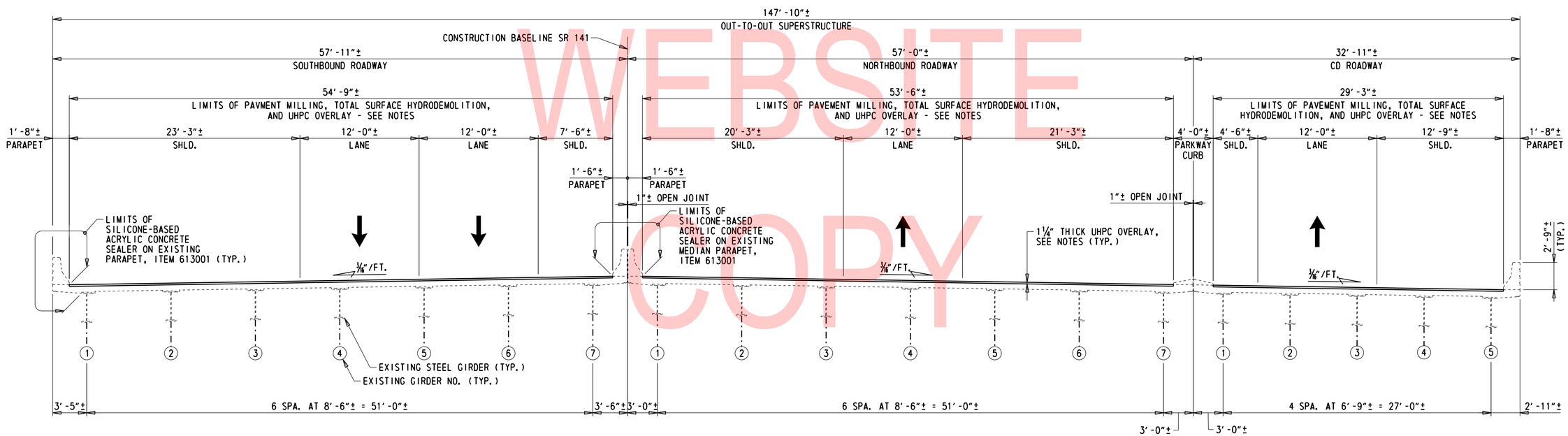

PROPOSED TYPICAL SECTION

1/16" = 1'-0"

NOTES:

1. THE PROPOSED OVERLAY THICKNESS NOTED IS THE AVERAGE THICKNESS OF UHPC PLACED FOLLOWING MILLING AND TOTAL SURFACE HYDRODEMOLITION OF THE EXISTING DECK, SEE DWG. SR-02 FOR UHPC PLACEMENT DETAILS.
2. THE PROPOSED OVERLAY SHALL MATCH THE EXISTING GRADE AND CROSS SLOPE OF THE BRIDGE DECK. THE CONTRACTOR SHALL SURVEY THE EXISTING BRIDGE DECK PRIOR TO DEMOLITION OPERATIONS TO ENSURE THE EXISTING GRADE AND CROSS SLOPE ARE MET IN THE FINAL CONDITION. COST OF THIS SURVEY WILL BE INCIDENTAL TO ITEM 763501 - CONSTRUCTION ENGINEERING.

NOTES CONTINUED THIS SHEET...

NOTES (CONTINUED):

3. REFERENCE DWGS. SR-01 AND SR-02 FOR LIMITS AND DETAILS OF THE MILLING AND TOTAL SURFACE HYDRODEMOLITION AND ASSOCIATED EXISTING DECK REPAIRS.
4. MILLING OF THE DECK WILL BE PAID FOR BY ITEM 760013 - PAVEMENT MILLING, PORTLAND CEMENT CONCRETE PAVEMENT. TOTAL SURFACE HYDRODEMOLITION WILL BE PAID FOR BY ITEM 760500 - TOTAL SURFACE HYDRODEMOLITION. THE UHPC OVERLAY WILL BE PAID FOR BY ITEM 625505 - UHPC OVERLAY. SEE SPECIAL PROVISIONS.
5. UPON COMPLETION OF THE UHPC OVERLAY, THE CONTRACTOR SHALL BLANKET GRIND THE PAVEMENT SURFACE IN ACCORDANCE WITH ITEM 501502 - DIAMOND GRINDING PCC PAVEMENT AND PRECAST PAVEMENT. SEE SPECIAL PROVISIONS.

UNOFFICIAL WEBSITE COPY

ADDENDA / REVISIONS		SCALE AS NOTED	REHABILITATION OF BRIDGES 1-600, 1-601, AND 1-604, SR 2 AND SR 141 INTERCHANGE	CONTRACT T201707403	BRIDGE NO. 1 604	BRIDGE TYPICAL SECTIONS	TS-01
				COUNTY NEW CASTLE	DESIGNED BY: ZMG		SECTION WRA
					CHECKED BY: WAG		SHEET NO. 83

N:\32122-002\C400\Bridge\BR1-604_TS01.dgn
7/31/2019 4:19:15 PM

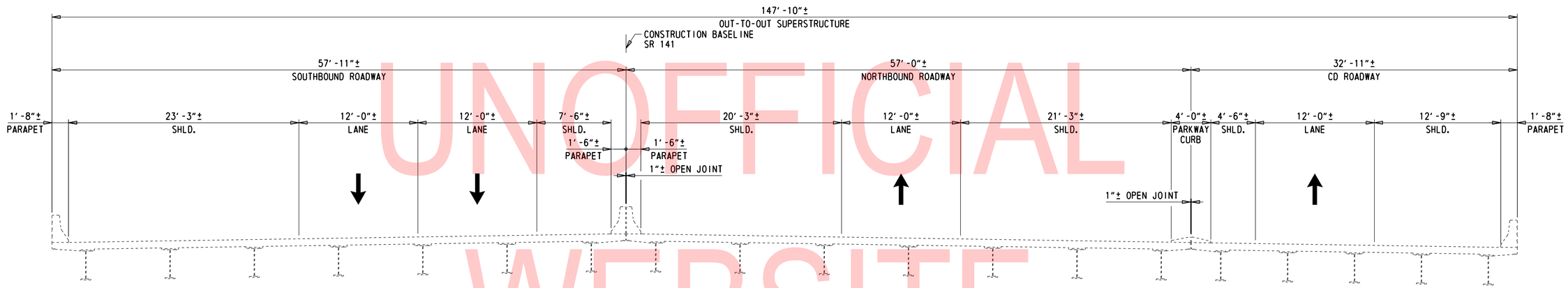

EXISTING TYPICAL SECTION

3/16" = 1'-0"

UNOFFICIAL WEBSITE COPY

N:\32122-002\C400\Bridge\BR1-604_SC01.dgn
7/31/2019 4:19:17 PM

ADDENDA / REVISIONS		SCALE AS NOTED	REHABILITATION OF BRIDGES 1-600, 1-601, AND 1-604, SR 2 AND SR 141 INTERCHANGE	CONTRACT T201707403	BRIDGE NO. 1 604	SEQUENCE OF CONSTRUCTION - 1	SC-01
				COUNTY NEW CASTLE	DESIGNED BY: ZMG		SECTION WRA
					CHECKED BY: WAG		SHEET NO. 84

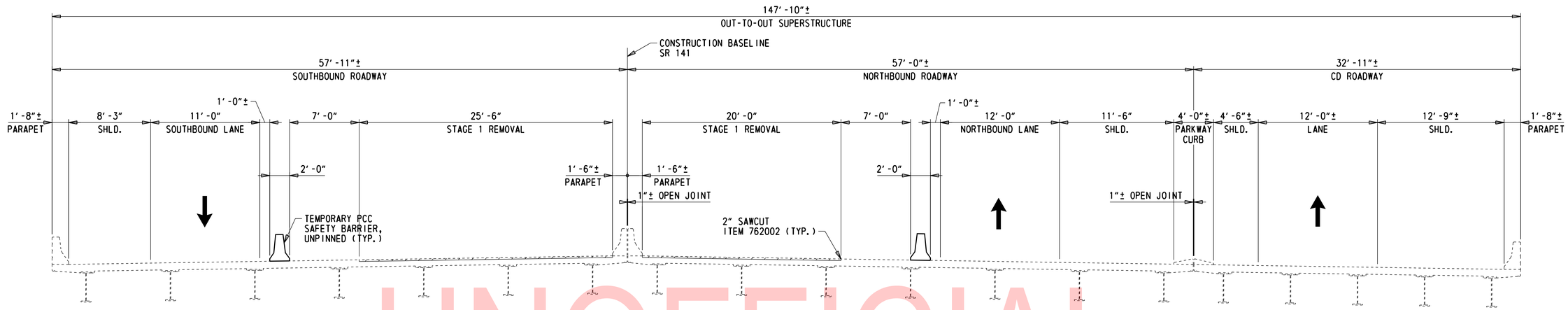

STAGE 1 REMOVAL

1/16" = 1'-0"

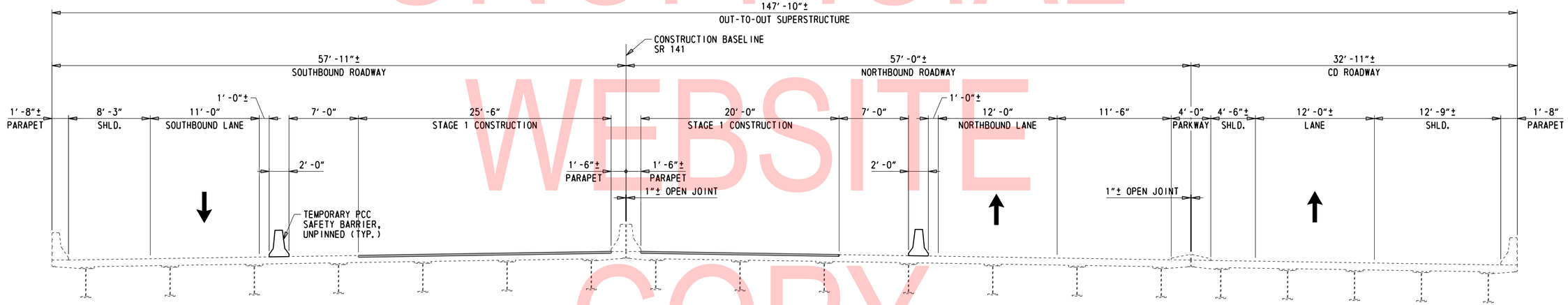

STAGE 1 CONSTRUCTION

1/16" = 1'-0"

UNOFFICIAL WEBSITE COPY

LEGEND

LIMITS OF REMOVAL - SEE NOTE 1
ITEM 760013 - PAVEMENT MILLING, P.C.C. PAVEMENT
ITEM 760500 - TOTAL SURFACE HYDRODEMOLITION

PROPOSED OVERLAY
ITEM 625505 - UHPC OVERLAY
ITEM 501502 - DIAMOND GRINDING P.C.C. PAVEMENT AND PRECAST PAVEMENT

N:\37122-003\C400\Bridge\BR1-604_SC02.dgn
7/31/2019 4:19:18 PM

ADDENDA / REVISIONS		SCALE AS NOTED	REHABILITATION OF BRIDGES 1-600, 1-601, AND 1-604, SR 2 AND SR 141 INTERCHANGE	CONTRACT T201707403	BRIDGE NO. 1 604	SEQUENCE OF CONSTRUCTION – 2	SC-02
				COUNTY NEW CASTLE	DESIGNED BY: ZMG		SECTION WRA
					CHECKED BY: WAG		SHEET NO. 85

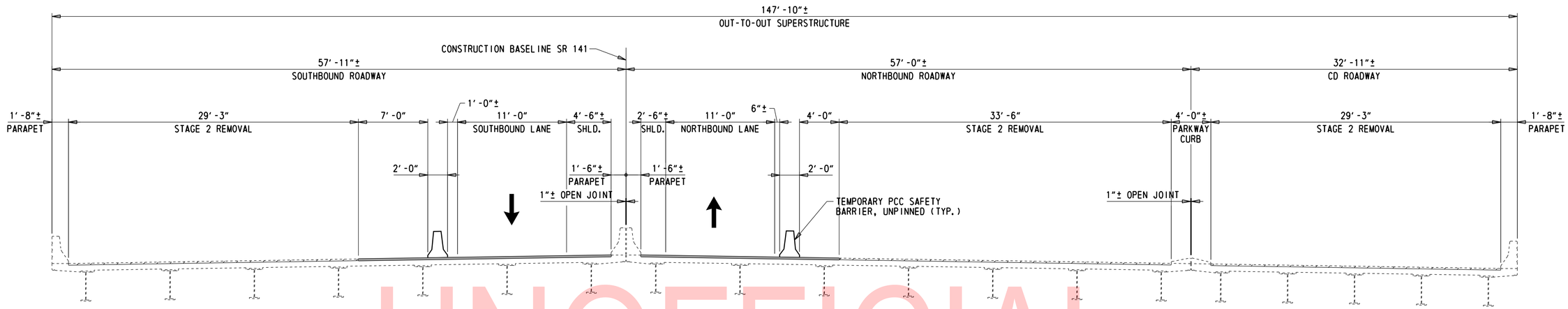

STAGE 2 REMOVAL

1/16" = 1'-0"

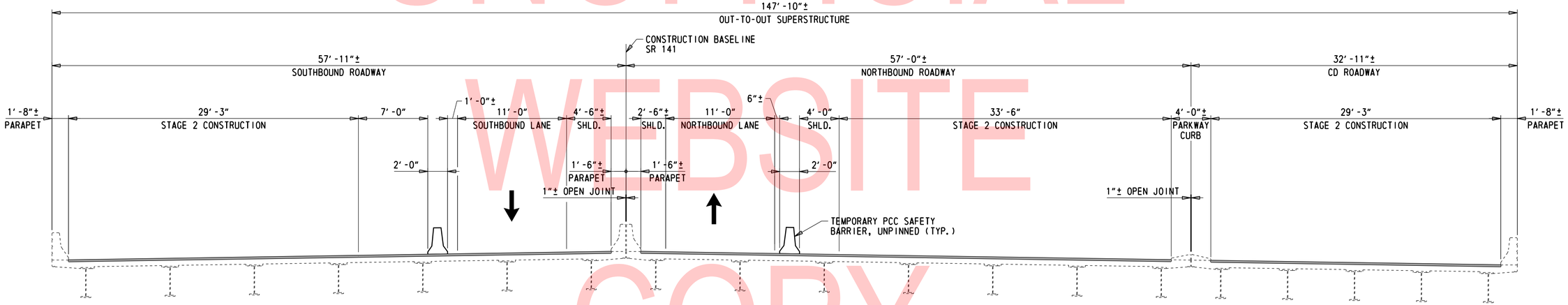

STAGE 2 CONSTRUCTION

1/16" = 1'-0"

UNOFFICIAL WEBSITE COPY

LEGEND

- LIMITS OF REMOVAL - SEE NOTE 1
  ITEM 760013 - PAVEMENT MILLING, P.C.C. PAVEMENT
  ITEM 760500 - TOTAL SURFACE HYDRODEMOLITION
- PROPOSED OVERLAY
  ITEM 625505 - UHPC OVERLAY
  ITEM 501502 - DIAMOND GRINDING P.C.C. PAVEMENT AND PRECAST PAVEMENT

NOTES:

1. FOR REMOVAL DETAILS, SEE DWGS. PN-03, SR-01, AND SR-02.

N:\37122-003\C40\Bridge\BR1-604_SC03.dgn
7/31/2019 4:19:19 PM

ADDENDA / REVISIONS		SCALE AS NOTED	REHABILITATION OF BRIDGES 1-600, 1-601, AND 1-604, SR 2 AND SR 141 INTERCHANGE	CONTRACT T201707403	BRIDGE NO. 1 604	SEQUENCE OF CONSTRUCTION – 3	SC–03
				COUNTY NEW CASTLE	DESIGNED BY: ZMG		SECTION WRA
					CHECKED BY: WAG		SHEET NO. 86

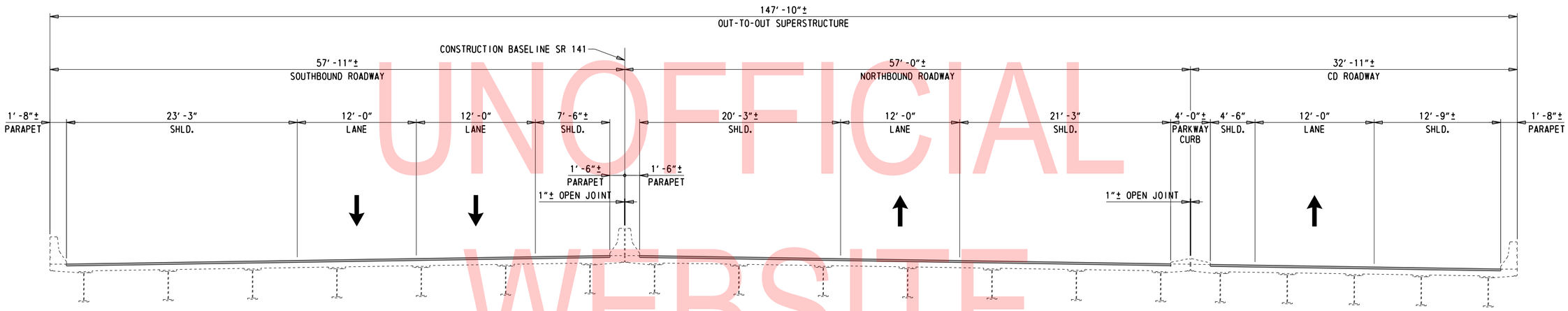

COMPLETED TYPICAL SECTION

3/16" = 1'-0"

UNOFFICIAL WEBSITE COPY

LEGEND

PROPOSED OVERLAY
ITEM 625505 - UHPC OVERLAY
ITEM 501502 - DIAMOND GRINDING P.C.C. PAVEMENT AND PRECAST PAVEMENT

N:\32122-002\C400\Bridge\BR1-604_SC04.dgn
7/31/2019 4:19:19 PM

ADDENDA / REVISIONS		SCALE AS NOTED	REHABILITATION OF BRIDGES 1-600, 1-601, AND 1-604, SR 2 AND SR 141 INTERCHANGE	CONTRACT T201707403	BRIDGE NO. 1 604	SEQUENCE OF CONSTRUCTION - 4	SC-04
				COUNTY NEW CASTLE	DESIGNED BY: ZMG		SECTION WRA
					CHECKED BY: WAG		SHEET NO. 87

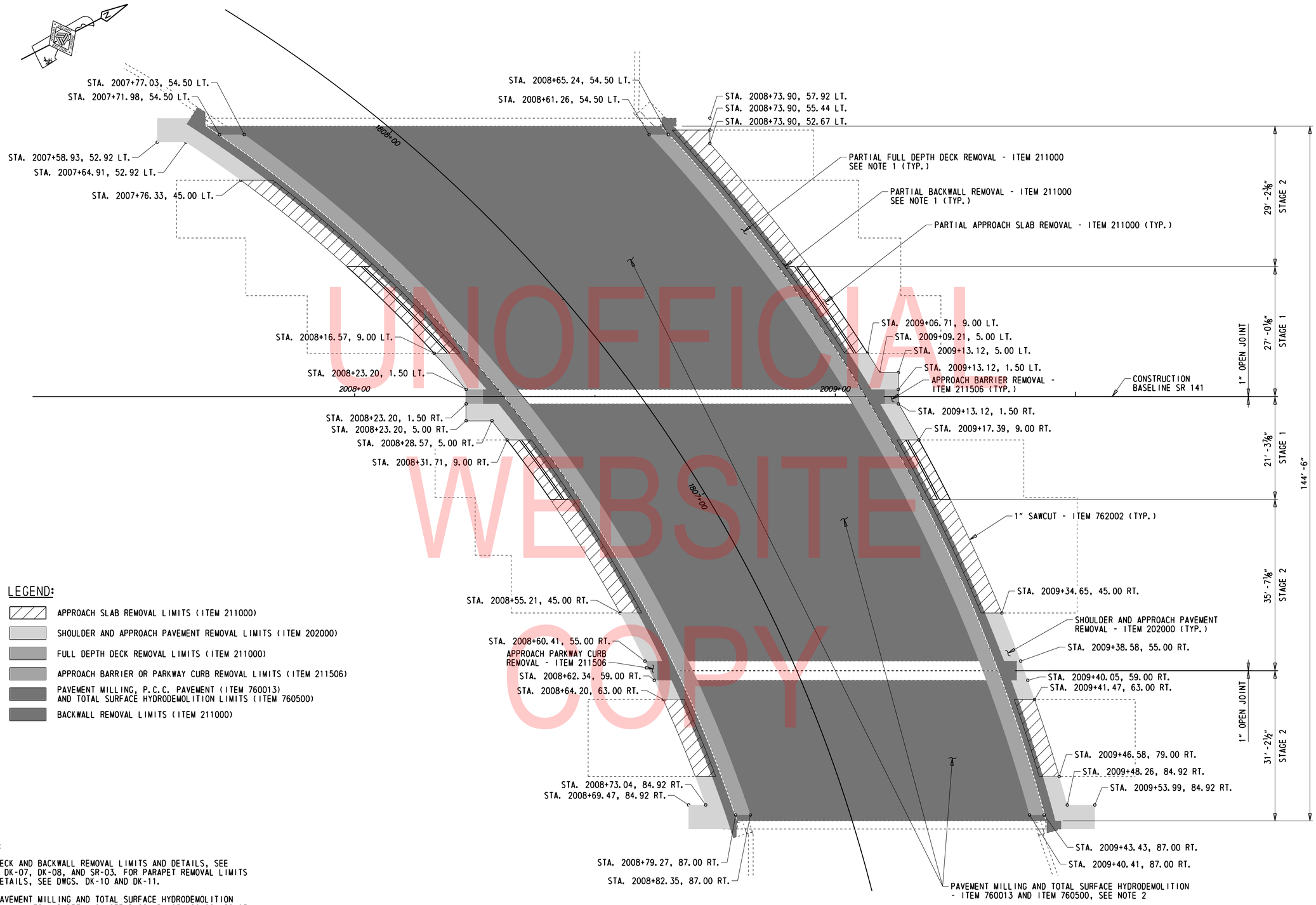

UNOFFICIAL WEBSITE COPY

LEGEND:

- APPROACH SLAB REMOVAL LIMITS (ITEM 211000)
- SHOULDER AND APPROACH PAVEMENT REMOVAL LIMITS (ITEM 202000)
- FULL DEPTH DECK REMOVAL LIMITS (ITEM 211000)
- APPROACH BARRIER OR PARKWAY CURB REMOVAL LIMITS (ITEM 211506)
- PAVEMENT MILLING, P.C.C. PAVEMENT (ITEM 760013) AND TOTAL SURFACE HYDRODEMOLITION LIMITS (ITEM 760500)
- BACKWALL REMOVAL LIMITS (ITEM 211000)

NOTES:

1. FOR DECK AND BACKWALL REMOVAL LIMITS AND DETAILS, SEE DWGS. DK-07, DK-08, AND SR-03. FOR PARAPET REMOVAL LIMITS AND DETAILS, SEE DWGS. DK-10 AND DK-11.
2. FOR PAVEMENT MILLING AND TOTAL SURFACE HYDRODEMOLITION REMOVAL LIMITS AND DETAILS, SEE DWGS. PN-03, SC-02, SC-03, AND SR-02.

REMOVAL PLAN

1" = 10'-0"

N:\32122-002\CADD\Bridge\BR1-604_SR01.dgn
7/31/2019 4:19:20 PM

ADDENDA / REVISIONS							
		SCALE AS NOTED	REHABILITATION OF BRIDGES 1-600, 1-601, AND 1-604, SR 2 AND SR 141 INTERCHANGE	CONTRACT T201707403	BRIDGE NO. 1 604	REMOVAL PLAN	SR-01
				COUNTY NEW CASTLE	DESIGNED BY: ZMG		SECTION WRA
					CHECKED BY: WAG		SHEET NO. 88

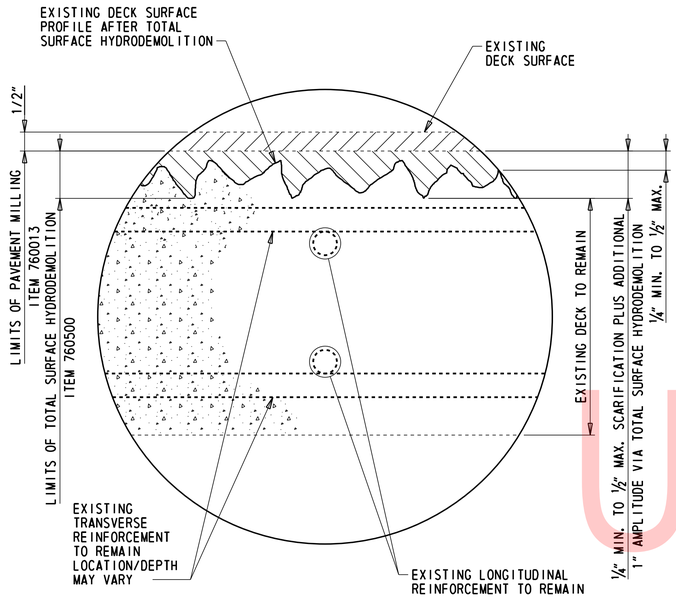

TOTAL SURFACE HYDRODEMOLITION DETAIL

6" = 1'-0"

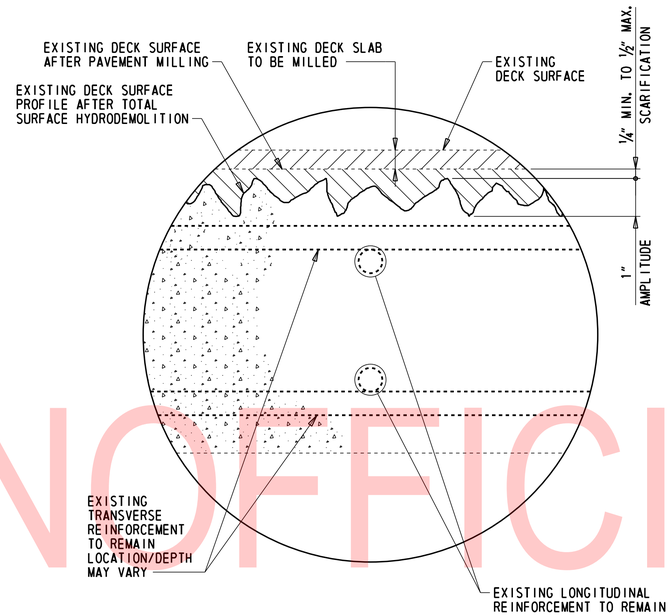

HYDRODEMOLITION AMPLITUDE DETAIL

6" = 1'-0"

UNOFFICIAL WEBSITE COPY

N:\32122-002\C400\Bridge\BR1-604_SR02.dgn
7/31/2019 4:19:21 PM

ADDENDA / REVISIONS	

SCALE AS NOTED

REHABILITATION OF BRIDGES 1-600, 1-601, AND 1-604, SR 2 AND SR 141 INTERCHANGE

CONTRACT	BRIDGE NO.	1 604
T201707403	DESIGNED BY: ZMG	
COUNTY		
NEW CASTLE	CHECKED BY: WAG	

BRIDGE DECK DEMOLITION DETAILS

SR-02
SECTION
WRA
SHEET NO.
89

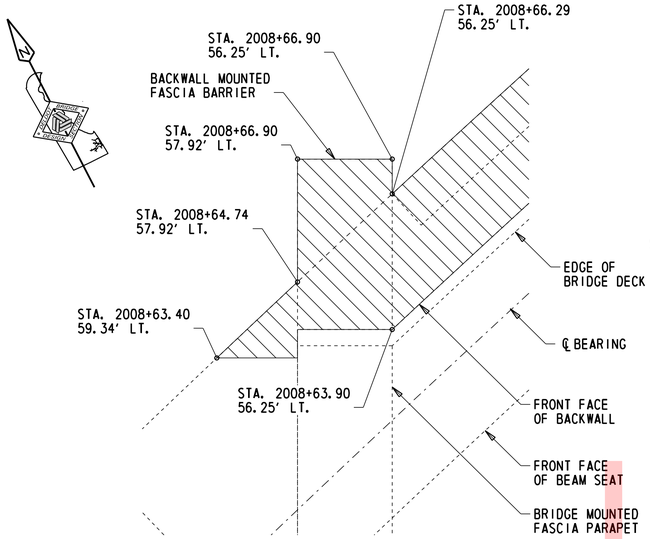

NORTH ABUTMENT WEST CORNER

¾" = 1'-0"

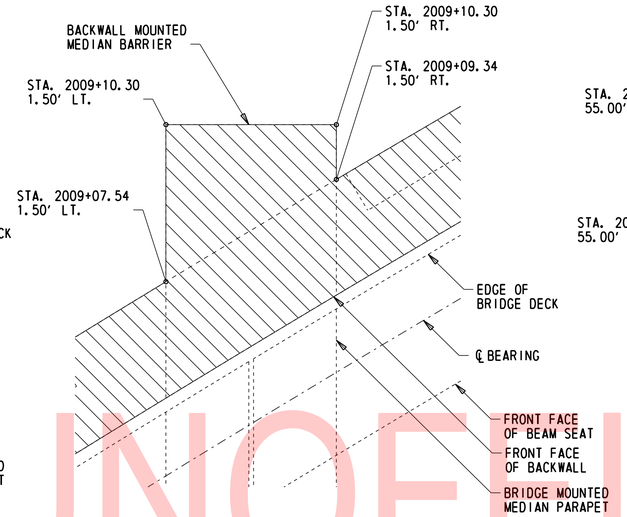

NORTH ABUTMENT MEDIAN BARRIER

¾" = 1'-0"

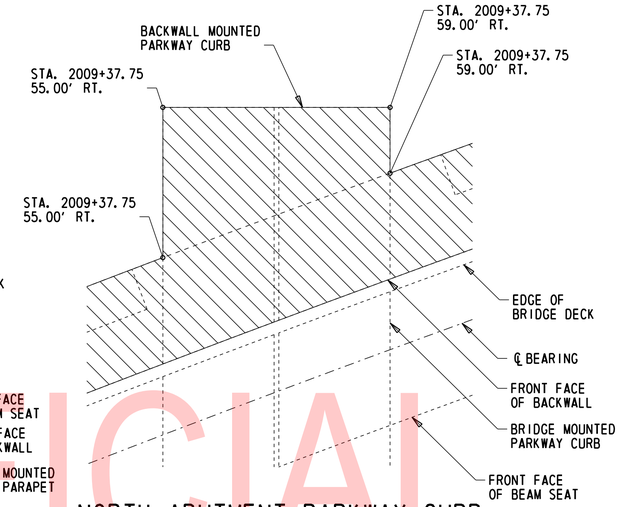

NORTH ABUTMENT PARKWAY CURB

¾" = 1'-0"

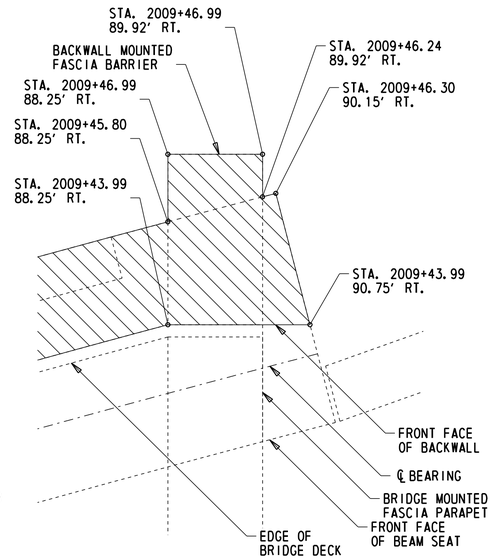

NORTH ABUTMENT EAST CORNER

3/4" = 1'-0"

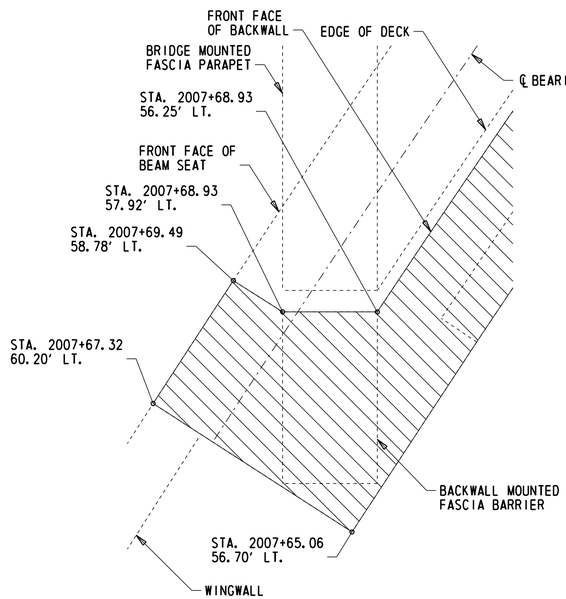

SOUTH ABUTMENT WEST CORNER

¾" = 1'-0"

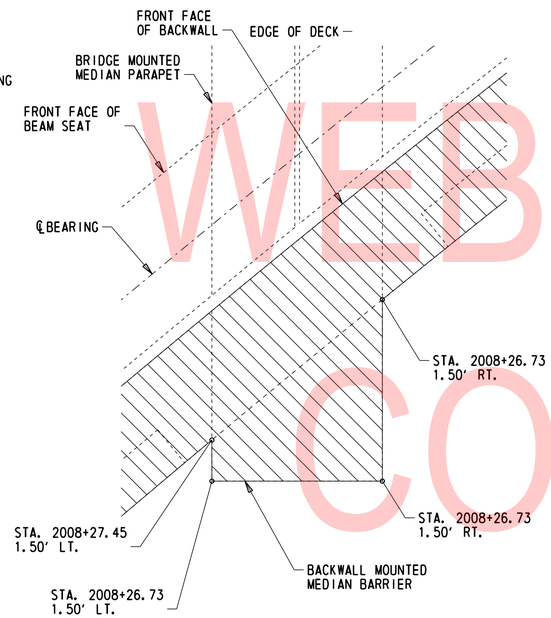

SOUTH ABUTMENT MEDIAN BARRIER

¾" = 1'-0"

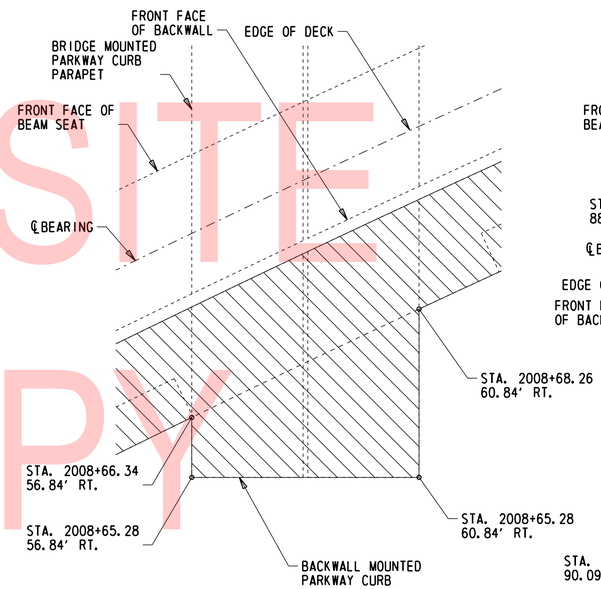

SOUTH ABUTMENT PARKWAY CURB

¾" = 1'-0"

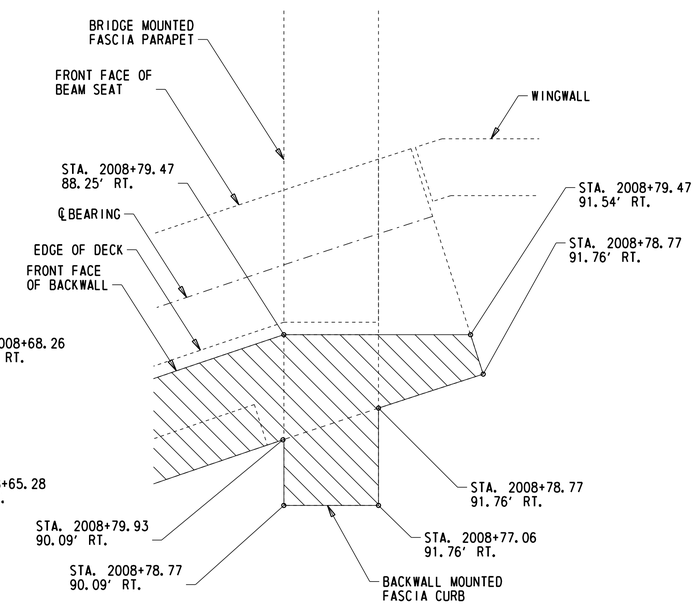

SOUTH ABUTMENT EAST CORNER

¾" = 1'-0"

UNOFFICIAL WEBSITE COPY

LEGEND:

REMOVAL LIMITS (ITEM 211000)

NOTES:

1. ALL CALL-OUTS SHOWN ARE TO EXISTING COMPONENTS.
2. SEE DWG. SR-01, DK-07, DK-08, DK-10, AND DK-11 FOR ADDITIONAL BACKWALL REMOVAL LIMIT DETAILS.

ADDENDA / REVISIONS	SCALE AS NOTED	REHABILITATION OF BRIDGES 1-600, 1-601, AND 1-604, SR 2 AND SR 141 INTERCHANGE	CONTRACT T201707403	BRIDGE NO. 1 604	BACKWALL DEMOLITION DETAILS	SR-03
			COUNTY NEW CASTLE	DESIGNED BY: ZMG		SECTION WRA
				CHECKED BY: WAG		SHEET NO. 90

H:\32122-002\C400\Bridge\BR1-604_SR03.dgn
7/31/2019 4:19:22 PM

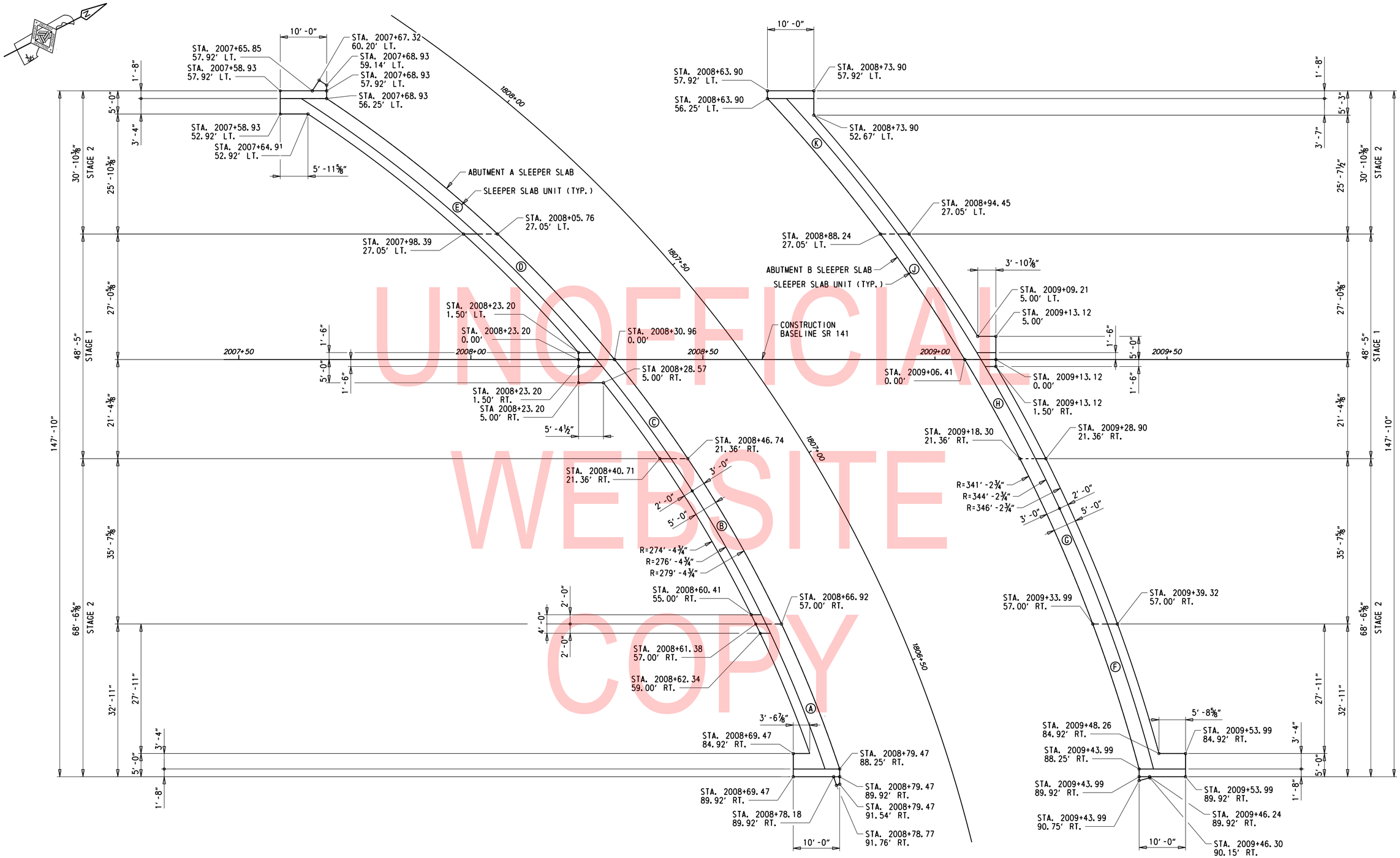

UNOFFICIAL WEBSITE COPY

SLEEPER SLAB LAYOUT PLAN

1" = 10'

NOTES:

1. FOR SLEEPER SLAB UNIT REINFORCEMENT DETAILS SEE DWGS. AS-02 THROUGH AS-12.

ADDENDA / REVISIONS	SCALE AS NOTED	REHABILITATION OF BRIDGES 1-600, 1-601, AND 1-604, SR 2 AND SR 141 INTERCHANGE	CONTRACT T201707403	BRIDGE NO. 1 604	SLEEPER SLAB LAYOUT PLAN	AS-01
			COUNTY NEW CASTLE	DESIGNED BY: CZK		SECTION WRA
				CHECKED BY: WAG		SHEET NO. 91

N:\33122-002\CADD\Bridge\BR1-604_AS01.dgn
7/31/2019 4:19:23 PM

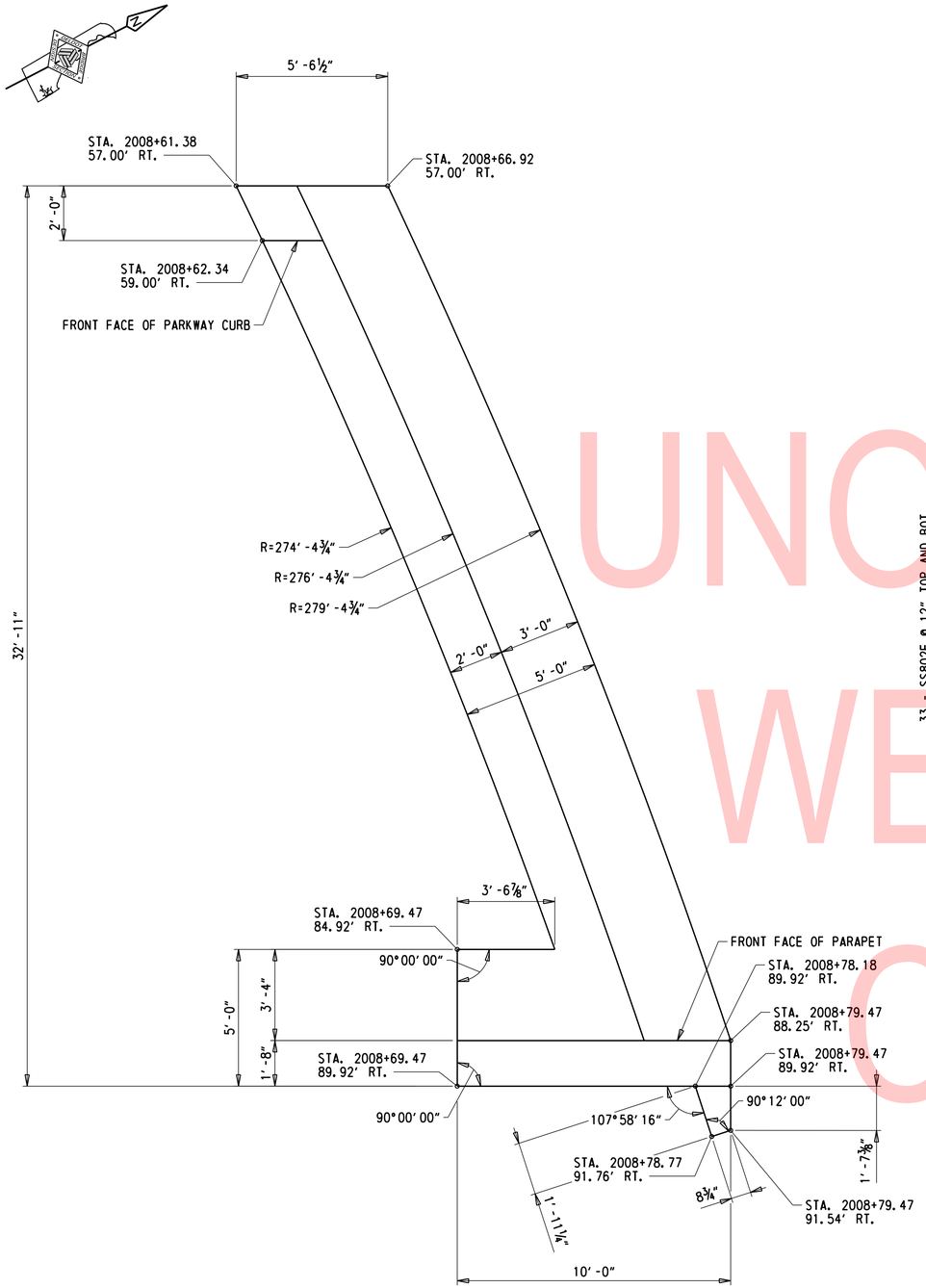

SLEEPER SLAB UNIT A - PLAN

⅜" = 1' -0'

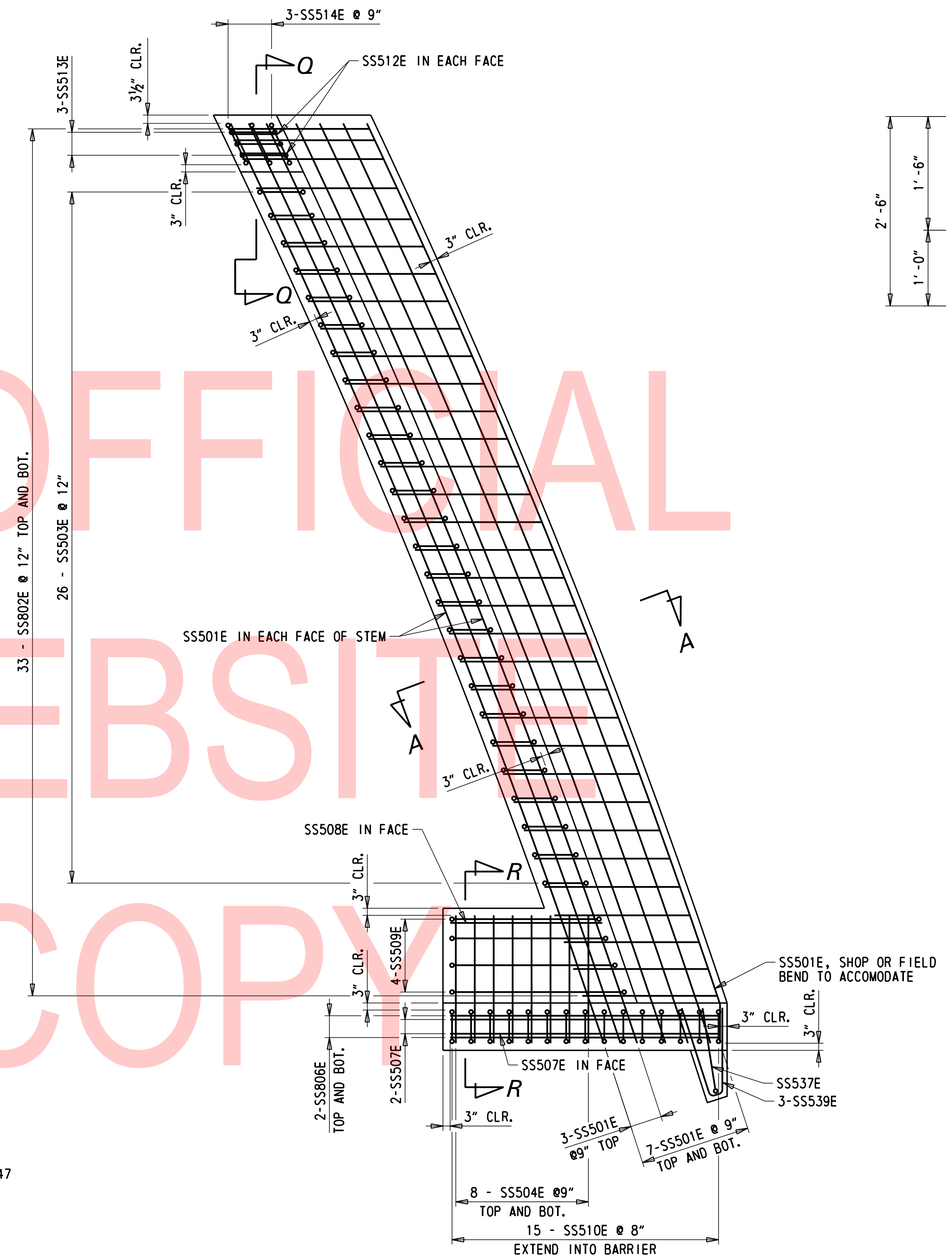

SLEEPER SLAB UNIT A - REINFORCEMENT

⅜" = 1' -0'

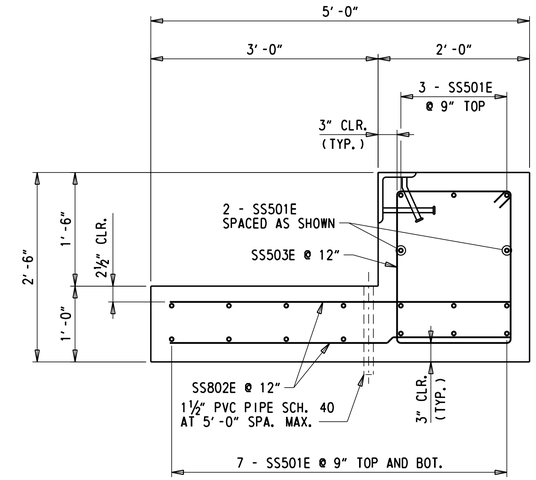

SECTION A-A

1" = 1' -0"

NOTES:

1. SEE DWG. AS-12 FOR ADDITIONAL SECTIONS.
2. FIELD BEND REINFORCEMENT TO FIT FORMS.

UNOFFICIAL WEBSITE COPY

N:\32122-002\CADD\Bridge\BR1-604_AS02.dgn
7/31/2019 4:19:24 PM

ADDENDA / REVISIONS	SCALE AS NOTED	REHABILITATION OF BRIDGES 1-600, 1-601, AND 1-604, SR 2 AND SR 141 INTERCHANGE	CONTRACT T201707403	BRIDGE NO. 1 604	SLEEPER SLAB UNIT A PLAN AND REINFORCEMENT	AS-02
			COUNTY NEW CASTLE	DESIGNED BY: CZK		SECTION WRA
				CHECKED BY: WAG		SHEET NO. 92

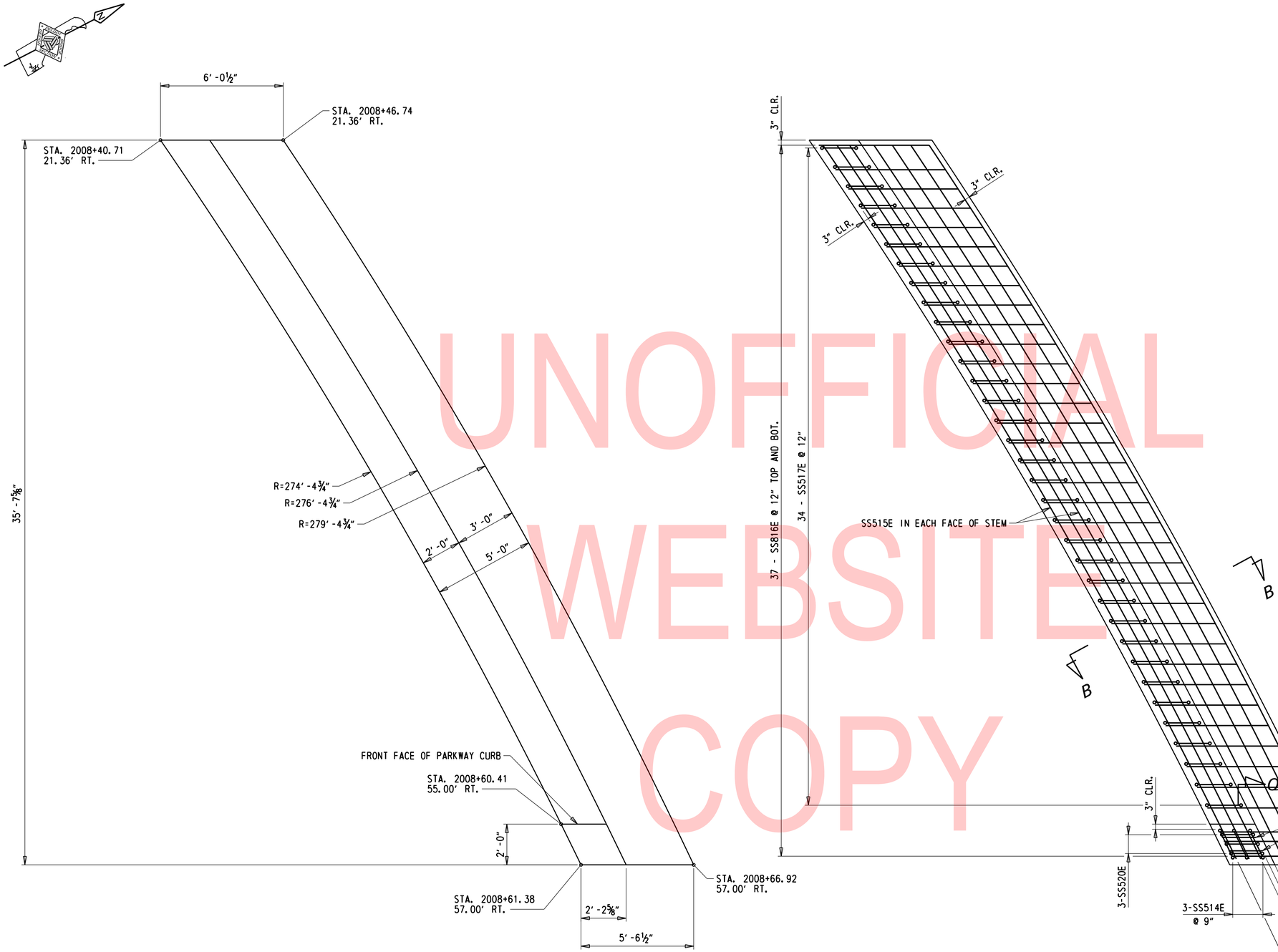

SLEEPER SLAB UNIT B - PLAN

⅜" = 1' -0'

SLEEPER SLAB UNIT B - REINFORCEMENT

⅜" = 1' -0'

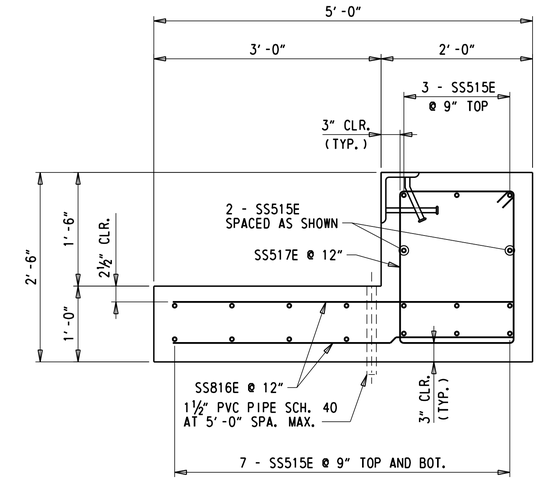

SECTION B-B

1" = 1' -0"

NOTES:

1. SEE DWG. AS-12 FOR ADDITIONAL SECTIONS.
2. FIELD BEND REINFORCEMENT TO FIT FORMS.

UNOFFICIAL WEBSITE COPY

N:\32122-002\CADD\Bridge\BR1-604_AS03.dgn
7/31/2019 4:19:25 PM

ADDENDA / REVISIONS	SCALE AS NOTED	REHABILITATION OF BRIDGES 1-600, 1-601, AND 1-604, SR 2 AND SR 141 INTERCHANGE	CONTRACT T201707403	BRIDGE NO. 1 604	SLEEPER SLAB UNIT B PLAN AND REINFORCEMENT	AS-03
			COUNTY NEW CASTLE	DESIGNED BY: CZK		SECTION WRA
				CHECKED BY: WAG		SHEET NO. 93

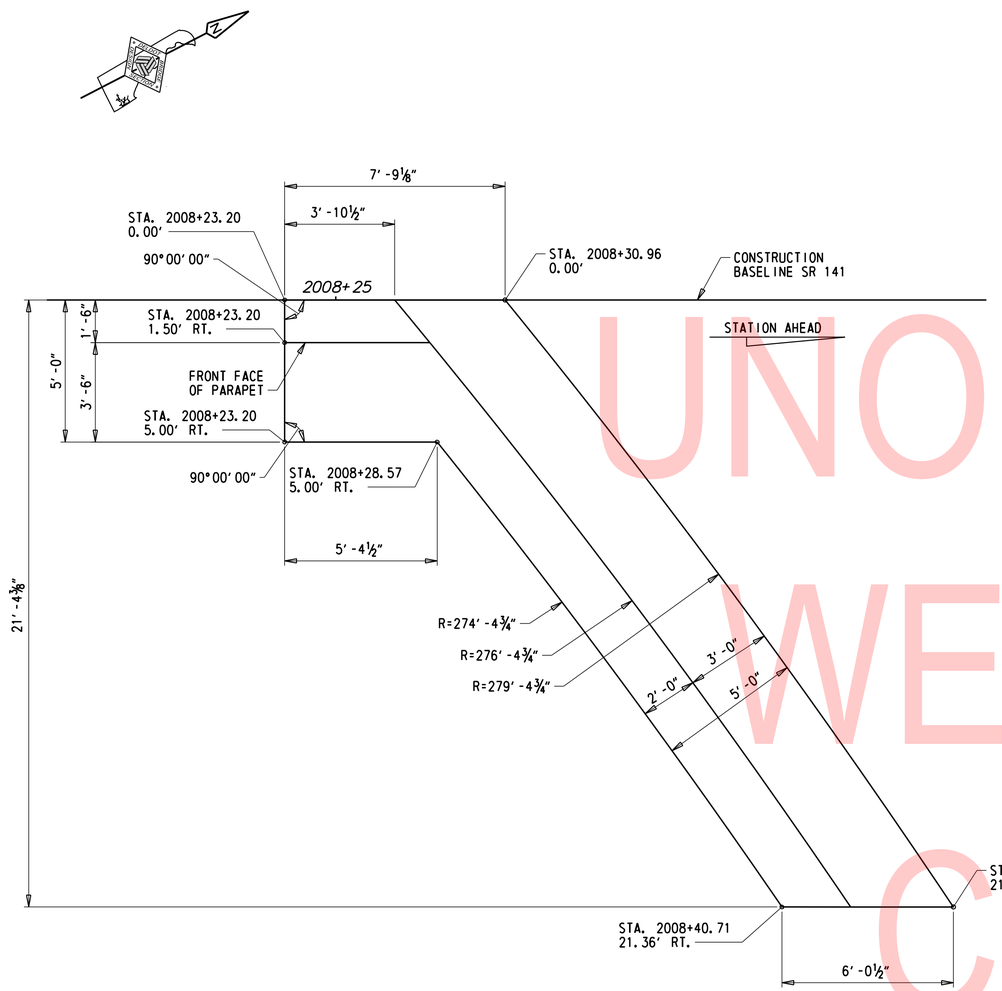

SLEEPER SLAB UNIT C - PLAN

⅜" = 1'-0'

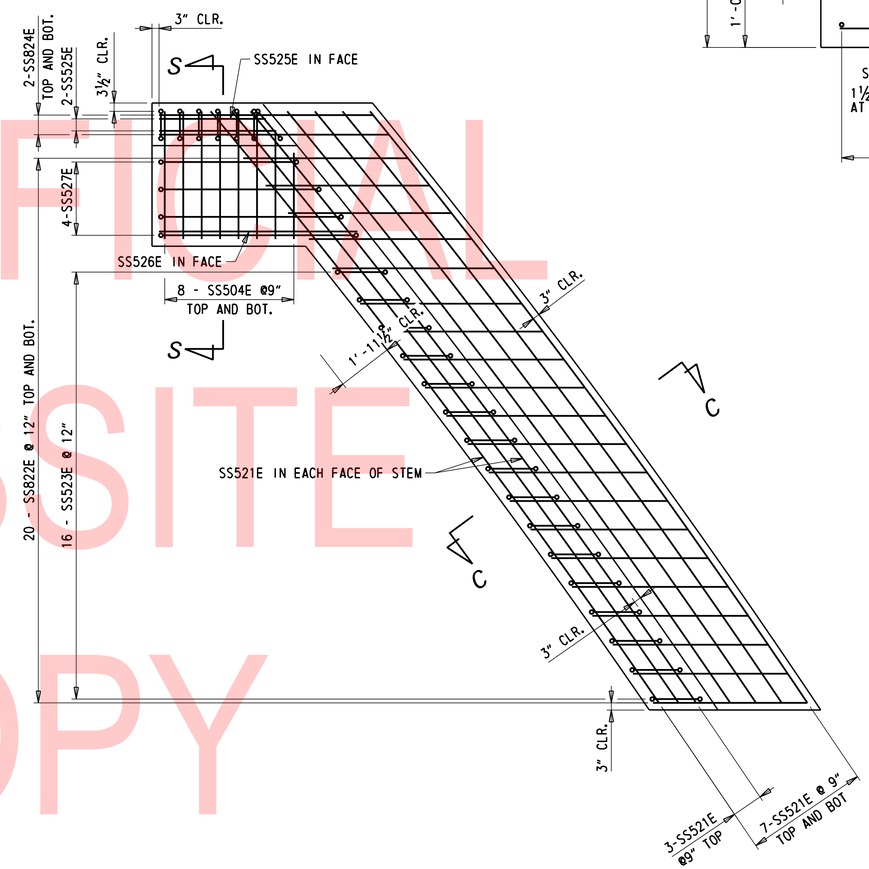

SLEEPER SLAB UNIT C - REINFORCEMENT

⅜" = 1'-0'

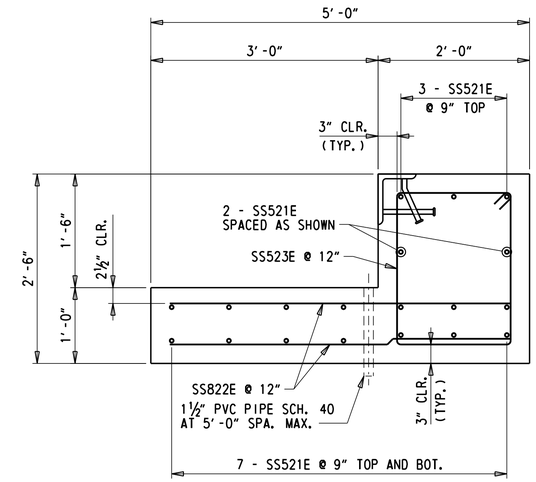

SECTION C-C

1" = 1'-0"

NOTES:

1. SEE DWG. AS-12 FOR ADDITIONAL SECTIONS.
2. FIELD BEND REINFORCEMENT TO FIT FORMS.

UNOFFICIAL WEBSITE COPY

N:\32122-002\CADD\Bridge\BR1-604_AS04.dgn
7/31/2019 4:19:25 PM

ADDENDA / REVISIONS	SCALE AS NOTED	REHABILITATION OF BRIDGES 1-600, 1-601, AND 1-604, SR 2 AND SR 141 INTERCHANGE	CONTRACT T201707403	BRIDGE NO. 1 604	SLEEPER SLAB UNIT C PLAN AND REINFORCEMENT	AS-04
			COUNTY NEW CASTLE	DESIGNED BY: CZK		SECTION WRA
				CHECKED BY: WAG		SHEET NO. 94

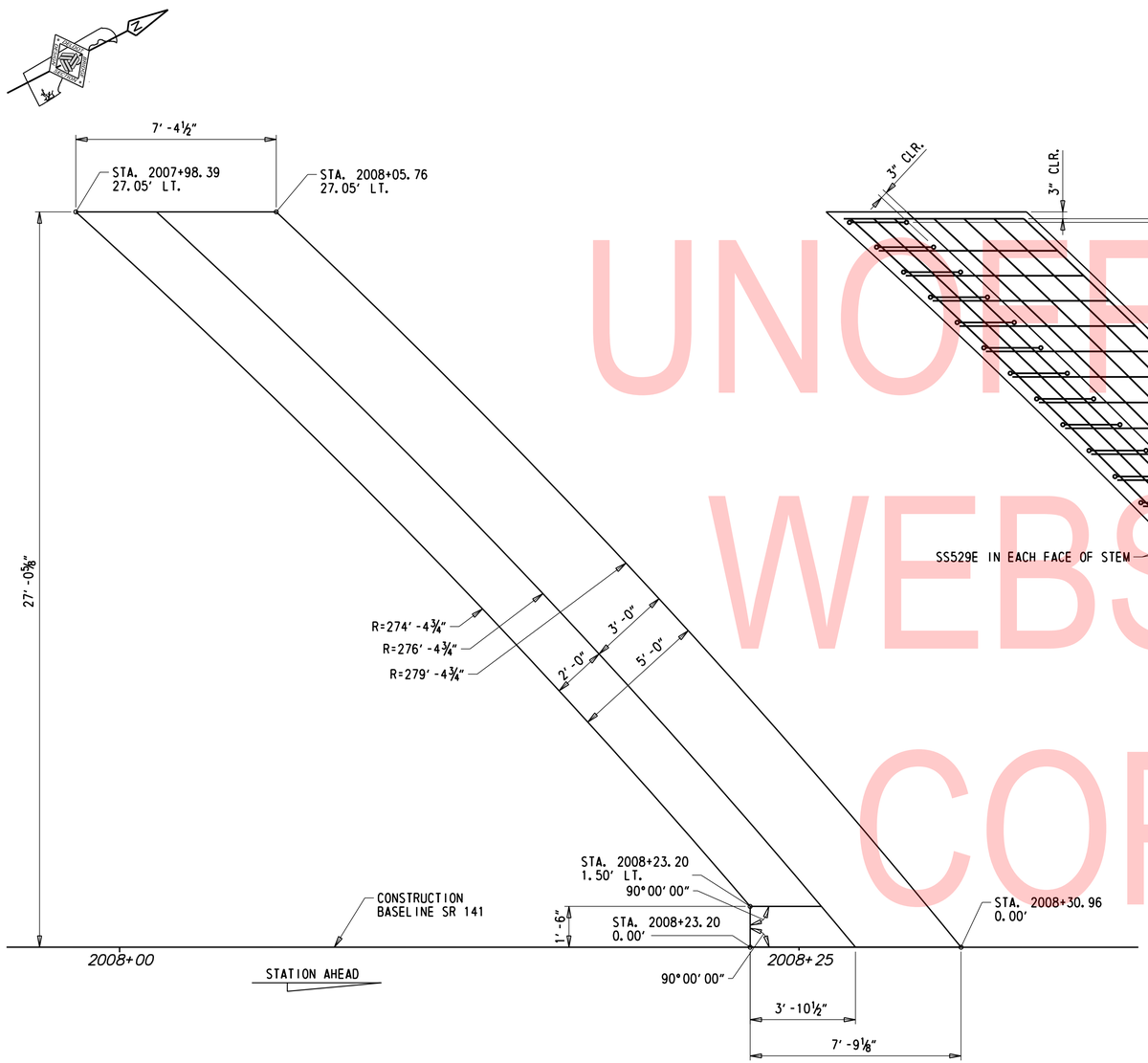

SLEEPER SLAB UNIT D - PLAN

⅜" = 1'-0"

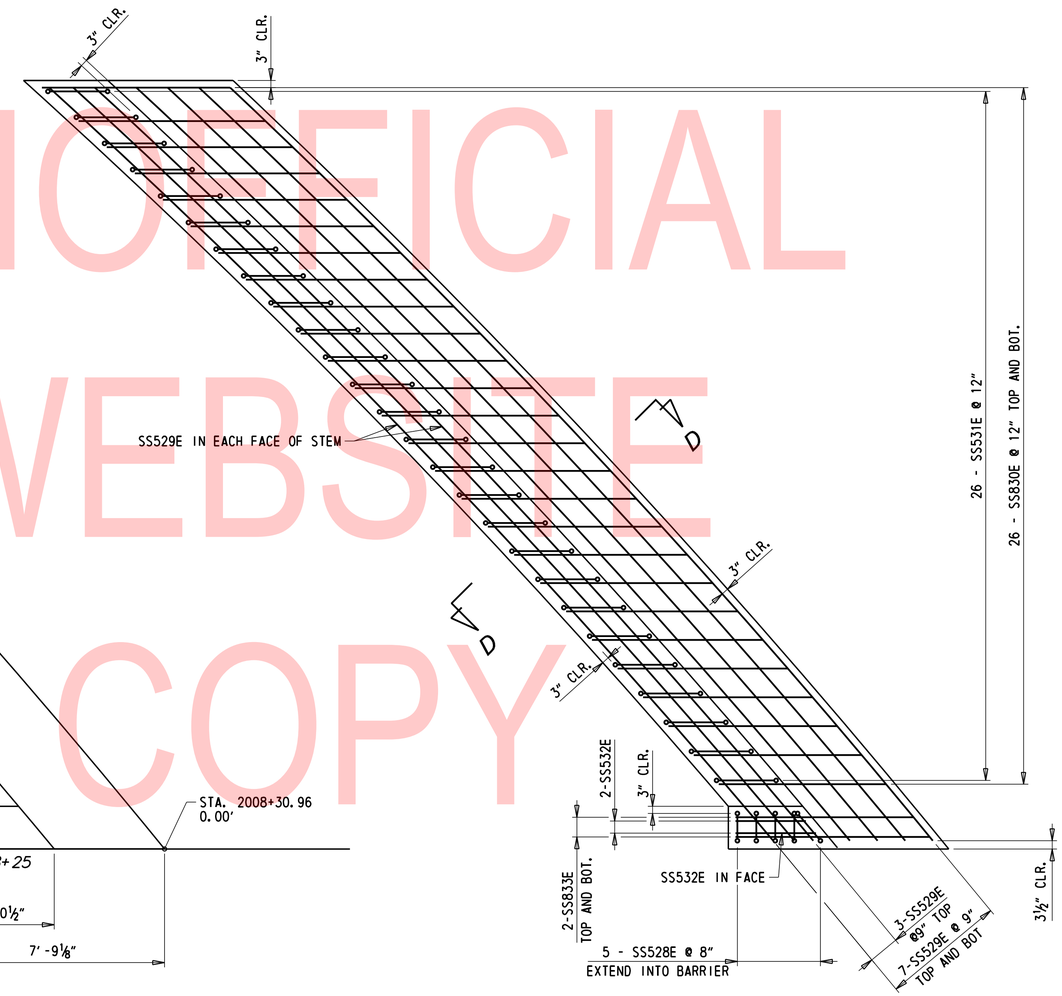

SLEEPER SLAB UNIT D - REINFORCEMENT

⅜" = 1'-0"

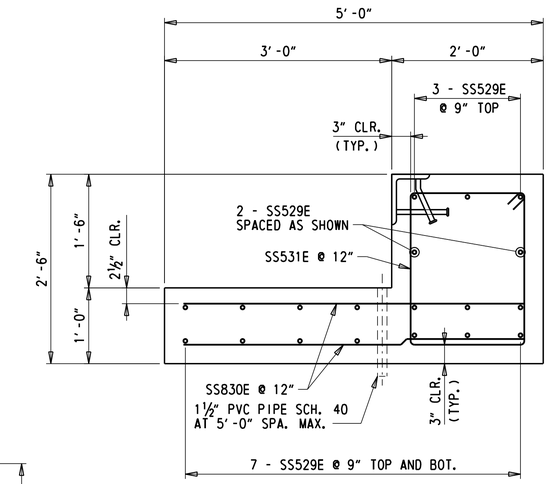

SECTION D-D

1" = 1'-0"

NOTES:

1. SEE DWG. AS-12 FOR ADDITIONAL SECTIONS.
2. FIELD BEND REINFORCEMENT TO FIT FORMS.

UNOFFICIAL WEBSITE COPY

ADDENDA / REVISIONS	SCALE AS NOTED	REHABILITATION OF BRIDGES 1-600, 1-601, AND 1-604, SR 2 AND SR 141 INTERCHANGE	CONTRACT T201707403	BRIDGE NO. 1 604	SLEEPER SLAB UNIT D PLAN AND REINFORCEMENT	AS-05
			COUNTY NEW CASTLE	DESIGNED BY: CZK		SECTION WRA
				CHECKED BY: WAG		SHEET NO. 95

H:\32122-002\CADD\Bridge\BR1-604_AS05.dgn
7/31/2019 4:19:26 PM

NOTES:

1. SEE DWG. AS-12 FOR ADDITIONAL SECTIONS.
2. FIELD BEND REINFORCEMENT TO FIT FORMS.

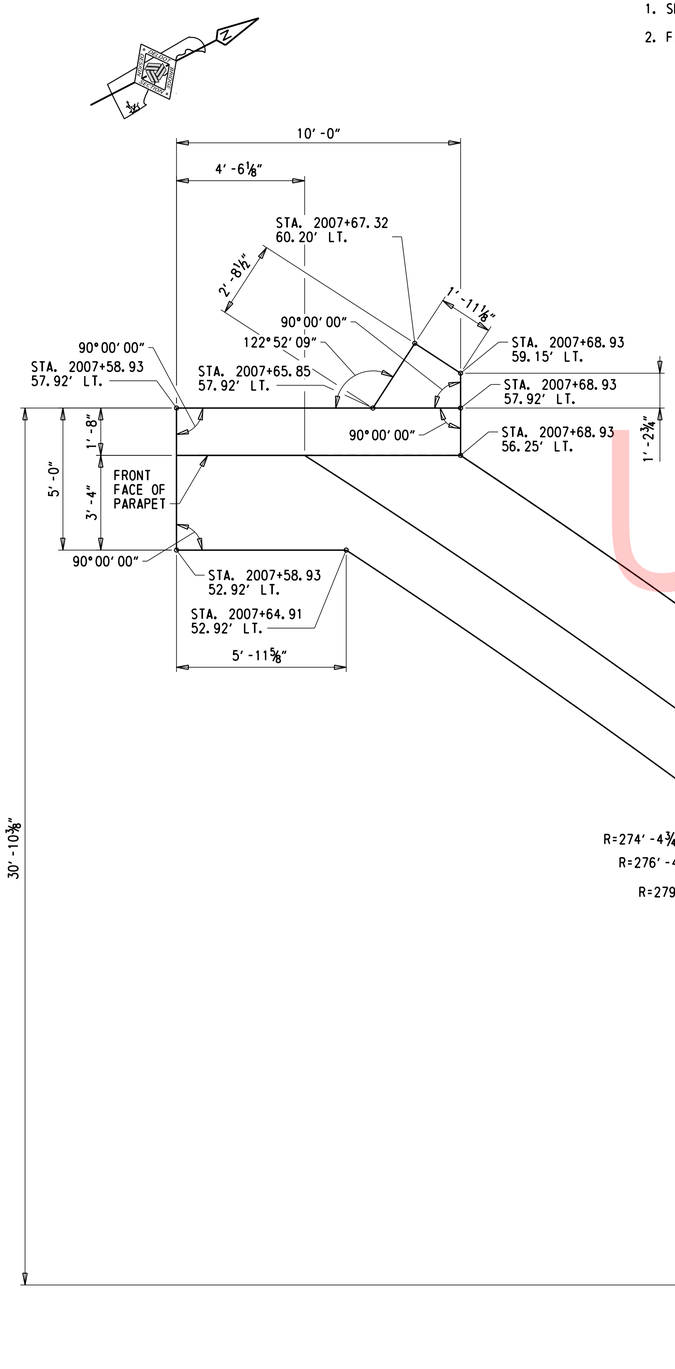

SLEEPER SLAB UNIT E - PLAN

⅜" = 1'-0"

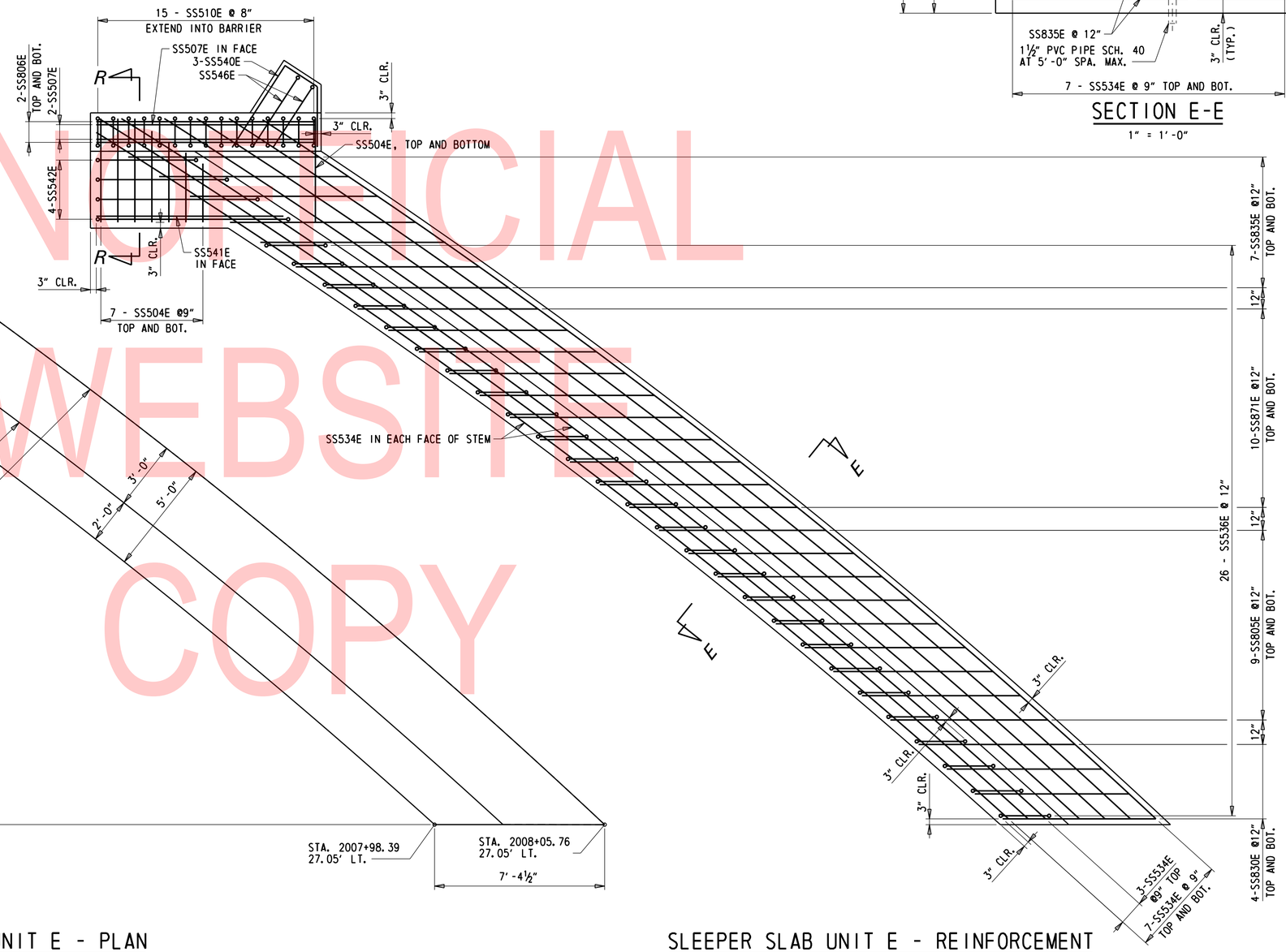

SLEEPER SLAB UNIT E - REINFORCEMENT

⅜" = 1'-0"

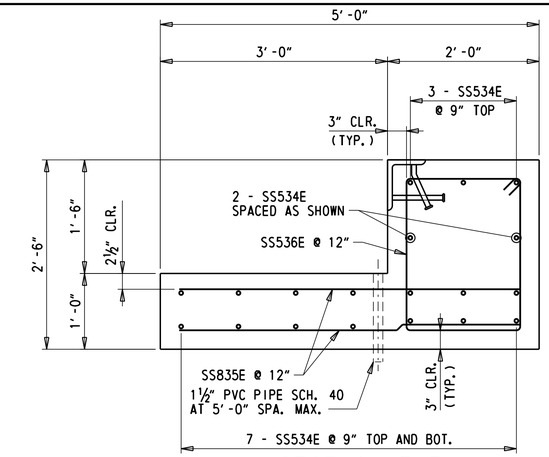

SECTION E-E

1" = 1'-0"

UNOFFICIAL WEBSITE COPY

N:\3222-002\CADD\Bridge\BR1-604_AS06.dgn
7/31/2019 4:19:27 PM

ADDENDA / REVISIONS	

SCALE AS NOTED

REHABILITATION OF BRIDGES 1-600, 1-601, AND 1-604, SR 2 AND SR 141 INTERCHANGE

CONTRACT	BRIDGE NO.	1 604
T201707403	DESIGNED BY: CZK	
COUNTY	CHECKED BY: WAG	
NEW CASTLE		

SLEEPER SLAB UNIT E PLAN AND REINFORCEMENT

AS-06
SECTION
WRA
SHEET NO.
96

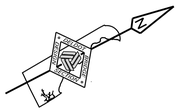

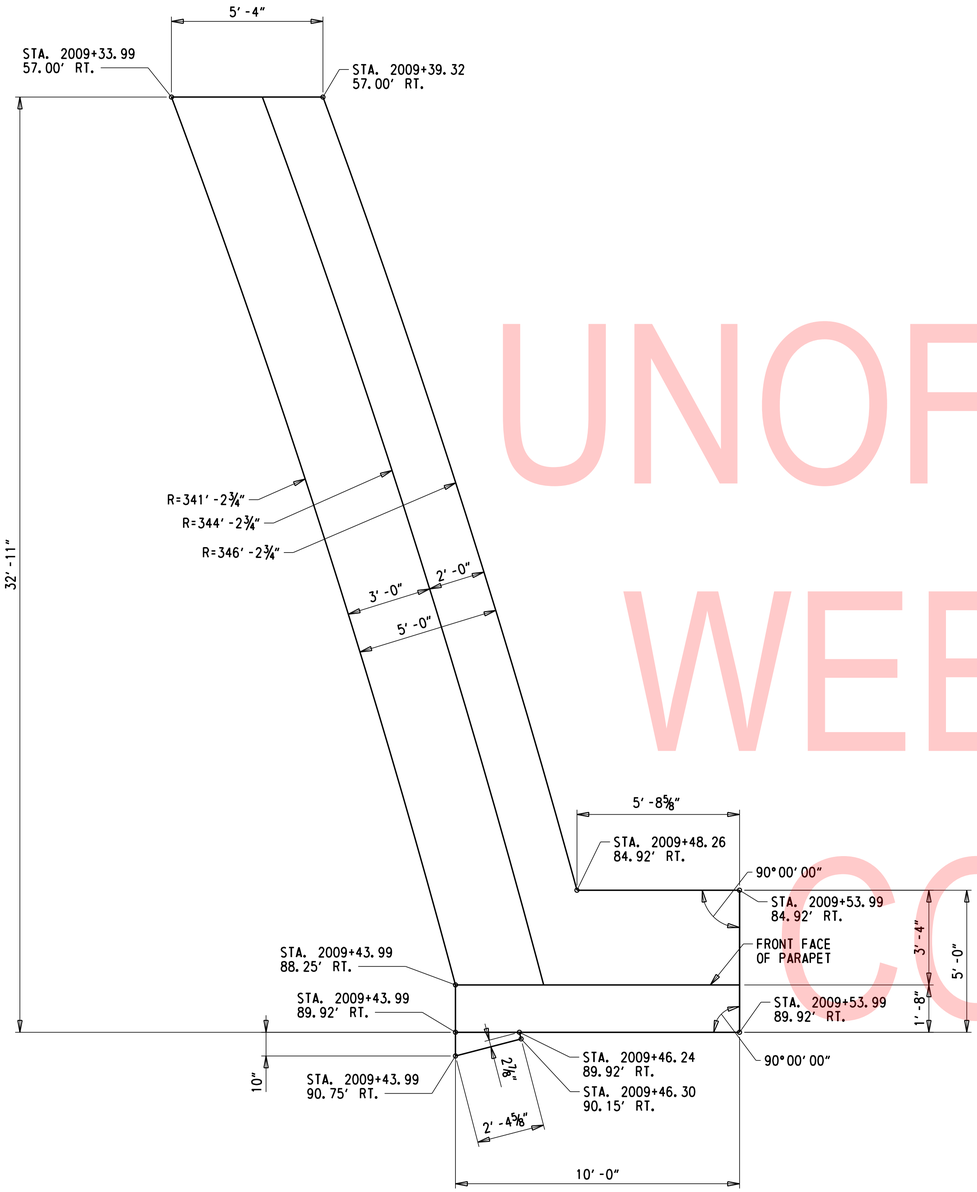

SLEEPER SLAB UNIT F - PLAN

⅜" = 1'-0'

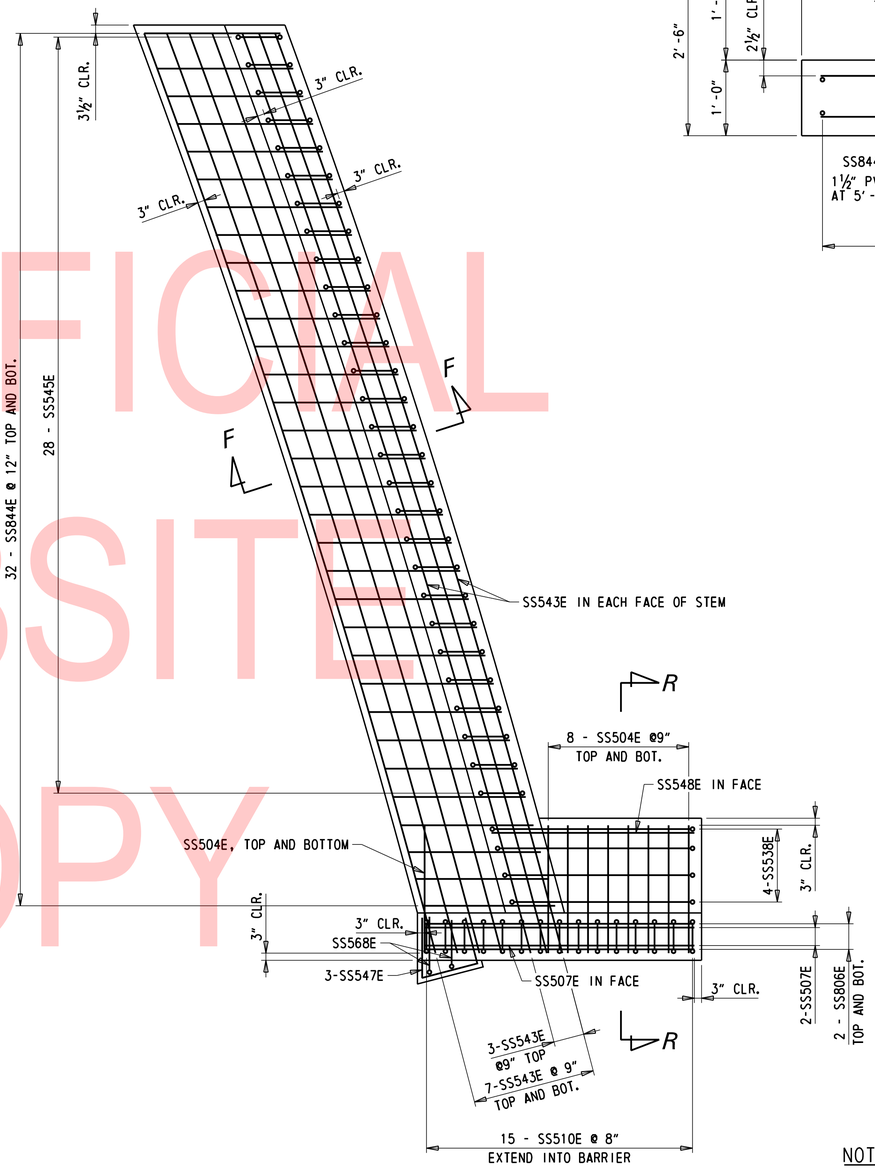

SLEEPER SLAB UNIT F - REINFORCEMENT

⅜" = 1'-0'

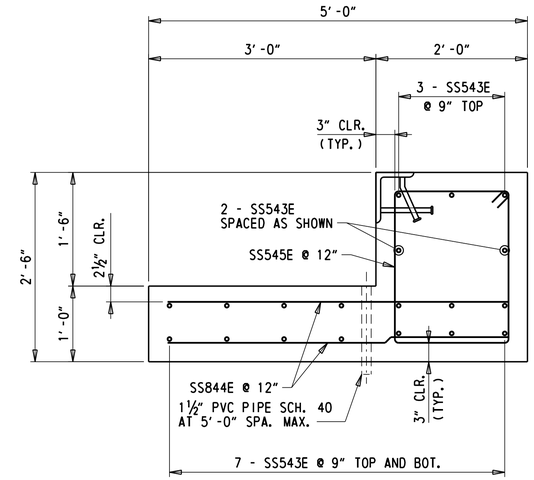

SECTION F-F

1" = 1'-0"

NOTES:

1. SEE DWG. AS-12 FOR ADDITIONAL SECTIONS.
2. FIELD BEND REINFORCEMENT TO FIT FORMS.

UNOFFICIAL WEBSITE COPY

N:\32122-002\CADD\Bridge\BR1-604_AS07.dgn
7/31/2019 4:19:28 PM

ADDENDA / REVISIONS		SCALE AS NOTED	REHABILITATION OF BRIDGES 1-600, 1-601, AND 1-604, SR 2 AND SR 141 INTERCHANGE	CONTRACT T201707403	BRIDGE NO. 1 604	SLEEPER SLAB UNIT F PLAN AND REINFORCEMENT	AS-07
				COUNTY NEW CASTLE	DESIGNED BY: CZK		SECTION WRA
					CHECKED BY: WAG		SHEET NO. 97

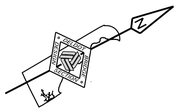

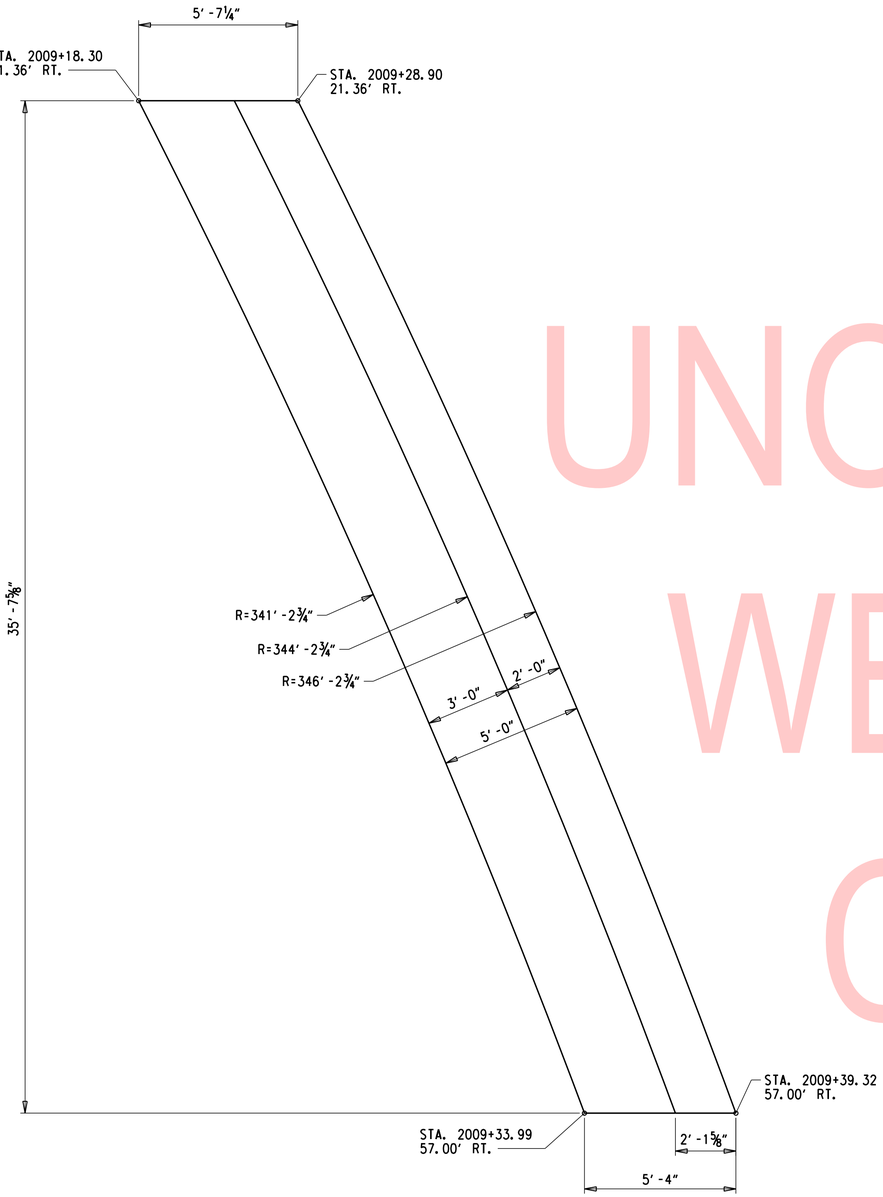

SLEEPER SLAB UNIT G - PLAN

⅜" = 1' -0'

SLEEPER SLAB UNIT G - REINFORCEMENT

⅜" = 1' -0'

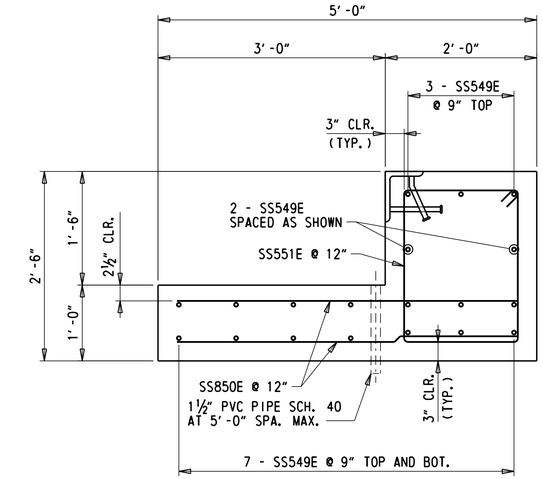

SECTION G-G

1" = 1' -0"

NOTES:

1. SEE DWG. AS-12 FOR ADDITIONAL SECTIONS.
2. FIELD BEND REINFORCEMENT TO FIT FORMS.

UNOFFICIAL WEBSITE COPY

N:\32122-002\CADD\Bridge\BRI-604_AS08.dgn
7/31/2019 4:19:43 PM

ADDENDA / REVISIONS		SCALE AS NOTED	REHABILITATION OF BRIDGES 1-600, 1-601, AND 1-604, SR 2 AND SR 141 INTERCHANGE	CONTRACT T201707403	BRIDGE NO. 1 604	SLEEPER SLAB UNIT G PLAN AND REINFORCEMENT	AS-08
				COUNTY NEW CASTLE	DESIGNED BY: CZK		SECTION WRA
					CHECKED BY: WAG		SHEET NO. 98

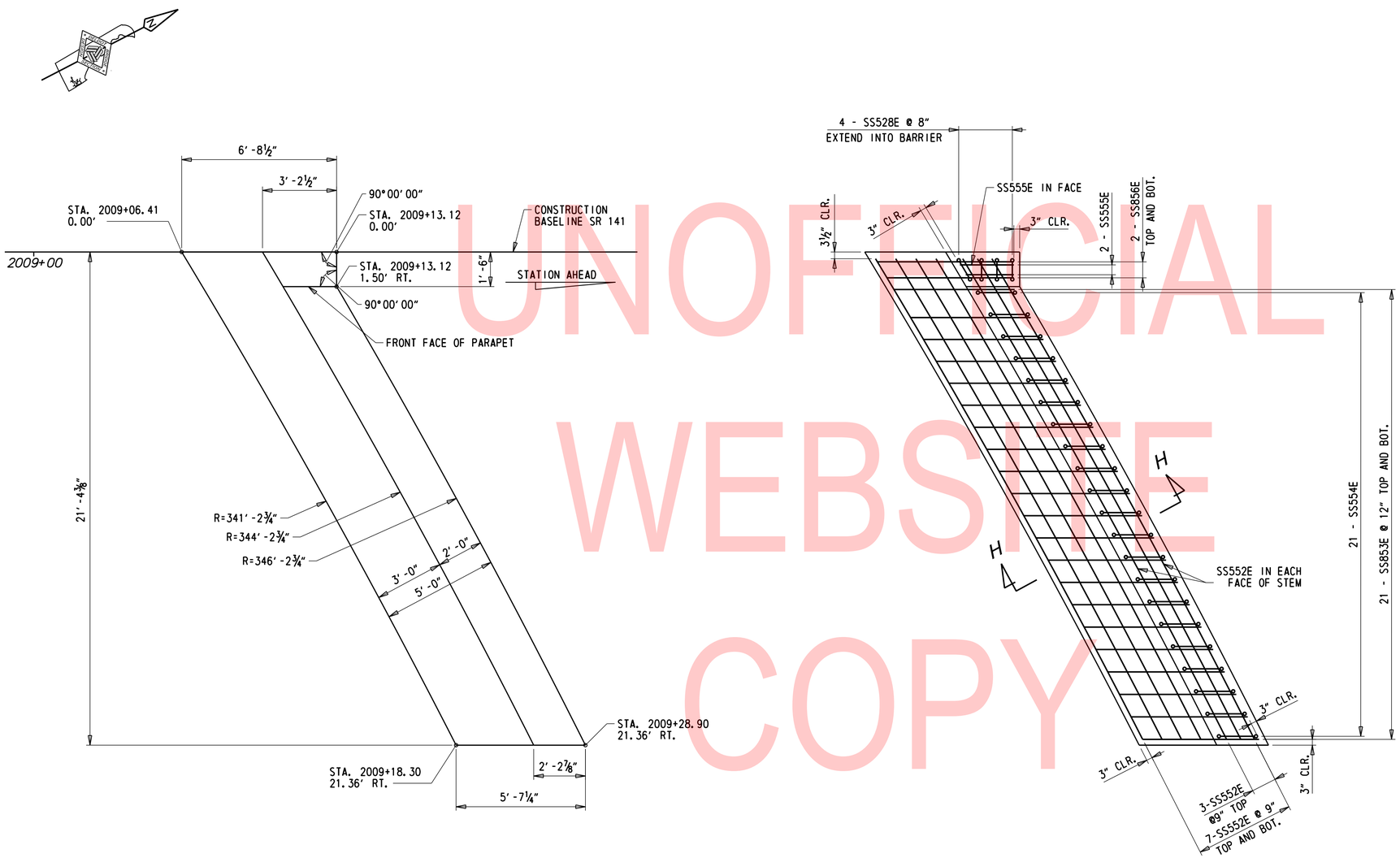

SLEEPER SLAB UNIT H - PLAN

⅜" = 1'-0'

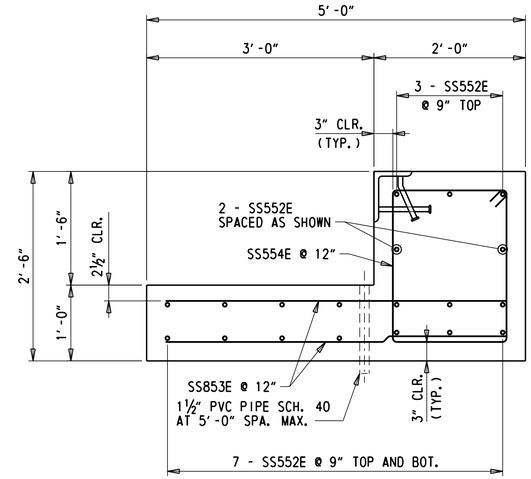

SECTION H-H

1" = 1'-0"

SLEEPER SLAB UNIT H - REINFORCEMENT

⅜" = 1'-0'

NOTES:

1. SEE DWG. AS-12 FOR ADDITIONAL SECTIONS.
2. FIELD BEND REINFORCEMENT TO FIT FORMS.

UNOFFICIAL WEBSITE COPY

N:\33122-002\CADD\Bridge\BR1-604_AS09.dgn
7/31/2019 4:19:45 PM

ADDENDA / REVISIONS	SCALE AS NOTED	REHABILITATION OF BRIDGES 1-600, 1-601, AND 1-604, SR 2 AND SR 141 INTERCHANGE	CONTRACT T201707403	BRIDGE NO. 1 604	SLEEPER SLAB UNIT H PLAN AND REINFORCEMENT	AS-09
			COUNTY NEW CASTLE	DESIGNED BY: CZK		SECTION WRA
				CHECKED BY: WAG		SHEET NO. 99

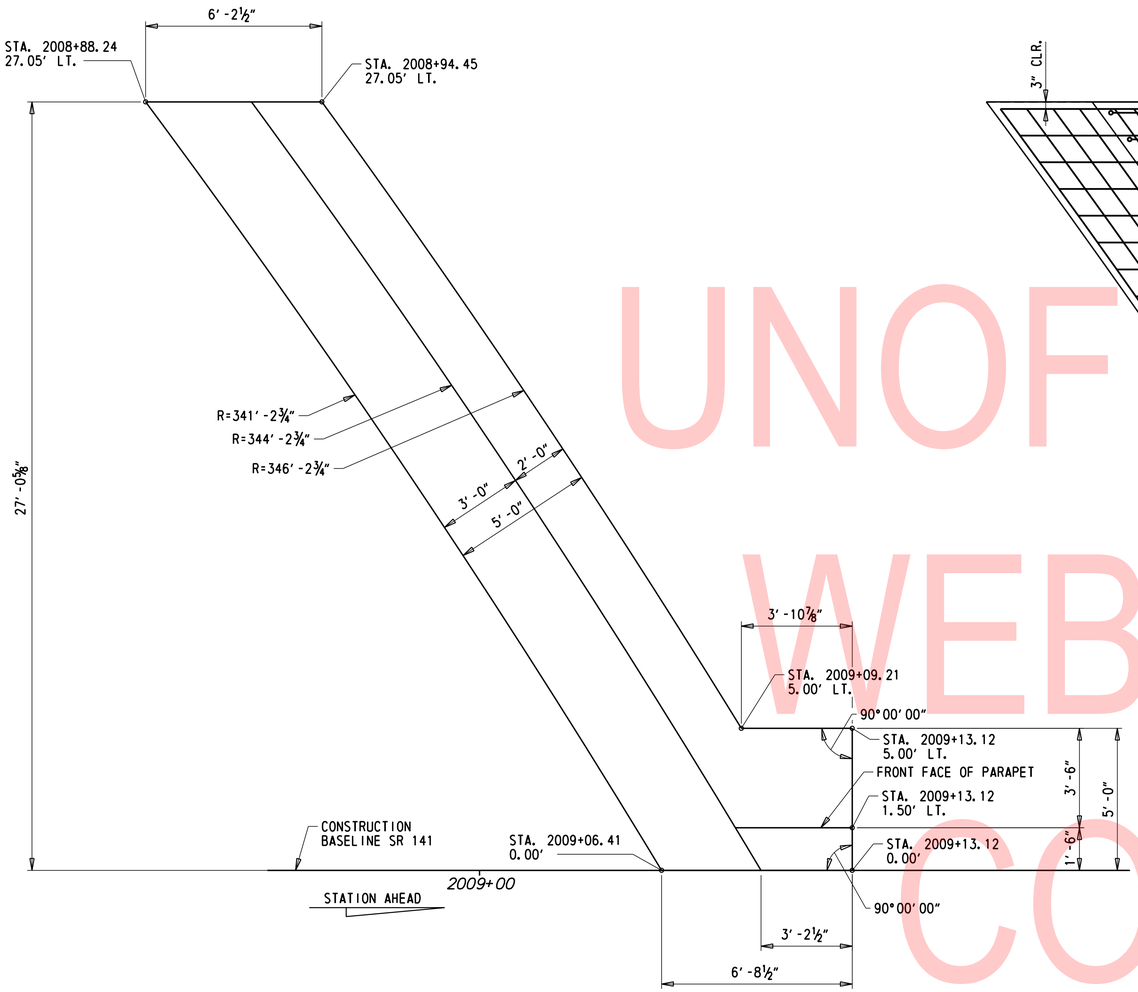

SLEEPER SLAB UNIT J - PLAN

⅜" = 1'-0'

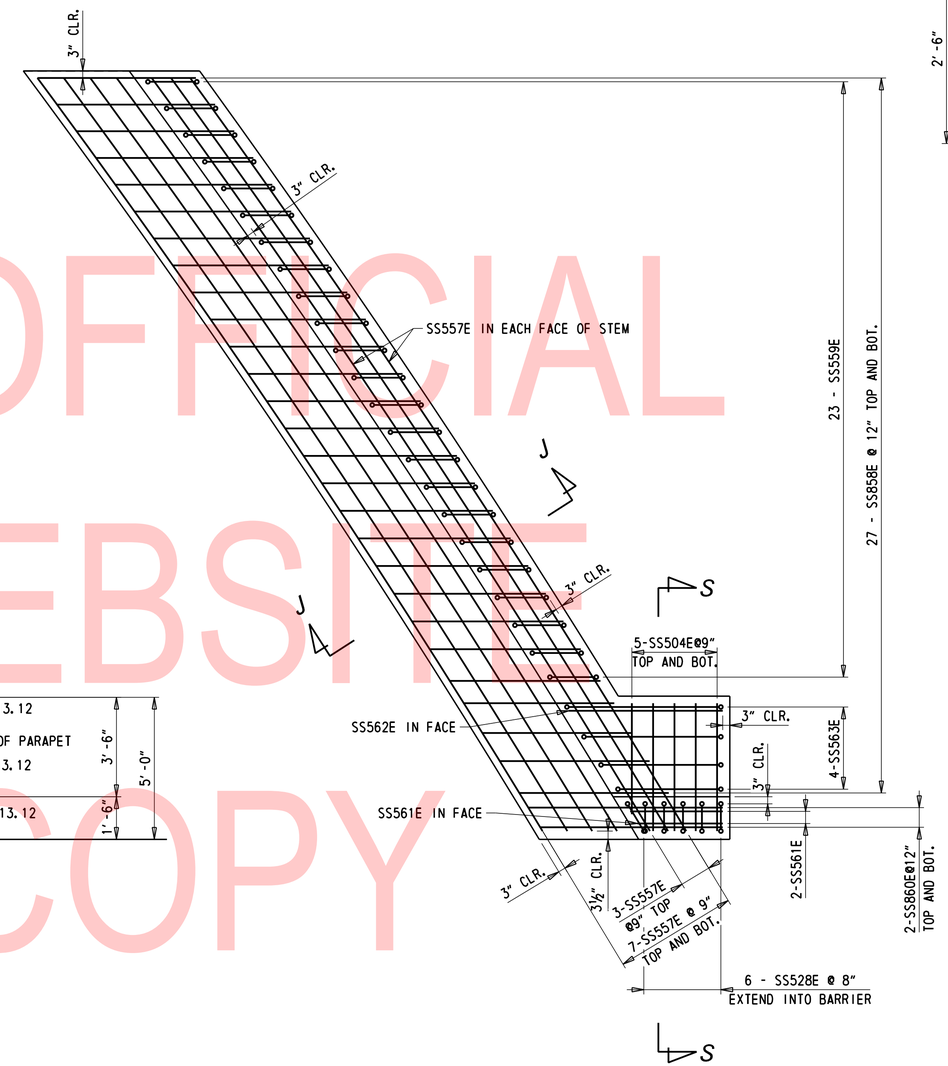

SLEEPER SLAB UNIT J - REINFORCEMENT

⅜" = 1'-0'

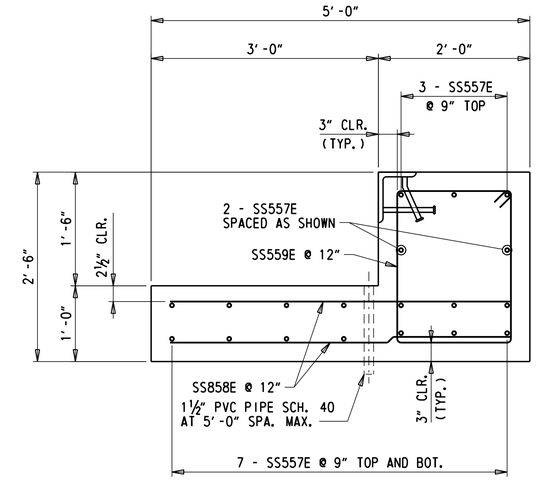

SECTION J-J

1" = 1'-0"

NOTES:

1. SEE DWG. AS-12 FOR ADDITIONAL SECTIONS.
2. FIELD BEND REINFORCEMENT TO FIT FORMS.

UNOFFICIAL WEBSITE COPY

N:\33122-002\C&D\Bridge\BR1-604_AS10.dgn
7/31/2019 4:19:49 PM

ADDENDA / REVISIONS	SCALE AS NOTED	REHABILITATION OF BRIDGES 1-600, 1-601, AND 1-604, SR 2 AND SR 141 INTERCHANGE	CONTRACT T201707403	BRIDGE NO. 1 604	SLEEPER SLAB UNIT J PLAN AND REINFORCEMENT	AS-10 SECTION WRA SHEET NO. 100
			COUNTY NEW CASTLE	DESIGNED BY: CZK CHECKED BY: WAG		

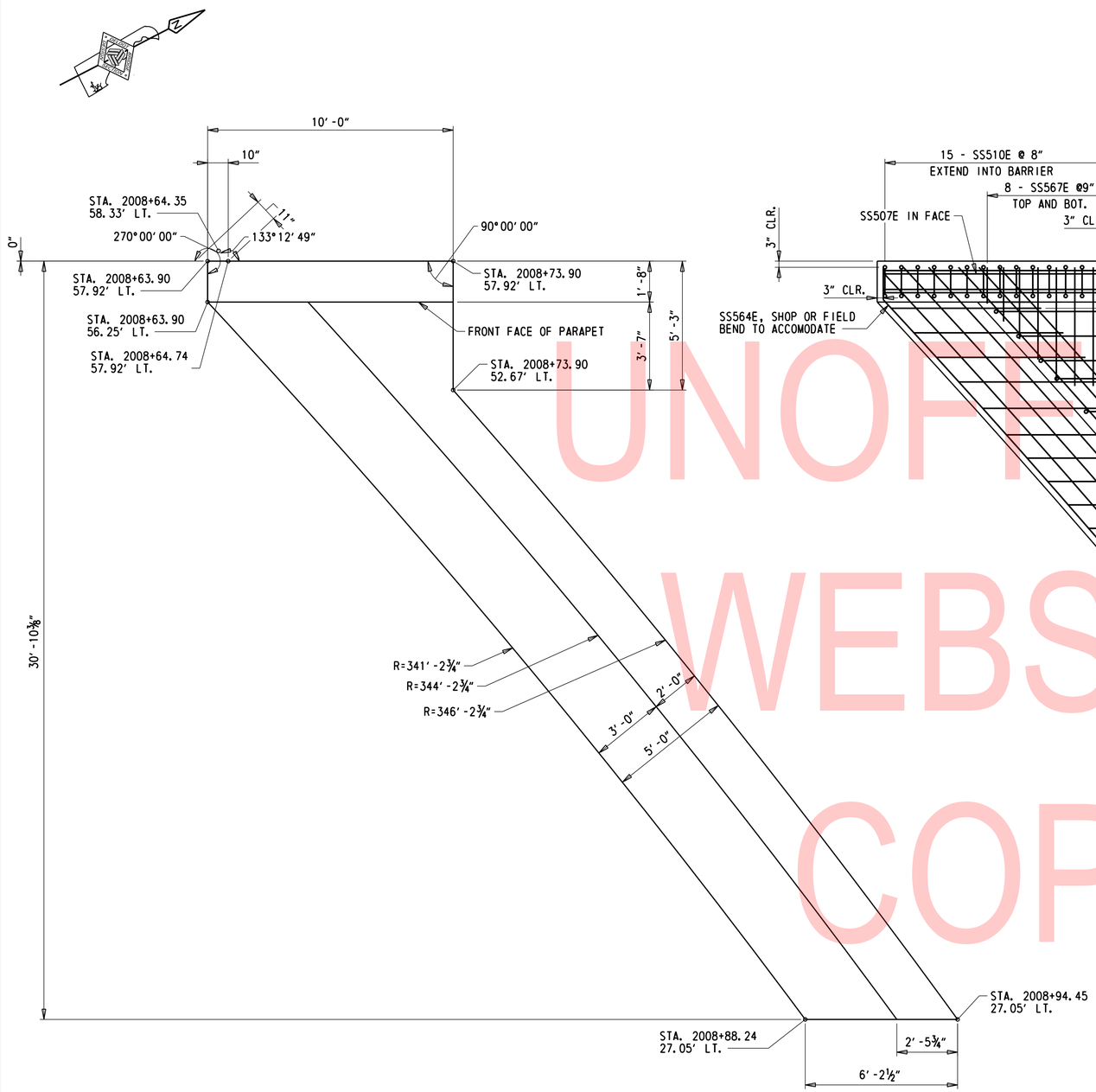

SLEEPER SLAB UNIT K - PLAN

⅜″ = 1′-0′

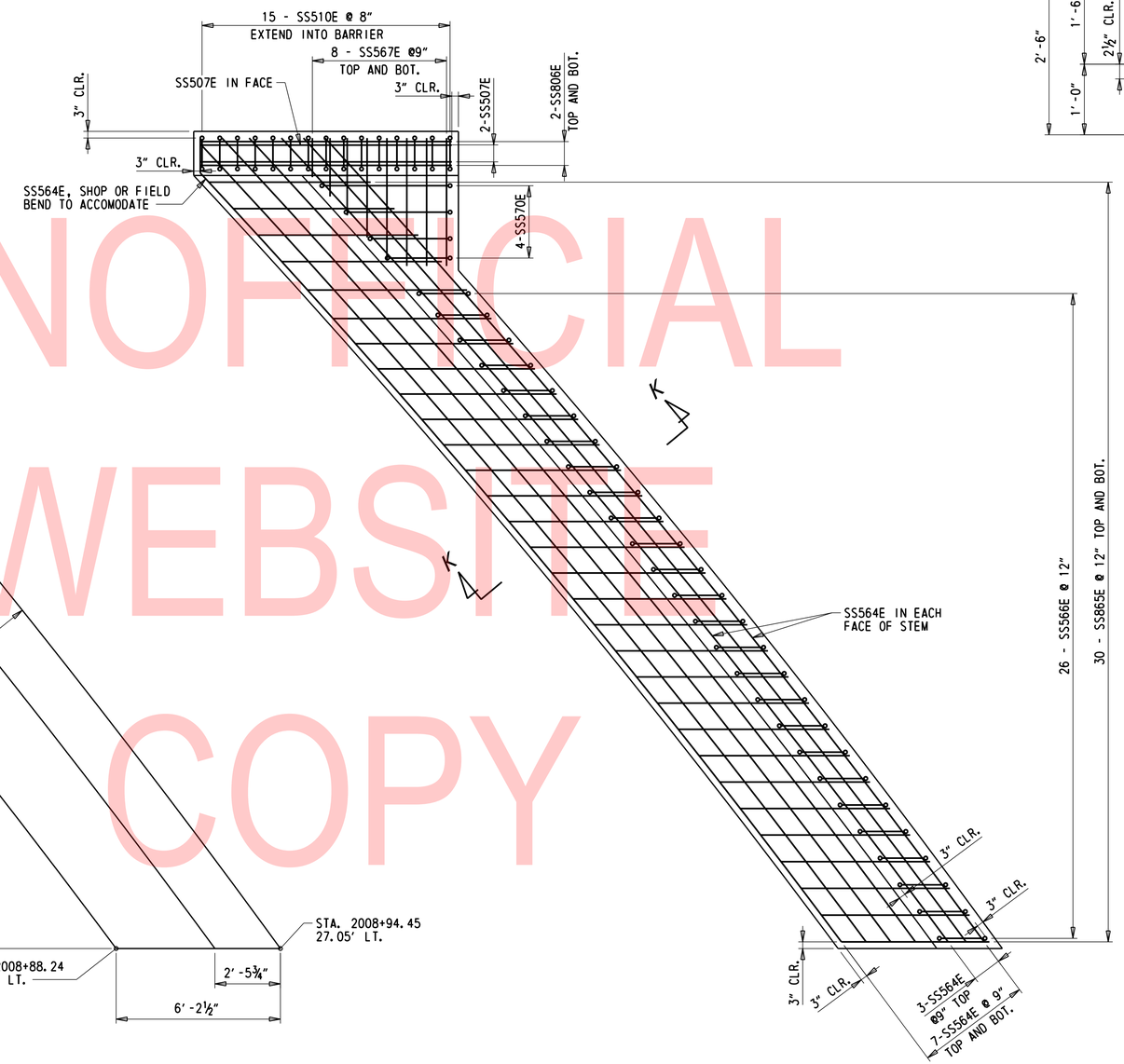

SLEEPER SLAB UNIT K - REINFORCEMENT

⅜″ = 1′-0′

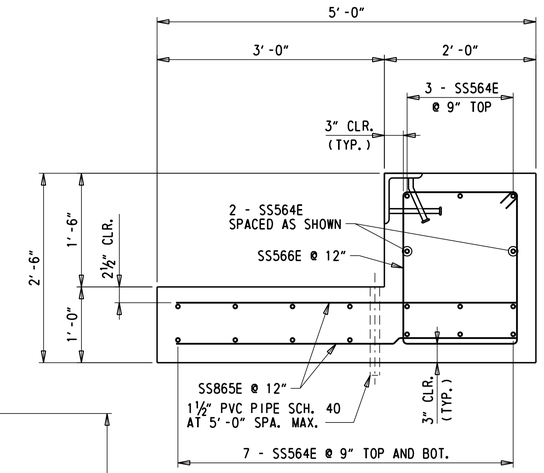

SECTION K-K

1″ = 1′-0″

UNOFFICIAL WEBSITE COPY

NOTES:

1. SEE DWG. AS-12 FOR ADDITIONAL SECTIONS.
2. FIELD BEND REINFORCEMENT TO FIT FORMS.

N:\33122-002\C400\Bridge\BR1-604_AS11.dgn
7/31/2019 4:19:47 PM

ADDENDA / REVISIONS	SCALE AS NOTED	REHABILITATION OF BRIDGES 1-600, 1-601, AND 1-604, SR 2 AND SR 141 INTERCHANGE	CONTRACT T201707403	BRIDGE NO. 1 604	SLEEPER SLAB UNIT K PLAN AND REINFORCEMENT	AS-11 SECTION WRA
			COUNTY NEW CASTLE	DESIGNED BY: CZK		SHEET NO. 101
				CHECKED BY: WAG		

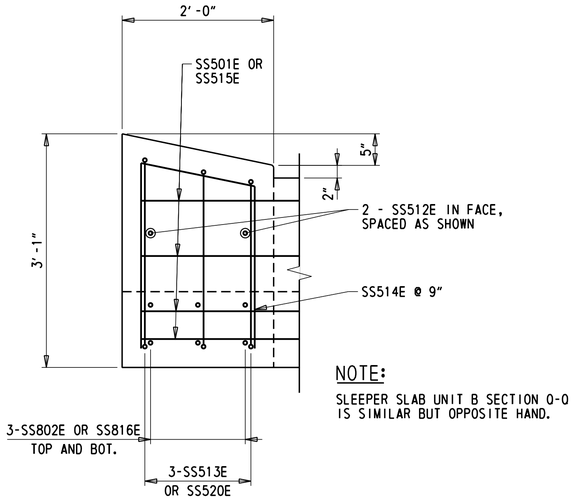

NOTE:

SLEEPER SLAB UNIT B SECTION Q-Q IS SIMILAR BUT OPPOSITE HAND.

SECTION Q-Q

1" = 1'-0"

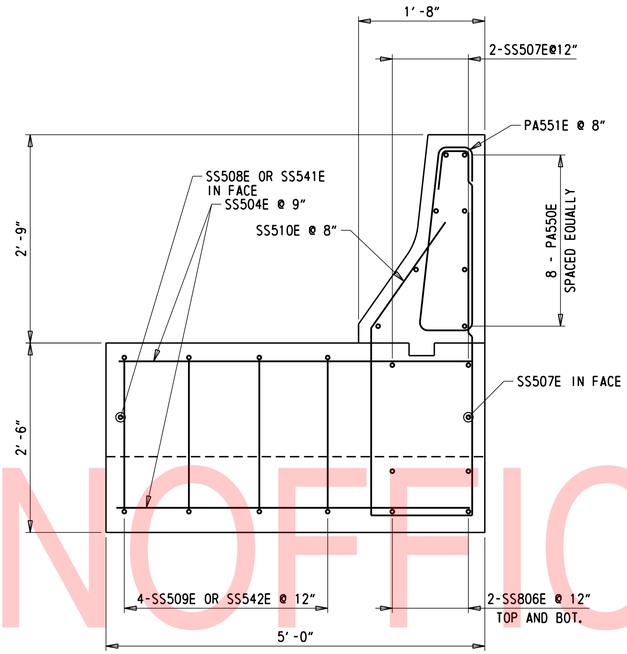

SECTION R-R

1" = 1'-0"

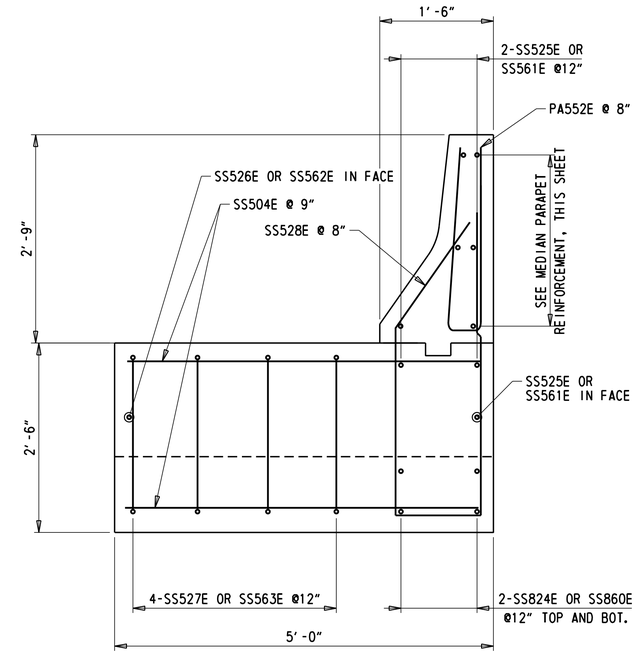

SECTION S-S

1" = 1'-0"

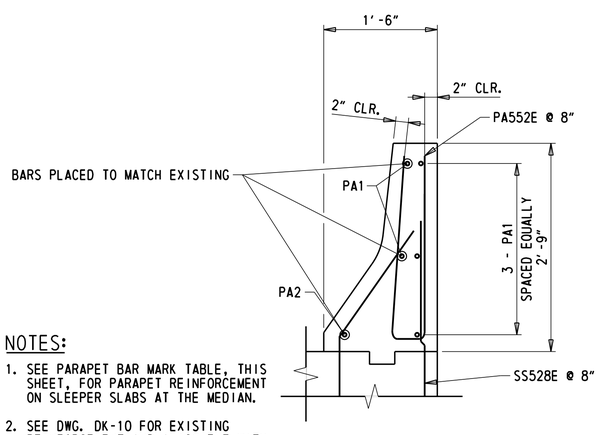

NOTES:

1. SEE PARAPET BAR MARK TABLE, THIS SHEET, FOR PARAPET REINFORCEMENT ON SLEEPER SLABS AT THE MEDIAN.
2. SEE DWG. DK-10 FOR EXISTING REINFORCEMENT AND ALIGNMENT WITH PROPOSED REINFORCEMENT IN SECTION D-D.

MEDIAN PARAPET REINFORCEMENT

1" = 1'-0"

PARAPET BAR MARK		
	PA1	PA2
SLEEPER SLAB C	PA553E	PA554E
SLEEPER SLAB D	PA555E	PA556E
SLEEPER SLAB H	PA557E	PA558E
SLEEPER SLAB J	PA559E	PA560E

UNOFFICIAL WEBSITE COPY

N:\32122-002\C400\Bridge\BR1-604_AS12.dgn
7/31/2019 4:19:48 PM

ADDENDA / REVISIONS	

SCALE AS NOTED

REHABILITATION OF BRIDGES 1-600, 1-601, AND 1-604, SR 2 AND SR 141 INTERCHANGE

CONTRACT	BRIDGE NO.	1 604
T201707403	DESIGNED BY: CZK	
COUNTY		
NEW CASTLE	CHECKED BY: WAG	

SLEEPER SLAB SECTIONS REINFORCEMENT

AS-12

SECTION	SHEET NO.
WRA	102

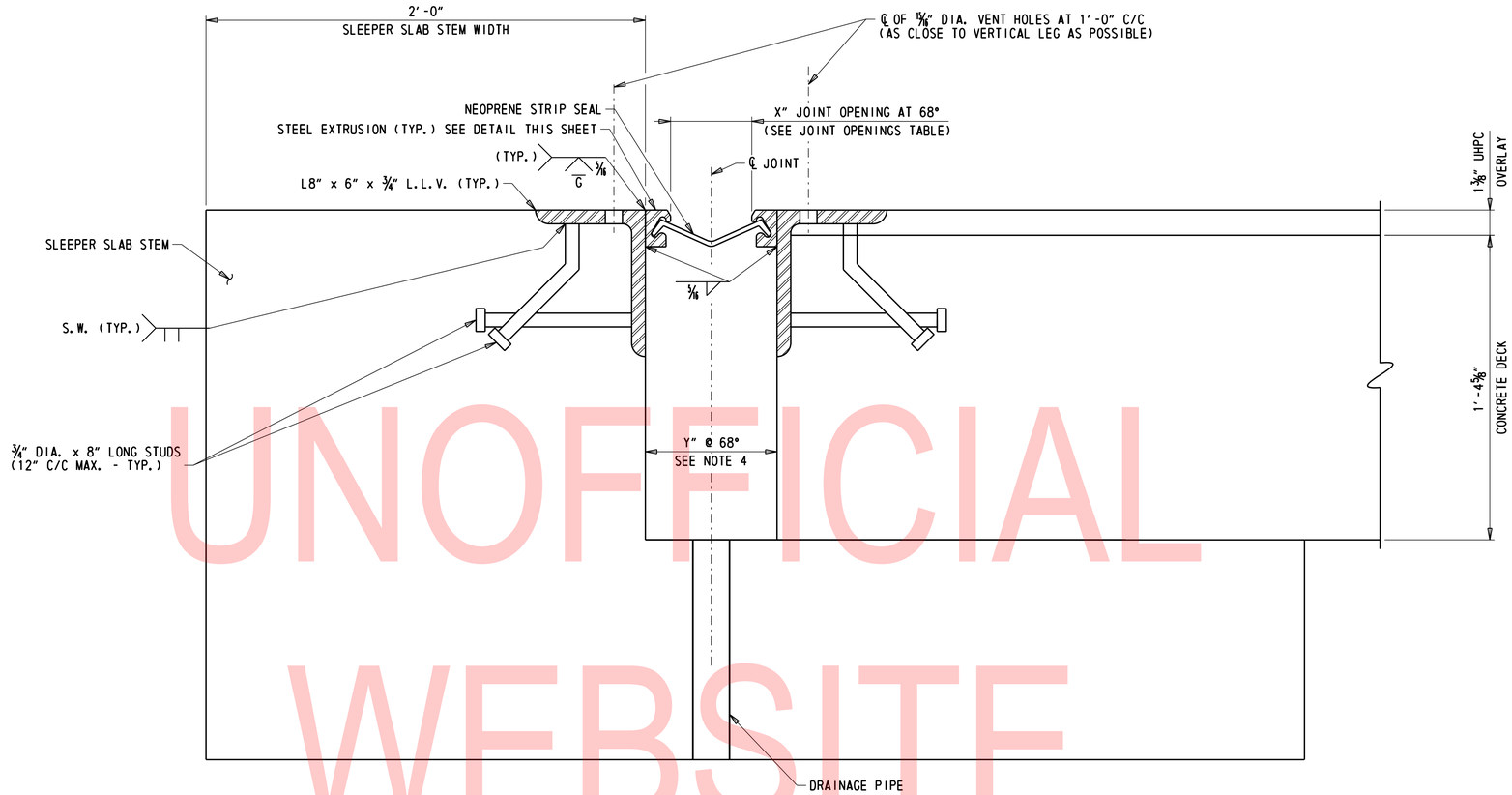

JOINT ASSEMBLY DETAIL

3" = 1'-0"

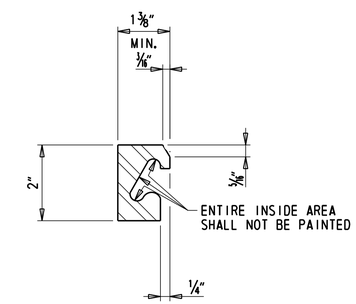

STEEL EXTRUSION DETAIL

6" = 1'-0"

STRIP SEAL EXPANSION JOINT NOTES:

1. STEEL FOR DECK JOINTS AND STEEL EXTRUSIONS SHALL BE AASHTO M270, GR. 36 (ASTM A36) AT MINIMUM.
2. NEOPRENE EXTRUSION TO MEET ASTM D-2628-81 MODIFIED, (RECOVERY TEST EXCLUDED).
3. THE EXPANSION JOINT SHALL BE CAPABLE OF SEALING THE APPROACH SLAB TO SLEEPER SLAB JOINT TO PREVENT MOISTURE AND OTHER CONTAMINANTS FROM DESCENDING THROUGH THE JOINT.
4. THE CONTRACTOR SHALL ADJUST THE OPEN JOINT (Y) AS REQUIRED BY THE WIDTH OF THE STEEL EXTRUSION USED SO AS TO PROVIDE A X" JOINT OPENING AT 68°F.
5. THE STRIP SEAL SHALL BE INSTALLED IN ONE PIECE ACROSS THE APPROACH SLAB WIDTH. SPLICING OF THE STRIP SEAL IS NOT PERMITTED.
6. THE EXPANSION JOINT SYSTEM IS PAID FOR UNDER ITEM 624000 - PREFABRICATED EXPANSION JOINT SYSTEM, 3".
7. STEEL EXTRUSIONS SHALL BE HOT-DIP GALVANIZED. ENTIRE EXPANSION DAM SHALL BE PAINTED AFTER FABRICATION USING URETHANE SYSTEM.
8. LUBRICANT-ADHESIVE FOR USE IN INSTALLING AND BONDING NEOPRENE SEAL ELEMENTS TO STEEL JOINT COMPONENTS SHALL BE A ONE QUART MOISTURE-CURING POLYURETHANE AND HYDROCARBON SOLVENT MIXTURE HAVING THE FOLLOWING PHYSICAL PROPERTIES:

AVERAGE WEIGHT, POUNDS PER GALLON	8±10%
SOLIDS CONTENT	65%
ADHESIVE SHALL REMAIN LIQUID FROM	5°F TO 120°F
FILM STRENGTH, AS PER ASTM D-412	2,000 PSI
ELONGATION	250%

9. STEEL EXTRUSIONS AND JOINT ANGLES SHALL BE CONTINUOUS ACROSS THE FULL WIDTH OF THE ROADWAY, NO SPLICING WILL BE PERMITTED.

JOINT OPENINGS, X										
TEMPERATURE °F	20°	30°	40°	50°	60°	68°	70°	80°	90°	100°
ABUTMENT B	2"	1 15/16"	1 7/8"	1 11/16"	1 3/4"	1 11/16" ±	1 11/16" ±	1 5/8"	1 9/16"	1 1/2"
ABUTMENT A	1 3/4"	1 3/4"	1 3/4"	1 3/4"	1 3/4"	1 3/4"	1 3/4"	1 3/4"	1 3/4"	1 3/4"

NOTES:

1. FOR SLEEPER SLAB PLAN AND SECTIONS, SEE DWGS. AS-01 THROUGH AS-12.
2. REMAINING SLEEPER SLAB REINFORCEMENT NOT SHOWN FOR CLARITY. SEE DWGS. AS-02 THROUGH AS-12 FOR MORE INFORMATION.
3. ABUTMENT A BEARINGS ARE FIXED; ABUTMENT B BEARINGS ARE EXPANSION.

UNOFFICIAL WEBSITE COPY

N:\32122-002\CADD\Bridge\BR1-604_EX01.dgn
7/31/2019 4:19:49 PM

ADDENDA / REVISIONS	

SCALE AS NOTED

REHABILITATION OF BRIDGES 1-600, 1-601, AND 1-604, SR 2 AND SR 141 INTERCHANGE

CONTRACT	BRIDGE NO.	1 604
T201707403	DESIGNED BY: ZMG	
COUNTY		
NEW CASTLE	CHECKED BY: WAG	

SLEEPER SLAB JOINT DETAILS – 1

EX-01
SECTION
WRA
SHEET NO.
103

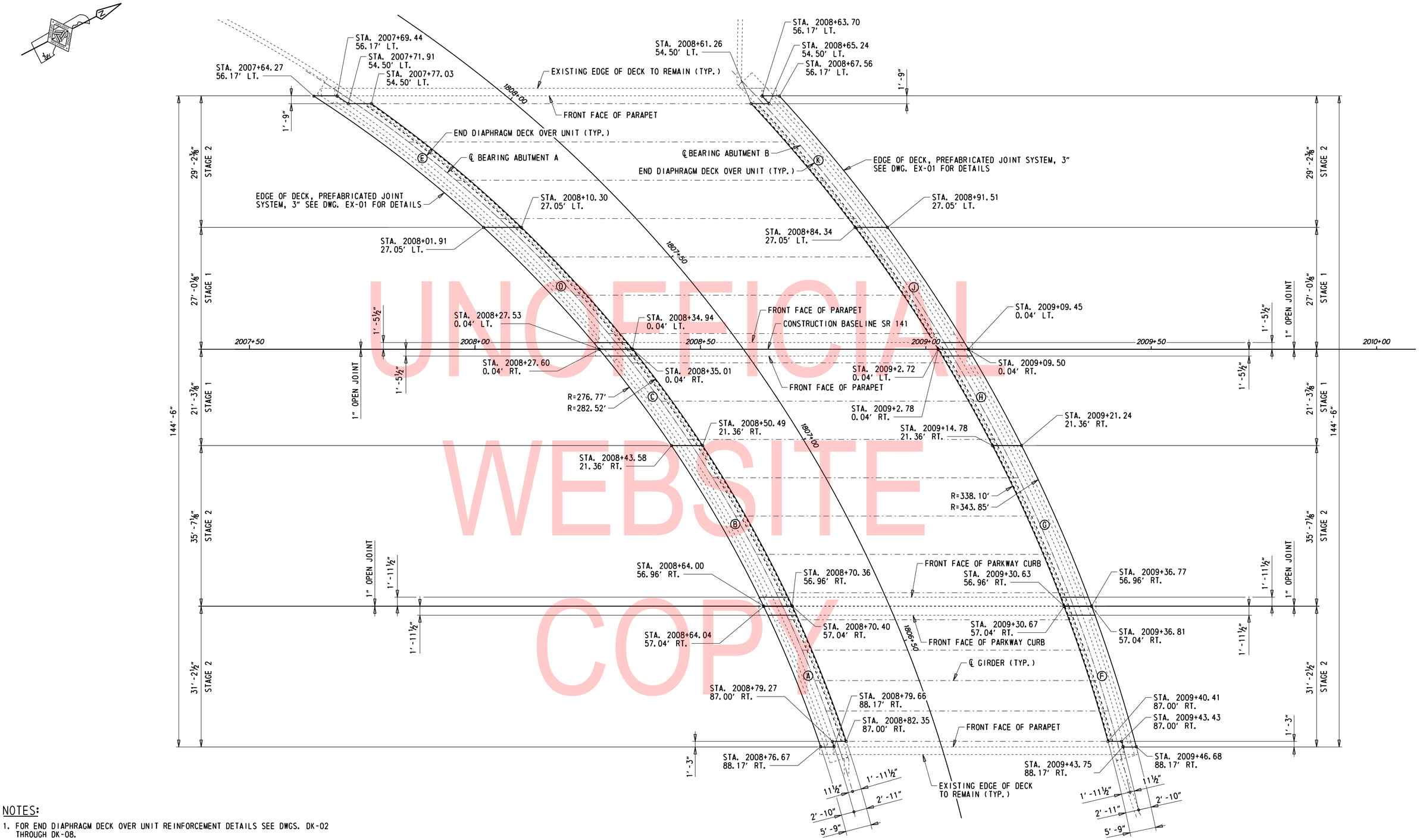

UNOFFICIAL WEBSITE COPY

NOTES:

1. FOR END DIAPHRAGM DECK OVER UNIT REINFORCEMENT DETAILS SEE DWGS. DK-02 THROUGH DK-08.
2. FOR ADDITIONAL MEDIAN AND PARKWAY CURB DETAILS SEE DWGS. DK-09 AND DK-10, RESPECTIVELY.
3. THE SKEW ANGLE DENOTED IS BASED ON AN ASSUMED VALUE THAT SHALL BE FIELD VERIFIED BY THE CONTRACTOR.

END DIAPHRAGM DECK OVER LAYOUT PLAN

1" = 10'

N:\32122-002\CADD\Bridge\BRI-604_DK01.dgn
7/31/2019 4:19:50 PM

ADDENDA / REVISIONS	SCALE AS NOTED	REHABILITATION OF BRIDGES 1-600, 1-601, AND 1-604, SR 2 AND SR 141 INTERCHANGE	CONTRACT T201707403	BRIDGE NO. 1 604	END DIAPHRAGM DECK OVER LAYOUT PLAN	DK-01
			COUNTY NEW CASTLE	DESIGNED BY: CZK		SECTION WRA
				CHECKED BY: WAG		SHEET NO. 104

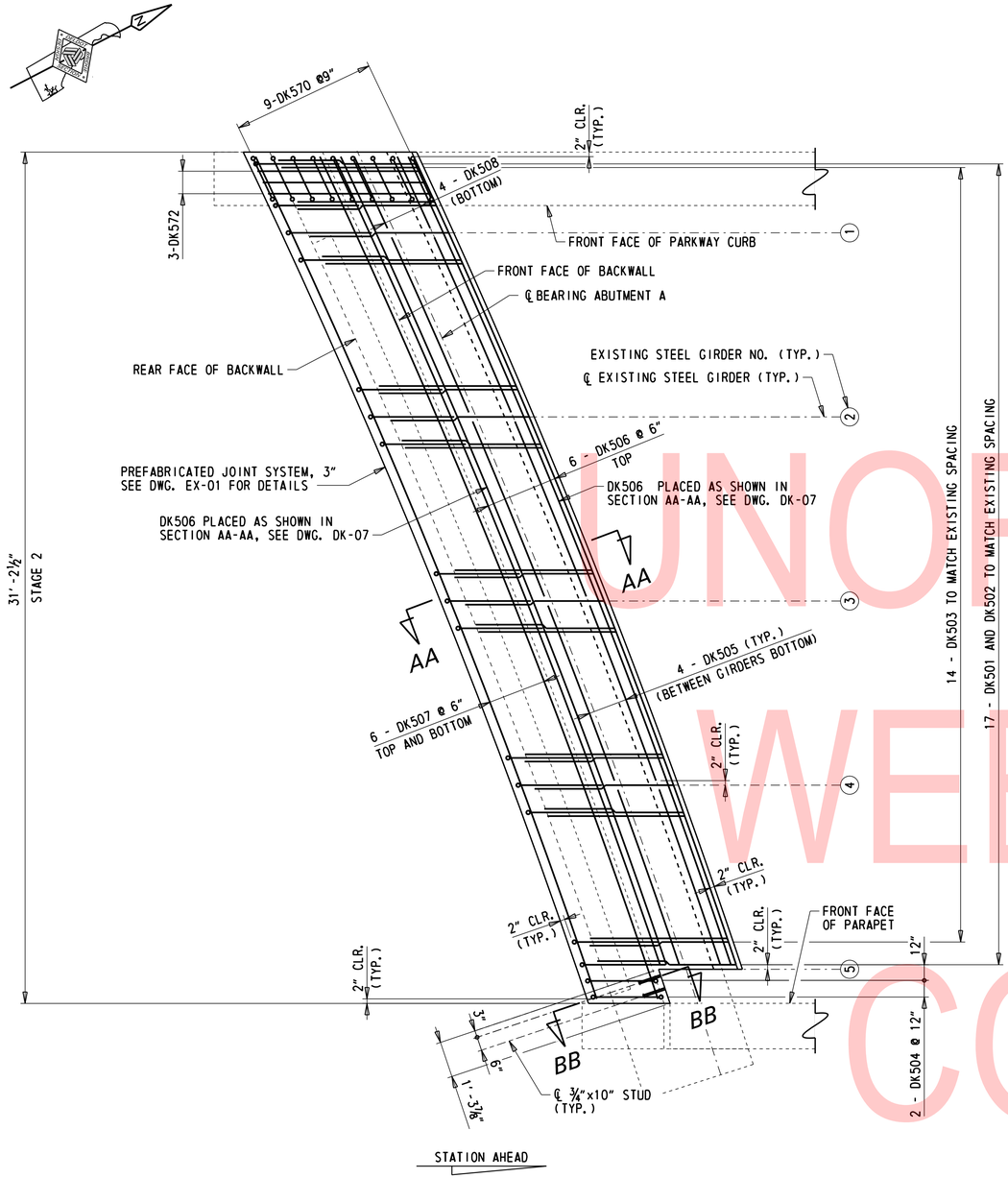

DECK OVER A - REINFORCEMENT PLAN

⅜" = 1'-0"

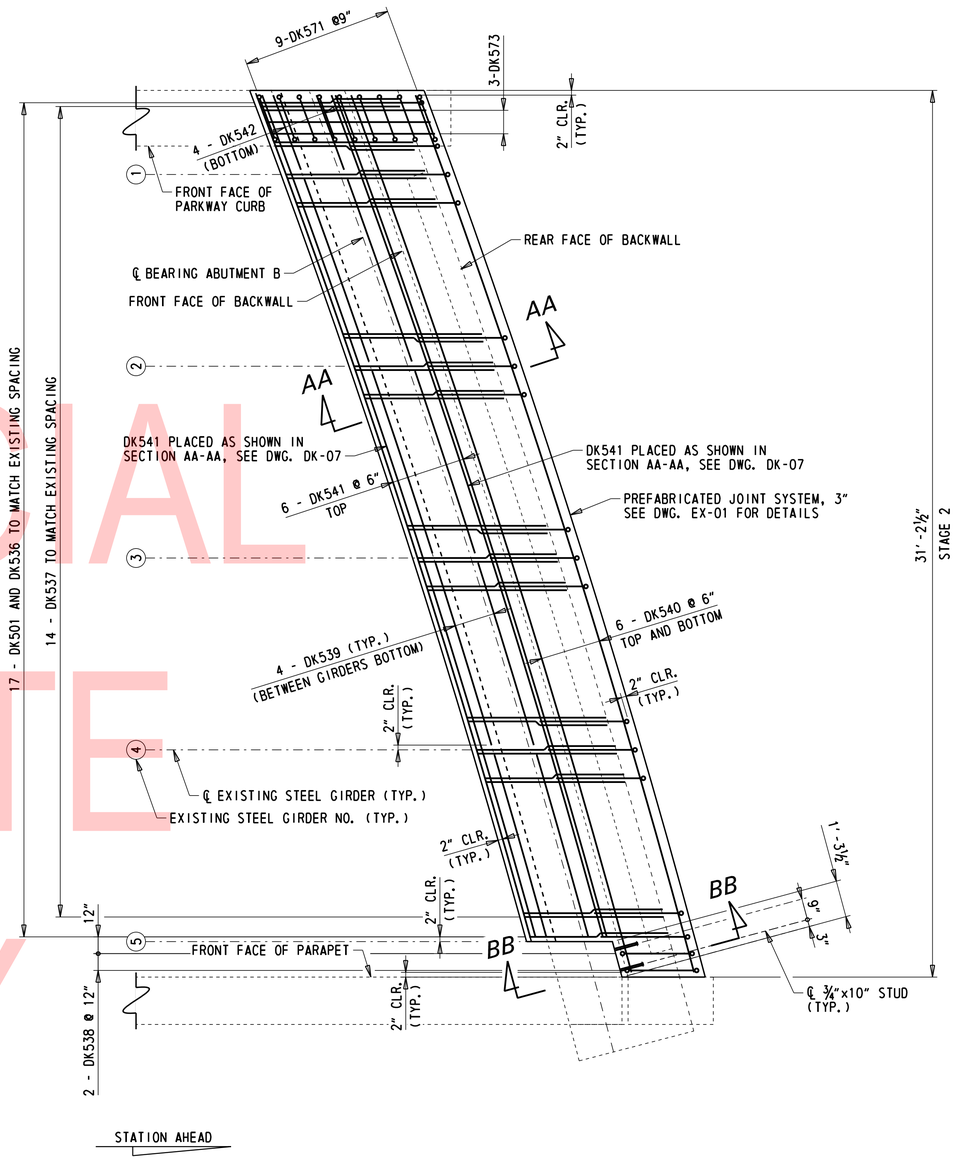

DECK OVER F - REINFORCEMENT PLAN

⅜" = 1'-0"

NOTES:

1. DK501, DK502, & DK503 (UNIT A) AND DK501, DK536, & DK537 (UNIT F) BARS BETWEEN BEAMS SPACED TO MATCH EXISTING DECK LONGITUDINAL BARS BETWEEN BEAMS. SEE DWG. DK-07 AND DK-08 FOR ADDITIONAL BAR DETAILS.
2. FOR DIAPHRAGM LONGITUDINAL BAR DETAILS, SEE DWG. DK-07 AND DK-08.
3. SPLICES IN REINFORCEMENT BETWEEN CONSTRUCTION STAGES SHALL USE THREADED COUPLERS. SEE DETAIL ON DWG. DK-09. PAYMENT FOR THREADED COUPLERS WILL BE INCIDENTAL TO ITEM 611001 BAR REINFORCEMENT, EPOXY COATED.

UNOFFICIAL WEBSITE COPY

ADDENDA / REVISIONS	SCALE AS NOTED	REHABILITATION OF BRIDGES 1-600, 1-601, AND 1-604, SR 2 AND SR 141 INTERCHANGE	CONTRACT T201707403	BRIDGE NO. 1 604	END DIAPHRAGM DECK OVER DETAILS – 1	DK-02
			COUNTY NEW CASTLE	DESIGNED BY: CZK		SECTION WRA
				CHECKED BY: WAG		SHEET NO. 105

N:\32122-002\C400\Bridge\BR1-604_DK02.dgn
7/31/2019 4:19:51 PM

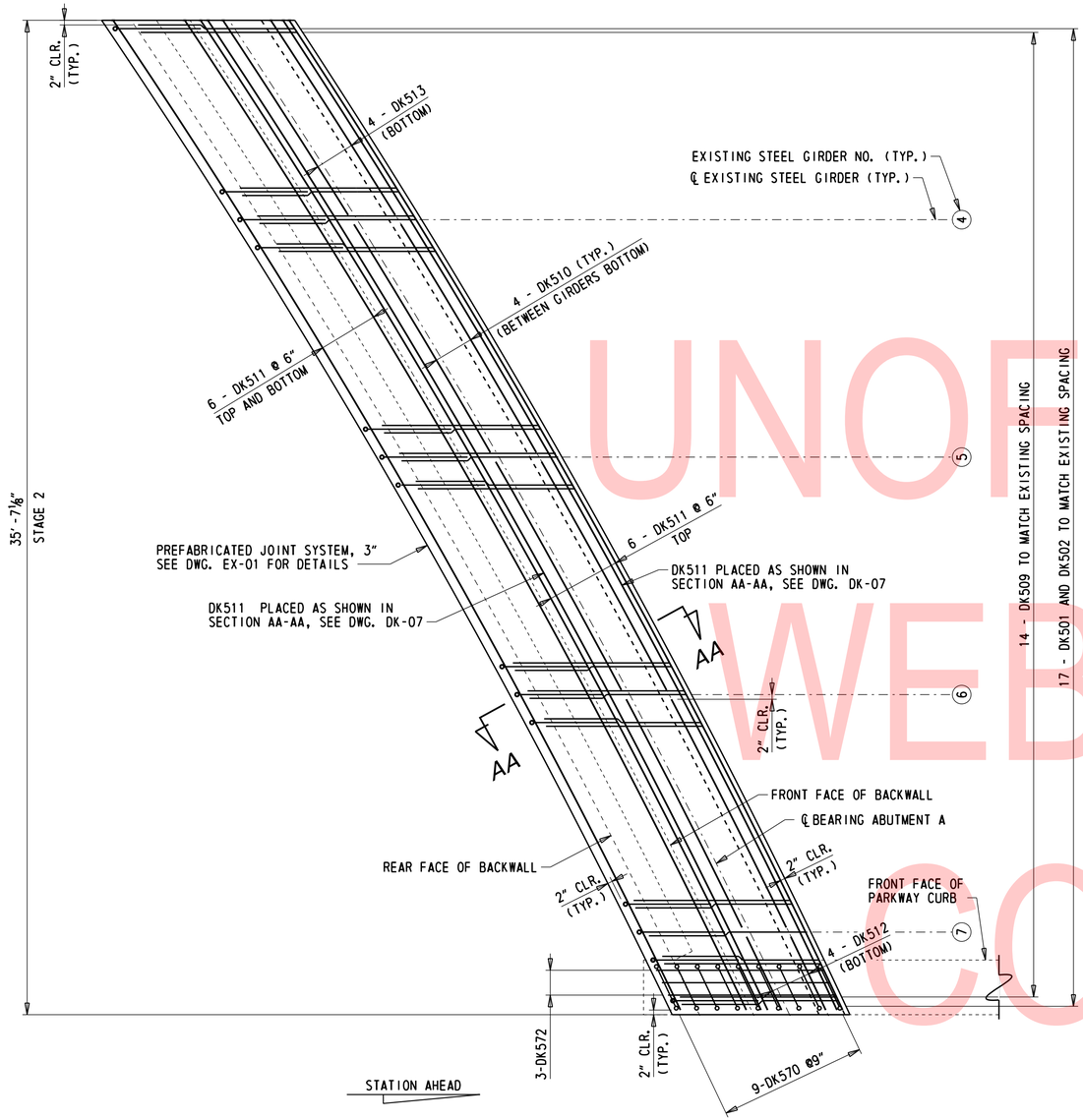

DECK OVER B - REINFORCEMENT PLAN

⅜" = 1'-0"

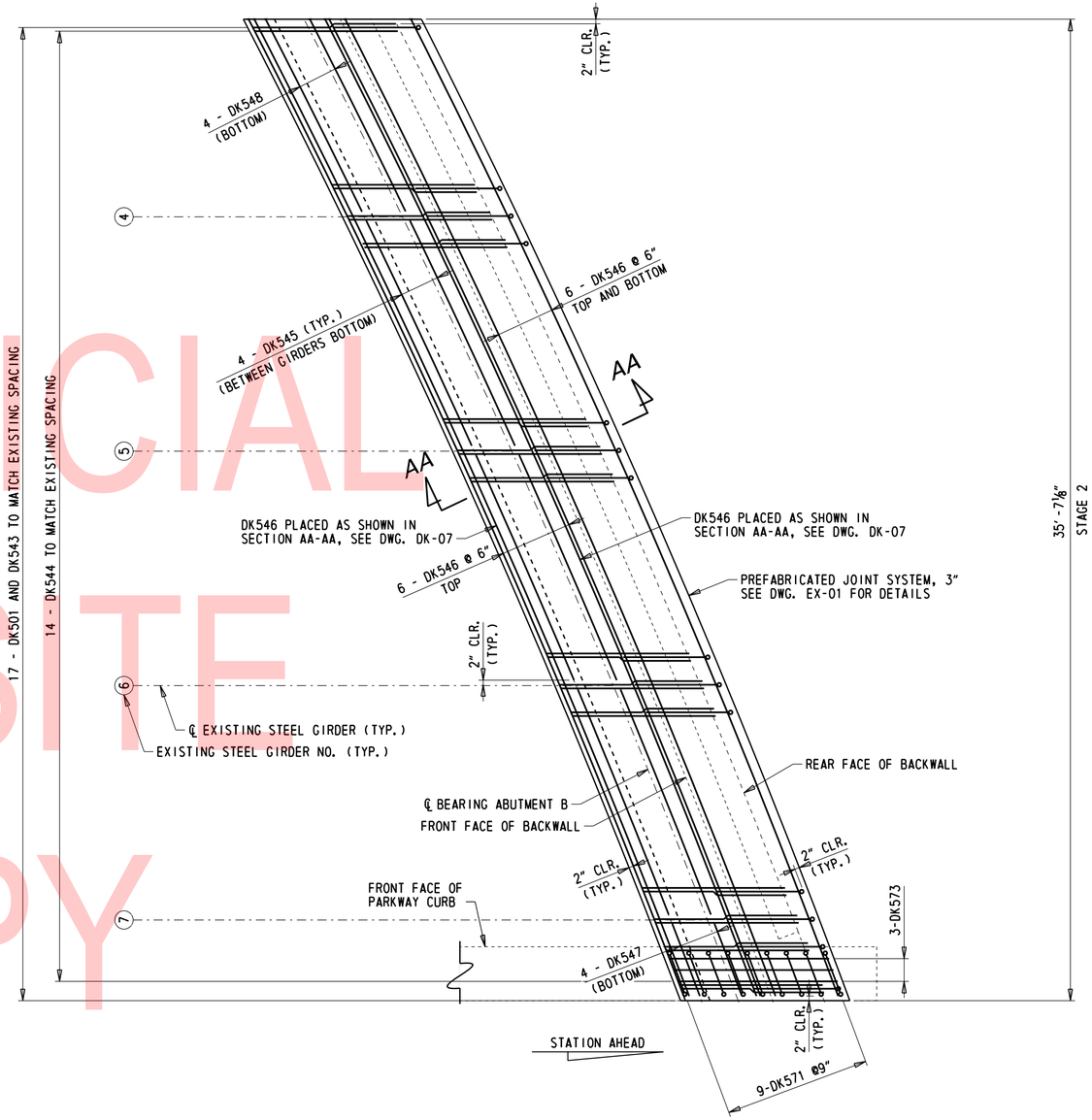

DECK OVER G - REINFORCEMENT PLAN

⅜" = 1'-0"

NOTES:

1. DK501, DK502, & DK509 (UNIT B) AND DK501, DK543, & DK544 (UNIT G) BARS BETWEEN BEAMS SPACED TO MATCH EXISTING DECK LONGITUDINAL BARS BETWEEN BEAMS. SEE DWG. DK-07 AND DK-08 FOR ADDITIONAL BAR DETAILS.
2. FOR DIAPHRAGM LONGITUDINAL BAR DETAILS, SEE DWG. DK-07 AND DK-08.
3. SPLICES IN REINFORCEMENT BETWEEN CONSTRUCTION STAGES SHALL USE THREADED COUPLERS. SEE DETAIL ON DWG. DK-09. PAYMENT FOR THREADED COUPLERS WILL BE INCIDENTAL TO ITEM 611001 BAR REINFORCEMENT, EPOXY COATED.

UNOFFICIAL WEBSITE COPY

ADDENDA / REVISIONS	SCALE AS NOTED	REHABILITATION OF BRIDGES 1-600, 1-601, AND 1-604, SR 2 AND SR 141 INTERCHANGE	CONTRACT T201707403	BRIDGE NO. 1 604	END DIAPHRAGM DECK OVER DETAILS - 2	DK-03
			COUNTY NEW CASTLE	DESIGNED BY: CZK		SECTION WRA
				CHECKED BY: WAG		SHEET NO. 106

N:\32122-003\CADD\Bridge\BR1-604_DK03.dgn
7/31/2019 4:19:51 PM

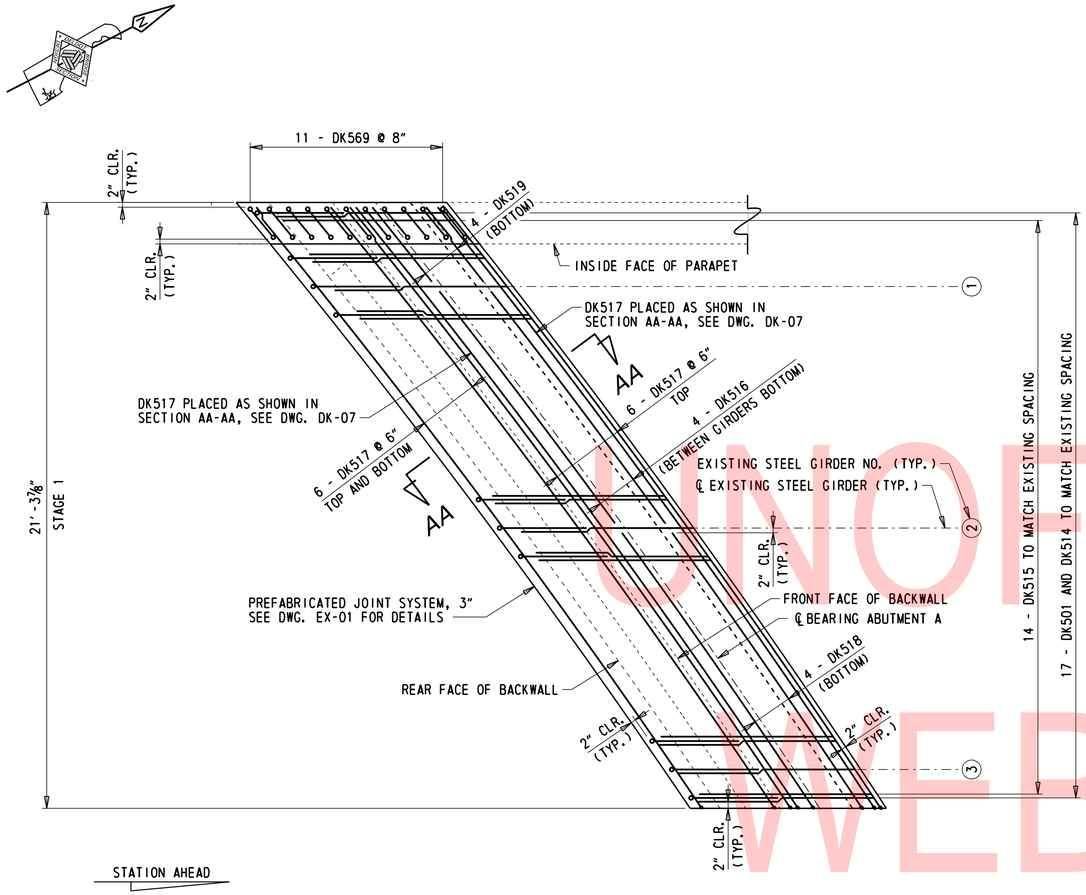

DECK OVER C - REINFORCEMENT PLAN

⅜" = 1'-0"

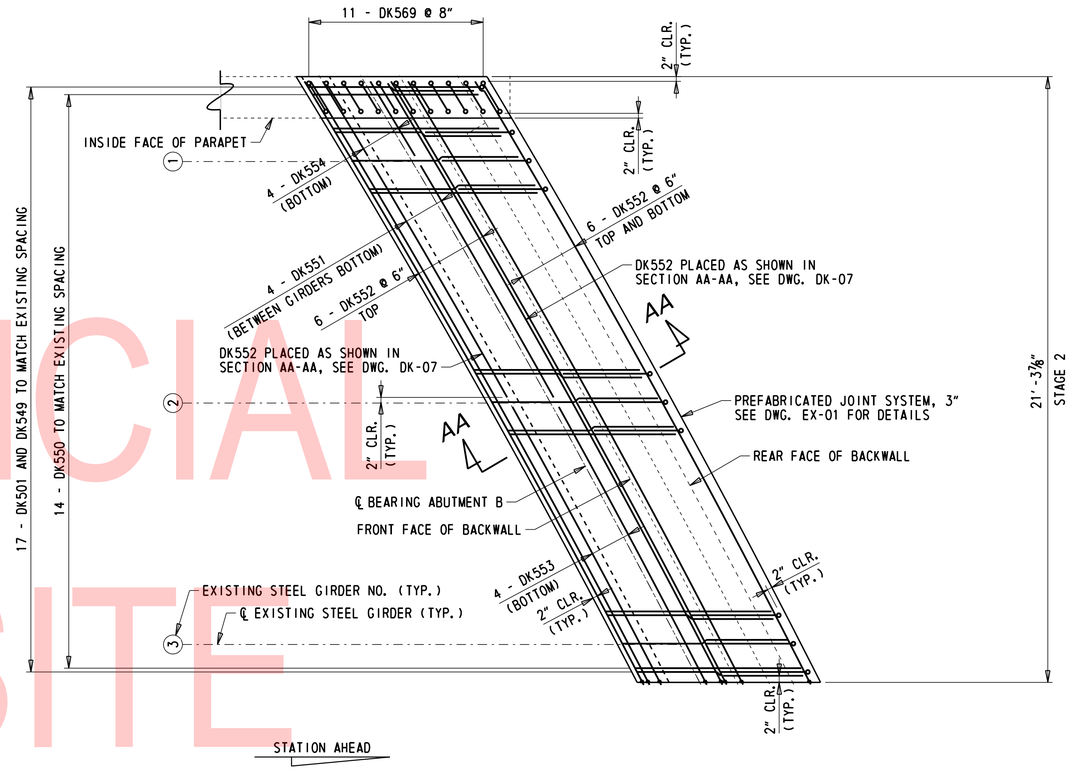

DECK OVER H - REINFORCEMENT PLAN

⅜" = 1'-0"

UNOFFICIAL WEBSITE COPY

NOTES:

1. DK501, DK514, & DK515 (UNIT C) AND DK501, DK549, & DK550 (UNIT H) BARS BETWEEN BEAMS SPACED TO MATCH EXISTING DECK LONGITUDINAL BARS BETWEEN BEAMS. SEE DWG. DK-07 AND DK-08 FOR ADDITIONAL BAR DETAILS.
2. FOR DIAPHRAGM LONGITUDINAL BAR DETAILS, SEE DWG. DK-07 AND DK-08.
3. SPLICES IN REINFORCEMENT BETWEEN CONSTRUCTION STAGES SHALL USE THREADED COUPLERS. SEE DETAIL ON DWG. DK-09. PAYMENT FOR THREADED COUPLERS WILL BE INCIDENTAL TO ITEM 611001 BAR REINFORCEMENT, EPOXY COATED.

N:\32122-002\CADD\Bridge\BR1-604_DK04.dgn
7/31/2019 4:19:52 PM

ADDENDA / REVISIONS		SCALE AS NOTED	REHABILITATION OF BRIDGES 1-600, 1-601, AND 1-604, SR 2 AND SR 141 INTERCHANGE	CONTRACT T201707403	BRIDGE NO. 1 604	END DIAPHRAGM DECK OVER DETAILS - 3	DK-04
				COUNTY NEW CASTLE	DESIGNED BY: CZK		SECTION WRA
					CHECKED BY: WAG		SHEET NO. 107

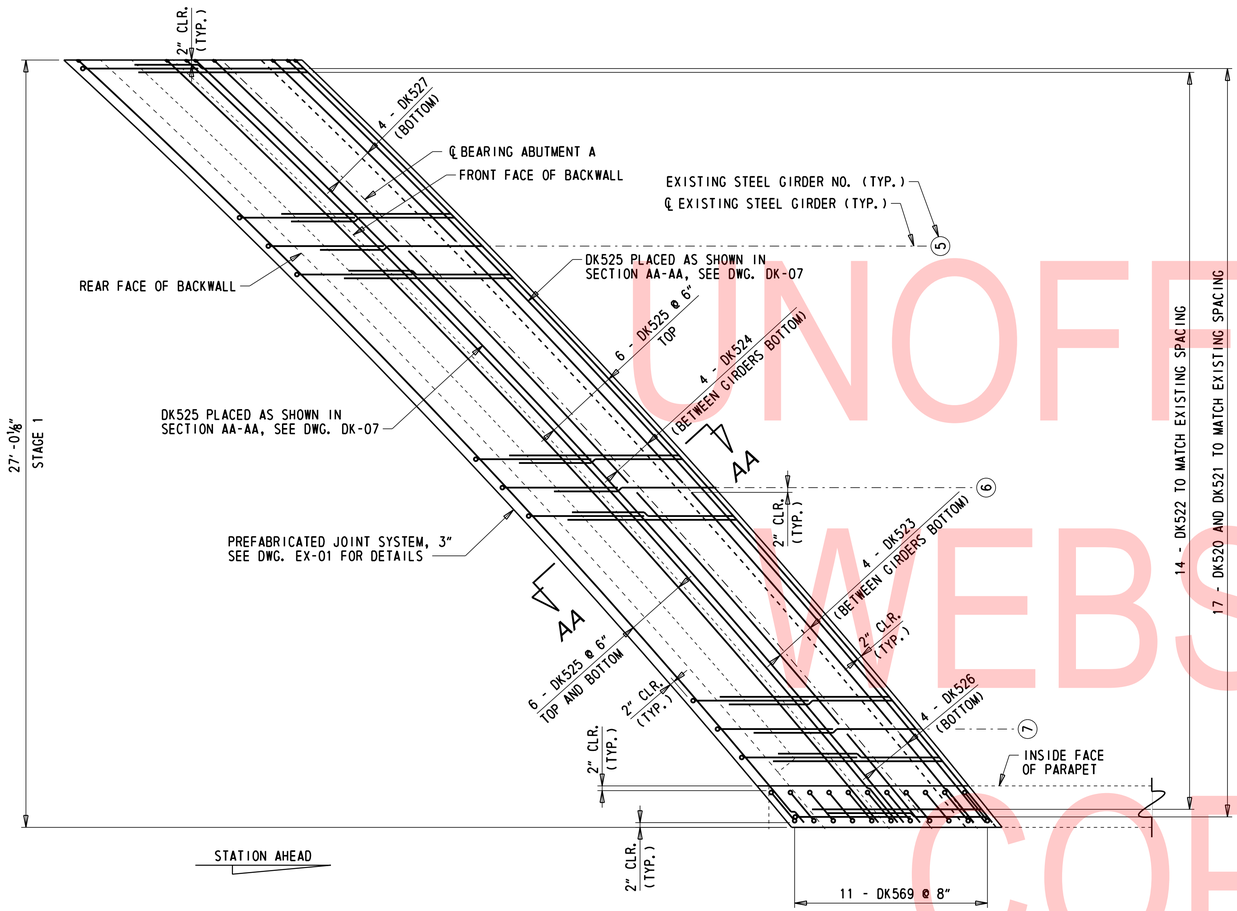

DECK OVER D - REINFORCEMENT PLAN

⅜" = 1'-0"

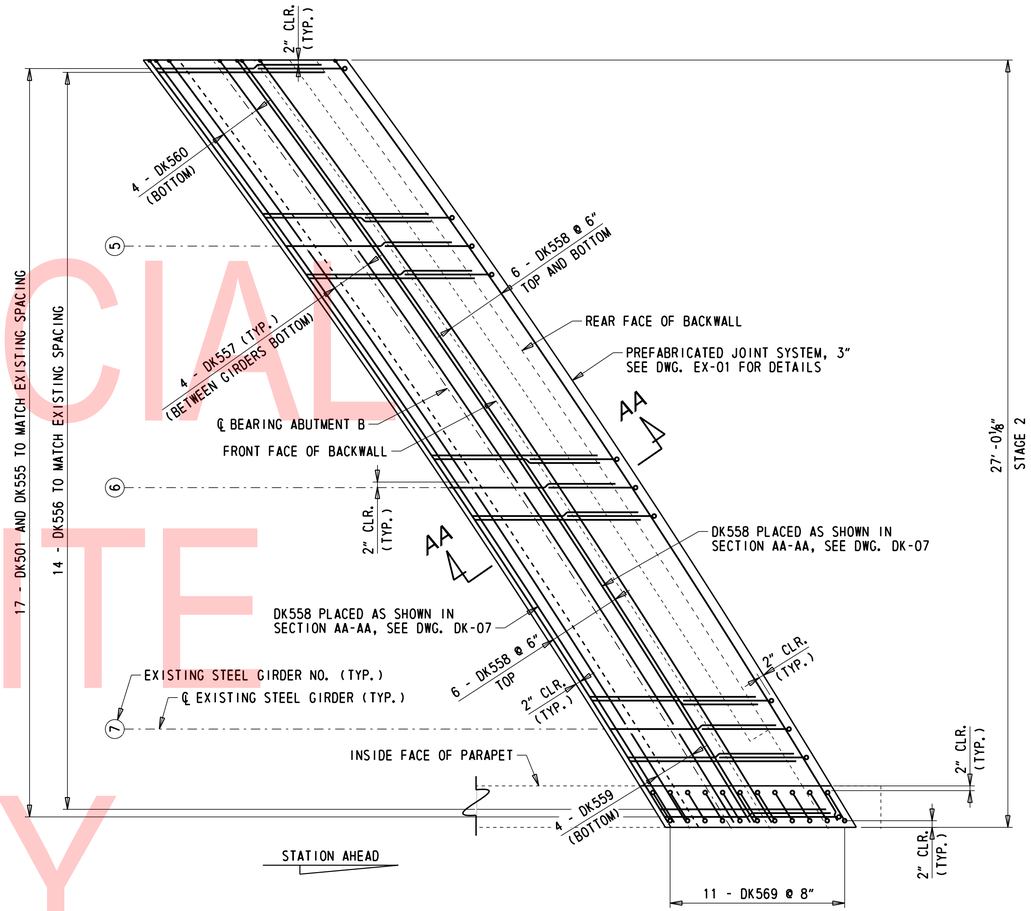

DECK OVER J - REINFORCEMENT PLAN

⅜" = 1'-0"

UNOFFICIAL WEBSITE COPY

NOTES:

1. DK520, DK521, & DK522 (UNIT D) AND DK501, DK555, & DK556 (UNIT J) BARS BETWEEN BEAMS SPACED TO MATCH EXISTING DECK LONGITUDINAL BARS BETWEEN BEAMS. SEE DWG. DK-07 AND DK-08 FOR ADDITIONAL BAR DETAILS.
2. FOR DIAPHRAGM LONGITUDINAL BAR DETAILS, SEE DWG. DK-07 AND DK-08.
3. SPLICES IN REINFORCEMENT BETWEEN CONSTRUCTION STAGES SHALL USE THREADED COUPLERS. SEE DETAIL ON DWG. DK-09. PAYMENT FOR THREADED COUPLERS WILL BE INCIDENTAL TO ITEM 611001 BAR REINFORCEMENT, EPOXY COATED.

ADDENDA / REVISIONS	SCALE AS NOTED	REHABILITATION OF BRIDGES 1-600, 1-601, AND 1-604, SR 2 AND SR 141 INTERCHANGE	CONTRACT T201707403	BRIDGE NO. 1 604	END DIAPHRAGM DECK OVER DETAILS - 4	DK-05
			COUNTY NEW CASTLE	DESIGNED BY: ZMG		SECTION WRA
				CHECKED BY: WAG		SHEET NO. 108

N:\32122-002\C4D\Bridge\BR1-604_DK05.dgn
7/31/2019 4:19:53 PM

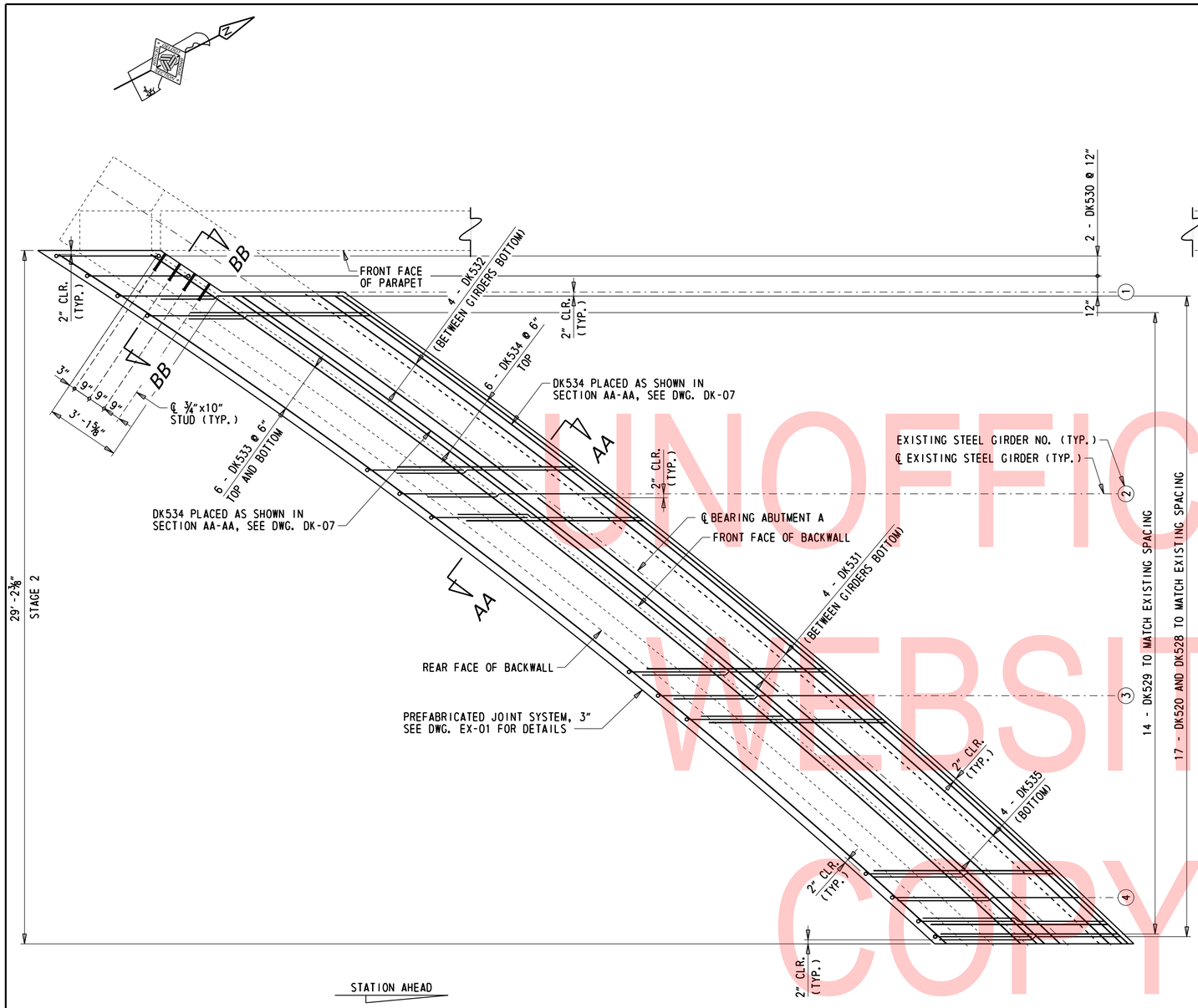

DECK OVER E - REINFORCEMENT PLAN

⅜" = 1'-0"

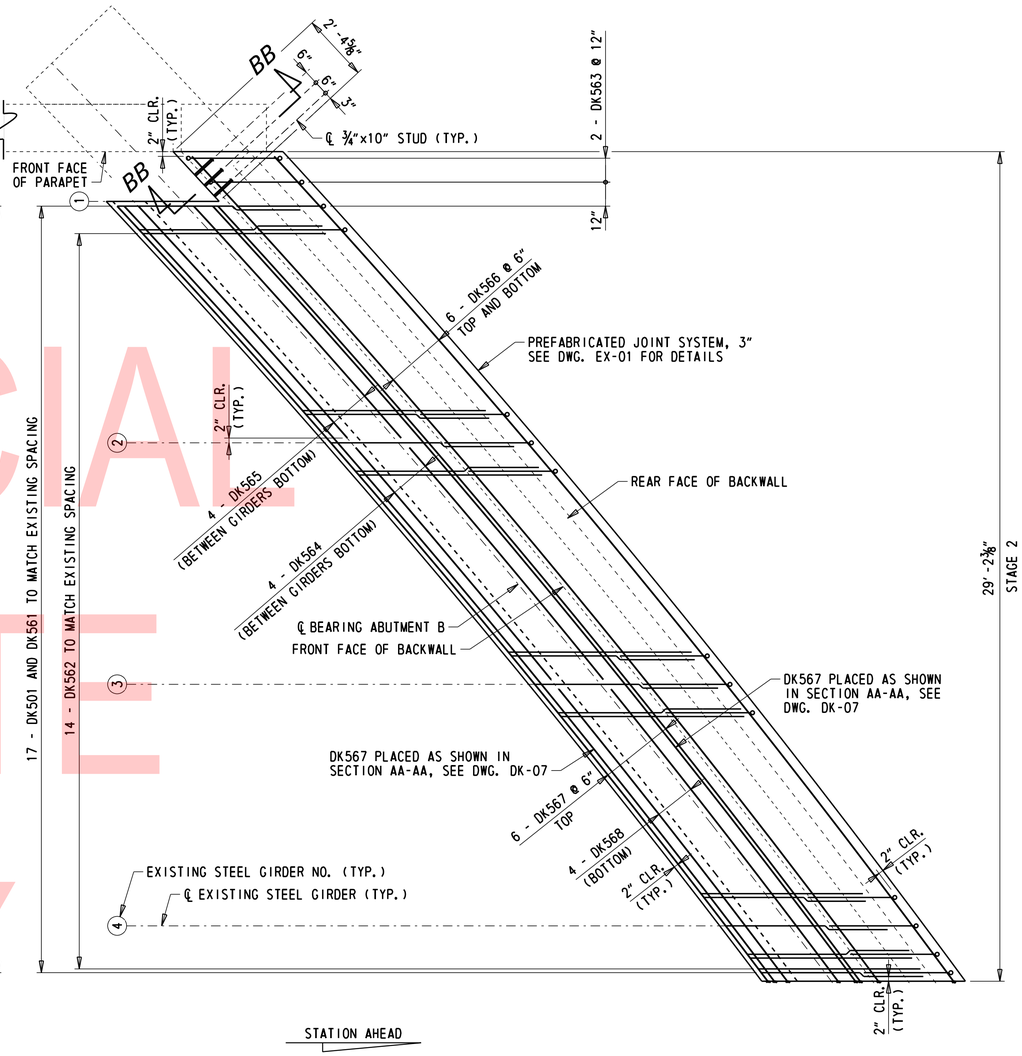

DECK OVER K - REINFORCEMENT PLAN

⅜" = 1'-0"

NOTES:

1. DK520, DK528, & DK529 (UNIT E) AND DK501, DK561, & DK562 (UNIT K) BARS BETWEEN BEAMS SPACED TO MATCH EXISTING DECK LONGITUDINAL BARS BETWEEN BEAMS. SEE DWG. DK-07 AND DK-08 FOR ADDITIONAL BAR DETAILS.
2. FOR DIAPHRAGM LONGITUDINAL BAR DETAILS, SEE DWG. DK-07 AND DK-08.
3. SPLICES IN REINFORCEMENT BETWEEN CONSTRUCTION STAGES SHALL USE THREADED COUPLERS. SEE DETAIL ON DWG. DK-09. PAYMENT FOR THREADED COUPLERS WILL BE INCIDENTAL TO ITEM 611001 BAR REINFORCEMENT, EPOXY COATED.

UNOFFICIAL WEBSITE COPY

N:\32122-002\CADD\Bridge\BR1-604_DK06.dgn
7/31/2019 4:19:54 PM

ADDENDA / REVISIONS	SCALE AS NOTED	REHABILITATION OF BRIDGES 1-600, 1-601, AND 1-604, SR 2 AND SR 141 INTERCHANGE	CONTRACT T201707403	BRIDGE NO. 1 604	END DIAPHRAGM DECK OVER DETAILS – 5	DK-06
			COUNTY NEW CASTLE	DESIGNED BY: ZMG		SECTION WRA
				CHECKED BY: WAG		SHEET NO. 109

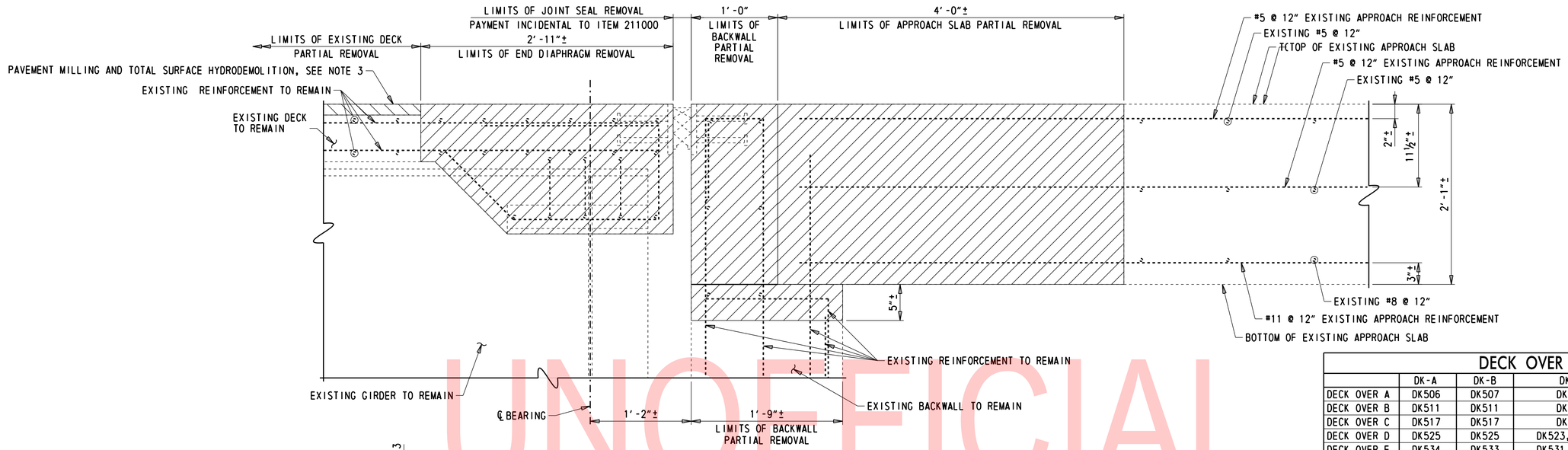

STRUCTURE REMOVAL DETAIL AT APPROACH SLAB

1½" = 1'-0"

DECK OVER BAR MARK						
	DK-A	DK-B	DK-C	DK-D	DK-E	DK-F
DECK OVER A	DK506	DK507	DK505	DK502	DK503	DK501
DECK OVER B	DK511	DK511	DK510	DK502	DK509	DK501
DECK OVER C	DK517	DK517	DK516	DK514	DK515	DK501
DECK OVER D	DK525	DK525	DK523, DK524	DK521	DK522	DK520
DECK OVER E	DK534	DK533	DK531, DK532	DK528	DK529	DK520
DECK OVER F	DK541	DK540	DK539	DK536	DK537	DK501
DECK OVER G	DK546	DK546	DK545	DK543	DK544	DK501
DECK OVER H	DK552	DK552	DK551	DK549	DK550	DK501
DECK OVER J	DK558	DK558	DK557	DK555	DK556	DK501
DECK OVER K	DK567	DK566	DK564, DK565	DK561	DK562	DK501

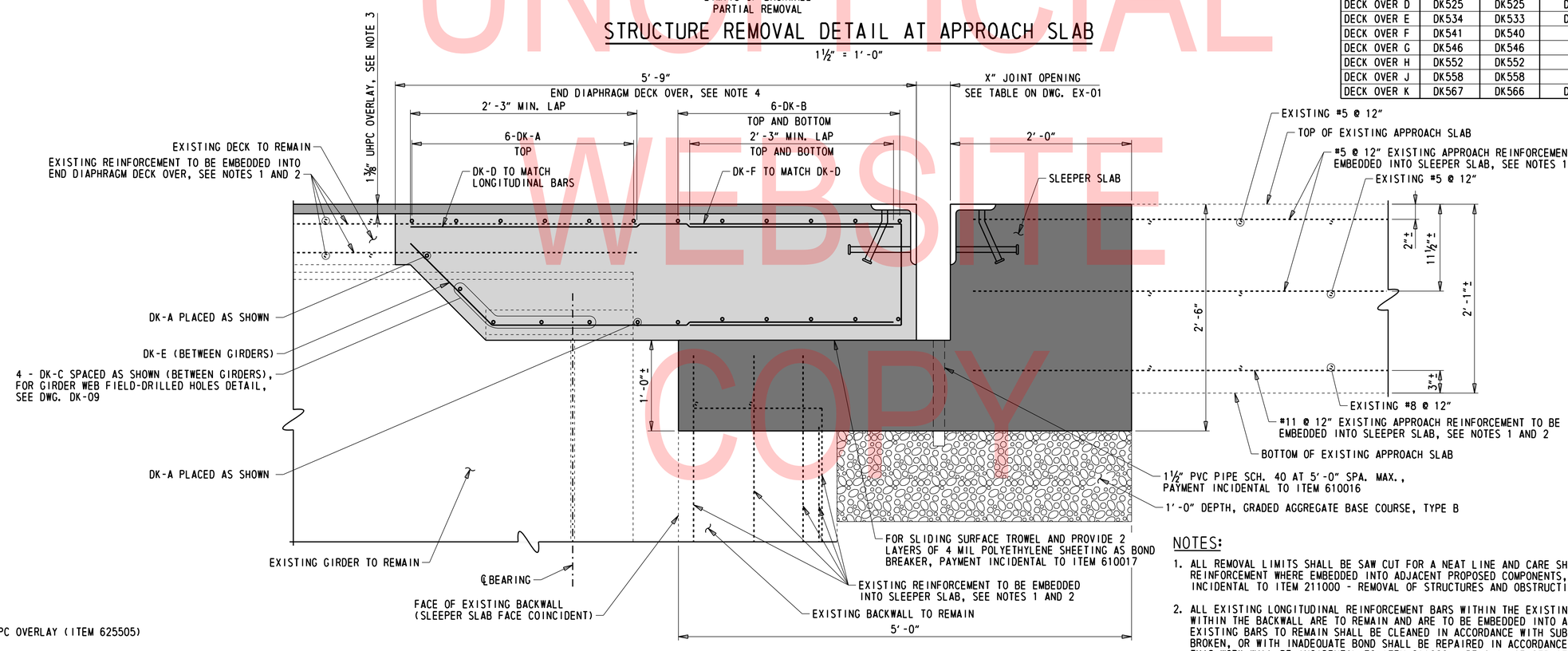

SECTION AA-AA

SEE 'DECK OVER BAR MARK' TABLE

X" = 1'-0"

LEGEND:

- UHPC OVERLAY (ITEM 625505)
- END DIAPHRAGM DECK OVER (ITEM 610017)
- SLEEPER SLAB (ITEM 610016)
- REMOVAL LIMITS (ITEM 211000)
- PAVEMENT MILLING, P.C.C. PAVEMENT (ITEM 760013) AND TOTAL SURFACE HYDRODEMOLITION LIMITS (ITEM 760500)

NOTES:

1. ALL REMOVAL LIMITS SHALL BE SAW CUT FOR A NEAT LINE AND CARE SHOULD BE TAKEN TO NOT DAMAGE EXISTING REINFORCEMENT WHERE EMBEDDED INTO ADJACENT PROPOSED COMPONENTS, AS SHOWN. PAYMENT FOR THIS WORK WILL BE INCIDENTAL TO ITEM 211000 - REMOVAL OF STRUCTURES AND OBSTRUCTIONS.
2. ALL EXISTING LONGITUDINAL REINFORCEMENT BARS WITHIN THE EXISTING DECK AND APPROACH SLAB AND VERTICAL BARS WITHIN THE BACKWALL ARE TO REMAIN AND ARE TO BE EMBEDDED INTO ADJACENT PROPOSED COMPONENTS, AS SHOWN. EXISTING BARS TO REMAIN SHALL BE CLEANED IN ACCORDANCE WITH SUBSECTION 628.03(E)7. BARS WITH CORROSION, BROKEN, OR WITH INADEQUATE BOND SHALL BE REPAIRED IN ACCORDANCE WITH SUBSECTION 628.03(E)7. PAYMENT FOR THIS WORK WILL BE INCIDENTAL TO ITEM 211000 - REMOVAL OF STRUCTURES AND OBSTRUCTIONS.
3. NOMINAL OVERLAY THICKNESS DIMENSIONED. FOR DETAILS ON EXISTING DECK PARTIAL REMOVAL AND OVERLAY PLACEMENT, SEE DWG. SR-02.
4. THE END DIAPHRAGM TOP SURFACE INTERFACING WITH THE UHPC OVERLAY SHALL HAVE A UNIFORM ROUGHENED SURFACE WITH A MINIMUM ¼" AMPLITUDE. THE UHPC OVERLAY SHALL NOT BE PLACED UNTIL THE END DIAPHRAGM CONCRETE HAS REACHED 80% OF ITS 28-DAY STRENGTH.

UNOFFICIAL WEBSITE COPY

N:\3122-002\CADD\Bridge\BR1-604_DK07.dgn
7/31/2019 4:19:55 PM

ADDENDA / REVISIONS	

SCALE AS NOTED

REHABILITATION OF BRIDGES 1-600, 1-601, AND 1-604, SR 2 AND SR 141 INTERCHANGE

CONTRACT	BRIDGE NO.	1 604
T201707403	DESIGNED BY: ZMG	
COUNTY		
NEW CASTLE	CHECKED BY: WAG	

END DIAPHRAGM DECK OVER DETAILS - 6

DK-07
SECTION
WRA
SHEET NO.
110

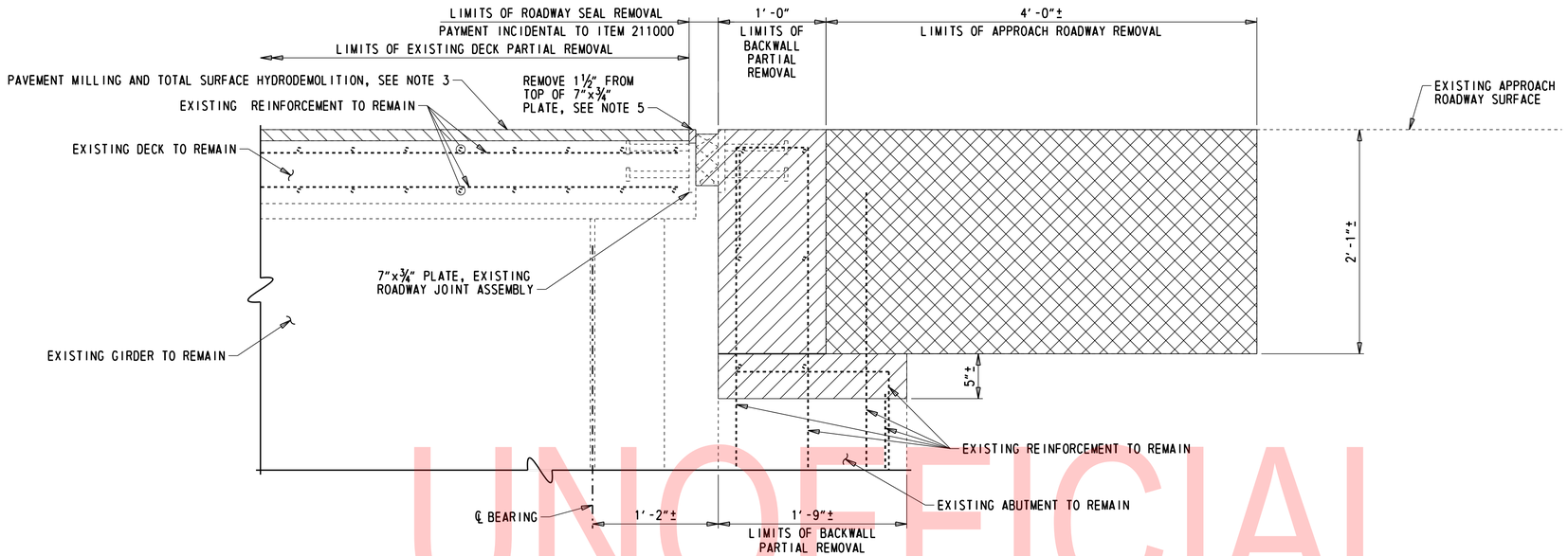

STRUCTURE REMOVAL DETAIL AT SHOULDER

1½" = 1'-0"

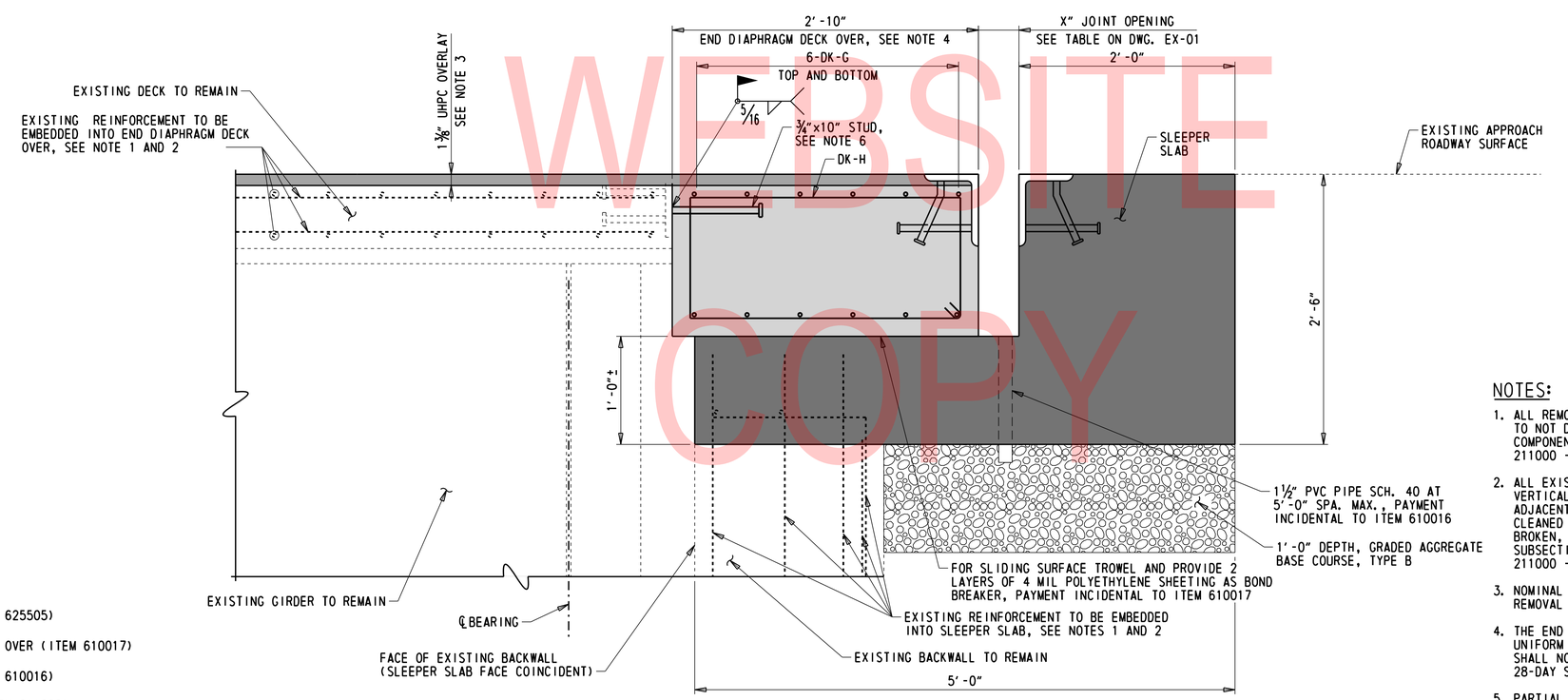

SECTION BB-BB

1½" = 1'-0"

DECK OVER BAR MARK		
	DK-G	DK-H
DECK OVER A	DK507	DK504
DECK OVER E	DK533	DK530
DECK OVER F	DK540	DK538
DECK OVER K	DK566	DK563

NOTES:

1. ALL REMOVAL LIMITS SHALL BE SAW CUT FOR A NEAT LINE AND CARE SHOULD BE TAKEN TO NOT DAMAGE EXISTING REINFORCEMENT WHERE EMBEDDED INTO ADJACENT PROPOSED COMPONENTS, AS SHOWN. PAYMENT FOR THIS WORK WILL BE INCIDENTAL TO ITEM 211000 - REMOVAL OF STRUCTURES AND OBSTRUCTIONS.
2. ALL EXISTING LONGITUDINAL REINFORCEMENT BARS WITHIN THE EXISTING DECK AND VERTICAL BARS WITHIN THE BACKWALL ARE TO REMAIN AND ARE TO BE EMBEDDED INTO ADJACENT PROPOSED COMPONENTS, AS SHOWN. EXISTING BARS TO REMAIN SHALL BE CLEANED IN ACCORDANCE WITH SUBSECTION 628.03(E)7. BARS WITH CORROSION, BROKEN, OR WITH INADEQUATE BOND SHALL BE REPAIRED IN ACCORDANCE WITH SUBSECTION 628.03(E)7. PAYMENT FOR THIS WORK WILL BE INCIDENTAL TO ITEM 211000 - REMOVAL OF STRUCTURES AND OBSTRUCTIONS.
3. NOMINAL OVERLAY THICKNESS DIMENSIONED. FOR DETAILS ON EXISTING DECK PARTIAL REMOVAL AND OVERLAY PLACEMENT, SEE DWG. SR-02.
4. THE END DIAPHRAGM TOP SURFACE INTERFACING WITH THE UHPC OVERLAY SHALL HAVE A UNIFORM ROUGHENED SURFACE WITH A MINIMUM ¼" AMPLITUDE. THE UHPC OVERLAY SHALL NOT BE PLACED UNTIL THE END DIAPHRAGM CONCRETE HAS REACHED 80% OF ITS 28-DAY STRENGTH.
5. PARTIAL REMOVAL OF ROADWAY JOINT ASSEMBLY PLATE PAYMENT WILL BE INCIDENTAL TO ITEM 211000.
6. FIELD WELD STUDS AT MID-DEPTH THE REMAINING SECTION OF THE EXISTING ROADWAY JOINT ASSEMBLY PLATE. STUDS AND FIELD WELD PAYMENT WILL BE INCIDENTAL TO ITEM 610017.

LEGEND:

- UHPC OVERLAY (ITEM 625505)
- END DIAPHRAGM DECK OVER (ITEM 610017)
- SLEEPER SLAB (ITEM 610016)
- REMOVAL LIMITS (ITEM 211000)
- REMOVAL LIMITS (ITEM 202000)
- PAVEMENT MILLING, P.C.C. PAVEMENT (ITEM 760013) AND TOTAL SURFACE HYDRODEMOLITION LIMITS (ITEM 760500)

UNOFFICIAL WEBSITE COPY

N:\32122-002\C400\Bridge\BR1-604_DK08.dgn
7/31/2019 4:19:55 PM

ADDENDA / REVISIONS	

SCALE AS NOTED

REHABILITATION OF BRIDGES 1-600, 1-601, AND 1-604, SR 2 AND SR 141 INTERCHANGE

CONTRACT	BRIDGE NO.	1 604
T201707403	DESIGNED BY: ZMG	
COUNTY		
NEW CASTLE	CHECKED BY: WAG	

END DIAPHRAGM DECK OVER DETAILS - 7

DK-08
SECTION
WRA
SHEET NO.
111

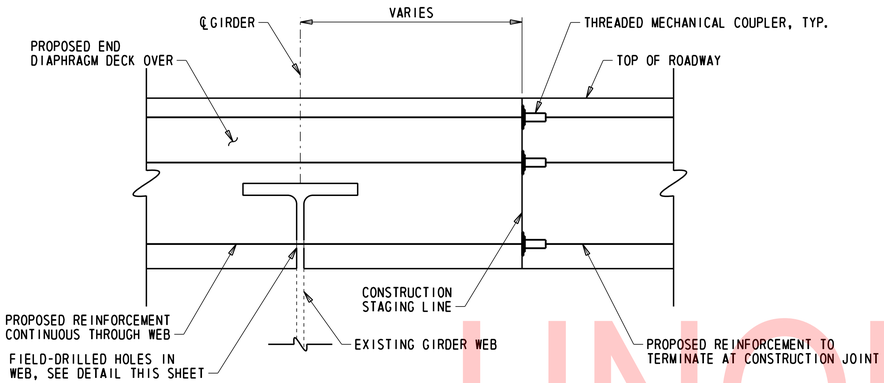

END DIAPHRAGM DECK OVER REINFORCEMENT DETAILS

1½" = 1'-0"

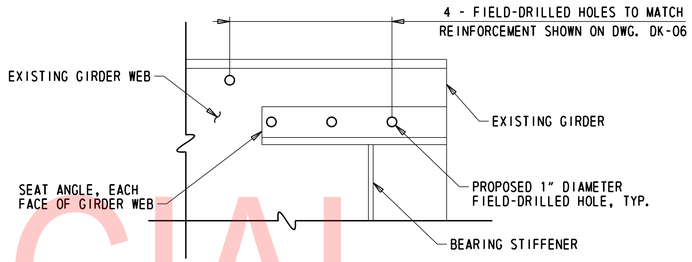

GIRDER WEB FIELD-DRILLED HOLES DETAIL

1½" = 1'-0"

UNOFFICIAL WEBSITE COPY

NOTES:

1. SPLICES IN REINFORCEMENT BETWEEN CONSTRUCTION STAGES SHALL USE THREADED COUPLERS. ALL THREADED COUPLER HARDWARE SHALL MEET OR EXCEED 125% OF BAR REINFORCEMENT YIELD STRENGTH. PAYMENT FOR THREADED COUPLERS WILL BE INCIDENTAL TO ITEM 611001 - BAR REINFORCEMENT, EPOXY COATED.
2. PAYMENT FOR GIRDER WEB FIELD-DRILLED HOLES WILL BE INCIDENTAL TO ITEM 611001 - BAR REINFORCEMENT, EPOXY COATED.

N:\32122-002\C400\Bridge\BR1-604_DK09.dgn
7/31/2019 4:19:56 PM

ADDENDA / REVISIONS		SCALE AS NOTED	REHABILITATION OF BRIDGES 1-600, 1-601, AND 1-604, SR 2 AND SR 141 INTERCHANGE	CONTRACT T201707403	BRIDGE NO. 1 604	END DIAPHRAGM DECK OVER DETAILS - 8	DK-09
				COUNTY NEW CASTLE	DESIGNED BY: ZMG		SECTION WRA
					CHECKED BY: WAG		SHEET NO. 112

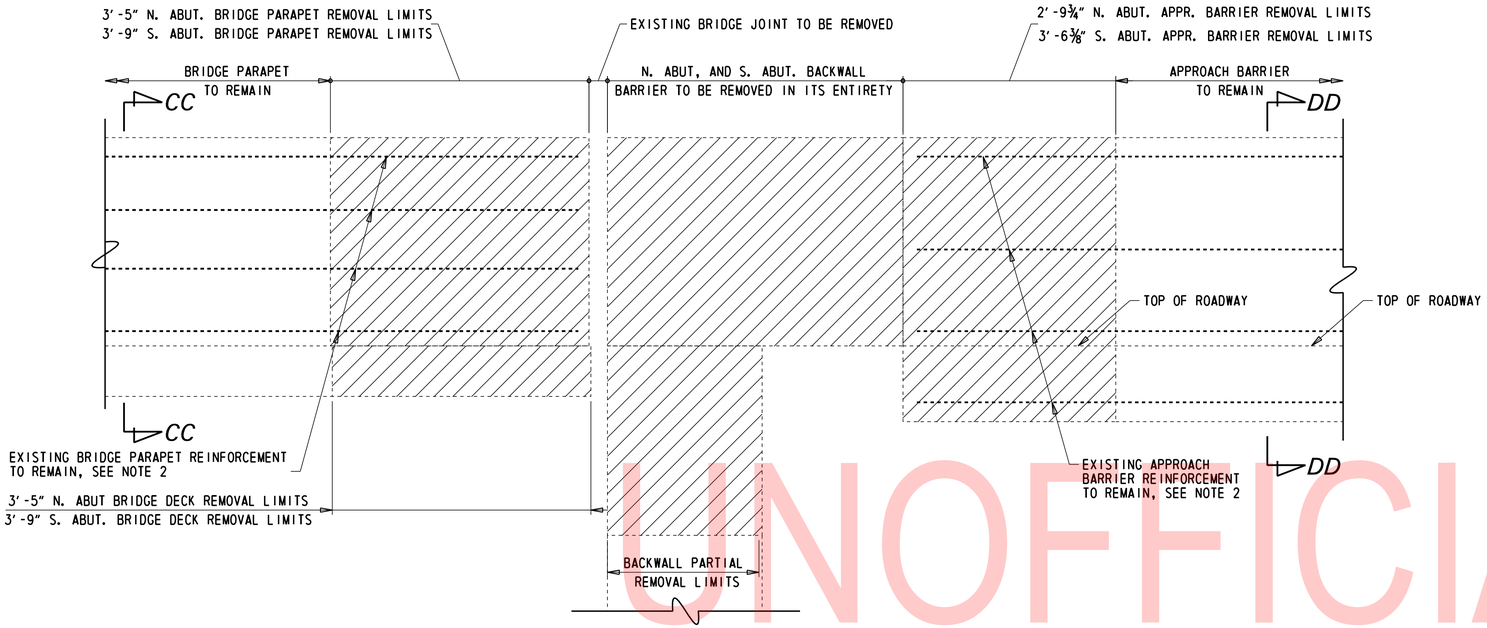

MEDIAN BARRIER DEMOLITION

NORTH ABUTMENT SHOWN; SOUTH ABUTMENT SIMILAR

1" = 1'-0"

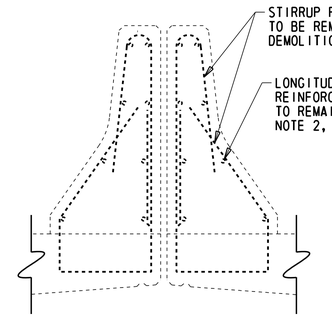

SECTION CC-CC

1" = 1'-0"

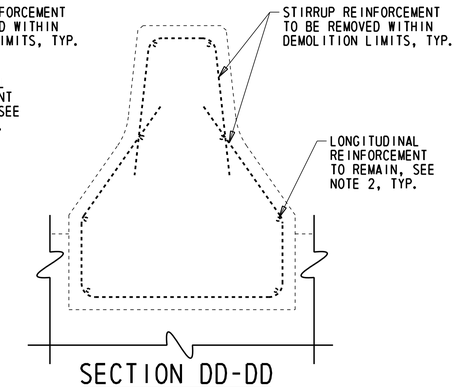

SECTION DD-DD

1" = 1'-0"

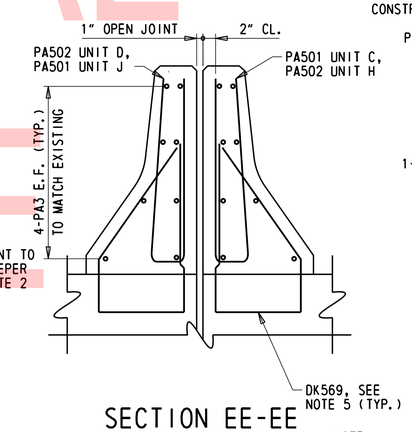

SECTION EE-EE

1" = 1'-0"

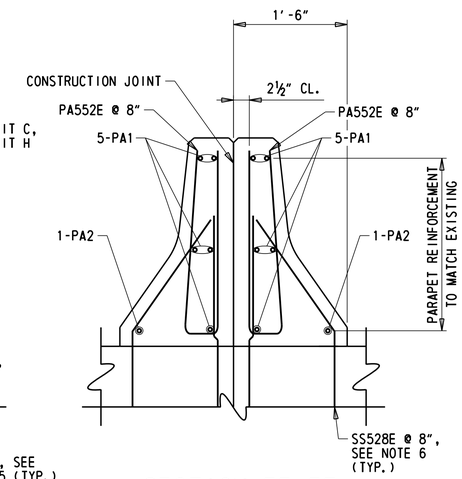

SECTION FF-FF

1" = 1'-0"

NOTE:

EXISTING REINFORCEMENT NOT SHOWN FOR CLARITY IN SECTIONS C-C AND D-D.

ALL BARS SHOWN IN SECTIONS C-C AND D-D TO MATCH EXISTING.

PARAPET BAR MARK			
	PA1	PA2	PA3
SLEEPER SLAB C	PA553E	PA554E	PA503
SLEEPER SLAB D	PA555E	PA556E	PA504
SLEEPER SLAB H	PA557E	PA558E	PA505
SLEEPER SLAB J	PA559E	PA560E	PA506

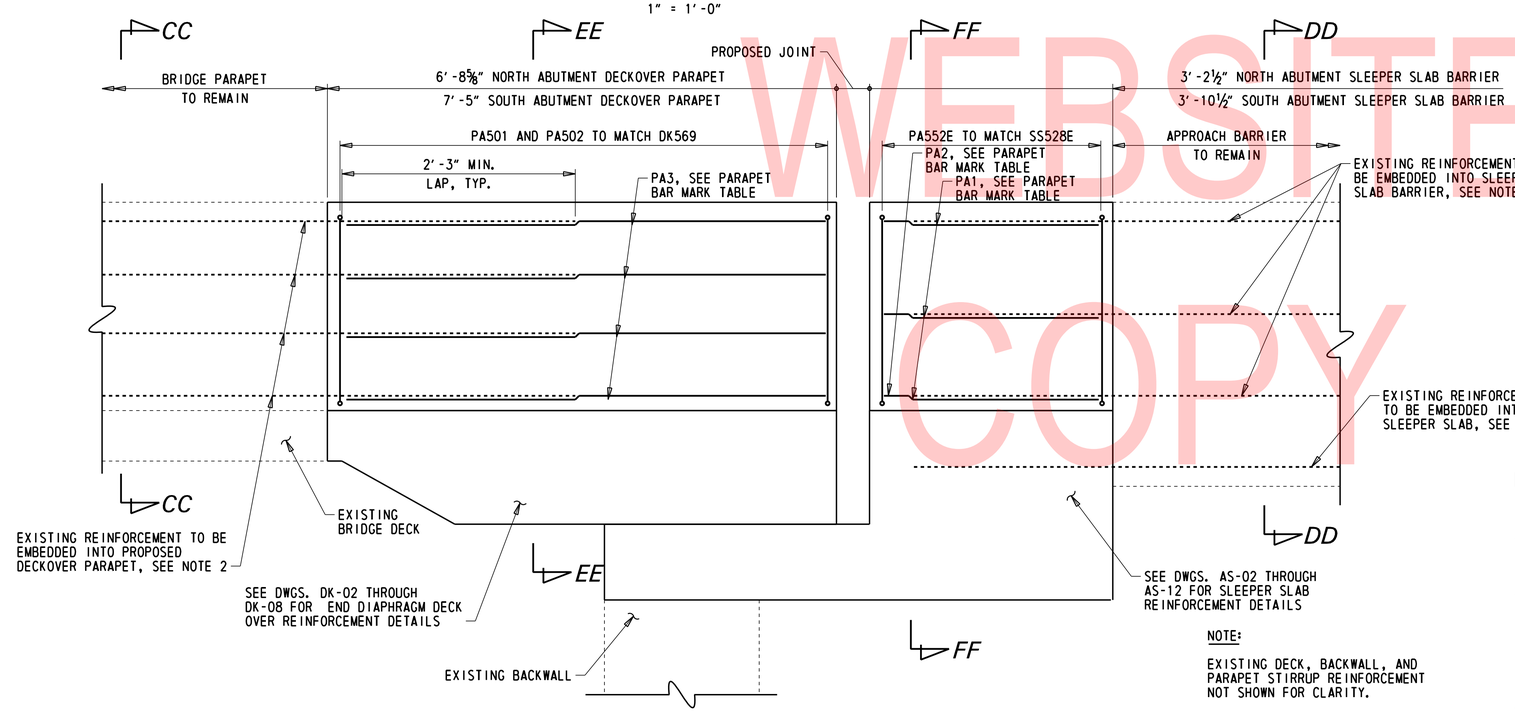

NOTE:

EXISTING DECK, BACKWALL, AND PARAPET STIRRUP REINFORCEMENT NOT SHOWN FOR CLARITY.

PROPOSED MEDIAN BARRIER

NORTH ABUTMENT SHOWN; SOUTH ABUTMENT SIMILAR

1" = 1'-0"

LEGEND:

LIMITS OF REMOVAL (ITEM 211000)

NOTES:

1. ALL DIMENSIONS MEASURED ALONG CONSTRUCTION BASELINE.
2. ALL EXISTING LONGITUDINAL REINFORCEMENT BARS WITHIN THE EXISTING APPROACH BARRIER DEMOLITION LIMITS AND EXISTING BRIDGE PARAPET DEMOLITION LIMITS TO REMAIN. STIRRUP REINFORCEMENT FULLY CONTAINED WITHIN DEMOLITION LIMITS SHALL BE REMOVED. PARTIALLY EMBEDDED STIRRUP REINFORCEMENT SHALL REMAIN IN ITS ENTIRETY.
3. ALL REMOVAL LIMITS SHALL BE SAW CUT FOR A NEAT LINE AND CARE SHOULD BE TAKEN TO NOT DAMAGE EXISTING REINFORCEMENT WHERE EMBEDDED INTO ADJACENT PROPOSED COMPONENTS, AS SHOWN. PAYMENT FOR THIS WORK WILL BE INCIDENTAL TO ITEM 211000 - REMOVAL OF STRUCTURES AND OBSTRUCTIONS.
4. EXISTING BARS TO REMAIN SHALL BE CLEANED IN ACCORDANCE WITH SUBSECTION 628.03(E)7. BARS WITH CORROSION, BROKEN, OR WITH INADEQUATE BOND SHALL BE REPAIRED IN ACCORDANCE WITH SUBSECTION 628.03(E)7. PAYMENT FOR THIS WORK WILL BE INCIDENTAL TO ITEM 211000 - REMOVAL OF STRUCTURES AND OBSTRUCTIONS.
5. ALL BARRIERS TO MATCH THE SHAPE AND FASCIA OF EXISTING BARRIERS.
6. FOR SECTION D-D, SEE SECTION Q-Q ON DWG. AS-05 AND SECTION T-T ON DWG. AS-12.
7. SEE DWGS. DK-02 THROUGH DK-08 FOR DECKOVER REINFORCEMENT DETAILS.
8. SEE DWGS. AS-02 THROUGH AS-13 FOR SLEEPER SLAB AND SLEEPER SLAB BARRIER STIRRUP REINFORCEMENT DETAILS.

UNOFFICIAL WEBSITE COPY

ADDENDA / REVISIONS

SCALE AS NOTED

REHABILITATION OF BRIDGES 1-600, 1-601, AND 1-604, SR 2 AND SR 141 INTERCHANGE

CONTRACT	BRIDGE NO.	1 604
T201707403	DESIGNED BY: ZMG	
COUNTY		
NEW CASTLE	CHECKED BY: WAG	

END DIAPHRAGM DECK OVER DETAILS - 9

DK-10

SECTION: WRA

SHEET NO. 113

N:\37122-003\CADD\Bridge\BR1-604_DK10.dgn 7/31/2019 4:19:57 PM

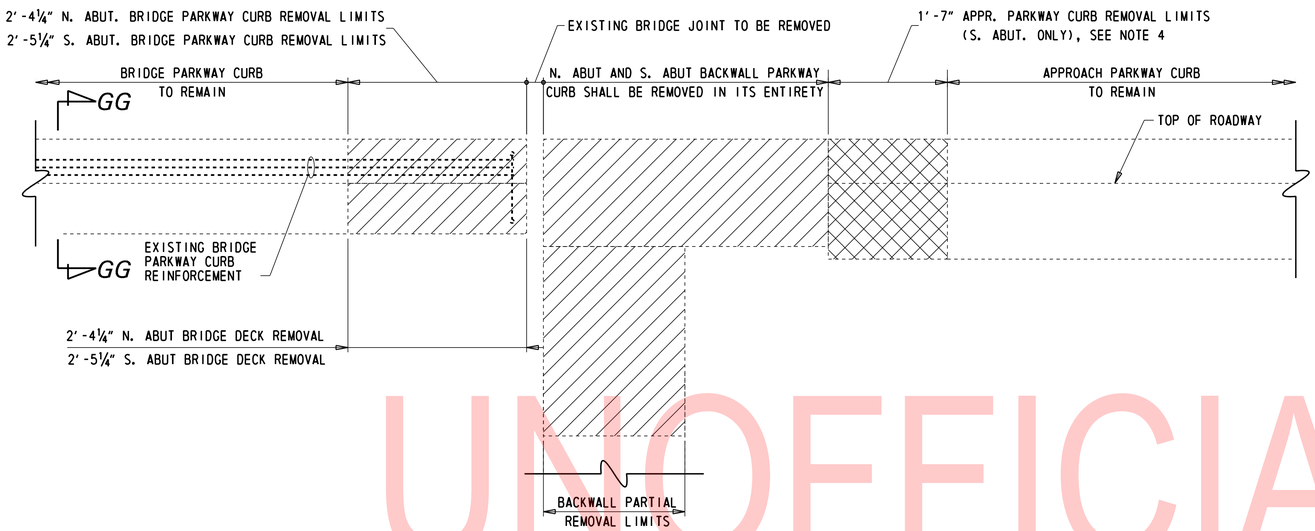

PARKWAY CURB DEMOLITION

NORTH ABUTMENT SHOWN; SOUTH ABUTMENT SIMILAR

1" = 1'-0"

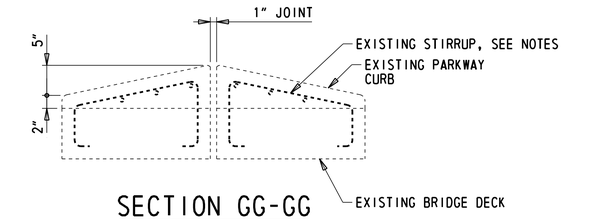

SECTION GG-GG

1" = 1'-0"

NOTE:

EXISTING BRIDGE DECK REINFORCEMENT NOT SHOWN FOR CLARITY

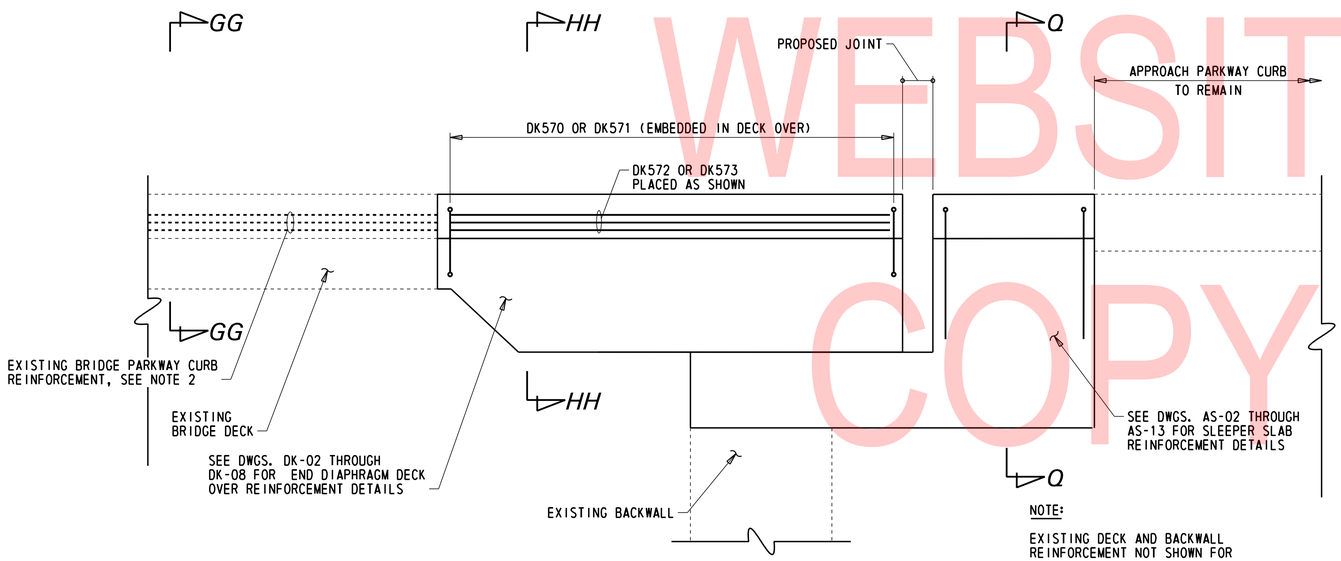

NOTE:

EXISTING DECK AND BACKWALL REINFORCEMENT NOT SHOWN FOR CLARITY.

PROPOSED PARKWAY CURB

NORTH ABUTMENT SHOWN; SOUTH ABUTMENT SIMILAR

1" = 1'-0"

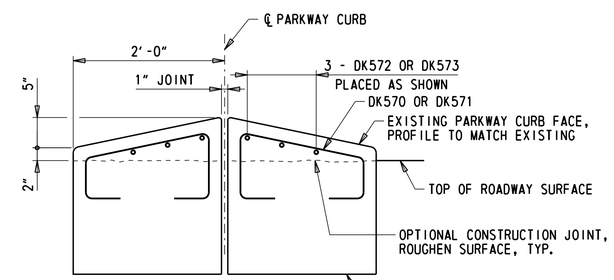

SECTION HH-HH

1" = 1'-0"

NOTE:

PROPOSED END DIAPHRAGM DECK OVER REINFORCEMENT NOT SHOWN FOR CLARITY.

NOTES:

1. ALL DIMENSIONS MEASURED ALONG CONSTRUCTION BASELINE.
2. LONGITUDINAL REINFORCEMENT TO BE FIELD CUT AND TERMINATED AT DEMOLITION LIMITS. STIRRUP REINFORCEMENT FULLY CONTAINED WITHIN DEMOLITION LIMITS SHALL BE REMOVED. PARTIALLY EMBEDDED STIRRUP REINFORCEMENT SHALL REMAIN IN ITS ENTIRETY.
3. ALL REMOVAL LIMITS SHALL BE SAW CUT FOR A NEAT LINE AND CARE SHOULD BE TAKEN TO NOT DAMAGE EXISTING REINFORCEMENT WHERE EMBEDDED INTO ADJACENT PROPOSED COMPONENTS, AS SHOWN. PAYMENT FOR THIS WORK WILL BE INCIDENTAL TO ITEM 211000 - REMOVAL OF STRUCTURES AND OBSTRUCTIONS.
4. EXISTING BARS TO REMAIN SHALL BE CLEANED IN ACCORDANCE WITH SUBSECTION 628.03(E)7. BARS WITH CORROSION, BROKEN, OR WITH INADEQUATE BOND SHALL BE REPAIRED IN ACCORDANCE WITH SUBSECTION 628.03(E)7. PAYMENT FOR THIS WORK WILL BE INCIDENTAL TO ITEM 211000 - REMOVAL OF STRUCTURES AND OBSTRUCTIONS.
5. THE CONTRACTOR IS RESPONSIBLE FOR VERIFYING REINFORCEMENT AT WITHIN THE EXISTING APPROACH PARKWAY CURB. IF PRESENT, ALL REINFORCEMENT SHALL BE FIELD CUT AT THE DEMOLITION LIMITS.
6. FOR SECTION Q-Q, SEE DWG. AS-12.

LEGEND:

- REMOVAL LIMITS (ITEM 211000)
- REMOVAL LIMITS (ITEM 211506)

UNOFFICIAL WEBSITE COPY

N:\32122-002\CADD\Bridge\BR1-604_DK11.dgn
7/31/2019 4:19:58 PM

ADDENDA / REVISIONS	SCALE AS NOTED	REHABILITATION OF BRIDGES 1-600, 1-601, AND 1-604, SR 2 AND SR 141 INTERCHANGE	CONTRACT T201707403	BRIDGE NO. 1 604	END DIAPHRAGM DECK OVER DETAILS – 10	DK-11
			COUNTY NEW CASTLE	DESIGNED BY: ZMG		SECTION WRA
				CHECKED BY: WAG		SHEET NO. 114

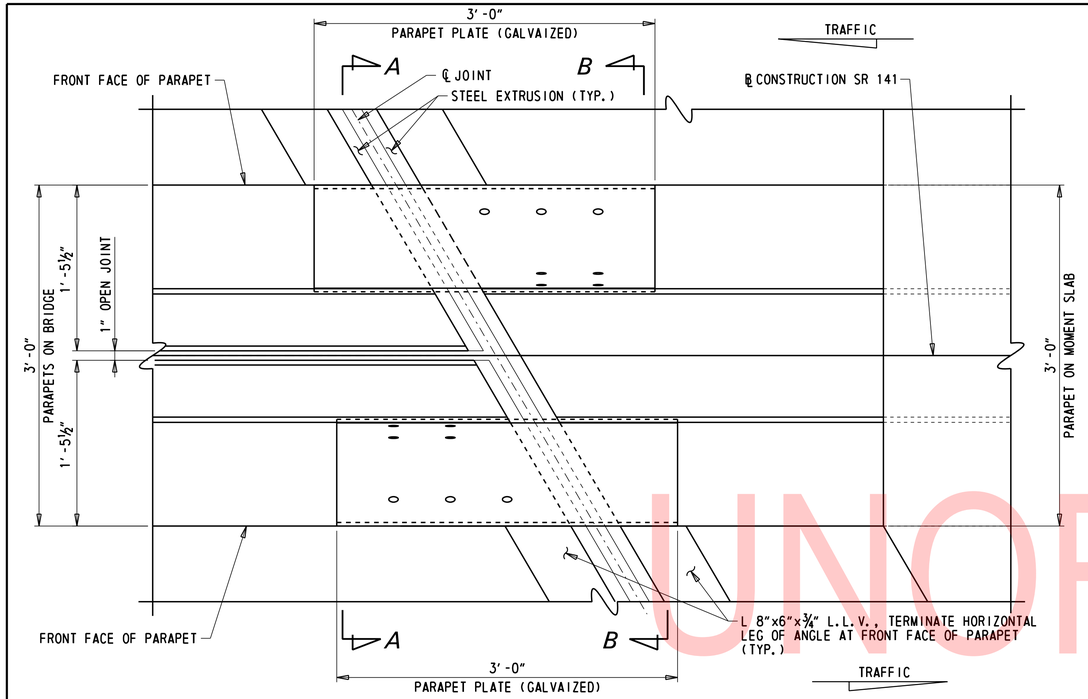

TYPICAL JOINT PLAN

1½" = 1'-0"

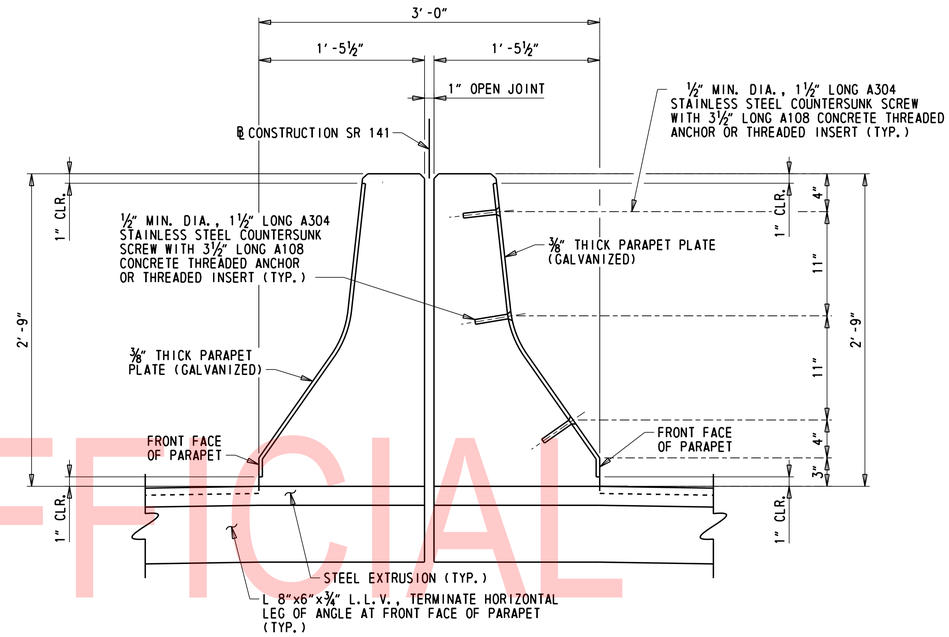

VIEW A-A

1½" = 1'-0"

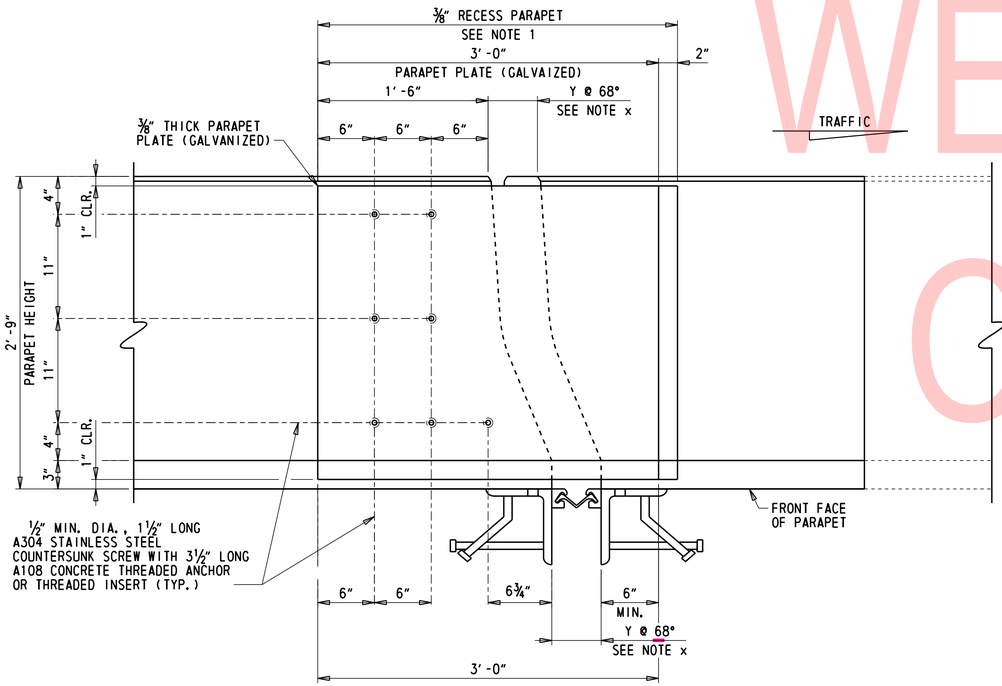

TYPICAL JOINT ELEVATION

1½" = 1'-0"

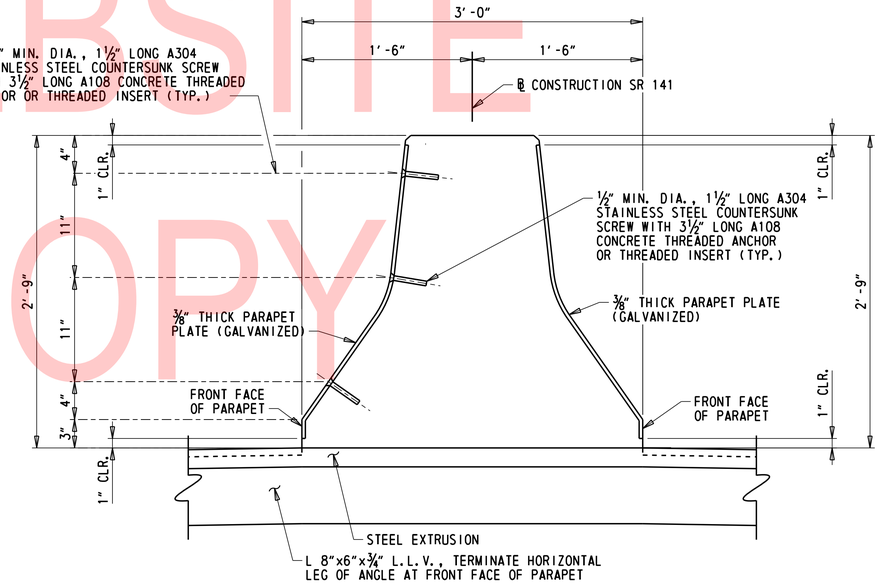

VIEW B-B

1½" = 1'-0"

PARAPET JOINT PLATE NOTES:

1. FORM CONCRETE RECESS AREA IN PARAPET AND GRIND TO PROVIDE SMOOTH SURFACE. APPLY ONE COAT OF ASPHALT CEMENT TO FREE SIDE OF JOINT IN ACCORDANCE WITH SECTION 1012 OF THE STANDARD SPECIFICATIONS TO ALLOW BENT SLIDING PLATE TO MOVE FREELY WITHOUT FRICTION. PAYMENT WILL BE INCIDENTAL TO ITEM 624000 - PREFABRICATED EXPANSION JOINT SYSTEM, 3".
2. PLACE PARAPET CONCRETE WITH STEEL BENT PLATES, INSERTS, AND BOLTS IN PLACE TO ENSURE PROPER ALIGNMENT OF INSERTS AND HOLES IN THE STEEL PLATE. REMOVE PLATES TO INSTALL SEAL. APPLY APPROVED BONDBREAKER TO SLIDING PLATES PRIOR TO PLACEMENT OF CONCRETE.
3. USE TYPE 316 STAINLESS STEEL COUNTERSUNK FLATHEAD SCREWS WITH ASTM A108 CONCRETE THREADED ANCHOR OR THREADED INSERT. HEAD OF SCREWS SHALL BE FLUSH WITH FACE OF STEEL PLATE.
4. THE CONTRACTOR SHALL SUBMIT WORKING DRAWINGS OF TRAFFIC BARRIER PLATES FOR APPROVAL.
5. ⅜" PARAPET PLATE SHALL BE UNPAINTED GALVANIZED STEEL. PAYMENT FOR PARAPET JOINT PLATES SHALL BE INCIDENTAL TO ITEM 624000 - PREFABRICATED EXPANSION JOINT SYSTEM, 3".
6. FOR JOINT ASSEMBLY DETAIL AND STRIP SEAL EXPANSION NOTES, SEE DWG. EX-01.
7. L.L.V. = LONG LEG VERTICAL

UNOFFICIAL WEBSITE COPY

N:\32122-002\CADD\Bridge\BR1-604_DK12.dgn
7/31/2019 4:19:59 PM

ADDENDA / REVISIONS	SCALE AS NOTED	REHABILITATION OF BRIDGES 1-600, 1-601, AND 1-604, SR 2 AND SR 141 INTERCHANGE	CONTRACT T201707403	BRIDGE NO. 1 604	PARAPET JOINT DETAILS – 1	DK-12
			COUNTY NEW CASTLE	DESIGNED BY: ZMG		SECTION WRA
				CHECKED BY: WAG		SHEET NO. 115

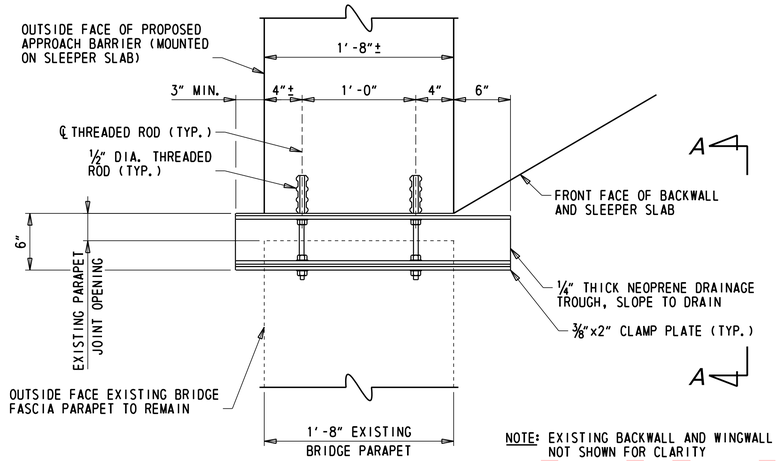

NOTE: EXISTING BACKWALL AND WINGWALL NOT SHOWN FOR CLARITY

PARAPET JOINT TROUGH PLAN - DETAIL 1

NORTHWEST AND SOUTHEAST CORNERS

1½" = 1'-0"

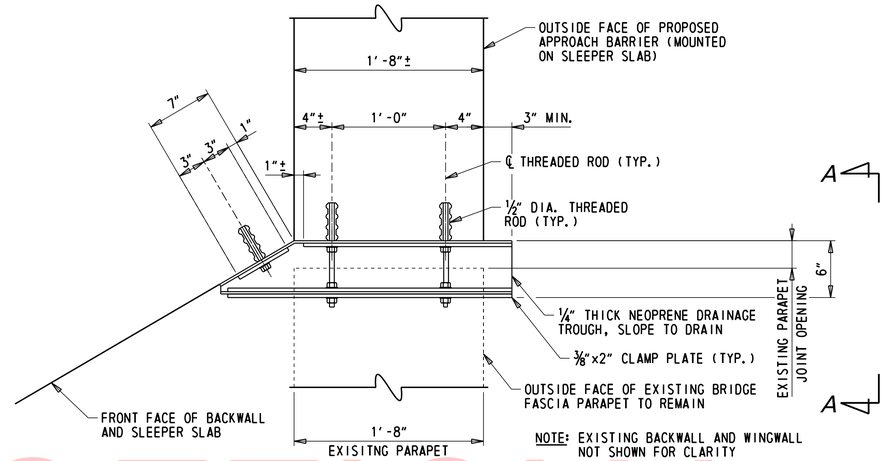

NOTE: EXISTING BACKWALL AND WINGWALL NOT SHOWN FOR CLARITY

PARAPET JOINT TROUGH PLAN - DETAIL 2

NORTHEAST AND SOUTHWEST CORNERS

1½" = 1'-0"

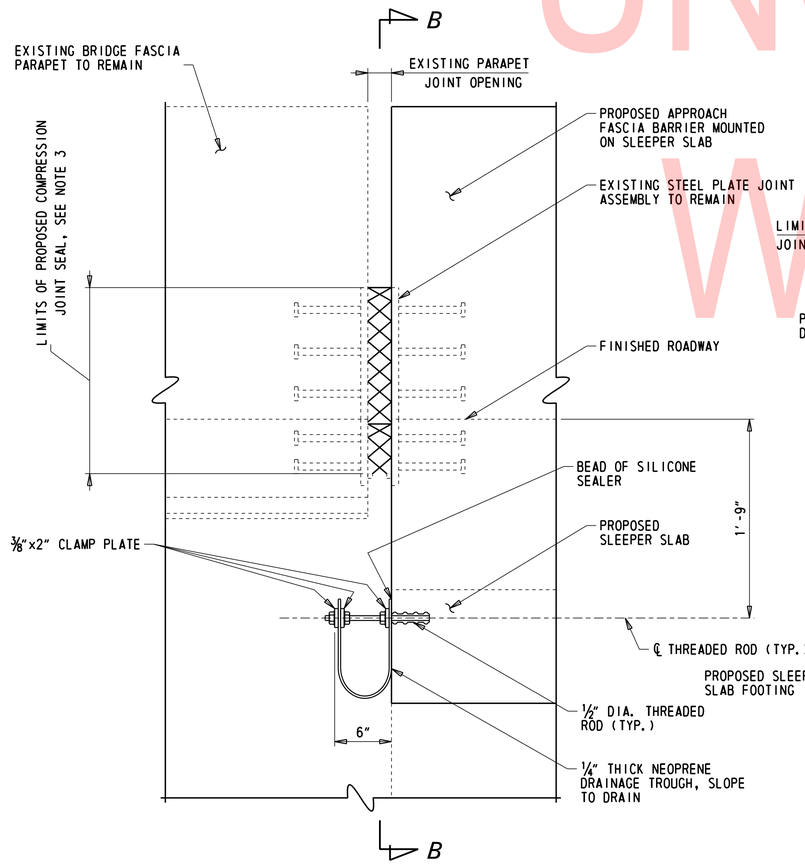

VIEW A-A

1½" = 1'-0"

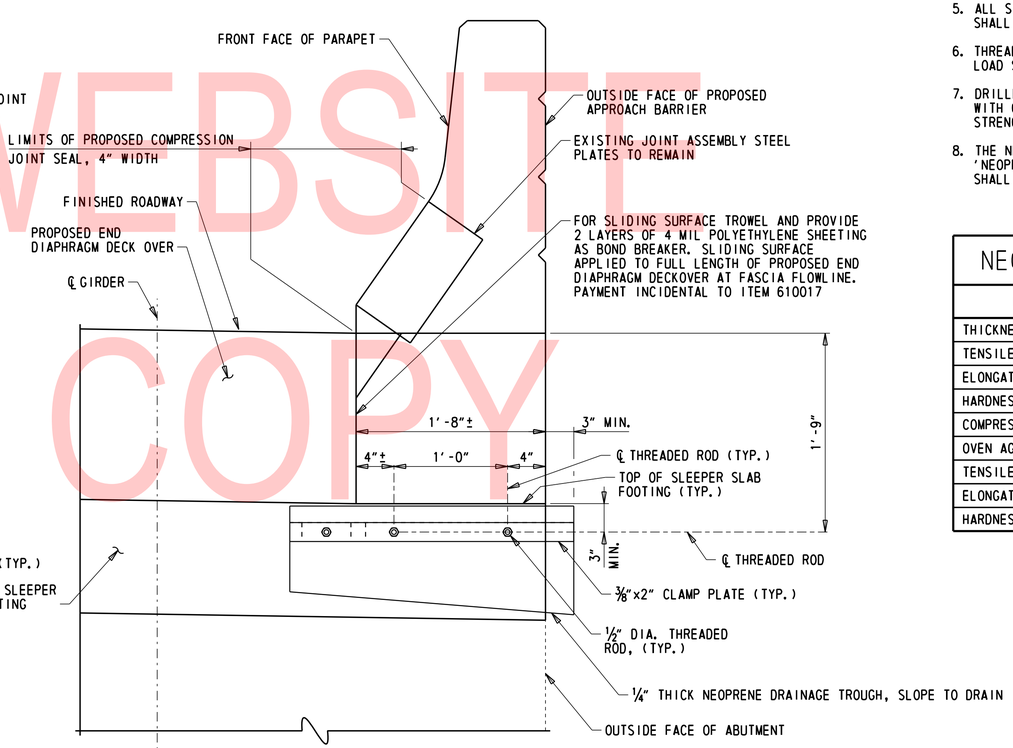

VIEW B-B

'PARAPET JOINT TROUGH PLAN - DETAIL 2' SHOWN

1½" = 1'-0"

NOTES:

1. THE COMPRESSION JOINT SEAL AND PARAPET JOINT TROUGH SHALL BE INSTALLED AT THE EXISTING FASCIA PARAPET JOINT LOCATIONS AT ALL FOUR CORNERS OF THE BRIDGE AS INDICATED IN PARAPET JOINT TROUGH PLAN - DETAILS 1 AND 2.
2. PAYMENT FOR INSTALLATION OF THE COMPRESSION JOINT SEAL, THE PARAPET JOINT TROUGH, AND ALL ASSOCIATED RESPECTIVE COMPONENTS AND HARDWARE WILL BE INCIDENTAL TO ITEM 610016.
3. THE PROPOSED COMPRESSION JOINT SEAL SHALL MEET THE REQUIREMENTS OF STANDARD SPECIFICATION SECTION 624.
4. THE CONTRACTOR SHALL SUBMIT WORKING DRAWINGS OF THE PARAPET JOINT TROUGH ASSEMBLY FOR APPROVAL.
5. ALL STEEL SHALL BE GALVANIZED ASTM A 709 GRADE 36 OR GRADE 50. ALL HARDWARE SHALL BE STAINLESS STEEL TYPE 304.
6. THREADED ROD MINIMUM DIAMETER SHALL BE 1/2". THREADED ROD MINIMUM WORKING LOAD SHALL BE 2000 LB. THREADED ROD MINIMUM EMBEDMENT LENGTH SHALL BE 4".
7. DRILLED HOLES SHALL BE 1/2" LARGER THAN THREADED ROD DIAMETERS AND FILLED WITH GROUT DURING INSTALLATION. GROUT SHALL HAVE A MINIMUM COMPRESSION STRENGTH OF 5000 PSI IN 7 DAYS.
8. THE NEOPRENE TROUGH SHALL MEET THE REQUIREMENTS OF ASTM D 2826 AND THE 'NEOPRENE DRAINAGE TROUGH REQUIREMENTS' TABLE BELOW. THE TROUGH CROSS SLOPE SHALL BE A MINIMUM OF 1" PER FOOT.

NEOPRENE DRAINAGE TROUGH REQUIREMENTS

PHYSICAL PROPERTIES	METHOD	LIMITS
THICKNESS (IN), MINIMUM	--	1/4
TENSILE STRENGTH (PSI), MINIMUM	D 412	2000
ELONGATION AT BREAK (%), MINIMUM	D 412	250
HARDNESS, TYPE A DUROMETER	D 2240	60±5
COMPRESSION SET, 22-HR @ 212 F (%), MAX.	D 395	35
OVEN AGING, 70-HR @ 212 F		
TENSILE STRENGTH, % LOSS MAX	D 573	20
ELONGATION (%), LOSS MAX		20
HARDNESS, TYPE A DUROMETER (POINTS CHANGE)		0 TO + 10

UNOFFICIAL WEBSITE COPY

N:\32122-002\CADD\Bridge\BR1-604_DK13.dgn
7/31/2019 4:20:00 PM

ADDENDA / REVISIONS	SCALE AS NOTED	REHABILITATION OF BRIDGES 1-600, 1-601, AND 1-604, SR 2 AND SR 141 INTERCHANGE	CONTRACT T201707403	BRIDGE NO. 1 604	PARAPET JOINT DETAILS – 2	DK-13
			COUNTY NEW CASTLE	DESIGNED BY: ZMG		SECTION WRA
				CHECKED BY: WAG		SHEET NO. 116

① ANY MARK NUMBER WITH SUFFIX 'E' DENOTES EPOXY COATED REINFORCING STEEL.

② ALL MARK 'LOCATION PREFIXES' SHALL CONSIST OF TWO LETTERS AND ARE AS FOLLOWS: AB = ABUTMENT, AS = APPROACH SLAB, BC = BOX CULVERT, BW = BACKWALL, CL = COLUMN, DK = DECK, DL = DOWEL, FT = FOOTING, HW = HEADWALL, MS = MISC. BARS, PA = PARAPET, PR = PIER, SC = SHEETPILE CAP, SL = SLAB, SS = SLEEPER SLAB, TW = TOEWALL, WL = WALL (UNIQUE LOCATION), WW = WINGWALL

SPECIFICATIONS					BENDING DIMENSIONS (FEET-INCHES /QUARTER INCH)										
QTY.	SIZE	LENGTH	MARK	TYPE	A	B	C	D	E	F/R	G	H	J	K	O
SLEEPER SLAB UNIT															
UNIT A															
19	5	34-11.2	SS501E	STR		34-11.2									
66	8	4-11.3	SS802E	STR		4-11.3									
26	5	8-2.2	SS503E	T1	0-5.2	1-7.3	2-0.0	1-7.3	2-0.0		0-5.2				
16	5	4-6.0	SS504E	STR		4-6.0									
4	8	9-6.0	SS806E	STR		9-6.0									
3	5	9-6.0	SS507E	STR		9-6.0									
1	5	5-3.0	SS508E	STR		5-3.0									
4••	5	15-6.0	SS509E	T1	0-5.2	5-3.2	2-0.0	5-3.2	2-0.0		0-5.2				
		T0				T0		T0							
		17-3.2			0-5.2	6-2.1	2-0.0	6-2.1	2-0.0		0-5.2				
			••1 SET OF 4												
15	5	9-4.2	SS510E	DE16		4-0.0	1-2.0	2-6.0	1-8.2			1-4.3		0-11.3	
2	5	1-8.0	SS512E	STR		1-8.0									
3•	5	9-4.2	SS513E	T1	0-5.2	1-7.3	2-7.0	1-7.3	2-7.0		0-5.2				
		T0					T0		T0						
		8-6.2			0-5.2	1-7.3	2-2.0	1-7.3	2-2.0		0-5.2				
			••1 SET OF 3												
3	5	6-2.1	SS514E	DE06		2-5.2	1-7.1	2-1.2				2-4.3	2-1.0	0-6.3	2-1.0
1	5	8-1.0	SS537E	17		3-0.0	2-1.0	3-0.0							
3	5	6-8.2	SS539E	DE07		3-3.1	0-5.1	3-0.0				3-3.1	2-10.1		1-4.1
8	5	9-8.0	PA550E	STR		9-8.0									
15	5	6-11.3	PA551E	T7	0-5.2	2-6.0	0-8.1	2-5.1	0-5.1		0-5.2	2-6.0		0-3.1	
UNIT B															
2	5	1-8.0	SS512E	STR		1-8.0									
3	5	6-2.1	SS514E	DE06		2-5.2	1-7.1	2-1.2				2-4.3	2-1.0	0-6.3	2-1.0
19	5	40-7.0	SS515E	STR		40-7.0									
74	8	5-5.1	SS816E	STR		5-5.1									
34	5	8-6.2	SS517E	T1	0-5.2	1-9.3	2-0.0	1-9.3	2-0.0		0-5.2				
3•	5	8-10.2	SS520E	T1	0-5.2	1-9.3	2-2.0	1-9.3	2-2.0		0-5.2				
		T0					T0		T0						
		9-8.2			0-5.2	1-9.3	2-7.0	1-9.3	2-7.0		0-5.2				
			••1 SET OF 3												

SPECIFICATIONS					BENDING DIMENSIONS (FEET-INCHES /QUARTER INCH)										
QTY.	SIZE	LENGTH	MARK	TYPE	A	B	C	D	E	F/R	G	H	J	K	O
SLEEPER SLAB UNIT															
UNIT C															
16	5	4-6.0	SS504E	STR		4-6.0									
19	5	26-1.2	SS521E	STR		26-1.2									
40	8	5-8.2	SS822E	STR		5-8.2									
16	5	9-0.0	SS523E	T1	0-5.2	2-0.0	2-0.0	2-0.0	2-0.0		0-5.2				
4••	8	7-6.1	SS824E	STR		7-6.1									
		T0				T0									
		8-1.0				8-1.0									
			••2 SETS OF 2												
3	5	4-11.0	SS525E	STR		4-11.0									
1	5	7-2.1	SS526E	STR		7-2.1									
4••	5	14-8.2	SS527E	T1	0-5.2	4-10.3	2-0.0	4-10.3	2-0.0		0-5.2				
		T0				T0		T0							
		19-1.0			0-5.2	7-1.0	2-0.0	7-1.0	2-0.0		0-5.2				
			••1 SET OF 4												
7	5	9-2.0	SS528E	DE16		4-0.0	0-11.2	2-6.0	1-8.2			1-4.3		0-11.3	
7	5	5-5.1	PA552E	T7		2-6.0	0-5.1	2-6.0				2-6.0		0-2.0	
5	5	3-8.2	PA553E	STR		3-8.2									
1	5	4-6.1	PA554E	STR		4-6.1									
UNIT D															
5	5	9-2.0	SS528E	DE16		4-0.0	0-11.2	2-6.0	1-8.2			1-4.3		0-11.3	
19	5	36-9.2	SS529E	STR		36-9.2									
52	8	6-7.2	SS830E	STR		6-7.2									
26	5	9-5.0	SS531E	T1	0-5.2	2-3.0	2-0.0	2-3.0	2-0.0		0-5.2				
3	5	2-9.0	SS532E	STR		2-9.0									
4••	8	6-3.1	SS833E	STR		6-3.1									
		T0				T0									
		6-10.0				6-10.0									
			••2 SETS OF 2												
5	5	5-5.1	PA552E	T7		2-6.0	0-5.1	2-6.0				2-6.0		0-2.0	
5	5	3-0.3	PA555E	STR		3-0.3									
1	5	2-5.1	PA556E	STR		2-5.1									

SPECIFICATIONS					BENDING DIMENSIONS (FEET-INCHES /QUARTER INCH)										
QTY.	SIZE	LENGTH	MARK	TYPE	A	B	C	D	E	F/R	G	H	J	K	O
SLEEPER SLAB UNIT															
UNIT E															
16	5	4-6.0	SS504E	STR		4-6.0									
18	8	7-2.2	SS805E	STR		7-2.2									
4	8	9-6.0	SS806E	STR		9-6.0									
3	5	9-6.0	SS507E	STR		9-6.0									
15	5	9-4.2	SS510E	DE16		4-0.0	1-2.0	2-6.0	1-8.2			1-4.3		0-11.3	
8	8	6-7.2	SS830E	STR		6-7.2									
19	5	49-6.3	SS534E	STR		49-6.3									
14	8	8-3.0	SS835E	STR		8-3.0									
26	5	10-3.2	SS536E	T1	0-5.2	2-8.1	2-0.0	2-8.1	2-0.0		0-5.2				
3	5	9-2.2	SS540E	DE06		2-9.0	2-3.0	4-2.2				2-9.0	4-2.2	0-0.1	2-3.2
1	5	8-6.0	SS541E	STR		8-6.0									
4••	5	13-8.2	SS542E	T1	0-5.2	4-4.3	2-0.0	4-4.3	2-0.0		0-5.2				
		T0				T0		T0							
		21-6.2			0-5.2	8-3.3	2-0.0	8-3.3	2-0.0		0-5.2				
			••1 SET OF 4												
2••	5	8-5.2	SS546E	17		3-2.1	2-1.0	3-2.1							
		T0				T0		T0							
		9-5.0				3-8.0	2-1.0	3-8.0							
			••1 SET OF 2												
20	8	7-9.0	SS871E	STR		7-9.0									
8	5	9-8.0	PA550E	STR		9-8.0									
15	5	6-11.3	PA551E	T7	0-5.2	2-6.0	0-8.1	2-5.1	0-5.1		0-5.2	2-6.0		0-3.1	

ASTM STANDARD ENGLISH REINFORCING BARS				RECOMMENDED END HOOKS, APPLICABLE TO ALL GRADES				STIRRUP AND TIE HOOKS, APPLICABLE TO ALL GRADES		
	NOMINAL DIMENSIONS				180° HOOKS		90° HOOKS		90° HOOK	135° HOOK	
BAR SIZE	DIAMETER (INCHES)	AREA (INCHES²)	WEIGHT (LBS./FT.)	D	A OR G	J	A OR G	D	A OR G	A OR G	A OR G
3	0.375	0.110	0.376	2¼"	5"	3"	6"	1½"	4"	4"	2½"
4	0.500	0.200	0.668	3"	6"	4"	8"	2"	4½"	4½"	3"
5	0.625	0.310	1.043	3¾"	7"	5"	10"	2½"	6"	5½"	3¾"
6	0.750	0.440	1.502	4½"	8"	6"	1-0"	4½"	1-0"	8"	4½"
7	0.875	0.600	2.044	5¼"	10"	7"	1-2"	5¼"	1-2"	9"	5¼"
8	1.000	0.790	2.670	6"	11"	8"	1-4"	6"	1-4"	10½"	6"
9	1.128	1.000	3.400	9½"	1-3"	11¾"	1-7"				
10	1.270	1.270	4.303	10¾"	1-5"	1-1¼"	1-10"				
11	1.410	1.560	5.313	1-0"	1-7"	1-2¾"	2-0"				
14	1.693	2.250	7.650	1-6¼"	2-3"	1-9¾"	2-7"				
18	2.257	4.000	13.600	2-0"	3-0"	2-4½"	3-5"				

NOTES:

1. FIGURES SHOWN IN CIRCLES REPRESENT BAR BEND TYPES.
2. STANDARD BAR BENDS INCLUDE ONLY THOSE TYPES BELOW, INDICATED AS SUCH.
3. ALL DIMENSIONS OUT-TO-OUT, EXCEPT "A" AND "G" ON STD. 180° AND 135° HOOKS.
4. "J" DIMENSIONS ON 180° HOOKS TO BE SHOWN ONLY WHERE NECESSARY TO RESTRICT HOOK SIZE, OTHERWISE STANDARD 'ACI' HOOKS ARE TO BE USED.
5. WHERE "J" IS NOT SHOWN, "J" WILL BE KEPT EQUAL TO OR LESS THAN "H" ON TYPES 3, 5 AND 22. WHERE "J" CAN EXCEED "H", IT SHALL BE SHOWN.
6. "H" DIMENSIONS OF STIRRUPS TO BE SHOWN AS NEEDED TO FIT WITHIN THE CONCRETE.
7. UNLESS OTHERWISE NOTED, DIAMETER "D" IS THE SAME FOR ALL BENDS AND HOOKS ON A BAR (EXCEPT FOR BEND TYPES 11 AND 13).
8. WHERE SLOPE DIFFERS FROM 45° OFFSET, "H" AND "K" MUST BE SHOWN.
9. WHERE BARS ARE TO BE BENT MORE ACCURATELY THAN STANDARD BENDING TOLERANCES, BENDING DIMENSIONS REQUIRING CLOSER FABRICATION SHOULD HAVE LIMITS INDICATED.
10. FOR RECOMMENDED DIAMETER "D", OF BENDS, HOOKS, ETC., REFER TO TABLE ABOVE, 'CRSI' OR 'ACI' TABLES WHERE APPLICABLE AND REQUIRED.
11. TYPE S1-S6, S11, T1-T3 AND T6-T9 APPLICABLE TO BAR SIZES #3 THROUGH #8.

STANDARD BAR BENDS

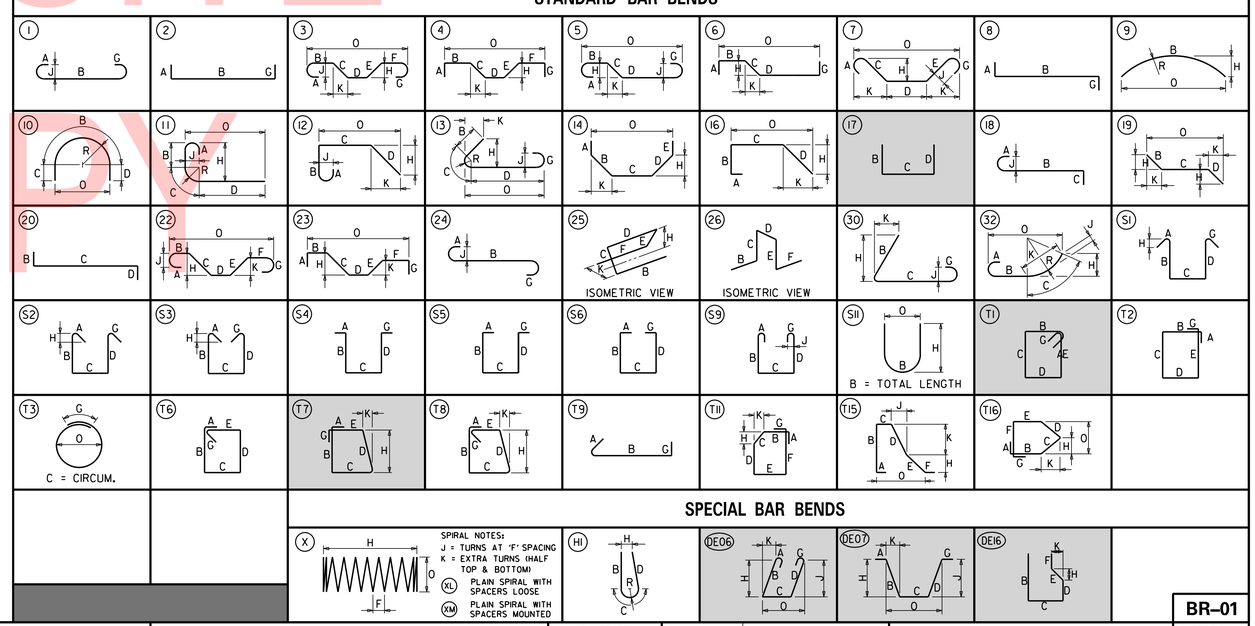

STIRRUP AND TIE HOOKS

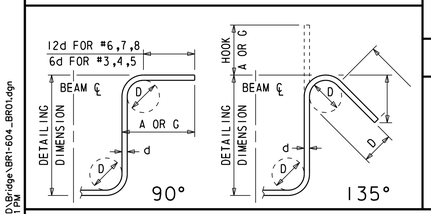

180° AND 90° END HOOKS

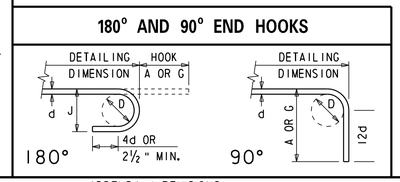

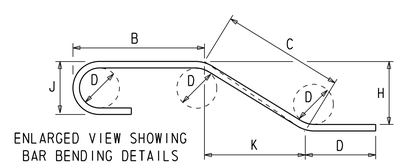

ADDENDA / REVISIONS

SCALE AS NOTED

REHABILITATION OF BRIDGES 1-600, 1-601, AND 1-604, SR 2 AND SR 141 INTERCHANGE

CONTRACT	BRIDGE NO.	1 604
T201707403	DESIGNED BY: ZMG	
COUNTY		
NEW CASTLE	CHECKED BY: WAG	

REINFORCEMENT BAR LIST SLEEPER SLAB - 1

BR-01

SECTION WRA

SHEET NO. 117

N:\32122-003\CADD\Bridge\BR1-604_BR01.dgn
7/31/2019 4:26:01 PM wagner

UNOFFICIAL WEBSITE COPY

① ANY MARK NUMBER WITH SUFFIX 'E' DENOTES EPOXY COATED REINFORCING STEEL.

② ALL MARK 'LOCATION PREFIXES' SHALL CONSIST OF TWO LETTERS AND ARE AS FOLLOWS: AB = ABUTMENT, AS = APPROACH SLAB, BC = BOX CULVERT, BW = BACKWALL, CL = COLUMN, DK = DECK, DL = DOWEL, FT = FOOTING, HW = HEADWALL, MS = MISC. BARS, PA = PARAPET, PR = PIER, SC = SHEETPILE CAP, SL = SLAB, SS = SLEEPER SLAB, TW = TOEWALL, WL = WALL (UNIQUE LOCATION), WW = WINGWALL

SPECIFICATIONS					BENDING DIMENSIONS (FEET-INCHES /QUARTER INCH)										
QTY.	SIZE	LENGTH	MARK	TYPE	A	B	C	D	E	F/R	G	H	J	K	O
SLEEPER SLAB UNIT															
UNIT F															
18	5	4-6 0	SS504E	STR		4-6 0									
4	8	9-6 0	SS806E	STR		9-6 0									
3	5	9-6 0	SS507E	STR		9-6 0									
15	5	9-4 2	SS510E	DE16		4-0 0	1-2 0	2-6 0	1-8 2			1-4 3		0-11 3	
4••	5	17-11 0	SS538E	T1	0-5 2	6-6 0	2-0 0	6-6 0	2-0 0		0-5 2				
		TO				TO		TO							
		19-3 0			0-5 2	7-2 0	2-0 0	7-2 0	2-0 0		0-5 2				
			••1 SET OF 4												
19	5	33-11 3	SS543E	STR		33-11 3									
64	8	4-9 2	SS844E	STR		4-9 2									
28	5	8-12 5	SS545E	T1	0-5 2	1-7 1	2-0 0	1-7 1	2-0 0		0-5 2				
3	5	5-9 1	SS547E	21		1-8 0	2-0 0	2-11				2-0 2		0-6 1	2-0 0
1	5	7-2 1	SS548E	STR		7-2 1									
2••	5	5-5 2	SS568E	17		1-8 1	2-10	1-8 1							
		TO				TO		TO							
		6-10				2-0 0	2-10	2-0 0							
			••1 SET OF 2												
8	5	9-8 0	PA550E	STR		9-8 0									
15	5	6-11 3	PA551E	T7	0-5 2	2-6 0	0-8 1	2-5 1	0-5 1		0-5 2	2-6 0		0-3 1	
UNIT G															
19	5	38-4 1	SS549E	STR		38-4 1									
74	8	5-0 2	SS850E	STR		5-0 2									
37	5	8-3 0	SS551E	T1	0-5 2	1-8 0	2-0 0	1-8 0	2-0 0		0-5 2				

SPECIFICATIONS					BENDING DIMENSIONS (FEET-INCHES /QUARTER INCH)										
QTY.	SIZE	LENGTH	MARK	TYPE	A	B	C	D	E	F/R	G	H	J	K	O
SLEEPER SLAB UNIT															
UNIT H															
4	5	9-2 0	SS528E	DE16		4-0 0	0-11 2	2-6 0	1-8 2			1-4 3		0-11 3	
19	5	23-10 0	SS552E	STR		23-10 0									
42	8	5-2 3	SS853E	STR		5-2 3									
21	5	8-5 0	SS554E	T1	0-5 2	1-9 0	2-0 0	1-9 0	2-0 0		0-5 2				
3	5	2-4 0	SS555E	STR		2-4 0									
4••	8	5-6 0	SS856E	STR		5-6 0									
		TO				TO									
		5-11 0				5-11 0									
			••2 SETS OF 2												
4	5	5-5 1	PA552E	T7		2-6 0	0-5 1	2-6 0				2-6 0		0-2 0	
5	5	2-6 2	PA557E	STR		2-6 2									
1	5	2-11	PA558E	STR		2-11									
UNIT J															
10	5	4-6 0	SS504E	STR		4-6 0									
6	5	9-2 0	SS528E	DE16		4-0 0	0-11 2	2-6 0	1-8 2			1-4 3		0-11 3	
19	5	31-9 0	SS557E	STR		31-9 0									
54	8	5-8 0	SS858E	STR		5-8 0									
23	5	8-7 2	SS559E	T1	0-5 2	1-10 1	2-0 0	1-10 1	2-0 0		0-5 2				
4••	8	6-5 0	SS860E	STR		6-5 0									
		TO				TO									
		6-10 0				6-10 0									
			••2 SETS OF 2												
3	5	3-3 0	SS561E	STR		3-3 0									
1	5	5-8 0	SS562E	STR		5-8 0									
4••	5	12-4 2	SS563E	T1	0-5 2	3-8 3	2-0 0	3-8 3	2-0 0		0-5 2				
		TO				TO		TO							
		15-11 0			0-5 2	5-6 0	2-0 0	5-6 0	2-0 0		0-5 2				
			••1 SET OF 4												
6	5	5-5 1	PA552E	T7		2-6 0	0-5 1	2-6 0				2-6 0		0-2 0	
5	5	3-0 0	PA559E	STR		3-0 0									
1	5	3-7 1	PA560E	STR		3-7 1									

SPECIFICATIONS					BENDING DIMENSIONS (FEET-INCHES /QUARTER INCH)										
QTY.	SIZE	LENGTH	MARK	TYPE	A	B	C	D	E	F/R	G	H	J	K	O
SLEEPER SLAB UNIT															
UNIT K															
4	8	9-6 0	SS806E	STR		9-6 0									
3	5	9-6 0	SS507E	STR		9-6 0									
15	5	9-4 2	SS510E	DE16		4-0 0	1-2 0	2-6 0	1-8 2			1-4 3		0-11 3	
19	5	39-3 2	SS564E	STR		39-3 2									
60	8	6-0 1	SS865E	STR		6-0 1									
26	5	9-0 0	SS566E	T1	0-5 2	2-0 0	2-0 0	2-0 0	2-0 0		0-5 2				
16	5	4-10 0	SS567E	STR		4-10 0									
3	5	3-10 0	SS569E	30		2-3 0	1-7 0					1-9 0		1-6 3	
4••	5	9-11 0	SS570E	T1	0-5 2	2-6 0	2-0 0	2-6 0	2-0 0		0-5 2				
		TO				TO		TO							
		14-10 2			0-5 2	4-11 3	2-0 0	4-11 3	2-0 0		0-5 2				
			••1 SET OF 4												
8	5	9-8 0	PA550E	STR		9-8 0									
15	5	6-11 3	PA551E	T7	0-5 2	2-6 0	0-8 1	2-5 1	0-5 1		0-5 2	2-6 0		0-3 1	

ASTM STANDARD ENGLISH REINFORCING BARS				RECOMMENDED END HOOKS, APPLICABLE TO ALL GRADES				STIRRUP AND TIE HOOKS, APPLICABLE TO ALL GRADES			
	NOMINAL DIMENSIONS				180° HOOKS		90° HOOKS		90° HOOK	135° HOOK	
BAR SIZE	DIAMETER (INCHES)	AREA (INCHES²)	WEIGHT (LBS./FT.)	D	A OR G	J	A OR G	D	A OR G	A OR G	A OR G
3	0.375	0.110	0.376	2¼"	5"	3"	6"	1½"	4"	4"	2½"
4	0.500	0.200	0.668	3"	6"	4"	8"	2"	4½"	4½"	3"
5	0.625	0.310	1.043	3¾"	7"	5"	10"	2½"	6"	5½"	3¾"
6	0.750	0.440	1.502	4½"	8"	6"	1-0"	4½"	1-0"	8"	4½"
7	0.875	0.600	2.044	5¼"	10"	7"	1-2"	5¼"	1-2"	9"	5¼"
8	1.000	0.790	2.670	6"	11"	8"	1-4"	6"	1-4"	10½"	6"
9	1.128	1.000	3.400	9½"	1-3"	11¾"	1-7"				
10	1.270	1.270	4.303	10¾"	1-5"	1-1¼"	1-10"				
11	1.410	1.560	5.313	1-0"	1-7"	1-2¾"	2-0"				
14	1.693	2.250	7.650	1-6¼"	2-3"	1-9¾"	2-7"				
18	2.257	4.000	13.600	2-0"	3-0"	2-4½"	3-5"				

NOTES:

1. FIGURES SHOWN IN CIRCLES REPRESENT BAR BEND TYPES.
2. STANDARD BAR BENDS INCLUDE ONLY THOSE TYPES BELOW, INDICATED AS SUCH.
3. ALL DIMENSIONS OUT-TO-OUT, EXCEPT "A" AND "G" ON STD. 180° AND 135° HOOKS.
4. "J" DIMENSIONS ON 180° HOOKS TO BE SHOWN ONLY WHERE NECESSARY TO RESTRICT HOOK SIZE, OTHERWISE STANDARD 'ACI' HOOKS ARE TO BE USED.
5. WHERE "J" IS NOT SHOWN, "J" WILL BE KEPT EQUAL TO OR LESS THAN "H" ON TYPES 3, 5 AND 22. WHERE "J" CAN EXCEED "H", IT SHALL BE SHOWN.
6. "H" DIMENSIONS OF STIRRUPS TO BE SHOWN AS NEEDED TO FIT WITHIN THE CONCRETE.
7. UNLESS OTHERWISE NOTED, DIAMETER "D" IS THE SAME FOR ALL BENDS AND HOOKS ON A BAR (EXCEPT FOR BEND TYPES 11 AND 13).
8. WHERE SLOPE DIFFERS FROM 45° OFFSET, "H" AND "K" MUST BE SHOWN.
9. WHERE BARS ARE TO BE BENT MORE ACCURATELY THAN STANDARD BENDING TOLERANCES, BENDING DIMENSIONS REQUIRING CLOSER FABRICATION SHOULD HAVE LIMITS INDICATED.
10. FOR RECOMMENDED DIAMETER "D", OF BENDS, HOOKS, ETC., REFER TO TABLE ABOVE, 'CRSI' OR 'ACI' TABLES WHERE APPLICABLE AND REQUIRED.
11. TYPE S1-S6, S11, T1-T3 AND T6-T9 APPLICABLE TO BAR SIZES #3 THROUGH #8.

STANDARD BAR BENDS

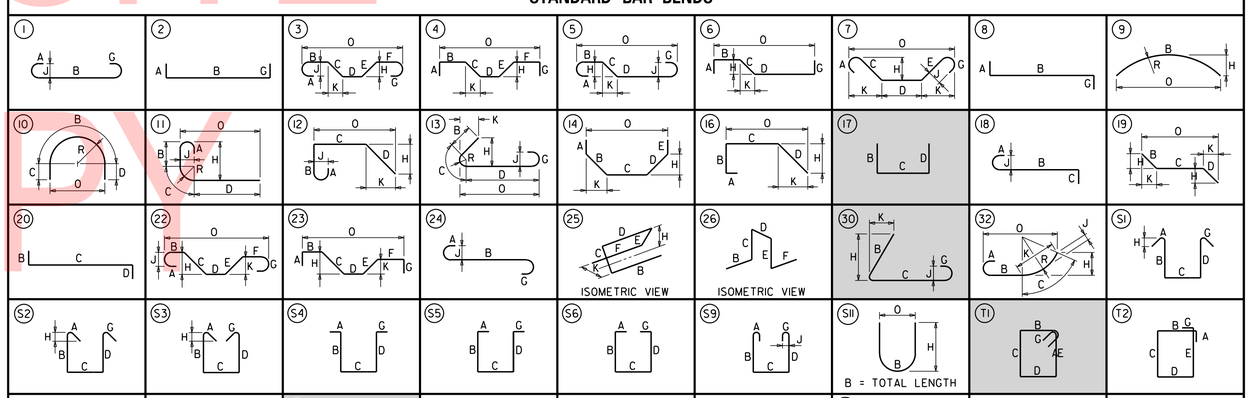

SPECIAL BAR BENDS

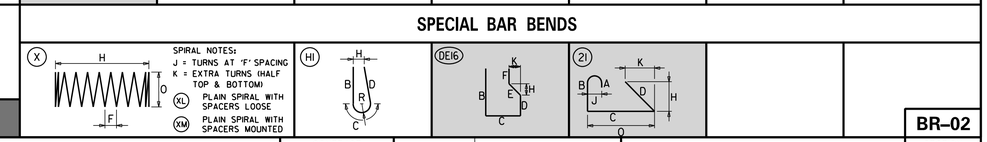

STIRRUP AND TIE HOOKS

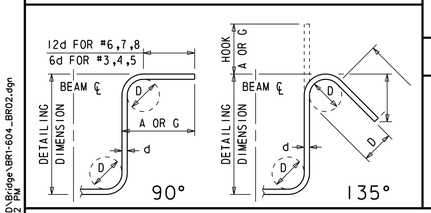

180° AND 90° END HOOKS

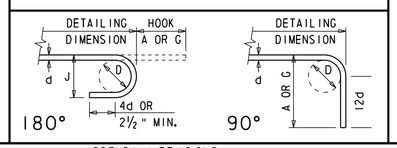

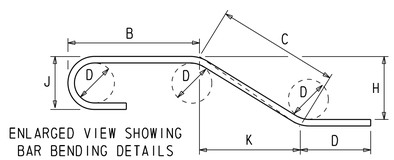

ENLARGED VIEW SHOWING BAR BENDING DETAILS

ADDENDA / REVISIONS

SCALE AS NOTED

REHABILITATION OF BRIDGES 1-600, 1-601, AND 1-604, SR 2 AND SR 141 INTERCHANGE

CONTRACT	BRIDGE NO.	1 604
T201707403	DESIGNED BY: ZMG	
COUNTY	CHECKED BY: WAG	
NEW CASTLE		

REINFORCEMENT BAR LIST SLEEPER SLAB - 2

BR-02

SECTION: WRA

SHEET NO. 118

N:\32122-002\CADD\Bridge\BR1-604_BR02.dgn
7/31/2019 4:20:02 PM

UNOFFICIAL WEBSITE COPY

① ANY MARK NUMBER WITH SUFFIX 'E' DENOTES EPOXY COATED REINFORCING STEEL.

② ALL MARK 'LOCATION PREFIXES' SHALL CONSIST OF TWO LETTERS AND ARE AS FOLLOWS: AB = ABUTMENT, AS = APPROACH SLAB, BC = BOX CULVERT, BW = BACKWALL, CL = COLUMN, DK = DECK, DL = DOWEL, FT = FOOTING, HW = HEADWALL, MS = MISC. BARS, PA = PARAPET, PR = PIER, SC = SHEETPILE CAP, SL = SLAB, SS = SLEEPER SLAB, TW = TOEWALL, WL = WALL (UNIQUE LOCATION), WW = WINGWALL

SPECIFICATIONS					BENDING DIMENSIONS (FEET-INCHES /QUARTER INCH)										
QTY.	SIZE	LENGTH	MARK	TYPE	A	B	C	D	E	F/R	G	H	J	K	O
DECK OVER UNIT															
UNIT A															
17	5	7-4.1	DK501	17		3-1.2	1-1.1	3-1.2							
17	5	5-7.1	DK502	STR		5-7.1									
14	5	5-4.3	DK503	16			4-2.0	1-2.3				0-10.0		0-11.0	5-1.0
2	5	8-4.2	DK504	T1	0-5.2	2-7.2	1-1.1	2-7.2	1-1.1		0-5.2				
16	5	7-0.0	DK505	STR		7-0.0									
8	5	31-11.2	DK506	STR		31-11.2									
12	5	33-4.0	DK507	STR		33-4.0									
4	5	2-10.2	DK508	STR		2-10.2									
9	5	4-1.1	DK570	DE05	0-5.2	0-11.1	1-9.0	0-6.0			0-5.2	0-11.0	0-6.0	0-2.1	1-10.1
3	5	5-11.3	DK572	STR		5-11.3									
2			3/4"x10" STUDS												
UNIT B															
17	5	7-4.1	DK501	17		3-1.2	1-1.1	3-1.2							
17	5	5-7.1	DK502	STR		5-7.1									
14	5	5-11.2	DK509	16			4-8.0	1-3.2				0-10.0		0-11.3	5-7.3
12	5	9-6.0	DK510	STR		9-6.0									
20	5	20-6.0	DK511	STR		20-6.0									
4	5	2-10.3	DK512	STR		2-10.3									
4	5	8-3.1	DK513	STR		8-3.1									
9	5	4-1.1	DK570	DE05	0-5.2	0-11.1	1-9.0	0-6.0			0-5.2	0-11.0	0-6.0	0-2.1	1-10.1
3	5	5-11.3	DK572	STR		5-11.3									
24			MECHANICAL COUPLERS UNIT B TO C												
UNIT C															
17	5	7-4.1	DK501	17		3-1.2	1-1.1	3-1.2							
17	5	6-0.3	DK514	STR		6-0.3									
14	5	6-4.3	DK515	16			5-0.2	1-4.1				0-10.0		1-0.3	6-1.1
4	5	10-3.0	DK516	STR		10-3.0									
20	5	26-4.0	DK517	STR		26-4.0									
4	5	11-9.1	DK518	STR		11-9.1									
4	5	3-4.0	DK519	STR		3-4.0									
11	5	6-8.1	DK569	DE16		2-0.2	1-3.3	1-6.0	1-10.0			1-4.0		1-3.0	
11	5	5-6.3	PA501	T7		2-6.0	0-6.3	2-6.0				2-6.0		0-2.2	
8	5	6-11.2	PA503	STR		6-11.2									

SPECIFICATIONS					BENDING DIMENSIONS (FEET-INCHES /QUARTER INCH)										
QTY.	SIZE	LENGTH	MARK	TYPE	A	B	C	D	E	F/R	G	H	J	K	O
DECK OVER UNIT															
UNIT D															
17	5	9-4.1	DK520	17		4-1.2	1-1.1	4-1.2							
17	5	5-11.2	DK521	STR		5-11.2									
14	5	6-4.0	DK522	16			4-10.3	1-5.1				0-10.0		1-2.0	6-0.3
4	5	10-10.0	DK523	STR		10-10.0									
4	5	11-3.0	DK524	STR		11-3.0									
20	5	36-9.0	DK525	STR		36-9.0									
4	5	4-0.2	DK526	STR		4-0.2									
4	5	9-1.2	DK527	STR		9-1.2									
11	5	6-8.1	DK569	DE16		2-0.2	1-3.3	1-6.0	1-10.0			1-4.0		1-3.0	
11	5	5-6.3	PA501	T7		2-6.0	0-6.3	2-6.0				2-6.0		0-2.2	
8	5	7-0.0	PA504	STR		7-0.0									
24			MECHANICAL COUPLERS UNIT D TO E												
UNIT E															
17	5	9-4.1	DK520	17		4-1.2	1-1.1	4-1.2							
17	5	7-7.3	DK528	STR		7-7.3									
14	5	8-2.3	DK529	16			6-6.3	1-8.0				0-10.0		1-5.1	8-0.0
2	5	11-10.2	DK530	T1	0-5.2	4-4.2	1-1.1	4-4.2	1-1.1		0-5.2				
4	5	13-0.0	DK531	STR		13-0.0									
4	5	13-9.0	DK532	STR		13-9.0									
12	5	47-4.2	DK533	STR		47-4.2									
8	5	43-5.3	DK534	STR		43-5.3									
4	5	15-4.0	DK535	STR		15-4.0									
4			3/4"x10" STUDS												

SPECIFICATIONS					BENDING DIMENSIONS (FEET-INCHES /QUARTER INCH)										
QTY.	SIZE	LENGTH	MARK	TYPE	A	B	C	D	E	F/R	G	H	J	K	O
DECK OVER UNIT															
UNIT F															
17	5	7-4.1	DK501	17		3-1.2	1-1.1	3-1.2							
17	5	4-10.2	DK536	STR		4-10.2									
14	5	5-2.3	DK537	16			4-0.1	1-2.2				0-10.0		0-10.2	4-10.3
2	5	8-3.2	DK538	T1	0-5.2	2-7.0	1-1.1	2-7.0	1-1.1		0-5.2				
16	5	6-8.0	DK539	STR		6-8.0									
12	5	32-5.0	DK540	STR		32-5.0									
8	5	31-2.0	DK541	STR		31-2.0									
4	5	2-9.2	DK542	STR		2-9.2									
9	5	4-0.2	DK571	DE05	0-5.2	0-11.1	1-8.1	0-6.0			0-5.2	0-11.0	0-6.0	0-2.1	1-9.2
3	5	5-9.2	DK573	STR		5-9.2									
2			3/4"x10" STUDS												
UNIT G															
17	5	7-4.1	DK501	17		3-1.2	1-1.1	3-1.2							
17	5	5-2.1	DK543	STR		5-2.1									
14	5	5-6.1	DK544	16			4-3.2	1-2.3				0-10.0		0-11.0	5-2.2
12	5	8-9.3	DK545	STR		8-9.3									
20	5	38-9.2	DK546	STR		38-9.2									
4	5	2-9.3	DK547	STR		2-9.3									
4	5	7-9.2	DK548	STR		7-9.2									
9	5	4-0.2	DK571	DE05	0-5.2	0-11.1	1-8.1	0-6.0			0-5.2	0-11.0	0-6.0	0-2.1	1-9.2
3	5	5-9.2	DK573	STR		5-9.2									
24			MECHANICAL COUPLERS UNIT G TO H												
UNIT H															
17	5	7-4.1	DK501	17		3-1.2	1-1.1	3-1.2							
17	5	5-10.0	DK549	STR		5-10.0									
14	5	6-2.0	DK550	16			4-10.3	1-3.1				0-10.0		0-11.2	5-10.1
4	5	9-5.0	DK551	STR		9-5.0									
20	5	24-3.1	DK552	STR		24-3.1									
4	5	11-0.0	DK553	STR		11-0.0									
4	5	3-0.3	DK554	STR		3-0.3									
11	5	6-8.1	DK569	DE16		2-0.2	1-3.3	1-6.0	1-10.0			1-4.0		1-3.0	
11	5	5-6.0	PA502	T7		2-6.0	0-6.0	2-6.0				2-6.0		0-2.1	
8	5	6-3.3	PA505	STR		6-3.3									

UNOFFICIAL WEBSITE COPY

ASTM STANDARD ENGLISH REINFORCING BARS				RECOMMENDED END HOOKS, APPLICABLE TO ALL GRADES				STIRRUP AND TIE HOOKS, APPLICABLE TO ALL GRADES			
	NOMINAL DIMENSIONS				180° HOOKS		90° HOOKS		90° HOOK	135° HOOK	
BAR SIZE	DIAMETER (INCHES)	AREA (INCHES²)	WEIGHT (LBS./FT.)	D	A OR G	J	A OR G	D	A OR G	A OR G	A OR G
3	0.375	0.110	0.376	2¼"	5"	3"	6"	1½"	4"	4"	2½"
4	0.500	0.200	0.668	3"	6"	4"	8"	2"	4½"	4½"	3"
5	0.625	0.310	1.043	3¾"	7"	5"	10"	2½"	6"	5½"	3¾"
6	0.750	0.440	1.502	4½"	8"	6"	1-0"	4½"	1-0"	8"	4½"
7	0.875	0.600	2.044	5¼"	10"	7"	1-2"	5¼"	1-2"	9"	5¼"
8	1.000	0.790	2.670	6"	11"	8"	1-4"	6"	1-4"	10½"	6"
9	1.128	1.000	3.400	9½"	1-3"	11¾"	1-7"				
10	1.270	1.270	4.303	10¾"	1-5"	1-1¼"	1-10"				
11	1.410	1.560	5.313	1-0"	1-7"	1-2¾"	2-0"				
14	1.693	2.250	7.650	1-6¼"	2-3"	1-9¾"	2-7"				
18	2.257	4.000	13.600	2-0"	3-0"	2-4½"	3-5"				

NOTES:

1. FIGURES SHOWN IN CIRCLES REPRESENT BAR BEND TYPES.
2. STANDARD BAR BENDS INCLUDE ONLY THOSE TYPES BELOW, INDICATED AS SUCH.
3. ALL DIMENSIONS OUT-TO-OUT, EXCEPT "A" AND "G" ON STD. 180° AND 135° HOOKS.
4. "J" DIMENSIONS ON 180° HOOKS TO BE SHOWN ONLY WHERE NECESSARY TO RESTRICT HOOK SIZE, OTHERWISE STANDARD 'ACI' HOOKS ARE TO BE USED.
5. WHERE "J" IS NOT SHOWN, "J" WILL BE KEPT EQUAL TO OR LESS THAN "H" ON TYPES 3, 5 AND 22. WHERE "J" CAN EXCEED "H", IT SHALL BE SHOWN.
6. "H" DIMENSIONS OF STIRRUPS TO BE SHOWN AS NEEDED TO FIT WITHIN THE CONCRETE.
7. UNLESS OTHERWISE NOTED, DIAMETER "D" IS THE SAME FOR ALL BENDS AND HOOKS ON A BAR (EXCEPT FOR BEND TYPES 11 AND 13).
8. WHERE SLOPE DIFFERS FROM 45° OFFSET, "H" AND "K" MUST BE SHOWN.
9. WHERE BARS ARE TO BE BENT MORE ACCURATELY THAN STANDARD BENDING TOLERANCES, BENDING DIMENSIONS REQUIRING CLOSER FABRICATION SHOULD HAVE LIMITS INDICATED.
10. FOR RECOMMENDED DIAMETER "D", OF BENDS, HOOKS, ETC., REFER TO TABLE ABOVE, 'CRSI' OR 'ACI' TABLES WHERE APPLICABLE AND REQUIRED.
11. TYPE S1-S6, S11, T1-T3 AND T6-T9 APPLICABLE TO BAR SIZES #3 THROUGH #8.

STANDARD BAR BENDS

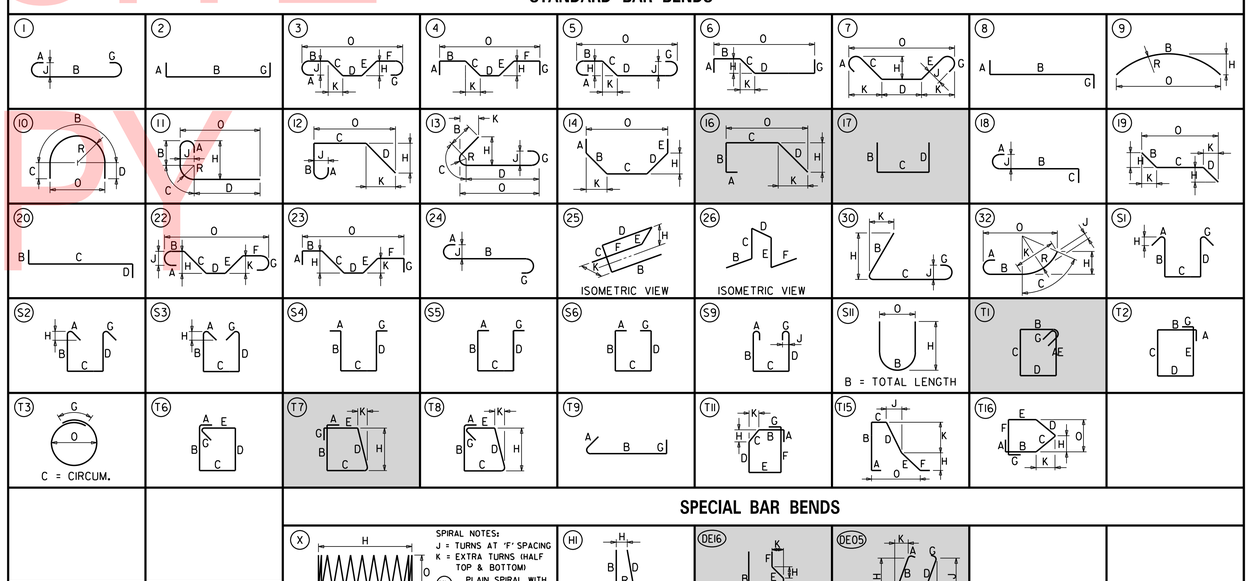

SPECIAL BAR BENDS

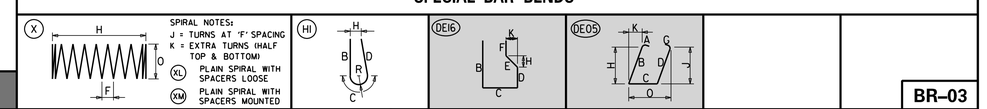

STIRRUP AND TIE HOOKS

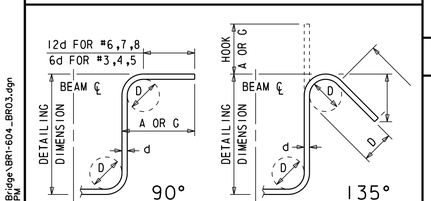

180° AND 90° END HOOKS

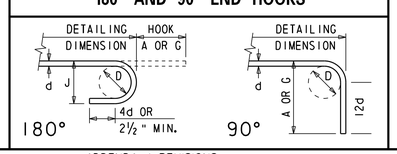

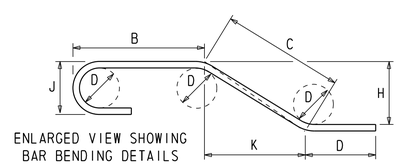

ADDENDA / REVISIONS

SCALE AS NOTED

REHABILITATION OF BRIDGES 1-600, 1-601, AND 1-604, SR 2 AND SR 141 INTERCHANGE

CONTRACT	BRIDGE NO.	1 604
T201707403	DESIGNED BY: ZMG	
COUNTY		
NEW CASTLE	CHECKED BY: WAG	

REINFORCEMENT BAR LIST DECK OVER – 1

BR-03

SECTION: WRA

SHEET NO. 119

N:\32122-002\CADD\Bridge\BR1-604_BR03.dgn 7/31/2019 4:26:02 PM

(1) ANY MARK NUMBER WITH SUFFIX 'E' DENOTES EPOXY COATED REINFORCING STEEL.

(2) ALL MARK 'LOCATION PREFIXES' SHALL CONSIST OF TWO LETTERS AND ARE AS FOLLOWS: AB = ABUTMENT, AS = APPROACH SLAB, BC = BOX CULVERT, BW = BACKWALL, CL = COLUMN, DK = DECK, DL = DOWEL, FT = FOOTING, HW = HEADWALL, MS = MISC. BARS, PA = PARAPET, PR = PIER, SC = SHEETPILE CAP, SL = SLAB, SS = SLEEPER SLAB, TW = TOEWALL, WL = WALL (UNIQUE LOCATION), WW = WINGWALL

SPECIFICATIONS					BENDING DIMENSIONS (FEET-INCHES /QUARTER INCH)										
QTY.	SIZE	LENGTH	MARK	TYPE	A	B	C	D	E	F/R	G	H	J	K	O
DECK OVER UNIT															
	UNIT J														
17	5	7-4 1/4	DK501	17		3-1/2	1-1 1/4	3-1/2							
17	5	5-10 1/4	DK555	STR		5-10 1/4									
14	5	6-2 1/4	DK556	16			4-10 3/2	1-3 3/2				0-10 0/2		1-0 1/4	5-10 3/2
8	5	9-9 0/2	DK557	STR		9-9 0/2									
20	5	32-5 3/2	DK558	STR		32-5 3/2									
4	5	3-8 0/2	DK559	STR		3-8 0/2									
4	5	7-11 0/2	DK560	STR		7-11 0/2									
11	5	6-8 1/4	DK569	DE16		2-0 2/2	1-3 3/2	1-6 0/2	1-10 0/2			1-4 0/2		1-3 0/2	
11	5	5-6 0/2	PA502	T7		2-6 0/2	0-6 0/2	2-6 0/2				2-6 0/2		0-2 1/4	
8	5	6-4 0/2	PA506	STR		6-4 0/2									
24			MECHANICAL COUPLERS UNIT J TO K												
	UNIT K														
17	5	7-4 1/4	DK501	17		3-1/2	1-1 1/4	3-1/2							
17	5	6-5 2/2	DK561	STR		6-5 2/2									
14	5	6-9 0/2	DK562	16			5-4 2/2	1-4 2/2				0-10 0/2		1-1 1/4	6-5 3/2
2	5	9-9 2/2	DK563	T1	0-5 2/2	3-4 0/2	1-1 1/4	3-4 0/2	1-1 1/4		0-5 2/2				
4	5	10-8 0/2	DK564	STR		10-8 0/2									
4	5	10-11 3/2	DK565	STR		10-11 3/2									
12	5	37-9 2/2	DK566	STR		37-9 2/2									
8	5	35-7 3/2	DK567	STR		35-7 3/2									
4	5	13-0 2/2	DK568	STR		13-0 2/2									
3			3/4"×10" STUDS												

SPECIFICATIONS					BENDING DIMENSIONS (FEET-INCHES /QUARTER INCH)										
QTY.	SIZE	LENGTH	MARK	TYPE	A	B	C	D	E	F/R	G	H	J	K	O

SPECIFICATIONS					BENDING DIMENSIONS (FEET-INCHES /QUARTER INCH)										
QTY.	SIZE	LENGTH	MARK	TYPE	A	B	C	D	E	F/R	G	H	J	K	O

UNOFFICIAL WEBSITE COPY

ASTM STANDARD ENGLISH REINFORCING BARS

BAR SIZE	NOMINAL DIMENSIONS: DIAMETER (INCHES)	AREA (INCHES²)	WEIGHT (LBS./FT.)	RECOMMENDED END HOOKS, APPLICABLE TO ALL GRADES: 180° HOOKS D	180° HOOKS A OR G	180° HOOKS J	90° HOOKS A OR G	STIRRUP AND TIE HOOKS, APPLICABLE TO ALL GRADES: 90° HOOK D	90° HOOK A OR G	135° HOOK A OR G	135° HOOK A OR G
3	0.375	0.110	0.376	2¼"	5"	3"	6"	1½"	4"	4"	2½"
4	0.500	0.200	0.668	3"	6"	4"	8"	2"	4½"	4½"	3"
5	0.625	0.310	1.043	3¾"	7"	5"	10"	2½"	6"	5½"	3¾"
6	0.750	0.440	1.502	4½"	8"	6"	1-0"	4½"	1-0"	8"	4½"
7	0.875	0.600	2.044	5¼"	10"	7"	1-2"	5¼"	1-2"	9"	5¼"
8	1.000	0.790	2.670	6"	11"	8"	1-4"	6"	1-4"	10½"	6"
9	1.128	1.000	3.400	9½"	1-3"	11¾"	1-7"				
10	1.270	1.270	4.303	10¾"	1-5"	1-1¼"	1-10"				
11	1.410	1.560	5.313	1-0"	1-7"	1-2¾"	2-0"				
14	1.693	2.250	7.650	1-6¼"	2-3"	1-9¾"	2-7"				
18	2.257	4.000	13.600	2-0"	3-0"	2-4½"	3-5"				

NOTES:

1. FIGURES SHOWN IN CIRCLES REPRESENT BAR BEND TYPES.
2. STANDARD BAR BENDS INCLUDE ONLY THOSE TYPES BELOW, INDICATED AS SUCH.
3. ALL DIMENSIONS OUT-TO-OUT, EXCEPT "A" AND "G" ON STD. 180° AND 135° HOOKS.
4. "J" DIMENSIONS ON 180° HOOKS TO BE SHOWN ONLY WHERE NECESSARY TO RESTRICT HOOK SIZE, OTHERWISE STANDARD 'ACI' HOOKS ARE TO BE USED.
5. WHERE "J" IS NOT SHOWN, "J" WILL BE KEPT EQUAL TO OR LESS THAN "H" ON TYPES 3, 5 AND 22. WHERE "J" CAN EXCEED "H", IT SHALL BE SHOWN.
6. "H" DIMENSIONS OF STIRRUPS TO BE SHOWN AS NEEDED TO FIT WITHIN THE CONCRETE.
7. UNLESS OTHERWISE NOTED, DIAMETER "D" IS THE SAME FOR ALL BENDS AND HOOKS ON A BAR (EXCEPT FOR BEND TYPES 11 AND 13).
8. WHERE SLOPE DIFFERS FROM 45° OFFSET, "H" AND "K" MUST BE SHOWN.
9. WHERE BARS ARE TO BE BENT MORE ACCURATELY THAN STANDARD BENDING TOLERANCES, BENDING DIMENSIONS REQUIRING CLOSER FABRICATION SHOULD HAVE LIMITS INDICATED.
10. FOR RECOMMENDED DIAMETER "D", OF BENDS, HOOKS, ETC., REFER TO TABLE ABOVE, 'CRSI' OR 'ACI' TABLES WHERE APPLICABLE AND REQUIRED.
11. TYPE S1-S6, S11, T1-T3 AND T6-T9 APPLICABLE TO BAR SIZES #3 THROUGH #8.

STANDARD BAR BENDS

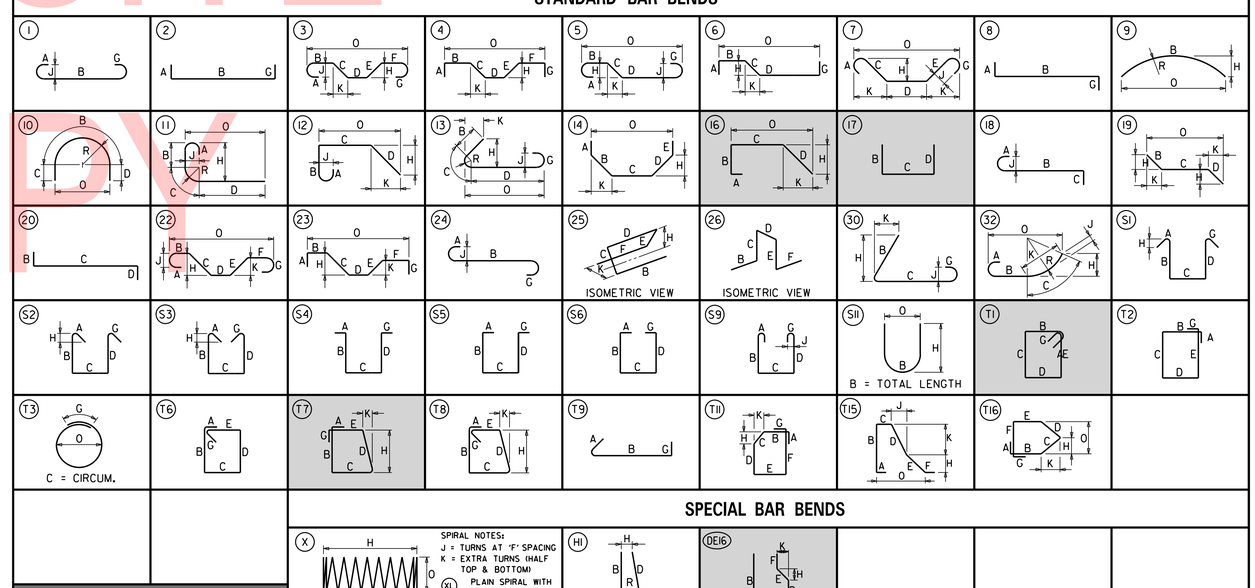

SPECIAL BAR BENDS

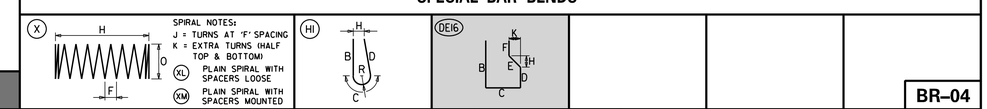

STIRRUP AND TIE HOOKS

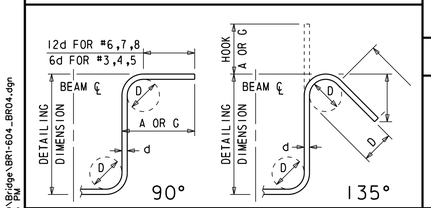

180° AND 90° END HOOKS

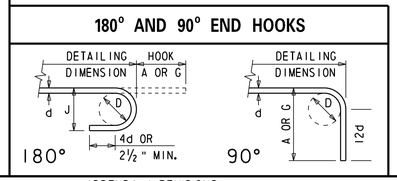

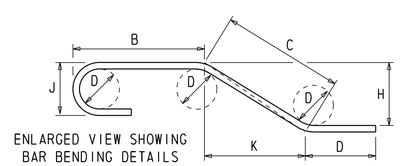

ADDENDA / REVISIONS

SCALE AS NOTED

REHABILITATION OF BRIDGES 1-600, 1-601, AND 1-604, SR 2 AND SR 141 INTERCHANGE

CONTRACT	BRIDGE NO.	1 604
T201707403	DESIGNED BY: ZMG	
COUNTY		
NEW CASTLE	CHECKED BY: WAG	

REINFORCEMENT BAR LIST DECK OVER – 2

BR-04

SECTION: WRA

SHEET NO. 120

N:\32122-002\CADD\Bridge\BR1-604_BR04.dgn 7/31/2019 4:26:03 PM

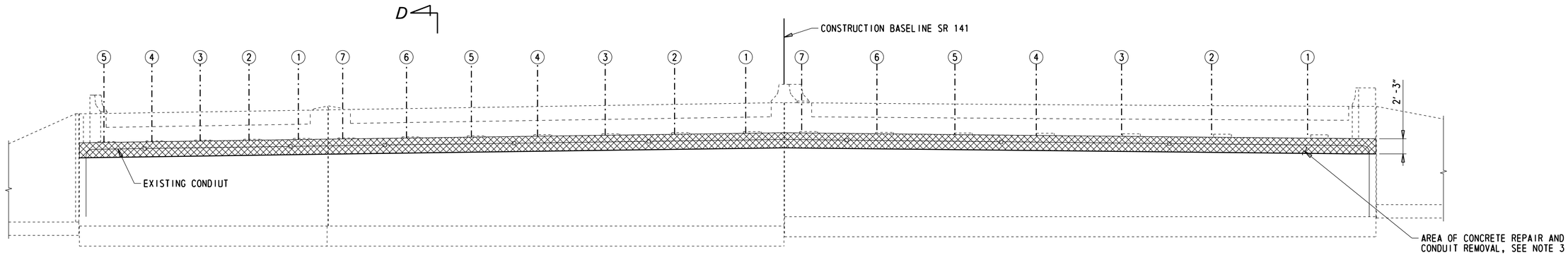

ABUTMENT A - ELEVATION

1/8" = 1'-0"

NOTE:
PILES NOT SHOWN FOR CLARITY.

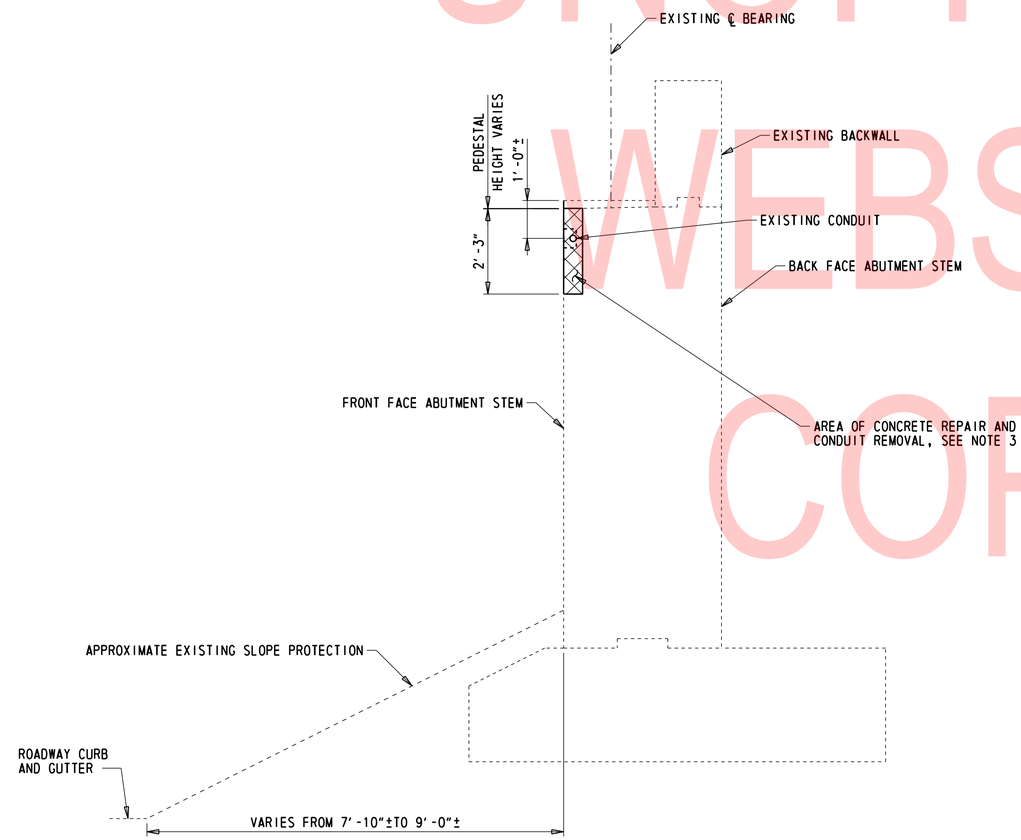

SECTION D-D

1/2" = 1'-0"

NOTES:

1. FOR REPAIR DESCRIPTIONS, LOCATIONS, AND QUANTITIES, SEE DWG. PN-04. PRIOR TO STARTING EACH REPAIR, THE LIMITS SHALL BE VERIFIED BY THE CONTRACTOR IN THE PRESENCE OF THE ENGINEER.
2. WHERE CRACKS AND SPALLS EXIST CONCURRENTLY, COMPLETE THE SPALL REPAIR COMPLETELY REMOVING THE ASSOCIATED CRACK. IF THE CRACK EXTENDS LESS THAN 1'-0" BEYOND THE LIMITS OF THE SPALL REPAIR, EXTEND THE LIMITS OF THE SPALL REPAIR TO ENCOMPASS THE CRACK. IF THE CRACK EXTENDS DEEPER THAN THE LIMITS OF CONCRETE REMOVAL, THE CONTRACTOR SHALL REMOVE ADDITIONAL CONCRETE UNTIL THE CRACK IS FULLY REMOVED. IF THE DEPTH OF REMOVAL REACHES MORE THAN 6" FROM THE ORIGINAL FACE OF CONCRETE, ALL WORK ON THE REPAIR SHALL STOP AND THE ENGINEER SHALL BE NOTIFIED IMMEDIATELY. IF THE CRACK EXTENDS MORE THAN 1'-0" BEYOND THE LIMITS OF THE SPALL REPAIR INTO SOUND CONCRETE THE CRACK SHALL BE REPAIRED BY EPOXY INJECTION AND PAID FOR UNDER ITEM 628001 BEYOND THE LIMITS OF THE SPALL REPAIR. CRACKS LOCATED WITHIN SPALL REPAIRS WILL NOT BE PAID FOR AND WILL BE CONSIDERED INCIDENTAL TO ITEM 628041.
3. FOR CONCRETE REPAIR DETAILS, SEE DWG. PN-03. EXISTING CONDUIT TO BE REMOVED WITHIN LIMITS OF CONCRETE REPAIR. PAYMENT IS INCIDENTAL TO ITEM NO. 628042.
4. CONTRACTOR SHALL TAKE CARE TO PROTECT THE BEARINGS DURING APPLICATION OF THE SILICONE-BASED ACRYLIC CONCRETE SEALER. ANY CLEAN-UP REQUIRED TO REMOVE THE SEALER FROM THE BEARINGS WILL BE AT NO ADDITIONAL COST TO THE DEPARTMENT AND TO THE SATISFACTION OF THE ENGINEER.
5. SILICONE-BASED ACRYLIC CONCRETE SEALER SHALL BE APPLIED TO ALL EXPOSED CONCRETE ABUTMENT SURFACES. PAYMENT WILL BE MADE UNDER ITEM 613001.
6. SILICONE-BASED ACRYLIC CONCRETE SEALER SHALL ONLY BE APPLIED AFTER ALL CONCRETE REPAIRS ARE COMPLETED AT EACH ABUTMENT.
7. SEE BACKWALL REMOVAL LIMITS ON DWGS. DK-07 AND DK-08.

UNOFFICIAL WEBSITE COPY

N:\37122-003\CADD\Bridge\BR1-604_AB01.dgn
7/31/2019 4:20:04 PM

ADDENDA / REVISIONS	SCALE AS NOTED	REHABILITATION OF BRIDGES 1-600, 1-601, AND 1-604, SR 2 AND SR 141 INTERCHANGE	CONTRACT T201707403	BRIDGE NO. 1 604	ABUTMENT A CONCRETE REPAIR DETAILS	AB-01
			COUNTY NEW CASTLE	DESIGNED BY: ZMG		SECTION WRA
				CHECKED BY: WAG		SHEET NO. 121

GENERAL TRAFFIC CONTROL NOTES

1) THIS PROJECT IS CONSIDERED A SIGNIFICANT PROJECT AS DEFINED BY DELDOT'S WORK ZONE MOBILITY PROCEDURES AND GUIDELINES. A TYPE B TRANSPORTATION MANAGEMENT PLAN (TMP) HAS BEEN PREPARED AND IS AVAILABLE FOR VIEWING BY CONTACTING THE DEPARTMENT'S SAFETY PROGRAMS MANAGER AT (302) 659-4060. ALL MONITORING REQUIREMENTS OF THE TMP SHALL BE CONDUCTED BY DELDOT FORCES UNLESS OTHERWISE DIRECTED BY THE ENGINEER. THE CONTRACTOR SHALL COMPLETE MODIFICATIONS TO THE TMP IF THE CONTRACTOR DESIRES TO CHANGE THE TIME RESTRICTIONS OR THE TRAFFIC CONTROL PLAN. THE MODIFIED TMP SHALL BE PREPARED BY A LICENSED PROFESSIONAL ENGINEER, REGISTERED IN THE STATE OF DELAWARE.

2) ALL NECESSARY SIGNS SHALL BE INSTALLED PRIOR TO THE OPENING/REOPENING/CLOSING OF A ROADWAY OR RAMP. THE CONTRACTOR SHALL SCHEDULE A WALKTHROUGH WITH THE ENGINEER, TRAFFIC SAFETY SECTION, TRAFFIC CONSTRUCTION SECTION, AND OTHER PERSONNEL SHALL OCCUR NO LESS THAN 48 HOURS PRIOR TO THE OPENING/REOPENING OF ANY ROAD OR RAMP.

3) DURING THE PERIOD BETWEEN STAGES, THE LIMITS OF THE WORK ZONE MAY BE ADJUSTED AS DIRECTED BY THE ENGINEER IN THE FIELD. A WARNING SIGN SHALL NOT BE PAID WHILE THE SIGN IS NOT IN USE, INCLUDING DURATIONS WHEN THE CONTRACTOR CHOOSES TO BAG THE SIGN.

4) REMOVAL OF EXISTING PAVEMENT MARKINGS AS DIRECTED BY THE ENGINEER SHALL BE PAID UNDER ITEM 817031 - REMOVAL OF PAVEMENT STRIPING. ALL MARKINGS THAT ARE NO LONGER IN USE AND CONFLICT WITH THE TEMPORARY PAVEMENT MARKINGS IN USE DURING A GIVEN STAGE ARE TO BE REMOVED BY THE CONTRACTOR AND MUST BE COMPLETELY OBLITERATED BY WATERBLASTING. PAINTING OVER THE CONFLICTING STRIPING WILL NOT BE ACCEPTED AS A METHOD OF REMOVAL. IF WEATHER CONDITIONS (FREEZING TEMPERATURES) PREVENT WATERBLASTING, THEN ALTERNATE REMOVAL METHODS MAY BE PERMITTED WITH APPROVAL OF THE ENGINEER.

5) THE CONTRACTOR SHALL SUPPLY PORTABLE CHANGEABLE MESSAGE SIGNS UNDER ITEM 803001 - FURNISH AND MAINTAIN PORTABLE CHANGEABLE MESSAGE SIGN. THE CONTRACTOR MUST DESIGNATE A PERSON RESPONSIBLE FOR THESE MESSAGE BOARDS. RELOCATING THE MESSAGE BOARDS TO DIFFERENT LOCATIONS WILL BE INCIDENTAL TO ITEM 803001. IN ADDITION TO THE LOCATIONS DEPICTED ON THE TRAFFIC CONTROL PLANS, MESSAGE BOARDS SHALL BE POSTED ALONG SR 141 NORTHBOUND AND SOUTHBOUND INFORMING MOTORISTS OF CHANGES IN TRAFFIC PATTERNS ASSOCIATED WITH EACH STAGE OF CONSTRUCTION. THE PCMSs SHALL DISPLAY THE MESSAGE "NEW TRAFFIC PATTERN" (SCREEN 1) "ON OR ABOUT MM/DD" (SCREEN 2) FOR SEVEN DAYS PRIOR TO TRAFFIC PATTERN CHANGES AND THE MESSAGE "NEW TRAFFIC PATTERN" (SCREEN 1) "USE CAUTION" (SCREEN 2) FOR SEVEN DAYS AFTER THE TRAFFIC PATTERN HAS BEEN CHANGED. ALL LOCATIONS AND MESSAGES FOR THE MESSAGE BOARDS SHALL BE APPROVED BY THE DISTRICT SAFETY OFFICER.

6) TEMPORARY IMPACT ATTENUATORS ON SR 141 SHALL BE DESIGNED FOR A 60 MPH DESIGN SPEED, NON-GATING, REDIRECTIVE, TL-3. TEMPORARY IMPACT ATTENUATORS IN USE ON OTHER ROADWAYS SHALL BE DESIGNED FOR THE DESIGN SPEED OF THE ROADWAY OR 85TH PERCENTILE PREVAILING SPEED, AS APPROVED BY THE ENGINEER.

7) THE REFLECTIVE LENSES ONLY OF ANY EXISTING RAISED/RECESSED PAVEMENT MARKERS IN CONFLICT WITH PROPOSED TEMPORARY STRIPING SHALL BE REMOVED. PAYMENT FOR REMOVAL OF THE REFLECTIVE LENSES WILL BE INCIDENTAL TO ITEM 801000 - MAINTENANCE OF TRAFFIC. REFER TO SIGNING, STRIPING AND CONDUIT PLANS FOR INSTALLATION OF PERMANENT PLOWABLE RAISED PAVEMENT MARKERS.

8) W11-10 (48"x48") TRUCK WARNING SIGNS SHALL BE INSTALLED 500 FEET IN ADVANCE OF ALL ACTIVE STABILIZED CONSTRUCTION ENTRANCES (SCEs). THE CONTRACTOR SHALL COORDINATE THE PLACEMENT OF THE TRUCK WARNING SIGNS WITH OTHER SIGNING AS APPROVED BY THE ENGINEER. SCEs SHALL BE DELINEATED BY TYPE III BARRICADES AT ALL TIMES.

9) WHEN THE LEADING END OF THE BARRIER IS OPEN FOR CONSTRUCTION ACCESS AND WORK IS OCCURRING WITHIN THE BARRIER LENGTH OF NEED (570 FEET OF THE LEADING END OF THE BARRIER FOR SR 141 MAINLINE), A TYPE 2 TRUCK MOUNTED ATTENUATOR SHALL BE PROVIDED AT THE LEADING END OF THE BARRIER TO PROTECT THE WORK AREA AND TO PREVENT ERRANT VEHICLES FROM TRAVELING BEHIND THE BARRIER.

10) THE TYPICAL APPLICATIONS FROM PART 6 OF THE DELAWARE MUTCD SHALL BE UTILIZED FOR CONSTRUCTION ACTIVITIES WHICH OCCUR OUTSIDE OF THE WORK AREAS ESTABLISHED ON THE CONSTRUCTION STAGING, MOT AND EROSION CONTROL PLANS, OR AS DIRECTED BY THE ENGINEER:

   a. TYPICAL APPLICATIONS 5A, 42, 43, AND 44 - ALL LIGHTING, SIGNING AND TEMPORARY SIGNING WORK IN THE MEDIAN AND ON OR OFF THE SHOULDER

   b. TYPICAL APPLICATIONS 33, 37, 42 & 44 - ALL OVERHEAD SIGNING WORK

   c. TYPICAL APPLICATIONS 35D & 35F - INSTALLATION OF ALL LANE LINE, CENTERLINE, AND EDGE LINE PAVEMENT MARKINGS

   d. TYPICAL APPLICATIONS 5A, 33, 37, 42, 43 AND 44 - PAVING & PATCHING

11) ALL DRUMS SHALL BE DOUBLE RINGED.

12) AMERICAN TRAFFIC SAFETY SERVICES ASSOCIATION (ATSSA) CERTIFIED TRAFFIC CONTROL SUPERVISOR REQUIREMENT FOR THIS PROJECT.

( )	THE CONTRACTOR SHALL NOT BE REQUIRED TO HAVE AN ATSSA SUPERVISOR ASSIGNED TO THIS PROJECT.
X	THE CONTRACTOR SHALL HAVE AN ATSSA SUPERVISOR ASSIGNED TO THIS PROJECT. THE CONTRACTOR'S GENERAL SUPERINTENDENT FOR THIS PROJECT OR ANOTHER ATSSA CERTIFIED MEMBER OF THE CONTRACTOR'S PROJECT STAFF MAY BE THE ATSSA SUPERVISOR. PAYMENT FOR ATSSA SUPERVISOR IS INCIDENTAL TO ITEM 801000.
( )	THE CONTRACTOR SHALL HAVE AN ATSSA SUPERVISOR ASSIGNED TO THIS PROJECT. THE ATSSA SUPERVISOR'S SOLE JOB SHALL BE SUPERVISION OF THE INSTALLATION, OPERATION AND MAINTENANCE OF TRAFFIC CONTROL DEVICES FOR THIS PROJECT. THE CONTRACTOR'S GENERAL SUPERINTENDENT FOR THIS PROJECT SHALL NOT BE THE ATSSA SUPERVISOR. PAYMENT FOR ATSSA SUPERVISOR SHALL BE PAID FOR UNDER ITEM 801000.

13)

EROSION POTENTIAL FOR THIS PROJECT	CONTRACTOR ESC SUPERVISOR REQUIREMENT
( ) INSIGNIFICANT	NONE
(X) MINOR	CONTRACTOR TRAINING PROGRAM, AS DEFINED IN SECTION 6.2 OF THE DELAWARE SEDIMENT AND STORMWATER REGULATIONS.
( ) MAJOR	CERTIFIED CONSTRUCTION REVIEWER (CCR), AS DEFINED IN SECTION 6.3 OF THE DELAWARE SEDIMENT AND STORMWATER REGULATIONS.

14) THE DISTURBED AREA FOR THIS PROJECT IS 0.92 ACRES.

15) THERE IS NO ADDITIONAL IMPERVIOUS AREA AS A RESULT OF THIS PROJECT.

16) THE SEDIMENT AND STORMWATER MANAGEMENT PLANS HAVE BEEN APPROVED BY DELDOT'S STORMWATER ENGINEER UNDER DELDOT'S DELEGATED AUTHORITY. THE SEDIMENT AND STORMWATER MANAGEMENT PLANS ARE VALID FOR A FIVE YEAR PERIOD, BEGINNING ON THE DATE THE STORMWATER ENGINEER SIGNED THE CONSTRUCTION TITLE SHEET. IF THE FINAL ACCEPTANCE OF THE PROJECT IS ANTICIPATED TO EXTEND BEYOND THE FIVE YEARS, THE CONTRACTOR WILL INFORM THE ENGINEER THREE MONTHS PRIOR TO THE EXPIRATION OF THE APPROVED SEDIMENT AND STORMWATER MANAGEMENT PLANS. THE STORMWATER ENGINEER WILL REVIEW THE CURRENT SEDIMENT AND STORMWATER MANAGEMENT PLAN AND ISSUE AN EXTENSION WITH ANY APPROPRIATE MODIFICATIONS.

TRAFFIC OFFICER NOTES

1) THE CONTRACTOR SHALL PROVIDE ONE TRAFFIC OFFICER FOR A FOUR-HOUR PERIOD TWICE PER MONTH TO PERFORM SPEED ENFORCEMENT ALONG ROADWAYS WITHIN THE PROJECT LIMITS. AT THE END OF THE DAY'S ENFORCEMENT ACTIVITY, THE TRAFFIC OFFICERS SHALL PROVIDE A REPORT TO THE ENGINEER IDENTIFYING THE NUMBER OF VEHICLES STOPPED, NUMBER AND TYPE OF CITATIONS GIVEN AND THE RANGE OF SPEEDS OF THOSE VEHICLES STOPPED. ENFORCEMENT LOCATIONS WILL BE DETERMINED BY THE ENGINEER.

2) THE CONTRACTOR SHALL PROVIDE ONE TRAFFIC OFFICER FOR NIGHTTIME MOBILE PAVEMENT MARKING OPERATIONS ON SR 141.

3) THE CONTRACTOR SHALL PROVIDE TWO TRAFFIC OFFICERS FOR MAJOR STAGE CHANGE TRAFFIC SWITCHES ON SR 141. THE TRAFFIC OFFICERS SHALL BE ON-SITE DURING THE TRAFFIC SWITCH AND DURING THE FIRST MORNING PEAK PERIOD (6AM - 9AM) AND THE FIRST AFTERNOON PEAK PERIOD (3PM - 7PM) AFTER THE TRAFFIC SWITCH HAS BEEN IMPLEMENTED.

4) SEE DETOUR PLANS FOR ADDITIONAL TRAFFIC OFFICER REQUIREMENTS.

5) FOR TEMPORARY NIGHTTIME CLOSURES OF ANY ROAD OR RAMP, THE CONTRACTOR SHALL PROVIDE ONE TRAFFIC OFFICER AT EACH CLOSURE POINT SHOWN IN THE APPLICABLE DETOUR PLANS. THE TRAFFIC OFFICER SHALL BE POSITIONED BEHIND THE CLOSURE BARRICADE WITH THE FRONT OF THE VEHICLE FACING APPROACHING TRAFFIC AND ALL EMERGENCY LIGHTS SHALL BE ACTIVATED. THE TRAFFIC OFFICER SHALL PROVIDE A REPORT TO THE ENGINEER AT THE END OF THE DAY'S ACTIVITY IDENTIFYING THE NUMBER OF VEHICLES THAT ATTEMPTED TO NOT FOLLOW THE DETOUR.

6) ADDITIONAL USAGE OF TRAFFIC OFFICERS OUTSIDE OF THE ABOVE REQUIREMENTS SHALL BE APPROVED BY THE ENGINEER IN CONSULTATION WITH THE TRAFFIC SAFETY SECTION.

ROADWAY NOTES

1) THE CONTRACTOR IS RESPONSIBLE FOR THE MAINTENANCE OF EXISTING PAVEMENT WITHIN THE PROJECT LIMITS FOR THE DURATION OF THE CONTRACT OR AS DIRECTED BY THE ENGINEER OR DESIGNER. ALL REPAIRS ARE AT THE CONTRACTOR'S EXPENSE AS DIRECTED BY THE ENGINEER.

2) THE USE OF MILLINGS AND GRADED AGGREGATE BASE COURSE (GABC) IN THE TRAVEL WAY, TEMPORARY TRAVEL WAY, HIGH VOLUME ENTRANCES AND ACCESS RAMP FOR THE PURPOSE OF PROVIDING A TEMPORARY ROADWAY SURFACE, POTHOLE REPAIR, TAPERED EDGE FOR UTILITIES, BUTT JOINTS, AN LONGITUDINAL DROP-OFFS (MILLING AND PAVING OPERATIONS) IS PROHIBITED UNLESS IT IS OTHERWISE DESIGNATED TO BE USED IN THE CONTRACT PLANS. USE COLD PATCH, BITUMINOUS CONCRETE, BITUMINOUS CONCRETE WEDGE, OR TAPER MILL, AS NOTED IN THE CONTRACT DOCUMENTS OR APPROVED BY THE ENGINEER. PAYMENT FOR COLD PATCH, BITUMINOUS CONCRETE OR BITUMINOUS CONCRETE WEDGE SHALL BE PAID FOR UNDER THE BITUMINOUS CONCRETE MILLING ITEM.

MILLINGS OR GABC SHALL BE USED AT THE FOLLOWING LOCATIONS WHERE ACCESS TO A BUSINESS, RESIDENCE, OR EDGE DROP OFF NEEDS TO BE MAINTAINED UNLESS OTHERWISE NOTED IN THE PLANS OR DIRECTED BY THE ENGINEER TO USE BITUMINOUS CONCRETE OR COLD PATCH. ALL MILLINGS AND GABC WILL BE ROLLED AND COMPACTED TO HELP PREVENT THE MATERIAL FROM UNRAVELING:

a. DRIVEWAYS
b. ENTRANCES
c. LOW VOLUME ACCESS RAMPS (IDENTIFIED IN THE CONTRACT DOCUMENTS)
d. EDGE DROP-OFFS ADJACENT TO LIVE ROADWAY (LANES AND SHOULDER) AND THE PROPOSED ROAD CONSTRUCTION
e. EDGE OF ROADWAY DROP-OFF

GRADING AND MAINTAINING BASE COURSE THAT IS BEING USED FOR ROADWAY WEDGE/FILLET BETWEEN TRAVEL LANES AND PAVEMENT BOX, EDGE OF TRAVELWAY, DRIVEWAY OR ENTRANCE ACCESS SHALL BE INCIDENTAL TO ITEM NO. 801000 - MAINTENANCE OF TRAFFIC. THE BASE COURSE MATERIAL SHALL BE PLACED AT NO GREATER THAN THE SLOPE SPECIFIED IN TABLE 6G-1 AND SHALL BE COMPACTED. EXCESS BASE COURSE MATERIAL SHALL BE PUSHED AHEAD AND USED IN THE NEXT SEGMENT AND SHALL BE INCIDENTAL TO THE PARTICULAR BASE COURSE PAY ITEM. NO SEPARATE PAYMENT SHALL BE MADE FOR MILLINGS OR GABC TEMPORARY ROADWAY MATERIAL (TRM) USED TO PROTECT EDGE DROP-OFFS, UNLESS THE MATERIAL IS EVENTUALLY UTILIZED AS PART OF A PERMANENT ROADWAY AT WHICH TIME THE MATERIAL WOULD BE PAID FOR UNDER THE RESPECTIVE CONTRACT MATERIAL ITEM.

VERTICAL DIFFERENCES SHALL BE CORRECTED IN ACCORDANCE WITH TABLE 6G-1 OF THE DELAWARE MUTCD.

Vincent W. Davis 09/03/2019
DELDOT STORMWATER ENGINEER — DATE

"I CERTIFY TO THE BEST OF MY KNOWLEDGE AND BELIEF THAT THESE PLANS MEET THE REQUIREMENTS OF THE DELAWARE SEDIMENT AND STORMWATER REGULATIONS AND THAT ALL CLEARING, GRADING, AND CONSTRUCTION WILL BE ACCOMPLISHED PURSUANT TO THE PLAN."

UNOFFICIAL WEB COPY

WORK HOUR RESTRICTION NOTES

1) ALL WORK REQUIRING LANE CLOSURES IN ADDITION TO THE PERMANENT LANE CLOSURES SHOWN ON THE CONSTRUCTION STAGING, M.O.T. AND EROSION CONTROL PLANS SHALL BE COMPLETED DURING THE HOURS PERMITTED IN THE FOLLOWING TABLES.

2) SEE CONTRACT SPECIFICATIONS FOR LIQUIDATED DAMAGES ASSOCIATED WITH OTHER TEMPORARY TRAFFIC CONTROL ACTIVITIES.

SINGLE LANE CLOSURE MATRIX FOR SR 2

HOUR	SUNDAY	MONDAY	TUESDAY	WEDNESDAY	THURSDAY	FRIDAY	SATURDAY
0							
1							
2							
3							
4							
5							
6							
7		X	X	X	X	X	
8		X	X	X	X	X	
9							
10							
11							
12	X						X
13	X						X
14	X	X	X	X	X	X	X
15	X	X	X	X	X	X	X
16	X	X	X	X	X	X	X
17		X	X	X	X	X	
18		X	X	X	X	X	
19							
20							
21							
22							
23							

SINGLE LANE CLOSURE MATRIX FOR SR 141 NB AND SB

HOUR	SUNDAY	MONDAY	TUESDAY	WEDNESDAY	THURSDAY	FRIDAY	SATURDAY
0							
1							
2							
3							
4							
5							
6							
7		X	X	X	X	X	
8		X	X	X	X	X	
9							
10							
11							
12							
13							
14							
15		X	X	X	X	X	
16		X	X	X	X	X	
17		X	X	X	X	X	
18		X	X	X	X	X	
19							
20							
21							
22							
23							

DOUBLE LANE CLOSURE MATRIX FOR SR 2

HOUR	SUNDAY	MONDAY	TUESDAY	WEDNESDAY	THURSDAY	FRIDAY	SATURDAY
0							
1							
2							
3							
4							
5							
6	X	X	X	X	X	X	X
7	X	X	X	X	X	X	X
8	X	X	X	X	X	X	X
9	X	X	X	X	X	X	X
10	X	X	X	X	X	X	X
11	X	X	X	X	X	X	X
12	X	X	X	X	X	X	X
13	X	X	X	X	X	X	X
14	X	X	X	X	X	X	X
15	X	X	X	X	X	X	X
16	X	X	X	X	X	X	X
17	X	X	X	X	X	X	X
18	X	X	X	X	X	X	X
19	X	X	X	X	X	X	X
20	X	X	X	X	X	X	X
21		X	X	X	X	X	
22							
23							

DOUBLE LANE CLOSURE MATRIX FOR SR 141 NB (SOUTH OF RAMP DIVERGE TO CD LANE ONLY)

HOUR	SUNDAY	MONDAY	TUESDAY	WEDNESDAY	THURSDAY	FRIDAY	SATURDAY
0							
1							
2							
3							
4							
5							
6	X	X	X	X	X	X	X
7	X	X	X	X	X	X	X
8	X	X	X	X	X	X	X
9	X	X	X	X	X	X	X
10	X	X	X	X	X	X	X
11	X	X	X	X	X	X	X
12	X	X	X	X	X	X	X
13	X	X	X	X	X	X	X
14	X	X	X	X	X	X	X
15	X	X	X	X	X	X	X
16	X	X	X	X	X	X	X
17	X	X	X	X	X	X	X
18	X	X	X	X	X	X	X
19	X	X	X	X	X	X	X
20	X	X	X	X	X	X	X
21		X	X	X	X	X	
22							
23							

X — LANE CLOSURES NOT PERMITTED

LANE CLOSURES PERMITTED

UNOFFICIAL WEBSITE COPY

N:\32122-002\CADD\Traffic\CS002_141.dgn
8/1/2019 3:14:44 PM

ADDENDA / REVISIONS	

REHABILITATION OF BRIDGES 1-600, 1-601, AND 1-604, SR 2 AND SR 141 INTERCHANGE

CONTRACT	BRIDGE NO.	
T201707403	DESIGNED BY: JDC	
COUNTY		
NEW CASTLE	CHECKED BY: JDC	

CONSTRUCTION STAGING, M.O.T., AND EROSION CONTROL PLAN GENERAL NOTES

CS-002

SECTION
WRA
SHEET NO.
123

WARNING SIGN LEGEND

ROAD WORK 1 MILE	END ROAD WORK	ROAD WORK AHEAD	ROAD WORK AHEAD / ON RAMP
(2) W20-1 (48" x 48")	(2) G20-2 (48" x 24")	W20-1 (48" x 48")	W20-1 (48" x 48") (STAGE 1 ONLY); W13-4P (36" x 36") (STAGE 1 ONLY)
1	2	3	4

REGULATORY SIGN LEGEND

BEGIN HIGHER FINES ZONE	END HIGHER FINES ZONE
(2) R2-10	(2) R2-11
R1	R2

NOTES:

1. SEE INDIVIDUAL STAGING PLANS FOR PLACEMENT OF ADDITIONAL WARNING SIGNS. LOCATION OF ALL PERMANENT WARNING SIGNS SHALL BE COORDINATED WITH THE ENGINEER.
2. ANY EXISTING SIGNS THAT CONFLICT WITH CONSTRUCTION WARNING SIGNS SHALL BE COVERED OR RELOCATED, AS DIRECTED BY THE ENGINEER.
3. PERMANENT WARNING SIGNS SHALL BE PLACED ON THE LEFT AND RIGHT SIDE OF THE ROADWAY OF DIVIDED HIGHWAYS WHEN APPLICABLE.
4. THE CONTRACTOR IS RESPONSIBLE FOR PROVIDING DETAILS AND CALCULATIONS FOR ANY BARRIER AND/OR BRIDGE MOUNTED PERMANENT WARNING SIGN SUPPORTS REQUIRED TO MOUNT PERMANENT WARNING SIGNS TO THE ENGINEER FOR APPROVAL. PROVIDING BARRIER AND/OR BRIDGE MOUNTED PERMANENT WARNING SIGN DETAILS AND CALCULATIONS WILL NOT BE MEASURED AND PAID FOR BUT WILL BE INCIDENTAL TO THE TEMPORARY WARNING SIGNS ITEM.
5. ALL PERMANENT WARNING SIGNS SHALL BE POST MOUNTED ON NCHRP REPORT 350 OR MASH APPROVED BREAKAWAY SUPPORTS UNLESS OTHERWISE NOTED ON THESE PLANS, AS DIRECTED BY THE ENGINEER, OR ONE OF THE FOLLOWING CONDITIONS APPLY:
   1) A UTILITY CONFLICT EXISTS THAT PREVENTS THE BREAKAWAY SUPPORTS FROM BEING DRIVEN INTO THE GROUND (ALL UTILITY CONFLICTS MUST BE VERIFIED BY THE INSPECTOR), OR
   2) MATERIAL OTHER THAN COMMON EARTH, SUCH AS CONCRETE, HOT MIX ASPHALT, BRICK, ETC. PREVENTS DRIVING THE POSTS AND SUPPORTS INTO THE GROUND.

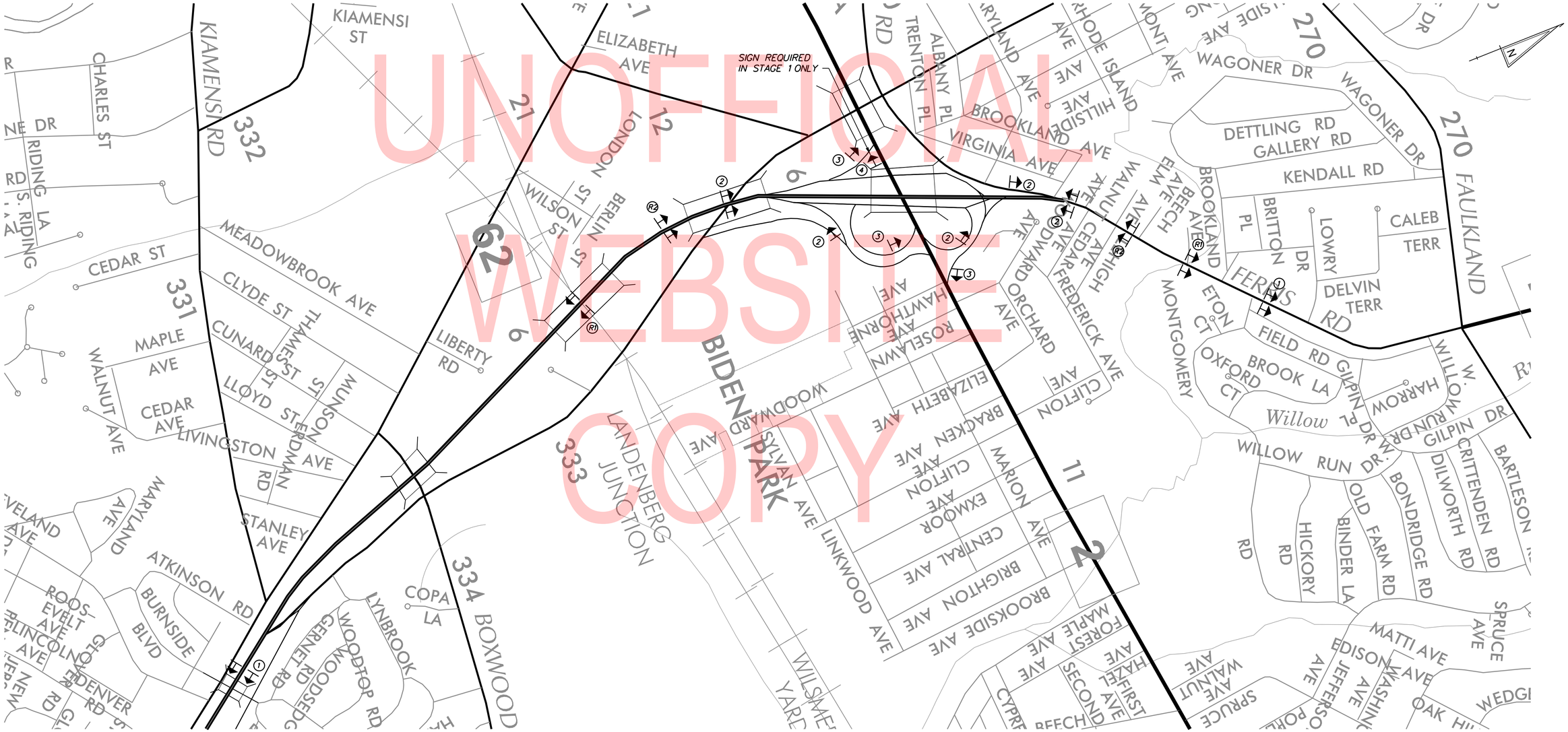

UNOFFICIAL WEBSITE COPY

N:\32122-002\CAD9\Traffic\CS003_141.dgn
8/1/2019 3:14:46 PM

ADDENDA / REVISIONS	

SCALE: 0 400 800 1200 FEET

REHABILITATION OF BRIDGES 1-600, 1-601, AND 1-604, SR 2 AND SR 141 INTERCHANGE

CONTRACT	BRIDGE NO.
T201707403	DESIGNED BY: JDC
COUNTY: NEW CASTLE	CHECKED BY: JDC

PERMANENT WARNING SIGN LOCATION PLAN

CS-003

SECTION	SHEET NO.
WRA	124

SECTION A-A

PRE-STAGE

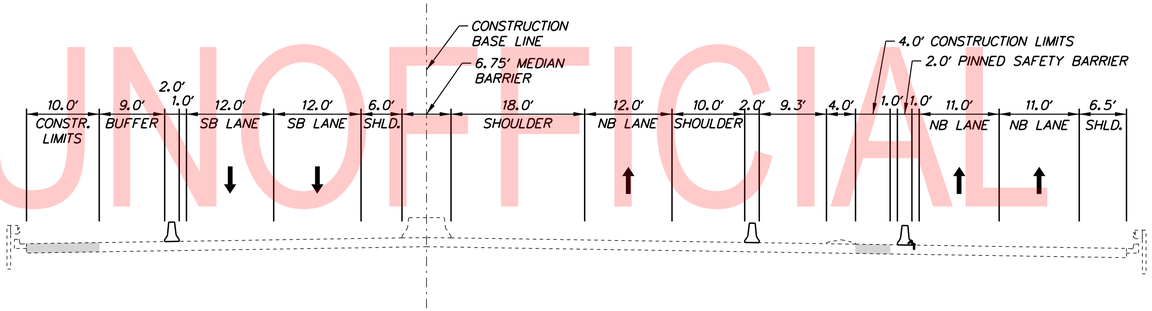

UNOFFICIAL WEBSITE COPY

NOTES:
1. REFER TO DRAWING CS-008 FOR THE LOCATION OF SECTION A-A.

N:\32122-002\C400\Traffic\CS004_141.dgn
8/1/2019 3:14:46 PM

ADDENDA / REVISIONS	

REHABILITATION OF BRIDGES 1-600, 1-601, AND 1-604, SR 2 AND SR 141 INTERCHANGE

CONTRACT	BRIDGE NO.	
T201707403	DESIGNED BY: JDC	
COUNTY		
NEW CASTLE	CHECKED BY: JDC	

M.O.T. TYPICAL SECTIONS

CS-004
SECTION
WRA
SHEET NO.
125

SECTION C-C
(BRIDGE 600)

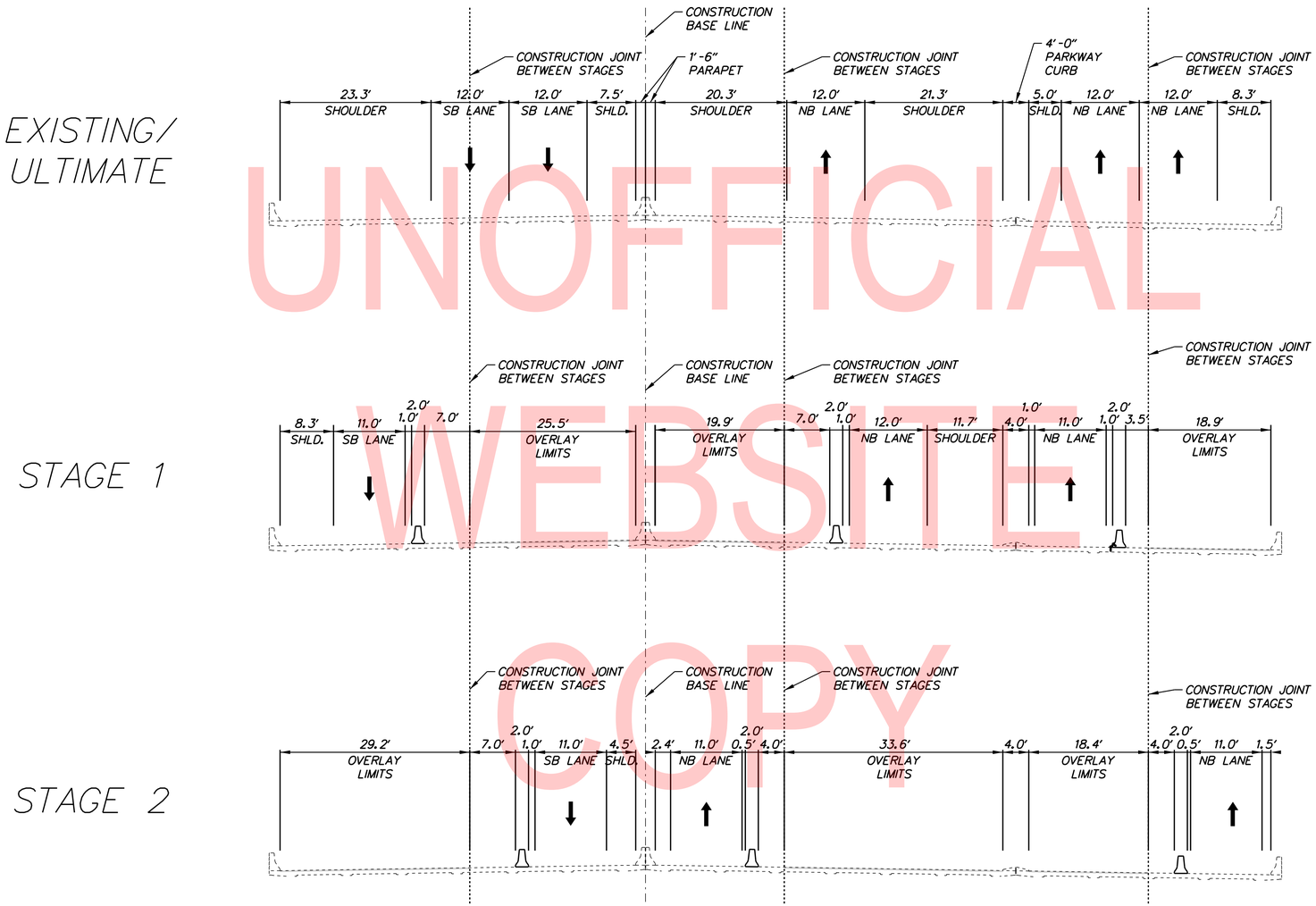

UNOFFICIAL WEBSITE COPY

NOTES:
1. REFER TO DRAWINGS CS-103 AND CS-203 FOR THE LOCATION OF SECTION C-C.

N:\32122-002\CADD\Traffic\CS005_141.dgn
8/1/2019 3:14:47 PM

ADDENDA / REVISIONS	

REHABILITATION OF BRIDGES 1-600, 1-601, AND 1-604, SR 2 AND SR 141 INTERCHANGE

CONTRACT	BRIDGE NO.	
T201707403	DESIGNED BY: JDC	
COUNTY		
NEW CASTLE	CHECKED BY: JDC	

M.O.T. TYPICAL SECTIONS

CS-005
SECTION
WRA
SHEET NO.
126

SECTION D-D
(BRIDGE 604)

EXISTING/
ULTIMATE

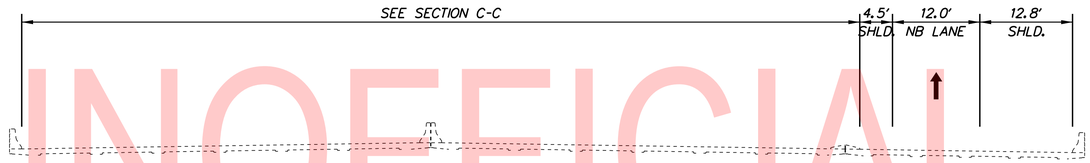

STAGE 1

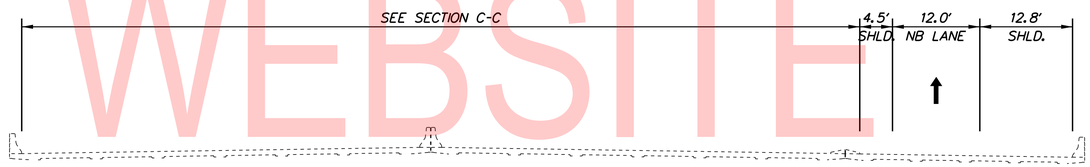

STAGE 2

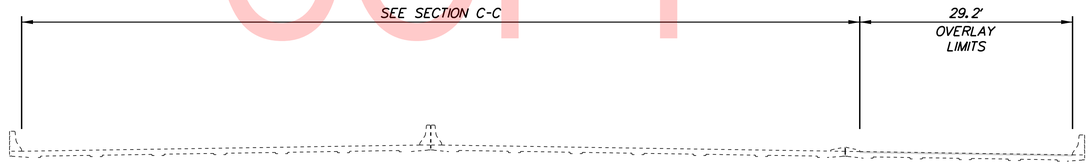

UNOFFICIAL WEBSITE COPY

NOTES:
1. REFER TO DRAWINGS CS-104 AND CS-204 FOR THE LOCATION OF SECTION D-D.

N:\32122-002\CADD\Traffic\CS006_141.dgn
8/1/2019 3:14:48 PM

ADDENDA / REVISIONS	

REHABILITATION OF BRIDGES 1-600, 1-601, AND 1-604, SR 2 AND SR 141 INTERCHANGE

CONTRACT	BRIDGE NO.	
T201707403	DESIGNED BY: JDC	
COUNTY		
NEW CASTLE	CHECKED BY: JDC	

M.O.T. TYPICAL SECTIONS

CS-006
SECTION
WRA
SHEET NO.
127

SEQUENCE OF CONSTRUCTION - PRE-STAGE

1. INSTALL TEMPORARY TRAFFIC CONTROL DEVICES AS SHOWN ON THE PERMANENT WARNING SIGN PLAN AND PRE-STAGE PLANS, SHIFT TRAFFIC TO DESIGNATED TRAVEL LANE.
2. RECONSTRUCT SHOULDER.

CONSTRUCTION STAGING LEGEND

- PROPOSED CONSTRUCTION THIS STAGE
- RUNOUT LENGTH SHADING
- EXISTING SIGN/PROPOSED TEMPORARY SIGN
- SKID MOUNTED PROPOSED TEMPORARY SIGN
- TYPE III BARRICADE
- PLASTIC DRUM
- TRAFFIC FLOW ARROW
- TEMPORARY P.C.C. SAFETY BARRIER, UNPINNED
- TEMPORARY P.C.C. SAFETY BARRIER, PINNED
- TEMPORARY IMPACT ATTENUATOR
- ARROW PANEL
- REMOVE EXISTING STRIPING BY CONTRACTOR
- PORTABLE CHANGEABLE MESSAGE SIGN

TEMPORARY PAVEMENT MARKINGS LEGEND

SYMBOL	ITEM
A	5" SOLID WHITE EPOXY
B	5" SOLID YELLOW EPOXY
C	5" SOLID WHITE TAPE
D	5" SOLID YELLOW TAPE
E	10" SOLID WHITE EPOXY
F	10" SOLID WHITE EPOXY, 3' LINE & 9' GAP
G	WHITE PAINT PAVEMENT SYMBOL
H	12" SOLID WHITE EPOXY
J	5" SOLID WHITE EPOXY, 3' LINE & 9' GAP
K	5" SOLID WHITE EPOXY, 10' LINE & 30' GAP

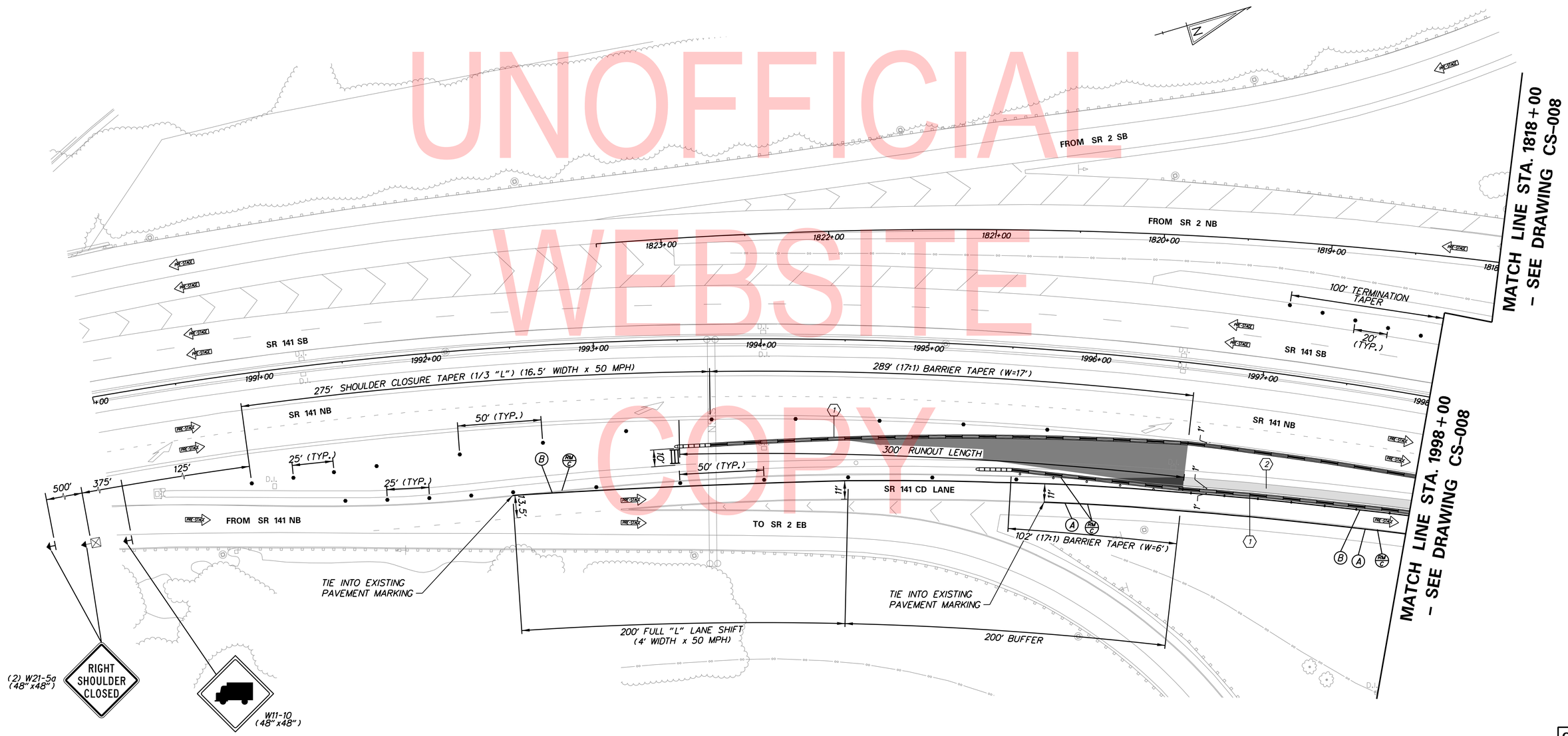

UNOFFICIAL WEBSITE COPY

ADDENDA / REVISIONS	

SCALE 0 30 60 90 FEET

REHABILITATION OF BRIDGES 1-600, 1-601, AND 1-604, SR 2 AND SR 141 INTERCHANGE

CONTRACT	BRIDGE NO.
T201707403	DESIGNED BY: JDC
COUNTY	
NEW CASTLE	CHECKED BY: JDC

CONSTRUCTION STAGING, M.O.T., AND EROSION CONTROL PLAN - PRE STAGE

CS-007
SECTION
WRA
SHEET NO.
128

N:\32122-002\CADD\Traffic\CS007_141 - Pre Stage.dgn
8/1/2019 3:14:49 PM

SEQUENCE OF CONSTRUCTION - PRE-STAGE

1. INSTALL TEMPORARY TRAFFIC CONTROL DEVICES AS SHOWN ON THE PERMANENT WARNING SIGN PLAN AND PRE-STAGE PLANS, SHIFT TRAFFIC TO DESIGNATED TRAVEL LANE.
2. INSTALL ALL EROSION AND SEDIMENT CONTROL MEASURES AS SHOWN.
3. RECONSTRUCT SHOULDER.
4. FOLLOWING COMPLETION OF SHOULDER RECONSTRUCTION ON THE WEST SIDE OF THE NB CD LANE, REMOVE THE NB CD LANE TEMPORARY TRAFFIC CONTROL DEVICES AND RECONSTRUCT SHOULDER FOLLOWING TA-43.
5. STABILIZE ALL DISTURBED AREAS WITH TOPSOIL, SEED AND MULCH PRIOR TO REMOVAL OF SEDIMENT CONTROL DEVICES BEFORE MOVING ON TO THE NEXT STAGE.

NOTES:
1. REFER TO DRAWING CS-004 FOR SECTION A-A DETAIL.

CONSTRUCTION STAGING LEGEND

- PROPOSED CONSTRUCTION THIS STAGE
- RUNOUT LENGTH SHADING
- EXISTING SIGN/PROPOSED TEMPORARY SIGN
- SKID MOUNTED PROPOSED TEMPORARY SIGN
- TYPE III BARRICADE
- PLASTIC DRUM
- TRAFFIC FLOW ARROW
- TEMPORARY P.C.C. SAFETY BARRIER, UNPINNED
- TEMPORARY P.C.C. SAFETY BARRIER, PINNED
- TEMPORARY IMPACT ATTENUATOR
- ARROW PANEL
- REMOVE EXISTING STRIPING BY CONTRACTOR
- PORTABLE CHANGEABLE MESSAGE SIGN

TEMPORARY PAVEMENT MARKINGS LEGEND

SYMBOL	ITEM
A	5" SOLID WHITE EPOXY
B	5" SOLID YELLOW EPOXY
C	5" SOLID WHITE TAPE
D	5" SOLID YELLOW TAPE
E	10" SOLID WHITE EPOXY
F	10" SOLID WHITE EPOXY, 3' LINE & 9' GAP
G	WHITE PAINT PAVEMENT SYMBOL
H	12" SOLID WHITE EPOXY
J	5" SOLID WHITE EPOXY, 3' LINE & 9' GAP
K	5" SOLID WHITE EPOXY, 10' LINE & 30' GAP

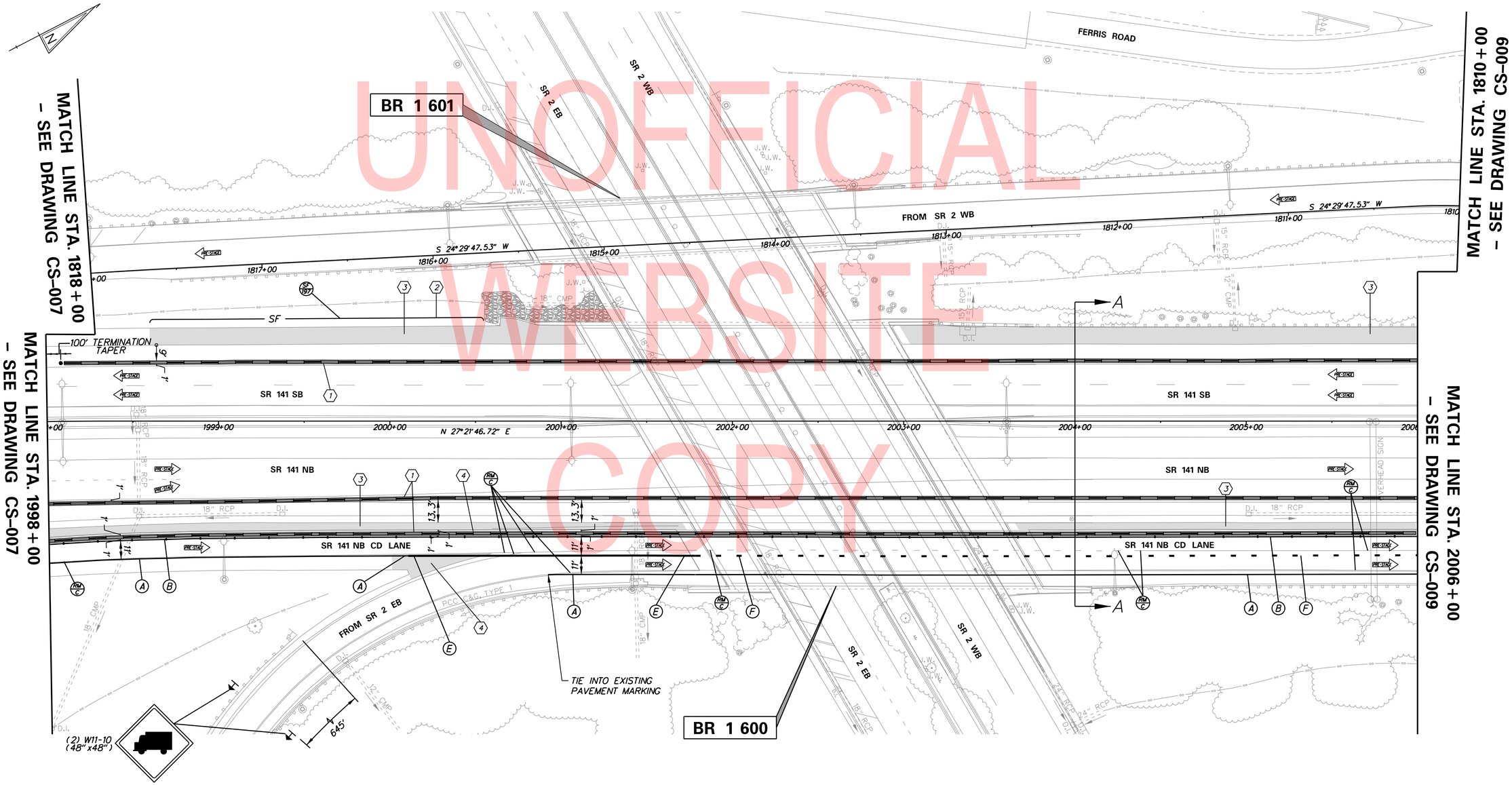

UNOFFICIAL WEBSITE COPY

ADDENDA / REVISIONS	

SCALE 0 30 60 90 FEET

REHABILITATION OF BRIDGES 1-600, 1-601, AND 1-604, SR 2 AND SR 141 INTERCHANGE

CONTRACT	BRIDGE NO.	1-600, 1-601
T201707403	DESIGNED BY: JDC	
COUNTY	CHECKED BY: JDC	
NEW CASTLE		

CONSTRUCTION STAGING, M.O.T., AND EROSION CONTROL PLAN – PRE STAGE

CS-008
SECTION
WRA
SHEET NO.
129

N:\32122-002\CADD\Traffic\CS008_141 - Pre Stage.dgn
8/1/2019 3:14:49 PM

SEQUENCE OF CONSTRUCTION - PRE-STAGE

1. INSTALL TEMPORARY TRAFFIC CONTROL DEVICES AS SHOWN ON THE PERMANENT WARNING SIGN PLAN AND PRE-STAGE PLANS, SHIFT TRAFFIC TO DESIGNATED TRAVEL LANE.
2. RECONSTRUCT SHOULDER.

CONSTRUCTION STAGING LEGEND

- PROPOSED CONSTRUCTION THIS STAGE
- RUNOUT LENGTH SHADING
- EXISTING SIGN/PROPOSED TEMPORARY SIGN
- SKID MOUNTED PROPOSED TEMPORARY SIGN
- TYPE III BARRICADE
- PLASTIC DRUM
- TRAFFIC FLOW ARROW
- TEMPORARY P.C.C. SAFETY BARRIER, UNPINNED
- TEMPORARY P.C.C. SAFETY BARRIER, PINNED
- TEMPORARY IMPACT ATTENUATOR
- ARROW PANEL
- REMOVE EXISTING STRIPING BY CONTRACTOR
- PORTABLE CHANGEABLE MESSAGE SIGN

TEMPORARY PAVEMENT MARKINGS LEGEND

SYMBOL	ITEM
A	5" SOLID WHITE EPOXY
B	5" SOLID YELLOW EPOXY
C	5" SOLID WHITE TAPE
D	5" SOLID YELLOW TAPE
E	10" SOLID WHITE EPOXY
F	10" SOLID WHITE EPOXY, 3' LINE & 9' GAP
G	WHITE PAINT PAVEMENT SYMBOL
H	12" SOLID WHITE EPOXY
J	5" SOLID WHITE EPOXY, 3' LINE & 9' GAP
K	5" SOLID WHITE EPOXY, 10' LINE & 30' GAP

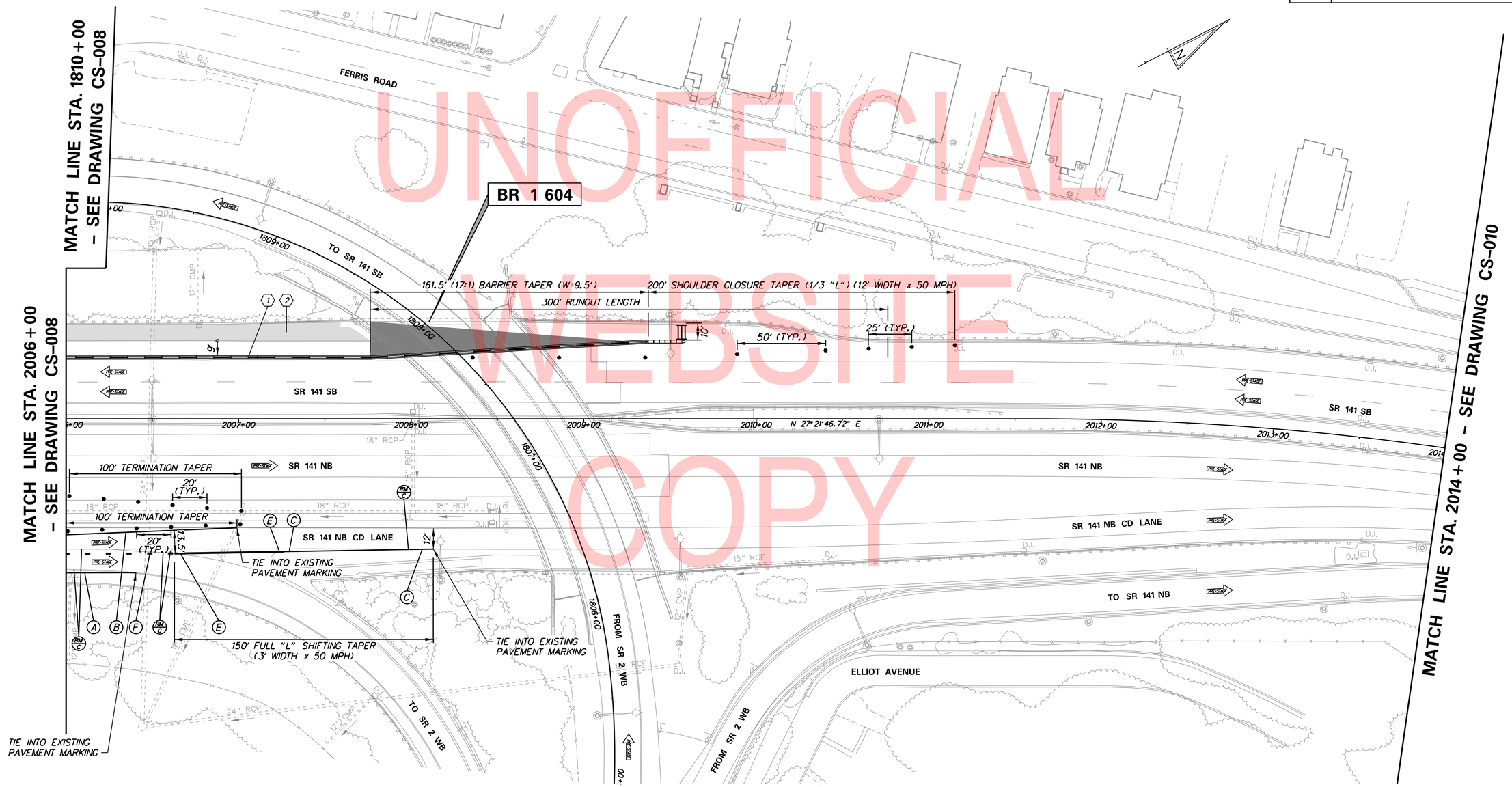

UNOFFICIAL WEBSITE COPY

ADDENDA / REVISIONS	

SCALE 0 30 60 90 FEET

REHABILITATION OF BRIDGES 1-600, 1-601, AND 1-604, SR 2 AND SR 141 INTERCHANGE

CONTRACT	BRIDGE NO.	1-604
T201707403	DESIGNED BY: JDC	
COUNTY		
NEW CASTLE	CHECKED BY: JDC	

CONSTRUCTION STAGING, M.O.T., AND EROSION CONTROL PLAN – PRE STAGE

CS-009
SECTION
WRA
SHEET NO.
130

N:\32122-002\CADD\Traffic\CS009_141 - Pre Stage.dgn
8/17/2019 3:14:50 PM

SEQUENCE OF CONSTRUCTION - PRE-STAGE

(1) INSTALL TEMPORARY TRAFFIC CONTROL DEVICES AS SHOWN ON THE PERMANENT WARNING SIGN PLAN AND PRE-STAGE PLANS, SHIFT TRAFFIC TO DESIGNATED TRAVEL LANE.

CONSTRUCTION STAGING LEGEND

- PROPOSED CONSTRUCTION THIS STAGE
- RUNOUT LENGTH SHADING
- EXISTING SIGN/PROPOSED TEMPORARY SIGN
- SKID MOUNTED PROPOSED TEMPORARY SIGN
- TYPE III BARRICADE
- PLASTIC DRUM
- TRAFFIC FLOW ARROW
- TEMPORARY P.C.C. SAFETY BARRIER, UNPINNED
- TEMPORARY P.C.C. SAFETY BARRIER, PINNED
- TEMPORARY IMPACT ATTENUATOR
- ARROW PANEL
- REMOVE EXISTING STRIPING BY CONTRACTOR
- PORTABLE CHANGEABLE MESSAGE SIGN

TEMPORARY PAVEMENT MARKINGS LEGEND

SYMBOL	ITEM
A	5" SOLID WHITE EPOXY
B	5" SOLID YELLOW EPOXY
C	5" SOLID WHITE TAPE
D	5" SOLID YELLOW TAPE
E	10" SOLID WHITE EPOXY
F	10" SOLID WHITE EPOXY, 3' LINE & 9' GAP
G	WHITE PAINT PAVEMENT SYMBOL
H	12" SOLID WHITE EPOXY
J	5" SOLID WHITE EPOXY, 3' LINE & 9' GAP
K	5" SOLID WHITE EPOXY, 10' LINE & 30' GAP

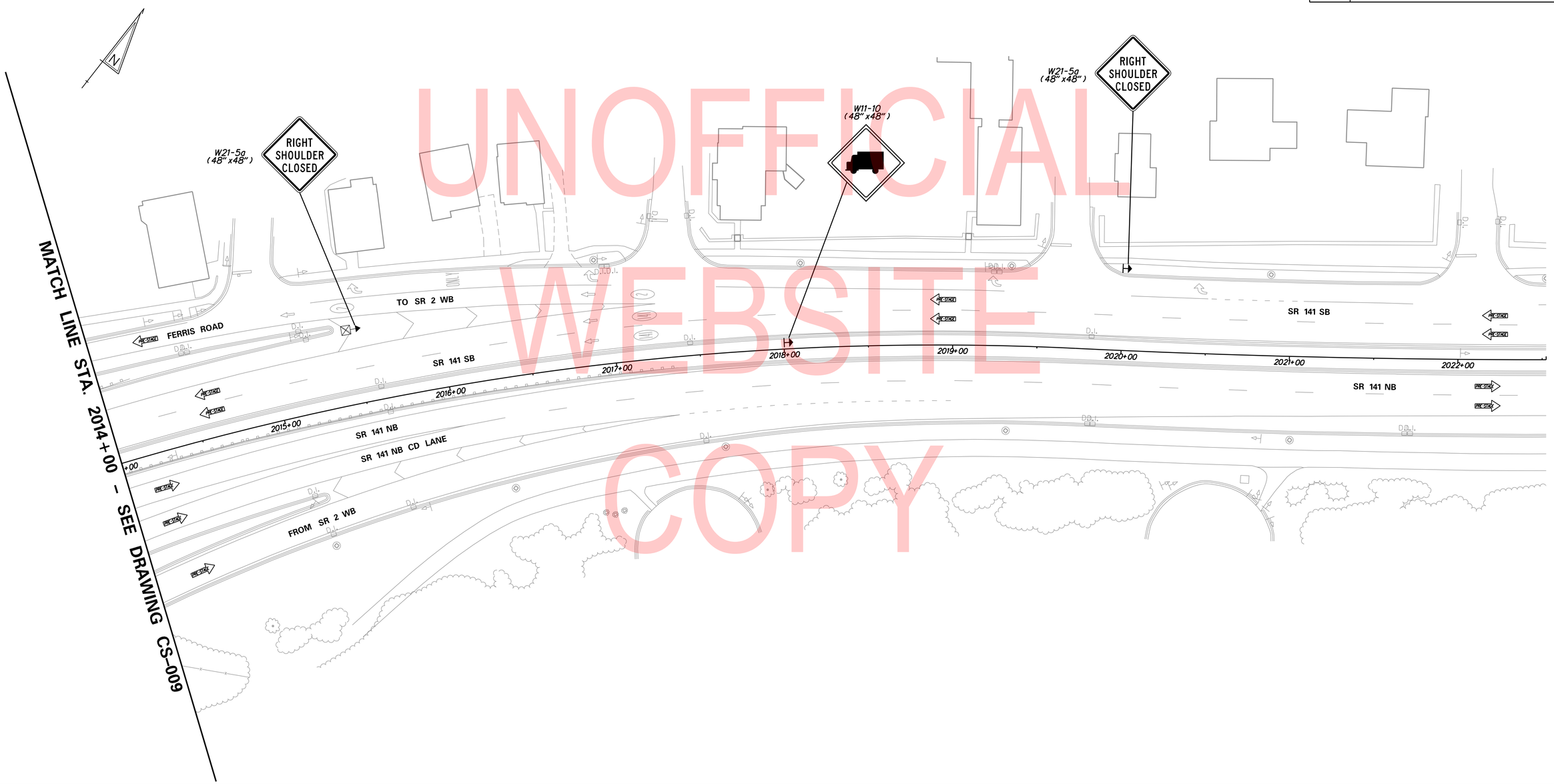

UNOFFICIAL WEBSITE COPY

ADDENDA / REVISIONS	

SCALE 0 30 60 90 FEET

REHABILITATION OF BRIDGES 1-600, 1-601, AND 1-604, SR 2 AND SR 141 INTERCHANGE

CONTRACT	BRIDGE NO.	
T201707403	DESIGNED BY: JDC	
COUNTY		
NEW CASTLE	CHECKED BY: JDC	

CONSTRUCTION STAGING, M.O.T., AND EROSION CONTROL PLAN - PRE STAGE

CS-010
SECTION
WRA
SHEET NO.
131

N:\32122-002\C4D\Traffic\CS010_141 - Pre Stage.dgn
8/1/2019 3:14:51 PM

SEQUENCE OF CONSTRUCTION - STAGE 1

(1) INSTALL TEMPORARY TRAFFIC CONTROL DEVICES AS SHOWN ON THE PERMANENT WARNING SIGN PLAN AND STAGE 1 PLANS, SHIFT TRAFFIC TO DESIGNATED TRAVEL LANE.

NOTES:

1. *COVER EXISTING SIGN PANEL UNTIL COMPLETION OF STAGE 2 CONSTRUCTION. THE COVERING AND UNCOVERING OF SIGN PANELS WILL NOT BE MEASURED AND PAID FOR BUT WILL BE INCIDENTAL TO THE LUMP SUM MAINTENANCE OF TRAFFIC ITEM.*

CONSTRUCTION STAGING LEGEND

- PROPOSED CONSTRUCTION THIS STAGE
- RUNOUT LENGTH SHADING
- EXISTING SIGN/PROPOSED TEMPORARY SIGN
- SKID MOUNTED PROPOSED TEMPORARY SIGN
- TYPE III BARRICADE
- PLASTIC DRUM
- TRAFFIC FLOW ARROW
- TEMPORARY P.C.C. SAFETY BARRIER, UNPINNED
- TEMPORARY P.C.C. SAFETY BARRIER, PINNED
- TEMPORARY IMPACT ATTENUATOR
- ARROW PANEL
- REMOVE EXISTING STRIPING BY CONTRACTOR
- PORTABLE CHANGEABLE MESSAGE SIGN

TEMPORARY PAVEMENT MARKINGS LEGEND

SYMBOL	ITEM
A	5" SOLID WHITE EPOXY
B	5" SOLID YELLOW EPOXY
C	5" SOLID WHITE TAPE
D	5" SOLID YELLOW TAPE
E	10" SOLID WHITE EPOXY
F	10" SOLID WHITE EPOXY, 3' LINE & 9' GAP
G	WHITE PAINT PAVEMENT SYMBOL
H	12" SOLID WHITE EPOXY
J	5" SOLID WHITE EPOXY, 3' LINE & 9' GAP
K	5" SOLID WHITE EPOXY, 10' LINE & 30' GAP

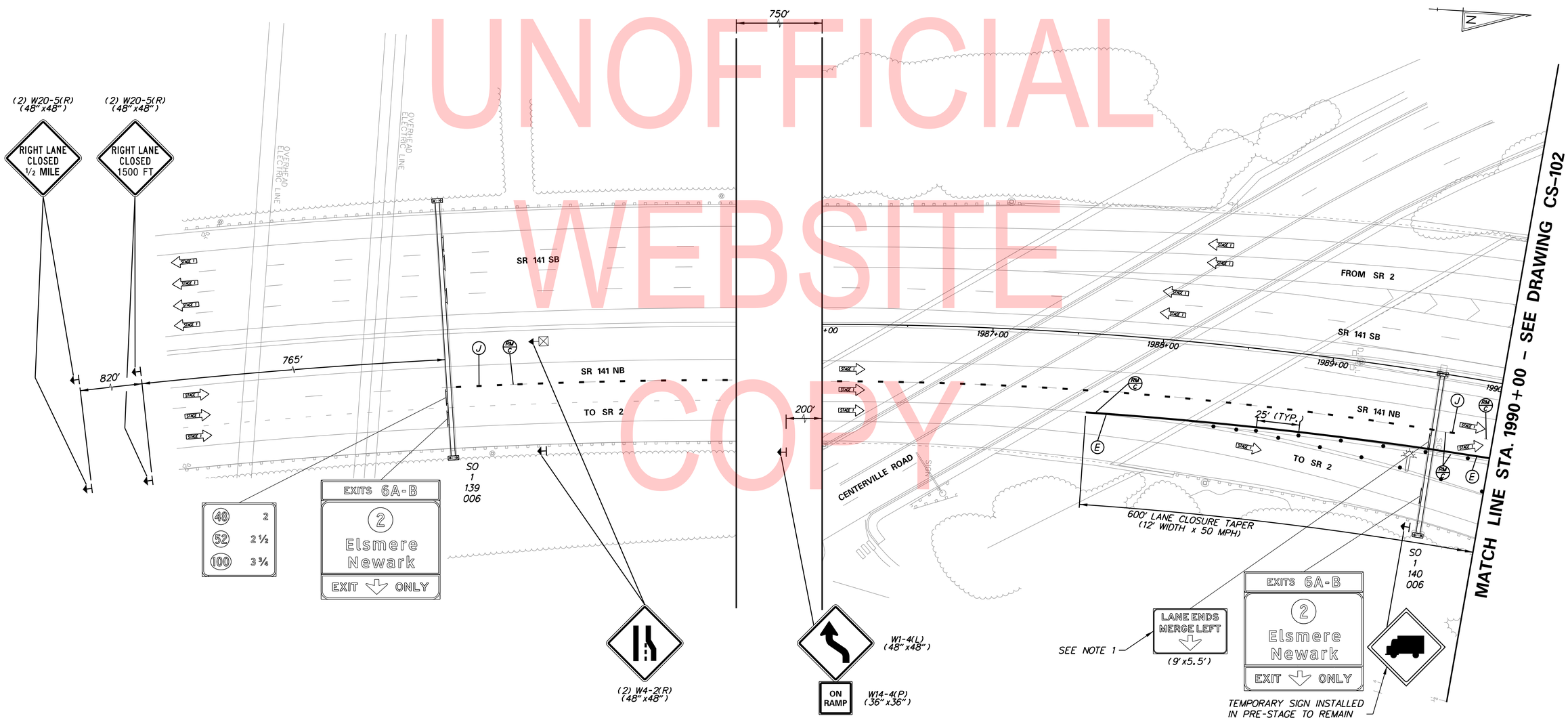

UNOFFICIAL WEBSITE COPY

N:\3222-002\CADD\Traffic\CS101_141.dgn
8/1/2019 3:14:52 PM

ADDENDA / REVISIONS	

SCALE 0 30 60 90 FEET

REHABILITATION OF BRIDGES 1-600, 1-601, AND 1-604, SR 2 AND SR 141 INTERCHANGE

CONTRACT	BRIDGE NO.
T201707403	DESIGNED BY: JDC
COUNTY	CHECKED BY: JDC
NEW CASTLE	

CONSTRUCTION STAGING, M.O.T., AND EROSION CONTROL PLAN - STAGE 1

CS-101
SECTION
WRA
SHEET NO.
132

SEQUENCE OF CONSTRUCTION - STAGE 1

1. INSTALL TEMPORARY TRAFFIC CONTROL DEVICES AS SHOWN ON THE PERMANENT WARNING SIGN PLAN AND STAGE 1 PLANS, SHIFT TRAFFIC TO DESIGNATED TRAVEL LANE.
2. INSTALL ALL EROSION AND SEDIMENT CONTROL MEASURES AS SHOWN.
3. RECONSTRUCT SHOULDER.
4. STABILIZE ALL DISTURBED AREAS WITH TOPSOIL, SEED AND MULCH PRIOR TO REMOVAL OF SEDIMENT CONTROL DEVICES BEFORE MOVING ON TO THE NEXT STAGE.

NOTES:

1. COVER EXISTING SIGN PANEL UNTIL COMPLETION OF STAGE 2 CONSTRUCTION. THE COVERING AND UNCOVERING OF SIGN PANELS WILL NOT BE MEASURED AND PAID FOR BUT WILL BE INCIDENTAL TO THE LUMP SUM MAINTENANCE OF TRAFFIC ITEM.

CONSTRUCTION STAGING LEGEND

- PROPOSED CONSTRUCTION THIS STAGE
- RUNOUT LENGTH SHADING
- EXISTING SIGN/PROPOSED TEMPORARY SIGN
- SKID MOUNTED PROPOSED TEMPORARY SIGN
- TYPE III BARRICADE
- PLASTIC DRUM
- TRAFFIC FLOW ARROW
- TEMPORARY P.C.C. SAFETY BARRIER, UNPINNED
- TEMPORARY P.C.C. SAFETY BARRIER, PINNED
- TEMPORARY IMPACT ATTENUATOR
- ARROW PANEL
- REMOVE EXISTING STRIPING BY CONTRACTOR
- PORTABLE CHANGEABLE MESSAGE SIGN

TEMPORARY PAVEMENT MARKINGS LEGEND

SYMBOL	ITEM
A	5" SOLID WHITE EPOXY
B	5" SOLID YELLOW EPOXY
C	5" SOLID WHITE TAPE
D	5" SOLID YELLOW TAPE
E	10" SOLID WHITE EPOXY
F	10" SOLID WHITE EPOXY, 3' LINE & 9' GAP
G	WHITE PAINT PAVEMENT SYMBOL
H	12" SOLID WHITE EPOXY
J	5" SOLID WHITE EPOXY, 3' LINE & 9' GAP
K	5" SOLID WHITE EPOXY, 10' LINE & 30' GAP

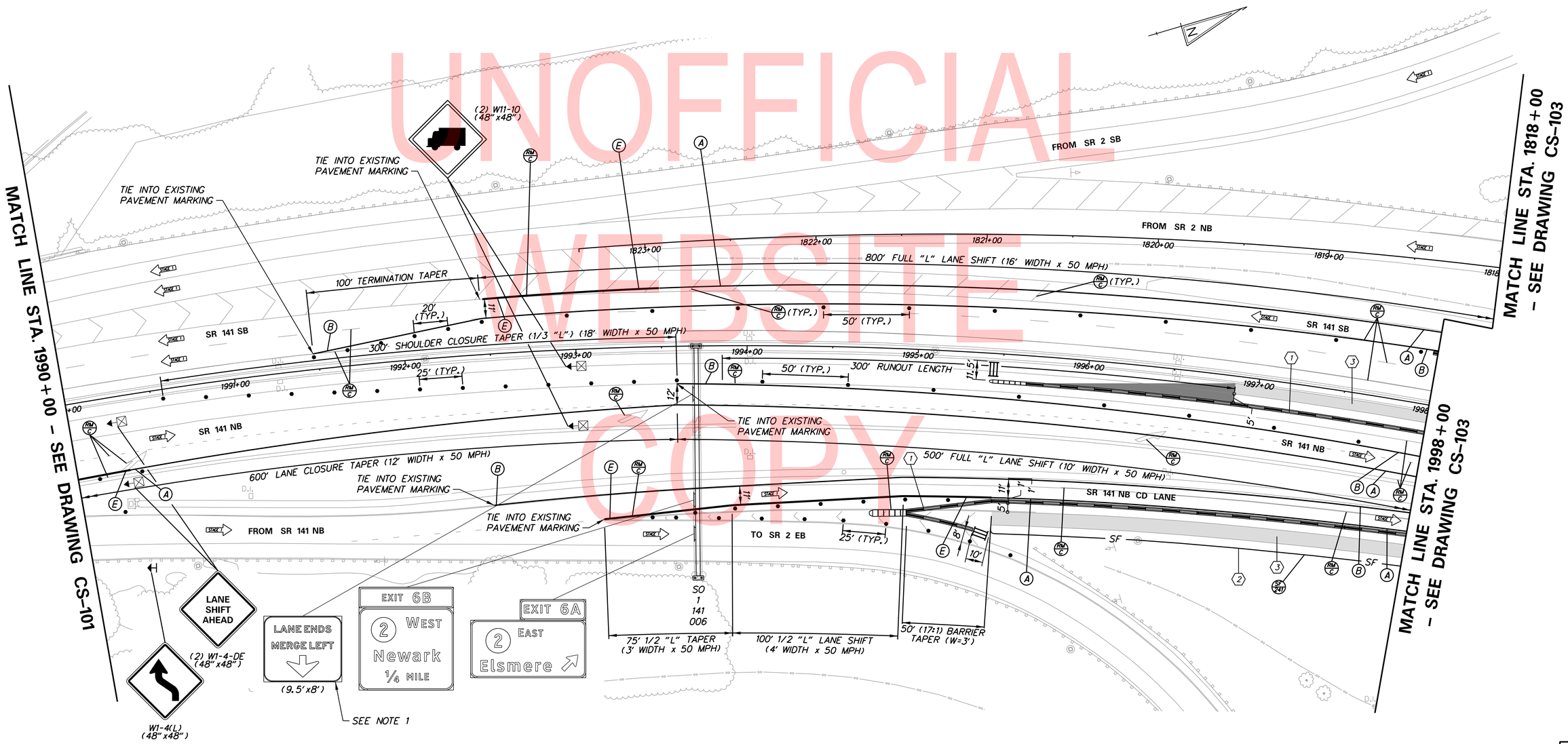

UNOFFICIAL WEBSITE COPY

N:\32122-002\CADD\Traffic\CS102_141.dgn
8/1/2019 3:14:53 PM

ADDENDA / REVISIONS	

SCALE 0 30 60 90 FEET

REHABILITATION OF BRIDGES 1-600, 1-601, AND 1-604, SR 2 AND SR 141 INTERCHANGE

CONTRACT	BRIDGE NO.
T201707403	DESIGNED BY: JDC
COUNTY	
NEW CASTLE	CHECKED BY: JDC

CONSTRUCTION STAGING, M.O.T., AND EROSION CONTROL PLAN – STAGE 1

CS-102
SECTION
WRA
SHEET NO.
133

SEQUENCE OF CONSTRUCTION - STAGE 1

1. INSTALL TEMPORARY TRAFFIC CONTROL DEVICES AS SHOWN ON THE PERMANENT WARNING SIGN PLAN AND STAGE 1 PLANS, SHIFT TRAFFIC TO DESIGNATED TRAVEL LANE.
2. DETOUR THE SR 2 WB TO SR 141 SB RAMP AS SHOWN ON DP-01 TO COMPLETE BRIDGE REPAIR CONSTRUCTION AND DECK OVERLAY.
3. INSTALL ALL EROSION AND SEDIMENT CONTROL MEASURES AS SHOWN.
4. RECONSTRUCT SHOULDER.
5. COMPLETE BRIDGE REPAIR CONSTRUCTION AND DECK OVERLAY.
6. STABILIZE ALL DISTURBED AREAS WITH TOPSOIL, SEED AND MULCH PRIOR TO REMOVAL OF SEDIMENT CONTROL DEVICES BEFORE MOVING ON TO THE NEXT STAGE.
7. FOLLOWING COMPLETION OF ROADWAY AND BRIDGE WORK ON THE SR 141 NB CD LANE, REMOVE THE TEMPORARY TRAFFIC CONTROL DEVICES AND TEMPORARY STOP CONDITION. REFER TO DRAWING CS-1A01.

NOTES:

1. *REFER TO DRAWING CS-005 FOR SECTION C-C DETAIL.*
2. *COORDINATE WITH DELDOT NORTH DISTRICT TO CUT THE TREE LINE BACK ALONG THE SR 2 EASTBOUND TO SR 141 NB LOOP RAMP PRIOR TO THE TEMPORARY CONVERSION TO STOP CONTROL.*

CONSTRUCTION STAGING LEGEND

- *PROPOSED CONSTRUCTION THIS STAGE*
- *RUNOUT LENGTH SHADING*
- *EXISTING SIGN/PROPOSED TEMPORARY SIGN*
- *SKID MOUNTED PROPOSED TEMPORARY SIGN*
- *TYPE III BARRICADE*
- *PLASTIC DRUM*
- *TRAFFIC FLOW ARROW*
- *TEMPORARY P.C.C. SAFETY BARRIER, UNPINNED*
- *TEMPORARY P.C.C. SAFETY BARRIER, PINNED*
- *TEMPORARY IMPACT ATTENUATOR*
- *ARROW PANEL*
- *REMOVE EXISTING STRIPING BY CONTRACTOR*
- *PORTABLE CHANGEABLE MESSAGE SIGN*

TEMPORARY PAVEMENT MARKINGS LEGEND

SYMBOL	ITEM
A	5" SOLID WHITE EPOXY
B	5" SOLID YELLOW EPOXY
C	5" SOLID WHITE TAPE
D	5" SOLID YELLOW TAPE
E	10" SOLID WHITE EPOXY
F	10" SOLID WHITE EPOXY, 3' LINE & 9' GAP
G	WHITE PAINT PAVEMENT SYMBOL
H	12" SOLID WHITE EPOXY
J	5" SOLID WHITE EPOXY, 3' LINE & 9' GAP
K	5" SOLID WHITE EPOXY, 10' LINE & 30' GAP

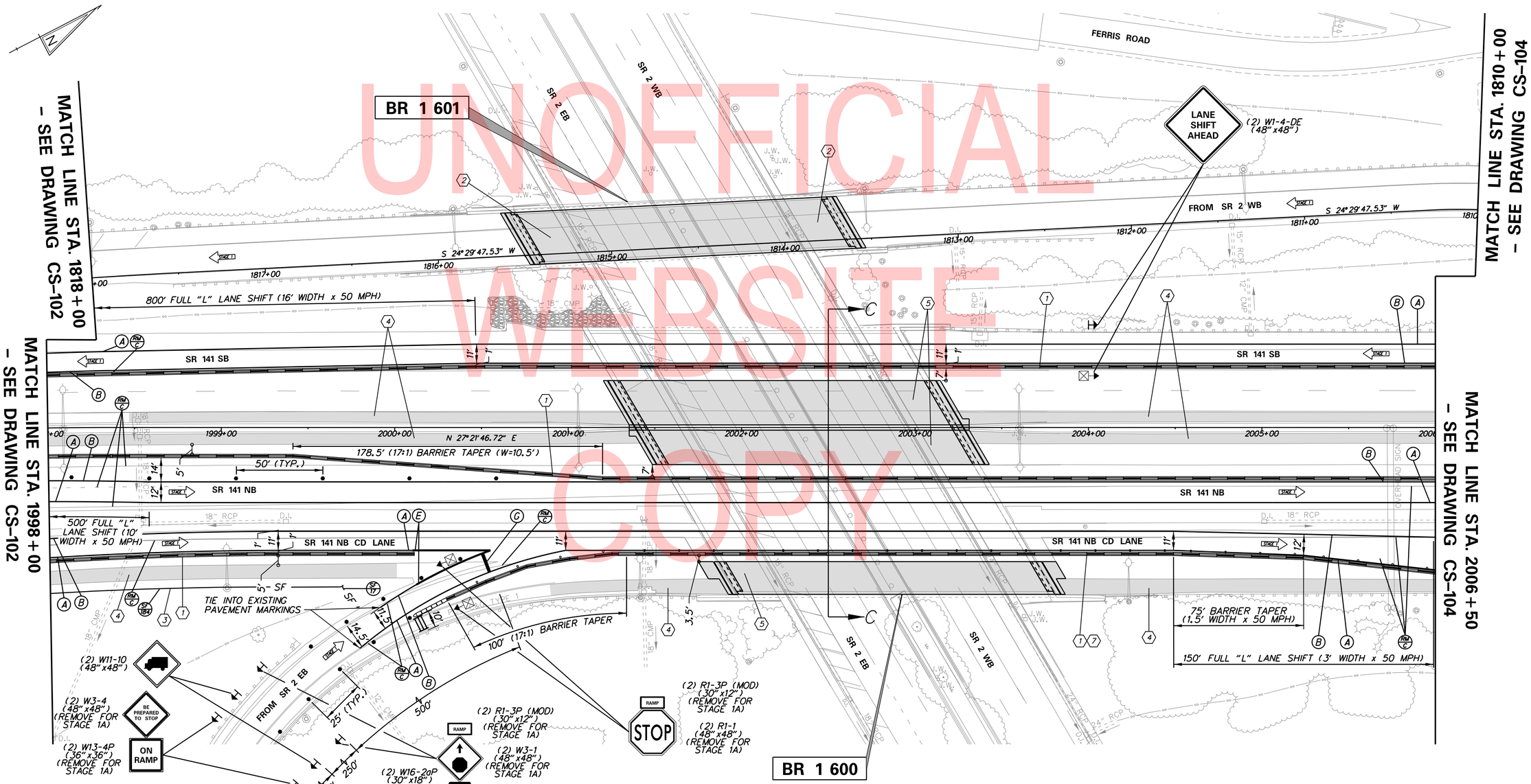

UNOFFICIAL WEBSITE COPY

ADDENDA / REVISIONS

SCALE 0 30 60 90 FEET

REHABILITATION OF BRIDGES 1-600, 1-601, AND 1-604, SR 2 AND SR 141 INTERCHANGE

CONTRACT	BRIDGE NO.	1-600, 1-601
T201707403	DESIGNED BY: JDC	
COUNTY		
NEW CASTLE	CHECKED BY: JDC	

CONSTRUCTION STAGING, M.O.T., AND EROSION CONTROL PLAN – STAGE 1

CS-103
SECTION
WRA
SHEET NO.
134

N:\32122-002\CADD\Traffic\CS103_141.dgn 8/17/2019 3:14:54 PM

SEQUENCE OF CONSTRUCTION - STAGE 1

1. INSTALL TEMPORARY TRAFFIC CONTROL DEVICES AS SHOWN ON THE PERMANENT WARNING SIGN PLAN AND STAGE 1 PLANS, SHIFT TRAFFIC TO DESIGNATED TRAVEL LANE.
2. RECONSTRUCT SHOULDER.
3. COMPLETE BRIDGE REPAIR CONSTRUCTION AND DECK OVERLAY.
4. CONSTRUCT CONCRETE BARRIER, CURB AND GUTTER AND GUARDRAIL.
5. FOLLOWING COMPLETION OF ROADWAY AND BRIDGE WORK ON THE SR 141 NB CD LANE, REMOVE THE TEMPORARY TRAFFIC CONTROL DEVICES AND TEMPORARY STOP CONDITION. REFER TO DRAWING CS-1A01.

NOTES:
1. REFER TO DRAWING CS-006 FOR SECTION D-D DETAIL.

CONSTRUCTION STAGING LEGEND

- PROPOSED CONSTRUCTION THIS STAGE
- RUNOUT LENGTH SHADING
- EXISTING SIGN/PROPOSED TEMPORARY SIGN
- SKID MOUNTED PROPOSED TEMPORARY SIGN
- TYPE III BARRICADE
- PLASTIC DRUM
- TRAFFIC FLOW ARROW
- TEMPORARY P.C.C. SAFETY BARRIER, UNPINNED
- TEMPORARY P.C.C. SAFETY BARRIER, PINNED
- TEMPORARY IMPACT ATTENUATOR
- ARROW PANEL
- REMOVE EXISTING STRIPING BY CONTRACTOR
- PORTABLE CHANGEABLE MESSAGE SIGN

TEMPORARY PAVEMENT MARKINGS LEGEND

SYMBOL	ITEM
A	5" SOLID WHITE EPOXY
B	5" SOLID YELLOW EPOXY
C	5" SOLID WHITE TAPE
D	5" SOLID YELLOW TAPE
E	10" SOLID WHITE EPOXY
F	10" SOLID WHITE EPOXY, 3' LINE & 9' GAP
G	WHITE PAINT PAVEMENT SYMBOL
H	12" SOLID WHITE EPOXY
J	5" SOLID WHITE EPOXY, 3' LINE & 9' GAP
K	5" SOLID WHITE EPOXY, 10' LINE & 30' GAP

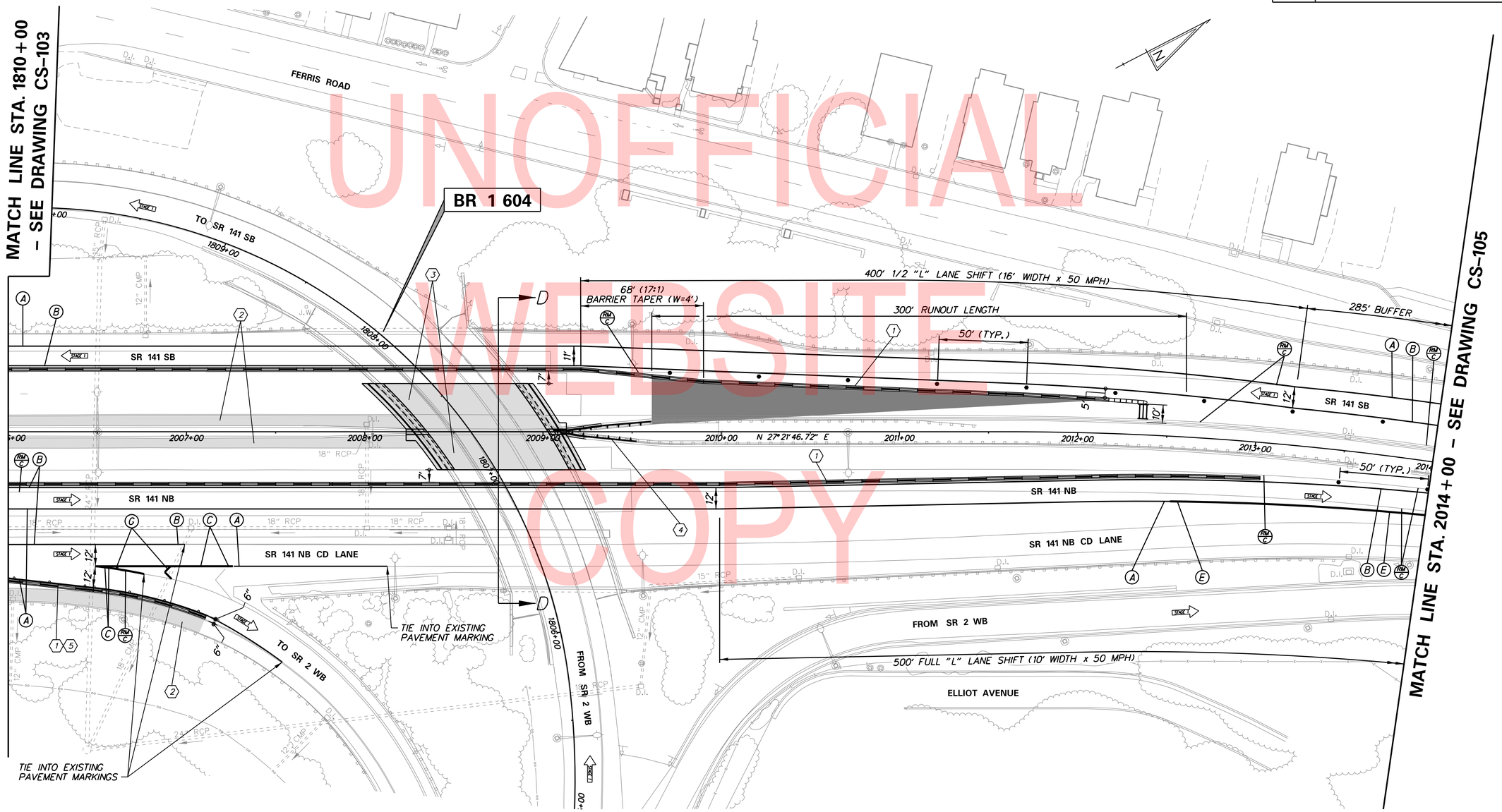

UNOFFICIAL WEBSITE COPY

N:\32222-002\C4D\Traffic\CS104_141.dgn
8/1/2019 3:14:55 PM

ADDENDA / REVISIONS	

SCALE 0 30 60 90 FEET

REHABILITATION OF BRIDGES 1-600, 1-601, AND 1-604, SR 2 AND SR 141 INTERCHANGE

CONTRACT	BRIDGE NO. 1-604
T201707403	DESIGNED BY: JDC
COUNTY	CHECKED BY: JDC
NEW CASTLE	

CONSTRUCTION STAGING, M.O.T., AND EROSION CONTROL PLAN – STAGE 1

CS-104
SECTION WRA
SHEET NO. 135

SEQUENCE OF CONSTRUCTION - STAGE 1

(1) INSTALL TEMPORARY TRAFFIC CONTROL DEVICES AS SHOWN ON THE PERMANENT WARNING SIGN PLAN AND STAGE 1 PLANS, SHIFT TRAFFIC TO DESIGNATED TRAVEL LANE.

CONSTRUCTION STAGING LEGEND

- PROPOSED CONSTRUCTION THIS STAGE
- RUNOUT LENGTH SHADING
- EXISTING SIGN/PROPOSED TEMPORARY SIGN
- SKID MOUNTED PROPOSED TEMPORARY SIGN
- TYPE III BARRICADE
- PLASTIC DRUM
- TRAFFIC FLOW ARROW
- TEMPORARY P.C.C. SAFETY BARRIER, UNPINNED
- TEMPORARY P.C.C. SAFETY BARRIER, PINNED
- TEMPORARY IMPACT ATTENUATOR
- ARROW PANEL
- REMOVE EXISTING STRIPING BY CONTRACTOR
- PORTABLE CHANGEABLE MESSAGE SIGN

TEMPORARY PAVEMENT MARKINGS LEGEND

SYMBOL	ITEM
A	5" SOLID WHITE EPOXY
B	5" SOLID YELLOW EPOXY
C	5" SOLID WHITE TAPE
D	5" SOLID YELLOW TAPE
E	10" SOLID WHITE EPOXY
F	10" SOLID WHITE EPOXY, 3' LINE & 9' GAP
G	WHITE PAINT PAVEMENT SYMBOL
H	12" SOLID WHITE EPOXY
J	5" SOLID WHITE EPOXY, 3' LINE & 9' GAP
K	5" SOLID WHITE EPOXY, 10' LINE & 30' GAP

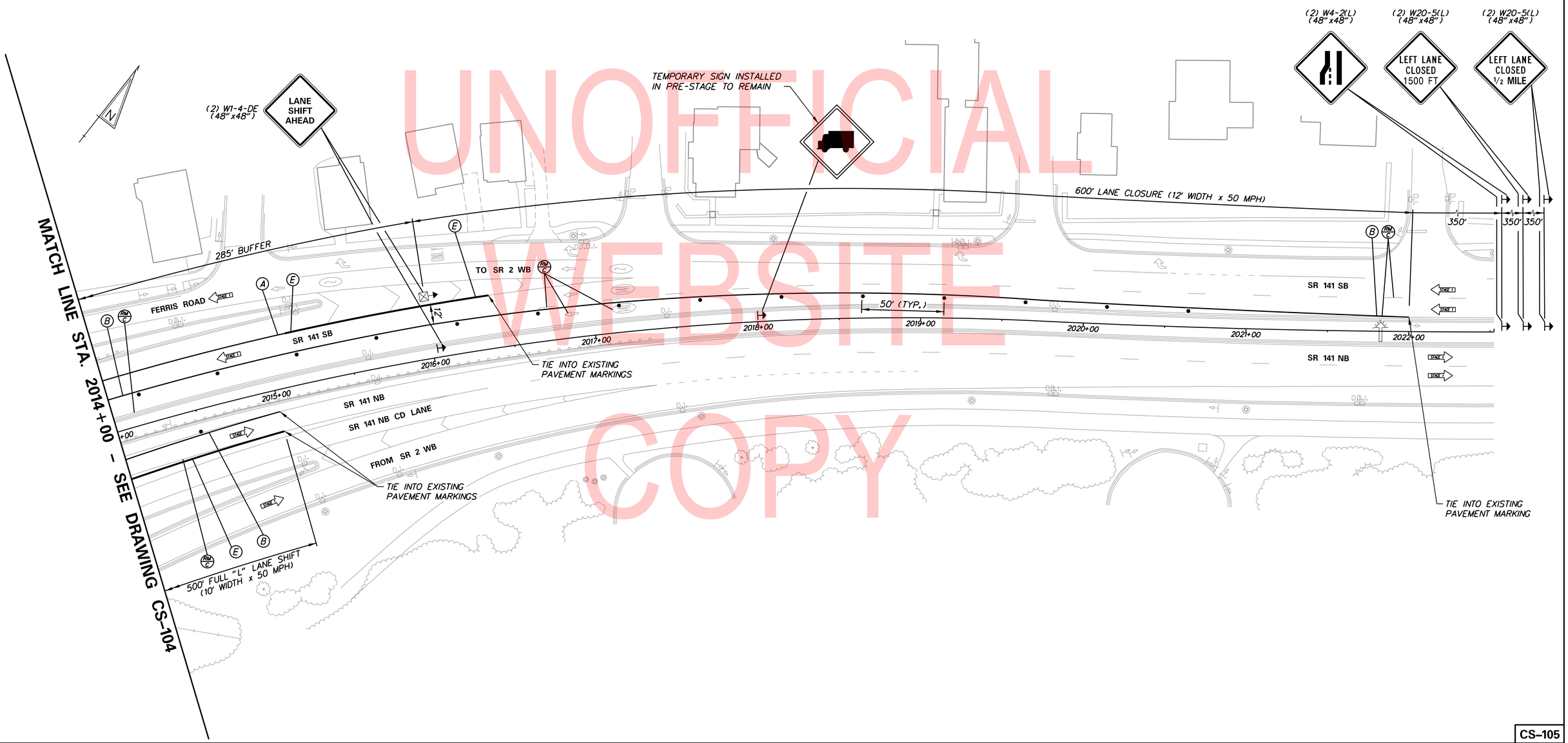

UNOFFICIAL WEBSITE COPY

N:\32122-002\C400\Traffic\CS105_141.dgn
8/1/2019 3:14:55 PM

ADDENDA / REVISIONS	

SCALE
0 30 60 90
FEET

REHABILITATION OF BRIDGES 1-600, 1-601, AND 1-604, SR 2 AND SR 141 INTERCHANGE

CONTRACT	BRIDGE NO.
T201707403	DESIGNED BY: JDC
COUNTY	CHECKED BY: JDC
NEW CASTLE	

CONSTRUCTION STAGING, M.O.T., AND EROSION CONTROL PLAN - STAGE 1

CS-105
SECTION
WRA
SHEET NO.
136

SEQUENCE OF CONSTRUCTION - STAGE 1A

(1) INSTALL TEMPORARY TRAFFIC CONTROL DEVICES AS SHOWN ON THE PERMANENT WARNING SIGN PLAN AND STAGE 1A PLANS, SHIFT TRAFFIC TO DESIGNATED TRAVEL LANE.

NOTES:

1. *TEMPORARY TRAFFIC CONTROL DEVICES SHOWN GREYSCALE FROM STAGE 1 SHALL REMAIN. TEMPORARY WARNING SIGNS FROM STAGE 1 SHALL REMAIN, EXCEPT WHERE NOTED ON THE PLANS. REFER TO DRAWINGS CS-101 THROUGH CS-105.*

CONSTRUCTION STAGING LEGEND

- PROPOSED CONSTRUCTION THIS STAGE
- RUNOUT LENGTH SHADING
- EXISTING SIGN/PROPOSED TEMPORARY SIGN
- SKID MOUNTED PROPOSED TEMPORARY SIGN
- TYPE III BARRICADE
- PLASTIC DRUM
- TRAFFIC FLOW ARROW
- TEMPORARY P.C.C. SAFETY BARRIER, UNPINNED
- TEMPORARY P.C.C. SAFETY BARRIER, PINNED
- TEMPORARY IMPACT ATTENUATOR
- ARROW PANEL
- REMOVE EXISTING STRIPING BY CONTRACTOR
- PORTABLE CHANGEABLE MESSAGE SIGN

TEMPORARY PAVEMENT MARKINGS LEGEND

SYMBOL	ITEM
A	5" SOLID WHITE EPOXY
B	5" SOLID YELLOW EPOXY
C	5" SOLID WHITE TAPE
D	5" SOLID YELLOW TAPE
E	10" SOLID WHITE EPOXY
F	10" SOLID WHITE EPOXY, 3' LINE & 9' GAP
G	WHITE PAINT PAVEMENT SYMBOL
H	12" SOLID WHITE EPOXY
J	5" SOLID WHITE EPOXY, 3' LINE & 9' GAP
K	5" SOLID WHITE EPOXY, 10' LINE & 30' GAP

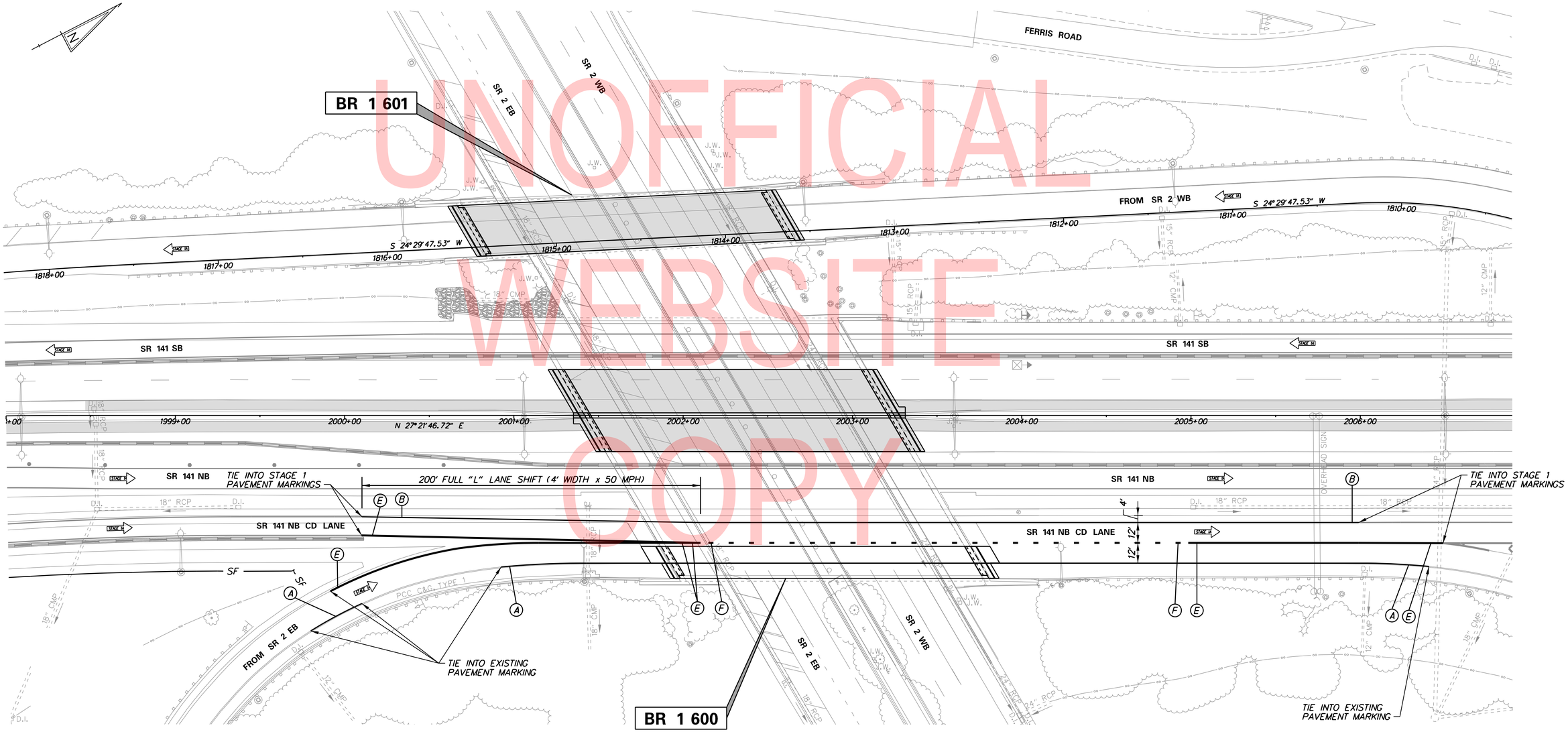

UNOFFICIAL WEBSITE COPY

ADDENDA / REVISIONS	

SCALE 0 30 60 90 FEET

REHABILITATION OF BRIDGES 1-600, 1-601, AND 1-604, SR 2 AND SR 141 INTERCHANGE

CONTRACT	BRIDGE NO.
T201707403	DESIGNED BY: JDC
COUNTY	
NEW CASTLE	CHECKED BY: JDC

CONSTRUCTION STAGING, M.O.T., AND EROSION CONTROL PLAN – STAGE 1A

CS-1A01

SECTION	SHEET NO.
WRA	137

N:\37122-002\CADD\Traffic\CS1A01_141.dgn
8/1/2019 3:14:56 PM

NOTES:
1. TEMPORARY TRAFFIC CONTROL DEVICES SHOWN GREYSCALE FROM STAGE 1 SHALL REMAIN. REFER TO DRAWINGS CS-101 THROUGH CS-105.
2. EXISTING SIGN TO REMAIN COVERED UNTIL COMPLETION OF STAGE 2 CONSTRUCTION.

CONSTRUCTION STAGING LEGEND

- PROPOSED CONSTRUCTION THIS STAGE
- RUNOUT LENGTH SHADING
- EXISTING SIGN/PROPOSED TEMPORARY SIGN
- SKID MOUNTED PROPOSED TEMPORARY SIGN
- TYPE III BARRICADE
- PLASTIC DRUM
- TRAFFIC FLOW ARROW
- TEMPORARY P.C.C. SAFETY BARRIER, UNPINNED
- TEMPORARY P.C.C. SAFETY BARRIER, PINNED
- TEMPORARY IMPACT ATTENUATOR
- ARROW PANEL
- REMOVE EXISTING STRIPING BY CONTRACTOR
- PORTABLE CHANGEABLE MESSAGE SIGN

TEMPORARY PAVEMENT MARKINGS LEGEND

SYMBOL	ITEM
A	5" SOLID WHITE EPOXY
B	5" SOLID YELLOW EPOXY
C	5" SOLID WHITE TAPE
D	5" SOLID YELLOW TAPE
E	10" SOLID WHITE EPOXY
F	10" SOLID WHITE EPOXY, 3' LINE & 9' GAP
G	WHITE PAINT PAVEMENT SYMBOL
H	12" SOLID WHITE EPOXY
J	5" SOLID WHITE EPOXY, 3' LINE & 9' GAP
K	5" SOLID WHITE EPOXY, 10' LINE & 30' GAP

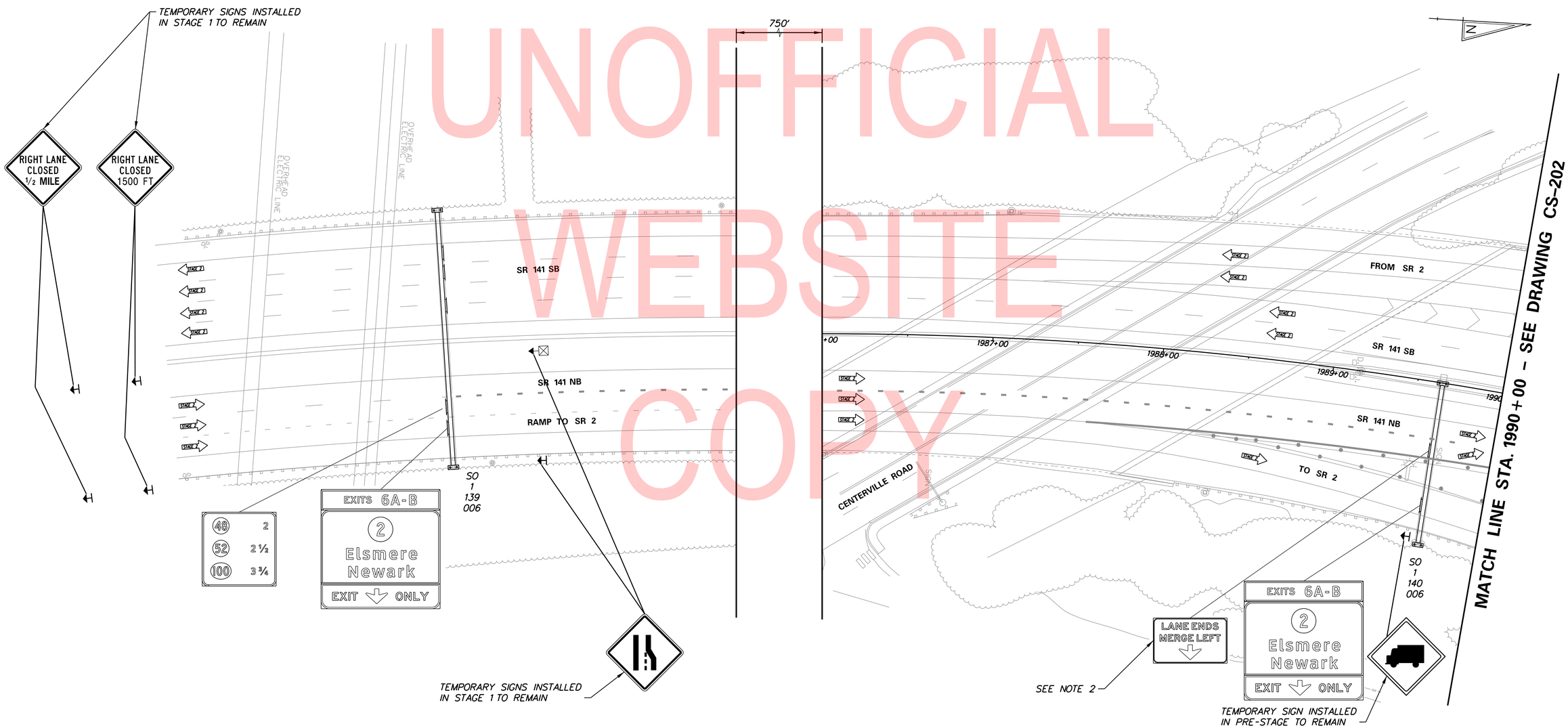

UNOFFICIAL WEBSITE COPY

N:\32122-002\CADD\Traffic\CS201_141.dgn
8/1/2019 3:14:57 PM

ADDENDA / REVISIONS	

SCALE 0 30 60 90 FEET

REHABILITATION OF BRIDGES 1-600, 1-601, AND 1-604, SR 2 AND SR 141 INTERCHANGE

CONTRACT	BRIDGE NO.
T201707403	
COUNTY	DESIGNED BY: JDC
NEW CASTLE	CHECKED BY: JDC

CONSTRUCTION STAGING, M.O.T., AND EROSION CONTROL PLAN - STAGE 2

CS-201
SECTION
WRA
SHEET NO.
138

SEQUENCE OF CONSTRUCTION - STAGE 2

(1) INSTALL TEMPORARY TRAFFIC CONTROL DEVICES AS SHOWN ON THE PERMANENT WARNING SIGN PLAN AND STAGE 2 PLANS, SHIFT TRAFFIC TO DESIGNATED TRAVEL LANE.

NOTES:

1. *TEMPORARY TRAFFIC CONTROL DEVICES SHOWN GREYSCALE FROM STAGE 1 SHALL REMAIN. REFER TO DRAWINGS CS-101 THROUGH CS-105.*
2. *EXISTING SIGN TO REMAIN COVERED UNTIL COMPLETION OF STAGE 2 CONSTRUCTION.*

CONSTRUCTION STAGING LEGEND

- *PROPOSED CONSTRUCTION THIS STAGE*
- *RUNOUT LENGTH SHADING*
- *EXISTING SIGN/PROPOSED TEMPORARY SIGN*
- *SKID MOUNTED PROPOSED TEMPORARY SIGN*
- *TYPE III BARRICADE*
- *PLASTIC DRUM*
- *TRAFFIC FLOW ARROW*
- *TEMPORARY P.C.C. SAFETY BARRIER, UNPINNED*
- *TEMPORARY P.C.C. SAFETY BARRIER, PINNED*
- *TEMPORARY IMPACT ATTENUATOR*
- *ARROW PANEL*
- *REMOVE EXISTING STRIPING BY CONTRACTOR*
- *PORTABLE CHANGEABLE MESSAGE SIGN*

TEMPORARY PAVEMENT MARKINGS LEGEND

SYMBOL	ITEM
A	5" SOLID WHITE EPOXY
B	5" SOLID YELLOW EPOXY
C	5" SOLID WHITE TAPE
D	5" SOLID YELLOW TAPE
E	10" SOLID WHITE EPOXY
F	10" SOLID WHITE EPOXY, 3' LINE & 9' GAP
G	WHITE PAINT PAVEMENT SYMBOL
H	12" SOLID WHITE EPOXY
J	5" SOLID WHITE EPOXY, 3' LINE & 9' GAP
K	5" SOLID WHITE EPOXY, 10' LINE & 30' GAP

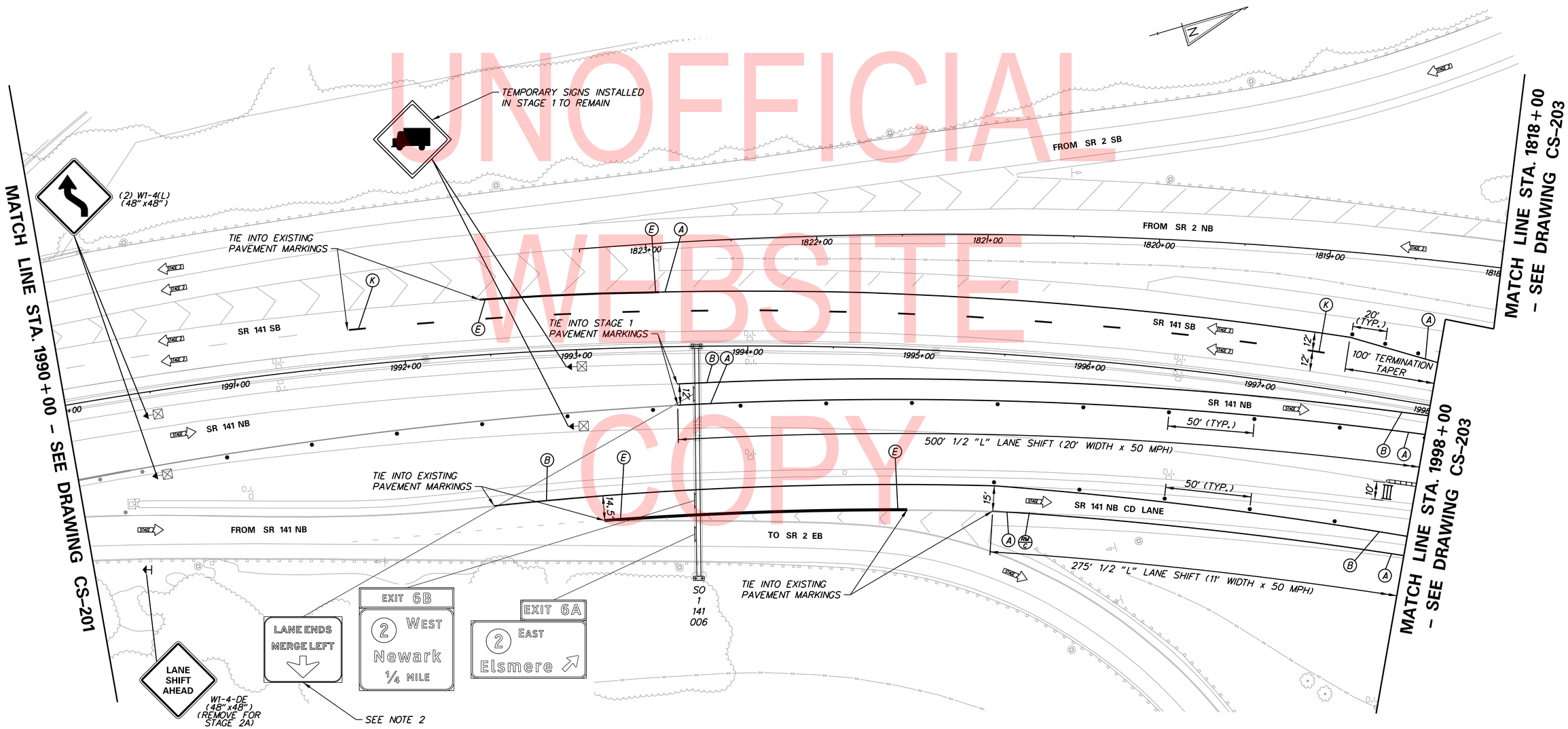

UNOFFICIAL WEBSITE COPY

ADDENDA / REVISIONS	

SCALE 0 30 60 90 FEET

REHABILITATION OF BRIDGES 1-600, 1-601, AND 1-604, SR 2 AND SR 141 INTERCHANGE

CONTRACT	BRIDGE NO.
T201707403	DESIGNED BY: JDC
COUNTY	CHECKED BY: JDC
NEW CASTLE	

CONSTRUCTION STAGING, M.O.T., AND EROSION CONTROL PLAN – STAGE 2

CS-202
SECTION
WRA
SHEET NO.
139

N:\32122-002\CADD\Traffic\CS202_141.dgn
8/1/2019 3:14:58 PM

SEQUENCE OF CONSTRUCTION - STAGE 2

1. DETOUR THE SR 2 EB TO SR 141 NB RAMP AS SHOWN ON DP-02.
2. INSTALL TEMPORARY TRAFFIC CONTROL DEVICES AS SHOWN ON THE PERMANENT WARNING SIGN PLAN AND STAGE 2 PLANS, SHIFT TRAFFIC TO DESIGNATED TRAVEL LANE.
3. COMPLETE BRIDGE REPAIR CONSTRUCTION AND DECK OVERLAY.
4. FOLLOWING COMPLETION OF BRIDGE WORK ON THE SR 141 NB CD LANE SYSTEM, REMOVE THE TEMPORARY TRAFFIC CONTROL DEVICES. REFER TO DRAWINGS CS-2A01 THROUGH CS-2A03 FOR DETAILS.

NOTES:
1. REFER TO DRAWING CS-005 FOR SECTION C-C DETAIL.

SECTION E-E (STATION 2005+00)

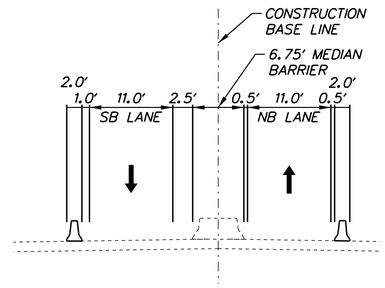

CONSTRUCTION STAGING LEGEND

- PROPOSED CONSTRUCTION THIS STAGE
- RUNOUT LENGTH SHADING
- EXISTING SIGN/PROPOSED TEMPORARY SIGN
- SKID MOUNTED PROPOSED TEMPORARY SIGN
- TYPE III BARRICADE
- PLASTIC DRUM
- TRAFFIC FLOW ARROW
- TEMPORARY P.C.C. SAFETY BARRIER, UNPINNED
- TEMPORARY P.C.C. SAFETY BARRIER, PINNED
- TEMPORARY IMPACT ATTENUATOR
- ARROW PANEL
- REMOVE EXISTING STRIPING BY CONTRACTOR
- PORTABLE CHANGEABLE MESSAGE SIGN

TEMPORARY PAVEMENT MARKINGS LEGEND

SYMBOL	ITEM
A	5" SOLID WHITE EPOXY
B	5" SOLID YELLOW EPOXY
C	5" SOLID WHITE TAPE
D	5" SOLID YELLOW TAPE
E	10" SOLID WHITE EPOXY
F	10" SOLID WHITE EPOXY, 3' LINE & 9' GAP
G	WHITE PAINT PAVEMENT SYMBOL
H	12" SOLID WHITE EPOXY
J	5" SOLID WHITE EPOXY, 3' LINE & 9' GAP
K	5" SOLID WHITE EPOXY, 10' LINE & 30' GAP

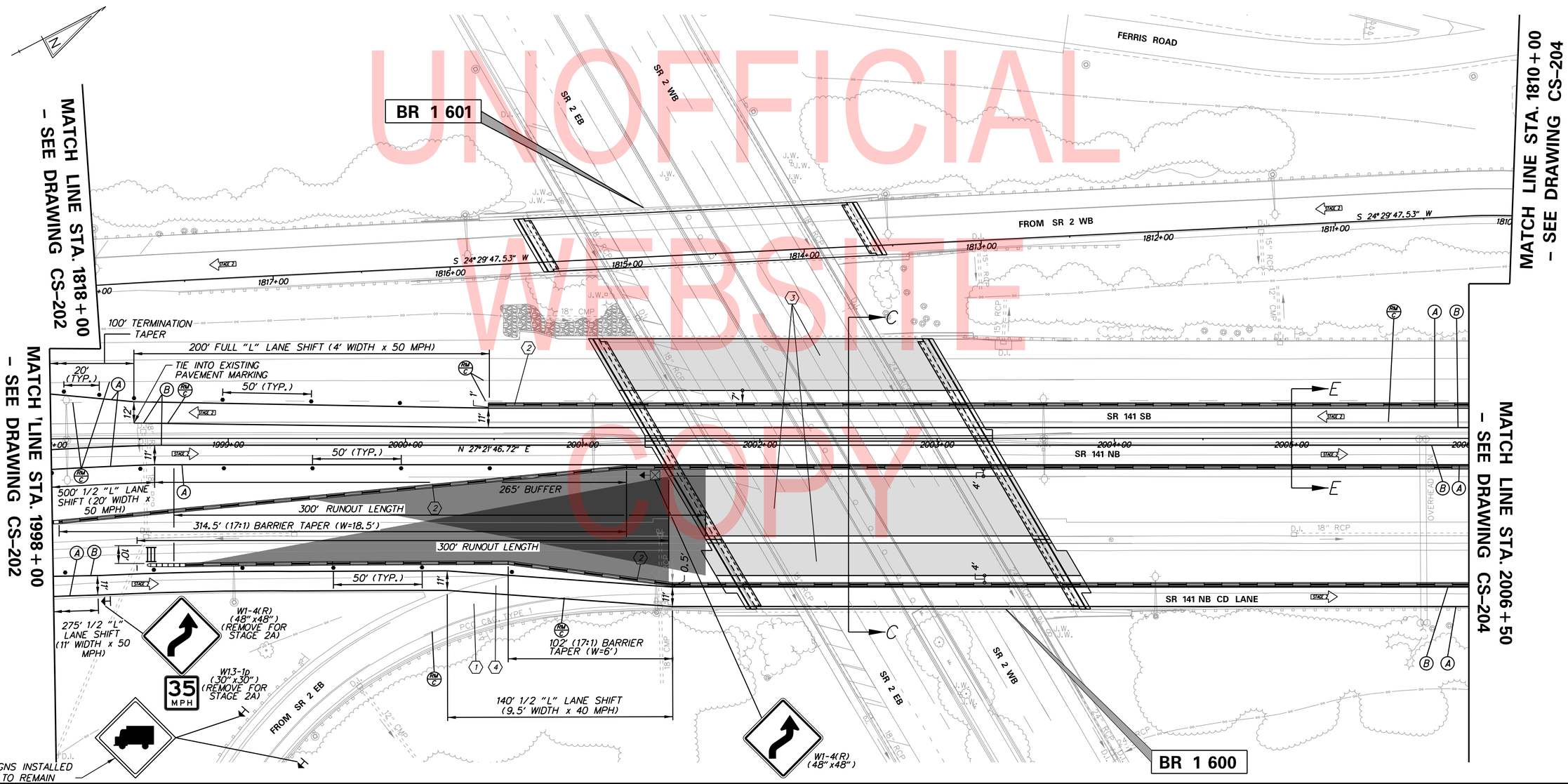

UNOFFICIAL WEBSITE COPY

ADDENDA / REVISIONS

SCALE 0 30 60 90 FEET

REHABILITATION OF BRIDGES 1-600, 1-601, AND 1-604, SR 2 AND SR 141 INTERCHANGE

CONTRACT	BRIDGE NO.	1-600, 1-601
T201707403	DESIGNED BY: JDC	
COUNTY		
NEW CASTLE	CHECKED BY: JDC	

CONSTRUCTION STAGING, M.O.T., AND EROSION CONTROL PLAN – STAGE 2

CS-203

SECTION	SHEET NO.
WRA	140

N:\32122-002\CADD\Traffic\CS203_141.dgn 8/1/2019 3:14:59 PM

SEQUENCE OF CONSTRUCTION - STAGE 2

1. INSTALL TEMPORARY TRAFFIC CONTROL DEVICES AS SHOWN ON THE PERMANENT WARNING SIGN PLAN AND STAGE 2 PLANS, SHIFT TRAFFIC TO DESIGNATED TRAVEL LANE.
2. COMPLETE BRIDGE REPAIR CONSTRUCTION AND DECK OVERLAY.

NOTES:
1. REFER TO DRAWING CS-006 FOR SECTION D-D DETAIL.

CONSTRUCTION STAGING LEGEND

- PROPOSED CONSTRUCTION THIS STAGE
- RUNOUT LENGTH SHADING
- EXISTING SIGN/PROPOSED TEMPORARY SIGN
- SKID MOUNTED PROPOSED TEMPORARY SIGN
- TYPE III BARRICADE
- PLASTIC DRUM
- TRAFFIC FLOW ARROW
- TEMPORARY P.C.C. SAFETY BARRIER, UNPINNED
- TEMPORARY P.C.C. SAFETY BARRIER, PINNED
- TEMPORARY IMPACT ATTENUATOR
- ARROW PANEL
- REMOVE EXISTING STRIPING BY CONTRACTOR
- PORTABLE CHANGEABLE MESSAGE SIGN

TEMPORARY PAVEMENT MARKINGS LEGEND

SYMBOL	ITEM
A	5" SOLID WHITE EPOXY
B	5" SOLID YELLOW EPOXY
C	5" SOLID WHITE TAPE
D	5" SOLID YELLOW TAPE
E	10" SOLID WHITE EPOXY
F	10" SOLID WHITE EPOXY, 3' LINE & 9' GAP
G	WHITE PAINT PAVEMENT SYMBOL
H	12" SOLID WHITE EPOXY
J	5" SOLID WHITE EPOXY, 3' LINE & 9' GAP
K	5" SOLID WHITE EPOXY, 10' LINE & 30' GAP

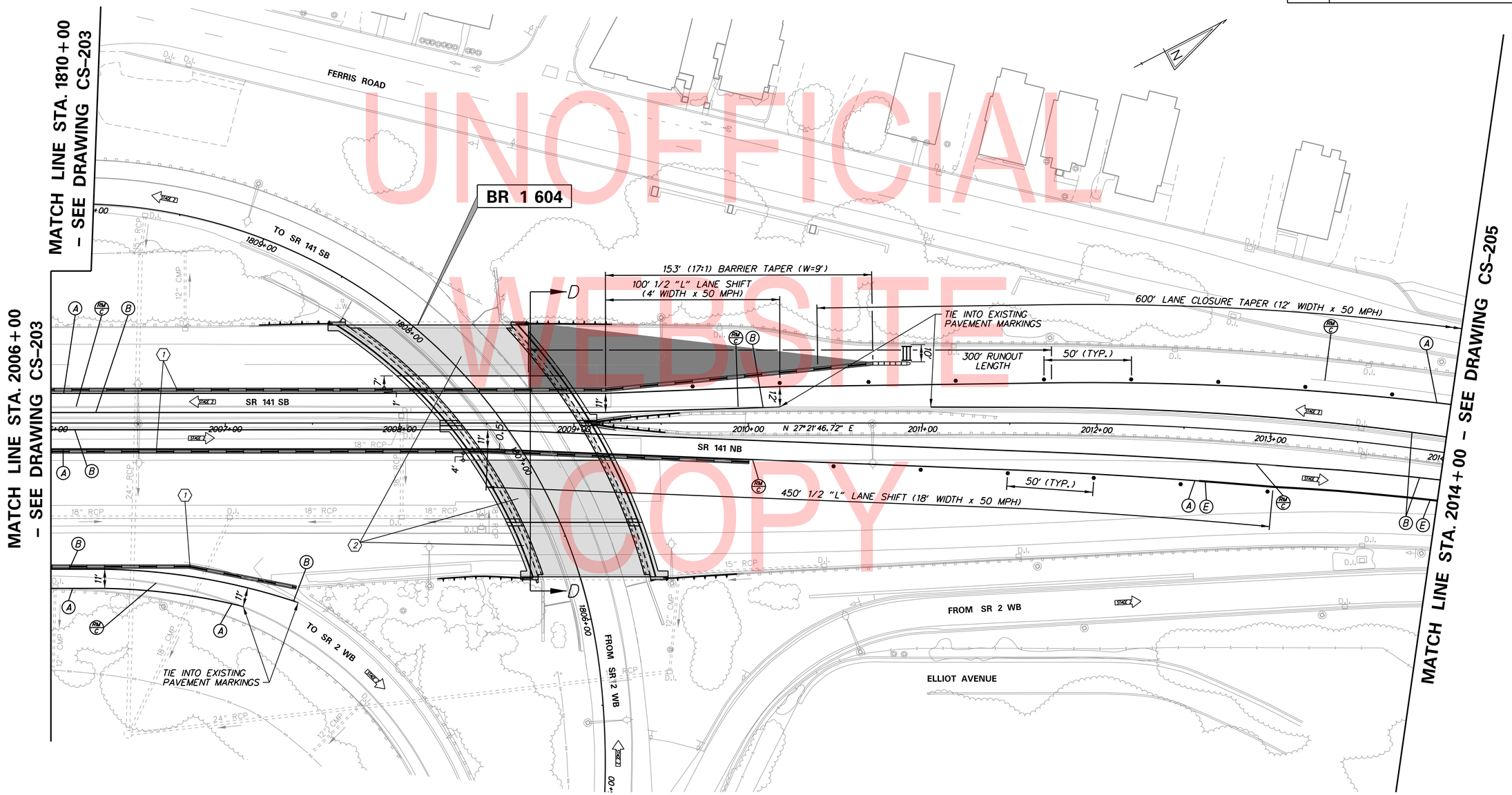

UNOFFICIAL WEBSITE COPY

ADDENDA / REVISIONS	

SCALE 0 30 60 90 FEET

REHABILITATION OF BRIDGES 1-600, 1-601, AND 1-604, SR 2 AND SR 141 INTERCHANGE

CONTRACT	BRIDGE NO.	1-604
T201707403	DESIGNED BY: JDC	
COUNTY		
NEW CASTLE	CHECKED BY: JDC	

CONSTRUCTION STAGING, M.O.T., AND EROSION CONTROL PLAN - STAGE 2

CS-204
SECTION
WRA
SHEET NO.
141

N:\32122-002\CADD\Traffic\CS204_141.dgn
8/17/2019 3:15:00 PM

SEQUENCE OF CONSTRUCTION - STAGE 2

1. INSTALL TEMPORARY TRAFFIC CONTROL DEVICES AS SHOWN ON THE PERMANENT WARNING SIGN PLAN AND STAGE 2 PLANS, SHIFT TRAFFIC TO DESIGNATED TRAVEL LANE.

CONSTRUCTION STAGING LEGEND

- PROPOSED CONSTRUCTION THIS STAGE
- RUNOUT LENGTH SHADING
- EXISTING SIGN/PROPOSED TEMPORARY SIGN
- SKID MOUNTED PROPOSED TEMPORARY SIGN
- TYPE III BARRICADE
- PLASTIC DRUM
- TRAFFIC FLOW ARROW
- TEMPORARY P.C.C. SAFETY BARRIER, UNPINNED
- TEMPORARY P.C.C. SAFETY BARRIER, PINNED
- TEMPORARY IMPACT ATTENUATOR
- ARROW PANEL
- REMOVE EXISTING STRIPING BY CONTRACTOR
- PORTABLE CHANGEABLE MESSAGE SIGN

TEMPORARY PAVEMENT MARKINGS LEGEND

SYMBOL	ITEM
A	5" SOLID WHITE EPOXY
B	5" SOLID YELLOW EPOXY
C	5" SOLID WHITE TAPE
D	5" SOLID YELLOW TAPE
E	10" SOLID WHITE EPOXY
F	10" SOLID WHITE EPOXY, 3' LINE & 9' GAP
G	WHITE PAINT PAVEMENT SYMBOL
H	12" SOLID WHITE EPOXY
J	5" SOLID WHITE EPOXY, 3' LINE & 9' GAP
K	5" SOLID WHITE EPOXY, 10' LINE & 30' GAP

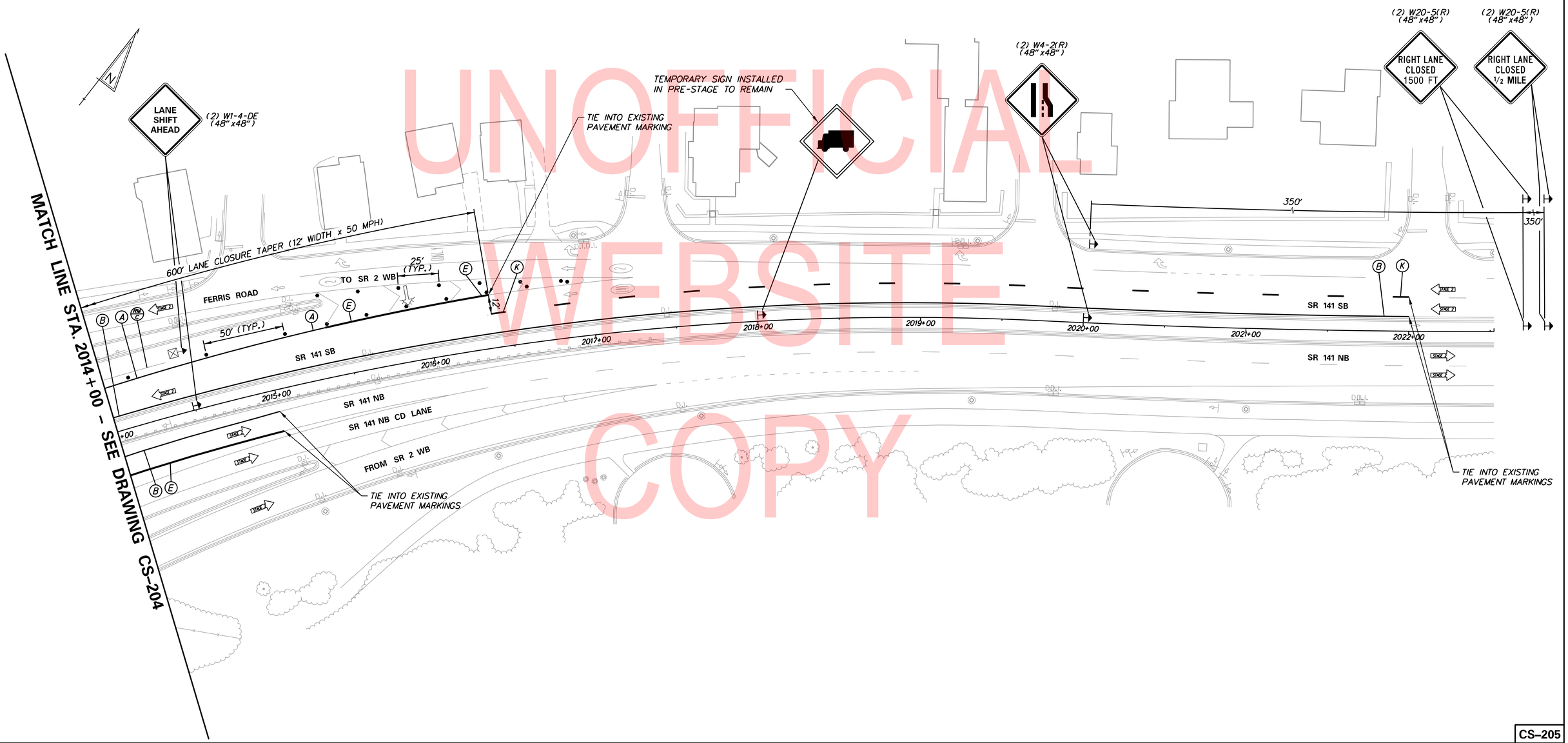

UNOFFICIAL WEBSITE COPY

N:\3222-002\CADD\Traffic\CS205_141.dgn
8/1/2019 3:15:01 PM

ADDENDA / REVISIONS	

SCALE 0 30 60 90 FEET

REHABILITATION OF BRIDGES 1-600, 1-601, AND 1-604, SR 2 AND SR 141 INTERCHANGE

CONTRACT	BRIDGE NO.
T201707403	DESIGNED BY: JDC
COUNTY	CHECKED BY: JDC
NEW CASTLE	

CONSTRUCTION STAGING, M.O.T., AND EROSION CONTROL PLAN – STAGE 2

CS-205
SECTION
WRA
SHEET NO.
142

SEQUENCE OF CONSTRUCTION - STAGE 2A

(1) INSTALL TEMPORARY TRAFFIC CONTROL DEVICES AS SHOWN ON THE PERMANENT WARNING SIGN PLAN AND STAGE 2A PLANS, SHIFT TRAFFIC TO DESIGNATED TRAVEL LANE.

NOTES:
1. TEMPORARY TRAFFIC CONTROL DEVICES SHOWN GREYSCALE FROM STAGE 2 SHALL REMAIN. TEMPORARY WARNING SIGNS FROM STAGE 2 SHALL REMAIN, EXCEPT WHERE NOTED ON THE PLANS. REFER TO DRAWINGS CS-201 THROUGH CS-205.
2. EXISTING SIGN TO REMAIN COVERED UNTIL COMPLETION OF STAGE 2 CONSTRUCTION.

CONSTRUCTION STAGING LEGEND

- PROPOSED CONSTRUCTION THIS STAGE
- RUNOUT LENGTH SHADING
- EXISTING SIGN/PROPOSED TEMPORARY SIGN
- SKID MOUNTED PROPOSED TEMPORARY SIGN
- TYPE III BARRICADE
- PLASTIC DRUM
- TRAFFIC FLOW ARROW
- TEMPORARY P.C.C. SAFETY BARRIER, UNPINNED
- TEMPORARY P.C.C. SAFETY BARRIER, PINNED
- TEMPORARY IMPACT ATTENUATOR
- ARROW PANEL
- REMOVE EXISTING STRIPING BY CONTRACTOR
- PORTABLE CHANGEABLE MESSAGE SIGN

TEMPORARY PAVEMENT MARKINGS LEGEND

SYMBOL	ITEM
A	5" SOLID WHITE EPOXY
B	5" SOLID YELLOW EPOXY
C	5" SOLID WHITE TAPE
D	5" SOLID YELLOW TAPE
E	10" SOLID WHITE EPOXY
F	10" SOLID WHITE EPOXY, 3' LINE & 9' GAP
G	WHITE PAINT PAVEMENT SYMBOL
H	12" SOLID WHITE EPOXY
J	5" SOLID WHITE EPOXY, 3' LINE & 9' GAP
K	5" SOLID WHITE EPOXY, 10' LINE & 30' GAP

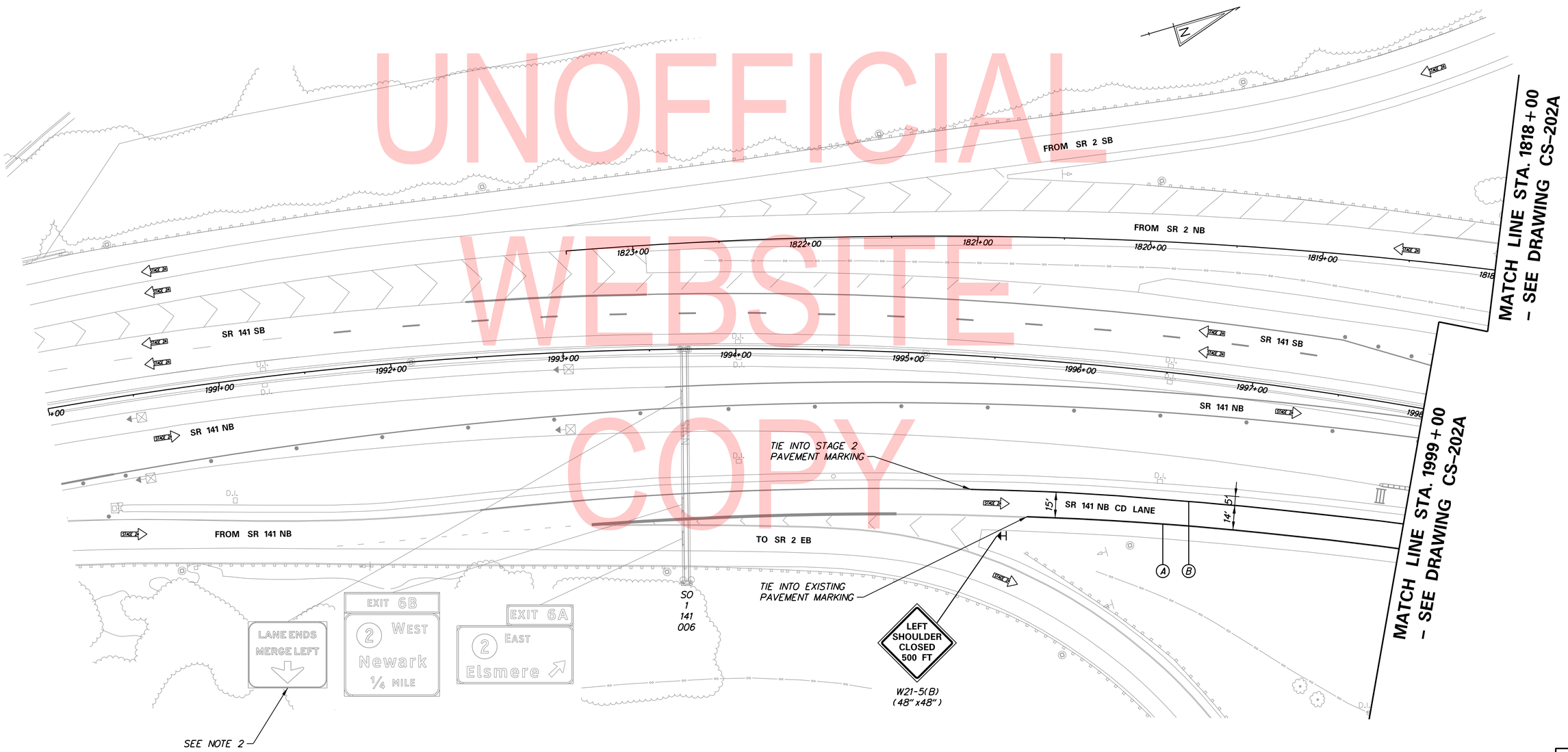

UNOFFICIAL WEBSITE COPY

N:\37227-002\CADD\Traffic\CS2A01_141.dgn
8/1/2019 3:15:02 PM

ADDENDA / REVISIONS	

SCALE 0 30 60 90 FEET

REHABILITATION OF BRIDGES 1-600, 1-601, AND 1-604, SR 2 AND SR 141 INTERCHANGE

CONTRACT	BRIDGE NO.
T201707403	DESIGNED BY: JDC
COUNTY	CHECKED BY: JDC
NEW CASTLE	

CONSTRUCTION STAGING, M.O.T., AND EROSION CONTROL PLAN - STAGE 2A

CS-2A01
SECTION
WRA
SHEET NO.
143

SEQUENCE OF CONSTRUCTION - STAGE 2A

(1) INSTALL TEMPORARY TRAFFIC CONTROL DEVICES AS SHOWN ON THE PERMANENT WARNING SIGN PLAN AND STAGE 2A PLANS, SHIFT TRAFFIC TO DESIGNATED TRAVEL LANE.

NOTES:

1. *TEMPORARY TRAFFIC CONTROL DEVICES SHOWN GREYSCALE FROM STAGE 2 SHALL REMAIN. TEMPORARY WARNING SIGNS FROM STAGE 2 SHALL REMAIN, EXCEPT WHERE NOTED ON THE PLANS. REFER TO DRAWINGS CS-201 THROUGH CS-205.*

CONSTRUCTION STAGING LEGEND

- PROPOSED CONSTRUCTION THIS STAGE
- RUNOUT LENGTH SHADING
- EXISTING SIGN/PROPOSED TEMPORARY SIGN
- SKID MOUNTED PROPOSED TEMPORARY SIGN
- TYPE III BARRICADE
- PLASTIC DRUM
- TRAFFIC FLOW ARROW
- TEMPORARY P.C.C. SAFETY BARRIER, UNPINNED
- TEMPORARY P.C.C. SAFETY BARRIER, PINNED
- TEMPORARY IMPACT ATTENUATOR
- ARROW PANEL
- REMOVE EXISTING STRIPING BY CONTRACTOR
- PORTABLE CHANGEABLE MESSAGE SIGN

TEMPORARY PAVEMENT MARKINGS LEGEND

SYMBOL	ITEM
A	5" SOLID WHITE EPOXY
B	5" SOLID YELLOW EPOXY
C	5" SOLID WHITE TAPE
D	5" SOLID YELLOW TAPE
E	10" SOLID WHITE EPOXY
F	10" SOLID WHITE EPOXY, 3' LINE & 9' GAP
G	WHITE PAINT PAVEMENT SYMBOL
H	12" SOLID WHITE EPOXY
J	5" SOLID WHITE EPOXY, 3' LINE & 9' GAP
K	5" SOLID WHITE EPOXY, 10' LINE & 30' GAP

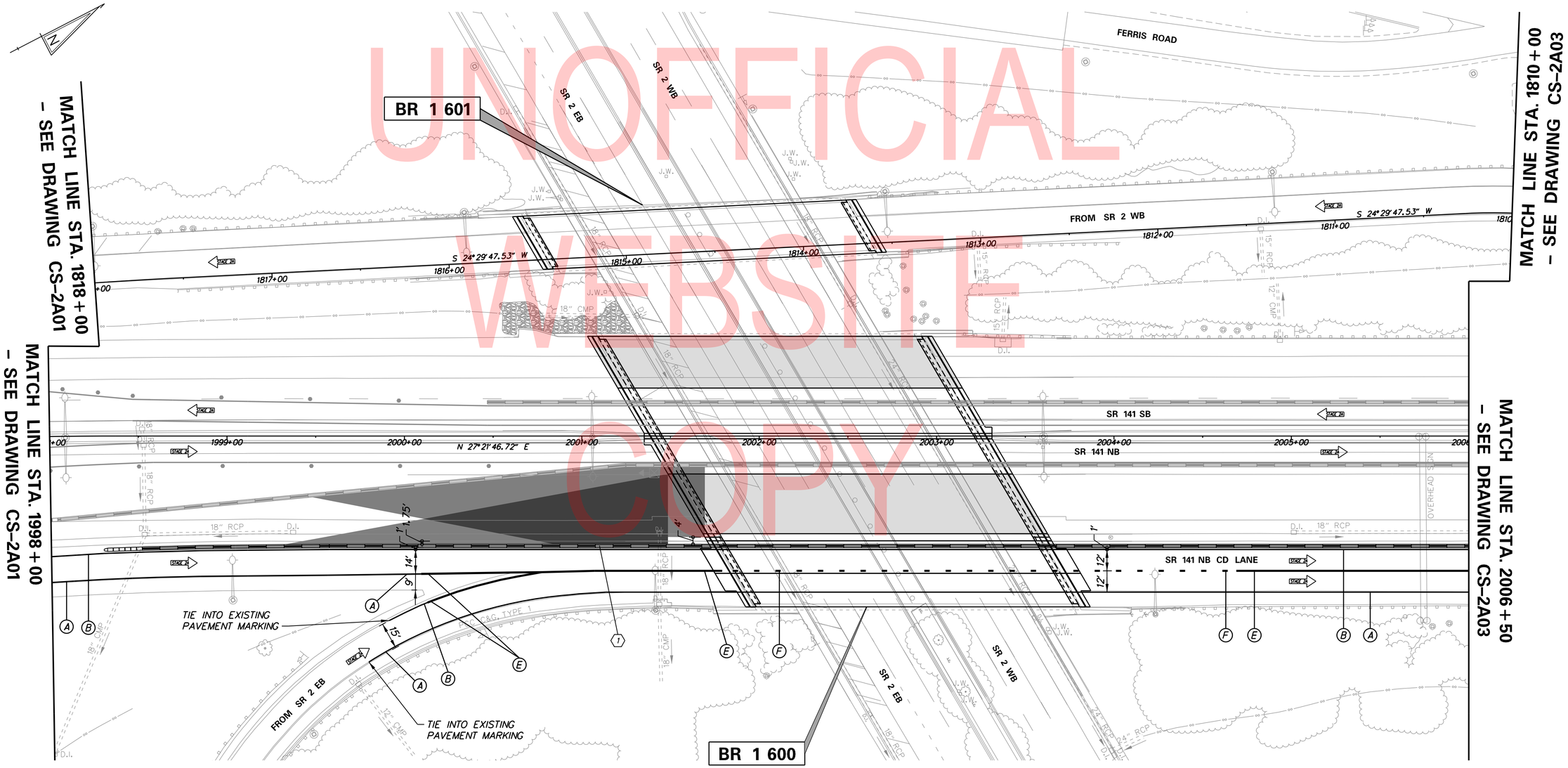

UNOFFICIAL WEBSITE COPY

ADDENDA / REVISIONS	SCALE 0 30 60 90 FEET	REHABILITATION OF BRIDGES 1-600, 1-601, AND 1-604, SR 2 AND SR 141 INTERCHANGE	CONTRACT T201707403	BRIDGE NO. 1-600, 1-601	CONSTRUCTION STAGING, M.O.T., AND EROSION CONTROL PLAN – STAGE 2A	CS-2A02
			COUNTY NEW CASTLE	DESIGNED BY: JDC		SECTION WRA
				CHECKED BY: JDC		SHEET NO. 144

pw:\32122-002\CADD\Traffic\CS2A02_141.dgn
8/17/2019 3:15:02 PM

SEQUENCE OF CONSTRUCTION - STAGE 2A

(1) INSTALL TEMPORARY TRAFFIC CONTROL DEVICES AS SHOWN ON THE PERMANENT WARNING SIGN PLAN AND STAGE 2A PLANS, SHIFT TRAFFIC TO DESIGNATED TRAVEL LANE.

NOTES:

1. TEMPORARY TRAFFIC CONTROL DEVICES SHOWN GREYSCALE FROM STAGE 2 SHALL REMAIN. TEMPORARY WARNING SIGNS FROM STAGE 2 SHALL REMAIN, EXCEPT WHERE NOTED ON THE PLANS. REFER TO DRAWINGS CS-201 THROUGH CS-205.

CONSTRUCTION STAGING LEGEND

- PROPOSED CONSTRUCTION THIS STAGE
- RUNOUT LENGTH SHADING
- EXISTING SIGN/PROPOSED TEMPORARY SIGN
- SKID MOUNTED PROPOSED TEMPORARY SIGN
- TYPE III BARRICADE
- PLASTIC DRUM
- TRAFFIC FLOW ARROW
- TEMPORARY P.C.C. SAFETY BARRIER, UNPINNED
- TEMPORARY P.C.C. SAFETY BARRIER, PINNED
- TEMPORARY IMPACT ATTENUATOR
- ARROW PANEL
- REMOVE EXISTING STRIPING BY CONTRACTOR
- PORTABLE CHANGEABLE MESSAGE SIGN

TEMPORARY PAVEMENT MARKINGS LEGEND

SYMBOL	ITEM
A	5" SOLID WHITE EPOXY
B	5" SOLID YELLOW EPOXY
C	5" SOLID WHITE TAPE
D	5" SOLID YELLOW TAPE
E	10" SOLID WHITE EPOXY
F	10" SOLID WHITE EPOXY, 3' LINE & 9' GAP
G	WHITE PAINT PAVEMENT SYMBOL
H	12" SOLID WHITE EPOXY
J	5" SOLID WHITE EPOXY, 3' LINE & 9' GAP
K	5" SOLID WHITE EPOXY, 10' LINE & 30' GAP

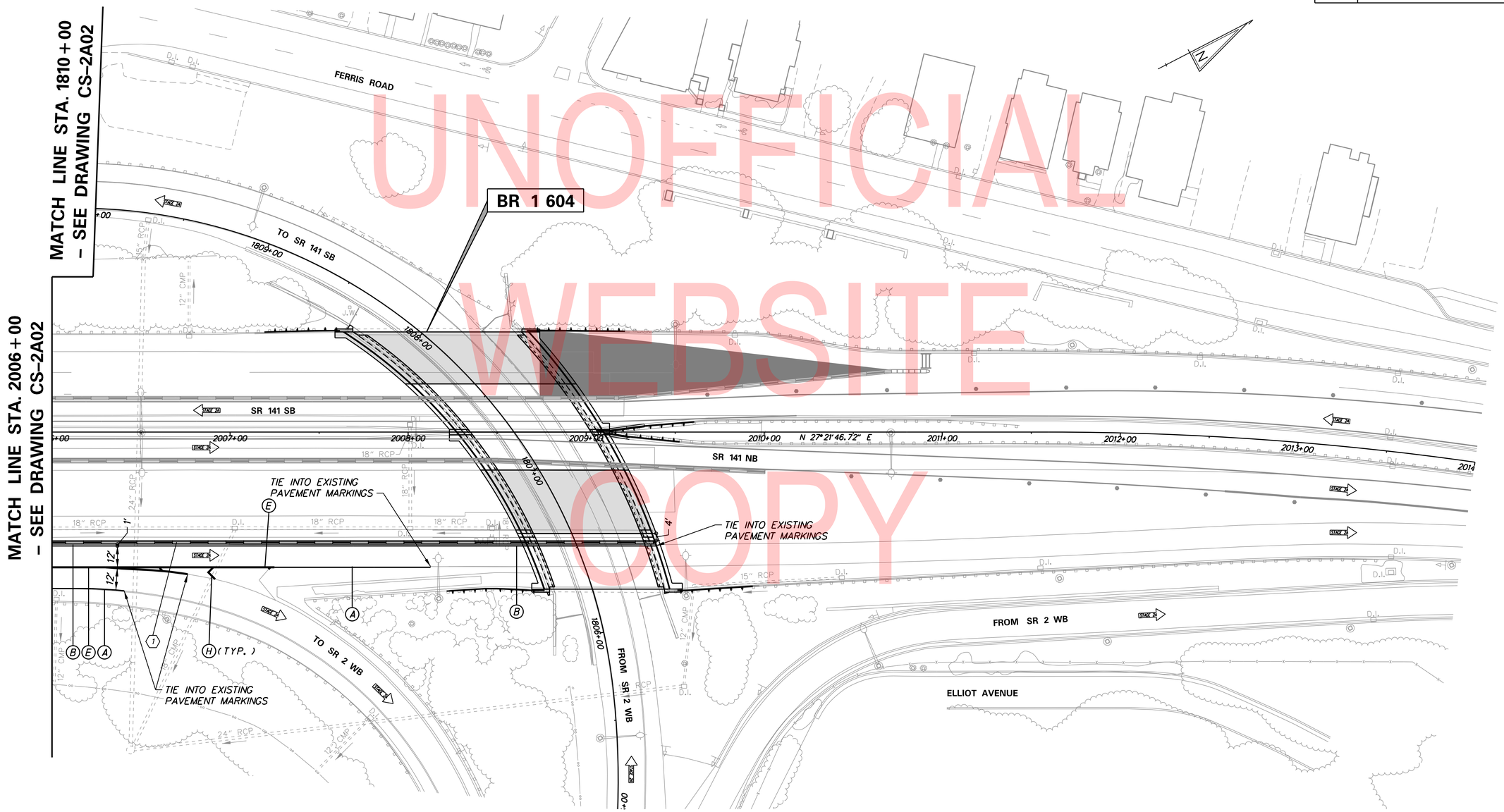

UNOFFICIAL WEBSITE COPY

N:\32122-002\CADD\Traffic\CS2A03_141.dgn
8/1/2019 3:15:03 PM

ADDENDA / REVISIONS	

SCALE 0 30 60 90 FEET

REHABILITATION OF BRIDGES 1-600, 1-601, AND 1-604, SR 2 AND SR 141 INTERCHANGE

CONTRACT	BRIDGE NO.	1-604
T201707403	DESIGNED BY: JDC	
COUNTY		
NEW CASTLE	CHECKED BY: JDC	

CONSTRUCTION STAGING, M.O.T., AND EROSION CONTROL PLAN – STAGE 2A

CS-2A03

SECTION	SHEET NO.
WRA	145

PORTABLE CHANGEABLE MESSAGE SIGNS

PRIOR TO DETOUR
(10 DAYS PRIOR TO BEGINNING OF DETOUR)

PCMS-1

RAMP TO SR 141 S TO CLOSE	STARTING XX/XX/XX

DURING DETOUR
(DISPLAY FOR 7 DAYS AFTER IMPLEMENTATION OF DETOUR)

PCMS-2

RAMP TO SR 141 S CLOSED	FOLLOW DETOUR

SPECIAL SIGNS

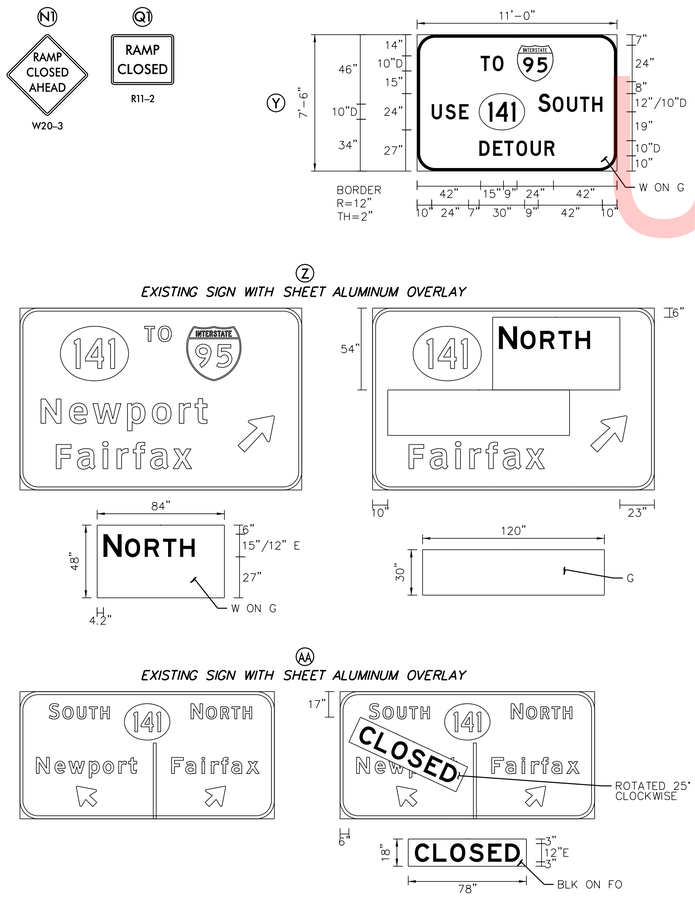

SPECIAL NOTES

1. CLOSE THE RAMP TO SR 141 SB WITH DRUMS SPACED AT 10 FEET. DRUMS SHALL COMPLETELY CLOSE THE SHOULDER, RAMP LANE AND THEORETICAL GORE.

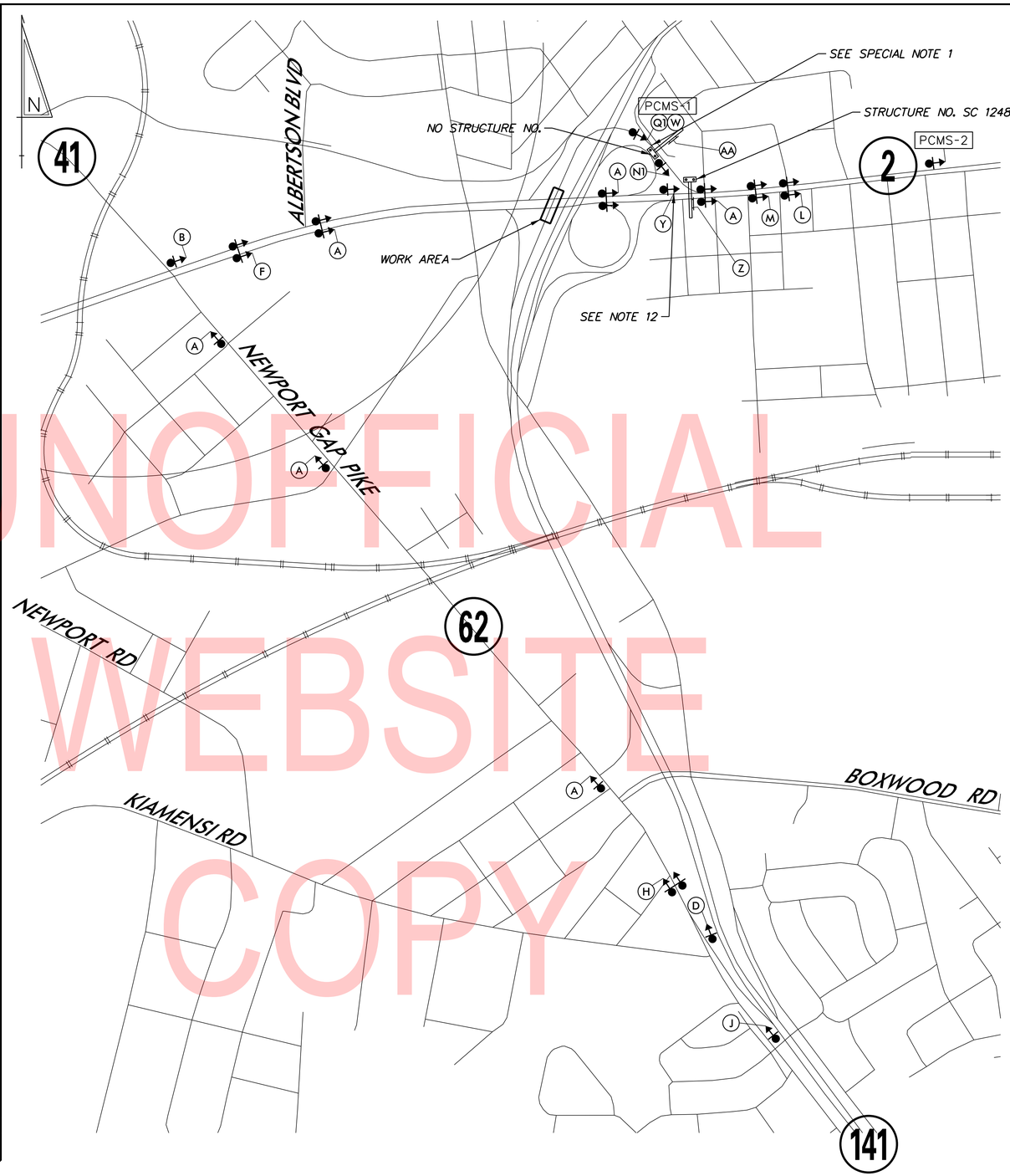

LEGEND

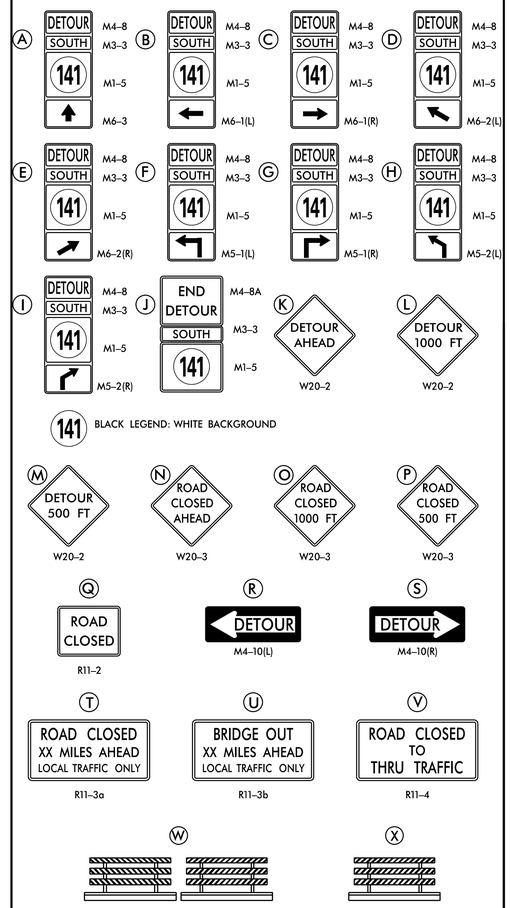

GENERAL NOTES

1. ALL DETOUR SIGNING, INCLUDING TRAILBLAZERS, ARE TO BE SUPPLIED AND MAINTAINED BY THE GENERAL CONTRACTOR IN COMPLIANCE WITH "THE DELAWARE MANUAL ON UNIFORM TRAFFIC CONTROL DEVICES" (DE MUTCD.)
2. THE CONTRACTOR SHALL COMPLY WITH GUIDELINES IN "THE DELAWARE MANUAL ON UNIFORM TRAFFIC CONTROL DEVICES" (DE MUTCD PART 6) FOR BARRICADES AND SIGNS (AS PER LATEST REVISION.)
3. DESIGN OF ALL SIGNS SHALL BE IN ACCORDANCE WITH THE FHWA STANDARD HIGHWAY SIGNS BOOK.
4. SIZES OF ALL SIGNS SHALL BE IN ACCORDANCE WITH "THE DELAWARE MANUAL ON UNIFORM TRAFFIC CONTROL DEVICES" (DE MUTCD.) SIZE OF SIGN SHALL BE BASED ON TYPE OF ROADWAY ON WHICH THE SIGN IS INSTALLED.
5. SIGNS NO LONGER IN USE SHALL BE COMPLETELY COVERED WITH NO RETROREFLECTIVE MATERIAL SHOWING, OR SHALL BE REMOVED, AS DIRECTED BY THE ENGINEER.
6. FIELD CONDITIONS MAY DICTATE CHANGES AT SOME TIME DURING THE LIFE OF THE CONTRACT. IN THE EVENT OF OMISSIONS OR CORRECTIONS, THE SIGNING PROVISIONS OF "THE DELAWARE MANUAL ON UNIFORM TRAFFIC CONTROL DEVICES" (DE MUTCD) WILL PREVAIL.
7. SIGNS "N" THROUGH "Q" AND "T" AND "V", THE WORD "ROAD" SHOULD BE CHANGED TO "RAMP", "RR XING", OR "BRIDGE" WHERE APPLICABLE.
8. WARNING SIGNS AND DETOUR TRAILBLAZERS SHALL BE MOUNTED ON BREAKAWAY POSTS AND HAVE RETROREFLECTIVE FLUORESCENT ORANGE SHEETING.
9. "W" BARRICADES SHALL COMPLETELY RUN THE FULL WIDTH OF THE ROADWAY.
10. BARRICADES SHALL BE A MINIMUM OF 6 FEET WIDE UNLESS DIRECTED BY THE ENGINEER.
11. DETOUR SIGNS SHALL BE DOUBLE POSTED ON THE LEFT AND RIGHT SIDE OF THE ROADWAY ALONG ROADWAYS WITH 3 OR MORE LANES OR ON DIVIDED ROADWAYS.

PREPARED BY

WRA Whitman, Requardt and Associates, LLP
Engineers • Architects • Environmental Planners Est. 1915

THIS SEAL APPLIES TO ALL SHEETS BEARING THE "WRA" SECTION DESIGNATION. DATE

SEAL

NOTES:
12. INSTALL EXTRUDED ALUMINUM SIGN ON THREE (3) NON-BREAKAWAY WOOD SIGN SUPPORTS, 6"X8" (L=21') SPACED AT 1.83'-3.67'-3.67'-1.83'. INSTALL THE SIGN WITH THE LEFT EDGE OF SIGN 30' FROM THE EDGE OF THE TRAVEL LANE AND WITH THE BOTTOM OF THE SIGN AT AN ELEVATION OF 7 FEET ABOVE THE HIGHEST POINT OF THE ROADWAY.

DP-01

ADDENDA / REVISIONS

NOT TO SCALE

REHABILITATION OF BRIDGES 1-600, 1-601, AND 1-604, SR 2 AND SR 141 INTERCHANGE

CONTRACT	PERMIT NO.	DP-01 – SR 2 WB TO SR 141 SB RAMP	SECTION
T201707404	DESIGNED BY: JDC		WRA
COUNTY			SHEET NO.
NEW CASTLE	CHECKED BY: JDC		146

N:\32122-002\CADD\Traffic\DP01_WB SR 2 Ramps to SB SR 141.dgn
8/1/2019 3:15:05 PM

UNOFFICIAL WEBSITE COPY

PORTABLE CHANGEABLE MESSAGE SIGNS

PRIOR TO DETOUR
(10 DAYS PRIOR TO BEGINNING OF DETOUR)

PCMS-5

RAMP TO SR 141 N TO CLOSE	STARTING XX/XX/XX

DURING DETOUR
(DISPLAY FOR 7 DAYS AFTER IMPLEMENTATION OF DETOUR)

PCMS-6

RAMP TO SR 141 N CLOSED	FOLLOW DETOUR

SPECIAL SIGNS

(N1) RAMP CLOSED AHEAD — W20-3

(Q1) RAMP CLOSED — R11-2

(Y)
EXISTING SIGN WITH SHEET ALUMINUM OVERLAY

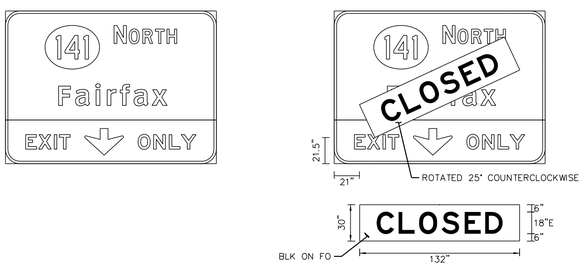

(Z)
EXISTING SIGN WITH SHEET ALUMINUM OVERLAY

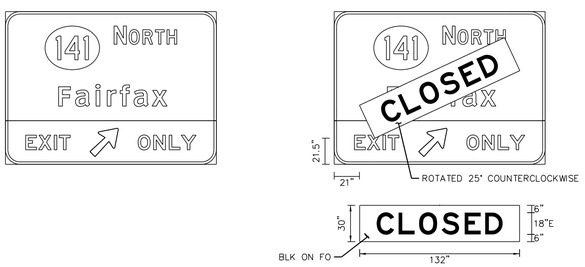

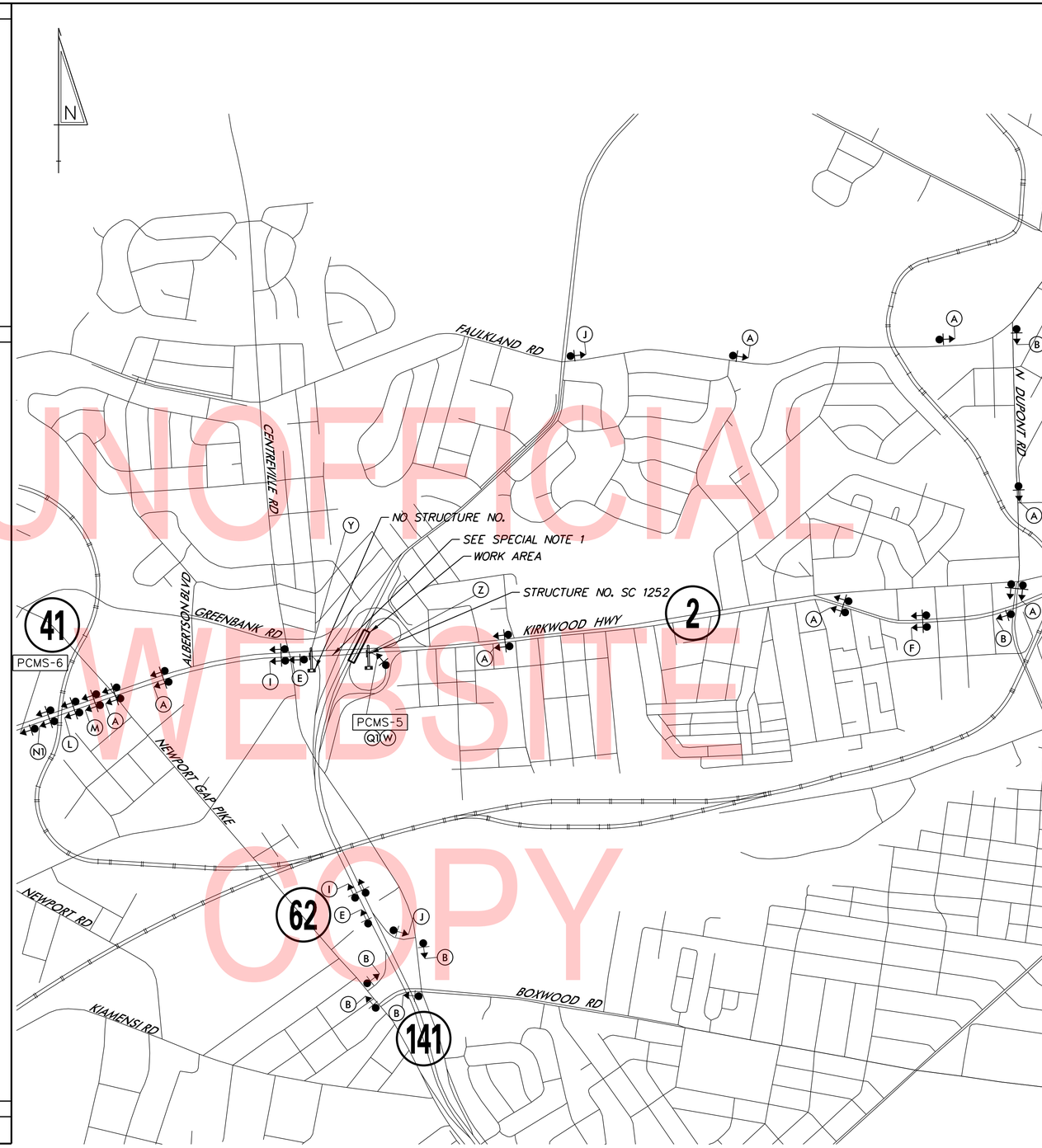

UNOFFICIAL WEBSITE COPY

LEGEND

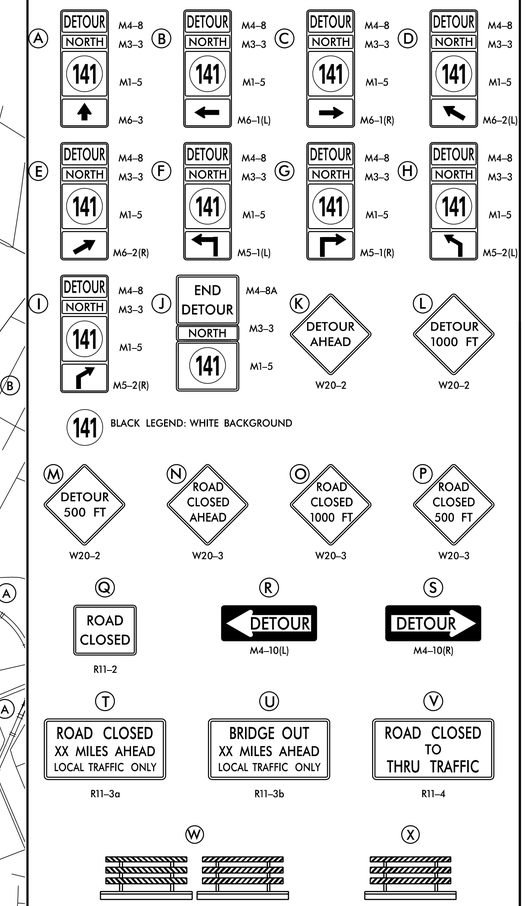

GENERAL NOTES

1. ALL DETOUR SIGNING, INCLUDING TRAILBLAZERS, ARE TO BE SUPPLIED AND MAINTAINED BY THE GENERAL CONTRACTOR IN COMPLIANCE WITH "THE DELAWARE MANUAL ON UNIFORM TRAFFIC CONTROL DEVICES" (DE MUTCD.)
2. THE CONTRACTOR SHALL COMPLY WITH GUIDELINES IN "THE DELAWARE MANUAL ON UNIFORM TRAFFIC CONTROL DEVICES" (DE MUTCD PART 6) FOR BARRICADES AND SIGNS (AS PER LATEST REVISION.)
3. DESIGN OF ALL SIGNS SHALL BE IN ACCORDANCE WITH THE FHWA STANDARD HIGHWAY SIGNS BOOK.
4. SIZES OF ALL SIGNS SHALL BE IN ACCORDANCE WITH "THE DELAWARE MANUAL ON UNIFORM TRAFFIC CONTROL DEVICES" (DE MUTCD.) SIZE OF SIGN SHALL BE BASED ON TYPE OF ROADWAY ON WHICH THE SIGN IS INSTALLED.
5. SIGNS NO LONGER IN USE SHALL BE COMPLETELY COVERED WITH NO RETROREFLECTIVE MATERIAL SHOWING, OR SHALL BE REMOVED, AS DIRECTED BY THE ENGINEER.
6. FIELD CONDITIONS MAY DICTATE CHANGES AT SOME TIME DURING THE LIFE OF THE CONTRACT. IN THE EVENT OF OMISSIONS OR CORRECTIONS, THE SIGNING PROVISIONS OF "THE DELAWARE MANUAL ON UNIFORM TRAFFIC CONTROL DEVICES" (DE MUTCD) WILL PREVAIL.
7. SIGNS "N" THROUGH "Q" AND "T" AND "V", THE WORD "ROAD" SHOULD BE CHANGED TO "RAMP", "RR XING", OR "BRIDGE" WHERE APPLICABLE.
8. WARNING SIGNS AND DETOUR TRAILBLAZERS SHALL BE MOUNTED ON BREAKAWAY POSTS AND HAVE RETROREFLECTIVE FLUORESCENT ORANGE SHEETING.
9. "W" BARRICADES SHALL COMPLETELY RUN THE FULL WIDTH OF THE ROADWAY.
10. BARRICADES SHALL BE A MINIMUM OF 6 FEET WIDE UNLESS DIRECTED BY THE ENGINEER.
11. DETOUR SIGNS SHALL BE DOUBLE POSTED ON THE LEFT AND RIGHT SIDE OF THE ROADWAY ALONG ROADWAYS WITH 3 OR MORE LANES OR ON DIVIDED ROADWAYS.

SPECIAL NOTES

1. CLOSE THE DECELERATION LANE BETWEEN THE RAMPS FROM SR 2 EASTBOUND TO SR 141 SOUTHBOUND AND NORTHBOUND FOLLOWING TA-33.

PREPARED BY

Whitman, Requardt and Associates, LLP
Engineers • Architects • Environmental Planners Est. 1915

THIS SEAL APPLIES TO ALL SHEETS BEARING THE "WRA" SECTION DESIGNATION. DATE

SEAL

DP-02

ADDENDA / REVISIONS

NOT TO SCALE

REHABILITATION OF BRIDGES 1-600, 1-601, AND 1-604, SR 2 AND SR 141 INTERCHANGE

CONTRACT	PERMIT NO.	DP-02 – SR 2 EB TO SR 141 NB RAMP	SECTION
T201707406	DESIGNED BY: JDC		WRA
COUNTY			SHEET NO.
NEW CASTLE	CHECKED BY: JDC		147

N:\32222-003\CADD\Traffic\DP02_EB SR 2 Ramps to NB SR 141(SB 141 and DuPont1).dgn
8/1/2019 3:15:05 PM

SIGNING, STRIPING AND CONDUIT PLAN GENERAL NOTES:

1. THE CONTRACTOR SHALL BE GOVERNED BY THE STANDARDS AND REQUIREMENTS OF THE FOLLOWING PUBLICATIONS, EXCEPT AS MODIFIED BY THE SPECIAL PROVISIONS OF THIS CONTRACT OR THROUGH WRITTEN APPROVAL BY THE ENGINEER.

   DELAWARE - "MANUAL ON UNIFORM TRAFFIC CONTROL DEVICES" 2011 EDITION AND SUBSEQUENT REVISIONS (DEMUTCD)

   F.H.W.A. - "STANDARD HIGHWAY SIGNS". 2004 EDITION AND ALL SUPPLEMENTS

2. THE CONTRACTOR SHALL INSTALL RAISED/RECESSED PAVEMENT MARKERS (RPMS) PER PART 3 OF THE DELAWARE MUTCD (SEE FIGURES 3B-15A, 3B-15B, 3B-15C, 3B-15E AND 3B-15F).

3. ALL EXISTING SIGNS NOT SHOWN ON THE PLAN SHALL REMAIN.

NOTES:

1. EXISTING SIGNING IS NOT SHOWN AS PERMANENT IMPACTS TO EXISTING SIGNING ARE NOT ANTICIPATED AND PERMANENT CHANGES TO TRAFFIC OPERATIONS ARE NOT PROPOSED.

2. PROPOSED PAVEMENT MARKINGS ARE SHOWN TO REPLACE EXISTING MARKINGS IMPACTED BY THE MAINTENANCE OF TRAFFIC. SEE CS SHEETS FOR DETAILS.

PAVEMENT MARKINGS LEGEND

SYMBOL	ITEM		QUANTITY
A	5" SOLID WHITE EPOXY RESIN PAINT (ITEM 817013)		
B	5" SOLID YELLOW EPOXY RESIN PAINT (ITEM 817013)		240 LF
C	8" SOLID WHITE CONTRAST EPOXY RESIN PAINT, 5" WHITE, 3" BLACK	ITEM 817013	
		ITEM 817018	
D	5" BROKEN WHITE RETROREFLECTIVE PREFORMED PATTERNED MARKINGS (TAPE) 10' LINE, 30' GAP (ITEM 817020)		
E	8" BROKEN WHITE RETROREFLECTIVE PREFORMED PATTERNED CONTRAST PAVEMENT MARKINGS, 10' LINE & 30' GAP (TAPE) (ITEM 817022)		320 LF
F	8" DOTTED WHITE RETROREFLECTIVE PREFORMED PATTERNED CONTRAST PAVEMENT MARKINGS, 3' LINE & 9' GAP (TAPE) (ITEM 817022)		
G	10" SOLID WHITE EPOXY RESIN PAINT (ITEM 817014)		240 LF
H	13" DOTTED WHITE RETROREFLECTIVE PREFORMED PATTERNED CONTRAST PAVEMENT MARKINGS, 3' LINE & 9' GAP (TAPE) (ITEM 817023)		
J	12" SOLID WHITE PERMANENT PAVEMENT STRIPING, ALKYD THERMOPLASTIC (ITEM 817006)		
K	12" SOLID WHITE RETROREFLECTIVE PREFORMED PATTERNED MARKINGS (TAPE) (ITEM NO. 817007)		
L	SOLID WHITE ALKYD-THERMOPLASTIC PERMANENT PAVEMENT SYMBOL (ITEM 817002)		
M	SOLID WHITE RETROREFLECTIVE PREFORMED PATTERNED SYMBOL (ITEM 817012)		
RM C	REMOVE EXISTING PAVEMENT STRIPING BY CONTRACTOR (ITEM 817031)		

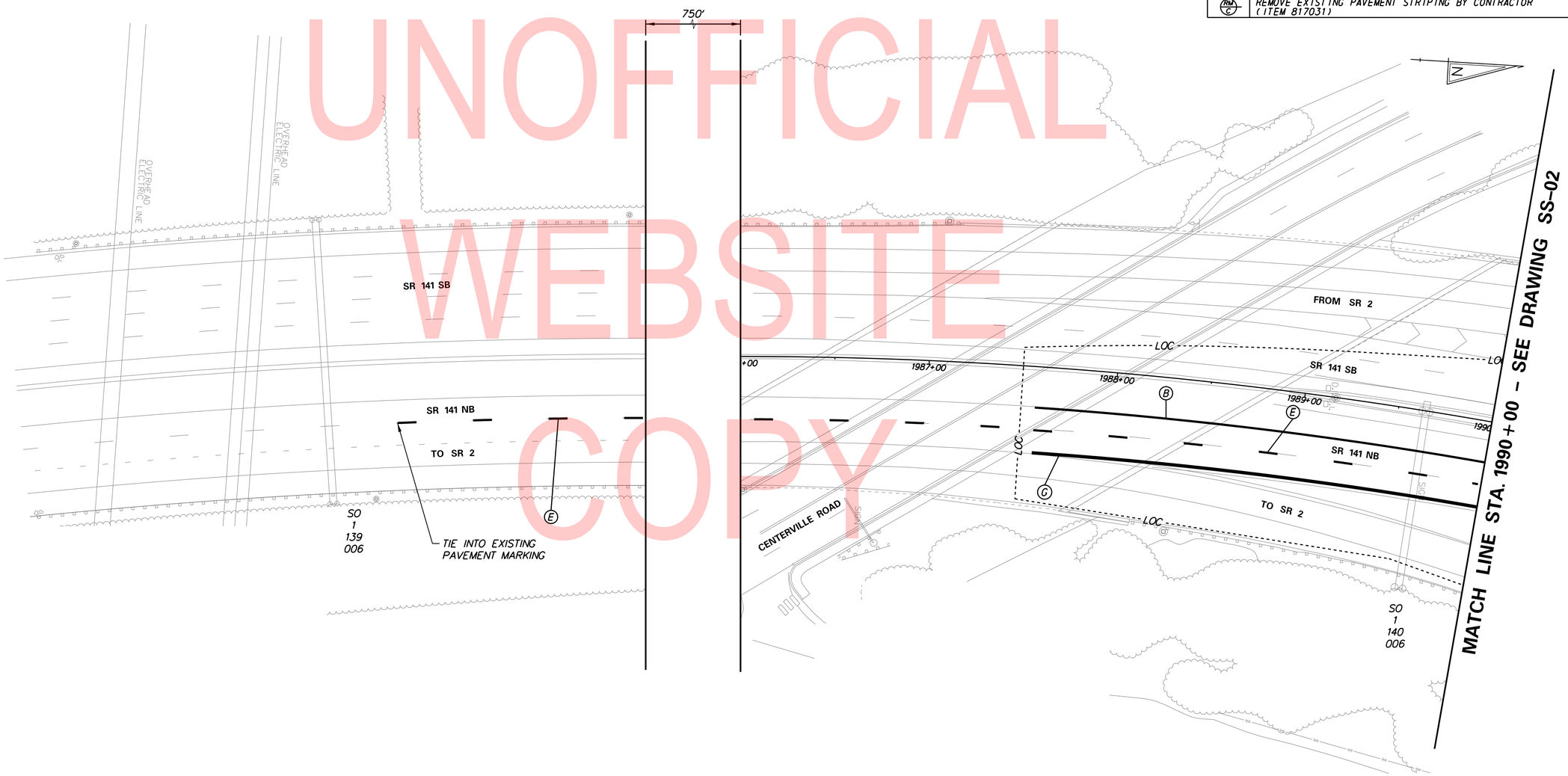

UNOFFICIAL WEBSITE COPY

N:\32122-002\C400\Traffic\SS01_141.dgn
8/1/2019 3:15:06 PM

ADDENDA / REVISIONS	

SCALE 0 30 60 90 FEET

REHABILITATION OF BRIDGES 1-600, 1-601, AND 1-604, SR 2 AND SR 141 INTERCHANGE

CONTRACT	BRIDGE NO.
T201707403	DESIGNED BY: JDC
COUNTY	
NEW CASTLE	CHECKED BY: JDC

SIGNING, STRIPING & CONDUIT PLAN

SS-01
SECTION
WRA
SHEET NO.
148

NOTES:

1. EXISTING SIGNING IS NOT SHOWN AS PERMANENT IMPACTS TO EXISTING SIGNING ARE NOT ANTICIPATED AND PERMANENT CHANGES TO TRAFFIC OPERATIONS ARE NOT PROPOSED.
2. PROPOSED PAVEMENT MARKINGS ARE SHOWN TO REPLACE EXISTING MARKINGS IMPACTED BY THE MAINTENANCE OF TRAFFIC. SEE CS SHEETS FOR DETAILS.

PAVEMENT MARKINGS LEGEND

SYMBOL	ITEM		QUANTITY
A	5" SOLID WHITE EPOXY RESIN PAINT (ITEM 817013)		
B	5" SOLID YELLOW EPOXY RESIN PAINT (ITEM 817013)		1985 LF
C	8" SOLID WHITE CONTRAST EPOXY RESIN PAINT, 5" WHITE, 3" BLACK	ITEM 817013	1455 LF
		ITEM 817018	1455 LF
D	5" BROKEN WHITE RETROREFLECTIVE PREFORMED PATTERNED MARKINGS (TAPE) 10' LINE, 30' GAP (ITEM 817020)		
E	8" BROKEN WHITE RETROREFLECTIVE PREFORMED PATTERNED CONTRAST PAVEMENT MARKINGS, 10' LINE & 30' GAP (TAPE) (ITEM 817022)		163 LF
F	8" DOTTED WHITE RETROREFLECTIVE PREFORMED PATTERNED CONTRAST PAVEMENT MARKINGS, 3' LINE & 9' GAP (TAPE) (ITEM 817022)		200 LF
G	10" SOLID WHITE EPOXY RESIN PAINT (ITEM 817014)		460 LF
H	13" DOTTED WHITE RETROREFLECTIVE PREFORMED PATTERNED CONTRAST PAVEMENT MARKINGS, 3' LINE & 9' GAP (TAPE) (ITEM 817023)		
J	12" SOLID WHITE PERMANENT PAVEMENT STRIPING, ALKYD THERMOPLASTIC (ITEM 817006)		
K	12" SOLID WHITE RETROREFLECTIVE PREFORMED PATTERNED MARKINGS (TAPE) (ITEM NO. 817007)		255 SF
L	SOLID WHITE ALKYD-THERMOPLASTIC PERMANENT PAVEMENT SYMBOL (ITEM 817002)		
M	SOLID WHITE RETROREFLECTIVE PREFORMED PATTERNED SYMBOL (ITEM 817012)		126 SF
RM C	REMOVE EXISTING PAVEMENT STRIPING BY CONTRACTOR (ITEM 817031)		

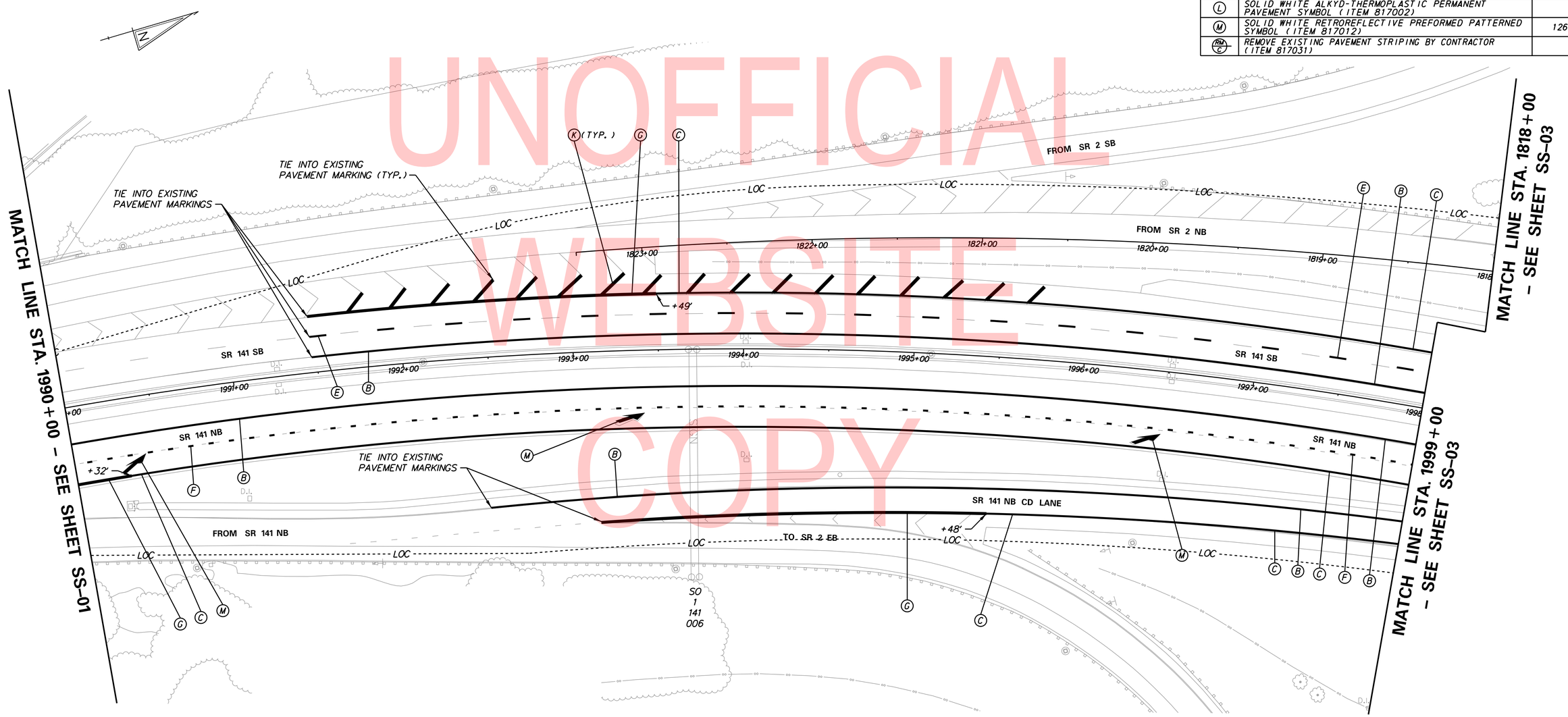

UNOFFICIAL WEBSITE COPY

N:\32122-002\C&D\Traffic\SS02_141.dgn
8/17/2019 3:15:07 PM

ADDENDA / REVISIONS	

SCALE 0 30 60 90 FEET

REHABILITATION OF BRIDGES 1-600, 1-601, AND 1-604, SR 2 AND SR 141 INTERCHANGE

CONTRACT	BRIDGE NO.
T201707403	DESIGNED BY: JDC
COUNTY	
NEW CASTLE	CHECKED BY: JDC

SIGNING, STRIPING & CONDUIT PLAN

SS-02
SECTION
WRA
SHEET NO.
149

PAVEMENT MARKINGS LEGEND

SYMBOL	ITEM		QUANTITY
A	5" SOLID WHITE EPOXY RESIN PAINT (ITEM 817013)		
B	5" SOLID YELLOW EPOXY RESIN PAINT (ITEM 817013)		2665 LF
C	8" SOLID WHITE CONTRAST EPOXY RESIN PAINT, 5" WHITE, 3" BLACK	ITEM 817013	2685 LF
		ITEM 817018	2685 LF
D	5" BROKEN WHITE RETROREFLECTIVE PREFORMED PATTERNED MARKINGS (TAPE) 10' LINE, 30' GAP (ITEM 817020)		
E	8" BROKEN WHITE RETROREFLECTIVE PREFORMED PATTERNED CONTRAST PAVEMENT MARKINGS, 10' LINE & 30' GAP (TAPE) (ITEM 817022)		200 LF
F	8" DOTTED WHITE RETROREFLECTIVE PREFORMED PATTERNED CONTRAST PAVEMENT MARKINGS, 3' LINE & 9' GAP (TAPE) (ITEM 817022)		25 LF
G	10" SOLID WHITE EPOXY RESIN PAINT (ITEM 817014)		360 LF
H	13" DOTTED WHITE RETROREFLECTIVE PREFORMED PATTERNED CONTRAST PAVEMENT MARKINGS, 3' LINE & 9' GAP (TAPE) (ITEM 817023)		85 LF
J	12" SOLID WHITE PERMANENT PAVEMENT STRIPING, ALKYD THERMOPLASTIC (ITEM 817006)		
K	12" SOLID WHITE RETROREFLECTIVE PREFORMED PATTERNED MARKINGS (TAPE) (ITEM NO. 817007)		
L	SOLID WHITE ALKYD-THERMOPLASTIC PERMANENT PAVEMENT SYMBOL (ITEM 817002)		
M	SOLID WHITE RETROREFLECTIVE PREFORMED PATTERNED SYMBOL (ITEM 817012)		42 SF
RM C	REMOVE EXISTING PAVEMENT STRIPING BY CONTRACTOR (ITEM 817031)		

NOTES:

1. EXISTING SIGNING IS NOT SHOWN AS PERMANENT IMPACTS TO EXISTING SIGNING ARE NOT ANTICIPATED AND PERMANENT CHANGES TO TRAFFIC OPERATIONS ARE NOT PROPOSED.
2. PROPOSED PAVEMENT MARKINGS ARE SHOWN TO REPLACE EXISTING MARKINGS IMPACTED BY THE MAINTENANCE OF TRAFFIC. SEE CS SHEETS FOR DETAILS.

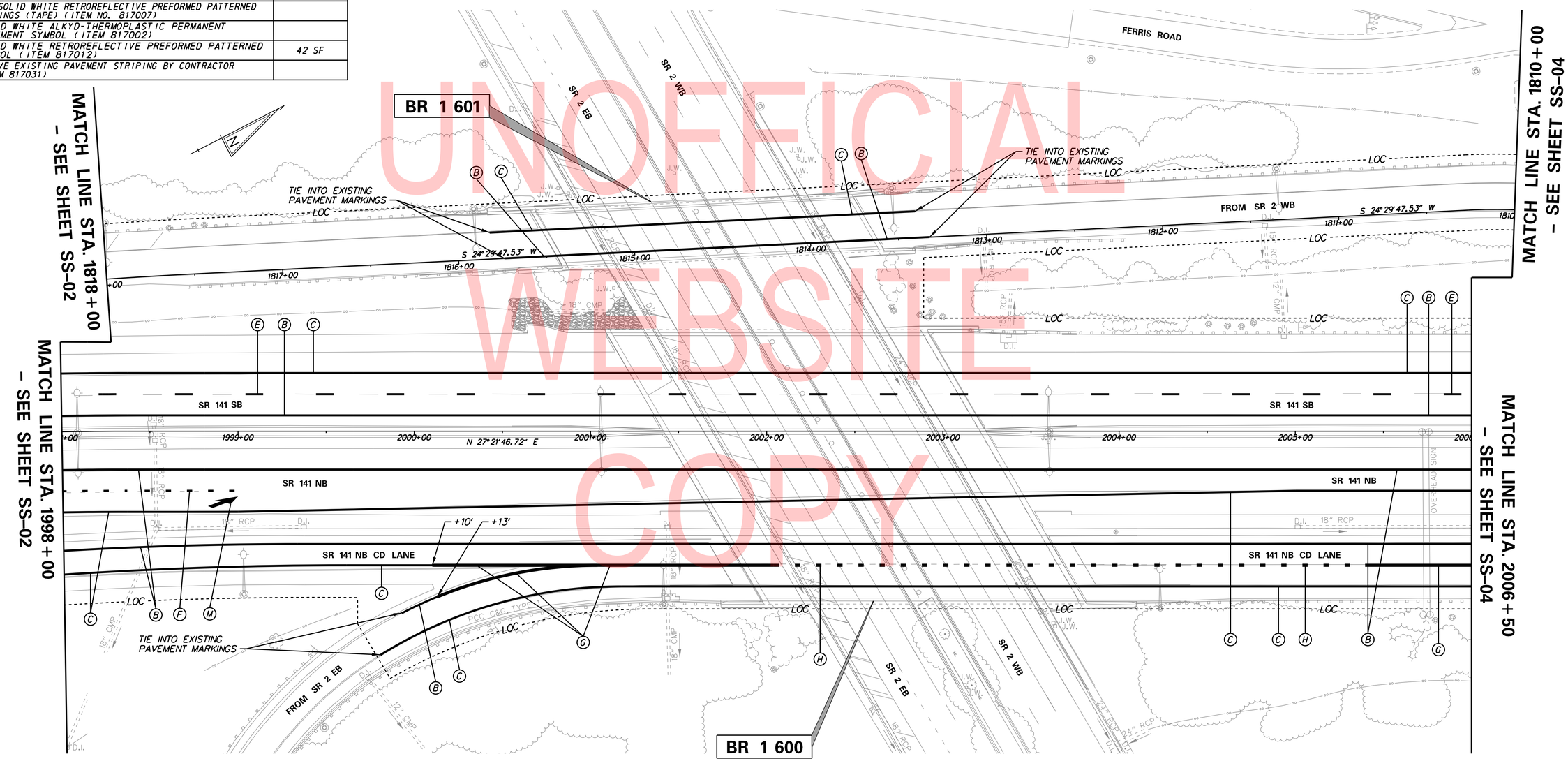

UNOFFICIAL WEBSITE COPY

N:\37272-002\CADD\Traffic\SS03_141.dgn
8/1/2019 3:15:08 PM

ADDENDA / REVISIONS	

SCALE 0 30 60 90 FEET

REHABILITATION OF BRIDGES 1-600, 1-601, AND 1-604, SR 2 AND SR 141 INTERCHANGE

CONTRACT	BRIDGE NO.	1-600, 1-601
T201707403	DESIGNED BY: JDC	
COUNTY	CHECKED BY: JDC	
NEW CASTLE		

SIGNING, STRIPING & CONDUIT PLAN

SS-03
SECTION
WRA
SHEET NO.
150

NOTES:
1. EXISTING SIGNING IS NOT SHOWN AS PERMANENT IMPACTS TO EXISTING SIGNING ARE NOT ANTICIPATED AND PERMANENT CHANGES TO TRAFFIC OPERATIONS ARE NOT PROPOSED.

2. PROPOSED PAVEMENT MARKINGS ARE SHOWN TO REPLACE EXISTING MARKINGS IMPACTED BY THE MAINTENANCE OF TRAFFIC. SEE CS SHEETS FOR DETAILS.

PAVEMENT MARKINGS LEGEND

SYMBOL	ITEM		QUANTITY
A	5" SOLID WHITE EPOXY RESIN PAINT (ITEM 817013)		950 LF
B	5" SOLID YELLOW EPOXY RESIN PAINT (ITEM 817013)		1885 LF
C	8" SOLID WHITE CONTRAST EPOXY RESIN PAINT, 5" WHITE, 3" BLACK	ITEM 817013	1030 LF
		ITEM 817018	1030 LF
D	5" BROKEN WHITE RETROREFLECTIVE PREFORMED PATTERNED MARKINGS (TAPE) 10' LINE, 30' GAP (ITEM 817020)		125 LF
E	8" BROKEN WHITE RETROREFLECTIVE PREFORMED PATTERNED CONTRAST PAVEMENT MARKINGS, 10' LINE & 30' GAP (TAPE) (ITEM 817022)		75 LF
F	8" DOTTED WHITE RETROREFLECTIVE PREFORMED PATTERNED CONTRAST PAVEMENT MARKINGS, 3' LINE & 9' GAP (TAPE) (ITEM 817022)		
G	10" SOLID WHITE EPOXY RESIN PAINT (ITEM 817014)		365 LF
H	13" DOTTED WHITE RETROREFLECTIVE PREFORMED PATTERNED CONTRAST PAVEMENT MARKINGS, 3' LINE & 9' GAP (TAPE) (ITEM 817023)		
J	12" SOLID WHITE PERMANENT PAVEMENT STRIPING, ALKYD THERMOPLASTIC (ITEM 817006)		
K	12" SOLID WHITE RETROREFLECTIVE PREFORMED PATTERNED MARKINGS (TAPE) (ITEM NO. 817007)		35 LF
L	SOLID WHITE ALKYD-THERMOPLASTIC PERMANENT PAVEMENT SYMBOL (ITEM 817002)		
M	SOLID WHITE RETROREFLECTIVE PREFORMED PATTERNED SYMBOL (ITEM 817012)		
RM C	REMOVE EXISTING PAVEMENT STRIPING BY CONTRACTOR (ITEM 817031)		

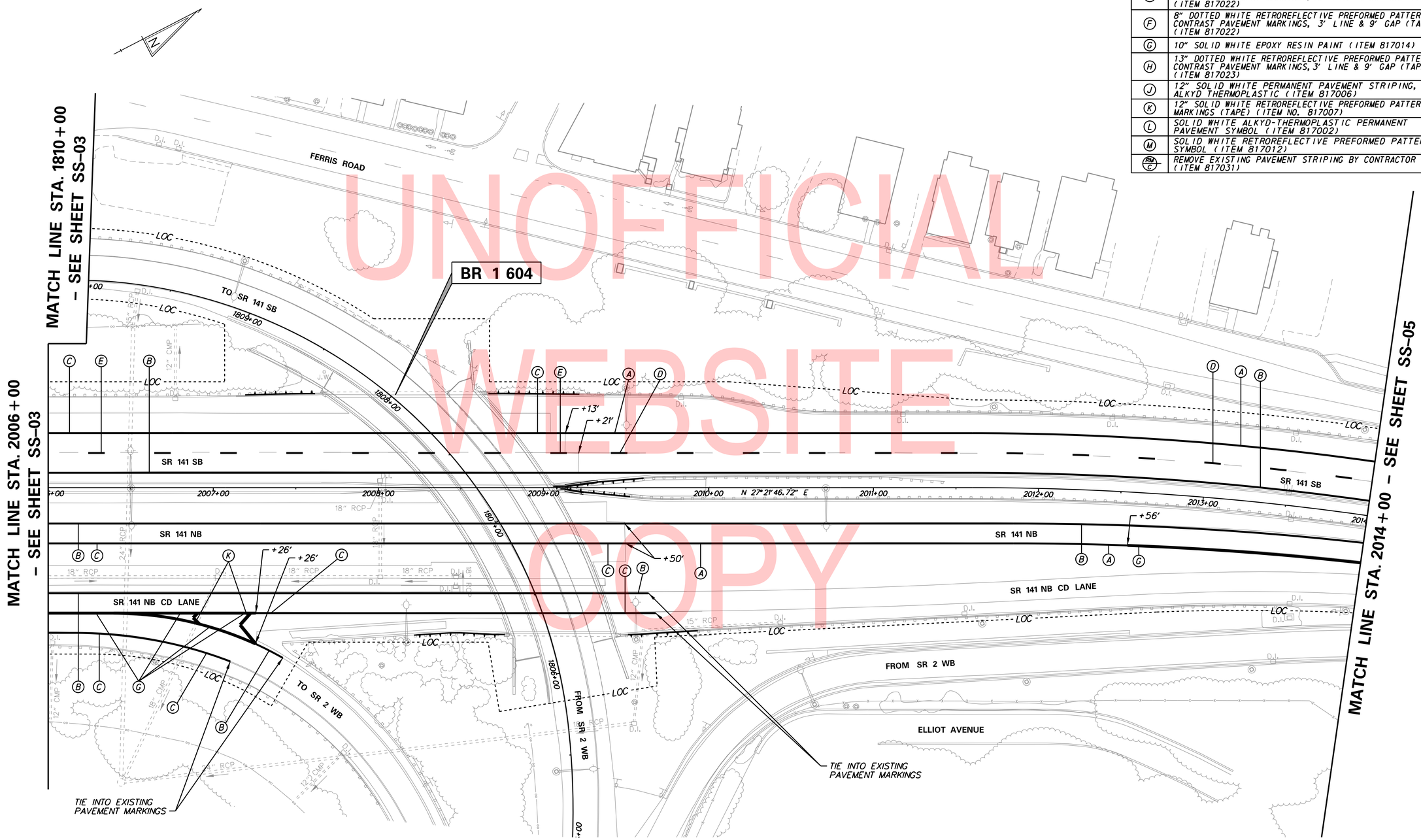

UNOFFICIAL WEBSITE COPY

N:\32122-002\CADD\Traffic\SS04_141.dgn
8/17/2019 3:15:09 PM

ADDENDA / REVISIONS	

SCALE 0 30 60 90 FEET

REHABILITATION OF BRIDGES 1-600, 1-601, AND 1-604, SR 2 AND SR 141 INTERCHANGE

CONTRACT	BRIDGE NO.	1-604
T201707403	DESIGNED BY: JDC	
COUNTY		
NEW CASTLE	CHECKED BY: JDC	

SIGNING, STRIPING & CONDUIT PLAN

SS-04
SECTION
WRA
SHEET NO.
151

NOTES:
1. INSTALL ELONGATED ROUTE SHIELD FOR PAVEMENT MARKINGS AS PER FIGURE 3B-25 OF THE DE MUTCD.
2. EXISTING SIGNING IS NOT SHOWN AS PERMANENT IMPACTS TO EXISTING SIGNING ARE NOT ANTICIPATED AND PERMANENT CHANGES TO TRAFFIC OPERATIONS ARE NOT PROPOSED.
3. PROPOSED PAVEMENT MARKINGS ARE SHOWN TO REPLACE EXISTING MARKINGS IMPACTED BY THE MAINTENANCE OF TRAFFIC. SEE CS SHEETS FOR DETAILS.

PAVEMENT MARKINGS LEGEND

SYMBOL	ITEM		QUANTITY
A	5" SOLID WHITE EPOXY RESIN PAINT (ITEM 817013)		580 LF
B	5" SOLID YELLOW EPOXY RESIN PAINT (ITEM 817013)		900 LF
C	8" SOLID WHITE CONTRAST EPOXY RESIN PAINT, 5" WHITE, 3" BLACK	ITEM 817013	
		ITEM 817018	
D	5" BROKEN WHITE RETROREFLECTIVE PREFORMED PATTERNED MARKINGS (TAPE) 10' LINE, 30' GAP (ITEM 817020)		200 LF
E	8" BROKEN WHITE RETROREFLECTIVE PREFORMED PATTERNED CONTRAST PAVEMENT MARKINGS, 10' LINE & 30' GAP (TAPE) (ITEM 817022)		
F	8" DOTTED WHITE RETROREFLECTIVE PREFORMED PATTERNED CONTRAST PAVEMENT MARKINGS, 3' LINE & 9' GAP (TAPE) (ITEM 817022)		
G	10" SOLID WHITE EPOXY RESIN PAINT (ITEM 817014)		290 LF
H	13" DOTTED WHITE RETROREFLECTIVE PREFORMED PATTERNED CONTRAST PAVEMENT MARKINGS, 3' LINE & 9' GAP (TAPE) (ITEM 817023)		
J	12" SOLID WHITE PERMANENT PAVEMENT STRIPING, ALKYD THERMOPLASTIC (ITEM 817006)		40 LF
K	12" SOLID WHITE RETROREFLECTIVE PREFORMED PATTERNED MARKINGS (TAPE) (ITEM NO. 817007)		
L	SOLID WHITE ALKYD-THERMOPLASTIC PERMANENT PAVEMENT SYMBOL (ITEM 817002)		85 SF
M	SOLID WHITE RETROREFLECTIVE PREFORMED PATTERNED SYMBOL (ITEM 817012)		
RM C	REMOVE EXISTING PAVEMENT STRIPING BY CONTRACTOR (ITEM 817031)		

UNOFFICIAL WEBSITE COPY

N:\32122-002\C400\Traffic\SS05_141.dgn
8/1/2019 3:15:10 PM

ADDENDA / REVISIONS	

SCALE
0 30 60 90
FEET

REHABILITATION OF BRIDGES 1-600, 1-601, AND 1-604, SR 2 AND SR 141 INTERCHANGE

CONTRACT	BRIDGE NO.
T201707403	DESIGNED BY: JDC
COUNTY	CHECKED BY: JDC
NEW CASTLE	

SIGNING, STRIPING & CONDUIT PLAN

SS-05
SECTION
WRA
SHEET NO.
152