STATE OF DELAWARE
DEPARTMENT OF TRANSPORTATION
800 BAY ROAD
P.O. BOX 778
DOVER, DELAWARE 19903

JENNIFER COHAN
SECRETARY

VIA OVERNIGHT DELIVERY

November 18, 2019

Contract No. T201707403.01
Federal Aid Project No. BHN-N006(17)
Rehabilitation of Bridges 1-600, 1-601, AND 1-604, SR2 AND SR141 Interchange
New Castle County

Ladies and Gentlemen:

Enclosed is Addendum No. 3 for the referenced contract consisting of the following:

1. The Bid Proposal Cover, revised, to be substituted for the same page of the Proposal.

2. Eight (8) pages, Bid Proposal Forms, pages 2, 4, 5, 6, 7, 8, 9 and 10, revised, to be substituted for same pages in the Proposal.

   The following Item Number has a revised quantity: 611000.

   The following Item Number has been added: 628070.

3. Nine (9) sheets, Construction Plans, sheets 3, 19, 43, 51, 56, 61, 79, 103 and 112, revised, to be substituted for the same sheets in the Plans.

4. Bid Express Amendment File No. 1.

Please note the revisions listed above and submit your bid based upon this information.

Sincerely,
~signature on file~
Connie Ivins
Competitively Bid Contracts Coordinator
Delaware Department of Transportation

Addendum No. 3
November 18, 2019

STATE OF DELAWARE

DEPARTMENT OF TRANSPORTATION

BID PROPOSAL

for

CONTRACT T201707403.01

FEDERAL AID PROJECT NO. BHN-N006(17)

CFDA NO. 20.205

REHABILITATION OF BRIDGES 1-600, 1-601, AND 1-604, SR2 AND SR141 INTERCHANGE

NEW CASTLE COUNTY

ADVERTISEMENT DATE: October 7, 2019

COMPLETION TIME: 268 Calendar Days

SPECIFICATIONS FOR ROAD AND BRIDGE CONSTRUCTION
DELAWARE DEPARTMENT OF TRANSPORTATION
AUGUST 2016

Bids will be received in the Bidder's Room at the Delaware Department of Transportation's Administration Building, 800 Bay Road, Dover, Delaware prior to 2:00 P.M. local time **November 5 ~~19~~ 26, 2019**

DELAWARE DEPARTMENT OF TRANSPORTATION PAGE: 2
SCHEDULE OF ITEMS DATE:

CONTRACT ID: T201707403.01 PROJECT(S): BHN-N006(17)

All figures must be typewritten.

CONTRACTOR :_____

LINE NO	ITEM DESCRIPTION	APPROX. QUANTITY AND UNITS		UNIT PRICE DOLLARS	CTS	BID AMOUNT DOLLARS	CTS
0090	401021 SUPERPAVE TYPE BCBC, PG 64-22	482.000	TON				
0100	401030 SUPERPAVE TYPE B, PG 64-22, PATCHING	2.000	TON				
0110	501502 DIAMOND GRINDING PORTLAND CEMENT CONCRETE PAVEMENT AND PRECAST PAVEMENT	44394.000	SF				
0120	602101 REPLACE DRAINAGE INLET FRAME(S)	1.000	EACH				
0130	602130 ADJUSTING AND REPAIRING EXISTING DRAINAGE INLET	8.000	EACH				
0140	604001 PROTECTIVE SHIELD		LUMP	LUMP			
0150	610008 PORTLAND CEMENT CONCRETE MASONRY, PARAPET, CLASS A	15.000	CY				
0160	610016 PORTLAND CEMENT CONCRETE MASONRY, CLASS D	274.000	CY				
0170	610017 PORTLAND CEMENT CONCRETE MASONRY, SUPERSTRUCTURE, CLASS D	217.000	CY				
0180	611000 BAR REINFORCEMENT	30048.000	LB				

CONTRACT ID: T201707403.01 PROJECT(S): BHN-N006(17)

All figures must be typewritten.

CONTRACTOR :_____

LINE NO	ITEM DESCRIPTION	APPROX. QUANTITY AND UNITS	UNIT PRICE DOLLARS	UNIT PRICE CTS	BID AMOUNT DOLLARS	BID AMOUNT CTS
0290	628001 REPAIR OF CONCRETE STRUCTURE BY EPOXY INJECTION	96.000 LF				
0300	628041 DEEP SPALL REPAIR	210.000 CF				
0310	628042 REHABILITATION OF PORTLAND CEMENT CONCRETE MASONRY	13.000 CY				
0320	628053 DECK REPAIR, FULL DEPTH	14.000 SF				
0330	628070 DRILLING HOLES AND INSTALLING DOWELS	120.000 EACH				
0340	628502 REMOVAL OF EXISTING DECK REPAIRS	14.000 SF				
0350	701021 INTEGRAL PORTLAND CEMENT CONCRETE CURB AND GUTTER, TYPE 3-4	32.000 LF				
0360	709001 PERFORATED PIPE UNDERDRAINS, 6"	948.000 LF				
0370	709011 UNDERDRAIN OUTLET PIPE, 6"	58.000 LF				
0380	720021 GALVANIZED STEEL BEAM GUARDRAIL, TYPE 1-31	169.000 LF				

CONTRACT ID: T201707403.01 PROJECT(S): BHN-N006(17)

All figures must be typewritten.

CONTRACTOR :_____

LINE NO	ITEM DESCRIPTION	APPROX. QUANTITY AND UNITS	UNIT PRICE DOLLARS	UNIT PRICE CTS	BID AMOUNT DOLLARS	BID AMOUNT CTS
0390	721009 GUARDRAIL TO BARRIER CONNECTION (EXIT TYPE 31)	3.000 EACH				
0400	721010 GUARDRAIL TO BARRIER CONNECTION, APPROACH TYPE 1-31	3.000 EACH				
0410	760013 PAVEMENT MILLING, PORTLAND CEMENT CONCRETE PAVEMENT	6489.000 SYIN				
0420	760500 TOTAL SURFACE HYDRODEMOLITION	4456.000 SY				
0430	762000 SAW CUTTING, BITUMINOUS CONCRETE	50.000 LF				
0440	762001 SAW CUTTING, CONCRETE, FULL DEPTH	4.000 LF				
0450	762002 SAW CUTTING, CONCRETE, VARIABLE DEPTH	488.000 LF				
0460	763000 INITIAL EXPENSE/DE-MOBILIZATION	LUMP	LUMP			
0470	763501 CONSTRUCTION ENGINEERING	LUMP	LUMP			
0480	763508 PROJECT CONTROL SYSTEM DEVELOPMENT PLAN	LUMP	LUMP			

CONTRACT ID: T201707403.01 PROJECT(S): BHN-N006(17)

All figures must be typewritten.

CONTRACTOR :_____

LINE NO	ITEM DESCRIPTION	APPROX. QUANTITY AND UNITS	UNIT PRICE DOLLARS	UNIT PRICE CTS	BID AMOUNT DOLLARS	BID AMOUNT CTS
0490	763509 CPM SCHEDULE UPDATES AND/OR REVISED UPDATES	10.000 EAMO				
0500	763599 FIELD OFFICE, SPECIAL II	10.000 EAMO				
0510	801000 MAINTENANCE OF TRAFFIC	LUMP	LUMP			
0520	802003 ARROW PANELS TYPE C	600.000 EADY				
0530	803001 FURNISH AND MAINTAIN PORTABLE CHANGEABLE MESSAGE SIGN	145.000 EADY				
0540	804001 FURNISH AND MAINTAIN PORTABLE LIGHT ASSEMBLY (FLOOD LIGHTS)	275.000 EADY				
0550	805001 PLASTIC DRUMS	46950.000 EADY				
0560	806001 TRAFFIC OFFICERS	600.000 HOUR	75.00000		45000.00	
0570	807001 FURNISH AND INSTALL TEMPORARY PORTLAND CEMENT CONCRETE SAFETY BARRIER, UNPINNED	4100.000 LF				

CONTRACT ID: T201707403.01 PROJECT(S): BHN-N006(17)

All figures must be typewritten.

CONTRACTOR :_____

LINE NO	ITEM DESCRIPTION	APPROX. QUANTITY AND UNITS	UNIT PRICE DOLLARS	UNIT PRICE CTS	BID AMOUNT DOLLARS	BID AMOUNT CTS
0580	807003 FURNISH AND INSTALL TEMPORARY PORTLAND CEMENT CONCRETE SAFETY BARRIER, PINNED IN CONCRETE	1150.000 LF				
0590	807004 RELOCATE TEMPORARY PORTLAND CEMENT CONCRETE SAFETY BARRIER, UNPINNED	7200.000 LF				
0600	807006 RELOCATE TEMPORARY PORTLAND CEMENT CONCRETE SAFETY BARRIER, PINNED IN CONCRETE	775.000 LF				
0610	807007 REFLECTOR PANELS	170.000 EACH				
0620	808002 FURNISH AND MAINTAIN TRUCK MOUNTED ATTENUATOR, TYPE II	300.000 EADY				
0630	809001 INSTALL TEMPORARY IMPACT ATTENUATOR	5.000 EACH				
0640	809005 FURNISH TEMPORARY IMPACT ATTENUATOR - NON-GATING, REDIRECTIVE, TEST LEVEL 3	5.000 EACH				
0650	809006 RELOCATE TEMPORARY IMPACT ATTENUATOR	9.000 EACH				
0660	810001 TEMPORARY WARNING SIGNS AND PLAQUES	16000.000 EADY				

CONTRACT ID: T201707403.01 PROJECT(S): BHN-N006(17)

All figures must be typewritten.

CONTRACTOR :_____

LINE NO	ITEM DESCRIPTION	APPROX. QUANTITY AND UNITS	UNIT PRICE DOLLARS	UNIT PRICE CTS	BID AMOUNT DOLLARS	BID AMOUNT CTS
0670	813001 TEMPORARY BARRICADES, TYPE III	10450.000 LFDY				
0680	817002 PERMANENT PAVEMENT STRIPING, SYMBOL/LEGEND, ALKYD-THERMOPLASTIC	100.000 SF				
0690	817006 PERMANENT PAVEMENT STRIPING, ALKYD-THERMOPLASTIC, 12"	50.000 LF				
0700	817007 RETROREFLECTIVE PREFORMED PATTERNED MARKINGS, 12"	320.000 LF				
0710	817012 RETROREFLECTIVE PREFORMED PATTERENED MARKINGS, SYMBOL/LEGEND	240.000 SF				
0720	817013 PERMANENT PAVEMENT STRIPING, EPOXY RESIN PAINT, WHITE/YELLOW, 5"	53850.000 LF				
0730	817014 PERMANENT PAVEMENT STRIPING, EPOXY RESIN PAINT, WHITE/YELLOW, 10"	6900.000 LF				
0740	817018 PERMANENT PAVEMENT STRIPING, EPOXY RESIN PAINT, BLACK, 3"`	5700.000 LF				
0750	817020 RETROREFLECTIVE PREFORMED PATTERENED MARKINGS, 5"	360.000 LF				

CONTRACT ID: T201707403.01 PROJECT(S): BHN-N006(17)

All figures must be typewritten.

CONTRACTOR :_____

LINE NO	ITEM DESCRIPTION	APPROX. QUANTITY AND UNITS		UNIT PRICE DOLLARS	CTS	BID AMOUNT DOLLARS	CTS
0760	817022 RETROREFLECTIVE PREFORMED PATTERNED MARKINGS, 8"	1100.000	LF				
0770	817023 RETROREFLECTIVE PREFORMED PATTERNED MARKINGS, 13"	100.000	LF				
0780	817028 REPLACEMENT OF RAISED/RECESSED PAVEMENT MARKER LENS	100.000	EACH				
0790	817029 REMOVAL OF RAISED/RECESSED PAVEMENT MARKER LENS	100.000	EACH				
0800	817031 REMOVAL OF PAVEMENT STRIPING	28000.000	SF				
0810	818003 SUPPLY OF FLAT SHEET ALUMINUM SIGN PANEL, TYPE XI, RETROREFLECTIVE SHEETING	130.000	SF				
0820	818006 SUPPLY OF EXTRUDED ALUMINUM SIGN PANEL, TYPE XI, RETROREFLECTIVE SHEETING	95.000	SF				
0830	819015 WOODEN SIGN POSTS, 6" X 8"	3.000	EACH				
0840	819019 INSTALLATION OR REMOVAL OF TRAFFIC SIGN(S) ON MULTIPLE SIGN POSTS	185.000	SF				

CONTRACT ID: T201707403.01 PROJECT(S): BHN-N006(17)

All figures must be typewritten.

CONTRACTOR :_____

LINE NO	ITEM DESCRIPTION	APPROX. QUANTITY AND UNITS		UNIT PRICE DOLLARS	CTS	BID AMOUNT DOLLARS	CTS
0850	819020 REMOVAL OF GROUND MOUNTED WOOD POST	3.000	EACH				
0860	822001 INSTALL SIGN PANEL OVERLAY	130.000	SF				
0870	822002 INSTALLLATION OF SIGN ON/OVER HIGHWAY STRUCTURE	95.000	SF				
0880	822009 REMOVAL OF SIGN ON/OVER HIGHWAY STRUCTURE	225.000	SF				
0890	830008 ADJUST OR REPAIR EXISTING CONDUIT JUNCTION WELL	2.000	EACH				
0900	905001 SILT FENCE	624.000	LF				
0910	908004 TOPSOIL, 6" DEPTH	400.000	SY				
0920	908014 PERMANENT GRASS SEEDING, DRY GROUND	400.000	SY				
	SECTION 0002 TOTAL						
	TOTAL BID						

ADDENDUM PREPARED BY

WRA Whitman, Requardt and Associates, LLP
Engineers • Architects • Environmental Planners Est. 1915

10/25/2019
DATE

THIS SEAL APPLIES TO THE FOLLOWING SHEETS CHANGED UNDER ADDENDUM #1:
BID PROPOSAL TITLE SHEET: BID DUE DATE

WILLIAM A. GESCHREI LICENSE No. 15578 DELAWARE PROFESSIONAL ENGINEER
SEAL

ADDENDUM PREPARED BY

WRA Whitman, Requardt and Associates, LLP
Engineers • Architects • Environmental Planners Est. 1915

11/15/2019
DATE

THIS SEAL APPLIES TO THE FOLLOWING SHEETS CHANGED UNDER ADDENDUM #2:
BID PROPOSAL TITLE SHEET: BID DUE DATE

WILLIAM A. GESCHREI LICENSE No. 15578 DELAWARE PROFESSIONAL ENGINEER
SEAL

ADDENDUM PREPARED BY

WRA Whitman, Requardt and Associates, LLP
Engineers • Architects • Environmental Planners Est. 1915

11/18/2019
DATE

THIS SEAL APPLIES TO THE FOLLOWING SHEETS CHANGED UNDER ADDENDUM #3:
PLAN SHEETS 3, 19, 43, 51, 56, 61, 79, 103, 112
BID PROPOSAL SCHEDULE OF ITEMS PAGES 103-112

WILLIAM A. GESCHREI LICENSE No. 15578 DELAWARE PROFESSIONAL ENGINEER
SEAL

N:\32122-002\CADD\AR01_141_AD3.dgn
11/15/2019 9:57:08 AM

ADDENDA / REVISIONS		
1 ADDENDUM 1	Z.M.G. 10/25/2019	
2 ADDENDUM 2	Z.M.G. 11/15/2019	
3 ADDENDUM 3	Z.M.G. 11/18/2019	

SCALE: NONE

REHABILITATION OF BRIDGES 1-600, 1-601, AND 1-604, SR 2 AND SR 141 INTERCHANGE

CONTRACT	BRIDGE NO.	1-600, 1-601, 1-604
T201707403	DESIGNED BY: S.J.B.	
COUNTY		
NEW CASTLE	CHECKED BY: D.A.D.	

ADDENDA AND REVISIONS

AR-01
SECTION
WRA
SHEET NO.
3

QUANTITIES

ITEM Nº	ITEM TITLE	UNIT	QUANTITY	CONTINGENT %	TOTAL QUANTITY
202000	EXCAVATION AND EMBANKMENT	CY	113	0	113
211000	REMOVAL OF STRUCTURES AND OBSTRUCTIONS	LS	1	0	1
211506	REMOVAL OF EX. PCC BARRIER & FOOTER	LF	14	0	14
301001	GRADED AGGREGATE BASE COURSE, TYPE B	CY	56	0	56
501502	DIAMOND GRINDING P.C.C. PAVEMENT AND PRECAST PAVEMENT	SF	27468	0	27468
604001	PROTECTIVE SHIELD	LS	1	0	1
610008	PORTLAND CEMENT CONCRETE MASONRY, PARAPET, CLASS A	CY	5	0	5
610016	PORTLAND CEMENT CONCRETE MASONRY, CLASS D	CY	134	0	134
610017	PORTLAND CEMENT CONCRETE MASONRY, SUPERSTRUCTURE, CLASS D	CY	99	0	99
3 611000	BAR REINFORCEMENT	LB	13512	~~0~~ 5	~~13512~~ 14188
611001	BAR REINFORCEMENT, EPOXY COATED	LB	20455	0	20455
613000	EPOXY CONCRETE SEALER	SF	420	0	420
613001	SILICONE BASED ACRYLIC CONCRETE SEALER	SF	14942	0	14942
616000	CLEANING AND PAINTING EXISTING STEEL	LS	1	0	1
623004	CLEAN AND GREASE BRIDGE BEARINGS	EA	38	0	38
624000	PREFABRICATED EXPANSION JOINT SYSTEM, 3"	LF	312	0	312
625505	ULTRA HIGH PERFORMANCE CONCRETE OVERLAY	CF	6581	0	6581
625507	ADDITIONAL UHPC CONCRETE FOR PARTIAL DECK REPAIRS	CF	132	0	132
628001	REPAIR OF CONCRETE STRUCTURES BY EPOXY INJECTION	LF	2	100	4
628041	DEEP SPALL REPAIR	CF	9	100	18
628053	DECK REPAIR, FULL DEPTH	SF	5	25	7
628502	REMOVAL OF EXISTING DECK REPAIRS	SF	5	25	7
760013	PAVEMENT MILLING, PORTLAND CEMENT CONCRETE PAVEMENT	SY-IN	5679	0	5679
760500	TOTAL SURFACE HYDRODEMOLITION	SY	2840	0	2840
762002	SAWCUTTING, CONCRETE, VARIABLE DEPTH	LF	223	0	223
3 628070	DRILLING HOLES AND INSTALLING DOWELS	EA	50	E.Q.	50

E.Q. = ENTIRE QUANTITY

LOAD RATING SUMMARY

DESIGN VEHICLE	*RATING FACTOR*	*RATING WEIGHT (TON)*	*CONTROLLING MEMBER*	*CONTROLLING POINT*	*LOAD EFFECT*
HL-93 TRUCK (INVENTORY)	*0.62*	*N/A*	*SPAN 1: EXTERIOR BEAM*	*110*	*STRENGTH I*
HL-93 TANDEM (INVENTORY)	*0.54*	*N/A*	*SPAN 1: EXTERIOR BEAM*	*110*	*STRENGTH I*
HS-20 (INVENTORY)	*1.13*	*40.76*	*SPAN 1: EXTERIOR BEAM*	*110*	*STRENGTH I*
HL-93 TRUCK (OPERATING)	*0.81*	*N/A*	*SPAN 1: EXTERIOR BEAM*	*110*	*STRENGTH I*
HL-93 TANDEM (OPERATING)	*0.70*	*N/A*	*SPAN 1: EXTERIOR BEAM*	*110*	*STRENGTH I*
HS-20 (OPERATING)	*1.47*	*52.83*	*SPAN 1: EXTERIOR BEAM*	*110*	*STRENGTH I*
DE S220	*2.50*	*49.95*	*SPAN 1: EXTERIOR BEAM*	*110*	*STRENGTH I*
DE S335	*1.49*	*52.18*	*SPAN 1: EXTERIOR BEAM*	*110*	*STRENGTH I*
DE S437	*1.42*	*51.86*	*SPAN 1: EXTERIOR BEAM*	*110*	*STRENGTH I*
DE S330	*1.88*	*56.26*	*SPAN 1: EXTERIOR BEAM*	*110*	*STRENGTH I*
DE S435	*1.61*	*56.31*	*SPAN 1: EXTERIOR BEAM*	*110*	*STRENGTH I*
DE S540	*1.43*	*57.16*	*SPAN 1: EXTERIOR BEAM*	*110*	*STRENGTH I*

NOTE: ALL LOAD RATINGS PROVIDED BY DELDOT

INDEX OF BRIDGE 1-600 SHEETS

SHEET Nº	BR. DWG. Nº	TABLE OF CONTENTS
17	BR-01	STRUCTURE LOCATION PLAN
18	PN-01	BRIDGE PROJECT NOTES - 1
19	PN-02	BRIDGE PROJECT NOTES - 2
20	PN-03	CONCRETE REPAIR DETAILS - 1
21	PN-04	CONCRETE REPAIR DETAILS - 2
22	PE-01	GENERAL PLAN AND ELEVATION
23	TS-01	BRIDGE TYPICAL SECTIONS
24	SC-01	SEQUENCE OF CONSTRUCTION - 1
25	SC-02	SEQUENCE OF CONSTRUCTION - 2
26	SC-03	SEQUENCE OF CONSTRUCTION - 3
27	SC-04	SEQUENCE OF CONSTRUCTION - 4
28	SR-01	REMOVAL PLAN
29	SR-02	DEMOLITION DETAILS
30	AS-01	SLEEPER SLAB LAYOUT PLAN
31	AS-02	SLEEPER SLAB UNIT A PLAN AND REINFORCEMENT
32	AS-03	SLEEPER SLAB UNIT B PLAN AND REINFORCEMENT
33	AS-04	SLEEPER SLAB UNIT C PLAN AND REINFORCEMENT
34	AS-05	SLEEPER SLAB UNIT D PLAN AND REINFORCEMENT
35	AS-06	SLEEPER SLAB UNIT E PLAN AND REINFORCEMENT
36	AS-07	SLEEPER SLAB UNIT F PLAN AND REINFORCEMENT
37	AS-08	SLEEPER SLAB UNIT G PLAN AND REINFORCEMENT
38	AS-09	SLEEPER SLAB UNIT H PLAN AND REINFORCEMENT
39	AS-10	SLEEPER SLAB UNIT J PLAN AND REINFORCEMENT
40	AS-11	SLEEPER SLAB UNIT K PLAN AND REINFORCEMENT
41	AS-12	SLEEPER SLAB UNIT L PLAN AND REINFORCEMENT
42	AS-13	SLEEPER SLAB UNIT M PLAN AND REINFORCEMENT
43	EX-01	SLEEPER SLAB JOINT DETAILS
44	DK-01	DECK OVER LAYOUT PLAN
45	DK-02	DECK OVER DETAILS - 1
46	DK-03	DECK OVER DETAILS - 2
47	DK-04	DECK OVER DETAILS - 3
48	DK-05	DECK OVER DETAILS - 4
49	DK-06	DECK OVER DETAILS - 5
50	DK-07	DECK OVER DETAILS - 6
51	DK-08	DECK OVER DETAILS - 7
52	DK-09	DECK OVER DETAILS - 8
53	DK-10	DECK OVER DETAILS - 9
54	DK-11	PARAPET JOINT DETAILS - 1
55	DK-12	PARAPET JOINT DETAILS - 2
56	BR-01	REINFORCEMENT BAR LIST DECK OVER - 1
57	BR-02	REINFORCEMENT BAR LIST DECK OVER - 2
58	BR-03	REINFORCEMENT BAR LIST SLEEPER SLAB - 1
59	BR-04	REINFORCEMENT BAR LIST SLEEPER SLAB - 2

TOTAL BRIDGE SHEETS: 43

ADDENDA / REVISIONS

3 REVISED QUANTITIES Z.M.G. 11/18/2019

NOT TO SCALE

REHABILITATION OF BRIDGES 1-600, 1-601, AND 1-604, SR 2 AND SR 141 INTERCHANGE

CONTRACT	BRIDGE NO. 1 600
T201707403	DESIGNED BY: ZMG
COUNTY	
NEW CASTLE	CHECKED BY: WAG

BRIDGE PROJECT NOTES – 2

PN-02

SECTION WRA

SHEET NO. 19

N:\37122-002\CADD\Bridge\BR1-600_PN02_A03.dgn
11/15/2019 9:57:10 AM

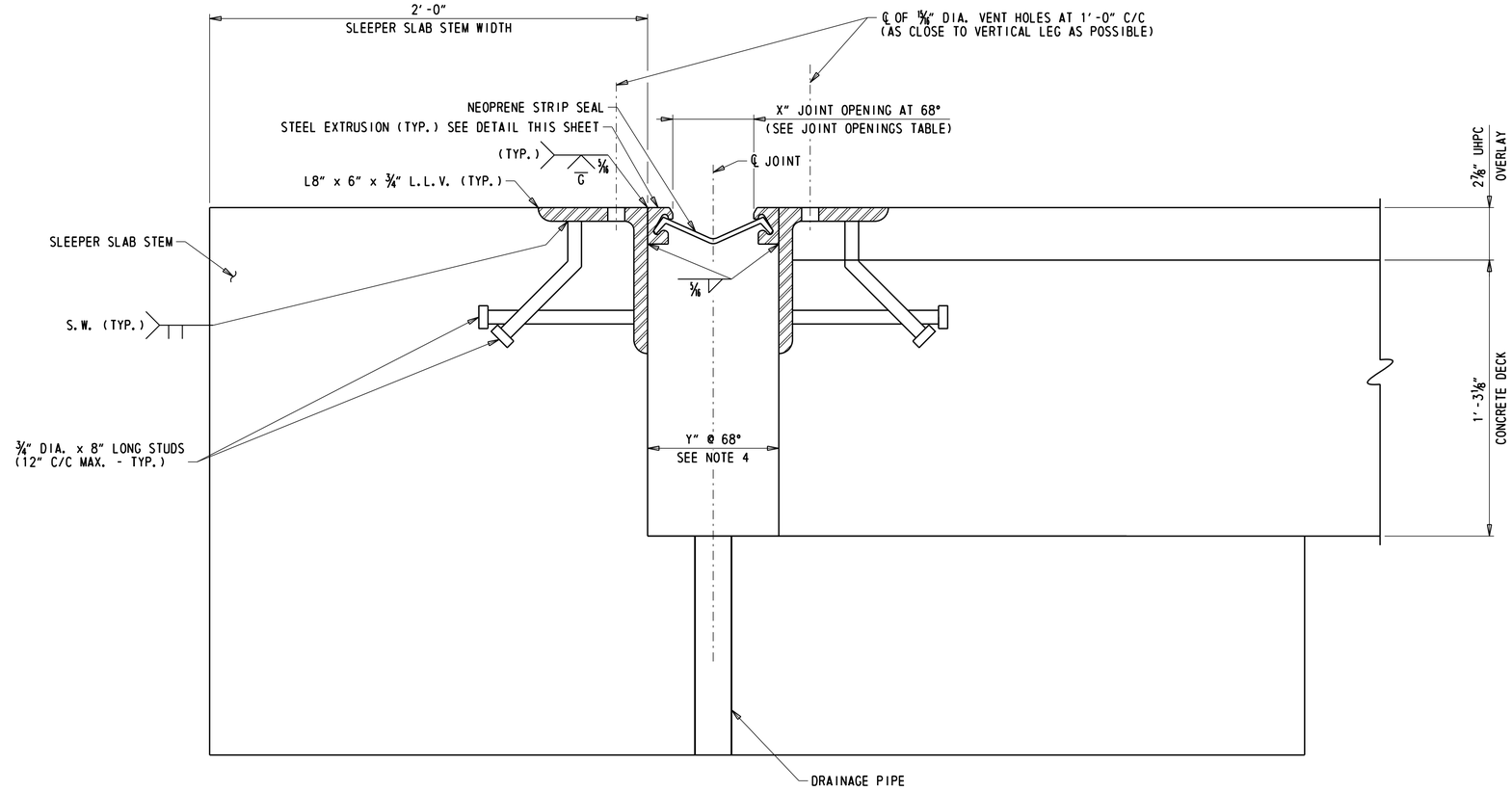

JOINT ASSEMBLY DETAIL

3" = 1'-0"

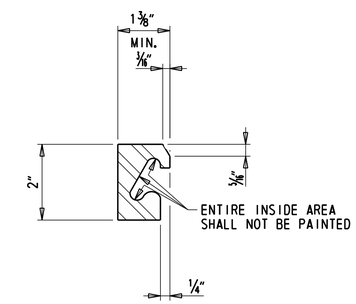

STEEL EXTRUSION DETAIL

6" = 1'-0"

STRIP SEAL EXPANSION JOINT NOTES:

1. STEEL FOR DECK JOINTS AND STEEL EXTRUSIONS SHALL BE AASHTO M270, GR. 36 (ASTM A36) AT MINIMUM.
2. NEOPRENE EXTRUSION TO MEET ASTM D-2628-81 MODIFIED, (RECOVERY TEST EXCLUDED).
3. THE EXPANSION JOINT SHALL BE CAPABLE OF SEALING THE APPROACH SLAB TO SLEEPER SLAB JOINT TO PREVENT MOISTURE AND OTHER CONTAMINANTS FROM DESCENDING THROUGH THE JOINT.
4. THE CONTRACTOR SHALL ADJUST THE OPEN JOINT (Y) AS REQUIRED BY THE WIDTH OF THE STEEL EXTRUSION USED SO AS TO PROVIDE A X" JOINT OPENING AT 68°F.
5. THE STRIP SEAL SHALL BE INSTALLED IN ONE PIECE ACROSS THE APPROACH SLAB WIDTH. SPLICING OF THE STRIP SEAL IS NOT PERMITTED.
6. THE EXPANSION JOINT SYSTEM IS PAID FOR UNDER ITEM 624000 - PREFABRICATED EXPANSION JOINT SYSTEM, 3".
7. STEEL EXTRUSIONS SHALL BE HOT-DIP GALVANIZED. ENTIRE EXPANSION DAM SHALL BE PAINTED AFTER FABRICATION USING URETHANE SYSTEM.
8. LUBRICANT-ADHESIVE FOR USE IN INSTALLING AND BONDING NEOPRENE SEAL ELEMENTS TO STEEL JOINT COMPONENTS SHALL BE A ONE QUART MOISTURE-CURING POLYURETHANE AND HYDROCARBON SOLVENT MIXTURE HAVING THE FOLLOWING PHYSICAL PROPERTIES:

AVERAGE WEIGHT, POUNDS PER GALLON	8±10%
SOLIDS CONTENT	65%
ADHESIVE SHALL REMAIN LIQUID FROM	5°F TO 120°F
FILM STRENGTH, AS PER ASTM D-412	2,000 PSI
ELONGATION	250%

3 ~~9. STEEL EXTRUSIONS AND JOINT ANGLES SHALL BE CONTINUOUS ACROSS THE FULL WIDTH OF THE ROADWAY, NO SPLICING WILL BE PERMITTED.~~

3 9. AT AREAS WHERE STEEL MEMBERS ARE TO BE SPLICED, THE USE OF COMPLETE JOINT PENETRATION (CJP) AND PARTIAL JOINT PENETRATION (PJP) WELD ARE BOTH PERMITTED. THE THICKNESS OF THE PJP WELD MUST BE A MINIMUM OF HALF OF THE STEEL MEMBER THICKNESS.

3 10. THE CONTRACTOR SHALL SUBMIT A WORKING PLAN FOR PLACEMENT OF THE STRIP SEAL DUE TO PHASING.

JOINT OPENINGS, X

TEMPERATURE °F	20°	30°	40°	50°	60°	68°	70°	80°	90°	100°
ABUTMENT A & B	2"	1 15/16"	1 7/8"	1 13/16"	1 3/4"	1 11/16" ±	1 11/16" ±	1 5/8"	1 9/16"	1 1/2"

NOTES:

1. FOR SLEEPER SLAB PLAN AND SECTIONS, SEE DWGS. AS-02 THROUGH A S-13.
2. REMAINING SLEEPER SLAB REINFORCEMENT NOT SHOWN FOR CLARITY. SEE DWGS. AS-02 THROUGH AS-13 FOR MORE INFORMATION.

EX-01

ADDENDA / REVISIONS		
3 MODIFIED NOTES	Z.M.G. 11/18/2019	

SCALE AS NOTED

REHABILITATION OF BRIDGES 1-600, 1-601, AND 1-604, SR 2 AND SR 141 INTERCHANGE

CONTRACT T201707403	BRIDGE NO. 1 600	SLEEPER SLAB JOINT DETAILS
COUNTY NEW CASTLE	DESIGNED BY: ZMG	
	CHECKED BY: WAG	

SECTION WRA

SHEET NO. 43

N:\32122-002\CADD\Bridge\BR1-600_EX01_A03.dgn
11/15/2019 9:57:11 AM

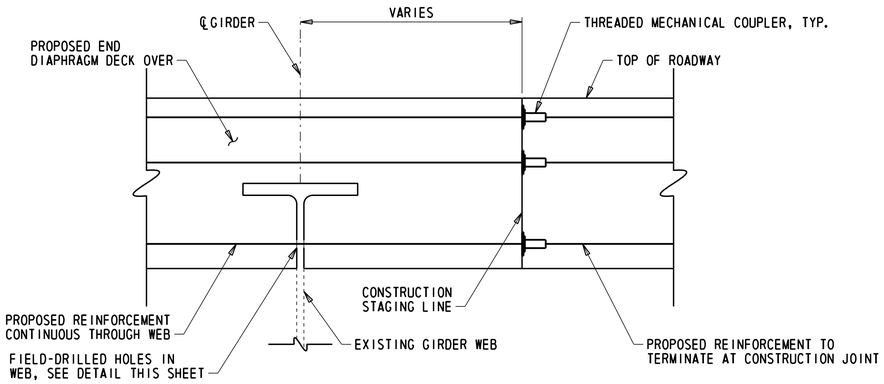

END DIAPHRAGM DECK OVER REINFORCEMENT DETAILS

△3 END DIAPHRAGM DECK OVER CONNECTIONS: C-D, E-F, J-K, L-M

1½" = 1'-0"

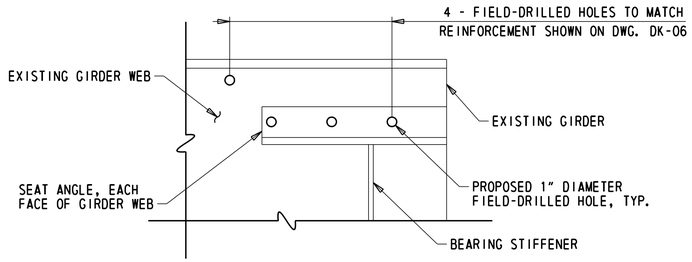

GIRDER WEB FIELD-DRILLED HOLES DETAIL

△3 END DIAPHRAGM DECK OVER CONNECTIONS: C-D, E-F, J-K, L-M

1½" = 1'-0"

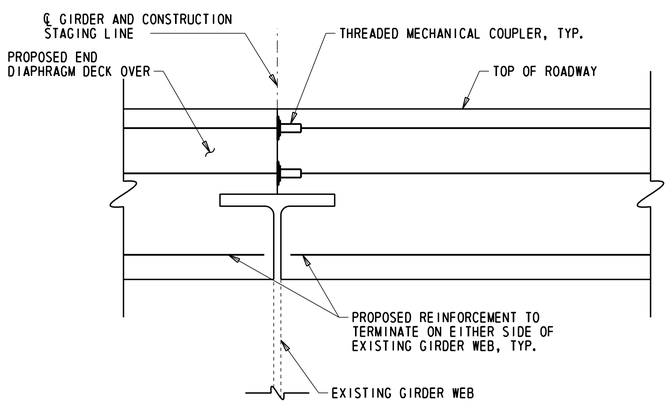

△3 END DIAPHRAGM DECK OVER REINFORCEMENT DETAILS

END DIAPHRAGM DECK OVER CONNECTIONS: A-B, G-H

1½" = 1'-0"

NOTES:

△3 1. SPLICES IN REINFORCEMENT BETWEEN CONSTRUCTION STAGES SHALL USE THREADED COUPLERS. ALL THREADED COUPLER HARDWARE SHALL MEET OR EXCEED 125% OF BAR REINFORCEMENT YIELD STRENGTH. PAYMENT FOR THREADED COUPLERS WILL BE INCIDENTAL TO ~~ITEM 611001 - BAR REINFORCEMENT, EPOXY COATED.~~ ITEM 611000 - BAR REINFORCEMENT.

△3 2. PAYMENT FOR GIRDER WEB FIELD-DRILLED HOLES WILL BE INCIDENTAL TO ~~ITEM 611001 - BAR REINFORCEMENT, EPOXY COATED.~~ ITEM 611000 - BAR REINFORCEMENT.

△3 3. FIELD-DRILLED HOLES IN EXISTING GIRDER WEB NOT REQUIRED AT CONNECTIONS BETWEEN END DIAPHRAGM DECK OVER UNITS A-B AND UNITS G-H. ASSOCIATED REINFORCEMENT TO TERMINATE ON EITHER SIDE OF EXISTING GIRDER.

ADDENDA / REVISIONS		
△3 MODIFIED NOTES AND ADDED/REVISED DETAILS	Z.M.G. 11/18/2019	

SCALE AS NOTED

REHABILITATION OF BRIDGES 1-600, 1-601, AND 1-604, SR 2 AND SR 141 INTERCHANGE

CONTRACT	BRIDGE NO.	1 600
T201707403	DESIGNED BY: ZMG	
COUNTY		
NEW CASTLE	CHECKED BY: WAG	

END DIAPHRAGM DECK OVER DETAILS - 7

DK-08
SECTION
WRA
SHEET NO.
51

N:\32122-002\C400\Bridge\BR1-600_DK08_A03.dgn
11/15/2019 9:57:11 AM

(1) ANY MARK NUMBER WITH SUFFIX 'E' DENOTES EPOXY COATED REINFORCING STEEL.

(2) ALL MARK 'LOCATION PREFIXES' SHALL CONSIST OF TWO LETTERS AND ARE AS FOLLOWS: AB = ABUTMENT, AS = APPROACH SLAB, BC = BOX CULVERT, BW = BACKWALL, CL = COLUMN, DK = DECK, DL = DOWEL, FT = FOOTING, HW = HEADWALL, MS = MISC. BARS, PA = PARAPET, PR = PIER, SC = SHEETPILE CAP, SL = SLAB, SS = SLEEPER SLAB, TW = TOEWALL, WL = WALL (UNIQUE LOCATION), WW = WINGWALL

SPECIFICATIONS					BENDING DIMENSIONS (FEET-INCHES /QUARTER INCH)										
QTY.	SIZE	LENGTH	MARK	TYPE	A	B	C	D	E	F/R	G	H	J	K	O
DECK OVER UNIT															
UNIT A															
8	5	9-5/2	DK501	STR		9-5/2									
17	5	7-4/2	DK502	17			6-3/1	1-1/1							
14	5	7-2/2	DK503	16		0-10/0	5-1/1	1-3/1				0-10/0		0-11/2	6-0/3
2	5	9-13/0	DK504	T1	0-5/2	2-11/1	1-1/1	2-11/1	1-1/1		0-5/2				
12	5	21-5/1	DK505	STR		21-5/1									
8	5	19-5/0	DK506	STR		19-5/0									
2			3/4"x10" STUDS												
UNIT B															
8	5	9-5/2	DK501	STR		9-5/2									
20	5	7-4/2	DK502	17			6-3/1	1-1/1							
17	5	7-2/2	DK503	16		0-10/0	5-1/1	1-3/1				0-10/0		0-11/2	6-0/3
4	5	3-7/1	DK507	STR		3-7/1									
20	5	23-2/1	DK508	STR		23-2/1									
10	5	4-2/1	DK570	DE05	0-5/2	0-11/1	1-10/0	0-6/0			0-5/2	0-11/0	0-6/0	0-2/2	1-11/2
3	5	6-3/1	DK571	STR		6-3/1									
UNIT C															
12	5	9-5/2	DK501	STR		9-5/2									
36	5	7-4/2	DK502	17			6-3/1	1-1/1							
31	5	7-2/2	DK503	16		0-10/0	5-1/1	1-3/1				0-10/0		0-11/2	6-0/3
20	5	41-0/2	DK509	STR		41-0/2									
4	5	3-0/2	DK510	STR		3-0/2									
4	5	8-0/3	DK511	STR		8-0/3									
10	5	4-2/1	DK570	DE05	0-5/2	0-11/1	1-10/0	0-6/0			0-5/2	0-11/0	0-6/0	0-2/2	1-11/2
3	5	6-3/1	DK571	STR		6-3/1									
△3 20			MECHANICAL COUPLERS UNIT A TO B												
△3 20			MECHANICAL COUPLERS UNIT G TO H												

SPECIFICATIONS					BENDING DIMENSIONS (FEET-INCHES /QUARTER INCH)										
QTY.	SIZE	LENGTH	MARK	TYPE	A	B	C	D	E	F/R	G	H	J	K	O
DECK OVER UNIT															
UNIT D															
4	5	9-5/2	DK501	STR		9-5/2									
21	5	7-4/2	DK502	17			6-3/1	1-1/1							
18	5	7-2/2	DK503	16		0-10/0	5-1/1	1-3/1				0-10/0		0-11/2	6-0/3
4	5	3-0/2	DK510	STR		3-0/2									
20	5	24-6/0	DK512	STR		24-6/0									
4	5	11-2/3	DK513	STR		11-2/3									
10	5	7-8/0	DK514	DE16		3-0/2	1-3/2	1-6/0	1-10/0			1-4/0		1-3/0	
10	5	5-6/0	PA501	T7		2-6/0	0-6/0	2-6/0				2-6/0		0-2/1	
8	5	6-3/1	PA502	STR		6-3/1									
24			MECHANICAL COUPLERS UNIT C TO D												
UNIT E															
8	5	9-5/2	DK501	STR		9-5/2									
27	5	7-4/2	DK502	17			6-3/1	1-1/1							
24	5	7-2/2	DK503	16		0-10/0	5-1/1	1-3/1				0-10/0		0-11/2	6-0/3
4	5	3-7/1	DK507	STR		3-7/1									
10	5	7-8/0	DK514	DE16		3-0/2	1-3/2	1-6/0	1-10/0			1-4/0		1-3/0	
20	5	31-1/0	DK516	STR		31-1/0									
4	5	7-4/2	DK517	STR		7-4/2									
10	5	5-6/0	PA501	T7		2-6/0	0-6/0	2-6/0				2-6/0		0-2/1	
8	5	6-3/1	PA502	STR		6-3/1									
UNIT F															
8	5	9-5/2	DK501	STR		9-5/2									
27	5	7-4/2	DK502	17			6-3/1	1-1/1							
23	5	7-2/2	DK503	16		0-10/0	5-1/1	1-3/1				0-10/0		0-11/2	6-0/3
2	5	9-13/0	DK504	T1	0-5/2	2-11/1	1-1/1	2-11/1	1-1/1		0-5/2				
4	5	12-0/0	DK519	STR		12-0/0									
6	5	33-7/2	DK520	STR		33-7/2									
8	5	31-7/1	DK521	STR		31-7/1									
24			MECHANICAL COUPLERS UNIT E TO F												
3			3/4"x10" STUDS												

SPECIFICATIONS					BENDING DIMENSIONS (FEET-INCHES /QUARTER INCH)										
QTY.	SIZE	LENGTH	MARK	TYPE	A	B	C	D	E	F/R	G	H	J	K	O
DECK OVER UNIT															
UNIT G															
8	5	9-5/2	DK501	STR		9-5/2									
17	5	7-4/2	DK502	17			6-3/1	1-1/1							
14	5	7-2/2	DK503	16		0-10/0	5-1/1	1-3/1				0-10/0		0-11/2	6-0/3
2	5	9-13/0	DK504	T1	0-5/2	2-11/1	1-1/1	2-11/1	1-1/1		0-5/2				
12	5	21-5/1	DK505	STR		21-5/1									
8	5	19-5/0	DK506	STR		19-5/0									
3			3/4"x10" STUDS												
UNIT H															
8	5	9-5/2	DK501	STR		9-5/2									
20	5	7-4/2	DK502	17			6-3/1	1-1/1							
17	5	7-2/2	DK503	16		0-10/0	5-1/1	1-3/1				0-10/0		0-11/2	6-0/3
4	5	3-7/1	DK507	STR		3-7/1									
20	5	23-2/1	DK508	STR		23-2/1									
10	5	4-2/1	DK570	DE05	0-5/2	0-11/1	1-10/0	0-6/0			0-5/2	0-11/0	0-6/0	0-2/2	1-11/2
3	5	6-3/1	DK571	STR		6-3/1									
UNIT J															
12	5	9-5/2	DK501	STR		9-5/2									
36	5	7-4/2	DK502	17			6-3/1	1-1/1							
31	5	7-2/2	DK503	16		0-10/0	5-1/1	1-3/1				0-10/0		0-11/2	6-0/3
20	5	41-0/2	DK509	STR		41-0/2									
4	5	3-0/2	DK510	STR		3-0/2									
4	5	8-0/3	DK511	STR		8-0/3									
10	5	4-2/1	DK570	DE05	0-5/2	0-11/1	1-10/0	0-6/0			0-5/2	0-11/0	0-6/0	0-2/2	1-11/2
3	5	6-3/1	DK571	STR		6-3/1									

ASTM STANDARD ENGLISH REINFORCING BARS				RECOMMENDED END HOOKS, APPLICABLE TO ALL GRADES				STIRRUP AND TIE HOOKS, APPLICABLE TO ALL GRADES			
	NOMINAL DIMENSIONS				180° HOOKS		90° HOOKS		90° HOOK	135° HOOK	
BAR SIZE	DIAMETER (INCHES)	AREA (INCHES²)	WEIGHT (LBS./FT.)	D	A OR G	J	A OR G	D	A OR G	A OR G	A OR G
3	0.375	0.110	0.376	2¼"	5"	3"	6"	1½"	4"	4"	2½"
4	0.500	0.200	0.668	3"	6"	4"	8"	2"	4½"	4½"	3"
5	0.625	0.310	1.043	3¾"	7"	5"	10"	2½"	6"	5½"	3¾"
6	0.750	0.440	1.502	4½"	8"	6"	1-0"	4½"	1-0"	8"	4½"
7	0.875	0.600	2.044	5¼"	10"	7"	1-2"	5¼"	1-2"	9"	5¼"
8	1.000	0.790	2.670	6"	11"	8"	1-4"	6"	1-4"	10½"	6"
9	1.128	1.000	3.400	9½"	1-3"	11¾"	1-7"				
10	1.270	1.270	4.303	10¾"	1-5"	1-1¼"	1-10"				
11	1.410	1.560	5.313	1-0"	1-7"	1-2¾"	2-0"				
14	1.693	2.250	7.650	1-6¼"	2-3"	1-9¾"	2-7"				
18	2.257	4.000	13.600	2-0"	3-0"	2-4½"	3-5"				

NOTES:

1. FIGURES SHOWN IN CIRCLES REPRESENT BAR BEND TYPES.
2. STANDARD BAR BENDS INCLUDE ONLY THOSE TYPES BELOW, INDICATED AS SUCH.
3. ALL DIMENSIONS OUT-TO-OUT, EXCEPT "A" AND "G" ON STD. 180° AND 135° HOOKS.
4. "J" DIMENSIONS ON 180° HOOKS TO BE SHOWN ONLY WHERE NECESSARY TO RESTRICT HOOK SIZE, OTHERWISE STANDARD 'ACI' HOOKS ARE TO BE USED.
5. WHERE "J" IS NOT SHOWN, "J" WILL BE KEPT EQUAL TO OR LESS THAN "H" ON TYPES 3, 5 AND 22. WHERE "J" CAN EXCEED "H", IT SHALL BE SHOWN.
6. "H" DIMENSIONS OF STIRRUPS TO BE SHOWN AS NEEDED TO FIT WITHIN THE CONCRETE.
7. UNLESS OTHERWISE NOTED, DIAMETER "D" IS THE SAME FOR ALL BENDS AND HOOKS ON A BAR (EXCEPT FOR BEND TYPES 11 AND 13).
8. WHERE SLOPE DIFFERS FROM 45° OFFSET, "H" AND "K" MUST BE SHOWN.
9. WHERE BARS ARE TO BE BENT MORE ACCURATELY THAN STANDARD BENDING TOLERANCES, BENDING DIMENSIONS REQUIRING CLOSER FABRICATION SHOULD HAVE LIMITS INDICATED.
10. FOR RECOMMENDED DIAMETER "D", OF BENDS, HOOKS, ETC., REFER TO TABLE ABOVE, 'CRSI' OR 'ACI' TABLES WHERE APPLICABLE AND REQUIRED.
11. TYPE S1-S6, S11, T1-T3 AND T6-T9 APPLICABLE TO BAR SIZES #3 THROUGH #8.

STANDARD BAR BENDS

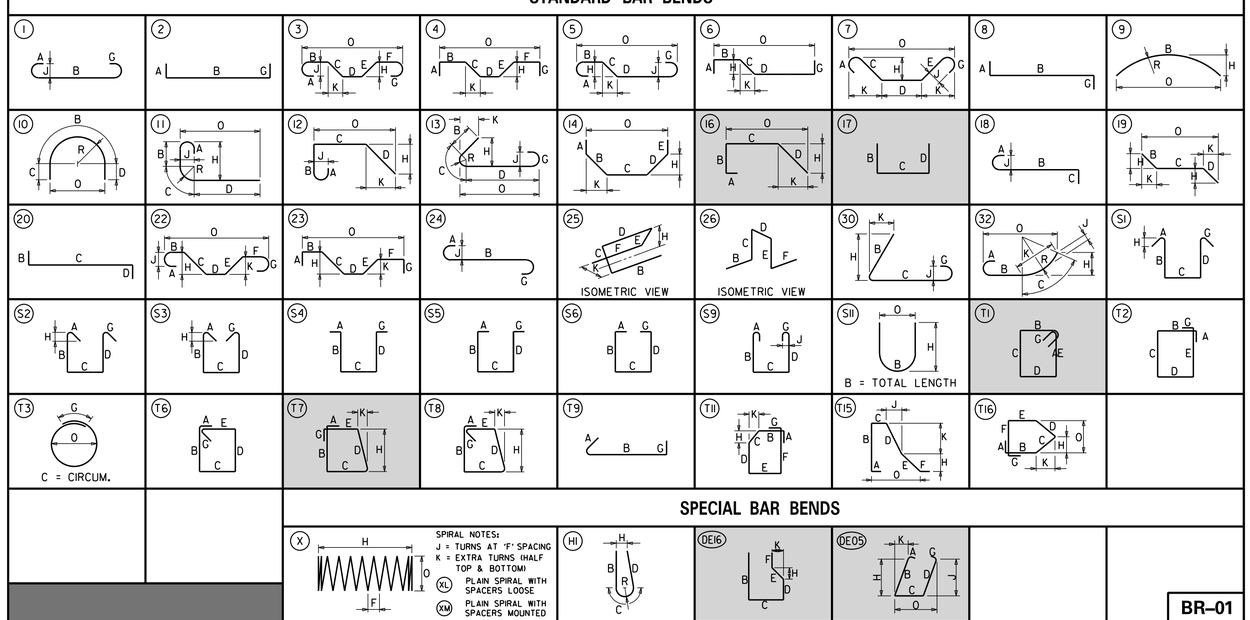

SPECIAL BAR BENDS

STIRRUP AND TIE HOOKS

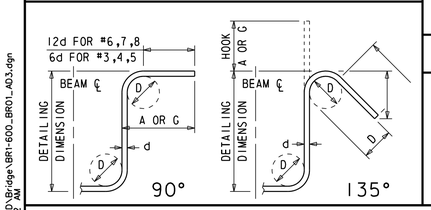

180° AND 90° END HOOKS

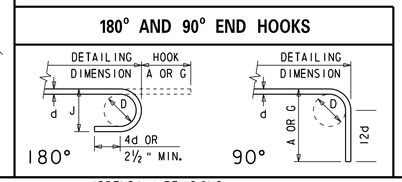

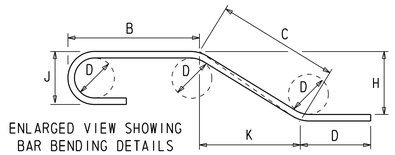

ENLARGED VIEW SHOWING BAR BENDING DETAILS

ADDENDA / REVISIONS

△3 ADDED MECHANICAL COUPLERS TO SCHEDULE Z.M.G. 11/18/2019

SCALE AS NOTED

REHABILITATION OF BRIDGES 1-600, 1-601, AND 1-604, SR 2 AND SR 141 INTERCHANGE

CONTRACT	BRIDGE NO.	1 600
T201707403	DESIGNED BY: ZMG	
COUNTY		
NEW CASTLE	CHECKED BY: WAG	

REINFORCEMENT BAR LIST DECK OVER - 1

BR-01

SECTION WRA

SHEET NO. 56

N:\37122-002\CADD\Bridge\BR1-600_BR01_A03.dgn 11/15/2019 9:57:12 AM

QUANTITIES

ITEM Nº	ITEM TITLE	UNIT	QUANTITY	CONTINGENT %	TOTAL QUANTITY
202000	EXCAVATION AND EMBANKMENT	CY	85	0	85
211000	REMOVAL OF STRUCTURES AND OBSTRUCTIONS	LS	1	0	1
301001	GRADED AGGREGATE BASE COURSE, TYPE B	CY	9	0	9
501502	DIAMOND GRINDING P.C.C. PAVEMENT AND PRECAST PAVEMENT	SF	5750	0	5750
604001	PROTECTIVE SHIELD	LS	1	0	1
610016	PORTLAND CEMENT CONCRETE MASONRY, CLASS D	CY	21	0	21
610017	PORTLAND CEMENT CONCRETE MASONRY, SUPERSTRUCTURE, CLASS D	CY	19	0	19
3 611000	BAR REINFORCEMENT	LB	2486	~~0~~ 5	~~2486~~ 2611
611001	BAR REINFORCEMENT, EPOXY COATED	LB	1775	0	1775
613000	EPOXY CONCRETE SEALER	SF	178	0	178
613001	SILICONE BASED ACRYLIC CONCRETE SEALER	SF	6008	0	6008
615006	STEEL STRUCTURE REPAIR	LS	1	0	1
616000	CLEANING AND PAINTING EXISTING STEEL	LS	1	0	1
623004	CLEAN AND GREASE BRIDGE BEARINGS	EA	10	0	10
624000	PREFABRICATED EXPANSION JOINT SYSTEM, 3"	LF	68	0	68
625505	ULTRA HIGH PERFORMANCE CONCRETE OVERLAY	CF	659	0	659
625507	ADDITIONAL UHPC CONCRETE FOR PARTIAL DECK REPAIRS	CF	14	0	14
628001	REPAIR OF CONCRETE STRUCTURES BY EPOXY INJECTION	LF	13	100	26
628041	DEEP SPALL REPAIR	CF	36	100	72
628042	REHABILITATION OF P.C.C. MASONRY	CY	1	10	2
628053	DECK REPAIR, FULL DEPTH	SF	1	25	2
628502	REMOVAL OF EXISTING DECK REPAIRS	SF	1	25	2
760013	PAVEMENT MILLING, PORTLAND CEMENT CONCRETE PAVEMENT	SY-IN	293	0	293
760500	TOTAL SURFACE HYDRODEMOLITION	SY	586	0	586
762001	SAW CUTTING, CONCRETE, FULL DEPTH	LF	36	0	36
3 628070	DRILLING HOLES AND INSTALLING DOWELS	EA	20	E.Q.	20

E.Q. = ENTIRE QUANTITY

INDEX OF BRIDGE 1-601 SHEETS

SHEET Nº	BR. DWG. Nº	TABLE OF CONTENTS
60	PN-01	BRIDGE PROJECT NOTES - 1
61	PN-02	BRIDGE PROJECT NOTES - 2
62	PN-03	CONCRETE REPAIR DETAILS - 1
63	PN-04	CONCRETE REPAIR DETAILS - 2
64	PE-01	GENERAL PLAN AND ELEVATION
65	TS-01	BRIDGE TYPICAL SECTIONS
66	SC-01	SEQUENCE OF CONSTRUCTION
67	SR-01	REMOVAL PLAN
68	SR-02	DEMOLITION DETAILS
69	AS-01	SLEEPER SLAB A DETAILS
70	AS-02	SLEEPER SLAB B DETAILS
71	EX-01	JOINT DETAILS
72	DK-01	DECK OVER DETAILS - 1
73	DK-02	DECK OVER DETAILS - 2
74	DK-03	DECK OVER DETAILS - 3
75	DK-04	PARAPET JOINT DETAILS
76	RH-01	STRUCTURAL REPAIRS
77	BR-01	REINFORCEMENT SCHEDULE

TOTAL BRIDGE SHEETS: 18

LOAD RATING SUMMARY

DESIGN VEHICLE	*RATING FACTOR*	*RATING WEIGHT (TON)*	*CONTROLLING MEMBER*	*CONTROLLING POINT*	*LOAD EFFECT*
HL-93 TRUCK (INVENTORY)	*0.92*	*N/A*	*SPAN 2: EXTERIOR BEAM*	*201*	*STRENGTH I*
HL-93 TANDEM (INVENTORY)	*1.12*	*N/A*	*SPAN 1: EXTERIOR BEAM*	*109*	*STRENGTH I*
HS-20 (INVENTORY)	*1.42*	*51.12*	*SPAN 2: EXTERIOR BEAM*	*201*	*STRENGTH I*
HL-93 TRUCK (OPERATING)	*1.19*	*N/A*	*SPAN 2: EXTERIOR BEAM*	*201*	*STRENGTH I-O*
HL-93 TANDEM (OPERATING)	*1.47*	*N/A*	*SPAN 1: EXTERIOR BEAM*	*109*	*STRENGTH I-O*
HS-20 (OPERATING)	*1.84*	*66.24*	*SPAN 2: EXTERIOR BEAM*	*201*	*STRENGTH I-O*
DE S220	*3.43*	*68.60*	*SPAN 2: EXTERIOR BEAM*	*201*	*STRENGTH I*
DE S335	*1.93*	*67.55*	*SPAN 1: EXTERIOR BEAM*	*109*	*STRENGTH I*
DE S437	*1.83*	*67.71*	*SPAN 1: EXTERIOR BEAM*	*109*	*STRENGTH I*
DE S330	*2.43*	*72.90*	*SPAN 1: EXTERIOR BEAM*	*109*	*STRENGTH I*
DE S435	*2.08*	*72.80*	*SPAN 1: EXTERIOR BEAM*	*109*	*STRENGTH I*
DE S540	*1.85*	*74.00*	*SPAN 1: EXTERIOR BEAM*	*109*	*STRENGTH I*

NOTE: ALL LOAD RATINGS PROVIDED BY DELDOT

ADDENDA / REVISIONS

3 REVISED QUANTITIES Z.M.G. 11/18/2019

NOT TO SCALE

REHABILITATION OF BRIDGES 1-600, 1-601, AND 1-604, SR 2 AND SR 141 INTERCHANGE

CONTRACT	BRIDGE NO. 1 601
T201707403	DESIGNED BY: ZMG
COUNTY	
NEW CASTLE	CHECKED BY: WAG

BRIDGE PROJECT NOTES - 2

PN-02

SECTION WRA

SHEET NO. 61

N:\37122-002\CADD\Bridge\BR1-601_PN02_A03.dgn
11/15/2019 9:57:13 AM

QUANTITIES

ITEM Nº	ITEM TITLE	UNIT	QUANTITY	CONTINGENT %	TOTAL QUANTITY
202000	EXCAVATION AND EMBANKMENT	CY	26	0	26
211000	REMOVAL OF STRUCTURES AND OBSTRUCTIONS	LS	1	0	1
211506	REMOVAL OF EX. PCC BARRIER & FOOTER	LF	15	0	15
301001	GRADED AGGREGATE BASE COURSE, TYPE B	CY	46	0	46
501502	DIAMOND GRINDING P.C.C. PAVEMENT AND PRECAST PAVEMENT	SF	11176	0	11176
604001	PROTECTIVE SHIELD	LS	1	0	1
610008	PORTLAND CEMENT CONCRETE MASONRY, PARAPET, CLASS A	CY	10	0	10
610016	PORTLAND CEMENT CONCRETE MASONRY, CLASS D	CY	119	0	119
610017	PORTLAND CEMENT CONCRETE MASONRY, SUPERSTRUCTURE, CLASS D	CY	99	0	99
3 611000	BAR REINFORCEMENT	LB	12605	~~0~~ 5	~~12605~~ 13236
611001	BAR REINFORCEMENT, EPOXY COATED	LB	21819	0	21819
613000	EPOXY CONCRETE SEALER	SF	840	0	840
613001	SILICONE BASED ACRYLIC CONCRETE SEALER	SF	9349	0	9349
616000	CLEANING AND PAINTING EXISTING STEEL	LS	1	0	1
623004	CLEAN AND GREASE BRIDGE BEARINGS	EA	38	0	38
624000	PREFABRICATED EXPANSION JOINT SYSTEM, 3"	LF	296	0	296
625505	ULTRA HIGH PERFORMANCE CONCRETE OVERLAY	CF	1281	0	1281
625507	ADDITIONAL UHPC CONCRETE FOR PARTIAL DECK REPAIRS	CF	26	0	26
628001	REPAIR OF CONCRETE STRUCTURES BY EPOXY INJECTION	LF	33	100	66
628041	DEEP SPALL REPAIR	CF	60	100	120
628042	REHABILITATION OF P.C.C. MASONRY	CY	10	10	11
628053	DECK REPAIR, FULL DEPTH	SF	5	25	7
628502	REMOVAL OF EXISTING DECK REPAIRS	SF	5	25	7
760013	PAVEMENT MILLING, PORTLAND CEMENT CONCRETE PAVEMENT	SY-IN	515	0	515
760500	TOTAL SURFACE HYDRODEMOLITION	SY	1030	0	1030
762001	SAW CUTTING, CONCRETE, FULL DEPTH	LF	229	0	229
3 628070	DRILLING HOLES AND INSTALLING DOWELS	EA	50	E.Q.	50

E.Q. = ENTIRE QUANTITY

LOAD RATING SUMMARY

DESIGN VEHICLE	*RATING FACTOR*	*RATING WEIGHT (TON)*	*CONTROLLING MEMBER*	*CONTROLLING POINT*	*LOAD EFFECT*
HL-93 TRUCK (INVENTORY)	*1.51*	*N/A*	*SECTION 2: GIRDER 8*	*108*	*SERVICE II*
HL-93 TANDEM (INVENTORY)	*1.78*	*N/A*	*SECTION 2: GIRDER 8*	*108*	*SERVICE II*
HS-20 (INVENTORY)	*1.94*	*69.84*	*SECTION 2: GIRDER 8*	*108*	*SERVICE II*
HL-93 TRUCK (OPERATING)	*1.96*	*N/A*	*SECTION 2: GIRDER 8*	*108*	*SERVICE II-O*
HL-93 TANDEM (OPERATING)	*2.31*	*N/A*	*SECTION 2: GIRDER 8*	*108*	*SERVICE II-O*
HS-20 (OPERATING)	*2.53*	*91.08*	*SECTION 2: GIRDER 8*	*108*	*SERVICE II-O*
DE S220	*3.63*	*72.60*	*SECTION 2: GIRDER 8*	*108*	*SERVICE II*
DE S335	*2.06*	*72.10*	*SECTION 2: GIRDER 8*	*108*	*SERVICE II*
DE S437	*2.00*	*74.00*	*SECTION 2: GIRDER 8*	*108*	*SERVICE II*
DE S330	*3.02*	*90.60*	*SECTION 2: GIRDER 8*	*108*	*SERVICE II*
DE S435	*2.42*	*84.70*	*SECTION 2: GIRDER 8*	*108*	*SERVICE II*
DE S540	*2.27*	*90.80*	*SECTION 2: GIRDER 8*	*108*	*SERVICE II*

NOTE: ALL LOAD RATINGS PROVIDED BY DELDOT

INDEX OF BRIDGE 1-604 SHEETS

SHEET Nº	BR. DWG. Nº	TABLE OF CONTENTS
78	PN-01	BRIDGE PROJECT NOTES - 1
79	PN-02	BRIDGE PROJECT NOTES - 2
80	PN-03	CONCRETE REPAIR DETAILS - 1
81	PN-04	CONCRETE REPAIR DETAILS - 2
82	PE-01	GENERAL PLAN AND ELEVATION
83	TS-01	BRIDGE TYPICAL SECTIONS
84	SC-01	SEQUENCE OF CONSTRUCTION - 1
85	SC-02	SEQUENCE OF CONSTRUCTION - 2
86	SC-03	SEQUENCE OF CONSTRUCTION - 3
87	SC-04	SEQUENCE OF CONSTRUCTION - 4
88	SR-01	REMOVAL PLAN
89	SR-02	BRIDGE DECK DEMOLITION DETAILS
90	SR-03	BACKWALL DEMOLITION DETAILS
91	AS-01	SLEEPER SLAB LAYOUT PLAN
92	AS-02	SLEEPER SLAB UNIT A PLAN AND REINFORCEMENT
93	AS-03	SLEEPER SLAB UNIT B PLAN AND REINFORCEMENT
94	AS-04	SLEEPER SLAB UNIT C PLAN AND REINFORCEMENT
95	AS-05	SLEEPER SLAB UNIT D PLAN AND REINFORCEMENT
96	AS-06	SLEEPER SLAB UNIT E PLAN AND REINFORCEMENT
97	AS-07	SLEEPER SLAB UNIT F PLAN AND REINFORCEMENT
98	AS-08	SLEEPER SLAB UNIT G PLAN AND REINFORCEMENT
99	AS-09	SLEEPER SLAB UNIT H PLAN AND REINFORCEMENT
100	AS-10	SLEEPER SLAB UNIT J PLAN AND REINFORCEMENT
101	AS-11	SLEEPER SLAB UNIT K PLAN AND REINFORCEMENT
102	AS-12	SLEEPER SLAB SECTIONS REINFORCEMENT
103	EX-01	SLEEPER SLAB JOINT DETAILS - 1
104	DK-01	END DIAPHRAGM DECK OVER LAYOUT PLAN
105	DK-02	END DIAPHRAGM DECK OVER DETAILS - 1
106	DK-03	END DIAPHRAGM DECK OVER DETAILS - 2
107	DK-04	END DIAPHRAGM DECK OVER DETAILS - 3
108	DK-05	END DIAPHRAGM DECK OVER DETAILS - 4
109	DK-06	END DIAPHRAGM DECK OVER DETAILS - 5
110	DK-07	END DIAPHRAGM DECK OVER DETAILS - 6
111	DK-08	END DIAPHRAGM DECK OVER DETAILS - 7
112	DK-09	END DIAPHRAGM DECK OVER DETAILS - 8
113	DK-10	END DIAPHRAGM DECK OVER DETAILS - 9
114	DK-11	END DIAPHRAGM DECK OVER DETAILS - 10
115	DK-12	PARAPET JOINT DETAILS - 1
116	DK-13	PARAPET JOINT DETAILS - 2
117	BR-01	REINFORCEMENT BAR LIST SLEEPER SLAB - 1
118	BR-02	REINFORCEMENT BAR LIST SLEEPER SLAB - 2
119	BR-03	REINFORCEMENT BAR LIST DECK OVER - 1
120	BR-04	REINFORCEMENT BAR LIST DECK OVER - 2
121	AB-01	ABUTMENT A CONCRETE REPAIR DETAILS
TOTAL BRIDGE SHEETS: 44		

ADDENDA / REVISIONS

3 REVISED QUANTITIES Z.M.G. 11/18/2019

NOT TO SCALE

REHABILITATION OF BRIDGES 1-600, 1-601, AND 1-604, SR 2 AND SR 141 INTERCHANGE

CONTRACT	BRIDGE NO. 1 604
T201707403	DESIGNED BY: ZMG
COUNTY	
NEW CASTLE	CHECKED BY: WAG

BRIDGE PROJECT NOTES – 2

PN-02

SECTION WRA

SHEET NO. 79

N:\37122-002\CADD\Bridge\BR1-604_PN02_A03.dgn
11/15/2019 9:57:14 AM

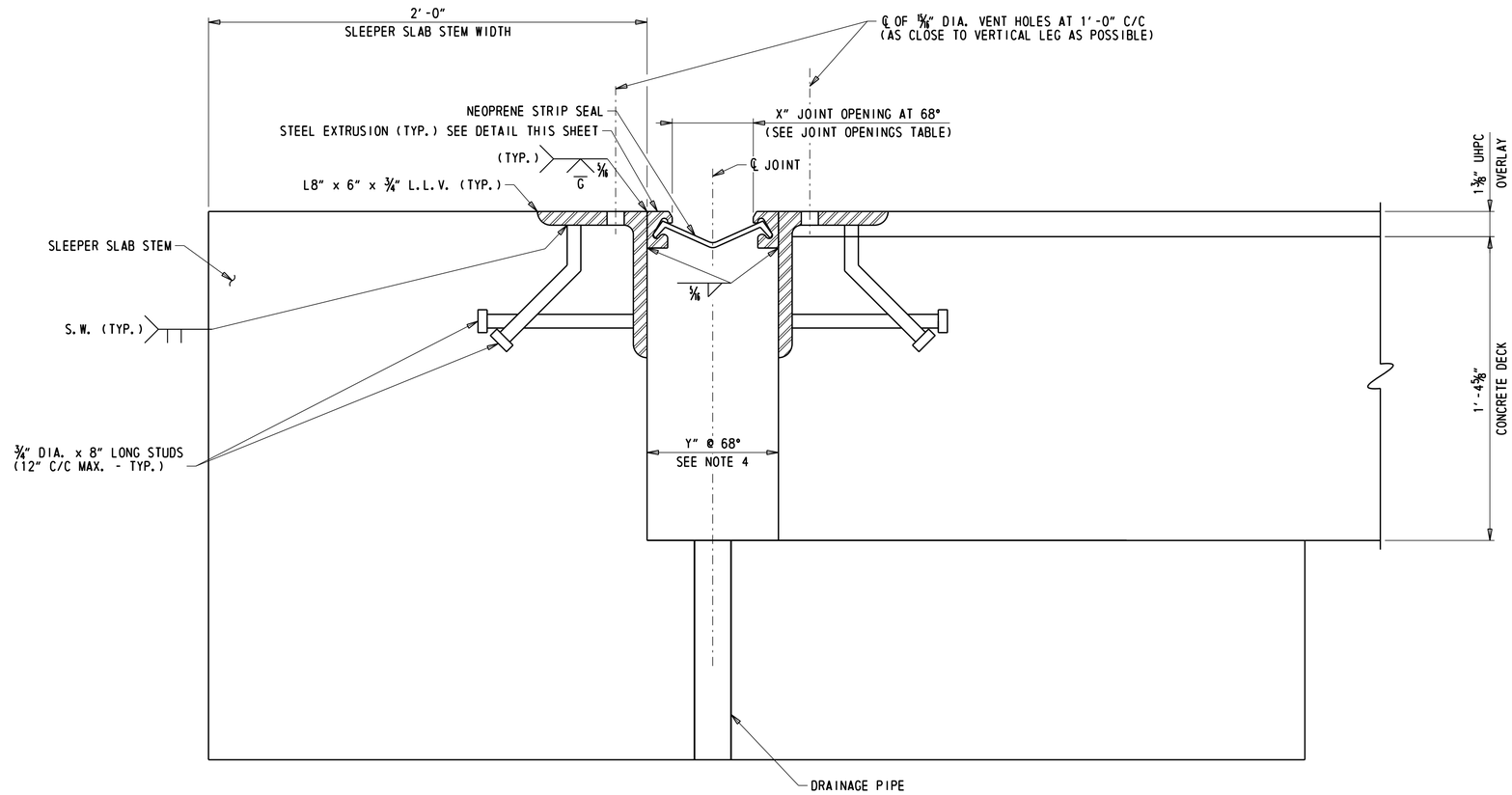

JOINT ASSEMBLY DETAIL

3" = 1'-0"

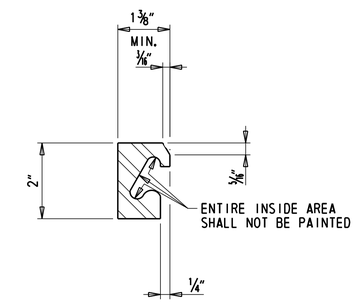

STEEL EXTRUSION DETAIL

6" = 1'-0"

STRIP SEAL EXPANSION JOINT NOTES:

1. STEEL FOR DECK JOINTS AND STEEL EXTRUSIONS SHALL BE AASHTO M270, GR. 36 (ASTM A36) AT MINIMUM.
2. NEOPRENE EXTRUSION TO MEET ASTM D-2628-81 MODIFIED, (RECOVERY TEST EXCLUDED).
3. THE EXPANSION JOINT SHALL BE CAPABLE OF SEALING THE APPROACH SLAB TO SLEEPER SLAB JOINT TO PREVENT MOISTURE AND OTHER CONTAMINANTS FROM DESCENDING THROUGH THE JOINT.
4. THE CONTRACTOR SHALL ADJUST THE OPEN JOINT (Y) AS REQUIRED BY THE WIDTH OF THE STEEL EXTRUSION USED SO AS TO PROVIDE A X" JOINT OPENING AT 68°F.
5. THE STRIP SEAL SHALL BE INSTALLED IN ONE PIECE ACROSS THE APPROACH SLAB WIDTH. SPLICING OF THE STRIP SEAL IS NOT PERMITTED.
6. THE EXPANSION JOINT SYSTEM IS PAID FOR UNDER ITEM 624000 - PREFABRICATED EXPANSION JOINT SYSTEM, 3".
7. STEEL EXTRUSIONS SHALL BE HOT-DIP GALVANIZED. ENTIRE EXPANSION DAM SHALL BE PAINTED AFTER FABRICATION USING URETHANE SYSTEM.
8. LUBRICANT-ADHESIVE FOR USE IN INSTALLING AND BONDING NEOPRENE SEAL ELEMENTS TO STEEL JOINT COMPONENTS SHALL BE A ONE QUART MOISTURE-CURING POLYURETHANE AND HYDROCARBON SOLVENT MIXTURE HAVING THE FOLLOWING PHYSICAL PROPERTIES:

AVERAGE WEIGHT, POUNDS PER GALLON	8±10%
SOLIDS CONTENT	65%
ADHESIVE SHALL REMAIN LIQUID FROM	5°F TO 120°F
FILM STRENGTH, AS PER ASTM D-412	2,000 PSI
ELONGATION	250%

3 ~~9. STEEL EXTRUSIONS AND JOINT ANGLES SHALL BE CONTINUOUS ACROSS THE FULL WIDTH OF THE ROADWAY, NO SPLICING WILL BE PERMITTED.~~

3 9. AT AREAS WHERE STEEL MEMBERS ARE TO BE SPLICED, THE USE OF COMPLETE JOINT PENETRATION (CJP) AND PARTIAL JOINT PENETRATION (PJP) WELD ARE BOTH PERMITTED. THE THICKNESS OF THE PJP WELD MUST BE A MINIMUM OF HALF OF THE STEEL MEMBER THICKNESS.

3 10. THE CONTRACTOR SHALL SUBMIT A WORKING PLAN FOR PLACEMENT OF THE STRIP SEAL DUE TO PHASING.

JOINT OPENINGS, X										
TEMPERATURE °F	20°	30°	40°	50°	60°	68°	70°	80°	90°	100°
ABUTMENT B	2"	1 15/16"	1 7/8"	1 13/16"	1 3/4"	1 11/16" ±	1 11/16" ±	1 5/8"	1 9/16"	1 1/2"
ABUTMENT A	1 3/4"	1 3/4"	1 3/4"	1 3/4"	1 3/4"	1 3/4"	1 3/4"	1 3/4"	1 3/4"	1 3/4"

NOTES:

1. FOR SLEEPER SLAB PLAN AND SECTIONS, SEE DWGS. AS-01 THROUGH AS-12.
2. REMAINING SLEEPER SLAB REINFORCEMENT NOT SHOWN FOR CLARITY. SEE DWGS. AS-02 THROUGH AS-12 FOR MORE INFORMATION.
3. ABUTMENT A BEARINGS ARE FIXED; ABUTMENT B BEARINGS ARE EXPANSION.

N:\33122-002\CADD\Bridge\BR1-604_EX01_A03.dgn
11/15/2019 9:57:15 AM

ADDENDA / REVISIONS		
3 MODIFIED NOTES	Z.M.G. 11/18/2019	

SCALE AS NOTED

REHABILITATION OF BRIDGES 1-600, 1-601, AND 1-604, SR 2 AND SR 141 INTERCHANGE

CONTRACT	BRIDGE NO. 1 604
T201707403	DESIGNED BY: ZMG
COUNTY	
NEW CASTLE	CHECKED BY: WAG

SLEEPER SLAB JOINT DETAILS - 1

EX-01

SECTION	SHEET NO.
WRA	103

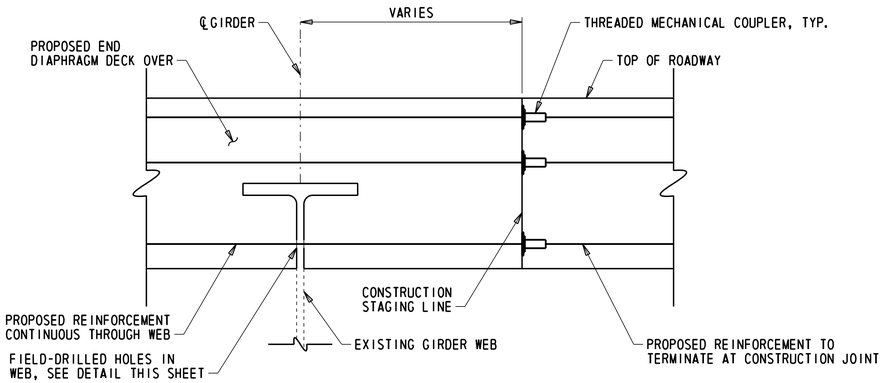

END DIAPHRAGM DECK OVER REINFORCEMENT DETAILS

1½" = 1'-0"

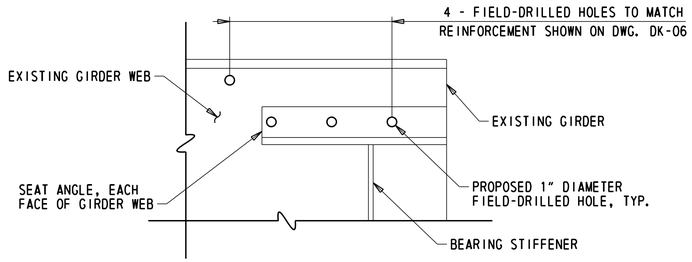

GIRDER WEB FIELD-DRILLED HOLES DETAIL

1½" = 1'-0"

NOTES:

3 1. SPLICES IN REINFORCEMENT BETWEEN CONSTRUCTION STAGES SHALL USE THREADED COUPLERS. ALL THREADED COUPLER HARDWARE SHALL MEET OR EXCEED 125% OF BAR REINFORCEMENT YIELD STRENGTH. PAYMENT FOR THREADED COUPLERS WILL BE INCIDENTAL TO ~~ITEM 611001 - BAR REINFORCEMENT, EPOXY COATED.~~ ITEM 611000 - BAR REINFORCEMENT.

3 2. PAYMENT FOR GIRDER WEB FIELD-DRILLED HOLES WILL BE INCIDENTAL TO ~~ITEM 611001 - BAR REINFORCEMENT, EPOXY COATED.~~ ITEM 611000 - BAR REINFORCEMENT.

N:\32122-002\C400\Bridge\BR1-604_DK09_A03.dgn
11/15/2019 9:57:16 AM

ADDENDA / REVISIONS		
3 MODIFIED NOTES	Z.M.G. 11/18/2019	

SCALE AS NOTED

REHABILITATION OF BRIDGES 1-600, 1-601, AND 1-604, SR 2 AND SR 141 INTERCHANGE

CONTRACT	BRIDGE NO.	1 604
T201707403	DESIGNED BY: ZMG	
COUNTY	CHECKED BY: WAG	
NEW CASTLE		

END DIAPHRAGM DECK OVER DETAILS - 8

DK-09
SECTION
WRA
SHEET NO.
112