THE STATE OF DELAWARE
DEPARTMENT OF TRANSPORTATION

U.S. CUSTOMARY UNITS

CONSTRUCTION PLANS FOR:

STATEWIDE HOPPER RACKS
FY18–20

CONTRACT NUMBER: T201780103

FEDERAL AID PROJECT NUMBER: ——

COUNTY: NEW CASTLE M.R. #: ——

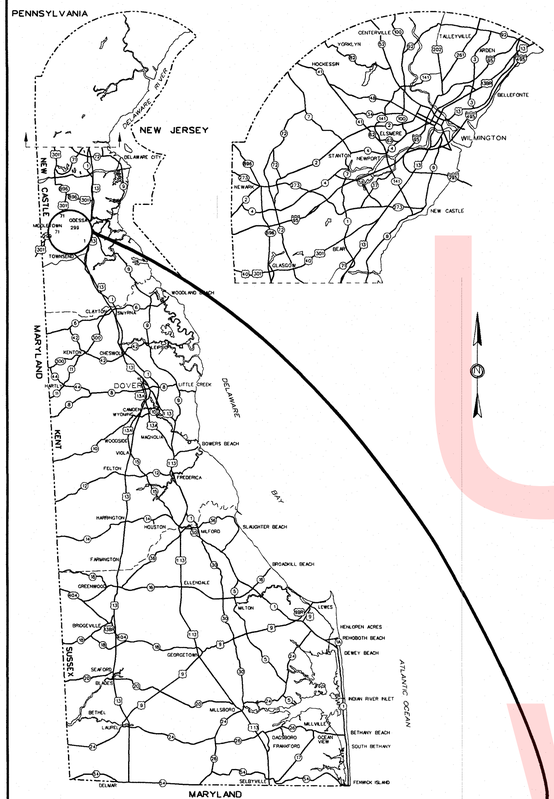

GENERAL LOCATION OF CONTRACT

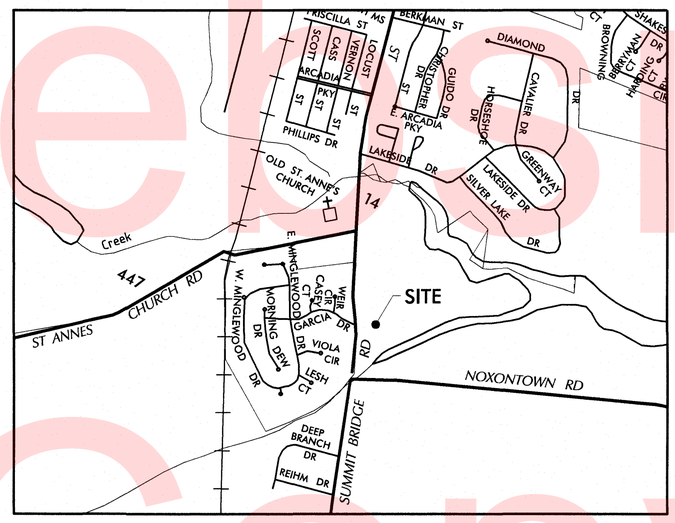

LOCATION MAP

SCALE: N. T. S.

CONSTRUCTION SPECIFICATIONS

CONSTRUCTION ON THIS SITE SHALL BE IN CONFORMANCE WITH THE DELAWARE DEPARTMENT OF TRANSPORTATION SPECIFICATIONS FOR ROAD AND BRIDGE CONSTRUCTION DATED AUGUST 2001, WITH SPECIFICATION SECTIONS AS INDICATED WITHIN THE PROJECT NOTES.

RECOMMENDED

STATEWIDE SUPPORT SERVICES ENGINEER — DATE 10/5/17

ASSISTANT DIRECTOR, STATEWIDE SUPPORT SERVICES — DATE 10/6/17

DIRECTOR, MAINTENANCE AND OPERATIONS — DATE 10/11/17

RECOMMENDED AS TO PROCESS

CHIEF ENGINEER

DATE 10/11/17

PREPARED BY
CIVIL/STRUCTURAL ENGINEER
JOHNSON, MIRMIRAN & THOMPSON
Engineering A Brighter Future®
121 Continental Drive, Suite 300 Newark, DE 19713

WILLIAM J. DOUGHERTY REGISTERED No. 13174 DELAWARE PROFESSIONAL ENGINEER

SEAL

RECOMMENDED — DATE 10/10/17

PREPARED BY
ARCHITECT
JOHNSON, MIRMIRAN & THOMPSON
Engineering A Brighter Future®
121 Continental Drive, Suite 300 Newark, DE 19713

SEAL

RECOMMENDED — DATE

PREPARED BY
MECHANICAL/ELECTRICAL ENGINEER
JOHNSON, MIRMIRAN & THOMPSON
Engineering A Brighter Future®
121 Continental Drive, Suite 300 Newark, DE 19713

SEAL

RECOMMENDED — DATE

DESIGN DESIGNATION

FUNCTIONAL CLASS: N/A	D.H.V. PROJECTED: N/A	YEAR: N/A
TYPE OF CONSTRUCTION: N/A	DESIGN SPEED: N/A	
A.A.D.T. CURRENT: N/A — YEAR: N/A	TRUCKS: N/A	
A.A.D.T. PROJECTED: N/A — YEAR: N/A	DIRECTION OF DISTRIBUTION: N/A	

INDEX OF SHEETS

SHEET №:	TABLE OF CONTENTS
1	TITLE SHEET
2	LEGEND
3	CONSTRUCTION PLAN
4	CONSTRUCTION LAYOUT
5	STRUCTURAL GENERAL NOTES
6-7	FRAMING PLAN & ELEVATIONS - 10 WHEEL TRUCK
8-9	FRAMING PLAN & ELEVATIONS - 6 WHEEL TRUCK
10	TYPICAL DETAILS AND SECTIONS

TOTAL SHEETS: 10

APPROVED DESIGN EXCEPTIONS

DESIGN PARAMETER	REQUIRED	PROVIDED

ADDENDA & REVISIONS

DESCRIPTION	NAME & DATE

ASSOCIATED CONTRACTS

CONTRACT NO.	CONTRACT NAME

T-1

Unofficial Website Copy

9/8/17 – T201780103

SUBMISSION STATUS: PS&E
DATE PLOTTED: 9/25/2017
JMT FILE LOCATION: Q:\NDE\151152_013_Statewide_Hopper_Rac\CADD\Middletown Yard Hopper Racks\TC.dgn

EXISTING SYMBOLS

DRAINAGE

	DITCH OR STREAM CENTERLINE
	DIRECTIONAL STREAM FLOW ARROW
C.B. / D.I.	DRAINAGE INLET
J.B.	DRAINAGE JUNCTION BOX
D	DRAINAGE MANHOLE
SIZE/TYPE LABEL	DRAINAGE PIPE AND FLOW ARROW
	DRAINAGE PIPE HEADWALL
	RIPRAP - AREA FEATURE
	RIPRAP - LINEAR FEATURE

MANMADE ROADSIDE FEATURES

	BOLLARD - STEEL POLE
	BOLLARD - WOOD POST
(TYPE LABEL)	CURB
(TYPE LABEL)	CURB AND GUTTER
	FENCE - CHAINLINK OR STRANDED
	FENCE - STOCKADE OR SPLIT RAIL
F.P.	FLAG POLE
	GUARDRAIL - STEEL BEAM
	GUARDRAIL - WIRE ROPE
LAMP	LAMP AND POST - RESIDENTIAL
MB	MAILBOX
P.M.	PARKING METER AND POST
	PAVEMENT - FLEXIBLE
	PAVEMENT - RIGID
	PILE - BRIDGE
	PILLAR OR MISCELLANEOUS POST
	TRAFFIC SIGN AND POST
	TRAFFIC SIGN AND I-BEAM POST
	WALL - BRICK OR BLOCK
	WALL - STONE

NATURAL ROADSIDE FEATURES

	GRASS LAWN
	HEDGEROW OR THICKET
	MARSH BOUNDARY LINE
	TREE - CONIFEROUS
	TREE - DECIDUOUS
	TREE STUMP
	SHRUBBERY
WL	DELINEATED WETLAND BOUNDARY LINE
	WOODS LINE BOUNDARY
OHW	ORDINARY HIGH WATER BOUNDARY
OHW/WL	ORDINARY HIGH WATER/DELINEATED WETLAND BOUNDARY

SURVEY CONTROL & MONUMENTATION

B.M.	SURVEY BENCHMARK LOCATION
T.P.	SURVEY TIE POINT LOCATION
	SURVEY TRAVERSE POINT
	POINT OF CURVATURE OR TANGENCY
	POINT OF INTERSECTING TANGENTS

RIGHT-OF-WAY SYMBOLS

C.M.	PROPERTY MARKER - CONCRETE MON.
I.P.	PROPERTY MARKER - IRON PIPE
100+00	HISTORIC RIGHT-OF-WAY BASELINE
	EXISTING RIGHT-OF-WAY
	EXISTING PROPERTY LINE
EASEMENT TYPE	EXISTING EASEMENT
DA	EXISTING DENIAL OF ACCESS
R/W-DA	EXISTING R/W & DENIAL OF ACCESS

UTILITY

	SOIL BORING LOCATION
	UTILITY TEST HOLE LOCATION
TV	CABLE TV DISTRIBUTION BOX
E	ELECTRIC MANHOLE
EM	ELECTRIC METER
E	ELECTRIC TRANSFORMER
	POLE MOUNTED LUMINAIRE
G	GAS MANHOLE
G.M.	GAS METER
G.V.	GAS VALVE
G.P.	GAS PUMP - SERVICE STATION
	RAILROAD TRACKS
S	SANITARY SEWER MANHOLE
S.V.	SANITARY SEWER VALVE
VENT	SANITARY SEWER VENT OR CLEANOUT
S.D.F.	SEPTIC DRAIN FIELD
B	TELEPHONE BOOTH
T	TELEPHONE MANHOLE
T	TELEPHONE TEST POINT
J.W.	TRAFFIC - CONDUIT JUNCTION WELL
	TRAFFIC - LIGHT POLE AND BASE
	TRAFFIC - PEDESTRIAN POLE & BASE
	TRAFFIC - SIGNAL CABINET & BASE
	TRAFFIC - SIGNAL POLE AND BASE
U	UTILITY BOX
	UTILITY POLE GUY WIRE ANCHOR
	UTILITY POLE
F.H.	WATER - FIRE HYDRANT
W.M.	WATER METER
W.V.	WATER VALVE
WELL	WELL HEAD
?	MANHOLE - UNDETERMINED OWNER

PROPOSED SYMBOLS

TRAFFIC

ITMS-CON	ITMS CONDUIT
SIG-CON	SIGNAL CONDUIT
DOT-E-DUCT	LIGHTING CONDUIT
	CONDUIT JUNCTION WELL
	CONDUIT JUNCTION WELL
	LUMINAIRE
	LIGHTING POLE BASE
	PAVEMENT MARKINGS
	PAVEMENT STRIPING
	TRAFFIC SIGN AND POST
	TRAFFIC SIGN AND I-BEAM POST

IDENTIFIERS

A/C	ADJUST BY CONTRACTOR
A/O	ADJUST BY OTHERS
AB/C	ABANDON BY CONTRACTOR
B	CONCRETE SAFETY BARRIER
C	CURB OR CURB & GUTTER
C/JB	CONVERT TO JUNCTION BOX
C/MH	CONVERT TO DRAINAGE MANHOLE
C/O	CURB OPENING
CR	CURB RAMP / TYPE
CR-N	CURB RAMP / TYPE - WITHOUT SIDEWALK SURFACE DETECTABLE WARNING SYSTEM
CSF	CONSTRUCTION SAFETY FENCE
DI	DRAINAGE INLET
DND	DO NOT DISTURB
ED	ENERGY DISSIPATOR
F	FENCE
FES	FLARED END SECTION
FF/C	FILL WITH FLOWABLE FILL
FS	FILTRATION STRUCTURE
GR	GUARDRAIL
JB	JUNCTION BOX
MH	MANHOLE
M	MONUMENT - RIGHT-OF-WAY
P	PIPE
RL/C	RELOCATE BY CONTRACTOR
RL/O	RELOCATE BY OTHERS
RM/C	REMOVE BY CONTRACTOR
RM/O	REMOVE BY OTHERS
RR	RIPRAP
UD	UNDERDRAIN / LENGTH
UOP	UNDERDRAIN OUTLET PIPE
UOC	UNDERDRAIN CLEANOUT
RM/TC	REMOVE BY TRAFFIC CONTRACTOR
AB/O	ABANDON BY OTHERS
SF	SILT FENCE

CONSTRUCTION

	CONCRETE SAFETY BARRIER - PERMANENT
BFS	BIOFILTRATION SWALE
	BRICK PATTERNED SURFACE
	BUTT JOINT
100+00	CONSTRUCTION BASELINE
CSF	CONSTRUCTION SAFETY FENCE
	CURB, TYPE 1 & TYPE 3
	CURB, TYPE 2
	CURB & GUTTER, TYPE 1
	CURB & GUTTER, TYPE 2
	CURB & GUTTER, TYPE 3
	CURB & GUTTER, TYPE 4
CZ	CLEAR ZONE
	DRAINAGE INLET
	DITCH
	FENCE - METAL
	FENCE - WOOD
	FLARED END SECTION
	GUARDRAIL, TYPE 1
	GUARDRAIL, TYPE 2
	GUARDRAIL, TYPE 3
	GUARDRAIL END ANCHORAGE
	GUARDRAIL END TREATMENT, TYPE 1
	GUARDRAIL END TREATMENT, TYPE 2
	GUARDRAIL END TREATMENT, TYPE 3
	IMPACT ATTENUATOR
	JUNCTION BOX - DRAINAGE
LO	LATERAL OFFSET
LOC	LIMIT OF CONSTRUCTION
MB	MAILBOX
	MANHOLE
	PAVEMENT PATCH
	PAVEMENT REMOVAL - TOPSOIL, SEED AND MULCH
	PIPE & DIRECTIONAL FLOW ARROW
	RIPRAP
	P.C.C. SIDEWALK - 4"
	P.C.C. SIDEWALK - 6" (USE 8" DEPTH FOR CHANNELIZATION ISLANDS.)
	UNDERDRAIN
	UNDERDRAIN CLEANOUT
	UNDERDRAIN OUTLET

RIGHT-OF-WAY SYMBOLS

	PROPOSED RIGHT-OF-WAY MONUMENT
DA	PROPOSED DENIAL OF ACCESS
PE	PROPOSED PERMANENT EASEMENT
R/W	PROPOSED RIGHT-OF-WAY
R/W-DA	PROPOSED R/W & DENIAL OF ACCESS
TCE	TEMPORARY CONSTRUCTION EASEMENT
100+00	PROPOSED RIGHT-OF-WAY BASELINE

PAVEMENT SECTION(S)

	GRADED AGGREGATE BASE COURSE, TYPE B

LANDSCAPING

LS	LANDSCAPE PLANTINGS
	SHRUBBERY
	CONIFEROUS TREE
	DECIDUOUS TREE

Unofficial Website Copy

[SHEET: LG01]
PLOTTED BY: BDOUGHERTY DATE: 9/28/2017
FILE LOCATION: Q:\NDE\151152_013_STATEWIDE_HOPPER_RAC\CADD\MIDDLETOWN YARD HOPPER RACKS\LG.DGN

DELAWARE DEPARTMENT OF TRANSPORTATION

ADDENDUMS / REVISIONS

NOT TO SCALE

STATEWIDE HOPPER RACKS FY18-20

CONTRACT	BRIDGE NO. N/A	SHEET NO.
T201780103	DESIGNED BY: CSR	2
COUNTY		TOTAL SHTS.
NEW CASTLE	CHECKED BY: WJD	10

LEGEND

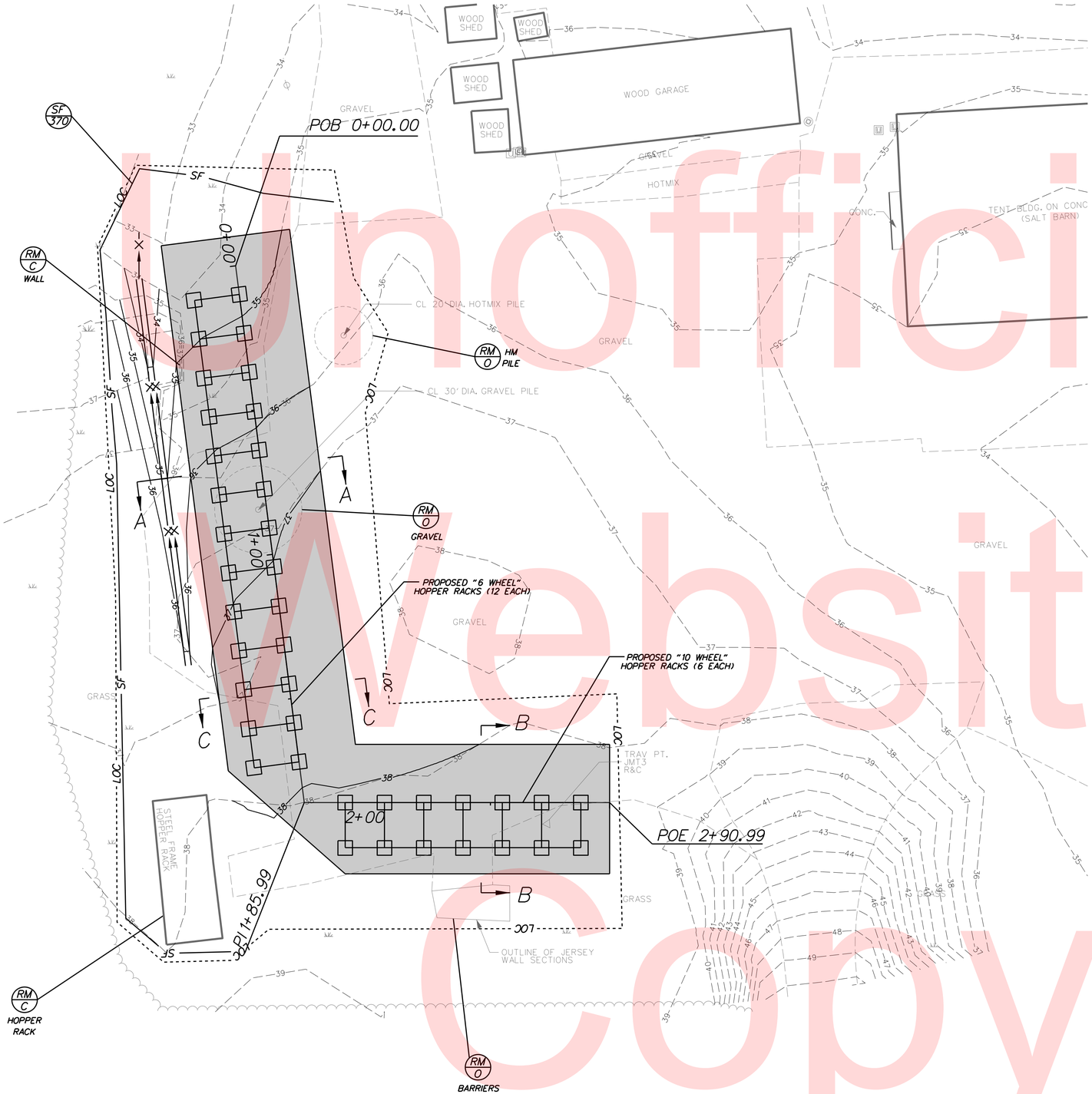

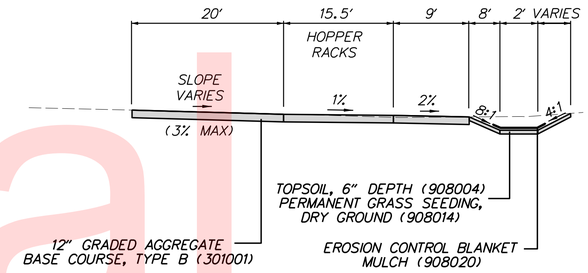

SECTION A-A
NOT TO SCALE

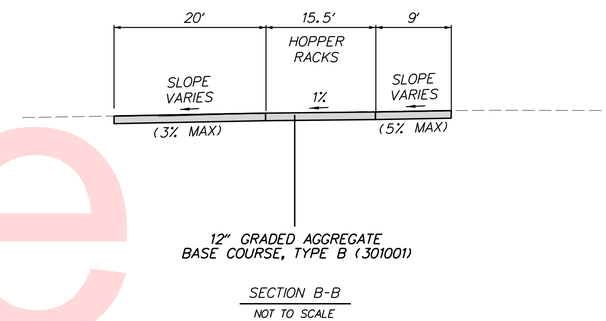

SECTION B-B
NOT TO SCALE

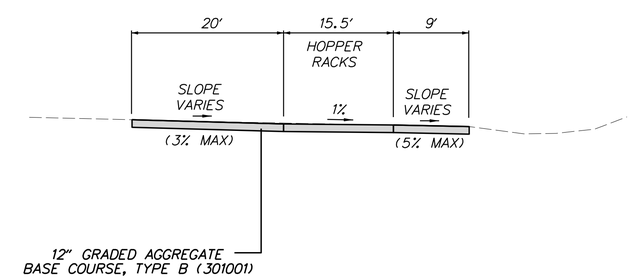

SECTION C-C
NOT TO SCALE

Unofficial Website Copy

PLOTTED BY: BDOUGHERTY DATE: 9/25/2017 [SHEET: 06]
FILE LOCATION: Q:\NDE\151152_013_STATEWIDE_HOPPER_RAC\CADD\MIDDLETOWN YARD HOPPER RACKS\CP 2D.DGN

DELAWARE DEPARTMENT OF TRANSPORTATION

ADDENDUMS / REVISIONS

SCALE 0 20 40 60 FEET

STATEWIDE HOPPER RACKS FY18-20
LOCATION 1: MIDDLETOWN

CONTRACT	BRIDGE NO.
T201780103	DESIGNED BY: CSR
COUNTY	
NEW CASTLE	CHECKED BY: WJD

CONSTRUCTION PLAN

SHEET NO.
3
TOTAL SHTS.
10

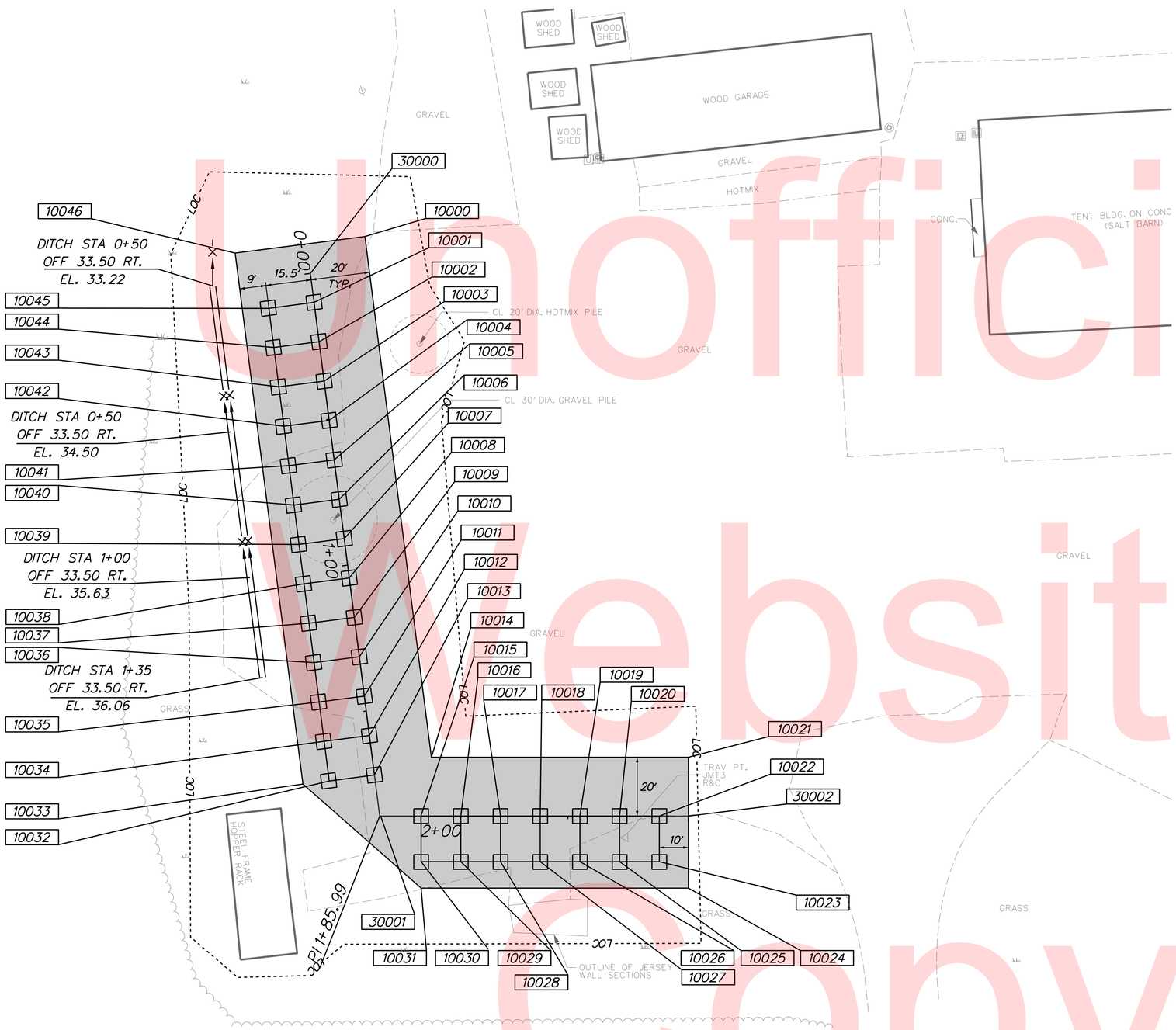

COORDINATE LIST

POINT NO.	NORTHING	EASTING
10000	522972.3165	572847.3208
10001	522944.6221	572841.5746
10002	522933.3359	572848.9822
10003	522922.0497	572856.3897
10004	522910.7635	572863.7972
10005	522899.4773	572871.2048
10006	522888.1911	572878.6123
10007	522876.9049	572886.0199
10008	522865.6187	572893.4274
10009	522854.3325	572900.8349
10010	522843.0463	572908.2425
10011	522831.7601	572915.6500
10012	522820.4739	572923.0576
10013	522809.1876	572930.4651
10014	522823.0921	572945.2621
10015	522803.5367	572950.7912
10016	522809.4977	572963.0130
10017	522815.4157	572975.1467
10018	522821.3337	572987.2804
10019	522827.2517	572999.4141
10020	522833.1697	573011.5478
10021	522861.3999	573023.8049
10022	522839.0877	573023.6816
10023	522825.1564	573030.4763
10024	522821.4036	573043.3124
10025	522819.2384	573018.3426
10026	522813.3204	573006.2089
10027	522807.4024	572994.0752
10028	522801.4844	572981.9414
10029	522795.5664	572969.8077
10030	522789.6484	572957.6740
10031	522781.5592	572961.6193
10032	522800.5953	572917.5642
10033	522795.7443	572909.9827
10034	522811.9689	572910.0993
10035	522823.2551	572902.6918
10036	522834.5413	572895.2842
10037	522845.8275	572887.8767
10038	522857.1137	572880.4692
10039	522868.3999	572873.0616
10040	522879.6861	572865.6541
10041	522890.9723	572858.2465
10042	522902.2585	572850.8390
10043	522913.5447	572843.4315
10044	522924.8309	572836.0239
10045	522936.0298	572828.6737
10046	522947.8991	572810.1181

HORIZONTAL / VERTICAL CONTROL DATA

POINT	STATION	OFFSET	NORTHING	EASTING	ELEVATION
JMT1	NA	NA	523111.6528	573401.1938	31.951
JMT2	NA	NA	523363.8871	572854.3887	33.104
JMT3	2+69.56	7.30'	522827.4682	573016.5122	38.586
JMT4	NA	NA	523092.5887	572783.3626	32.534

CONSTRUCTION ALIGNMENT CONTROL

POINT	STATION	OFFSET	NORTHING	EASTING
30000	0+00.00	0.00'	522952.8919	572836.1469
30001	1+86.35	0.00'	522797.5527	572938.5221
30002	2+90.99	0.00'	522843.4241	573032.5724

DATUM REFERENCE:
HORIZONTAL - THIS PROJECT IS REFERENCED TO THE DELAWARE STATE PLANE COORDINATE SYSTEM (NAD 83/2011).

VERTICAL - THIS PROJECT IS REFERENCED TO NAVD 88.

Unofficial Website Copy

GENERAL NOTES

1. CONTRACTOR TO VERIFY ALL DIMENSIONS AND SITE CONDITIONS PRIOR TO STARTING WORK. IF ANY DISCREPANCIES ARE NOTED, CONTRACTOR SHALL NOTIFY ARCHITECT AND ENGINEER IMMEDIATELY.
2. CONTRACTOR MUST SUBMIT SHOP DRAWINGS TO ENGINEER FOR APPROVAL. CONTRACTOR SHALL REVIEW SHOP DRAWINGS BEFORE SUBMITTING THEM TO ENGINEER NOTING ANY DISCREPANCIES FOUND. FAILURE TO SUBMIT THE SHOP DRAWINGS TO THE ENGINEER IS AT THE CONTRACTOR'S OWN RISK.
3. STRUCTURAL DRAWINGS ARE TO BE USED IN CONJUNCTION WITH ARCHITECTURAL AND/OR ANY OTHER TRADE RELATED DRAWINGS.
4. THE STRUCTURE IS DESIGNED TO BE SELF SUPPORTING AND STABLE AFTER FULLY COMPLETED. THE CONTRACTOR IS SOLELY RESPONSIBLE FOR THE DESIGN AND ERECTION OF ANY TEMPORARY SHORING OR BRACING NECESSARY TO PROVIDE FOR THE SAFE CONSTRUCTION OF THE STRUCTURE
5. THE ENGINEER HAS NO EXPERTISE IN, AND TAKES NO RESPONSIBILITY FOR, CONSTRUCTION MEANS AND METHODS OR JOB SITE SAFETY DURING CONSTRUCTION. IT IS SOLELY THE RESPONSIBILITY OF EACH CONTRACTOR TO FOLLOW ALL APPLICABLE SAFETY CODES AND REGULATIONS DURING ALL PHASES OF CONSTRUCTION.

DESIGN NOTES

DESIGN BASIS:

NEW CASTLE
INTERNATIONAL BUILDING CODE, 2015 EDITION
ASCE 7-10 MINIMUM DESIGN LOADS FOR BUILDINGS AND OTHER STRUCTURES
ACI 318-14 MANUAL FOR CONCRETE CONSTRUCTION
AISC 360-10 STEEL CONSTRUCTION MANUAL 14TH EDITION
NATIONAL DESIGN SPECIFICATION FOR WOOD CONSTRUCTION, (NDS) 2015

KENT
INTERNATIONAL BUILDING CODE, 2012 EDITION
ASCE 7-10 MINIMUM DESIGN LOADS FOR BUILDINGS AND OTHER STRUCTURES
ACI 318-11 MANUAL FOR CONCRETE CONSTRUCTION.
AISC 360-10 STEEL CONSTRUCTION MANUAL 14TH EDITION
NATIONAL DESIGN SPECIFICATION FOR WOOD CONSTRUCTION, (NDS) 2012

SUSSEX
INTERNATIONAL BUILDING CODE, 2012 EDITION
ASCE 7-10 MINIMUM DESIGN LOADS FOR BUILDINGS AND OTHER STRUCTURES
ACI 318-11 MANUAL FOR CONCRETE CONSTRUCTION
AISC 360-10 STEEL CONSTRUCTION MANUAL 14TH EDITION
NATIONAL DESIGN SPECIFICATION FOR WOOD CONSTRUCTION, (NDS) 2012

DESIGN LOADS:

ROOF:

DEAD:	15 PSF
LIVE:	20 PSF
SNOW:	20 PSF

WIND:

SPEED:	3 SEC, 105 MPH
IMPORTANCE FACTOR:	1.0
BUILDING CATEGORY:	I
ENCLOSURE CLASSIFICATION:	OPEN
INTERNAL PRESSURE COEFFICIENT:	± 0.00
ROOF PRESSURE MFRS:	MAX. = 30.3 PSF WINDWARD MIN. = 16 PSF WINDWARD MAX. = 24.2 PSF LEEWARD MIN. = 16 PSF LEEWARD

ROOF PRESSURE C&C:

EFF. AREA	SURFACE PRESSURE (PSF) <=9 SF	>9,<=36 SF	>36 SF
NEG. ZONE 1	-33.8	-33.8	-33.8
NEG. ZONE 2	-51.3	-51.3	-33.8
NEG. ZONE 3	-67.5	-51.3	-33.8
POS. ALL ZONES	69.1	51.8	34.5

SEISMIC:

SEISMIC RISK FACTOR:	I
SEISMIC DESIGN CATEGORY:	B
SITE CLASS:	D
SEISMIC RESISTING SYSTEM:	STEEL MOMENT RESIST FRAME
ANALYSIS PROCEDURE:	EQUIVALENT LATERAL FORCE
S_{DS} :	0.183 g
S_{D1} :	0.090 g

GEOTECHNICAL

1. CONTRACTOR IS RESPONSIBLE FOR PROTECTING ANY AND ALL EXCAVATION SLOPES FROM CAVE-IN.
2. MAINTAIN POSITIVE SURFACE DRAINAGE TO PREVENT THE ACCUMULATION OF WATER IN EXCAVATED AREAS.
3. MATERIAL TO BE USED AS FILL SHALL BE TESTED BY AN APPROVED TESTING LABORATORY TO DETERMINE SUITABILITY PRIOR TO BEING PLACED.
4. SURFACE AREAS AT GRADE AND AREAS TO RECEIVE FILL SOILS SHALL BE DETERMINED WITHIN ±2 PERCENTAGE POINTS OF THE OPTIMUM MOISTURE CONTENT DETERMINED FROM THE MODIFIED PROCTOR TEST.
5. IMMEDIATELY PRIOR TO CONSTRUCTION, SUB GRADE SOILS SHALL BE PROOF ROLLED WITH A FULLY LOADED TANDEM-AXLE DUMP TRUCK OR SIMILAR EQUIPMENT TO DETECT ANY UNSTABLE AREAS. THE PROOF ROLLING EQUIPMENT SHALL MAKE A MINIMUM OF FOUR PASSES OVER EACH SECTION, WITH THE LAST TWO PASSES PERPENDICULAR TO THE FIRST TWO. ANY AREAS WHICH PUMP OR RUT SHALL BE UNDERCUT OR SCARIFIED AND DENSIFIED IN PLACE AND PROOF ROLLED AGAIN. CONTRACTOR SHALL NOTIFY OWNER PRIOR TO COMMENCEMENT OF PROOF ROLLING OPERATIONS.

FOUNDATION, EXCAVATION AND FILL

1. THE FOUNDATION DESIGN WAS PREPARED IN THE ABSENCE OF A SOILS REPORT. THE DESIGN ASSUMES A SOIL BEARING PRESSURE OF 1500 PSF. THE REASONABLENESS OF THIS ASSUMPTION SHOULD BE VERIFIED BY THE OWNER WITH A GEOTECHNICAL ENGINEER KNOWLEDGEABLE OF LOCAL SOIL CONDITIONS.
2. ALL EXCAVATIONS FOR FOOTINGS SHALL BE MADE TO THE GRADES SHOWN FOR CONTINUOUS AND SPREAD FOOTINGS. CONTRACTOR SHALL TAKE MEASURES TO PREVENT CAVE-IN OF THE FOOTING EXCAVATION. THESE MEASURES MAY INCLUDE CUTTING BACK THE SIDE SLOPES AND/OR THE USE OF SIDE FORMS.
3. COMPACTED FILL MATERIAL SHALL BE FREE OF ORGANICS, STONES, ROCKS, BROKEN BRICKS, WOOD FRAGMENTS, OR OTHER DELETERIOUS MATERIAL THAT AFFECTS THE COMPACTIBILITY OF THE MATERIAL.
4. THE MATERIAL SHALL CONSIST OF A MAXIMUM OF 20% FINES (MATERIAL PASSING A #200 SIEVE) AND HAVE A MAXIMUM DRY DENSITY (MODIFIED PROCTOR ASTM D-1557) OF AT LEAST 100 PCF. THE MATERIAL'S LIQUID LIMIT SHALL NOT EXCEED 30 AND THE PLASTICITY INDEX SHALL NOT BE GREATER THAN 15.
5. FILL MATERIAL SHALL BE PLACED IN LIFTS NOT TO EXCEED 10" AND COMPACTED TO AT LEAST 95% OF THE MODIFIED PROCTOR MAXIMUM DRY DENSITY. ANY SOFT AREAS OR AREAS SUSPECTED OF POOR MATERIAL SHALL BE REMOVED TO A DEPTH OF NOT LESS THAN 24" BELOW THE UNSUITABLE MATERIAL AND REPLACED WITH A SUITABLE FILL MATERIAL AS DESCRIBED ABOVE.
6. PRIOR TO PLACEMENT OF ANY CONCRETE, THE THIN LAYER OF DISTURBED SOIL IN THE FOOTING SUBGRADE SHALL BE COMPACTED WITH HAND-OPERATED, GAS POWERED TAMPERS.
7. PROVIDE SHORING, BRACING, AND SHEETING, AS NECESSARY, IN ACCORDANCE WITH COE EM 385-1-1.
8. EXCAVATIONS FOR STRUCTURES LOCATED BELOW OR WITHIN THREE FEET OF THE GROUNDWATER LEVEL SHALL BE DEWATERED. GROUNDWATER SHALL BE LOWERED AND CONTINOUSLY MAINTAINED AT LEAST THREE FEET BELOW THE PROPOSED BEARING ELEVATION.

STRUCTURAL STEEL

1. ALL DESIGN AND CONSTRUCTION OF STRUCTURAL STEEL SHALL CONFORM TO THE AISC MANUAL OF STEEL CONSTRUCTION (14H EDITION).
2. MATERIAL:

A. W-SHAPE	ASTM A992, FY=50KSI
B. CHANNELS, ANGLES, & PLATE	ASTM A36, FY=36KSI
C. RECTANGULAR HSS	ASTM A500 GRADE B, FY=46KSI
D. ROUND HSS	ASTM A500 GRADE B, FY=42KSI
E. STEEL PIPE	ASTM A53 GRADE B, FY=35KSI
F. HIGH-STRENGTH BOLT	ASTM A325 N GALV.
G. STEEL NUTS	ASTM A563, GALV.
H. STEEL WASHERS	ASTM F436, GALV.
I. ANCHOR ROD	ASTM F1554, GALV.
J. THREADED ROD	ASTM A36, GALV.

-NO SECOND HAND MATERIAL PERMITTED

3. ALL STEEL SHAPES, PLATES, MISCELLANEOUS FABRICATIONS, AND HARDWARE SHALL BE ZINC-COATED OR GALVANIZED BY THE HOT DIP PROCESS IN ACCORDANCE WITH THE REQUIREMENTS OF ASTM A123 AND/OR ASTM A153 AS APPLICABLE AFTER FABRICATION. UNLESS OTHERWISE NOTED, FIELD TREAT DAMAGED GALVANIZED STEEL FINISH WITH TWO COATS OF HIGH ZINC DUST OXIDE PAINT, COLD GALVANIZED COMPOUNDS, OR APPROVED EQUAL CONFORMING TO THE REQUIREMENTS OF ASTM A 780.
4. ALL EXPOSED THREADED SURFACES ON BOLTS AND ANCHORS SHALL RECEIVE TWO COATS OF HIGH ZINC DUST OXIDE PAINT AFTER INSTALLATION OF THE NUT
5. MAKE ALL FIELD MEASUREMENTS REQUIRED TO VERIFY DIMENSIONS.
6. CONNECTIONS:
   A. ALL WELDING SHALL BE PERFORMED BY AWS CERTIFIED WELDERS AND IN ACCORDANCE WITH THE AMERICAN WELDING SOCIETY STANDARD D1.1, LATEST EDITION.
   B. UNLESS SHOWN OTHERWISE, PROVIDE STANDARD FRAMED OR SEATED BEAM CONNECTIONS AS SHOWN IN PART 4 OF THE AISC"MANUAL OF STEEL CONSTRUCTION".
   C. UNLESS GREATER REACTIONS ARE INDICATED ON THE PLANS, PROVIDE CONNECTIONS DEVELOPING AT LEAST ONE HALF OF THE TOTAL UNIFORM LOAD CAPACITY TABULATED IN THE TABLES OF THE AISC MANUAL FOR THE GIVEN SECTION AND SPAN OF THE BEAM. IN NO CASE SHALL THE LENGTH OF THE FRAMED CONNECTIONS BE LESS THAN ONE HALF THE "T" DIMENSION OF THE BEAM.
7. ERECTION: PROVIDE ADEQUATE EQUIPMENT TO PERFORM THE WORK WITHOUT DAMAGE TO PROPERTY AND PROVIDE COMPLETE SAFETY TO PUBLIC, WORKMEN AND PROPERTY.
8. CONTRACTOR SHALL SUBMIT ERECTION PLANS AND DETAIL SHOP DRAWINGS FOR REVIEW BY ENGINEER BEFORE FABRICATION.
9. THE CONTRACTOR SHALL NOT CUT OR ALTER IN ANY WAY THE STRUCTURAL MEMBERS WITHOUT THE APPROVAL OF THE ENGINEER.
10. GROUT UNDER ALL BASE PLATES AND BEARING PLATES WITH NON-SHRINK TYPE GROUT, MINIMUM COMPRESSIVE STRENGTH OF 7000 PSI AT 28 DAYS.
11. ASTM A1085 IS AN ACCEPTABLE SUBSTITUTION FOR ASTM A 500 HSS STRUCTURAL SHAPES.

CONCRETE

1. ALL REINFORCED CONCRETE WORK SHALL BE PERFORMED IN ACCORDANCE WITH
2. ACI 318, LATEST EDITION.
3. UNLESS NOTED OTHERWISE CONCRETE SHALL HAVE A 28 DAY COMPRESSIVE STRENGTH OF NO LESS THAN 4000 PSI.
4. CONCRETE IS TO BE CURED FOR A MINIMUM OF 7 DAYS BEFORE IMPOSING LOADS.
5. FOLLOW ACI RECOMMENDATIONS FOR PLACING CONCRETE IN COLD OR HOT WEATHER.
6. CONTRACTOR IS TO INSURE THAT ALL CONCRETE REINFORCEMENT IS INSTALLED PROPERLY AND PER THE PLANS BEFORE PLACING CONCRETE.
7. CONTRACTOR IS RESPONSIBLE FOR THE DESIGN AND FABRICATION OF ALL FORMWORK.
8. REBAR IS TO BE GRADE 60 PER ASTM A615
9. WELDED WIRE FABRIC IS TO BE PER ASTM 185.
10. MINIMUM COVER REQUIREMENT FOR ALL REINFORCING STEEL IS 3".
11. CAST IN PLACE CONCRETE SHALL BE NORMAL WEIGHT CONCRETE, (145± PCF)
12. PROVIDE ¾" X 45° CHAMFER ON ALL EXTERNAL CORNERS OF CONCRETE, UNLESS NOTED OTHERWISE ON THE DRAWINGS.

TRUSS NOTES (OPTIONS 1 & 3)

1. TRUSSES DESIGNED BY OTHERS. ATTACH EACH VALLEY TRUSS TO THE COMMON TRUSSES BELOW USING (1) SIMPSON VTC2 VALLEY TRUSS CLIP AT EACH END OF EACH VALLEY TRUSS.
2. TRUSS DESIGNER TO PROVIDE HANGERS FOR ALL TRUSSES ATTACHED TO TRUSS GIRDER.
3. ROOF DESIGN LOADS:
   A. TOP CHORD: DEAD LOAD: 15 PSF; LIVE LOAD: 16 PSF (4:12 SLOPE OR HIGHER)
   B. BOTTOM CHORD: DEAD LOAD: 8 PSF; LIVE LOAD: 20 PSF W/STORAGE; 10 PSF W/OUT STORAGE
4. LIVE LOAD DEFLECTION OF TRUSSES: L/240 MAXIMUM.
5. BRACE TRUSSES DURING ERECTION TO MAINTAIN PROPER POSITION AND SPACING.
6. PERMANENT LATERAL BRACING (MINIMUM):
   A. TOP CHORD: 2x4 @ 12'-0" O.C.
   B. BOTTOM CHORD: DIAGONAL AS PER MANUFACTURER'S RECOMMENDATIONS.
   C. WEBS: DIAGONAL AT MIDPOINTS AS PER MANUFACTURER'S RECOMMENDATIONS.
7. TRUSS BEARING ELEVATIONS TO BE DETERMINED BY ARCHITECT AND TRUSS DESIGNER.
8. PROVIDE PLATE CONNECTORS TO CONNECT TRUSS TO TRUSS OR TRUSS TO TRUSS GIRDER.
9. TRUSS MANUFACTURER IS RESPONSIBLE FOR FINAL DESIGN AND CONFIGURATION USING INDICATED LOADS. SUBMIT SHOP DRAWINGS FOR REVIEW BEFORE FABRICATION. PROVIDE HURRICANE STRAPS FOR UPLIFT FORCES PROVIDED BY TRUSS MANUFACTURER. SUBMIT TRUSS DESIGN CALCULATIONS SEALED BY A PROFESSIONAL ENGINEER LICENSED IN DELAWARE.
10. THE TOP CHORD OF THE GABLE END TRUSSES ARE TO BE FABRICATED 3-1/2" LOWER THAN THE TOP CHORD OF THE ADJACENT TRUSSES TO ACCOMMODATE 2x4 OUTRIGGERS SPACED AT 24" O.C., SEE ARCHITECTURAL DRAWINGS FOR EAVE LENGTH.
11. HURRICANE STRAPS:
   A. TYPICAL STRAPPING FOR TRUSSES - 780#: USE (1) SIMPSON H10
   B. TYPICAL STRAPPING FOR 2-PLY TRUSS GIRDER - 3570#: USE (2) SIMPSON LGT2
   C. WHEN TWO STRAPS ARE USED FOR THE SAME TRUSS, ATTACH STRAPS ON OPPOSITE SIDES OF THE WALL.
   D. REFER TO ROOF TRUSS SHOP DRAWINGS FOR UPLIFT LOADS.

ROOF SHEATHING (OPTIONS 1 & 3)

ALL ROOF SHEATHING TO BE MINIMUM 15/32" OR 1/2" APA RATED SHEATHING OR STRUCTURAL I SHEATHING WITH 10d COMMON NAILS (OR EQUIVALENT) SPACED @ 6" O.C. AT THE EDGES AND 12" O.C. IN THE FIELD; EDGE PANELS (EAVE OR GABLE) TO BE FASTENED WITH 8d OR 10d RING-SHANK NAILS SPACED @ 3" O.C. ON THE EDGES AND 9" O.C. IN THE FIELD.

HOISTS & WENCH

1. WINCH SHALL BE DUTTON-LAINSON B3503 BRAKE WINCH OR APPROVED EQUAL CAPABLE OF VERTICAL LIFTING APPLICATIONS WITH A 3 KIP MINIMUM CAPACITY AND AN AUTOMATIC STOP.
2. HOIST SHALL HAVE A 3 KIP MINIMUM CAPACITY.
3. CHAIN SHALL BE ½" DIAMETER GRADE 80 STEEL WITH A 9 KIP MINIMUM TENSILE LOAD CAPACITY OR APPROVED EQUAL.
4. ALL WINCHES, HOISTS, AND CHAINS SHALL BE ZINC-COATED OR GALVANIZED BY THE HOT DIP PROCESS IN ACCORDANCE WITH THE REQUIREMENTS OF ASTM A123 AND/OR ASTM A153 AS APPLICABLE AFTER FABRICATION. UNLESS OTHERWISE NOTED, FIELD TREAT DAMAGED GALVANIZED STEEL FINISH WITH TWO COATS OF HIGH ZINC DUST OXIDE PAINT, COLD GALVANIZED COMPOUNDS, OR APPROVED EQUAL CONFORMING TO THE REQUIREMENTS OF ASTM A 780.

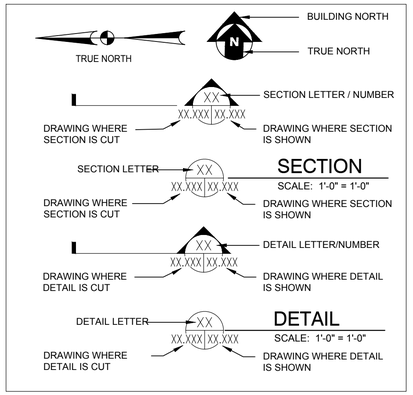

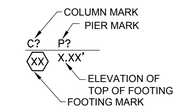

ABBREVIATIONS

ACI	AMERICAN CONCRETE INSTITUTE
AISC	AMERICAN INSTITUTE OF STEEL CONSTRUCTION
ASCE	AMERICAN SOCIETY OF CIVIL ENGINEERS
ASTM	AMERICAN SOCIETY OF TESTING AND MATERIALS
ARCH	ARCHITECT
BG	BELOW GRADE
C	CENTER LINE
COL	COLUMN
CJ	CONTROL JOINT
CONC.	CONCRETE
CONT.	CONTINUOUS
DOD	DEPARTMENT OF DEFENSE
DWG	DRAWING
ø	DIAMETER
EA	EACH WAY
ED	EDUCATION
EJ	EXPANSION JOINT
EW	EACH WAY
FS	FOOTING STEP
L	ANGLE
LLH	LONG LEG HORIZONTAL
LLV	LONG LEG VERTICAL
LONG	LONGITUDINAL
LW	LONG WAY
MP	MULTIPURPOSE
PAF	POWDER ACTUATED FASTENER
PSF	POUNDS PER SQUARE FOOT
PSI	POUNDS PER SQUARE INCH
RW	RETAINING WALL
SW	SHORT WAY
SSPC	STEEL STRUCTURES PAINTING COUNCIL
TRANS	TRANSVERSE
TYP	TYPICAL
UNO	UNLESS NOTED OTHERWISE
WWM	WELDED WIRE MESH

NO SCALE

S001

Unofficial Website Copy

Q:\NDE\151152_013_Statewide_Hopper_Roc\CADD\Structural\S001.dwg

DRAWING NOTES

1. CENTRAL AND CANAL DISTRICTS ONLY USE CHAINS FOR HOPPER SUSPENSION ATTACHMENT.

FOOTING SCHEDULE			
MARK	SIZE	THICK.	REINFORCING
F5	5'-0" x 5'-0"	1'-0"	7 #4 E.W. TOP & BOTT.

NOTE
PRESUMPTIVE ALLOWABLE SOIL BEARING PRESSURE = 1500PSF, TO BE VERIFIED IN FIELD BY A GEOTECHNICAL ENGINEER PRIOR TO CASTING FOOTING CONCRETE.

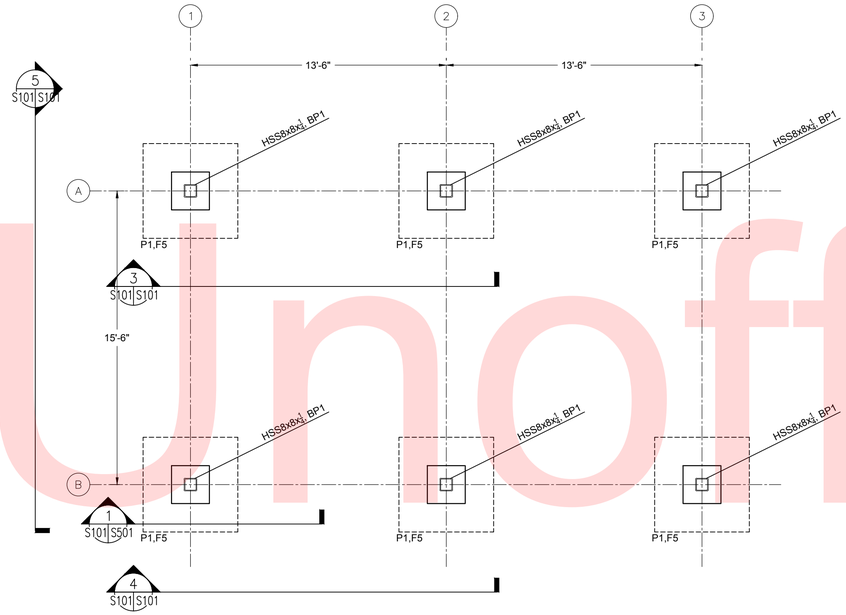

1 S101 S101 FOUNDATION PLAN

SCALE: 0'-1/4" = 1'-0"

NOTES:
1. HIGH POINT OF FINISH GRADE REF. ELEV.: 0'-0".
2. TOP OF PIER ELEVATION" +0'-6" ABOVE FINISH.
3. TOP OF FOOTING ELEVATION: -2'-0" BELOW FINISH GRADE AT FOOTING.
4. REF. SECTION 6 & 7/S501 FOR PIER & BASE PL. DETAILS.

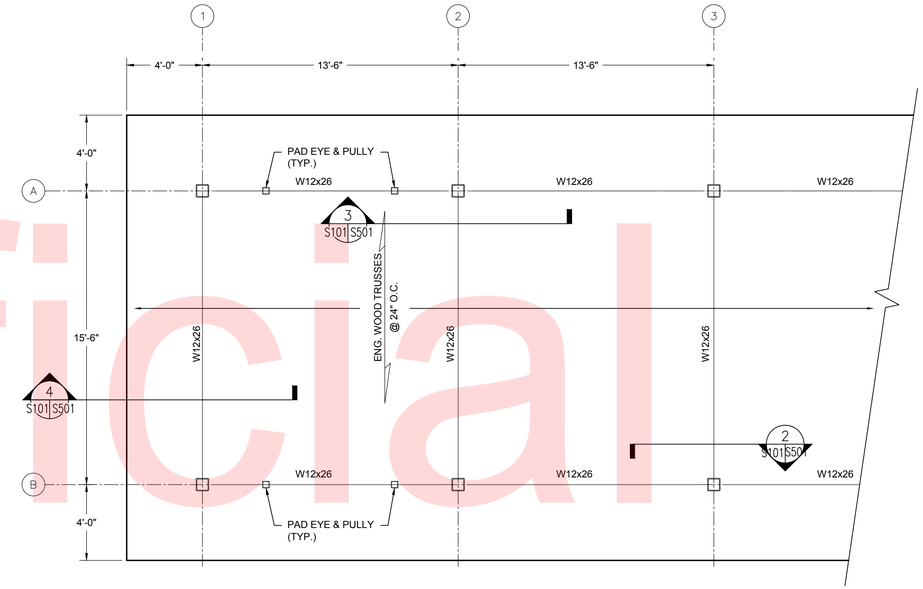

2 S101 S101 TYPICAL ROOF FRAMING PLAN

SCALE: 0'-1/4" = 1'-0"

NOTES:
1. ALL STEEL TO BE HOT-DIPPED GALVANIZED.
2. TOP OF STEEL ELEVATION: +15'-0" ABOVE HIGH POINT OF FINISH GRADE.
3. REF. 8, 9, & 10/S501 FOR PERMANENT TRUSS BRACING DETAILS.
4. ALL HANGING COMPONENTS TO HAVE MINIMUM ALLOWABLE CAPACITY OF 3000LBS. THIS INCLUDES: WINCHES, CHAIN, CABLES, PULLEYS, AND ALL ASSOCIATED ACCESSORIES.
5. PROVIDE MIN. 6' CHAIN AT ALL CHAIN HANGERS.

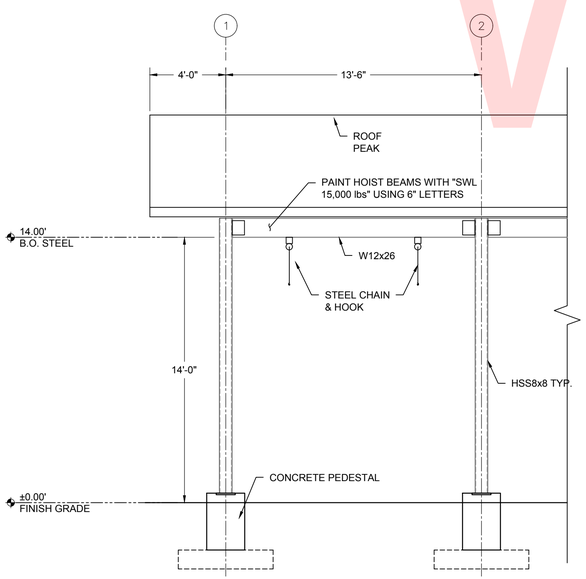

3 S101 S101 PARTIAL REAR ELEVATION

SCALE: 0'-1/4" = 1'-0"

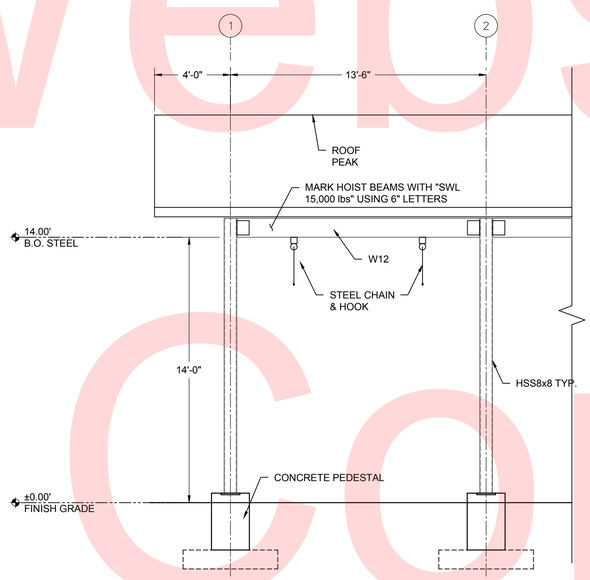

4 S101 S101 PARTIAL FRONT ELEVATION

SCALE: 0'-1/4" = 1'-0"

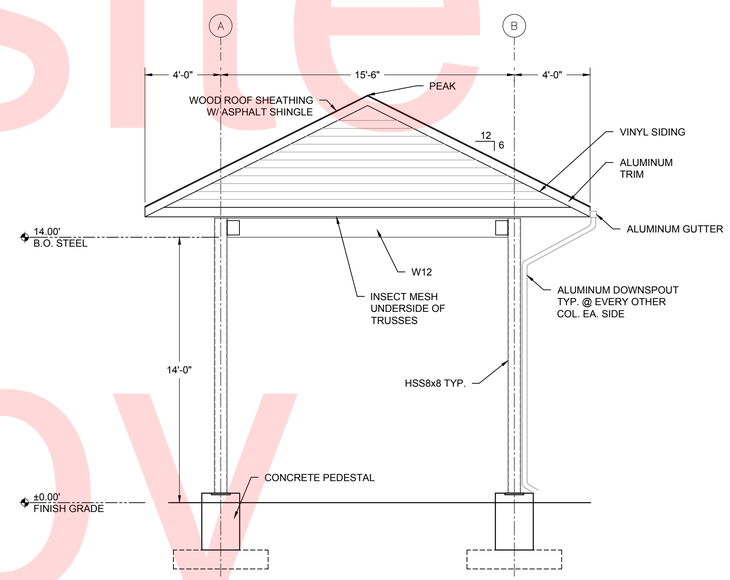

5 S101 S101 END ELEVATION

SCALE: 0'-1/4" = 1'-0"

S101

Unofficial Website Copy

Q:\WDE\15152_013_Statewide_Hopper_Rac\CADD\Structural\S101.dwg

DELAWARE DEPARTMENT OF TRANSPORTATION	ADDENDUMS / REVISIONS	AS SHOWN	STATEWIDE HOPPER RACKS FY18-20	CONTRACT T201780103 / COUNTY NEW CASTLE	BRIDGE NO. N/A / DESIGNED BY: CR / CHECKED BY: DO	FRAMING PLAN & ELEVATIONS 10 WHEEL TRUCK	SHEET NO. 6 / TOTAL SHTS. 10

DRAWING NOTES

1. CENTRAL AND CANAL DISTRICTS ONLY USE CHAINS FOR HOPPER SUSPENSION ATTACHMENT.

FOOTING SCHEDULE			
MARK	SIZE	THICK.	REINFORCING
F5	5'-0" x 5'-0"	1'-0"	7 #4 E.W. TOP & BOTT.

NOTE
PRESUMPTIVE ALLOWABLE SOIL BEARING PRESSURE = 1500PSF, TO BE VERIFIED IN FIELD BY A GEOTECHNICAL ENGINEER PRIOR TO CASTING FOOTING CONCRETE.

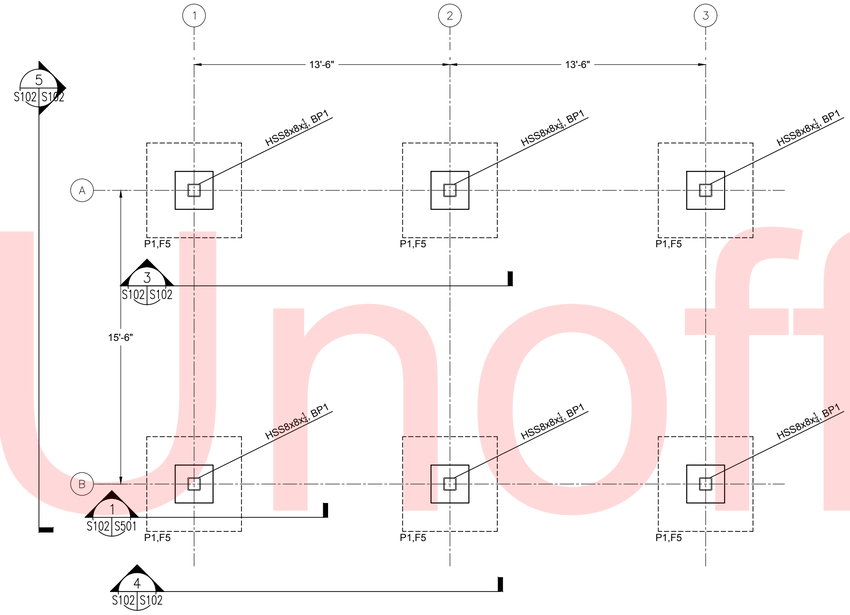

1 S102 S102 FOUNDATION PLAN

SCALE: 0'-1/4" = 1'-0"

NOTES:
1. HIGH POINT OF FINISH GRADE REF. ELEV.: 0'-0".
2. TOP OF PIER ELEVATION" +0'-6" ABOVE FINISH.
3. TOP OF FOOTING ELEVATION: -2'-0" BELOW FINISH GRADE AT FOOTING.
4. REF. SECTION 6 & 7/S501 FOR PIER & BASE PL. DETAILS.

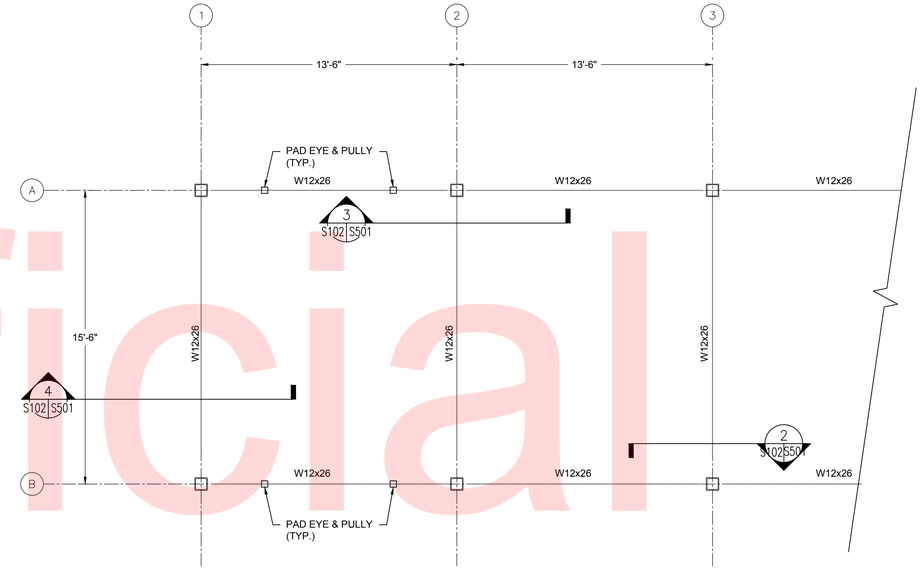

2 S102 S102 TYPICAL ROOF FRAMING PLAN

SCALE: 0'-1/4" = 1'-0"

NOTES:
1. ALL STEEL TO BE HOT-DIPPED GALVANIZED.
2. TOP OF STEEL ELEVATION: +15'-0" ABOVE HIGH POINT OF FINISH GRADE.
3. ALL HANGING COMPONENTS TO HAVE MINIMUM ALLOWABLE CAPACITY OF 3000LBS. THIS INCLUDES: WINCHES, CHAIN, CABLES, PULLEYS, AND ALL ASSOCIATED ACCESSORIES.
4. PROVIDE MIN. 6' CHAIN AT ALL CHAIN HANGERS.

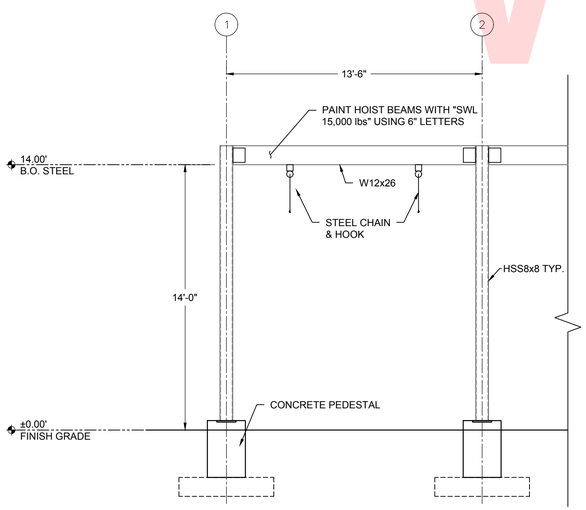

3 S102 S102 PARTIAL REAR ELEVATION

SCALE: 0'-1/4" = 1'-0"

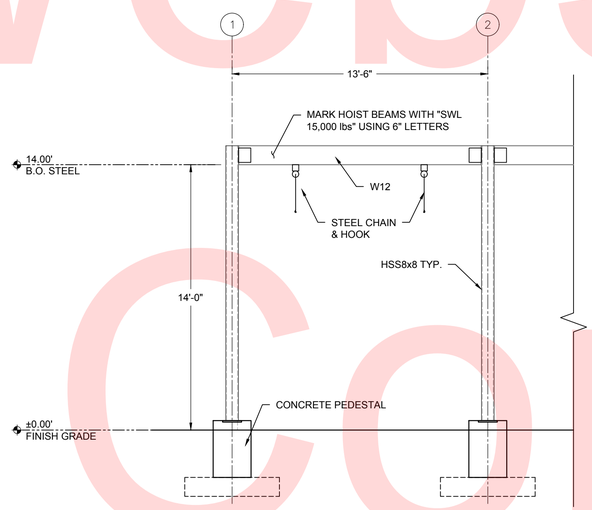

4 S102 S102 PARTIAL FRONT ELEVATION

SCALE: 0'-1/4" = 1'-0"

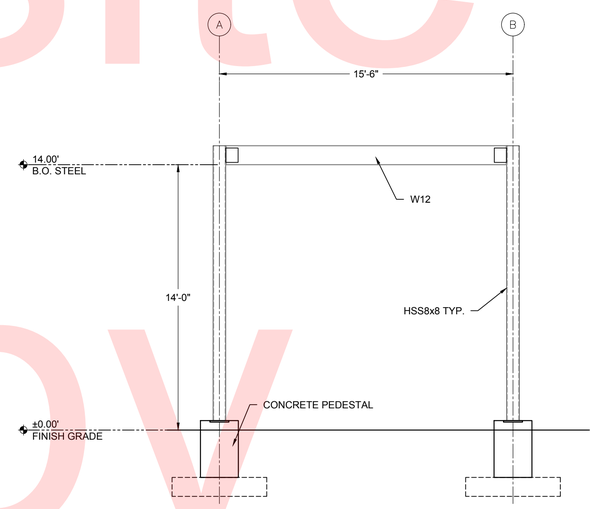

5 S102 S102 END ELEVATION

SCALE: 0'-1/4" = 1'-0"

Unofficial Website Copy

Q:\WDE\151152_013_Statewide_Hopper_Rec\CADD\Structural\S102.dwg

S102

DELAWARE DEPARTMENT OF TRANSPORTATION	ADDENDUMS / REVISIONS	AS SHOWN	STATEWIDE HOPPER RACKS FY18–20	CONTRACT T201780103	BRIDGE NO. N/A	FRAMING PLAN & ELEVATIONS 10 WHEEL TRUCK	SHEET NO. 7
				COUNTY NEW CASTLE	DESIGNED BY: CR		TOTAL SHTS. 10
					CHECKED BY: DO		

DRAWING NOTES

1. CENTRAL AND CANAL DISTRICTS ONLY USE CHAINS FOR HOPPER SUSPENSION ATTACHMENT.

FOOTING SCHEDULE			
MARK	SIZE	THICK.	REINFORCING
F5	5'-0" x 5'-0"	1'-0"	7 #4 E.W. TOP & BOTT.

NOTE
PRESUMPTIVE ALLOWABLE SOIL BEARING PRESSURE = 1500PSF, TO BE VERIFIED IN FIELD BY A GEOTECHNICAL ENGINEER PRIOR TO CASTING FOOTING CONCRETE.

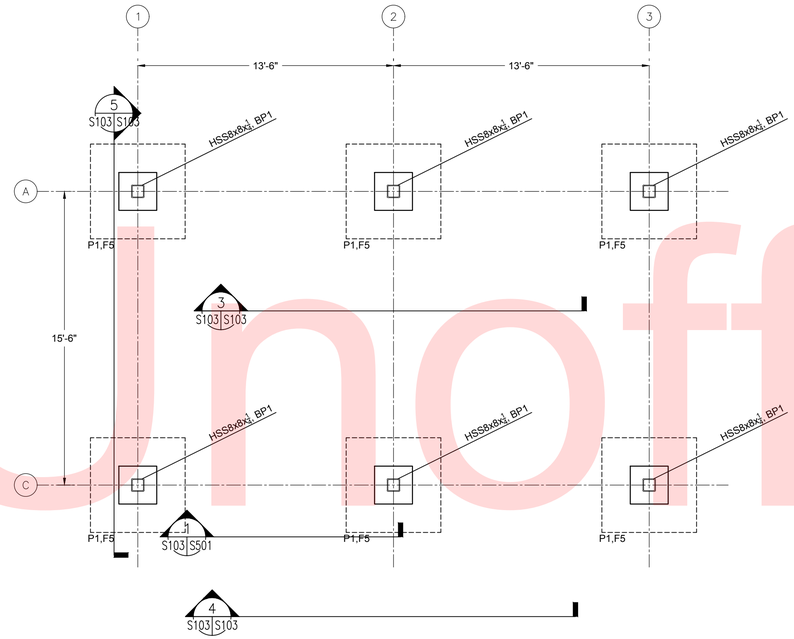

1 FOUNDATION PLAN
S103 S103 SCALE: 0'-1/4" = 1'-0"

NOTES:
1. HIGH POINT OF FINISH GRADE REF. ELEV.: 0'-0".
2. TOP OF PIER ELEVATION" +0'-6" ABOVE FINISH.
3. TOP OF FOOTING ELEVATION: -2'-0" BELOW FINISH GRADE AT FOOTING.
4. REF. SECTION 6 & 7/S501 FOR PIER & BASE PL. DETAILS.

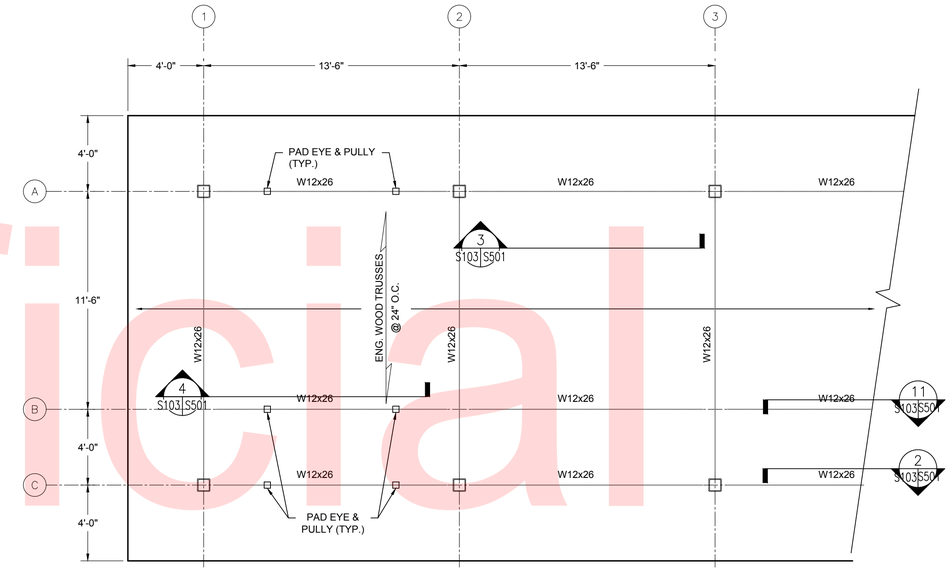

2 TYPICAL ROOF FRAMING PLAN
S103 S103 SCALE: 0'-1/4" = 1'-0"

NOTES:
1. ALL STEEL TO BE HOT-DIPPED GALVANIZED.
2. TOP OF STEEL ELEVATION: +15'-0" ABOVE HIGH POINT OF FINISH GRADE.
3. REF. 8, 9, & 10/S501 FOR PERMANENT TRUSS BRACING DETAILS.
4. ALL HANGING COMPONENTS TO HAVE MINIMUM ALLOWABLE CAPACITY OF 3000LBS. THIS INCLUDES: WINCHES, CHAIN, CABLES, PULLEYS, AND ALL ASSOCIATED ACCESSORIES.
5. PROVIDE MIN. 6' CHAIN AT ALL CHAIN HANGERS.

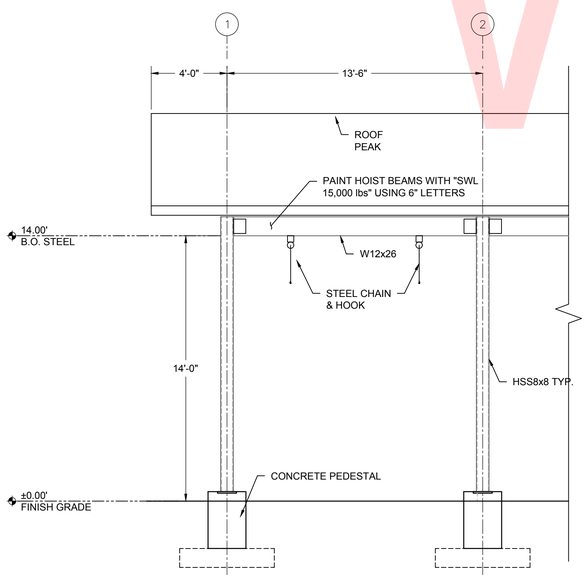

3 PARTIAL REAR ELEVATION
S103 S103 SCALE: 0'-1/4" = 1'-0"

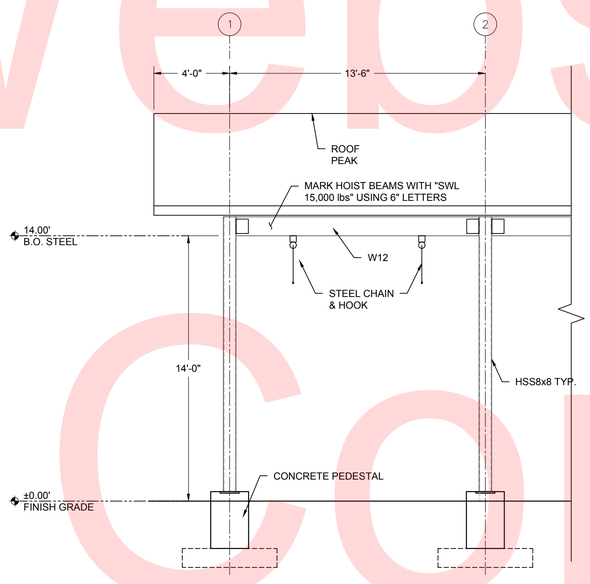

4 PARTIAL FRONT ELEVATION
S103 S103 SCALE: 0'-1/4" = 1'-0"

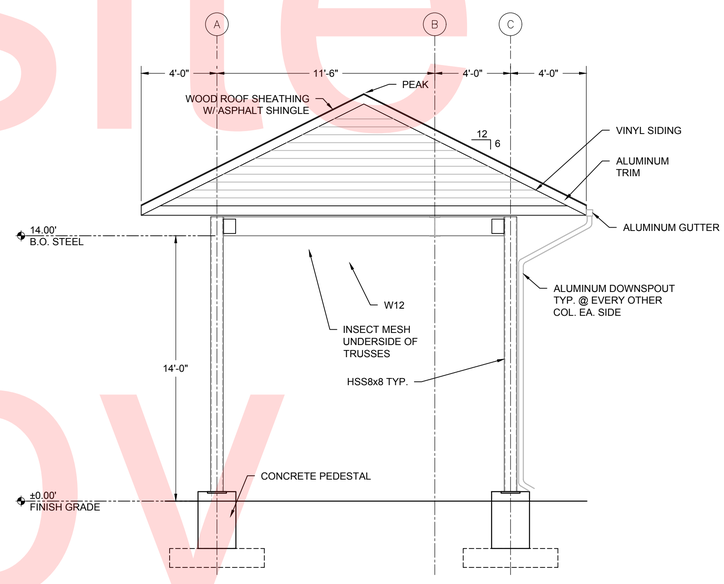

5 END ELEVATION
S103 S103 SCALE: 0'-1/4" = 1'-0"

Unofficial Website Copy

Q:\WDE\151152_013_Statewide_Hopper_Rac\CADD\Structural\S103.dwg

S103

DELAWARE DEPARTMENT OF TRANSPORTATION	ADDENDUMS / REVISIONS	AS SHOWN	STATEWIDE HOPPER RACKS FY18-20	CONTRACT T201780103 / COUNTY NEW CASTLE	BRIDGE NO. N/A / DESIGNED BY: CR / CHECKED BY: DO	FRAMING PLAN & ELEVATIONS 6 WHEEL TRUCK	SHEET NO. 8 / TOTAL SHTS. 10

DRAWING NOTES

1. CENTRAL AND CANAL DISTRICTS ONLY USE CHAINS FOR HOPPER SUSPENSION ATTACHMENT.

FOOTING SCHEDULE

MARK	SIZE	THICK.	REINFORCING
F5	5'-0" x 5'-0"	1'-0"	7 #4 E.W. TOP & BOTT.

NOTE
PRESUMPTIVE ALLOWABLE SOIL BEARING PRESSURE = 1500PSF, TO BE VERIFIED IN FIELD BY A GEOTECHNICAL ENGINEER PRIOR TO CASTING FOOTING CONCRETE.

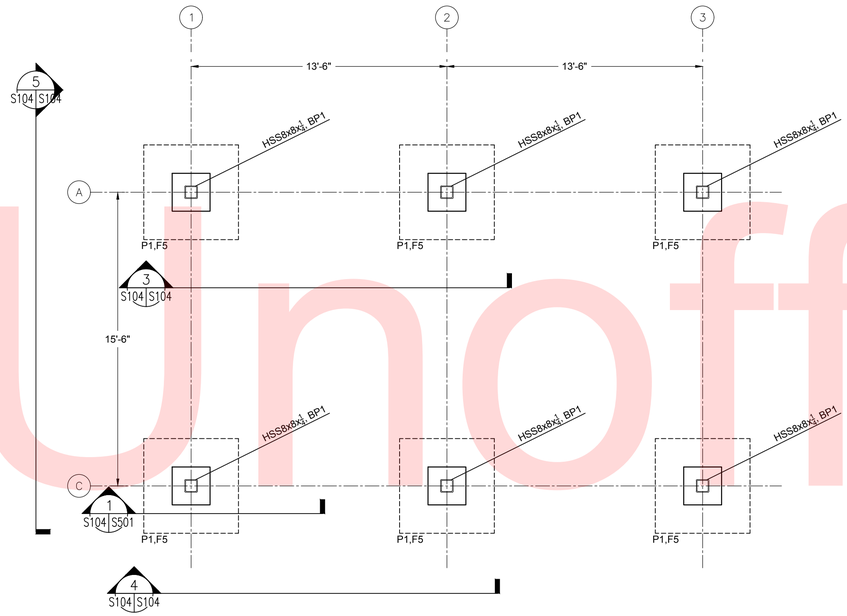

1 S104 S104 FOUNDATION PLAN

SCALE: 0'-1/4" = 1'-0"

NOTES:
1. HIGH POINT OF FINISH GRADE REF. ELEV.: 0'-0".
2. TOP OF PIER ELEVATION" +0'-6" ABOVE FINISH.
3. TOP OF FOOTING ELEVATION: -2'-0" BELOW FINISH GRADE AT FOOTING.
4. REF. SECTION 6 & 7/S501 FOR PIER & BASE PL. DETAILS.

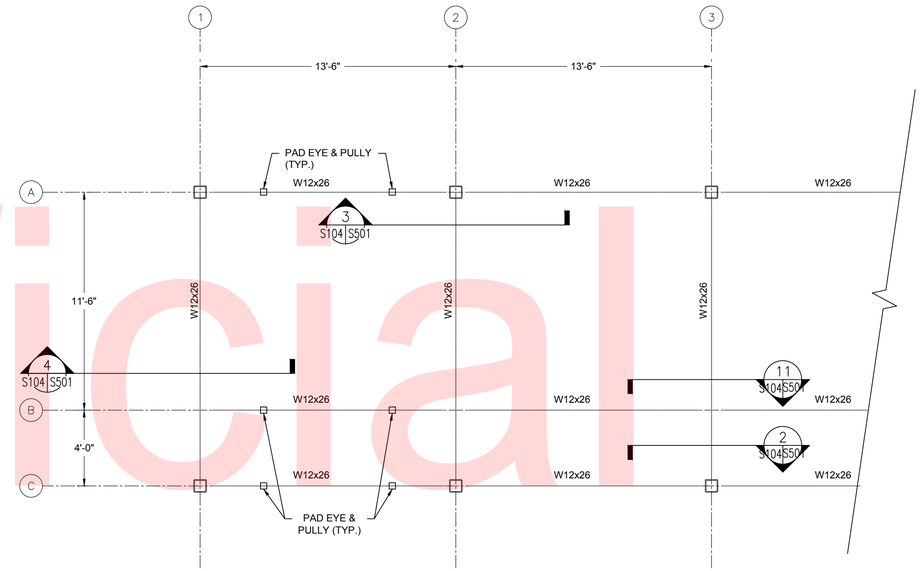

2 S104 S104 TYPICAL ROOF FRAMING PLAN

SCALE: 0'-1/4" = 1'-0"

NOTES:
1. ALL STEEL TO BE HOT-DIPPED GALVANIZED.
2. TOP OF STEEL ELEVATION: +15'-0" ABOVE HIGH POINT OF FINISH GRADE.
3. ALL HANGING COMPONENTS TO HAVE MINIMUM ALLOWABLE CAPACITY OF 3000LBS. THIS INCLUDES: WINCHES, CHAIN, CABLES, PULLEYS, AND ALL ASSOCIATED ACCESSORIES.
4. PROVIDE MIN. 6' CHAIN AT ALL CHAIN HANGERS.

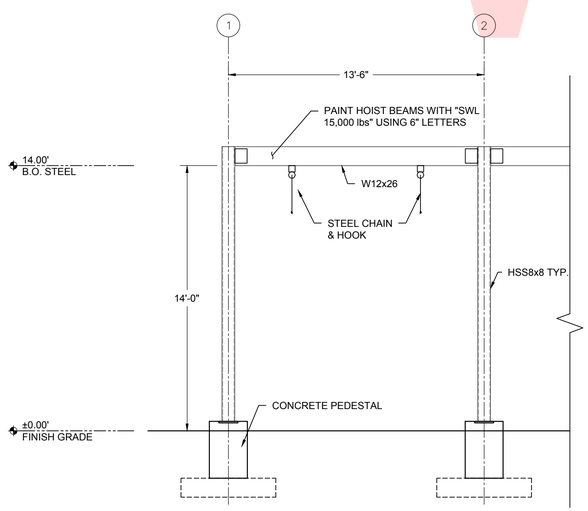

3 S104 S104 PARTIAL REAR ELEVATION

SCALE: 0'-1/4" = 1'-0"

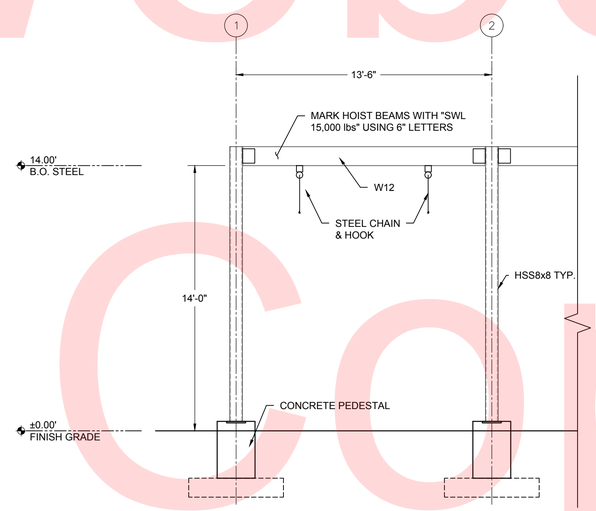

4 S104 S104 PARTIAL FRONT ELEVATION

SCALE: 0'-1/4" = 1'-0"

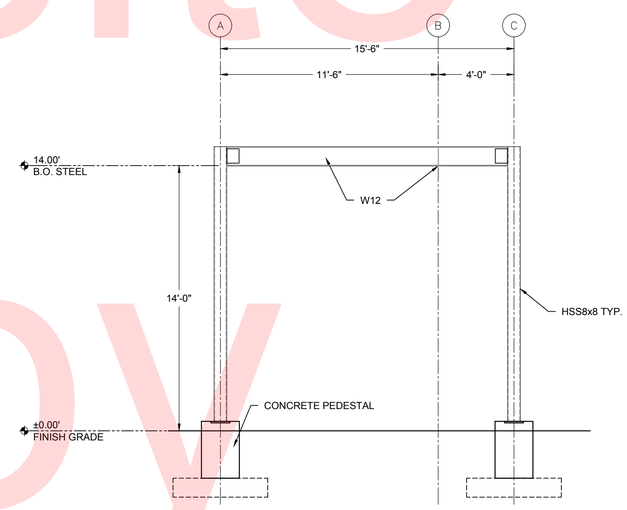

5 S104 S104 END ELEVATION

SCALE: 0'-1/4" = 1'-0"

Unofficial Website Copy

Q:\WDE\151152_013_Statewide_Hopper_Rac\CADD\Structural\S104.dwg

DELAWARE DEPARTMENT OF TRANSPORTATION	ADDENDUMS / REVISIONS	AS SHOWN	STATEWIDE HOPPER RACKS FY18–20	CONTRACT T201780103 / COUNTY NEW CASTLE	BRIDGE NO. N/A / DESIGNED BY: CR / CHECKED BY: DO
FRAMING PLAN & ELEVATIONS 6 WHEEL TRUCK	SHEET NO. 9 / TOTAL SHTS. 10				

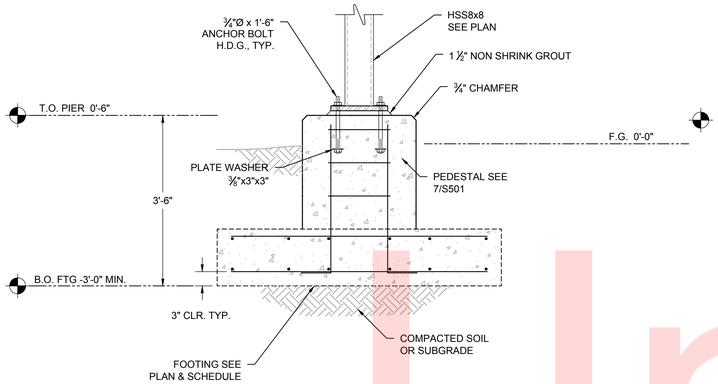

1 SECTION
S101/S102/S501 S103/S104
SCALE: 3/4" = 1'-0"

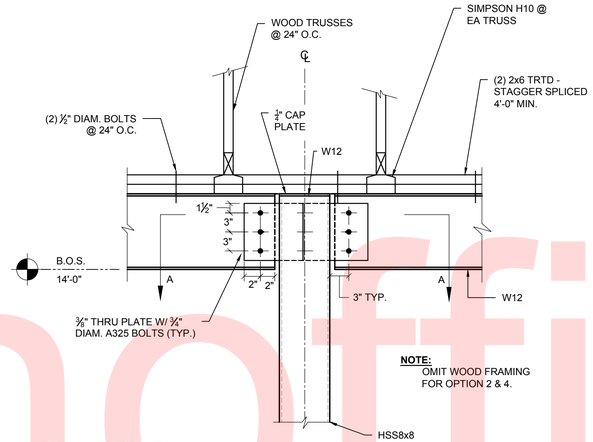

NOTE:
OMIT WOOD FRAMING FOR OPTION 2 & 4.

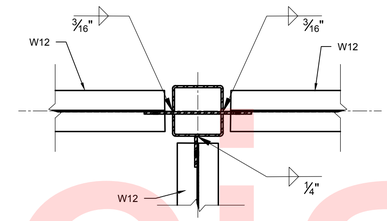

SECT A-A

2 SECTION
S101/S102/S103/S104 S501
SCALE: 1" = 1'-0"

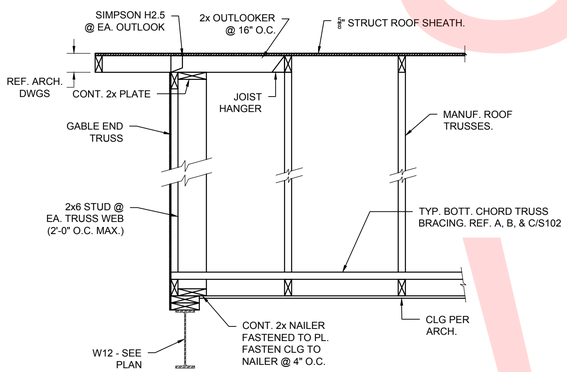

4 TYPICAL GABLE END
S101/S103 S501
SCALE: 3/4" = 1'-0"
ONLY FOR OPTION 1 & 3, PER S101 AND S103.

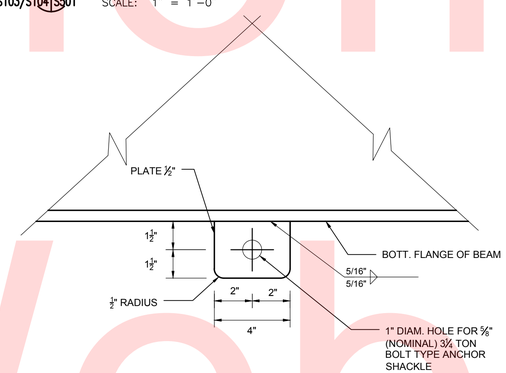

5 TYPICAL PAD EYE
S501 S501
SCALE: 3" = 1'-0"

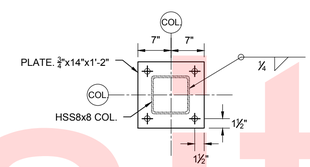

6 BASE PL. BP1
S501 S501
SCALE: 3/4" = 1'-0"

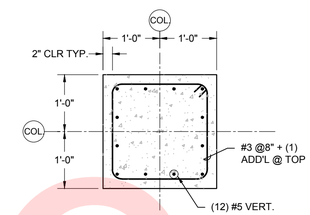

7 PEDESTAL
S501 S501
SCALE: 3/4" = 1'-0"

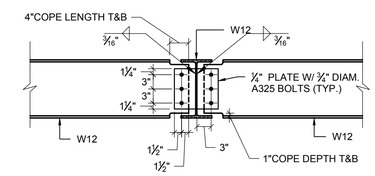

11 SECTION - BEAM/GIRDER CONN.
S103/S104 S501
SCALE: 3/4" = 1'-0"

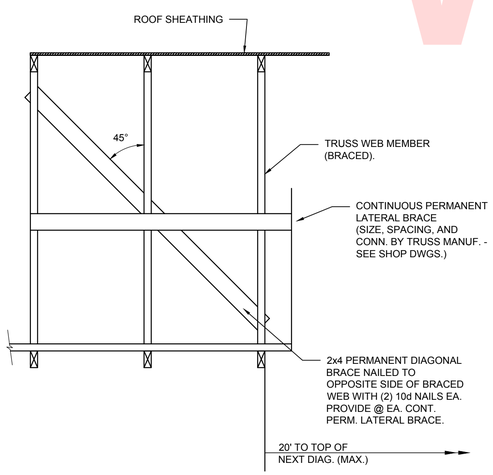

8 PERM. DIAG. BRACE @ CONT. PERM. LAT. BRACE
S501 S501
SCALE: 3/4" = 1'-0"
ONLY FOR OPTION 1 & 3, PER S101 AND S103.

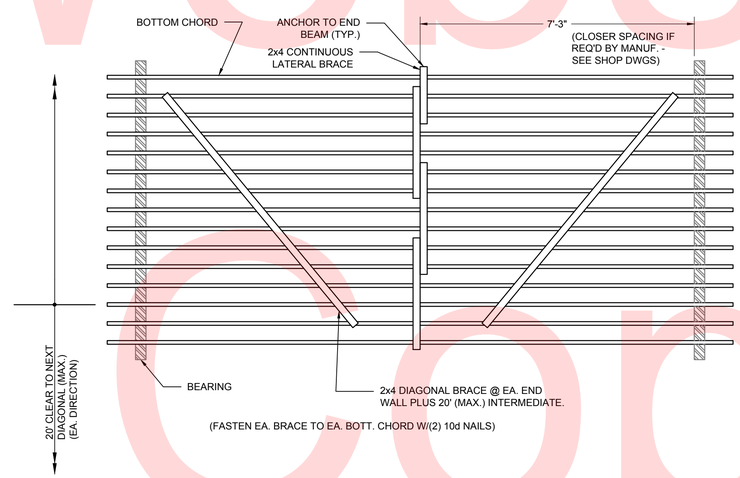

9 PERM. DIAG. BRACE @ CONT. PERM. LAT. BRACE
S501 S501
SCALE: 3/4" = 1'-0"
ONLY FOR OPTION 1 & 3, PER S101 AND S103.

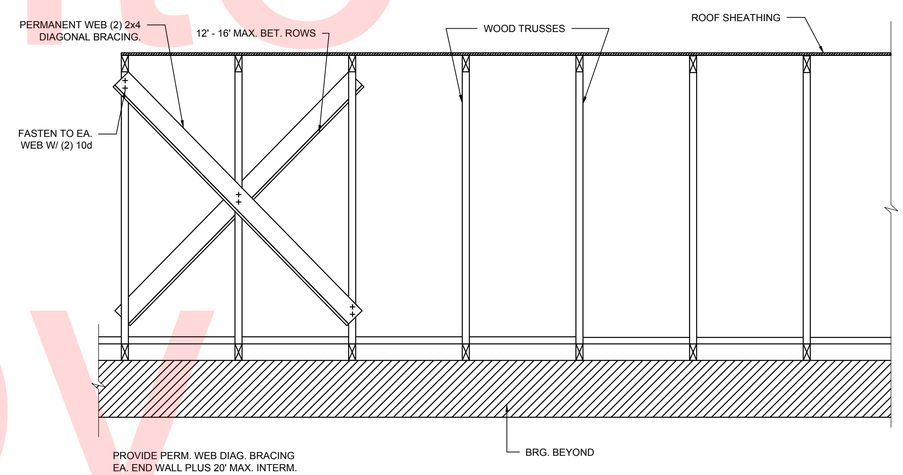

10 PERM. DIAG. BRACE @ CONT. PERM. LAT. BRACE
S501 S501
SCALE: 3/4" = 1'-0"
ONLY FOR OPTION 1 & 3, PER S101 AND S103.

S501

Unofficial Website Copy

Q:\WDE\151152_013_Statewide_Hopper_Rac\CADD\Structural\S501.dwg

DELAWARE DEPARTMENT OF TRANSPORTATION	ADDENDUMS / REVISIONS	AS SHOWN	STATEWIDE HOPPER RACKS FY18–20	CONTRACT T201780103 / COUNTY NEW CASTLE	BRIDGE NO. N/A / DESIGNED BY: CR / CHECKED BY: DO	TYPICAL DETAILS & SECTIONS	SHEET NO. 10 / TOTAL SHTS. 10