THE STATE OF DELAWARE

DEPARTMENT OF TRANSPORTATION

MAINTENANCE AND OPERATIONS

CONSTRUCTION PLANS AND SPECIFICATIONS FOR

GUARDRAIL UPGRADES, NEW CASTLE COUNTY, OPEN END, FY19-21,

RE-ADVERTISED

UNOFFICIAL WEBSITE COPY

CONTRACT NUMBER - T201887701.03 **PRIMAVERA ID – 18-22006**

FEDERAL AID NUMBER - ESTP-2018(20) **COUNTY: NEW CASTLE**

PLANS PREPARED BY: _____

DESIGNER

_____ 10/8/18

NORTH DISTRICT DESIGN ENGINEER DATE

NATHAN S. DRAPER
LICENSE
No. 21487
DELAWARE
PROFESSIONAL ENGINEER

APPROVED FOR ADVERTISEMENT

_____ 10/9/18

DIRECTOR OF MAINTENANCE AND OPERATIONS DATE

CONTRACT DESCRIPTION

The purpose of this Contract is to repair damaged guardrail, guardrail components, end treatments, and crash cushions as required for all State maintained roads within DelDOT North District. This includes interstate roads I-95, I-295 and I-495, and all other State maintained roads within North District. The work shall include but not be limited to Maintenance of Traffic, removal of damaged guardrail, components and end treatments, repair/replacement of damaged guardrail, components and end treatments/crash cushions, topsoil, seeding and mulching as required or directed by the Engineer on the individual work orders.

The specific work sites are not listed herein, but will be assigned as available by North District Maintenance.

The Contract also includes removal of existing guardrail turned down ends, replacement with new attenuators, curb removal and replacement, and related paving and grading. The locations for the turned down removal work are open end and will be located throughout New Castle County in both North and Canal Maintenance Districts. Plans will be provided once locations are determined.

The Contract also includes the replacement/upgrading of crash cushions statewide, and the possibility of installing wire rope guardrail statewide, pricing will be negotiated as needs arise.

UNOFFICIAL WEBSITE COPY

GENERAL NOTES

1. All work shall be performed in accordance with the Delaware Department of Transportation Standard Specifications dated August 2016 (as amended by the Supplemental Specifications), the DelDOT Special Provisions, the Standard Construction Details, the current Delaware MUTCD (including revisions up to the day of contract advertising), and these project notes.

2. This contract shall be for a period of three (3) years from the date of Initial Notice to Proceed, with the option to extend the contract for one (1) additional one-year period. The one-year extension must be approved by both parties in writing, at least 30 days prior to the expiration of the existing contract. The Performance Bond shall be submitted with the contract extension and shall be subject to any such agreed upon renewal for the extension period. Failure on the part of the Contractor to submit the Performance Bond for the extension period prior to the last working day before end of the previous period may result in the contract being cancelled. It shall be the contractor's responsibility to obtain the forms necessary to renew the Performance Bond each year the contract is in force.

3. An updated Performance Bond shall be submitted at the beginning of each fiscal year. Failure on the part of the Contractor to submit the Performance Bond shall result in the Contract being cancelled. Costs to be included in the price bid for Item 763000 (Initial Expense).

4. Whenever the word "Contractor" is used in this contract, it shall refer to the person or persons, company or corporation furnishing the services required.

5. Whenever the word "Department" or "Engineer" is used, it shall refer to the person or persons, representing the Delaware Department of Transportation (DelDOT).

6. Tasking of work for Fiscal Years relevant to this contract is contingent upon authorization of Federal and State funding.

7. Section 101.03 "Working Day" definition is amended. There will not be a winter shutdown from December 16th to March 15th. The Department reserves the right to issue work and charge time between these dates.

8. No utility relocation involvement is anticipated. Should any conflicts be encountered during construction requiring adjustment and/or relocation of the agencies' existing facilities, the necessary relocation work shall be accomplished by the respective agencies' forces, as directed by the Engineer. Any adjustments and/or relocations of municipally owned facilities shall be done by the State's contractor in accordance with the respective agencies' standard specifications as directed by the Engineer.

9. No environmental permits are required for this work provided no jurisdictional wetlands or waters are impacted. If there is any question as to whether or not a water or wetland is jurisdictional, contact the DelDOT Environmental Section at (302) 760-2264. In the event that a jurisdictional water or wetland is impacted, the Environmental Studies Section will be responsible for securing the appropriate permit authorizations.

10. Work within waters/wetlands shall not begin on locations requiring environmental permits until all applicable permits have been obtained by DelDOT. Confirm permit status with DelDOT Engineer prior to commencement of applicable work.

11. It is anticipated that all work will occur within DelDOT's existing right of way or easement areas. Should the need occur to trespass onto private property; it will be the responsibility of the DelDOT Project Manager to secure such trespass needs.

UNOFFICIAL WEBSITE COPY

12. It is anticipated that all work will occur within DelDOT's right of way. Should the need occur to trespass onto railroad property, including highway-rail crossings; please contact DelDOT's railroad coordinator.

13. The Project Manager is responsible for ensuring any required documents and analysis as part of the adopted Work Zone Safety and Mobility Procedures and Guidelines has been completed prior to any work starting on this contract.

14. Underground and aerial utilities may be present at all locations. Therefore, all standard practices and procedures regarding utilities shall be followed. The Contractor shall contact Miss Utility of Delaware prior to starting each work order. The Contractor is responsible for the support and protection of all utilities when excavating. The Contractor is responsible for ensuring proper clearances, including safety clearances, from overhead utilities for construction equipment. The Contractor is advised to check the site for access purposes for his equipment, and make arrangements directly with utility companies for field adjustments for adequate clearances if necessary.

15. Contractor shall comply with DelDOT Standard Construction Details for all work performed in this Contract.

16. The Contractor shall not trespass on private property unless the District has acquired a "Temporary Trespass Agreement" from the property owner. If the work is within a permanent easement, the work shall not begin until the adjacent property owners have been notified. Prior to starting work on private property, the Contractor shall notify affected property owners of proposed work dates.

17. Work located within Municipalities requires a Town Agreement. Contact DelDOT TEAM Support section at (302) 760-2251 prior to commencing work within Municipalities to process a town agreement.

18. Excavated material not needed on the project shall be removed from the site at the Contractor's expense.

19. Clearing and grubbing of weeds, trees and shrubs less than 6 inches in diameter shall be incidental to the applicable repair or replacement item. Grubbing activities performed in wetland areas requires environmental permit approvals obtained by DelDOT prior to commencement of work.

UNOFFICIAL WEBSITE COPY

20. The Contractor shall provide residents 24-hour prior written notice for all phases of contract work. This notice shall be given to all residents whose property is adjacent to the street on which work is to be performed. Failure to give notice will result in a suspension of work.

21. The Contractor shall acquire all necessary materials and equipment prior to starting work at a specific location. The equipment and material shall remain accessible and on-site until completion of work at that particular location unless prior approval from the Engineer is given.

22. Grass and soil areas within State right-of-way that have been damaged by equipment during this Contract shall be restored with topsoil, seed and mulch at Contractor's own expense to the satisfaction of the Engineer.

23. Delete Section 104.06 of the DelDOT Standard Specifications, and replace with the following:

UNOFFICIAL WEBSITE COPY

The Department reserves the right to, at any time prior to completion of the contract, issue plan revisions, make adjustments in Contract item quantities, or make such alterations considered necessary to satisfactorily complete the Contract.

The Department reserves the right to increase or decrease the quantities of Pay Items specified in the Contract. Such additions or deletions shall not be cause for an increase or decrease in Contract unit bid prices. The "Change" threshold of plus or minus 25%, as described in Subsection 104.06 of the DelDOT Standard Specifications dated August 2016 shall not apply to this Contract. Quantity increases or decreases of plus or minus 25% or greater shall not be justification for adjustments to unit prices.

The plan revisions and quantity adjustments described above do not invalidate the Contract or release the Contract surety. Payment for these changes shall exclude any amount for loss of anticipated profits alleged to result from the change.

When payment for the Contract work cannot be agreed upon by the Contractor and the Department prior to starting such work ordered, the Department may direct the Contractor to perform the work under Force Account provisions of Subsection 109.04. The Contractor will proceed immediately with the work so ordered and such direction shall neither invalidate the Contract, nor release the surety.

24. All additional work shall be performed using Contract unit bid prices. When contract unit bid prices are not available, then prices will be negotiated or performed by Force Account procedures in accordance with Section 109.04 of the DelDOT Standard Specifications.

25. Performance and Progress of Work:

The Contractor shall commence on work indicated on the work order no later than the fifth (5th) business day after issuance unless required materials are not available. Non-availability of materials shall be verified by at least three (3) different sources. Verification shall be formal and supplied by the Contractor in writing.

Issuance of each work order constitutes the notice to proceed with the work described on the work order.

If there is a verified non-availability of materials, time charges shall commence on the first (1st) working day following the delivery date of materials.

Failure to start assigned work orders in the allowed time constitutes "Failure to Pursue the Work" and subjects the Contractor to Liquidated damages as outlined in Section 108.08 of the Standard Specifications. If work on a specific work order is not completed within the allotted time, Liquidated Damages will be assessed in accordance with Subsection 108.09 and based on the total value of that work order.

Each work order shall be considered a separate unit of work. The Engineer will make payment monthly for the completed invoices as outlined in Section 109.07. Upon the substantial completion of the work at an individual location, the Engineer will stop time at that location and perform a semi-final inspection for the work order location in accordance with Subsection 105.16. The Engineer reserves the right to require the Contractor to add Work or make repairs to completed locations at the Engineer's expense until such a location has been accepted by the Department. The Contractor must repair all defects in the work caused by poor workmanship or materials at his/her own expense until the Department accepts the Contract after the Final Inspection.

UNOFFICIAL WEBSITE COPY

A Semi-Final and Final Inspection will be completed on an annual basis for work orders completed in a calendar year. Upon satisfactory completion of the Final Punchlist, the Department will accept the location and release the Contractor from responsibility for the Work at that location. If a work order is sufficiently large and complex as determined by the Engineer, a Final Inspection may be held upon the individual completion of that work order.

26. The Contractor is reminded that Section 105.07 of the Standard Specifications requires the Contractor to maintain a competent Superintendent or Foreman on the job site at all times.

27. Payment will be monthly for the completed work as outlined in Section 109.07.

28. Payment for re-setting of posts knocked out of position is incidental to the applicable rail item, there will be no additional pay for re-setting posts knocked out of position.

29. Backfill of holes created by post removal, in compacted lifts, providing and installing rail backup plates, bolts, nuts, and washers, providing and setting up traffic cones and/or patterns are incidental to the Bid Items. Cost for the placement of one-third (1/3) of a cubic yard of Portland

Cement Concrete around the base of unstable posts, as directed by the Engineer, is incidental to the unit price bid for Item 720006, Galvanized Steel Post or Item 720549, Galvanized Steel Post, extra-length. Cost for excavating and disposing of up to one (1) cubic yard of material and/or grading (up to a 6" depth) to meet the manufacturer's slope requirements is incidental to the unit price bid for Items 721001, 721003, or 721004. If excavation in excess of one (1) cubic yard is required, then the entire excavation necessary to meet the grading requirements at the location in question will be measured and paid for under item 202000, Excavation and Embankment. If additional borrow is needed to construct the required grading zone, payment shall be made under Item 209006 (Borrow, Type F).

30. For the purpose of this Contract, the replacement guardrail type and location shall be identical to the damaged guardrail, except in the instances when an upgrade to the current standard of guardrail is deemed necessary, or when otherwise directed by the Engineer. The Engineer shall determine for the Contractor what, if any, guardrail elements shall be reused on each project. Any guardrail elements not to be reused, as determined by the Engineer, become the property of the Contractor. Removal and legal disposal of the unused elements, including, but not limited to, rails, posts, end attachments, and anchors are the responsibility of the Contractor with costs incidental to the item being repaired. Certain types of rope guardrail hardware, however, will become the Department's property, as specified by the Engineer.

UNOFFICIAL WEBSITE COPY

31. Night work may be required in certain locations, no additional payment outside Portable Light Assembly (Item 804001) is warranted or applicable. Night work is considered a part of this Contract.

32. GUARDRAIL/END TREATMENT/ATTENUATOR, TYPE I

All bolts, washers and nuts shall be incidental to repairs.

a) LEVEL I REPAIR

A Level I Repair shall be used when the Attenuator is damaged up to, but not including, the third post.

The following Items shall be reused or replaced at the discretion of the Engineer:

A Level I Repair shall consist of the following:

Guardrail Extruder	(Reuse)
Bearing Plate	(Reuse)
Assembly Cable	(Reuse)
Strut	(Reuse)

Cable Anchor	(Reuse)
Deep Beam Guardrail	(Replace)
Wood Post	(Replace)
Impact Head	(Reuse)
Ground Strut	(Reuse)
W-Beam Guardrail End	(Replace)

b) LEVEL II REPAIR

A Level II Repair shall be used when the Attenuator is damaged up to but not including the fifth post. The following Items shall be replaced unless otherwise directed by the Engineer.

All Items specified in Level I Repair plus the following:

Wood Block (Replace)

c) LEVEL III REPAIR

A Level III Repair shall be a complete replacement of the attenuator unit.

UNOFFICIAL WEBSITE COPY

31. GUARDRAIL/END TREATMENT ATTENUATOR TYPE II

All bolts, washers and nuts shall be incidental to repairs.

a) LEVEL I REPAIR

A Level I Repair for Impact Attenuator Type II shall be used when the Attenuator is damaged to but not past the second post. The following Items shall be replaced, unless otherwise directed by the Engineer:

Barrier (Terminal)
Strut Assembly
Cable

Cable Anchor Bracket

Back up Plate
Post
Bearing Plate
Pipe
Guardrail

b) LEVEL II REPAIR

A Level II Repair for Impact Attenuator Type II shall be used when the Attenuator is damaged to but not past the third post. The following Items shall be replaced, unless otherwise directed by the Engineer.

Posts

Block
Back up Plate
Guardrail

c) LEVEL III REPAIR

Shall be the complete replacement of the damaged unit, which shall include parts and labor to bring unit up to standard.

NOTE: If damage to 5' tube sleeve occurs, this will be considered a LEVEL II Repair. Soil Plate may also need to be replaced.

UNOFFICIAL WEBSITE COPY

32. GUARDRAIL/END TREATMENT ATTENUATOR TYPE III

All bolts, washers and nuts shall be incidental to repairs.

a) LEVEL I REPAIR

A Level I Repair for Impact Attenuator Type III shall be used when the Attenuator is damaged to but not including the second post. The following Items shall be replaced, unless otherwise directed by the Engineer:

Nose Plate/Rolled
Channel Strut
Side Plate
Bearing Plate
Pipe Sleeve
Cable Assembly
Bent Plate Sleeve
Wood Post
Wood Block

b) LEVEL II REPAIR

A Level II Repair for Impact Attenuator Type III shall be used when the Attenuator is damaged to but not including the third post, the following Items shall be replaced, unless otherwise directed by the Engineer.

All Items in Level I plus the following:

Spacer Channel
Guardrail
Wood Block
Pipe
** Wood Post
Tube Sleeve
Soil Plate

** Note: Tube sleeve and soil plate may need to be replaced in this level if damaged.

c) LEVEL III REPAIR - will be the complete replacement of the unit

UNOFFICIAL WEBSITE COPY

GENERAL MAINTENANCE OF TRAFFIC NOTES FOR OVERALL CONTRACT

1. All work shall be performed in a manner that will reasonably provide the least practicable obstruction to all road users, including vehicular, pedestrian, and bicycle traffic, and shall conform to the requirements of the Delaware Manual On Uniform Traffic Control Devices (MUTCD), Part 6, including all revisions up to the date of advertisement for bids.

2. All shoulder or travel lane closures on I-95, I-495, I-295 and interstate ramps shall be performed during day-time between 9:00 AM to 3:00 PM, Monday through Friday. All other lane and shoulder closures shall be performed during 8:00 AM and 4:00 PM unless otherwise directed by the Engineer with direction from the North District Safety Officer. Any deviation from this time restriction must be approved by the North District Engineer and DelDOT Safety Officer prior to commencement of work. Night work may be required in certain locations, no additional payment outside Portable Light Assembly (Item 804001) is warranted or applicable. Night work is considered a part of this Contract.

3. No lane closures will be permitted on holidays or holiday weekends, unless approved by the Engineer with consultation with DelDOT Safety Section. This requirement applies to all roads impacted in this Contract..

4. The Contractor shall have an American Traffic Safety Services Association (ATSSA) Certified Supervisor assigned to this project. The Contractor's general superintendent for this project or another ATSSA certified member of the Contractor's project staff shall not be the ATSSA supervisor.

5. If a road/ramp closure is required, the Contractor shall be required to submit the proposed detour route to the DelDOT Safety Officer for approval. Payment for detour plan preparation shall be included in the bid price for Item 763000 (Initial Expense/De-Mobilization). The Department will coordinate with the Safety Section and be responsible for the necessary notifications. The detour route requires approval by the Department prior to closure. A two week detour review lead time shall be required for any requested detour. The Contractor shall be responsible for furnishing and maintaining the Maintenance of Traffic apparatus at the closure (i.e. Type III Barricade, Road Closed signs, etc.) and all signs. The Contractor shall be responsible for placement of detour trailblazers. Payment will be under Item 810001 (Temporary Warning Signs and Plaques).

6. Any existing signs that conflict with any construction signs shall be covered by the Contractor as needed, or as directed by the Engineer. The Contractor shall stake out locations of warning signs in the field and receive approval from the Engineer for the location and method of mounting prior to ordering the signs. The Contractor, with the Engineer, shall inventory all existing signs within the Contract limits. Signs that must remain in place during the project shall be maintained by the Contractor. Any other existing signs shall be removed and properly stored by the Contractor to prevent loss or damage.

UNOFFICIAL WEBSITE COPY

7. The safety measures outlined within this Contract and the Delaware MUTCD are not necessarily sufficient in every instance to guarantee the protection of the traveling public or the persons working on the project. Therefore, the provisions of this Contract do not relieve the Contractor of the sole responsibility for the safety of all persons working within or traveling through the work zone throughout the duration of the project. The Contractor shall implement any additional safety measures that are not expressly required by the Contract and are necessary to ensure the safety of all persons. The Contractor shall submit to the Engineer justification for deviations from the Traffic Control Plan or Traffic Management Plan. Final approval of the deviations or additions shall rest with the Engineer. All costs for this work shall be incidental to Item 763000 (Initial Expense).

8. Any deficiencies related to temporary traffic control that are reported to the Contractor in writing shall be corrected within 24 hours or as directed by the Engineer. Corrective actions on severe deficiencies as determined by the Engineer shall be taken immediately unless otherwise directed by the Engineer. Failure to comply will result in non-payment for those devices that are found to be deficient for the duration of the deficiency. Severe deficiencies that are not corrected immediately could result in possible suspension of work until items identified are brought back into compliance and/or the holding of the pay estimate until the severe deficiencies are corrected.

9. At the end of each workday, the Contractor shall correct all pavement edge drop-offs in accordance with the Delaware MUTCD. This corrective work shall be accomplished with Hot Mix Temporary Road Material. All ruts and potholes shall be filled with TRM as soon as possible, but no later than by the end of each workday. Placement of TRM shall be completed in accordance with the applicable sections of the Delaware Standard Specifications. If temporary elimination of a drop-off hazard cannot be accomplished, then the area shall be properly marked and protected with additional temporary barriers, barricades, warning signs, etc. as required by the Delaware MUTCD, and as approved by the Engineer. Payment for all work described in this Project Note shall be incidental to applicable Maintenance of Traffic Pay Items in the Contract. There shall be no additional compensation provided to the Contractor for this work.

10. If the Contractor does not complete the contract work within the contract completion time as listed on the Work Order (including approved time extensions), the Contractor shall be responsible for providing the necessary temporary traffic control devices that are required to complete any remaining work. The cost of such temporary traffic control shall be borne by the Contractor. No additional payment will be made to the Contractor to maintain traffic in accordance with the Delaware MUTCD, specifications, and these project notes. Temporary traffic control items shall include, but not be limited to, warning lights, warning signs, barricades, plastic drums, P.C.C. safety barrier, flaggers, traffic officers, arrow panels, message boards, portable light assemblies and portable impact attenuators.

11. All equipment shall be removed from the job sites on a daily basis, except when allowed by the Engineer.

12. All temporary traffic control devices used on all highways open to the public in this State shall be crashworthy in accordance with the National Cooperative Highway Research Program (NCHRP) Report 350 and the memorandum issued August 28, 1998 by The USDOT Federal Highway Administration Information: Crash Tested Work Zone Traffic Control Devices and/or MASH. It is the requirement of the Department that such certification be submitted for traffic control devices used on all projects, not just those involving the National Highway System.

13. The Department reserves the right to stop the Contractor's operations, if in the opinion of the Engineer, the Contractor's operations are not in compliance with the Delaware MUTCD, the specifications, or the Contract Documents. The Department also reserves the right to stop the Contractor's operations if the Engineer deems the operation unsafe.

14. The Department will not make payment to the Contractor for any and all temporary traffic control devices where the Contractor sets up temporary traffic control to perform work, but fails to perform any work.

UNOFFICIAL WEBSITE COPY

15. Pedestrian Maintenance of Traffic: This work shall consist of providing and maintaining an accessible pedestrian route throughout the project's limits in accordance with the Americans with Disabilities Act of 1990 (ADA) Title II, paragraph 35.130.

The contractor shall be required to review each curb ramp location and submit the appropriate maintenance of traffic detail and devices to the Engineer for each location at least 2-weeks before construction for review, comment, and approval.

The following considerations shall be taken into account when addressing accessible pedestrian maintenance of traffic:

• All pedestrians, including persons with disabilities, shall be provided with a reasonably safe, convenient and accessible path that replicates as much as practicable the existing pedestrian facilities.

• Maintain access to all business and residents at all times.

• Provide pedestrian access thru or around the work zone. If a detour is deemed necessary the Contractor must submit the detour route to the Engineer for review and approval by the Traffic Safety Section. The detour route must meet or exceed the current conditions.

• Work should be phased so that all areas of an intersection/sidewalk path are not under construction at the same time unless a clear path is provided and identified.

• Traffic control devices and other construction materials and features shall not intrude into the usable width of the sidewalk, temporary pathway or other pedestrian facility.

• Signs and other devices mounted lower than 7 ft above the temporary pedestrian pathway shall not project more than 4 in. into accessible pedestrian route.

• A smooth, continuous hard surface shall be provided throughout the entire length and width of the pedestrian route throughout construction.

• There shall be no curbs or vertical elevation changes greater than ¼ in. in grade or terrain that could cause tripping or be a barrier to wheelchair use.

UNOFFICIAL WEBSITE COPY

ITEM SUMMARY

ITEM #	ITEM DESCRIPTION	UNIT	QUANTITY
720004	Steel Rail Element, Straight	LF	50,000.00
720005	Steel Rail Element, Curved	LF	2,500.00
720006	Galvanized Steel Posts	EACH	2,500.00
720007	Short Wood Breakaway Post, Treated	EACH	10.00
720008	Treated Wood Block	EACH	8,500.00
720009	Terminal Connector, Bridge & Barrier	EACH	15.00
720010	Galvanized Rail Element, Thrie Beam	EACH	5.00
720011	Galvanized Transition Section, Thrie Beam	EACH	5.00
720012	Galvanized Steel Post, Thrie Beam	EACH	5.00
720013	Galvanized Steel Bracket, Thrie Beam	EACH	5.00
720020	Reflectorized Washers	EACH	2,500.00
720021	Galvanized Steel Beam Guardrail, Type 1-31	LF	1,000.00
720027	Treated Wood Guardrail Post	EACH	5.00
720032	Remove & Reset Galvanized Steel Post & Offset Block	EACH	30.00
720500	Galvanized And Fusion-Bonded Polyester Coated Guardrail	LF	2,500.00
720549	Galvanized Steel Post, Extra Length	LF	120.00
720566	Setting Guardrail Post in Rock	LF	120.00
720591	End Anchorage Repair* (breakout sheet)	LS	1.00
720595	Guardrail End Treatment Attenuator, Type 1, Level I Repair	EACH	45.00
720596	Guardrail End Treatment Attenuator, Type 1, Level II Repair	EACH	45.00
720597	Guardrail End Treatment Attenuator, Type 2, Level I Repair	EACH	10.00
720598	Guardrail End Treatment Attenuator, Type 2, Level II Repair	EACH	10.00
720600	Guardrail End Treatment Attenuator, Type 3, Level II Repair	EACH	5.00
720601	Guardrail End Treatment Attenuator, Type 3, Level I Repair	EACH	10.00

UNOFFICIAL WEBSITE COPY

720663	Guardrail End Treatment Attenuator, Minor Repair	EACH	20.00
721001	Guardrail End Treatment Attenuator, Type 1-31	EACH	140.00
721003	Guardrail End Treatment Attenuator, Type 2-31	EACH	10.00
721004	Guardrail End Treatment Attenuator, Type 3-31	EACH	5.00
721006	End Anchorage 31	EACH	10.00
721008	Buried End Section	EACH	5.00
721009	Guardrail to Barrier Connection (Exit Type)	EACH	10.00
721010	Guardrail to Barrier Connection, Approach Type I-31	EACH	10.00
721011	Guardrail to Barrier Connection, Approach Type 2-31	EACH	5.00
721514	Guardrail to Barrier Connection (Approach) Repair	LS	1.00
763000	Initial Expense	LS	1.00
763507	Emergency Mobilization	EACH	5.00
801000	Maintenance of Traffic	LS	1.00
802003	Arrow Panel, Type C	EADY	300.00
803001	Furnish and Maintain Portable Changeable Message Sign	EADY	125.00
805001	Plastic Drums	EADY	5,250.00
808002	Furnish and Maintain Truck-Mounted Attenuator, Type II	EADY	600.00
810001	Temporary Warning Signs and Plaques	EADY	2,200.00
811001	Flagger, New Castle County, State	HOUR	650.00
811013	Flagger, New Castle County, State, Overtime	HOUR	50.00
813001	Temporary Barricades Type III	LFDY	50.00
908004	Topsoil, 6" Depth	SY	25.00

UNOFFICIAL WEB SITE COPY

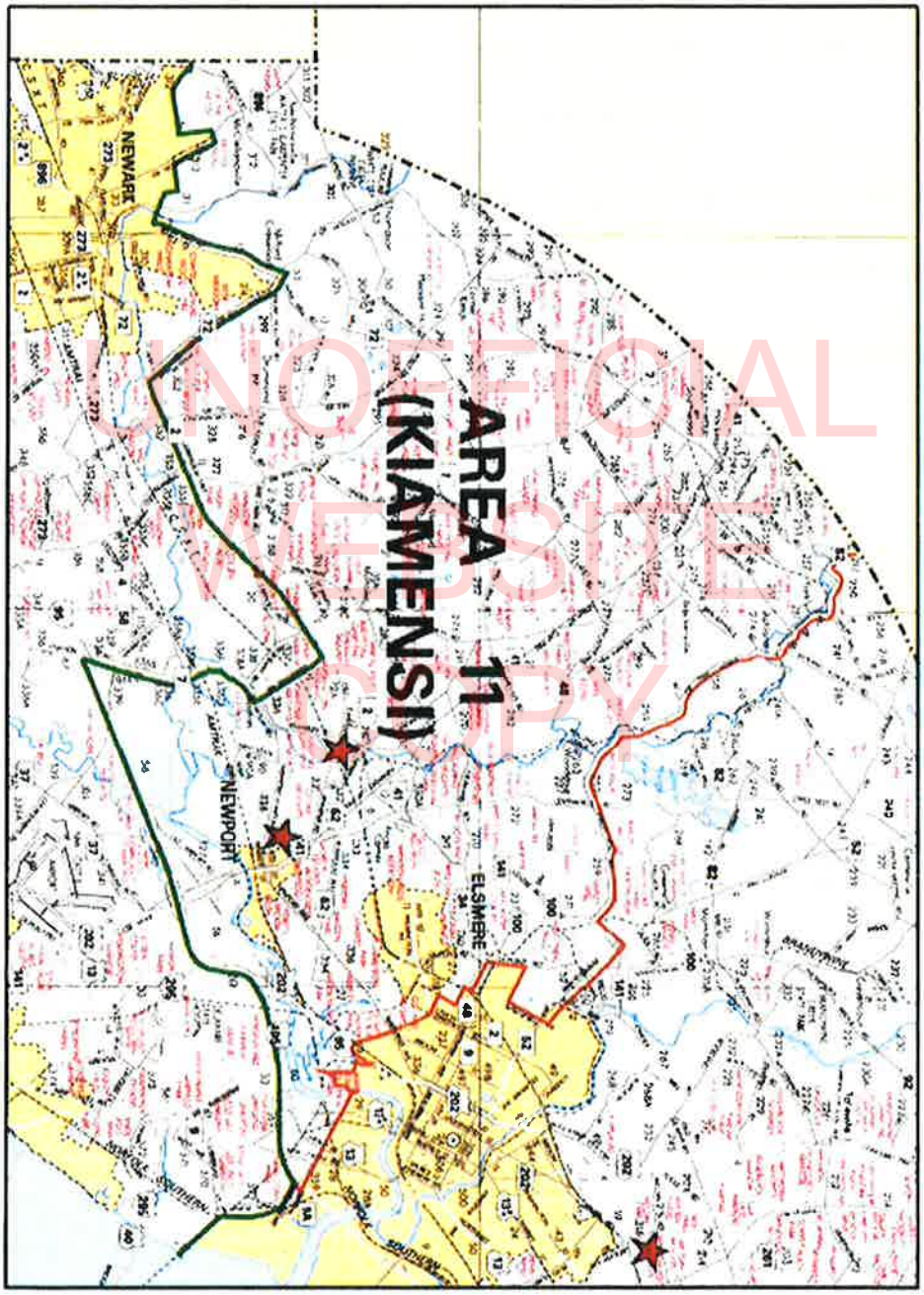

UNOFFICIAL WEBSITE COPY

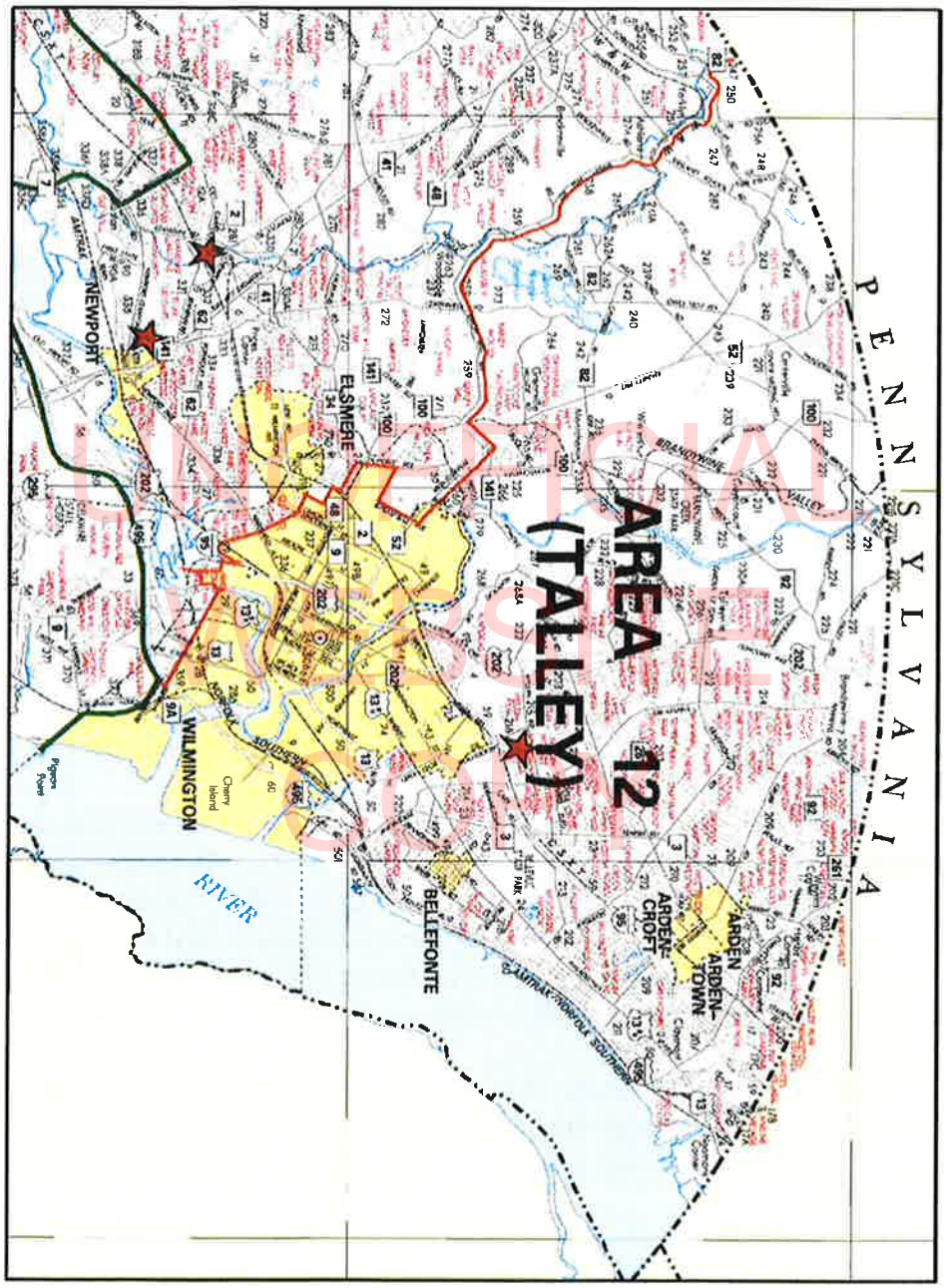
PENNSYLVANIA
AREA 12
(TALLEY)
ARDEN
ARDEN-TOWN
ARDEN-CROFT
BELLEFONTE
ELSMERE
NEWPORT
WILMINGTON
RIVER

THE NOTES AND DETAILS STARTING ON THIS PLAN SHEET THROUGH THE END OF THE CONTRACT APPLY ONLY TO THE WORK INVOLVING "TURNED DOWN GUARDRAIL END REMOVAL, REPLACEMENT, AND RELATED WORK". THE GENERAL NOTES ON PLAN SHEETS 2 THROUGH 13 ALSO APPLY TO THE FOLLOWING WORK.

PROJECT NOTES SPECIFIC TO FEDERALLY FUNDED TURNED DOWN GUARDRAIL ITEMS ONLY

1. Item 211002 (Removal of Structures and Obstructions – Guardrail) shall be utilized for, and payment shall include, the removal and disposal of existing guardrail, Turned Down Ends, and all appurtenances attached to these elements including the rails, posts, blocks, washers, reflectors, bolts turned down rail section, and any other incidentals within the length of material being removed. Measurement shall be made for the linear feet of rail or turned down rail actually removed from the site. Note that costs to remove any concrete anchors that are part of the turned down end sections are to be paid separately under Item 607000 (Removal of Existing Masonry).

2. At locations where 27 inch guardrail exists, a transition section shall be installed between the attenuator and existing guardrail. Standard Construction Detail sheet B-7 shows this transition. Payment for the transition will be made using Items 720021 and 720022. No additional payment, other than these unit prices. Will be made to construct the transitions unless otherwise approved by the engineer.

3. If concrete curb (or curb and gutter) removal and replacement is to be performed at a work site, a one foot wide patch shall be placed in front of the new curb (or gutter pan). The excavation for the patch shall be paid under Item 202000. Items 762000 or 762001 shall be used to longitudinally sawcut the patch area. 2 inches of Bituminous Concrete, Type C (Item 401001) over 6 inches of Bituminous Concrete, Type B in two lifts (Item 401010) over 8 inches of GABC (Item 301002) shall be placed to complete the patch.

4. Hotmix curb shall be removed as directed in the field with payment to be made under Item 202000 (if the total excavation at the location exceeds one cubic yard). If additional borrow is needed to construct the required grading zone, payment shall be made under Item 209006 (Borrow, Type F).

5. All runs of new guardrail shall utilize composite offset blocks. Payment for these blocks in new guardrail to be included in item 720021. Composite blocks shall conform to NCHRP Repost 350, Test Level 4 and/or applicable MASH requirements. Unless specifically directed otherwise by the Engineer, no steel or wood blocks are to be utilized in these runs.

UNOFFICIAL WEBSITE COPY

6. The Contractor shall acquire all necessary materials and equipment prior to starting work at a specific location. The equipment and material shall remain accessible and on-site until completion of work at that particular location unless prior approval from the engineer is given.

7. Exposed soil must be stabilized with seed and mulch on this contract within seven (7) calendar days from the time that the excavation takes place.

8. Construction layout for guardrail runs, approach grading areas, curbs, and wheel chair ramps is the responsibility of the Contractor with costs included in Item 763501, Construction Engineering.

9. Tapers from one height of curb to another shall be made at a rate of 12 inches horizontal to 1 inch vertical with costs incidental to the new curb being constructed.

10. The Contractor shall field verify all dimensions and curved radius sections for proper fit prior to installing the guardrail. Costs to provide curved guardrail sections, if necessary, are to be included in and measured for payment under Items 720021 or 720022.

11. The cost to fine grade, compact, and prepare existing acceptable base materials for bituminous concrete or cement concrete placement shall be incidental to the bituminous or cement concrete item being placed on the base material.

12. Prior to the start of construction, the Contractor shall submit to the Engineer for review and approval, a Work Schedule in Bar Graph format showing the proposed sequence of the various work locations and the Calendar Day durations anticipated for each location. Work may be prosecuted on multiple sites concurrently, provided that no maintenance of Traffic conflicts occur as a result. Additionally, the Contractor shall notify the Engineer at least 10 days in advance to confirm the starting date of each location of work in order that necessary public notice can be made by the Engineer.

13. Whenever guardrail, attenuators, and/or turned down end treatments are removed from a location of work that is not closed with a posted detour, the Contractor shall perform the work continually until the replacement guardrail and/or attenuators have been installed. Protection of these areas with only cones or drums is unacceptable.

UNOFFICIAL WEBSITE COPY

MAINTENANCE OF TRAFFIC NOTES

1. The plans will note the "Typical Applications" from the Delaware MUTCD that apply to the individual locations of work. Any additional or alternate Maintenance of Traffic measures required at specific locations shall be submitted to the Engineer and approved by DelDOT Safety Section prior to starting work at the location in question.

2. If a road closure is being considered, it will be so noted on the Plans. Following contract award, the Contractor will be furnished approved detour plans for locations that are approved by the Department and agreed by the Contractor to be done under closed conditions. The Contractor shall be responsible for furnishing and maintaining the Maintenance of Traffic apparatus at the closure (such as Message Boards, Type III barricades, road closure signs, etc.) and all advance warning signs. The Contractor shall also be responsible for placement of detour trailblazers. Payment for detour trailblazers shall be made under Item 810001 (Temporary Warning Signs). Whenever the Contractor closes a lane or road, they shall contact DelDOT's TMC at (302) 659-4600 notifying them of the time the restriction is put into place and again when the restriction is lifted.

3. All open excavations shall be secured with plastic drums having retroreflective fluorescent orange and white prismatic sheeting and with orange plastic safety fence. Depending on the proximity of the excavation to the travelway, and its depth, steel plates may also be required. The safety fence, tie wire, steel plates, and associated items shall be incidental to the work being protected. If approved by the Engineer, plastic drums will be paid at the unit bid price for Item 805001.

UNOFFICIAL WEBSITE COPY

CONSTRUCTION DETAILS

UNOFFICIAL
WEBSITE
COPY

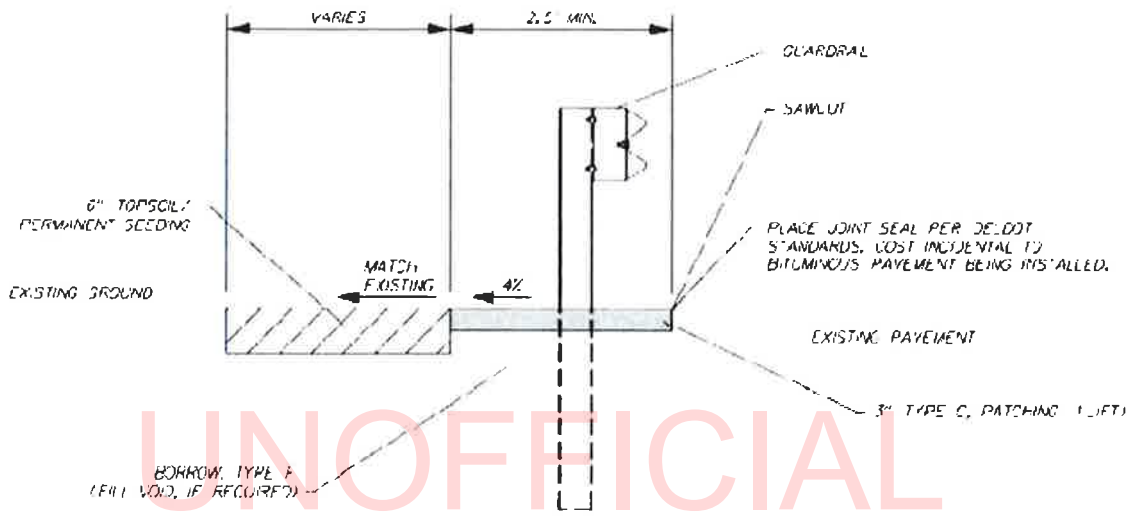

BITUMINOUS CONCRETE MAINTENANCE STRIP DETAIL

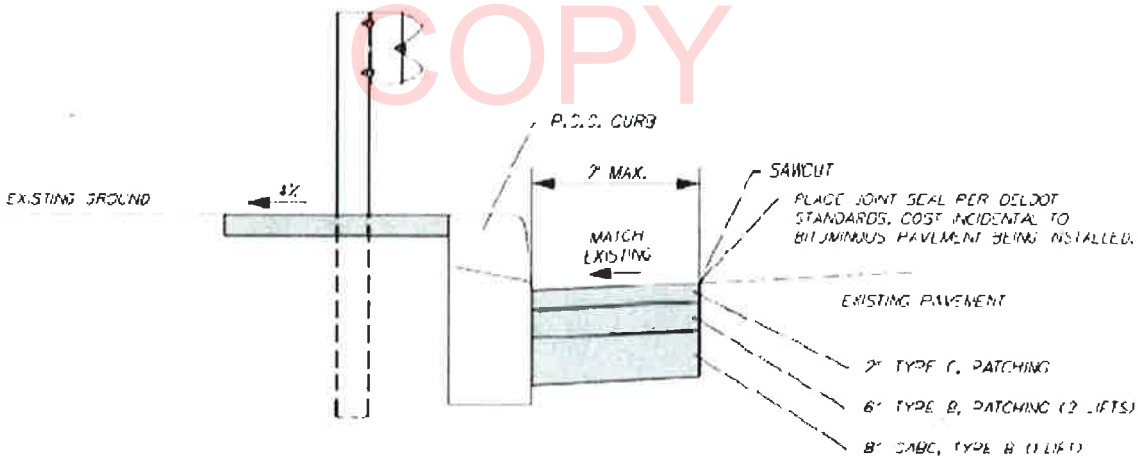

BITUMINOUS CONCRETE PATCHING DETAIL

UNOFFICIAL WEBSITE COPY

ITEM SUMMARY

202000	Excavation and Embankment	CY	250.00
209006	Borrow, Type F	CY	25.00
211001	Removal of Existing Portland Cement Concrete Pavement, Curb, Sidewalk, etc.	SY	120.00
211002	Removal of Structures and Obstructions, Guardrail	LF	5,000.00
301002	Graded Aggregate Base Course, Type B, Patching	CY	30.00
401026	Bituminous Concrete Superpave, Type C, 160 Gyrations, PG 64-22, Patching	TON	420.00
401027	Bituminous Concrete Superpave, Type B, 160 Gyrations, PG 64-22, Patching	TON	8.00
701012	Portland Cement Concrete Curb, Type 1-6	LF	100.00
701022	Integral Portland Cement Concrete Curb & Gutter, Type 3-6	LF	630.00
705007	Sidewalk Surface Detectable Warning System	SF	12.00
705009	Curb Ramp, Type 2, 3, and/or 4	SF	33.00
707015	Riprap, R-4	TON	14.00
708003	Geotextiles, Riprap	SY	21.00
720022	Galvanized Steel Beam Guardrail, Type 2-31	LF	630.00
720026	Guardrail over Culverts, Type 3-31	EACH	1.00
720033	Offset Blocks	EACH	6.00
762000	Saw-cutting Bituminous Concrete	LF	2,100.00
762001	Saw-cutting, concrete, full depth	LF	13.00
763501	Construction Engineering	LS	1.00
806001	Traffic Officers	HOUR	8.00
817013	Permanent Pavement Striping, Epoxy Resin Paint, White/Yellow, 5"	LF	420.00
905005	Inlet Sediment Control, Curb Inlet	EACH	4.00
908001	Topsoil (Ton)	TON	168.00
908014	Permanent Grass Seeding, Dry Ground	SY	1,680.00

UNOFFICIAL WEBSITE COPY