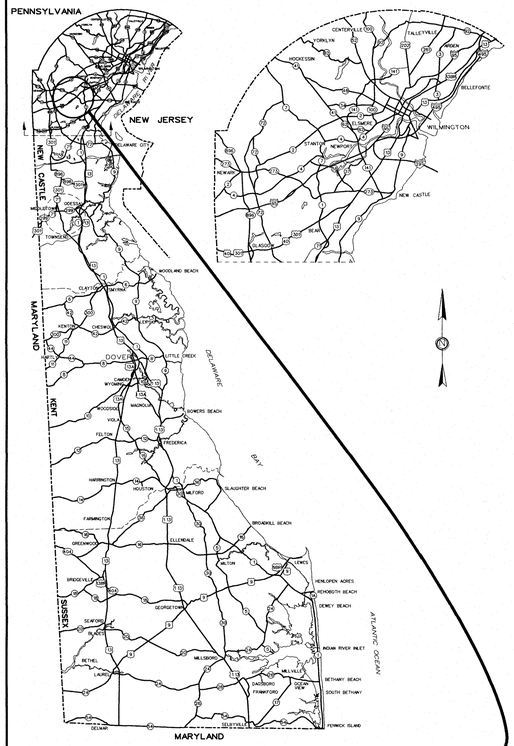

GENERAL LOCATION OF CONTRACT

PREPARED BY
CIVIL/STRUCTURAL ENGINEER

JOHNSON, MIRMIRAN & THOMPSON
Engineering A Brighter Future®
121 Continental Drive, Suite 300 Newark, DE 19713

BRADLEY P. HEINZ
No. 13395
DELAWARE
PROFESSIONAL ENGINEER

SEAL

I HEREBY CERTIFY THAT THIS PLAN HAS BEEN PREPARED UNDER MY SUPERVISION AND TO THE BEST OF MY KNOWLEDGE COMPLIES WITH THE APPLICABLE STATE AND LOCAL REGULATIONS AND ORDINANCES.

RECOMMENDED — DATE 06/07/2019

PREPARED BY
ARCHITECT

JOHNSON, MIRMIRAN & THOMPSON
Engineering A Brighter Future®
121 Continental Drive, Suite 300 Newark, DE 19713

KEITH N. MCCORMACK
NO. S5-0008486
STATE OF DELAWARE
REGISTERED ARCHITECT

SEAL

I HEREBY CERTIFY THAT THIS PLAN HAS BEEN PREPARED UNDER MY SUPERVISION AND TO THE BEST OF MY KNOWLEDGE COMPLIES WITH THE APPLICABLE STATE AND LOCAL REGULATIONS AND ORDINANCES.

RECOMMENDED — DATE 06/07/2019

PREPARED BY
MECHANICAL/ELECTRICAL ENGINEER

JOHNSON, MIRMIRAN & THOMPSON
Engineering A Brighter Future®
121 Continental Drive, Suite 300 Newark, DE 19713

SEAL

I HEREBY CERTIFY THAT THIS PLAN HAS BEEN PREPARED UNDER MY SUPERVISION AND TO THE BEST OF MY KNOWLEDGE COMPLIES WITH THE APPLICABLE STATE AND LOCAL REGULATIONS AND ORDINANCES.

RECOMMENDED — DATE 06/07/2019

THE STATE OF DELAWARE
DEPARTMENT OF TRANSPORTATION

U.S. CUSTOMARY UNITS

CONSTRUCTION PLANS FOR:

NORTH DISTRICT CREW QUARTERS AND SITE WORK, PHASE 1A

CONTRACT NUMBER: T201880103
FEDERAL AID PROJECT NUMBER: N/A

COUNTY: NEW CASTLE **M.R. #:** —

UNOFFICIAL WEBSITE COPY

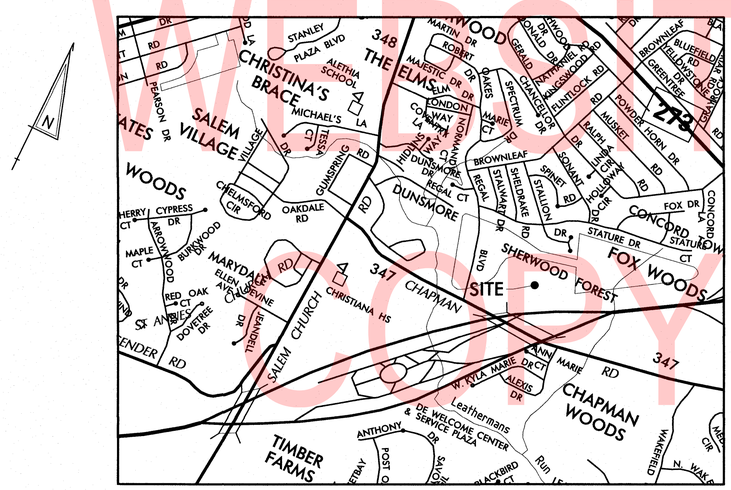

LOCATION MAP

N. T. S.

APPROVED FOR ADVERTISEMENT

DIRECTOR OF MAINTENANCE AND OPERATIONS — DATE 6/13/19

DESIGN DESIGNATION

FUNCTIONAL CLASS: N/A	D.H.V. PROJECTED: N/A	YEAR: N/A
TYPE OF CONSTRUCTION: N/A	DESIGN SPEED: N/A	
A.A.D.T. CURRENT: N/A — YEAR: N/A	TRUCKS: N/A	
A.A.D.T. PROJECTED: N/A — YEAR: N/A	DIRECTION OF DISTRIBUTION: N/A	

INDEX OF SHEETS

DWG. No.	SHT. No.	TABLE OF CONTENTS	DWG. No.	SHT. No.	TABLE OF CONTENTS
		SITE DRAWINGS	M-001	50	MECHANICAL GENERAL NOTES AND SYMBOLS
	1	TITLE			
	2	ADDENDA AND REVISIONS	M-100	51	MECHANICAL SITE PLAN
	3	LEGEND	M-101	52	MECHANICAL FLOOR PLAN
	4	NOTES	M-401	53	MECHANICAL PART PLANS
	5	TYPICAL SECTIONS	M-402	54	MECHANICAL BUILDING SECTION
	6	EXISTING CONDITIONS & DEMOLITION PLAN	M-501	55	MECHANICAL DETAILS I
	7-8	CONSTRUCTION PLAN	M-502	56	MECHANICAL DETAILS II
	9	PROFILES	M-503	57	MECHANICAL GEOTHERMAL SYSTEM PIPING DIAGRAM
	10-11	CONSTRUCTION LAYOUT			
	12	GRADING PLAN	M-601	58	MECHANICAL SCHEDULES
	13-18	DETAILS	M-701	59	MECHANICAL CONTROLS
	19-22	STORMWATER MANAGEMENT PLAN			
	23-24	CONSTRUCTION PHASING M.O.T. AND EROSION CONTROL PLANS	FP-101	60	FIRE PROTECTION NEW WORK FLOOR PLAN
	25	LANDSCAPING PLAN			
	26-28	UTILITY PLAN	P-001	61	PLUMBING SYMBOLS, ABBREVIATIONS AND GENERAL NOTES
		CREW OPERATIONS BUILDING	P-101	62	PLUMBING NEW WORK FLOOR PLAN
ALS-101	29	LIFE SAFETY PLAN	P-201	63	PLUMBING RISER DIAGRAMS
A-101	30	FLOOR PLAN	P-501	64	PLUMBING DETAILS & SCHEDULES
A-102	31	ROOF PLAN			
A-103	32	REFLECTED CEILING PLAN	E-001	65	ELECTRICAL SYMBOLS, LEGENDS AND ABBREVIATIONS
A-104	33	FINISH PLAN			
A-201	34	EXTERIOR ELEVATIONS	E-002	66	ELECTRICAL GENERAL NOTES
A-202	35	EXTERIOR ELEVATIONS	E-101	67	UTILITY SITE PLAN NEW WORK
A-301	36	BUILDING SECTIONS	E-102	68	ELECTRICAL SITE NEW WORK PLAN
A-302	37	WALL SECTIONS	E-103	69	ELECTRICAL SITE NEW WORK PLAN
A-401	38	TOILET ROOM PLANS, ELEVATIONS AND DETAILS	E-201	70	CREW OPERATIONS BUILDING ELECTRICAL FLOOR PLAN POWER
A-402	39	INTERIOR ELEVATIONS	E-202	71	CREW OPERATIONS BUILDING ELECTRICAL FLOOR PLAN LIGHTING
A-501	40	DETAILS			
A-502	41	DETAILS	E-401	72	ELECTRICAL DETAILS I
A-601	42	SCHEDULES	E-402	73	ELECTRICAL DETAILS II
			E-403	74	ELECTRICAL DETAILS III
S-001	43	STRUCTURAL NOTES	E-404	75	ELECTRICAL SINGLE LINE
S-002	44	SPECIAL INSPECTIONS	E-501	76	CREW OPERATIONS BUILDING ELECTRICAL SCHEDULES
S-101	45	FOUNDATION PLAN			
S-102	46	ROOF PLAN			
S-301	47	SECTIONS			
S-501	48	DETAILS			
S-502	49	DETAILS			

TOTAL SHEETS: 76

⚠ XXX APPROVED DESIGN EXCEPTIONS

DESIGN PARAMETER	REQUIRED	PROVIDED

CONSTRUCTION SPECIFICATIONS

CONSTRUCTION ON THIS SITE SHALL BE IN CONFORMANCE WITH THE DELAWARE DEPARTMENT OF TRANSPORTATION SPECIFICATIONS FOR ROAD AND BRIDGE CONSTRUCTION DATED AUGUST 2016 AND SUPPLEMENTAL SPECIFICATIONS DATED JUNE 15, 2018 AND DECEMBER 28, 2018; WITH SPECIFICATION SECTIONS AS INDICATED WITHIN THE PROJECT NOTES.

ASSOCIATED CONTRACTS

CONTRACT NO.	CONTRACT NAME
i- 1(21)	PROPERTY ACQUISITION PLANS FOR DELAWARE TURNPIKE MAY 1976
i- 1(21)	PROPERTY ACQUISITION PLANS FOR DELAWARE TURNPIKE APRIL 1976
7001	DELAWARE TURNPIKE
7058	DELAWARE TURNPIKE - STATE LINE TO BASIN ROAD WIDENING
7171	DELAWARE TURNPIKE IMPROVEMENTS TO MAINTENANCE AREA
78-021-16	CHAPMAN ROAD - PHASE 1
94-074-07	BR 1-714 ON CHAPMAN ROAD OVER I-95

T201880103

T-1

SUBMISSION STATUS: PS&E
DATE PLOTTED: 6/7/2019
JMT FILE LOCATION: Q:\NDE\151152_010_Chapman_Yard_-_Phase\CADD\TC.dgn

UNOFFICIAL
WEBSITE
COPY

PLOTTED BY: BDOUGHERTY DATE: 6/7/2019
FILE LOCATION: Q:\NDE\151152_010_CHAPMAN_YARD_-_PHASE\CADD\AD.DGN [SHEET: CP01]

CP-01

ADDENDA / REVISIONS	

SCALE
0 30 60 90
FEET

NORTH DISTRICT CREW QUARTERS AND SITE WORK, PHASE 1A

CONTRACT	BRIDGE NO.	N/A
T201880103	DESIGNED BY: WJD	
COUNTY		
NEW CASTLE	CHECKED BY: BPH	

ADDENDA AND REVISIONS

SECTION: JMT
SHEET NO.: 2

EXISTING SYMBOLS

DRAINAGE

	DITCH OR STREAM CENTERLINE
	DIRECTIONAL STREAM FLOW ARROW
C.B. / D.I.	DRAINAGE INLET
J.B.	DRAINAGE JUNCTION BOX
D	DRAINAGE MANHOLE
SIZE/TYPE LABEL	DRAINAGE PIPE AND FLOW ARROW
	DRAINAGE PIPE HEADWALL
	RIPRAP - AREA FEATURE
	RIPRAP - LINEAR FEATURE

MANMADE ROADSIDE FEATURES

	BOLLARD - STEEL POLE
	BOLLARD - WOOD POST
(TYPE LABEL)	CURB
(TYPE LABEL)	CURB AND GUTTER
	FENCE - CHAINLINK OR STRANDED
	FENCE - STOCKADE OR SPLIT RAIL
FP	FLAG POLE
	GUARDRAIL - STEEL BEAM
	GUARDRAIL - WIRE ROPE
LAMP	LAMP AND POST - RESIDENTIAL
MB	MAILBOX
PM	PARKING METER AND POST
	PAVEMENT - FLEXIBLE
	PAVEMENT - RIGID
	PILE - BRIDGE
	PILLAR OR MISCELLANEOUS POST
	TRAFFIC SIGN AND POST
	WALL - BRICK OR BLOCK
	WALL - STONE

NATURAL ROADSIDE FEATURES

	GRASS LAWN
	HEDGEROW OR THICKET
	MARSH BOUNDARY LINE
	TREE - CONIFEROUS
	TREE - DECIDUOUS
	TREE STUMP
	SHRUBBERY
WL	DELINEATED WETLAND BOUNDARY LINE
	WOODS LINE BOUNDARY

RIGHT-OF-WAY SYMBOLS

C.M.	PROPERTY MARKER - CONCRETE MON.
I.P.	PROPERTY MARKER - IRON PIPE
100+00	HISTORIC RIGHT-OF-WAY BASELINE
	EXISTING RIGHT-OF-WAY
PL	EXISTING PROPERTY LINE
EASEMENT TYPE	EXISTING EASEMENT
DA	EXISTING DENIAL OF ACCESS
R/W-DA	EXISTING R/W & DENIAL OF ACCESS

SURVEY CONTROL & MONUMENTATION

B.M.	SURVEY BENCHMARK LOCATION
T.P.	SURVEY TIE POINT LOCATION
	SURVEY TRAVERSE POINT
	POINT OF CURVATURE OR TANGENCY
	POINT OF INTERSECTING TANGENTS

UTILITY

	SOIL BORING LOCATION
	UTILITY TEST HOLE LOCATION
TV	CABLE TV DISTRIBUTION BOX
E	ELECTRIC MANHOLE
EM	ELECTRIC METER
E	ELECTRIC TRANSFORMER
	POLE MOUNTED LUMINAIRE
G	GAS MANHOLE
G.M.	GAS METER
G.V.	GAS VALVE
G.P.	GAS PUMP - SERVICE STATION
	RAILROAD TRACKS
S	SANITARY SEWER MANHOLE
S.V.	SANITARY SEWER VALVE
SCO	SANITARY SEWER CLEANOUT OR VENT
S.D.F.	SEPTIC DRAIN FIELD
B	TELEPHONE BOOTH
T	TELEPHONE MANHOLE
T	TELEPHONE TEST POINT
J.W.	TRAFFIC - CONDUIT JUNCTION WELL
	TRAFFIC - LIGHT POLE AND BASE
	TRAFFIC - PEDESTRIAN POLE & BASE
	TRAFFIC - SIGNAL CABINET & BASE
	TRAFFIC - SIGNAL POLE AND BASE
U	UTILITY BOX
	UTILITY POLE GUY WIRE ANCHOR
	UTILITY POLE
F.H.	WATER - FIRE HYDRANT
W.M.	WATER METER
W.V.	WATER VALVE
WELL	WELL HEAD
?	MANHOLE - UNDETERMINED OWNER

UTILITY COMPANY FACILITIES

SUEZ-W	EXISTING UTILITY NAME
NCC-S	N.C.C SANITARY SEWER

PROPOSED SYMBOLS

CONSTRUCTION

	CONCRETE SAFETY BARRIER - PERMANENT
BFS	BIOFILTRATION SWALE
	BRICK PATTERNED SURFACE
	BUTT JOINT
CZ	CLEAR ZONE
100+00	CONSTRUCTION BASELINE
CSF	CONSTRUCTION SAFETY FENCE
	CURB, TYPE 1 & TYPE 3
	CURB, TYPE 2
	CURB & GUTTER, TYPE 1
	CURB & GUTTER, TYPE 2
	CURB & GUTTER, TYPE 3
	CURB & GUTTER, TYPE 4
	CURB OPENING
	DRAINAGE INLET
	DITCH
	FENCE - METAL
	FENCE - WOOD
	FLARED END SECTION
	GUARDRAIL, TYPE 1
	GUARDRAIL, TYPE 2
	GUARDRAIL, TYPE 3
	GUARDRAIL END ANCHORAGE
	GUARDRAIL END TREATMENT, TYPE 1
	GUARDRAIL END TREATMENT, TYPE 2
	GUARDRAIL END TREATMENT, TYPE 3
	IMPACT ATTENUATOR
	JUNCTION BOX - DRAINAGE
LO	LATERAL OFFSET
LOC	LIMIT OF CONSTRUCTION
MB	MAILBOX
	MANHOLE
	PAVEMENT PATCH
	PAVEMENT REMOVAL - TOPSOIL, SEED AND MULCH
	PIPE & DIRECTIONAL FLOW ARROW
	RIPRAP
	P.C.C. SIDEWALK - 4"
	P.C.C. SIDEWALK - 6" (USE 8" DEPTH FOR CHANNELIZATION ISLANDS.)
	UNDERDRAIN
	UNDERDRAIN OUTLET
	LEVEL SPREADER

RIGHT-OF-WAY SYMBOLS

	PROPOSED RIGHT-OF-WAY MONUMENT
DA	PROPOSED DENIAL OF ACCESS
PE	PROPOSED PERMANENT EASEMENT
R/W	PROPOSED RIGHT-OF-WAY
R/W-DA	PROPOSED R/W & DENIAL OF ACCESS
TCE	TEMPORARY CONSTRUCTION EASEMENT
100+00	PROPOSED RIGHT-OF-WAY BASELINE

IDENTIFIERS

A/C	ADJUST BY CONTRACTOR
A/O	ADJUST BY OTHERS
B	CONCRETE SAFETY BARRIER
C	CURB OR CURB & GUTTER
CJB	CONVERT TO JUNCTION BOX
CMH	CONVERT TO DRAINAGE MANHOLE
C/O	CURB OPENING
CR	CURB RAMP / TYPE
CR-N	CURB RAMP / TYPE - WITHOUT SIDEWALK SURFACE DETECTABLE WARNING SYSTEM
CSF	CONSTRUCTION SAFETY FENCE
DI	DRAINAGE INLET
DND	DO NOT DISTURB
ED	ENERGY DISSIPATOR
F	FENCE
FES	FLARED END SECTION
FF/C	FILL WITH FLOWABLE FILL
FS	FILTRATION STRUCTURE
GR	GUARDRAIL
JB	JUNCTION BOX
MH	MANHOLE
M	MONUMENT - RIGHT-OF-WAY
P	PIPE
RL/C	RELOCATE BY CONTRACTOR
RL/O	RELOCATE BY OTHERS
RL/PO	RELOCATE BY PROPERTY OWNER
RM/C	REMOVE BY CONTRACTOR
RM/TC	REMOVE BY TRAFFIC CONTRACTOR
RM/O	REMOVE BY OTHERS
UD	UNDERDRAIN / LENGTH
UDO	UNDERDRAIN OUTLET PIPE

LANDSCAPING

LS	LANDSCAPE PLANTINGS
	SHRUBBERY
	CONIFEROUS TREE
	DECIDUOUS TREE

TRAFFIC

ITMS-CON	ITMS CONDUIT
SIG-CON	SIGNAL CONDUIT
	CONDUIT JUNCTION WELL
	LUMINAIRE
	PAVEMENT MARKINGS
	PAVEMENT STRIPING
	TRAFFIC SIGN

PAVEMENT SECTION(S)

	OVERLAY PAVEMENT - SEE TYPICAL SECTIONS FOR MATERIALS AND DEPTHS
	RECONSTRUCTED PAVEMENT - SEE TYPICAL SECTIONS FOR MATERIALS AND DEPTHS
	DRIVEWAY AND ENTRANCE PAVEMENT - SEE NOTES FOR MATERIALS AND DEPTHS

UTILITY COMPANY FACILITIES

NCC-S	N.C.C. SANITARY SEWER
W	PRIVATE WATER

UNOFFICIAL WEBSITE COPY

PLOTTED BY: BDOUGHERTY DATE: 6/7/2019
FILE LOCATION: Q:\NDE\151152_010_CHAPMAN_YARD_-_PHASE\CADD\LG.DGN [SHEET: LG01]

ADDENDA / REVISIONS

NOT TO SCALE

NORTH DISTRICT
CREW QUARTERS AND SITE WORK, PHASE 1A

CONTRACT T201880103	BRIDGE NO. N/A	LEGEND	SECTION JMT
COUNTY NEW CASTLE	DESIGNED BY: WJD		SHEET NO. 3
	CHECKED BY: BPH		

GENERAL NOTES

1. THIS PROJECT IS TO BE CONSTRUCTED IN ACCORDANCE WITH THE DELAWARE DEPARTMENT OF TRANSPORTATION "STANDARD SPECIFICATIONS", DATED AUGUST 2016 AND THE DELAWARE DEPARTMENT OF TRANSPORTATION "STANDARD CONSTRUCTION DETAILS", DATED 2016, INCLUDING ALL REVISIONS UP TO THE DATE OF ADVERTISEMENT.

2. ELECTRONIC PROJECT FILES THAT WILL BE MADE AVAILABLE TO THE AWARDED CONTRACTOR, INCLUDE:

( )	NONE
(X)	ASCII DATA FILES WITH COORDINATES AND ELEVATIONS FOR PROPOSED POINTS AS SELECTED BY THE ENGINEER.
(X)	ALL PLAN SHEETS, IN PDF FORMAT.
(X)	EXISTING DIGITAL TERRAIN MODEL, IN .DTM FILE FORMAT, COMPATIBLE WITH SOFTWARE CURRENTLY USED BY DELDOT.
(X)	PROPOSED DIGITAL TERRAIN MODEL, IN .DTM FILE FORMAT, COMPATIBLE WITH SOFTWARE CURRENTLY USED BY DELDOT.
(X)	DESIGN FILE, IN .DGN FILE FORMAT, CONTAINING ONLY THE PROPOSED 3D TRIANGLES OF THE PROPOSED DIGITAL TERRAIN MODEL (DTM).

NOTE: THE DOCUMENT ENTITLED "RELEASE FOR DELIVERY OF DOCUMENTS IN ELECTRONIC FORM TO A CONTRACTOR" MUST BE SIGNED BY ALL PARTIES PRIOR TO THE DELIVERY OF ANY ELECTRONIC PROJECT FILES.

3. PROJECT FILES THAT WILL BE MADE AVAILABLE TO THE CONTRACTOR, INCLUDE:

( )	CROSS SECTIONS
( )	RIGHT-OF-WAY PLANS (WILL BE MADE AVAILABLE TO THE AWARDED CONTRACTOR)

PROJECT NOTES

SECTION 100

1. ANY DAMAGE TO ITEMS NOTED TO BE RELOCATED OR RESET BY THE CONTRACTOR, AT THE DISCRETION OF THE ENGINEER, SHALL BE REPAIRED AND/OR REPLACED IN KIND AT THE CONTRACTOR'S EXPENSE.
2. THE CONTRACTOR WILL CONTACT THE DELAWARE TMC AT 302-659-4600 PRIOR TO ANY UNMANNED AIRCRAFT VEHICLE (UAV) FLIGHTS. THE CONTRACTOR WILL BE REQUIRED TO PROVIDE THE FOLLOWING INFORMATION: THE REGISTRATION NUMBER OF THE UAV, THE FLIGHT TIME, LOCATION OF THE FLIGHT, THE PILOT'S NAME AND THE PILOT'S CONTACT NUMBER DURING THE FLIGHT.

SECTION 200

3. ITEMS TO BE REMOVED UNDER ITEM 211000 - REMOVAL OF STRUCTURES AND OBSTRUCTIONS SHALL INCLUDE, BUT NOT BE LIMITED TO THE FOLLOWING:
   - FENCE
   - STORAGE BAYS
   - CONCRETE PADS
   - DRAINAGE PIPES AND INLETS
   - ABANDONED FIBER OPTIC PATHWAY AND JUNCTION WELLS
   - COLD PATCH STORAGE SHED

SECTION 600

4. STATION AND ELEVATION DATA GIVEN FOR DRAINAGE STRUCTURES ARE TO BE APPLIED TO THE CENTER OF THE GRATE FOR INLETS AND TO THE CENTER OF THE STRUCTURE FOR JUNCTION BOXES AND MANHOLES.

SECTION 700

5. ALL PAVED AREAS TO BE RECONSTRUCTED OR WIDENED SHALL BE SAWCUT AT THE POINT WHERE THE NEW PAVEMENT IS TO TIE INTO THE EXISTING PAVEMENT.

SECTION 900

6. THIS PROJECT IS COVERED UNDER AN NPDES GENERAL PERMIT FOR CONSTRUCTION. UNDER THE GENERAL PERMIT, COMPLIANCE WITH DELDOT'S APPROVED SEDIMENT AND STORMWATER MANAGEMENT PLANS WILL CONSTITUTE COMPLIANCE WITH THE NPDES INDUSTRIAL PERMITTING REQUIREMENTS FOR THIS CONSTRUCTION PROJECT. A COPY OF THE NPDES GENERAL PERMIT AND NOI IS KEPT ON FILE IN EACH OF THE CONSTRUCTION OFFICES AND THE DEPARTMENT'S TEAM SUPPORT SECTION. A COPY OF THE GENERAL PERMIT OR THE NOI CAN BE OBTAINED UPON REQUEST FROM EITHER THE DEPARTMENT'S STORMWATER ENGINEER OR THE APPROPRIATE CONSTRUCTION ENGINEER.

MISCELLANEOUS

7. THERE ARE NO ENVIRONMENTAL PERMITS ASSOCIATED WITH THIS PROJECT. AS SUCH, AN ENVIRONMENTAL COMPLIANCE SHEET WAS NOT PREPARED.

UNOFFICIAL WEBSITE COPY

PLOTTED BY: BDOUGHERTY DATE: 6/7/2019
FILE LOCATION: Q:\NDE\151152_010_CHAPMAN_YARD_-_PHASE\CADD\PN.DGN [SHEET: PN01]

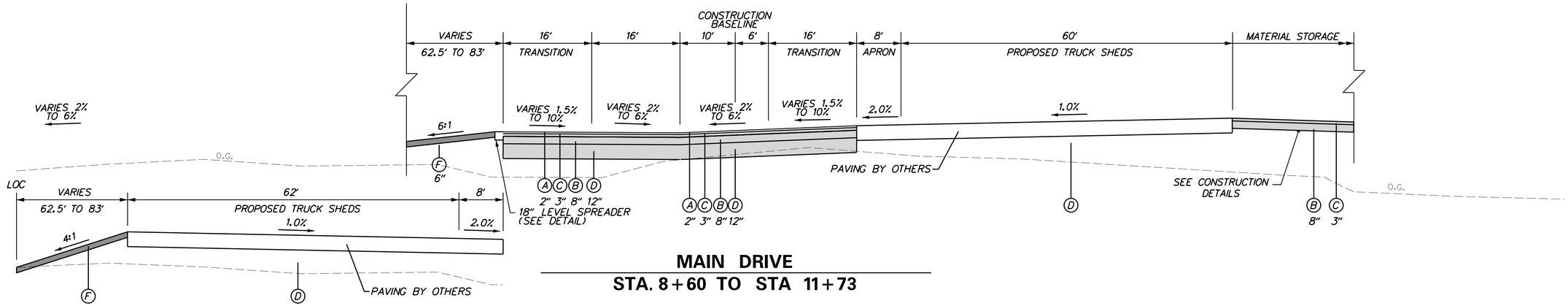

MAIN DRIVE
STA. 8+60 TO STA 11+73

STA. 8+99 TO STA 11+73

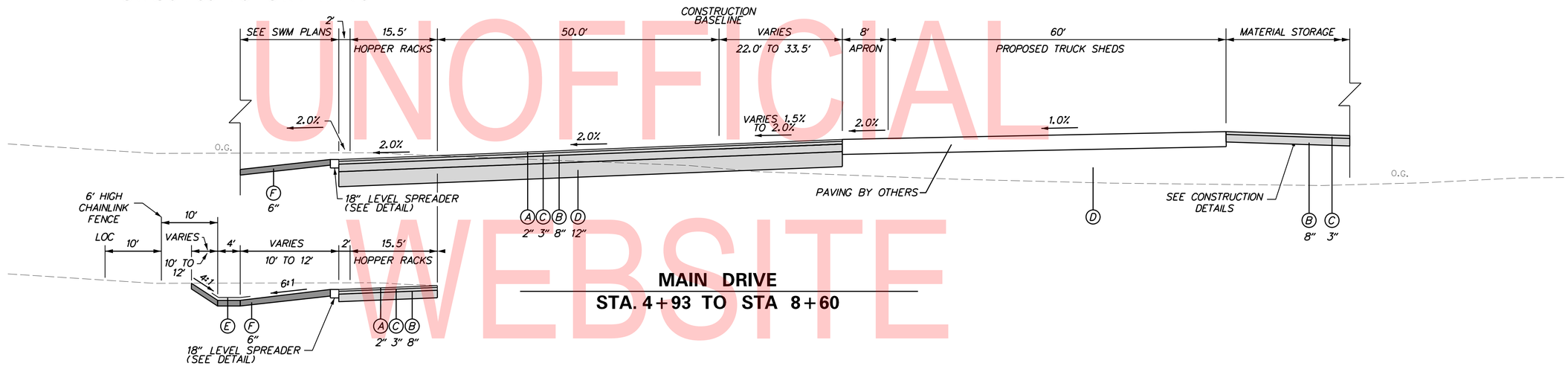

MAIN DRIVE
STA. 4+93 TO STA 8+60

STA. 7+43 TO STA 8+87

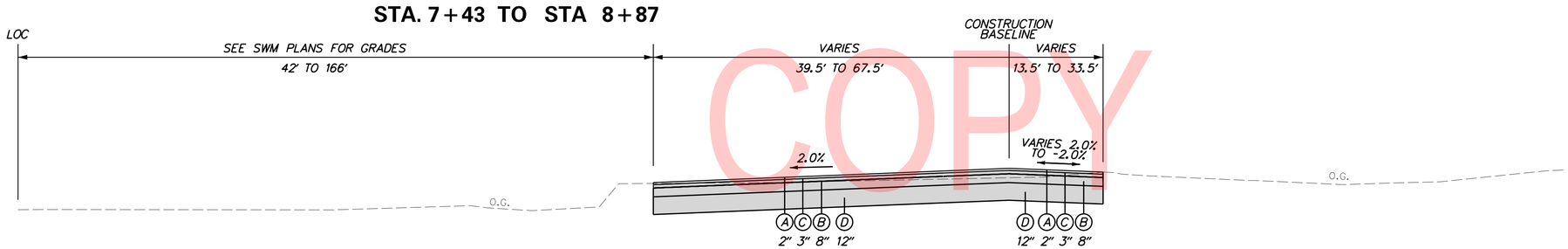

MAIN DRIVE
STA. 4+00 TO STA 4+93

UNOFFICIAL WEBSITE COPY

LEGEND

- (A) ITEM 401006- SUPERPAVE TYPE C, PG 70-22 (CARBONATE STONE)
- (B) ITEM 301003 - GRADED AGGREGATE BASE COURSE, TYPE B
- (C) ITEM 401005- SUPERPAVE, TYPE B, PG 70-22
- (D) ITEM 209006 - BORROW, TYPE F
- (F) ITEM 908004 - TOPSOIL, 6"
  ITEM 908014 - PERMANENT SEEDING, DRY GROUND
- (G) ITEM 209001 - BORROW, TYPE A

MATERIAL	LIFT THICKNESS	
	MINIMUM	MAXIMUM
BITUMINOUS CONCRETE, TYPE 'C'	1.25"	2"
BITUMINOUS CONCRETE, TYPE 'B'	2.25"	4"
BITUMINOUS CONCRETE BASE COURSE	3"	6"
GRADED AGGREGATE BASE COURSE	-	8"

ADDENDA / REVISIONS

SCALE 0 10 20 30 FEET

NORTH DISTRICT CREW QUARTERS AND SITE WORK, PHASE 1A

CONTRACT	BRIDGE NO.	N/A
T201880103	DESIGNED BY: WJD	
COUNTY		
NEW CASTLE	CHECKED BY: BPH	

TYPICAL SECTIONS

SECTION: JMT
SHEET NO. 5

PLOTTED BY: BDOUGHERTY DATE: 6/7/2019
FILE LOCATION: Q:\NDE\151152_010_CHAPMAN_YARD_-_PHASE\CADD\TS.DGN [SHEET: TS01]

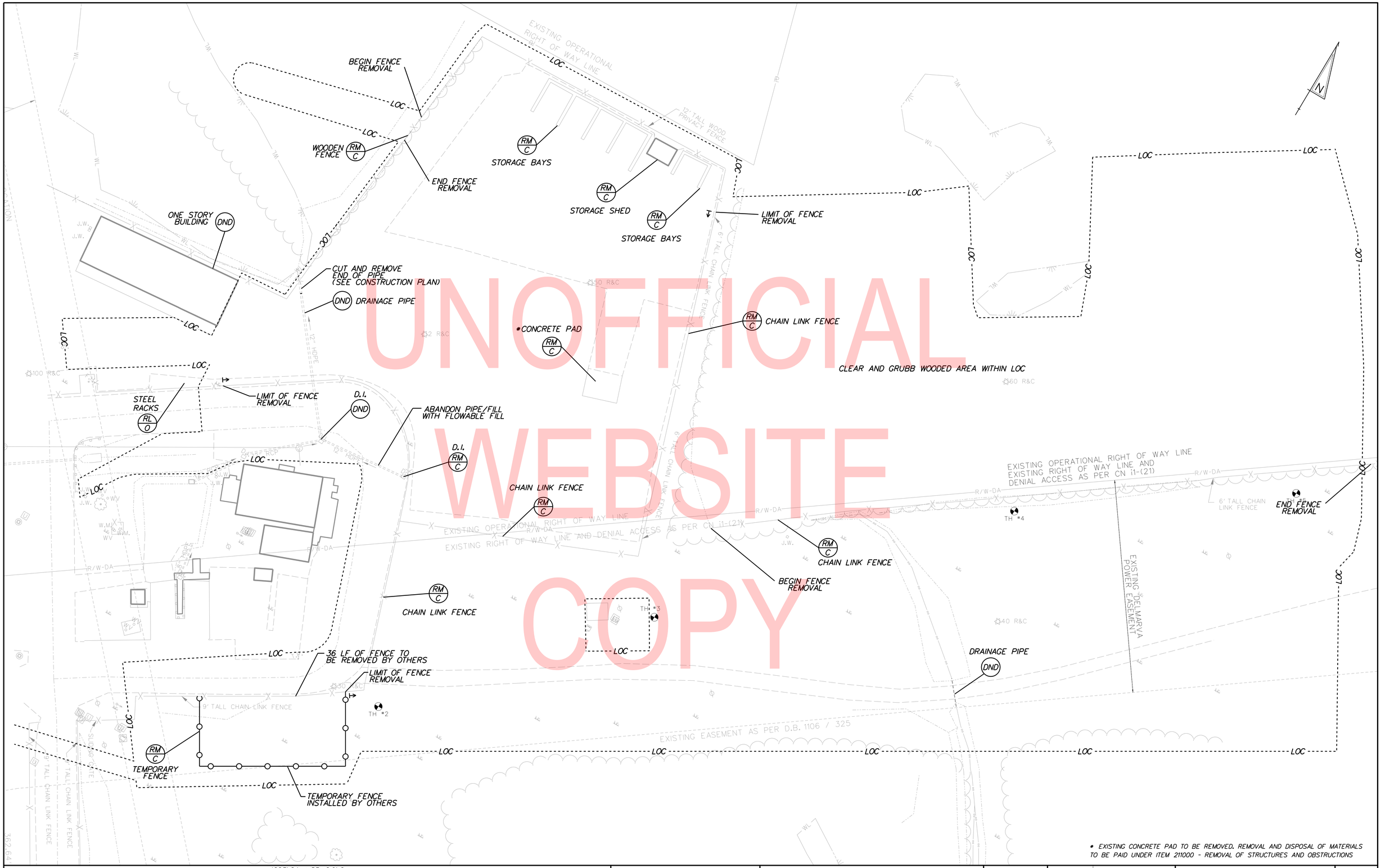

* EXISTING CONCRETE PAD TO BE REMOVED. REMOVAL AND DISPOSAL OF MATERIALS TO BE PAID UNDER ITEM 211000 - REMOVAL OF STRUCTURES AND OBSTRUCTIONS

UNOFFICIAL WEBSITE COPY

ADDENDA / REVISIONS	

SCALE 0 30 60 90 FEET

NORTH DISTRICT CREW QUARTERS AND SITE WORK, PHASE 1A

CONTRACT	BRIDGE NO.	N/A
T201880103	DESIGNED BY: WJD	
COUNTY	CHECKED BY: BPH	
NEW CASTLE		

EXISTING CONDITIONS & DEMOLITION PLAN

SECTION: JMT

SHEET NO. 6

PLOTTED BY: BDOUGHERTY DATE: 6/7/2019
FILE LOCATION: Q:\NDE\15152_010_CHAPMAN_YARD_-_PHASE\CADD\DEMO PLAN.DGN [SHEET: CP01]

NOTES:

1. SEE CP-02 FOR DRAINAGE, FENCE, AND PAVEMENT MARKING SCHEDULES.
2. COMPOST FILTER LOGS SHOWN ON THIS PLAN SHALL BE TRIPLE STACKED, IN ACCORDANCE WITH DETAIL PROVIDED WITH THESE PLANS, TO BE INSTALLED AS A PERMANENT SEDIMENT FILTRATION DEVICE AND INSPECTED ON A YEARLY BASIS AND REPLACED AS NEEDED. CONTRACTOR SHALL INSTALL CONCURRENTLY WITH OTHER EROSION AND SEDIMENTATION CONTROLS.
3. CONTRACTOR SHALL ENSURE P-500 HAS 1 FT OF COVER, AS MEASURED TO THE TOP OF PIPE.
4. TEMPORARY PCC CONCRETE BARRIER TO REMAIN UNTIL FUTURE TRUCK SHED PROJECT IS COMPLETE.
5. CONTRACTOR OF FUTURE TRUCK SHEDS SHALL INSTALL ALL FUTURE ROOF DRAIN DOWNSPOUT CONNECTIONS AT INLETS DI-401 AND DI-402.
6. SEDIMENT FOREBAY SPILLWAY AND ALL SWALES SHALL HAVE ECB INSTALLED IMMEDIATELY UPON CONSTRUCTION.

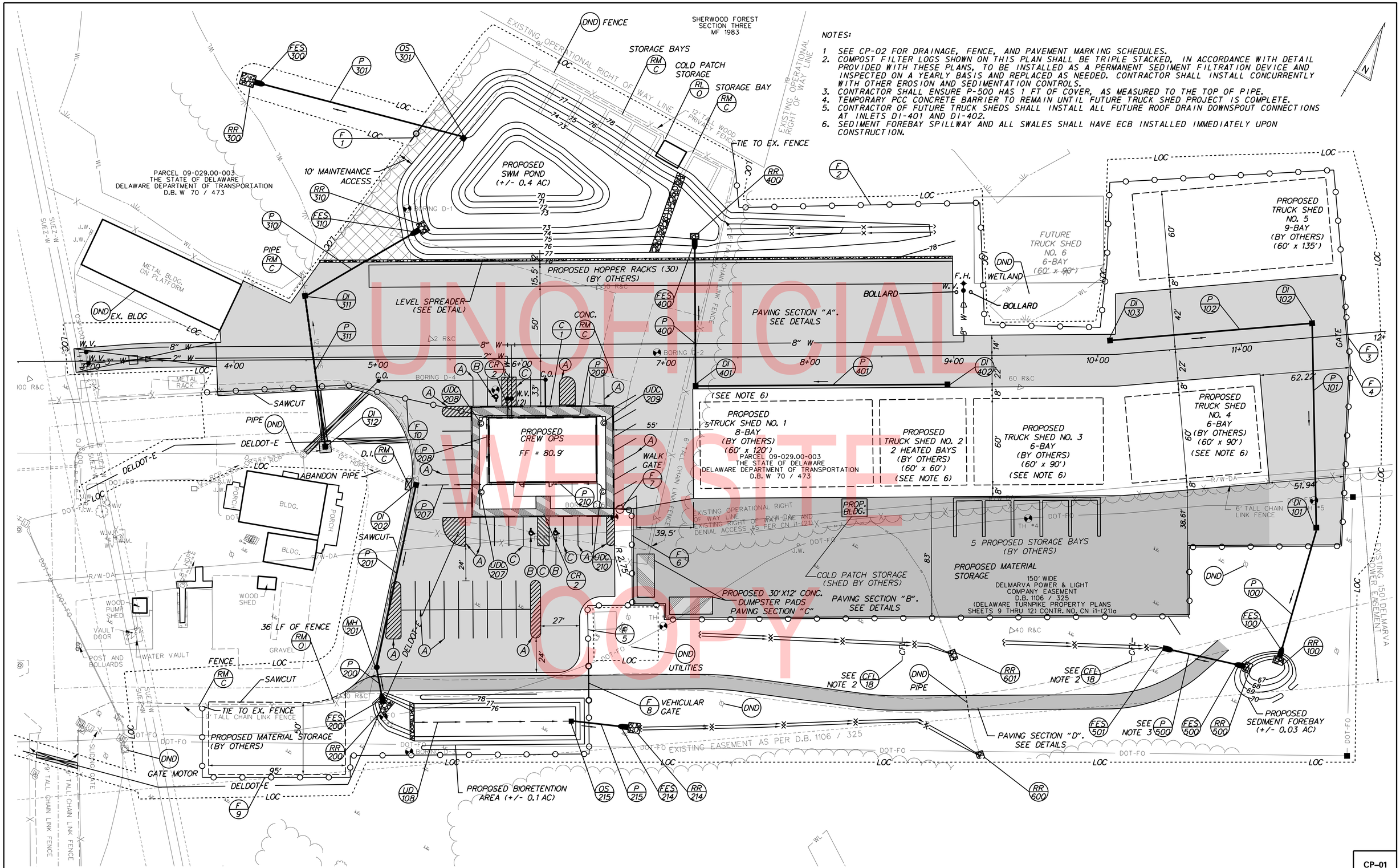

UNOFFICIAL WEBSITE COPY

PLOTTED BY: BDOUGHERTY DATE: 6/7/2019
FILE LOCATION: Q:\NDE\151152_010_CHAPMAN_YARD__-_PHASE\CADD\CP.DGN [SHEET: CP01]

ADDENDA / REVISIONS	

SCALE 0 30 60 90 FEET

NORTH DISTRICT CREW QUARTERS AND SITE WORK, PHASE 1A

CONTRACT	BRIDGE NO.	N/A
T201880103	DESIGNED BY: WJD	
COUNTY	CHECKED BY: BPH	
NEW CASTLE		

CONSTRUCTION PLAN

CP-01

SECTION	SHEET NO.
JMT	7

RIPRAP SCHEDULE

NO.	TYPE	L	W	D
100	R-4	5'	7'	14"
200	R-4	9'	9'	14"
214	R-4	8'	7'	14"
300	R-4	10'	8.5'	14"
310	R-4	6'	8'	14"
400	R-4	4'	6'	14"
500	R-4	5'	7'	14"
601	R-4	7'	5'	14"
600	R-4	7'	5'	14"

UNDERDRAIN CLEANOUTS***

NO.	STATION	OFFSET
210	6+51.75	87.19
209	6+52.82	33.45
208	5+78.28	33.45
207	5+75.26	87.45

*** ALL DOWNSPOUT CONNECTIONS TO THE PIPE AND PIPE CLEANOUTS SHALL BE PAID INCIDENTAL TO THE PIPE ITEMS.

FLARED END SECTION SCHEDULE

NO.	SIZE / TYPE	SLOPE	SAFETY GRATE
100	15" RCP	0.015	N/A
200	12" RCP	0.005	N/A
214	15" RCP	0.006	N/A
300	18" RCP	0.006	N/A
301	15" RCP	0.003	N/A
400	12" RCP	0.010	N/A
500	15" RCP	0.008	N/A
501	15" RCP	0.008	N/A

CURB SCHEDULE

NO.	ITEM DESCRIPTION / TYPE	LENGTH
1	P.C.C. CURB TYPE 1-8	353'

OUTLET STRUCTURE SCHEDULE**

NO.	STATION	OFFSET	BOX SIZE	T.S. EL.*	INV. EL.
215	6+32.59	252.10	34" x 24"	77.00	73.00
301	5+60.33	-153.25	48" x 48"	76.00	74.00

* TOP OF STRUCTURE ELEVATION.
** SEE STORMWATER MANAGEMENT PLANS AND DETAILS FOR TRASH RACK DETAIL.

MANHOLE SCHEDULE

NO.	STATION	OFFSET	TYPE/SIZE	T.G. EL.	INV. EL.
201	4+97.62	213.47	48" x 30"	79.35	75.10

DRAINAGE INLET SCHEDULE****

NO.	STATION	OFFSET	BOX SIZE	GRATE	T.G. EL.	INV. EL.
103	10+08.55	-9.76	34" x 24"	2	77.50	73.90
102	11+50.20	-9.89	34" x 24"	2	74.66	71.80
101	11+40.93	131.73	34" x 24"	2	75.04	69.70
202	5+25.84	87.37	34" x 24"	2	78.00	75.75
311	4+62.93	60.48	34" x 24"	2	77.45	74.55
312	4+49.59	-44.38	34" x 24"	2	77.88	74.26
402	8+95.44	20.02	34" x 24"	2	79.69	77.60
401	7+20.48	20.00	34" x 24"	2	79.75	75.90

**** CONTRACTOR SHALL INSTALL A SUNTREE TECHNOLOGIES GRATE INLET SKIMMER BOX GISB-20-36-20 OR AN APPROVED EQUIVALENT. THE CONTRACTOR SHALL CONTACT THE MANUFACTURER WITH THE FINAL INTERNAL BOX DIMENSIONS AND GRATE INFORMATION PRIOR TO ORDERING PRODUCT. PAYMENT TO FURNISH AND INSTALL THE GRATE INLET SKIMMER BOX OR APPROVED EQUIVALENT, INCLUDING ALL ADDITIONAL INSTALLATION MATERIALS, SHALL BE INCIDENTAL TO DRAINAGE INLET ITEM.

FENCE SCHEDULE

NO.	QTY.	DESCRIPTION	NOTES
1	20 LF	WOOD PRIVACY FENCE, 12 FT. HIGH	STA. 5+23.15, LT. 151' TO STA. 5+35.29, LT. 167'
2	715 LF	CHAIN LINK FENCE, 9 FT. HIGH (3 STRANDS BARBED WIRE)	STA. 7+42.22, LT. 99' TO STA. 11+74.32 LT. 14'
3	20 LF	CHAIN LINK GATE, 9 FT. HIGH (3 STRANDS BARBED WIRE)	STA. 11+74.32, LT 14' TO STA. 11+74.32, RT. 14'
4	681 LF	CHAIN LINK FENCE, 9 FT. HIGH (3 STRANDS BARBED WIRE)	STA. 11+74.32, RT. 28' TO STA. 11+57.30, RT. 146''
5	70 LF	CHAIN LINK FENCE, 9 FT. HIGH (3 STRANDS BARBED WIRE)	STA. 10+47.97, RT. 186' TO STA. 6+44.88, RT. 212'
6	85 LF	CHAIN LINK FENCE, 9 FT. HIGH (3 STRANDS BARBED WIRE)	STA. 6+75.48, RT. 172' TO STA. 6+75.48, RT. 108'
7	5 LF	CHAIN LINK GATE, 9 FT. HIGH (3 STRANDS BARBED WIRE)	STA. 6+57.73, RT. 104.5' TO STA. 6+75.48, RT. 106'
8	20 LF	CHAIN LINK GATE, 9 FT. HIGH (3 STRANDS BARBED WIRE)	STA. 6+44.88, RT. 212.5' TO STA. 6+44.88, RT. 240'
9	369 LF	CHAIN LINK FENCE, 9 FT. HIGH (3 STRANDS BARBED WIRE)	STA. 6+44.88, RT. 240' TO STA. 3+72.00, RT. 231.4'
10	185 LF	CHAIN LINK FENCE, 9 FT. HIGH (3 STRANDS BARBED WIRE)	STA. 3+94.32, RT. 21.55' TO STA. 5+70.04, RT. 39.5'

PAVEMENT MARKINGS LEGEND

SYMBOL	ITEM	QUANTITY
A	EPOXY RESIN PAINT PAVEMENT STRIPING, WHITE 5" SOLID (ITEM 817013)	1780 LF
B	PREFORMED THERMOPLASTIC PAVEMENT MARKING WHITE, HANDICAP SYMBOL (817017)	3 EACH
C	EPOXY RESIN PAINT PAVEMENT STRIPING, BLUE 5" SOLID (ITEM 817013)	217 LF

DRAINAGE PIPE SCHEDULE

NO.	SIZE / TYPE	CLASS	LENGTH	SLOPE	INT. EL.	DIS. EL.
102	15" RCP	III	138	0.015	73.90	71.80
101	15" RCP	III	141	0.015	71.80	69.70
100	15" RCP	III	86	0.015	69.70	68.40
210	6" PVC	***	76	0.005	76.70	76.30
209	6" PVC	***	76	0.005	77.00	76.60
208	6" PVC	***	48	0.006	76.60	76.30
207	6" PVC	***	48	0.006	76.30	76.00
201	12" RCP	IV	127	0.005	75.75	75.10
200	12" RCP	III	19	0.005	75.10	75.00
215	15" RCP	III	32	0.006	73.00	72.80
301	15" RCP	III	142	0.007	74.00	73.00
310	15" RCP	III	85	0.003	74.26	74.00
311	15" RCP	III	103	0.003	74.55	74.26
401	12" RCP	IV	172	0.010	77.60	75.90
400	12" RCP	III	95	0.010	75.90	75.00
500	15" RCP	V	53	0.008	70.00	69.50

*** ALL DOWNSPOUT CONNECTIONS TO THE PIPE AND PIPE CLEANOUTS SHALL BE PAID INCIDENTAL TO THE PIPE ITEMS.

UNOFFICIAL WEBSITE COPY

PLOTTED BY: BDOUGHERTY DATE: 6/7/2019 [SHEET: CP02]
FILE LOCATION: Q:\NDE\151152_010_CHAPMAN_YARD__-_PHASE\CADD\CP.DGN

ADDENDA / REVISIONS

SCALE 0 30 60 90 FEET

NORTH DISTRICT CREW QUARTERS AND SITE WORK, PHASE 1A

CONTRACT	BRIDGE NO.	N/A
T201880103	DESIGNED BY: WJD	
COUNTY		
NEW CASTLE	CHECKED BY: BPH	

CONSTRUCTION PLAN

CP-02

SECTION JMT

SHEET NO. 8

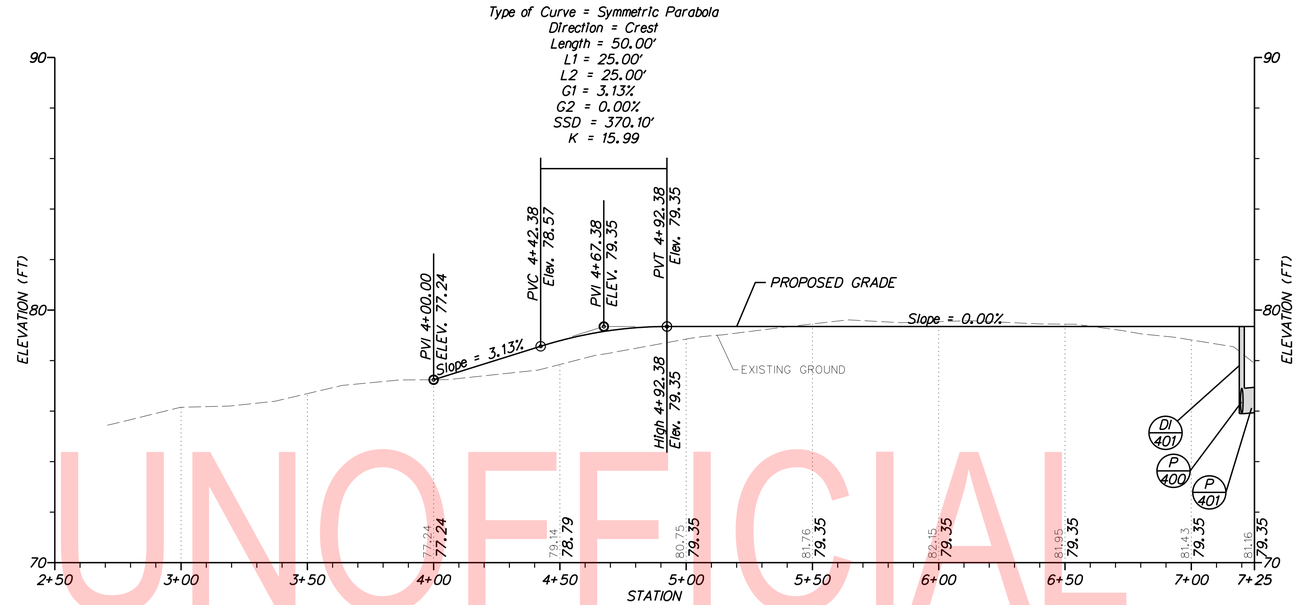

North District Yard Main

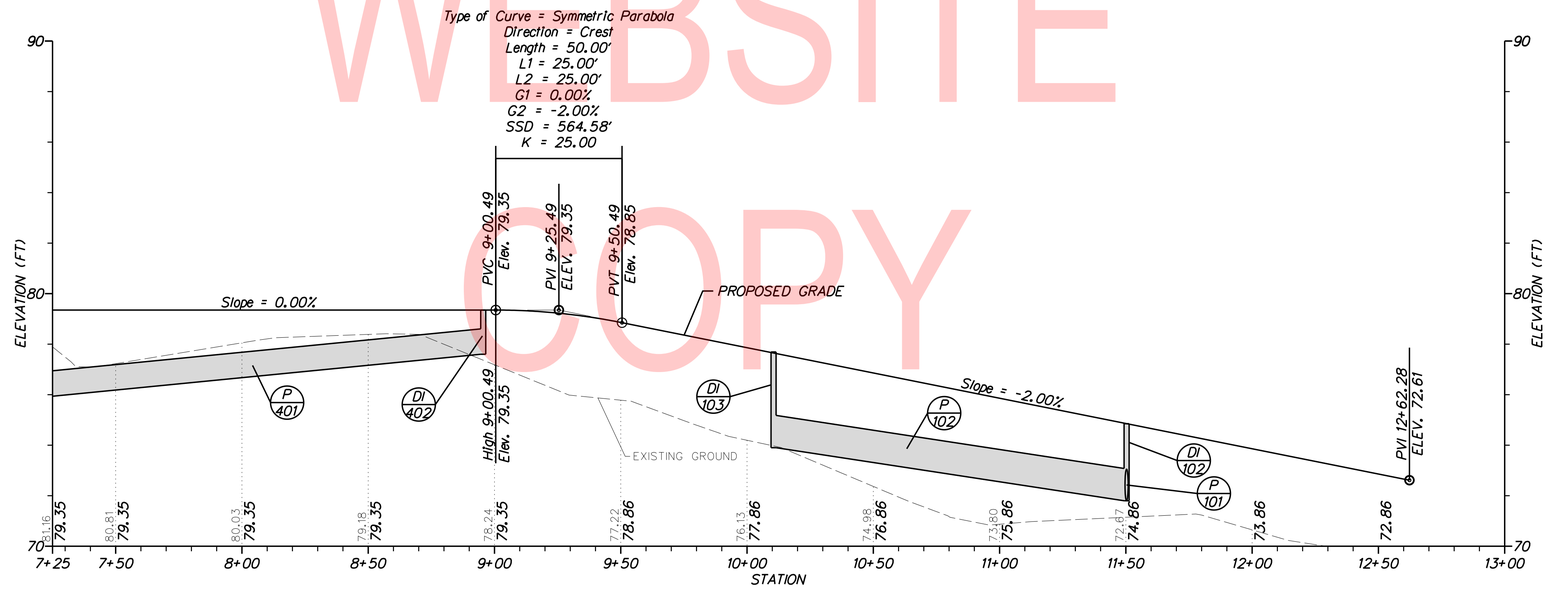

North District Yard Main

UNOFFICIAL WEBSITE COPY

VERTICAL SCALE FEET 9 6 3 0

ADDENDA / REVISIONS

SCALE 0 30 60 90 FEET

NORTH DISTRICT CREW QUARTERS AND SITE WORK, PHASE 1A

CONTRACT	BRIDGE NO.	N/A
T201880103	DESIGNED BY: WJD	
COUNTY		
NEW CASTLE	CHECKED BY: BPH	

PROFILES

SECTION JMT

SHEET NO. 9

PLOTTED BY: BDOUGHERTY DATE: 6/7/2019 FILE LOCATION: Q:\NDE\151152_010_CHAPMAN_YARD_-_PHASE\CADD\PF.DGN [SHEET: PF01]

NOTE: SEE DATA TABLES ON SHEET CL02

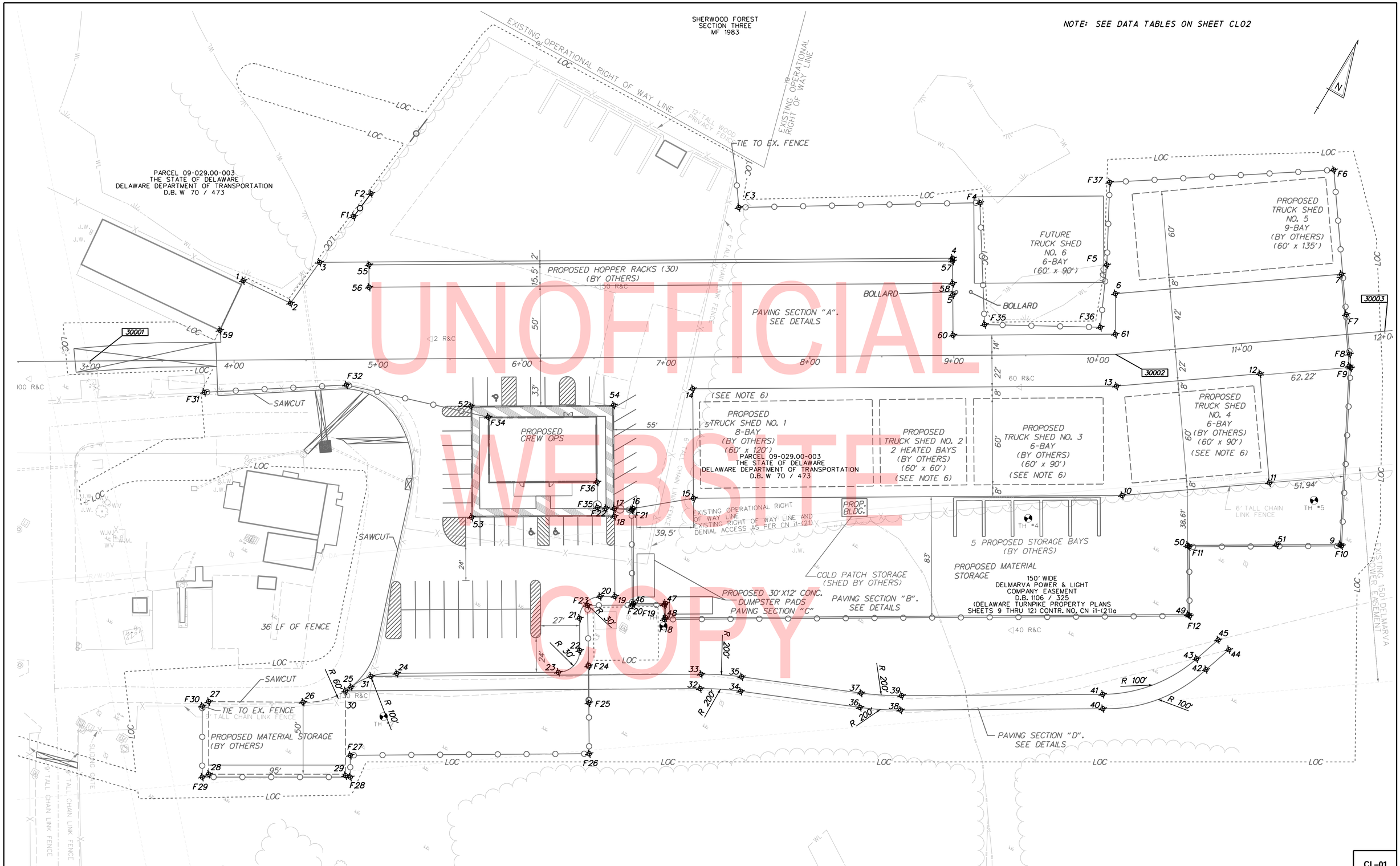

UNOFFICIAL WEBSITE COPY

PLOTTED BY: BDOUGHERTY DATE: 6/7/2019
FILE LOCATION: Q:\NDE\151152_010_CHAPMAN_YARD_-_PHASE\CADD\CL.DGN [SHEET: CL01]

ADDENDA / REVISIONS	

SCALE
0 30 60 90
FEET

NORTH DISTRICT
CREW QUARTERS AND SITE WORK, PHASE 1A

CONTRACT	BRIDGE NO.	N/A
T201880103	DESIGNED BY: WJD	
COUNTY	CHECKED BY: BPH	
NEW CASTLE		

CONSTRUCTION LAYOUT

CL-01

SECTION	SHEET NO.
JMT	10

CONSTRUCTION ALIGNMENT CONTROL

POINT	STATION	OFFSET	NORTHING	EASTING
30001	3+00.00	0.00	607770.3301	580368.7717
30002	10+12.29	0.00	608139.0856	580978.1814
30003	12+00.00	0.00	608248.6954	581130.5617

DATUM REFERENCE:
HORIZONTAL - THIS PROJECT IS REFERENCED TO THE DELAWARE STATE PLANE COORDINATE SYSTEM (NAD 83/91).

VERTICAL - THIS PROJECT IS REFERENCED TO NAVD 88.

HORIZONTAL / VERTICAL CONTROL DATA

POINT	STATION	OFFSET	NORTHING	EASTING	ELEVATION
JMT1	2+57.73	-12.13'	607738.0700	580338.8803	75.530
JMT2	5+36.49	-13.78'	607904.5508	580563.9703	79.595
JMT3	4+71.10	233.81'	607658.8708	580636.1979	80.037
JMT4	9+38.86	191.15'	607937.5325	581014.3142	72.999

FENCE COORDINATE LIST

POINT NO.	STATION	OFFSET	NORTHING	EASTING
F1	4+83.72	-99.12	607950.2469	580474.6375
F2	4+95.86	-115.02	607970.1301	580476.7957
F3	7+51.33	-103.71	608092.7104	580701.2211
F4	9+18.73	-105.92	608181.2733	580843.2981
F5	10+06.67	-62.08	608189.2877	580941.2269
F6	11+74.33	-114.58	608326.7202	581042.8176
F7	11+74.32	-13.79	608244.8942	581101.6611
F8	11+74.32	13.79	608222.5022	581117.7638
F9	11+74.31	23.48	608214.6349	581123.4214
F10	11+57.30	145.97	608105.2641	581181.1290
F11	10+51.78	137.57	608050.4666	581090.5700
F12	10+47.97	185.41	608009.4059	581115.4159
F18	6+97.64	182.00	607820.4826	580803.1992
F19	6+97.64	171.91	607829.1086	580797.9796
F20	6+75.48	171.91	607817.6355	580779.0190
F21	6+75.48	105.83	607874.1732	580744.8079
F22	6+57.73	104.46	607866.1611	580728.9128
F23	6+44.41	171.91	607801.5480	580752.4327
F24	6+44.92	213.91	607765.8778	580774.6126
F25	6+44.88	239.62	607743.8670	580787.8867
F26	6+44.89	274.97	607713.6297	580806.1995
F27	4+78.94	274.97	607627.7144	580664.2149
F28	4+78.84	290.10	607614.7140	580671.9664
F29	3+75.98	289.43	607562.0337	580583.6142
F30	3+76.30	240.09	607604.4191	580558.3418
F31	3+79.25	22.23	607792.3217	580448.0588
F32	4+77.94	17.78	607847.2418	580530.2159
F33	5+70.04	30.00	607884.4658	580615.3423
F34	5+70.04	38.75	607876.9823	580619.8706
F35	9+21.46	-21.29	608110.2741	580889.4523
F36	10+01.86	-18.87	608149.8323	580959.4851
F37	10+18.57	-119.40	608239.6762	580913.5551

COORDINATE LIST

POINT NO.	STATION	OFFSET	NORTHING	EASTING
1	4+06.65	-55.12	607872.6996	580431.4874
2	4+39.45	-39.26	607876.1095	580467.7580
3	4+59.88	-67.50	607910.8494	580470.6119
4	8+99.54	-67.50	608138.4629	580846.7686
5	8+99.54	-42.00	608116.6461	580859.9700
6	10+13.96	-42.00	608174.1554	580955.0105
7	11+73.32	-42.00	608267.2135	581084.3805
8	11+73.32	22.00	608215.2585	581121.7527
9	11+56.41	145.04	608105.4994	581179.8728
10	11+57.30	145.97	608057.2911	581032.3049
11	11+11.10	98.01	608117.2170	581115.6275
12	11+11.10	22.00	608178.9240	581071.2403
13	10+23.53	183.47	608120.5301	580990.0606
14	7+18.48	22.00	607968.1580	580738.2000
15	7+18.48	98.00	607903.1354	580777.5454
16	6+76.48	104.91	607875.4816	580745.1851
17	6+63.48	104.91	607868.7527	580734.0649
18	6+63.48	110.21	607864.2182	580736.8087
19	6+63.48	165.82	607816.6399	580765.5985
20	6+53.12	165.82	607811.2718	580756.7271
21	6+38.81	180.80	607791.0484	580752.2483
22	6+38.81	203.25	607771.8452	580763.8682
23	6+23.81	218.25	607751.2463	580758.8004
24	5+11.61	218.25	607693.1581	580662.8032
25	4+79.74	227.56	607668.6894	580640.3570
26	4+46.41	237.89	607642.5945	580617.1910
27	3+80.84	237.05	607609.3722	580560.6613
28	3+80.52	287.46	607566.0709	580586.4798
29	4+75.51	289.08	607613.8638	580668.5878
30	4+75.90	230.25	607664.4025	580638.4608
31	4+93.66	220.25	607682.1546	580648.4820
32	7+22.25	230.25	607791.9382	580849.2276
34	7+50.45	232.25	607804.8303	580874.3945
35	7+51.16	222.25	607813.7528	580869.8239
36	8+33.26	244.04	607837.6070	580951.3472
37	8+33.97	234.04	607846.5295	580946.7765
38	8+61.46	246.04	607850.4992	580976.5140
39	8+62.17	236.04	607859.4217	580971.9433
40	10+01.90	246.04	607923.2048	581096.6682
41	10+01.90	236.04	607931.7604	581091.4912
42	10+56.10	223.56	607983.1815	581144.2906
43	10+50.20	215.49	607986.2847	581134.7842
44	10+73.11	211.11	608003.2197	581150.8317
45	10+66.30	203.70	608005.2566	581140.9773
46	6+76.48	170.91	607819.0088	580779.3569
47	6+98.64	170.91	607830.4819	580798.3175
48	6+98.64	180.87	607821.9671	580803.4698
49	10+47.06	184.33	608009.7437	581114.0427
50	10+50.86	136.49	608050.8044	581089.1967
51	11+12.51	141.40	608082.8182	581142.1030
52	5+64.32	33.00	607878.9406	580611.9970
53	5+64.29	110.21	607812.8632	580651.9485
54	6+63.48	33.00	607930.2759	580696.8375
55	4+94.10	-65.50	607926.8547	580500.9256
56	4+94.10	-50.00	607913.5935	580508.9500
57	8+99.54	-65.50	608136.7518	580847.8040
58	8+99.54	-50.00	608123.4906	580855.8284
59	3+90.32	-20.76	607834.8541	580435.2961

UNOFFICIAL WEBSITE COPY

PLOTTED BY: BDOUGHERTY DATE: 6/7/2019
FILE LOCATION: Q:\NDE\151152_010_CHAPMAN_YARD_-_PHASE\CADD\CL.DGN [SHEET: CL02]

CL-02

ADDENDA / REVISIONS

SCALE 0 30 60 90 FEET

NORTH DISTRICT CREW QUARTERS AND SITE WORK, PHASE 1A

CONTRACT	BRIDGE NO.	N/A
T201880103	DESIGNED BY: WJD	
COUNTY		
NEW CASTLE	CHECKED BY: BPH	

CONSTRUCTION LAYOUT

SECTION: JMT

SHEET NO. 11

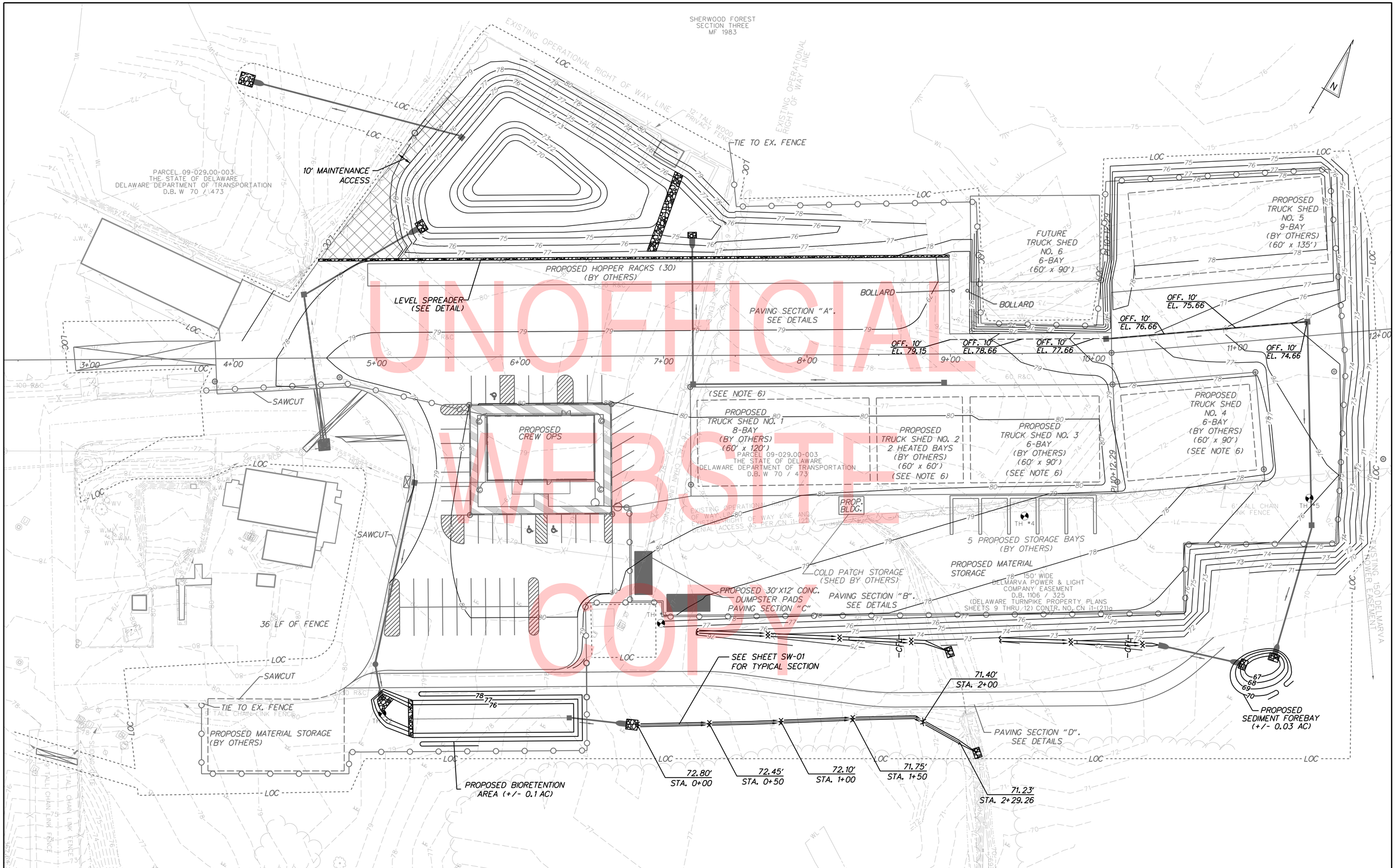

UNOFFICIAL WEBSITE COPY

PLOTTED BY: BDOUGHERTY DATE: 6/7/2019
FILE LOCATION: Q:\NDE\151152_010_CHAPMAN_YARD_-_PHASE\CADD\GP.DGN [SHEET: GP01]

ADDENDA / REVISIONS

SCALE
0 30 60 90
FEET

NORTH DISTRICT CREW QUARTERS AND SITE WORK, PHASE 1A

CONTRACT	BRIDGE NO.	N/A
T201880103	DESIGNED BY: WJD	
COUNTY	CHECKED BY: BPH	
NEW CASTLE		

GRADING PLAN

SECTION
JMT
SHEET NO.
12

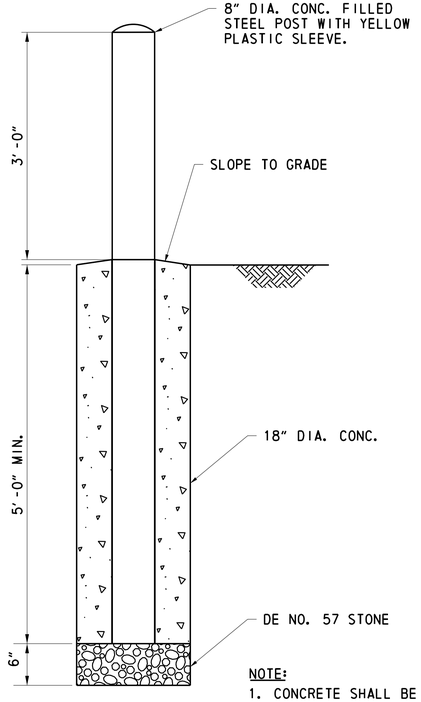

NOTE:
1. CONCRETE SHALL BE CLASS B.

BOLLARD DETAIL
N.T.S.

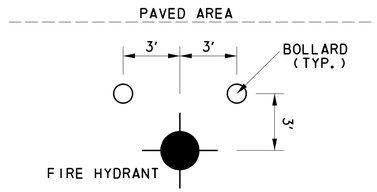

AT FIRE HYDRANT
N.T.S.

NOTES:

1. MARK IN 5' SQUARES, MAKE ALL EFFORTS TO HAVE SIDEWALK JOINTS MATCH CURB JOINTS.
2. CONSTRUCT SIDEWALK AT GRADE. SLOPE SIDEWALK AWAY FROM BUILDING AT 1.5% (MIN.) TO 2% (MAX.) IN ORDER TO ASSURE POSITIVE DRAINAGE.

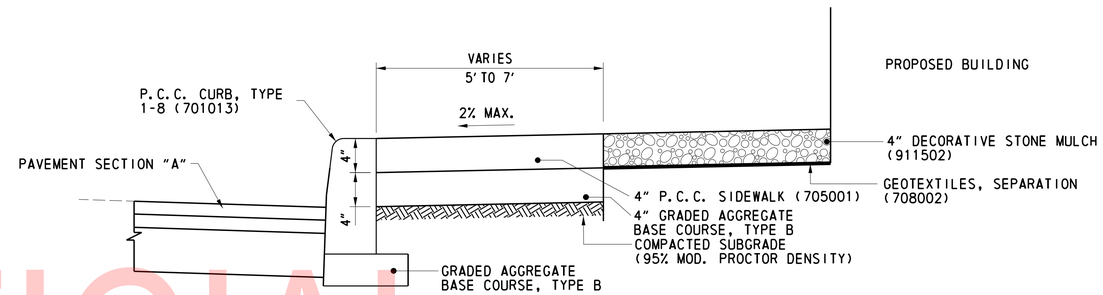

CONCRETE SIDEWALK DETAIL
N.T.S.

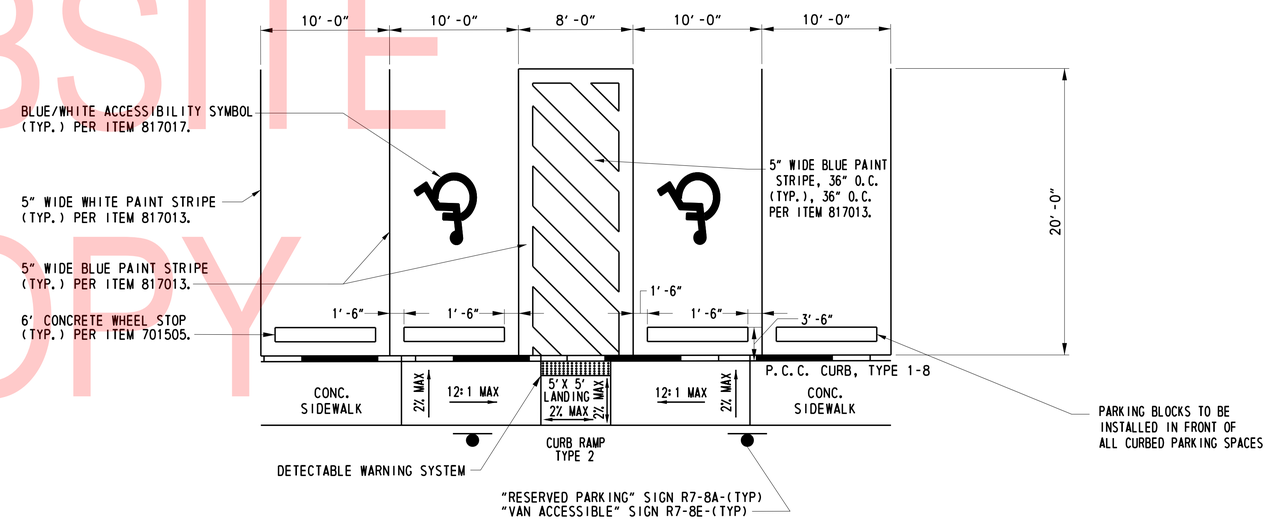

PARKING LAYOUT
N.T.S.

UNOFFICIAL WEBSITE COPY

PLOTTED BY: BDOUGHERTY DATE: 6/7/2019
FILE LOCATION: Q:\NDE\151152_010_CHAPMAN_YARD_-_PHASE\CADD\DT.DGN [SHEET: DT01]

ADDENDA / REVISIONS	

NOT TO SCALE

NORTH DISTRICT
CREW QUARTERS AND SITE WORK, PHASE 1A

CONTRACT	BRIDGE NO.	N/A
T201880103	DESIGNED BY: WJD	
COUNTY		
NEW CASTLE	CHECKED BY: BPH	

DETAILS

DT-01

SECTION
JMT
SHEET NO.
13

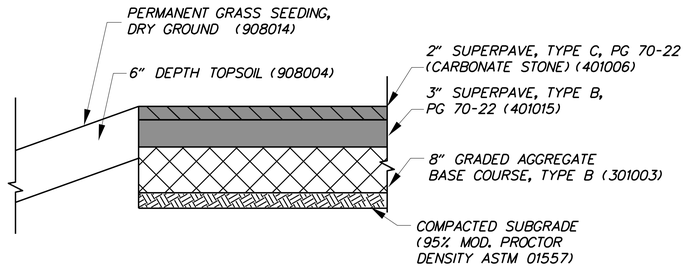

PAVING SECTION 'A'
N. T. S.

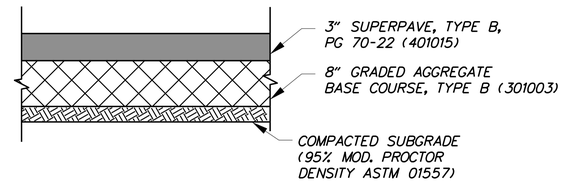

PAVING SECTION 'B'
N. T. S.

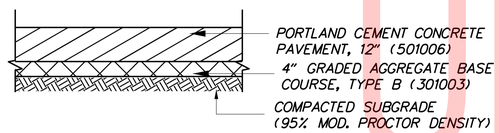

PAVING SECTION 'C'
N. T. S.

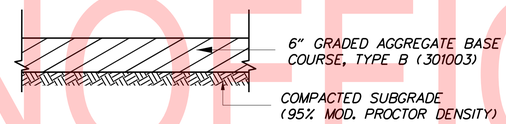

PAVING SECTION 'D'
N. T. S.

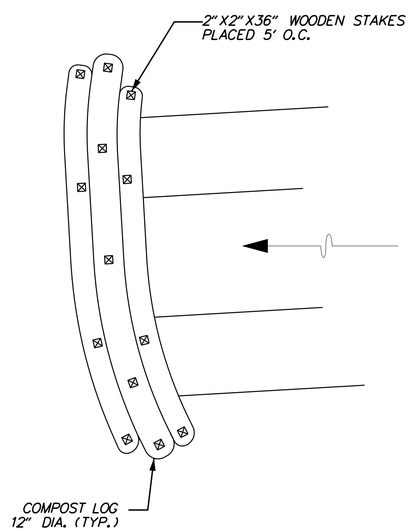

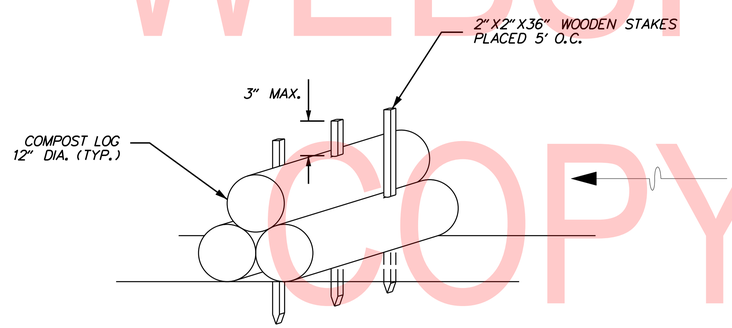

NOTES:
1. ALL MATERIAL WILL MEET DNREC SPECIFICATIONS.
2. SEDIMENT SHOULD BE REMOVED FROM BEHIND THE CHECK DAM ONCE THE ACCUMULATED HEIGHT HAS REACHED ½ THE HEIGHT OF THE CHECK DAM.

TRIPLE-STACK COMPOST FILTER LOG DETAIL
N. T. S.

Part # GISB-20-36-20

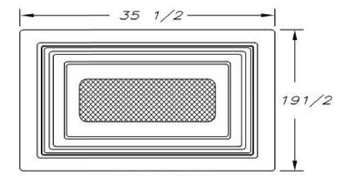

TOP VIEW

Flow Specifications

Description of filter opening	Percent Open (Based on Screen Dimensions)	Total Square Inches per Unit	Square Inches of Total Unobstructed Openings	Flow Rate (Cubic Feet per Second)
Skimmer protected By-Pass	100%	211.4	211.4	7.4 cfs
Coarse Screen 3/4" x 1-3/4" stainless steel flattened expanded	62%	187.2	116.1	5.0 cfs
Medium Screen 10x10 mesh stainless steel	56%	187.2	104.9	5.2cfs
Fine screen 14 x 18 mesh stainless steel	68%	119.1	76.9	4.3 cfs
THROAT FLOW RATE Total: 12.2 cfs			TREATED FLOW RATE Total: 14.5 cfs	
FLOW RATES BASED ON UNOBSTRUCTED OPENINGS				

FLOW SCHEMATIC

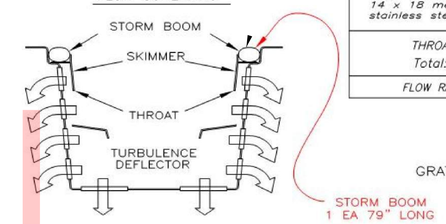

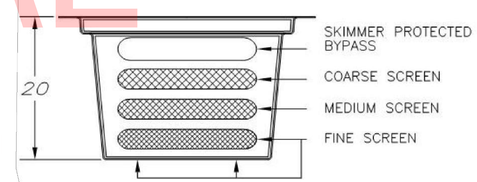

SIDE VIEW

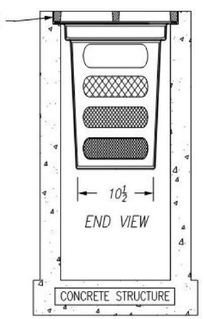

BOX MANUFACTURED FROM MARINE GRADE FIBERGLASS & GEL COATED FOR UV PROTECTION

REMOVE GRATE INSERT GISB REINSTALL GRATE

NOTE: GRATE INLET SKIMMER BOX TO BE INSTALLED AFTER FINAL STABILIZATION OF ALL DISTURBED AREAS.

GRATE INLET SKIMMER BOX
N. T. S.

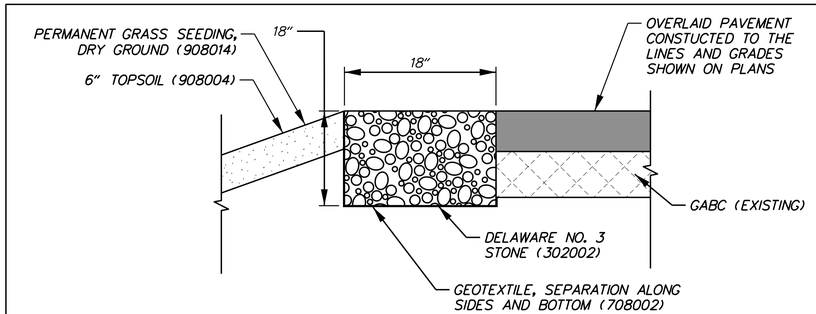

LEVEL SPREADER DETAIL
N. T. S.

UNOFFICIAL WEBSITE COPY

PLOTTED BY: BDOUGHERTY DATE: 6/7/2019
FILE LOCATION: Q:\NDE\151152_010_CHAPMAN_YARD_-_PHASE\CADD\DT.DGN [SHEET: DT02]

ADDENDA / REVISIONS	NOT TO SCALE	NORTH DISTRICT CREW QUARTERS AND SITE WORK, PHASE 1A	CONTRACT T201880103	BRIDGE NO. N/A	DETAILS	DT-02
			COUNTY NEW CASTLE	DESIGNED BY: WJD		SECTION JMT
				CHECKED BY: BPH		SHEET NO. 14

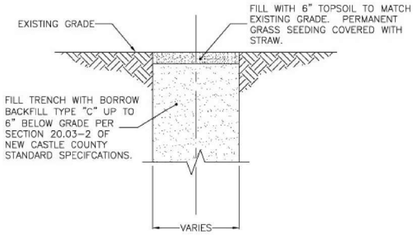

NOTES:
1. ALL BACKFILL AND BEDDING TO BE COMPACTED USING MECHANICAL TAMPER OR VIBRATORY COMPACTOR IN 8" LIFTS.
2. TYPICAL TRENCH WIDTH AND PIPE BEDDING, SEE DETAIL: SS-IN-2.

(NOT TO SCALE)

NEW CASTLE COUNTY, DELAWARE DEPARTMENT OF SPECIAL SERVICES	SANITARY SEWER DETAILS RESTORATION & TRENCH BACKFILL NON-PAVED AREA	ISSUED 5/27/10 REVISED 5/2/12 REVISED DETAIL SS-IN-1A

SS-IN-1A

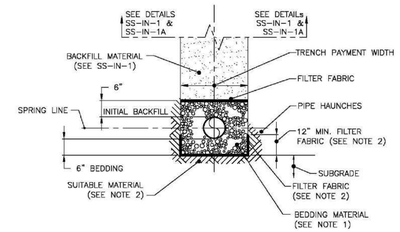

TYPICAL SECTION
(NOT TO SCALE)

NOTES:

1) STONE BEDDING: BEDDING, HAUNCHING AND INITIAL BACKFILL SHALL CONFORM TO SECTION 20.04-1 OF THE NCC STANDARD SPECIFICATIONS.

2) BEDDING: PRIOR TO PIPE INSTALLATION, CAREFULLY BRING 6" OF BEDDING MATERIAL TO PROPOSED BOTTOM OF PIPE ALONG THE ENTIRE LENGTH OF PIPE TO BE INSTALLED. IF SUBGRADE IS IN UNSUITABLE MATERIAL, SUITABLE FILL MATERIAL AND MIRAFI 140N OR APPROVED EQUAL FILTER FABRIC WILL BE REQUIRED PRIOR TO PLACEMENT OF BEDDING.

3) PIPE HAUNCHES: CAREFULLY WORK, BY HAND, STONE BEDDING FROM THE EDGE OF THE TRENCH UP AND UNDER THE PIPE TO SUPPORT THE HAUNCHES. CONTINUE FILLING, BY HAND, TO THE SPRING LINE OF THE PIPE.

4) FOR NEW CASTLE COUNTY CAPITAL IMPROVEMENT PROJECTS, SEE TABLE FOR TRENCH PAYMENT WIDTH.

PIPE DIAMETER	TRENCH PAYMENT WIDTH
6"	36"
8"	36"
10"	36"
12"	36"
15" AND 16"	36"
18"	42"
20" AND 21"	42"
24"	48"
27"	60"
30"	60"

NEW CASTLE COUNTY, DELAWARE DEPARTMENT OF SPECIAL SERVICES	SANITARY SEWER DETAILS TRENCH WIDTH & PIPE BEDDING	ISSUED 5/27/10 REVISED 12/05/11 REVISED 12/8/15 DETAIL SS-IN-2

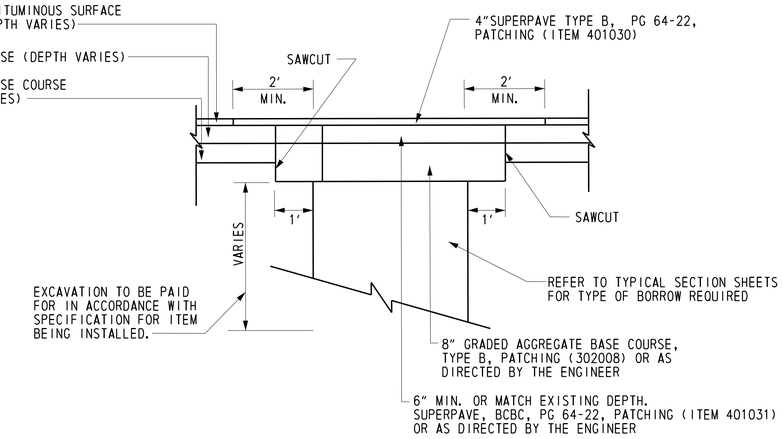

PIPE / CONDUIT TRENCH PAVING SECTION
NOT TO SCALE

The installation of any sanitary service laterals proposed to connect buildings to the sanitary sewer collection system cannot be commenced apart from issuance of a plumbing permit from the New Castle County Department of Land Use. This work must be performed by a licensed plumber. The following link will take you to the permit application form:
https://www.nccde.org/DocumentCenter/View/480/Plumbing-Permit-Application-PDF

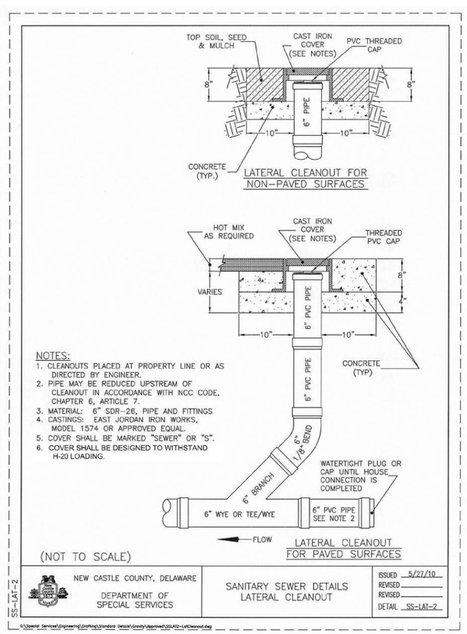

NOTES:
1. CLEANOUTS PLACED AT PROPERTY LINE OR AS DIRECTED BY ENGINEER.
2. PIPE MAY BE REDUCED UPSTREAM OF CLEANOUT IN ACCORDANCE WITH NCC CODE, CHAPTER 6, ARTICLE 7.
3. MATERIAL: 6" SDR-26, PIPE AND FITTINGS
4. CASTINGS: EAST JORDAN IRON WORKS, MODEL 1574 OR APPROVED EQUAL.
5. COVER SHALL BE MARKED "SEWER" OR "S".
6. COVER SHALL BE DESIGNED TO WITHSTAND H-20 LOADING.

(NOT TO SCALE)

NEW CASTLE COUNTY, DELAWARE DEPARTMENT OF SPECIAL SERVICES	SANITARY SEWER DETAILS LATERAL CLEANOUT	ISSUED 5/27/10 REVISED REVISED DETAIL SS-LAT-2

SS-LAT-2

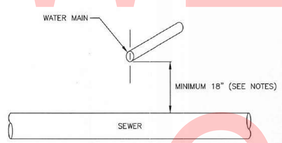

ELEVATION

WATER MAIN/SEWER CROSSING DETAIL
(NOT TO SCALE)

NOTES:

IN THE EVENT THAT THE VERTICAL SEPARATION BETWEEN WATER MAIN AND SEWER (WITH WATER MAIN ABOVE OR BELOW SEWER) IS 18" OR LESS:

1) SEWER SHALL BE DESIGNED AND CONSTRUCTED EQUAL TO WATER PIPE AND SHALL BE PRESSURE TESTED AT 150 p.s.i. TO ASSURE WATER TIGHTNESS PRIOR TO BACKFILLING.

2) EITHER WATER MAIN OR SEWER LINE MAY BE ENCASED IN A WATERTIGHT CARRIER PIPE WHICH EXTENDS 10 FEET ON BOTH SIDES OF THE CROSSING, MEASURED PERPENDICULAR TO THE WATER MAIN. THE CARRIER PIPE SHALL BE OF MATERIALS APPROVED BY NEW CASTLE COUNTY FOR USE IN WATER MAIN CONSTRUCTION.

3) THE CROSSING SHALL BE ARRANGED SO THAT THE JOINTS IN THE SEWER PIPE WILL BE EQUIDISTANT AND AS FAR AS POSSIBLE FROM THE WATER MAIN JOINTS.

4) WHERE A WATER MAIN CROSSES UNDER A SEWER, ADEQUATE STRUCTURAL SUPPORT SHALL BE PROVIDED FOR THE SEWER TO MAINTAIN LINE AND GRADE.

NEW CASTLE COUNTY, DELAWARE DEPARTMENT OF SPECIAL SERVICES	SANITARY SEWER DETAILS WATER MAIN CROSSING	ISSUED 5/27/10 REVISED REVISED DETAIL SS-MISC-4

SS-MISC-4

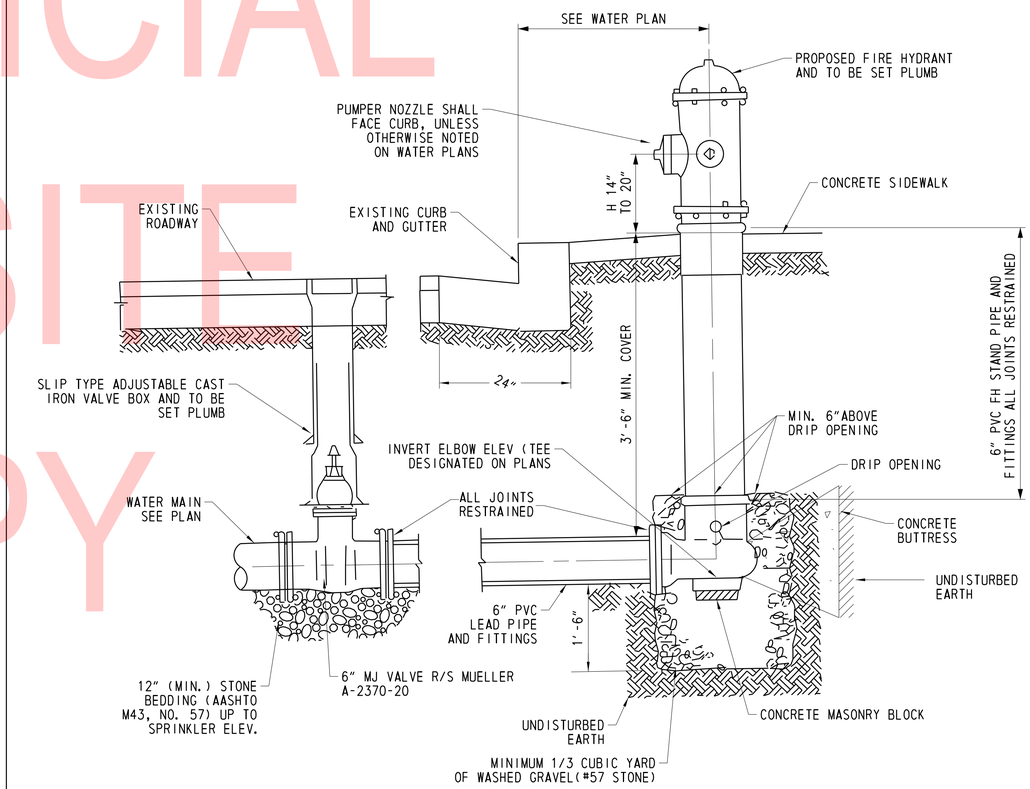

NOTES
1. FIRE HYDRANT MUELLER-HYDRANT MODEL A-423 CENTURTAN 5 1/4" N/S WITH MJ SHOE OR APPROVED EQUAL.
2. RESTORE ALL PAVING, CURB AND GUTTER AND SIDEWALK TO ORIGINAL CONDITIONS

FIRE HYDRANT SETTING DETAIL - EXISTING CONDITIONS
NOT TO SCALE

UNOFFICIAL WEBSITE COPY

PLOTTED BY: BDOUGHERTY DATE: 6/7/2019 [SHEET: DT02]
FILE LOCATION: Q:\NDE\151152_010_CHAPMAN_YARD__-_PHASE\CADD\DT.DGN

ADDENDA / REVISIONS

NOT TO SCALE

NORTH DISTRICT CREW QUARTERS AND SITE WORK, PHASE 1A

CONTRACT T201880103	BRIDGE NO.	N/A
COUNTY NEW CASTLE	DESIGNED BY: WJD	
	CHECKED BY: BPH	

CONSTRUCTION DETAILS

DT-03

SECTION	SHEET NO.
JMT	15

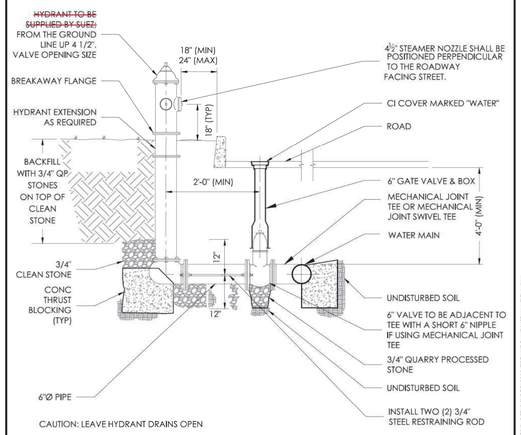

NOTES:
1. INSTALL CLEAN STONE AROUND THE HYDRANT BASE. WEEP HOLES AT BASE SHALL NOT BE BLOCKED.

FIRE HYDRANT INSTALLATION

DETAIL H1
N.T.S.

SUEZ | FIRE HYDRANT INSTALLATION | SCD-0010

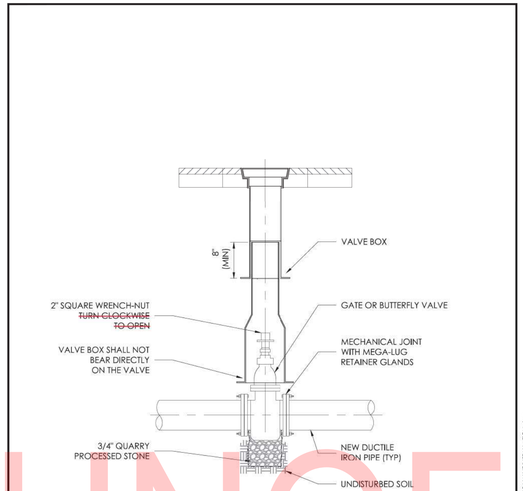

VALVE INSTALLATION

DETAIL V1
N.T.S.

SUEZ | VALVE INSTALLATION | SCD-0012

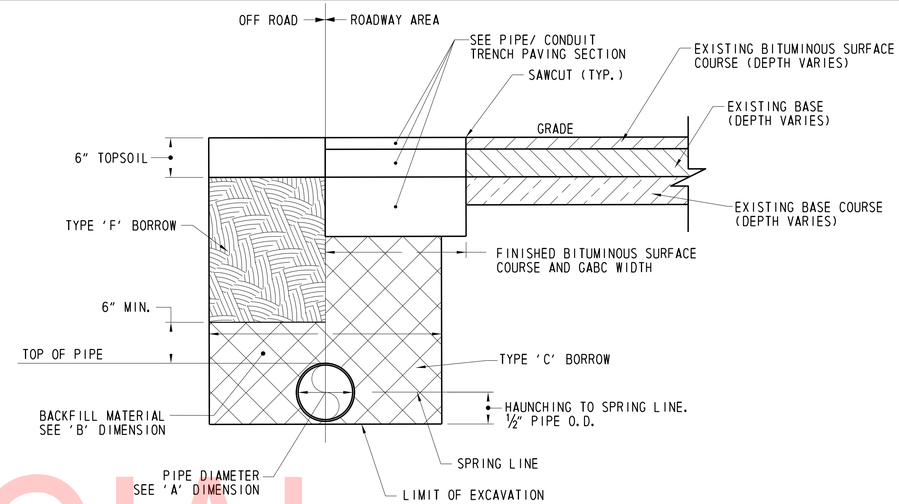

NOTES

1. BACKFILL MATERIAL: PRIOR TO PIPE INSTALLATION, CAREFULLY EXCAVATE TO GUIDE ALONG THE ENTIRE LENGTH OF PIPE TO BE INSTALLED. CAREFULLY WORK BACKFILL MATERIAL MEETING TYPE C BORROW SPECIFICATIONS BY HAND FROM THE EDGE OF THE TRENCH UP AND UNDER THE PIPE TO THE SPRING LINE OF THE PIPE. BACKFILL MATERIAL REQUIRED SHALL BE INCIDENTAL TO THE WATER MAIN PIPE ITEM.
2. BACKFILL MATERIAL MAY BE MECHANICALLY PLACED AND SHALL BE COMPACTED IN 8" LIFTS AFTER PIPE IS COVERED 6".
3. WHERE TWO TIER SHEETING IS AUTHORIZED BY THE ENGINEER, ALL WIDTHS SHOWN ON TRENCH PAVEMENT WIDTH TABLE SHALL BE INCREASED BY 3 FEET.
4. PROVIDE CONTINUOUS BEARING FOR FULL LENGTH OF PIPE.

TRENCH PAVEMENT WIDTH TABLE

'A' PIPE DIAMETER	'B' TRENCH WIDTH	GABC PAVING WIDTH	FINISHED PAVING WIDTH
2"/4"	24"	60"	60"
6"	28"	60"	60"
8"	32"	60"	60"

WATER PIPE TRENCH BEDDING DETAIL
NOT TO SCALE

NOMINAL PIPE SIZE (INCHES)	MAXIMUM PIPE O.D. (INCHES)	REQUIRED BEARING AREA (SQ FT)			
		90 DEG	45 DEG	22.50 DEG	11.25 DEG
2/3	4.80	2.9	1.6	0.8	0.4
6	6.96	6	4	2	1
8	9.05	11	6	3	2
12	13.20	24	13	7	4
16	17.40	38	20	10	5

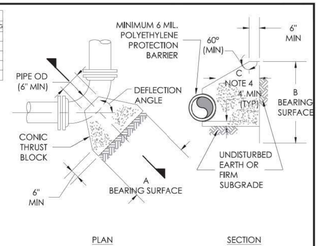

NOTES:
1. MAXIMUM TEST PRESSURE = 1.5 X 150 PSI
2. MINIMUM ALLOWABLE SOIL BEARING PRESSURE = 2000 PSF
3. BEARING AREA = A x B
4. C SHALL BE GREATER THAN A/2 AND B/2

DETAIL FOR HORIZONTAL BENDS

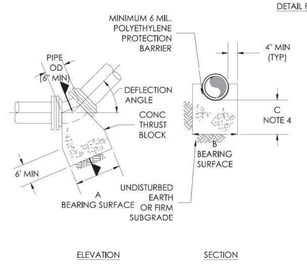

DETAIL FOR LOWER VERTICAL BENDS

THRUST BLOCKS FOR HORIZONTAL BENDS AND LOWER VERTICAL BENDS

DETAIL TB3
N.T.S.

SUEZ | INSTALLATION OF 2" FLUSHING/SAMPLE TAP FOR DECHLORINATION | SCD-0017

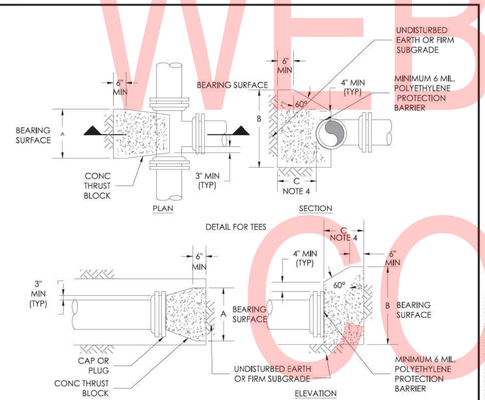

PLAN DETAIL FOR CAPS OR PLUGS

NOMINAL PIPE SIZE (IN)	MAXIMUM PIPE OD (IN)	REQUIRED BEARING AREA (SQ FT)
2/3	4.80	2
6	6.90	4
8	9.05	7
10	11.10	11
12	13.20	15
14	15.30	21
16	17.40	27
18	19.50	34

NOTES:
1. MAXIMUM TEST PRESURE = 1.50 x 150 PSI
2. MINIMUM ALLOWABLE SOIL BEARING PRESSURE = 2000 PSF
3. BEARING AREA = A x B
4. C SHALL BE GREATER THAN A/2 AND B/2.
5. WHEN POSSIBLE JOINTS TO BE TIED WITH THREE (3) - 3/4" RODS TO RESTRAINER ON STRAIGHT PIPE IN LIEU OF THRUST BLOCKING.

THRUST BLOCK FOR TEES, CAPS, AND PLUGS

DETAIL TB1
N.T.S.

SUEZ | THRUST BLOCK FOR TEES, CAPS, AND PLUGS | SCD-0019

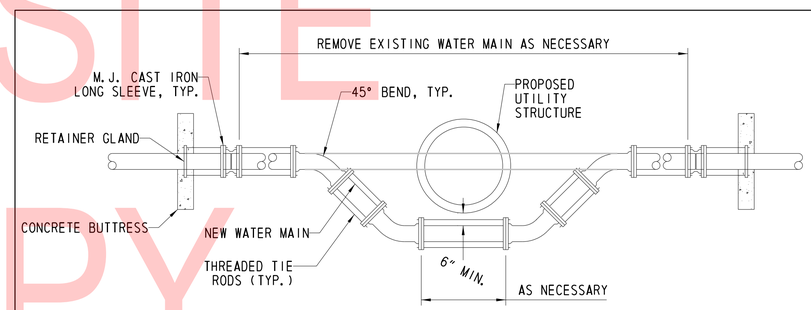

NOTES

1. DIAMETER OF WATER MAIN TO BE LOWERED OR RAISED VARIES.
2. TO RAISE WATER MAIN USE INVERSE OR MIRROR IMAGE OF VERTICAL REALIGNMENT.
3. PIPE DIAMETER 12" OR SMALLER USE (2) 3/4" THREADED TIE RODS 180° APART.

VERTICAL REALIGNMENT
NOT TO SCALE

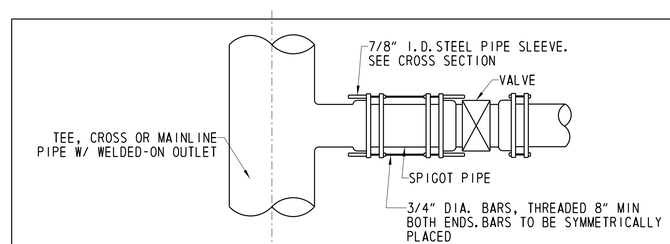

NOTES

1. USE MECHANICAL JOINT FITTINGS ONLY.
2. COAT BARS AND APPURTENANCES WITH FIELD-APPLIED COATING IN ACCORDANCE WITH CITY OF NEWARK SPECIFICATIONS.

METHOD OF STRAPPING VALVE TO MAIN
NOT TO SCALE

UNOFFICIAL WEBSITE COPY

PLOTTED BY: BDOUGHERTY DATE: 6/7/2019
FILE LOCATION: G:\NDEV\51152_010_CHAPMAN_YARD_-_PHASE\CADD\DT.DGN [SHEET: DT02]

ADDENDA / REVISIONS

NOT TO SCALE

NORTH DISTRICT CREW QUARTERS AND SITE WORK, PHASE 1A

CONTRACT	BRIDGE NO.	N/A
T201880103	DESIGNED BY: WJD	
COUNTY		
NEW CASTLE	CHECKED BY: BPH	

CONSTRUCTION DETAILS

DT-04

SECTION	JMT
SHEET NO.	16

MISCELLANEOUS EQUIPMENT SCHEDULE

DESIG.	DESCRIPTION	BASIS	NOTES:
FFS-1	FUEL FILTERING SYSTEM: SIMPLX PACKAGED AUTOMATED TANK FUEL FILTERING SYSTEM. INSTALLED PER MANUFACTURER'S RECOMMENDATIONS.	SIMPLEX SMART FILTER	1
ST-1	DIESEL FUEL STORAGE TANK: THERMALLY INSULATED, FG DOUBLE WALL STEEL ABOVEGROUND CYLINDRICAL STORAGE TANK. 4,000 GALLON CAPACITY; OVERALL DIMENSIONS: 5'10"W x 6'8"H x 24'7"L. PROVIDE WITH OPTIONAL STIARS AND CATWALK INSTALLED PER MANUFACTURER'S RECOMMENDAT	HIGHLAND TANK FIREGUARD	1
E-GEN-1	GENERATOR: INLINE 4-CYCLE DIESEL GENERATOR. WATER-COOLED ENGINE WITH BRUSHLESS GENERATOR AND ACCESSORIES. 60 HZ FREQUENCY AND 480 V, 3 PHASE UNIT.	CATERPILLAR C15	1
E-GEN-2	GENERATOR: INLINE 4-CYCLE DIESEL GENERATOR. WATER-COOLED ENGINE WITH BRUSHLESS GENERATOR AND ACCESSORIES. 60 HZ FREQUENCY AND 480 V, 3 PHASE UNIT.	CATERPILLAR C15	1
IC-1	REMOTE MONITORING PANEL: REMOTE MONITORING PANEL & TANK GAUGING SYSTEM. PANEL LOCATED IN CREW OPS BUILDING AND INSTALLED PER MANUFACTURER'S RECOMMENDATIONS	OMNTEC OEL8000IIIKP	1

NOTES:
1.) REFER TO ELECTRICAL DRAWINGS AND SPECFICATIONS FOR ADDITIONAL INFORMATION.

FUEL PLAN LEGEND

FFS	FUEL FILTRATION SYSTEM
FOF	FUEL OIL FILL
FOR	FUEL OIL RETURN
FOS	FUEL OIL SUPPLY
FS	FLOW SWITCH
PFOR	POLISHING RETURN
PFOS	POLISHING SUPPLY
RF	REMOTE FILL
ST	STANDARD TANK

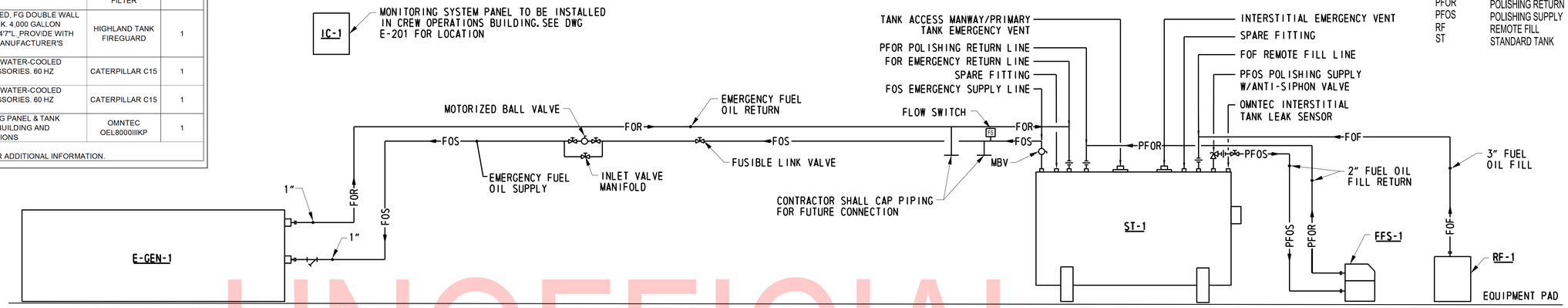

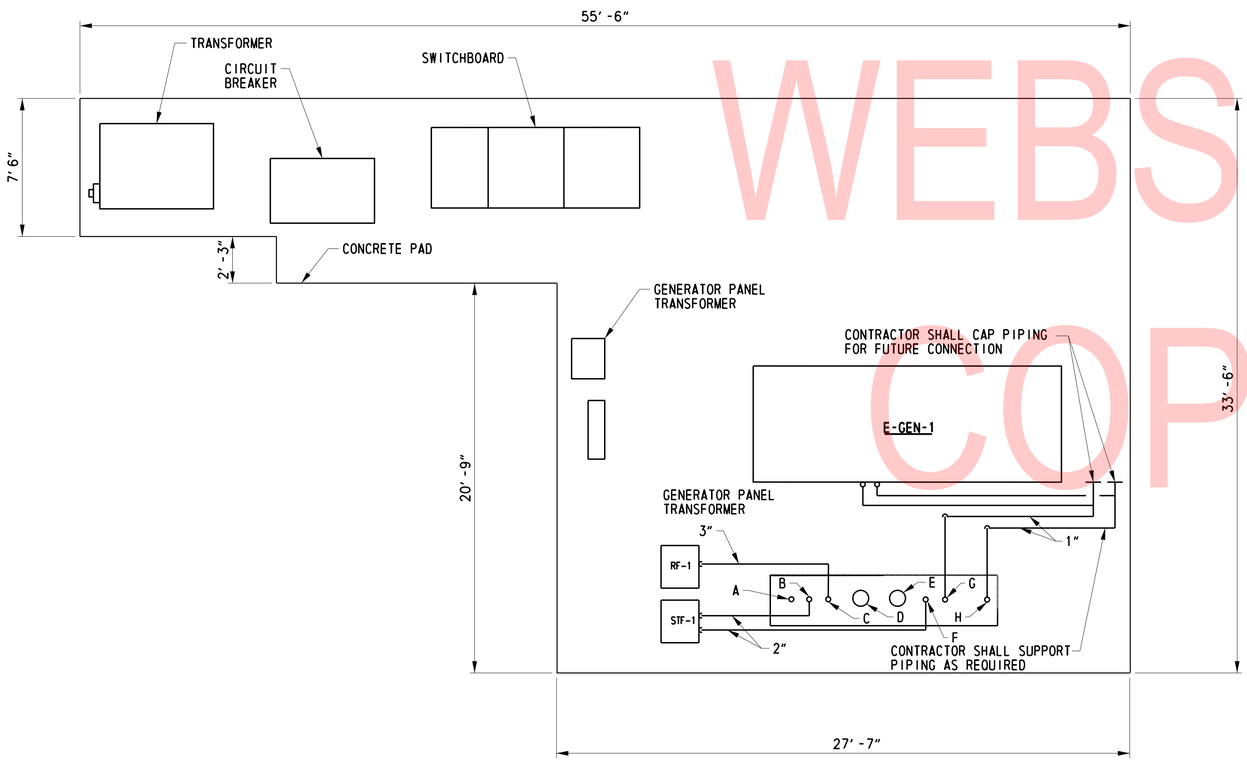

FUEL TANK SCHEDULE

ITEM	SIZE	FUNCTION
A	4"	OMNTEC INTERSTITIAL TANK LEAK SENSOR
B	4"	PFOS POLISHING SUPPLY W/ANTI-SIPHON VALVE
C	4"	FOF REMOTE FILL LINE
D	6"	INTERSTITIAL EMERGENCY VENT
E	6"	TANK ACCESS MANWAY; PRIMARY TANK EMERGENCY VENT
F	4"	PFOS POLISHING LINE RETURN
G	4"	FOR EMERGENCY RETURN LINE
H	4"	FOS EMERGENCY SUPPLY LINE

NOTES: INCLUDE (2) SPARE 4" FITTINGS FOR FUTURE USE

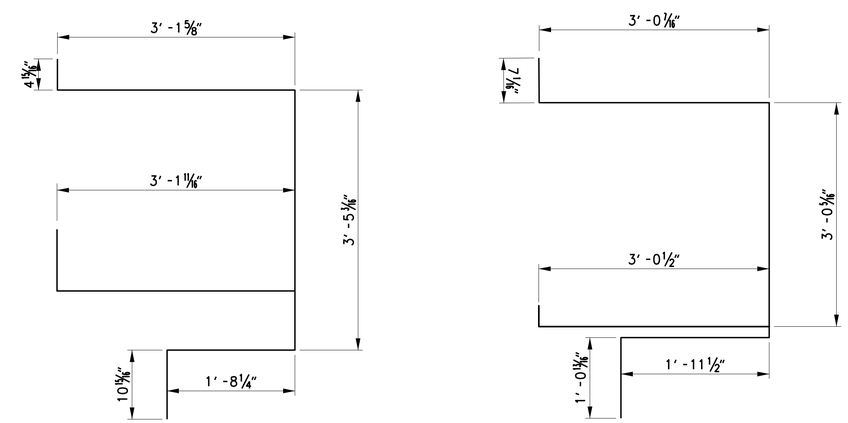

UNOFFICIAL WEBSITE COPY

PLOTTED BY: BDOUGHERTY DATE: 6/7/2019
FILE LOCATION: Q:\NDE\151152_010_CHAPMAN_YARD__PHASE\CADD\DT.DGN [SHEET: DT02]

ADDENDA / REVISIONS	NOT TO SCALE	NORTH DISTRICT CREW QUARTERS AND SITE WORK, PHASE 1A	CONTRACT T201880103	BRIDGE NO. N/A	CONSTRUCTION DETAILS	DT-05
			COUNTY NEW CASTLE	DESIGNED BY: WJD		SECTION JMT
				CHECKED BY: BPH		SHEET NO. 17

SLAB NOTES

1. CONSTRUCTION JOINH AND CONTROL JOINT MAY BE INTERCHANGED TO SUIT CONCRETE POUR SCHEDULE.

2. A SOIL BEARING CAPACITY OF 2000 PSF WAS USED IN THE FOUNDATION DESIGN AND MUST BE FIELD VERIFIED BY A REGISTERED DEOTECHNICAL ENGINEER.

3. EXACT LOCATION OF CONTROL JOINTS SHALL BE ESTABLISHED PRIOR TO CUTTING OF REINFORCING AND PLACING OF CONCRETE. FIELD CONTROL SHALL ASSURE THAT THE JOINTS OCCUR OVER THE CUT REINFORCING.

4. SAWING OF JOINTS:
   A. THE PREFERRED METHOD FOR SAWING CONTROL JOINTS IS WITH THE "SOFF-CUT" SAW WITHIN ONE HOUR OF FINISHED CONCRETE.
   B. THE CONVENTIONAL CONCRETE SAW CUTTING A 3/16" (5MM) WIDE GROOVE IS ALSO ACCEPTABLE. SAWING SHALL BEGIN AS SOON AS THE CONCRETE SURFACE HAS SUFFICIENTLY HARDENED TO PERMIT SAWING WITHOUT EXCESSIVE RAVELING AND BEFORE SHRINKAGE CRACKS OCCUR. SAWING SHALL BEGIN WITHIN 10 HOURS OF THE FINAL FINISHING OPERATION.
   C. WHERE THE SAW IS OBSTRUCTED, TOOLD OR FORMED JOINTS SHALL BE PROVIDED TO JOIN THE SAW CUT JOINT AND COMPLETE THE CONTROL JOINT.
   D. THE CONTRACTOR SHALL MAKE ALL NECESSARY PROVISIONS TO ENSURE THAT SAWED JOINTS ARE MADE IN THE PROPER INTERVAL INCLUDING, BUT NOT LIMITED TO LIGHTING, TWO SHIFTS, OVERTIME, ETC.

5. SLAB CONTROL JOINTS SHALL BE PLACED SUCH THAT SPACING DOES NOT EXCEED 36xSLAB THINCKNESS UP TO A MAXIMUM 18 FEET BETWEEN JOINTS PER ACI 302. JOINST SHALL BE CUT INTO THE SLAB AT A DEPTH OF ONE-THIRD TIMES THE THICKNESS OF THE SLAB WITHIN 12 HOURS OF PLACEMENT. JOINTS SHALL BE CUT AS SOON AS CONCRETE HAS CURED ENOUGH TO PREVENT DISLODGING AGGREGATE.

6. ALL FILL UNDER SLAB(S) IS TO BE COMPACTED TO 95% OF MAXIMUM DENSITY AT OPTIMUM MOISTURE CONTENT IN ACORDANCE WITH ASTM D1557.

CONCRETE NOTES

1. UNLESS NOTED OTHERWISE CONCRETE SHALL HAVE A 28 DAY COMPRESSIVE STRENGTH OF NO LESS THAN 4000 PSI.

2. CONCRETE IS TO BE CURED FOR A MINIMUM OF 7 DAYS BEFORE IMPOSING LOADS.

3. FOLLOW DELDOT RECOMMENDATIONS FOR PLACING CONCRETE IN COLD OR HOT WEATHER.

4. CONTRACTOR IS TO INSURE THAT ALL CONCRETE REINFORCEMENT IS INTALLED PROPOERLY AND PER THE PLANS BEFORE PLACING CONCRETE.

5. CONTRACTOR IS RESPONSIBLE FOR THE DESIGN AND FABIRCATION OF ALL FORM WORK.

6. REBAR IS TO BE GRADE 60 PER ASTM A615.

7. WELDED WIRE FABRIC IS TO BE PER ASTM 185.

8. CONCRETE COVER FOR REINFORCING SHALL BE 2" EXCEPT FOR CONCRETE CAST AGAINST THE GROUND. CONCRETE COVER FOR CONCRETE CAST AGAINST GROUND SHALL BE 3 INCHES.

9. ALL CONCRETE EXPOSED TO THE WEATHER SHALL HAVE AN AIR ENTRAINMENT OF 6% ±1%. NO ADMIXTURES CONTAINING CALCIUM CHLORIDE SHALL BE PERMITTED.

10. THE MAXIMUM SLUMP OF ALL CONCRETE SHALL BE 4" UNLESS OTHERWISE NOTED IN APPROVED MIX DESIGN.

GENERAL NOTES

DESIGN BASIS:

IBC	INTERNATIONAL
2012	BUILDING CODE
ACI	MANUAL FOR CONCRETE
318-11	CONSTRUCTION
ACI	GUIDE TO CONCRETE FLOOR AND SLAB
302-11	CONSTRUCTION

1. CONTRACTOR SHALL FULLY COORDINATE CONCRETE FOUNDATIONS WITH MANUFACTURER DRAWINGS.

2. CONTRACTOR TO VERIFY ALL DIMENSIONS AND SITE CONDITIONS PRIOR TO STARTING WORK. IF ANY DISCREPANCIES ARE NOTES, CONTRACTOR SHALL NOTIFY ARCHITECT AND ENGINEER IMMEDIATELY.

3. DO NOT SCALE DRAWINGS.

4. CONTRACTOR SHALL FULLY COORDINATE MANUFACTURER DRAWINGS WITH CONSTRUCTION DETAILS AND FULLY RESOLVE ANY CONFLICTS PRIOR TO COMMENCING WORK.

5. THE CONTRACTOR SHALL BE RESPONSIBLE FOR MEANS, METHODS, TECHNIQUES, SEQUENCES, AND PROCEDURES IN ORDER TO COMPLY WITH THE CONTRACT DRAWINGS AND SPECIFICATIONS.

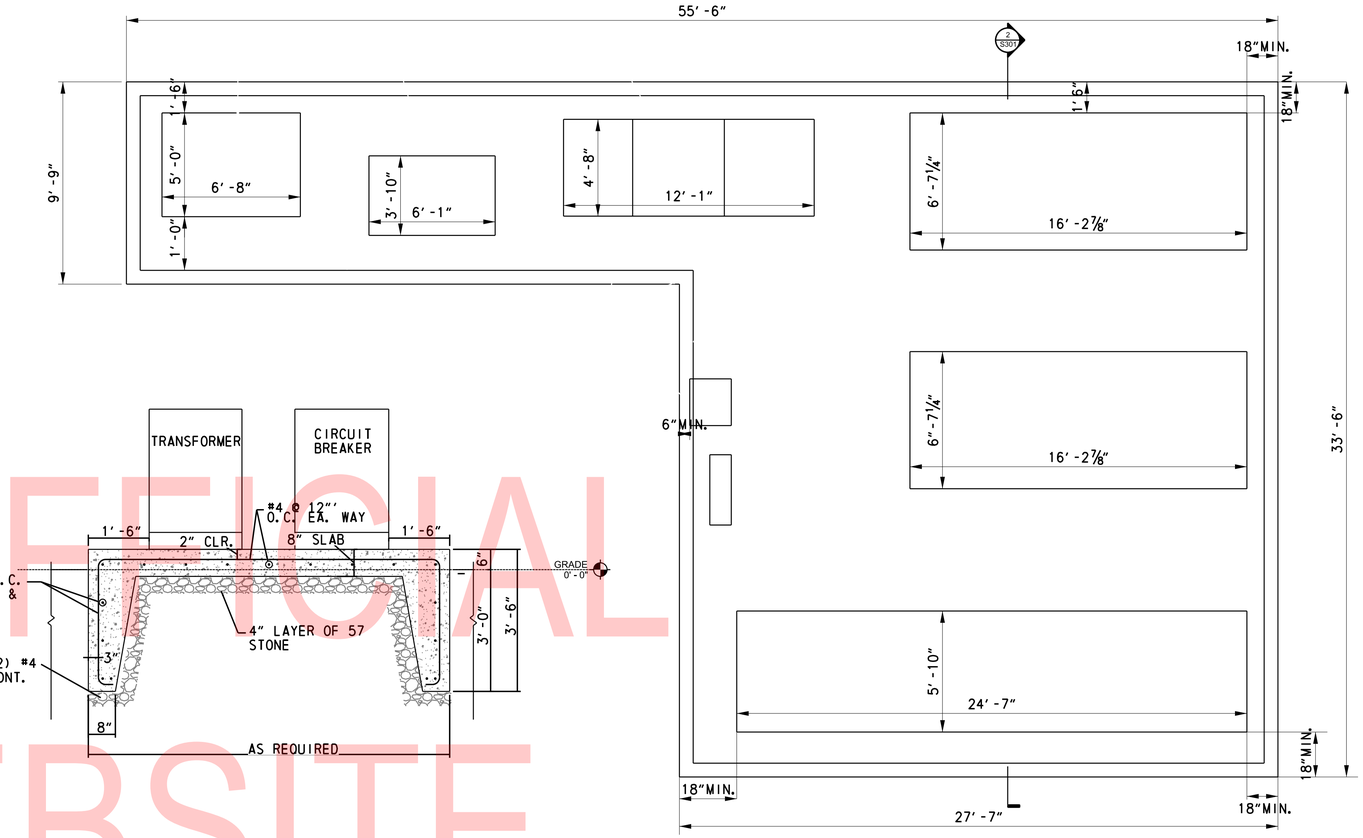

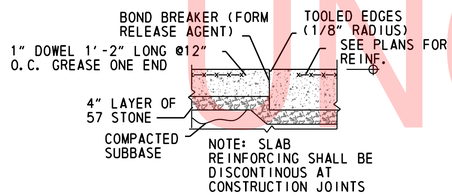

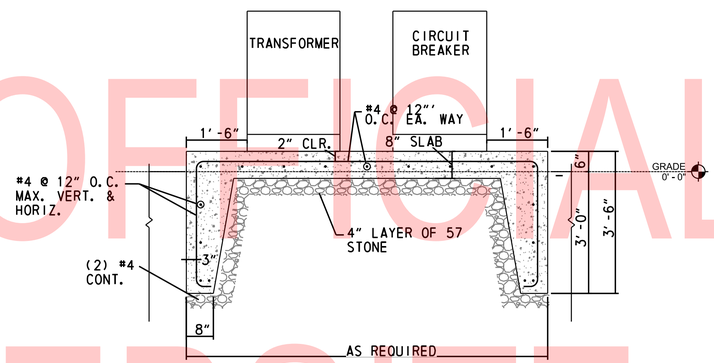

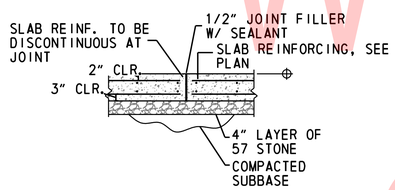

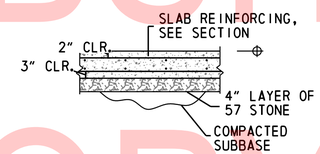

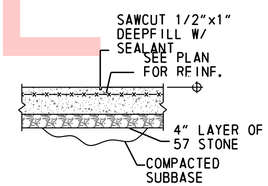

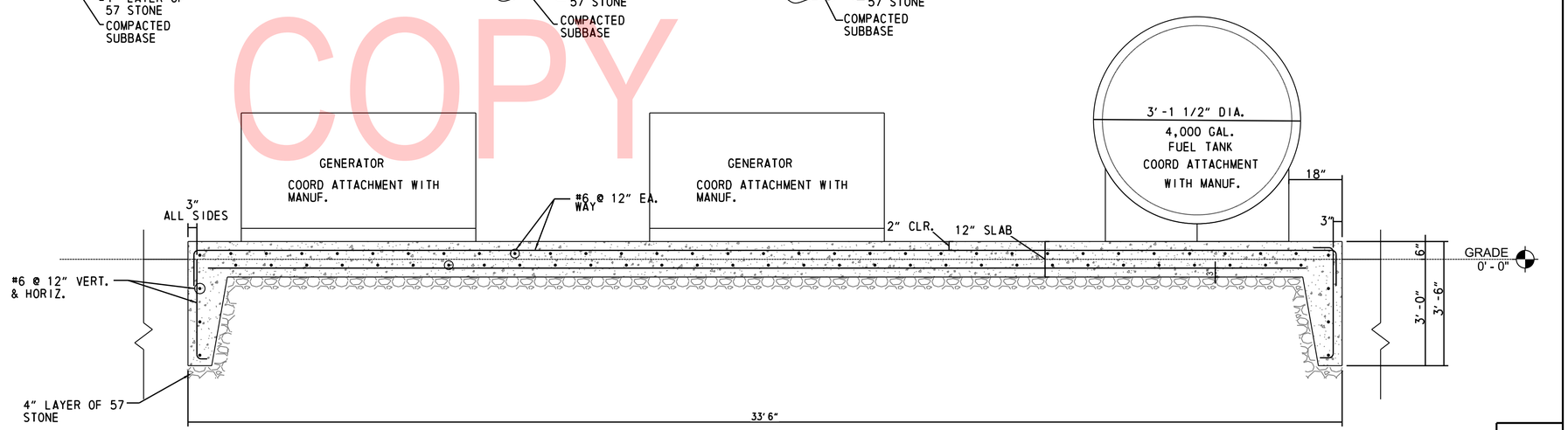

UNOFFICIAL WEBSITE COPY

PLOTTED BY: BDOUGHERTY DATE: 6/7/2019
FILE LOCATION: Q:\NDE\151152_010_CHAPMAN_YARD_-_PHASE\CADD\DT.DGN [SHEET: DT06]

ADDENDA / REVISIONS	NOT TO SCALE	NORTH DISTRICT CREW QUARTERS AND SITE WORK, PHASE 1A	CONTRACT T201880103	BRIDGE NO. N/A	CONSTRUCTION DETAILS	DT-06
			COUNTY NEW CASTLE	DESIGNED BY: WJD		SECTION JMT
				CHECKED BY: BPH		SHEET NO. 18

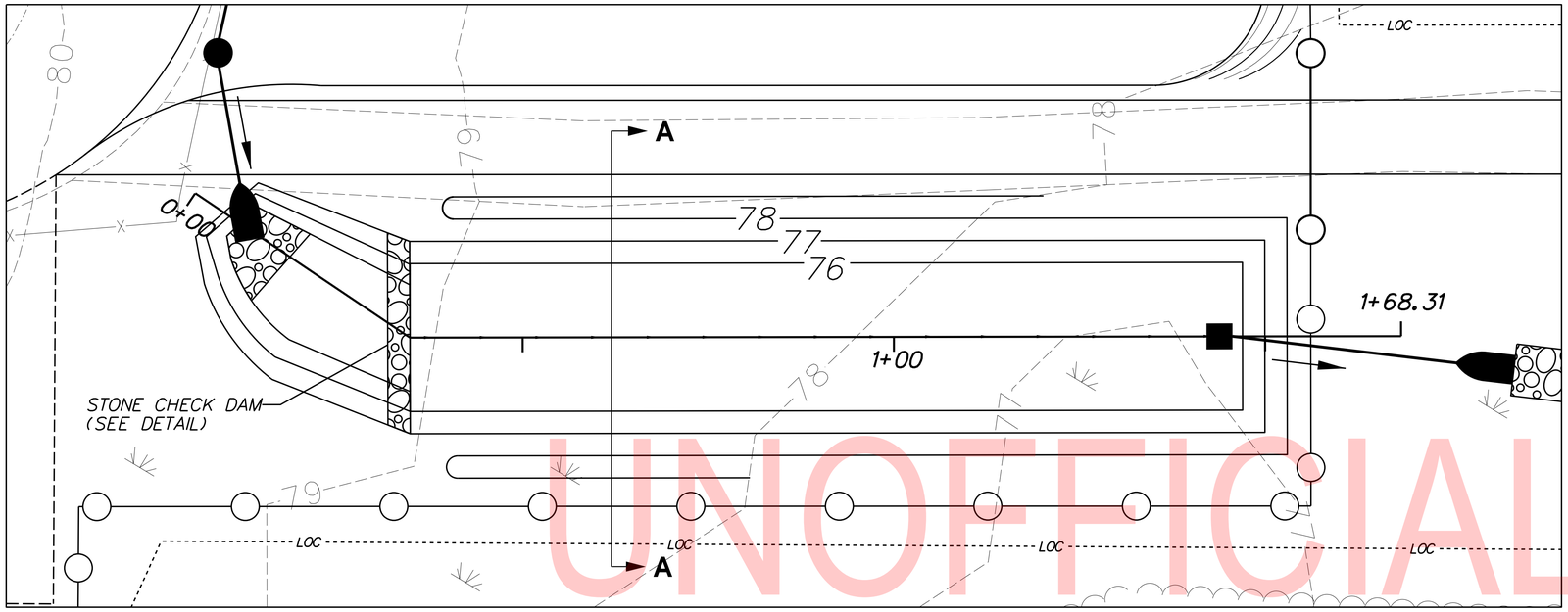

PLAN – BMP 1007 BIORETENTION AREA

SEQUENCE OF CONSTRUCTION FOR BIORETENTION AREA:

THE BIORETENTION AREA SHALL FUNCTION AS A SEDIMENT BASIN DURING CONSTRUCTION. PAYMENT SHALL BE INCIDENTAL TO BIORETENTION ITEMS.

1. *CLEAR AND GRUB AREA FOR BIORETENTION AREA CONSTRUCTION, INSTALL PERIMETER CONTROLS.*
2. *EXCAVATE AS NEEDED TO INSTALL BIORETENTION OUTLET STRUCTURE. TEMPORARILY PLUG LOW FLOW UNDERDRAIN ORIFICE.*
3. *EXCAVATE REMAINING BIORETENTION AREA TO AN ELEVATION OF 73.00'.*

CONVERSION TO PERMANENT BIORETENTION AREA:

CONVERT THE BIORETENTION AREA AFTER ALL AREAS DRAINING TO THE FACILITY ARE AT FINAL GRADE AND STABILIZED AND WITH CONCURRENCE FROM DELDOT'S STORMWATER ENGINEER. ABSOLUTELY NO HEAVY EQUIPMENT SHALL BE IN THE ACTUAL BIOSOIL FOOTPRINT ONCE THE CONVERSION PROCESS HAS STARTED. ALL EXCAVATION SHALL BE FROM THE SIDE.

1. *CONSTRUCT FOREBAY TO LINES, GRADES AND DETAILS AS SHOWN ON THE STORMWATER PLANS AND STABILIZE IMMEDIATELY AFTER CONSTRUCTION. DEWATER WORK AREA AS NEEDED IN ACCORDANCE WITH SECTION 900 OF THE STANDARD SPECIFICATIONS.*
2. *EXCAVATE THE BIORETENTION AREA TO THE DIMENSIONS AS SHOWN ON THE PLANS AND SCARIFY THE BOTTOM.*
3. *INSTALL UNDERDRAIN AND NO. 8 INFILTRATION STONE AS SHOWN ON PLAN.*
4. *BACKFILL BIOSOIL MIX AND MULCH TO THE LINES AND GRADES AS SHOWN ON THE PLANS.*
5. *E&S DEVICES SHALL BE REMOVED AFTER FINAL VEGETATIVE STABILIZATION OF ALL DISTURBED AREAS AND WITH CONCURRENCE FROM DELDOT'S STORMWATER ENGINEER.*

NOTES:

1. *THE CONTRACTOR SHALL INSPECT THE BIORETENTION AREA IMMEDIATELY AFTER EVERY RAIN EVENT AND MAKE REPAIRS AS NECESSARY.*
2. *ENTIRE DISTURBED AREA EXCEPT THE AREA COVERED WITH BIOSOIL MIX SHALL RECEIVE 6" TOPSOIL (908004) AND PERMANENT SEEDING, STORMWATER FACILITY (908015). SIDE SLOPES SHALL RECEIVE EROSION CONTROL BLANKET MULCH (908020).*
3. *OUTFALL DITCH SHALL RECEIVE 6" TOPSOIL (908004), PERMANENT SEEDING, DRY GROUND (908014), AND EROSION CONTROL BLANKET MULCH (908020).*

UNOFFICIAL WEBSITE COPY

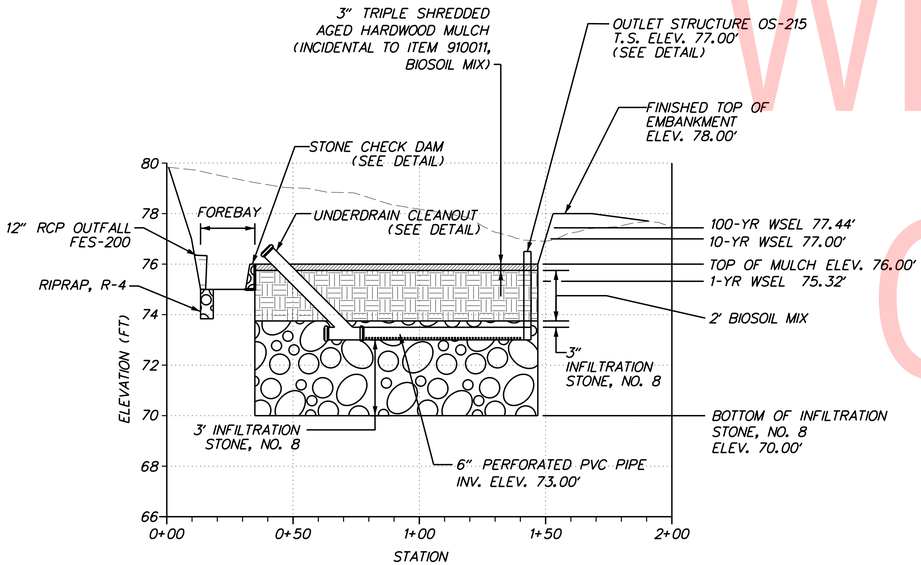

NOT TO SCALE

BIORETENTION PROFILE

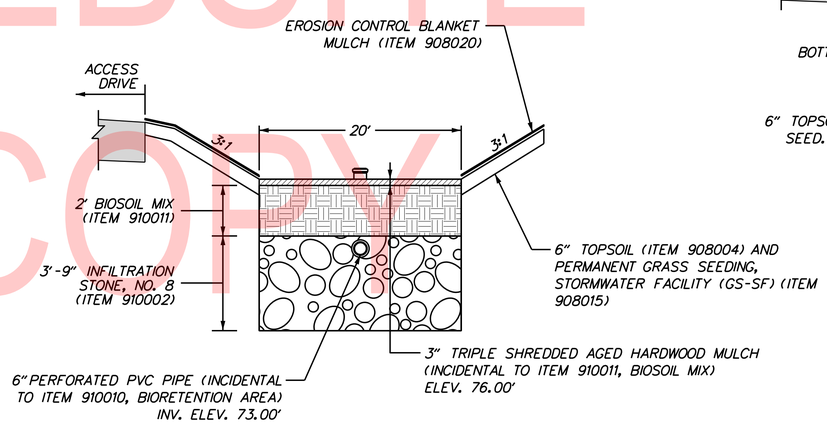

NOT TO SCALE

BIORETENTION TYPICAL SECTION
SECTION A–A

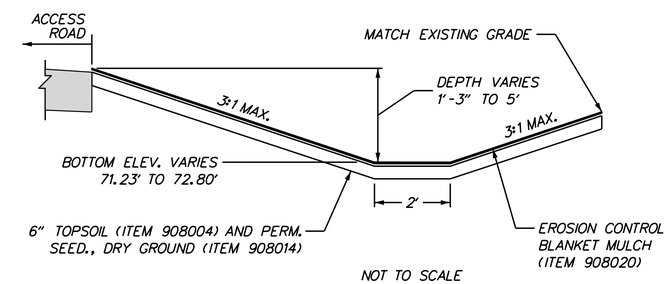

NOT TO SCALE

OUTFALL DITCH TYPICAL SECTION

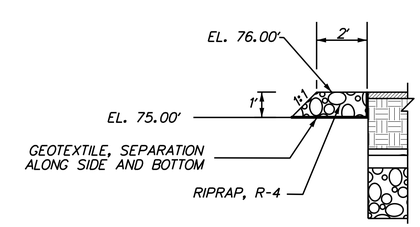

NOT TO SCALE

STONE CHECK DAM DETAIL

ADDENDA / REVISIONS	

SCALE 0 10 20 30 FEET

NORTH DISTRICT CREW QUARTERS AND SITE WORK, PHASE 1A

CONTRACT	BRIDGE NO.	N/A
T201880103	DESIGNED BY: WJD	
COUNTY		
NEW CASTLE	CHECKED BY: BPH	

STORMWATER MANAGEMENT PLAN

SW-01

SECTION: JMT

SHEET NO. 19

PLOTTED BY: BDOUGHERTY DATE: 6/7/2019
FILE LOCATION: Q:\NDE\151152_010_CHAPMAN_YARD_-_PHASE\CADD\SW.DGN [SHEET: SW01]

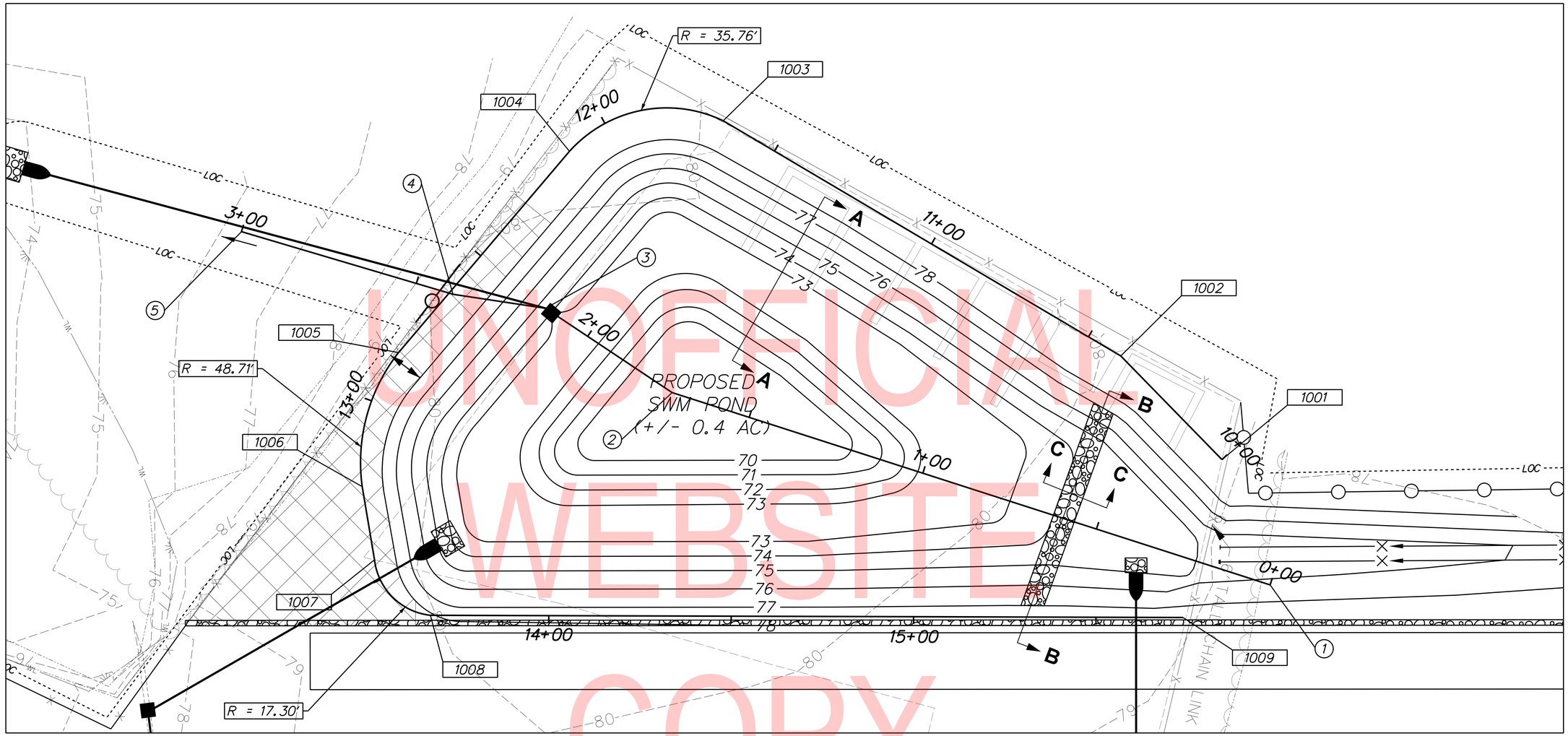

PLAN – BMP 1008 WET POND

UNOFFICIAL WEBSITE COPY

POND DESIGN SUMMARY

DESIGN STORM	FACILITY INFLOW (CFS)	FACILITY DISCHARGE (CFS)	WATER SURFACE EL. (FT)	STORAGE VOLUME (AC. FT)
1-YEAR RPv	11.75	0.69	75.31	0.85
10-YEAR Cv	21.96	4.34	75.97	1.09
100-YEAR Fv	37.34	6.23	76.96	1.53

XXXX POND EMBANKMENT BASELINE

NO.	POINT	STATION	NORTHING	EASTING
1001	POB	10+00.00	608096.94	580690.22
1002	PI	10+39.72	608106.87	580651.77
1003	PC	11+66.34	608105.61	580525.15
1004	PT	12+12.42	608076.62	580493.44
1005	PC	12+84.79	608005.17	580481.91
1006	PT	13+23.89	607968.59	580492.40
1007	PC	13+44.25	607953.16	580505.67
1008	PT	13+67.54	607948.09	580526.64
1009	POE	15+73.84	608054.38	580703.46

(X) PRINCIPAL SPILLWAY BASELINE

NO.	POINT	STATION	NORTHING	EASTING
1	POB	0+00.00	608074.39	580719.37
2	PI	1+72.18	608034.61	580551.85
3	PI	2+13.88	608036.42	580510.19
4	PI	2+39.52	608026.57	580486.52
5	POE	3+00.00	608003.41	580430.65

NOTES:

1. DRAINAGE AREA TO FACILITY: 3.5 AC
2. MANAGEMENT PROVIDED BY FACILITY:
   WATER QUALITY BY 48-HR EXTENDED DETENTION OF RUNOFF FROM 1-YEAR (RPv) STORM
   WATER QUANTITY BY ATTENUATION OF RUNOFF FROM 10-YEAR (Cv) AND 100-YEAR (Fv) STORMS
3. SEE SHEET SW-03 FOR WET POND PROFILE, SECTIONS, AND SEQUENCE OF CONSTRUCTION.

ADDENDA / REVISIONS

SCALE 0 15 30 45 FEET

NORTH DISTRICT CREW QUARTERS AND SITE WORK, PHASE 1A

CONTRACT T201880103 | BRIDGE NO. N/A | COUNTY NEW CASTLE | DESIGNED BY: WJD | CHECKED BY: BPH

STORMWATER MANAGEMENT PLAN

SW-02 | SECTION JMT | SHEET NO. 20

PLOTTED BY: BDOUGHERTY DATE: 6/7/2019
FILE LOCATION: Q:\NDE\151152_010_CHAPMAN_YARD_-_PHASE\CADD\SW.DGN [SHEET: SW02]

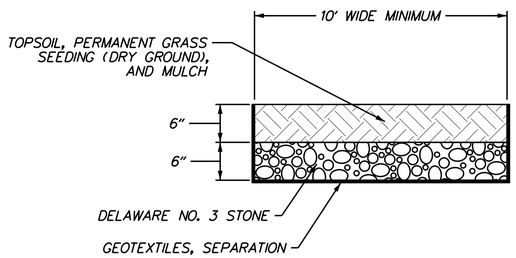

POND MAINTENANCE ACCESS
N.T.S.

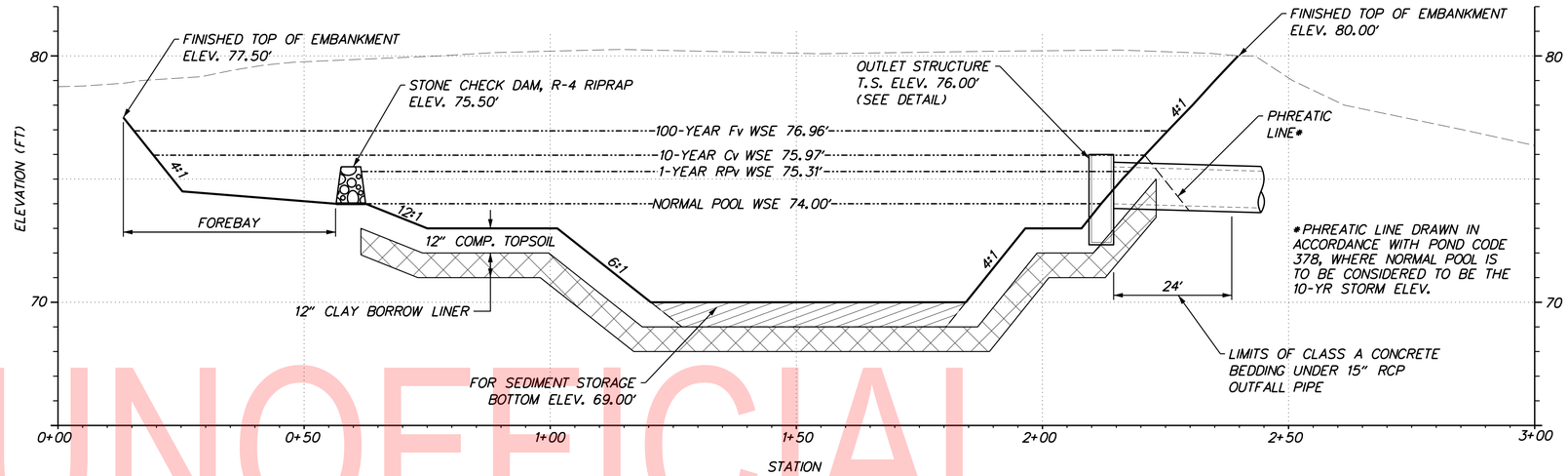

PROFILE – BMP 1008 WET POND

UNOFFICIAL WEBSITE COPY

SEQUENCE OF CONSTRUCTION FOR SWM POND:

THE STORMWATER MANAGEMENT POND SHALL FUNCTION AS A SEDIMENT BASIN DURING SITE CONSTRUCTION.

1. CLEAR AND GRUB FOR INSTALLATION OF PERIMETER EROSION AND SEDIMENT CONTROLS.
2. INSTALL PERIMETER SEDIMENT CONTROLS AS SHOWN IN CONSTRUCTION PHASING SHEETS.
3. CLEAR AND GRUB REMAINING AREA FOR POND CONSTRUCTION.
4. EXCAVATE PARTIAL EMBANKMENT AS NEEDED TO CONSTRUCT AND INSTALL POND OUTLET STRUCTURE. DEWATER AS NEEDED IN ACCORDANCE WITH SECTION 900 OF DELDOT'S STANDARDS AND SPECIFICATIONS.
5. BLOCK WEIR FROM ELEVATION 74.00' TO 76.00'. INSTALL SKIMMER DEWATER DEVICE, ITEM NO. 906004 AND SET DISCHARGE TO ELEVATION 75.00'.
6. EXCAVATE THE POND AND COMPLETE THE EMBANKMENT AND BASIN TO THE LINES, GRADES, AND DETAILS AS SHOWN IN THE CONSTRUCTION PLANS. THE CONTRACTOR SHALL OVER EXCAVATE POND 2' BELOW GRADES.
7. STABILIZE ALL BARE AREAS.

MAINTENANCE OF POND AS SEDIMENT BASIN:

1. CONTRACTOR SHALL INSPECT THE BASIN IMMEDIATELY AFTER EVERY RAIN AND MAKE REPAIRS AS NEEDED.
2. CLEANOUT ELEVATION FOR SWM FACILITY NO. 1008 IS 72.00'.

CONVERSION TO PERMANENT STORMWATER MANAGEMENT POND:

1. CONVERT THE BASIN INTO THE PERMANENT STORMWATER MANAGEMENT POND AFTER ALL AREAS DRAINING TO THE POND HAVE BEEN PERMANENTLY STABILIZED AND WITH CONCURRENCE FROM DELDOT'S STORMWATER ENGINEER.
2. REMOVE ANY ACCUMULATED SEDIMENT AND INSTALL ITEM 910005, CLAY BORROW LINER AS SHOWN ON THE PLANS. CLAY BORROW LINER SHALL NOT BE INSTALLED IN FOREBAY AREA. COMPACT ADDITIONAL 12" OF TOPSOIL IN 6" LIFTS TO THE FINISHED ELEVATIONS SHOWN.
3. E&S DEVICES SHALL BE REMOVED AFTER FINAL VEGETATIVE STABILIZATION OF ALL DISTURBED AREAS AND WITH CONCURRENCE FROM DELDOT'S STORMWATER ENGINEER.

NOTES:

1. EMBANKMENT SLOPE SHALL BE TOPSOILED, SEEDED WITH GS-SF (908015), AND MULCHED WITH EROSION CONTROL BLANKET MULCH (908020).

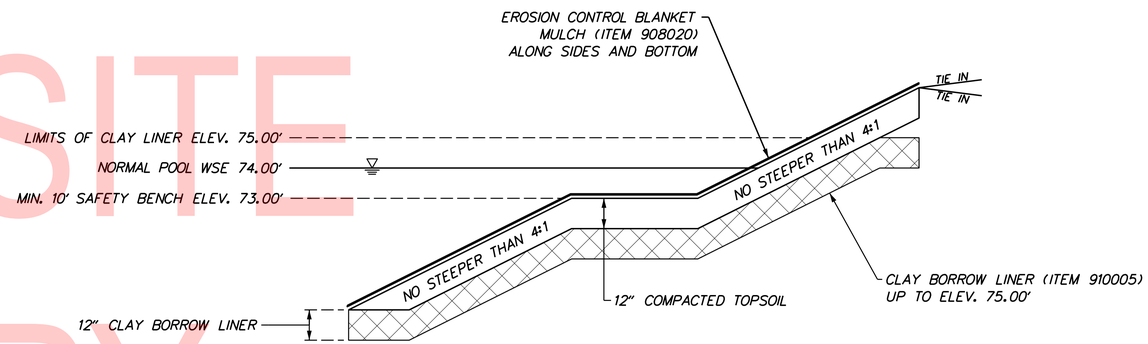

SECTION A–A

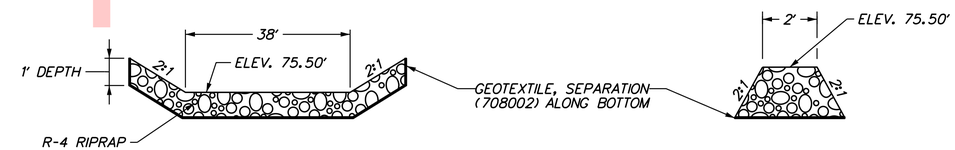

SECTION B–B

SECTION C–C

TYPICAL SECTIONS – BMP 1008 WET POND
N.T.S.

PLOTTED BY: BDOUGHERTY DATE: 6/7/2019
FILE LOCATION: Q:\NDE\151152_010_CHAPMAN_YARD_-_PHASE\CADD\SW.DGN [SHEET: SW02]

ADDENDA / REVISIONS	NOT TO SCALE	NORTH DISTRICT CREW QUARTERS AND SITE WORK, PHASE 1A	CONTRACT T201880103	BRIDGE NO. N/A	STORMWATER MANAGEMENT PLAN	SW-03
			COUNTY NEW CASTLE	DESIGNED BY: WJD		SECTION JMT
				CHECKED BY: BPH		SHEET NO. 21

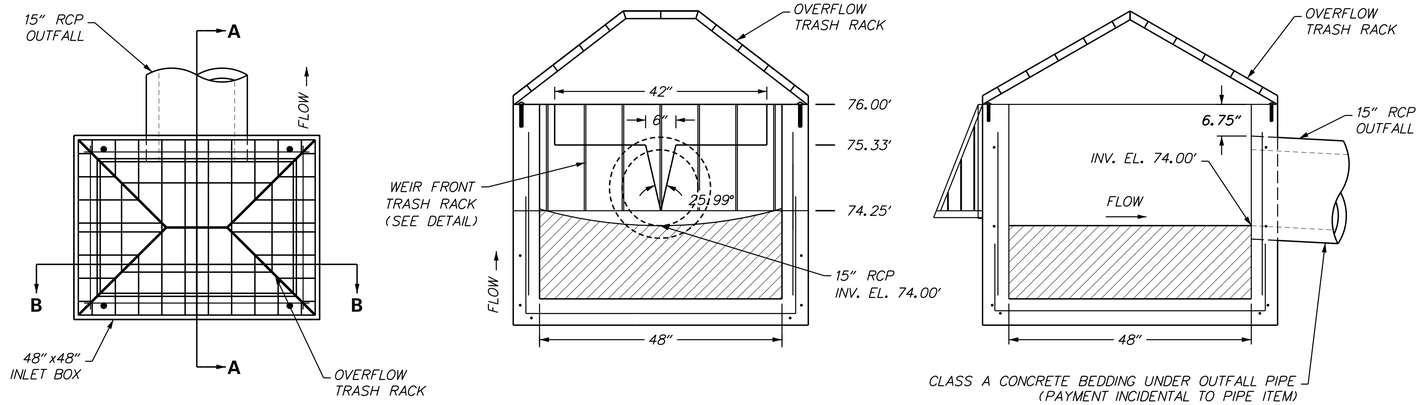

TOP VIEW

SECTION B–B

SECTION A–A

SWM POND – OUTLET STRUCTURE DETAIL

N.T.S.

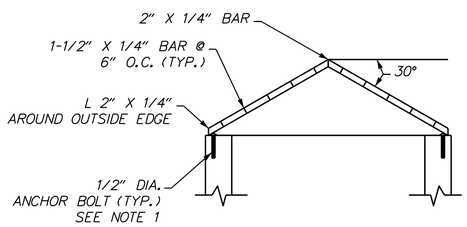

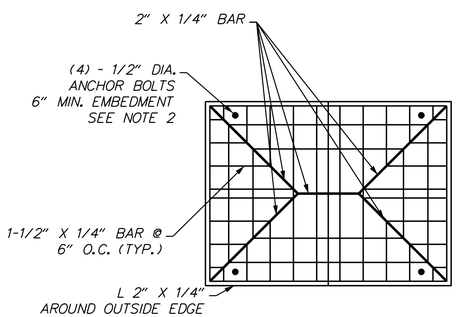

NOTES:

1. ANCHOR BOLTS TO BE STAINLESS STEEL ONLY.
2. TRASH RACK BARS TO BE ALUMINUM ONLY.
3. PAYMENT OF TRASH RACK IS INCEDENTAL TO ITEM 910006.

OVERFLOW TRASH RACK DETAIL

N.T.S.

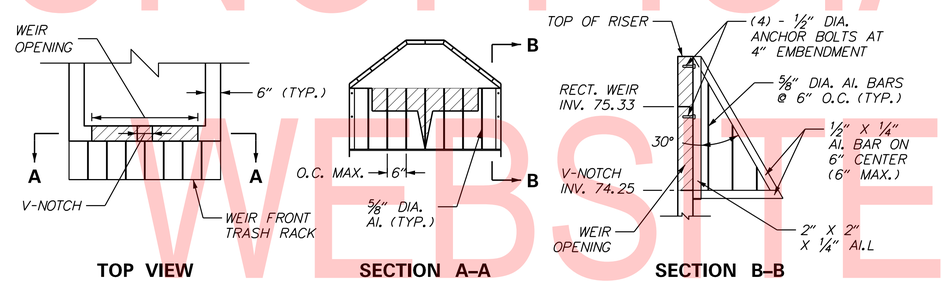

TOP VIEW

SECTION A–A

SECTION B–B

WEIR FRONT TRASH RACK DETAIL

N.T.S.

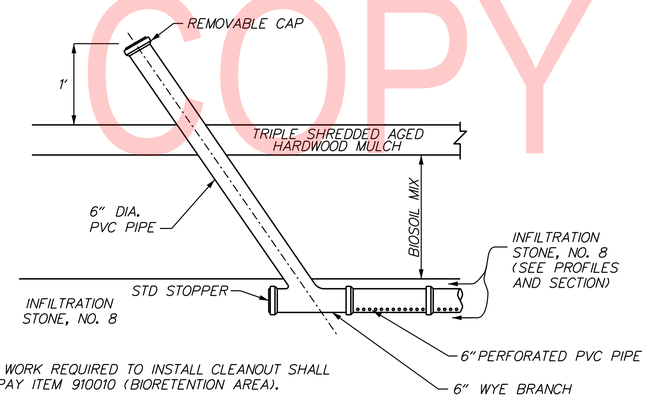

NOTES:

1. ALL MATERIAL AND WORK REQUIRED TO INSTALL CLEANOUT SHALL BE INCIDENTAL TO PAY ITEM 910010 (BIORETENTION AREA).

CLEANOUT DETAIL

N.T.S.

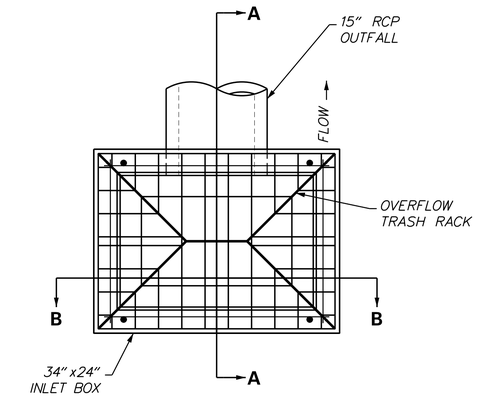

TOP VIEW

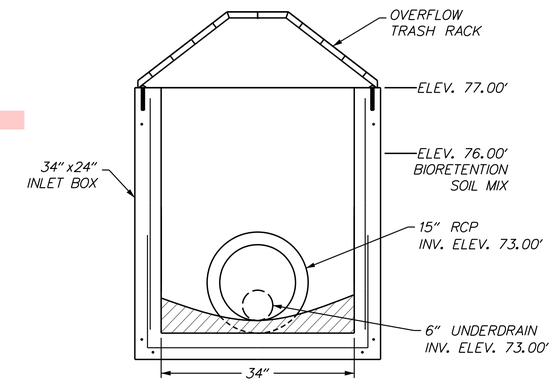

SECTION B–B

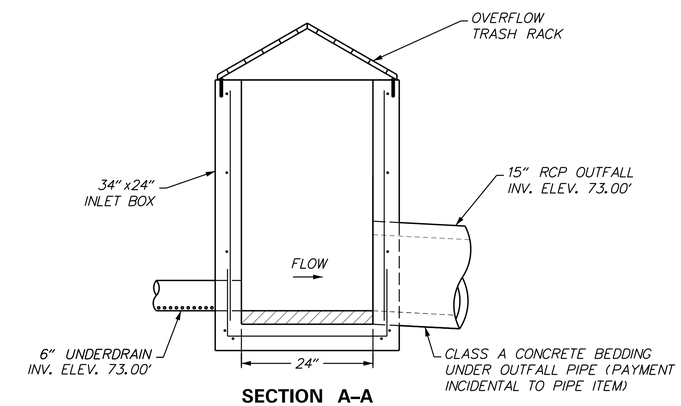

SECTION A–A

BIORETENTION AREA – OUTLET STRUCTURE DETAIL

N.T.S.

UNOFFICIAL WEBSITE COPY

PLOTTED BY: BDOUGHERTY DATE: 6/7/2019
FILE LOCATION: Q:\NDE\151152_010_CHAPMAN_YARD_-_PHASE\CADD\SW.DGN [SHEET: SW04]

ADDENDA / REVISIONS	NOT TO SCALE	NORTH DISTRICT CREW QUARTERS AND SITE WORK, PHASE 1A	CONTRACT T201880103	BRIDGE NO. N/A	STORMWATER MANAGEMENT PLAN	SW–04
			COUNTY NEW CASTLE	DESIGNED BY: WJD		SECTION JMT
				CHECKED BY: BPH		SHEET NO. 22

PREPARED BY
JMT

06/13/2019
THIS SEAL APPLIES TO ALL SHEETS BEARING THE "JMT" SECTION DESIGNATION. — DATE

JAMES J. KELLEY REGISTERED No. 12162 DELAWARE PROFESSIONAL ENGINEER
SEAL

"I CERTIFY TO THE BEST OF MY KNOWLEDGE AND BELIEF THAT THE DESIGN OF THESE PLANS MEETS THE REQUIREMENTS OF THE DELAWARE SEDIMENT AND STORMWATER REGULATIONS."

Vincent W. Davis, P.E. — 13 JUNE 2019
DELDOT STORMWATER ENGINEER — DATE

"I CERTIFY TO THE BEST OF MY KNOWLEDGE AND BELIEF THAT THESE PLANS MEET THE REQUIREMENTS OF THE DELAWARE SEDIMENT AND STORMWATER REGULATIONS AND THAT ALL CLEARING, GRADING, AND CONSTRUCTION WILL BE ACCOMPLISHED PURSUANT TO THE PLAN."

EROSION AND SEDIMENT CONTROL NOTES

1.

EROSION POTENTIAL FOR THIS PROJECT	CONTRACTOR ESC SUPERVISOR REQUIREMENT
( ) INSIGNIFICANT	NONE
( ) MINOR	CONTRACTOR TRAINING PROGRAM, AS DEFINED IN SECTION 6.2 OF THE DELAWARE SEDIMENT AND STORMWATER REGULATIONS.
(X) MAJOR	CERTIFIED CONSTRUCTION REVIEWER (CCR), AS DEFINED IN SECTION 6.3 OF THE DELAWARE SEDIMENT AND STORMWATER REGULATIONS.

2. THE DISTURBED AREA FOR THE PROJECT IS 7.1 ACRES.
3. ONCE THE SEDIMENT AND STORMWATER MANAGEMENT PLANS HAVE BEEN APPROVED BY DELDOT'S STORMWATER ENGINEER UNDER DELDOT'S DELEGATED AUTHORITY, THE SEDIMENT AND STORMWATER MANAGEMENT PLANS ARE VALID FOR A FIVE YEAR PERIOD, BEGINNING ON THE DATE THE STORMWATER ENGINEER SIGNED THE CONSTRUCTION TITLE SHEET. IF THE FINAL ACCEPTANCE OF THE PROJECT IS ANTICIPATED TO EXTEND BEYOND THE FIVE YEARS, THE CONTRACTOR WILL INFORM THE ENGINEER THREE MONTHS PRIOR TO THE EXPIRATION OF THE APPROVED SEDIMENT AND STORMWATER MANAGEMENT PLANS. THE STORMWATER ENGINEER WILL REVIEW THE CURRENT SEDIMENT AND STORMWATER MANAGEMENT PLAN AND ISSUE AN EXTENSION WITH ANY APPROPRIATE MODIFICATIONS.

EROSION AND SEDIMENT CONTROL SEQUENCE

1. CAREFULLY REMOVE AND STORE STORMWATER WATER QUALITY INSERTS FROM EXISTING DRAINAGE INLETS NOTED ON THE PLANS.
2. INSTALL ALL EROSION AND SEDIMENT PERIMETER CONTROL MEASURES, STABILIZED CONSTRUCTION ENTRANCES, INLET PROTECTION, AND COMPOST FILTER LOGS AS SHOWN ON THE PLANS. INLETS INSTALLED WITHOUT FRAME AND GRATE SHALL BE PROTECTED WITH ITEM NO. 905004 - INLET SEDIMENT CONTROL, DRAINAGE INLET. ONCE FRAME AND GRATE ARE INSTALLED, ITEM NO. 905004 SHALL BE REMOVED AND REPLACED WITH ITEM NO. 905005 - INLET SEDIMENT CONTROL, CURB INLET. PAYMENT TO INSTALL, REMOVE, AND REPLACE SHALL BE INCIDENTAL TO THE INDIVIDUAL ITEM.
3. REMOVE ALL E&S DEVICES AFTER FINAL VEGETATIVE STABILIZATION OF ALL DISTURBED AREAS AND WITH CONCURRENCE FROM DELDOT'S STORMWATER ENGINEER.
4. RE-PLACE AND INSTALL ALL STORMWATER WATER QUALITY INSERTS TO ALL DRAINAGE INLETS NOTED ON THE PLANS.

CONSTRUCTION SEQUENCE

1. CONSTRUCT CREW OPERATIONS BUILDING, UTILITY CONNECTIONS AND SIDEWALK.
2. REMOVE STORAGE BAYS AND COLD PATCH STORAGE BUILDING.
3. INSTALL EROSION AND SEDIMENT CONTROL DEVICES FOR THE CONSTRUCTION OF THE STORMWATER MANAGEMENT FACILITIES IN ACCORDANCE WITH THE STORMWATER MANAGEMENT PLAN SHEETS.
4. CONSTRUCT STORMWATER MANAGEMENT FACILITIES AND OUTFALL.
5. CLEAR AND GRUB WOODED AREA TO LIMIT OF CONSTRUCTION.
6. INSTALL REMAINDER OF EROSION AND SEDIMENT CONTROL DEVICES IN ACCORDANCE WITH THE EROSION AND SEDIMENT CONTROL SEQUENCE AND CONSTRUCTION PHASING PLANS.
7. PERFORM EARTHWORK OPERATIONS.
8. INSTALL GEOTHERMAL WELLS, UTILITIES, AND DRAINAGE FACILITIES.
9. GRADE MATERIAL STORAGE AREAS AND INSTALL STONE MAINTENANCE ROAD.
10. INSTALL ASPHALT PAVING AND UTILITY CONNECTIONS TO FUTURE TRUCK SHEDS.
11. CONVERT BIORETENTION AREA AND STORMWATER POND TO PERMANENT STORMWATER MANAGEMENT FACILITIES IN ACCORDANCE WITH THE STORMWATER MANAGEMENT PLAN SHEETS.
12. INSTALL NEW FENCING.

EROSION & SEDIMENT CONTROL	
CFL	COMPOST FILTER LOG
CFL	COMPOST FILTER LOG IDENTIFER/LENGTH
CIP	CULVERT INLET PROTECTION
DWBAG	DEWATERING BAG
DWB	DEWATERING BASIN
ED	EARTH DIKE
	INLET SEDIMENT CONTROL
	PERIMETER DIKE/SWALE
PST	PORTABLE SEDIMENT TANK
SBD	SANDBAG DIKE
SB	SANDBAG DIVERSION
	STONE CHECK DAM
SCE	STABILIZED CONSTRUCTION ENTRANCE
SF	SILT FENCE / LENGTH
SF	SILT FENCE
RSF	SILT FENCE - REINFORCED / LENGTH
RSF	SILT FENCE - REINFORCED
SP	SUMP PIT
ST	SEDIMENT TRAP / NUMBER
ST	SEDIMENT TRAP
ST	SEDIMENT TRAP WITH INLET AS OUTLET
ST	SEDIMENT TRAP PIPE OUTLET
STW	STILLING WELL
	TEMPORARY SWALE
TSD	TEMPORARY SLOPE DRAIN
	TURBIDITY CURTAIN / LENGTH
T	TURBIDITY CURTAIN

CONSTRUCTION PHASING & M.O.T	
	BARRICADE, TYPE 3
	CONCRETE SAFETY BARRIER - PORTABLE
	CONSTRUCTION SAFETY FENCE / LENGTH
CSF	CONSTRUCTION SAFETY FENCE
	CONSTRUCTION WARNING SIGN LOCATION
END ROAD WORK	CONSTRUCTION WARNING SIGN
	CRASH CUSHION ARRAY
	DRUM - TRAFFIC CONTROL
	FLAGGER LOCATION
	PHASING TRAFFIC FLOW ARROW
	TEMPORARY CONSTRUCTION
	TEMPORARY PAVEMENT MARKING ARROW
	TRUCK WITH MOUNTED ATTENUATOR
	WORK AREA - ACTIVE PHASE

UNOFFICIAL WEBSITE COPY

PLOTTED BY: BDOUGHERTY DATE: 6/7/2019
FILE LOCATION: Q:\NDE\151152_010_CHAPMAN_YARD_-_PHASE\CADD\CS.DGN [SHEET: CP01]

ADDENDA / REVISIONS

SCALE 0 30 60 90 FEET

NORTH DISTRICT CREW QUARTERS AND SITE WORK, PHASE 1A

CONTRACT T201880103 | COUNTY NEW CASTLE | BRIDGE NO. N/A | DESIGNED BY: WJD | CHECKED BY: BPH

CONSTRUCTION PHASING, M.O.T., AND EROSION CONTROL PLAN

CS-01 | SECTION JMT | SHEET NO. 23

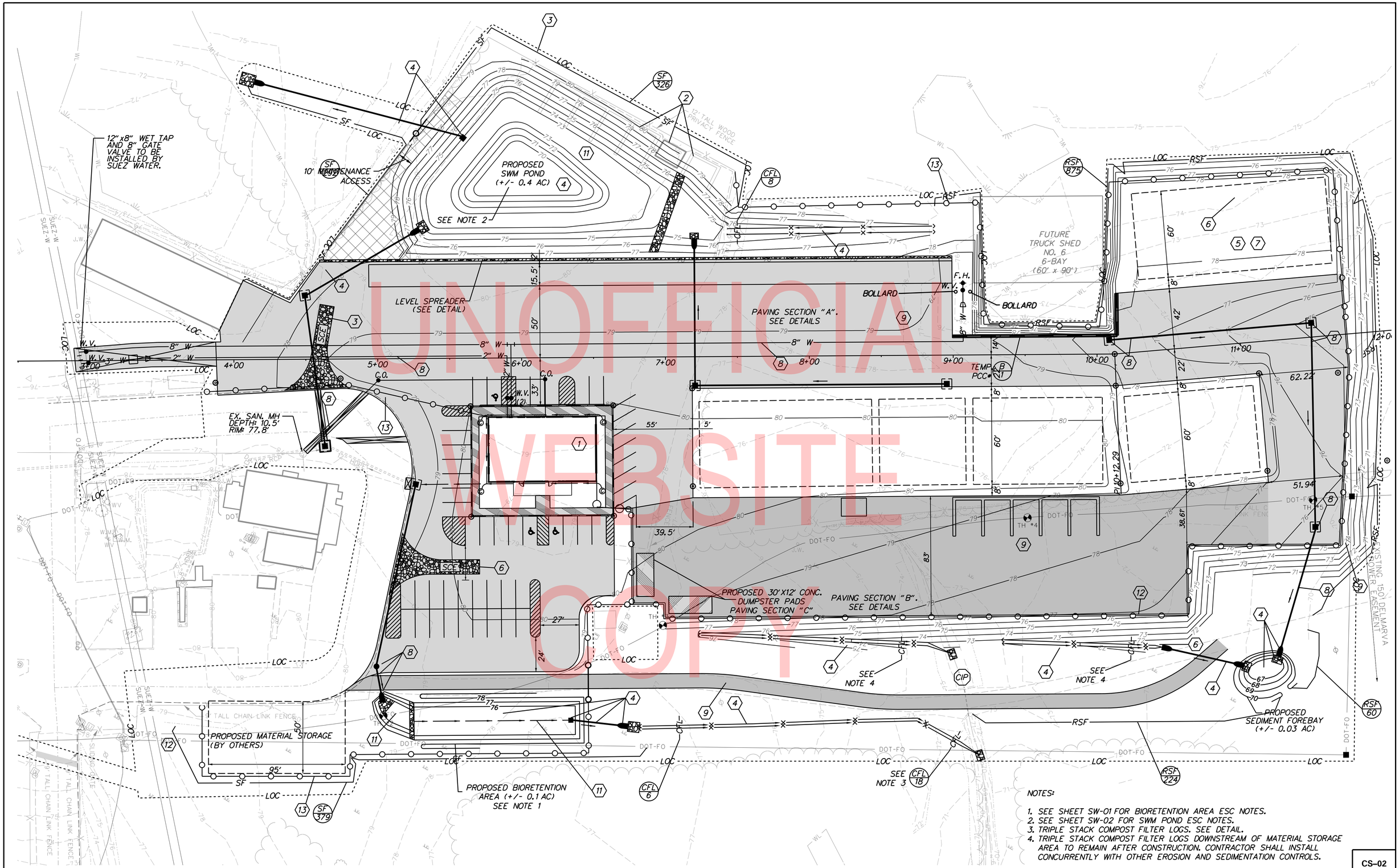

NOTES:

1. SEE SHEET SW-01 FOR BIORETENTION AREA ESC NOTES.
2. SEE SHEET SW-02 FOR SWM POND ESC NOTES.
3. TRIPLE STACK COMPOST FILTER LOGS. SEE DETAIL.
4. TRIPLE STACK COMPOST FILTER LOGS DOWNSTREAM OF MATERIAL STORAGE AREA TO REMAIN AFTER CONSTRUCTION. CONTRACTOR SHALL INSTALL CONCURRENTLY WITH OTHER EROSION AND SEDIMENTATION CONTROLS.

CS-02

ADDENDA / REVISIONS

SCALE 0 30 60 90 FEET

NORTH DISTRICT CREW QUARTERS AND SITE WORK, PHASE 1A

CONTRACT	BRIDGE NO.	N/A
T201880103	DESIGNED BY: WJD	
COUNTY		
NEW CASTLE	CHECKED BY: BPH	

CONSTRUCTION PHASING, M.O.T., AND EROSION CONTROL PLAN

SECTION JMT

SHEET NO. 24

PLOTTED BY: BDOUGHERTY DATE: 6/7/2019
FILE LOCATION: Q:\NDE\151152_010_CHAPMAN_YARD_-_PHASE\CADD\CS.DGN [SHEET: CP01]

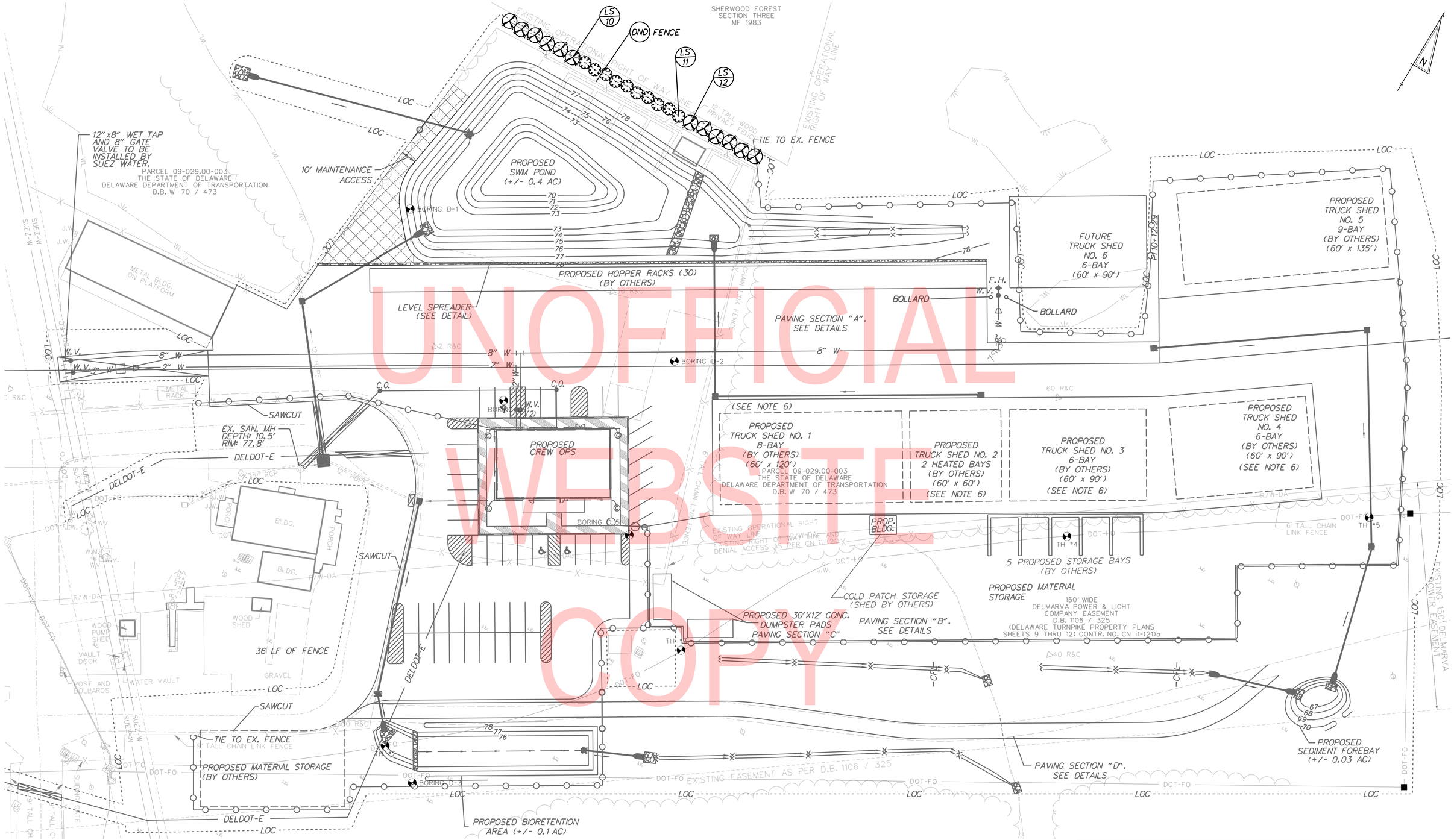

UNOFFICIAL WEBSITE COPY

TOTAL LANDSCAPE MATERIAL

QUANTITY	BOTANICAL NAME	COMMON NAME	SIZE	ROOT	REMARKS
12	ILEX X 'NELLIE R. STEVENS'	'NELLIE R. STEVENS' HOLLY	5' HGT.	B&B / #15 CONT.	10' O.C., 5' MIN. OFFSET FROM R.O.W.
10	VIBURNUM 'PRAGENSE'	PRAGUE VIBURNUM	3' HGT.	#7 CONT.	8' O.C., 5' MIN. OFFSET FROM R.O.W.

LANDSCAPE MATERIAL

NO.	ITEM	QUANTITY
10	ILEX X 'NELLIE R. STEVENS'	6
11	VIBURNUM 'PRAGENSE'	10
12	ILEX X 'NELLIE R. STEVENS'	6

ADDENDA / REVISIONS

SCALE 0 30 60 90 FEET

NORTH DISTRICT CREW QUARTERS AND SITE WORK, PHASE 1A

CONTRACT: T201880103
COUNTY: NEW CASTLE
BRIDGE NO.: N/A
DESIGNED BY: WJD
CHECKED BY: BPH

LANDSCAPING PLAN

LS-01
SECTION: JMT
SHEET NO.: 25

PLOTTED BY: BDOUGHERTY DATE: 6/7/2019
FILE LOCATION: Q:\NDE\151152_010_CHAPMAN_YARD_-_PHASE\CADD\LS.DGN [SHEET: LS01]

UTILITY TEST HOLE SCHEDULE

NO.	UTILITY	STATION	OFFSET	GRND EL.	COVER	O.D. & MATERIAL
TH-1	DELDOT	2+22.48	269.73	76.76'	2.88'	1¾" PI COND. FO
TH-2	DELDOT	5+02.27	248.18	79.05'	3.18'	1¾" PI COND. FO
TH-3	DELDOT	6+97.00	186.59	77.03'	3.66'	1¾" PI COND. FO
TH-4	DELDOT	9+50.94	113.47	72.97'	2.64'	1¾" PI COND. FO
TH-5	DELDOT	11+41.02	112.84	70.00'	2.75'	1¾" PI COND. FO

SANITARY PIPE SCHEDULE

NO.	SIZE/TYPE	LENGTH	SLOPE (FT/FT)	INV. EL.	DIS. EL.
SP-1	6" SDR-26 PVC	73	0.0320	69.99	67.65
SP-2	6" SDR-26 PVC	116	0.0320	73.70	69.99
SP-3	6" SDR-26 PVC	24	0.0320	74.47	73.70

NOTES:

1. WATER MAIN TRACER TAPE TO BE INSTALLED BY THE CONTRACTOR. THE TRACER TAPE SHALL BE A MINIMUM OF 3" WIDE AND BLUE IN COLOR. THE TRACER TAPE WILL BE MADE FROM BONDED LAYER PLASTIC WITH A METALLIC FOIL CORE AND BE IMPRINTED TO IDENTIFY THE WATER LINE.
2. CONTRACTOR SHALL CORE EXISTING MANHOLE AND MODIFY EXISTING FLOW CHANNEL TO ALLOW FOR PROPOSED 6" SANITARY SEWER LATERAL. NEW CASTLE COUNTY WILL NEED TO INSPECT THE LATERAL TO MANHOLE CONNECTION.
3. PROPOSED SANITARY SEWER LATERAL SHALL BE OWNED AND OPERATED BY THE STATE OF DELAWARE.

WATER ACCESSORIES SCHEDULE

NO.	DESCRIPTION	QUANTITY
1	CONNECT PROP. 3" WATER MAIN TO 3" GATE VALVE TO* BE INSTALLED BY SUEZ WATER.	1
2	CONNECT PROP. 8" WATER MAIN TO 8" GATE VALVE TO* BE INSTALLED BY SUEZ WATER.	1
3	4"x3" DR-11 HDPE REDUCER	1
4	8"x4" DIP TEE	1
5	HORIZONTAL 2" BEND, 90 DEGREES	1
6	2" CURB STOP W/C.I. BOX AND COVER	1
7	HORIZONTAL 8" BEND, 90 DEGREES	1
8	FIRE HYDRANT. 6" GATE VALVE W/C.I. BOX AND COVER	1
9	8"x6" REDUCER	1
10	3" GATE VALVE W/C.I. BOX AND COVER	1
11	4" DIP X 4" DR-11 HDPE ADAPTER	1
12	3" METER PIT	1
13	3"X2" REDUCER	1

* SUEZ WATER WILL COMPLETE THE TAPPING OF THE 12" MAIN AND WILL INSTALL THE 8" GATE VALVE AND 3" CURB STOP. CONTACT TERRI BLUM AT (302) 252-3012 TO INITIATE NEW SERVICES.

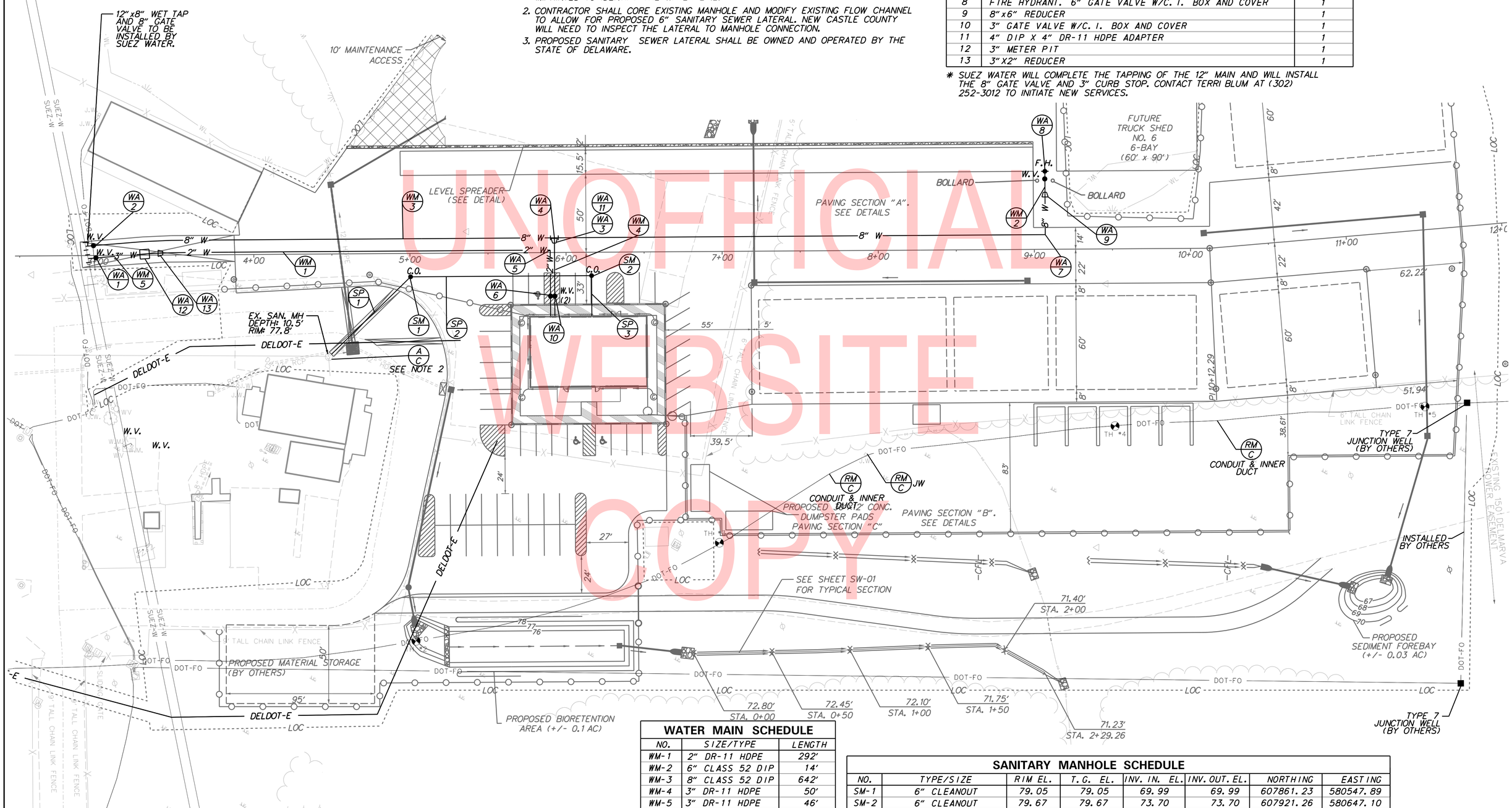

UNOFFICIAL WEBSITE COPY

WATER MAIN SCHEDULE

NO.	SIZE/TYPE	LENGTH
WM-1	2" DR-11 HDPE	292'
WM-2	6" CLASS 52 DIP	14'
WM-3	8" CLASS 52 DIP	642'
WM-4	3" DR-11 HDPE	50'
WM-5	3" DR-11 HDPE	46'

SANITARY MANHOLE SCHEDULE

NO.	TYPE/SIZE	RIM EL.	T.G. EL.	INV. IN. EL.	INV. OUT. EL.	NORTHING	EASTING
SM-1	6" CLEANOUT	79.05	79.05	69.99	69.99	607861.23	580547.89
SM-2	6" CLEANOUT	79.67	79.67	73.70	73.70	607921.26	580647.10

ADDENDA / REVISIONS

SCALE 0 30 60 90 FEET

NORTH DISTRICT CREW QUARTERS AND SITE WORK, PHASE 1A

CONTRACT	BRIDGE NO.	N/A
T201880103	DESIGNED BY: WJD	
COUNTY		
NEW CASTLE	CHECKED BY: BPH	

UTILITY PLAN

SECTION: JMT

SHEET NO. 26

PLOTTED BY: BDOUGHERTY DATE: 6/7/2019
FILE LOCATION: Q:\NDE\151152_010_CHAPMAN_YARD_-_PHASE\CADD\UT.DGN [SHEET: CP01]

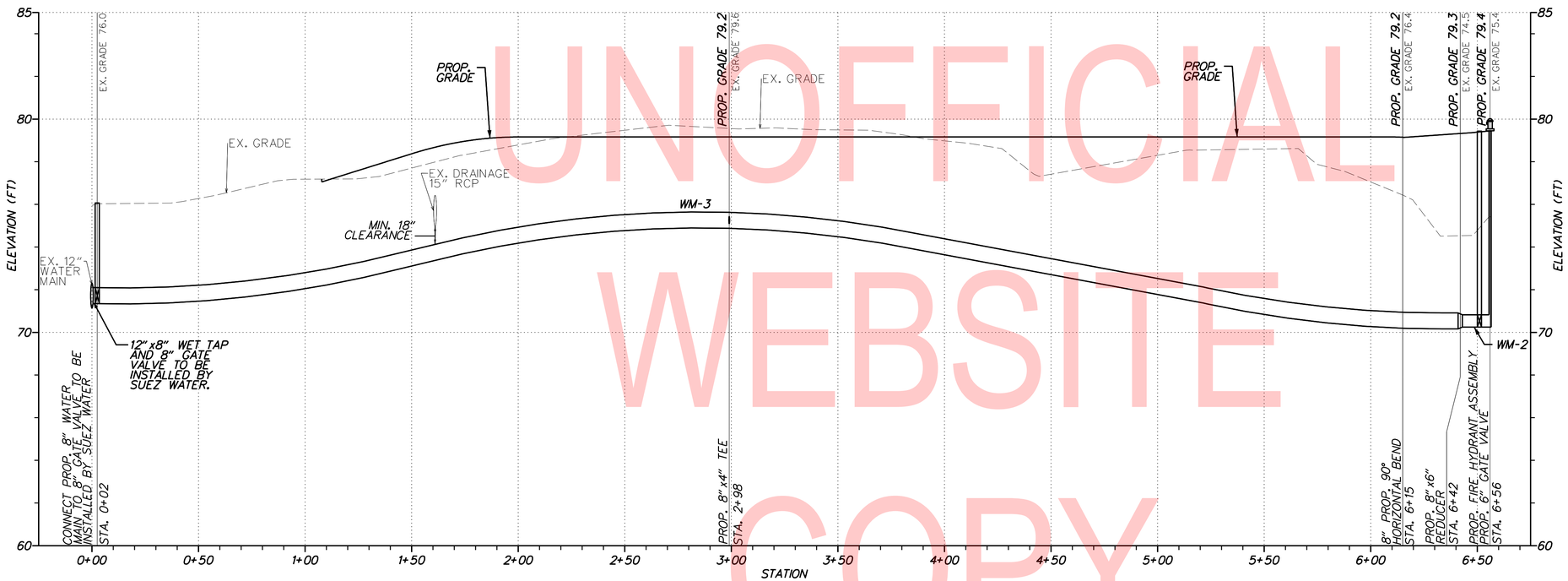

NORTH DISTRICT MAINTENANCE YARD
ALIGNMENT 1 – 8" DIP CLASS 52
STA. 2+92.28 OFFSET 5.96' L TO
STA. 9+07.05 OFFSET 50.00' L

WATER MAIN SCHEDULE		
NO.	SIZE/TYPE	LENGTH
WM-2	6" CLASS 52 DIP	14'
WM-3	8" CLASS 52 DIP	642'

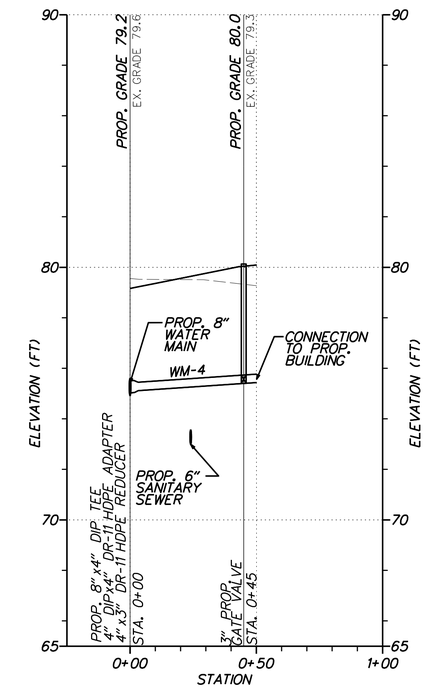

NORTH DISTRICT MAINTENANCE YARD
ALIGNMENT 4 – 3" DR-11 HDPE
STA. 5+91.61 OFFSET 9.41' L TO
STA. 5+91.61 OFFSET 40.72' R

WATER MAIN SCHEDULE		
NO.	SIZE/TYPE	LENGTH
WM-4	3" DR-11 HDPE	50'

UNOFFICIAL WEBSITE COPY

PLOTTED BY: BDOUGHERTY DATE: 6/7/2019
FILE LOCATION: Q:\NDE\151152_010_CHAPMAN_YARD_-_PHASE\CADD\UT.DGN [SHEET: CP01]

ADDENDA / REVISIONS

SCALE 0 30 60 90 FEET

NORTH DISTRICT CREW QUARTERS AND SITE WORK, PHASE 1A

CONTRACT	BRIDGE NO.	N/A
T201880103	DESIGNED BY: WJD	
COUNTY		
NEW CASTLE	CHECKED BY: BPH	

UTILITY PLAN

SECTION: JMT
SHEET NO. 27

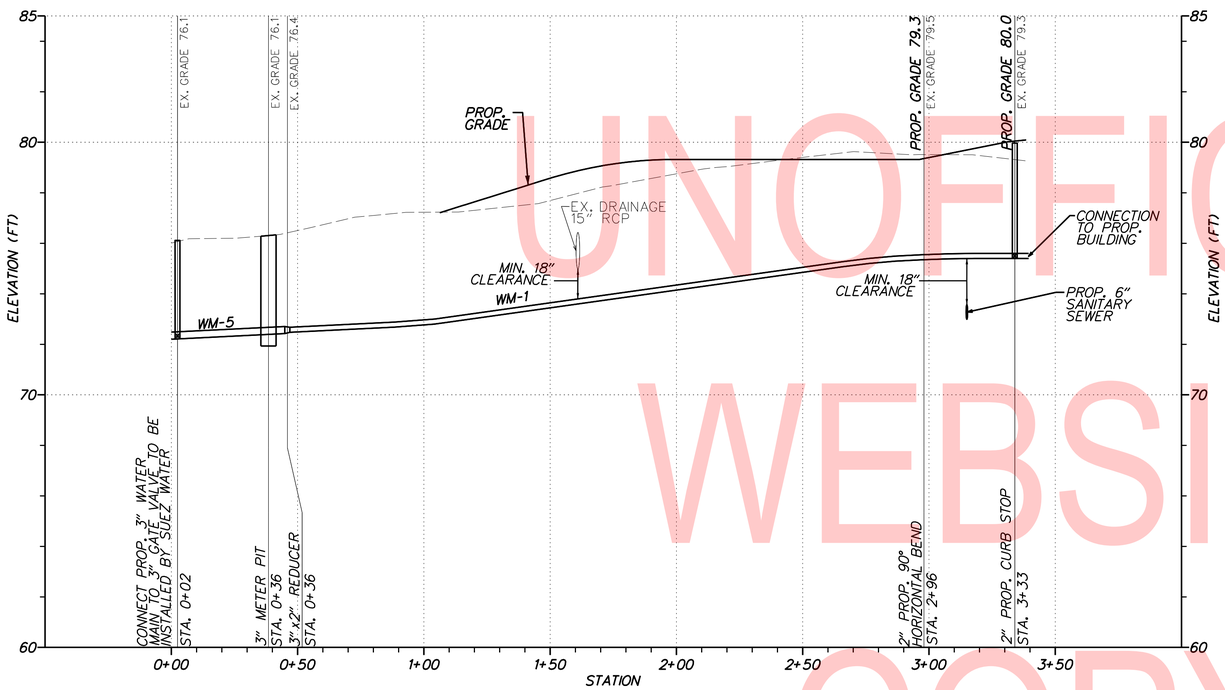

NORTH DISTRICT MAINTENANCE YARD
ALIGNMENT 2 – 2" DR-11 HDPE
STA. 2+93.82 OFFSET 1.92' R TO
STA. 5+90.86 OFFSET 40.75' R

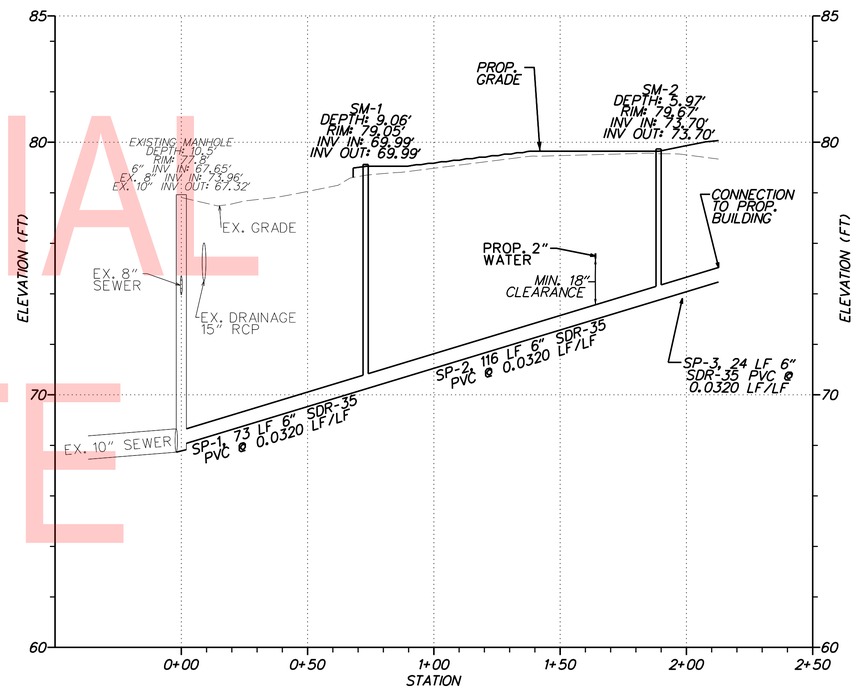

NORTH DISTRICT MAINTENANCE YARD
GRAVITY SEWER – 6" PVC SDR-26

WATER MAIN SCHEDULE		
NO.	SIZE/TYPE	LENGTH
WM-1	2" DR-11 HDPE	292'
WM-5	2" DR-11 HDPE	46'

SANITARY MANHOLE SCHEDULE							
NO.	TYPE/SIZE	RIM EL.	T.G. EL.	INV. IN. EL.	INV. OUT. EL.	NORTHING	EASTING
SM-1	6" CLEANOUT	79.05	79.05	69.99	69.99	607861.23	580547.89
SM-2	6" CLEANOUT	79.67	79.67	73.70	73.70	607921.26	580647.10

SANITARY PIPE SCHEDULE					
NO.	SIZE/TYPE	LENGTH	SLOPE (FT/FT)	INV. EL.	DIS. EL.
SP-1	6" SDR-26 PVC	73	0.0320	69.99	67.65
SP-2	6" SDR-26 PVC	116	0.0320	73.70	69.99
SP-3	6" SDR-26 PVC	24	0.0320	74.47	73.70

UNOFFICIAL WEBSITE COPY

PLOTTED BY: BDOUGHERTY DATE: 6/7/2019
FILE LOCATION: Q:\NDE\151152_010_CHAPMAN_YARD_-_PHASE\CADD\UT.DGN [SHEET: CP01]

ADDENDA / REVISIONS

SCALE 0 30 60 90 FEET

NORTH DISTRICT CREW QUARTERS AND SITE WORK, PHASE 1A

CONTRACT	BRIDGE NO.	N/A	UTILITY PLAN	SECTION
T201880103	DESIGNED BY: WJD			JMT
COUNTY				SHEET NO.
NEW CASTLE	CHECKED BY: BPH			28

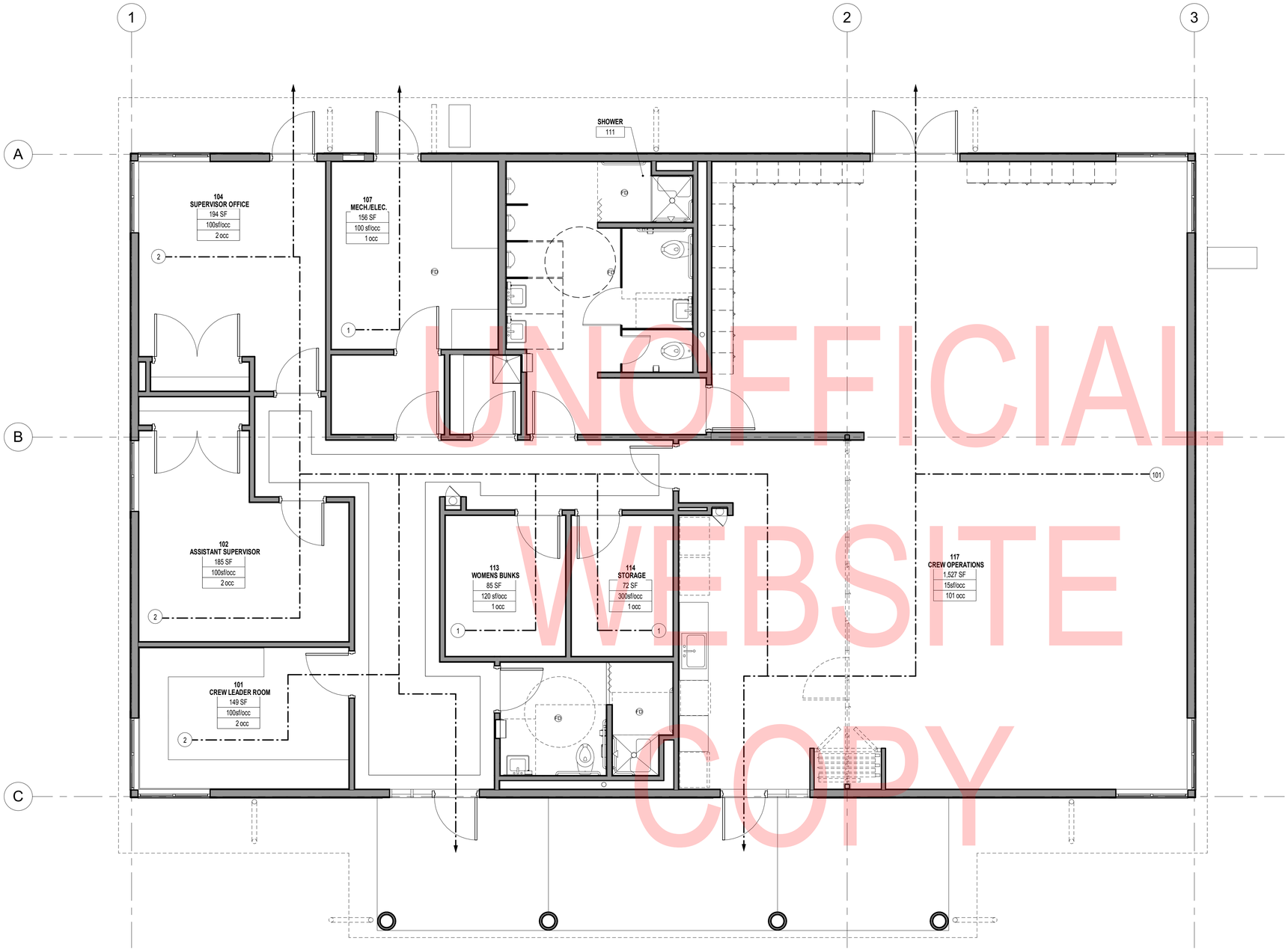

UNOFFICIAL WEBSITE COPY

1 LIFE SAFETY PLAN
ALS-101 1/4" = 1'-0"

CODE SYNOPSIS

SITE LOCATION: DELAWARE DEPARTMENT OF TRANSPORTATION
NORTH DISTRICT MAINTENANCE YARD SHOP
39 E REGAL BLVD
NEWARK, DELAWARE 19713

BUILDING OWNER: (DELDOT) DELAWARE DEPARTMENT OF TRANSPORTATION

APPLICANT: JOHNSON, MIRMIRAN AND THOMPSON
131 CONTINENTAL DRIVE, SUITE 109
NEWARK, DELAWARE 19713

DESIGN PROFESSIONAL: SAME AS APPLICANT

BUILDING OCCUPANCY AND OPERATIONAL NARRATIVE:
THE FACILITY IS TO BE OPEN MONDAY THRU FRIDAY DURING THE HOURS OF 7:00 AM TO 4:00 PM FOR THE ADMINISTRATIVE USE OF THE DELDOT EMPLOYEES. THESE HOURS MAY BE EXTENDED TO POSSIBLY 24 HOURS DURING SNOW EMERGENCIES.

APPLICABLE CODES: INTERNATIONAL BUILDING CODE 2015
NFPA 101 LIFE SAFETY CODE, 2015

ACCESSIBILITY: STATE OF DELAWARE ARCHITECTURAL ACCESSIBILITY STANDARDS

BUILDING'S TOTAL AREA: ONE STORY - 3,330 GSF ENCLOSED W/ 350 S.F. COVERED PORCH

OCCUPANCY : B- BUSINESS (NEW)

CONSTRUCTION TYPE : VB, UNPROTECTED

ALLOWABLE STORIES PER TABLE 504.4: 2 STORIES
ACTUAL STORIES: 1 STORY

ALLOWABLE SQUARE FOOTAGE PER TABLE 506.2: 9,000 S.F.
ACTUAL SQUARE FOOTAGE: 3,330 S.F. THUS NO AREA MODIFICATIONS ARE NEEDED

OCCUPANTS: OFFICES 1,820 GSF = 18 OCCUPANTS (100 SF/OCC.)
CREW OPERATIONS ROOM = WILL NOT EVER HAVE GATHERINGS OF MORE THAN 50 OCCUPANTS

EXITS REQD./ PROVIDED: ENTIRE BLDG. - BUSINESS: 2 / 4
CREW OPERATIONS ROOM - 2 EXITS DIRECTLY TO EXTERIOR OPERABLE WALL DIVIDES ROOM INTO TWO ROOMS, EACH WITH 1 EXIT DIRECTLY TO EXTERIOR

ALL EGRESS DOORS ARE A MINIMUM OF 36" WIDE.

MAXIMUM TRAVEL DISTANCE 300' WITH SPRINKLER.

EGRESS CORRIDORS FOR B OCCUPANCY ARE NOT REQUIRED TO BE RATED PER IBC 1020.1.

EGRESS AISLES & PASSAGEWAYS WILL BE KEPT FREE AND CLEAR OF EQUIPMENT AND BARRIERS THAT WOULD LIMIT READY ACCESS TO AND THE USE OF FIRE FIGHTING EQUIPMENT.

NO DEAD END CORRIDORS OVER 20 FEET IN LENGTH.

EGRESS DOORS WILL BE SELF-CLOSING.

PORTABLE FIRE EXTINGUISHERS ARE PROVIDED.

ATTIC WILL NOT BE USED FOR COMBUSTIBLE STORAGE & REQUIRES NO DRAFT STOPPING IF UNDER 3,000 SF

THE MECHANICAL ROOM WILL NOT BE USED FOR STORAGE PURPOSES.

FLAMMABLE LIQUIDS WILL NOT BE STORED IN ANY AMOUNTS

THE BUILDING IS NOT REQUIRED TO HAVE : FIRE ALARM SYSTEM, PER IBC 907.2

FIRE SUPPRESSION SPRINKLERING IS PROVIDED IN ACCORDANCE WITH NFPA 13.

LEGEND

- DIRECTION TO PATH OF TRAVEL
- EGRESS PATHWAY
- FIRE EXTINGUISHER CABINET W/ ABC EXTINGUISHER
- EXIT SIGN - CEILING MOUNTED DIRECTIONAL
- EXIT SIGN - WALL MOUNTED
- WOMEN'S T.R. 114 — ROOM NAME TAG

ALS-101

ADDENDUMS / REVISIONS	

NORTH DISTRICT CREW QUARTERS AND SITE WORK, PHASE 1A

CONTRACT	BRIDGE NO.	N/A
T201880103	DESIGNED BY: DCH	
COUNTY	CHECKED BY: KNM	
NEW CASTLE		

LIFE SAFETY PLAN

SECTION
JMT
SHEET NO.
29

$DATE_USER$
Q:\NDE\151152_010_Chapman_Yard__Phase\CADD\Architecture\15-1152-010_Chapman Yard Phase I Crew Ops_PSE Set.rvt

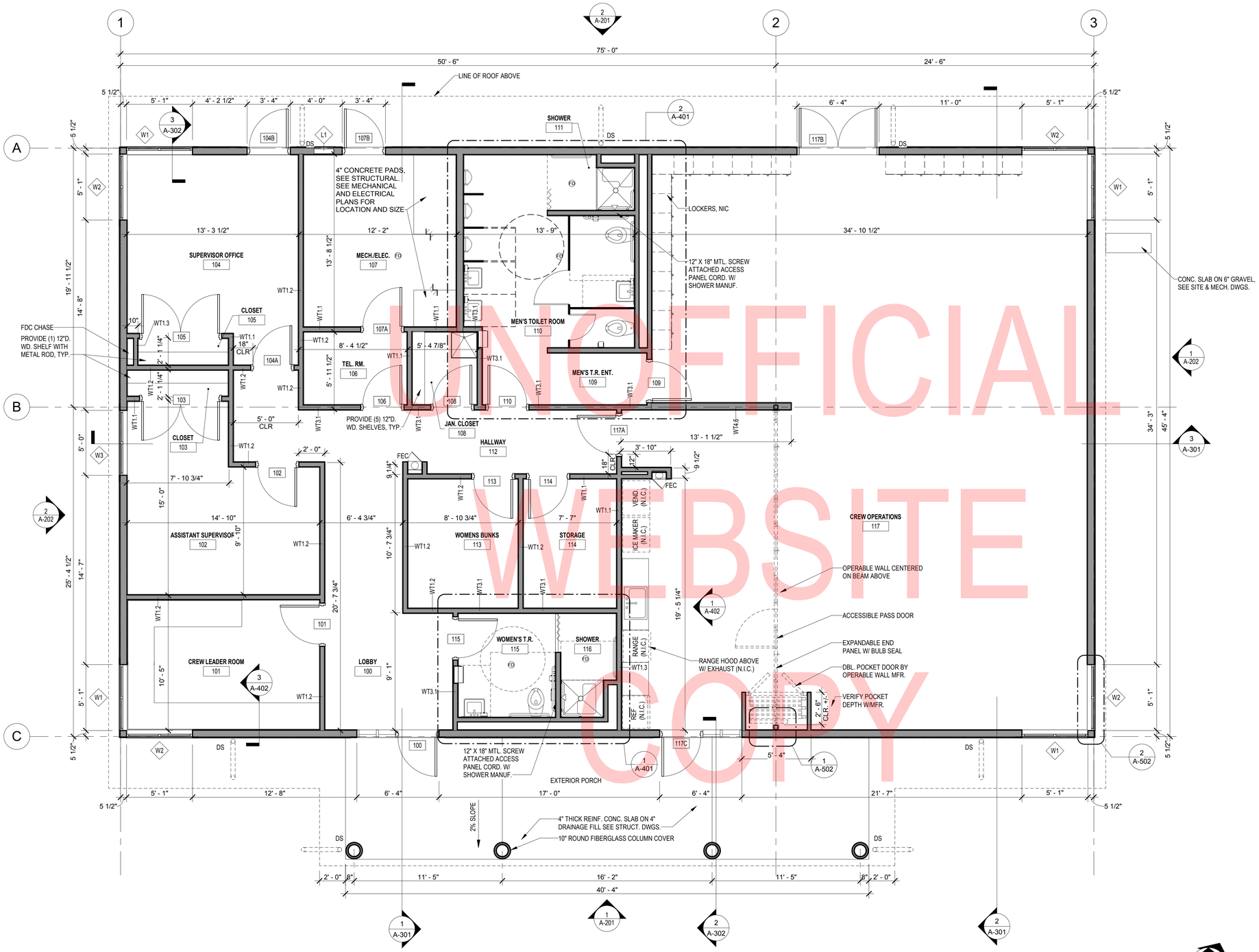

1 A-101 FLOOR PLAN
1/4" = 1'-0"

NOTES

1. DIMENSIONS ARE SHOWN TO FACE OF STUD., U.N.O.

LEGEND

- NEW DOOR WITH DOOR TAG (100)
- NEW WALL WITH DOOR TAG (WT1.3)
- WINDOW TAG (W4)
- WOMEN'S T.R. 114 — ROOM NAME TAG
- 2 A-402 — EXTERIOR ELEVATION SYMBOL
- 1 A-301 — INTERIOR ELEVATION SYMBOL
- 3 A-501 — DRAWING SECTION SYMBOL
- 2 A-510 — ENLARGED VIEW SYMBOL
- FIRE EXTINGUISHER CABINET W/ EXTINGUISHER

UNOFFICIAL WEBSITE COPY

A-101

ADDENDUMS / REVISIONS						
		NORTH DISTRICT CREW QUARTERS AND SITE WORK, PHASE 1A	CONTRACT T201880103	BRIDGE NO. N/A	FLOOR PLAN	SECTION JMT
			COUNTY NEW CASTLE	DESIGNED BY: DCH		SHEET NO. 30
				CHECKED BY: KNM		

$DATE_USER$
Q:\NDE\15152_010_Chapman_Yard_-_Phase\CADD\Architecture\15-1152-010_Chapman Yard Phase I Crew Ops_PSE Set.rvt

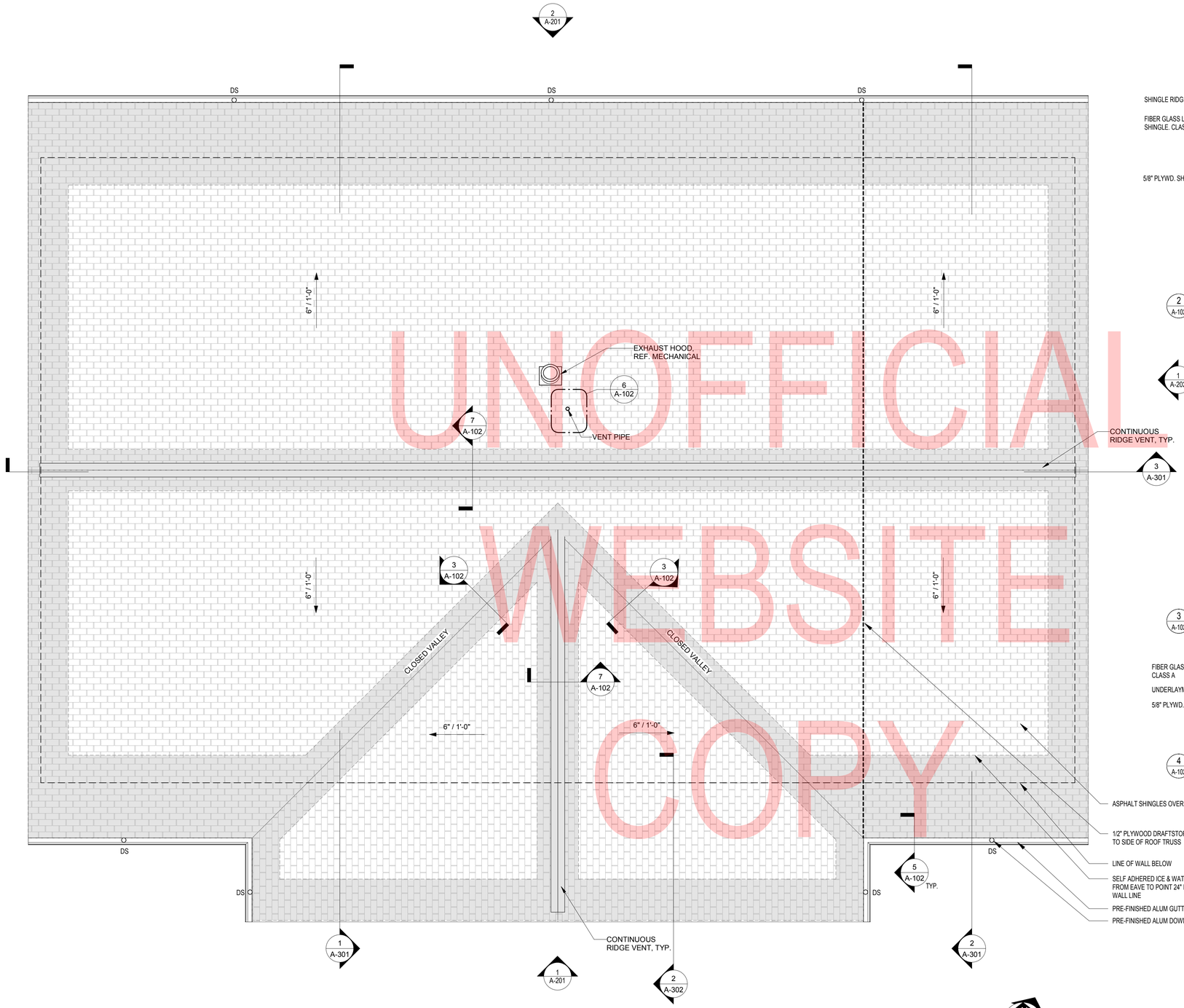

UNOFFICIAL WEBSITE COPY

1 A-102 ROOF PLAN
1/4" = 1'-0"

NOTES: PROVIDE 1 LAYER OF 1/2" PLYWOOD DRAFTSTOPPING DIVIDING ATTIC INTO 3000sf AREAS MAXIMUM.

ASPHALT SHINGLES OVER 30# ROOF FELT

1/2" PLYWOOD DRAFTSTOPPING ATTACHED TO SIDE OF ROOF TRUSS

LINE OF WALL BELOW

SELF ADHERED ICE & WATER BARRIER, EXTEND FROM EAVE TO POINT 24" INSIDE EXTERIOR WALL LINE

PRE-FINISHED ALUM GUTTER, TYP.

PRE-FINISHED ALUM DOWNSPOUT, TYP.

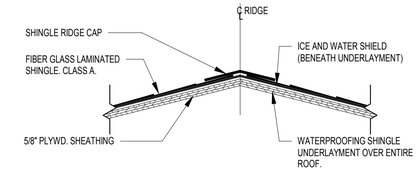

1. ALL UNDERLAYMENT, SEALANT, AND FASTENERS, ARE ITEMS TO BE FURNISHED AND INSTALLED BY THE ROOFING INSTALLER.

F = FINISH SIDE

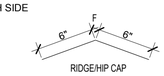

2 A-102 RIDGE AND HIP DETAIL
1 1/2" = 1'-0"

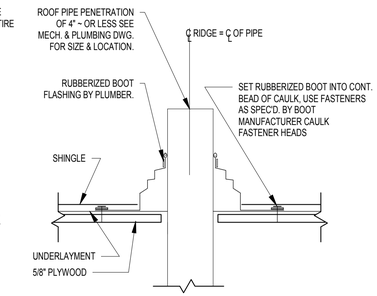

6 A-102 PIPE PENETRATION DETAIL
1 1/2" = 1'-0"

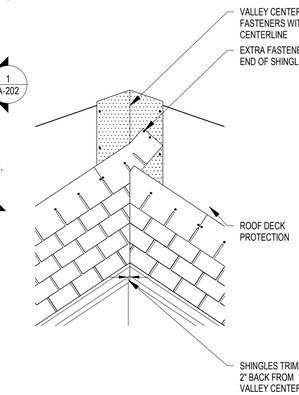

3 A-102 CLOSED CUT VALLEY FLASHING DETAIL
1" = 1'-0"

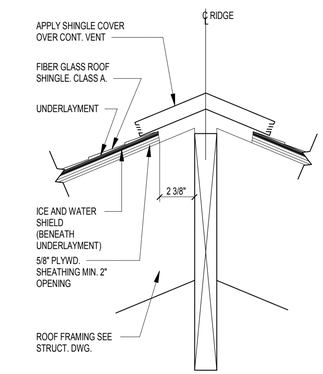

7 A-102 RIDGE VENT DETAIL
1 1/2" = 1'-0"

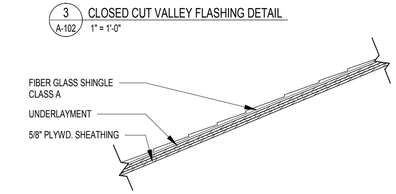

4 A-102 TYP. ROOF ASSEMBLY
1 1/2" = 1'-0"

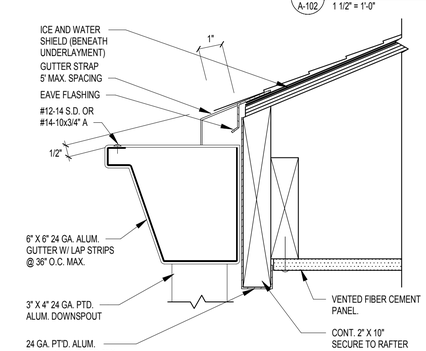

5 A-102 TYP. EAVE DETAIL W/ GUTTER
1 1/2" = 1'-0"

A-102

ADDENDUMS / REVISIONS							
		NORTH DISTRICT CREW QUARTERS AND SITE WORK, PHASE 1A	CONTRACT T201880103	BRIDGE NO. N/A	ROOF PLAN	SECTION JMT
			COUNTY NEW CASTLE	DESIGNED BY: DCH		SHEET NO. 31
				CHECKED BY: KNM		

$DATE_USERS
Q:\NDE\151152_010_Chapman_Yard__-_Phase\CADD\Architecture\15-1152-010_Chapman Yard Phase I Crew Ops_PSE Set.rvt

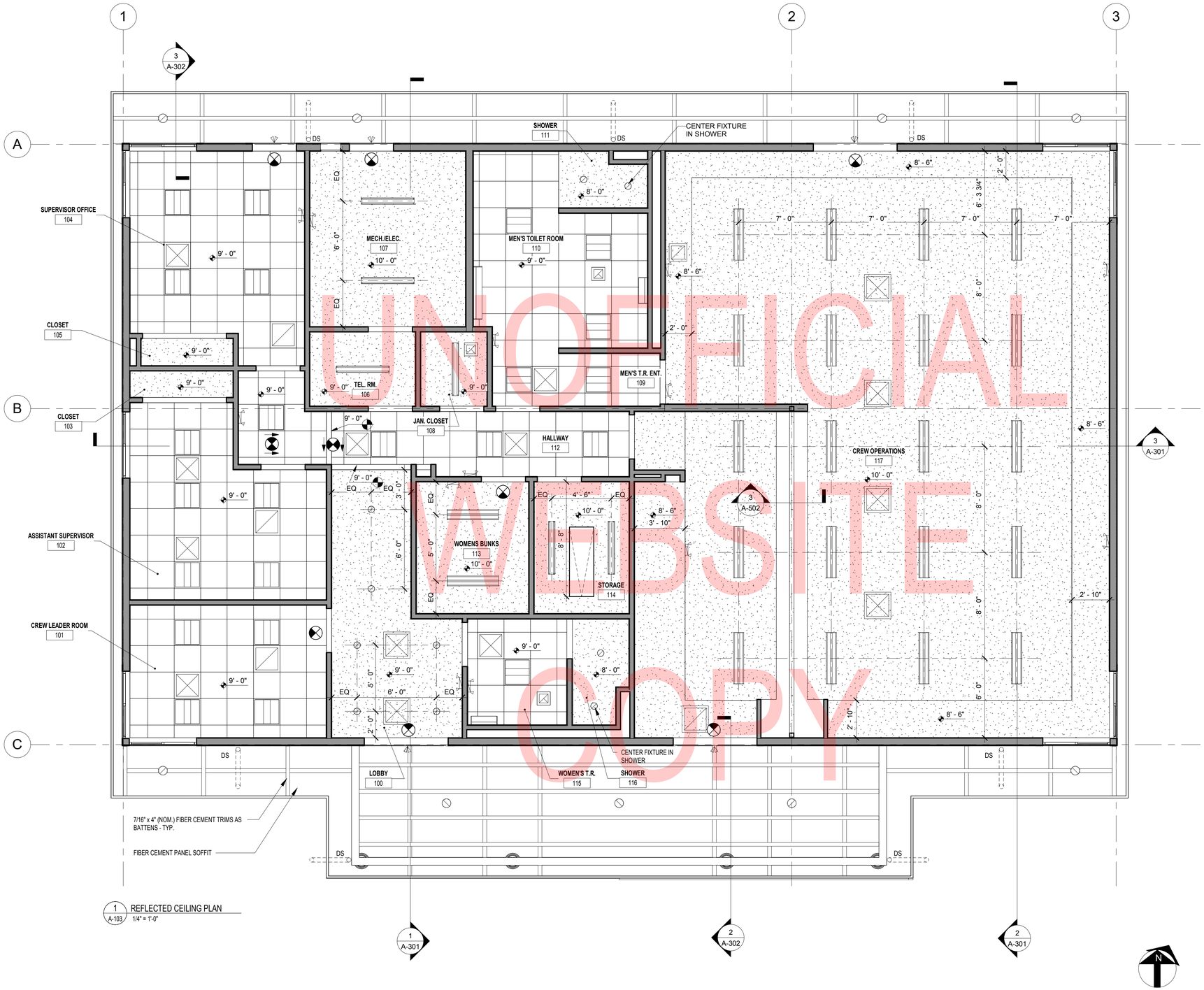

1 A-103 REFLECTED CEILING PLAN
1/4" = 1'-0"

CEILING LEGEND

- 2'x2' SUSPENDED ACOUSTICAL CEILING TILE
- 5/8" GYPSUM WALL BOARD CEILING
- 4' SURFACE MOUNTED STRIP FIXTURE (SEE ELECTRICAL)
- 4' SURFACE MOUNTED VOLUMETRIC FIXTURE (SEE ELECTRICAL)
- 2'x2' DIRECT/INDIRECT FIXTURE (SEE ELECTRICAL)
- RECESSED OPEN DOWNLIGHT (SEE ELECTRICAL)
- WALL MOUNTED VANITY FIXTURE (SEE ELECTRICAL)
- EMERGENCY LIGHTING (SEE ELECTRICAL)
- EMERGENCY EXIT SIGN (SEE ELECTRICAL)
- RETURN AIR GRILLE (SEE MECHANICAL)
- RETURN AIR DIFFUSER (SEE MECHANICAL)
- EXHAUST FAN (SEE MECHANICAL)
- N/C NO CEILING
- INSULATED PULL DOWN ATTIC ACCESS W/ LADDER

UNOFFICIAL WEBSITE COPY

A-103

ADDENDUMS / REVISIONS							
		NORTH DISTRICT CREW QUARTERS AND SITE WORK, PHASE 1A	CONTRACT T201880103	BRIDGE NO. N/A	REFLECTED CEILING PLAN	SECTION JMT
			COUNTY NEW CASTLE	DESIGNED BY: DCH		SHEET NO. 32
				CHECKED BY: KNM		

$DATE_USERS
Q:\NDE\151152_010_Chapman_Yard__-_Phase\CADD\Architecture\15-1152-010_Chapman Yard Phase I Crew Ops_PSE Set.rvt

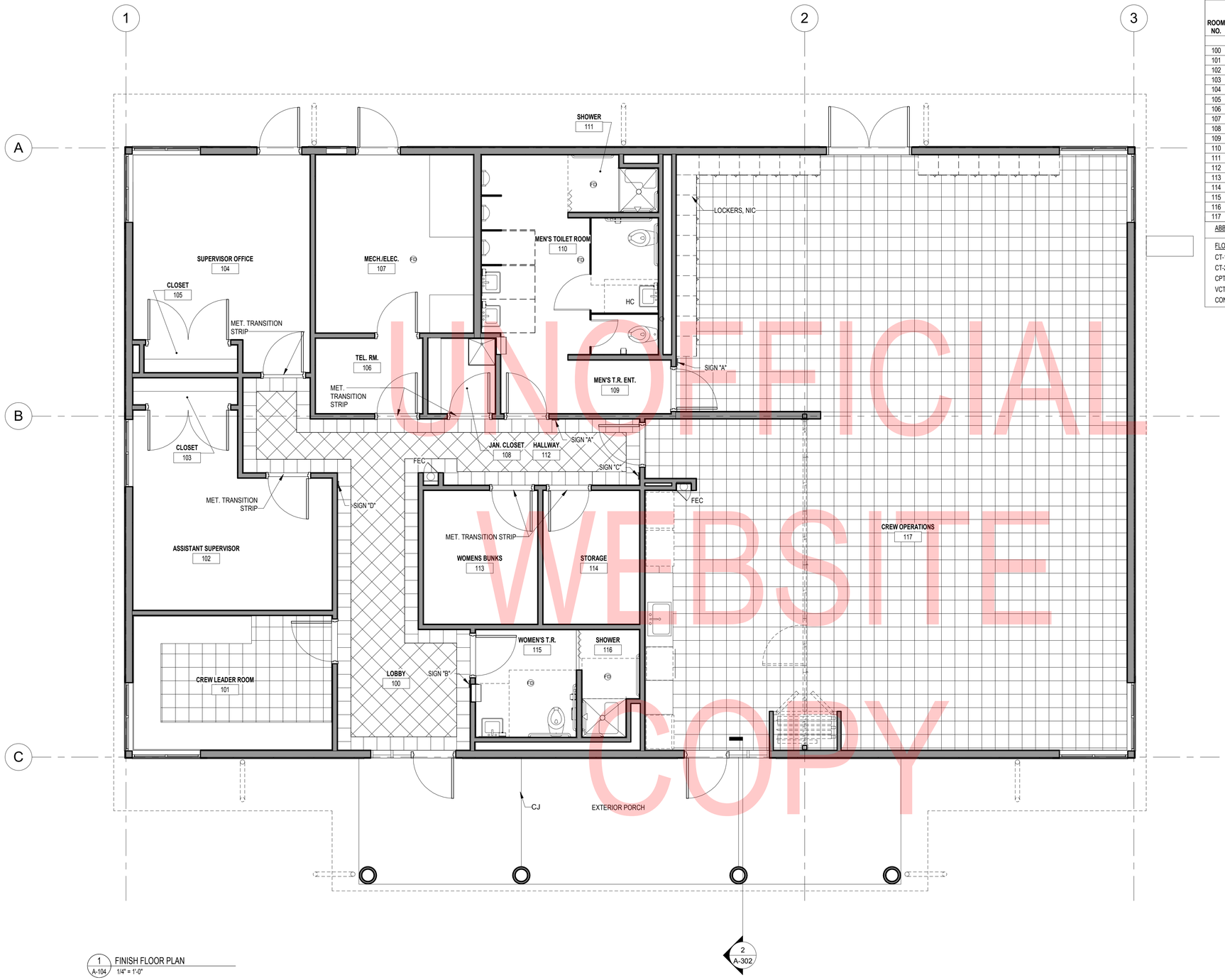

UNOFFICIAL WEBSITE COPY

1 A-104 FINISH FLOOR PLAN
1/4" = 1'-0"

NOTES:
1. PROVIDE CONSTRUCTION JOINT IN TILE AS SHOWN IN DETAIL 2/A-104.
2. COORDINATE CJ LOCATIONS WITH STRUCTURAL PLANS. CONTRACTOR TO COORDINATE CJ LOCATIONS WITH FLOORING FINISH.

ROOM FINISH SCHEDULE

ROOM NO.	ROOM NAME	FLOOR FINISH	FLOOR BASE	WALLS NORTH	WALLS SOUTH	WALLS EAST	WALLS WEST	CASEWORK	CEILING	REMARKS
100	LOBBY	CT-1	CT	PTD	PTD	PTD	PTD		GWB	
101	CREW LEADER ROOM	CT-1	RB	PTD	PTD	PTD	PTD		ACT	TILE FLOORING EXTENDS UNDER CASEWORK
102	ASSISTANT SUPERVISOR	CPT-1	RB	PTD	PTD	PTD	PTD		ACT	
103	CLOSET	CPT-1	RB	PTD	PTD	PTD	PTD		GWB	
104	SUPERVISOR OFFICE	CPT-1	RB	PTD	PTD	PTD	PTD		ACT	
105	CLOSET	CPT-1	RB	PTD	PTD	PTD	PTD		GWB	
106	TEL. RM.	VCT	RB	PTD	PTD	PTD	PTD		ACT	
107	MECH./ELEC.	CONC-1	RB	PTD	PTD	PTD	PTD		GWB	
108	JAN. CLOSET	VCT	RB	PTD	PTD	PTD	PTD		GWB	
109	MEN'S T.R. ENT.	CT-2	CT	CT	CT	CT	CT		ACT	
110	MEN'S TOILET ROOM	CT-2	CT	CT	CT	CT	CT		ACT	
111	SHOWER	CT-2	CT	CT	CT	CT	CT		GWB	
112	HALLWAY	CT-1	CT	PTD	PTD	PTD	PTD		ACT	
113	WOMENS BUNKS	CT-1	CT	PTD	PTD	PTD	PTD		ACT	
114	STORAGE	CONC-1	RB	PTD	PTD	PTD	PTD		GWB	
115	WOMEN'S T.R.	CT-2	CT	CT	CT	CT	CT		ACT	
116	SHOWER	CT-2	CT	CT	CT	CT	CT		GWB	
117	CREW OPERATIONS	CT-1	CT	PTD	PTD	PTD	PTD		GWB	TILE FLOORING EXTENDS UNDER LOCKERS

ABBREVIATIONS

FLOOR		BASE		WALLS	
CT-1	CERAMIC TILE TYPE 1- 12" SQUARE	CT	CERAMIC TILE COVE TO MATCH FLOOR	CT-3	CERAMIC TILE TYPE 3- 4" SQUARE
CT-2	CERAMIC TILE TYPE 2- 2" SQUARE	RB	RESILIENT BASE	PTD	PAINTED
CPT-1	CARPET TILE			**CEILING**	
VCT	VINYL COMPOSITE TILE			ACT	ACOUSTICAL CEILING TILE
CONC-1	SEALED CONCRETE			GWB	GYPSUM BOARD- PAINTED

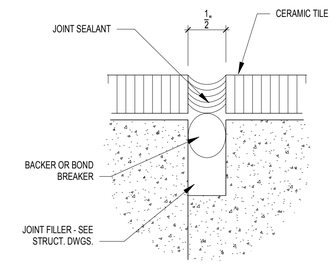

2 A-104 TILE DETAIL @ CONSTRUCTION JOINT
3/4" = 1'-0"

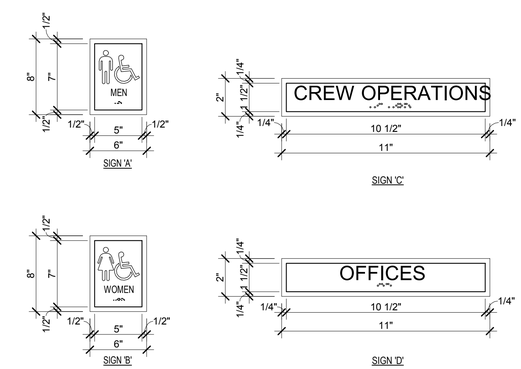

3 A-104 TOILET ROOM SIGNAGE ELEVATION
1 1/2" = 1'-0"

4 A-104 ROOM SIGNAGE ELEVATION
3" = 1'-0"

A-104

ADDENDUMS / REVISIONS	

NORTH DISTRICT CREW QUARTERS AND SITE WORK, PHASE 1A

CONTRACT	BRIDGE NO.	N/A
T201880103	DESIGNED BY: DCH	
COUNTY		
NEW CASTLE	CHECKED BY: KNM	

FINISH PLAN

SECTION
JMT
SHEET NO.
33

$DATE_USERS
Q:\NDE\151152_010_Chapman_Yard_-_Phase\CADD\Architecture\15-1152-010_Chapman Yard Phase I Crew Ops_PSE Set.rvt

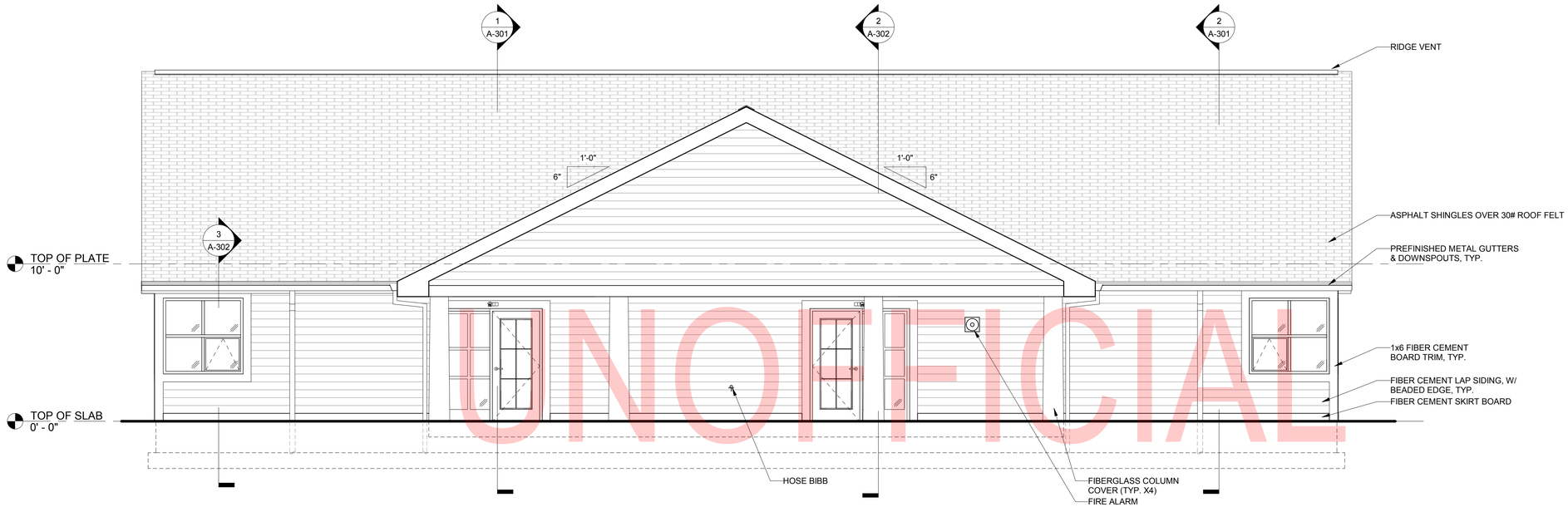

1 A-201 SOUTH ELEVATION
1/4" = 1'-0"

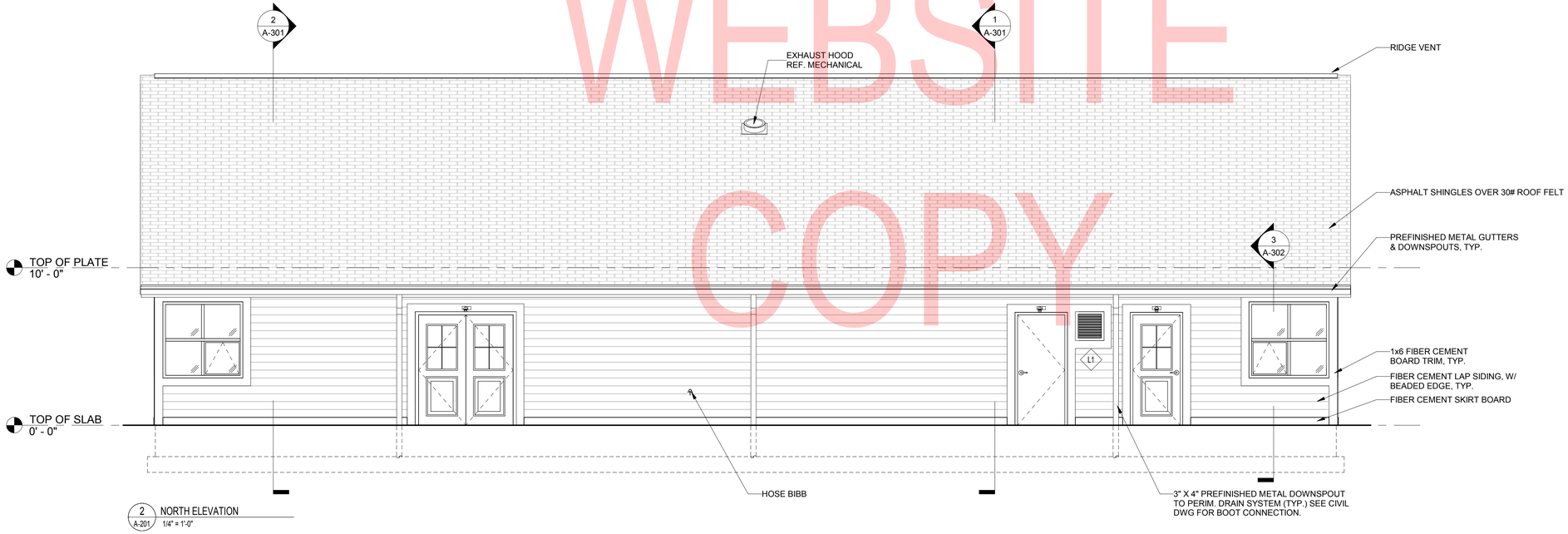

2 A-201 NORTH ELEVATION
1/4" = 1'-0"

UNOFFICIAL WEBSITE COPY

A-201

ADDENDUMS / REVISIONS			NORTH DISTRICT CREW QUARTERS AND SITE WORK, PHASE 1A	CONTRACT	BRIDGE NO. N/A	EXTERIOR ELEVATIONS	SECTION
				T201880103	DESIGNED BY: DCH		JMT
				COUNTY			SHEET NO.
				NEW CASTLE	CHECKED BY: KNM		34

$DATE_USER$
Q:\NDE\151152_010_Chapman_Yard_-_Phase\CADD\Architecture\15-1152-010_Chapman Yard Phase I Crew Ops_PSE Set.rvt

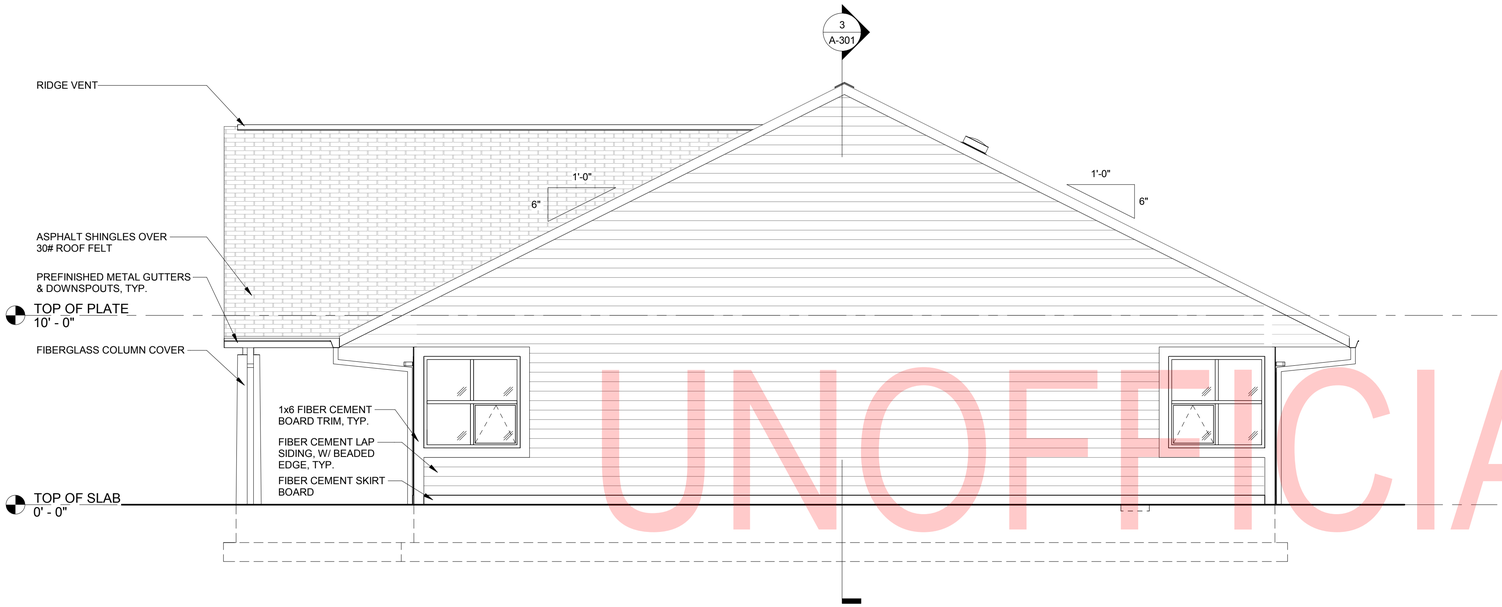

1 A-202 EAST ELEVATION
1/4" = 1'-0"

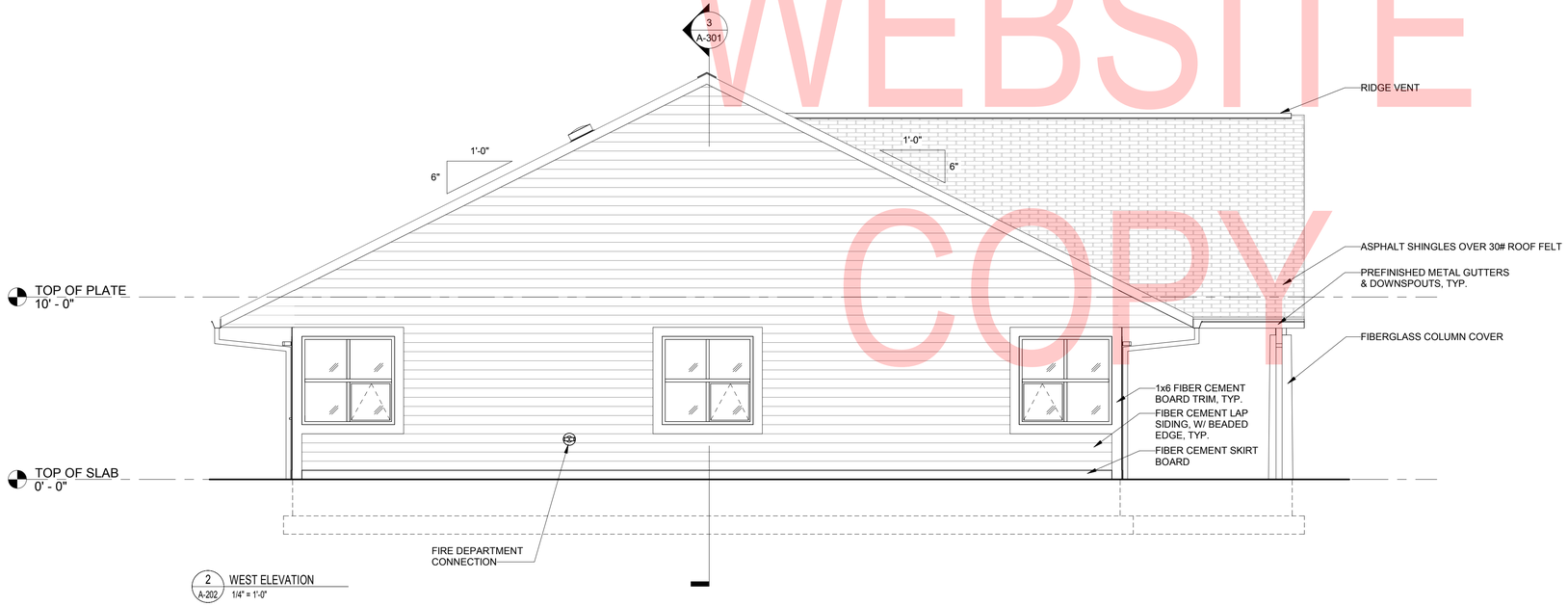

2 A-202 WEST ELEVATION
1/4" = 1'-0"

UNOFFICIAL WEBSITE COPY

A-202

ADDENDUMS / REVISIONS							
		NORTH DISTRICT CREW QUARTERS AND SITE WORK, PHASE 1A	CONTRACT T201880103	BRIDGE NO. N/A	EXTERIOR ELEVATIONS	SECTION JMT
			COUNTY NEW CASTLE	DESIGNED BY: DCH		SHEET NO. 35
				CHECKED BY: KNM		

$DATE_USER$
Q:\NDE\151152_010_Chapman_Yard_-_Phase\CADD\Architecture\15-1152-010_Chapman Yard Phase I Crew Ops_PSE Set.rvt

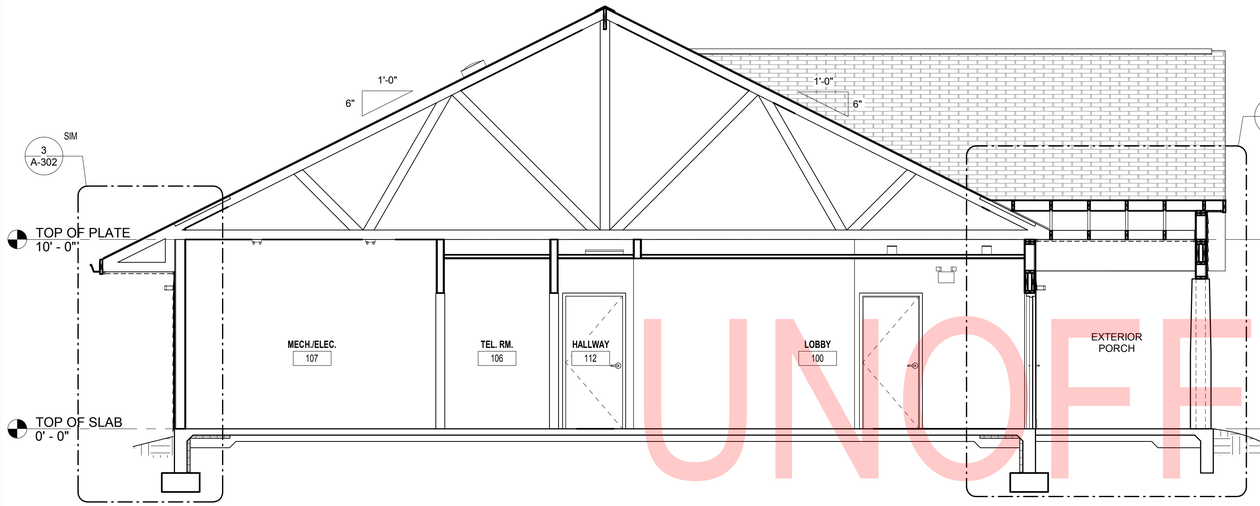

1 A-301 BUILDING SECTION
1/4" = 1'-0"

NOTE: ALIGN ATTIC STORAGE AREA TO NORTH WALL OF TEL RM 106 AND SOUTH WALL OF STORAGE 114

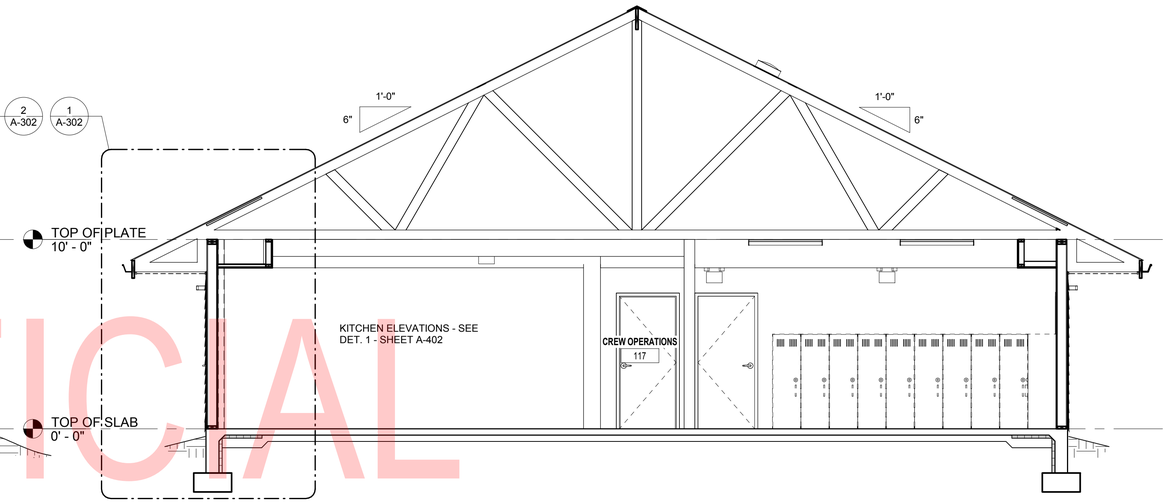

2 A-301 BUILDING SECTION
1/4" = 1'-0"

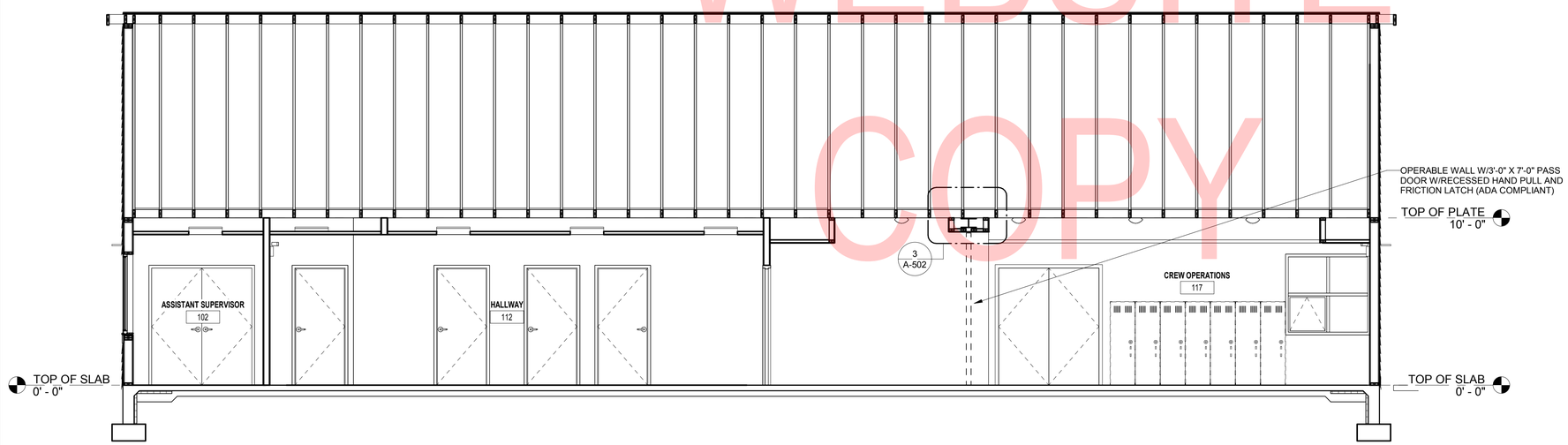

3 A-301 BUILDING SECTION
1/4" = 1'-0"

NOTE: ALIGN ATTIC STORAGE AREA TO WEST WALL OF LOBBY 100 AND EAST WALL OF STORAGE 114

UNOFFICIAL WEBSITE COPY

$DATE, USERS
Q:\NDE\151152_010_Chapman_Yard__-_Phase\CADD\Architecture\15-1152-010_Chapman Yard Phase I Crew Ops_PSE Set.rvt

A-301

ADDENDUMS / REVISIONS		NORTH DISTRICT CREW QUARTERS AND SITE WORK, PHASE 1A	CONTRACT T201880103	BRIDGE NO. N/A	BUILDING SECTIONS	SECTION JMT
			COUNTY NEW CASTLE	DESIGNED BY: DCH		SHEET NO. 36
				CHECKED BY: KNM		

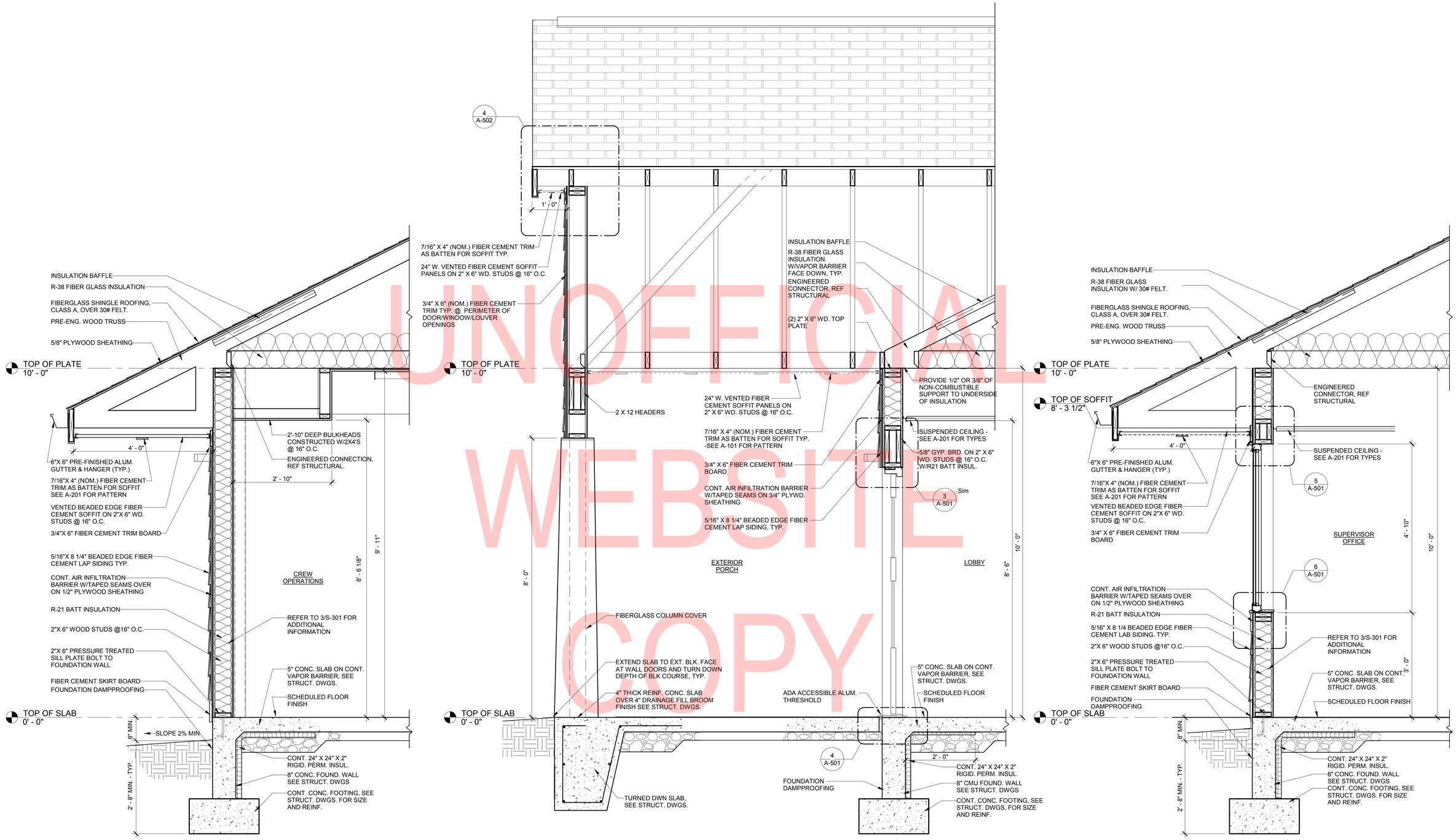

UNOFFICIAL WEBSITE COPY

A-302

ADDENDUMS / REVISIONS	

NORTH DISTRICT CREW QUARTERS AND SITE WORK, PHASE 1A

CONTRACT	BRIDGE NO.	N/A
T201880103	DESIGNED BY: DCH	
COUNTY		
NEW CASTLE	CHECKED BY: KNM	

WALL SECTIONS

SECTION
JMT
SHEET NO.
37

$DATE_USER$
Q:\NDE\151152_010_Chapman_Yard__Phase\CADD\Architecture\15-1152-010_Chapman Yard Phase I Crew Ops_PSE Set.rvt

TOILET ACCESSORIES SCHEDULE

MARK	ITEM	MNT. HGT.	BOBRICK CATALOG NO.
A	1-1/2" GRAB BAR	36" AFF TO CENTERLINE	B-6806 X 36
B	1-1/2" GRAB BAR	36" AFF TO CENTERLINE	B-6806 X 42
C	MIRROR W/STAINLESS STL. ANGLE FRAME, TEMPERED GLASS	40" AFF TO BOT. OF REFLECTIVE SURFACE	B-165 2436
D	TOILET PAPER DISPENSER	19" TO CENTERLINE	B-4288
E	PAPER TOWEL DISPENSER/WASTE RECEPTACLE, RECESSED	59-1/2" AFF TO TOP	B-3961
F	SANITARY NAPKIN DISPOSAL	19" AFF TO CENTERLINE	B-270
G	SOAP DISPENSER, SURFACE MOUNTED	38" AFF TO BOT.	B-2112
H	HEAVY DUTY SHOWER CURTAIN ROD, HOOKS, & VINYL PRIVACY CURTAIN	78" AFF TO CENTERLINE	B-6107/B-204-1/B-204-2
J	1-1/2" GRAB BAR	36" AFF TO CENTERLINE	BY SHOWER MANUF.
K	TOWEL BAR	48" AFF TO CENTERLINE	B-205-24
L	18" CLOTHES HOOK STRIP	60" AFF TO CENTERLINE	B-985
M	1-1/2" GRAB BAR	41" AFF TO CENTERLINE	B-6806X 18

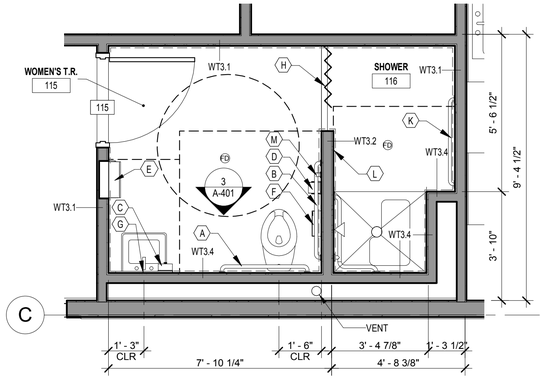

1 A-401 WOMENS TOILET ROOM
3/8" = 1'-0"

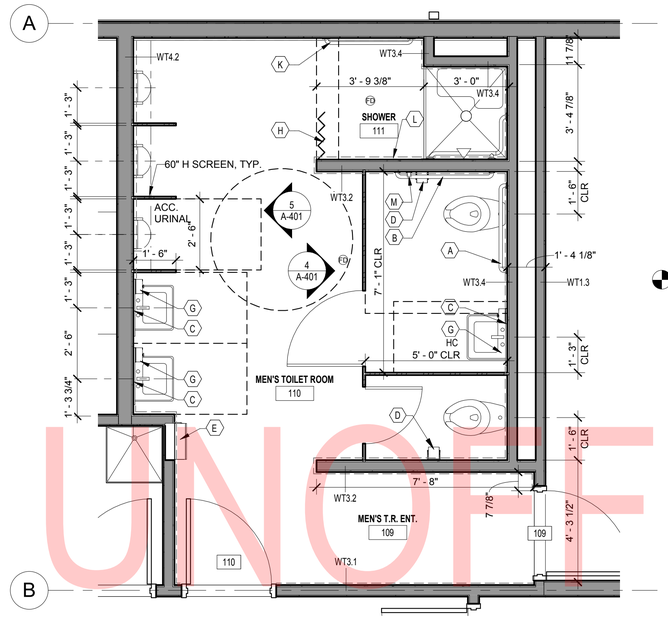

2 A-401 MENS TOILET ROOM
3/8" = 1'-0"

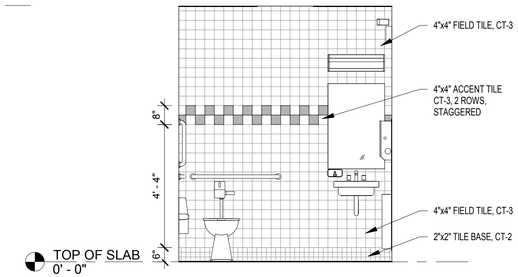

3 A-401 WOMENS ROOM ELEVATION- SOUTH
3/8" = 1'-0"

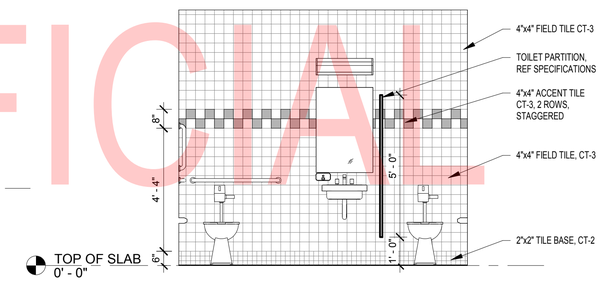

4 A-401 MENS ROOM ELEVATION- EAST
3/8" = 1'-0"

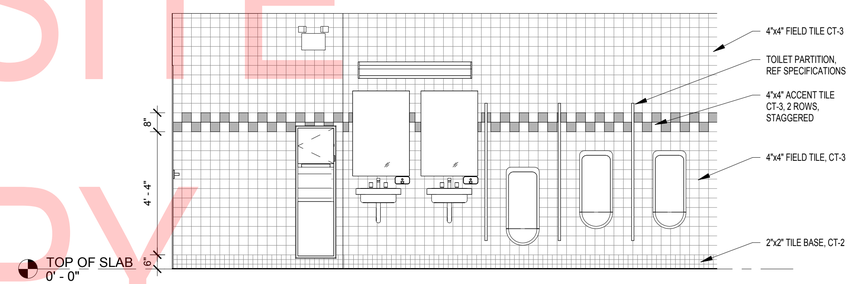

5 A-401 MENS ROOM ELEVATION - WEST
3/8" = 1'-0"

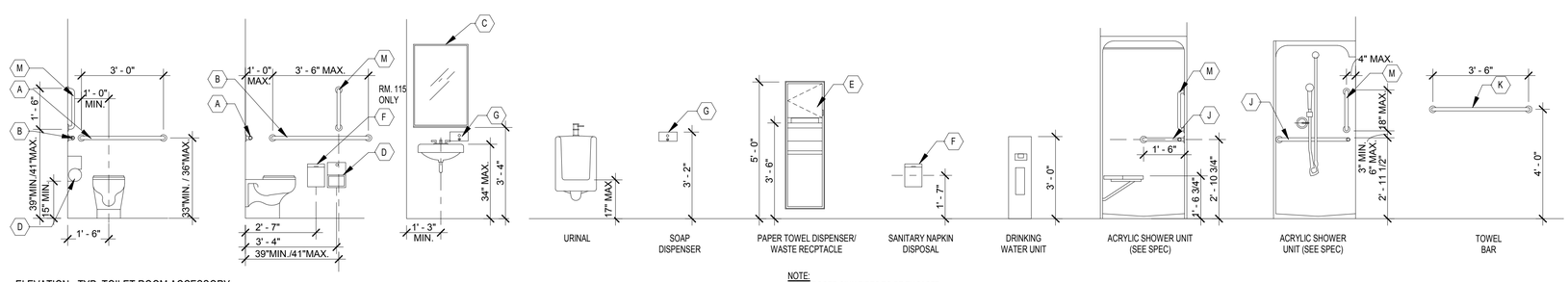

NOTE:
ALL EXPOSED SINK PIPES TO BE ENCASED W/REMOVABLE ADA COMPLIANT INSULATION

6 A-401 ELEVATION - TYP. TOILET ROOM ACCESSORY MOUNTING LOCATIONS
3/8" = 1'-0"

UNOFFICIAL WEBSITE COPY

A-401

ADDENDUMS / REVISIONS	

NORTH DISTRICT CREW QUARTERS AND SITE WORK, PHASE 1A

CONTRACT	BRIDGE NO.	N/A
T201880103	DESIGNED BY: DCH	
COUNTY		
NEW CASTLE	CHECKED BY: KNM	

TOILET ROOM PLANS, ELEVATIONS, AND DETAILS

SECTION: JMT

SHEET NO. 38

$DATE$ USERS
Q:\NDE\15152_010_Chapman_Yard__-_Phase\CADD\Architecture\15-1152-010_Chapman Yard Phase I Crew Ops_PSE Set.rvt

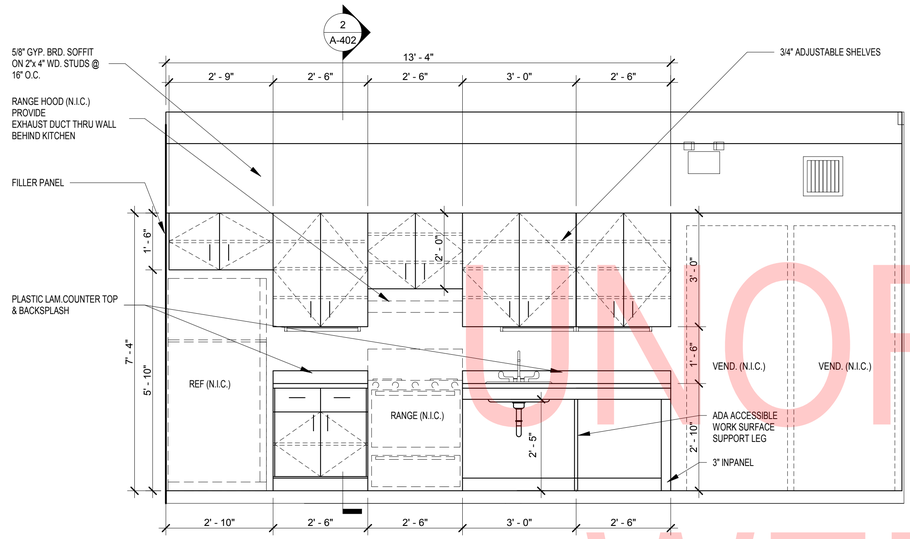

1 A-402 ELEVATION - CASEWORK IN CREW OPERATIONS RM
1/2" = 1'-0"

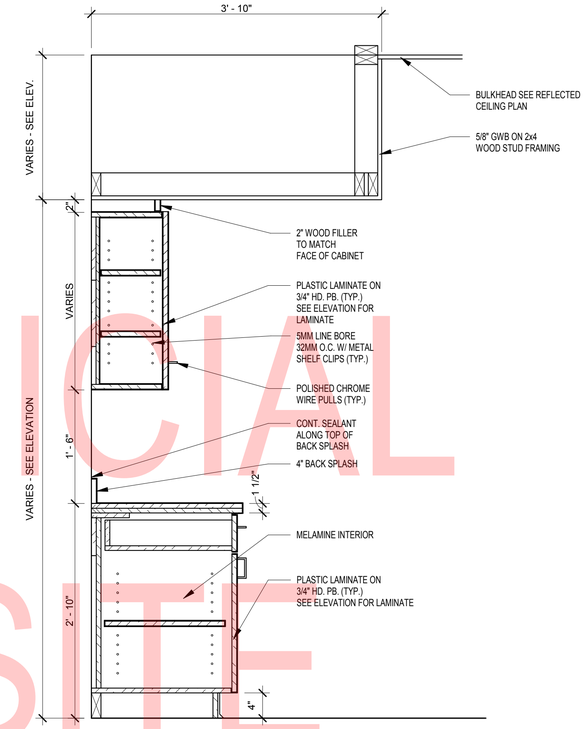

2 A-402 SECTION - CASEWORK
1" = 1'-0"

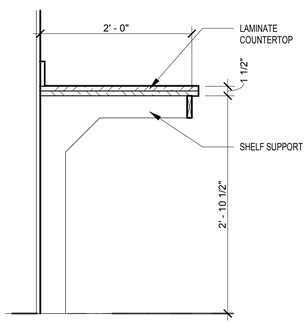

3 A-402 SECTION - COUNTERTOP SECTION
1" = 1'-0"

UNOFFICIAL WEBSITE COPY

$DATE_USERS
Q:\NDE\151152_010_Chapman_Yard__Phase\CADD\Architecture\15-1152-010_Chapman Yard Phase I Crew Ops_PSE Set.rvt

A-402

ADDENDUMS / REVISIONS	

NORTH DISTRICT
CREW QUARTERS AND SITE WORK, PHASE 1A

CONTRACT	BRIDGE NO.	N/A
T201880103	DESIGNED BY: DCH	
COUNTY		
NEW CASTLE	CHECKED BY: KNM	

INTERIOR ELEVATIONS

SECTION
JMT
SHEET NO.
39

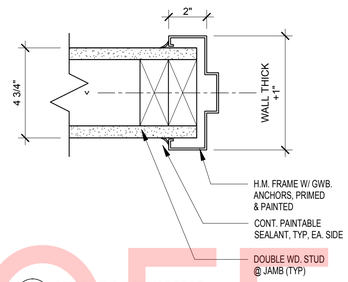

1 A-501 DETAIL - TYP. INTERIOR DOOR
3" = 1'-0"

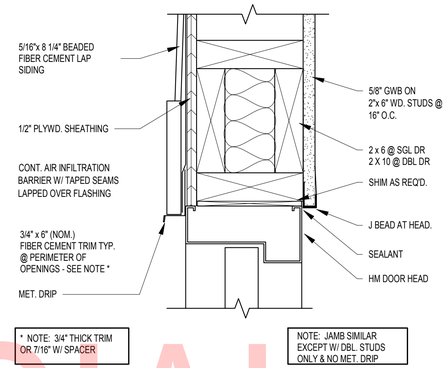

* NOTE: 3/4" THICK TRIM OR 7/16" W/ SPACER

NOTE: JAMB SIMILAR EXCEPT W/ DBL. STUDS ONLY & NO MET. DRIP

3 A-501 DETAIL - TYP. EXTERIOR DOOR HEAD
3" = 1'-0"

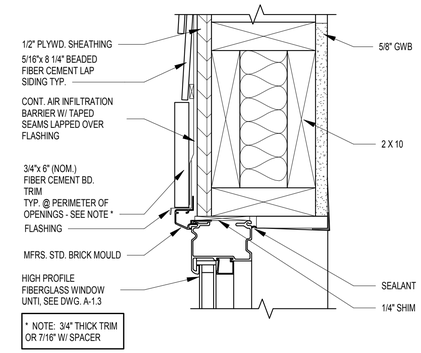

* NOTE: 3/4" THICK TRIM OR 7/16" W/ SPACER

5 A-501 DETAIL - TYP EXTERIOR WINDOW
3" = 1'-0"

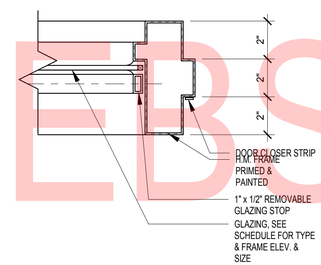

2 A-501 DETAIL - WINDOW
3" = 1'-0"

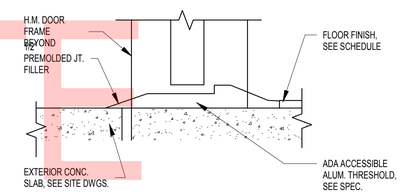

4 A-501 TYP. EXTERIOR DOOR SILL
3" = 1'-0"

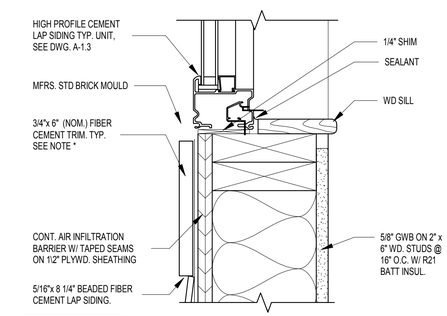

* NOTE: 3/4" THICK TRIM OR 7/16" W/ SPACER

6 A-501 DETAIL - TYP. EXTERIOR WINDOW
3" = 1'-0"

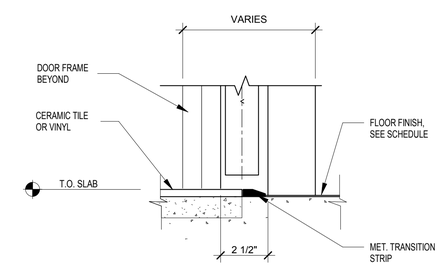

7 A-501 DETAIL - TYP. DOOR SILL
3" = 1'-0"

UNOFFICIAL WEBSITE COPY

$DATE_USERS
Q:\NDE\151152_010_Chapman_Yard_-_Phase\CADD\Architecture\15-1152-010_Chapman Yard Phase I Crew Ops_PSE Set.rvt

A-501

ADDENDUMS / REVISIONS			NORTH DISTRICT CREW QUARTERS AND SITE WORK, PHASE 1A	CONTRACT T201880103	BRIDGE NO. N/A	DETAILS	SECTION JMT
				COUNTY NEW CASTLE	DESIGNED BY: DCH		SHEET NO. 40
					CHECKED BY: KNM		

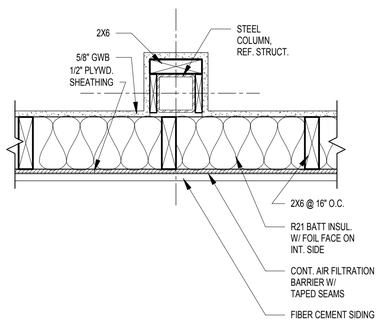

1 A-502 DETAIL - TYP. EXT. COL.
1 1/2" = 1'-0"

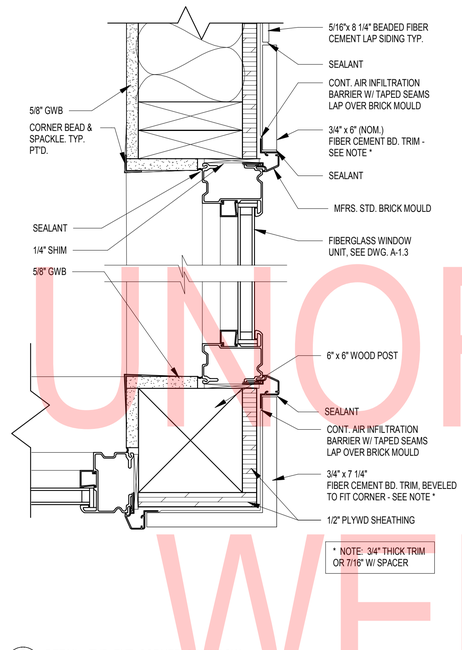

2 A-502 DETAIL - TYP. EXT. CORNER @ WINDOW
3" = 1'-0"

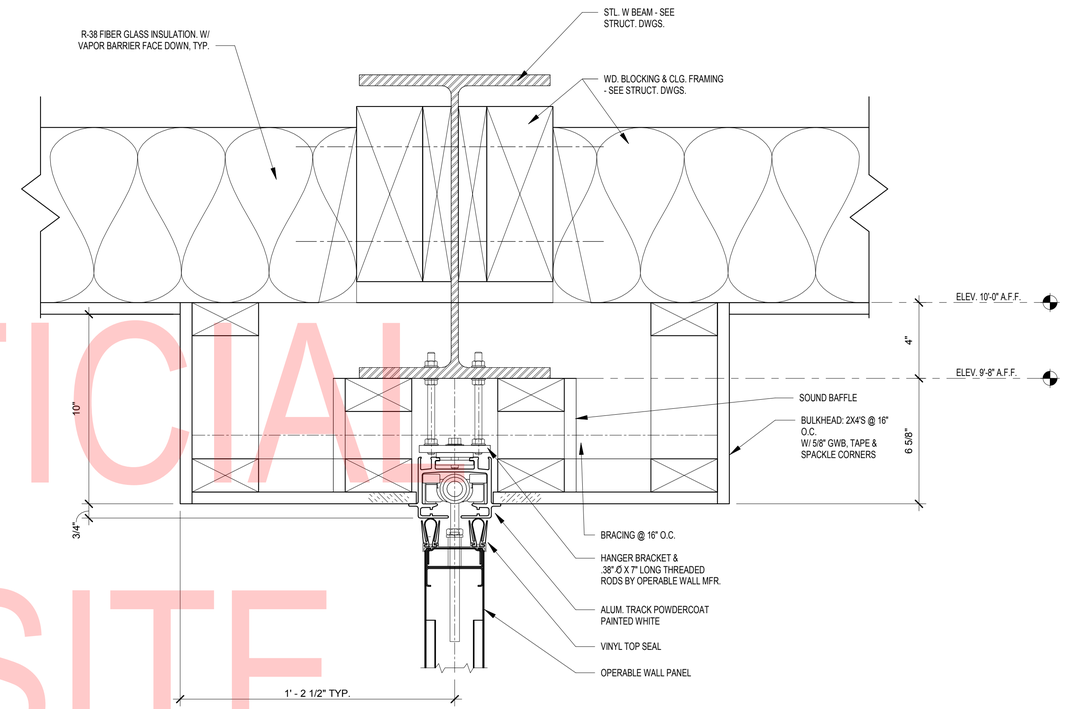

3 A-502 SECTION DETAIL - HEAD @ OPERABLE WALL
3" = 1'-0"

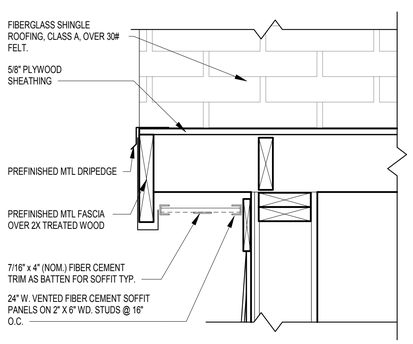

4 A-502 DETAIL - ROOF @ PORCH OVERHANG
1 1/2" = 1'-0"

UNOFFICIAL WEBSITE COPY

$DATE_USERS
Q:\NDE\151152_010_Chapman_Yard__-_Phase\CADD\Architecture\15-1152-010_Chapman Yard Phase I Crew Ops_PSE Set.rvt

A-502

ADDENDUMS / REVISIONS			NORTH DISTRICT CREW QUARTERS AND SITE WORK, PHASE 1A	CONTRACT T201880103	BRIDGE NO. N/A	DETAILS	SECTION JMT
				COUNTY NEW CASTLE	DESIGNED BY: DCH		SHEET NO. 41
					CHECKED BY: KNM		

DOOR SCHEDULE

NUM.	TYPE	DOOR SIZE WIDTH	DOOR SIZE HEIGHT	DOOR SIZE THK	CONSTRUCTION	FINISH	FRAME TYPE	FRAME FINISH	FRAME DETAIL HEAD	FRAME DETAIL JAMB	FRAME DETAIL SILL	UL DES.	HHARDWARE SET	NOTES
100	D-3	3' - 0"	7' - 0"	0' - 1 3/4"	HM		F-2		3/A-501	3/A-501	4/A-501		H10	
101	D-2	3' - 0"	7' - 0"	0' - 1 3/4"	WD		F-1		1/A-501	1/A-501	--		H1	
102	D-2	3' - 0"	7' - 0"	0' - 1 3/4"	WD		F-1		1/A-501	1/A-501	7/A-501		H1	
103	D-2	6' - 0"	7' - 0"	0' - 1 3/4"	WD		F-1		1/A-501	1/A-501	--		H4	
104A	D-2	3' - 0"	7' - 0"	0' - 1 3/4"	WD		F-1		1/A-501	1/A-501	7/A-501		H1	
104B	D-4	3' - 0"	7' - 0"	0' - 1 3/4"	HM		F-1		3/A-501	3/A-501	4/A-501		H10	
105	D-2	6' - 0"	7' - 0"	0' - 1 3/4"	WD		F-1		1/A-501	1/A-501	--		H4	
106	D-2	3' - 0"	7' - 0"	0' - 1 3/4"	WD		F-1		1/A-501	1/A-501	7/A-501		H2	
107A	D-1	3' - 0"	7' - 0"	0' - 1 3/4"	HM		F-1		1/A-501	1/A-501	--		H2	
107B	D-1	3' - 0"	7' - 0"	0' - 1 3/4"	HM		F-1		3/A-501	3/A-501	4/A-501		H10	
108	D-2	3' - 0"	7' - 0"	0' - 1 3/4"	WD		F-1		1/A-501	1/A-501	--		H2	
109	D-2	3' - 0"	7' - 0"	0' - 1 3/4"	WD		F-1		1/A-501	1/A-501	--		H3	
110	D-2	3' - 0"	7' - 0"	0' - 1 3/4"	WD		F-1		1/A-501	1/A-501	--		H3	
113	D-2	3' - 0"	7' - 0"	0' - 1 3/4"	WD		F-1		1/A-501	1/A-501	7/A-501		H1	
114	D-2	3' - 0"	7' - 0"	0' - 1 3/4"	WD		F-1		1/A-501	1/A-501	7/A-501		H2	
115	D-2	3' - 0"	7' - 0"	0' - 1 3/4"	WD		F-1		1/A-501	1/A-501	--		H5	
117A	D-2	3' - 0"	7' - 0"	0' - 1 3/4"	WD		F-1		1/A-501	1/A-501	--		H1	
117B	D-4	6' - 0"	7' - 0"	0' - 1 3/4"	HM		F-1		3/A-501	3/A-501	4/A-501		H11	
117C	D-3	3' - 0"	7' - 0"	0' - 1 3/4"	HM		F-2		3/A-501	3/A-501	4/A-501		H10	

LOUVER SCHEDULE

SYMBOL	SIZE WIDTH	SIZE HEIGHT	BASIS OF DESIGN
1	1' - 6"	1' - 6"	GREENHECK ESD-403

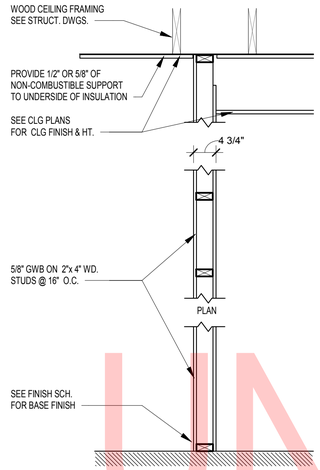

WT1.1 2"x 4" WD. STUDS @ 16" O.C. W/ 5/8" GWB BOTH SIDES.
HT. OF STUDS: 10'-0".
WALL THICKNESS: 4 3/4"

WT1.2 SAME AS WT1.1 W/ ACOUSTIC BATT INSUL.
FULL HT.

WT1.3 2"x 4" WD. STUDS @ 16" O.C. W/ 5/8" GWB ONE SIDE
HT. OF STUDS: 10'-0"
WALL THICKNESS: 4 1/8"

WT1.4 NOT USED

WT1.5 2"x 4" WD. STUDS @ 16" O.C.
SHOWER WALL ONE SIDE, NOTHING ON OTHER SIDE
HT. OF STUDS: 10'-0"
WALL THICKNESS: 3 1/2"

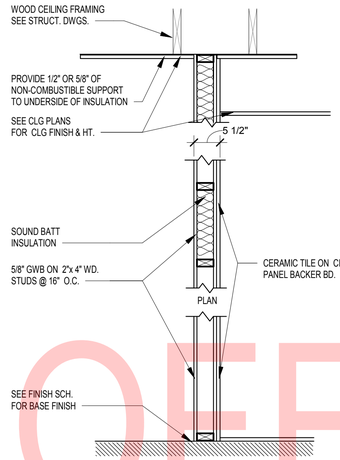

WT3.1 2"x 4" WD. STUDS @ 16" O.C., 5/8" GWB ONE SIDE, ON OTHER SIDE 1/4" CERAMIC TILE, 1/2" CEMENT PANEL BACKER BD.
HT. OF STUDS: 10'-0".
WALL THICKNESS: 5"

WT3.2 2" X 4" WD. STUDS @ 16" OC W/ CEMENT PANEL BACKER BD. & CERAMIC TILE, BOTH SIDES. NO BATTS
HT. OF STUDS: 10'-0"
WALL THICKNESS: 5 1/4"

WT3.3 NOT USED

WT3.4 2" X 4" WD. STUDS @ 16" OC W/ CEMENT PANEL BACKER BD. & CERAMIC TILE ON ONE SIDE & NOTHING ON THE OTHER SIDE.
HT. OF STUDS: 10'-0"
WALL THICKNESS: 4 1/4"

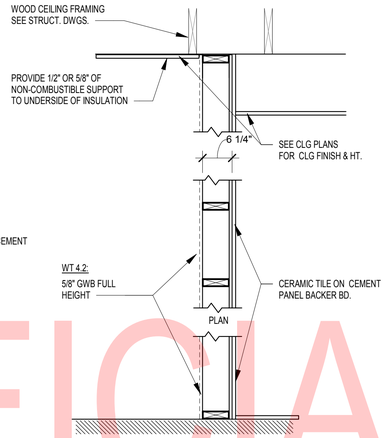

WT4.1 2"x 6" WD. STUDS @ 16" O.C. W/
CEMENT PANEL BACKER BD. & CERAMIC TILE ON ONE SIDE & NOTHING ON THE OTHER SIDE.
HT. OF WALL: 10'-0".
WALL THICKNESS: 6 1/2"

WT4.2 2"x 6" WD. STUDS @ 16" O.C., CEMENT PANEL BACKER BD. & 1/4" CERAMIC TILE ON ONE SIDE & 5/8" GWB ON THE OTHER SIDE.
HT. OF WALL: 10'-0".
WALL THICKNESS: 7"

WT4.3 2"x 6" WD. STUDS @ 16" O.C. W/
SHOWER WALL ONE SIDE, NOTHING ON OTHER SIDE
HT. OF STUDS: 10'-0"
WALL THICKNESS: 6 3/4"

WT4.4 2"x 6" WD. STUDS @ 16" O.C. W/
CERAMIC TILE ON 1/2" CEMENT PANEL BACKER BD. ON BOTH SIDES
HT. OF WALL: 10'-0".
WALL THICKNESS: 7 1/4"

WT4.5 2"x 6" WD. STUDS @ 16" O.C. W/
CERAMIC TILE ON 1/2" CEMENT PANEL BACKER BD.
NOTHING ON OTHER SIDE.

WT4.6 2"x 6" WD. STUDS @ 16" O.C. W/
5/8" GYP. BOARD ON BOTH SIDES.

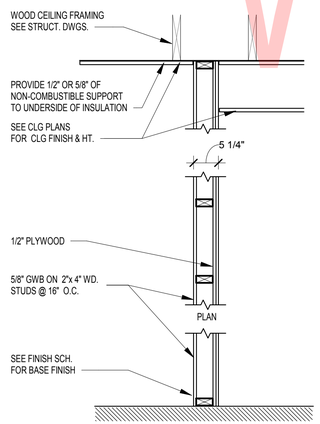

WT5.1 2"x 4" WD. STUDS @ 16" O.C. W/ 5/8" GWB BOTH SIDES.
1/2" PLYWOOD ON SIDE(S) INDICATED
HT. OF STUDS: 10'-0".
WALL THICKNESS: 5 1/4"

WT5.2 SAME AS WT1.1 W/ ACOUSTIC BATT INSUL.
FULL HT.

WALL TYPES

SCALE : 3/4" = 1'-0"

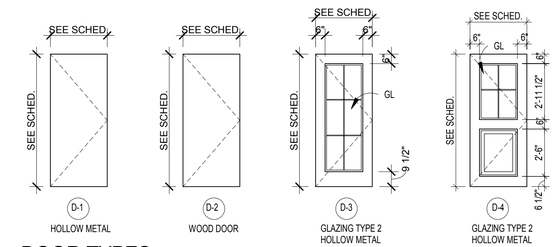

DOOR TYPES

SCALE : 1/4" = 1'-0"

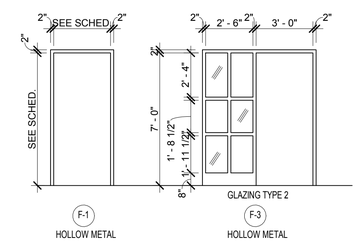

GLAZING SCHEDULE

TYPE NO.	DESCRIPTION
1	1/4" CLEAR GLASS, FULLY TEMPERED
2	1" INSULATION UNIT W/ 1/4" CLEAR INNER LITE, 1/2" ARGON GAS FILLED, & 1/4" - "LOW E" GLAZING

FRAME TYPES

SCALE : 1/4" = 1'-0"

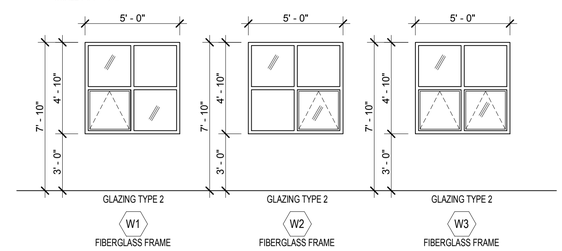

WINDOW TYPES

SCALE : 1/4" = 1'-0"

UNOFFICIAL WEBSITE COPY

$DATE_USER$
Q:\NDE\151152_010_Chapman_Yard__Phase\CADD\Architecture\15-1152-010_Chapman Yard Phase I Crew Ops_PSE Set.rvt

A-601

ADDENDUMS / REVISIONS	

NORTH DISTRICT
CREW QUARTERS AND SITE WORK, PHASE 1A

CONTRACT	BRIDGE NO.	N/A
T201880103	DESIGNED BY: DCH	
COUNTY		
NEW CASTLE	CHECKED BY: KNM	

SCHEDULES

SECTION: JMT
SHEET NO.: 42

GENERAL

1. CONTRACTOR TO VERIFY ALL DIMENSIONS AND SITE CONDITIONS PRIOR TO STARTING WORK. IF ANY DISCREPANCIES ARE NOTED, CONTRACTOR SHALL NOTIFY ARCHITECT AND ENGINEER IMMEDIATELY.
2. DO NOT SCALE DRAWINGS. CONSULT ENGINEER FOR DIMENSIONS.
3. CONTRACTOR SHALL FULLY COORDINATE ALL ARCHITECTURAL AND STRUCTURAL DRAWINGS AND SHALL FULLY RESOLVE ANY CONFLICTS PRIOR TO COMMENCING WORK. MISCELLANEOUS STRUCTURAL ITEMS, CONDITIONS OR PIECES OF STEEL MAY BE SHOWN ON ARCHITECTURAL DRAWINGS.
4. CONTRACTOR MUST SUBMIT SHOP DRAWINGS TO ENGINEER FOR APPROVAL. CONTRACTOR SHALL REVIEW SHOP DRAWINGS BEFORE SUBMITTING THEM TO ENGINEER NOTING ANY DISCREPANCIES FOUND. FAILURE TO SUBMIT THE SHOP DRAWINGS TO THE ENGINEER IS AT THE CONTRACTOR'S OWN RISK.
5. STRUCTURAL DRAWINGS ARE TO BE USED IN CONJUNCTION WITH ARCHITECTURAL AND/OR ANY OTHER TRADE RELATED DRAWINGS. THE ENGINEER SHOULD BE NOTIFIED IMMEDIATELY OF ANY DISCREPANCIES.
6. THE CONTRACTOR SHALL BE RESPONSIBLE FOR MEANS, METHODS, TECHNIQUES, SEQUENCES, AND PROCEDURES IN ORDER TO COMPLY WITH THE CONTRACT DRAWINGS AND SPECIFICATIONS.
7. THE STRUCTURE SHOWN ON THESE DRAWINGS IS STRUCTURALLY SOUND IN ITS COMPLETED FORM. THE CONTRACTOR SHALL BE RESPONSIBLE FOR PROVIDING THE DESIGN, ADEQUACY AND SAFETY OF TEMPORARY ERECTION BRACING AND SHORING.
8. THE ENGINEER HAS NO EXPERTISE IN, AND TAKES NO RESPONSIBILITY FOR, CONSTRUCTION MEANS AND METHODS OR JOB SITE SAFETY DURING CONSTRUCTION. IT IS SOLELY THE RESPONSIBILITY OF EACH CONTRACTOR TO FOLLOW ALL APPLICABLE SAFETY CODES AND REGULATIONS DURING ALL PHASES OF CONSTRUCTION.
9. NOTES BELOW ARE NOT INTENDED TO REPLACE SPECIFICATIONS. SEE SPECIFICATIONS FOR REQUIREMENTS IN ADDITION TO GENERAL NOTES.
10. THE CONTRACTOR SHALL MAKE NO DEVIATION FROM THE CONTRACT DOCUMENTS WITHOUT WRITTEN APPROVAL FROM THE OWNER.

DESIGN BASIS:

IBC 2015	INTERNATIONAL BUILDING CODE
ASCE 7-10	MINIMUM DESIGN LOADS FOR BUILDINGS AND OTHER STRUCTURES
ACI 318-11	MANUAL FOR CONCRETE CONSTRUCTION
NDS 2011	NATIONAL DESIGN SPECIFICATION FOR WOOD CONSTRUCTION

PROJECT LOADS

	UNIFORM (PSF)	CONC. (LBS)
ROOF LIVE LOAD:	20 TOP CHORD	
ATTIC STORAGE:	30 BOTTOM CHORD	
LIGHT STORAGE:	125	
LOBBIES & CORRIDORS:	100	2,000
OFFICES :	80	2,000

WIND LOAD PER ASCE 7-10

BUILDING RISK CATEGORY:	II
DESIGN WIND SPEED	115 MPH 3-SEC GUST
DIRECTIONALITY FACTOR (K_d):	0.85
WIND EXPOSURE:	B
TOPOGRAPHIC FACTOR (K_{zt}):	1.0
GUST EFFECT FACTOR (G):	0.85
ENCLOSURE CLASSIFICATION:	ENCLOSED
INTERNAL PRESSURE COEFF:	±0.18
MWFRS DESIGN PROCEDURE:	ENVELOPE

MWFRS

WALL PRESSURE		POS. (PSF)	NEG. (PSF)
WINDWARD:	FIELD	16	16
	END ZONE	16	18
LEEWARD:	FIELD	16	-16
	END ZONE	16	-16
SIDEWALL:	FIELD	16	-16
	END ZONE	16	-16
ROOF PRESSURE:	FIELD	-16	16
	END ZONE	-25	-18

END ZONE "a" = 4.5FT

COMPONENTS AND CLADDING:

ROOF SURFACE PRESSURE (PSF)

AREA	50SF	100SF	200SF	500SF
NEG. ZONE 1	-23	-20	-20	-20
NEG. ZONE 2	-43	-40	-40	-40
NEG. ZONE 3	-43	-40	-40	-40
POS. ALL ZONES	21	20	20	20
ROOF OVERHANG = 0.75xSURFACE PRESSURE, APPLIED AS AN ADDITIONAL UPWARD LOADING (POSITIVE PRESSURE).				

WALL SURFACE PRESSURE (PSF)

AREA	50SF	100SF	200SF	500SF
NEG. ZONE 4	-24	-23	-21	-20
NEG. ZONE 5	-27	-25	-23	-20
POS. ALL ZONES	21	20	20	20

** REFER TO ASCE 7-10, CHAPTER 30 FOR ZONE DEFINITIONS**

SEISMIC DESIGN CRITERIA

RISK CATEGORY:	II
SEISMIC IMPORTANCE FACTOR(I_e):	I_e = 1.0
MAPPED SPECTRAL RESPONSE ACC'L:	S_S = 0.187 g
	S_1 = 0.058 g
SPECTRAL RESPONSE ACCELERATIONS:	S_{dS} = 0.200 g
	S_{d1} = 0.093 g
SITE CLASS:	D
SEISMIC DESIGN CATEGORY:	B

SEISMIC DESIGN FACTORS

BASIC SEISMIC-FORCE-RESISTING SYSTEM(S):	LIGHT FRAME (WOOD) WALLS WITH WOOD STRUCTURAL PANELS
RESPONSE MODIFICATION FACTOR:	R = 7
SEISMIC RESPONSE COEFFICIENT:	C_S = 0.029
DESIGN BASE SHEAR:	V = 4 k

SNOW LOADS

GROUND SNOW LOAD:	25 PSF
SLOPED ROOF SNOW LOAD:	16 PSF

CONTROLLED FILL AND BACKFILL:

1. SAMPLES OF ALL MATERIALS THAT THE CONTRACTOR PROPOSES TO USE FOR COMPACTED FILL SHALL BE APPROVED BY THE GEOTECHNICAL ENGINEER.
2. COMPACTED FILL SHALL CONSIST OF LOCAL MATERIAL FREE OF DELETERIOUS MATTER AND CLASSIFIED CL, SC, GC, GM, OR SM PER ASTM D-2487.
3. THE CONTROL OF THE MOISTURE FOR PLACING THE FILL WILL BE BASED ON THE RESULTS OF COMPACTION TESTS PER ASTM D-1557.
4. ALL COMPACTED FILL SHALL HAVE A DENSITY OF AT LEAST 95% OF THE MODIFIED PROCTOR MAXIMUM DRY DENSITY AS DETERMINED BY ASTM D-1557.
5. FILL MATERIAL SHALL BE PLACED IN LOOSE LIFTS NOT EXCEEDING 8" IN THICKNESS AND SHALL BE MIXED, SPREAD AND PLACED IN SUCH A WAY AS TO PRODUCE A UNIFORM THICKNESS OF MATERIAL AFTER PLACING.
6. COMPACTED FILL PLACED WITHIN 4 FEET OF STRUCTURES AND PIPES SHOULD BE PLACED IN HORIZONTAL LIFTS NOT TO EXCEED 4 INCHES THICKNESS AND COMPACTED WITH HAND TAMPERS OR LIGHT COMPACTION EQUIPMENT TO THE SAME STANDARD. HEAVY COMPACTION EQUIPMENT SHOULD NOT BE ALLOWED WITHIN 4 FEET OF STRUCTURES UNLESS A MINIMUM 2 FEET DEPTH OF FILL COVERS THE STRUCTURES.
7. WHENEVER IN PLACE DENSITIES ARE FOUND BELOW ACCEPTABLE LIMITS, ADDITIONAL ROLLING TO PRODUCE THE SPECIFIED DENSITIES SHALL BE REQUIRED.
8. MAINTAIN POSITIVE SURFACE DRAINAGE TO PREVENT THE ACCUMULATION OF WATER IN EXCAVATED AREAS. SEDIMENT CONTROL MEASURES SHALL BE MAINTAINED AT ALL TIMES.
9. PLACING OF FILL CONTAINING ORGANIC MATTER; PLACING OF FILL WITH MOISTURE CONTENT TOO HIGH OR TOO LOW FOR PROPER COMPACTION; PLACING OF FILL WHEN FREE WATER IS STANDING ON THE EXISTING FILL SURFACE; PLACING OF FILL IN A FROZEN CONDITION OR ON TOP OF FROZEN MATTER WILL NOT BE PERMITTED.
10. THE SOILS ENGINEER SHALL SUPERVISE THE PLACING OF THE COMPACTED FILL AND ALL THE MATERIAL AND EQUIPMENT USED FOR THIS PURPOSE AND SHALL MAKE SUCH SOILS TESTS AS MAY BE REQUIRED FOR THE COMPLETION OF THE WORK.

CONCRETE:

1. ALL CONCRETE WORK SHALL CONFORM TO ALL THE PROVISIONS OF THE "SPECIFICATIONS FOR STRUCTURAL CONCRETE FOR BUILDINGS" (ACI 301), AND TO THE "BUILDING CODE REQUIREMENTS FOR REINFORCED CONCRETE" (ACI 318).
2. ALL STRUCTURAL CONCRETE SHALL HAVE A MINIMUM 28 DAY COMPRESSIVE STRENGTH OF 4,000 PSI UNLESS NOTED OTHERWISE.
3. THE CONCRETE SHALL CONFORM TO ALL THE PROVISIONS OF "RECOMMENDED PRACTICE FOR HOT WEATHER CONCRETING" (ACI 305) AND "RECOMMENDED PRACTICE FOR COLD WEATHER CONCRETING" (ACI 306).
4. ALL FORMWORK SHALL BE IN ACCORDANCE WITH THE AMERICAN CONCRETE INSTITUTE "FORMWORK FOR CONCRETE" SPECIAL PUBLICATION NO. 4 AND ACI'S "STANDARD RECOMMENDED PRACTICE FOR CONCRETE FORMWORK" (ACI-347).
5. ALL CONCRETE EXPOSED TO THE WEATHER SHALL HAVE AN AIR ENTRAINMENT OF 6% ± 1%. NO ADMIXTURES CONTAINING CALCIUM CHLORIDE SHALL BE PERMITTED.
6. THE MAXIMUM SLUMP OF ALL CONCRETE SHALL BE 4", OR IN ACCORDANCE WITH APPROVED MIX DESIGN.
7. ALL CONCRETE LEFT EXPOSED AT THE COMPLETION OF THE PROJECT SHALL BE TREATED WITH A CLEAR, PENETRATING ACRYLIC BASE POLYMER CAPABLE OF PREVENTING INFILTRATION OF WATER BORNE CHLORIDES SUCH AS CONSPEC #1 BY CONSPEC MARKETING & MANUFACTURING COMPANY OR APPROVED EQUAL.
8. A CONCRETE STRUCTURE MAY NOT SUPPORT ITS DESIGN LIVE LOAD FOR 28 DAYS. CONTRACTOR SHALL SUPPORT ADJACENT STRUCTURES, UTILITIES, AND EXCAVATIONS AS REQUIRED FOR COMPLETION OF WORK.
9. REINFORCING STEEL SHALL BE DEFORMED BARS IN ACCORDANCE WITH ASTM A-615, GRADE 60. BENDS ARE TO BE FABRICATED CRSI STANDARDS.
10. PLACE MAIN REINFORCING STEEL SO AS TO PROVIDE 3" MINIMUM COVER FOR FOUNDATIONS POURED ON EARTH, AND 2" FOR ALL REBAR IN EXPOSED CONCRETE (EXCEPT AS OTHERWISE DETAILED).

FOUNDATION:

1. CONCRETE SHALL NOT BE POURED ON FROZEN GROUND.
2. FILL ALL VOIDS AND REPLACE DISTURBED SOIL WITH LEAN CONCRETE.
3. BOTTOM OF ALL EXTERIOR FOOTINGS SHALL BE A MINIMUM OF 2'-8" BELOW FINISHED GRADE.
4. FOUNDATION DESIGN IS BASED ON RECOMMENDATION IN THE GEOTECHNICAL REPORT PREPARED BY JMT, DATED JUNE 11, 2018. INDIVIDUAL SPREAD FOOTING AND CONTINUOUS FOOTING SHALL BEAR ON SOIL CAPABLE OF SUPPORTING 2000 PSF.
5. IF SOIL OF THIS BEARING CAPACITY IS NOT ENCOUNTERED AT THE ELEVATIONS INDICATED ON THE CONTRACT DRAWINGS, FOOTINGS SHALL BE LOWERED OR INCREASED IN SIZE AS DIRECTED BY THE GEOTECHNICAL ENGINEER.
6. IMMEDIATELY PRIOR TO CONSTRUCTION, SUB GRADE SOILS SHALL BE PROOF ROLLED WITH A FULLY LOADED TANDEM-AXLE DUMP TRUCK OR SIMILAR EQUIPMENT TO DETECT ANY UNSTABLE AREAS. THE PROOF ROLLING EQUIPMENT SHALL MAKE A MINIMUM OF FOUR PASSES OVER EACH SECTION, WITH THE LAST TWO PASSES PERPENDICULAR TO THE FIRST TWO. ANY AREAS WHICH PUMP OR RUT SHALL BE UNDERCUT OR SCARIFIED AND DENSIFIED IN PLACE AND PROOF ROLLED AGAIN. CONTRACTOR SHALL NOTIFY OWNER PRIOR TO COMMENCEMENT OF PROOF ROLLING OPERATIONS.

SLAB NOTES:

1. CONSTRUCTION JOINT AND CONTROL JOINT MAY BE INTERCHANGED TO SUIT CONCRETE POUR SCHEDULE.
2. EXACT LOCATION OF CONTROL JOINTS SHALL BE ESTABLISHED PRIOR TO CUTTING OF REINFORCING AND PLACING OF CONCRETE. FIELD CONTROL SHALL ASSURE THAT THE JOINTS OCCUR OVER THE CUT REINFORCING.
4. SAWING OF JOINTS:

A. THE PREFERRED METHOD FOR SAWING CONTROL JOINTS IS WITH THE "SOFF-CUT" SAW WITHIN ONE HOUR OF FINISHED CONCRETE.
B. THE CONVENTIONAL CONCRETE SAW CUTTING A 3/16" (5MM) WIDE GROOVE IS ALSO ACCEPTABLE. SAWING SHALL BEGIN AS SOON AS THE CONCRETE SURFACE HAS SUFFICIENTLY HARDENED TO PERMIT SAWING WITHOUT EXCESSIVE RAVELING AND BEFORE SHRINKAGE CRACKS OCCUR. SAWING SHALL BEGIN WITHIN 10 HOURS OF THE FINAL FINISHING OPERATION.
C. WHERE THE SAW IS OBSTRUCTED, TOOLED OR FORMED JOINTS SHALL BE PROVIDED TO JOIN THE SAW CUT JOINT AND COMPLETE THE CONTROL JOINT
D. THE CONTRACTOR SHALL MAKE ALL NECESSARY PROVISIONS TO ENSURE THAT SAWED JOINTS ARE MADE IN THE PROPER INTERVAL INCLUDING, BUT NOT LIMITED TO LIGHTING, TWO SHIFTS, OVERTIME, ETC.

6. ALL DOWELS SHALL BE SAW CUT, NOT SHEARED, CONFORMING TO ASTM A615 PLAIN, GRADE 60, AND SHALL BE LOCATED AT MID-DEPTH OF THE SLAB. DOWELS SHALL BE CAREFULLY AND FIRMLY SUPPORTED DURING CONSTRUCTION. DOWELS SHALL BE COATED WITH A BOND BREAKER PRIOR TO PLACING CONCRETE IN THE SECOND POUR.
7. INSTALL VAPOR BARRIER CONFORMING TO ASTM E1745 AND 10 MIL THICK UNDER SLAB. OVERLAP SPLICES 6" MINIMUM OR PER MANUFACTURER'S RECOMMENDATION.
8. SLAB CONTROL JOINTS SHALL BE PLACED SUCH THAT SPACING DOES NOT EXCEED 36xSLAB THICKNESS UP TO A MAXIMUM 18 FEET BETWEEN JOINTS PER ACI 302. JOINTS SHALL BE CUT INTO THE SLAB AT A DEPTH OF 1/3 TIMES THE THICKNESS OF THE SLAB WITHIN 12 HOURS OF PLACEMENT.
9. ALL FILL UNDER SLAB(S) IS TO BE COMPACTED TO 95% OF MAXIMUM DENSITY AT OPTIMUM MOISTURE CONTENT IN ACCORDANCE WITH ASTM D1557.
10. PLUMBING AND ELECTRICAL CONDUITS SHALL BE PLACED BELOW THE SLAB AND NOT WITHIN THE SLAB. VERTICAL PENETRATIONS ARE ALLOWED.

FOUNDATION ANCHORAGE:

1. WOOD SILL PLATES AT EXTERIOR WALLS, INTERIOR LOAD BEARING WALLS, AND INTERIOR SHEAR WALLS TO BE ANCHORED TO THE CMU OR CONCRETE AS FOLLOWS.

A. 5/8" ANCHOR BOLTS EMBEDDED 7". BOLTS TO BE SPACED AT 32" O.C. WITH ONE BOLT PLACED WITHIN 12" OF EACH CORNER AND AT THE ENDS OF EACH SILL PLATE. PROVIDE NUTS AND WASHERS FOR EACH BOLT. USE 3"x3"x1/4" THICK WASHERS.

B. 5/8" DIAMETER THREADED RODS MAY BE SUBSTITUTED FOR THE ANCHOR BOLTS. DRILL AND EPOXY RODS INTO CMU OR CONCRETE USING EITHER SIMPSON AT, ET, OR SET ANCHORING ADHESIVES. EMBEDMENT AND SPACING ARE THE SAME AS STATED ABOVE.

2. AS AN ALTERNATIVE SIMPSON MAS MUDSILL ANCHOR PLACED 3-1/2" FROM THE EDGE OF THE CONCRETE POUR. SPACE THE ANCHOR 24" O.C. WITH AT LEAST ON ANCHOR PLACED WITHIN 12" OF EACH CORNER AND AT THE ENDS OF EACH SILL PLATE.

STRUCTURAL TIMBER:

1. ALL STRUCTURAL TIMBER LISTED BELOW AND TJI JOISTS LISTED ON THE PLANS ARE MANUFACTURED BY TRUS-JOIST. OTHER MANUFACTURERS ARE ACCEPTABLE AS LONG AS THERE PRODUCTS MEET OR EXCEED THE DESIGN VALUES SHOWN BELOW.
2. ALL TIMBER TO BE MIN. GRADE & SPECIES AS PER THE LATEST EDITION OF THE NATIONAL DESIGN SPECIFICATION FOR WOOD CONSTRUCTION.
A. INTERIOR/EXTERIOR STUDS: SEE STUD WALL FRAMING LOCATED ON GENERAL NOTES PAGE.
B. BEAMS, HEADERS, POSTS, AND JOIST: SOUTHERN YELLOW PINE #2 UNLESS OTHERWISE NOTED ON THE PLANS.

3. DESIGN VALUES:
A. MICROLLAM LVL : E= 1900 KSI, Fb= 2600 PSI, Fv= 285 PSI
B. TIMBERSTRAND LSL: E= 1700 KSI, Fb= 2600 PSI, Fv= 400 PSI
C. PARALLAM PSL: E= 1740 KSI, Fb= 2088 PSI, Fv= 177 PSI
D. T.J STRAND RIM BOARD: E= 800 KSI, Fb= 1200 PSI, Fv= 400 PSI
*NOTE: DESIGN VALUES LISTED ARE FOR A 12" DEEP MEMBER.

4. PRESSURE TREATMENT IS REQUIRED FOR THE FOLLOWING;
A. ALL FIRST FLOOR TOE PLATES OR WOOD IN CONTACT WITH CMU OR CONCRETE.
B. ALL EXTERIOR BEAMS, POSTS, AND FLOOR JOISTS.

5. GLUE LAMINATED TIMBER TO BE SOUTHERN PINE WITH A COMBINATION SYMBOL OF 24F-V3.

WOOD FRAMING NOTES:

1. ALL WOOD FRAMING MATERIALS SHALL BE SOUTHERN YELLOW PINE OR EQUAL, UNLESS NOTED OTHERWISE. ALSO SEE THE STRUCTURAL TIMBER SECTION OF THE GENERAL NOTES.
2. ALL LUMBER SHALL BE CONTINUOUS WITHOUT SPLICES EXCEPT AS NOTED ON THE DRAWINGS. FACTORY MACHINED SPLICES ARE ACCEPTABLE AS LONG AS THE MINIMUM STRUCTURAL PROPERTIES OF THE MEMBER ARE MAINTAINED.
3. ALL EXTERIOR WALLS SHALL BE SHEATHED WITH APA RATED SHEATHING WITH BLOCKING AT ALL SEAMS. SHEATHING IS TO BE NAILED TO ALL STUDS, TOP PLATES, SILL PLATE BANDS AND BLOCKING.
4. ALL WOOD MEMBERS IN CONTACT WITH CONCRETE, MASONRY OR EXPOSED TO WEATHER SHALL BE PRESSURE TREATED.
5. ALL NAILING TO BE IN ACCORDANCE WITH THE STANDARDS PRESCRIBED BY THE INTERNATIONAL RESIDENTIAL CODE.
6. THE ENDS OF ALL RAFTERS AND OR TRUSSES SHALL BE ANCHORED WITH AN APPROPRIATELY DESIGNED STRAP. SHEATHING AND OR ANCHORS SHALL BE INSTALLED SO THAT THERE IS A CONTINUOUS LOAD PATH FROM THE ROOF DOWN TO THE FOUNDATION.
7. CONTRACTOR TO PROVIDE MULTIPLE STUDS UNDER ALL TRUSS GIRDERS AND OR STRUCTURAL BEAMS TO ACCOUNT FOR THE END REACTIONS. AT NO TIME SHALL THERE BE ANY LESS THAN THREE STUDS UNDER THE ABOVE STATED MEMBERS. CONTRACTOR IS TO ALSO ENSURE THAT BLOCKING IS PLACED WHERE NECESSARY TO TRANSFER LOAD FROM FLOOR TO FLOOR.
8. PROVIDE SOLID BLOCKING BETWEEN JOISTS WHENEVER JOISTS ARE SUPPORTING WALL ABOVE.
9. ALL LOAD BEARING WALLS AND OR SHEAR WALLS LOCATED PERPENDICULAR TO FLOOR JOISTS OR TRUSSES SHALL HAVE SOLID BLOCKING SECURELY PLACED BETWEEN THE FLOOR MEMBERS. THE SOLID WOOD BLOCKING SHALL BE THE FULL DEPTH OF THE FLOOR MEMBERS AND BE LOCATED DIRECTLY UNDER THE WALL FOR THE FULL BEARING AND WIDTH OF THE WALL.
10. UNLESS OTHERWISE NOTED PROVIDE DOUBLE JOISTS UNDER ALL PARTITION WALLS FRAMED PARALLEL TO THE FLOOR JOISTS.
11. EXTRA CONTINUOUS STUDS, NOT JACK STUDS, SHALL BE INSTALLED AT ALL OPENING JAMBS TO REPLACE THE TYPICALLY SPACED STUDS INTERRUPTED BY THE OPENINGS.
12. WHERE CEILING JOISTS ARE NOT PROVIDED AT THE TOP OF THE RAFTER SUPPORT WALLS, THE RIDGE FORMED BY THESE RAFTERS SHALL BE SUPPORTED BY A PROPERLY DESIGNED RIDGE BEAM.

WALL SHEATHING:

1. UNLESS OTHERWISE NOTED ON THE PLANS, ALL EXTERIOR WALL SHEATHING TO BE A MINIMUM 7/16" OR 1/2" APA RATED SHEATHING OR STRUCTURAL I SHEATHING WITH 8d COMMON NAILS (OR EQUIVALENT) SPACED @ 6" O.C. AT THE EDGES AND 12" O.C. IN THE FIELD.
2. INTERIOR BEARING OR SHEAR WALLS: ALL LOAD BEARING WALLS OR INTERIOR SHEAR WALLS TO HAVE 1/2" GYPSUM BOARD SHEATHING APPLIED TO BOTH SIDES OF THE STUD WALL WITH 6d COMMON NAILS OR 1-1/4" TYPE W SCREWS @ 4" O.C. AT THE EDGES AND 8" O.C. AT THE INTERMEDIATE SUPPORTS.

ROOF SHEATHING:

1. ALL ROOF SHEATHING TO BE MINIMUM 19/32" OR 5/8" APA RATED SHEATHING OR STRUCTURAL I SHEATHING WITH 8d COMMON NAILS (OR EQUIVALENT) SPACED @ 6" O.C. AT THE EDGES AND 12" O.C. IN THE FIELD; EDGE PANELS (EAVE OR GABLE) TO BE FASTENED WITH 8d RING-SHANK NAILS SPACED @ 3" O.C. ON THE EDGES AND 9" O.C. IN THE FIELD.

STRUCTURAL STEEL:

1. STRUCTURAL STEEL PLATES, ANGLES, CHANNELS, BARS, AND ROLLED S, M, AND HP SHAPES SHALL CONFORM TO ASTM A-36.
2. ROLLED WIDE FLANGE SHAPES SHALL CONFORM TO ASTM A-992, GRADE 50.
3. STRUCTURAL STEEL TUBULAR SHAPES SHALL CONFORM TO ASTM A-500, GRADE B (FY=46KSI) OR ASTM A1085 AND STRUCTURAL STEEL PIPES SHAPES SHALL CONFORM TO ASTM A-53, TYPES E OR S, GRADE B (FY=35KSI).
4. ANCHOR BOLTS SHALL CONFORM TO ASTM F1554, GRADE 36.
5. ALL CONNECTIONS WITH SLOTTED AND OVERSIZE HOLES SHALL HAVE SLIP CRITICAL CONNECTIONS. ALL OTHER CONNECTIONS MAY BE BEARING TYPE CONNECTIONS.
6. ALL BOLTS SHALL CONFORM TO ASTM A-325.
7. WELDS SHALL CONFORM TO ALL THE PROVISIONS OF THE STRUCTURAL WELDING CODE, AWS D1.1 OF THE AMERICAN WELDING SOCIETY EXCEPT SECTIONS 2.3, 2.4, 2.5, 8.13.1.2
8. NO OPENINGS IN BEAMS OTHER THAN SHOWN ON THE STRUCTURAL DRAWINGS SHALL BE PERMITTED WITHOUT WRITTEN APPROVAL FROM THE STRUCTURAL ENGINEER.

TRUSS NOTES:

1. TRUSSES DESIGNED BY OTHERS. ATTACH EACH VALLEY TRUSS TO THE COMMON TRUSSES BELOW USING (1) SIMPSON VTC2 VALLEY TRUSS CLIP AT EACH END OF EACH VALLEY TRUSS.
2. IN AREAS WHERE ATTIC STORAGE IS LOCATED, PROVIDE 3/4" TONGUE AND GROOVE PLYWOOD.
3. TRUSS DESIGNER TO PROVIDE HANGERS FOR ALL TRUSSES ATTACHED TO TRUSS GIRDER.
4. ROOF DESIGN LOADS:
A. TOP CHORD: DEAD LOAD: 12PSF
LIVE LOAD: 16 PSF (4:12 SLOPE OR HIGHER)

B. BOTTOM CHORD: DEAD LOAD: 8PSF
LIVE LOAD: 30 PSF W/STORAGE
10 PSF W/OUT STORAGE

5. LIVE LOAD DEFLECTION OF TRUSSES: L/240 MAXIMUM.
6. BRACE TRUSSES DURING ERECTION TO MAINTAIN PROPER POSITION AND SPACING.
7. PERMANENT LATERAL BRACING (MINIMUM):
A. TOP CHORD: 2x4 @ 12'-0" O.C.
B. BOTTOM CHORD: DIAGONAL AS PER MANUFACTURER'S RECOMMENDATIONS.
C. WEBS: DIAGONAL AT MIDPOINTS AS PER MANUFACTURER'S RECOMMENDATIONS.

8. TRUSS BEARING ELEVATIONS TO BE DETERMINED BY ARCHITECT AND TRUSS DESIGNER.
9. PROVIDE PLATE CONNECTORS TO CONNECT TRUSS TO TRUSS OR TRUSS TO TRUSS GIRDER.
10. TRUSS MANUFACTURER IS RESPONSIBLE FOR FINAL DESIGN AND CONFIGURATION USING INDICATED LOADS. SUBMIT SHOP DRAWINGS FOR REVIEW BEFORE FABRICATION. PROVIDE HURRICANE STRAPS FOR UPLIFT FORCES PROVIDED BY TRUSS MANUFACTURER. SUBMIT TRUSS DESIGN CALCULATIONS SEALED BY A PROFESSIONAL ENGINEER LICENSED IN DELAWARE.
11. THE TOP CHORD OF THE GABLE END TRUSSES ARE TO BE FABRICATED 3-1/2" LOWER THAN THE TOP CHORD OF THE ADJACENT TRUSSES TO ACCOMMODATE 2x4 OUTRIGGERS SPACED AT 24" O.C.. SEE ARCHITECTURAL DRAWINGS FOR EAVE LENGTH.
12. HURRICANE STRAPS:
A. TYPICAL STRAPPING FOR TRUSSES - 780#: USE (1) SIMPSON H10
B. TYPICAL STRAPPING FOR 2-PLY TRUSS GIRDER - 3570#: USE (2) SIMPSON LGT2
C. WHEN TWO STRAPS ARE USED FOR THE SAME TRUSS, ATTACH STRAPS ON OPPOSITE SIDES OF THE WALL. REFER TO ROOF TRUSS SHOP DRAWINGS FOR UPLIFT LOADS.

UTILITIES:

1. CONTRACTOR TO VERIFY LOCATIONS OF ALL UNDERGROUND UTILITIES PRIOR TO PERFORMING ANY SUBSURFACE OR EXCAVATION WORK.

2. PROTECTION: PROTECT EXISTING UTILITIES TO REMAIN DURING EXCAVATION, AND CUTTING AND PATCHING, TO PREVENT DAMAGE.

LEGEND

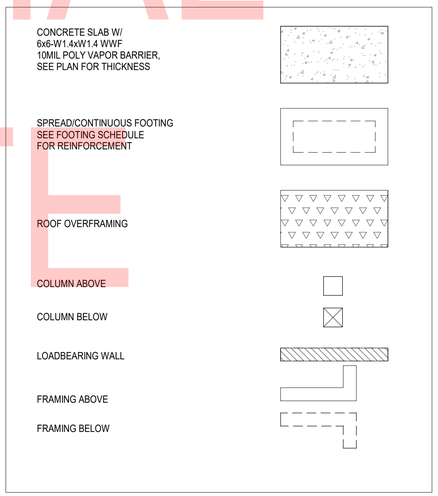

STRUCTURAL LEGEND

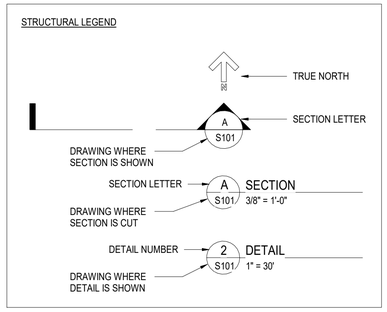

ABBREVIATIONS

@ At
AB: Anchor Bolt
ABV: Above
ACI: American Concrete Institute
ADDL: Additional
AFF: Above Finished Floor
AISC: American Institute of Steel Construction
APPROX: Approximate
APRVD: Approved
ARCH: Architect, Architectural
ASTM: American Society for Testing Materials
AVG: Average
AWS: American Welding Society

BLDG: Building
BOTT: Bottom
BP: Base Plate
BRG: Bearing

C/C: Center to Center
CIR: Circle, Circular,
CJ: Control Joint
CL: Centerline,
CLR: Clear
CLR OPG: Clear Opening
CMU: Concrete Masonry Unit
COEF: Coefficient
COL: Column
CONC: Concrete
CONST: Construction
CONT: Continuous,
CTR: Center

DEMO: Demolition
DET: Detail
DIA: Diameter
DIM: Dimension
DL: Dead Load
DWG: Drawing

EA: Each
EF: Each Face
EJ: Expansion Joint
EL: Elevation
ELEC: Electrical
ELEV: Elevation
ENGR: Engineer
EQ: Equal
EQUIP: Equipment
EW: Each Way
EXP: Expansion
EXT: Exterior

FNDN: Foundation
FF: Far Face
FFE: Finished Floor Elevation
FT: Foot, Feet, Fully Tempered
FTG: Footing

ID: Inside Diameter
INT: Interior, Internal

JT: Joint

L: Angle, Left, Length
LB: Pound (weight)
LL: Live Load

MAINT: Maintenance
MATL: Material
MAX: Maximum
MECH: Mechanical
MEZZ: Mezzanine
MFR: Manufacture, Manufacturer
MIN: Minimum
MISC: Miscellaneous
MRD: Metal Roof Deck
MTD: Mounted
MTL: Metal

N: North,
NTS: Not To Scale

O.C.: On Center
OD: Outside Diameter
OPP: Opposite

GA: Gauge, Gage
GALV: Galvanized
GC: General Contractor
GRND: Ground

HOR: Horizontal
HT: Height
HVAC: Heating, Ventilating & Air Conditioning

THK: Thick, Thickness
THRU: Through
T.O. SLAB: Top of Slab
T.O.S: Top of Steel

UNO: Unless Noted Otherwise

VERT: Vertical

W/: With
WWM: Wire Mesh
WP: Working Point
WT: Weight
WWF: Welded Wire Fabric

XS: Extra Strong
XXS: Double Extra Strong
PAF: Powder Actuated Fasteners
PCF: Pounds per cubic foot
PERIM: Perimeter
PERP: Perpendicular
PL: Plate, Plan,
PLF: Pounds Per Lineal Foot

PSF: Pounds per square foot
PSI: Pounds per square inch
PT: Pressure Treated

QTY: Quantity

RCP: Reinforced Concrete Pipe
REBAR: Reinforcing Bar
REINF: Reinforcement, or Reinforce
REQD: Required
REV: Revise, Revision
RFG: Roofing
RGH OPNG: Rough Opening

SIM: Similar
SLOT: Slotted
SPECS: Specifications
SQ: Square
SS: Stainless Steel
STA: Station
STD: Standard
STL: Steel

S-001

OFFICIAL WEBSITE COPY

$DATE_USER$
C:\Users\dthede\Documents\15-1152-010 Chapman Yard Phase I Crew Ops - Structural - R16_beisenhauerNHQVV.rvt

ADDENDUMS / REVISIONS	

NORTH DISTRICT CREW QUARTERS AND SITE WORK, PHASE 1A

CONTRACT	BRIDGE NO. N/A	CREW OPERATION BUILDING STRUCTURAL NOTES	SECTION
T201880103	DESIGNED BY: DO		JMT
COUNTY	CHECKED BY: CR		SHEET NO.
NEW CASTLE			43

SPECIAL INSPECTIONS SCHEDULES

1705.6 Soils

MATERIAL / ACTIVITY	SERVICE	APPLICABLE TO THIS PROJECT Y/N	EXTENT	AGENT*	DATE COMPLETED
1. Verify materials below shallow foundations are adequate to achieve the design bearing capacity.	Field inspection	Y	Periodic	1	
2. Verify excavations are extended to proper depth and have reached proper material.	Field inspection	Y	Periodic	1	
3. Perform classification and testing of controlled fill materials.	Field inspection	Y	Periodic	1	
4. Verify use of proper materials, densities, and lift thicknesses during placement and compaction of controlled fill	Field inspection	Y	Continuous	1	
5. Prior to placement of controlled fill, observe subgrade and verify that site has been prepared properly	Field inspection	Y	Periodic	1	

1705.3 Concrete Construction

MATERIAL / ACTIVITY	SERVICE	APPLICABLE TO THIS PROJECT Y/N	EXTENT	AGENT*	DATE COMPLETED
1. Inspection of reinforcing steel installation (see 1705.2.2 for welding)	Shop (3) and field inspection	Y	Periodic - before each concrete pour of ftgs., walls, columns, and elevated slabs with sufficient time allowed for inspection of completed installed reinforcing prior to pour.	1	
2. Inspection of prestressing steel installation	Shop (3) and field inspection	Y	Periodic - before each concrete pour of ftgs., walls, columns, and elevated slabs with sufficient time allowed for inspection of completed installed reinforcing prior to pour.		
3. Inspection of anchors cast in concrete where allowable loads have been increased per Section 1908.5 or where strength design is used	Shop (3) and field inspection	N	Periodic		
4. Inspection of anchors and reinforcing steel post-installed in hardened concrete: Per research reports including verification of anchor type, anchor dimensions, hole dimensions, hole cleaning procedures, anchor spacing, edge distances, concrete minimum thickness, anchor embedment and tightening torque	Field inspection	Y	Periodic or as required by the research report issued by an approved source	1	
5. Verify use of approved design mix	Shop (3) and field inspection	Y	Periodic	1 & 2	
6. Fresh concrete sampling, perform slump and air content tests and determine temperature of concrete	Shop (3) and field inspection	Y	Continuous - sample every 75 cubic yds or each day (whichever is more stringent) and each change in concrete strength.	1	
7. Inspection of concrete and shotcrete placement for proper application techniques	Shop (3) and field inspection	Y	Continuous	1	
8. Inspection for maintenance of specified curing temperature and techniques	Shop (3) and field inspection	Y	Periodic	1	
9. Inspection of prestressed concrete:					
a. Application of prestressing force	Shop (3) and field inspection	Y	Continuous	1	
b. Grouting of bonded prestressing tendons in the seismic-force-resisting system	Shop (3) and field inspection	Y	Continuous	1	
10. Erection of precast concrete members					
a. Inspect in accordance with construction documents	Field inspection	N	In accordance with construction documents - 1) Sample grout: (3) test samples every day of masonry construction for first three days of masonry construction with additional (3) samples every 30 cubic yards placed/once per week/every 5000 SF of wall, whichever is most stringent. 2) Inspect erection, bearing conditions and general conformance to erection drawings (2) times per week minimum.	1	
b. Perform inspections of welding and bolting in accordance with Section 1705.2	Field inspection	N	In accordance with Section 1705.2 - (1) time per week minimum	1	
11. Verification of in-situ concrete strength, prior to stressing of tendons in post tensioned concrete and prior to removal of shores and forms from beams and structural slabs	Review field testing and laboratory reports	Y	Periodic - additional cylinder for 3-day/7-day tests (contractor's option) on time of testing with same sampling frequency as typical fresh concrete sampling. Verify that adequate concrete strength has been obtained on concrete test cylinders.	1	
12. Inspection of formwork for shape, lines, location, and dimensions	Field inspection	Y	Periodic - inspect prior to each concrete placement.	1	
13. Concrete strength testing and verification of compliance with construction documents	Field testing and review of laboratory reports	Y	Periodic	1 & 2	

1705.5 Wood Construction

MATERIAL / ACTIVITY	SERVICE	APPLICABLE TO THIS PROJECT Y/N	EXTENT	AGENT*	DATE COMPLETED
1. Inspection of the fabrication process of wood structural elements and assemblies in accordance with Section 1704.2.5	In-plant review (3)	Y	Periodic -"If fabricator is not Truss Plate Institute certified, perform one fabrication inspection prior to each truss shipment		
2. For high-load diaphragms, verify grade and thickness of structural panel sheathing agree with approved building plans	Field inspection	Y	Periodic - one inspection per shipment		
3. For high-load diaphragms, verify nominal size of framing members at adjoining panel edges, nail or staple diameter and length, number of fastener lines, and that spacing between fasteners in each line and at edge margins agree with approved building plans	Field inspection	Y	Periodic - observe all panels		
4. Metal-plate-connected wood trusses: verify temporary and permanent restraint/bracing are installed in accordance with the approved truss submittal package	Field inspection	Y	Periodic		

STATEMENT OF SPECIAL INSPECTIONS PLAN

GENERAL NOTES

1. THE STATEMENT OF SPECIAL INSPECTIONS PLAN DRAWINGS PROVIDES PROJECT COMPLIANCE WITH THE PROVISIONS OF 2015 INTERNATIONAL BUILDING CODE (IBC) CHAPTER 17 FOR SPECIAL INSPECTION, STRUCTURAL OBSERVATION AND TESTING FOR WIND AND SEISMIC RESISTANCE EXCEPT WHERE OTHERWISE NOTED. THIS INSPECTION IS OWNER FURNISHED.

2. ITEMS IDENTIFIED IN THESE TABLES ARE REQUIRED TO MEET BUILDING CODE COMPLIANCE. THESE ARE NOT THE ENTIRE INSPECTIONS REQUIRED. EACH SPECIFICATION SECTION MAY REQUIRE ADDITIONAL INSPECTIONS AND QUALITY CONTROL MEASURES THAT ARE REQUIRED TO MEET THE STANDARDS ESTABLISHED FOR THE PROJECT CONTRACT. CONTRACTOR SHALL FURNISH ALL ELEMENTS, TESTS AND INSPECTIONS NOT INDICATED TO BE BY THE OWNER.

SPECIAL INSPECTION

1. SPECIAL INSPECTION WILL BE IN ACCORDANCE WITH IBC CHAPTER 17 TOGETHER WITH LOCAL AND STATE AMENDMENTS. REFER TO THE TABLES CONTAINED ON THESE GENERAL SHEETS FOR PROJECT SPECIFIC INSPECTION TYPES AND REFERENCES.

2. SPECIAL INSPECTIONS WILL BE PERFORMED BY A CERTIFIED OR QUALIFIED INSPECTOR AND ASSOCIATED TESTING WILL BE PERFORMED BY AN APPROVED ACCREDITED INDEPENDENT AGENCY. THE OWNER WILL SECURE AND PAY FOR THE SERVICES OF THE AGENCY TO PERFORM ALL SPECIAL INSPECTION AND ASSOCIATED TESTS. INSPECTORS FOR EACH SYSTEM AND MATERIAL WILL BE THE INTERNATIONAL CODE COUNCIL (ICC) CERTIFIED OR OTHERWISE APPROVED BY THE BUILDING OFFICIAL.

3. THE SPECIAL INSPECTOR WILL OBSERVE THE INDICATED WORK FOR COMPLIANCE WITH THE APPROVED CONTRACT DOCUMENTS AND SUBMIT RECORDS OF INSPECTION. ALL DISCREPANCIES WILL BE BROUGHT TO THE IMMEDIATE ATTENTION OF THE CONTRACTOR FOR CORRECTION.

4. SPECIAL INSPECTION AND ASSOCIATED TESTING REPORTS WILL BE SUBMITTED BY THE ENGINEER, CONTRACTOR, BUILDING OFFICIAL, AND OWNER WITHIN ONE WEEK OF INSPECTION OR WITHIN ONE WEEK OF TEST COMPLETION. INSPECTIONS FOR WHICH REPORTING WILL BE REQUIRED ARE NOTED IN THE TABLES CONTAINED ON THIS PLAN.

5. AT THE CONCLUSION OF CONSTRUCTION, A FINAL REPORT DOCUMENTING REQUIRED SPECIAL INSPECTIONS AND CORRECTION OF PREVIOUSLY NOTED DISCREPANCIES WILL BE SUBMITTED.

GEOTECHNICAL OBSERVATION

1. GEOTECHNICAL OBSERVATION SHALL BE IN ACCORDANCE WITH IBC SECTION 1704.7, 1803.5 AND 1803.6 TOGETHER WITH LOCAL AND STATE AMENDMENTS.

2. GEOTECHNICAL OBSERVATION SHALL BE PERFORMED BY A REGISTERED DESIGN PROFESSIONAL FOR GENERAL CONFORMANCE TO THE APPROVED CONSTRUCTION DOCUMENTS. GEOTECHNICAL OBSERVATION DOES NOT INCLUDE OR WAIVE THE RESPONSIBILITY FOR ANY REQUIRED SPECIAL INSPECTION OR INSPECTIONS BY THE BUILDING OFFICIAL.

3. THE CONTRACTOR SHALL SCHEDULE AND FACILITATE GEOTECHNICAL OBSERVATION.

STRUCTURAL OBSERVATION

1. STRUCTURAL OBSERVATION IN ACCORDANCE WITH IBC SECTION 1709 TOGETHER WITH LOCAL AND STATE AMENDMENTS ARE NOT APPLICABLE TO PROJECT.

2. STRUCTURAL OBSERVATION IF PERFORMED WILL BE BY A REGISTERED PROJECT DESIGN PROFESSIONAL FOR GENERAL CONFORMANCE TO THE APPROVED CONSTRUCTION DOCUMENTS. ANY STRUCTURAL OBSERVATION DOES NOT INCLUDE OR WAIVE THE RESPONSIBILITY FOR ANY REQUIRED SPECIAL INSPECTIONS. INSPECTIONS BY THE BUILDING OFFICIAL OR SPECIFICATION REQUIRED QUALITY CONTROL.

3. STRUCTURAL OBSERVATION REPORTS, NOTING ANY DEFICIENCIES IN OBSERVED CONSTRUCTION, WILL BE DELIVERED TO THE CONTRACTOR, BUILDING OFFICIAL, AND OWNER FOLLOWING EACH OBSERVATION IF A VISIT IS PERFORMED. THE CONTRACTOR WILL BE NOTIFIED ON-SITE OR BY PHONE OR EMAIL WITHIN 24 HOURS UPON FINDING ANY DEFICIENCIES.

SPECIAL INSPECTIONS FOR SEISMIC RESISTANCE

SPECIAL INSPECTION FOR STRUCTURAL STEEL SHALL BE IN ACCORDANCE WITH THE QUALITY ASSURANCE REQUIREMENTS OF AISC 341. THE SPECIAL INSPECTOR SHALL EXAMINE DESIGNATED SEISMIC SYSTEMS REQUIRING SEISMIC QUALIFICATION IN ACCORDANCE WTIH IBC SECTION 1705.12.3 AND VERIFY THAT THE LABEL, ANCHORAGE, OR MOUNTING CONFORMS TO THE CERTIFICATE OF COMPLIANCE.

TESTING FOR STRUCTURAL STEEL SHALL BE IN ACCORDANCE WITH THE QUALITY ASSURANCE REQUIREMENTS OF AISC 341.

UNOFFICIAL WEBSITE COPY

$DATE_USERS
C:\Users\dthede\Documents\15-1152-010 Chapman Yard Phase I Crew Ops - Structural - R16_beisenhauerNHQVV.rvt

S-002

ADDENDUMS / REVISIONS	

NORTH DISTRICT CREW QUARTERS AND SITE WORK, PHASE 1A

CONTRACT	BRIDGE NO.	N/A
T201880103	DESIGNED BY: DO	
COUNTY		
NEW CASTLE	CHECKED BY: CR	

CREW OPERATION BUILDING SPECIAL INSPECTIONS

SECTION
JMT
SHEET NO.
44

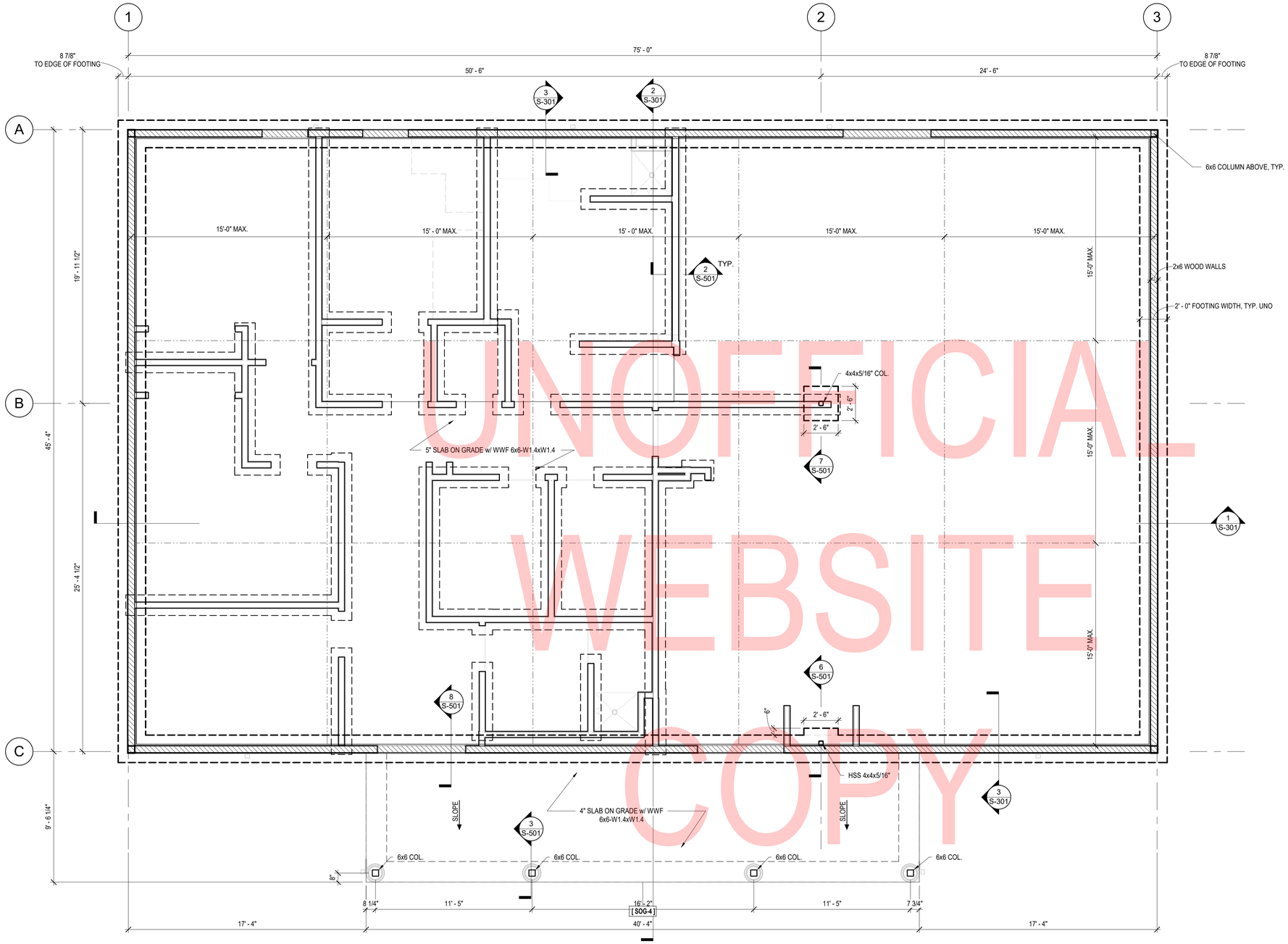

1 S-101 Foundation Plan
1/4" = 1'-0"

STRUCTURAL PLAN NOTES

1. CONTRACTOR TO VERIFY ALL DIMENSIONS AND SITE CONDITIONS PRIOR TO STARTING WORK. IF ANY DISCREPANCIES ARE NOTED, CONTRACTOR SHALL NOTIFY ARCHITECT AND ENGINEER IMMEDIATELY.
2. DO NOT SCALE DRAWINGS. CONSULT ENGINEER FOR DIMENSIONS.

—·—·— : DESIGNATES CONTROL JOINTS, COORDINATE JOINT LOCATIONS WITH ARCHITECTURAL FLOOR FINISHES

▨ : DESIGNATES LOADBEARING WALL

UNOFFICIAL WEBSITE COPY

$DATE_USERS
C:\Users\dthede\Documents\15-1152-010 Chapman Yard Phase I Crew Ops - Structural - R16_beisenhauerNHQVV.rvt

S-101

ADDENDUMS / REVISIONS						
		NORTH DISTRICT CREW QUARTERS AND SITE WORK, PHASE 1A	CONTRACT T201880103	BRIDGE NO. N/A	CREW OPERATIONS BUILDING FOUNDATION PLAN	SECTION JMT
			COUNTY NEW CASTLE	DESIGNED BY: DO		SHEET NO. 45
				CHECKED BY: CR		

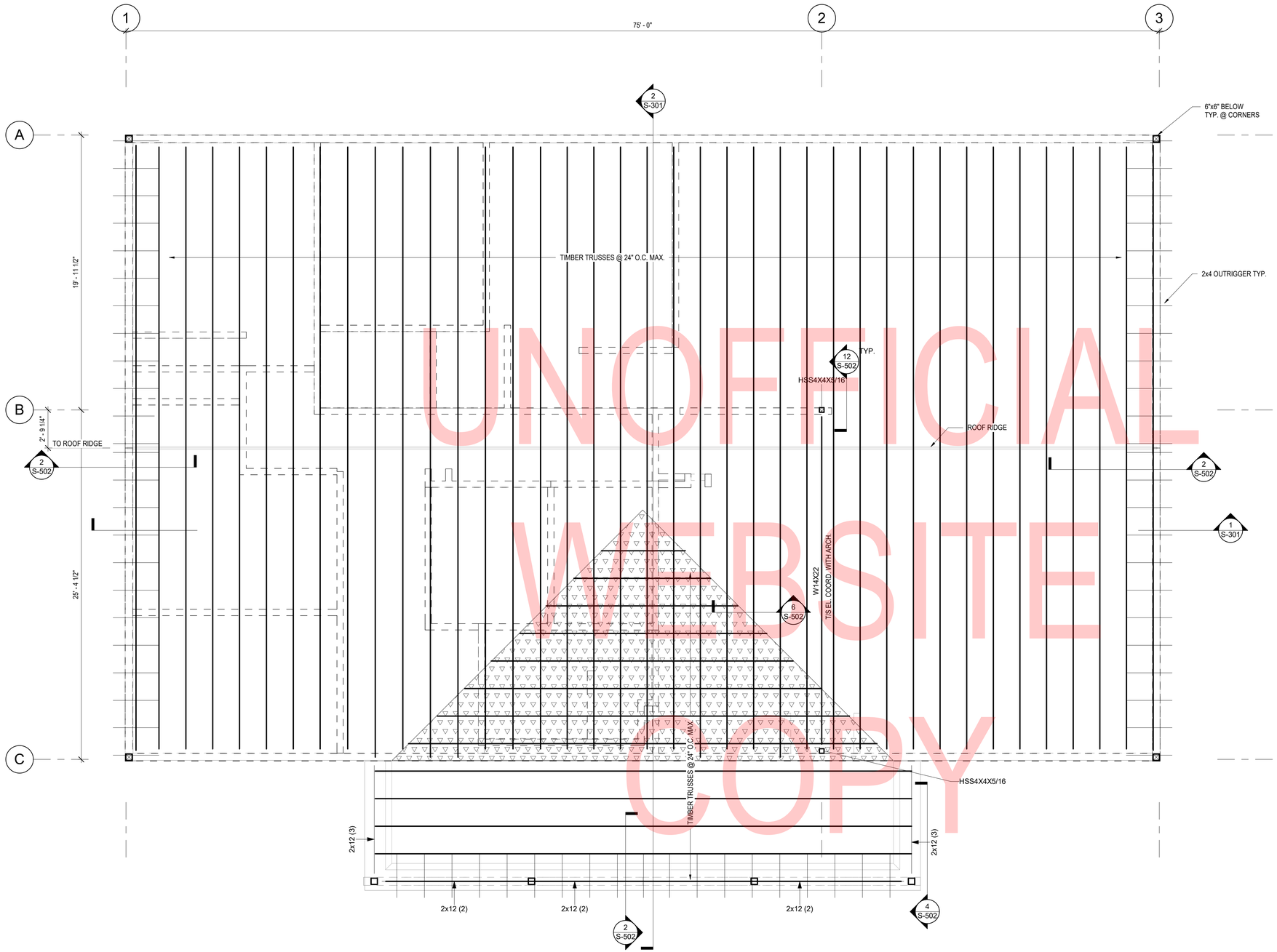

UNOFFICIAL WEBSITE COPY

ROOF FRAMING PLAN NOTES

NOTE 1: ROOF SHEATHING SHALL BE APA RATED SHEATHING, EXPOSURE 1, MIN. 5/8" THICK. STAGGER JOINTS.

NOTE 2: COORDINATE ROOF SLOPES & OVERHANG DETAILS WITH ARCHITECTURAL DRAWINGS.

INDICATES AREA TO BE OVERFRAMED

1 S-102 ROOF PLAN
1/4" = 1'-0"

S-102

ADDENDUMS / REVISIONS	

NORTH DISTRICT CREW QUARTERS AND SITE WORK, PHASE 1A

CONTRACT	BRIDGE NO.	N/A
T201880103	DESIGNED BY: DO	
COUNTY	CHECKED BY: CR	
NEW CASTLE		

CREW OPERATION BUILDING ROOF PLAN

SECTION
JMT
SHEET NO.
46

$DATE_USER$
C:\Users\dthede\Documents\15-1152-010 Chapman Yard Phase I Crew Ops - Structural - R16_beisenhauerNHQVV.rvt

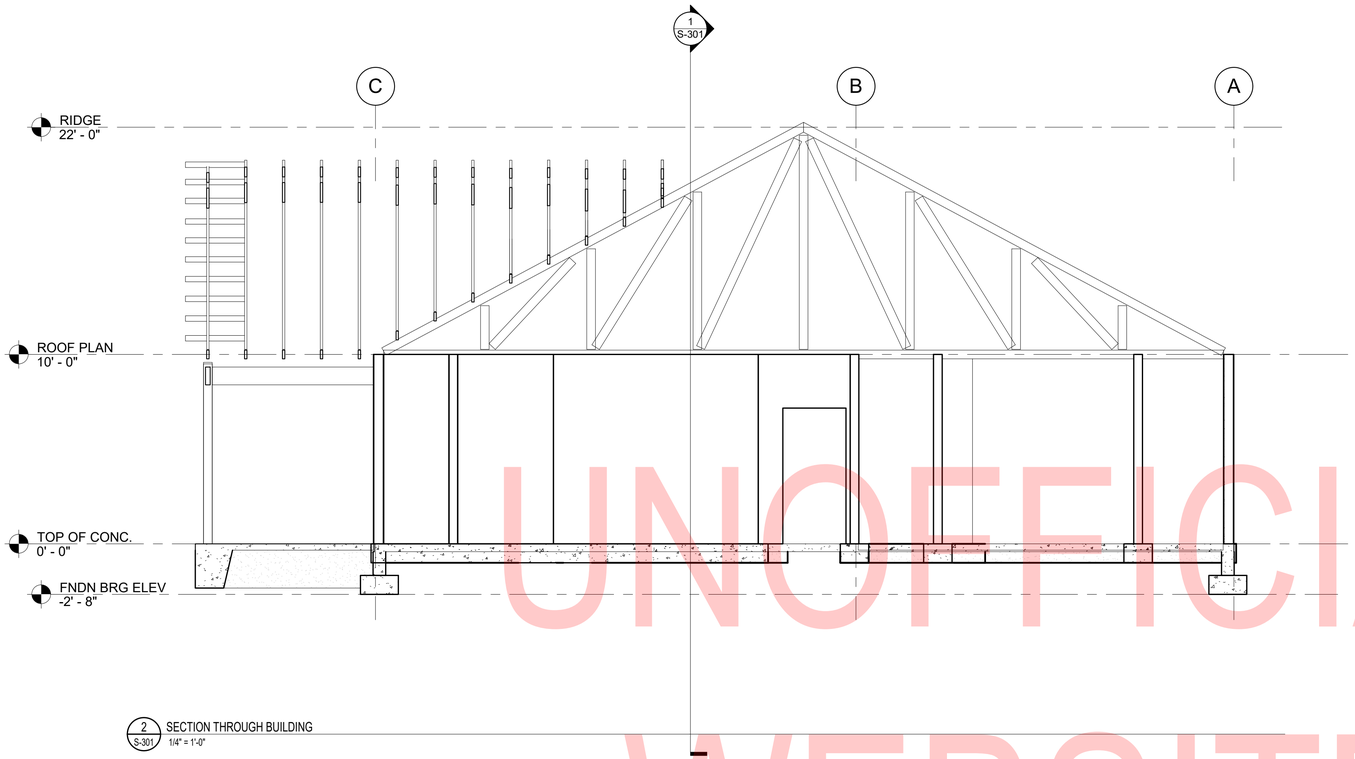

2 S-301 SECTION THROUGH BUILDING
1/4" = 1'-0"

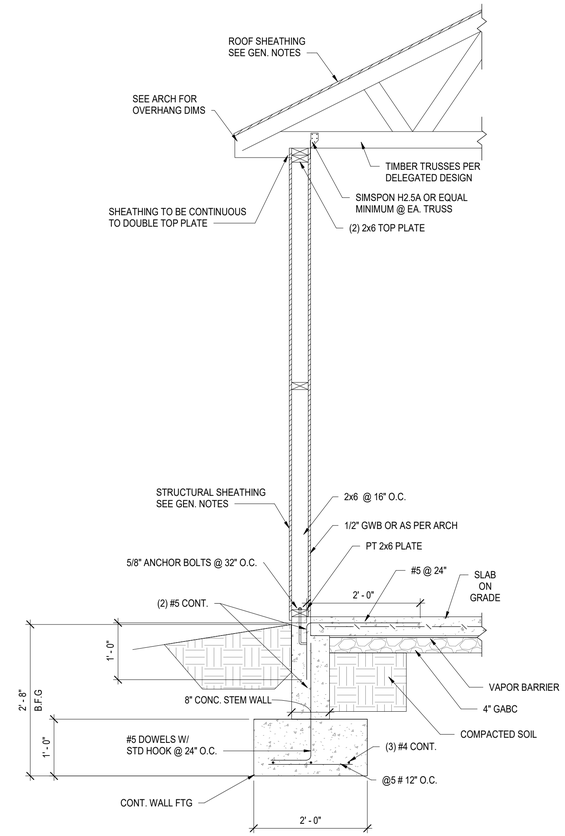

3 S-301 TYPICAL EXTERIOR WALL SECTION
3/4" = 1'-0"

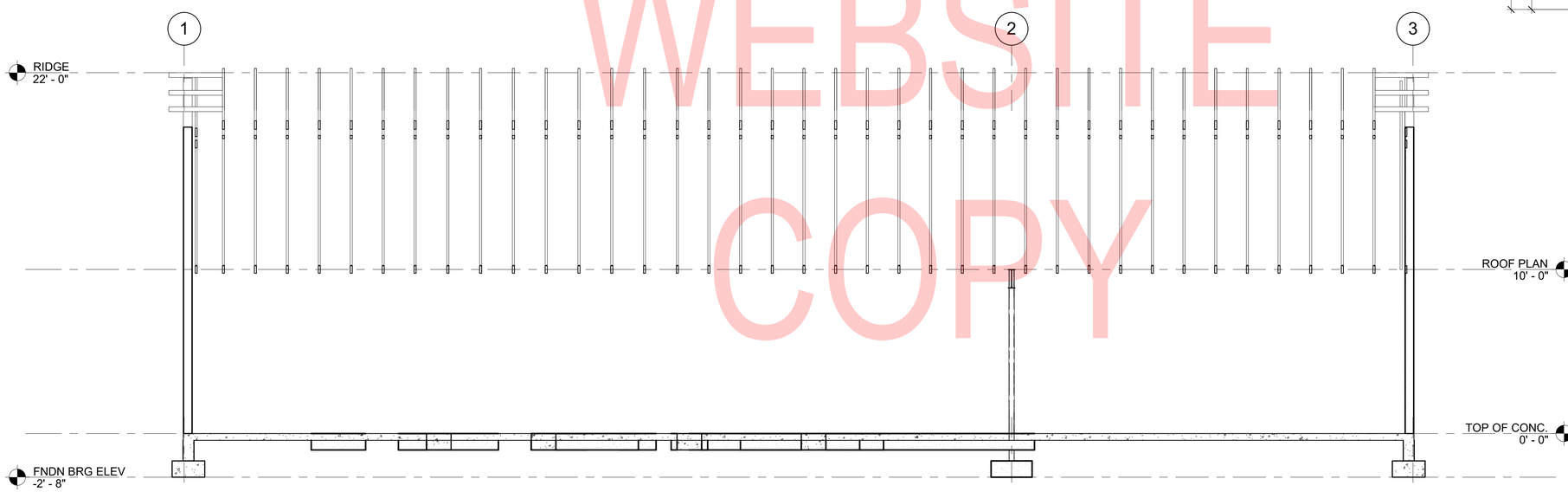

1 S-301 SECTION
1/4" = 1'-0"

UNOFFICIAL WEBSITE COPY

$DATE_USER$
C:\Users\dthede\Documents\15-1152-010 Chapman Yard Phase I Crew Ops - Structural - R16_beisenhauerNHQVV.rvt

S-301

ADDENDUMS / REVISIONS			NORTH DISTRICT CREW QUARTERS AND SITE WORK, PHASE 1A	CONTRACT T201880103	BRIDGE NO. N/A	CREW OPERATION BUILDING SECTIONS	SECTION JMT
				COUNTY NEW CASTLE	DESIGNED BY: DO		SHEET NO. 47
					CHECKED BY: CR		

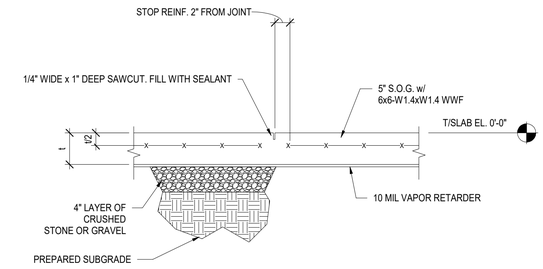

TYPICAL CONTRACTION JOINT DETAIL (C.J.)

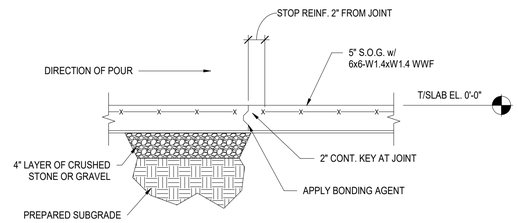

TYPICAL CONSTRUCTION JOINT DETAIL

1 S-501 TYPICAL SLAB JOINT DETAILS
1" = 1'-0"

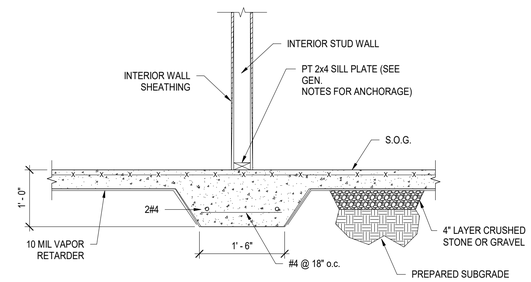

2 S-501 INTERIOR WALL THICKENED SLAB DETAIL
3/4" = 1'-0"

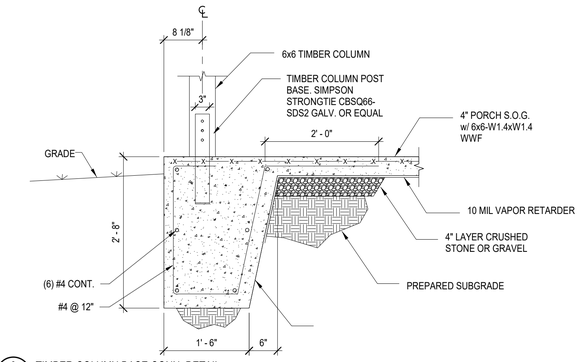

3 S-501 TIMBER COLUMN BASE CONN. DETAIL
3/4" = 1'-0"

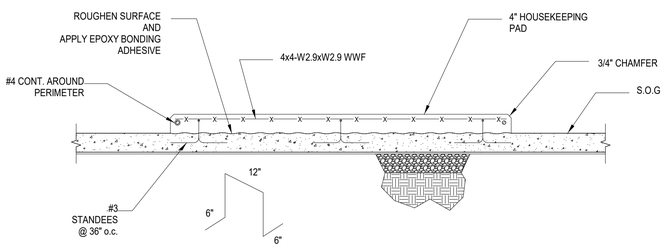

NOTE: SEE MECH. AND/OR ARCH. DRAWINGS FOR HOUSEKEEPING PAD LOCATIONS AND SIZES

4 S-501 TYP. HOUSEKEEPING PAD DETAIL
3/4" = 1'-0"

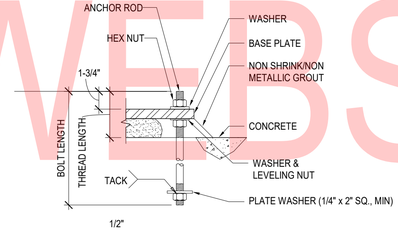

5 S-501 TYP. ANCHOR ROD DETAIL
1/2" = 1'-0"

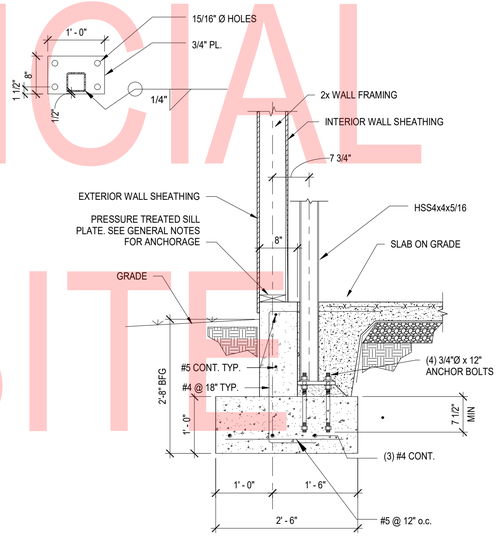

6 S-501 HSS COLUMN @ WALL FOOTING DETAIL
3/4" = 1'-0"

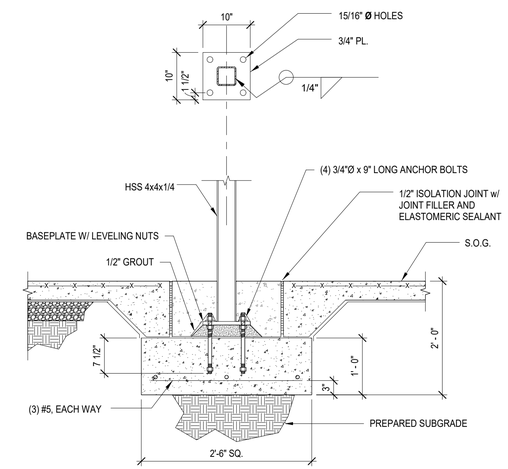

7 S-501 HSS COLUMN FOOTING DETAIL
3/4" = 1'-0"

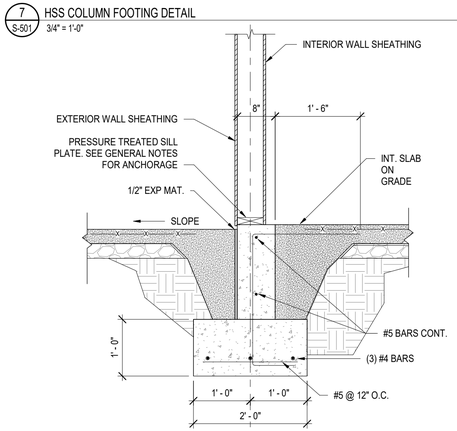

8 S-501 WALL FOOTING @ PORCH
3/4" = 1'-0"

S-501

UNOFFICIAL WEBSITE COPY

$DATE_USERS
C:\Users\dthede\Documents\15-1152-010 Chapman Yard Phase I Crew Ops - Structural - R16_beisenhauerNHQWW.rvt

ADDENDUMS / REVISIONS	

NORTH DISTRICT
CREW QUARTERS AND SITE WORK, PHASE 1A

CONTRACT	BRIDGE NO.	N/A
T201880103	DESIGNED BY: DO	
COUNTY		
NEW CASTLE	CHECKED BY: CR	

CREW OPERATIONS BUILDING DETAILS

SECTION
JMT
SHEET NO.
48

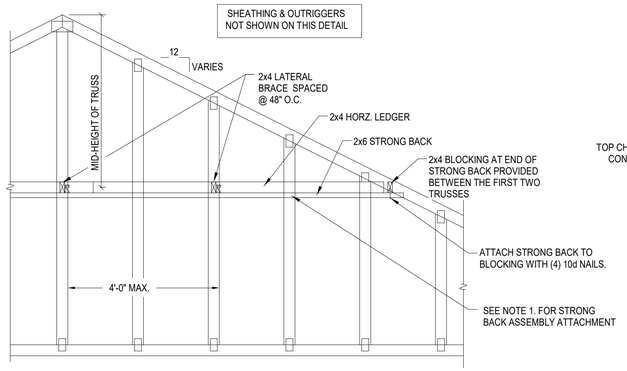

NOTE 1. THE STRONG BACK ASSEMBLY IS TO BE ATTACHED TO EACH VERTICAL GABLE END STUD WITH (3) 16d NAILS.

1 S-502 GABLE ENDWALL BRACING
1/2" = 1'-0"

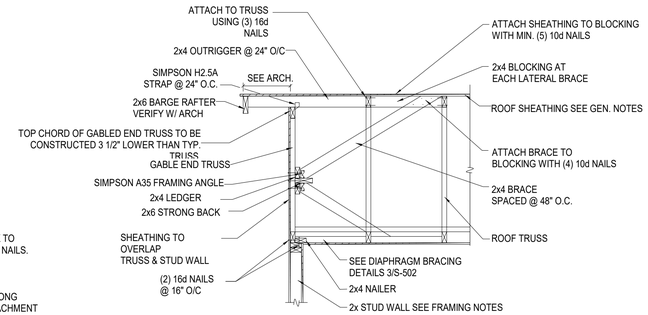

NOTE 1. STRONG BACK AND LATERAL BRACE IS REQUIRED ON ALL GABLE END TRUSSES WHEN THE HEIGHT OF THE TRUSS FROM PEAK TO BOTTOM CHORD EXCEEDS 6'-0".

NOTE 2. LOCATE LATERAL BRACE, THAT IS TO BE SPACED AT A MAXIMUM OF 48" O.C, DIRECTLY IN LINE WITH A VERTICAL STUD IN THE GABLE END TRUSS.

2 S-502 GABLE ENDWALL BRACING/OUTRIGGER DETAIL
1/2" = 1'-0"

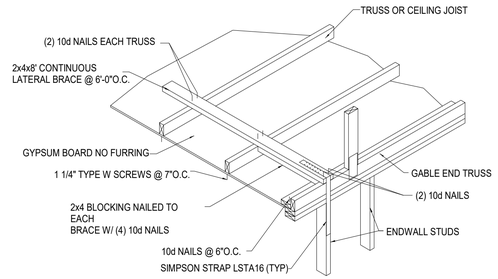

3 S-502 DIAPHRAM BRACING
1/2" = 1'-0"

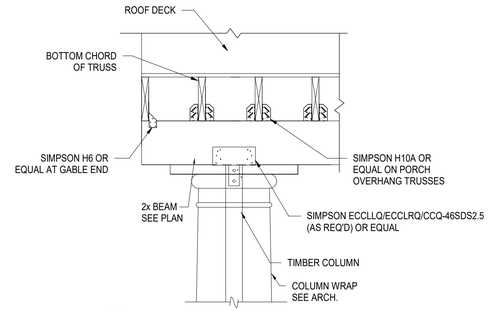

4 S-502 PORCH COLUMN-BEAM CONNECTION
3/4" = 1'-0"

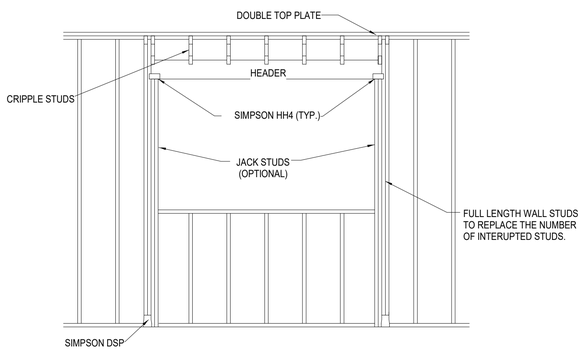

5 S-502 WALL OPENING FRAMING
3/8" = 1'-0"

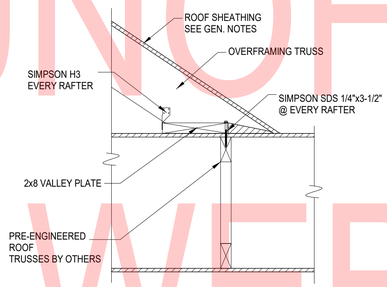

6 S-502 OVER FRAMING DETAIL
3/4" = 1'-0"

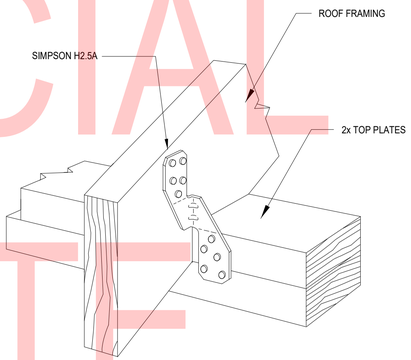

7 S-502 HURRICANE STRAP DETAIL
1 1/2" = 1'-0"

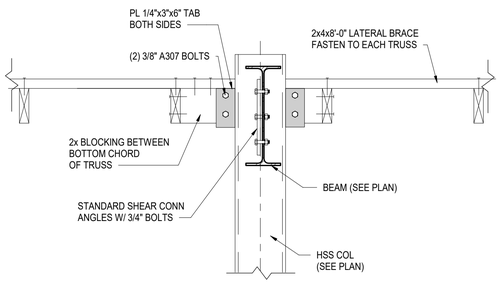

8 S-502 TRUSS - STEEL COL CONNECTION
1" = 1'-0"

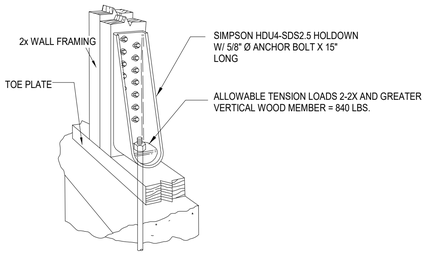

9 S-502 HOLD DOWN DETAIL
1" = 1'-0"

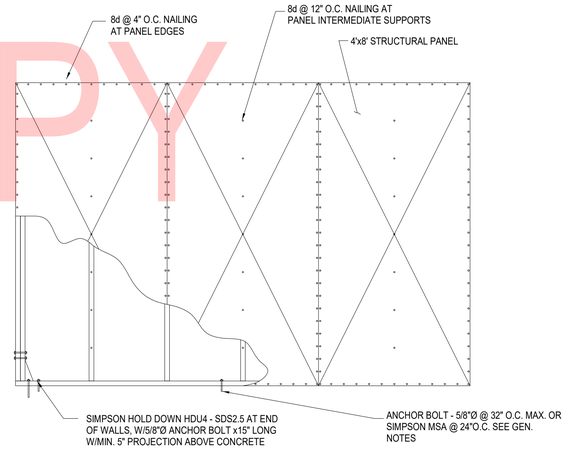

11 S-502 WALL SHEATHING
1/2" = 1'-0"

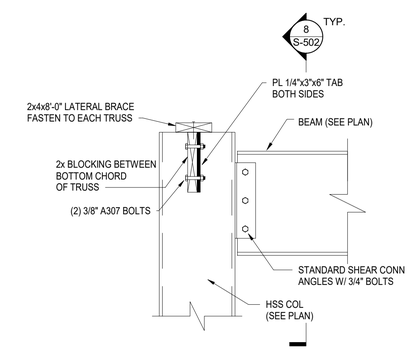

12 S-502 STEEL COL-BEAM CONNECTION
1" = 1'-0"

UNOFFICIAL WEBSITE COPY

S-502

ADDENDUMS / REVISIONS							
		NORTH DISTRICT CREW QUARTERS AND SITE WORK, PHASE 1A	CONTRACT T201880103	BRIDGE NO. N/A	CREW OPERATIONS BUILDING DETAILS	SECTION JMT
			COUNTY NEW CASTLE	DESIGNED BY: DO		SHEET NO. 49
				CHECKED BY: CR		

$DATE_USERS
C:\Users\dthede\Documents\15-1152-010 Chapman Yard Phase I Crew Ops - Structural - R16_beisenhauerNHQVV.rvt

MECHANICAL LEGEND

SYMBOL	DESCRIPTION
T	THERMOSTAT OR TEMPERATURE SENSOR
	BRANCH TAKE OFF
	PIPE DROP TEE
	PIPE RISE TEE
	AUTOMATIC CONTROL VALVE (3 WAY)
	SHUT-OFF VALVE
	UNION
	STRAINER W/BLOWDOWN VALVE
	PIPE GUIDE
	PIPE ANCHORS
	ECCENTRIC REDUCER
	CONCENTRIC REDUCER
	PRESSURE RELIEF VALVE
	BALANCING VALVE (W/MEMORY STOP)
	HOSE END DRAIN VALVE
	CHECK VALVE; (ARROW INDICATES DIRECTION OF FLOW)

SYMBOL	DESCRIPTION
	FLANGED PIPE CONNECTION
	FLOW DIRECTION ARROW
30 PSI	PRESSURE RELIEF VALVE (NUMERALS INDICATE SETTING)
	AIR FLOW
	AUTOMATIC AIR VENT
	MANUAL AIR VENT
	PRESSURE GAUGE w/GAUGE COCK
	THERMOMETER
18"x12"	DUCT (FIRST FIGURE SIDE SHOWN)
D	DROP IN DIRECTION OF ARROW
R	RISE IN DIRECTION OF ARROW
	SUPPLY AIR DIFFUSER
	RETURN AIR GRILLE
	EXHAUST AIR GRILLE
F	FIRE DAMPER
	MANUAL VOLUME DAMPER
	SQUARE TO ROUND DUCT TRANSITION
	FLEXIBLE CONNECTION
	DUCTWORK SOUND LINING, 1"THICK
	MOTOR OPERATED DAMPER
	DUCT TRANSITION
	RECTANGULAR BRANCH TAKE-OFF
	BELL MOUTH BRANCH TAKE-OFF
	ROUND BRANCH TAKE-OFF
	CIRCULAR AIR DIFFUSER
	CIRCULAR DUCT DROP OFF BOTTOM
	SUPPLY AIR DEVICE WITH 2'x2' LAY-IN PANEL
	RETURN AIR DEVICE WITH 2'x2' LAY-IN PANEL
	FLEX DUCT
	SUPPLY AIR DEVICE WITH PLENUM AND 2'x2' LAY-IN PANEL
	RETURN AIR DEVICE WITH PLENUM AND 2'x2' LAY-IN PANEL
	SUPPLY/OUTSIDE AIR DUCT RISER
	RETURN AIR DUCT RISER
	EXHAUST/RELIEF AIR DUCT RISER
	ELBOW WITH DOUBLE THICKNESS TURNING VANES
	ROUND DUCT RISER
ø	DIAMETER
	POINT OF CONNECTION, NEW TO EXISTING
1	SYMBOL FOR SPECIFIC NOTE. NOTE APPLIES TO DRAWING ON WHICH IT OCCURS.

DESIGNATIONS

EQUIPMENT DESIGNATIONS

AS-	AIR SEPARATOR
DSS-	DUCTLESS SPLIT SYSTEM
EF-	EXHAUST FAN
ET-	EXPANSION TANK
GFS	GLYCOL FEED SYSTEM
GRH-	GRAVITY RELIEF HOOD
P-	PUMP
UH-	UNIT HEATER
WTAHP-	WATER TO AIR HEAT PUMP

X / X — SECTION REFERENCE: (SEE DATA BELOW FOR DETAILS)

/ SHT — DETAIL = LETTER / SECTION = NUMBER; DRAWING TITLE; SCALE; SHEET NUMBER FROM WHICH THE PARTIAL, SECTION, ELEVATION, OR DETAIL IS DRAWN

PLAN NORTH

N — NORTH ARROW

NECK SIZE — 12"x12" D — XXX CFM — AIR DEVICE DESIG. (D/R/G) — AIR FLOW (TO BE BALANCED)

ABBREVIATIONS

@	AT
ABV	ABOVE
ACV	AUTOMATIC CONTROL VALVE
APD	AIR PRESSURE DROP
APPROX	APPROXIMATELY
ATC	AUTOMATIC TEMPERATURE CONTROL
AWT	AVERAGE WATER TEMPERATURE
BHP	BRAKE HORSEPOWER
BLDG	BUILDING
BLW	BELOW
BTM	BOTTOM
BTUH	BRITISH THERMAL UNITS PER HOUR
R BV	BALANCING VALVE
CC	COOLING COIL
CFM	CUBIC FEET PER MINUTE
CONC	CONCRETE
CONN	CONNECT, CONNECTION
D	SUPPLY AIR DIFFUSER OR DEEP, DEPTH
DB	DECIBEL OR DRY BULB
DESG	DESIGNATION
DIA, ø	DIAMETER
DN	DOWN
DPR	DAMPER
DWG	DRAWING
EA	EXHAUST AIR
EAT	ENTERING AIR TEMPERATURE
EF	EXHAUST FAN
ELEC	ELECTRIC
ESP	EXTERNAL STATIC PRESSURE
EWT	ENTERING WATER TEMPERATURE
EXH	EXHAUST
°F	DEGREES FAHRENHEIT
FC	FLEXIBLE CONNECTION
FD	FIRE DAMPER OR FOUNDATION DRAINAGE
FLA	FULL LOAD AMPERES
FT, '	FOOT, FEET OR FLASH TANK
FT HD	FEET OF HEAD
H2O	WATER
HP	HORSEPOWER
IN, "	INCH, INCHES
KW	KILOWATTS
L	LONG, LENGTH
LAT	LEAVING AIR TEMPERATURE
LBS	POUNDS
LWT	LEAVING WATER TEMPERATURE
MAX	MAXIMUM
MBH	THOUSAND BRITISH THERMAL UNITS PER HOUR
MCA	MINIMUM CIRCUIT AMAPCITY
MECH	MECHANICAL
MOD	MOTOR OPERATED DAMPER
No	NUMBER
NTS	NOT TO SCALE
OA	OUTDOOR AIR
OAI	OUTDOOR AIR INTAKE
%	PERCENT
PD	PRESSURE DROP OR PUMP DISCHARGE
PRESS, P	PRESSURE
PSI	POUNDS PER SQUARE INCH POUNDS
R	RETURN/EXHAUST/SUPPLY AIR REGISTER
RA	RETURN AIR
RM	ROOM
RPM	REVOLUTIONS PER MINUTE
SA	SUPPLY AIR
SENS	SENSIBLE
SP	STATIC PRESSURE
△ T	TEMPERATURE DROP
TEMP, T	TEMPERATURE
TYP	TYPICAL
UH	UNIT HEATER
V	VOLTS
VD	VOLUME DAMPER
W	WIDTH, WATTS
W/	WITH
WB	WET BULB
WPD	WATER PRESSURE DROP

GENERAL NOTES

1. WORK SHALL CONFORM TO THE CONTRACT DRAWINGS, SPECIFICATIONS AND THE LATEST APPLICABLE INTERNATIONAL MECHANICAL AND PLUMBING CODE AND THE NATIONAL ELECTRIC CODE. WORK SHALL BE PERFORMED IN ACCORDANCE WITH NFPA 70, THE NATIONAL ELECTRICAL CODE, THE NATIONAL ELECTRICAL SAFETY CODE, OSHA AND NATIONAL SAFETY CODE REQUIREMENTS.
2. THE SCOPE OF WORK INDICATED IN THESE DOCUMENTS SHALL INCLUDE MECHANICAL SYSTEMS, FULLY ADJUSTED, TESTED AND READY TO USE. PROVIDE ITEMS NECESSARY TO COMPLETE THE SYSTEMS. EXAMINE WORK INDICATED FOR TRADES IN ORDER TO DETERMINE THE EXTENT OF THE WORK REQUIRED TO BE COMPLETED.
3. IT IS THE INTENTION OF THESE DRAWINGS TO CALL FOR FINISHED WORK,TESTED AND READY FOR OPERATION. WHEREVER THE WORD "PROVIDE" IS USED, IT SHALL MEAN "FURNISH AND INSTALL COMPLETE, TESTED AND READY FOR USE."
4. THE DRAWINGS ARE DIAGRAMMATIC AND DO NOT SHOW EVERY COMPONENT AND/OR ACCESSORY REQUIRED FOR A COMPLETE INSTALLATION. THE CONTRACTOR SHALL PROVIDE ITEMS NECESSARY FOR A PROPERLY WORKING SYSTEM IN COMPLIANCE WITH ACCEPTED INDUSTRY STANDARDS AND MANUFACTURER'S RECOMMENDATIONS.
5. PRIOR TO BID, THE CONTRACTOR SHALL VISIT THE SITE AND IDENTIFY ITEMS THAT MAY AFFECT THEIR BID. PRIOR TO THE INSTALLATION, FABRICATION, REMOVAL, OR RELOCATION OF ANY WORK, THE CONTRACTORS SHALL REVIEW THE ACTUAL CONDITIONS UNDER WHICH THE WORK IS TO BE PERFORMED AND SHALL COORDINATE WORK WITH THE PLANS, EXISTING EQUIPMENT AND SYSTEMS, BUILDING STRUCTURE AND WORK OF OTHER TRADES. WHERE CONFLICTS OCCUR, OR IF CONNECTIONS THERETO CAN NOT BE MADE, THE CONTRACTOR SHALL IMMEDIATELY NOTIFY THE ENGINEER PRIOR TO MATERIAL FABRICATION OR INSTALLATION.
6. WHERE THE WORK OF VARIOUS TRADES WILL BE INSTALLED IN CLOSE PROXIMITY TO ONE ANOTHER OR WHERE THERE IS EVIDENCE THAT THE WORK OF ONE TRADE WILL INTERFERE WITH WORK OF ANOTHER, THE CONTRACTOR SHALL WORK OUT SPACE CONDITIONS TO MAKE A SATISFACTORY ADJUSTMENT. IF THE CONTRACTOR ALLOWS ONE TRADE TO INSTALL HIS WORK BEFORE COORDINATING WITH WORK OF OTHER TRADES THE CONTRACTOR SHALL MAKE NECESSARY CHANGES TO CORRECT THE CONDITIONS IN A MANNER ACCEPTABLE TO THE OWNER AND THE CONTRACTOR SHALL BEAR THE COST OF SUCH CORRECTIONS.
7. THE CONTRACTOR SHALL LOCATE EQUIPMENT WHICH MUST BE SERVICED, OPERATED, OR MAINTAINED IN FULLY ACCESSIBLE POSITION. EQUIPMENT SHALL INCLUDE, BUT NOT BE LIMITED TO, VALVES, MOTORS, CONTROLLERS, DRAIN PANS, ETC. IF REQUIRED FOR ACCESSIBILITY, FURNISH ACCESS DOORS FOR THE PURPOSE. MINOR DEVIATIONS FROM DRAWINGS MAY BE MADE TO ALLOW FOR BETTER ACCESSIBILITY.
8. THE CONTRACTOR SHALL LEAVE THE ENTIRE MECHANICAL SYSTEM INSTALLED UNDER THIS CONTRACT IN PROPER WORKING ORDER AND SHALL, WITHOUT CHARGE, REPLACE ANY WORK OR MATERIALS WHICH DEVELOP DEFECTS, EXCEPT FROM ORDINARY WEAR AND TEAR, WITHIN ONE YEAR FROM THE DATE OF FINAL ACCEPTANCE.
9. THE CONTRACTOR SHALL, DURING THE ONE YEAR WARRANTEE PERIOD, BE RESPONSIBLE FOR PROPER REPAIR AND ADJUSTMENTS OF MECHANICAL SYSTEMS AND EQUIPMENT, APPARATUS, DEVICES ETC. INSTALLED BY HIM, AND DO WORK NECESSARY TO ENSURE EFFICIENT AND PROPER FUNCTIONING.
10. THE CONTRACTOR SHALL BE RESPONSIBLE FOR, AND SHALL INCUR FINANCIAL RESPONSIBILITIES FOR, ANY DAMAGES CAUSED BY OR RESULTING FROM DEFECTS IN THEIR WORK.
11. WHEREVER PIPES, CONDUITS, OR OTHER ITEMS PASS THROUGH FIRE RATED WALLS AND FLOORS, THE SPACE BETWEEN THE ITEM AND THE MASONRY OR THE SPACE BETWEEN THE ITEM AND THE SLEEVE SHALL BE ADEQUATELY FIRE STOPPED WITH A NON COMBUSTIBLE, NON MELTING MATERIAL IN ACCORDANCE WITH NFPA STANDARDS.
12. WALL OPENINGS RESULTING FROM DEMOLITION SHALL BE CLOSED AND FINISHED TO MATCH EXISTING.
13. FINISHES DAMAGED DURING THE PROJECTS SHALL BE REPAIRED TO MATCH EXISTING

UNOFFICIAL WEBSITE COPY

$DATE_USER$
\\jmt.corp.local\jmtdfs\NDE\151152_010_Chapman_Yard___Phase\CADD\MEP\15-1152-010_CHAPMAN YARD - MEP - CENTRAL.rvt

M-001

ADDENDUMS / REVISIONS	

NORTH DISTRICT CREW QUARTERS AND SITE WORK, PHASE 1A

CONTRACT	BRIDGE NO.	N/A
T201880103	DESIGNED BY: BD	
COUNTY		
NEW CASTLE	CHECKED BY: DMC	

MECHANICAL GENERAL NOTES AND SYMBOLS

SECTION: JMT

SHEET NO. 50

GENERAL SHEET NOTES:

1. INFORMATION SHOWN ON THIS DRAWING PERTAINING TO EXISTING CONDITIONS HAS BEEN OBTAINED FROM AVAILABLE BUILDING DRAWINGS OR GENERAL FIELD OBSERVATIONS AND MAY NOT INDICATE ACTUAL EXISTING CONDITIONS IN DETAIL OR DIMENSION. THE CONTRACTOR IS RESPONSIBLE FOR DETERMINING THE ACTUAL EXISTING CONDITIONS PRIOR TO FABRICATION OR PERFORMANCE OF ANY WORK. SHOULD CONDITIONS BE DISCOVERED THAT PREVENT EXECUTION OF THE WORK AS INDICATED, THE CONTRACTOR SHALL IMMEDIATELY NOTIFY THE ARCHITECT IN WRITING AND AWAIT DIRECTION BEFORE PROCEEDING WITH THE WORK.
2. UNLESS OTHERWISE NOTED, MECHANICAL/PLUMBING ITEMS SHOWN HEAVY SOLID ( ) SHALL BE NEW WORK AND MECHANICAL/PLUMBING ITEMS SHOWN LIGHT SOLID ( ) SHALL BE EXISTING.
3. DO NOT LOCATE PIPING WITHIN DEDICATED ELECTRICAL SPACE ABOVE ELECTRICAL PANELS OR EQUIPMENT. REFER TO SHEET M-001 FOR MECHANICAL LEGEND AND GENERAL NOTES.

SHEET KEYNOTES:

1 1 1/4" GEOTHERMAL LOOP PIPING UNDERGROUND TO MECHANICAL ROOM. SEE DWG. M-401 FOR CONTINUATION.

2 PROVIDE TWO GEOTHERMAL CIRCUITS WITH THREE WELLS PER CIRCUIT. EACH WELL SHALL BE LOCATED 20' FROM ADJACENT WELLS AND BE 300' DEEP. SEE DWG. M-501 FOR ADDITIONAL WELL DETAILS.

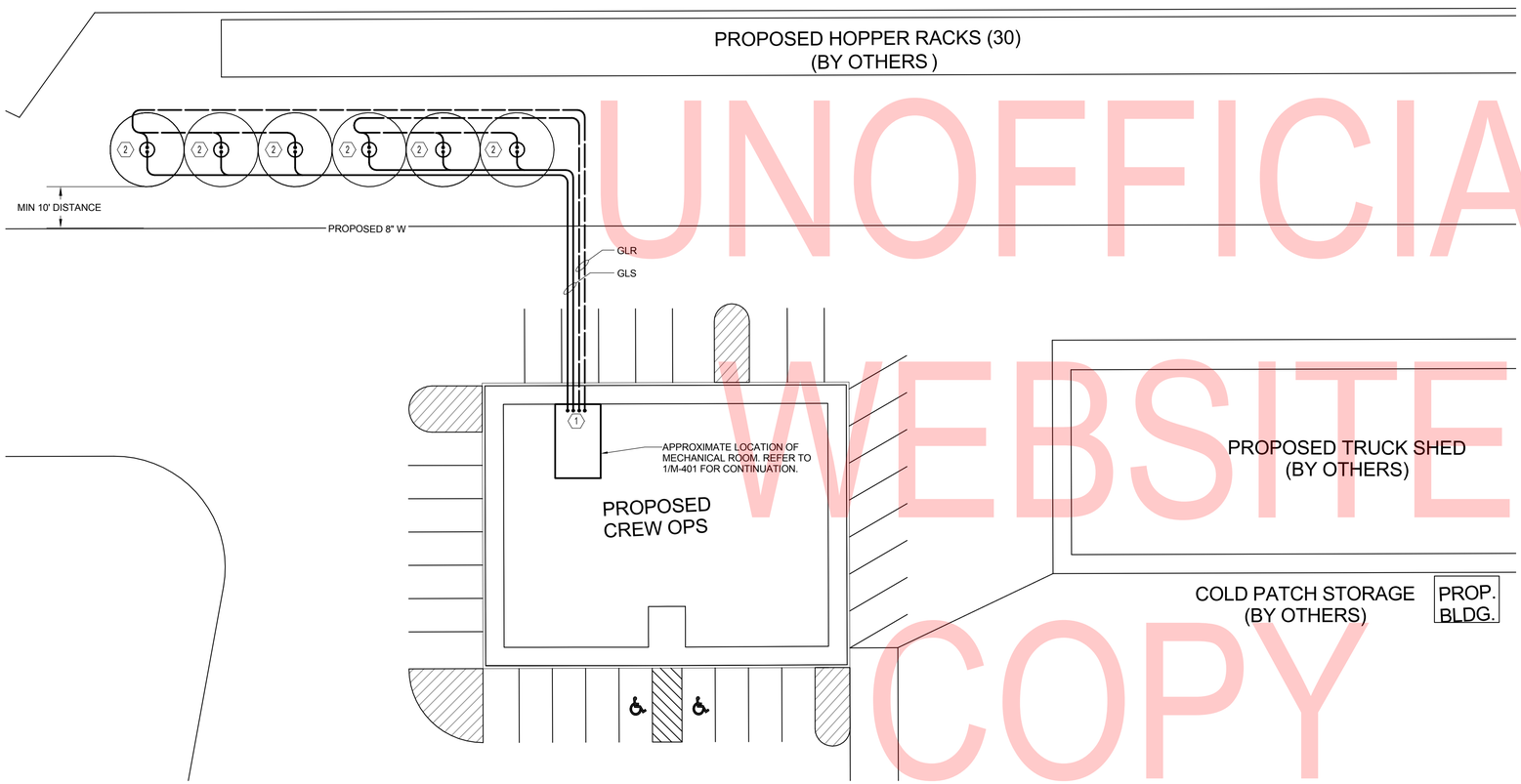

1 M-100 MECHANICAL SITE PLAN
SCALE: 1" = 20'-0"

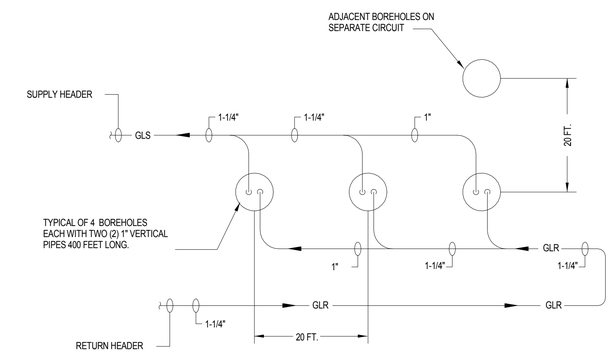

2 M-100 PIPING FOR GEOTHERMAL HEAT EXCHANGER CIRCUIT
SCALE: 12" = 1'-0"

UNOFFICIAL WEBSITE COPY

$DATE_USER$
\\jmt.corp.local\jmtdfs\NDE\151152_010_Chapman_Yard_-_Phase\CADD\MEP\15-1152-010_CHAPMAN YARD - MEP - CENTRAL.rvt

M-100

ADDENDUMS / REVISIONS							
		NORTH DISTRICT CREW QUARTERS AND SITE WORK, PHASE 1A	CONTRACT T201880103	BRIDGE NO. N/A	MECHANICAL SITE PLAN	SECTION JMT
			COUNTY NEW CASTLE	DESIGNED BY: BD		SHEET NO. 51
				CHECKED BY: DMC		

GENERAL SHEET NOTES:

1. INFORMATION SHOWN ON THIS DRAWING PERTAINING TO EXISTING CONDITIONS HAS BEEN OBTAINED FROM AVAILABLE BUILDING DRAWINGS OR GENERAL FIELD OBSERVATIONS AND MAY NOT INDICATE ACTUAL EXISTING CONDITIONS IN DETAIL OR DIMENSION. THE CONTRACTOR IS RESPONSIBLE FOR DETERMINING THE ACTUAL EXISTING CONDITIONS PRIOR TO FABRICATION OR PERFORMANCE OF ANY WORK. SHOULD CONDITIONS BE DISCOVERED THAT PREVENT EXECUTION OF THE WORK AS INDICATED, THE CONTRACTOR SHALL IMMEDIATELY NOTIFY THE ARCHITECT IN WRITING AND AWAIT DIRECTION BEFORE PROCEEDING WITH THE WORK.
2. UNLESS OTHERWISE NOTED, MECHANICAL/PLUMBING ITEMS SHOWN HEAVY SOLID ( ) SHALL BE NEW WORK AND MECHANICAL/PLUMBING ITEMS SHOWN LIGHT SOLID ( ) SHALL BE EXISTING.
3. DO NOT LOCATE PIPING WITHIN DEDICATED ELECTRICAL SPACE ABOVE ELECTRICAL PANELS OR EQUIPMENT. REFER TO SHEET M-001 FOR MECHANICAL LEGEND AND GENERAL NOTES.

SHEET KEYNOTES:

1. PROVIDE ACOUSTIC DUCT LINING FOR FIRST 15'-0" ON SUPPLY AND RETURN DUCTWORK FROM UNITS. INNER DUCT DIMENSIONS SHALL MATCH DUCT SIZES AS SHOWN ON DRAWINGS M101 AND M-401.
2. INSTALL INLINE FAN EF-1 VERTICALLY MOUNTED IN ATTIC SPACE CONNECTED TO ASSOCIATED ROOF VENTILATOR. (GRH-1)
3. PROVIDE EQUIPMENT PAD FOR NEW CONDENSING UNIT.

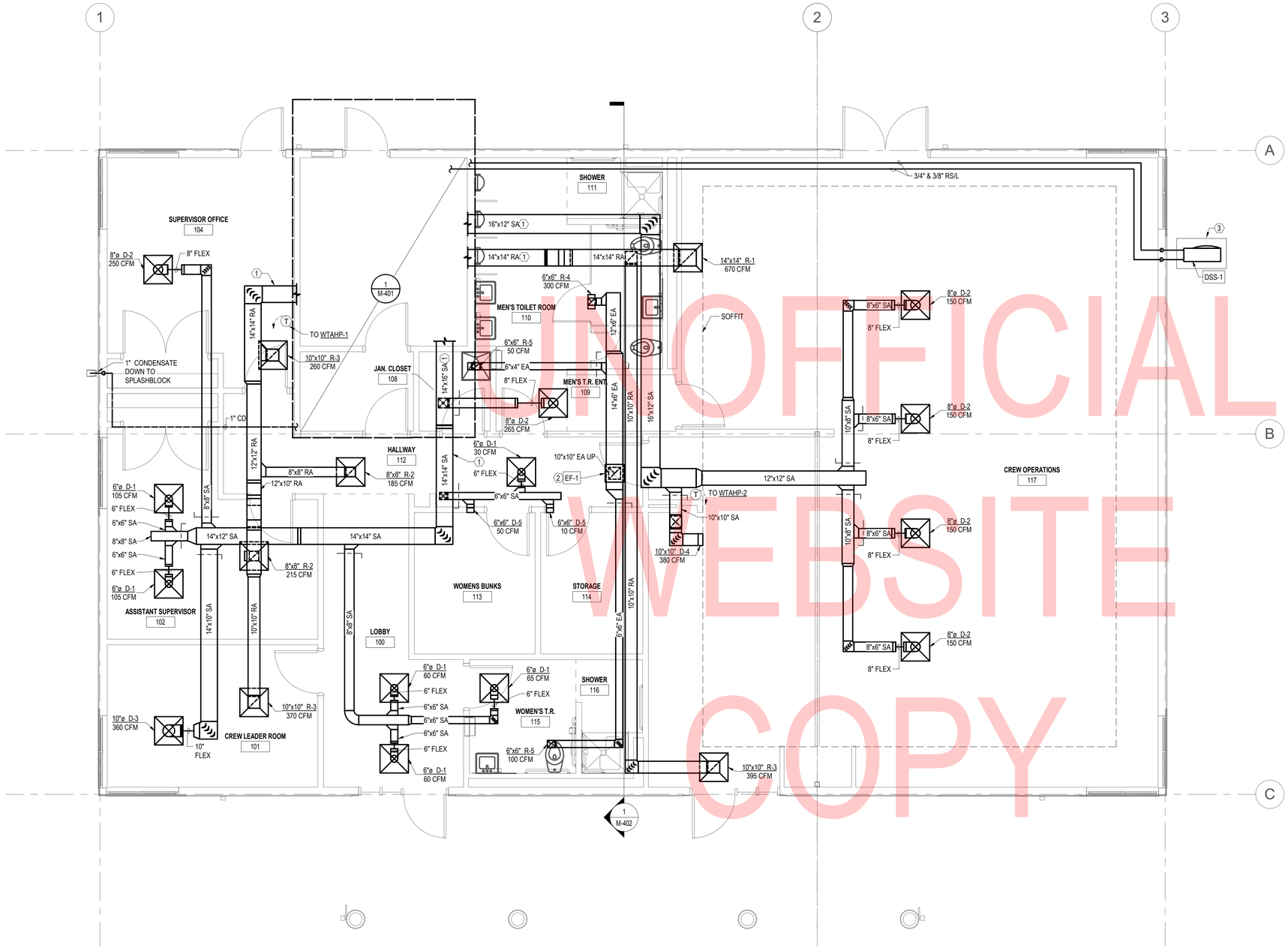

1 M-101 MECHANICAL FLOOR PLAN
SCALE: 1/4" = 1'-0"

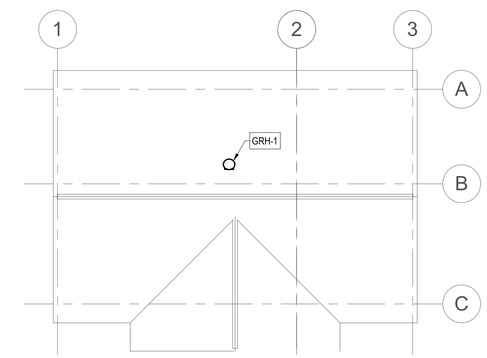

2 M-101 MECHANICAL ROOF PLAN
SCALE: 1/16" = 1'-0"

UNOFFICIAL WEBSITE COPY

$DATE_USER$
\\jmt.corp.local\jmtdfs\NDE\151152_010_Chapman_Yard_-_Phase\CADD\MEP\15-1152-010_CHAPMAN YARD - MEP - CENTRAL.rvt

M-101

ADDENDUMS / REVISIONS							
		NORTH DISTRICT CREW QUARTERS AND SITE WORK, PHASE 1A	CONTRACT T201880103	BRIDGE NO. N/A	MECHANICAL FLOOR PLAN	SECTION JMT
			COUNTY NEW CASTLE	DESIGNED BY: BD		SHEET NO. 52
				CHECKED BY: DMC		

GENERAL SHEET NOTES:

1. INFORMATION SHOWN ON THIS DRAWING PERTAINING TO EXISTING CONDITIONS HAS BEEN OBTAINED FROM AVAILABLE BUILDING DRAWINGS OR GENERAL FIELD OBSERVATIONS AND MAY NOT INDICATE ACTUAL EXISTING CONDITIONS IN DETAIL OR DIMENSION. THE CONTRACTOR IS RESPONSIBLE FOR DETERMINING THE ACTUAL EXISTING CONDITIONS PRIOR TO FABRICATION OR PERFORMANCE OF ANY WORK. SHOULD CONDITIONS BE DISCOVERED THAT PREVENT EXECUTION OF THE WORK AS INDICATED. THE CONTRACTOR SHALL IMMEDIATELY NOTIFY THE ARCHITECT IN WRITING AND AWAIT DIRECTION BEFORE PROCEEDING WITH THE WORK.
2. UNLESS OTHERWISE NOTED, MECHANICAL/PLUMBING ITEMS SHOWN HEAVY SOLID ( ) SHALL BE NEW WORK AND MECHANICAL/PLUMBING ITEMS SHOWN LIGHT SOLID ( ) SHALL BE EXISTING.
3. DO NOT LOCATE PIPING WITHIN DEDICATED ELECTRICAL SPACE ABOVE ELECTRICAL PANELS OR EQUIPMENT. REFER TO SHEET M-001 FOR MECHANICAL LEGEND AND GENERAL NOTES.

SHEET KEYNOTES:

1. PROVIDE ACOUSTIC DUCT LINING FOR FIRST 15'-0" ON SUPPLY AND RETURN DUCTWORK FROM UNITS. INNER DUCT DIMENSIONS SHALL MATCH DUCT SIZES AS SHOWN ON DRAWINGS M101 AND M-401.
2. OA DUCT DOWN TO MEET OA LOUVER. TRANSITION DUCT CONNECTION TO FULL LOUVER SIZE AS SHOWN ON THIS SHEET. REFER TO ARCHITECTURAL DRAWINGS FOR FULL LOUVER INSTALLATION DETAILS.
3. PIPING ELEVATION SHOWN FOR CLARITY. PIPING SHALL BE ROUTED AS HIGH AS POSSIBLE WITHOUT INTERFERING WITH DUCTWORK OR LIMITING MAINTENANCE ACCESS TO PUMPS AND PIPING COMPONENTS.
4. TRANSITION FROM UNIT CONNECTION TO LISTED SUPPLY DUCT IN VERTICAL DUCT.
5. CONDENSATE TO INCLUDE TRAP AT UNIT CONNECTION.
6. P-2 LOCATED BEYOND P-1. SEE 1/M-401 FOR MORE DETAIL.
7. PROVIDE CONDENSATE PUMP LITTLE GIANT VCMA-15ULS OR APPROVED EQUAL. PUMP SHALL BE CAPABLE OF 25 GPH AT 10' HEAD.

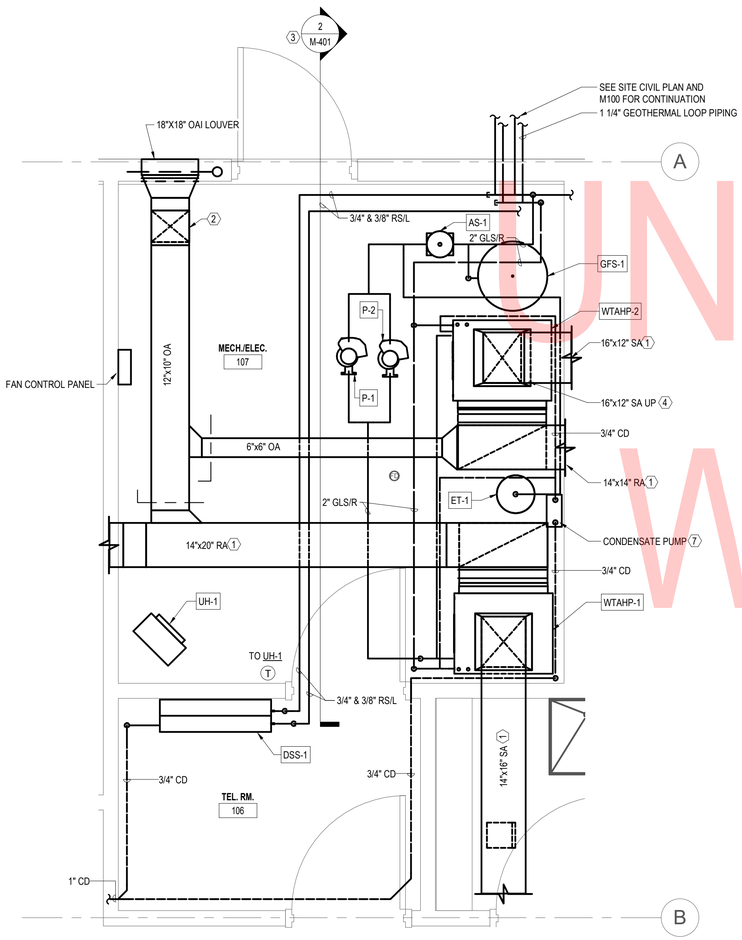

1 M-401 MECHANICAL ROOM - PART PLAN
SCALE: 1/2" = 1'-0"

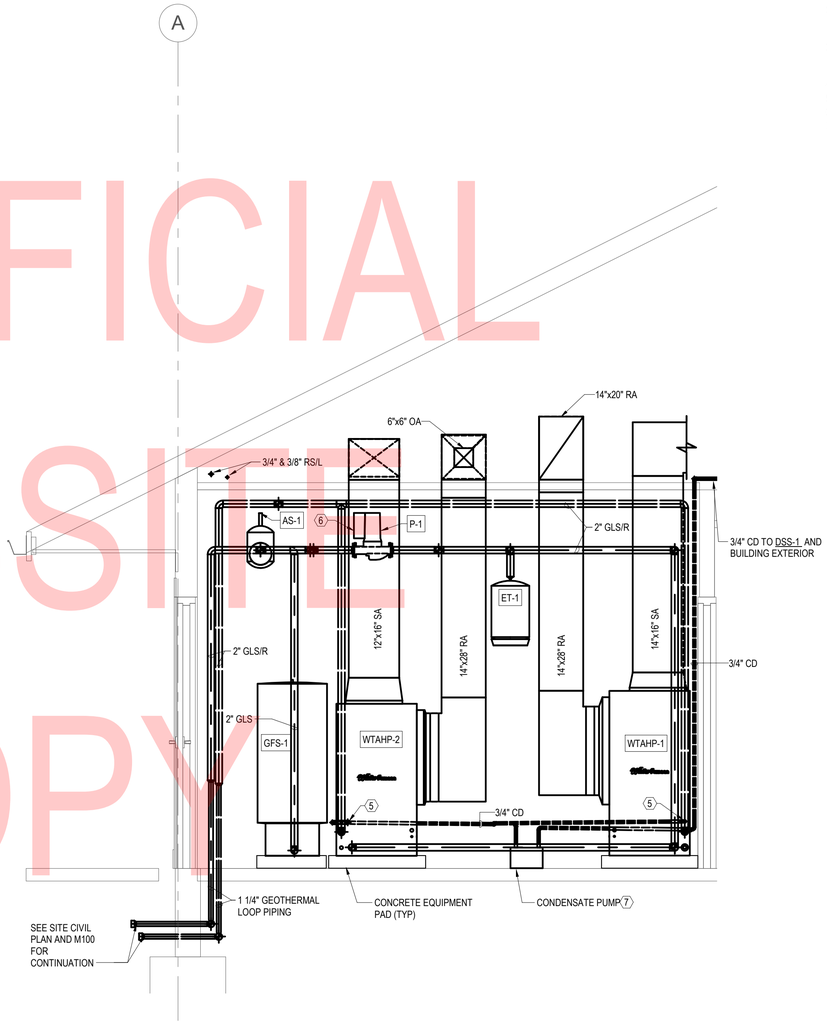

2 M-401 MECHANICAL ROOM - SECTION
SCALE: 1/2" = 1'-0"

UNOFFICIAL WEBSITE COPY

$DATE_USER$
\\jmt.corp.local\jmtdfs\NDE\151152_010_Chapman_Yard_-_Phase\CADD\MEP\15-1152-010_CHAPMAN YARD - MEP - CENTRAL.rvt

M-401

ADDENDUMS / REVISIONS	

NORTH DISTRICT CREW QUARTERS AND SITE WORK, PHASE 1A

CONTRACT	BRIDGE NO.	N/A
T201880103	DESIGNED BY: BD	
COUNTY		
NEW CASTLE	CHECKED BY: DMC	

MECHANICAL PART PLANS

SECTION
JMT
SHEET NO.
53

GENERAL SHEET NOTES:

1. INFORMATION SHOWN ON THIS DRAWING PERTAINING TO EXISTING CONDITIONS HAS BEEN OBTAINED FROM AVAILABLE BUILDING DRAWINGS OR GENERAL FIELD OBSERVATIONS AND MAY NOT INDICATE ACTUAL EXISTING CONDITIONS IN DETAIL OR DIMENSION. THE CONTRACTOR IS RESPONSIBLE FOR DETERMINING THE ACTUAL EXISTING CONDITIONS PRIOR TO FABRICATION OR PERFORMANCE OF ANY WORK. SHOULD CONDITIONS BE DISCOVERED THAT PREVENT EXECUTION OF THE WORK AS INDICATED, THE CONTRACTOR SHALL IMMEDIATELY NOTIFY THE ARCHITECT IN WRITING AND AWAIT DIRECTION BEFORE PROCEEDING WITH THE WORK.
2. UNLESS OTHERWISE NOTED, MECHANICAL/PLUMBING ITEMS SHOWN HEAVY SOLID ( ) SHALL BE NEW WORK AND MECHANICAL/PLUMBING ITEMS SHOWN LIGHT SOLID ( ) SHALL BE EXISTING.
3. DO NOT LOCATE PIPING WITHIN DEDICATED ELECTRICAL SPACE ABOVE ELECTRICAL PANELS OR EQUIPMENT. REFER TO SHEET M-001 FOR MECHANICAL LEGEND AND GENERAL NOTES.

SHEET KEYNOTES:

1 SEE 2/M-502 FOR FAN SUPPORT DETAIL.

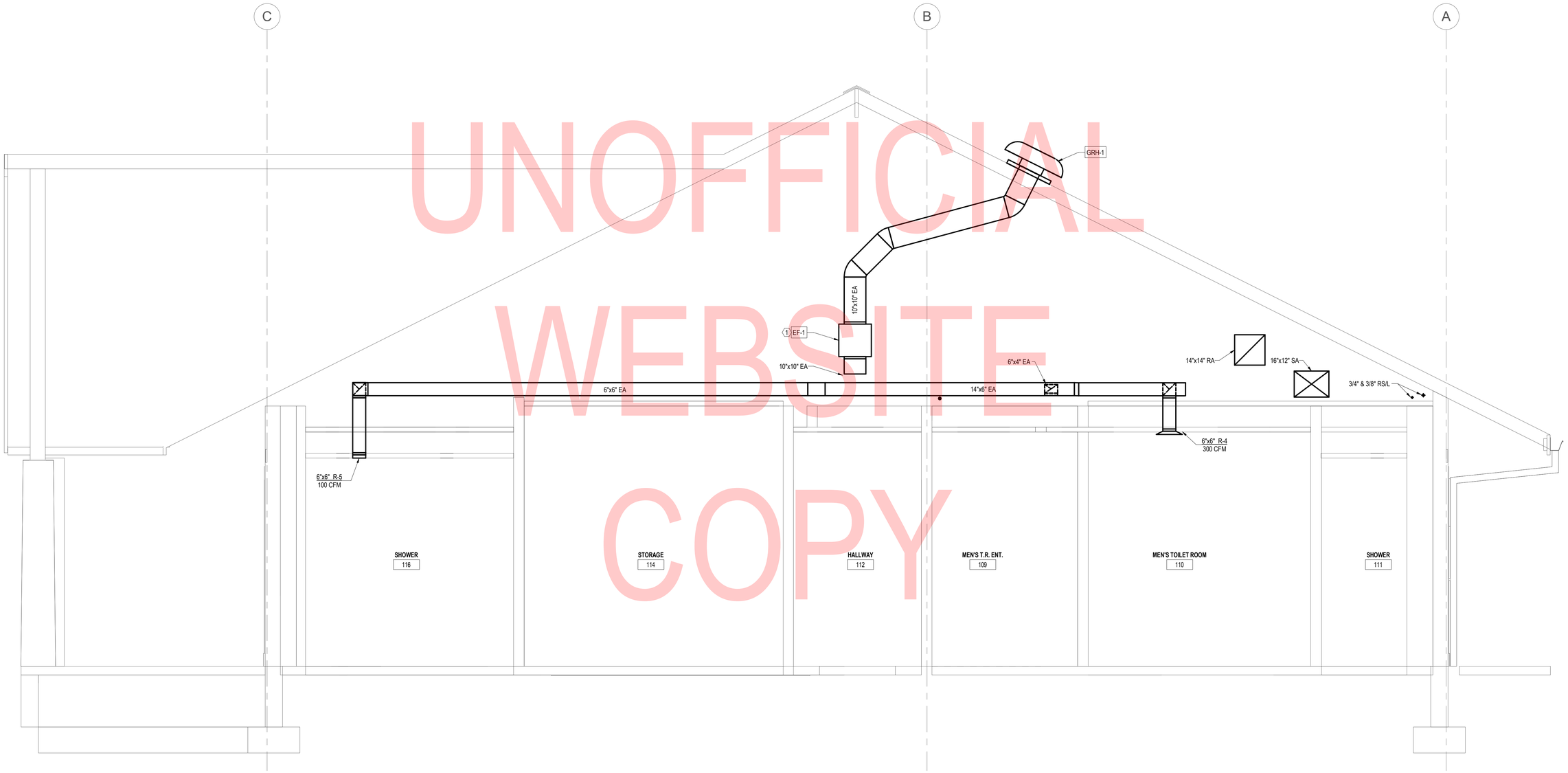

1 M-402 BUILDING SECTION
SCALE: 1/2" = 1'-0"

UNOFFICIAL WEBSITE COPY

$DATE_USERS
\\jmt.corp.local\jmtdfs\NDE\151152_010_Chapman_Yard_-_Phase\CADD\MEP\15-1152-010_CHAPMAN YARD - MEP - CENTRAL.rvt

M-402

ADDENDUMS / REVISIONS							
		NORTH DISTRICT CREW QUARTERS AND SITE WORK, PHASE 1A	CONTRACT T201880103	BRIDGE NO. N/A	MECHANICAL BUILDING SECTION	SECTION JMT
			COUNTY NEW CASTLE	DESIGNED BY: BD		SHEET NO. 54
				CHECKED BY: DMC		

MAX. HANGER LOADING

PIPE SIZE	ROD DIA.	MAX. SPACING
1/2" THRU 2"	1/2"	8'
2 1/2" & 3"	5/8"	10'
4" & 5"	5/8"	14'

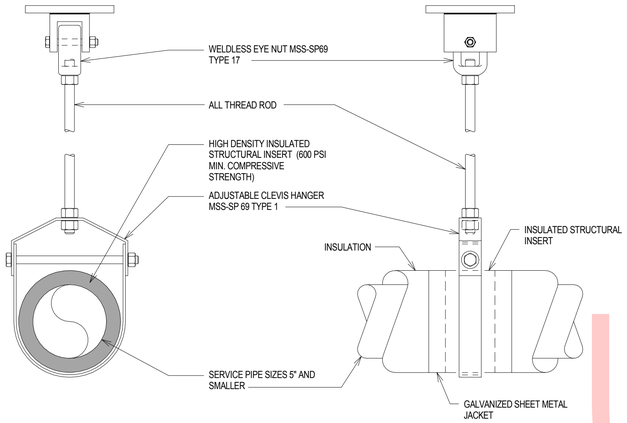

NOTE:

1. THIS DETAIL SHALL BE USED AS A GUIDE. ALL HANGERS SHALL MEET THE REQUIREMENTS OF SPECIFICATION SECTION 230529 - 'HANGERS AND SUPPORTS'.

1 M-501 HANGER SUPPORT
SCALE: NONE

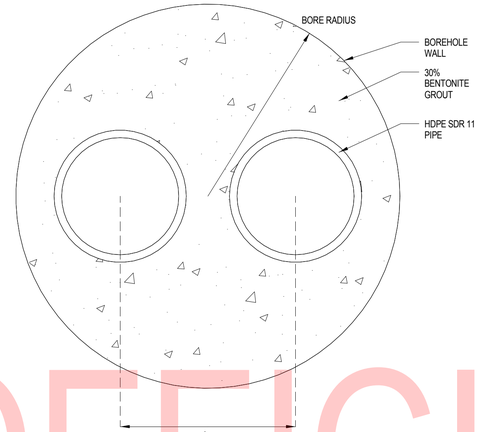

NOTES:
MINIMUM DISTANCE FROM LOT LINES, UTILITIES, FOUNDATIONS = 10 FEET.
MINIMUM DISTANCE FROM NONPUBLIC WELLS = 20 FEET.
MINIMUM DISTANCE FROM SEPTIC TANKS = 50 FEET.
MINIMUM DISTANCE FROM PUBLIC WELLS, SESS POOLS, SEWAGE FIELDS = 100 FEET.

2 M-501 TYPICAL GEOTHERMAL WELL PIPING SECTION
SCALE: NONE

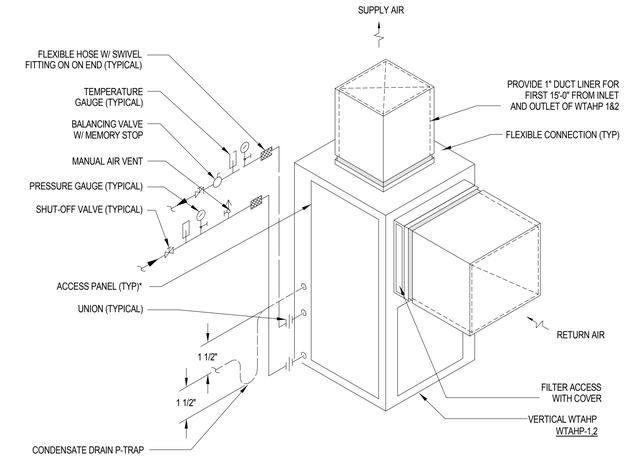

NOTE:
PIPING SHALL NOT BLOCK UNIT ACCESS PANELS

3 M-501 VERTICAL WTAHP PIPING CONNECTION
SCALE: NONE

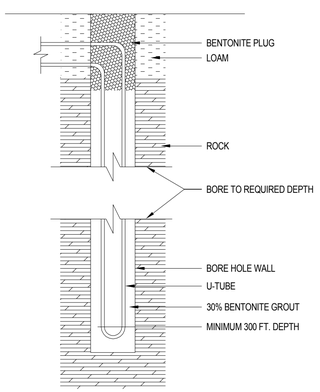

4 M-501 TYPICAL GEOTHERMAL WELL PIPING
SCALE: NONE

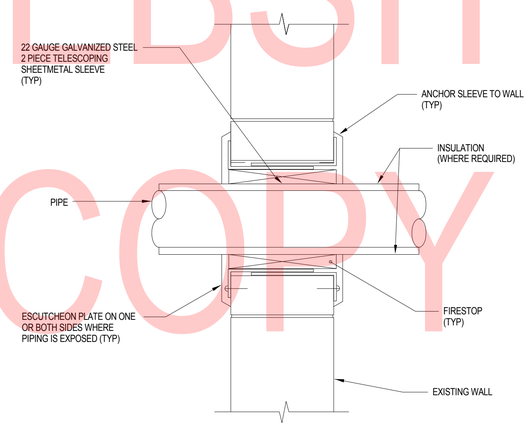

5 M-501 PIPE PENETRATION DETAIL
SCALE: NONE

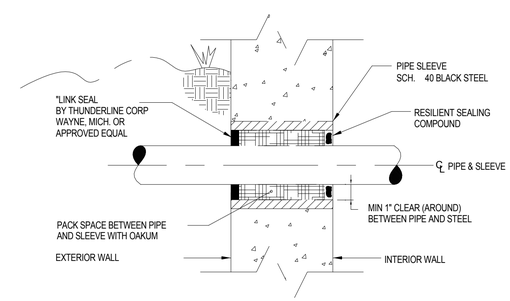

6 M-501 SLEEVE DETAIL - EXTERIOR WALL UNDERGROUND
SCALE: NONE

UNOFFICIAL WEBSITE COPY

$DATE_USER$
\\jmt.corp.local\jmtdfs\NDE\151152_010_Chapman_Yard__Phase\CADD\MEP\15-1152-010_CHAPMAN YARD - MEP - CENTRAL.rvt

M-501

ADDENDUMS / REVISIONS	

NORTH DISTRICT
CREW QUARTERS AND SITE WORK, PHASE 1A

CONTRACT	BRIDGE NO.	N/A
T201880103	DESIGNED BY: BD	
COUNTY		
NEW CASTLE	CHECKED BY: DMC	

MECHANICAL DETAILS I

SECTION
JMT
SHEET NO.
55

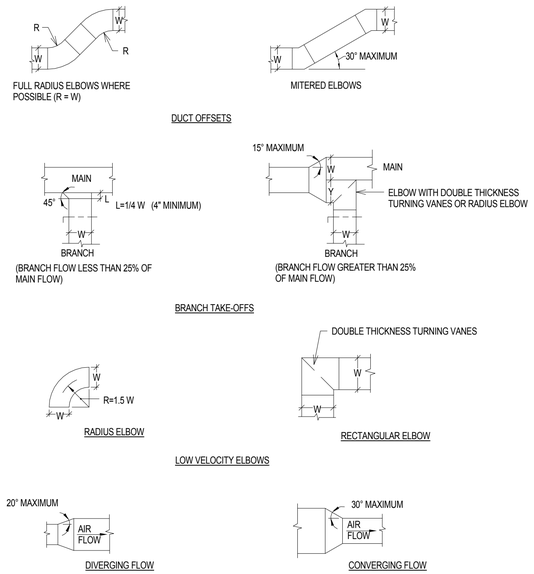

1 M-502 DUCT FITTINGS
SCALE: NONE

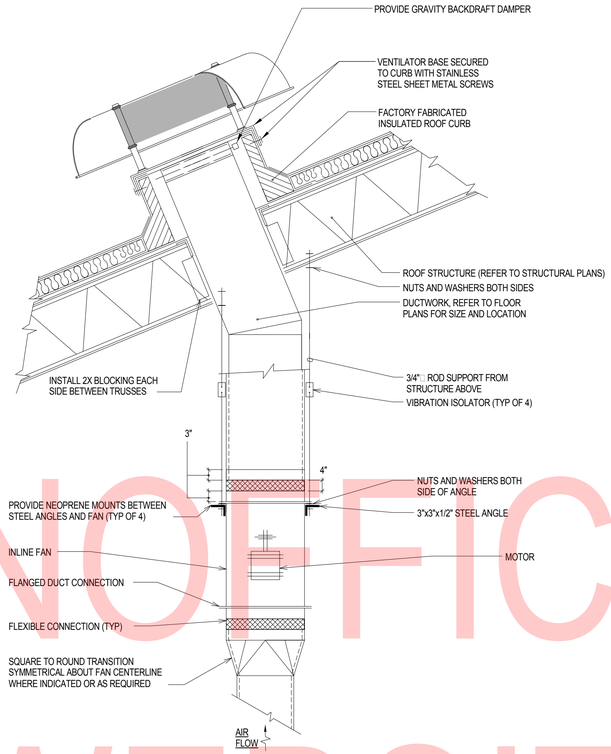

2 M-502 INLINE FAN AND RELIEF VENTILATOR INSTALLATION
SCALE: NONE

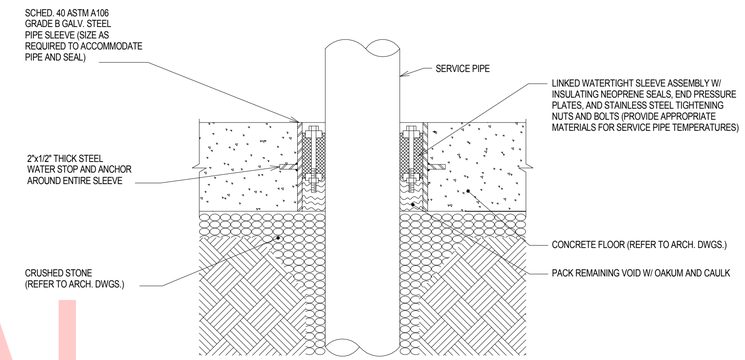

3 M-502 TYPICAL PIPE PENETRATION THROUGH GRADE FLOOR
SCALE: NONE

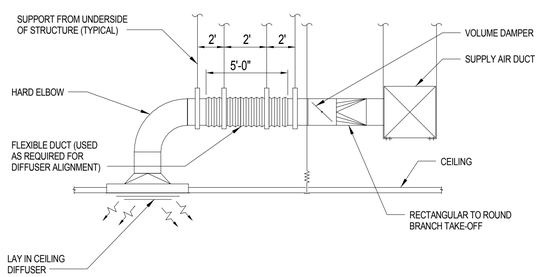

NOTES: MAXIMUM SAG 1/2" PER FOOT.

4 M-502 BRANCH AND DIFFUSER INSTALLATION
SCALE: NONE

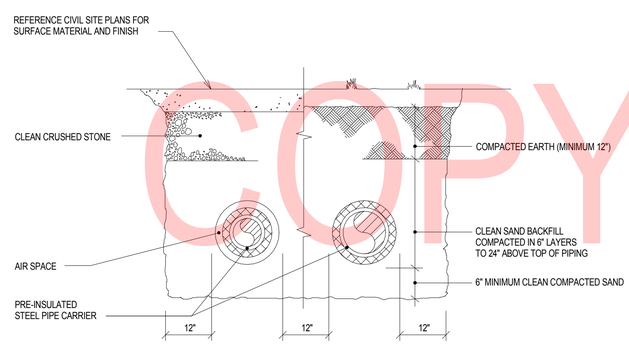

NOTE:
1. REFER TO CIVIL SPECIFICATION SECTION FOR EXCAVATION AND BACKFILL ADDITIONAL REQUIREMENTS.

5 M-502 BELOW GRADE PIPING INSTALLATION
SCALE: NONE

UNOFFICIAL WEBSITE COPY

$DATE_USER$
\\jmt.corp.local\jmtdfs\NDE\151152_010_Chapman_Yard_-_Phase\CADD\MEP\15-1152-010_CHAPMAN YARD - MEP - CENTRAL.rvt

M-502

ADDENDUMS / REVISIONS	

NORTH DISTRICT CREW QUARTERS AND SITE WORK, PHASE 1A

CONTRACT	BRIDGE NO.	N/A
T201880103	DESIGNED BY: BD	
COUNTY		
NEW CASTLE	CHECKED BY: DMC	

MECHANICAL DETAILS II

SECTION
JMT
SHEET NO.
56

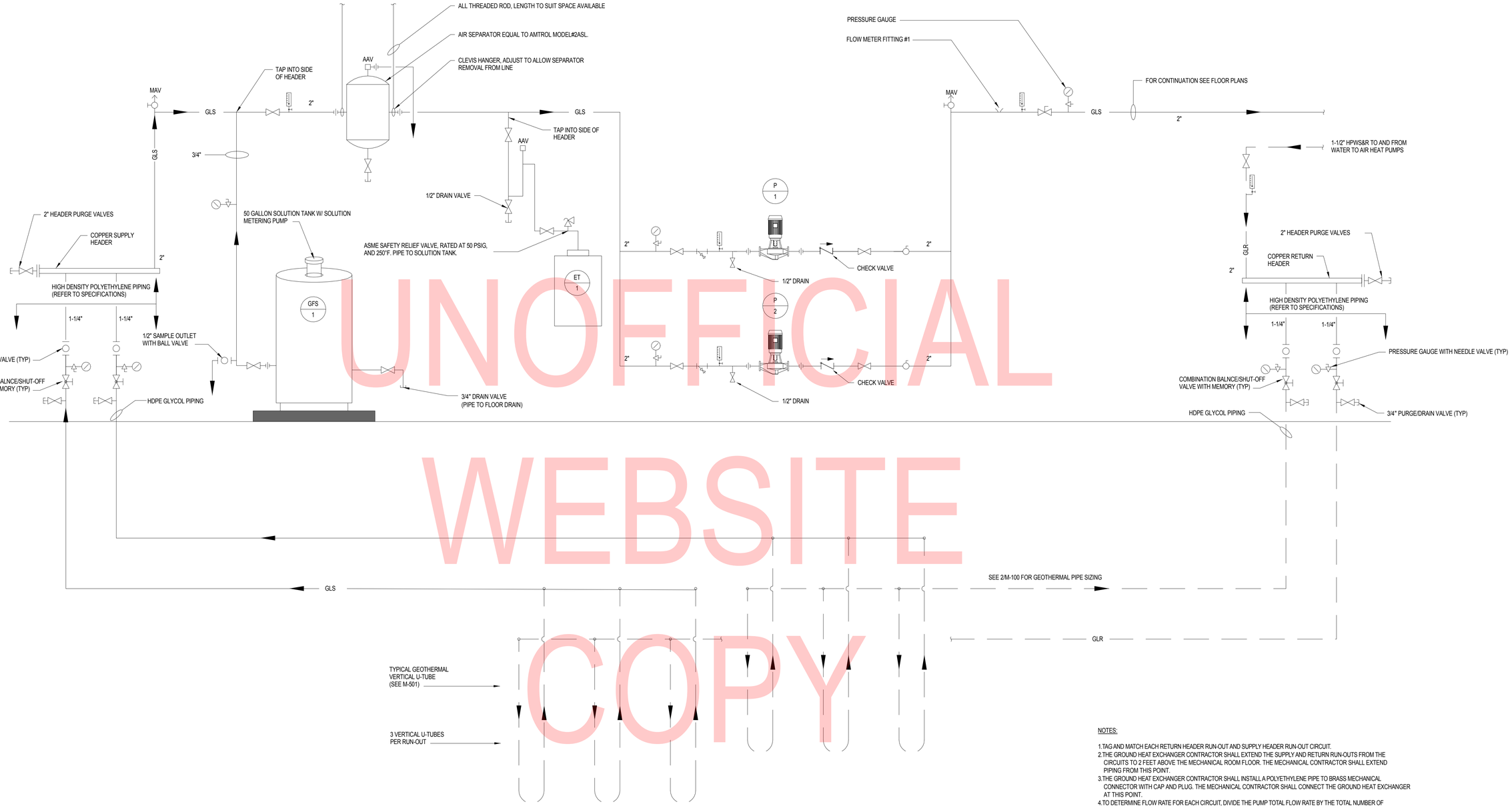

UNOFFICIAL WEBSITE COPY

NOTES:

1. TAG AND MATCH EACH RETURN HEADER RUN-OUT AND SUPPLY HEADER RUN-OUT CIRCUIT.
2. THE GROUND HEAT EXCHANGER CONTRACTOR SHALL EXTEND THE SUPPLY AND RETURN RUN-OUTS FROM THE CIRCUITS TO 2 FEET ABOVE THE MECHANICAL ROOM FLOOR. THE MECHANICAL CONTRACTOR SHALL EXTEND PIPING FROM THIS POINT.
3. THE GROUND HEAT EXCHANGER CONTRACTOR SHALL INSTALL A POLYETHYLENE PIPE TO BRASS MECHANICAL CONNECTOR WITH CAP AND PLUG. THE MECHANICAL CONTRACTOR SHALL CONNECT THE GROUND HEAT EXCHANGER AT THIS POINT.
4. TO DETERMINE FLOW RATE FOR EACH CIRCUIT, DIVIDE THE PUMP TOTAL FLOW RATE BY THE TOTAL NUMBER OF VERTICAL U-TUBES. THEN MULTIPLY THE VALUE BY THE NUMBER OF VERTICAL U-TUBES PER CIRCUIT.

$DATE_USER$
\\jmt.corp.local\jmtdfs\NDE\151152_010_Chapman_Yard__Phase\CADD\MEP\15-1152-010_CHAPMAN YARD - MEP - CENTRAL.rvt

M-503

ADDENDUMS / REVISIONS	

NORTH DISTRICT CREW QUARTERS AND SITE WORK, PHASE 1A

CONTRACT	BRIDGE NO.	N/A
T201880103	DESIGNED BY: BD	
COUNTY		
NEW CASTLE	CHECKED BY: DMC	

MECHANICAL GEOTHERMAL SYSTEM PIPING DIAGRAM

SECTION
JMT
SHEET NO.
57

WATER-TO-AIR HEAT PUMP SCHEDULE

DESIGNATION	SERVICE	FAN CFM	OA CFM	FAN SPEED	ESP	FLUID GPM	MAX WPD (FT. W.G.)	GLYCOL	% GLYCOL	HEATING EWT	HEATING LWT	HEATING EAT	HEATING LAT	HEATING CAPACITY (MBH)	HEATING COP	COOLING EWT	COOLING LWT	COOLING EAT (DB)	COOLING EAT (WB)	COOLING LAT	COOLING CAPACITY (MBH)	COOLING SENSIBLE CAPACITY (MBH)	EER	FILTER TYPE	FILTER NO.	FITLER THICKNESS (IN)	VOLTAGE	PHASE	MCA	LENGTH (IN)	WIDTH (IN)	HEIGHT (IN)	OPERATING WEIGHT	BASIS	NOTES
WTAHP-1	117	1370	410	LOW	1.00 in-wg	18	14.00	PROPYLENE	20	37.0 °F	32.4 °F	49.7 °F	85.6 °F	54.4	3.9	77.0 °F	86.3 °F	80.7 °F	67.3 °F	52.4 °F	67.8	43.0	17.4	MERV 13	1	2	230	3	32 A	25.5	31.2	52.2	445 LB	WATERFURNACE ENVISION COMPACT NB 070	1, 2, 3, 4, 5
WTAHP-2	100, 101, 102, 104, 109, 112, 113, 114, 115	975	120	LOW	0.80 in-wg	11	10.30	PROPYLENE	20	37.0 °F	33.1 °F	61.6 °F	88.0 °F	28.1	3.9	77.0 °F	85.6 °F	77.4 °F	64.5 °F	52.9 °F	39.3	26.2	20	MERV 13	1	2	230	3	20 A	25.5	31.2	48.2	365 LB	WATERFURNACE ENVISION COMPACT NB 042	1, 2, 3, 4, 5

NOTES:
1). PROVIDE UNIT WITH FACTORY INSTALLED DISCONNECT.
2). PROVIDE MODULATING HOT GAS REHEAT.
3). PROVIDE THERMOSTAT WITH AN INTEGRAL HUMIDITY SENSOR TO CONTROL HOT GAS REHEAT.
4). UNIT SHALL BE INSTALLED ON CONCRETE HOUSEKEEPING PAD. COORDINATE WITH STRUCTURAL DRAWINGS.
5). UNIT SHALL HAVE VERTICAL CONFIGURATION.

DUCTLESS SPLIT SYSTEM SCHEDULE

DESIGNATION	HEATING CAPACITY (MBH)	COOLING CAPACITY (MBH)	COMPRESSOR NO.	COMPRESSOR REFRIGERANT	VOLT	MCA	MOP	COOLING FLA	HEATING FLA	INDOOR UNIT LENGTH (IN)	INDOOR UNIT WIDTH (IN)	INDOOR UNIT HEIGHT (IN)	OUTDOOR UNIT LENGTH (IN)	OUTDOOR UNIT WIDTH (IN)	OUTDOOR UNIT HEIGHT (IN)	INDOOR UNIT WEIGHT	OUTDOOR UNIT WEIGHT	SYSTEM BASIS	INDOOR UNIT BASIS	OUTDOOR UNIT BASIS	NOTES
DSS-1	12	9	1	R410A	208 V	10	15	3.2	6.5	35.25	10.25	10.25	31 1/8	11.25	21 9/16	24.25 lb	81.6 lb	SAMSUNG AR09KSWSJWKCV	SAMSUNG AR09KSWSJWKNCV	SAMSUNG AR09KSWSJWKXCV	1, 2, 3

NOTES:
1). PROVIDE UNIT WITH FACTORY INSTALLED, INVERTER CONTROLLED ROTARY COMPRESSORS.
2). PROVIDE UNIT WITH CONTROLLABLE THERMOSTAT.
3. PROVIDE WITH INTEGRAL CONDENSATE PUMP.

GRAVITY RELIEF HOOD SCHEDULE

DESIGNATION	SERVICE	LOCATION	AIR FLOW	SP	THROAT WIDTH (IN)	THROAT LENGTH (IN)	CURB CAP WIDTH (IN)	CURB CAP LENGTH (IN)	BASIS	NOTES
GRH-1	CREW OPERATION'S BUILDING EXHAUST	ROOF	450 CFM	0.04 in-wg	14.25	14.25	29	29	GREENHECK GRSR-15	1

NOTES:
1). PROVIDE RELIEF HOOD WITH INTERNAL GRAVITY BACKDRAFT DAMPER.

EXHAUST FAN SCHEDULE

DESIGNATION	SERVICE	LOCATION	TYPE	AIR FLOW	ESP	MOTOR RPM	MOTOR HP	DRIVE	VOLTS/PHASE	APPROX. WEIGHT (LBS)	BASIS	NOTES
EF-1	RESTROOM EXHAUST	ATTIC	INLINE	450 CFM	0.25 in-wg	1346	1/10	DIRECT	115/1	50	GREENHECK SQ-90-VG	1

NOTES:
1). PROVIDE FACTORY INSTALLED DISCONNECT AND THERMAL OVERLOAD PROTECTOR.
2). PROVIDE GREENHECK RELIEF VENTILATION MODEL MRSR SIZE 10, OR APPROVED EQUAL. PERFORMANCE SHALL BE 500 CFM AT 0.075" W.G. PRESSURE DROP.
3). PROVIDE MANUFACTURER'S SUPPLIED FAN SPEED CONTROLLER.

UNIT HEATER SCHEDULE

DESIGNATION	SERVICE	TYPE	CFM	HEATING CAPACITY (KW)	VOLTS/PHASE	TOTAL AMPS	LENGTH (IN)	WIDTH (IN)	HEIGHT (IN)	WEIGHT (LBS)	BASIS	NOTES
UH-1	107 - MECH./ELEC.	SUSPENDED	320	3	208/3	14.4	9 1/8	15 9/16	16 3/8	40	REZNOR EGEB-3	1, 2

NOTES:
1). PROVIDE LOCAL WALL THERMOSTAT WITH UNIT HEATER.
2). PROVIDE UNIT HEATER WITH FACTORY INSTALLED DISCONNECT.

PUMP SCHEDULE

DESIGNATION	SERVICE	TYPE	FLOW RATE	FLUID PD (FT. W.G.)	MOTOR RPM	MOTOR HP	VOLTS/PHASE	BASIS	NOTES
P-1	GROUND LOOP CIRCULATOR	INLINE	29 GPM	70	3300	2	208/1	BELL AND GOSSETT ECOCIRC XL 70-145	1, 2
P-2	GROUND LOOP CIRCULATOR	INLINE	29 GPM	70	3300	2	208/1	BELL AND GOSSETT ECOCIRC XL 70-145	1, 2

NOTES:
1). PROVIDE FACTORY INSTALLED THERMAL OVERLOAD PROTECTOR.
2). SYSTEM FLUID IS 20% PROPYLENE GLYCOL SOLUTION.

MISCELLANEOUS EQUIPMENT SHEDULE

DESIGNATION	DESCRIPTION	BASIS
AS-1	2 1/2" NPT CONNECTIONS, 125 PSIG MAX WORKING PRESSURE, 170 MAXIMUM GPM; ASME LABEL	BELL AND GOSSETT ROLAIRTROL R-2 1/2
GFS-1	50 GALLON TANK MIXED TO 20% PROPYLENE GLYCOL SOLUTION. CUT-IN RANGE 10-45 PSI. CUT-OUT RANGE 20-60 PSI. LOW LEVEL FLOAT SWITCH.	NEPTUNE G-50-1
ET-1	VERTICAL DIAPHRAM EXPANSION TANK, 125 PSI MAXIMUM WORKING PRESSURE, 240°F MAXIMUM OPERATING TEMPERATURE, 8 GALLON TANK VOLUME, 2.3 GALLON ACCEPTANCE VOLUME; ASME LABEL	BELL AND GOSSET D-15V

AIR DEVICE SCHEDULE

DESIGNATION	DUTY	FACE SIZE	NECK SIZE	CFM RANGE	BLOW	BASIS	NOTES
D-1	SUPPLY	24"x24"	6"	30-105	4-WAY	TITUS TMSA-AA	1
D-2	SUPPLY	24"x24"	8"	150-265	4-WAY	TITUS TMSA-AA	1
D-3	SUPPLY	24"x24"	10"	360	4-WAY	TITUS TMSA-AA	1
D-4	SUPPLY	10"x10"	-	380	1-WAY	TITUS 122RL	1
D-5	SUPPLY	6"x6"	-	10	1-WAY	TITUS 122RL	1
R-1	RETURN	16"x16"	14"x14"	670	1-WAY	TITUS PAR-AA	1
R-2	RETURN	24"x24"	8"x8"	185-215	1-WAY	TITUS PAR-AA	1
R-3	RETURN	24"x24"	10"x10"	260-395	1-WAY	TITUS PAR-AA	1
R-4	EXHAUST	12"x6"	-	300	1-WAY	TITUS 350ZFL	1
R-5	EXHAUST	6"x6"	-	50-100	1-WAY	TITUS 350ZFL	1

NOTES:
1). PROVIDE NECK MOUNTED OPPOSED BLADE DAMPER.

UNOFFICIAL WEBSITE COPY

$DATE_USERS
\\jmt.corp.local\jmtdfs\NDE\151152_010_Chapman_Yard__-_Phase\CADD\MEP\15-1152-010_CHAPMAN YARD - MEP - CENTRAL.rvt

M-601

ADDENDUMS / REVISIONS	

NORTH DISTRICT
CREW QUARTERS AND SITE WORK, PHASE 1A

CONTRACT	BRIDGE NO.	N/A
T201880103	DESIGNED BY: BD	
COUNTY		
NEW CASTLE	CHECKED BY: DMC	

MECHANICAL SCHEDULES

SECTION
JMT
SHEET NO.
58

GENERAL CONTROL NOTES

1. THESE CONTROL DRAWINGS INDICATE THE INTENDED SEQUENCES OF OPERATION FOR SYSTEMS TO BE CONTROLLED BY STANDALONE MEANS. PROVISIONS SHALL BE PROVIDED FOR FUTURE CONNECTION OF THE SYSTEM TO THE DELDOT NETWORK.
2. SENSORS AND MEASURING INSTRUMENTS SHOWN ON SEQUENCES THAT ARE NOT UTILIZED FOR THE SEQUENCE OF OPERATION ARE INTENDED TO PROVIDE OPERATOR INFORMATION AND ARE REQUIRED.
3. ALL SETPOINTS, RESET SCHEDULES, AND DEADBANDS IDENTIFIED HEREIN SHALL BE ADJUSTABLE BY THE BUILDING OPERATOR THROUGH THE MANUFACTURER'S CONTROLLER.
4. SETPOINT SHALL BE DEFINED AS A PERFORMANCE STANDARD FOR A COMPONENT OR SYSTEM UNDER CONTROL, WHICH IS ESTABLISHED BY THE CONTROL SYSTEM USER. TYPICALLY, A SETPOINT IS DEFINED WITH AN ACCEPTABLE DEADBAND, TO ALLOW THE MECHANICAL OR ELECTRICAL SYSTEM THE OPPORTUNITY TO DAMPEN OR ELIMINATE EXCESSIVE START/STOP OR OSCILLATION OF THE EQUIPMENT.
5. DEADBAND IS THE ACCEPTABLE RANGE ASSOCIATED WITH THE SETPOINT, IN WHICH THE CONTROL SYSTEM IS SATISFIED WITH NO MECHANICAL OR ELECTRICAL SYSTEM MODULATION NECESSARY FROM THE CONTROL SYSTEM. TYPICALLY, A DEADBAND IS EXPRESSED AS A + AND - RANGE AROUND THE NUMERICAL VALUE OF THE SETPOINT.
6. CONTRACTOR SHALL BE RESPONSIBLE FOR VERIFYING AND DEMONSTRATING THE LISTED SEQUENCES OF OPERATION FOR ALL MECHANICAL SYSTEMSTO THE OWNER OR OWNER'S REPRESENTATIVE. CONTRACTOR SHALL PROVIDE A MINIMUM OF 5 DAYS ADVANCED NOTICE OF DEMONSTRATIONS.

CONTROLS DESIGNATIONS

"X"-"Y" POINT INTEGRATED TO BAS

"X"		"Y"	
EA	EXHAUST AIR	H	HUMIDITY
OA	OUTDOOR AIR	T	TEMPERATURE
RA	RETURN AIR	DPR	DAMPER
SA	SUPPLY AIR	SS	START/STOP
EF	EXHAUST FAN	SW	SWITCH ON/OFF
SF	SUPPLY FAN		
P	PUMP		
ZN	ZONE		

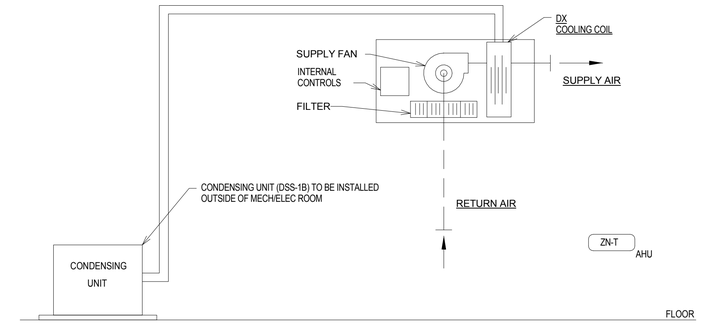

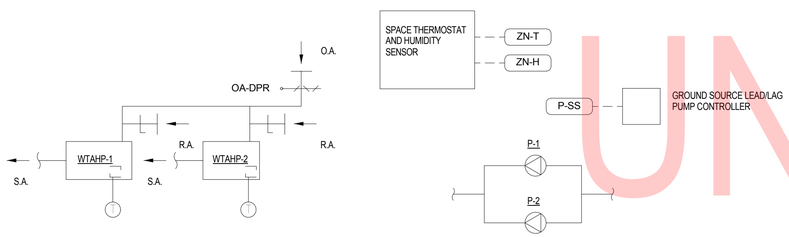

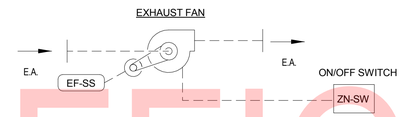

SPLIT SYSTEM AIR HANDLING UNIT

A. GENERAL

THE SPLIT SYSTEM CONSISTS OF AN OUTDOOR HEAT PUMP TYPE CONDENSING UNIT AND AN INDOOR AIR HANDLING UNIT AND A DEDICATED THERMOSTAT. A PROGRAMMABLE THERMOSTAT SHALL BE INSTALLED IN THE SPACE. ALL SYSTEM ADJUSTMENTS, ETC. SHALL BE MADE AT THE THERMOSTAT. THIS UNIT SERVES THE TEL. ROOM.

INTERIOR AIR HANDLER (DSS-1) INTERNAL CONTROLS SHALL CYCLE THE SUPPLY FAN AS NEEDED TO MEET THE ZONE TEMPERATURE SETPOINT AS SELECTED ON THE THERMOSTAT PROVIDED WITH THE UNIT. THE AHU SHALL MODULATE TO MAINTAIN SPACE TEMPERATURE SETPOINT (72°F COOLING, 70°F HEATING (ADJ.)).

THE AIR COOLED CONDENSING UNIT SHALL BE ENERGIZED WHEN THE INDOOR UNIT CALLS FOR HEATING OR COOLING. THE AIR COOLED CONDENSING UNIT SHALL MODULATE AS NEEDED TO SATISFY LOAD.

B. PROVIDED CONTROLS

ALL CONTROLS SHALL BE SUPPLIED AND INSTALLED BY FACTORY EQUIPMENT MANUFACTURER. CONTROLS SHALL HAVE BACNET INTERFACE.

EXHAUST FAN EF-1

A. GENERAL

THE CONSTANT VOLUME EXHAUST FAN (EF-1) SHALL BE ENERGIZED DURING OCCUPIED MODE ONLY. OCCUPANCY SCHEDULE TO BE COORDINATED WITH OWNER. AN H-O-A SWITCH SHALL BE PROVIDED ON THE CONTROL PANEL TO ALLOW FOR MANUAL FAN OPERATION DURING UNOCCUPIED PERIODS.

WATER TO AIR HEAT PUMPS

WATER TO AIR HEAT PUMP (WTAHP-1 & 2) OPERATION

A. GENERAL

THE INTEGRAL WTAHP CONTROLLER SHALL PROVIDE OCCUPIED HEATING SETPOINT (ADJ.), OCCUPIED COOLING SETPOINT (ADJ.), UNOCCUPIED HEATING SETPOINT (ADJ.), UNOCCUPIED COOLING SETPOINT (ADJ.), OCCUPIED/UNOCCUPIED SCHEDULE (ADJ.), AND SPACE RELATIVE HUMIDITY SETPOINT (ADJ.) FOR DEHUMIDIFICATION. THE WTAHPS SHALL ONLY ENERGIZE IF FLOW FROM THE INLINE GROUND SOURCE PUMPS HAS BEEN VERIFIED.

B. OCCUPIED MODE

THE TIME CLOCK SHALL INDEX THE WTAHP INTO OCCUPIED MODE BASED UPON THE SEVEN DAY OCCUPIED/UNOCCUPIED SCHEDULE (ADJ.). THE SUPPLY FAN SHALL RUN CONTINUOUSLY AND THE WTAHP SHALL MODULATE THROUGH INTERNAL CONTROLS TO MAINTAIN HEATING/COOLING SPACE TEMPERATURE AND HUMIDITY SETPOINT DURING COOLING MODE (ADJ.). UNIT CONTROLLER SHALL ENABLE/DISABLE FAN AND COMPRESSOR OPERATION AND MONITOR ALL EQUIPMENT PROTECTION CONTROLS.

A ROOM TEMPERATURE SENSOR WITH AN LED DISPLAY SHALL BE PROVIDED WITH EACH UNIT. THE LED DISPLAY SHALL SHOW ROOM TEMPERATURE, TEMPERATURE SETPOINT, AND HEATING/COOLING MODE AS WELL AS ANY FAULT OR ALARM GENERATED BY THE UNIT. THE UNIT DISPLAY SHALL GIVE THE OPERATOR FULL ABILITY TO CHANGE SETPOINTS AND OCCUPIED/UNOCCUPIED MODES IF NECESSARY. THE UNIT DISPLAY SHALL INCLUDE THE ABILITY TO LOCK THE SCREEN TO PREVENT UNAUTHORIZED ADJUSTMENT OF SETPOINTS OR SCHEDULE.

WTAHP-1 & 2 SHALL BE EQUIPPED WITH A SPACE HUMIDITY SENSOR. IF HUMIDITY IS ABOVE SETPOINT (60% RH ADJ.), A SIGNAL FROM THE HUMIDITY SENSOR SHALL MODULATE THE HOT GAS VALVE FOR HOT GAS REHEAT TO MAINTAIN SPACE TEMP SETPOINT (ADJ.). THE HOT GAS REHEAT IS DISABLED WHEN THE SPACE HUMIDITY DROPS 5% BELOW SETPOINT.

C. UNOCCUPIED MODE

WHILE IN UNOCCUPIED MODE THE WTAHP SHALL NORMALLY BE DE-ENERGIZED. IF THE WTAHP'S SPACE SENSOR SENSES A SPACE TEMPERATURE ABOVE OR BELOW THE UNOCCUPIED HEATING SPACE TEMPERATURE SETPOINT (ADJ.) OR UNOCCUPIED COOLING SPACE TEMPERATURE SETPOINT (ADJ.) THEN THE WTAHP WILL MODULATE THROUGH INTERNAL CONTROLS TO MAINTAIN THE UNOCCUPIED HEATING/COOLING SPACE TEMPERATURES.

OUTDOOR AIR DAMPER (OA-DPR) OPERATION

A. GENERAL

THE OUTDOOR AIR DAMPER (OA-DPR) SHALL BE CONTROLLED BY THE OCCUPIED/UNOCCUPIED TIME CLOCK. THE TIME CLOCK SHALL OPEN THE DAMPER WHENEVER THE BUILDING IS IN OCCUPIED MODE OTHERWISE THE DAMPER WILL BE NORMALLY CLOSED.

GROUND SOURCE INLINE PUMPS (P-1 & 2) OPERATION

A. GENERAL

THE GROUND SOURCE INLINE PUMPS SHALL OPERATE IN A LEAD/LAG CONFIGURATION AND SHALL ENERGIZE WHENEVER ANY HEAT PUMP IS ENERGIZED. THE PUMPS SHALL SWITCH FROM LEAD TO LAG EVERY 168 HOURS OF RUN TIME. UPON A FAILURE OF THE LEAD PUMP, THE LAG PUMP SHALL ENERGIZE, AND AN AUDIBLE ALARM SHALL SOUND UNTIL MANUALLY CLEARED.

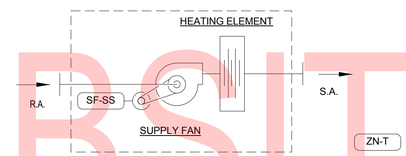

CEILING MOUNTED UNIT HEATER UH-1

A. CEILING MOUNTED UNIT HEATERS

THE CONSTANT VOLUME CEILING MOUNTED UNIT HEATER (UH-1) HAS A CONSTANT VOLUME FAN AND AN ELECTRIC HEATING ELEMENT. WHEN THE HEATING SPACE TEMPERATURE IS BELOW 65°F (ADJUSTABLE), THE UNIT HEATER FAN SHALL RUN ONCE THE HEATING ELEMENT REACHES OPERATING TEMPERATURE. THE SPACE TEMPERATURE SHALL BE MONITORED BY A SPACE THERMOSTAT.

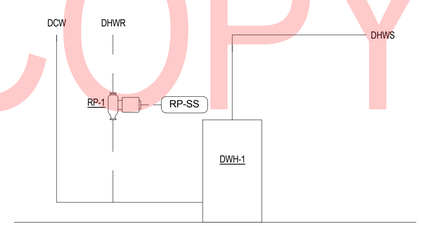

DOMESTIC HOT WATER CIRCULATION PUMP RP-1

A. GENERAL

THE DOMESTIC HOT WATER RECIRCULATION PUMP (RP-1) SHALL BE ENERGIZED DURING OCCUPIED MODE ONLY. OCCUPANCY SCHEDULE TO BE COORDINATED WITH OWNER.

CONTROL POINTS

WATER TO AIR HEAT PUMPS
ZONE TEMPERATURE
ZONE HUMIDITY
PUMP START/STOP
PUMP STATUS
EXHAUST FANS
FAN START/STOP
FAN STATUS
UNIT HEATER
ZONE TEMPERATURE
SUPPLY FAN START/STOP
DUCTLESS SPLIT SYSTEM
ZONE TEMPERATURE
DOMESTIC HOT WATER RECIRCULATION PUMP
PUMP START/STOP
PUMP STATUS

UNOFFICIAL WEBSITE COPY

$DATE_USERS
\\jmt.corp.local\jmtdfs\NDE\151152_010_Chapman_Yard__Phase\CADD\MEP\15-1152-010_CHAPMAN YARD - MEP - CENTRAL.rvt

M-701

ADDENDUMS / REVISIONS	

NORTH DISTRICT CREW QUARTERS AND SITE WORK, PHASE 1A

CONTRACT	BRIDGE NO. N/A	MECHANICAL CONTROLS	SECTION
T201880103	DESIGNED BY: BD		JMT
COUNTY			SHEET NO.
NEW CASTLE	CHECKED BY: DMC		59

SHEET KEYNOTES:

1. PROVIDE UPRIGHT SPRINKLER HEADS WITHIN AREA. SPRINKLER PIPING MAY RUN WITHIN SPACE. SIZE, LOCATE AND INSTALL SYSTEM PER SITE AND NFPA 13R REQUIREMENTS.
2. PROVIDE SEMI-RECESSED SPRINKLER HEADS CENTERED IN ACOUSTICAL TILES WITHIN AREA AND ASSOCIATED SPACES. SIZE, LOCATE AND INSTALL SYSTEM PER SITE AND NFPA 13R REQUIREMENTS.
3. PROVIDE SEMI-RECESSED SPRINKLER HEADS IN GYPSUM BOARD CEILING WITHIN AREA. SIZE, LOCATE AND INSTALL SYSTEM PER SITE AND NFPA 13R REQUIREMENTS.
4. PROVIDE SIDE-WALL MOUNTED SPRINKLER HEADS IN WALLS WITHIN AREA. SIZE, LOCATE AND INSTALL SYSTEM PER SITE AND NFPA 13R REQUIREMENTS.
5. PROVIDE SIDE-WALL MOUNTED, DRY PENDANT SPRINKLER HEADS IN WALLS WITHIN AREA. SIZE, LOCATE AND INSTALL SYSTEM PER SITE AND NFPA 13R REQUIREMENTS.

GENERAL SHEET NOTES:

1. INFORMATION SHOWN ON THIS DRAWING PERTAINING TO EXISTING CONDITIONS HAS BEEN OBTAINED FROM AVAILABLE BUILDING DRAWINGS OR GENERAL FIELD OBSERVATIONS AND MAY NOT INDICATE ACTUAL EXISTING CONDITIONS IN DETAIL OR DIMENSION. THE CONTRACTOR IS RESPONSIBLE FOR DETERMINING THE ACTUAL EXISTING CONDITIONS PRIOR TO FABRICATION OR PERFORMANCE OF ANY WORK. SHOULD CONDITIONS BE DISCOVERED THAT PREVENT EXECUTION OF THE WORK AS INDICATED, THE CONTRACTOR SHALL IMMEDIATELY NOTIFY THE OWNER IN WRITING AND AWAIT DIRECTION BEFORE PROCEEDING WITH THE WORK.
2. UNLESS OTHERWISE NOTED, FIRE PROTECTION ITEMS SHOWN HEAVY SOLID (———) SHALL BE NEW WORK AND FIRE PROTECTION ITEMS SHOWN LIGHT SOLID (———) SHALL BE EXISTING.
3. DO NOT LOCATE DUCTWORK OR PIPING ABOVE ELECTRICAL PANELS OR EQUIPMENT.

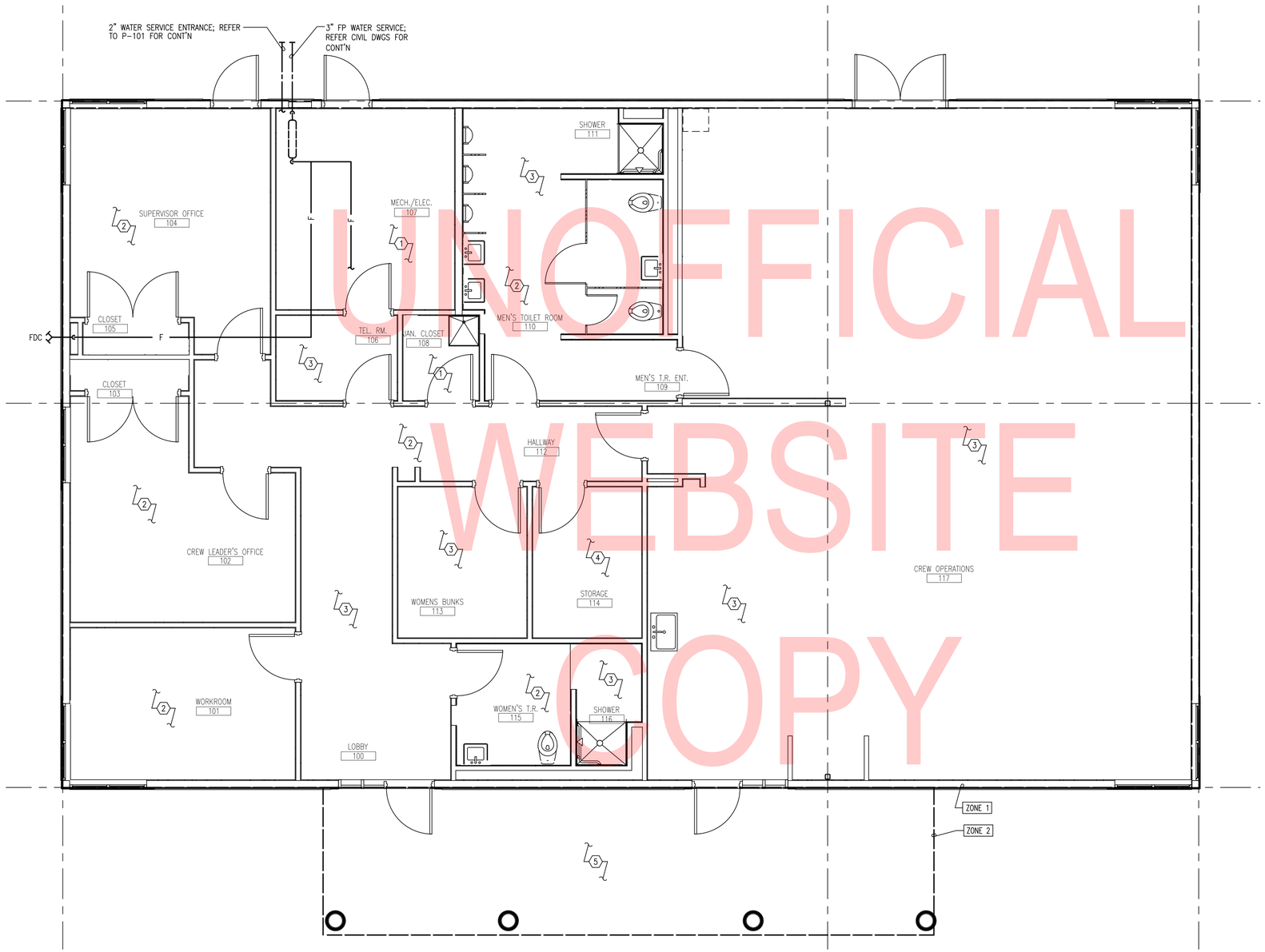

UNOFFICIAL WEBSITE COPY

1 FP101 FIRE PROTECTION – FLOOR PLAN
SCALE: 1/4" = 1'-0"

2' 0 2' 4'
SCALE: ¼"= 1'-0"

FP-101

ADDENDUMS / REVISIONS	

NORTH DISTRICT CREW QUARTERS AND SITE WORK, PHASE 1A	CONTRACT T201880103	BRIDGE NO. N/A	FIRE PROTECTION NEW WORK FLOOR PLAN
	COUNTY NEW CASTLE	DESIGNED BY: D. COYNE	SECTION JMT
		CHECKED BY: W. REID	SHEET NO. 60

JMT

Q:\WDE\151152_010_Chapman_Yard_-_Phase\CADD\MEP\PLUMBING\15-1152-010-FP-101.dwg

PLUMBING LEGEND

SYMBOL	DESCRIPTION
	SOIL, WASTE, OR SANITARY PIPE
	STORM WATER PIPE
CD	CONDENSATE DRAIN PIPE
	VENT PIPE
	DOMESTIC COLD WATER PIPE
	DOMESTIC HOT WATER PIPE
	DOMESTIC HOT WATER RETURN PIPE
F	FIRE LINE PIPE
CO CO	CLEANOUT (WALL/FLOOR)
	PIPE CAP
	PIPE DROP TEE
	PIPE RISE TEE
	SHUT-OFF VALVE
	HOSE END DRAIN VALVE
	BACKFLOW PREVENTER
	CHECK VALVE; (ARROW INDICATES DIRECTION OF FLOW)
	FLOOR DRAIN
	WALL HYDRANT
	HOSE BIBB
	FIRE DEPARTMENT CONNECTION (SIAMESE)
	PIPE UNION
1	SYMBOL FOR SPECIFIC NOTE. NOTE APPLIES TO DRAWING ON WHICH IT OCCURS.

ABBREVIATIONS

CO	CLEANOUT
CV	CHECK VALVE
CW	DOMESTIC COLD WATER
FDC	FIRE DEPARTMENT CONNECTION
FDR	FLOOR DRAIN
FDV	FIRE DEPARTMENT VALVE
FOF	FUEL OIL FILL
FOR	FUEL OIL RETURN
FOS	FUEL OIL SUPPLY
FS	FLOW SWITCH
GPM	GALLONS PER MINUTE
HB	HOSE BIBB
HED	HOSE END DRAIN VALVE
HW	DOMESTIC HOT WATER
HWR	HOT WATER RETURN
IN, "	INCH, INCHES
INV	INVERTED
NIC	NOT IN CONTRACT
OIS1	OMNTEC INTERSTITIAL TANK LEAK SENSOR
OMP1	OMNTEC MAGETOSTRICTIVE TANK LEVEL PROBE
PFOR	POLISHING RETURN
PFOS	POLISHING SUPPLY
PSI	POUNDS PER SQUARE INCH POUNDS
SAN	SANITARY, SOIL, WASTE
SLTA	SIMPLEX LEVEL TRANSDUCER & FLOAT ASSEMBLY
TMW	TANK ACCESS MANWAY
TPEV	PRIMARY TANK EMERGENCY VENT
TSEV	SECONDARY TANK EMERGENCY VENT
VP	SANITARY VENT PIPE
VTR	VENT THROUGH ROOF
WH	WALL HYDRANT

DESIGNATIONS

EQUIPMENT DESIGNATIONS

DWH-	DOMESTIC WATER HEATER
PET-	POTABLE EXPANSION TANK
RP-	RECIRCULATION PUMP
TMV-	THERMOSTATIC MIXING VALVE
V-	VALVE
P-_	PLUMBING FIXTURE

X / X — SECTION REFERENCE: (SEE DATA BELOW FOR DETAILS)

/ SHT — DRAWING TITLE — SCALE

DETAIL = LETTER / SECTION = NUMBER

SHEET NUMBER FROM WHICH THE PARTIAL, SECTION, ELEVATION, OR DETAIL IS DRAWN

PLAN NORTH — N — TRUE NORTH — NORTH ARROW

GENERAL NOTES

1. WORK SHALL CONFORM TO THE CONTRACT DRAWINGS, SPECIFICATIONS AND THE LATEST APPLICABLE INTERNATIONAL MECHANICAL AND PLUMBING CODE AND THE NATIONAL ELECTRIC CODE. WORK SHALL BE PERFORMED IN ACCORDANCE WITH NFPA 70, THE NATIONAL ELECTRICAL CODE, THE NATIONAL ELECTRICAL SAFETY CODE, OSHA AND NATIONAL SAFETY CODE REQUIREMENTS.
2. THE SCOPE OF WORK INDICATED IN THESE DOCUMENTS SHALL INCLUDE PLUMBING SYSTEMS, FULLY ADJUSTED, TESTED AND READY TO USE. PROVIDE ITEMS NECESSARY TO COMPLETE THE SYSTEMS. EXAMINE WORK INDICATED FOR TRADES IN ORDER TO DETERMINE THE EXTENT OF THE WORK REQUIRED TO BE COMPLETED.
3. IT IS THE INTENTION OF THESE DRAWINGS TO CALL FOR FINISHED WORK, TESTED AND READY FOR OPERATION. WHEREVER THE WORD "PROVIDE" IS USED, IT SHALL MEAN "FURNISH AND INSTALL COMPLETE, TESTED AND READY FOR USE."
4. THE DRAWINGS ARE DIAGRAMMATIC AND DO NOT SHOW EVERY COMPONENT AND/OR ACCESSORY REQUIRED FOR A COMPLETE INSTALLATION. THE CONTRACTOR SHALL PROVIDE ITEMS NECESSARY FOR A PROPERLY WORKING SYSTEM IN COMPLIANCE WITH ACCEPTED INDUSTRY STANDARDS AND MANUFACTURER'S RECOMMENDATIONS.
5. PRIOR TO BID, THE CONTRACTOR SHALL VISIT THE SITE AND IDENTIFY ITEMS THAT MAY AFFECT THEIR BID. PRIOR TO THE INSTALLATION, FABRICATION, REMOVAL, OR RELOCATION OF ANY WORK, THE CONTRACTORS SHALL REVIEW THE ACTUAL CONDITIONS UNDER WHICH THE WORK IS TO BE PERFORMED AND SHALL COORDINATE WORK WITH THE PLANS, EXISTING EQUIPMENT AND SYSTEMS, BUILDING STRUCTURE AND WORK OF OTHER TRADES. WHERE CONFLICTS OCCUR, OR IF CONNECTIONS THERETO CAN NOT BE MADE, THE CONTRACTOR SHALL IMMEDIATELY NOTIFY THE ENGINEER PRIOR TO MATERIAL FABRICATION OR INSTALLATION.
6. WHERE THE WORK OF VARIOUS TRADES WILL BE INSTALLED IN CLOSE PROXIMITY TO ONE ANOTHER OR WHERE THERE IS EVIDENCE THAT THE WORK OF ONE TRADE WILL INTERFERE WITH WORK OF ANOTHER, THE CONTRACTOR SHALL WORK OUT SPACE CONDITIONS TO MAKE A SATISFACTORY ADJUSTMENT. IF THE CONTRACTOR ALLOWS ONE TRADE TO INSTALL HIS WORK BEFORE COORDINATING WITH WORK OF OTHER TRADES THE CONTRACTOR SHALL MAKE NECESSARY CHANGES TO CORRECT THE CONDITIONS IN A MANNER ACCEPTABLE TO THE OWNER AND THE CONTRACTOR SHALL BEAR THE COST OF SUCH CORRECTIONS.
7. THE CONTRACTOR SHALL LOCATE EQUIPMENT WHICH MUST BE SERVICED, OPERATED, OR MAINTAINED IN FULLY ACCESSIBLE POSITION. EQUIPMENT SHALL INCLUDE, BUT NOT BE LIMITED TO, VALVES, MOTORS, CONTROLLERS, DRAIN PANS, ETC. IF REQUIRED FOR ACCESSIBILITY, FURNISH ACCESS DOORS FOR THE PURPOSE. MINOR DEVIATIONS FROM DRAWINGS MAY BE MADE TO ALLOW FOR BETTER ACCESSIBILITY.
8. WORK IN OCCUPIED SPACE SHALL BE COORDINATED WITH THE OWNER. SHOULD ANY OUTAGES BE REQUIRED IN THE COURSE OF THIS PROJECT, THE CONTRACTOR SHALL COORDINATE SUCH OUTAGES WITH THE OWNER'S DESIGNATED REPRESENTATIVE, SCHEDULING ANY OUTAGES DURING THE NON WORKING HOURS, SO AS NOT TO EFFECT FACILITY OPERATIONS, 72 HOURS NOTICE WILL BE REQUIRED PRIOR TO ANY OUTAGE. NO OUTAGE MAY BE EXECUTED PRIOR TO APPROVAL OF THE OWNER'S DESIGNATED REPRESENTATIVE AND THE FACILITY MANAGER.
9. THE CONTRACTOR SHALL LEAVE THE ENTIRE PLUMBING SYSTEM INSTALLED UNDER THIS CONTRACT IN PROPER WORKING ORDER AND SHALL, WITHOUT CHARGE, REPLACE ANY WORK OR MATERIALS WHICH DEVELOP DEFECTS, EXCEPT FROM ORDINARY WEAR AND TEAR, WITHIN ONE YEAR FROM THE DATE OF FINAL ACCEPTANCE.
10. THE CONTRACTOR SHALL, DURING THE ONE YEAR WARRANTEE PERIOD, BE RESPONSIBLE FOR PROPER REPAIR AND ADJUSTMENTS OF PLUMBING SYSTEMS AND EQUIPMENT, APPARATUS, DEVICES ETC. INSTALLED BY HIM, AND DO WORK NECESSARY TO ENSURE EFFICIENT AND PROPER FUNCTIONING.
11. THE CONTRACTOR SHALL BE RESPONSIBLE FOR, AND SHALL INCUR FINANCIAL RESPONSIBILITIES FOR, ANY DAMAGES CAUSED BY OR RESULTING FROM DEFECTS IN HIS WORK.
12. WHEREVER PIPES, CONDUITS, OR OTHER ITEMS PASS THROUGH FIRE RATED WALLS AND FLOORS, THE SPACE BETWEEN THE ITEM AND THE MASONRY OR THE SPACE BETWEEN THE ITEM AND THE SLEEVE SHALL BE ADEQUATELY FIRE STOPPED WITH A NON COMBUSTIBLE, NON MELTING MATERIAL IN ACCORDANCE WITH NFPA STANDARDS.
13. WALL OPENINGS RESULTING FROM DEMOLITION SHALL BE CLOSED AND FINISHED TO MATCH EXISTING.
14. FINISHES DAMAGED DURING THE PROJECTS SHALL BE REPAIRED TO MATCH EXISTING.

UNOFFICIAL WEBSITE COPY

Q:\WDE\151152_010_Chapman_Yard_-_Phase\CADD\MEP\PLUMBING\15-1152-010-P-001.dwg

P-001

ADDENDUMS / REVISIONS	

NORTH DISTRICT CREW QUARTERS AND SITE WORK, PHASE 1A

CONTRACT	BRIDGE NO.	N/A
T201880103	DESIGNED BY:	D. COYNE
COUNTY		
NEW CASTLE	CHECKED BY:	W. REID

PLUMBING SYMBOLS, ABBREVIATIONS AND GENERAL NOTES

SECTION: JMT

SHEET NO. 61

GENERAL SHEET NOTES:

1. INFORMATION SHOWN ON THIS DRAWING PERTAINING TO EXISTING CONDITIONS HAS BEEN OBTAINED FROM AVAILABLE BUILDING DRAWINGS OR GENERAL FIELD OBSERVATIONS AND MAY NOT INDICATE ACTUAL EXISTING CONDITIONS IN DETAIL OR DIMENSION. THE CONTRACTOR IS RESPONSIBLE FOR DETERMINING THE ACTUAL EXISTING CONDITIONS PRIOR TO FABRICATION OR PERFORMANCE OF ANY WORK. SHOULD CONDITIONS BE DISCOVERED THAT PREVENT EXECUTION OF THE WORK AS INDICATED, THE CONTRACTOR SHALL IMMEDIATELY NOTIFY THE ARCHITECT IN WRITING AND AWAIT DIRECTION BEFORE PROCEEDING WITH THE WORK.
2. UNLESS OTHERWISE NOTED, MECHANICAL/PLUMBING ITEMS SHOWN HEAVY SOLID (———) SHALL BE NEW WORK AND MECHANICAL/PLUMBING ITEMS SHOWN LIGHT SOLID (———) SHALL BE EXISTING.
3. DO NOT LOCATE DUCTWORK OR PIPING ABOVE ELECTRICAL PANELS OR EQUIPMENT.

SHEET KEYNOTES:

1. PROVIDE SERVICE ENTRANCE BACKFLOW PREVENTER ASSEMBLY. REFER TO SHEET P-501 FOR INSTALLATION DETAIL. INTENT IS FOR ALL BACKFLOW PREVENTERS TO BE INSTALLED ALONG THE WALL.
2. PROVIDE DOMESTIC WATER HEATER; ASSOCIATED PIPES, SUPPORTS AND CONTROLS. ROUTE CONDENSATE DRAIN TO NEAREST FLOOR DRAIN. REFER TO DETAILS FOR INSTALLATION.
3. REFER TO DOMESTIC PLUMBING FLOOR PLAN FOR TRAP PRIMING PIPING.
4. PROVIDE RECIRCULATION PUMP TO BE CONNECTED TO THE COLD WATER SUPPLY OF THE THERMOSTATIC MIXING VALVE.
5. PROVIDE BACKFLOW PREVENTOR ASSEMBLY FOR GLYCOL FEEDER SYSTEM MAKE-UP WATER ASSEMBLY.
6. COORDINATE DRAIN LOCATION WITH ICE MAKER TO MINIMIZE THE LENGTH OF DRAIN PIPING.

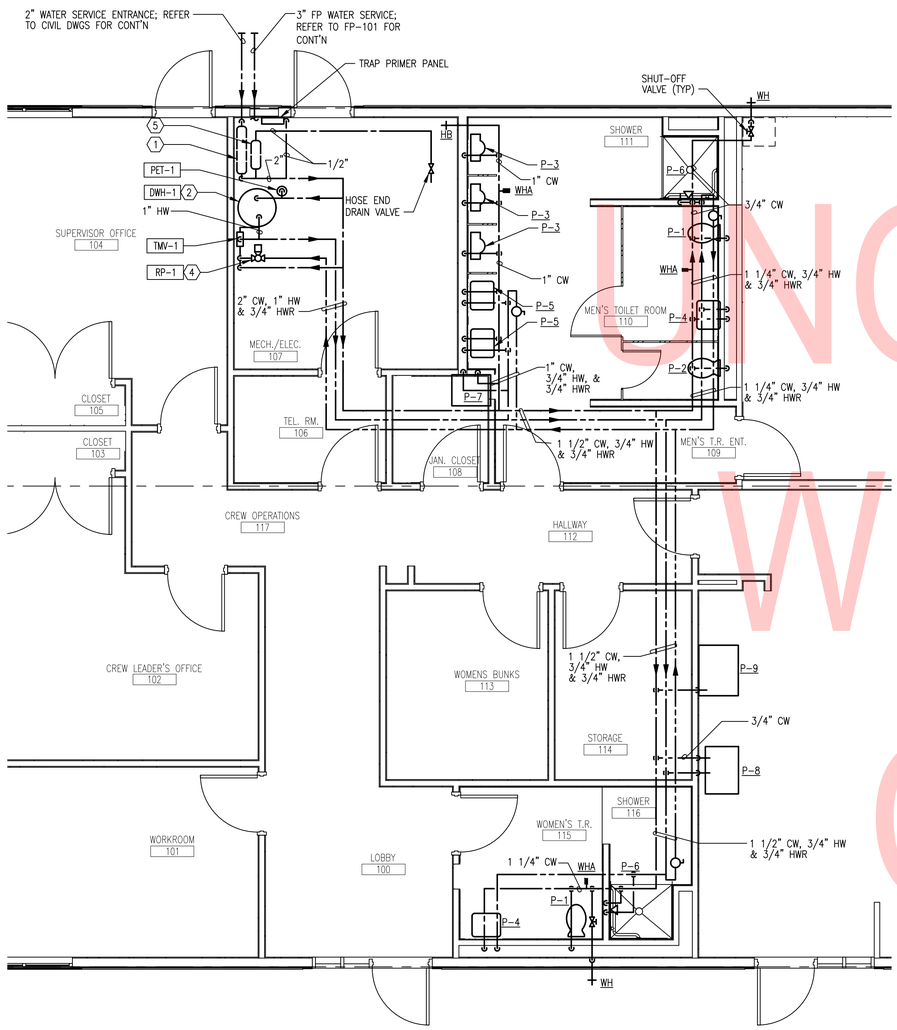

1 P101 DOMESTIC PLUMBING FLOOR PLAN
SCALE: 1/4" = 1'-0"

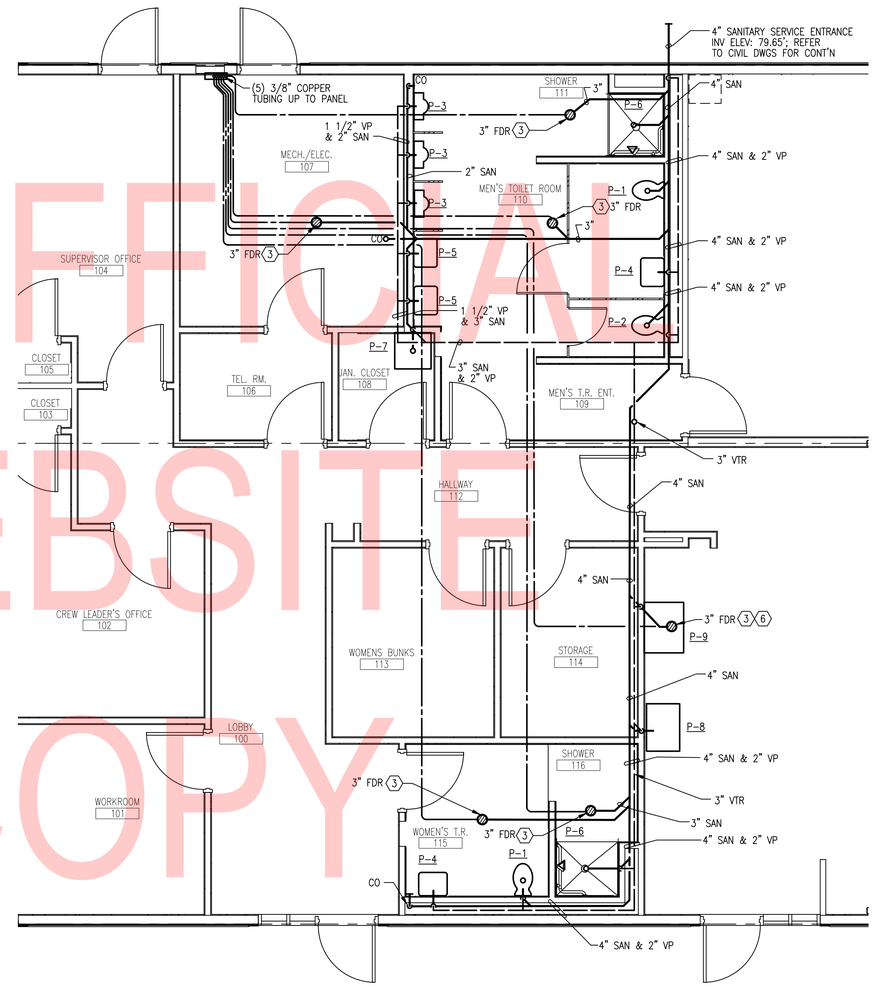

2 P101 SANITARY PLUMBING FLOOR PLAN
SCALE: 1/4" = 1'-0"

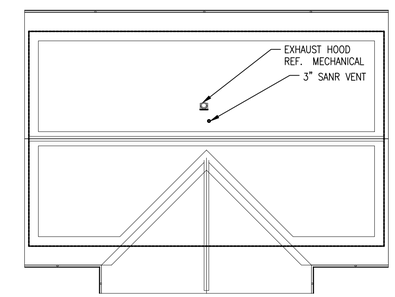

3 P101 SANITARY VENT PENETRATION ROOF PLAN
SCALE: 1/16" = 1'-0"

2' 0 2' 4'
SCALE: ¼"= 1'-0"

UNOFFICIAL WEBSITE COPY

P-101

ADDENDUMS / REVISIONS						
		NORTH DISTRICT CREW QUARTERS AND SITE WORK, PHASE 1A	CONTRACT T201880103	BRIDGE NO. N/A	PLUMBING NEW WORK FLOOR PLAN	SECTION JMT
			COUNTY NEW CASTLE	DESIGNED BY: D. COYNE		SHEET NO. 62
				CHECKED BY: W. REID		

JMT Q:\WDE\151152_010_Chapman_Yard_-_Phase\CADD\MEP\PLUMBING\15-1152-010-P-101.dwg

GENERAL SHEET NOTES:

1. INFORMATION SHOWN ON THIS DRAWING PERTAINING TO EXISTING CONDITIONS HAS BEEN OBTAINED FROM AVAILABLE BUILDING DRAWINGS OR GENERAL FIELD OBSERVATIONS AND MAY NOT INDICATE ACTUAL EXISTING CONDITIONS IN DETAIL OR DIMENSION. THE CONTRACTOR IS RESPONSIBLE FOR DETERMINING THE ACTUAL EXISTING CONDITIONS PRIOR TO FABRICATION OR PERFORMANCE OF ANY WORK. SHOULD CONDITIONS BE DISCOVERED THAT PREVENT EXECUTION OF THE WORK AS INDICATED, THE CONTRACTOR SHALL IMMEDIATELY NOTIFY THE ARCHITECT IN WRITING AND AWAIT DIRECTION BEFORE PROCEEDING WITH THE WORK.
2. UNLESS OTHERWISE NOTED, MECHANICAL/PLUMBING ITEMS SHOWN HEAVY SOLID (———) SHALL BE NEW WORK AND MECHANICAL/PLUMBING ITEMS SHOWN LIGHT SOLID (———) SHALL BE EXISTING.
3. DO NOT LOCATE DUCTWORK OR PIPING ABOVE ELECTRICAL PANELS OR EQUIPMENT.

SHEET KEYNOTES:

1. 3/8" TRAP PRIMING LINE TO FLOOR DRAIN. REFER TO SHEET P-501 FOR TRAP PRIMING DETAIL.

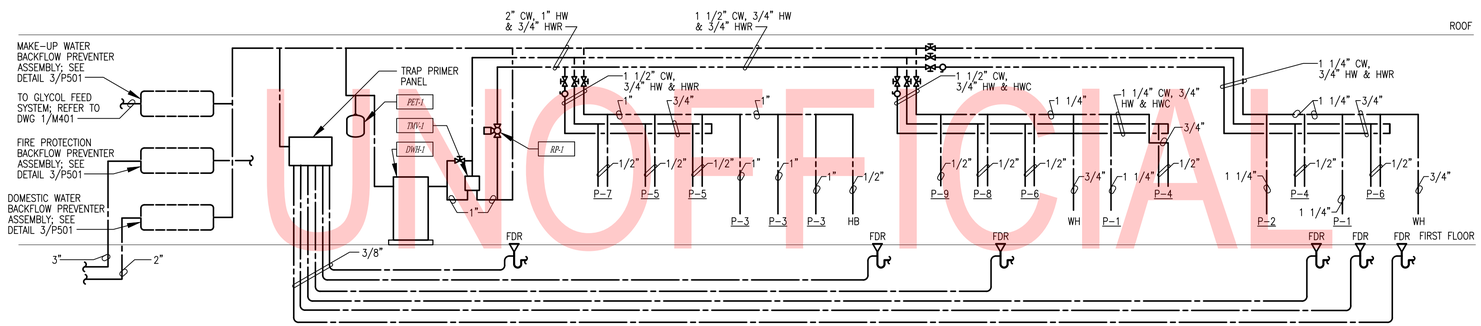

1 P201 DOMESTIC WATER RISER DIAGRAM
SCALE: NOT TO SCALE

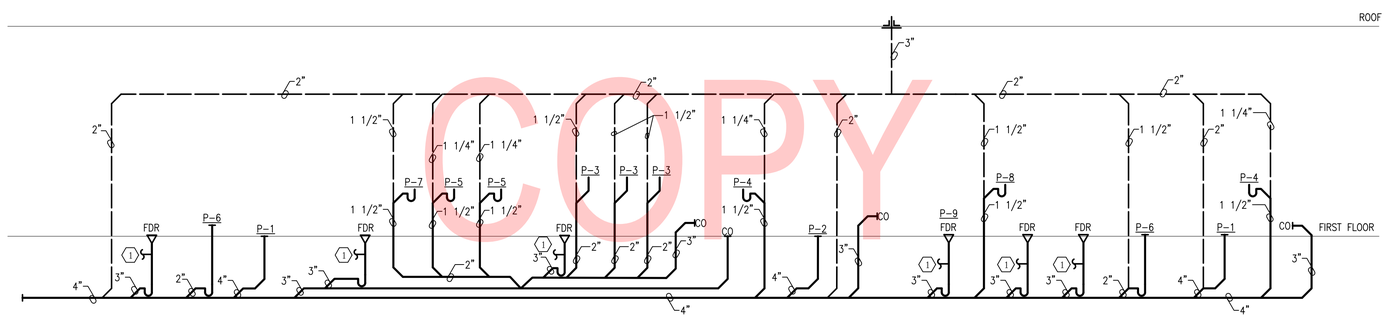

2 P201 SANITARY RISER DIAGRAM
SCALE: NOT TO SCALE

UNOFFICIAL WEBSITE COPY

P-201

ADDENDUMS / REVISIONS							
		NORTH DISTRICT CREW QUARTERS AND SITE WORK, PHASE 1A	CONTRACT T201880103	BRIDGE NO. N/A	PLUMBING RISER DIAGRAMS	SECTION JMT
			COUNTY NEW CASTLE	DESIGNED BY: D. COYNE		SHEET NO. 63
				CHECKED BY: W. REID		

Q:\NDE\15152_010_Chapman_Yard_-_Phase\CADD\MEP\PLUMBING\15-1152-010-P-201.dwg

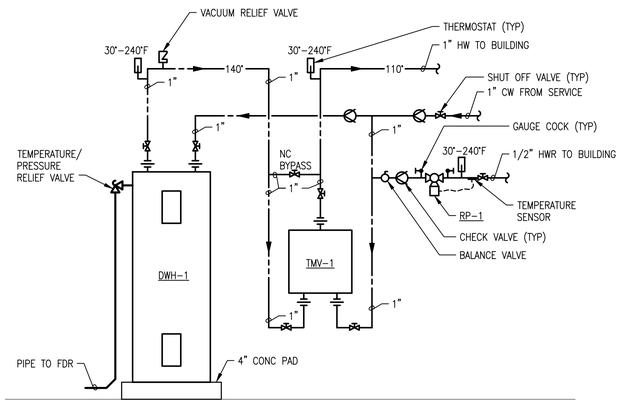

1 P501 ELECTRIC WATER HEATER
SCALE: NONE

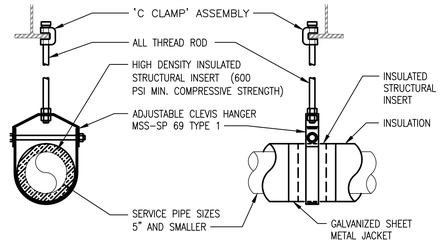

NOTES:
1. THIS DETAIL SHALL BE USED AS A GUIDE. ALL HANGERS SHALL MEET THE REQUIREMENTS OF SPECIFICATIONS SECTION 23-0529 'HANGERS AND SUPPORTS'.

MAX. HANGER LOADING

PIPE SIZE	ROD DIA.	MAX. SPACING
1/2" THRU 2"	1/2"	8'
2 1/2" THRU 5"	5/8"	10'

4 P501 HANGER SUPPORT
SCALE: NOT TO SCALE

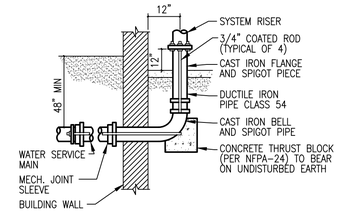

7 P501 THRUST BLOCK INSTALLATION
SCALE: NOT TO SCALE

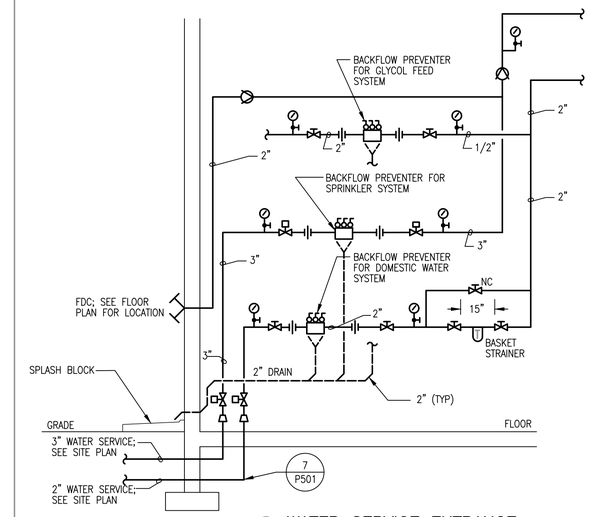

8 P501 WATER SERVICE ENTRANCE
SCALE: NOT TO SCALE

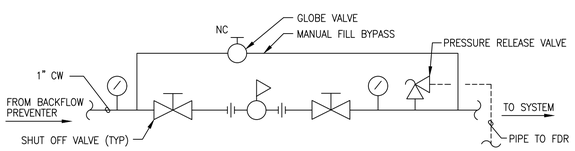

2 P501 MAKE-UP WATER ASSEMBLY
SCALE: NTS

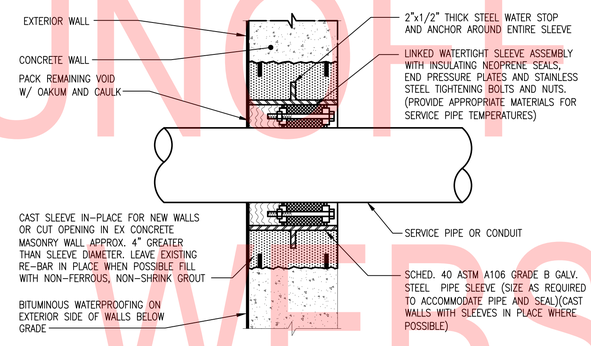

NOTE:
1. WHERE DRAWINGS INDICATE A WATERTIGHT SLEEVE, WATERTIGHT ASSEMBLY SHALL BE INSTALLED ON ACCESSIBLE SIDE OF SLEEVE INSTALLATION.
2. MASONARY WALLS TO BE DONE IN A SIMILAR MANNER.

5 P501 WATERTIGHT SLEEVE ASSEMBLY
SCALE: NONE

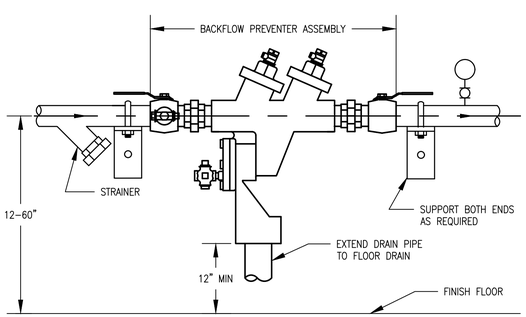

NOTES:
BACKFLOW PREVENTER SHALL BE 48" ABOVE FINISH FLOOR

3 P501 BACKFLOW PREVENTER
SCALE: NOT TO SCALE

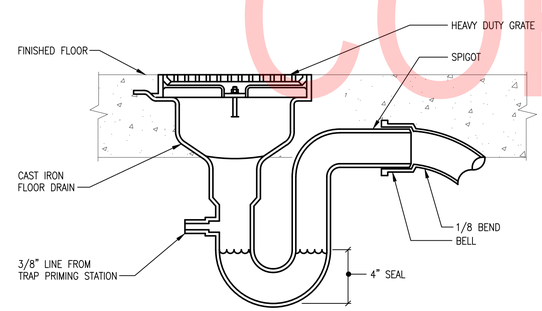

6 P501 FLOOR DRAIN
SCALE: NONE

RECIRCULATION PUMP SCHEDULE

DESIG.	SERVICE	TYPE	GPM	FLUID PD (FT. W.G.)	MOTOR RPM	MOTOR WATTS	VOLTS/ PHASE	BASIS	NOTES
RP-1	HW CIRCULATOR	IN-LINE	5	10	2800	39	120/1	BELL & GOSSETT NBF	1

NOTES:
1). PROVIDE FACTORY INSTALLED THERMAL OVERLOAD PROTECTOR.

MISCELLANEOUS EQUIPMENT SCHEDULE

DESIG.	DESCRIPTION	BASIS
EXPANSION TANK PET-1	VERTICAL POTABLE WATER DIAPHRAGM EXPANSION TANK, 150 PSI MAXIMUM WORKING PRESSURE, 200°F MAXIMUM OPERATING TEMPERATURE, 2 GALLON TANK VOLUME, 0.9 GALLON ACCEPTANCE VOLUME; ASME LABEL	BELL AND GOSSETT PTA
TRAP PRIMER	SURFACE MOUNTED ELECTRONIC TRAP PRIMER, 140°F MAXIMUM OPERATING TEMPERATURE, 60 PSI MAXIMUM WORKING PRESSURE, 300 FEET MAXIMUM DISTANCE TO ELECTRICAL SUPPLY	SIOUX CHIEF 695-ES10
THERMOSTATIC MIXING VALVE TMV-1	MULTI-VALVE ASSEMBLY, 0.5 GPM MINIMUM FLOW, 20 GPM @ 10 PSI PD, BOTTOM INLETS AND TOP OUTLET	POWERS SERIES LFMM430

WATER HEATER

DESIG.	LOCATION	ELECTRIC		WATER			SHIPPING WEIGHT (LBS)	BASIS	NOTES
		KW	VOLT/PH	TEMP RISE (°F)	GPH	CAPACITY (GAL)			
DWH-1	MECH/ELEC	(2) 4.5	208/1	100	36	80.0	211.0	AO SMITH DEN	1

NOTES:
1.) DISCONNECT SHALL BE PROVIDED UNDER DIVISION 26

PLUMBING FIXTURE ROUGH-IN SCHEDULE

DESIG.	FIXTURE	ROUGH-IN CONNECTION				REMARKS
		TW	CW	HW	SAN	
P-1	WATER CLOSET (ADA)	--	1-1/4"	--	4"	ADA FLOOR MOUNTED
P-2	WATER CLOSET	--	1-1/4"	--	4"	FLOOR MOUNTED
P-3	URINAL (ADA)	--	1"	--	2"	ADA WALL MOUNTED
P-4	LAVATORY SINK (ADA)	--	1/2"	1/2"	1-1/4"	ADA WALL MOUNTED
P-5	LAVATORY SINK	--	1/2"	1/2"	1-1/4"	WALL MOUNTED
P-6	SHOWER (ADA)	--	1/2"	1/2"		ADA COMPLIANT
P-7	SERVICE SINK	--	1/2"	1/2"	3"	FLOOR MOUNTED
P-8	COUNTERTOP SINK	--	1/2"	1/2"	1-1/2"	COUNTERTOP
P-9	ICE MACHINE	--	1/2"	--	--	STAND ALONE
HB	HOSE BIBB	--	1/2"	--		
WH	WALL HYDRANT	--	1/2"			EXTERIOR
FDR	FLOOR DRAIN	--			3"	

UNOFFICIAL WEBSITE COPY

Q:\NDE\151152_010_Chapman_Yard_-_Phase\CADD\MEP\PLUMBING\15-1152-010-P-501.dwg

JMT

ADDENDUMS / REVISIONS	

NORTH DISTRICT CREW QUARTERS AND SITE WORK, PHASE 1A

CONTRACT	BRIDGE NO.	N/A
T201880103	DESIGNED BY: D. COYNE	
COUNTY		
NEW CASTLE	CHECKED BY: W. REID	

PLUMBING DETAILS & SCHEDULES

SECTION: JMT
SHEET NO.: 64

P-501

SYMBOL LEGEND

SYMBOL	DESCRIPTION
	208/120V PANELBOARD, SURFACE MOUNTED
	208/120V PANELBOARD, FLUSH MOUNTED
	CONTROL PANEL/CABINET, SURFACE MOUNTED
	CONTROL PANEL/CABINET, FLUSH MOUNTED
	2' X 4' RECESSED MOUNTED LIGHT FIXTURE
	1' X 4' RECESSED MOUNTED LIGHT FIXTURE
	2' X 2' RECESSED MOUNTED LIGHT FIXTURE
	2' X 4' SURFACE MOUNTED LIGHT FIXTURE
	2' X 4' PENDANT MOUNTED LIGHT FIXTURE
	1' X 4' SURFACE MOUNTED LIGHT FIXTURE
	2' X 2' SURFACE MOUNTED LIGHT FIXTURE
	4' INDUSTRIAL/STRIP FIXTURE, PENDANT MOUNT
	WALL MOUNTED LIGHT FIXTURE
	RECESSED DOWN LIGHT FIXTURE
	LED EXIT SIGN (NUMBER OF FACES AND ARROWS AS INDICATED ON DRAWINGS)
	EMERGENCY BATTERY UNIT – TWO HEADS
	OCCUPANCY SENSOR, DUAL TECHNOLOGY, CEILING MOUNTED
PP	LIGHTING POWER PACK
DL	DAYLIGHT SENSOR
USB	125 VOLT, 2 POLE, 3 WIRE, 20 AMP DUPLEX RECEPTACLE "USB" – DENOTES ADDITIONAL USB CHARGING PORTS INCLUDED
	125 VOLT, 2 POLE, 3 WIRE, 20 AMP DUPLEX RECEPTACLE MOUNTED ABOVE COUNTER
	125 VOLT, 2 POLE, 3 WIRE, 20 AMP DOUBLE DUPLEX RECEPTACLE
GFCI	125 VOLT, 2 POLE, 3 WIRE, 20 AMP DUPLEX RECEPTACLE EQUIPPED WITH INTEGRAL GROUND FAULT CIRCUIT INTERRUPTER
GFCI/WP	125 VOLT, 2 POLE, 3 WIRE, 20 AMP WEATHERPROOF DUPLEX RECEPTACLE EQUIPPED WITH GROUND FAULT CIRCUIT INTERRUPTER
	125 VOLT, 2 POLE, 3 WIRE, 20 AMP, DUPLEX RECEPTACLE RECESSED CEILING MOUNTED
	SPECIAL RECEPTACLE, NEMA CONFIGURATION AS INDICATED ON PLANS
	125 VOLT, 2 POLE, 3 WIRE, 20 AMP SINGLE RECEPTACLE
S^{b}_{3}	SWITCH, TOGGLE "b" DENOTES SWITCH CONTROL "k" DENOTES KEY OPERATED SWITCH "3" DENOTES THREE POLE SWITCH "4" DENOTES FOUR POLE SWITCH
S_{LV}	WALL SWITCH, LOW VOLTAGE
S_{OS}	WALL SWITCH, OCCUPANCY SENSOR
J	JUNCTION BOX – WALL MOUNTED
J	JUNCTION BOX
	COMMUNICATIONS – VOICE/DATA – OUTLET BOX. PROVIDE BACK BOX, 1" CONDUIT WITH PULL STRING TO IT ROOM. MOUNT 18" AFF UNLESS OTHERWISE NOTED.
C	CLOSED CIRCUIT SECURITY CAMERA OUTLET BOX. PROVIDE OCTAGON BOX, 1" CONDUIT WITH PULL STRING TO IT ROOM. CEILING MOUNTED UNLESS OTHERWISE NOTED.

SYMBOL	DESCRIPTION
H	HAND HOLE
	EMERGENCY POWER SHUT-OFF PUSH-BUTTON
AF P OR AF/NF/P/3R	NON-FUSED DISCONNECT SWITCH, SIZE AS INDICATED WHERE: "AF" – INDICATES AMPERE SWITCH SIZE "NF" – DENOTES NON-FUSED "P" – DENOTES POLE "3R" – DENOTES NEMA TYPE ENCLOSURE
AF AT 3P L2 OR AF/AT/P/3R	FUSED DISCONNECT SWITCH, SIZE AS INDICATED WHERE: "AF" – INDICATES AMPERE SWITCH SIZE "AT" – INDICATES AMPERE FUSE SIZE "P" – DENOTES POLE "3R" – DENOTES NEMA TYPE ENCLOSURE
OR	COMBINATION MOTOR STARTER AND DISCONNECT SWITCH
M	MOTOR TERMINATION
S_M	MANUAL MOTOR STARTER WITH THERMAL OVERLOAD PROTECTION
VFD	VARIABLE FREQUENCY DRIVE WITH INTEGRAL DISCONNECT
F	FIRE ALARM MANUAL PULL STATION
F LF 75cd	FIRE ALARM AUDIO/VISUAL SIGNALING DEVICE WALL MOUNTED 75cd – DENOTES CANDELA RATING "LF" – DENOTES LOW FREQUENCY (15cd UNLESS OTHERWISE NOTED)
F 75cd	FIRE ALARM VISUAL SIGNALING DEVICE WALL MOUNTED 75cd – DENOTES CANDELA RATING (15cd UNLESS OTHERWISE NOTED)
F	FIRE ALARM AUDIO/VISUAL SIGNALING DEVICE FLUSH CEILING MOUNTED (15cd UNLESS OTHERWISE NOTED)
F	FIRE ALARM VISUAL SIGNALING DEVICE FLUSH CEILING MOUNTED (15cd UNLESS OTHERWISE NOTED)
F	FIRE ALARM VOICE EVACUATION SPEAKER AND VISUAL SIGNALING DEVICE, WALL MOUNTED
H	FIRE ALARM VOICE EVACUATION SPEAKER WALL MOUNTED
SD E	SMOKE DETECTOR "E" – DENOTES ELEVATOR RECALL
HD F	HEAT DETECTOR "F" – DENOTES FIXED TEMPERATURE
S DS R	DUCT MOUNTED SMOKE DETECTOR "S" – DENOTES MOUNTED ON SUPPLY SIDE "R" – DENOTES MOUNTED ON RETURN SIDE
CO	CARBON MONOXIDE DETECTOR
FS	FLOW SWITCH ON FIRE PROTECTION PIPING
TS	TAMPER SWITCH ON FIRE PROTECTION PIPING
D	FIRE ALARM MAGNETIC SMOKE DOOR HOLDER
RAI T	FIRE ALARM REMOTE ALARM INDICATOR WITH TEST SWITCH
FACP	FIRE ALARM SYSTEM CONTROL PANEL
FAAP	FIRE ALARM GRAPHIC ANNUNCIATOR PANEL
KB	FIREMAN'S KNOX BOX
NAC	FIRE ALARM NOTIFICATION APPLIANCE CIRCUIT PANEL
CR	CARD READER OUTLET BOX.

SYMBOL	DESCRIPTION
TV	TV OUTLET BOX.
TVSS	TRANSIENT VOLTAGE SURGE SUPPRESSION DEVICE
GFP	GROUND FAULT PROTECTION
KI	KIRK KEY INTERLOCK
	TRANSFORMER
	ENCLOSED CIRCUIT BREAKER
Δ	DELTA CONFIGURATION
Y	START (WYE) CONFIGURATION
ø	ELECTRICAL PHASE
SB	POLE MOUNTED EXTERIOR SITE FIXTURE

GENERAL ABBREVIATIONS

A	AMPERES
ADA	AMERICANS WITH DISABILITIES ACT
AFF	ABOVE FINISH FLOOR
AFG	ABOVE FINISH GRADE
AHJ	AUTHORITY HAVING JURISDICTION
AHU	AIR HANDLING UNIT
AIC	AMPERE INTERRUPTING CAPACITY
AL	ALUMINUM
ANSI	AMERICAN NATIONAL STANDARDS INSTITUTE
ARCH	ARCHITECT
ATS	AUTOMATIC TRANSFER SWITCH
ATC	AUTOMATIC TEMPERATURE CONTROL
AWG	AMERICAN WIRE GAUGE
BFG	BELOW FINISH GRADE
BLDG	BUILDING
C	CONDUIT
CB	CIRCUIT BREAKER
CKT	CIRCUIT
CL	CENTERLINE
CLF	CURRENT LIMITING FUSE
COL	COLUMN
CPT	CONTROL POWER TRANSFORMER
CT	CURRENT TRANSFORMER
CU	COPPER
DWG	DRAWING
EC	ELECTRICAL CONTRACTOR
ECB	ENCLOSED CIRCUIT BREAKER
EF	EXHAUST FAN
EM	EMERGENCY
EMT	ELECTRICAL METALLIC TUBING
EPO	EMERGENCY POWER OFF
ETR	EXISTING TO REMAIN
EWC	ELECTRIC WATER COOLER
EX	EXISTING
F	FUSE
FA	FIRE ALARM
FLA	FULL LOAD AMPERES
FMC	FLEXIBLE METAL CONDUIT
FT	FEET
G,GND	GROUND OR GROUNDING
GFCI	GROUND FAULT CIRCUIT INTERRUPTER
GRMC	GALVANIZED RIGID METALLIC CONDUIT
HOA	HAND, OFF, AUTOMATIC SWITCH
IEEE	INSTITUTE OF ELECTRICAL AND ELECTRONIC ENGINEERS
IMC	INTERMEDIATE METAL CONDUIT
INT	INTERLOCK
KCMIL	THOUSAND CIRCULAR MILS
KVA	KILOVOLT AMPERES
KW	KILOWATTS
LTG	LIGHTING
LFMC	LIQUID TIGHT FLEXIBLE METAL CONDUIT
MAU	MAKE-UP AIR UNIT
MC	METAL CLAD CABLE
MCB	MAIN CIRCUIT BREAKER
MCC	MOTOR CONTROL CENTER
MCP	MOTOR CIRCUIT PROTECTOR
MISC	MISCELLANEOUS
MLO	MAIN LUGS ONLY
NC	NORMALLY CLOSED
NEC	NATIONAL ELECTRIC CODE
NEMA	NATIONAL ELECTRICAL MANUFACTURES ASSOCIATION
NFPA	NATIONAL FIRE PROTECTION ASSOCIATION
NO	NORMALLY OPEN OR NUMBER
NTS	NOT TO SCALE
P	POLE
PB	PUSHBUTTON
PNL	PANEL
PVC	POLYVINYL CHLORIDE
PWR	POWER
QTY	QUANTITY
REL	RELOCATE
REQ'D	REQUIRED
REX	REPLACE EXISTING
RMC	RIGID METAL CONDUIT
RMS	ROOT MEAN SQUARED
RNMC	RIGID NON-METALLIC CONDUIT
RTU	ROOF TOP UNIT
RX	REMOVE EXISTING
SW	SWITCH
SYM	SYMMETRICAL
TEL	TELEPHONE
TMCB	THERMAL MAGNETIC CIRCUIT BREAKER
UL	UNDERWRITERS LABORATORIES
V	VOLT
VFC	VARIABLE FREQUENCY CONTROLLER
W	WIRE
WH	WATER HEATER
WP	WEATHERPROOF
XFMR	TRANSFORMER

ELECTRICAL CONVENTIONS

PRESENTATION

ELECTRICAL EQUIPMENT DESIGNATED BY SOLID HEAVY LINE WEIGHT INDICATES NEW WORK TO BE PROVIDED.

ELECTRICAL EQUIPMENT DESIGNATED BY SOLID LIGHT LINE WEIGHT INDICATES EXISTING EQUIPMENT TO REMAIN, UNLESS OTHERWISE INDICATED.

ELECTRICAL EQUIPMENT DESIGNATED BY DASHED HEAVY LINE WEIGHT REPRESENTS EXISTING EQUIPMENT TO BE REMOVED AND DISPOSED, UNLESS INDICATED TO BE REMOUNTED, RELOCATED, OR TURNED OVER TO OWNER.

WIRING

LP2A-1,3,5 — HOMERUN TO PANEL "LP2A", CIRCUITS #1,3,5 (VIA 20A-1P C/B'S). PROVIDE INSULATED GROUND CONDUCTOR IN ACCORDANCE WITH SPECIFICATIONS. NUMBER OF CIRCUITS INDICATED BY QUANTITY OF ARROW HEADS.

HASH MARKS INDICATE QUANTITY OF #12 AWG COPPER CONDUCTORS IN CONDUIT. WHEN NO HASH MARKS ARE INDICATED, CONDUIT SHALL CONTAIN (2) #12 WIRES AND (1) #12 GROUND WIRE. ASSUME 3/4" DIAMETER CONDUIT UNLESS NOTED OTHERWISE. EXAMPLE SHOWN AT LEFT INDICATES 2 HOT, 2 NEUTRAL (LONG LINES), AND 1 GROUND WIRES.

CONCEALED CONDUIT AND/OR WIRING.

BELOW GRADE CONDUIT AND/OR WIRING.

EXPOSED CONDUIT AND/OR WIRING.

CIRCUITRY TURNING DOWN

CIRCUITRY TURNING UP

ANNOTATION

/ SHT — DETAIL REFERENCE "#" DENOTES DETAIL NUMBER "SHT" DENOTES SHEET NUMBER

X / # — ELEVATION OR SECTION IDENTIFIER "X" DENOTES ELEVATION OR SECTION NUMBER "#" DENOTES SHEET NUMBER

1 — SHEET KEYNOTE NUMBER

X — FEEDER TAG (REFER TO FEEDER SCHEDULE)

1 — REVISION NUMBER

LIGHTING

LUMINAIRE TYPE – SEE LUMINAIRE SCHEDULE

A 1 — CIRCUIT NUMBER

a — CONTROL POINT DESIGNATION

MOUNTING LEGEND

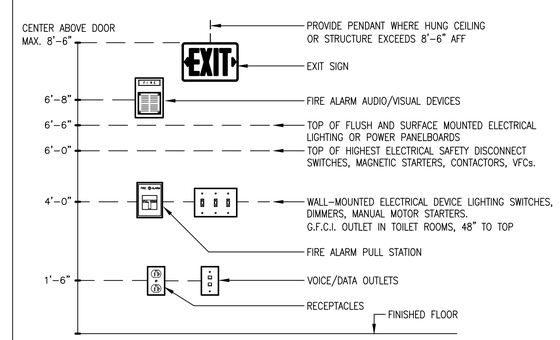

MOUNTING NOTES:

1. THE ABOVE MOUNTING HEIGHTS SHALL BE ADHERED TO UNLESS SPECIFICALLY NOTED OR DETAILED OTHERWISE ON THE DRAWINGS OR SPECIFICATIONS.
2. LOCATION AND INSTALLATION HEIGHT OF ALL WALL DEVICES TO BE COORDINATE WITH MILLWORKS IN ALL LOCATIONS.
3. RECESSED OUTLETS IN MASONRY CONSTRUCTION THE ABOVE MOUNTING HEIGHTS SHALL BE USED FOR REFERENCE TO NEAREST BLOCK OR BRICK COURSING.

E-001

UNOFFICIAL WEBSITE COPY

ADDENDUMS / REVISIONS

NORTH DISTRICT CREW QUARTERS AND SITE WORK, PHASE 1A

CONTRACT	BRIDGE NO.	N/A
T201880103	DESIGNED BY:	JRM
COUNTY	CHECKED BY:	JL
NEW CASTLE		

ELECTRICAL SYMBOLS, LEGENDS AND ABBREVIATIONS

SECTION JMT

SHEET NO. 65

JMT \\jmt.corp.local\jmtdfs\NDE\151152_010_Chapman_Yard_-_Phase\CADD\MEP\Electrical\15-1152-010-E-001 E-002.dwg

GENERAL NOTES

1. THE SCOPE OF WORK CONSISTS OF FURNISHING AND INSTALLING OF A COMPLETE ELECTRICAL SYSTEM AS INDICATED ON THE DRAWINGS AND SPECIFIED HEREIN. THE CONTRACTOR SHALL PROVIDE SUPERVISION, LABOR, MATERIALS, EQUIPMENT, MACHINERY, ADDITIONAL DESIGN AND ALL INCIDENTALS NECESSARY TO COMPLETE THE ELECTRICAL SYSTEM. THE CONTRACTOR SHALL PROVIDE AND INSTALL THE NUMBER OF ITEMS OF EQUIPMENT AS INDICATED ON THE DRAWINGS AND/OR AS REQUIRED FOR A COMPLETE SYSTEM. COORDINATE WORK TO BE PERFORMED OR INSTALLED BY OTHERS AFFECTING ELECTRICAL WORK AND PROVIDE AND INSTALL ALL NECESSARY ANCHORS, SLEEVES, HANGERS, ACCESSORIES, ETC. FOR ATTACHING OR CONNECTING ELECTRICAL WORK TO RELATED WORK OF OTHER TRADES. ALL WORK SHALL BE PERFORMED BY A QUALIFIED ELECTRICAL CONTRACTOR LICENSED IN THE STATE OF DELAWARE THAT HAS PREVIOUSLY PERFORMED WORK OF THIS SIZE AND TYPE.

2. REFER TO THE SPECIFICATIONS THAT ARE PART OF THIS CONTRACT AND ARE COMPLEMENTARY TO THESE GENERAL NOTES. IN CASE OF A CONFLICT BETWEEN THE SPECIFICATIONS AND DRAWINGS, THE MOST STRINGENT REQUIREMENTS SHALL APPLY AS DETERMINED BY THE ARCHITECT/ENGINEER/OWNER.

3. PERFORM WORK AS REQUIRED BY CODES, REGULATIONS AND LAWS OF LOCAL, STATE AND FEDERAL GOVERNMENTS AND OTHER AUTHORITIES WITH LAWFUL JURISDICTION. INCLUDING, BUT NOT LIMITED TO, THE FOLLOWING:

   a. THE 2014 VERSION OF N.E.C., AND LOCAL N.E.C. AMENDMENTS.
   b. ALL LOCAL CODES.
   c. NFPA 72 AND THE LATEST VERSION OF THE LOCALLY RECOGNIZED BUILDING CODE.
   d. THE AMERICANS WITH DISABILITIES ACT (ADA).
   e. THE 2014 IECC CODE.

4. WHEREVER THE WORD "PROVIDE" IS USED, IT SHALL MEAN TO "FURNISH AND INSTALL COMPLETE AND READY FOR USE." CONTRACTOR SHALL PROVIDE ALL TESTING AND INSTRUCTION REQUIRED FOR OPERATION AND MAINTENANCE OF EQUIPMENT AND SYSTEM BY OWNER UNLESS OTHERWISE NOTED.

5. MATERIAL AND EQUIPMENT SHALL BE UL, NEMA, ANSI, IEEE, ADA & CBM APPROVED FOR INTENDED SERVICE. MATERIAL AND INSTALLATION SHALL MEET REQUIREMENTS OF NATIONAL AND STATE ELECTRICAL CODE.

6. ELECTRICAL DRAWINGS WHICH CONSTITUTE A PART OF THIS CONTRACT ARE DIAGRAMMATIC ONLY AND INDICATE THE GENERAL ARRANGEMENT OF CIRCUITS AND OUTLETS, LOCATIONS OF SWITCHES, PANELBOARDS CONDUIT AND OTHER WORK. ALL ITEMS NOT SPECIFICALLY MENTIONED HEREIN, WHICH ARE NECESSARY TO MAKE A COMPLETE WORKING INSTALLATION, SHALL BE INCLUDED AT NO EXTRA COST.

7. CONTRACTOR SHALL EXAMINE THE ARCHITECTURAL, STRUCTURAL, MECHANICAL AND PLUMBING DRAWINGS TO FAMILIARIZE HIMSELF WITH ALL ASPECTS OF THOSE DESIGNS AFFECTING HIS WORK. ELECTRICAL CONTRACTOR IS RESPONSIBLE TO COORDINATE WITH ALL OTHER TRADES.

8. PRIOR TO SUBMITTING BID, THE CONTRACTOR SHALL VISIT THE SITE AND BE THOROUGHLY FAMILIAR WITH THE EXISTING CONDITIONS AND PROPOSED CONSTRUCTION. CONTRACTOR SHALL INCLUDE IN THEIR BID ALL MATERIAL, LABOR AND ALL INCIDENTALS FOR A COMPLETE INSTALLATION WHETHER SPECIFICALLY CALLED FOR OR NOT. ALL ERROR, DISCREPANCIES AND MISSED ITEMS SHALL BE BROUGHT TO THE ATTENTION OF THE ENGINEER DURING THE BIDDING PROCESS BY THE CONTRACTOR. THESE ITEMS SHALL BE INCLUDED IN THE BID PRICE. NO EXTRA COST WILL BE ALLOWED FOR ANY DISCREPANCY WHICH COULD HAVE BEEN NOTICED AT THE SITE VISIT BY THE CONTRACTOR.

9. GIVE NOTICES, FILE PLANS, OBTAIN PERMITS AND LICENSES, PAY FEES AND BACK CHARGES, AND OBTAIN NECESSARY APPROVALS FROM AUTHORITIES THAT HAVE JURISDICTION. IT IS THE CONTRACTOR'S RESPONSIBILITY TO DETERMINE THE REQUIRED NOTICES, PERMITS, LICENSES, FEES, BACK CHARGES AND APPROVALS REQUIRED FOR THIS PROJECT.

10. THE CONTRACTOR SHALL MAINTAIN AT THE SITE FOR THE OWNER ONE COPY OF ALL DRAWINGS, SPECIFICATIONS, ADDENDA, APPROVED SHOP OR SETTING DRAWINGS, CHANGE ORDERS AND OTHER MODIFICATIONS IN GOOD ORDER AND MARKED TO RECORD ALL CHANGES AS THEY OCCUR DURING CONSTRUCTION. THESE SHALL BE AVAILABLE TO THE ARCHITECT/ENGINEER, THE OWNER, THE PROJECT INSPECTOR, THE OWNER'S OTHER INSPECTORS AND TO THE OWNER'S TESTING PERSONNEL. THE DRAWINGS SHALL BE NEATLY AND CLEARLY MARKED IN COLOR DURING CONSTRUCTION TO RECORD ALL VARIATIONS MADE DURING CONSTRUCTION. THE REPRESENTATION OF SUCH VARIATIONS SHALL INCLUDE SUCH SUPPLEMENTARY NOTES, SYMBOLS, LEGENDS, AND DETAILS AS MAY BE NECESSARY TO CLEARLY SHOW THE AS-BUILT CONSTRUCTION. UPON COMPLETION OF THE WORK THE CONTRACTOR SHALL DELIVER TO THE ARCHITECT/ENGINEER, ONE COMPLETE SET OF "AS-BUILT DRAWINGS"

11. ALL WORKMANSHIP, MATERIALS AND EQUIPMENT SHALL BE GUARANTEED FOR A PERIOD OF TWO YEARS AFTER ACCEPTANCE OF AREA BY OWNER. REPAIR OR REPLACE DEFECTIVE MATERIALS OR INSTALLATION AT NO COST TO OWNER DURING THE GUARANTEE PERIOD. CORRECT DAMAGE CAUSED IN MAKING NECESSARY REPAIRS AND REPLACEMENTS UNDER GUARANTEE AT NO COST TO OWNER.

12. SUBMIT GUARANTEE TO CONTRACT OFFICER BEFORE FINAL PAYMENT.

13. STATEMENT OF GUARANTEE REQUIREMENTS SHALL NOT BE INTERPRETED TO LIMIT OWNER'S RIGHTS UNDER LAW AND THIS CONTRACT.

14. ADDRESS QUESTIONS REGARDING DRAWINGS TO ENGINEER IN WRITING BEFORE AWARD OF CONTRACT. OTHERWISE, ENGINEER INTERPRETATION OF MEANING AND INTENT OF DRAWINGS SHALL BE FINAL.

15. THE CONSTRUCTION ADMINISTRATION PHASE SERVICES ARE INTENDED TO BENEFIT THE CLIENT ONLY. SERVICES RENDERED BY ENGINEER DO NOT RELIEVE CONTRACTOR FROM OBLIGATIONS UNDER THE CONSTRUCTION DOCUMENTS. ENGINEER DOES NOT HAVE AUTHORITY TO SUPERVISE, DIRECT OR CONTROL CONTRACTOR, AND IS NOT RESPONSIBLE FOR MEANS, METHODS, TECHNIQUES, SEQUENCES, OR PROCEDURES OF CONSTRUCTION OR FOR SAFETY PROGRAMS OR PRECAUTIONS DURING CONSTRUCTION. NOR IS ENGINEER RESPONSIBLE FOR CONTRACTORS FAILURE TO PERFORM THE WORK IN ACCORDANCE WITH THE CONSTRUCTION DOCUMENTS OR APPLICABLE LAWS OR CODES.

16. SUBMIT SHOP DRAWINGS AND PRODUCT DATA WITHIN 21 DAYS AFTER AWARD OF CONTRACT. CHECK, STAMP AND MARK WITH PROJECT NAMES SUBMITTALS BEFORE TRANSMITTING TO ARCHITECT. INDICATE DEVIATIONS FROM CONTRACT DOCUMENTS. SHOP DRAWINGS SHALL BE PROVIDED FOR ALL EQUIPMENT SHOWN ON THE DRAWINGS. SUBMITTALS SHALL BE APPROVED BY THE ENGINEER BEFORE PURCHASE OF MATERIALS.

17. DEVIATION FROM CONTRACT DOCUMENTS, OR PROPOSED SUBSTITUTION OF MATERIALS OR EQUIPMENT FOR THOSE SPECIFIED, SHALL BE REQUESTED IN SEPARATE LETTER, WHETHER DEVIATIONS ARE DUE TO FIELD CONDITIONS, STANDARD SHOP PRACTICE, OR OTHER CAUSE.

18. SCHEDULE AT LEAST TEN WORKING DAYS, EXCLUSIVE OF TRANSMITTAL TIME FOR SUBMITTAL REVIEW.

19. ALL WORK SHALL BE EXECUTED IN WORKMANLIKE MANNER AND SHALL PRESENT NEAT, RECTILINEAR AND MECHANICAL APPEARANCE WHEN COMPLETED. THE CONTRACTOR SHALL INSTALL ALL EQUIPMENT AND MATERIALS IN ACCORDANCE WITH THE BEST ENGINEERING PRACTICE. THE CONTRACTOR SHALL BE RESPONSIBLE FOR INSTALLING ALL EQUIPMENT IN STRICT ACCORDANCE WITH THE MANUFACTURER'S PUBLISHED INSTALLATION INSTRUCTIONS. THIS SHALL INCLUDE PROVIDING CLEARANCES AS DEFINED IN THE INSTALLATION INSTRUCTIONS AND IN ACCORDANCE WITH NEC REQUIREMENTS. PROVIDE ALL AUXILIARY ITEMS REQUIRED TO PERFORM FUNCTION INTENDED.

20. ALL WORK SHALL BE SUBJECT TO THE APPROVAL OF THE OWNER OR HIS AUTHORIZED REPRESENTATIVE AND SHALL BE PERFORMED IN ACCORDANCE WITH ALL BUILDING RULES AND REGULATIONS AS PROVIDED BY THE BUILDING OWNER.

21. LOCATION OF MECHANICAL EQUIPMENT THAT REQUIRE ELECTRICAL CONNECTIONS ARE SHOWN ON THE MECHANICAL DRAWINGS. COORDINATE ALL WORK AND MAKE ALL FINAL CONNECTIONS REQUIRED FOR A COMPLETE INSTALLATION OF MECHANICAL EQUIPMENT AND CONTROLS. MECHANICAL EQUIPMENT RATINGS ARE APPROXIMATE AND MAY VARY BY MANUFACTURERS. VERIFY EXACT ELECTRICAL REQUIREMENTS WITH APPROVED SHOP DRAWINGS ADJUST SIZE OF CIRCUIT BREAKERS, SWITCHES, WIRES, MULTIPLE POWER SOURCES AND MOTOR CONTROLS INCLUDING HEATER ELEMENTS BASED UPON THE ACTUAL EQUIPMENT INSTALLED AT NO ADDITIONAL COST TO THE OWNER.

22. CONTRACTOR SHALL REVIEW ALL TRADES' CONTRACT DOCUMENTS TO DETERMINE SPECIFIC MOUNTING LOCATIONS FOR ELECTRICAL EQUIPMENT.

23. CONDUIT HOMERUNS SHOWN ON THE DRAWING WITH MORE THAN 3 CURRENT CARRYING CONDUCTORS ARE SHOWN DIAGRAMMATIC. THE CONTRACTOR SHALL NOT INSTALL MORE THAN 3 CURRENT CARRYING CONDUCTORS IN A RACEWAY UNLESS DONE SO STRICTLY TO COMPLY WITH THE NATIONAL ELECTRIC CODE REQUIREMENTS FOR APPLYING ADJUSTMENT FACTORS FOR MORE THAN THREE CURRENT-CARRYING CONDUCTORS IN A RACEWAY.

24. ALL CONDUCTORS SHALL BE COPPER, MINIMUM SIZE CONDUCTOR SHALL BE NO. 12 AWG WITH 600 VOLT TYPE "THWN" INSULATION, RATED MINIMUM 75° C. AND ROUTED IN CONDUIT. CONDUCTORS NO. 8 AWG AND LARGER SHALL BE STRANDED. THE USE OF ALUMINUM CONDUCTORS SHALL NOT BE ACCEPTABLE.

25. ALL 120 VOLT CIRCUIT HOME RUNS WHICH ARE OVER 75 LINEAR FEET SHALL BE #10 CONDUCTORS MINIMUM. CONTRACTOR SHALL INCREASE WIRE SIZE AS REQUIRED TO MAINTAIN A MAXIMUM VOLTAGE DROP OF 3%.

26. COLOR CODING AND LABELING OF UTILITIES SHALL BE ACCOMPLISHED PER THE REQUIREMENTS OF DELMARVA POWER.

27. COLOR CODE SECONDARY SERVICE, FEEDERS AND BRANCH CIRCUIT CONDUCTORS AS FOLLOWS:

    <u>208Y/120V</u>
    BLACK FOR PHASE A,
    RED FOR PHASE B,
    BLUE FOR PHASE C,
    WHITE FOR NEUTRAL.
    PROVIDE WITH SOLID GREEN GROUNDING CONDUCTOR.

    <u>480Y/277V</u>
    BROWN FOR PHASE A,
    ORANGE FOR PHASE B,
    YELLOW FOR PHASE C,
    GREY FOR NEUTRAL.
    PROVIDE WITH SOLID GREEN GROUNDING CONDUCTOR.

28. BRANCH CIRCUIT CONDUCTORS #12 AND #10 SHALL HAVE SOLID COLOR COMPOUND, SOLID COLOR COATING. NEUTRALS AND EQUIPMENT GROUNDS SHALL HAVE SOLID COMPOUND OR SOLID COLOR COATING (WHITE, GRAY AND GREEN), EXCEPT THAT NEUTRALS WITH COLORED STRIPE SHALL BE USED WHERE REQUIRED BY NEC. CONDUCTORS #8 AND LARGER WITH STRIPES, BANDS OR HASH MARKS SHALL HAVE BACKGROUND COLOR OTHER THAN WHITE, GREEN, AND GRAY.

35. ALL CIRCUITS MUST HAVE SEPARATE INSULATED GROUND WIRE. THE CONDUIT CANNOT BE USED IN PLACE OF THE GROUND WIRE.

36. A DEDICATED NEUTRAL SHALL BE INSTALLED WITH EACH LIGHTING, COMPUTER AND APPLIANCE PANELBOARD BRANCH CIRCUIT. A SHARED NEUTRAL IS NOT PERMITTED. FOR ELECTRIFIED FURNITURE SYSTEMS, THE PREFERRED FURNITURE WIRING ARRANGEMENT IS TO PROVIDE A SEPARATE NEUTRAL FOR EACH PHASE CONDUCTOR. WHEN A SHARED NEUTRAL IS PROVIDED IN ELECTRIFIED FURNITURE, A COMMON NEUTRAL OF #10 MINIMUM SIZE SHALL BE PROVIDED IN THE BRANCH CIRCUIT(S).

37. CONDUCTORS SHALL BE CONTINUOUS FROM TERMINATION TO TERMINATION. PROVIDE JUNCTION BOXES WHERE SPLICES ARE ABSOLUTELY NECESSARY, SPLICE IN READILY ACCESSIBLE JUNCTION BOX OR OUTLET BOX.

38. CONTROL/POWER WIRING REQUIRED BUT NOT SHOWN FOR, AND NOT LIMITED TO, THERMOSTATS, CONTROLLERS, VARIABLE FREQUENCY DRIVE CONTROLS, EQUIPMENT MANUFACTURER CONTROL PANELS, DAMPER MOTORS, CONTROL MOTORS, VALVES, SENSING DEVICES (TEMPERATURE, PRESSURE, HUMIDITY, LEVEL, FLOW, ON-OFF, FIRE ALARM DEVICES) SHALL BE SUPPLIED AND INSTALLED TO PROVIDE A COMPLETE AND USABLE FACILITY AS SPECIFIED. COORDINATE WITH MECHANICAL DIVISION AND PROVIDE AS REQUIRED.

39. ALL WIRING SHALL BE INSTALLED IN CONDUIT. MINIMUM CONDUIT SIZE SHALL BE 3/4-INCH.

40. ALL WIRING IN FINISHED SPACES SHALL BE INSTALLED CONCEALED IN CEILINGS AND WALLS IN EMT CONDUIT UNLESS SHOWN OR SPECIFIED OTHERWISE. PVC CONDUITS SHALL NOT BE INSTALLED IN ANY INDOOR AREA.

41. GALVANIZED RIGID METAL CONDUIT (GRC) OR GALVANIZED INTERMEDIATE METAL CONDUIT (IMC) SHALL BE USED IN CONCEALED MASONRY WALLS, FLOOR SLABS AND UTILITY ROOMS.

42. INTERMEDIATE METAL CONDUIT (IMC) CONDUIT SHALL NOT BE USED IN WET LOCATIONS OR HIGH CORROSIVE AREAS. OTHERWISE, NFPA 70 ARTICLE 342 FULLY APPLIES.

43. IN HAZARDOUS LOCATIONS GALVANIZED RIGID METAL CONDUIT (GRC) SHALL BE USED.

44. EXPOSED INDOOR CONDUIT SHALL BE GALVANIZED RIGID METAL CONDUIT (GRC).

45. PVC-COATED RIGID GALVANIZED METAL CONDUIT SHALL NOT BE USED INDOORS.

46. GALVANIZED RIGID METAL CONDUIT (GRC) CONDUIT SHALL BE USED FOR ALL FIRE ALARM SYSTEM WIRES AND CABLES.

47. ELECTRICAL METALLIC TUBING (EMT) CONDUIT SHALL NOT EXCEED 2 INCHES DIAMETER FOR POWER FEEDER OR BRANCH CIRCUITS AND SHALL NOT EXCEED 4 INCHES DIAMETER FOR CONTROL CIRCUITS AND COMMUNICATIONS SYSTEMS.

48. CONNECTIONS TO MOTORS AND BUILDING EQUIPMENT THAT CAN BE MOVED BY HAND FOR ACCESS AND SERVICING SHALL BE FLEXIBLE METAL CONDUIT, NO MORE THAN 18 INCHES LONG.

49. EXPOSED OUTDOOR CONDUITS SHALL BE GALVANIZED RIGID METAL CONDUIT (GRC). 3/4-INCH DIAMETER MINIMUM. IN HIGH-TRAFFIC AREAS, AND OTHER AREAS PRONE TO POLLUTION, CONDUITS SHALL BE PVC-COATED RIGID GALVANIZED METAL, 3/4-INCH SIZE MINIMUM.

50. CONDUITS SHALL BE INDEPENDENTLY SUPPORTED; DO NOT SUPPORT CONDUITS FROM DUCTWORK.

51. EXPANSION FITTINGS SHALL BE INSTALLED IN CONDUITS CROSSING EXPANSION JOINTS.

52. CONDUITS IN FINISHED AREAS SHALL BE CONCEALED AND THOSE IN UNFINISHED AREAS SHALL BE SURFACE MOUNTED.

53. PROVIDE POLYETHYLENE CORDS FOR PULLING WIRE.

54. PROVIDE PULLING WIRES FOR COMMUNICATION AND OTHER EMPTY CONDUIT SYSTEMS REQUIRED, WITHOUT SPLICES AND WITH AMPLE EXPOSED LENGTHS AT EACH END.

55. TOP ENTRIES OF CONDUITS INTO ELECTRICAL ENCLOSURES LOCATED IN AREAS SUBJECT TO WATER OR CONDENSATION SHALL NOT BE PERMITTED.

56. ALL CIRCUITRY RUNS INDICATED ARE DIAGRAMMATIC. THE CONTRACTOR SHALL DETERMINE IN THE FIELD THE MOST SUITABLE ROUTES. THE CONTRACTOR SHALL PROVIDE "AS-BUILT" DOCUMENTATION OF ALL CIRCUITRY RUNS.

57. PROVIDE ACCESS PANELS WHERE REQUIRED FOR PROPER ACCESS TO JUNCTION BOXES, PULL BOXES ETC.

58. ALL JUNCTION BOXES ABOVE CEILINGS SHALL BE MARKED WITH PANEL AND CIRCUIT DESIGNATION FOR CIRCUITS CONTAINED WITHIN.

59. CONTRACTOR SHALL PROVIDE ALL FIREPROOFING FOR ELECTRICAL PENETRATIONS.

60. FURNISH AND INSTALL NAMEPLATES ON ALL ELECTRICAL EQUIPMENT (SCREW ON TYPE).

61. ALL GROUNDING SHALL BE PERFORMED IN ACCORDANCE WITH THE NATIONAL AND STATE ELECTRICAL CODES.

62. COORDINATE ALL ELECTRICAL ITEMS WITH EXISTING FIELD CONDITIONS. LOCATIONS SHOWN ARE APPROXIMATE AND MAY REQUIRE MINOR ADJUSTMENT IN THE FIELD TO SATISFY THE DESIGN INTENT.

63. DAMAGE TO EXISTING FACILITIES AND EQUIPMENT SHALL BE REPAIRED OR REPLACED IMMEDIATELY BY THE CONTRACTOR AT NO ADDITIONAL EXPENSE TO THE OWNER.

64. THE LOCATIONS SHOWN ON THESE PLANS ARE APPROXIMATE AND REQUIRE COORDINATION WITH ALL OTHER TRADES AND VERIFICATION OF EXISTING CONDITIONS. ROUTING OF CONDUIT IS DIAGRAMMATIC IN NATURE AND NOT INTENDED TO SHOW ALL REQUIRED OFFSETS AND DETAILS. THE CONTRACTOR IS RESPONSIBLE FOR FIELD VERIFICATION OF ALL EXISTING ASSOCIATED EQUIPMENT AND CONDITIONS. COORDINATE THE LOCATION OF ALL EQUIPMENT WITH THE ENGINEER AND THE OWNER. CONTRACTOR IS RESPONSIBLE FOR OBTAINING ALL OTHER TRADES' DRAWINGS AND SPECIFICATIONS AND COORDINATING WITH OTHER TRADE DURING BIDDING AND CONSTRUCTION.

65. REPAIR AND PATCH ANY DISTURBED AREA TO MATCH EXISTING CONDITIONS.

66. ALL ELECTRICAL WORK INDICATED TO REMAIN SHALL BE SUITABLY PROTECTED TO PREVENT ANY DAMAGE.

67. ALL ELECTRICAL CURRENT CARRYING PARTS SHALL BE COPPER FOR ALL EQUIPMENT.

68. SWITCHBOARDS AND PANELBOARDS SHALL BE FULLY RATED. SERIES RATING IS NOT ACCEPTABLE. CIRCUIT BREAKERS SHALL BE THE BOLT-ON TYPE WITH FULL COPPER BUSSING, 100% NEUTRAL AND ISOLATED GROUND BUSS REMOVABLE COVER AND NAMEPLATE. U.O.N

69. PROVIDE TEMPORARY POWER AND LIGHTING FOR ALL TRADES AND REQUIRED TO COMPLETE THE PROJECT. ALL TEMPORARY AND INTERIM EQUIPMENT SHALL BE INSTALLED IN ACCORDANCE WITH ALL APPLICABLE CODES AND STANDARDS INCLUDING. BUT NOT LIMITED TO, NFPA 70. THE CONTRACTOR IS RESPONSIBLE FOR COORDINATING THIS REQUIREMENT WITH ALL OTHER TRADES AND INCLUDING ALL ASSOCIATED COST IN BID PRICE.

70. ENGAGE A QUALIFIED ELECTRICAL TESTING COMPANY TO LOCATE ALL UNDERGROUND UTILITIES IN PROPOSED CONSTRUCTION AREAS FOR ALL TRADES BEFORE DIGGING. THE CONTRACTOR IS RESPONSIBLE FOR CONTACTING THIS ORGANIZATION AND INCLUDING ALL ASSOCIATED COSTS IN THE BID PRICE.

71. PROVIDE FIRE SEALANT FOR PENETRATIONS THROUGH FIRE RATED FLOORS AND WALLS TO MAINTAIN THE APPLICABLE FIRE RATING. ALL WALL PENETRATIONS SHALL BE A MINIMUM OF ONE HOUR FIRE RATED. ALL FIREPROOFING FOR ELECTRICAL PENETRATIONS SHALL BE PROVIDED BY ELECTRICAL CONTRACTOR.

72. PROVIDE CONCRETE FOUNDATION HOUSEKEEPING PAD FOR ALL FLOOR MOUNTED EQUIPMENT.

73. THE EXISTING ELECTRICAL EQUIPMENT AND DEVICES WITHIN DEMOLITION AREA SHALL BE DEMOLISHED ALONG WITH ALL FEEDERS AND CONDUITS BACK TO SOURCE UNLESS OTHERWISE NOTED. CONTRACTOR SHALL DISCONNECT, MAKE SAFE, AND REMOVE ALL LIGHT FIXTURES, CORD DROP RECEPTACLES, AND OTHER ASSOCIATED ELECTRICAL EQUIPMENT AND ALL ASSOCIATED CIRCUITRY WITHIN THIS AREA, EXCEPT AS SHOWN OTHERWISE. UPON REMOVAL, INVENTORY MAJOR ELECTRICAL ITEMS THAT ARE REMOVED AND PROVIDE A LIST TO THE OWNER FOR THEIR SELECTION OF ITEMS TO BE RETAINED. ALL ITEMS REJECTED BY THE OWNER SHALL BECOME THE PROPERTY OF THE CONTRACTOR AND SHALL BE REMOVED FROM THE SITE.

74. THIS DOCUMENT INCLUDES INFORMATION AND DEPICTIONS OF DELMARVA POWER ELECTRIC UTILITIES LOCATED WITHIN THE PROJECT AREA, LOCATIONS, DIMENSIONS, DEPTHS, AND OTHER DETAILS OF ANY SUCH UTILITIES MAY NOT BE AS-BUILT, AND THE INFORMATION SHALL NOT BE RELIED UPON WITHOUT FIELD VERIFICATION, EXCAVATORS MUST EMPLOY SAFE DIGGING BEST PRACTICES WHEN APPROACHING DELMARVA POWER ELECTRIC UTILITIES AND COMPLY WITH ALL APPLICABLE FEDERAL, STATE, AND LOCAL LAWS, INCLUDING, BUT NOT LIMITED TO, THE "MISS UTILITY LAW". NO REPRESENTATION, GUARANTEES, OR WARRANTIES, EXPRESS OR IMPLIED, ARE MADE BY DELMARVA POWER AS TO THE QUALITY, COMPLETENESS, OR ACCURACY OF THE DELMARVA POWER UTILITY INFORMATION, AND IN ACCEPTING THIS DOCUMENT, THE RECIPIENT EXPRESSLY ACKNOWLEDGES AND AGREES THAT IT IS NOT RELYING ON THE ACCURACY OF THE SAME.

INCOMPLETE WEBSITE COPY

E-002

ADDENDUMS / REVISIONS	

NORTH DISTRICT CREW QUARTERS AND SITE WORK, PHASE 1A

CONTRACT	BRIDGE NO.	N/A	SECTION
T201880103	DESIGNED BY:	JRM	JMT
COUNTY			SHEET NO.
NEW CASTLE	CHECKED BY:	JL	66

ELECTRICAL GENERAL NOTES

JMT. \\jmt.corp.local\jmtdfs\NDE\15152_010_Chapman_Yard_-_Phase\CADD\MEP\Electrical\15-1152-010-E-001 E-002.dwg

SHEET KEYNOTES:

1. COORDINATE WITH DELMARVA POWER FOR WORK REQUIRED AT EXISTING DELMARVA POWER POLE. CONTRACTOR SHALL PROVIDE ALL MATERIAL, LABOR, AND INCIDENTALS REQUIRED FOR DELMARVA POWER SERVICE TO THE SITE.
2. PROPOSED TYPE 4 JUNCTION WELL. PROVIDE 12 SPARE 4" CONDUITS WITH PULL STRINGS FROM TYPE 4 JUNCTION WELL TO MAIN DISTRIBUTION SWITCHBOARD SECTION 2.
3. PROPOSED TYPE 4 JUNCTION WELL. PROVIDE 12 SPARE 4" CONDUITS WITH PULL STRING FROM TYPE 4 JUNCTION WEL TO MAIN DISTRIBUTION SWITCHBOARD SECTION 3.

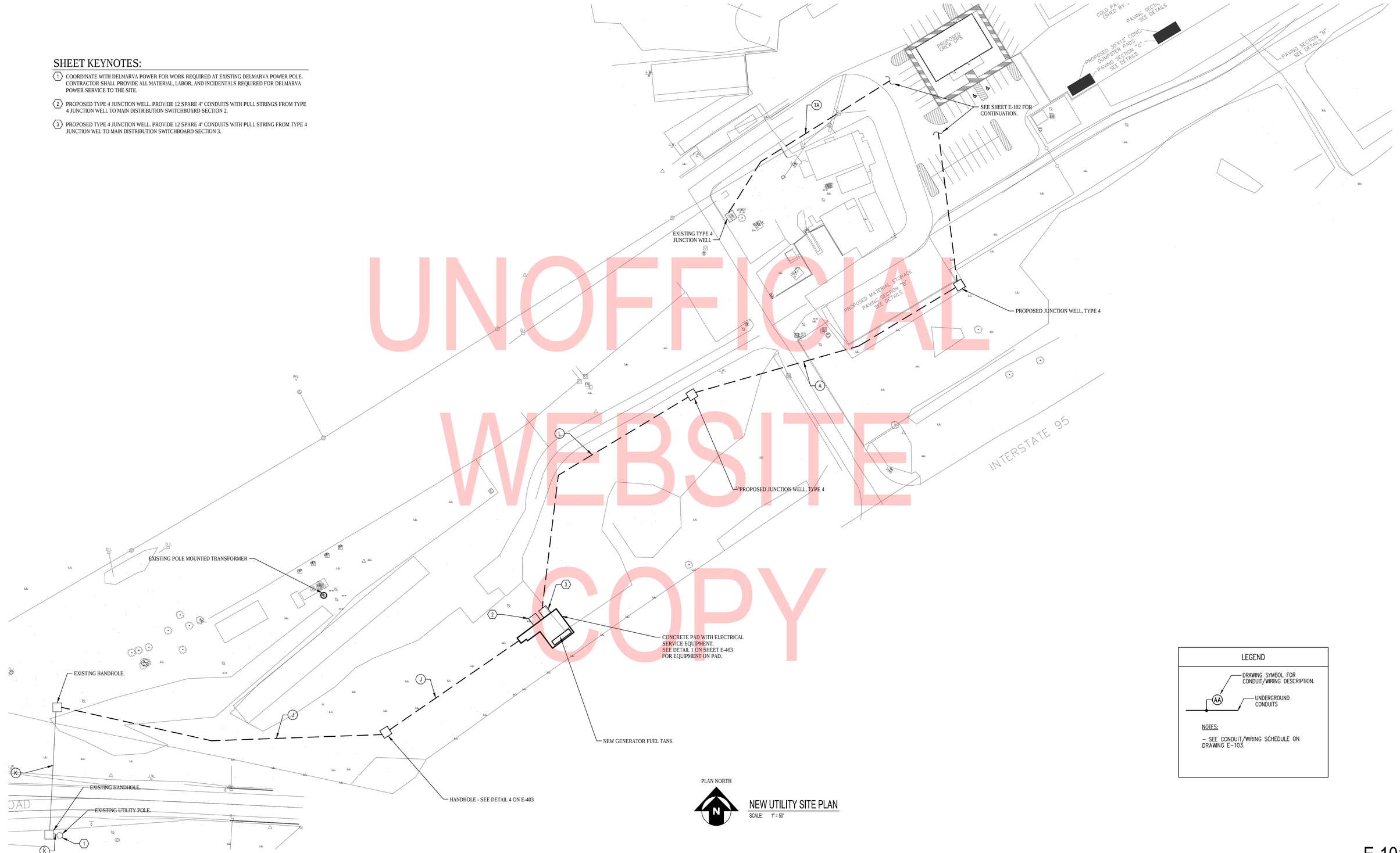

UNOFFICIAL WEBSITE COPY

E-101

ADDENDUMS / REVISIONS	

NORTH DISTRICT CREW QUARTERS AND SITE WORK, PHASE 1A

CONTRACT	BRIDGE NO.	N/A
T201880103	DESIGNED BY:	JRM
COUNTY		
NEW CASTLE	CHECKED BY:	JL

UTILITY SITE PLAN
NEW WORK

SECTION: JMT
SHEET NO. 67

JMT

Q:\WDE\15152_010_Chapman_Yard_-_Phase\CADD\MEP\Electrical\15-1152-010-E-101.dwg

SITE LIGHTING FIXTURE SCHEDULE

TYPE	SYMBOL	DESCRIPTION	MANUFACTURER	CATALOG NO.	LAMP NO.	LAMP TYPE	LAMP WATT.	LAMP VOLTAGE	LAMP COLOR	LAMP CRI	LAMP LIFE	FIXTURE VOLTAGE	DRIVER FACTOR	MINIMUM LUMENS	FIXTURE WATTS	FINISH	MOUNTING	NOTES
SB	SB	POLE MOUNTED EXTERIOR SITE FIXTURE	HOLOPHANE	MGLED-4-4K-AS-A-L-A-G	4COB	LED	–	BY DRIVER	4000 'K	≥70	50,000 HRS	208V/1ø	1.0	22,280LM	168W	GRAY	POLE 22'-0" + BASE	PROVIDE HOLOPHANE POLE REF.: RTA1650G
SB-2	SB-2	POLE MOUNTED EXTERIOR SITE FIXTURE	HOLOPHANE	MGLED-6-4K-AS-W-L-A-G	6COB	LED	–	BY DRIVER	4000 'K	≥70	50,000 HRS	208V/1ø	1.0	31,325LM	255W	GRAY	POLE 22'-0" + BASE	PROVIDE HOLOPHANE POLE REF.: RTA1650G

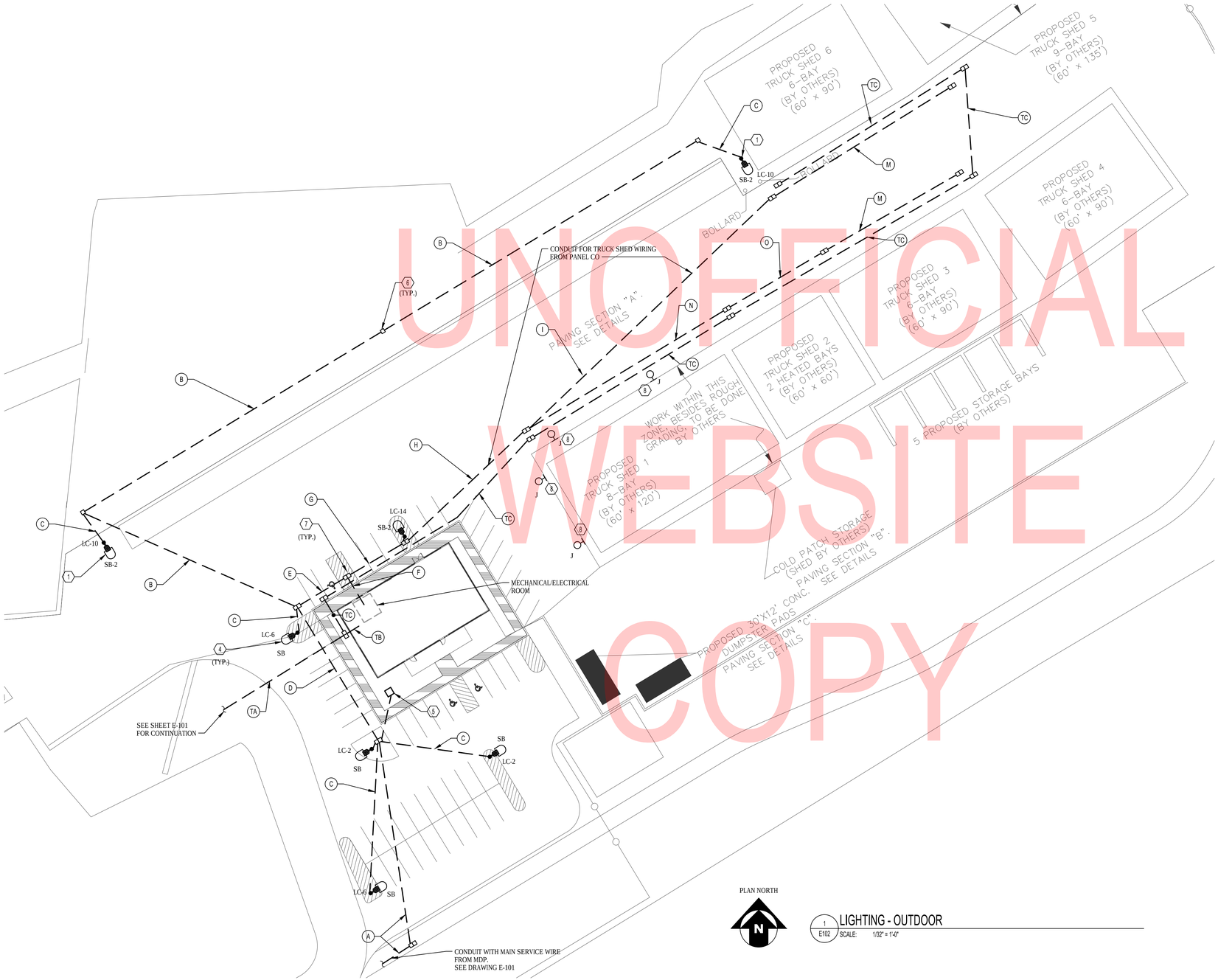

UNOFFICIAL WEBSITE COPY

SHEET GENERAL NOTES

1. SEE ARCHITECTURAL PLANS, ELEVATIONS, DETAILS AND SPECIFICATION FOR ELECTRICAL EQUIPMENT LOCATIONS AND HEIGHTS. COORDINATE EXACT LOCATION IN FIELD PRIOR TO INSTALLATION.
2. ALL WIRING SHALL BE INSTALLED IN CONDUIT, INCLUSIVE OF LOW VOLTAGE/CONTROL WIRING. BURIED CONDUIT SHALL BE PVC SCHEDULE 40 OR SCHEDULE 80, ENCASED IN CONCRETE.
3. EXTEND DEPTHS OF SITE LIGHTING POLE FOUNDATIONS PER FIELD CONDITIONS TO PROVIDE BEARING ON UNDISTURBED SOIL (NOT BACKFILL). COMPACT ALL BACKFILL AROUND POLE FOUNDATIONS TO 95% DENSITY.
4. ALL LUMINAIRES TYPE "SB" AND "SB-2" SHALL BE INSTALLED ON 4"ø – 22' HEIGHT ROUND ALUMINUM POLE MOUNTED ON 24" CONCRETE AFG.

SHEET KEY NOTES:

1. LIGHTS TO BE PLACED FAR ENOUGH NOT TO CAUSE OBSTRUCTION OR INTERACTION WITH REGULAR OPERATION OF HOPPER RACK.
2. PROVIDE PHOTOCELL TO CONTROL OUTDOOR LIGHTING SIMILAR TO HUBBELL LX PHOTO SENSOR CONTROL MODULE OR EQUAL COMPATIBLE WITH THE LIGHTING CONTROL PANEL. PROVIDE ALL REQUIRED INTERFACES, POWER MODULES AND ALL NECESSARY ACCESSORIES FOR A COMPLETE AND FUNCTIONAL SYSTEM. EXACT MOUNTING LOCATION TO BE FIELD-DETERMINED PER MANUFACTURER'S RECOMMENDATIONS.
3. SEE E-501 FOR EXTERIOR LIGHTING CONTROLLED BY PANEL "LC" – CONDUIT & WIRING.
4. SEE SITE LIGHTING FIXTURE SCHEDULE FOR LUMINAIRES ON THIS DRAWING. COORDINATE EXACT LOCATION IN FIELD. SEE DETAIL 1 & 2 ON DWG E-402.
5. 112.5KVA, 480 – 208/120V, NON-VENTILATED, TRANSFORMER IN NEMA 3R ENCLOSURE.
6. CONDUIT JUNCTION WELL TYPE 1 FOR UNDERGROUND CONDUITS. SEE DETAIL "4" ON DWG E-402.
7. CONDUIT JUNCTION WELL TYPE 4 FOR UNDERGROUND CONDUITS. SEE DETAIL "5" ON DWG E-402.
8. LUMINAIRES TYPE "J" SHALL BE MOUNTED ON TRUCK SHED AT 20' AFG. BY OTHERS.

LEGEND

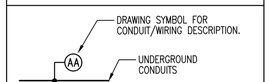

NOTES:

– SEE CONDUIT/WIRING SCHEDULE ON DRAWING E-103.

E-102

ADDENDUMS / REVISIONS	

NORTH DISTRICT CREW QUARTERS AND SITE WORK, PHASE 1A

CONTRACT	BRIDGE NO.	N/A
T201880103	DESIGNED BY:	JRM
COUNTY	CHECKED BY:	JL
NEW CASTLE		

ELECTRICAL SITE PLAN NEW WORK

SECTION: JMT

SHEET NO. 68

JMT

Q:\NDE\151152_010_Chapman_Yard__Phase\CADD\MEP\Electrical\15-1152-010-E-102.dwg

ELECTRICAL CONDUIT AND WIRING SCHEDULE		
ID	CONDUIT – FEEDER	DESCRIPTION
A	(3) 4" C. – 3#500 + 1#1/0G	TO CREW OPERATIONS TRANSFORMER
	(3) 4" C. – PULL STRING	SPARE TO CREW OPERATIONS TRANSFORMER
	(1) 1" C. – GENERATOR REMOTE ANNUNCIATOR, WITH CABLES AS REQUIRED BY MANUFACTURER.	FROM GENERATOR CONTROLLER TO REMOTE ANNUNCIATOR
	(1) 2" C. – PULL STRING	SPARE FROM GENERATOR CONTROLLER TO REMOTE ANNUNCIATOR
	(1) 1" C. – CABLES AS REQUIRED BY MANUFACTURER.	FROM FUEL MANAGEMENT PANEL TO REMOTE FUEL MONITORING PANEL
	(1) 2" C. – PULL STRING	SPARE FROM FUEL MANAGEMENT PANEL TO REMOTE FUEL MONITORING PANEL
B	(1) 1" C. – 2#10 + 1 #10G	TO SITE LIGHTING FROM RELAY PANEL
	(2) 1" C. – PULL STRING	SPARE
	(2) 1" C. – PULL STRING	SPARE
C	(1) 1" C. – 2#10 + 1 #10G	TO SITE LIGHTING FROM RELAY PANEL
D	(2) 3" C. – 4#4/0 + 1#4G	TO CREW OPERATIONS PANEL "CO"
	(1) 1" C. – 2#10 + 1 #10G	TO SITE LIGHTING FROM RELAY PANEL
	(1) 1" C. – 2#10 + 1 #10G	TO SITE LIGHTING FROM RELAY PANEL
	(2) 1" C. – GEN. CONTROL CABLES	FOR GENERATOR CONTROLS
	(2) 3" C. – PULL STRING	SPARE
	(2) 1" C. – PULL STRING	SPARE
	(2) 2" C. – PULL STRING	SPARE
	(1) 1" C. – GENERATOR REMOTE ANNUNCIATOR, WITH CABLES AS REQUIRED BY MANUFACTURER.	FROM GENERATOR CONTROLLER TO REMOTE ANNUNCIATOR
	(1) 2" C. – PULL STRING	SPARE FROM GENERATOR CONTROLLER TO REMOTE ANNUNCIATOR
	(1) 1" C. – CABLES AS REQUIRED BY MANUFACTURER.	FROM FUEL MANAGEMENT PANEL TO REMOTE FUEL MONITORING PANEL
	(1) 2" C. – PULL STRING	SPARE FROM FUEL MANAGEMENT PANEL TO REMOTE FUEL MONITORING PANEL
E	(2) 3" C. – 4#4/0 + 1#4G	TO CREW OPERATIONS PANEL "CO"
	(1) 1" C. – 2#10 + 1 #10G	TO SITE LIGHTING FROM RELAY PANEL
	(1) 1" C. – 2#10 + 1 #10G	TO SITE LIGHTING FROM RELAY PANEL
	(1) 1" C. – 2#10 + 1 #10G	TO SITE LIGHTING FROM RELAY PANEL
	(2) 1" C. – GEN. CONTROL CABLES	FOR GENERATOR CONTROLS
	(2) 3" C. – PULL STRING	SPARE
	(4) 1" C. – PULL STRING	SPARE
	(4) 2" C. – PULL STRING	SPARE
	(1) 1" C. – GENERATOR REMOTE ANNUNCIATOR, WITH CABLES AS REQUIRED BY MANUFACTURER.	FROM GENERATOR CONTROLLER TO REMOTE ANNUNCIATOR
	(1) 2" C. – PULL STRING	SPARE FROM GENERATOR CONTROLLER TO REMOTE ANNUNCIATOR
	(1) 1" C. – CABLES AS REQUIRED BY MANUFACTURER.	FROM FUEL MANAGEMENT PANEL TO REMOTE FUEL MONITORING PANEL
	(1) 2" C. – PULL STRING	SPARE FROM FUEL MANAGEMENT PANEL TO REMOTE FUEL MONITORING PANEL
F	(3) 3" C. – 4#4/0 + 1#4G	TO CREW OPERATIONS PANEL "CO"
	(1) 1" C. – 2#10 + 1#10G	TO SITE LIGHTING FROM RELAY PANEL
	(1) 1" C. – 2#10 + 1#10G	TO SITE LIGHTING FROM RELAY PANEL
	(1) 1" C. – 2#10 + 1#10G	TO SITE LIGHTING FROM RELAY PANEL
	(6) 2" C. – PULL STRING	FOR FUTURE TRUCK SHED
	(2) 1" C. – GEN. CONTROL CABLES	FOR GENERATOR CONTROLS
	(2) 3" C. – PULL STRING	SPARE
	(6) 1" C. – PULL STRING	SPARE
	(4) 2" C. – PULL STRING	SPARE
	(2) 2" C. – PULL STRING	SPARE
	(1) 1" C. – GENERATOR REMOTE ANNUNCIATOR, WITH CABLES AS REQUIRED BY MANUFACTURER.	FROM GENERATOR CONTROLLER TO REMOTE ANNUNCIATOR
	(1) 2" C. – PULL STRING	SPARE FROM GENERATOR CONTROLLER TO REMOTE ANNUNCIATOR
	(1) 1" C. – CABLES AS REQUIRED BY MANUFACTURER.	FROM FUEL MANAGEMENT PANEL TO REMOTE FUEL MONITORING PANEL
	(1) 2" C. – PULL STRING	SPARE FROM FUEL MANAGEMENT PANEL TO REMOTE FUEL MONITORING PANEL

ELECTRICAL CONDUIT AND WIRING SCHEDULE		
ID	CONDUIT – FEEDER	DESCRIPTION
G	(6) 2" C. – PULL STRING	FOR FUTURE TRUCK SHED
	(1) 1" C. – 2#10 + 1#10G	TO SITE LIGHTING FROM RELAY PANEL
	(2) 1" C. – PULL STRING	SPARE
	(2) 2" C. – PULL STRING	SPARE
H	(6) 2" C. – PULL STRING	FOR FUTURE TRUCK SHED
	(2) 1" C. – PULL STRING	SPARE
	(2) 2" C. – PULL STRING	SPARE
I	(2) 2" C. – PULL STRING	FOR FUTURE TRUCK SHED
	(1) 1" C. – PULL STRING	SPARE
	(1) 2" C. – PULL STRING	SPARE
J	(1) 4" C. – PULL STRING	SPARE
	(1) 4" C. – 3–1/C, 25 KV, ALUMINUM, #1/0, SOLID, 100%, 260MIL X LP, 16 #4 C.N. JACKETED DELMARVA POWER APPROVED CABLE.	PRIMARY FEEDER TO DELMARVA TRANSFORMER
K	(1) 4" C. – PULL STRING	SPARE
	(1) 4" C. – PROVIDE 3–1/C, 25 KV, ALUMINUM, #1/0, SOLID, 100%, 260MIL X LP, 16 #4 C.N. JACKETED DELMARVA POWER APPROVED CABLE IN EXISTING CONDUIT.	PRIMARY FEEDER TO DELMARVA TRANSFORMER
L	(3) 4" C. – 3#500 + 1#1/0G	TO CREW OPERATIONS TRANSFORMER
	(3) 4" C. – PULL STRING	SPARE TO CREW OPERATIONS TRANSFORMER
	(1) 1" C. – GENERATOR REMOTE ANNUNCIATOR, WITH CABLES AS REQUIRED BY MANUFACTURER.	FROM GENERATOR CONTROLLER TO REMOTE ANNUNCIATOR
	(1) 2" C. – PULL STRING	SPARE FROM GENERATOR CONTROLLER TO REMOTE ANNUNCIATOR
	(1) 1" C. – CABLES AS REQUIRED BY MANUFACTURER.	FROM FUEL MANAGEMENT PANEL TO REMOTE FUEL MONITORING PANEL
	(1) 2" C. – PULL STRING	SPARE FROM FUEL MANAGEMENT PANEL TO REMOTE FUEL MONITORING PANEL
	(2) 2" C. – PULL STRING	SPARE FOR FUTURE TRUCK WASH
	(2) 2" C. – PULL STRING	SPARE FOR FUTURE SALT BARN
M	(1) 2" C. – PULL STRING	FOR FUTURE TRUCK SHED
	(1) 1" C. – PULL STRING	SPARE
	(1) 2" C. – PULL STRING	SPARE
N	(3) 2" C. – PULL STRING	FOR FUTURE TRUCK SHED
	(1) 1" C. – PULL STRING	SPARE
	(1) 2" C. – PULL STRING	SPARE
O	(2) 2" C. – PULL STRING	FOR FUTURE TRUCK SHED
	(1) 1" C. – PULL STRING	SPARE
	(1) 2" C. – PULL STRING	SPARE

COMMUNICATIONS CONDUIT AND WIRING SCHEDULE		
ID	CONDUIT – FEEDER	DESCRIPTION
TA	(2) 4" C. – PULL STRING	IT INCOMING SERVICE
TB	(2) 4" C. – PULL STRING	IT INCOMING SERVICE
	(1) 4" C. – PULL STRING	DATA NETWORK/CAMERA SYSTEM
	(1) 4" C. – PULL STRING	FIRE DETECTION
	(1) 1" C. – PULL STRING	SPARE
	(1) 2" C. – PULL STRING	SPARE
TC	(1) 4" C. – PULL STRING	DATA NETWORK/CAMERA SYSTEM
	(1) 4" C. – PULL STRING	FIRE DETECTION
	(1) 1" C. – PULL STRING	SPARE
	(1) 2" C. – PULL STRING	SPARE

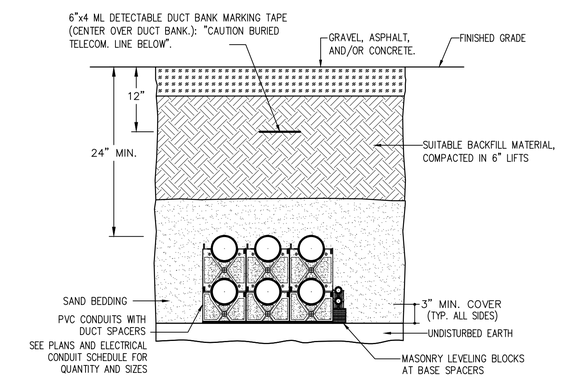

1 E-103 TYPICAL BURIED CONDUIT SECTION
SCALE: NONE

UNOFFICIAL WEBSITE COPY

Q:\NDE\151152_010_Chapman_Yard_-_Phase\CADD\WEP\Electrical\15-1152-010-E-102.dwg

E-103

ADDENDUMS / REVISIONS	

NORTH DISTRICT CREW QUARTERS AND SITE WORK, PHASE 1A

CONTRACT	BRIDGE NO.	N/A
T201880103	DESIGNED BY:	JRM
COUNTY		
NEW CASTLE	CHECKED BY:	JL

ELECTRICAL SITE PLAN NEW WORK

SECTION
JMT
SHEET NO.
69

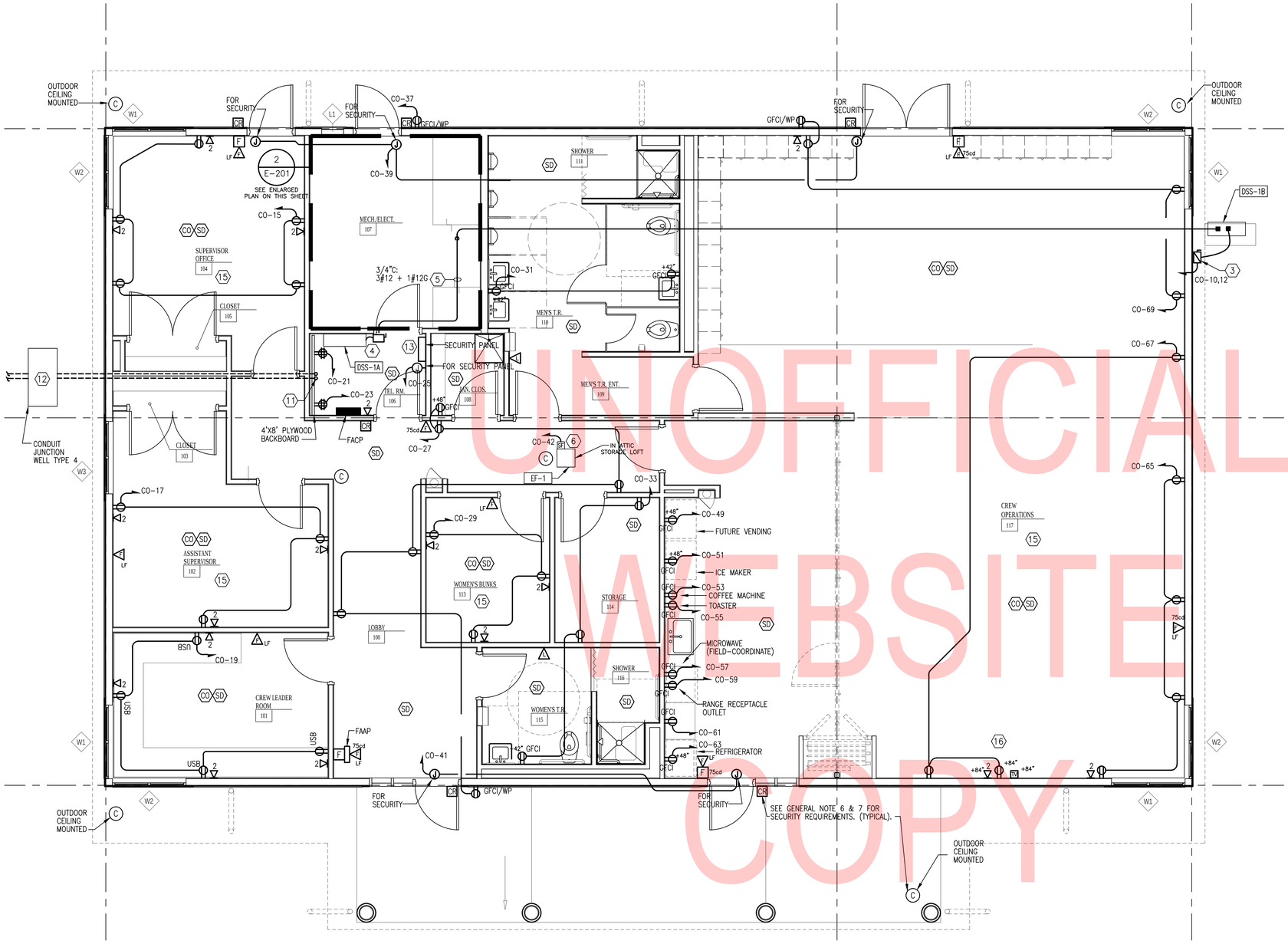

1 E201 POWER – GROUND FLOOR PLAN
SCALE: 1/4" = 1'-0"

SHEET GENERAL NOTES

1. SEE ARCHITECTURAL PLANS, ELEVATIONS, DETAILS AND SPECIFICATION FOR ELECTRICAL EQUIPMENT LOCATIONS AND HEIGHTS. COORDINATE EXACT LOCATION IN FIELD PRIOR TO INSTALLATION.
2. LOCATION AND INSTALLATION HEIGHT OF ALL WALL DEVICES TO BE COORDINATE WITH MILLWORK IN ALL LOCATIONS.
3. ALL WIRING SHALL BE INSTALLED IN CONDUIT, INCLUSIVE OF LOW VOLTAGE/CONTROL WIRING (I.E. THERMOSTATS, AUDIO, VISUAL, COMM. ETC.)
4. ALL COMMUNICATIONS DEVICES SHALL RETURN TO THE COMMUNICATIONS DEMARCATION IN MINIMUM 1" CONDUIT.
5. ALL OUTDOOR RECEPTACLES SHALL BE GROUND FAULT CIRCUIT INTERRUPTER (GFCI) WITH WEATHER PROOF OUTDOOR RATED METALLIC COVER.
6. CONTRACTOR SHALL FURNISH AND INSTALL ALL DOOR HARDWARE IN ACCORDANCE TO DelDOT SPECIFICATIONS. AS WELL AS ALL CONDUITS, BACKBOXES AND REQUIRED ACCESSORIES AS NECESSARY TO SUPPORT THE COMPLETE INSTALLATION OF ALL ACCESS CONTROLLED DOORS. THE CONTRACTOR SHALL COORDINATE WITH THE DelDOT INTEGRATOR TO DETERMINE ALL CONDUIT REQUIREMENTS PRIOR TO THE COMMENCEMENT OF ANY WORK. (TYPICAL ALL LOCATIONS).
7. CONTRACTOR SHALL FURNISH AND INSTALL ALL CONDUITS, BACKBOXES AND REQUIRED ACCESSORIES AS NECESSARY TO SUPPORT THE COMPLETE INSTALLATION OF ALL FIXED VIDEO SURVEILLANCE CAMERAS. THE CONTRACTOR SHALL COORDINATE WITH THE DelDOT INTEGRATOR TO DETERMINE ALL CONDUIT REQUIREMENTS PRIOR TO THE COMMENCEMENT OF ANY WORK. (TYPICAL ALL LOCATIONS).

SHEET KEY NOTES:

1. SEE PANEL SCHEDULES ON DWG E-501
2. SEE LIGHTING CONTROL PANEL "LC" SCHEDULE ON DWG E-501.
3. PROVIDE FUSED SAFETY SWITCH: 30A/2P, 240V, HEAVY DUTY IN NEMA 3R ENCLOSURE (PROVIDE SQUARE D CLASS 3110 OR APPROVED EQUAL). PROVIDE 20A CLASS R FUSE.
4. PROVIDE NON-FUSED SAFETY SWITCH: 30A/2P, 240V, HEAVY DUTY IN NEMA 1 ENCLOSURE (PROVIDE SQUARE D CLASS 3110 OR APPROVED EQUAL).
5. PROVIDE POWER SUPPLY & CONTROL CIRCUIT FOR INDOOR UNIT AC/1 (FED DIRECTLY FROM OUTDOOR UNIT CU/1).
6. FAN SPEED CONTROL FURNISHED BY MECHANICAL EQUIPMENT MANUFACTURER AND INSTALLED BY ELECTRICAL CONTRACTOR.
7. PROVIDE FUSED SAFETY SWITCH: 20A/2P, 240V, HEAVY DUTY IN NEMA 1 ENCLOSURE (PROVIDE SQUARE D CLASS 3110 OR APPROVED EQUAL). PROVIDE 20A CLASS R FUSES.
8. PROVIDE FUSED SAFETY SWITCH: 60A/3P, 240V, HEAVY DUTY IN NEMA 1 ENCLOSURE (PROVIDE SQUARE D CLASS 3110 OR APPROVED EQUAL). PROVIDE 40A CLASS R FUSES.
9. PROVIDE FUSED SAFETY SWITCH: 30A/3P, 240V, HEAVY DUTY IN NEMA 1 ENCLOSURE (PROVIDE SQUARE D CLASS 3110 OR APPROVED EQUAL). PROVIDE 30A CLASS R FUSES.
10. PROVIDE FUSED SAFETY SWITCH: 30A/3P, 240V, HEAVY DUTY IN NEMA 1 ENCLOSURE (PROVIDE SQUARE D CLASS 3110 OR APPROVED EQUAL). PROVIDE 20A CLASS R FUSES.
11. STUB UP CONDUITS 6" ABOVE FINISHED FLOOR.
12. SEE DETAIL "3" ON DWG E-402 FOR JUNCTION WELL TYPE 4.
13. PROPOSED LOCATION FOR SECURITY ACCESS PANEL. COORDINATE EXACT LOCATION IN FIELD WITH PROJECT MANAGER. CONDUITS FROM ALL ACCESS CONTROLLED DOORS (CARD READERS) SHALL RUN TO THE FINAL LOCATION OF THE SECURITY PANEL. SEE SCHEMATIC ACCESS CONTROL SYSTEM RISER DIAGRAM ON DWG. E-401.
14. PROVIDE FUSED SAFETY SWITCH: 60A/2P, 240V, HEAVY DUTY IN NEMA 1 ENCLOSURE (PROVIDE SQUARE D CLASS 3110 OR APPROVED EQUAL). PROVIDE 60A CLASS R FUSES.
15. ROOM SHOULD HAVE TWO DUPLEX RECEPTACLES WITH USB CHARGING CAPABILITIES. EXACT PLACEMENT SHALL BE COORDINATED WITH OWNER.
16. EXACT PLACEMENT OF TELEVISION OUTLET BOXES SHALL BE COORDINATED WITH OWNER.

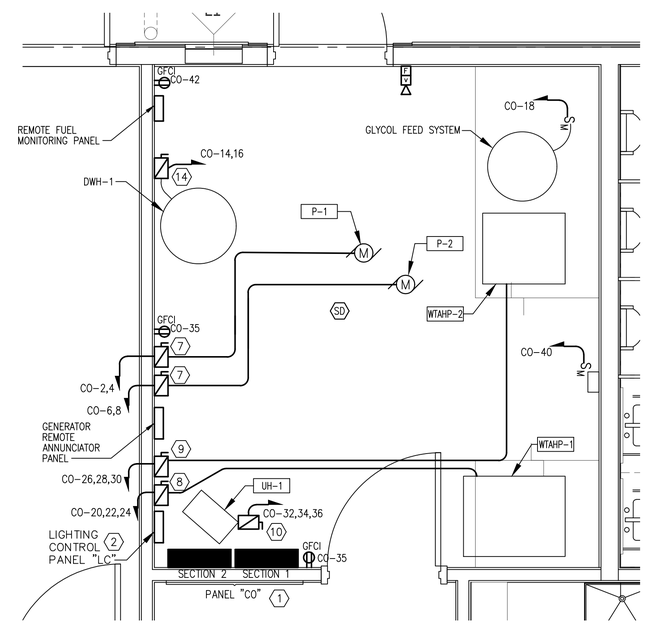

2 E201 POWER – ENLARGED MECH./ELEC. ROOM
SCALE: 1/2" = 1'-0"

E-201

UNOFFICIAL WEBSITE COPY

\\jmt.corp.local\jmtdfs\WDE\151152_010_Chapman_Yard__Phase\CADD\MEP\Electrical\15-1152-010-E-201.dwg

ADDENDUMS / REVISIONS	

NORTH DISTRICT CREW QUARTERS AND SITE WORK, PHASE 1A

CONTRACT	BRIDGE NO.	N/A
T201880103	DESIGNED BY:	JRM
COUNTY		
NEW CASTLE	CHECKED BY:	JL

CREW OPERATIONS BUILDING ELECTRICAL FLOOR PLAN POWER

SECTION
JMT
SHEET NO.
70

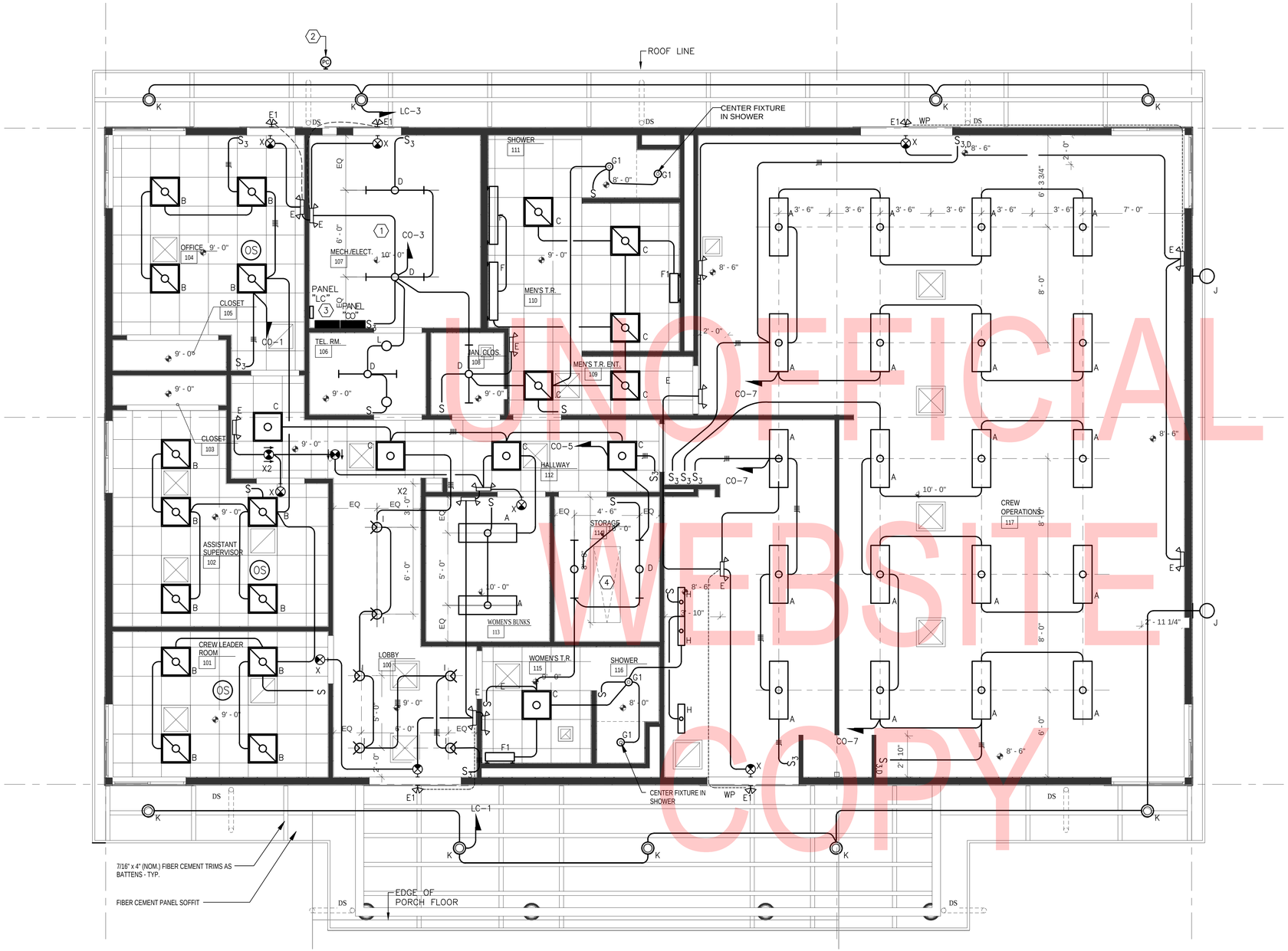

UNOFFICIAL WEBSITE COPY

SHEET GENERAL NOTES

1. SEE ARCHITECTURAL PLANS, ELEVATIONS, DETAILS AND SPECIFICATION FOR ELECTRICAL EQUIPMENT LOCATIONS AND HEIGHTS. COORDINATE EXACT LOCATION IN FIELD PRIOR TO INSTALLATION.
2. NO ELECTRICAL CORDS ARE ALLOWED TO PENETRATE WALLS, MILLWORK, OR CEILING PANELS. ALL ELECTRICAL OUTLETS MUST BE READILY ACCESSIBLE.
3. ALL WIRING SHALL BE INSTALLED IN CONDUIT, INCLUSIVE OF LOW VOLTAGE/CONTROL WIRING.
4. 2'X2' RECESSED FIXTURES MOUNTED ON SUSPENDED CEILINGS SHALL BE SUPPORTED FROM THE ROOF CONSTRUCTION ABOVE BY MEANS OF A MINIMUM OF FOUR SEPARATE GALVANIZED CHAINS OR WIRES PER FIXTURE ONE AT EACH CORNER OF THE FIXTURE. EACH CHAIN SHALL BE CAPABLE OF SUPPORTING 100 LBS AND EACH WIRE SHALL BE A MINIMUM OF 12 AWG MILD STEEL.
5. SEE LIGHTING FIXTURE SCHEDULE ON DWG E-501
6. LIGHTING SWITCHES TO BE TOGGLE SWITCH WITH PILOT LIGHT.

SHEET KEY NOTES:

1. EXACT LOCATION OF LIGHTING FIXTURE(S) IN THIS AREA TO BE COORDINATED WITH MECHANICAL DUCTWORK AND PIPING.
2. PROVIDE PHOTOCELL TO CONTROL OUTDOOR LIGHTING SIMILAR TO HUBBELL LX PHOTO SENSOR CONTROL MODULE OR EQUAL COMPATIBLE WITH THE LIGHTING CONTROL PANEL. PROVIDE ALL REQUIRED INTERFACES, POWER MODULES AND ALL NECESSARY ACCESSORIES FOR A COMPLETE AND FUNCTIONAL SYSTEM. EXACT MOUNTING LOCATION TO BE FIELD-DETERMINED PER MANUFACTURER'S RECOMMENDATIONS.
3. SEE E-501 FOR EXTERIOR LIGHTING CONTROLLED BY PANEL "LC" - CONDUIT & WIRING.
4. A LIGHTING OUTLET SHALL BE PROVIDED IN THE STORAGE ATTIC AREA. USE A PULL CHAIN THAT IS ACCESSIBLE AT THE POINT OF ENTRY AS THE CONTROL MECHANISM FOR THIS LIGHT.

1 / E101 LIGHTING - GROUND FLOOR PLAN
SCALE: 1/4" = 1'-0"

E-202

ADDENDUMS / REVISIONS							
		NORTH DISTRICT CREW QUARTERS AND SITE WORK, PHASE 1A	CONTRACT T201880103	BRIDGE NO. N/A	CREW OPERATIONS BUILDING ELECTRICAL FLOOR PLAN LIGHTING	SECTION JMT
			COUNTY NEW CASTLE	DESIGNED BY: JRM		SHEET NO. 71
				CHECKED BY: JL		

JMT \\jmt.corp.local\jmtdfs\NDE\151152_010_Chapman_Yard__Phase\CADD\MEP\Electrical\15-1152-010-E-202.dwg

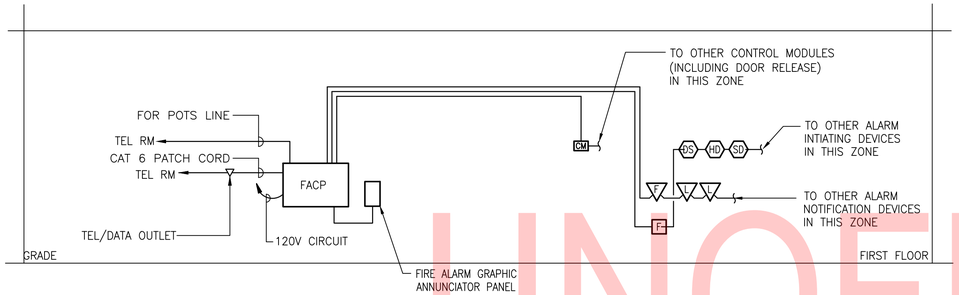

1 E-401 SCHEMATIC FIRE ALARM RISER DIAGRAM
SCALE: NONE

NOTES:

1. REFER TO FLOOR PLANS FOR EXACT DEVICE COUNT AND LOCATIONS. PROVIDE CONDUIT AND WIRING AS REQUIRED BY SYSTEM MANUFACTURER.

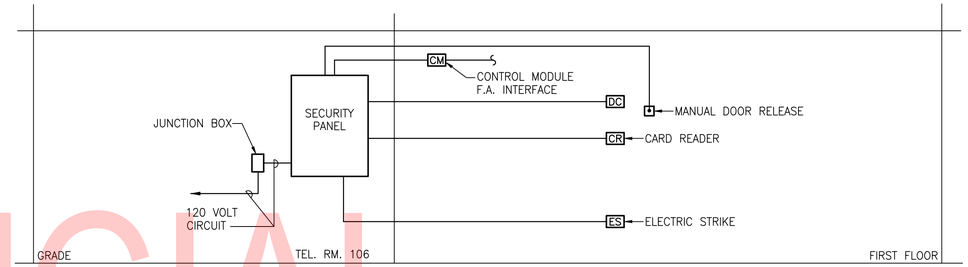

2 E-401 SCHEMATIC ACCESS CONTROL SYSTEM RISER DIAGRAM
SCALE: NONE

NOTES:

1. REFER TO FLOOR PLANS FOR EXACT DEVICE COUNT AND LOCATIONS. PROVIDE BOXES AND EMPTY CONDUIT WITH PULL STRING AS REQUIRED BY SYSTEM MANUFACTURER.

2. CONTRACTOR SHALL FURNISH AND INSTALL ALL DOOR HARDWARE IN ACCORDANCE TO DelDOT SPECIFICATIONS. AS WELL AS ALL CONDUITS, BACKBOXES AND REQUIRED ACCESSORIES AS NECESSARY TO SUPPORT THE COMPLETE INSTALLATION OF ALL ACCESS CONTROLLED DOORS. THE CONTRACTOR SHALL COORDINATE WITH THE DelDOT INTEGRATOR TO DETERMINE ALL CONDUIT REQUIREMENTS PRIOR TO THE COMMENCEMENT OF ANY WORK. (TYPICAL ALL LOCATIONS).

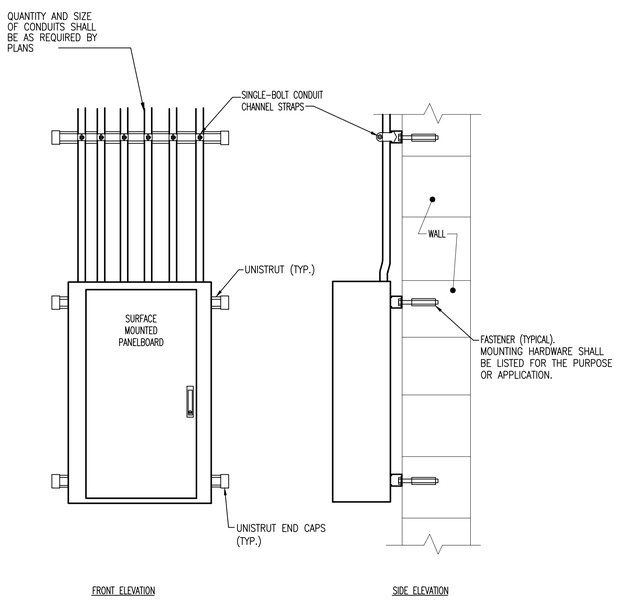

3 E-401 PANELBOARD MOUNTING DETAIL
SCALE: NONE

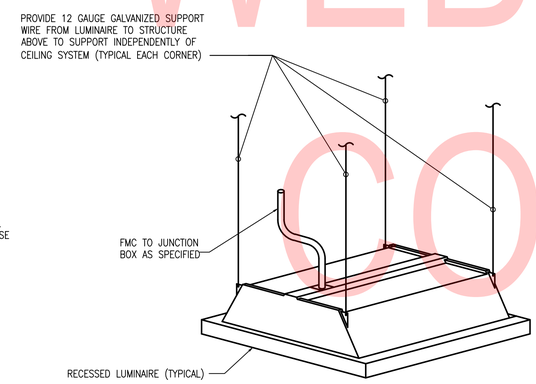

4 E-401 RECESSED LUMINAIRE SUPPORT DETAIL
SCALE: NONE

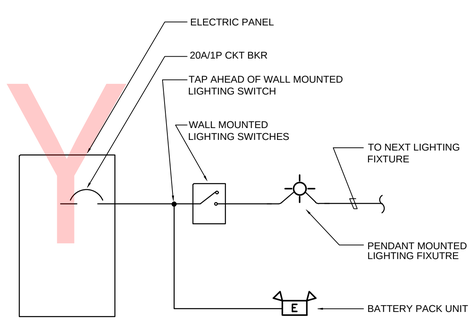

5 E-401 BATTERY PACK UNIT CONNECTION DETAIL
SCALE: NONE

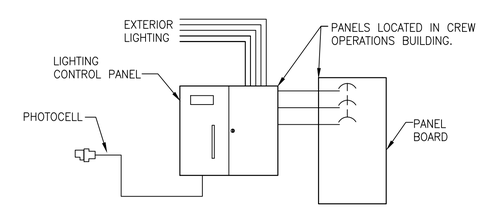

NOTES:

1. PROVIDE LIGHTING CONTROL PANEL SIMILAR TO HUBBELL LXBC-1-IL-B-30-H-15 WITH ENCLOSURE LEXEN-32-S OR EQUAL. SEE SHEET E-501 FOR PANEL SCHEDULE.

2. PROVIDE ALL NECESSARY ACCESSORIES FOR COMPLETE AND FUNCTIONAL INSTALLATION.

6 E-401 LIGHTING RELAY CONTROL PANEL "LC"
SCALE: NONE

UNOFFICIAL WEBSITE COPY

ADDENDUMS / REVISIONS	

NORTH DISTRICT CREW QUARTERS AND SITE WORK, PHASE 1A	CONTRACT T201880103	BRIDGE NO. N/A	CREW OPERATION BUILDING ELECTRICAL DETAILS I	SECTION JMT
	COUNTY NEW CASTLE	DESIGNED BY: JRM		SHEET NO. 72
		CHECKED BY: JL		

JMT \\jmt.corp.local\jmtdfs\WDE\151152_010_Chapman_Yard__Phase\CADD\MEP\Electrical\15-1152-010-E-401.dwg

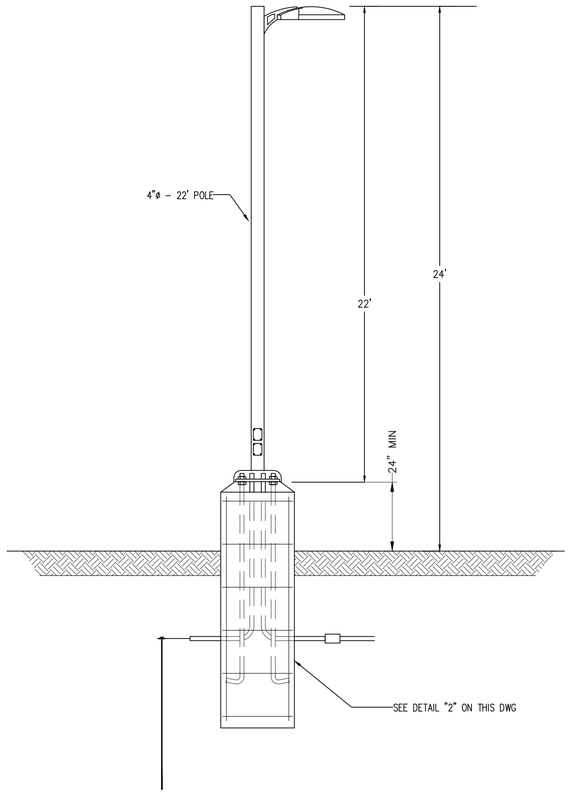

1 E-402 LUMINAIRE TYPE "SB" MOUNTING HEIGHT
SCALE: NONE

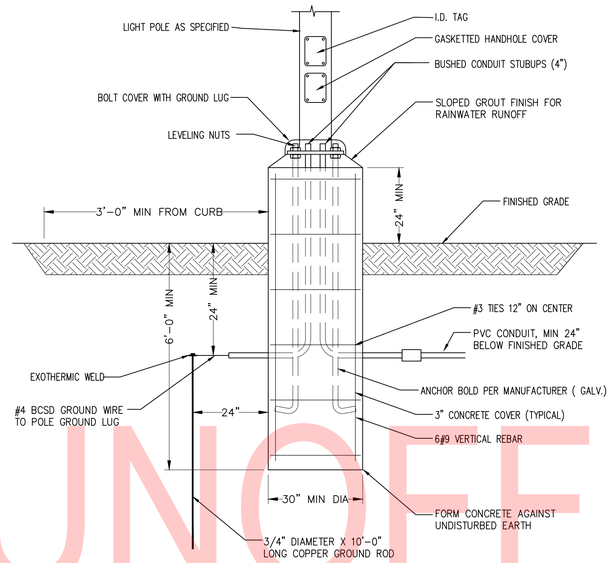

NOTES:
1. ALL REINFORCING STEEL TO BE ASTM A615, GRADE 60 EXCEPT TIES, TIES SHALL BE GRADE 40
2. POLE BASES SHALL BE RUBBED AND GROUND BETWEEN BASE AND LEVELING PLATE.
3. DEPTH OF POLE BASE SHALL EXTENDED PER FIELD CONDITIONS TO ACHIEVE BEARING ON UNDISTURBED SOIL.
4. THIS DETAIL IS FOR STANDARD POLE BASE INSTALLATION. CONTRACTOR TO INSTALL SPECIFIED POLE AND BASE AS INSTRUCTED BY MANUFACTURER.

2 E-402 LUMINAIRE TYPE "SB" POLE BASE DETAIL
SCALE: NONE

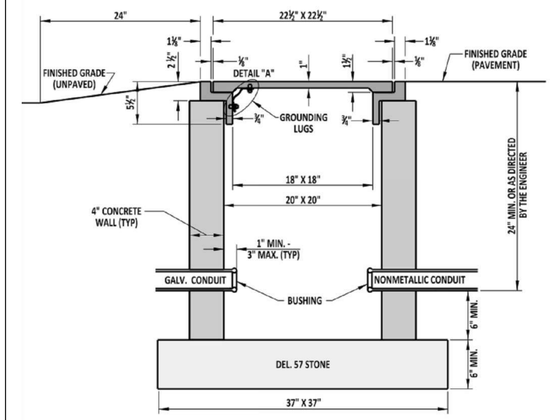

SECTION A-A

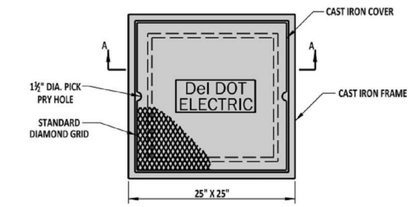

PLAN VIEW

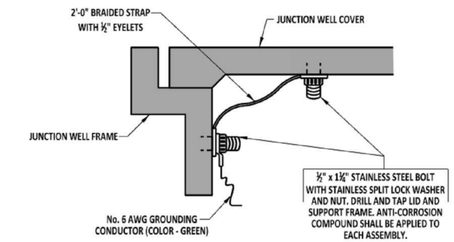

DETAIL "A"

4 S-E205 CONDUIT JUNCTION WELL, TYPE 1
SCALE: NONE

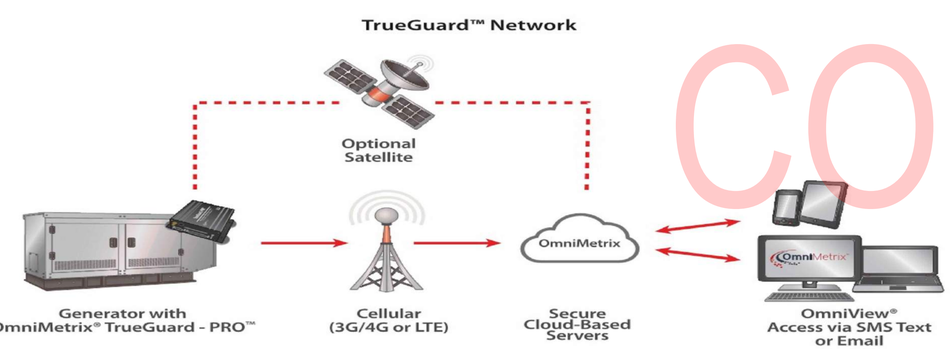

THE INSTALLATION REQUIRES THE OMNIMETRIX TRUEGUARD–PRO WIRELESS REMOTE MONITORING AND CONTROL SYSTEM TO PROVIDE A SOLUTION FOR BACKUP POWER MONITORING.

3 E-402 GENERATOR WIRELESS MONITORING AND CONTROL SYSTEM
SCALE: NONE

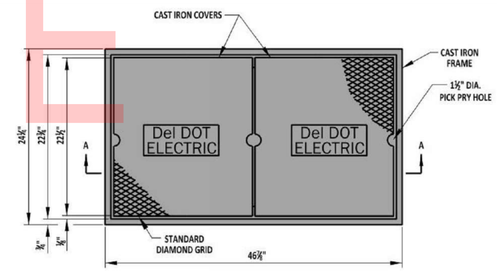

PLAN VIEW

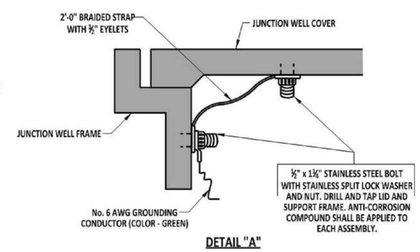

DETAIL "A"

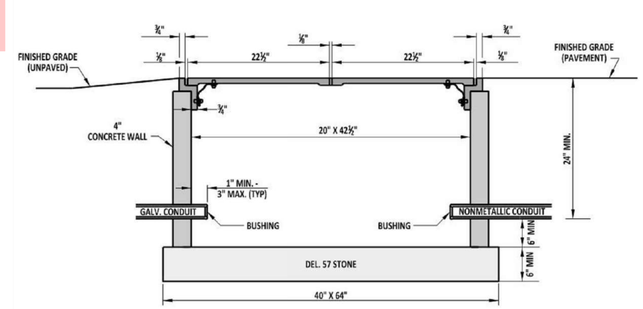

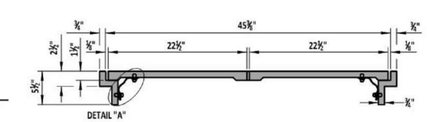

SECTION A-A

NOTES:
1). TYPE 4 CONDUIT JUNCTION WELL SHALL BE PRECAST CONCRETE. AT LEAST ONE HOLE IN PRECAST WELLS WILL BE OF A 5" DIAMETER COMPLETELY THROUGH THE WALL. UNUSED HOLES SHALL BE PLUGGED.
2). ALL CONDUIT JUNCTION WELLS PLACED IN PAVED AREAS SHALL BE CONSTRUCTED FLUSH WITH THE FINISHED GRADE. ALL CONDUIT JUNCTION WELLS PLACED IN UNPAVED AREAS SHALL BE CONSTRUCTED ABOVE FINISHED GRADE, AND GRADED TO DRAIN AWAY FROM THE WELL, AS DETAILED.
3). ALL CRACKS, GAPS, OR OPENINGS IN JUNCTION WELL WALL SHALL BE SEALED WITH CONCRETE.

5 E-402 CONDUIT JUNCTION WELL, TYPE 4
SCALE: NONE

E-402

UNOFFICIAL WEBSITE COPY

\\jmt.corp.local\jmtdfs\NDE\151152_010_Chapman_Yard__Phase\CADD\MEP\Electrical\15-1152-010-E-401.dwg

JMT

ADDENDUMS / REVISIONS	

NORTH DISTRICT CREW QUARTERS AND SITE WORK, PHASE 1A

CONTRACT	BRIDGE NO.	N/A
T201880103	DESIGNED BY:	JRM
COUNTY		
NEW CASTLE	CHECKED BY:	JL

CREW OPERATIONS BUILDING ELECTRICAL DETAILS II

SECTION
JMT
SHEET NO.
73

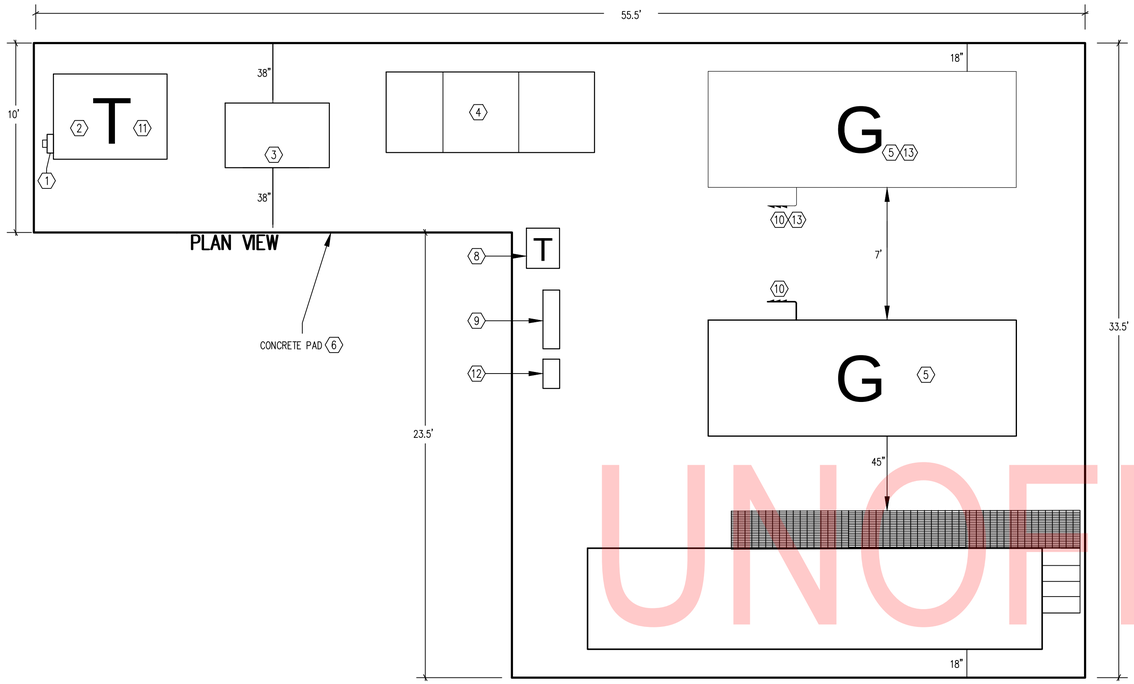

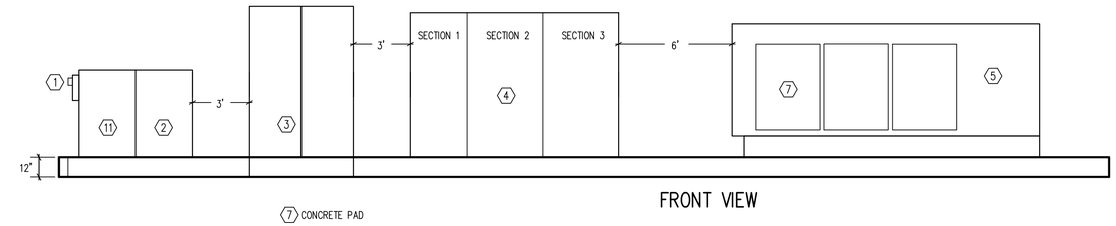

FRONT VIEW

UTILITY PAD KEY NOTES:

1. DELMARVA POWER ELECTRICAL METER.
2. DELMARVA POWER PAD-MOUNTED TRANSFORMER. PROVIDED BY DELMARVA POWER.
3. PROVIDE 1600A, 480Y/277V, 4 POLE, AUTOMATIC TRANSFER SWITCH, NEMA 4X. WITH SEPARATE MAIN ENTRANCE ENCLOSED CIRCUIT BREAKER COMPARTMENT.
4. PROVIDE 1600A, 480Y/277V, 3P, 4W, SWITCHBOARD "SQUARE D" TYPE QED-S SERIES 2, NEMA 3R.
5. PROVIDE TWO PARALLEL 500KW, DIESEL, 480Y/277V, 3P, 4W, STATIONARY EMERGENCY GENERATORS.
6. SEE CIVIL DRAWINGS FOR CONCRETE PAD DETAIL.
7. PROVIDE GENERATOR WIRELESS REMOTE AND CONTROL SYSTEM EQUAL TO THE TRUEGUARD-PRO MANUFACTURED BY OMNIMETRIX WITH ALL NECESSARY ACCESSORIES FOR COMPLETE AND FUNCTIONAL SYSTEM. SEE DETAILS 2, 3 & 4 ON DRAWING E-403 FOR MORE INFORMATION.
8. 75 KVA, 480 – 208/120V, NON-VENTILATED, TRANSFORMER IN NEMA 3R ENCLOSURE. FOR GENERATOR PANEL.
9. PROVIDE 250A, 208Y/120V, 3P, 4W, PANELBOARD IN NEMA 3R ENCLOSURE. TO BE MOUNTED ON KINDORF RACK.
10. SUPPLY GENERATOR ENCLOSURE PANELBOARD FROM PANEL RP1.
11. PROVIDE GROUNDING FOR DELMARVA TRANSFORMER IN ACCORDANCE WITH DELMARVA POWER REQUIREMENTS.
12. TANK CONTROL DEVICE IC-1 IN NEMA 4C ENCLOSURE. BASIS OF DESIGN IS OMNTEC. TO BE MOUNTED ON KINDORF RACK.
13. EQUIPMENT WILL BE INSTALLED AS PART OF A FUTURE TASK.

1 / E-403 PROPOSED ELECTRICAL UTILITY PAD LAYOUT
SCALE: NONE

UNOFFICIAL WEBSITE COPY

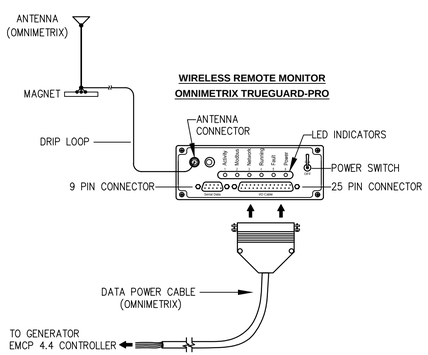

NOTES:

1. PROVIDE WIRELESS REMOTE AND CONTROL SYSTEM EQUAL TO: TRUEGUARD-PRO WITH ANTENNA AND POWER/DATA CABLE MANUFACTURED BY OMNIMETRIX WITH ALL NECESSARY ACCESSORIES FOR COMPLETE AND FUNCTIONAL INSTALLATION.
2. INSTALL THE ANTENNA VERTICALLY ON THE ROOF OF THE GENERATOR AND ROUTE THE ANTENNA CABLE INTO THE AREA OF THE GENERATOR CONTROL. THE ANTENNA USED FOR TRANSMITTING MUST BE INSTALLED TO PROVIDE A SEPARATION DISTANCE OF AT LEAST 20 CENTIMETERS FROM ALL PERSONS AND MUST NOT TRANSMIT SIMULTANEOUSLY WITH ANY OTHER ANTENNA TRANSMITTERS. BE SURE TO PROVIDE A DRIP LOOP LOWER THAN THE MONITOR TO KEEP WATER FROM RUNNING DOWN THE ANTENNA CABLE INTO THE MONITOR CONNECTION.
3. INSTALL THE TRUEGUARD-PRO MONITOR VIA ITS MAGNETIC FEET, ON TOP OF THE ENGINE CONTROLLER OR OTHER APPROPRIATE LOCATION FOLLOWING MANUFACTURER INSTRUCTIONS.
4. ROUTE THE DATA/POWER CABLE INTO THE GENERATOR CONTROL ENCLOSURE AND CONNECT TO THE TRUEGUARD-PRO MONITOR 25 PIN CONNECTOR AND THE GENERATOR EMCP 4.4 TERMINAL BOARD FOLLOWING THE MANUFACTURER WIRING DEFINITION.

2 / E-403 WIRELESS REMOTE MONITOR SCHEMATIC DIAGRAM
SCALE: NONE

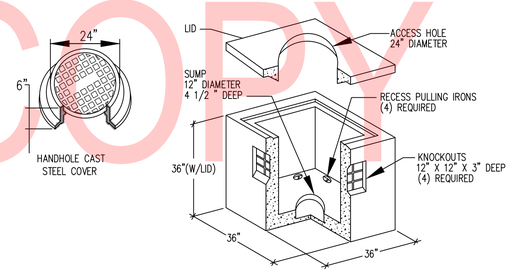

NOTE: HANDHOLE COVER SHALL BE BOLTED TO THE FRAME.

3 / E-403 PRECAST HANDHOLE AND COVER
SCALE: NONE

ELECTRIC SERVICE GROUNDING ELECTRODE:

1. MAIN SWITCHBOARD GROUND BUS.
2. #3/0 BARE CU. GROUND CONDUCTOR.
3. 3/4" X 10'-0" LONG COPPER CLAD STEEL GROUND ROD DRIVEN WITH TOP MINIMUM 30" BELOW GRADE. EXOTHERMIC-WELD CONNECTORS TO GROUND ROD.
4. #3/0 BARE CU. GROUND CONDUCTOR IN CONCRETE ENCASEMENT TO TRANSFORMER/GENERATOR PAD GROUNDING GRID.
5. GROUNDING CLAMP ON METALLIC PIPE.
6. WATER SERVICE PIPE.

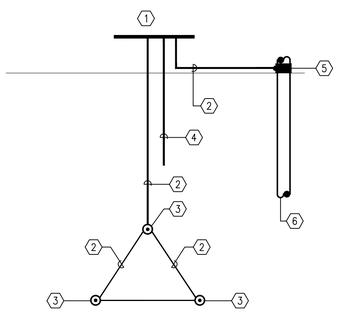

4 / E-403 ELECTRIC SERVICE GROUNDING ELECTRODE
SCALE: NONE

E-403

ADDENDUMS / REVISIONS	

NORTH DISTRICT CREW QUARTERS AND SITE WORK, PHASE 1A

CONTRACT	BRIDGE NO.	N/A
T201880103	DESIGNED BY:	JRM
COUNTY		
NEW CASTLE	CHECKED BY:	JL

CREW OPERATION BUILDING ELECTRICAL DETAILS III

SECTION: JMT
SHEET NO. 74

Q:\WIDE\151152_010_Chapman_Yard_-_Phase\CADD\MEP\Electrical\15-1152-010-E-403.dwg

SHEET KEYNOTES:

1. PROVIDE AUTOMATIC TRANSFER SWITCH WITH LUGS AS REQUIRED TO ACCEPT ALL CONDUCTORS. PROVIDE AUTOMATIC TRANSFER SWITCH WITH ALL SUPPLY AND LOAD EQUIPMENT REQUIRED TO SEND START SIGNAL TO EACH PARALLEL GENERATOR.
2. PROVIDE ELECTRONIC TRIP CIRCUIT BREAKER WITH ADJUSTABLE LONG TIME, SHORT TIME, INSTANTANEOUS, AND GROUND FAULT SETTINGS.

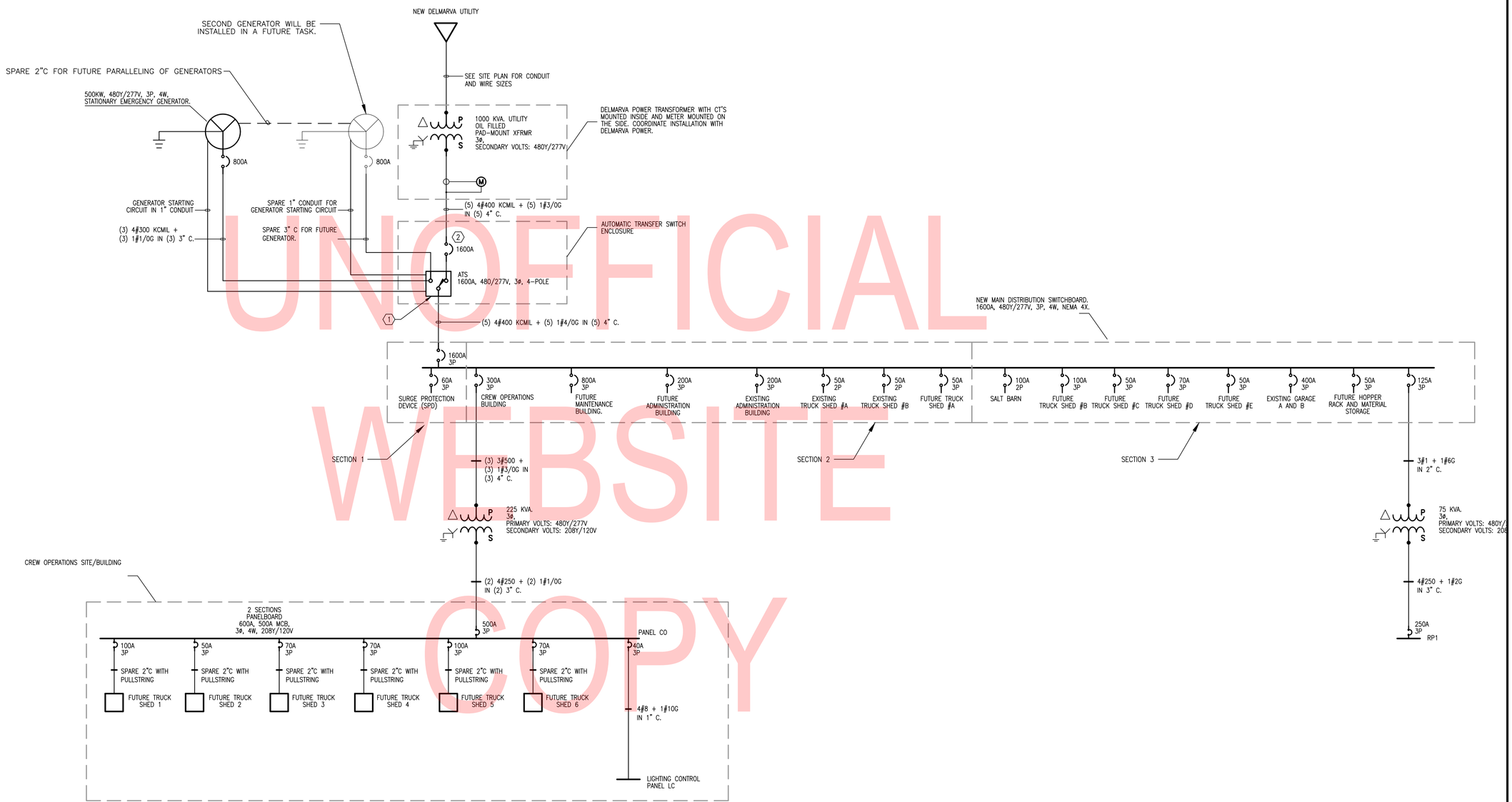

1 E-404 ELECTRICAL SINGLE LINE DIAGRAM
SCALE: NONE

UNOFFICIAL WEBSITE COPY

E-404

ADDENDUMS / REVISIONS			NORTH DISTRICT CREW QUARTERS AND SITE WORK, PHASE 1A	CONTRACT T201880103	BRIDGE NO. N/A	ELECTRICAL SINGLE LINE	SECTION JMT
				COUNTY NEW CASTLE	DESIGNED BY: JRM		SHEET NO. 75
					CHECKED BY: JL		

Q:\WDE\151152_010_Chapman_Yard_-_Phase\CADD\MEP\Electrical\15-1152-010-E-403.dwg

CREW OPERATIONS BUILDING LIGHTING FIXTURE SCHEDULE

TYPE	SYMBOL	DESCRIPTION	EQUAL MANUFACTURER	CATALOG NO.	LAMP QTY.	LAMP TYPE	LAMP COLOR	LAMP CRI	LAMP LIFE	FIXTURE VOLTAGE	FIXTURE WATTS	FINISH	MOUNTING	NOTES
A	A	4' SURFACE VOLUMETRIC LED LUMINAIRE	LITHONIA	SLT4 40L MVOLT EZ1 LP840	1	LED	4000 'K	≥90	50,000 HRS	120V	35W	WHITE PAINT	SURFACE	SEE NOTE 1, 2, 3, 4 & 5
B	B	RECESSED 2'X2' LED LUMINAIRE	LITHONIA	2BLT2 40L ADP EZ1 LP935	1	LED	3500 'K	≥90	50,000 HRS	120V	39W	WHITE PAINT	RECESSED IN T-GRID CEILING	SEE NOTE 1, 2, 3, 4 & 5
C	C	RECESSED 2'X2' LED LUMINAIRE WITH FROSTED ACRYLIC TILE.	LITHONIA	2ACL2 33L EZ1 LP835	1	LED	3500 'K	≥80	50,000 HRS	120V	29W	WHITE PAINT	RECESSED IN T-GRID CEILING	SEE NOTE 1, 2, 3, 4 & 5
D	D	LOW-PROFILE CURVED BASKET LED WRAPAROUND	LITHONIA	LBL4 48L EZ1 LP835	1	LED	3500 'K	≥90	50,000 HRS	120V	39W	WHITE PAINT	SURFACE CEILING	SEE NOTE 1, 2, 3, 4 & 5
E	E	EMERGENCY LIGHT WITH BATTERY PACK	LITHONIA	ELM2 LED HO	2	LED	–	–	–	120V	3W	THERMOPLASTIC WHITE	SURFACE WALL 8' AFF	SEE NOTE 1, 2, 3, 4 & 5
E1	E1	OUTDOOR REMOTE EMERGENCY LIGHTING	LITHONIA	ELA TQWP L0304SD	2	LED	–	–	–	120V	3W	THERMOPLASTIC WHITE	SURFACE WALL 8' AFF	SEE NOTE 1, 2, 3, 4 & 5
F	F	SURFACE 4' WALL MOUNTED VANITY LED	LITHONIA	FMVTSL 48IN MVOLT 35K 90CRI BN	1	LED	3500 'K	≥90	50,000 HRS	120V	34W	BRUSHED NICKEL	SURFACE WALL 8' AFF	SEE NOTE 1, 2, 3, 4 & 5
F1	F1	SURFACE 2' WALL MOUNTED VANITY LED	LITHONIA	FMVTSL 24IN MVOLT 35K 90CRI BN	1	LED	3500 'K	≥90	50,000 HRS	120V	17W	BRUSHED NICKEL	SURFACE WALL 8' AFF	SEE NOTE 1, 2, 3, 4 & 5
G	G	RECESSED 8" LED DOWNLIGHT	GOTHAM	EVO 35/30 8AR MWD LSS 120 EZ1 TRW LS AR	1	LED	3500 'K	≥80	50,000 HRS	120V	47W	SPECULAR(LS). CLEAR(AR)	RECESSED	SEE NOTE 1, 2, 3, 4 & 5
G1	G1	RECESSED 6" LED NON-CONDUCTIVE SHOWER LIGHT	GOTHAM	EVO 35/35 6 DFR 120 EZ1 LS AR	1	LED	3500 'K	≥80	50,000 HRS	120V	30W	SPECULAR(LS). CLEAR(AR)	RECESSED	SEE NOTE 1, 2, 3, 4 & 5
H	H	UNDER CABINET MOUNT 2' LED	LITHONIA	UCLD 24IN 35K 90CRI WH UC ERC	1	LED	3500 'K	≥90	50,000 HRS	120V	39W	WHITE PAINT	SURFACE UNDER CABINET	SEE NOTE 1, 2, 3, 4 & 5
I	I	RECESSED 6" LED DOWNLIGHT WALL WASH	GOTHAM	EVO WW 35/25 AR LSS CRI90	1	LED	3500 'K	≥90	50,000 HRS	120V	30W	CLEAR	RECESSED IN T-GRID CEILING	SEE NOTE 1, 2, 3, 4 & 5
J	J	EXTERIOR LED WALLPACK LIGHT FIXTURE	HUBBEL	LNC2 18LU 4K 4	1	LED	4000 'K	≥70	60,000 HRS	120V	41W	BLACK	SURFACE WALL 13' AFF	SEE NOTE 1, 2, 3, 4 & 5
K	K	VANDAL RESISTANT 8" LED DOWNLIGHT	GOTHAM	EVO VR 35/30 8WR T73 120	1	LED	3500 'K	≥90	50,000 HRS	120V	39W	WITHE W/PRISMATIC LENS	RECESSED	SEE NOTE 1, 2, 3, 4 & 5
L	L	RECESSED 6" LED DOWNLIGHT	PHILIPS LIGHTOLIER	FRAME: C6RN ENGINE: C6L35940MZ10U TRIM: C6RDLCL	1	LED	4000 'K	≥90	50,000 HRS	120V	30W	SPECULAR CLEAR WHITE FLANGE	RECESSED	SEE NOTE 1, 2, 3, 4 & 5
X	X	LED EMERGENCY EXIT SIGN	BARRON EXITRONIX	402E-WB-BL-G2	1	LED	3500 'K	–	–	120V	≤2.5W	BLACK W/ ALUMINUM FACE	WALL	SEE NOTE 1, 2, 3, 4, 5 & 6
X2	X2	LED EMERGENCY EXIT SIGN DOUBLE FACE WITH ARROWS AS REQUIRED	BARRON EXITRONIX	403E-WB-BL-G2	1	LED	3500 'K	–	–	120V	≤5W	BLACK W/ ALUMINUM FACE	CEILING	SEE NOTE 1, 2, 3, 4, 5 & 6

FIXTURE SCHEDULE NOTES:

1. COORDINATE ALL FIXTURE QUANTITIES AND PLACEMENT REQUIREMENTS.
2. CONTRACTOR SHALL BE RESPONSIBLE FOR ORDERING AND COORDINATING ALL FIXTURE OPTIONS AND ACCESSORIES TO ENSURE A COMPLETE QUALITY INSTALLATION.
3. FOR ALL LIGHT FIXTURES, FINISH SHOULD BE COORDINATED WITH ARCHITECT.
4. FOR ALL LIGHT FIXTURES, REFER TO ARCHITECTURAL DRAWINGS FOR EXACT LOCATIONS AND MOUNTING HEIGHT.
5. LIGHTING SUBSTITUTIONS SHALL BE APPROVED BY THE OWNER / ARCHITECT PRIOR TO ORDERING AND INSTALLING.
6. FOR EXIT LIGHTS PROVIDE SINGLE OR DOUBLE FACE AS INDICATED ON FLOOR PLANS ALSO PROVIDE INTEGRAL BATTERY BACK-UP.

PANEL: CO SECTION 1

MOUNTING: SURFACE

MAIN: 500 MCB

AMP: 600 VOLT: 208Y/120
PHASE: 3 4 WIRE + GND
AIC: 22K AMPS RMS SYM

Branch Circuit Load Description	KVA Load A	KVA Load B	KVA Load C	Trip Poles	Circuit Wiring NO	Circuit Wiring Size	Circuit Wiring GND	Circuit Wiring C	Ckt. No.	Phase	Ckt. No.	Circuit Wiring NO	Circuit Wiring Size	Circuit Wiring GND	Circuit Wiring C	Trip Poles	KVA Load A	KVA Load B	KVA Load C	Branch Circuit Load Description
LIGHTS RM. 101-105	0.70			20/1	2	#12	#12	3/4"	1	A	2	2	#12	#12	3/4"	20/2	1.00			CIRC. PUMP P-1
LIGHTS RM. 106-111		0.70		20/1	2	#12	#12	3/4"	3	B	4	-	-	-	-	-		1.00		-
LIGHTS 100, 113, 114, 115, 116			0.90	20/1	2	#12	#12	3/4"	5	C	6	2	#12	#12	3/4"	20/2			1.00	CIRC. PUMP P-2
LIGHTS CO 117	0.40			20/1	2	#12	#12	3/4"	7	A	8	-	-	-	-	-	1.00			-
LIGHTING CONTROL PANEL		1.50		40/3	4	#8	#10	1"	9	B	10	2	#12	#12	3/4"	20/2		0.70		D.SPLIT SYSTEM DSS-1
-			1.20	-	-	-	-	-	11	C	12	-	-	-	-	-			0.70	-
-	1.70			-	-	-	-	-	13	A	14	2	#6	#10	1"	60/2	4.50			W. HEATER DWH-1
RECEPTACLES RM.104		1.00		20/1	2	#12	#12	3/4"	15	B	16	-	-	-	-	-		4.50		-
RECEPTACLES RM.102			1.00	20/1	2	#12	#12	3/4"	17	C	18	2	#12	#12	3/4"	20/1			0.90	GLYCOL FEED SYSTEM GFS-1
RECEPTACLES RM.101	1.00			20/1	2	#12	#12	3/4"	19	A	20	3	#8	#10	1"	40/3	3.80			W. A. HEAT PUMP WTAHP-1
RECEPTACLE IT RM.106		1.00		20/1	2	#12	#12	3/4"	21	B	22	-	-	-	-	-		3.80		-
RECEPTACLE IT RM.106			1.00	20/1	2	#12	#12	3/4"	23	C	24	-	-	-	-	-			3.80	-
RECEPTACLE SEC. RM.106	1.00			20/1	2	#12	#12	3/4"	25	A	26	3	#10	#10	3/4"	30/3	2.30			W. A. HEAT PUMP WTAHP-2
RECEPTACLES LOBBY/CORR. 100		1.00		20/1	2	#12	#12	3/4"	27	B	28	-	-	-	-	-		2.30		-
RECETACLES W/B. 113			1.00	20/1	2	#12	#12	3/4"	29	C	30	-	-	-	-	-			2.30	-
RECEPTACLES MENS TR.110	1.00			20/1	2	#12	#12	3/4"	31	A	32	3	#12	#12	3/4"	20/3	1.00			SUSPENDED UNIT HEATER UH-1
RECEPTACLES W.TR.115-ST.112		1.00		20/1	2	#12	#12	3/4"	33	B	34	-	-	-	-	-		1.00		-
RECEPTACLES RM.107			1.00	20/1	2	#12	#12	3/4"	35	C	36	-	-	-	-	-			1.00	-
RECEPTACLE OUTDOOR	0.20			20/1	2	#12	#12	3/4"	37	A	38	2	#12	#12	3/4"	20/1	0.10			CONDENSATE PUMP
SECURITY DOORS		0.90		20/1	2	#12	#12	3/4"	39	B	40	2	#12	#12	3/4"	20/1		0.20		EXHAUST FAN EF-1
SECURITY DOORS			0.60	20/1	2	#12	#12	3/4"	41	C	42	2	#12	#12	3/4"	20/1			0.10	FUEL MANAGEMENT PANEL
	6.00	7.10	6.70		<< PHASE SUB-TOTALS >>												13.70	13.50	9.80	MECH EQUIP. CIRCUIT BREAKERS SHALL BE HACR RATED.

PROVIDE THE FOLLOWING:

PHASE A 19.70 kVA
PHASE B 20.60 kVA
PHASE C 16.50 kVA

56.80 kVA CONNECTED LOAD (SECTION 1)
104.90 kVA CONNECTED LOAD (SECTION 2)
161.70 kVA TOTAL CONNECTED LOAD
156.09 kVA TOTAL DEMAND LOAD

NOTE:

1. SEE SITE PLAN ON DRAWING E-102 FOR LIGHT LOCATIONS

PANEL: LC

MOUNTING: SURFACE

MAIN: MLO

AMP: 100 VOLT: 208Y/120
PHASE: 3 4 WIRE + GND
AIC: 14K AMPS RMS SYM

Branch Circuit Load Description	KVA Load A	KVA Load B	KVA Load C	Trip Poles	Wiring NO	Wiring Size	Wiring GND	Wiring C	Ckt. No.	Phase	Ckt. No.	Wiring NO	Wiring Size	Wiring GND	Wiring C	Trip Poles	KVA Load A	KVA Load B	KVA Load C	Branch Circuit Load Description
CREW OUTDOOR LIGHTS	0.50			20/1	2	#12	#12	3/4"	1	A	2	2	#10	#10	1"	20/2	0.50			OUTDOOR LIGHTS (1)
CREW OUTDOOR LIGHTS		0.50		20/1	2	#12	#12	3/4"	3	B	4	-	-	-	-	-		0.50		-
SPARE			0.00	20/1	-	-	-	-	5	C	6	2	#10	#10	1"	20/2			0.50	OUTDOOR LIGHTS (1)
SPARE	0.00			20/1	-	-	-	-	7	A	8	-	-	-	-	-	0.50			-
SPARE		0.00		20/1	-	-	-	-	9	B	10	2	#10	#10	1"	20/2		0.50		OUTDOOR LIGHTS (1)
SPARE			0.00	20/1	-	-	-	-	11	C	12	-	-	-	-	-			0.50	-
SPARE	0.00			20/1	-	-	-	-	13	A	14	-	-	-	-	20/2	0.00			SPARE
SPARE		0.00		20/1	-	-	-	-	15	B	16	-	-	-	-	-		0.00		-
SPARE			0.00	20/1	-	-	-	-	17	C	18	-	-	-	-	20/2			0.00	SPARE
SPARE	0.00			20/1	-	-	-	-	19	A	20	-	-	-	-	-	0.00			-
SPARE		0.00		20/1	-	-	-	-	21	B	22	-	-	-	-	20/2		0.00		SPARE
SPARE			0.00	20/1	-	-	-	-	23	C	24	-	-	-	-	-			0.00	-
SPARE	0.00			20/1	-	-	-	-	25	A	26	-	-	-	-	20/2	0.00			SPARE
SPARE		0.00		20/1	-	-	-	-	27	B	28	-	-	-	-	-		0.00		-
SPARE			0.00	20/1	-	-	-	-	29	C	30	-	-	-	-	20/1			0.00	SPARE
	0.50	0.50	0.00	SE SUB-TOTALS >>													1.00	1.00	1.00	MECH EQUIP. CIRCUIT BREAKERS SHALL BE HACR RATED.

PROVIDE THE FOLLOWING:

PHASE A 1.50 kVA
PHASE B 1.50 kVA
PHASE C 1.00 kVA

4.00 kVA TOTAL CONNECTED LOAD
4.00 kVA TOTAL DEMAND LOAD

NOTE:

1. SEE SITE PLAN ON DRAWING E-102 FOR OUTDOOR LIGHT LOCATIONS

PANEL: RP1

MOUNTING: SURFACE

MAIN: 250 MCB

AMP: 250 VOLT: 208Y/120
PHASE: 3 4 WIRE + GND
AIC: 14K AMPS RMS SYM

Branch Circuit Load Description	KVA Load A	KVA Load B	KVA Load C	Trip Poles	Circuit NO	Circuit Size	Circuit GND	Circuit C	Ckt. No.	Phase	Ckt. No.	Circuit NO	Circuit Size	Circuit GND	Circuit C	Trip Poles	KVA Load A	KVA Load B	KVA Load C	Branch Circuit Load Description
GENERATOR LOAD CENTER	7.00			100/3	4	#2	#8	1-1/2"	1	A	2	4	#2	#8	1-1/2"	100/3	7.00			GENERATOR LOAD CENTER
-		7.00		-	-	-	-	-	3	B	4	-	-	-	-	-		7.00		-
-			7.00	-	-	-	-	-	5	C	6	-	-	-	-	-			7.00	-
SPARE	0.00			20/1	-	-	-	-	7	A	8	-	-	-	-	20/1	0.00			SPARE
SPARE		0.00		20/1	-	-	-	-	9	B	10	-	-	-	-	20/2		0.00		SPARE
SPARE			0.00	20/1	-	-	-	-	11	C	12	-	-	-	-	-			0.00	-
SPARE	0.00			20/1	-	-	-	-	13	A	14	-	-	-	-	20/2	0.00			SPARE
SPARE		0.00		20/1	-	-	-	-	15	B	16	-	-	-	-	-		0.00		-
SPARE			0.00	20/1	-	-	-	-	17	C	18	-	-	-	-	20/2			0.00	SPARE
SPARE	0.00			20/1	-	-	-	-	19	A	20	-	-	-	-	-	0.00			-
SPARE		0.00		20/1	-	-	-	-	21	B	22	-	-	-	-	20/2		0.00		SPARE
SPARE			0.00	20/1	-	-	-	-	23	C	24	-	-	-	-	-			0.00	-
SPARE	0.00			20/1	-	-	-	-	25	A	26	-	-	-	-	20/2	0.00			SPARE
SPARE		0.00		20/1	-	-	-	-	27	B	28	-	-	-	-	-		0.00		-
SPARE			0.00	20/1	-	-	-	-	29	C	30	-	-	-	-	20/1			0.00	SPARE
	7.00	7.00	7.00	SE SUB-TOTALS >>													7.00	7.00	7.00	MECH EQUIP. CIRCUIT BREAKERS SHALL BE HACR RATED.

PROVIDE THE FOLLOWING:

PHASE A 14.00 kVA
PHASE B 14.00 kVA
PHASE C 14.00 kVA

42.00 kVA TOTAL CONNECTED LOAD
21.00 kVA TOTAL DEMAND LOAD

PANEL: CO SECTION 2

MOUNTING: SURFACE

MAIN: MLO

AMP: 600 VOLT: 208Y/120
PHASE: 3 4 WIRE + GND
AIC: 22K AMPS RMS SYM

Branch Circuit Load Description	KVA Load A	KVA Load B	KVA Load C	Trip Poles	Circuit Wiring NO	Circuit Wiring Size	Circuit Wiring GND	Circuit Wiring C	Ckt. No.	Phase	Ckt. No.	Circuit Wiring NO	Circuit Wiring Size	Circuit Wiring GND	Circuit Wiring C	Trip Poles	KVA Load A	KVA Load B	KVA Load C	Branch Circuit Load Description
SPARE	0.00			30/3	-	-	-	-	43	A	44	-	-	-	-	100/3	8.20			TRUCK SHED 1
-		0.00		-	-	-	-	-	45	B	46	-	-	-	-	-		8.20		-
-			0.00	-	-	-	-	-	47	C	48	-	-	-	-	-			8.20	-
VENDING RM.117	1.00			20/1	2	#12	#12	3/4"	49	A	50	-	-	-	-	50/3	3.00			TRUCK SHED 2
ICE MAKER RM.117		1.20		20/1	2	#12	#12	3/4"	51	B	52	-	-	-	-	-		3.00		-
COFFEE RM.117			1.00	20/1	2	#12	#12	3/4"	53	C	54	-	-	-	-	-			3.00	-
TOASTER RM.117	1.00			20/1	2	#12	#12	3/4"	55	A	56	-	-	-	-	70/3	4.40			TRUCK SHED 3
MICROWAVE RM.117		1.20		20/1	2	#12	#12	3/4"	57	B	58	-	-	-	-	-		4.40		-
RANGE RM.117			1.50	20/1	2	#12	#12	3/4"	59	C	60	-	-	-	-	-			4.40	-
REC.COUNTER RM.117	1.00			20/1	2	#12	#12	3/4"	61	A	62	-	-	-	-	70/3	4.40			TRUCK SHED 4
REFRIGERATOR RM.117		1.00		20/1	2	#12	#12	3/4"	63	B	64	-	-	-	-	-		4.40		-
RECEPTACLES RM. 117			1.00	20/1	2	#12	#12	3/4"	65	C	66	-	-	-	-	-			4.40	-
RECEPTACLES RM. 117	1.00			20/1	2	#12	#12	3/4"	67	A	68	-	-	-	-	100/3	6.60			TRUCK SHED 5
RECEPTACLES RM. 117		1.00		20/1	2	#12	#12	3/4"	69	B	70	-	-	-	-	-		6.60		-
SPARE			0.00	20/1	-	-	-	-	71	C	72	-	-	-	-	-			6.60	-
SPARE	0.00			20/1	-	-	-	-	73	A	74	-	-	-	-	70/3	4.40			TRUCK SHED 6
SPARE		0.00		20/1	-	-	-	-	75	B	76	-	-	-	-	-		4.40		-
SPARE			0.00	20/1	-	-	-	-	77	C	78	-	-	-	-	-			4.40	-
SPARE	0.00			20/1	-	-	-	-	79	A	80	-	-	-	-	100/3	0.00			SPARE
SPARE		0.00		20/1	-	-	-	-	81	B	82	-	-	-	-	-		0.00		-
SPARE			0.00	20/1	-	-	-	-	83	C	84	-	-	-	-	-			0.00	-
	4.00	4.40	3.50	<< PHASE SUB-TOTALS >>													31.00	31.00	31.00	MECH EQUIP. CIRCUIT BREAKERS SHALL BE HACR RATED.

PROVIDE THE FOLLOWING:

PHASE A 35.00 kVA
PHASE B 35.40 kVA
PHASE C 34.50 kVA

104.90 kVA TOTAL CONNECTED LOAD
100.74 kVA TOTAL DEMAND LOAD

UNOFFICIAL WEBSITE COPY

E-501

ADDENDUMS / REVISIONS

NORTH DISTRICT
CREW QUARTERS AND SITE WORK, PHASE 1A

CONTRACT	BRIDGE NO.	N/A
T201880103	DESIGNED BY:	JRM
COUNTY		
NEW CASTLE	CHECKED BY:	JL

CREW OPERATIONS BUILDING ELECTRICAL SCHEDULES

SECTION: JMT
SHEET NO. 76

Q:\MDE\151152_010_Chapman_Yard_-_Phase\CADD\WEP\Electrical\15-1152-010-E-501.dwg