THE STATE OF DELAWARE
DEPARTMENT OF TRANSPORTATION

U.S. CUSTOMARY UNITS

CONSTRUCTION PLANS FOR:

MILLER ROAD STREETSCAPE IMPROVEMENTS PHASE II

CONTRACT NUMBER: T201901101
FEDERAL AID PROJECT NUMBER: ESTP-N217(02)

COUNTY: NEW CASTLE **M.R. #:** N217

UNOFFICIAL WEBSITE COPY

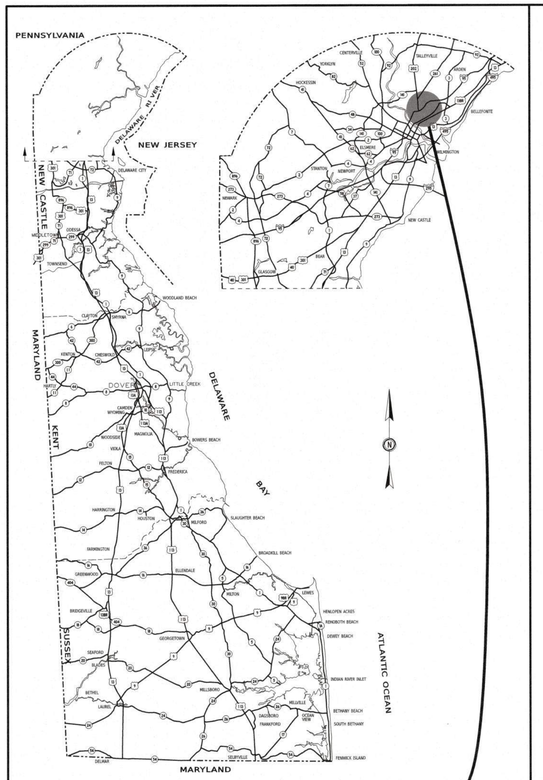

GENERAL LOCATION OF CONTRACT

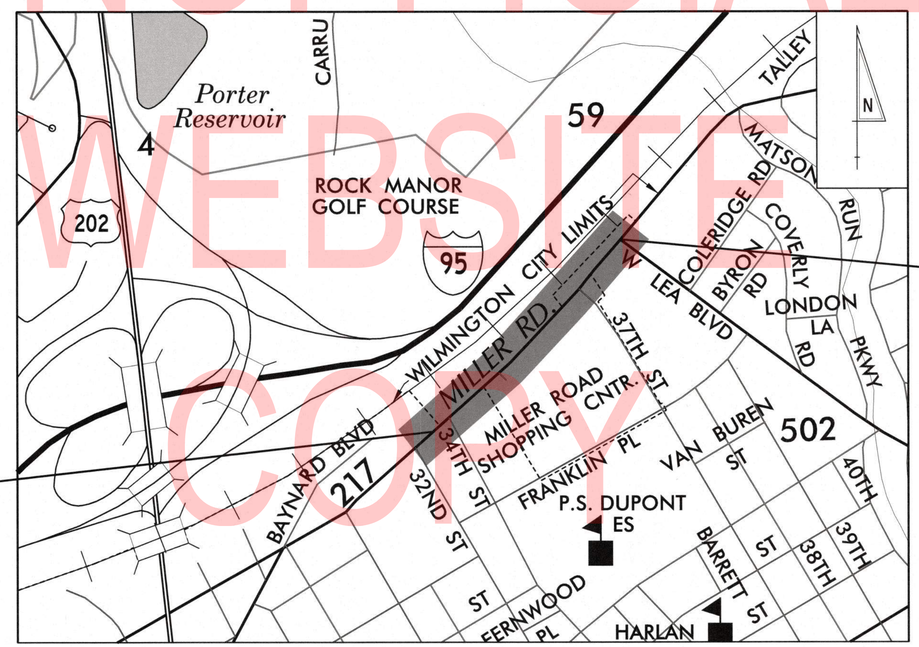

PROJECT LOCATION
NOT TO SCALE

BEGIN CONTRACT
STA. 100+32.98

END CONTRACT
120+71.65

DESIGN DESIGNATION

MRD #: N217	ROAD NAME: MILLER ROAD		
FUNCTIONAL CLASS: MAJOR COLLECTOR		D.H.V. PROJECTED: N/A	YEAR: N/A
TYPE OF CONSTRUCTION: PEDESTRIAN IMPROVEMENTS		DESIGN SPEED: 25 M.P.H.	
A.A.D.T. CURRENT: 10,649	YEAR: 2017	TRUCKS: N/A	
A.A.D.T. PROJECTED: N/A	YEAR: N/A	DIRECTION OF DISTRIBUTION: N/A	

APPROVED DESIGN EXCEPTIONS

DESIGN PARAMETER	REQUIRED	PROVIDED	DATE

ADDENDA / REVISIONS

ASSOCIATED CONTRACTS

CONTRACT NO.	CONTRACT NAME
1401	MILLER ROAD (LEA BLVD. TO CONCORD PIKE)

APPROVED FOR ADVERTISEMENT

Dan A Bogar 1/22/20
DIRECTOR OF PLANNING DATE

PREPARED BY
CENTURY ENGINEERING

Jonathan Michael Herrick 1-22-20
THIS SEAL APPLIES TO ALL SHEETS BEARING THE "CEI" SECTION DESIGNATION. DATE

JONATHAN MICHAEL HERRICK LICENSE No. 10572 DELAWARE PROFESSIONAL ENGINEER
SEAL

LAST REVISED: 11/26/2018
22-JAN-2020
08:05
G:\PROJECTS\185003.00 Agmt 1834 TAP\185003.08 (Task 8 - Miller Road)\Cadd\Sheets\TC\tc00_miller.dgn

INDEX OF SHEETS		
SECTION	SHEET DESCRIPTION	SHEET NO(S)
CEI	TITLE	1
CEI	INDEX OF SHEETS	2
CEI	ADDENDA AND REVISIONS	3
CEI	LEGEND	4
CEI	NOTES	5
CEI	TYPICAL SECTIONS	6
CEI	HORIZONTAL AND VERTICAL CONTROL	7-8
CEI	CONSTRUCTION PLANS	9-13
CEI	PROFILES	14
CEI	GRADES AND GEOMETRICS	15-19
CEI	CONSTRUCTION DETAILS	20-26
CEI	ENVIRONMENTAL COMPLIANCE PLAN	27
CEI	CONSTRUCTION PHASING, M.O.T. AND EROSION CONTROL PLANS	28-41
CEI	SIGNING AND STRIPING PLANS	42-48
CEI	SIGNALIZATION PLANS	49
CEI	RIGHT-OF-WAY PLANS	50-57

UNOFFICIAL WEBSITE COPY

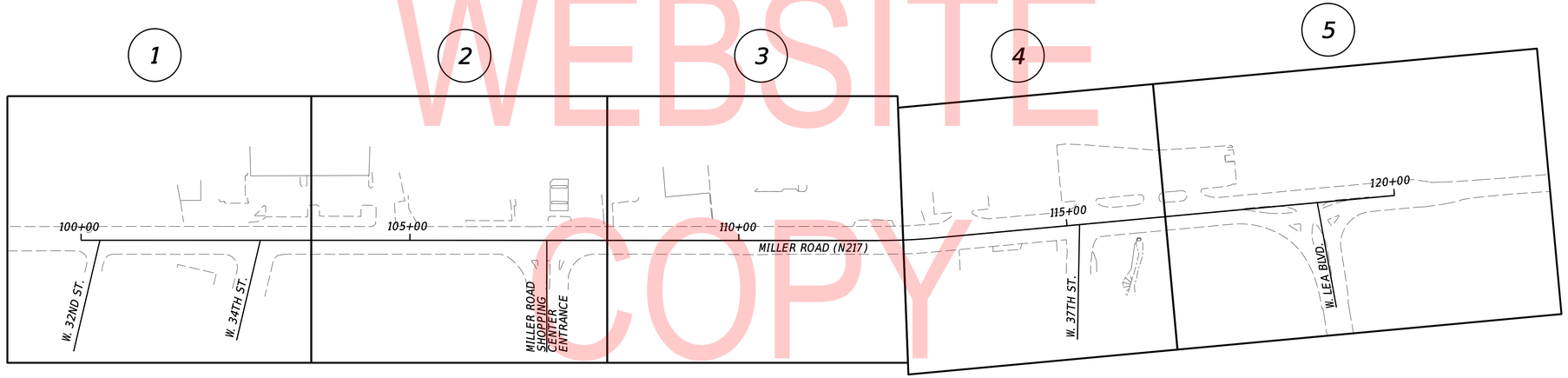

23-JAN-2020
13:32
G:\PROJECTS\185003.00 Agmt 1834 TAP\185003.08 (Task 8 - Miller Road)\Cadd\Base\is01_miller.dgn

ADDENDA / REVISIONS	

SCALE
0 100 200 300
FEET

MILLER ROAD STREETSCAPE IMPROVEMENTS PHASE II

CONTRACT	BRIDGE NO.	X
T201901101	DESIGNED BY:	T. BANEZ
COUNTY		
NEW CASTLE	CHECKED BY:	W. CONWAY

INDEX OF SHEETS

SECTION
CEI
SHEET NO.
2

UNOFFICIAL
WEBSITE
COPY

ADDENDA / REVISIONS		NOT TO SCALE	MILLER ROAD STREETSCAPE IMPROVEMENTS PHASE II	CONTRACT	BRIDGE NO.	X	ADDENDA AND REVISIONS	SECTION
				T201901101	DESIGNED BY:	T. BANEZ		CEI
				COUNTY				SHEET NO.
				NEW CASTLE	CHECKED BY:	W. CONWAY		3

23-JAN-2020
13:32
G:\PROJECTS\185003.00 Agmt 1834 TAP\185003.08 (Task 8 - Miller Road)\Cadd\Base\ar01_miller.dgn

EXISTING SYMBOLS

DRAINAGE

	DITCH OR STREAM CENTERLINE
	DIRECTIONAL STREAM FLOW ARROW
C.B. / D.I.	DRAINAGE INLET
J.B.	DRAINAGE JUNCTION BOX
D	DRAINAGE MANHOLE
SIZE/TYPE LABEL	DRAINAGE PIPE AND FLOW ARROW
	DRAINAGE PIPE HEADWALL
	RIPRAP - AREA FEATURE
	RIPRAP - LINEAR FEATURE

MANMADE ROADSIDE FEATURES

	BOLLARD - STEEL POLE
	BOLLARD - WOOD POST
(TYPE LABEL)	CURB
(TYPE LABEL)	CURB AND GUTTER
	FENCE - CHAINLINK OR STRANDED
	FENCE - STOCKADE OR SPLIT RAIL
F.P.	FLAG POLE
	GUARDRAIL - STEEL BEAM
	GUARDRAIL - WIRE ROPE
LAMP	LAMP AND POST - RESIDENTIAL
MB	MAILBOX
P.M.	PARKING METER AND POST
	PAVEMENT - FLEXIBLE
	PAVEMENT - RIGID
	PILE - BRIDGE
	PILLAR OR MISCELLANEOUS POST
	TRAFFIC SIGN AND POST
	WALL - BRICK OR BLOCK
	WALL - STONE

NATURAL ROADSIDE FEATURES

	GRASS LAWN
	HEDGEROW OR THICKET
	MARSH BOUNDARY LINE
	TREE - CONIFEROUS
	TREE - DECIDUOUS
	TREE STUMP
	SHRUBBERY
WL	DELINEATED WETLAND BOUNDARY LINE
	WOODS LINE BOUNDARY

RIGHT-OF-WAY SYMBOLS

C.M.	PROPERTY MARKER - CONCRETE MON.
I.P.	PROPERTY MARKER - IRON PIPE
100+00	HISTORIC RIGHT-OF-WAY BASELINE
	EXISTING RIGHT-OF-WAY
	EXISTING PROPERTY LINE
EASEMENT TYPE	EXISTING EASEMENT
DA	EXISTING DENIAL OF ACCESS
R/W-DA	EXISTING R/W & DENIAL OF ACCESS

SURVEY CONTROL & MONUMENTATION

B.M.	SURVEY BENCHMARK LOCATION
T.P.	SURVEY TIE POINT LOCATION
	SURVEY TRAVERSE POINT
	POINT OF CURVATURE OR TANGENCY
	POINT OF INTERSECTING TANGENTS

UTILITY

	SOIL BORING LOCATION
	UTILITY TEST HOLE LOCATION
TV	CABLE TV DISTRIBUTION BOX
E	ELECTRIC MANHOLE
EM	ELECTRIC METER
E	ELECTRIC TRANSFORMER
	POLE MOUNTED LUMINAIRE
G	GAS MANHOLE
G.M.	GAS METER
G.V.	GAS VALVE
G.P.	GAS PUMP - SERVICE STATION
	RAILROAD TRACKS
S	SANITARY SEWER MANHOLE
S.V.	SANITARY SEWER VALVE
S.C.O.	SANITARY SEWER CLEANOUT OR VENT
S.D.F.	SEPTIC DRAIN FIELD
B	TELEPHONE BOOTH
T	TELEPHONE MANHOLE
T	TELEPHONE TEST POINT
J.W.	TRAFFIC - CONDUIT JUNCTION WELL
	TRAFFIC - LIGHT POLE AND BASE
	TRAFFIC - PEDESTRIAN POLE & BASE
	TRAFFIC - SIGNAL CABINET & BASE
	TRAFFIC - SIGNAL POLE AND BASE
U	UTILITY BOX
	UTILITY POLE GUY WIRE ANCHOR
	UTILITY POLE
F.H.	WATER - FIRE HYDRANT
W.M.	WATER METER
WV	WATER VALVE
WELL	WELL HEAD
?	MANHOLE - UNDETERMINED OWNER

UTILITY COMPANY FACILITIES

DP-G	DELMARVA POWER - GAS (D)
DP-E	DELMARVA POWER - ELECTRIC (D)
CW-W	CITY OF WILMINGTON - WATER (D)
CW-S	CITY OF WILMINGTON - SEWER (D)
COM-C	COMCAST - UTILIQUEST - COMMUNICATION (D)
NCSS	NEW CASTLE DEPARTMENT OF SPECIAL SERVICES (D)
VER-C	VERIZON COMMUNICATION (D)

(X) REPRESENTS ASCE DEFINED SUE QUALITY LEVEL

PROPOSED SYMBOLS

CONSTRUCTION

	CONCRETE SAFETY BARRIER - PERMANENT
BFS	BIOFILTRATION SWALE
	BRICK PATTERNED SURFACE
	BUTT JOINT
CZ	CLEAR ZONE
100+00	CONSTRUCTION BASELINE
CSF	CONSTRUCTION SAFETY FENCE
	CURB, TYPE 1 & TYPE 3
	CURB, TYPE 2
	CURB & GUTTER, TYPE 1
	CURB & GUTTER, TYPE 2
	CURB & GUTTER, TYPE 3
	CURB & GUTTER, TYPE 4
	CURB OPENING - SUMP / ON GRADE
	CURB OPENING WITH SIDEWALK
	DRAINAGE INLET
	DITCH
	FENCE - METAL / FENCE - WOOD
	FLARED END / SAFETY END SECTION
	GUARDRAIL, TYPE 1
	GUARDRAIL, TYPE 2
	GUARDRAIL, TYPE 3
	GUARDRAIL END ANCHORAGE
	GUARDRAIL END TREATMENT, TYPE 1
	GUARDRAIL END TREATMENT, TYPE 2
	GUARDRAIL END TREATMENT, TYPE 3
	IMPACT ATTENUATOR
	JUNCTION BOX - DRAINAGE
LO	LATERAL OFFSET
LOC	LIMIT OF CONSTRUCTION
MB	MAILBOX
	MANHOLE
	PAVEMENT PATCH
	PAVEMENT REMOVAL - TOPSOIL, SEED AND MULCH
	PIPE & DIRECTIONAL FLOW ARROW
	RIPRAP
	P.C.C. SIDEWALK - 4"
	P.C.C. SIDEWALK - 6" (USE 8" DEPTH FOR CHANNELIZATION ISLANDS.)
	UNDERDRAIN
	UNDERDRAIN OUTLET

RIGHT-OF-WAY SYMBOLS

	PROPOSED RIGHT-OF-WAY MONUMENT
DA	PROPOSED DENIAL OF ACCESS
PE	PROPOSED PERMANENT EASEMENT
R/W	PROPOSED RIGHT-OF-WAY
R/W-DA	PROPOSED R/W & DENIAL OF ACCESS
RTE	RIGHT-TO-ENTER
TCE	TEMPORARY CONSTRUCTION EASEMENT
100+00	PROPOSED RIGHT-OF-WAY BASELINE

IDENTIFIERS

A / C	ADJUST BY CONTRACTOR
A / O	ADJUST BY OTHERS
B / XXX	CONCRETE SAFETY BARRIER
C / XXX	CURB OR CURB & GUTTER
CJB / XXX	CONVERT TO JUNCTION BOX
CMH / XXX	CONVERT TO DRAINAGE MANHOLE
C / O	CURB OPENING - SUMP / ON GRADE
CO / SW	CURB OPENING WITH SIDEWALK
CSF / XXX	CONSTRUCTION SAFETY FENCE
DI / XXX	DRAINAGE INLET
DND	DO NOT DISTURB
ED / XXX	ENERGY DISSIPATOR
F / XXX	FENCE
FES / XXX	FLARED END SECTION
FF / C	FILL WITH FLOWABLE FILL
FS	FILTRATION STRUCTURE
GR / XXX	GUARDRAIL
JB / XXX	JUNCTION BOX
MH / XXX	MANHOLE
M / XXX	MONUMENT - RIGHT-OF-WAY
PC / XX	PEDESTRIAN CONNECTION / TYPE
PC-N / XXX	PEDESTRIAN CONNECTION / TYPE WITHOUT SIDEWALK SURFACE DETECTABLE WARNING SYSTEM
P / XXX	PIPE
RL / C	RELOCATE BY CONTRACTOR
RL / O	RELOCATE BY OTHERS
RL / PO	RELOCATE BY PROPERTY OWNER
RM / C	REMOVE BY CONTRACTOR
RM / TC	REMOVE BY TRAFFIC CONTRACTOR
RM / O	REMOVE BY OTHERS
SES / XXX	SAFETY END SECTION
UD / XXX	UNDERDRAIN / LENGTH
UDO / XXX	UNDERDRAIN OUTLET PIPE

LANDSCAPING

LS / XXX	LANDSCAPE PLANTINGS
	SHRUBBERY
	CONIFEROUS TREE
	DECIDUOUS TREE

TRAFFIC

ITMS-CON	ITMS CONDUIT
SIG-CON	SIGNAL CONDUIT
	CONDUIT JUNCTION WELL
	LUMINAIRE
	PAVEMENT MARKINGS
	PAVEMENT STRIPING
	TRAFFIC SIGN

PAVEMENT SECTION(S)

	VARIABLE DEPTH MILL AND OVERLAY - SEE TYPICAL SECTIONS
	WIDENING AND PATCHING - SEE TYPICAL SECTIONS
	DRIVEWAY/ENTRANCE TIE-INS- SEE TYPICAL SECTIONS

UNOFFICIAL WEBSITE COPY

ADDENDA / REVISIONS

NOT TO SCALE

MILLER ROAD STREETSCAPE IMPROVEMENTS PHASE II

CONTRACT	BRIDGE NO.	X
T201901101	DESIGNED BY:	T. BANEZ
COUNTY	CHECKED BY:	W. CONWAY
NEW CASTLE		

LEGEND

SECTION
CEI
SHEET NO.
4

23-JAN-2020
13:32
G:\PROJECTS\185003.00 Agmt 1834 TAP\185003.08 (Task 8 - Miller Road)\Cadd\Base\lg01_miller.dgn

GENERAL NOTES

1. THIS PROJECT IS TO BE CONSTRUCTED IN ACCORDANCE WITH THE DELAWARE DEPARTMENT OF TRANSPORTATION "STANDARD SPECIFICATIONS", DATED AUGUST 2016 AND THE DELAWARE DEPARTMENT OF TRANSPORTATION "STANDARD CONSTRUCTION DETAILS", DATED 2018, INCLUDING ALL REVISIONS UP TO THE DATE OF ADVERTISEMENT.

2. ELECTRONIC PROJECT FILES THAT WILL BE MADE AVAILABLE TO THE AWARDED CONTRACTOR, INCLUDE:

( )	NONE
( )	ASCII DATA FILES WITH COORDINATES AND ELEVATIONS FOR PROPOSED POINTS AS SELECTED BY THE ENGINEER.
(X)	EXISTING DIGITAL TERRAIN MODEL, IN .DTM FILE FORMAT, COMPATIBLE WITH SOFTWARE CURRENTLY USED BY DELDOT.
(X)	PROPOSED DIGITAL TERRAIN MODEL, IN .DTM FILE FORMAT, COMPATIBLE WITH SOFTWARE CURRENTLY USED BY DELDOT.
( )	DESIGN FILE, IN .DGN FILE FORMAT, CONTAINING ONLY THE PROPOSED 3D TRIANGLES OF THE PROPOSED DIGITAL TERRAIN MODEL (DTM).

NOTES: 1. THE DOCUMENT ENTITLED "RELEASE FOR DELIVERY OF DOCUMENTS IN ELECTRONIC FORM TO A CONTRACTOR" MUST BE SIGNED BY ALL PARTIES PRIOR TO THE DELIVERY OF ANY ELECTRONIC PROJECT FILES.
2. THERE MAY BE SOME AREAS OF THE PROJECT NOT INCLUDED IN THE ELECTRONIC DATA DESIGN FILE(S). IT IS THE CONTRACTOR'S RESPONSIBILITY TO REVIEW THE DESIGN DATA FILE AND DETERMINE THE LIMITS OF THE PROJECT INCLUDED.

3. PROJECT FILES THAT WILL BE MADE AVAILABLE TO THE CONTRACTOR, INCLUDE:

( )	CROSS SECTIONS
(X)	RIGHT-OF-WAY PLANS (WILL BE MADE AVAILABLE TO THE AWARDED CONTRACTOR)

4. THE ADDITIONAL IMPERVIOUS AREA CREATED BY THIS PROJECT IS 0.13 ACRES.

5. THE CONTRACTOR SHALL BE RESPONSIBLE FOR ADHERING TO THE CONSTRUCTION SITE POLLUTION PREVENTION SPECIFICATIONS AS DETAILED IN SECTION 3.6 OF THE "DELAWARE EROSION AND SEDIMENT CONTROL HANDBOOK". ALL COSTS ASSOCIATED WITH ADHERING TO THE STANDARDS SHALL BE INCIDENTAL TO THE OVERALL CONTRACT COSTS.

PROJECT NOTES

SECTION 100

1. ANY DAMAGE DONE BY THE CONTRACTOR TO ITEMS NOTED TO BE RELOCATED OR RESET BY THE CONTRACTOR OR OTHERS, AT THE DISCRETION OF THE ENGINEER, SHALL BE REPAIRED AND/OR REPLACED IN KIND AT THE CONTRACTOR'S EXPENSE. ROADSIDE AMMENITIES WITHIN THE LIMITS OF CONSTRUCTION OR EASEMENT AREAS THAT ARE TO REMAIN IN PLACE AND ARE NOTED "DND" SHALL BE PROTECTED BY THE CONTRACTOR WITH SAFETY FENCE OR OTHER MEASURES AS DIRECTED BY THE ENGINEER. ALL PROTECTIVE COSTS SHALL BE INCIDENTAL TO ITEM 201000. ANY DAMAGE TO THESE AMMENITIES CAUSED BY THE CONTRACTOR SHALL BE REPAIRED OR THE AMMENITY IS TO BE REPLACED IN KIND AT THE CONTRACTOR'S EXPENSE.

2. THE CONTRACTOR WILL CONTACT THE DELAWARE TMC AT 302-659-4600 PRIOR TO ANY UNMANNED AIRCRAFT VEHICLE (UAV) FLIGHTS. THE CONTRACTOR WILL BE REQUIRED TO PROVIDE THE FOLLOWING INFORMATION:

   - THE FLIGHT REGISTRATION NUMBER OF THE UAV
   - THE FLIGHT TIME
   - THE PILOTS' NAME AND CONTACT NUMBER DURING THE FLIGHT

SECTION 200

3. ALL EXISTING INLETS AND PIPES WITHIN THE PROJECT LIMITS THAT ARE TO REMAIN SHALL BE CLEANED OUT. COST IS INCIDENTAL TO ITEM 201000.

4. ITEMS TO BE REMOVED UNDER ITEM 211000 - REMOVAL OF STRUCTURES AND OBSTRUCTIONS:
   - CONCRETE HEADWALL AND PAD AT OUTFALL AT ~STATION 116+05, RIGHT
   - DRAINAGE INLETS
   - POLE AND POLE BASE AT STA. 108+23, RIGHT
   - LANDSCAPING BLOCKS PROJECT PARCEL 214
   - GUARDRAIL AND POSTS PROJECT PARCEL 214

5. PARKING BUMPERS THAT NEED TO BE RELOCATED TEMPORARILY FOR DRIVEWAY OR ENTRANCE TIE-INS SHALL BE RESET IN THEIR ORIGINAL LOCATION ONCE THE TIE-IN WORK IS COMPLETE. ANY DAMAGE DONE TO PARKING BUMPERS IS AT THE CONTRACTOR'S EXPENSE. ALL COSTS ARE INCIDENTAL TO ITEM 211000.

SECTION 600

6. THE CONTRACTOR SHALL REPLACE ANY DRAINAGE INLET GRATES WITHIN THE PROJECT LIMITS ALONG THE EXISTING MILLER ROAD CURB LNE THAT ARE NOT DELDOT TYPE 1 DRAINAGE INLET GRATES WITH A TYPE 1 DRAINAGE INLET GRATE. COST IS INCIDENTAL TO ITEM 602130 - ADJUSTING AND REPAIRING DRAINAGE INLET.

7. WHEN INSTALLING DRAINAGE PIPES, COSTS FOR PIPE EXCAVATION, BACKFILLING, AND BORROW TYPE C BACKFILLING ARE INCIDENTAL TO ITEMS 601032, 601038, AND 601190.

8. WHEN INSTALLING DRAINAGE STRUCTURES, COSTS FOR EXCAVATION, BACKFILLING, AND BORROW TYPE C BACKFILL ARE INCIDENTAL TO ITEMS 602003, 602004, 602010, 602067, 602130, AND 602132.

9. WIDTH MEASUREMENT FOR 4" SIDEWALK WILL INCREASE FROM 5 FEET TO 6 FEET WITHIN THE LIMITS OF THE MODULAR BLOCK WALL (STA. 109+00 TO STA. 112+50, RIGHT OF CENTERLINE).

SECTION 700

10. IN AREAS WHERE PROPOSED CURB MEETS EXISTING CURB AND THE TWO CURB TYPES ARE NOT SIMILAR, THE PROPOSED CURB SHALL BE TRANSITIONED TO MATCH THE EXISTING CURB WITHIN 10 LINEAR FEET OR AS DIRECTED BY THE ENGINEER IN THE FIELD. PAYMENT FOR TRANSITIONING SHALL BE INCIDENTAL TO THE PROPOSED CURB ITEM.

11. WHERE PROPOSED CONCRETE SIDEWALK IS CONSTRUCTED TO MEET EXISTING SIDEWALK, THE EXISTING SIDEWALK SHALL BE SAWCUT AT THE TIE-IN POINT OR MEET THE NEAREST EXISTING SIDEWALK JOINT. ALL SAW CUTTING SHALL BE FULL DEPTH, UNLESS OTHERWISE NOTED ON THE PLANS OR DIRECTED BY THE ENGINEER AND SHALL BE PAID FOR UNDER ITEM 762001 - SAWCUTTING, CONCRETE, FULL DEPTH.

12. ALL PAVED AREAS TO BE RECONSTRUCTED OR WIDENED SHALL BE SAWCUT AT THE POINT WHERE THE NEW PAVEMENT IS TO TIE INTO THE EXISTING PAVEMENT, INCLUDING TIEING IN WITH MILL AND OVERLAY.

13. SEE GRADES AND GEOMETRICS SHEETS FOR LIMITS OF DEPRESSED CURBS AND ENTRANCES. USE 6" SIDEWALK OVER 6" GABC WHEREVER THE PROPOSED SIDEWALK IS SHADED, INCLUDING DRIVEWAYS, ENTRANCES, CURB RAMPS, AND BUS PADS. LIMITS OF 6" SIDEWALK OVER 6" GABC FOR CURB RAMPS AS PER STANDARD CONSTRUCTION DETAILS.

14. USE 8" SIDEWALK OVER 8" GABC IN ALL ISLANDS.

15. FULL DEPTH SAWCUTTING OF ASPHALT OVERLAID CONCRETE SHALL BE PAID UNDER ITEM 762001 ONLY. ITEM 762000 WILL NOT BE PAID IN ADDITION.

16. THE NEW CASTLE COUNTY DEPARTMENT OF PUBLIC WORKS SHALL SUPPLY AND THE STATE'S CONTRACTOR SHALL INSTALL NEW SELF-SEALING MANHOLE FRAMES AND COVERS ON ALL COUNTY SEWER MANHOLES THAT ARE NOT BEING RELOCATED, WITHIN THE PROJECT LIMITS IN ACCORDANCE WITH THE COUNTY'S STANDARD SPECIFICATIONS. THE NEW COVERS SHALL BE IN COMPLIANCE WITH ADA STANDARDS AS MUCH AS POSSIBLE. THE EXISTING MANHOLE COVERS AND FRAMES THAT ARE REMOVED SHALL BECOME THE PROPERTY OF THE STATE'S CONTRACTOR. PAYMENT SHALL BE INCIDENTAL TO ITEM 711500 - ADJUST AND REPAIR EXISTING SANITARY SEWER MANHOLE.

17. WATER METER ADJUSTMENTS WILL BE PAID FOR UNDER ITEM 710002, ADJUST WATER VAVLE BOXES.

SECTION 900

18. THIS PROJECT IS COVERED UNDER AN NPDES GENERAL PERMIT FOR CONSTRUCTION. UNDER THE GENERAL PERMIT, COMPLIANCE WITH DELDOT'S APPROVED SEDIMENT AND STORMWATER MANAGEMENT PLANS WILL CONSTITUTE COMPLIANCE WITH THE NPDES INDUSTRIAL PERMITTING REQUIREMENTS FOR THIS CONSTRUCTION PROJECT. A COPY OF THE NPDES GENERAL PERMIT AND NOI IS KEPT ON FILE IN EACH OF THE CONSTRUCTION OFFICES AND THE DEPARTMENT'S STORMWATER SECTION. A COPY OF THE GENERAL PERMIT OR THE NOI CAN BE OBTAINED UPON REQUEST FROM EITHER THE DEPARTMENT'S STORMWATER ENGINEER OR THE APPROPRIATE CONSTRUCTION ENGINEER.

MISCELLANEOUS NOTES

19. THE LOCATIONS OF ALL ABOVE GROUND ITEMS TO BE INSTALLED, SUCH AS PEDESTRIAN HANDRAILS, FENCES, SIGNS, ETC., SHALL BE VERIFIED BY THE ENGINEER PRIOR TO INSTALLATION. ALL COSTS INCIDENTAL ITEM 763501 - CONSTRUCTION ENGINEERING.

20. THE CONTRACTOR SHALL NOTIFY DART FIRST STATE AT DOT_DETOURS@DELAWARE.GOV AT LEAST 14 DAYS PRIOR TO THE START OF ANY DETOURS OR CONSTRUCTION, AND DOT_DTC_PROJECTDEVELOPMENT@DELAWARE.GOV AT SUCH TIME THE FACILITY IS COMPLETED AND OPERABLE FOR TRANSIT OPERATIONS. FOR EMERGENCE DETOUR INFORMATION ONLY, PLEASE CONTACT DTC'S CHIEF SCHEDULER AT 302-576-6019.

21. ALL COSTS ASSOCIATED WITH CONNECTING EXISTING DRAINAGE PIPES TO PROPOSED DRAINAGE INLETS ARE INCIDENTAL TO THE PROPOSED DRAINAGE INLET THE EXISTING DRAINAGE PIPES ARE BEING CONNECTED TO.

22. THE CONTRACTOR SHALL MARK THEIR COMPANY NAME IN THE CONCRETE, EITHER BY STAMPING OR BY INLAYING AN APPROVED METAL PLATE. THE STAMPED LETTERS SHALL BE ONE INCH IN HEIGHT AND ONE-QUARTER INCH DEEP. IF A METAL PLATE IS USED, THE TOP OF THE PLATE SHALL BE FLUSH WITH THE FINISHED SURFACE OF THE SIDEWALK. THE CONTRACTOR'S NAME SHALL BE MARKED AT THE ENDS OF THE FINISHED SIDEWALK AND MIDWAY BETWEEN THE ENDS IN ACCORDANCE WITH THE CITY OF WILMINGTON CODE OF ORDINANCES. ALL COSTS ARE INCIDENTAL TO THE PCC SIDEWALK ITEM BEING STAMPED.

23. THE CONTRACTOR SHALL CONTACT AND COORDINATE WITH ALL PROPERTY OWNERS AT LEAST 48 HOURS IN ADVANCE OF WORK AFFECTING ENTRANCES OR ACCESS OF ANY KIND TO THE PROPERTY. COSTS ARE INCIDENTAL TO ITEM 801000.

24. THE CONTRACTOR SHALL CONSTRUCT THE PROPOSED MODULAR BLOCK RETAINING WALL FROM THE GRASSY AREA IN FRONT OF THE HOME DEPOT, AND FROM INSIDE THE STATE RIGHT-OF-WAY. THE CONTRACTOR IS NOT ALLOWED TO OCCUPY ANY SPACE BEYOND THE EXISTING RIGHT-OF-WAY ON THE HOME DEPOT PROPERTY. SEE PLANS FOR ACCESS. THE MODULAR BLOCK RETAINING WALL SHALL BE BUILT IN PHASE 1, AS IDENTIFIED IN THE CONTRACT DOCUMENTS, AND SHALL BE COMPLETE WITHIN 60 CALENDAR DAYS FROM THE CONTRACTOR RECEIVING NOTICE TO PROCEED FROM DELDOT.

25. ALL DART SIGNS HAVE BEEN UPDATED TO A NEW DESIGN. THE DELDOT SIGN SHOP DOES NOT FABRICATE THE UPDATED SIGN OR ANY SUPPLEMENTAL PLAQUES TO ALLOW FOR ADDITIONAL ROUTE NUMBERS. ALL REQUESTS FOR FABRICATION OF THESE SIGNS MUST BE MADE THROUGH DART TRANSIT AT (302) 576-6132.

26. ALL DISTURBED AREAS WITHIN THE LIMIT OF CONSTRUCTION, SHALL BE TOPSOILED (6" MINIMUM), AND SEEDED AS DIRECTED BY THE ENGINEER. ALL COSTS ARE PAID UNDER THE RESPECTIVE ITEMS BEING INSTALLED.

27. THE P.S. DUPONT MIDDLE SCHOOL IS IN THE BRANDYWINE SCHOOL DISTRICT. THE TELEPHONE NUMBER FOR THE DISTRICT IS (302) 793-5000. THE TELEPHONE NUMBER FOR THE MIDDLE SCHOOL IS (302) 762-7146.

28. PRIOR TO CONSTRUCTION OF THE PROJECT, THE CONTRACTOR SHALL CONTACT DELDOT'S HAZMAT PROGRAM MANAGER'S OFFICE AT (302) 894-6308 TO SET UP AN ON-SITE MEETING TO DISCUSS HANDLING OF POTENTIAL CONTAMINATED SOIL. WORK SHALL BE IN CONFORMANCE WITH ITEM 202560 - CONTAMINATED MATERIAL.

UNOFFICIAL WEBSITE COPY

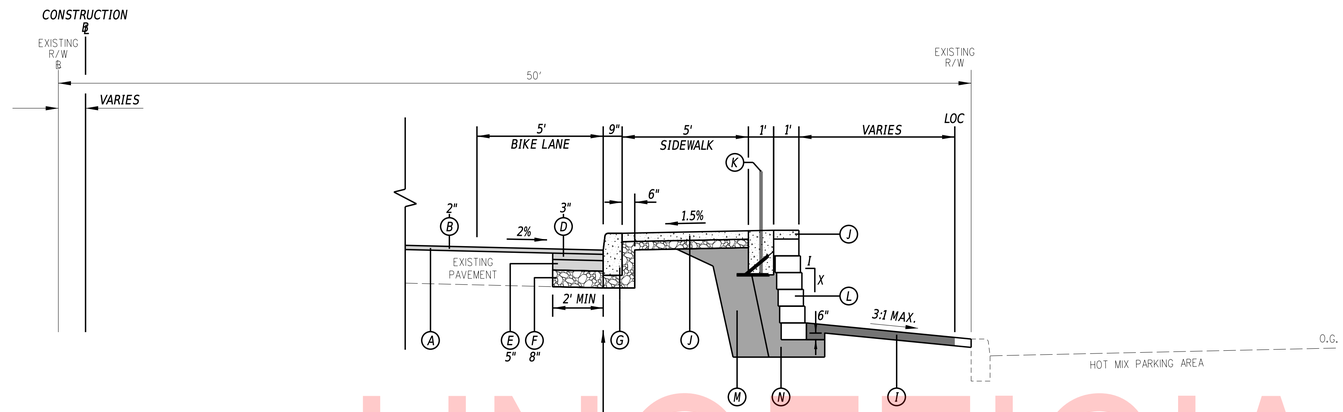

MILLER ROAD

STA. 109+00.00 TO STA. 112+50.00
(OUTSIDE TREATMENT, RIGHT SIDE)

NOTE: SEE MODULAR BLOCK RETAINING WALL SECTION WITH GEOGRID DETAIL ON SHEET 22

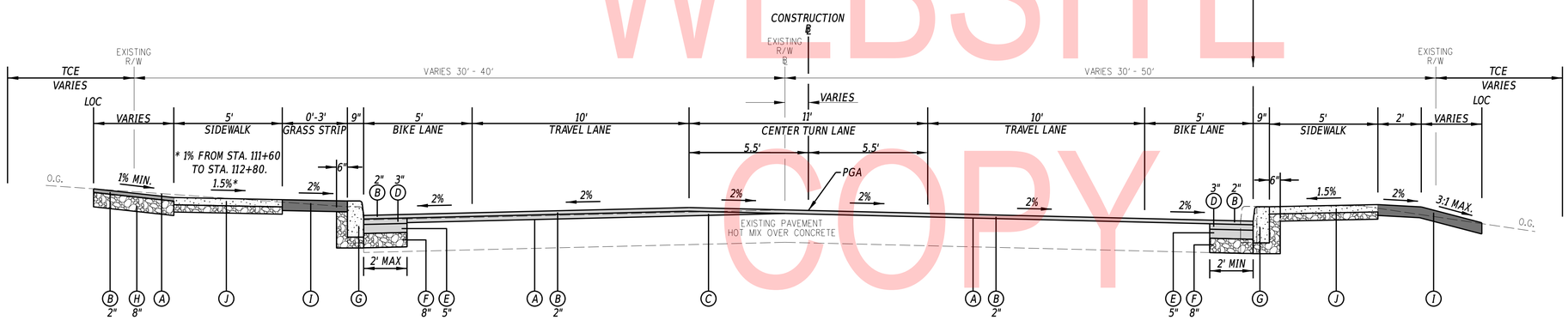

MILLER ROAD

STA. 100+32.98 TO STA. 117+48.15
(EXCLUDING OUTSIDE TREATMENT STA. 103+60 TO STA. 106+50 AND STA. 109+00 TO STA. 112+50 RIGHT)

NOTE: OUTSIDE TREATMENT APPLIES TO AREA BEHIND BACK OF PROPOSED SIDEWALK. SEE PLANS FOR TREATMENT IN THESE AREAS.

LEGEND

- (A) ITEM 760012 - PAVEMENT MILLING, BITUMINOUS CONCRETE PAVEMENT, VARIABLE DEPTH
- (B) ITEM 401006 - SUPERPAVE TYPE C, PG 70-22 (CARBONATE STONE)
- (C) ITEM 401036 - SUPERPAVE TYPE C, PG 64-22, WEDGE
- (D) ITEM 401030 - SUPERPAVE TYPE B, PG 64-22, PATCHING
- (E) ITEM 401031 - SUPERPAVE BCBC, PG 64-22, PATCHING
- (F) ITEM 301002 - GRADED AGGREGATE BASE COURSE, TYPE B, PATCHING
- (G) ITEM 701013 - P.C.C. CURB, TYPE 1-8 OVER 4" GRADED AGGREGATE BASE COURSE
- (H) ITEM 301001 - GRADED AGGREGATE BASE COURSE, TYPE B
- (I) ITEM 908001 - TOPSOIL
  ITEM 908016 - PERMANENT GRASS SEEDING SUBDIVISION
- (J) ITEM 705001 - P.C.C. SIDEWALK, 4" OVER GABC, TYPE B, 4" (SEE PLANS)
  ITEM 705002 - P.C.C. SIDEWALK, 6" OVER GABC, TYPE B, 6" (SEE PLANS)
- (K) ITEM 727505 - STEEL RAIL FENCE
- (L) ITEM 607010 - MODULAR BLOCK RETAINING WALL
- (M) ITEM 209004 - BORROW, TYPE C *
- (N) ITEM 302005 - DELAWARE NO. 57 STONE *

* INCIDENTAL TO ITEM 607010 - MODULAR BLOCK RETAINING WALLS

ABBREVIATIONS

PR - POINT OF ROTATION
PDGA - PROFILE DITCH GRADE APPLICATION
PGA - PROFILE GRADE APPLICATION

PAVEMENT MATERIAL LIFT THICKNESS

MATERIAL	MINIMUM	MAXIMUM
BITUMINOUS CONCRETE SUPERPAVE, TYPE C	1.25"	2"
BITUMINOUS CONCRETE SUPERPAVE, TYPE B	2.25"	4"
BITUMINOUS CONCRETE BASE COURSE	3"	6"
GRADED AGGREGATE BASE COURSE, TYPE B	4"	8"

NOTES

1. BORROW, TYPE C SHALL BE PLACED IN SUCCESSIVE LAYERS NOT TO EXCEED 8" IN DEPTH, LOOSE MEASUREMENT, UNLESS OTHERWISE APPROVED BY THE ENGINEER.
2. SEE GRADES AND GEOMETRICS SHEETS FOR FURTHER DETAILS WITHIN THE LIMITS OF INTERSECTIONS.
3. LATERAL OFSET IS MEASURED TO THE POINT 4' (6' AT INTERSECTIONS AND ALONG OUTSIDES OF CURVES) BEHIND THE FACE OF CURB, WHERE APPLICABLE.

UNOFFICIAL WEBSITE COPY

ADDENDA / REVISIONS	NOT TO SCALE	MILLER ROAD STREETSCAPE IMPROVEMENTS PHASE II	CONTRACT T201901101	BRIDGE NO. X	TYPICAL SECTIONS	SECTION CEI
			COUNTY NEW CASTLE	DESIGNED BY: T. BANEZ		SHEET NO. 6
				CHECKED BY: W. CONWAY		

23-JAN-2020 13:32 G:\PROJECTS\185003.00 Agmt 1834 TAP\185003.08 (Task 8 - Miller Road)\Cadd\Sheets\TS\ts01_miller.dgn

CIRCULAR CURVE 1

	STATION	NORTHING	EASTING
PC (1001)	7+80.15	644165.8928	623268.9602
PI (1002)	8+23.51	644133.1445	623240.5412
CC (1003)		644779.9029	622561.4127
PT (1004)	8+66.81	644103.1613	623209.2188
Radius:	936.8201		
Delta:	5°18'00.00" Right		
Degree of Curvature(Arc):	6°06'57.55"		
Length:	86.6582		
Tangent:	43.3600		
Chord:	86.6273		
Middle Ordinate:	1.0018		
External:	1.0029		
Tangent Direction:	S 40°57'05.26" W		
Radial Direction:	N 49°02'54.74" W		
Chord Direction:	S 43°36'05.26" W		
Radial Direction:	N 43°44'54.73" W		
Tangent Direction:	S 46°15'05.26" W		

CIRCULAR CURVE 2

	STATION	NORTHING	EASTING
PC (1005)	23+93.23	643047.6500	622106.5610
PI (1006)	24+92.22	642979.1990	622035.0525
CC (1007)		643639.2864	621540.2214
PT (1008)	25+90.25	642929.7560	621949.2946
Radius:	819.0080		
Delta:	13°47'00.00" Right		
Degree of Curvature(Arc):	6°59'44.71"		
Length:	197.0243		
Tangent:	98.9900		
Chord:	196.5496		
Middle Ordinate:	5.9175		
External:	5.9606		
Tangent Direction:	S 46°15'05.26" W		
Radial Direction:	N 43°44'54.74" W		
Chord Direction:	S 53°08'35.26" W		
Radial Direction:	N 29°57'54.74" W		
Tangent Direction:	S 60°02'05.26" W		

HORIZONTAL / VERTICAL CONTROL DATA

POINT	STATION	OFFSET	NORTHING	EASTING	ELEVATION
TP-1	111+36.11	-30.28'	644071.7290	623132.5990	167.52
TP-2	108+05.53	-30.04'	643842.9660	622893.9530	155.40
TP-3	104+36.60	-35.54'	643591.8250	622623.6430	146.03
TP-4	100+65.01	-22.26'	643325.2800	622364.3940	135.37
TP-5	97+90.51	26.75'	643099.9820	622199.9960	132.03
TP-6	101+92.01	27.72'	643376.9950	622490.7020	139.40
TP-7	106+33.17	27.19'	643682.4420	622809.0160	148.57
TP-8	111+96.89	79.68'	644034.2560	623252.5360	156.78
TP-9	114+81.46	389.10'	644048.2980	623682.0720	145.02
TP-10	118+81.46	476.79'	644292.6820	624010.2490	150.67
TP-11	119+37.90	34.72'	644620.5180	623709.4220	167.80
TP-12	115+57.19	29.72'	644340.7850	623460.0610	162.55

NOTE: NEGATIVE OFFSET DENOTES LEFT OF BASELINE

EXISTING R/W ALIGNMENT CONTROL

POINT	STATION	OFFSET	NORTHING	EASTING
1000 (POB)	0+00.00	0.00	644755.1128	623780.2857
1009 (POE)	30+55.00	0.00	642697.6267	621546.6704
1010 (POB)	50+00.00	0.00	644608.5758	623653.1208
1011 (POE)	52+80.00	0.00	644439.0859	623875.9956

EXISTING R/W BASELINE TANGENT BEARINGS

TANGENT	BEARING
T1	S 40°57'05.26" W
T2	S 46°15'05.26" W
T3	S 60°02'05.26" W
T4	S 52°44'53.05" E

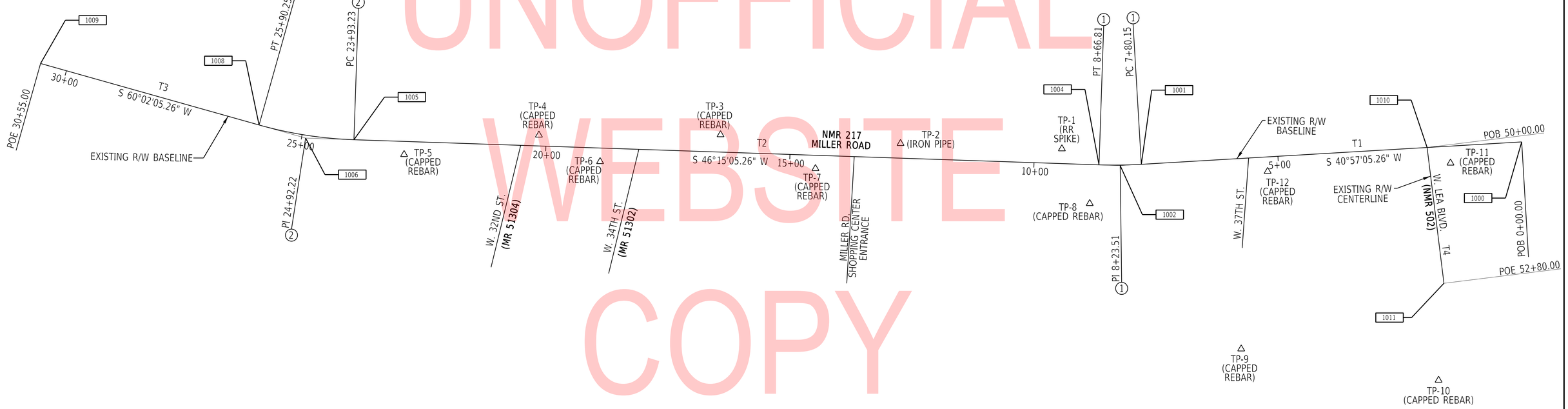

UNOFFICIAL WEBSITE COPY

DATUM REFERENCE:

HORIZONTAL - THIS PROJECT IS REFERENCED TO THE DELAWARE STATE PLANE COORDINATE SYSTEM, NORTH AMERICAN DATUM OF 1983 (NAD 83).

VERTICAL - THIS PROJECT IS REFERENCED TO THE NORTH AMERICAN VERTICAL DATUM OF 1988 (NAVD 88).

ADDENDA / REVISIONS

SCALE 0 100 200 300 FEET

MILLER ROAD STREETSCAPE IMPROVEMENTS PHASE II

CONTRACT	BRIDGE NO.	X
T201901101	DESIGNED BY:	T. BANEZ
COUNTY	CHECKED BY:	W. CONWAY
NEW CASTLE		

HORIZONTAL AND VERTICAL CONTROL

SECTION: CEI

SHEET NO. 7

23-JAN-2020
13:32
G:\PROJECTS\185003.00 Agmt 1834 TAP\185003.08 (Task 8 - Miller Road)\Cadd\Sheets\HV\hv01_miller.dgn

CONSTRUCTION BASELINE TANGENT BEARINGS

LINE	BEARING
T1	N 46°12'38.29" E
T2	N 48°40'54.22" E
T3	N 46°20'14.96" E
T4	N 46°19'17.86" E
T5	N 45°59'44.63" E
T6	N 46°15'41.56" E
T7	N 43°52'08.93" E
T8	N 41°09'48.20" E
T9	N 40°39'28.40" E
T10	N 40°47'25.19" E
T11	N 40°20'39.05" E
T12	N 42°10'36.88" E

CONSTRUCTION ALIGNMENT CONTROL

POINT	STATION	OFFSET	NORTHING	EASTING
2000	100+00.00	0.00'	643263.7660	622333.2905
2001	104+25.47	0.00'	643558.1971	622640.4344
2002	105+04.91	0.00'	643610.6422	622700.0931
2003	106+54.60	0.00'	643713.9927	622808.3850
2004	108+06.14	0.00'	643818.6468	622917.9820
2005	108+85.10	0.00'	643873.4989	622974.7746
2006	111+17.00	0.00'	644033.8317	623142.3280
2007	112+91.34	0.00'	644159.5251	623263.1552
2008	114+18.88	0.00'	644255.5327	623347.0951
2009	115+78.64	0.00'	644376.7255	623451.1825
2010	118+32.88	0.00'	644569.2170	623617.2800
2011	119+11.02	0.00'	644628.7730	623667.8662
2012	122+00.00	0.00'	644842.9263	623861.8914
2013	115+78.64	0.00'	644376.7255	623451.1825
2014	118+32.88	0.00'	644569.2170	623617.2800
2015	119+11.02	0.00'	644628.7730	623667.8662
2016	122+00.00	0.00'	644842.9263	623861.8914

CIRCULAR CURVE 1

PC (2013)	110+63.76	643997.0195	623103.8579
PI (2006)	111+17.00	644033.8317	623142.3280
CC (2017)		645839.4028	621340.8708
PT (2014)	111+70.23	644072.2178	623179.2279
Radius:	2550.0000		
Delta:	2°23'32.62" Left		
Degree of Curvature(Arc):	2°14'48.82"		
Length:	106.4757		
Tangent:	53.2456		
Chord:	106.4680		
Middle Ordinate:	0.5557		
External:	0.5558		
Tangent Direction:	N 46°15'41.56" E		
Radial Direction:	S 43°44'18.44" E		
Chord Direction:	N 45°03'55.25" E		
Radial Direction:	S 46°07'51.07" E		
Tangent Direction:	N 43°52'08.93" E		

CIRCULAR CURVE 2

PC (2015)	112+38.20	644121.2171	623226.3302
PI (2007)	112+91.34	644159.5251	623263.1552
CC (2018)		645680.4980	621604.2504
PT (2016)	113+44.46	644199.5288	623298.1306
Radius:	2250.0000		
Delta:	2°42'20.74" Left		
Degree of Curvature(Arc):	2°32'47.32"		
Length:	106.2550		
Tangent:	53.1374		
Chord:	106.2451		
Middle Ordinate:	0.6272		
External:	0.6274		
Tangent Direction:	N 43°52'08.93" E		
Radial Direction:	S 46°07'51.07" E		
Chord Direction:	N 42°30'58.56" E		
Radial Direction:	S 48°50'11.80" E		
Tangent Direction:	N 41°09'48.20" E		

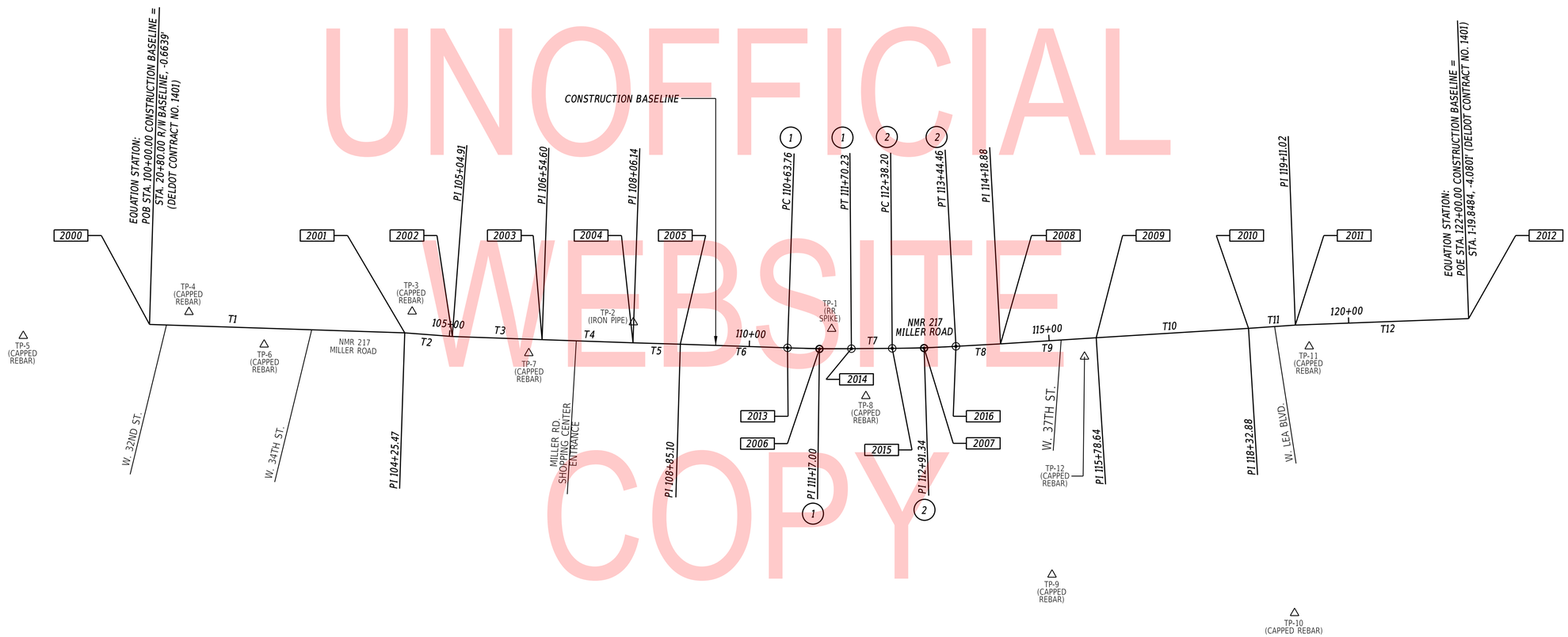

UNOFFICIAL WEBSITE COPY

DATUM REFERENCE:

HORIZONTAL - THIS PROJECT IS REFERENCED TO THE DELAWARE STATE PLANE COORDINATE SYSTEM, NORTH AMERICAN DATUM OF 1983 (NAD 83).

VERTICAL - THIS PROJECT IS REFERENCED TO THE NORTH AMERICAN VERTICAL DATUM OF 1988 (NAVD 88).

ADDENDA / REVISIONS

SCALE 0 100 200 300 FEET

MILLER ROAD STREETSCAPE IMPROVEMENTS PHASE II

CONTRACT	BRIDGE NO.	X
T201901101	DESIGNED BY:	T. BANEZ
COUNTY		
NEW CASTLE	CHECKED BY:	W. CONWAY

HORIZONTAL AND VERTICAL CONTROL

SECTION
CEI
SHEET NO.
8

23-JAN-2020
13:32
G:\PROJECTS\185003.00 Agmt 1834 TAP\185003.08 (Task 8 - Miller Road)\Cadd\Sheets\HVtv02_miller.dgn

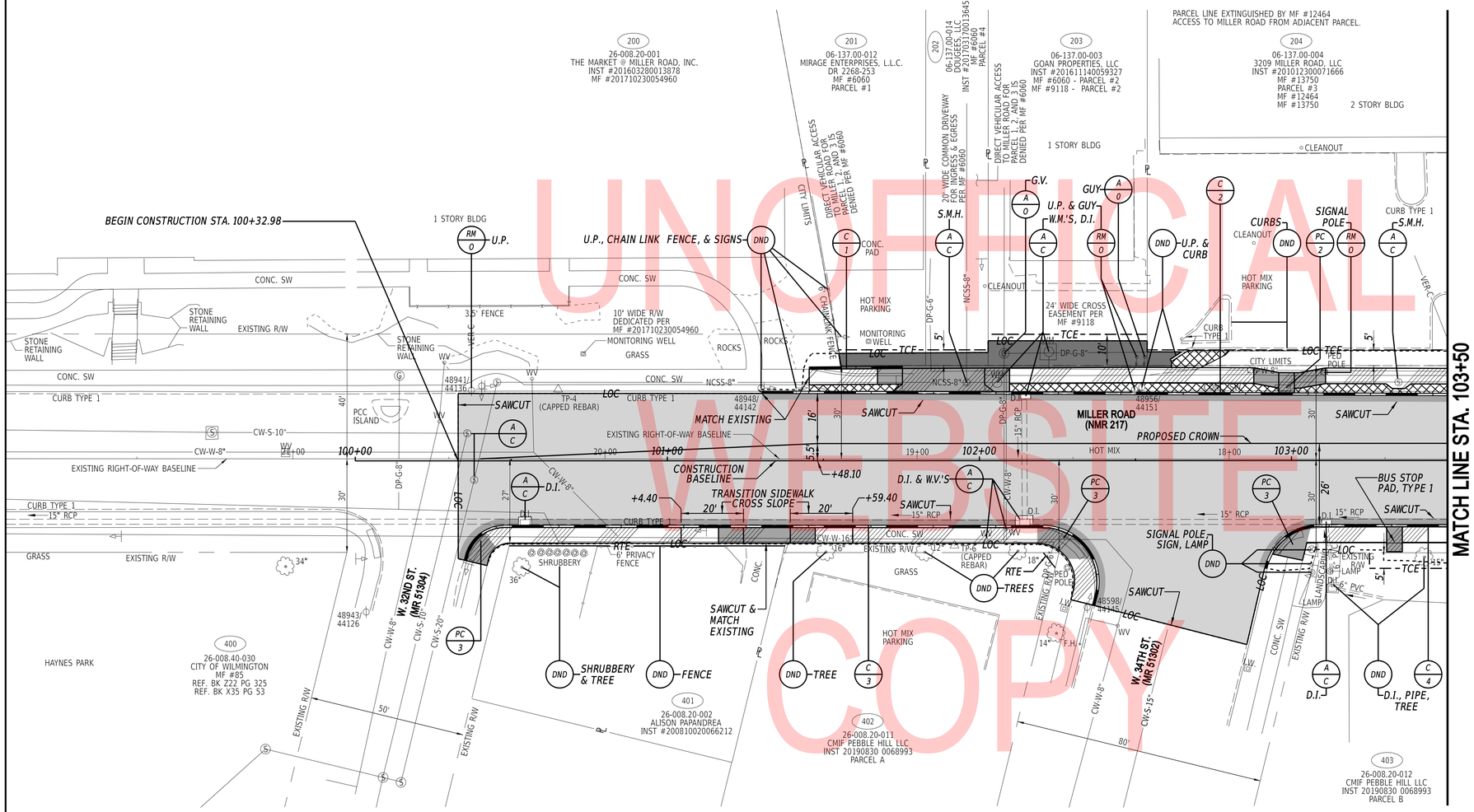

CURB SCHEDULE

NO.	ITEM DESCRIPTION / TYPE	LENGTH
1	PCC CURB, TYPE 1-8	30'
2	PCC CURB, TYPE 1-8	220'
3	PCC CURB, TYPE 1-8	225'
4	PCC CURB, TYPE 1-8	66'

NOTE: CURB NO. 1 SHALL BE FULL HEIGHT FROM THE BACK OF THE PROPOSED SIDEWALK FROM STA. 101+53.46 TO STA. 101+67.36, AND SHALL TAPER TO FLUSH WITH THE PROPOSED SIDEWALK OUTSIDE OF THOSE STATIONS. THE HOT MIX TIE-IN BEHIND CURB NO. 1 SHALL MATCH THE TOP OF CURB NO. 1.

NOTE: WHERE RIGHT TO ENTER (RTE) IS DESIGNATED ON THE PLANS, IT INDICATES LOCATIONS WHERE THE DEPARTMENT ALREADY HAS THE RIGHT UNDER DELAWARE CODE TO ENTER ONTO PRIVATE PROPERTY TO MAINTAIN, REPAIR, OR RECONSTRUCT FACILITIES USED BY THE PUBLIC AND MAINTAINED AT PUBLIC EXPENSE.

UNOFFICIAL WEBSITE COPY

ADDENDA / REVISIONS

SCALE 0 20 40 60 FEET

MILLER ROAD STREETSCAPE IMPROVEMENTS PHASE II

CONTRACT	BRIDGE NO.	X
T201901101	DESIGNED BY:	T. BANEZ
COUNTY		
NEW CASTLE	CHECKED BY:	W. CONWAY

CONSTRUCTION PLANS

CP-01

SECTION: CEI

SHEET NO. 9

23-JAN-2020
13:32
G:\PROJECTS\185003.00 Agmt 1834 TAP\185003.08 (Task 8 - Miller Road)\Cadd\Sheets\CP\cp01_miller.dgn

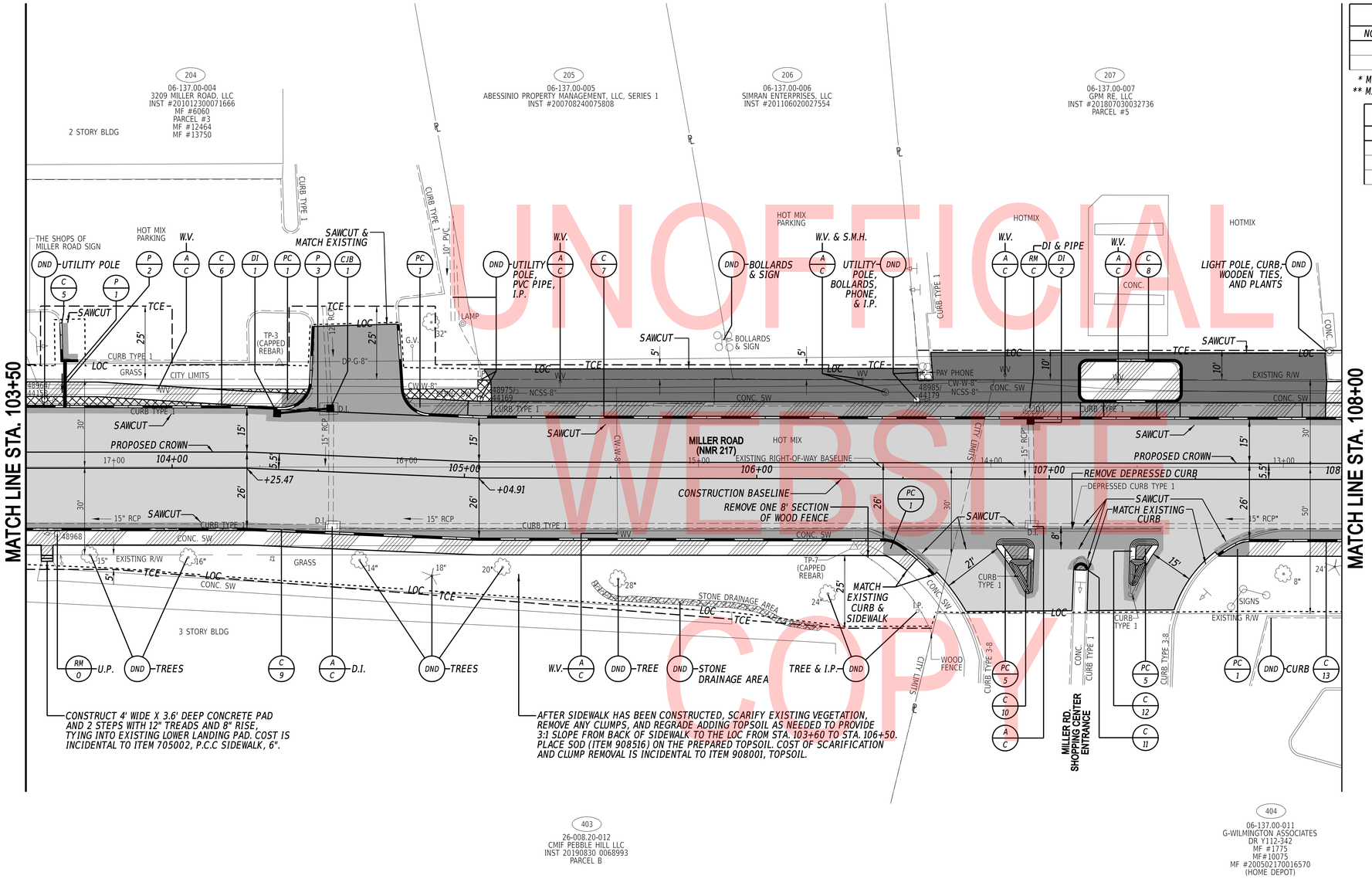

CONSTRUCT 4' WIDE X 3.6' DEEP CONCRETE PAD AND 2 STEPS WITH 12" TREADS AND 8" RISE. TYING INTO EXISTING LOWER LANDING PAD. COST IS INCIDENTAL TO ITEM 705002, P.C.C SIDEWALK, 6".

AFTER SIDEWALK HAS BEEN CONSTRUCTED, SCARIFY EXISTING VEGETATION, REMOVE ANY CLUMPS, AND REGRADE ADDING TOPSOIL AS NEEDED TO PROVIDE 3:1 SLOPE FROM BACK OF SIDEWALK TO THE LOC FROM STA. 103+60 TO STA. 106+50. PLACE SOD (ITEM 908516) ON THE PREPARED TOPSOIL. COST OF SCARIFICATION AND CLUMP REMOVAL IS INCIDENTAL TO ITEM 908001, TOPSOIL.

DRAINAGE INLET SCHEDULE

NO.	STATION	OFFSET	BOX SIZE	GRATE	T.G. EL.	INV. EL.
1	104+35.11	*	34" x 24"	TYPE 1	**	140.20
2	106+93.60	*	34" x 24"	TYPE 1	**	145.90

* MATCH PROPOSED CURB
** MATCH PROPOSED FLOW LINE OF CURB

DRAINAGE PIPE SCHEDULE

NO.	SIZE / TYPE	CLASS	LENGTH	SLOPE	INVERT EL.	DIS. EL.
1	4" PVC	N/A	16.4'	0.05'/'	143.70	142.93
2	4" PVC	N/A	16.4'	0.05'/'	143.70	142.93
3	15" RCP	IV	18'	0.05'/'	141.10	140.20

CURB SCHEDULE

NO.	ITEM DESCRIPTION / TYPE	LENGTH
5	PCC CURB, TYPE 1-8	19'
6	PCC CURB, TYPE 1-8	122'
7	PCC CURB, TYPE 1-8	349'
8	PCC CURB, TYPE 1-8	93'
9	PCC CURB, TYPE 1-8	315'
10	PCC CURB, TYPE 2	53'
11	PCC CURB, TYPE 1-4	8'
12	PCC CURB, TYPE 2	43'
13	PCC CURB, TYPE 1-8	44'

CONVERT TO JUNCTION BOX SCHEDULE

NO.	STATION	OFFSET	T.C. EL.	INVERT EL.
1	104+53.20	-21.62'	145.61'	140.10

UNOFFICIAL WEBSITE COPY

ADDENDA / REVISIONS

SCALE 0 20 40 60 FEET

MILLER ROAD STREETSCAPE IMPROVEMENTS PHASE II

CONTRACT	BRIDGE NO.	X
T201901101	DESIGNED BY:	T. BANEZ
COUNTY		
NEW CASTLE	CHECKED BY:	W. CONWAY

CONSTRUCTION PLANS

CP-02
SECTION CEI
SHEET NO. 10

23-JAN-2020
13:32
G:\PROJECTS\185003.00 Agmt 1834 TAP\185003.08 (Task 8 - Miller Road)\Cadd\Sheets\CP\cp02_miller.dgn

FENCE SCHEDULE

NO.	QTY.	DESCRIPTION	NOTES
1	348 LF	STEEL FENCE, 4 FT. HIGH (ITEM 727505)	STA. 109+01.20', 27'RT. TO STA. 112+48.06, 27'RT.

DRAINAGE INLET SCHEDULE

NO.	STATION	OFFSET	BOX SIZE	GRATE	T.G. EL.	INV. EL.
3	110+70.90	*	48" x 30"	TYPE 1	**	162.11
4	110+30.72	*	72" x 48"	TYPE 1	**	159.40

* MATCH PROPOSED CURB

** MATCH PROPOSED FLOW LINE OF CURB

NOTE: PLACE INLET NO. 4 SO THAT THE EXISTING CROSSROAD PIPE INTERCEPTS IT ON THE 48" SIDE. ADDITIONAL 15" RCP (CLASS IV) MAY BE REQUIRED TO CONNECT TO EXISTING DOWNSTREAM PIPE. TOP OF DI-4 SHALL HAVE ONLY ONE FRAME AND GRATE, SET ALONG THE PROPOSED CURB LINE.

CURB SCHEDULE

NO.	ITEM DESCRIPTION / TYPE	LENGTH
14*	PCC CURB, TYPE 1-8	450'
15	PCC CURB, TYPE 1-8	451'

* HEIGHT OF CURBS 14 AND 16 VARY FROM STA. 111+60 TO STA. 112+80 AS SHOWN IN GRADES AND GEOMETRICS. COST OF CURB HEIGHT ADJUSTMENT IS INCIDENTAL TO ITEM 701013, PCC CURB TYPE 1-8.

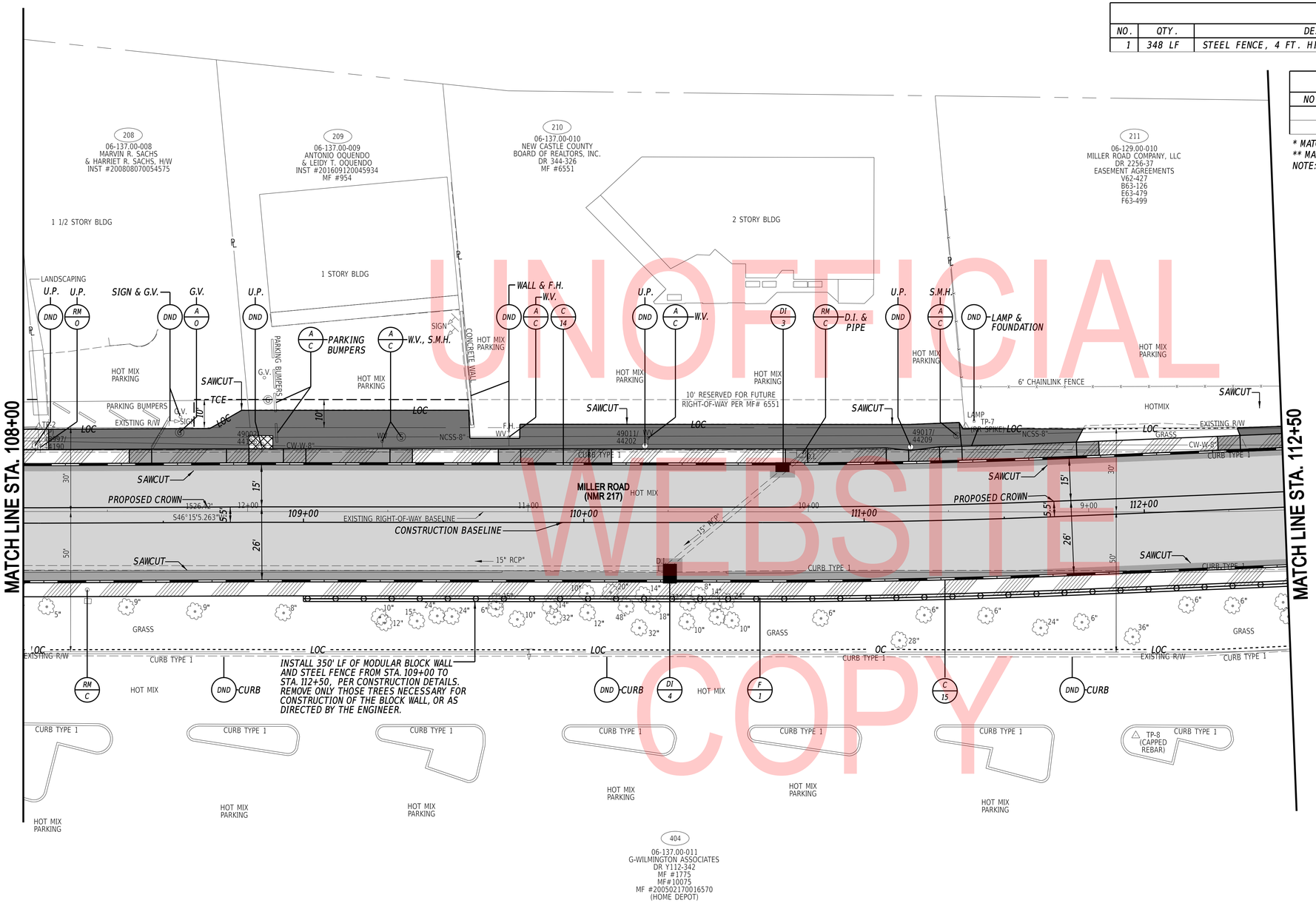

UNOFFICIAL WEBSITE COPY

ADDENDA / REVISIONS

SCALE 0 20 40 60 FEET

MILLER ROAD STREETSCAPE IMPROVEMENTS PHASE II

CONTRACT	BRIDGE NO.	X
T201901101	DESIGNED BY:	T. BANEZ
COUNTY		
NEW CASTLE	CHECKED BY:	W. CONWAY

CONSTRUCTION PLANS

CP-03

SECTION CEI

SHEET NO. 11

23-JAN-2020
13:32
G:\PROJECTS\185003.00 Agmt 1834 TAP\185003.08 (Task 8 - Miller Road)\Cadd\Sheets\CP\cp03_miller.dgn

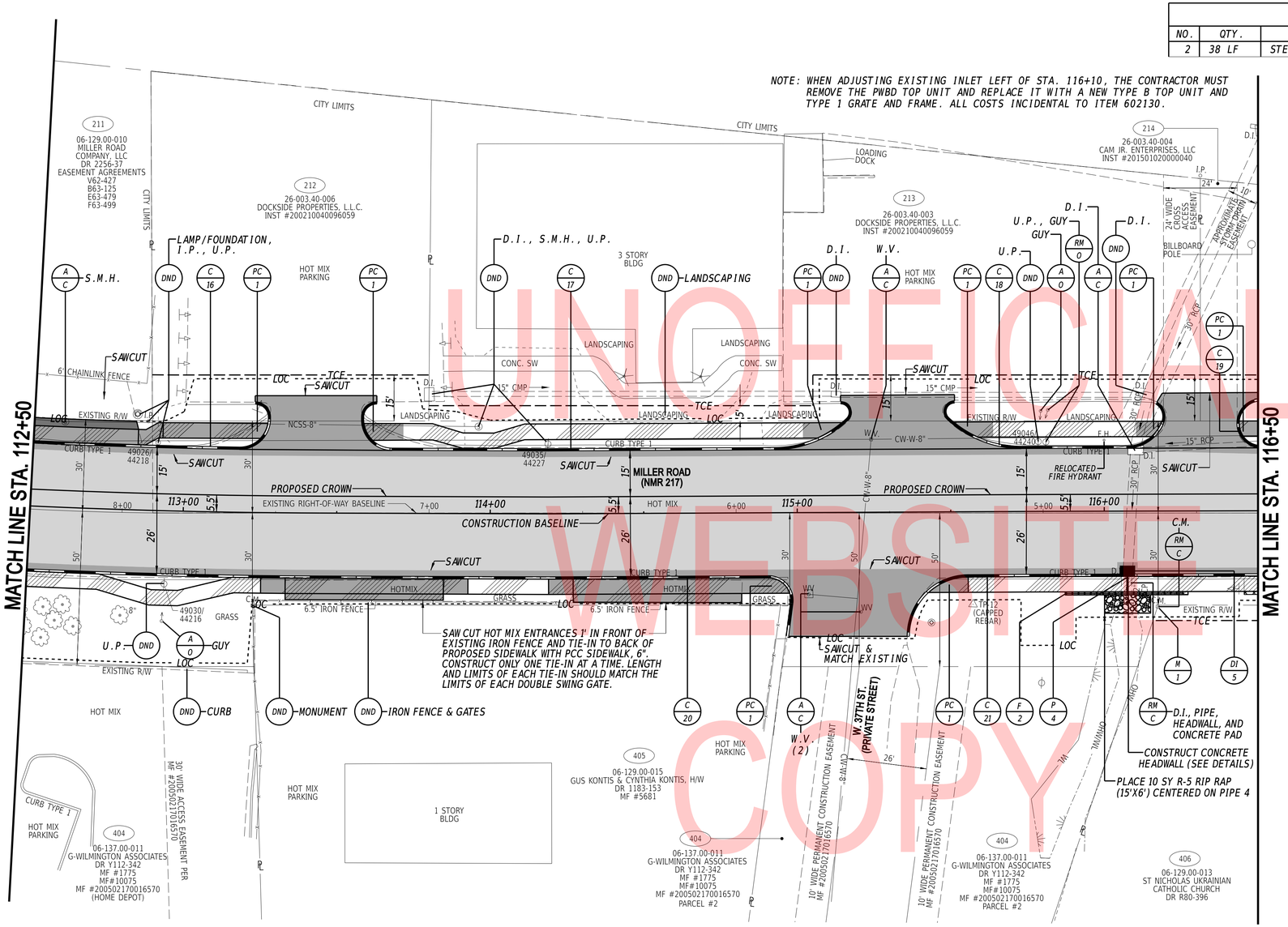

FENCE SCHEDULE

NO.	QTY.	DESCRIPTION	NOTES
2	38 LF	STEEL FENCE, 4 FT. HIGH (ITEM 727556)	STA. 115+88.2, 26.75'RT. TO STA. 116+26.2, 26.75'RT.

DRAINAGE INLET SCHEDULE

NO.	STATION	OFFSET	BOX SIZE	GRATE	T.G. EL.	INV. EL.
5	116+07.51	*	48" x 30"	TYPE 1	**	156.90

* MATCH PROPOSED CURB
** MATCH PROPOSED FLOW LINE OF CURB

DRAINAGE PIPE SCHEDULE

NO.	SIZE / TYPE	CLASS	LENGTH	SLOPE	INVERT EL.	DIS. EL.
4	33" RCP	IV	6.5'	0.7'/'	156.90	156.85

CURB SCHEDULE

NO.	ITEM DESCRIPTION / TYPE	LENGTH
16	PCC CURB, TYPE 1-8	72'
17	PCC CURB, TYPE 1-8	163'
18	PCC CURB, TYPE 1-8	81'
19	PCC CURB, TYPE 1-8	14'
20	PCC CURB, TYPE 1-8	266'
21	PCC CURB, TYPE 1-8	126'

* HEIGHT OF CURBS 14 AND 16 VARY FROM STA. 111+60 TO STA. 112+80 AS SHOWN IN GRADES AND GEOMETRICS. COST OF CURB HEIGHT ADJUSTMENT IS INCIDENTAL TO ITEM 701013, PCC CURB TYPE 1-8.

RIGHT-OF-WAY MONUMENT SCHEDULE

NO.	TYPE	STATION	OFFSET	NORTHING	EASTING
1	CAPPED REBAR	3+62.5321	-30.00	644386.1159	623499.7911

NOTE: NEGATIVE OFFSET DENOTES LEFT OF BASELINE.

UNOFFICIAL WEBSITE COPY

ADDENDA / REVISIONS

SCALE 0 20 40 60 FEET

MILLER ROAD STREETSCAPE IMPROVEMENTS PHASE II

CONTRACT	BRIDGE NO.	X
T201901101	DESIGNED BY:	T. BANEZ
COUNTY		
NEW CASTLE	CHECKED BY:	W. CONWAY

CONSTRUCTION PLANS

CP-04

SECTION: CEI

SHEET NO. 12

23-JAN-2020 13:32 G:\PROJECTS\185003.00 Agmt 1834 TAP\185003.08 (Task 8 - Miller Road)\Cadd\Sheets\CP\cp04_miller.dgn

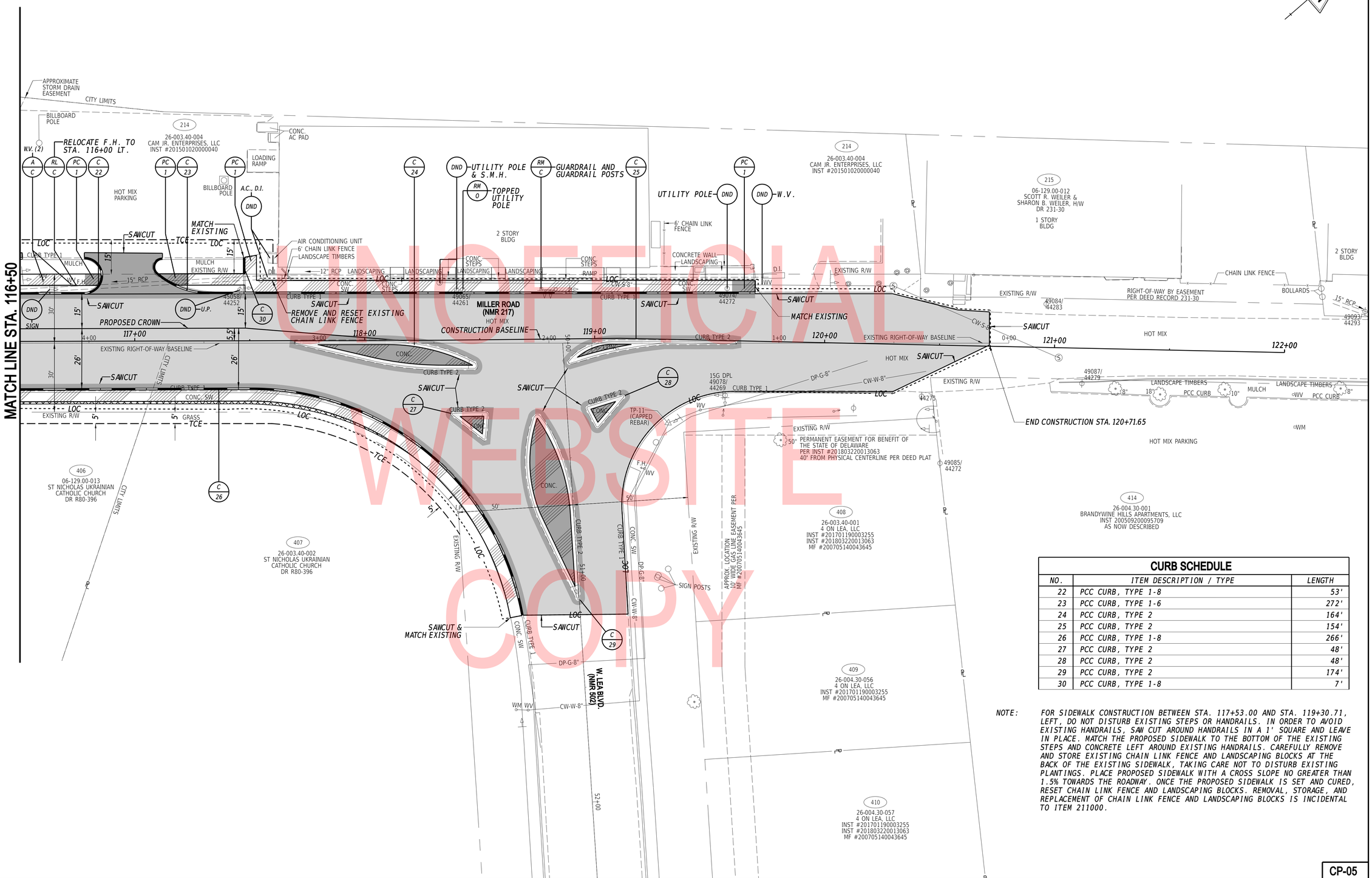

CURB SCHEDULE

NO.	ITEM DESCRIPTION / TYPE	LENGTH
22	PCC CURB, TYPE 1-8	53'
23	PCC CURB, TYPE 1-6	272'
24	PCC CURB, TYPE 2	164'
25	PCC CURB, TYPE 2	154'
26	PCC CURB, TYPE 1-8	266'
27	PCC CURB, TYPE 2	48'
28	PCC CURB, TYPE 2	48'
29	PCC CURB, TYPE 2	174'
30	PCC CURB, TYPE 1-8	7'

NOTE: FOR SIDEWALK CONSTRUCTION BETWEEN STA. 117+53.00 AND STA. 119+30.71, LEFT, DO NOT DISTURB EXISTING STEPS OR HANDRAILS. IN ORDER TO AVOID EXISTING HANDRAILS, SAW CUT AROUND HANDRAILS IN A 1' SQUARE AND LEAVE IN PLACE. MATCH THE PROPOSED SIDEWALK TO THE BOTTOM OF THE EXISTING STEPS AND CONCRETE LEFT AROUND EXISTING HANDRAILS. CAREFULLY REMOVE AND STORE EXISTING CHAIN LINK FENCE AND LANDSCAPING BLOCKS AT THE BACK OF THE EXISTING SIDEWALK, TAKING CARE NOT TO DISTURB EXISTING PLANTINGS. PLACE PROPOSED SIDEWALK WITH A CROSS SLOPE NO GREATER THAN 1.5% TOWARDS THE ROADWAY. ONCE THE PROPOSED SIDEWALK IS SET AND CURED, RESET CHAIN LINK FENCE AND LANDSCAPING BLOCKS. REMOVAL, STORAGE, AND REPLACEMENT OF CHAIN LINK FENCE AND LANDSCAPING BLOCKS IS INCIDENTAL TO ITEM 211000.

UNOFFICIAL WEBSITE COPY

ADDENDA / REVISIONS

SCALE 0 20 40 60 FEET

MILLER ROAD STREETSCAPE IMPROVEMENTS PHASE II

CONTRACT	BRIDGE NO.	X
T201901101	DESIGNED BY:	T. BANEZ
COUNTY		
NEW CASTLE	CHECKED BY:	W. CONWAY

CONSTRUCTION PLANS

CP-05

SECTION CEI

SHEET NO. 13

23-JAN-2020 13:32 G:\PROJECTS\185003.00 Agmt 1834 TAP\185003.08 (Task 8 - Miller Road)\Cadd\Sheets\CP\cp05_miller.dgn

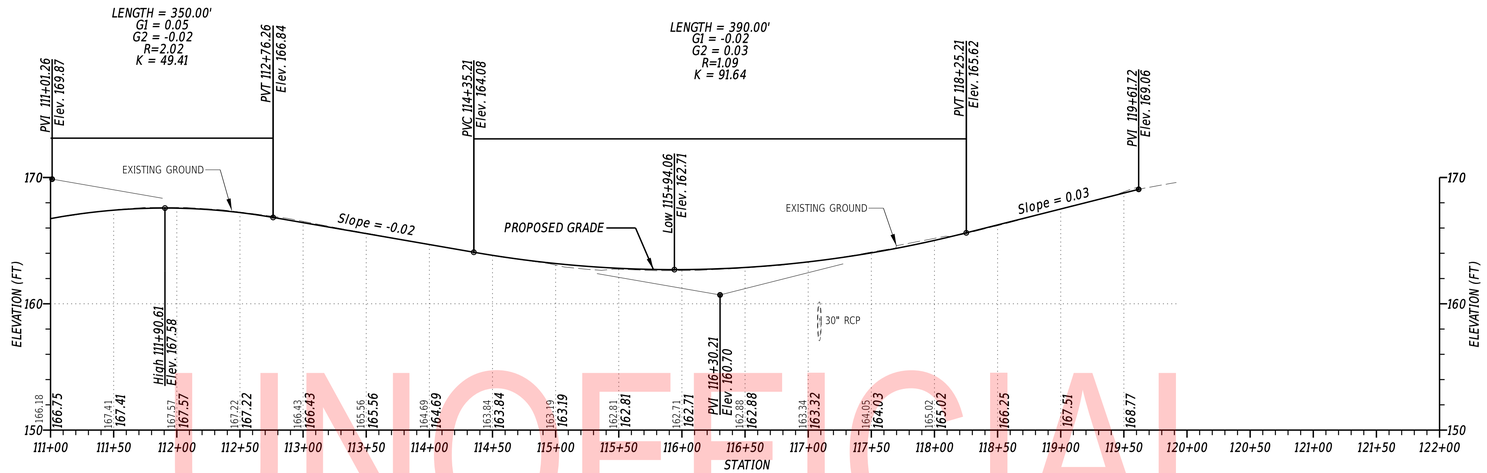

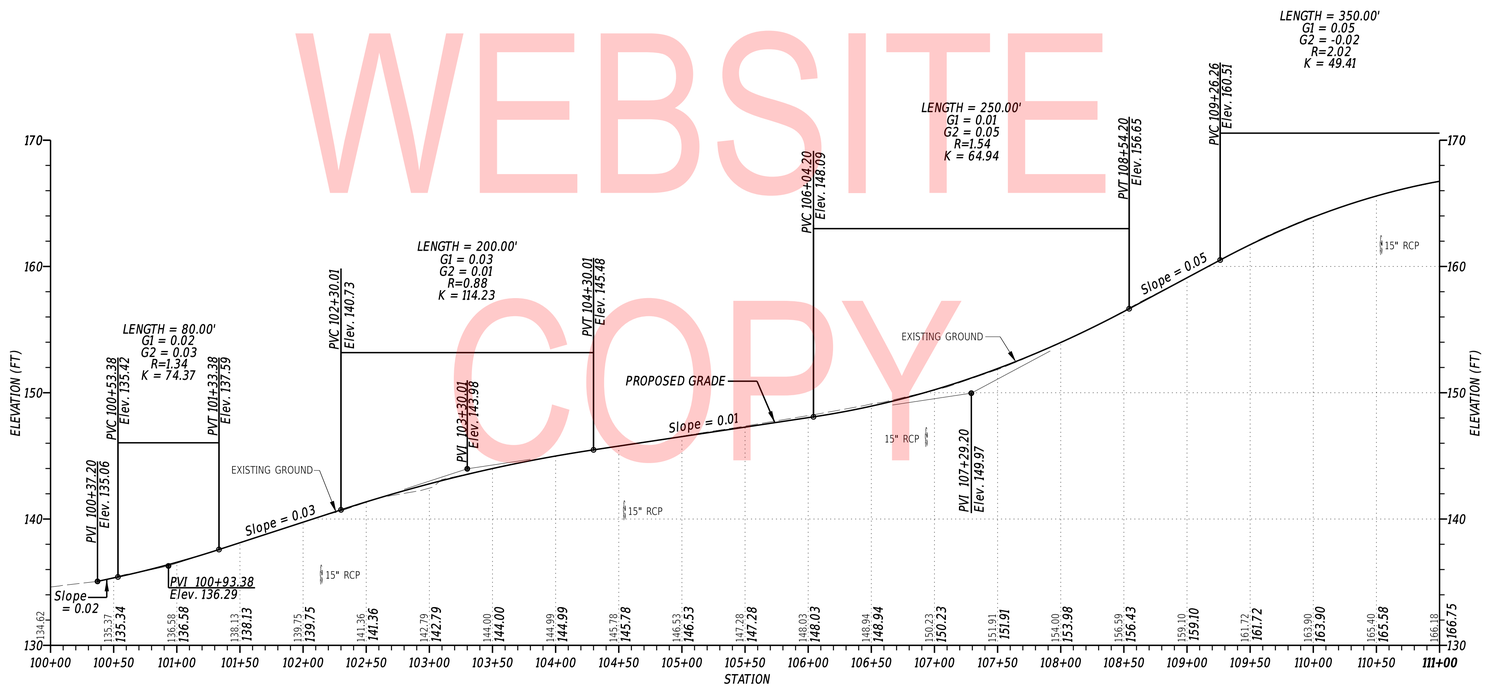

UNOFFICIAL WEBSITE COPY

VERTICAL SCALE FEET 0 6 12 18

ADDENDA / REVISIONS	SCALE 0 60 120 180 FEET	MILLER ROAD STREETSCAPE IMPROVEMENTS PHASE II	CONTRACT T201901101	BRIDGE NO. X	PROFILES	SECTION CEI
			COUNTY NEW CASTLE	DESIGNED BY: T. BANEZ		SHEET NO. 14
				CHECKED BY: W. CONWAY		

23-JAN-2020
13:32
G:\PROJECTS\185003.00 Agmt 1834 TAP\185003.08 (Task 8 - Miller Road)\Cadd\Baseline\p00_miller.dgn

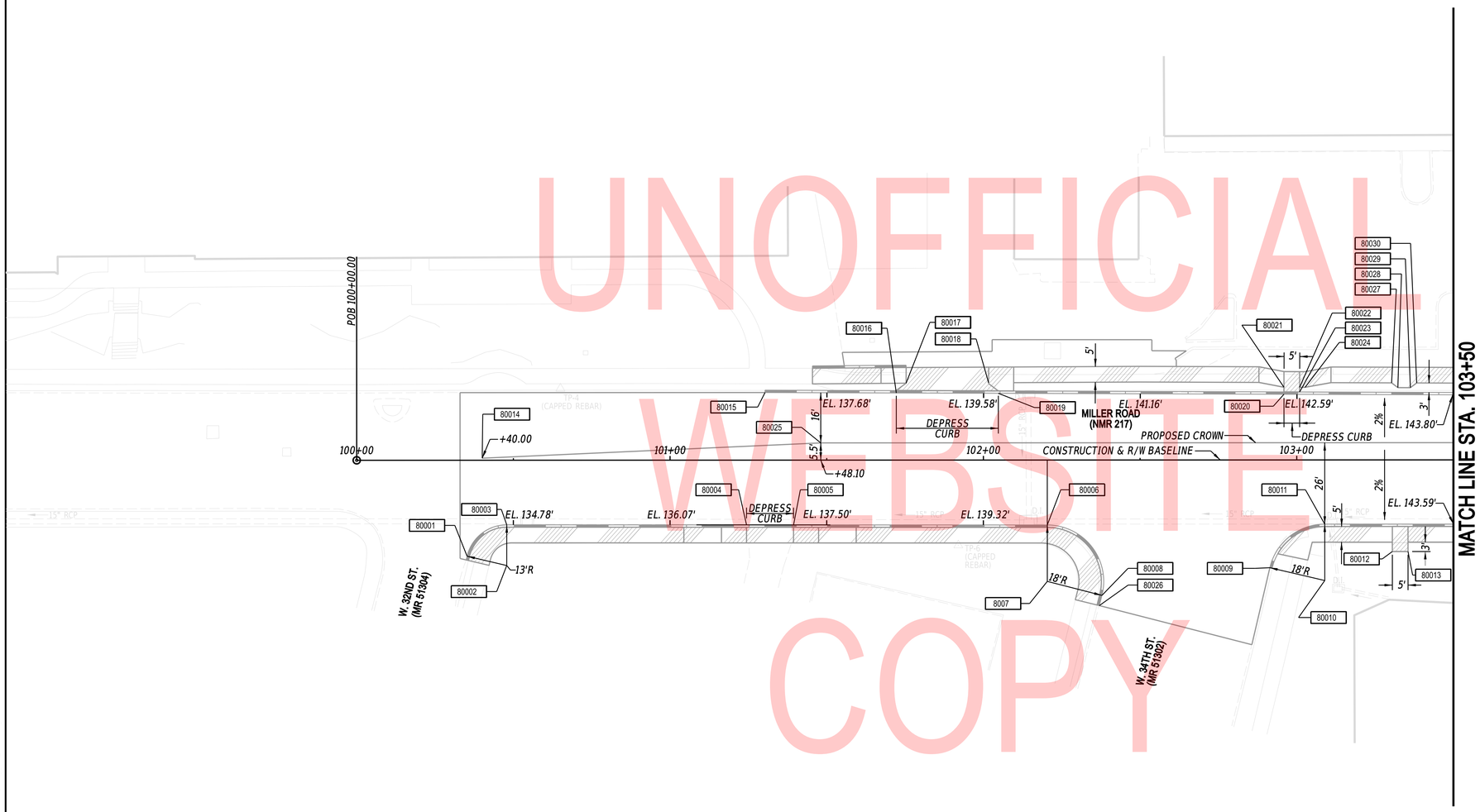

UNOFFICIAL WEBSITE COPY

COORDINATE LIST

POINT NO.	STATION	OFFSET	NORTHING	EASTING
80001	100+35.21	30.63	643266.0232	622379.9067
80002	100+47.87	20.62	643282.0100	622382.1197
80003	100+47.87	33.62	643272.6191	622391.1092
80004	101+24.40	20.67	643334.9266	622437.4000
80005	101+39.40	20.69	643345.2990	622448.2357
80006	102+20.38	20.74	643401.2969	622506.7348
80007	102+20.38	38.74	643388.3029	622519.1909
80008	102+37.81	43.22	643397.1372	622534.8739
80009	102+91.40	34.40	643440.5840	622567.4579
80010	103+08.93	38.50	643449.7557	622582.9459
80011	103+08.93	20.50	643462.7497	622570.4897
80012	103+30.50	29.25	643471.3598	622592.1160
80013	103+35.50	29.25	643474.8199	622595.7254
80014	100+40.06	-0.65	643291.9552	622361.7545
80015	101+30.32	-21.59	643369.5331	622412.4309
80016	101+72.21	-21.43	643398.4097	622442.7767
80017	101+75.34	-24.55	643402.8227	622442.8761
80018	102+01.67	-24.67	643421.1330	622461.8020
80019	102+04.77	-21.31	643420.8568	622466.3659
80020	102+95.93	-20.98	643483.6952	622532.4016
80021	102+95.93	-23.22	643485.3110	622530.8528
80022	103+00.93	-23.20	643488.7576	622534.4750
80023	103+00.93	-20.96	643487.1420	622536.0238
80024	103+02.67	-23.19	643489.9605	622535.7391
80025	101+48.10	-5.50	643370.2209	622436.3940
80026	102+36.98	46.47	643394.2107	622536.5224
80027	103+30.28	-24.60	643510.0811	622554.6972
80028	103+32.28	-23.10	643510.3731	622557.1800
80029	103+36.28	-23.10	643513.1304	622560.0778
80030	103+38.28	-24.60	643515.5957	622560.4927

NOTES:

1. OFFSETS SHOWN IN THE GEOMETRIC TABLES WITH A MINUS SIGN ARE TO THE LEFT OF THE CONSTRUCTION BASELINE AND/OR R/W CENTERLINE.
2. UNLESS OTHERWISE NOTED, POINT GEOMETRY ADJACENT TO CURB & GUTTER IS GIVEN TO THE EDGE OF PAVEMENT.
3. RADII ARE GIVEN TO THE EDGE OF PAVEMENT.
4. UNLESS OTHERWISE NOTED, EDGE OF PAVEMENT ELEVATIONS AT CURB RETURNS ARE GIVEN AT 10 FOOT INTERVALS.
5. THE CONTRACTOR SHALL STAKE ALL GRADES TO ENSURE POSITIVE DRAINAGE PRIOR TO CONSTRUCTION. ALL GRADES MUST BE APPROVED BY THE ENGINEER IN THE FIELD PRIOR TO CONSTRUCTION. ALL WORK REQUIRED FOR THE CALCULATING AND STAKING OF GRADES SHALL BE PAID FOR UNDER ITEM 763501 - CONSTRUCTION ENGINEERING.
6. PROPOSED CURBS OR PAVEMENT THAT TIE INTO EXISTING PAVEMENT OR CURB SHALL MATCH THE EXISTING PAVEMENT OR CURB ELEVATIONS.
7. SIDEWALK TO MATCH EXISTING GRADE OR AS DIRECTED IN THE FIELD BY THE ENGINEER. THE PROPOSED PATH AND SIDEWALK CROSS SLOPE SHALL NOT EXCEED 1.5% THE PATH AND SIDEWALK SHALL BE LAID OUT FOR APPROVAL BY THE ENGINEER PRIOR TO INSTALLATION. ALL COSTS ARE INCIDENTAL TO THE PROJECT.
8. SEE THE PEDESTRIAN CONNECTION DETAILS FOR ADDITIONAL GRADES AND GEOMETRICS.

23-JAN-2020
13:32
G:\PROJECTS\185003.00 Agmt 1834 TAP\185003.08 (Task 8 - Miller Road)\Cadd\Sheets\GG\gg01_miller.dgn

ADDENDA / REVISIONS

SCALE
0 20 40 60
FEET

MILLER ROAD STREETSCAPE IMPROVEMENTS PHASE II

CONTRACT	BRIDGE NO.	X
T201901101	DESIGNED BY:	T. BANEZ
COUNTY		
NEW CASTLE	CHECKED BY:	W. CONWAY

GRADES AND GEOMETRICS

GG-01

SECTION: CEI

SHEET NO. 15

NOTES:

1. OFFSETS SHOWN IN THE GEOMETRIC TABLES WITH A MINUS SIGN ARE TO THE LEFT OF THE CONSTRUCTION BASELINE AND/OR R/W CENTERLINE.
2. UNLESS OTHERWISE NOTED, POINT GEOMETRY ADJACENT TO CURB & GUTTER IS GIVEN TO THE EDGE OF PAVEMENT.
3. RADII ARE GIVEN TO THE EDGE OF PAVEMENT.
4. UNLESS OTHERWISE NOTED, EDGE OF PAVEMENT ELEVATIONS AT CURB RETURNS ARE GIVEN AT 10 FOOT INTERVALS.
5. THE CONTRACTOR SHALL STAKE ALL GRADES TO ENSURE POSITIVE DRAINAGE PRIOR TO CONSTRUCTION. ALL GRADES MUST BE APPROVED BY THE ENGINEER IN THE FIELD PRIOR TO CONSTRUCTION. ALL WORK REQUIRED FOR THE CALCULATING AND STAKING OF GRADES SHALL BE PAID FOR UNDER ITEM 763501 - CONSTRUCTION ENGINEERING.
6. PROPOSED CURBS OR PAVEMENT THAT TIE INTO EXISTING PAVEMENT OR CURB SHALL MATCH THE EXISTING PAVEMENT OR CURB ELEVATIONS.
7. SIDEWALK TO MATCH EXISTING GRADE OR AS DIRECTED IN THE FIELD BY THE ENGINEER. THE PROPOSED PATH AND SIDEWALK CROSS SLOPE SHALL NOT EXCEED 1.5% THE PATH AND SIDEWALK SHALL BE LAID OUT FOR APPROVAL BY THE ENGINEER PRIOR TO INSTALLATION. ALL COSTS ARE INCIDENTAL TO THE PROJECT.
8. SEE THE PEDESTRIAN CONNECTION DETAILS FOR ADDITIONAL GRADES AND GEOMETRICS.

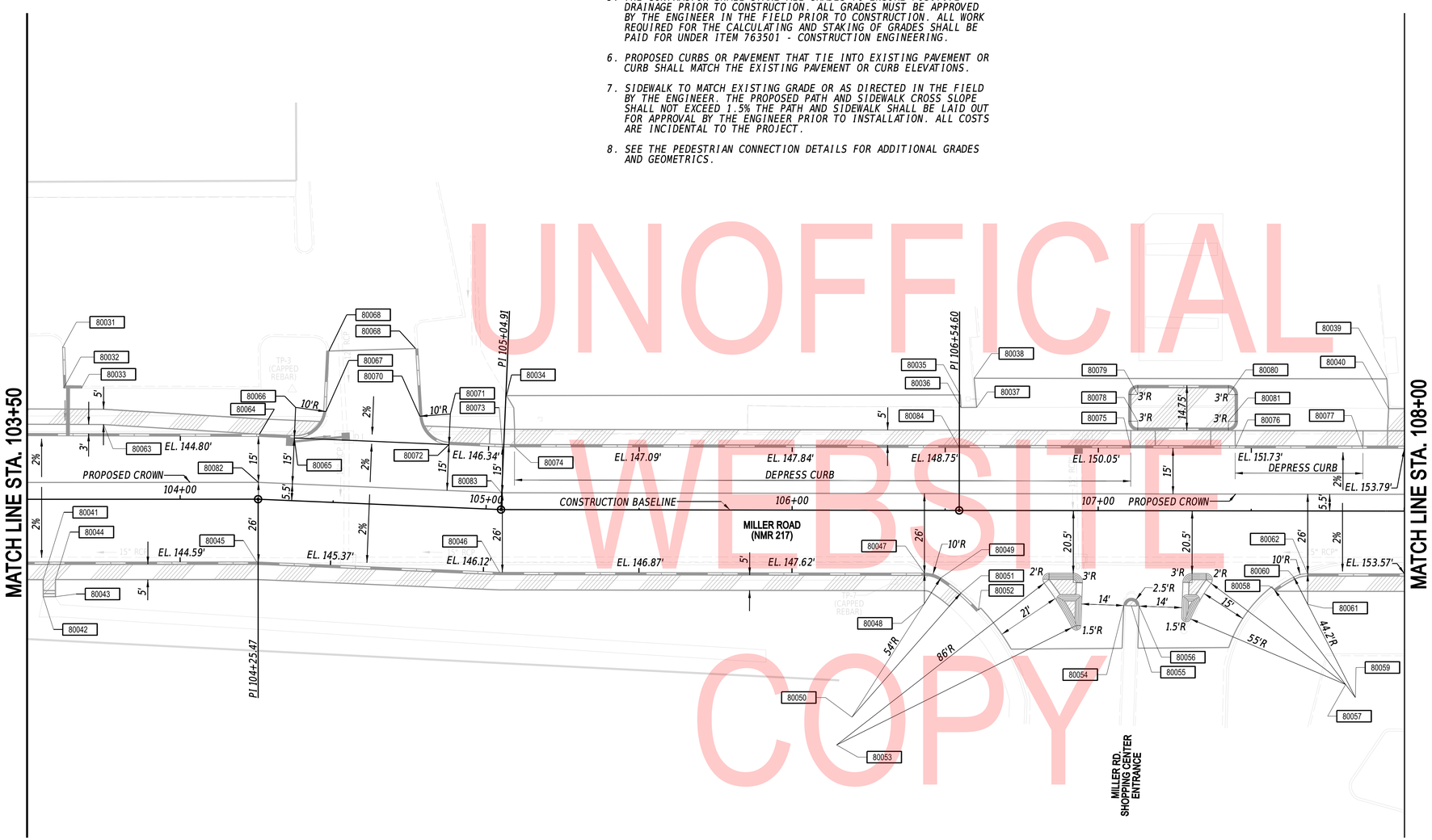

UNOFFICIAL WEBSITE COPY

COORDINATE LIST

POINT NO.	STATION	OFFSET	NORTHING	EASTING
80031	103+61.60	-49.61	643549.8128	622559.9919
80032	103+61.97	-36.35	643540.4937	622569.4388
80033	103+67.81	-36.33	643544.5189	622573.6626
80034	105+06.62	37.27	643638.7867	622675.5956
80035	106+54.90	-37.75	643741.5024	622782.5309
80036	106+55.15	-33.65	643738.7041	622785.5428
80037	106+60.23	-33.69	643742.2488	622789.1874
80038	106+59.41	-43.22	643748.5700	622782.0112
80039	107+94.23	-43.22	643841.6846	622879.5185
80040	107+94.86	-33.50	643835.0836	622886.6909
80041	103+55.27	26.25	643490.6655	622607.9200
80042	103+55.27	31.84	643486.6300	622611.7884
80043	103+59.27	31.84	643489.3980	622614.6759
80044	103+59.27	26.25	643493.4335	622610.8075
80045	104+25.03	20.50	643543.0924	622654.3015
80046	N/A	20.50	643595.5225	622713.9431
80047	106+43.28	20.50	643691.3433	622814.3453
80048	106+43.28	30.50	643684.1092	622821.2493
80049	106+48.64	22.06	643693.9180	622819.3036
80050	106+19.67	67.63	643640.9501	622829.8106
80051	106+55.20	26.97	643694.8989	622827.4464
80052	106+60.93	32.55	643694.8295	622835.4419
80053	106+14.68	76.73	643630.9253	622832.4819
80054	107+08.41	31.00	643728.7355	622868.7094
80055	107+10.91	31.09	643730.3962	622870.5782
80056	107+13.41	31.18	643732.0569	622872.4469
80057	107+80.92	56.70	643760.2256	622938.9025
80058	107+57.48	25.65	643766.4919	622900.5070
80059	107+84.12	60.94	643759.3669	622944.1481
80060	107+63.93	21.60	643773.8747	622902.3769
80061	107+68.50	30.50	643770.5938	622911.8233
80062	107+68.50	20.50	643777.8261	622904.9172
80063	103+75.00	-24.43	643540.9061	622587.0921
80064	104+25.47	-21.25	643573.8451	622626.0504
80065	104+36.45	-20.50	643580.8386	622635.1409
80066	104+36.45	-30.50	643588.3491	622628.5385
80067	104+46.40	-29.56	643594.2184	622636.6349
80068	104+46.51	-49.37	643609.1661	622623.6414
80069	104+74.77	-51.39	643629.3418	622643.5350
80070	104+77.09	-29.35	643614.3245	622659.8222
80071	104+87.03	-30.50	643621.7440	622666.5267
80072	104+87.03	-20.50	643614.2335	622673.1291
80073	105+04.49	-20.50	643625.7619	622686.2431
80074	105+09.29	-20.50	643628.4961	622689.1081
80075	107+10.62	-20.50	643767.5070	622834.7430
80076	107+10.62	-20.50	643791.0644	622859.4130
80077	107+86.48	-20.50	643819.8911	622889.6043
80078	107+12.89	-29.50	643819.8911	622889.6043
80079	107+12.88	-38.00	643781.7267	622824.2943
80080	107+42.50	-38.00	643802.1762	622845.7097
80081	107+42.50	-29.50	643795.8480	622851.7525
80082	104+25.47	-5.50	643562.2495	622636.7140
80083	105+04.91	-5.50	643614.6987	622696.3772
80084	106+54.60	-20.50	643728.8208	622794.2295

ADDENDA / REVISIONS

SCALE 0 20 40 60 FEET

MILLER ROAD STREETSCAPE IMPROVEMENTS PHASE II

CONTRACT	BRIDGE NO.	X
T201901101	DESIGNED BY:	T. BANEZ
COUNTY		
NEW CASTLE	CHECKED BY:	W. CONWAY

GRADES AND GEOMETRICS

GG-02

SECTION: CEI

SHEET NO. 16

23-JAN-2020
13:32
G:\PROJECTS\185003.00 Agmt 1834 TAP\185003.08 (Task 8 - Miller Road)\Cadd\Sheets\GG\gg02_miller.dgn

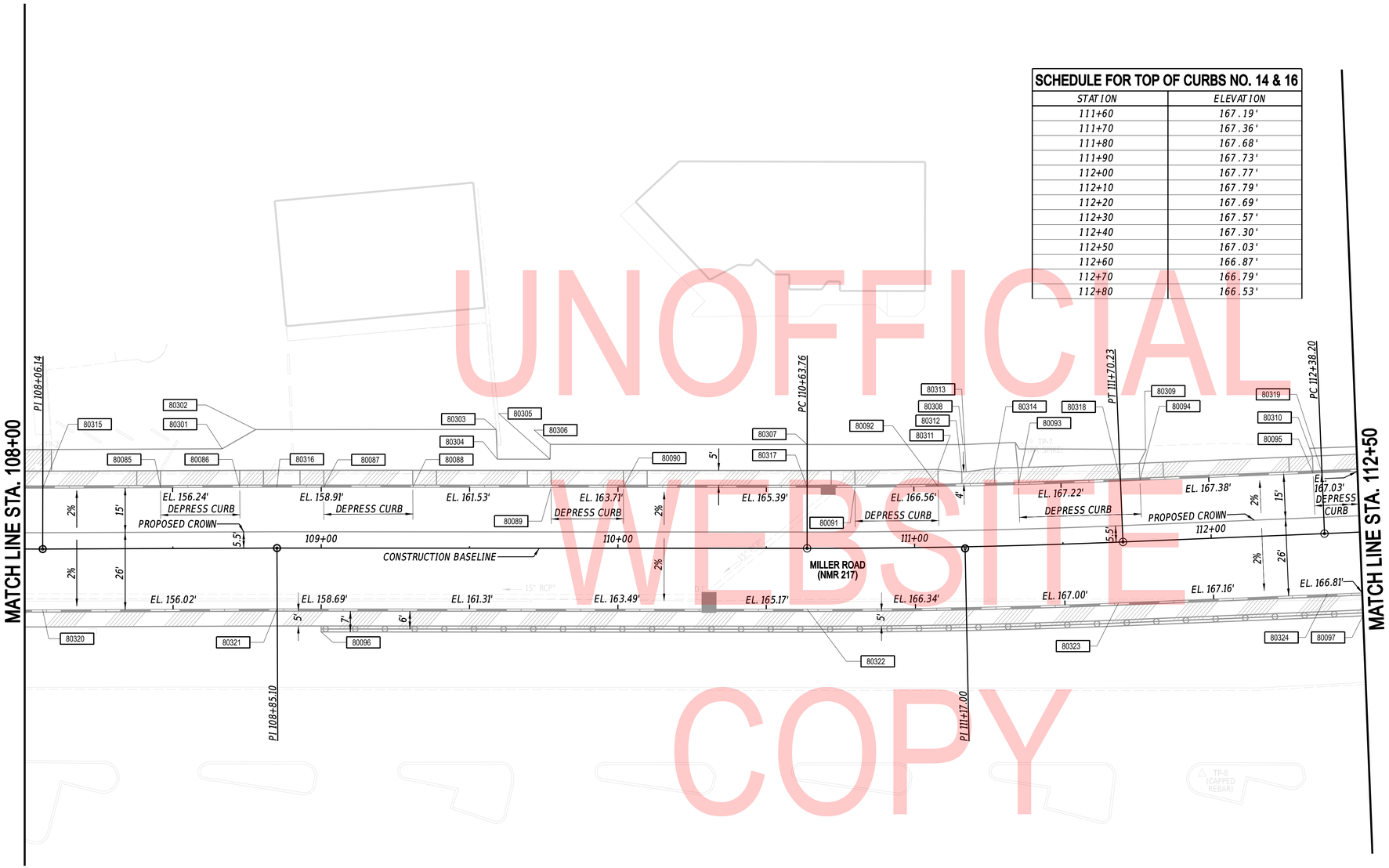

SCHEDULE FOR TOP OF CURBS NO. 14 & 16

STATION	ELEVATION
111+60	167.19'
111+70	167.36'
111+80	167.68'
111+90	167.73'
112+00	167.77'
112+10	167.79'
112+20	167.69'
112+30	167.57'
112+40	167.30'
112+50	167.03'
112+60	166.87'
112+70	166.79'
112+80	166.53'

COORDINATE LIST

POINT NO.	STATION	OFFSET	NORTHING	EASTING
80085	108+45.96	-20.50	643861.0527	622932.3795
80086	108+72.64	-20.50	643879.5934	622951.5760
80087	109+00.85	-20.50	643899.1996	622971.9813
80088	109+30.85	-20.50	643919.9406	622993.6564
80089	109+77.48	-20.50	643952.1825	623027.3503
80090	110+01.84	-20.50	643969.0213	623044.9474
80091	110+80.00	-20.50	644023.0073	623101.2905
80092	111+08.28	-20.50	644042.6394	623121.3234
80093	111+35.59	-20.50	644061.8139	623140.4673
80094	111+76.79	-20.50	644091.1490	623168.9905
80095	112+35.21	-20.50	644133.2672	623209.4782
80096	109+00.00	28.25	643863.3924	623005.0739
80097	112+50.00	28.25	644110.1637	623254.8482
80301	108+66.75	-33.52	643884.8676	622938.2908
80302	108+77.86	-40.00	643897.3803	622941.9836
80303	109+58.93	-40.00	643953.4468	623000.4666
80304	109+59.33	-30.00	643946.4997	623007.6708
80305	109+77.14	-30.00	643958.8120	623020.5375
80306	109+77.18	-35.00	643962.4538	623017.1112
80307	110+63.76	-35.00	644022.3071	623079.6600
80308	111+17.00	-34.45	644058.6141	623117.6021
80309	111+79.15	-30.83	644100.0455	623163.0997
80310	112+34.35	-28.91	644138.4800	623202.8252
80311	111+08.28	-26.25	644046.7248	623117.2771
80312	111+16.36	-25.25	644051.6567	623123.6569
80313	111+17.88	-25.25	644052.7159	623124.7191
80314	111+27.51	-26.25	644060.1720	623130.7456
80315	N/A	-20.50	643833.4327	622903.7824
80316	N/A	-20.50	643888.2774	622960.5670
80317	110+63.76	-20.50	644011.8308	623089.6849
80318	111+70.23	-20.50	644086.4246	623164.4490
80319	112+38.20	-20.50	644135.4239	623211.5513
80320	N/A	20.50	643803.8467	622932.1669
80321	N/A	20.50	643858.7205	622988.9820
80322	110+63.76	20.50	643982.2082	623118.0309
80323	111+67.89	20.50	644056.3085	623192.3688
80324	112+38.20	20.50	644107.0103	623241.1092

NOTES:

1. OFFSETS SHOWN IN THE GEOMETRIC TABLES WITH A MINUS SIGN ARE TO THE LEFT OF THE CONSTRUCTION BASELINE AND/OR R/W CENTERLINE.
2. UNLESS OTHERWISE NOTED, POINT GEOMETRY ADJACENT TO CURB & GUTTER IS GIVEN TO THE EDGE OF PAVEMENT.
3. RADII ARE GIVEN TO THE EDGE OF PAVEMENT.
4. UNLESS OTHERWISE NOTED, EDGE OF PAVEMENT ELEVATIONS AT CURB RETURNS ARE GIVEN AT 10 FOOT INTERVALS.
5. THE CONTRACTOR SHALL STAKE ALL GRADES TO ENSURE POSITIVE DRAINAGE PRIOR TO CONSTRUCTION. ALL GRADES MUST BE APPROVED BY THE ENGINEER IN THE FIELD PRIOR TO CONSTRUCTION. ALL WORK REQUIRED FOR THE CALCULATING AND STAKING OF GRADES SHALL BE PAID FOR UNDER ITEM 763501 - CONSTRUCTION ENGINEERING.
6. PROPOSED CURBS OR PAVEMENT THAT TIE INTO EXISTING PAVEMENT OR CURB SHALL MATCH THE EXISTING PAVEMENT OR CURB ELEVATIONS.
7. SIDEWALK TO MATCH EXISTING GRADE OR AS DIRECTED IN THE FIELD BY THE ENGINEER. THE PROPOSED PATH AND SIDEWALK CROSS SLOPE SHALL NOT EXCEED 1.5% THE PATH AND SIDEWALK SHALL BE LAID OUT FOR APPROVAL BY THE ENGINEER PRIOR TO INSTALLATION. ALL COSTS ARE INCIDENTAL TO THE PROJECT.
8. SEE THE PEDESTRIAN CONNECTION DETAILS FOR ADDITIONAL GRADES AND GEOMETRICS.

UNOFFICIAL WEBSITE COPY

ADDENDA / REVISIONS

SCALE 0 20 40 60 FEET

MILLER ROAD STREETSCAPE IMPROVEMENTS PHASE II

CONTRACT	BRIDGE NO.	X
T201901101	DESIGNED BY:	T. BANEZ
COUNTY		
NEW CASTLE	CHECKED BY:	W. CONWAY

GRADES AND GEOMETRICS

GG-03

SECTION CEI

SHEET NO. 17

23-JAN-2020 13:32 G:\PROJECTS\185003.00 Agmt 1834 TAP\185003.08 (Task 8 - Miller Road)\Cadd\Sheets\GG\gg03_miller.dgn

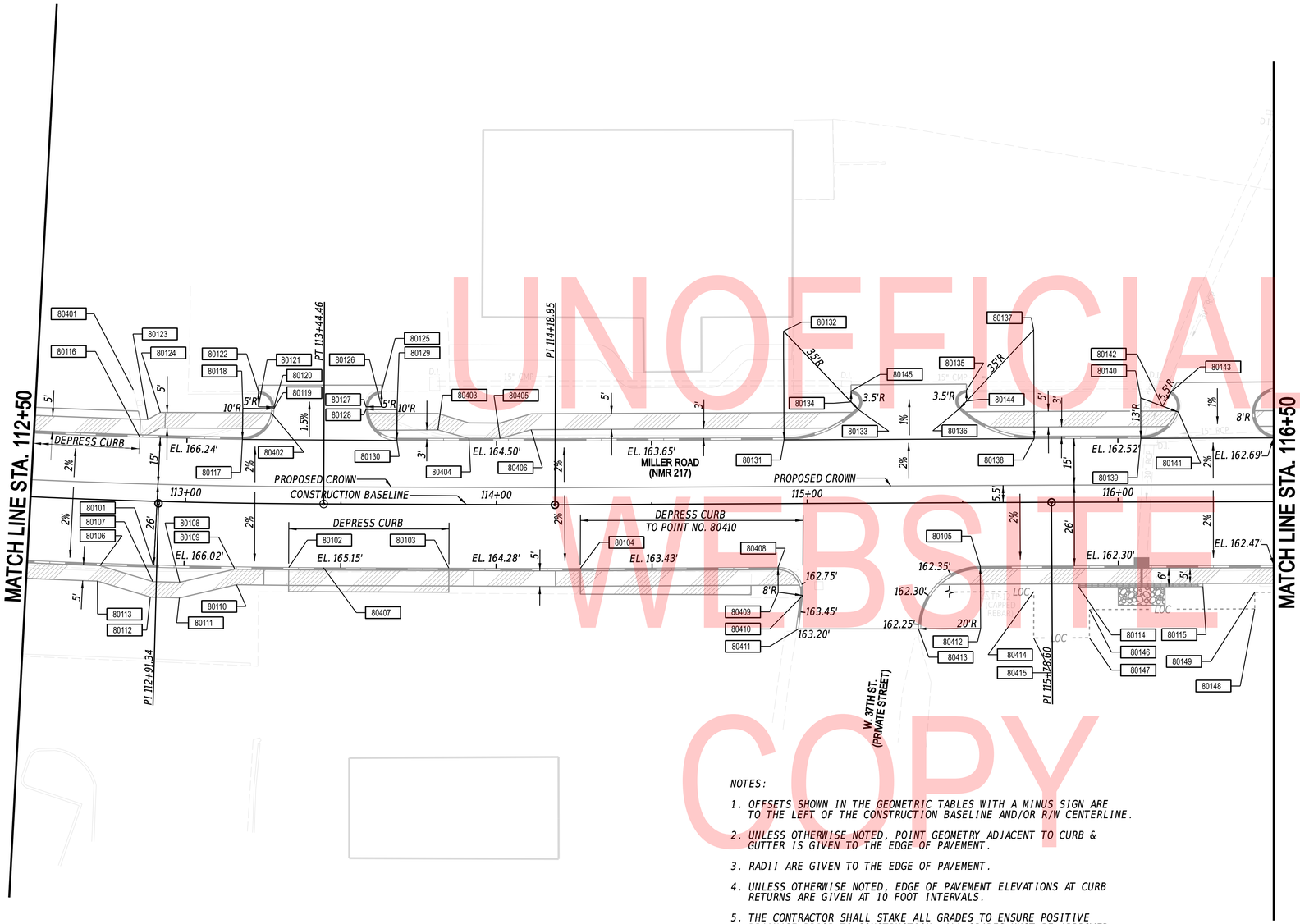

UNOFFICIAL WEBSITE COPY

NOTES:

1. OFFSETS SHOWN IN THE GEOMETRIC TABLES WITH A MINUS SIGN ARE TO THE LEFT OF THE CONSTRUCTION BASELINE AND/OR R/W CENTERLINE.
2. UNLESS OTHERWISE NOTED, POINT GEOMETRY ADJACENT TO CURB & GUTTER IS GIVEN TO THE EDGE OF PAVEMENT.
3. RADII ARE GIVEN TO THE EDGE OF PAVEMENT.
4. UNLESS OTHERWISE NOTED, EDGE OF PAVEMENT ELEVATIONS AT CURB RETURNS ARE GIVEN AT 10 FOOT INTERVALS.
5. THE CONTRACTOR SHALL STAKE ALL GRADES TO ENSURE POSITIVE DRAINAGE PRIOR TO CONSTRUCTION. ALL GRADES MUST BE APPROVED BY THE ENGINEER IN THE FIELD PRIOR TO CONSTRUCTION. ALL WORK REQUIRED FOR THE CALCULATING AND STAKING OF GRADES SHALL BE PAID FOR UNDER ITEM 763501 - CONSTRUCTION ENGINEERING.
6. PROPOSED CURBS OR PAVEMENT THAT TIE INTO EXISTING PAVEMENT OR CURB SHALL MATCH THE EXISTING PAVEMENT OR CURB ELEVATIONS.
7. SIDEWALK TO MATCH EXISTING GRADE OR AS DIRECTED IN THE FIELD BY THE ENGINEER. THE PROPOSED PATH AND SIDEWALK CROSS SLOPE SHALL NOT EXCEED 1.5% THE PATH AND SIDEWALK SHALL BE LAID OUT FOR APPROVAL BY THE ENGINEER PRIOR TO INSTALLATION. ALL COSTS ARE INCIDENTAL TO THE PROJECT.
8. SEE THE PEDESTRIAN CONNECTION DETAILS FOR ADDITIONAL GRADES AND GEOMETRICS.

COORDINATE LIST

POINT NO.	STATION	OFFSET	NORTHING	EASTING
80101	112+90.18	20.50	644145.2429	623277.0212
80102	113+33.40	20.50	644177.6544	623306.1997
80103	113+84.80	20.50	644216.4074	623340.1181
80104	114+26.89	20.50	644248.2802	623367.8892
80105	115+55.58	20.50	644345.9057	623451.7357
80106	112+73.22	21.50	644132.1653	623265.9490
80107	112+90.18	25.83	644141.6364	623280.9507
80108	112+98.78	25.83	644148.0527	623286.8165
80109	113+16.21	21.25	644164.1972	623295.2289
80110	113+16.82	26.25	644161.3163	623299.3613
80111	112+98.77	30.83	644144.6833	623290.5107
80112	112+89.52	30.83	644137.7634	623284.1822
80113	112+72.58	26.25	644128.2828	623269.1654
80114	115+87.21	27.25	644365.4408	623477.4375
80115	116+27.21	27.25	644395.7251	623503.5693
80116	112+84.66	-20.50	644168.9410	623243.1115
80117	113+17.98	-20.50	644193.3755	623265.3153
80118	113+17.98	-30.50	644200.0457	623257.8650
80119	113+28.12	-30.52	644207.5260	623264.5015
80120	113+28.12	-31.06	644207.8800	623264.1026
80121	113+23.05	-31.05	644204.1398	623260.7843
80122	113+22.98	-36.05	644207.4145	623257.0059
80123	112+87.11	-26.25	644174.6177	623240.5232
80124	112+91.12	-28.63	644179.1422	623241.4534
80125	113+62.93	-36.32	644237.3414	623282.9430
80126	113+62.93	-31.32	644234.0667	623286.7214
80127	113+57.95	-31.32	644230.3025	623283.4304
80128	113+57.95	-30.50	644229.7612	623284.0495
80129	113+67.95	-30.50	644237.2896	623290.6316
80130	113+67.95	-20.50	644230.7075	623298.1599
80131	114+92.66	-20.50	644324.8866	623379.6373
80132	114+92.66	-55.50	644347.6905	623353.0858
80133	115+16.70	-30.06	644349.3528	623388.0463
80134	115+14.30	-32.61	644349.1865	623384.5502
80135	115+51.42	-36.17	644379.6708	623406.0300
80136	115+49.01	-30.14	644373.9130	623409.0420
80137	115+73.13	-55.50	644408.7346	623405.5140
80138	115+73.13	-20.50	644385.9307	623432.0655
80139	116+07.38	-20.50	644411.9074	623454.4636
80140	116+07.38	-33.50	644420.4003	623444.6212
80141	116+19.53	-28.87	644426.5725	623456.0662
80142	116+14.39	-30.82	644423.9570	623451.2279
80143	116+17.25	-35.52	644429.1926	623449.5429
80144	116+51.42	-32.67	644377.3952	623408.6892
80145	115+14.29	-36.11	644351.4621	623381.8910
80146	115+90.72	34.55	644363.3299	623485.2542
80147	115+90.66	43.63	644357.3498	623492.0933
80148	116+43.86	34.48	644403.6100	623519.9235
80149	116+43.86	29.15	644407.0924	623515.8876
80401	112+82.07	-35.64	644177.3309	623230.2578
80402	113+27.26	-29.19	644206.0048	623264.9396
80403	113+81.11	-23.96	644242.8973	623304.2188
80404	113+91.11	-21.25	644248.6405	623312.8426
80405	114+01.11	-21.25	644256.1689	623319.4247
80406	114+11.11	-24.14	644265.5985	623323.8322
80407	113+44.46	20.50	644186.0355	623313.5637
80408	114+90.52	20.50	644296.5506	623409.3467
80409	114+90.52	20.50	644291.3383	623415.4156
80410	114+98.45	29.57	644296.6523	623421.3957
80411	114+97.00	40.31	644288.5539	623428.5921
80412	115+55.58	40.50	644332.8749	623466.9080
80413	115+35.58	40.50	644317.7026	623453.8771
80414	115+72.76	28.72	644353.5824	623469.1653
80415	115+72.63	43.64	644343.7611	623480.3974

ADDENDA / REVISIONS

SCALE
0 20 40 60
FEET

MILLER ROAD STREETSCAPE IMPROVEMENTS PHASE II

CONTRACT	BRIDGE NO.	X
T201901101	DESIGNED BY:	T. BANEZ
COUNTY	CHECKED BY:	W. CONWAY
NEW CASTLE		

GRADES AND GEOMETRICS

GG-04
SECTION
CEI
SHEET NO.
18

23-JAN-2020
13:32
G:\PROJECTS\185003.00 Agmt 1834 TAP\185003.08 (Task 8 - Miller Road)\Cadd\Sheets\GG\ggd04_miller.dgn

COORDINATE LIST				
POINT NO.	STATION	OFFSET	NORTHING	EASTING
80151	117+50.42	20.50	644493.4160	632578.9495
80152	117+20.50	140.50	644415.0208	623669.8021
80153	118+67.35	118.14	644519.0299	623729.6528
80154	117+48.17	-5.50	644508.6988	623557.7954
80155	116+51.29	-20.50	644445.1513	623483.1491
80156	116+78.17	-20.50	644465.5050	623500.7120
80157	116+78.17	-36.54	644475.9846	623488.5671
80158	116+78.17	-28.50	644470.7313	623494.6551
80159	116+51.29	-28.50	644450.3776	623477.0923
80160	117+12.14	-36.17	644501.4628	623511.0368
80161	117+10.02	-28.72	644494.9871	623515.2967
80162	117+32.56	-55.50	644529.5434	623509.7408
80163	117+32.56	-20.50	644506.6781	623536.2395
80164	117+48.01	-21.21	644518.8394	623545.7987
80165	117+47.26	-36.25	644528.1020	623533.9161
80166	119+69.31	-20.66	644685.8640	623691.7164
80167	120+29.07	-21.94	644731.0127	623730.8945
80168	120+57.57	-15.49	644747.7986	623754.8036
80169	120+71.35	-14.94	644757.6454	623764.4693
80170	120+71.64	-0.50	644748.1624	623775.3641
80171	119+60.69	0.59	644665.2102	623701.6738
80172	117+71.09	0.77	644521.9560	623577.5147
80173	118+08.85	-0.19	644551.1717	623601.4639
80174	118+09.82	81.81	644498.3337	623664.1707
80175	118+47.79	9.28	644574.5926	623634.0279
80176	118+46.85	11.05	644572.7326	623634.7631
80177	118+46.82	13.05	644571.4169	623636.2695
80178	118+33.22	12.86	644561.1703	623627.3202

COORDINATE LIST				
POINT NO.	STATION	OFFSET	NORTHING	EASTING
80179	118+35.14	-127.13	644653.2649	623521.8754
80180	118+01.89	9.09	644539.8359	623603.9356
80181	118+88.13	9.55	644605.1735	623660.3479
80182	118+88.90	10.19	644605.3439	623661.3332
80183	118+89.21	11.40	644604.9608	623662.2569
80184	119+07.33	25.57	644609.4338	623684.9822
80185	119+08.42	0.59	644626.4311	623666.6494
80186	119+30.52	2.28	644641.7151	623682.6733
80187	119+51.79	186.06	644534.0849	623833.1417
80188	118+38.32	32.27	644552.4972	623645.4179
80189	118+51.53	42.89	644555.6895	623662.0655
80190	118+52.55	32.22	644563.3747	623654.5922
80191	118+72.76	33.60	644577.8873	623668.7240
80192	118+74.64	34.27	644578.8839	623670.4581
80193	118+76.30	33.16	644580.8712	623670.6833
80194	118+06.36	80.75	644496.4118	623661.1114
80195	118+90.51	74.34	644563.0365	623711.2677
80196	119+30.94	53.28	644607.7834	623720.7454
80197	118+74.79	79.12	644549.9583	623704.7373
80198	118+96.56	30.05	644598.3216	623681.4331
80199	119+00.74	38.18	644596.2474	623690.3362
80200	119+12.69	25.45	644612.9461	623687.8631
80201	118+67.69	120.00	644518.0852	623731.2946
80202	119+17.10	119.87	644552.8237	623760.8011
80203	120+29.98	20.70	644703.0567	623763.1059
80204	116+51.29	-36.54	644455.6309	623471.0043
80205	117+12.14	-32.17	644498.8460	623514.0621
80206	118+91.58	112.81	644540.9500	623741.2842

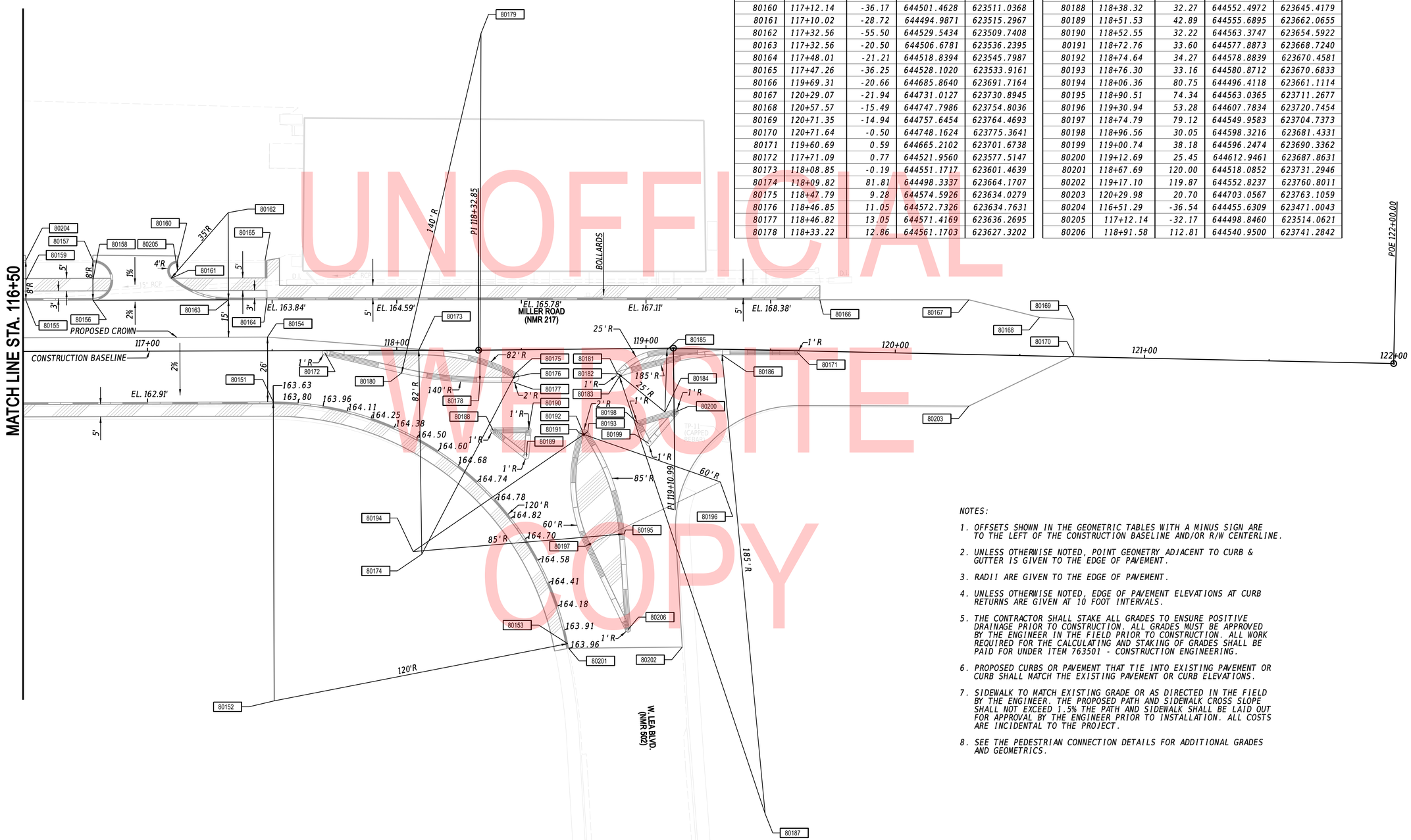

UNOFFICIAL WEBSITE COPY

NOTES:

1. OFFSETS SHOWN IN THE GEOMETRIC TABLES WITH A MINUS SIGN ARE TO THE LEFT OF THE CONSTRUCTION BASELINE AND/OR R/W CENTERLINE.
2. UNLESS OTHERWISE NOTED, POINT GEOMETRY ADJACENT TO CURB & GUTTER IS GIVEN TO THE EDGE OF PAVEMENT.
3. RADII ARE GIVEN TO THE EDGE OF PAVEMENT.
4. UNLESS OTHERWISE NOTED, EDGE OF PAVEMENT ELEVATIONS AT CURB RETURNS ARE GIVEN AT 10 FOOT INTERVALS.
5. THE CONTRACTOR SHALL STAKE ALL GRADES TO ENSURE POSITIVE DRAINAGE PRIOR TO CONSTRUCTION. ALL GRADES MUST BE APPROVED BY THE ENGINEER IN THE FIELD PRIOR TO CONSTRUCTION. ALL WORK REQUIRED FOR THE CALCULATING AND STAKING OF GRADES SHALL BE PAID FOR UNDER ITEM 763501 - CONSTRUCTION ENGINEERING.
6. PROPOSED CURBS OR PAVEMENT THAT TIE INTO EXISTING PAVEMENT OR CURB SHALL MATCH THE EXISTING PAVEMENT OR CURB ELEVATIONS.
7. SIDEWALK TO MATCH EXISTING GRADE OR AS DIRECTED IN THE FIELD BY THE ENGINEER. THE PROPOSED PATH AND SIDEWALK CROSS SLOPE SHALL NOT EXCEED 1.5% THE PATH AND SIDEWALK SHALL BE LAID OUT FOR APPROVAL BY THE ENGINEER PRIOR TO INSTALLATION. ALL COSTS ARE INCIDENTAL TO THE PROJECT.
8. SEE THE PEDESTRIAN CONNECTION DETAILS FOR ADDITIONAL GRADES AND GEOMETRICS.

ADDENDA / REVISIONS

SCALE 0 20 40 60 FEET

MILLER ROAD STREETSCAPE IMPROVEMENTS PHASE II

CONTRACT	BRIDGE NO.	X
T201901101	DESIGNED BY:	T. BANEZ
COUNTY		
NEW CASTLE	CHECKED BY:	W. CONWAY

GRADES AND GEOMETRICS

GG-05

SECTION CEI

SHEET NO. 19

23-JAN-2020
13:32
G:\PROJECTS\185003.00 Agmt 1834 TAP\185003.08 (Task 8 - Miller Road)\Cadd\Sheets\GGgg05_miller.dgn

MILLER ROAD (NMR 217)

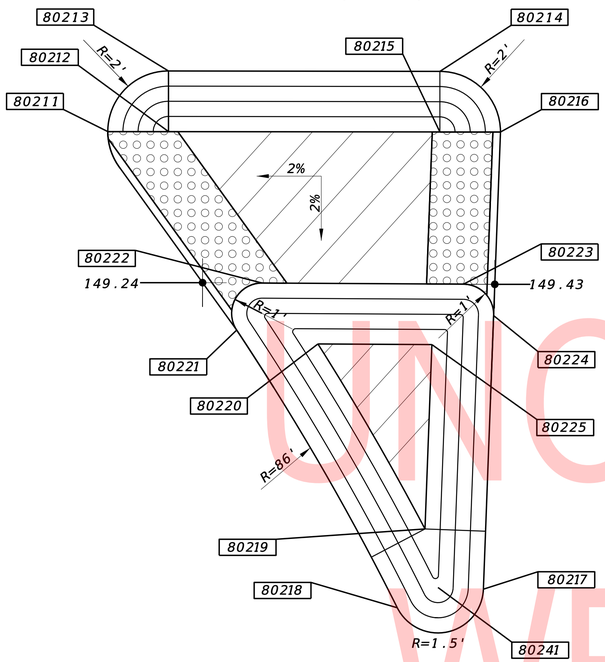

PEDESTRIAN CONNECTION TYPE 5 DETAIL

COORDINATE LIST					
POINT NO.	STATION	OFFSET	NORTHING	EASTING	ELEVATION
80211	106+81.97	22.50	643716.6249	622843.7214	149.28
80212	106+83.97	22.50	643718.0061	622845.1678	N/A
80213	106+83.97	20.50	643719.4525	622843.7866	149.37
80214	106+91.90	20.50	643724.9235	622849.5160	149.59
80215	106+91.90	22.50	643723.4771	622850.8972	N/A
80216	106+94.73	22.50	643725.4304	622852.9428	149.53
80217	106+94.39	37.58	643714.2927	622863.1203	149.13
80218	106+91.55	38.20	643711.8842	622861.4931	149.04
80219	106+92.46	35.60	643714.3947	622860.3541	N/A
80220	106+88.92	29.50	643716.3590	622853.5789	N/A
80221	106+86.75	29.82	643714.6280	622852.2267	149.14
80222	106+88.00	27.50	643717.1728	622851.5351	149.30
80223	106+93.20	27.50	643720.7614	622855.2933	149.40
80224	106+94.70	29.05	643720.6730	622857.4504	149.38
80225	106+92.68	29.50	643718.9571	622856.2997	N/A
80241	106+92.91	37.53	643713.2963	622861.9991	N/A

MILLER ROAD (NMR 217)

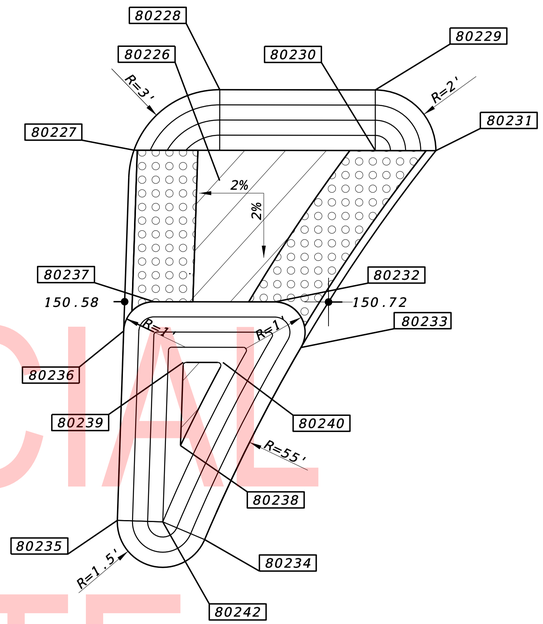

PEDESTRIAN CONNECTION TYPE 5 DETAIL

COORDINATE LIST					
POINT NO.	STATION	OFFSET	NORTHING	EASTING	ELEVATION
80226	107+30.72	23.50	643749.5619	622861.9991	150.81
80227	107+27.89	22.50	643748.3318	622876.9259	150.68
80228	107+30.71	22.50	643750.2851	622878.9715	N/A
80229	107+35.32	20.50	643754.9143	622880.9233	150.97
80230	107+35.32	22.50	643753.4679	622882.3045	N/A
80231	107+37.32	22.50	643754.8491	622883.7510	150.87
80232	107+31.68	27.50	643747.3353	622883.1223	150.66
80233	107+32.99	29.74	643746.6214	622885.6116	150.51
80234	107+30.24	35.35	643740.6650	622887.4984	150.00
80235	107+27.36	34.72	643739.1306	622884.9792	150.01
80236	107+27.54	28.95	643743.4260	622881.1312	150.46
80237	107+29.04	27.50	643745.5117	622881.2126	150.61
80238	107+29.44	32.25	643742.3526	622884.7780	N/A
80239	107+29.52	29.50	643744.3997	622882.9441	N/A
80240	107+30.83	29.50	643745.3019	622883.8918	N/A
80242	107+30.83	34.76	643740.1315	622886.0965	N/A

NOTES: 1. FOR RAMPS, THE MAXIMUM CROSS SLOPE IS 2% (50:1) AND THE MAXIMUM RUN SLOPE IS 8.3% (12:1).

2. ALL TRUNCATED DOMES ARE TO BE 2' WIDE WITH A 2% MAX (50:1) CROSS SLOPE.

UNOFFICIAL WEBSITE COPY

ADDENDA / REVISIONS

NOT TO SCALE

MILLER ROAD STREETSCAPE IMPROVEMENTS PHASE II

CONTRACT	BRIDGE NO.	X
T201901101	DESIGNED BY:	T. BANEZ
COUNTY		
NEW CASTLE	CHECKED BY:	W. CONWAY

CONSTRUCTION DETAILS

CD-01

SECTION CEI

SHEET NO. 20

23-JAN-2020 13:32 G:\PROJECTS\185003.00 Agmt 1834 TAP\185003.08 (Task 8 - Miller Road)\Cadd\Sheets\CD\cd01_miller.dgn

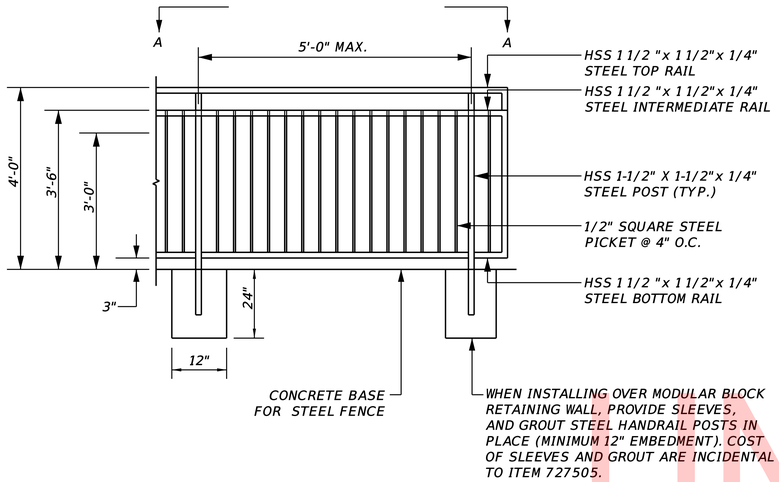

727505 – STEEL FENCE ELEVATION

HSS 1 1/2 "x 1 1/2"x 1/4"
STEEL BOTTOM RAIL

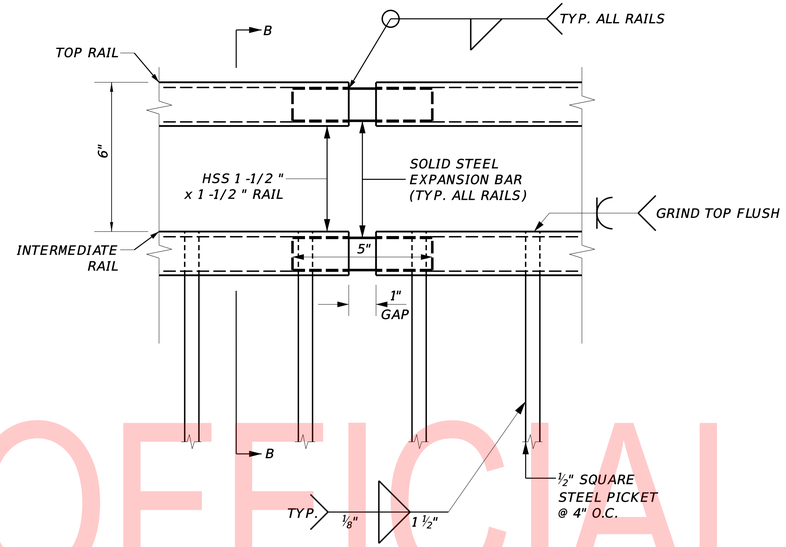

STEEL FENCE EXPANSION JOINT

NOTES:

1. WHEN INSTALLING STEEL FENCE ON TOP OF MODULAR BLOCK WALL, STEEL FENCE POSTS TO BE SET IN 12" DIA. X 24" TALL CONCRETE FOUNDATION (SEE "POST SLEEVE AND FENCE POST INSTALLATION DETAIL"). FOUNDATION TO BE CLASS B CONCRETE. GROUT POSTS IN SLEEVE TO FLUSH WITH CONCRETE.
2. FENCE TO HAVE BLACK POWDER COAT FINISH.
3. EXPANSION JOINTS SHALL BE LOCATED EVERY 18' ALONG THE TOP, INTERMEDIATE AND BOTTOM RAILS.
4. MAINTAIN 4" SPACING BETWEEN PICKETS.
5. GREASE INTERNAL EXPANSION BAR IMMEDIATELY PRIOR TO FINAL CONSTRUCTION OF FENCE.
6. FENCE SLEEVE SHALL BE CAPABLE OF RESISTING ALL LOADS AS REQUIRED BY SECTION 1607.7.1 OF THE INTERNATIONAL BUILDING CODE.
7. CANTILEVER STEEL BASE, VERTICAL LEGS, AND STRUTS SHALL BE WELDED WIRE REINFORCEMENT FABRICATION FROM D-4 AND D-7 WIRE MEETING THE REQUIREMENTS OF ASTM A497 AND A496. WIRE SHALL BE EPOXY COATED.
8. HANDRAIL POSTS SHALL BE SPACED AT 5'-0" O.C. MAX.
9. HANDRAIL SHALL BE PARALLEL TO THE TOP OF THE WALL.
10. THE CONTRACTOR SHALL SUBMIT SHOP DRAWINGS FOR MODULAR BLOCK WALL, AND STEEL FENCE FOR REVIEW AND APPROVAL.
11. ALL COSTS INCLUDED IN ITEM 727505 - STEEL FENCE.

UNOFFICIAL WEBSITE COPY

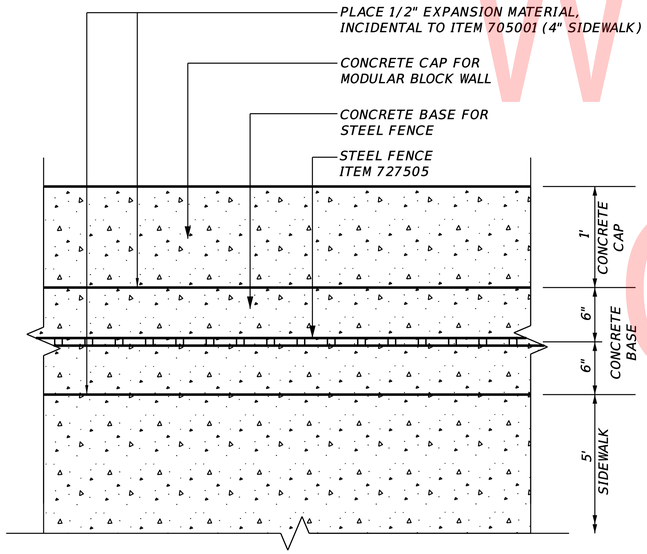

SECTION A–A

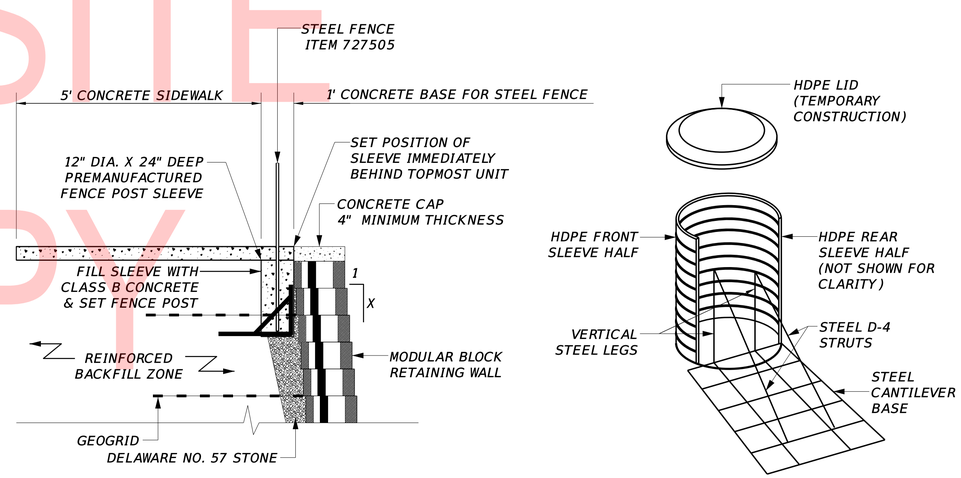

NOTE: CUT GEOGRID AROUND POST SLEEVES AS NECESSARY. COST OF GEOGRID, DELAWARE NO. 57 STONE, AND BORROW, TYPE C REQUIRED TO CONSTRUCT MODULAR BLOCK WALL IS INCIDENTAL TO ITEM 607010 - MODULAR BLOCK RETAINING WALLS.

POST SLEEVE AND FENCE POST INSTALLATION DETAIL

ADDENDA / REVISIONS	NOT TO SCALE	MILLER ROAD STREETSCAPE IMPROVEMENTS PHASE II	CONTRACT T201901101	BRIDGE NO. X	CONSTRUCTION DETAILS	CD-02
			COUNTY NEW CASTLE	DESIGNED BY: T. BANEZ		SECTION CEI
				CHECKED BY: W. CONWAY		SHEET NO. 21

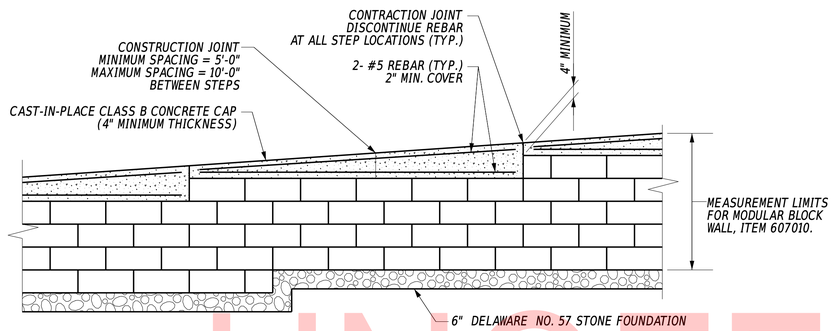

MODULAR BLOCK RETAINING WALL ELEVATION

N.T.S.

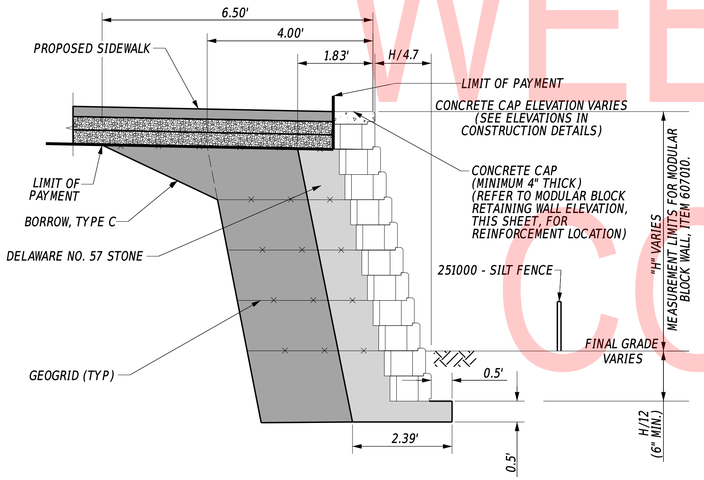

MODULAR BLOCK RETAINING WALL SECTION WITH GEOGRID

N.T.S.

UNOFFICIAL WEBSITE COPY

MODULAR BLOCK RETAINING WALL NOTES:

1. THE DETAILS PROVIDED PER THIS PLAN SHEET ARE FOR REFERENCE ONLY AND ARE NOT ENGINEERED DETAILS. THE DETAILS ARE SIMPLY MEANT TO ASSIST THE BIDDER IN DETERMINING A REASONABLE COST FOR CONSTRUCTION OF THE PROPOSED MODULAR BLOCK RETAINING WALL.

2. THE CONTRACTOR SHALL CONTACT/EMPLOY A MODULAR BLOCK RETAINING WALL MANUFACTURER FOR THE PROPOSED RETAINING WALL TO BE DESIGNED BY THE PRODUCT MANUFACTURER'S ENGINEER. CONTRACTOR SHALL SUBMIT, FOR APPROVAL, CONSTRUCTION DRAWINGS AND DESIGN CALCULATIONS FOR THE RETAINING WALL SYSTEM PREPARED AND SEALED BY A PROFESSIONAL ENGINEER REGISTERED IN THE STATE OF DELAWARE.

   ACCEPTABLE MODULAR BLOCK RETAINING WALLS ARE:

   A. "KEYSTONE RETAINING WALL SYSTEMS", AS MANUFACTURED BY ANCHOR CONCRETE PRODUCTS, INC., P.O. BOX 601, BRIDGEPORT, NJ 08014 (TELEPHONE 609-241-1544).

   B. "ALLAN BLOCK RETAINING WALL SYSTEMS" STYLE AB THREE AS MANUFACTURED BY FIZZANO BROS., INC., CHESTER PIKE, CRUM LYNNE, PA 19022 (TELEPHONE 610-833-1100).

   C. APPROVED EQUAL.

3. ANY GEOGRID REINFORCEMENT, UNDERDRAINS/DRAINAGE SYSTEM THAT MAY BE DEEMED NECESSARY BY THE MODULAR RETAINING WALL SYSTEM DESIGN ENGINEER SHALL BE INCIDENTAL TO THE ITEM 607010 - MODULAR BLOCK RETAINING WALLS AT NO ADDITIONAL COST TO THE OWNER.

4. SHOP DRAWINGS SHALL INCLUDE THE FOLLOWING INFORMATION: TYPE OF WALL, LOCATION, LENGTH, TOP ELEVATION(S), PROPOSED BOTTOM OF FOOTING OR LEVELING PAD ELEVATION(S), MODULAR BLOCKS, WALL DRAINAGE UNIT, AND CROSS SECTIONS INCLUDING DRAINAGE ZONE, BACKFILL MATERIAL TYPE AND LIMITS, AND QUANTITIES. DETAILS FOR ALL DRAIN OUTLETS, INCLUDING SOLID FLEXIBLE PIPING EXTENDING THRU THE MODULAR BLOCK WALL SHALL BE PROVIDED IN THE SHOP DRAWINGS. CONTRACTOR SHALL VERIFY ALL FIELD DIMENSIONS AND ELEVATIONS PRIOR TO SUBMITTAL OF SHOP DRAWINGS.

5. PERFORM REQUIRED DESIGN OF THE RETAINING WALL IN ACCORDANCE WITH THE AASHTO LRFD BRIDGE DESIGN SPECIFICATIONS WITH CURRENT INTERIMS.

6. WALLS SHALL BE CONSTRUCTED FROM LOW END TO HIGH END.

7. WALLS SHALL EXTEND A MINIMUM OF ONE BLOCK UNIT BENEATH THE COMPACTED FILL ALONG THE FRONT FACE, OR AS SPECIFIED BY THE MANUFACTURER.

8. ALL EXPOSED MODULAR BLOCK SURFACES SHALL HAVE A SPLIT-FACED TEXTURE.

9. LEVELING PAD, SIZE, AND MATERIAL, SHALL BE IN ACCORDANCE WITH THE MANUFACTURER'S SPECIFICATIONS.

10. WALLS SHALL HAVE A NEAR VERTICAL FACE WITH MINIMUM SETBACKS AS RECOMMENDED BY THE MANUFACTURER.

11. THE CONTRACTOR SHALL INSTALL THE MODULAR BLOCK WALL PER THE MANUFACTURER'S RECOMMENDATIONS.

12. ALL COSTS FOR PROVIDING ALL MATERIALS AS NOTED AND DETAILED INCLUDING SHOP DRAWINGS SHALL BE INCIDENTAL TO ITEM 607010 - MODULAR BLOCK RETAINING WALLS.

13. CAST-IN-PLACE CONCRETE CAP SHALL BE CLASS B CONCRETE AND SHALL CONFORM TO SECTION 610009 . PAYMENT FOR THE CAST-IN-PLACE CONCRETE CAP AND REBAR SHALL BE INCLUDED IN ITEM 607010 - MODULAR BLOCK RETAINING WALL.

14. THE CONTRACTOR SHALL BE RESPONSIBLE FOR PROVIDING AND INSTALLING ANY SHEETING AND SHORING REQUIRED FOR THE INSTALLATION OF THE MODULAR BLOCK RETAINING WALL. PRICE FOR ANY SHEETING AND SHORING SHALL BE INCIDENTAL TO THE MODULAR BLOCK RETAINING WALL.

15. THE CONTRACTOR SHALL BE RESPONSIBLE FOR AND ENSURE THAT THE CONSTRUCTION OF THE MODULAR BLOCK RETAINING WALL DOES NOT UNDERMINE THE EXISTING ROADWAY. ANY UNDERMINING SHALL BE REPAIRED BY THE CONTRACTOR AT THE CONTRACTOR'S EXPENSE.

16. VOIDS IN TOP COURSE OF RETAINING WALL TO BE BACKFILLED WITH DELAWARE NO. 57 STONE TO ONE HALF THE HEIGHT OF THE COURSE, INCIDENTAL TO ITEM 607010 - MODULAR BLOCK RETAINING WALLS.

17. UPPER HALF OF VOIDS IN TOP COURSE OF RETAINING WALL BLOCKS TO BE LEFT EMPTY FOR CONSTRUCTION OF AND KEYING CAST-IN-PLACE CONCRETE CAP.

18. RETAINING WALL SECTIONS SHOWN FOR ESTIMATING PURPOSES ONLY. CONTRACTOR SHALL REFER TO MANUFACTURER'S SHOP DRAWINGS FOR ACTUAL DESIGN DETAILS INCLUDING MATERIALS AND DIMENSIONS.

19. ALL MODULAR BLOCK RETAINING WALL WORK SHALL BE PERFORMED FROM THE HOME DEPOT PARKING LOT SIDE OF THE PROPOSED WALL AND NOT FROM THE ROADWAY, AND THE RETAINING WALL TIE-BACK EXCAVATION LIMITS IN A TOP-DOWN MANNER.

20. STEEL FENCE RAILING NOT SHOWN FOR CLARITY. SEE STEEL FENCE DETAILS.

21. COLOR OF RETAINING WALL BLOCKS SHALL BE INTEGRAL AND SHALL BE MANUFACTURER'S STANDARD DARK BROWN. CONTRACTOR TO SUBMIT MANUFACTURER'S COLOR CHART FOR REVIEW AND APPROVAL.

22. DELAWARE NO. 57 STONE , GEOGRID, AND BORROW TYPE C REQUIRED TO BUILD THE MODULAR BLOCK RETAINING WALL SHALL BE INCIDENTAL TO ITEM 607010 - MODULAR BLOCK WALLS.

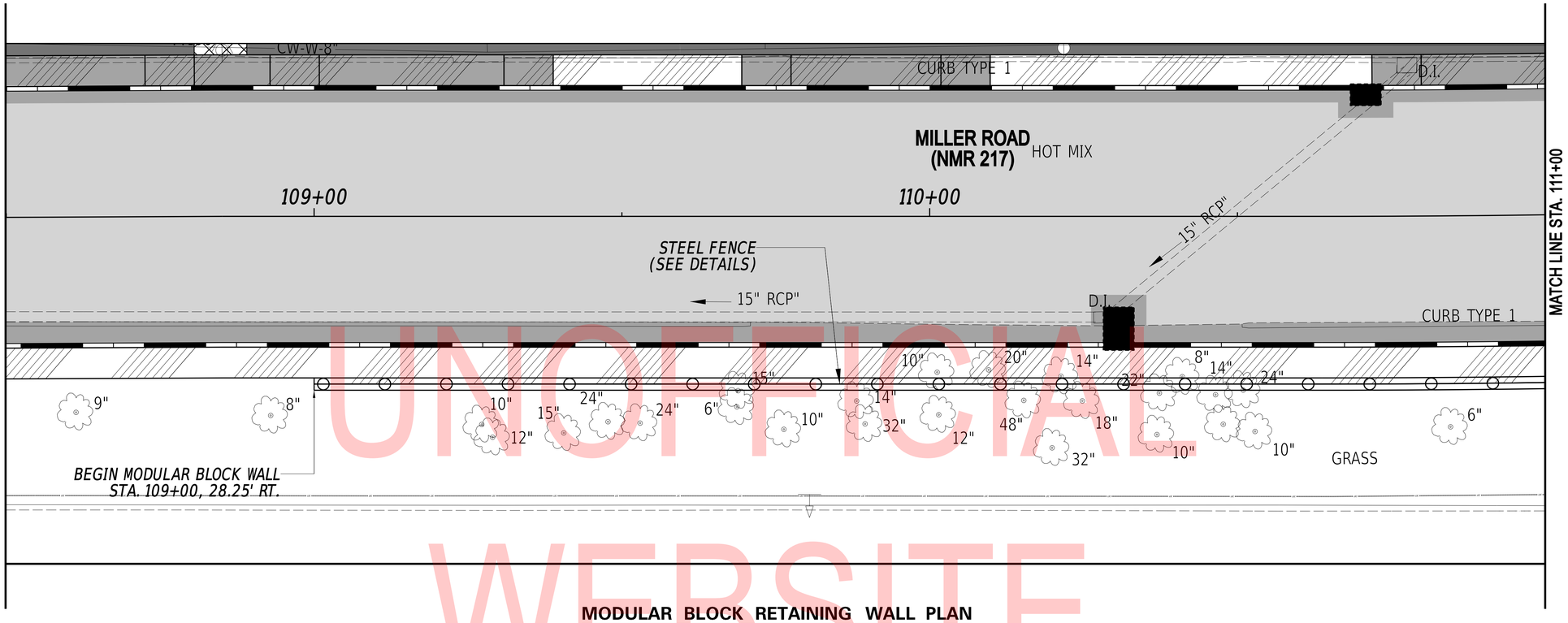

MODULAR BLOCK RETAINING WALL PLAN
SCALE: 1" = 10'

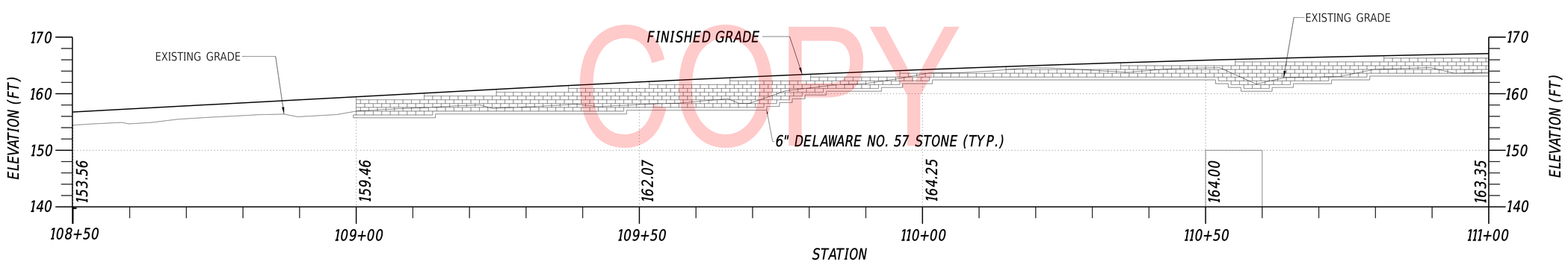

MODULAR BLOCK RETAINING WALL ELEVATION
SCALE: 1" = 10'

UNOFFICIAL WEBSITE COPY

CD-04

ADDENDA / REVISIONS	SCALE AS SHOWN	MILLER ROAD STREETSCAPE IMPROVEMENTS PHASE II	CONTRACT T201901101	BRIDGE NO. X	CONSTRUCTION DETAILS	SECTION CEI
			COUNTY NEW CASTLE	DESIGNED BY: T. BANEZ		SHEET NO. 23
				CHECKED BY: W. CONWAY		

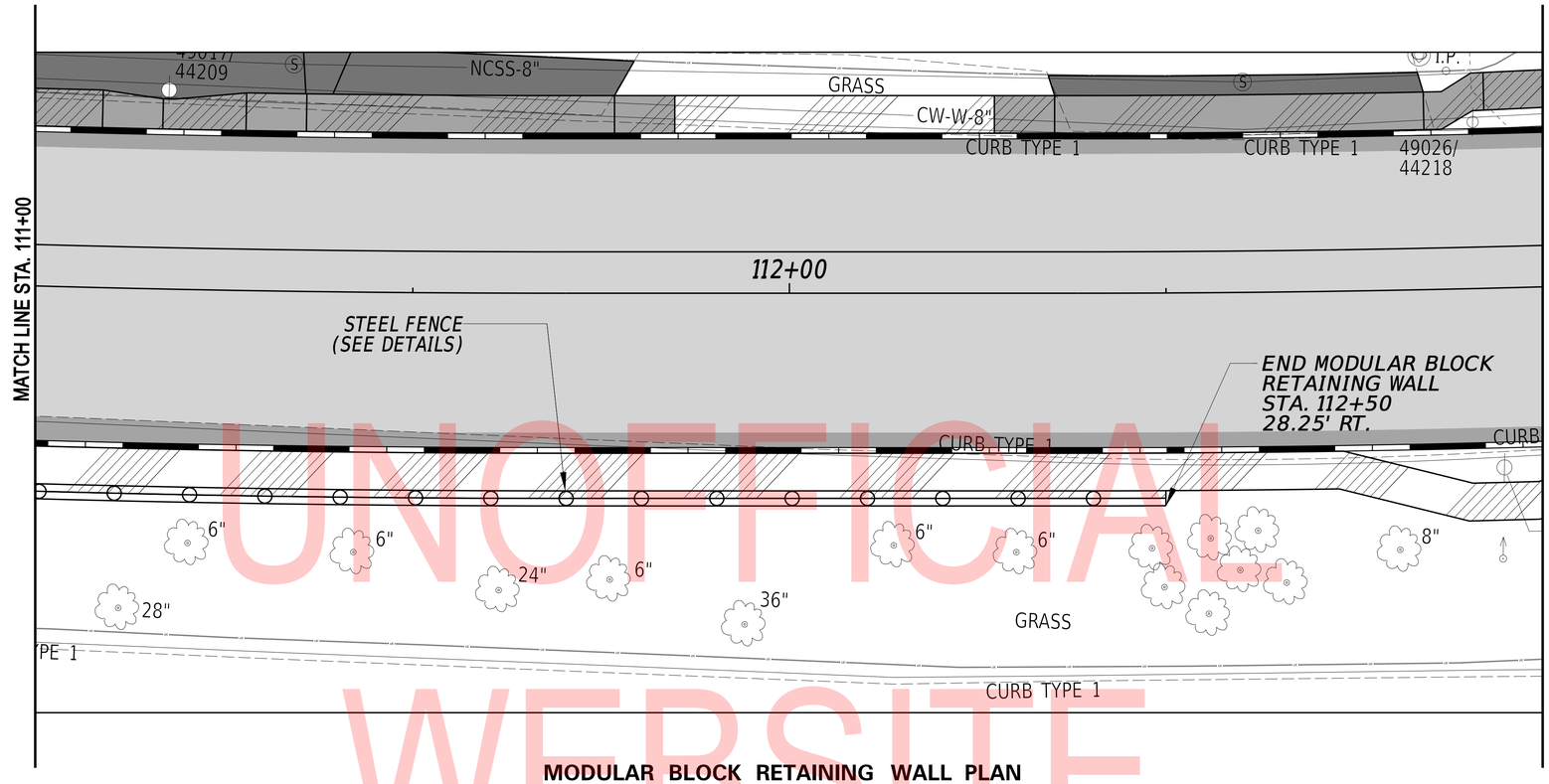

MODULAR BLOCK RETAINING WALL PLAN
SCALE: 1" = 10'

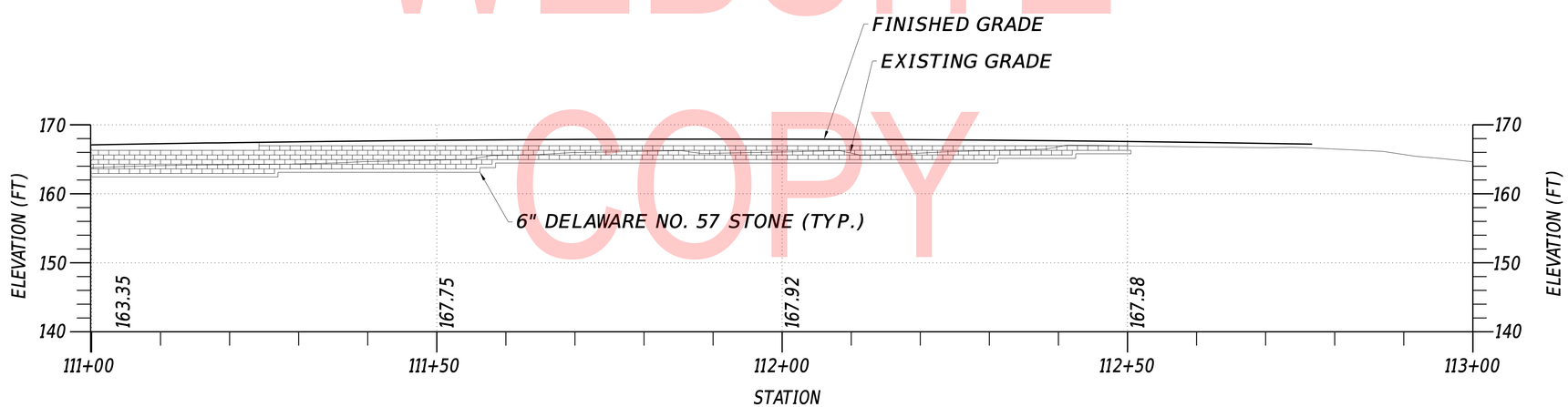

MODULAR BLOCK RETAINING WALL ELEVATION
SCALE: 1" = 10'

UNOFFICIAL WEBSITE COPY

ADDENDA / REVISIONS	SCALE AS SHOWN	MILLER ROAD STREETSCAPE IMPROVEMENTS PHASE II	CONTRACT T201901101	BRIDGE NO. X	CONSTRUCTION DETAILS	CD–05
			COUNTY NEW CASTLE	DESIGNED BY: T. BANEZ		SECTION CEI
				CHECKED BY: W. CONWAY		SHEET NO. 24

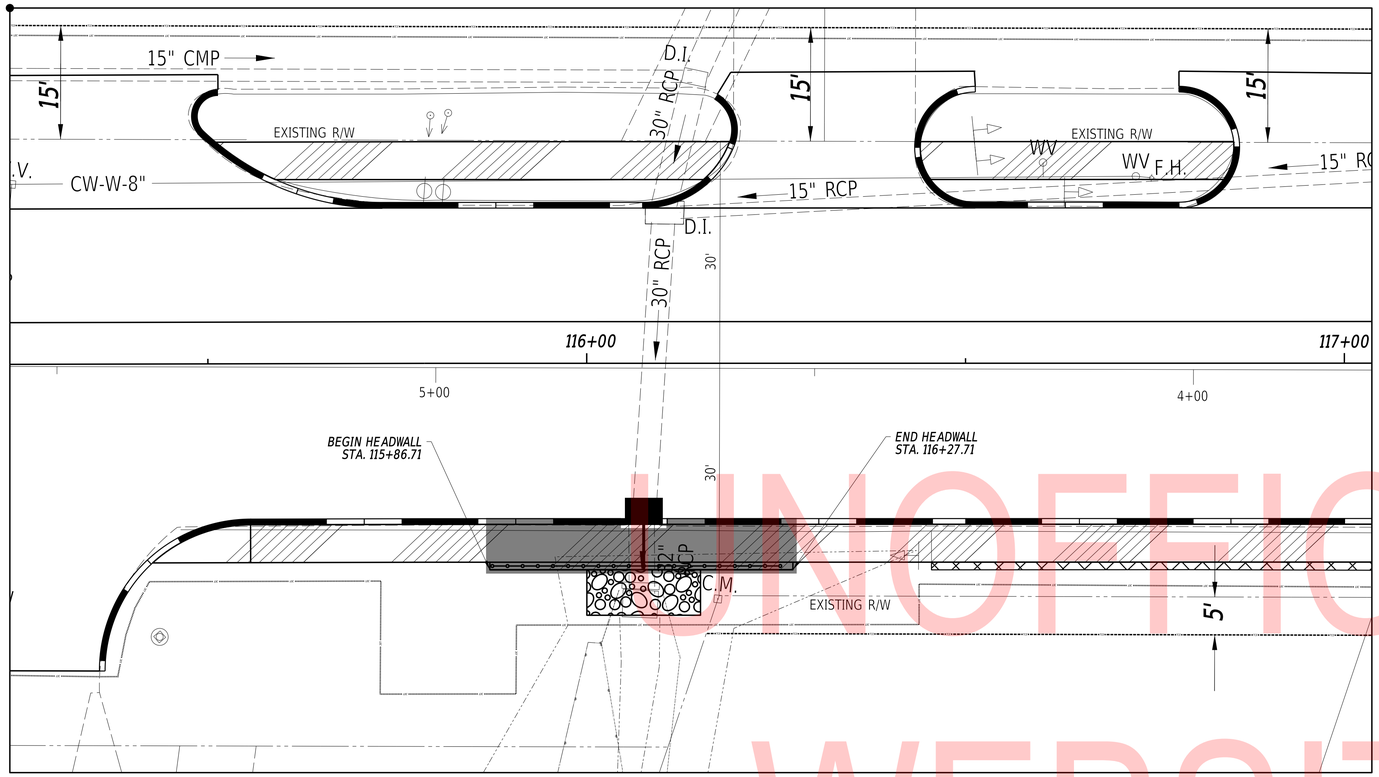

CULVERT CROSSING PLAN
SCALE: 1" = 10'

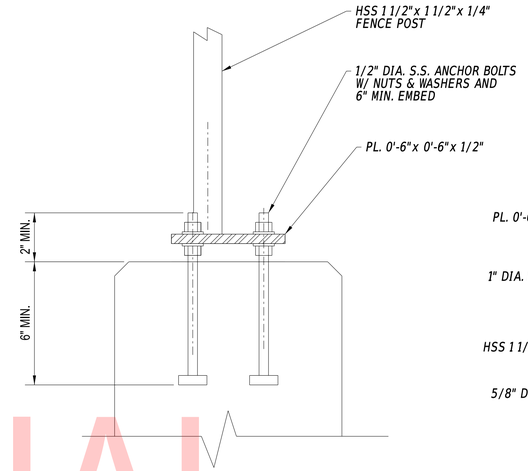

FENCE CONNECTION DETAIL
SCALE: 3" = 1'

NOTE:
REFER TO PLAN SHEET CD-02 FOR FENCE FINISHING INFORMATION.

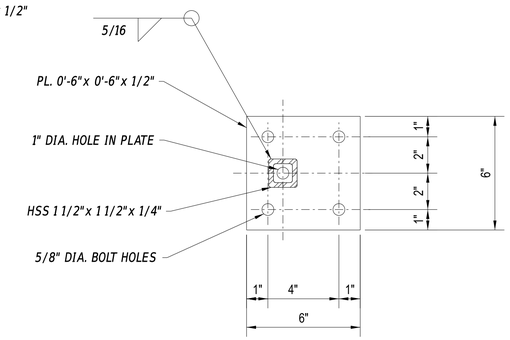

FENCE POST BASE PLATE
SCALE: 3" = 1'

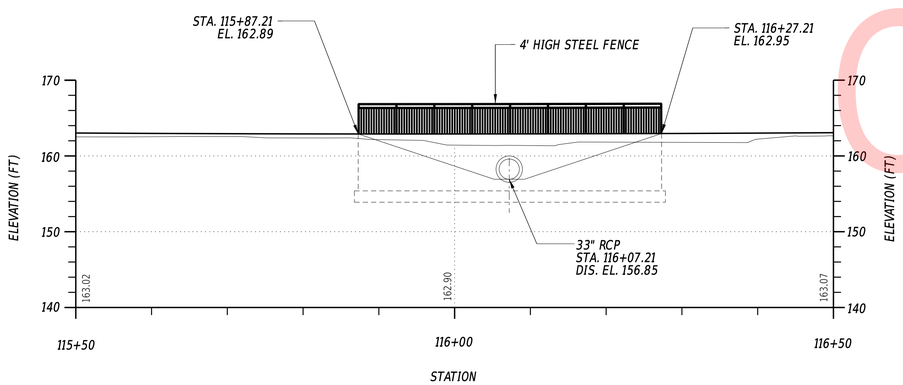

CULVERT CROSSING ELEVATION
SCALE: 1" = 10'

NOTES:

1. CONCRETE FOR HEADWALL STEM SHALL CONFORM TO ITEM 61002 - PORTLAND CEMENT MASONRY, ABUTMENT ABOVE FOOTING, CLASS A.
2. CONCRETE FOR HEADWALL FOOTING SHALL CONFORM TO ITEM 610011 - PORTLAND CEMENT MASONRY, ABUTMENT FOOTING, CLASS B.
3. MINIMUM CONCRETE COVER FOR REBAR SHALL BE 3 INCHES FOR SURFACES CAST AGAINST EARTH, AND 2 INCHES FOR ALL OTHER FIELD-FORMED SURFACES.
4. CHAMFER ALL EXPOSED EDGES 3/4" UNLESS OTHERWISE NOTED.
5. THE UNIT PRICE BID FOR ITEM 727505 SHALL APPLY TO THE FENCE ON THE MODULAR BLOCK WALL AND TO THE FENCE ON THE CONCRETE HEADWALL, INCLUDING THE TWO DIFFERENT ANCHORAGES INTO THE CONCRETE. ONLY ONE UNIT PRICE IS INTENDED TO COVER BOTH CONNECTION METHODS.
6. INSTALL A FLEXIBLE EXPANSION MATERIAL AROUND THE 33" RCP EXTERIOR WHERE IT MAKES CONTACT WITH THE CONCRETE HEADWALL. COST IS INCIDENTAK TO ITEM 610002.
7. EXTEND 33" RCP 4" TO 6" INCHES BEYOND THE CONCRETE HEADWALL TO PREVENT WALL STAINING.

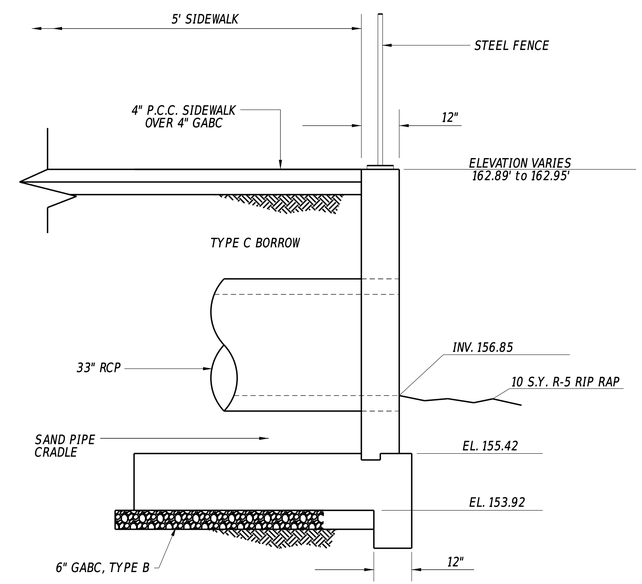

CULVERT CROSSING SECTION
SCALE: 1/2" = 1'

UNOFFICIAL WEBSITE COPY

ADDENDA / REVISIONS	SCALE AS SHOWN	MILLER ROAD STREETSCAPE IMPROVEMENTS PHASE II	CONTRACT T201901101	BRIDGE NO. X	CONSTRUCTION DETAILS	CD–06
			COUNTY NEW CASTLE	DESIGNED BY: T. BANEZ		SECTION CEI
				CHECKED BY: W. CONWAY		SHEET NO. 25

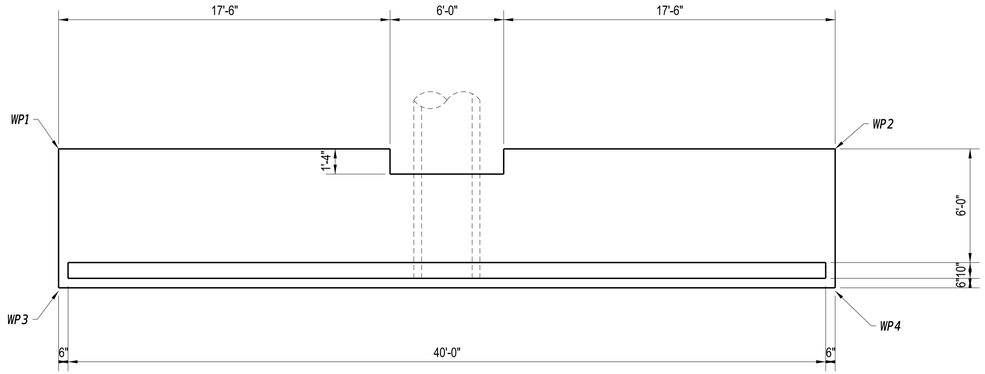

CULVERT CROSSING FOUNDATION PLAN

SCALE: 1/4" = 1'

REBAR SCHEDULE

	MARK	SIZE	NO.	LENGTH	TYPE	A	B	C	D	E	F	G	H	K	REMARKS
FOOTING	F501	5	11	39'-8"	STR										
	F502	5	30	4'-6"	STR										
	F503	5	30	6'-10"	STR										
	F601	6	60	6'-10"	STR										
	F602	6	60	4'-10"	2		3'-10"	1'-0"							
WALL	W501	5	4	39'-3"	STR										
	W502	5	8	17'-6"	STR										
	W503	5	4	17'-2"	STR										
	W504	5	2	6'-0"	STR										
	W505	5	2	4'-6"	STR										
	W506	5	30	7'-4"	STR										
	W601	6	60	7'-4"	STR										

WORKING POINTS

MARK	STATION	OFFSET
WP1	115+86.71	20.4200
WP2	116+27.71	20.4200
WP3	115+86.71	27.7533
WP4	116+27.71	27.7533

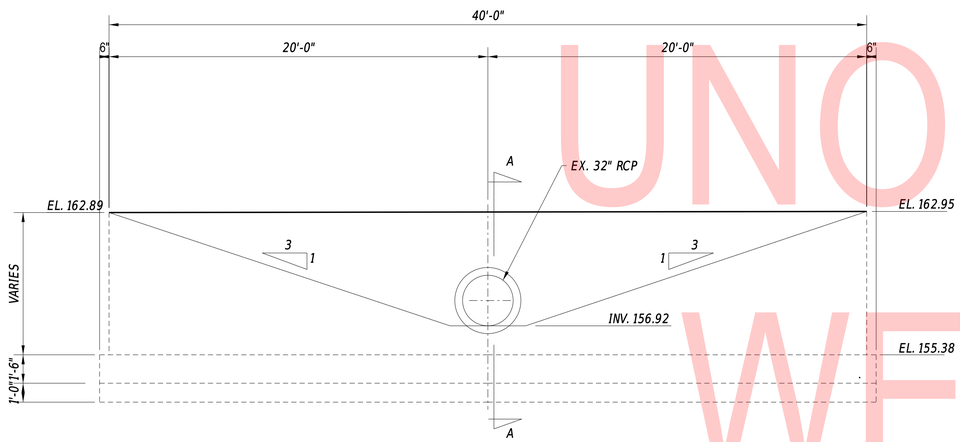

CULVERT CROSSING ELEVATION

SCALE: 1/4" = 1'

BAR BENDS

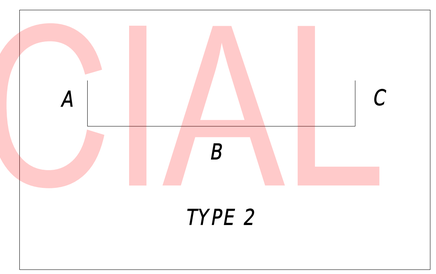

LEGEND:

N.F.	NEAR FACE
F.F.	FAR FACE
E.F.	EACH FACE
O.C.	ON CENTER
T&B	TOP AND BOTTOM

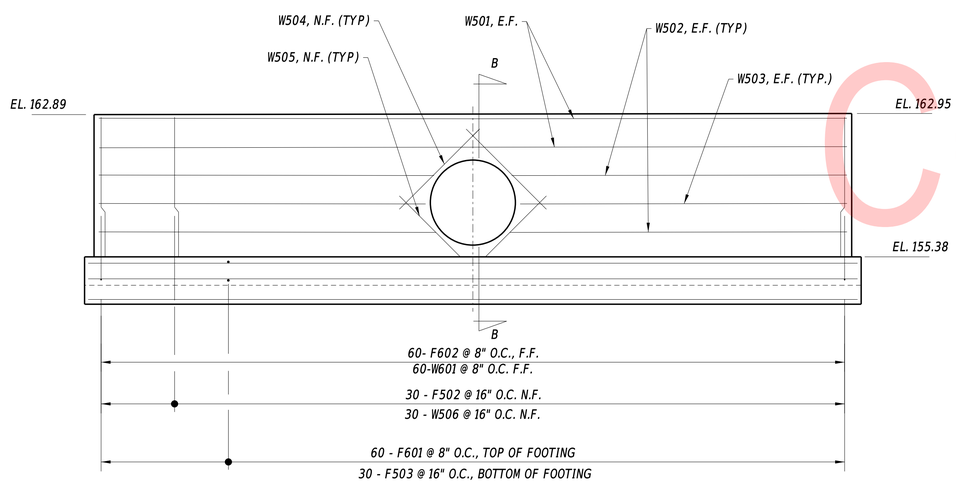

CULVERT CROSSING REBAR ELEVATION

SCALE: 1/4" = 1'

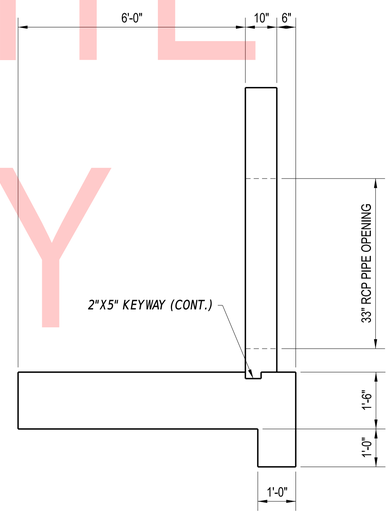

SECTION A–A

SCALE: 1/2" = 1'

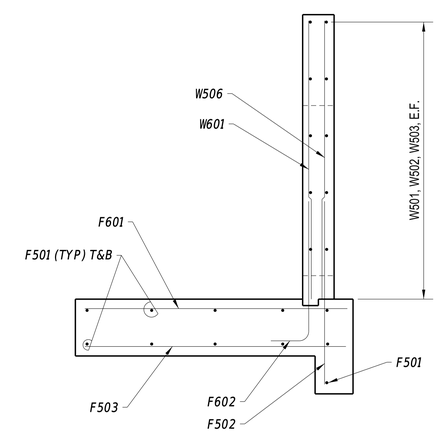

SECTION B–B
REBAR DETAIL

SCALE: 1/2" = 1'

UNOFFICIAL WEBSITE COPY

ADDENDA / REVISIONS	SCALE AS SHOWN	MILLER ROAD STREETSCAPE IMPROVEMENTS PHASE II	CONTRACT T201901101	BRIDGE NO. X	CONSTRUCTION DETAILS	CD–07
			COUNTY NEW CASTLE	DESIGNED BY: T. BANEZ		SECTION CEI
				CHECKED BY: W. CONWAY		SHEET NO. 26

1. GENERAL NOTES:

A. THE PURPOSE OF THIS SHEET IS TO IDENTIFY THOSE ITEMS ASSOCIATED WITH ENVIRONMENTAL COMPLIANCE. IMPACT CALCULATIONS ARE FOR THE AGENCY PERMIT REPORTING PURPOSES ONLY AND ARE NOT TO BE USED FOR BIDDING PURPOSES.

B. IF A DEPARTURE FROM THE APPROVED PLANS (WHICH WOULD AFFECT ANY OF THE NATURAL AND/OR CULTURAL RESOURCE ISSUES) IS NECESSARY, THE ENVIRONMENTAL STUDIES SECTION SHALL BE CONTACTED AT (302) 760-2264 TO ALLOW THE DEPARTMENT TO COORDINATE WITH THE APPROPRIATE RESOURCE AGENCIES FOR APPROVAL.

C. USE OF THIS SHEET DOES NOT ALLEVIATE THE CONTRACTOR'S RESPONSIBILITY TO COMPLY WITH ALL CONDITIONS SET FORTH IN THE ENVIRONMENTAL STATEMENT AND PERMITS.

D. THE IDENTIFIED PERMANENT AND TEMPORARY IMPACTS TO JURISDICTIONAL RESOURCES SHOWN ON THE ENVIRONMENTAL COMPLIANCE SHEET ARE THE ONLY AUTHORIZED IMPACTS.

2. CULTURAL RESOURCES ISSUES:

A. AS A RESULT OF THE CURRENT PROJECT COORDINATION, THIS PROJECT IS CONSISTENT WITH STIPULATION II.B.2 OF DELDOT'S PROGRAMMATIC AGREEMENT WITH DE STATE HISTORIC PRESERVATION OFFICE (DE SHPO), FEDERAL HIGHWAY ADMINISTRATION (FHWA), AND ADVISORY COUNCIL ON HISTORIC PRESERVATION (ACHP). THERE ARE NO CULTURAL RESOURCE CONCERNS AS LONG AS THE PROJECT SCOPE IS NOT MODIFIED AND ALL STAGING AND STOCKPILING REMAINS WITHIN THE PROJECT LOC AND ROADWAY FOOTPRINT. SHOULD IT BE NECESSARY TO ADD ADDITIONAL ACCESS LOCATIONS OR OTHER STOCKPILING/STAGING AREAS, DELDOT ENVIRONMENTAL STUDIES STAFF WILL NEED TO REVIEW THESE AREAS FOR POTENTIAL CULTURAL RESOURCE CONCERNS.

3. NATURAL RESOURCE ISSUES:

A. PERMIT REQUIREMENT/APPROVALS:
U.S. ARMY CORPS OF ENGINEERS (COE): NWP 3(a) AND (c) (NO PCN).
DNREC - WETLANDS AND SUBAQUEOUS LANDS (WLSL): PROJECT CONSISTENT WITH DEL. CODE CH. 27, SECTION 7217, SPECIAL EXEMPTION B.

DNREC - WATER QUALITY (WQC) & COASTAL ZONE CONSISTENCY (CZM): ISSUED (PROJECT IS NOT IN A CRW).
NCCO - NONE.

* THE PERMITS/APPROVALS LISTED ARE THOSE REQUIRED FOR THIS PROJECT. THE ENVIRONMENTAL STUDIES SECTION IS RESPONSIBLE FOR COORDINATING AND/OR OBTAINING THIS APPROVAL.

** THE CONTRACTOR MUST ENSURE THAT THESE PERMITS/APPROVALS ARE IN THEIR POSSESSION PRIOR TO BEGINNING CONSTRUCTION IN THE PERMITTED AREA(S) AND ENSURE IT IS DISPLAYED ON-SITE DURING THE ENTIRE CONSTRUCTION PERIOD.

B. CONSTRUCTION RESTRICTIONS:
- FISHERIES - NONE.
- MIGRATORY BIRDS - NONE.
- ENDANGERED SPECIES - NOT APPLICABLE.

4. PROTECTION OF RESOURCES:

A. KEEP CLEARING IN WETLAND AREAS TO A MINIMUM ABSOLUTELY NECESSARY FOR CONSTRUCTION ACCESS. SUPPORT ALL EQUIPMENT TRAVERSING WETLANDS AND SUBAQUEOUS LAND ON MATS. PAYMENT FOR MATS WILL BE MADE UNDER ITEM 621500, TEMPORARY TIMBER MAT. IN WETLAND AREAS THAT ARE CLEARED, NO GRUBBING EXCEPT WHERE NECESSARY TO CONSTRUCT PROJECT COMPONENTS SUCH AS FOUNDATIONS AND RIPRAP PROTECTION IS PERMITTED. CUT VEGETATION FLUSH WITH THE GROUND (I.E. NO DISTURBANCE OF THE ROOT MAT). RESTORE TEMPORARILY DISTURBED WETLAND AREAS TO GRADE AND SEED WITH ITEM 908017 - TEMPORARY GRASS SEEDING (ANNUAL RYEGRASS).

B. USE SILT FENCE OR CONSTRUCTION SAFETY FENCE ALONG THE LIMITS OF CONSTRUCTION IN ALL AREAS WHERE WATER/WETLANDS ARE BEING IMPACTED (AS SHOWN ON ENVIRONMENTAL COMPLIANCE SHEETS), AND ALSO IN ANY AREA WHERE WATER/WETLANDS EXIST WITHIN 20 FEET OF THE LIMIT OF CONSTRUCTION (AS SHOWN ON CONSTRUCTION PLAN SHEETS). ANY CONTRACTOR ACCESS BEYOND THE LIMIT OF CONSTRUCTION IS STRICTLY PROHIBITED.

C. USE SANDBAGS OR COMPOST FILTER LOG (CFL) TO SECURE SILT FENCE AT AREAS ADJACENT TO WOODED UPLANDS/ ALL WETLANDS IN LIEU OF TRENCHING UNLESS PROPER EROSION AND SEDIMENT CONTROL CANNOT BE MAINTAINED. SANDBAGS AND CFL'S (AND CONTENTS) MUST BE REMOVED IN THEIR ENTIRETY WHEN NO LONGER NEEDED. SANDBAGS/CFL USED TO SECURE THE SILT FENCE IS INCIDENTAL TO ITEM 905001 - SILT FENCE. DELDOT ENVIRONMENTAL STUDIES SECTION (TREVOR MCCOLLEY, 302-760-2278) CAN PROVIDE FURTHER GUIDANCE REGARDING THIS METHOD OF INSTALLATION.

D. CLEARLY MARK ALL TREES TO BE REMOVED WITH PAINT PRIOR TO THE EROSION AND SEDIMENT CONTROL MEETING.

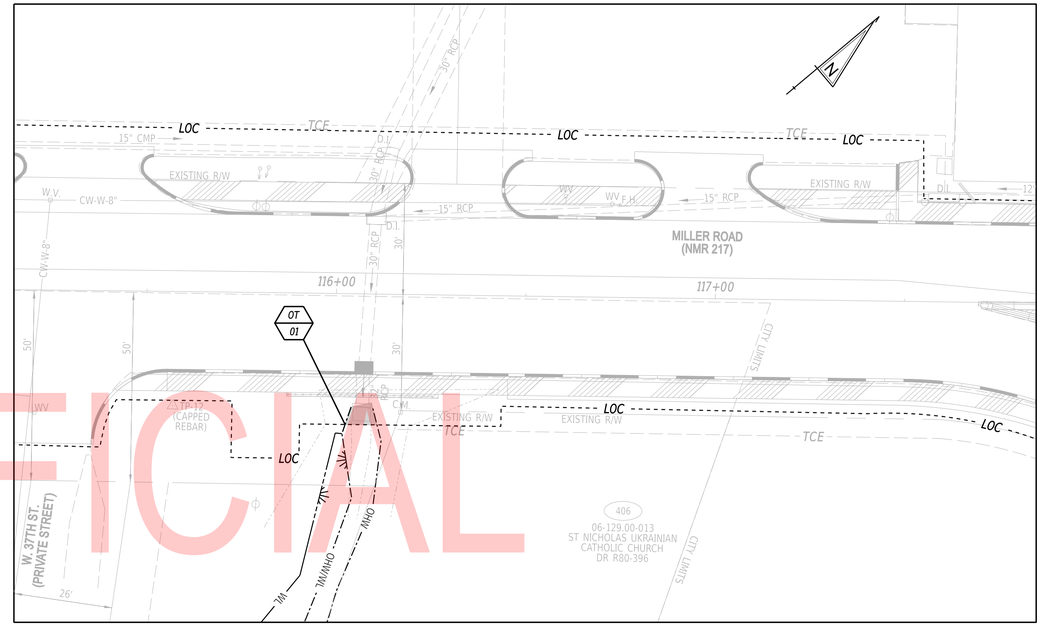

TEMPORARY OPEN WATER IMPACT AREA SCHEDULE					
ID	IMPACT DESCRIPTION	AREA (SF)	AREA (AC)	VOLUME (CY)	JURISDICTION
OT-1	SB DIKE AND CONCRETE REMOVAL	35.8	0.0008	0.35	USACE/DNREC
TOTAL TEMPORARY OPEN WATER IMPACT AREAS		35.8	0.0008	0.35	USACE/DNREC

LEGEND

OHW/WL	ORDINARY HIGH WATER/ WETLAND BOUNDARY
OHW	ORDINARY HIGH WATER
WL	WETLAND BOUNDARY
LOC	LIMIT OF CONSTRUCTION
	PERMANENT IMPACT AREA
	TEMPORARY IMPACT AREA
XX / ?X	IMPACT AREA TYPE ID. (SEE BELOW) / IMPACT AREA ID. AND/OR NUMBER

-W = WETLAND IMPACT -T = TEMPORARY IMPACT

SHEET PREPARED BY:
CENTURY ENGINEERING, INC.
550 BAY ROAD
DOVER, DE 19901
MAY, 2019
LAST UPDATED SEPTEMBER 25, 2019

WETLAND DELINEATION BY TJ AUSTIN (CENTURY ENGINEERING, INC.)
IN JANUARY 2019, IN ACCORDANCE WITH THE CORPS WETLANDS
DELINEATION MANUAL AND THE CORPS ATLANTIC AND GULF
COASTAL PLAIN REGIONAL SUPPLEMENT VERSION 2.0 (2010)

UNOFFICIAL WEBSITE COPY

ADDENDA / REVISIONS

SCALE 0 20 40 60 FEET

MILLER ROAD
STREETSCAPE IMPROVEMENTS
PHASE II

CONTRACT	BRIDGE NO.	X	ENVIRONMENTAL COMPLIANCE	SECTION
T201901101	DESIGNED BY:	T. BANEZ		CEI
COUNTY				SHEET NO.
NEW CASTLE	CHECKED BY:	W. CONWAY		27

TRAFFIC CONTROL NOTES

1. THE CONTRACTOR IS RESPONSIBLE FOR THE MAINTENANCE OF EXISTING PAVEMENT WITHIN THE PROJECT LIMITS FOR THE DURATION OF THE CONTRACT OR AS DIRECTED BY THE ENGINEER OR DESIGNEE. ALL REPAIRS ARE AT THE CONTRACTOR'S EXPENSE AS DIRECTED BY THE ENGINEER.

2. THE CONTRACTOR SHALL ONLY WORK ON ONE SIDE OF THE ROAD AT A TIME OR AS DIRECTED IN FIELD BY THE ENGINEER. THE CONTRACTOR SHALL MAINTAIN ACCESS TO ENTRANCES DURING CONSTRUCTION. COSTS ASSOCIATED WITH MAINTAINING ENTRANCES ARE INCIDENTAL TO ITEM 801000 - MAINTENANCE OF TRAFFIC.

3. UNLESS OTHERWISE APPROVED BY THE ENGINEER, THE ROADWAY SHALL NOT BE MILLED UNTIL ALL NEW CURBS HAVE BEEN INSTALLED AND BASE HOT-MIX IS PLACED IN THE PATCH AREAS. MILLING AND OVERLAY MAY THEN PROCEED FOR THAT PHASE. THE MILLED SURFACE MAY NOT BE LEFT UNPAVED FOR MORE THAN THREE DAYS.

4. ACCEPTABLE MATERIALS FOR TEMPORARY PEDESTRIAN PATHS SHALL INCLUDE CONCRETE, HOT-MIX, COMPACTED MILLINGS OR PLYWOOD WALKWAY STRUCTURE. PLYWOOD WALKWAY STRUCTURES SHALL ALSO INCLUDE DETECTABLE EDGING AND RAILINGS IN ACCORDANCE WITH ADA GUIDELINES AND THE DELAWARE MUTCD. TEMPORARY PEDESTRIAN PATHS SHALL BE INCIDENTAL TO ITEM 801000 UNLESS OTHERWISE SPECIFIED IN THE PLANS. STONE OR GRADED AGGREGATE BASE COURSE SHALL NOT BE USED FOR TEMPORARY PEDESTRIAN PATHS.

5. TYPICAL APPLICATIONS PER THE DELAWARE MUTCD SHALL BE INCORPORATED TO ACHIEVE TEMPORARY TRAFFIC CONTROL AND SAFETY REQUIREMENTS. EACH PHASE OF THIS PROJECT IS SUBJECT TO TYPICAL APPLICATIONS (SEE PHASING NOTES) FOR MILLER ROAD UNLESS DIRECTED OTHERWISE BY THE ENGINEER.

6. WITHIN THE CONSTRUCTION AREA, AND ON ALL INTERSECTION STREETS, A ROAD WORK AHEAD PERMANENT SIGN SHALL BE PLACED AS DIRECTED BY THE ENGINEER OR DESIGNEE. THE END ROAD WORK SIGN SHALL BE INSTALLED ADJACENT TO THE ROAD WORK AHEAD SIGN. ALL DISTANCES ARE APPROXIMATE AND MAY BE ADJUSTED TO MEET FIELD CONDITIONS AS APPROVED BY THE ENGINEER OR DESIGNEE. ALL PERMANENT SIGNING SHALL BE GROUND MOUNTED ON TWO-NCHRP-350 APPROVED BREAK-AWAY POSTS AND PER SECTION 6F.01 THRU 6F.04 OF DE MUTCD PART 6.

7. THE CONTRACTOR SHALL PROVIDE FLAGGERS (ITEMS 811001 AND 811013) TO GUIDE PEDESTRIANS THROUGH THE WORK ZONE DURING WORKING HOURS. ALL COSTS ARE INCIDENTAL TO THE RESPECTIVE PAY ITEMS.

8. THE CONTRACTOR SHALL COMPLETE ALL PHASES PER THE PHASING SHEETS, IN ORDER. ALL WORK SHALL BE COMPLETED IN A PHASE BEFORE STARTING WORK IN A SUBSEQUENT PHASE UNLESS OTHERWISE APPROVED BY THE ENGINEER. ALL DISTURBED AREAS IN A PHASE SHALL BE STABILIZED AS DIRECTED BY THE ENGINEER BEFORE BEGINNING WORK IN THE NEXT PHASE.

9. AMERICAN TRAFFIC SAFETY SERVICES ASSOCIATION (ATSSA) CERTIFIED TRAFFIC CONTROL SUPERVISOR REQUIREMENT FOR THIS PROJECT:

( )	THE CONTRACTOR SHALL NOT BE REQUIRED TO HAVE AN ATSSA SUPERVISOR ASSIGNED TO THIS PROJECT.
(X)	THE CONTRACTOR SHALL HAVE AN ATSSA SUPERVISOR ASSIGNED TO THIS PROJECT. THE CONTRACTOR'S GENERAL SUPERINTENDENT FOR THIS PROJECT OR ANOTHER ATSSA CERTIFIED MEMBER OF THE CONTRACTOR'S PROJECT STAFF MAY BE THE ATSSA SUPERVISOR. PAYMENT FOR ATSSA SUPERVISOR IS INCIDENTAL TO ITEM 801000.

10. WHEN THE CONTRACTOR IS WORKING IN THE AREA OF MILLER ROAD AND 34TH STREET, CONTRACTOR SHALL PROVIDE FLAGGERS DURING THE ARRIVAL AND DISMISSAL AT P.S. DUPONT MIDDLE SCHOOL (7:00AM - 8:30AM AND 2:30PM - 3:30PM) TO ASSIST BUS AND VEHICLE ACCESS TO THE SCHOOL.

11. THE CONTRACTOR SHALL PROVIDE TRAFFIC OFFICERS FOR THE NIGHT TIME WORK IN PHASE 2 (MILLER ROAD/LEA BOULEVARD) AND DURING PHASE 3 ON MILLER ROAD BETWEEN STATIONS 117+00 AND 120+00. DEPENDING ON TRAFFIC CONDITIONS, THE ENGINEER WITH CONSULTATION OF THE TRAFFIC SAFETY SECTION, MAY REMOVE THE TRAFFIC OFFICER REQUIREMENT.

12. ONCE THE ROAD DIET IS INSTALLED, USE TA-11B FOR ADDITIONAL MAINTENANCE OF TRAFFIC.

GENERAL PROJECT NOTES FOR SEDIMENT AND STORMWATER MANAGEMENT

1.

EROSION POTENTIAL FOR THIS PROJECT	CONTRACTOR EROSION AND SEDIMENT CONTROL SUPERVISOR REQUIREMENT
( ) INSIGNIFICANT	NONE
(X) MINOR	CONTRACTOR TRAINING PROGRAM, AS DEFINED IN SECTION 6.2 OF THE DELAWARE SEDIMENT AND STORMWATER REGULATIONS.
( ) MAJOR	CERTIFIED CONSTRUCTION REVIEWER (CCR), AS DEFINED IN SECTION 6.3 OF THE DELAWARE SEDIMENT AND STORMWATER REGULATIONS.

2. ALL EXISTING INLETS AND PIPES WITHIN THE PROJECT LIMITS TO REMAIN SHALL BE CLEANED OUT. THE COST OF CLEANING OUT THE EXISTING PIPES TO REMAIN IS INCIDENTAL TO ITEM #201000.

3. THE DISTURBED AREA FOR THIS PROJECT IS 1.10 ACRES.

4. THE AMOUNT OF NEW IMPERVIOUS FOR THIS PROJECT IS 0.13 ACRES.

5. THE SEDIMENT AND STORMWATER MANAGEMENT PLANS HAVE BEEN APPROVED BY DELDOT'S STORMWATER ENGINEER UNDER DELDOT'S DELEGATED AUTHORITY. THE SEDIMENT AND STORMWATER MANAGEMENT PLANS ARE VALID FOR A FIVE YEAR PERIOD, BEGINNING ON THE DATE THE STORMWATER ENGINEER SIGNED THE CONSTRUCTION TITLE SHEET. IF THE FINAL ACCEPTANCE OF THE PROJECT IS ANTICIPATED TO EXTEND BEYOND THE FIVE YEARS, THE CONTRACTOR WILL INFORM THE ENGINEER THREE MONTHS PRIOR TO THE EXPIRATION OF THE APPROVED SEDIMENT AND STORMWATER MANAGEMENT PLANS. THE STORMWATER ENGINEER WILL REVIEW THE CURRENT SEDIMENT AND STORMWATER MANAGEMENT PLAN AND ISSUE AN EXTENSION WITH ANY APPROPRIATE MODIFICATIONS.

6. THE CONTRACTOR HAS THE ULTIMATE RESPONSIBILITY FOR COMPLIANCE WITH THE APPROVED SEDIMENT AND STORMWATER MANAGEMENT PLAN AS WELL AS ADHERING TO THE REQUIREMENTS OF THE POLLUTION PREVENTION ASPECTS (I.E. STORMWATER POLLUTION PREVENTION PLAN (SWPPP)), DELAWARE SEDIMENT AND STORMWATER REGULATIONS AND ANY OTHER APPLICABLE LAWS, REGULATIONS, PERMITS, ETC.

7. IF THESE SHEETS NEED TO BE MODIFIED, WRITTEN CORRESPONDENCE FROM THE CONTRACTOR SHALL BE SENT TO THE APPROPRIATE DELDOT CONSTRUCTION PERSONNEL. NO CONSTRUCTION ACTIVITY CONCERNING THE PROPOSED CHANGES CAN BEGIN UNTIL WRITTEN APPROVAL FROM THE ENGINEER.

8. ALL PERIMETER EROSION AND SEDIMENT CONTROL ITEMS INCLUDING SEDIMENT TRAPS, SHOWN GRAPHICALLY ON THE FOLLOWING SHEETS, SHALL BE INSTALLED FIRST BEFORE ANY LAND DISTURBING ACTIVITIES MAY BEGIN. THE ONLY DISTURBANCE WILL BE WHAT IS REQUIRED TO INSTALL THE PARTICULAR EROSION AND SEDIMENT CONTROL PRACTICE(S). INTERIOR / INTERMITTENT EROSION AND SEDIMENT CONTROL ITEMS SHALL BE PLACED AS NEEDED DURING CONSTRUCTION.

9. FOLLOWING SOIL DISTURBANCE OR REDISTURBANCE, PERMANENT OR TEMPORARY STABILIZATION SHALL BE COMPLETED WITHIN A MAXIMUM OF THREE (3) CALENDAR DAYS.

10. UPON DISCOVERY OF ANY SEDIMENT LADEN RELEASE LEAVING THE LIMIT OF CONSTRUCTION VIA PUMPING, RUNOFF, OR WIND, THE CONTRACTOR SHALL IMMEDIATELY EMPLOY BEST AVAILABLE TECHNOLOGIES TO CONTROL ANY FURTHER TURBID DISCHARGE. THIS COULD INCLUDE ADDITIONAL STANDARD E&S PRACTICES AND POSSIBLY THE USE OF FLOCCULANTS.

Vincent W. Davis, P.E. — 23 JAN 20

DELDOT STORMWATER ENGINEER — DATE

"I CERTIFY TO THE BEST OF MY KNOWLEDGE AND BELIEF THAT THESE PLANS MEET THE REQUIREMENTS OF THE DELAWARE SEDIMENT AND STORMWATER REGULATIONS AND THAT ALL CLEARING, GRADING, AND CONSTRUCTION WILL BE ACCOMPLISHED PURSUANT TO THE PLAN."

TRM NOTES

1. THE USE OF MILLINGS AND GRADED AGGREGATE BASE COURSE (GABC) IN THE TRAVEL WAY, TEMPORARY TRAVEL WAY, HIGH VOLUME ENTRANCES AND ACCESS RAMP FOR THE PURPOSE OF PROVIDING A TEMPORARY ROADWAY SURFACE, POTHOLE REPAIR, TAPERED EDGE FOR UTILITIES, BUTT JOINTS, AND LONGITUDINAL DROP-OFFS (MILLING AND PAVING OPERATIONS) IS PROHIBITED UNLESS IT IS OTHERWISE DESIGNATED TO BE USED IN THE CONTRACT PLANS. USE COLD PATCH, BITUMINOUS CONCRETE, BITUMINOUS CONCRETE WEDGE, OR TAPER MILL, AS NOTED IN THE CONTRACT DOCUMENTS OR APPROVED BY THE ENGINEER. PAYMENT FOR COLD PATCH, BITUMINOUS CONCRETE OR BITUMINOUS CONCRETE WEDGE SHALL BE PAID AS NOTED IN THE CONTRACT DOCUMENTS. TAPER MILL BITUMINOUS CONCRETE SHALL BE PAID UNDER THE BITUMINOUS CONCRETE MILLING ITEM.

2. MILLINGS OR GABC SHALL BE USED AT THE FOLLOWING LOCATIONS WHERE ACCESS TO A BUSINESS, RESIDENCE, OR EDGE DROP OFF NEEDS TO BE MAINTAINED UNLESS OTHERWISE NOTED IN THE PLANS OR DIRECTED BY THE ENGINEER TO USE BITUMINOUS CONCRETE OR COLD PATCH. ALL MILLINGS AND GABC WILL BE ROLLED AND COMPACTED TO HELP PREVENT THE MATERIAL FROM UNRAVELLING:

   A. DRIVEWAYS
   B. ENTRANCES
   C. LOW VOLUME ACCESS RAMPS (IDENTIFIED IN THE CONTRACT DOCUMENTS)
   D. EDGE DROP-OFFS ADJACENT TO LIVE ROADWAY(LANES AND SHOULDER) AND THE PROPOSED ROAD CONSTRUCTION
   E. EDGE OF ROADWAY DROP-OFF

3. GRADING AND MAINTAINING BASE COURSE THAT IS BEING USED FOR ROADWAY WEDGE/FILLET BETWEEN TRAVEL LANES AND PAVEMENT BOX, EDGE OF TRAVELWAY, DRIVEWAY OR ENTRANCE ACCESS SHALL BE INCIDENTAL TO ITEM NO. 801000 - MAINTENANCE OF TRAFFIC. THE BASE COURSE MATERIAL SHALL BE PLACED AT NO GREATER THAN THE SLOPE SPECIFIED IN TABLE 6G-1 AND SHALL BE COMPACTED. EXCESS BASE COURSE MATERIAL SHALL BE PUSHED AHEAD AND USED IN THE NEXT SEGMENT AND SHALL BE INCIDENTAL TO THE PARTICULAR BASE COURSE PAY ITEM. NO SEPARATE PAYMENT SHALL BE MADE FOR MILLINGS OR GABC TEMPORARY ROADWAY MATERIAL (TRM) USED TO PROTECT EDGE DROP-OFFS, UNLESS THE MATERIAL IS EVENTUALLY UTILIZED AS PART OF A PERMANENT ROADWAY AT WHICH TIME THE MATERIAL WOULD BE PAID FOR UNDER THE RESPECTIVE CONTRACT MATERIAL ITEM.

4. VERTICAL DIFFERENCES SHALL BE CORRECTED IN ACCORDANCE WITH TABLE 6G-1 OF THE DELAWARE MUTCD.

LANE RESTRICTIONS

THE CONTRACTOR SHALL COORDINATE WITH AREA SPECIAL EVENTS. IN ADDITION TO THE EVENT AND HOLIDAY LANE CLOSURE RESTRICTIONS IN SECTION 800, LANE CLOSURES ARE NOT PERMITTED DURING THE FOLLOWING EVENTS:

1. PRIMARY ELECTIONS - NO LANE CLOSURES ARE PERMITTED WITHIN ONE MILE OF A POLLING PLACE DURING PRIMARY/GENERAL ELECTIONS.

2. GENERAL ELECTIONS - NO LANE CLOSURES ARE PERMITTED DURING THE DAY OF GENERAL ELECTIONS. THE ENGINEER WILL PROVIDE THE DATE.

ALLOWABLE LANE CLOSURE HOURS (THROUGH THE HOUR SHOWN)

MILLER ROAD

	12:00 AM	1:00 AM	2:00 AM	3:00 AM	4:00 AM	5:00 AM	6:00 AM	7:00 AM	8:00 AM	9:00 AM	10:00 AM	11:00 AM	12:00 PM	1:00 PM	2:00 PM	3:00 PM	4:00 PM	5:00 PM	6:00 PM	7:00 PM	8:00 PM	9:00 PM	10:00 PM	11:00 PM
SUNDAY																								
MONDAY																								
TUESDAY																								
WEDNESDAY																								
THURSDAY																								
FRIDAY																								
SATURDAY																								

	ONE LANE CLOSURE
	ALL LANES OPEN

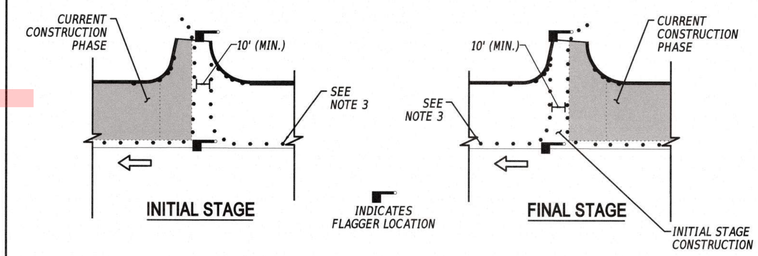

TYPICAL DRIVEWAY / ENTRANCE RECONSTRUCTION

NOT TO SCALE

NOTES

1. THIS DETAIL PROVIDES THE PROPER TRAFFIC CONTROL DEVICES AT DRIVEWAYS AND ENTRANCES THAT ARE TO BE BUILT IN HALF-SECTION UNDER FLAGGER CONTROL. APPLICATION OF THIS DETAIL SHALL BE AS INDICATED ON THE PLANS, DURING DAYLIGHT HOURS ONLY, OR AS DIRECTED BY THE ENGINEER. TRAFFIC CONTROL DEVICES AT ENTRANCES SHALL BE RESET TO MAIN PHASE AT END OF EACH WORKING DAY.

2. CHANNELIZATION THROUGH ENTRANCE AREA SHALL BE ACCOMPLISHED WITH DRUMS PLACED AT 10' BETWEEN THE EDGES OF THE DRUMS IMMEDIATELY ADJACENT TO THE TRAVELED WAY, UNLESS OTHERWISE DIRECTED BY THE ENGINEER. DRUM LAYOUT SHALL ACCOMMODATE THE LARGEST DESIGN VEHICLE EXPECTED TO USE ENTRANCE.

3. TRAFFIC CONTROL DEVICES ALONG MAINLINE ROADWAY SHALL BE AS SHOWN ON CONSTRUCTION PHASING PLANS.

4. DEPENDING ON TRAFFIC VOLUME UTILIZING ENTRANCE AND OTHER SITE-SPECIFIC CONDITIONS, THE NUMBER OF FLAGGERS USED DURING ENTRANCE CONSTRUCTION MAY BE REDUCED FROM 2 TO 1, SUBJECT TO APPROVAL OF ENGINEER.

5. COORDINATE WITH BUSINESS OWNERS TO SCHEDULE THE ENTRANCE CLOSURE AT NON-PEAK TIMES.

LEGEND

CONSTRUCTION PHASING & M.O.T	
	BARRICADE, TYPE 3
	CONCRETE SAFETY BARRIER - PORTABLE
	CONSTRUCTION SAFETY FENCE / LENGTH
CSF	CONSTRUCTION SAFETY FENCE
	CONSTRUCTION WARNING SIGN LOCATION
	CONSTRUCTION WARNING SIGN
	CRASH CUSHION ARRAY
	DRUM - TRAFFIC CONTROL
	FLAGGER LOCATION
	PHASING TRAFFIC FLOW ARROW
	TEMPORARY CONSTRUCTION
	TEMPORARY PAVEMENT MARKING ARROW
	TRUCK WITH MOUNTED ATTENUATOR
	WORK AREA - ACTIVE PHASE

EROSION & SEDIMENT CONTROL	
CFL	COMPOST FILTER LOG
	COMPOST FILTER LOG / LENGTH
	DEWATERING BAG
DWB	DEWATERING BASIN
ED	EARTH DIKE
	INLET SEDIMENT CONTROL
	PERIMETER DIKE/SWALE
	PORTABLE SEDIMENT TANK
	SANDBAG DIKE
SB	SANDBAG DIVERSION
	COMPOST FILTER LOG CHECK DAM
SCE	STABILIZED CONSTRUCTION ENTRANCE
	SILT FENCE / LENGTH
SF	SILT FENCE

EROSION & SEDIMENT CONTROL	
	REINFORCED SILT FENCE / LENGTH
RSF	REINFORCED SILT FENCE
	SUPER SILT FENCE / LENGTH
SSF	SUPER SILT FENCE
	SUMP PIT
	SEDIMENT TRAP / NUMBER
	SEDIMENT TRAP
	SEDIMENT TRAP WITH INLET AS OUTLET
	SEDIMENT TRAP PIPE OUTLET
	STILLING WELL
	TEMPORARY SWALE
TSD	TEMPORARY SLOPE DRAIN
	TURBIDITY CURTAIN / LENGTH
T	TURBIDITY CURTAIN

UNOFFICIAL WEBSITE

ADDENDA / REVISIONS

NOT TO SCALE

MILLER ROAD STREETSCAPE IMPROVEMENTS PHASE II

CONTRACT	BRIDGE NO.	X
T201901101	DESIGNED BY:	T. BANEZ
COUNTY		
NEW CASTLE	CHECKED BY:	W. CONWAY

CONSTRUCTION PHASING, M.O.T., AND EROSION CONTROL PLANS

SECTION: CEI

SHEET NO. 28

1/21/2020
1:46:22 PM
G:\PROJECTS\185003.00 Agmt 1834 TAP\185003.08 (Task 8 - Miller Road)\Cad\Sheets\C5\cs_notes_miller.dgn

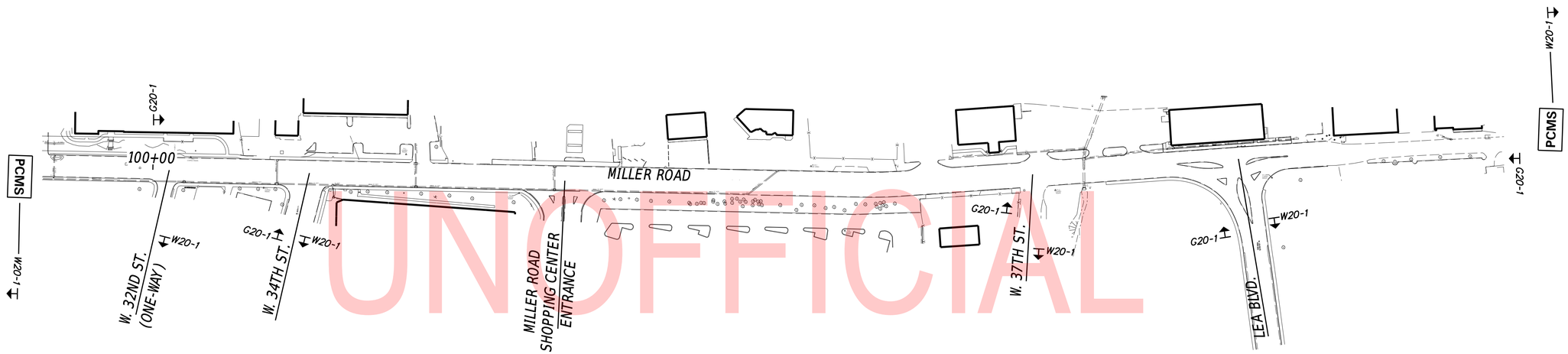

ADVANCED WARNING SIGN LAYOUT

NOTE: PEDESTRIAN MOT FOR SIDEWALK CLOSINGS SHALL BE AS SHOWN ON PHASING PLANS AND FOLLOW CASE 16, OR AS DIRECTED IN THE FIELD BY THE ENGINEER.

PCMS = PORTABLE CHANGEABLE MESSAGE SIGN LOCATION

MESSAGE SIGNS SHALL BE PLACED 10 DAYS IN ADVANCE OF THE WORK AND REMAIN IN PLACE FOR 5 DAYS AFTER THE START OF WORK. LOCATIONS OF MESSAGE SIGNS AND MESSAGES DISPLAYED SHALL BE REVIEWED AND APPROVED BY THE DISTRICT SAFETY OFFICER.

10 DAYS PRIOR TO CONSTRUCTION:

ROAD WORK STARTING	XX/XX/XX EXPECT DELAYS

5 DAYS AFTER CONSTRUCTION HAS BEGUN:

ROAD WORK AHEAD	XX AM–X PM EXPECT DELAYS

ADVANCED WARNING SIGNS

THE CONTRACTOR SHALL LAYOUT SIGNS FOR APPROVAL BY THE ENGINEER PRIOR TO INSTALLATION. THE COVERING OF ANY CONFLICTING SIGNS SHALL BE INCIDENTAL TO ITEM# 810001. ALL TEMPORARY WARNING SIGNS TO BE PAID UNDER ITEM# 810001.

W20-1
48" X 48"

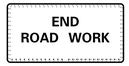

G20-1
48" X 24"

UNOFFICIAL WEBSITE COPY

ADDENDA / REVISIONS	

SCALE 0 100 200 300 FEET

MILLER ROAD STREETSCAPE IMPROVEMENTS PHASE II

CONTRACT	BRIDGE NO.	X
T201901101	DESIGNED BY:	T. BANEZ
COUNTY		
NEW CASTLE	CHECKED BY:	W. CONWAY

CONSTRUCTION PHASING, M.O.T., AND EROSION CONTROL PLANS

SECTION CEI

SHEET NO. 29

23-JAN-2020
13:33
G:\PROJECTS\185003.00 Agmt 1834 TAP\185003.08 (Task 8 - Miller Road)\Cadd\Sheets\CS\cs_aws_miller.dgn

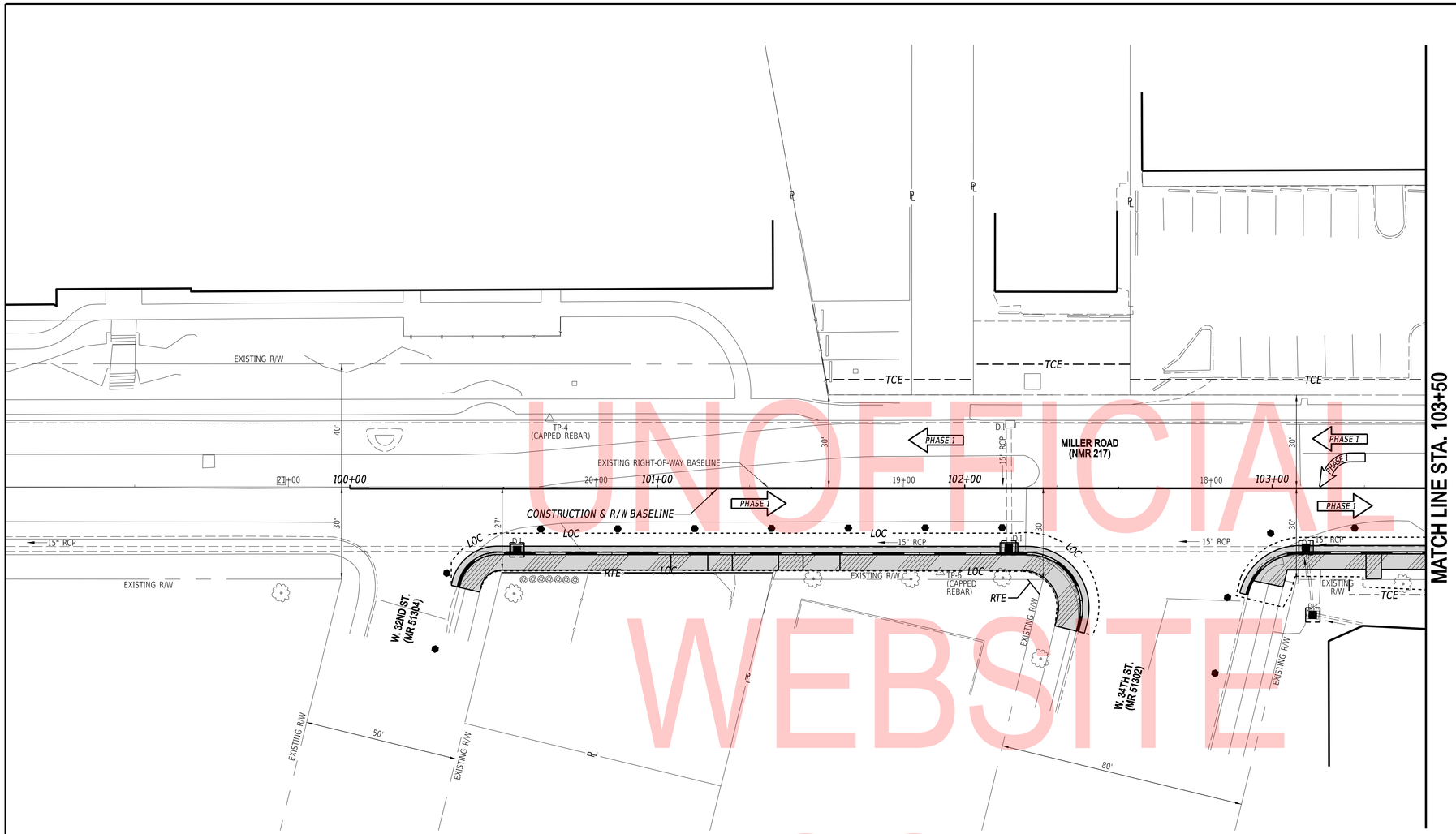

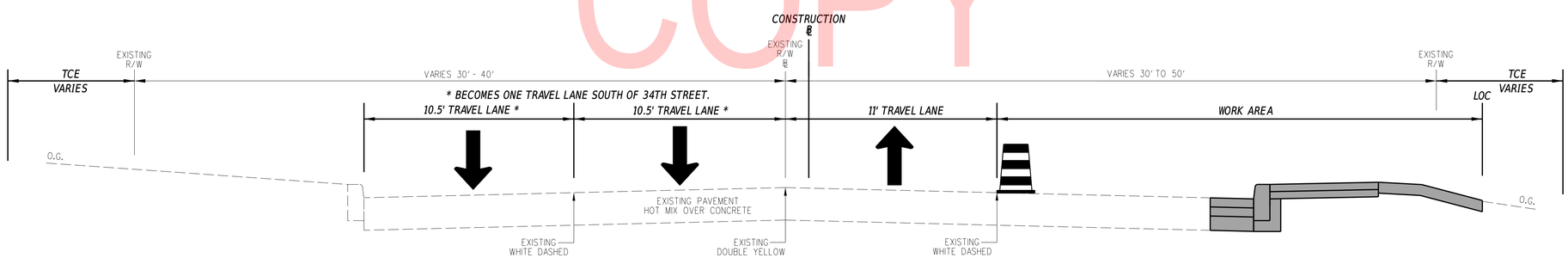

MILLER ROAD PHASE 1

STA. 100+32.98 TO STA. 117+50.42

PHASE 1 NOTES:

1. *INSTALL ALL EROSION AND SEDIMENT CONTROL MEASURES AS SHOWN.*
2. *THE CONTRACTOR'S WORK ACTIVITY WITHIN THIS PHASE SHALL PROCEED FROM THE MOST UPSTREAM TO DOWN-STREAM TRAFFIC SEGMENTS (IN A NORTHEASTERLY DIRECTION) WITH NO MORE THAN 750 FEET OF ROADWAY UNDER CONSTRUCTION AT ANY POINT IN TIME. LIMITS OF EACH SEGMENT SHALL BE AS FOLLOWS UNLESS APPROVED IN ADVANCE BY THE ENGINEER BEFORE CONSTRUCTION ACTIVITY IS INITIATED IN THAT AREA:*

   STA. 100+00 THRU STA. 107+50, RT.
   STA. 107+50 THRU STA. 113+50, RT.
   STA. 113+50 THRU STA. 119+00, RT.

2. *CLOSE THE RIGHT NORTHEASTBOUND TRAVEL LANE ALONG MILLER ROAD, USING TA-10 OR TA-23 OF THE DE MUTCD, AS DIRECTED BY THE ENGINEER. MAINTAIN VEHICULAR AND PEDESTRIAN TRAFFIC WITH FLAGGERS.*
3. *SAWCUT AND REMOVE EXISTING CURB, PAVEMENT AND SIDEWALK WITHIN THE CONSTRUCTION LIMITS OF THE PHASE.*
4. *ADJUST AND/OR RELOCATE ANY UTILITIES DENOTED WITHIN THIS PHASE.*
5. *CONSTRUCT PROPOSED DRAINAGE, WALLS, CURB, SIDEWALK, PEDESTRIAN CONNECTIONS, ROADWAY PATCHES, AND ALL OTHER WORK WITHIN THIS PHASE OF CONSTRUCTION.*
6. *TOPSOIL AND SEED ALL DISTURBED AREAS WITHIN THIS PHASE OF CONSTRUCTION. PLACE SOD WHERE DIRECTED.*

UNOFFICIAL WEBSITE COPY

ADDENDA / REVISIONS	SCALE 0 20 40 60 FEET	MILLER ROAD STREETSCAPE IMPROVEMENTS PHASE II	CONTRACT T201901101	BRIDGE NO. X	CONSTRUCTION PHASING, M.O.T., AND EROSION CONTROL PLANS - PHASE 1	SECTION CEI
			COUNTY NEW CASTLE	DESIGNED BY: T. BANEZ		SHEET NO. 30
				CHECKED BY: W. CONWAY		

23-JAN-2020
13:33
G:\PROJECTS\185003.00 Agmt 1834 TAP\185003.08 (Task 8 - Miller Road)\Cadd\Sheets\CS\cs01-1_miller.dgn

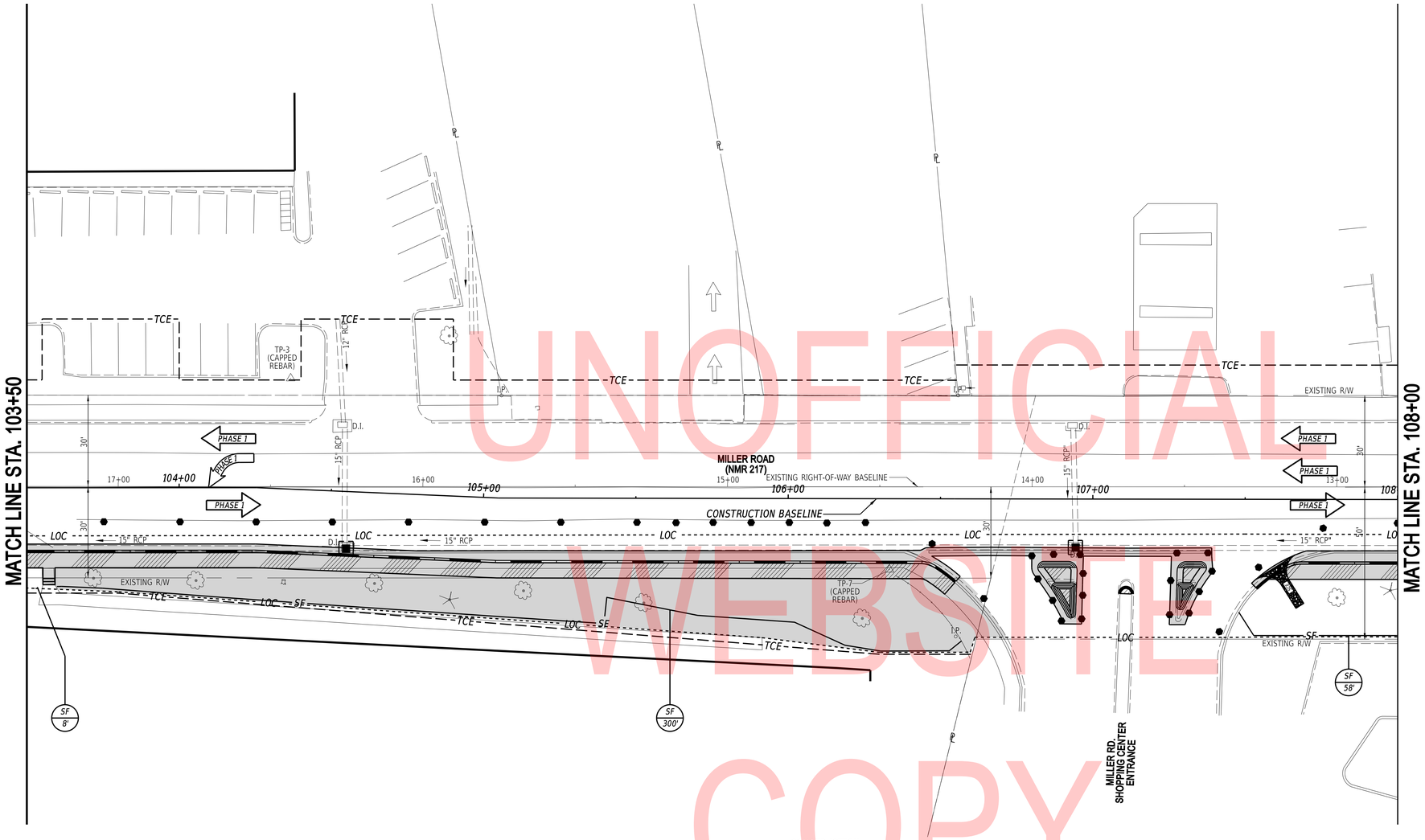

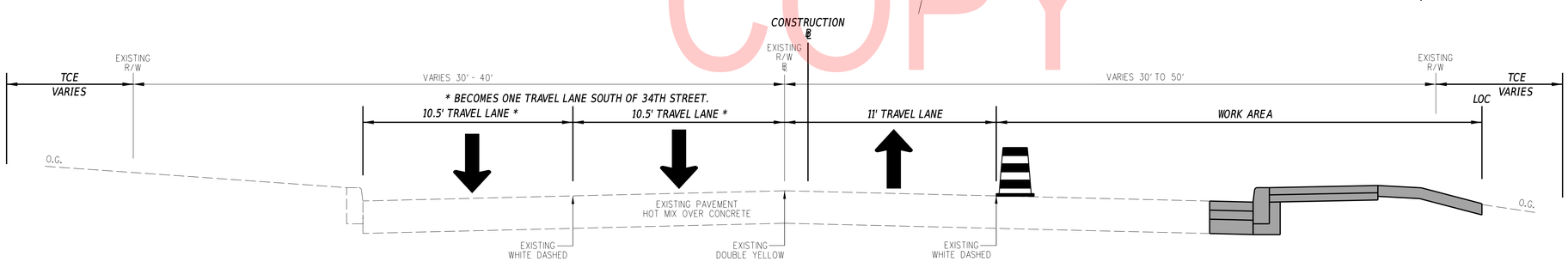

MILLER ROAD PHASE 1
STA. 100+32.98 TO STA. 117+50.42

PHASE 1 NOTES:

1. *INSTALL ALL EROSION AND SEDIMENT CONTROL MEASURES AS SHOWN.*
2. *THE CONTRACTOR'S WORK ACTIVITY WITHIN THIS PHASE SHALL PROCEED FROM THE MOST UPSTREAM TO DOWN-STREAM TRAFFIC SEGMENTS (IN A NORTHEASTERLY DIRECTION) WITH NO MORE THAN 750 FEET OF ROADWAY UNDER CONSTRUCTION AT ANY POINT IN TIME. LIMITS OF EACH SEGMENT SHALL BE AS FOLLOWS UNLESS APPROVED IN ADVANCE BY THE ENGINEER BEFORE CONSTRUCTION ACTIVITY IS INITIATED IN THAT AREA:*

   STA. 100+00 THRU STA. 107+50, RT.
   STA. 107+50 THRU STA. 113+50, RT.
   STA. 113+50 THRU STA. 119+00, RT.
2. *CLOSE THE RIGHT NORTHEASTBOUND TRAVEL LANE ALONG MILLER ROAD, USING TA-10 OR TA-23 OF THE DE MUTCD, AS DIRECTED BY THE ENGINEER. MAINTAIN VEHICULAR AND PEDESTRIAN TRAFFIC WITH FLAGGERS.*
3. *SAWCUT AND REMOVE EXISTING CURB, PAVEMENT AND SIDEWALK WITHIN THE CONSTRUCTION LIMITS OF THE PHASE.*
4. *ADJUST AND/OR RELOCATE ANY UTILITIES DENOTED WITHIN THIS PHASE.*
5. *CONSTRUCT MODULAR BLOCK WALL BEFORE CONSTRUCTING CURB AND SIDEWALK WITHIN THE LIMITS OF THE BLOCK WALL. CONSTRUCT PROPOSED DRAINAGE, CONCRETE HEADWALL, CURB, SIDEWALK, PEDESTRIAN CONNECTIONS, ROADWAY PATCHES, AND ALL OTHER WORK WITHIN THIS PHASE OF CONSTRUCTION.*
6. *TOPSOIL AND SEED ALL DISTURBED AREAS WITHIN THIS PHASE OF CONSTRUCTION. PLACE SOD WHERE DIRECTED.*

UNOFFICIAL WEBSITE COPY

ADDENDA / REVISIONS		SCALE 0 20 40 60 FEET	MILLER ROAD STREETSCAPE IMPROVEMENTS PHASE II	CONTRACT T201901101	BRIDGE NO. X	CONSTRUCTION PHASING, M.O.T., AND EROSION CONTROL PLANS - PHASE 1	SECTION CEI
				COUNTY NEW CASTLE	DESIGNED BY: T. BANEZ		SHEET NO. 31
					CHECKED BY: W. CONWAY		

23-JAN-2020
13:33
G:\PROJECTS\185003.00 Agmt 1834 TAP\185003.08 (Task 8 - Miller Road)\Cadd\Sheets\CS\cs01-2_miller.dgn

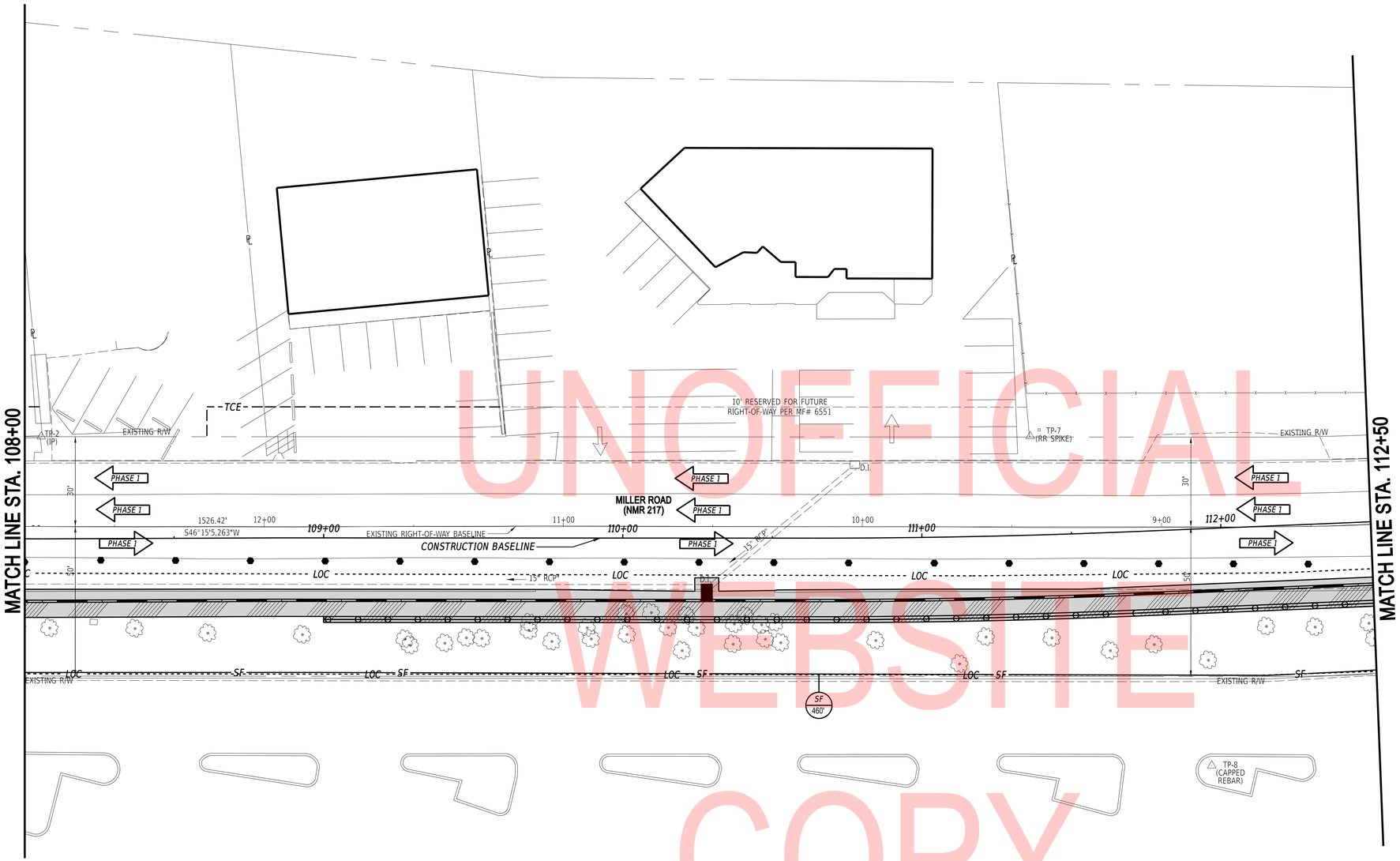

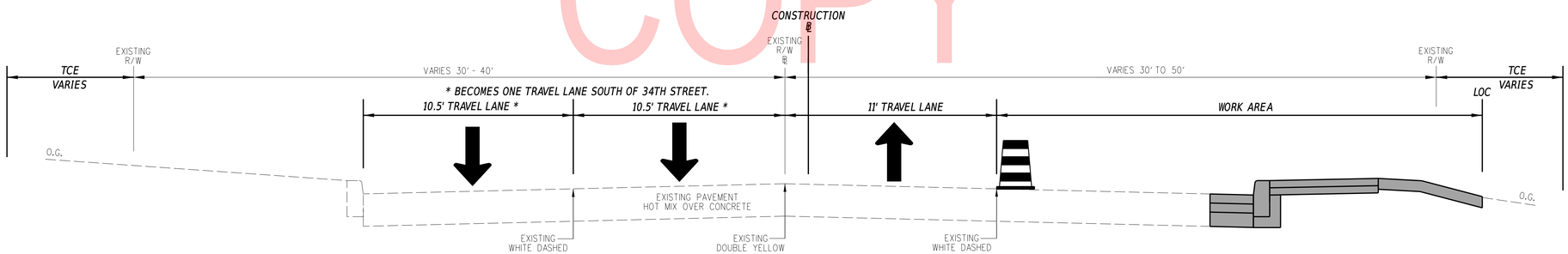

MILLER ROAD PHASE 1
STA. 100+32.98 TO STA. 117+50.42

PHASE 1 NOTES:

1. *INSTALL ALL EROSION AND SEDIMENT CONTROL MEASURES AS SHOWN.*
2. *THE CONTRACTOR'S WORK ACTIVITY WITHIN THIS PHASE SHALL PROCEED FROM THE MOST UPSTREAM TO DOWN-STREAM TRAFFIC SEGMENTS (IN A NORTHEASTERLY DIRECTION) WITH NO MORE THAN 750 FEET OF ROADWAY UNDER CONSTRUCTION AT ANY POINT IN TIME. LIMITS OF EACH SEGMENT SHALL BE AS FOLLOWS UNLESS APPROVED IN ADVANCE BY THE ENGINEER BEFORE CONSTRUCTION ACTIVITY IS INITIATED IN THAT AREA:*

   STA. 100+00 THRU STA. 107+50, RT.
   STA. 107+50 THRU STA. 113+50, RT.
   STA. 113+50 THRU STA. 119+00, RT.

2. *CLOSE THE RIGHT NORTHEASTBOUND TRAVEL LANE ALONG MILLER ROAD, USING TA-10 OR TA-23 OF THE DE MUTCD, AS DIRECTED BY THE ENGINEER. MAINTAIN VEHICULAR AND PEDESTRIAN TRAFFIC WITH FLAGGERS.*
3. *SAWCUT AND REMOVE EXISTING CURB, PAVEMENT AND SIDEWALK WITHIN THE CONSTRUCTION LIMITS OF THE PHASE.*
4. *ADJUST AND/OR RELOCATE ANY UTILITIES DENOTED WITHIN THIS PHASE.*
5. *CONSTRUCT PROPOSED DRAINAGE, WALLS, CURB, SIDEWALK, PEDESTRIAN CONNECTIONS, ROADWAY PATCHES, AND ALL OTHER WORK WITHIN THIS PHASE OF CONSTRUCTION.*
6. *TOPSOIL AND SEED ALL DISTURBED AREAS WITHIN THIS PHASE OF CONSTRUCTION. PLACE SOD WHERE DIRECTED.*

UNOFFICIAL WEBSITE COPY

ADDENDA / REVISIONS		SCALE 0 20 40 60 FEET	MILLER ROAD STREETSCAPE IMPROVEMENTS PHASE II	CONTRACT T201901101	BRIDGE NO. X	CONSTRUCTION PHASING, M.O.T., AND EROSION CONTROL PLANS - PHASE 1	SECTION CEI
				COUNTY NEW CASTLE	DESIGNED BY: T. BANEZ		SHEET NO. 32
					CHECKED BY: W. CONWAY		

23-JAN-2020
13:33
G:\PROJECTS\185003.00 Agmt 1834 TA\P\185003.08 (Task 8 - Miller Road)\Cadd\Sheets\CS\cs01-3_miller.dgn

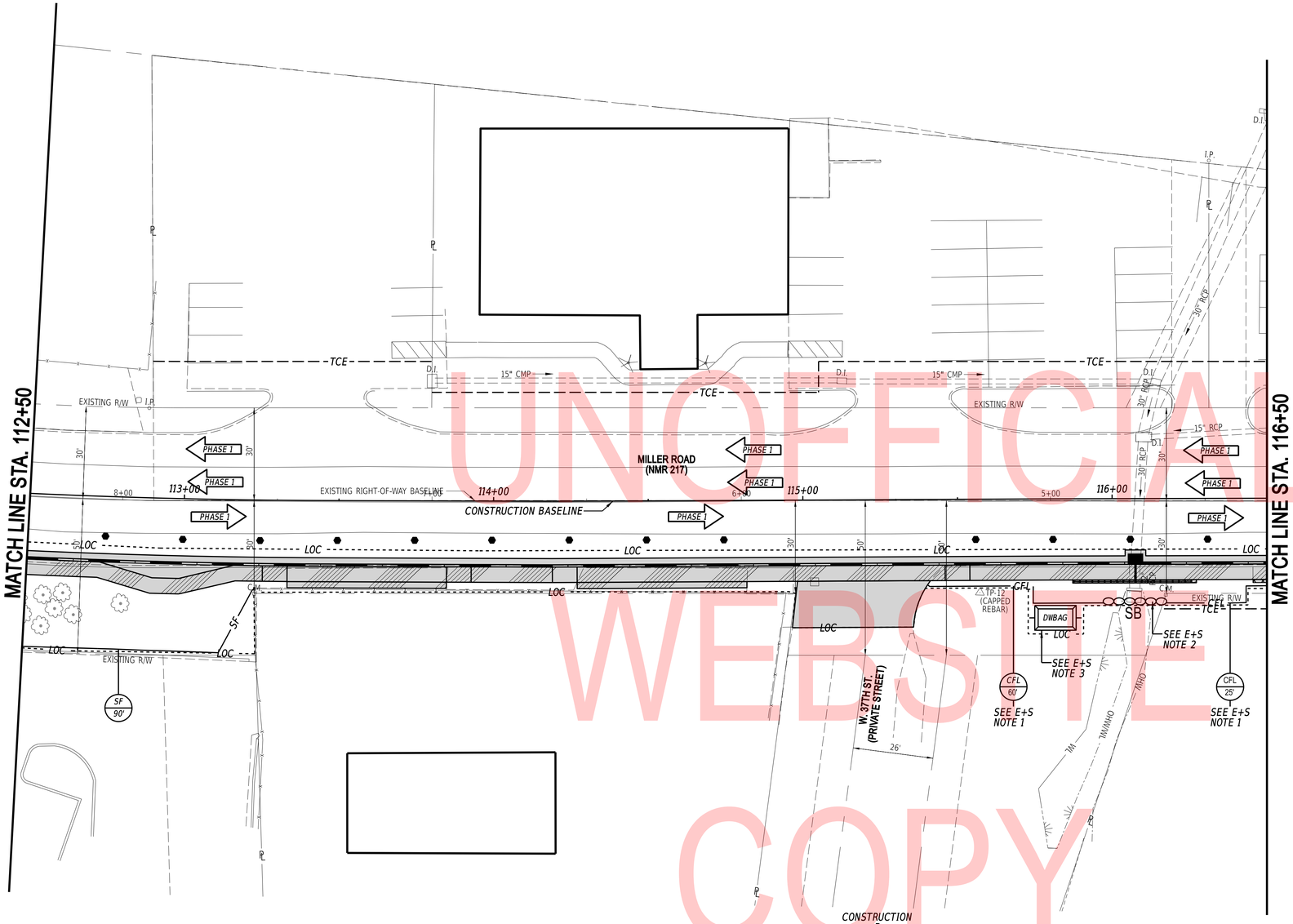

UNOFFICIAL WEBSITE COPY

PHASE 1 NOTES:

1. INSTALL ALL EROSION AND SEDIMENT CONTROL MEASURES AS SHOWN.
2. THE CONTRACTOR'S WORK ACTIVITY WITHIN THIS PHASE SHALL PROCEED FROM THE MOST UPSTREAM TO DOWN-STREAM TRAFFIC SEGMENTS (IN A NORTHEASTERLY DIRECTION) WITH NO MORE THAN 750 FEET OF ROADWAY UNDER CONSTRUCTION AT ANY POINT IN TIME. LIMITS OF EACH SEGMENT SHALL BE AS FOLLOWS UNLESS APPROVED IN ADVANCE BY THE ENGINEER BEFORE CONSTRUCTION ACTIVITY IS INITIATED IN THAT AREA:

   STA. 100+00 THRU STA. 107+50, RT.
   STA. 107+50 THRU STA. 113+50, RT.
   STA. 113+50 THRU STA. 119+00, RT.

2. CLOSE THE RIGHT NORTHEASTBOUND TRAVEL LANE ALONG MILLER ROAD, USING TA-10 OR TA-23 OF THE DE MUTCD, AS DIRECTED BY THE ENGINEER. MAINTAIN VEHICULAR AND PEDESTRIAN TRAFFIC WITH FLAGGERS.
3. SAWCUT AND REMOVE EXISTING CURB, PAVEMENT AND SIDEWALK WITHIN THE CONSTRUCTION LIMITS OF THE PHASE.
4. ADJUST AND/OR RELOCATE ANY UTILITIES DENOTED WITHIN THIS PHASE.
5. CONSTRUCT PROPOSED DRAINAGE, WALLS, CURB, SIDEWALK, PEDESTRIAN CONNECTIONS, ROADWAY PATCHES, AND ALL OTHER WORK WITHIN THIS PHASE OF CONSTRUCTION.
6. TOPSOIL AND SEED ALL DISTURBED AREAS WITHIN THIS PHASE OF CONSTRUCTION. PLACE SOD WHERE DIRECTED.

E+S NOTES:

1. CONTRACTOR MAY USE 12 INCH CFL IN PLACE OF 18 INCH CFL.
2. CONTRACTOR SHALL STACK SANDBAGS 2 FEET HIGH AND COVER ENTIRE WIDTH OF STREAM CHANNEL.
3. IF DEWATERING IS NEEDED, CONTRACTOR SHALL PUMP SEDIMENT LADEN RUNOFF TO DEWATERING BAG.

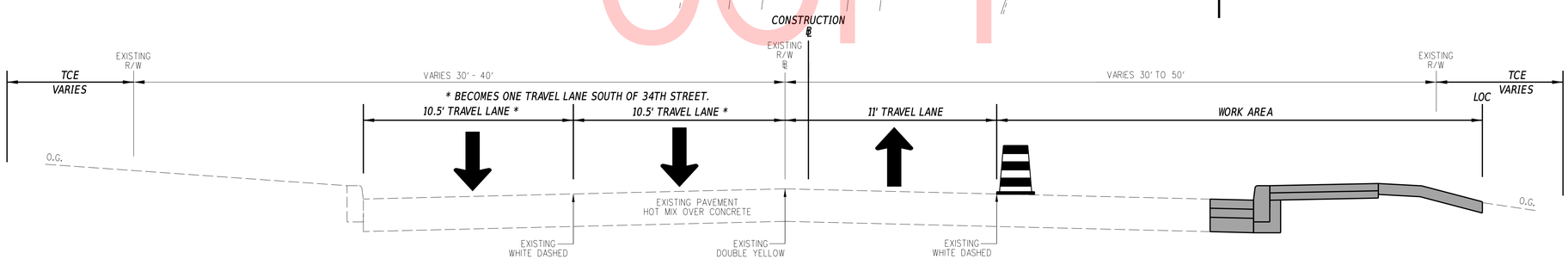

MILLER ROAD PHASE 1
STA. 100+32.98 TO STA. 117+50.42

ADDENDA / REVISIONS		SCALE 0 20 40 60 FEET	MILLER ROAD STREETSCAPE IMPROVEMENTS PHASE II	CONTRACT T201901101	BRIDGE NO. X	CONSTRUCTION PHASING, M.O.T., AND EROSION CONTROL PLANS - PHASE 1	SECTION CEI
				COUNTY NEW CASTLE	DESIGNED BY: T. BANEZ		SHEET NO. 33
					CHECKED BY: W. CONWAY		

23-JAN-2020
13:33
G:\PROJECTS\185003.00 Agmt 1834 TAP\185003.08 (Task 8 - Miller Road)\Cadd\Sheets\CS\cs01-4_miller.dgn

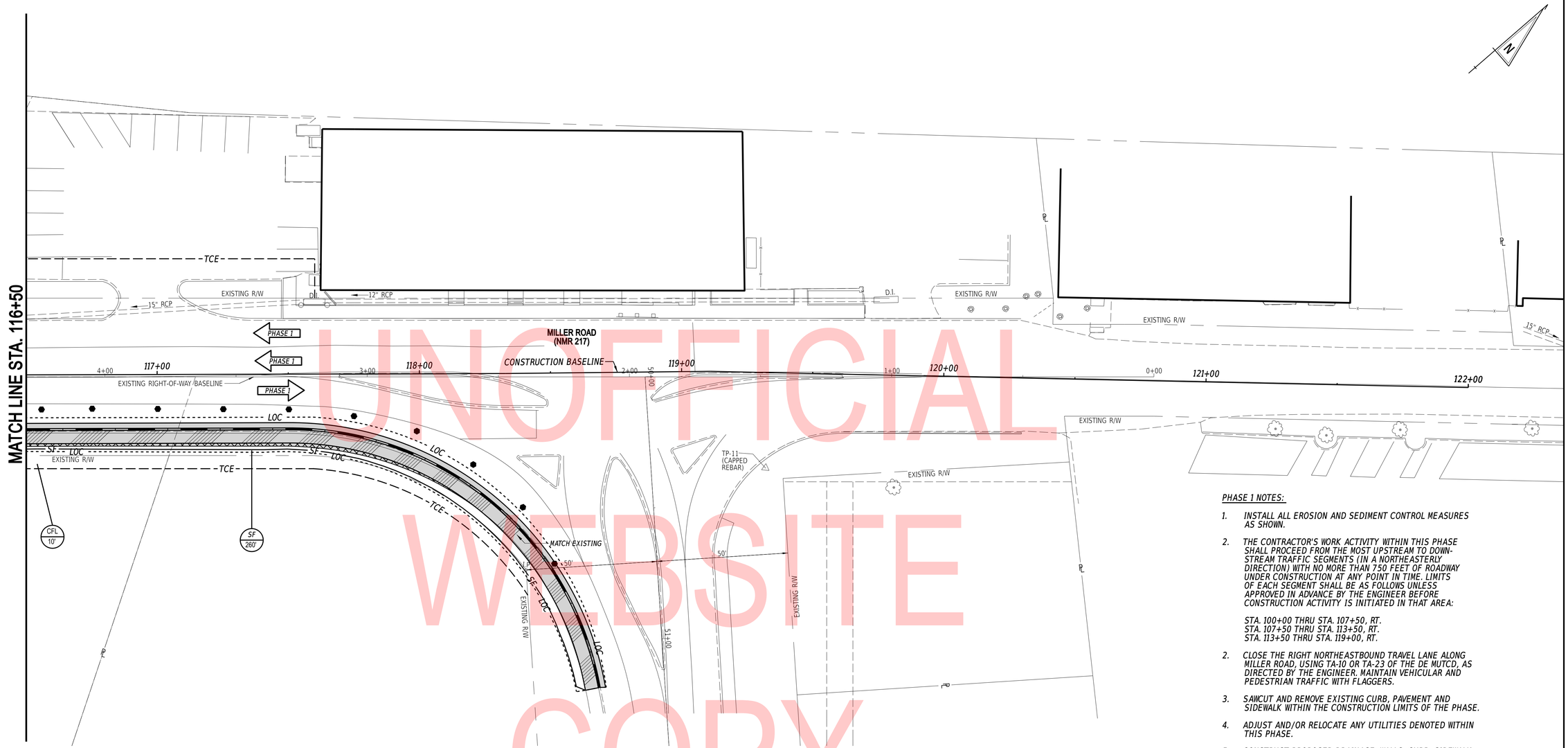

UNOFFICIAL WEBSITE COPY

PHASE 1 NOTES:

1. INSTALL ALL EROSION AND SEDIMENT CONTROL MEASURES AS SHOWN.
2. THE CONTRACTOR'S WORK ACTIVITY WITHIN THIS PHASE SHALL PROCEED FROM THE MOST UPSTREAM TO DOWN-STREAM TRAFFIC SEGMENTS (IN A NORTHEASTERLY DIRECTION) WITH NO MORE THAN 750 FEET OF ROADWAY UNDER CONSTRUCTION AT ANY POINT IN TIME. LIMITS OF EACH SEGMENT SHALL BE AS FOLLOWS UNLESS APPROVED IN ADVANCE BY THE ENGINEER BEFORE CONSTRUCTION ACTIVITY IS INITIATED IN THAT AREA:

   STA. 100+00 THRU STA. 107+50, RT.
   STA. 107+50 THRU STA. 113+50, RT.
   STA. 113+50 THRU STA. 119+00, RT.

2. CLOSE THE RIGHT NORTHEASTBOUND TRAVEL LANE ALONG MILLER ROAD, USING TA-10 OR TA-23 OF THE DE MUTCD, AS DIRECTED BY THE ENGINEER. MAINTAIN VEHICULAR AND PEDESTRIAN TRAFFIC WITH FLAGGERS.
3. SAWCUT AND REMOVE EXISTING CURB, PAVEMENT AND SIDEWALK WITHIN THE CONSTRUCTION LIMITS OF THE PHASE.
4. ADJUST AND/OR RELOCATE ANY UTILITIES DENOTED WITHIN THIS PHASE.
5. CONSTRUCT PROPOSED DRAINAGE, WALLS, CURB, SIDEWALK, PEDESTRIAN CONNECTIONS, ROADWAY PATCHES, AND ALL OTHER WORK WITHIN THIS PHASE OF CONSTRUCTION.
6. TOPSOIL AND SEED ALL DISTURBED AREAS WITHIN THIS PHASE OF CONSTRUCTION. PLACE SOD WHERE DIRECTED.

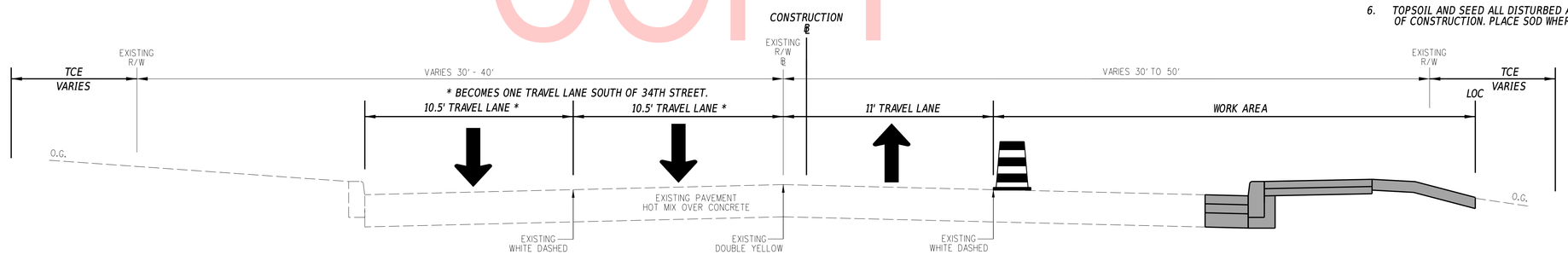

MILLER ROAD PHASE 1
STA. 100+32.98 TO STA. 117+50.42

ADDENDA / REVISIONS	

SCALE
0 20 40 60
FEET

MILLER ROAD STREETSCAPE IMPROVEMENTS PHASE II

CONTRACT	BRIDGE NO.	X
T201901101	DESIGNED BY:	T. BANEZ
COUNTY		
NEW CASTLE	CHECKED BY:	W. CONWAY

CONSTRUCTION PHASING, M.O.T., AND EROSION CONTROL PLANS - PHASE 1

SECTION
CEI
SHEET NO.
34

23-JAN-2020
13:33
G:\PROJECTS\185003.00 Agmt 1834 TAP\185003.08 (Task 8 - Miller Road)\Cadd\Sheets\CS\cs01-5_miller.dgn

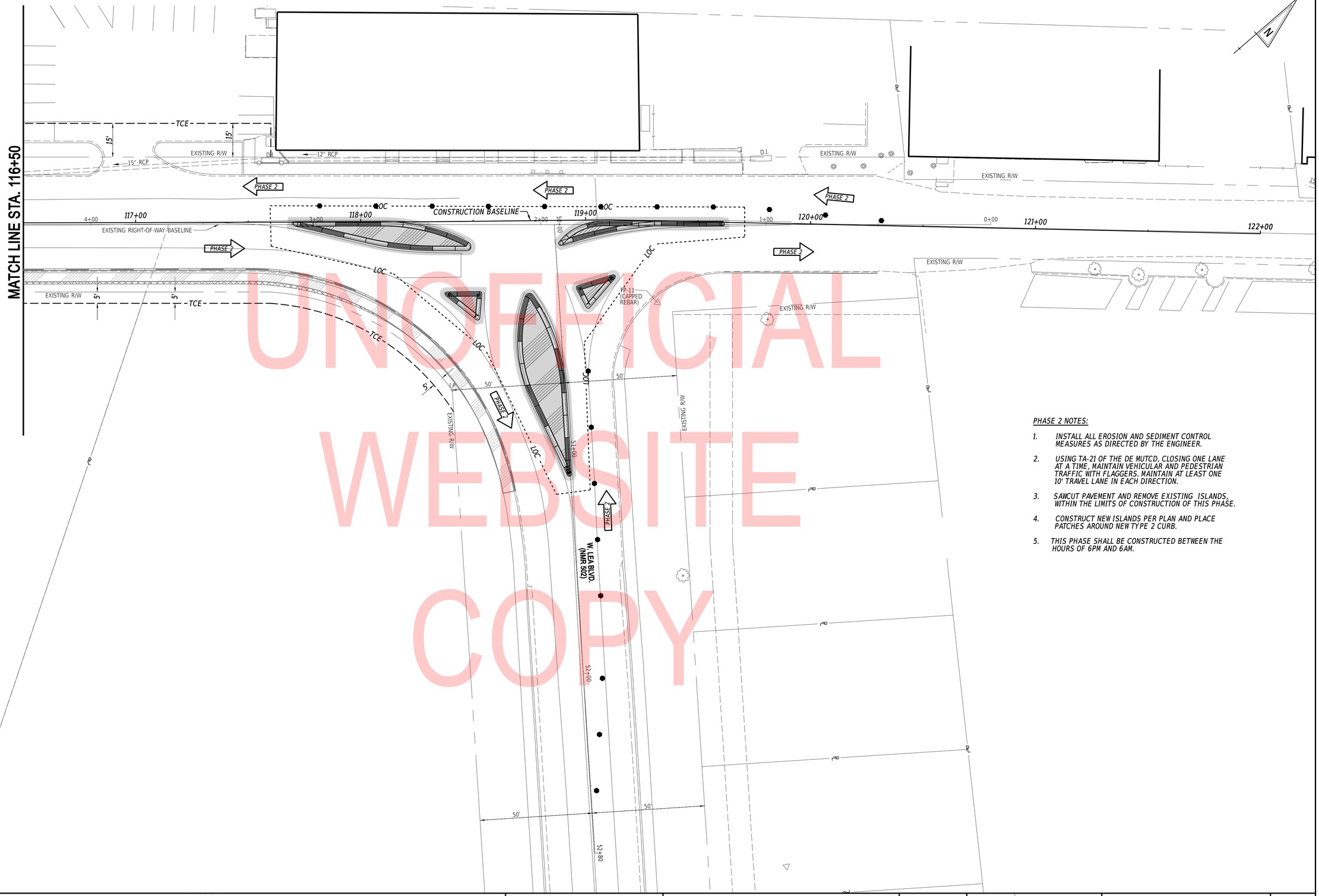

UNOFFICIAL WEBSITE COPY

PHASE 2 NOTES:

1. *INSTALL ALL EROSION AND SEDIMENT CONTROL MEASURES AS DIRECTED BY THE ENGINEER.*
2. *USING TA-21 OF THE DE MUTCD, CLOSING ONE LANE AT A TIME, MAINTAIN VEHICULAR AND PEDESTRIAN TRAFFIC WITH FLAGGERS. MAINTAIN AT LEAST ONE 10' TRAVEL LANE IN EACH DIRECTION.*
3. *SAWCUT PAVEMENT AND REMOVE EXISTING ISLANDS, WITHIN THE LIMITS OF CONSTRUCTION OF THIS PHASE.*
4. *CONSTRUCT NEW ISLANDS PER PLAN AND PLACE PATCHES AROUND NEW TYPE 2 CURB.*
5. *THIS PHASE SHALL BE CONSTRUCTED BETWEEN THE HOURS OF 6PM AND 6AM.*

ADDENDA / REVISIONS	

SCALE: 0 20 40 60 FEET

MILLER ROAD STREETSCAPE IMPROVEMENTS PHASE II

CONTRACT	BRIDGE NO.	X
T201901101	DESIGNED BY:	T. BANEZ
COUNTY		
NEW CASTLE	CHECKED BY:	W. CONWAY

CONSTRUCTION PHASING, M.O.T., AND EROSION CONTROL PLANS - PHASE 2

SECTION: CEI

SHEET NO. 35

23-JAN-2020
13:33
G:\PROJECTS\185003.00 Agmt 1834 TAP\185003.08 (Task 8 - Miller Road)\CadD\Sheets\CS\cs02-1_miller.dgn

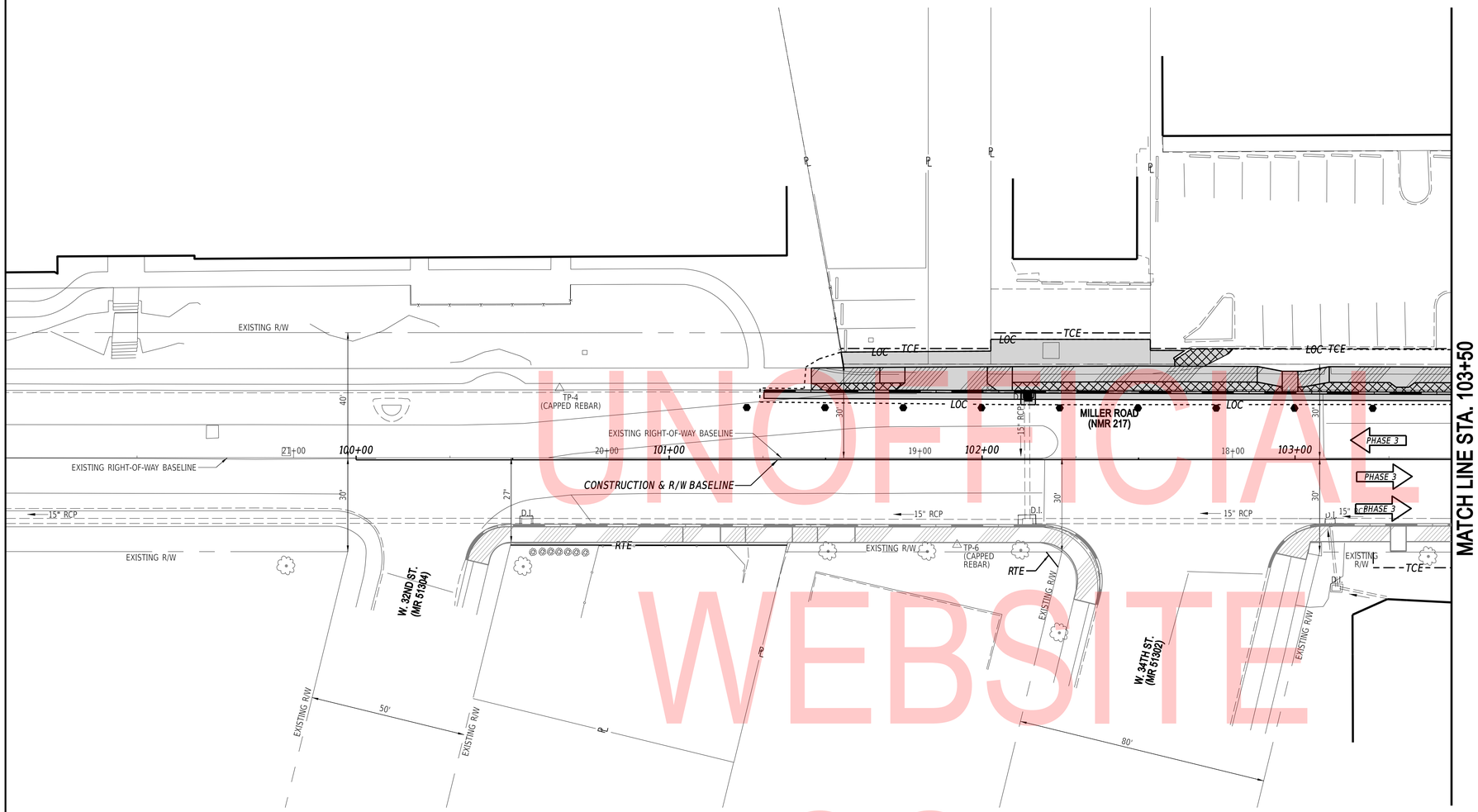

UNOFFICIAL WEBSITE COPY

PHASE 3 NOTES:

1. *INSTALL ALL EROSION AND SEDIMENT CONTROL MEASURES AS SHOWN.*
2. *THE CONTRACTOR'S WORK ACTIVITY WITHIN THIS PHASE SHALL PROCEED PROGRESSING FROM THE MOST UPSTREAM TO DOWN-STREAM TRAFFIC SEGMENTS (IN A SOUTHWESTERLY DIRECTION) WITH NO MORE THAN 650 FEET OF ROADWAY UNDER CONSTRUCTION AT ANY POINT IN TIME. LIMITS OF EACH SEGMENT SHALL BE AS FOLLOWS UNLESS APPROVED IN ADVANCE BY THE ENGINEER BEFORE CONSTRUCTION ACTIVITY IS INITIATED IN THAT AREA:*

   STA. 119+70 THRU STA. 113+20, LT.
   STA. 113+20 THRU STA. 107+50, LT.
   STA. 107+50 THRU STA. 101+30, LT.
3. *CLOSE THE RIGHT SOUTHWESTBOUND TRAVEL LANE ALONG MILLER ROAD, USING TA-10 OR TA-23 OF THE DE MUTCD, AND MAINTAIN VEHICULAR AND PEDESTRIAN TRAFFIC AS DIRECTED BY THE ENGINEER.*
4. *SAWCUT AND REMOVE EXISTING CURB, PAVEMENT AND SIDEWALK WITHIN THE CONSTRUCTION LIMITS OF THE PHASE.*
5. *ADJUST AND/OR RELOCATE ANY UTILITIES DENOTED WITHIN THIS PHASE.*
6. *CONSTRUCT PROPOSED DRAINAGE, CURB, SIDEWALK, PEDESTRIAN CONNECTIONS, ROADWAY PATCHES, DRIVEWAY AND ENTRANCE TIE-INS, AND ALL OTHER WORK WITHIN THIS PHASE OF CONSTRUCTION.*
7. *TOPSOIL AND SEED ALL DISTURBED AREAS WITHIN THIS PHASE OF CONSTRUCTION.*

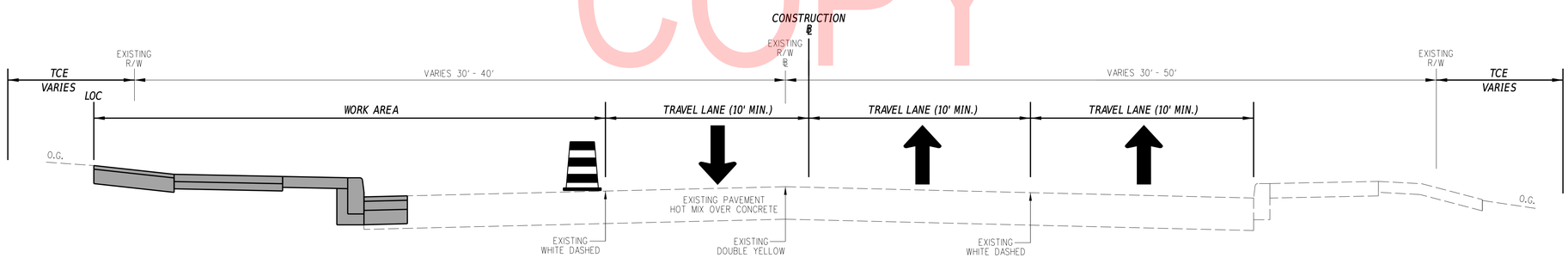

MILLER ROAD PHASE 3
STA. 101+30.46 TO STA. 119+70.00

ADDENDA / REVISIONS	SCALE 0 20 40 60 FEET	MILLER ROAD STREETSCAPE IMPROVEMENTS PHASE II	CONTRACT T201901101	BRIDGE NO. X	CONSTRUCTION PHASING, M.O.T., AND EROSION CONTROL PLANS - PHASE 3	SECTION CEI
			COUNTY NEW CASTLE	DESIGNED BY: T. BANEZ		SHEET NO. 36
				CHECKED BY: W. CONWAY		

23-JAN-2020
13:33
G:\PROJECTS\185003.00 Agmt 1834 TAP\185003.08 (Task 8 - Miller Road)\Cadd\Sheets\CS\cs03-1_miller.dgn

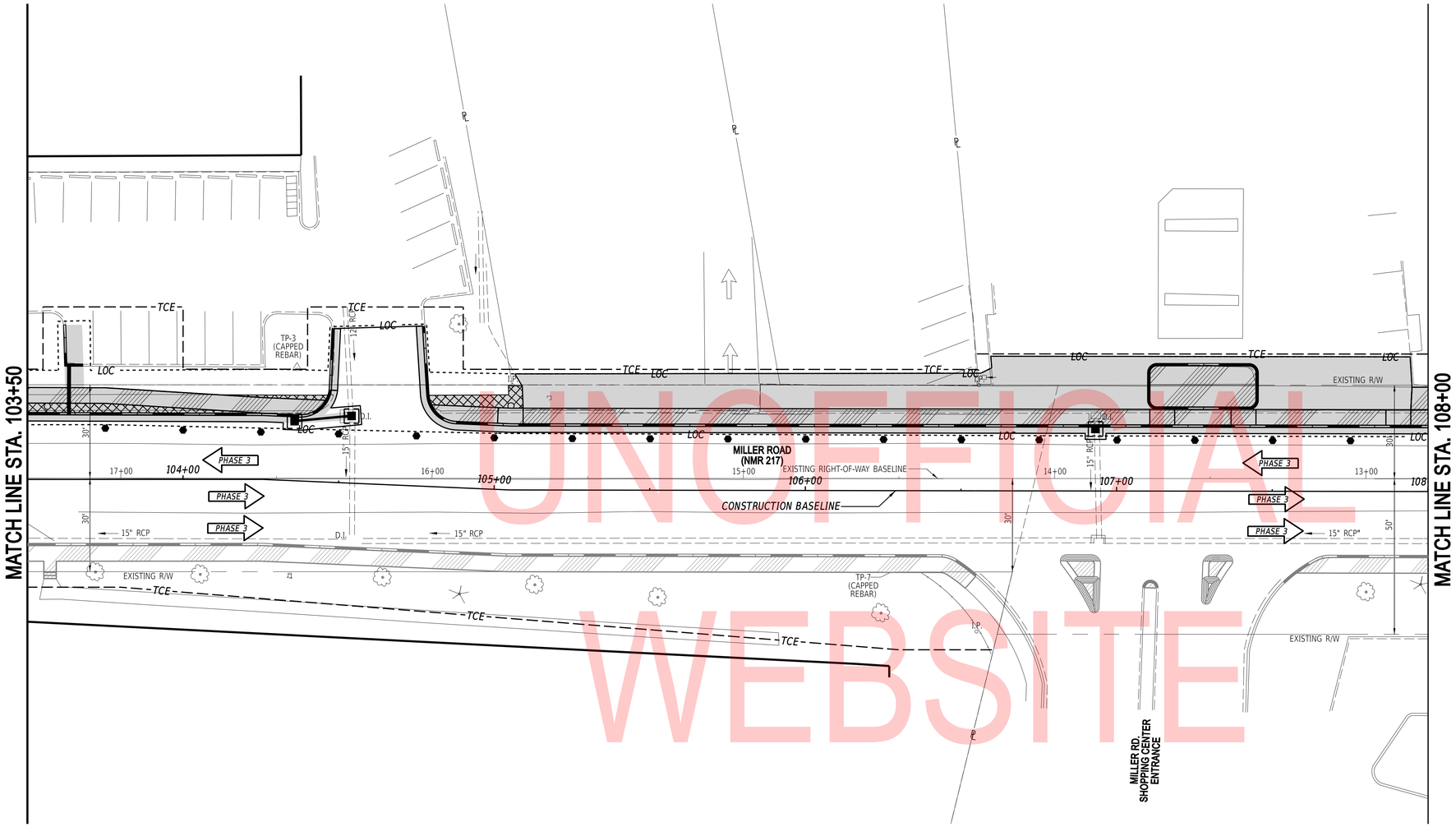

UNOFFICIAL WEBSITE COPY

PHASE 3 NOTES:

1. *INSTALL ALL EROSION AND SEDIMENT CONTROL MEASURES AS SHOWN.*
2. *THE CONTRACTOR'S WORK ACTIVITY WITHIN THIS PHASE SHALL PROCEED PROGRESSING FROM THE MOST UPSTREAM TO DOWN-STREAM TRAFFIC SEGMENTS (IN A SOUTHWESTERLY DIRECTION) WITH NO MORE THAN 650 FEET OF ROADWAY UNDER CONSTRUCTION AT ANY POINT IN TIME. LIMITS OF EACH SEGMENT SHALL BE AS FOLLOWS UNLESS APPROVED IN ADVANCE BY THE ENGINEER BEFORE CONSTRUCTION ACTIVITY IS INITIATED IN THAT AREA:*

   STA. 119+70 THRU STA. 113+20, LT.
   STA. 113+20 THRU STA. 107+50, LT.
   STA. 107+50 THRU STA. 101+30, LT.
3. *CLOSE THE RIGHT SOUTHWESTBOUND TRAVEL LANE ALONG MILLER ROAD, USING TA-10 OR TA-23 OF THE DE MUTCD, AND MAINTAIN VEHICULAR AND PEDESTRIAN TRAFFIC AS DIRECTED BY THE ENGINEER.*
4. *SAWCUT AND REMOVE EXISTING CURB, PAVEMENT AND SIDEWALK WITHIN THE CONSTRUCTION LIMITS OF THE PHASE.*
5. *ADJUST AND/OR RELOCATE ANY UTILITIES DENOTED WITHIN THIS PHASE.*
6. *CONSTRUCT PROPOSED DRAINAGE, CURB, SIDEWALK, PEDESTRIAN CONNECTIONS, ROADWAY PATCHES, DRIVEWAY AND ENTRANCE TIE-INS, AND ALL OTHER WORK WITHIN THIS PHASE OF CONSTRUCTION.*
7. *TOPSOIL AND SEED ALL DISTURBED AREAS WITHIN THIS PHASE OF CONSTRUCTION.*

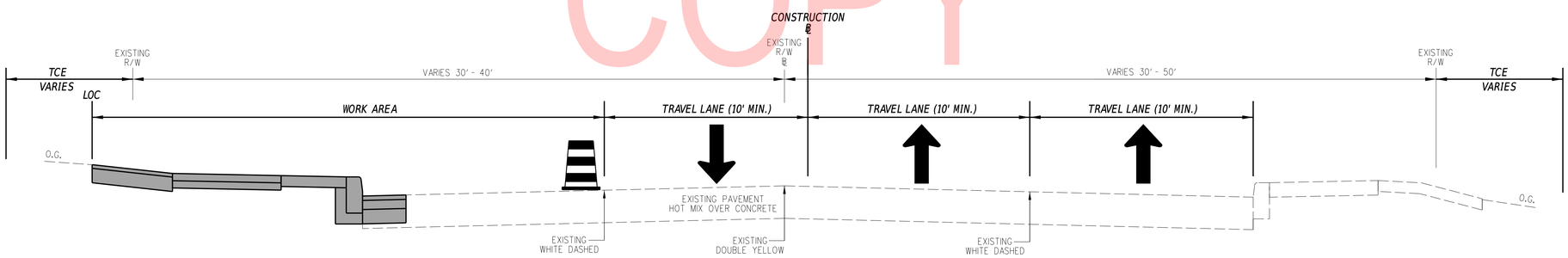

MILLER ROAD PHASE 3
STA. 101+30.46 TO STA. 119+70.00

ADDENDA / REVISIONS	SCALE 0 20 40 60 FEET	MILLER ROAD STREETSCAPE IMPROVEMENTS PHASE II	CONTRACT T201901101	BRIDGE NO. X	CONSTRUCTION PHASING, M.O.T., AND EROSION CONTROL PLANS - PHASE 3	SECTION CEI
			COUNTY NEW CASTLE	DESIGNED BY: T. BANEZ		SHEET NO. 37
				CHECKED BY: W. CONWAY		

23-JAN-2020
13:33
G:\PROJECTS\185003.00 Agmt 1834 TAP\185003.08 (Task 8 - Miller Road)\Cadd\Sheets\CS\cs03-2_miller.dgn

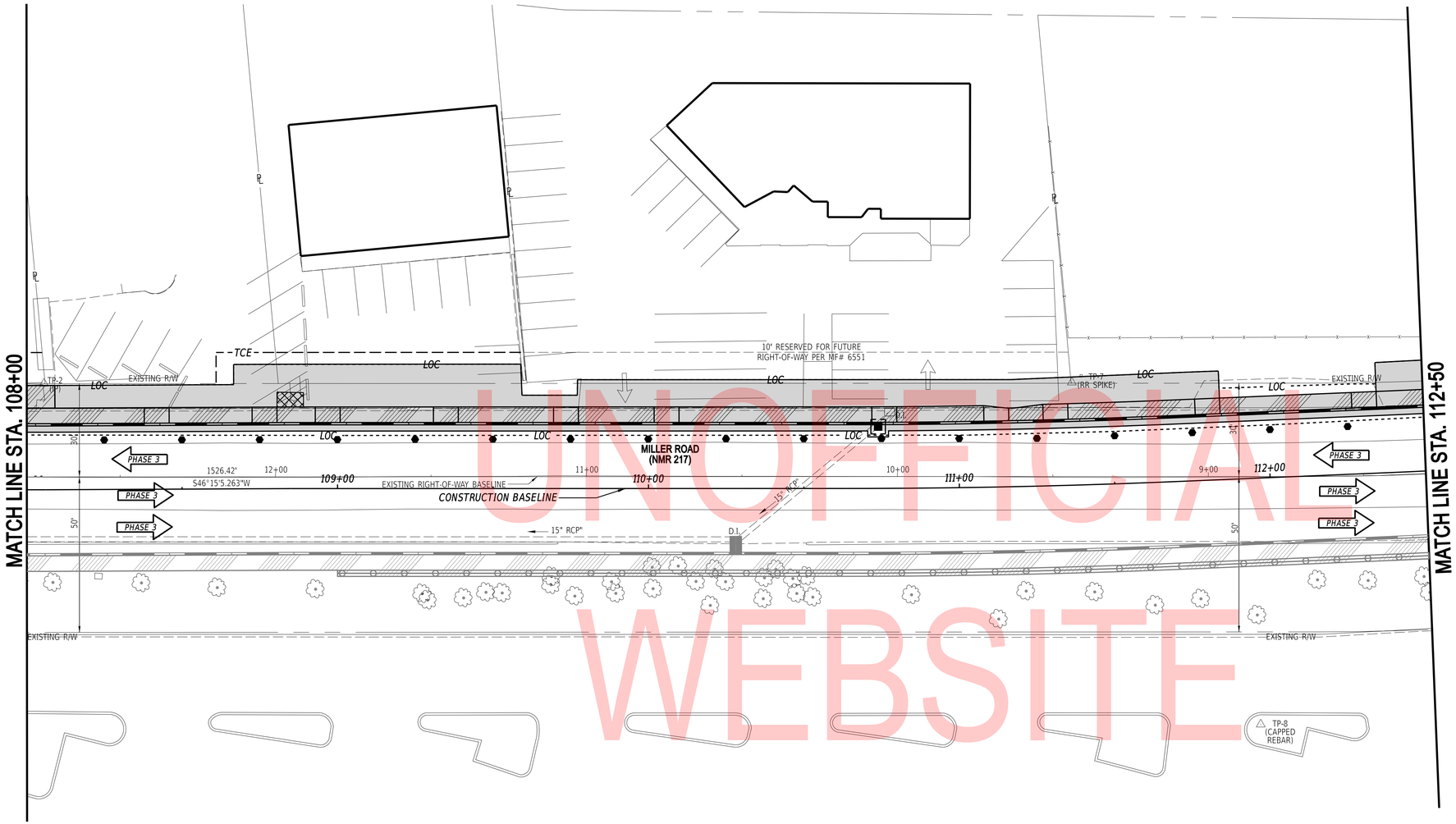

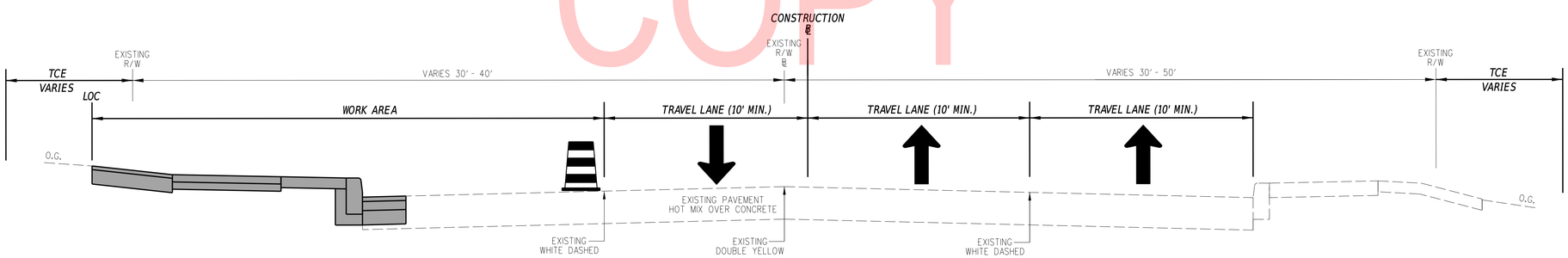

MILLER ROAD PHASE 3
STA. 101+30.46 TO STA. 119+70.00

PHASE 3 NOTES:

1. *INSTALL ALL EROSION AND SEDIMENT CONTROL MEASURES AS SHOWN.*
2. *THE CONTRACTOR'S WORK ACTIVITY WITHIN THIS PHASE SHALL PROCEED PROGRESSING FROM THE MOST UPSTREAM TO DOWN-STREAM TRAFFIC SEGMENTS (IN A SOUTHWESTERLY DIRECTION) WITH NO MORE THAN 650 FEET OF ROADWAY UNDER CONSTRUCTION AT ANY POINT IN TIME. LIMITS OF EACH SEGMENT SHALL BE AS FOLLOWS UNLESS APPROVED IN ADVANCE BY THE ENGINEER BEFORE CONSTRUCTION ACTIVITY IS INITIATED IN THAT AREA:*

   STA. 119+70 THRU STA. 113+20, LT.
   STA. 113+20 THRU STA. 107+50, LT.
   STA. 107+50 THRU STA. 101+30, LT.
3. *CLOSE THE RIGHT SOUTHWESTBOUND TRAVEL LANE ALONG MILLER ROAD, USING TA-10 OR TA-23 OF THE DE MUTCD, AND MAINTAIN VEHICULAR AND PEDESTRIAN TRAFFIC AS DIRECTED BY THE ENGINEER.*
4. *SAWCUT AND REMOVE EXISTING CURB, PAVEMENT AND SIDEWALK WITHIN THE CONSTRUCTION LIMITS OF THE PHASE.*
5. *ADJUST AND/OR RELOCATE ANY UTILITIES DENOTED WITHIN THIS PHASE.*
6. *CONSTRUCT PROPOSED DRAINAGE, CURB, SIDEWALK, PEDESTRIAN CONNECTIONS, ROADWAY PATCHES, DRIVEWAY AND ENTRANCE TIE-INS, AND ALL OTHER WORK WITHIN THIS PHASE OF CONSTRUCTION.*
7. *TOPSOIL AND SEED ALL DISTURBED AREAS WITHIN THIS PHASE OF CONSTRUCTION.*

UNOFFICIAL WEBSITE COPY

ADDENDA / REVISIONS	SCALE 0 20 40 60 FEET	MILLER ROAD STREETSCAPE IMPROVEMENTS PHASE II	CONTRACT T201901101	BRIDGE NO. X	CONSTRUCTION PHASING, M.O.T., AND EROSION CONTROL PLANS - PHASE 3	SECTION CEI
			COUNTY NEW CASTLE	DESIGNED BY: T. BANEZ		SHEET NO. 38
				CHECKED BY: W. CONWAY		

23-JAN-2020
13:33
G:\PROJECTS\185003.00 Agmt 1834 TAP\185003.08 (Task 8 - Miller Road)\Cadd\Sheets\CS\cs03-3_miller.dgn

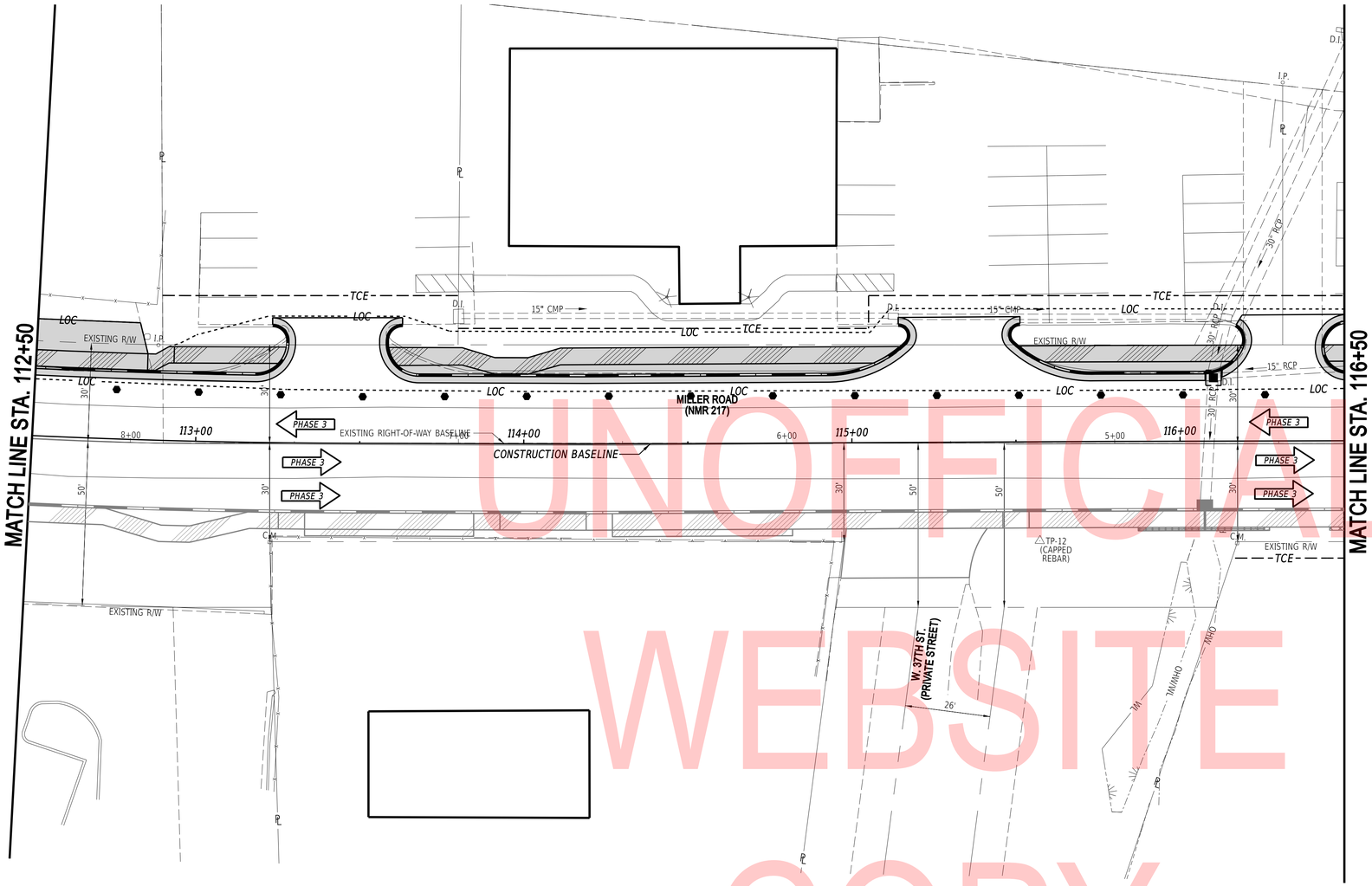

UNOFFICIAL WEBSITE COPY

PHASE 3 NOTES:

1. INSTALL ALL EROSION AND SEDIMENT CONTROL MEASURES AS SHOWN.
2. THE CONTRACTOR'S WORK ACTIVITY WITHIN THIS PHASE SHALL PROCEED PROGRESSING FROM THE MOST UPSTREAM TO DOWN-STREAM TRAFFIC SEGMENTS (IN A SOUTHWESTERLY DIRECTION) WITH NO MORE THAN 650 FEET OF ROADWAY UNDER CONSTRUCTION AT ANY POINT IN TIME. LIMITS OF EACH SEGMENT SHALL BE AS FOLLOWS UNLESS APPROVED IN ADVANCE BY THE ENGINEER BEFORE CONSTRUCTION ACTIVITY IS INITIATED IN THAT AREA:

   STA. 119+70 THRU STA. 113+20, LT.
   STA. 113+20 THRU STA. 107+50, LT.
   STA. 107+50 THRU STA. 101+30, LT.
3. CLOSE THE RIGHT SOUTHWESTBOUND TRAVEL LANE ALONG MILLER ROAD, USING TA-10 OR TA-23 OF THE DE MUTCD, AND MAINTAIN VEHICULAR AND PEDESTRIAN TRAFFIC AS DIRECTED BY THE ENGINEER.
4. SAWCUT AND REMOVE EXISTING CURB, PAVEMENT AND SIDEWALK WITHIN THE CONSTRUCTION LIMITS OF THE PHASE.
5. ADJUST AND/OR RELOCATE ANY UTILITIES DENOTED WITHIN THIS PHASE.
6. CONSTRUCT PROPOSED DRAINAGE, CURB, SIDEWALK, PEDESTRIAN CONNECTIONS, ROADWAY PATCHES, DRIVEWAY AND ENTRANCE TIE-INS, AND ALL OTHER WORK WITHIN THIS PHASE OF CONSTRUCTION.
7. TOPSOIL AND SEED ALL DISTURBED AREAS WITHIN THIS PHASE OF CONSTRUCTION.

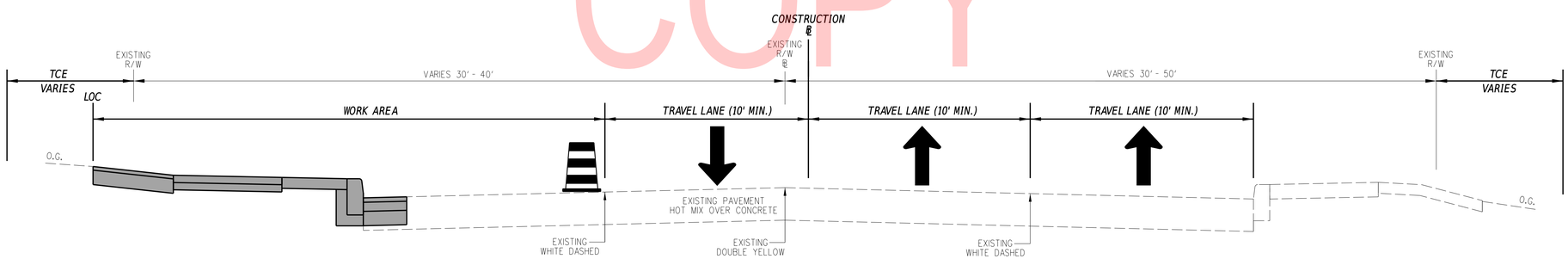

MILLER ROAD PHASE 3
STA. 101+30.46 TO STA. 119+70.00

ADDENDA / REVISIONS	SCALE 0 20 40 60 FEET	MILLER ROAD STREETSCAPE IMPROVEMENTS PHASE II	CONTRACT T201901101	BRIDGE NO. X	CONSTRUCTION PHASING, M.O.T., AND EROSION CONTROL PLANS - PHASE 3	SECTION CEI
			COUNTY NEW CASTLE	DESIGNED BY: T. BANEZ		SHEET NO. 39
				CHECKED BY: W. CONWAY		

23-JAN-2020
13:33
G:\PROJECTS\185003.00 Agmt 1834 TAP\185003.08 (Task 8 - Miller Road)\Cadd\Sheets\CS\cs03-4_miller.dgn

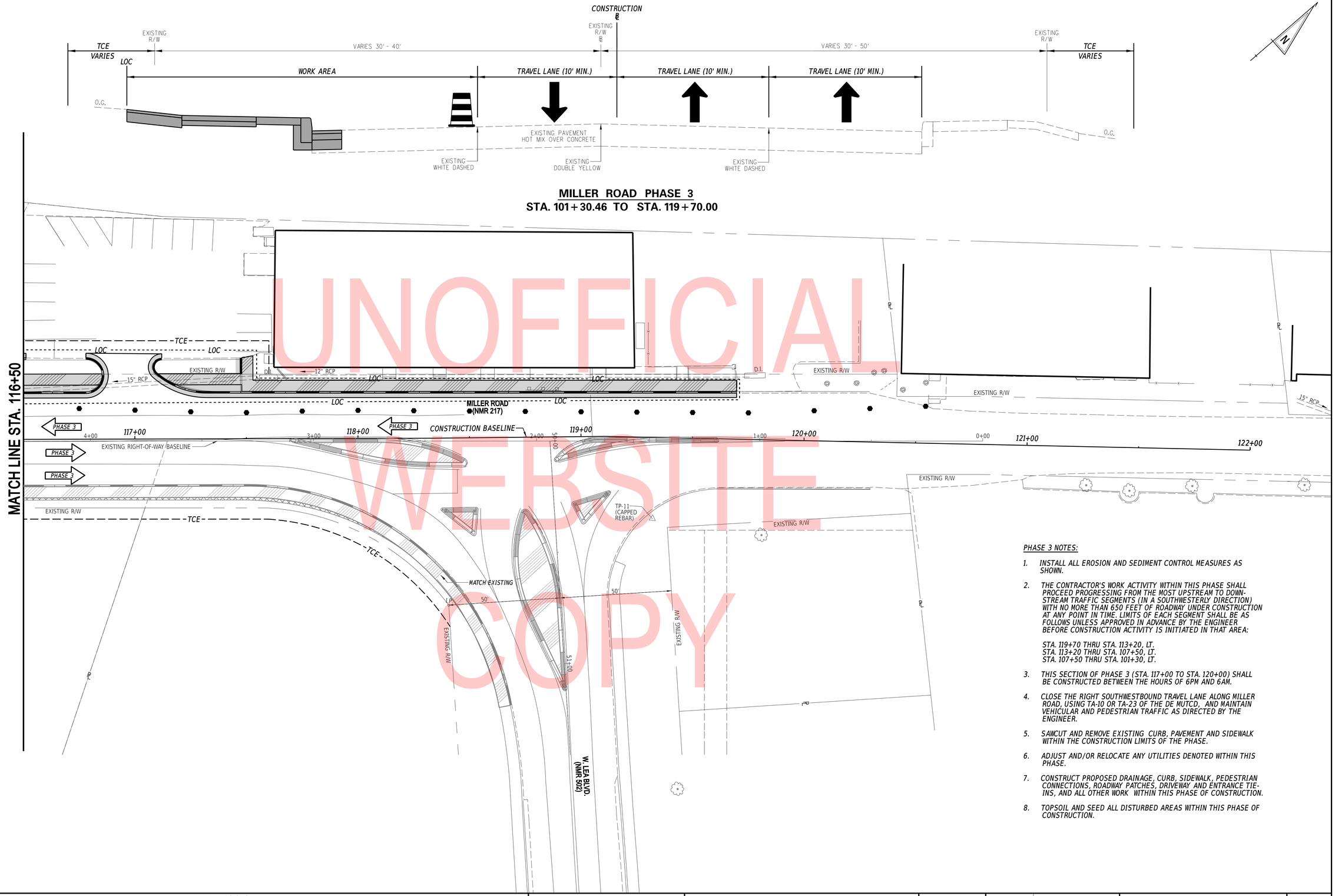

UNOFFICIAL WEBSITE COPY

PHASE 3 NOTES:

1. INSTALL ALL EROSION AND SEDIMENT CONTROL MEASURES AS SHOWN.
2. THE CONTRACTOR'S WORK ACTIVITY WITHIN THIS PHASE SHALL PROCEED PROGRESSING FROM THE MOST UPSTREAM TO DOWN-STREAM TRAFFIC SEGMENTS (IN A SOUTHWESTERLY DIRECTION) WITH NO MORE THAN 650 FEET OF ROADWAY UNDER CONSTRUCTION AT ANY POINT IN TIME. LIMITS OF EACH SEGMENT SHALL BE AS FOLLOWS UNLESS APPROVED IN ADVANCE BY THE ENGINEER BEFORE CONSTRUCTION ACTIVITY IS INITIATED IN THAT AREA:

   STA. 119+70 THRU STA. 113+20, LT.
   STA. 113+20 THRU STA. 107+50, LT.
   STA. 107+50 THRU STA. 101+30, LT.
3. THIS SECTION OF PHASE 3 (STA. 117+00 TO STA. 120+00) SHALL BE CONSTRUCTED BETWEEN THE HOURS OF 6PM AND 6AM.
4. CLOSE THE RIGHT SOUTHWESTBOUND TRAVEL LANE ALONG MILLER ROAD, USING TA-10 OR TA-23 OF THE DE MUTCD, AND MAINTAIN VEHICULAR AND PEDESTRIAN TRAFFIC AS DIRECTED BY THE ENGINEER.
5. SAWCUT AND REMOVE EXISTING CURB, PAVEMENT AND SIDEWALK WITHIN THE CONSTRUCTION LIMITS OF THE PHASE.
6. ADJUST AND/OR RELOCATE ANY UTILITIES DENOTED WITHIN THIS PHASE.
7. CONSTRUCT PROPOSED DRAINAGE, CURB, SIDEWALK, PEDESTRIAN CONNECTIONS, ROADWAY PATCHES, DRIVEWAY AND ENTRANCE TIE-INS, AND ALL OTHER WORK WITHIN THIS PHASE OF CONSTRUCTION.
8. TOPSOIL AND SEED ALL DISTURBED AREAS WITHIN THIS PHASE OF CONSTRUCTION.

ADDENDA / REVISIONS

SCALE 0 20 40 60 FEET

MILLER ROAD STREETSCAPE IMPROVEMENTS PHASE II

CONTRACT	BRIDGE NO.	X
T201901101	DESIGNED BY:	T. BANEZ
COUNTY		
NEW CASTLE	CHECKED BY:	W. CONWAY

CONSTRUCTION PHASING, M.O.T., AND EROSION CONTROL PLANS - PHASE 3

SECTION CEI

SHEET NO. 40

23-JAN-2020
13:33
G:\PROJECTS\185003.00 Agmt 1834 TAP\185003.08 (Task 8 - Miller Road)\Cadd\Sheets\CS\cs03-5_miller.dgn

MILLER ROAD PHASE 4

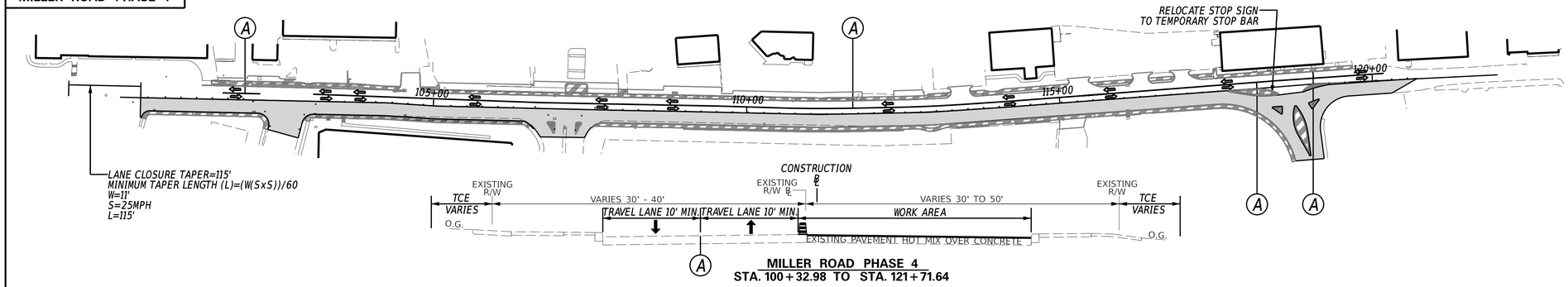

MILLER ROAD PHASE 4
STA. 100+32.98 TO STA. 121+71.64

PHASE 4 NOTES:

1. *USING TA-17A OF THE DE MUTCD, CLOSE LEFT LANE OF BOTH THE SOUTHWEST AND NORTHEAST BOUND TRAVEL LANES, REMOVE EXISTING CENTER STRIPE, APPLY TEMPORARY DOUBLE YELLOW PAVEMENT MARKINGS (PAINT) AND STOP BARS (PAINT) AS SHOWN. TIE TEMPORARY MARKINGS INTO EXISTING MARKINGS.*
2. *USING TA-21 and TA-11B OF THE DE MUTCD, CLOSE THE NORTHEAST BOUND TRAVEL LANES ALONG MILLER ROAD AND MAINTAIN ONE TRAVEL LANE LEFT OF CONSTRUCTION BASELINE UNTIL THE MILLING OPERATION HAS MOVED FROM THE 32ND STREET AREA TO NORTH 34TH STREET. THEN MAINTAIN TWO LANES OF TRAFFIC USING TA-21, LEFT OF BASELINE.*
3. *MILL THE TWO NORTHEAST BOUND TRAVEL LANES WITHIN THE CONTRACT LIMITS, AND ALL INTERSECTIONS AND TIE-INS RIGHT OF BASELINE.*

TEMPORARY PAVEMENT MARKINGS LEGEND

SYM.	ITEM	QUANTITY
A	TEMPORARY MARKINGS, PAINT, 4" (ITEM 817003)	3800 LF

MILLER ROAD PHASE 5

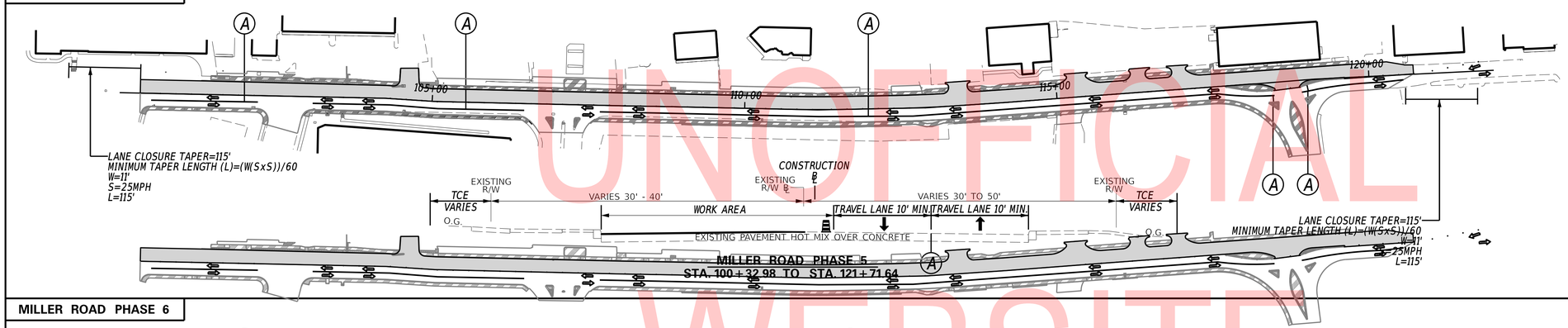

MILLER ROAD PHASE 5
STA. 100+32.98 TO STA. 121+71.64

PHASE 5 NOTES:

1. *APPLY TEMPORARY DOUBLE YELLOW PAVMENT MARKINGS (PAINT) AND STOP BARS (PAINT), RIGHT OF BASELINE AS SHOWN. TIE TEMPORARY MARKINGS INTO EXISTING MARKINGS.*
2. *USING TA-21 OF THE DE MUTCD, CLOSE THE SOUTHWEST BOUND TRAVEL LANES ALONG MILLER ROAD AND MAINTAIN TWO TRAVEL LANES, ONE IN EACH DIRECTION, RIGHT OF CONSTRUCTION BASELINE.*
3. *MILL AND OVERLAY THE TWO SOUTHWESTBOUND TRAVEL LANES WITHIN THE CONTRACT LIMITS, AND ALL INTERSECTIONS AND TIE-INS LEFT OF BASELINE.*

TEMPORARY PAVEMENT MARKINGS LEGEND

SYM.	ITEM	QUANTITY
A	TEMPORARY MARKINGS, PAINT, 4" (ITEM 817003)	3600 LF

MILLER ROAD PHASE 6

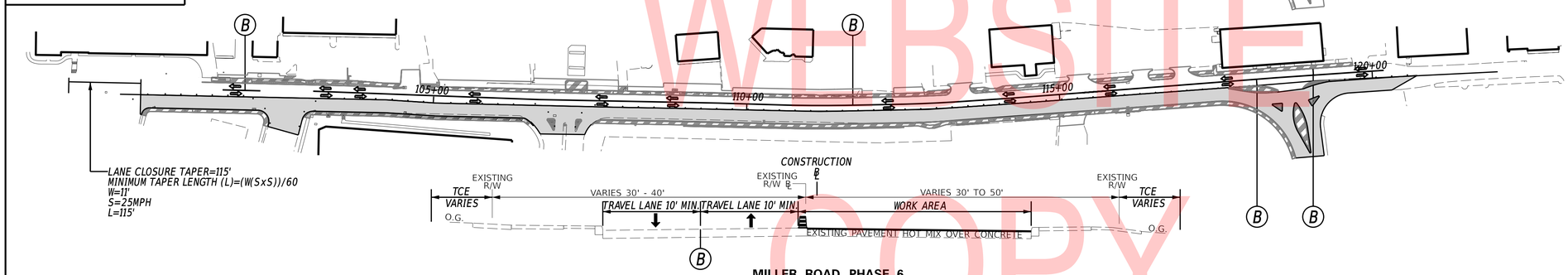

MILLER ROAD PHASE 6
STA. 100+32.98 TO STA. 121+71.64

PHASE 6 NOTES:

1. *APPLY TEMPORARY DOUBLE YELLOW PAVEMENT MARKINGS (TAPE) AND STOP BARS (TAPE) IN THE SOUTHWEST BOUND LANES AS SHOWN. TIE TEMPORARY MARKINGS INTO EXISTING MARKINGS.*
2. *USING TA-21 OF THE DE MUTCD, CLOSE THE NORTHEAST BOUND TRAVEL LANES ALONG MILLER ROAD AND MAINTAIN TWO TRAVEL LANES, ONE IN EACH DIRECTION, LEFT OF CONSTRUCTION BASE LINE.*
3. *OVERLAY THE TWO NORTHEASTBOUND TRAVEL LANES THROUGH LEA BOULEVARD, AND ALL INTERSECTIONS AND TIE-INS RIGHT OF BASELINE.*

TEMPORARY PAVEMENT MARKINGS LEGEND

SYM.	ITEM	QUANTITY
B	TEMPORARY MARKINGS, TAPE, 4" (ITEM 817009)	2000 LF

MILLER ROAD PHASE 7

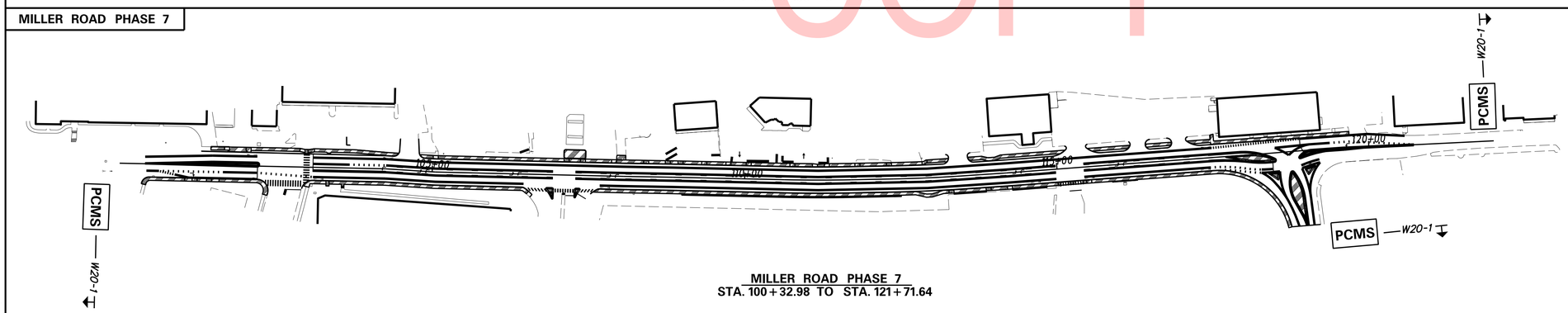

MILLER ROAD PHASE 7
STA. 100+32.98 TO STA. 121+71.64

PHASE 7 NOTES:

1. *ADD PCMS BOARDS 10 DAYS PRIOR TO OPENING THE ROAD TO TRAFFIC WITH THE FINAL CONFIGURATION. THE PCMS BOARDS SHALL READ "NEW TRAFFIC PATTERN" AND "USE CAUTION". LEAVE PCMS BOARDS IN PLACE FOR 5 DAYS.*
2. *REMOVE TEMPORARY STRIPING AND APPLY FINAL STRIPING DURING NIGHT HOURS.*
3. *INSTALL PROPOSED SIGNAGE.*
4. *TOPSOIL AND SEED ANY REMAINING DISTURBED AREAS.*
5. *REMOVE ALL EROSION AND SEDIMENT CONTROL MEASURES.*
6. *REMOVE ALL TEMPORARY TRAFFIC CONTROL DEVICES.*

UNOFFICIAL WEBSITE COPY

ADDENDA / REVISIONS

SCALE 0 100 200 300 FEET

MILLER ROAD STREETSCAPE IMPROVEMENTS

CONTRACT	BRIDGE NO.	X
T201901101	DESIGNED BY:	T. BANEZ
COUNTY	CHECKED BY:	W. CONWAY
NEW CASTLE		

CONSTRUCTION PHASING, M.O.T., AND EROSION CONTROL PLANS

SECTION CEI
SHEET NO. 41

23-JAN-2020
13:33
G:\PROJECTS\185003.00 Agmt 1834 TAP\185003.08 (Task 8 - Miller Road)\Cadd\Sheets\CS\cs04 thru 07.dgn

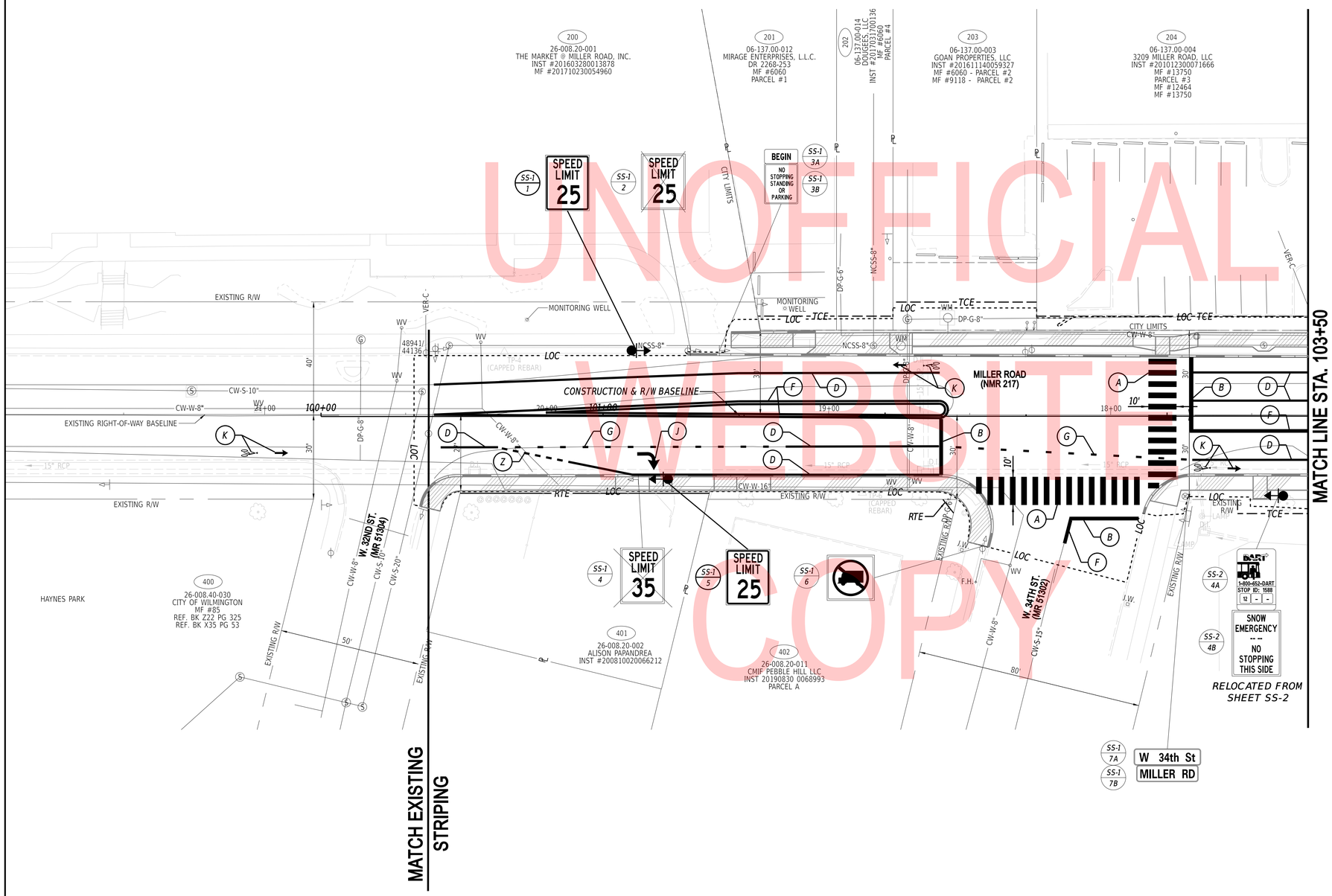

PAVEMENT MARKINGS LEGEND

SYM	ITEM	QUANTITY
A	24" SOLID WHITE ALKYD THERMOPLASTIC PAVEMENT STRIPING (ITEM 817002)	520 SF
B	16" SOLID WHITE ALKYD THERMOPLASTIC PAVEMENT STRIPING (ITEM 817002)	93 SF
D	EPOXY RESIN PAINT PAVEMENT STRIPING, WHITE 5" SOLID (ITEM 817013)	510 LF
E	EPOXY RESIN PAINT PAVEMENT STRIPING, YELLOW 5" SOLID (ITEM 817013)	0 LF
F	EPOXY RESIN PAINT PAVEMENT STRIPING, YELLOW 5" SOLID DOUBLE LINE (ITEM 817013)	755 LF
G	EPOXY RESIN PAINT PAVEMENT STRIPING, WHITE 5" DOTTED - 2' LINE & 6' GAP (ITEM 817013)	48 LF
H	EPOXY RESIN PAINT PAVEMENT STRIPING, YELLOW 5" BROKEN - 10' LINE & 30' GAP (ITEM 817013)	0 LF
J	WHITE ALKYD THERMOPLASTIC PAVEMENT SYMBOL (ITEM 817002)	16 LF
K	PREFORMED THERMOPLASTIC PAVEMENT MARKING WHITE, BIKE SYMBOL INCLUDES ARROW (817015)	3 EA
Z	EPOXY RESIN PAINT PAVEMENT STRIPING, WHITE 5" DOTTED - 2' LINE & 2' GAP (ITEM 817013)	12 LF

UNOFFICIAL WEBSITE COPY

ADDENDA / REVISIONS

SCALE 0 20 40 60 FEET

MILLER ROAD STREETSCAPE IMPROVEMENTS PHASE II

CONTRACT	BRIDGE NO.	X
T201901101	DESIGNED BY: M. PENNINGTON	
COUNTY		
NEW CASTLE	CHECKED BY: B. MARTINE	

SIGNING & STRIPING PLAN

SS-01
SECTION CEI
SHEET NO. 42

23-JAN-2020
13:33
G:\PROJECTS\185003.00 Agmt 1834 TAP\185003.08 (Task 8 - Miller Road)\Cadd\Sheets\SSiss01_miller.dgn

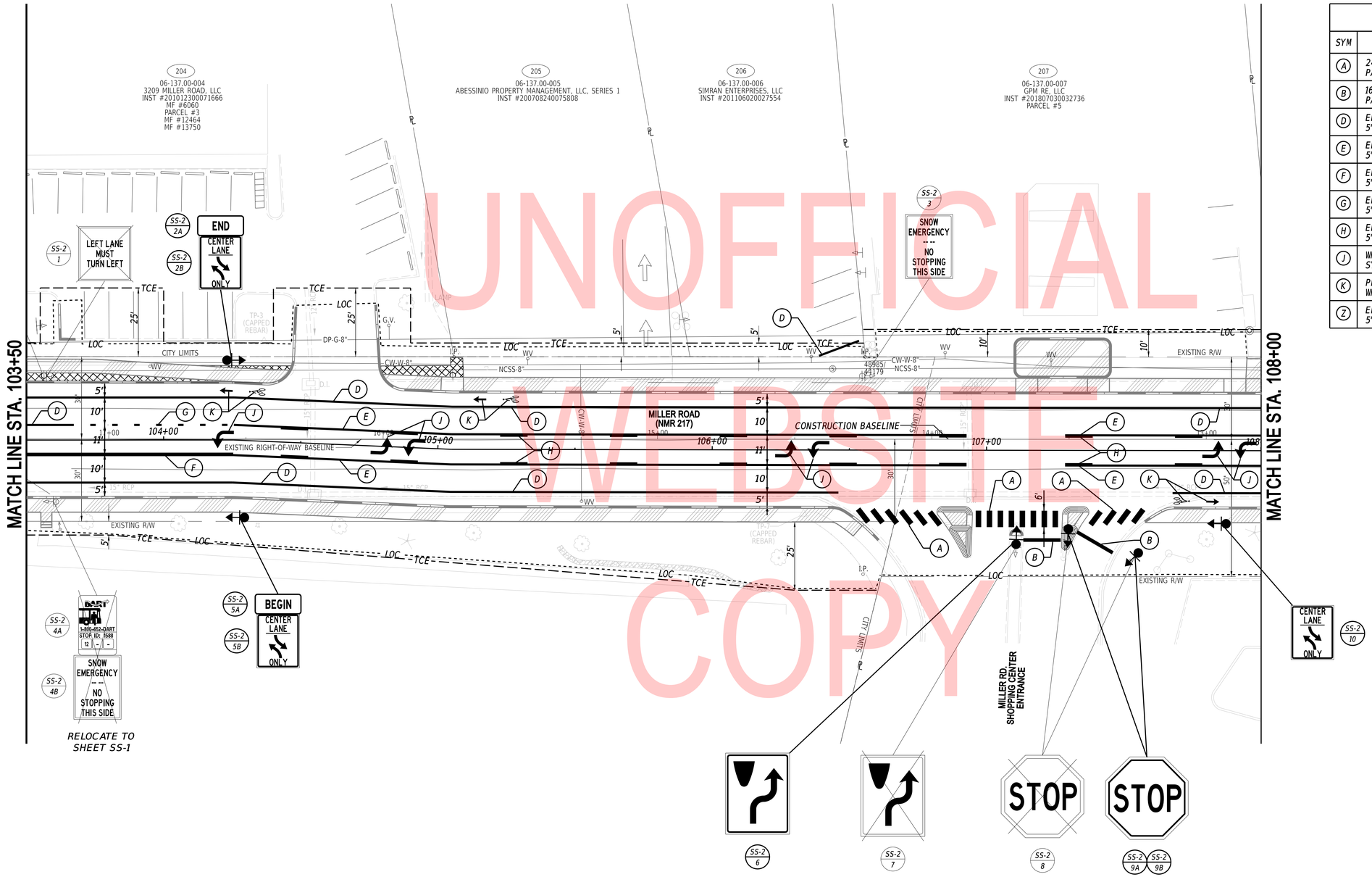

UNOFFICIAL WEBSITE COPY

PAVEMENT MARKINGS LEGEND

SYM	ITEM	QUANTITY
A	24" SOLID WHITE ALKYD THERMOPLASTIC PAVEMENT STRIPING (ITEM 817002)	216 SF
B	16" SOLID WHITE ALKYD THERMOPLASTIC PAVEMENT STRIPING (ITEM 817002)	38 SF
D	EPOXY RESIN PAINT PAVEMENT STRIPING, WHITE 5" SOLID (ITEM 817013)	811 LF
E	EPOXY RESIN PAINT PAVEMENT STRIPING, YELLOW 5" SOLID (ITEM 817013)	677 LF
F	EPOXY RESIN PAINT PAVEMENT STRIPING, YELLOW 5" SOLID DOUBLE LINE (ITEM 817013)	150 LF
G	EPOXY RESIN PAINT PAVEMENT STRIPING, WHITE 5" DOTTED - 2' LINE & 6' GAP (ITEM 817013)	14 LF
H	EPOXY RESIN PAINT PAVEMENT STRIPING, YELLOW 5" BROKEN - 10' LINE & 30' GAP (ITEM 817013)	180 LF
J	WHITE ALKYD THERMOPLASTIC PAVEMENT SYMBOL (ITEM 817002)	109 LF
K	PREFORMED THERMOPLASTIC PAVEMENT MARKING WHITE, BIKE SYMBOL INCLUDES ARROW (817015)	3 EA
Z	EPOXY RESIN PAINT PAVEMENT STRIPING, WHITE 5" DOTTED - 2' LINE & 2' GAP (ITEM 817013)	0 LF

ADDENDA / REVISIONS

SCALE 0 20 40 60 FEET

MILLER ROAD STREETSCAPE IMPROVEMENTS PHASE II

CONTRACT	BRIDGE NO.	X
T201901101	DESIGNED BY: M. PENNINGTON	
COUNTY		
NEW CASTLE	CHECKED BY: B. MARTINE	

SIGNING & STRIPING PLAN

SS-02
SECTION
CEI
SHEET NO.
43

23-JAN-2020
13:33
G:\PROJECTS\185003.00 Agmt 1834 TAP\185003.08 (Task 8 - Miller Road)\Cadd\Sheets\SSsss02_miller.dgn

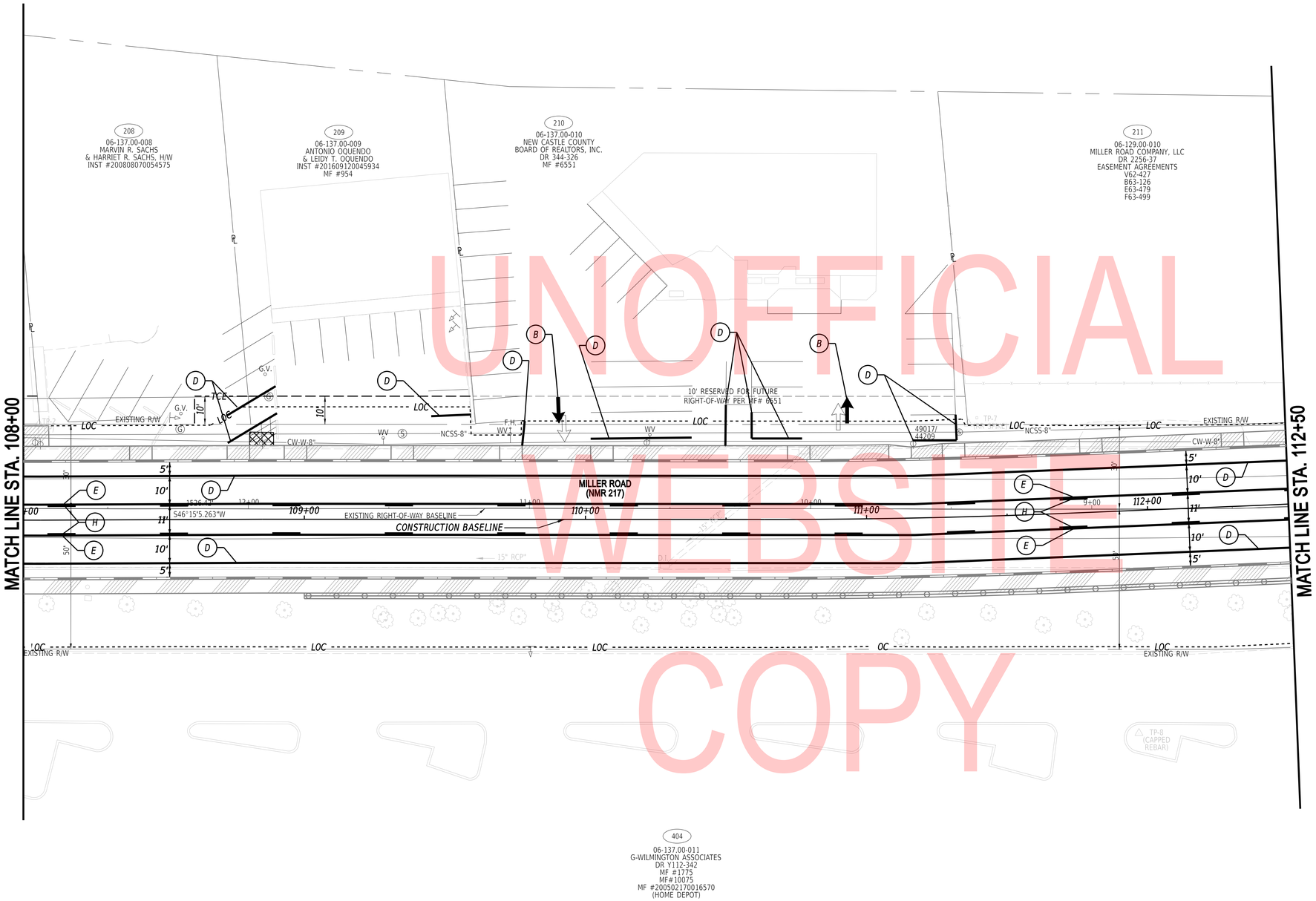

UNOFFICIAL WEBSITE COPY

404
06-137.00-011
G-WILMINGTON ASSOCIATES
DR Y112-342
MF #1775
MF#10075
MF #200502170016570
(HOME DEPOT)

PAVEMENT MARKINGS LEGEND

SYM	ITEM	QUANTITY
A	24" SOLID WHITE ALKYD THERMOPLASTIC PAVEMENT STRIPING (ITEM 817002)	0 SF
B	16" SOLID WHITE ALKYD THERMOPLASTIC PAVEMENT STRIPING (ITEM 817002)	32 SF
D	EPOXY RESIN PAINT PAVEMENT STRIPING, WHITE 5" SOLID (ITEM 817013)	1066 LF
E	EPOXY RESIN PAINT PAVEMENT STRIPING, YELLOW 5" SOLID (ITEM 817013)	900 LF
F	EPOXY RESIN PAINT PAVEMENT STRIPING, YELLOW 5" SOLID DOUBLE LINE (ITEM 817013)	0 LF
G	EPOXY RESIN PAINT PAVEMENT STRIPING, WHITE 5" DOTTED - 2' LINE & 6' GAP (ITEM 817013)	0 LF
H	EPOXY RESIN PAINT PAVEMENT STRIPING, YELLOW 5" BROKEN - 10' LINE & 30' GAP (ITEM 817013)	220 LF
J	WHITE ALKYD THERMOPLASTIC PAVEMENT SYMBOL (ITEM 817002)	0 LF
K	PREFORMED THERMOPLASTIC PAVEMENT MARKING WHITE, BIKE SYMBOL INCLUDES ARROW (817015)	0 EA
Z	EPOXY RESIN PAINT PAVEMENT STRIPING, WHITE 5" DOTTED - 2' LINE & 2' GAP (ITEM 817013)	0 LF

ADDENDA / REVISIONS

SCALE
0 20 40 60
FEET

MILLER ROAD STREETSCAPE IMPROVEMENTS PHASE II

CONTRACT	BRIDGE NO.	X
T201901101	DESIGNED BY: M. PENNINGTON	
COUNTY		
NEW CASTLE	CHECKED BY: B. MARTINE	

SIGNING & STRIPING PLAN

SS-03
SECTION
CEI
SHEET NO.
44

23-JAN-2020
13:33
G:\PROJECTS\185003.00 Agmt 1834 TAP\185003.08 (Task 8 - Miller Road)\Cadd\Sheets\SSsss03_miller.dgn

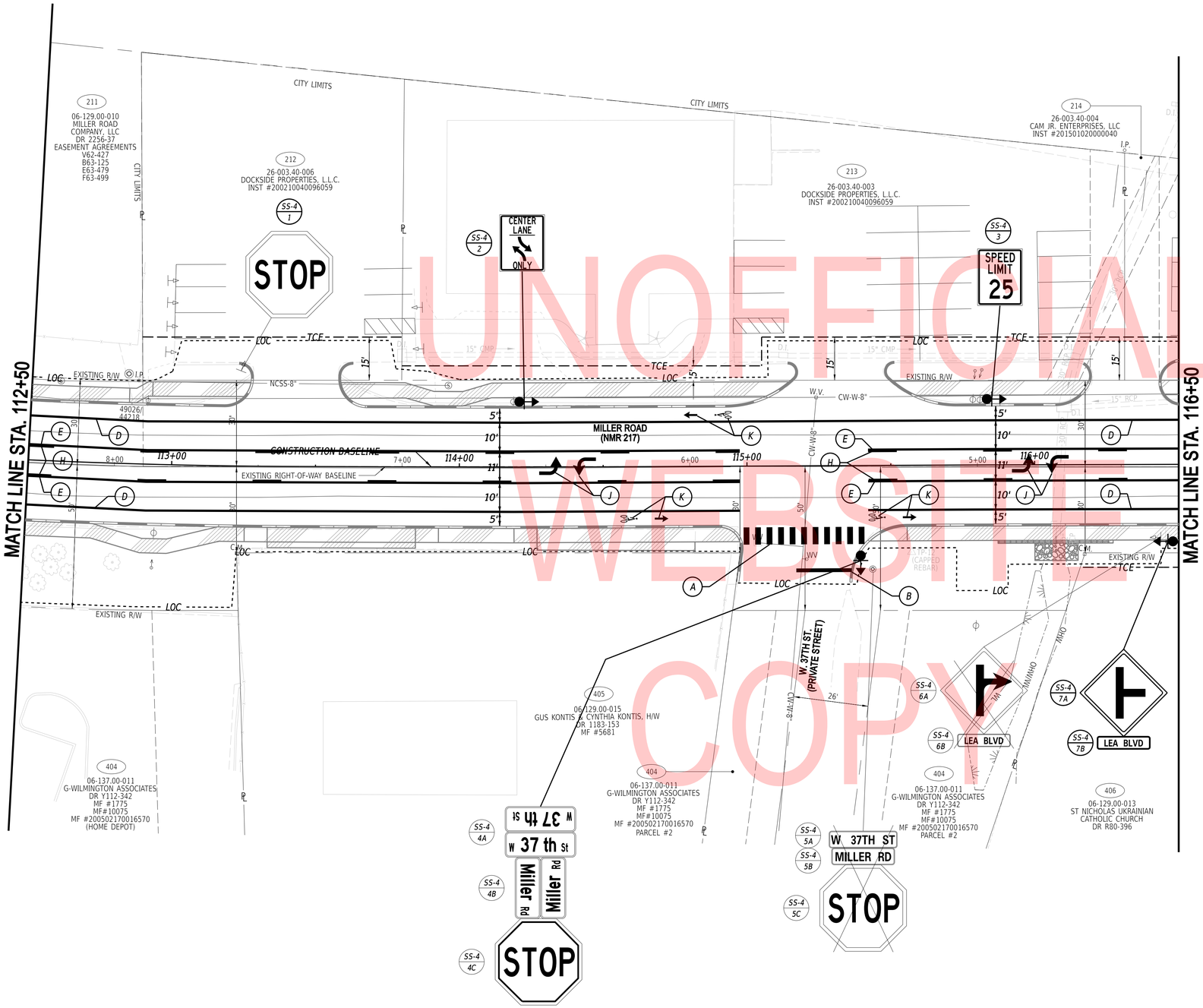

UNOFFICIAL WEBSITE COPY

PAVEMENT MARKINGS LEGEND

SYM	ITEM	QUANTITY
A	24" SOLID WHITE ALKYD THERMOPLASTIC PAVEMENT STRIPING (ITEM 817002)	132 SF
B	16" SOLID WHITE ALKYD THERMOPLASTIC PAVEMENT STRIPING (ITEM 817002)	28 SF
D	EPOXY RESIN PAINT PAVEMENT STRIPING, WHITE 5" SOLID (ITEM 817013)	755 LF
E	EPOXY RESIN PAINT PAVEMENT STRIPING, YELLOW 5" SOLID (ITEM 817013)	710 LF
F	EPOXY RESIN PAINT PAVEMENT STRIPING, YELLOW 5" SOLID DOUBLE LINE (ITEM 817013)	0 LF
G	EPOXY RESIN PAINT PAVEMENT STRIPING, WHITE 5" DOTTED - 2' LINE & 6' GAP (ITEM 817013)	0 LF
H	EPOXY RESIN PAINT PAVEMENT STRIPING, YELLOW 5" BROKEN - 10' LINE & 30' GAP (ITEM 817013)	200 LF
J	WHITE ALKYD THERMOPLASTIC PAVEMENT SYMBOL (ITEM 817002)	62 LF
K	PREFORMED THERMOPLASTIC PAVEMENT MARKING WHITE, BIKE SYMBOL INCLUDES ARROW (817015)	3 EA
Z	EPOXY RESIN PAINT PAVEMENT STRIPING, WHITE 5" DOTTED - 2' LINE & 2' GAP (ITEM 817013)	0 LF

ADDENDA / REVISIONS

SCALE 0 20 40 60 FEET

MILLER ROAD STREETSCAPE IMPROVEMENTS PHASE II

CONTRACT	BRIDGE NO.	X
T201901101	DESIGNED BY: M. PENNINGTON	
COUNTY	CHECKED BY: B. MARTINE	
NEW CASTLE		

SIGNING & STRIPING PLAN

SS-04
SECTION
CEI
SHEET NO.
45

23-JAN-2020
13:33
G:\PROJECTS\185003.00 Agmt 1834 TAP\185003.08 (Task 8 - Miller Road)\Cadd\Sheets\SSsss04_miller.dgn

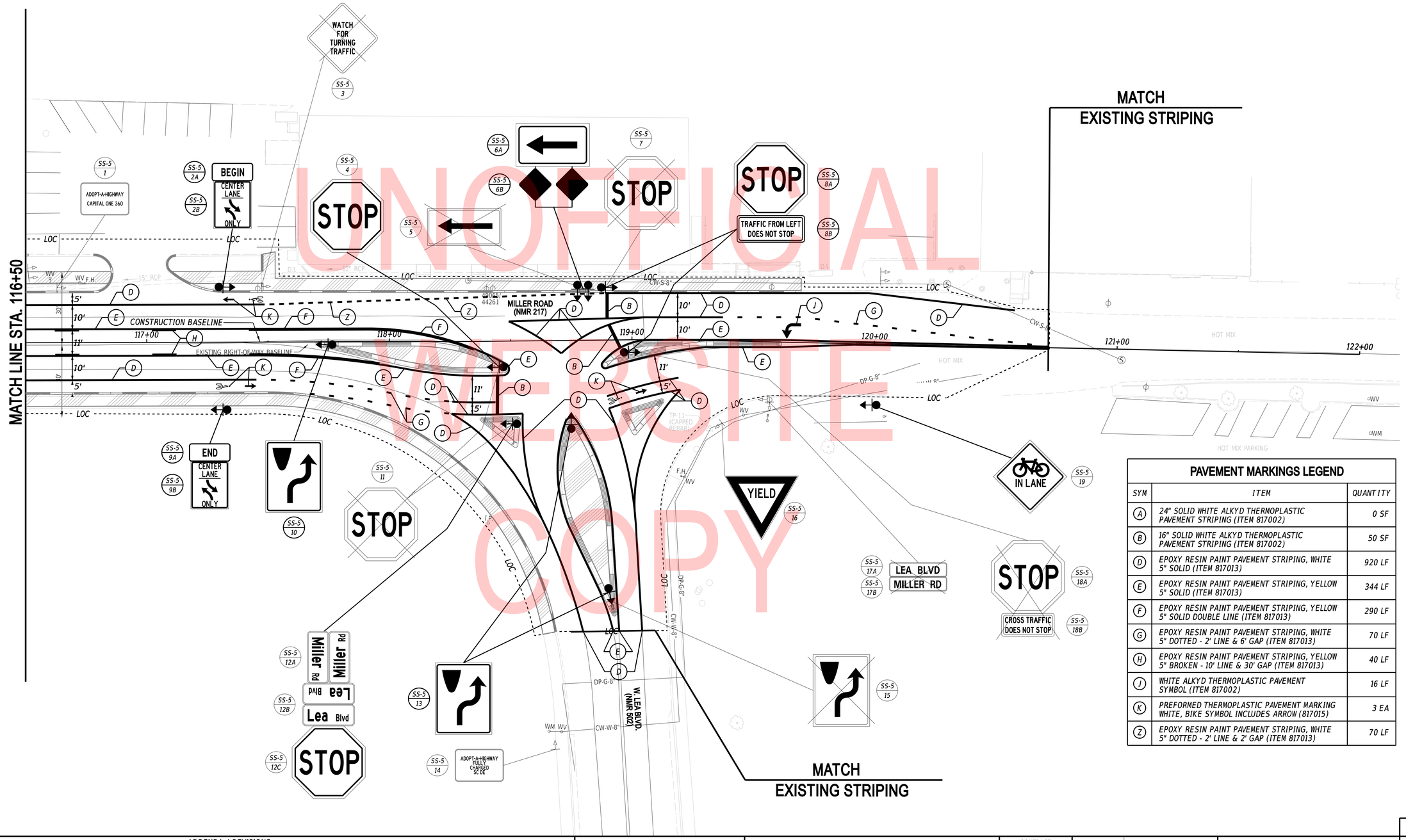

UNOFFICIAL WEBSITE COPY

PAVEMENT MARKINGS LEGEND

SYM	ITEM	QUANTITY
A	24" SOLID WHITE ALKYD THERMOPLASTIC PAVEMENT STRIPING (ITEM 817002)	0 SF
B	16" SOLID WHITE ALKYD THERMOPLASTIC PAVEMENT STRIPING (ITEM 817002)	50 SF
D	EPOXY RESIN PAINT PAVEMENT STRIPING, WHITE 5" SOLID (ITEM 817013)	920 LF
E	EPOXY RESIN PAINT PAVEMENT STRIPING, YELLOW 5" SOLID (ITEM 817013)	344 LF
F	EPOXY RESIN PAINT PAVEMENT STRIPING, YELLOW 5" SOLID DOUBLE LINE (ITEM 817013)	290 LF
G	EPOXY RESIN PAINT PAVEMENT STRIPING, WHITE 5" DOTTED - 2' LINE & 6' GAP (ITEM 817013)	70 LF
H	EPOXY RESIN PAINT PAVEMENT STRIPING, YELLOW 5" BROKEN - 10' LINE & 30' GAP (ITEM 817013)	40 LF
J	WHITE ALKYD THERMOPLASTIC PAVEMENT SYMBOL (ITEM 817002)	16 LF
K	PREFORMED THERMOPLASTIC PAVEMENT MARKING WHITE, BIKE SYMBOL INCLUDES ARROW (817015)	3 EA
Z	EPOXY RESIN PAINT PAVEMENT STRIPING, WHITE 5" DOTTED - 2' LINE & 2' GAP (ITEM 817013)	70 LF

ADDENDA / REVISIONS

SCALE 0 20 40 60 FEET

MILLER ROAD STREETSCAPE IMPROVEMENTS PHASE II

CONTRACT	BRIDGE NO.	X
T201901101	DESIGNED BY: M. PENNINGTON	
COUNTY		
NEW CASTLE	CHECKED BY: B. MARTINE	

SIGNING & STRIPING PLAN

SS-05
SECTION CEI
SHEET NO. 46

23-JAN-2020 13:33 G:\PROJECTS\185003.00 Agmt 1834 TAP\185003.08 (Task 8 - Miller Road)\Cadd\Sheets\SSSs05_miller.dgn

PERMANENT SIGN SCHEDULE

SHEET NO.	PLAN IDENTIFIER	SIGN DESIGNATION	QTY.	DESCRIPTION	SIGN WIDTH (IN)	SIGN HEIGHT (IN)	SIGN AREA (SF)	ITEM 819018 INSTALLATION OR REMOVAL OF TRAFFIC SIGN(S) ON SINGLE POST (EACH)			ITEM 819019 INSTALLATION OR REMOVAL OF TRAFFIC SIGN(S) ON MULTIPLE SIGN POSTS (SF)			POST INSTALLATION TYPE	Code X11 12' Post (W/ Basepost) (EACH)	ITEM 819016 4" HOLE, 0-6" (EACH)	ITEM 819017 4" HOLE, >6" (EACH)	REMARKS
								SIGN DISPOSITION	REMOVE	INSTALL	SIGN DISPOSITION	REMOVE	INSTALL					
SS-1	1	R2-1-25(24)	1	SPEED LIMIT (25 MPH - 24x30)	24	30	5.0	NEW		1				SOIL	1			
SS-1	2	R2-1-25(24)	1	SPEED LIMIT (25 MPH - 24x30)	24	30		REMOVE	1									
SS-1	3A	R7-202aP-DE	1	BEGIN (plaque - red)	12	6		REMAIN										
SS-1	3B	R7-4-DE(12)	1	NO STOPPING, STANDING, OR PARKING - 12x18	12	18		REMAIN										
SS-1	4	R2-1-35(24)	1	SPEED LIMIT (35 MPH - 24x30)	24	30		REMOVE	1									
SS-1	5	R2-1-25(24)	1	SPEED LIMIT (25 MPH - 24x30)	24	30	5.0	NEW		1				NEW CONCRETE	1			
SS-1	6	R5-2(24)	1	NO TRUCKS (Symbol) - 24x24	24	24		REMAIN										
SS-1	7A	D3-1(6)	1	STREET NAME (1 Line)	30	6		REMAIN										W 34th St
SS-1	7B	D3-1(6)	1	STREET NAME (1 Line)	30	6		REMAIN										MILLER RD
SS-2	1	R3-7_L(30)	1	LEFT LANE MUST TURN LEFT - 30"x30"	30	30		REMOVE	1									
SS-2	2A	R3-9dP	1	END (plaque)	30	12	2.5	ADD TO ASSEMBLY		1								
SS-2	2B	R3-9b(24)	1	TWO-WAY LEFT TURN ONLY (Ground Mounted) - 24"x36"	24	36	6.0	NEW		1				SOIL	1			
SS-2	3	R7-203(18)	1	EMEGENCY SNOW ROUTE - 18x24	18	24		REMAIN										
SS-2	4A	D4-3-DE	1	BUS STOP (DART)	12	18		REPOSITION	1	1								
SS-2	4B	R7-203(18)	1	EMEGENCY SNOW ROUTE - 18x24	18	24		REPOSITION	1	1								
SS-2	5A	R3-9cP	1	BEGIN (plaque)	30	12	2.5	ADD TO ASSEMBLY		1								
SS-2	5B	R3-9b(24)	1	TWO-WAY LEFT TURN ONLY (Ground Mounted) - 24"x36"	24	36	6.0	NEW		1				SOIL	1			
SS-2	6	R4-7(18)	1	KEEP RIGHT (Symbol) - 18x24	18	24	3.0	NEW		1				EX. CONCRETE	1	1		
SS-2	7	R4-7(18)	1	KEEP RIGHT (Symbol) - 18x24	18	24		REMOVE	1									
SS-2	8	R1-1(30)	2	STOP	30	30		REMOVE	2									
SS-2	9A	R1-1(36)	1	STOP	36	36	7.5	NEW		1				NEW CONCRETE	1			
SS-2	9B	R1-1(36)	1	STOP	36	36	7.5	NEW		1				SOIL	1			
SS-2	10	R3-9b(24)	1	TWO-WAY LEFT TURN ONLY (Ground Mounted) - 24"x36"	24	36	6.0	NEW		1				NEW CONCRETE	1			
SS-4	1	R1-1(30)	1	STOP	30	30		REMAIN										
SS-4	2	R3-9b(24)	1	TWO-WAY LEFT TURN ONLY (Ground Mounted) - 24"x36"	24	36	6.0	NEW		1				SOIL	1			
SS-4	3	R2-1-25(24)	1	SPEED LIMIT (25 MPH - 24x30)	24	30	5.0	NEW		1				SOIL	1			
SS-4	4A	D3-1(12)	2	STREET NAME (1 Line) Posted speed ≤ 40 MPH	30	12	5.0	ADD TO ASSEMBLY		2								W 37th St Hwy C, 6"/4"
SS-4	4B	D3-1(12)	2	STREET NAME (1 Line) Posted speed ≤ 40 MPH	30	12	5.0	ADD TO ASSEMBLY		2								Miller Rd Hwy C, 6"/4"
SS-4	4C	R1-1(36)	1	STOP	36	36	7.5	NEW		1				SOIL	1			
SS-4	5A	D3-1(6)	1	STREET NAME (1 Line)	30	6		REMOVE	1									W 37TH ST
SS-4	5B	D3-1(6)	1	STREET NAME (1 Line)	30	6		REMOVE	1									MILLER RD
SS-4	5C	R1-1(30)	1	STOP	30	30		REMOVE	1									
SS-4	6A	W2-2_R(30)	1	SIDE ROAD (Perpendicular - Right) - 30x30	30	30		REMOVE	1									
SS-4	6B	W16-8P	1	ADVANCE STREET NAME (1 - line plaque)	18	9		REMOVE	1									LEA BLVD
SS-4	7A	W2-2_R(30)	1	SIDE ROAD (Perpendicular - Right) - 30x30	30	30	6.3	NEW		1				SOIL	1			
SS-4	7B	W16-8P	1	ADVANCE STREET NAME (1 - line plaque)	18	9	1.1	ADD TO ASSEMBLY		1								Lea Blvd Hwy C, 4"
SS-5	1	D14-3-DE	1	ADOPT A HIGHWAY	24	24		REMAIN										CAPITAL ONE 360
SS-5	2A	R3-9cP	1	BEGIN (plaque)	30	12	2.5	ADD TO ASSEMBLY		1								
SS-5	2B	R3-9b(24)	1	TWO-WAY LEFT TURN ONLY (Ground Mounted) - 24"x36"	24	36	6.0	NEW		1				SOIL	1			
SS-5	3	W21-9-DE(36)	1	WATCH FOR TURNING TRAFFIC - 36x36	36	36		REMOVE	1									
SS-5	4	R1-1(36)	1	STOP	36	36	7.5	NEW		1				EX. CONCRETE	1	1		
SS-5	5	W1-6_L(48)	1	ONE DIRECTIONAL LARGE ARROW (Left) - 48x24	48	24					REMOVE	8.0						
PAGE TOTALS							103		14	24		8	0		14	2	0	

UNOFFICIAL WEBSITE COPY

PERMANENT SIGN SCHEDULE

SHEET NO.	PLAN IDENTIFIER	CODE	QTY.	DESCRIPTION	SIGN WIDTH (IN)	SIGN HEIGHT (IN)	SIGN AREA (SF)	ITEM 819018 SINGLE POST (EACH)			ITEM 819019 INSTALLATION OR REMOVAL OF TRAFFIC SIGN(S) ON MULTIPLE SIGN POSTS (SF)			POST INSTALLATION TYPE	Code X11 12' Post (W/ Basepost) (EACH)	ITEM 819016 4" HOLE, 0-6" (EACH)	ITEM 819017 4" HOLE, >6" (EACH)	REMARKS
								SIGN DISPOSITION	REMOVE	INSTALL	SIGN DISPOSITION	REMOVE	INSTALL					
SS-5	6A	W1-6_L(48)	1	ONE DIRECTIONAL LARGE ARROW (Left) - 48x24	48	24	8.0				NEW		8.0	SOIL	2			PLACE POSTS BETWEEN BOLLARDS
SS-5	6B	OM1-3	2	TYPE 1 OBJECT MARKER	18	18	4.5				ADD TO ASSEMBLY		4.5					
SS-5	7	R1-1(30)	1	STOP	30	30		REMOVE	1									
SS-5	8A	R1-1(36)	2	STOP	36	36	14.9	NEW		2				NEW CONCRETE	2			
SS-5	8B	W4-4aP_L(24)	2	TRAFFIC FROM LEFT DOES NOT STOP (plaque) - 24x12	24	12	4.0	ADD TO ASSEMBLY		2								
SS-5	9A	R3-9dP	1	END (plaque)	30	12	2.5	ADD TO ASSEMBLY		1								
SS-5	9B	R3-9b(24)	1	TWO-WAY LEFT TURN ONLY (Ground Mounted) - 24"x36"	24	36	6.0	NEW		1				SOIL	1			
SS-5	10	R4-7(18)	1	KEEP RIGHT (Symbol) - 18x24	18	24	3.0	NEW		1				NEW CONCRETE	1			
SS-5	11	R1-1(30)	2	STOP	30	30		REMOVE	2									
SS-5	12A	D3-1(12)	2	STREET NAME (1 Line) Posted speed ≤ 40 MPH	24	12	4.0	ADD TO ASSEMBLY		2								Miller Rd Hwy C, 6"/4"
SS-5	12B	D3-1(12)	2	STREET NAME (1 Line) Posted speed ≤ 40 MPH	24	12	4.0	ADD TO ASSEMBLY		2								Lea Blvd Hwy C, 6"/4"
SS-5	12C	R1-1(36)	1	STOP	36	36	7.5	NEW		1				NEW CONCRETE	1			
SS-5	13	R4-7(18)	2	KEEP RIGHT (Symbol) - 18x24	18	24	6.0	NEW		1				NEW CONCRETE	2			
SS-5	14	D14-3-DE	1	ADOPT A HIGHWAY	24	24		REMAIN										FULLY CHARGED SC DE
SS-5	15	R4-7(18)	1	KEEP RIGHT (Symbol) - 18x24	18	24		NEW										
SS-5	16	R1-2(36)	1	YIELD	36	36		REMAIN										
SS-5	17A	D3-1(6)	1	STREET NAME (1 Line)	24	6		REMOVE	1									LEA BLVD
SS-5	17B	D3-1(6)	1	STREET NAME (1 Line)	24	6		REMOVE	1									MILLER RD
SS-5	18A	R1-1(30)	1	STOP	30	30		REMOVE	1									
SS-5	18B	W4-4P(24)	1	CROSS TRAFFIC DOES NOT STOP (plaque) - 24x12	24	12		REMOVE	1									
SS-5	19	W11-1-DE(30)	1	BICYCLE (Symbol) IN LANE - 30x30	30	30	6.3	NEW		1				SOIL	1			
PAGE TOTALS							71		8	15		0	13		10	0	0	
JOB TOTALS							173		22	39		8	13		24	1	0	

UNOFFICIAL WEBSITE COPY

ADDENDA / REVISIONS

NOT TO SCALE

MILLER ROAD STREETSCAPE IMPROVEMENTS PHASE II

CONTRACT T201901101
COUNTY NEW CASTLE
BRIDGE NO. X
DESIGNED BY: M. PENNINGTON
CHECKED BY: B. MARTINE

PERMANENT SIGNING SCHEDULE

SS-07
SECTION CEI
SHEET NO. 48

CONDUIT RUN SCHEDULE

CO#	# OF CONDUITS	SIZE	TYPE	LENGTH	B/T/O/P	AMOUNT AND TYPE OF CABLE/ WIRE
X1	1	1.5"	-	22'	-/-	RISER ATTACHED TO STRAIN POLE. EXISTING (1)2/#8 U.F. W/GND
X2	1	2.5"	-	44'	-/-	EXISTING (1)5/#14
X3	1	2.5"	-	63'	-/-	EXISTING (1)5/#14
X4	1	2.5"	-	16'	-/-	EXISTING (1)5/#14
X5	1	1.5"	-	25'	-/-	RISER ATTACHED TO UTILITY POLE. REMOVE (1)9/#14 [6] [7]
X6	1	2.5"	-	62'	-/-	REMOVE (1)9/#14
7	1	2"	PVC	20'/30'	P/T	NEW [(1) 9/#14, (1) 5/#14, (1)#6 SC]
8	1	3"	PVC	20'	T	NEW [(1) 9/#14, (1) 5/#14, (1)#6 SC]

X-DENOTES EXISTING

POLE SCHEDULE

POLE #	POLE TYPE	HEIGHT	MATERIAL
X1	STRAIN	28'	STEEL
X2	PEDESTAL	10'	ALUMINUM
X3	UTILITY	40'	WOOD
4	PEDESTAL	14'	ALUMINUM
X5	PEDESTAL	10'	ALUMINUM

X-DENOTES EXISTING

OVERHEAD RUN SCHEDULE

OH#	LENGTH	AMOUNT AND TYPE OF CABLE/ WIRE
X1	74'	EXISTING (1)2/#8 U.F. W/GND REMOVE (1)20/#14 NEW [(1) 16/#14, (1) 9/#14, (1) 5/#14, (3) 4/#18)] [6]
X2	120'	EXISTING (2) 1/#8

X-DENOTES EXISTING

NOTE: CONTRACTOR TO INSTALL CO-5 RISER REPLACEMENT AND TYPE 4B POLE BASE. THE CONTRACTOR SHALL CONTACT EITHER EDDIE TOULSON (302) 760-2565 OR CODY WATERS (302) 222-5928 OF DELDOT TRAFFIC OPERATIONS AND COORDINATE WITH DELDOT TRAFFIC OPERATIONS FOR ANY SIGNAL CONSTRUCTION RELATED WORK.

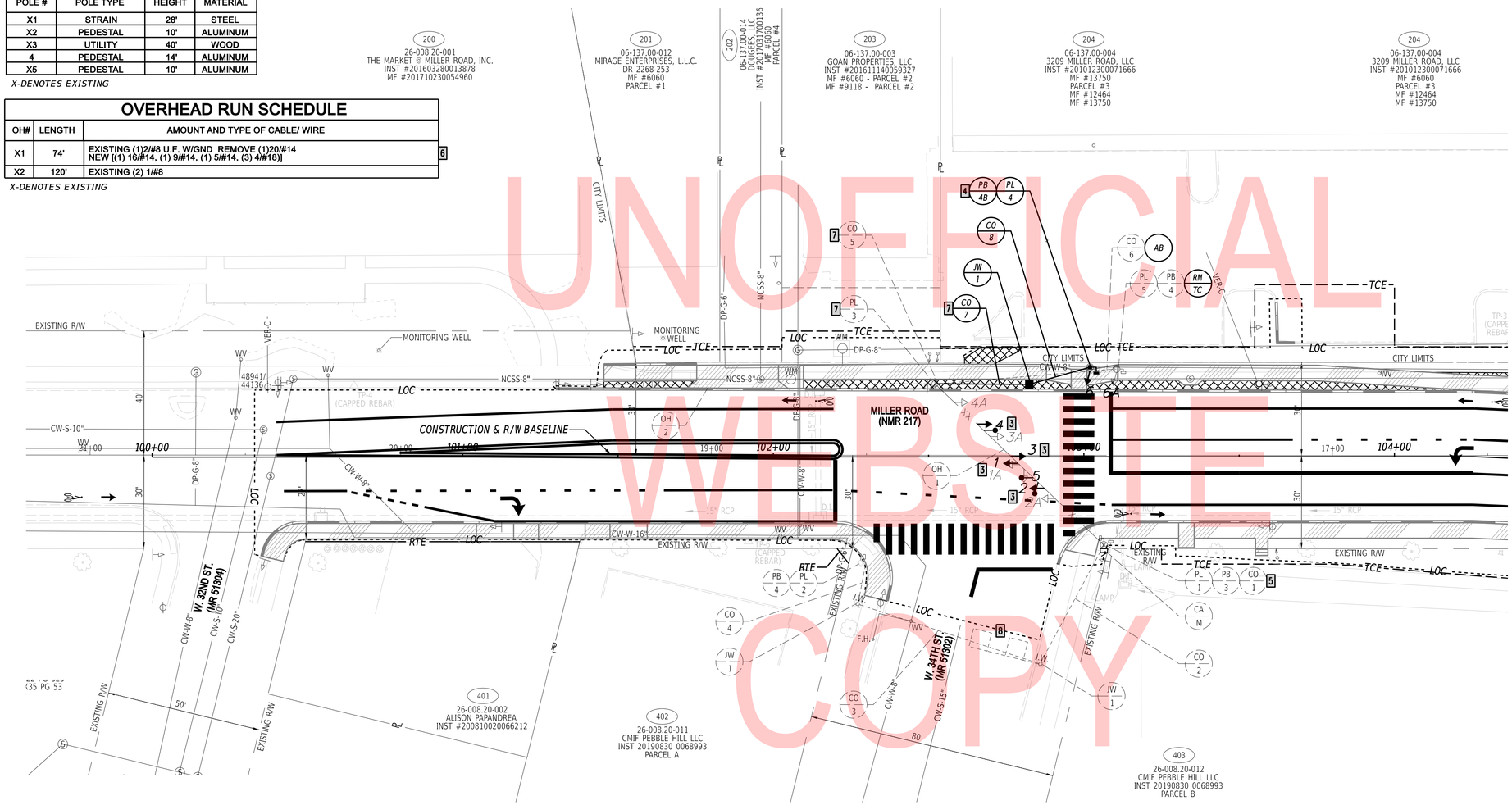

3 TRAFFIC CONTRACTOR SHALL SLIDE EXISTING SIGNAL HEADS #1A, #2A, #3A & #4A TO PROPOSED LOCATIONS 1, 2, 3 & 4 AS SHOWN.

4 PROPOSED COUNT-DOWN PEDESTRIAN SIGNAL HEAD SHALL BE SET TO PRE-TIMED CONTROL.

5 REMOVE EXISTING 20/#14 SIGNAL HEAD CABLE, INSTALL WEATHER HEAD ON STRAIN POLE, THEN INSTALL NEW (1) 16/#14 SIGNAL HEAD CABLE, (3) 4/#18 AND (1) 5/#14 SIGNAL CABLES FROM POLE 1 TO DIAGONAL SPAN WIRE.

6 (1) 9/#14 CABLE SHALL BE SPLICED INTO 16/#14 SIGNAL HEAD CABLE FOR PHASE 4 WIRING OF SIGNAL HEAD #6. (1) 5/#14 IS FOR COUNTDOWN PED SIGNAL.

7 CONTRACTOR TO REPLACE EXISTING RISER (CO-5) AND CONNECT TO PROPOSED CO-7.

8 EXISTING TRAFFIC LOOPS ARE ABANDONED IN PLACE.

SIGNAL PHASING

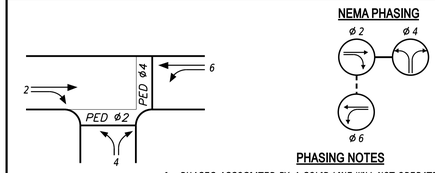

PHASING NOTES

1. PHASES ASSOCIATED BY A SOLID LINE WILL NOT OPERATE CONCURRENTLY.
2. PHASES ASSOCIATED BY A DASHED LINE WILL OPERATE CONCURRENTLY.

SIGNAL HEAD DIAGRAM

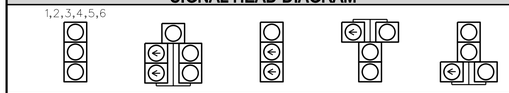

LEGEND

AB — ABANDON	OH # — EXISTING OVERHEAD RUN IDENTIFIER (# OF OVERHEAD RUN)
CA X — EXISTING CABINET IDENTIFIER (TYPE OF CABINET)	OH # — PROPOSED OVERHEAD RUN IDENTIFIER (# OF OVERHEAD RUN)
CA X — PROPOSED CABINET IDENTIFIER (TYPE OF CABINET)	PB X — EXISTING POLE BASE IDENTIFIER (TYPE OF POLE BASE)
CO # — EXISTING CONDUIT RUN IDENTIFIER (# OF CONDUIT RUN)	PB X — PROPOSED POLE BASE IDENTIFIER (TYPE OF POLE BASE)
CO # — PROPOSED CONDUIT RUN IDENTIFIER (# OF CONDUIT RUN)	PL X — EXISTING POLE IDENTIFIER (# OF POLE)
JW X — EXISTING JUNCTION WELL IDENTIFIER (TYPE OF JUNCTION WELL)	PL X — PROPOSED POLE IDENTIFIER (# OF POLE)
JW X — PROPOSED JUNCTION WELL IDENTIFIER (TYPE OF JUNCTION WELL)	RM C — REMOVE BY CONTRACTOR
MA XX — EXISTING MAST ARM IDENTIFIER (LENGTH OF ARM)	RM O — REMOVE BY OTHERS
MA XX — PROPOSED MAST ARM IDENTIFIER (LENGTH OF ARM)	RM TC — REMOVE BY TRAFFIC CONTRACTOR

	EXISTING SYMBOL	PROPOSED SYMBOL
JUNCTION WELL	J.W.	■
LOOP DETECTOR, TYPE 1		
LOOP DETECTOR, TYPE 2		
LUMINAIRE		
MAST ARM		
MICROWAVE DETECTION		
OPTICOM RECEIVER		
OVERHEAD SIGNING		
PEDESTRIAN POLE/BASE		
PEDESTRIAN PUSHBUTTON		
PEDESTRIAN SIGNAL HEAD		
RIGHT-OF-WAY		R/W
SERVICE PEDESTAL	P	P
SIGNAL CABINET		
SIGNAL HEAD		
SIGNAL POLE/BASE		
CCTV CAMERA		
SPAN WIRE	XX	
UTILITY POLE		
VIDEO DETECTION		

GENERAL SIGNAL NOTES

1. ALL SIGNAL EQUIPMENT REMOVED FROM A PROJECT IS TO BE RETURNED TO THE CITY OF WILMINGTON.

2. ALL UNDERGROUND AND OVERHEAD UTILITIES SHOWN ON THESE PLANS ARE SCHEMATIC ONLY AND MAY NOT BE COMPLETE. THE CONTRACTOR SHALL BE RESPONSIBLE FOR NOTIFYING MISS UTILITY, AND/OR THE APPROPRIATE UTILITY PRIOR TO THE BEGINNING OF CONSTRUCTION FOR THE UTILITY MARKOUTS. IF THE CONTRACTOR PERCEIVES THAT A CONFLICT BETWEEN UTILITIES AND THE TRAFFIC SIGNAL WILL OCCUR, THE CONTRACTOR SHALL NOTIFY DELDOT TRAFFIC IMMEDIATELY BEFORE CONSTRUCTION.

PREPARED BY

CENTURY ENGINEERING
520 BAY RD
DOVER, DELAWARE 19901
(302) 734-9188

THIS SEAL APPLIES TO THIS SHEET ONLY. DATE

SEAL

CONCURRENCE FOR INSTALLATION

CITY OF WILMINGTON DATE

SG–01

ADDENDA / REVISIONS

SCALE 0 20 40 60 FEET

MILLER ROAD STREETSCAPE IMPROVEMENTS PHASE II

CONTRACT	T201901101
COUNTY	NEW CASTLE
PERMIT NO.	COW
DESIGNED BY:	M. PENNINGTON
CHECKED BY:	B. MARTINE

SIGNAL PLAN MILLER RD @ W. 34TH ST

SECTION	CEI
SHEET NO.	49

PREPARED BY
CENTURY ENGINEERING

JONATHAN MICHAEL HERRIGE
LICENSE
No. 10572
DELAWARE
PROFESSIONAL ENGINEER

RECOMMENDED — DATE 1/22/20

RECOMMENDED AS TO ENGINEERING NEED

MANAGER, ROW ENGINEERING — DATE 1/22/2020

PROGRAM MANAGER, TEAM SUPPORT — DATE

TECHNICAL REVIEWER, TEAM SUPPORT — DATE 1/22/2020

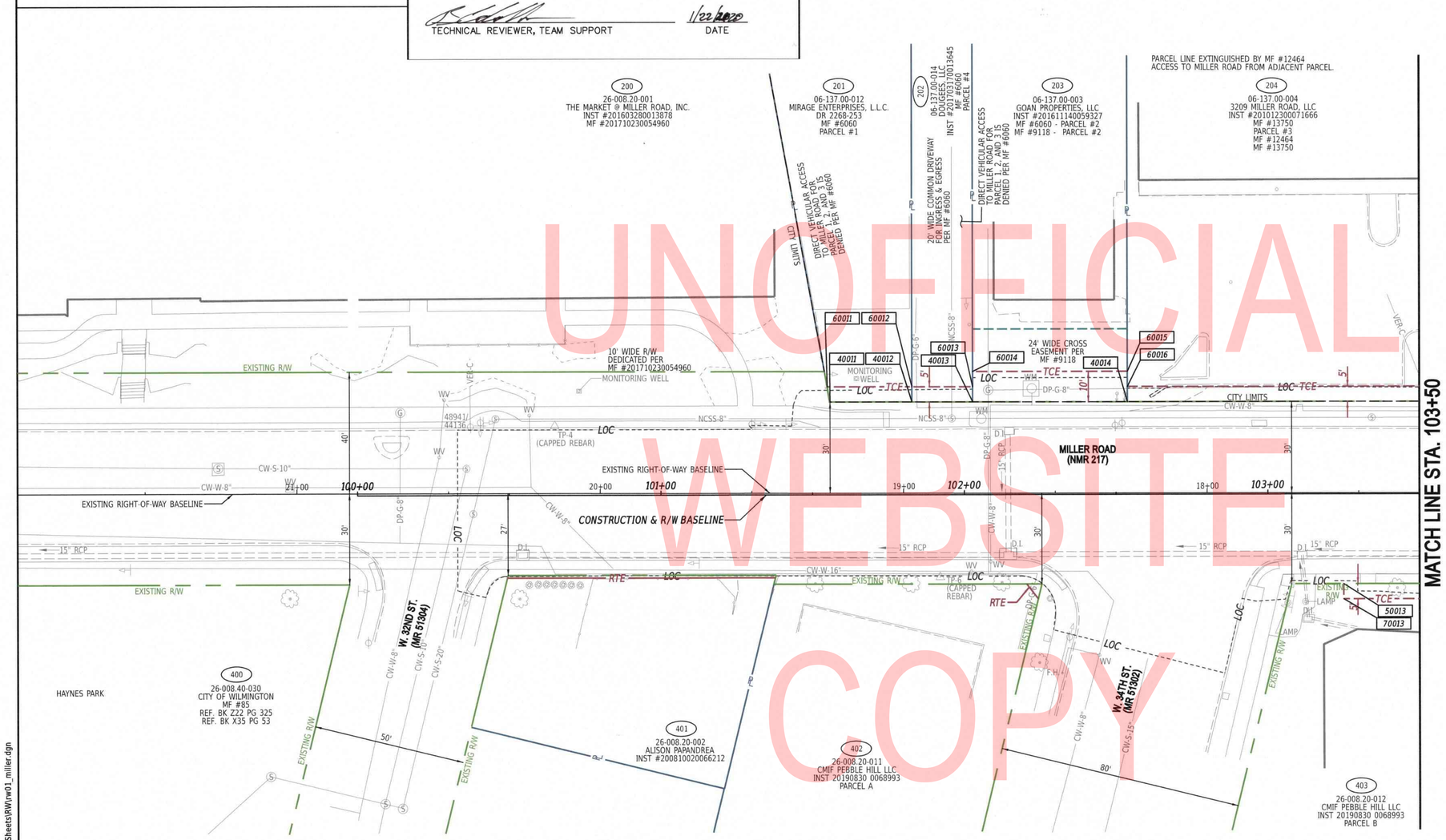

UNOFFICIAL WEBSITE COPY

NOTE:
STORMWATER MANAGEMENT FACILITIES, INCLUDING BEST MANAGEMENT PRACTICE (BMP) FACILITIES, MAY BE PRESENT WITHIN THE LIMITS OF THIS PROJECT. PLEASE CONSULT THE CONSTRUCTION PLANS FOR THIS PROJECT TO DETERMINE THE TYPE AND LOCATION OF THESE FACILITIES.

NOTE:
WHERE RIGHT TO ENTER (RTE) IS DESIGNATED ON THE PLANS, IT INDICATES LOCATIONS WHERE THE DEPARTMENT ALREADY HAS THE RIGHT UNDER DELAWARE CODE TO ENTER ONTO PRIVATE PROPERTY TO MAINTAIN, REPAIR, OR RECONSTRUCT FACILITIES USED BY THE PUBLIC AND MAINTAINED AT PUBLIC EXPENSE.

ADDENDA / REVISIONS

SCALE 0 20 40 60 FEET

MILLER ROAD STREETSCAPE IMPROVEMENTS PHASE II

CONTRACT	BRIDGE NO.	X
T201901101	DESIGNED BY:	T. BANEZ
COUNTY	CHECKED BY:	W. CONWAY
NEW CASTLE		

RIGHT-OF-WAY PLAN

SECTION CEI

SHEET NO. 50

21-JAN-2020
14:11
G:\PROJECTS\185003.00 Agmt 1834 TAP\185003.08 (Task 8 - Miller Road)\CADD\Sheets\RW\rw01_miller.dgn

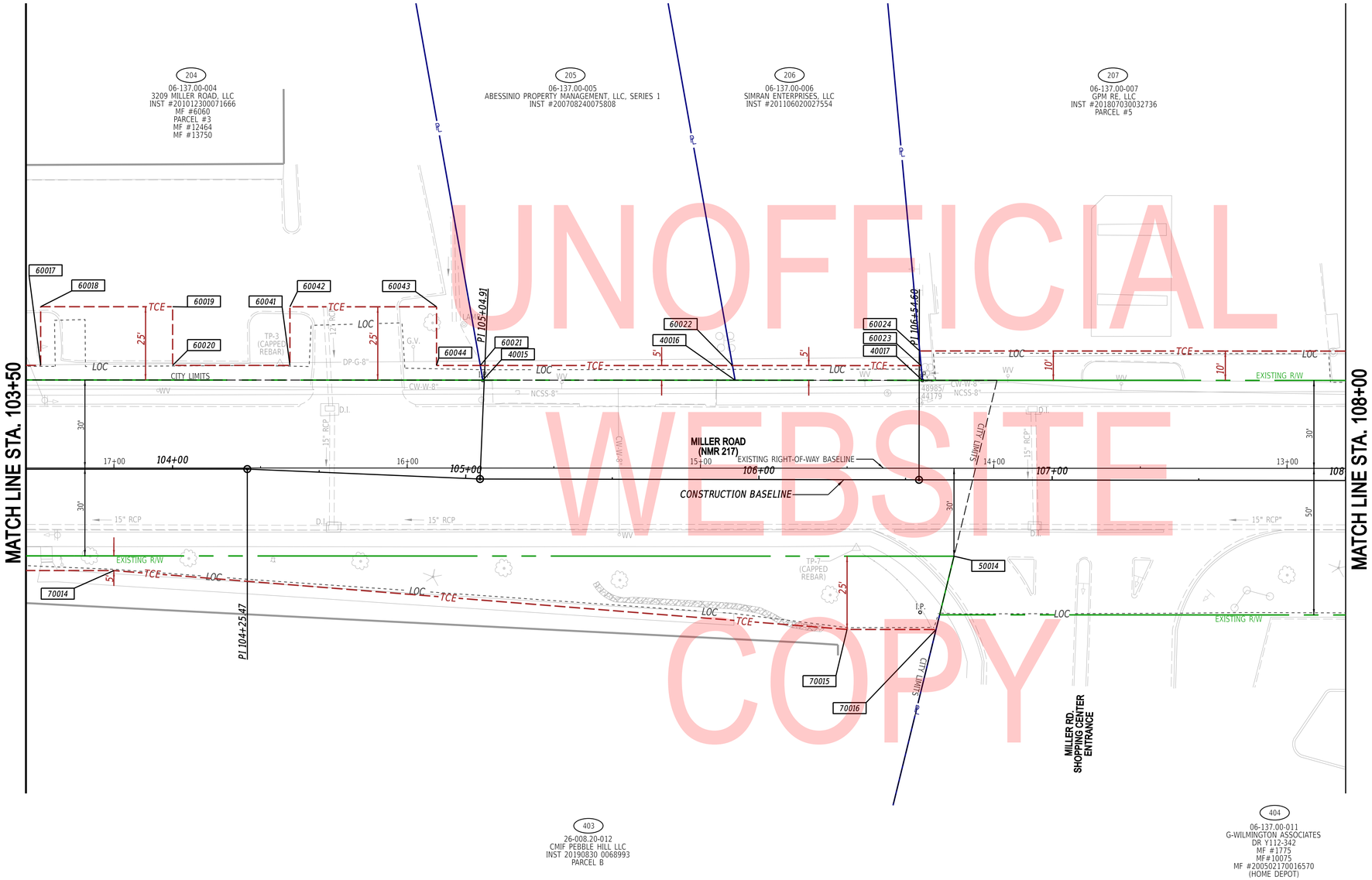

UNOFFICIAL WEBSITE COPY

NOTE:
STORMWATER MANAGEMENT FACILITIES, INCLUDING BEST MANAGEMENT PRACTICE (BMP) FACILITIES, MAY BE PRESENT WITHIN THE LIMITS OF THIS PROJECT. PLEASE CONSULT THE CONSTRUCTION PLANS FOR THIS PROJECT TO DETERMINE THE TYPE AND LOCATION OF THESE FACILITIES.

ADDENDA / REVISIONS	

SCALE
0 20 40 60
FEET

MILLER ROAD STREETSCAPE IMPROVEMENTS PHASE II

CONTRACT	BRIDGE NO.	X	RIGHT-OF-WAY PLAN	SECTION
T201901101	DESIGNED BY:	T. BANEZ		CEI
COUNTY				SHEET NO.
NEW CASTLE	CHECKED BY:	W. CONWAY		51

23-JAN-2020
13:33
G:\PROJECTS\185003.00 Agmt 1834 TAP\185003.08 (Task 8 - Miller Road)\Cadd\Sheets\RW\rw02_miller.dgn

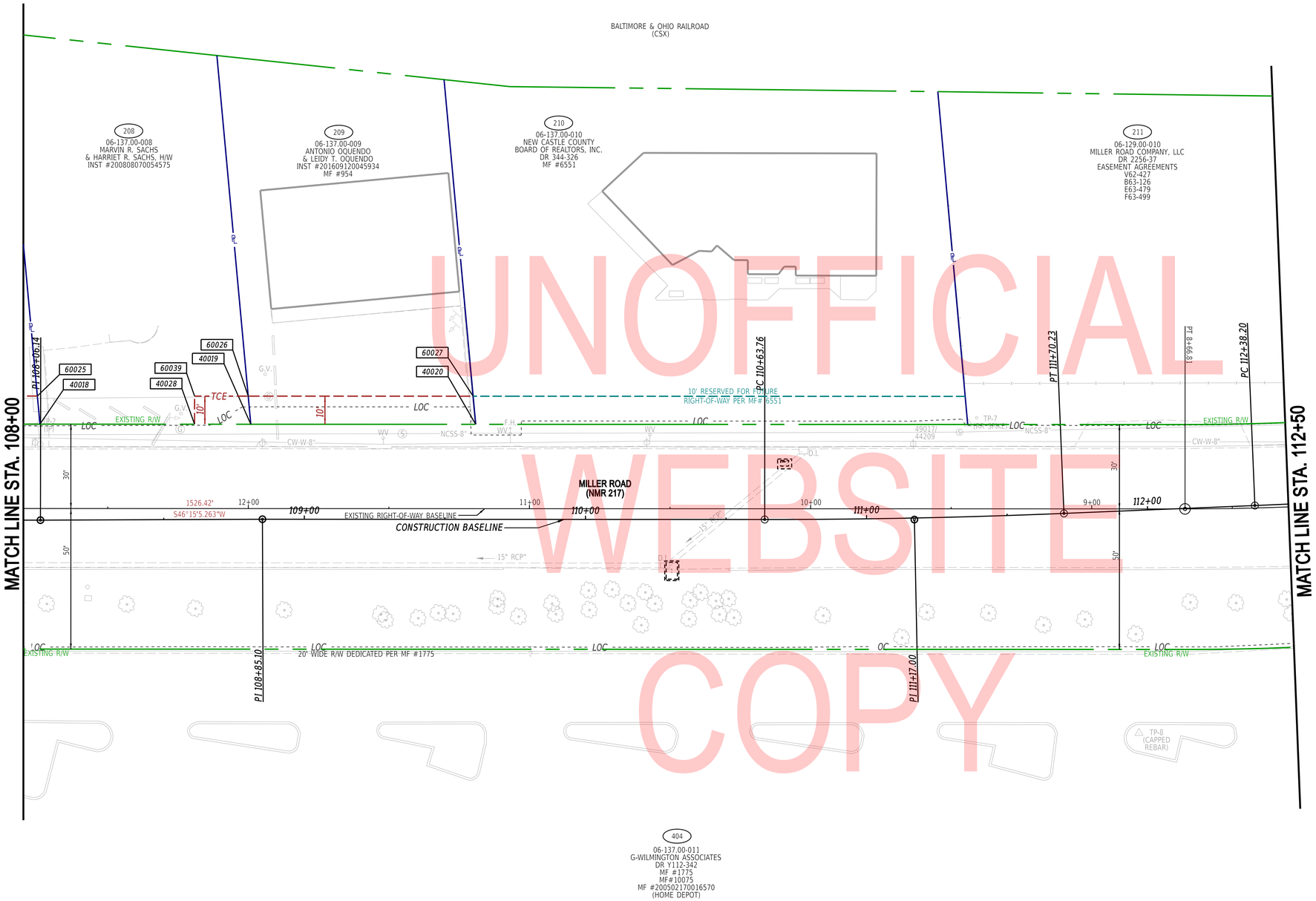

UNOFFICIAL WEBSITE COPY

NOTE:
STORMWATER MANAGEMENT FACILITIES, INCLUDING BEST MANAGEMENT PRACTICE (BMP) FACILITIES, MAY BE PRESENT WITHIN THE LIMITS OF THIS PROJECT. PLEASE CONSULT THE CONSTRUCTION PLANS FOR THIS PROJECT TO DETERMINE THE TYPE AND LOCATION OF THESE FACILITIES.

ADDENDA / REVISIONS	

SCALE
0 20 40 60
FEET

MILLER ROAD STREETSCAPE IMPROVEMENTS PHASE II

CONTRACT	BRIDGE NO.	X
T201901101	DESIGNED BY:	T. BANEZ
COUNTY		
NEW CASTLE	CHECKED BY:	W. CONWAY

RIGHT-OF-WAY PLAN

SECTION
CEI
SHEET NO.
52

23-JAN-2020
13:33
G:\PROJECTS\185003.00 Agmt 1834 TAP\185003.08 (Task 8 - Miller Road)\Cadd\Sheets\RW\rw03_miller.dgn

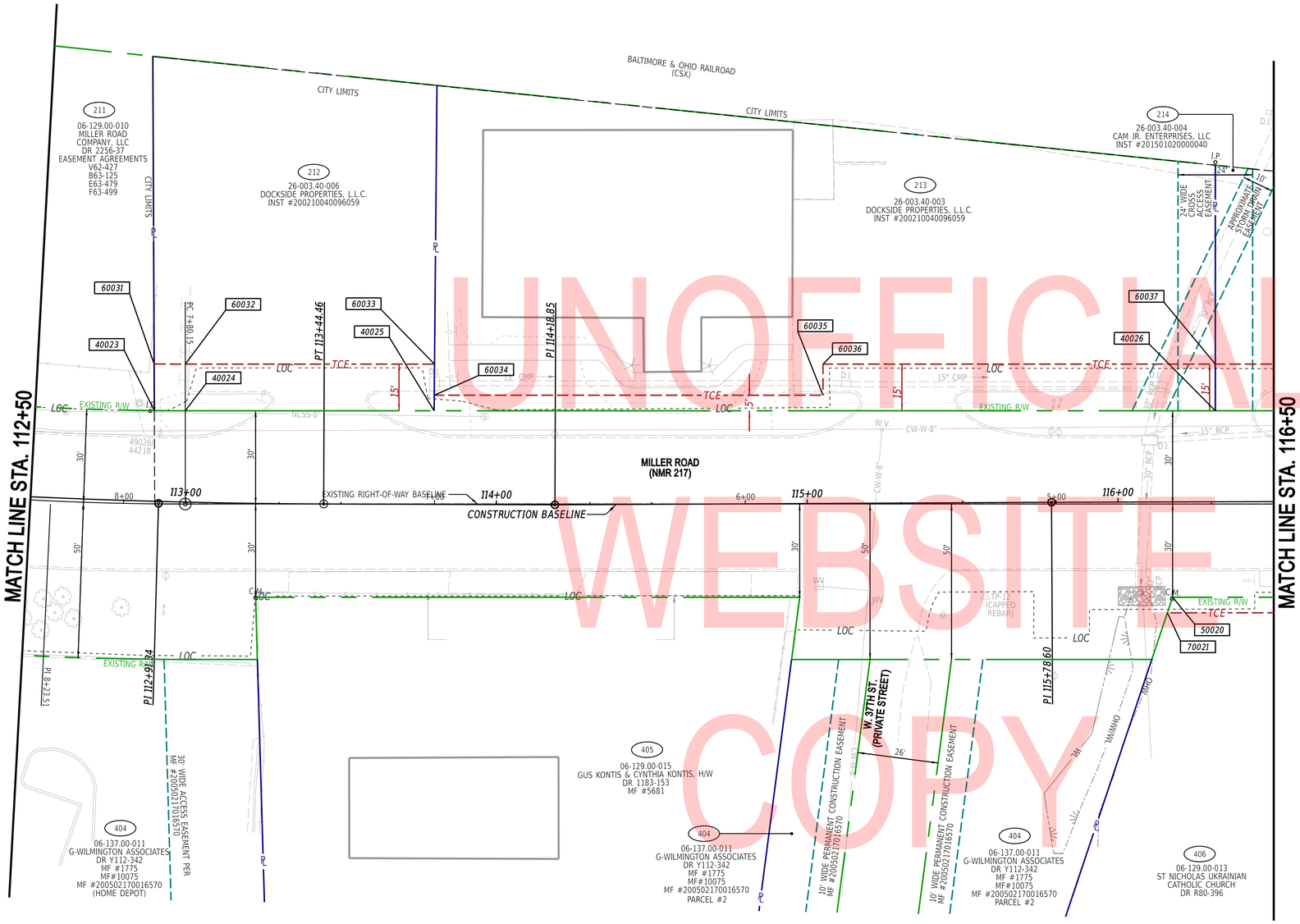

UNOFFICIAL WEBSITE COPY

NOTE:
STORMWATER MANAGEMENT FACILITIES, INCLUDING BEST MANAGEMENT PRACTICE (BMP) FACILITIES, MAY BE PRESENT WITHIN THE LIMITS OF THIS PROJECT. PLEASE CONSULT THE CONSTRUCTION PLANS FOR THIS PROJECT TO DETERMINE THE TYPE AND LOCATION OF THESE FACILITIES.

ADDENDA / REVISIONS	

SCALE 0 20 40 60 FEET

MILLER ROAD STREETSCAPE IMPROVEMENTS PHASE II

CONTRACT	BRIDGE NO.	X
T201901101	DESIGNED BY:	T. BANEZ
COUNTY		
NEW CASTLE	CHECKED BY:	W. CONWAY

RIGHT-OF-WAY PLAN

SECTION
CEI
SHEET NO.
53

23-JAN-2020
13:33
G:\PROJECTS\185003.00 Agmt 1834 TAP\185003.08 (Task 8 - Miller Road)\Cadd\Sheets\RWrw04_miller.dgn

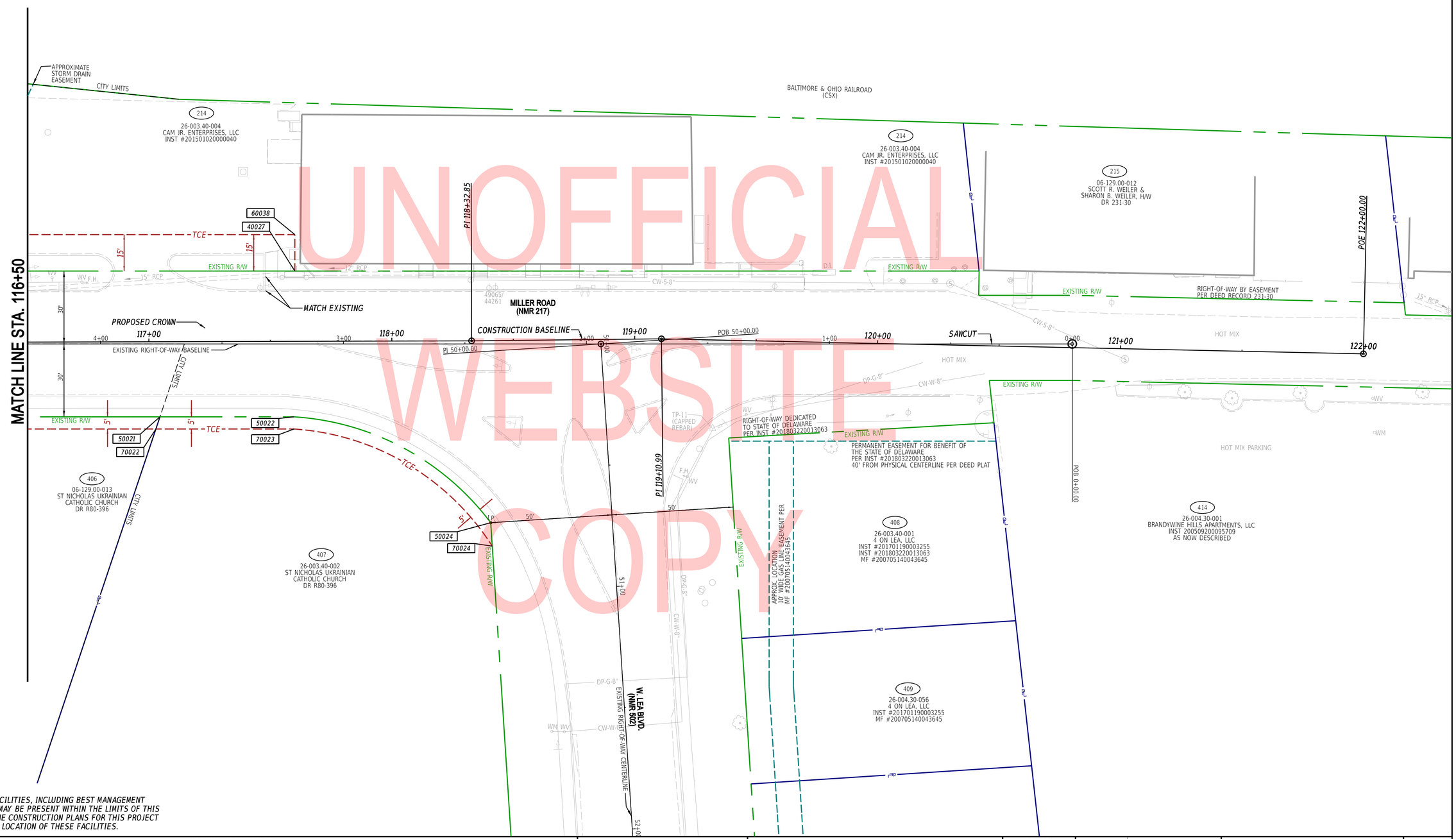

UNOFFICIAL WEBSITE COPY

NOTE:
STORMWATER MANAGEMENT FACILITIES, INCLUDING BEST MANAGEMENT PRACTICE (BMP) FACILITIES, MAY BE PRESENT WITHIN THE LIMITS OF THIS PROJECT. PLEASE CONSULT THE CONSTRUCTION PLANS FOR THIS PROJECT TO DETERMINE THE TYPE AND LOCATION OF THESE FACILITIES.

ADDENDA / REVISIONS

SCALE
0 20 40 60
FEET

MILLER ROAD STREETSCAPE IMPROVEMENTS PHASE II

CONTRACT	BRIDGE NO.	X
T201901101	DESIGNED BY:	T. BANEZ
COUNTY		
NEW CASTLE	CHECKED BY:	W. CONWAY

RIGHT-OF-WAY PLAN

SECTION: CEI
SHEET NO. 54

23-JAN-2020
13:33
G:\PROJECTS\185003.00 Agmt 1834 TAP\185003.08 (Task 8 - Miller Road)\Cadd\Sheets\RW\rw05_miller.dgn

ASSESSMENT NUMBER	OWNERSHIP OF RECORD	TYPE OF ACQUISITION	TITLE SOURCE	PARCEL AREA (ACRES)
06-137.00-012	(201) MIRAGE ENTERPRISES, L.L.C.	TCE	D.R. 2268-253	0.115

ALIGNMENT NUMBER & DESCRIPTION: 00217 - EX. MILLER ROAD

PT. NO.	ALIGN. NO.	STATION	OFFSET *	NORTH	EAST	BEARING	DISTANCE	CHORD BEARING	CHORD LENGTH	ARC LENGTH	RADIUS **
40011	00217	19+24.22	30.00	643393.6357	622424.6165	N 54°06'34.74" W	5.08				
60011	00217	19+25.14	35.00	643396.6154	622420.4987	N 46°15'05.26" E	27.91				
60012	00217	18+97.23	35.00	643415.9141	622440.6594	S 43°44'54.74" E	5.00				
40012	00217	18+97.23	30.00	643412.3022	622444.1169	S 46°15'05.26" W	26.99				
40011	00217	19+24.22	30.00	643393.6357	622424.6165						

FIGURE 20101 AREA = 137.2579 SQ. FT. (0.0032 ACRES)

ASSESSMENT NUMBER	OWNERSHIP OF RECORD	TYPE OF ACQUISITION	TITLE SOURCE	PARCEL AREA (ACRES)
06-137.00-014	(202) DOUGEES, LLC	TCE	201703170013645	0.357

ALIGNMENT NUMBER & DESCRIPTION: 00217 - EX. MILLER ROAD

PT. NO.	ALIGN. NO.	STATION	OFFSET *	NORTH	EAST	BEARING	DISTANCE	CHORD BEARING	CHORD LENGTH	ARC LENGTH	RADIUS **
40012	00217	18+97.23	30.00	643412.3022	622444.1169	N 43°44'54.74" W	5.00				
60012	00217	18+97.23	35.00	643415.9141	622440.6594	N 46°15'05.26" E	20.00				
60013	00217	18+77.23	35.00	643429.7440	622455.1070	S 43°44'54.74" E	5.00				
40013	00217	18+77.23	30.00	643426.1321	622458.5645	S 46°15'05.26" W	20.00				
40012	00217	18+97.23	30.00	643412.3022	622444.1169						

FIGURE 20201 AREA = 100.0000 SQ. FT. (0.0023 ACRES)

ASSESSMENT NUMBER	OWNERSHIP OF RECORD	TYPE OF ACQUISITION	TITLE SOURCE	PARCEL AREA (ACRES)
06-137.00-003	(203) GOAN PROPERTIES, LLC	TCE	201611140059327	0.146

ALIGNMENT NUMBER & DESCRIPTION: 00217 - EX. MILLER ROAD

PT. NO.	ALIGN. NO.	STATION	OFFSET *	NORTH	EAST	BEARING	DISTANCE	CHORD BEARING	CHORD LENGTH	ARC LENGTH	RADIUS **
40013	00217	18+77.23	30.00	643426.1321	622458.5645	N 43°44'54.74" W	10.00				
60014	00217	18+77.23	40.00	643433.3559	622451.6496	N 46°15'05.26" E	50.98				
60015	00217	18+26.25	40.00	643468.6054	622488.4735	S 43°44'54.74" E	10.00				
40014	00217	18+26.25	30.00	643461.3815	622495.3884	S 46°15'05.26" W	50.98				
40013	00217	18+77.23	30.00	643426.1321	622458.5645						

FIGURE 20301 AREA = 509.7570 SQ. FT. (0.0117 ACRES)

ASSESSMENT NUMBER	OWNERSHIP OF RECORD	TYPE OF ACQUISITION	TITLE SOURCE	PARCEL AREA (ACRES)
06-137.00-004	(204) 3209 MILLER ROAD, LLC	TCE	201012300071666	0.895

ALIGNMENT NUMBER & DESCRIPTION: 00217 - EX. MILLER ROAD

PT. NO.	ALIGN. NO.	STATION	OFFSET *	NORTH	EAST	BEARING	DISTANCE	CHORD BEARING	CHORD LENGTH	ARC LENGTH	RADIUS **
40014	00217	18+26.25	30.00	643461.3815	622495.3884	N 43°44'54.74" W	5.00				
60016	00217	18+26.25	35.00	643464.9934	622491.9309	N 46°15'05.26" E	101.25				
60017	00217	17+25.00	35.00	643535.0096	622565.0745	N 43°44'54.74" W	20.00				
60018	00217	17+25.00	55.00	643549.4572	622551.2446	N 46°15'05.26" E	45.00				
60019	00217	16+80.00	55.00	643580.5744	622583.7517	S 43°44'54.74" E	20.00				
60020	00217	16+80.00	35.00	643566.1268	622597.5816	N 46°15'05.26" E	40.00				
60041	00217	16+40.00	35.00	643593.7866	622626.4769	N 43°44'54.74" W	20.00				
60042	00217	16+40.00	55.00	643608.2342	622612.6470	N 46°15'05.26" E	50.00				
60043	00217	15+90.00	55.00	643642.8090	622648.7661	S 43°44'54.74" E	20.00				
60044	00217	15+90.00	35.00	643628.3613	622662.5960	N 46°15'05.26" E	14.91				
60021	00217	15+75.09	35.00	643638.6705	622673.3657	S 53°50'26.21" E	5.08				
40015	00217	15+74.20	30.00	643635.6740	622677.4660	S 46°15'05.26" W	252.05				
40014	00217	18+26.25	30.00	643461.3815	622495.3884						

FIGURE 20402 AREA = 3158.0342 SQ. FT. (0.0725 ACRES)

ASSESSMENT NUMBER	OWNERSHIP OF RECORD	TYPE OF ACQUISITION	TITLE SOURCE	PARCEL AREA (ACRES)
06-137.00-005	(205) ABESSINIO PROPERTY MANAGEMENT, LLC, SERIES 1	TCE	200708240075808	0.340

ALIGNMENT NUMBER & DESCRIPTION: 00217 - EX. MILLER ROAD

PT. NO.	ALIGN. NO.	STATION	OFFSET *	NORTH	EAST	BEARING	DISTANCE	CHORD BEARING	CHORD LENGTH	ARC LENGTH	RADIUS **
40015	00217	15+74.20	30.00	643635.6740	622677.4660	N 53°50'26.21" W	5.08				
60021	00217	15+75.09	35.00	643638.6705	622673.3657	N 46°15'05.26" E	86.00				
60022	00217	14+89.09	35.00	643698.1424	622735.4940	S 53°50'26.21" E	5.08				
40016	00217	14+88.20	30.00	643695.1459	622739.5943	S 46°15'05.26" W	86.00				
40015	00217	15+74.20	30.00	643635.6740	622677.4660						

FIGURE 20501 AREA = 430.0240 SQ. FT. (0.0099 ACRES)

ASSESSMENT NUMBER	OWNERSHIP OF RECORD	TYPE OF ACQUISITION	TITLE SOURCE	PARCEL AREA (ACRES)
06-137.00-006	(206) SIMRAN ENTERPRISES, LLC	TCE	201106020027554	0.270

ALIGNMENT NUMBER & DESCRIPTION: 00217 - EX. MILLER ROAD

PT. NO.	ALIGN. NO.	STATION	OFFSET *	NORTH	EAST	BEARING	DISTANCE	CHORD BEARING	CHORD LENGTH	ARC LENGTH	RADIUS **
40016	00217	14+88.20	30.00	643695.1459	622739.5943	N 53°50'26.21" W	5.08				
60022	00217	14+89.09	35.00	643698.1424	622735.4940	N 46°15'05.26" E	64.30				
60023	00217	14+24.78	35.00	643742.6086	622781.9463	S 49°01'27.21" E	5.02				
40017	00217	14+24.32	30.00	643739.3159	622785.7373	S 46°15'05.26" W	63.88				
40016	00217	14+88.20	30.00	643695.1459	622739.5943						

FIGURE 20601 AREA = 320.4516 SQ. FT. (0.0074 ACRES)

ASSESSMENT NUMBER	OWNERSHIP OF RECORD	TYPE OF ACQUISITION	TITLE SOURCE	PARCEL AREA (ACRES)
06-137.00-007	(207) GPM RE, LLC	TCE	201807030032736	0.520

ALIGNMENT NUMBER & DESCRIPTION: 00217 - EX. MILLER ROAD

PT. NO.	ALIGN. NO.	STATION	OFFSET *	NORTH	EAST	BEARING	DISTANCE	CHORD BEARING	CHORD LENGTH	ARC LENGTH	RADIUS **
40017	00217	14+24.32	30.00	643739.3159	622785.7373	N 49°01'27.21" W	10.04				
60024	00217	14+25.24	40.00	643745.9012	622778.1553	N 46°15'05.26" E	150.20				
60025	00217	12+75.05	40.00	643849.7627	622886.6559	S 49°01'21.21" E	10.04				
40018	00217	12+74.12	30.00	643843.1772	622894.2377	S 46°15'05.26" W	150.20				
40017	00217	14+24.32	30.00	643739.3159	622785.7373						

FIGURE 20701 AREA = 1501.9835 SQ. FT. (0.0345 ACRES)

ASSESSMENT NUMBER	OWNERSHIP OF RECORD	TYPE OF ACQUISITION	TITLE SOURCE	PARCEL AREA (ACRES)
06-137.00-008	(208) MARVIN R. SACHS & HARRIET R. SACHS, H/W	TCE	200808070054575	0.234

ALIGNMENT NUMBER & DESCRIPTION: 00217 - EX. MILLER ROAD

PT. NO.	ALIGN. NO.	STATION	OFFSET *	NORTH	EAST	BEARING	DISTANCE	CHORD BEARING	CHORD LENGTH	ARC LENGTH	RADIUS **
40028	00217	12+19.12	30.00	643881.2109	622933.9703	N 43°44'54.74" W	10.00				
60039	00217	12+19.12	40.00	643888.4348	622927.0554	N 46°15'05.26" E	19.08				
60026	00217	12+00.04	40.00	643901.6254	622940.8353	S 49°01'21.21" E	10.04				
40019	00217	11+99.12	30.00	643895.0399	622948.4170	S 46°15'05.26" W	20.00				
40028	00217	12+19.12	30.00	643881.2109	622933.9703						

FIGURE 20801 AREA = 195.3715 SQ. FT. (0.0045 ACRES)

ASSESSMENT NUMBER	OWNERSHIP OF RECORD	TYPE OF ACQUISITION	TITLE SOURCE	PARCEL AREA (ACRES)
06-137.00-009	(209) ANTONIO OQUENDO & LEIDY T. OQUENDO	TCE	201609120045934	0.210

ALIGNMENT NUMBER & DESCRIPTION: 00217 - EX. MILLER ROAD

PT. NO.	ALIGN. NO.	STATION	OFFSET *	NORTH	EAST	BEARING	DISTANCE	CHORD BEARING	CHORD LENGTH	ARC LENGTH	RADIUS **
40019	00217	11+99.12	30.00	643895.0399	622948.4170	N 49°01'21.21" W	10.04				
60026	00217	12+00.04	40.00	643901.6254	622940.8353	N 46°15'05.26" E	80.01				
60027	00217	11+20.04	40.00	643956.9488	622998.6298	S 49°00'59.88" E	10.04				
40020	00217	11+19.12	30.00	643950.3626	623006.2108	S 46°15'05.26" W	80.00				
40019	00217	11+99.12	30.00	643895.0399	622948.4170						

FIGURE 20901 AREA = 800.0502 SQ. FT. (0.0184 ACRES)

ASSESSMENT NUMBER	OWNERSHIP OF RECORD	TYPE OF ACQUISITION	TITLE SOURCE	PARCEL AREA (ACRES)
26-003.40-006	(212) DOCKSIDE PROPERTIES, L.L.C.	TCE	200210040096059	0.229

ALIGNMENT NUMBER & DESCRIPTION: 00217 - EX. MILLER ROAD

PT. NO.	ALIGN. NO.	STATION	OFFSET *	NORTH	EAST	BEARING	DISTANCE	CHORD BEARING	CHORD LENGTH	ARC LENGTH	RADIUS **
40023	00217	7+90.43	30.00	644178.0737	623239.7374	N 49°17'40.56" W	15.00				
60031	00217	7+90.67	45.00	644187.8575	623228.3650			N 41°16'23.76" E	10.02	10.02	-891.82
60032	00217	7+80.15	45.00	644195.3866	623234.9733	N 40°57'05.26" E	80.18				
60033	00217	6+99.97	45.00	644255.9424	623287.5237	S 48°32'40.56" E	15.00				
40025	00217	7+00.10	30.00	644246.0115	623298.7662	S 40°57'05.26" W	80.05				
40024	00217	7+80.15	30.00	644185.5553	623246.3023			S 41°15'57.27" W	9.95	9.95	906.82
40023	00217	7+90.43	30.00	644178.0737	623239.7374						

FIGURE 21201 AREA = 1351.4700 SQ. FT. (0.0310 ACRES)

ASSESSMENT NUMBER	OWNERSHIP OF RECORD	TYPE OF ACQUISITION	TITLE SOURCE	PARCEL AREA (ACRES)
26-003.40-003	(213) DOCKSIDE PROPERTIES, L.L.C.	TCE	200210040096059	0.534

ALIGNMENT NUMBER & DESCRIPTION: 00217 - EX. MILLER ROAD

PT. NO.	ALIGN. NO.	STATION	OFFSET *	NORTH	EAST	BEARING	DISTANCE	CHORD BEARING	CHORD LENGTH	ARC LENGTH	RADIUS **
40025	00217	7+00.10	30.00	644246.0115	623298.7662	N 48°32'40.56" W	5.00				
60034	00217	7+00.06	35.00	644249.3218	623295.0187	N 40°57'05.26" E	125.06				
60035	00217	5+75.00	35.00	644343.7751	623376.9853	N 49°02'54.74" W	10.00				
60036	00217	5+75.00	45.00	644350.3293	623369.4326	N 40°57'05.26" E	126.21				
60037	00217	4+48.79	45.00	644445.6488	623452.1509	S 49°02'54.73" E	15.00				
40026	00217	4+48.79	30.00	644435.8175	623463.4799	S 40°57'05.26" W	251.31				
40025	00217	7+00.10	30.00	644246.0115	623298.7662						

FIGURE 21301 AREA = 2518.5091 SQ. FT. (0.0578 ACRES)

UNOFFICIAL WEBSITE COPY

LEGEND

FEE AREA OF ACQUISITION
RW AREA OCCUPIED BY EXISTING RW
P/E PERMANENT EASEMENT
TCE TEMPORARY CONSTRUCTION EASEMENT

* "–" OFFSET IS LEFT OF BASELINE
** "–" CURVE TURNS TO THE LEFT

ADDENDA / REVISIONS

NOT TO SCALE

MILLER ROAD STREETSCAPE IMPROVEMENTS

CONTRACT: T201901101
COUNTY: NEW CASTLE
BRIDGE NO.: N/A
DESIGNED BY: TMB
CHECKED BY: WFC

RIGHT–OF–WAY DATA AND TABULATION SHEET

SECTION: CEI
SHEET NO.: 55

ASSESSMENT NUMBER	OWNERSHIP OF RECORD	TYPE OF ACQUISITION	TITLE SOURCE	PARCEL AREA (ACRES)
26-003.40-004	(214) CAM JR. ENTERPRISES, LLC	TCE	201501020000040	0.640

ALIGNMENT NUMBER & DESCRIPTION: 00217 - EX. MILLER ROAD

PT. NO.	ALIGN. NO.	STATION	OFFSET *	NORTH	EAST	BEARING	DISTANCE	CHORD BEARING	CHORD LENGTH	ARC LENGTH	RADIUS **
40026	00217	4+48.79	30.00	644435.8175	623463.4799	N 49°02'54.73" W	15.00				
60037	00217	4+48.79	45.00	644445.6488	623452.1509	N 40°57'05.26" E	128.79				
60038	00217	3+20.00	45.00	644542.9219	623536.5646	S 49°02'54.74" E	15.00				
40027	00217	3+20.00	30.00	644533.0906	623547.8935	S 40°57'05.26" W	128.79				
40026	00217	4+48.79	30.00	644435.8175	623463.4799						

FIGURE 21401 AREA = 1931.8995 SQ. FT. (0.0444 ACRES)

ASSESSMENT NUMBER	OWNERSHIP OF RECORD	TYPE OF ACQUISITION	TITLE SOURCE	PARCEL AREA (ACRES)
26-008.20-012	(403) CMIF PEBBLE HILL LLC PARCEL B	TCE	201908300068993	3.474

ALIGNMENT NUMBER & DESCRIPTION: 00217 - EX. MILLER ROAD

PT. NO.	ALIGN. NO.	STATION	OFFSET *	NORTH	EAST	BEARING	DISTANCE	CHORD BEARING	CHORD LENGTH	ARC LENGTH	RADIUS **
50013	00217	17+55.00	-30.00	643467.3099	622588.3502	N 46°15'05.26" E	341.46				
50014	00217	14+13.54	-30.00	643703.4300	622835.0170	S 30°01'15.31" E	25.74				
70016	00217	14+19.64	-55.00	643681.1474	622847.8927	S 46°15'05.26" W	30.36				
70015	00217	14+50.00	-55.00	643660.1562	622825.9639	S 50°49'31.38" W	250.80				
70014	00217	17+00.00	-35.00	643501.7302	622631.5386	S 46°15'05.26" W	55.00				
70013	00217	17+55.00	-35.00	643463.6980	622591.8076	N 43°44'54.74" W	5.00				
50013	00217	17+55.00	-30.00	643467.3099	622588.3502						

FIGURE 40301 AREA = 4860.2461 SQ. FT. (0.1116 ACRES)

ASSESSMENT NUMBER	OWNERSHIP OF RECORD	TYPE OF ACQUISITION	TITLE SOURCE	PARCEL AREA (ACRES)
06-129.00-013	(406) ST. NICHOLAS UKRAINIAN CATHOLIC CHURCH	TCE	D.R. R80-396	0.370

ALIGNMENT NUMBER & DESCRIPTION: 00217 - EX. MILLER ROAD

PT. NO.	ALIGN. NO.	STATION	OFFSET *	NORTH	EAST	BEARING	DISTANCE	CHORD BEARING	CHORD LENGTH	ARC LENGTH	RADIUS **
50020	00217	4+62.53	-30.00	644386.1159	623499.7911	N 40°57'05.26" E	87.01				
50021	00217	3+75.52	-30.00	644451.8322	623556.8198	S 30°31'05.83" E	5.27				
70022	00217	3+77.20	-35.00	644447.2894	623559.4977	S 40°57'05.26" W	87.01				
70021	00217	4+64.21	-35.00	644381.5730	623502.4690	N 30°31'05.83" W	5.27				
50020	00217	4+62.53	-30.00	644386.1159	623499.7911						

FIGURE 40601 AREA = 435.0550 SQ. FT. (0.0100 ACRES)

ASSESSMENT NUMBER	OWNERSHIP OF RECORD	TYPE OF ACQUISITION	TITLE SOURCE	PARCEL AREA (ACRES)
26-003.40-002	(407) ST. NICHOLAS UKRAINIAN CATHOLIC CHURCH	TCE	D.R. R80-396	1.480

ALIGNMENT NUMBER & DESCRIPTION: 00217 - EX. MILLER ROAD

PT. NO.	ALIGN. NO.	STATION	OFFSET *	NORTH	EAST	BEARING	DISTANCE	CHORD BEARING	CHORD LENGTH	ARC LENGTH	RADIUS **
50021	00217	3+75.52	-30.00	644451.8322	623556.8198	N 40°57'05.26" E	55.20				
50022	00217	3+20.32	-30.00	644493.5205	623592.9969			N 69°14'26.11" E	91.94	94.85	110.00
50024	00217	2+39.37	-73.57	644526.1068	623678.9645	S 52°44'53.05" E	9.67				
70024	00217	2+38.74	-83.22	644520.2521	623686.6633			S 71°26'53.33" W	95.04	98.63	-105.00
70023	00217	3+20.64	-34.99	644490.0135	623596.5608	S 40°56'29.53" W	56.56				
70022	00217	3+77.20	-35.00	644447.2894	623559.4977	N 30°31'05.83" W	5.27				
50021	00217	3+75.52	-30.00	644451.8322	623556.8198						

FIGURE 40701 AREA = 762.3595 SQ. FT. (0.0175 ACRES)

UNOFFICIAL WEBSITE COPY

LEGEND

FEE AREA OF ACQUISITION
R/W AREA OCCUPIED BY EXISTING R/W
P/E PERMANENT EASEMENT
TCE TEMPORARY CONSTRUCTION EASEMENT

* "-" OFFSET IS LEFT OF BASELINE
** "-" CURVE TURNS TO THE LEFT

ADDENDA / REVISIONS

NOT TO SCALE

MILLER ROAD STREETSCAPE IMPROVEMENTS

CONTRACT T201901101
COUNTY NEW CASTLE
BRIDGE NO. N/A
DESIGNED BY: TMB
CHECKED BY: WFC

RIGHT-OF-WAY DATA AND TABULATION SHEET

SECTION CEI
SHEET NO. 56

COUNTY ASSESSMENT PARCEL NUMBER	PLAN SHEET NUMBER	OWNERSHIP OF RECORD	TITLE SOURCE	PROPERTY AREA BEFORE ACQUISITION (ACRE) D=DEED C=CALCULATED A=ASSESMENT	ACQUISITION CODE FEE, R/W, P/E, TCE	AREA TO BE ACQUIRED				PROPERTY AREA REMAINING (SQ. FEET/ACRES)	DEED RECORD OF ACQUISTITION	REMARKS
						ACQUISITION (SQ. FEET/ACRES)	AREA OCCUPIED BY EXISTING RIGHT OF WAY (SQ. FEET/ACRES)	EASEMENT PERMANENT (SQ. FEET/ACRES)	EASEMENT TEMPORARY (SQ. FEET/ACRES)			
06-137.00-012	59	(201) MIRAGE ENTERPRISES, L.L.C.	D.R. 2268-253	D - 0.12	TCE				137.2579 / 0.00	5004.00 / 0.11		
06-137.00-014	59	(202) DOUGEES, LLC	201703170013645	D - 0.36	TCE				100.00 / 0.00	15551.00 / 0.36		
06-137.00-003	59	(203) GOAN PROPERTIES, LLC	201611140059327	D - 0.15	TCE				509.757 / 0.01	6371.00 / 0.15		
06-137.00-004	59,60	(204) 3209 MILLER ROAD, LLC	201012300071666	D - 0.90	TCE				3158.0342 / 0.07	38986.20 / 0.90		
06-137.00-005	60	(205) ABESSINIO PROPERTY MANAGEMENT, LLC, SERIES 1	200708240075808	D - 0.34	TCE				430.024 / 0.01	14809.375 / 0.34		
06-137.00-006	60	(206) SIMRAN ENTERPRISES, LLC	201106020027554	D - 0.27	TCE				320.4516 / 0.01	11761.20 / 0.27		
06-137.00-007	60	(207) GPM RE, LLC	201807030032736	D - 0.52	TCE				1501.9835 / 0.03	22651.20 / 0.52		
06-137.00-008	61	(208) MARVIN R. SACHS & HARRIET R. SACHS, H/W	200808070054575	D - 0.23	TCE				195.3715 / 0.00	10193.04 / 0.23		
06-137.00-009	61	(209) ANTONIO OQUENDO & LEIDY T. OQUENDO	201609120045934	D - 0.21	TCE				800.0502 / 0.02	9147.60 / 0.21		
26-003.40-006	62	(212) DOCKSIDE PROPERTIES, L.L.C.	200210040096059	D - 0.23	TCE				1351.47 / 0.03	9975.24 / 0.23		
26-003.40-003	62	(213) DOCKSIDE PROPERTIES, L.L.C.	200210040096059	D - 0.53	TCE				2518.5091 / 0.06	23261.04 / 0.53		
26-003.40-004	62,63	(214) CAM JR. ENTERPRISES, LLC	201501020000040	D - 0.64	TCE				1931.8995 / 0.04	27878.40 / 0.64		
26-008.20-012	59,60	(403) CMIF PEBBLE HILL LLC PARCEL B	201908300068993	D - 3.47	TCE				4860.2461 / 0.11	151327.44 / 3.47		
06-129.00-013	62,63	(406) ST. NICHOLAS UKRAINIAN CATHOLIC CHURCH	D.R. R80-396	D - 0.37	TCE				435.055 / 0.01	16117.20 / 0.37		
26-003.40-002	63	(407) ST. NICHOLAS UKRAINIAN CATHOLIC CHURCH	D.R. R80-396	D - 1.48	TCE				762.3595 / 0.02	64468.80 / 1.48		

UNOFFICIAL WEBSITE COPY

ACQUISITION CODES

FEE - ACQUISITION
R/W - AREA OCCUPIED BY EXISTING R/W
P/E - PERMANENT EASEMENT
TCE - TEMPORARY EASEMENT

ADDENDA / REVISIONS

NOT TO SCALE

MILLER ROAD
STREETSCAPE IMPROVEMENTS

CONTRACT T201901101
COUNTY NEW CASTLE
BRIDGE NO. N/A
DESIGNED BY: TMB
CHECKED BY: WFC

RIGHT-OF-WAY DATA
AND TABULATION SHEET

SECTION CEI
SHEET NO. 57